DESIGN DESIGNATION	
Current A.D.T. =	15,949 (1970)
Design Year A.D.T.	28,709 (1986)
DHV =	2400
D =	50-50
T =	14%
V =	60 M.P.H

MICROFILMED JAN 31 1990

STATE OF OHIO
DEPARTMENT OF HIGHWAYS
FRA - 33 - 29.53
FRANKLIN COUNTY
VILLAGE OF CANAL WINCHESTER
MADISON TOWNSHIP

R F-485 (10)

FED. RD. DIVISION	STATE	PROJECT	
2	OHIO	RF-485 (10)	

1/155

FRANKLIN COUNTY
FRA-33-29.53

Sheet No. 140 revised 7-10-70 EBL

ON MICROFILM BOX NO. 4-A

J-1

CONVENTIONAL SIGNS

Corporation Line
Existing Right of Way — R/W
Existing Limited Access — LA
Limited Access Only — LA
Right of Way Only — R/W

Section Line
Center Line
Fence Line
Guard Rail existing
Guard Rail proposed
Railroads
Power Poles
Telephone Poles
Trees or Stumps existing
Trees or Stumps to be removed

INDEX OF SHEETS

Title Sheet	1	Ramp "E" Plan Profile & X-Sections	57-64
Schematic	2	Ramp "F" Plan Profile & X-Sections	65-72
Geometric Layout	3	Pavement Details	73-79
Typical Sections	4-7	Grading Plan	80-81
General Notes	8	X-Section Layout	82
General Summary	9-10	Approach Slab Details	83
Calculations	11	Miscellaneous Details & Guard Rail Details	84-84A-84B
U.S. 33 Plan Profile & X-Sections	12-25	Structures 20' Span & Under	85-93
Gender Road Plan Profile & X-Sections	26-34	Signing Plans	94-116
S.R. 674 Plan Profile & X-Sections	35-36	Lighting Plans	117,117A,118-126
Ramp "A" Plan Profile & X-Sections	37-43	Structures Over 20' Span	127-146
Ramp "B" Plan Profile & X-Sections	44-49	Right-Of-Way Plans	147-155
Ramp "D" Plan Profile & X-Sections	50-56		

LINE DATA

Length of Project		0.000 lin. ft. or 0.000 Miles
Length of Work :		
U.S.R. 33		
Begin Work	Sta. 496 + 75	
Suspend Work	Sta. 497 + 25	50.000 lin. ft.
Resume Work	Sta. 526 + 50	
Suspend Work	Sta. 570 + 52.31	4402.310 lin. ft.
Resume Work	Sta. 599 + 75	
End Work	Sta. 600 + 25	50.000 lin. ft.
GENDER ROAD		
Begin Work	Sta. 11 + 00	
End Work	Sta. 43 + 80	3280.000 lin. ft.
Total Length of Work		7782.310 lin. ft. or 1.473 miles

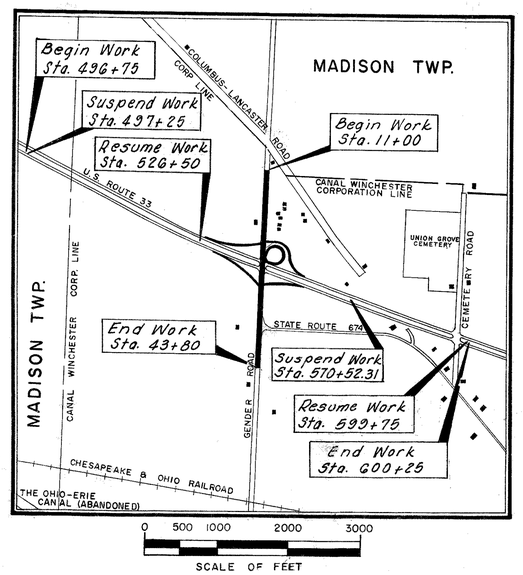

LOCATION MAP

PORTION TO BE IMPROVED
STATE ROADS — 674
U.S ROADS — 33
OTHER ROADS

SCALES

PLAN — 0 50 100
PROFILE — VERT. 0 5 10 15 20; HORZ. 0 25 50 75 100
CROSS SECTIONS — VERT. 0 10 20; HORZ. 0 10 20

Project designation FRA-33-29.97 appearing throughout this plan shall be considered to read FRA-33-29.53

LIMITED ACCESS

This improvement is especially designed for through traffic and has been declared a limited access highway or freeway by action of the Director of Highways in accordance with provisions of Section 5511.02 of the Revised Code of Ohio.

— 1969 SPECIFICATIONS —

The Standard Specifications of the State of Ohio, Department of Highways, including changes and supplemental specifications listed in the proposal shall govern this improvement.

The right of way for this improvement will be provided by the State of Ohio.

I hereby approve these plans and declare that the making of this improvement will not require the closing of the highway to traffic, and that provisions for the maintenance and safety of traffic will be set forth on the plans and estimates.

APPROVED Richard D. Jackson
DATE 1-19-70 DIVISION DEPUTY DIRECTOR

APPROVED C. H. Alkwatz
DATE 3-16-70 ENGINEER OF BRIDGES

APPROVED R. E. Gatlin
DATE 3-16-70 ENGINEER OF LOCATION & DESIGN

APPROVED Benj. J. Thomas
DATE 3-16-70 DEPUTY DIRECTOR OF DESIGN & CONSTRUCTION

APPROVED T. H. Bovard
DATE 4-6-70 DEPUTY DIRECTOR OF RIGHT OF WAY

APPROVED Thomas M. Major
DATE 4-6-70 DEPUTY DIRECTOR OF PLANNING & PROGRAMMING

APPROVED
DATE 4-7-70 FIRST ASSISTANT DIRECTOR

APPROVED
DATE 4-7-70 DIRECTOR OF HIGHWAYS

APPROVED
DATE

r. d. zande & associates
consulting engineers
columbus, ohio
By Richard D. Zande
Registered Engineer

ENGINEERS SEAL

DEPARTMENT OF TRANSPORTATION
FEDERAL HIGHWAY ADMINISTRATION
BUREAU OF PUBLIC ROADS
APPROVED
DIVISION ENGINEER DATE

File No. FRANKLIN COUNTY FRA-33-29.53
Date of Letting
Contract No.

Supplemental Prints of Standard Construction Drawings

BP-5	6-1-65	FACI-1	9-15-67	L-1	6-1-65	MC-8	12-1-67		
BP-6	6-1-65	FACI-2	6-1-65	MC-1	6-13-69	MH-1	10-1-68		
BP-7	1-1-66			MC-3	6-20-69				
CB-2-2-B	6-1-65	GR-2 B	2-15-68	MC-4	6-13-69	HW-E	6-1-65		
CB-2-3&2-4	6-1-65	GR-5	1-15-68	MC-6	6-1-65	BP-3	12-1-68		
CB-3-A	6-1-65	GR-6	7-15-68	MC-7	10-1-68				
CB-6	6-1-65	HL-1	11-1-65	AS-1-67	6-12-69				
CB-8	9-1-69	HL-2	11-1-65	BR-1-67	2-1-68				
F-2	3-10-69	HL-3	11-1-65	RB-1-55	2-2-59				
		HL-4	1-1-66	SD-1-69	6-12-69				

Supplemental Specifications	
801	7-1-69
808	11-14-69
811	1-1-69
815	1-7-69
816	1-1-69
830	6-17-69
836	6-17-69
938	8-12-69
1001	1-1-69

SCHEMATIC PLAN

MICROFILMED
JAN 31 1990

FED. RD. DIVISION	STATE	PROJECT	
2	OHIO		

FRANKLIN COUNTY
FRA - 33 - 29.97

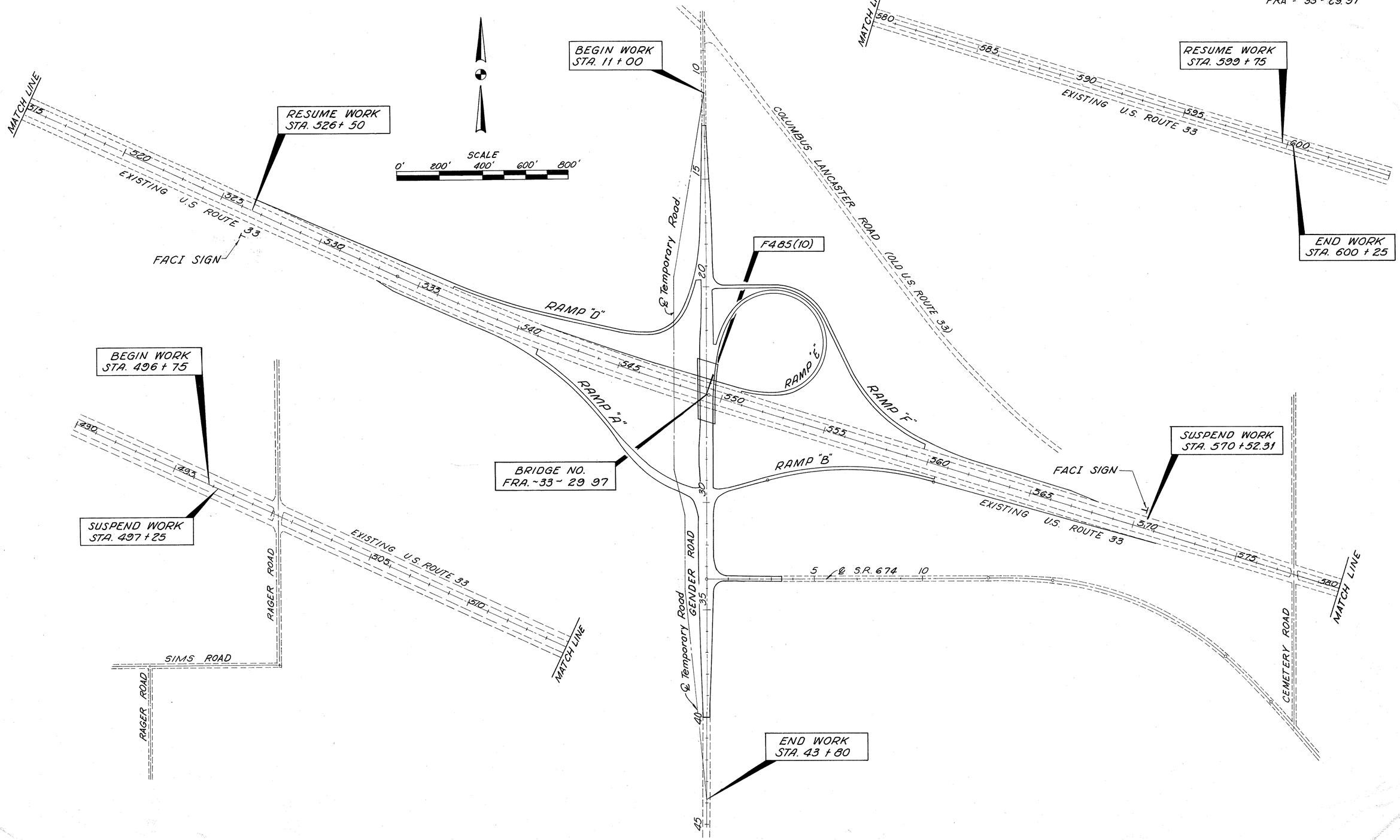

BRUNING 44560 10943

FED. RD. DIVISION	STATE	PROJECT	
2	OHIO		

3/55

FRANKLIN COUNTY
FRA. 33 - 29.97

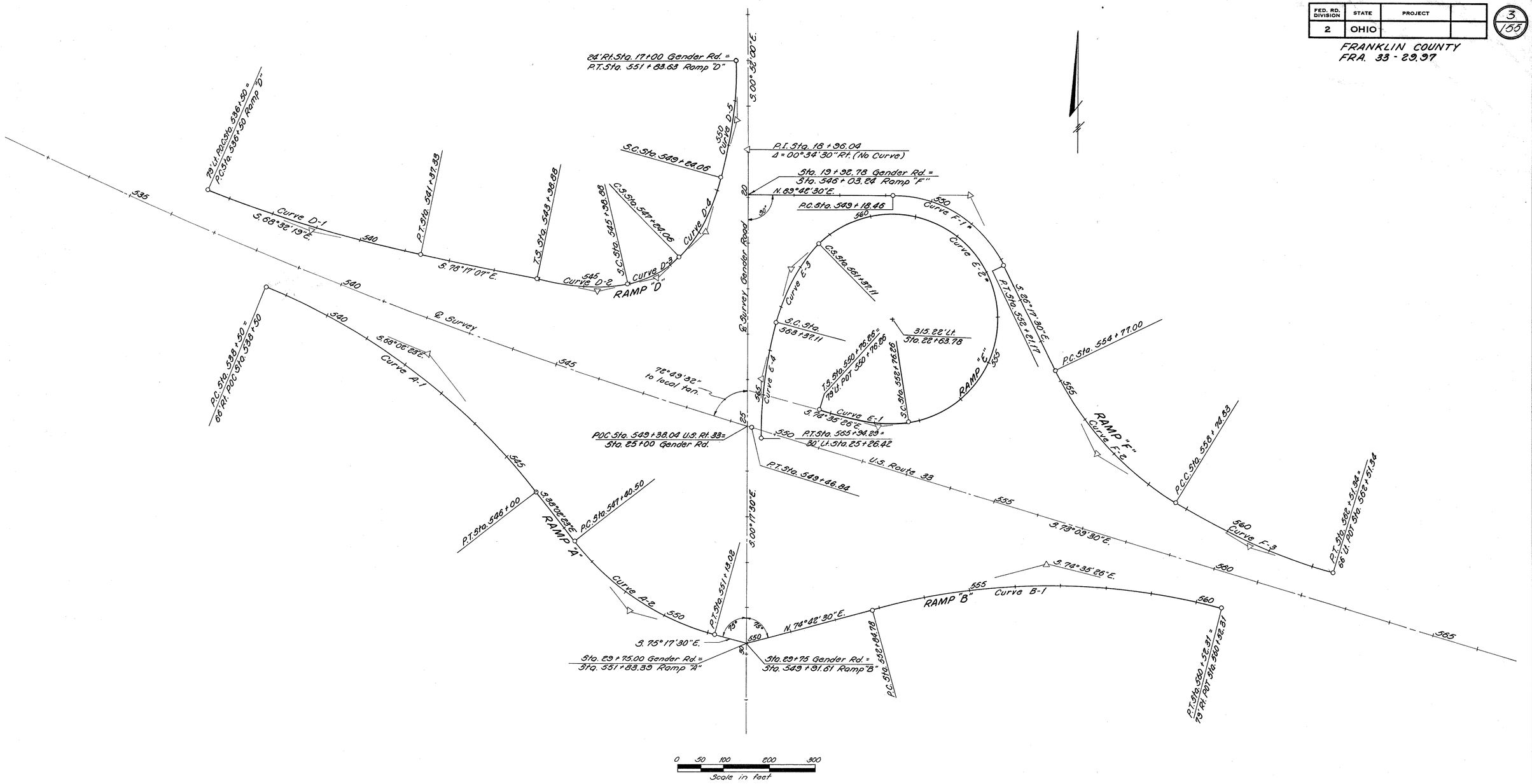

CURVE NUMBER	A-1	A-2	B-1	E-1	E-2*	E-3	E-4	F-1*	F-2	F-3	D-1	D-2	D-3	D-4	D-5	U.S.R. 33
P.I. STATION	542+33.81	549+33.61	556+78.00	552+10.94		562+19.04	564+66.48	550+87.80	556+80.92	560+63.93	538+94.26	545+33.56	546+63.06	548+05.99	550+54.65	541+73.46
Δ or θs	30°00'00"	37°15'07"	30°42'04"	24°54'40"	214°26'54"	30°54'40"	15°25'50"	64°00'00"	31°47'11"	15°04'49"	9°44'48"	24°54'40"	31°11'05"	30°54'40"	15°34'28"	7°13'40"
Dc	4°00'00"	10°00'00"	4°00'00"		24°54'40"		6°00'00"	21°08'32"	8°00'00"	4°00'00"	2°00'00"		24°54'40"		6°00'00"	0°28'00"
Rc	1432.39'	572.96'	1432.39'		230.00'	R1=230'; R2=954.93	954.93'	271.00'	716.20'	1432.39'	2864.79'		230.00'	R1=230'; R2=954.93	954.93'	12,277.67'
Lc or Ls	750.00'	372.52'	767.53'	200.00	860.85'	200.00'	257.18'	302.71'	397.33'	377.01'	487.33'	200.00'	125.18'	200.00'	259.57'	1548.81'
L.T. or Tc	383.81	193.11'	393.22'	134.68		123.06 (Ahd.)	129.37'	169.34'	203.92'	189.60'	244.26'	134.68	64.18'	123.06'	130.59'	775.43'
S.T.				67.89		81.93 (Bk.)						67.89'		81.93'		
E or Es	50.53	31.67'	52.99'				8.72'	48.56	28.47'	12.49'	10.39'		8.79'		8.89'	24.46'

*Curve E-2 is concentric with curve F-1. The common radius point is 315.22' Lt. of GENDER RD. Sta. 22+63.78'

GEOMETRIC LAYOUT - GENDER ROAD INTERCHANGE

FED. RD. DIVISION	STATE	PROJECT	
2	OHIO		

4/155

FRANKLIN COUNTY
FRA-33-29.97

TYPICAL SECTIONS
TYPE 404 ON 301

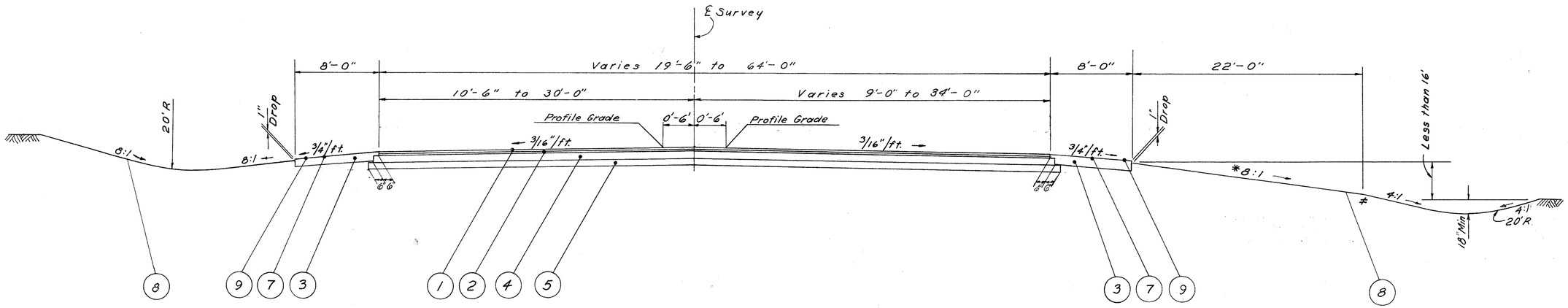

= 6' Rounding

NORMAL SECTION
Without Concrete Median
GENDER ROAD

Limiting Stations
STATION 12+50.00 TO STATION 22+68.31 = 1018.31 LIN. FT.
STATION 28+88.85 TO STATION 29+65.67 = 76.82 LIN. FT.
STATION 33+05.00 TO STATION 41+50.00 = 845.00 LIN. FT.
TOTAL = 1940.13 LIN. FT.

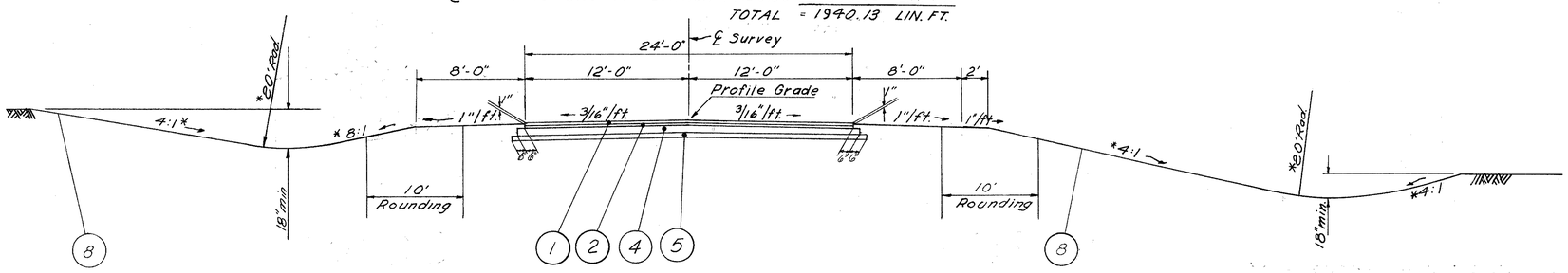

*Unless otherwise shown on Cross Sections

NORMAL SECTION
S.R. 674
Limiting Stations
STATION 0+30 TO STATION 3+25.00 = 295.00 LIN. FT.

ITEM		DESCRIPTION
1	404	1¼" ASPHALT CONCRETE (70-85)
2	402	1¼" ASPHALT CONCRETE (70-85)
3	304	8" AGGREGATE BASE
4	301	7" BITUMINOUS AGGREGATE BASE 702.01(85-100) OR 702.09, RT-11 OR RT-12★
5	310	4" SUBBASE — "B" GRADING
7	409	SEAL COAT, USING 0.008 CU.YD. No. 8 COVER AGGREGATE PER SQ.YD. AND 0.3 GAL. 702.09, RT-9 OR RT-10 OR 702.02, MC-800 OR MC-3000 Per Sq.Yd
8	659	SEEDING & MULCHING (SEE GENERAL NOTES)
9	408	PRIME COAT; 702.09, RT-2 or RT-3 APPLIED AT THE RATE OF 0.4 GAL. PER SQ. YD.

★ Placed in 2-3½" Courses

FED. RD. DIVISION	STATE	PROJECT	
2	OHIO		

FRANKLIN COUNTY
FRA 33-29.97

GENDER ROAD TYPICAL SECTIONS

TYPE 404 ON 301

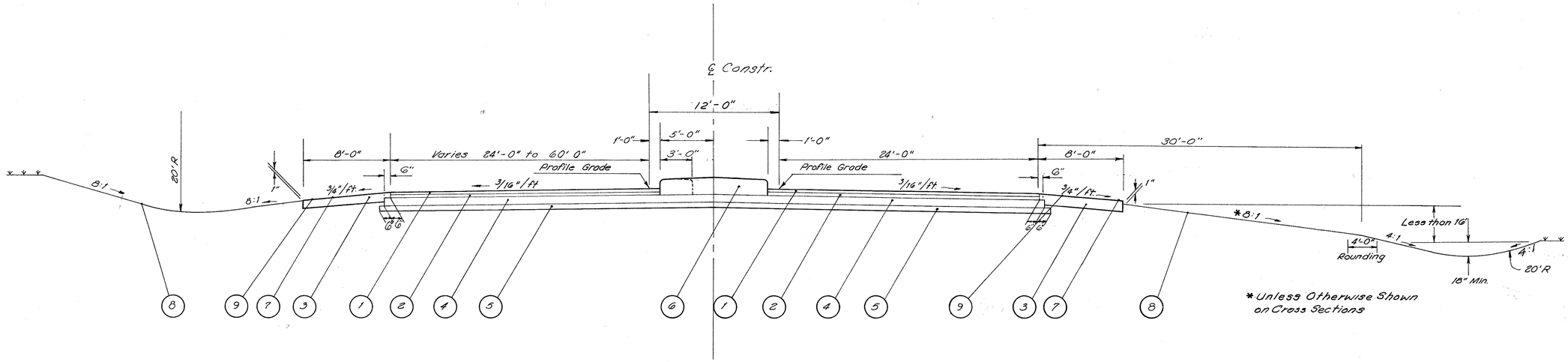

NORMAL SECTION WITH CONCRETE MEDIAN

Limiting Stations

STATION 22+68.31 TO STATION 27+58.00	=	489.69 LIN.FT.		
	-	335.45 LIN.FT.	DEDUCT FOR BRIDGE AND APPROACH SLABS	
TOTAL	=	154.24 LIN.FT.		

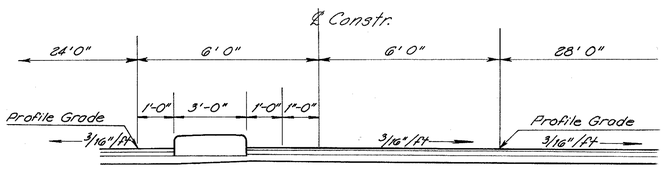

SECTION FOR LEFT TURN STORAGE LANES

Reference is made to Standard Drawing MC-6
(612 - Concrete Median Pavement)

Limiting Stations

STATION 27+58.00 TO STATION 28+88.85	=	150.85 LIN.FT.		
STATION 29+65.67 TO STATION 33+05.00	=	39.33 LIN.FT.		
TOTAL	=	190.18 LIN.FT.		

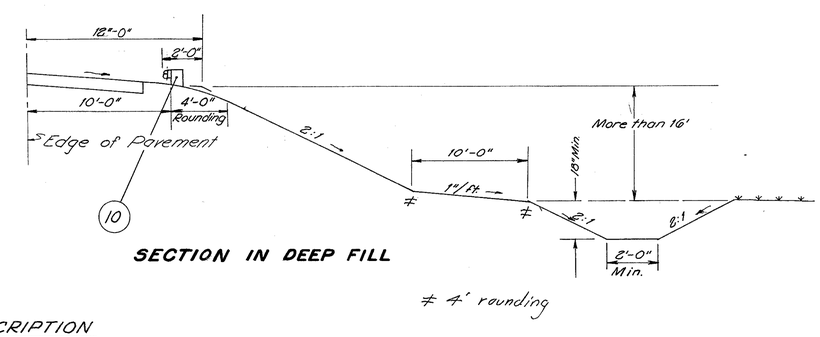

SECTION IN DEEP FILL

ITEM		DESCRIPTION
1	404	1½" ASPHALT CONCRETE (70-85)
2	402	1½" ASPHALT CONCRETE (70-85)
3	304	8" AGGREGATE BASE
4	301	7" BITUMINOUS AGGREGATE BASE 702.01 (85-100) or 702.09 (RT-11 or RT-12)★
5	310	4" SUBBASE — "B" GRADING

★ Placed in 2-3½" courses

ITEM		DESCRIPTION
6	612	CONCRETE MEDIAN
7	409	SEAL COAT, USING 0.008 CU. YD. NO. 8 COVER AGGREGATE PER SQ. YD. AND 0.3 GAL. 702.09, RT-9 OR RT-10 OR 702.08, MC-800 OR MC-3000 PER SQ. YD.
8	659	SEEDING AND MULCHING (SEE GENERAL NOTES)
9	408	PRIME COAT; 702.09, AT-2 or RT-3 APPLIED AT THE RATE OF 0.4 GAL PER SQ. YD.
10	606	GUARD RAIL, TYPE 5

FED. RD. DIVISION	STATE	PROJECT	
2	OHIO		

FRANKLIN COUNTY
FRA 33-29.97

RAMPS TYPICAL SECTIONS

TYPE 404 ON 301

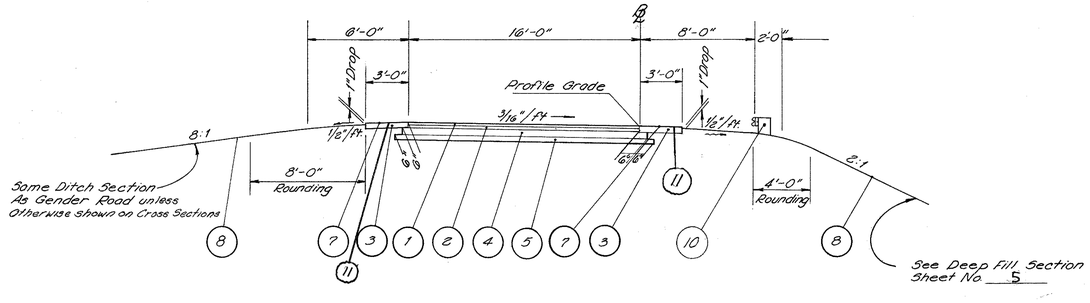

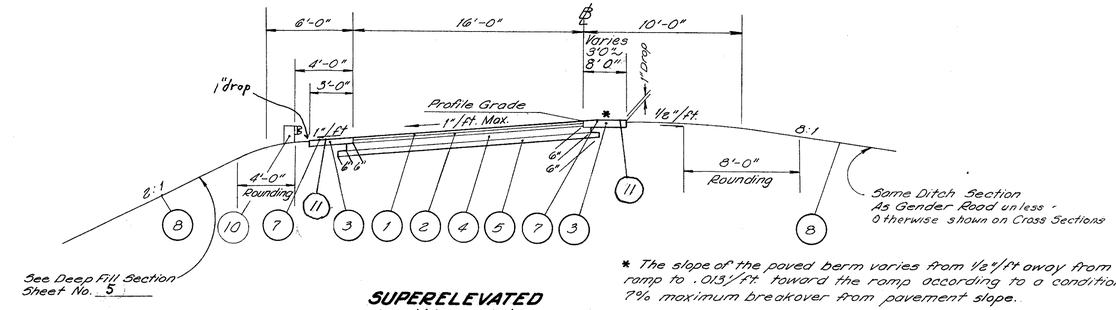

* The slope of the paved berm varies from 1/8"/ft away from the ramp to .013/ft. toward the ramp according to a condition of 7% maximum breakover from pavement slope.

NORMAL

Limiting Stations

RAMP "B" STATION	550+22.67	TO	STATION	552+25.00	= 202.33 LIN. FT.
RAMP "D" STATION	542+00.00	TO	STATION	543+00.00	= 100 LIN. FT.
RAMP "E" STATION	546+27.24	TO	STATION	547+75.00	= 147.76 LIN. FT.
RAMP "F" STATION	553+00.00	TO	STATION	553+25.00	= 25 LIN. FT.
			TOTAL		475.09 LIN. FT.

SUPERELEVATED

Limiting Stations

RAMP "A" STATION	541+12.15	TO	STATION	551+49.19	= 1037.04 LIN. FT.
RAMP "B" STATION	552+25.00	TO	STATION	560+52.31	= 827.31 LIN. FT.
RAMP "D" STATION	536+50.00	TO	STATION	542+00.00	= 550.00 LIN. FT.
RAMP "D" STATION	543+00.00	TO	STATION	549+24.06	= 624.06 LIN. FT.
RAMP "E" STATION	550+76.26	TO	STATION	557+04.94	= 628.68 LIN. FT.
RAMP "E" STATION	559+61.85	TO	STATION	563+37.11	= 375.26 LIN. FT.
RAMP "F" STATION	547+75.00	TO	STATION	549+18.46	= 143.46 LIN. FT.
RAMP "F" STATION	552+21.17	TO	STATION	553+00.00	= 78.83 LIN. FT.
RAMP "F" STATION	553+25.00	TO	STATION	559+74.33	= 649.33 LIN. FT.
			TOTAL		= 4913.97 LIN. FT.

	ITEM	DESCRIPTION
1	404	1¼" ASPHALT CONCRETE (70-85)
2	402	1¼" ASPHALT CONCRETE (70-85)
3	304	8" AGGREGATE BASE
4	301	7" BITUMINOUS AGGREGATE BASE 702.01 (85-100) OR 702.09 (RT-11 OR RT-12) (Placed in 2-3½" courses)
5	310	4" SUBBASE ~ "B" GRADING
6	612	CONCRETE MEDIAN
7	409	SEAL COAT, USING 0.008 CU. YD. NO. 8 COVER AGGREGATE PER SQ. YD. AND 0.3 GAL. 702.09, RT-9 OR RT. 10 OR 702.02 MC-800 OR MC-3000 PER SQ. YD.
8	659	SEEDING AND MULCHING (SEE GENERAL NOTES)
9	301	3" Bituminous Aggregate Base 702.01 (85-100) or 702.09 RT-11 or RT-12
10	606	Guard Rail, Type 5
13	606	Guard Rail, Type 5 Barrier
11	408	Bituminous Prime Coat 702.09, RT-2 or RT-3 Applied at the rate of 0.4 gal. per sq. yd.

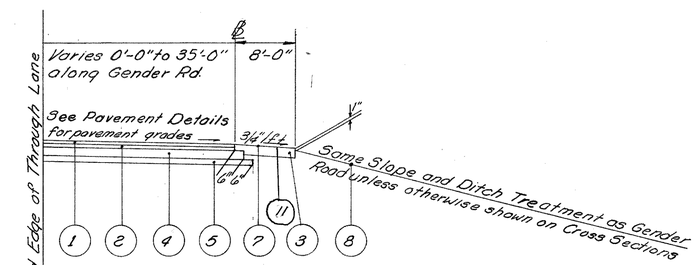

RAMP CONNECTIONS TO GENDER Ro.

Limiting Stations

Sta 549+24.06	to	Sta 551+83.63	Ramp D	= 259.57 Lin. Ft.
Sta 563+37.11	to	Sta 565+94.29	Ramp E	= 257.18 Lin. Ft.
Deduct for Bridge and approach slab				(-) 196.42 Lin. Ft.
			TOTAL	= 320.33 Lin. Ft.

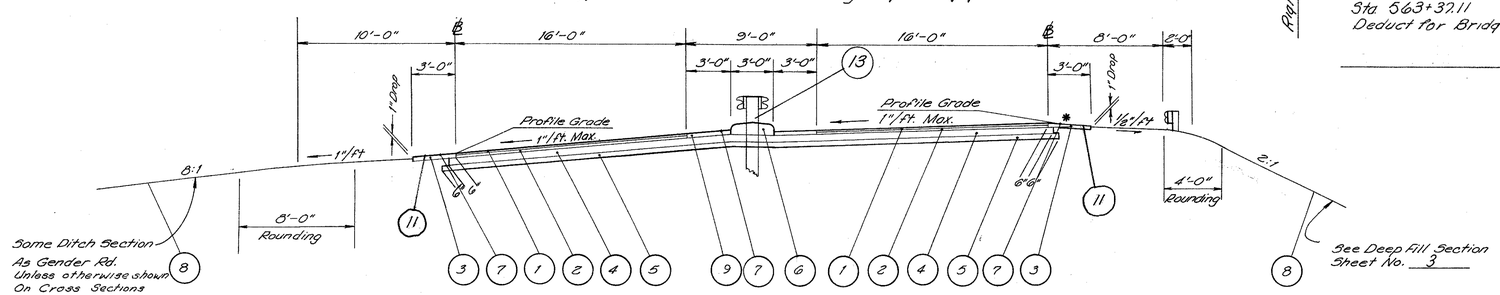

TWO-WAY

Limiting Stations

RAMP "E" STATION	557+04.94	TO	STATION	559+61.85	= 256.91 LIN. FT.
RAMP "F" STATION	549+18.46	TO	STATION	552+21.17	= 302.71 LIN. FT.
			TOTAL		= 559.62

FED. RD. DIVISION	STATE	PROJECT	
2	OHIO		

FRANKLIN COUNTY
FRA-33-29.97

U.S. 33 TYPICAL SECTION

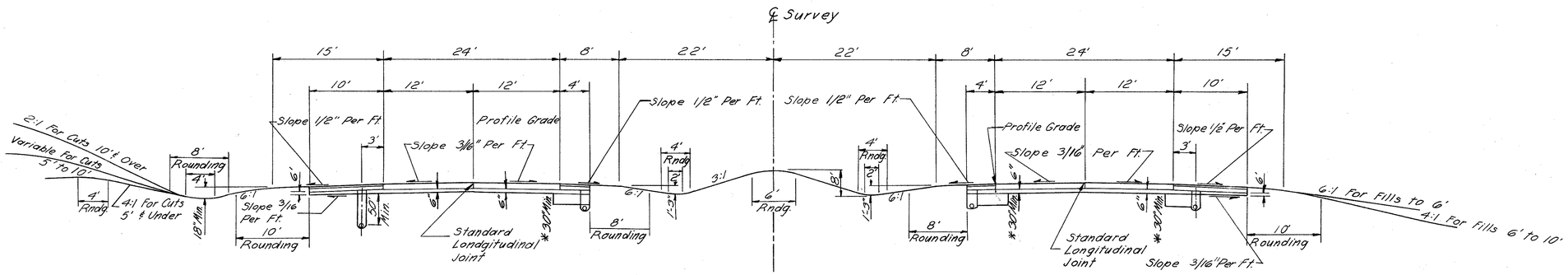

EXISTING U.S. ROUTE 33 NORMAL SECTION

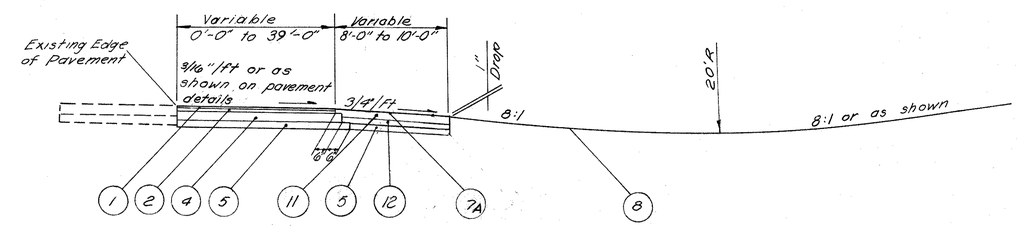

RAMP CONNECTIONS TO U.S. Route 33

Limiting Stations

U.S. Rte. 33 Rt.	Sta. 533+11.97	to	Sta. 538+50.00	=	538.03	Lin. Ft.
Ramp "A"	Sta. 538+50.00	to	Sta. 541+12.15	=	262.15	Lin. Ft.
U.S. Rte. 33 Rt.	Sta. 560+52.31	to	Sta. 570+52.31	=	1000.00	Lin. Ft.
U.S. Rte. 33 Lt.	Sta. 540+76.26	to	Sta. 550+76.26	=	1000.00	Lin. Ft.
U.S. Rte. 33 Lt.	Sta. 526+50.00	to	Sta. 536+50.00	=	1000.00	Lin. Ft.
Ramp "F"	Sta. 559+74.33	to	Sta. 562+51.34	=	277.01	Lin. Ft.
U.S. Rte. 33 Lt.	Sta. 562+51.34	to	Sta. 567+72.98	=	521.64	Lin. Ft.
			TOTAL	=	4598.83	Lin. Ft.

Note: Use this shoulder typical Section for shoulder replacement as shown in Calculations on sh. 11 and shown by shading on sheets 14 and 15.

	ITEM	DESCRIPTION
1	404	1 1/4" ASPHALT CONCRETE (70-85)
2	402	1 1/4" ASPHALT CONCRETE (70-85)
3	304	8" AGGREGATE BASE
4	301	7" BITUMINOUS AGGREGATE BASE 702.01 (85-100) OR 702.09 (RT-11 OR RT-12) Placed in 2-3½" courses
5	310	4" SUBBASE ~ "B" GRADING
7A	409	SEAL COAT, USING 0.008 CU. YD. NO.8 COVER AGGREGATE PER SQ. YD. AND 0.3 GAL. bituminous Material per sq. yd. See note in proposal.
8	659	SEEDING AND MULCHING (SEE GENERAL NOTES)
11	301	3½" BITUMINOUS AGGREGATE BASE 702.01 (85-100) OR 702.09 (RT 11 OR RT 12)
12	304	6" AGGREGATE BASE

BRUNING 44560 10943

FRANKLIN COUNTY
FRA 33-29.97

GENERAL NOTES

SUPERELEVATION

SUPERELEVATED CURVES SHALL BE BUILT WITHOUT CROWN. THE CROWN SHALL BE WORKED OUT OF THE PAVEMENT IN THE PORTION BETWEEN THE BEGINNING OF THE TRANSITION AND THE POINT WHERE THE SUPERELEVATION EQUALS TWICE THE CROWN.

REMOVAL OF EXISTING PIPE

THE REMOVAL OF ALL EXISTING PIPE DRAINS WHICH WOULD NORMALLY BE REMOVED IN VARIOUS EXCAVATION ITEMS SHALL BE INCLUDED FOR PAYMENT IN THE UNIT PRICES BID FOR THE RESPECTIVE EXCAVATION ITEMS, UNLESS OTHERWISE ITEMIZED IN THE PLANS.

REMOVAL OF TREES AND STUMPS

ALL TREES AND STUMPS SPECIFICALLY MARKED FOR REMOVAL WITHIN THE CONSTRUCTION LIMITS OF THIS PROJECT SHALL BE REMOVED UNDER THE LUMP SUM PRICE BID FOR 201 CLEARING AND GRUBBING, EXCEPT THAT THOSE TREES FOR WHICH PROTECTION AND PRESERVATION WORK IS INDICATED ELSEWHERE IN THESE PLANS SHALL NOT BE REMOVED.

THE FOLLOWING IS AN APPROXIMATE ESTIMATE OF THE NUMBER OF TREES AND STUMPS TO BE REMOVED:

SIZES	NO. TREES	NO. STUMPS
18	2	—
30	2	—
48	1	—

THE ABOVE ESTIMATE IS APPROXIMATE AND THE STATE OF OHIO RESERVES THE RIGHT TO ORDER THE REMOVAL OF ADDITIONAL TREES OR STUMPS OUTSIDE OF THE LIMITS OF CONSTRUCTION BUT WITHIN THE RIGHT-OF-WAY AND/OR EASEMENT LINES. PAYMENT FOR THE REMOVAL OF THESE ADDITIONAL TREES OR STUMPS SHALL BE INCLUDED IN THE LUMP SUM PRICE BID FOR 201 CLEARING AND GRUBBING.

DRIVE LOCATION

THE LOCATION OF DRIVES ON THIS PROJECT MAY BE VARIED AT THE DIRECTION OF THE ENGINEER, PROVIDING THERE IS NO ADDITIONAL COST TO THE STATE AND PROVIDING THE DRIVES ARE IN AREAS NOT DESIGNATED FOR LIMITED ACCESS.

SEEDING

QUANTITIES FOR SEEDING ARE CALCULATED FOR THE SOIL AREAS BETWEEN THE WORK LIMITS, AS SHOWN ON THE CROSS SECTIONS.

PROOF ROLLING

AN ESTIMATED QUANTITY FOR THIS ITEM HAS BEEN PROVIDED IN THE GENERAL SUMMARY FOR USE IN PROOF ROLLING OF SUBGRADE FOR THE GENDER ROAD AND RAMP PAVEMENTS, AND FOR USR. 33 PAVED SHOULDERS, IN ACCORDANCE WITH SUPPLEMENTAL SPECIFICATION 801.

EROSION CONTROL

ITEM 601 ROCK CHANNEL PROTECTION IS PROVIDED IN THE PLANS FOR EROSION CONTROL. ROCK OF A STABLE NATURE WILL NOT BE REMOVED IN ORDER TO PLACE ANY OF THESE ITEMS. THE ENGINEER SHALL CHECK AND NON-PERFORM QUANTITIES OR ADJUST LOCATIONS AND QUANTITIES FOR THESE ITEMS WHERE INDICATED BY FIELD CONDITIONS DURING CONSTRUCTION.

CONNECTIONS TO EXISTING PIPE

AT PLACES WHERE THE PLANS PROVIDE FOR PROPOSED PIPE TO BE CONNECTED TO THE EXISTING PIPE, IT SHALL BE THE RESPONSIBILITY OF THE CONTRACTOR TO LOCATE THE EXISTING PIPE BOTH AS TO LINE AND GRADE BEFORE HE STARTS TO LAY THE PROPOSED PIPE. THE COST OF THIS OPERATION SHALL BE INCLUDED IN THE UNIT PRICE BID FOR THE PERTINENT 603 CONDUIT ITEM.

MAILBOX TURNOUTS

IN LIEU OF THE DETAILS SHOWN ON STANDARD DRAWING BP-6, MAILBOX TURNOUTS OF FLEXIBLE PAVEMENT COMPOSITION SHALL HAVE THE TRANSITION FROM FULL MAILBOX TURNOUT WIDTH TO THE MAIN PAVEMENT EDGE CONTINUED IN A STRAIGHT LINE UNTIL IT MEETS THE MAIN PAVEMENT EDGE. THIS APPLIES TO THE TRANSITION AT BOTH ENDS OF THE TURNOUT.

THE TRANSITION SHALL NOT BE SNUBBED OFF WHEN IT REACHES A 12 INCH WIDTH

WHERE FEASIBLE MAILBOX TURNOUTS WILL BE COMBINED WITH DRIVES AND QUANTITIES ADJUSTED BY THE ENGINEER

	ESTIMATED MAILBOX	QUANTITIES SINGLES
ITEM 404	"B"	1.0 Cu. Yds. } 5 locations
ITEM 304	"B"	3.0 Cu. Yds. }

Type B One commercial size larger than existing conduit

FARM DRAINS

ALL FARM DRAINS WHICH ARE ENCOUNTERED DURING CONSTRUCTION SHALL BE PROVIDED WITH UNOBSTRUCTED OUTLETS UNDER THE DIRECTION OF THE ENGINEER. EXISTING COLLECTORS WHICH ARE LOCATED BELOW THE ROADWAY DITCH ELEVATIONS AND WHICH CROSS THE ROADWAY SHALL BE REPLACED WITHIN THE Limited Access LIMITS BY 603 CONDUIT# EXISTING COLLECTORS AND ISOLATED FARM DRAINS WHICH ARE ENCOUNTERED ABOVE THE ELEVATION OF THE ROADWAY DITCHES SHALL BE OUTLETTED INTO THE ROADWAY DITCH BY 603 CONDUIT TYPE F. THE OPTIMUM OUTLET ELEVATION SHALL BE, IF POSSIBLE, ONE FOOT ABOVE THE FLOW-LINE ELEVATION OF THE DITCH. LATERAL TILE FIELDS WHICH CROSS THE ROADWAY SHALL BE INTERCEPTED BY 603 CONDUIT TYPE E AND CARRIED IN A LONGITUDINAL DIRECTION TO AN ADEQUATE OUTLET OR ROADWAY CROSSING.

THE LOCATION, TYPE SIZE AND GRADE OF REQUIRED REPLACEMENTS SHALL BE DETERMINED BY THE ENGINEER DURING CONSTRUCTION AND PAYMENT SHALL BE MADE ON FINAL MEASUREMENTS.

THE FOLLOWING ESTIMATED QUANTITIES HAVE BEEN INCLUDED IN THE GENERAL SUMMARY FOR THE WORK NOTED ABOVE:

ITEM 603 -	8" CONDUIT, TYPE B	50 L.F.
ITEM 603 -	10" CONDUIT, TYPE B	50 L.F.
ITEM 603 -	8" CONDUIT, TYPE E	50 L.F.
ITEM 603 -	6" CONDUIT, TYPE F	50 L.F.
ITEM 603 -	8" CONDUIT, TYPE F	50 L.F.
ITEM 601 -	ROCK CHANNEL PROTECTION, TYPE B	25 C.Y.

AND NECESSARY BENDS AND BRANCHES WHICH SHALL BE INCLUDED FOR PAYMENT IN THE PERTINENT CONDUIT ITEM.

NONE OF THE ABOVE MATERIALS SHALL BE ORDERED BY THE CONTRACTOR UNTIL REQUESTED BY THE ENGINEER

MAINTENANCE OF SEWER FLOWS

THE CONTRACTOR SHALL CONDUCT HIS OPERATIONS SO AS TO MAINTAIN AT ALL TIMES SEWER FLOWS THROUGH EXISTING FACILITIES TO REMAIN IN PLACE AND THROUGH EXISTING FACILITIES TO BE REPLACED UNTIL NEW FACILITIES ARE COMPLETED AND PLACED INTO USE.

PAYMENT FOR ANY ADDITIONAL COSTS INVOLVED IN MAINTAINING THESE FLOWS BY PUMPING OR BY ANY OTHER MEANS APPROVED BY THE ENGINEER SHALL BE INCLUDED IN THE UNIT PRICES BID FOR THE RESPECTIVE 603 CONDUIT.

TREATED SANITARY FLOW INTO HIGHWAY DRAINAGE SYSTEMS

TREATED SANITARY FLOW MAY BE DISCHARGED INTO THE HIGHWAY DRAINAGE SYSTEM PROVIDED THE OWNER HAS SECURED THE APPROVAL OF THE LOCAL HEALTH AUTHORITIES.

IN EACH CASE WHERE A PERMIT HAS BEEN ISSUED FOR A SANITARY CONNECTION TO BE MADE INTO A HIGHWAY DRAINAGE CONDUIT, IT SHALL BE PROVIDED WITH AN INSPECTION WELL, IN ACCORDANCE WITH THE DETAIL SHOWN ON STANDARD DRAWING MC-8, LOCATED APPROXIMATELY ONE FOOT INSIDE THE RIGHT-OF-WAY LINE.

THE FOLLOWING ESTIMATED QUANTITIES HAVE BEEN INCLUDED IN THE GENERAL SUMMARY, FOR USE AS DIRECTED BY THE ENGINEER, IN MAKING THE ABOVE DESCRIBED CONNECTIONS:

ITEM 603 -	6" CONDUIT, TYPE C	50 L.F.
ITEM 604 -	INSPECTION WELLS	1 EACH

ALL NECESSARY BENDS AND BRANCHES WHICH SHALL BE INCLUDED FOR PAYMENT IN THE PERTINENT CONDUIT ITEM.

NONE OF THE ABOVE MATERIALS SHALL BE ORDERED BY THE CONTRACTOR UNTIL AUTHORIZED BY THE ENGINEER.

FEDERAL AID CONSTRUCTION IDENTIFICATION SIGNS

THE CONTRACTOR SHALL FURNISH, ERECT, MAINTAIN AND SUBSEQUENTLY REMOVE FEDERAL AID CONSTRUCTION IDENTIFICATION SIGNS AT EACH OF THE FOLLOWING APPROXIMATE LOCATIONS:

1. Rt. STA 526 + 50 U.S.R. 33
2. Lt. STA 570 + 50 U.S.R. 33

SIGN DETAILS SHALL BE AS SPECIFIED ON STANDARD DRAWING FACI-1, "CODE N-54(1)-96(2)

THE SIGNS SHALL BE ERECTED IN ACCORDANCE WITH STANDARD DRAWING FACI-2. ADDITIONAL REQUIREMENTS SHALL BE IN ACCORDANCE WITH NOTES IN THE PROPOSAL.

ITEM SPECIAL, DRILLED WELL ABANDONED

THE EXISTING CONCRETE OR STONE SLAB WELL COVER AND PUMPING EQUIPMENT SHALL BE REMOVED AND DISPOSED OF. THE CASING SHALL BE CUT OFF AT LEAST ONE (1) FOOT BELOW THE PROPOSED FINISHED GRADE OUTSIDE PROPOSED PAVEMENT AREAS OR AT LEAST ONE (1) FOOT BELOW THE PROPOSED SUBGRADE ELEVATION INSIDE PROPOSED PAVEMENT AREAS AND CAPPED WITH CLASS C CONCRETE OR A STANDARD THREADED PIPE CAP.

THE UNIT PRICE BID FOR EACH "DRILLED WELL ABANDONED" SHALL INCLUDE PAYMENT FOR ALL LABOR, TOOLS, MATERIALS, AND INCIDENTALS NECESSARY TO COMPLETE THIS ITEM.

LOCATIONS OF GUARD RAIL:
The locations of guard rail runs, as shown on these plans, are subject to adjustment to assure that the planned installations will afford maximum protection to traffic.

DUST CONTROL

A QUANTITY OF CALCIUM CHLORIDE AND WATER IS PROVIDED IN THE GENERAL SUMMARY FOR USE FOR DUST CONTROL AS DIRECTED BY THE ENGINEER.

ITEM 616 WATER FOR DUST CONTROL 100M, GAL.
ITEM 616 CALCIUM CHLORIDE FOR DUST CONTROL 5 TONS.

AGRICULTURAL LIMING, AS PER PLAN
THE LOCATION AND NEED FOR AGRICULTURAL LIMING WILL BE DETERMINED BY LABORATORY TESTS, AFTER ROUGH GRADING OPERATIONS HAVE BEEN PERFORMED QUANTITIES OF AGRICULTURAL LIMING, AS SHOWN ON THE PLANS, ARE SUFFICIENT FOR THE ENTIRE PROJECT, BUT WILL BE NONPERFORMED FOR THE AREAS WHERE TESTS SHOW THAT THE LIMING IS NOT REQUIRED.

ITEM 659 - FERTILIZER

FERTILIZER WITH THE ANALYSIS OF 18-46-0 SHALL BE UNIFORMALLY APPLIED AT THE RATE OF FIFTEEN (15) POUNDS PER 1000 SQ. FT. OVER THE ENTIRE AREA TO BE SEEDED OR SODDED AND WORKED INTO A DEPTH OF NOT LESS THAN TWO (2) INCHES.

ITEM 659 - SEEDING

SEED MIXTURE ENTIRE PROJECT:

45% CREEPING RED FESCUE (FESTUCA RUBRA)
40% KY BLUEGRASS (POA PRATENSIS)
10% RED TOP (AGROSTIS ALBA)
5% WHITE DUTCH CLOVER (TRIFOLIUM REPENS)

SEEDED AT THE STANDARD RATE. SPECIAL EROSION PROTECTION, SOW AN ADDITIONAL 1 LB/1000 SQ. FT. OF ANNUAL RYE GRASS (LOLIUM MULTIFLORUM) IN ALL DITCH BOTTOMS, ON ALL SLOPES 3:1 OR STEEPER, AND ALL AREAS WHERE EXCELSIOR IS USED AS A MULCH.

WHEN ASPHALT IS USED AS A TIE, IT SHALL BE APPLIED AT THE RATE OF 100 GALLONS PER TON OF STRAW IN LIEU OF THE SPECIFIED RATE.

NO ASPHALT SHALL BE APPLIED WHEN THE TEMPERATURE IS BELOW 40° F.

WHEN STRAW IS USED AS A MULCH IT SHALL BE APPLIED AT SUCH A RATE AS TO INSURE A MINIMUM TWO (2) INCH DEPTH LOOSE MEASURE, APPROXIMATELY TWO (2) TONS PER ACRE.

EROSION CONTROL

USE EXCELSIOR MATTING (ITEM SS-830) ON ALL SLOPES STEEPER THAN 3:1, GENERALLY:

GENDER RD. - STA 26 + 50 TO 31 + 50 INCLUDING DITCH BACK SLOPES.
RAMP "A" STA 548 + 25 TO 551 + 00 RIGHT.
RAMP "B" STA 551 + 00 TO 552 + 50 RIGHT.
RAMP "F" STA 546 + 85 TO 548 + 25 LEFT.

A QUANTITY OF 4820 SQ. YDS. HAS BEEN PROVIDED FOR THIS ITEM

DESIGN SPEED

THE GEOMETRICS FOR THIS PROJECT HAVE BEEN PLANNED FOR A DESIGN SPEED AS FOLLOWS:

U. S. 33 70 M.P.H.
GENDER ROAD 60 M.P.H.

FIELD OFFICE

THE CONTRACTOR SHALL, IN ADDITION TO THE REQUIREMENTS OF 619, PROVIDE A SUITABLE FIELD OFFICE HAVING A MINIMUM OF 400 SQ. FT. OF FLOOR SPACE. THE CONTRACTOR SHALL ALSO PROVIDE AND MAINTAIN SANITARY PROVISIONS AS PER 107.06. ALL THE ABOVE IS INCLUDED IN THE LUMP SUM BID FOR 619 FIELD OFFICE.

ROUNDING OF CORNERS SHOWN ON CROSS SECTIONS

THE ROUNDED CORNERS SHOWN ON THE TYPICAL SECTIONS, APPLY TO ALL CROSS SECTIONS, EVEN THOUGH OTHERWISE SHOWN ON THESE PLANS.

UNDERGROUND UTILITIES

THE LOCATIONS OF THE UNDERGROUND UTILITIES SHOWN ON THE PLANS HAVE BEEN OBTAINED BY DILIGENT FIELD CHECKS AND SEARCHES OF AVAILABLE RECORDS. IT IS BELIEVED THAT THEY ARE ESSENTIALLY CORRECT, BUT THE STATE OF OHIO DOES NOT GUARANTEE THEIR ACCURACY OR COMPLETENESS.

ESTIMATED QUANTITIES

SPECIFIC LOCATIONS AND USAGE OF ESTIMATED QUANTITIES SET UP ON THIS PLAN TO BE USED "AS DIRECTED BY THE ENGINEER" SHALL BE MADE A MATTER OF RECORD BY INCORPORATION INTO THE FINAL CHANGE ORDER GOVERNING COMPLETION OF THIS PROJECT.

CONSTRUCTION LAYOUT STAKES

SEE NOTE IN PROPOSAL DESCRIBING THE WORK INCLUDED IN THIS LUMP SUM PAY ITEM.

MAINTENANCE OF TRAFFIC

GENERAL

USR-33-TWO LANES OF TRAFFIC IN EACH DIRECTION WILL BE MAINTAINED AT ALL TIMES OVER THE PRESENT FACILITIES DURING CONSTRUCTION EXCEPT ONE LANE OF TRAFFIC, IN ITS RESPECTIVE DIRECTIONAL LANE, WILL BE PERMITTED DURING PERIODS WHEN THERE IS CONSTRUCTION WORK ADJACENT TO THE EXISTING PAVEMENT. ONE LANE OPERATION WILL NOT BE PERMITTED DURING WEEKENDS AND NATIONAL HOLIDAYS.
GENDER ROAD-TWO WAY TRAFFIC SHALL BE MAINTAINED AT ALL TIMES BY THE USE OF THE EXISTING PAVEMENT, PROPOSED PAVEMENT, and THE TEMPORARY ROAD.
SR-674-THIS ROUTE MAY BE CLOSED FOR A MAXIMUM OF SIX (6) CONSECUTIVE CALENDAR MONTHS. WHENEVER BARRELS ARE USED AS TEMPORARY TRAFFIC CONTROL DEVICES, THEY SHALL BE PAINTED YELLOW AND REFLECTORIZED BY A MINIMUM OF TWO (2) 5" HORIZONTAL, CIRCUMFERENTIAL STRIPS OF WHITE REFLECTORIZED MATERIAL.

THE INDIVIDUAL TRAFFIC MOVEMENTS SHALL BE ACCOMPLISHED AS FOLLOWS:

S.B. U.S.R. 33 TO S.B. GENDER ROAD & S.R. 674. THIS MOVEMENT WILL BE ACCOMPLISHED OVER THE TEMPORARY ROAD WHILE IT IS IN SERVICE. AFTER THE TEMPORARY ROAD IS PUT OUT OF SERVICE, THIS MOVEMENT WILL BE MADE VIA CEMETERY ROAD, UNTIL RAMP "A" IS COMPLETED.

S.B. U.S.R. 33 TO N.B. GENDER ROAD. THIS MOVEMENT WILL BE ACCOMPLISHED OVER THE TEMPORARY ROAD WHILE IT IS IN SERVICE. WHEN THE TEMPORARY ROAD IS PUT OUT OF SERVICE, THIS MOVEMENT WILL BE MADE VIA CEMETERY ROAD, S.R. 674 AND GENDER ROAD.

N.B. U.S.R. 33 TO S.B. GENDER ROAD & S.R. 674. THIS MOVEMENT SHALL BE ACCOMPLISHED BY USING THE TEMPORARY ROAD. WHEN THE TEMPORARY ROAD IS PUT OUT OF SERVICE, RAMP "F" WILL BE OPEN TO TRAFFIC.

N.B. U.S.R. 33 TO N.B. GENDER ROAD. THIS MOVEMENT SHALL BE ACCOMPLISHED OVER THE TEMPORARY ROAD. WHEN THE TEMPORARY ROAD IS PUT OUT OF SERVICE, RAMP "F" WILL BE OPEN TO TRAFFIC.

N.B. GENDER ROAD TO N.B. U.S.R. 33. THIS MOVEMENT SHALL BE ACCOMPLISHED OVER THE TEMPORARY ROAD. WHEN THE TEMPORARY ROAD IS PUT OUT OF SERVICE, RAMP "E" WILL BE OPEN TO TRAFFIC - EXCEPT THAT PART OF THE ACCELERATION LANE WHICH WAS OCCUPIED BY THE TEMPORARY ROAD WHICH WILL HAVE TO BE COMPLETED.

N.B. GENDER ROAD TO S.B. U.S.R. 33. THIS MOVEMENT SHALL BE ACCOMPLISHED VIA THE TEMPORARY ROAD. WHEN THE TEMPORARY ROAD IS PUT OUT OF SERVICE, RAMP "B" WILL BE OPEN TO TRAFFIC.

S.B. GENDER ROAD TO N.B. U.S.R. 33. THIS MOVEMENT SHALL BE ACCOMPLISHED OVER THE TEMPORARY ROAD. WHEN THE TEMPORARY ROAD IS PUT OUT OF SERVICE, THIS MOVEMENT SHALL BE MADE VIA GENDER ROAD, S.R. 674 AND CEMETERY ROAD UNTIL RAMP "D" IS OPEN TO TRAFFIC.

S.R. 674. WHILE S.R. 674 & GENDER ROAD IS CLOSED TO TRAFFIC, THIS TRAFFIC SHALL ENTER BOTH N.B. & S.B. U.S.R. 33 VIA CEMETERY ROAD.

Included in the General Summary are the following Quantities For maintaining traffic.
410 Traffic Compacted Surface
Type "A" or "B" - 50 Cu. Yds.
Type "C" - 50 Cu. Yds.

Provisions for traffic Control and safety should be in accordance with the "Ohio Manual of Uniform Traffic Control Devices for Streets and Highways"

MONUMENTS:
Monuments shall be constructed in accordance with the the details of Std. Dwg. MC-1. For locations see Sh. 147

EMBANKMENT:
If 203.02 soil is available at the borrow site, it shall be used in the top portion of all embankments to be seeded. The use of granular material on upper portion of embankments should be avoided.

FRANKLIN COUNTY
FRA-33-29.97

GENERAL SUMMARY

⊕ Farm Drain

Type Code G203 except as noted

Item	Quant.	Unit	DESCRIPTION	8	11	12	13	14	15	16	17	26	27	28	29	35	37	38	44	45	50	51	57	58	65	66	85	118	147
			ROADWAY																										
202	1644	Sq.Yd	Existing Pavement Removed and disposed of					1345	299																				
201	Lump	Lump	Clearing and Grubbing	Lump																									
202	158	Lin.Ft.	Pipe Removed Over 24"										158																
202	305	Lin.Ft.	Pipe Removed 24" and Under									285															20		
202	Lump	Lump	Existing Structure Removed									Lump																	
202	5	Each	Catch Basin Removed or Abandoned									2	2	1															
203	205219	Cu.Yd.	Embankment, As per plan			76	1556	490	286	411	1	10618	66767	24916	138	1453	5877	24950	12981	1158	4877	17029	765	17644	12830	396			
203	35897	Cu.Yd.	Excavation Not Including Embankment Construction			124	743	1904	3943	1480	1	931	317	1845	126	402	732	1563	238	1176	2563	1609	5152	6374	651	3930	93		
203	38553	Sq.Yd.	Subgrade Compaction		38553																								
203	11	Hour	Proof Rolling		11																								
Special	2	Each	Drilled Well: Abandoned	Special																					2				
410	50	Cu.Yd	Traffic Compacted Surface, Type A or B	50																									
604	4	Each	Centerline Reference Monument																										4
606	350	Lin.Ft.	Guard Rail Type 5, Barrier Design					25	25															300					
606	10	Each	Approach End Assembly, Single Rail					1	1			1	2	1				1					1	1	1				
606	4	Each	Bridge Terminal Assembly										3											1					
606	2	Each	Approach End Assembly-Barrier Rail					1	1																				
606	3987.5	Lin.Ft.	Guard Rail Type 5					759.5	290.5			158.5	829.0	487				449.5	284.5				200	312.5	216.5				
606	8	Each	Anchor Assembly					1	1				1	1					1				1	2					
616	5	Tons	Calcuim Chloride	5																									
616	100	M.Gal.	Water	100																									
607	2619	Lin.Ft.	Fence Type 47																										2619
410	50	Cu.Yd.	Traffic Compacted Surface, Type C	50																									
615	2964	Sq.Yd.	Temporary Pavement Class B									2029	3055	2222	658														
615	Lump Sum	Lump	Temporary Road									Lump	Lump	Lump	Lump														
607	132	L.A.Ft.	Fence Type CL, Modified As Per Plan																									32	
607	1	Each	8' Gate Type CL, Modified As Per Plan																									1	
			DRAINAGE																										
602	10.5	Cu.Yd.	Concrete Masonry											0.5		0.3							0.2		0.5		9		
603	128	Lin.Ft.	18" Conduit Type A 706.02 or 706.08																								128		
603	200	Lin.Ft.	18" Conduit Type A 706.02 Class IV																								200		
603	186	Lin.Ft.	27" Conduit Type A 706.02 or 706.08																								186		
603	244	Lin.Ft.	30" Conduit Type A 706.02 or 706.08																								244		
603	160	Lin.Ft.	30" Conduit Type A 706.02 Class IV																								160		
603	316	Lin.Ft.	27" Conduit Type C																								316		
603	52	Lin.Ft.	30" Conduit Type C																								52		
603	118	Lin.Ft.	12" Conduit Type B																				56		62				
603	491	Lin.Ft.	12" Conduit Type B 706.01, 706.02 CL.III or 706.08																						491				
603	238	Lin.Ft.	12" Conduit Type B 706.02 Class IV																						238				
603	400	Lin.Ft.	12" Conduit Type B 706.02 Class V										400																
603	68	Lin.Ft.	27" Conduit Type B																								68		
603	84	Lin.Ft.	30" Conduit Type B																								84		
603	50 ⊕	Lin.Ft.	8" Conduit Type B	50 ⊕																									
603	50 ⊕	Lin.Ft.	10" Conduit Type B	50 ⊕																									
603	160	Lin.Ft.	8" Conduit Type C																						160				
603	284	Lin.Ft.	12" Conduit Type C 706.01 E.S., 706.02 or 706.08 E.S.											284															
603	58	Lin.Ft.	18" Conduit Type C													34											24		
603	240	Lin.Ft.	12" Conduit Type D									240																	
603	50	Lin.Ft.	8" Conduit Type E	50																									
603	50	Lin.Ft.	6" Conduit Type C	50																									
603	26	Lin.Ft.	15" Conduit Type C						26																				
603	110	Lin.Ft.	6" Conduit Type F	50					10			10		20								10	10						
603	70	Lin.Ft.	8" Conduit Type F	50										10							10								
605	112	Lin.Ft.	6" Unclassified Pipe Underdrains																		52						60		
604	1	Each	Inspection Well	1																									
604	7	Each	Standard No. 2-2-B Catch Basin										1	1		1									4				
604	4	Each	Standard No. 2-3 Catch Basin																								4		
604	1	Each	Standard No. 3-A Catch Basin																						1				
604	1	Each	Standard No. Q Catch Basin																				1						
604	1	Each	Standard No. 8 Catch Basin						1																				
603	50			50																									
603	50			50																									

BRUNING 44-560 10943

FED. RD. DIVISION	STATE	PROJECT	
2	OHIO		

FRANKLIN COUNTY
FRA-33-29.97

GENERAL SUMMARY

Type Code 6203 except as noted

ITEM	Sheet Numbers 8	11	12	13	14	15	16	17	26	27	28	29	35	37	38	44	45	50	51	57	58	65	66	85	95	109	115	Item	Quant.	Unit	DESCRIPTION
																															PAVEMENT
404		1148							2			2	2															404	1154	Cu.Yd.	Asphalt Concrete (70-85)
402		1148																										402	1148	Cu.Yd.	Asphalt Concrete (70-85)
301		6917																										301	6917	Cu.Yd.	Bituminous Aggregate Base 702.01 (85-100) or 702.09 Rt. 11 or Rt. 12
310		4137																										310	4137	Cu.Yd.	Subbase
304	15	2737							199		38																	304	2989	Cu.Yd.	Aggregate Base
408		3351																										408	3351	Gallon	Bituminous Prime Coat, 702.09 RT-2 or RT-3
409		2574																										409	2574	Gallon	Seal Coat Bituminous Material, 702.09, RT-9 or RT10 or 702.02 MC-800 or MC-3000
409		110																										409	110	Cu.Yd.	Seal Coat Cover Aggregate No. 8
609		258																										609	258	Lin.Ft.	Concrete Curb, Std. Type 6
609		250																										609	250	Lin.Ft.	Concrete Curb, Std. Type 7
609		627																										609	627	Lin.Ft.	Concrete Curb, Std. Type 8
404	5								46		4																	404	55	Cu.Yd.	Asphalt Concrete (85-100)
611										384																		611	384	Sq.Yd.	Reinforced Concrete Approach Slab as Per Plan T=13"
612		459																										612	459	Sq.Yd.	Concrete Median
409		1466																										409	1466	Gal.	Seal Coat bituminous Material, As per plan
																															EROSION CONTROL (Code Y-005)
601																								9				601	9	Sq.Yd.	Riprap using 6" Reinforced Concrete Slab
601	25																			1.2		2.4		21.9				601	51	Cu.Yd.	Rock Channel Protection, Type B
660										211																		660	211	Sq.Yd.	Sodding for Special Berm and Slope Protection, as per Plan
659			776	3413	3905	8394	4410	61	3537	2889	10288	700	1920	5412	10582	4714	3197	7675	7811	7560	14583	6009	6174					659	119012	Sq.Yd.	Seeding and Mulching, As per plan
650		8.36																										650	8.36	Tons	Commercial Fertilizer (18-46-0) As per plan
659		55.72																										659	55.72	Tons	Agricultural Liming, As per plan
660														49					50					6				660	105	Sq.Yd.	Sodding
830	4820																											830	4820	Sq.Yd.	Excelsior Matting & Seeding
																															See Sheet No 118 for Estimated Quantities for Lighting
																															STRUCTURES OVER 20' SPAN
																															BRIDGE No. FRA-33-2907 (For Quantities, See Sheet No. 129)
619	Lump																											619	Lump	Lump	Field Office
614	Lump																											614	Lump	Lump	Maintaining Traffic
	Lump																												Lump	Lump	Construction Layout Stakes
																															TRAFFIC CONTROL
815																			392									815	392	Sq.Ft.	Sign Erection Flat Sheet Type
815																			1180									815	1180	Sq.Ft.	Sign Erection Extru-Sheet Type
816																			32									816	32	Lin.Ft.	Structural Supports 8 lb. Beam, as per plan
816																			16									816	16	Lin.Ft.	Structural Supports 6 lb. Beam, as per plan
816																			70									816	70	Lin.Ft.	Structural Supports 8 lb. Beam
816																			496									816	496	Lin.Ft.	Structural Supports 6 lb Beam
816																			342									816	342	Lin.Ft.	Structural Supports Steel Beam 10 WF 21
816																			1									816	1	Each	Combination Support No. 9.12 Design 1 Mod., 7' Arm
816																			1									816	1	Each	Combination Support No. 12.24 Design 2 Mod., 23' Arm
816																			1									816	1	Each	Overhead Sign Support No. 12.24 Design 2, 23' Arm
816																			1									816	1	Each	Overhead Sign Support 3 Ga., 14" x 21' Pole, 38' Arm
816																			27.1									816	27.1	Cu.Yd.	Concrete for Ground Mounted Sign Support Foundations
816																			11.4									816	11.4	Cu.Yd.	Concrete for Overhead Sign Support Foundations
816																			18									816	18	Each	Breakaway Sign Support Connection
625																			6									625	6	Each	Ballast Type A
625																			2									625	2	Each	48" Fixture with HO Lamp
625																			41									625	41	Each	72" Fixture with HO Lamp
625																			2									625	2	Each	Transformer Type I
625																			2									625	2	Each	Transformer Type II
625																			4									625	4	Each	Ground Rod
625																			6									625	6	Each	Signs Wired Complete
625																			4									625	4	Each	Sign Service
625																			4									625	4	Each	Disconnect Switch with Type Y Enclosure
620																					181							620	181	Each	Delineator Type C-2, Post Mounted
621																				4.40								621	4.40	Miles	4" Edge Lines
621																				0.55								621	0.55	Miles	4" Lane Lines
621																				1,710								621	1,710	Lin.Ft.	4" Barrier Lines
621																				2,722								621	2,722	Lin.Ft.	8" Channelizing Lines
621																				924								621	924	Lin.Ft.	24" Broad Transverse Stripes
621																				905								621	905	Lin.Ft.	Curb Marking

BRUNING 44-560 10943

FED. RD. DIVISION	STATE	PROJECT	
2	OHIO		

FRANKLIN COUNTY
FRA-33-29.97

CALCULATIONS

⊕ 409 Seal Coat, See note in proposal, As per plan

Location	Length	Width		Area	404 Asphalt Concrete	402 Asphalt Concrete	301 Bit. Agg. Base	310 Subbase	304 Aggregate Base	612 Concrete Median	408 Prime Coat	409 Seal Coat	
Stations	I	II	III	IV	IV x 1¼	IV x 1¼	I x (III+1) x 7	I x (III+2) x 4	I x 2W x 8	I x Width	I x 2W x 0.4	I x 2W / 9	
		Normal	Average	I x III	9 x 36	9 x 36	9 x 36	9 x 36	9 x 36	9	9	x 0.3	x 0.008
Gender Rd.	Lin Ft.	Ft.	Ft.	Sq. Ft.	Cu. Yds.	Cu. Yd.	Cu. Yd.	Cu. Yd.	Cu Yd.	Sq. Yd.	Gal.	Gal.	Cu. Yd.
12+50		21											
	450		34.5	15525.0	59.9	59.9	345.1	202.8	124.8		234.7	176.0	4.7
17+00		48											
	328.31		48	15758.88	60.8	60.8	347.6	202.7	62.0		116.7	87.5	2.3
20+28.31		48											
	240.00		54	12960.00	50.0	50.0	285.2	165.9	90.7		170.7	128.0	3.4
22+68.31		60 / 50											
	47.84		50	2392.0	9.2	9.2	62.5	36.0	11.9	53.15	22.4	16.8	0.4
23+16.15		50											
Bridge													
26+51.60		52.54											
	106.40		56.77	6040.33	23.3	23.3	145.9	85.3	49.7	66.91	93.4	70.1	1.9
27+58		61											
	130.85		61	7981.85	30.8	30.8	183.8	106.6	49.5	43.58	93.0	69.8	1.9
28+88.85		61 / 64											
	76.82		64	4916.48	19.0	19.0	107.9	62.16	16.4		30.9	23.2	0.6
29+65.67		64 / 61											
	285.23		61	17393.03	67.1	67.1	400.6	232.4	90.6	95.08	170.4	127.8	3.4
32+50.90		61											
	54.10		61	3300.10	12.7	12.7	76.0	44.1	19.7	18.03	37.0	27.8	0.7
33+05.00		61 / 64											
	112.00		64	7168.00	27.7	27.7	157.3	91.3	21.1		39.8	29.9	0.8
34+17.00		64											
	583.00		44.6	26001.8	100.3	100.3	574.4	335.4	220.4		414.6	310.9	8.3
40+00.00		25.2											
	150.00		22.7	3405.0	13.1	13.1	76.8	45.7	56.7		106.7	80.0	2.1
41+50.00		20.2											
Ramp "A"													
533+11.97		0											
	100.00		6	600.00	2.3	2.3	14.0	8.6	18.9			⊕ 26.7 *	0.7
534+11.97		12											
	438.03		12	5256.36	20.3	20.3	118.3	70.3	82.8			⊕ 116.8 *	3.1
538+50.00		12											
	262.15			5538.18	2.14	2.14	123.0	72.2	49.6			⊕ 69.9 *	1.9
541+12.15		30 / 16											
	100.00		16	1600.00	6.2	6.2	36.7	22.2	19.3		37.8	88.3	1.6
542+12.15		16											
	387.81		16	6205.60	23.4	23.4	142.5	86.2	50.9		103.4	77.6	2.1
546+00.00		16											
	240.0		26	6240.0	24.1	24.1	140.0	83.0	31.5		64.0	48.0	1.3
548+40.00		36											
	259.52		36	9342.72	36.0	36.0	207.5	121.8	34.0		69.2	51.9	1.4
550+99.52		36											
	109.16			2645.91	10.2	10.2	58.3	34.0	6.0		14.6	10.9	0.3
551+49.19													
Ramp "B"													
550+22.67													
	185.79			2508.87	9.7	9.7	55.4	32.3	12.2		24.7	18.6	0.6
551+05.58		16											
	746.73		16	11947.68	46.1	46.1	274.3	160.0	98.0		199.1	149.3	4.0
558+52.31		16											
	100.00		16	1500.00	5.8	5.8	34.6	21.0	13.1		26.7	20.0	0.5
559+52.31		16											
	100.00		15	1500.00	5.8	5.8	34.6	21.0	19.3		37.7	28.3	0.8
560+52.31		14 / 25											
	1000.00		12.5	12500.00	48.2	48.2	280.9	166.7	189.1			⊕ 266.7 *	7.1
570+52.31		0											
US 33 Shoulder Replacement — Use same typical section as shown, for ramp connections, on Sh. 7													
545+45		4											
(Median Rt.)	505.00		4				17.3	19.8	29.6			⊕ 53.3	1.4
550+50		4											
548+52.12		4											
Median Lt.	392.88		4				17.3	19.8	29.6			⊕ 53.3	1.4
552+45		4											
549+05.40		10											
(Right side)	144.60		10				43.2	49.3	74.0			⊕ 133.2 *	3.6
550+50		10											

Location	Length	Width		Area	404 Asphalt Concrete	402 Asphalt Concrete	301 Bit. Agg. Base	310 Subbase	304 Aggregate Base	612 Concrete Median	408 Prime Coat	409 Seal Coat	
Stations	I	II	III	IV	IV x 1¼	IV x 1¼	I x (3+1) x 7	I x (3+2) x 7	I x 2W x 8	I x Width	I x 2W x 0.4	I x 2W / 9	
		Normal	Average	I x III	9 x 36	9 x 36	9 x 36	9 x 36	9 x 36	9	9	x 0.3	x 0.008
	Lin. Ft.	Ft.	Ft.	Sq. Ft.	Cu. Yds.	Cu. Yd.	Cu. Yd.	Cu. Yd.	Cu. Yd.	Sq. Yd.	Gal.	Gal.	Cu. Yd.
Sub Totals					714.14	714.14	4361.0	2605.0	1571.4	276.75	2107.5	1640.7	62.3
												⊕ 719.9	
Ramp "D"													
526+50.00		0											
	1000.00		12.5	12500.00	48.2	48.2	280.9	166.7	189.1			⊕ 266.7 *	7.1
536+50.00		25 / 14											
	100.00		15	1500.00	5.8	5.8	34.6	21.0	19.3		37.7	28.3	0.8
537+50.00		16 / 14											
	100.00		15	1500.00	5.8	5.8	34.6	21.0	13.1		26.7	20.0	0.5
538+50.00		16											
	974.06		16	15584.96	60.1	60.1	357.8	216.5	127.9		259.7	194.8	5.2
548+24.06		16											
	100.00		16	1600.00	6.2	6.2	36.7	22.2	19.3		37.7	28.3	1.6
549+24.06		16											
	259.57			3072.25	11.9	11.9	69.2	41.1	49.1		92.3	69.2	1.8
551+83.63		0											
Ramp "E"													
540+76.26		0											
	1000.00		12.5	12500.00	48.2	48.2	280.9	166.7	189.1			⊕ 266.7 *	7.1
550+76.26		25 / 14											
	100.00		15	1500.00	5.8	5.8	34.6	21.0	19.3		37.7	28.3	0.8
551+76.26		16 / 14											
	100.00		15	1500.00	5.8	5.8	34.6	21.0	13.1		26.7	20.0	0.5
552+76.26		16											
	960.85		16	15373.60	59.3	59.3	332.9	213.5	126.0		256.3	192.2	5.1
562+37.11		16											
	100.00		16	1600.00	6.2	6.2	36.7	22.2	19.3		37.7	28.3	1.6
563+37.11		16											
	85.00			1659.13	6.4	6.4	36.8	21.5	16.1		3.0	3.0	0.6
563+97.87													
Ramp F													
546+27.24													
	131.21			2093.04	8.1	8.1	46.6	27.5	8.6		17.5	13.1	0.4
546+84.61		16											
	1189.72		16	19035.32	73.4	73.4	437.5	264.4	156.1	181.67	317.1	237.8	6.3
558+74.33		16											
	100.00		16	1600.00	6.2	6.2	36.7	22.2	19.3		37.7	28.3	1.6
559+74.33		16 / 39											
	277.01			5816.54	22.4	22.4	128.7	75.2	52.4			⊕ 73.9 *	2.0
562+51.34		12											
	421.64		12	5059.68	19.5	19.5	113.9	67.7	79.7			⊕ 112.4 *	3.0
566+72.98		12											
	100.00		6	600.00	2.3	2.3	14.0	8.6	18.9			⊕ 26.7 *	0.7
567+72.98		0											
				294,328.31	SUB TOTAL								
SR 674	156.52												
0+30.00													
	156.52		24	2694.96	10.4	10.4	59.9	35.2	29.6		55.7	41.7	1.1
0+87.35		24											
	237.63		24	5703.12	22.0	22.0	128.3	76.3					
3+25.00		24										(359.7) *	
				8398.08	SUB TOTAL SR 674								
Total				302,726.39	1148.14	1148.14	6916.9	4136.06	2736.7	458.42	3351.0	2574.0	110.1
												⊕ 1466.3	

From Sheet No. 10 Seeding and Mulching = 119012 S.Y.
Item 659 Commerical Fertilizer
(119012+4820) x 9 x 15 / 1000 x 2000 = 8.36 Tons

Item 659 Agricultural Liming
(119012+4820) x 9 x 100 / 1000 x 2000 = 55.72 Tons

Item 609 Curbing		Type 6	Type 7	Type 8
Ramp B	Sheet No. 75		102	167
Ramp D	Sheet No. 76		101	301
Ramp E	Sheet No. 77		47	159
Ramp E & F	Sheet No. 78	258		
Total		258	250	627

Item 203 Subgrade Compaction = 38,552.59 SY
302,726.39 / 9 (Area) + 1359.7 / 9 (Seal Coat) + 3840 (Approach Slab) =

Item 203 Proof Rolling = (33,206.74 / 3000) = 11.07 hrs.

CALCULATED BY C.M.K. DATE 7-12-90 CHECKED BY [illegible] DATE 7-12-90

* Portion on Paved Shoulders

CALCULATIONS

BRUNING 44-560 10943

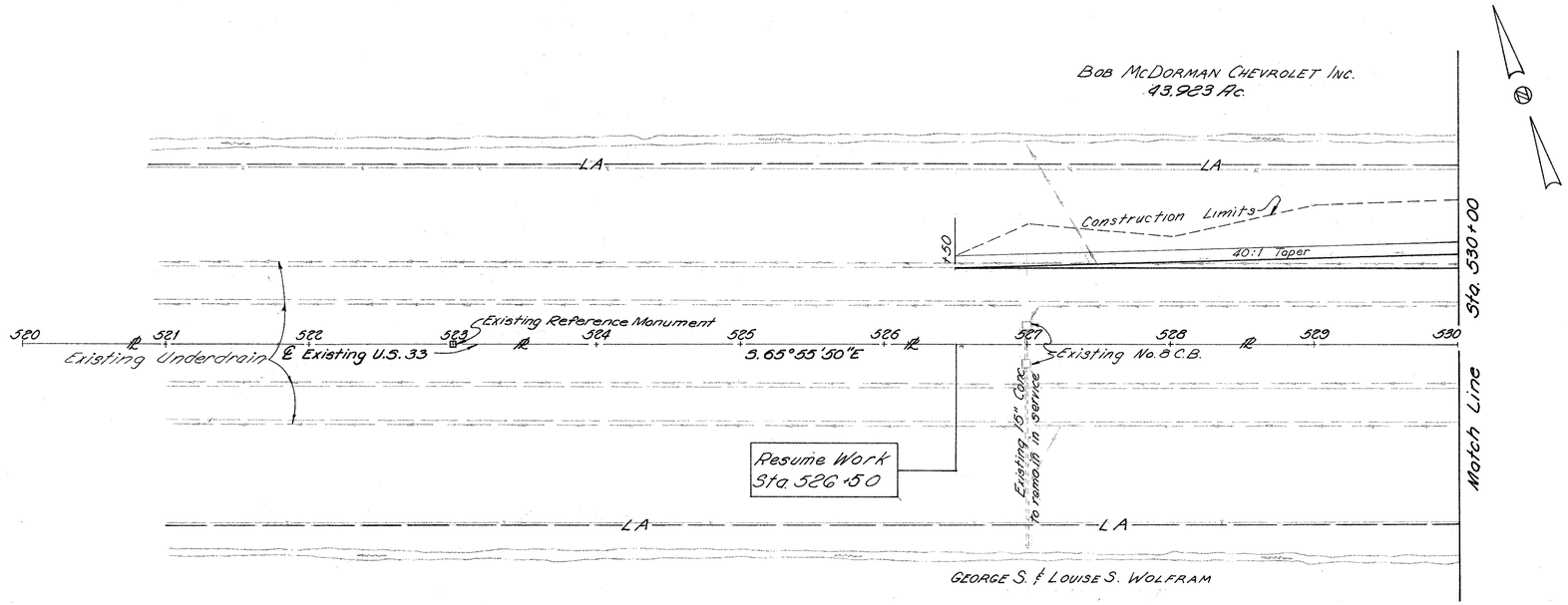

For Ramp "D" Plan & Profile
See Sheet Nos. 50 thru 51

UTILITY COMPANIES

South Central Power Company
P.O. Box 250
Lancaster, Ohio 43130

Columbia Gas of Ohio, Inc. &
The Ohio Fuel Gas Company
99 No. Front Street
Columbus, Ohio 43215

The Ohio Bell Telephone Company
111 No. Fourth Street
Columbus, Ohio 43215

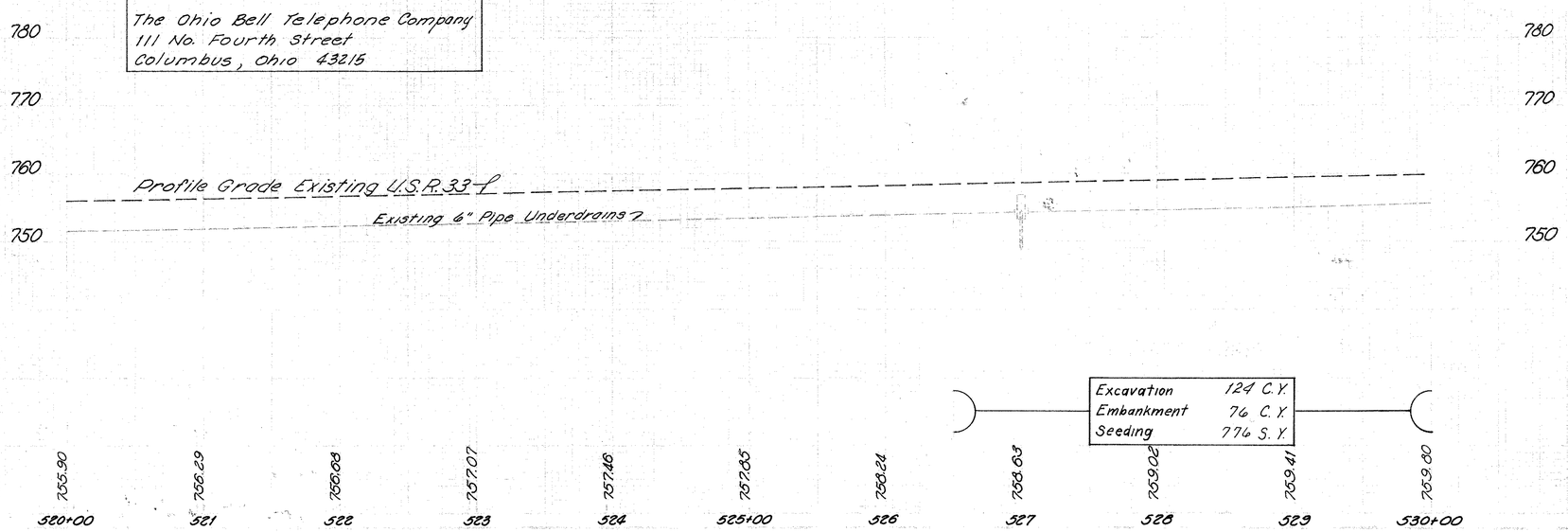

CALCULATED BY CMT DATE 11-18-69

CHECKED BY [illegible] DATE 10-22-69

PLAN AND PROFILE U.S. ROUTE 33 STA. 520+00 TO STA. 530+00

CURVE DATA EXISTING U.S. 33
P.I. = Sta. 541+73.46
Δ = 7°13'40" Lt
D = 0°28'
R = 12,277.67'
T = 775.43'
L = 1543.31'
E = 24.46'

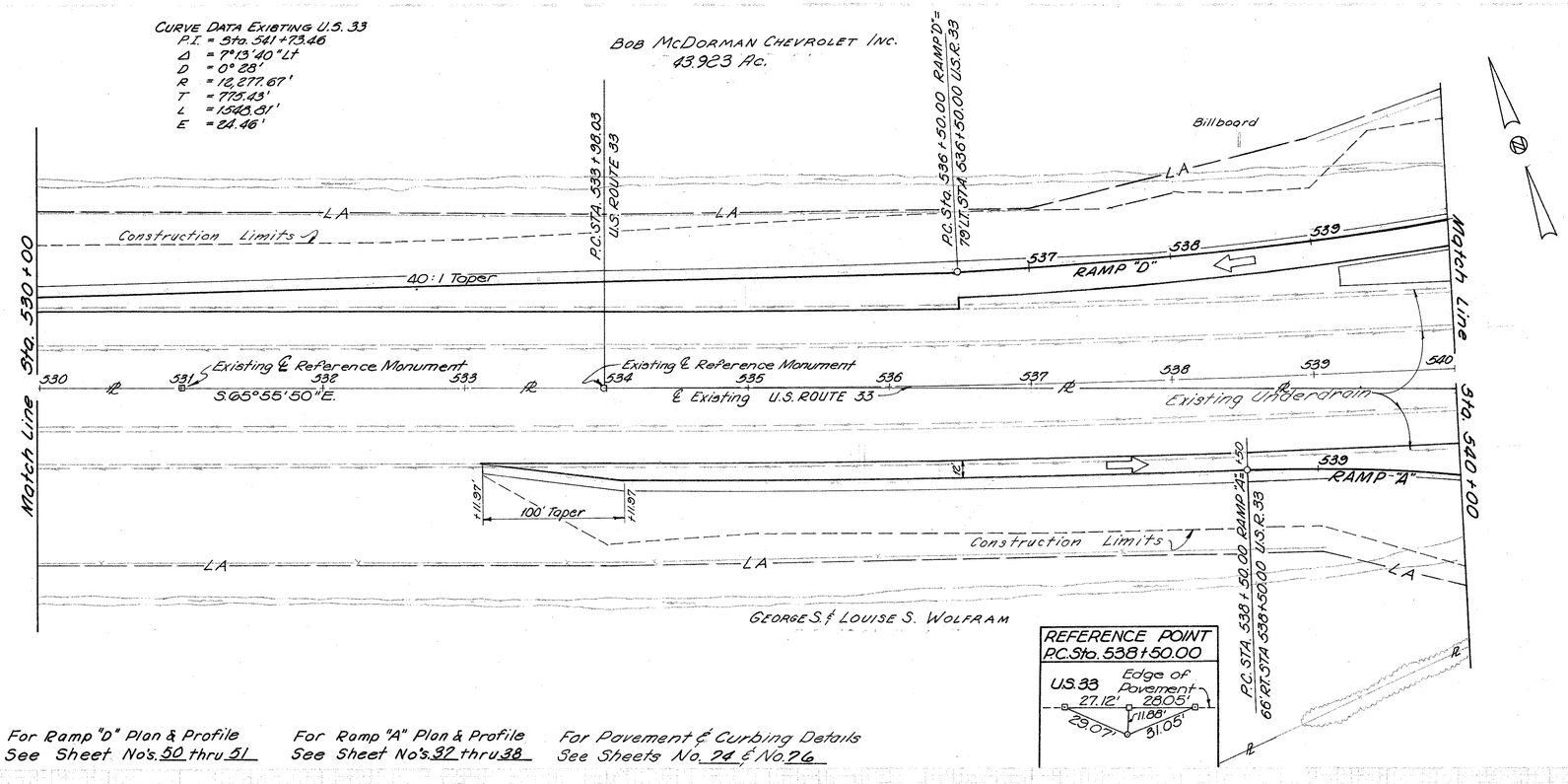

For Ramp "D" Plan & Profile
See Sheet No's. 50 thru 51

For Ramp "A" Plan & Profile
See Sheet No's. 32 thru 38

For Pavement & Curbing Details
See Sheets No. 24 & No. 76

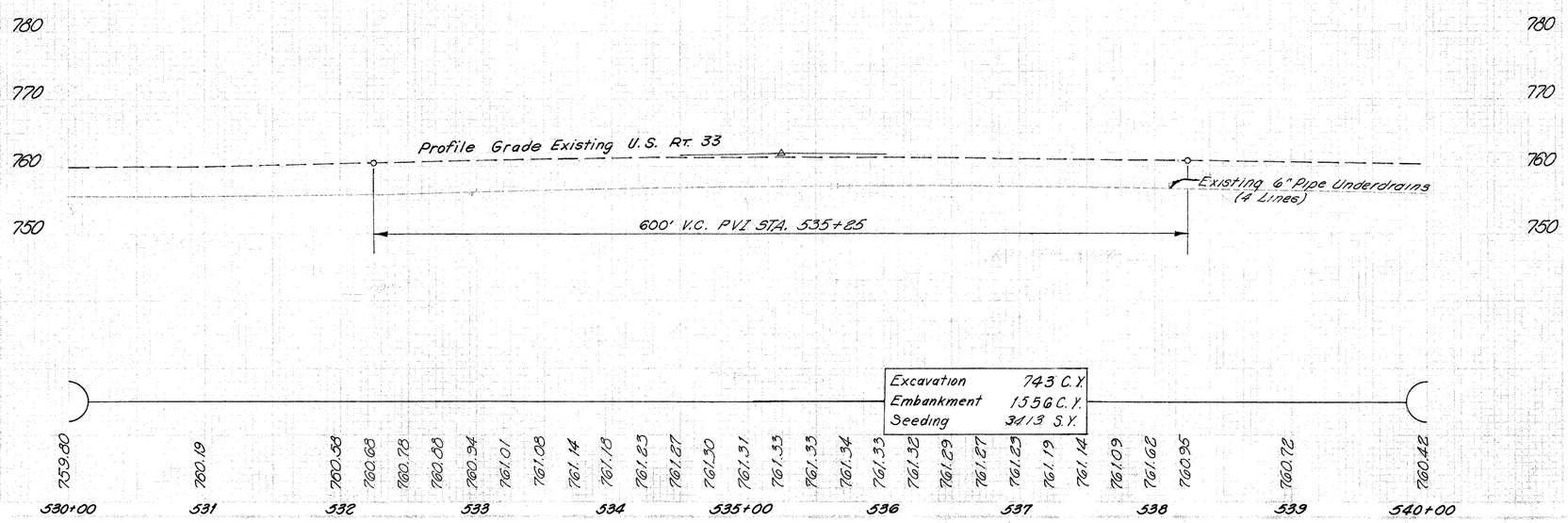

Excavation	743 C.Y.
Embankment	1556 C.Y.
Seeding	3413 S.Y.

CALCULATED BY CMT DATE 11-18-69

CHECKED BY [illegible] DATE 10 Dec 69

PLAN AND PROFILE U.S. ROUTE 33 STA. 530+00 TO STA. 540+00

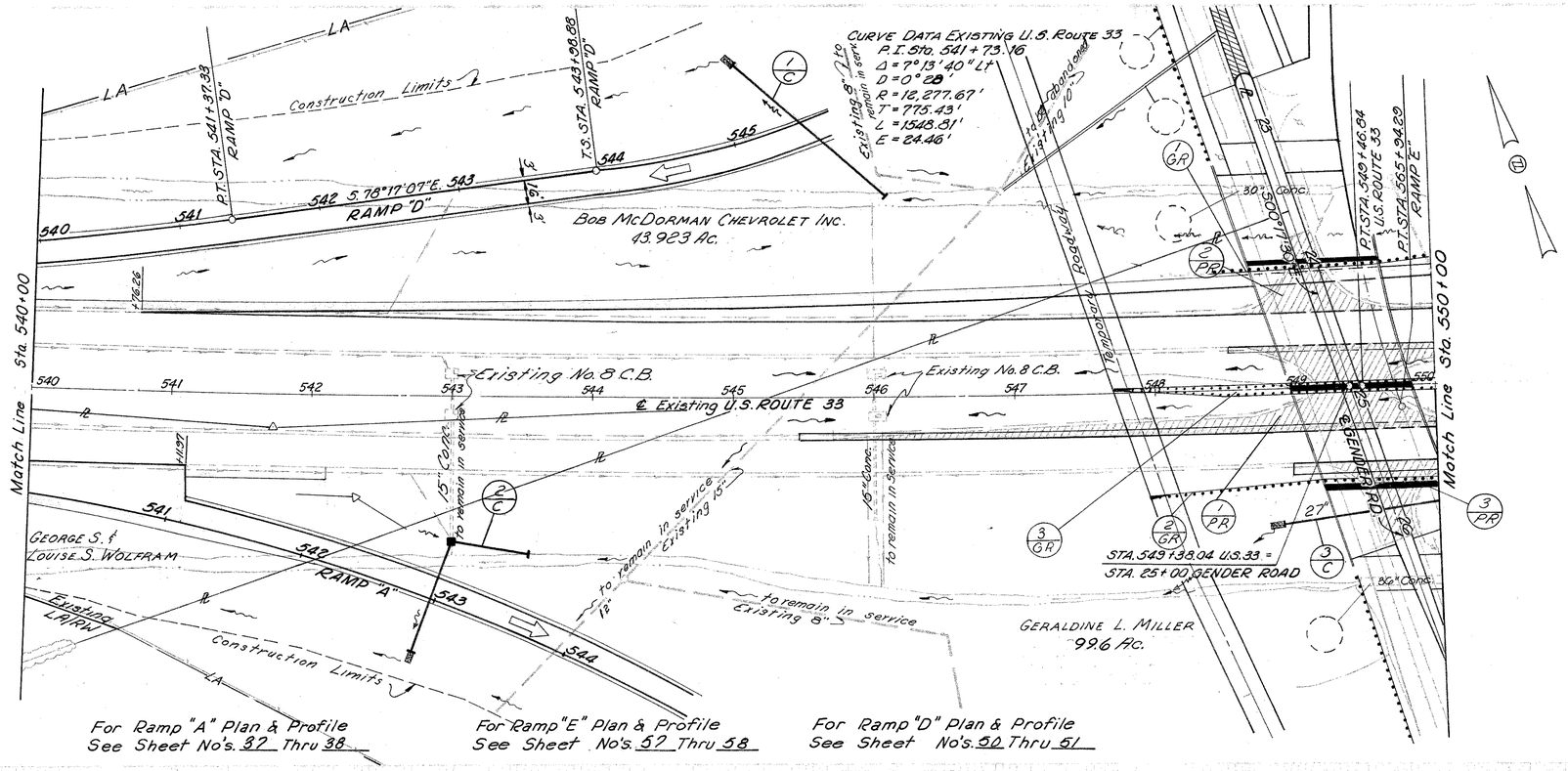

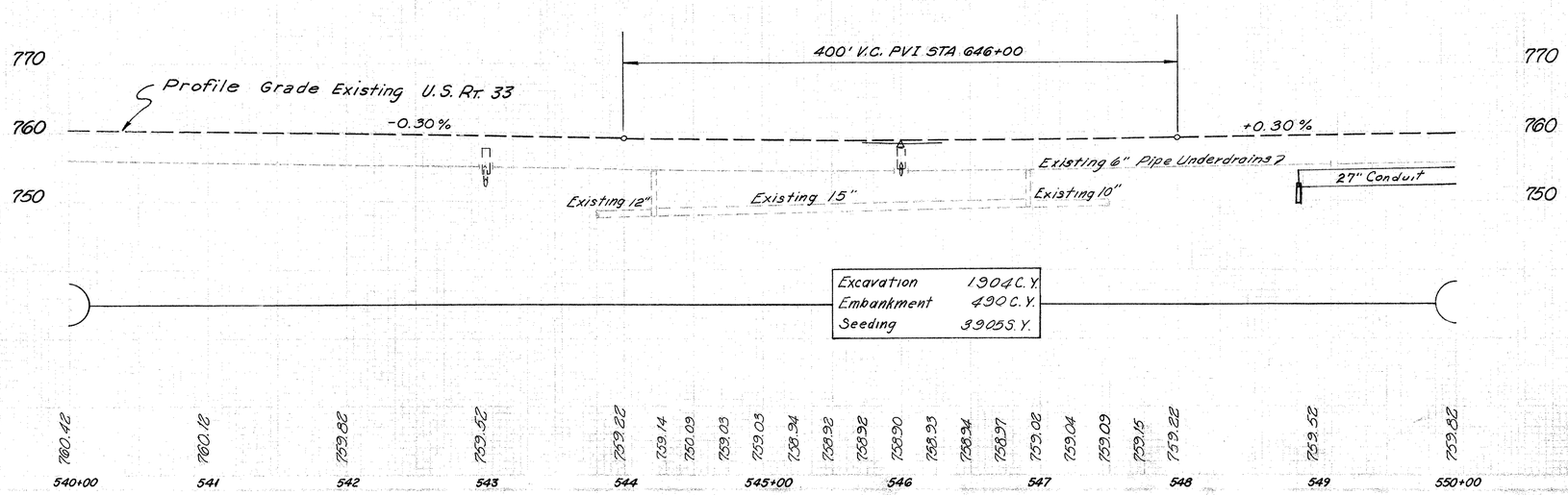

Excavation	1904 C.Y.
Embankment	490 C.Y.
Seeding	3905 S.Y.

	606 Guard Rail	606 Approach Rail Assem. Type 5	606 Anchor Assem. Type 5	606 Barrier Rail End Assembly	606 Approach End Type 5 Lin. Ft.	202 Existing Pavement Removed Square Yd.
1-GR 548+65 - 550+00 ℄						8.91
2-GR 548+57.87 - 549+68.77 Lt.						250
3-GR 549+50.00 - 550+00 Rt.						60
1-C 545+50 Ramp D						
2-C 542+99 Ramp A						
3-C 23+90 Gender Rd ℄						
3-3 22+28.5 Gender Rd						
1-GR 548+65 - 550+00 Lt.			1			
2-GR 547+97 - 550+00 Rt.						
3-GR 547+75 - 550+00 ℄						
Total			1			
15 & 5			1			
203.0						
400.0				25	1	
Total					25	1
Total	7895	1	1			1345

* Single Rail

CALCULATED BY CMT DATE 11-1969
CHECKED BY HDC DATE 12-26-69

* Barrier Rail

PLAN AND PROFILE U.S. ROUTE 33 STA. 540+00 TO STA. 550+00

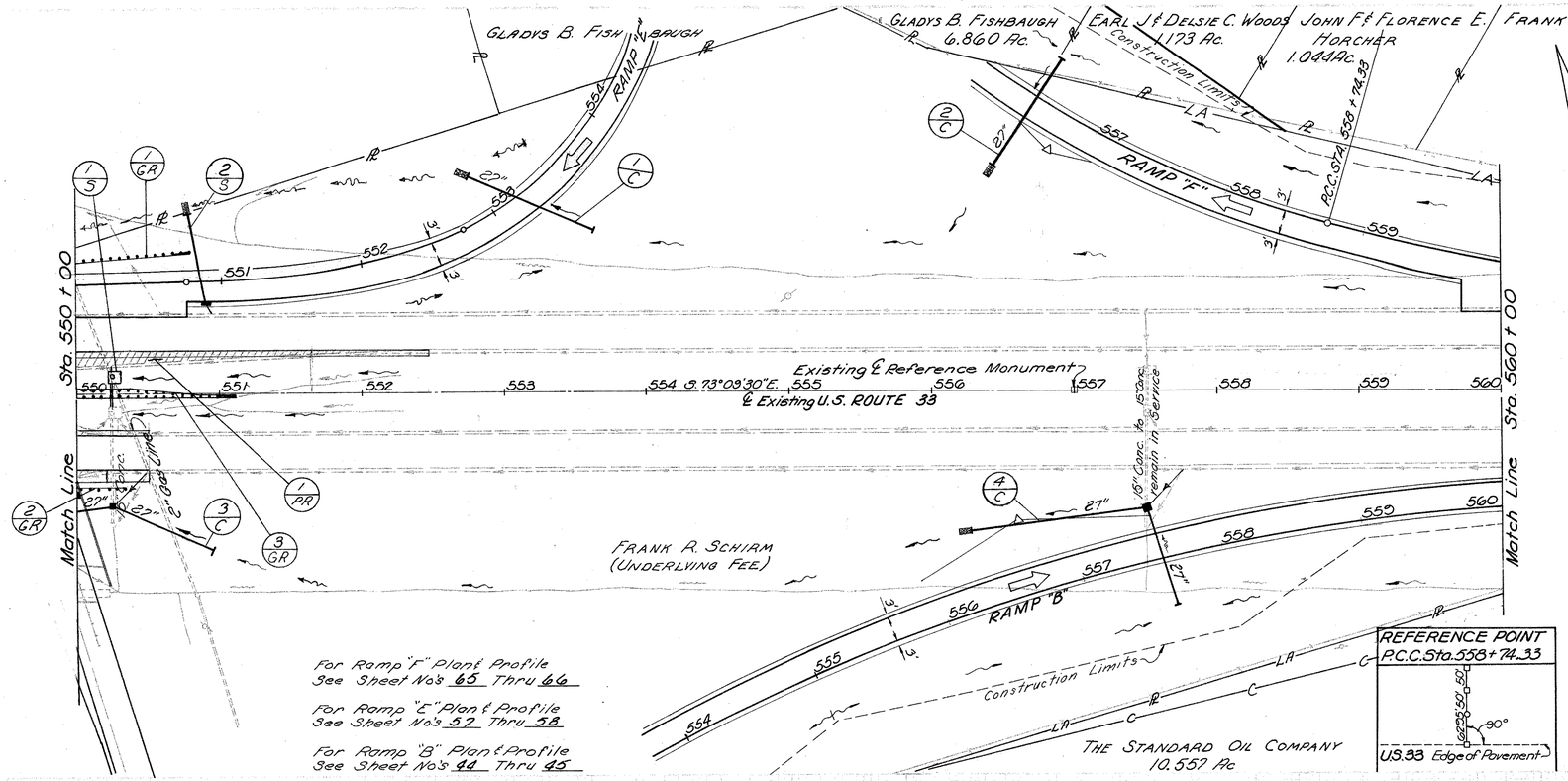

For Ramp "F" Plan & Profile
See Sheet No's 65 Thru 66

For Ramp "E" Plan & Profile
See Sheet No's 57 Thru 58

For Ramp "B" Plan & Profile
See Sheet No's 44 Thru 45

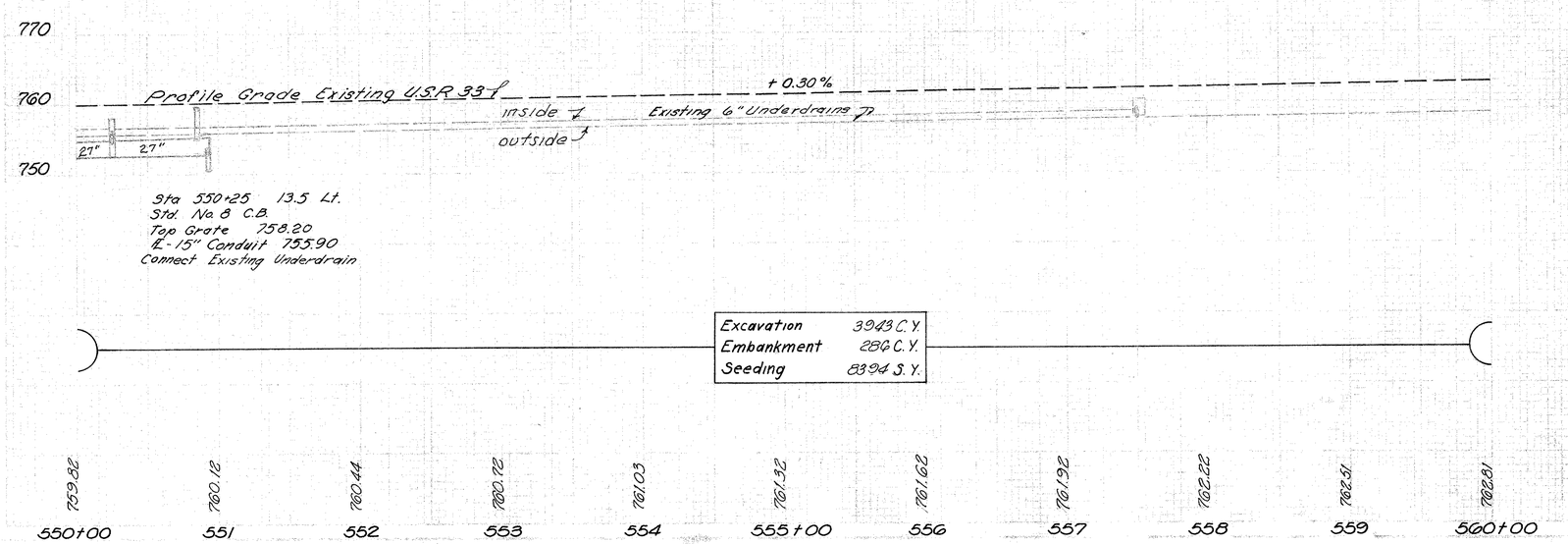

Excavation	3943 C.Y.
Embankment	286 C.Y.
Seeding	8394 S.Y.

| | | |

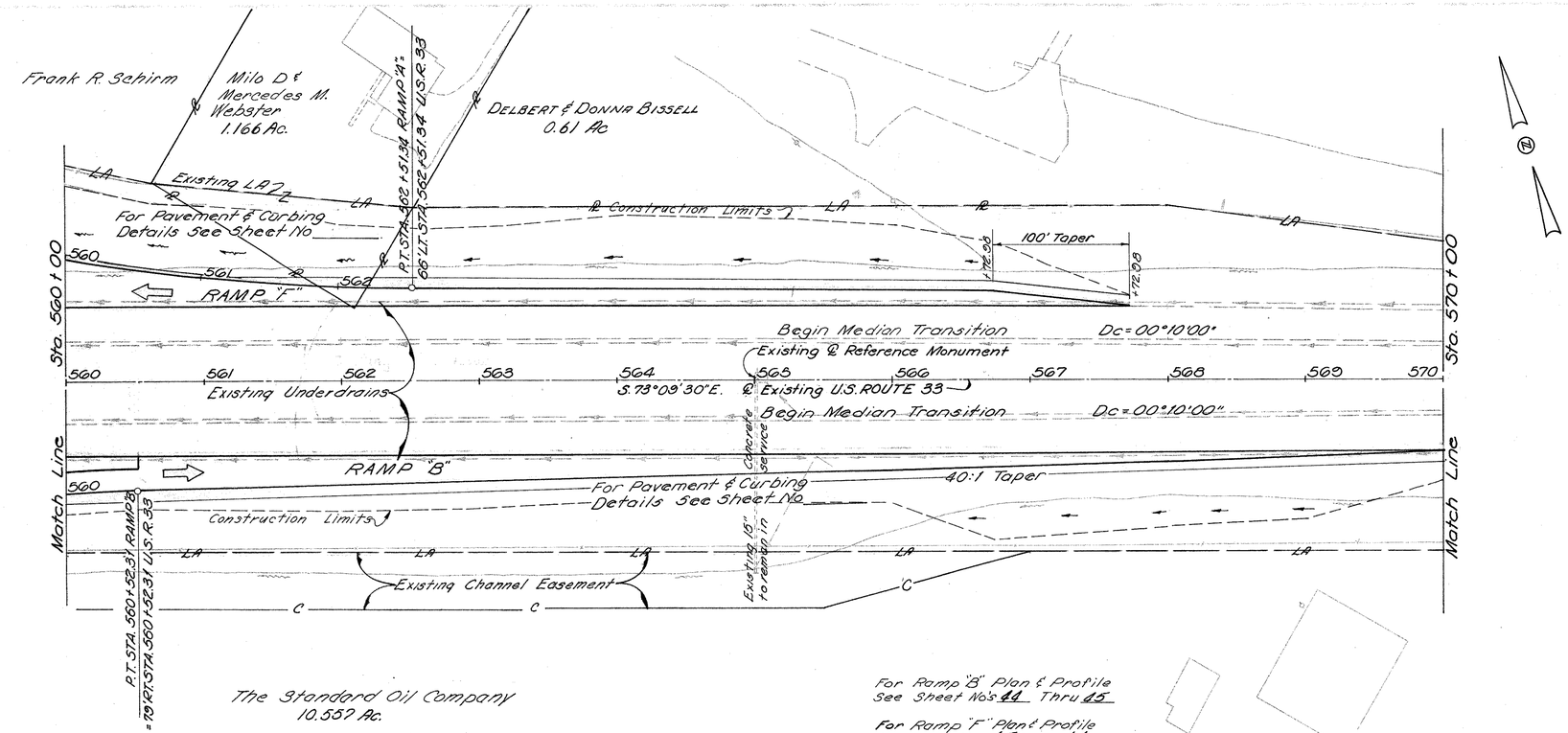

For Ramp "B" Plan & Profile
See Sheet No's 44 Thru 45

For Ramp "F" Plan & Profile
See Sheet No's 65 Thru 66

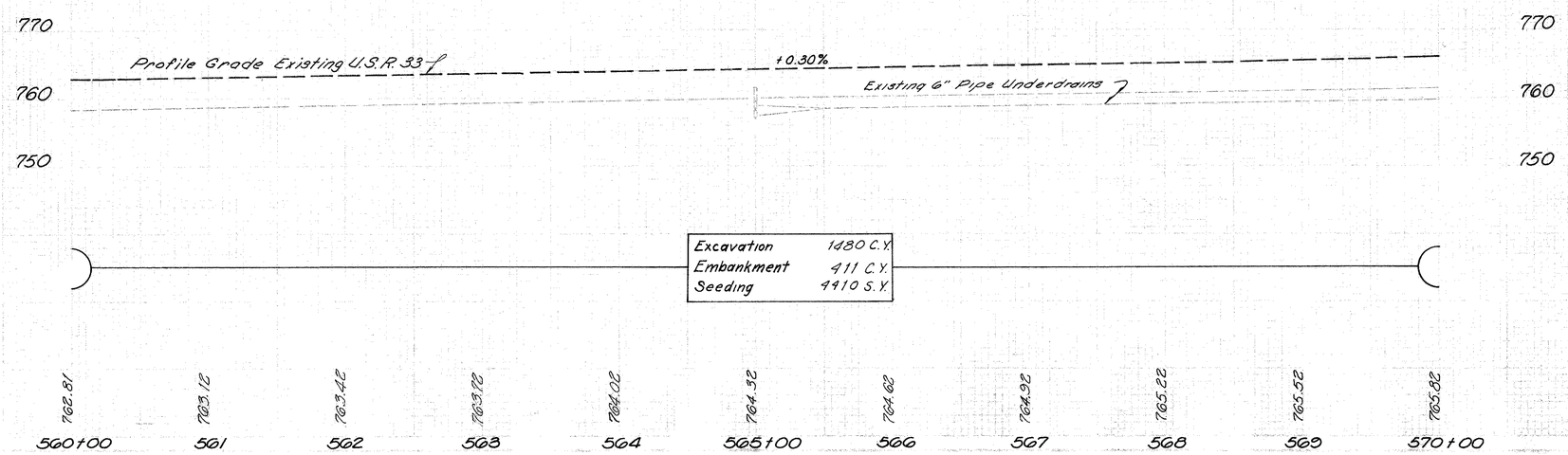

Excavation	1480 C.Y.
Embankment	411 C.Y.
Seeding	4410 S.Y.

CALCULATED BY CMT DATE 11-18-69

CHECKED BY [illegible] DATE 10 Dec 69

PLAN AND PROFILE U.S. ROUTE 33 STA. 560+00 TO STA. 570+00

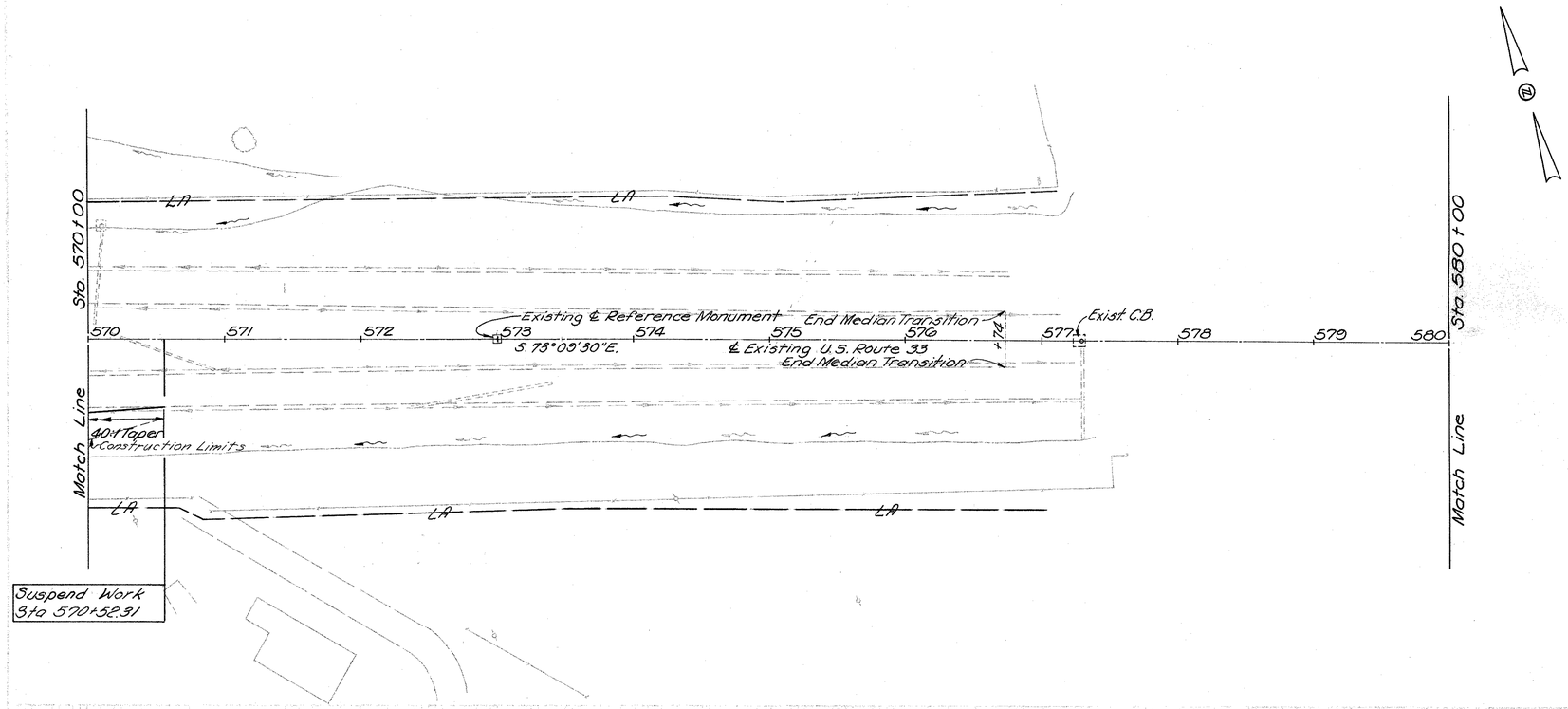

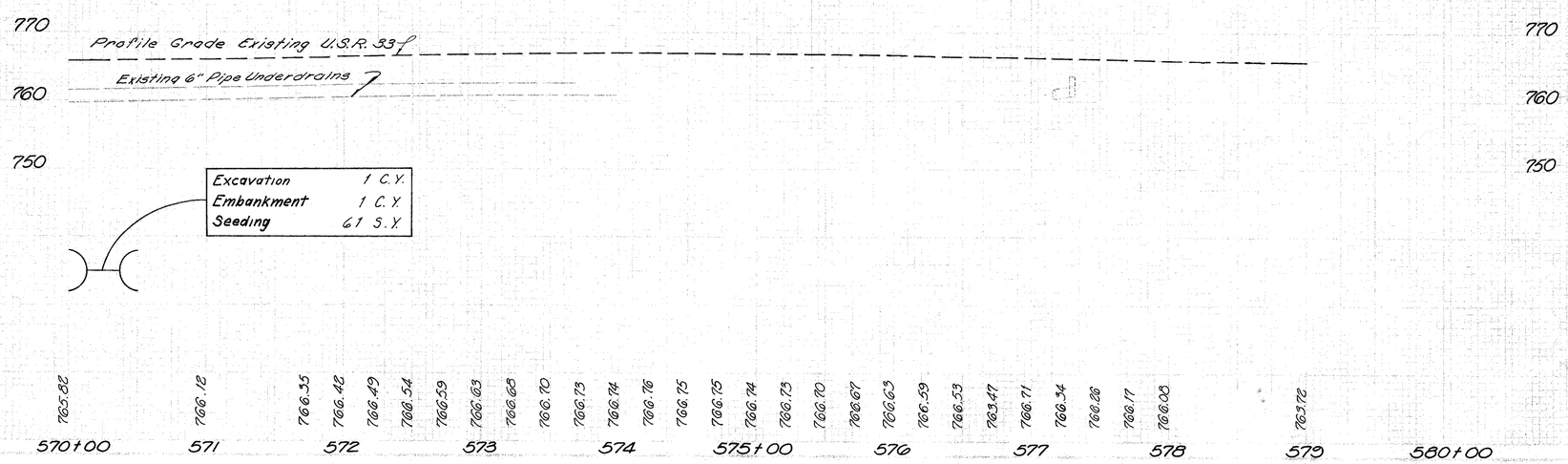

CALCULATED BY CMT DATE 11-19-69

CHECKED BY [illegible] DATE 10 Dec 69

PLAN AND PROFILE U.S. ROUTE 33 STA. 570+00 TO STA. 580+00.

FRANKLIN COUNTY
FRA-33-29.97

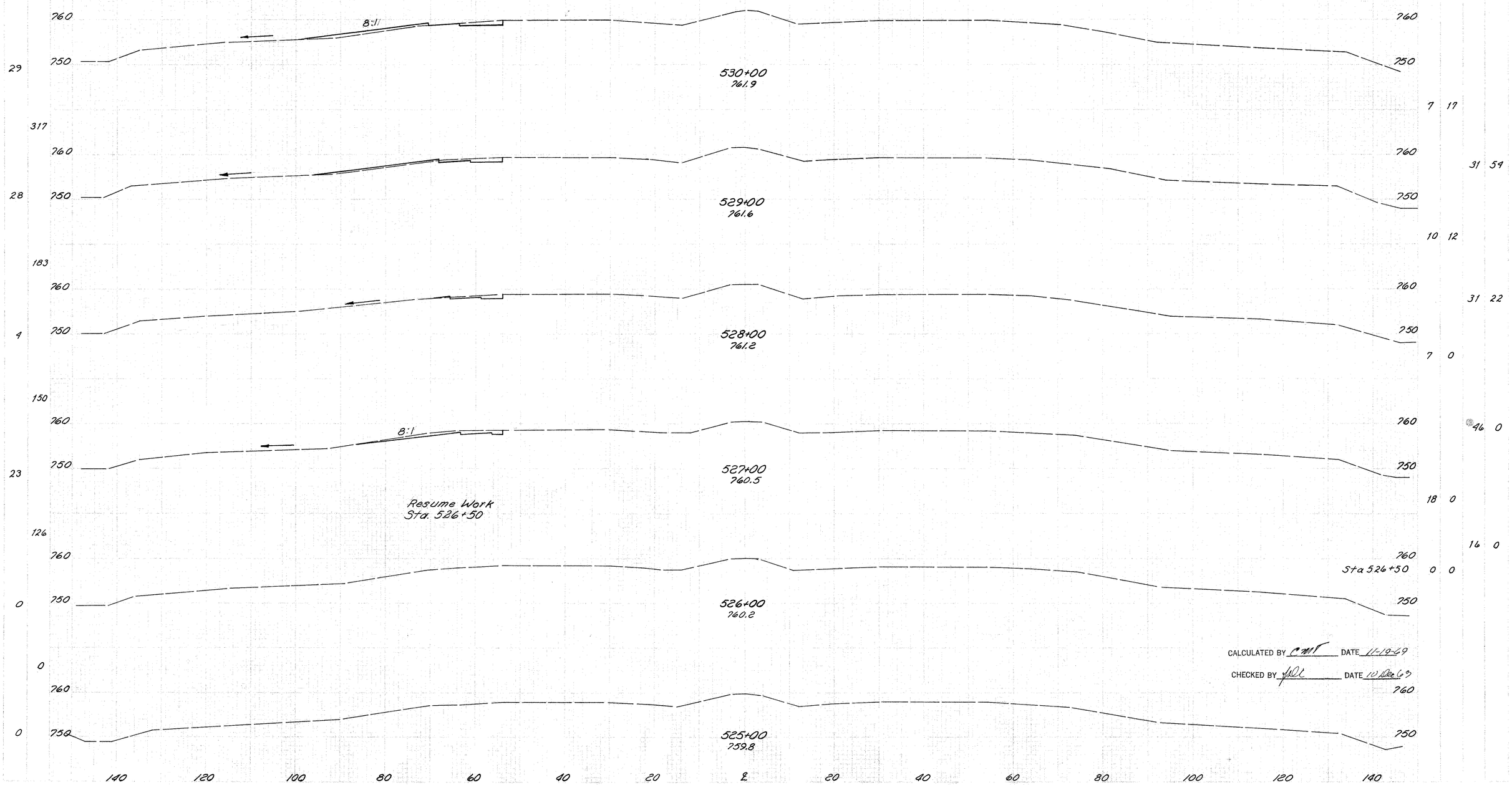

CALCULATED BY CMT DATE 11-19-69

CHECKED BY HDC DATE 10 Dec 69

U.S. Route 33 CROSS SECTIONS ~ STA. 525+00 TO STA 530+00

FRANKLIN COUNTY
FRA-33-29.97

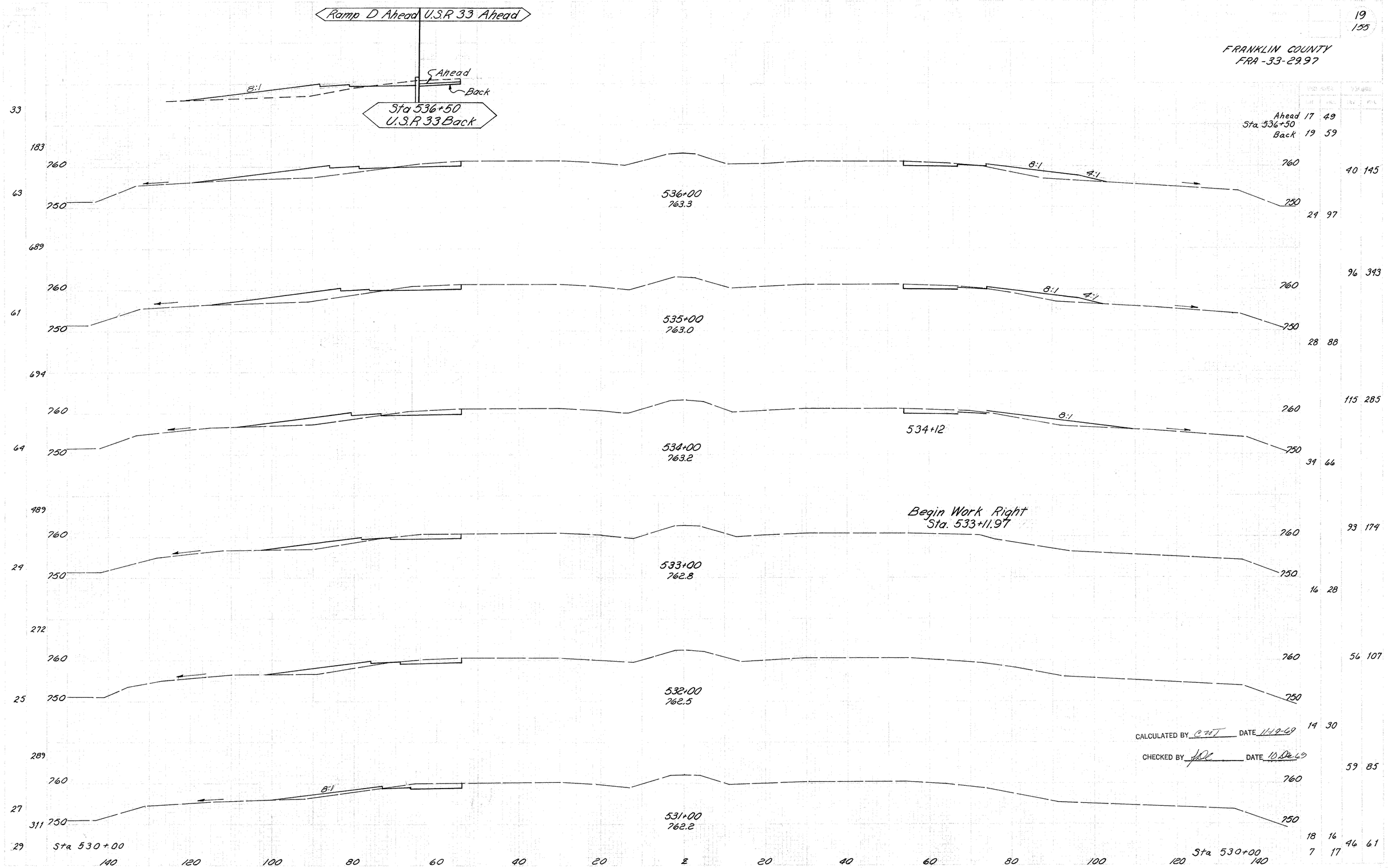

CALCULATED BY CMT DATE 11-19-69

CHECKED BY [illegible] DATE 10 Dec 69

U.S. Route 33 CROSS SECTIONS – STA 531+00 TO STA 536+00

FRANKLIN COUNTY
FRA-33-29.97

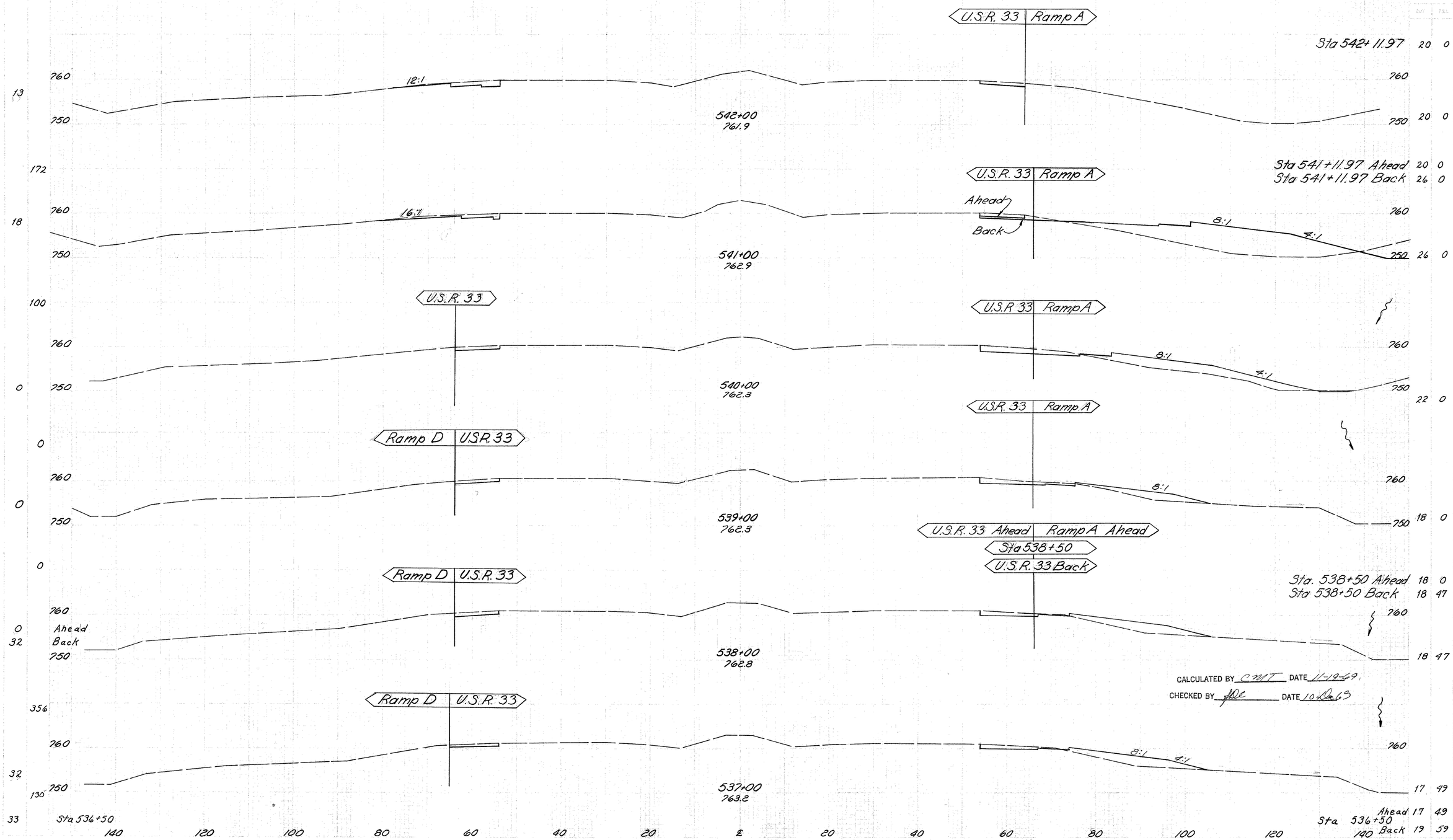

U.S. Route 33 CROSS SECTIONS ~ STA 537+00 TO STA 542+00

FRANKLIN COUNTY
FRA-33-29.97

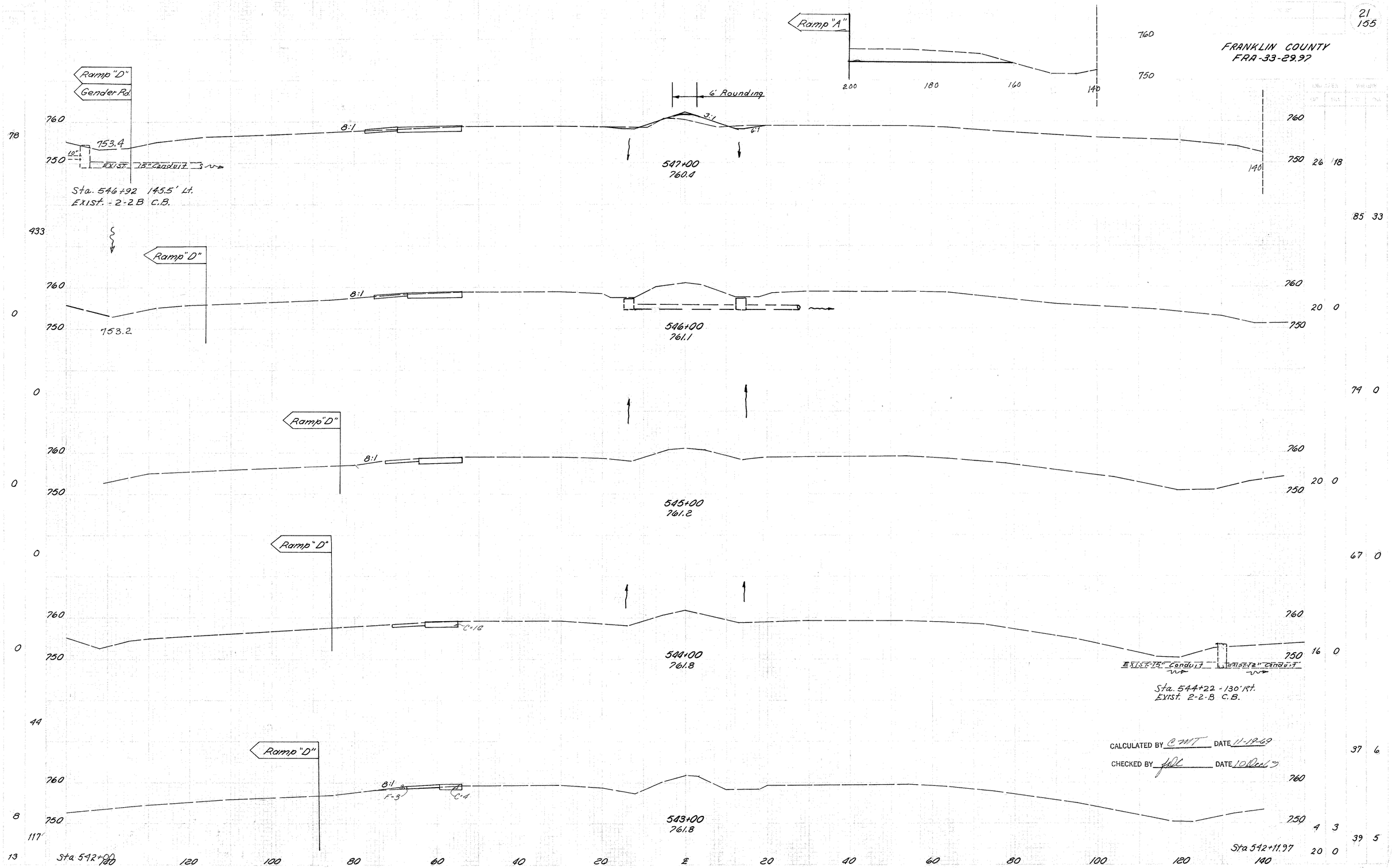

CALCULATED BY C.M.T. DATE 11-12-69

CHECKED BY JDC DATE 10 Dec 69

U.S. Route 33 CROSS SECTIONS — STA 543+00 TO STA 547+00

FRANKLIN COUNTY
FRA-33-29.97

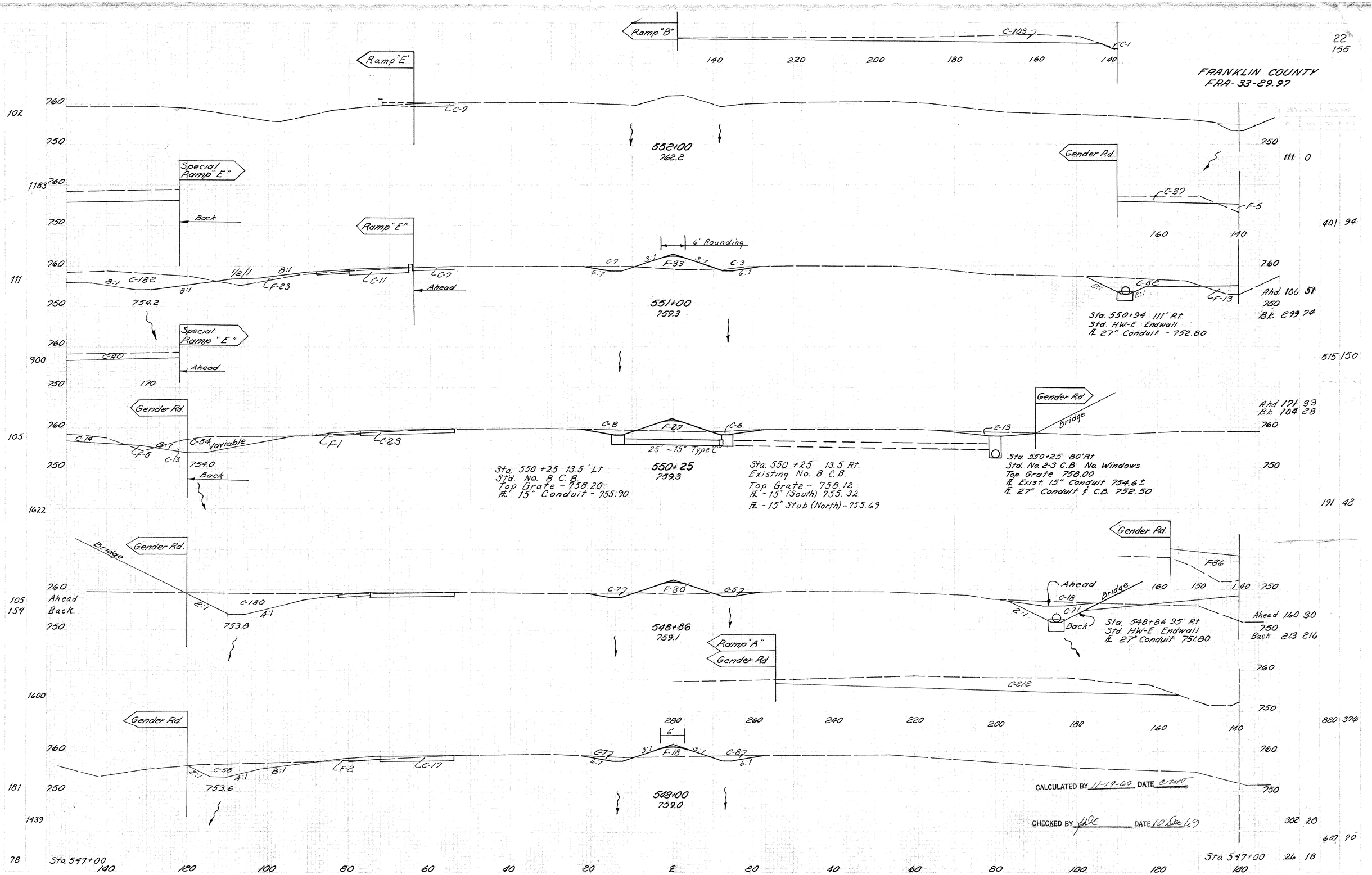

CALCULATED BY 11-19-69 DATE

CHECKED BY DATE 10 Dec 69

U.S. Route 33 CROSS SECTIONS ~ STA 548+00 TO STA 552+00

FRANKLIN COUNTY
FRA-33-29.97

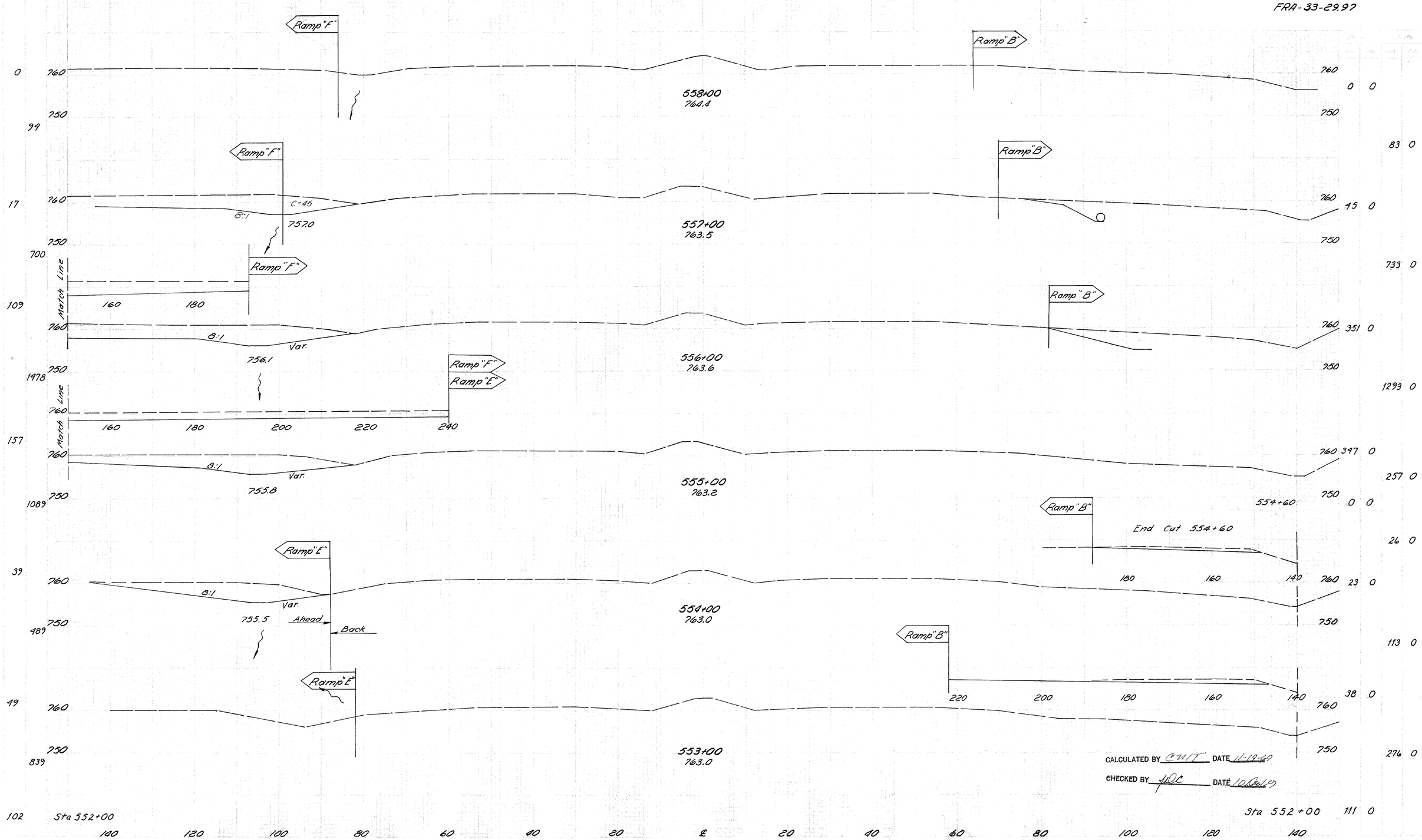

FRANKLIN COUNTY
FRA-33-29.97

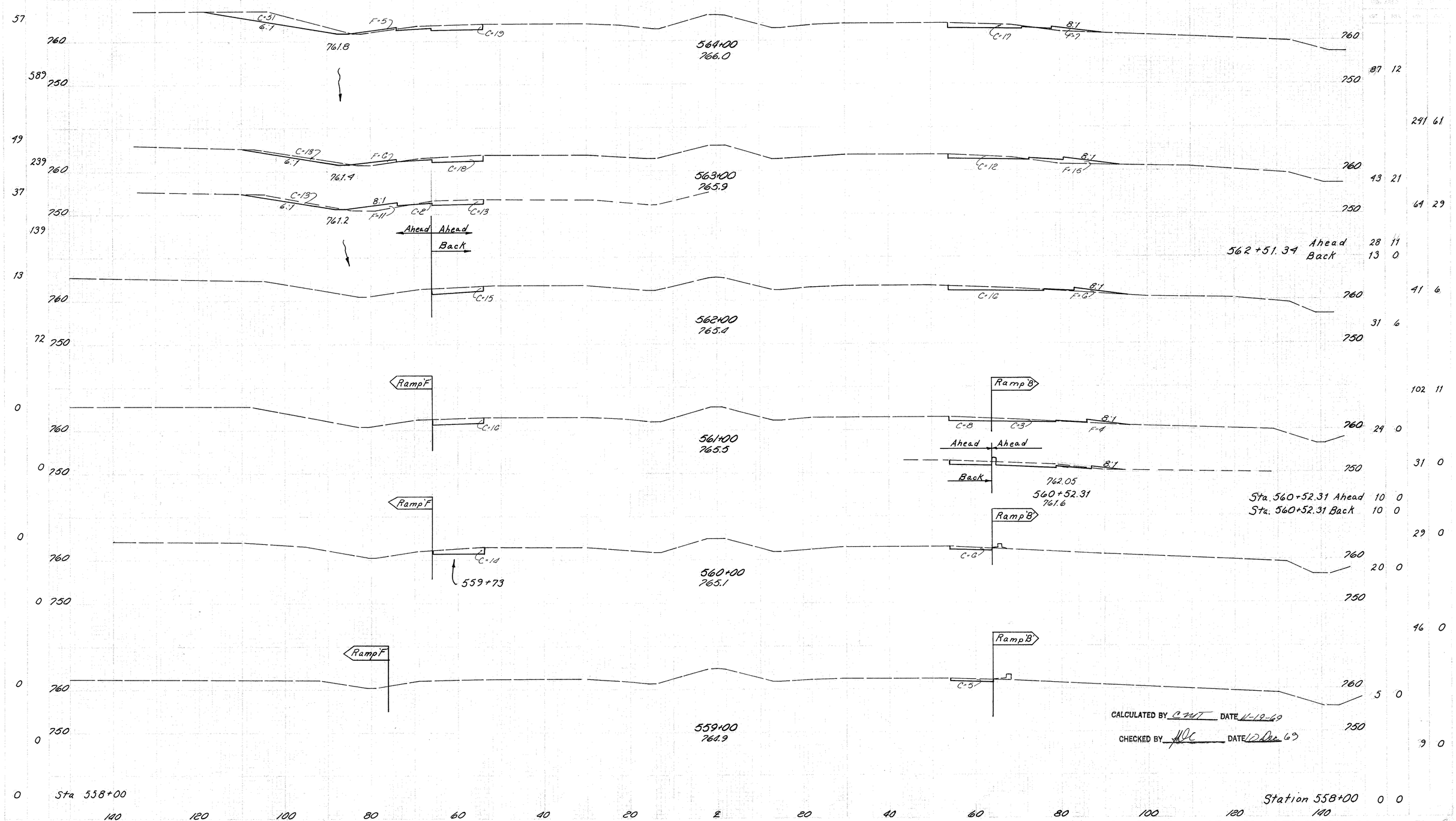

U.S. Route 33 CROSS SECTIONS ~ STA 559+00 TO STA 564+00

FRANKLIN COUNTY
FRA-33-29.97

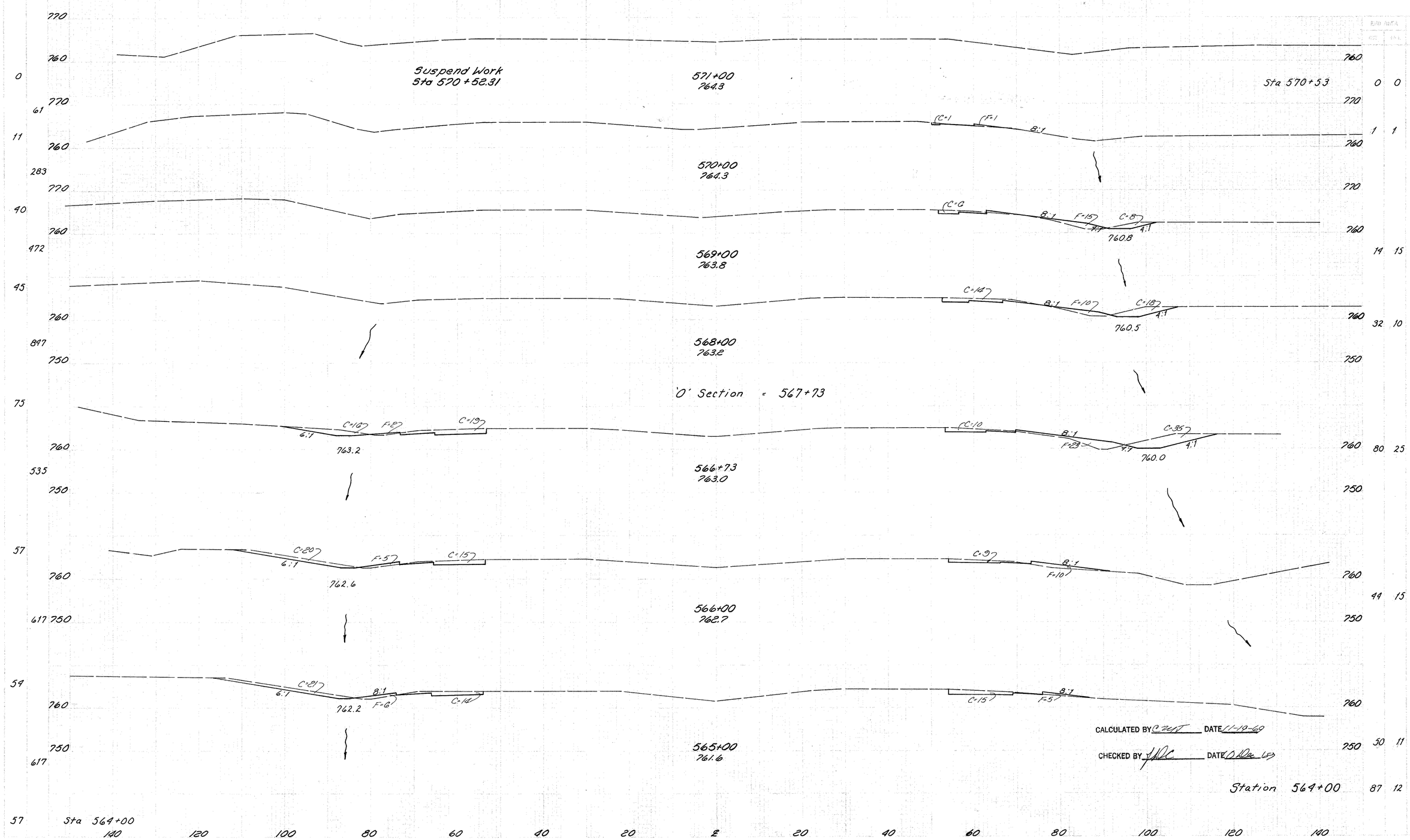

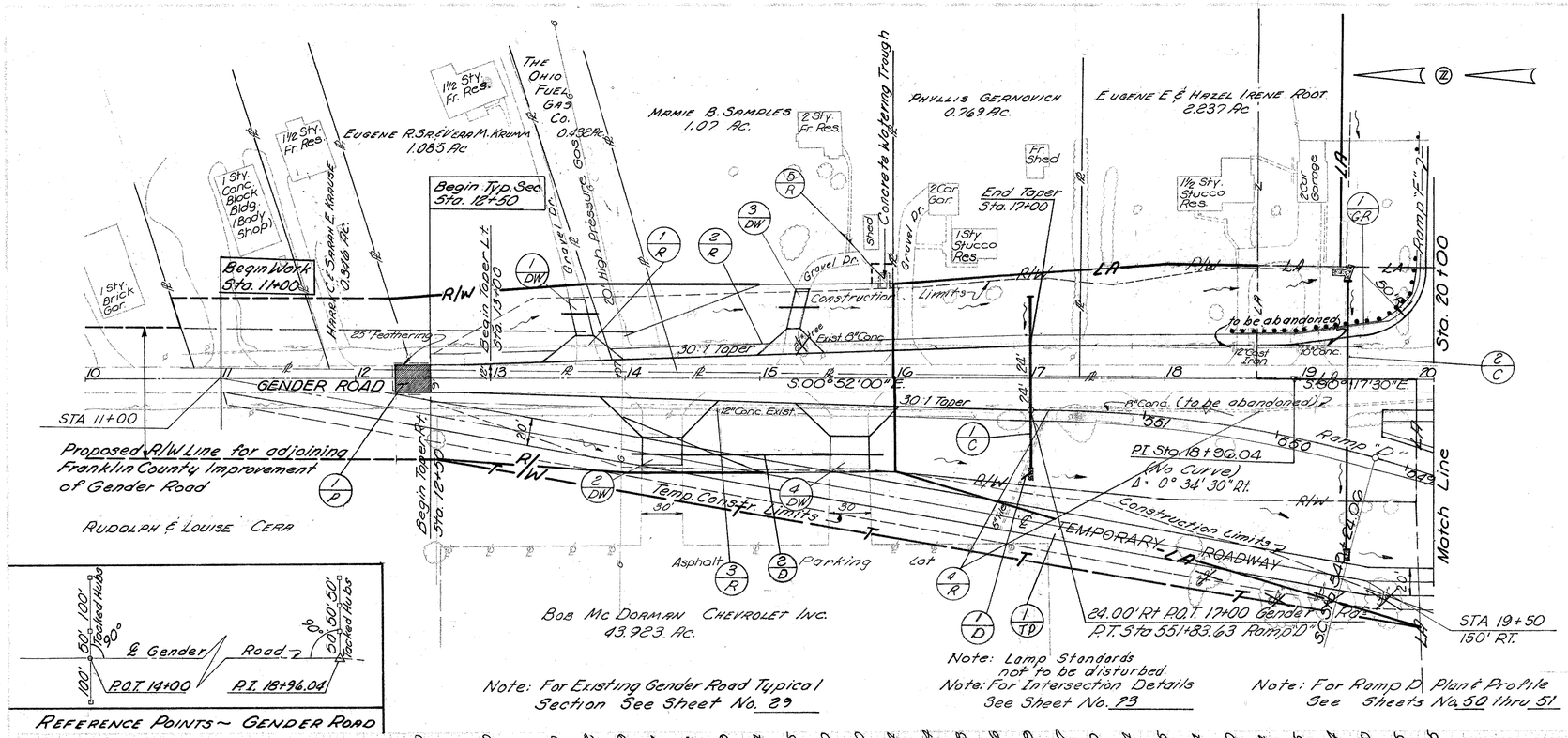

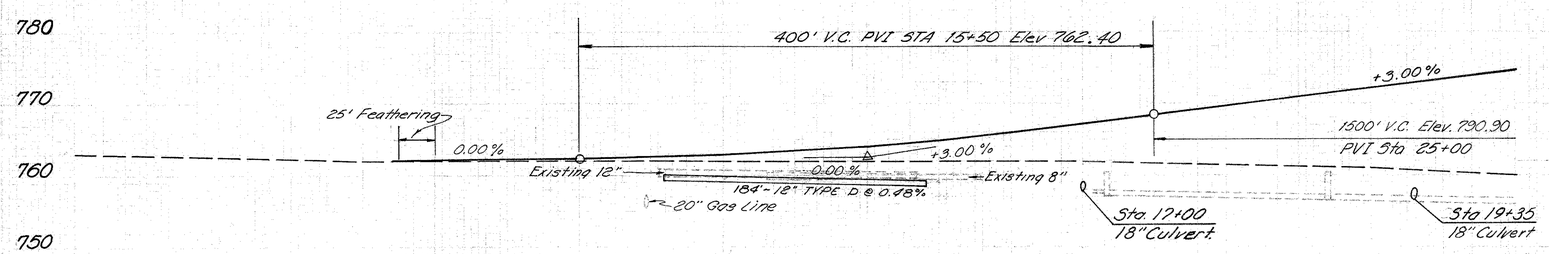

Excavation	931	C.Y.
Embankment	10,618	C.Y.
Seeding	3,537	S.Y.

762.40 762.40 762.46 762.49 762.61 762.78 762.99 763.24 763.55 763.90 764.30 764.74 765.24 765.78 766.36 766.99 767.67 768.40 769.14 769.85 770.54 771.20 771.84 772.45 773.04 773.60 774.15 774.65

763.33 762.63 762.26 762.16 762.15 762.13 761.89 761.86 761.46 761.21 +45 760.96 760.10

10+00 11 12 13 14 15+00 16 17 18 19 20+00

202 Pipe Culvert Removed 24" or Under L.F.	202 Earth Excavation Removed L.F.	202 Existing Asphalt Pavement Removed Structure Concrete (83.100)	404 Asphalt Conc. Pavement (Type 2)	404 Asphalt Conc. Pavement (Type 5)	606 Guard Rail Type 5 L.F.	606 Guard Rail Type 5 Assembly Each	603 Conduit	615 Temp. Rd.	
									Lump
20 Lt									
93 Lt									
172 Rt									
Rt									
2 Lt		Lump							
			41	12.7					
			15.1	51.5					
			3.8	16.8					
			15.1	51.5					

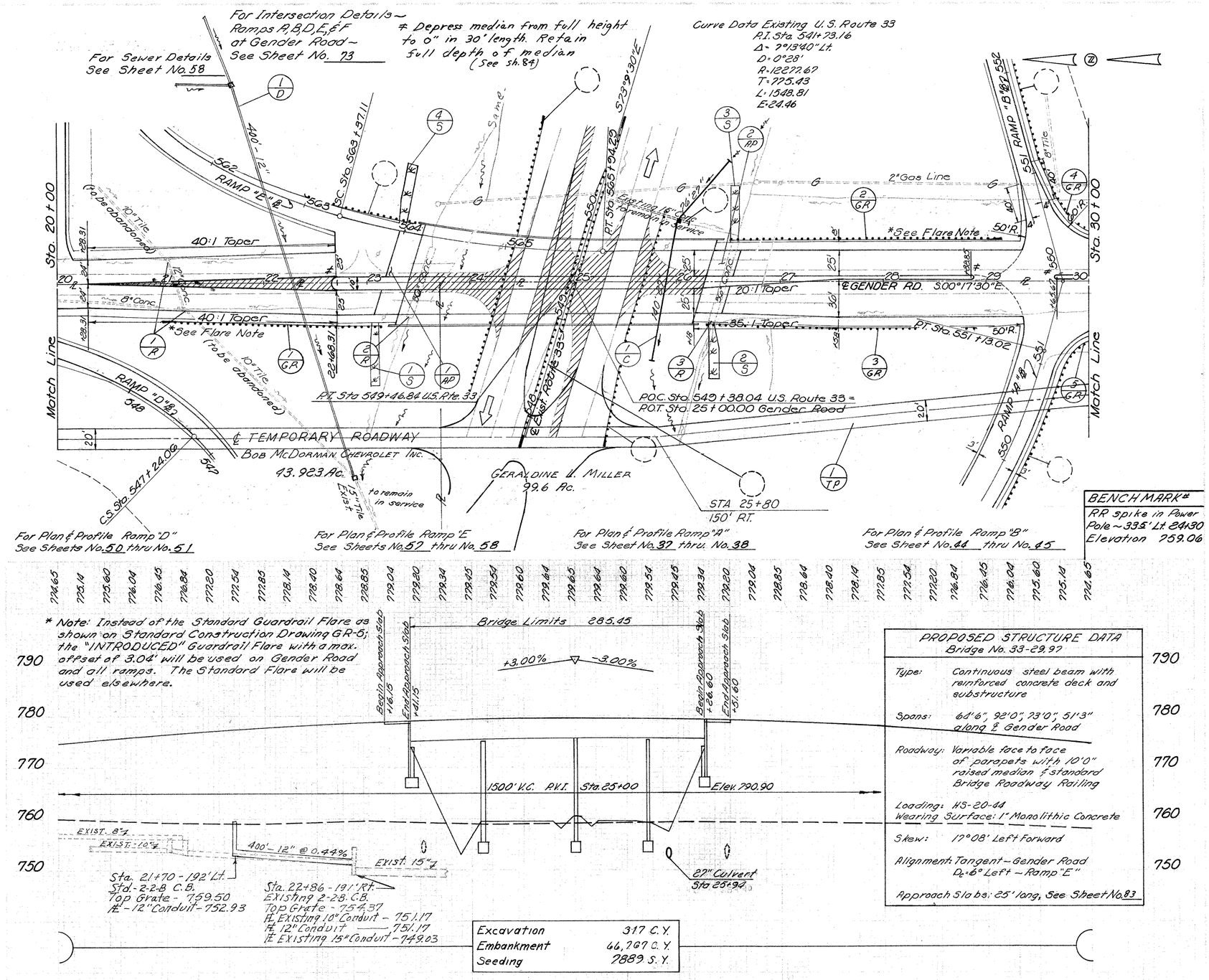

BENCH MARK #
RR spike in Power Pole ~ 33.5' Lt. 24+30
Elevation 759.06

PROPOSED STRUCTURE DATA
Bridge No. 33-29.97

Type: Continuous steel beam with reinforced concrete deck and substructure

Spans: 64'-6", 92'-0", 73'-0", 51'-3" along ℄ Gender Road

Roadway: Variable face to face of parapets with 10'-0" raised median & standard Bridge Roadway Railing

Loading: HS-20-44

Wearing Surface: 1" Monolithic Concrete

Skew: 17°08' Left Forward

Alignment: Tangent - Gender Road
D_c 6° Left - Ramp "E"

Approach Slabs: 25' long, See Sheet No. 83

| | | |

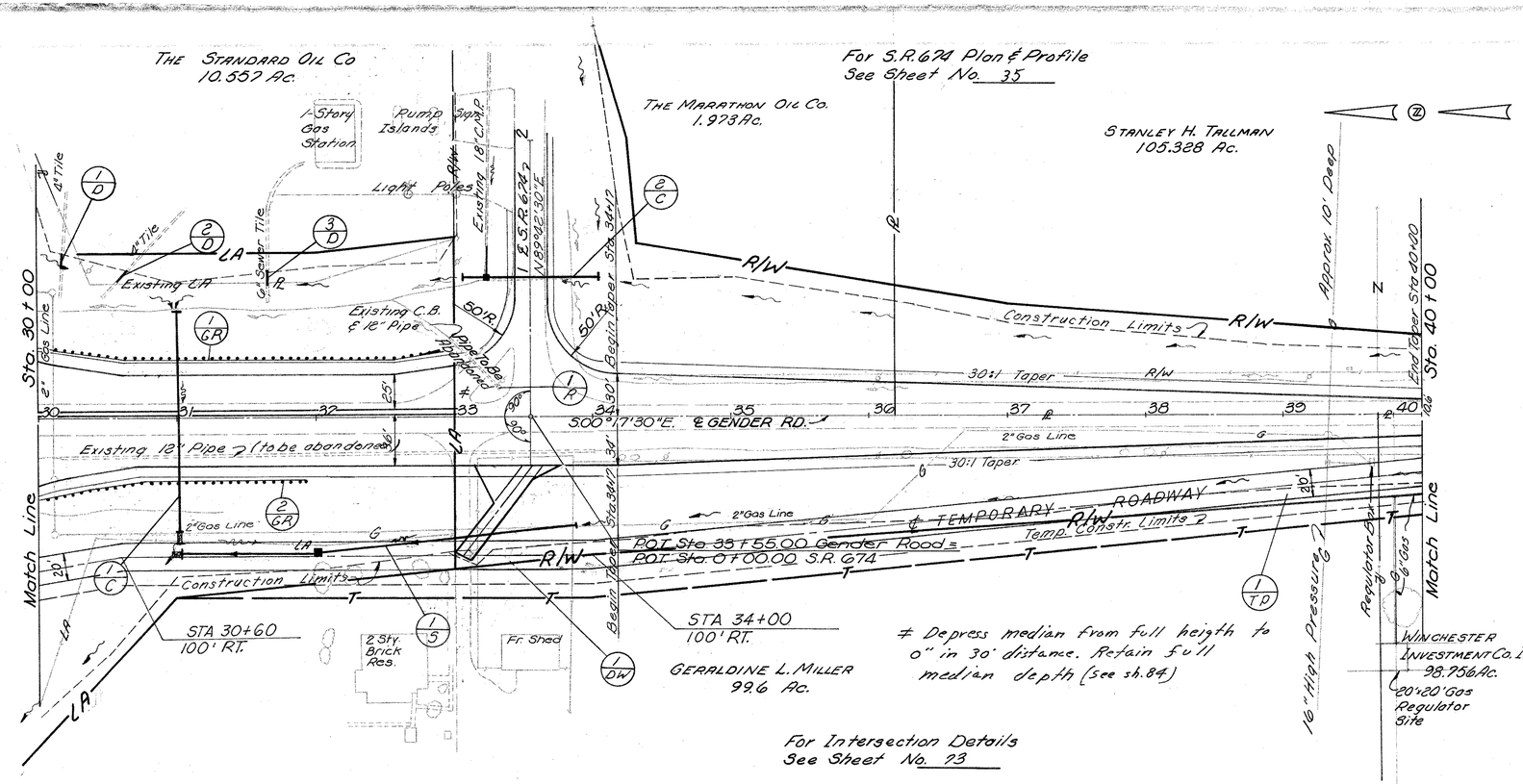
THE STANDARD OIL CO
10.557 AC.
1-Story Gas Station
Pump Islands
Sign
Light Poles
Existing 18" C.M.P.
4" Tile
Existing C.B. & 12" Pipe
Pipe To Be Abandoned
6" Sewer Tile
Existing C.A.
Existing 12" Pipe (to be abandoned)
2" Gas Line
Match Line
Sta. 30+00
Sta. 40+00
Construction Limits
R/W
30:1 Taper
S00°17'30"E. ℄ GENDER RD.
℄ TEMPORARY R/W ROADWAY
Temp. Constr. Limits
POI Sta 33+55.00 Gender Road
POI Sta 0+00.00 S.R. 674
Begin Taper Sta 34+17
End Taper Sta 40+20
Approx 10' Deep
Regulator Bldg
6" Gas
16" High Pressure
STA 30+60
100' RT.
2 Sty. Brick Res.
Fr. Shed
STA 34+00
100' RT.
GERALDINE L. MILLER
99.6 Ac.
Depress median from full heigth to 0" in 30' distance. Retain full median depth (see sh. 84)
THE MARATHON OIL CO.
1.973 Ac.
STANLEY H. TALLMAN
105.328 Ac.
WINCHESTER INVESTMENT CO. INC.
98.756 Ac.
20'x20' Gas Regulator Site
For S.R. 674 Plan & Profile
See Sheet No. 35
For Intersection Details
See Sheet No. 73

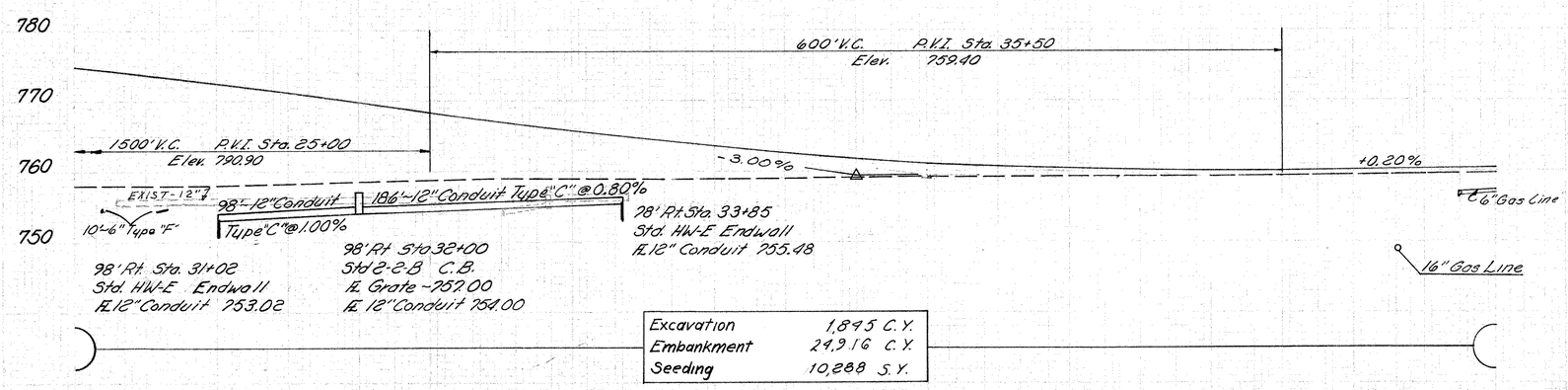
600' V.C. P.V.I. Sta. 35+50
Elev. 759.40
1500' V.C. P.V.I. Sta. 25+00
Elev. 790.90
-3.00%
+0.20%
EXIST-12"
98'-12" Conduit
186'-12" Conduit Type "C" @ 0.80%
10'-6" Type "F"
Type "C" @ 1.00%
98' Rt. Sta. 31+02
Std. HW-E Endwall
℄ 12" Conduit 753.02
98' Rt. Sta. 32+00
Std 2-2-B C.B.
℄ Grate - 757.00
℄ 12" Conduit 754.00
98' Rt. Sta. 33+85
Std. HW-E Endwall
℄ 12" Conduit 755.48
6" Gas Line
16" Gas Line
Excavation 1,895 C.Y.
Embankment 24,916 C.Y.
Seeding 10,288 S.Y.
30+00
31
32
33
34
35+00
36
37
38
39
40+00

| | | |

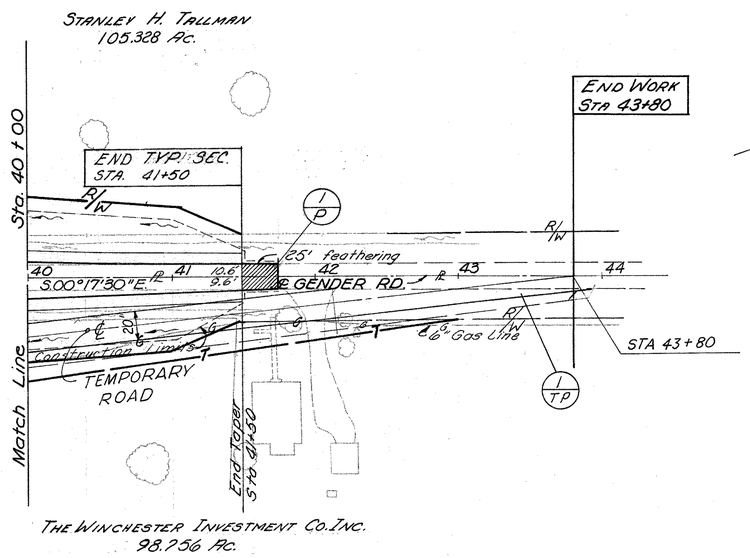

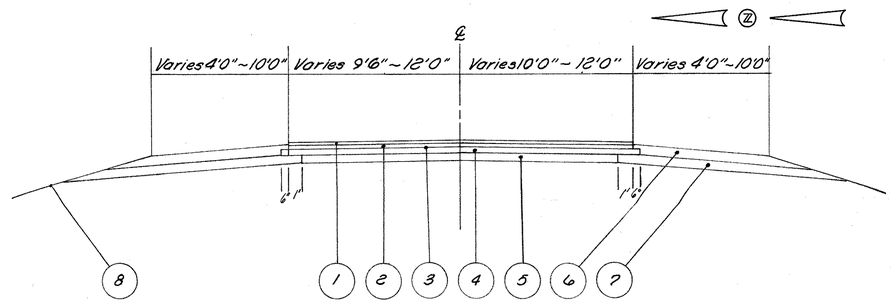

	ITEM	DESCRIPTION
1	404	1¼" Asphalt Concrete (70-85)
2	402	1¾" Asphalt Concrete (70-85)
3	408	Bituminous Prime Coat, Sec. M-57, RT-2 or RT-3 applied at the rate of 0.4 Gallons Per Square Yard
4	304	6" Aggregate Base
5	310	5" Subbase
6	617	Reconditioned Shoulders
7	605	Aggregate Drains
8	659	Seeding & Mulching

EXISTING TYPICAL SECTION~ GENDER ROAD

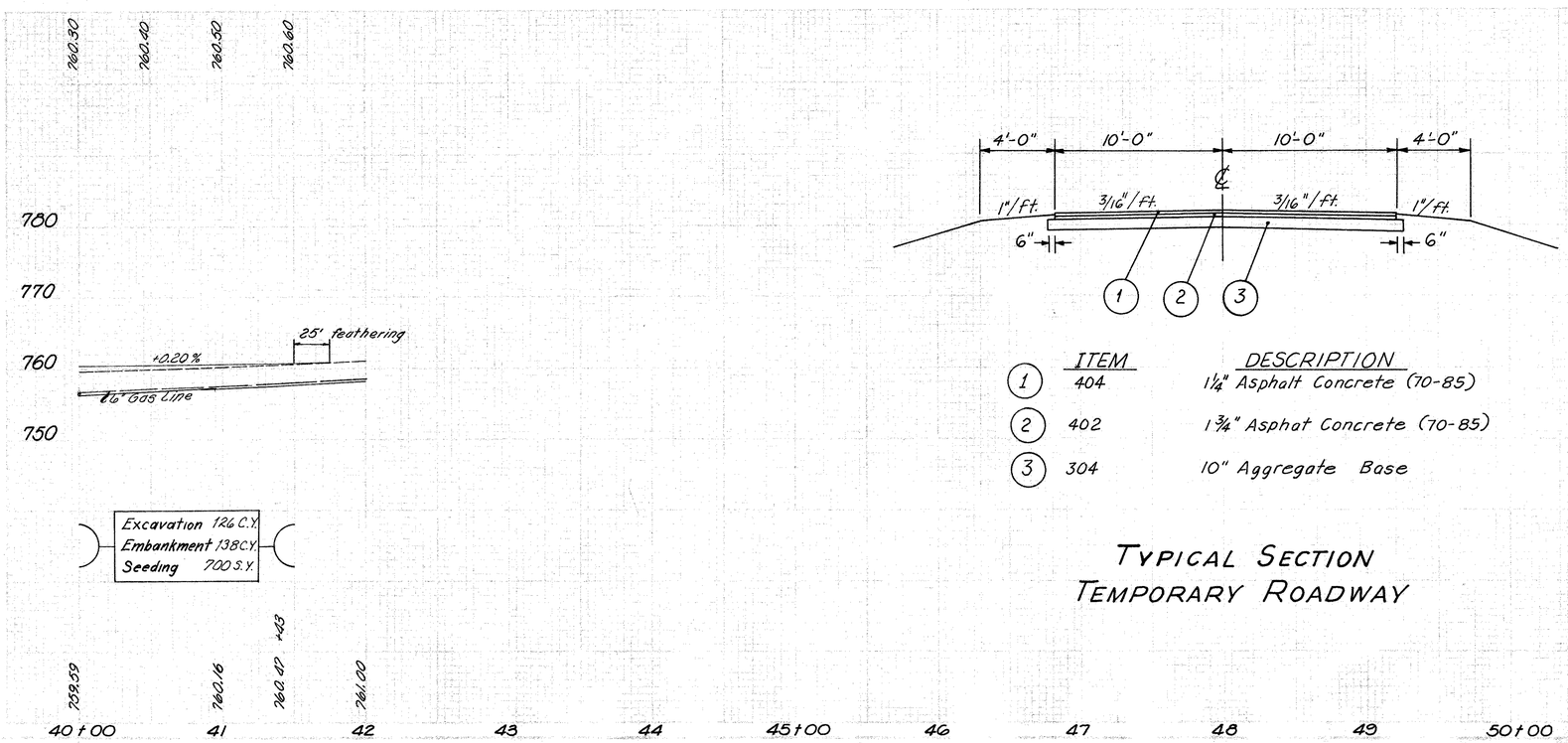

	ITEM	DESCRIPTION
1	404	1¼" Asphalt Concrete (70-85)
2	402	1¾" Asphat Concrete (70-85)
3	304	10" Aggregate Base

TYPICAL SECTION
TEMPORARY ROADWAY

	404	615	402	659
	Asphalt Conc. 70-85	Temp. Pav't. Road Class "B"		
	C.Y.	S.Y.	Lump	Lump
1-P 41+50 ~ 41+75	8			
1-TP 40+00 ~ 43+80	Rt.		2	658 Lump

CALCULATED BY CWT DATE 11-19-69

CHECKED BY HDC DATE 10 Dec 69

PLAN AND PROFILE GENDER ROAD STA. 40+00 TO STA. 50+00

FRANKLIN COUNTY
FRA-33-29.97

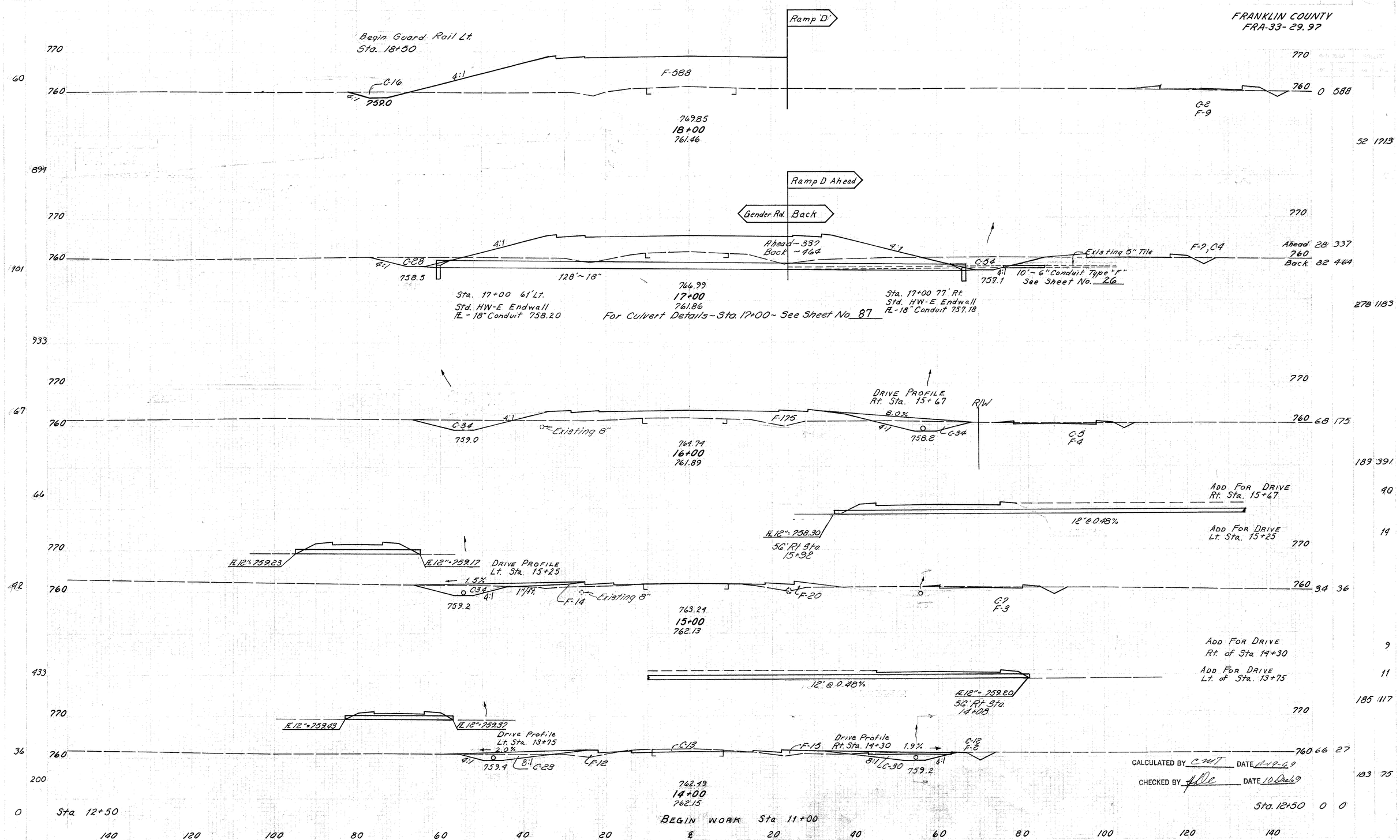

GENDER ROAD CROSS SECTIONS STA. 14+00 TO STA. 18+00

FRANKLIN COUNTY
FRA-33-29.97

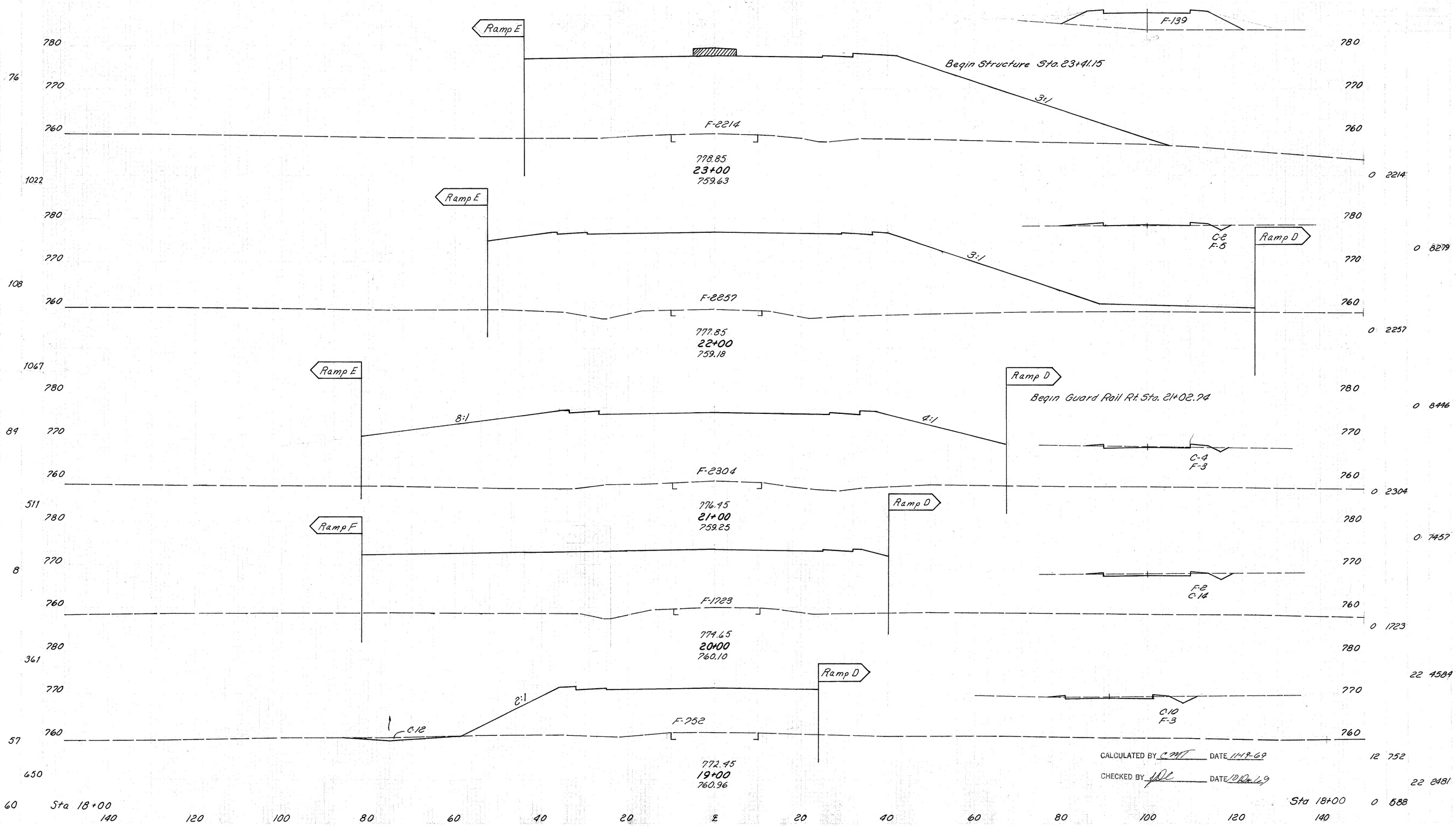

CALCULATED BY CMT DATE 11-19-69

CHECKED BY HDL DATE 12 Dec 69

GENDER ROAD CROSS SECTIONS STA 19+00 TO STA 23+00

FRANKLIN COUNTY
FRA-33-29.97

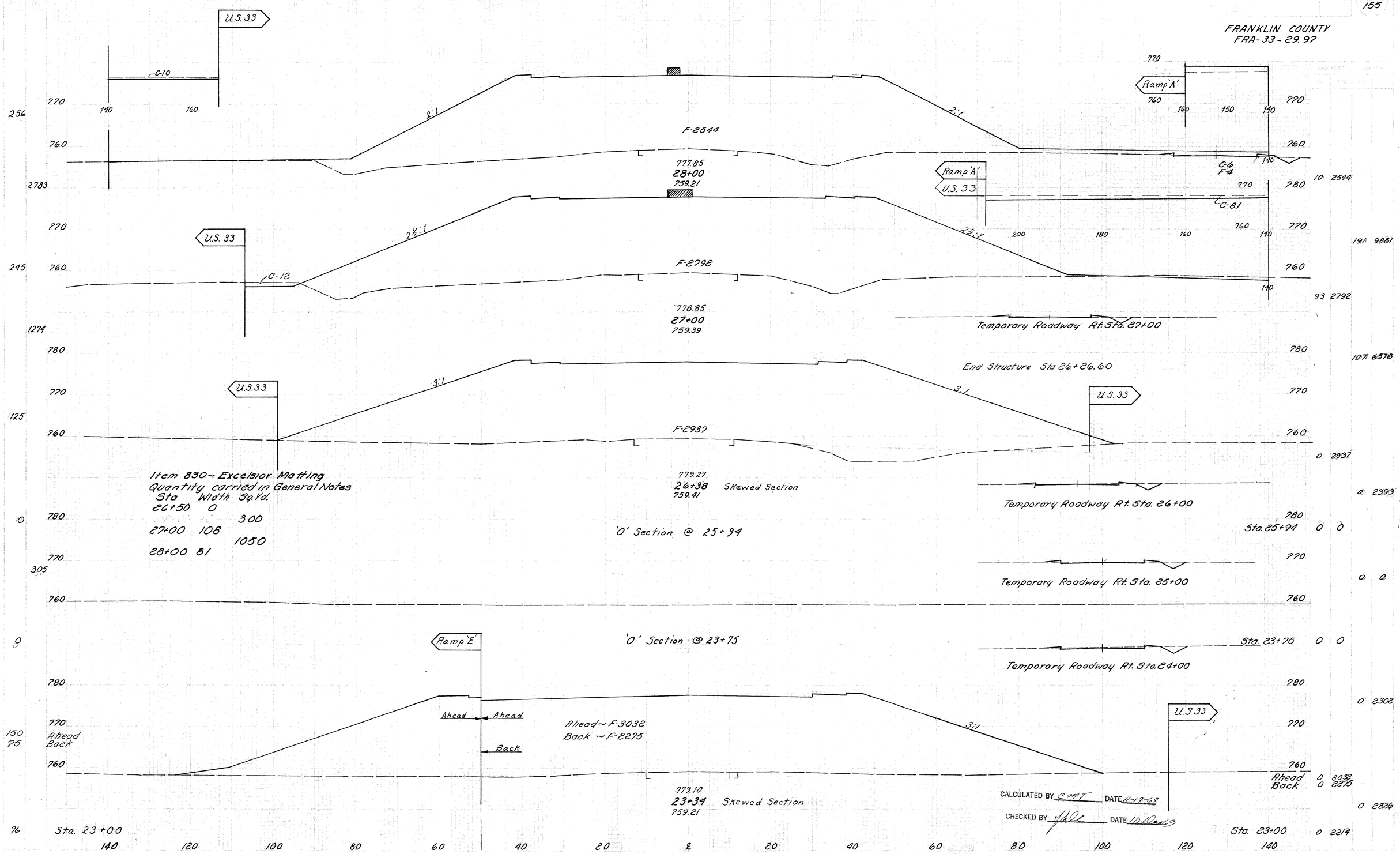

CALCULATED BY CMT DATE 11-19-68
CHECKED BY HAC DATE 10 Dec 69

GENDER ROAD CROSS SECTIONS STA 24+00 TO STA 28+00

FRANKLIN COUNTY
FRA-33-29.97

Item 830-Excelsior Matting
Quantity carried in General Notes

Sta.	Width	Sq. Yd.
28+00	81	
		539
29+00	16	
		—
30+00	37	
		428
31+00	40	
		111
31+50	0	

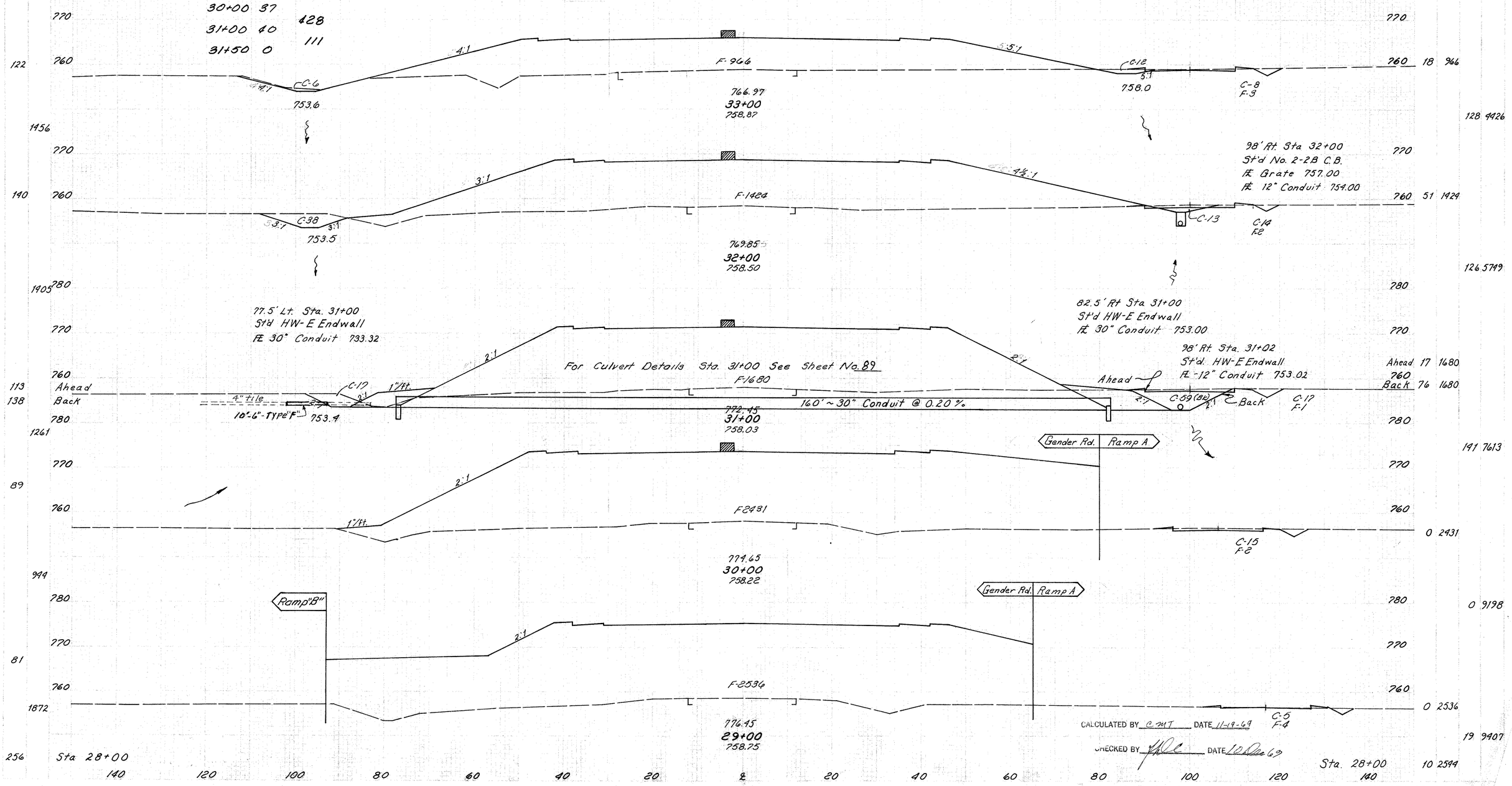

CALCULATED BY C. MT DATE 11-19-69
CHECKED BY [illegible] DATE 10 Dec 69

GENDER ROAD CROSS SECTIONS STA 29+00 TO STA 33+00

End Work ~ Sta. 43+80
End Typical Section ~ Sta. 41+50

FRANKLIN COUNTY
FRA-33-29.97

CALCULATED BY C.M.T. DATE 11-19-69

CHECKED BY [illegible] DATE 12 Dec 69

GENDER ROAD CROSS SECTIONS STA 34+00 TO STA 41+00

*Note: Do Not Disturb Light Standards or Commercial Signs on the Gas Station Property outside the Right-of-Way

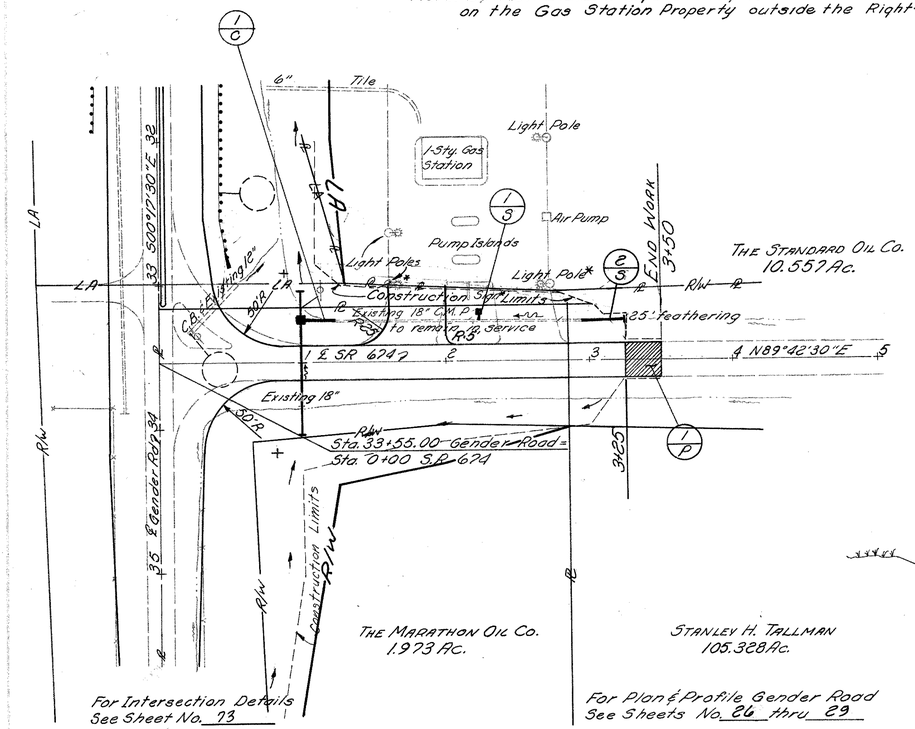

	ITEM	DESCRIPTION
1	404	1¼" Asphalt Concrete (70-85)
2	402	1¼" Asphalt Concrete (70-85)
3	402	1½" Asphalt Concrete (70-85)
4	408	Bituminous Prime Coat, Sec. M-57, RT-2 or RT-3 applied At the rate of 0.4 Gal. Per Sq. Yd.
5	304	8" Aggregate Base
6	310	6" Subbase
7	605	Aggregate Drains
8	659	Seeding & Mulching

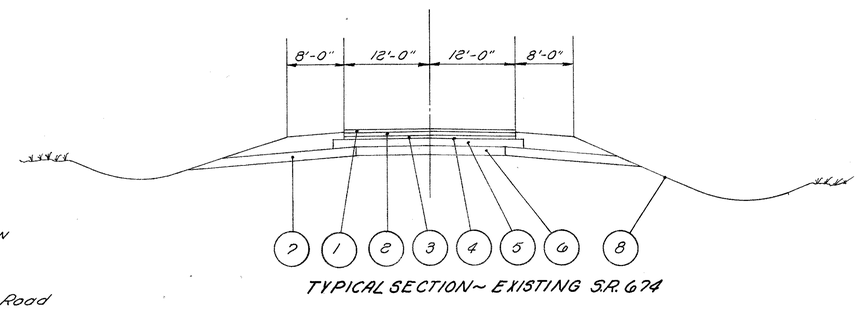

TYPICAL SECTION ~ EXISTING S.R. 674

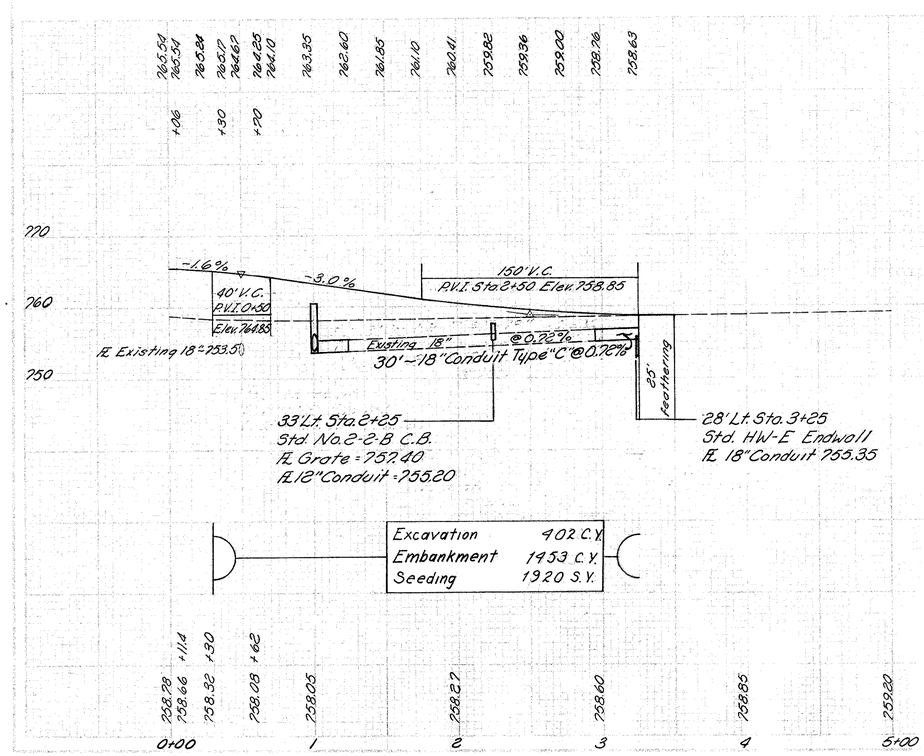

| | | |

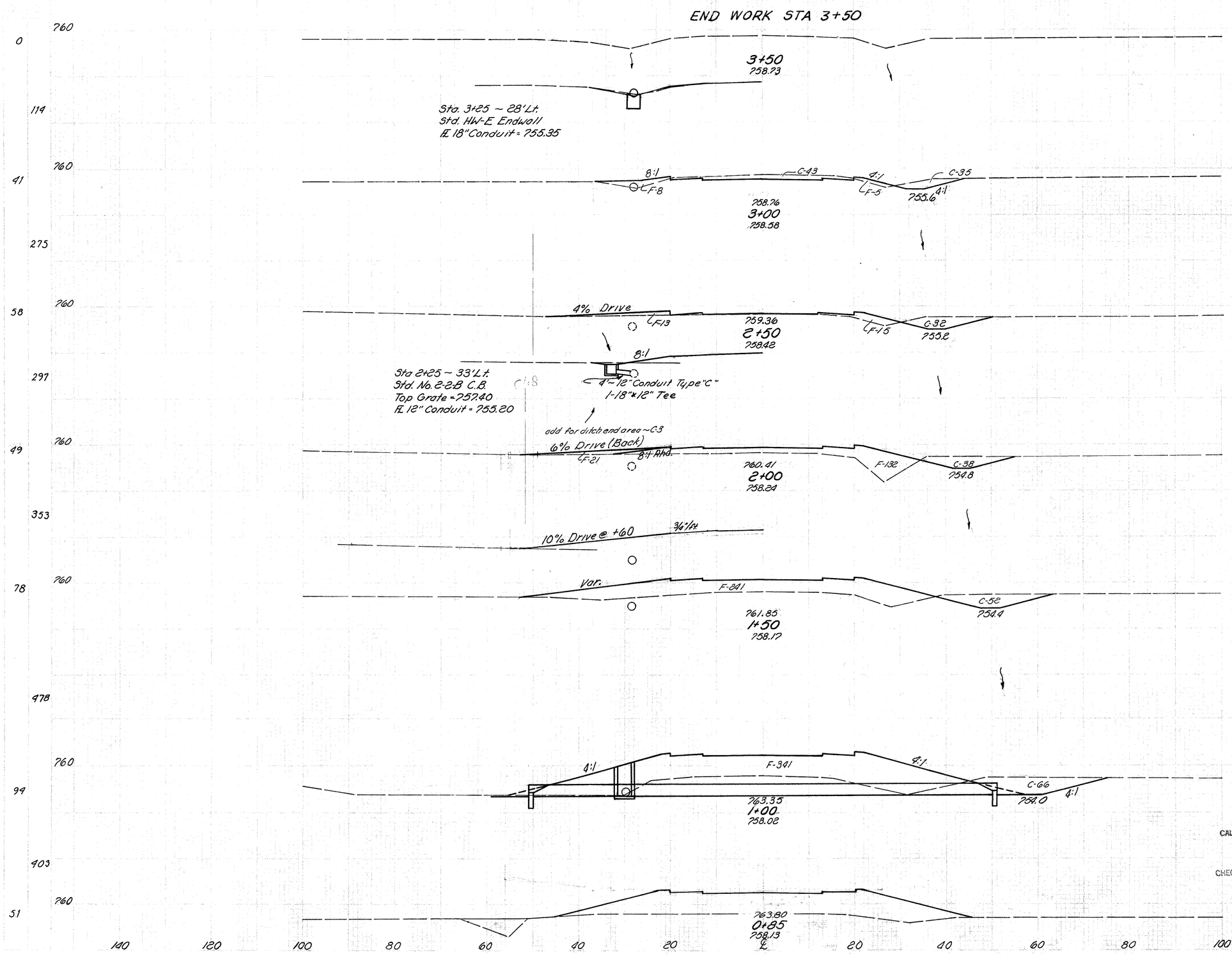

36
155

FRANKLIN COUNTY
FRA-33-29.97

Sta. 3+25	0	0	
	36	6	
	28	13	
	102	39	
	32	28	
	65	161	
Sta. 2+02	41	153	
2+00	38	132	3 11
	68	246	
	52	241	
	110	539	
	66	341	
	18	192	
	0	350	
Sta. 0+45	0	0	0 259

CALCULATED BY CMT DATE 11-19-69

CHECKED BY [illegible] DATE 10 Dec 69

S.R. 674 CROSS SECTIONS ~ STA 0+50 TO STA 3+50

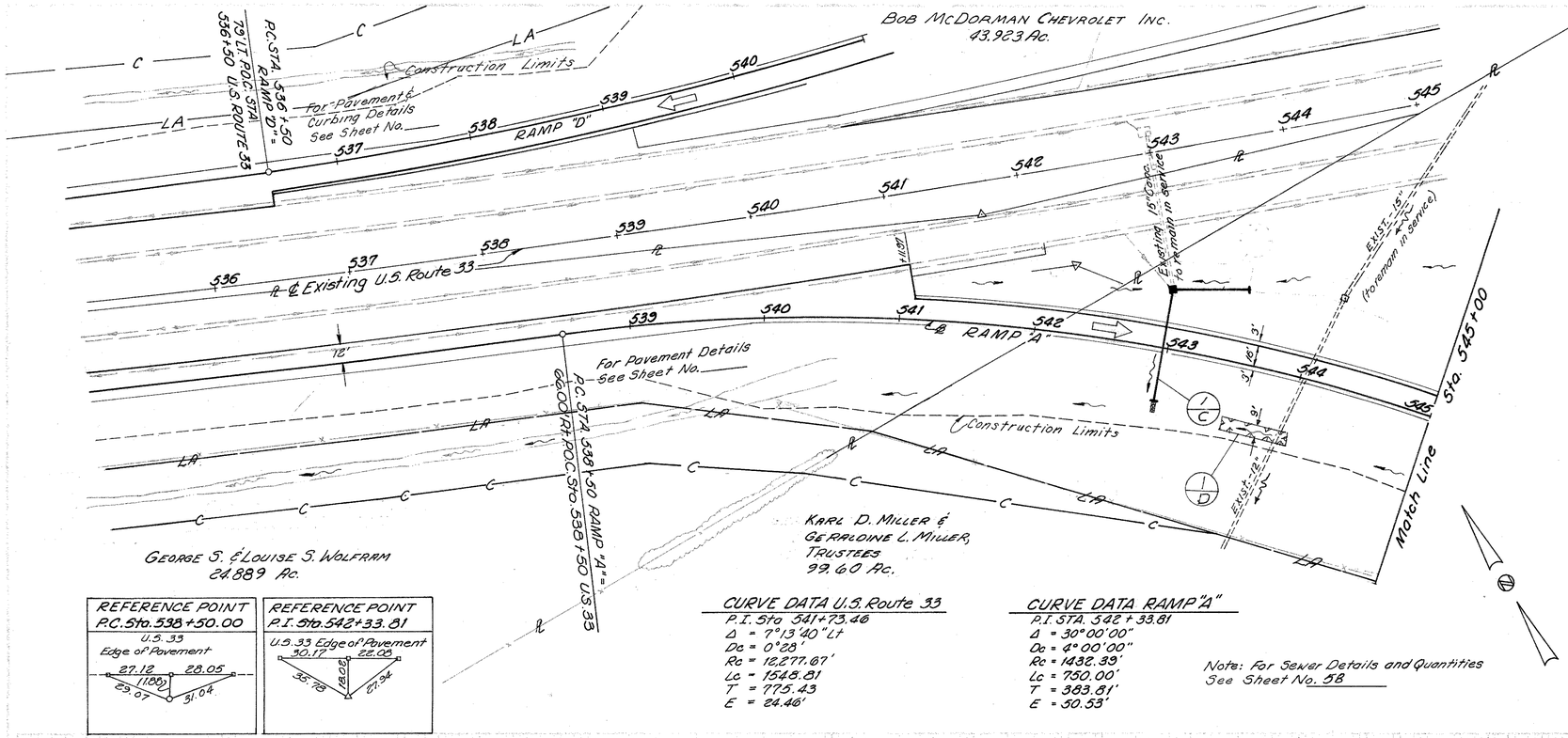

REFERENCE POINT P.C. Sta. 538+50.00	REFERENCE POINT P.I. Sta. 542+33.81
U.S. 33 Edge of Pavement 27.12 28.05 (1.00) 29.07 31.04	U.S. 33 Edge of Pavement 30.17 22.05 (8.08) 35.78 27.94

CURVE DATA U.S. Route 33

P.I. Sta 541+73.46
Δ = 7°13'40" Lt
Dc = 0°28'
Rc = 12,277.67'
Lc = 1548.81
T = 775.43
E = 24.46'

CURVE DATA RAMP "A"

P.I. STA. 542+33.81
Δ = 30°00'00"
Dc = 4°00'00"
Rc = 1432.39'
Lc = 750.00'
T = 383.81'
E = 50.53'

Note: For Sewer Details and Quantities See Sheet No. 58

Excavation	732	C.Y.
Embankment	5877	C.Y.
Seeding	5912	S.Y.

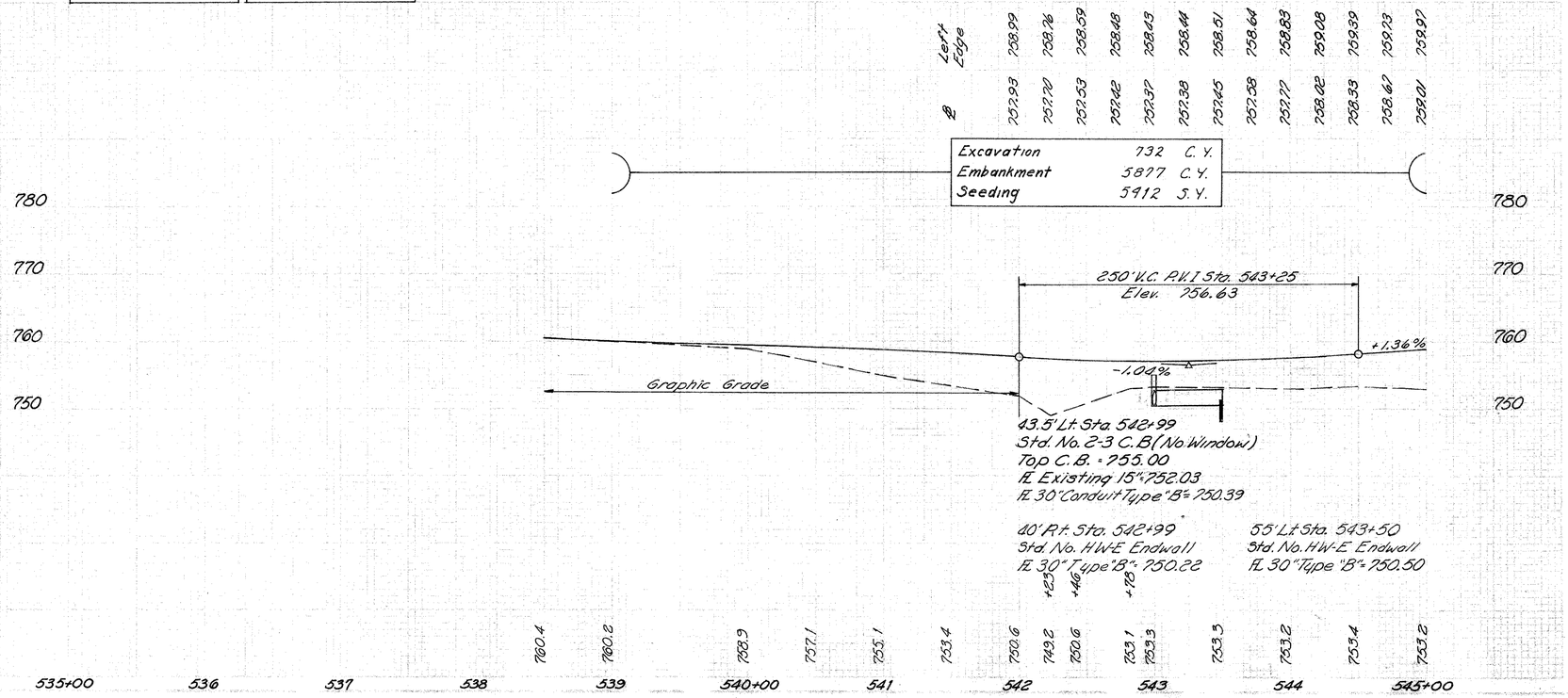

660 Sodding Sq. Yd.

1-C 542+99 ~ 542+50 RHLT.
1-D 543+50 ~ 544+00 RT. 49

49

CALCULATED BY CMT DATE 11-12-69
CHECKED BY [illegible] DATE 10 Dec 69

PLAN AND PROFILE RAMP "A" STA. 535+00 TO STA. 545+00

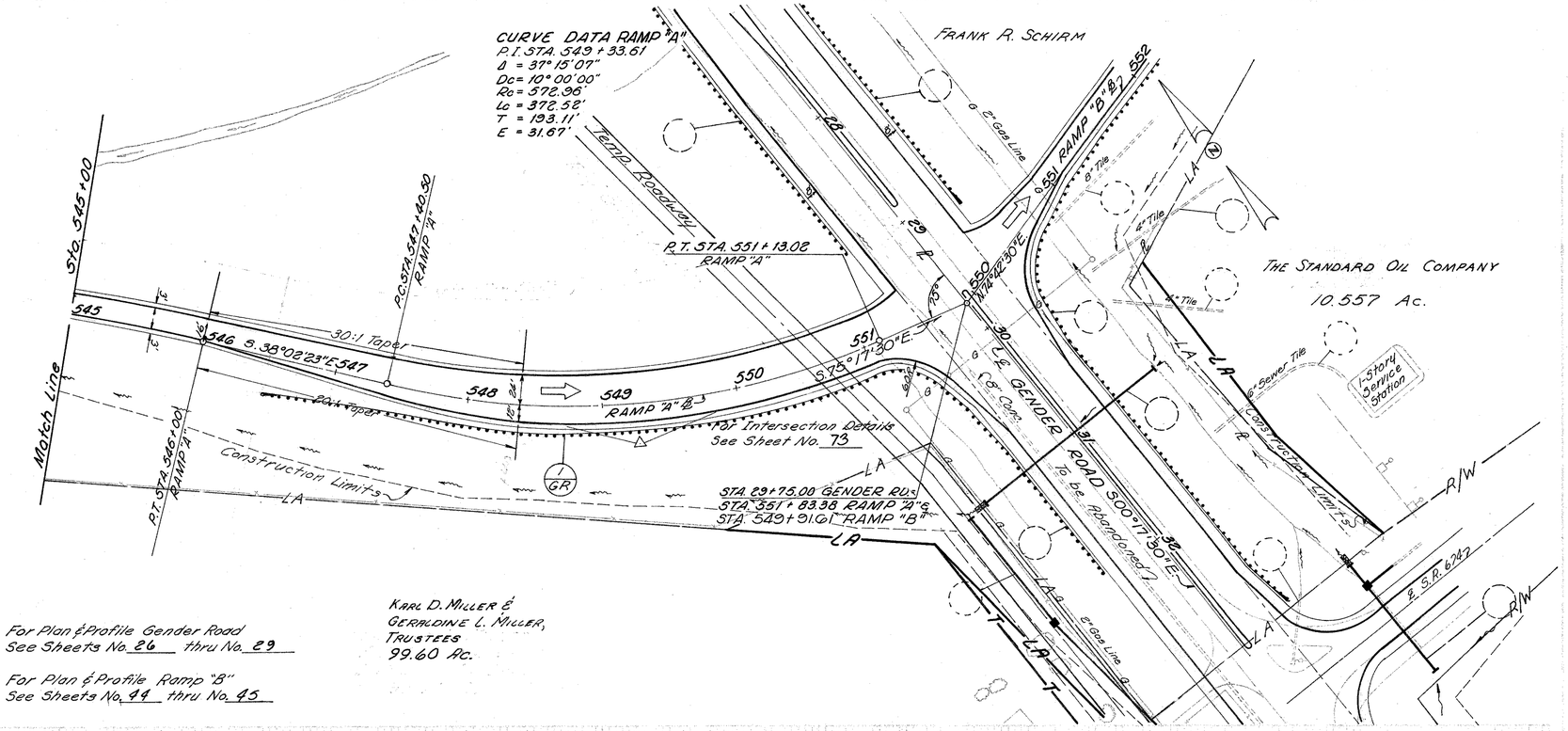

For Plan & Profile Gender Road
See Sheets No. 26 thru No. 29

For Plan & Profile Ramp "B"
See Sheets No. 44 thru No. 45

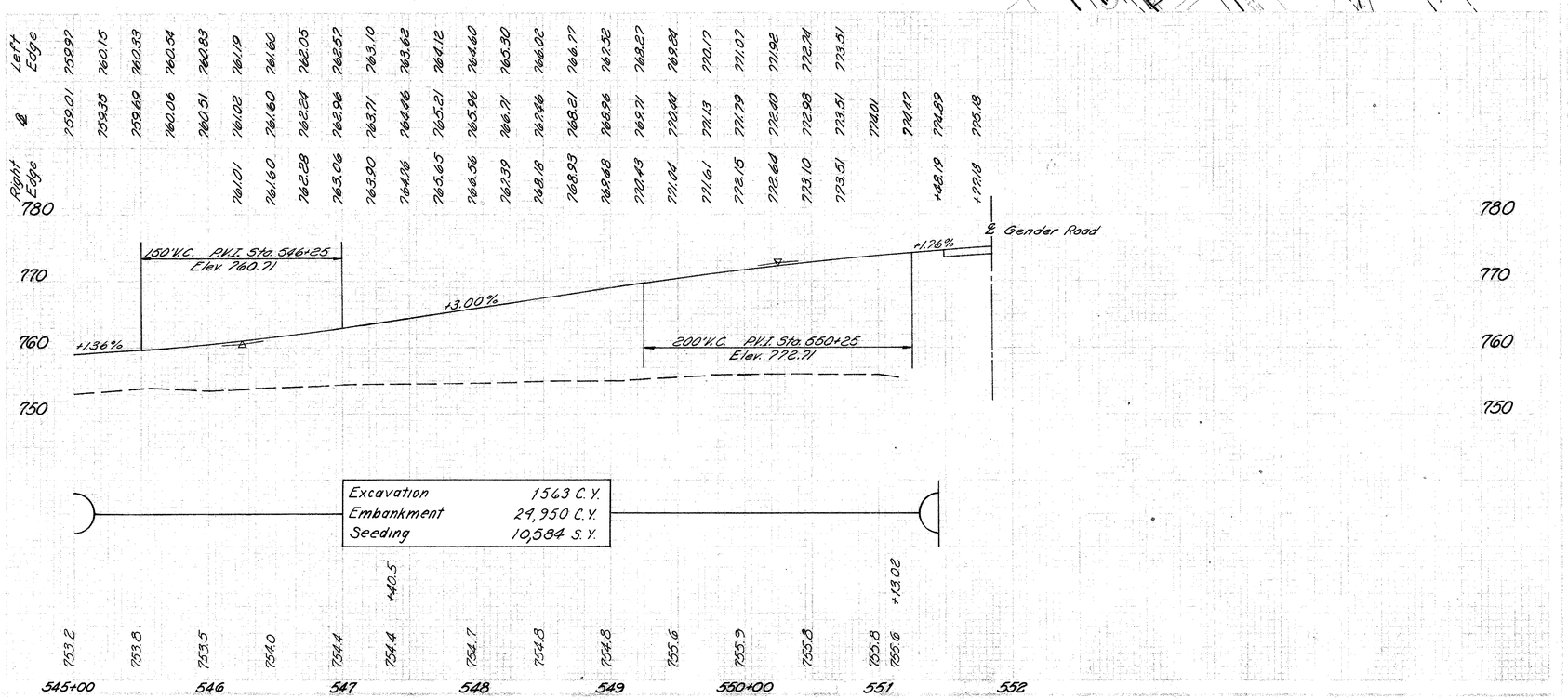

Item	Unit	Quantity
606 606 Guard Rail Type 25-Approach (Type 5-Anchor)	L.F. Each	449.5 1
1-GR 546+50~550+99.5		449.5 1

CALCULATED BY C.T.T. DATE 11-19-69

CHECKED BY [illegible] DATE 10 Dec 69

PLAN AND PROFILE RAMP "A" STA. 545+00 TO STA. 551+83.38

FRANKLIN COUNTY
FRA - 33 - 29.97

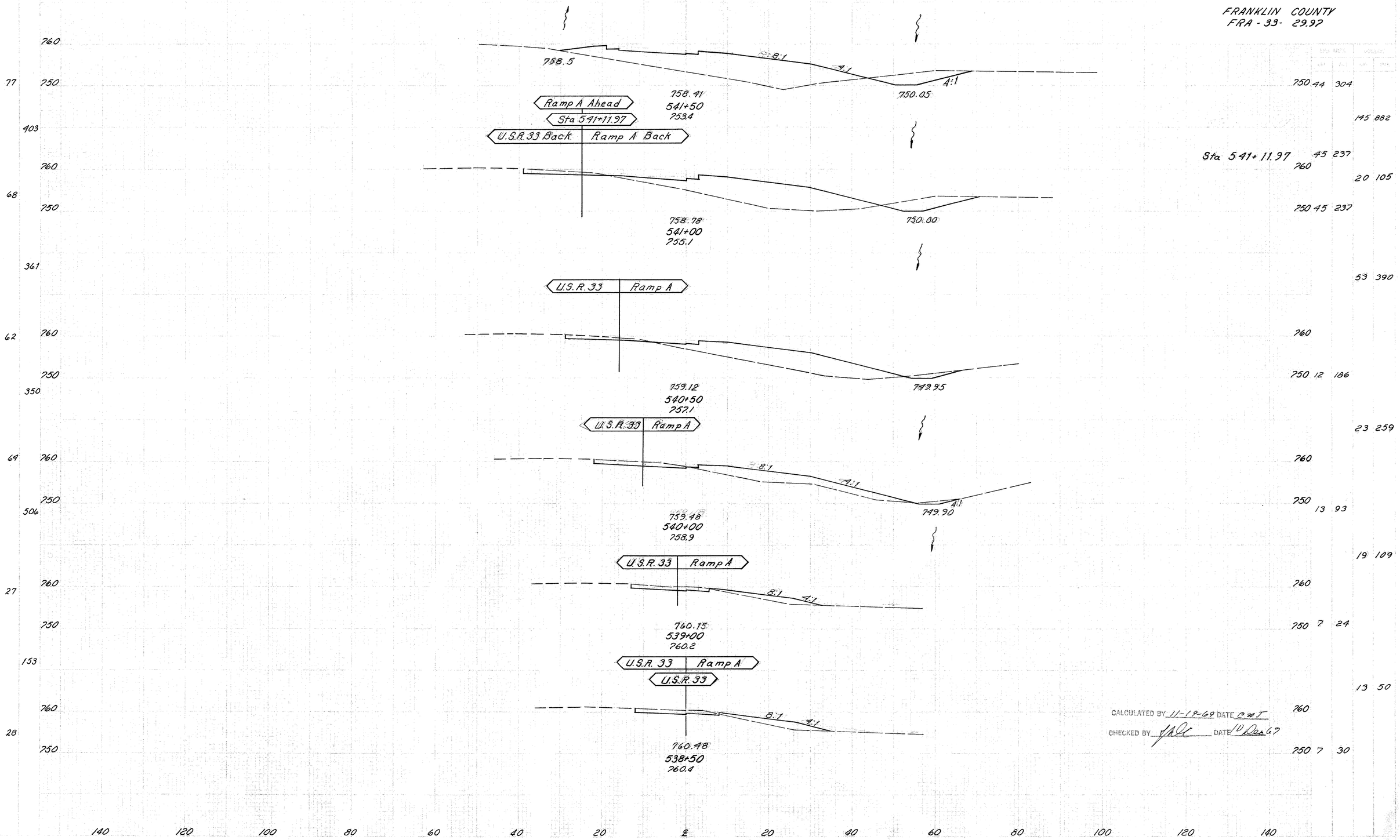

CALCULATED BY 11-19-69 DATE CMT
CHECKED BY JAC DATE 1 Dec 69

RAMP "A" CROSS SECTIONS ~ STA 538+50 TO STA 541+50

FRANKLIN COUNTY
FRA-33-29.97

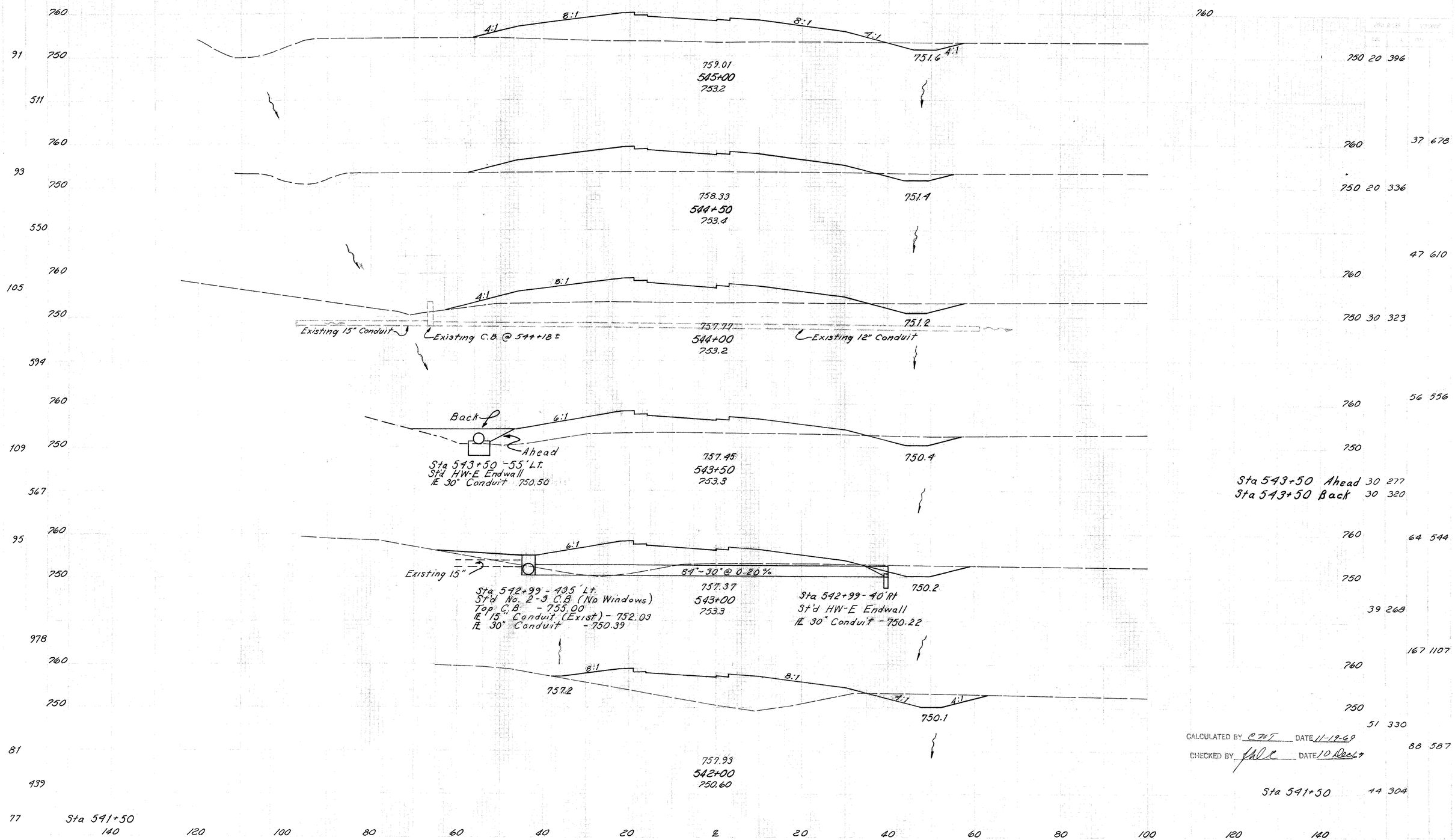

CALCULATED BY CMT DATE 11-19-69
CHECKED BY JDC DATE 10 Dec 69

RAMP "A" CROSS SECTIONS ~ STA 542+00 TO STA 545+00

FRANKLIN COUNTY
FRA-33-29.97

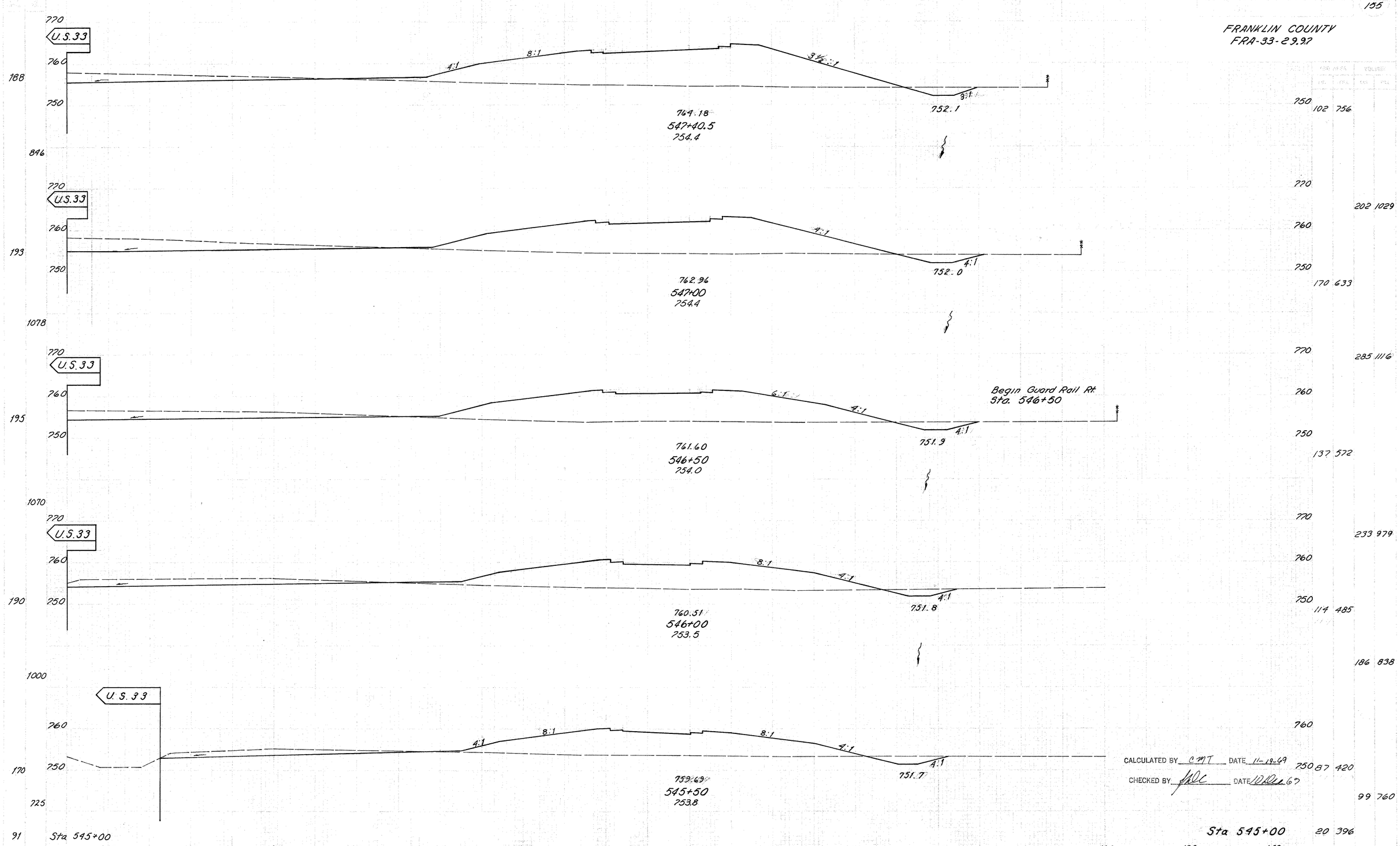

CALCULATED BY CMT DATE 11-19-69
CHECKED BY JDC DATE 10 Dec 69

RAMP "A" CROSS SECTIONS ~ STA 545+50 TO STA 547+40.5

FRANKLIN COUNTY
FRA-33-29.97

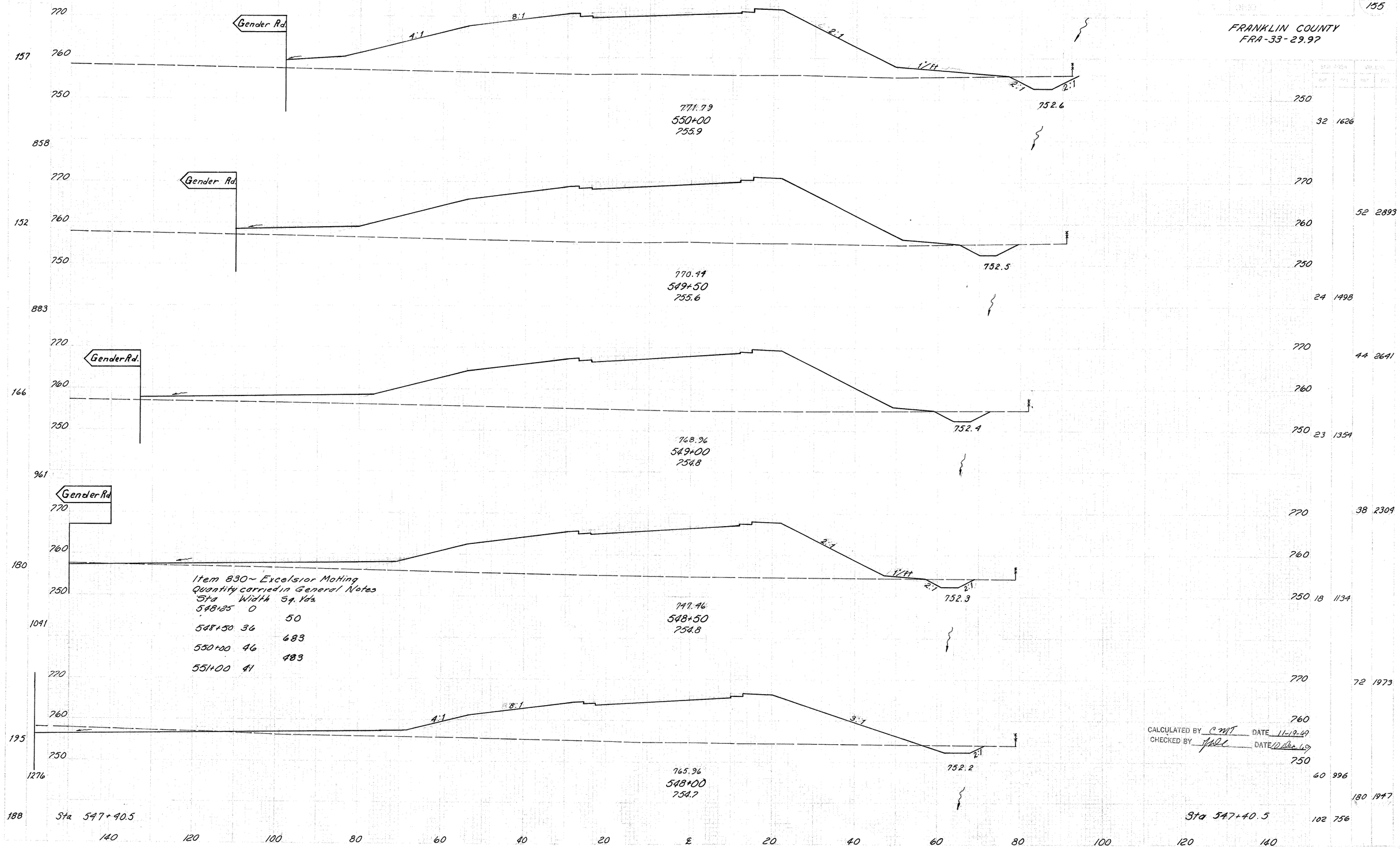

CALCULATED BY CMT DATE 11-19-69
CHECKED BY MAL DATE 11 Dec 69

RAMP "A" CROSS SECTIONS ~ STA 548+00 TO STA 550+00

FRANKLIN COUNTY
FRA-33-29.97

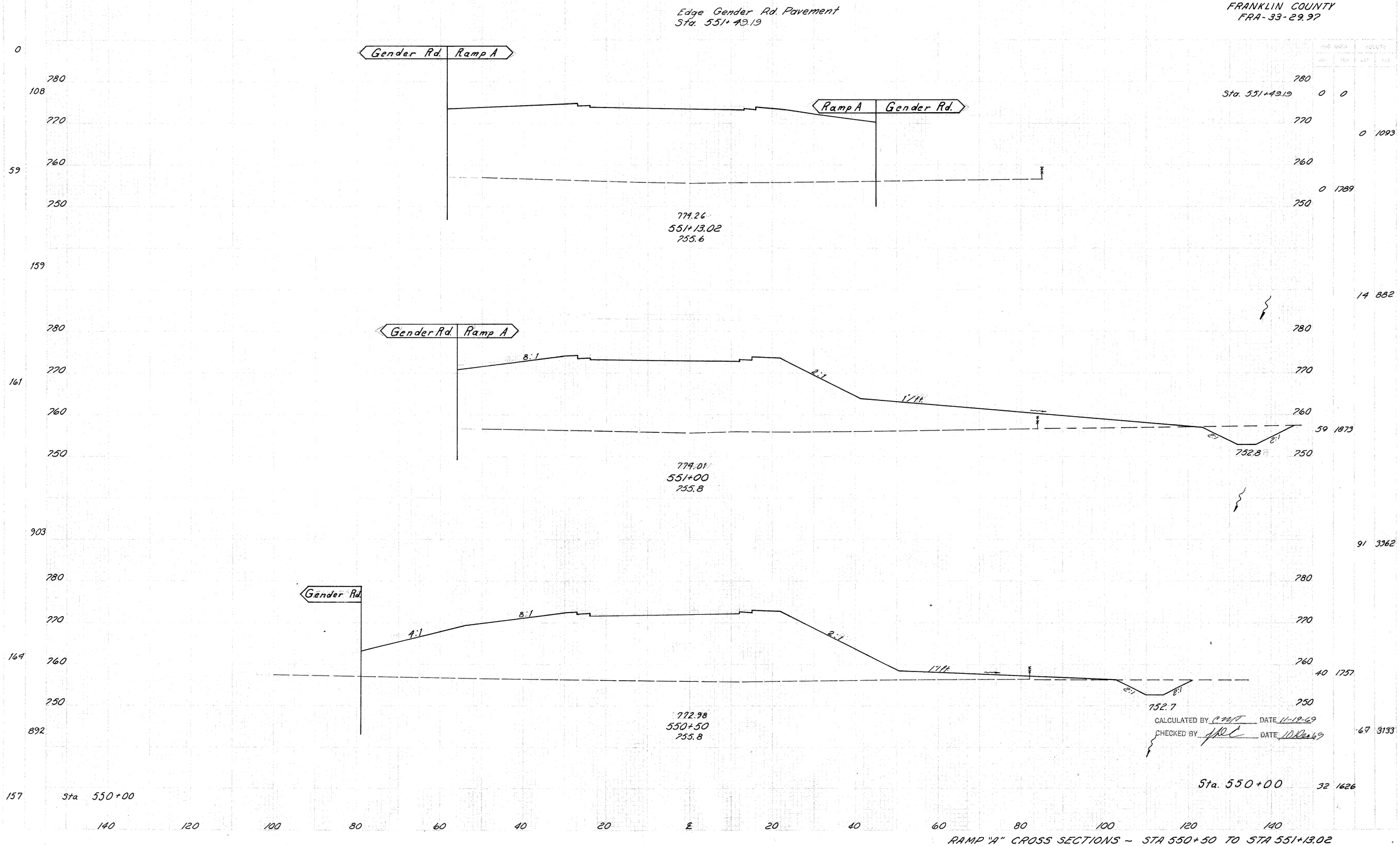

RAMP "A" CROSS SECTIONS – STA 550+50 TO STA 551+13.02

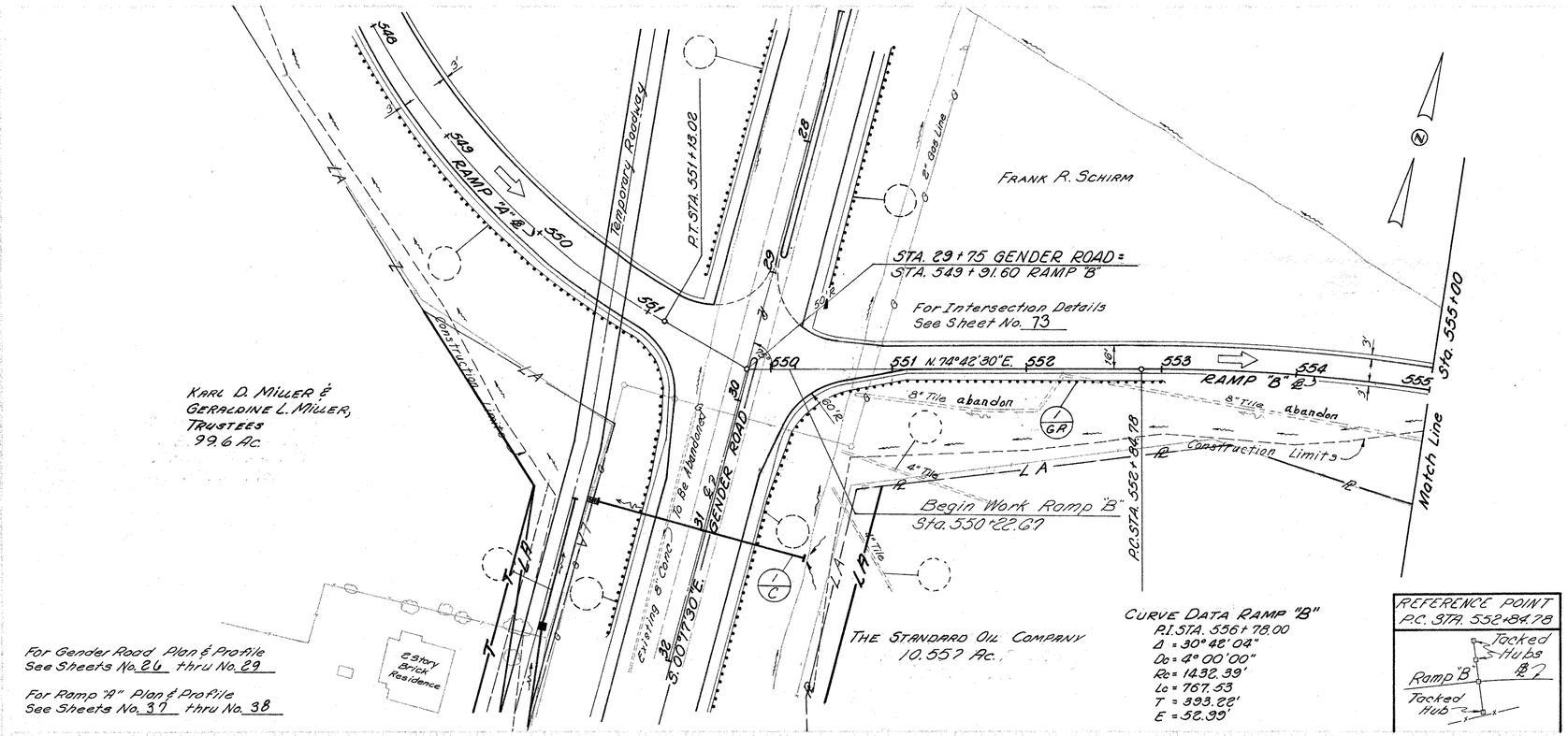

For Gender Road Plan & Profile
See Sheets No. 26 thru No. 29

For Ramp "A" Plan & Profile
See Sheets No. 37 thru No. 38

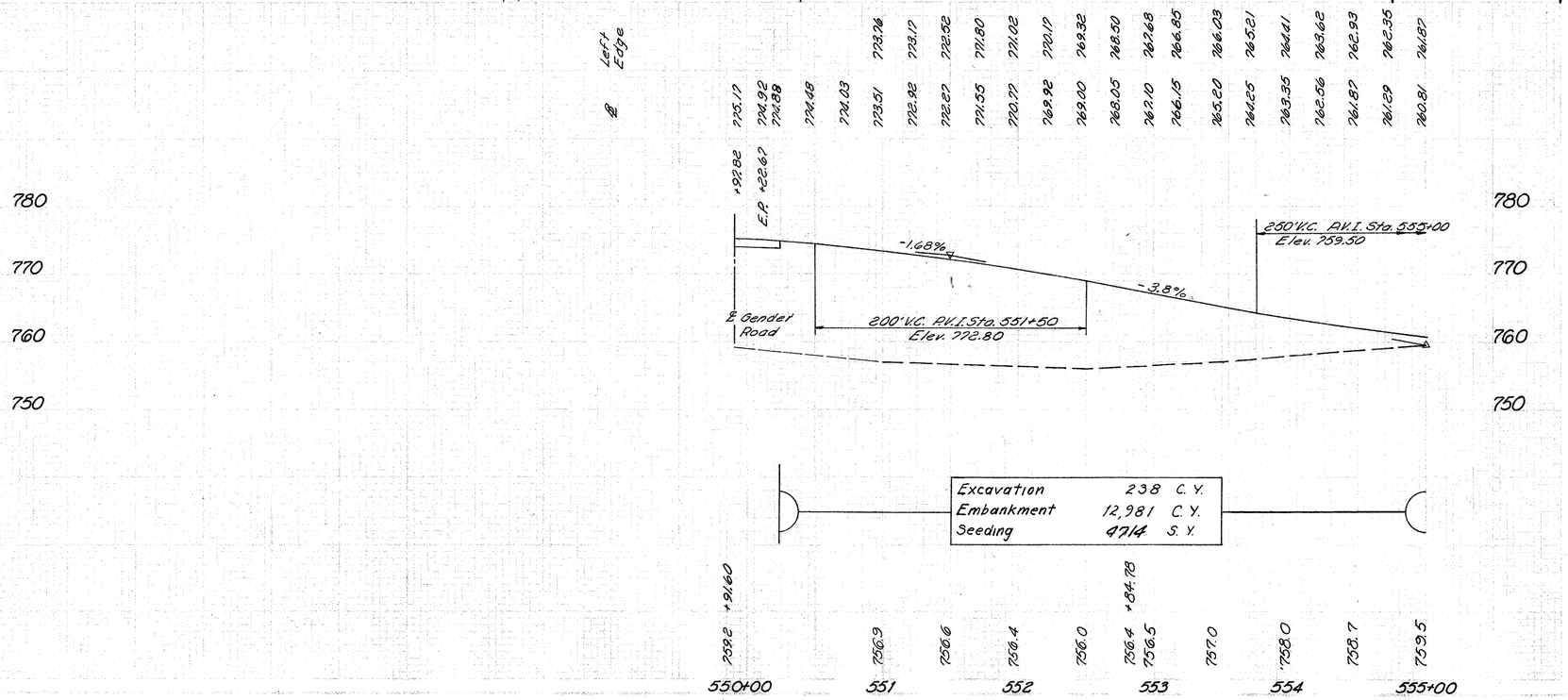

606	Guard Anchor Rail Type 5 Assembly	Each	1
606		L.F.	284.5
1-C	3'x20' Gender Rd. ℄		
1-BR	550+65.5-553+00	Rt.	

284.5 1

CALCULATED BY CWT DATE 11-18-69

CHECKED BY [illegible] DATE 10 Dec 69

PLAN AND PROFILE RAMP "B" STA. 549+91.60 TO STA. 555+00

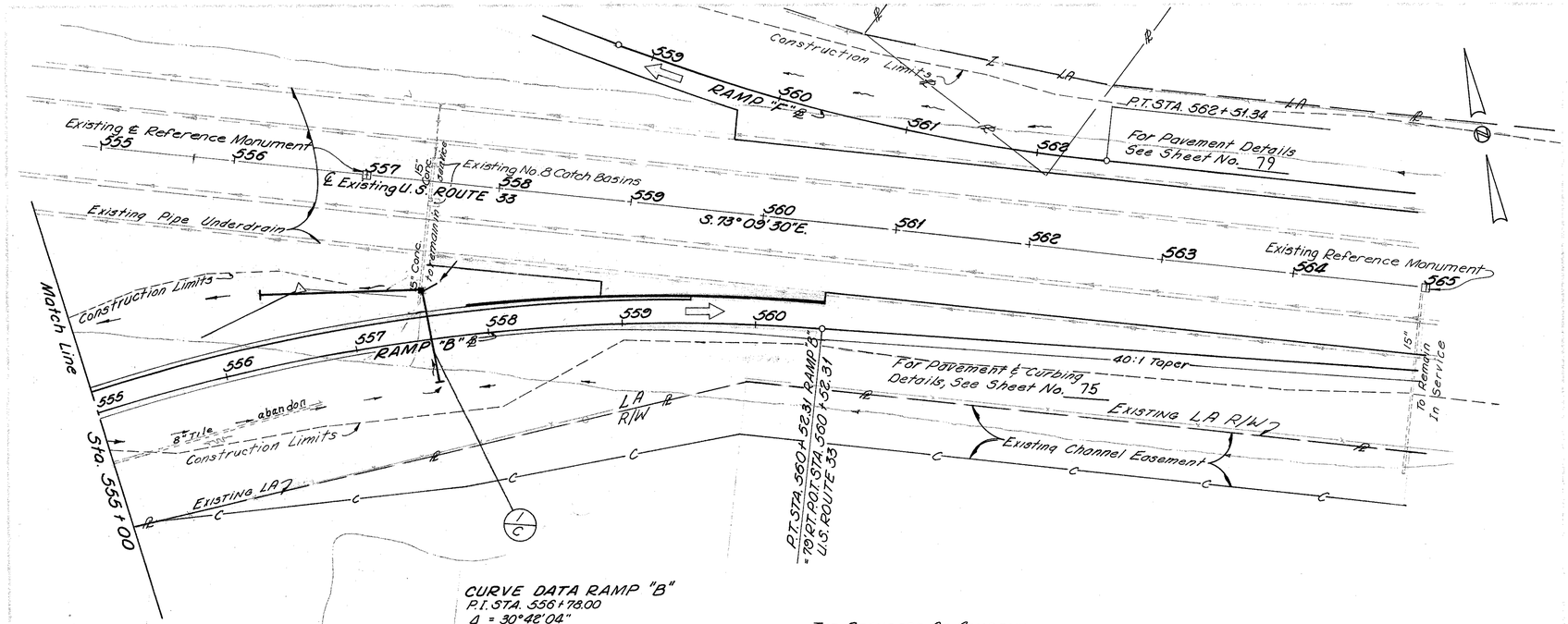

Note: For Sewer Details
and Quantities
See Sheet No. 58

CURVE DATA RAMP "B"
P.I. STA. 556+78.00
Δ = 30°42'04"
Dc = 4° 00' 00"
Rc = 1432.39'
Lc = 767.53'
T = 393.22'
E = 52.99'

THE STANDARD OIL COMPANY
10.557 Ac.

For Plan & Profile Ramp "F"
See Sheet No. 65 thru No. 66

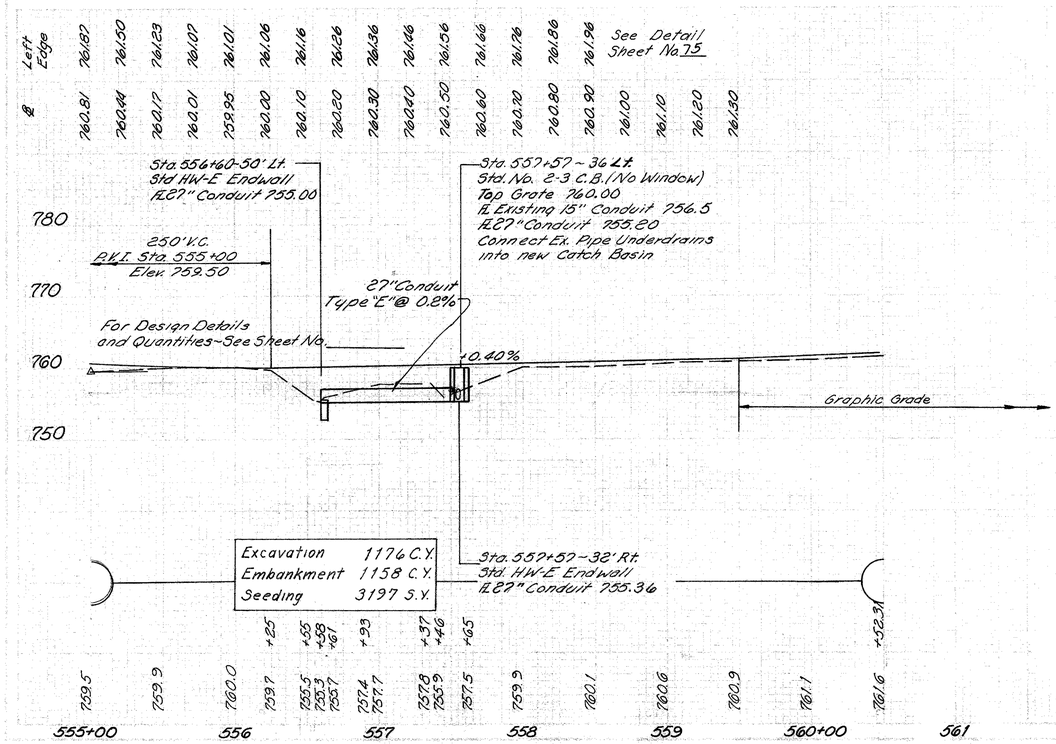

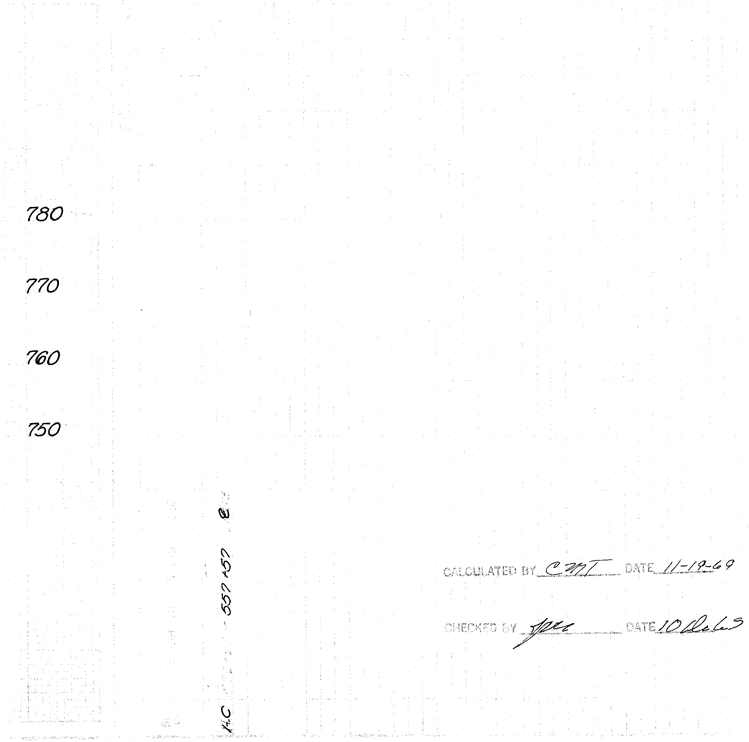

CALCULATED BY CMT DATE 11-19-69

CHECKED BY JMH DATE 10 Feb 73

PLAN AND PROFILE RAMP "B" STA. 555+00 TO STA. 560+52.31

FRANKLIN COUNTY
FRA-33-29.97

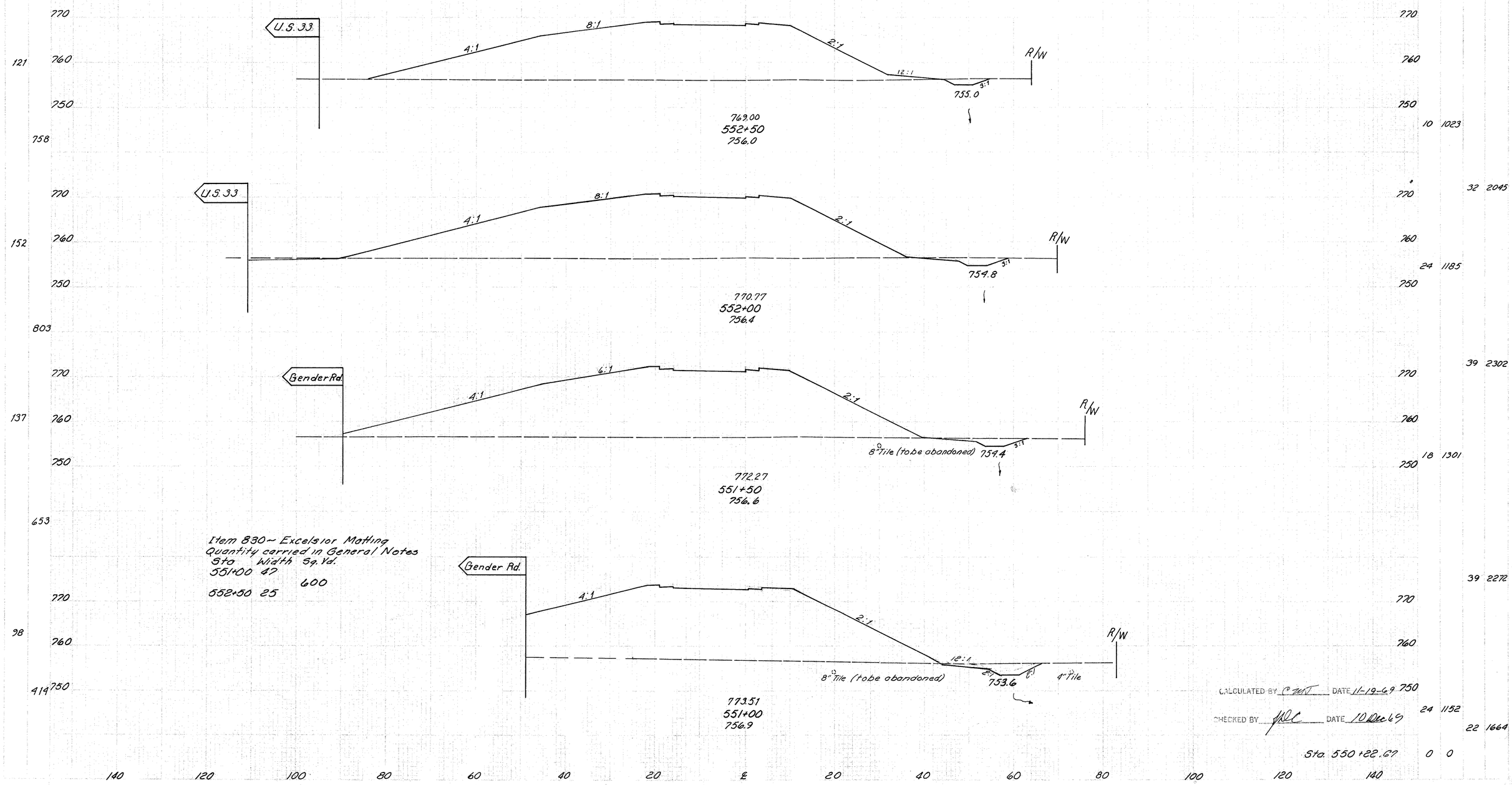

Item 830 ~ Excelsior Matting
Quantity carried in General Notes

Sta	Width	Sq. Yd.
551+00	47	
		600
552+50	25	

CALCULATED BY CMT DATE 11-19-69
CHECKED BY JDC DATE 10 Dec 69

Sta. 550+22.67

RAMP "B" CROSS SECTIONS ~ STA 551+00 TO STA 552+50

FRANKLIN COUNTY
FRA-33-29.97

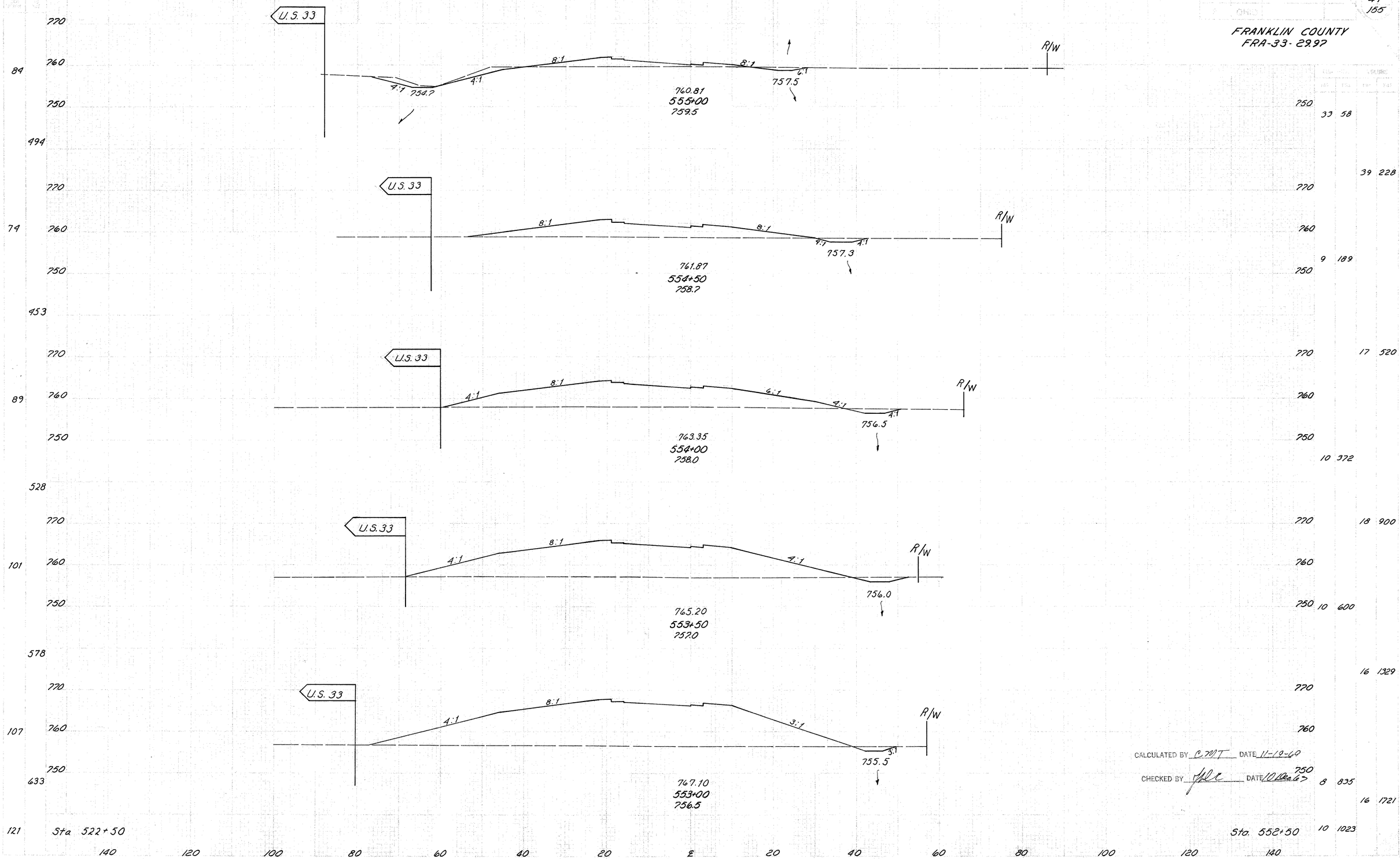

CALCULATED BY CMT DATE 11-19-60

CHECKED BY [illegible] DATE 10 Dec 60

RAMP "B" CROSS SECTIONS ~ STA 553+00 TO STA 555+00

FRANKLIN COUNTY
FRA-33-29.97

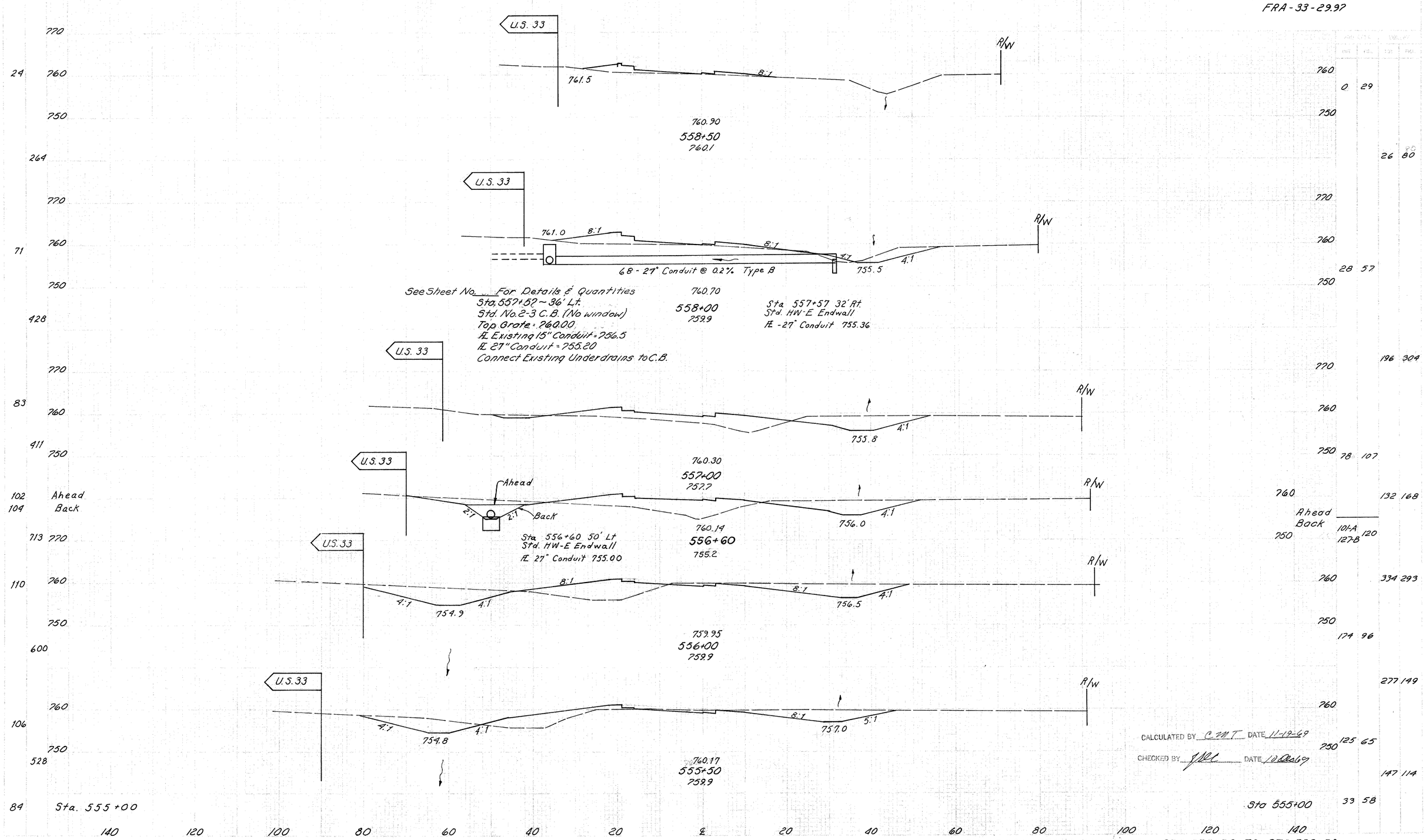

RAMP "B" CROSS SECTIONS ~ STA 555+50 TO STA 558+50

FRANKLIN COUNTY
FRA-33-29.92

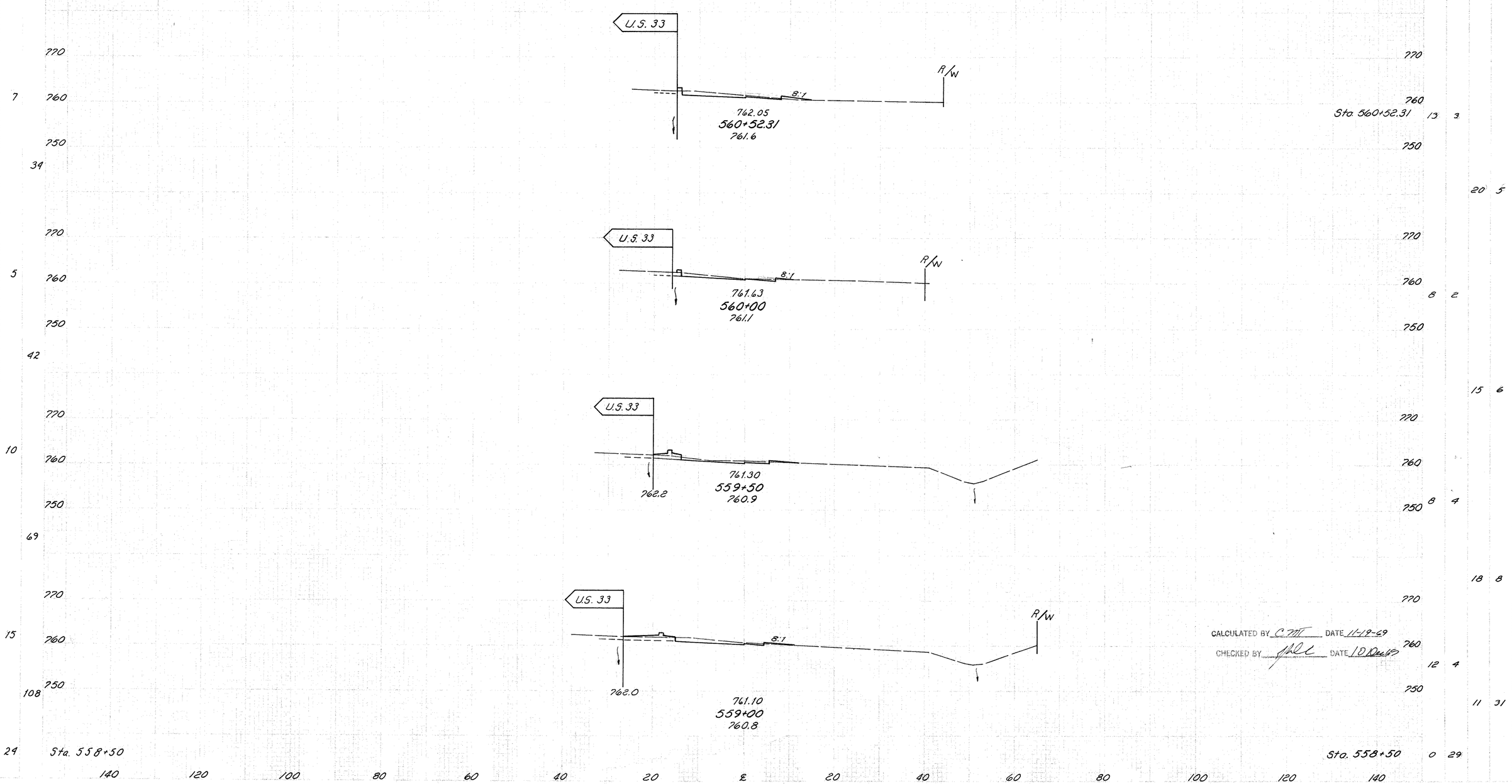

CALCULATED BY C.T.M. DATE 11-18-69
CHECKED BY [illegible] DATE 10 Dec 69

RAMP "B" CROSS SECTIONS ~ STA 559+00 TO STA 560+52.31

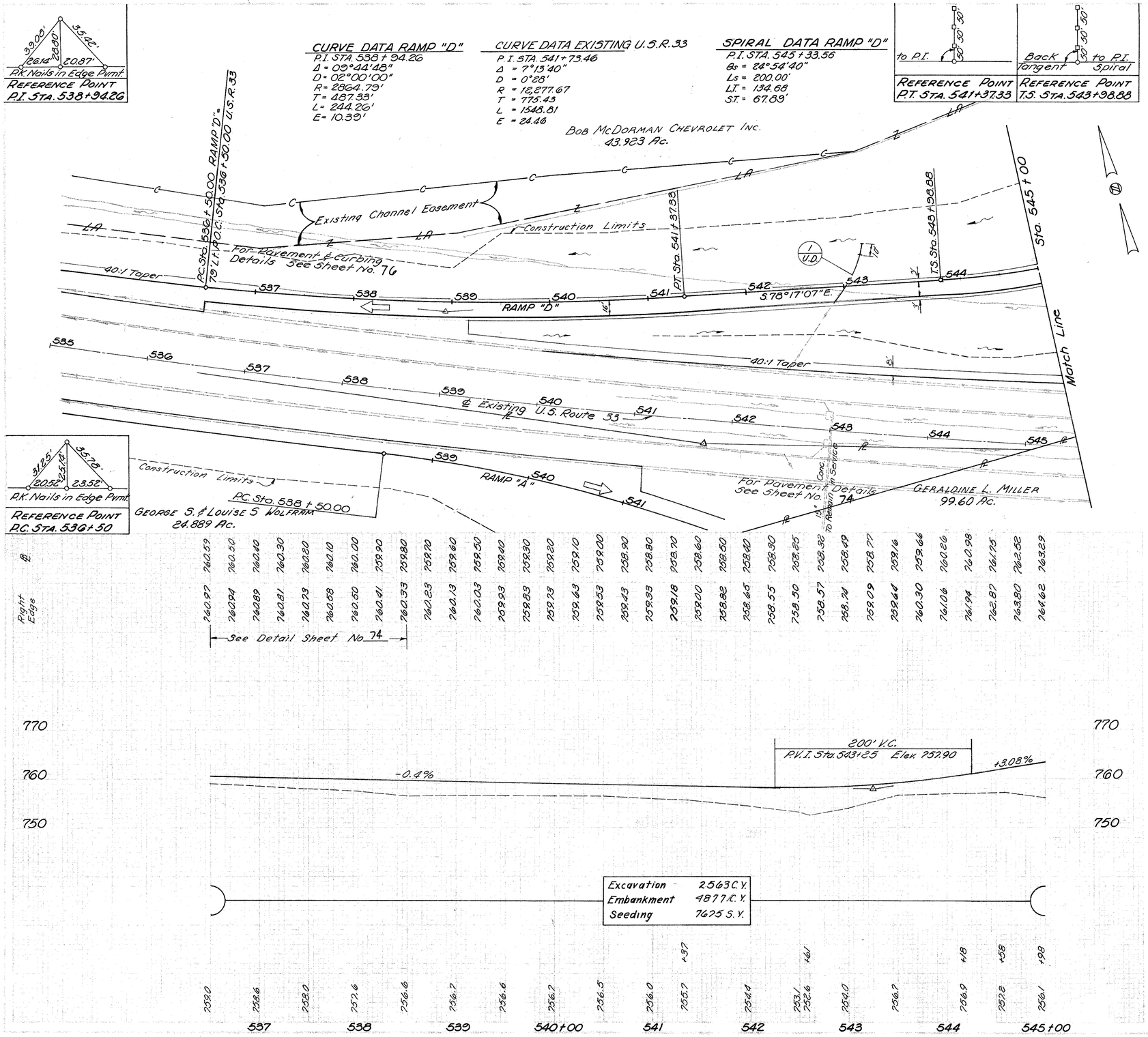

603	605
8" Conduit Unci. Type 3 Pipe Underdrn.	
L.F.	L.F.
1+10	52
543+15 LtPR	52

CALCULATED BY CMT DATE 11-12-69

CHECKED BY [illegible] DATE [illegible]

PLAN AND PROFILE RAMP "D" STA. 536+50.00 to STA. 545+00

SPIRAL DATA
P.I. Sta. 545+33.56
$\theta_s = 24°54'40''$
$L_s = 200.00'$
$L.T. = 134.68'$
$S.T. = 67.89'$

CURVE DATA
P.I. Sta. 546+63.06
$\Delta = 31°11'05''$
$D = 24°54'40''$
$R = 230.00'$
$L_c = 125.18'$
$T = 64.18'$
$E = 8.79'$

SPIRAL DATA
P.I. Sta. 548+05.99
$\theta_s = 30°54'40''$
$R_1 = 230.00'$
$R_2 = 954.93'$
$L_s = 200.00'$
$L.T. = 123.06'$
$S.T. = 81.93'$

CURVE DATA
P.I. Sta. 550+54.65
$\Delta = 15°34'28''$
$D = 06°00'00''$
$R = 954.93'$
$L_c = 259.57'$
$T = 130.59'$
$E = 8.89'$

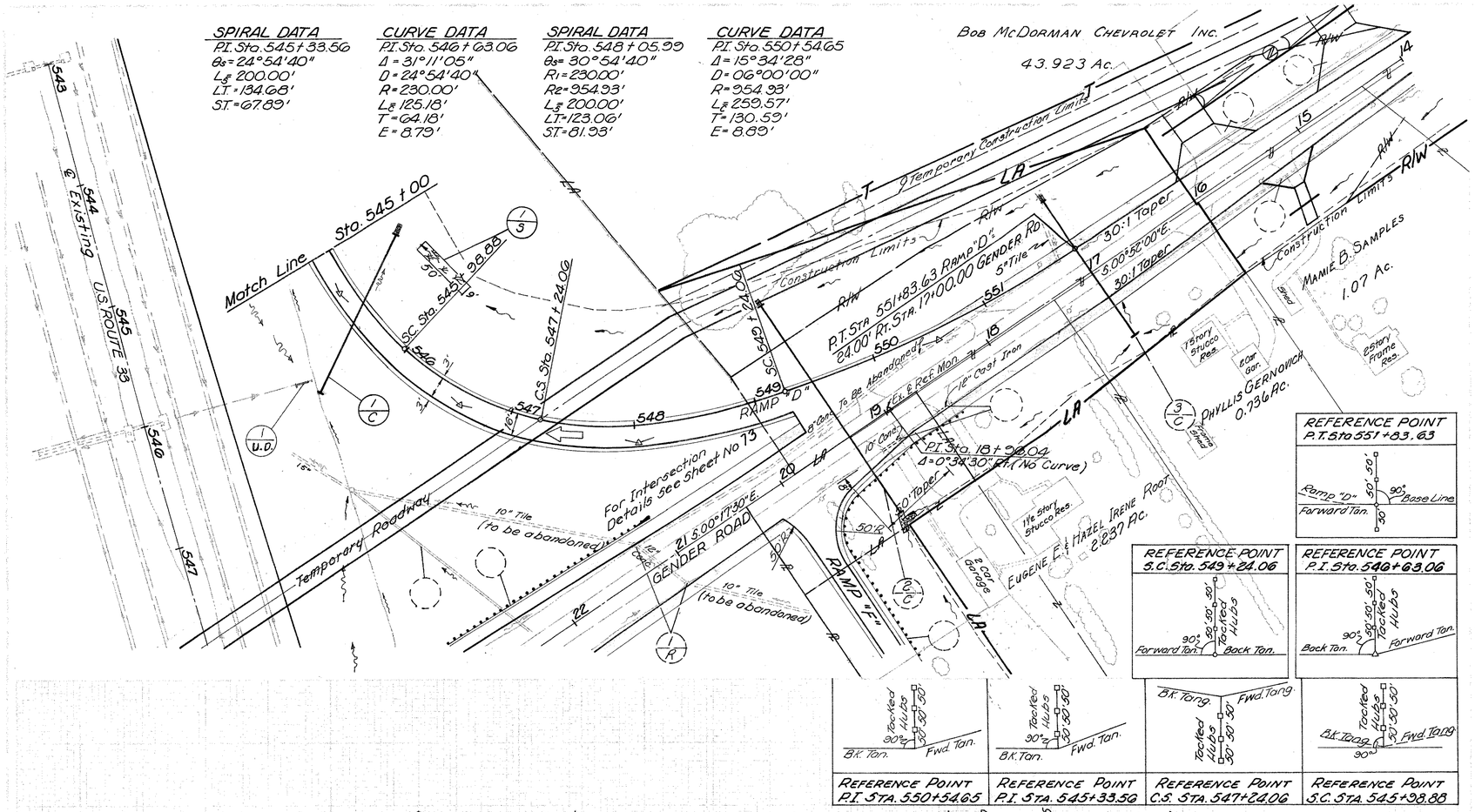

| | | |

FRANKLIN COUNTY
FRA-33-29.97

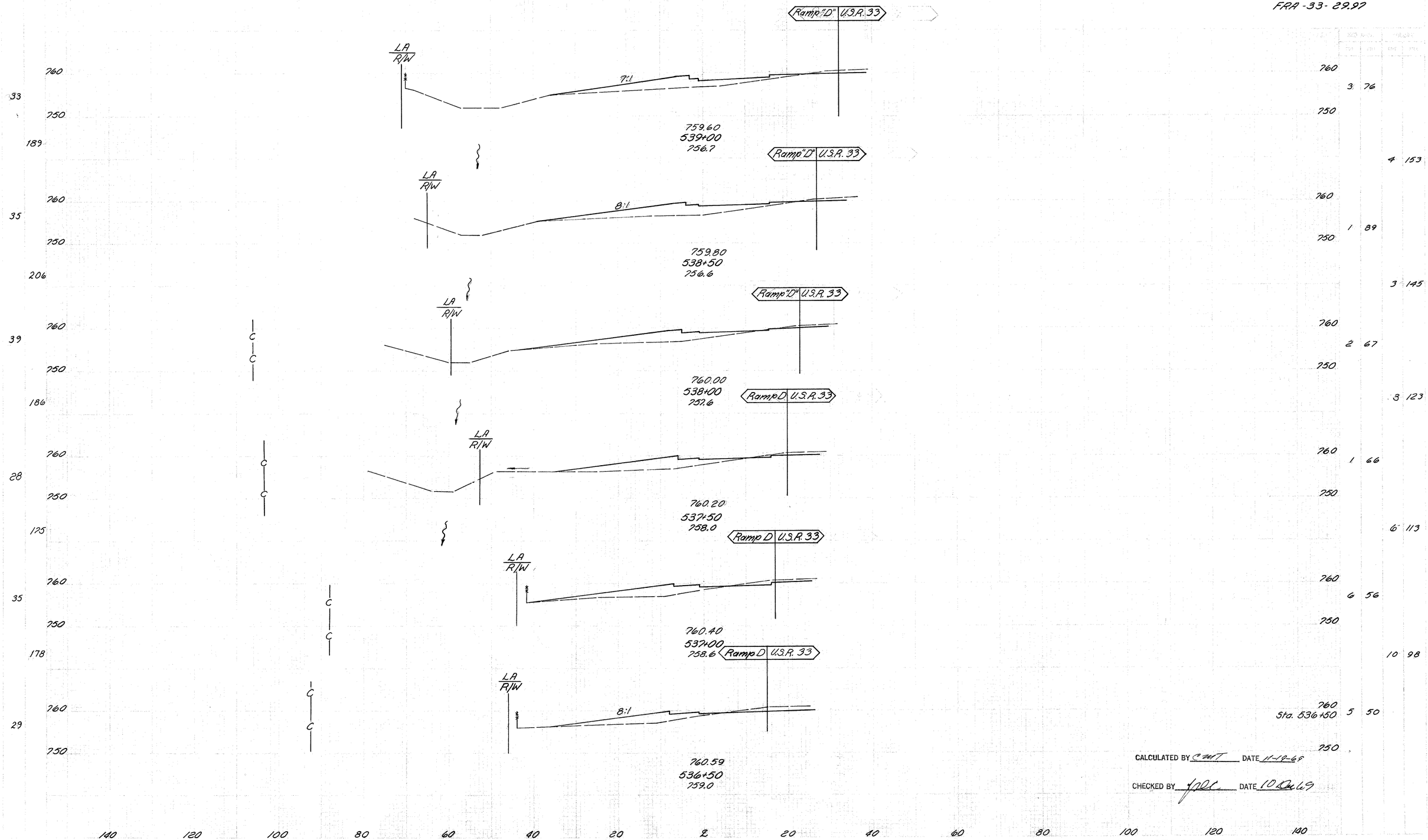

CALCULATED BY CMT DATE 11-19-69

CHECKED BY JDC DATE 10 Dec 69

RAMP "D" CROSS SECTIONS – STA. 536+50 TO STA. 539+00

FRANKLIN COUNTY
FRA - 33-29.97

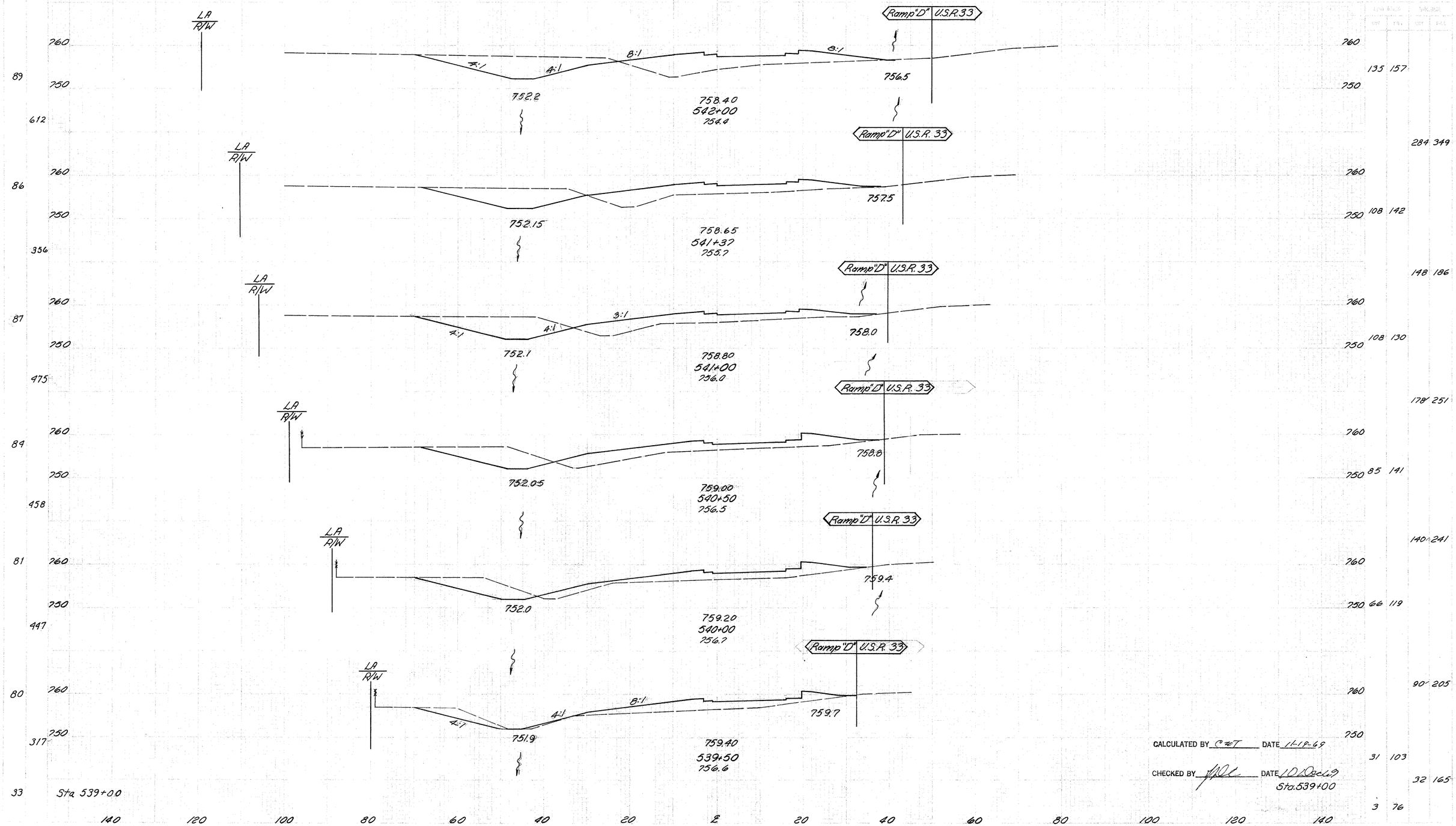

CALCULATED BY C.A.T. DATE 11-19-69

CHECKED BY [illegible] DATE 10 Dec 69

Sta. 539+00

RAMP "D" CROSS SECTIONS ~ STA 539+50 TO STA 542+00

FRANKLIN COUNTY
FRA-33-29.97

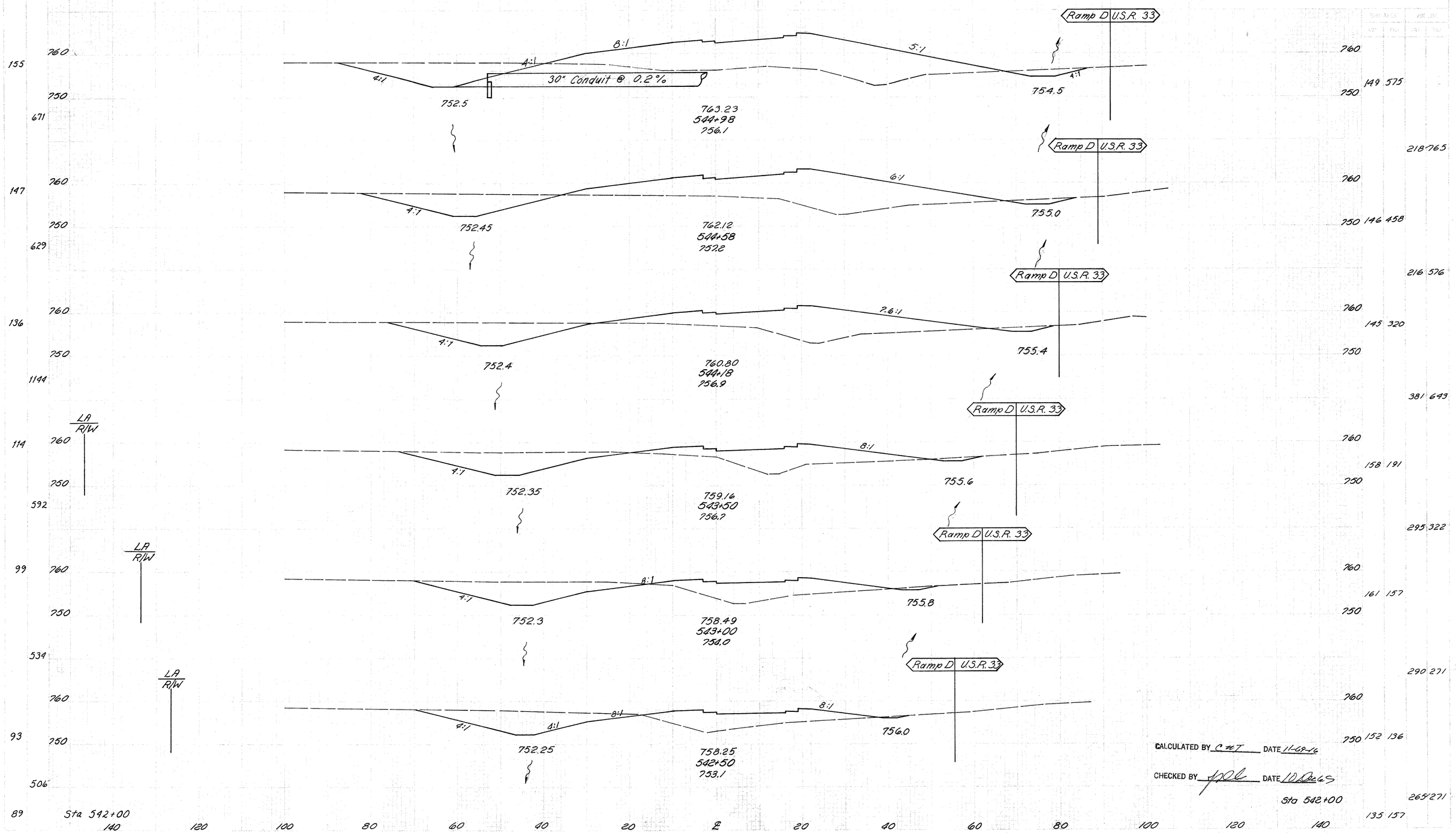

CALCULATED BY C.M.T. DATE 11-08-16

CHECKED BY [illegible] DATE 10 Dec 16

RAMP "D" CROSS SECTIONS STA 542+50 TO STA 544+98

FRANKLIN COUNTY
FRA-33-29.97

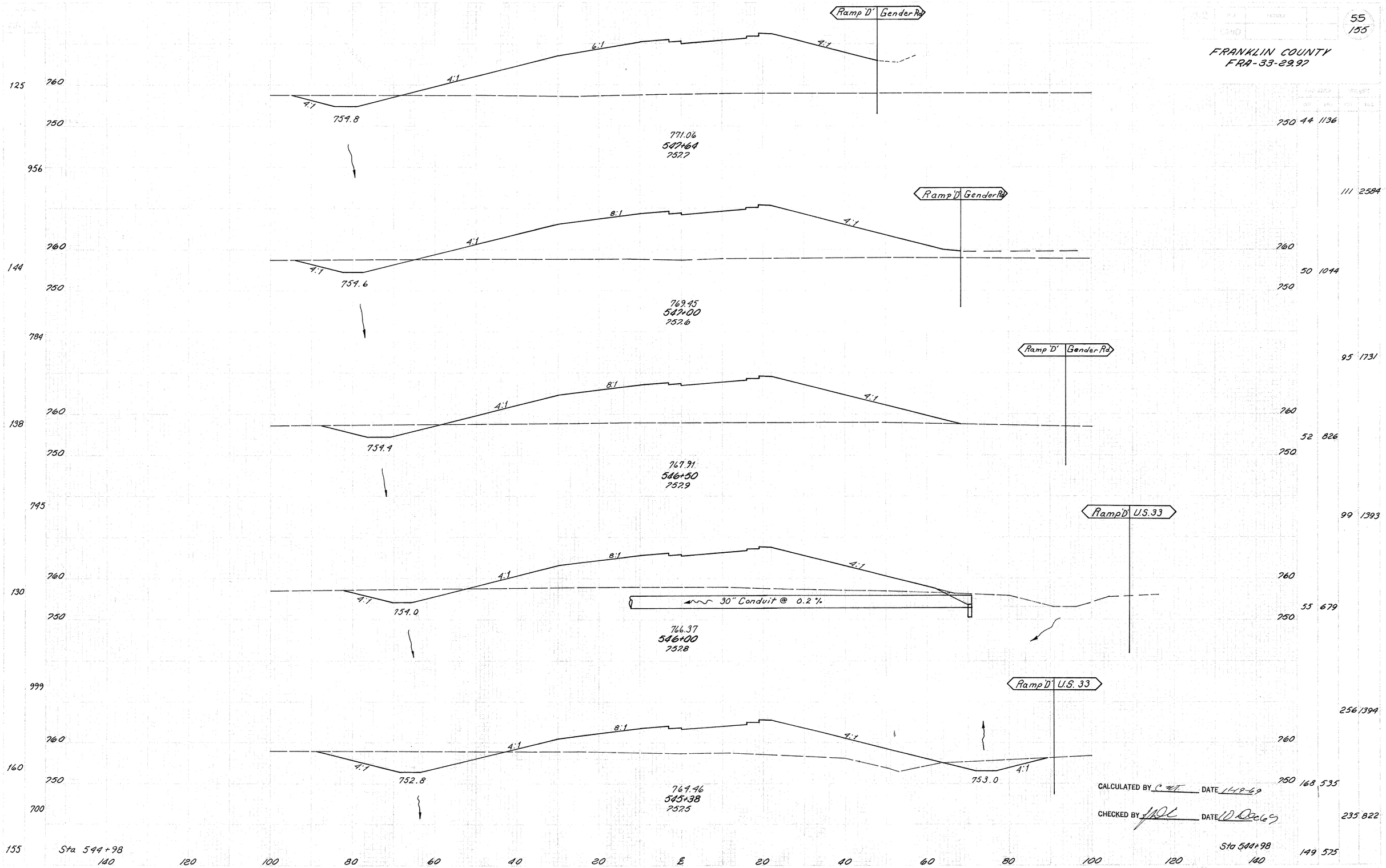

CALCULATED BY C WT DATE 11-19-69

CHECKED BY [illegible] DATE 11 Dec 69

RAMP "D" CROSS SECTIONS – STA 545+38 TO STA 547+64

FRANKLIN COUNTY
FRA-33-29.97

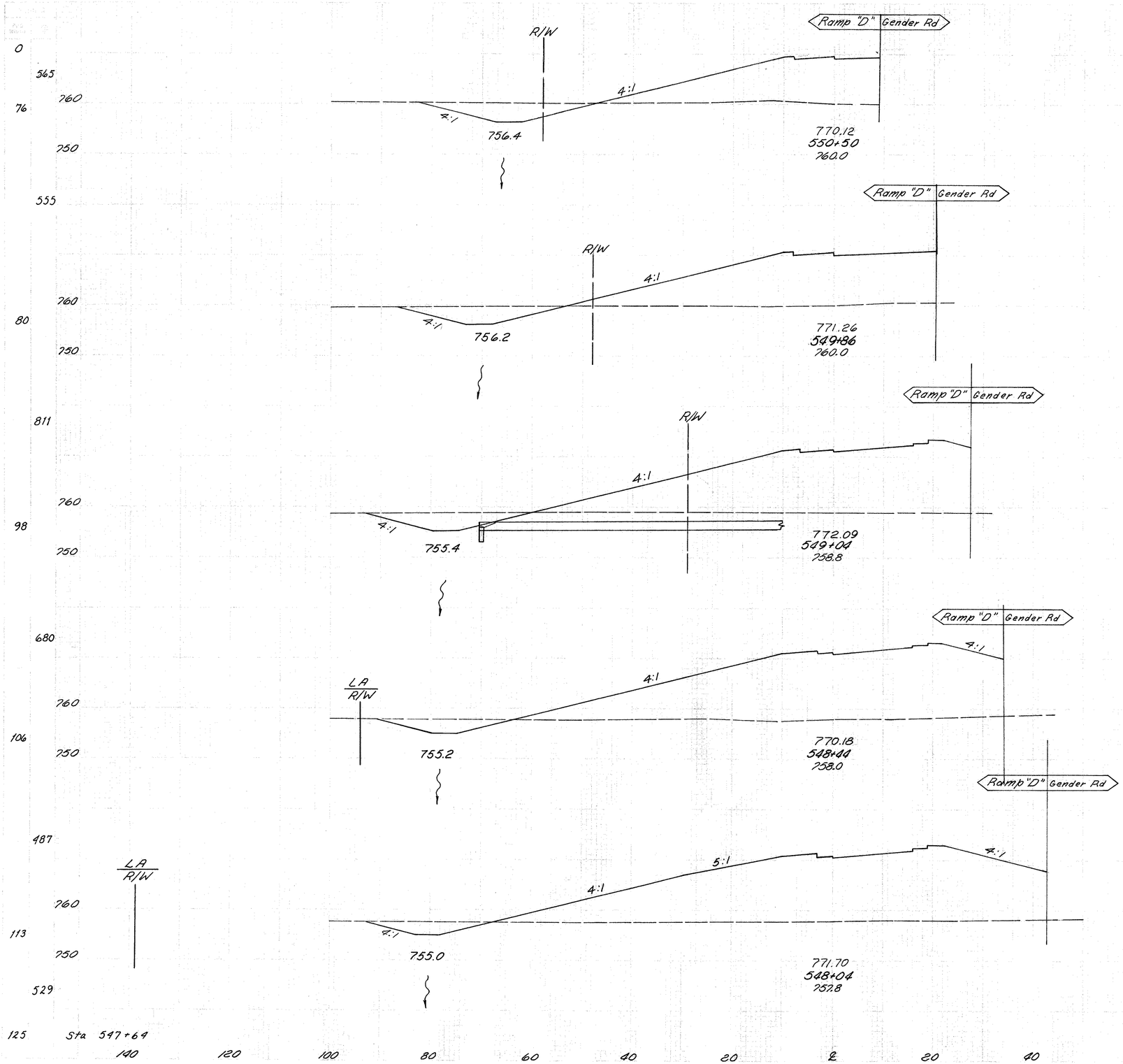

750				
551+83.63	0	0		
550+50	76	344	188	847
			171	1063
760				
	68	553		
750				
			203	2061
760				
750				
	66	804		
			125	1957
760				
750				
	47	957		
			64	1522
760				
750				
	39	1098		
			62	1655
	44	1136		

CALCULATED BY CAT DATE 11-19-69

CHECKED BY HDC DATE 10 Dec 69

Sta 547+64

RAMP "D" CROSS SECTIONS ~ STA 548+04 TO STA 550+50

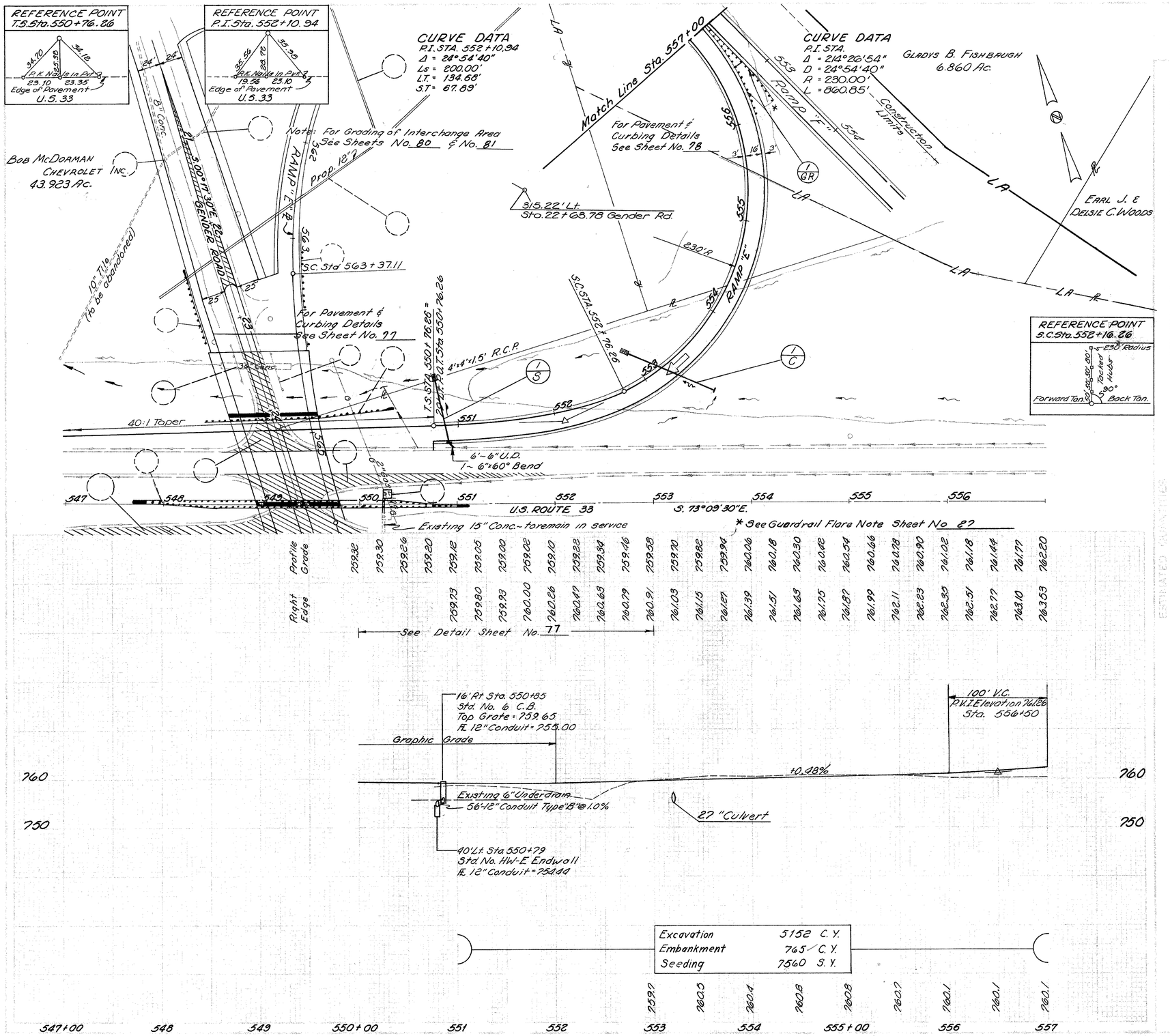

Excavation	5152 C.Y.
Embankment	745 C.Y.
Seeding	7560 S.Y.

| | | |

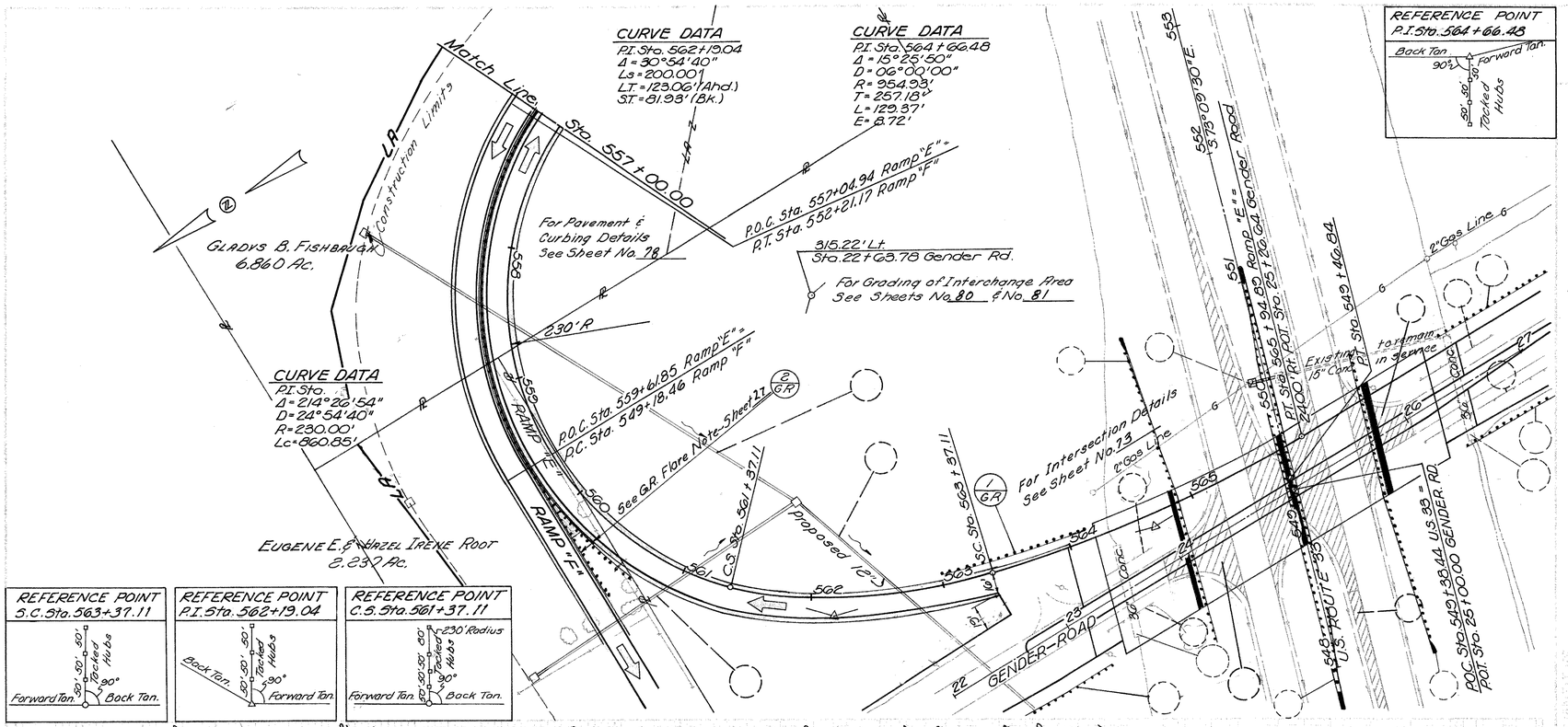

606	Guard Rail Type "5" Assembly	LF	125	
606	Bridge Anchor Terminal Assem. Type "5" Assembly	Each	1	
606	Guard Rail End Assembly	Each	1	
606	Approach Rail Type "5" Assembly	Lin Ft	300	1
606	Approach End Assembly	Each		1

(-)-R 562+92.14-564+11.69 Lt.
606-57700-560+62.27 Rt.

312.5 1 2 300 1

CALCULATED BY CWT DATE 11-18-69
CHECKED BY [illegible] DATE 10 Dec 69

PLAN AND PROFILE RAMP "E" STA. 557+00 TO STA. 565+94.89

FRANKLIN COUNTY
FRA-33-29.97

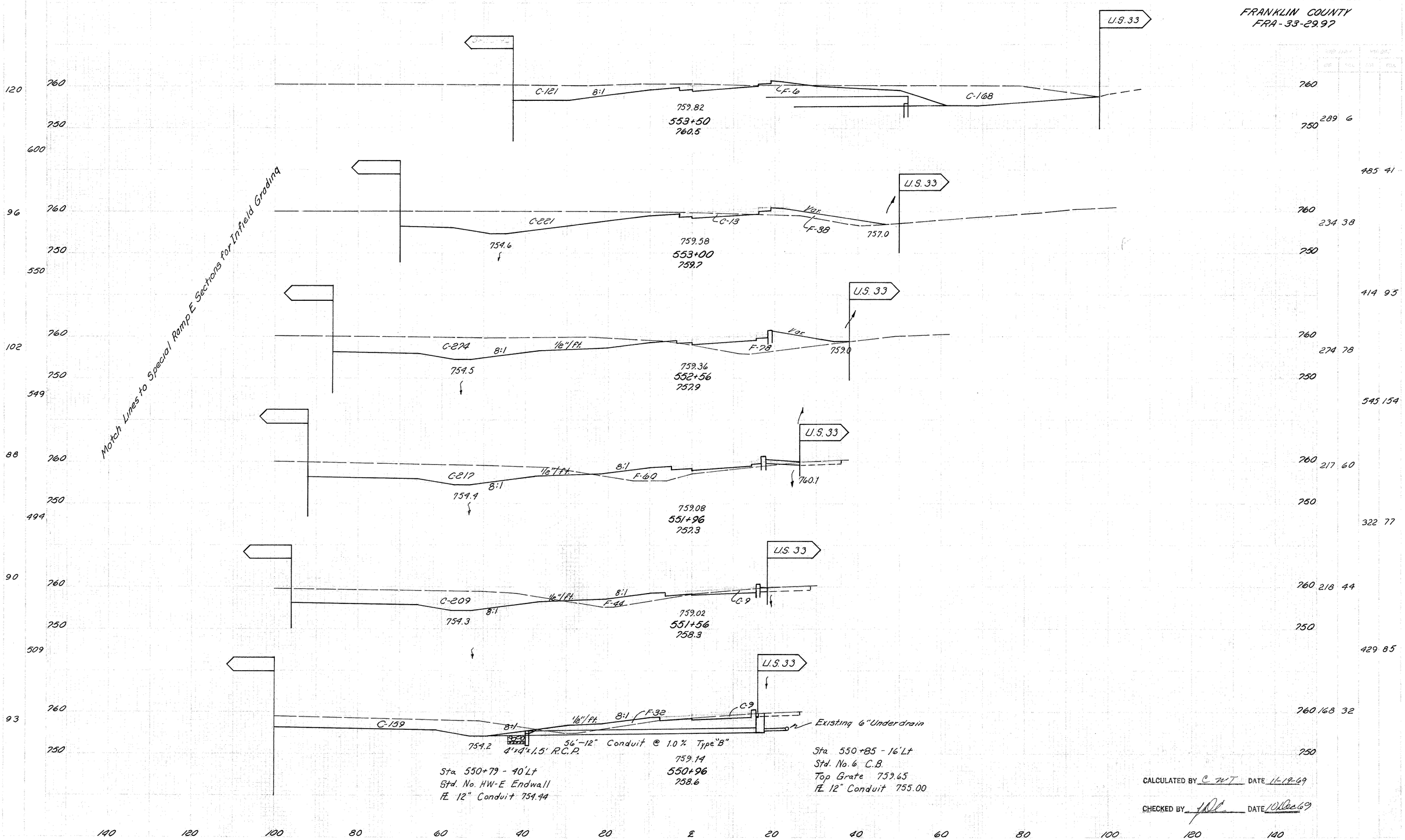

CALCULATED BY C. W.T. DATE 11-19-69

CHECKED BY [illegible] DATE 10 Dec 69

RAMP "E" CROSS SECTIONS ~ STA 550+96 TO STA 553+50

FRANKLIN COUNTY
FRA-33-29.97

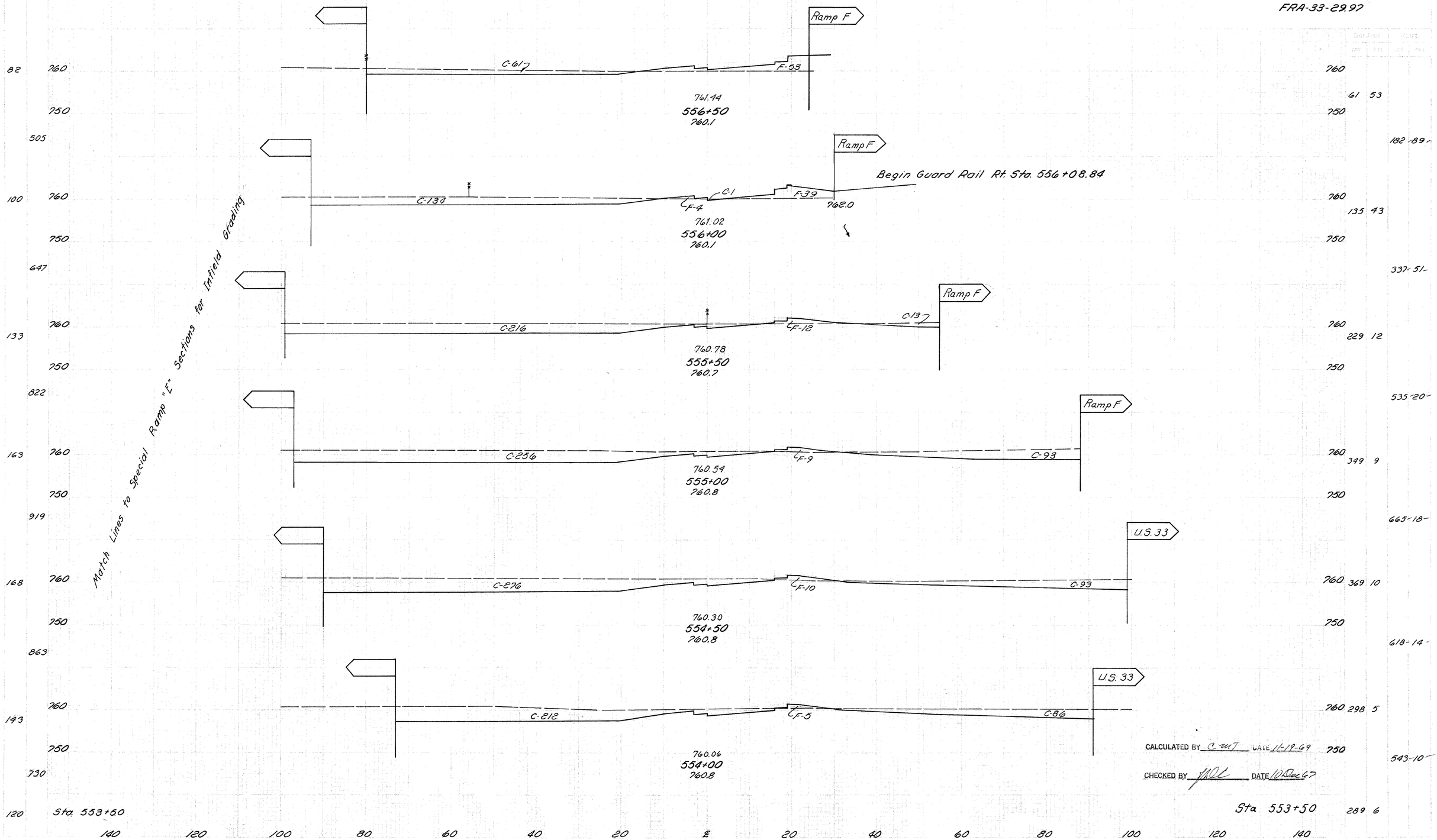

CALCULATED BY C MJ DATE 11-19-69

CHECKED BY MDC DATE 10 Dec 69

RAMP "E" CROSS SECTIONS – STA 554+00 TO STA 556+50

FRANKLIN COUNTY
FRA-33-29.97

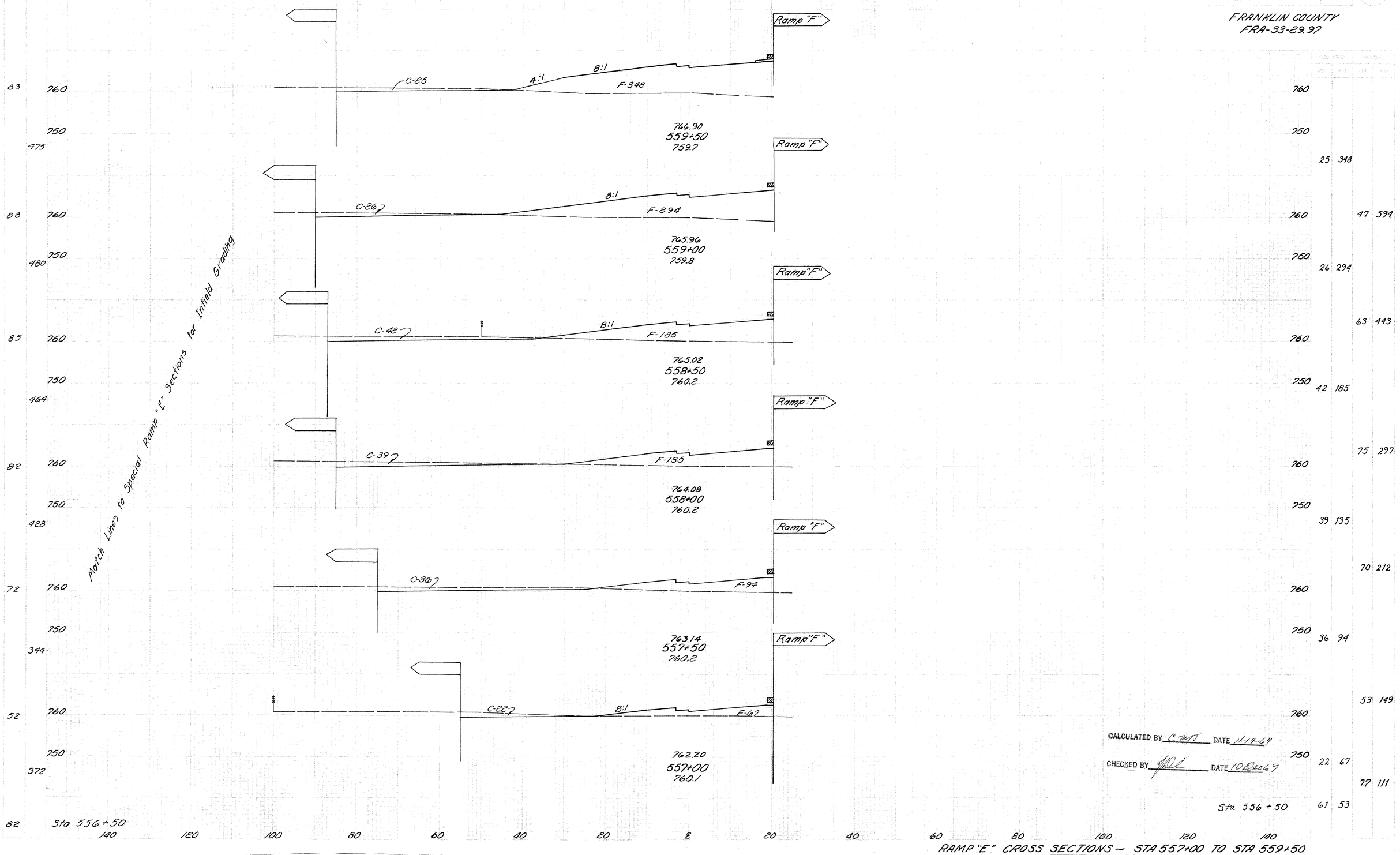

CALCULATED BY C MT DATE 11-19-69

CHECKED BY [illegible] DATE 10 Dec 69

RAMP "E" CROSS SECTIONS – STA 557+00 TO STA 559+50

FRANKLIN COUNTY
FRA-33-29.97

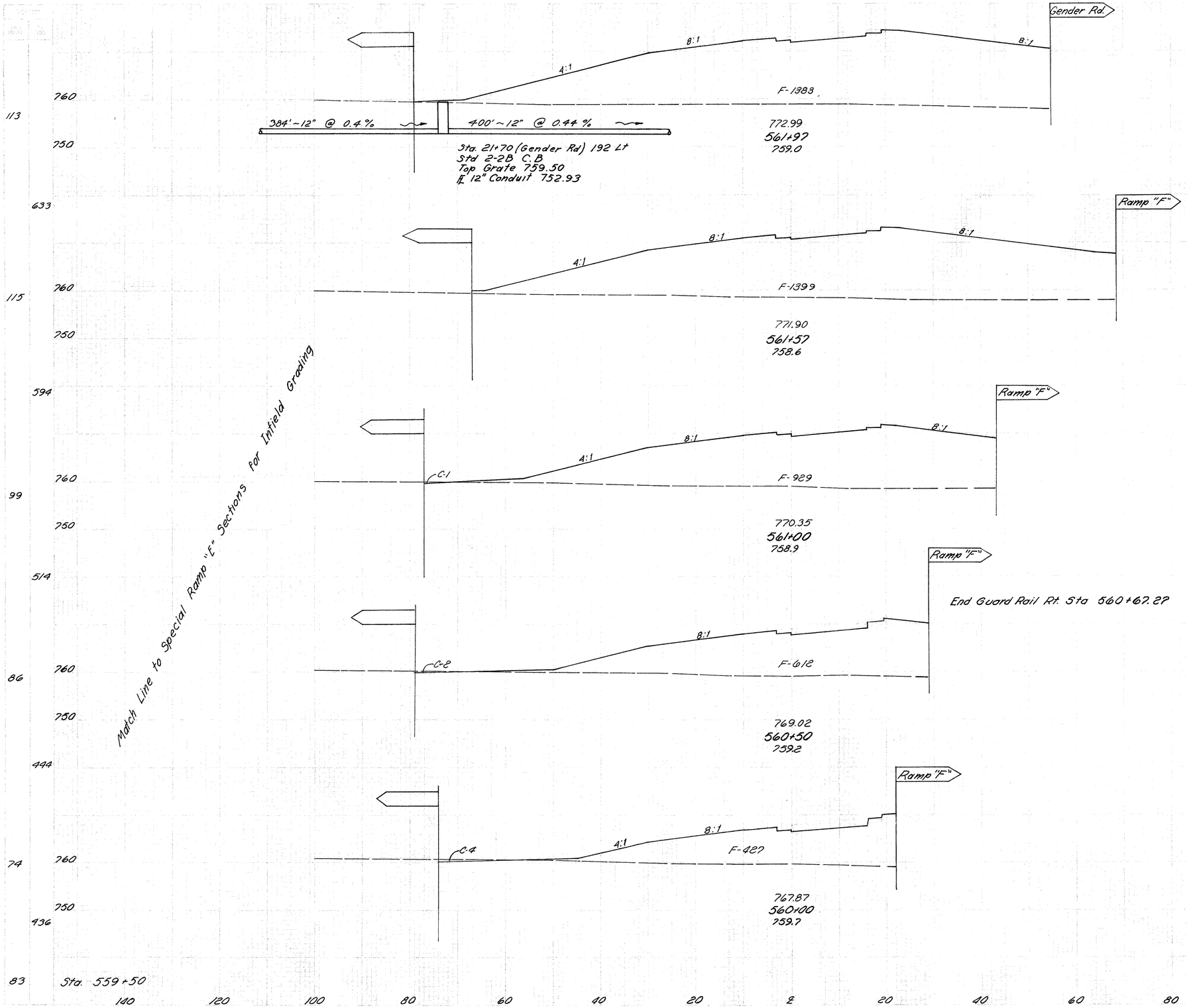

750	0	1383	
			0 2061
760			
750	0	1399	
			1 2457
760			
750	1	929	
			3 1427
760	2	612	
750			
			6 962
760			
750	4	427	
			27 717
	25	398	

CALCULATED BY C MT DATE 11-19-69

CHECKED BY [illegible] DATE 10 Dec 69

Sta 559+50

RAMP "E" CROSS SECTIONS ~ STA 560+00 TO STA 561+97

FRANKLIN COUNTY
FRA-33-29.97

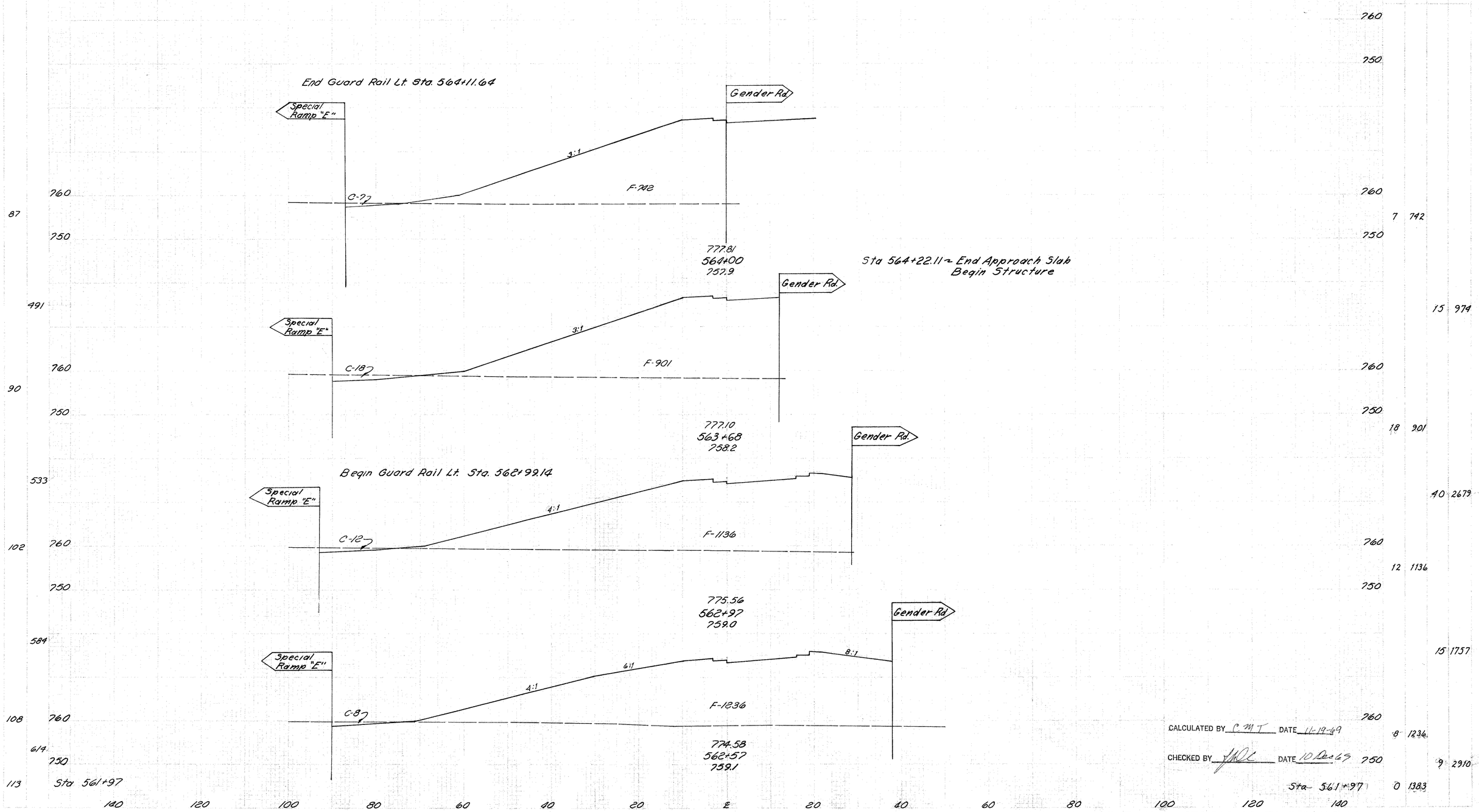

CALCULATED BY C.M.T. DATE 11-19-69

CHECKED BY [illegible] DATE 10 Dec 69

RAMP "E" CROSS SECTIONS ~ STA 562+57 TO STA 565+00

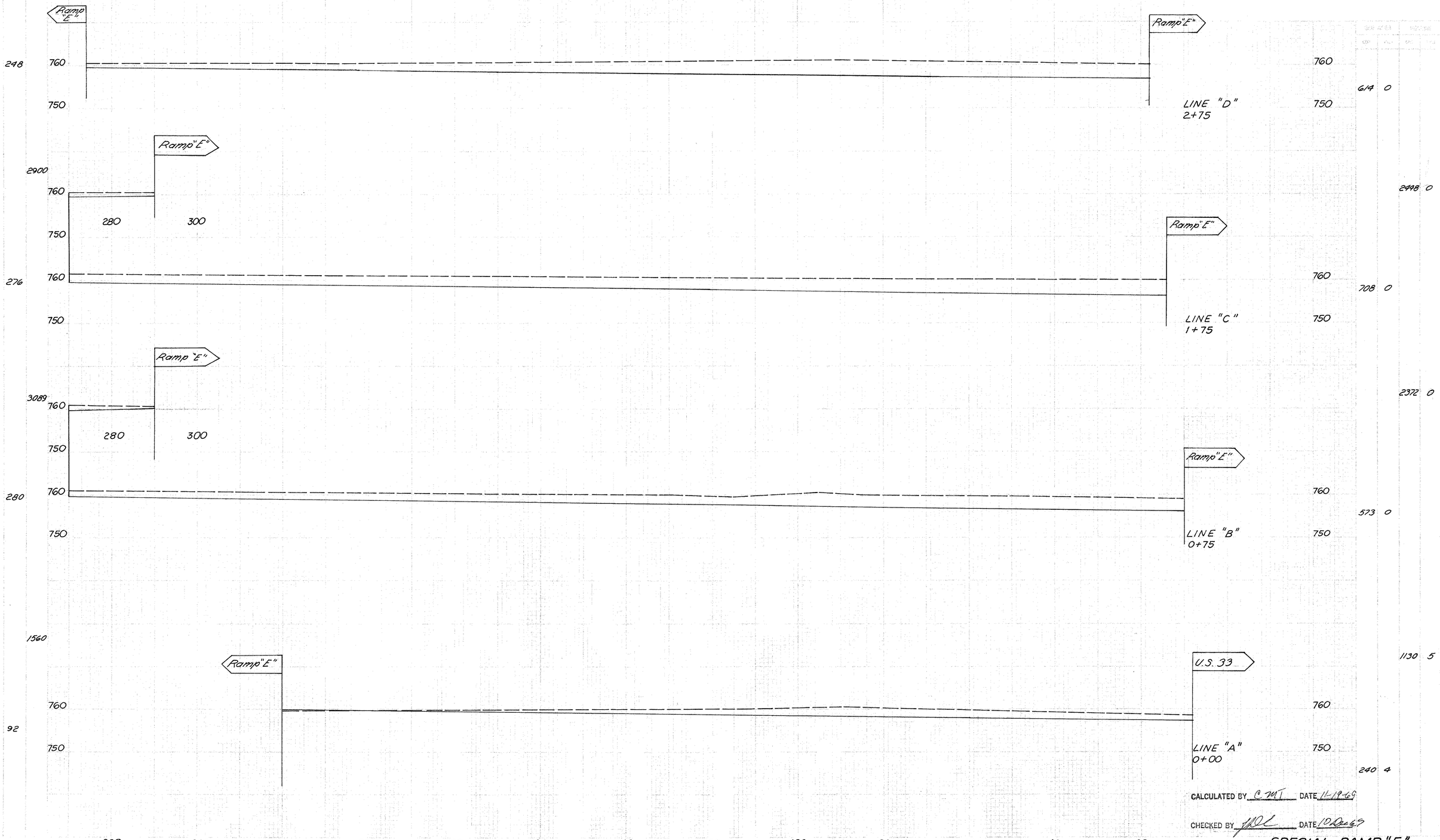

CALCULATED BY C.M.T. DATE 11-19-69

CHECKED BY HDL DATE 10 Dec 69

SPECIAL RAMP "E"
CROSS SECTIONS

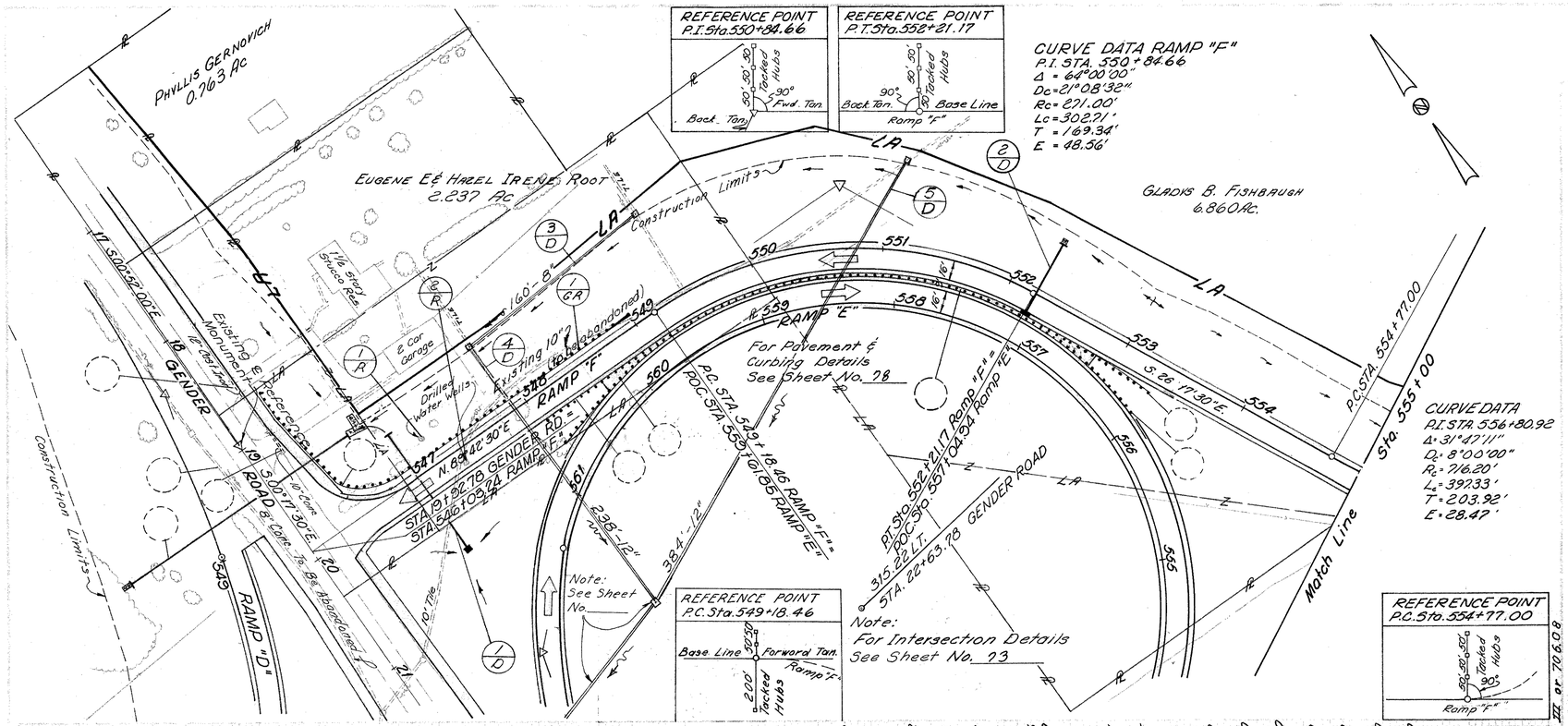

Pay Item	Station	Rt.	Lt.	604 Structure No. 2-2B	604 Structure No. 3-A	604 Structure No. C.B.	603 12" Type B Class III	603 12" Type B Class III	603 12" Type B Class III	603 8" Type "C"	603 Conduit L.F.	606 Concr. Masonry C.Y.	606 Approach Rock Channel Protection C.Y.	606 Rock Channel Protection Each	Special Drilled Guard Rail Each L.F.	Special Drilled Water Wells Each L.F.
1-D	542+00	Lt.&Rt.		1												
2-D	552+25	Lt.&Rt.			1											
1-R	547+20	Lt.				1										
2-R	547+36	Rt.				1										
3-D	547+90 - 547+42	Lt.									160	0.29	10.7	62		
4-D	547+90 - 547+92	Lt.&Rt.									238	0.83				
5-D	547+92 - 551+12	Lt.&Rt.														
1-GR	546+84.5 - 549+01	Lt.					384									
2-GR	546+03.24 - 549+01	Lt.						216.5	1							
				1	1	4	1	2	1	2	238	0.46	49.1	62	2.4	216.5

CALCULATED BY CMT DATE 11-19-69

CHECKED BY [illegible] DATE 10 Dec 69

PLAN AND PROFILE RAMP "F" STA. 546+03.24 TO STA. 555+00

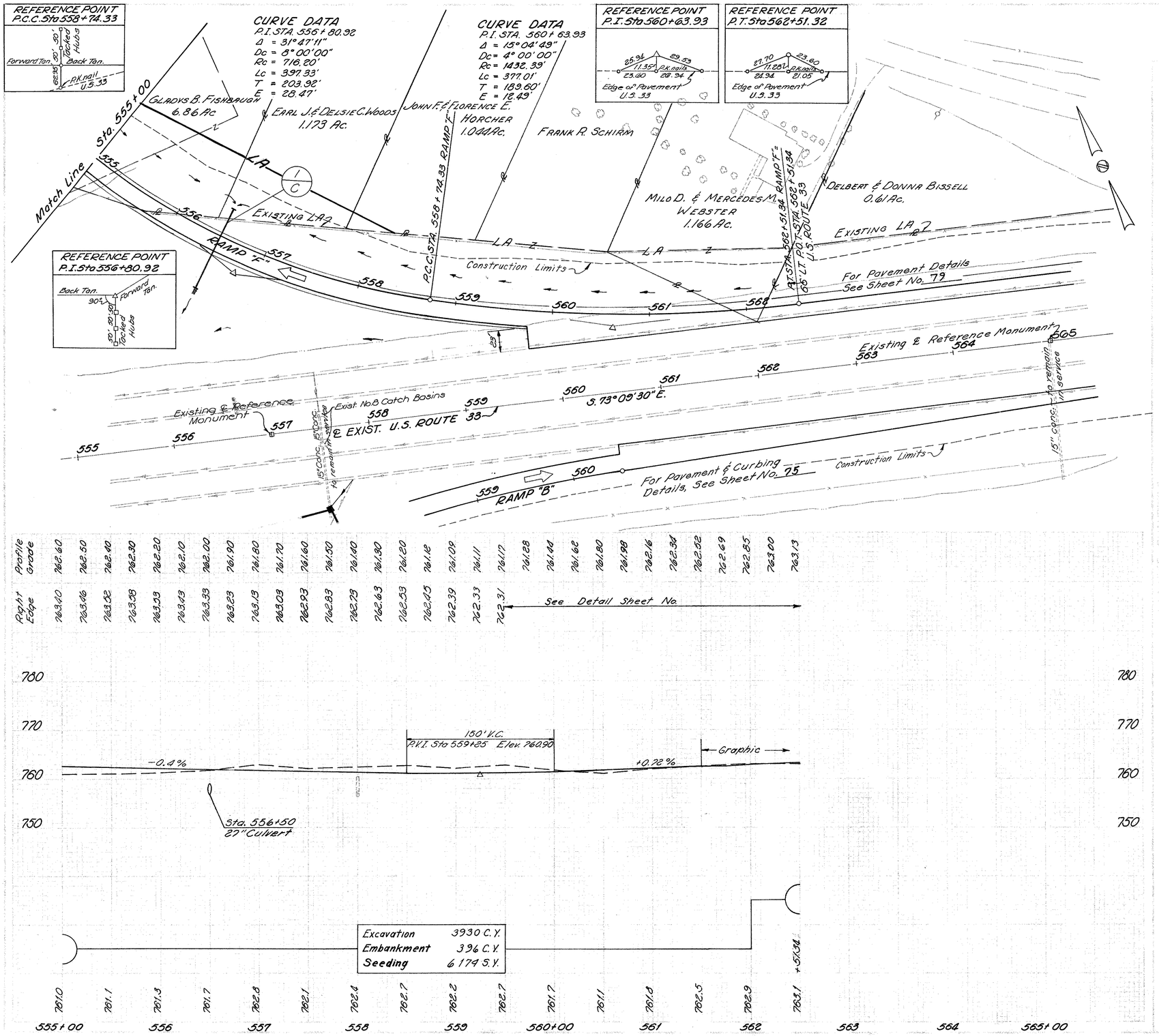

PLAN AND PROFILE RAMP "F" STA. 555+00 TO STA. 562+51.34

CALCULATED BY C.W.T. DATE 11-12-69

CHECKED BY [illegible] DATE [illegible]

FRANKLIN COUNTY
FRA-33-29.97

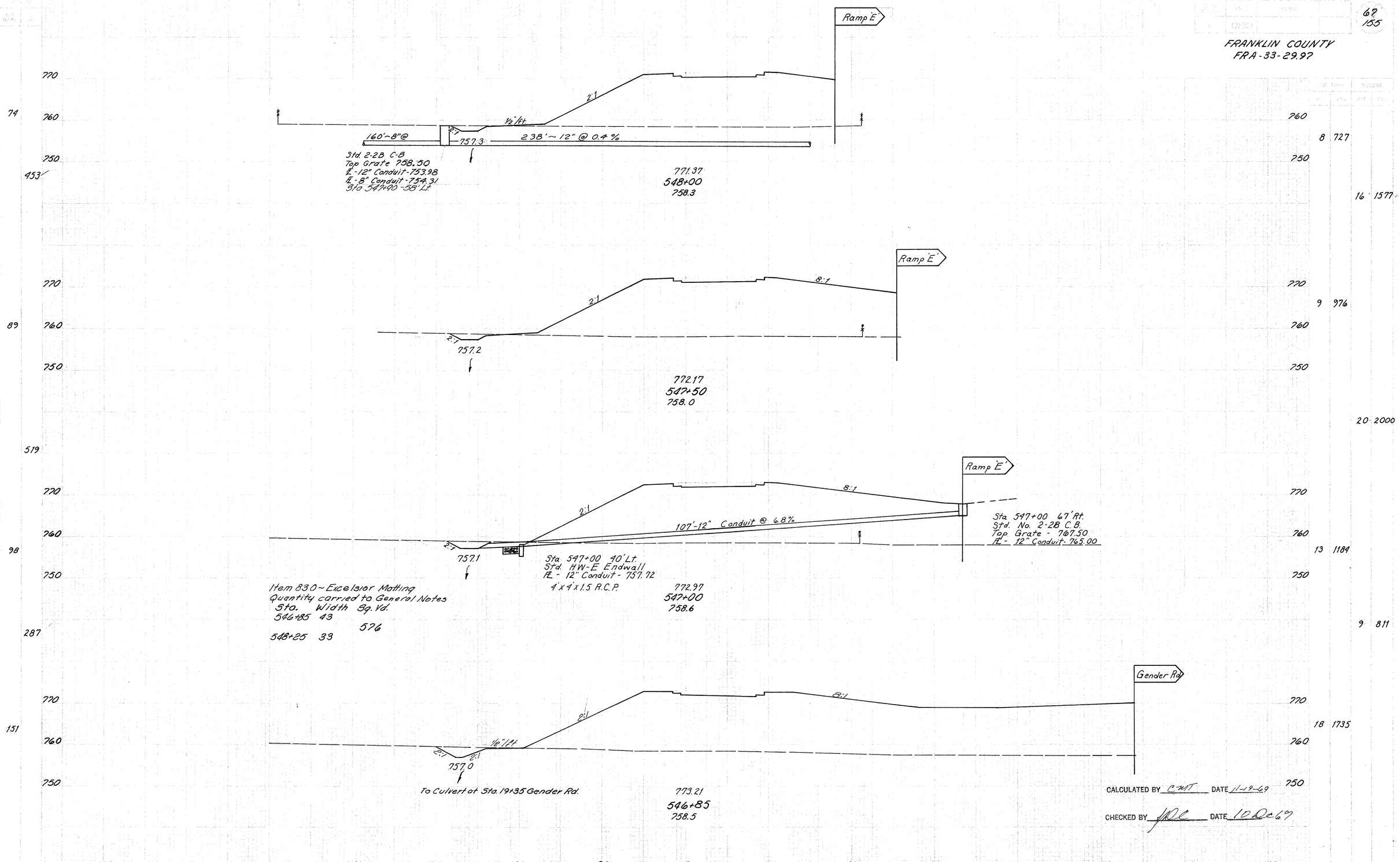

RAMP "F" CROSS SECTIONS ~ STA 546+85 TO STA 548+00

FRANKLIN COUNTY
FRA -33-29.97

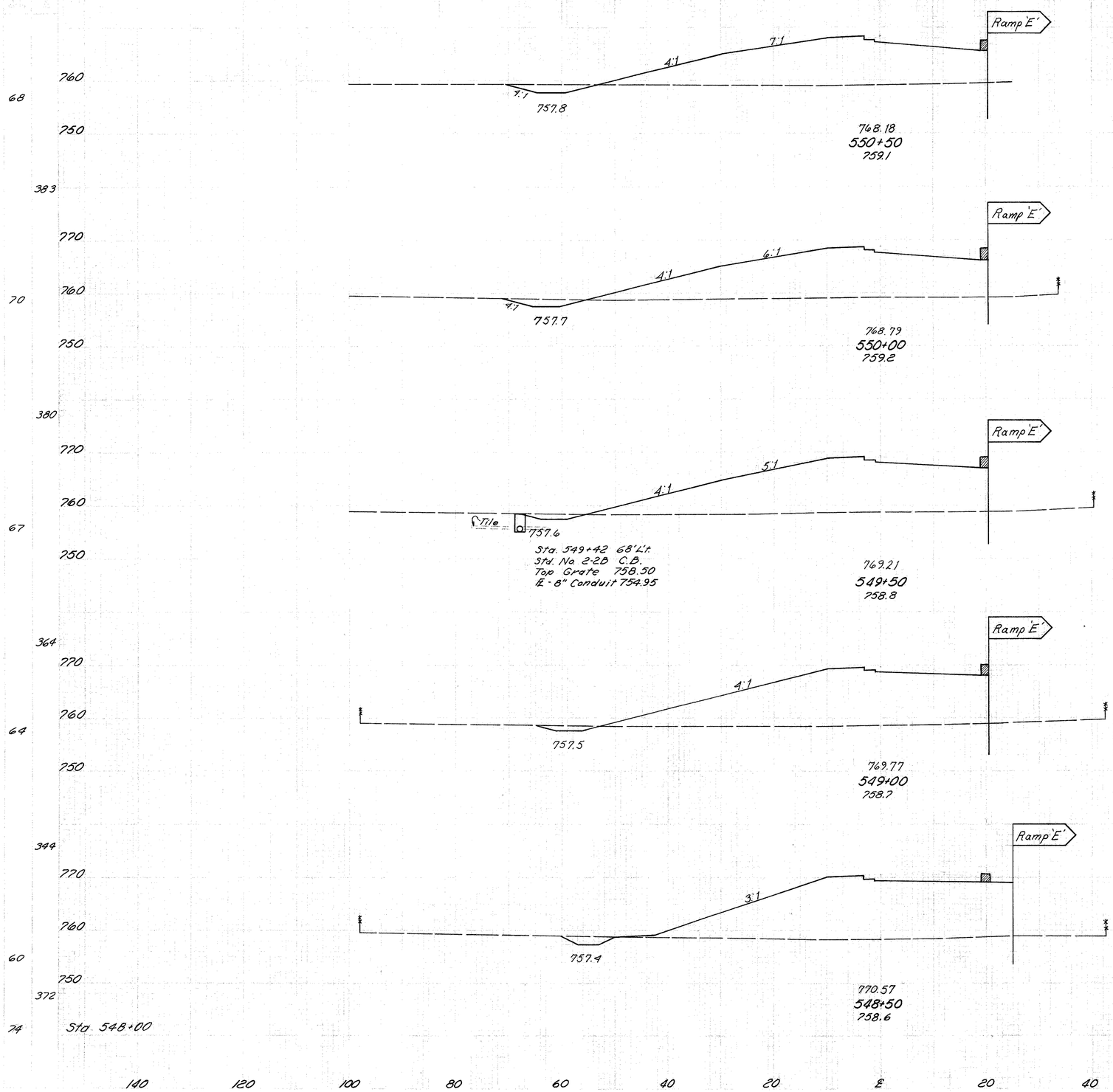

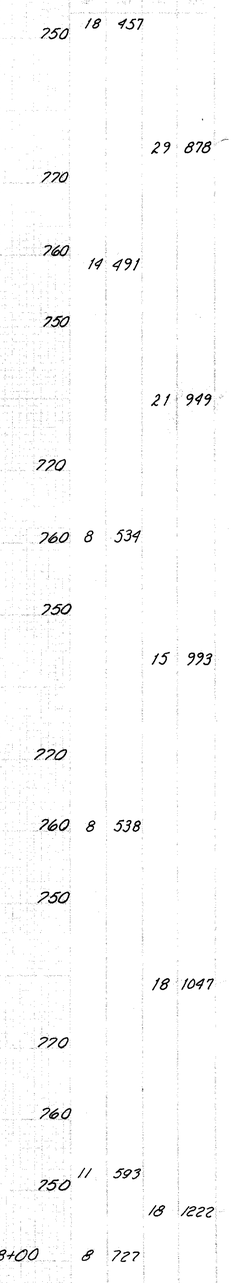

CALCULATED BY C.M.T. DATE 11-19-69

CHECKED BY [illegible] DATE 10 Dec 69

RAMP "F" CROSS SECTIONS – STA 548+50 TO STA 550+50

FRANKLIN COUNTY
FRA-33-29.97

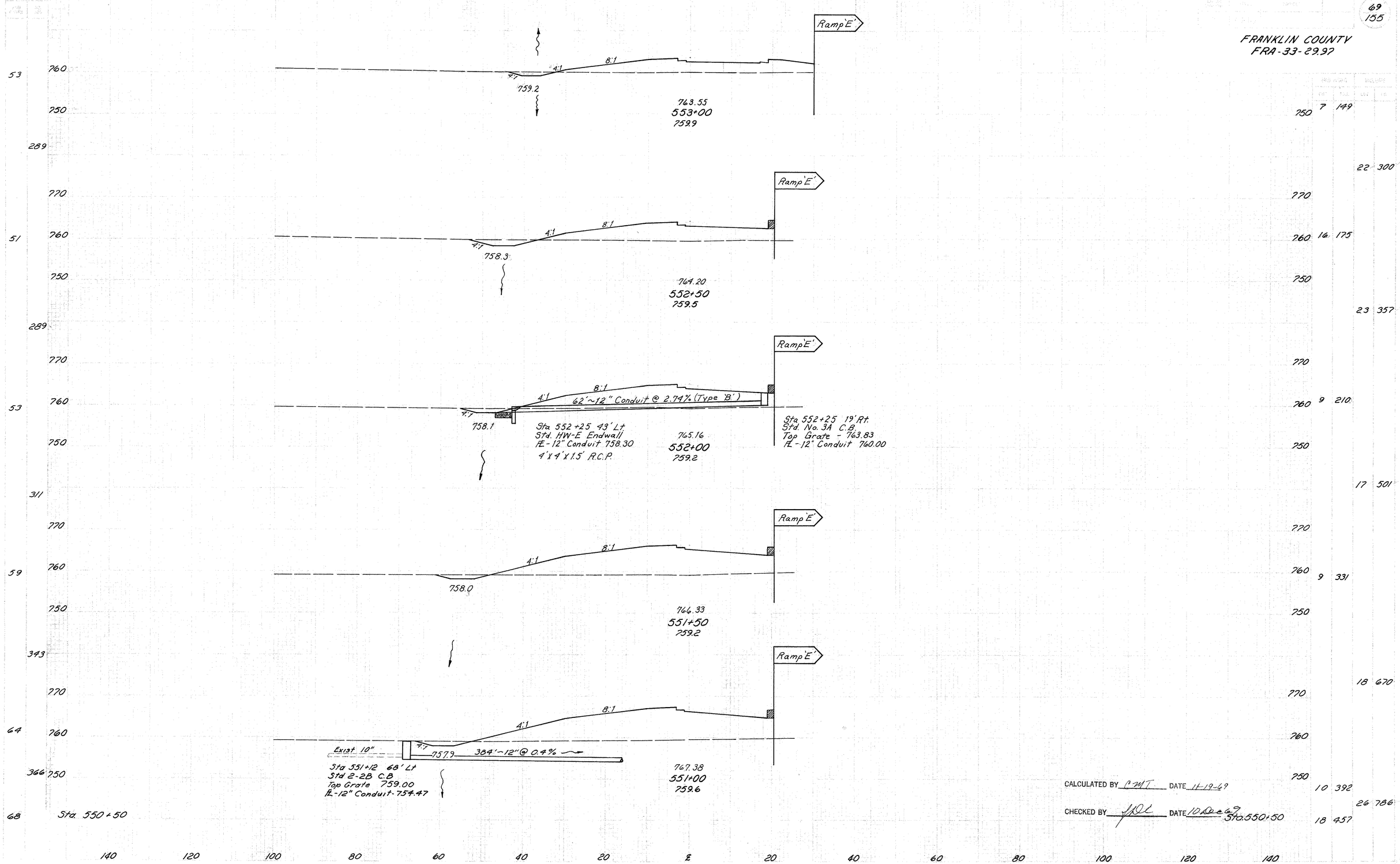

CALCULATED BY CMT DATE 11-19-69

CHECKED BY HDL DATE 10 Dec 69

RAMP "F" CROSS SECTIONS ~ STA 551+00 TO STA 553+00

FRANKLIN COUNTY
FRA-33-29.97

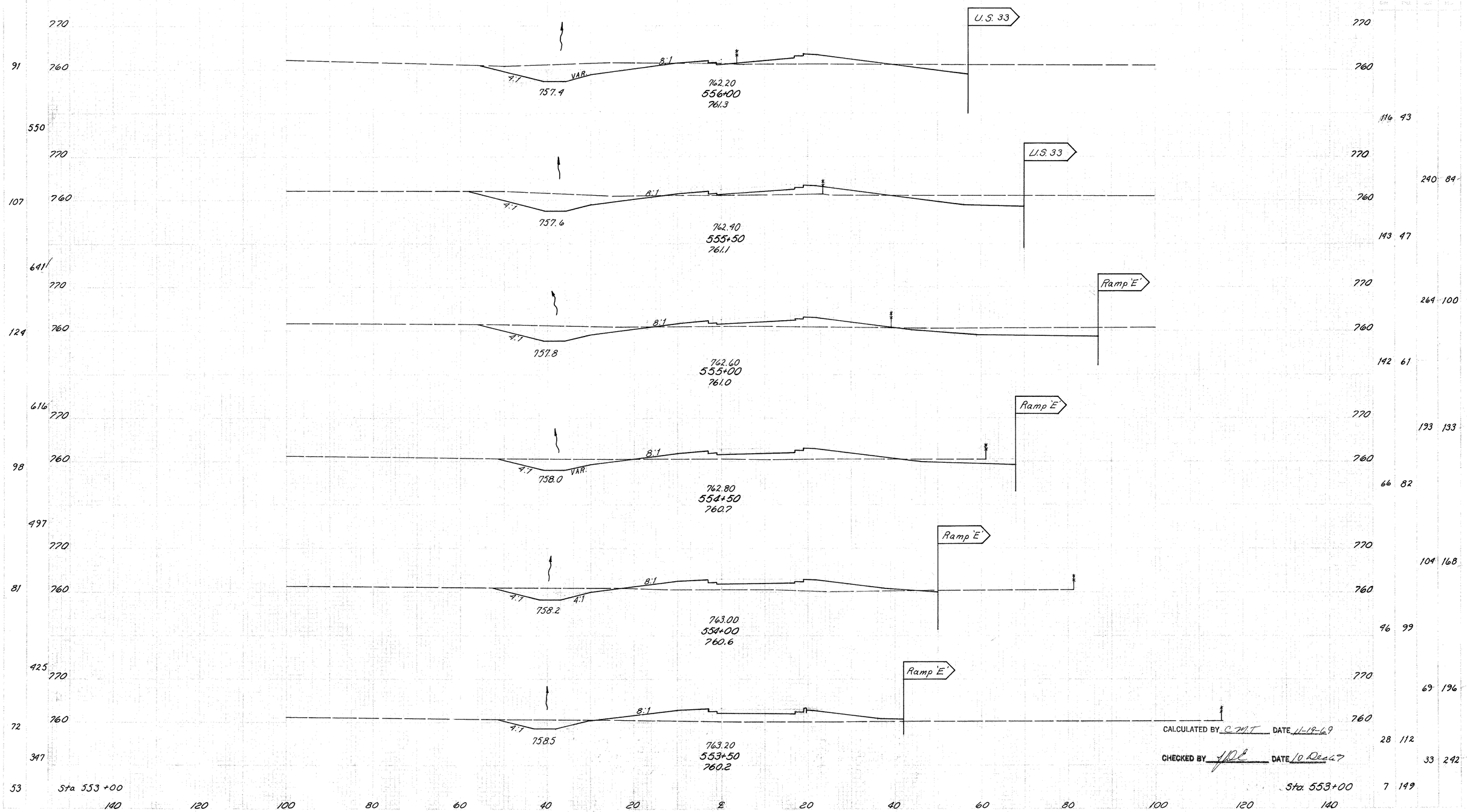

CALCULATED BY C.M.T. DATE 11-19-69

CHECKED BY JDE DATE 10 Dec 69

RAMP "F" CROSS SECTIONS – STA 553+50 TO STA 556+00

FRANKLIN COUNTY
FRA-33-29.97

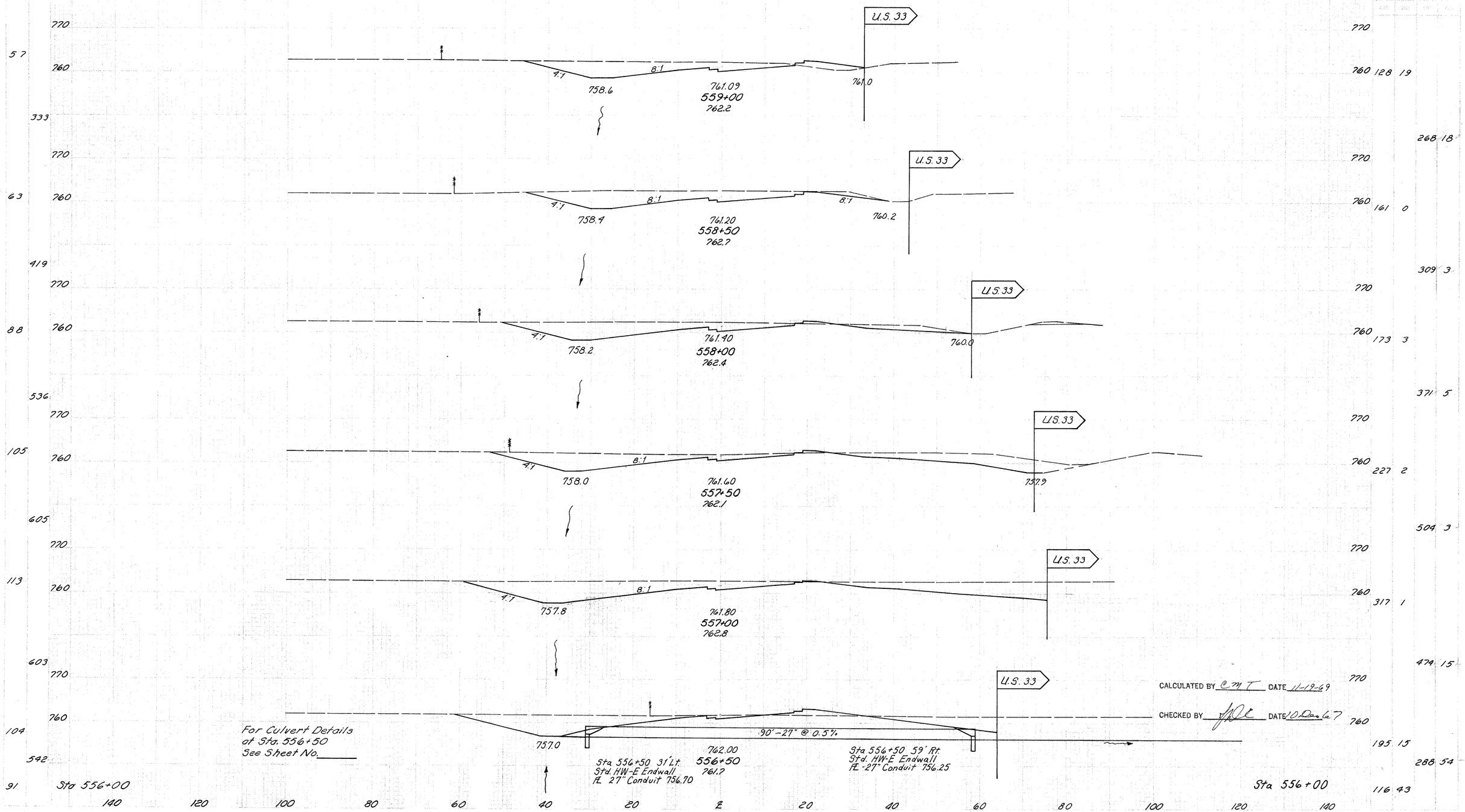

CALCULATED BY CMT DATE 11-19-69

CHECKED BY [illegible] DATE 10 Dec 69

RAMP "F" CROSS SECTIONS ~ STA 556+50 TO STA 559+00

FRANKLIN COUNTY
FRA-33-29.97

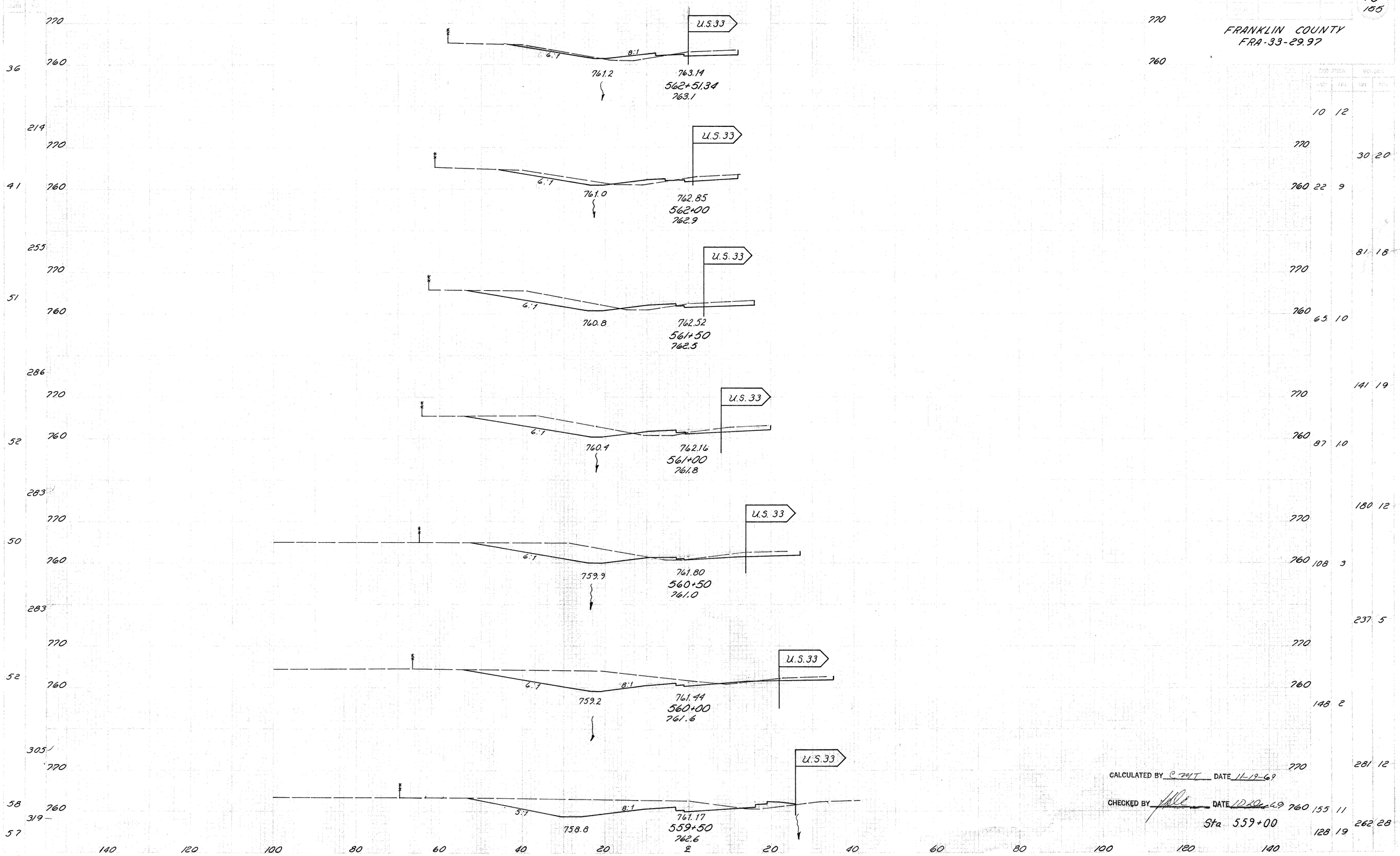

CALCULATED BY C MJT DATE 11-19-69

CHECKED BY [illegible] DATE 12-20-69

Sta 559+00

RAMP "F" CROSS SECTIONS – STA 559+50 TO STA 562+51.34

FED. RD. DIVISION	STATE	PROJECT	
2	OHIO		

FRANKLIN COUNTY
FRA-33-29.97

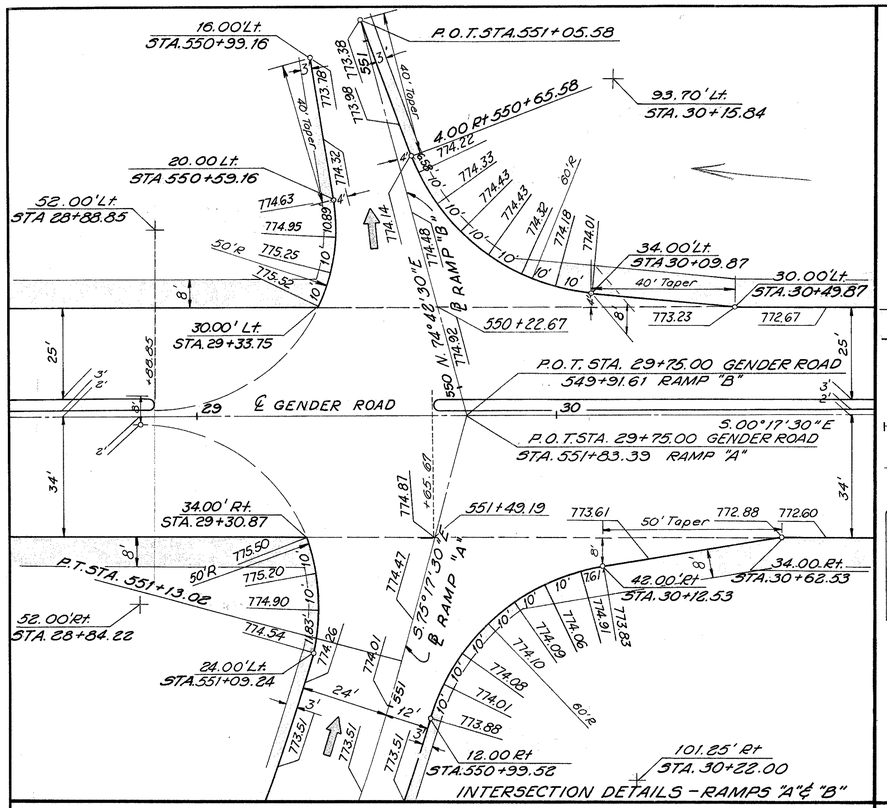

INTERSECTION DETAILS - RAMPS "A" & "B"

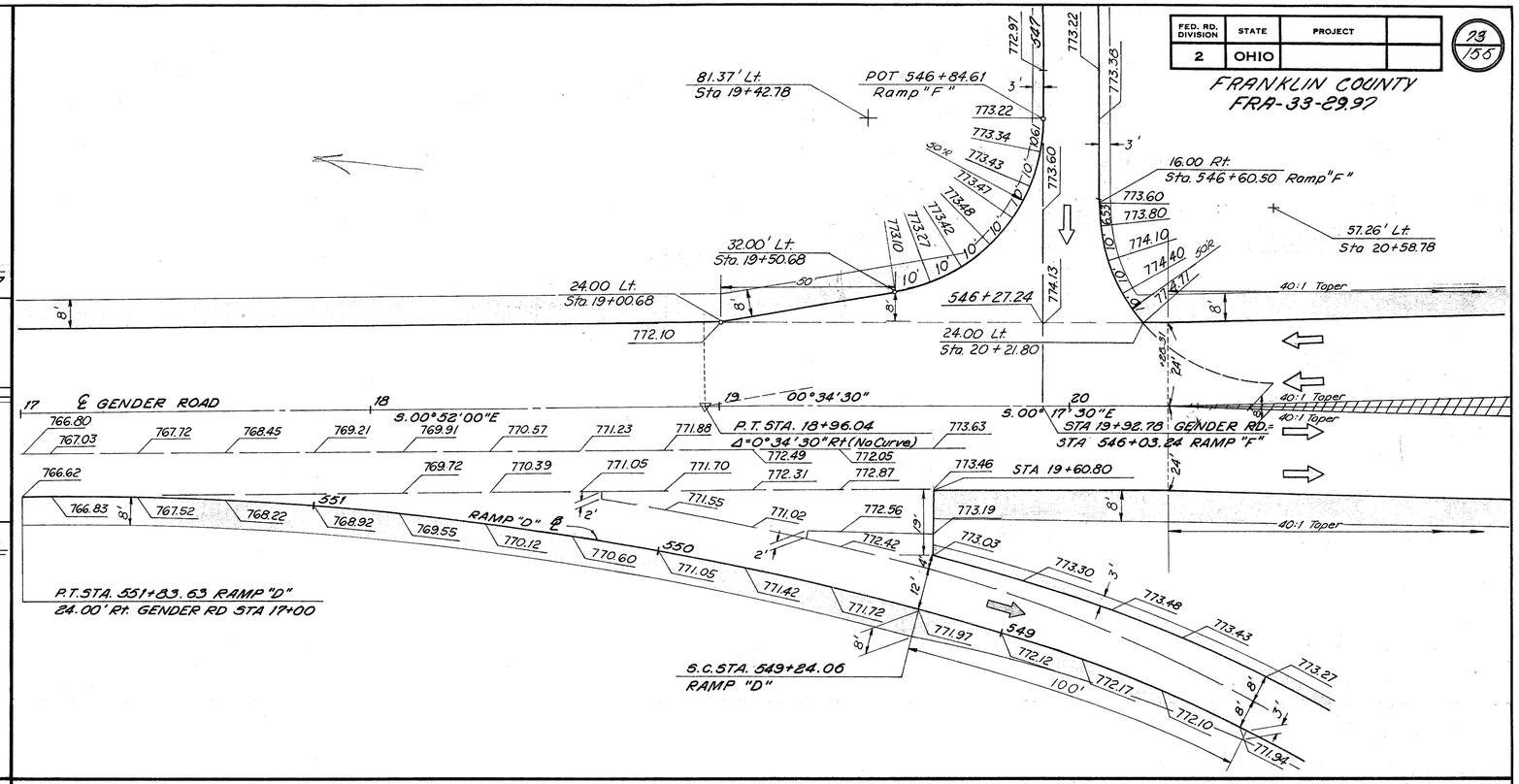

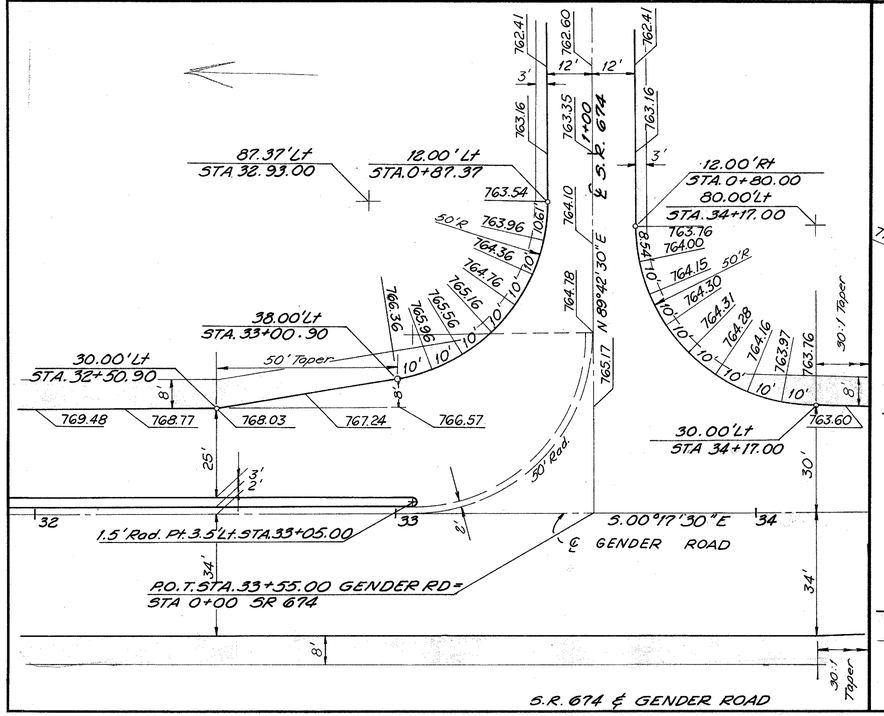

S.R. 674 & GENDER ROAD

NOTE: For Curb elevation Taper Detail
See Sheet N° 84

CALCULATED BY [illegible] DATE 10-16-69

CHECKED BY [illegible] DATE 12-11-69

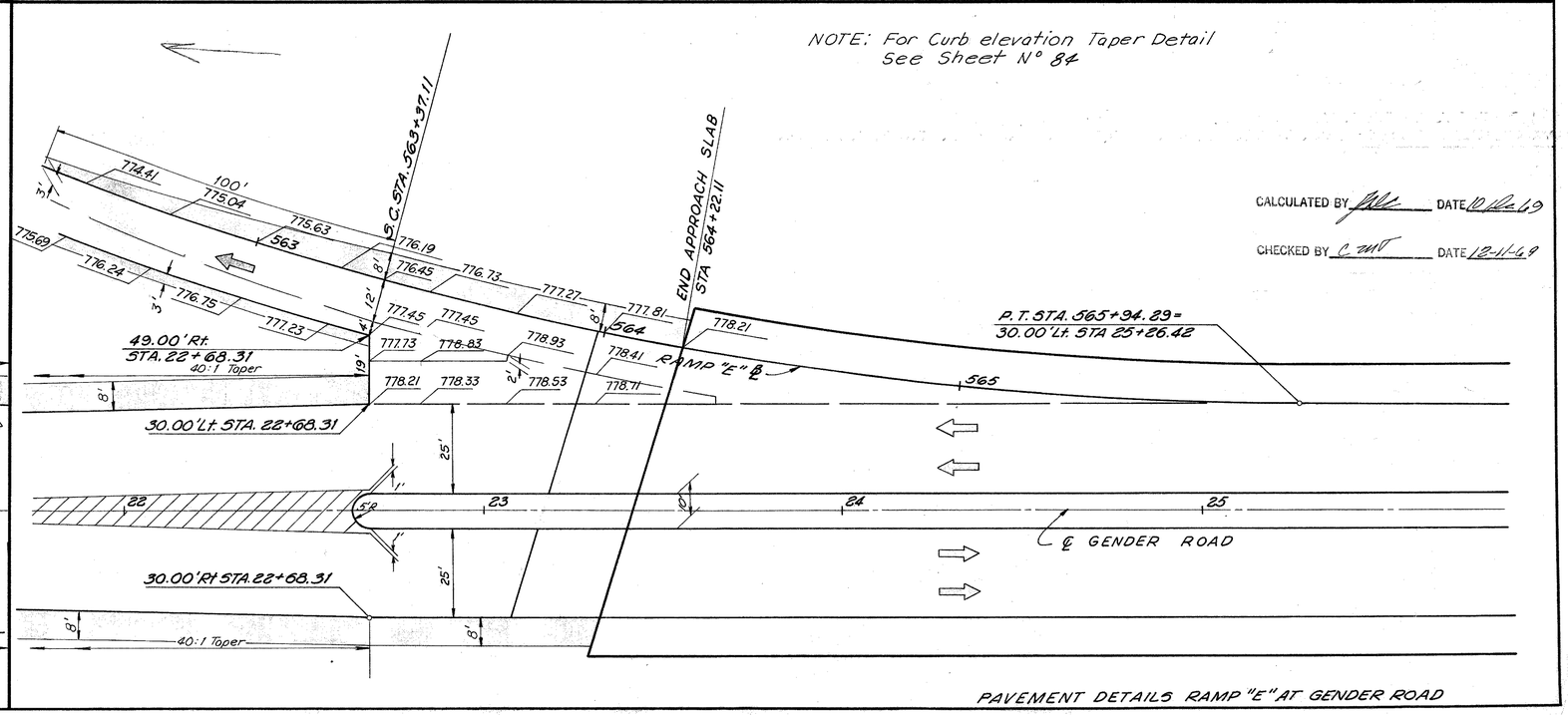

PAVEMENT DETAILS RAMP "E" AT GENDER ROAD

FED. RD. DIVISION	STATE	PROJECT	
2	OHIO		

FRANKLIN COUNTY
FRA-33-29.97

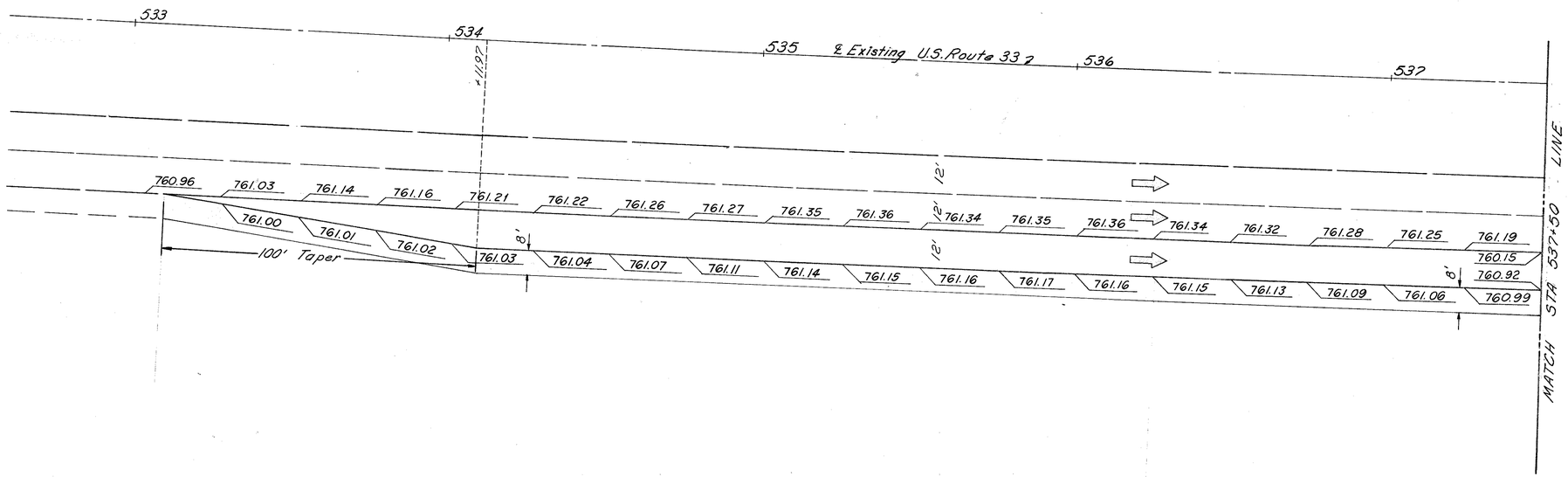

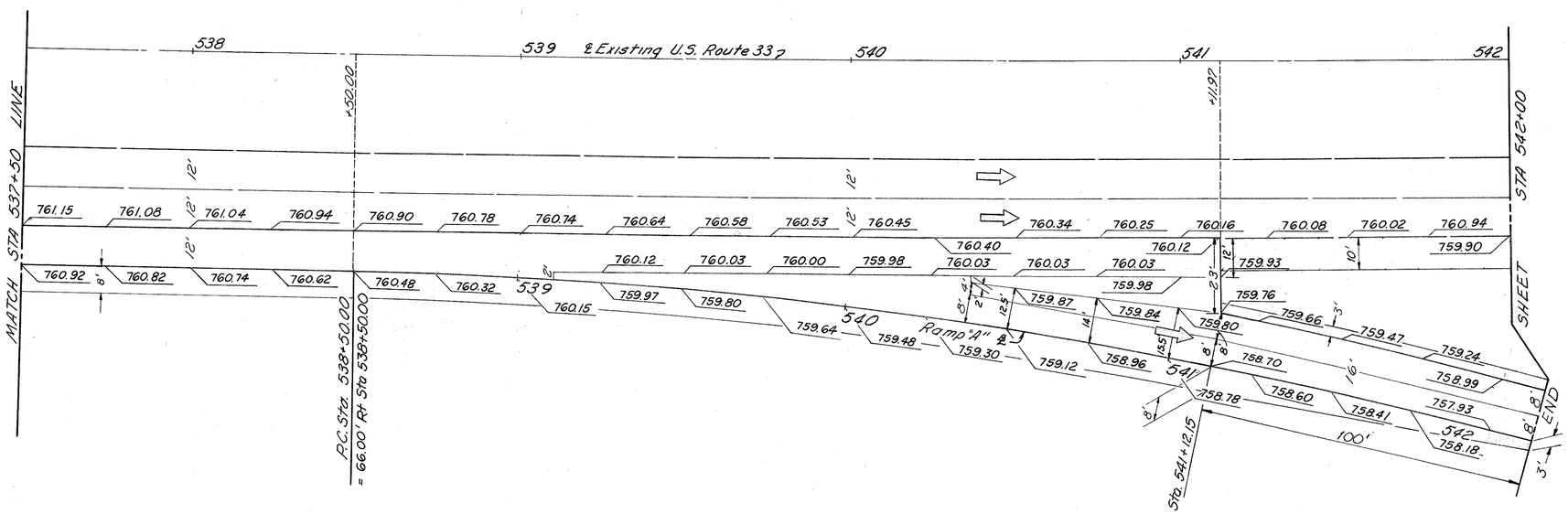

CALCULATED BY [illegible] DATE 10-26-69

CHECKED BY [illegible] DATE 12-4-69

GENDER ROAD INTERCHANGE-RAMP "A" PAVEMENT DETAILS

FED. RD. DIVISION	STATE	PROJECT	
2	OHIO		

FRANKLIN COUNTY
FRA-33-29.97

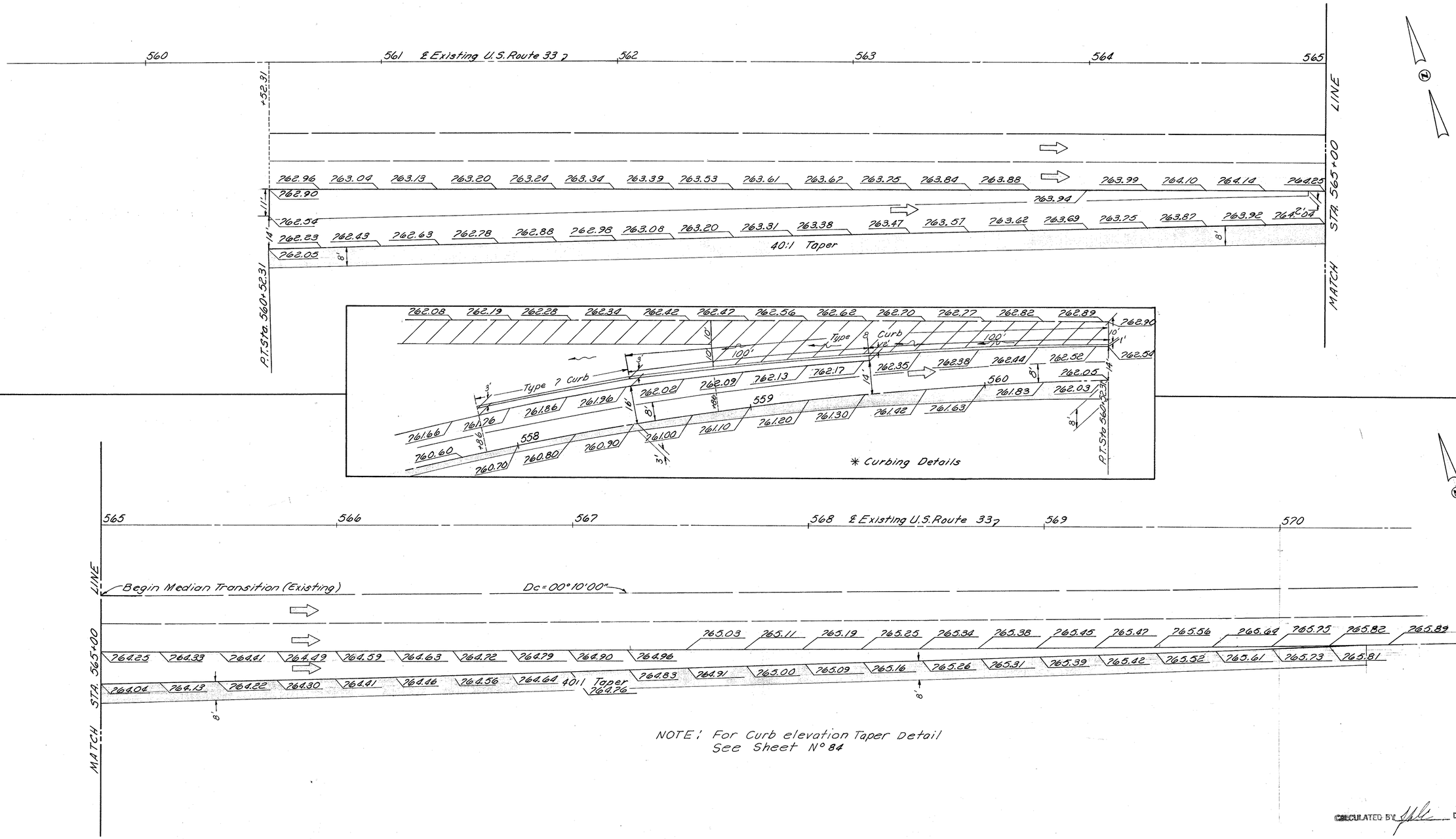

NOTE: For Curb elevation Taper Detail
See Sheet N° 84

CALCULATED BY [illegible] DATE 10 Dec 69

CHECKED BY C [illegible] DATE 12-4-69

GENDER ROAD INTERCHANGE ~ RAMP "B" PAVEMENT DETAILS

FED. RD. DIVISION	STATE	PROJECT	
2	OHIO		

76/166

FRANKLIN COUNTY
FRA-33-29.97

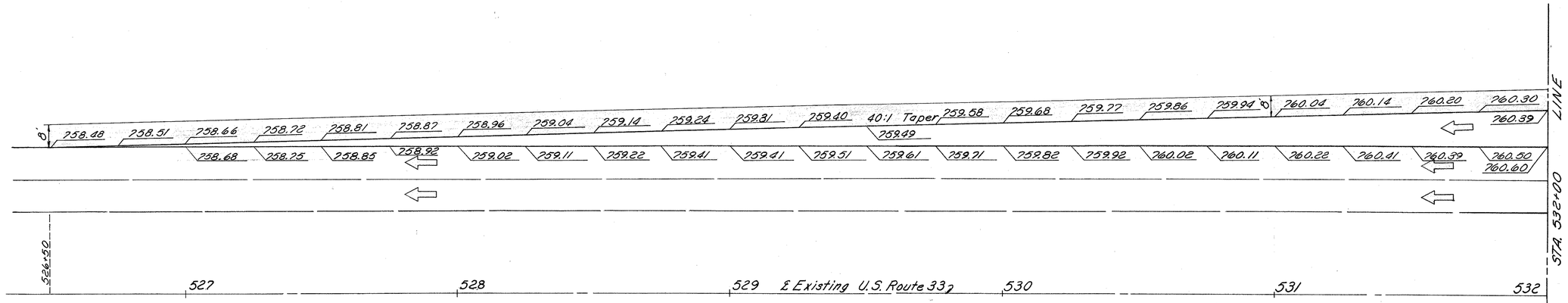

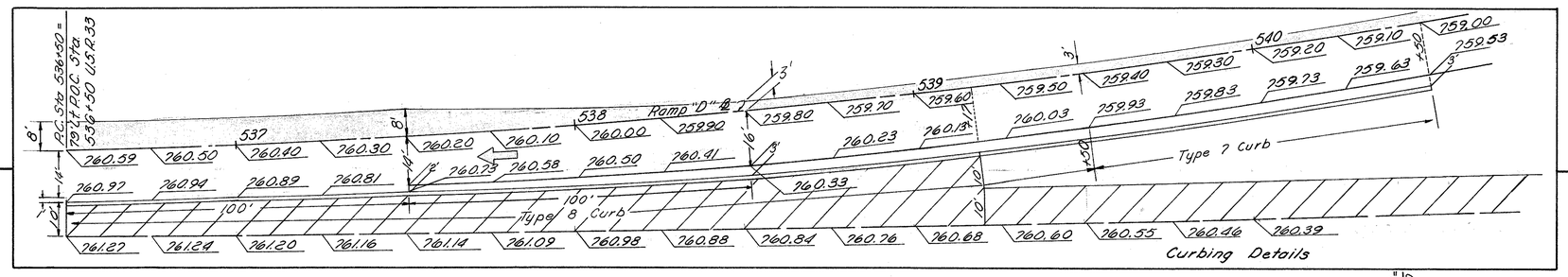

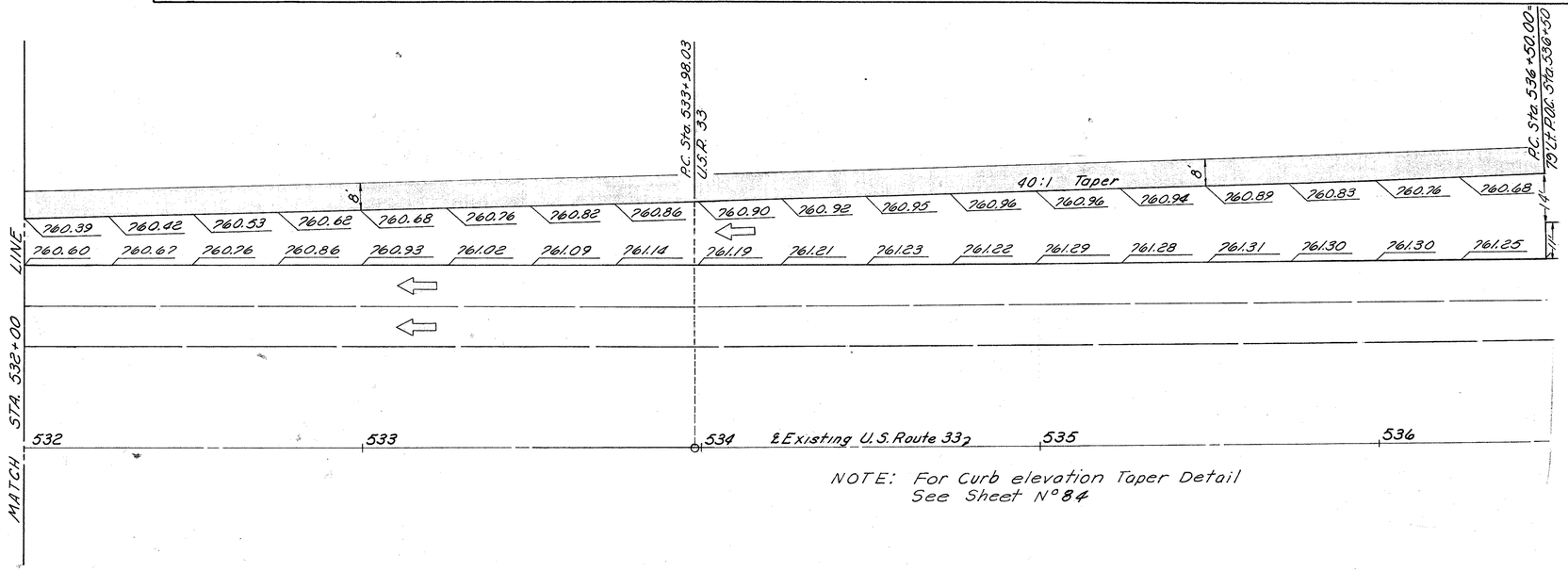

NOTE: For Curb elevation Taper Detail
See Sheet N°84

CALCULATED BY JHL DATE 10-16-69

CHECKED BY CWT DATE 12-11-69

GENDER ROAD INTERCHANGE ~ RAMP "D" PAVEMENT DETAILS

FED. RD. DIVISION	STATE	PROJECT	
2	OHIO		

FRANKLIN COUNTY
FRA-33-29.97

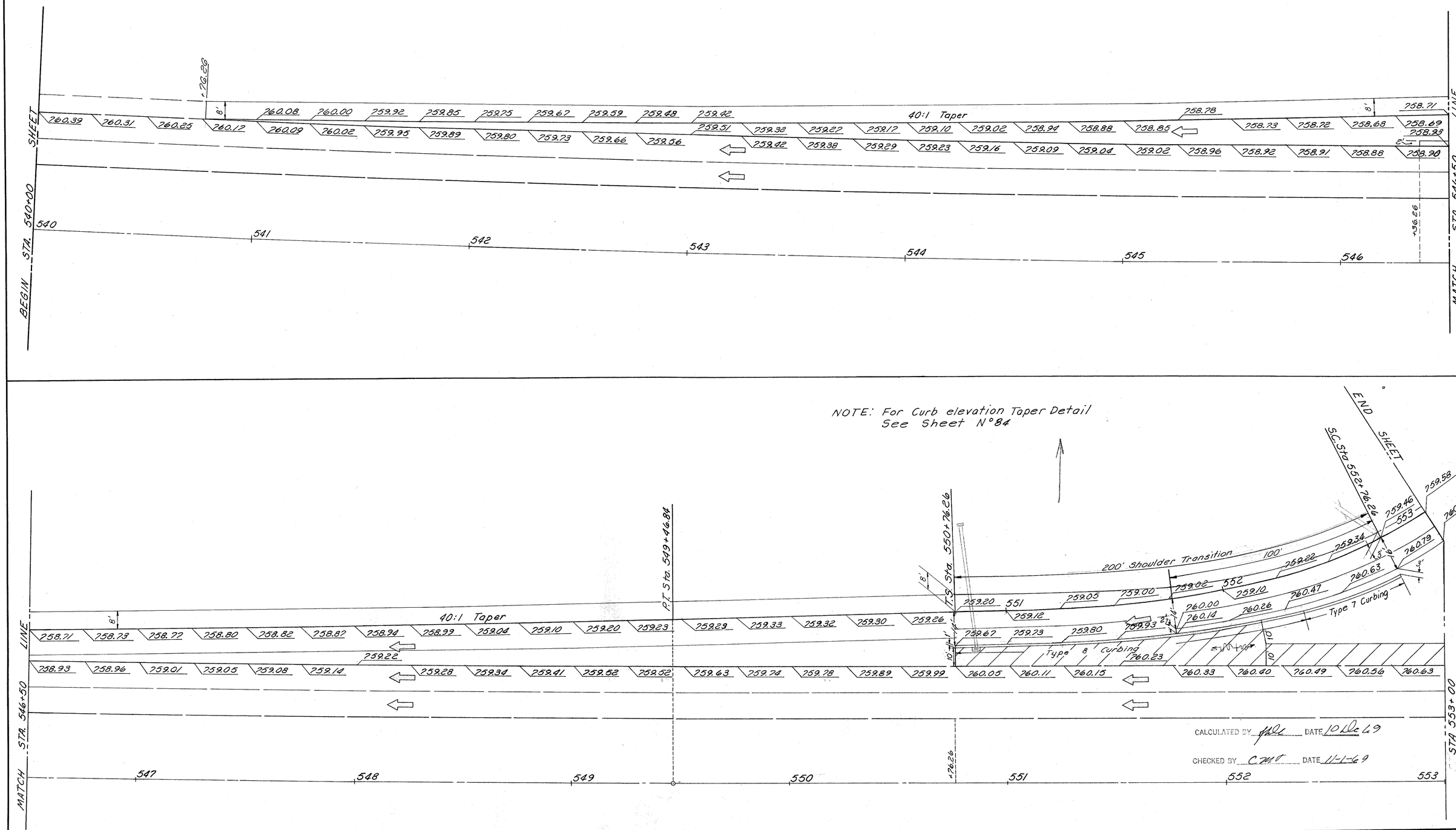

GENDER ROAD INTERCHANGE~ RAMP "E" PAVEMENT DETAILS

FED. RD. DIVISION	STATE	PROJECT	
2	OHIO		

28/155

FRANKLIN COUNTY
FRA-33-29.97

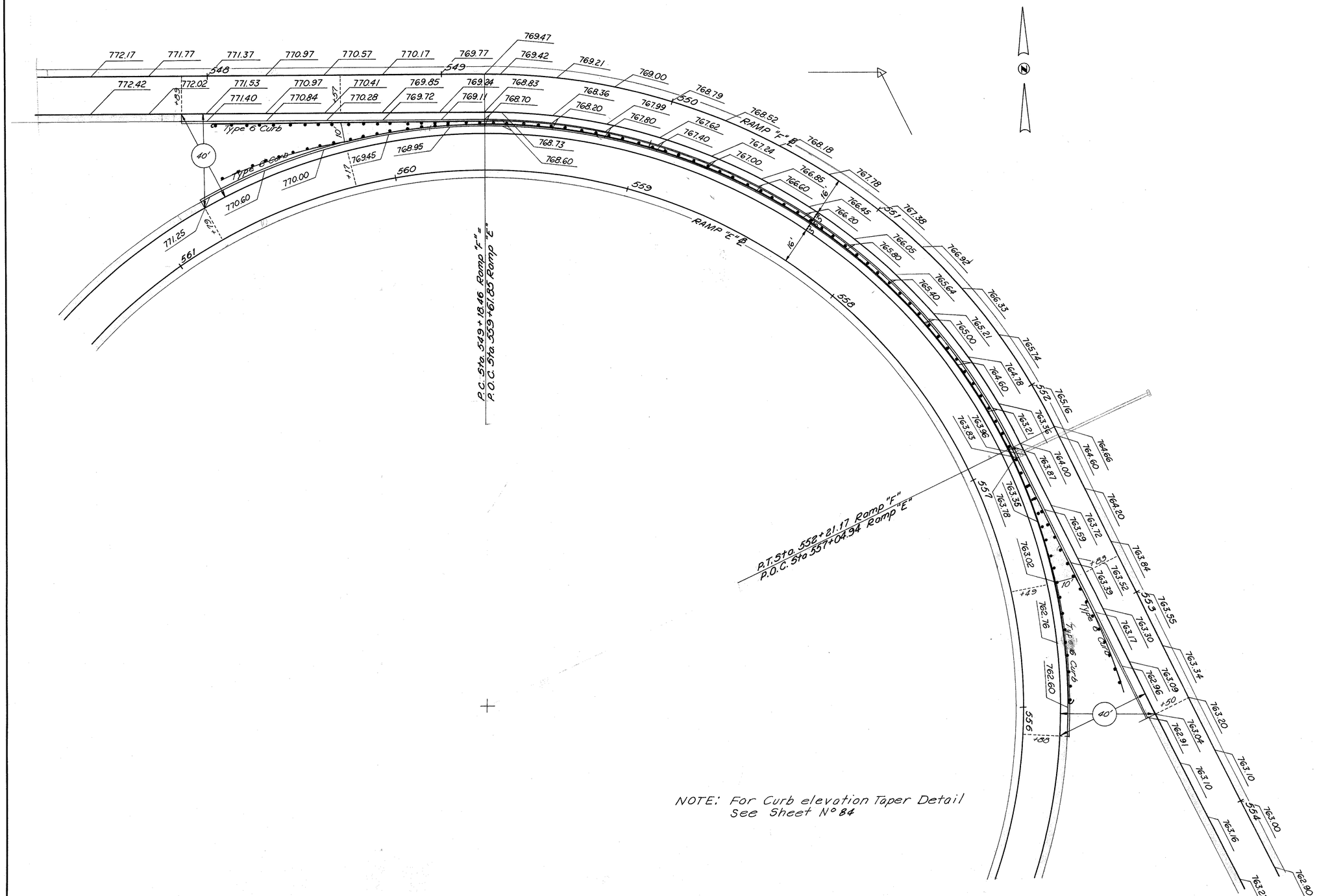

NOTE: For Curb elevation Taper Detail
See Sheet N° 84

CALCULATED BY [illegible] DATE 12-11-69

CHECKED BY C M D DATE 12-11-69

PAVEMENT & CURBING DETAILS RAMPS "E" & "F"

FED. RD. DIVISION	STATE	PROJECT	
2	OHIO		

FRANKLIN COUNTY
FRA-33-29.97

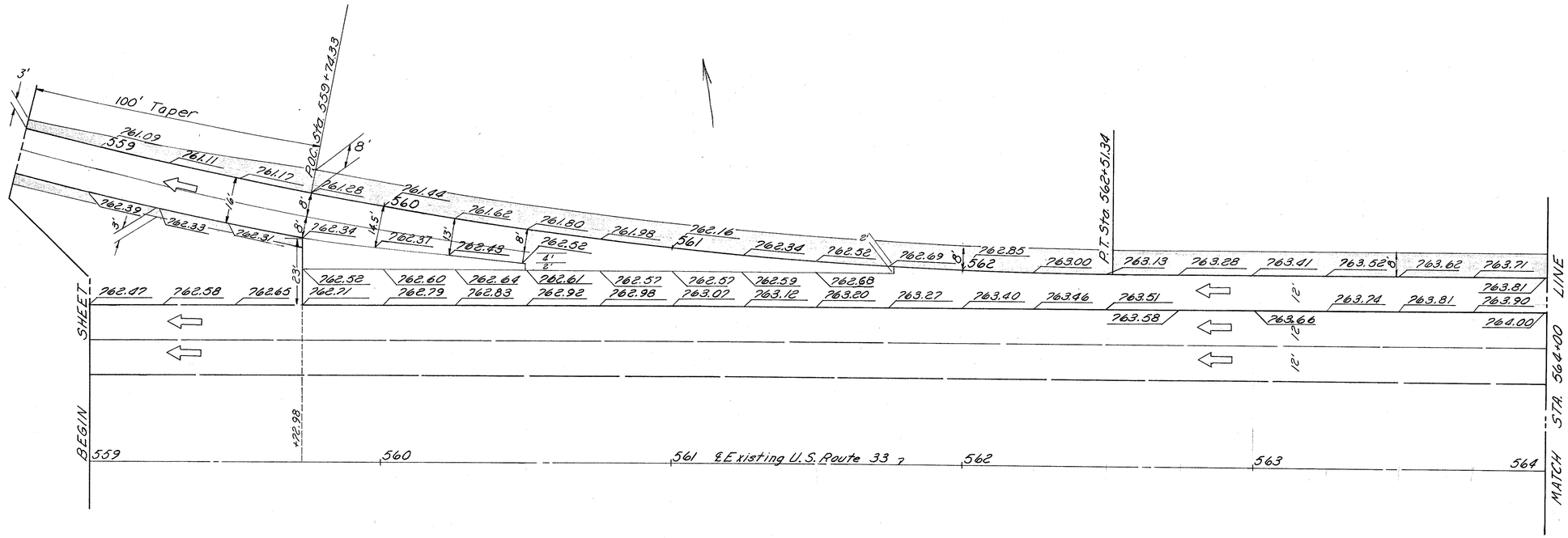

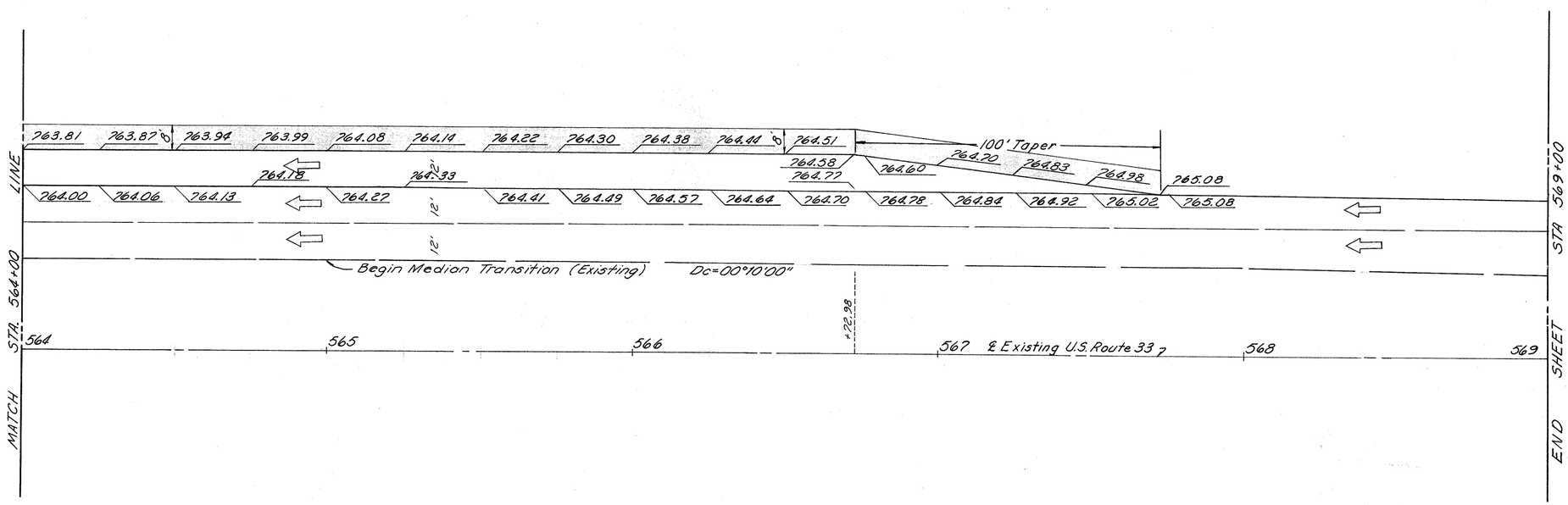

CALCULATED BY [illegible] DATE 10-16-69

CHECKED BY [illegible] DATE 12-1-69

GENDER ROAD INTERCHANGE – RAMP "F" PAVEMENT DETAILS

FED. RD. DIVISION	STATE	PROJECT	
2	OHIO		

80/155

FRANKLIN COUNTY
FRA. 33-29.53

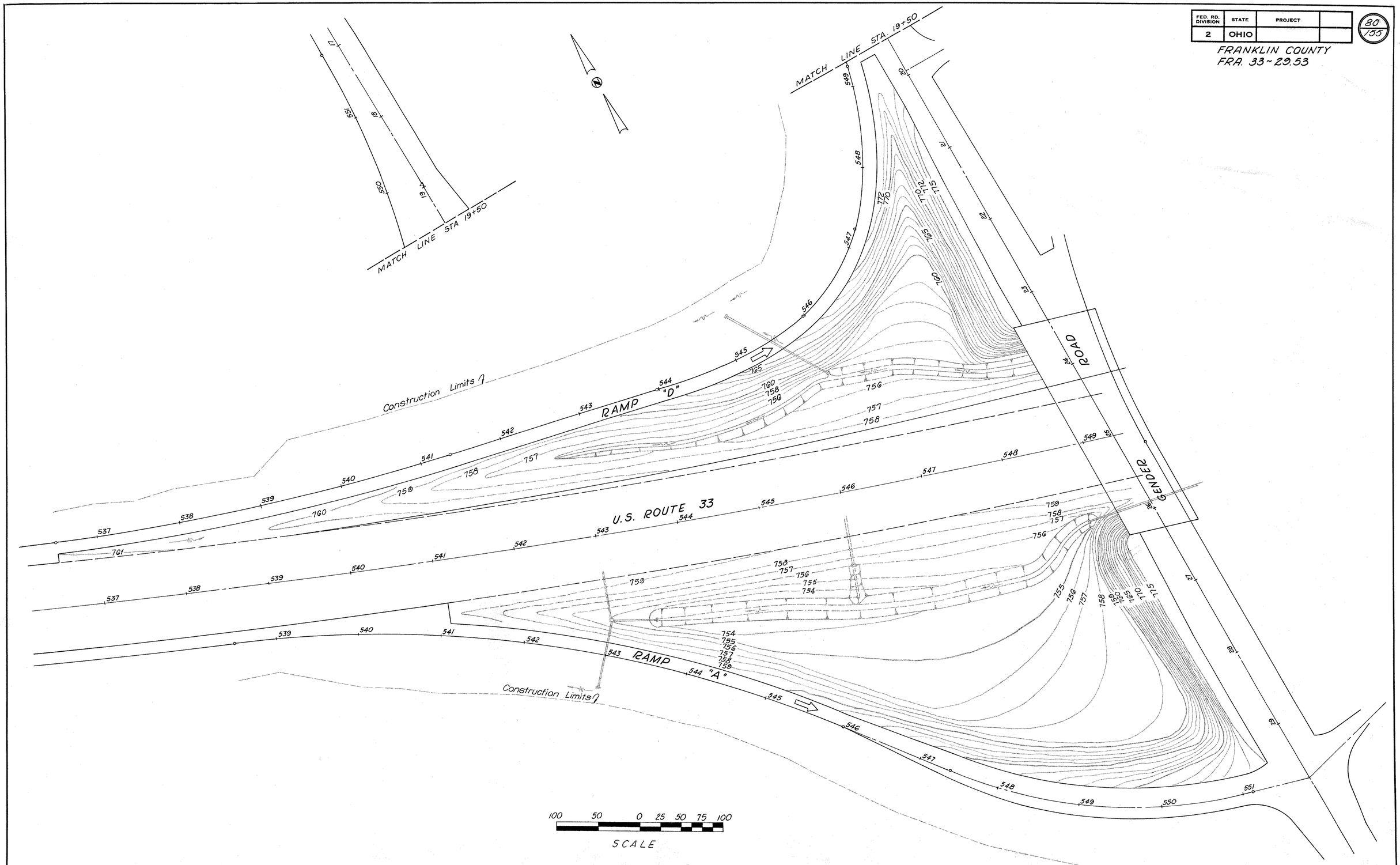

GENDER ROAD GRADING PLAN

FED. RD. DIVISION	STATE	PROJECT	
2	OHIO		

81/155

FRANKLIN COUNTY
FRA. 33-29.53

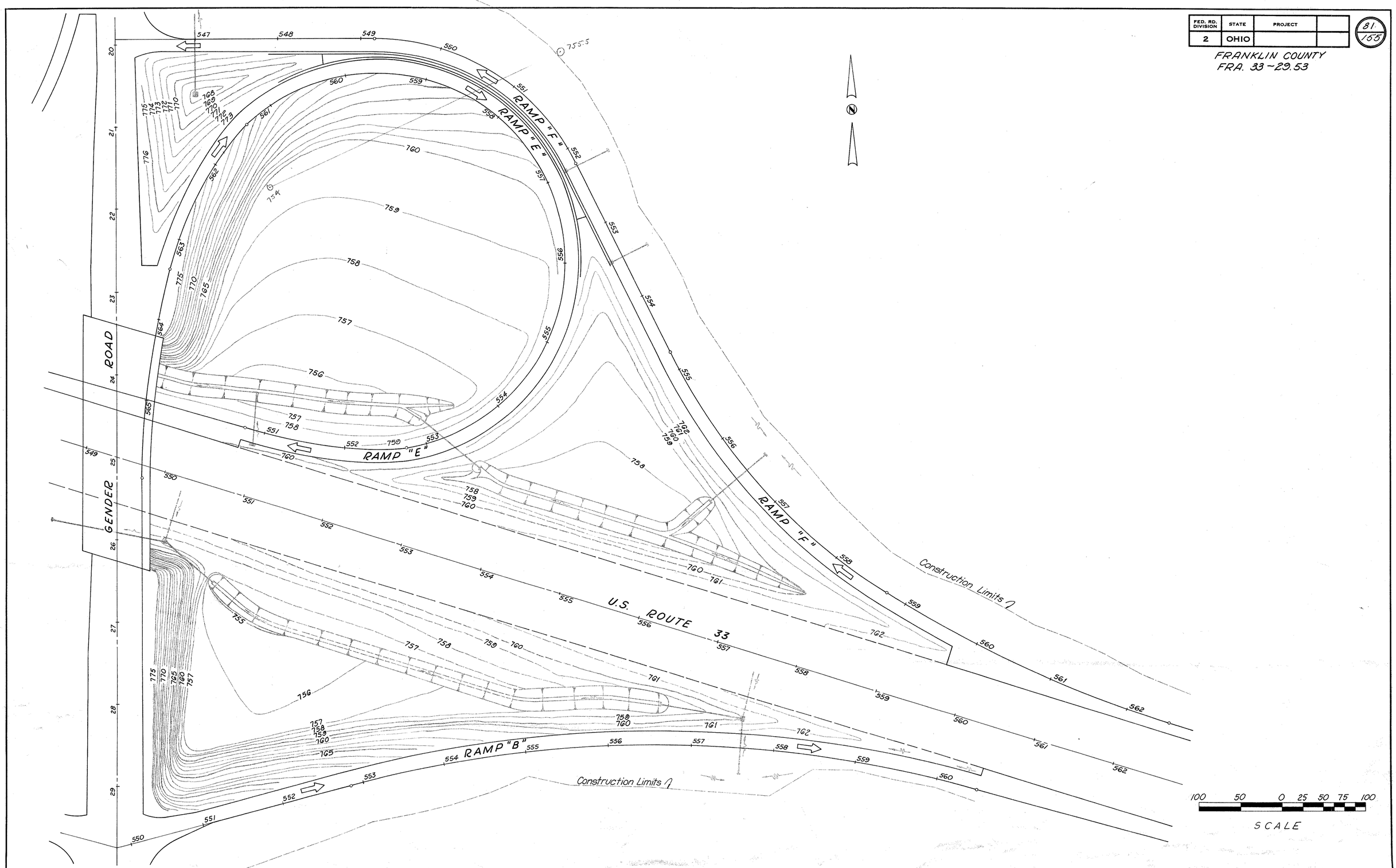

GENDER ROAD GRADING PLAN

FED. RD. DIVISION	STATE	PROJECT	
2	OHIO		

82
155

FRANKLIN COUNTY
FRA. 33 - 29.97

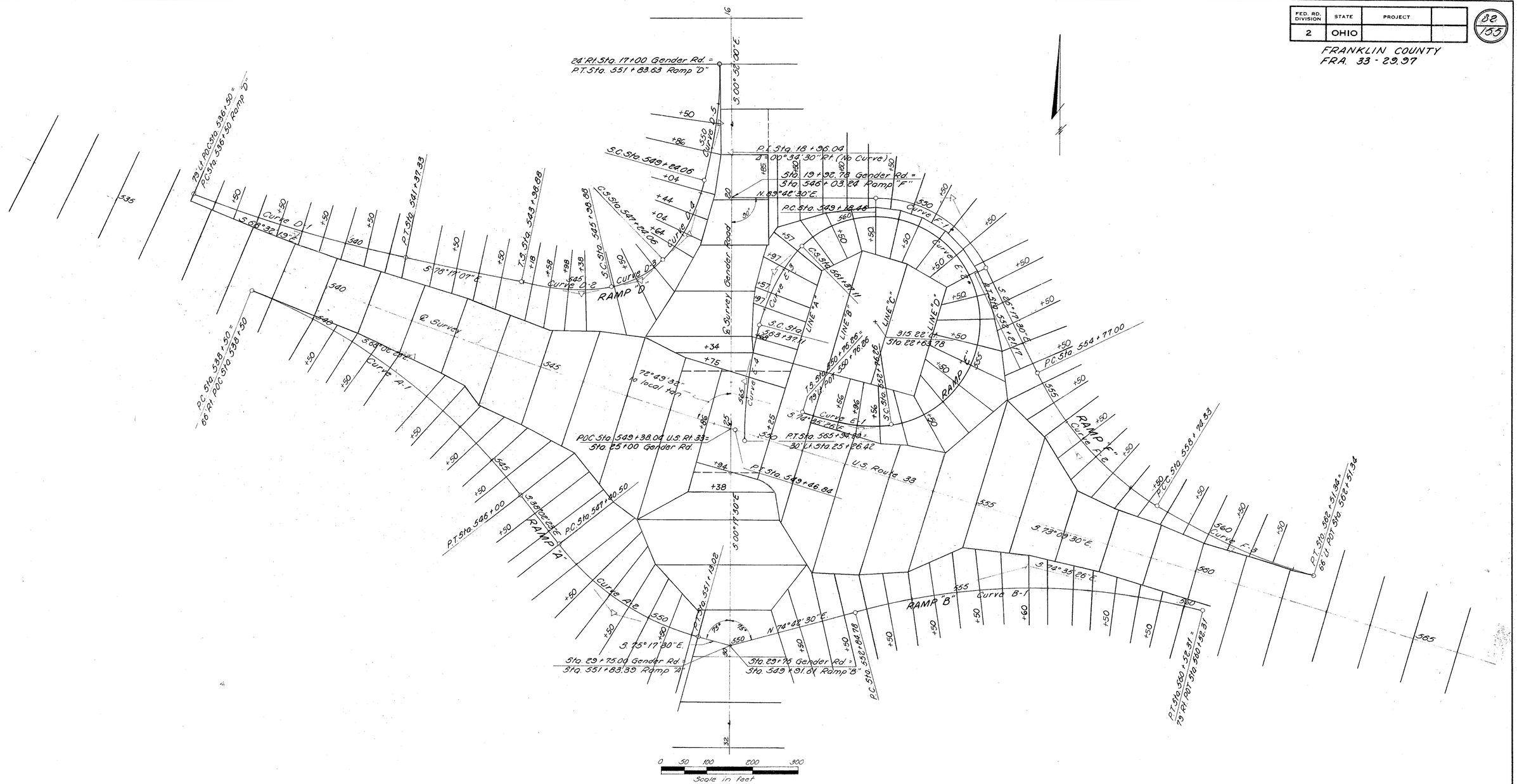

CROSS SECTION LAYOUT GENDER ROAD INTERCHANGE

FED. RD. DIVISION	STATE	PROJECT	
2	OHIO		

83/155

FRANKLIN COUNTY
FRA-33-29.97

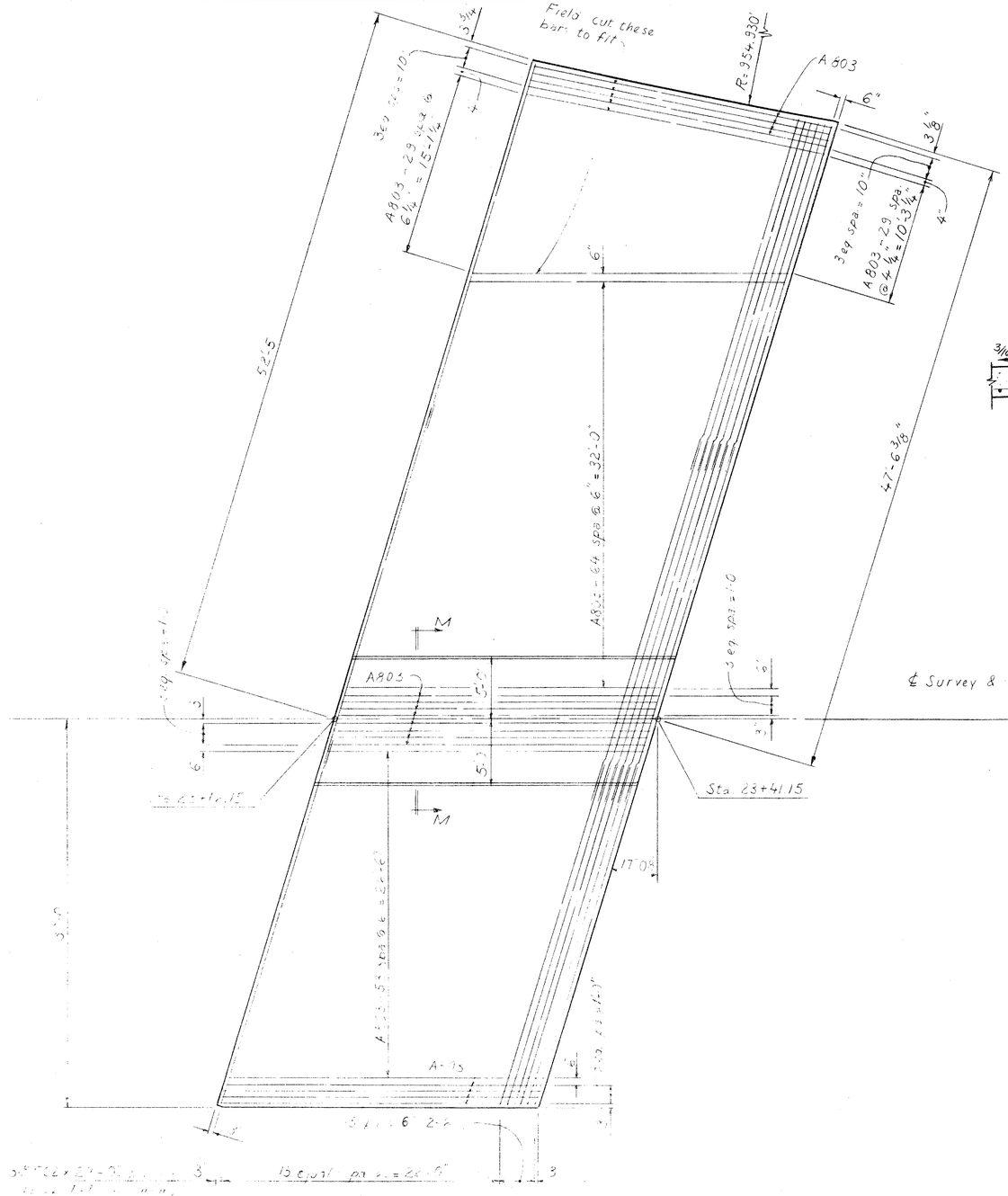

NORTH APPROACH SLAB
(All Steel Shown Is In Bottom Of Slab)

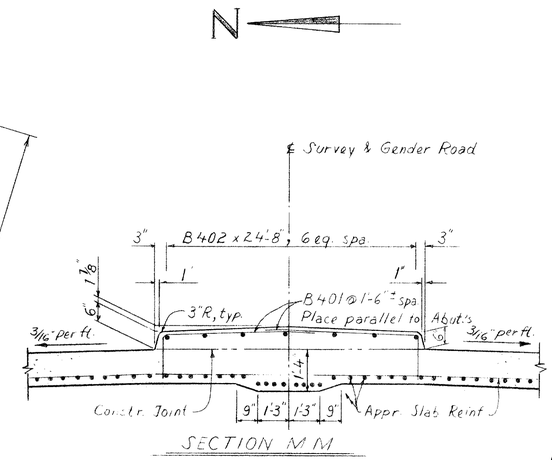

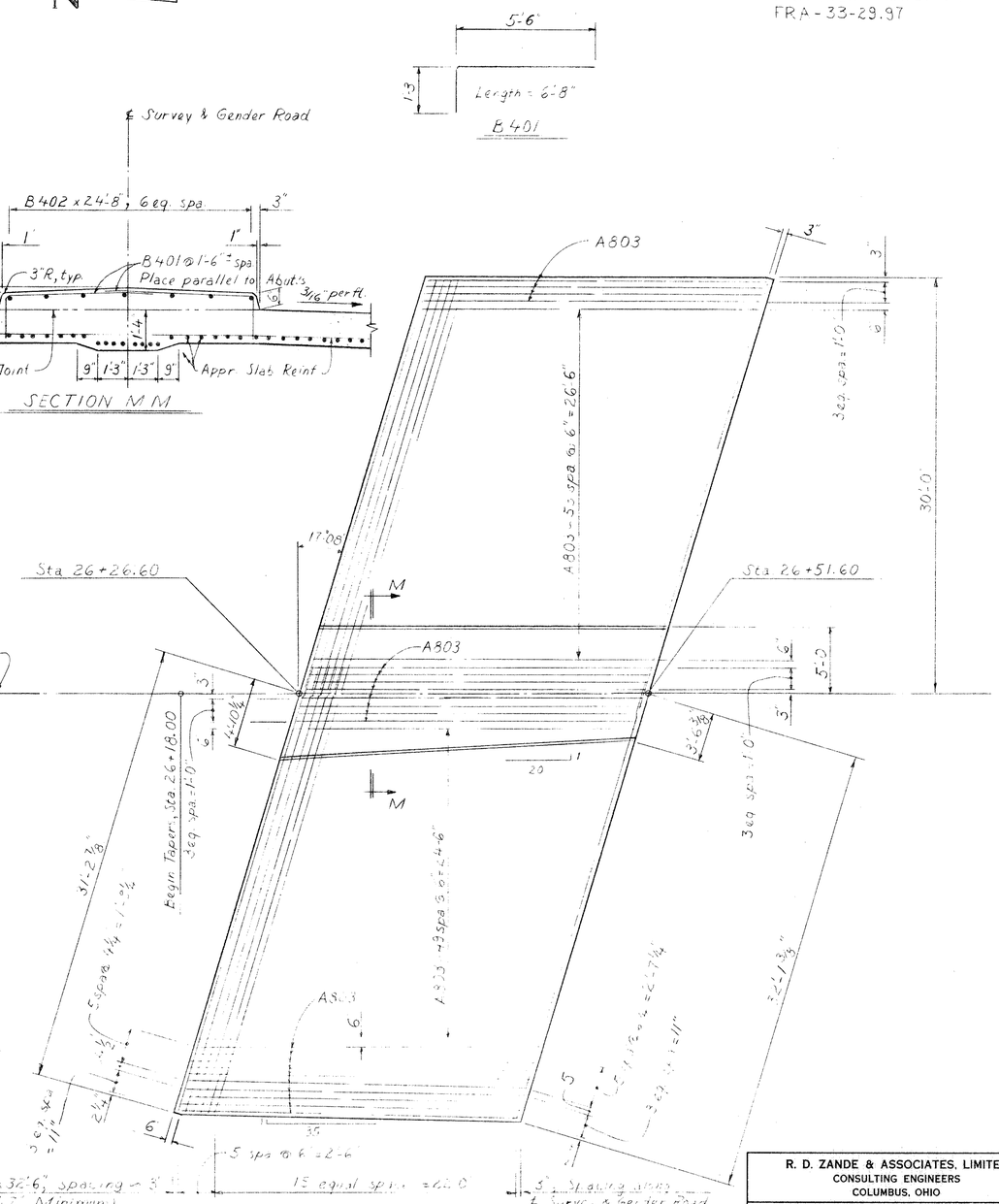

2-B503 x 32'-6 1/2" spacing - 3" [illegible]
(Lap 1'-7" Minimum)

SOUTH APPROACH SLAB
(All Steel Shown Is In Bottom Of Slab)

R. D. ZANDE & ASSOCIATES, LIMITED
CONSULTING ENGINEERS
COLUMBUS, OHIO

DESIGNED	DRAWN	TRACED	CHECKED	REVIEWED	DATE	REVISED

APPROACH SLABS DETAILS

(For Additional Details And Notes See Std Dwg AS-1-67)

BRUNING 40-21

APPROACH SLABS DETAILS

FED. RD. DIVISION	STATE	PROJECT	
2	OHIO		

84/155

FRANKLIN COUNTY
FRA-33-29.97

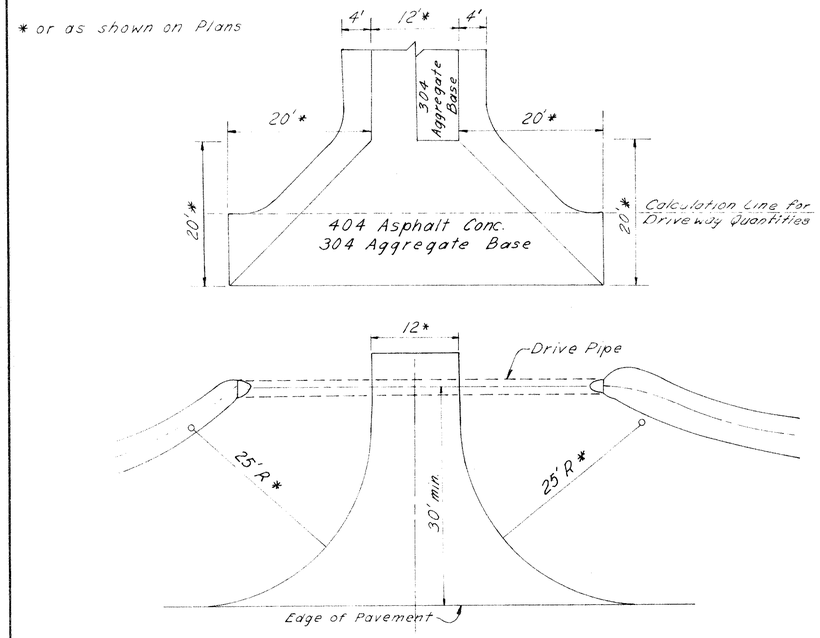

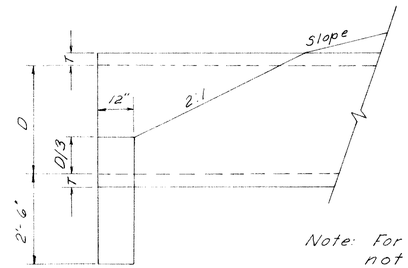

Note: For Dimensions & Details not shown See Standard Drawing HW-E

DETAIL OF SLOPE TREATMENT AT HW-E ENDWALLS

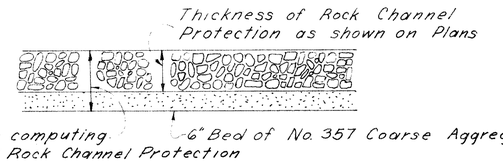

DETAIL OF ROCK CHANNEL PROTECTION

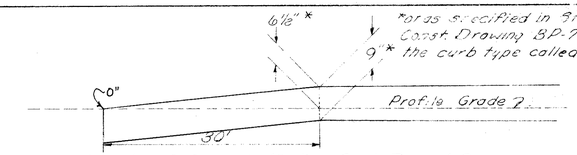

Elevation taper at ends of Concrete Median, Curb Types 6, 7

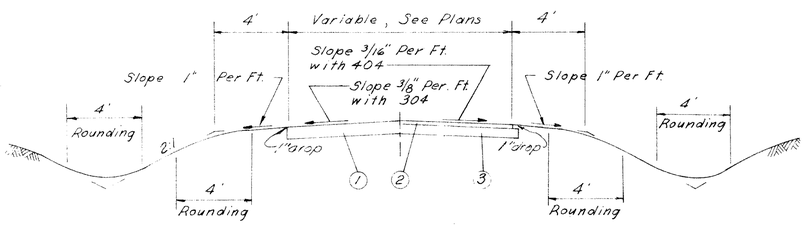

Note: For Dimensions & Details not shown See Standard Drawing BP-6

① Item 304 9" Aggregate Base for Commercial Drives
7" Aggregate Base for Field Drives

② Item 404 2" Asphalt Concrete (85-100) Applied in 2-1" courses

③ Item 304 5" Aggregate Base For Residential & Field Drives
7" Aggregate Base For Commercial Drives

TYPICAL HALF SECTION FOR DRIVEWAYS

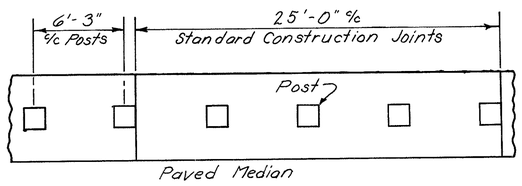

JOINT DETAIL AT GUARD RAIL POSTS

NOTES:

In lieu of the spacing requirements of Standard Drawing MC-6, expansion and contraction joints shall be provided in the concrete median as required hereon whenever guardrail is specified.

1/4" expansion joints, 705.03, shall be provided at each construction joint, at each end of each inlet and approximately 20 feet and 60 feet beyond each approach slab, cost included with 612 for payment.

Construction joints shall conform with details shown on Standard Drawing BP-4, 305 Base, except that spacing shall be 25'. Joint opening shall be filled with 1:3 grout or Class C concrete.

For square-sawed wood posts 1/4" 705.03 expansion joint material shall be used on all four sides for the depth of median. When steel posts are used, a coating of an oil such as SAE. 140 or other "bond-breaking" material shall be applied to the depth of median prior to placing the concrete. Payment shall be included in 612.

BRUNING 44.560 10943

FED RD DIVISION	STATE	PROJECT	
2	OHIO		

FRA-33-29.53

84A

NOTES

For details not shown, see Standard Drawings GR-2A and GR-2B.

All steel parts shall be galvanized in accordance with ASTM A123, A153 or A525, whichever may apply.

This drawing shall govern where a conflict arises.

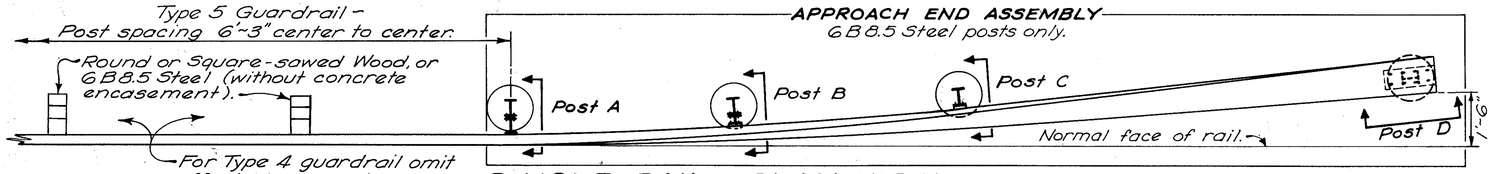

SINGLE RAIL ~ PLAN VIEW

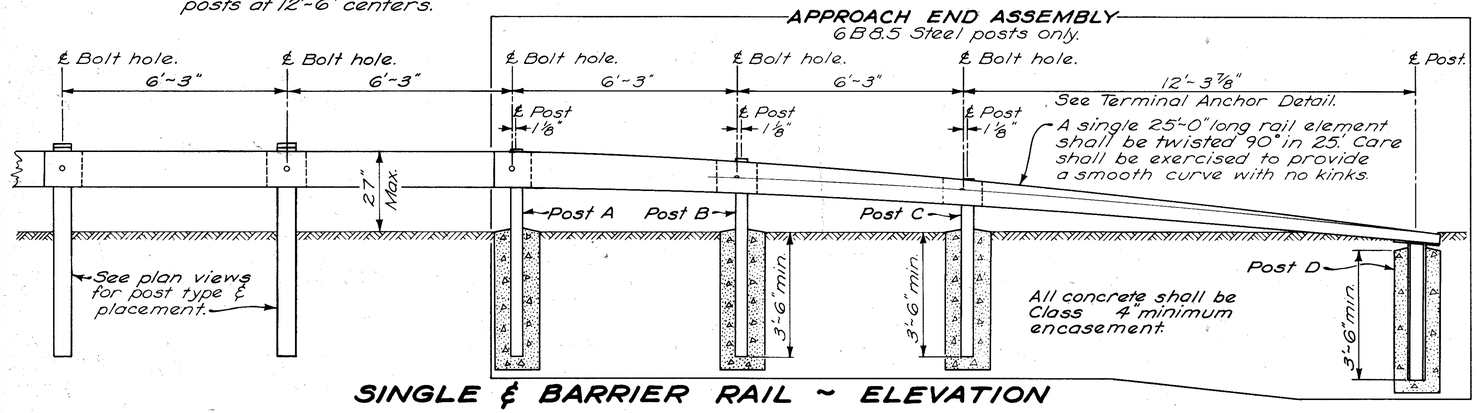

SINGLE & BARRIER RAIL ~ ELEVATION

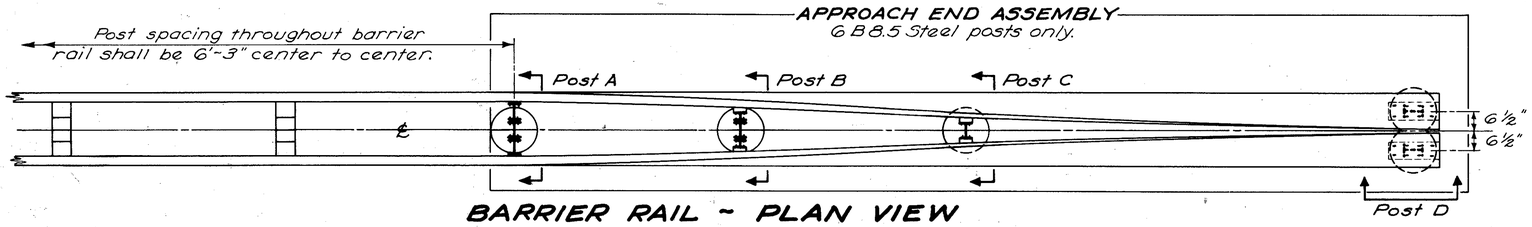

BARRIER RAIL ~ PLAN VIEW

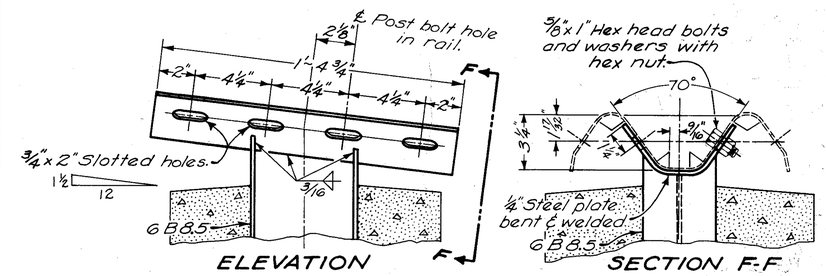

TERMINAL ANCHOR DETAIL

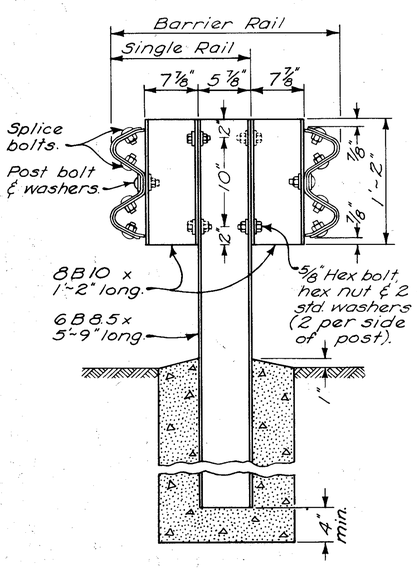

POST A

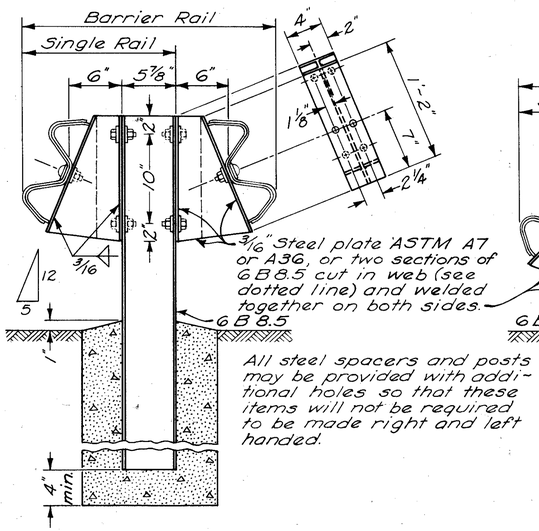

POST B

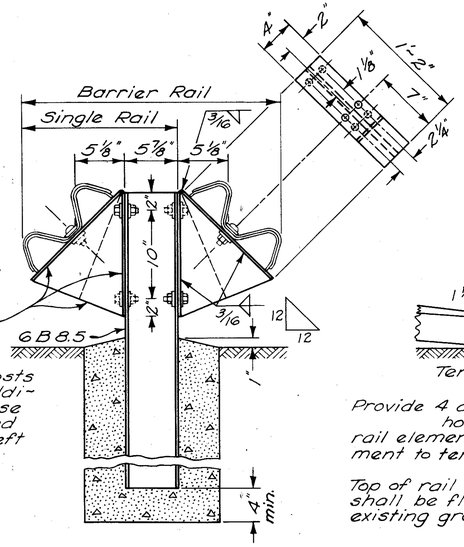

POST C

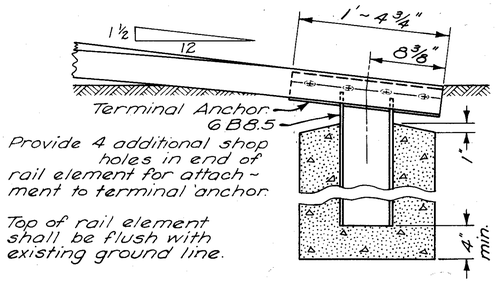

POST D

GR-4: GUARD RAIL ~ APPROACH END ASSEMBLY

Rev. 2-15-68

FED. RD. DIVISION	STATE	PROJECT	
2	OHIO		

84B

FRA-33-29.53

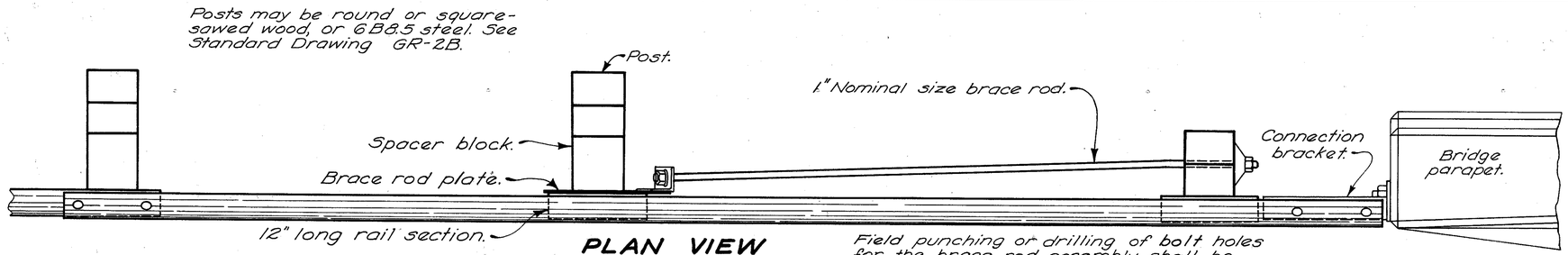

PLAN VIEW

Field punching or drilling of bolt holes for the brace rod assembly shall be accomplished as provided for in 606.04.

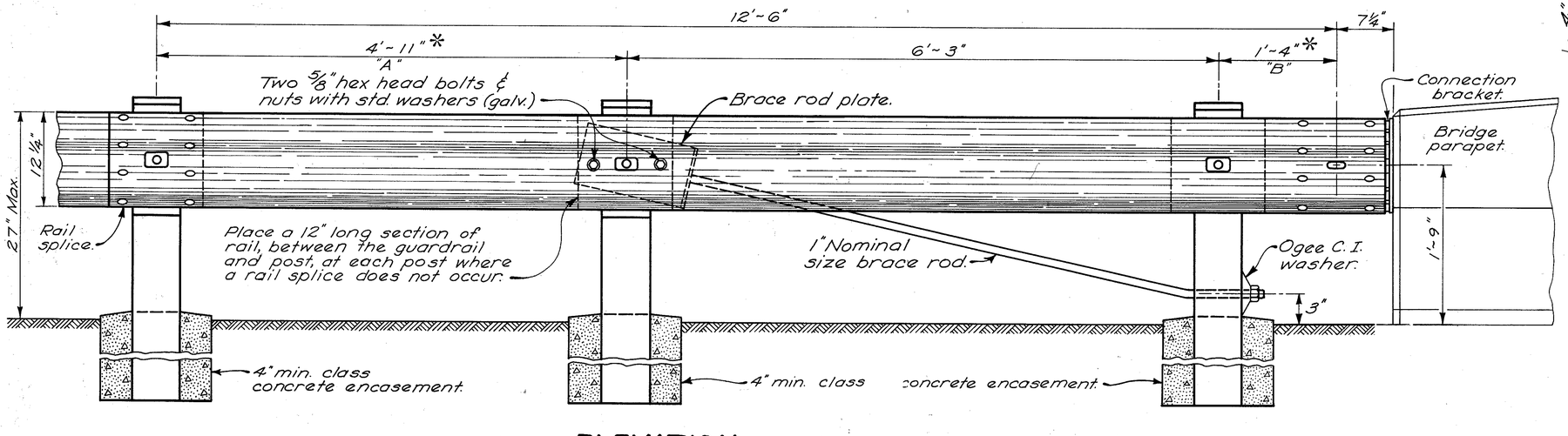

ELEVATION

GUARDRAIL TERMINAL AT BRIDGE

* Dimension "A" shall decrease as dimension "B" increases to accommodate interference by the bridge substructure.

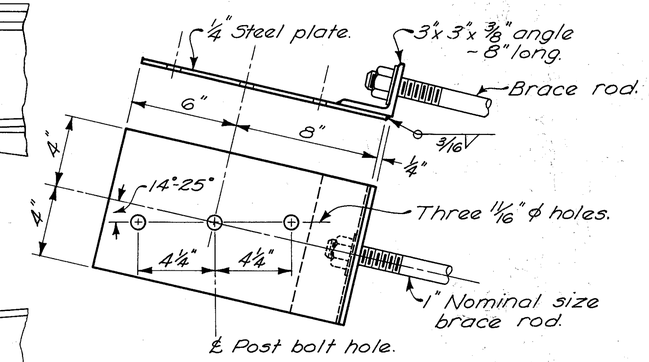

BRACE ROD PLATE

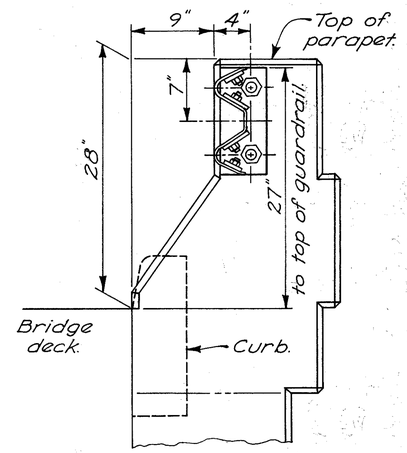

PARAPET APPROACH

For uncurbed approaches, guardrail shall be set 27" above ground line at face of rail. For curbed approaches guardrail shall be located 27" above gutter line and 9" behind the face of curb.

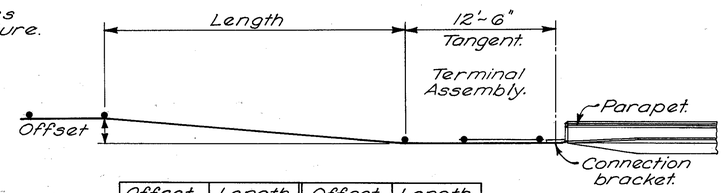

Offset	Length	Offset	Length
1'-0"	25.00'	5'-0"	100.00'
2'-0"	50.00'	6'-0"	100.00'
4'-0"	100.00'	7'-0"	100.00'

GUARDRAIL OFFSET DETAIL

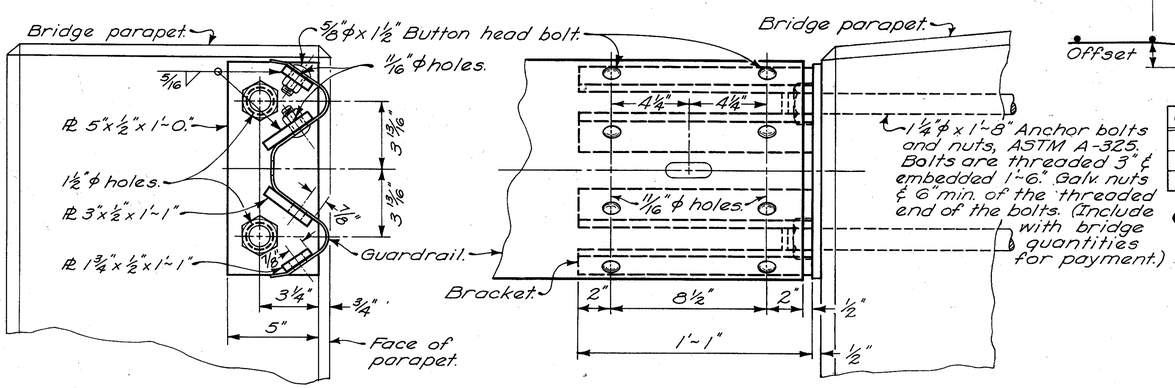

CONNECTION BRACKET DETAIL

GUARDRAIL ~ BRIDGE CONNECTION

The connection bracket shall be galvanized after welding and shall be included with guardrail for payment.

Rev. 7-10-68

GR-3 : BRIDGE TERMINAL ASSEMBLY

FED. RD. DIVISION	STATE	PROJECT	
2	OHIO		

85/155

FRANKLIN COUNTY
FRA-33-29.97

CULVERT SUBSUMMARY

STATION		601 Rock Channel Protection "B" C.Y.	601 RIP-RAP 6" REINF. CONC. SLAB S.Y.	602 CONC. MASONRY C.Y.	203 EXCAVATION C.Y.	604 Std. No. 2-3 CATCH BASIN EACH	202 PIPE REMOVAL 24" & UNDER LIN. FT.	605 UNCLASS. 6" PIPE UNDER-DRAIN LIN. FT.	660 SODDING	603 CONDUIT (LIN. FT.) TYPE "A" 706.02 or 706.08 18"	TYPE "A" 706.02 Class IV 18"	TYPE "A"	TYPE "A"	TYPE "B" 706.02 or 706.08 27"	TYPE "B" 706.02 Class IV 30"	TYPE "B" 706.02 or 706.08 30"	TYPE "B"	TYPE "B" 27"	TYPE "B"	TYPE "B" 30"	TYPE "C"	TYPE "C" 18"	TYPE "C" 27"	TYPE "C" 30"	SHEET NO.
28+90	GENDER ROAD	2.7		0.94		1	10	30															216		86
17+00	GENDER ROAD	1.8		0.6						128															87
19+35	GENDER ROAD	1.8	9	0.6					5.5		200														88
31+00	GENDER ROAD	2.4		1.02											160										
542+99	RAMP "A"	3.0		1.02		1														84				52	86
557+57	RAMP "B"	2.7		0.94		1	10	30										68					100		86
545+50	RAMP "D"	2.4		1.02												142									90
553+20	RAMP "E"	1.2		0.94	36									96											91
556+50	RAMP "F"	1.5		0.94	57									90											92
1+00	S.R. 674	2.4		1.02		1										102						24			93
TOTALS*		21.9	9	9.04	93	4	20	60	5.5	128	200			186	160	244		68		84		24	316	52	

* TOTALS CARRIED TO PAGE NO 9 & 10

CALCULATED BY C.M.V. DATE 12-11-69

CHECKED BY MDC DATE 10 Dec 69

FED. RD. DIVISION	STATE	PROJECT	
2	OHIO		

86/158

FRANKLIN COUNTY
FRA - 33 - 29.97

ESTIMATED QUANTITIES		
ITEM	DESCRIPTION	QUANTITY
202	Pipe Removal 24" & Under	10 Lin. Ft.
602	Concrete Masonry	0.94 Cu. Yds.
603	27" Conduit Type "C"	216 Lin. Ft.
601	Rock Channel Protection Type "B"	2.7 Cu. Yds.
605	Unclassified 6" pipe Underdrain	30 Lin. Ft.
604	Std No. 2-3. Catch Basin	1 Each

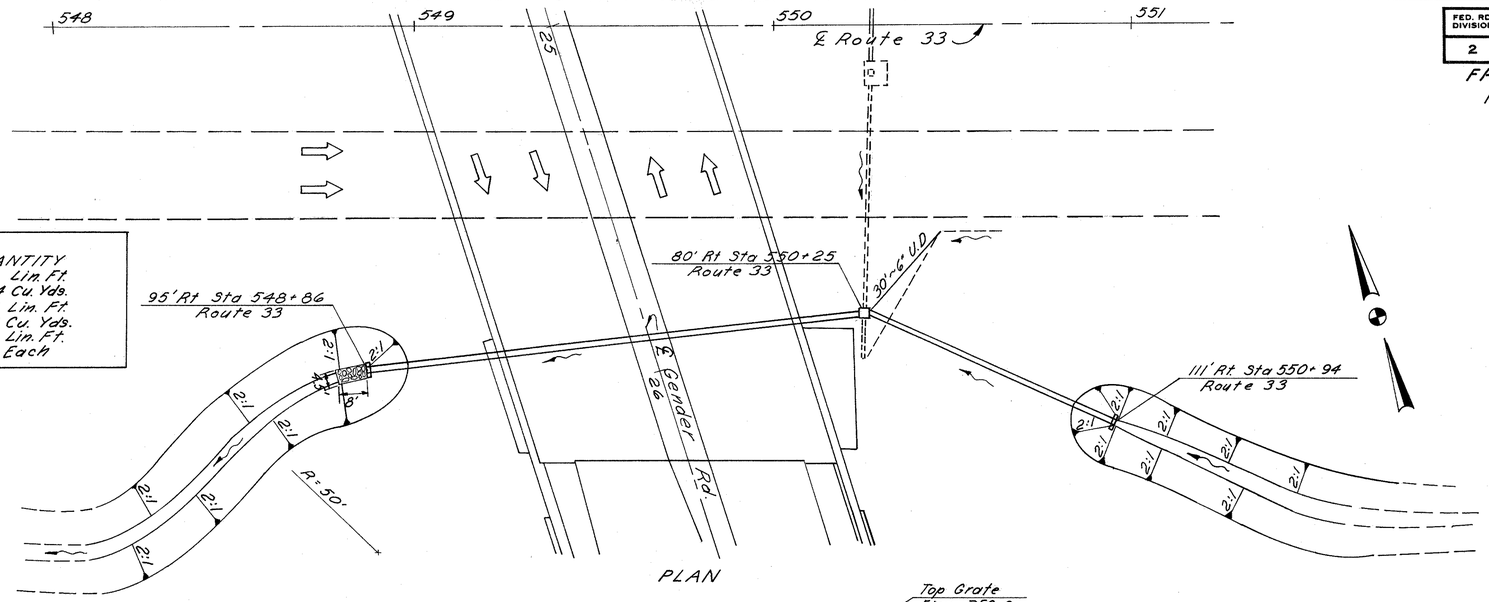

PLAN

SCALES

PLANS: 0 10 20 30 40

PROFILES: VERTICAL 0 5 10 20

HORIZONTAL 0 10 20 30 40

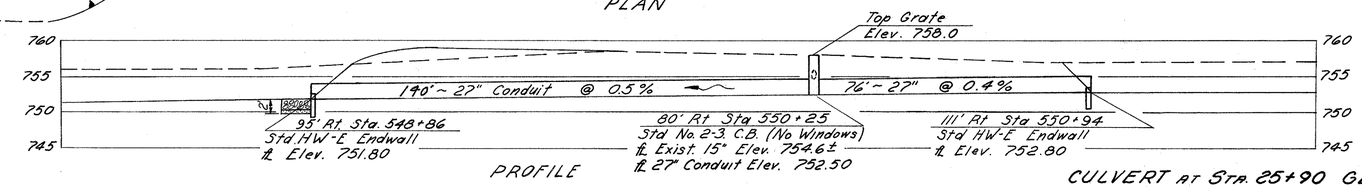

PROFILE

CULVERT AT STA. 25+90 GENDER ROAD

NOTE: Reference is made to Standard Construction Drawings CB 2-3, MC-4, & HW-E.

ESTIMATED QUANTITIES		
ITEM	DESCRIPTION	QUANTITY
602	Concrete Masonry	1.02 Cu. Yds
603	30" Conduit Type "B"	84 Lin. Ft.
603	30" Conduit Type "C"	52 Lin. Ft.
601	Rock Channel Protection Type "B"	3.0 Cu. Yds.
604	Std No. 2-3 Catch Basin	1 Each

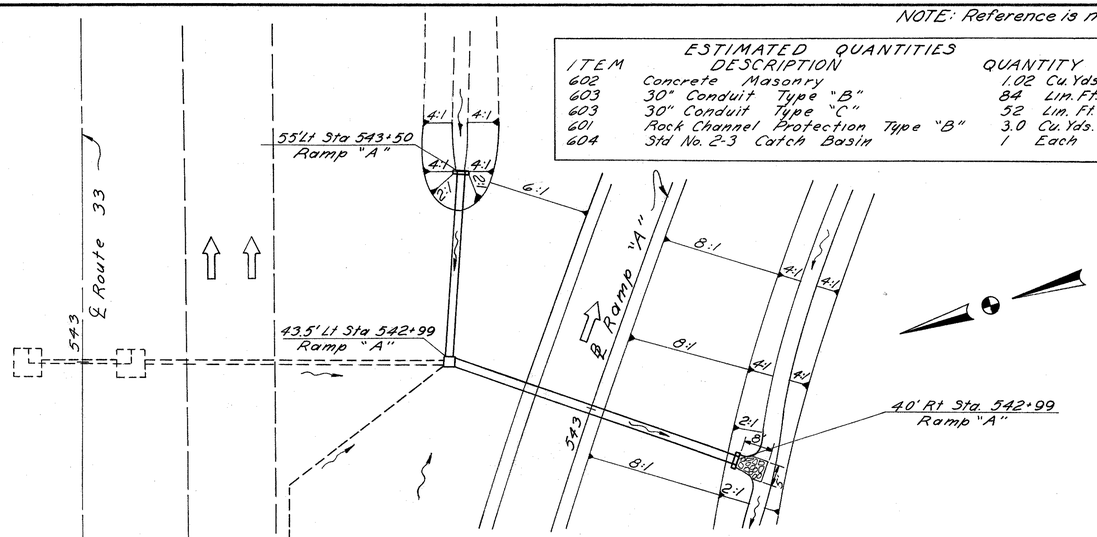

PLAN

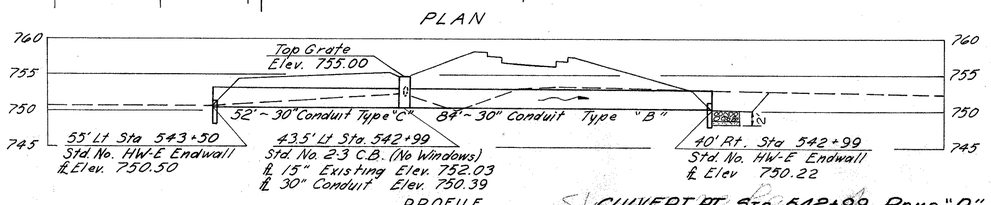

PROFILE

CULVERT AT STA. 542+99 RAMP "A"

ESTIMATED QUANTITIES		
ITEM	DESCRIPTION	QUANTITY
602	Concrete Masonry	0.94 Cu. Yds
603	27" Conduit Type "B"	68 Lin. Ft.
603	27" Conduit Type "C"	100 Lin. Ft.
601	Rock Channel Protection Type "B"	2.7 Cu. Yds
604	Std No. 2-3 Catch Basin	1 Each
202	Pipe Removal 24" & Under	10 Lin. Ft.
605	Unclassified 6" Pipe Underdrain	30 Lin. Ft.

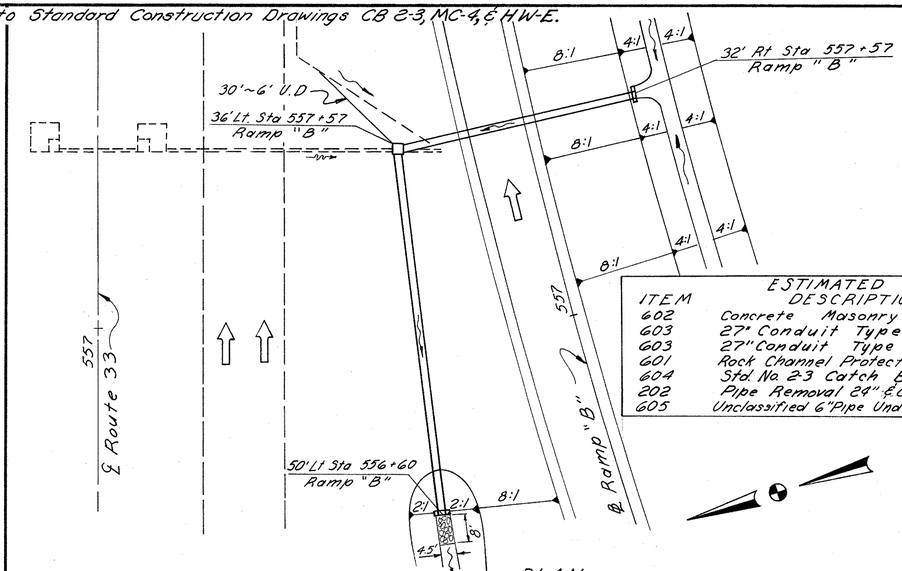

PLAN

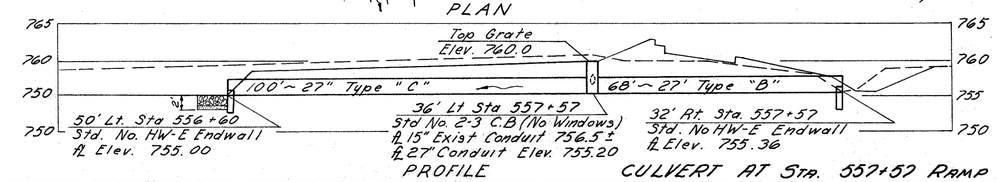

PROFILE

CULVERT AT STA. 557+57 RAMP "B"

CALCULATED BY C.M.T. DATE 12-1-69

CHECKED BY [illegible] DATE 12-20-69

CULVERTS AT 25+90 GENDER ROAD, 542+99 RAMP "A", & 557+57 RAMP "B"

BRUNING 44-560 10943

FED. RD. DIVISION	STATE	PROJECT	
2	OHIO		

82/135

FRANKLIN COUNTY
FRA-33-29.97

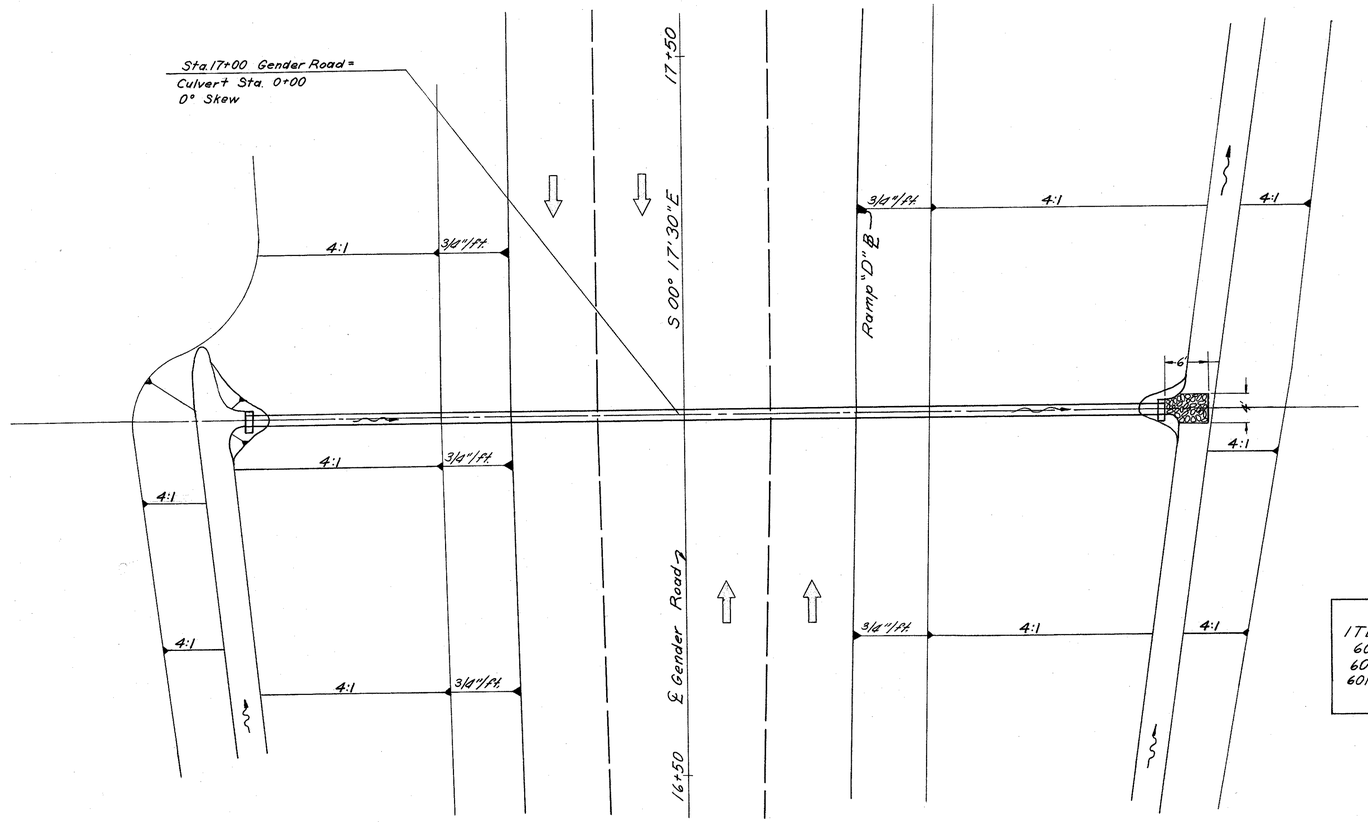

ITEM	DESCRIPTION	QUANTITY
603	18" Conduit Type "A" 706.02 or 706.08	128 Lin. Ft.
602	Concrete Masonry	0.6 Cu. Yd.
601	Rock Channel Protection Type "B"	1.8 Cu Yd

Drainage Area:	6.3 Ac.
Q_{25} =	12 cfs

PLAN

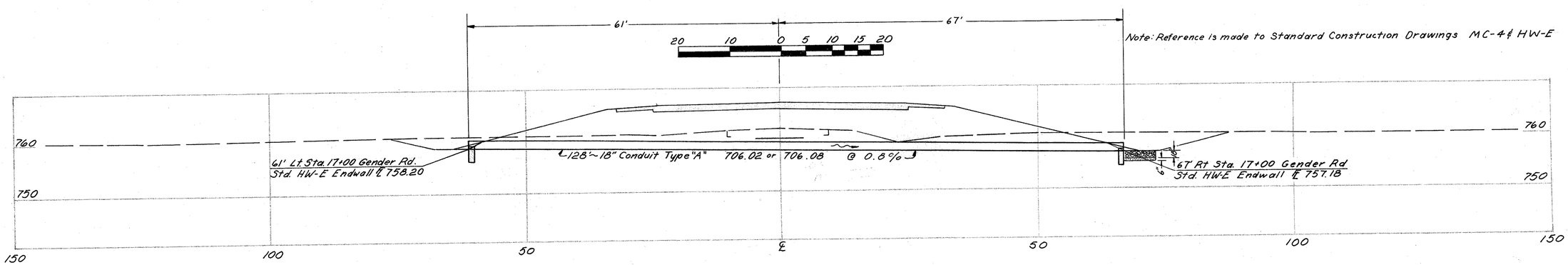

PROFILE

CALCULATED BY C WT DATE 12-1-69

CHECKED BY MJL DATE 10 Dec 69

CULVERT AT STA. 17+00 GENDER ROAD

BRUNING 44-560 10943

FED. RD. DIVISION	STATE	PROJECT	
2	OHIO		

88/155

FRANKLIN COUNTY
FRA - 33 - 29.97

ESTIMATED QUANTITIES		
ITEM	DESCRIPTION	QUANTITY
603	18" Type "A" Conduit, 706.02 Class IV	200 Lin. Ft.
602	Concrete Masonry	0.6 Cu. Yd.
601	Riprap (6" Reinforced Concrete Slab)	9 Sq. Yds.
601	Rock Channel Protection Type "B"	1.8 Cu. Yd.
660	Sodding	5.5 Sq. Yds.

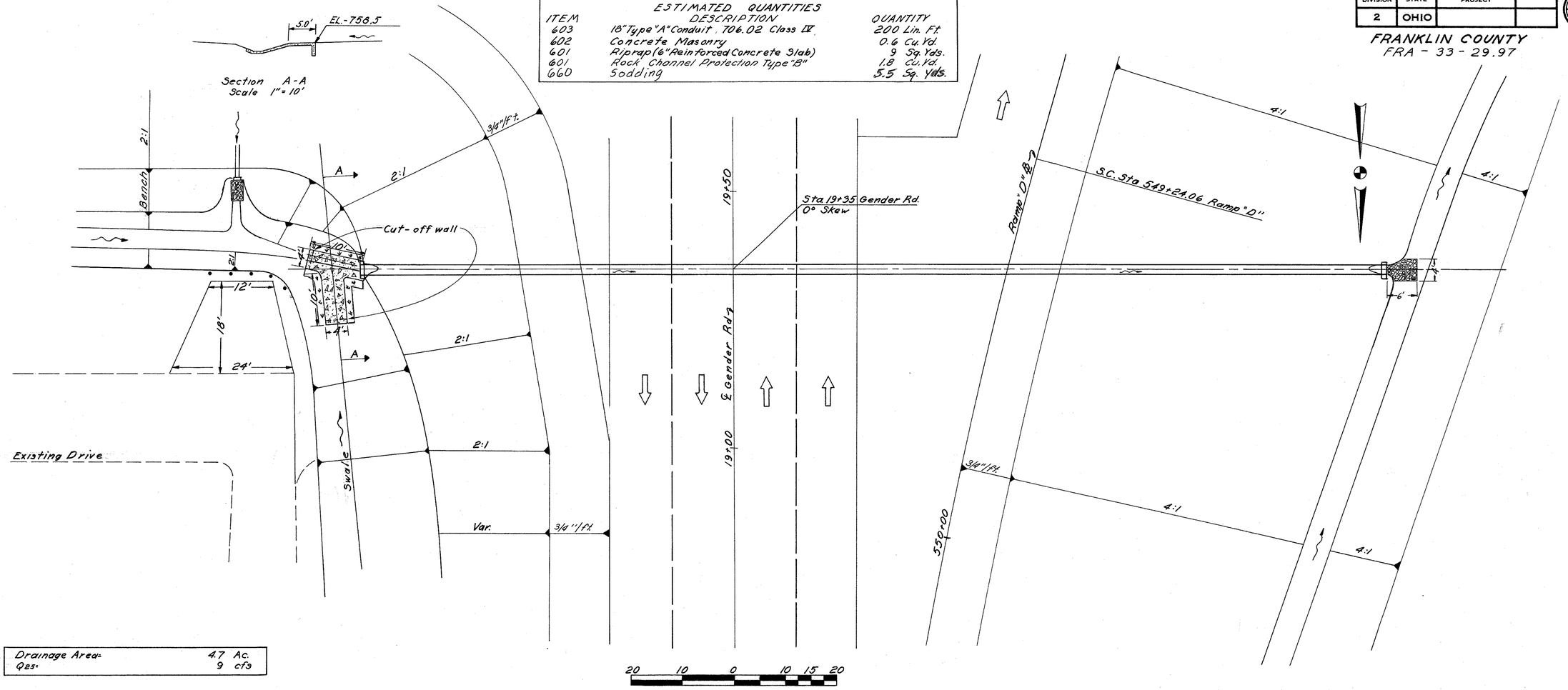

Drainage Area =	4.7 Ac.
Q25 =	9 cfs

Note: Reference is made to Standard Construction Drawings MCG & HW-E

PLAN

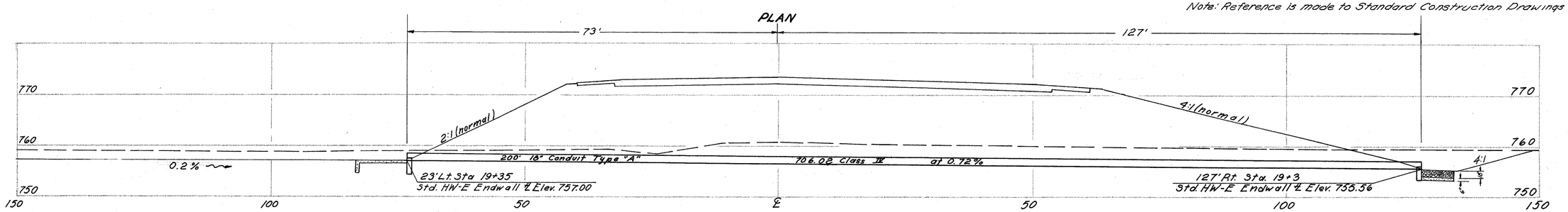

PROFILE

CALCULATED BY C. MT DATE 12-1-69

CHECKED BY [illegible] DATE 10-12-69

BRUNING 44-560 10943

CULVERT AT STA. 19+35 GENDER ROAD

FED. RD. DIVISION	STATE	PROJECT	
2	OHIO		

89/166

FRANKLIN COUNTY
FRA - 33 - 29.97

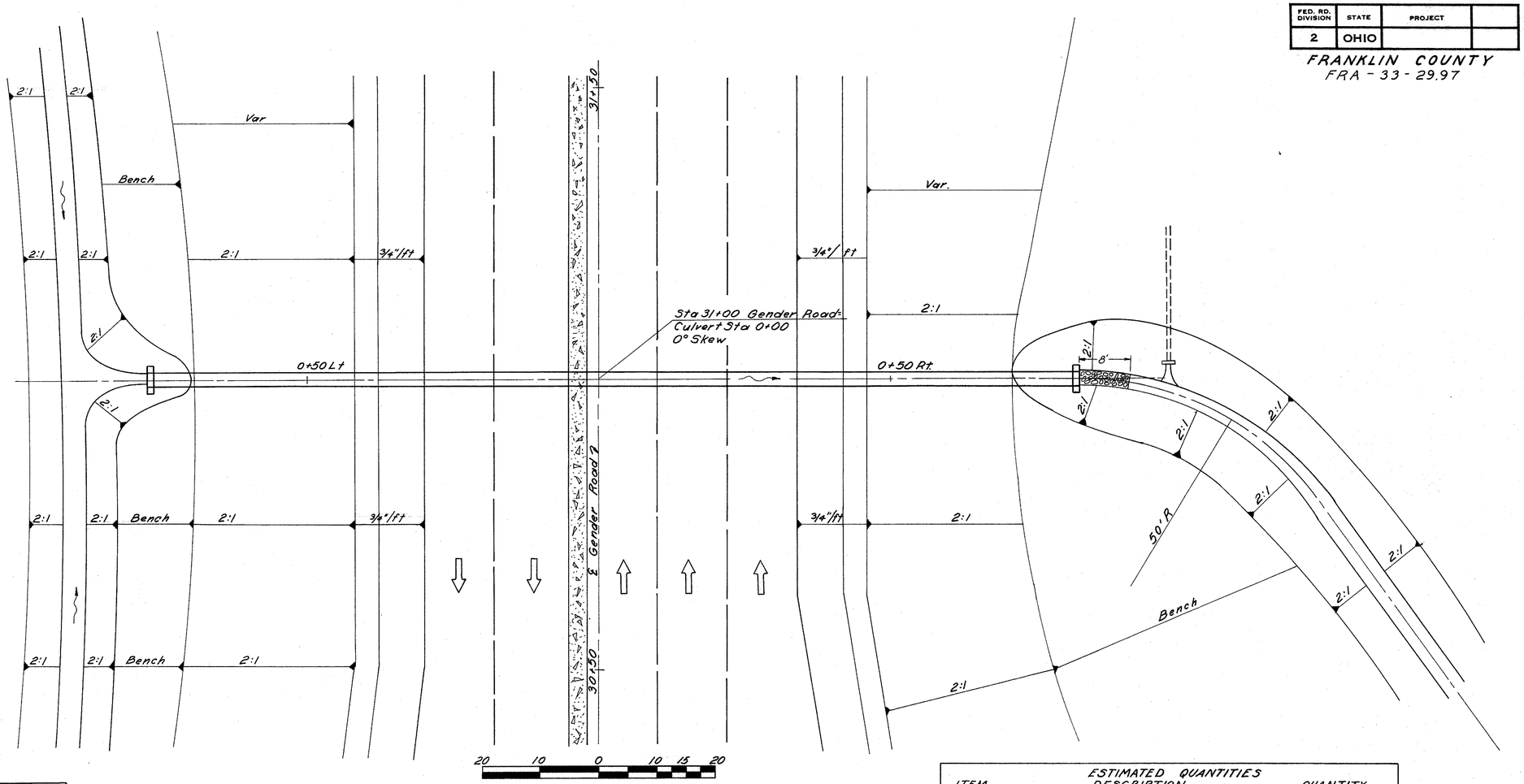

PLAN

Drainage Area =	29.6 Ac.
Qes =	33 c.f.s

ESTIMATED QUANTITIES

ITEM	DESCRIPTION	QUANTITY
603	30" Conduit Type "A" (706.02 Class IV)	160 Lin. Ft.
602	Concrete Masonry	1.02 Cu. Yd.
601	Rock Channel Protection Type "B"	2.4 Cu. Yd.

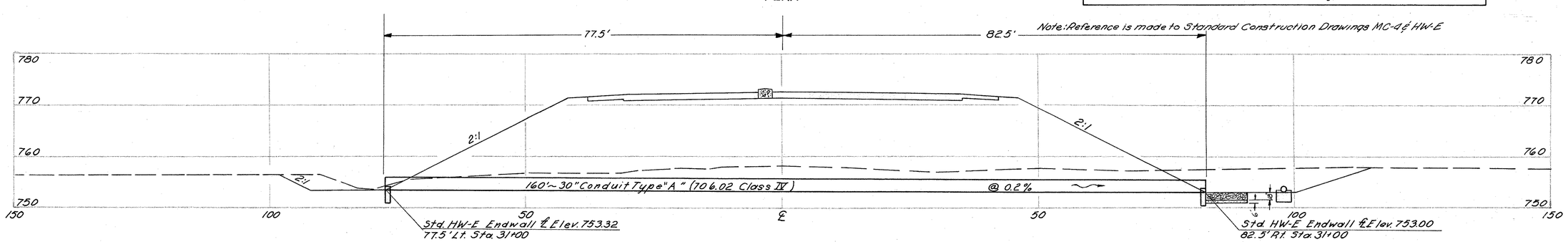

PROFILE

CALCULATED BY C MT DATE 12-1-69

CHECKED BY [illegible] DATE 10 Dec 69

BRUNING 44-560 10943

CULVERT AT STA. 31+00 GENDER ROAD

FED. RD. DIVISION	STATE	PROJECT	
2	OHIO		

90/155

FRANKLIN COUNTY
FRA-33-29.97

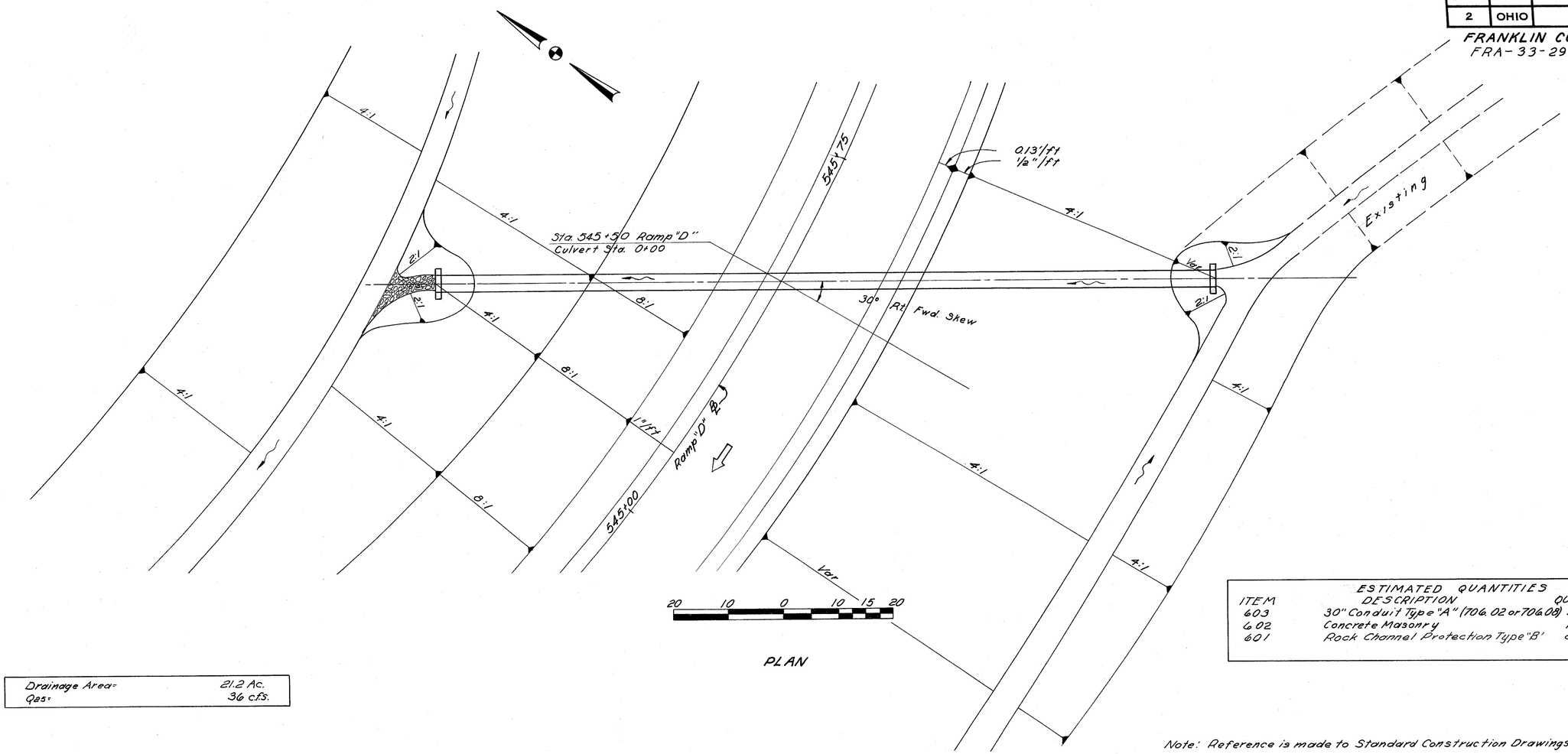

PLAN

ITEM	ESTIMATED QUANTITIES DESCRIPTION	QUANTITY
603	30" Conduit Type "A" (706.02 or 706.08)	142 Lin. Ft.
602	Concrete Masonry	1.02 Cu. Yd.
601	Rock Channel Protection Type "B"	2.4 Cu. Yd.

Drainage Area=	21.2 Ac.
Qes=	36 c.f.s.

Note: Reference is made to Standard Construction Drawings MC-4 & HW-E

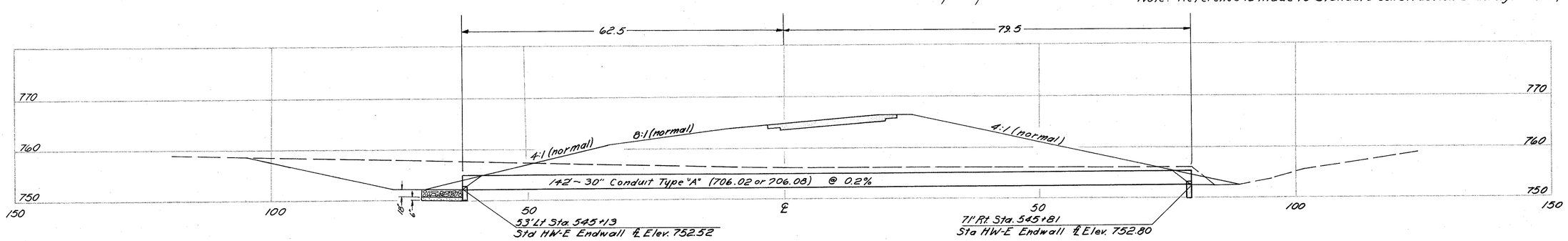

PROFILE

CALCULATED BY C MT DATE 12-1-69

CHECKED BY JKO DATE 10 Dec 69

CULVERT AT STA 545+50 RAMP "D"

BRUNING 44-560 10943

FED. RD. DIVISION	STATE	PROJECT	
2	OHIO		

91/155

FRANKLIN COUNTY
FRA-33-29.97

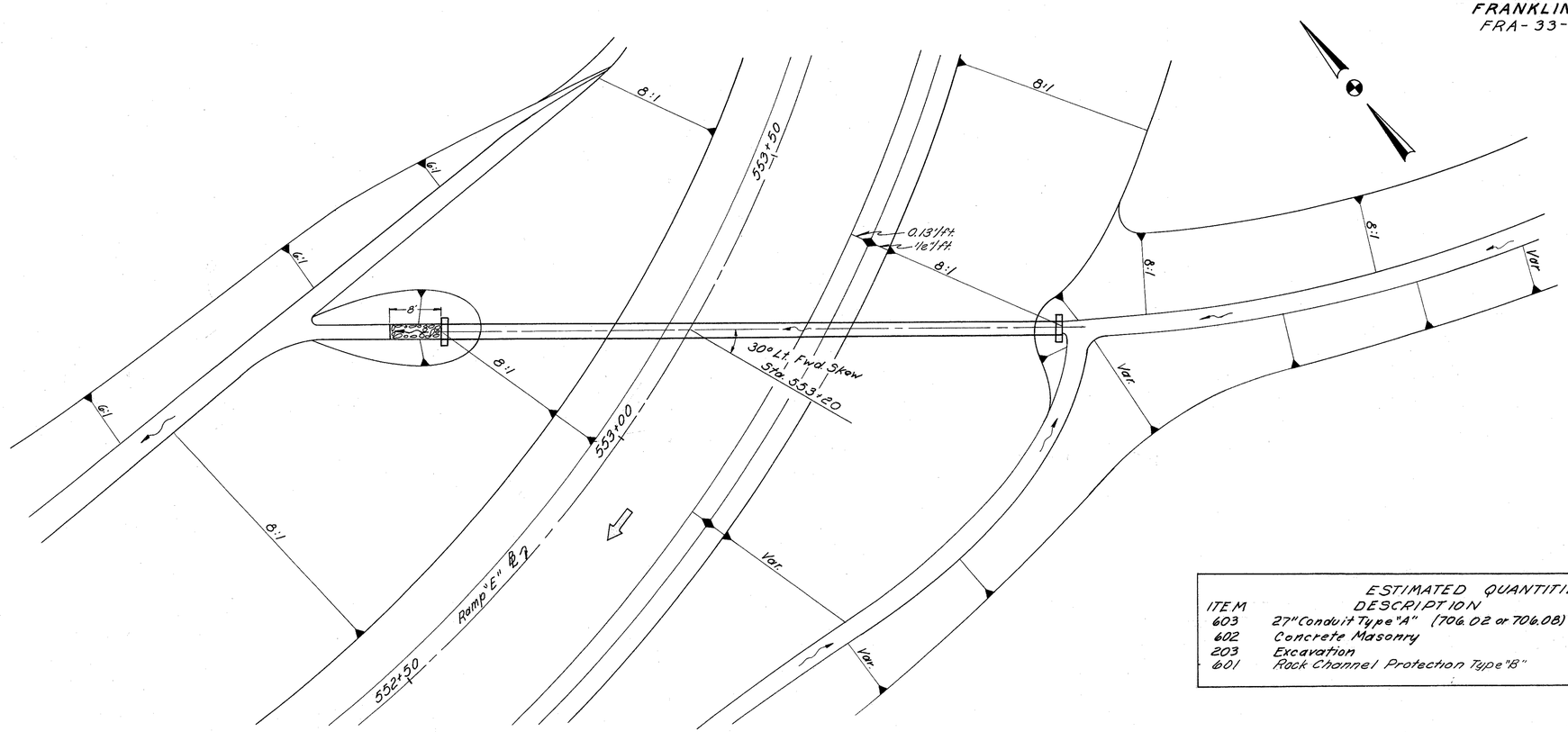

ESTIMATED QUANTITIES		
ITEM	DESCRIPTION	QUANTITY
603	27" Conduit Type "A" (706.02 or 706.08)	96 Lin.Ft.
602	Concrete Masonry	0.94 Cu.Yd.
203	Excavation	36 Cu.Yd.
601	Rock Channel Protection Type "B"	1.2 Cu.Yd.

PLAN

20 10 0 5 10 15 20

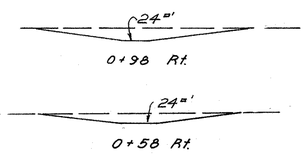

Note: Reference is made to Standard Construction Drawings MC-4 & HW-E

Drainage Area=	13 Ac
Qas =	26 c.f.s.

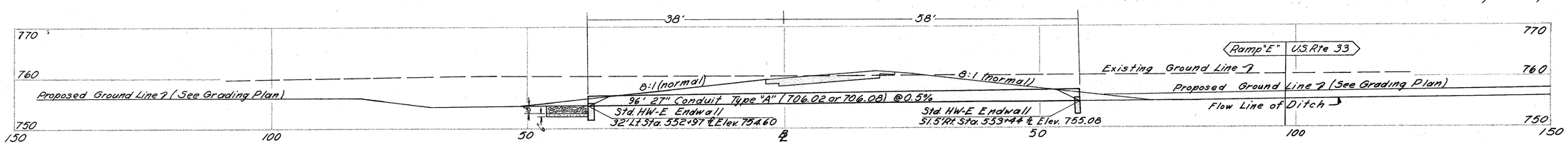

PROFILE

CALCULATED BY CMT DATE 12-1-69

CHECKED BY HLC DATE 10-20-69

BRUNING 44-560 10943

CULVERT AT STA. 553+20 RAMP "E"

FED. RD. DIVISION	STATE	PROJECT	
2	OHIO		

FRANKLIN COUNTY
FRA-33-29.97

ITEM	ESTIMATED QUANTITIES DESCRIPTION	QUANTITY
603	27" Conduit Type "A" (706.02 or 706.08	90 Lin Ft.
602	Concrete Masonry	0.94 Cu. Yd.
203	Excavation	57 Cu. Yd.
601	Rock Channel Protection Type "B"	1.5 Cu. Yd.

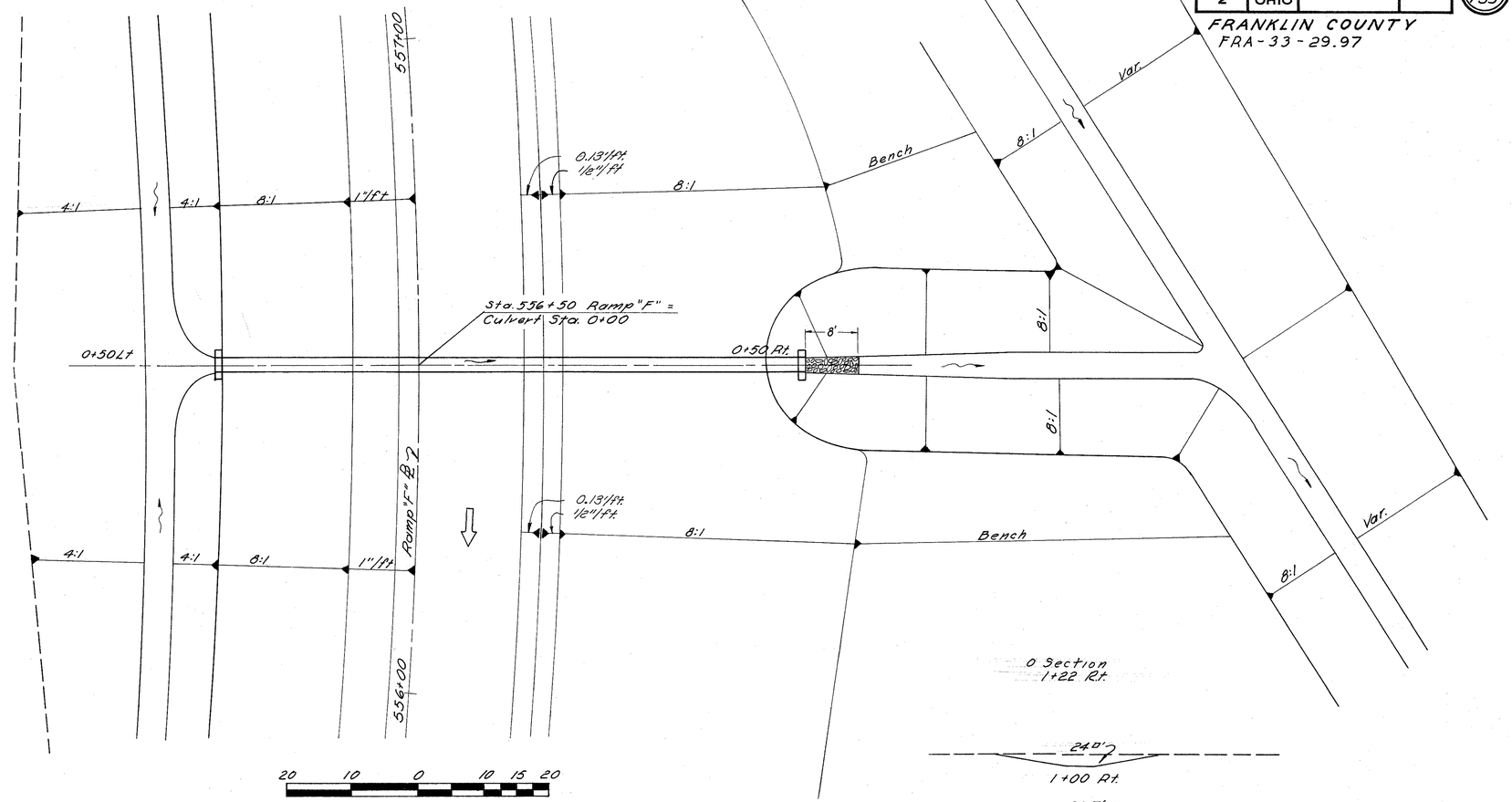

PLAN

Drainage Area =	10.4 Ac
Q25 =	22 c.f.s

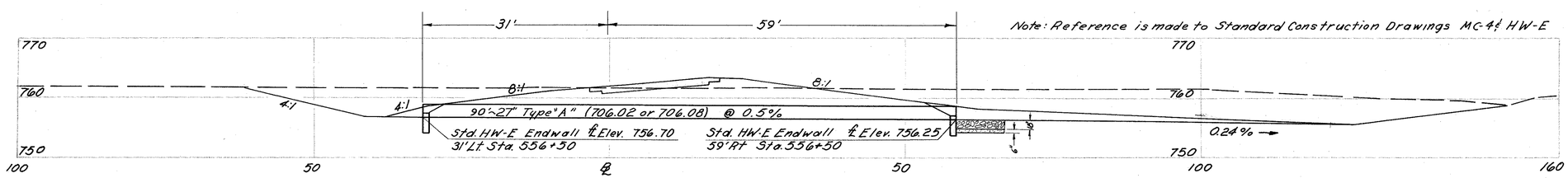

PROFILE

CALCULATED BY C.M.T. DATE 12-1-49

CHECKED BY [illegible] DATE 10-20-49

BRUNING 44-560 10943

CULVERT AT STA. 556+50 RAMP "F"

FED. RD. DIVISION	STATE	PROJECT	
2	OHIO		

93/155

FRANKLIN COUNTY
FRA-33-29.97

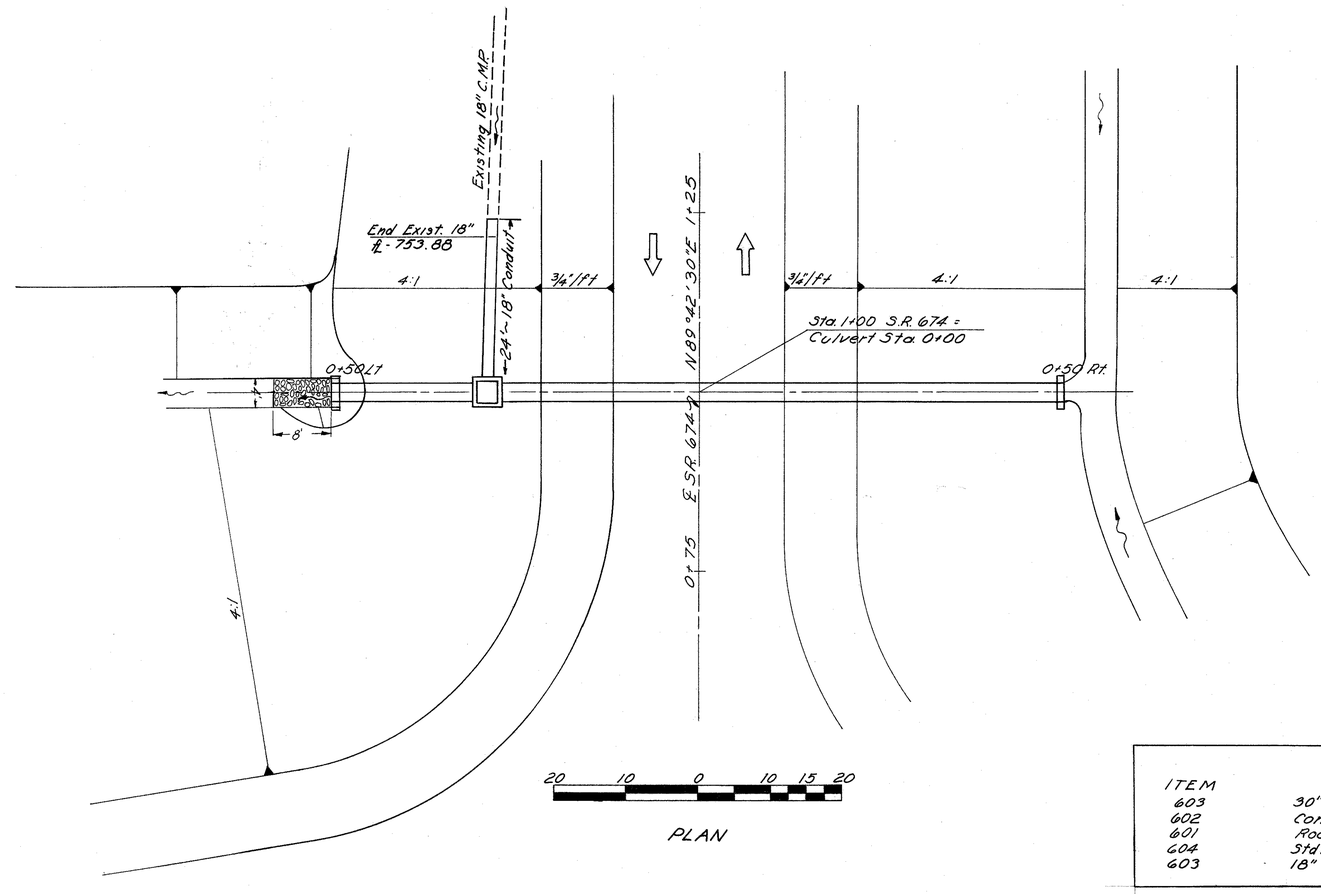

PLAN

ESTIMATE OF QUANTITIES		
ITEM	DESCRIPTION	QUANTITY
603	30" Conduit Type "A" (706.02 or 706.08)	102 Lin.Ft.
602	Concrete Masonry	1.02 Cu.Yd.
601	Rock Channel Protection Type "B"	2.4 Cu.Yd.
604	Std. No. 2-3 Catch Basin	1 Each
603	18" Conduit Type "C"	24 Lin.Ft.

Drainage Area =	14 Ac.
Qas =	20 c.f.s

Note: Reference is made to Standard Construction Drawings MC-4 & HW-E.

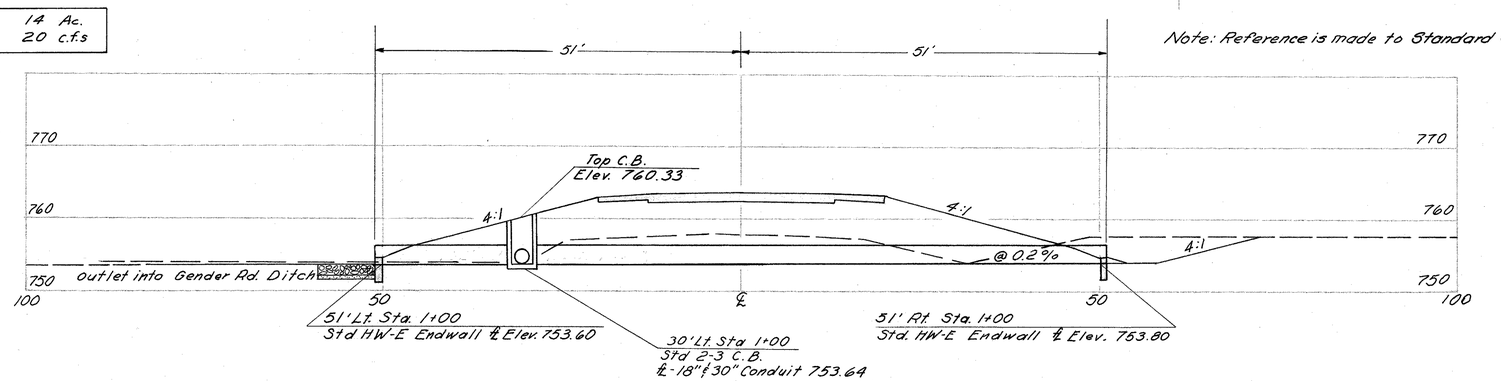

PROFILE

CALCULATED BY C.M.T. DATE 12-1-69

CHECKED BY [illegible] DATE 10 Dec 69

BRUNING 44-560 10943

CULVERT AT STA. 1+00 S.R. 674

GENERAL NOTES · SIGNING

OVERHEAD SIGN SUPPORT, BY TYPE

ALL COMPONENT PARTS OF THE OVERHEAD SIGN SUPPORTS SHALL BE STEEL, EXCEPT FOR THE TRUSS AND COMPONENTS FOR THE NUMBER 7 SERIES WHICH SHALL BE ALUMINUM. FOR SPECIFIC DETAILS AND MATERIALS, SEE SHEET NUMBERS 95 THROUGH 108.

COST OF FURNISHING AND INSTALLING THE SIGN BRACKETS AND THE FIXTURE SUPPORT ARM, LENGTH "G", WITH MOUNTING HOLES AND HARDWARE SHALL BE INCLUDED IN THE CONTRACT UNIT PRICE BID FOR OVERHEAD SIGN SUPPORTS.

MODIFYING SUPPLEMENTAL SPECIFICATION 816 SWITCH ENCLOSURE MOUNTING BRACKETS INCLUDING MOUNTING BOLTS AND DRILLED HOLES SHALL BE FURNISHED AND INSTALLED UNDER PAYMENT FOR 816 OVERHEAD SIGN SUPPORT STRUCTURES AT THE CONTRACT PRICE PER OVERHEAD SIGN SUPPORT, BY TYPE.

PAYMENT FOR THIS ITEM SHALL BE MADE AT THE CONTRACT UNIT PRICE BID FOR EACH OVERHEAD SIGN SUPPORT, BY TYPE, INSTALLED IN PLACE AND ACCEPTED, WHICH PRICE SHALL BE FULL COMPENSATION FOR FURNISHING ALL ANCHOR BOLTS (FOR INSTALLATION UNDER 816 CONCRETE FOR OVERHEAD SIGN SUPPORT FOUNDATIONS), AND FOR FURNISHING AND INSTALLING EACH OVERHEAD SIGN SUPPORT STRUCTURE SHOWN ON SHEET 92 INCLUDING FIXTURE SUPPORT ARMS, SWITCH ENCLOSURE MOUNTING BRACKET, SIGN BRACKETS AND ALL COMPONENT PARTS NECESSARY TO MAKE A COMPLETE WORKABLE INSTALLATION READY FOR SIGN ERECTION, INSTALLATION OF DISCONNECT SWITCH AND ENCLOSURE, GROUND ROD AND WIRE CONNECTIONS AND SIGN WIRING.

ERECTION OF THESE SUPPORTS SHALL BE ACCOMPLISHED IN A MANNER MEETING THE REQUIREMENTS OF SUPPLEMENTAL SPECIFICATION 816.

ELECTRICAL - GENERAL

THIS ITEM SHALL CONSIST OF FURNISHING ALL NECESSARY MATERIAL, LABOR AND FACILITIES REQUIRED TO COMPLETE THE ELECTRICAL INSTALLATION IN ACCORDANCE WITH THE DESIGNS, DIMENSIONS AND DETAILS SHOWN IN THE PLANS AND DESCRIBED IN THE SPECIFICATIONS.

ALL MATERIAL, WORKMANSHIP AND CONSTRUCTION METHODS, EXCEPT AS MODIFIED HEREIN, SHALL CONFORM TO THE GENERAL REQUIREMENTS OF THE STATE OF OHIO, DEPARTMENT OF HIGHWAYS, CONSTRUCTION AND MATERIALS SPECIFICATIONS, JANUARY 1, 1969.

SIGN SERVICE

THIS ITEM SHALL CONSIST OF THE COMPLETION OF THE ELECTRICAL SYSTEM AND COMPONENTS FROM THE CONNECTORS IN THE PULL BOX TO THE PRIMARY SIDE OF THE DISCONNECT SWITCH.

WORK WILL INCLUDE THE FURNISHING AND INSTALLING (INCLUDING TRENCHING AND BACKFILLING) OF THE 2 INCH GALVANIZED STEEL CONDUIT AND COUPLINGS FROM THE PULL BOX TO THE CONDUIT ELL IN THE SIGN SUPPORT FOUNDATION.

THIS ITEM WILL ALSO INCLUDE THE FURNISHING AND INSTALLING OF THE 1/C 600 VOLT SERVICE WIRE FROM THE CONNECTORS TO THE DISCONNECT SWITCH.

BASIS OF PAYMENT FOR THIS ITEM SHALL BE AT CONTRACT UNIT PRICE PER EACH, WHICH SHALL INCLUDE ALL LABOR, MATERIAL, AND EQUIPMENT REQUIRED TO COMPLETE THIS ITEM OF WORK.

WIRE AND CABLE

WIRE AND CABLE INSTALLATION SHALL CONFORM TO SECTION 625.14 OF THE CONSTRUCTION AND MATERIALS SPECIFICATIONS AND SHALL BE OF THE SIZES AND TYPES SHOWN ON THE PLANS.

WIRE OR CABLE INSTALLED IN CONDUIT ON OR WITH SIGN STRUCTURES SHALL BE #10 RHH, 600 VOLT STANDARD COPPER WIRE (POLE AND BRACKET CABLE).

CABLE INSTALLED UNDERGROUND LEADING FROM THE PULLBOX TO THE DISCONNECT SWITCH SHALL BE #4 OR 6 SINGLE CONDUCTOR CIRCUIT CABLE.

DISCONNECT SWITCH WITH TYPE "Y" ENCLOSURE

THIS ITEM SHALL INCLUDE FURNISHING OF A 30 AMP. 600 VOLT FUSED DISCONNECT SWITCH OF TYPE AND MAKE AS INDICATED ON SHEET 105 AND SHALL BE MOUNTED IN A NEMA 4 STAINLESS STEEL ENCLOSURE TYPE "Y" AND ATTACHED TO EACH SIGN SUPPORT BY MEANS OF A MOUNTING BRACKET AS DESCRIBED IN DETAIL ON SHEET 105.

EACH SWITCH ENCLOSURE SHALL BE FURNISHED WITH ONE PADLOCK. PADLOCKS SHALL HAVE A BRASS BODY AND WROUGHT IRON SHACKLE EQUAL TO RUSSWIN NO. 2882 KA OR MASTER NO. 4 KA OR APPROVED EQUAL.

BASIS OF PAYMENT FOR THIS ITEM SHALL BE PER EACH AT CONTRACT UNIT PRICE, WHICH SHALL INCLUDE ALL LABOR, MATERIAL, AND EQUIPMENT TO COMPLETE THIS ITEM AT WORK.

TRANSFORMER, BY TYPE

THIS ITEM OF WORK SHALL CONSIST OF FURNISHING AND INSTALLING TRANSFORMERS AS SPECIFIED ON SHEET 105.

BASIS OF PAYMENT FOR THIS ITEM SHALL BE AT CONTRACT UNIT PRICE PER EACH, WHICH SHALL INCLUDE ALL LABOR, MATERIAL AND EQUIPMENT REQUIRED FOR THIS COMPLETE ITEM OF WORK.

BALLAST, BY TYPE

BALLAST FOR FIXTURES SHALL BE WEATHER-PROOF OUTDOOR TYPE FOR A 120 VOLT 60 CYCLE SYSTEM AND SHALL PROVIDE LAMP STARTING AT AN AMBIENT TEMPERATURE OF -20 DEGREES F.

THIS ITEM OF WORK SHALL CONSIST OF FURNISHING ALL BALLAST TYPE AS SPECIFIED ON SHEET 104.

BASIS OF PAYMENT FOR THIS ITEM SHALL BE AT CONTRACT UNIT PRICE PER EACH, FURNISHED TO THE JOB FOR INSTALLATION UNDER ITEM 625 "SIGNS WIRED, COMPLETE".

LIGHT FIXTURE WITH LAMP, BY TYPE AND SIZE

THIS ITEM OF WORK SHALL CONSIST OF FURNISHING ALL LIGHT FIXTURES AND LAMPS, TYPES AND SIZES AS SPECIFIED ON SHEET 95.

BASIS OF PAYMENT FOR THIS ITEM SHALL BE AT CONTRACT UNIT PRICE PER EACH, FURNISHED TO THE JOB FOR INSTALLATION UNDER ITEM 625 SIGNS WIRED, COMPLETE.

GROUND RODS

THIS ITEM OF WORK SHALL CONSIST OF FURNISHING AND INSTALLING GROUND ROD AND CABLE AS SPECIFIED ON SHEET 105.

BASIS OF PAYMENT FOR THIS ITEM SHALL BE AT CONTRACT UNIT PRICE PER EACH, WHICH SHALL INCLUDE ALL LABOR, MATERIALS AND EQUIPMENT REQUIRED TO COMPLETE THIS ITEM OF WORK.

SIGNS WIRED, COMPLETE

THIS ITEM SHALL CONSIST OF THE COMPLETION OF THE ELECTRICAL SIGN LIGHTING SYSTEM FOR EACH ILLUMINATED SIGN.

WORK SHALL INCLUDE INSTALLATION OF LIGHT FIXTURES AND BALLASTS, AND FURNISHING AND INSTALLATION OF ALL RIGID AND FLEXIBLE CONDUIT, CONDULETS, JUNCTION BOXES, CABLE, FASTENERS, HARDWARE, AND ALL OTHER ITEMS REQUIRED TO ENERGIZE THE SIGN LIGHTING SYSTEM. SEE DETAILS ON SHEETS 105.

THE COST OF FURNISHING AND INSTALLING CABLE, CABLE GRIPS, CABLE SPLICE UNITS, AND NECESSARY FASTENERS FROM THE DISCONNECT SWITCH TO THE SIGNS WITHIN SIGN SUPPORT MEMBERS SHALL BE INCLUDED IN THIS ITEM OF WORK.

BASIS OF PAYMENT SHALL BE AT THE CONTRACT UNIT PRICE PER EACH SIGN WIRED WHICH PRICE SHALL INCLUDE ALL LABOR, MATERIALS, TOOLS, EQUIPMENT, AND OTHER INCIDENTALS TO PROVIDE A COMPLETE AND ACCEPTED ITEM OF WORK.

INSPECTION AND TESTING OF SIGN LIGHTING

THE CONTRACTOR SHALL FURNISH ALL LABOR, ELECTRICAL POWER, AND EQUIPMENT NECESSARY TO DEMONSTRATE TO THE ENGINEER THAT NO SHORT CIRCUITS AND UNSPECIFIED GROUNDS EXIST AND THAT THE SIGN CIRCUITS ARE PROPERLY CONNECTED AND OPERABLE PRIOR TO ACCEPTANCE.

THIS DEMONSTRATION SHALL INCLUDE A MEGGARING TEST TO SHOW THAT THE POWER CONDUCTORS ARE NOT GROUNDED AND THAT THE RESISTANCE TO GROUND FOR THE GROUND CONDUCTOR IS NOT MORE THAN 25 OHMS. WHERE RESISTANCE EXCEEDS 25 OHMS, ADDITIONAL LENGTH AND/OR NUMBERS OF RODS SHALL BE INSTALLED PER REQUIREMENTS OF 625.10.

A VOLTAGE AND AMPERAGE MEASUREMENT SHALL BE MADE AT THE SIGN SUPPORT SWITCH.

WHERE A LOW VOLTAGE TAP TRANSFORMER IS USED THE VOLTAGE MEASUREMENT SHALL BE USED TO DETERMINE THE APPLICABLE TAP.

AFTER THE SIGN LIGHTING SYSTEM IS COMPLETED, THE ENTIRE SYSTEM SHALL BE OPERATED CONTINUOUSLY EACH NIGHT UNTIL SEVEN (7) CONSECUTIVE DAYS ELAPSE WITHOUT FAILURE OR DEFECT. THE CONTRACTOR SHALL RECORD AND SUBSEQUENTLY CORRECT ANY DEFECTS WHICH MAY DEVELOP AT NO EXTRA COST TO THE STATE.

DURING THE TEST PERIOD, ADJUSTMENTS TO FIXTURE ARMING ANGLES SHALL BE MADE TO OBTAIN MAXIMUM UNIFORMITY AS DIRECTED BY THE ENGINEER.

THE ABOVE MEASUREMENTS, VOLTAGE TAP SELECTION NOTATIONS, AND METHODS OF DEFECT CORRECTION SHALL BE RECORDED AND DELIVERED TO THE ENGINEER FOR INCLUSION IN THE PROJECT RECORDS.

INSPECTION AND TESTING OF THE SIGN LIGHTING SYSTEM SHALL BE CONSIDERED A SUBSIDARY WORK ITEM AND PAYMENT THEREFOR SHALL BE INCLUDED IN THE UNIT PRICES BID FOR THE RESPECTIVE ITEMS TESTED.

CERTIFICATION AND APPROVAL OF SIGN SUPPORT & SIGN LIGHTING ITEMS

THE CONTRACTOR SHALL SUBMIT THROUGH PROPER CHANNELS THE DRAWINGS, INFORMATION, & SAMPLES AS REQUIRED BELOW:

A. 8 COPIES OF SHOP DRAWINGS AND MATERIAL LISTS FOR APPROVAL:
   1. OVERHEAD SIGN SUPPORTS
   2. SIGN LIGHTING LAYOUT PLAN AND DETAILS FOR WIRING, CONDUIT SIZE AND PLACEMENT FROM SIGN DISCONNECT SWITCH TO FIXTURE.

B. 8 COPIES OF CATALOG CUTS DESCRIPTIONS OF SAMPLES OF FABRICATORS STANDARD ITEMS AS SHOWN IN THE PLANS OR THEIR EQUALS FOR APPROVAL OF THEIR USE.

C. CERTIFICATIONS AND/OR SAMPLES FOR ALL MATERIAL WHICH HAVE BEEN APPROVED ABOVE UNDER "A" AND "B".

D. APPROVAL OF ITEMS UNDER "A" AND "B" SHALL BE IN THE HAND OF THE CONTRACTOR PRIOR TO ANY PURCHASE OR INSTALLATION.

E. CERTIFICATIONS OF SAMPLES UNDER "C" MUST BE IN HAND AND APPROVED PRIOR TO CONTRACT COMPLETION.

ALTERNATE DESIGNS FOR OVERHEAD SIGN SUPPORTS

IF THE CONTRACTOR DESIRES TO FURNISH AN ALTERNATE DESIGN FOR OVERHEAD SIGN SUPPORTS, THE ALTERNATE DESIGNS MUST BE SUBMITTED TO THE STATE AT LEAST 21 DAYS PRIOR TO OPENING OF BIDS. THE BIDDER WILL BE NOTIFIED AS TO ACCEPTANCE OR REJECTION OF ALTERNATE DESIGN AT LEAST 7 DAYS BEFORE BIDS ARE TO BE OPENED. ALTERNATE DESIGNS MUST UTILIZE TUBULAR STRUCTURAL MEMBERS. SUBMISSIONS SHALL BE MADE TO OHIO DEPARTMENT OF HIGHWAYS, OFFICE OF DESIGN SERVICES, 25 SOUTH FRONT STREET, 43215.

EXISTING SIGNS

EXISTING SIGNS LOCATED WITHIN THE ROADWORK AREAS ~~WHICH ARE NECESSARY FOR INTERIM OR PERMANENT TRAFFIC CONTROL~~ SHALL BE REMOVED AS APPROVED BY THE ENGINEER. STOP SIGNS WILL BE MAINTAINED AT ALL TIMES WHILE TRAFFIC IS MAINTAINED. THE COST OF REMOVAL SHALL BE CONSIDERED A SUBSIDIARY WORK ITEM AND SHALL BE INCLUDED IN THE PRICE BID FOR THE ROADWAY WORK ITEMS.

CONCRETE FOUNDATIONS, FOR SIGN SUPPORTS

PAYMENT FOR THIS ITEM SHALL BE BASED ON PLAN DIMENSIONS (OR DIMENSIONS AS MODIFIED BY THE ENGINEER IN LIEU OF PLAN QUANTITIES) AS REQUIRED IN SUPPLEMENTAL SPECIFICATION 816.

PAYMENT FOR REINFORCING STEEL AND INSTALLATION ONLY OF CONDUIT ELLS SHALL BE INCLUDED IN THE COST OF CONCRETE FOUNDATIONS FOR OVERHEAD SIGN SUPPORTS. CONCRETE SHALL BE CLASS "C".

BASIS OF PAYMENT SHALL BE AS FOLLOWS:

1. CONCRETE FOR OVERHEAD SIGN SUPPORT FOUNDATIONS, PER CUBIC YARD.

2. CONCRETE FOR GROUND MOUNTED SIGN SUPPORT FOUNDATIONS, PER CUBIC YARD.

STRUCTURAL SUPPORTS, STEEL BEAM (TYPE)

THE STRUCTURAL STEEL BEAM SUPPORTS INCLUDING 8 AND 6 POUND BEAMS, AND HARDWARE SHALL BE GALVANIZED IN ACCORDANCE WITH ASTM A-123 AND A-153 RESPECTIVELY.

QUANTITIES FOR ITEM 816 "STRUCTURAL SUPPORTS, STEEL BEAM, TYPES 6, 8 & 10 WF 21, APPEARING IN THE QUANTITY TABLES ARE APPROXIMATE. THE CONTRACTOR SHALL BE RESPONSIBLE FOR DETERMINING EXACT SUPPORT LENGTHS PRIOR TO FABRICATION AND GALVANIZING OF SUPPORTS. PAYMENT SHALL BE AT THE CONTRACT UNIT PRICE BID PER LIN. FT. WHICH PRICE AND PAYMENT SHALL INCLUDE ALL COSTS IN CONNECTION WITH THE EMBEDMENT OF THE SUPPORTS.

THE COST OF THE CONCRETE USED FOR EMBEDMENT WILL BE A SEPARATE PAY ITEM.

BREAKAWAY SIGN SUPPORT CONNECTION

THIS ITEM CONSISTS OF CUTTING AND DRILLING THE STRUCTURAL SUPPORT; FURNISHING AND ATTACHING THE FUSE PLATE; AND FURNISHING AND ATTACHING THE BASE PLATES FOR EACH STRUCTURAL SIGN SUPPORT AS INDICATED ON THE PLANS.

ALL MATERIALS, LABOR AND EQUIPMENT REQUIRED TO FABRICATE AND INSTALL THIS ITEM FOR EACH SIGN SUPPORT (EXCLUSIVE OF THE STRUCTURAL SIGN SUPPORT) WILL BE MEASURED AND PAID FOR AT THE UNIT PRICE BID FOR ITEM 816 EACH BREAKAWAY SIGN SUPPORT CONNECTION.

CONSTRUCTION LAYOUT STAKES FOR SIGNS

THE CONTRACTOR SHALL STAKE OUT ALL SIGNS SUPPORTS IN ACCORDANCE WITH SUPPLEMENTAL SPECIFICATION 816 PRIOR TO INSTALLATION OF ANY FOUNDATIONS OR SUPPORTS.

AFTER STAKEOUT THE CONTRACTOR SHALL NOTIFY THE ENGINEER A MINIMUM OF SEVEN (7) DAYS IN ADVANCE OF SCHEDULED WORK. SUPPORT LOCATIONS FOR EACH SUPPORT WILL BE FIELD CHECKED AND APPROVED BY THE ENGINEER WHO SHALL COORDINATE WITH THE DIVISION AND/OR CITY TRAFFIC ENGINEER PRIOR TO PROCEEDING WITH CONSTRUCTION WORK REQUIRED.

IF BOTH MAJOR AND MINOR TYPE SUPPORTS ARE INCLUDED WITHIN THE PROJECT IT WILL BE PERMISSIBLE TO PERFORM THE CONSTRUCTION STAKE-OUT AND FIELD INSPECTION IN TWO (2) STAGES, ONE FOR MAJOR SUPPORTS AND ONE FOR MINOR SUPPORTS.

COST FOR THIS ITEM OF WORK WILL BE INCIDENTAL TO THE VARIOUS 816 ITEMS OF WORK CONTAINED IN THE PROJECT.

816 STRUCTURAL SUPPORTS, 6 LB. OR 8 LB. BEAM, AS PER PLAN

THIS ITEM SHALL CONSIST OF THE FURNISHING, ASSEMBLY, AND INSTALLATION OF TWO (2) 3 LB. OR 4 LB. PER FOOT DRIVE POSTS IN COMBINATION WITH A SQUARE SEAMLESS TUBULAR POST EXTENSION SPLICED TO THE TOP OF THE 6 LB. OR 8 LB. BEAM. DETAILS ARE SHOWN ON SHEET 92.

SQUARE SEAMLESS TUBULAR POST MATERIAL SHALL BE MILD STEEL CONFORMING TO ASA 1020 STEEL, MINIMUM YIELD STRENGTH 35,000 PSI, ULTIMATE YIELD 55,000 PSI.

WORK SHALL INCLUDE ALL LABOR, MATERIALS, EQUIPMENT, TOOLS, AND HARDWARE NECESSARY TO PERFORM THE REQUIRED ITEM OF WORK.

BASIS OF PAYMENT SHALL BE FOR STRUCTURAL SUPPORTS, 6 LB. OR 8 LB. BEAM, AS PER PLAN PER LINEAR FOOT MEASURED BY TOTAL LENGTH OF COMBINATION BEAM FROM END TO END.

SUMMARY OF QUANTITIES • SIGNING

FRANKLIN COUNTY
FRA - 33 - 29.53

FED. RD. DIVISION	STATE	PROJECT	
2	OHIO		

Sign Support No.		Station Location	Roadway	Side	816 #8 Beam As per plan	815 Effective Sign Size	815 Sign Erection Extru. Sheet Type	815 Flat Sheet	816 #6 Beam as per plan	816 * No. 9/2 Design No. 1 Modified 7.0' ARM	816 No. 12.24 Design No. 2 23' ARM	816 * No. 12.24 Design No. 2 Modified 23' ARM	816 Monolever Design 38' ARM	816 #6 Beam	816 #8 Beam	816 # 10 WF 21	816 Conc. Foundat'n For Grnd Mounted Signs - Type C	816 Conc. Foundat'n For Overhead Signs - Type C	816 Break-away Signs Support Connection	625 Ballast Rating and Type: Wattage Rating	625 Ballast Rating and Type: Type A	625 Fixture & Lamp Rating & Type: 48" Fixture 48" HO Lamp	625 Fixture & Lamp Rating & Type: 72" Fixture 72" HO Lamp	625 Transformer Rating & Type: K.V.A Rating	625 Transformer Rating & Type: Type I	625 Transformer Rating & Type: Type II	625 Ground Rod	625 Signs Wired Complete	625 Sign Service	625 30amp. Fused Disconned Switch w/ Enclosure	Code No.
					L.F.		Sq. Ft.	Sq. Ft.	Each	Each	Each	Each	L.F.	L.F.	L.F.	C.Y.	C.Y.	Each		Each	Each	Each		Each	Each	Each	Each	Each	Each	
1		497+00	US 33	Rt.	19'x8'	152									44	2.50		2												
2		497+00		Lt.	14'x6'	84									40	2.50		2												
		511+00		Lt.	4'x5'			20																						R-10-48 , R-16-48
					4'x4'			16						18		0.12														
		521+00		Lt	—			6					16			0.12														M-37-40-24 , M-1-24
		586+00		Rt	—			36					18			0.12														R-10-48 , R-16-48
12		596+00		Rt.	16'x5	80									40	2.50		2												
3		533+00		Rt	19'x8'	152									44	2.50		2												
		540+00		Lt	3'x3'			9					16			0.12														W-40-36
4		541+20		Rt	6'x5'	30								18		0.12														N-12-72
		544+00		Rt	2'x2'			4					16			0.12														M-1-24
		553+00		Lt	3'x3'			9					16			0.12														W-40-36
		557+00		Rt	3'x3'			9					16			0.12														W-40-36
		557+60		Lt	2'x2'			4					16			0.12														M-1-24
5		559+65		Lt	6'x5'			30						18		0.12														N-12-72
6		568+00		Lt	19'x8'	152									44	2.50		2												
		576+00		Rt	—			6					16			0.12														M-1-24 M-38-39-24
7		600+00	US 33	Lt	19'x8'	152									44	2.50		2												
		10+60	Gender Rd	Rt.	—			6					16			0.12														M-17-24 , M-1-24
8		12+25		Rt.	8'x25	20							30			0.24														M-2-24 , M-26-20 , D-3-24-6
9		13+00		Lt	11'x4'	44									34	2.50		2												D-4-2
		15+70		Lt.	2.5'x2'			5					16			0.12														R-10-24
		17+40		Lt.	3'x3'			9					16			0.12														W-60-36
		18+60		Rt.	9'x5'	45				1							2.86		190	1			1		0.25	1		1	1	1	1	
		22+70		℄	3'x3'			9					16			0.12														R-37-A-36
		22+90		Rt.	—			12					16			0.12														M-2-24 ; M-1-24 M-21-20 ; M-26-20
		28+85		℄	3'x3'			9					16			0.12														R-37-A-36
		29+10		Lt.	7'x6'	84				1							2.86		190	2			2		0.50	1		1	2	1	1	
		33+40		Rt.	—			5					16			0.12														M-2-24 ; M-24-20
		33+04		℄	3'x3'			9					16			0.12														N-37-36
		33+10		Lt.	—			5					16			0.12														M-2-24 M-24-20 20
		35+50		Rt	3'x3'			9					16			0.12														W 60-36 W 60-36
		40+00	Gender Rd.	Lt.	—			11					16			0.12														M-17-24; M-1-24; M-38-24; M-2-24; M-19-20
		0+60	S.R. 674	Lt	2'x2'			4					16			0.12														R-1-36
		1+50	S.R. 674	Rt.	—			5					16			0.12														M-38-24; M-2-24
		5+20	S.R. 674	Lt.	—			6					16			0.12														M-8-24 ; M-1-24
		542+00	Ramp A	Rt.	3'x3'			9					16			0.12														W-45-36
		548+40	Ramp A	Rt	—	36				1							2.86		190	2		2			0.50		1		1	2	1	1	R-26A-48 ; R-27A-48 (future), R-27A-48
		551+10	Ramp A	Rt.	—			19								0.12														R-1-36 ; R-43R-36 ; R-41-24 ; R-43L-36
		551+30	Ramp A	Lt.	—			19								0.12														R-1-36 ; R-43R-36 ; R-41-24 ; R-43L-36
		547+60	Ramp D	Lt.	3'x3'			9					16			0.12														R-15A-36
		548+90	Ramp D	Lt.	3.5'x3'			10.5					16			0.12														W-98-36
		562+00	Ramp E	Lt.	3'x3'			9					16			0.12														R-15A-36
		563+00	Ramp E	Lt	3.5'x3'			10.5					16			0.12														W-98-36
		563+75	Ramp E	Lt	9'x5'	45						1					2.86		190	1			1		0.25	1		1	1	1	1	
		564+40	Ramp F	Rt.	—			10	16							0.12														R-43L-36 ; R-41-24 , R-43R-36
		564+80	Ramp F	Lt.	—			13						16		0.12														R-41-24 ; R-1-36
11		551+00	Ramp F	Lt	13'x4'	52		6							26	2.50		2												M-2-24 ; M-24-20 ; D-4-2
		558+50	Ramp F	Lt	3'x3'			9					16			0.12														N-45-36
		551+50	Ramp B	Rt.	3'x3'			9					16			0.12														R-15A-36
10		544+50	Ramp A	Rt.	13'x4'	52		6							26	2.50		2												M-2-24 ; M-24-20 ; D-4-2
—		Totals	—	—	32	—	1180	392	16	1	1	1	1	496	70	342	27.06	11.44	18	—	6	—	—	2	4	—	—	—	1.50	2	2	—	—	—	—	—	—	—	—	4	6	4	4	

* Combination Overhead Sign Support

CALCULATED BY DSG DATE 1-12-70

CHECKED BY CMT DATE 1-12-70

BRUNING 44560 10943

FED. RD. DIVISION	STATE	PROJECT	
2	OHIO		

FRANKLIN COUNTY
FRA - 33 - 29.97

SCHEMATIC PLAN
SIGNING

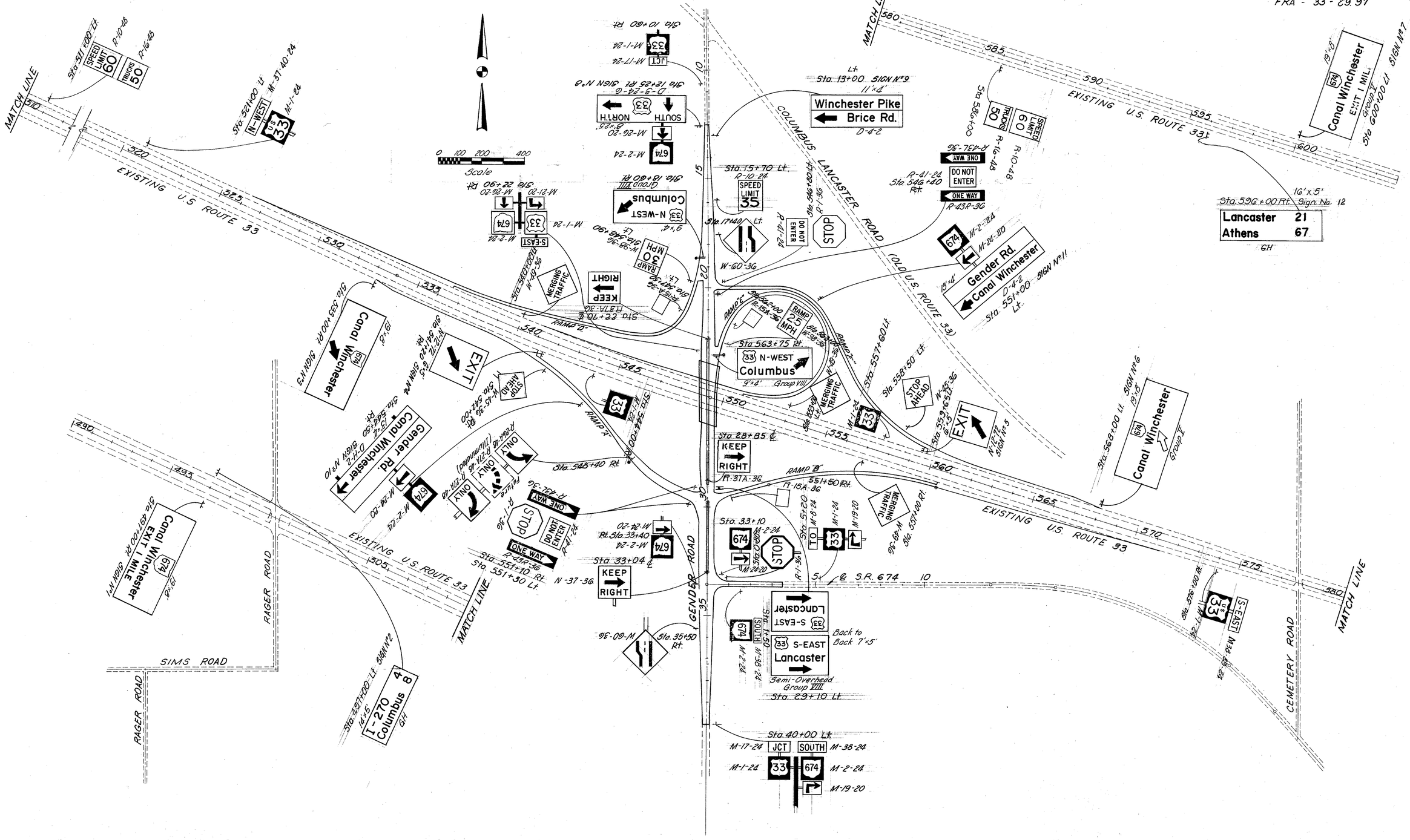

BRUNING 44-560 10943

FED. RD. DIVISION	STATE	PROJECT	
2	OHIO		

97/155

FRANKLIN COUNTY
FRA. -33-29.57

Sign Size = 9'x4' = 36 sq.ft.
Arm 7 gage - 8" Length 23'
Design No. 2 - 12.24

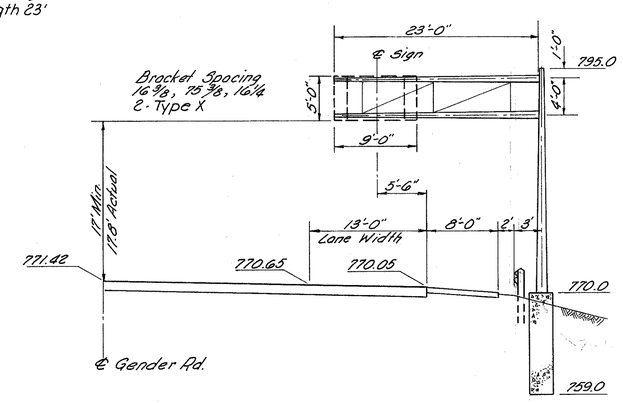

STATION 18+60 GENDER ROAD (Right Side)
Illuminated Overhead Sign

Sign Size = 9'x4' = 36 Sq. Ft.
Shaft 3 gage - 12"
Shaft Length = 30'
Arm = 7 gage - 8" ; Length 23'
Combination overhead Sign Support
Design No. 2 mod. = 12.24

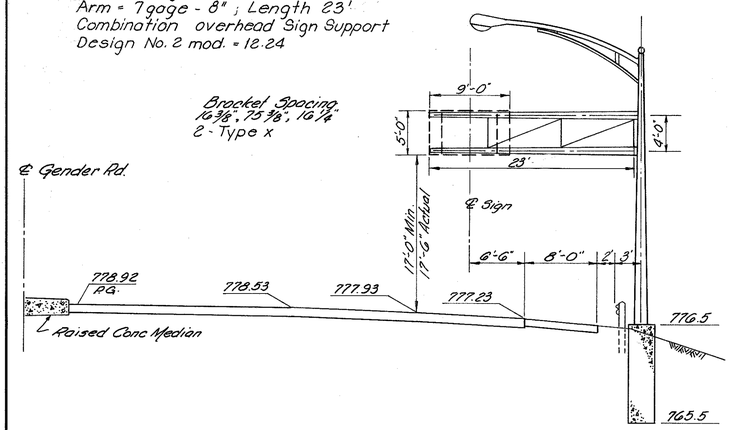

STATION 563+75 RAMP "E"
Combination Light & Illuminated Overhead Sign Group VIII

Sign Size = 7'x5 = 35 Sq. Ft.
Shaft 3 gage 12" Length 30'
Arm = 7 gage 8" Length = 7'-0"
Combination Sign Support
No. 9.12 Design No. 1 Mod.

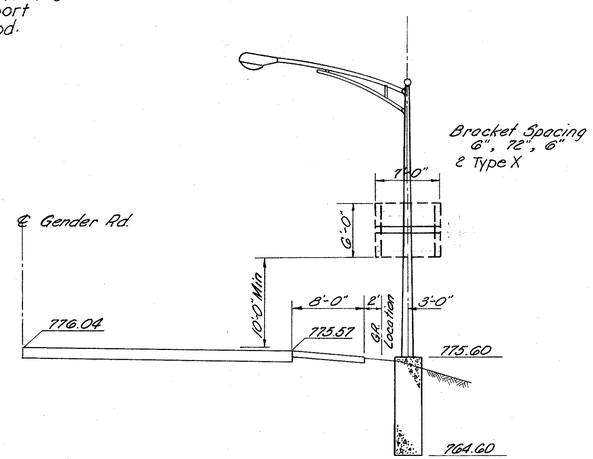

STATION 29+10 GENDER ROAD (Left Side)
Combined Light & Semi-Overhead
Illuminated Sign Group VIII

Sign Size 4'x4.5' = 18 Sq. Ft. x 3 = 54 Sq. Ft.
Shaft = 3 gage = 14", Length 21'
Arm = 3 gage - 11", Length 38'
Camber = 1/2" Per. Ft.
Design = Monolever

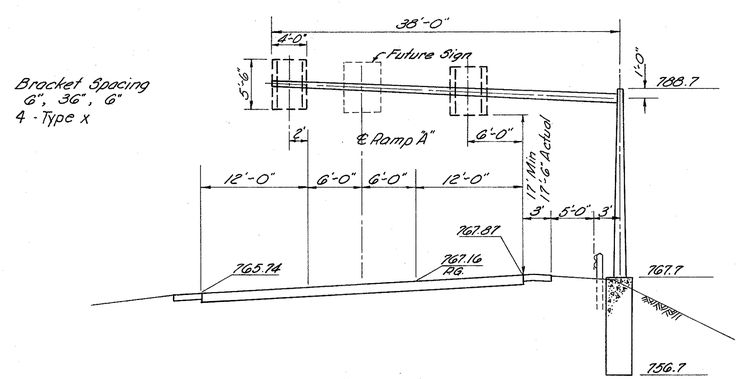

STATION 548+40 RAMP "A"
Illuminated Sign

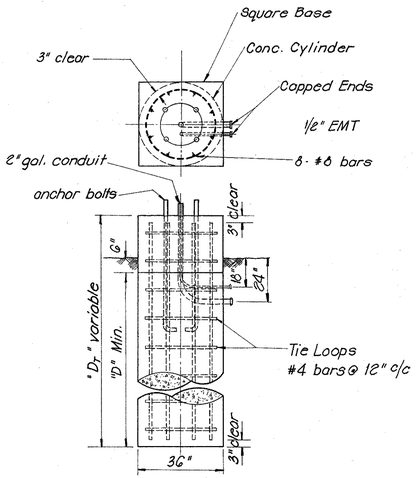

FOUNDATION DETAIL
scale 1/8" = 1'-0"

SIGN DETAILS

BRUNING 44-560 10943

FED. RD. DIVISION	STATE	PROJECT	
2	OHIO		

98
155

FRANKLIN COUNTY
FRA. - 33 - 29.53

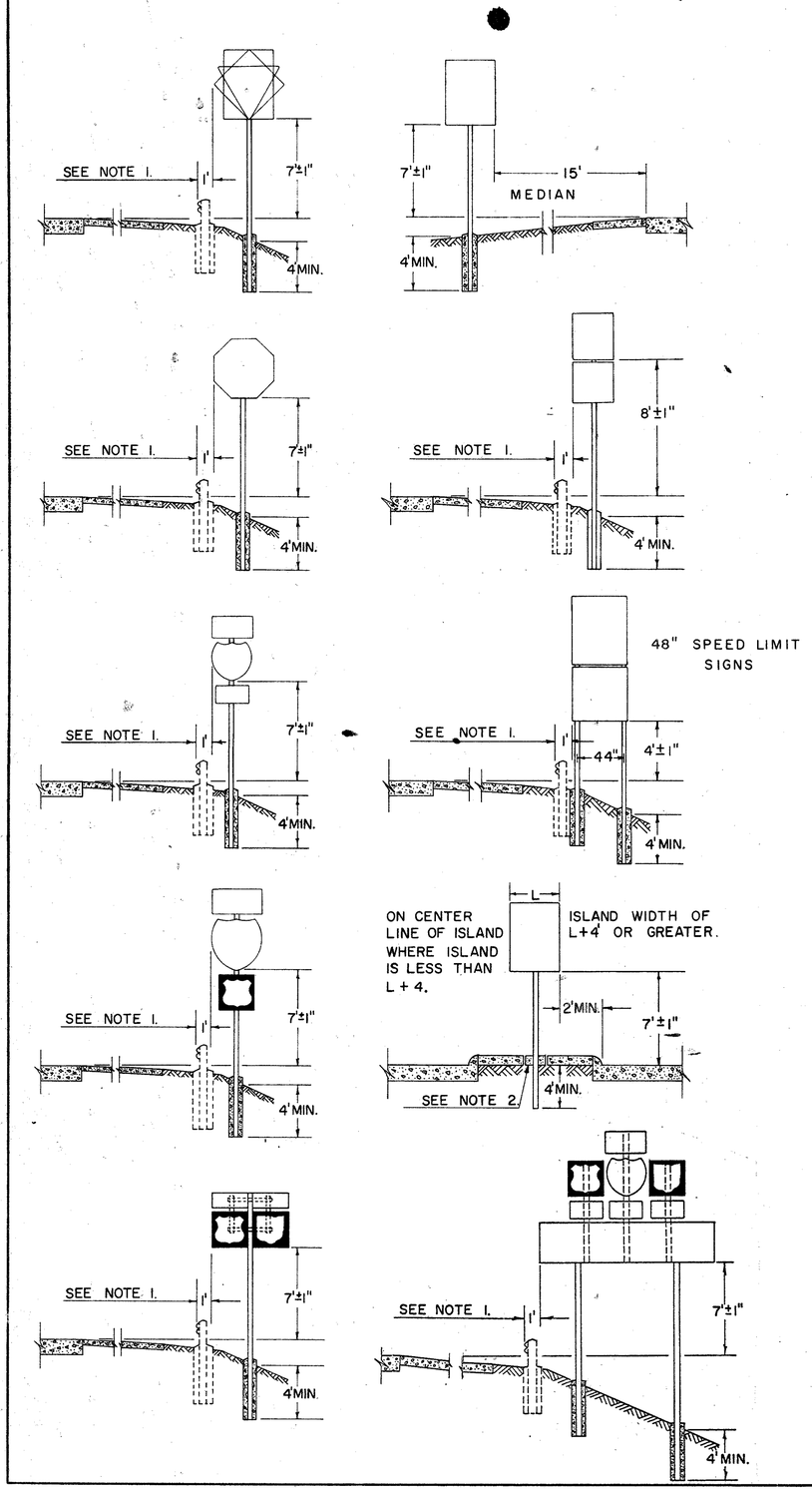

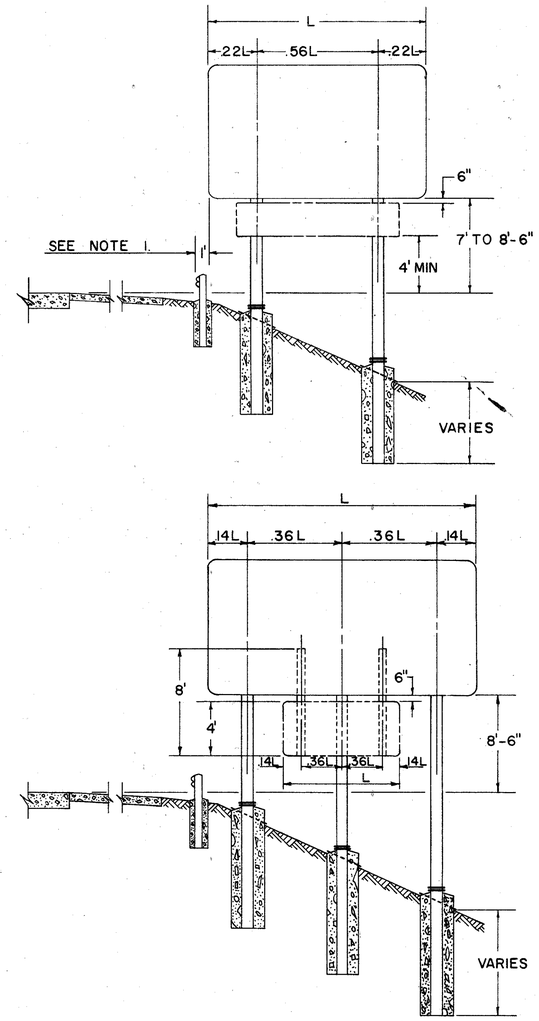

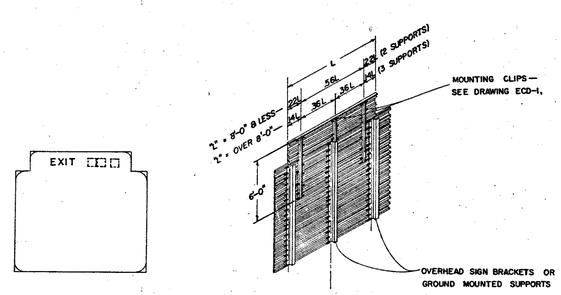

"EXIT" SIGN ATTACHMENT DETAIL

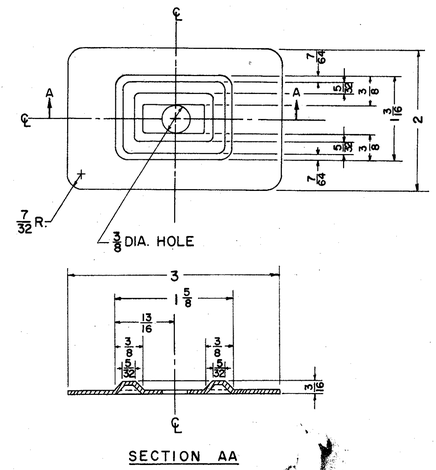

NOTE:
THE PLATE IS SYMMETRICAL ABOUT EITHER CENTERLINE.
METAL SHALL BE 16 GAUGE STEEL.
ALL DIMENSIONS ARE IN INCHES.

BEARING PLATE DETAIL

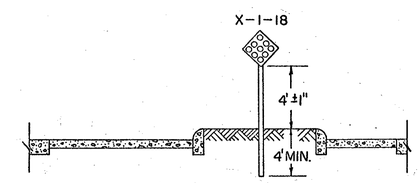

SIGN SUPPORT SPACING

L=FT	2 SUPPORTS .22	2 SUPPORTS .56	3 SUPPORTS .14	3 SUPPORTS .36	L=FT	2 SUPPORTS .22	2 SUPPORTS .56	3 SUPPORTS .14	3 SUPPORTS .36
5.0	1.10	2.80	0.70	1.80	17.0	3.74	9.52	2.38	6.12
6.0	1.32	3.36	0.84	2.16	18.0	3.96	10.08	2.52	6.48
7.0	1.54	3.92	0.98	2.52	19.0	4.18	10.64	2.66	6.84
8.0	1.76	4.48	1.12	2.88	20.0			2.80	7.20
9.0	1.98	5.04	1.26	3.24	21.0			2.94	7.56
10.0	2.20	5.60	1.40	3.60	22.0			3.08	7.92
11.0	2.42	6.16	1.54	3.96	23.0			3.22	8.28
12.0	2.64	6.72	1.68	4.32	24.0			3.36	8.64
13.0	2.86	7.28	1.82	4.68	25.0			3.50	9.00
14.0	3.08	7.84	1.96	5.04	26.0			3.64	9.36
15.0	3.30	8.40	2.10	5.40	27.0			3.78	9.72
16.0	3.52	8.96	2.24	5.76	28.0			3.92	10.08

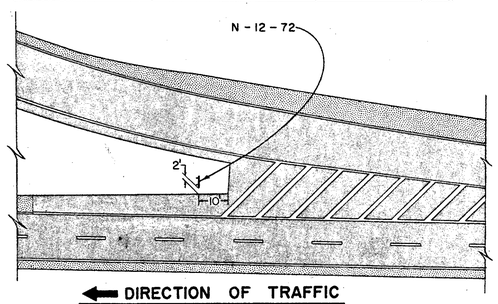

NOTES

1. THE NEAR EDGE OF ALL MAIN LINE SIGNS, EXCEPT GORE INSTALLATIONS, SHALL BE LOCATED ONE FOOT (1') BACK OF GUARD RAIL FACE. THIS DIMENSION SHALL BE DETERMINED BY ROADWAY TYPICAL SECTION & USED WHETHER OR NOT GUARD RAIL IS PRESENT.

ON RAMPS THE NEAR EDGE OF SIGNS SHALL BE LOCATED ONE FOOT (1') BACK OF GUARD RAIL FACE. THIS DIMENSION WILL BE DETERMINED AND USED AS FOR MAIN LINE ABOVE.

ON APPROACHES THE NEAR EDGE OF SIGNS SHALL BE

(A) ONE FOOT (1') BEHIND EXISTING GUARD RAIL

(B) TWO FEET (2') FROM THE EDGE OF PAVED OR TRAVELED SHOULDER WITH A MINIMUM OF 6' FROM EDGE OF ROADWAY PAVEMENT.

2. POSTS PLACED IN CONCRETE MEDIANS SHALL BE INSTALLED BY DRIVING THROUGH A 6" SLEEVE OR CORE DRILLED HOLE. THE HOLE SHALL BE FILLED WITH ASPHALT OR PORTLAND CONCRETE AFTER THE POST IS IN THE PROPER POSITION.

3. HORIZONTAL BACK BRACING SHALL ALWAYS BE MOUNTED ON THE FRONT FLANGE OF THE SUPPORT EXCEPT WHERE SIGNS ARE MOUNTED BACK TO BACK. BACK BRACING SHALL NEVER EXTEND ABOVE TOP EDGE OF UPPERMOST SIGN PLATE AND SHALL BE ATTACHED TO SUPPORTS USING 5/16" GALVANIZED STEEL BOLTS.

4. SCREWS, NUTS, AND WASHERS FOR SIGN ERECTION SHALL BE ALUMINUM EXCEPT AS NOTED ABOVE. 5/16" TRUSS HEAD SLOTTED MACHINE SCREWS WITH HEX. NUTS PLAIN AND LOCKWASHERS SHALL BE USED. PLAIN WASHERS SHALL BE 5/16" WIDE", USED ON SIGN FACE ONLY.

5. SIGN INSTALLATIONS SHALL BE PLACED SO THAT SUPPORTS ARE NOT PLACED IN DRAINAGE DITCHES.

6. HORIZONTAL CLEARANCES SHOWN PERTAIN TO NON-CURBED SECTIONS. SECTIONS WITH UNMOUNTABLE CURB SHALL HAVE A HORIZONTAL CLEARANCE OF 2'-0" MINIMUM FROM THE CURB FACE TO THE SIGN EDGE.

7. VERTICAL AND HORIZONTAL CLEARANCE BETWEEN SIGNS ON ONE ASSEMBLY SHALL BE A MAXIMUM OF 2" AND A MINIMUM OF 1".

8. GALVANIZED STEEL BEARING PLATES SHALL BE INCLUDED BETWEEN ALL SHEET ALUMINUM SIGNS ATTACHED TO VERTICAL SUPPORTS AT EACH SIGN BOLT LOCATION.

BUREAU OF TRAFFIC
OHIO DEPARTMENT OF HIGHWAYS

TYPICAL PLACEMENT OF SIGNS

TPS-1

DATE
9-27-67
7-12-68
5-13-69

APPROVED _____
ENGINEER OF TRAFFIC

FED. RD. DIVISION	STATE	PROJECT	
2	OHIO		

99/156

FRANKLIN COUNTY
FRA - 33 - 29.53

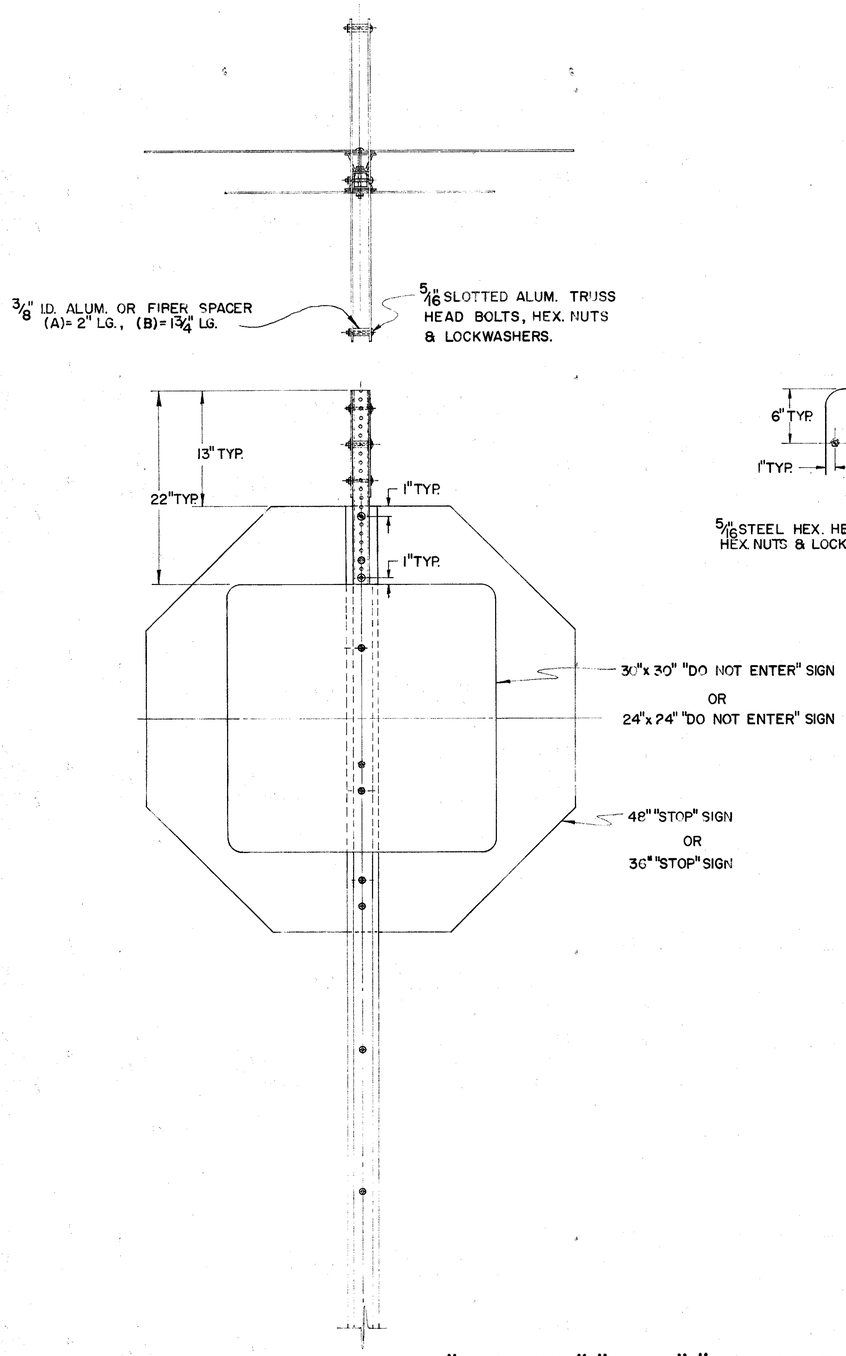

"ONE WAY", "STOP", "DO NOT ENTER", SIGN INSTALLATION.

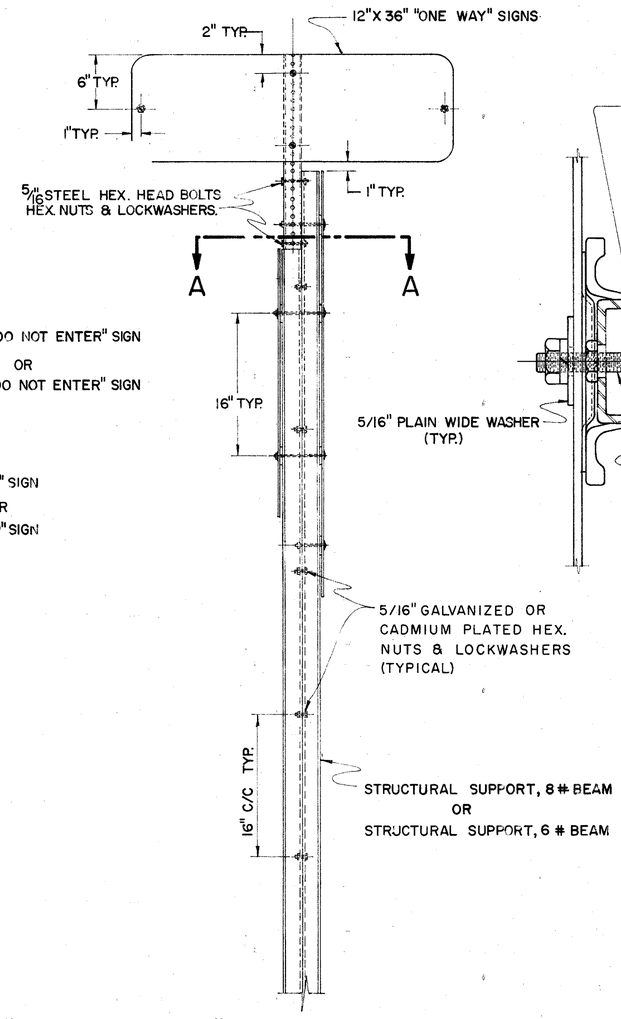

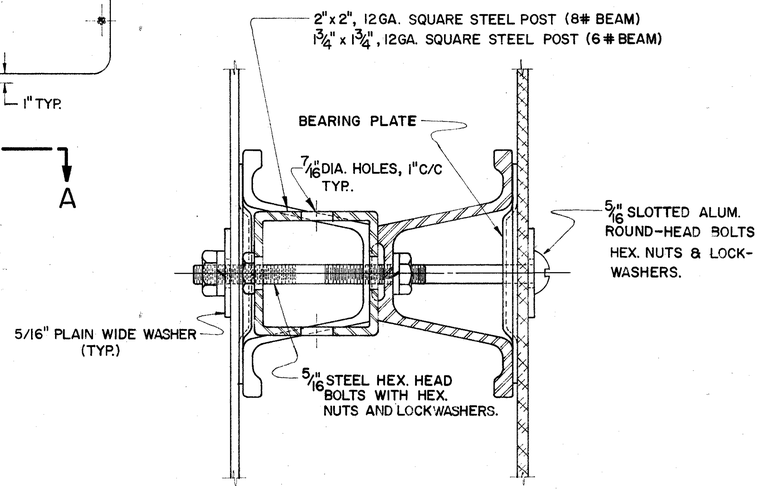

SECTION A-A

NOTES

MATERIALS

ALL SIGN MATERIALS SHALL BE IN ACCORDANCE WITH SUPPLEMENT SPECIFICATION 815.

ALL STRUCTURAL MATERIALS SHALL BE IN ACCORDANCE WITH SUPPLEMENT SPECIFICATION 816.

FOR SPECIFICATIONS FOR THE 2" & 1 3/4" SQUARE STEEL POST SEE GENERAL NOTES, SHEET NO.____.

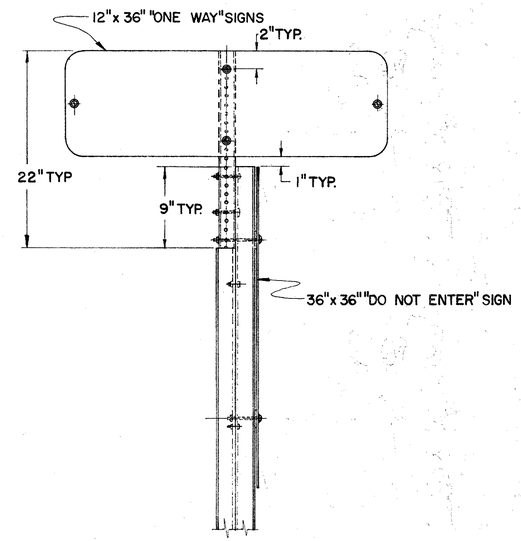

"ONE WAY", "DO NOT ENTER" SIGN INSTALLATION

BUREAU OF TRAFFIC
OHIO DEPARTMENT OF HIGHWAYS

SPECIAL "ONE WAY" SIGN SUPPORT DETAILS	SOW	DATE 2-7-66 4-18-67

APPROVED_____
ENGINEER OF TRAFFIC

SPECIAL "ONE WAY" SIGN SUPPORT DETAILS

FED. RD. DIVISION	STATE	PROJECT	
2	OHIO		

100
155

FRANKLIN COUNTY
FRA - 33 - 29.57

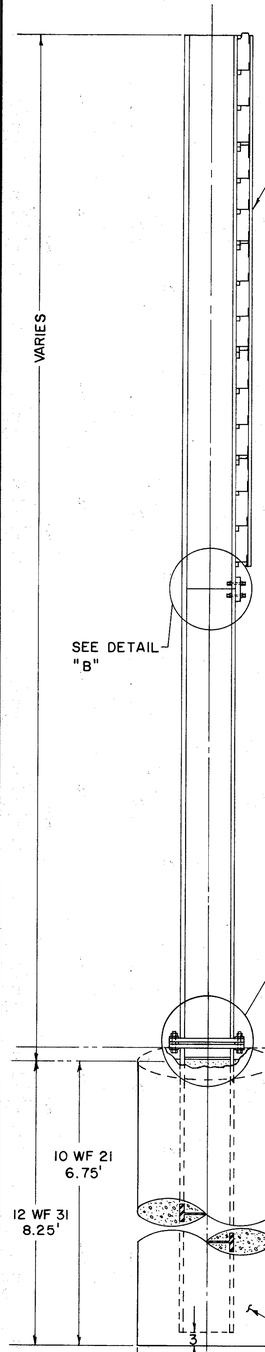

SIDE ELEVATION

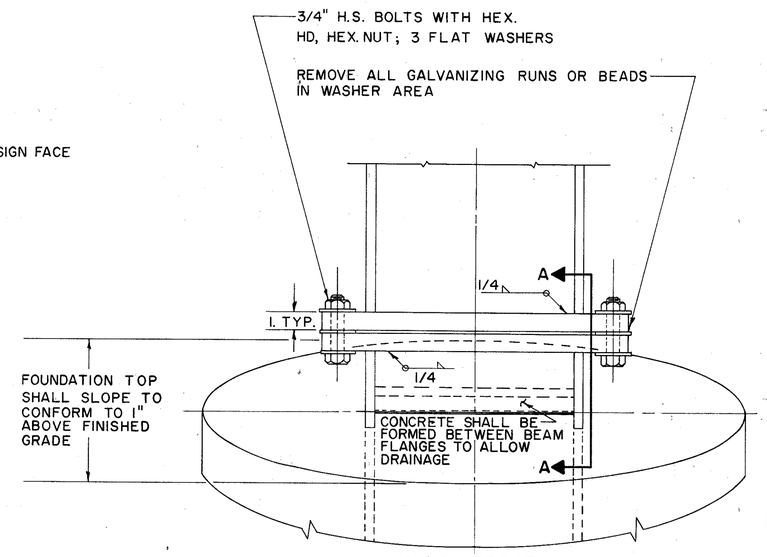

BOLTING PROCEDURE

1. ASSEMBLE POST TO STUB W/BOLTS & ONE FLAT WASHER ON EACH BOLT BETWEEN PLATES.
2. TIGHTEN ALL BOLTS THE MAXIMUM POSSIBLE W/12" TO 15" WRENCH TO BED & TO CLEAN BOLT THREADS. LOOSEN EACH BOLT IN TURN & RETIGHTEN BOLTS IN A SYSTEMATIC ORDER TO THE PRESCRIBED TORQUE OF 750 IN. LBS.
3. BURR THREADS AT JUNCTION W/NUT USING A CENTER PUNCH TO PREVENT NUT LOOSENING.

NOTE: TIGHTEN THE H.S. BOLTS IN THE BASE CONNECTION ONLY TO GIVEN TORQUE DO NOT OVER TIGHTEN

VIEW "A" ROTATED 180°

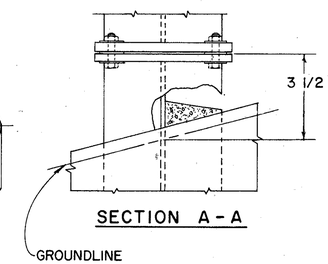

SECTION A - A

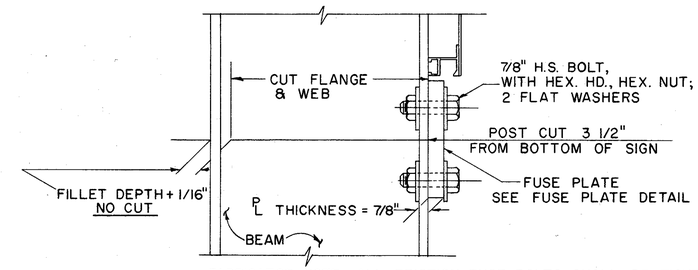

FABRICATOR NOTE: ALL FRICTION FUSE BOLTS SHALL BE TIGHTENED IN THE SHOP FOLLOWING A METHOD APPROVED BY THE ENGINEER. TIGHTENING SHALL BE TO SUCH A DEGREE AS TO OBTAIN MINIMUM RESIDUAL TENSION IN EACH BOLT OF 36,050 LBS.

NOTE: INSTALL FUSE PLATE WITH NOTCHES TOWARD BASE

DETAIL "B"

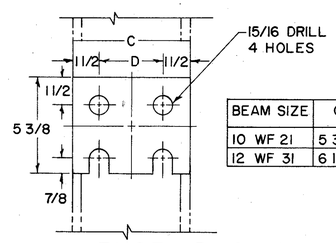

BEAM SIZE	C	D
10 WF 21	5 3/4	2 3/4
12 WF 31	6 1/2	3 1/2

FUSE PLATE DETAIL

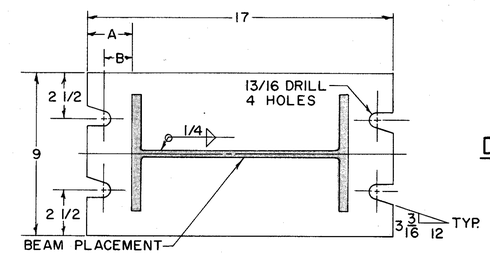

BEAM SIZE	A	B
10 WF 21	3 1/2	2 5/8
12 WF 31	2 1/2	1 5/8

BASE PLATE DETAIL

(TOP VIEW)

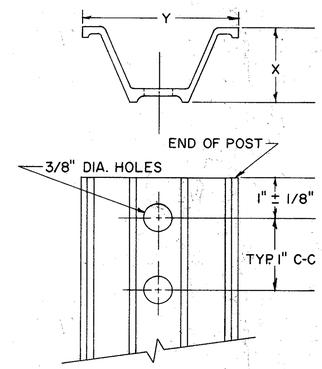

WEIGHT PER FOOT	X ± 3/32"	Y ± 1/8"
2.00 #	1 15/32"	3 1/16"
3.00 #	1 7/8"	3 1/2"
4.00 #	2"	3 5/8"

DRIVE POST DETAIL

NOTE: THE FOUNDATION FOR 4# DRIVE POST IS SIMILAR TO THE FOUNDATION SHOWN FOR 6# & 8# BEAM

NOTES: ALL MATERIALS SHALL CONFORM TO THE STATE OF OHIO, CONSTRUCTION & MATERIALS SPECIFICATIONS OR AS OTHERWISE SPECIFIED

1.) 511 FOUNDATIONS
2.) 711.01 STRUCTURAL STEEL SHAPES & PLATES
3.) 711.09 H.S. STEEL BOLTS, NUTS & WASHERS

ALL DIMENSIONS IN INCHES UNLESS OTERWISE SHOWN

BREAKAWAY SIGN SUPPORT BASE PLATE ORIENTATION

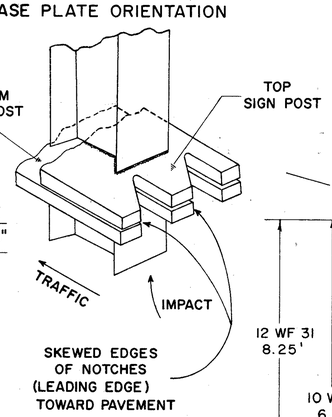

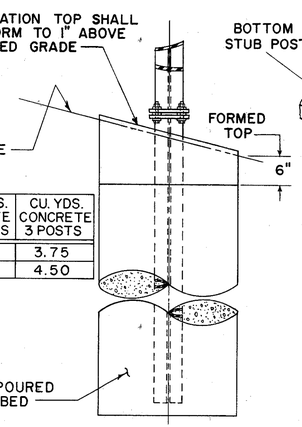

FOUNDATION TABLE	CU. YDS. CONCRETE 2 POSTS	CU. YDS. CONCRETE 3 POSTS
10 WF 21	2.50	3.75
12 WF 31	3.00	4.50

FRONT ELEVATION

BREAK - AWAY SUPPORT

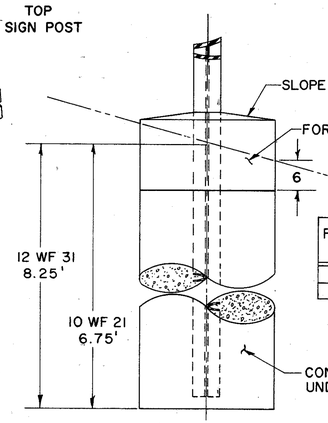

FOUNDATION TABLE	CU. YDS. CONCRETE 2 POSTS	CU. YDS. CONCRETE 3 POSTS
10 WF 21	2.50	3.75
12 WF 31	3.00	4.50

FRONT ELEVATION

STANDARD SUPPORT

STRUCTURAL SUPPORTS

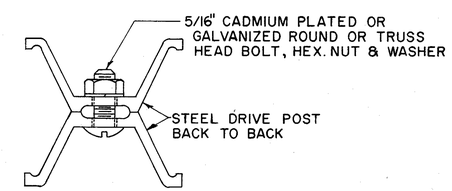

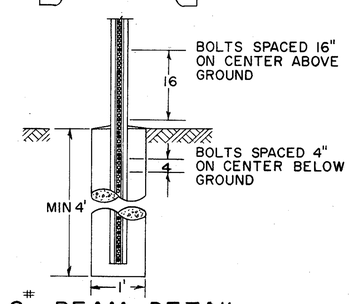

6# & 8# BEAM DETAIL

BUREAU OF TRAFFIC
OHIO DEPARTMENT OF HIGHWAYS

GROUND MOUNTED SIGN SUPPORTS

GMSS

DATE
5-10-68
7-12-68
5-23-69
9-16-69

APPROVED _____
ENGINEER OF TRAFFIC

FED. RD. DIVISION	STATE	PROJECT	
2	OHIO		

101/155

FRANKLIN COUNTY
FRA. - 33 - 29.53

12" EXTRUSHEET PANEL

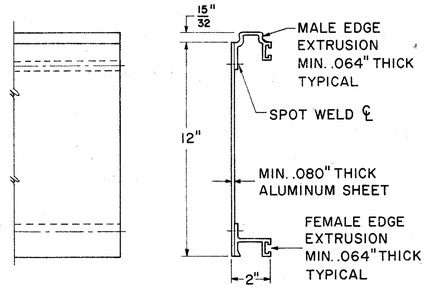

FRONT VIEW SIDE VIEW

18" EXTRUSHEET PANEL

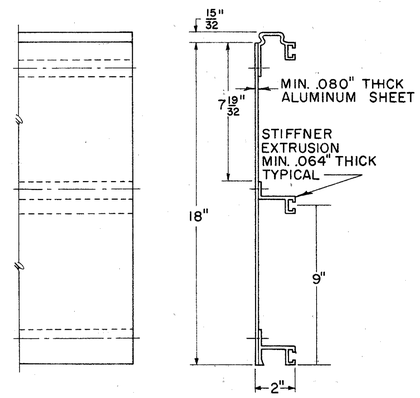

FRONT VIEW SIDE VIEW

24" EXTRUSHEET PANEL

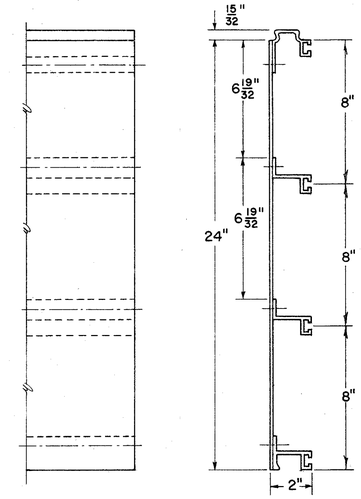

FRONT VIEW SIDE VIEW

NOTES:

EXTRUSHEET PANELS SHALL BE ALUMINUM; SPOT WELDING AND ALL MATERIALS SHALL CONFORM WITH SUPPLEMENTAL SPECIFICATION

COMBINATIONS OF 12", 18", AND 24" PANELS ARE USED TO ATTAIN REQUIRED SIGN HEIGHT.

INDIVIDUAL PANELS SHALL BE THE SAME LENGTH AS THE HORIZONTAL LENGTH OF SIGN WITH NO SPLICES.

PANELS SHALL BE INTERLOCKED AND ERECTED WITH THE MALE EXTRUSION LOCATED AT THE TOP EDGE OF THE SIGN.

EXTRUSHEET PANELS SHALL BE FASTENED TO EACH VERTICAL SUPPORT MEMBER WITH MOUNTING CLIPS; ALTERNATELY AT EACH HORIZONTAL EXTRUSION; BOTH SIDES AT EACH JOINT, AND ON BOTH SIDES AT TOP AND BOTTOM EDGE OF SIGN.

THE PANELS SHALL BE DESIGNED TO WITHSTAND A WIND LOAD OF 35 POUNDS PER SQUARE FOOT, IN ACCORDANCE WITH THE A.A.S.H.O. SPECIFICATION FOR DESIGN AND CONSTRUCTION OF STRUCTURAL SUPPORTS FOR HIGHWAY SIGNS.

THE MAXIMUM SIGN LENGTH FOR TWO SUPPORTS IS 19'-0".
THE MAXIMUM SIGN LENGTH FOR THREE SUPPORTS IS 29'-0".

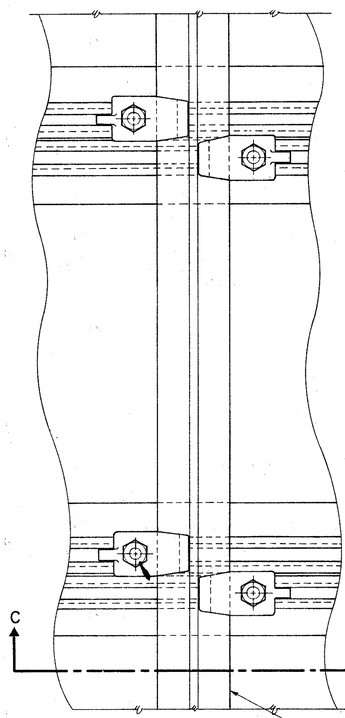

SECTION A-A

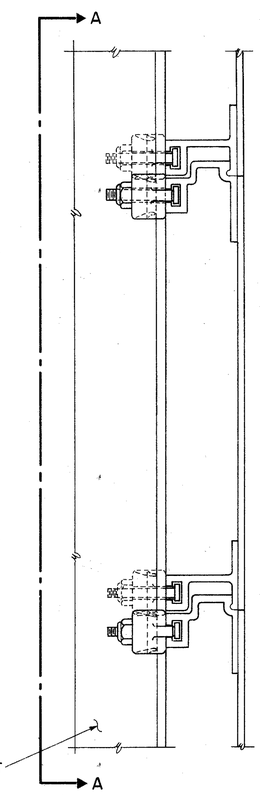

SECTION B-B

GENERAL ARRANGEMENT

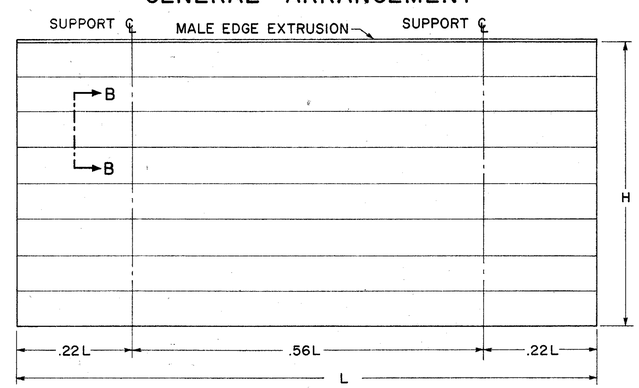

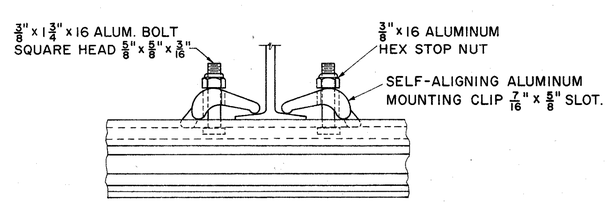

SECTION C-C

CLIP DETAIL

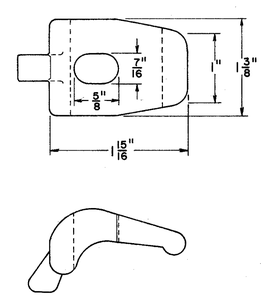

SPOT WELDS

PANEL SIZE	MAXIMUM SPOT WELD SPACING	
	CENTER TO CENTER	BETWN ROWS
12 INCH	4 INCH	10 INCH
18 & 24 INCH	4 INCH	8 INCH

BUREAU OF TRAFFIC
OHIO DEPARTMENT OF HIGHWAYS

ALUMINUM EXTRUSHEET PANEL SIGN

ECD 1

DATE 9-25-63 5-19-64 10-21-65

APPROVED Fred C. Lavey
ENGINEER OF TRAFFIC

ALUMINUM EXTRUSHEET PANEL SIGN

FED. RD. DIVISION	STATE	PROJECT	
2	OHIO		

102/155

FRANKLIN COUNTY
FRA. -33 - 29.53

12" BOLTED-EXTRUSHEET PANEL

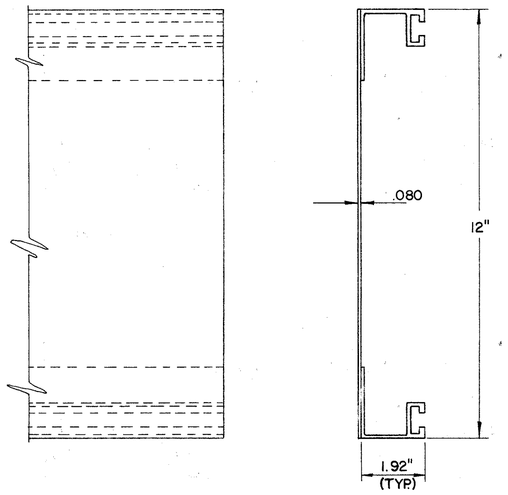

FRONT VIEW

SIDE VIEW

18" BOLTED-EXTRUSHEET PANEL

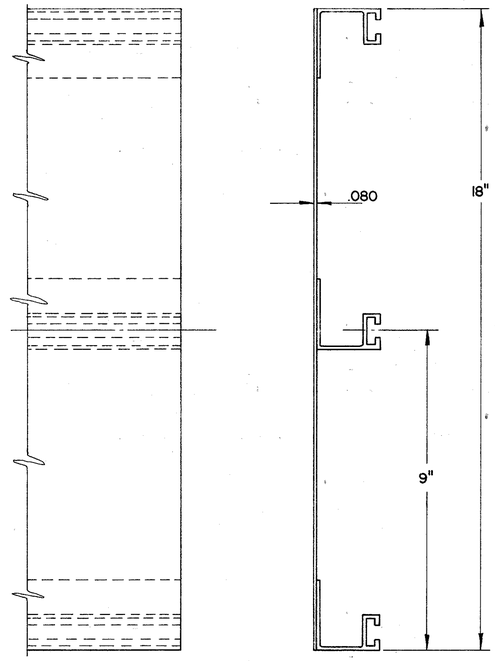

FRONT VIEW

SIDE VIEW

24" BOLTED-EXTRUSHEET PANEL

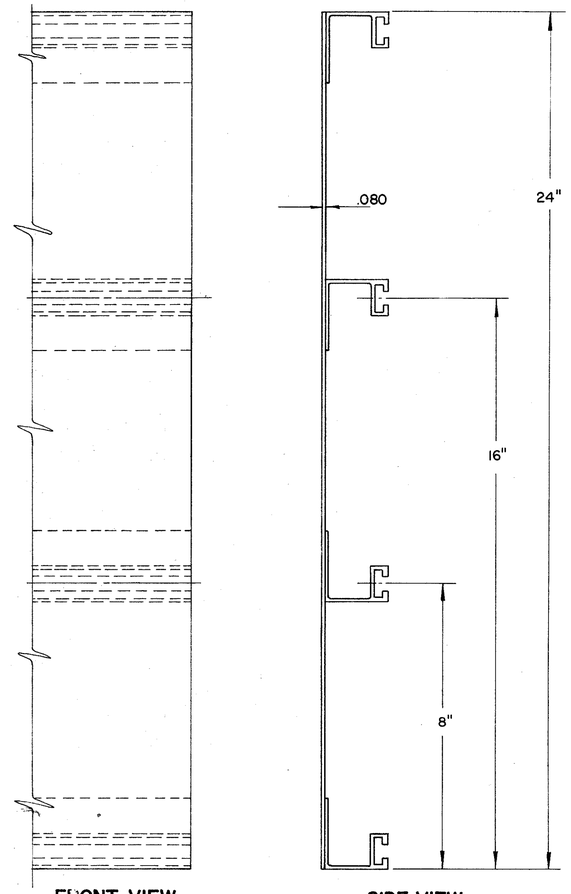

FRONT VIEW

SIDE VIEW

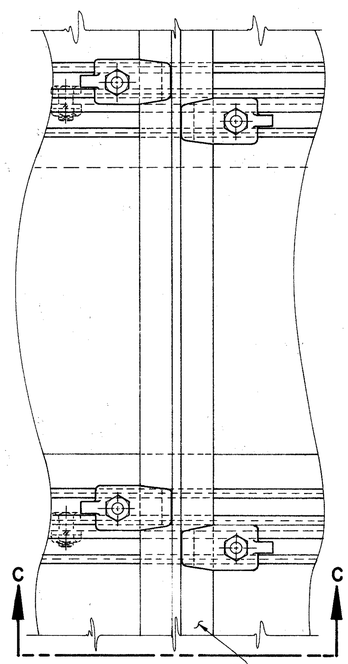

SECTION A-A

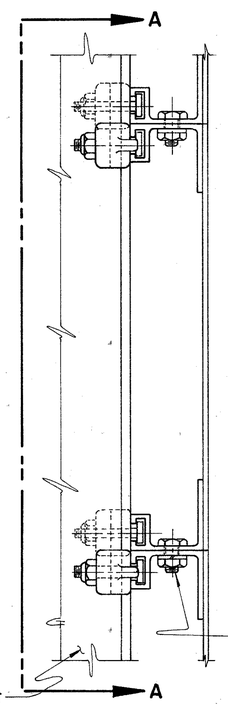

SECTION B-B

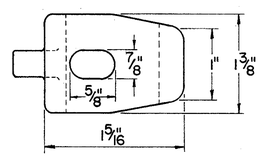

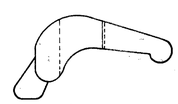

CLIP DETAIL

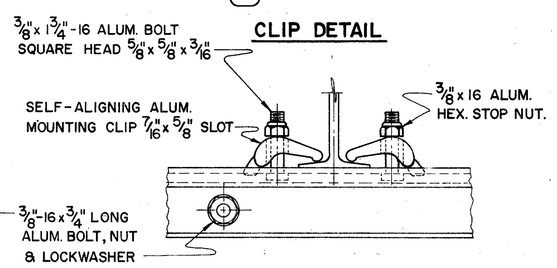

SECTION C-C

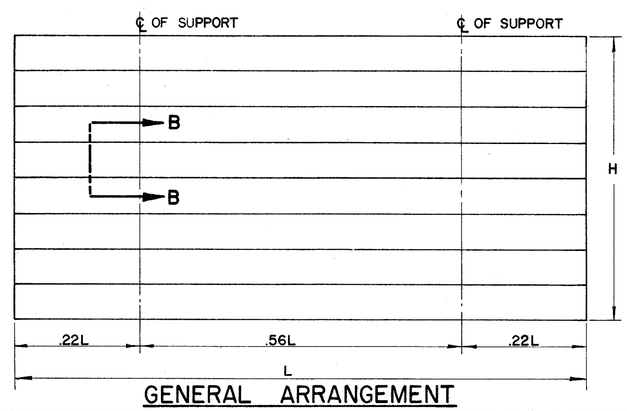

GENERAL ARRANGEMENT

NOTES

EXTRU-SHEET PANELS SHALL BE ALUMINUM; SPOT WELDING, MATERIALS AND HARDWARE SHALL CONFORM WITH SPECIFICATION NO. 815

COMBINATIONS OF 12", 18" AND 24" PANELS ARE TO BE USED TO ATTAIN REQUIRED SIGN HEIGHT.

INDIVIDUAL PANELS SHALL BE THE SAME LENGTH AS THE HORIZONTAL LENGTH OF SIGN, WITH NO SPLICES.

THE PANELS SHALL BE ERECTED HORIZONTALLY AND BOLTED ON 24" CENTERS.

THE PANELS SHALL BE FASTENED TO EACH VERTICAL SUPPORT MEMBER WITH MOUNTING CLIPS; ALTERNATELY AT EACH HORIZONTAL EXTRUSION; BOTH SIDES AT EACH JOINT, AND BOTH SIDES AT TOP AND BOTTOM EDGES OF SIGN.

THE PANELS SHALL BE DESIGNED IN ACCORDANCE WITH THE A.A.S.H.O SPECIFICATION FOR THE DESIGN AND CONSTRUCTION OF STRUCTURAL SUPPORTS FOR HIGHWAY SIGNS, BASE ON A WIND LOAD OF 35#/SQ. FT.

THE MAXIMUM SIGN LENGTH FOR TWO SUPPORTS IS 19'-0". THE MAXIMUM SIGN LENGTH FOR THREE SUPPORTS IS 29'-0".

SPOT WELDS

PANEL SIZE	MAXIMUM SPOT WELD SPACING	
	CENTER TO CENTER	BETWN ROWS
12 INCH	4 INCH	10 INCH
18 & 24 INCH	4 INCH	8 INCH

BUREAU OF TRAFFIC
OHIO DEPARTMENT OF HIGHWAYS

ALUMINUM BOLTED EXTRUSHEET PANEL SIGN

ECD 2

DATE 10-14-65

APPROVED Fred C. Talbot
ENGINEER OF TRAFFIC

ALUMINUM BOLTED-EXTRUSHEET PANEL SIGN

FED. RD. DIVISION	STATE	PROJECT	
2	OHIO		

103/165

FRANKLIN COUNTY
FRA - 33 - 29.53

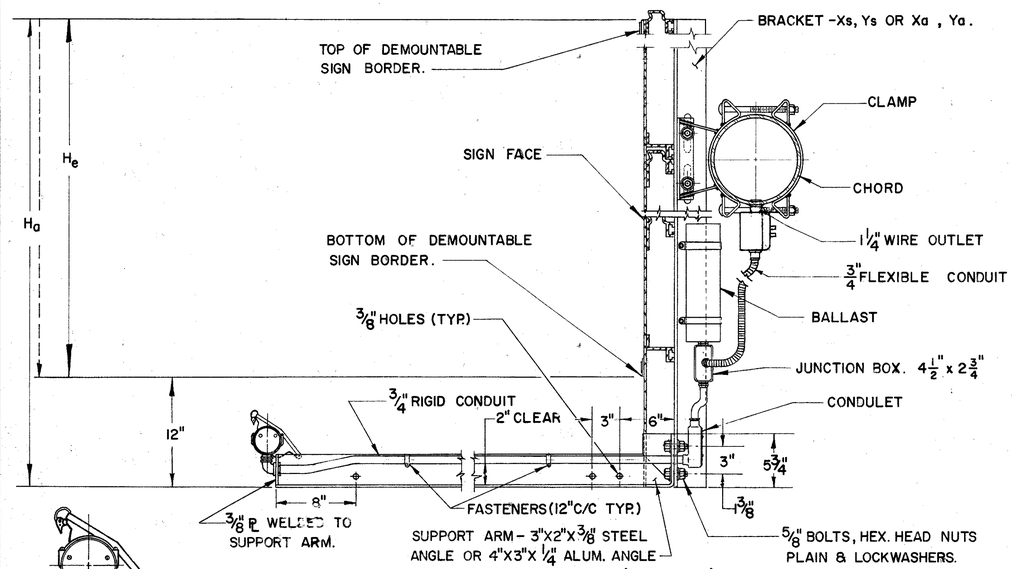

STANDARD FIXTURE LOCATION (BELOW)

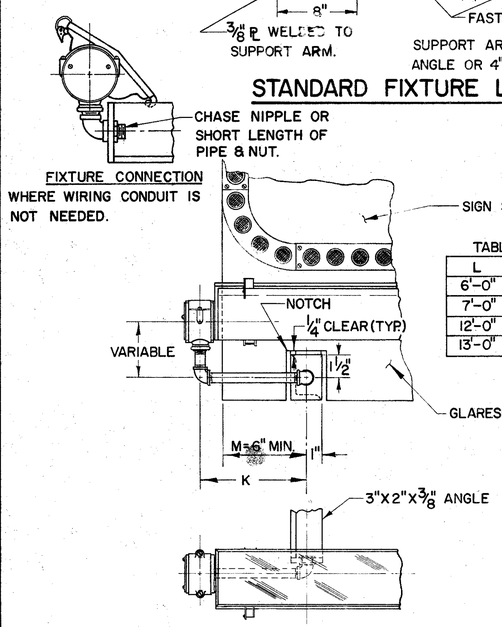

TABLE III.

L	K
6'-0"	7 11/16"
7'-0"	1 11/16"
12'-0"	9 3/8"
13'-0"	3 3/8"

ALTERNATE FIXTURE CONNECTIONS FOR SIGN 6', 7', 12' & 13' IN LENGTH.

DETAIL A.

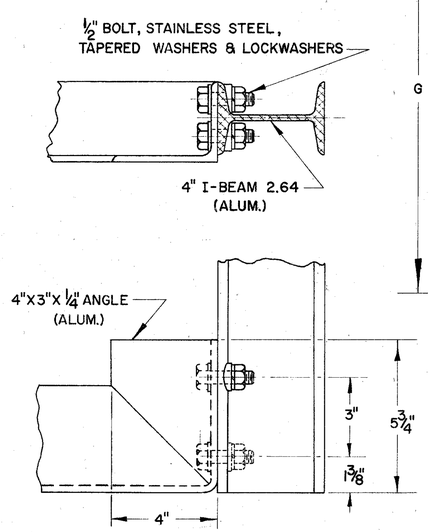

FOR SUPPORTS 7.2-7.6

DETAIL B.

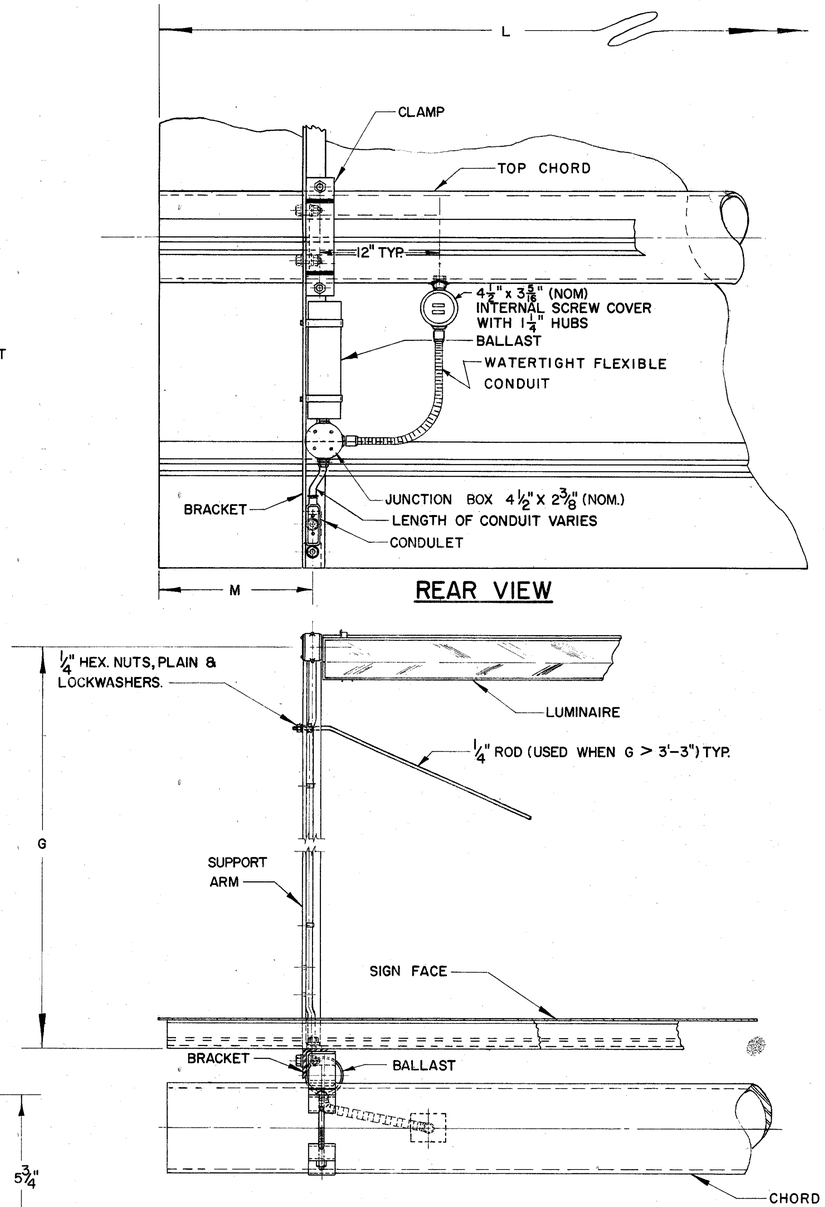

REAR VIEW

TOP VIEW

FABRICATION — ALL STRUCTURAL COMPONENTS SHOWN ON THIS SHEET SHALL CONFORM TO SUPPLEMENT SPECIFICATIONS 816.

MATERIALS — THE MATERIALS USED IN THE COMPONENTS SHOWN ON THIS SHEET SHALL BE IN CONFORMANCE WITH THE MATERIALS USED IN THE SIGN SUPPORT

TABLE I.

"L" SIGN LENGTH		FIXTURES 75 3/8"	FIXTURES 99 3/8"	"M" EDGE DISTANCE A LT.	A RT.	B LT.	B RT.	NO. BALLAST
A	B							
6'-0"	7'-0"	1		6"	6"	6"	6"	1
8'-0"	9'-0"	1		10 3/8	10 1/4	16 3/8	16 1/4	1
10'-0"	11'-0"		1	10 3/8	10 1/4	16 3/8	16 1/4	1
12'-0"	13'-0"	2		6"	6	6	6	1
14'-0"	15'-0"	2		8 5/8	8 5/8	14 5/8	14 5/8	1
16'-0"	17'-0"	1	1	8 5/8	8 5/8	14 5/8	14 5/8	1
18'-0"	19'-0"		2	8 5/8	8 5/8	14 5/8	14 5/8	1
20'-0"	21'-0"	3		7"	6 7/8	13	12 7/8	2
22'-0"	23'-0"	2	1	7"	6 7/8	13	12 7/8	2
24'-0"	25'-0"	1	2	7"	6 7/8	13	12 7/8	2
26'-0"	27'-0"		3	7"	6 7/8	13	12 7/8	2

Sn= Nominal Fixture Length, 72" & 96" respectively.
Sa= Actual Fixture Length, for mounting purposes, 75 3/8" and 99 3/8" respectively. (Slight variation for different manufacturers.)
M= Distance from edge of sign to ℄ of notch, min. 6". When the length of the sign minus 1'-0" is less than the sum of the actual fixture lengths, an offset "K" is used. For additional details see detail A and table III.

TABLE II

MAX. BRACKET SPACING FOR EXTERNALLY ILLUMINATED SIGNS

ACTUAL SIGN HEIGHT "Ha"	SUPPORT TYPES 9.12, 11.08, 13.2, 7.2 SINGLE TUBE DOUBLE TUBE LESS 36" C/C	9.24, 10.48, 12.24, 14.5, 15.8, 7.2 to 7.6 DOUBLE TUBE C/C 36"-42"	C/C 48"-54"	C/C 60"-72"
	MAXIMUM BRACKET SPACING			
to 5'-0"	6'-4" with X 8'-4" with Y	8'-4" with X	8'-4" with X	8'-4" with X
5'-6" to 8'-0"	6'-4" with Y	4'-2" with X 6'-4" with Y	6'-4" with X 8'-4" with Y	8'-4" with X
8'-6" to 10'-0"	3'-2" with X 4'-2" with Y	6'-4" with Y	6'-4" with Y	8'-4" with Y
10'-6" to 12'-0"	———	4'-2" with Y	6'-4" with Y	6'-4" with Y
12'-6" to 14'-0"	———	3'-2" with Y	3'-2" with Y	4'-2" with Y

Ha= ACTUAL SIGN HEIGHT
He= EFFECTIVE SIGN HEIGHT
BRACKET SIZE: Xs = 3 1/2" X 2 1/2" X 5/16" — L @ 6.1 LB. STEEL; Ys = 4" X 3 1/16" X 1/4" — Z @ 8.2 LB. STEEL } 9.12, 10.48, 11.08, 12.24, 14.5 & 15.8
Xa = 3" X 2 11/16" X 1/4" — Z @ 2.33 LB. ALUM.; Ya = 4" X 2 21/32" X 3/16" — I @ 2.64 LB. ALUM. } 7.2 Thru 7.6

WHEN MAX. ALLOWABLE SPACING IS LESS THAN ACTUAL FIXTURE LENGTHS, Sa, ADDITIONAL STANDARD BRACKETS MUST BE FURNISHED, EQUAL IN HEIGHT TO "Ha".

SUPPORTS 7.2 THROUGH 7.6 SHALL HAVE AN ALUMINUM FIXTURE ARM, 4"X3"X1/4" ANGLE. SEE DETAIL B. BOLTS AND ACCESSORIES SHALL BE STAINLESS STEEL.

BUREAU OF TRAFFIC
OHIO DEPARTMENT OF HIGHWAYS

STRUCTURAL DETAILS FOR EXTERNALLY ILLUMINATED SIGNS

EI-1

APPROVED Fred C. Tarbox
ENGINEER OF TRAFFIC

STRUCTURAL DETAILS FOR EXTERNALLY ILLUMINATED SIGNS

FED. RD. DIVISION	STATE	PROJECT	
2	OHIO		

104/155

FRANKLIN COUNTY
FRA. - 33 - 29.53

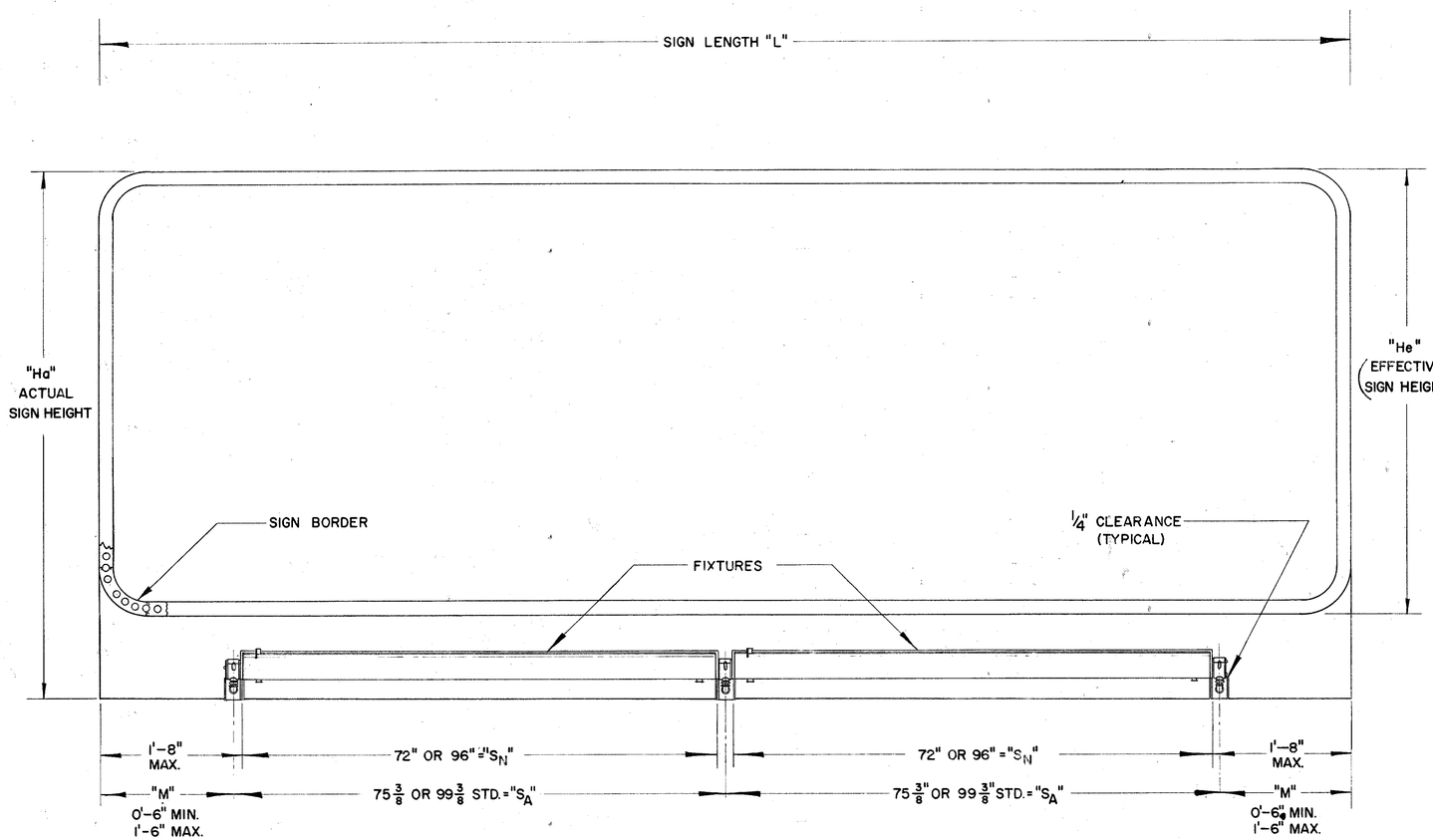

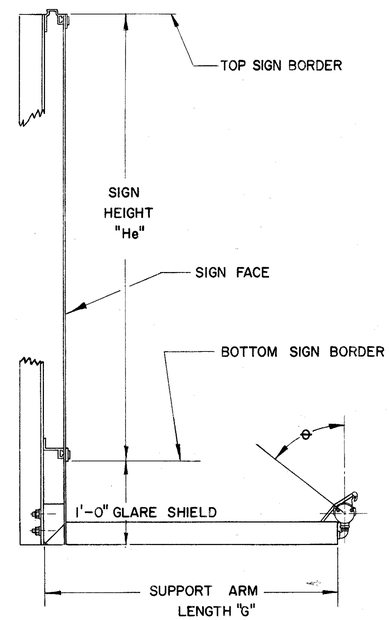

SIGN LIGHTING NOTES

SIGN ILLUMINATION

SIGN ILLUMINATION SHALL BE BY ATTACHED FLUORESCENT FIXTURES AS SHOWN ON ILLUMINATED SIGN DETAIL SHEETS.

LAMPS

LAMPS SHALL BE TYPE F72 OR F96-T12/CW/HO AS MANUFACTURED BY WESTINGHOUSE, GENERAL ELECTRIC OR APPROVED EQUAL FOR SIGNS TO A MAXIMUM HEIGHT OF 6'-6". LAMP TYPE SHALL BE F72 OR F96-T12/CW/SHO AS MANUFACTURED BY WESTINGHOUSE, F72 OR F96-PG17/CW AS MANUFACTURED BY GENERAL ELECTRIC OR APPROVED EQUAL FOR SIGNS THAT ARE 7'-0" OR GREATER IN HEIGHT.

LAMP FIXTURES

LIGHTING FIXTURES SHALL BE CONSTRUCTED OF CORROSION RESISTANT MATERIALS OR WITH HIGH QUALITY CORROSION RESISTANT FINISH. ALL FIXTURES SHALL BE SPECIFICALLY DESIGNED FOR OUTDOOR SIGN LIGHTING SERVICE. MAJOR COMPONENTS SHALL INCLUDE WEATHERPROOF CAST ALUMINUM MOUNTING HUBS DESIGNED TO SECURELY LOCK THE FIXTURES AT ANY ANGLE THROUGH 360 DEGREES. INDICATORS IN 10 DEGREE INCREMENTS SHALL BE STAMPED OR CAST INTO THE HUB TO FACILITATE PROPER AIMING OF THE FIXTURE. FINAL ADJUSTMENT OF FIXTURE SHALL BE DONE AT NIGHT UNDER THE PROJECT ENGINEER'S DIRECTION.

THE BODY DESIGN OF THE FIXTURE SHALL PROVIDE AN ASYMMETRIC SPECULAR ALZAK REFLECTOR TO GIVE A HIGH LEVEL OF UNIFORM ILLUMINATION AND SHALL PROVIDE A WIREWAY FROM END TO END. WHEN ADJACENT FIXTURES ARE WIRED TOGETHER THROUGH THE WIREWAY, WIRE BETWEEN FIXTURES SHALL BE ENTIRELY ENCLOSED.

EXTERIOR FINISH OF THE FIXTURE BODY SHALL BE INTERSTATE GREEN COLOR, HEAT RESISTANT BAKED ENAMEL AS # 8950 UNIVERSAL PAINT AND VARNISH INC., OR MIDWESTERN COLOR WORKS, OR APPROVED EQUAL. REFLECTOR, LAMP AND SOCKETS SHALL BE PROTECTED BY A HINGED DOOR OF CLEAR ACRYLIC PLASTIC WITH ALUMINUM OR STAINLESS STEEL FRAME AND NEOPRENE GASKETING.

BALLASTS

BALLASTS FOR FIXTURES SHALL BE WEATHER-PROOF OUTDOOR TYPE FOR A 120 VOLT 60 CYCLE SYSTEM AND SHALL PROVIDE LAMP STARTING AT AN AMBIENT TEMPERATURE OF -20°F. BALLASTS SHALL BE MOUNTED ON SIGN BRACKET ONLY. WIRING SHALL BE ACCOMPLISHED IN SUCH A MANNER THAT THE SIGN MAY BE REMOVED WITHOUT DISTURBING THE ELECTRICAL WIRING.

EFFECTIVE SIGN HEIGHT "H"	SUPPORT ARM LENGTH "G"	APPROX. AIMING ANGLE θ
3'-0" to 5'-0"	2'-9"	25°
5'-0" to 6'-6"	3'-3"	25°
7'-0" to 10'-0"	4'-3"	17°
10'-6" to 13'-0"	5'-9"	23°

"L" SIGN LENGTH	NO. OF FIXTURES			He=3'-0" to 6'-6" LAMP=T12/cw/ho			He=7'-0" to 13'-0" LAMP=T12/cw/sho		
	72	96		BALLAST NO.	BALLAST TYPE	WATTAGE PER SIGN	BALLAST NO.	BALLAST TYPE	WATTAGE PER SIGN
6'-0" to 7'-0"	1			1	A	190	1	C	250
8'-0" to 9'-0"	1			1	A	190	1	C	250
10'-0" to 11'-0"			1	1	A	190	1	C	250
12'-0" to 13'-0"	2			1	B	250	1	D	425
14'-0" to 15'-0"	2			1	B	250	1	D	425
16'-0" to 17'-0"	1	1	1	1	B	250	1	D	425
18'-0" to 19'-0"			2	1	B	250	1	D	425
20'-0" to 21'-0"	3			2	A & B	440	2	C & D	675
22'-0" to 23'-0"	2	1		2	A & B	440	2	C & D	675
24'-0" to 25'-0"	1	2		2	A & B	440	2	C & D	675
26'-0" to 27'-0"		3		2	A & B	440	2	C & D	675

BALLASTS

TYPE	MANUFACTURERS G.E.	MANUFACTURERS JEFFERSON	WATTAGE
A	GG 3583	257-321	190
B	GG 3535	257-331	250
C	GG 3585	257-361	250
D	GG 3588	257-371	425

BALLASTS SHALL BE GENERAL ELECTRIC, JEFFERSON AS SPECIFIED ABOVE OR EQUAL.

TRANSFORMERS

TYPE	MANUFACTURERS G.E.	MANUFACTURERS JEFFERSON	OUTPUT K.V.A.	SWITCH TRANSFORMER ENCLOSURE
I	9T51Y7	220-241	.25	Y
II	9T51Y8	220-251	.50	Y
III	9T51Y9	220-261	.75	Y
IV	9T51Y10	220-071-100	1.00	Z
V	9T51Y11	220-081-100	1.50	Z
VI	9T51Y12	220-091-100	2.00	Z
VII	9T51Y13	221-102	3.00	Z

BUREAU OF TRAFFIC
OHIO DEPARTMENT OF HIGHWAYS

ELECTRICAL DETAILS FOR EXTERNALLY ILLUMINATED SIGNS

EI-2

DATE 10-31-63 5-6-64 10-29-64 03-29-67

APPROVED Fred C Talbot
ENGINEER OF TRAFFIC

FED. RD. DIVISION	STATE	PROJECT	
2	OHIO		

105/155

FRANKLIN COUNTY
FRA - 33 - 29.53

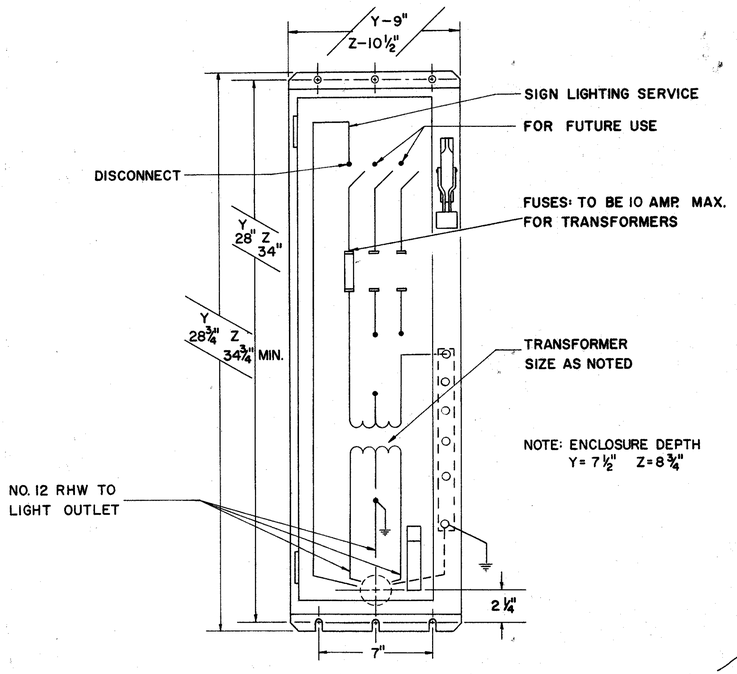

TYPICAL ENCLOSURE DETAIL

480 VOLT SIGN LIGHTING SERVICE

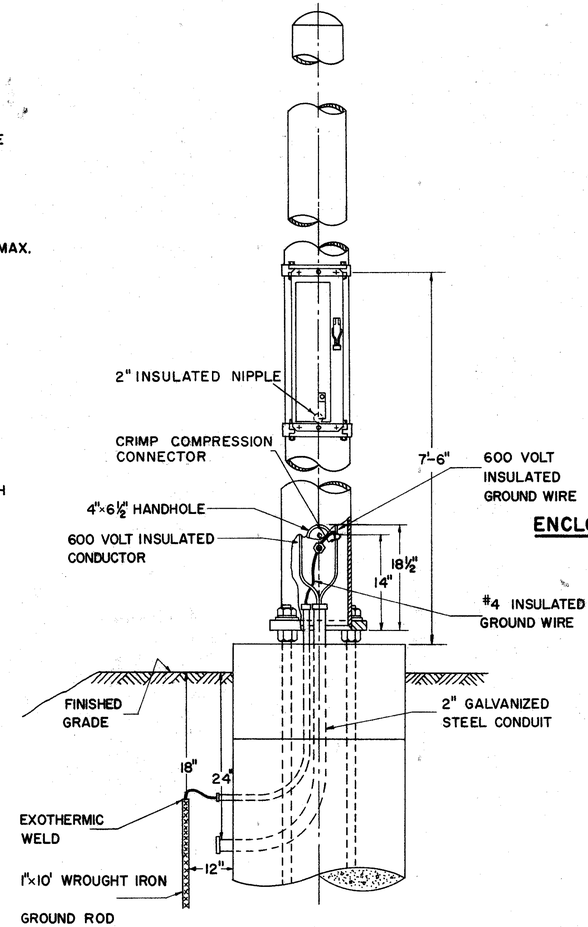

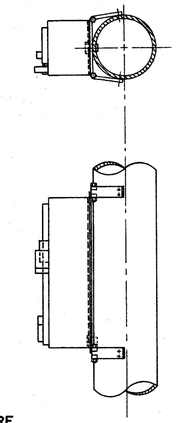

ENCLOSURE MOUNTING DETAIL

SIGN SUPPORT DETAIL FOR ILLUMINATED SIGNS

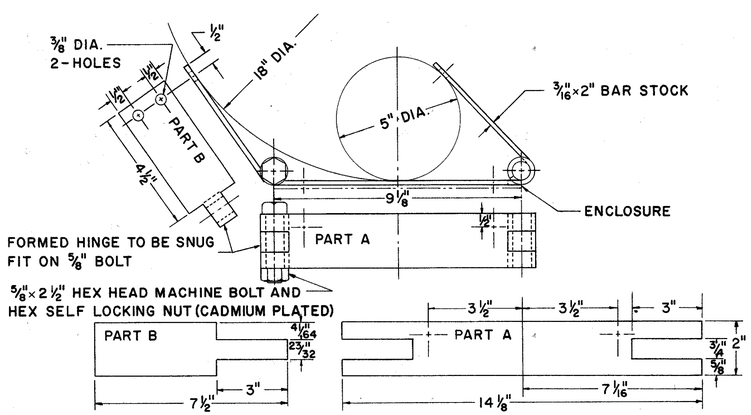

ENCLOSURE MOUNTING BRACKET

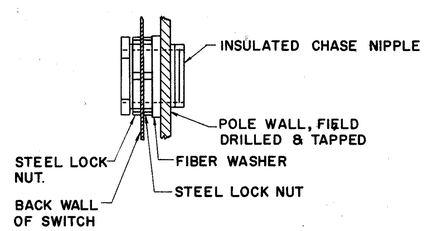

INSULATED CHASE NIPPLE ASSEMBLY

AS MANUFACTURED BY THOMAS BETTS, APPELTON, STEEL CITY OR EQUAL

NOTES

GENERAL

DETAILS OF THIS SHEET SHALL APPLY TO EACH OVERHEAD SIGN STRUCTURE TO SUPPORT EXTERNALLY ILLUMINATED SIGNS.

SERVICE

ELECTRIC SERVICE SHALL ENTER THROUGH A 2" GALVANIZED RIGID STEEL CONDUIT INSTALLED IN STRUCTURE FOUNDATION AS PER DETAIL. SIGN SERVICE OR CIRCUITRY SHALL BE CONTROLLED AS REQUIRED BY THE SYSTEM DESIGN AT THE PRIMARY SOURCE.

SERVICE CONDUCTORS SHALL BE THE SIZE AND TYPE AS SPECIFIED.

COMBINATION SWITCH AND TRANSFORMER

(TYPE Y OR Z ENCLOSURE REQUIRED AS PER SCHEDULE ON THIS SHEET)

THIS COMBINATION SHALL BE A 30 OR 60 AMPERE 600 VOLT SWITCH WITH A .25 TO 3.0 KVA TRANSFORMER. THE COMBINATION AND ENCLOSURE SHALL BE AS SQUARE D CLASS 9421, COLUMBUS ELECTRIC WORKS CLASS 101, PANALS INCORPORATED-CLASS 9400, OR APPROVED EQUAL.

TRANSFORMER

THE TRANSFORMER SHALL BE DRY TYPE SINGLE PHASE 240/480 VOLT PRIMARY 120/240 VOLT SECONDARY, THE TYPE AND CAPACITY AS SPECIFIED IN DETAILED SCHEDULE ON THIS SHEET.

ENCLOSURE

THE ENCLOSURE SHALL BE NEMA #4 WATER TIGHT .063 GAGE STAINLESS STEEL ASTA 302-303. A DISCONNECT HANDLE SHALL BE FLANGE MOUNTED AND CAPABLE OF BEING LOCKED IN EITHER POSITION. THE ENCLOSURE SHALL BE EQUIPPED WITH A DOOR LOCKING MECHANISM WITH A DEFEATER THAT NECESSITATES TWO HANDS TO OPERATE MECHANISM WITH THE SWITCH IN OFF POSITION. SPACE FOR A 2" INSULATED CHASE NIPPLE SHALL BE PROVIDED APPROXIMATELY 2¼" ABOVE THE CENTER LINE OF THE LOWER MOUNTING SLOT. THIS ENCLOSURE AND STRUCTURE SHALL BE FIELD DRILLED AND TAPPED FOR THE REQUIRED NIPPLE AS SHOWN ON THE DETAIL ON THIS SHEET.

THIS ENCLOSURE SHALL BE FLANGE MOUNTED ON BRACKETS WITH 5/16"-18×¾" HEX HEAD CADMIUM PLATED MACHINE BOLTS. ENCLOSURES SHALL BE TYPE Y OR Z AS SPECIFIED AND DIMENSIONED ON THIS SHEET.

ENCLOSURE MOUNTING BRACKET

THE ENCLOSURE MOUNTING BRACKET SHALL BE FABRICATED THEN GALVANIZED BEFORE ASSEMBLY. THE BRACKET SHALL BE FIELD MOUNTED WITH 5/16 HEX HEAD SELF TAPPING CADMIUM PLATED SCREWS. THE SIGN SUPPORT SHALL BE FIELD DRILLED, AS PER DETAIL.

WIRE AND CABLE

ALL WIRE AND CABLE UP TO AND INCLUDING #4 SHALL COMPLY WITH FAA TYPE A SPECIFICATIONS. #2 OR LARGER WIRE OR CABLE SHALL BE G.E. 58006 OR ANACONDA AP-10711, OR EQUAL. ALL WIRE AND CABLE SHALL BE 600 VOLT.

GROUNDING

EACH SIGN SUPPORT OR STRUCTURE SHALL BE GROUNDED WITH A #4 RUBBER INSULATION AND NEOPRENE JACKETED CONDUCTOR. THE GROUNDING CONDUCTOR SHALL BE CONNECTED TO THE SWITCH THEN TO THE COMPRESSION CONNECTOR IN THE SIGN SUPPORT THEN TO A 1"×10' SOLID WROUGHT IRON GROUND ROD. GROUND CONDUCTOR SHALL BE EXOTHERMICALLY WELDED TO GROUND ROD AND THEN TAPED WITH PLASTIC ELECTRICAL TAPE AT EACH EXPOSED PORTION OF CONDUCTOR. THE WELDED CONNECTION AND TAPED PORTION SHALL BE PAINTED 2 COATS OF INSULATING ENAMEL.

TRANSFORMERS

TYPE	MANUFACTURERS G.E.	MANUFACTURERS JEFFERSON	OUTPUT K.V.A.	SWITCH TRANSFORMER ENCLOSURE
I	9T51Y7	220-241	.25	Y
II	9T51Y8	220-251	.50	Y
III	9T51Y9	220-261	.75	Y
IV	9T51Y10	220-071-100	1.00	Z
V	9T51Y11	220-081-100	1.50	Z
VI	9T51Y12	220-091-100	2.00	Z
VII	9T51Y13	221-102	3.00	Z

BUREAU OF TRAFFIC
OHIO DEPARTMENT OF HIGHWAYS

ELECTRICAL SIGN SERVICE DETAILS 480 VOLT SYSTEM

ES-3A

DATE 6-18-64 9-15

APPROVED _____
ENGINEER OF TRAFFIC

FED. RD. DIVISION	STATE	PROJECT	
2	OHIO		

106/155

FRANKLIN COUNTY
FRA. - 33 - 29.53

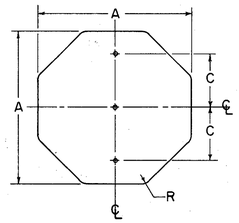

A	C	R	GAUGE
30	8	1 1/2	.080
36	8	1 1/2	.080

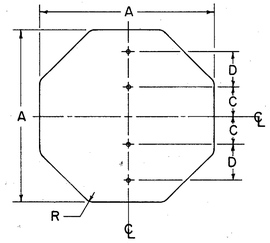

A	C	D	R	GAUGE
48	8	10	1 1/2	.100

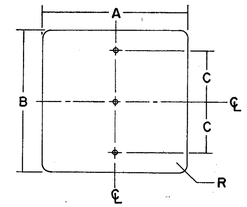

A	B	C	R	GAUGE
24	30	8	1 1/2	.063
24	48	15	1 1/2	.100
30	36	11	1 1/2	.080
30	42	12	1 1/2	.080
36	36	11	1 1/2	.080
36	42	15	1 1/2	.080
36	48	15	1 1/2	.080
48	24	10	3	.100
48	36	13	3	.100

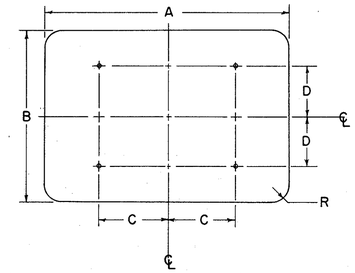

A	B	C	D	R	GAUGE
48	48	22	16	3	.100
48	60	22	22	3	.100

SPEED LIMIT SIGNS ON TWO SUPPORTS

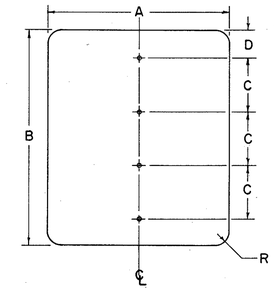

A	B	C	D	R	GAUGE
48	48	12	6	3	.100
48	60	15	7 1/2	3	.100

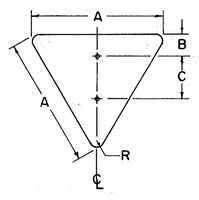

A	B	C	R	GAUGE
36	3	16	2 1/2	.080

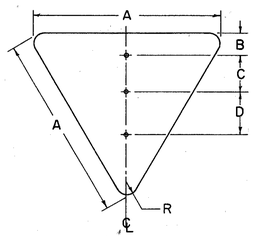

A	B	C	D	R	GAUGE
48	4	10	15	3	.100
60	5	10	15	4	.100

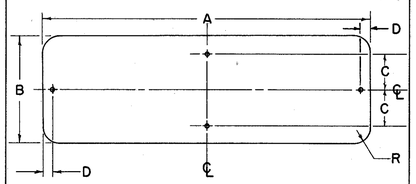

A	B	C	D	R	GAUGE
36	12	4	1	1 1/2	.080
72	12	—	16	1 1/2	.100
60	12	—	13	1 1/2	.100

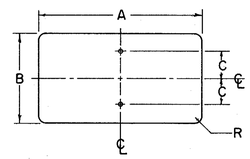

A	B	C	R	GAUGE
12	6	1 1/2	1 1/2	.063
20	15	6	1 1/2	.063
24	12	4 1/2	1 1/2	.063
24	18	7 1/2	1 1/2	.063
8	26	8	1	.063
36	18	7 1/2	1 1/2	.080

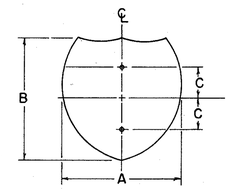

A	B	C	GAUGE
24	24	8	.063
30	24	8	.080

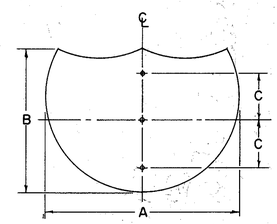

A	B	C	GAUGE
36	36	11	.080
48	36	11	.100

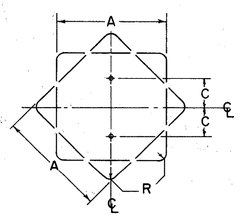

A	C	R	GAUGE
18	7 1/2	1 1/2	.063
24	8	1 1/2	.063
30	8	1 1/2	.080

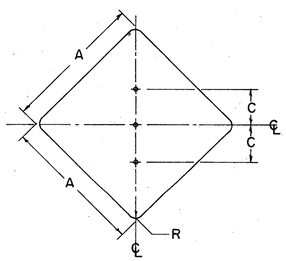

A	C	R	GAUGE
36	12	1 1/2	.080
48	14	3	.100

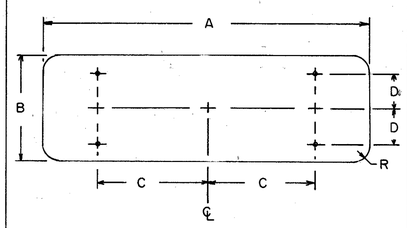

A	B	C	D	R	GAUGE
72	18	20	6	1 1/2	.100
72	24	20	8	1 1/2	.100
60	30	17	10	1 1/2	.100
96	18	27	6	1 1/2	.100

Location of holes on "Demountable Shields" (attached to guide signs)

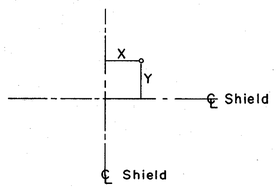

SIZE	NO. HOLES	X	Y
(26) 24X24	4	7	7
30X24	4	8	8
(39) 36X36	4	10	10
		0	10
48X36	6	15	10

For notes on fastening see drawing for miscellaneous "Signing Items" sheet.

NOTES:

ALL DIMENSIONS ARE IN INCHES UNLESS OTHERWISE SHOWN.

MATERIAL

FLAT SIGN BLANKS SHALL BE FURNISHED IN ALUMINUM ALLOY 6061-T6, (ASTM-B209, GS11A-T6) WITH MILL FINISH.

BOLT HOLES

THE BOLT HOLES SHALL BE 3/8" IN DIAMETER, AND MAY BE DRILLED, BLANKED OR PUNCHED TO FINISHED SIZE.

BUREAU OF TRAFFIC
OHIO DEPARTMENT OF HIGHWAYS

SIGN BLANK DETAILS

SBD

DATE
4-14-67
5-10-68
10-1-68
5-27-69
6-18-69

APPROVED _____
ENGINEER OF TRAFFIC

FED. RD. DIVISION	STATE	PROJECT	
2	OHIO		

102/155

FRANKLIN COUNTY
FRA - 33 - 29.53

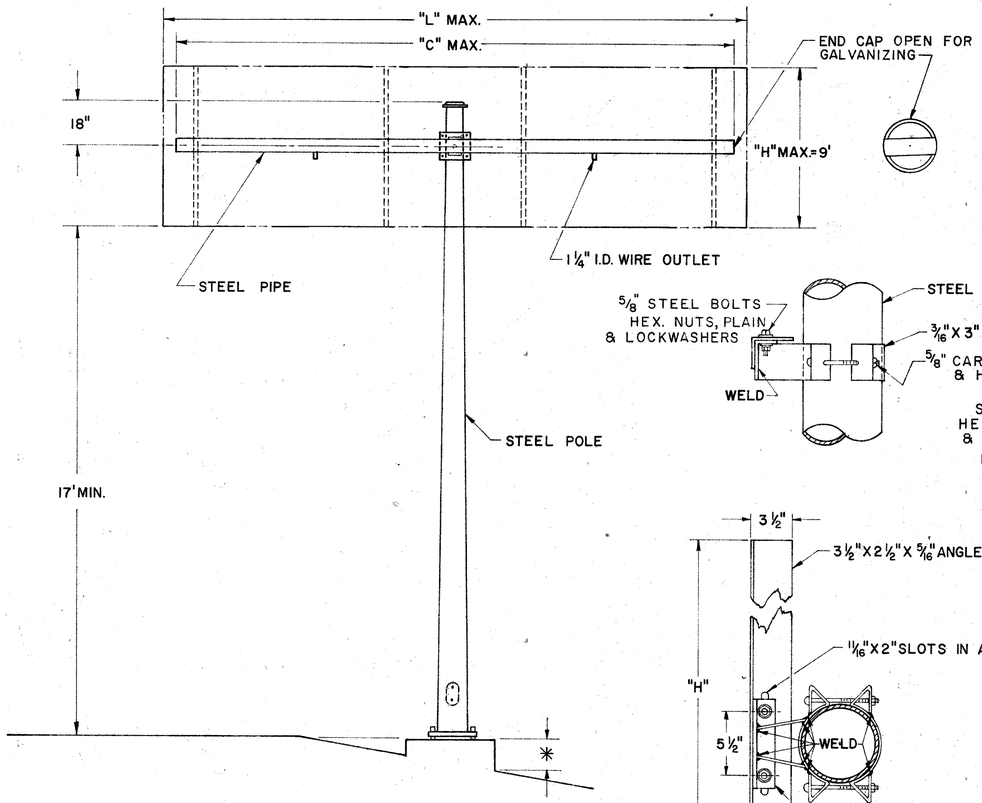

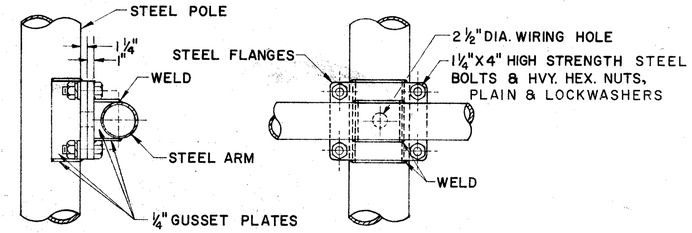

ARM ATTACHMENT

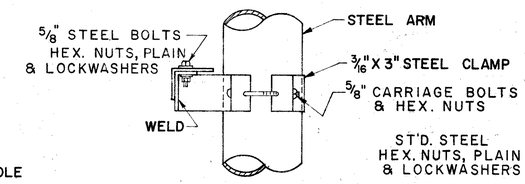

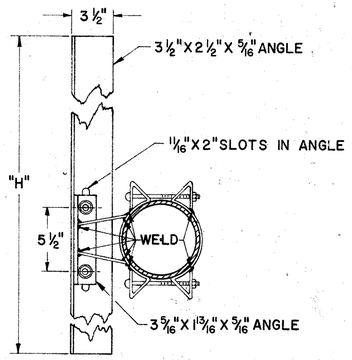

SIGN ATTACHMENT DETAIL

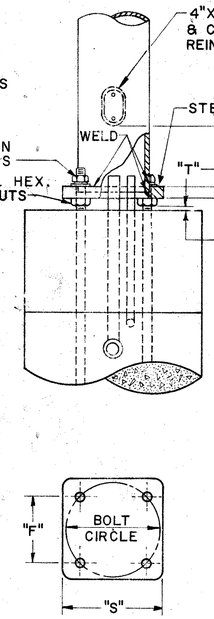

POLE DETAIL

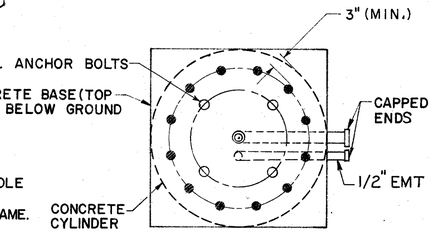

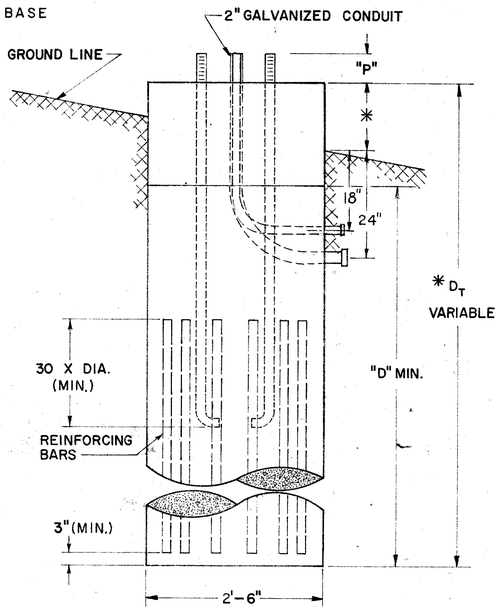

FOUNDATION DETAIL

NOTES

FABRICATION – ALL PORTIONS OF THE SIGN SUPPORT, INCLUDING SIGN ATTACHMENTS, SHALL BE HOT DIP GALVANIZED IN ACCORDANCE WITH THE REQUIREMENTS OF A.S.T.M. DESIGNATIONS A-123 AND A-153. THE CONDUIT SHALL BE GALVANIZED IN ACCORDANCE WITH SEC. 625.13 AND SHALL BE INCLUDED IN THE UNIT PRICE BID FOR OVERHEAD SIGN SUPPORTS FOR PAYMENT.

* FOUNDATION – THE TOP ELEVATION OF FOUNDATIONS SHALL BE VARIED SO AS TO MAINTAIN A MINIMUM CLEARANCE OF 17' BETWEEN THE BOTTOM OF THE SIGN AND THE HIGHWAY CROWN.

MATERIAL – STEEL POLE BASES, FLANGES, AND END CAPS SHALL CONFORM TO THE REQUIREMENTS OF ASTM SPECIFICATION A 30 GRADE B. HIGH STRENGTH STEEL BOLTS SHALL CONFORM TO ASTM SPECIFICATION A 193 GRADE B 7. AFTER FABRICATION TAPERED POLES SHALL HAVE A MINIMUM YIELD STRENGTH OF 48,000 PSI.

SOILS – THE FOUNDATION DETAILS SHOWN ARE FOR AVERAGE SOIL CONDITIONS (MEDIUM CLAY, CEMENTED SAND AND GRAVEL, SANDY CLAY, OR STIFF CLAY). FOR POOR SOIL CONDITIONS, INCREASE "D" MIN. BY: 50% IN DRY OR WET SAND, 60% IN SILTY CLAY, 100% IN SOFT CLAY, AND FROM 75% TO 150% IN WET SILT, DEPENDING ON QUICKSAND ACTION.

REINFORCING STEEL – REINFORCING STEEL AS SHOWN IN TABLE SHALL BE INSTALLED WHEN "D_T" EXCEEDS THE ANCHOR BOLT LENGTH BY MORE THAN 3 FT. THE COST AND PLACEMENT OF REINFORCING STEEL SHALL BE INCLUDED IN THE UNIT PRICE FOR 816 CONCRETE FOR SIGN SUPPORT FOUNDATION.

DESIGN NO.	POLE SIZE	PIPE SIZE	DIM C	DIM F	DIM P	DIM S	DIM T	BOLT CIRCLE	ANCHOR BOLT SIZE	MAX SIGN AREA	MAX. "L" WITH MAX. SIGN AREA	"D" MIN.	REINF. BARS TYPE	REINF. BARS NO.
1	7ga, 11" X 7.99 X 21'-6"	4" SCH. 40 GRADE A	18'	10 5/8"	6 1/2"	15 5/8"	1 1/2"	15"	1 1/2" X 60"	60	24'-9"	7'-0"	#6	8
2	3ga, 13" X 9.99 X 21'-6"	4" SCH. 80 GRADE A	14'	12 3/4"	7 3/4"	18 1/2"	2"	18"	1 3/4" X 90"	120	16'-9"	8'-6"	#7	12
3	3ga, 13" X 9.99 X 21'-6"	6" SCH. 40 GRADE A	20'	12 3/4"	7 3/4"	18 1/2"	2"	18"	1 3/4" X 90"	120	24'-0"	9'-0"	#7	12

DESIGN
THE DESIGN OF OVERHEAD SUPPORTS IS IN ACCORDANCE WITH A.A.S.H.O. SPECIFICATION FOR THE DESIGN AND CONSTRUCTION OF STRUCTURAL SUPPORTS FOR HIGHWAY SIGNS, ADOPTED JUNE 12, 1961.

BUREAU OF TRAFFIC
OHIO DEPARTMENT OF HIGHWAYS

OVERHEAD SIGN SUPPORT	816 No. 9.12	DATE 1-19-62 3-30-62

APPROVED Robert E. Comer
ENGINEER OF TRAFFIC

FED. RD. DIVISION	STATE	PROJECT	
2	OHIO		

108/165

FRANKLIN COUNTY
FRA - 33 - 29.53

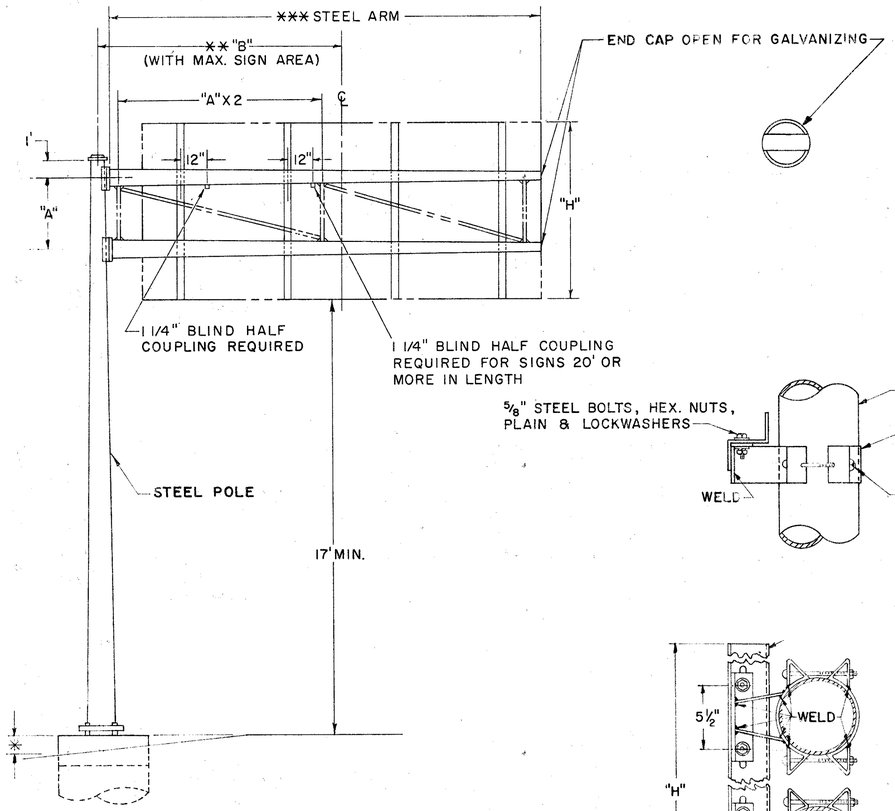

NOTE:
THE 12" DIMENSION SHOWN FOR BLIND HALF COUPLINGS MAY BE INCREASED OR DECREASED WHEN NECESSARY TO TO PREVENT INTERFERENCE WITH OTHER MEMBERS.

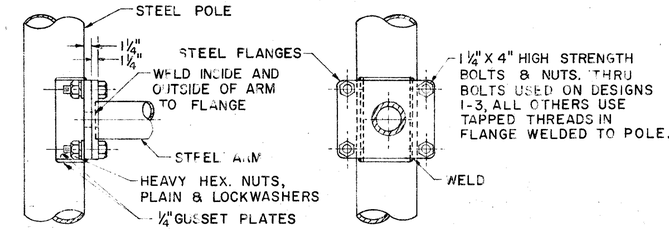

ARM ATTACHMENT

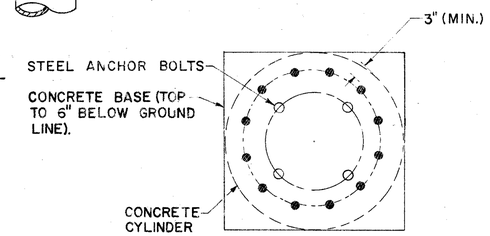

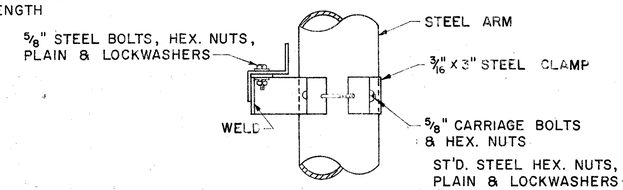

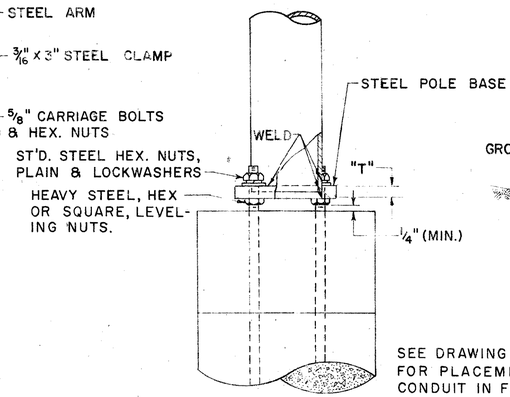

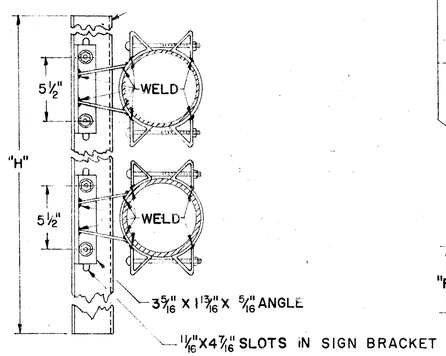

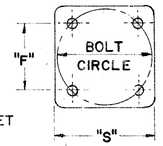

POLE BASE DETAIL

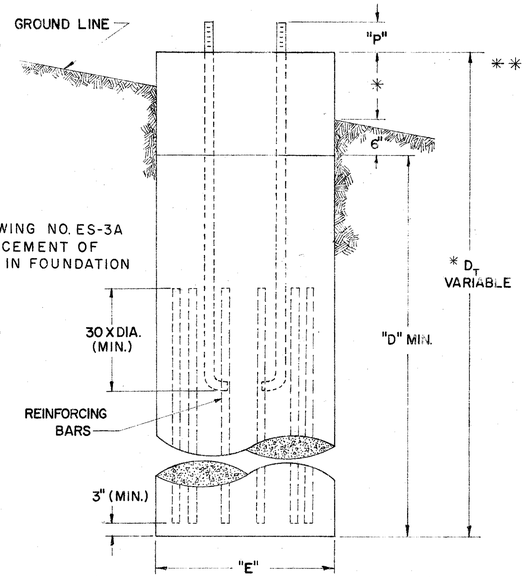

FOUNDATION DETAIL

SIGN ATTACHMENT DETAIL

DESIGN NO.	POLE SIZE	*** ARM SIZE	DIM A	DIM ** B	DIM "D" MIN.	DIM F	DIM F	DIM P	DIM S	DIM T	BOLT CIRCLE	ANCHOR BOLT SIZE	MAX SIGN AREA	REINF BARS SIZE	REINF BARS # REQ'D
1	3 Ga, 12" X 8.78" X 23'-0"	7Ga, 6.9" X 4.66" X 16'-0"	4'	12'	9'	3'-0"	11 5/16"	7 3/4"	17"	2"	16"	1 3/4" X 90"	80	3/4"	12
2	3 Ga, 12" X 8.78" X 23'-0"	7 Ga, 8" X 5.2" X 20'-0"	4'	16'	9'	3'-0"	11 5/16"	7 3/4"	17"	2"	16"	1 3/4" X 90"	80	3/4"	12
3	3 Ga, 15" X 11.5" X 25'-0"	7 Ga, 8.3" X 6.06" X 16'-0"	4'	12'	11'	3'-0"	15 1/2"	8 3/8"	23"	2"	22"	2" X 96"	120	1"	12
4	3 Ga, 16" X 12.5" X 25'-0"	3 Ga, 9.2" X 6.40" X 20'-0"	4'	16'	11'	3'-0"	16 5/16"	8 3/8"	24 1/2"	2"	23 1/2"	2" X 96"	120	1"	12
5	0 Ga, 18" X 14.36" X 26'-0"	7 Ga, 11" X 7.92" X 22'-0"	6'	14'	13'	3'-0"	18"	9 3/8"	26 1/2"	2 1/2"	25 1/2"	2 1/4" X 120"	180	1 1/8"	12
6	0 Ga, 18" X 14.36" X 26'-0"	7 Ga, 12.5" X 8.86" X 26'-0"	6'	18'	13'	3'-0"	18"	9 3/8"	26 1/2"	2 1/2"	25 1/2"	2 1/4" X 120"	180	1 1/8"	12
7	2 PLY 7 Ga, 18" X 14.36" X 26'-0"	7 Ga, 12.5" X 9.14" X 24'-0"	6'	14'	15'	3'-0"	18"	9 3/4"	26 1/2"	2 1/2"	25 1/2"	2 1/2" X 144"	240	1 1/4"	12
8	2 PLY 1/4", 18" X 14.36" X 26'-0"	3 Ga, 12.5" X 8.58" X 28'-0"	6'	18'	15'	3'-0"	18"	11 1/4"	26 1/2"	3"	25 1/2"	3" X 144"	240	1 1/4"	12

NOTES

FABRICATION - ALL PORTIONS OF THE SIGN SUPPORT, INCLUDING SIGN ATTACHMENTS, SHALL BE HOT DIP GALVANIZED IN ACCORDANCE WITH THE REQUIREMENTS OF A.S.T.M. DESIGNATIONS A-123 AND A-153. THE CONDUIT SHALL BE GALVANIZED IN ACCORDANCE WITH SEC. 625.13 AND SHALL BE INCLUDED IN THE UNIT PRICE BID FOR OVERHEAD SIGN SUPPORTS FOR PAYMENT.

* FOUNDATION - THE TOP ELEVATION OF FOUNDATIONS SHALL BE VARIED SO AS TO MAINTAIN A MINIMUM CLEARANCE OF 17' BETWEEN THE BOTTOM OF THE SIGN AND THE HIGHWAY CROWN.

** ERECTION - VALUES OF "B" MAY BE EXCEEDED PROVIDED THE PRODUCT OF ACTUAL SIGN AREA TIMES THE DISTANCE FROM ℄ OF POLE TO ℄ OF SIGN DOES NOT EXCEED THE MAX. SIGN AREA TIMES "B".

*** ARMS 20' LONG OR LONGER ARE TO BE TRUSS TYPE WITH 3" X 3" X 3/8" ANGLES WELDED TO GUSSET PLATES.

MATERIAL - STEEL POLE BASES, FLANGES, AND END CAPS SHALL CONFORM TO THE REQUIREMENTS OF ASTM SPECIFICATION A 30 GRADE B.
HIGH STRENGTH STEEL BOLTS SHALL CONFORM TO ASTM SPECIFICATION A 193 GRADE B7
AFTER FABRICATION TAPERED POLES AND ARMS SHALL HAVE A MINIMUM YIELD STRENGTH OF 48,000 PSI.

SOILS - THE FOUNDATION DETAILS SHOWN ARE FOR AVERAGE SOIL CONDITIONS (MEDIUM CLAY, CEMENTED SAND AND GRAVEL, SANDY CLAY, OR STIFF CLAY).
FOR POOR SOIL CONDITIONS, INCREASE "D" MIN. BY: 50% IN DRY OR WET SAND, 60% IN SILTY CLAY, 100% IN SOFT CLAY, AND FROM 75% TO 150% IN WET SILT, DEPENDING ON QUICKSAND ACTION.

REINFORCING STEEL - REINFORCING STEEL AS SHOWN IN TABLE SHALL BE INSTALLED WHEN "D_T" EXCEEDS THE ANCHOR BOLT LENGTH BY MORE THAN 3 FT. THE COST AND PLACEMENT OF REINFORCING STEEL SHALL BE INCLUDED IN THE UNIT PRICE FOR ITEM 816 CONCRETE FOR SIGN SUPPORT FOUNDATIONS.

DESIGN

THE DESIGN OF OVERHEAD SUPPORTS IS IN ACCORDANCE WITH A.A.S.H.O. SPECIFICATIONS FOR THE DESIGN AND CONSTRUCTION OF STRUCTURAL SUPPORTS FOR HIGHWAY SIGNS, ADOPTED JUNE 12, 1961.

BUREAU OF TRAFFIC
OHIO DEPARTMENT OF HIGHWAYS

OVERHEAD SIGN SUPPORT	816 No. 12.24	DATE 8-18-61, 4-11-62, 4-18-67

APPROVED Robert E. Cowan
ENGINEER OF TRAFFIC

FED. RD. DIVISION	STATE	PROJECT	
2	OHIO		

109/155

FRANKLIN COUNTY
FRA.-33-29.97

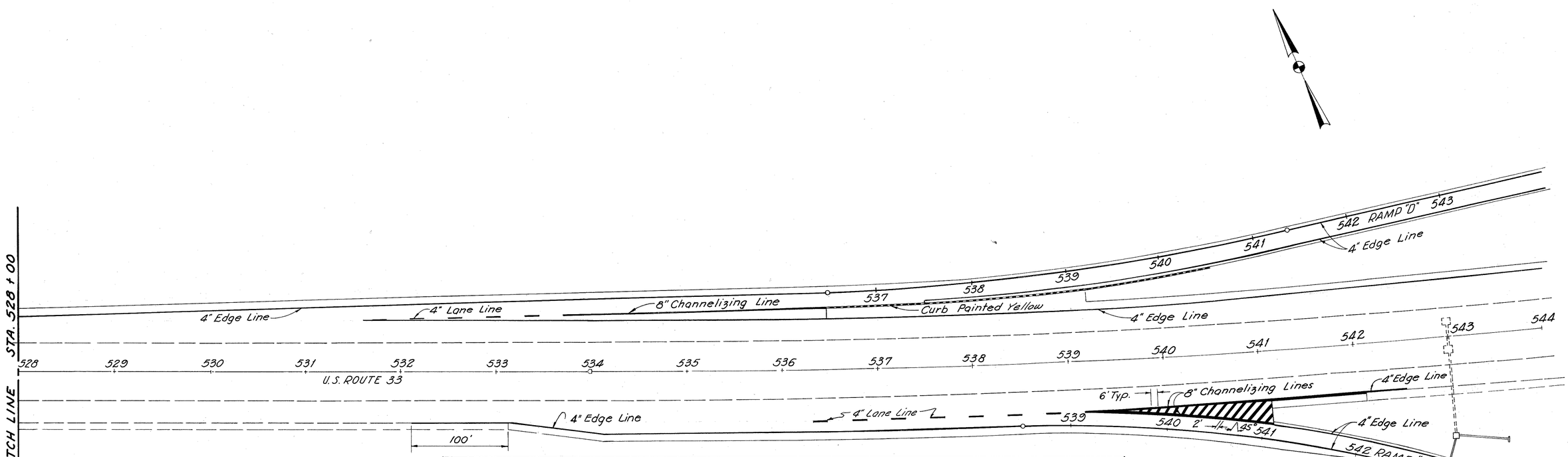

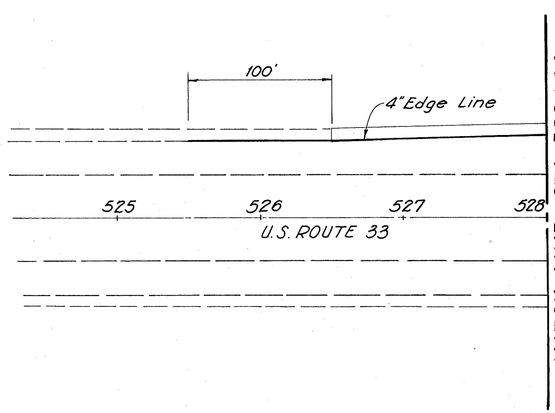

ITEM 621 SUMMARY OF TRAFFIC ZONE PAINT MARKING

Station to Station	Length	4" Edge Lines White		*Lane Lines White 4"		4" Barrier Lines Yellow		8" Channel Lines White	2' Broad Travs. Stripes White	Curb Marking Yellow
	L.F.	No.	L.F.	No.	L.F.	No.	L.F.	L.F.	L.F.	L.F.
Gender Road										
12+25 to 17+00	475	2	950	1	475	2	950			
17+00 to 19+00	200	1	200	2	400	2	400			
Ramp D Nosing		1	260					200	124	
18+60 to 19+00				1	40					
19+00 to 19+60	60	1	60	3	180	2	120			
19+60 to 20+80	120	2	185	3	360	2	240			
20+80 to 22+70	190	2	380	2	380			380	225	
22+70 to 24+00	130	1	60	3	300			180		
24+00 to 27+00	300			2	600					
26+96 to 27+00	74	2	148							
27+00 to 29+35	235	2	470	2	470			135		
29+35 to 30+00	65			2	130					
30+00 to 33+10	310	2	620	3	705			916		
33+10 to 33+90	80	1	80	3	240					
33+90 to 35+15	125	2	250	4	1000					
35+15 to 38+20	305	2	610	2	610					
38+20 to 41+75	355	2	710	1	355					
Ramp "A"										
532+11 to 536+33	422	1	422							
536+33 to 538+50	217	1	217	1	217					
538+50 to 539+16	66	1	66	1	66					
539+16 to 541+10	194	1	194					495	238	
541+10 to 548+40	730	2	1460							
548+40 to 551+48	308	2	616	1	308				55	
RAMP "B"										
550+23 to 557+85	762	2	1524							165
557+85 to 559+50	165	2	330							102
559+50 to 560+52	102	2	204							
560+62 to 562+80	218	2	436					218		
562+80 to 565+40	260	2	520	1	260					
565+40 to 571+55	615	1	615							

Station to Station	Length	4" Edge Lines White		*Lane Lines White 4"		4" Barrier Lines Yellow		8" Channel Lines White	2' Broad Travs. Stripes White	Curb Marking Yellow
	L.F.	No.	L.F.	No.	L.F.	No.	L.F.	L.F.	L.F.	L.F.
Ramp "D"										
525+50 to 531+60	610	1	610							
531+60 to 533+70	210	2	240	1	210					
533+70 to 536+50	280	2	560					280		
536+50 to 537+50	100	2	200							100
537+50 to 539+18	168	3	504							168
539+18 to 540+50	132	2	264							132
540+50 to 549+24	874	2	1748							
Ramp "E"										
540+50 to 546+60	610	1	610							
546+60 to 548+88	228	2	456	1	228					
548+88 to 550+76	188	2	376					188		
550+76 to 551+76	100	2	200							100
551+76 to 552+05	29	3	78							78
552+05 to 552+65	60	2	120							60
			90							
552+65 to 563+37	1072	2	2144							
563+37 to Bridge	82		82							
Ramp "F"										
546+26 to 559+75	1349	2	2698							
558+73 to 559+75	100	1	100							
559+75 to 561+90	215							430	282	
561+90 to 564+28	238	1	238	1	238					
564+28 to 568+75	447	1	447							
Totals			23,252		7,772		1,710	2,722	924	905

23,252 ÷ 5280'/mile = 4.40 miles
* 15' painted Line + 25' gap = 40' = 0.375 x length
0.375 x 7,772' ÷ 5280'/mile = 0.552 miles

CALCULATED BY DSG DATE 1-12-70

CHECKED BY CMT DATE 1-12-70

BRUNING 44-560 10943

PAVEMENT MARKINGS - U.S. 33

FED. RD. DIVISION	STATE	PROJECT	
2	OHIO		

110/155

FRANKLIN COUNTY
FRA.-33-29.97

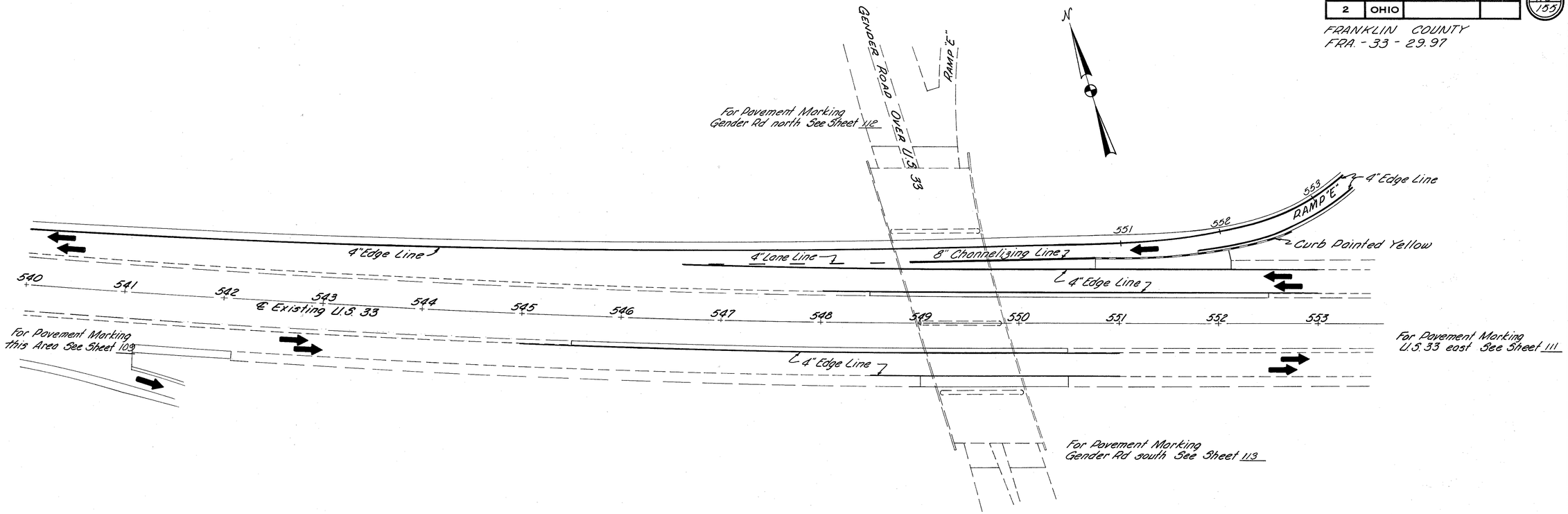

BRUNING 44-560 10943

PAVEMENT MARKINGS - U.S. 33

FED. RD. DIVISION	STATE	PROJECT	
2	OHIO		

155

FRANKLIN COUNTY
FRA. - 33 - 29.97

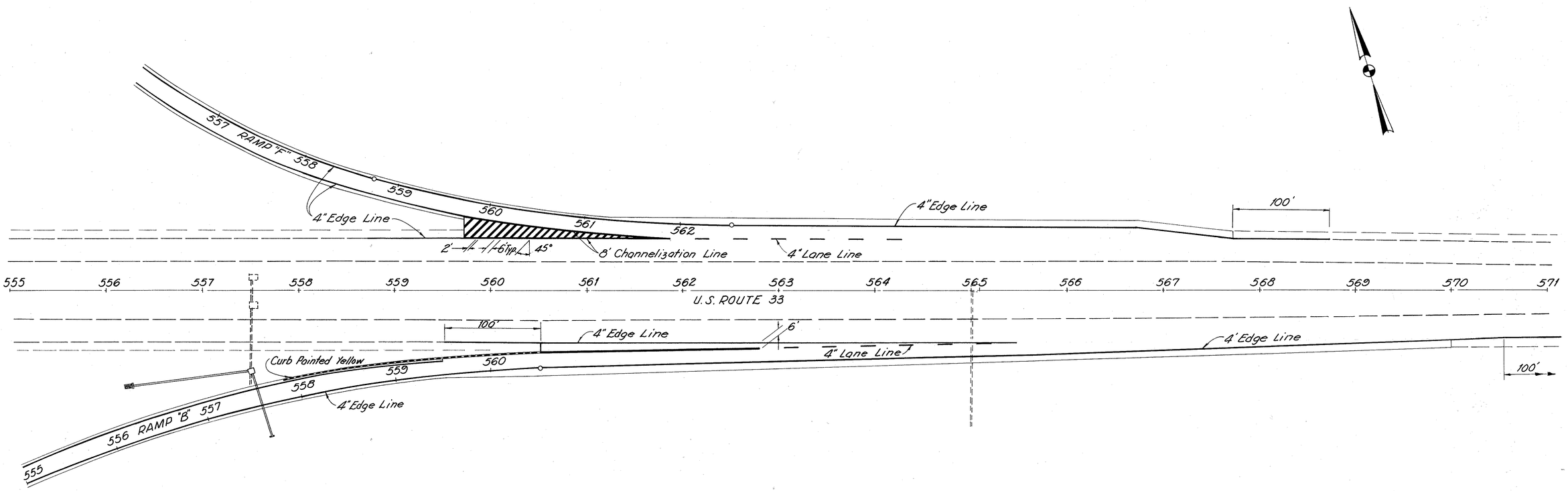

PAVEMENT MARKINGS ~ U.S. 33

BRUNING 44-560 10943

FED. RD. DIVISION	STATE	PROJECT	
2	OHIO		

112
155

FRANKLIN COUNTY
FRA. - 33 - 29.97

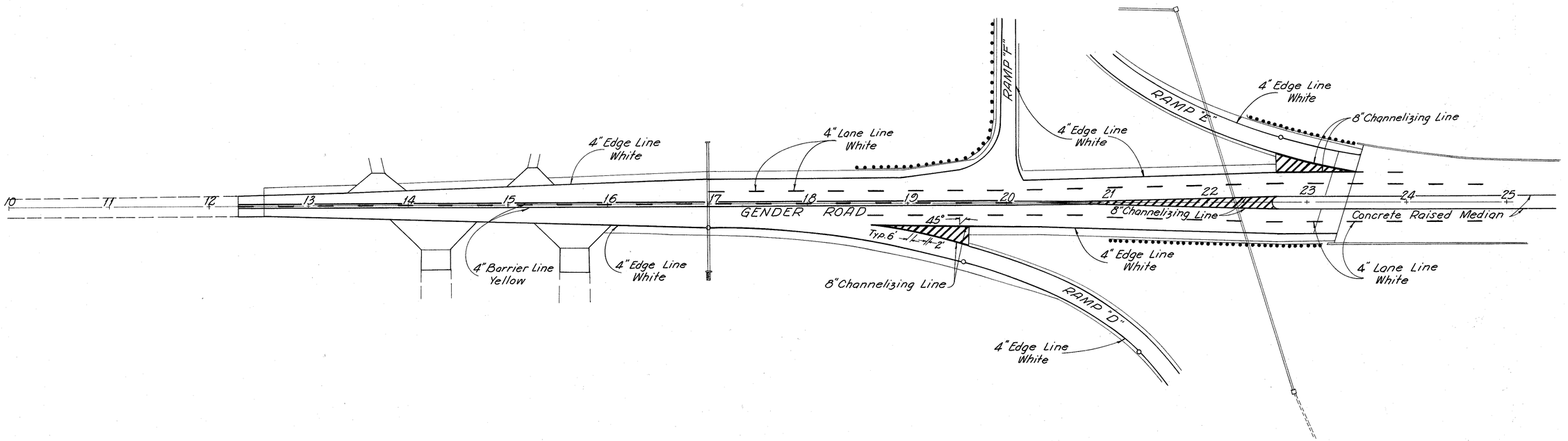

PAVEMENT MARKINGS - GENDER ROAD

BRUNING 44-560 10943

FED. RD. DIVISION	STATE	PROJECT	
2	OHIO		

113/155

FRANKLIN COUNTY
FRA. - 33 - 29.97

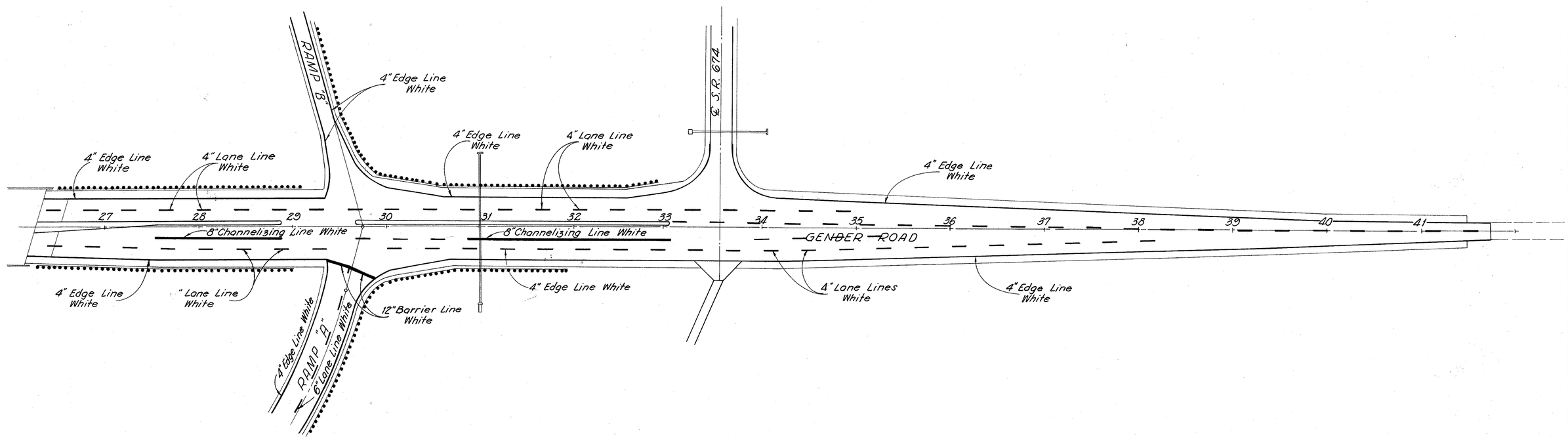

PAVEMENT MARKINGS - GENDER ROAD

BRUNING 44-560 10943

FED. RD. DIVISION	STATE	PROJECT	
2	OHIO		

114/155

FRANKLIN COUNTY
FRA. - 33.- 29.53

ENTRANCE TERMINAL - PARALLEL ACCELERATION LANE

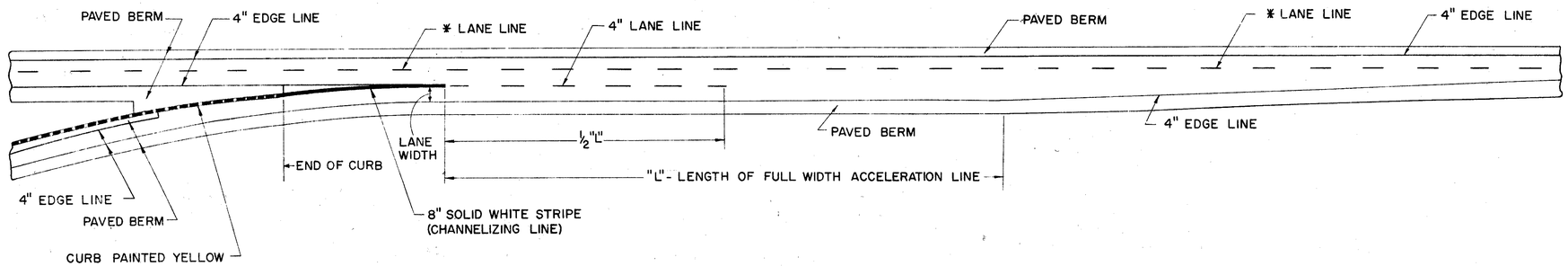

ENTRANCE TERMINAL - TAPERED ACCELERATION LANE

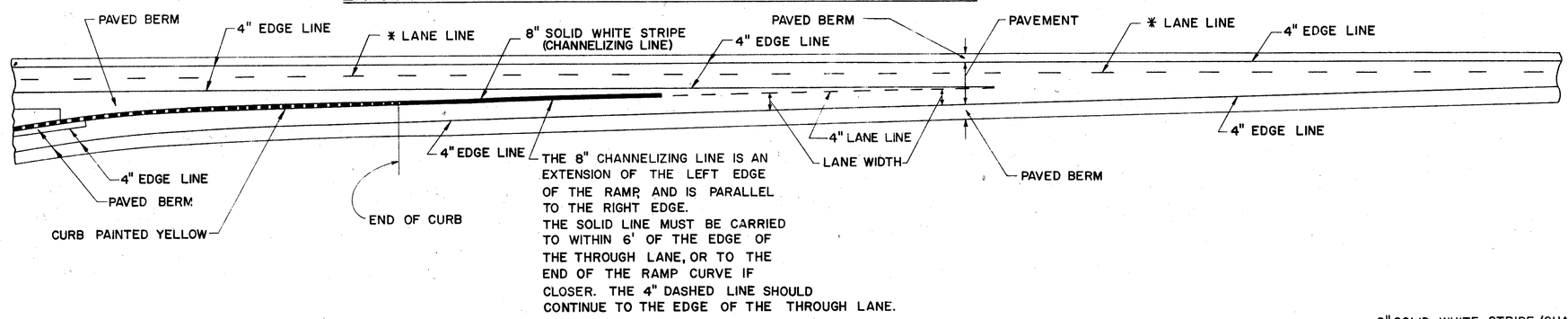

NOTES

DIAGONAL STRIPES AT EXIT RAMPS SHALL BE 24" BROAD TRANSVERSE STRIPES, 621.11, WITH A 6' SPACE BETWEEN STRIPES.

* 6" LANE LINE ON INTERSTATE HIGHWAYS ONLY.
4" LANE LINE ON ALL OTHER HIGHWAYS.

CURBED EXIT TERMINAL - PARALLEL DECELERATION LANE

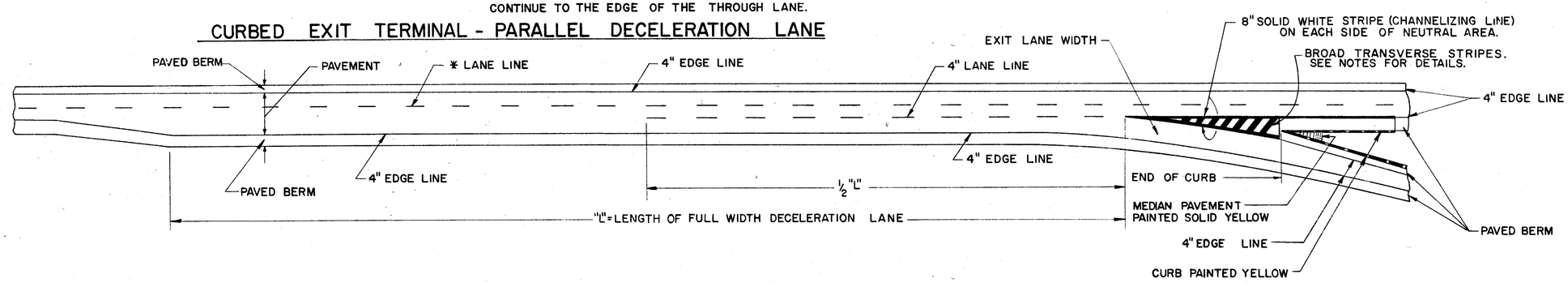

UNCURBED EXIT TERMINAL - PARALLEL DECELERATION LANE

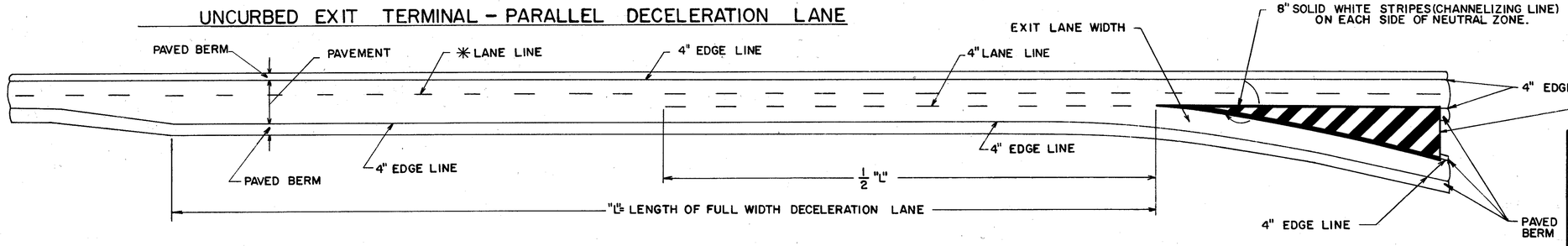

BUREAU OF TRAFFIC
OHIO DEPARTMENT OF HIGHWAYS

PAVEMENT MARKING 621

DATE
7-17-61
4-6-62
5-24-65
9-[illegible]-67
4-17-68

APPROVED Robert E. Lowder
ENGINEER OF TRAFFIC

FED. RD. DIVISION	STATE	PROJECT	
2	OHIO		

115/155

FRANKLIN COUNTY
FRA - 33 - 29.97

SCHEMATIC PLAN
DELINEATOR LAYOUT

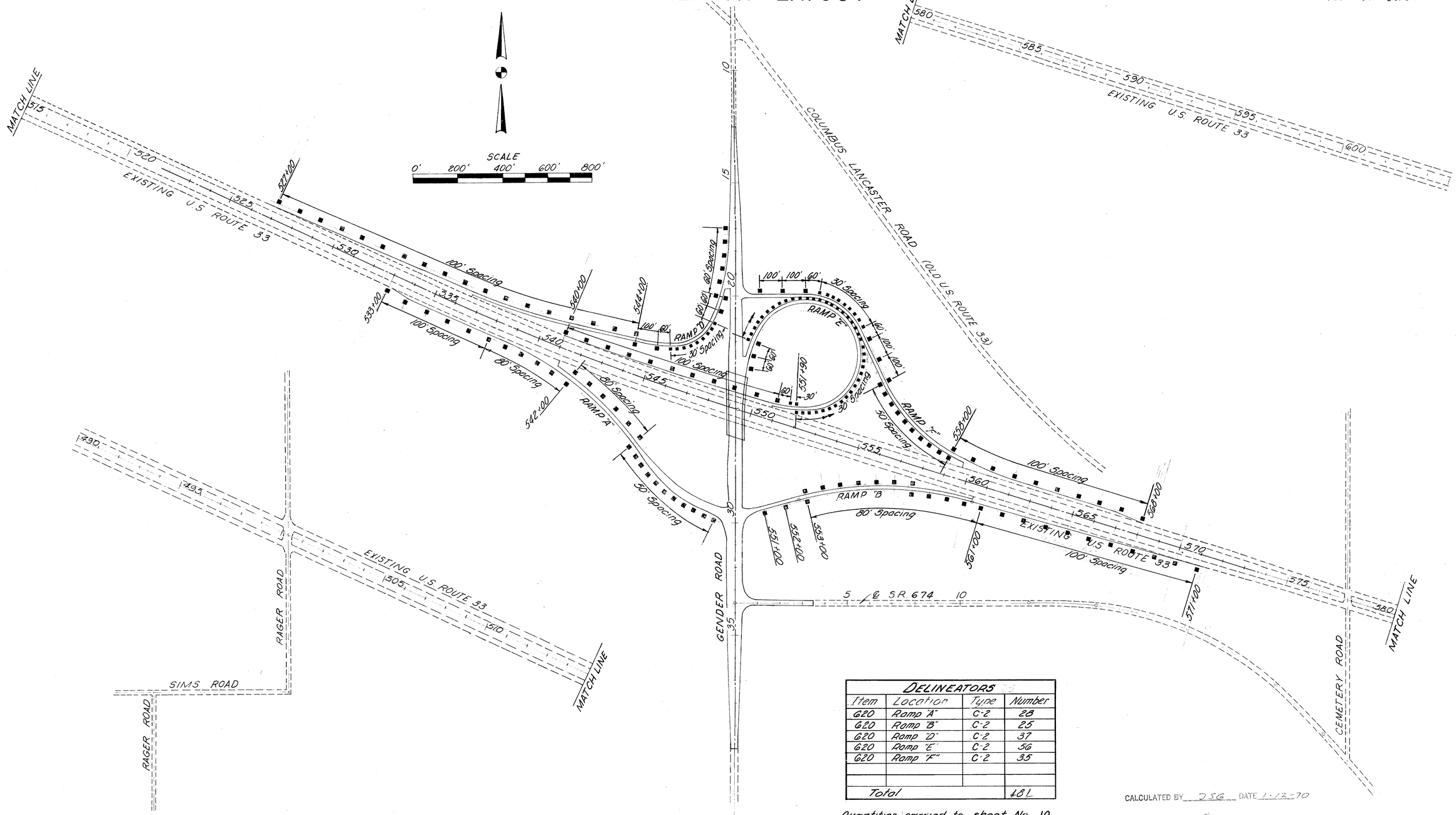

DELINEATORS			
Item	Location	Type	Number
620	Ramp "A"	C-2	28
620	Ramp "B"	C-2	25
620	Ramp "D"	C-2	37
620	Ramp "E"	C-2	56
620	Ramp "F"	C-2	35
Total			181

Quantities carried to sheet No 10

CALCULATED BY DSG DATE 1-12-70

CHECKED BY CMT DATE 1-12-70

BRUNING 44 560 10943

FED. RD. DIVISION	STATE	PROJECT	
2	OHIO		

116/155

FRANKLIN COUNTY
FRA. -33-29.53

TYPE A

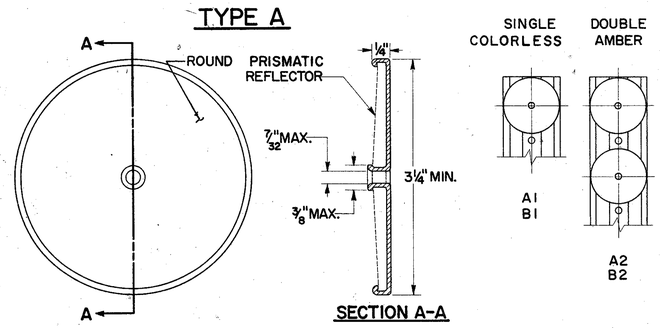

SECTION A-A

TYPE B

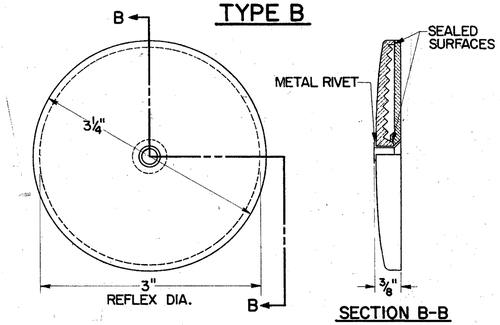

SECTION B-B

NOTE:

(A.) DOUBLE AMBER DELINEATORS SHALL BE PLACED ON ALL RAMPS AS SHOWN. ■

(B.) SINGLE COLORLESS DELINEATORS SHALL BE PLACED ON ALL MAINLINES AS SHOWN. ●

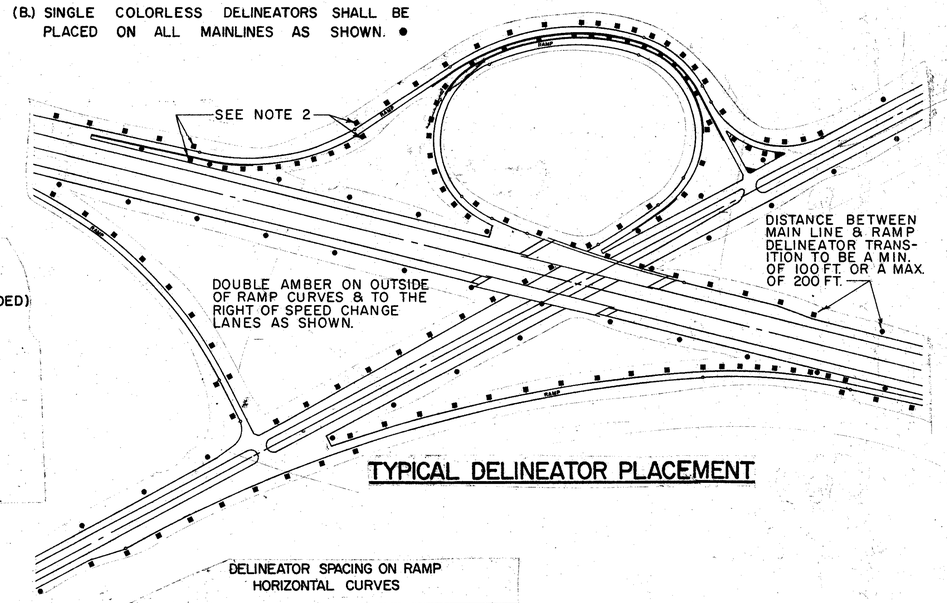

TYPICAL DELINEATOR PLACEMENT

TYPE C

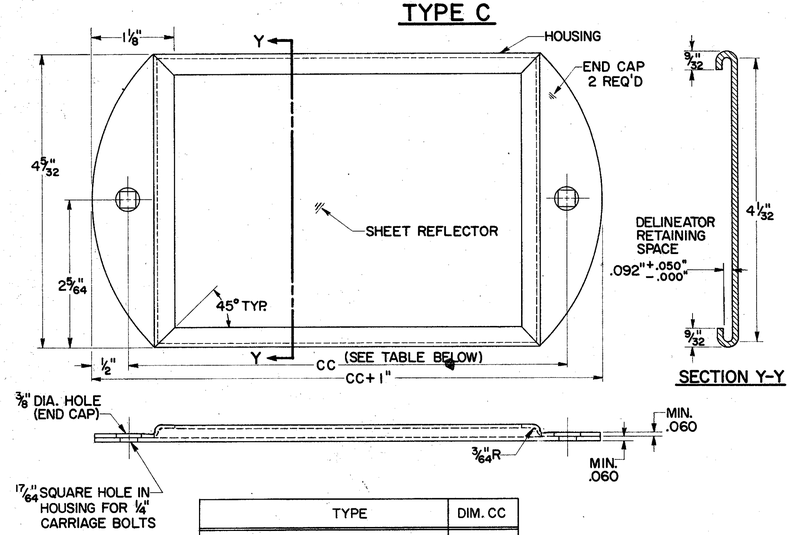

SECTION Y-Y

TYPE	DIM. CC
C1 – SINGLE COLORLESS	6"
C2 – DOUBLE AMBER	11"

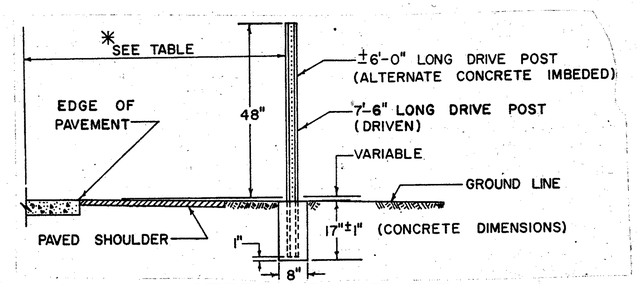

LATERAL PLACEMENT OF DELINEATORS

* TABLE

TYPE DELINEATOR	NO GUARDRAIL	GUARDRAIL
SINGLE COLORLESS	12'-6"	6" OUTSIDE
DOUBLE AMBER RIGHT SIDE	** 8'-6"	6" OUTSIDE
DOUBLE AMBER LEFT SIDE	4'-6"	6" OUTSIDE

** THIS DIMENSION SHALL VARY ON SPEED CHANGE LANES TO MAINTAIN MINIMUM DISTANCE OF 2'-6" FROM EDGE OF PAVED SHOULDER.

DELINEATOR SPACING ON RAMP HORIZONTAL CURVES

RADII, FT. FROM	RADII, FT. TO	SPACING ON CURVE	* TRANSITION SPACING	
TANGENT	1,801	100'	100'	100'
1,800	1,401	80'	100'	100'
1,400	1,001	70'	100'	100'
1,000	751	60'	100'	100'
750	551	50'	80'	100'
550	326	40'	70'	100'
325	——	30'	60'	100'

* SUCH AS 40' TO 70' TO 100' OR 100' TO 80' TO 50' OR ANY OTHER COMBINATION SHOWN ABOVE.

NOTES

1. TYPE A1 OR B1 DELINEATORS ON THE RIGHT OF THE THROUGH ROADWAY ARE TO BE SPACED AT 200 FT. INTERVALS THROUGHOUT, REGARDLESS OF CURVES.
2. WHEN CROSSING FROM LEFT TO RIGHT OR FROM RIGHT TO LEFT ON THE RAMPS THE DELINEATORS AT THE POINT OF CROSSOVER ARE TO BE AT THE SAME STATION ON EACH SIDE.
3. NO DELINEATORS ARE TO BE PLACED IN PAVED BERM
4. WHEN RADII OF CURVE ON RAMPS REQUIRE 100' SPACING THE DELINEATORS SHALL BE PLACED ON THE RIGHT IN RELATION TO THE FLOW OF TRAFFIC.

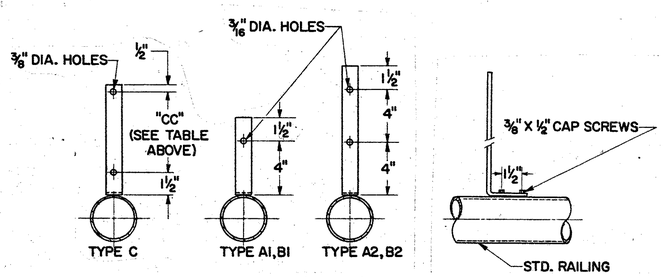

ALL BRACKETS 1/4" x 1 1/4" STAINLESS STEEL

BRIDGE RAIL BRACKET

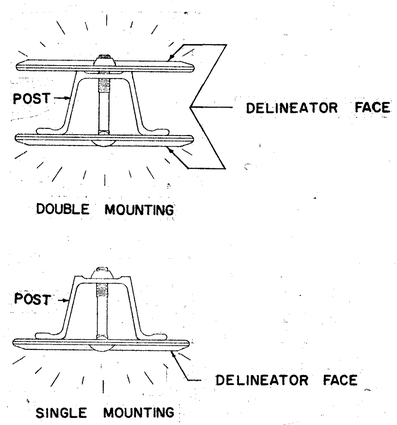

DELINEATOR MOUNTING

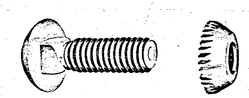

TAMPER RESISTANT FASTENERS SHALL BE USED TO FASTEN DELINEATORS TO POST AS/OR SIMILAR TO ONE SHOWN ABOVE.

TAMPER RESISTANT FASTENERS

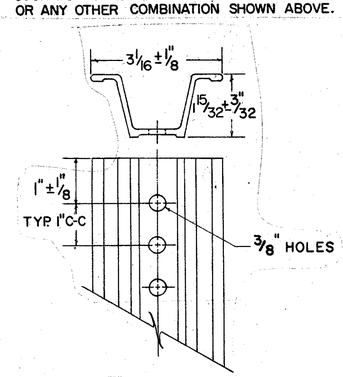

2 LB./FT. DELINEATOR DRIVE POST

BUREAU OF TRAFFIC
OHIO DEPARTMENT OF HIGHWAYS

DELINEATOR DETAILS

620

DATE 9-25-62 5-24-65 9-12-67

APPROVED Robert A. Lomer
ENGINEER OF TRAFFIC

GENERAL NOTES ~ LIGHTING

SPECIFICATIONS

THESE NOTES ARE SUPPLEMENTAL TO ITEMS 625 AND 713 OF THE STATE OF OHIO DEPARTMENT OF HIGHWAYS CONSTRUCTION AND MATERIAL SPECIFICATIONS DATED JANUARY 1, 1969.

REFERENCE SHALL BE MADE TO STANDARD CONSTRUCTION DRAWINGS HL-1, HL-2, HL-3 AND HL-4.

625.03 GENERAL

THE POWER SUPPLYING AGENCY FOR THIS PROJECT IS:
SOUTH CENTRAL POWER COMPANY
P. O. BOX 250
LANCASTER, OHIO 43130

625.06 LIGHT POLE FOUNDATIONS

INSTEAD OF DETAILS SHOWN ON STANDARD CONSTRUCTION DRAWING HL-1, THE MAXIMUM PROJECTION OF FOUNDATION ABOVE FINISHED GRADE AT THE EDGE FACING THE ROADWAY SHALL BE 1 INCH AND THE LOCATION OF LIGHT POLE FOUNDATION SHALL BE AS SHOWN ON THE PLANS.

625.07 - 713.11 LUMINAIRES

400 WATT LUMINAIRES SHALL HAVE DUAL RATED 240/480 VOLT INTEGRAL REGULATOR BALLASTS AND SHALL BE GENERAL ELECTRIC M400, WESTINGHOUSE OV-25, MCGRAW-EDISON "UNISTYLE", OR EQUAL APPROVED BY THE ENGINEER.

625.11 - PULL BOXES

ANCHORING OF AIR BELLS SPECIFIED FOR THIS ITEM MAY BE ACCOMPLISHED BY THE USE OF 4 POLY PROPYLENE ROPES. THE ROPES, IF USED, SHALL BE KNOTTED AT ONE END. THE OTHER ENDS SHALL ENTER THE BOX THROUGH EACH OF 4 EQUALLY SPACED HOLES AROUND THE UPPER CIRCUMFERENCE OF THE BOX. THE ENTERING ENDS OF EACH TWO OPPOSING ROPES SHALL BE PULLED TIGHT AND TIED TOGETHER OVER THE AIR BELL TO HOLD IT SECURELY IN PLACE.

IN ADDITION TO THE REQUIREMENTS OF THIS ITEM, A TREATED 1" X 2" WOOD STAKE OR 3/8" DIAMETER ALUMINUM OR STEEL PIN AT LEAST 30 INCHES LONG SHALL BE DRIVEN INTO THE CENTER OF THE PULL BOX. THE CONNECTOR KITS IN THE BOX SHALL BE SECURELY TAPED TO THE TOP OF THE STAKE OR PIN IN SUCH A MANNER THAT ALL PARTS OF THE KITS ARE SUSPENDED WITHIN THE AIR BELL ABOVE THE ELEVATION OF THE UPPERMOST OPENING OR NOTCH CUT INTO THE LOWER CIRCUMFERENCE OF THE AIR BELL.

OPENINGS OR NOTCHES MAY BE FIELD CUT IN THE BELL TO MATCH THE LOWER OPENINGS IN THE PULLBOX IF NECESSARY TO SECURE A FIRM SEATING FOR THE BELL. THIS OPERATION, HOWEVER, MUST NOT REDUCE THE SIZE OF THE AIR CHAMBER BELOW THAT REQUIRED FOR SUSPENSION OF THE CONNECTOR KITS ABOVE THE UPPER ELEVATION OF THE LOWER EDGE OF THE BELL IN PLACE.

PAYMENT FOR THE ABOVE WORK SHALL BE INCLUDED IN THE UNIT PRICE BID FOR EACH PULL BOX.

625.12 TRENCH

EXCAVATION FOR **TRENCHES SHALL NOT EXCEED TWELVE** (12) INCHES IN WIDTH WITHOUT PRIOR APPROVAL OF THE ENGINEER.

CONDUIT ON STRUCTURES

EXPANSION FITTINGS FOR CONDUIT ON STRUCTURES SHALL BE (OZ TYPE AX, SPRING CITY TYPE AF, APPLETON TYPE XJ-4, OR EQUAL APPROVED BY THE ENGINEER), FOR BRIDGE NO. FRA-33-29.97.

ITEM 625 - CONDUIT JACKED UNDER PAVEMENT, AS PER PLAN

THIS ITEM SHALL CONSIST OF INSTALLING 3" CONDUIT UNDER EXISTING PAVEMENT AND CONTIGUOUS SHOULDERS BY AN APPROVED METHOD SUCH AS "DRILLING" OR "JACKING".

THE CONTRACTOR SHALL PLACE THE CONDUIT WITH THE LEAST AMOUNT OF DISTURBANCE TO THE EXISTING PAVEMENT, SUBBASE, BERM PAVEMENT, OR SHOULDERS OF THE ROADWAY. ALL PUSH PITS OR ANY NECESSARY EXCAVATIONS SHALL BE BACK FILLED AND RESTORED IN ACCORDANCE WITH 625.01.

MEASUREMENT OF THE CONDUIT SHALL BE THE ACTUAL AMOUNT OF LINEAL FEET INSTALLED UNDER PAVEMENT AND SHOULDERS, MEASURED IN PLACE, AS ACCEPTED BY THE ENGINEER. THE UNIT PRICE BID FOR ITEM 625 "CONDUIT JACKED UNDER PAVEMENT, AS PER PLAN" SHALL BE FULL COMPENSATION FOR EXCAVATION, DRILLING OR JACKING, BACKFILLING, COMPACTION, RESTORATION, AND ALL LABOR, MATERIAL, EQUIPMENT, AND INCIDENTALS NECESSARY TO COMPLETE THE WORK AS SPECIFIED.

713.15 - CABLE CONNECTORS AND CONNECTOR KITS

CONNECTOR KIT TYPE II, FUSED FOR INSTALLATION, LINE-SIDE OF CIRCUIT, SHALL CONTAIN 6 AMPERE FUSE FOR LAMP RATING OF 400 WATTS.

625.14 - 625.15 CABLE AND DUCT-CABLE IDENTIFICATION

ALL CABLES, EXCEPT STRUCTURE GROUNDING SYSTEM CABLE, ENTERING AN ACCESSIBLE ENCLOSURE SUCH AS A PULL BOX, JUNCTION BOX, HANDHOLE, TRANSFORMER BASE, OR DEVICE HOUSING, ETC., FOR THE PURPOSE OF BEING TERMINATED OR CONNECTED TO ANOTHER CABLE SHALL BE IDENTIFIED IN SUCH ENCLOSURE WITH TAGS OR BANDS AS DESCRIBED IN 713.18.

NO CABLE SPLICES WILL BE PERMITTED BETWEEN TERMINATIONS. EXOTHERMICALLY WELDED JOINTS IN STRUCTURE GROUNDING SYSTEMS ARE NOT CONSIDERED AS SPLICES.

PAYMENT FOR THE ABOVE SHALL BE INCLUDED IN THE UNIT PRICES BID FOR THE RESPECTIVE CABLE ITEMS.

625.08 - 713.14 LAMPS

MERCURY LAMPS SHALL BE GENERAL ELECTRIC "BONUS LINE" WESTINGHOUSE "LIFEGUARD", SYLVANIA "ROUGH SERVICE", OR EQUAL APPROVED BY THE ENGINEER.

PROTECTION OF COMPLETED WORK

CONDUIT AND/OR DUCTCABLE TERMINALS SHALL BE SEALED, AS REQUIRED BY 625.13, IMMEDIATELY UPON COMPLETION OF INSTALLATION.

EMPTY CONDUITS SHALL BE CAPPED OR OTHERWISE CLOSED IMMEDIATELY UPON INSTALLATION UNTIL PULL WIRE OR CABLE IS INSTALLED AND FINAL SEALING COMPLETED.

LIGHT POLE HAND HOLES AND OPENINGS OF TRANSFORMER BASE POLES SHALL HAVE COVERS INSTALLED IMMEDIATELY UPON ERECTION OF POLE.

ALL CABLE CONNECTOR KITS AND EXPOSED CABLE ENDS SHALL BE ADEQUATELY PROTECTED BY ENCLOSING IN PLASTIC BAGS, TAPING, OR OTHER APPROVED MEANS UNTIL CABLE CONNECTIONS HAVE BEEN COMPLETED.

PAYMENT FOR THIS WORK SHALL BE INCLUDED IN THE UNIT PRICES BID FOR EACH OF THE RESPECTIVE ITEMS.

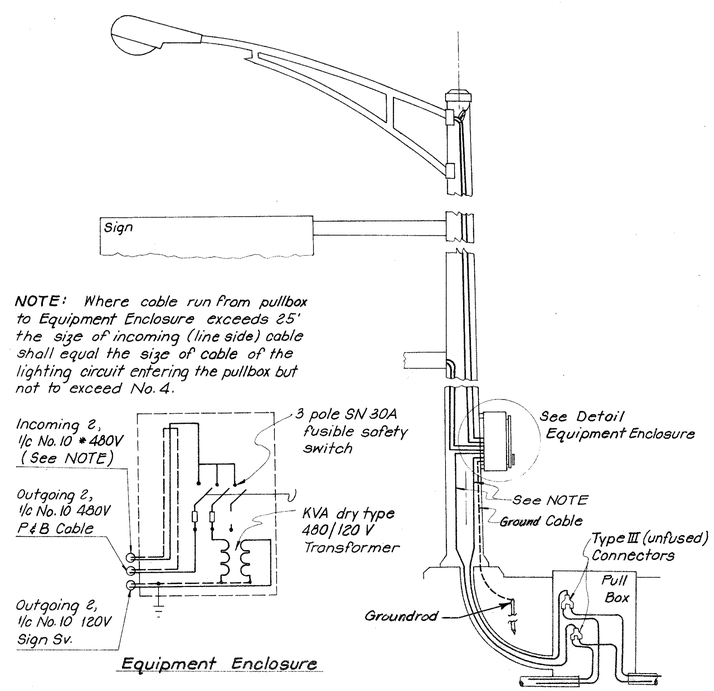

WIRING FOR COMBINATION LIGHT AND SIGN POLE

CABLE CONNECTOR KIT

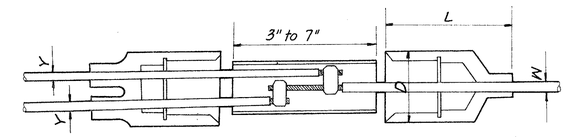

D	L	CABLE DIAMETER Min.	CABLE DIAMETER Max.	SYMBOL FOR Y	SYMBOL FOR W	AWG 600V CABLE Per 713.02
1 29/32"	4 1/16"	.320"	.430"	D	D	No. 6 and No. 4
"	"	.420"	.585"	E	E	No. 2 and No. 2/0
"	"	.575"	.785"	F	F	No. 3/0 - 250 MCM
"	"	.775"	.985"	N.A.	G	300 MCM - 400 MCM
"	4 3/16"	.975"	1.185"	N.A.	H	500 MCM
"	4 5/16"	1.175"	1.385"	N.A.	J	600 MCM - 750 MCM

VII B Connector kit - Y type connection same as shown

VII C Connector kit - 4-way cable connection w/ both end housings same as shown & equiped w/ 3 type H.

N.A. - Not Available
Both wires w/ symbol Y must be of equal size for a given connection.

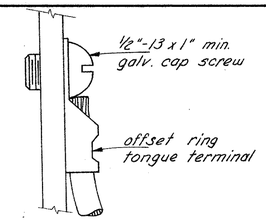

Detail of Termination for Ground Cable

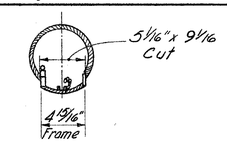

SECTION A-A

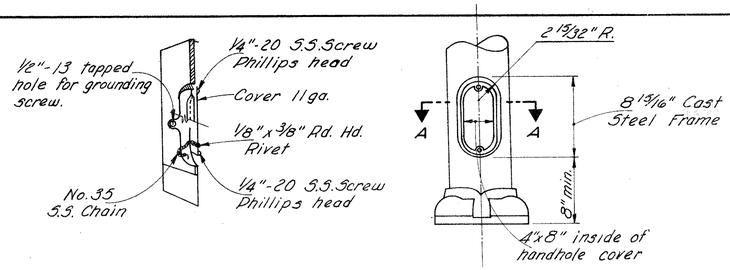

ALTERNATE 4"x8" CURVED HANDHOLE, FRAME, AND COVER FOR LIGHTPOLES

625.05 LIGHT POLES

MECHANICAL PROPERTIES FOR LIGHT POLES

Reference Letter	Pole Design Number	Shaft Size	Inch/Foot Taper	Gauge	Foundation Anchor Bolts: Size	Foundation Anchor Bolts: DIA. Bolt Circle	Foundation Anchor Bolts: Project Above Foundation	Arm Length	Nominal Mounting Height	Elastic Deflection Rate - Inches per 100 Pounds	At 2/3 Of Yield Stress: Load 18" Down From Top	At 2/3 Of Yield Stress: Total Def'n. Inches	At 2/3 Of Yield Stress: Perm. Set Inches	At Yield Stress: Load 18" Down From Top	At Yield Stress: Total Def'n. Inches	At Yield Stress: Perm. Set Inches	Transformer Base Type	Location
A	11AT15B34.2	9.0"x4.87"x29'-6"	.14	11	1"x40"	17 1/4"	3"	15	34.2'	2.16	659	14.73	.50	989	24.00	2.64	AT-C	US33
B	11AT8B34.2	8.0"x3.87"x29'-6"	.14	11	1"x40"	17 1/4"	3"	8	34.2'	3.32	517	17.66	.50	776	28.84	3.08	AT-C	Ramps
C	11AT12B34.2	9.0"x4.87"x29'-6"	.14	11	1"x40"	17 1/4"	3"	12	34.2'	2.16	659	14.73	.50	989	24.00	2.64	AT-C	US33 Trans. Gender
D	11A12B32.5	9.0"x4.87"x29'-6"	.14	11	1"x40"	12.5"	3"	12	32.5'	2.16	659	14.73	.50	989	24.00	2.64	None	Gender
E	7A12B32.5	9.0"x4.87"x29'-6"	.14	7	1 1/4"x85"	12.5"	3"	12	32.5'	1.45	983	14.75	.50	1474	24.01	2.64	None	Bridge
F	FUTURE				1 1/4"x85"	12.5"	3"										None	Bridge

FED. RD. DIVISION	STATE	PROJECT	
2	OHIO	F-485(10)	

117/155

FRANKLIN COUNTY
FRA.-33-29.97

BRUNING 44-560 10943

FED. RD. DIVISION	STATE	PROJECT	
2	OHIO		

FRANKLIN COUNTY
FRA-33-29.53

117(a)
155

SCHEMATIC PLAN · LIGHTING

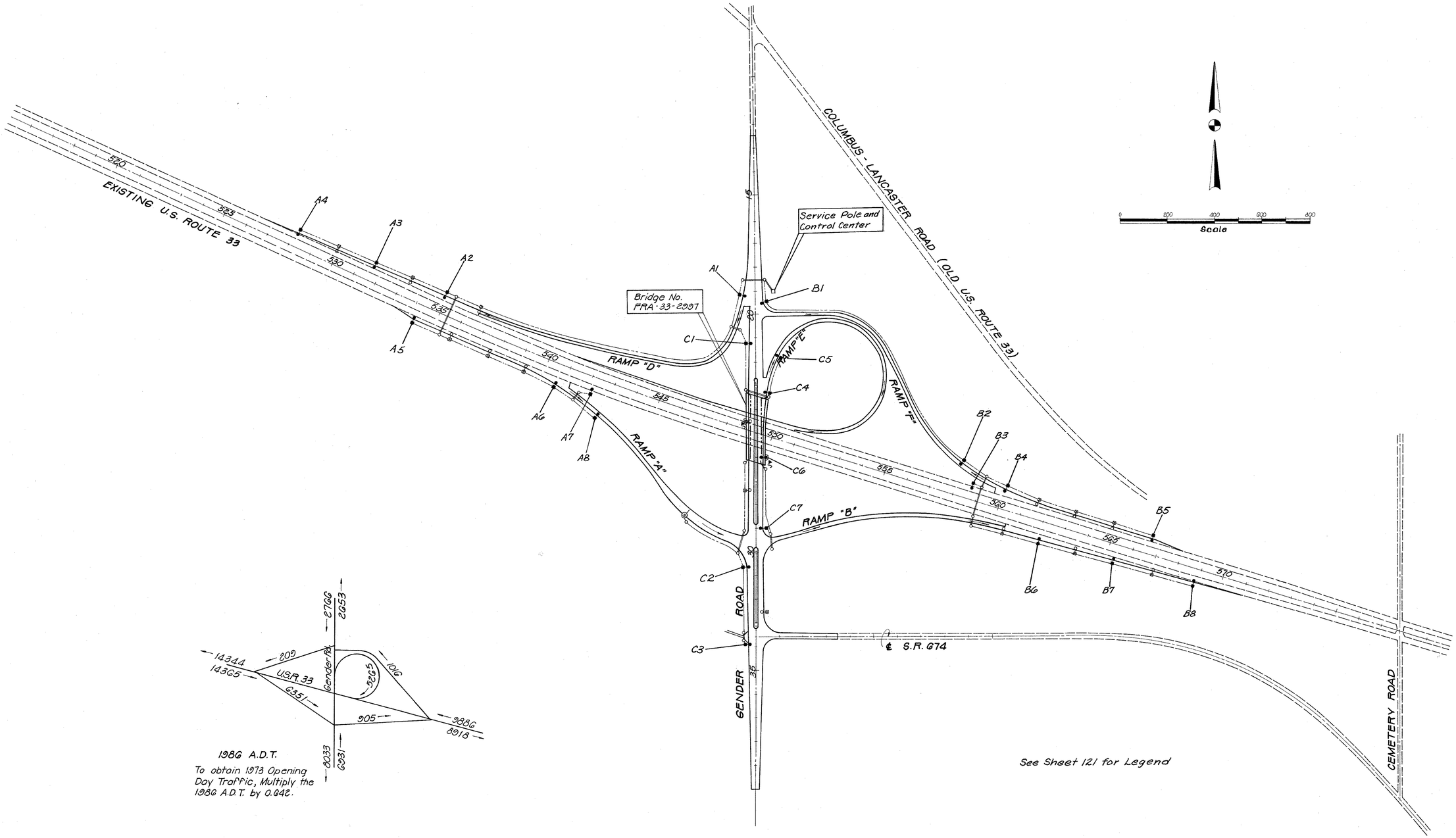

1986 A.D.T.

To obtain 1973 Opening Day Traffic, Multiply the 1986 A.D.T. by 0.642.

See Sheet 121 for Legend

BRUNING 44560 10943

FED. RD. DIVISION	STATE	PROJECT	
2	OHIO		

118/155

FRANKLIN COUNTY
FRA.-33-29.53

GENERAL SUMMARY LIGHTING QUANTITIES

NORMAL PARTICIPATION STRUCTURES 123	STRUCTURES 124	STRUCTURES TOTAL	ROADWAY 121	ROADWAY 122	ROADWAY 123	ROADWAY 124	TOTAL	GRAND TOTAL	UNIT	ITEM	DESCRIPTION (Code 6203)	Reference Letter
			1	1			2	2	Each	625	Light Pole Design 11 AT 15 B 34.2	A
			1	1	1		3	3	Each	625	Light Pole Design 11 AT 8 B 34.2	B
			5	5	1	1	12	12	Each	625	Light Pole Design 11 AT 12 B 34.2	C
					2	1	3	3	Each	625	Light Pole Design 11 A 12 B 32.5	D
	1	1						1	Each	625	Light Pole Design 7A 12B 32.5	E
					1	1	2	2	Each	625	Bracket Arm 15'	
			7	7	4	2	20	20	Each	625	Light Pole Foundation 24" x 6' deep	
			1	1	1		3	3	Each	625	Luminaire, Type II, Medium Cut Off, 400 Watt, 713.11	
	1	1	6	6	4	3	19	20	Each	625	Luminaire, Type III, Medium Cut Off, 400 Watt, 713.11	
	1	1	7	7	5	3	22	23	Each	625	Lamp, 400 Watt, Mercury, 713.14	
			7	7	5	3	22	22	Each	625	Ground Rod	
			6	5	9	9	29	29	Each	625	Pullbox 18" I.D., Circular, 713.09	
			2550	2235	1693	911	7389	7389	L.F.	625	Trench, 24" Deep	
					150	280	430	430	L.F.	625	Trench, 4'-6" Deep	
545	105	650						650	LF	625	Conduit 2", Type II or III, 713.04	
			210	227	330	189	956	956	LF	625	Conduit 3", Type II or III, 713.04, Jacked under Pavement, as per plan	
1090		1090	420	287	870	569	2146	3236	LF	625	No. 4 AWG, 600V, Distribution Cable	
			680	680	380	282	2022	2022	LF	625	No. 10 AWG, Pole and Bracket Cable	
			2670	2335	2013	1341	8359	8359	LF	625	1 1/2" Duct Cable with 2-No.4 AWG, 600V, Cable	
			2	2	2	12	18	18	Each	625	Connector kit, Type I	
			7	7	4	3	21	21	Each	625	Connector kit, Type II	
			7	7	6	5	25	25	Each	625	Connector kit, Type III	
			6	6	6	2	20	20	Each	625	Connector kit, Type VII-B	
					2		2	2	Each	625	Connector Kit, Type VII-C	
					Lump		Lump	Lump	Lump	625	Service Pole & Control Center	
					1		1	1	Each	625	Marker	
2	2	4						4	Each	625	Structure Grounding System	
1	1	2						2	Each	625	Structure Junction Box	
2	2	4						4	Each	625	Light Pole Anchor "U" bolt for Structure, 713.01	
					32		32	◓ 32	LF	607	Fence Type CL, Modified as per Plan	
					1		1	◓ 1	Each	607	8' Gate Type CL Modified as per Plan	

◓ Carried forward to General Summary

CALCULATED BY DSG DATE 3/12/70

CHECKED BY CMT DATE 3/13/70

BRUNING 44-560 10943

LIGHTING SUBSUMMARY

FRANKLIN COUNTY
FRA - 33 - 29.53

FED. RD. DIVISION	STATE	PROJECT	
2	OHIO		

119/155

Reference No.	Side	Station	Station	Light Pole Design 11 AT 15B 34.2	Light Pole Design 11 AT .8 B 34.2	Light Pole Design 11 AT 12B 34.2	Light Pole Design 11 A 12 B 32.5	Light Pole Design 7A 12B 32.5	Bracket Arm 15'	Light Pole Foundation 24" x 8' deep	Luminaire Type II 400 watt	Luminaire Type III 400 watt	Lamp 400 watt	Ground Rod	Pull Box 18" Circular	Trench 24" Deep	Trench 4'-6" Deep	Conduit 2" Type II or III	Conduit 3" Type II or III	Distribution Cable # 4 AWG, 600 v
				Each	Each	Each	Each	Each	Each	Each	Each	Each	Each	Each	Each	L.F.	L.F.	L.F.	L.F.	L.F.
	Sheet No: 121																			
1	Lt	528+20				1				1		1	1	1						
2	Lt	531+70				1				1		1	1	1						
3	Lt	534+95				1				1		1	1	1						
4	Lt	535+35													1					
5	Lt/Rt.	535+35																	170	360
6	Lt	528+20	544+50													1630				
7	Lt	540+10													1					
8	Lt	543+60													1					
9	Rt	534+15				1				1		1	1	1						
10	Rt.	535+35													1					
11	Rt	534+15	542+91													876				
12	Rt.	540+73				1				1		1	1	1						
13	Rt.	541+70													1					
14	Rt.	541+70																	40	60
15	Rt.	541+70													1					
16	Rt.	541+70	542+14													44				
17	Rt.	542+14		1						1		1	1	1						
18	Rt.	542+91			1					1	1		1	1						
Totals	Sheet No	121		1	1	5				7	1	6	7	7	6	2550			210	420
	Sheet No 122																			
19	Lt	554+50	566+72													1222				
20	Lt	557+05													1					
21	Lt	557+96			1					1	1		1	1						
22	Lt	559+17													1				50	70
23	Lt/Rt.	559+17																		
24	Lt	559+17													1					
25	Lt	559+17	558+72													45				
26	Lt	558+72		1						1		1	1	1						
27	Lt	560+14				1				1		1	1	1						
28	Lt	566+72				1				1		1	1	1						
29	Rt.	560+15													1					
30	Rt.	559+15																	37	57
31	Rt.	559+15													1					
32	Rt/Lt.	559+15																	140	160
33	Rt.	559+15	568+83													968				
34	Rt.	562+07				1				1		1	1	1						
35	Rt.	565+31				1				1		1	1	1						
36	Rt.	568+83				1				1		1	1	1						
Totals	Sheet	No. 122		1	1	5				7	1	6	7	7	5	2235			227	287

Reference No.	Pole and Bracket Cable # AWG	Duct Cable 1 1/2" W/2 #4 AWG	Connector Kit Type I	Connector Kit Type II	Connector Kit Type III	Connector Kit Type VIII B	Service Pole & Control Center		Connector Kit Type VIII-C	Structure Grounding System	Structure Junction Box	Light Pole Anchor "J" Bolt for Structure
	L.F.	L.F.	Each	Each	Each	Each	Lump		Each	Each	Each	Each
Sheet No: 121												
1	98			1	1							
2	98			1	1							
3	98			1	1							
4						2						
5												
6		1630										
7												
8												
9	98			1	1							
10						2						
11		916										
12	98			1	1							
13						2						
14			2									
15		64										
16	98			1	1							
17	92			1	1							
18												
Totals Sheet No 121	680	2670	2	7	7	6						
Sheet No 122												
19		1262										
20												
21	92			1	1							
22						2						
23												
24						2						
25		65										
26	98			1	1							
27	98			1	1							
28	98			1	1							
29						2						
30												
31			2									
32												
33		1008										
34	98			1	1							
35	98			1	1							
36	98			1	1							
Totals Sheet No. 122	680	2335	2	7	7	6						

CALCULATED BY DSG DATE 3/12/70

CHECKED BY CMT DATE 3/13/70

LIGHTING SUBSUMMARY

ING 144.560 10943

LIGHTING SUBSUMMARY

FRANKLIN COUNTY
FRA-33-29.53

FED. RD. DIVISION	STATE	PROJECT
2	OHIO	

Reference No.	Side	Station	Station	Light Pole Design II AT 15 B 34.2 (Each)	Light Pole Design II AT 8 B 34.2 (Each)	Light Pole Design II AT 12 B 34.2 (Each)	Light Pole Design 11 A 12 B 32.5 (Each)	Light Pole Design 7A 12 B 32.5 (Each)	Bracket Arm 15' (Each)	Light Pole Foundation 24"x6" Deep (Each)	Luminaire Type II 400 watt (Each)	Luminaire Type III 400 watt (Each)	Lamp 400 watt (Each)	Ground Rod (Each)	Pull Box 18" Circular (Each)	Trench 24" Deep (L.F.)	Trench 4'-6" Deep (L.F.)	Conduit 2" (L.F.)	Conduit 3" Type II or III (L.F.)	Distribution Cable #4 AWG 600V Pole & Bracket Cable (L.F.)	#10 AWG (L.F.)	Duct Cable 1 1/2" w/ #4 AWG (L.F.)	Connector Kit Type I (Each)	Connector Kit Type II (Each)	Connector Kit Type III (Each)	Connector Kit Type VII-B (Each)	Service Pole & Control Center (Lump)	Connector Kit Type VII-C (Each)	Structure Grounding System (Each)	Structure Junction Box (Each)	Light Pole Anchor "U" Bolt for Structure (Each)
	Sheet No	123																													
37	Lt.	19+00													1				40	60							1				
38	Lt.	18+70													1											2					
39	Lt/Rt.	18+70																	100	250											
40	Lt.	18+70	19+53													83						103									
41	Lt.	19+53					1			1		1	1	1							95			1	1						
42	Lt.	19+53	on Ramp F													660	150					850									
43	Lt.	549+90	Ramp F												1																
44	Lt.	553+60	Ramp F												1																
45	Lt.	562+20	Ramp E		1					1	1		1	1							92			1	1						
46	Lt.	23+08	Gender Rd.						1			1	1	1																	
47	Lt.	562+20	23+50													195						225									
47A	Rt.	18+70													1																
48	Lt	23+30													1													2			
49	Lt/Rt.	22+95	23+30																120	280											
50	Lt.	23+30	25+85															255		550									1		
51	Rt.	18+70													1										2						
52	Rt.	19+20				1				1		1	1	1							98			1	1						
53	Rt	20+65													1											2					
54	Rt	20+65	20+90																70	180											
55	Rt	20+90													1																
56	Rt.	21+30					1			1		1	1	1							95		2	1	1						
57	Rt	20+90	22+95													205						235									
58	Rt.	22+95													1											2					
59	Rt.	22+95	25+85															290		640									1		
60	Rt.	24+50																												1	2
61	Rt.	18+70	on Ramp D													550						600									
Totals	Sheet	No 123			1	1	2		1	4	1	4	5	5	9	1693	150	545	330	1960	380	2013	2	4	6	6	1	2	2	1	2
	Sheet No.	124																													
62	Lt.	26+00						1				1	1								89			1	1				2	1	2
63	Lt.	25+85	26+55															70		200											
64	Lt.	26+55													1								2								
65	Lt.	26+55	29+20													265						305									
66	Lt.	29+00							1			1	1	1																	
67	Lt.	29+20													1										2						
68	Lt.	29+20	29+90																70			35									
69	Lt.	29+20													1																
70	Rt.	25+85	26+20															35		90											
71	Rt.	26+20													1								2								
72	Rt.	26+20	29+20													300						320									
73	Rt.	29+20													1								2								
74	Rt.	29+20	30+07																87	214											
75	Rt.	30+07													1											2					
76	Rt.	Ramp "A"															280					300									
77	Rt.	548+50	Ramp A												1								2								
78	Rt.	30+65					1			1		1	1	1							95			1	1						
79	Rt.	30+07	33+43													336						366									
80	Rt.	33+43													1								2								
81	Rt.	33+43	33+75																32	65											
82	Rt.	33+75													1								2								
83	Rt.	33+85				1				1		1	1	1							98			1	1						
84	Rt.	33+75	33+85													10						15									
Totals	Sheet	No. 124				1	1	1	1	2		4	4	3	9	911	280	105	189	569	282	1341	12	3	5	2			2	1	2

CALCULATED BY DSG DATE 3/12/70

CHECKED BY CMT DATE 3/13/70

BRUNING 44.560 10943

FED. RD. DIVISION	STATE	PROJECT	
2	OHIO		

121
155

FRANKLIN COUNTY
FRA. - 33 - 29.53

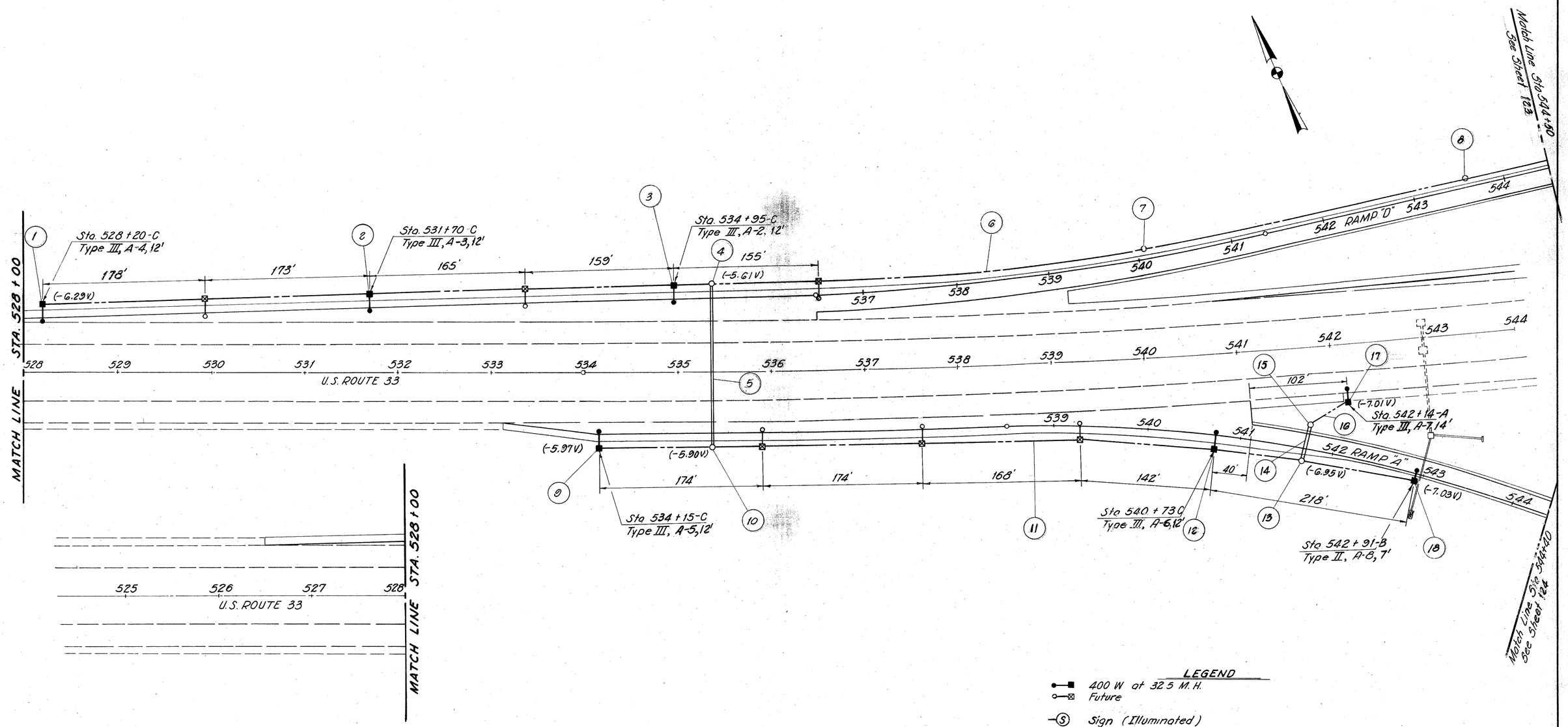

BRUNING 44.560 10943

LIGHTING PLAN - GENDER ROAD

FED. RD. DIVISION	STATE	PROJECT	
2	OHIO		

122
155

FRANKLIN COUNTY
FRA. - 33 - 29.53

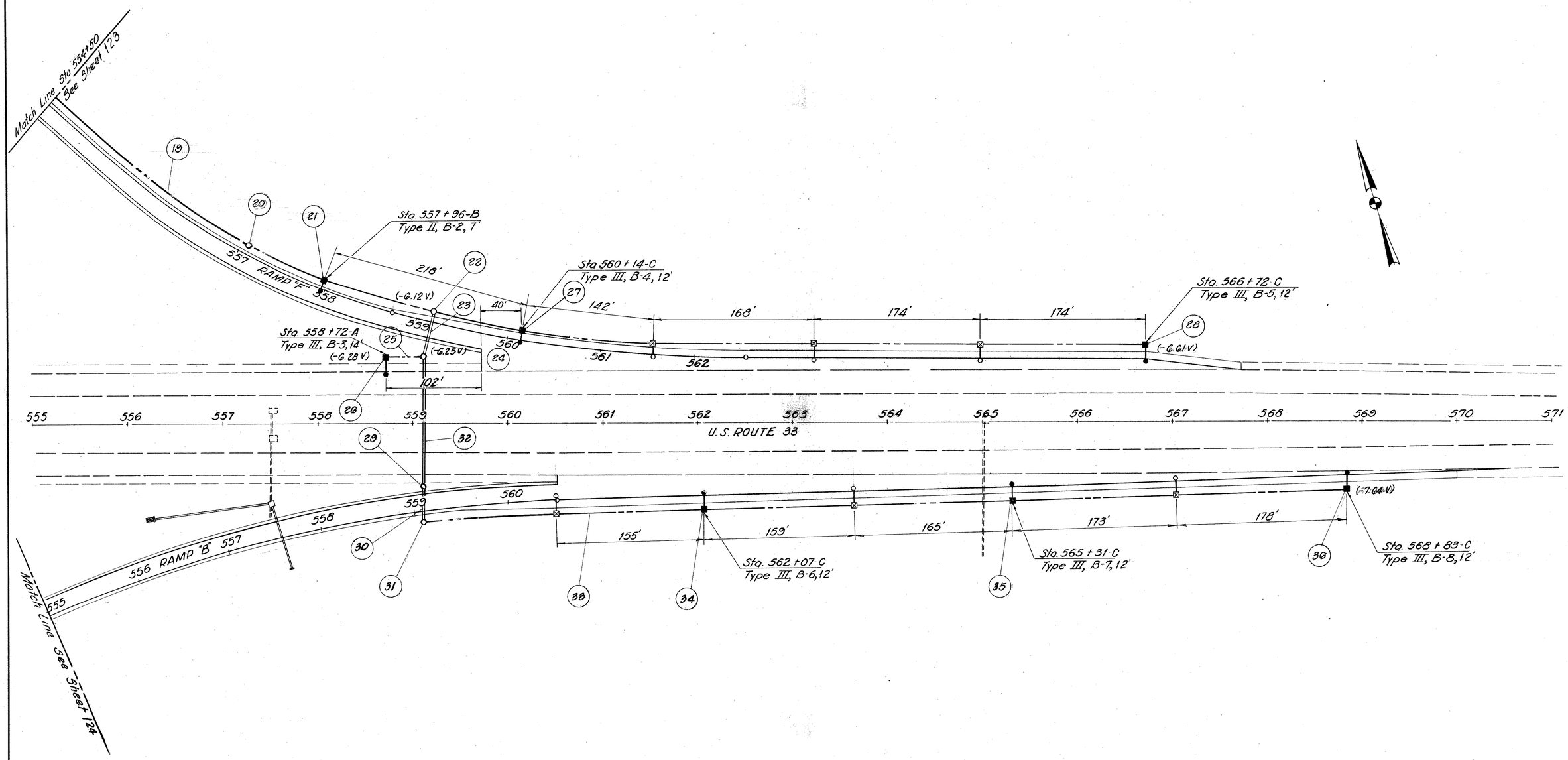

NOTE:
For Legend See Sheet No. 121

BRUNING 44-560 10943

LIGHTING PLAN - GENDER ROAD

FED. RD. DIVISION	STATE	PROJECT	
2	OHIO		

123/155

FRANKLIN COUNTY
FRA. - 33 - 29.53

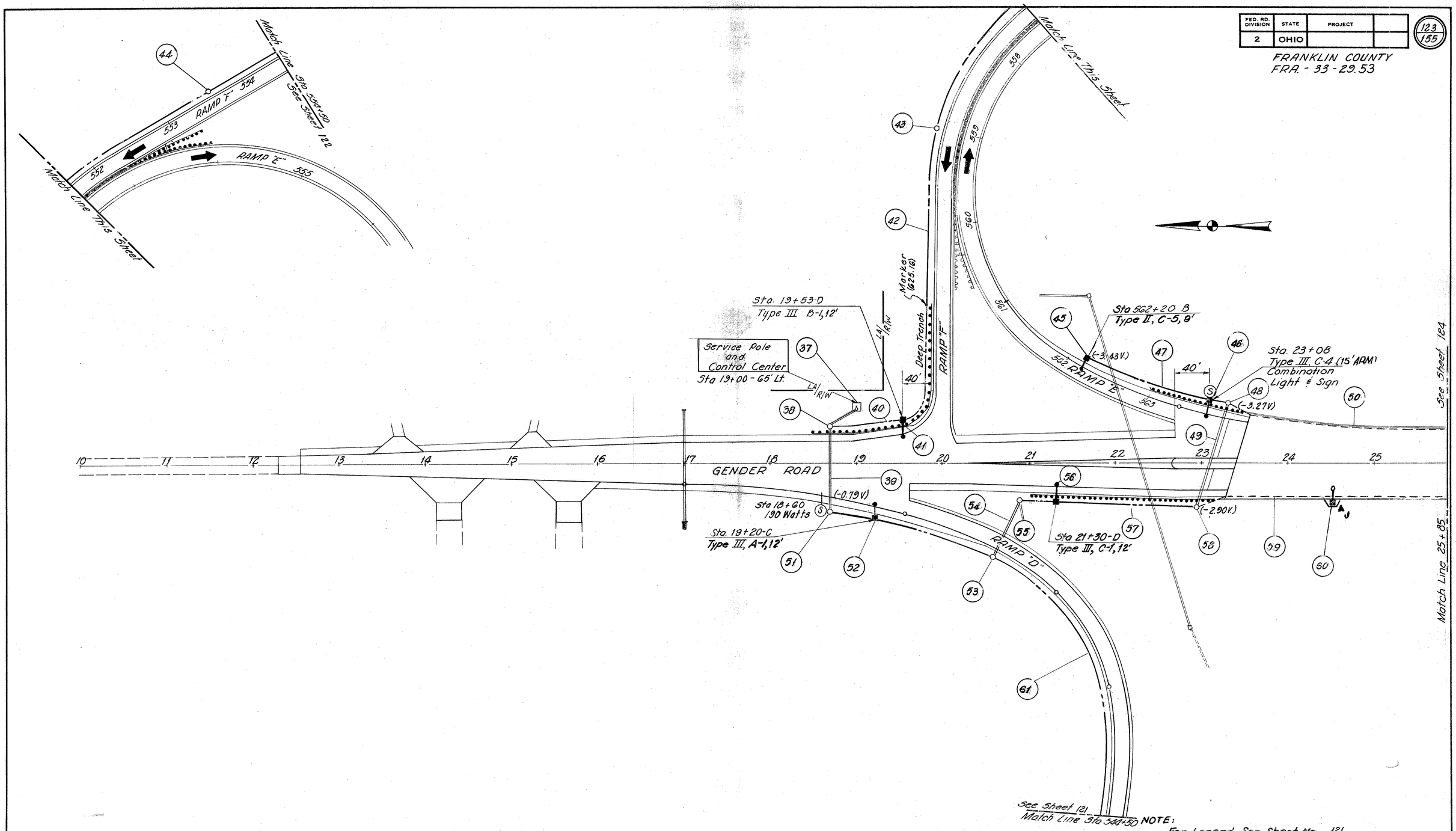

NOTE:
For Legend See Sheet No. 121

BRUNING 44-560 10943

LIGHTING PLAN -- GENDER ROAD

FED. RD. DIVISION	STATE	PROJECT	
2	OHIO		

124
155

FRANKLIN COUNTY
FRA. - 33 - 29.53

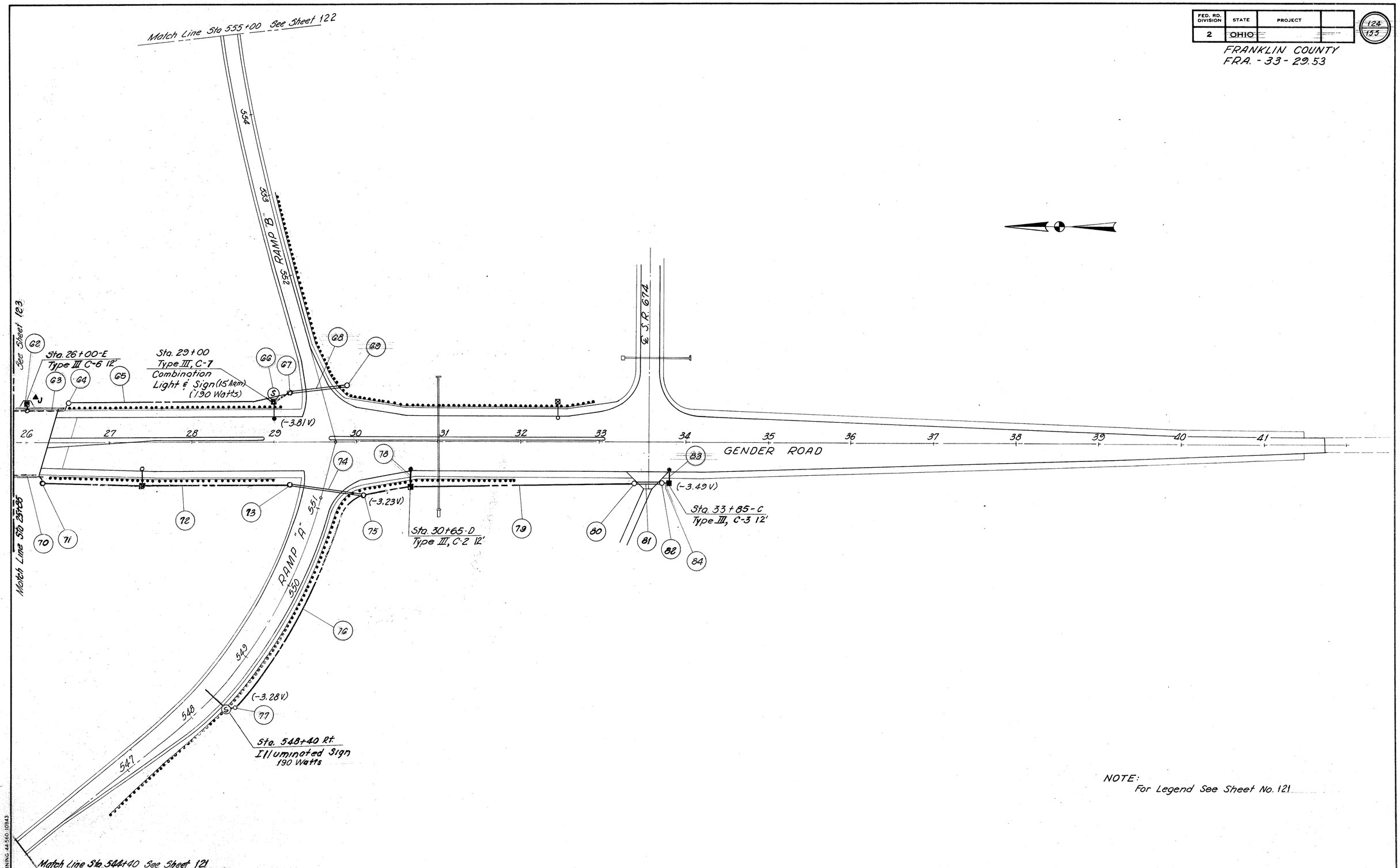

NOTE:
For Legend See Sheet No. 121

BRUNING 44-560 10943

LIGHTING PLAN ~ GENDER ROAD

FED. RD. DIVISION	STATE	PROJECT	
2	OHIO		

125/155

FRANKLIN COUNTY
FRA - 33 - 29.53

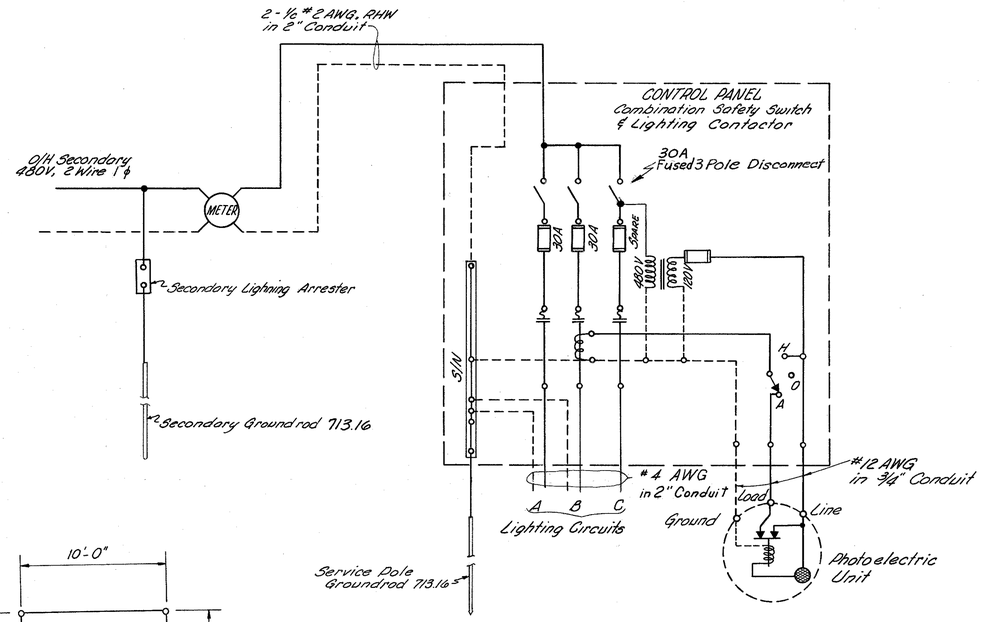

WIRING DIAGRAM
SERVICE POLE & CONTROL CENTER

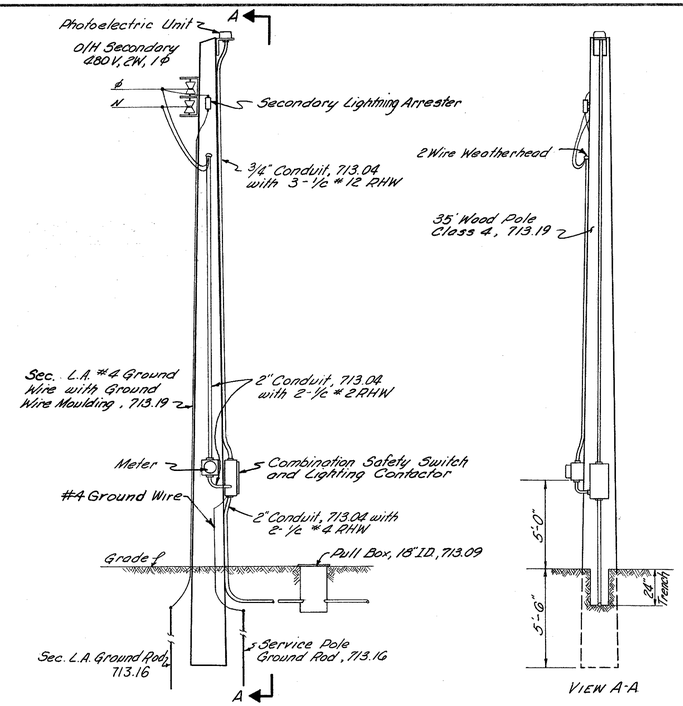

SERVICE POLE INSTALLATION
LIGHTING CONTROL CENTER

CONTROL CENTER NOTES

POWER SOURCE & SUPPLY
Electric power will be supplied by the "Utility Co." described in General Lighting Notes. The "Utility Co." will furnish overhead, 480 volt, 2 wire, single phase service to meter on wood pole mounted control center for installation by contractor.

POLE MOUNTED CONTROL CENTER
The contractor shall furnish and install wood pole and equipment per Service Pole Installation Details, and in general compliance with 625.18 and 625.19, as applicable.

ELECTRICAL EQUIPMENT
Photo electric unit shall be 120 V, 60 cycle, similar to G.E. C402G200 with A99G5 mounting bracket, Tork 2000 B with mounting bracket, Fisher-Pierce 6660 with mounting bracket or equal approved by Engineer.

Combination safety switch and lighting contactor shall be square "D" W939FA609A, Columbus Electric Co. CEW17554630, Control Systems & Equipment Co. Z3030, or equal approved by Engineer.

Meter furnished by "Utility Co."

Secondary lightning arrester shall be 650 V, A.C. one pole, outdoor, similar to G.E. 9L15BCA006, Joslyn J9200-7, Line Material A51A1, or equal approved by the engineer.

FENCE
10' square fenced enclosed and 8' wide single gate. Chain link fence and gate shall be 8' high plus 1' 3 Strand Barbed Wire at 45° at top. Materials and installation shall conform to item 607, lock to be provided

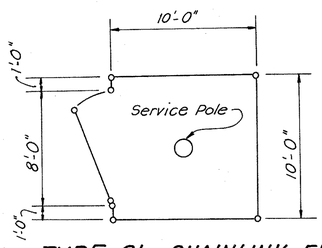

TYPE CL - CHAINLINK FENCE
PER STD. CONSTR. DWG. F-1
See Control Center Notes - FENCE

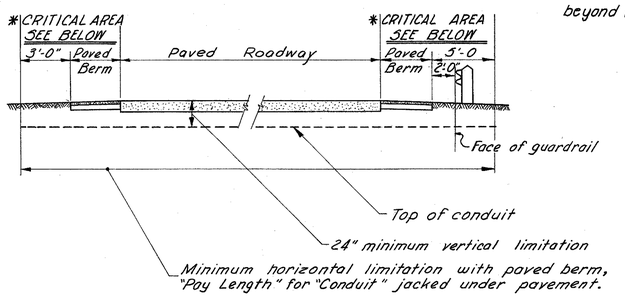

* CRITICAL AREA:
When undermining in this location provide 3/4" thick steel surface plates, corrugated pipe sleeves, shoring and other approved means to prevent cave-in.

NOTE: Access (push) pits or trenches for setting up drilling or jacking equipment shall be located outside horizontal limitation.

PUSHING AND/OR JACKING CONDUIT
UNDER EXISTING PAVEMENT

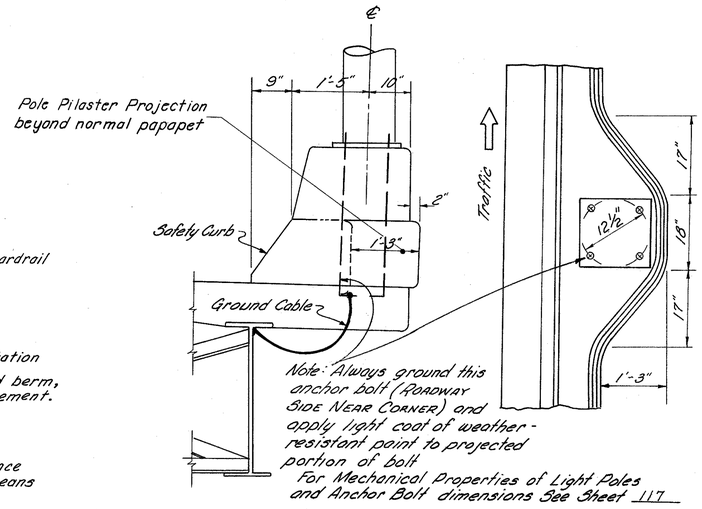

FOUNDATION FOR LIGHT POLES MOUNTED ON
BRIDGE WITH SAFETY CURB

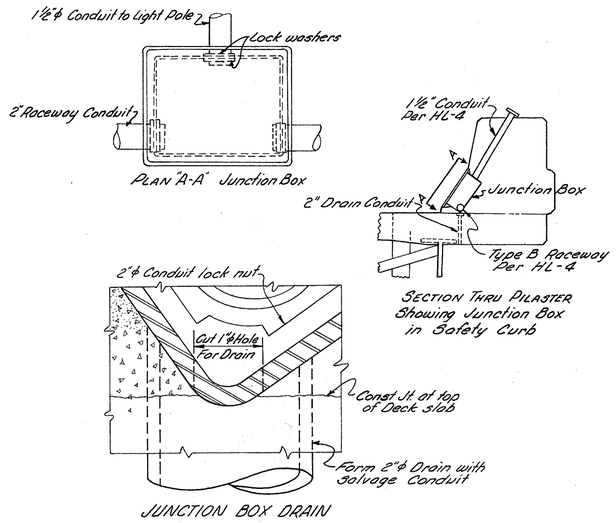

Junction Box To Be:
OZ Cat. No. YR16120G, Thomas & Betts 10998, Hope H 7048 or Approved Equal.

JUNCTION BOX FOR BRIDGE LIGHT POLE CABLE CONNECTIONS

BRUNING 44560 10943

FED. RD. DIVISION	STATE	PROJECT	
2	OHIO		

126/155

FRANKLIN COUNTY
FRA -33 -29.53

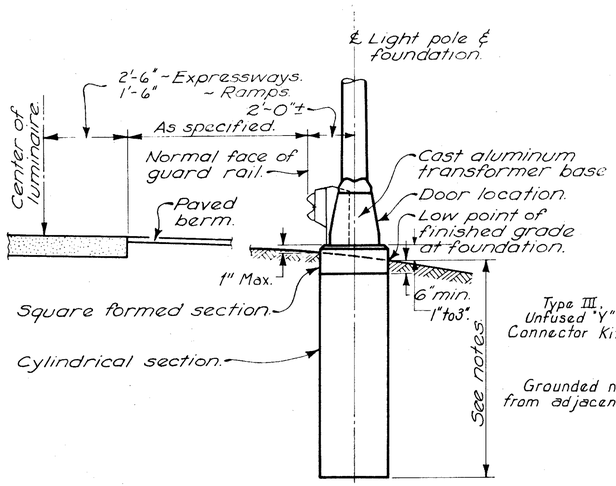

LOCATION OF POLE WITH OR WITHOUT ALUMINUM TRANSFORMER BASES

(Supersedes "Location of Light Pole Foundation" shown on Standard Drawing HL-1).

NOTE: Split-bolt Connector shall be made of tin plated copper alloy with tin plated spacer. Acceptable models are: Blackburn #10HPS, Burndy #KSU-25, Line Material #DK-5B-10, Kearney #118109-02, Penn Union # SW1 or an approved equal.

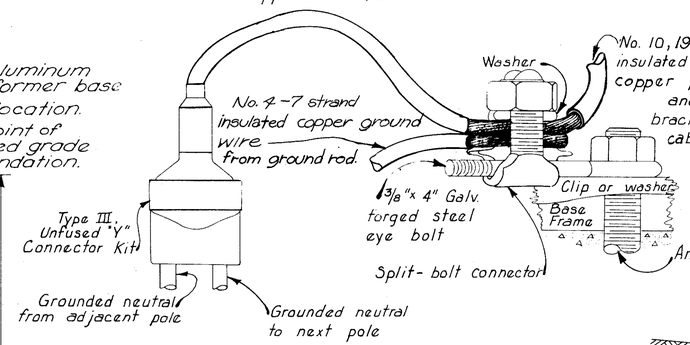

POLE GROUNDING DETAIL

(2- Wire Grounded Neutral System Only)

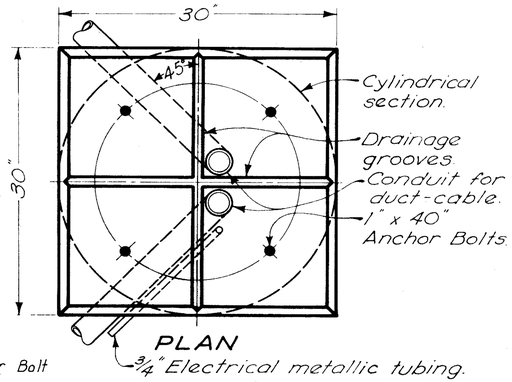

PLAN

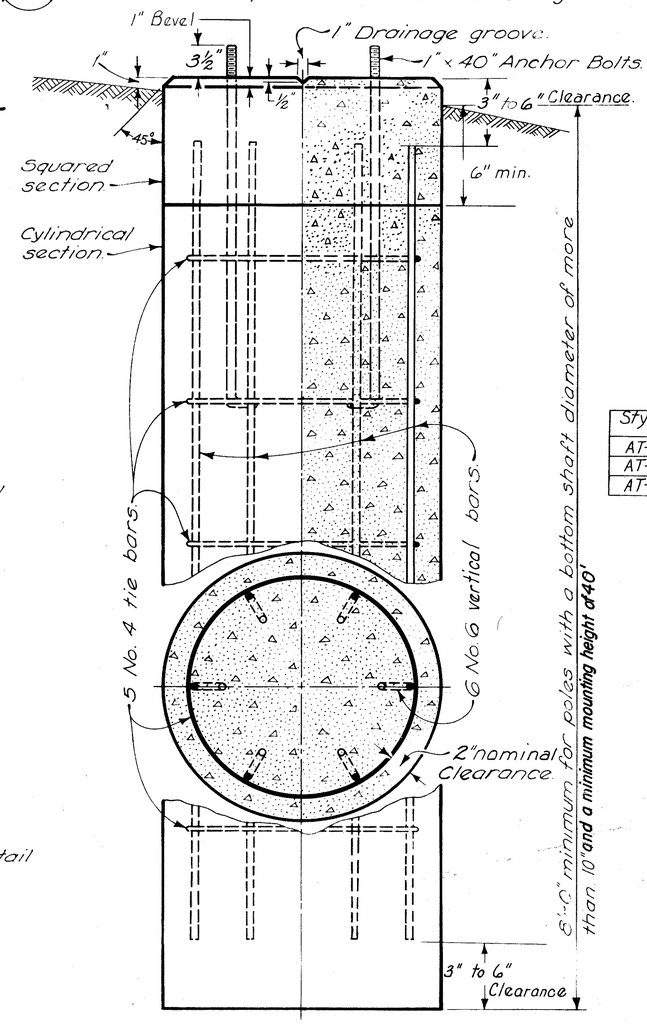

ELEVATION

30" FOUNDATION

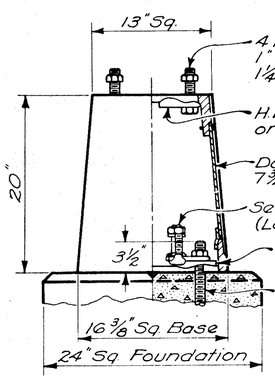

ELEVATION

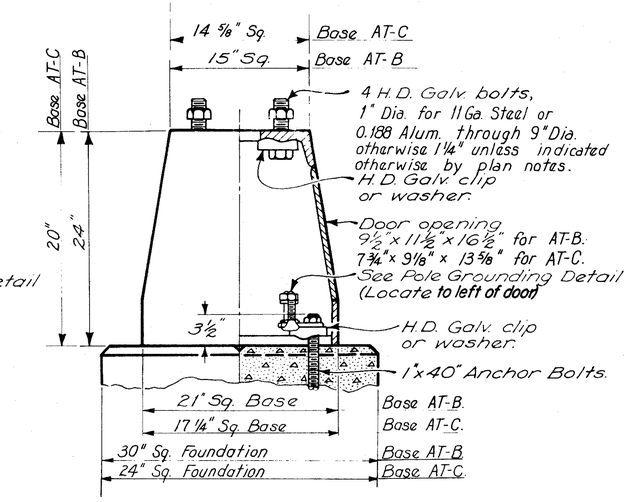

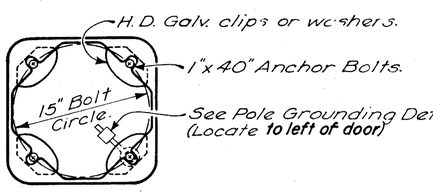

BASE FRAME

BASE AT-A

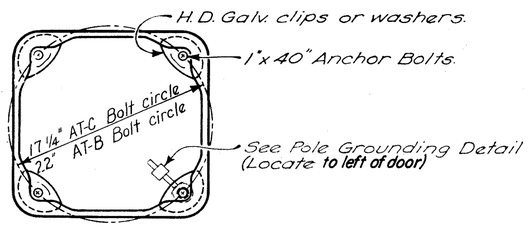

BASE FRAME

BASES AT-B AND AT-C

CAST ALUMINUM TRANSFORMER BASES

NOTES

FOUNDATION: Foundations for light poles shall be poured-in-place concrete (vibrated and spaded 511.09). Each foundation must meet minimum depths as specified, but additional depth may be required by the Engineer because of existing soil conditions. The 30" foundation (detailed hereon) shall be used for light poles having a bottom shaft diameter of more than 10" through 12". The 24" foundation (detailed on Standard Drawing HL-1) shall be used for all light poles having a bottom shaft diameter of 6.0" through 10". See HL-1 for Foundation depth. Rotate reinforcing bars to clear conduit.

Drainage grooves on foundation top, as detailed hereon, shall be required on all foundations even though they do not appear on Standard Drawing HL-1.

ALUMINUM TRANSFORMER BASES: All bases shall be cast from ASTM B-26 or B-108 Alloy 5G 70A-T6.

Base AT-A shall be used with anchor base poles of 6" through 9.2" dia. inclusive, thru 34'-6" Mtg. Hgt. Base AT-B shall be used for anchor base poles above 10" through 12" diameter. Base AT-C shall be used for anchor base poles with bottom diameter 9" through 10"*

The transformer bases shall be capable of resisting the following moments in foot pounds with load applied at a distance of 20' feet above the top of the base without collasping or rupturing.

Style	Bolt Circle	Base Height	Moment-Foot Pounds	Arm Length
AT-A	15"	20"	37,000	15' Max.
AT-C	17 1/4"	20"	56,000	10' to 25'
AT-B	22"	24"	52,000	10' to 25'

Both the bottom of the cast steel pole base and the top of the aluminum transformer base shall be coated or painted with a heavy film of zinc rich paint (Federal Specification TT-P-641-Type II) to reduce galvanic action between the two dissimilar metals.

PAYMENT: 30" Light Pole Foundations shall be paid for at the unit price bid per each foundation.

Aluminum base complete with hardware, zinc rich paint, and installation shall be included with ground-mounted poles for payment.

* AT-C Base can be used with 8" or 8 1/2" dia. base poles, if desired, in order to reduce maintenance items.

Revised: 7-1-69
Revised: 1-24-69
Revised: 5-14-68
Issued: 11-6-67
Revised: 11-10-69
Revised: 2-10-70

ALUMINUM TRANSFORMER BASE DETAILS

FED. RD. DIVISION	STATE	PROJECT	
2	OHIO		

127/155

FRANKLIN COUNTY
FRA-33-29.53

(GENDER RD)
VERTICAL CURVE DATA
PVI: Sta 25+00.00
ELEV: 790.90
V.C.: 1500.00
g1 = +3.00%
g2 = -3.00%
Corr. = -11.25
P.G. = 779.65

(RAMP "E")
HORIZONTAL CURVE DATA
Δ=15°25'50"
PI: Sta. 564+66.48
Dc = 6°-00
Rc = 954.930
Lc = 257.176
Tc = 129.371
E = 8.724

MICROFILMED
JAN 31 1990

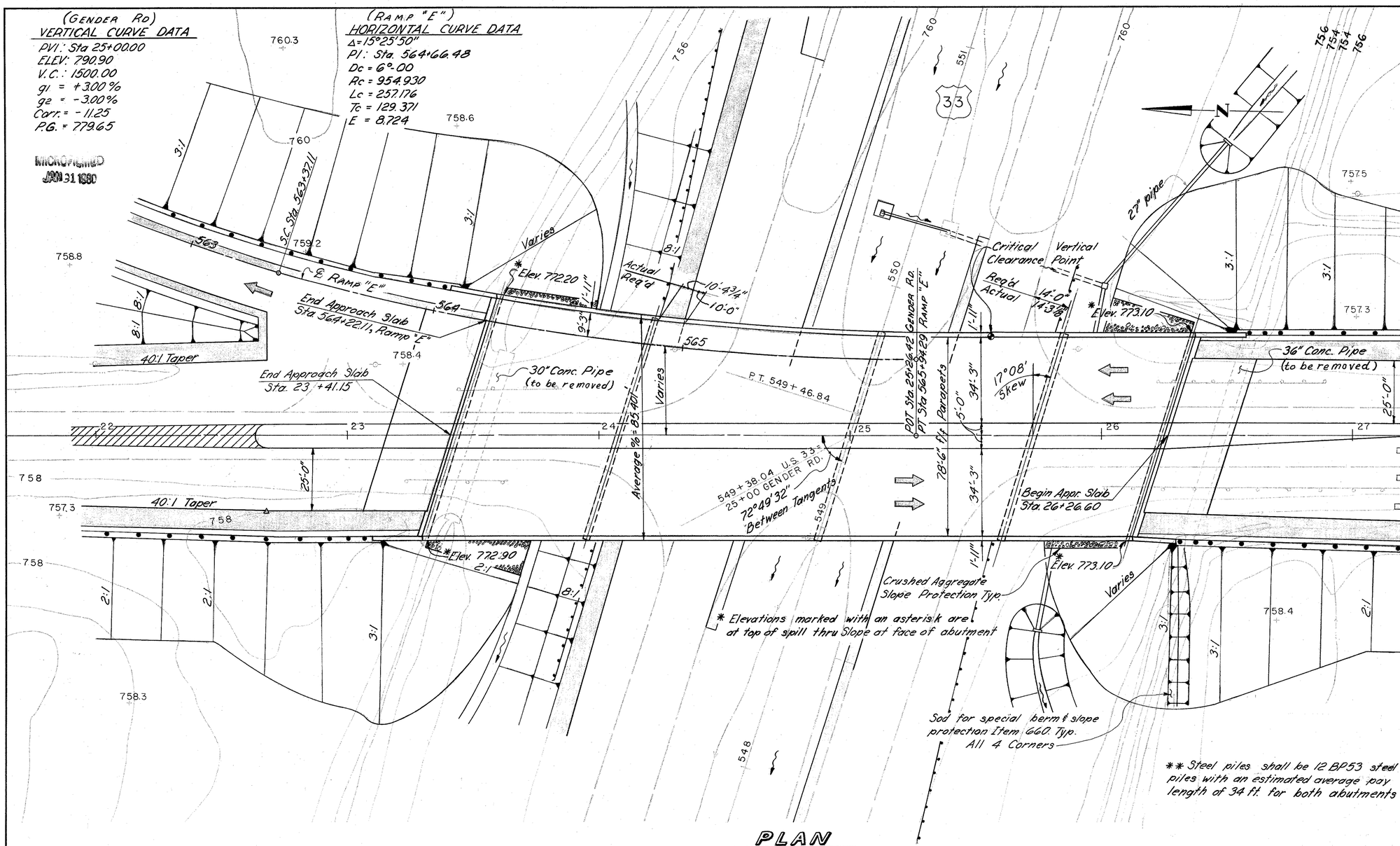

NOTES:
Earthwork Limits shown are schematic. Actual slopes shall conform to Plan Cross-Sections.
1986 ADT = 9872.

** Steel piles shall be 12 BP53 steel piles with an estimated average pay length of 34 ft. for both abutments

PLAN

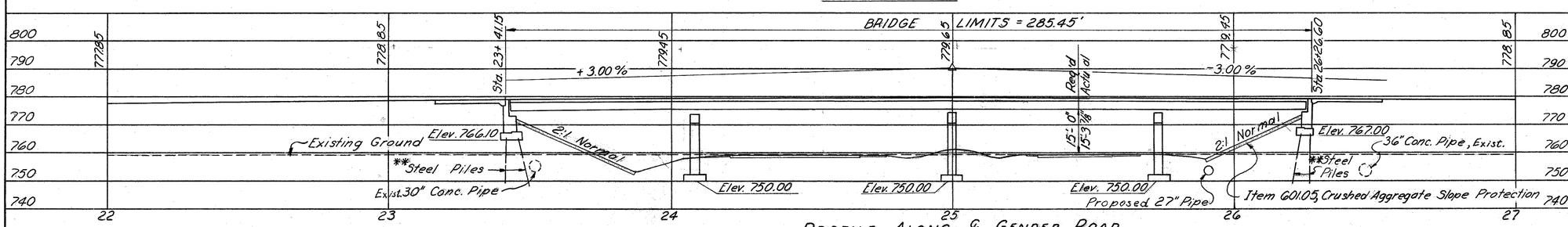

PROFILE ALONG ℄ GENDER ROAD

PROPOSED STRUCTURE
TYPE: Continous steel beam with reinforced concrete deck and substructure
SPANS: 64'-6", 92'-0", 73'-0", 51'-3" Along ℄ Gender Rd.
ROADWAY: Variable face to face of parapets with 10'-0" raised median & Standard Bridge Roadway Railing
LOADING: HS-20-44
WEARING SURFACE: 1" Monolithic concrete
SKEW: 17°-08' Left Forward
ALIGNMENT: Tangent-Gender Road
Dc = 6° Left - Ramp "E"
APPROACH SLABS: 25' long, see Sheet 83

R. D. ZANDE & ASSOCIATES, LIMITED
CONSULTING ENGINEERS
COLUMBUS, OHIO

1/20

SITE PLAN

BRIDGE NO. FRA-33-2997
U.S. 33 UNDER GENDER ROAD
FRANKLIN CO. STA. 549+38.04

PRESENT TOPOGRAPHY		PROPOSED WORK			
SURVEYED	DRAWN	DESIGNED	DRAWN	CHECKED	REVIEWED
AERIAL SURVEY	AERIAL SURVEY	ANA	ANA	CMT	ANA 2-17-69

4-30-68

MICROFILMED
JAN 31 1980

FED. RD. DIVISION	STATE	PROJECT	
2	OHIO		

FRANKLIN COUNTY
FRA-33-29.53

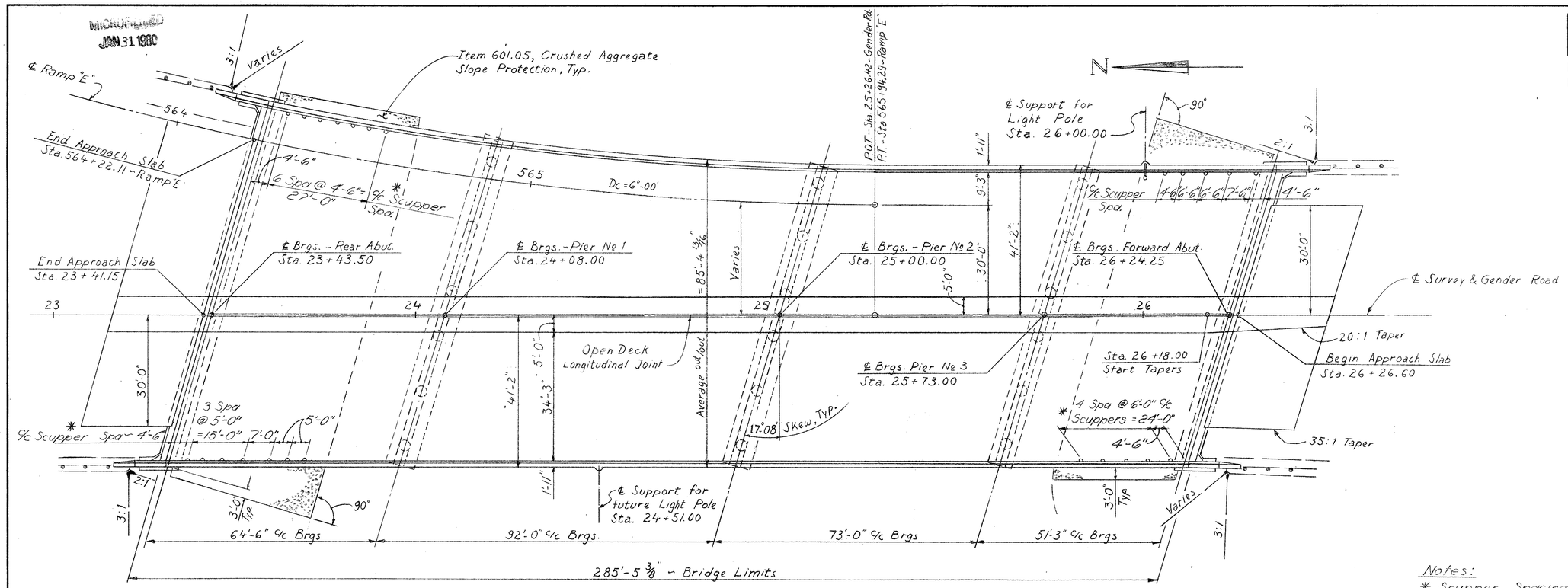

GENERAL PLAN

Notes:

* Scupper Spacings are along ℄ Exterior Beams.

For General Notes and Estimated Quantities see Sheet 3/20.

For Details and Reinforcing of Light Pole Support See Sheet 19/20.

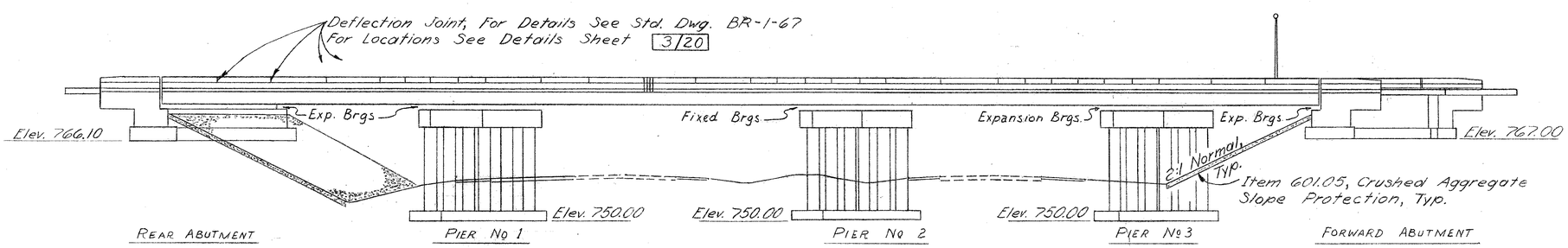

GENERAL ELEVATION
(Abut. piles not shown)

R. D. ZANDE & ASSOCIATES, LIMITED
CONSULTING ENGINEERS
COLUMBUS, OHIO

2/20

GENERAL PLAN AND ELEVATION
BRIDGE No FRA-33-2997
U.S. 33 UNDER GENDER ROAD
FRANKLIN COUNTY STA. 549+38.04

DESIGNED	DRAWN	TRACED	CHECKED	REVIEWED	DATE	REVISED
ANA	ANA		SP	ANA	8-13-69	

BRUNING 40-21 —

MAY 31 1969

GENERAL NOTES

Reference shall be made for the following Standard Drawings:

Drawing No.	Date
AS-1-67	Revised 6-12-69
BR-1-67 Sheet #1	2-1-68
RB-1-55	Revised 2-2-59
SD-1-69 Sheets #1 thru #4	6-12-69
HL-4	1-1-66

Reference shall be made for the following Supplemental Specifications:

Number	Title	Date
808	Chemical admixtures for concrete	11-14-69
811	Examination of Welds, Parts I and II	1-1-69
836	Concrete Curing and Protective Membrane	6-17-69

Design Specifications: This structure conforms to "Standard Specifications for Highway Bridges" adopted by the American Association of State Highway Officials, 1965, including the Ohio "Supplement" to these Specifications.

Design Data:

Design Loading - HS 20-44

Concrete Class "C" - Unit Stress 1200 psi for superstructure
- Unit Stress 1333 psi for substructure

Structural Steel - ASTM A-36 - Unit Stress 20,000 psi
- ASTM A-325, Unit Stress 13,500 psi (Shear for high strength bolts)

Reinforcing Steel - ASTM A-615, A-616, or A-617, Unit Stress 20,000 psi
- Spiral reinforcement shall be plain bars ASTM A-306 or A-499

Embankment Construction: The embankments shall be constructed to the level of subgrade for a minimum distance of 200 feet back of the abutments. Excavation shall then be made for the abutments.

Piles: Shall be driven to a minimum bearing capacity of 45 Tons per pile for the abutments.

Utility Lines: All expense involved in relocating the affected utility lines shall be borne by the Owners. The Contractor and the Owners are requested to cooperate by arranging their work in such a manner that inconvenience to either would be held to a minimum.

Pier Foundations Pressure: Pier footings are designed for a maximum bearing pressure of 2.5 Tons per Sq. Ft.

Maintenance of Traffic: For notes see sheet 8 of the Highway Plans.

Welds: On non-stress carrying members are shown thus:

N

ESTIMATED QUANTITIES

	ITEM	TOTAL	UNIT	DESCRIPTION	ABUT.'S	PIERS	SUPERS.	GENERAL		
	503	Lump	Sum	Cofferdams, Cribs and Sheeting		Lump				
	503	1255	Cu. Yd.	Unclassified Excavation	468	787				
	505	Lump	Sum	First Test Pile	Lump					
	507	1560	Lin. Ft.	Steel Piles, 12 BP53	1560					
	509	277,318	Lb.	Reinforcing Steel	22,355	61,957	193,006			
	511	743	Cu. Yd.	Class "C" Concrete, Superstructure			743			
	511	204	Cu. Yd.	Class "C" Concrete, Pier Caps and Columns		204				
	511	201	Cu. Yd.	Class "C" Concrete, Abutments above Footings	201					
	511	325	Cu. Yd.	Class "C" Concrete, Footings	146	179				
	512	25	Lin. Ft.	Premolded Sealing Strip	25					
*	513	787,700	Lb.	Structural Steel			785,600			
*	514	787,700	Lb.	Field Painting of Structural Steel			785,600			
	516	55	Sq. Ft.	1" Preformed Expansion Joint Filler	55					
	518	87	Cu. Yd.	Porous Backfill	87					
	518	167	Lin. Ft.	6" Perforated, Helical C.M.P. Including Specials 707.01	167					
	518	143	Lin. Ft.	6" Non-Perforated Helical C.M.P., 707.01	143					
	518	24	Each	Scuppers Including Supports			24			
	601	880	Sq. Yd.	Crushed Aggregate Slope Protection				880		
	625	**		Electrical Equipment						
	808	743	Units	Chemical admixtures for concrete, Type A, B or D.			743			

* 2100 lbs. to be paid for By Ohio Bell Telephone Co.

** Lighting Quantities For This Bridge Will Be Found Listed Item By Item On The Lighting General Summary Sheet № 118.

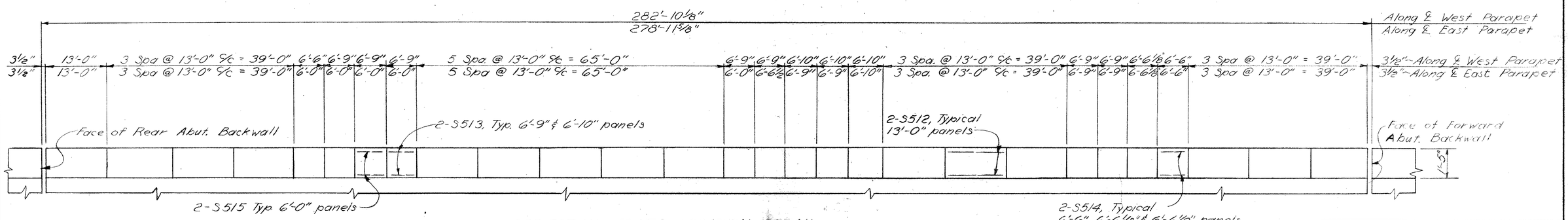

DEFLECTION JOINTS LOCATION DETAIL

R. D. ZANDE & ASSOCIATES, LIMITED
CONSULTING ENGINEERS
COLUMBUS, OHIO

3/20

GENERAL NOTES AND ESTIMATED QUANTITIES

BRIDGE № FRA-33-2997

U. S. 33 UNDER GENDER ROAD

FRANKLIN COUNTY STA. 549 + 38.04

DESIGNED	DRAWN	TRACED	CHECKED	REVIEWED	DATE	REVISED
ANA	ANA	CJH	SP 8-18-69	ANA	8-19-69	

BRUNING 40-21 —

FED. RD. DIVISION	STATE	PROJECT	
2	OHIO		

130/155

FRANKLIN COUNTY
FRA-33-29.53

MICROFILMED JAN 31 1980

Notes: For View A3-A3 and Section A2-A2 see Sheet 5/20.
For additional notes see Sheet 5/20.

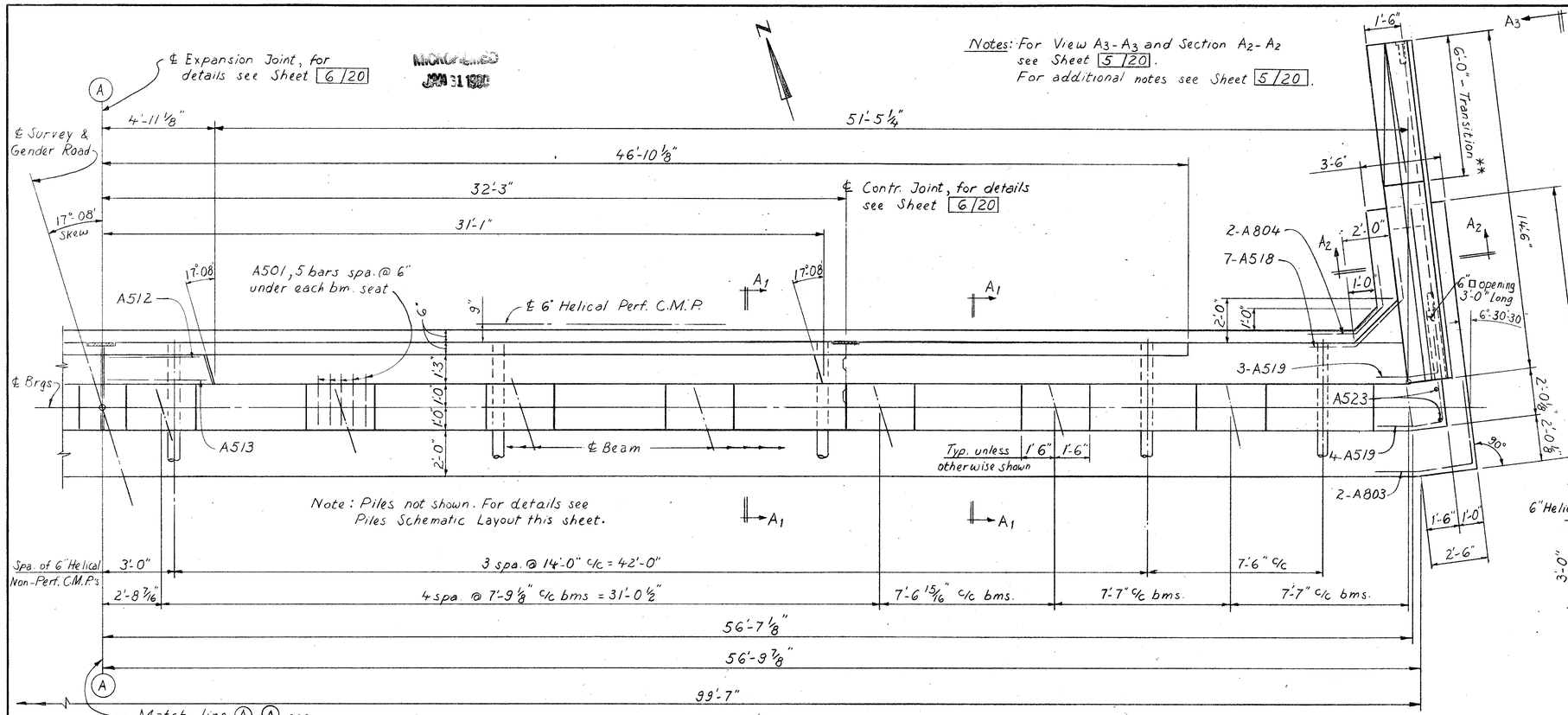

PARTIAL PLAN

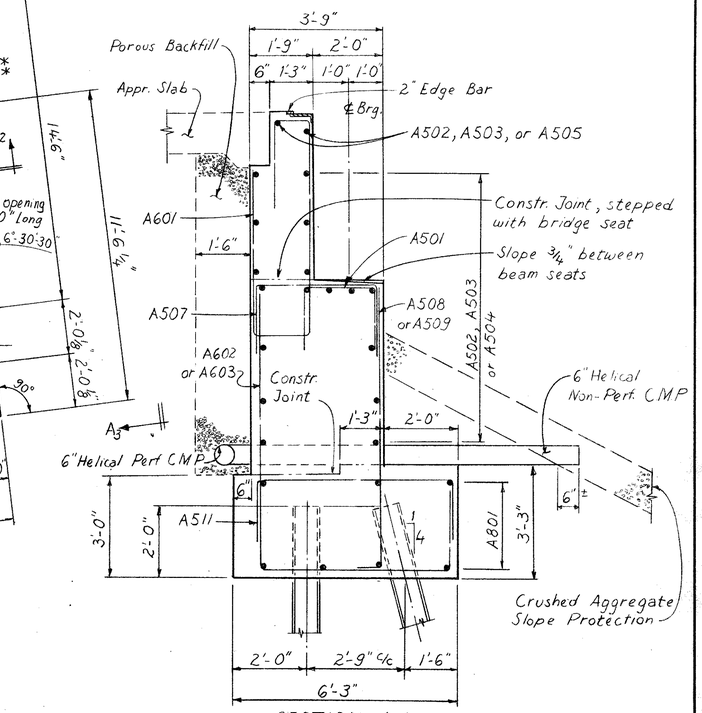

SECTION A1 A1

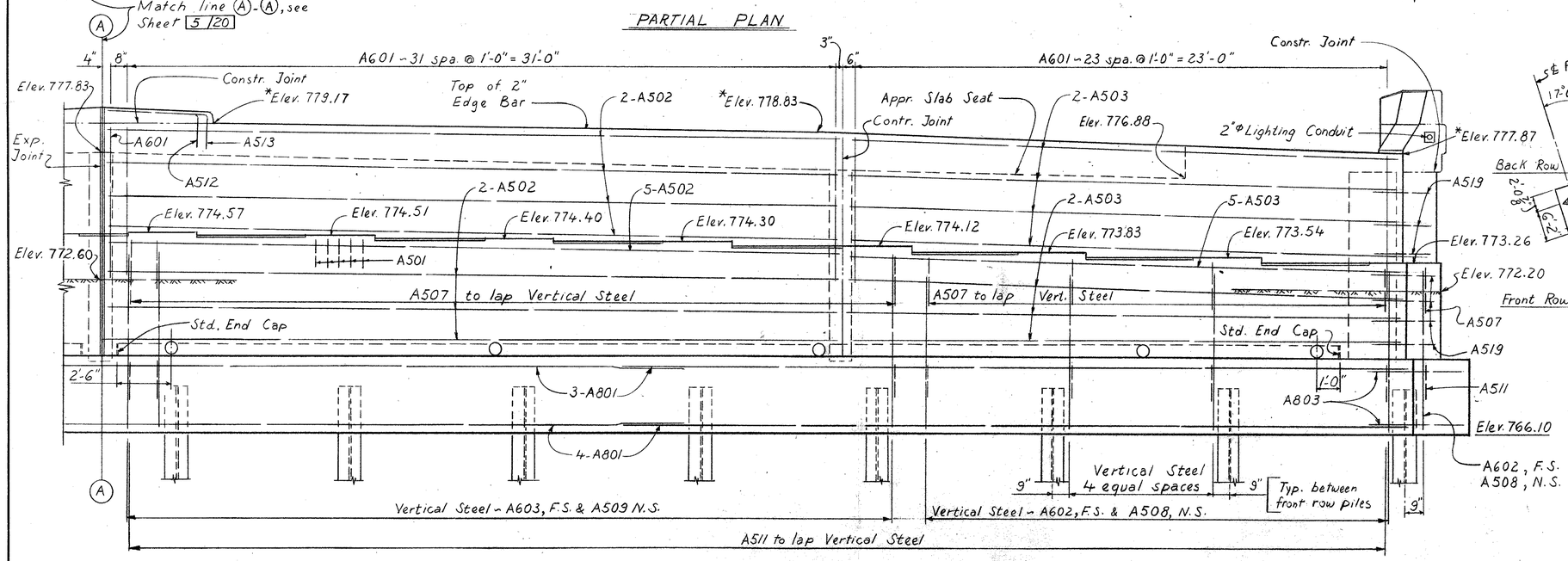

PARTIAL ELEVATION

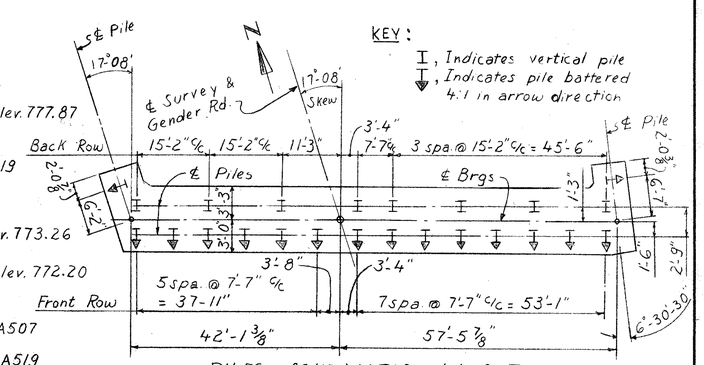

PILES SCHEMATIC LAYOUT
(All Piles Shall be 12 BP53 Steel Piles)

R. D. ZANDE & ASSOCIATES, LIMITED
CONSULTING ENGINEERS
COLUMBUS, OHIO

4/20

REAR ABUTMENT DETAILS
BRIDGE No FRA-33-2997
U.S. 33 UNDER GENDER ROAD
FRANKLIN COUNTY STA. 549+38.04

DESIGNED	DRAWN	TRACED	CHECKED	REVIEWED	DATE	REVISED
ANA	ANA		SP	ANA	8-19-'69	

BRUNING 40-21 —

FED. RD. DIVISION	STATE	PROJECT	
2	OHIO		

131/155

FRANKLIN COUNTY
FRA-33-29.53

MICROFILMED JAN 31 1980

NOTES

* Elevations marked with an asterisk are to top of 2" edge bar.

** For details of 6'-0" transition, placement of reinforcing steel in transition and guardrail anchor details see Std. Dwg. BR-1-67.

Reinforcing Steel Location: N.S. indicates near side F.S. indicates far side.

Field bending of longitudinal bars in abutment backwall shall be included with Item 509 for payment.

NOTES CONT'D

Porous backfill, 1'-6" thick, full length of the abutments and wingwalls, shall extend up to the approach slab or the limits of the stabilized shoulder.

Expansion and Contraction Joints: A joint shall be provided in the abutment portion of the end dam at each contraction or expansion joint.

Adjust vertical steel spacing to miss 6" non-perf. C.M.P.s. The reinforcing steel in the footing shall clear all concrete faces by 3" minimum.

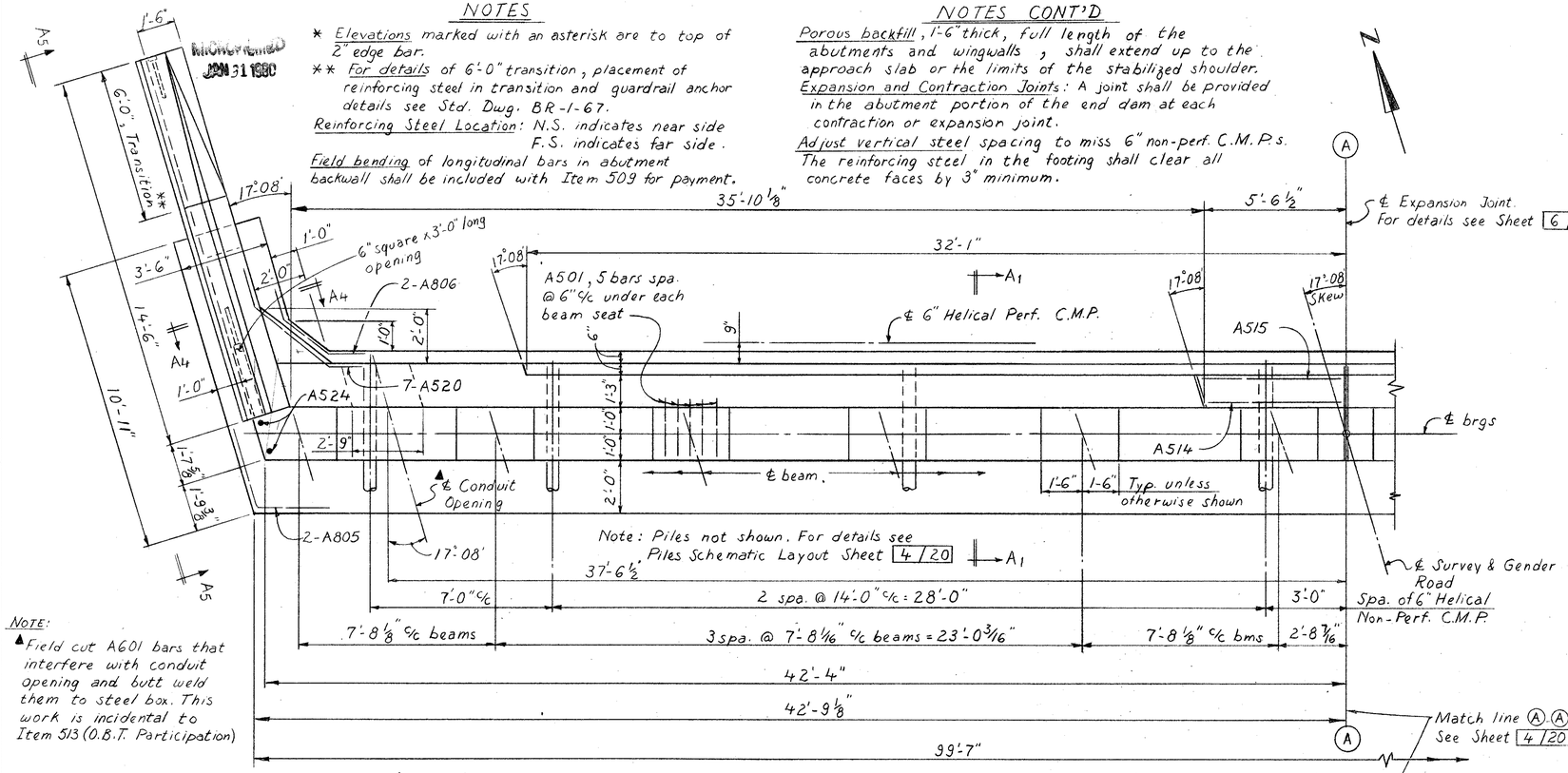

PARTIAL PLAN

NOTE:
▲ Field cut A601 bars that interfere with conduit opening and butt weld them to steel box. This work is incidental to Item 513 (O.B.T. Participation)

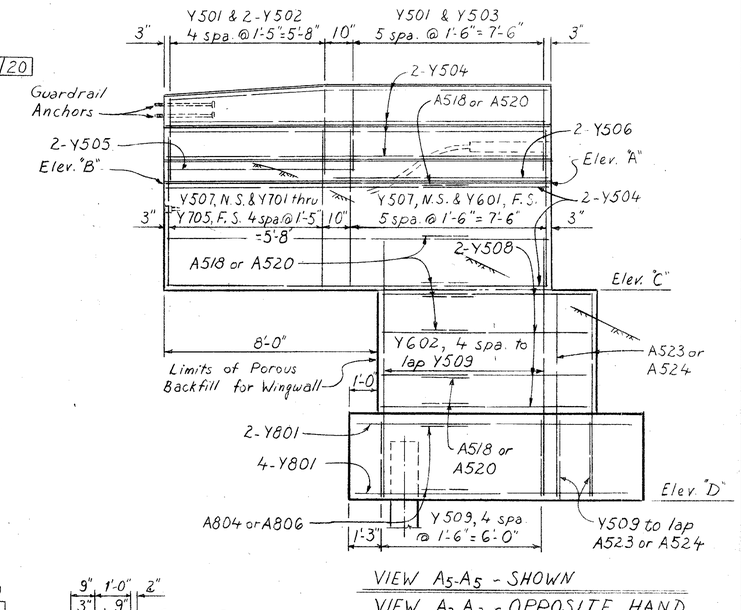

VIEW A_5-A_5 - SHOWN
VIEW A_3-A_3 - OPPOSITE HAND

TABLE OF ELEVATION				
Location	Elev. "A"	Elev. "B"	Elev. "C"	Elev. "D"
VIEW A_3-A_3	777.02	776.76	773.26	766.10
VIEW A_5-A_5	777.72	777.62	773.95	766.10

Note: For Section A_1-A_1 see sheet 4/20.

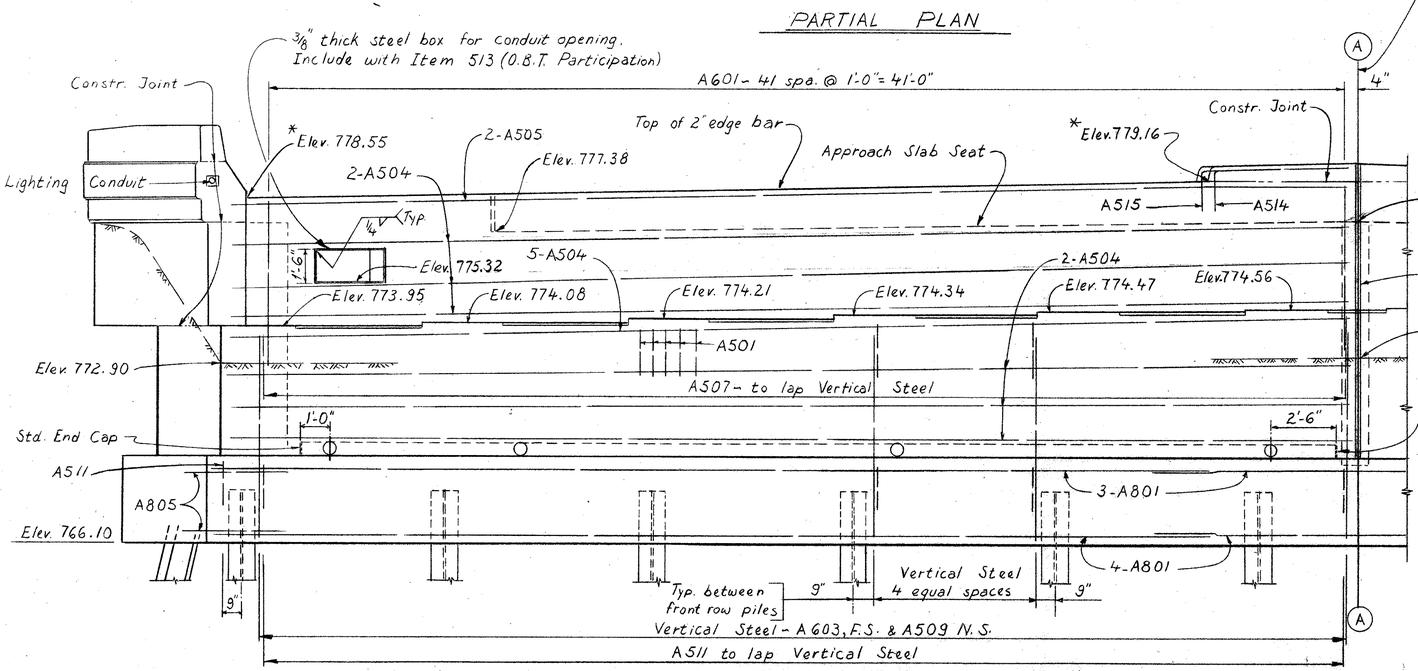

PARTIAL ELEVATION

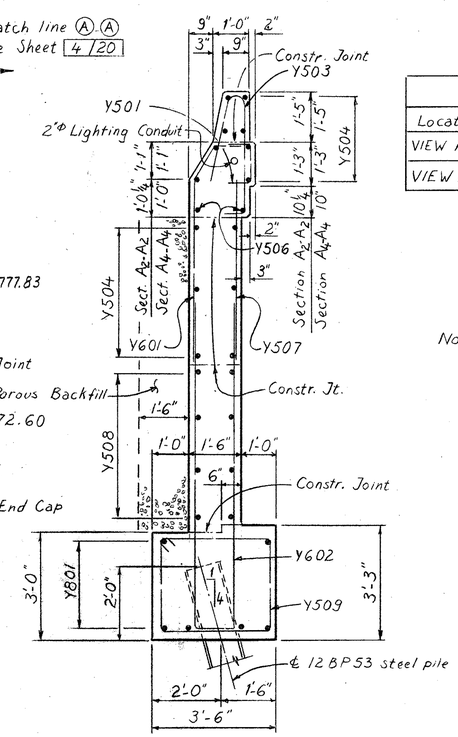

SECTIONS A_4-A_4 OR A_2-A_2

R. D. ZANDE & ASSOCIATES, LIMITED
CONSULTING ENGINEERS
COLUMBUS, OHIO

5/20

REAR ABUTMENT DETAILS
BRIDGE No FRA-33-2997
U.S. 33 UNDER GENDER ROAD
FRANKLIN COUNTY STA. 549+38.04

DESIGNED	DRAWN	TRACED	CHECKED	REVIEWED	DATE	REVISED
ANA	ANA		SP	ANA	8-13-69	

BRUNING 40-21

JAN 31 1990

FED. RD. DIVISION	STATE	PROJECT	
2	OHIO		

FRANKLIN COUNTY
FRA-33-29.53

NOTES

For notes see Sheet 5/20.

For View A_7-A_7 and Section A_8-A_8 see Sheet 7/20.

NOTE:
▲ Field cut A601 bars that interfere with conduit opening, and butt weld them to steel box. This work is incidental to Item 513 (O.B.T. Participation)

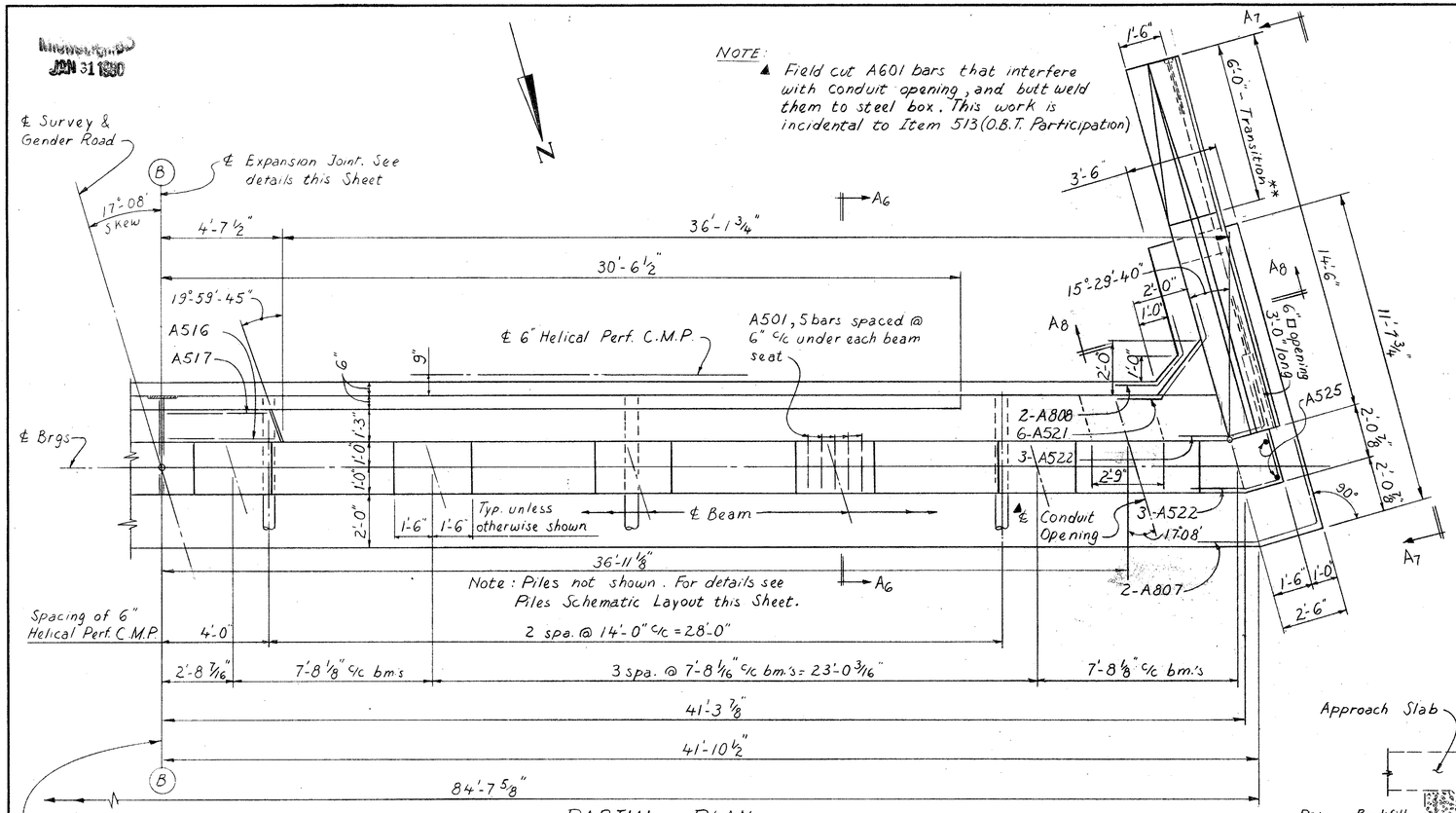

PARTIAL PLAN

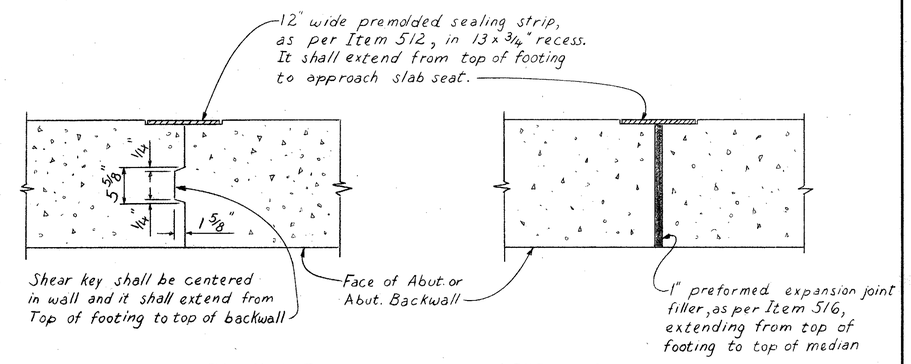

CONTRACTION JOINT DETAIL

EXPANSION JOINT DETAIL

PARTIAL ELEVATION

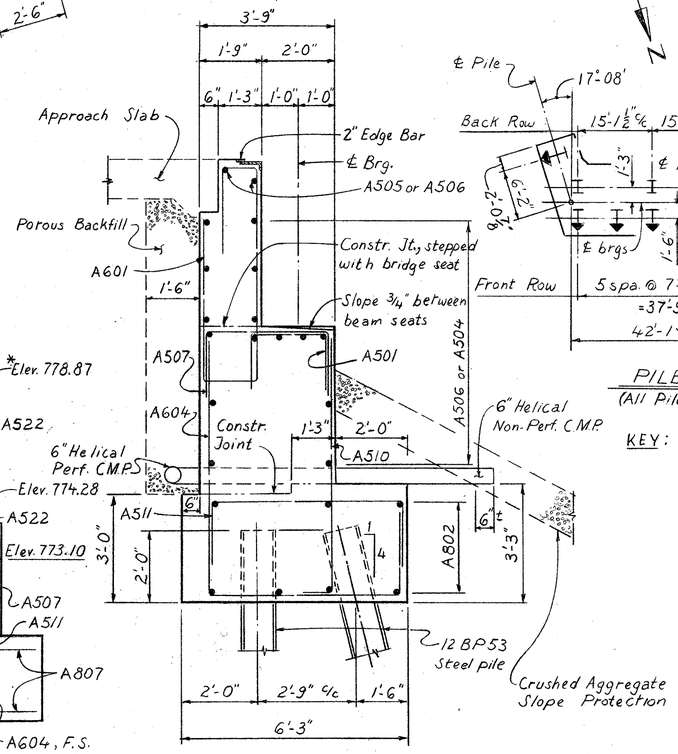

SECTION A_6-A_6

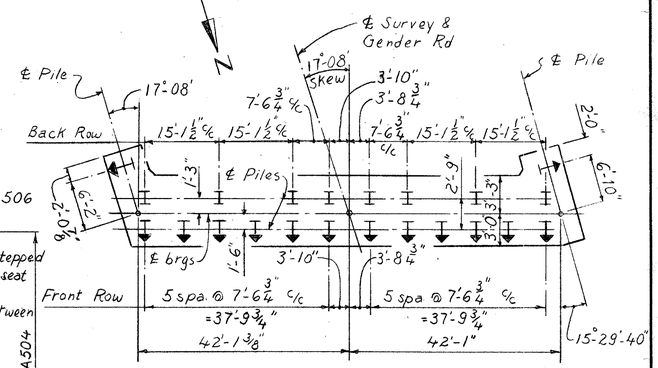

PILES SCHEMATIC LAYOUT
(All Piles are 12 BP53 Steel Piles)

KEY:
I, Indicates Vertical Pile
I, Indicates Pile Battered 4:1 In Arrow Direction

R. D. ZANDE & ASSOCIATES, LIMITED
CONSULTING ENGINEERS
COLUMBUS, OHIO

6/20

FORWARD ABUTMENT DETAILS
BRIDGE No FRA-33-29.97
U.S. 33 UNDER GENDER ROAD
FRANKLIN COUNTY STA. 549+38.04

DESIGNED	DRAWN	TRACED	CHECKED	REVIEWED	DATE	REVISED
ANA	ANA		SP	ANA	8-19-69	

BRUNING 40.21

FED. RD. DIVISION	STATE	PROJECT	
2	OHIO		

133/155

FRANKLIN COUNTY
FRA-33-29.53

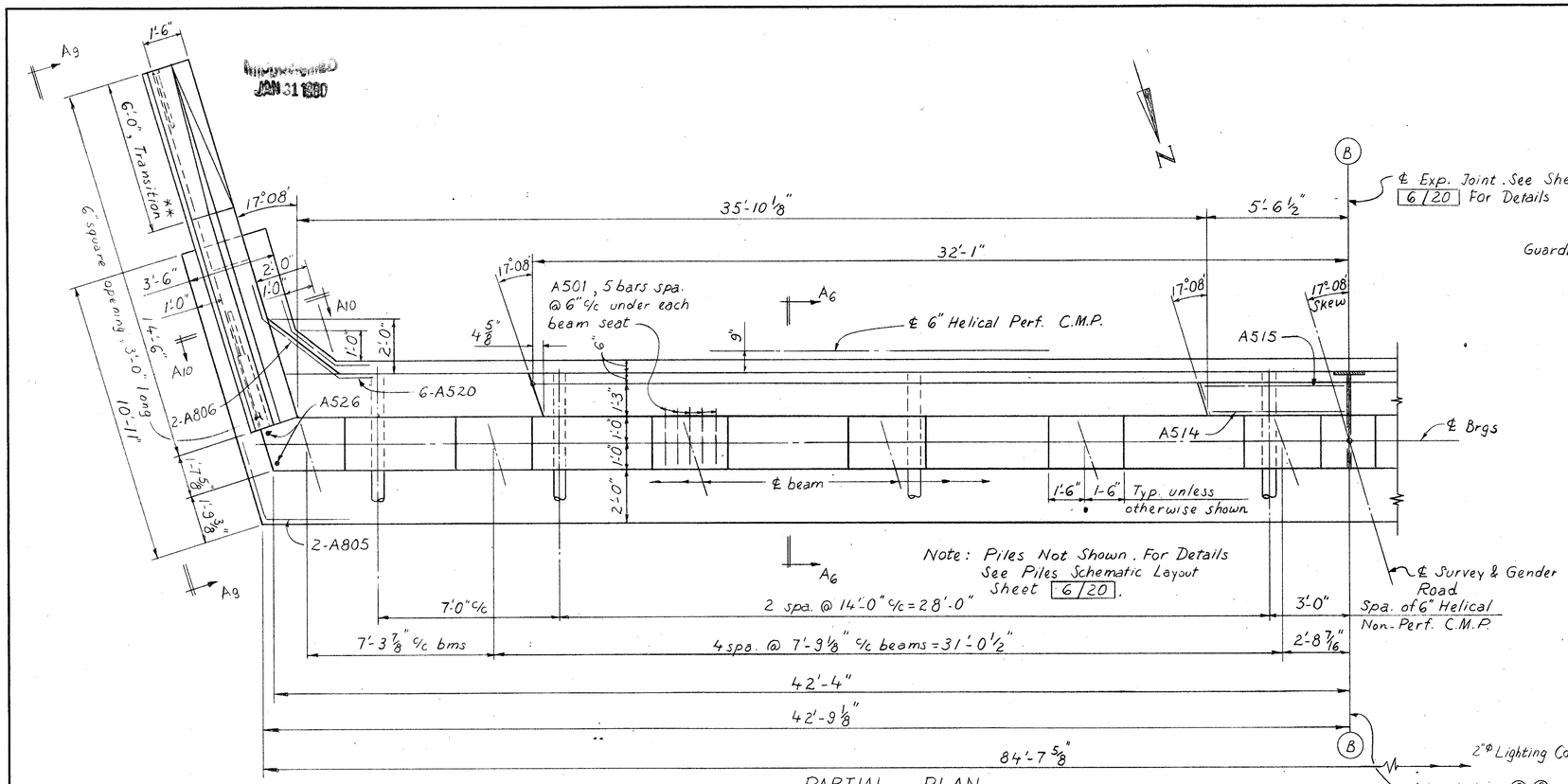

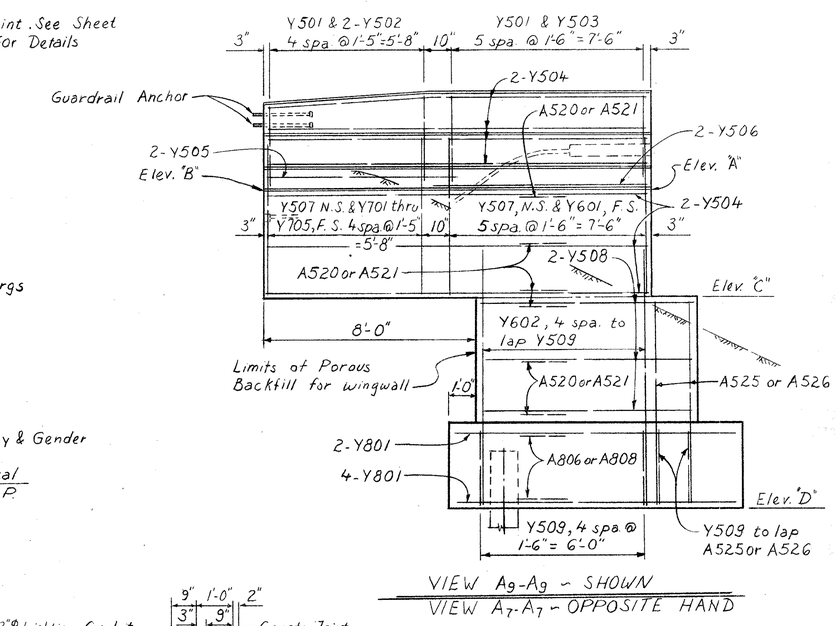

VIEW A_9-A_9 ~ SHOWN
VIEW A_7-A_7 ~ OPPOSITE HAND

TABLE OF ELEVATIONS				
Location	Elev. "A"	Elev. "B"	Elev. "C"	Elev. "D"
View A_7-A_7	778.04	777.97	774.28	767.00
View A_9-A_9	777.89	777.81	774.13	767.00

NOTES

For notes see Sheet 5/20.

For Section A_6-A_6 see Sheet 6/20.

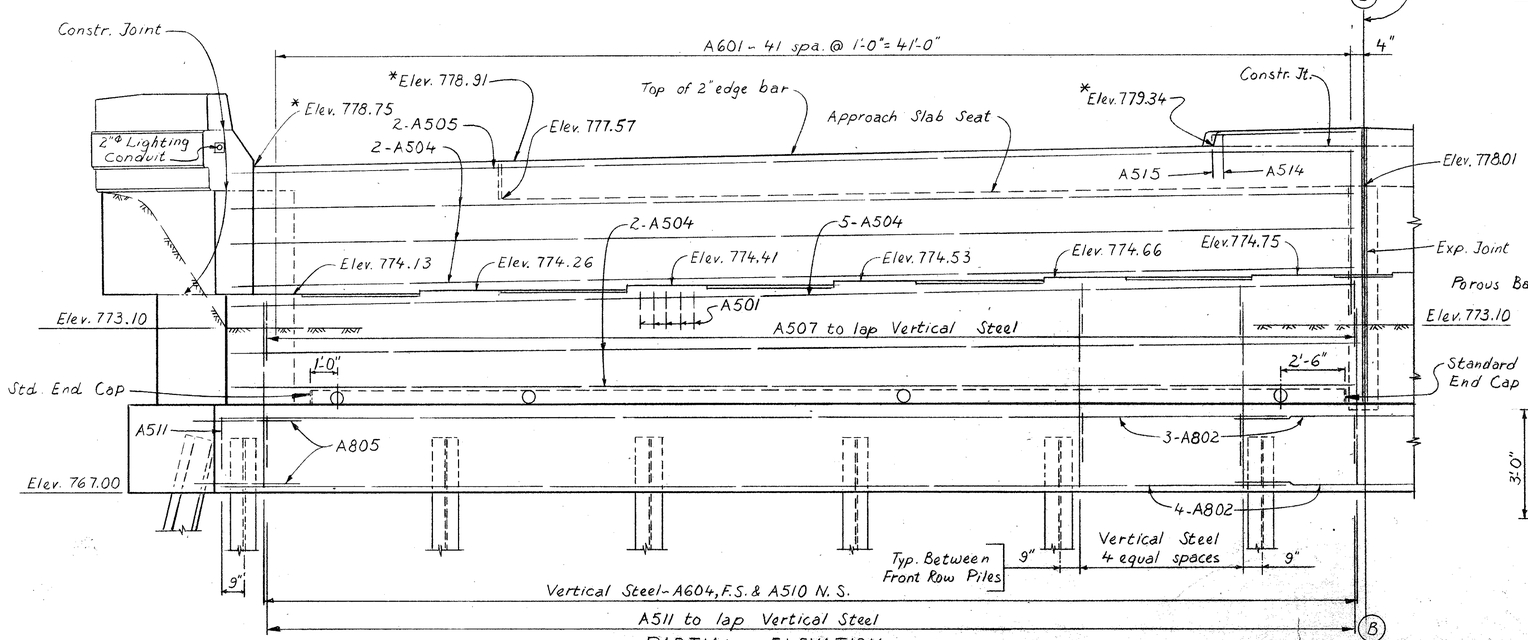

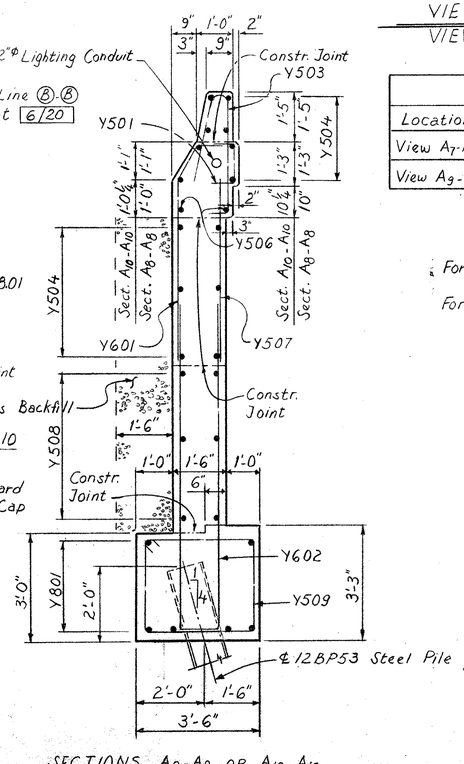

R. D. ZANDE & ASSOCIATES, LIMITED
CONSULTING ENGINEERS
COLUMBUS, OHIO

7/20

FORWARD ABUTMENT DETAILS
BRIDGE No FRA-33-2997
U.S. 33 UNDER GENDER ROAD
FRANKLIN COUNTY STA. 549+38.04

DESIGNED	DRAWN	TRACED	CHECKED	REVIEWED	DATE	REVISED
ANA	ANA		SP	ANA	8-19-'69	

BRUNING 40-21

FED. RD. DIVISION	STATE	PROJECT	
2	OHIO		

134/155

FRANKLIN COUNTY
FRA-33-29.53

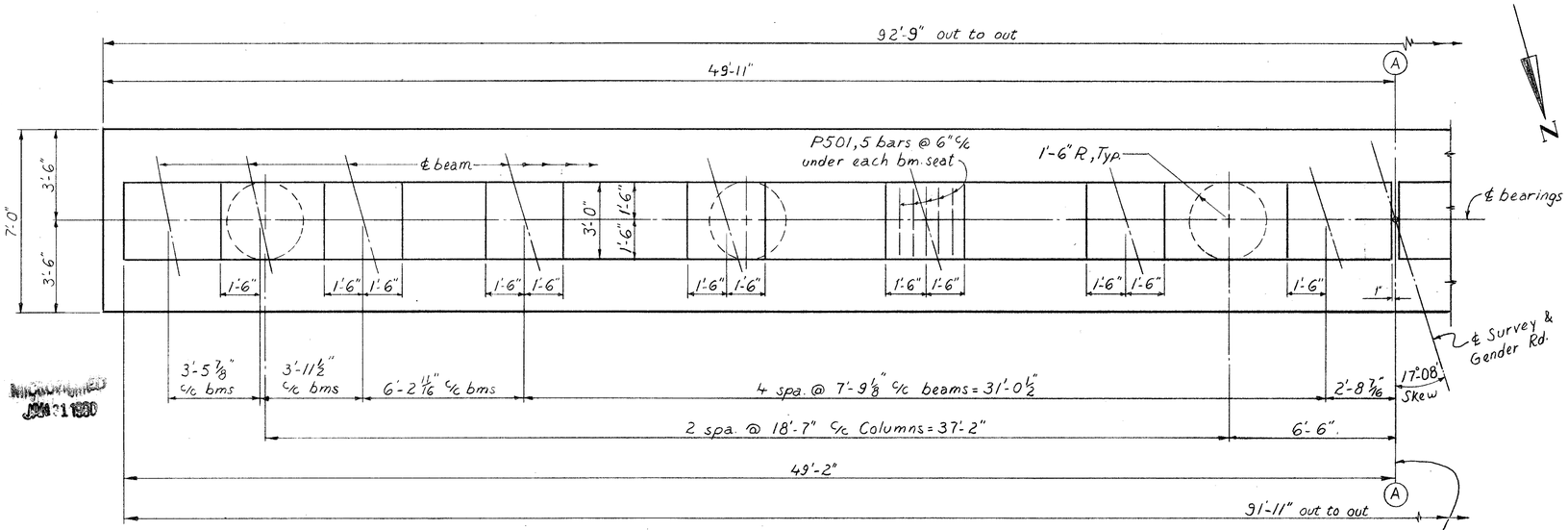

PARTIAL PLAN

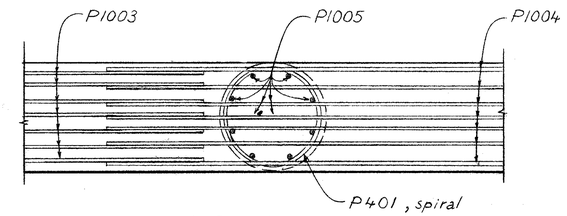

VIEW P_3 - P_3

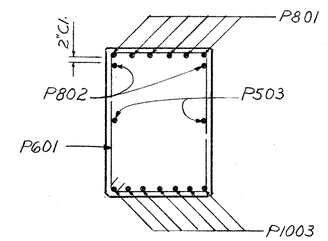

SECTION P_1 - P_1

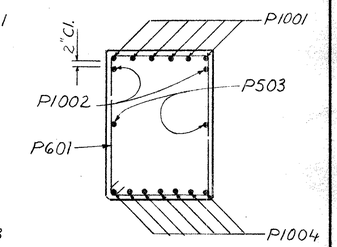

SECTION P_2 - P_2

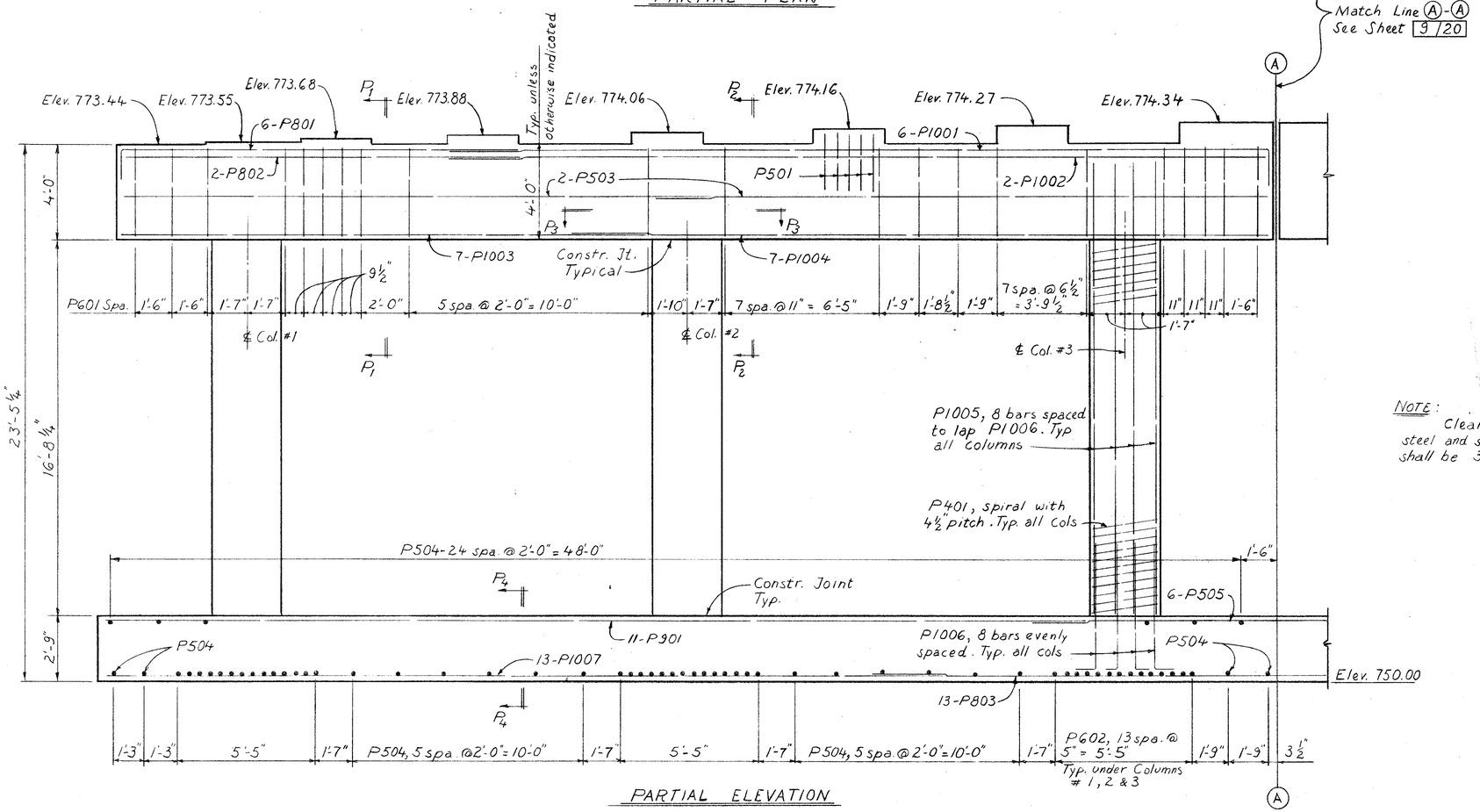

PARTIAL ELEVATION

NOTE: Clearance between reinforcing steel and surface of footing concrete shall be 3 inches.

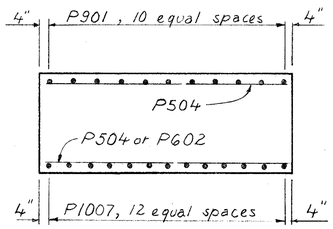

SECTION P_4 - P_4

R. D. ZANDE & ASSOCIATES, LIMITED
CONSULTING ENGINEERS
COLUMBUS, OHIO

8/20

PIER No 1 DETAILS
BRIDGE No FRA-33-2997
U.S. 33 UNDER GENDER ROAD
FRANKLIN COUNTY STA. 549+38.04

DESIGNED	DRAWN	TRACED	CHECKED	REVIEWED	DATE	REVISED
ANA	ANA		SP	ANA	8-19-69	

BRUNING 40-21

FED. RD. DIVISION	STATE	PROJECT	
2	OHIO		

135/155

FRANKLIN COUNTY
FRA-33-29.53

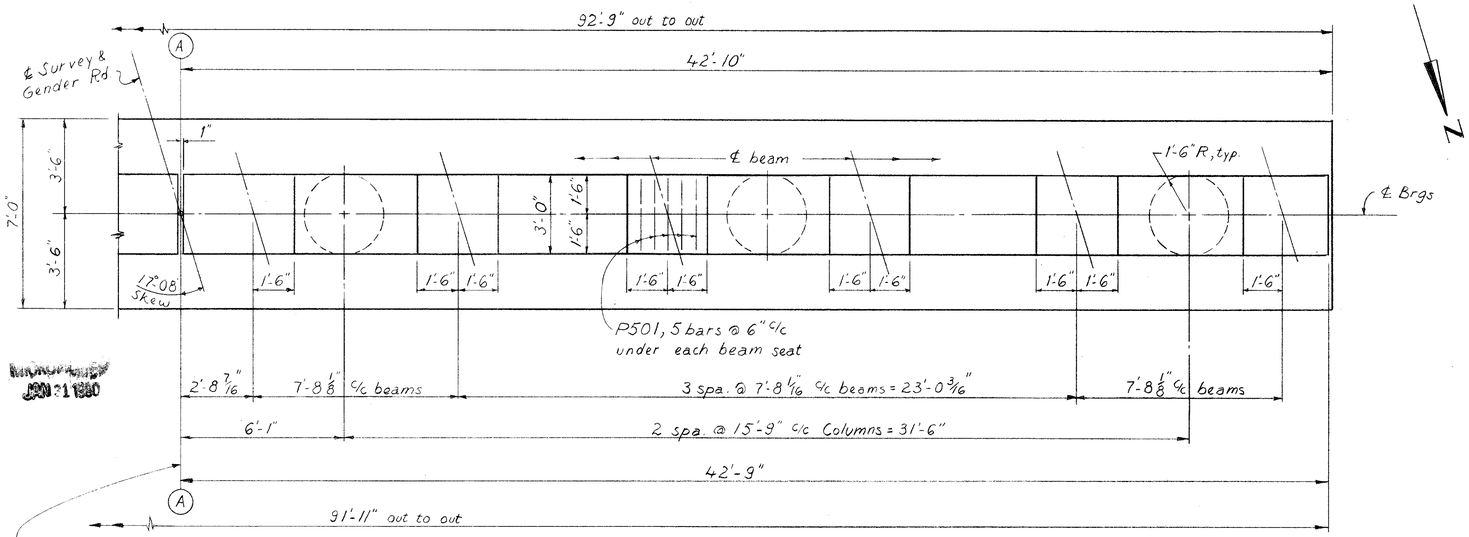

PARTIAL PLAN

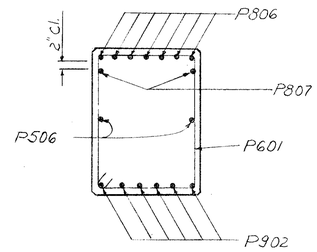

SECTION P_6-P_6

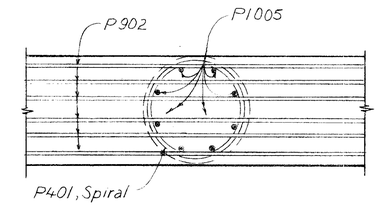

VIEW P_5-P_5

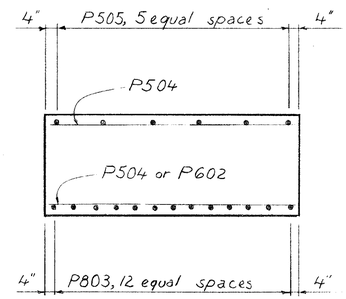

SECTION P_7-P_7

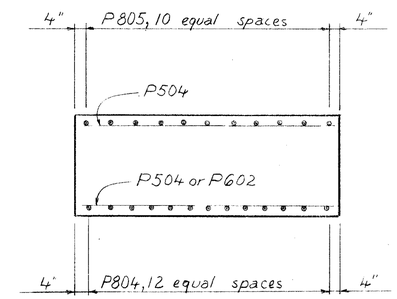

SECTION P_8-P_8

NOTE: Clearance between reinforcing steel and surface of footing concrete shall be 3 inches.

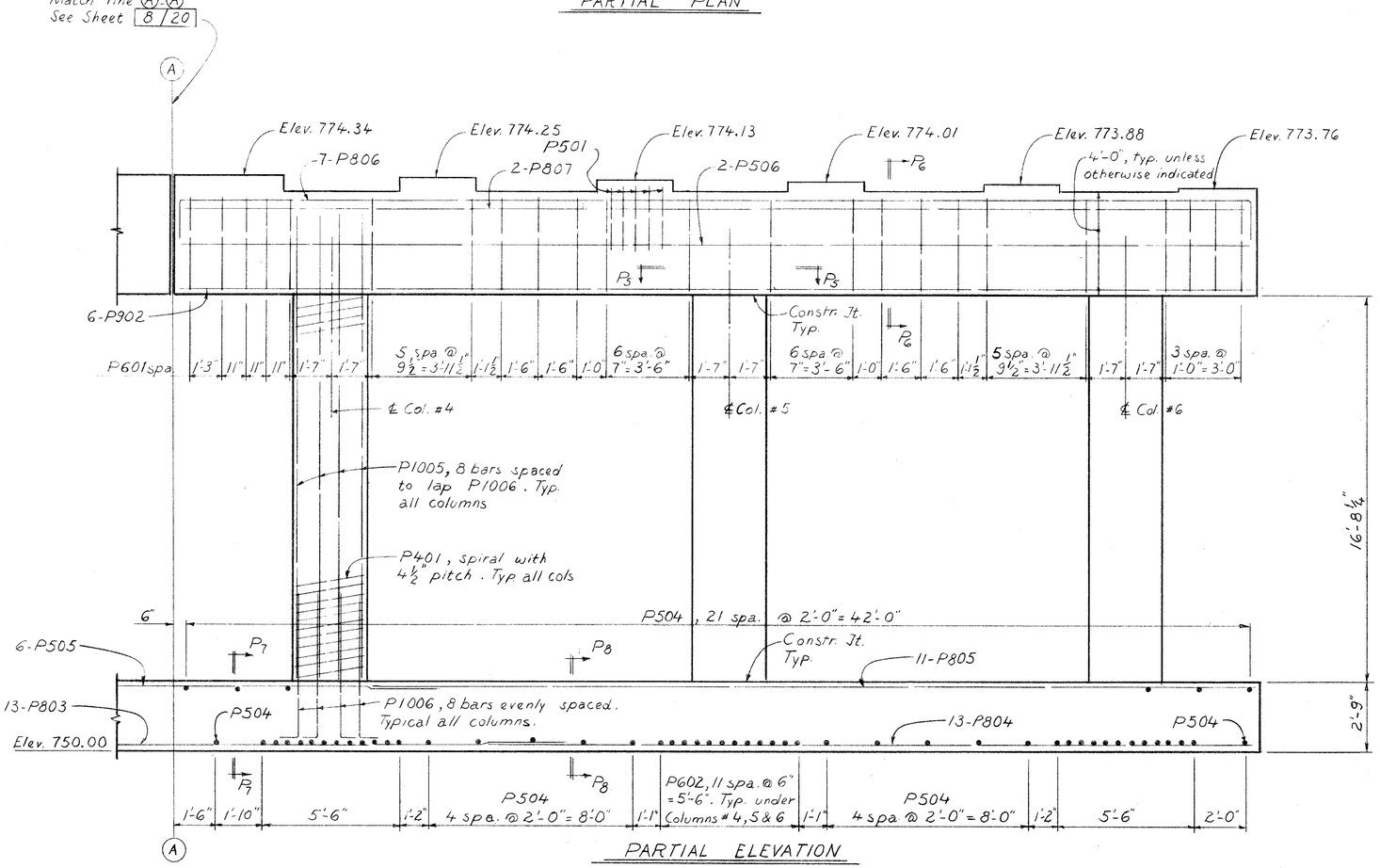

PARTIAL ELEVATION

R. D. ZANDE & ASSOCIATES, LIMITED
CONSULTING ENGINEERS
COLUMBUS, OHIO

9/20

PIER No 1 DETAILS
BRIDGE No FRA-33-2997
U.S. 33 UNDER GENDER ROAD
FRANKLIN COUNTY STA. 549+38.04

DESIGNED	DRAWN	TRACED	CHECKED	REVIEWED DATE	REVISED
ANA	ANA		SP	ANA 8-19-69	

BRUNING 40-21

APPROVED
JAN 21 1980

FED. RD. DIVISION	STATE	PROJECT	
2	OHIO		

136/155

FRANKLIN COUNTY
FRA-33-29.53

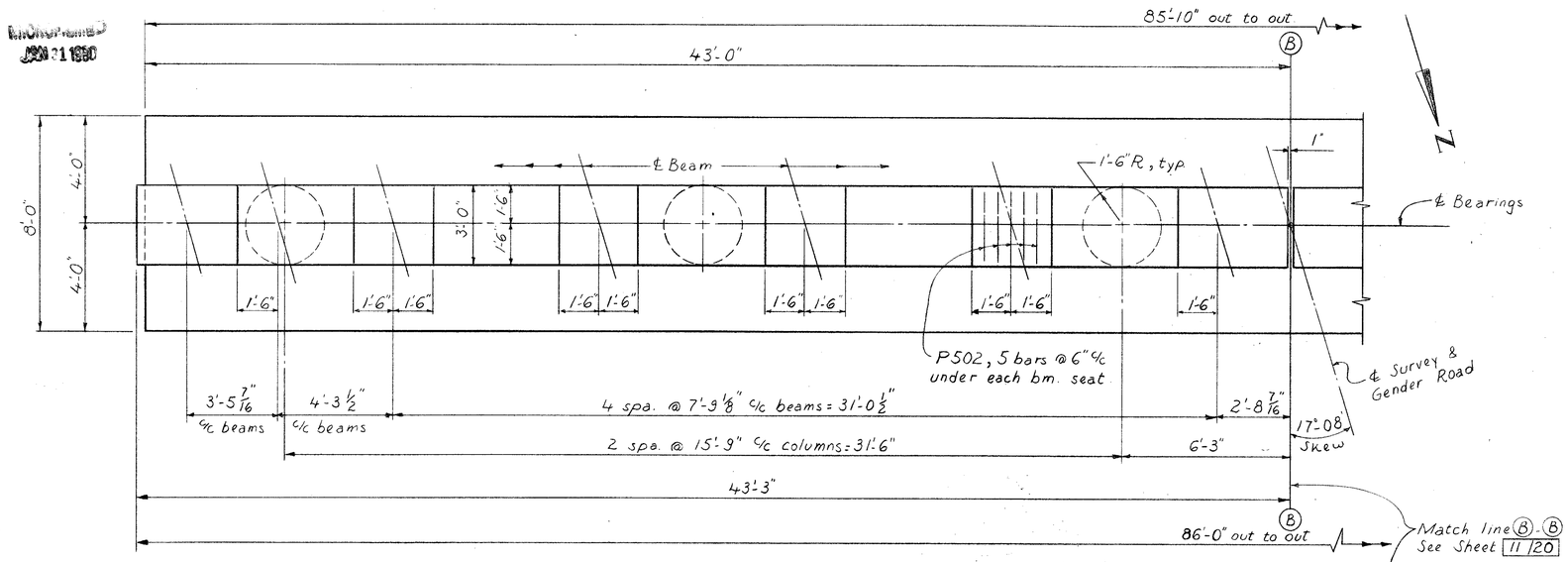

PARTIAL PLAN

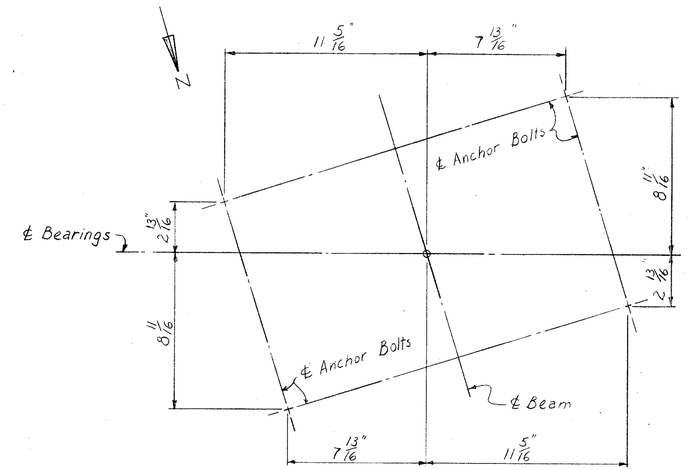

ANCHOR BOLTS SETTING DETAIL
(All Beams)

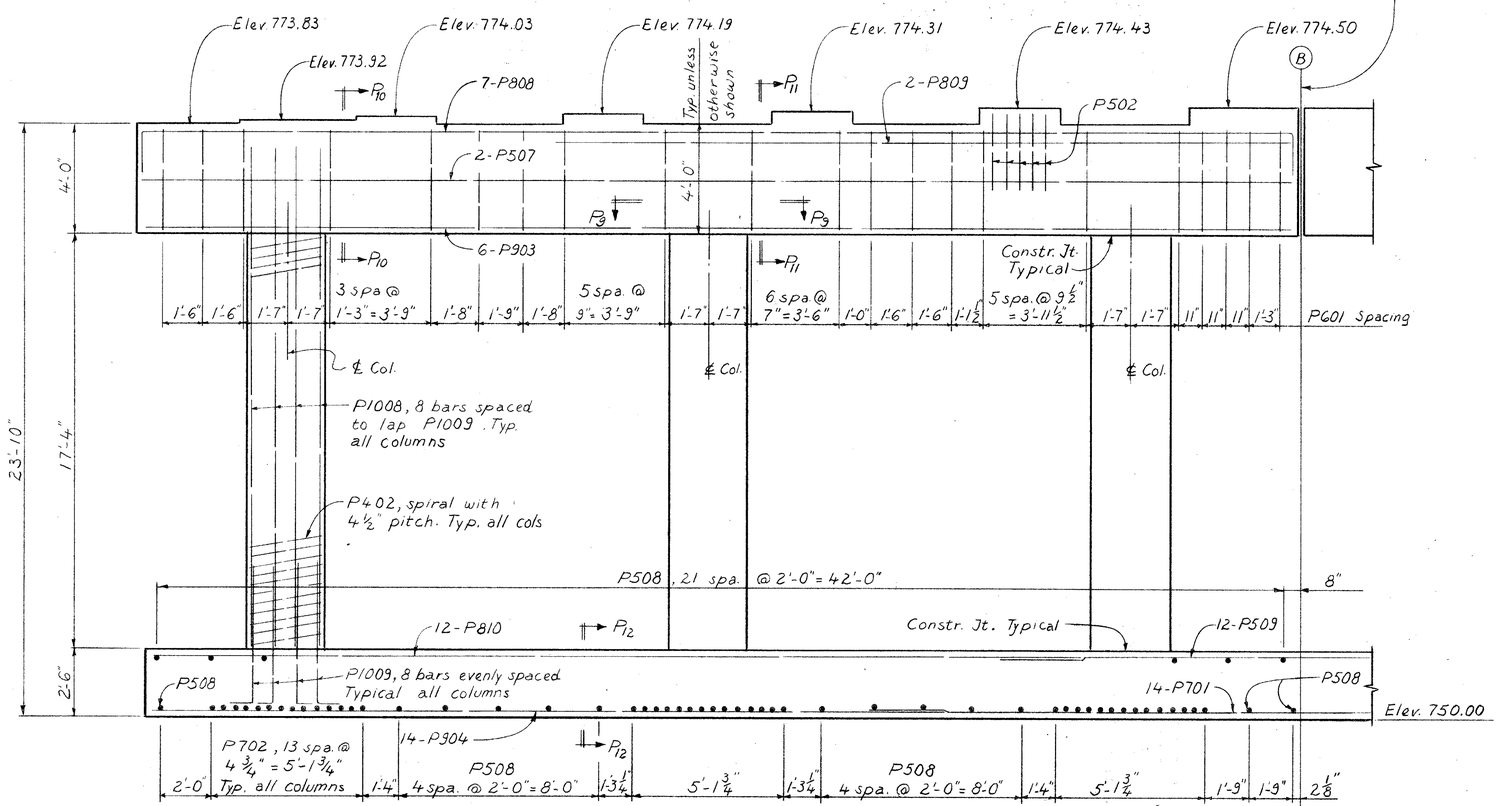

PARTIAL ELEVATION

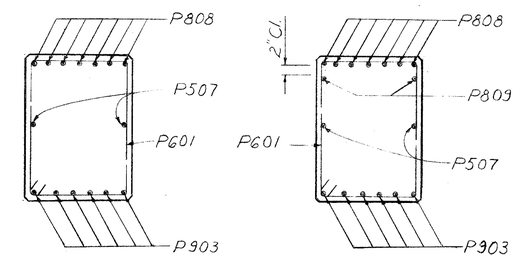

SECTION P_{10}-P_{10} SECTION P_{11}-P_{11}

NOTES

Clearance between reinforcing steel and surface of footing concrete shall be 3 inches.

Bridge Seat Reinforcing: Special care shall be taken in placing reinforcing steel in the vicinity of the bridge seat; so as to avoid interference with the drilling of anchor bolt holes.

For View P_9-P_9 and Section P_{12}-P_{12} see Sheet 11/20.

R. D. ZANDE & ASSOCIATES, LIMITED
CONSULTING ENGINEERS
COLUMBUS, OHIO

10/20

PIER No 2 DETAILS
BRIDGE No FRA-33-2997
U.S. 33 UNDER GENDER ROAD
FRANKLIN COUNTY STA. 549+38.04

DESIGNED	DRAWN	TRACED	CHECKED	REVIEWED	DATE	REVISED
ANA	ANA		SP	ANA	8-19-69	

BRUNING 40-21 —

FED. RD. DIVISION	STATE	PROJECT	
2	OHIO		

137/155

FRANKLIN COUNTY
FRA-33-29.53

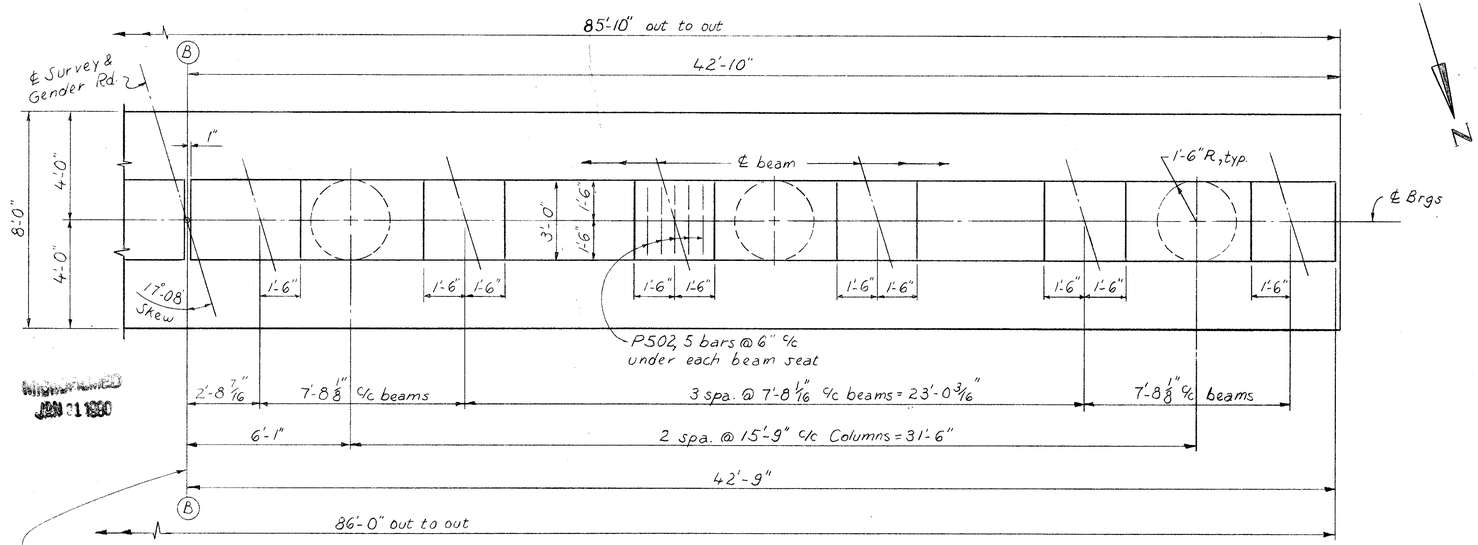

PARTIAL PLAN

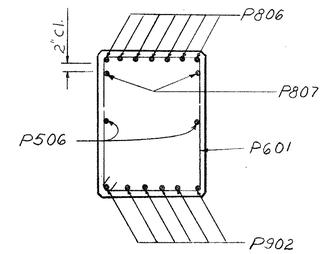

SECTION P_{14}-P_{14}

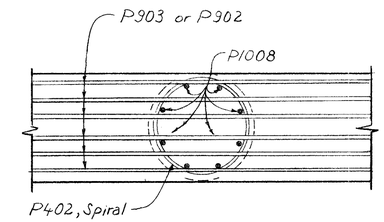

VIEW P_3-P_3

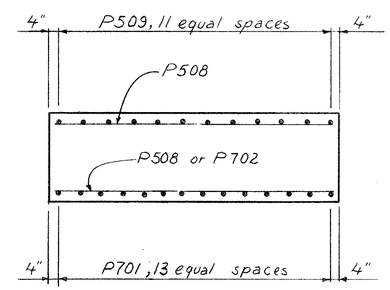

SECTION P_{13}-P_{13}

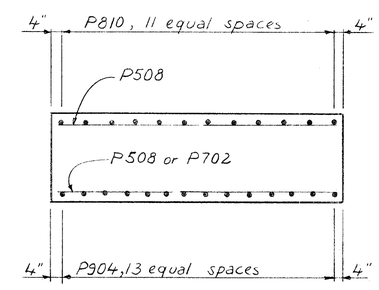

SECTION P_{12}-P_{12}

NOTE: For notes see Sheet 10/20

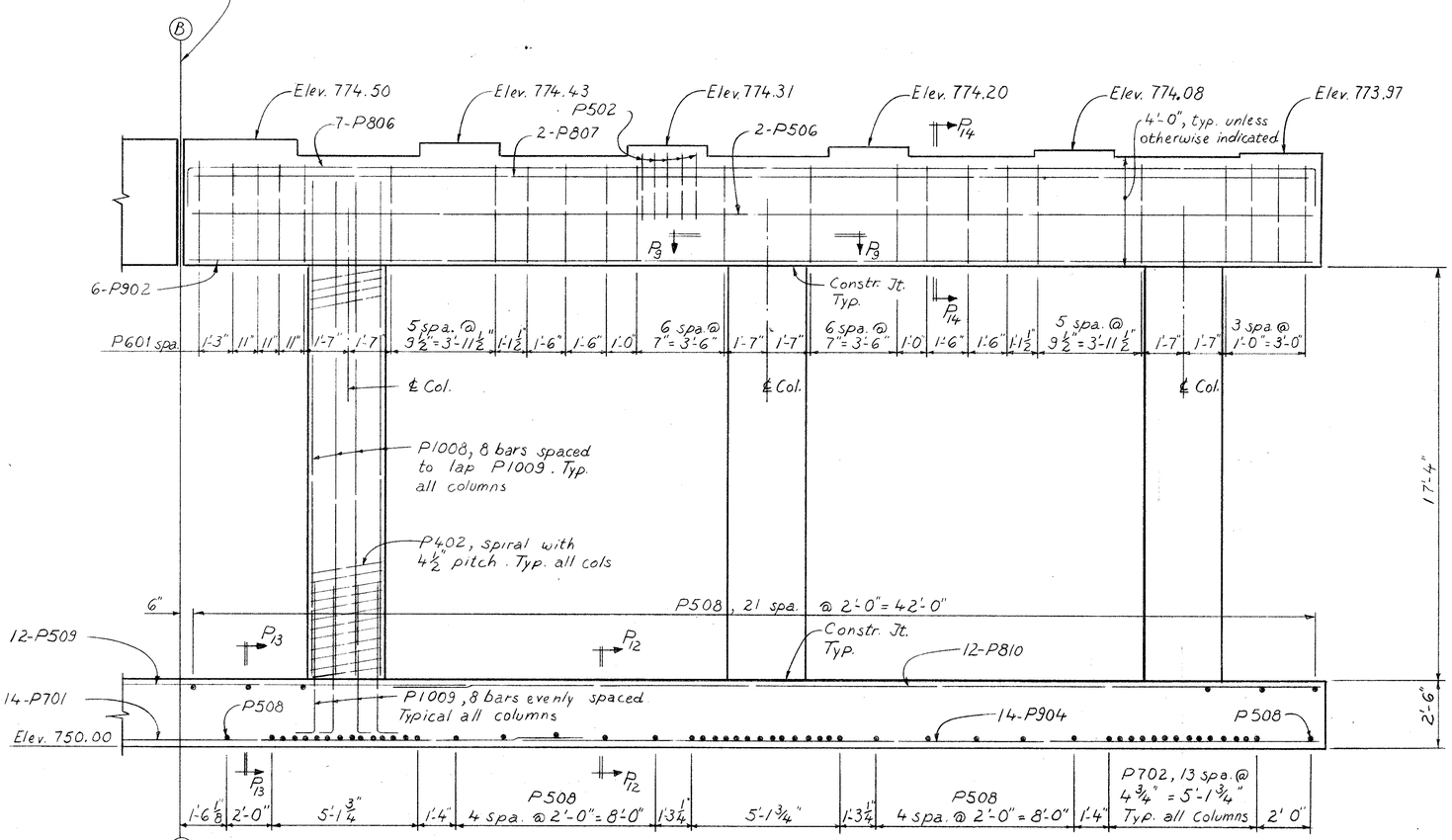

PARTIAL ELEVATION

R. D. ZANDE & ASSOCIATES, LIMITED
CONSULTING ENGINEERS
COLUMBUS, OHIO

11/20

PIER № 2 DETAILS
BRIDGE № FRA-33-2997
U.S. 33 UNDER GENDER ROAD
FRANKLIN COUNTY STA 549+38.04

DESIGNED	DRAWN	TRACED	CHECKED	REVIEWED	DATE	REVISED
ANA	ANA		SP	ANA	8-19-63	

BRUNING 40-21

FED. RD. DIVISION	STATE	PROJECT	
2	OHIO		

138/155

FRANKLIN COUNTY
FRA-33-29.53

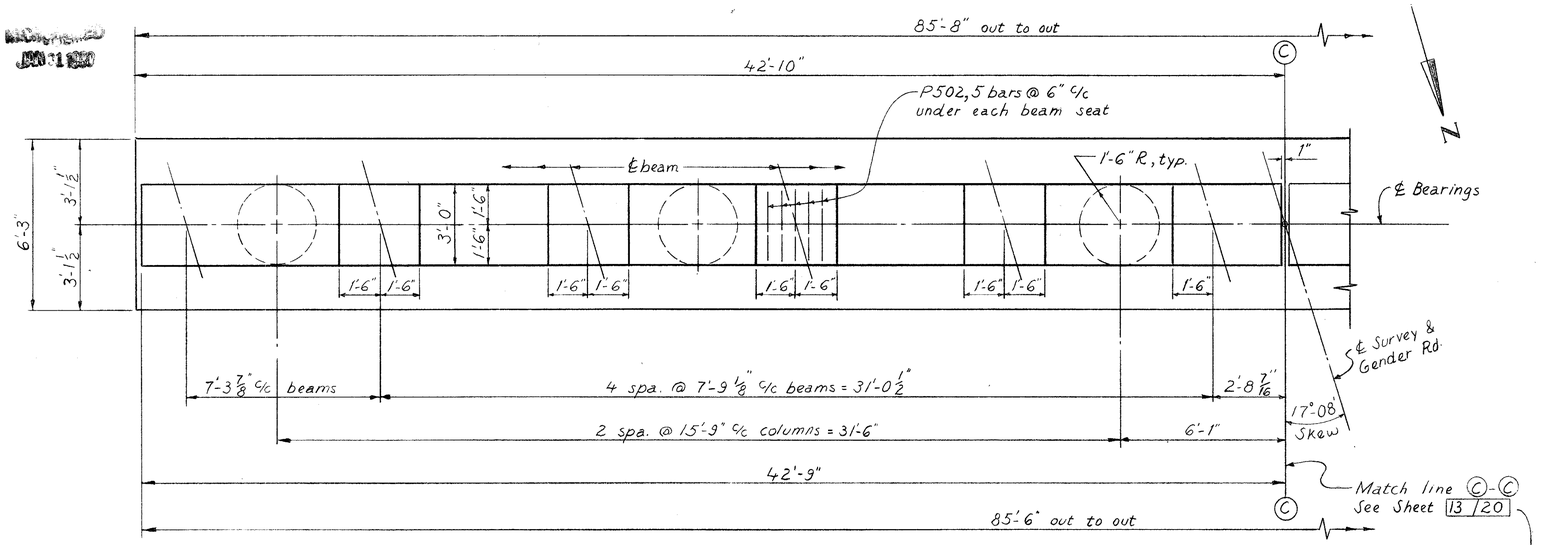

PARTIAL PLAN

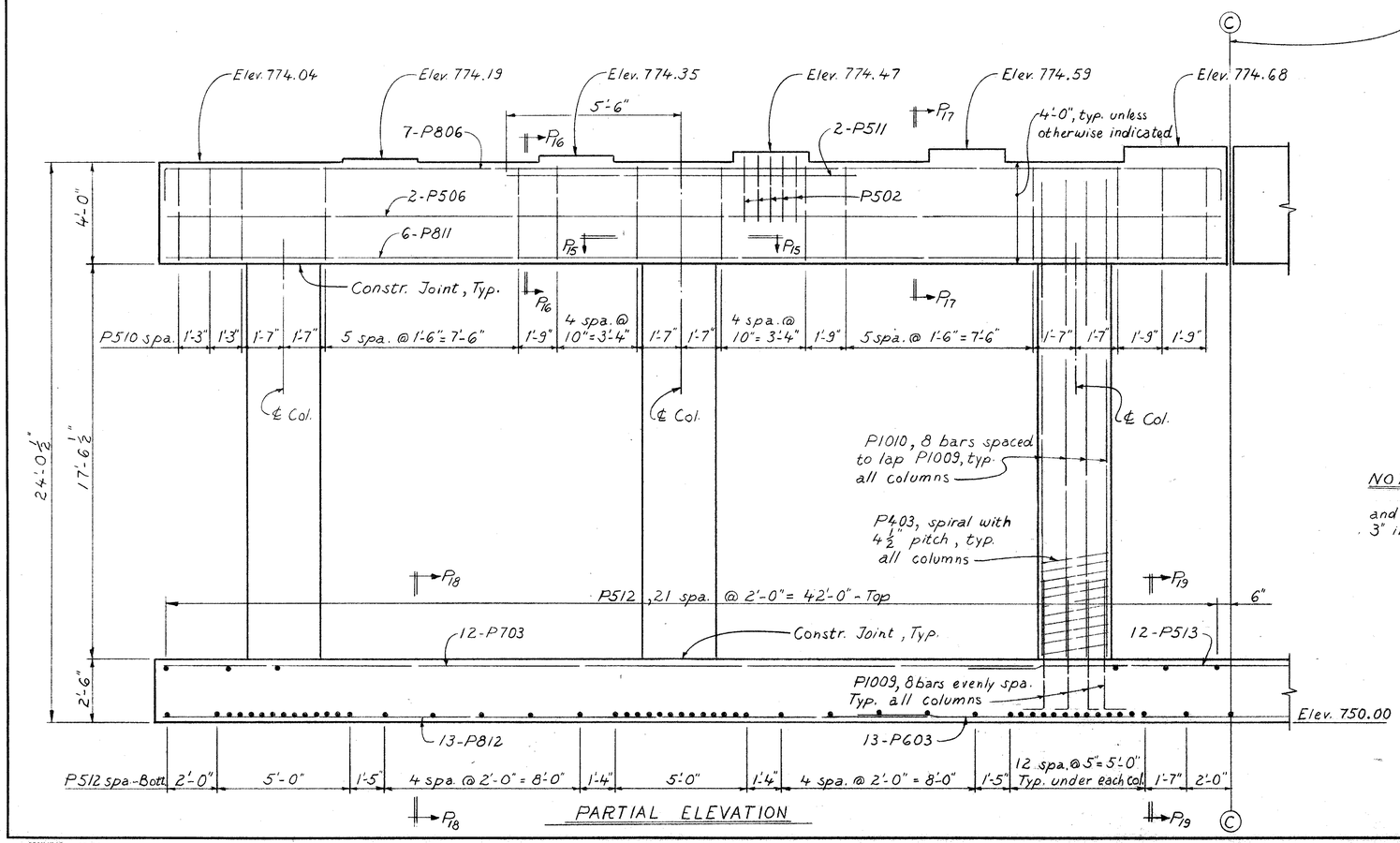

PARTIAL ELEVATION

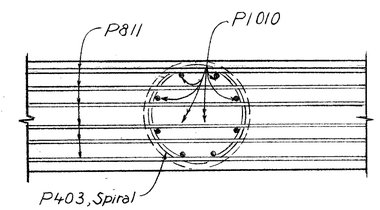

VIEW P15 P15

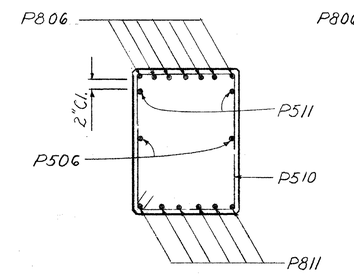

SECTION P16-P16

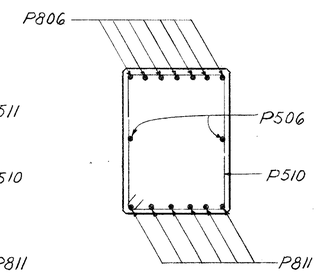

SECTION P17-P17

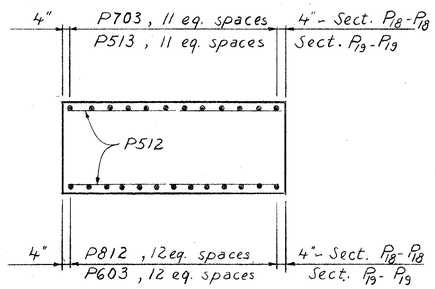

SECTIONS P18-P18 AND P19-P19

NOTE:
Clearance between reinforcing steel and surface of footing concrete shall be 3" inches.

R. D. ZANDE & ASSOCIATES, LIMITED
CONSULTING ENGINEERS
COLUMBUS, OHIO

12/20

PIER № 3 DETAILS
BRIDGE № FRA-33-2997
U.S. 33 UNDER GENDER ROAD
FRANKLIN COUNTY STA. 549+38.04

DESIGNED	DRAWN	TRACED	CHECKED	REVIEWED DATE	REVISED
ANA	ANA		SP	ANA 8-19-69	

BRUNING 40-21

FED. RD. DIVISION	STATE	PROJECT	
2	OHIO		

139/155

FRANKLIN COUNTY
FRA-33-29.53

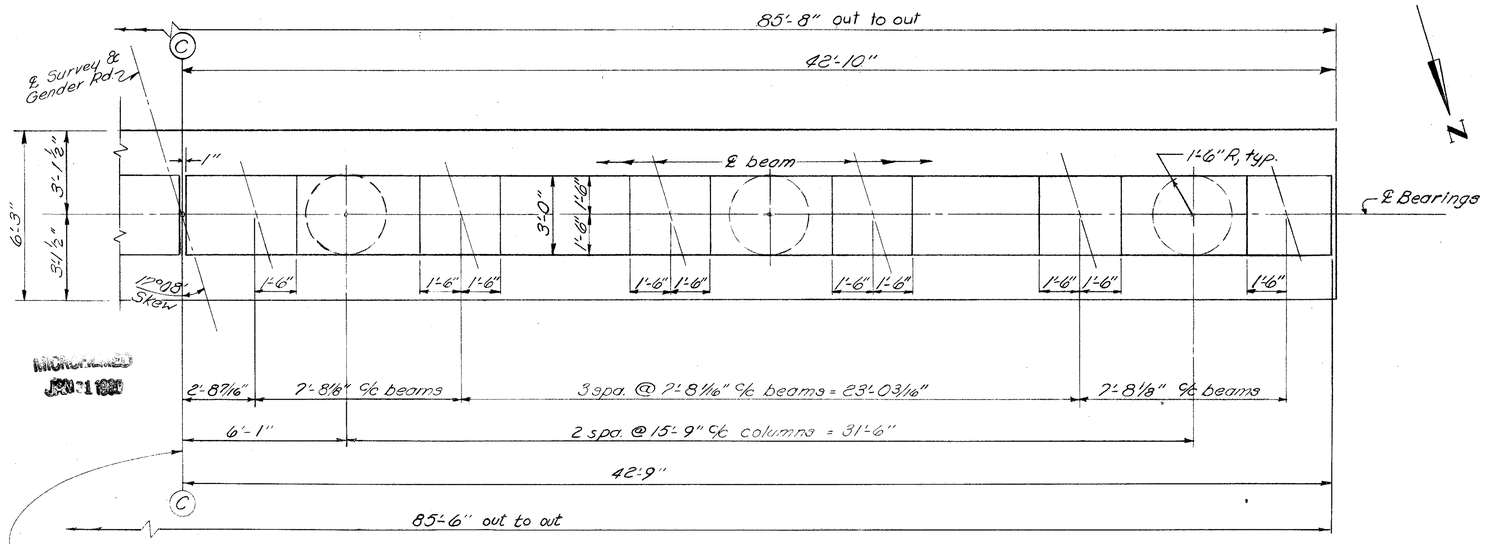

PARTIAL PLAN

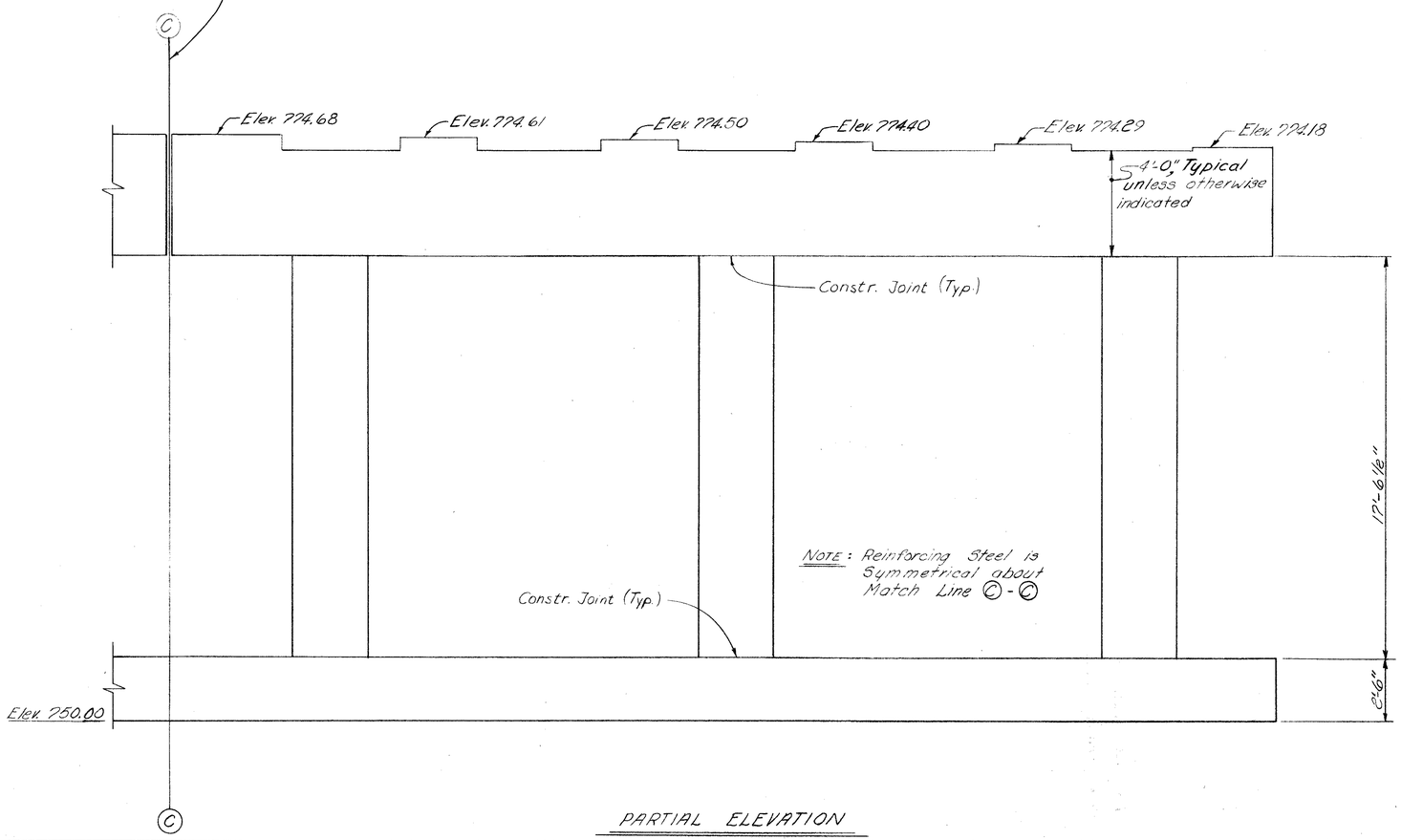

PARTIAL ELEVATION

R. D. ZANDE & ASSOCIATES, LIMITED
CONSULTING ENGINEERS
COLUMBUS, OHIO

13/20

PIER No. 3 DETAILS
BRIDGE No. FRA-33-2997
U.S. 33 UNDER GENDER ROAD
FRANKLIN COUNTY STA. 549+38.04

DESIGNED	DRAWN	TRACED	CHECKED	REVIEWED	DATE	REVISED
ANA	ANA	JDC	SP	ANA	8-19-69	

BRUNING 40-21 —

JAN 31 1980

FED. RD. DIVISION	STATE	PROJECT	
2	OHIO		

Franklin County
FRA - 33 - 29.53

NOTES - CONT'D

Longitudinal reinforcing steel shall be field cut as necessary to avoid interference with scuppers.
Lap S501 and S502 bars 1'-7" minimum.

*** This dimension varies from Gender Rd. sta. 26+18 and Forward for details see General Plan & Elevation Sheet [2/20].

Field bending for transverse steel shall be included with Item 509 for payment.

At Sta. 23+53, slope = .0420 ft/ft.

At Sta. 26+43, slope = .0156 ft/ft.

DIMENSION "A" (Slab Cantilever)	
Location	Dimen.
℄ Brg. Rear Abut.	1'-9"
1/4 Point Span 1	1'-6 5/8"
1/2 Point Span 1	1'-7 1/4"
℄ Field Splice "A"	1'-9"
℄ Brg. Pier No. 1	1'-5 5/8"
℄ Field Splice "B"	1'-9"
1/2 Point Span 2	1'-5 1/8"
℄ Field Splice "C"	1'-9"
℄ Brg. Pier No. 2	1'-5 1/8"
℄ Diaphragm No. 2	1'-6 1/8"
1/2 Point Span 3	1'-7 1/8"
℄ Field Splice "D"	1'-9"
℄ Brg. Pier No. 3	1'-9"
℄ Brg. Fwd. Abut.	1'-9"

For locations of Spans, Fields splices, Diaphragm No. 2, see Framing Plan Sheet [16/20]

Values of "T"		
Location	Beams # 1 thru 4	Beams # 5 thru 14
℄ Brg. Rear Abut.	9"	8 3/4"
℄ Brg. Pier No. 1	9"	8 3/4"
℄ Brg. Pier No. 2	8 15/16"	8 11/16"
℄ Brg. Pier No. 3	9 3/16"	8 15/16"
℄ Brg. Fwd. Abut.	9 3/16"	8 15/16"

For Beam Number designations, See Framing Plan Sheet [16/20]

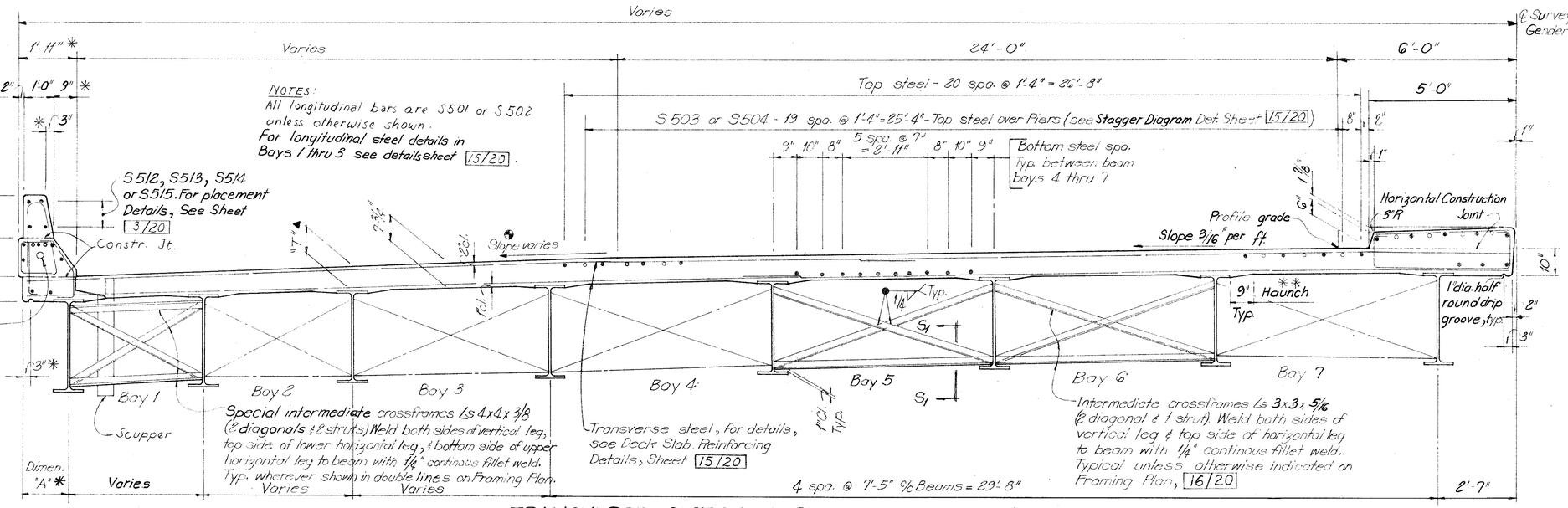

TRANSVERSE SECTION - NORTH BOUND LANES

(Curb reinforcing same as South Bound Lanes unless otherwise indicated.)

NOTES:

* These dimensions are radial to Ramp "E" & from Begin Bridge to Gender Rd. sta. 25+26.42. From Gender Rd. sta. 25+26.42 and forward, these dimensions are normal to ℄ Gender Rd.

** A haunch width of 9" shall be used for computing quantity of concrete, however, the haunch width may vary between 6" & 12" provided that the slope shall not be more than 1:4 for a haunch less than 9" in width.

▲ Deck Slab Depth: The distance shown from top of deck slab to top of steel beam is the design dimension. The quantity of deck concrete to be paid for shall be based on this dimension. Even though deviation from it may be necessary because the top flange of the beam may not have the exact camber or conformation required to place it parallel to the finish grade.

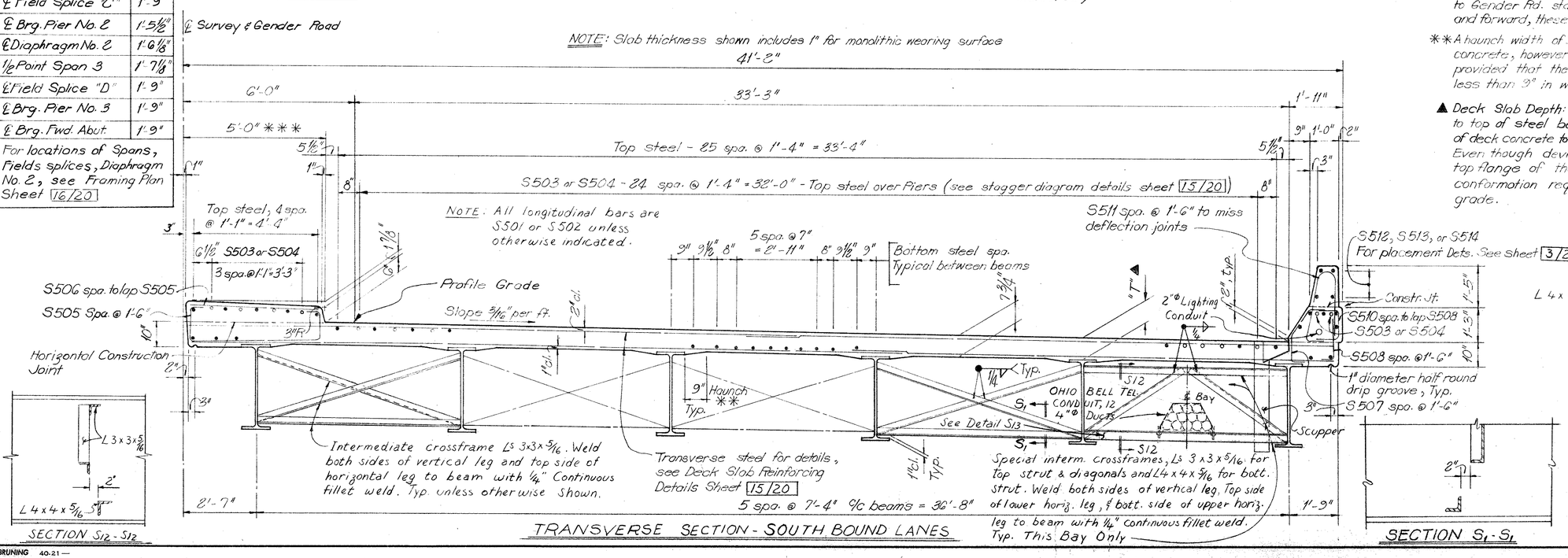

TRANSVERSE SECTION - SOUTH BOUND LANES

SECTION S12 - S12

SECTION S1 - S1

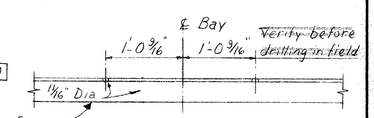

Notes
~~Galvanize after drilling.~~
Strap, board & ducts shall be furnished by OHIO BELL TEL.
DETAIL S13

R. D. ZANDE & ASSOCIATES, LIMITED
CONSULTING ENGINEERS
COLUMBUS, OHIO

14/20

SUPERSTRUCTURE DETAILS

Bridge No. FRA-33-2997
U.S. 33 under Gender Road

Franklin County Sta. 549+38.04

DESIGNED	DRAWN	TRACED	CHECKED	REVIEWED	DATE	REVISED
ANA	ANA	r.s.	SP	ANA	8-13-'69	

BRUNING 40-21 —

FED. RD. DIVISION	STATE	PROJECT	
2	OHIO		

141/155

FRANKLIN COUNTY
FRA-33-29.53

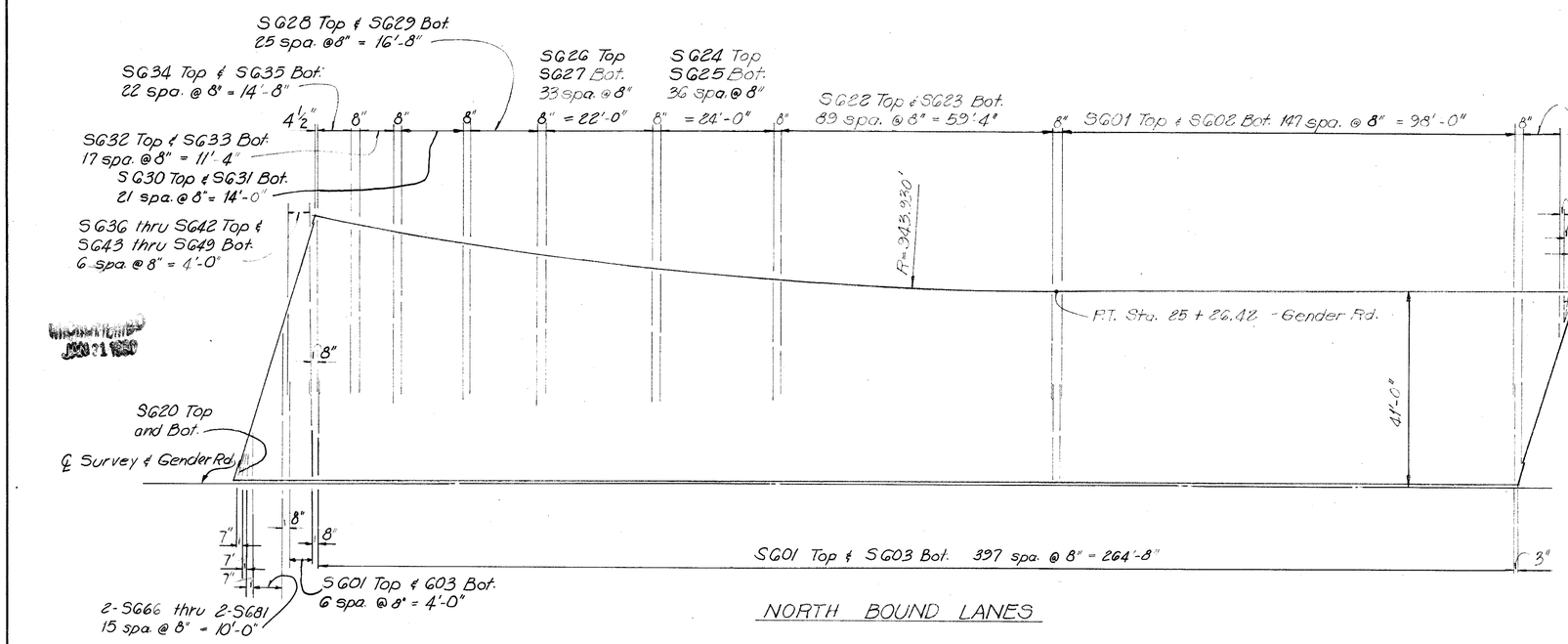

NORTH BOUND LANES

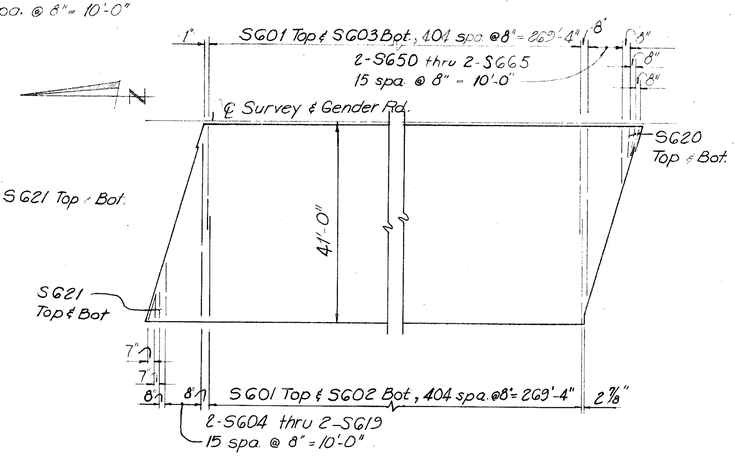

SOUTH BOUND LANES

DECK SLAB REINFORCING DETAILS
(Transverse Reinforcing shown only)

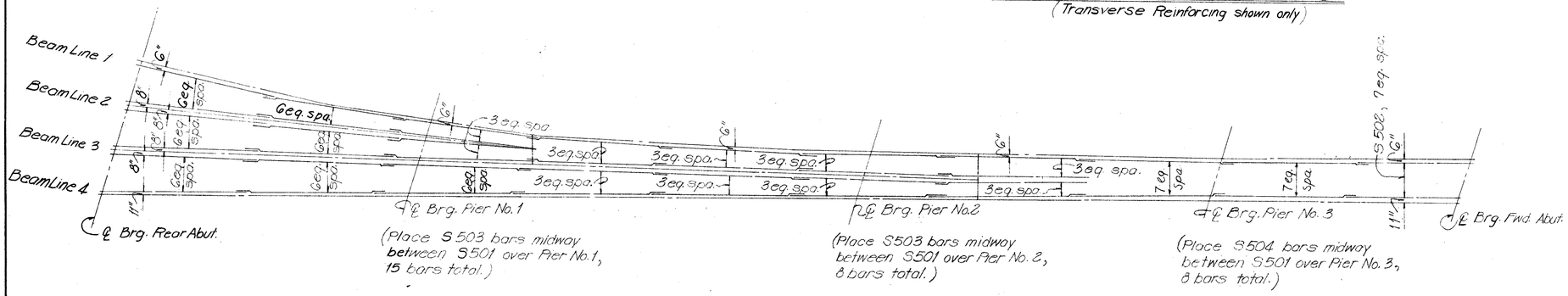

TOP STEEL

NOTE:
All bars are S501 unless otherwise indicated.

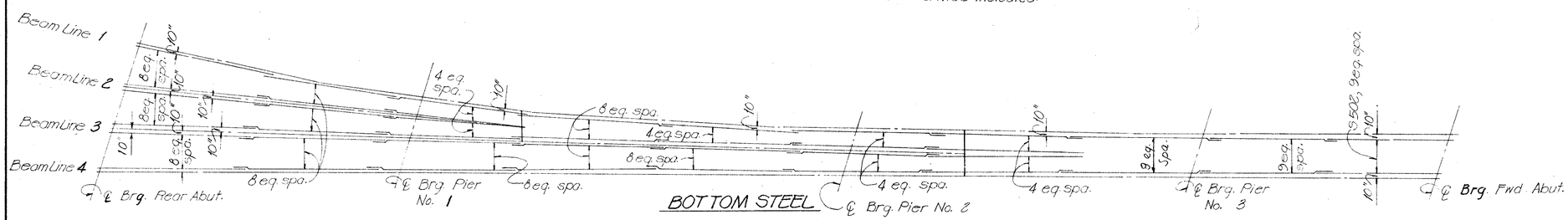

BOTTOM STEEL

LONGITUDINAL REINFORCING DETAILS IN BAYS 1, 2 & 3

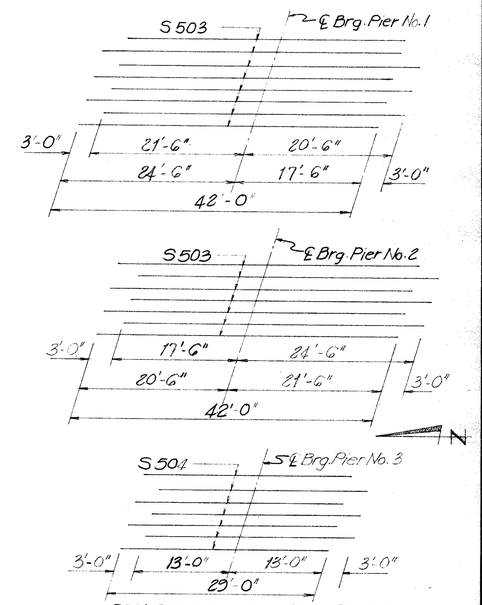

STAGGER DIAGRAMS OF S503 & S504 OVER PIERS

R. D. ZANDE & ASSOCIATES, LIMITED
CONSULTING ENGINEERS
COLUMBUS, OHIO

15/20

SUPERSTRUCTURE DETAILS

Bridge No. FRA-33-2997
U.S. 33 under GENDER ROAD

FRANKLIN CO. STA. 549 + 38.04

DESIGNED	DRAWN	TRACED	CHECKED	REVIEWED	DATE	REVISED
ANA	ANA	r.s.	SP	ANA	8-13-'69	

BRUNING 40-21 —

FED. RD. DIVISION	STATE	PROJECT	
2	OHIO		

142/155

FRANKLIN COUNTY
FRA - 33 - 29.53

Note: Place intermediate crossframes & bearing devices normal to ℄ Survey ℄ Gender Rd. For additional notes and details see sheets 17, 18 & 19 / 20

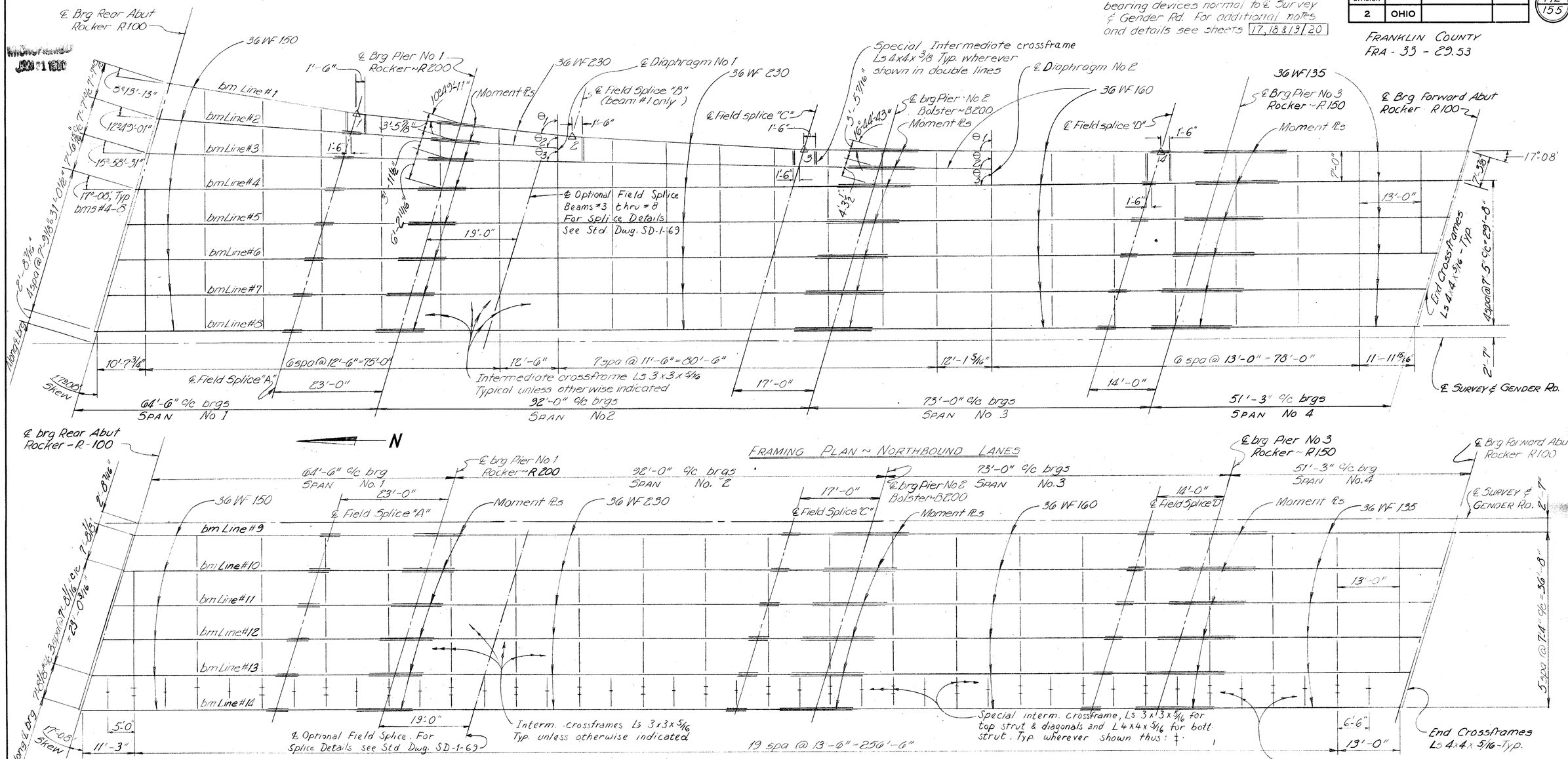

FRAMING PLAN ~ NORTHBOUND LANES

FRAMING PLAN ~ SOUTHBOUND LANES

HORIZONTAL LENGTHS TABLE OF BEAM LINE #1

℄ Brg Rear Abut to ℄ Field Splice "A"	℄ Field Splice "A" to ℄ brg Pier No 1	℄ brg Pier No 1 to ℄ Diaphragm No 1	℄ brg Pier No 1 to ℄ Field Splice "B"	℄ Field Splice "B" to ℄ Field Splice "C"	℄ Field Splice "C" to ℄ brg pier No 2	℄ brg pier No 2 to ℄ Diaphragm No 2	℄ brg pier No. 2 to ℄ Field Splice "D"	℄ Field Splice "D" to ℄ brg pier No 3	℄ brg pier No 3 to ℄ brg Fwd abut
40' - 0 13/16"	22' - 4 1/2"	20' - 7 3/16"	23' - 4 3/16"	50' - 2 1/16"	16' - 11 9/16"	22' - 10"	58' - 10 9/16"	14' - 0"	51' - 3"

GIRDER LINE #1 HORIZONTAL DEFLECTION ANGLES

Δ_1	Δ_2	Δ_3	Δ_4
2°-35'-58"	2°-54'-19"	3°-01'-13"	0°-23'-17"

HORIZONTAL LENGTHS TABLE OF BEAM LINES 2 THRU 4

Beam Line #	℄ brg Rear Abut to ℄ Field Splice A	℄ Field Splice "A" to ℄ brg Pier No 1	℄ brg pier No 1 to ℄ Diaphragm No 1	℄ brg Pier No. 1 to ℄ Field Splice "C"	℄ Field Splice "C" to ℄ brg Pier No 2	℄ brg Pier No 2 to ℄ Diaphragm No 2	℄ brg Pier No 2 to ℄ Field Splice "D"	℄ Field Splice "D" to ℄ brg Pier No 3	℄ brg Pier No 3 to ℄ brg Fwd Abut
2	40' - 0 1/16"	22' - 6 1/2"	21' - 6 3/4"	—	—	—	—	—	—
3	41' - 3"	22' - 10 3/8"	22' - 8 1/16"	74' - 6 5/8"	16' - 10 3/4"	23' - 10 1/4"	59' - 0"	14' - 0"	51' - 3"
4	41' - 6"	23' - 0"	—	75' - 0"	17' - 0"	25' - 1 3/8"	59' - 0"	14' - 0"	51' - 3"

DIAPHRAGM ANGLES

Angle	Θ_1	Θ_2	Θ_3
Diaphragm No 1	83°-41'-11"	85°-41'-01"	88°-50'-31"
Diaphragm No 2	89°-36'-43"	88°-50'-31"	90°-00'-00"

R. D. ZANDE & ASSOCIATES, LIMITED
CONSULTING ENGINEERS
COLUMBUS, OHIO

16/20

SUPERSTRUCTURE DETAILS

BRIDGE NO. FRA - 33 - 2997
U.S. 33 UNDER GENDER ROAD
FRANKLIN COUNTY STA 549+38.04

DESIGNED	DRAWN	TRACED	CHECKED	REVIEWED	DATE	REVISED
ANA	ANA	JJ	SP	ANA	8-19-69	

BRUNING 40-21

FED. RD. DIVISION	STATE	PROJECT	
2	OHIO		

143/155

FRANKLIN COUNTY
FRA - 33 - 29.53

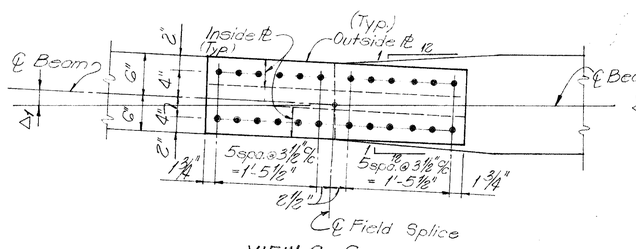

VIEW S_4 - S_4 (beam #1)

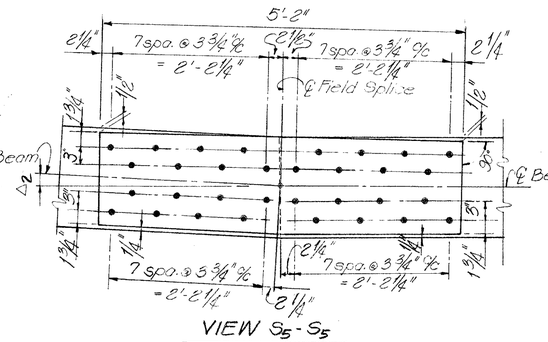

VIEW S_5 - S_5

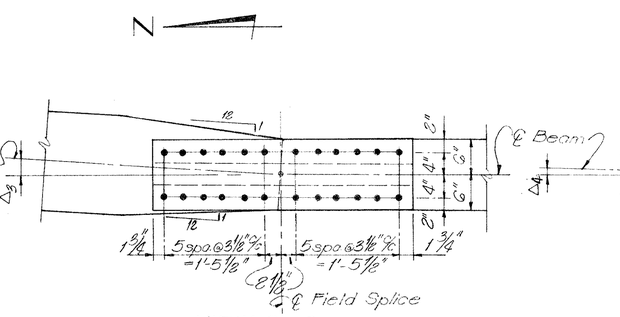

VIEW S_6 - S_6 (beam #1)

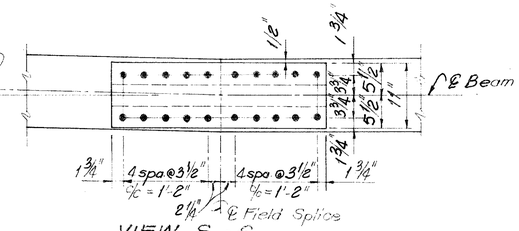

VIEW S_7 - S_7 (beam # 1)

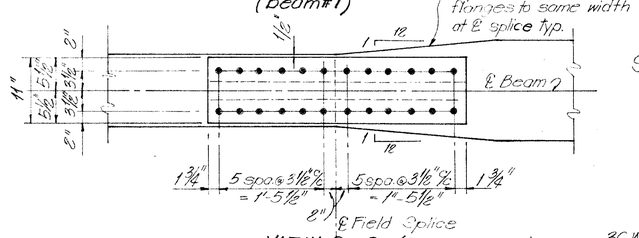

VIEW S_4 - S_4 (beams # 2-14)

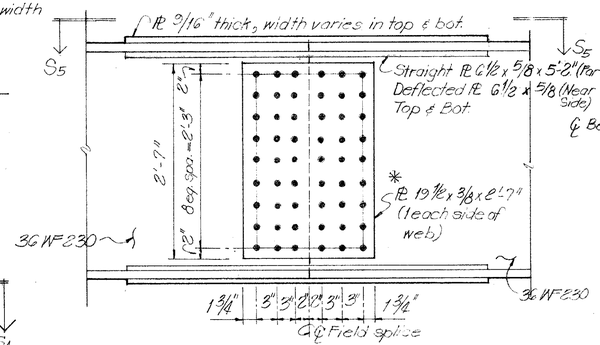

FIELD SPLICE "B" (beam # 1 only)

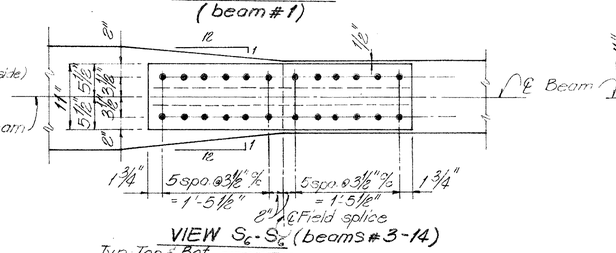

VIEW S_6 - S_6 (beams # 3-14)

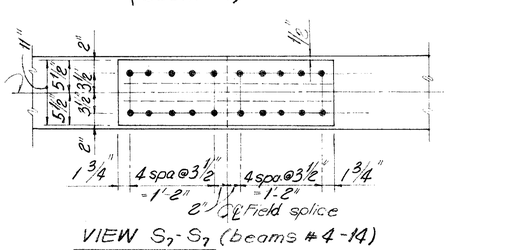

VIEW S_7 - S_7 (beams # 4-14)

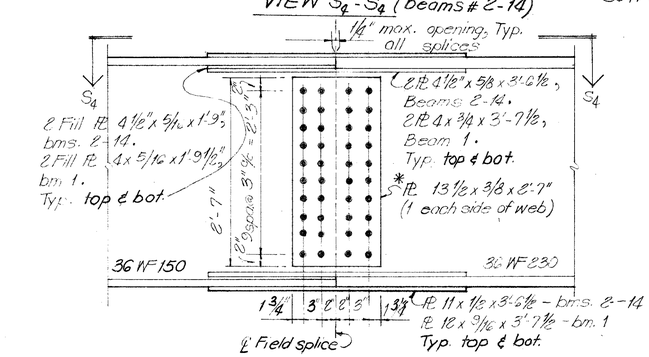

FIELD SPLICE "A"

NOTES:

* Web splice Pl. for beam #1 are bent for all field splices.

All bolts shall be 1" Ø high strength bolts.

Place bolt head on exposed side of facia beams & place nuts on the top surface of lower flange splice.

For values of horizontal Deflection angles Δ_1 thru Δ_4, see sheet 16/20.

FIELD SPLICE DETAILS

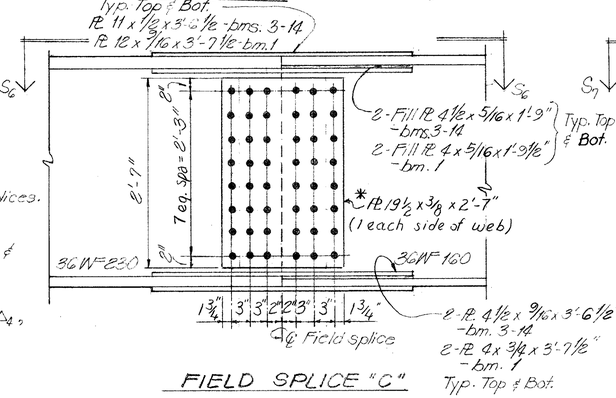

FIELD SPLICE "C"

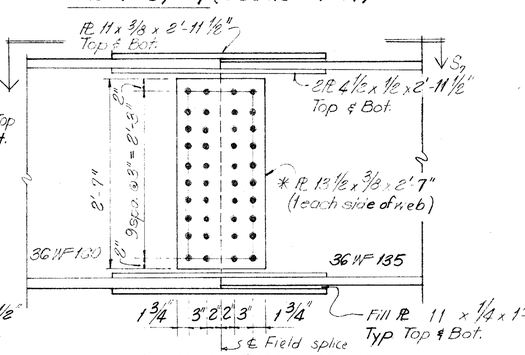

FIELD SPLICE "D"

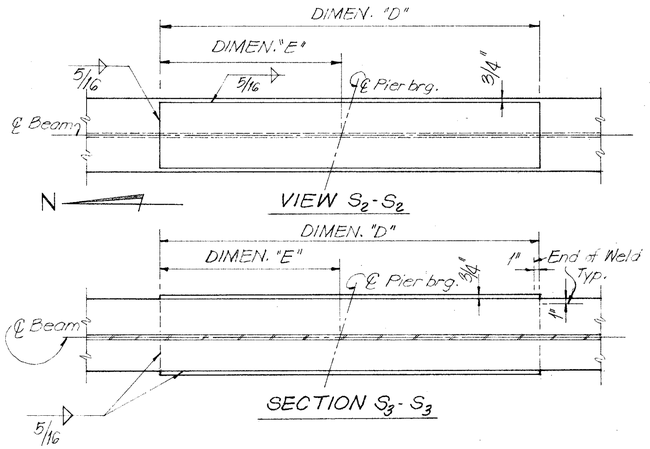

MOMENT PLATES DATA					
Location	Beam "A"	Pl. "B"	Pl. "C"	Dimen. "D"	Dimen. "E"
Over Pier No. 1	36 WF 230	15 x 5/8	18 x 3/4	10'-0"	5'-0"
Over Pier No. 2	36 WF 160	10 1/2 x 7/8	13 1/2 x 11/16	16'-0"	7'-3"
Over Pier No. 3	36 WF 135	10 1/2 x 9/16	13 1/2 x 9/16	18'-0"	4'-6"

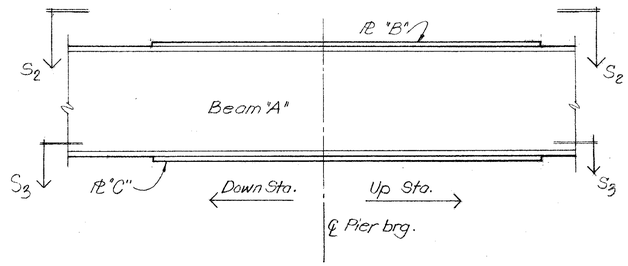

MOMENT PLATES DETAILS

NOTES:

Adjust intermediate crossframes spacing to miss bolted web splice Pl.'s.

Suggested Erection Procedure Beam Lines #1 thru:

1) Erect beam line # 1
2) Erect beam line # 4
   Steps 1 & 2 are interchangeable
3) Erect diaphragm No. 2
4) Erect beam line 3
5) Erect diaphragm No. 1
6) Erect beam line 2.

For additional details see sheet 16/20.

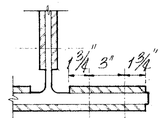

PARTIAL SECTION (Field Splice "B")

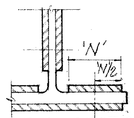

PARTIAL SECTION Field Splices "A", "C", "D"

R. D. ZANDE & ASSOCIATES, LIMITED
CONSULTING ENGINEERS
COLUMBUS, OHIO

17/20

SUPERSTRUCTURE DETAILS

Bridge No. FRA-33-2997
U.S. 33 Under Gender Rd.

Franklin County Sta. 549 + 38.04

DESIGNED	DRAWN	TRACED	CHECKED	REVIEWED	DATE	REVISED
ANA	ANA	r.s.	SP	ANA	8-19-'69	

BRUNING 40-21

Highway Office
JAN 1 1969

FED. RD. DIVISION	STATE	PROJECT	
2	OHIO		

FRANKLIN COUNTY
FRA - 33 - 29.53

DEFLECTION and CAMBER TABLE - Beams #5 thru 14															
Location	SPAN No. 1				SPAN No. 2				SPAN No. 3				SPAN No. 4		
	1/4 Pt.	1/2 Pt.	@Splice	3/4 Pt.	1/4 Pt.	1/2 Pt.	3/4 Pt.	@Splice	1/4 Pt.	1/2 Pt.	3/4 Pt.	@Splice	1/4 Pt.	1/2 Pt.	3/4 Pt.
Deflection Due to Weight of Steel	1/16	1/16	0	0	1/8	1/4	1/8	1/8	0	1/16	0	0	0	1/16	0
Deflection Due to Remaining Dead Load	1/4	1/4	1/8	1/16	7/16	3/4	7/16	5/16	1/16	3/16	1/8	1/8	1/16	3/16	3/16
Adjustment Required for Vertical Curve	3/16	1/4	1/4	3/16	3/8	1/2	3/8	5/16	1/4	5/16	1/4	3/16	1/8	3/16	1/8
Required Shop Camber	1/2	9/16	3/8	1/4	15/16	1 1/2	15/16	3/4	5/16	9/16	3/8	5/16	3/16	7/16	5/16

DEFLECTION and CAMBER TABLE - Beam # 4															
Location	SPAN No. 1				SPAN No. 2				SPAN No. 3			SPAN No. 4			
	1/4 Pt.	1/2 Pt.	@Splice	3/4 Pt.	1/4 Pt.	1/2 Pt.	3/4 Pt.	@Splice	℄ Diaphragm	1/2 Pt.	@Splice	1/4 Pt.	1/2 Pt.	3/4 Pt.	
Deflection Due to Weight of Steel	1/16	1/16	0	0	1/8	1/4	1/8	1/8	0	1/16	0	0	1/16	0	
Deflection Due to Remaining Dead Load	1/4	1/4	1/8	1/16	1/4	1/2	5/16	1/4	1/16	1/8	1/16	1/16	3/16	1/8	
Adjustment Required for Vertical Curve	3/16	1/4	1/4	3/16	3/8	1/2	3/8	5/16	5/16	5/16	3/16	1/8	3/16	1/8	
Required Shop Camber	1/2	9/16	3/8	1/4	3/4	1 1/4	1 3/16	11/16	3/8	1/2	1/4	3/16	7/16	1/4	

DEFLECTION and CAMBER TABLE - Beam # 3									
Location	SPAN No. 1				SPAN No. 2				SPAN No. 3
	1/4 Pt.	1/2 Pt.	@Splice	3/4 Pt.	℄ Diaphragm	1/2 Pt.	3/4 Pt.	@Splice	℄ Diaphragm
Deflection due to Weight of Steel	1/16	1/16	0	0	1/8	1/4	1/8	1/8	0
Deflection Due to Remaining Dead Load	1/4	1/4	1/8	1/16	1/4	1/2	5/16	1/4	1/16
Adjustment Due to Curvature	3/16	1/4	1/4	3/16	7/16	9/16	7/16	5/16	-1 1/8
Required Shop Camber	1/2	9/16	3/8	1/4	13/16	1 5/16	7/8	11/16	-1 1/16

DEFLECTION and CAMBER TABLE - Beam # 2					
Location	SPAN No. 1				SPAN No. 2
	1/4 Pt.	1/2 Pt.	@Splice	3/4 Pt.	℄ Diaphragm
Deflection Due to Weight of Steel	1/16	1/16	0	0	1/8
Deflection Due to Remaining Dead Load	1/4	1/4	1/8	1/16	1/4
Adjustment Due to Curvature	3/16	5/16	5/16	1/4	-5/8
Required Shop Camber	1/2	5/8	7/16	5/16	-1/4

NOTE: Camber shown by a negative (-) sign indicates that camber point is below the Work Line.

DEFLECTION and CAMBER TABLE - Beam # 1														
Location	SPAN No. 1				SPAN No. 2				SPAN No. 3			SPAN No. 4		
	1/4 Pt.	1/2 Pt.	@Splice	3/4 Pt.	℄ Diaphragm	@Splice	1/2 Pt.	@Splice	℄ Diaphragm	1/2 Pt.	@Splice	1/4 Pt.	1/2 Pt.	3/4 Pt.
Deflection Due to Weight of Steel	1/16	1/16	0	0	1/8	1/8	1/4	1/8	0	1/16	0	0	1/16	0
Deflection Due to Remaining Dead Load	1/4	1/4	1/8	1/16	1/4	1/4	1/2	1/4	1/16	1/8	1/16	1/16	3/16	1/8
Adjustment Due to Curvature	7/16	5/8	9/16	7/16	3/4	3/4	1 1/16	5/8	5/16	5/16	3/16	1/8	3/16	1/8
Required Shop Camber	3/4	15/16	11/16	1/2	1 1/8	1 1/8	1 13/16	1	3/8	1/2	1/4	3/16	7/16	1/4

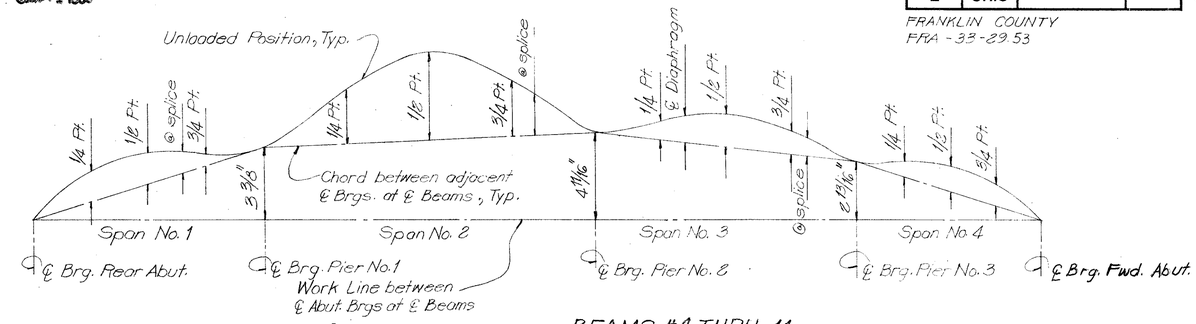

BEAMS #4 THRU 14

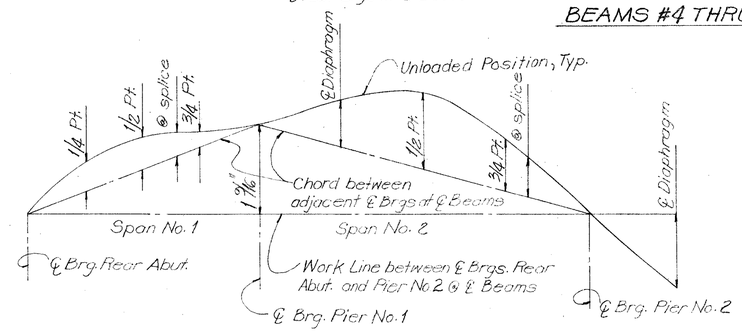

BEAM # 3

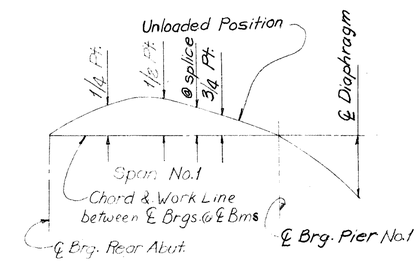

BEAM # 2

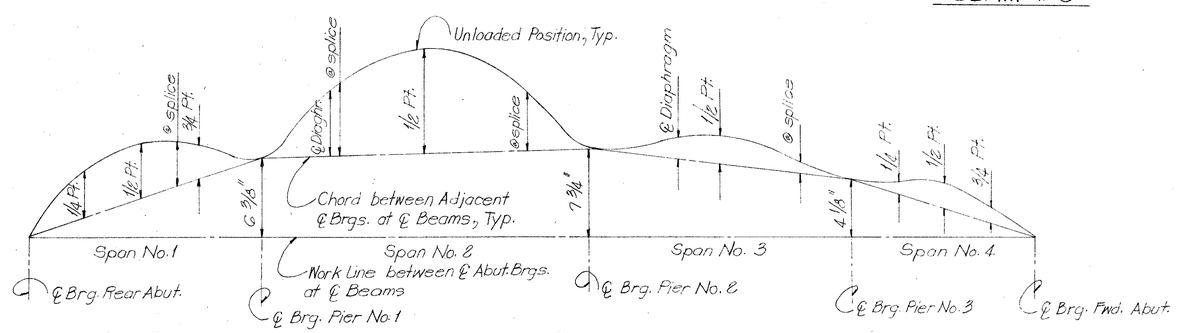

BEAM # 1 - (Schematic Elev. View Developed Along ℄ of Beam)

CAMBER and BLOCKING DIAGRAM

R. D. ZANDE & ASSOCIATES, LIMITED
CONSULTING ENGINEERS
COLUMBUS, OHIO

18/20

SUPERSTRUCTURE DETAILS
Bridge No. FRA-33-2997
U.S. 33 under GENDER ROAD

FRANKLIN COUNTY Sta. 549+38.04

DESIGNED	DRAWN	TRACED	CHECKED	REVIEWED DATE	REVISED
ANA	ANA	R.S.	SP	ANA 8-13-69	

BRUNING 40-21 ---

FED. RD. DIVISION	STATE	PROJECT	
2	OHIO		

145/155

FRANKLIN COUNTY
FRA-33-2.9.53

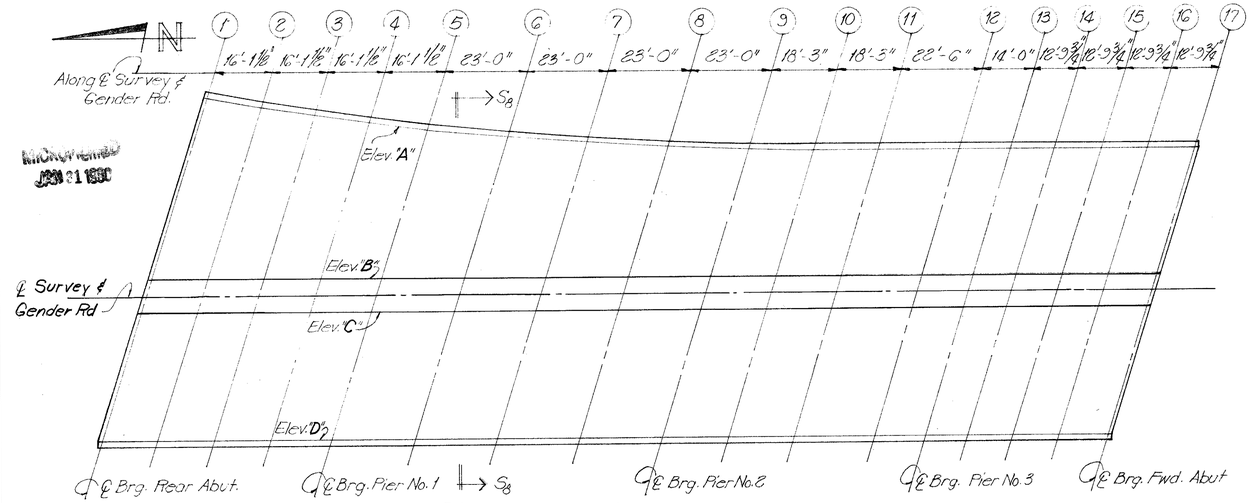

DECK PLAN

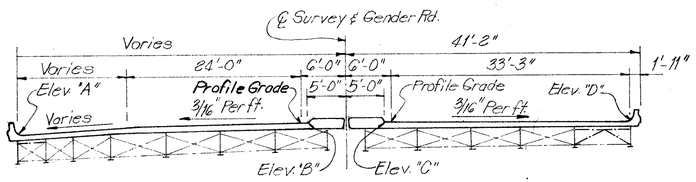

SECTION S_8 - S_8

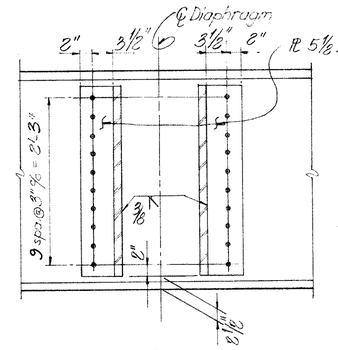

SECTION S_9 - S_9

NOTES: All bolts shall be 1"Ø high strength bolts.
For value of angles θ_1, θ_2, & θ_3, see sheet 16/20

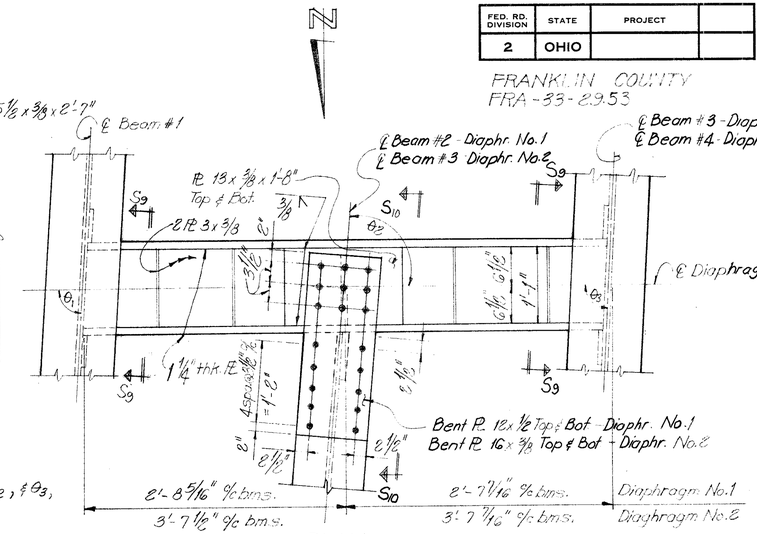

PLAN

* The elevations shown are those which are required before the concrete deck is placed. Proper allowance has been made for the dead load deflections caused by the weight of concrete.

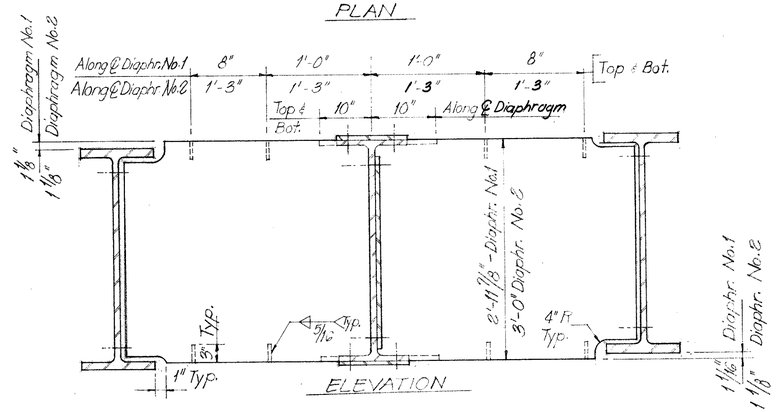

DIAPHRAGMS No. 1 and No. 2 DETAILS

TABLE OF DECK ELEVATIONS

Screedline	1	2	3	4	5	6	7	8	9	10	11	12	13	14	15	16	17
Elev. "A"	777.89	778.13	778.33	778.48	778.63	778.80	778.94	779.00	779.02	779.02	779.02	778.97	778.94	778.91	778.88	778.82	778.75
Elev. "B"	779.19	779.30	779.39	779.45	779.50	779.61	779.69	779.70	779.67	779.66	779.65	779.60	779.56	779.52	779.48	779.43	779.35
Elev. "C"	779.17	779.28	779.37	779.44	779.49	779.60	779.68	779.69	779.67	779.67	779.66	779.61	779.56	779.53	779.49	779.44	779.37
Elev. "D"	778.56	778.69	778.78	778.85	778.91	779.04	779.13	779.14	779.13	779.14	779.14	779.10	779.06	779.03	779.00	778.95	778.88

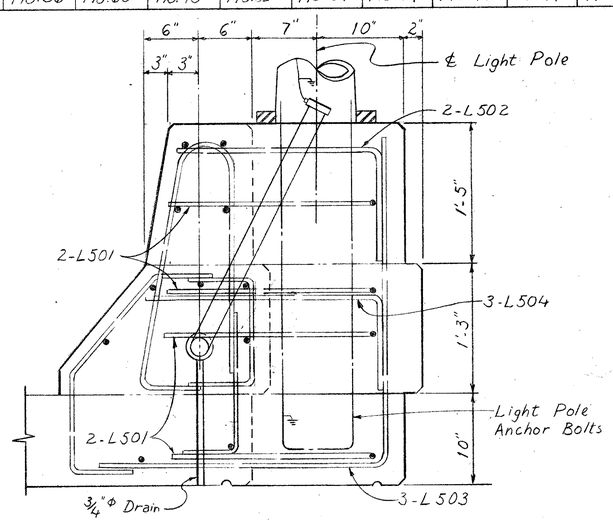

SECTION A-A

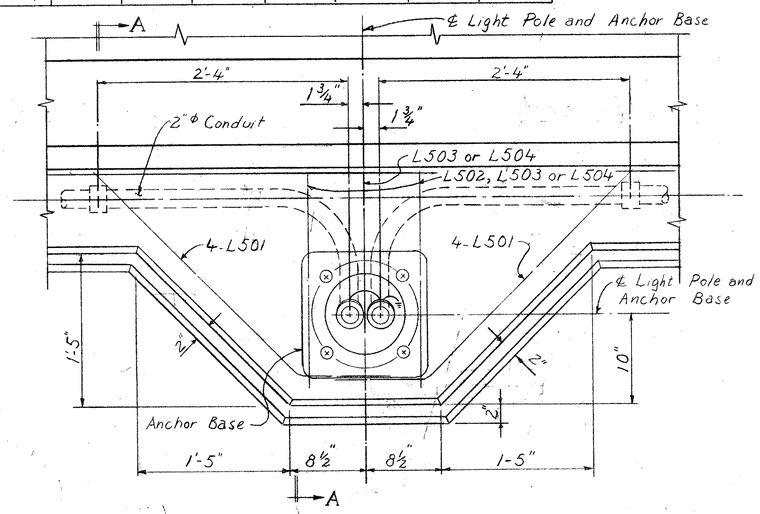

LIGHT POLE SUPPORT DETAIL
WITH TYPE "A" BRIDGE RACEWAY

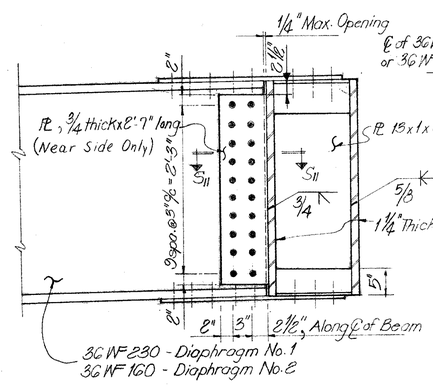

SECTION S_{10} - S_{10}

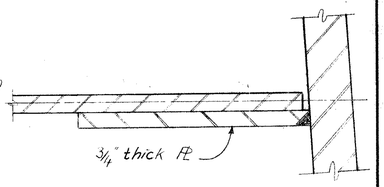

SECTION S_{11} - S_{11}

R. D. ZANDE & ASSOCIATES, LIMITED
CONSULTING ENGINEERS
COLUMBUS, OHIO

19/20

SUPERSTRUCTURE DETAILS
Bridge No. FRA-33-2997
US 33 under GENDER ROAD

FRANKLIN COUNTY STA. 549+38.04

DESIGNED	DRAWN	TRACED	CHECKED	REVIEWED DATE	REVISED
ANA	ANA	r.s.	SP	ANA 8-13-69	

BRUNING 40-21 —

FED. RD DIVISION	STATE	PROJECT	TYPE FUNDS
2	OHIO		

146/155

FRANKLIN COUNTY
FRA - 33 - 29.53

REINFORCING STEEL LIST

ABUTMENTS

MARK	NO.	LENGTH	WEIGHT	TYPE	"A"	"B"	"C"	"D"	"E"	SHAPE
A501	130	5-1	689	4	1-7	2-2	1-7			bt.
A502	19	31-10	631							st.
A503	19	23-9	471							st.
A504	32	41-2	1374							st.
A505	4	42-0	175							st.
A506	17	40-6	718							st.
A507	122	7-8	976	4	2-3	3-5	2-3			bt.
A508	15	7-3	113	8	6-9	0-7½				bt.
A509	51	8-0	426	8	7-6	0-7½				bt.
A510	56	7-2	419	8	6-8	0-7½				bt.
A511	124	9-3	1196	4	2-1	5-4	2-1			bt.
A512	1	6-0	6	8	4-0	2-1½				bt.
A513	1	6-5	7	8	4-5	2-1½				bt.
A514	2	7-0	15	8	5-0	2-1½				bt.
A515	2	7-5	15	8	5-5	2-1½				bt.
A516	1	6-1	6	8	4-1	2-1½				bt.
A517	1	5-7	6	8	3-7	2-1½				bt.
A518	7	6-0	44	10	1-7	3-1	0-10¾			bt.
A519	7	5-0	37	14	—	0-3	1-10	1-4	2-0	bt.
A520	13	6-8	90	10	1-7	3-9	1-4⅜			bt.
A521	6	5-9	36	10	1-7	2-10	0-9⅛			bt.
A522	6	5-5	34	14	—	0-7	2-1	1-4	2-1	bt.
A523	2	6-9	14							st.
A524	2	7-5	15							st.
A525	2	6-10	14							st.
A526	2	6-8	14							st.
Y501	44	2-1	96	4	0-8	1-0	0-8			bt.
Y502	40	3-0	125							st.
Y503	24	6-3	156	16	(see bending diagram)					bt.
Y504	56	14-2	827							st.
Y505	8	7-3	60							st.
Y506	8	8-6	71							st.
Y507	44	4-8	214							st.
Y508	28	7-9	226							st.
Y509	28	11-6	336	13	2-6	3-0				bt.
A601	182	16-6	4511	3	4-11	1-5	6-5	0-11	3-5	bt.
A602	15	13-11	314	4	6-9	5-4	2-1			bt.
A603	51	14-8	1123	4	7-6	5-4	2-1			bt.
A604	56	13-10	1164	4	6-8	5-4	2-1			bt.
Y601	24	6-3	225	14	0-9	0-9	0-11½	4-5		bt.
Y602	20	20-1	603	4	9-7	1-2	9-7			bt.
Y701	4	5-3	43							st.
Y702	4	5-11	48	14	0-9	0-2¼	0-11½	4-4	—	bt.
Y703	4	6-0	49	14	0-9	0-4	0-11½	4-4	—	bt.
Y704	4	6-1	50	14	0-9	0-6	0-11½	4-4	—	bt.
Y705	4	6-2	50	14	0-9	0-9	0-11½	4-4	—	bt.
A801	21	34-10	1953							st.
A802	14	43-6	1626							st.
A803	2	7-8	41	14	—	0-4	2-6	2-4	3-1	bt.
A804	2	6-7	35	10	2-6	2-0	0-10¾			bt.
A805	4	4-10	52	14	2-6	0-9	2-5	—	—	bt.
A806	4	6-9	72	10	2-6	2-2	1-4⅜			bt.
A807	2	7-10	42	14	—	0-8	2-5	2-4	3-3	bt.
A808	2	6-4	34	10	2-6	1-9	0-9⅛			bt.
Y801	24	10-5	668							st.

NOTE: Bar size is indicated in the bar mark. The first digit where three digits are used, and the first two digits where four digits are used, indicate the bar size number.

PIERS

MARK	NO.	LENGTH	WEIGHT	TYPE	"A"	"B"	"C"	"D"	"E"	SHAPE
P501	70	7-5	542	4	2-6	2-8	2-6			bt.
P502	125	6-11	902	4	2-3	2-8	2-3			bt.
P503	4	25-2	105							st.
P504	75	6-6	509							st.
P505	6	18-9	117							st.
P506	8	42-4	353							st.
P507	2	42-10	89							st.
P508	69	7-6	540							st.
P509	12	18-6	232							st.
P510	56	13-2	769	13	2-8	3-8				bt.
P511	4	11-0	46							st.
P512	147	5-9	882							st.
P513	12	18-4	229							st.
P601	155	13-3	3085	13	2-8	3-8				bt.
P602	78	6-6	762							st.
P603	13	29-10	583							st.
P701	14	30-6	873							st.
P702	84	7-6	1288							st.
P703	24	35-0	1717							st.
P801	6	17-0	272	8	16-1	1-1½				bt.
P802	2	16-1	86							st.
P803	13	32-3	1119							st.
P804	13	29-11	1038							st.
P805	11	35-0	1028							st.
P806	28	44-2	3302	4	1-1½	42-4	1-1½			bt.
P807	4	42-4	452							st.
P808	7	44-8	835	4	1-1½	42-10	1-1½			bt.
P809	2	27-6	147							st.
P810	24	35-1	2248							st.
P811	12	42-4	1356							st.
P812	26	29-7	2054							st.
P901	11	41-8	1558							st.
P902	12	42-4	1727							st.
P903	6	42-10	874							st.
P904	28	29-9	2832							st.
P1001	6	36-8	947	8	35-7	1-4½				bt.
P1002	2	35-7	306							st.
P1003	7	22-5	675							st.
P1004	7	29-7	891							st.
P1005	48	19-11	4114							st.
P1006	48	6-10	1411	8	5-9	1-4½				bt.
P1007	13	35-2	1967							st.
P1008	48	20-7	4251							st.
P1009	96	6-7	2719	8	5-6	1-4½				bt.
P1010	48	20-9	4286							st.
		REPLACEMENT STEEL FOR SPIRALS								
RE401	1	6-3	—	12		6-3		1-3½		bt.
			REPLACEMENT STEEL							
RE501	5	6-7	—							st.
RE601	7	6-11	—							st.
RE701	1	7-3	—							st.
RE801	1	7-6	—							st.
RE901	1	7-10	—							st.
RE1001	2	8-3	—							st.

SUPERSTRUCTURE

MARK	NO.	LENGTH	WEIGHT	TYPE	"A"	"B"	"C"	"D"	"E"	SHAPE
S501	1753	30-0	54851							st.
S502	185	26-0	5017							st.
S503	137	42-0	6001							st.
S504	65	29-0	1966							st.
S505	378	7-1	2793	7	1-0	4-5	0-10	0-8	0-8	bt.
S506	378	4-6	1774							st.
S507	376	3-0	1177	14	0-9	0-9	0-11½	0-8	0-8	bt.
S508	376	2-4	915	8	1-9	0-8				bt.
S510	376	2-1	817	4	0-8	1-0	0-8			bt.
S511	376	5-4	2092	15	(see Bending Diagram)					bt.
S512	120	12-8	1585							st.
S513	60	6-5	402							st.
S514	24	6-2	154							st.
S515	20	5-8	118							st.
S601	1363	21-5	43845							st.
S602	553	17-3	14328							st.
S603	810	25-5	30923							st.
S604	4	5-8								st.
thru		Δ=2-2	2107							
S619	4	38-2								st.
S620	12	4-8	84							st.
S621	12	3-6	63							st.
S622	90	23-5	3165							st.
S623	90	19-3	2602							st.
S624	37	25-5	1413							st.
S625	37	21-3	1181							st.
S626	34	27-9	1417							st.
S627	34	23-7	1204							st.
S628	26	29-9	1162							st.
S629	26	25-7	999							st.
S630	22	31-11	1055							st.
S631	22	27-9	917							st.
S632	18	33-9	912							st.
S633	18	29-7	800							st.
S634	23	36-3	1252							st.
S635	23	32-1	1108							st.
S636	1	22-2								st.
thru		Δ=2-2	301							
S642	1	35-2								st.
S643	1	18-1								st.
thru		Δ=2-2	258							
S649	1	31-1								st.
S650	2	37-6								st.
thru		Δ=2-2	1021							
S665	2	5-0								st.
S666	2	6-8								st.
thru		Δ=2-2	1101							
S681	2	39-2								st.
			LIGHT POLE STEEL							
L501	5	3-[illegible]	57	14	[illegible]	[illegible]	0-[illegible]	—	—	st.
L502	4	2-10	12	8	1-10	1-2				st.
L503	6	6-2	39	8	[illegible]-2	3-2				st.
L504	6	2-[illegible]	10	8	2-[illegible]	1-0				st.

Light Pole Reinforcing Steel is included with Superstructure Reinforcing Steel for Payment.

BENDING DIAGRAM

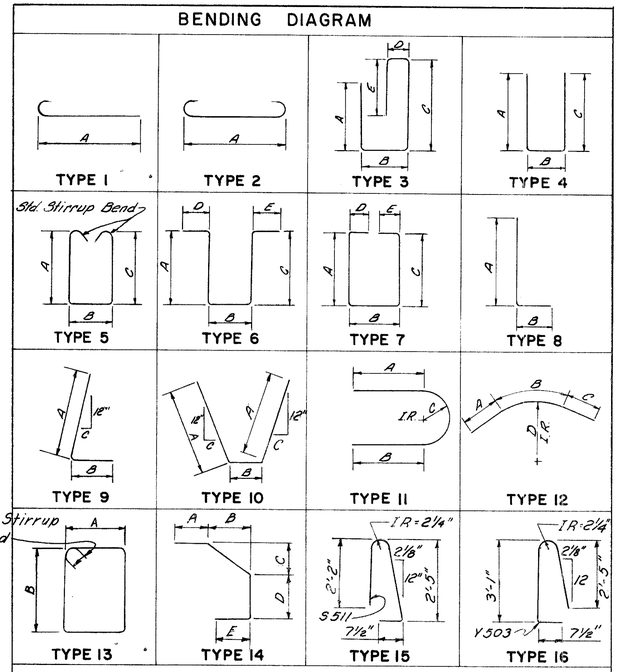

Note: All dimensions are out to out unless otherwise shown

* Inside bend diameter for P601 bars shall be 3½" with an extension of 6"

SPIRALS DATA

Core Diameter = 32" o/o
Pitch = 4½" o/o
Spacers = 4 per each Column
Other details in accordance with C.R.S.I. Standard Practice

Mark	No	**Length	Weight
P401	6	16-8	1890
P402	6	17-4	1961
P403	6	17-7	1988

** The length of the spiral is the out to out of Coils (including 1½ finishing turns at each end). It shall extend from the top of footing to the bottom of the Pier cap.

R. D. ZANDE & ASSOCIATES, LIMITED
CONSULTING ENGINEERS
COLUMBUS, OHIO

20/20

REINFORCING BAR LISTS
BRIDGE No FRA-33-2997
US 33 UNDER GENDER ROAD
FRANKLIN COUNTY STA 549+38.04

DESIGNED	DRAWN	TRACED	CHECKED	REVIEWED	DATE	REVISED
ANA	CJH		SP	ANA	8-20-69	

CENTERLINE PLAT

OHIO DEPARTMENT OF HIGHWAYS

FRA-33-29.53 GENDER ROAD INTERCHANGE

FRANKLIN COUNTY

VILLAGE OF CANAL WINCHESTER

FED. RD. DIVISION	STATE	PROJECT	
2	OHIO		

149/165

FRANKLIN COUNTY
FRA-33-29.53
R/W PLANS

1/9

LIMITED ACCESS

THIS IMPROVEMENT HAS BEEN DECLARED A LIMITED ACCESS HIGHWAY BY ACTION OF THE DIRECTOR OF HIGHWAYS AND RECORDED IN VOLUME 54, PAGE 747 OF THE DIRECTOR'S JOURNAL PURSUANT TO LAW

NOTE: THE CENTERLINE SHOWN ON THIS PLAT IS A PORTION OF THE CENTERLINE RECORDED IN VOLUME 32, PAGES 536-54 OF THE PLAT RECORDS OF FRANKLIN COUNTY, OHIO.

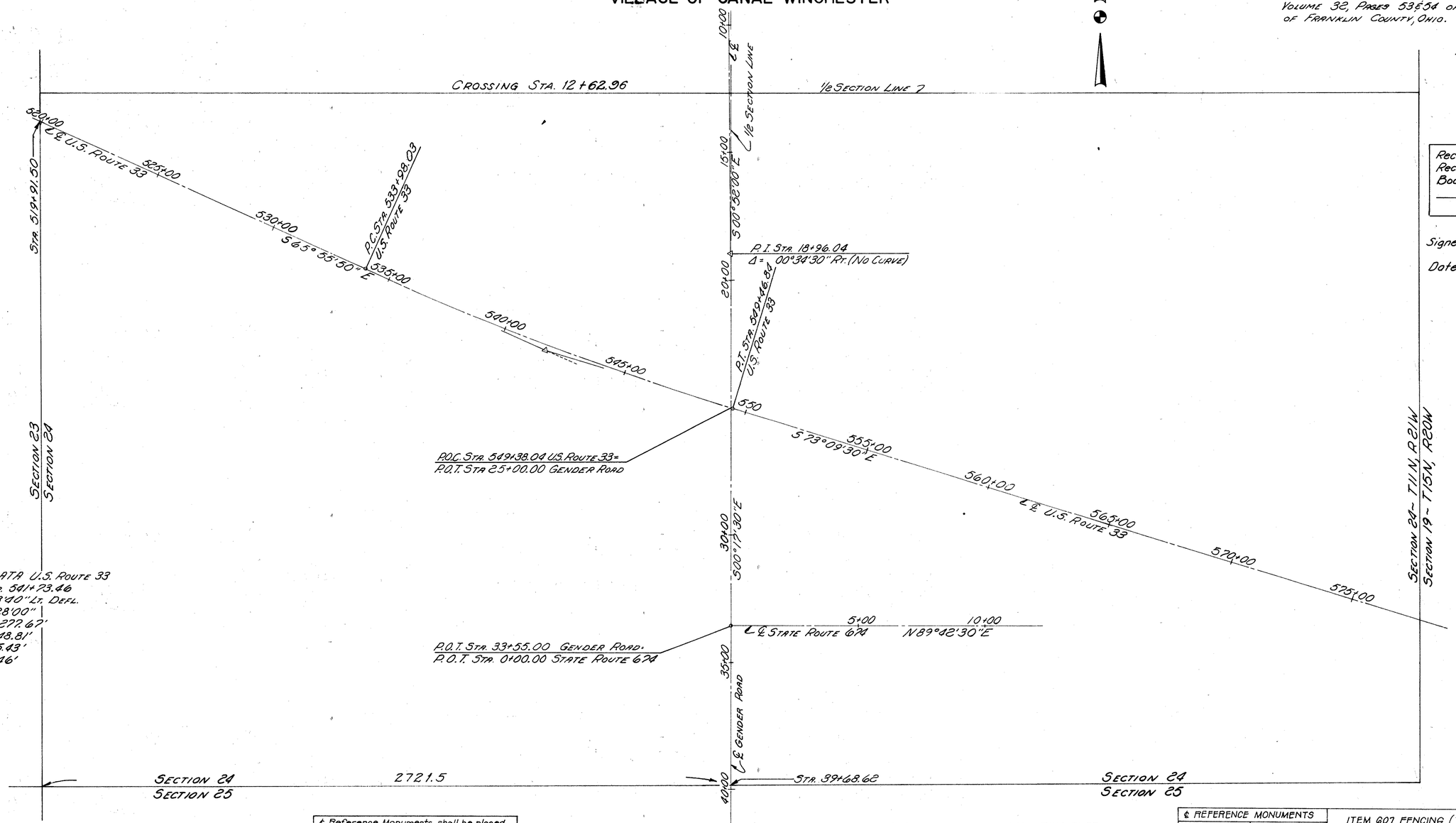

Received _____ 19___
Recorded _____ 19___
Book _____ Page _____
_____ County Recorder

Signed Richard D. Jackson
Division Deputy Director
Date _____

℄ Reference Monuments shall be placed during Constr. @ the following Locations

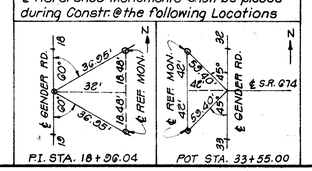

0 200 400 600 800
Scale

Surveyors Seal

I HEREBY CERTIFY THAT THIS PLAT IS A TRUE DELINEATION OF A SURVEY MADE FOR THE OHIO DEPARTMENT OF HIGHWAYS IN 1969 By

R. D. ZANDE & ASSOCIATES, LTD.
COLUMBUS, OHIO

David L. Guthrie DATE Nov. 7, 1969

℄ REFERENCE MONUMENTS	
STATION	Number to be Set
STA. 18+96.04	2
STA. 33+55.00	2
TOTAL	4

ITEM 607 FENCING (TYPE 47) SUBSUMMARY	
Sheet No.	Quantity
5	1208 Lin. Ft.
6	118 Lin. Ft.
7	270 Lin. Ft.
8	58 Lin. Ft.
9	905 Lin. Ft.
Total to Gen. Summary	2619 Lin. Ft.

BRUNING 44-560 10943

FED. RD. DIVISION	STATE	PROJECT	
2	OHIO		

148/155

FRANKLIN COUNTY
FRA - 33-29.53
R/W PLANS

2/9

PROPERTY MAP

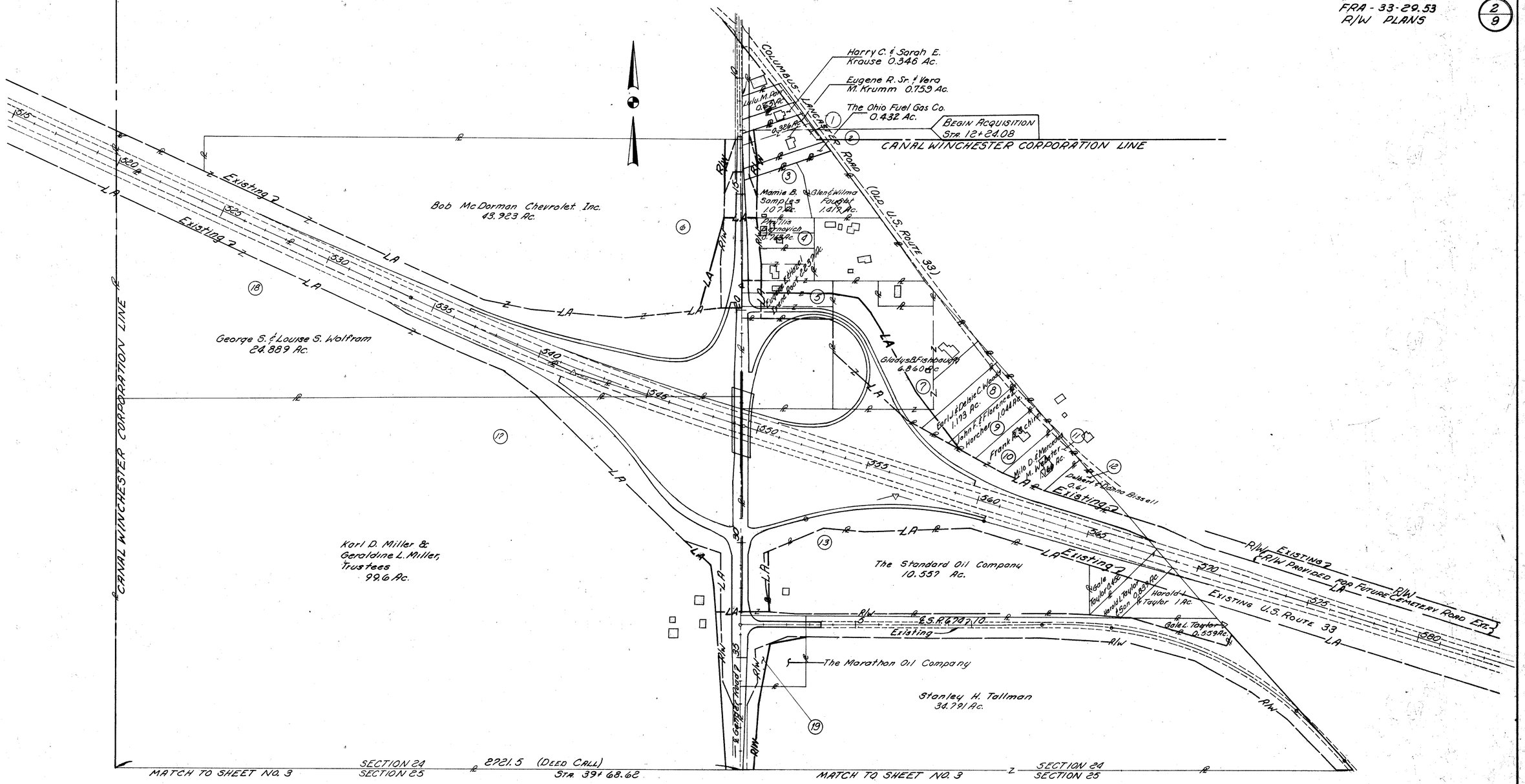

Existing R/W and LA-R/W acquired by the STATE OF OHIO in fee simple is indicated by ~

REV.	DATE	DESCRIPTION

GENDER ROAD INTERCHANGE ~ PROPERTY MAP

2

FED. RD. DIVISION	STATE	PROJECT	
2	OHIO		

149/155

FRANKLIN COUNTY
FRA-33-29.53
R/W PLANS

3/9

PROPERTY MAP

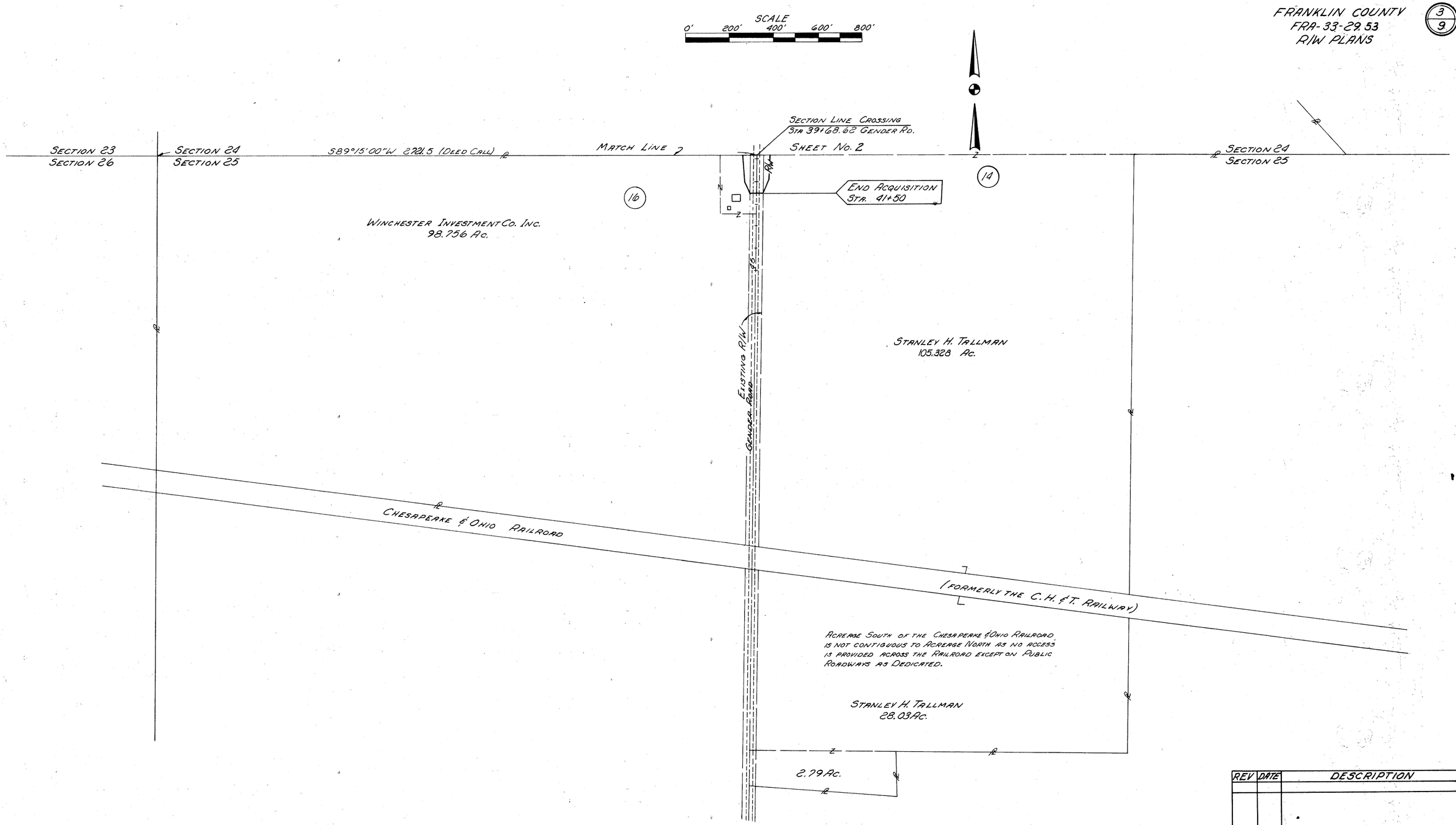

REV	DATE	DESCRIPTION

BRUNING 44-560 10943

GENDER ROAD INTERCHANGE - PROPERTY MAP

3

JOB NUMBER
06927(0)

FED. RD. DIVISION	STATE	PROJECT	
2	OHIO		

150/155

4/9

FRANKLIN COUNTY
FRA-33-29.53
R/W PLANS

SUMMARY OF ADDITIONAL RIGHT OF WAY REQUIRED

NO. OF STRUCTURE PARCELS --- 0
NO. OF PROPERTIES -- 13
NO. OF PARCELS ----- 15

* JOINT PROPORTIONAL PARTICIPATION ~ STATE OF OHIO & FRANKLIN COUNTY, OHIO

PARCEL NO.	OWNER	AUDITORS PARCEL	TYPE FUND	RECORDED BOOK	RECORDED PAGE	DEED AREA	TOTAL P.R.O.	TOTAL TAKE	P.R.O. IN TAKE	NET TAKE LAND	NET TAKE BLDG.	NET RESIDUE LEFT	NET RESIDUE RIGHT	SHEET NO.	REMARKS
1-WD	EUGENE R. SR. & VERA M. KRUMM	958	STATE ~~COUNTY~~	~~2379~~ ~~2510~~	~~229~~ ~~503~~	1.085	0.104	0.199	0.104	0.095	NO	0.886	—	9	STATE OF OHIO 0.155 Ac.; FRA. Co. 0.044 Ac.*
2-WD	THE OHIO FUEL GAS CO.	947	STATE	1684	251	0.432	0.035	0.075	0.035	0.040	NO	0.357	—	9	
3-WD	MAMIE B. SAMPLES	884		1585	315	1.07	0.341	0.368	0.341	0.027	NO	0.702	—	9	
3-T	MAMIE B. SAMPLES						—	0.001	0.000	0.001	—	—	—		TO MOVE WATERING TROUGH
4-LA	PHYLLIS GERNOVICH	878 & 190		1545	633	0.769	0.000	—	—	—	NO	0.769	—		Limitations of Access
5-WL	EUGENE E. & HAZEL IRENE ROOT	53,919,820		~~1429~~ ~~1517~~	~~166~~ ~~574~~	2.237	0.322	1.115	0.322	0.793	NO	1.122	—	5,9	
5-LA	EUGENE E. & HAZEL IRENE ROOT	816, 817	STATE	2428	130								—	9	TO LIMIT ACCESS
6-WD	BOB MC DORMAN CHEVROLET INC.	1002	STATE ~~COUNTY~~	2813	214	43.923	10.977	0.272	0.097	0.175	NO	—	—	9	STATE OF OHIO .217 Ac.; FRA. Co. 0.55 Ac.*
6-LA	BOB MC DORMAN CHEVROLET INC.		STATE					0.365	0.000	0.365	NO	—	32.406	8,9	
7-WL	GLADYS B. FISHBAUGH	875		~~2374~~ ~~2914~~	~~254~~ ~~512~~	6.860	0.984	2.977	0.698	2.279	NO	3.597	—	5	
8-WL	EARL J. & DELSIE C. WOODS	339		2658	98	1.173	0.202	0.127	0.000	0.127	NO	0.844	—	5	
9-WL	JOHN F. & FLORENCE E. HORCHER	999		2746	475	1.044	0.195	0.011	0.000	0.011	NO	0.838	—	5	
10	FRANK R. SCHIRM	853		~~1314~~ ~~2325~~	~~264~~ ~~530~~	—	—	—	—	—	—	—	—	5	ADDITIONAL TAKE NOT REQUIRED
11	MILO D. & MERCEDES M. WEBSTER	922		2712	425	1.166	—	—	—	—	—	—	—	5	ADDITIONAL TAKE NOT REQUIRED
12	DELBERT & DONNA BISSELL	1005		2845	617	0.61	—	—	—	—	—	—	—	5	ADDITIONAL TAKE NOT REQUIRED
13-WL	THE STANDARD OIL COMPANY	957		2568	128	10.557	0.000	0.099	0.000	0.099	NO	10.458	—	6,9	
14-WD	STANLEY H. TALLMAN	~~870~~ ~~865~~		~~700~~ ~~1237~~	~~441~~ ~~278~~	105.328	6.00	0.806	0.394	0.412	NO	98.916	—	9	
16-WD	WINCHESTER INVESTMENT CO. INC.	959, 996		~~2570~~ ~~2570~~	~~642~~ ~~644~~	98.756	1.212	0.212	0.125	0.087	NO	—	97.457	9	
17-WD	KARL D. & GERALDINE L. MILLER - TRUSTEES	872		3004	463	99.6	9.117	0.620	0.185	0.435	NO	—		9	
17-LA	KARL D. & GERALDINE L. MILLER - TRUSTEES			—	—	—	—	0.299	0.000	0.299	NO	—	89.749	7,9	
17-T	KARL D. & GERALDINE L. MILLER - TRUSTEES			—	—	—	—	0.042	0.000	0.042	NO	—		9	TO CONSTRUCT A DRIVE
18	GEORGE S. & LOUISE S. WOLFRAM	871	STATE	1041	125	—	—	—	—	—	—	—	—	7	ADDITIONAL TAKE NOT REQUIRED
19-WD	THE MARATHON OIL COMPANY	1085		2987	568	1.973	0.914	1.193	0.914	0.279	NO	0.780	—	9	

UTILITY COMPANIES
South Central Power Company
P.O. Box 250
Lancaster, Ohio 43130

Columbia Gas of Ohio Inc. &
The Ohio Fuel Gas Company
99 No. Front St. Columbus, Ohio 43215

The Ohio Bell Telephone Co.
111 No. Fourth St.
Columbus, Ohio 43215

REV.	DATE	DESCRIPTION

SUMMARY OF ADDITIONAL RIGHT-OF-WAY

FED. RD. DIVISION	STATE	PROJECT	
2	OHIO		

151/155

FRANKLIN COUNTY
FRA-33-29.53
R/W PLANS

5/9

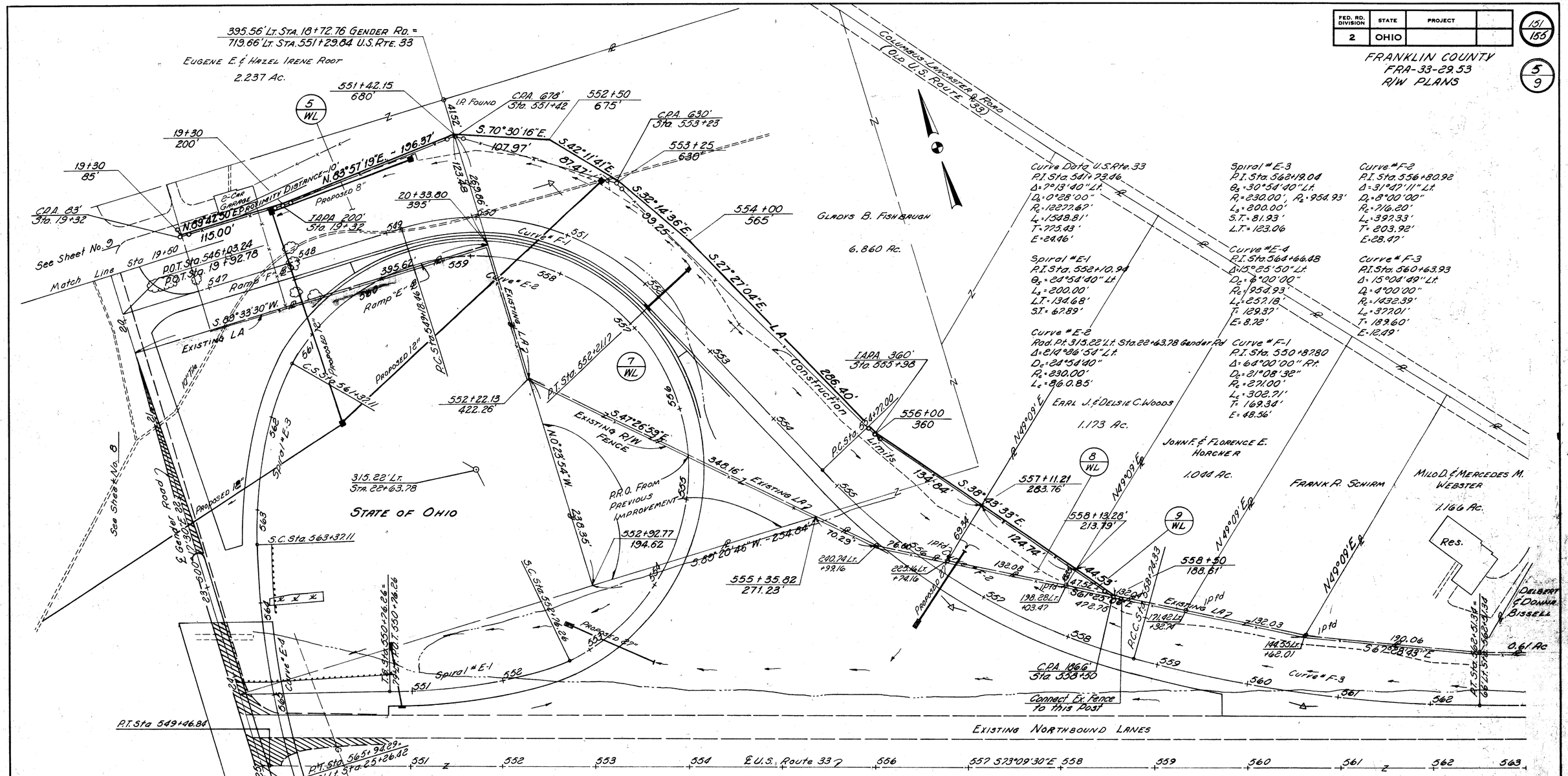

Curve Data U.S. Rte. 33
P.I. Sta. 541+73.46
Δ = 7°13'40" Lt.
D_a = 0°28'00"
R_c = 12277.67'
L_t = 1548.81'
T = 775.43'
E = 24.46'

Spiral #E-1
P.I. Sta. 552+10.94
θ_s = 24°54'40" Lt.
L_s = 200.00'
L.T. = 134.68'
S.T. = 67.89'

Curve #E-2
Rad. Pt. 315.22' Lt. Sta. 22+63.78 Gender Rd
Δ = 84°86'54" Lt.
D_c = 24°54'40"
R_c = 230.00'
L_c = 366.85'

Spiral #E-3
P.I. Sta. 562+19.04
θ_s = 30°54'40" Lt.
R_1 = 230.00', R_2 = 954.93'
L_s = 200.00'
S.T. = 81.93'
L.T. = 123.06

Curve #E-4
P.I. Sta. 564+66.48
Δ = 15°25'50" Lt.
D_c = 6°00'00"
R_c = 954.93'
L_c = 257.18'
T = 129.37'
E = 8.78'

Curve #F-1
P.I. Sta. 550+87.80
Δ = 64°00'00" Rt.
D_c = 21°08'32"
R_c = 271.00'
L_c = 302.71'
T = 169.34'
E = 48.56'

Curve #F-2
P.I. Sta. 556+80.92
Δ = 31°47'11" Lt.
D_c = 8°00'00"
R_c = 716.20'
L_c = 397.33'
T = 203.92'
E = 28.47'

Curve #F-3
P.I. Sta. 560+63.93
Δ = 15°04'49" Lt.
D_c = 4°00'00"
R_c = 1432.39'
L_c = 377.01'
T = 189.60'
E = 12.49'

	Eugene E. & Hazel Irene Root	
Cont.	0.793	Ac.
P.R.O.	0.322	Ac.
Total	1.115	Ac.

Cont.		Ac.
P.R.O.		Ac.
Total		Ac.

	Gladys B. Fisbaugh	
Cont.	2.279	Ac.
P.R.O.	0.698	Ac.
Total	2.977	Ac.

	Earl J. & Delsie C. Woods	
Cont.	0.127	Ac.
P.R.O.	0.000	Ac.
Total	0.127	Ac.

	John F. & Florence E. Horcher	
Cont.	0.011	Ac.
P.R.O.	0.000	Ac.
Total	0.011	Ac.

Existing R/W & LA-R/W Owned by The State of Ohio in Fee Simple

ITEM	QUANTITY
607 Type 47	1208 Lin. Ft.

Quantity to Sheet No. 1 R/W

REV	DATE	DESCRIPTION

GENDER ROAD INTERCHANGE – N.E. QUADRANT

6

FED. RD. DIVISION	STATE	PROJECT	
2	OHIO		

152/155

FRANKLIN COUNTY
FRA-33-29.53
R/W PLANS

6/9

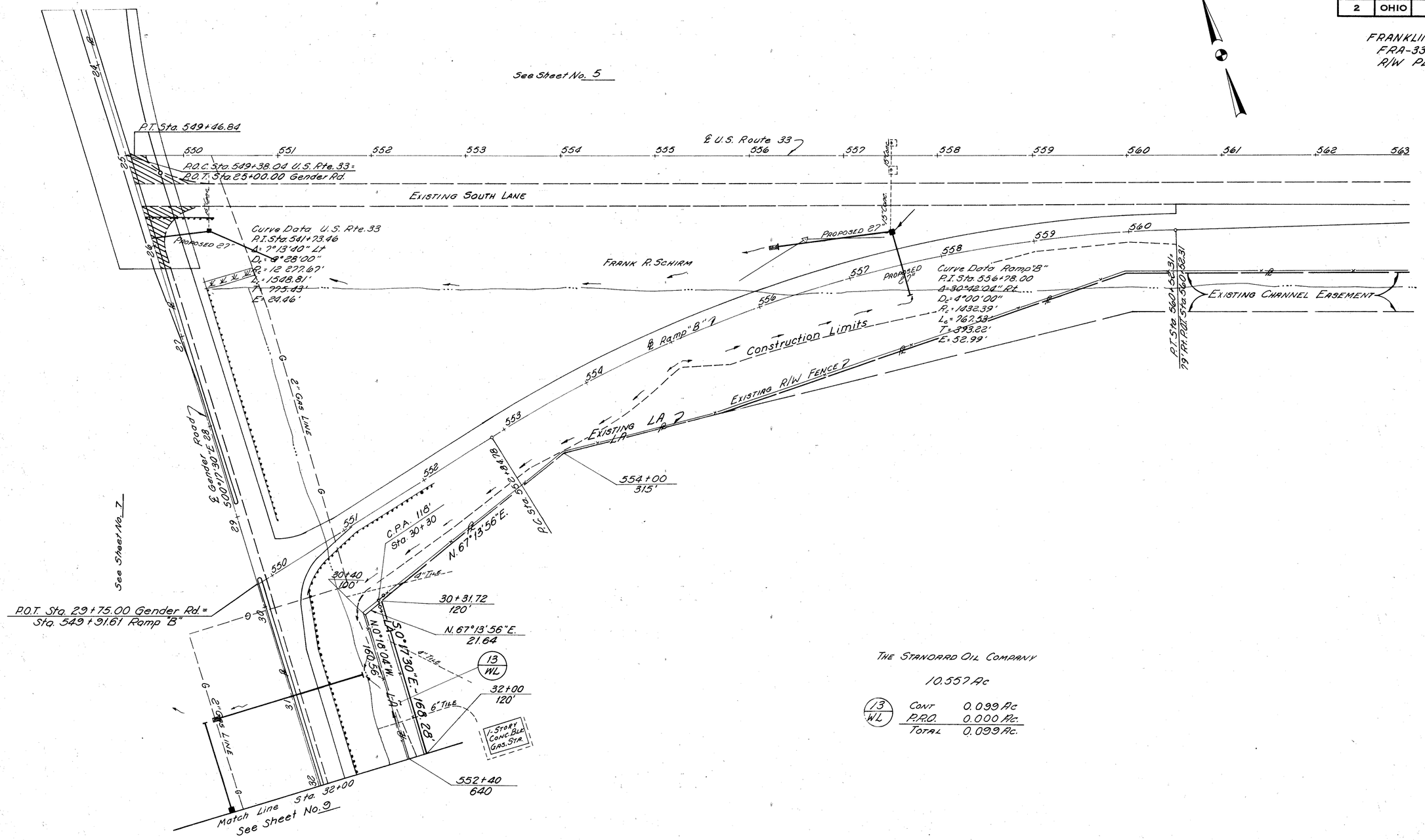

THE STANDARD OIL COMPANY

10.557 Ac

13 WL		
	CONT	0.099 Ac
	P.R.O.	0.000 Ac.
	TOTAL	0.099 Ac.

ITEM	QUANTITY
607 Type 47	178 Lin. Ft.

Quantity to sheet No. 1 R/W

REV.	DATE	DESCRIPTION

GENDER ROAD INTERCHANGE – S.E. QUADRANT

6

FED. RD. DIVISION	STATE	PROJECT	
2	OHIO		

153/155

FRANKLIN COUNTY
FRA-33-29.53
R/W PLANS

7/9

BOB MC DORMAN CHEVROLET INC

43.923 Ac.

(6)		
	CONT	Ac.
	P.R.O.	Ac.
	TOTAL	Ac

See Sheet No. 8

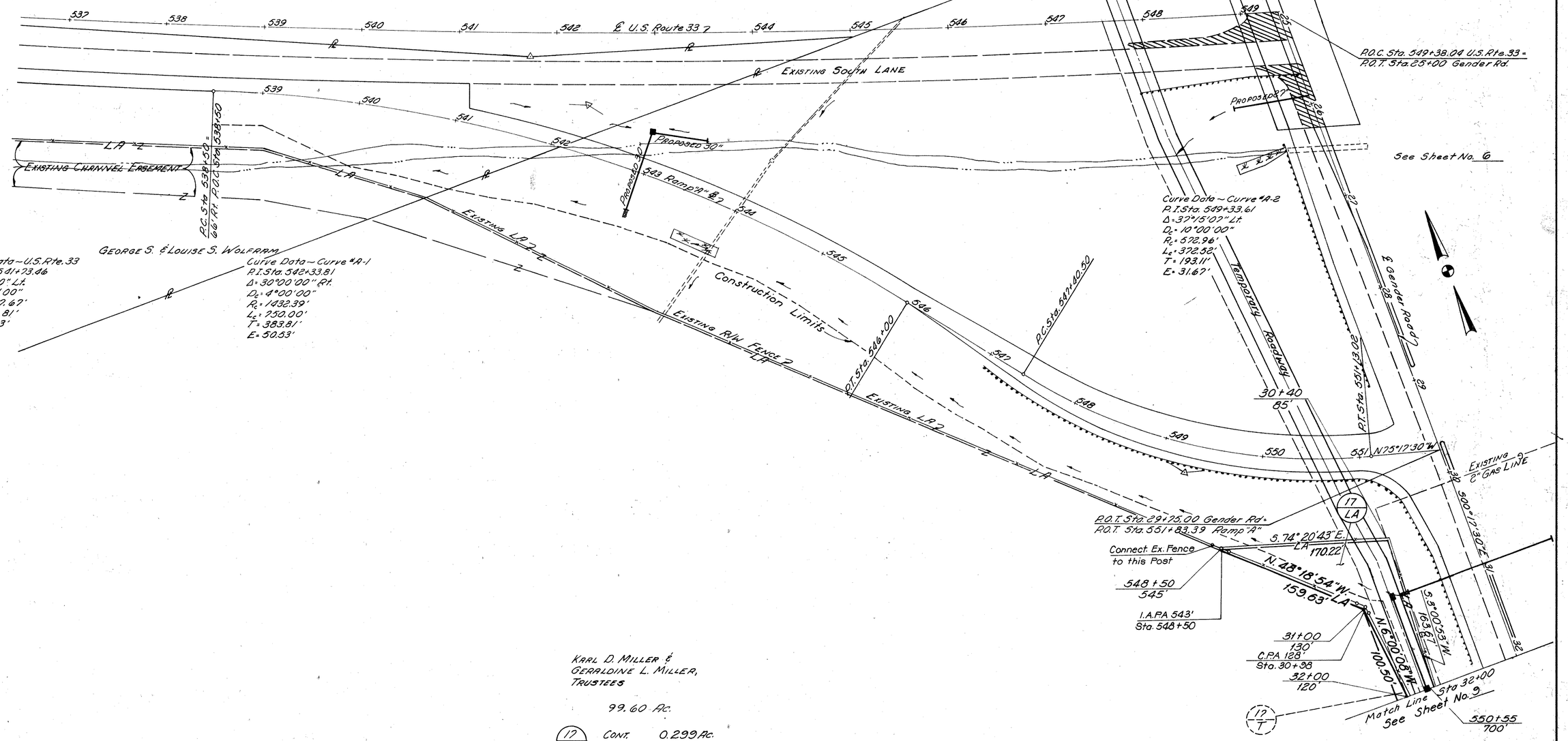

KARL D. MILLER &
GERALDINE L. MILLER,
TRUSTEES

99.60 Ac.

(17/LA)	CONT.	0.299 Ac.
	P.R.O.	0.000 Ac
	TOTAL	0.299 Ac.
(17/WD)	CONT	0.435 Ac
	P.R.O	0.185 Ac.
	TOTAL	0.620 Ac.

ITEM	QUANTITY
607 Type 47	270 Lin. Ft.

Quantity to sheet No. 1 R/W

REV.	DATE	DESCRIPTION

GENDER ROAD INTERCHANGE ~ SW QUADRANT

7

FED. RD. DIVISION	STATE	PROJECT	
2	OHIO		

154/155

FRANKLIN COUNTY
FRA-33-29.53
R/W PLANS

8/9

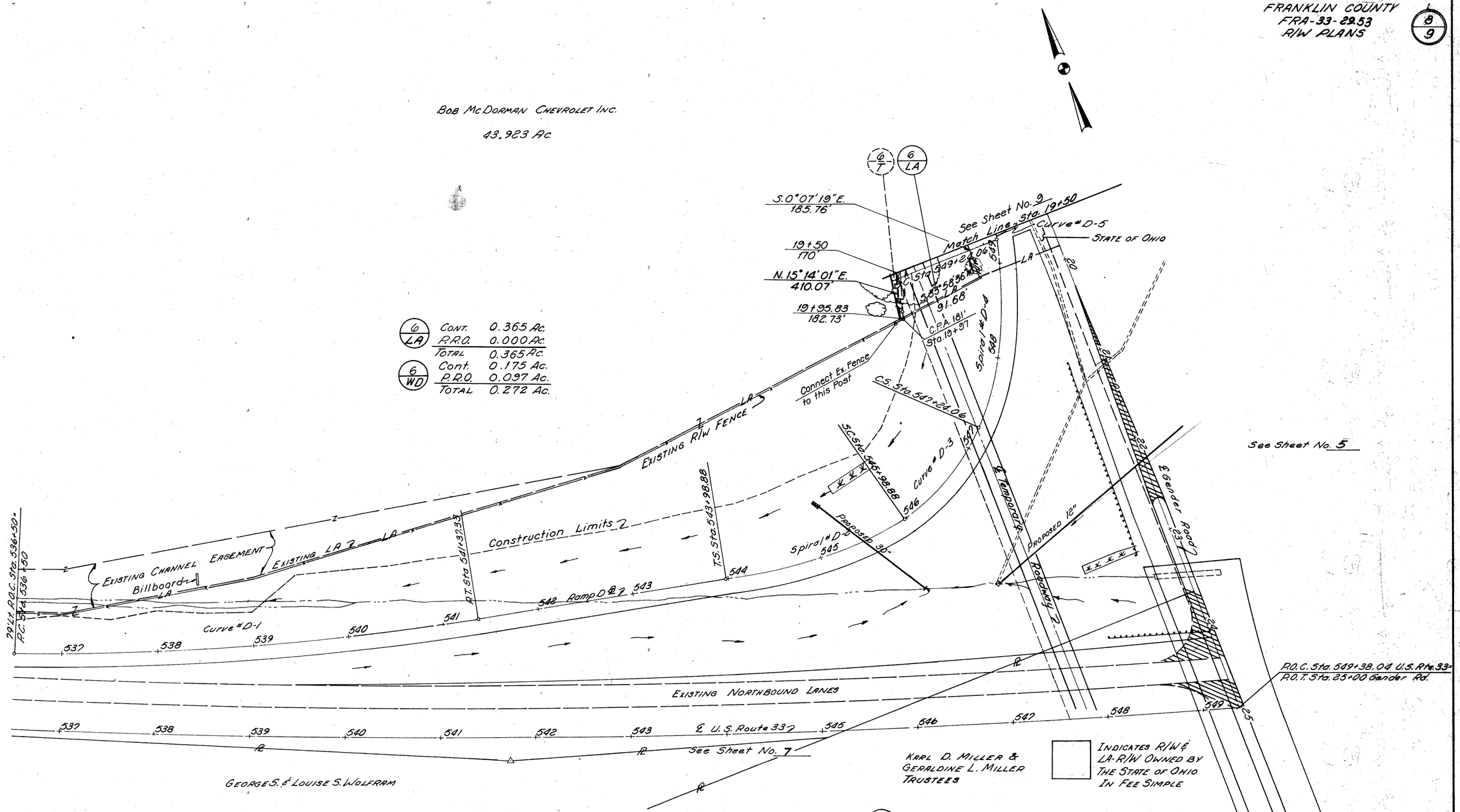

6/LA	CONT.	0.365 Ac.
	P.R.O.	0.000 Ac.
	TOTAL	0.365 Ac.
6/WD	CONT.	0.175 Ac.
	P.R.O.	0.097 Ac.
	TOTAL	0.272 Ac.

Curve – U.S. Rte. 33
P.I. Sta. 541+73.46
$\Delta = 7°13'40''$ Lt.
$D_c = 0°28'00''$
$R_c = 12\,277.67'$
$L_c = 1548.81'$
$T = 775.43'$
$E = 24.46'$

Curve #D-1
P.I. Sta. 538+94.26
$\Delta = 9°44'48''$ Lt.
$D_c = 2°00'00''$
$R_c = 2864.79'$
$L_c = 487.33'$
$T = 244.26'$
$E = 10.39'$

Spiral #D-2
P.I. Sta. 545+33.56
$\theta_s = 24°54'40''$ Lt.
$L_s = 200.00'$
$L.T. = 134.68'$
$S.T. = 67.89'$

Curve #D-3
P.I. Sta. 546+63.06
$\Delta = 31°11'05''$ Lt.
$D_c = 24°54'40''$
$R_c = 230.00'$
$L_c = 125.18'$
$T = 64.18'$
$E = 8.79'$

Spiral #D-4
P.I. Sta. 548+05.99
$\theta_s = 30°54'00''$ Lt.
$R_1 = 230.00'$, $R_2 = 954.93'$
$L_s = 200.00'$
$S.T. = 81.93'$
$L.T. = 123.06'$

Curve #D-5
P.I. Sta. 550+54.65
$\Delta = 15°34'28''$ Lt.
$D_c = 6°00'00''$
$R_c = 954.93$
$L_c = 259.57'$
$T = 130.59'$
$E = 8.89'$

17/LA	CONT.	0.299 Ac.
	P.R.O.	0.000 Ac.
	TOTAL	0.299 Ac
17/WD	CONT.	0.435 Ac.
	P.R.O.	0.185 Ac.
	TOTAL	0.620 Ac.

ITEM	QUANTITY
607 Type 47	58 Lin. Ft.

Quantity to sheet No. 1 R/W

REV.	DATE	DESCRIPTION

GENDER ROAD INTERCHANGE–N.W. QUADRANT

8

FED. RD. DIVISION	STATE	PROJECT		
2	OHIO			

155/155

FRANKLIN COUNTY
FRA-33-29.53
R/W PLANS

9/9

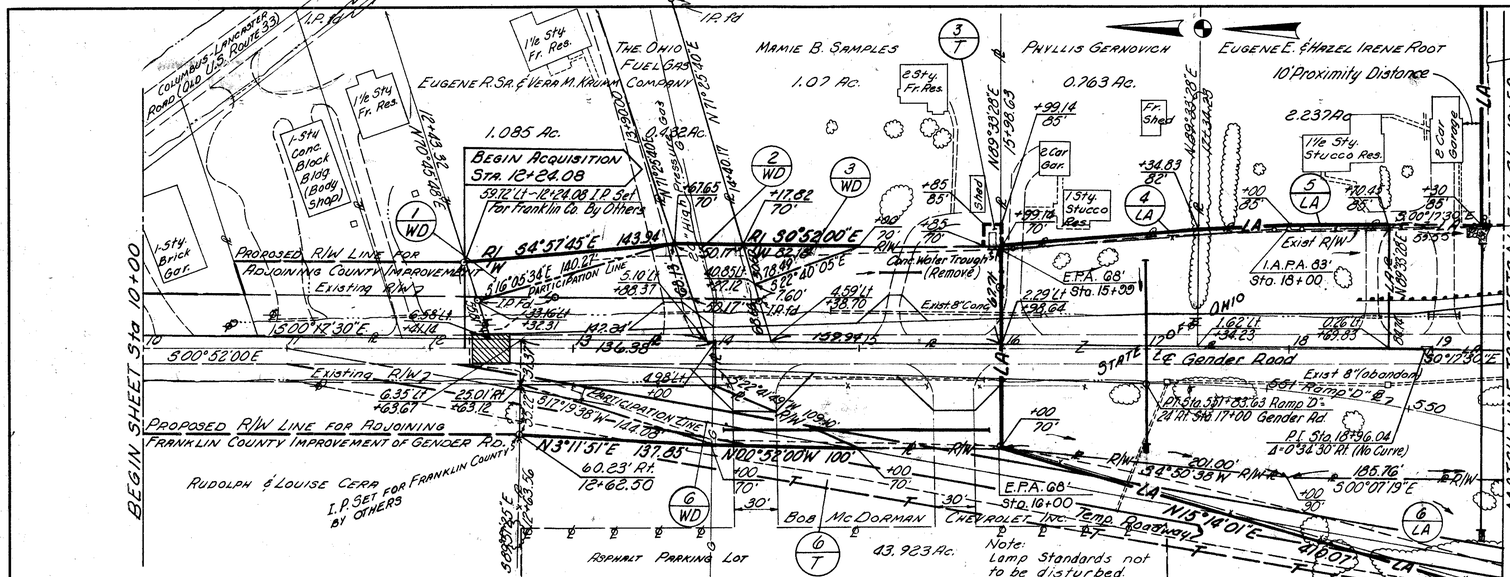

1/WD	Eugene R. Sr. & Vera M. Krumm		
	Cont.	0.095	Ac.
	P.R.O.	0.104	Ac.
	Total	0.199	Ac.
2/WD	The Ohio Fuel Gas Co.		
	Cont.	0.040	Ac.
	P.R.O.	0.035	Ac.
	Total	0.075	Ac.
3/WD	Mamie B. Samples		
	Cont.	0.027	Ac.
	P.R.O.	0.341	Ac.
	Total	0.368	Ac.
4/LA	Phyllis Gernovich		
	Cont.	0.000	Ac.
	P.R.O.	0.000	Ac.
	Total	0.000	Ac.
3/T	Mamie B. Samples		
	Cont.	0.001	Ac.
	P.R.O.	0.000	Ac.
	Total	0.001	Ac.
5/WL	Eugene E. & Hazel Irene Root		
	Cont.	0.793	Ac.
	P.R.O.	0.322	Ac.
	Total	1.115	Ac.
5/LA	Eugene E. & Hazel Irene Root		
	Cont.	0.000	Ac.
	P.R.O.	0.000	Ac.
	Total	0.000	Ac.
6/WD	Bob McDorman Chevrolet Inc.		
	Cont.	0.175	Ac.
	P.R.O.	0.097	Ac.
	Total	0.272	Ac.
6/LA	Bob McDorman Chevrolet Inc.		
	Cont.	0.365	Ac.
	P.R.O.	0.000	Ac.
	Total	0.365	Ac.
6/T	Bob McDorman Chevrolet Inc.		
	Cont.	0.370	Ac.
	P.R.O.	0.000	Ac.
	Total	0.370	Ac.

NOTE: FOR STATE/COUNTY PARTICIPATION IN PARCELS 1-WD & 6-WD, SEE SUMMARY OF ADDITIONAL R/W REQUIRED

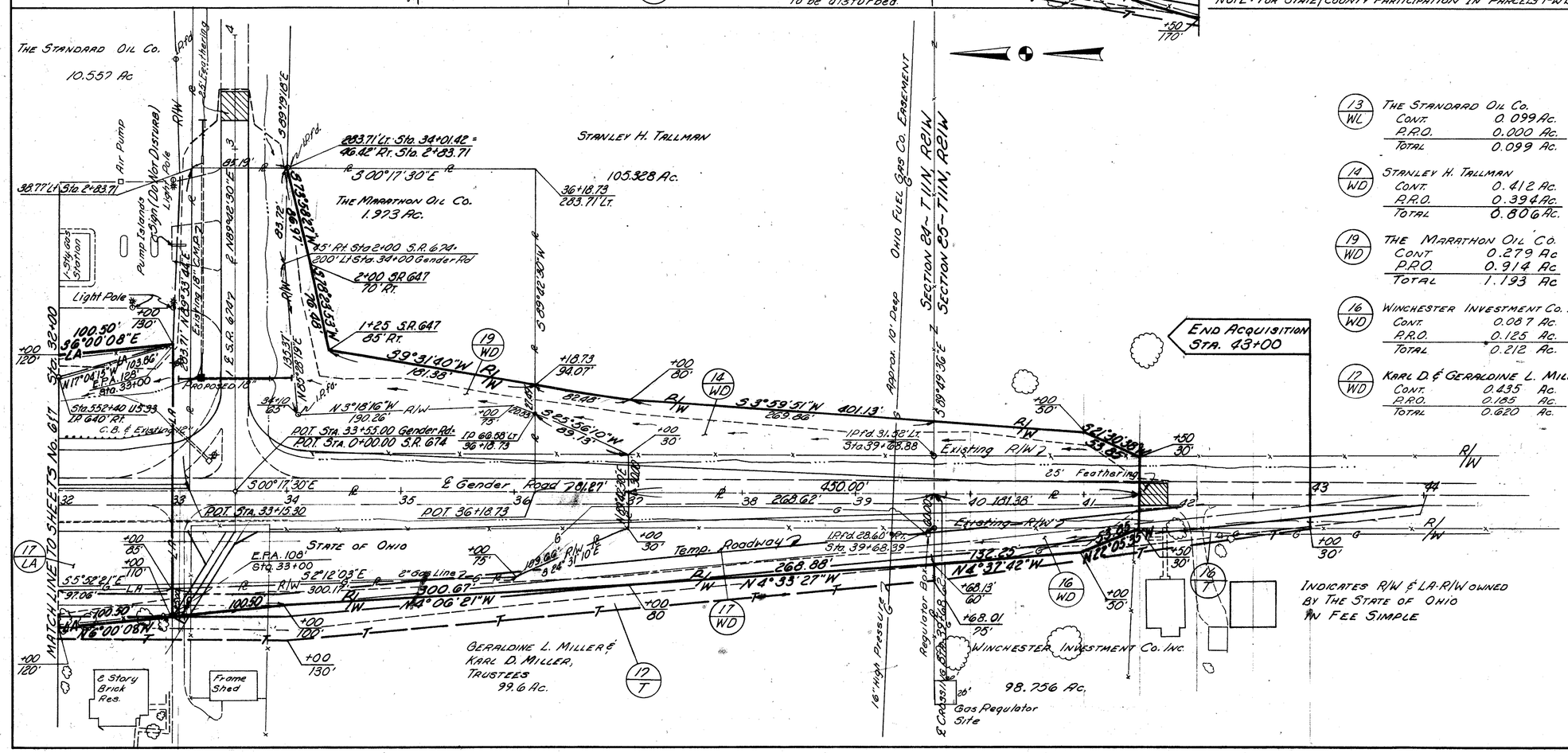

13/WL	The Standard Oil Co.		
	Cont.	0.099	Ac.
	P.R.O.	0.000	Ac.
	Total	0.099	Ac.
14/WD	Stanley H. Tallman		
	Cont.	0.412	Ac.
	P.R.O.	0.394	Ac.
	Total	0.806	Ac.
19/WD	The Marathon Oil Co.		
	Cont.	0.279	Ac.
	P.R.O.	0.914	Ac.
	Total	1.193	Ac.
16/WD	Winchester Investment Co. Inc.		
	Cont.	0.087	Ac.
	P.R.O.	0.125	Ac.
	Total	0.212	Ac.
17/WD	Karl D. & Geraldine L. Miller, Tr.		
	Cont.	0.435	Ac.
	P.R.O.	0.185	Ac.
	Total	0.620	Ac.
17/LA	Karl D. & Geraldine L. Miller, Tr.		
	Cont.	0.299	Ac.
	P.R.O.	0.000	Ac.
	Total	0.299	Ac.
17/T	Karl D. & Geraldine L. Miller, Tr.		
	Cont.	0.389	Ac.
	P.R.O.	0.000	Ac.
	Total	0.389	Ac.
16/T	Winchester Investment Co. Inc.		
	Cont.	0.079	Ac.
	P.R.O.	0.000	Ac.
	Total	0.079	Ac.

STA - STA	ITEM	QUANTITY
10+00 - 19+50	607 Type 47	705 Lin. Ft.
32+00 - 42+00	607 Type 47	200 Lin. Ft.
Total This Sheet		905 Lin. Ft.

Quantity to Sheet 1 (R/W)

REV	DATE	DESCRIPTION

STA. 10+00 TO STA. 19+50 & STA. 32+00 TO STA. 42+00 GENDER ROAD

TE-118
600-12-68

MICROFILMED
JAN 1 1980

GEOLOGY OF THE SITE

THE STRUCTURE SITE IS LOCATED ON THE RELATIVELY FLAT GLACIATED MISSISSIPPI VALLEY PLAIN, IN A DEEPLY BURIED DEEP STAGE RIVER, IN AN AREA WHERE DEEP GLACIAL DRIFT OVERLIES BEDROCK, OF MISSISSIPPIAN AGE.

EXPLORATION

THE EXPLORATION CONSISTED OF TWO DRIVE SAMPLE BORINGS, MADE ON MAY 22 AND 23, 1969, AND FIVE DRIVE ROD PENETRATION TESTS, MADE BETWEEN JUNE 1 AND 4, 1969.

INVESTIGATIONAL FINDINGS

BORINGS ENCOUNTERED DENSE AND EXTREMELY DENSE GRAVELLY SANDY SILTS AND VERY STIFF SANDY GRAVELLY CLAYS. THE BORINGS WERE TERMINATED AT 41-FOOT DEPTH, ELEVATIONS 717 AND 716 FEET, AFTER PENETRATING IN EXCESS OF 30 FEET OF MATERIAL REQUIRING IN EXCESS OF 30 BLOWS PER FOOT IN THE STANDARD PENETRATION TEST.

ROD SOUNDINGS ENCOUNTERED GRADUAL INCREASE IN PENETRATION RESISTANCE WITH INCREASE IN DEPTH, AND WERE TERMINATED UPON ENCOUNTER WITH REFUSAL AND NEAR-REFUSAL TO PENETRATION AT 28 TO 34-FOOT DEPTHS, ELEVATIONS 731 TO 722 FEET, CONSIDERED TO BE IN VERY DENSE SANDY SILTS.

NO FREE WATER WAS ENCOUNTERED IN ANY OF THE ROD SOUNDING HOLES.

BEDROCK WAS NOT ENCOUNTERED IN ANY OF THE TESTS.

LEGEND

- Auger Boring Location - Plan View.
- Press and / or Drive Sample and / or Core Boring Location - Plan View.
- Drive Rod Penetration Resistance Sounding Location - Plan View.
- Capped Pile
- Footing
- Footing on Pile
- TR — Top of Rock
- Horizontal Bar on Boring Log Indicates the Depth the Sample Was Taken.
- X/Y — Figures Beside the Boring Log in Profile Indicate the Number of Blows for Standard Penetration Test.
  X = Number of Blows for First 6 inches.
  Y = Number of Blows for Second 6 inches.
- Drive Rod Penetration Resistance Sounding Log - Profile
- Casing
- Resistance "R" < 10,000 lbs.
- Resistance "R" > 10,000 lbs.
- Z — Indicates Final Measurement of Penetration, in Inches.
- W — Indicates Free Water Elevation.
- Indicates Static Water Elevation.

SYMBOLS OF ROCK TYPES

- Coal
- Weathered Siltstone, Mudstone, or Claystone
- Siltstone, Mudstone, or Claystone
- Weathered Shale
- Shale
- Boulders or Cobbles
- Weathered Sandstone
- Sandstone
- Leached Dolomite
- Dolomite
- Leached Limestone
- Limestone

GENERAL INFORMATION

Drive Rod Penetration Sounding Tests

Drive rod penetration resistance tests constitute driving a 1.315-inch diameter steel rod, with a 45° cone point, into the ground, using a 122-pound drop-hammer with a free fall of five feet. At one or two-foot depth intervals, a measurement is taken to determine the amount of penetration achieved in three hammer drops. This reading is converted to an empirical value for capacity "R", in thousands of pounds (which is a measure of both the point resistance and frictional resistance on the rod), by using charts prepared by the Ohio Department of Highways, Bureau of Bridges, on the basis of correlation study of rod penetration with past performance of pile driving. For interpretation, a graph is prepared by plotting the value "R" against the depth at which the reading was taken, and connecting the plotted points. The curve so obtained reflects the density of subsurface materials in a manner that can be readily compared with data from similar tests at other locations on the structure site. From this comparison, the overall uniformity of subsurface condition may be evaluated.

Drive Sample Borings - Drive-Press Sample Borings

Drive sample borings are made by means of a rotary-type drill rig, employing a 2" O.D., 1-3/8" I.D. sampler, at 2-1/2 and / or 5-foot depth intervals, driven by means of a 140 - pound drop-hammer with a free fall of 30 inches. The number of blows required to drive the sampler 12 inches is considered the standard penetration test.

Drive-press sample borings are made by means of a rotary-type drill rig, employing a 2" O.D., 1-3/8" I.D. drive sampler, and 3" O.D. thin-wall press sampler. The press sampler is advanced by continuous uniform pressure, applied by the drill rig.

The boring log sheets show a graphic plot of the information obtained, including depth and elevation of the sample, number of blows for the standard penetration tests in two 6-inch increments, depth of press samples, field sample number, sample description - based on laboratory tests and the Casagrande AC classification system-and gradation, plasticity, and moisture content determinations. Results of strength and consolidation testing, if performed, appear on separate enclosures.

At depths where materials are bouldery or gravelly to the extent that the sampler can not be driven, a wash sample is procured for visual classification, in order to determine the general character of the material. These samples are not considered sufficiently representative to warrant laboratory testing.

Particle Size Definitions

Boulders	12"	Cobbles	3"	Gravel	2.0mm (No. 10 sieve)	Coarse Sand	0.42mm (No. 40 sieve)	Fine Sand	0.074mm (No. 200 sieve)	Silt	0.005mm	Clay

LOG OF BORING

Date Started 5-22-69 — Sampler Type SS — Dia 1 3/8" — Water Elev
Date Completed 5-23-69 — Casing Length — Dia
Boring No. B-1 — Station & Offset 23+25, 40' Rt. (Rear Abutment) — Surface Elev 757.9'

Elev	Depth	Std Pen (In)	Rec (ft)	Loss (ft)	Description	Sample No	% Agg	% C S	% F S	% Silt	% Clay	L L	P I	W C	SHTL Class.
757.9	0														
	2														
	4														
752.9	6	7/20			Brownish-Gray Sandy Silt	1	11	15	23	12	39	NP	NP	12	A-4a
750.4	8	11/24			Gray Sandy Gravelly Silt	2	22	6	11	45	16	18	6	9	A-4a
747.9	10	18/31			Gray Silty Gravelly Sand	3	33	14	22	7	24	16	3	11	A-2-4
745.4	12														
742.9	14	50/*			No Sample Recovered - Cobbles (Driller's Description)		V	I		S		U	A	L	
	16	21/38			Gray Gravelly Sandy Silt	4	-	-	-	-	-	-	-	9	Visual
740.4	18	22/34			Gray Gravelly Silt	5	24	1	2	33	40	17	5	10	A-4a
737.9	20	20/27			Gray Sandy Silt	6	7	9	20	34	30	17	5	10	A-4a
735.4	22	18/22			Gray Sandy Silt	7	10	7	20	33	30	17	5	11	A-4a
732.9	24	21/36			Gray Sandy Silt	8	10	7	18	37	28	18	6	11	A-4a
	26														
	28														
727.9	30	30/60			Gray Gravelly Silt	9	-	-	-	-	-	-	-	35	Visual
	32														
	34														
722.9	36	24/44			Gray Sandy Silt	10	13	6	10	42	29	21	6	15	A-4a
	38														
717.9	40														
716.9		16/28			Gray Gravelly Clay — BOTTOM OF BORING	11	14	2	8	47	29	29	13	15	A-6a

*Refusal

LOG OF BORING

Date Started 5-22-69 — Sampler Type SS — Dia 1 3/8" — Water Elev
Date Completed 5-22-69 — Casing Length — Dia
Boring No. B-10 — Station & Offset 26+37, 35' Lt. (Forward Abutment) — Surface Elev 757.4'

Elev	Depth	Std Pen (In)	Rec (ft)	Loss (ft)	Description	Sample No	% Agg	% C S	% F S	% Silt	% Clay	L L	P I	W C	SHTL Class.
757.4	0														
	2														
	4														
752.4	6	3/3			Brown Gravelly Sandy Silt	1	15	8	14	31	32	-	-	12	-
749.9	8	20/29			Gray Silty Sandy Gravel	2	57	17	11	-15	-	NP	NP	7	A-1-a
747.4	10	50*/(0.3')			Brown Gravelly Sandy Silt	3	-	-	-	-	-	-	-	15	Visual
	12														
	14														
742.4	16	50*(0.6')			No Sample Recovered - Cobbles (Driller's Description)		V	I		S		U	A	L	
739.9	18	19/23			Gray Gravelly Sandy Silt	4	22	8	16	26	28	20	6	13	A-4a
737.4	20	50*(0.6')			Gray Gravelly Sandy Silt	5	-	-	-	-	-	-	-	22	Visual
	22														
734.9	24	50*(0.6')			Gray Gravelly Sandy Silt	6	26	14	16	19	25	-	-	16	-
732.4	26	50*(0.7')			Gray Gravelly Sandy Silt	7	-	-	-	-	-	-	-	16	Visual
	28														
727.4	30	25/30			Gray Gravelly Sandy Silt	8	18	4	12	39	27	20	6	19	A-4a
	32														
	34														
722.4	36	15/28			Gray Silt and Clay	9	5	2	5	32	56	30	11	21	A-6a
	38														
717.4	40														
716.4		14/24			Gray Sandy Silt — BOTTOM OF BORING	10	0	5	34	32	29	19	5	16	A-4a

*Refusal

NOTE: Information shown by this subsurface investigation was obtained solely for the use in establishing design controls for the project. The State of Ohio does not guarantee the accuracy of this data and it is not to be construed as a part of the plans governing construction of the project.

OHIO DEPARTMENT OF HIGHWAYS
TESTING LABORATORY
1620 WEST BROAD STREET, COLUMBUS, OHIO 43223

STRUCTURE FOUNDATION INVESTIGATION
BRIDGE NO. FRA-33-2997
UNDER GENDER ROAD
SEC. FRA-33-29.53

CHECKED BY	REVIEWED BY	DATE
R.D.R.	G.P.H.	6/18/69

MICROFILMED
JAN 11 1980

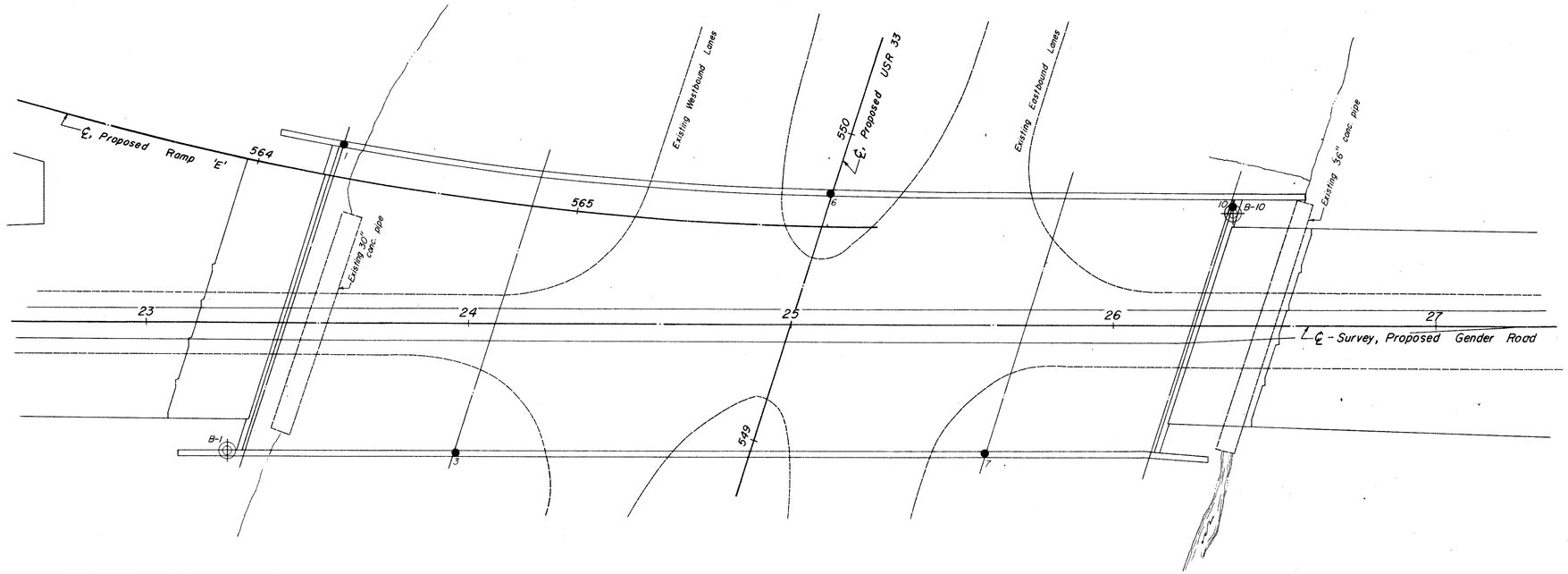

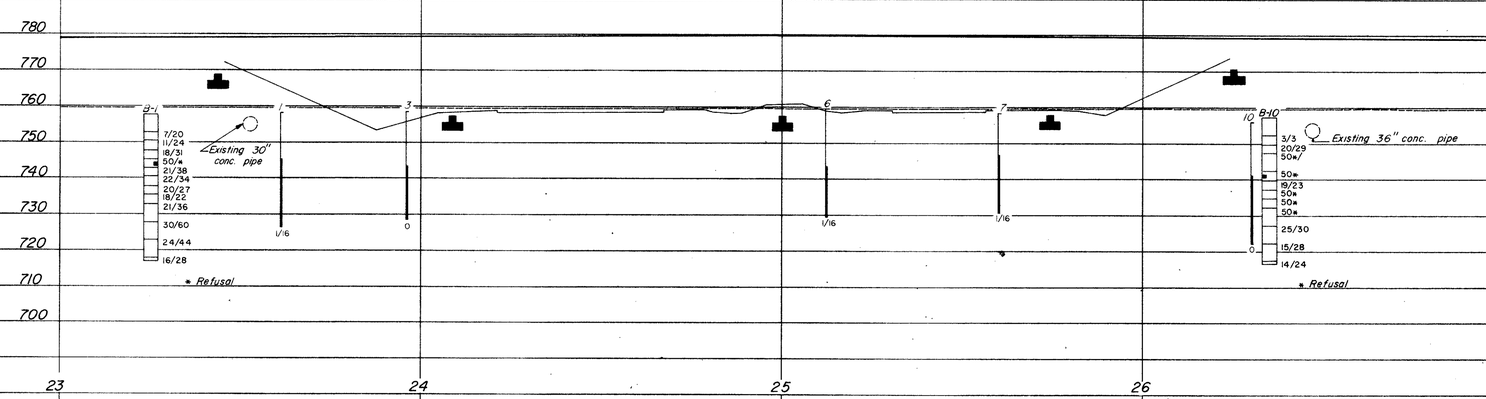

SCALE: 1" = 20'

OHIO DEPARTMENT OF HIGHWAYS
TESTING LABORATORY
1620 WEST BROAD STREET, COLUMBUS 23, OHIO

STRUCTURE FOUNDATION INVESTIGATION
BRIDGE NO. FRA-33-2997
UNDER GENDER ROAD
SEC. FRA-33-29.53

PLAN AND PROFILE

DRAWN BY	CHECKED BY	REVIEWED BY	DATE
E.D.W.	R.D.R.	G.P.H.	6/18/69

RECEIVED
JUN 11 1980

Test Location No. ____
Station & Offset ____
Surface Elev. ____ Water Elev. ____
Piling ____
Hammer ____
Formula ____
Reference ____
Rod Condition ____

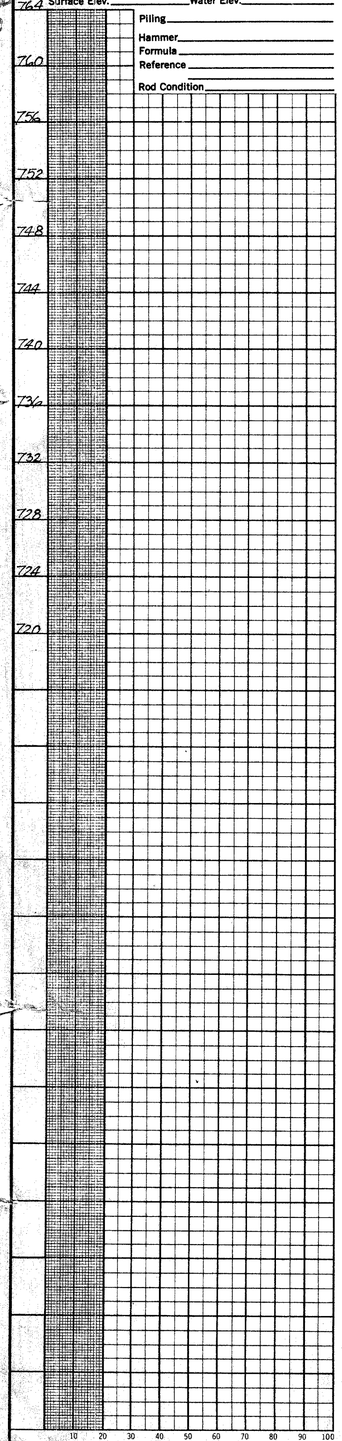

Test Location No. ____
Station & Offset ____
Surface Elev. ____ Water Elev. ____
Piling ____
Hammer ____
Formula ____
Reference ____
Rod Condition ____

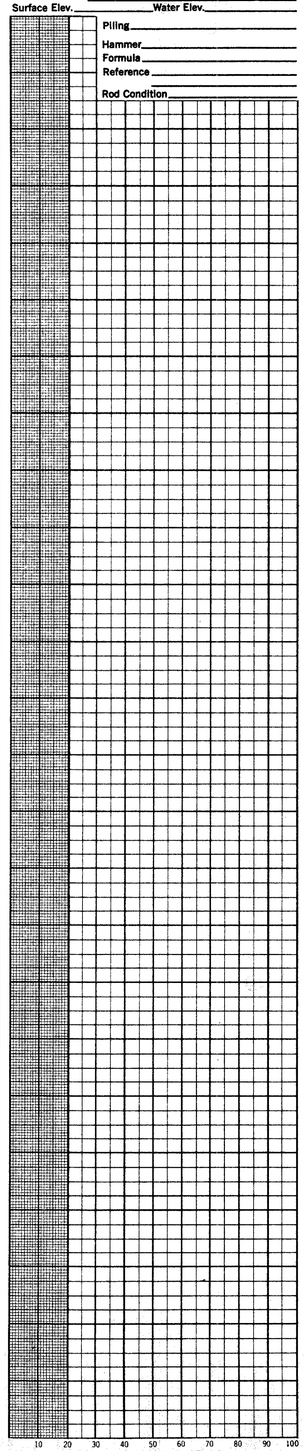

Test Location No. ____
Station & Offset ____
Surface Elev. ____ Water Elev. ____
Piling ____
Hammer ____
Formula ____
Reference ____
Rod Condition ____

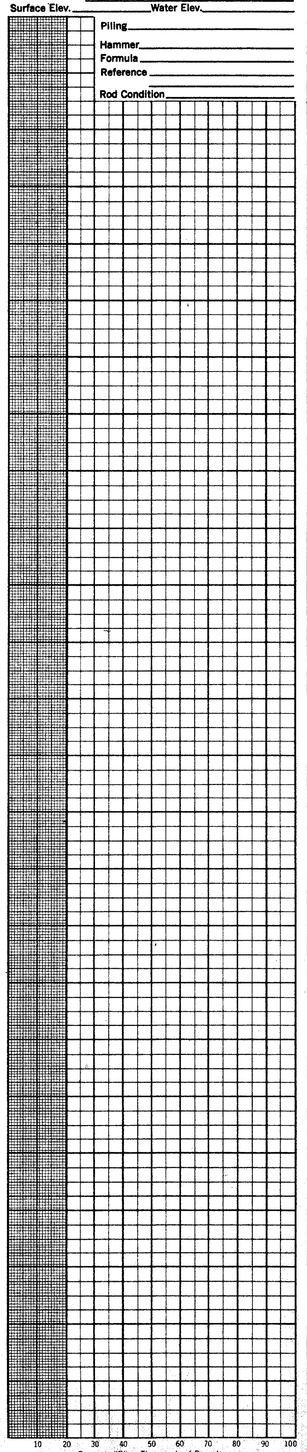

Test Location No. 1
Station & Offset 23+61.55'LT REAR ABUTMENT
Surface Elev. 758.2 Water Elev. ____
Piling ____
Hammer ____
Formula ____
Reference ____
Rod Condition ____

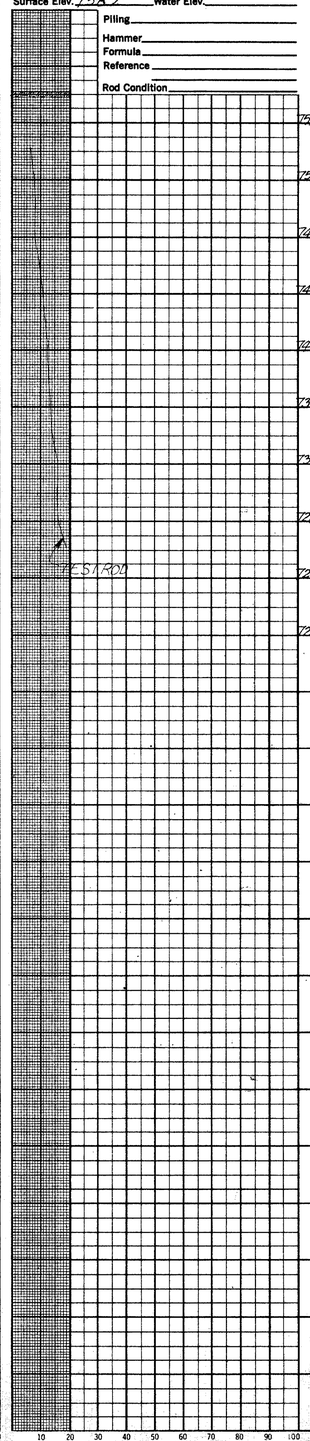

Test Location No. 3
Station & Offset 23+96.40'RT REAR PIER
Surface Elev. 758.4 Water Elev. ____
Piling ____
Hammer ____
Formula ____
Reference ____
Rod Condition ____

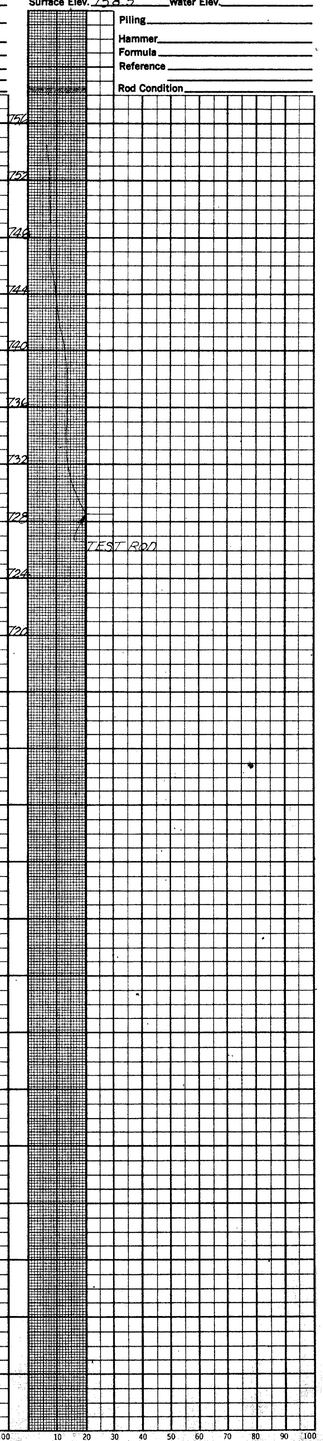

Test Location No. 6
Station & Offset 25+12.40'LT CENTER PIER
Surface Elev. 759.3 Water Elev. ____
Piling ____
Hammer ____
Formula ____
Reference ____
Rod Condition ____

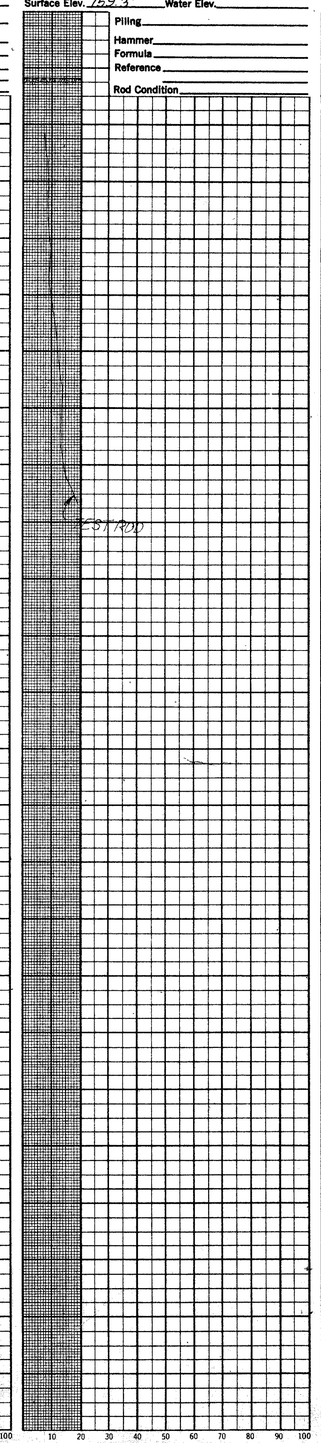

Test Location No. 7
Station & Offset 25+60.40'RT FORWARD PIER
Surface Elev. 758.5 Water Elev. ____
Piling ____
Hammer ____
Formula ____
Reference ____
Rod Condition ____

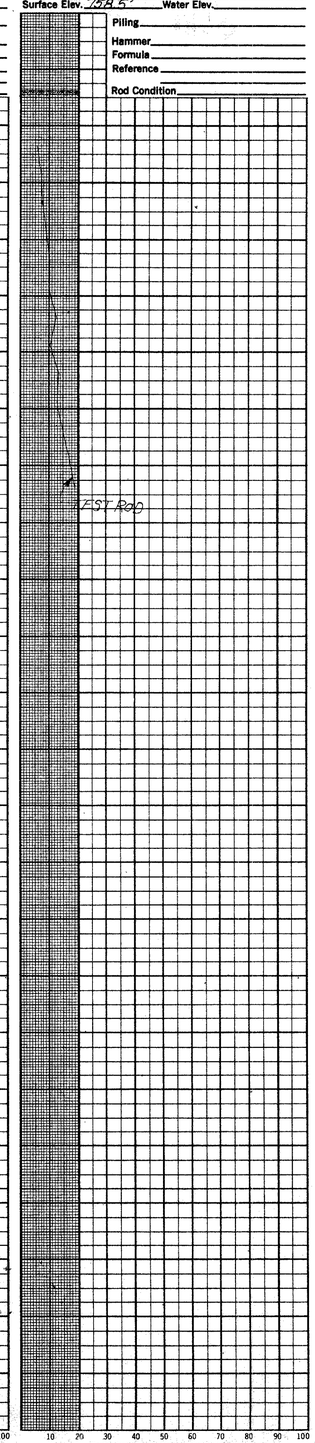

Test Location No. 10
Station & Offset 26+37.37'LT FORWARD ABUTMENT
Surface Elev. 756.0 Water Elev. ____
Piling ____
Hammer ____
Formula ____
Reference ____
Rod Condition ____

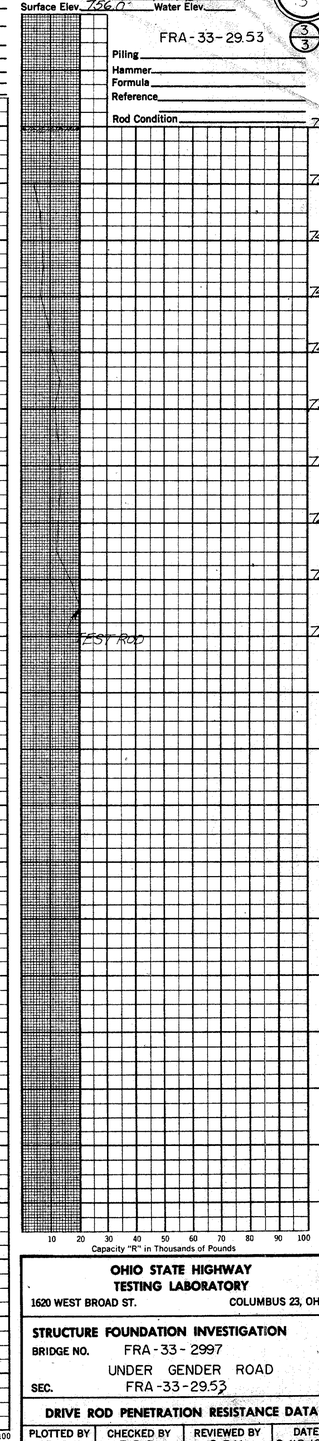

3/3

FRA-33-29.53 3/3

OHIO STATE HIGHWAY TESTING LABORATORY
1620 WEST BROAD ST. COLUMBUS 23, OHIO

STRUCTURE FOUNDATION INVESTIGATION
BRIDGE NO. FRA-33-2997
UNDER GENDER ROAD
SEC. FRA-33-29.53

DRIVE ROD PENETRATION RESISTANCE DATA

PLOTTED BY	CHECKED BY	REVIEWED BY	DATE
R.C.	R.D.R.	G.P.H.	6/18/69