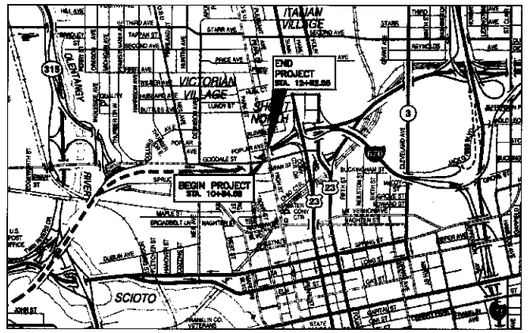

LATITUDE: 39°58' – LONGITUDE: 82°59'

LOCATION MAP

0 1500 3000

SCALE

NORTH

STATE OF OHIO
DEPARTMENT OF TRANSPORTATION
FRA-670-3.80 PART 2
CITY OF COLUMBUS
FRANKLIN COUNTY

FOR PART 1, SEE FRA-670-3.17

PROJECT DESCRIPTION

THE PROJECT CONSISTS OF THE CONSTRUCTION OF TWO BRIDGE STRUCTURES DESIGNED TO SUPPORT FUTURE RETAIL STRUCTURES IN CENTRAL FRANKLIN COUNTY IN THE COLUMBUS METROPOLITAN AREA. THE BRIDGES HAVE A NORTH–SOUTH ORIENTATION SPANNING INTERSTATE 670 AT HIGH STREET.

1997 SPECIFICATIONS

THE STANDARD SPECIFICATIONS OF THE STATE OF OHIO, DEPARTMENT OF TRANSPORTATION, INCLUDING CHANGES AND SUPPLEMENTAL SPECIFICATIONS LISTED IN THE PROPOSAL, SHALL GOVERN THIS IMPROVEMENT.

INDEX OF SHEETS

TITLE SHEET 1
SITE PLAN 2
GENERAL NOTES 3
ESTIMATED QUANTITIES 4
ABUTMENT DETAILS 5–8
PIER DETAILS 9–10
SUPERSTRUCTURE DETAILS 11–29
BEARING DETAILS & EXPANSION DEVICES 30
REINFORCING STEEL 31

PLAN SHEETS REDUCED 50%

DESIGN DESIGNATION:

THIS STRUCTURE IS NOT DESIGNED TO SUPPORT TRAFFIC LOADS. THE STRUCTURE HAS BEEN DESIGNED TO SUPPORT FUTURE RETAIL FACILITIES. ALL MEMBERS HAVE BEEN PROPORTIONED TO SAFELY SUPPORT THE ACTUAL DEAD LOAD OF THE DECK AND FUTURE RETAIL STRUCTURE PLUS THE APPROPRIATE OCCUPANCY LIVE LOAD AS REQUIRED BY THE 1998 OHIO BASIC BUILDING CODE.

DESIGN EXCEPTIONS:

NONE REQUIRED.

PLANS CERTIFIED BY:
NAME: Megan Blackford DATE: 9/5/01
DISTRICT 6
OHIO DEPT. OF TRANSPORTATION

FOR CITY OF COLUMBUS

APPROVED _____
DATE 8/30/01 STATE/FEDERAL PROJECTS ENGINEER

APPROVED _____
DATE 8/30/01 CITY ENGINEER

APPROVED _____
DATE 8/30/01 DIRECTOR OF PUBLIC SERVICE

APPROVED _____
DATE 9/3/01 DIRECTOR OF UTILITIES

FOR STATE OF OHIO

APPROVED _____
DATE 9/4/01 DISTRICT DEPUTY DIRECTOR

APPROVED _____
DATE _____ DIRECTOR, DEPARTMENT OF TRANSPORTATION

UNDERGROUND UTILITIES

TWO WORKING DAYS
BEFORE YOU DIG
CALL...1–800–362–2764 (TOLL FREE)
OHIO UTILITIES PROTECTION SERVICE

NON–MEMBERS
MUST BE CALLED DIRECTLY

PLANS PREPARED BY:
JEZERINAC GEERS & ASSOC.
5640 FRANTZ ROAD
DUBLIN, OH 43017
(614) 766–0066

ENGINEERS SEAL:

STATE OF OHIO — DONALD M. JEZERINAC, RICHARD E. GEERS — REGISTERED PROFESSIONAL ENGINEER

SIGNED: _____
DATE: 8-14-01

STANDARD DRAWINGS	SUPPLEMENTAL SPECIFICATIONS
SEE PART 1	SEE PART 1
	SPECIAL PROVISIONS
	SEE PART 1

FEDERAL PROJECT NO. TE21–6000(153)

PID NO. 4666

CONSTRUCTION PROJECT NO.

RAILROAD INVOLVEMENT NONE

FRA–670–3.80

B.M. 113
STA.156+47.92 I-670, 38.14'LT.
R.R.SPIKE SET ELEV.= 730.93

B.M. 122
STA.13+56.67 HIGH ST., 33.70'LT.
P.K.SET ELEV.= 754.51

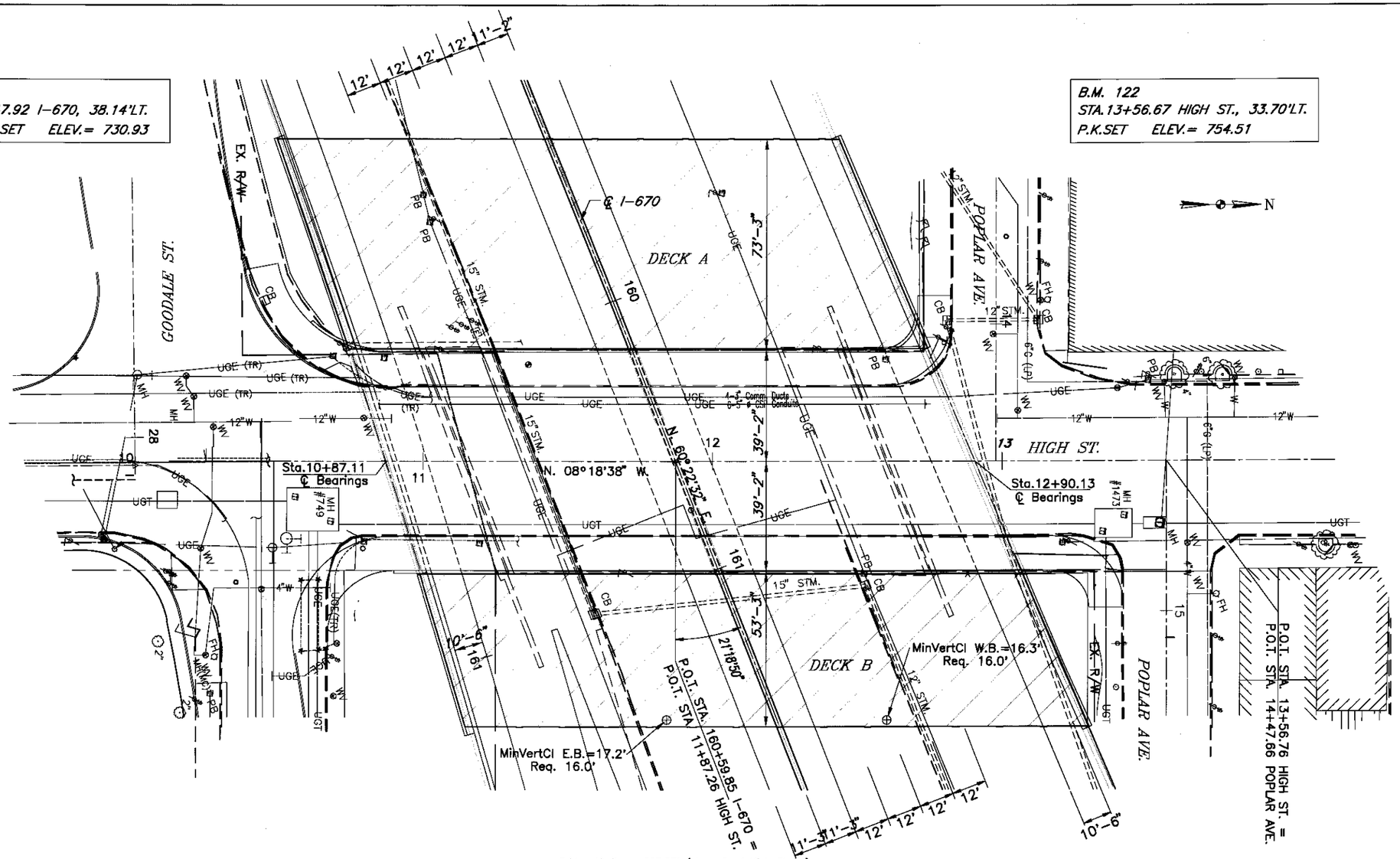

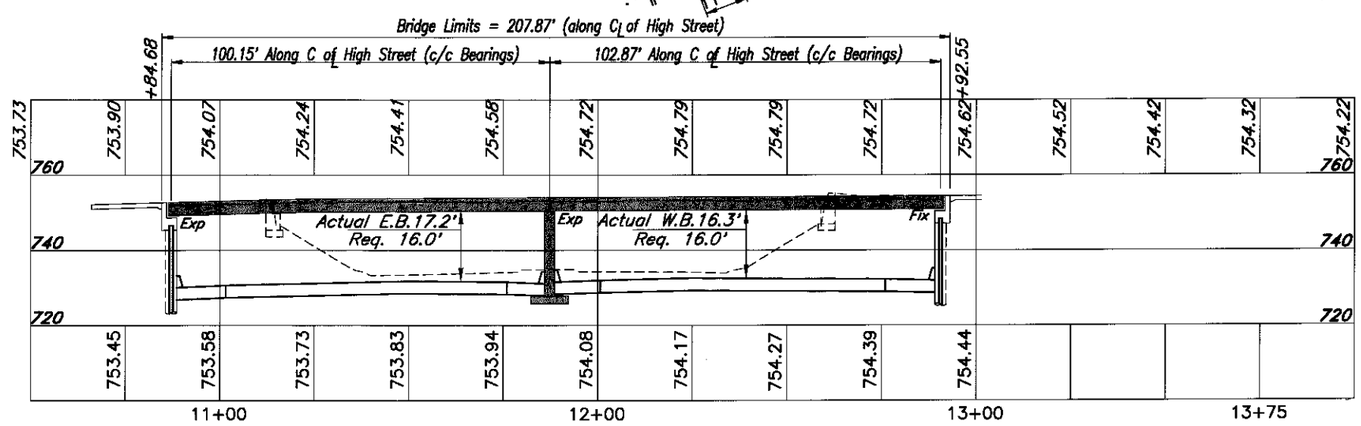

PROPOSED BRIDGE OVER I-670
Along ℄ High Street

PROPOSED STRUCTURE

TYPE: Reinforced Concrete Deck on Continuous Steel Beams & Reinforced Concrete Substructure

DECK A SPAN: 94.64'+100.16' c/c Bearing

DECK B SPAN: 104.95'+104.23' c/c Bearing

LOADING: Floor Live Load 100 psf
Roof Live Load 25 psf

SKEW: 21°-18'-50" R.F.

ALIGNMENT: Tangent

CROWN: None

DESIGN AGENCY
JEZERINAC GEERS & ASSOC.
5640 FRANTZ ROAD
DUBLIN, OH 43017

DESIGNED	DRAWN	REVIEWED	DATE
TR	CAD	-	8/15/01
CHECKED	REVISED	STRUCTURE FILE NUMBER	
REG		2500630 2500631	

SITE PLAN
BRIDGE NO. FRA-670-0380A & B
I-670 UNDER HIGH STREET

FRA-670-3.80

GENERAL NOTES

REFERENCE SHALL BE MADE TO ODOT STANDARD DRAWINGS:
EXJ-4-87
GSD-1-96
BS-1-93

AND TO SUPPLEMENTAL SPECIFICATIONS:
816 DATED 4-21-97
842 DATED 1-6-99
863 DATED 10-12-99
864 DATED 7-11-00
899 DATED 10-21-98
910 DATED 7-11-00

DESIGN SPECIFICATIONS: THIS STRUCTURE CONFORMS TO "STANDARD SPECIFICATIONS FOR HIGHWAY BRIDGES" ADOPTED BY THE AMERICAN ASSOCIATION OF STATE HIGHWAY AND TRANSPORTATION OFFICIALS, 1996, INCLUDING THE 1997, 1998, AND 1999 INTERIM SPECIFICATIONS AND THE ODOT BRIDGE DESIGN MANUAL.

DESIGN LOADING: BRIDGE ELEMENTS ARE DESIGNED TO SUPPORT A SUPERIMPOSED BUILDING, DESIGNED IN ACCORDANCE WITH THE OHIO BASIC BUILDING CODE, 1998 EDITION. SPECIFIC DESIGN LOADS FOR THE BUILDING INCLUDE:

ROOF LIVE LOAD: 20 PSF
ROOF SNOW LOAD: 25 PSF GROUND SNOW, WITH DRIFTING AND EXPOSURE MODIFICATIONS.
- EXPOSURE FACTOR: 0.7
- IMPORTANCE FACTOR: 1.0

FLOOR LIVE LOADS: INTERIOR RETAIL SPACES: 100 PSF
EXTERIOR WALKWAY SPACES: 100 PSF

WIND LOADS: (IN ACCORDANCE WITH OBC 1609):
BASIC WIND SPEED: 80 MPH (100 MPH ON BRIDGE STRUCTURE)
EXPOSURE CATEGORY: EXP. C
IMPORTANCE FACTOR: 1.0
BASIC VELOCITY PRESSURE: 16.4 PSF

SEISMIC DESIGN CRITERIA:
Av = 0.07; Aa = 0.07; R = 4.5; R = 4.0
SEISMIC HAZARD EXPOSURE GROUP: 1
SEISMIC PERFORMANCE CATEGORY: B
BASIC STRUCTURAL SYSTEM: MOMENT RESIST. FRAMES
SEISMIC RESISTING SYSTEM: ORDINARY MOMENT FRAMES OF STEEL
ANALYSIS PROCEDURE: OBC 1610.4

DESIGN DATA: BRIDGE COMPUTATIONS ARE BASED UPON LOAD FACTOR DESIGN:

CONCRETE CLASS S - COMPRESSIVE STRENGTH 4500 PSI (SUPERSTRUCTURE)
CONCRETE CLASS C - COMPRESSIVE STRENGTH 4000 PSI (SUBSTRUCTURE - FOOTINGS, COLUMNS, PIER CAPS)
REINFORCING STEEL - ASTM A1615, A616, OR A617, GRADE 60, YIELD STRENGTH 60,000 PSI
STRUCTURAL STEEL - ASTM A572/A709, GRADE 50, YIELD STRENGTH 50,000 PSI

DESIGN LOADING, BRIDGE STRUCTURE, TEMPORARY USAGE: PRIOR TO INSTALLATION OF BUILDING COMPONENTS, BRIDGE STRUCTURE MAY NOT BE USED FOR TEMPORARY TRAFFIC ROUTING OR FOR STORAGE. BRIDGE MAY BE USED FOR INCIDENTAL STORAGE NOT TO EXCEED 50 PSF, OR FOR VEHICULAR TRAFFIC NOT TO EXCEED 5000 POUND VEHICLES.

DECK PROTECTION METHOD: EPOXY COATED REINFORCING STEEL, 2-1/2" CONCRETE COVER AND SEALING OF CONCRETE SURFACES. MAJORITY OF FINISHED STRUCTURE IS INTERIOR SPACE WITHIN RETAIL STRUCTURE, AND PROTECTION IS FOR TEMPORARY CONDITIONS.

FOUNDATION BEARING PRESSURE: PIER FOOTINGS, AS DESIGNED PRODUCE A MAXIMUM BEARING PRESSURE OF 2.25 TONS PER SQUARE FOOT. THE ALLOWABLE BEARING PRESSURE IS 2.50 TONS PER SQUARE FOOT.

UTILITY LINES: ALL EXPENSE INVOLVED IN RELOCATION OF THE AFFECTED UTILITY LINES SHALL BE BORNE BY THE UTILITIES. THE CONTRACTOR AND UTILITIES ARE TO COOPERATE BY ARRANGING THEIR WORK IN SUCH A MANNER THAT INCONVENIENCE TO EITHER WILL BE HELD TO A MINIMUM.

EXISTING CONSTRUCTION: FRONT AND REAR ABUTMENTS SUPPORTING BRIDGE BEAMS ARE PART OF ODOT PROJECT FRA-670-3.17, AND ARE NOT A PART OF THIS PROJECT. COORDINATE WITH ADJACENT PROJECT CONTRACTOR FOR EMBEDS AND EXPANSION JOINT BOXOUTS REQUIRED.

ITEM 503 - UNCLASSIFIED EXCAVATION AS PER PLAN: UNCLASSIFIED EXCAVATION SHALL BE IN ACCORDANCE WITH 503.

ITEM 816 - FIELD PAINTING OF NEW STEEL INTERMEDIATE AND FINISH COAT, SYSTEM IZEU, AS PER PLAN: THE URETHANE TOP COAT FOR THE IZEU PAINT SYSTEM SHALL BE FEDERAL COLOR STANDARD NO. 14062 (DARK GREEN).

ITEM 864 - SEALING OF CONCRETE SURFACES (EPOXY - URETHANE): THE URETHANE TOP COAT FOR THE EPOXY-URETHANE SEALER SHALL BE FEDERAL COLOR STANDARD NO. 17778 (LIGHT NEUTRAL).

FUTURE CONSTRUCTION: AFTER BRIDGE STRUCTURES HAVE BEEN COMPLETED AND THE WORK HAS BEEN ACCEPTED, THE CONTRACTOR SHALL MAKE PROVISION TO ACCOMMODATE BUILDING CONTRACTORS FOR FUTURE CONSTRUCTION.

ITEM 842, CLASS C CONCRETE, FOOTING, AS PER PLAN: IN ADDITION TO THE REQUIREMENTS OF ITEM 842, REFERENCE MONUMENTS SHALL BE INSTALLED IN EACH PIER AND ABUTMENT SPREAD FOOTING. EACH SPREAD FOOTING SHALL HAVE TWO REFERENCE MONUMENTS INSTALLED, ONE AT EACH END OF THE FOOTING. THE REFERENCE MONUMENTS SHALL CONSIST OF A #8, OR LARGER, EPOXY COATED REBAR. IT SHALL BE EMBEDDED INTO THE FOOTING AT LEAST 6" AND EXTEND VERTICALLY 4 TO 6 INCHES ABOVE THE TOP OF THE FOOTING. A SIX INCH DIAMETER, SCHEDULE 40, PLASTIC PIPE SHALL BE INSTALLED AROUND THE REFERENCE MONUMENT; SHALL BE VERTICAL; AND THE TOP OF THE PIPE SHALL BE AT THE FINISHED GRADE. THE PIPE SHALL HAVE A REMOVABLE, SCHEDULE 40, PLASTIC CAP. THE PIPE SHALL BE CENTERED ON THE REFERENCE MONUMENT. THE BOTTOM OF THE PIPE SHALL BE PERMANENTLY ATTACHED TO THE TOP OF THE FOOTING.

THE BELOW TABLES SHALL BE COMPLETED FOR EACH INSTALLED REFERENCE MONUMENT.

PROJECT NUMBER	FRA-670-3.80	MAXIMUM BEARING PRESSURE 4500 PSF	
BRIDGE NUMBER	FRA-670-0380 A	STRUCTURE FILE NUMBER 2506238	
PIER OR ABUTMENT	PIER CAP "A"	LEFT MONUMENT	LEFT MONUMENT
AFTER FOOTING CONCRETE IS PLACED			
BEFORE PLACEMENT OF SUPERSTRUCTURE			
BEFORE DECK PLACMENT			
AFTER DECK PLACMENT			
PROJECT COMPLETED			
BENCHMARK LOCATION			

PROJECT NUMBER	FRA-670-3.80	MAXIMUM BEARING PRESSURE 4500 PSF	
BRIDGE NUMBER	FRA-670-0380 B	STRUCTURE FILE NUMBER 2506351	
PIER OR ABUTMENT	PIER CAP "B"	LEFT MONUMENT	LEFT MONUMENT
AFTER FOOTING CONCRETE IS PLACED			
BEFORE PLACEMENT OF SUPERSTRUCTURE			
BEFORE DECK PLACMENT			
AFTER DECK PLACMENT			
PROJECT COMPLETED			
BENCHMARK LOCATION			

ESTIMATED QUANTITIES

ITEM	ITEM EXT.	TOTAL	UNIT	DESCRIPTION	DECK "A" SUPER.	DECK "A" ABUT.	DECK "A" PIER	DECK "B" SUPER.	DECK "B" ABUT.	DECK "B" PIER	GENERAL	SHEET NO.
503	21301	LUMP		UNCLASSIFIED EXCAVATION, AS PER PLAN		LUMP			LUMP		LUMP	3/31
516	10901	410	LIN FT	ELASTOMERIC COMPRESSION SEAL, AS PER PLAN	201			209				30/31
516	11211	244	LIN FT	STRUCTURAL EXPANSION JOINT INCLUDING ELASTOMERIC STRIP SEAL, AS PER PLAN	132			112				30/31
516	44101	19	EACH	ELASTOMERIC BEARING WITH INTERNAL LAMINATES & LOAD PLATE (NEOPRENE), AS PER PLAN	11			8				30/31
				(2" x 9" x 13" WITH 1 1/2" x 10" x 21" LOAD PLATE)								
516	44101	2	EACH	ELASTOMERIC BEARING WITH INTERNAL LAMINATES & LOAD PLATE (NEOPRENE), AS PER PLAN	1			1				30/31
				(2" x 13" x 13" WITH 1 1/2" x 14" x 21" LOAD PLATE)								
516	44101	13	EACH	ELASTOMERIC BEARING WITH INTERNAL LAMINATES & LOAD PLATE (NEOPRENE), AS PER PLAN	8			5				30/31
				(2" x 10" x 18" WITH 2 1/2" x 11" x 26" LOAD PLATE)								
516	44101	2	EACH	ELASTOMERIC BEARING WITH INTERNAL LAMINATES & LOAD PLATE (NEOPRENE), AS PER PLAN	1			1				30/31
				(2" x 16" x 18" WITH 2 1/2" x 17" x 26" LOAD PLATE)								
516	44101	6	EACH	ELASTOMERIC BEARING WITH INTERNAL LAMINATES & LOAD PLATE (NEOPRENE), AS PER PLAN	3			3				30/31
				(2" x 14" x 18" WITH 2 1/2" x 15" x 26" LOAD PLATE)								
516	44101	19	EACH	ELASTOMERIC BEARING WITH INTERNAL LAMINATES & LOAD PLATE (NEOPRENE), AS PER PLAN	11			8				30/31
				(2 1/2" x 9" x 13" WITH 1 1/2" x 10" x 21" LOAD PLATE)								
516	44101	2	EACH	ELASTOMERIC BEARING WITH INTERNAL LAMINATES & LOAD PLATE (NEOPRENE), AS PER PLAN	1			1				30/31
				(2 1/2" x 13" x 13" WITH 1 1/2" x 14" x 21" LOAD PLATE)								
816	00601	LUMP		FIELD PAINTING OF NEW STEEL, INTERMEDIATE AND FINISH COAT, SYSTEM IZEU, AS PER PLAN	LUMP			LUMP				3/31
842	32200	575	CU YD	CLASS S CONCRETE, SUPERSTRUCTURE	337			238				
842	33401	45	CU YD	CLASS S CONCRETE, SUPERSTRUCTURE, AS PER PLAN	22			23				17/31, 18/31
842	41000	127	CU YD	CLASS C CONCRETE, PIER ABOVE FOOTINGS			77			50		
842	44101	41	CU YD	CLASS C CONCRETE, ABUTMENT NOT INCLUDING FOOTING, AS PER PLAN		24			17			7/31, 8/31
842	46501	125	CU YD	CLASS C CONCRETE, FOOTING, AS PER PLAN			72			53		3/31
863	10240	884,713	POUND	STRUCTURAL STEEL MEMBERS, LEVEL TWO (2) FABRICATION	481,351			403,362				
863	20000	2786	EACH	WELDED STUD SHEAR CONNECTORS	1527			1259				
864	10000	172	SQ YD	SEALING OF CONCRETE SURFACES	89			83				
864	10100	522	SQ YD	SEALING OF CONCRETE SURFACES (EPOXY-URETHANE)		122	183		88	129		3/31

DESIGN AGENCY
JEZERINAC GEERS & ASSOC.
5640 FRANTZ ROAD
DUBLIN, OH 43017

DATE 8/15/01 | REVIEWED – | STRUCTURE FILE NUMBER 5500916 25A036

DRAWN CAD | REVISED

DESIGNED TR | CHECKED REG

ESTIMATED QUANTITIES
BRIDGE NO. FRA-670-0380A & B
I-670 UNDER HIGH STREET

FRA-670-3.80

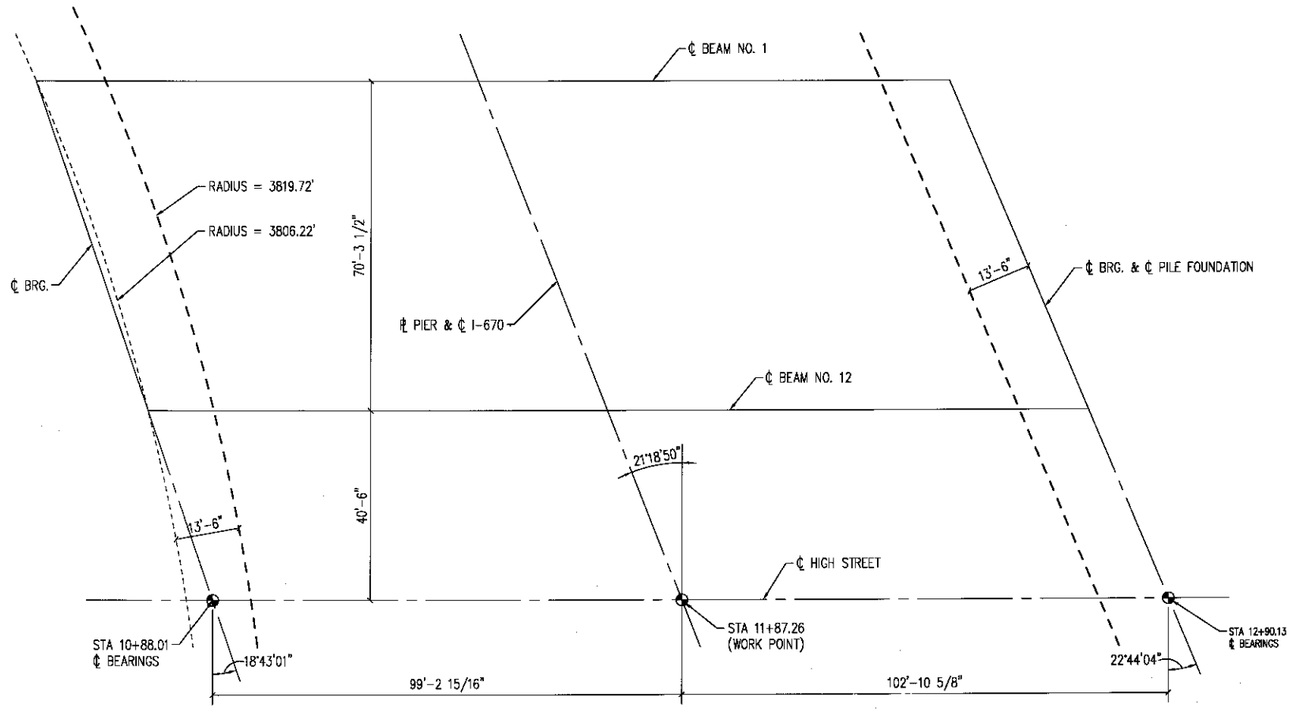

PLAN LAYOUT – DECK "A"

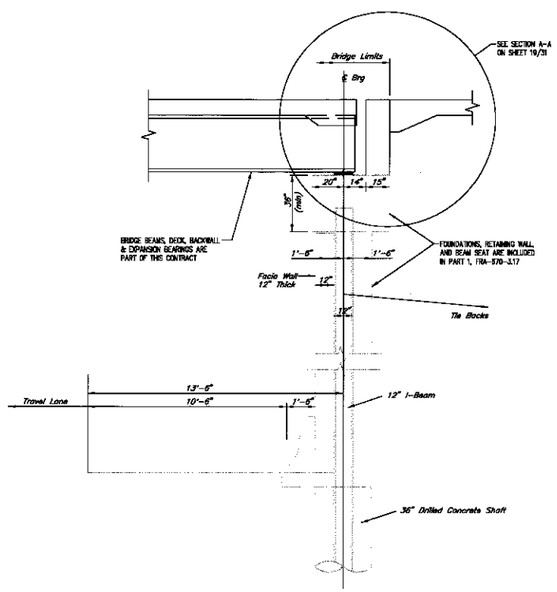

TYPICAL ABUTMENT SECTION

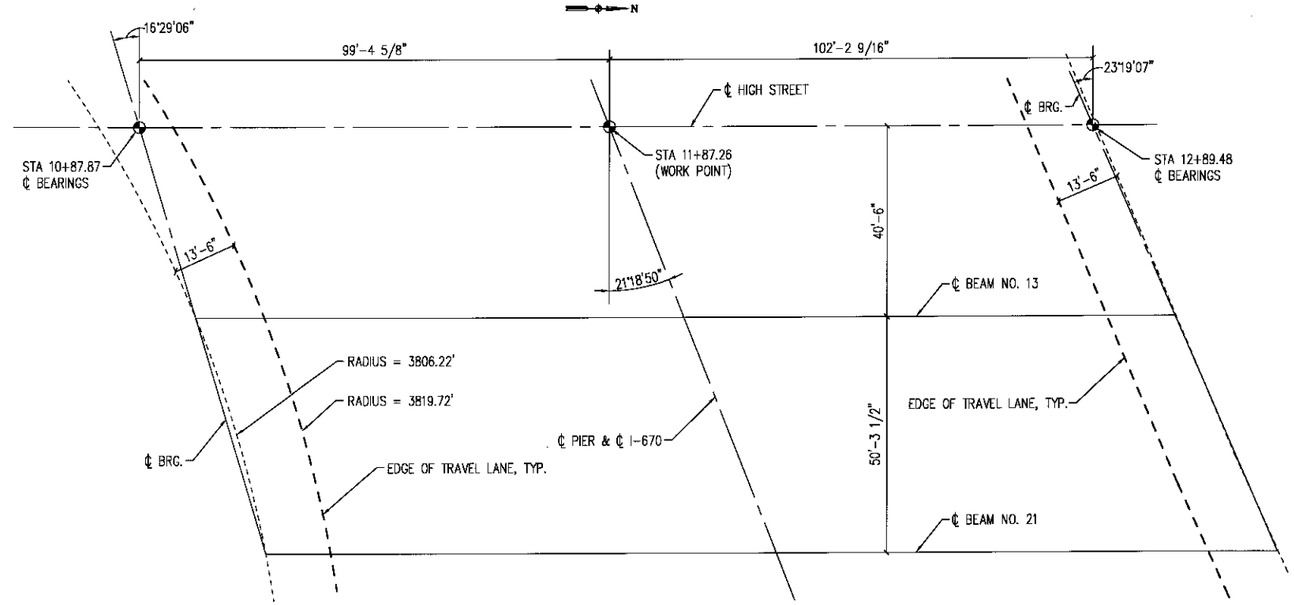

PLAN LAYOUT – DECK "B"

DESIGN AGENCY
JEZERINAC GEERS & ASSOC.
5640 FRANTZ ROAD
DUBLIN, OH 43017

DESIGNED	DRAWN	REVIEWED	DATE
TR	CAD	–	8/15/01
CHECKED	REVISED	STRUCTURE FILE NUMBER	
REG		2500326 2500327	

ABUTMENT DETAILS
BRIDGE NO. FRA-670-0380A & B
I-670 UNDER HIGH STREET

FRA-670-3.80

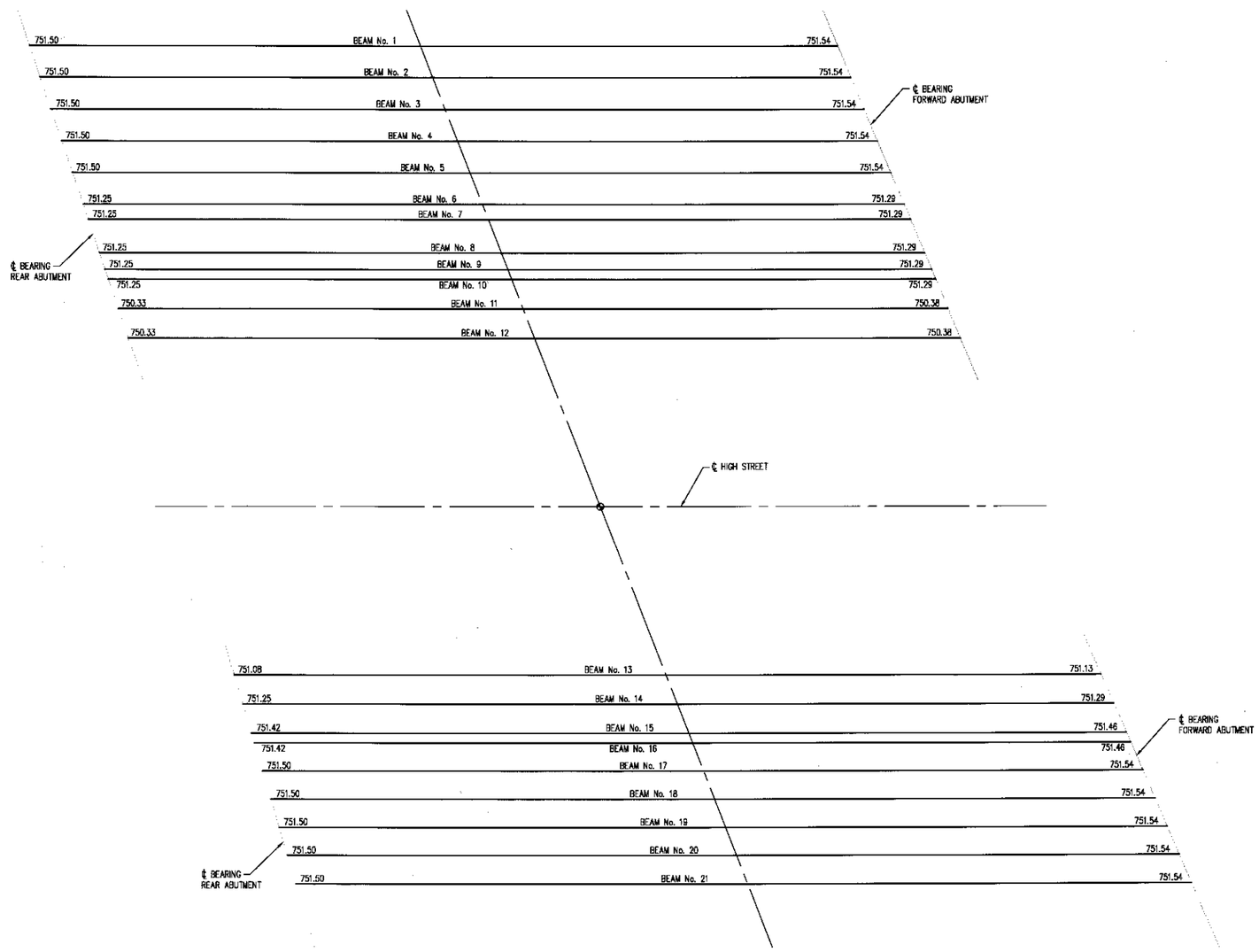

BRIDGE SEAT ELEVATIONS AT ABUTMENT

N

DESIGN AGENCY
JEZERINAC GEERS & ASSOC.
5640 FRANTZ ROAD
DUBLIN, OH 43017

DESIGNED	DRAWN	REVIEWED	DATE
TR	CAD	–	8/15/01
CHECKED	REVISED	STRUCTURE FILE NUMBER	
REG		2500236 2500351	

ABUTMENT DETAILS
BRIDGE NO. FRA-670-0380A & B
I-670 UNDER HIGH STREET

FRA-670-3.80

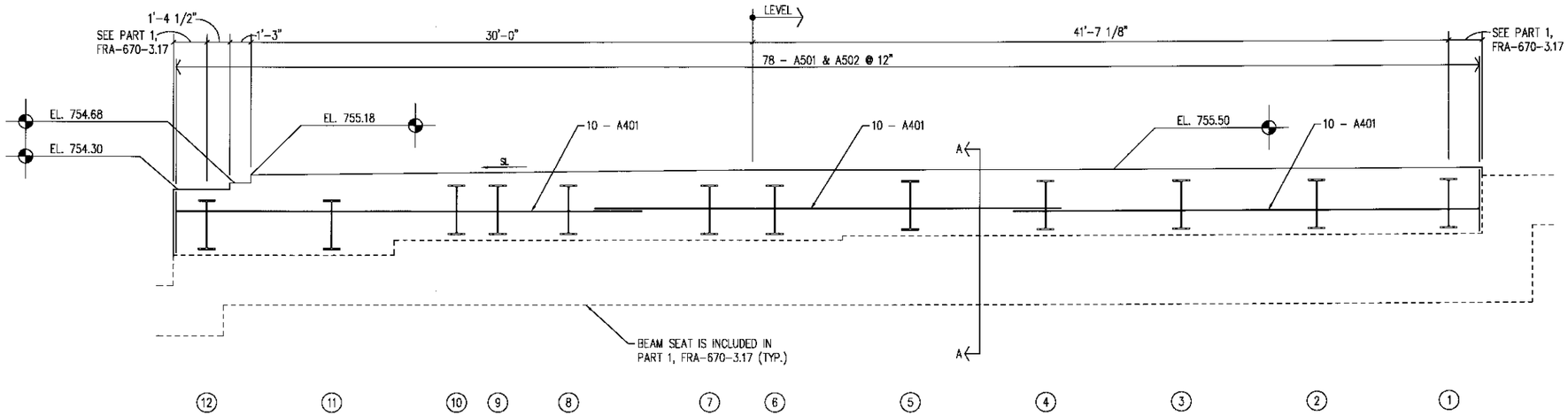

DECK "A" REAR ABUTMENT (SOUTH)

BEAM SEAT ELEVATION		
BEAM #	REAR ABUT.	FORWARD ABUT.
1	751.50	751.54
2	751.50	751.54
3	751.50	751.54
4	751.50	751.54
5	751.50	751.54
6	751.25	751.29
7	751.25	751.29
8	751.25	751.29
9	751.25	751.29
10	751.25	751.29
11	750.33	750.38
12	750.33	750.38

FOR SECTION A-A SEE SHEET 19/31

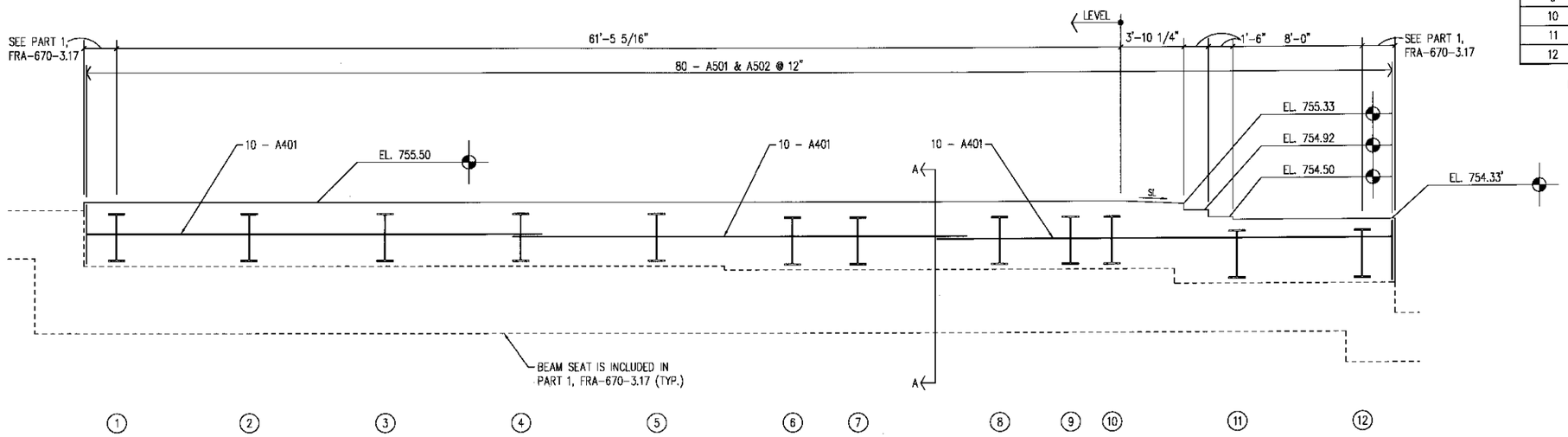

DECK "A" FORWARD ABUTMENT (NORTH)

MIN. BAR LAPS
#4 = 1'-9"
#5 = 2'-2"

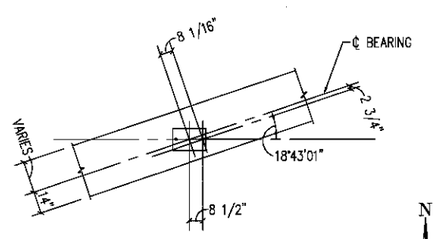

BOLT LAYOUT @ REAR ABUTMENT

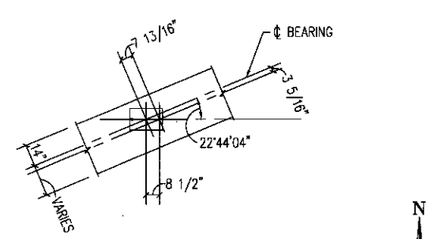

BOLT LAYOUT @ FORWARD ABUTMENT

DESIGN AGENCY
JEZERINAC GEERS & ASSOC.
5640 FRANTZ ROAD
DUBLIN, OH 43017

REVIEWED — DATE 8/15/01
STRUCTURE FILE NUMBER 2500236

DRAWN CAD REVISED

DESIGNED TR CHECKED REG

ABUTMENT DETAILS
BRIDGE NO. FRA-670-0380A
I-670 UNDER HIGH STREET

FRA-670-3.80

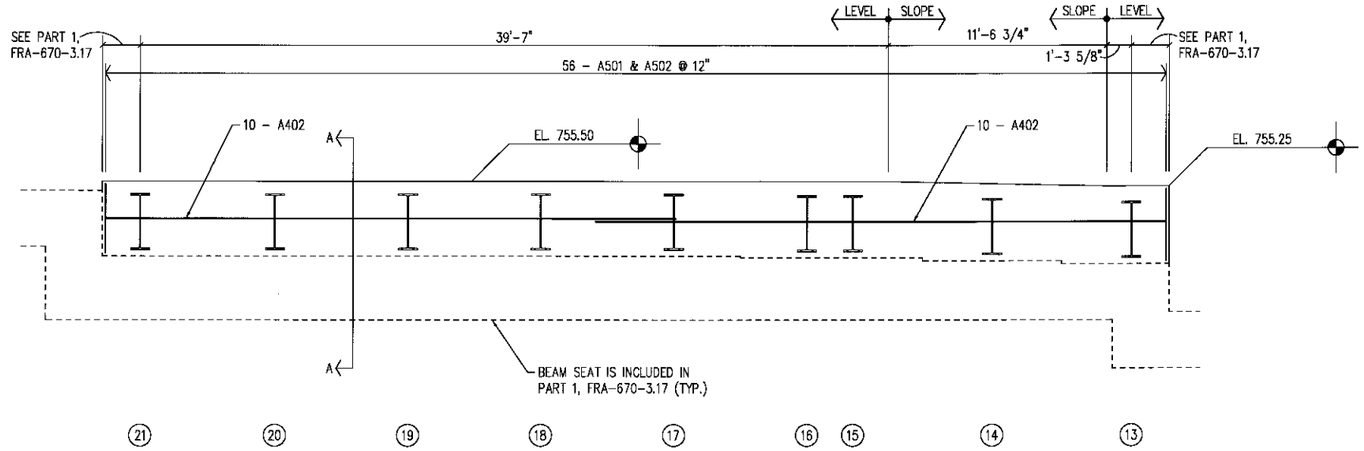

DECK "B" REAR ABUTMENT (SOUTH)

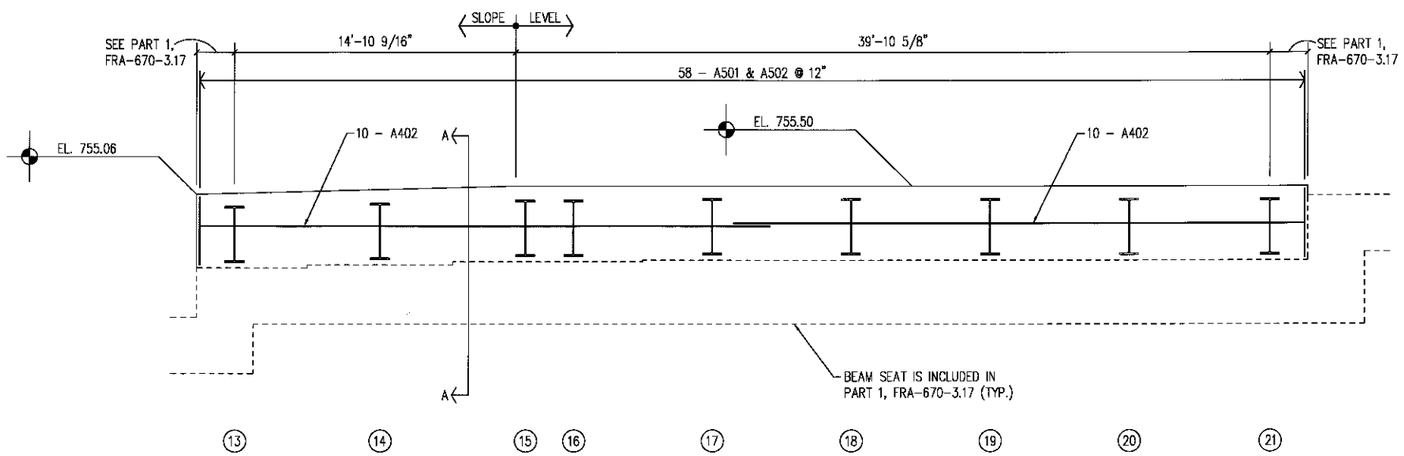

DECK "B" FORWARD ABUTMENT (NORTH)

BEAM SEAT ELEVATION		
BEAM #	REAR ABUT.	FORWARD ABUT.
13	751.08	751.13
14	751.25	751.29
15	751.42	751.46
16	751.42	751.46
17	751.50	751.54
18	751.50	751.54
19	751.50	751.54
20	751.50	751.54
21	751.50	751.54

FOR SECTION A-A SEE SHEET 19/31

MIN. BAR LAPS
#4 = 1'-9"
#5 = 2'-2"

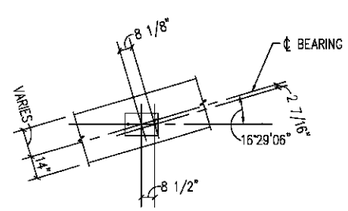

BOLT LAYOUT @ REAR ABUTMENT

N

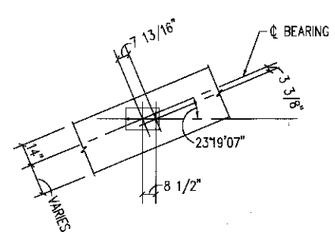

BOLT LAYOUT @ FORWARD ABUTMENT

N

DESIGN AGENCY
JEZERINAC GEERS & ASSOC.
5640 FRANTZ ROAD
DUBLIN, OH 43017

DESIGNED	DRAWN	REVIEWED	DATE
TR	CAD	-	8/15/01
CHECKED	REVISED	STRUCTURE FILE NUMBER	
REG		2500331	

ABUTMENT DETAILS
BRIDGE NO. FRA-670-0380B
I-670 UNDER HIGH STREET

FRA-670-3.80

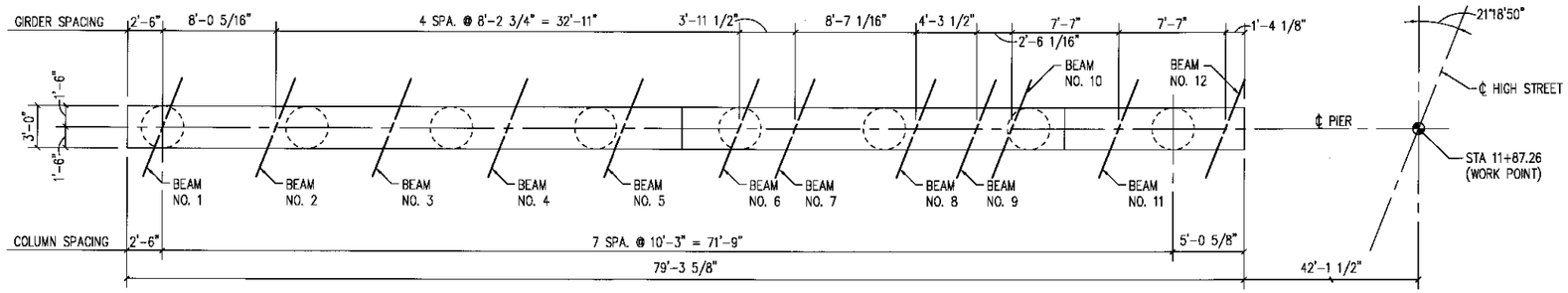

PIER "A" PLAN

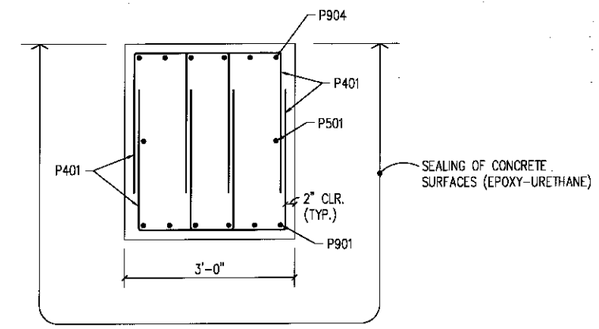

SECTION A–A

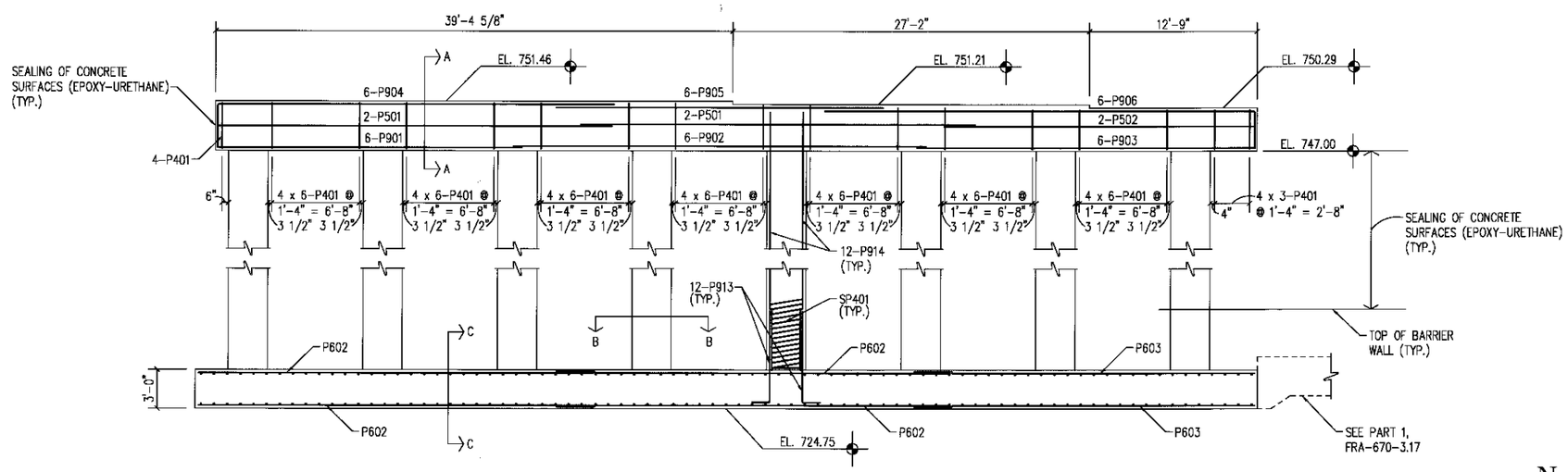

PIER "A" ELEVATION

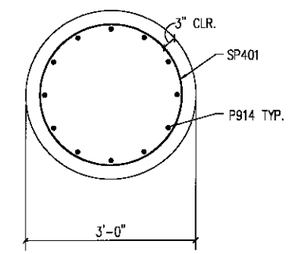

SECTION B–B

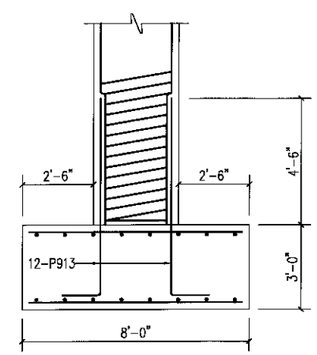

SECTION C–C

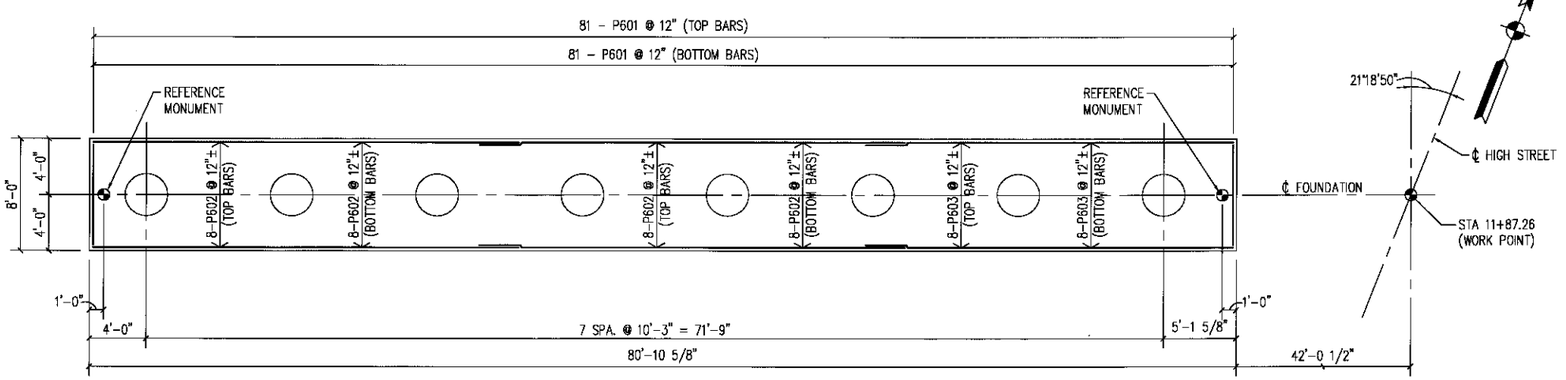

PIER "A" FOUNDATION PLAN

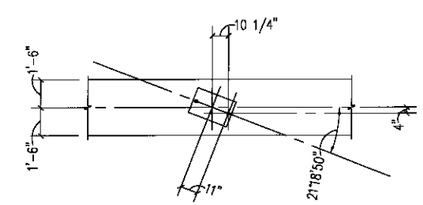

BOLT LAYOUT @ PIER

MIN. LAP LENGTH
#5 = 2'-2"
#6 = 2'-7"
#9 = 4'-6"

DESIGN AGENCY
JEZERINAC GEERS & ASSOC.
5640 FRANTZ ROAD
DUBLIN, OH 43017

DESIGNED	DRAWN	REVIEWED	DATE
TR	CAD	–	8/15/01
CHECKED	REVISED	STRUCTURE FILE NUMBER	
REG		2508238	

PIER DETAILS
BRIDGE NO. FRA-670-0380A
I-670 UNDER HIGH STREET

FRA-670-3.80

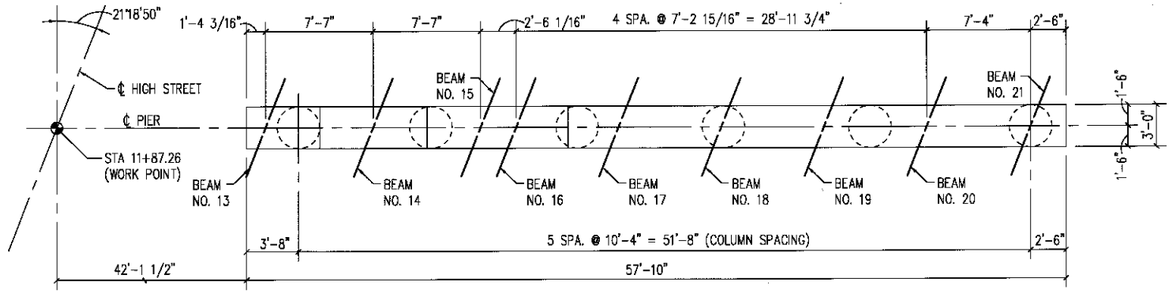

PIER "B" PLAN

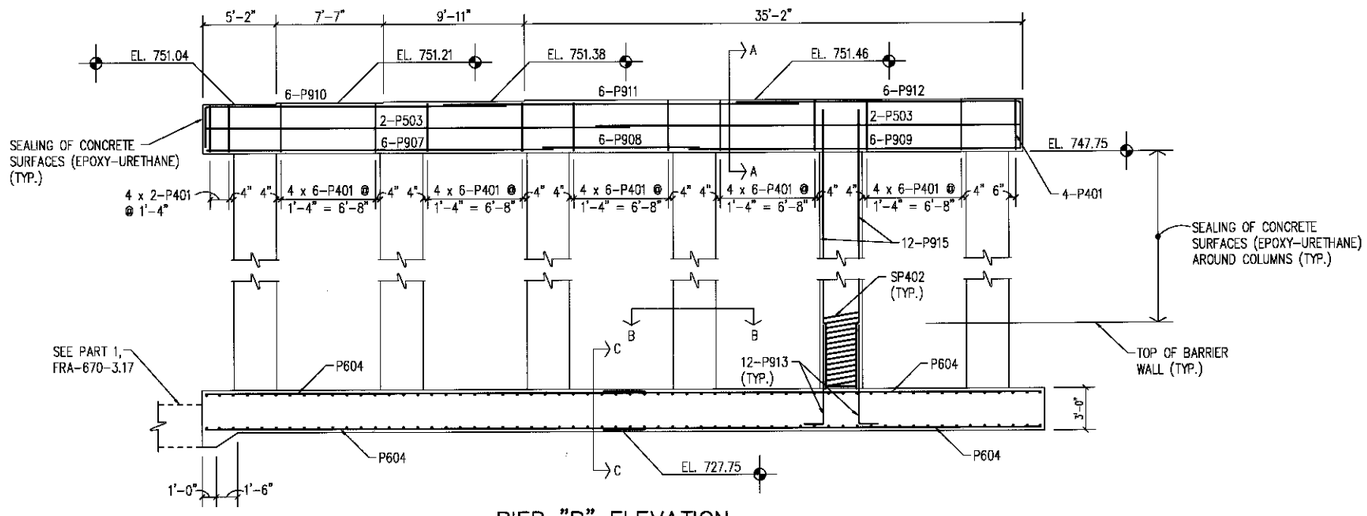

PIER "B" ELEVATION

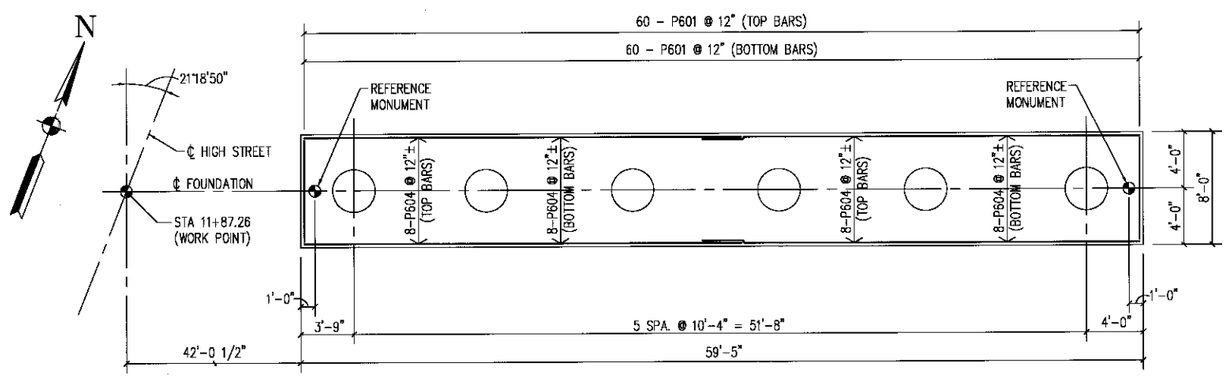

PIER "B" FOUNDATION PLAN

MIN. LAP LENGTH
#5 = 2'-2"
#6 = 2'-7"
#9 = 4'-6"

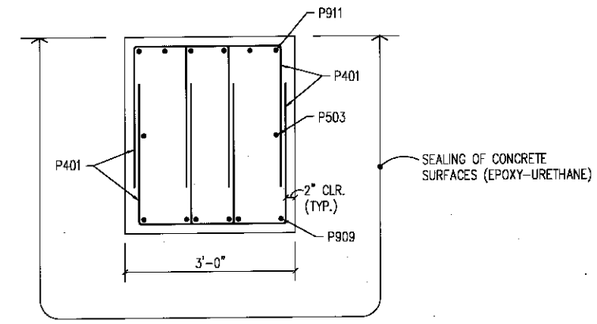

SECTION A-A

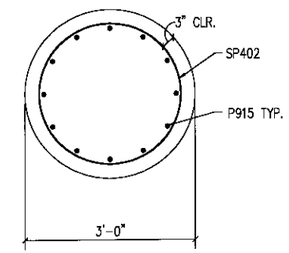

SECTION B-B

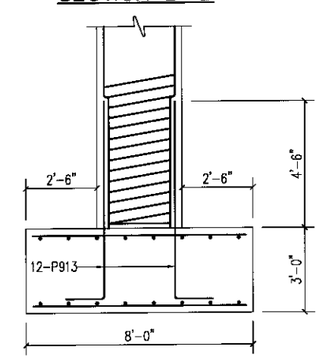

SECTION C-C

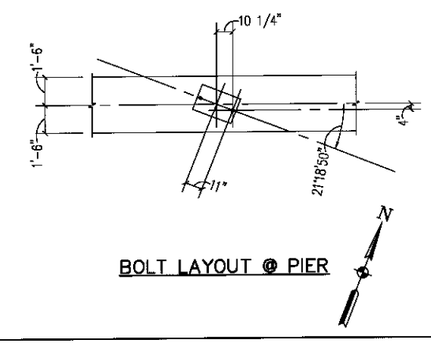

BOLT LAYOUT @ PIER

DESIGN AGENCY
JEZERINAC GEERS & ASSOC.
5640 FRANTZ ROAD
DUBLIN, OH 43017

DESIGNED	DRAWN	REVIEWED	DATE
TR	CAD	-	8/15/01
CHECKED	REVISED	STRUCTURE FILE NUMBER	
REG		2500331	

PIER DETAILS
BRIDGE NO. FRA-670-0380B
I-670 UNDER HIGH STREET

FRA-670-3.80

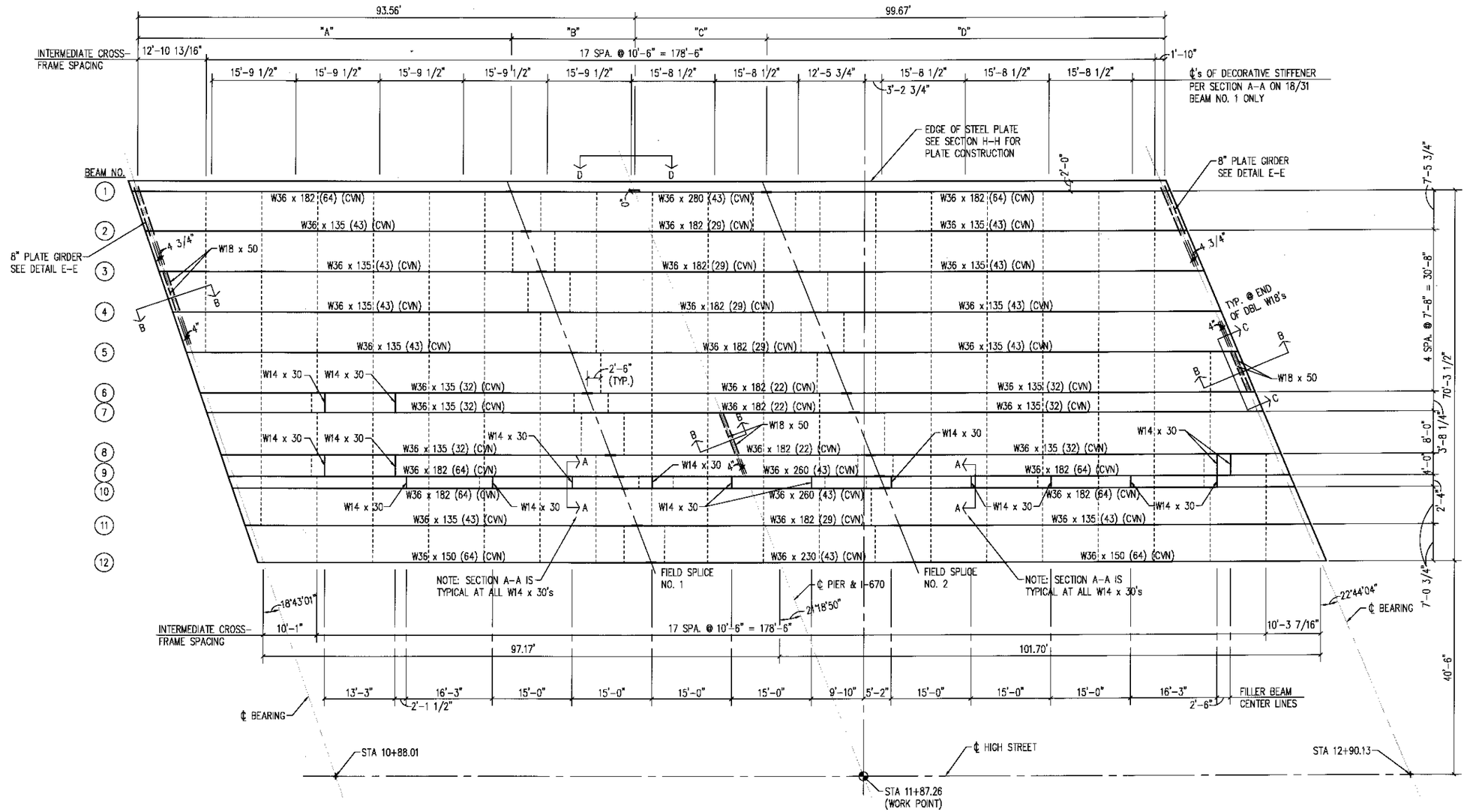

DECK "A" FRAMING PLAN

NOTES:

ALL STRUCTURAL STEEL TO BE ASTM A572.

WHEN A SHAPE OR PLATE IS DESIGNATED (CVN) THE MATERIAL SHALL MEET SPECIFIED MINIMUM NOTCH TOUGHNESS REQUIREMENTS AS SPECIFIED IN 711.01.

( ) INDICATES NUMBER OF ¾"ø HEADED STUDS

SEE SHEET 14/31 FOR SECTIONS A-A THRU H-H.

DESIGNED	DRAWN	REVIEWED	DATE
TR	CAD	–	8/15/01
CHECKED	REVISED	STRUCTURE FILE NUMBER	
REG		2500230	

DESIGN AGENCY
JEZERINAC GEERS & ASSOC.
5640 FRANTZ ROAD
DUBLIN, OH 43017

SUPERSTRUCTURE DETAILS
BRIDGE NO. FRA-670-0380A
I-670 UNDER HIGH STREET

FRA-670-3.80

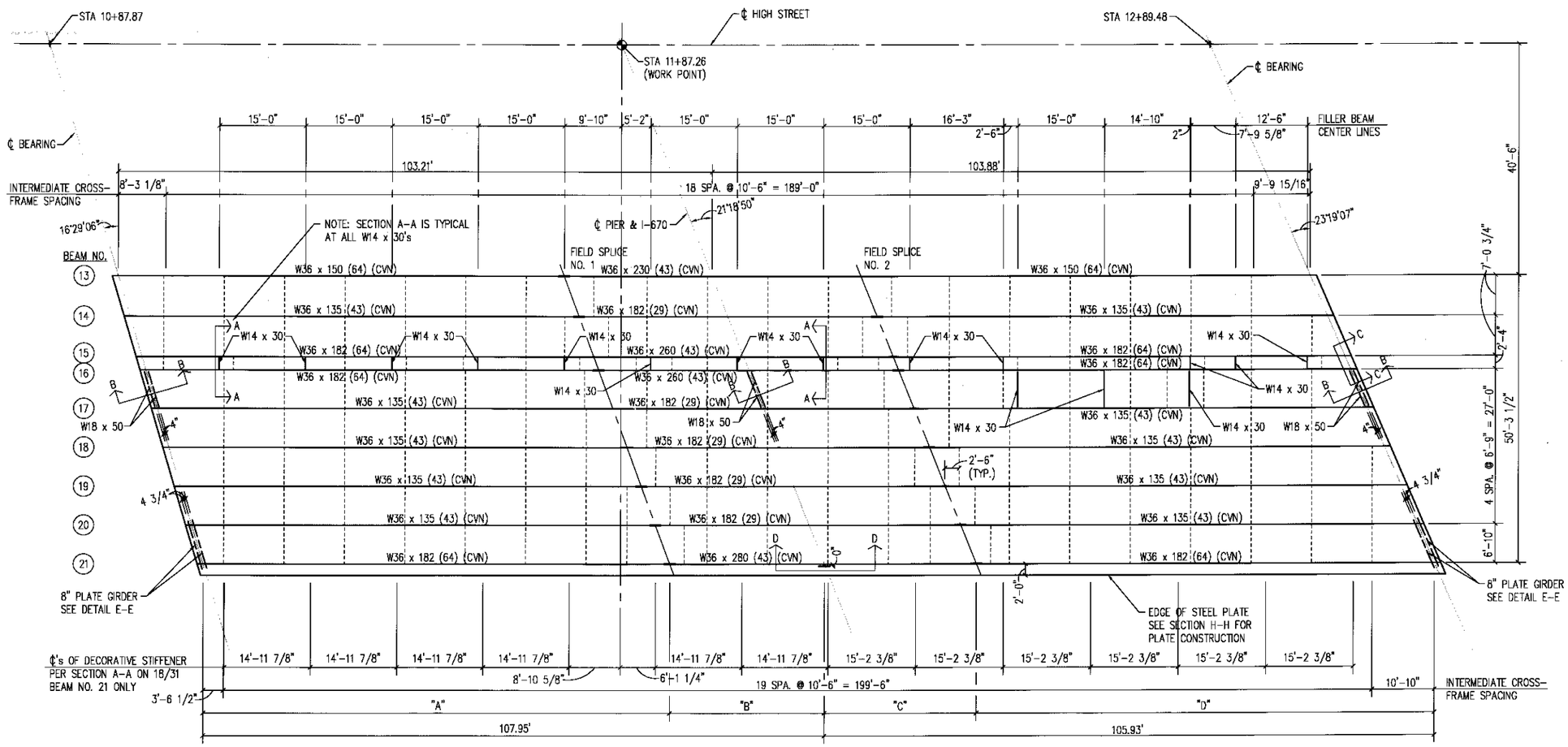

DECK "B" FRAMING PLAN

N

NOTES:

ALL STRUCTURAL STEEL TO BE ASTM A572.

WHEN A SHAPE OR PLATE IS DESIGNATED (CVN) THE MATERIAL SHALL MEET SPECIFIED MINIMUM NOTCH TOUGHNESS REQUIREMENTS AS SPECIFIED IN 711.01.

( ) INDICATES NUMBER OF ¾"ø HEADED STUDS

SEE SHEET 14/31 FOR SECTIONS A-A THRU H-H.

DESIGN AGENCY
JEZERINAC GEERS & ASSOC.
5640 FRANTZ ROAD
DUBLIN, OH 43017

DESIGNED	DRAWN	REVIEWED	DATE
TR	CAD	-	8/15/01
CHECKED	REVISED	STRUCTURE FILE NUMBER	
REG		2504351	

SUPERSTRUCTURE DETAILS
BRIDGE NO. FRA-670-0380B
I-670 UNDER HIGH STREET

FRA-670-3.80

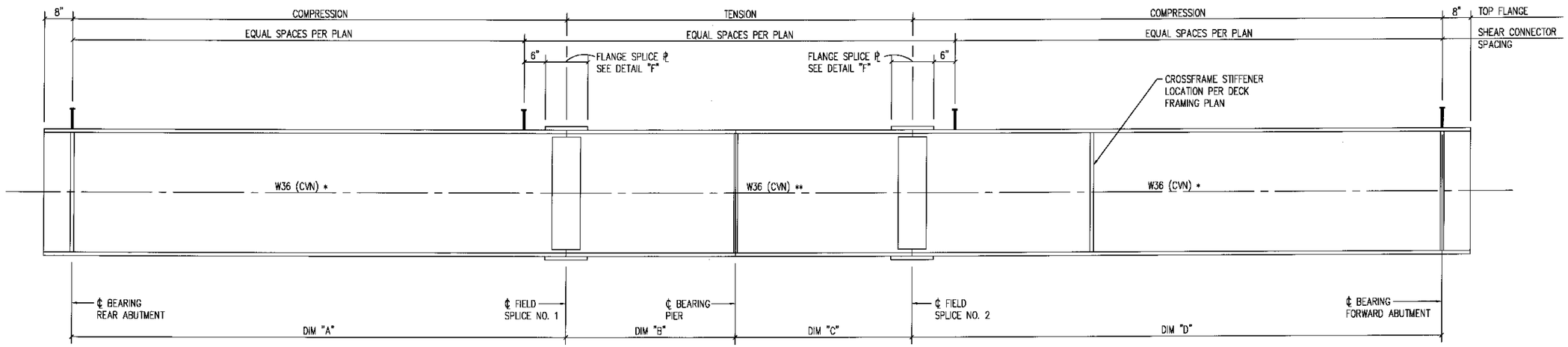

BEAM ELEVATION – TYPICAL

NOT TO SCALE

* W36 x 182 FOR BEAMS NO. 1, NO. 9, NO. 10, NO. 15, NO. 16, & NO. 21
* W36 x 135 FOR BEAMS NO. 2 THRU NO. 8, NO. 11, NO. 14, & NO. 17 THRU NO. 20
* W36 x 150 FOR BEAMS NO. 12 & NO. 13
** W36 x 280 FOR BEAMS NO. 1 & NO. 21
** W36 x 182 FOR BEAMS NO. 2 THRU NO. 8, NO. 11, NO. 14, & NO. 17 THRU NO. 20
** W36 x 260 FOR BEAMS NO. 9, NO. 10, NO. 15, & NO. 16
** W36 x 230 FOR BEAMS NO. 12, & NO. 13

WELDED ATTACHMENT OF SUPPORTS FOR CONCRETE DECK FINISHING MACHINE MAY BE MADE TO AREAS OF THE FACIA STRINGER FLANGES DESIGNATED "COMPRESSION." ATTACHMENTS SHALL NOT BE MADE TO AREAS DESIGNATED "TENSION." FILET WELDS TO COMPRESSION FLANGES SHALL BE NOT CLOSER THAN 1" FROM EDGE OF FLANGE, BE NOT MORE THAN 2" LONG, AND BE NOT SMALLER THAN THE MINIMUM SIZE REQUIRED BY AASHTO.

WHEN A SHAPE OR PLATE IS DESIGNATED (CVN) THE MATERIAL SHALL MEET SPECIFIED MINIMUM NOTCH TOUGHNESS REQUIREMENTS AS SPECIFIED IN 711.01 .

FOR DETAIL "F" SEE SHEET 14/31

BEAM DIMENSIONS

BEAM	DIM "A"	DIM "B"	DIM "C"	DIM "D"
1	70.17	23.39	24.92	74.77
2	70.46	23.48	24.97	74.93
3	70.75	23.59	25.03	75.09
4	71.05	23.68	25.08	75.26
5	71.34	23.78	25.14	75.43
6	71.64	23.88	25.20	75.59
7	71.78	23.93	25.22	75.67
8	72.09	24.03	25.28	75.84
9	72.24	24.08	25.31	75.93
10	72.33	24.11	25.33	75.98
11	72.60	24.20	25.38	76.13
12	72.88	24.29	25.43	76.28
13	77.40	25.80	25.97	77.90
14	77.90	25.97	26.04	78.12
15	78.40	26.13	26.11	78.34
16	78.56	26.19	26.13	78.41
17	79.04	26.35	26.20	78.62
18	79.52	26.50	26.28	78.82
19	80.00	26.66	26.34	79.03
20	80.47	26.83	26.41	79.24
21	80.96	26.98	26.48	79.45

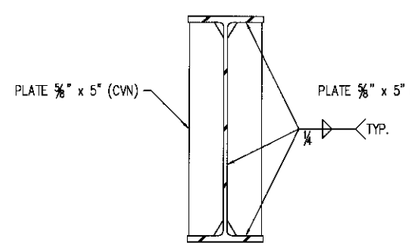

BEARING STIFFENER AT ABUTMENTS

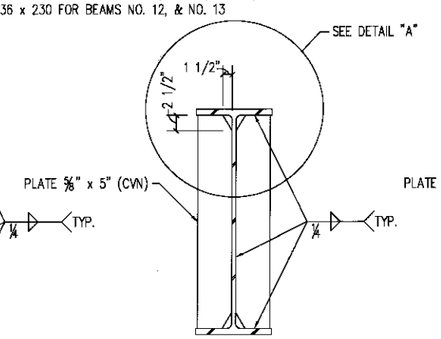

BEARING STIFFENER AT PIER

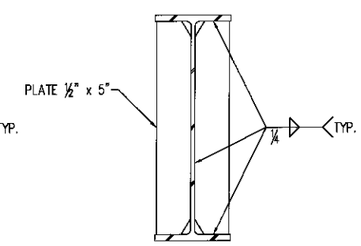

CROSSFRAME CONNECTION DETAIL

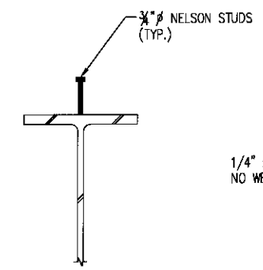

SHEAR CONNECTOR DETAIL

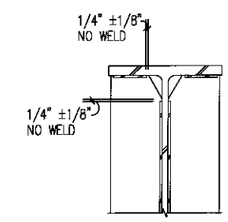

DETAIL "A" (TYPICAL)

TYPICAL BEAM DETAILS

DESIGN AGENCY
JEZERINAC GEERS & ASSOC.
5640 FRANTZ ROAD
DUBLIN, OH 43017

DESIGNED	DRAWN	REVIEWED	DATE
TR	CAD	–	8/15/01
CHECKED	REVISED	STRUCTURE FILE NUMBER	
REG		2500386	

SUPERSTRUCTURE DETAILS
BRIDGE NO. FRA-670-0380A & B
I-670 UNDER HIGH STREET

FRA-670-3.80

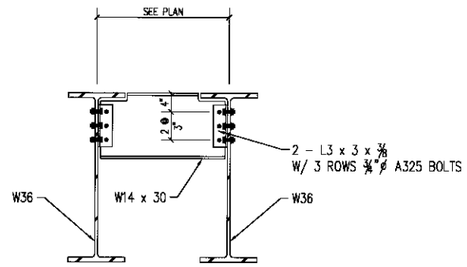

SECTION A–A

FOR LOCATION OF SECTION A–A
SEE SHEETS 11/31 & 12/31

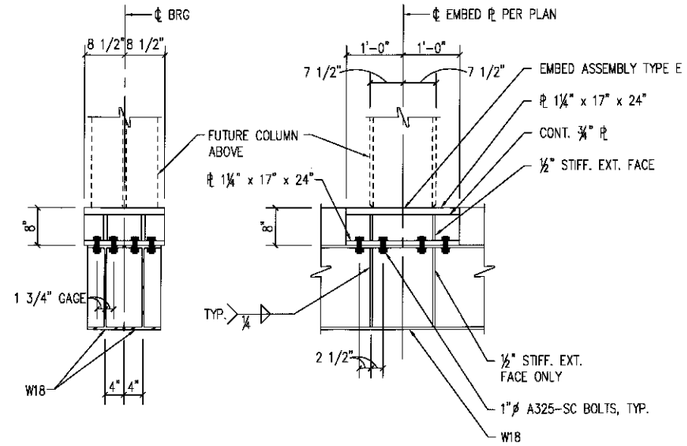

SECTION B–B

FOR LOCATION OF SECTION B–B
SEE SHEETS 11/31 & 12/31

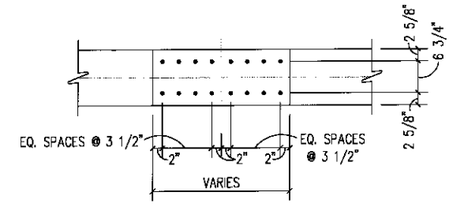

PLAN – TOP FLANGE

(BOTTOM FLANGE SIMILAR)

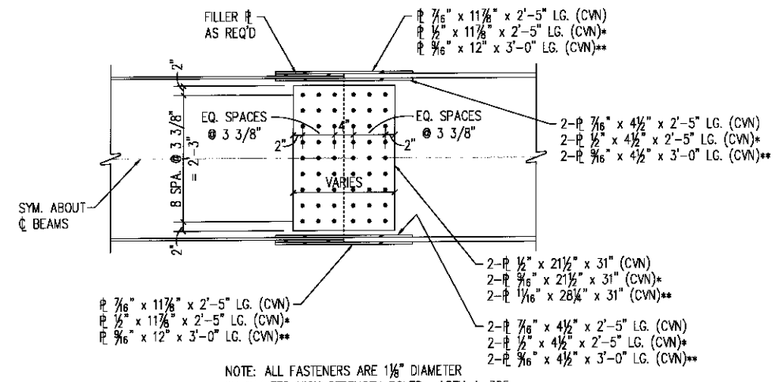

NOTE: ALL FASTENERS ARE 1⅛" DIAMETER GALVANIZED HIGH STRENGTH BOLTS. ASTM A–325.

WHEN A SHAPE OR PLATE IS DESIGNATED (CVN) THE MATERIAL SHALL MEET SPECIFIED MINIMUM NOTCH TOUGHNESS REQUIREMENT AS SPECIFIED IN 711.01 .

* BEAM NO. 12 & NO. 13
** BEAM NO. 1, NO. 9, NO. 10, NO. 15, NO. 16, & NO. 21

ELEVATION

FIELD SPLICE DETAILS

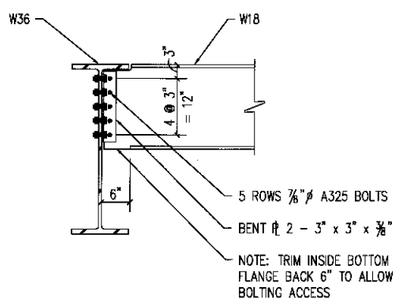

SECTION C–C

FOR LOCATION OF SECTION C–C
SEE SHEETS 11/31 & 12/31

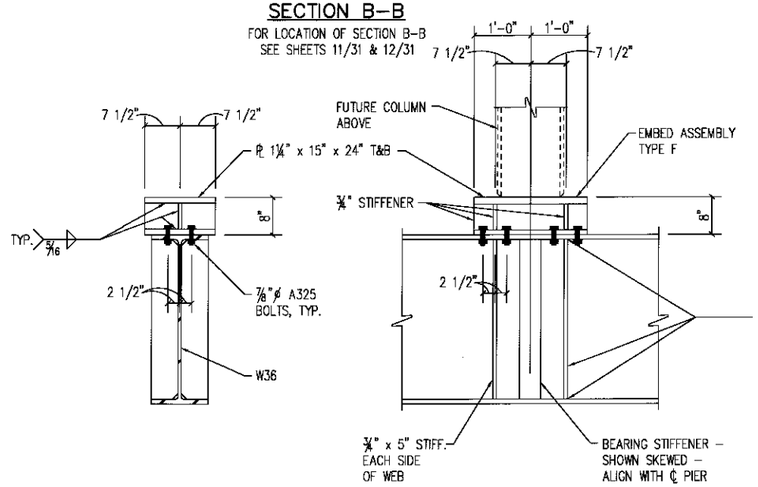

SECTION D–D

FOR LOCATION OF SECTION D–D
SEE SHEETS 11/31 & 12/31

DETAIL F

FOR LOCATION OF DETAIL "F"
SEE SHEET 13/31

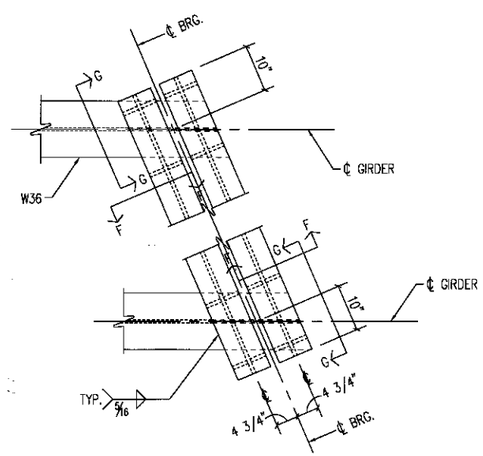

PLAN DETAIL E–E

FOR LOCATION OF SECTION E–E
SEE SHEETS 11/31 & 12/31

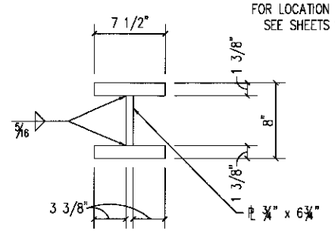

SECTION F–F

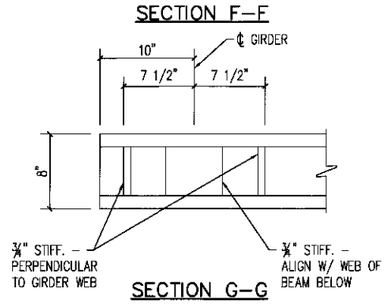

SECTION G–G

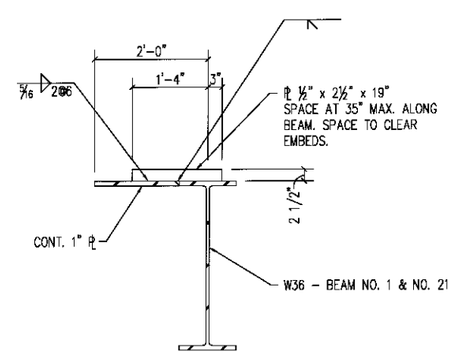

SECTION H–H

FOR LOCATION OF SECTION H–H
SEE SHEETS 11/31 &12/31

DESIGN AGENCY
JEZERINAC GEERS & ASSOC.
5640 FRANTZ ROAD
DUBLIN, OH 43017

DESIGNED	DRAWN	REVIEWED	DATE
TR	CAD	–	8/15/01
CHECKED	REVISED	STRUCTURE FILE NUMBER	
REG		5300386 2500A,B	

SUPERSTRUCTURE DETAILS
BRIDGE NO. FRA–670–0380A & B
I–670 UNDER HIGH STREET

FRA–670–3.80

		SPAN NO. 1			SPAN NO. 2		
		1/4 POINT "A"	CENTER POINT "B"	SPLICE NO. 1 "C"	SPLICE NO. 2 "D"	CENTER POINT "E"	1/4 POINT "F"
BEAM 1	DEFLECTION DUE TO WEIGHT OF STEEL	1/4	5/16	1/8	1/4	1/2	3/8
	DEFLECTION DUE TO PRECOMPOSITE DEAD LOAD	5/8	5/8	1/4	1/2	1 1/16	15/16
	DEFLECTION DUE TO FUTURE DEAD LOAD	5/8	3/4	5/16	5/8	1 1/8	15/16
	REQUIRED SHOP CAMBER	1 1/2	1 11/16	11/16	1 3/8	2 11/16	2 1/4
BEAM 2	DEFLECTION DUE TO WEIGHT OF STEEL	5/16	5/16	1/8	1/4	9/16	7/16
	DEFLECTION DUE TO PRECOMPOSITE DEAD LOAD	1 5/16	1 7/16	9/16	1 1/8	2 5/16	2
	REQUIRED SHOP CAMBER	1 5/8	1 3/4	11/16	1 3/8	2 7/8	2 7/16
BEAM 3	DEFLECTION DUE TO WEIGHT OF STEEL	5/16	5/16	1/8	1/4	1/2	7/16
	DEFLECTION DUE TO PRECOMPOSITE DEAD LOAD	1 3/8	1 1/2	5/8	1 1/8	2 3/8	2
	REQUIRED SHOP CAMBER	1 11/16	1 13/16	3/4	1 3/8	2 7/8	2 7/16
BEAM 4	DEFLECTION DUE TO WEIGHT OF STEEL	5/16	5/16	1/8	1/4	9/16	7/16
	DEFLECTION DUE TO PRECOMPOSITE DEAD LOAD	1 3/8	1 9/16	5/8	1 1/8	2 3/8	2 1/16
	REQUIRED SHOP CAMBER	1 11/16	1 7/8	3/4	1 3/8	2 15/16	2 1/2
BEAM 5	DEFLECTION DUE TO WEIGHT OF STEEL	5/16	3/8	1/8	1/4	9/16	7/16
	DEFLECTION DUE TO PRECOMPOSITE DEAD LOAD	1 7/16	1 9/16	5/8	1 1/8	2 3/8	2 1/16
	REQUIRED SHOP CAMBER	1 3/4	1 15/16	3/4	1 3/8	2 15/16	2 1/2
BEAM 6	DEFLECTION DUE TO WEIGHT OF STEEL	5/16	3/8	1/8	1/4	9/16	1/2
	DEFLECTION DUE TO PRECOMPOSITE DEAD LOAD	1 1/16	1 3/16	1/2	7/8	1 3/4	1 1/2
	REQUIRED SHOP CAMBER	1 3/8	1 9/16	5/8	1 1/8	2 5/16	2
BEAM 7	DEFLECTION DUE TO WEIGHT OF STEEL	5/16	3/8	1/8	1/4	9/16	1/2
	DEFLECTION DUE TO PRECOMPOSITE DEAD LOAD	1 1/8	1 1/4	1/2	7/8	1 13/16	1 1/2
	REQUIRED SHOP CAMBER	1 7/16	1 5/8	5/8	1 1/8	2 3/8	2
BEAM 8	DEFLECTION DUE TO WEIGHT OF STEEL	5/16	3/8	3/16	1/4	9/16	7/16
	DEFLECTION DUE TO PRECOMPOSITE DEAD LOAD	1 3/16	1 5/16	1/2	15/16	1 7/8	1 5/8
	REQUIRED SHOP CAMBER	1 1/2	1 11/16	11/16	1 3/16	2 7/16	2 1/16
BEAM 9	DEFLECTION DUE TO WEIGHT OF STEEL	5/16	3/8	1/8	1/4	1/2	7/16
	DEFLECTION DUE TO PRECOMPOSITE DEAD LOAD	7/16	7/16	3/16	5/16	11/16	9/16
	DEFLECTION DUE TO FUTURE DEAD LOAD	7/16	9/16	1/4	3/8	3/4	5/8
	REQUIRED SHOP CAMBER	1 1/16	1 3/8	9/16	15/16	1 15/16	1 5/8
BEAM 10	DEFLECTION DUE TO WEIGHT OF STEEL	5/16	5/16	1/8	1/4	9/16	7/16
	DEFLECTION DUE TO PRECOMPOSITE DEAD LOAD	5/8	11/16	1/4	1/2	1 1/16	15/16
	DEFLECTION DUE TO FUTURE DEAD LOAD	7/16	9/16	1/4	7/16	13/16	5/8
	REQUIRED SHOP CAMBER	1 3/8	1 9/16	5/8	1 3/16	2 7/16	2
BEAM 11	DEFLECTION DUE TO WEIGHT OF STEEL	5/16	3/8	3/16	1/4	9/16	7/16
	DEFLECTION DUE TO PRECOMPOSITE DEAD LOAD	1 7/16	1 9/16	5/8	1 1/16	2 1/4	1 15/16
	REQUIRED SHOP CAMBER	1 3/4	1 15/16	13/16	1 5/16	2 13/16	2 3/8
BEAM 12	DEFLECTION DUE TO WEIGHT OF STEEL	5/16	3/8	1/8	1/4	1/2	7/16
	DEFLECTION DUE TO PRECOMPOSITE DEAD LOAD	13/16	7/8	3/8	9/16	1 5/16	1 1/8
	DEFLECTION DUE TO FUTURE DEAD LOAD	5/8	3/4	5/16	1/2	1	13/16
	REQUIRED SHOP CAMBER	1 3/4	2	13/16	1 5/16	2 13/16	2 3/8

		SPAN NO. 1			SPAN NO. 2		
		1/4 POINT "A"	CENTER POINT "B"	SPLICE NO. 1 "C"	SPLICE NO. 2 "D"	CENTER POINT "E"	1/4 POINT "F"
BEAM 13	DEFLECTION DUE TO WEIGHT OF STEEL	7/16	1/2	3/16	1/4	1/2	7/16
	DEFLECTION DUE TO PRECOMPOSITE DEAD LOAD	1 1/8	1 1/4	9/16	9/16	1 5/16	1 3/16
	DEFLECTION DUE TO FUTURE DEAD LOAD	11/16	13/16	3/8	7/16	13/16	11/16
	REQUIRED SHOP CAMBER	2 1/4	2 9/16	1 1/8	1 1/4	2 5/8	2 5/16
BEAM 14	DEFLECTION DUE TO WEIGHT OF STEEL	1/2	9/16	1/4	1/4	9/16	1/2
	DEFLECTION DUE TO PRECOMPOSITE DEAD LOAD	2	2 5/16	1	1 1/16	2 3/8	2
	REQUIRED SHOP CAMBER	2 1/2	2 7/8	1 1/4	1 5/16	2 15/16	2 1/2
BEAM 15	DEFLECTION DUE TO WEIGHT OF STEEL	7/16	9/16	1/4	1/4	1/2	7/16
	DEFLECTION DUE TO PRECOMPOSITE DEAD LOAD	15/16	1 1/16	7/16	7/16	1 1/16	15/16
	DEFLECTION DUE TO FUTURE DEAD LOAD	1/2	5/8	5/16	5/16	5/8	1/2
	REQUIRED SHOP CAMBER	1 7/8	2 1/4	1	1	2 3/16	1 7/8
BEAM 16	DEFLECTION DUE TO WEIGHT OF STEEL	7/16	1/2	1/4	1/4	9/16	1/2
	DEFLECTION DUE TO PRECOMPOSITE DEAD LOAD	15/16	1 1/16	7/16	7/16	1	7/8
	DEFLECTION DUE TO FUTURE DEAD LOAD	1/2	5/8	5/16	5/16	5/8	1/2
	REQUIRED SHOP CAMBER	1 7/8	2 3/16	1	1	2 3/16	1 7/8
BEAM 17	DEFLECTION DUE TO WEIGHT OF STEEL	1/2	5/8	1/4	1/4	9/16	1/2
	DEFLECTION DUE TO PRECOMPOSITE DEAD LOAD	2 1/16	2 5/16	1 1/16	1	2 1/4	1 15/16
	REQUIRED SHOP CAMBER	2 9/16	2 15/16	1 5/16	1 1/4	2 13/16	2 7/16
BEAM 18	DEFLECTION DUE TO WEIGHT OF STEEL	1/2	5/8	5/16	1/4	5/8	1/2
	DEFLECTION DUE TO PRECOMPOSITE DEAD LOAD	2 1/8	2 7/16	1 1/16	1	2 1/4	2
	REQUIRED SHOP CAMBER	2 5/8	3 1/16	1 3/8	1 1/4	2 7/8	2 1/2
BEAM 19	DEFLECTION DUE TO WEIGHT OF STEEL	9/16	5/8	5/16	1/4	9/16	1/2
	DEFLECTION DUE TO PRECOMPOSITE DEAD LOAD	2 1/8	2 1/2	1 1/8	1	2 5/16	2
	REQUIRED SHOP CAMBER	2 11/16	3 1/8	1 7/16	1 1/4	2 7/8	2 1/2
BEAM 20	DEFLECTION DUE TO WEIGHT OF STEEL	9/16	11/16	5/16	1/4	9/16	1/2
	DEFLECTION DUE TO PRECOMPOSITE DEAD LOAD	2 1/4	2 9/16	1 3/16	1	2 5/16	2
	REQUIRED SHOP CAMBER	2 13/16	3 1/4	1 1/2	1 1/4	2 7/8	2 1/2
BEAM 21	DEFLECTION DUE TO WEIGHT OF STEEL	1/2	5/8	5/16	1/4	1/2	7/16
	DEFLECTION DUE TO PRECOMPOSITE DEAD LOAD	1 1/8	1 1/4	9/16	7/16	1 1/8	1
	DEFLECTION DUE TO FUTURE DEAD LOAD	1 1/4	1 1/2	3/4	5/8	1 5/16	1 1/8
	REQUIRED SHOP CAMBER	2 7/8	3 3/8	1 5/8	1 5/16	2 15/16	2 9/16

VERTICAL OFFSET DIMENSIONS (IN FEET)			
BEAM	G	H	I
1	1.33	1.33	1.33
2	1.33	1.33	1.33
3	1.33	1.33	1.33
4	1.33	1.33	1.33
5	1.33	1.33	1.33
6	1.08	1.08	1.08
7	1.08	1.08	1.08
8	1.08	1.08	1.08
9	1.08	1.08	1.08
10	1.08	1.08	1.08
11	.17	.17	.17
12	.17	.17	.17
13	.92	.92	.92
14	1.08	1.08	1.08
15	1.25	1.25	1.25
16	1.25	1.25	1.25
17	1.33	1.33	1.33
18	1.33	1.33	1.33
19	1.33	1.33	1.33
20	1.33	1.33	1.33
21	1.33	1.33	1.33

DIMENSIONS "G, H, AND I" ARE FROM "BASE LINE" TO TOP OF BEAM FLANGE AT ABUTMENT AND PIER BEARINGS.

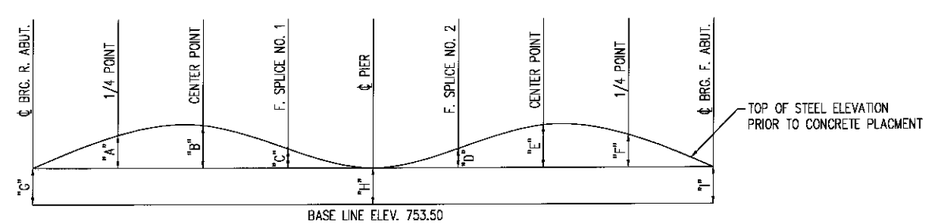

CAMBER DIAGRAM

DESIGN AGENCY
JEZERINAC GEERS & ASSOC.
5640 FRANTZ ROAD
DUBLIN, OH 43017

DESIGNED	DRAWN	REVIEWED	DATE
TR	CAD	–	8/15/01
CHECKED	REVISED	STRUCTURE FILE NUMBER	
REG		5500-670-2596.50	

SUPERSTRUCTURE DETAILS
BRIDGE NO. FRA-670-0380A & B
I-670 UNDER HIGH STREET

FRA-670-3.80

SCREED ELEVATIONS

BEAM	SPAN NO. 1					SPAN NO. 2			
	REAR ABUT. BRG.	1/4 POINT	CENTER POINT	℄ SPLICE NO. 1	℄ PIER BRG.	℄ SPLICE NO. 2	CENTER POINT	3/4 POINT	FORWARD ABUT.BRG.
1	755.50	755.60	755.61	755.55	755.50	755.59	755.68	755.66	755.50
2	755.50	755.61	755.62	755.55	755.50	755.59	755.69	755.67	755.50
3	755.50	755.61	755.63	755.55	755.50	755.59	755.70	755.67	755.50
4	755.50	755.61	755.63	755.55	755.50	755.59	755.70	755.67	755.50
5	755.50	755.62	755.63	755.55	755.50	755.59	755.70	755.67	755.50
6	755.50	755.59	755.60	755.54	755.50	755.57	755.65	755.63	755.50
7	755.47	755.59	755.60	755.54	755.50	755.57	755.65	755.63	755.50
8	755.40	755.60	755.61	755.54	755.50	755.58	755.66	755.64	755.50
9	755.34	755.56	755.58	755.54	755.50	755.56	755.62	755.60	755.50
10	755.31	755.59	755.60	755.54	755.50	755.58	755.66	755.63	755.46
11	755.23	755.45	755.51	755.43	755.38	755.47	755.57	755.54	755.33
12	754.33	754.47	755.39	755.31	755.25	755.34	755.44	755.41	754.33
13	755.25	755.40	755.42	755.36	755.25	755.33	755.43	755.31	755.06
14	755.38	755.54	755.57	755.46	755.38	755.47	755.55	755.49	755.25
15	755.50	755.62	755.64	755.56	755.50	755.56	755.61	755.62	755.50
16	755.50	755.62	755.64	755.56	755.50	755.56	755.64	755.61	755.50
17	755.50	755.67	755.69	755.59	755.50	755.58	755.69	755.66	755.50
18	755.50	755.68	755.70	755.59	755.50	755.58	755.69	755.67	755.50
19	755.50	755.68	755.71	755.59	755.50	755.58	755.69	755.67	755.50
20	755.50	755.69	755.71	755.60	755.50	755.58	755.69	755.67	755.50
21	755.50	755.65	755.73	755.61	755.50	755.59	755.70	755.68	755.50

SCREED ELEVATIONS ARE FOR THE CONCRETE SURFACE BEFORE THE CONCRETE IS PLACED. ALLOWANCE HAS BEEN MADE FOR THE ANTICIATED DEFLECTION OF THE STRUCTURAL STEEL.

SEE SHEETS 26/31 AND 27/31 FOR ADDITIONAL SLAB INFORMATION.

DESIGN AGENCY
JEZERINAC GEERS & ASSOC.
5640 FRANTZ ROAD
DUBLIN, OH 43017

DATE 8/15/01
REVIEWED –
STRUCTURE FILE NUMBER 2500036 2500035

DRAWN CAD
REVISED

DESIGNED TR
CHECKED REG

SUPERSTRUCTURE DETAILS
BRIDGE NO. FRA-670-0380A & B
I-670 UNDER HIGH STREET

FRA-670-3.80

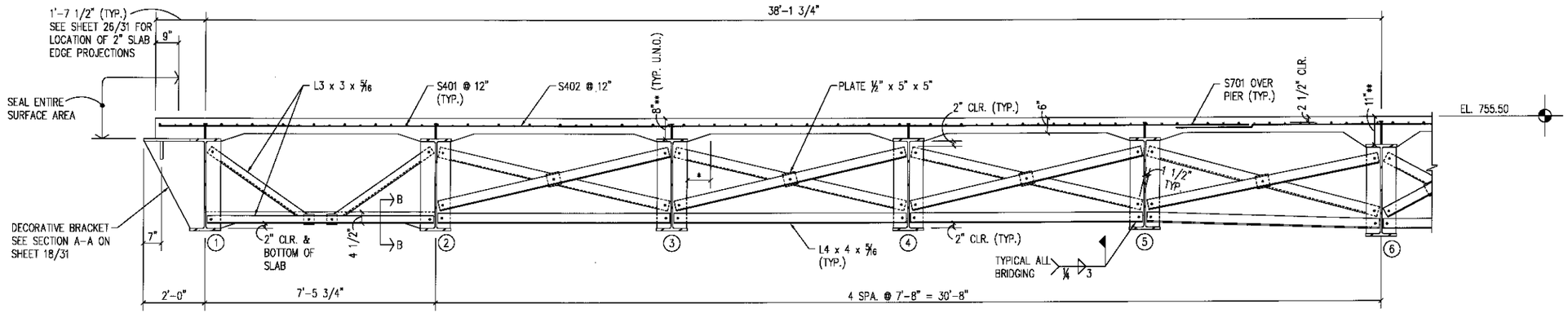

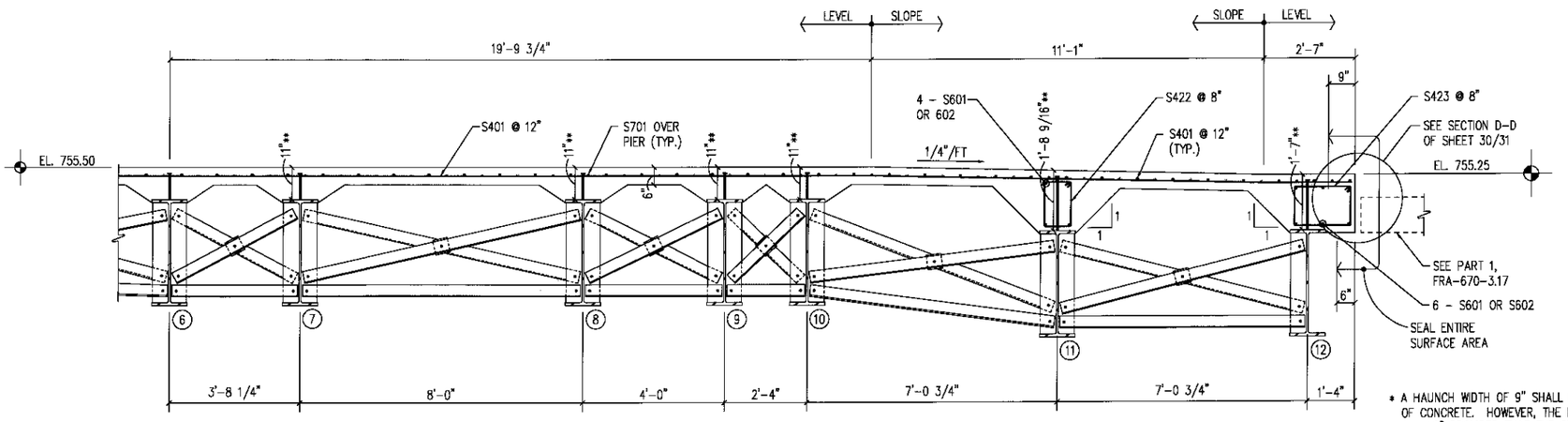

MIN. BAR LAPS
#4 = 2'-4"
#6 = 3'-6"

NOTE: ALL FASTENERS ARE 5/8" DIAMETER GALVANIZED HIGH STRENGTH BOLTS. ASTM A-325

DECK "A" TRANSVERSE SECTION A-A

FOR SECTION B-B SEE SHEET 18/31

* A HAUNCH WIDTH OF 9" SHALL BE USED FOR COMPUTING QUANTITY OF CONCRETE. HOWEVER, THE HAUNCH WIDTH MAY VARY BETWEEN 6" AND 12" PROVIDED THAT THE SLOPE SHALL BE NOT MORE THAN 1:4 FOR A HAUNCH LESS THAN 9" IN WIDTH.

** DECK DEPTH: THE DISTANCE FROM TOP OF DECK SLAB TO TOP OF STEEL BEAM IS THE THEORETICAL DESIGN DIMENSION INCLUDING THE DESIGN THICKNESS OF 6 INCHES. THE QUANTITY OF DECK CONCRETE TO BE PAID FOR SHALL BE BASED ON THIS DIMENSION, EVEN THOUGH DEVIATION FROM IT MAY BE NECESSARY BECAUSE THE TOP FLANGE OF THE BEAM MAY NOT HAVE THE EXACT CAMBER OR CONFORMATION REQUIRED TO PLACE IT PARALLEL TO THE FINISHED GRADE.

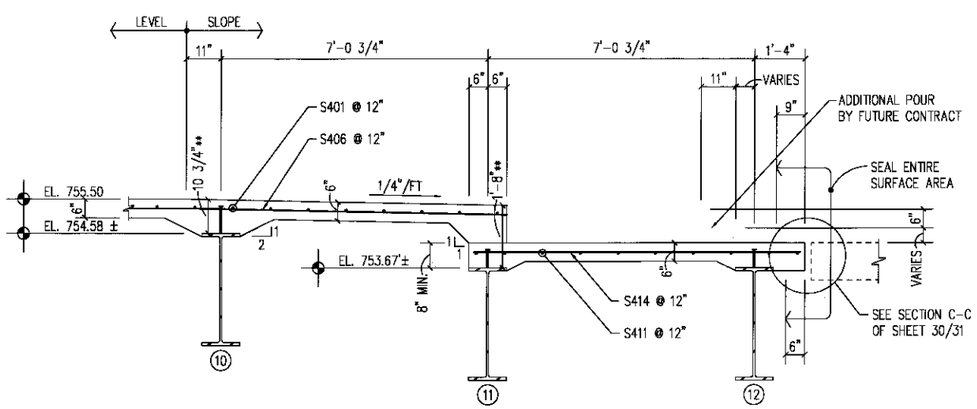

DECK "A" TRANSVERSE SECTION B-B

SEE TRANSVERSE SECTION A-A FOR CROSSFRAME DETAILS

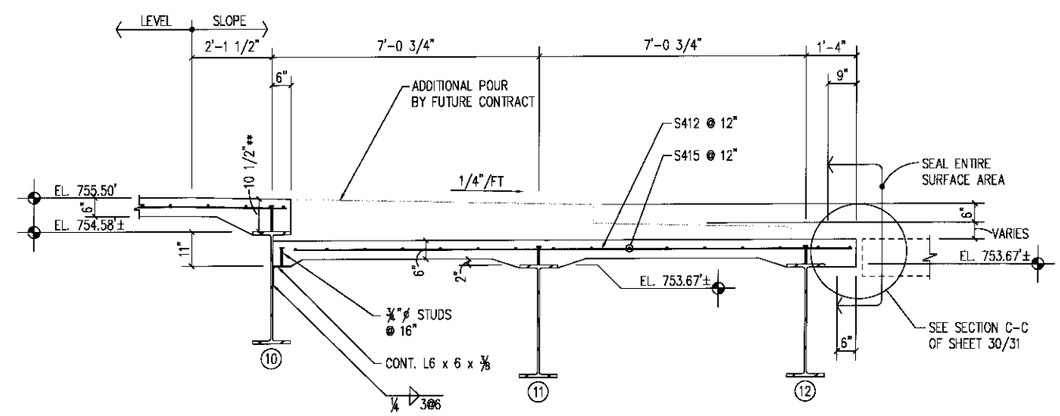

DECK "A" TRANSVERSE SECTION C-C

SEE TRANSVERSE SECTION A-A FOR CROSSFRAME DETAILS

FOR MORE DETAILS AND NOTES REFERENCE IS MADE TO STANDARD DRAWINGS CSD-1-96 SHEETS NO. 1, NO. 2, & NO. 3 .

DESIGN AGENCY
JEZERINAC CEERS & ASSOC.
5640 FRANTZ ROAD
DUBLIN, OH 43017

DESIGNED	DRAWN	REVIEWED	DATE
TR	CAD	-	8/15/01
CHECKED	REVISED	STRUCTURE FILE NUMBER	
REG		2500236	

SUPERSTRUCTURE DETAILS
BRIDGE NO. FRA-670-0380A
I-670 UNDER HIGH STREET

FRA-670-3.80

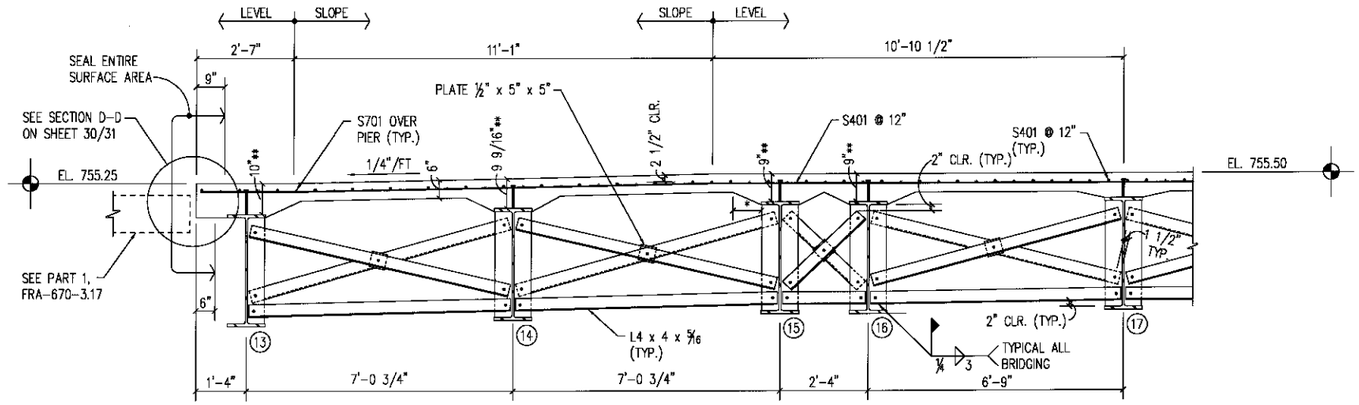

* A HAUNCH WIDTH OF 9" SHALL BE USED FOR COMPUTING QUANTITY OF CONCRETE. HOWEVER, THE HAUNCH WIDTH MAY VARY BETWEEN 6" AND 12" PROVIDED THAT THE SLOPE SHALL BE NOT MORE THAN 1:4 FOR A HAUNCH LESS THAN 9" IN WIDTH.

** DECK DEPTH: THE DISTANCE FROM TOP OF DECK SLAB TO TOP OF STEEL BEAM IS THE THEORETICAL DESIGN DIMENSION INCLUDING THE DESIGN THICKNESS OF 6 INCHES. THE QUANTITY OF DECK CONCRETE TO BE PAID FOR SHALL BE BASED ON THIS DIMENSION, EVEN THOUGH DEVIATION FROM IT MAY BE NECESSARY BECAUSE THE TOP FLANGE OF THE BEAM MAY NOT HAVE THE EXACT CAMBER OR CONFORMATION REQUIRED TO PLACE IT PARALLEL TO THE FINISHED GRADE.

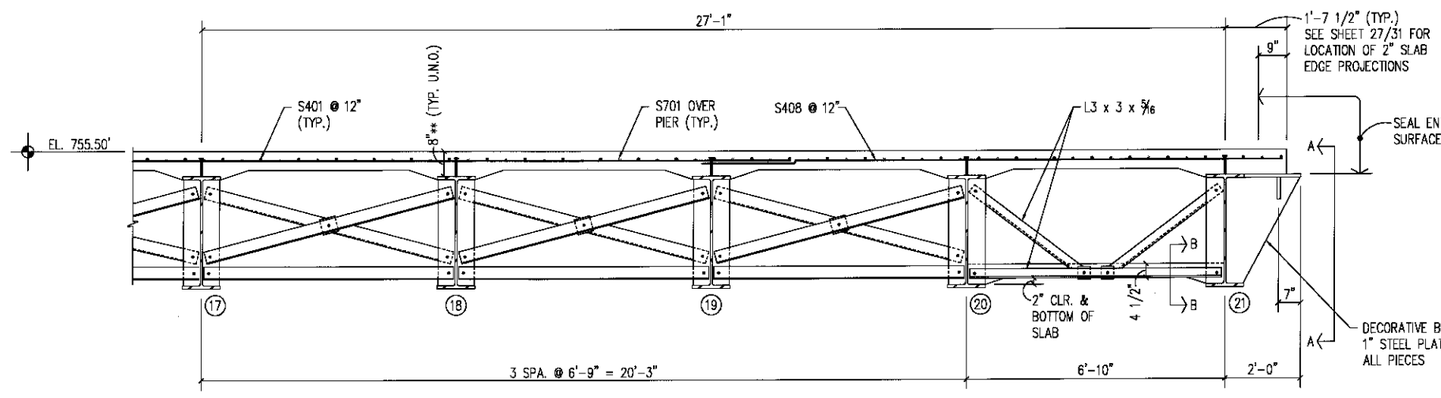

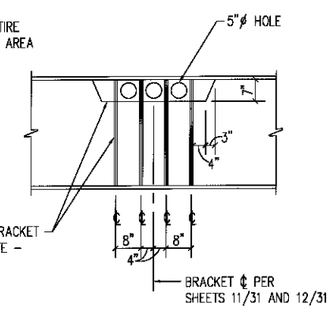

SECTION A-A

NOTE: ALL FASTENERS ARE 5/8" DIAMETER GALVANIZED HIGH STRENGTH BOLTS. ASTM A-325

DECK "B" TRANSVERSE SECTION

MIN. BAR LAPS
#4 = 2'-4"

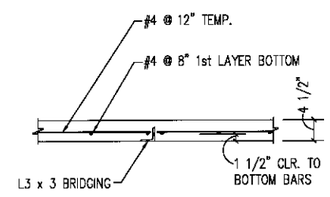

SECTION B-B

FOR MORE DETAILS AND NOTES REFERENCE IS MADE TO STANDARD DRAWINGS GSD-1-96 SHEETS NO. 1, NO. 2, & NO. 3 .

DESIGN AGENCY
JEZERINAC GEERS & ASSOC.
5640 FRANTZ ROAD
DUBLIN, OH 43017

DESIGNED	DRAWN	REVIEWED	DATE
TR	CAD	-	8/15/01
CHECKED	REVISED	STRUCTURE FILE NUMBER	
REG		2500301	

SUPERSTRUCTURE DETAILS
BRIDGE NO. FRA-670-0380B
I-670 UNDER HIGH STREET

FRA-670-3.80

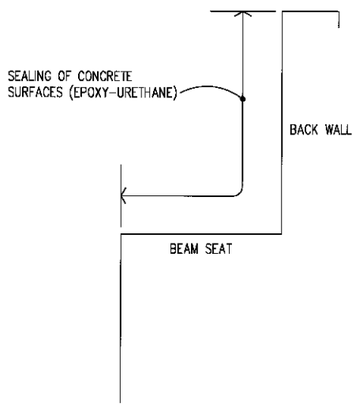

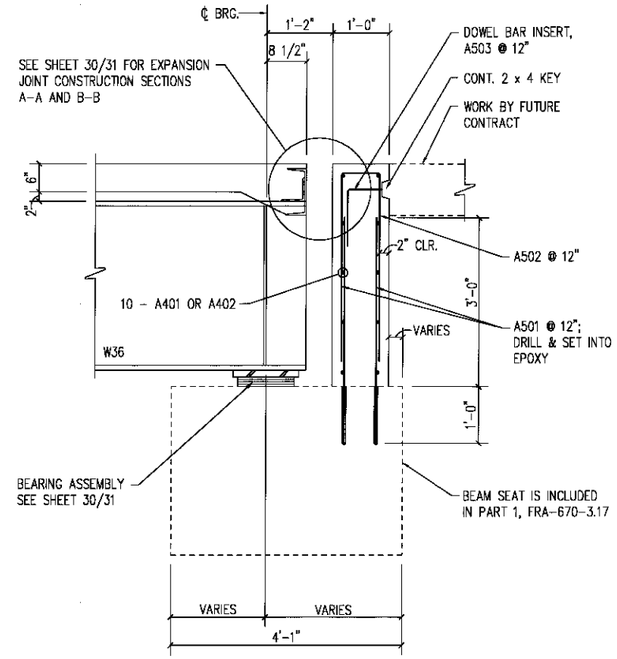

SECTION A-A

FOR LOCATION OF DETAIL A-A
SEE SHEETS 7/31 AND 8/31

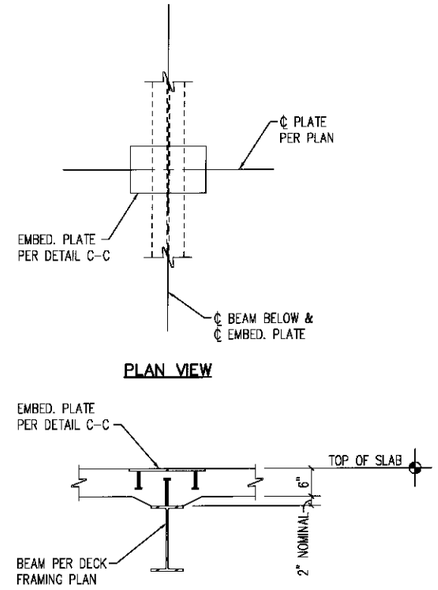

DETAIL D-D

FOR LOCATION OF DETAIL D-D
SEE SHEETS 26/31 AND 27/31

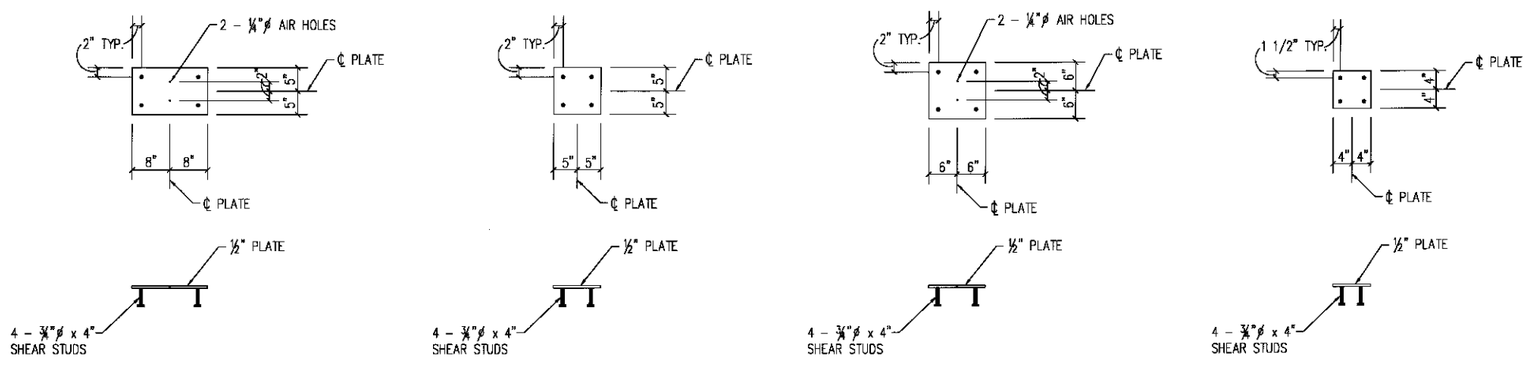

DETAIL C-C - DECK EMBED PLATES

FOR LOCATION OF DETAIL C-C
SEE SHEETS 26/31 AND 27/31

DESIGN AGENCY
JEZERINAC GEERS & ASSOC.
5640 FRANTZ ROAD
DUBLIN, OH 43017

DESIGNED	DRAWN	REVIEWED	DATE
TR	CAD	-	8/15/01
CHECKED	REVISED	STRUCTURE FILE NUMBER	
REG		2500530 2500531	

SUPERSTRUCTURE DETAILS
BRIDGE NO. FRA-670-0380A & B
I-670 UNDER HIGH STREET

FRA-670-3.80

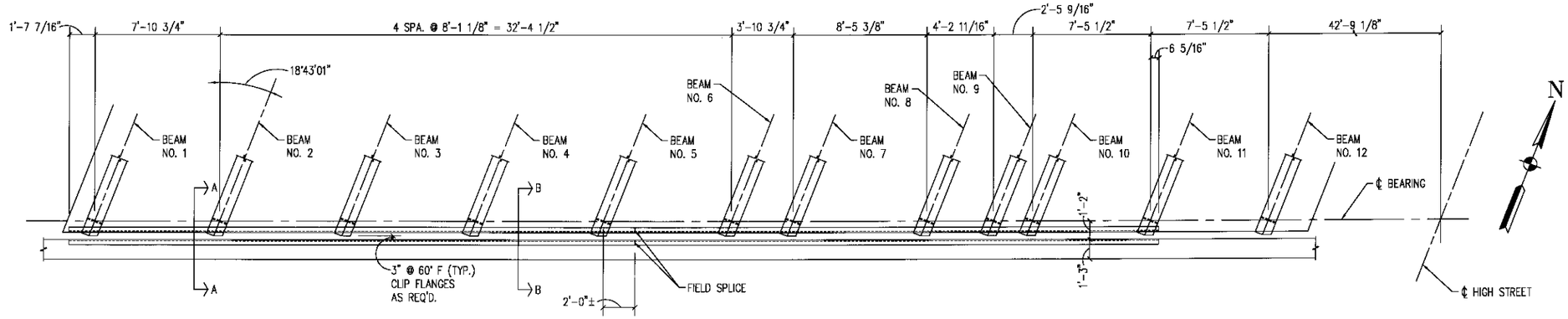

DECK "A" REAR END DAM

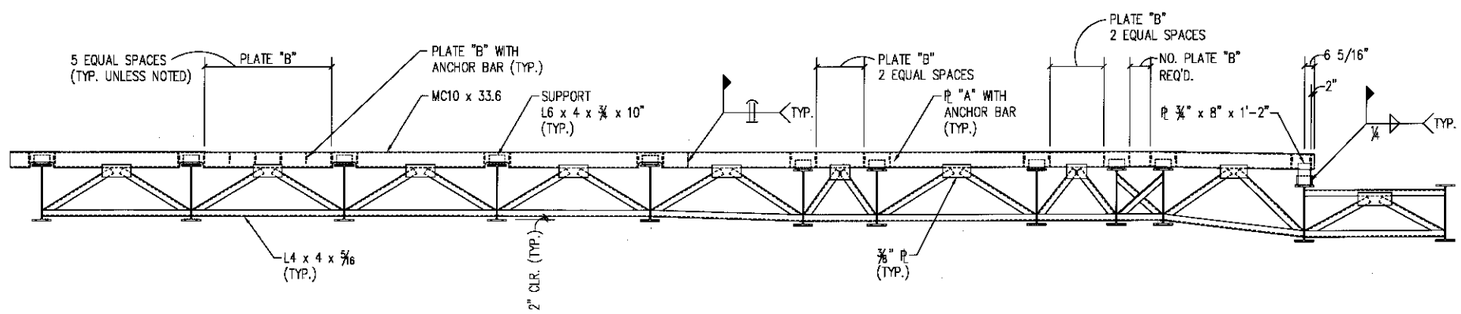

ELEVATION

FOR SECTION A-A SEE SHEET 30/31

FOR SECTION B-B SEE SHEET 30/31

FOR MORE DETAILS AND NOTES REFERENCE IS MADE
TO STANDARD DRAWINGS EXJ-4-87
SHEETS NO. 1, NO. 2, NO. 3, NO. 4, & NO. 5

DESIGN AGENCY
JEZERINAC GEERS & ASSOC.
5640 FRANTZ ROAD
DUBLIN, OH 43017

REVIEWED — DATE 8/15/01
STRUCTURE FILE NUMBER 2500338

DRAWN CAD REVISED
DESIGNED TR CHECKED REG

SUPERSTRUCTURE DETAILS
BRIDGE NO. FRA-670-0380A
I-670 UNDER HIGH STREET

FRA-670-3.80

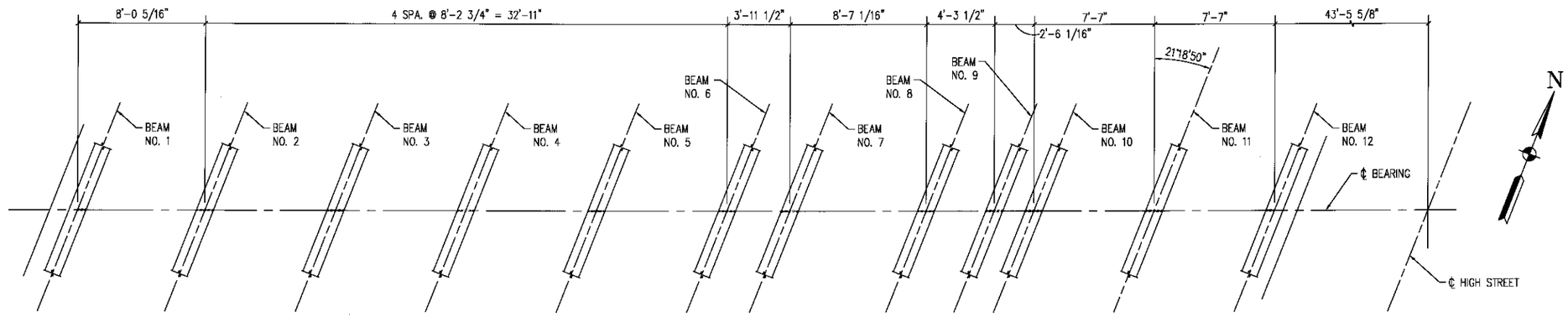

DECK "A" PIER

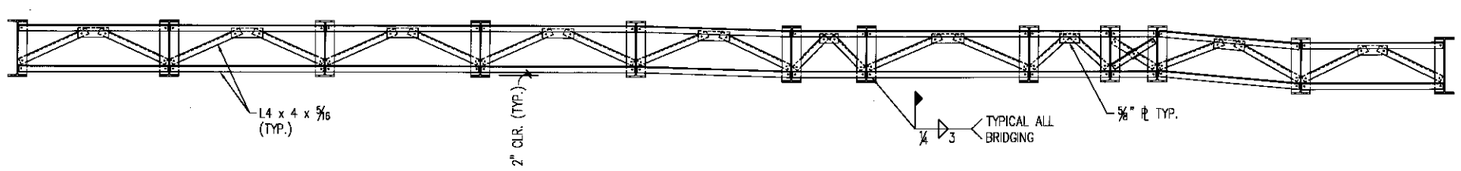

ELEVATION

NOTE: ALL FASTENERS ARE 5/8" DIAMETER GALVANIZED HIGH STRENGTH BOLTS. ASTM A-325

DESIGN AGENCY
JEZERINAC GEERS & ASSOC.
5640 FRANTZ ROAD
DUBLIN, OH 43017

DESIGNED	DRAWN	REVIEWED	DATE
TR	CAD	–	8/15/01
CHECKED	REVISED	STRUCTURE FILE NUMBER	
REG		2500330	

SUPERSTRUCTURE DETAILS
BRIDGE NO. FRA-670-0380A
I-670 UNDER HIGH STREET

FRA-670-3.80

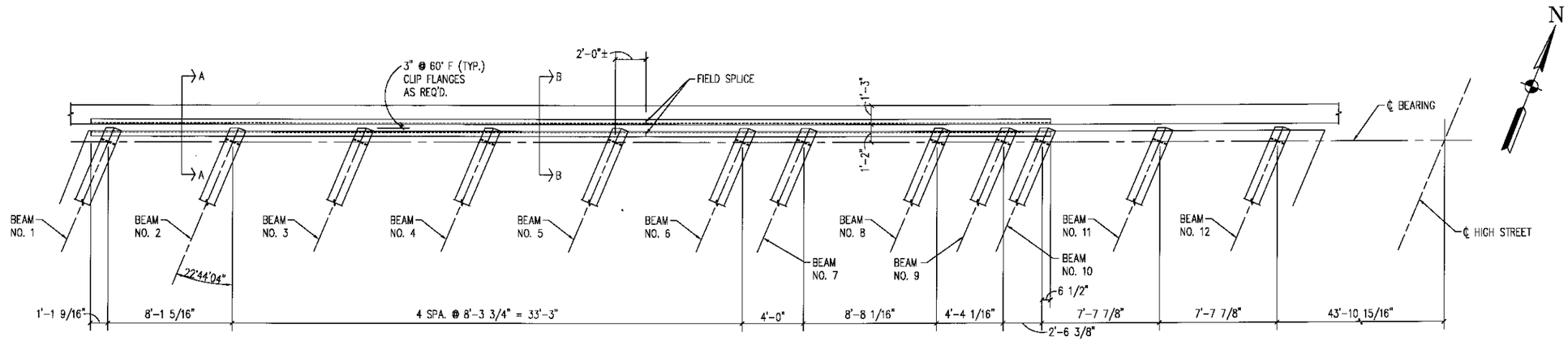

DECK "A" FORWARD END DAM

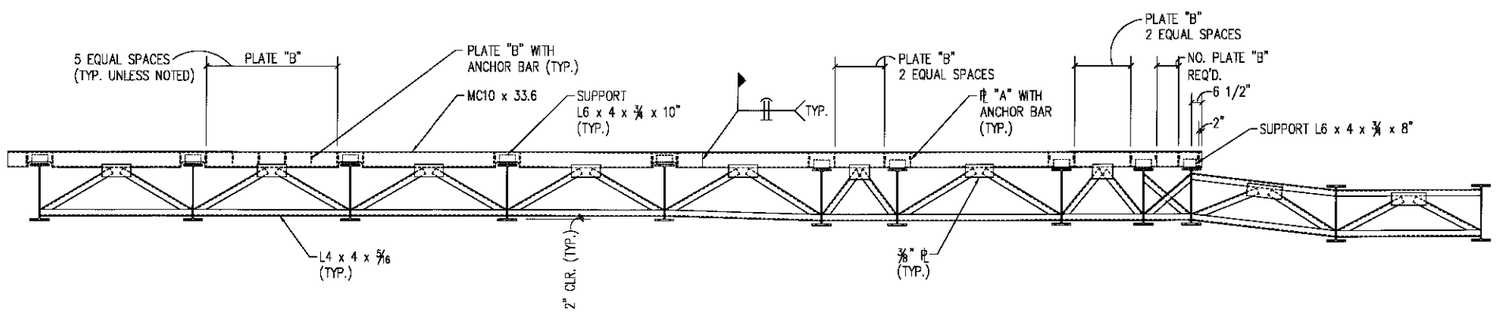

ELEVATION

FOR SECTION A-A SEE SHEET 30/31

FOR SECTION B-B SEE SHEET 30/31

FOR MORE DETAILS AND NOTES REFERENCE IS MADE
TO STANDARD DRAWINGS EXJ-4-87
SHEETS NO. 1, NO. 2, NO. 3, NO. 4, & NO. 5

DESIGN AGENCY
JEZERINAC GEERS & ASSOC.
5640 FRANTZ ROAD
DUBLIN, OH 43017

DESIGNED	DRAWN	REVIEWED	DATE
TR	CAD	–	8/15/01
CHECKED	REVISED	STRUCTURE FILE NUMBER	
REG		2500238	

SUPERSTRUCTURE DETAILS
BRIDGE NO. FRA-670-0380A
I-670 UNDER HIGH STREET

FRA-670-3.80

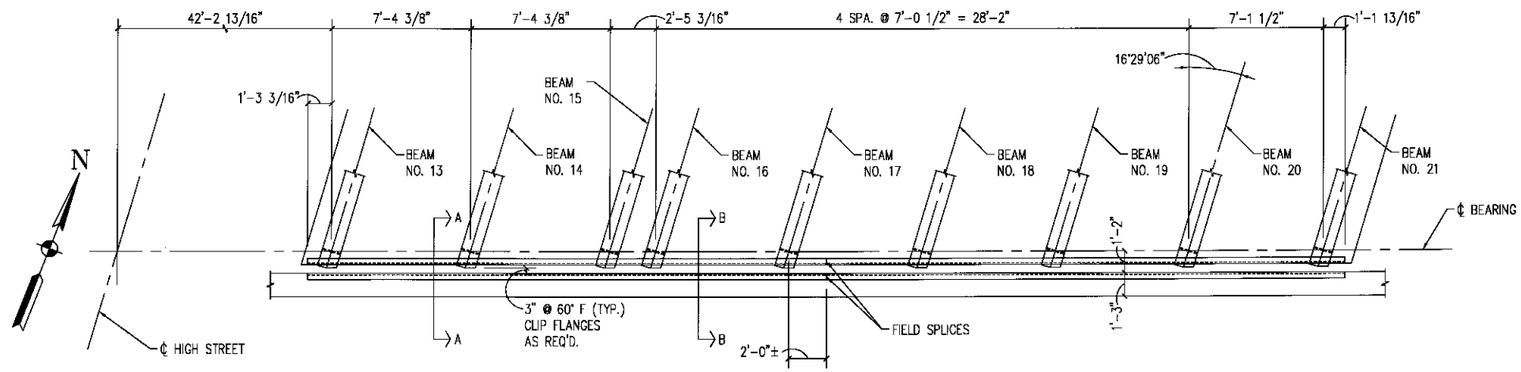

DECK "B" REAR END DAM

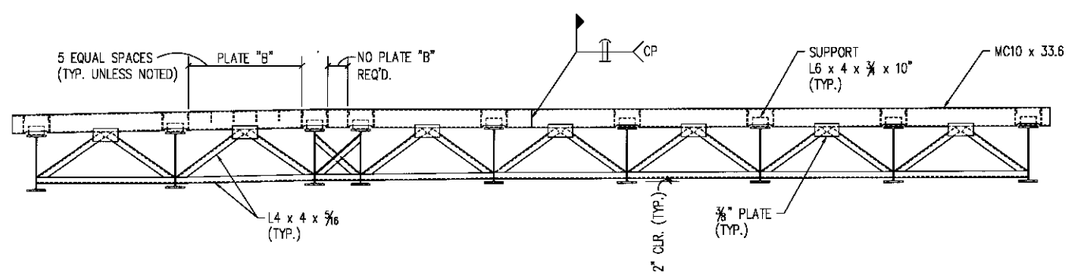

ELEVATION

FOR SECTION A-A SEE SHEET 30/31

FOR SECTION B-B SEE SHEET 30/31

FOR MORE DETAILS AND NOTES REFERENCE IS MADE TO STANDARD DRAWINGS EXJ-4-87 SHEETS NO. 1, NO. 2, NO. 3, NO. 4, & NO. 5

DESIGN AGENCY
JEZERINAC GEERS & ASSOC.
5640 FRANTZ ROAD
DUBLIN, OH 43017

DESIGNED	DRAWN	REVIEWED	DATE
TR	CAD	–	8/15/01
CHECKED	REVISED	STRUCTURE FILE NUMBER	
REG		2500331	

SUPERSTRUCTURE DETAILS
BRIDGE NO. FRA-670-0380B
I-670 UNDER HIGH STREET

FRA-670-3.80

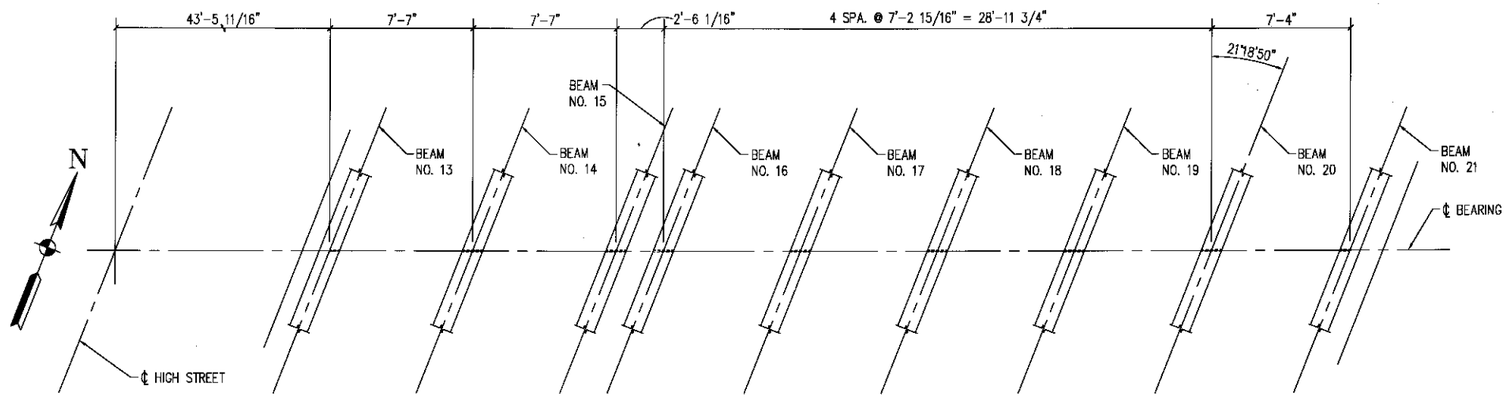

DECK "B" PIER

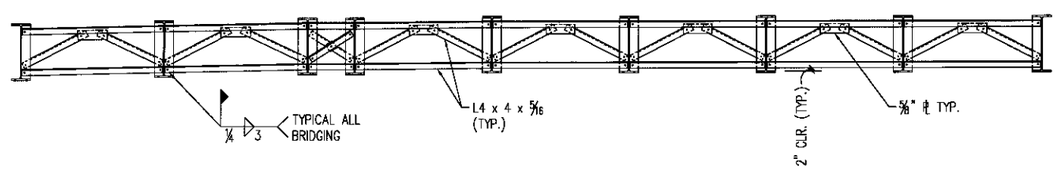

ELEVATION

NOTE: ALL FASTENERS ARE 5/8" DIAMETER GALVANIZED HIGH STRENGTH BOLTS. ASTM A-325

DESIGN AGENCY
JEZERINAC GEERS & ASSOC.
5640 FRANTZ ROAD
DUBLIN, OH 43017

DESIGNED	DRAWN	REVIEWED	DATE
TR	CAD	—	8/15/01
CHECKED	REVISED	STRUCTURE FILE NUMBER	
REG		2500301	

SUPERSTRUCTURE DETAILS
BRIDGE NO. FRA-670-0380B
I-670 UNDER HIGH STREET

FRA-670-3.80

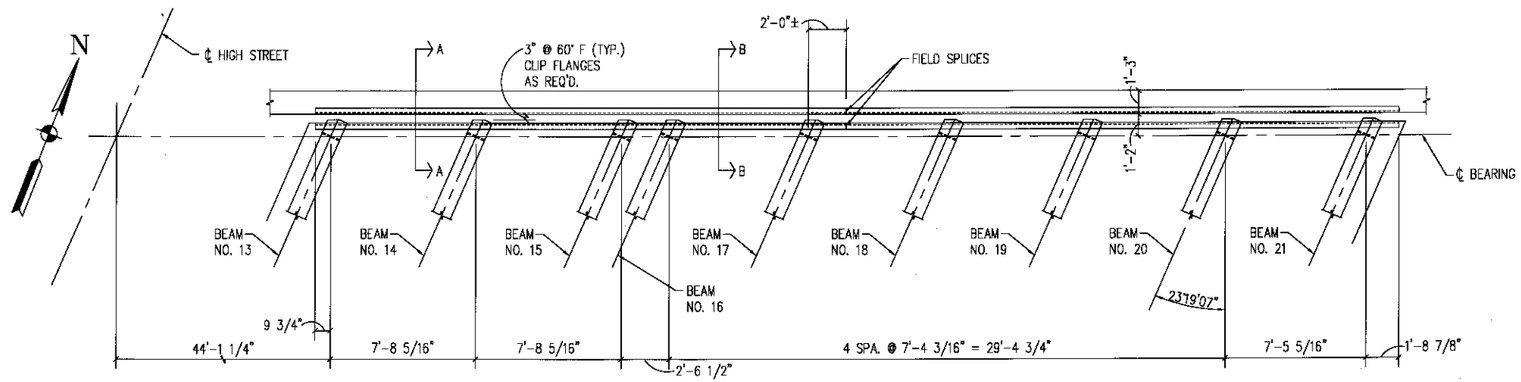

DECK "B" FORWARD END DAM

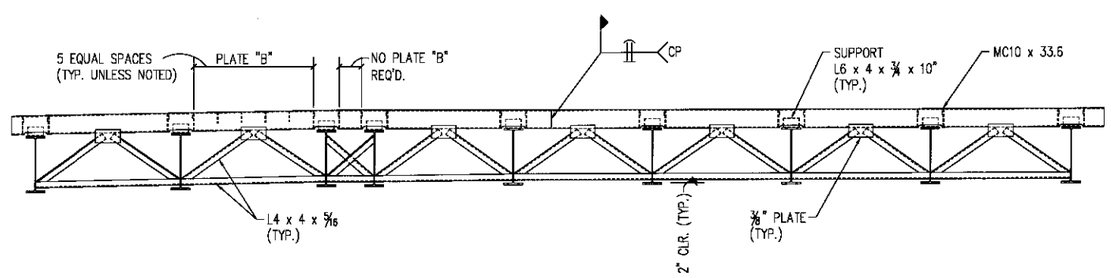

ELEVATION

FOR SECTION A-A SEE SHEET 30/31

FOR SECTION B-B SEE SHEET 30/31

FOR MORE DETAILS AND NOTES REFERENCE IS MADE
TO STANDARD DRAWINGS EXJ-4-87
SHEETS NO. 1, NO. 2, NO. 3, NO. 4, & NO. 5

DESIGN AGENCY
JEZERINAC GEERS & ASSOC.
5640 FRANTZ ROAD
DUBLIN, OH 43017

DESIGNED	DRAWN	REVIEWED	DATE
TR	CAD	—	8/15/01
CHECKED	REVISED	STRUCTURE FILE NUMBER	
REG		2500351	

SUPERSTRUCTURE DETAILS
BRIDGE NO. FRA-670-0380B
I-670 UNDER HIGH STREET

FRA-670-3.80

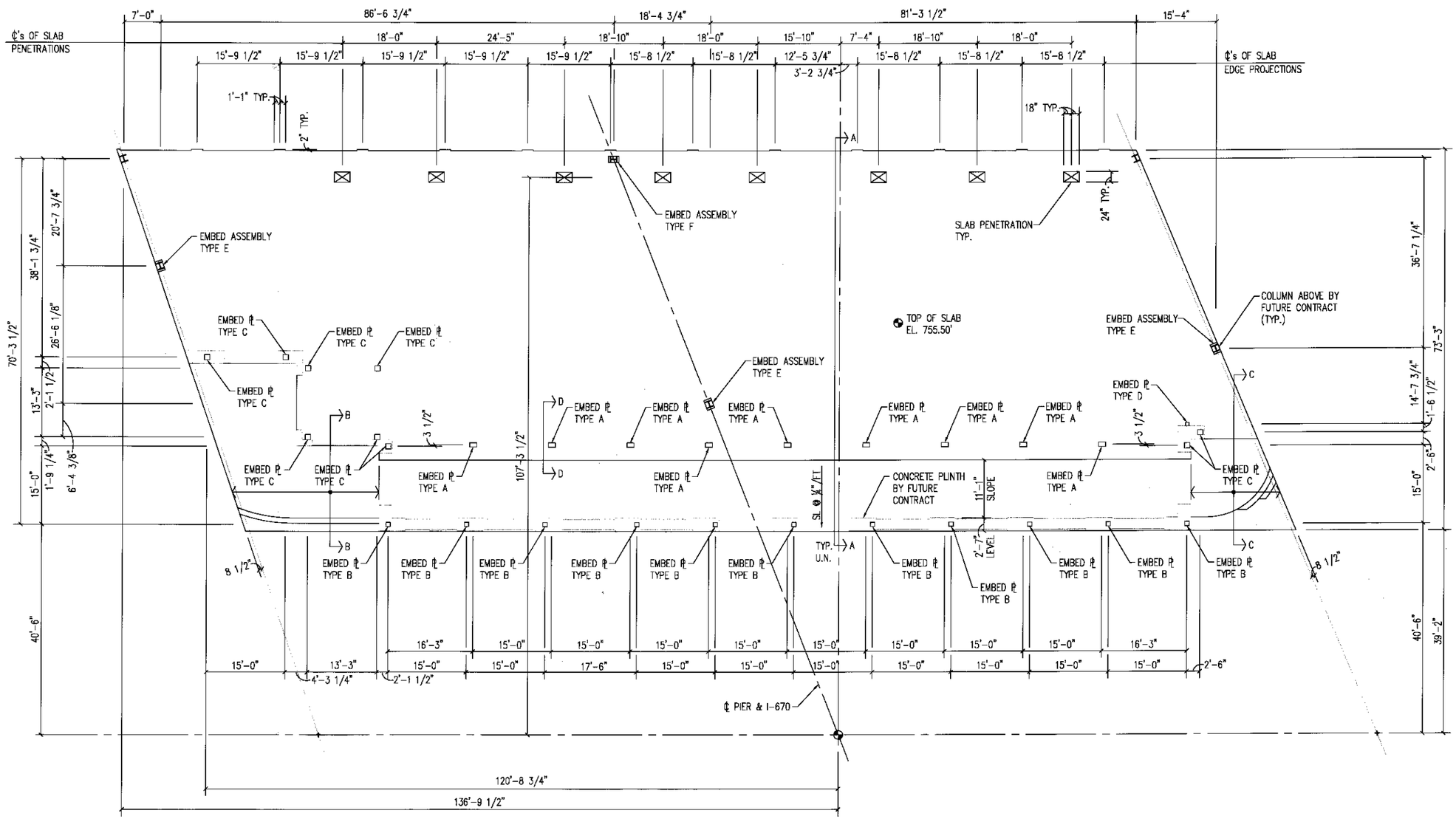

DECK "A" SLAB & INSERT PLAN

N

SEE SHEET 19/31 FOR EMBED PLATES TYPES A THROUGH D.

SEE SHEET 14/31 FOR EMBED ASSEMBLIES TYPES E AND F

SEE SHEET 17/31 FOR TRANSVERSE DECK SECTIONS A-A, B-B, C-C.

SEE SHEET 19/31 FOR DETAIL D-D.

DESIGN AGENCY
JEZERINAC GEERS & ASSOC.
5640 FRANTZ ROAD
DUBLIN, OH 43017

DATE	REVIEWED	STRUCTURE FILE NUMBER
8/15/01	—	2500238

DRAWN	REVISED
CAD	

DESIGNED	CHECKED
TR	REG

SUPERSTRUCTURE DETAILS
BRIDGE NO. FRA-670-0380A
I-670 UNDER HIGH STREET

FRA-670-3.80

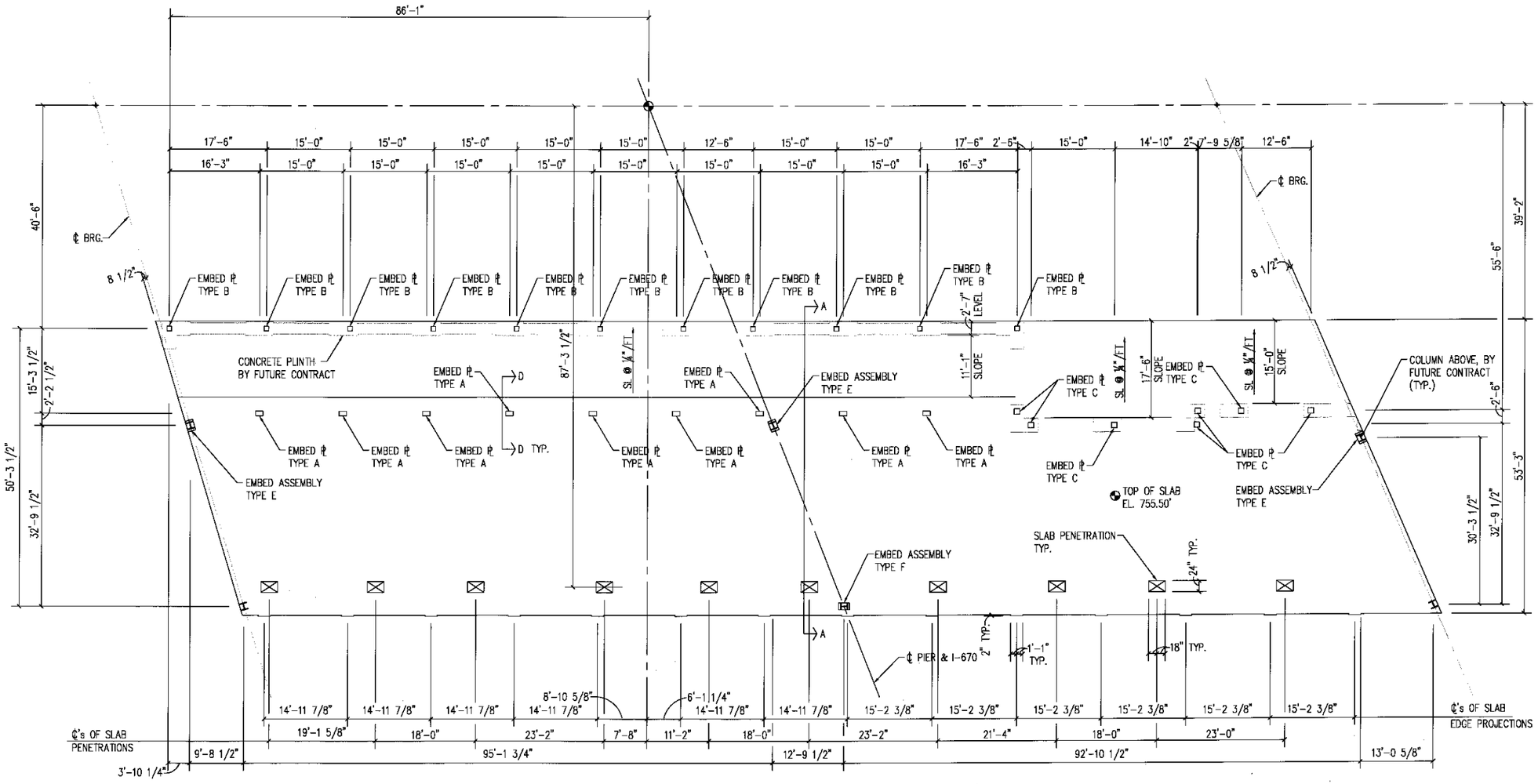

DECK "B" SLAB & INSERT PLAN

N

SEE SHEET 19/31 FOR EMBED PLATES TYPES A THROUGH D.

SEE SHEET 14/31 FOR EMBED ASSEMBLIES TYPES E & F.

SEE SHEET 18/31 FOR TRANSVERSE DECK SECTION A-A.

SEE SHEET 19/31 FOR DETAIL D-D.

DESIGN AGENCY
JEZERINAC GEERS & ASSOC.
5640 FRANTZ ROAD
DUBLIN, OH 43017

DESIGNED	DRAWN	REVIEWED	DATE
TR	CAD	—	8/15/01
CHECKED	REVISED	STRUCTURE FILE NUMBER	
REG		2500351	

SUPERSTRUCTURE DETAILS
BRIDGE NO. FRA-670-0380B
I-670 UNDER HIGH STREET

FRA-670-3.80

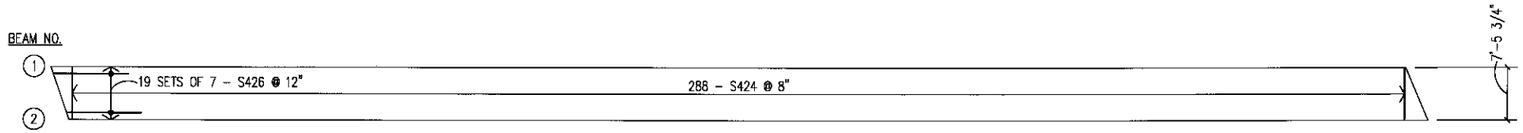

DECK "A" PLUMBING TROUGH REINFORCING PLAN

N

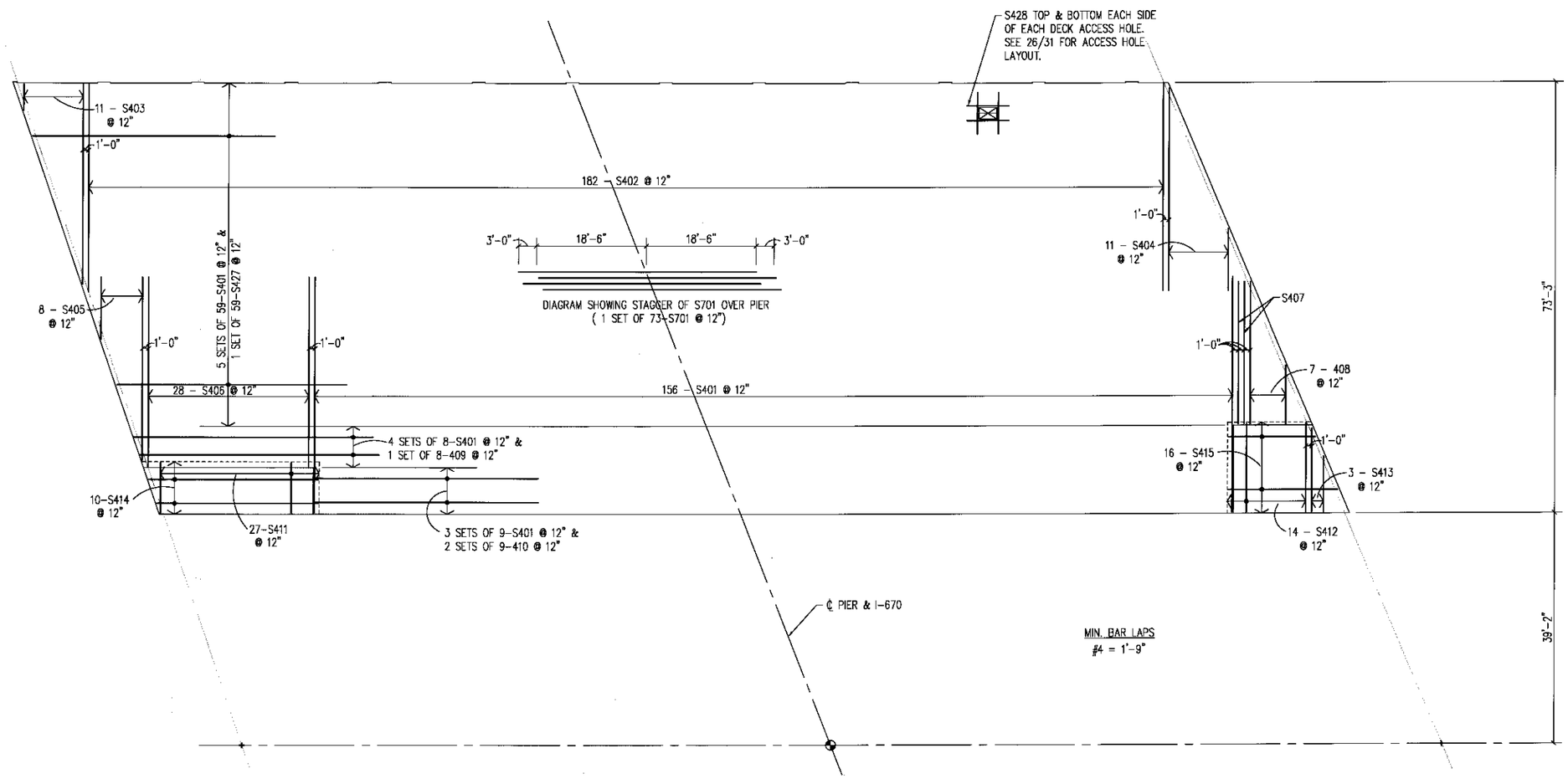

DECK "A" REINFORCING PLAN

N

DESIGN AGENCY
JEZERINAC GEERS & ASSOC.
5640 FRANTZ ROAD
DUBLIN, OH 43017

DESIGNED	DRAWN	REVIEWED	DATE
TR	CAD	–	8/15/01
CHECKED	REVISED	STRUCTURE FILE NUMBER	
REG		2500238	

SUPERSTRUCTURE DETAILS
BRIDGE NO. FRA-670-0380A
I-670 UNDER HIGH STREET

FRA-670-3.80

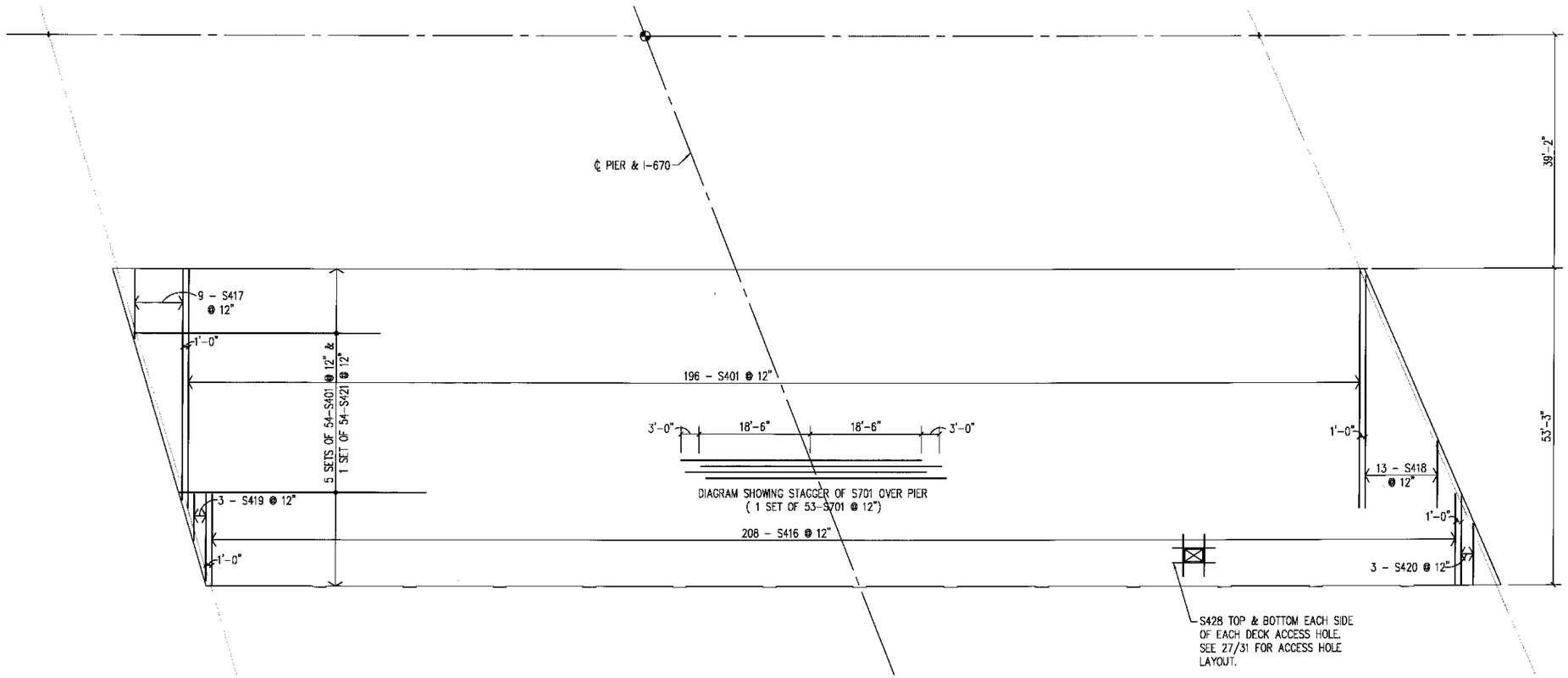

DECK "B" REINFORCING PLAN

N

MIN. BAR LAPS
#4 = 1'-9"

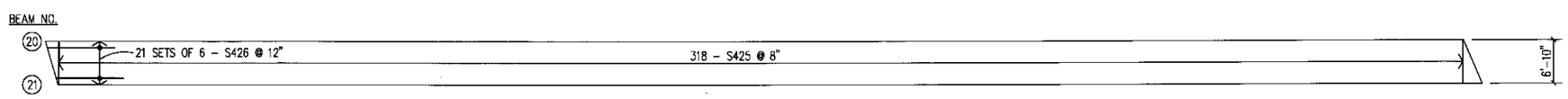

DECK "B" PLUMBING TROUGH REINFORCING PLAN

N

DESIGN AGENCY
JEZERINAC GEERS & ASSOC.
5640 FRANTZ ROAD
DUBLIN, OH 43017

DESIGNED	DRAWN	REVIEWED	DATE
TR	CAD	–	8/15/01
CHECKED	REVISED	STRUCTURE FILE NUMBER	
REG		2500351	

SUPERSTRUCTURE DETAILS
BRIDGE NO. FRA-670-0380B
I-670 UNDER HIGH STREET

FRA-670-3.80

LAMINATED ELASTOMERIC BEARINGS										
LOCATION	DIMENSIONS (INCHES)					N	STEEL LOAD PLATE	REACTION		MAXIMUM DESIGN LOAD
	L	W	ti	te	T			DL	LL	
FORWARD ABUTMENT FIXED BRGS	9	13	.30	.21	2	5	1 1/2 x 10 x 21	32K	46K	78K
FORWARD ABUTMENT FIXED BRGS*	13	13	.30	.21	2	5	1 1/2 x 14 x 21	91K	64K	155K
PIER EXPANSION BEARINGS	10	18	.30	.21	2	5	2 1/2 x 11 x 26	100K	65K	165K
PIER EXPANSION BEARINGS*	16	18	.30	.21	2	5	2 1/2 x 17 x 26	250K	146K	396K
PIER EXPANSION BEARINGS**	14	18	.30	.21	2	5	2 1/2 x 15 x 26	126K	111K	237K
REAR ABUTMENT EXPANSION BRGS	9	13	.40	.27	2 1/2	5	1 1/2 x 10 x 21	32K	46K	78K
REAR ABUTMENT EXPANSION BRGS*	13	13	.40	.27	2 1/2	5	1 1/2 x 14 x 21	91K	64K	155K

ti = THICKNESS OF INTERNAL LAYER
te = THICKNESS OF EXTERNAL LAYER
T = TOTAL THICKNESS OF ELASTOMERIC BEARING

N = NO. OF STEEL LAMINATES
INTERNAL STEEL LAMINATE THICKNESS = 0.0747"
DUROMETER OF ELASTOMER = 60

* BEAM NO. 1 & NO. 21

** BEAM NO. 9, NO. 10, NO. 12, NO. 13, NO. 15, & NO. 16

DIM "A" (IN.)		
TEMP.	SOUTH ABUT.	NORTH ABUT.
30° F	2.00	2.00
40° F	1.83	2.00
50° F	1.67	2.00
60° F	1.50	2.00
70° F	1.33	2.00
80° F	1.17	2.00
90° F	1.00	2.00

LOAD PLATE: THE STEEL LOAD PLATE SHALL BE THE SAME MATERIAL AS THE ATTACHED STRUCTURAL STEEL AND BE SIMILARLY CLEANED AND COATED. SURFACE PREPARATION AND PRIMING SHALL BE DONE IN THE SHOP AND BE INCLUDED IN THE PRICE BID FOR THE BEARINGS. FIELD COATS SHALL BE INCLUDED IN THE PRICE BID FOR PAINTING MAIN STRUCTURAL STEEL.

THE STEEL LOAD PLATE SHALL BE BONDED BY VULCANIZATION TO THE ELASTOMER DURING THE MOLDING PROCESS.

WELDING OF THE LOAD PLATE TO THE SUPERSTRUCTURE SHALL BE CONTROLLED SO THAT THE PLATE TEMPERATURE AT THE ELASTOMER BONDED SURFACE SHALL NOT EXCEED 300° F AS DETERMINED BY THE USE OF PYROMETRIC STICKS OR OTHER TEMPERATURE MONITORING DEVICES.

BASIS OF PAYMENT: THE UNIT BID PRICE SHALL INCLUDE ALL MATERIALS, LABOR AND INCIDENTALS NECESSARY TO FINISH AND INSTALL LAMINATED ELASTOMERIC BEARINGS, ETHER FIXED OR EXPANSION. PAYMENT WILL BE MADE AT THE CONTRACT PRICE FOR ITEM 516, EACH, LAMINATED ELASTOMERIC BEARINGS.

ELASTOMERIC BEARINGS: ELASTOMERIC BEARINGS SHALL COMPLY WITH ITEM 516 AND AASHTO STANDARD SPECIFICATIONS FOR HIGHWAY BRIDGES, SECTION 18, BEARING DEVICES, DIVISION II, CONSTRUCTION, ARTICLES 18.4.5.1 AND 18.5.6.2. BEARINGS SHALL BE GRADE 3, 60 DUROMETER ELASTOMER, AND SHALL BE SUBJECTED TO THE LOAD TESTING REQUIREMENTS DEFINED IN ARTICLE 18.7.4.5 OF THE AASHTO DOCUMENT LISTED ABOVE. THE UNIT BID PRICE SHALL INCLUDE ALL MATERIALS, LABOR, TESTING, STEEL LOAD PLATES AND INCIDENTALS NECESSARY TO FURNISH AND INSTALL LAMINATED ELASTOMERIC BEARINGS. PAYMENT WILL BE MADE AT THE CONTRACT PRICE FOR ITEM 516, EACH, ELASTOMERIC BEARINGS WITH INTERNAL LAMINATES AND LOAD PLATE (NEOPRENE), AS PER PLAN.

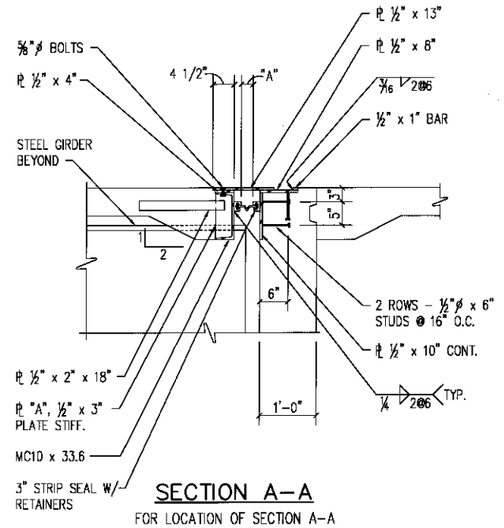

SECTION A–A

FOR LOCATION OF SECTION A–A
SEE SHEETS 20/31, 22/31, 23/31, AND 25/31

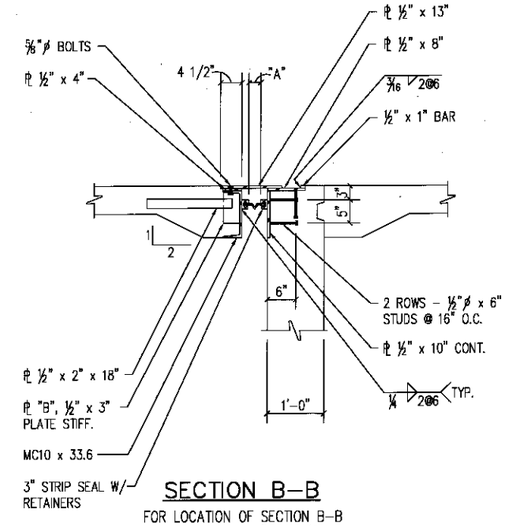

SECTION B–B

FOR LOCATION OF SECTION B–B
SEE SHEETS 20/31, 22/31, 23/31, AND 25/31

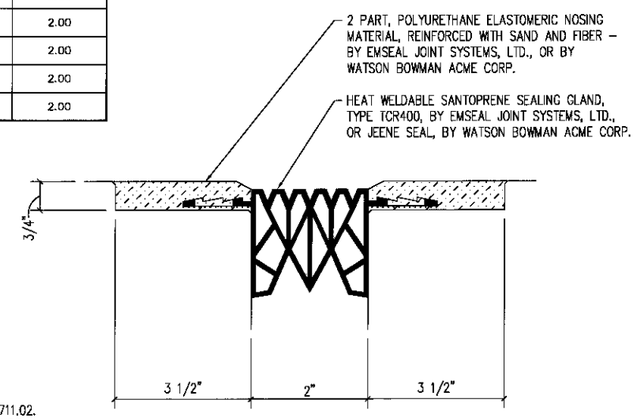

SECTION C–C

FOR LOCATION OF SECTION C–C
SEE SHEET 17/31

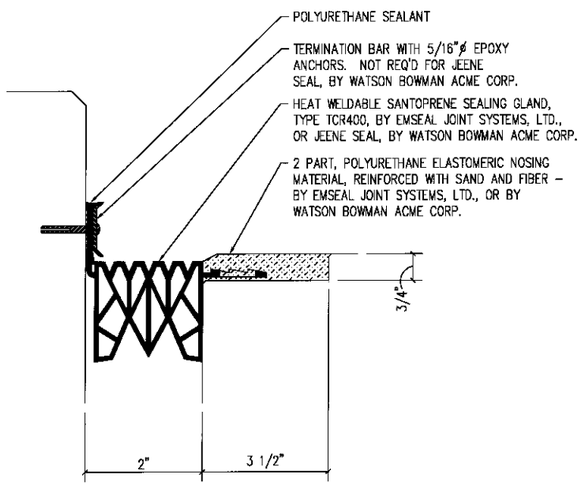

SECTION D–D

FOR LOCATION OF SECTION D–D
SEE SHEETS 17/31 AND 18/31

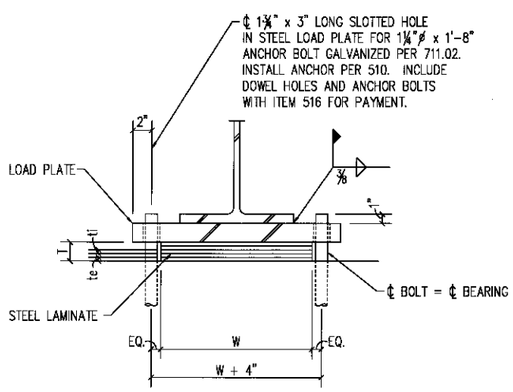

LAMINATED ELASTOMERIC
EXPANSION BEARING

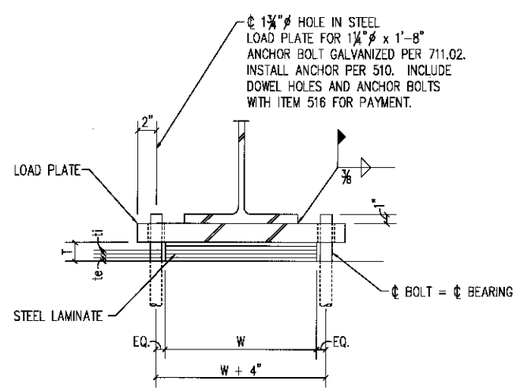

LAMINATED ELASTOMERIC
FIXED BEARING

DESIGN AGENCY
JEZERINAC GEERS & ASSOC.
5640 FRANTZ ROAD
DUBLIN, OH 43017

DATE 8/15/01 | REVIEWED – | STRUCTURE FILE NUMBER 2500336 2500331

DRAWN CAD | REVISED

DESIGNED TR | CHECKED REG

BEARING DETAILS AND EXPANSION DEVICES
BRIDGE NO. FRA-670-0380A & B
I-670 UNDER HIGH STREET

FRA-670-3.80

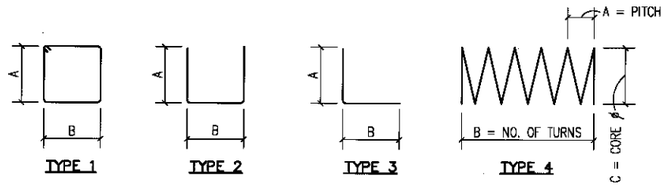

PIER "A" (EPOXY COATED)

MARK	NO.	LENGTH	WEIGHT	TYPE	A	B	C	D	E	REMARKS
SP401	8	19'-9"	2820	4	4½	56	2'-6"			
P401	184	6'-6"	799	2	2'-6"	1'-8"				
P501	4	30'-0"	125	STR.						
P502	2	23'-4"	49	STR.						
P601	162	7'-6"	1825	STR.						
P602	32	30'-0"	1442	STR.						
P603	16	28'-7"	687	STR.						
P901	6	23'-1"	471	STR.						
P902	6	30'-3"	617	STR.						
P903	6	25'-8"	524	STR.						
P904	6	32'-8"	658	3	30'-2"	2'-4"				
P905	6	24'-11"	508	STR.						
P906	6	34'-10"	711	3		2'-4"				
P113	96	8'-0"	2611	3	7'-0"	1'-4"				
P914	96	20'-1"	6555	STR.						
		TOTAL	20,402	LBS.	EPOXY	COATED	STEEL			

PIER "B" (EPOXY COATED)

MARK	NO.	LENGTH	WEIGHT	TYPE	A	B	C	D	E	REMARKS
SP402	6	16'-9"	1809	4	4½	48	2'-6"			
P401	132	6'-6"	573	2	2'-6"	1'-8"				
P503	4	29'-10"	124	STR.						
P601	120	7'-6"	1352	STR.						
P604	32	31'-6"	1514	STR.						
P907	6	23'-11"	488	STR.						
P908	6	10'-10"	221	STR.						
P909	6	23'-3"	474	STR.						
P910	6	23'-3"	474	3	21'-2"	2'-4"				
P911	6	25'-0"	510	STR.						
P912	6	22'-1"	451	3	20'-0"	2'-4"				
P913	72	8'-0"	1958	3						
P915	72	23'-1"	5651	STR.						
		TOTAL	15,599	LBS.	EPOXY	COATED	STEEL			

THE BAR SIZE NUMBER IS SPECIFIED ON THE BAR MARK COLUMN. THE FIRST DIGIT WHERE THREE DIGITS ARE USED, AND THE FIRST TWO DIGITS WHERE FOUR DIGITS ARE USED, INDICATES THE BAR SIZE NUMBER. FOR EXAMPLE, "P601" IS A NUMBER 6 BAR. BAR DIMENSIONS SHOWN ARE OUT TO OUT UNLESS OTHERWISE NOTED. "R" INDICATES INSIDE RADIUS, UNLESS OTHREWISE NOTED. "STD." WRITTEN IN PLACE OF A DIMENSION INDICATES A STANDARD BEND AT THE END OF THE BAR.

PAYMENT FOR REINFORCING STEEL IS INCLUDED WITH APPROPRIATE CONCRETE ITEM.

SUPERSTRUCTURE "A" (EPOXY COATED)

MARK	NO.	LENGTH	WEIGHT	TYPE	A	B	C	D	E	REMARKS
S401	510	40'-0"	13,627	STR.						
S402	182	35'-2"	4275	STR.						
S403	1 SER.	4'-5" TO	141	STR.						
	OF 11	33'-11"								
S404	1 SER.	10'-6" TO	165	STR.						
	OF 11	34'-5"								
S405	1 SER.	10'-4" TO	110	STR.						
	OF 8	31'-0"								
S406	28	31'-11"	597	STR.						
S407	2	23'-10"	32	STR.						
S408	1 SER.	24'-2" TO	80	STR.						
	OF 7	9'-11"								
S409	1 SER.	34'-4" TO	181	STR.						
	OF 8	33'-4"								
S410	18	22'-0"	265	STR.						
S411	27	8'-6"		STR.						
S412	14	15'-0"	153	STR.						
S413	1 SER.	14'-1" TO	23	STR.						
	OF 3	9'-4"								
S414	1 SER.	29'-5" TO	183	STR.						
	OF 10	26'-5"								
S415	1 SER.	13'-6" TO	179	STR.						
	OF 16	20'-0"								
S422	233	4'-2"	649	1	1'-3"	9"				
S423	233	5'-8"	882	1	1'-1"	1'-7"				
S424	288	7'-1"	1363	STR.						
S426	133	10'-4"	918	STR.						
S427	1 SER.	4'-11" TO	335	STR.						
	OF 59	12'-1"								
S428	64	7'-0"	299	STR.						
S601	30	40'-0"	1802	STR.						
S602	20	24'-4"	731	STR.						
S701	73	40'-0"	5968	STR.						
		TOTAL	32,958	LBS.	EPOXY	COATED	STEEL			

SPIRAL REINFORCING BARS: THE "LENGTH" SHOWN IN THE STEEL LIST FOR SPIRAL BARS IS THE LENGTH OF THE SPIRAL ALONG THE AXIS OF THE SPIRAL. ONE AND ONE-HALF CLOSED-COIL TURNS SHALL BE PROVIDED AT ENDS OF EACH SPIRAL UNIT. FOUR STEEL CHANNEL, TEE, OR ANGLE SPACERS, WEIGHING APPROXIMATELY 0.80 LB. PER LINEAR FOOT OF SPACERS, SHALL BE PROVIDED FOR EACH SPIRAL UNIT. THEY SHALL BE EQUALLY SPACED ALONG THE PERIPHERY OF THE COILS. THE NUMBER OF POUNDS OF THESE SPACERS, BASED ON 3.20 LBS. PER LINEAR FOOT, WILL BE PAID FOR AS REINFORCING STEEL AND IS INCLUDED IN THE TABULATED QUANTITIES OF SPIRAL BARS.

SUPERSTRUCTURE "B" (EPOXY COATED)

MARK	NO.	LENGTH	WEIGHT	TYPE	A	B	C	D	E	REMARKS
S401	466	40'-0"	12,452	STR.						
S416	208	15'-2"	2107	STR.						
S417	1 SER.	11'-6" TO	225	STR.						
	OF 9	38'-7"								
S418	1 SER.	11'-2" TO	218	STR.						
	OF 13	39'-0"								
S419	1 SER.	7'-8" TO	22	STR.						
	OF 3	14'-6"								
S420	1 SER.	10'-0" TO	25	STR.						
	OF 3	14'-8"								
S421	1 SER.	14'-11" TO	667	STR.						
	OF 54	22'-1"								
S425	318	6'-6"	1381	STR.						
S426	126	10'-4"	870	STR.						
S428	80	7'-0"	374	STR.						
S701	53	40'-0"	4333	STR.						
		TOTAL	22,674	LBS.	EPOXY	COATED	STEEL			

ABUTMENT "A" (EPOXY COATED)

MARK	NO.	LENGTH	WEIGHT	TYPE	A	B	C	D	E	REMARKS
A401	60	27'-10"	1116	STR.						
A501	158	4'-0"	659	STR.						
A502	158	7'-1"	1167	2	3'-4"	8"				
A503	105	4'-9"	520	2	1'-0"	8"				*
		TOTAL	3,462	LBS.	EPOXY	COATED	STEEL			

ABUTMENT "B" (EPOXY COATED)

MARK	NO.	LENGTH	WEIGHT	TYPE	A	B	C	D	E	REMARKS
A402	40	30'-2"	806	STR.						
A501	114	4'-0"	476	STR.						
A502	114	7'-1"	842	2	3'-4"	8"				
A503	76	4'-9"	377	2	1'-0"	8"				*
		TOTAL	2,501	LBS.	EPOXY	COATED	STEEL			

* DOWEL BAR INSERT

DESIGN AGENCY
JEZERINAC GEERS & ASSOC.
5640 FRANTZ ROAD
DUBLIN, OH 43017

DATE 8/15/01
REVIEWED –
STRUCTURE FILE NUMBER 2500036 2500051

DRAWN CAD
REVISED

DESIGNED TR
CHECKED REG

REINFORCING STEEL
BRIDGE NO. FRA-670-0380A & B
I-670 UNDER HIGH STREET

FRA-670-3.80

31
31