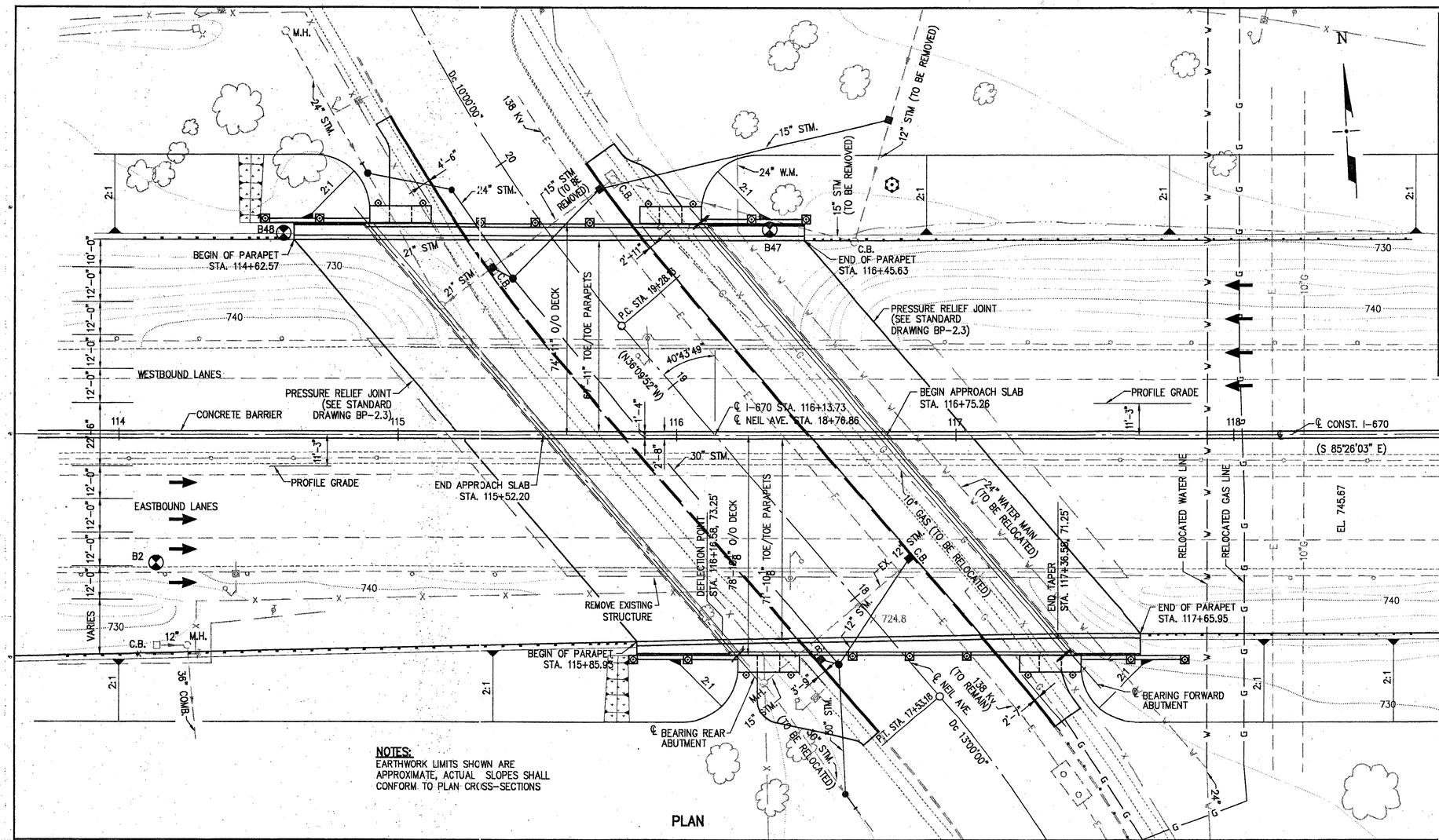

NOTES:
EARTHWORK LIMITS SHOWN ARE APPROXIMATE, ACTUAL SLOPES SHALL CONFORM TO PLAN CROSS-SECTIONS

PLAN

EXISTING STRUCTURE

TYPE: 3 SPAN CONTINUOUS ROLLED BEAM WITH REINFORCED CONCRETE DECK AND SUBSTRUCTURE

SKEW: 40°46'00" R.F.

SPANS: 58'-0", 83'-0", 58'-0"

ROADWAY: 78'-0" F/F OF 1'-10" SAFETY CURBS WITH 4'-0" MEDIAN

LOADING: CF2000

DISPOSITION: EXISTING STRUCTURE TO BE REMOVED

WEARING SURFACE: ASPHALT CONCRETE

APPROACH SLAB: AS-I-54 (20'-0" LONG)

ALIGNMENT: TANGENT

SLOPE PROTECTION: CONCRETE

DATE BUILT: 1960

STATE OF OHIO
TIMOTHY J. KELLER #52319
REGISTERED PROFESSIONAL ENGINEER

Timothy J. Keller 7/12/01
TIMOTHY J. KELLER, P.E. NUMBER 52319

ARCHITECT OF RECORD FOR NEIL AVE. BRIDGE:
DAVID BENJAMIN MELECA ARCHITECTURE

● MINIMUM VERTICAL CLEARANCE
REQUIRED = 15.00'
ACTUAL = 15.06'
EXISTING = 14.02'

⊗ BORING LOCATIONS
B2 STA. 114+11 47.5' RT.
B47 STA. 116+31 73.0' LT.
B48 STA. 114+61 71.0' LT.

ESTIMATED PILE LENGTH FOR 14"ø C.I.P. PILE:
REAR ABUTMENT = 45'
FORWARD ABUTMENT = 45'

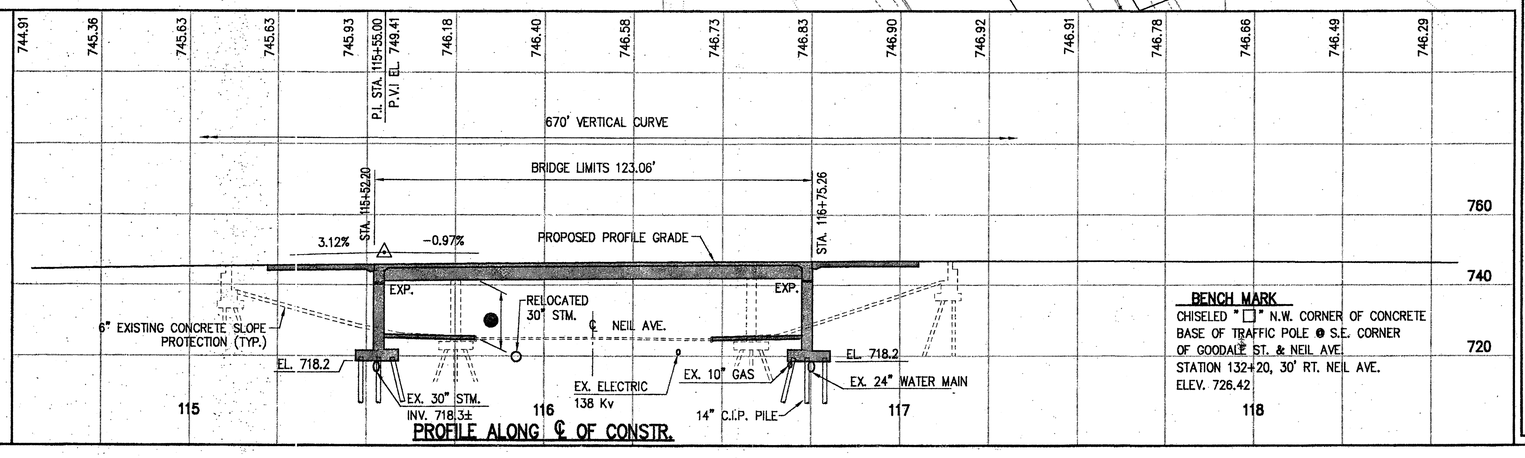

PROFILE ALONG ℄ OF CONSTR.

BENCH MARK
CHISELED "□" N.W. CORNER OF CONCRETE BASE OF TRAFFIC POLE ● S.E. CORNER OF GOODALE ST. & NEIL AVE.
STATION 132+20, 30' RT. NEIL AVE.
ELEV. 726.42

PROPOSED STRUCTURE

TYPE: SIMPLE SPAN STEEL GIRDERS (A572-50) WITH A COMPOSITE CONCRETE DECK SUPPORTED BY SEMI-INTEGRAL WALL TYPE ABUTMENT

SKEW: 40°43'49" LT

SPAN: 120'-5" C/C BEARINGS

ROADWAY:
EASTBOUND: 71'-10 1/2" TOE/TOE PARAPET
WESTBOUND: 67'-11" TOE/TOE PARAPET

LOADING: HS25 (CASE 1) AND ALTERNATE MILITARY LOADING

WEARING SURFACE: 1" MONOLITHIC CONCRETE

APPROACH SLAB: 30'-0" LONG (AS-1-81)

ALIGNMENT: TANGENT

SUPERELEVATION: NONE

CROWN: 3/16" PER FOOT

TRAFFIC DATA:
2020 ADT= 95,677 V.P.D.
2020 ADTT= 9,568 V.P.D.
T = 8.0 %

LATITUDE: 39°58'24"
LONGITUDE: 83°00'28"

URS
architects • engineers • planners
277 west nationwide boulevard
columbus, ohio 43215-2592
(614)464-4500 fax (614)464-4008
http://www.urscorp.com

DESIGNED	DRAWN	REVIEWED	DATE
MSL	CMS	TJK	5/25/01
CHECKED	REVISED	STRUCTURE FILE NUMBER	
AD		25170220 EASTBOUND 25170220 WESTBOUND	

FRANKLIN COUNTY
STA. 115+52.20
STA. 116+75.26

SITE PLAN
BRIDGE NO. FRA-670-0312 L&R
I-670 OVER NEIL AVENUE

FRA-670-03.12

SNYDER 11:10PM J:\0697100\MAKE\SHEETS\697SP01.DWG, 06/29/01 07:39 LTS: 1 PB:TS: 1

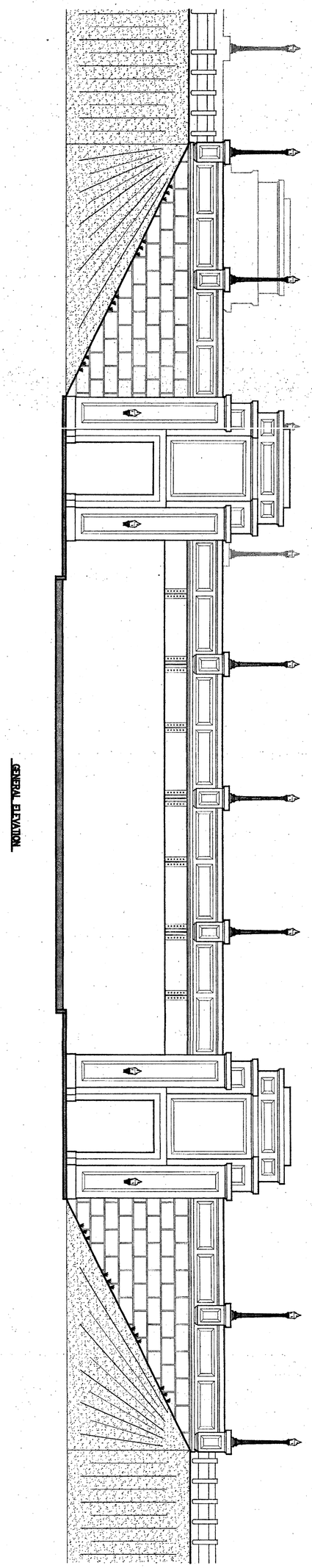

1A / 31	FRA-670-03.12	GENERAL ELEVATION BRIDGE NO. FRA.-670-0312 L&R I-670 OVER NEIL AVENUE	DESIGNED MSL CHECKED AD	DRAWN CMS REVISED	REVIEWED TJK REVISED	DATE 5/25/01 STRUCTURE FILE NUMBER 2517639 EASTBOUND 2517620 WESTBOUND	URS architects • engineers • planners 277 west nationwide boulevard columbus, ohio 43215-2568 (614)464-4500 fax (614)464-0588 http://www.urscorp.com

STRUCTURE GENERAL NOTES

REFERENCE: SHALL BE MADE TO STANDARD BRIDGE DRAWINGS:

AS 1-81	DATE 04-20-01
GSD-1-96	DATE 04-20-01
SICD-1-96	DATE 04-20-01

SUPPLEMENTAL SPECIFICATIONS:

816	DATE 04-21-97
842	DATE 01-06-99
844	DATE 01-06-99
863	DATE 10-12-99
864	DATE 07-11-00
899	DATE 10-21-98
910	DATE 07-11-00
911	DATE 07-10-97
954	DATE 09-09-97

DESIGN SPECIFICATIONS: THIS STRUCTURE CONFORMS TO "STANDARD SPECIFICATIONS FOR HIGHWAY BRIDGES" ADOPTED BY THE AMERICAN ASSOCIATION OF STATE HIGHWAY AND TRANSPORTATION OFFICIALS, 1996, INCLUDING THE 1997, 1998, AND 1999 INTERIM SPECIFICATIONS AND THE ODOT BRIDGE DESIGN MANUAL.

DESIGN LOADING: HS25-44, CASE 1 AND THE ALTERNATE MILITARY LOADING.

FUTURE WEARING SURFACE:

AN ALLOWANCE OF 60 PSF FOR FUTURE WEARING SURFACE HAS BEEN INCLUDED.

DESIGN STRESSES:

HIGH PERFORMANCE CONCRETE HPC SS844 FOR SUPERSTRUCTURE- COMPRESSIVE STRENGTH 4500 P.S.I.

HIGH PERFORMANCE CONCRETE HPC SS844 FOR SUBSTRUCTURE- COMPRESSIVE STRENGTH 4000 P.S.I. (INCLUDING PEDESTRIAN TOWER)

REINFORCING STEEL - ASTM A615, A616, OR A617, GRADE 60, MINIMUM YIELD STRENGTH 60,000 P.S.I.

STRUCTURAL STEEL - ASTM A572 GRADE 50, YIELD STRENGTH 50,000 P.S.I.

DECK PROTECTION METHOD: EPOXY COATED REINFORCING STEEL AND 2 1/2" CONCRETE COVER.

MONOLITHIC WEARING SURFACE: IS ASSUMED, FOR DESIGN PURPOSES, TO BE 1" THICK.

REINFORCING BAR SPLICES: REINFORCING BAR SPLICE LENGTHS SHALL CONFORM TO THE MINIMUM LENGTHS SPECIFIED BY 509.08 OF THE C.M.S. UNLESS NOTED OTHERWISE ON THE PLANS.

REINFORCING STEEL COVER: UNLESS NOTED OTHERWISE, MINIMUM REINFORCING STEEL CLEARANCE TO FACE OF CONCRETE IS 2".

UTILITY LINES: ALL EXPENSE INVOLVED IN RELOCATION OF THE AFFECTED UTILITY LINES SHALL BE BORNE BY THE UTILITY. THE CONTRACTOR AND UTILITY ARE TO COOPERATE BY ARRANGING THEIR WORK IN SUCH A MANNER THAT INCONCVENIENCE TO EITHER WILL BE HELD TO A MINIMUM.

ITEM 202 - STRUCTURE REMOVED, OVER 20 FOOT SPAN, AS PER PLAN

WHEN NO LONGER NEEDED TO MAINTAIN TRAFFIC, THE EXISTING STRUCTURE SHALL BE REMOVED UPON RECEIVING PERMISSION FROM THE ENGINEER.

PROTECTION OF TRAFFIC:

PRIOR TO THE DEMOLITION OF ANY PORTIONS OF THE EXISTING SUPERSTRCTURE, THE CONTRACTOR SHALL SUBMIT PLANS FOR THE PROTECTION OF TRAFFIC (VEHICULAR, PEDESTRIAN, ETC.) ADJACENT TO AND UNDER THE STRUCTURE TO THE ENGINEER FOR APPROVAL. THESE PLANS SHALL INCLUDE PROVISIONS FOR ANY DEVICES AND STRUCTURES THAT MAY BE NECESSARY TO ENSURE SUCH PROTECTION.

PAYMENT FOR ALL LABOR, EQUIPMENT, MATERIALS, AND INCIDENTALS NECESSARY TO COMPLETE THE WORK SHALL BE INCLUDED IN THE CONTRACT LUMP SUM PRICE BID FOR ITEM 202 - STRUCTURE REMOVED, OVER 20 FOOT SPAN, AS PER PLAN.

ITEM 203- EMBANKMENT, AS PER PLAN

ALL FILL MATERIAL FOR THE CONSTRUCTION OF THE APPROACH EMBANKMENT PLACED BETWEEN STATIONS 115+00 TO 117+50 AND FOR FILLING THE EXCAVATION VOID CREATED BY REMOVAL OF THE EXISTING ABUTMENTS AND PEIRS, SHALL BE PLACED IN 6 INCH LIFTS.

PILE DRIVING CONSTRAINTS

PRIOR TO DRIVING PILES AT THE ABUTMENTS, THE BRIDGE APPROACH EMBANKMENT BEHIND THE ABUTMENTS SHALL BE CONSTRUCTED UP AT A 1:1 SLOPE FROM THE BOTTOM OF THE HEEL OF THE FOOTING TO THE SUBGRADE ELEVATION AND FOR A MINIMUM DISTANCE OF 250 FEET BEHIND THE ABUTMENTS. THE INSTALLATION OF THE ABUTMENT PILES SHALL NOT BEGIN UNTIL AFTER THE ABOVE REQUIRED EMBANKMENT HAS BEEN CONSTRUCTED. AFTER THE FOOTING AND THE BREASTWALL HAVE BEEN CONSTRUCTED, THE EMBANKMENT IMMEDIATELY BEHIND THE ABUTMENTS SHALL BE CONSTRUCTED UP TO THE BEAM SEAT ELEVATION AND ON A 1:1 SLOPE UP TO THE SUBGRADE ELEVATION PRIOR TO SETTING THE BEAMS ON THE ABUTMENTS.

PILES

THE ULTIMATE BEARING VALUE IS 139 TONS PER PILE FOR THE 14" CAST-IN-PLACE ABUTMENT PILES

REAR AND FORWARD ABUTMENT PILES:

223 PILES 45 FOOT LONG, ESTIMATED LENGTH
223 PILES OF ORDER LENGTH 45 FOOT LONG
112 SPLICES

ITEM 516 - STRUCTURAL JOINT OR JOINT SEALER, MISC.: LONGITUDINAL JOINT , AS PER PLAN

THIS ITEM SHALL INCLUDE THE SURFACE PREPARATION AND INSTALLATION OF THE PREFORMED JOINT FILLER AT THE FOLLOWING LOCATIONS:

1. BETWEEN THE MEDIAN BARRIERS - 2" WIDTH
2. AT THE PEDESTRIAN TOWERS INTERFACE WITH THE DECORATIVE RAILING - 2" WIDTH

THE PREFORMED JOINT FILLER SURFACE PREPARATION AND INSTALLATION SHALL BE IN ACCORDANCE WITH MANUFACTURER RECOMMENDATIONS. THE MATERIAL SHALL BE EVAZOTE 380 E.S.P. WITH H.A.L.S., BEIGE COLORING, MANUFACTURED BY E-POXY INDUSTRIES, INC., 460 SOUTH PEARL ST., ALBANY, NY 12202-1152, 1-800-833-3400, OR CAPITAL SERVICES 112 MORRIS ROAD, SCHENECTADY, NY 12304, 1-800-356-6007, OR AN APPROVED EQUAL.

ITEM 516 - SEMI-INTEGRAL ABUTMENT EXPANSION JOINT SEAL, AS PER PLAN

AT THE ABUTMENTS INSTALL A 3 FOOT WIDE STRIP, 3/32 INCH THICK, GENERAL PURPOSE, HEAVY DUTY NEOPRENE SHEET WITH NYLON FABRIC REINFORCEMENT AT LOCATIONS SHOWN IN THE PLANS. SECURE WITH 3 FOOT WIDE NEOPRENE SHEETING TO THE CONCRETE WITH 1 1/4" x 3/32" (LENGTH x SHANK DIAMETER) #10 GALVANIZED BUTTON HEAD SPIKES THROUGH A ONE INCH OUTSIDE DIAMETER, #10 GALVANIZED WASHER. MAXIMUM FASTENER SPACING IS NINE INCHES. OTHER SIMILAR GALVANIZED DEVICES WHICH WILL NOT DAMAGE EITHER THE NEOPRENE OR THE CONCRETE MAY BE USED SUBJECT TO THE APPROVAL OF THE ENGINEER.

CENTER THE NEOPRENE STRIPS ON ALL JOINTS. FOR HORIZONTAL JOINTS, SECURE THE HORIZONTAL NEOPRENE STRIP BY USING A SINGLE LINE OF FASTENERS, STARTING AT 6 INCHES (+/-) FROM THE TOP OF THE NEOPRENE STRIP. FOR THE VERTICAL JOINTS SECURE THE VERTICAL NEOPRENE STRIP BY USING A SINGLE VERTICAL LINE OF FASTENERS, STARTING AT 6 INCHES (+/-) FROM THE VERTICAL EDGE OF THE NEOPRENE STRIP NEAREST TO THE CENTERLINE OF ROADWAY. FOR VERTICAL JOINTS, INSTALL TWO ADDITIONAL FASTENERS AT 6 INCHES CENTER TO CENTER ACROSS THE TOP OF THE NEOPRENE STRIP ON THE SAME SIDE OF THE VERTICAL JOINT AS THE SINGLE VERTICAL ROW OF FASTENERS IS LOCATED.

THE VERTICAL NEOPRENE STRIPS SHOULD COMPLETELY OVERLAP THE HORIZONTAL STRIPS. LAPS IN THE LENGTH OF THE HORIZONTAL STRIPS DUE TO MATERIAL MANUFACTURING SHALL BE AT LEAST 1 FOOT IN LENGTH, IF NOT VULCANIZED OR ADHESIVE BONDED, OR 6 INCHES IN LENGTH IF THE LAP IS VULCANIZED OR ADHESIVE BONDED. NO LAPS ARE ACCEPTABLE IN VERTICALLY INSTALLED NEOPRENE STRIPS.

THE NEOPRENE SHEETING SHALL BE 3/32 INCH THICK GENERAL PURPOSE, HEAVY DUTY NEOPRENE SHEET WITH NYLON FABRIC REINFORCEMENT. THE SHEETING SHALL BE "FAIRPRENE NUMBER NN-0003", BY E.I. DUPONT DE NEMOURS AND COMPANY, INC., "WINGPRENE" BY THE GOODYEAR TIRE AND RUBBER COMPANY, OR AN APPROVED ALTERNATE. THE NEOPRENE SHEETING SHALL CONFORM TO THE FOLLOWING:

ITEM 516 - SEMI-INTEGRAL ABUTMENT EXPANSION JOINT SEAL, AS PER PLAN

DESCRIPTION OF TEST	ASTM METHOD	REQUIREMENT
THICKNESS, INCHES	D 751	0.094 +/-.01
BREAKING STRENGTH, GRAB WXF, LBS, MINIMUM	D 751	700 x 700
ADHESIVE 1" STRIP, 2" MINIMUM, LBS, MINIMUM	D 751	9
BURST STRENGTH (MULLEN) PSI, MINIMUM	D 751	1400
HEAT AGING 70 HOURS T 212°F, 180 BEND WITHOUT BEND CRACKING	D 2136	NO CRACKING OF COATING
LOW TEMPERATURE BRITTLENESS 1 HOUR AT -40°F, AROUND 1/4 INCH MANDREL	D 2136	NO CRACKING OF COATING

IN LIEU OF THE NEOPRENE SHEETING THE CONTRACTOR MAY CHOOSE TO SUPPLY TYPE 3 MEMBRANE, 711.29. PAYMENT LABOR, MATERIALS AND INSTALLATION OF THESE ITEMS SHALL BE INCLUDED IN ITEM 516 SEMI-INTEGRAL ABUTMENT EXPANSION JOINT SEAL, AS PER PLAN

ITEM SPECIAL - FORM LINER

CONCRETE FORM LINER SHALL BE USED ON THE ABUTMENTS AND WINGWALLS AS SHOWN ON SHEET NOS. 6/31 THROUGH 12/31.

CONCRETE FORM LINER SHALL BE RUNNING BOND ASHLAR STONE, AS MANNUFACTURED BY GREENSTREAK, INC., 3400 TREE COURT INDUSTRIAL BOULEVARD, ST. LOUIS, MO 63122, 1-800-325-9504, OR AN APPROVED EQUAL. THE SAME FORM LINER MANUFACTURER SHALL BE USED FOR THE ABUTMENTS, WINGWALLS, AND RETAINING WALLS.

THE USE OF VIBRATION METHOD DURING CONCRETE PLACEMENT IS REQUIRED IN ORDER TO ENSURE PROPER FILLING OF THE PATTERN DETAILS. PLACEMENT OF CONCRETE INCLUDING VIBRATION METHOD SHALL FOLLOW SUPPLEMENTAL SPECIFICATION 842 AND MANUFACTURER'S RECOMMENDATIONS. THE FORMLINER SHALL BE SUPPORTED AS NECESSARY TO PREVENT DEFORMATIONS AS PER MANUFACTURER'S RECOMMENDATIONS. HORIZONTAL LINES OF THE STONE PATTERN SHALL BE ALIGNED AND AT THE SAME ELEVATION. COMPLETE SHOP DRAWINGS DETAILING THE STONE PATTERNS SHALL BE SUBMITTED FOR APPROVAL PRIOR TO PLACING ANY CONCRETE WHERE THE FORMLINER IS TO BE USED. THE SHOP DRAWING SHALL SHOW PLAN, ELEVATION AND DETAILS TO SHOW OVERALL PATTERN, JOINT LOCATIONS, FORM TIE LOCATIONS AND OTHER SPECIAL CONSIDERATIONS. COMPLETE STONE PATTERNS SHALL BE DETAILED ON THE SUBSTRUCTURE UNITS. THE FINISHED TEXTURE SHALL BE SIMILAR TO THAT OF RUBBED CONCRETE. ALL RIDGES IN CONCRETE CAUSED BY MISALIGNMENT OF THE FORM LINERS SHALL BE REPAIRED AT THE CONTRACTOR'S EXPENSE AS DIRECTED BY THE ENGINEER.

FORM LINER SHALL BE SECURELY ATTACHED TO THE FORM AS PER MANUFACTURER'S RECOMMENDATIONS TO AVOID MOVEMENT OF THE LINER DURING CONCRETE PLACEMENT. A RELEASE AGENT, GREENSTREAK 7000, CRESSET 860, OR APPROVED EQUAL, SHALL BE APPLIED TO THE FORM LINER PRIOR TO CONCRETE PLACEMENT. THE METHOD AND RATE OF APPLICATION SHALL BE AS PER MANUFACTURER'S RECOMMENDATIONS. THE RELEASE AGENT MUST BE COMPATIBLE WITH THE EPOXY-URETHANE SEALER OR SHALL BE COMPLETELY REMOVED PRIOR TO THE APPLICATION OF THE EPOXY-URETHANE SEALER. THE REMOVAL OF THE RELEASE AGENT SHALL NOT DAMAGE THE CONCRETE.

A PRECONSTRUCTION TEST SAMPLE SHALL BE CONSTRUCTED FOR APPROVAL BY THE DIRECTOR. IF THE TEST SAMPLE DOES NOT MEET THE APPROVAL OF THE DIRECTOR, THE RESULTS MAY BE GROUNDS TO REJECT THE PROPOSED FORMLINER AND/OR THE CONCRETE STAIN. THE TEST SAMPLE MUST PASS APPROVAL, FAILURE WILL CONSTITUTE PLACEMENT OF ANOTHER TEST SAMPLE. A FIVE FOOT HIGH BY EIGHT FOOT LONG TEST SAMPLE SHALL BE MADE. THE MINIMUM SAMPLE THICKNESS SHALL BE 9 INCHES AND SHOULD BE PLACED UPRIGHT AS PLACED ON THE STRUCTURE. THE TEST SAMPLE SHALL BE OF THE SAME CEMENT AND AGGREGATE SOURCE THAT WILL BE USED IN THE SUBSTRUCTURE UNITS AND CURED IN THE SAME MANNER. PLACEMENT SHALL BE DONE IN A MANNER TO DUPLICATE CONSTRUCTION METHODS THAT WILL BE USED IN THE FIELD. THE TEST SLAB SHALL BE CONSTRUCTED AT DISTRICT OFFICE OR AN APPROVED SITE AGREED UPON BY THE PROJECT ENGINEER. AFTER APPROVAL THE CONCRETE TEST SAMPLE SHALL BE REMOVED AND DISPOSED OF BY THE CONTRACTOR. SAMPLE COLORS (SWABS) SHALL BE SUBMITTED FOR APPROVAL TO THE DISTRICT PRIOR TO APPLYING THE EPOXY-URETHANE SEALER TO THE TEST SAMPLE AND ALTERATIONS TO THE COLORS BASED ON THE APPEARANCE MAY BE NECESSARY AFTER THE TEST SAMPLE IS EPOXY-URETHANE SEALER.

URS
architects • engineers • planners
277 west nationwide boulevard
columbus, ohio 43215-2568
(614)464-4500 fax (614)464-1568
http://www.urscorp.com

DESIGNED	DRAWN	REVIEWED	DATE
MSL	MSL	TJK	5/25/01
CHECKED	REVISED	STRUCTURE FILE NUMBER	
AD		2517639 EASTBOUND 2517620 WESTBOUND	

STRUCTURE GENERAL NOTES SHEET 1
BRIDGE NO. FRA-670-0312 L&R
I-670 OVER NEIL AVENUE

FRA-670-03.12

SNYDER 11:GFB J:\91671\00\TRANS\SHEETS\91679N01.DWG, 06/29/01 07:39 LTS: 1 PSLTS: 1

STRUCTURE GENERAL NOTES (CON'T)

ITEM SPECIAL – FORM LINER (CON'T)

THE EPOXY–URETHANE SEALER SHALL BE APPLIED AT LEAST 28 DAYS AFTER PLACEMENT OF THE CONCRETE. SURFACE PREPARATION FOR THE EPOXY–URETHANE SEALER AND APPLICATION REQUIREMENTS SHALL BE PER MANUFACTURER'S RECOMMENDATION. IF THE COATING FAILS TO ADHERE OR DOES NOT ATTAIN THE DESIRED APPEARANCE (AS DEMONSTRATED ON THE TEST SAMPLE), THE COATING SHALL BE COMPLETELY REMOVED AND REAPPLIED UNTIL THE DESIRED FINISH IS OBTAINED. THE AVERAGE THICKNESS OF THE COMPLETED COATING SHALL NOT EXCEED SUPPLEMENTAL SPECIFICATION 864. THE FINAL EPOXY–URETHANE SEALER COLOR SHALL BE AS DIRECTED BY THE ENGINEER BASED ON RESULTS OF THE TEST SLAB.

IF THE FORM LINERS ARE TO BE REUSED, THEY SHALL BE THOROUGHLY CLEANED AS PER MANUFACTURER'S RECOMMENDATIONS IMMEDIATELY AFTER THE FORMS ARE REMOVED. IF THE FORM LINERS ARE NOT CLEANED OR ARE DAMAGED DURING FORM LINER REMOVAL, THE ENGINEER WILL REJECT THE FORM LINERS FROM BEING REUSED.

A CONCRETE AESTHETIC TREATMENT SYSTEM SHALL BE SUCH TO DUPLICATE CLOSELY THE APPEARANCE OF NATURAL STONE. THE SURFACE FINISH, SEALING AND FORMLINERS TO BE USED AT THE ABUTMENTS, RETAINING WALLS AND OTHER LOCATIONS SHALL BE AS SHOWN IN THE PLANS. ALL MATERIALS, SURFACE PREPARATION, SEALING AND TEST SAMPLES REQUIRED TO COMPLETE THIS WORK SHALL BE INCLUDED WITH THE ITEM SPECIAL – FORM LINER FOR PAYMENT.

ITEM 816–FIELD PAINTING OF NEW STEEL, INTERMEDIATE AND FINISH COAT, SYSTEM IZEU, AS PER PLAN

THE URETHANE TOP COAT FOR THE IZEU PAINT SYSTEM SHALL BE FEDERAL COLOR STANDARD NO. 27038 "SEMI–GLOSS" (BLACK)

ITEM 844 – HIGH PERFORMANCE CONCRETE SUPERSTUCTURE (PARAPET), AS PER PLAN

CONCRETE PARAPETS;

AS SOON AS A CONCRETE SAW CAN BE OPERATED WITHOUT DAMAGING THE FRESHLY PLACED CONCRETE, 1 1/4" DEEP CONTROL JOINTS SHALL BE SAWED INTO THE PERIMETER OF THE CONCRETE PARAPET. THE SAW CUT SHALL BE MADE IN THE COMPLETE CIRCUMFERENCE OF THE PARAPET, STARTING AND ENDING AT THE ELEVATION OF THE CONCRETE DECK. THE SAWCUTS SHALL BE PLACED AT A MINIMUM OF 6 FEET AND A MAXIMUM OF 10 FEET CENTERS. THE USE OF AN EDGE GUIDE, FENCE, OR JIG IS REQUIRED TO INSURE THAT THE CUT JOINT IS STRAIGHT, TRUE, AND ALIGNED ON ALL FACES OF THE PARAPET. THE JOINT WIDTH SHALL BE THE WIDTH OF THE SAW BLADE, A NOMINAL WIDTH OF 1/4 INCH. THE PERIMETER OF THE DEFLECTION CONTROL JOINT SHALL BE SEALED A CAULKING MATERIAL CONFORMING TO FEDERAL SPECIFICATION, TT–S–00227E TO A MINIMUM DEPTH OF 1 INCH. THE BOTTOM 1/2 INCH OF THE INSIDE AND OUTSIDE FACE SHOULD BE LEFT UNSEALED TO ALLOW WATER TO ESCAPE.

DECORATIVE RAILING;

NO CHAMFERS SHALL BE PERMITTED ON THE OUTSIDE FACE OF THE DECORATIVE RAILING UNLESS SHOWN.

AS SOON AS A CONCRETE SAW CAN BE OPERATED WITHOUT DAMAGING THE FRESHLY PLACED CONCRETE, 1 1/4" DEEP CONTROL JOINTS SHALL BE SAWED INTO THE INSIDE FACE AND TOP OF THE DECORATIVE RAILING. THE SAWCUTS SHALL BE PLACED AT A MINIMUM OF 6 FEET AND A MAXIMUM OF 10 FEET CENTERS. THE USE OF AN EDGE GUIDE, FENCE, OR JIG IS REQUIRED TO INSURE THAT THE CUT JOINT IS STRAIGHT, TRUE, AND ALIGNED ON THE INSIDE FACE AND TOP DECORATIVE RAILING. THE JOINT WIDTH SHALL BE THE WIDTH OF THE SAW BLADE, A NOMINAL WIDTH OF 1/4 INCH. THE DEFLECTION CONTROL JOINT SHALL BE SEALED WITH A CAULKING MATERIAL CONFORMING TO FEDERAL SPECIFICATION, TT–S–00227E TO A MINIMUM DEPTH OF 1 INCH. THE BOTTOM 1/2 INCH OF THE INSIDE FACE SHOULD BE LEFT UNSEALED TO ALLOW WATER TO ESCAPE.

ITEM 844 – HIGH PERFORMANCE CONCRETE , MISC: PEDESTRIAN TOWER AS PER PLAN

NO CHAMFERS SHALL BE PERMITTED ON THE SURFACES OF THE PEDESTRAIN TOWERS UNLESS SHOWN.

IN LIEU OF THE CAST–IN–PLACE CONCRETE THE CONTRACTOR MAY CHOOSE TO USE PRE–CAST SEGMENTS UPON APPROVED SUBMITTAL FROM THE ENGINEER. PAYMENT LABOR, MATERIALS AND INSTALLALION OF THESE ITEMS SHALL BE INCLUDED IN ITEM 844 – HIGH PERFORMANCE CONCRETE , MISC: PEDESTRIAN TOWER

ITEM 864 – SEALING OF CONCRETE SURFACES

ALL EXPOSED SURFACES OF THE REAR ABUTMENT, THE FORWARD ABUTMENT, AND PEDESTRIAN TOWER SHALL BE SEALED WITH AN EPOXY–URETHANE SEALER.

THE URETHANE TOP COAT FOR THE EPOXY–URETHANE SEALER SHALL BE FEDERAL COLOR STANDARD NO. 37150 "LUSTERLESS" (LIGHT GREY)

ABBREVIATIONS:

P.E.J.F. – PREFORMED EXPANSION JOINT FILLER
E.F. – EACH FACE
F.F. – FAR FACE
N.F. – NEAR FACE
PL. – PLATE
SPA. – SPACES
BRG. – BEARING
CLR. – CLEARANCE
BOTT.– BOTTOM
C.J. – CONSTRUCTION JOINT
EQ. – EQUAL
R.A. – REAR ABUTMENT
F.A. – FORWARD ABUTMENT
TYP. – TYPICAL
CVN – CHARPY V–NOTCH
DIA. – DIAMETER
CL. – CENTERLINE
EA. – EACH

ESTIMATED QUANTITIES

CALC. BY MSL DATE 05/09/01 | CHKD. BY AD DATE 05/23/01

ITEM	ITEM EXT.	TOTAL	UNIT	DESCRIPTION	E.B. STRUCTURE ABUT	E.B. STRUCTURE SUPER–STRUCTURE	W.B. STRUCTURE ABUT	W.B. STRUCTURE SUPER–STRUCTURE	GENERAL E.B.	GENERAL W.B.	SHEET NO.
202	11003	LUMP		STRUCTURE REMOVED, OVER 20 FOOT SPAN, AS PER PLAN					LUMP	LUMP	2/31
503	11100	LUMP		COFFERDAMS, CRIBS AND SHEETING					LUMP	LUMP	
503	21300	LUMP		UNCLASSIFIED EXCAVATION					LUMP	LUMP	
505	11100	LUMP		PILE DRIVING EQUIPMENT MOBILIZATION	LUMP		LUMP				
506	11100	LUMP		STATIC LOAD TEST	LUMP		LUMP				
507	00600	9765	LIN. FT.	14" CAST–IN–PLACE REINFORCED CONCRETE PILES, DRIVEN	4905		4860				
507	00650	9765	LIN. FT.	14" CAST–IN–PLACE REINFORCED CONCRETE PILES, FURNISHED	4905		4860				
507	50500	109	EACH	STEEL PILE SPLICES	55		54				
512	33000	18	SQ. YD.	TYPE 2 WATERPROOFING	13	5					
516	13900	281	SQ. FT.	2" PREFORMED EXPANSION JOINT FILLER	147	93		41			
516	14021	412	LIN. FT.	SEMI–INTEGRAL ABUTMENT EXPANSION JOINT SEAL, AS PER PLAN		211		201			2/31
516	14600	212	LIN. FT.	STRUCTURAL JOINT OR JOINT SEALER, MISC.: LONGITUDINAL JOINT, AS PER PLAN					106	106	2/31
516	44401	40	EACH	ELASTOMERIC BEARING WITH INTERNAL LAMINATES AND LOAD PLATE (NEOPRENE), AS PER PLAN (18" X 16" X 3 1/16 " WITH 20" X 18" X 2" LOAD PLATE AND PEDESTAL)		20		20			19/31
518	21230	LUMP		POROUS BACKFILL WITH FILTER FABRIC	LUMP		LUMP				
518	40000	562	LIN. FT.	6" PERFORATED CORRUGATED PLASTIC PIPE	286		276				
518	40010	160	LIN. FT.	6" NON–PERFORATED CORRUGATED PLASTIC PIPE, INCLUDING SPECIALS	80		80				
SPECIAL	53000800	942	SQ. YD.	SPECIAL – STRUCTURE, MISC.: FORM LINERS	471		471				2/31
816	00601	LUMP		FIELD PAINTING OF NEW STEEL, INTERMEDIATE AND FINISH COAT, SYSTEM IZEU, AS PER PLAN		LUMP		LUMP			3/31
844	48021	150	CU. YD.	HIGH PERFORMANCE CONCRETE SUPERSTRUCTURE (PARAPET), AS PER PLAN		75		75			3/31
844	48040	1884	CU. YD.	HIGH PERFORMANCE CONCRETE SUBSTRUCTURE	946		938				
844	49500	444	CU. YD.	HIGH PERFORMANCE CONCRETE, MISC.: PEDESTRIAN TOWER, AS PER PLAN					222	222	3/31
863	10080	LUMP		STRUCTURAL STEEL MEMBERS, LEVEL FOUR (4) FABRICATION		LUMP		LUMP			
863	20000	6000	EACH	WELDED STUD SHEARS CONNECTORS		3000		3000			
864	10100	2699	SQ. YD.	SEALING OF CONCRETE SURFACES (EPOXY–URETHANE)	383	395	374	395	576	576	
894	10000	755	CU. YD.	HIGH PERFORMANCE CONCRETE, FOR BRIDGE DECK WITH WARRANTY		388		367			

URS
architects • engineers • planners
277 west nationwide boulevard
columbus, ohio 43215-2568
(614)464-4500 fax (614)464-1068
http://www.urscorp.com

DESIGNED MSL | DRAWN MSL | REVIEWED TJK | DATE 5/25/01
CHECKED AD | REVISED | STRUCTURE FILE NUMBER 2517639 EASTBOUND 2517620 WESTBOUND

STRUCTURE GENERAL NOTES AND ESTIMATED QUANTITIES
BRIDGE NO. FRA.–670–0312 L&R
I–670 OVER NEIL AVENUE

FRA-670-03.12

SNYDER 11GPB J:\91671100\TRANS\SHEETS\91673N02.DWG 06/29/01 07:58 LTS: 1 PSLTS: 1

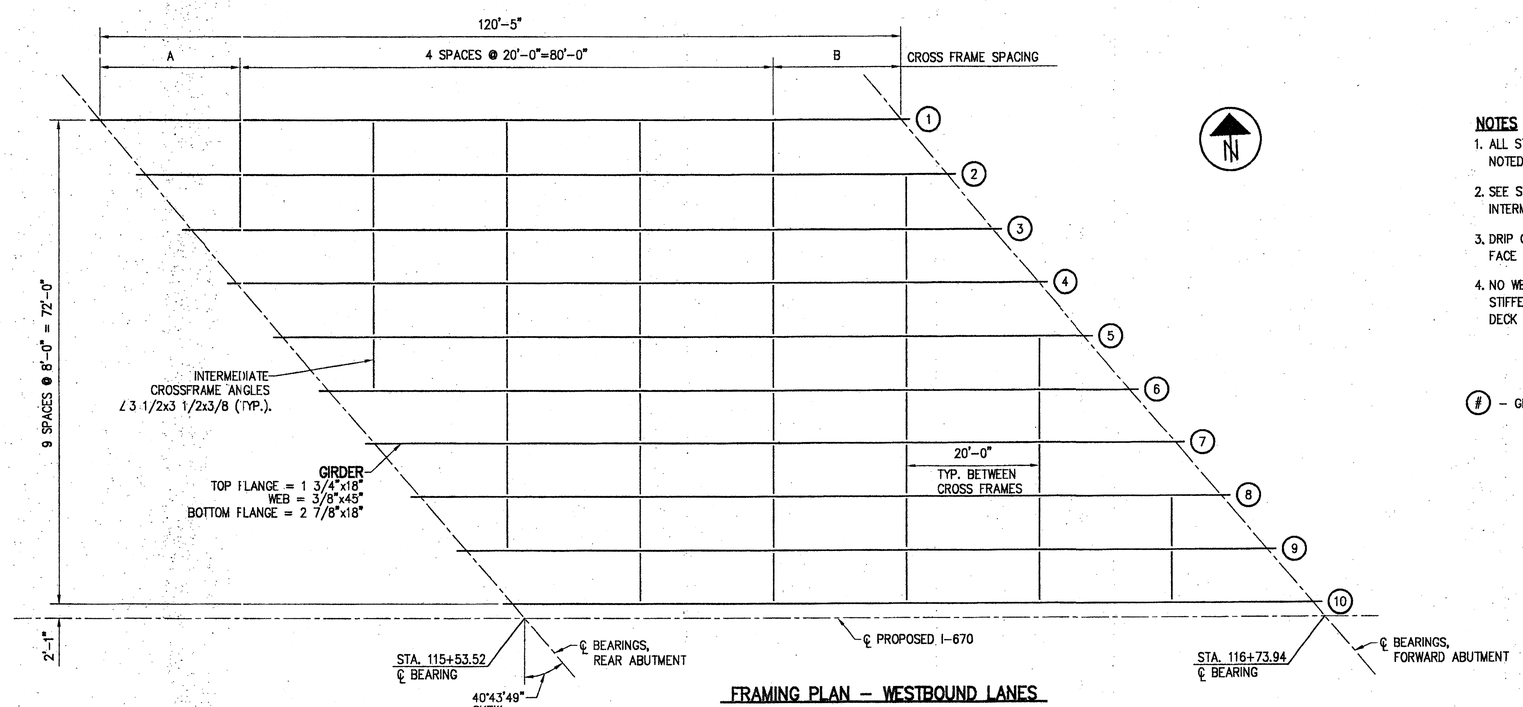

FRAMING PLAN – WESTBOUND LANES

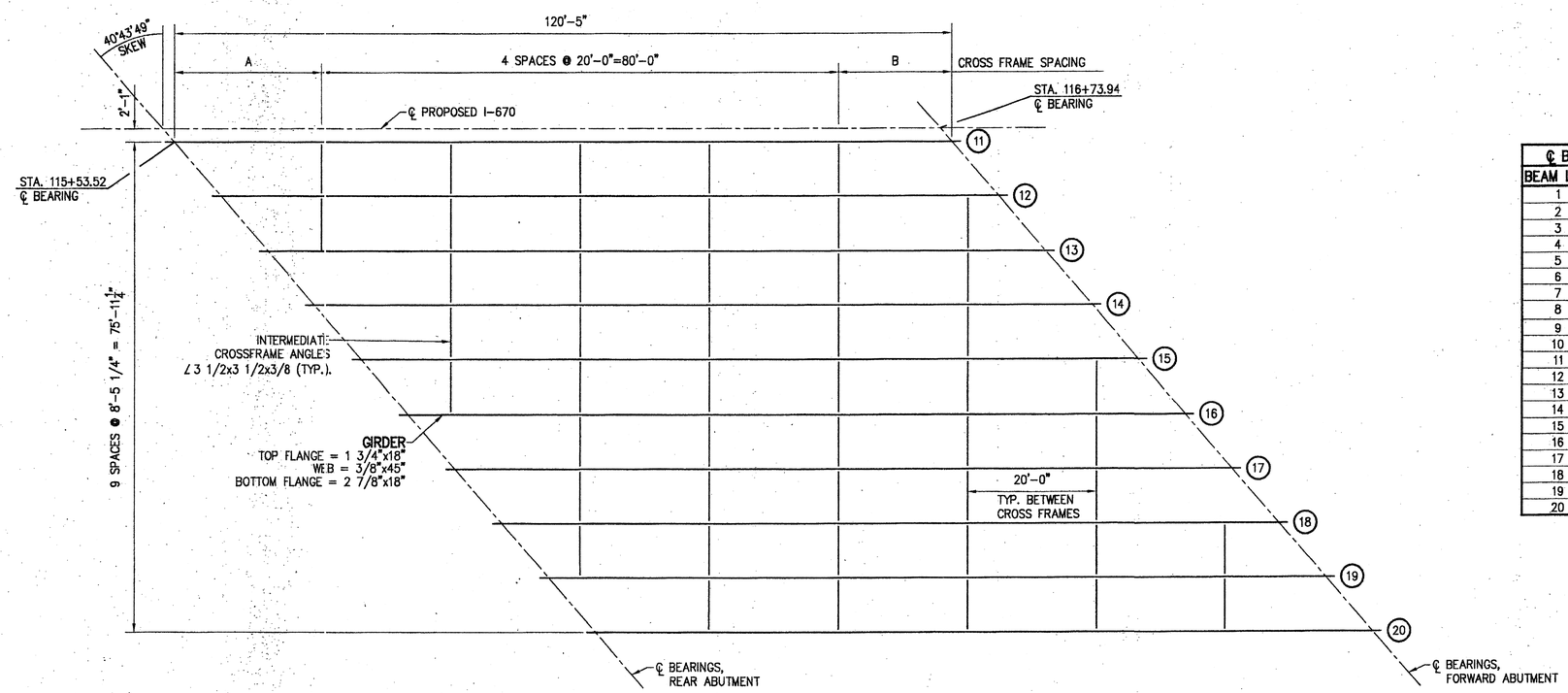

FRAMING PLAN – EASTBOUND LANES

NOTES

1. ALL STRUCTURAL STEEL SHALL BE ASTM A572 UNLESS NOTED OTHERWISE.
2. SEE STANDARD DRAWING GSD-1-96 FOR TYPICAL INTERMEDIATE WELDED CROSS FRAME DETAILS.
3. DRIP GROOVES SHALL TERMINATE 2 FEET FROM FACE OF THE ABUTMENT.
4. NO WELDING OF THE CROSS FRAMES MEMBERS TO THE STIFFENERS SHALL BE DONE UNTIL THE CONCRETE DECK HAS BEEN PLACED.

(#) – GIRDER NUMBERING

℄ BEARING TO FIRST CROSS FRAME		
BEAM LINE	A	B
1	21'-2 1/2"	19'-2 1/2"
2	14'-3 13/16"	6'-1 3/16"
3	7'-5 1/8"	12'-11 7/8"
4	20'-6 1/2"	19'-10 1/2"
5	13'-7 13/16"	6'-9 3/16"
6	6'-9 3/16"	13'-7 13/16"
7	19'-10 1/2"	20'-6 1/2"
8	12'-11 7/8"	7'-5 1/8"
9	6'-1 3/16"	14'-3 13/16"
10	19'-2 1/2"	21'-2 1/2"
11	22'-10 13/16"	17'-6 3/16"
12	15'-7 5/8"	4'-9 3/8"
13	8'-4 7/16"	12'-0 9/16"
14	21'-1 1/4"	19'-3 3/4"
15	13'-10 1/16"	6'-6 15/16"
16	6'-6 15/16"	13'-10 1/16"
17	19'-3 3/4"	21'-1 1/4"
18	12'-0 9/16"	8'-4 7/16"
19	4'-9 3/8"	15'-7 5/8"
20	17'-6 3/16"	22'-10 13/16"

URS
architects • engineers • planners
277 west, 400 south, 3rd floor
salt lake city, utah 84101-3508
(801)364-5300 fax (801)364-0268
http://www.urs.com

DESIGNED	DRAWN	REVIEWED	DATE
MSL	CMS	TJK	5/25/01
CHECKED	REVISED	25170306 RE STRUCTURE	
AD		25170620 WESTBOUND	

FRAMING PLAN
BR. NO. FRA-670-0312 L&R
OVER NEIL AVENUE

FRA-670-03.12

SNYDER 110PB ◆ \\p167100\TRANS\SHEETS\p167500.DWG, 06/29/01 07:37 LTS: 1 © PSLTS: 1

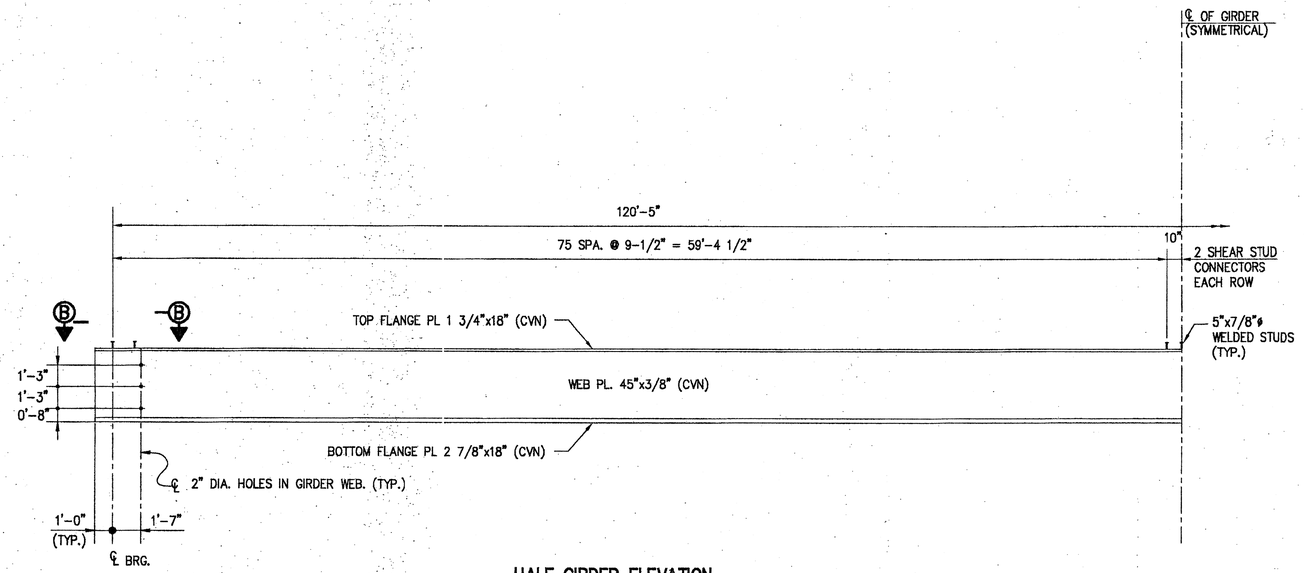

HALF GIRDER ELEVATION
(BEAM LINE 2 TO 19)

NOTE:

CVN WHERE A PLATE IS DESIGNATED (CVN) THE MATERIAL SHALL MEET SPECIFIED MINIMUM NOTCH TOUGHNESS REQUIREMENT AS SPECIFIED IN 711.01

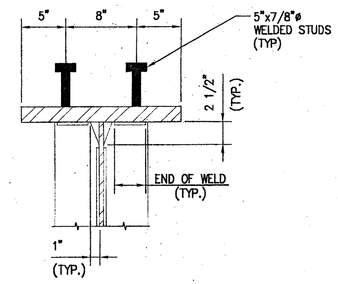

DETAIL A
WELD TERMINATION AND STIFFENER PLATE CLIPPING DETAIL

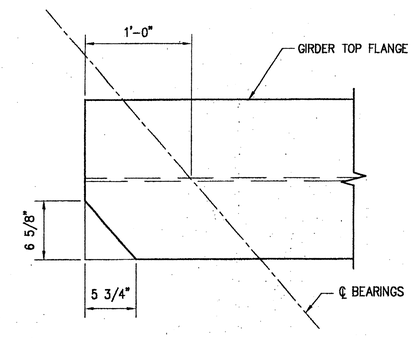

NOTE: COPE TOP FLANGE ONLY

SECTION B

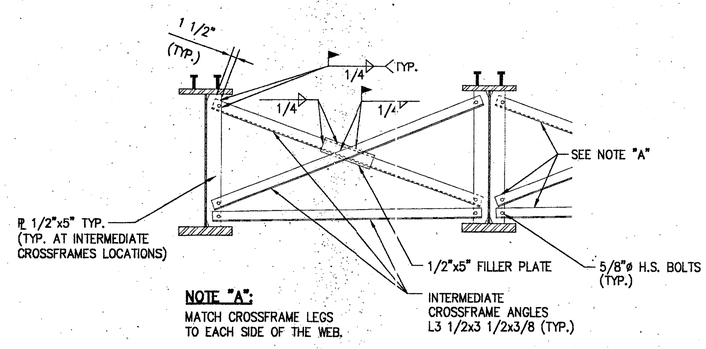

NOTE "A":
MATCH CROSSFRAME LEGS TO EACH SIDE OF THE WEB.

TYPE 3 INTERMEDIATE WELDED CROSSFRAME DETAILS

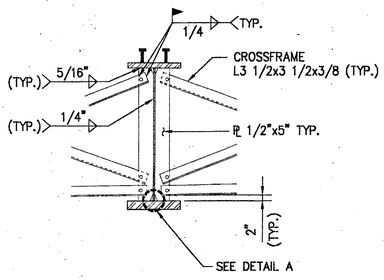

INTERMEDIATE TRANSVERSE STIFFENER @ CROSS-FRAME LOCATIONS
SEE STD. DRWG. GSD-1-96 FOR ADDITIONAL DETAILS (TYPE 3 CROSSFRAMES)

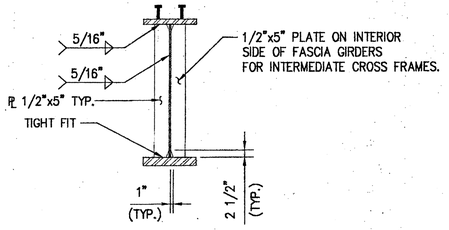

TYPICAL
TRANSVERSE STIFFENER @ CROSS-FRAME LOCATIONS

URS
architects • engineers • planners
277 west ocean blvd. boulevard
long beach, ca 90802
(562)491-4500 fax (562)491-4555
http://www.urscorp.com

DESIGNED	DRAWN	REVIEWED	DATE
MSL	CMS	TJK	5/25/01
CHECKED	REVISED	REVISED	REVISED
AD		25 STRUCTURE FILE STRUCTURE	25 STRUCTURE FILE STRUCTURE
		2517820 WESTBOUND	2517820 WESTBOUND

BEAM DETAILS
BR. NO. FRA-670-0312 L&R
OVER NEIL AVENUE

FRA-670-03.12

SNYDER 11(DF5 J:\P167100\TRANS\SHEETS\P167DRD.DWG 06/28/01 15:42 LTS: 1 PS:LTS: 1

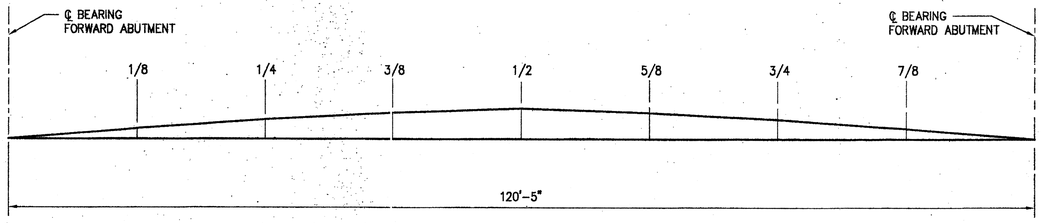

BLOCKING AND CAMBER DIAGRAM

CAMBER AND DEFLECTION TABLE (INCHES)								
POINT	GIRDERS	1/8	1/4	3/8	1/2	5/8	3/4	7/8
DEFLECTION DUE TO WEIGHT OF STEEL	1 TO 20	1/2	15/16	1 1/4	1 3/8	1 1/4	15/16	1/2
DEFLECTION DUE TO REMAINING DEAD LOAD	1 TO 10	1 11/16	3 1/8	4	4 5/16	4	3 1/8	1 11/16
	11 TO 20	1 3/4	3 3/16	4 1/8	4 1/2	4 1/8	3 3/16	1 11/16
ADJUSTMENT REQUIRED FOR VERTICAL CURVE	1 TO 20	9/16	1	1 1/4	1 3/8	1 1/4	1	9/16
REQUIRED SHOP CAMBER	1 TO 10	2 3/4	5 1/16	6 1/2	7 1/16	6 1/2	5 1/16	2 3/4
	11 TO 20	2 13/16	5 1/8	6 5/8	7 1/4	6 5/8	5 1/8	2 13/16

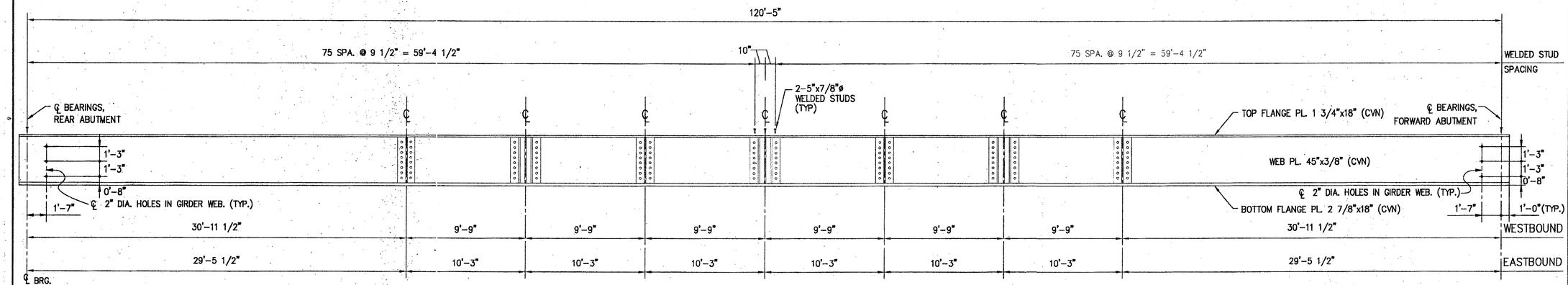

FASCIA GIRDER ELEVATION

FASCIA GIRDERS ONLY (BEAMLINE 1 & 20)

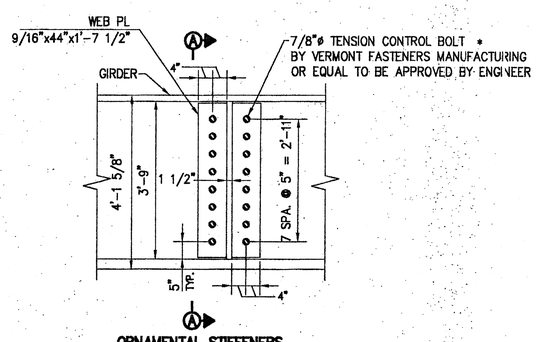

ORNAMENTAL STIFFENERS

FASCIA GIRDERS ONLY (BEAMLINE 1 & 20)

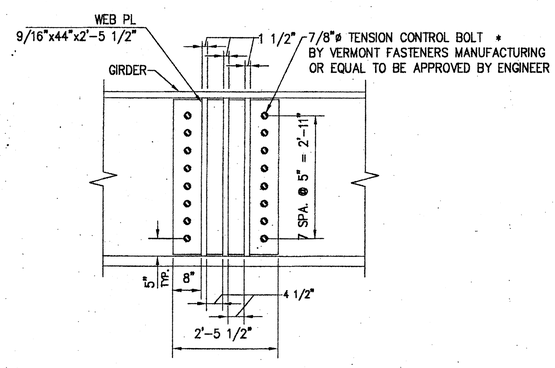

ORNAMENTAL STIFFENERS

FASCIA GIRDERS ONLY (BEAMLINE 1 & 20)

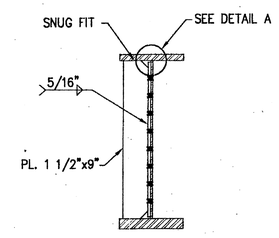

SECTION A

NOTE:

MATERIAL FOR ORNAMENTAL STIFFENERS SHALL BE ASTM A572. PAYMENT FOR ORNAMENTAL STIFFENERS MATERIALS AND INSTALLATION OF THESE ITEMS SHALL BE INCLUDED IN ITEM 863 STRUCTURAL STEEL MEMBERS.

CVN WHERE A PLATE IS DESIGNATED (CVN) THE MATERIAL SHALL MEET SPECIFIED MINIMUM NOTCH TOUGHNESS REQUIREMENT AS SPECIFIED IN 711.01

* THESE BOLTS ARE TO BE USED FOR ORNAMENTAL STIFFENERS ONLY. THE BOLT HEAD SHALL BE LOCATED ON THE EXTERIOR OF THE FASCIA BEAMS SO THAT THESE BOLTS LOOK LIKE RIVET HEADS WHEN VIEWED FROM A DISTANCE.

URS
architects • engineers • planners
277 west colorado boulevard
pasadena, ca 91105-3928
(626)584-4000 fax (626)584-4066
http://www.urscorp.com

DESIGNED	DRAWN	REVIEWED	DATE
MSL	CMS	TJK	5/25/01
CHECKED	REVISED	STRUCTURE	FILE NUMBER
AD		25170539	EASTBOUND
		25170520	WESTBOUND

BLOCKING & CAMBER DIAGRAM & SCREED TABLES
BR. NO. FRA.-670-0312 L&R
OVER NEIL AVENUE

FRA-670-03.12

SKYDER 110FB J:\01671001\TRANS\SHEETS\01670A08.DWG, 05/24/01 08:43 LTS: 1 PSLTS: 1

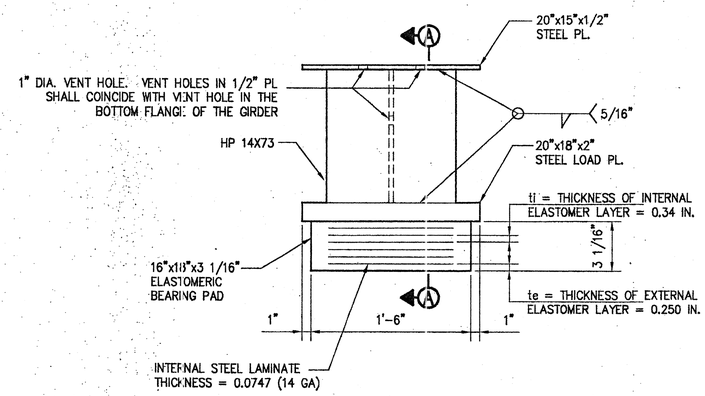

REAR AND FORWARD ABUTMENT LAMINATED ELASTOMERIC EXPANSION BEARING

TOTAL NUMBER INTERNAL STEEL LAMINATE = 7
TOTAL NUMBER INTERNAL ELASTOMER LAYER = 6
TOTAL NUMBER EXTERNAL ELASTOMER LAYER = 2

DEAD LOAD = 152.6 k
LIVE LOAD = 64.6 k
TOTAL LOAD = 217.2 k

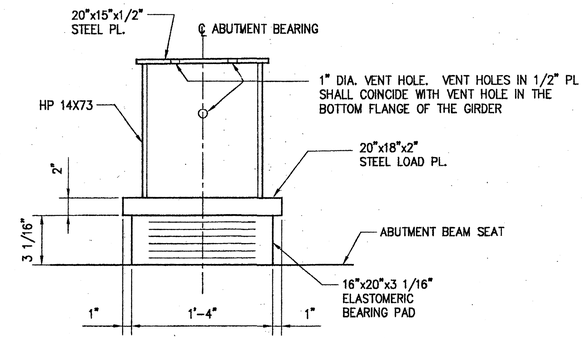

SECTION A-A

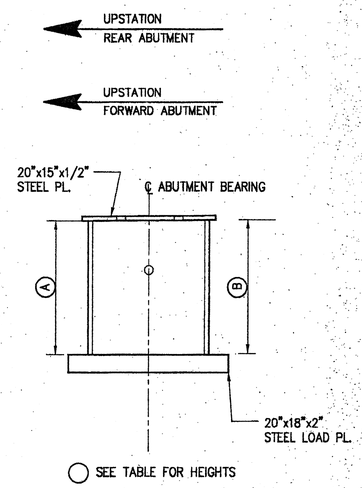

BEVELED PEDESTAL HEIGHT

BEAM LINE	PEDESTAL HEIGHT REAR ABUTMENT A	REAR ABUTMENT B	FORWARD ABUTMENT A	FORWARD ABUTMENT B
1	0'-6 7/16"	0'-6 1/8"	0'-6 7/16"	0'-6 5/16"
2	0'-9 1/8"	0'-9 13/16"	0'-8 1/2"	0'-8 3/8"
3	0'-11 13/16"	0'-11 1/2"	0'-10 9/16"	0'-10 7/16"
4	1'-2 7/16"	1'-2 1/8"	1'-0 5/8"	1'-0 1/2"
5	1'-5"	1'-4 11/16"	1'-2 5/8"	1'-2 1/2"
6	1'-7 1/8"	1'-6 13/16"	1'-4 1/8"	1'-4"
7	1'-6 11/16"	1'-6 3/8"	1'-3"	1'-2 7/8"
8	1'-6 3/16"	1'-5 7/8"	1'-1 15/16"	1'-1 13/16"
9	1'-5 5/8"	1'-5 3/16"	1'-0 3/4"	1'-0 5/8"
10	1'-5 1/16"	1'-4 3/4"	0'-11 9/16"	0'-11 5/16"
11	1'-5 1/2"	1'-5 5/16"	0'-11 3/4"	0'-11 5/8"
12	1'-8"	1'-7 11/16"	1'-1 9/16"	1'-1 7/16"
13	1'-10 1/2"	1'-10 3/16"	1'-3 3/8"	1'-3 1/4"
14	2'-0 7/8"	2'-0 9/16"	1'-5 3/16"	1'-5 1/16"
15	2'-3 1/16"	2'-2 3/4"	1'-6 11/16"	1'-6 9/16"
16	2'-2 1/4"	2'-1 15/16"	1'-5 1/4"	1'-5 1/8"
17	2'-1 3/8"	2'-1 1/16"	1'-3 3/4"	1'-3 5/8"
18	2'-0 1/2"	2'-0 3/16"	1'-2 1/4"	1'-2 1/8"
19	1'-11 9/16"	1'-11 1/4"	1'-0 5/8"	1'-0 1/2"
20	1'-10 9/16"	1'-10 1/4"	1'-11"	1'-10 7/8"

ALL PEDESTALS ARE HP14X73

NOTES:

MATERIALS: STEEL PLATES AND STOOLS SHALL BE THE SAME GRADE OF STEEL AS THE PROPOSED STEEL GIRDER. THE STEEL PLATES SHALL HAVE THE SAME PROTECTIVE COATING AS MAIN STRUCTURAL STEEL.

PAYMENT FOR MATERIALS, LABOR, FABRICATION, PROTECTIVE COATING, STEEL PLATES AND PEDESTAL SHALL BE INCLUDED WITH ITEM 516 ABUTMENT ELASTOMERIC BEARINGS FOR PAYMENT.

WELDING: WELDING OF THE LOAD PLATE TO THE SUPERSTRUCTURE SHALL BE CONTROLLED SO THAT THE PLATE TEMPERATURE AT THE ELASTOMER BONDED SURFACE SHALL NOT EXCEED 300°F AS DETERMINED BY THE USE OF PYROMETRIC STICKS OR OTHER TEMPERATURE MONITORING DEVICES. THE STEEL LOAD PLATE SHALL BE BONDED BY VULCANIZATION TO THE ELASTOMER DURING THE MOLDING PROCESS.

ELASTOMERIC BEARINGS: SHALL COMPLY WITH ITEM 516 AND AASHTO STANDARD SPECIFICATION FOR HIGHWAY BRIDGES, SECTION 18, BEARING DEVICES, DIVISION II, CONSTRUCTION ARTICLES 18.4.5.1 AND 18.5.6.2. BEARINGS SHALL BE GRADE 3, 50 DUROMETER ELASTOMER AND SHALL BE SUBJECTED TO THE LOAD TESTING REQUIREMENTS DEFINED IN ARTICLE 18.7.4.5 OF THE AASHTO DOCUMENT LISTED ABOVE. THE UNIT BID PRICE SHALL INCLUDE ALL MATERIALS, LABOR, TESTING, STEEL LOAD PLATES AND INCIDENTALS NECESSARY TO FURNISH AND INSTALL LAMINATED ELASTOMERIC BEARINGS. PAYMENT WILL BE MADE AT THE CONTRACT PRICE FOR ITEM 516, EACH, ELASTOMERIC BEARINGS WITH INTERNAL LAMINATES AND LOAD PLATE (NEOPRENE), AS PER PLAN.

BEARING REPOSITIONING: IF DECK CONCRETE IS PLACED AT AN AMBIENT TEMPERATURE HIGHER THAN 80°F OR LOWER THAN 40° F AND THE BEARING SHEAR DEFLECTION EXCEEDS ONE-SIXTH OF THE BEARING HEIGHT AT 60° F ± 10° F, THE BEAMS SHALL BE RAISED TO ALLOW THE BEARING TO RETURN TO THEIR UNDERFORMED SHAPE AT 60°F +/- 10° F.

BASIS OF PAYMENT: THE UNIT BID PRICE SHALL INCLUDE ALL MATERIALS, LABOR, TESTING, STEEL PLATES, STOOLS AND INCIDENTALS NECESSARY TO FURNISH AND INSTALL LAMINATED ELASTOMERIC EXPANSION BEARINGS. PAYMENT WILL BE MADE AT THE CONTRACT PRICE FOR ITEM 516, EACH, ELASTOMERIC BEARINGS WITH INTERNAL LAMINATES AND LOAD PLATE (NEOPRENE), AS PER PLAN: 18"x16"x3 1/16" WITH 20"x18"x2" LOAD PLATE

URS
architects • engineers • planners
277 west nationwide boulevard
columbus, ohio 43215-2568
(614) 228-3500 FAX (614) 464-4008
http://www.urscorp.com

DESIGNED	DRAWN	REVIEWED	DATE
MSL	CMS	TJK	5/25/01
CHECKED	REVISED	STRUCTURE FILE NUMBER	
AD		2517639 EASTBOUND 2517620 WESTBOUND	

BEARING PAD DETAILS
BR. NO. FRA.-670-0312 L&R
OVER NEIL AVENUE

FRA-670-03.12

SNYDER 11:PB J:\0167100\TRANS\SHEETS\0167PAD.DWG, 05/24/01 10:59 LTS: 1 PSLTS: 1

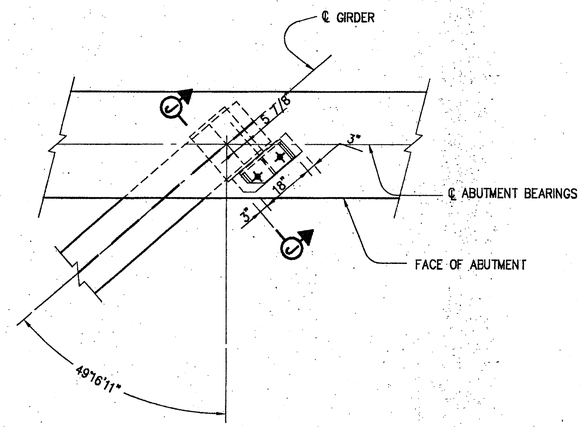

BEARING RETAINER

BEAM LINES LOCATED ADJACENT TO OBTUSE ANGLES OF BEAM LINES 1, 9, 11, AND 19

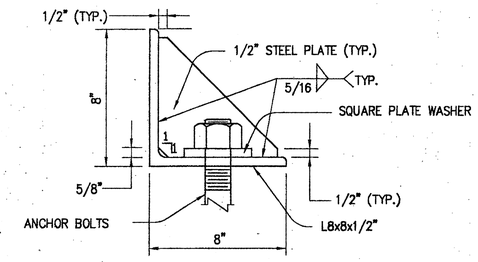

SECTION H–H

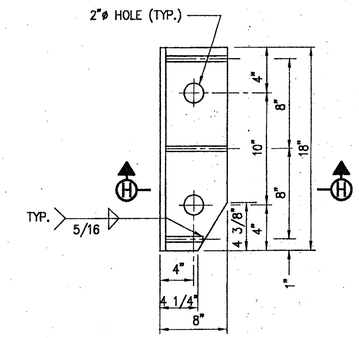

BEARING RETAINER ASSEMBLY

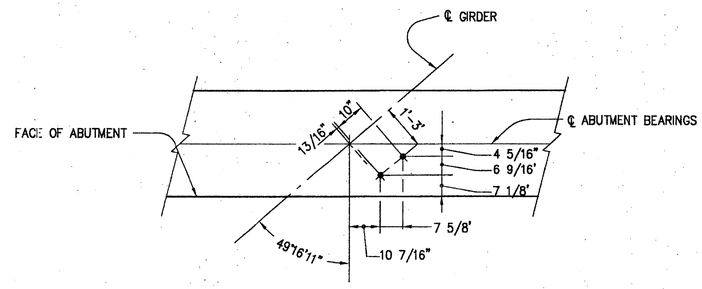

ANCHOR BOLT LAYOUT

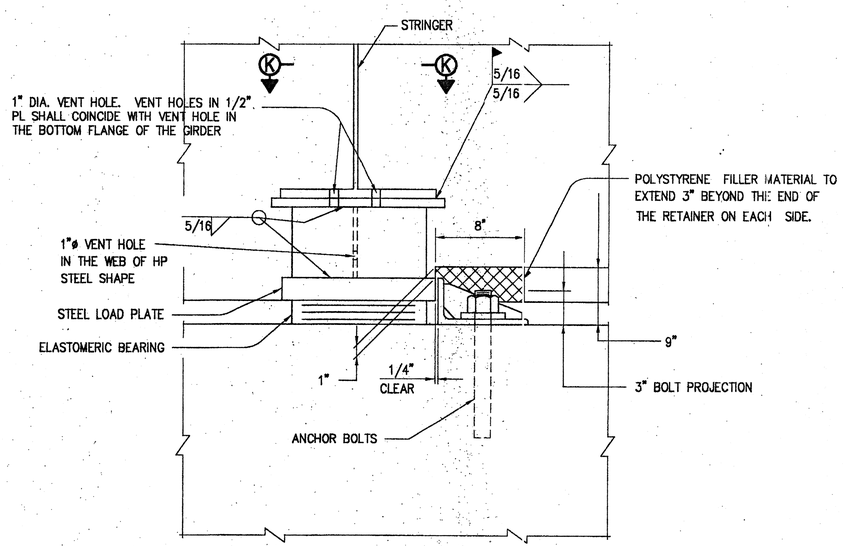

SECTION J–J

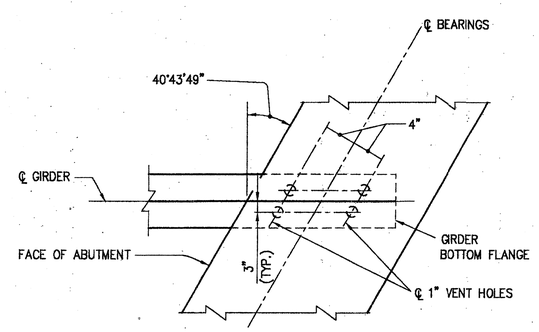

SECTION K–K

NOTES:

1. HP STEEL SHAPE INCLUDED WITH ITEM 516 ELASTOMERIC BEARING FOR PAYMENT.
2. 1 1/2" DIAMETER ANCHOR BOLTS WITH NUT AND 4"x4"x1/2" SQUARE PLATE WASHER WITH 1 3/4" DIAMETER HOLES. WHEN FIELD DRILLING GROUT WITH EPOXY NONSHRINKING GROUT IN 1 3/4" X 10" DEEP HOLES.
3. REINFORCING STEEL IN THE VICINITY OF THE BEARING RETAINER SHALL BE ACCURATELY PLACED TO AVOID INTERFERNCE WITH THE DRILLING OF BEARING RETAINER ANCHOR HOLES OR THE PRE-SETTING OF THE BEARING RETAINING ANCHORS.
4. MATERIALS: THE STEEL RETAINER ASSEMBLY AND THE SQUARE PLATE WASHER SHALL BE ASTM 572. ANCHOR BOLTS AND NUTS SHALL BE ASTM A325M. STEEL RETAINER ASSEMBLIES, ANCHOR BOLTS, NUTS AND SQUARE PLATE WASHERS SHALL BE GALVANIZED AS PER 711.02.
5. PAYMENT FOR LABOR, MATERIALS, FABRICATION, PROTECTIVE COATING, GALVANIZING, POLYSTYRENE AND INSTALLATION OF THE RETAINER ASSEMBLIES SHALL BE INCLUDED WITH ITEM 516, ELASTOMERIC BEARINGS.

URS
architects • engineers • planners
277 west nationwide boulevard
columbus, ohio 43215-2568
(614)461-4000 fax (614)464-1068
http://www.urscorp.com

DESIGNED	DRAWN	REVIEWED	DATE
MSL	CMS	TJK	5/25/01
CHECKED	REVISED	STRUCTURE REVIEW	
AD		2517630 EASTBOUND 2517620 WESTBOUND	

BEARING RETAINER ASSEMBLY
BR. NO. FRA-670-0312 L&R
OVER NEIL AVENUE

FRA-670-03.12

SNYDER 11(PS) o:\2167102\MAINSHEETS\2167TP.DWG 07/05/01 13:43 LTS: 1 • PSLTS: 1

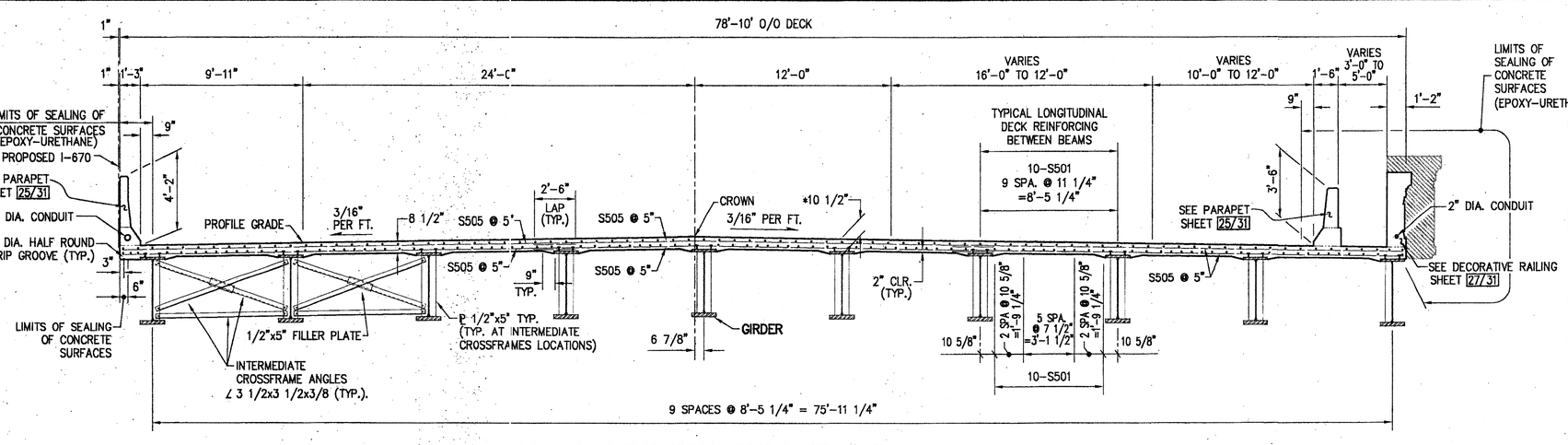

TYPICAL TRANSVERSE SECTION EAST BOUND LANES

NOTES:

***DECK SLAB DEPTH FOR CONCRETE QUANTITY:** THE DIMENSION SHOWN FROM THE TOP OF THE CONCRETE DECK TO THE BOTTOM OF THE TOP FLANGE MINUS THE DESIGN HAUNCH THICKNESS OF 2 INCHES, HAS BEEN USED FOR COMPUTING THE DECK CONCRETE QUANTITIES. CONCRETE REQUIRED TO FILL THE HAUNCHES, INCLUDING ADDITIONAL OR LESS MATERIAL REQUIRED DUE TO HAUNCH CONSTRUCTION TOLERANCES, SHALL BE CONSIDERED AS INCIDENTAL AND WILL NOT BE INCLUDED IN THE QUANTITY CALCULATIONS FOR PAYMENT.

A HAUNCH WIDTH OF 9 INCHES SHALL BE USED. HOWEVER, THE HAUNCH WIDTH MAY VARY BETWEEN 6 INCHES AND 12 INCHES.

ABUTMENT DIAPHRAGM CONCRETE: THE CONCRETE ENCASING STRUCTURAL STEEL MEMBERS MAY BE PLACED BEFORE THE ACTUAL DECK CONCRETE IS PLACED. IF THE CONTRACTOR CHOOSES THIS OPTION THE CONCRETE SHALL HAVE HAD AT LEAST 48 HOURS OF SET TIME BEFORE DECK CONCRETE IS PLACED.

SEE SHEET 23/31 FOR SECTION A-A AND D-D.

SEE SHEET 26/31 FOR SECTION E-E.

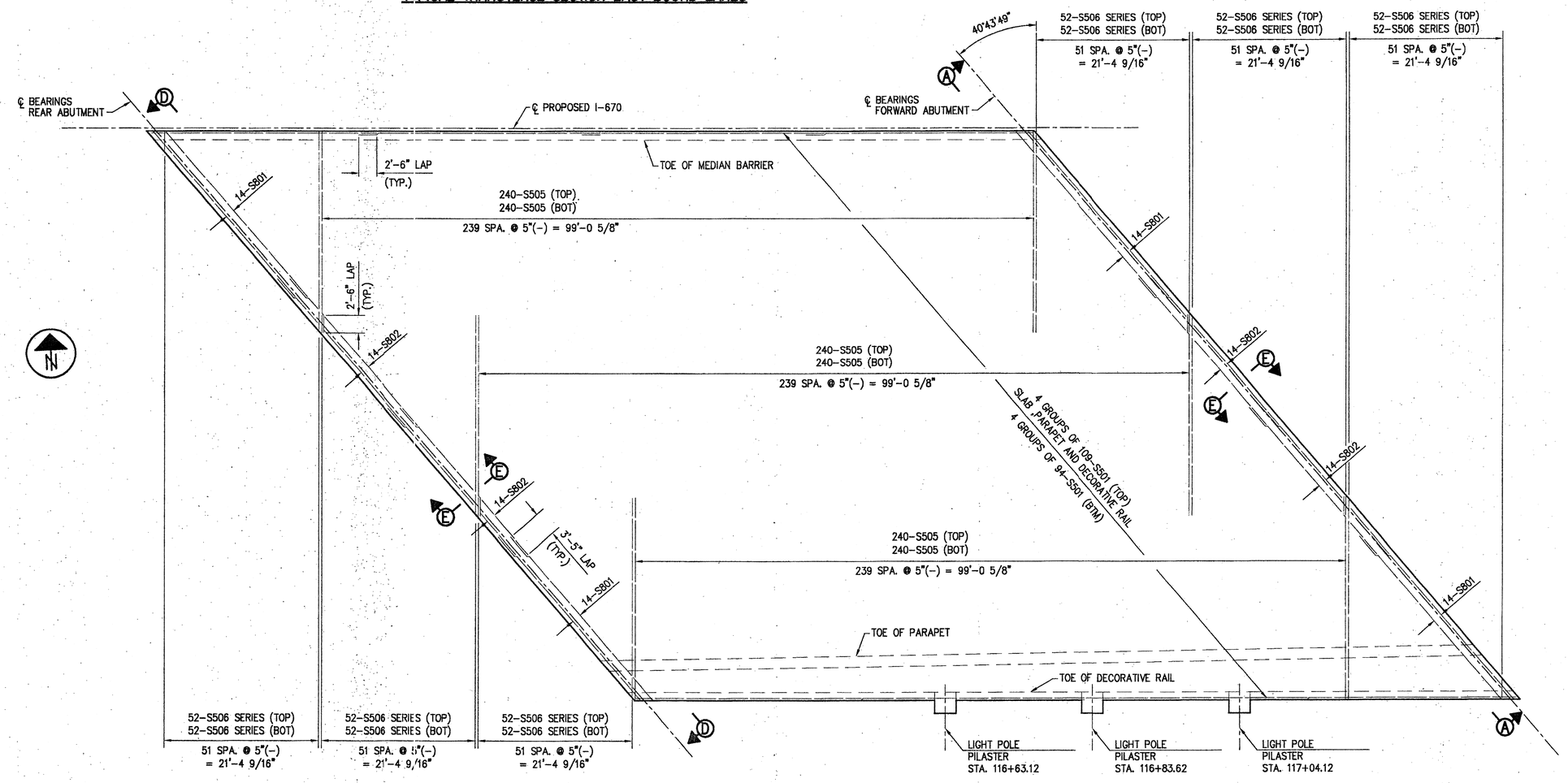

DECK PLAN – EASTBOUND LANES

URS
architects • engineers • planners
277 west nationwide boulevard
columbus, ohio 43215-2568
(614)464-4500 fax (614)464-4008
http://www.urscorp.com

DATE	REVISED	DRAWN	DESIGNED
5/25/01	TJK	CMS	MSL
STRUCTURE FILE NUMBER 25173239 EASTBOUND 25173230 WESTBOUND		REVISED	CHECKED AD

EAST BOUND DECK PLAN AND SECTION
BR. NO. FRA-670-0312 L&R
OVER NEIL AVENUE

FRA-670-03.12

21/31

228/231

SNYDER 11/0PR J:\01671100\FRA#3\SHEETS\01675E02.DWG 06/25/01 07:37 LTS: 1 PS:TS: 1 6

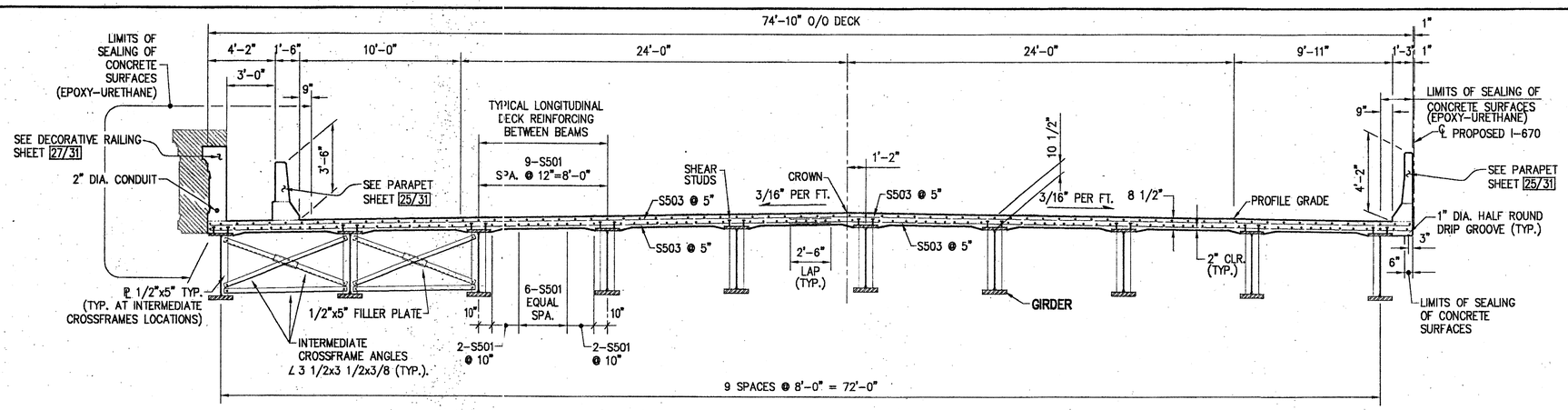

TYPICAL TRANSVERSE SECTION WEST BOUND LANES

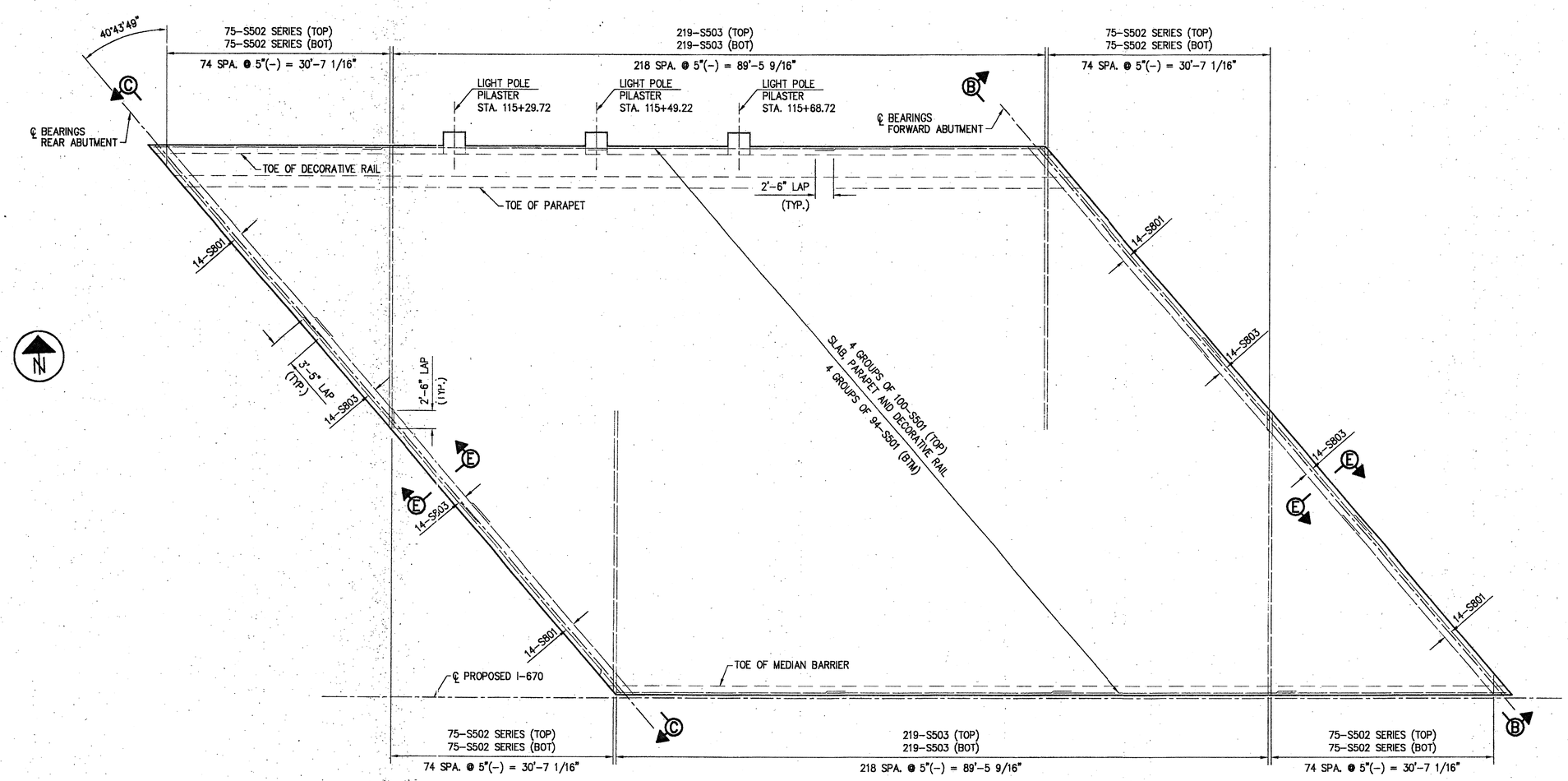

NOTES:

SEE SHEET 21/31 FOR ADDITIONAL NOTES.

SEE SHEET 21/31 FOR SECTION B-B AND C-C

URS
architects • engineers • planners
277 west colorado boulevard
pasadena, ca 91105-3928
(626)584-4200 fax (626)584-4288
http://www.urscorp.com

DESIGNED	DRAWN	REVIEWED	DATE
MSL	CMS	TJK	5/25/01
CHECKED	REVISED	STRUCTURE	HYDRAULIC
AD		2517636 EASTBOUND	2517620 WESTBOUND

WEST BOUND DECK PLAN AND SECTION
BR. NO. FRA-670-0312 L&R
OVER NEIL AVENUE

FRA-670-03.12

22BA

HDPB J:\0187100\PLANS\SHEETS\0187500.DWG 07/05/01 13:43 LTS: 1 PSLTS: 1

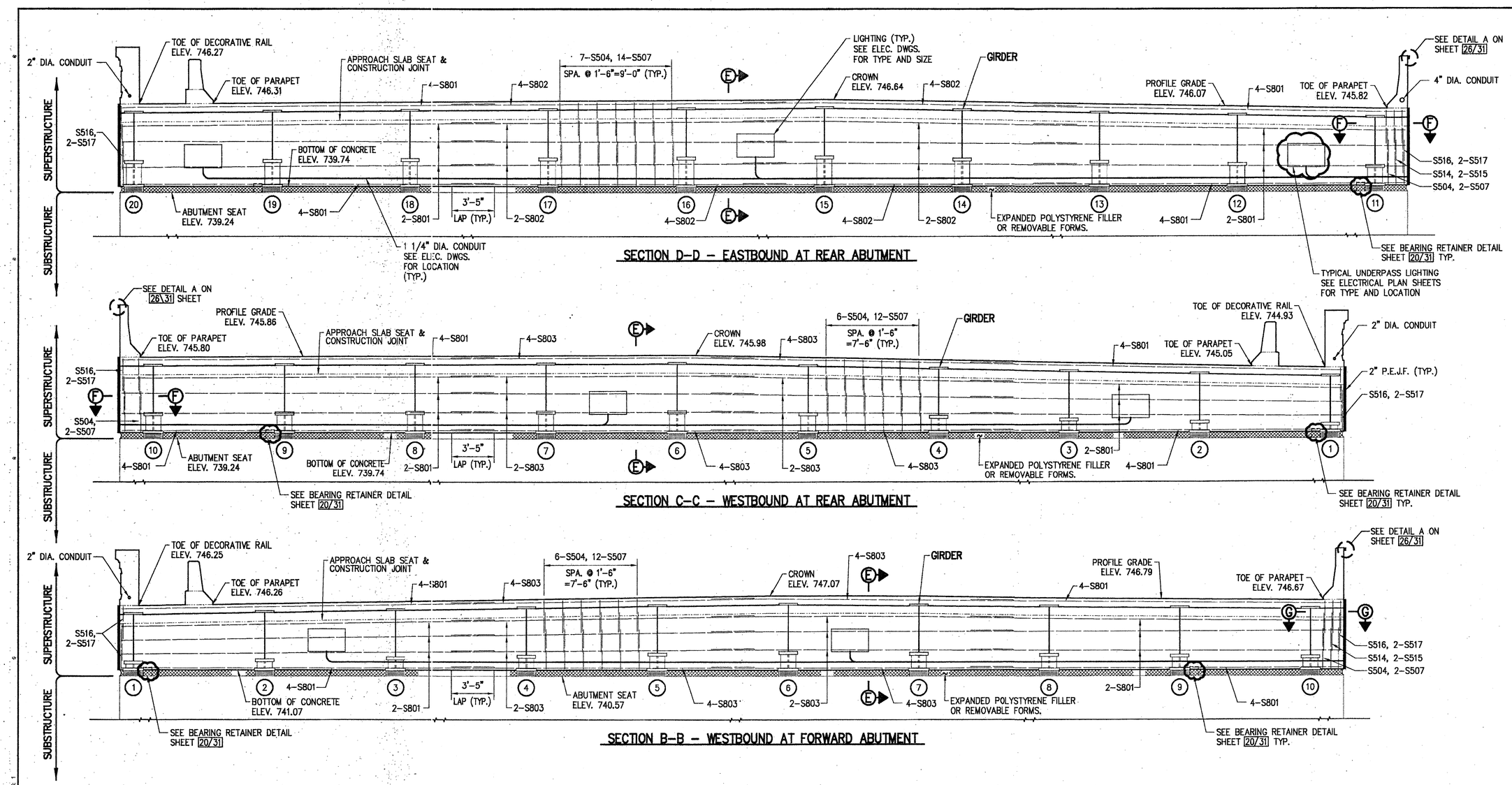

SECTION D-D – EASTBOUND AT REAR ABUTMENT

SECTION C-C – WESTBOUND AT REAR ABUTMENT

SECTION B-B – WESTBOUND AT FORWARD ABUTMENT

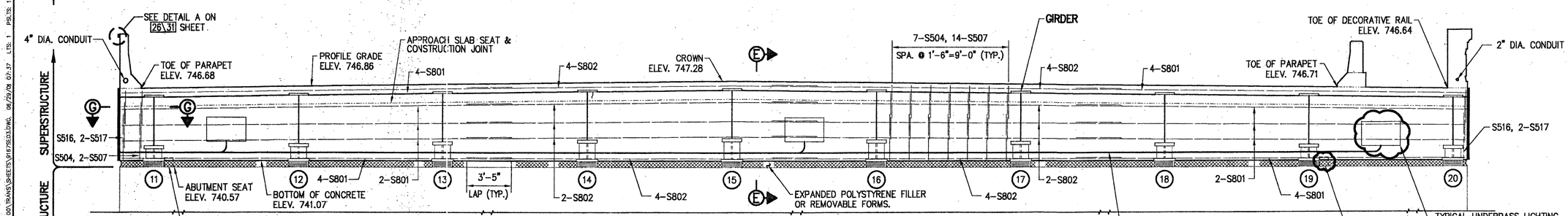

SECTION A-A – EASTBOUND AT FORWARD ABUTMENT

NOTE:

URS
corporation • engineers • planners
277 west, ohio-ohio boulevard
columbus, ohio 43215-2418
(614)464-4500 fax (614)464-1068
http://www.urscorp.com

DESIGNED	DRAWN	REVIEWED	DATE
MSL	CMS	TJK	5/25/01
CHECKED	REVISED	STRUCTURE	FILE NUMBER
AD		2517835 EASTBOUND	
		2517820 WESTBOUND	

SUPERSTRUCTURE ELEVATIONS

BR. NO. FRA-670-0312 L&R
OVER NEIL AVENUE

FRA-670-03.12

J:\61670\0\TRANS\SHEETS\01670SD3.DWG, 06/29/06 07:37 LTS: 1 PS:TS: 1