FRA - IR 71-5.29
150395 PID - 84868
Dist 6 7/15/2015

Contract Proposal Available
@ www.contracts.dot.
state.oh.us/home

12/27/2

STATE OF OHIO
DEPARTMENT OF TRANSPORTATION
FRA-71-5.29

CITY OF GROVE CITY
JACKSON TOWNSHIP
FRANKLIN COUNTY

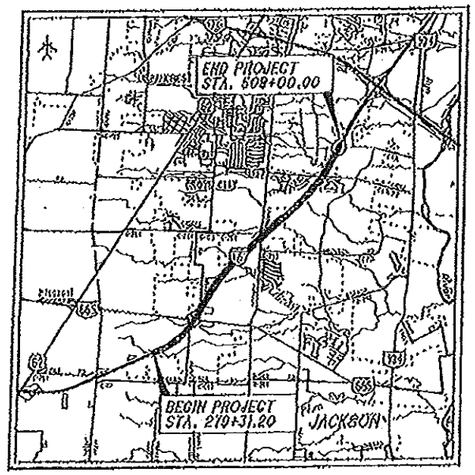

LOCATION MAP

LATITUDE: 39°51'18" LONGITUDE: 83°04'30"

SCALE IN MILES
0 1 2 3 4

PORTION TO BE IMPROVED
INTERSTATE HIGHWAY
FEDERAL ROUTES
STATE ROUTES
COUNTY & TOWNSHIP ROADS
OTHER ROADS

DESIGN DESIGNATION

CURRENT ADT (2016)	70,250
DESIGN YEAR ADT (2036)	100,080
DESIGN HOURLY VOLUME (2036)	9140
DIRECTIONAL DISTRIBUTION	50%
TRUCKS (24 HOUR D&C)	26%
DESIGN SPEED	70 MPH
LEGAL SPEED	65 MPH
DESIGN FUNCTIONAL CLASSIFICATION: URBAN INTERSTATE	
HHS PROJECT	YES

DESIGN EXCEPTIONS

NONE REQUIRED

UNDERGROUND UTILITIES

CONTACT BOTH SERVICES
CALL TWO WORKING DAYS
BEFORE YOU DIG

CALL
1-800-362-2764
(TOLL FREE)

OHIO UTILITIES PROTECTION SERVICE
NON-MEMBERS
MUST BE CALLED DIRECTLY

OIL & GAS PRODUCERS UNDERGROUND
PROTECTION SERVICE CALL: 1-800-925-0988

PLAN PREPARED BY:
E.L. ROBINSON ENGINEERING

ENGINEERS SEAL:
FOR TRAFFIC CONTROL AND LIGHTING

STATE OF OHIO
MARK
HUNTER
E-50376
REGISTERED
PROFESSIONAL ENGINEER

SIGNED: Mark Hunter
DATE: 12/27/14

ENGINEERS SEAL:
FOR STRUCTURES 20' AND OVER

STATE OF OHIO
RICHARD
ROCKWELL JR.
83-17365
REGISTERED
PROFESSIONAL ENGINEER

SIGNED: Richard Rockwell Jr.
DATE: 12/17/14

ENGINEERS SEAL:
FOR GUIDE REINSET EXCEPT TRAFFIC CONTROL, LIGHTING, AND STRUCTURES 20' AND OVER

STATE OF OHIO
DENNIS
DOMINA
REGISTERED
PROFESSIONAL ENGINEER

SIGNED: Dennis Domina
DATE: 12/17/14

INDEX OF SHEETS:

TITLE SHEET	1
SCHEMATIC PLAN	2-5
REFERENCES & BENCHMARKS	6
TYPICAL SECTIONS	7-13
GENERAL NOTES	14-16
MAINTENANCE OF TRAFFIC	17-115
GENERAL SUMMARY	116-121
SUBSUMMARIES	122-128
PROJECT SITE PLAN	129-132
I.R. 71 - PLAN & PROFILE	133-152
CROSS SECTIONS	153-397
C.R. 136 RAMP A - PLAN & PROFILE	398
CROSS SECTIONS	399-406
C.R. 136 RAMP D - PLAN & PROFILE	407-409
CROSS SECTIONS	410-427
SUPERELEVATION TABLES	428-431
INTERCHANGE DETAILS	432-449
INTERSECTION DETAILS	450-451
CULVERT DETAILS	452-464
UNDERDRAIN DETAILS	465-482
NOISE BARRIER DETAILS	483-543
MISCELLANEOUS DETAILS	544
TRAFFIC CONTROL	545-577
LIGHTING	578-584
STRUCTURES (20 FT AND OVER)	585-823
STRUCTURE FOUNDATION EXPLORATION	

PROJECT DESCRIPTION

THIS PROJECT INCLUDES: 4.38 MILES OF FULL DEPTH PAVEMENT REPLACEMENT, THE ADDITION OF ONE LANE IN EACH DIRECTION IN THE MEDIAN OF I.R. 71, REPLACEMENT OF THE I.R. 71 SOUTHBOUND OFF-RAMP AND I.R. 71 NORTHBOUND OFF-RAMP AT THE STRINGTOWN ROAD INTERCHANGE, THE REHABILITATION OF STRUCTURES OVER WHITE ROAD, AND THE ADDITION OF NOISE WALLS. A PROPOSED DRAINAGE SYSTEM, GUARDRAIL, LIGHTING, AND CULVERTS WILL ALSO BE ADDED TO THE PROJECT.

EARTH DISTRUBED AREA

PROJECT EARTH DISTURBED AREA:	115 ACRES
ESTIMATED CONTRACTOR EARTH DISTURBED AREA:	1 ACRES
NOTICE OF INTENT EARTH DISTURBED AREA:	116 ACRES

LIMITED ACCESS

THIS IMPROVEMENT IS ESPECIALLY DESIGNED FOR THROUGH TRAFFIC AND HAS BEEN DECLARED A LIMITED ACCESS HIGHWAY OR FREEWAY BY ACTION OF THE DIRECTOR IN ACCORDANCE WITH THE PROVISIONS OF SECTION 5511.02 OF THE OHIO REVISED CODE.

2013 SPECIFICATIONS

THE STANDARD SPECIFICATIONS OF THE STATE OF OHIO, DEPARTMENT OF TRANSPORTATION, INCLUDING CHANGES AND SUPPLEMENTAL SPECIFICATIONS LISTED IN THE PROPOSAL SHALL GOVERN THIS IMPROVEMENT.

I HEREBY APPROVED THESE PLANS AND DECLARE THAT THE MAKING OF THIS IMPROVEMENT WILL NOT REQUIRE THE CLOSING TO TRAFFIC OF THE HIGHWAY AND THAT PROVISIONS FOR THE MAINTENANCE AND SAFETY OF TRAFFIC WILL BE AS SET FORTH ON THE PLANS AND ESTIMATES.

APPROVED: _____
DATE: 12-13-14 DISTRICT DEPUTY DIRECTOR

APPROVED: _____
DATE: 5-1-15 DIRECTOR, DEPARTMENT OF TRANSPORTATION

STANDARD CONSTRUCTION DRAWINGS

GP-1.1	7/20/12	DM-4.1	7/20/12	RM-1.1	7/18/14	MT-98.20	7/18/14	TC-11.15	10/18/13	800	04/17/15
GP-2.1	7/19/13	DM-4.3	7/19/13	RM-4.5	7/18/14	MT-98.21	7/18/14	TC-11.20	10/18/13	803	01/17/14
GP-2.2	7/18/08	DM-4.4	7/20/12	RM-4.6	7/18/14	MT-98.28	7/18/14	TC-11.30	10/18/13	832	01/17/14
GP-2.3	7/18/14	MGS-1.1	7/19/13	AS-1-81	1/18/11	MT-98.29	7/18/14	TC-11.40	10/18/13	838	10/18/13
GP-3.1	7/19/14	MGS-2.1	7/19/13	PSID-1-13	10/18/13	MT-98.30	7/18/14	TC-11.50	10/18/13		
GP-5.1	7/19/13	MGS-3.1	7/18/13	SDR-1-13	1/17/14	MT-99.30	7/18/13	TC-12.10	10/18/13	902	12/31/14
GP-8.1	7/18/13	MGS-3.2	7/18/13	SICD-1-86	7/18/13	MT-101.10	1/17/14	TC-12.20	10/18/13		
GP-9.1	7/18/13	MGS-4.2	7/18/13	RL-20.21	1/17/14	MT-101.30	7/18/14	TC-51.11	1/17/14		
CD-3.2	1/18/13	MGS-4.3	7/18/13	RL-30.11	1/17/14	MT-102.10	7/18/13	TC-51.12	1/17/14		
CB-3.3	1/18/13	MGS-5.2	7/18/13	RL-30.21	1/17/14	MT-102.30	7/18/13	TC-52.10	10/18/13		
CB-3.4	1/18/13	MGS-5.3	7/18/13	RL-30.22	1/17/14	MT-105.10	7/18/13	TC-52.20	7/18/14		
MH-2.1	1/18/13	MGS-6.1	7/18/13	RL-60.21	1/17/14	TC-7.65	10/18/13	TC-61.10	7/18/14		
MH-2.2	1/18/13	MGS-6.2	7/18/13	MT-95.30	7/18/14	TC-12.30	10/18/13	TC-65.10	1/17/14		
I-2.3	1/17/14	RM-1.1	7/18/14	MT-95.10	7/18/14	TC-21.20	10/18/13	TC-65.11	7/18/14		
DK-1.2	1/18/13	RM-4.1	7/18/13	MT-95.50	7/18/13	TC-22.10	10/18/13	TC-71.10	1/17/14		
DK-1.1	1/18/13	RM-4.2	7/18/13	MT-96.10	7/18/14	TC-22.20	1/17/14	TC-72.20	7/18/14		
DM-1.2	1/18/13	RM-4.3	7/18/13	MT-98.11	7/18/14	TC-11.10	7/18/13				

SUPPLEMENTAL SPECIFICATIONS

SPECIAL PROVISIONS

FRANKLIN CO Floodplain LD-50 LD-51 03/12/16
Grove City Floodplain LD-50 LD-51 03/12/16
3D/4D Modeling 04/24/15

FEDERAL PROJECT NO.	E081090
PID NO.	84868
CONSTRUCTION PROJECT NO.	
RAILROAD INVOLVEMENT	NONE
	FRA-71-5.29
	1 / 823

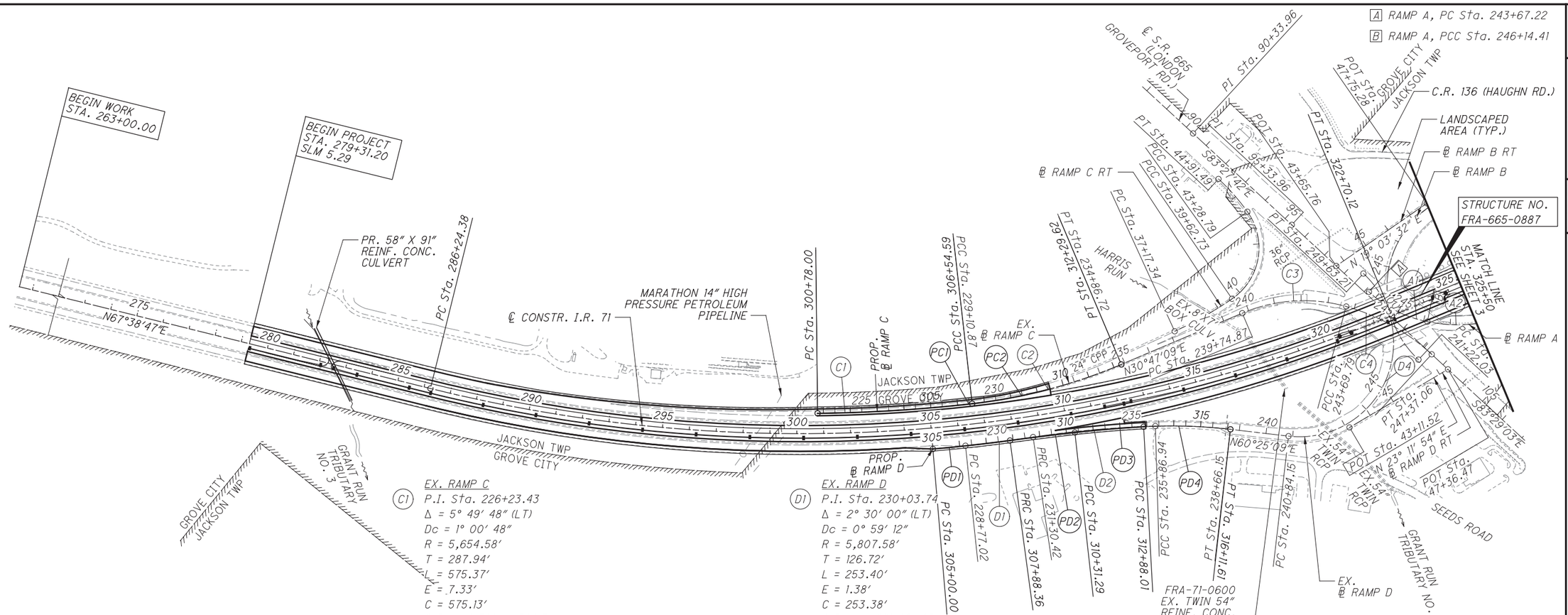

C1 EX. RAMP C
P.I. Sta. 226+23.43
Δ = 5° 49′ 48″ (LT)
Dc = 1° 00′ 48″
R = 5,654.58′
T = 287.94′
L = 575.37′
E = 7.33′
C = 575.13′
C.B. = N 50° 11′ 52″ E

D1 EX. RAMP D
P.I. Sta. 230+03.74
Δ = 2° 30′ 00″ (LT)
Dc = 0° 59′ 12″
R = 5,807.58′
T = 126.72′
L = 253.40′
E = 1.38′
C = 253.38′
C.B. = N 46° 26′ 45″ E

PC1 PROP. RAMP C
P.I. Sta. 303+66.55
Δ = 5° 50′ 42″ (LT)
Dc = 1° 00′ 49″
R = 5,652.20′
T = 288.55′
L = 576.59′
E = 7.36′
C = 576.34′
C.B. = N 50° 10′ 54″ E
e max = .0330

PC2 P.I. Sta. 309+44.10
Δ = 16° 28′ 24″ (LT)
Dc = 2° 51′ 53″
R = 2,000.00′
T = 289.51′
L = 575.03′
E = 20.85′
C = 573.05′
C.B. = N 39° 01′ 21″ E
e max = .0595

C2 P.I. Sta. 232+00.80
Δ = 16° 29′ 49″ (LT)
Dc = 2° 51′ 53″
R = 2,000.00′
T = 289.93′
L = 575.85′
E = 20.91′
C = 573.87′
C.B. = N 39° 02′ 04″ E

C3 P.I. Sta. 241+80.16
Δ = 38° 36′ 47″ (RT)
Dc = 9° 46′ 39″
R = 586.00′
T = 205.29′
L = 394.92′
E = 34.92′
C = 387.49′
C.B. = N 50° 05′ 32″ E

C4 P.I. Sta. 245+56.93
Δ = 27° 07′ 01″ (RT)
Dc = 7° 23′ 01″
R = 776.00′
T = 187.14′
L = 367.27′
E = 22.25′
C = 363.85′
C.B. = N 82° 57′ 26″ E

CR1 EX. RAMP C RT
P.I. Sta. 38+40.33
Δ = 9° 48′ 54″ (LT)
Dc = 3° 59′ 59″
R = 1,432.47′
T = 122.99′
L = 245.39′
E = 5.27′
C = 245.09′
C.B. = N 24° 14′ 31″ E

CR2 P.I. Sta. 41+97.56
Δ = 91° 11′ 27″ (LT)
Dc = 24° 54′ 40″
R = 230.00′
T = 234.83′
L = 366.06′
E = 98.70′
C = 328.63′
C.B. = N 26° 15′ 40″ W

CR3 P.I. Sta. 44+10.42
Δ = 11° 39′ 09″ (LT)
Dc = 7° 09′ 43″
R = 800.00′
T = 81.63′
L = 162.70′
E = 4.15′
C = 162.42′
C.B. = N 77° 40′ 58″ W

D2 P.I. Sta. 233+58.95
Δ = 6° 50′ 52″ (RT)
Dc = 1° 30′ 00″
R = 3,819.72′
T = 228.53′
L = 456.52′
E = 6.83′
C = 456.25′
C.B. = N 48° 37′ 11″ E

D3 P.I. Sta. 237+26.80
Δ = 8° 22′ 33″ (RT)
Dc = 2° 59′ 59″
R = 1,910.00′
T = 139.85′
L = 279.21′
E = 5.11′
C = 278.96′
C.B. = N 56° 13′ 53″ E

D4 P.I. Sta. 251+58.24
Δ = 143° 54′ 10″ (LT)
Dc = 16° 22′ 13″
R = 350.00′
T = 1,074.09′
L = 879.05′
E = 779.68′
C = 665.56′
C.B. = N 11° 31′ 56″ W

PD1 PROP. RAMP D
P.I. Sta. 306+44.21
Δ = 2° 50′ 46″ (LT)
Dc = 0° 59′ 13″
R = 5,805.20′
T = 144.21′
L = 288.36′
E = 1.79′
C = 288.33′
C.B. = N 47° 27′ 33″ E
.0330

PD2 P.I. Sta. 309+09.83
Δ = 1° 20′ 10″ (RT)
Dc = 0° 33′ 00″
R = 10,417.41′
T = 121.47′
L = 242.93′
E = 0.71′
C = 242.92′
C.B. = N 46° 42′ 16″ E
.0160

PD3 P.I. Sta. 311+59.68
Δ = 3° 12′ 33″ (RT)
Dc = 1° 15′ 00″
R = 4,583.66′
T = 128.40′
L = 256.72′
E = 1.80′
C = 256.69′
C.B. = N 48° 58′ 37″ E
e max = .0240

PD4 P.I. Sta. 314+50.20
Δ = 9° 42′ 16″ (RT)
Dc = 2° 59′ 56″
R = 1,910.50′
T = 162.19′
L = 323.59′
E = 6.87′
C = 323.21′
C.B. = N 55° 26′ 01″ E
e max = .0240

FOR RAMP A AND RAMP B GEOMETRIC DATA, SEE SHEET 3.

0 100 200 400 HORIZONTAL SCALE IN FEET

CALCULATED CDS CHECKED GPD

SCHEMATIC PLAN
I.R. 71 BEGIN PROJECT TO STA. 325+50

FRA-71-5.29

P:\84868\roadway\sheets\84868GB001.dgn 3/27/2015 2:28:55 PM kfahy

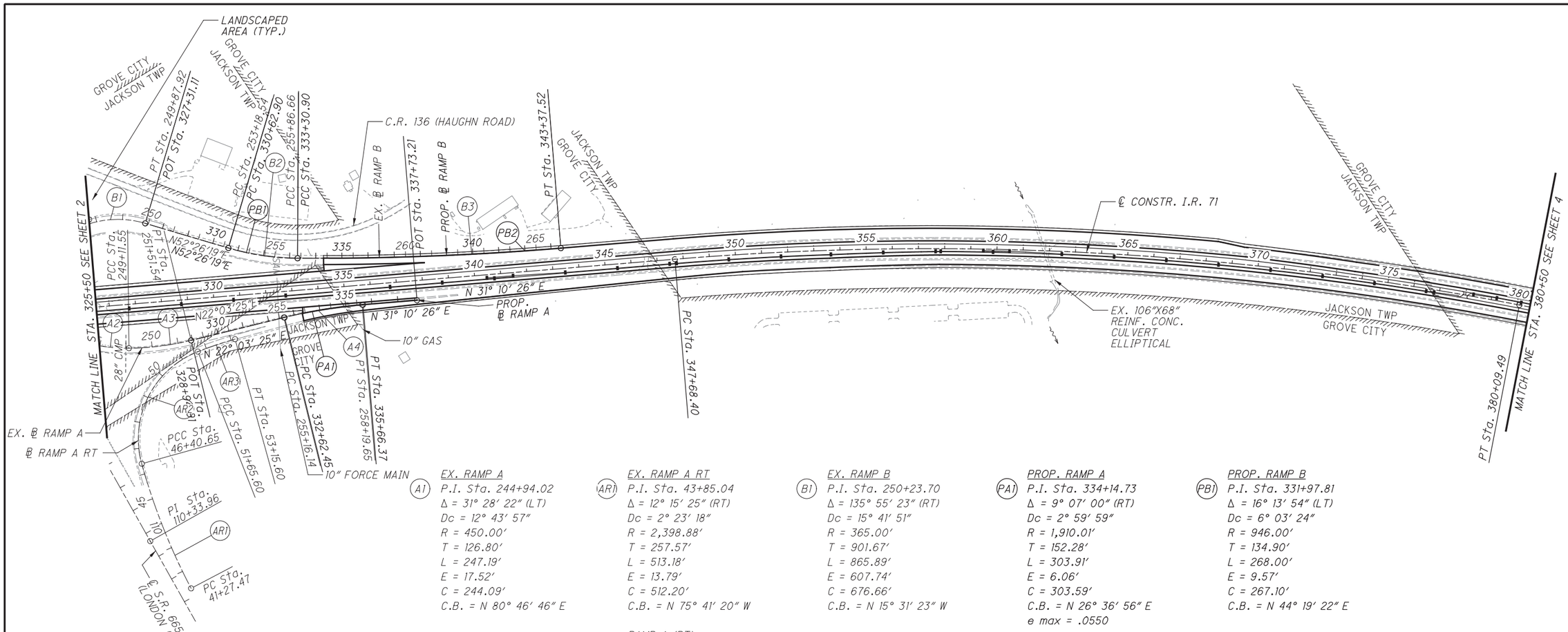

EX. RAMP A
P.I. Sta. 244+94.02
Δ = 31° 28′ 22″ (LT)
Dc = 12° 43′ 57″
R = 450.00′
T = 126.80′
L = 247.19′
E = 17.52′
C = 244.09′
C.B. = N 80° 46′ 46″ E

EX. RAMP A RT
P.I. Sta. 43+85.04
Δ = 12° 15′ 25″ (RT)
Dc = 2° 23′ 18″
R = 2,398.88′
T = 257.57′
L = 513.18′
E = 13.79′
C = 512.20′
C.B. = N 75° 41′ 20″ W

EX. RAMP B
P.I. Sta. 250+23.70
Δ = 135° 55′ 23″ (RT)
Dc = 15° 41′ 51″
R = 365.00′
T = 901.67′
L = 865.89′
E = 607.74′
C = 676.66′
C.B. = N 15° 31′ 23″ W

PROP. RAMP A
P.I. Sta. 334+14.73
Δ = 9° 07′ 00″ (RT)
Dc = 2° 59′ 59″
R = 1,910.01′
T = 152.28′
L = 303.91′
E = 6.06′
C = 303.59′
C.B. = N 26° 36′ 56″ E
e max = .0550

PROP. RAMP B
P.I. Sta. 331+97.81
Δ = 16° 13′ 54″ (LT)
Dc = 6° 03′ 24″
R = 946.00′
T = 134.90′
L = 268.00′
E = 9.57′
C = 267.10′
C.B. = N 44° 19′ 22″ E

RAMP A (RT)

A2 P.I. Sta. 247+66.42
Δ = 29° 47′ 22″ (LT)
Dc = 10° 01′ 32″
R = 571.50′
T = 152.01′
L = 297.14′
E = 19.87′
C = 293.80′
C.B. = N 50° 08′ 54″ E

AR2 P.I. Sta. 49+63.08
Δ = 84° 00′ 51″ (RT)
Dc = 16° 00′ 16″
R = 358.00′
T = 322.42′
L = 524.94′
E = 123.79′
C = 479.16′
C.B. = N 27° 33′ 12″ W

B2 P.I. Sta. 254+53.51
Δ = 16° 14′ 21″ (LT)
Dc = 6° 03′ 24″
R = 946.00′
T = 134.96′
L = 268.12′
E = 9.58′
C = 267.22′
C.B. = N 44° 19′ 09″ E

PB2 P.I. Sta. 338+34.54
Δ = 5° 01′ 59″ (LT)
Dc = 0° 30′ 00″
R = 11,459.16′
T = 503.63′
L = 1,006.62′
E = 11.06′
C = 1,006.30′
C.B. = N 33° 41′ 25″ E
e max = .0175

A3 P.I. Sta. 250+32.08
Δ = 13° 11′ 47″ (LT)
Dc = 5° 29′ 55″
R = 1,042.00′
T = 120.53′
L = 240.00′
E = 6.95′
C = 239.47′
C.B. = N 28° 39′ 19″ E

AR3 P.I. Sta. 52+40.66
Δ = 5° 57′ 59″ (RT)
Dc = 3° 58′ 40″
R = 1,440.43′
T = 75.07′
L = 150.00′
E = 1.95′
C = 149.93′
C.B. = N 17° 26′ 14″ E

B3 P.I. Sta. 260+90.78
Δ = 5° 02′ 17″ (LT)
Dc = 0° 30′ 00″
R = 11,459.16′
T = 504.12′
L = 1,007.59′
E = 11.08′
C = 1,007.26′
C.B. = N 33° 40′ 50″ E

A4 P.I. Sta. 256+68.22
Δ = 9° 06′ 16″ (RT)
Dc = 2° 59′ 59″
R = 1,910.01′
T = 152.07′
L = 303.50′
E = 6.04′
C = 303.18′
C.B. = N 26° 36′ 33″ E

HORIZONTAL SCALE IN FEET
0 100 200 400

CALCULATED CDS
CHECKED GPD

SCHEMATIC PLAN
I.R. 71 STA. 325+50 TO STA. 380+50

FRA-71-5.29

3
623

P:\84868\roadway\sheets\84868GB002.dgn 3/27/2015 2:28:55 PM kfahy

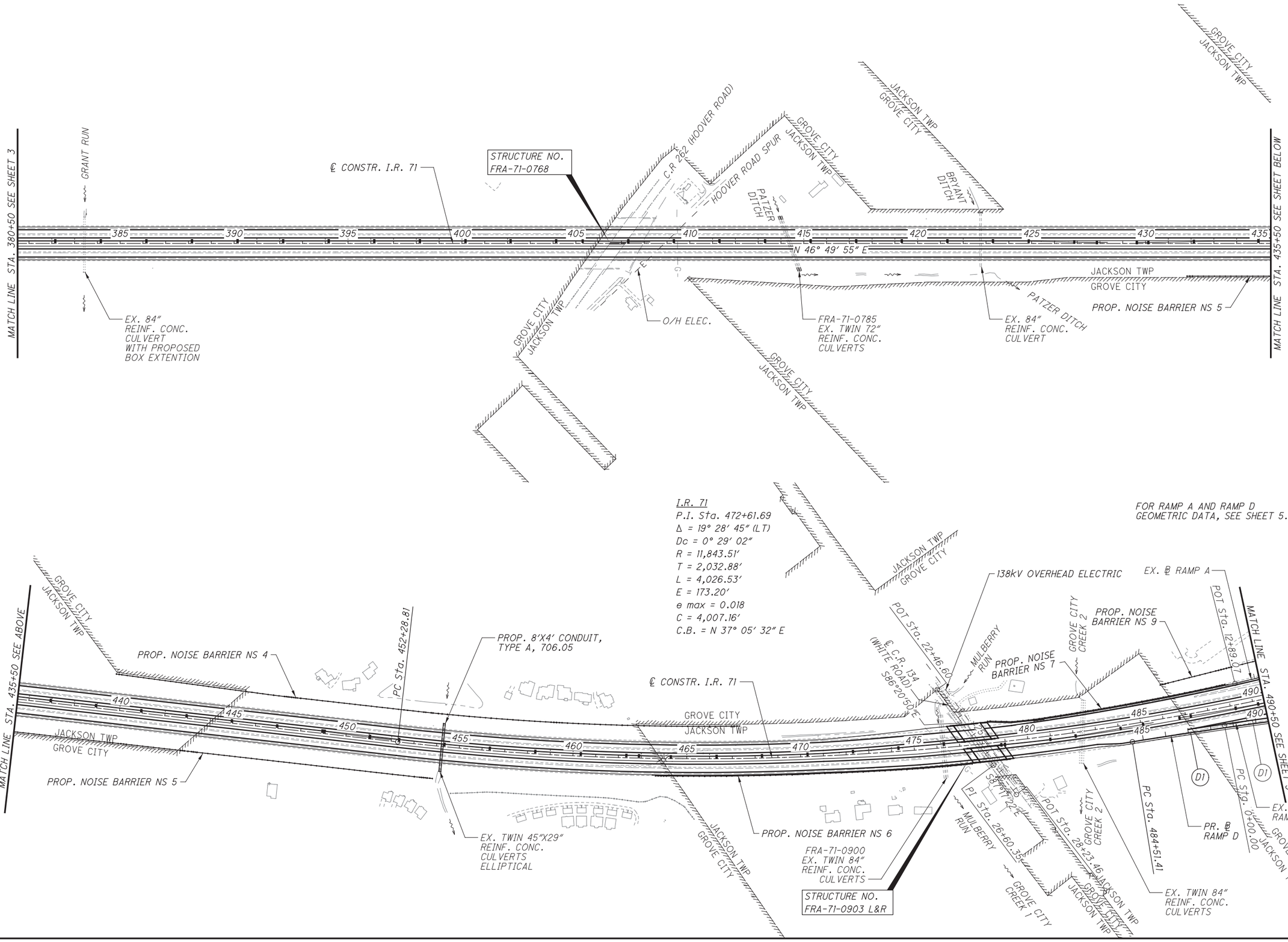

0 100 200 400 HORIZONTAL SCALE IN FEET

CALCULATED CDS CHECKED GPD

SCHEMATIC PLAN

I.R. 71 STA. 380+50 TO STA. 490+50

FRA-71-5.29

P:\84868\roadway\sheets\84868GB003.dgn 3/27/2015 2:28:56 PM kfahy

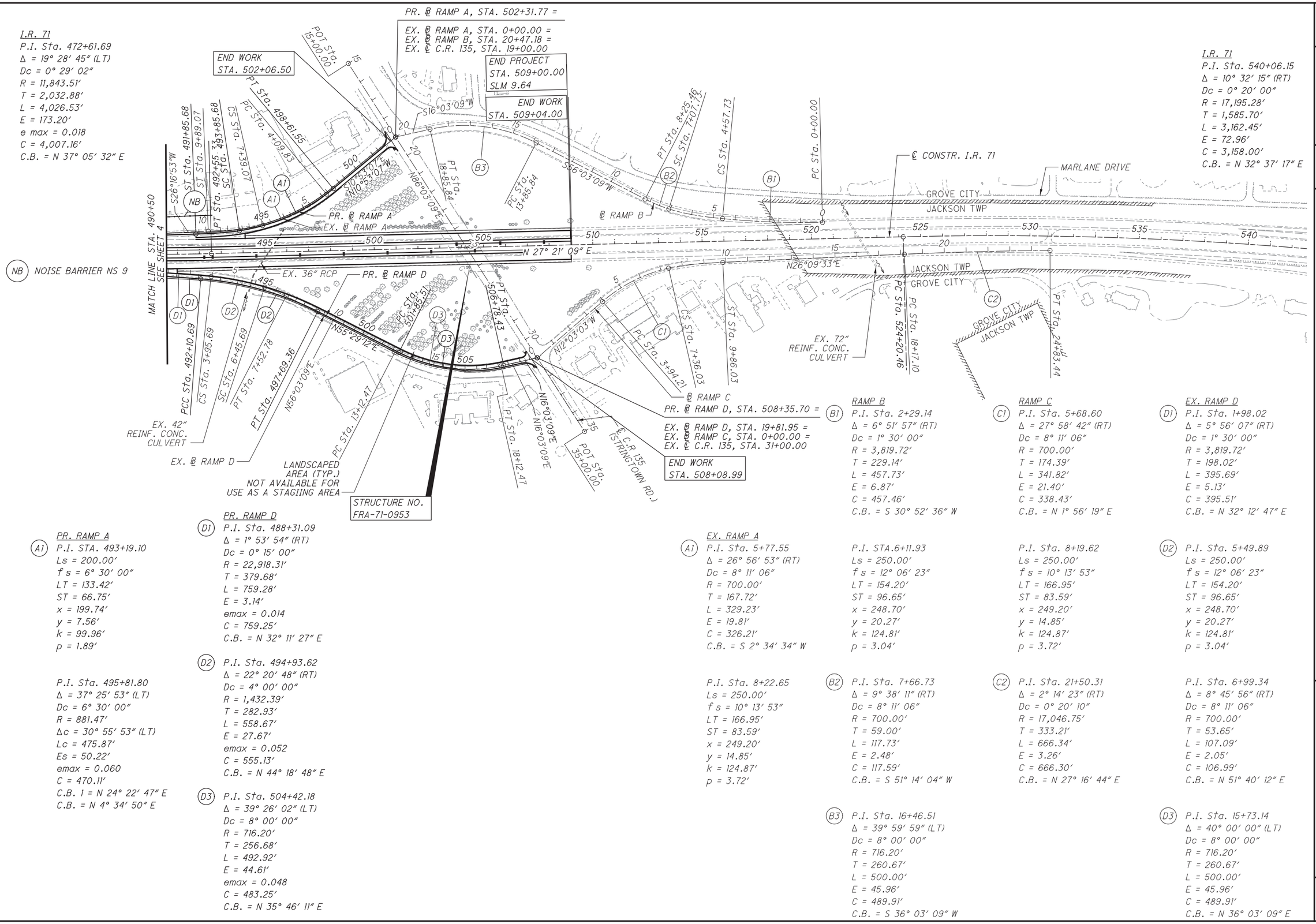

PR. RAMP A

(A1) P.I. STA. 493+19.10
Ls = 200.00′
f s = 6° 30′ 00″
LT = 133.42′
ST = 66.75′
x = 199.74′
y = 7.56′
k = 99.96′
p = 1.89′

P.I. Sta. 495+81.80
Δ = 37° 25′ 53″ (LT)
Dc = 6° 30′ 00″
R = 881.47′
Δc = 30° 55′ 53″ (LT)
Lc = 475.87′
Es = 50.22′
emax = 0.060
C = 470.11′
C.B. 1 = N 24° 22′ 47″ E
C.B. = N 4° 34′ 50″ E

PR. RAMP D

(D1) P.I. Sta. 488+31.09
Δ = 1° 53′ 54″ (RT)
Dc = 0° 15′ 00″
R = 22,918.31′
T = 379.68′
L = 759.28′
E = 3.14′
emax = 0.014
C = 759.25′
C.B. = N 32° 11′ 27″ E

(D2) P.I. Sta. 494+93.62
Δ = 22° 20′ 48″ (RT)
Dc = 4° 00′ 00″
R = 1,432.39′
T = 282.93′
L = 558.67′
E = 27.67′
emax = 0.052
C = 555.13′
C.B. = N 44° 18′ 48″ E

(D3) P.I. Sta. 504+42.18
Δ = 39° 26′ 02″ (LT)
Dc = 8° 00′ 00″
R = 716.20′
T = 256.68′
L = 492.92′
E = 44.61′
emax = 0.048
C = 483.25′
C.B. = N 35° 46′ 11″ E

RAMP B

(B1) P.I. Sta. 2+29.14
Δ = 6° 51′ 57″ (RT)
Dc = 1° 30′ 00″
R = 3,819.72′
T = 229.14′
L = 457.73′
E = 6.87′
C = 457.46′
C.B. = S 30° 52′ 36″ W

EX. RAMP A

(A1) P.I. Sta. 5+77.55
Δ = 26° 56′ 53″ (RT)
Dc = 8° 11′ 06″
R = 700.00′
T = 167.72′
L = 329.23′
E = 19.81′
C = 326.21′
C.B. = S 2° 34′ 34″ W

P.I. STA.6+11.93
Ls = 250.00′
f s = 12° 06′ 23″
LT = 154.20′
ST = 96.65′
x = 248.70′
y = 20.27′
k = 124.81′
p = 3.04′

P.I. Sta. 8+22.65
Ls = 250.00′
f s = 10° 13′ 53″
LT = 166.95′
ST = 83.59′
x = 249.20′
y = 14.85′
k = 124.87′
p = 3.72′

(B2) P.I. Sta. 7+66.73
Δ = 9° 38′ 11″ (RT)
Dc = 8° 11′ 06″
R = 700.00′
T = 59.00′
L = 117.73′
E = 2.48′
C = 117.59′
C.B. = S 51° 14′ 04″ W

(B3) P.I. Sta. 16+46.51
Δ = 39° 59′ 59″ (LT)
Dc = 8° 00′ 00″
R = 716.20′
T = 260.67′
L = 500.00′
E = 45.96′
C = 489.91′
C.B. = S 36° 03′ 09″ W

RAMP C

(C1) P.I. Sta. 5+68.60
Δ = 27° 58′ 42″ (RT)
Dc = 8° 11′ 06″
R = 700.00′
T = 174.39′
L = 341.82′
E = 21.40′
C = 338.43′
C.B. = N 1° 56′ 19″ E

P.I. Sta. 8+19.62
Ls = 250.00′
f s = 10° 13′ 53″
LT = 166.95′
ST = 83.59′
x = 249.20′
y = 14.85′
k = 124.87′
p = 3.72′

(C2) P.I. Sta. 21+50.31
Δ = 2° 14′ 23″ (RT)
Dc = 0° 20′ 10″
R = 17,046.75′
T = 333.21′
L = 666.34′
E = 3.26′
C = 666.30′
C.B. = N 27° 16′ 44″ E

EX. RAMP D

(D1) P.I. Sta. 1+98.02
Δ = 5° 56′ 07″ (RT)
Dc = 1° 30′ 00″
R = 3,819.72′
T = 198.02′
L = 395.69′
E = 5.13′
C = 395.51′
C.B. = N 32° 12′ 47″ E

(D2) P.I. Sta. 5+49.89
Ls = 250.00′
f s = 12° 06′ 23″
LT = 154.20′
ST = 96.65′
x = 248.70′
y = 20.27′
k = 124.81′
p = 3.04′

P.I. Sta. 6+99.34
Δ = 8° 45′ 56″ (RT)
Dc = 8° 11′ 06″
R = 700.00′
T = 53.65′
L = 107.09′
E = 2.05′
C = 106.99′
C.B. = N 51° 40′ 12″ E

(D3) P.I. Sta. 15+73.14
Δ = 40° 00′ 00″ (LT)
Dc = 8° 00′ 00″
R = 716.20′
T = 260.67′
L = 500.00′
E = 45.96′
C = 489.91′
C.B. = N 36° 03′ 09″ E

P:\84868\roadway\sheets\84868GB004.dgn 3/27/2015 2:28:57 PM kfahy

PRIMARY PROJECT CONTROL INFORMATION						
	GRID COORDINATES U.S. SURVEY FEET		SCALED COORDINATES U.S. SURVEY FEET		ORTHOMETRIC HEIGHT (ELEVATION)	
POINT NUMBER	NORTHING	EASTING	NORTHING	EASTING		DESCRIPTION
SV2511	682,417.660	1,812,807.330	682,417.660	1,812,807.330	757.660	BENCHMARK "B"
SV2056	682,319.290	1,813,115.210	682,319.290	1,813,115.210	754.710	IRON PIPE MARKED "EMHT"
SV2155	682,390.240	1,813,128.300	682,390.240	1,813,128.300	758.920	BENCHMARK "A"
SV2203	682,351.450	1,813,073.910	682,351.450	1,813,073.910	755.190	MONUMENT BOX
SV2394	682,377.810	1,812,661.000	682,377.810	1,812,661.000	763.530	MONUMENT BOX

REFERENCE POINTS								
	GRID COORDINATES U.S. SURVEY FEET		SCALED COORDINATES U.S. SURVEY FEET					
POINT NUMBER	NORTHING	EASTING	NORTHING	EASTING	ALIGNMENT	STATION	OFFSET	DESCRIPTION
POT	665,802.202	1,793,409.293	665,802.202	1,793,409.293	I.R. 71	215+12.62	C/L	C/L MONUMENT
PC	668,506.967	1,799,986.634	668,506.967	1,799,986.634	I.R. 71	286+24.38	C/L	C/L MONUMENT
PT	670,839.187	1,802,708.649	670,839.187	1,802,708.649	I.R. 71	322+70.12	C/L	C/L MONUMENT
PC	672,976.719	1,804,001.847	672,976.719	1,804,001.847	I.R. 71	347+68.40	C/L	C/L MONUMENT
PT	675,487.590	1,806,035.318	675,487.590	1,806,035.318	I.R. 71	380+09.49	C/L	C/L MONUMENT
PC	680,426.618	1,811,300.722	680,426.618	1,811,300.722	I.R. 71	452+28.81	C/L	C/L MONUMENT
PT	683,622.993	1,813,717.443	683,622.993	1,813,717.443	I.R. 71	492+55.33	C/L	C/L MONUMENT
PC	686,434.240	1,815,171.708	686,434.240	1,815,171.708	I.R. 71	524+20.46	C/L	C/L MONUMENT
PT	689,094.067	1,816,874.137	689,094.067	1,816,874.137	I.R. 71	555+82.91	C/L	C/L MONUMENT
POT	697,704.233	1,823,574.585	697,704.233	1,823,574.585	I.R. 71	664+93.04	C/L	C/L MONUMENT
ST	683,603.506	1,813,604.679	683,603.506	1,813,604.679	STRINGTOWN RD. RAMP A	491+85.68	C/L	C/L MONUMENT
SC	683,785.568	1,813,687.189	683,785.568	1,813,687.189	STRINGTOWN RD. RAMP A	493+85.68	C/L	C/L MONUMENT
PT	684,254.178	1,813,724.732	684,254.178	1,813,724.732	STRINGTOWN RD. RAMP A	498+61.55	C/L	C/L MONUMENT
POT	684,617.739	1,813,654.818	684,617.739	1,813,654.818	STRINGTOWN RD. RAMP A	502+31.77	C/L	C/L MONUMENT
PC	682,881.578	1,813,390.817	682,881.578	1,813,390.817	STRINGTOWN RD. RAMP D	484+51.41	C/L	C/L MONUMENT
PCC	683,524.113	1,813,795.300	683,524.113	1,813,795.300	STRINGTOWN RD. RAMP D	492+10.69	C/L	C/L MONUMENT
PT	683,921.326	1,814,183.104	683,921.326	1,814,183.104	STRINGTOWN RD. RAMP D	497+69.36	C/L	C/L MONUMENT
PC	684,157.117	1,814,526.010	684,157.117	1,814,526.010	STRINGTOWN RD. RAMP D	501+85.51	C/L	C/L MONUMENT
PT	684,549.216	1,814,808.485	684,549.216	1,814,808.485	STRINGTOWN RD. RAMP D	506+78.43	C/L	C/L MONUMENT
POT	684,700.347	1,814,851.971	684,700.347	1,814,851.971	STRINGTOWN RD. RAMP D	508+35.70	C/L	C/L MONUMENT

CALCULATED CDS CHECKED BBD

REFERENCES AND BENCHMARKS

FRA-71-5.29

P:\84868\roadway\sheets\84868GM001.dgn 3/27/2015 2:28:58 PM kfahy

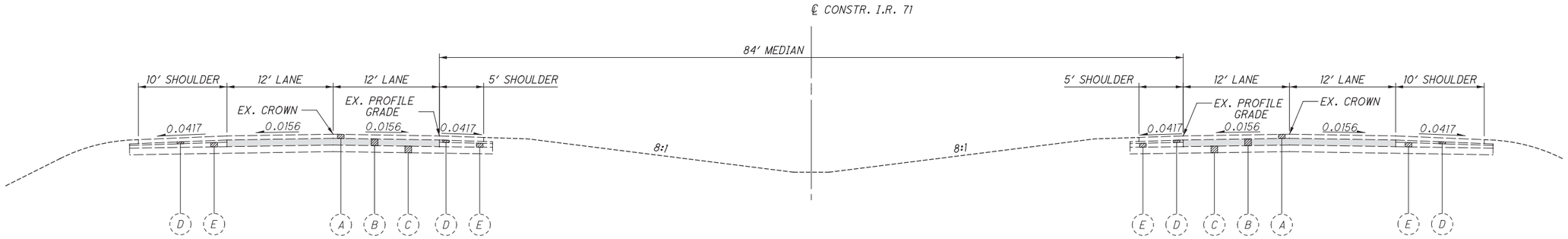

NORMAL SECTION - I.R. 71

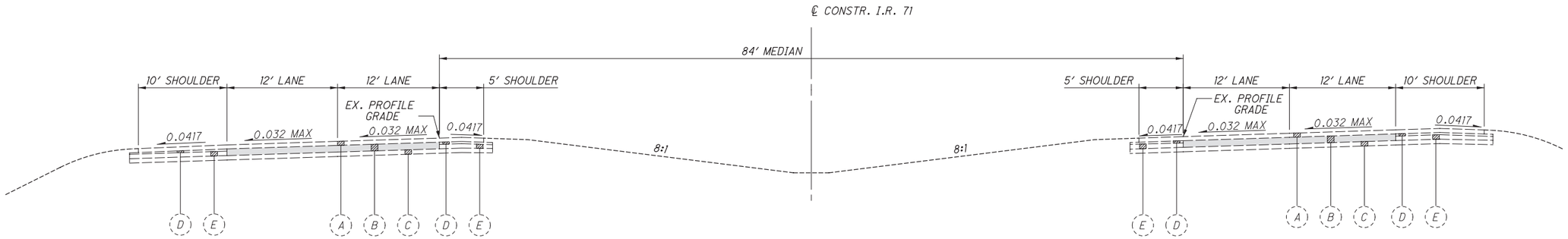

SUPERELEVATED SECTION - I.R. 71

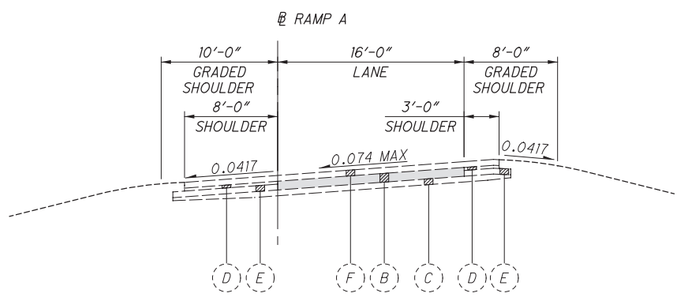

SUPERELEVATED SECTION - STRINGTOWN ROAD RAMP A

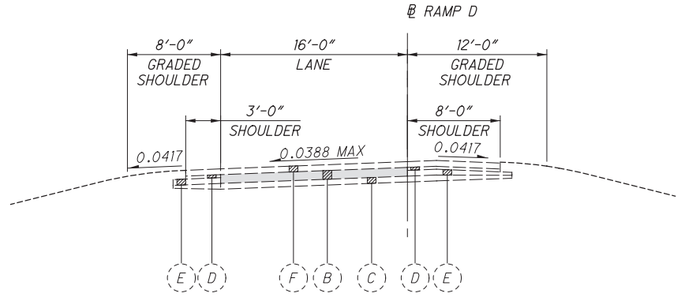

NORMAL SECTION - STRINGTOWN ROAD RAMP D

EXISTING LEGEND

- (A) 6″ ASPHALT
- (B) 9″ PORTLAND CEMENT CONCRETE
- (C) 6″± DEPTH SUBBASE
- (D) 3″ BITUMINOUS BASE
- (E) 6″ CRUSHED AGGREGATE
- (F) VARIABLE DEPTH ASPHALT
- (G) REINFORCED CONCRETE APPROACH SLAB (t = 13″)

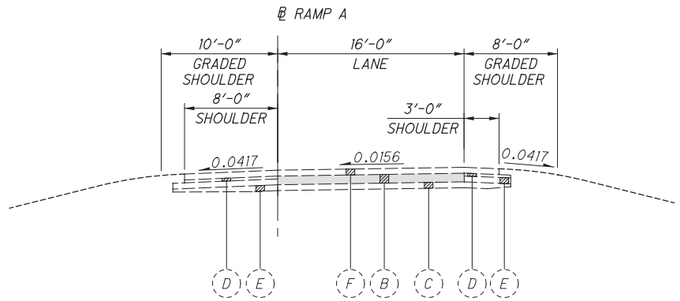

NORMAL SECTION - STRINGTOWN ROAD RAMP A

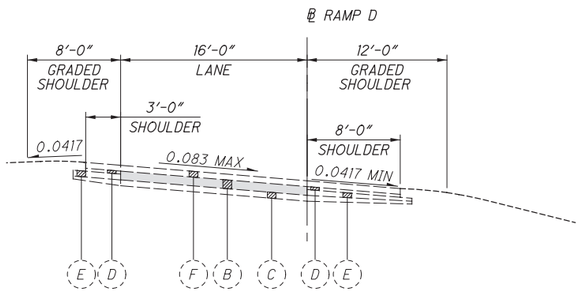

SUPERELEVATED SECTION - STRINGTOWN ROAD RAMP D

EXISTING TYPICAL SECTIONS I.R. 71, STRINGTOWN ROAD RAMPS A & D

FRA-71-5.29

P:\84868\roadway\sheets\84868GY001.dgn 3/27/2015 2:28:59 PM kfahy

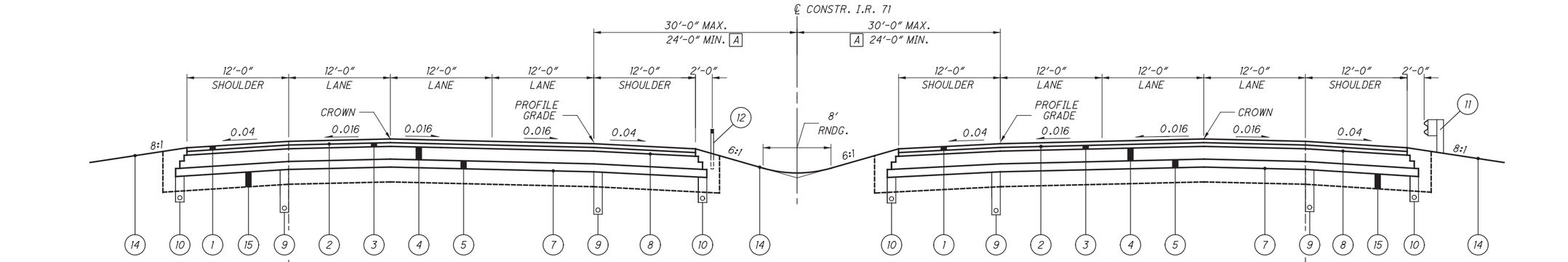

NORMAL SECTION - I.R. 71
FULL DEPTH FLEXIBLE PAVEMENT BUILDUP

STA. 279+31.20 TO STA. 283+62.38
STA. 325+40.42 TO STA. 345+96.40
STA. 381+85.29 TO STA. 450+56.81
STA. 494+31.13 TO STA. 509+00.00

A 30′ STA. 279+31.20 TO STA. 283+62.38
STA. 325+40.42 TO STA. 345+96.40
STA. 494+31.13 TO STA. 509+00.00
24′ STA. 381+85.29 TO STA. 450+56.81

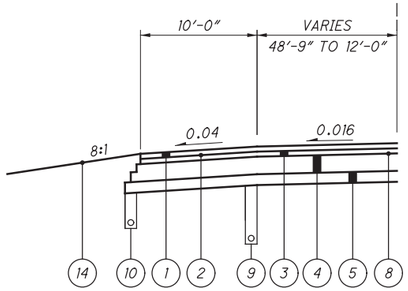

SPEED CHANGE LANE
STA. 334+28.96 TO STA. 345+96.40

B 6′ STA. 333+35.53 TO STA. 335+17.04
VARIES 6′ TO 8′ STA. 335+17.04 TO STA. 335+66.37
8′ STA. 335+66.37 TO 345+96.40

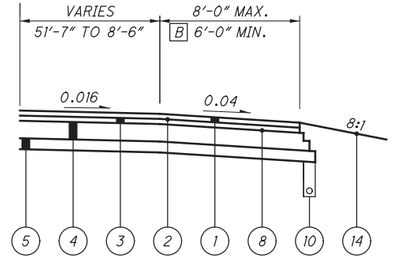

SPEED CHANGE LANE
STA. 333+35.53 TO STA. 345+96.40

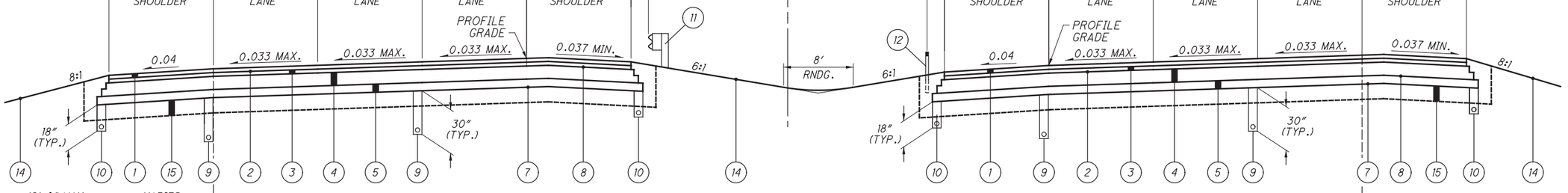

SUPERELEVATED SECTION - I.R. 71
FULL DEPTH FLEXIBLE PAVEMENT BUILDUP
STA. 283+62.38 TO STA. 325+40.42

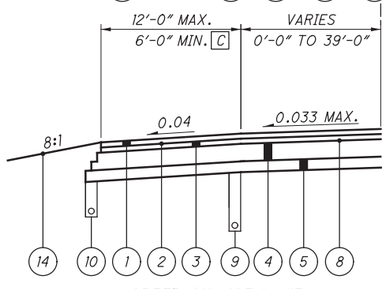

C VARIES 12′ TO 8′ STA. 288+28.00 TO STA. 290+28.00
8′ STA. 290+28.00 TO 306+62.24
VARIES 8′ TO 6′ STA. 306+62.24 TO 307+12.54
6′ STA. 307+12.54 TO 309+60.42

SPEED CHANGE LANE
STA. 288+28.00 TO STA. 309+60.42

D VARIES 12′ TO 8′ STA. 304+00.00 TO 305+00.00
8′ STA. 305+00.00 TO 312+08.96

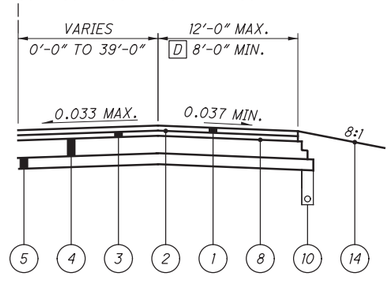

SPEED CHANGE LANE
STA. 304+00.00 TO STA. 312+08.96

PROPOSED FLEXIBLE PAVEMENT LEGEND

1. ITEM 442 - 1.5″ ASPHALT CONCRETE SURFACE COURSE, 12.5MM, TYPE A (446)
2. ITEM 407 - TACK COAT FOR INTERMEDIATE COURSE
3. ITEM 442 - 1.75″ ASPHALT CONCRETE INTERMEDIATE COURSE, 19MM, TYPE A (446)
4. ITEM 302 - 12″ ASPHALT CONCRETE BASE
5. ITEM 304 - 6″ AGGREGATE BASE
6. NOT USED
7. ITEM 204 - PROOF ROLLING
8. ITEM 407 - TACK COAT
9. ITEM 605 - 6″ SHALLOW PIPE UNDERDRAINS, 707.31
10. ITEM 605 - 6″ BASE PIPE UNDERDRAINS, 707.31
11. ITEM 606 - GUARDRAIL, TYPE MGS
12. ITEM 606 - GUARDRAIL, MISC.: TENSIONED CABLE WITH CONCRETE FOUNDATION LINE POST (SOCKETED)
13. ITEM 622 - CONCRETE BARRIER, TYPE D
14. ITEM 659 - SEEDING AND MULCHING
15. ITEM 206 - CEMENT STABILIZED SUBGRADE 12″ DEEP

TYPICAL SECTIONS FLEXIBLE PAVEMENT - I.R. 71

FRA-71-5.29

P:\84868\roadway\sheets\84868GY002.dgn 3/27/2015 2:28:59 PM kfahy

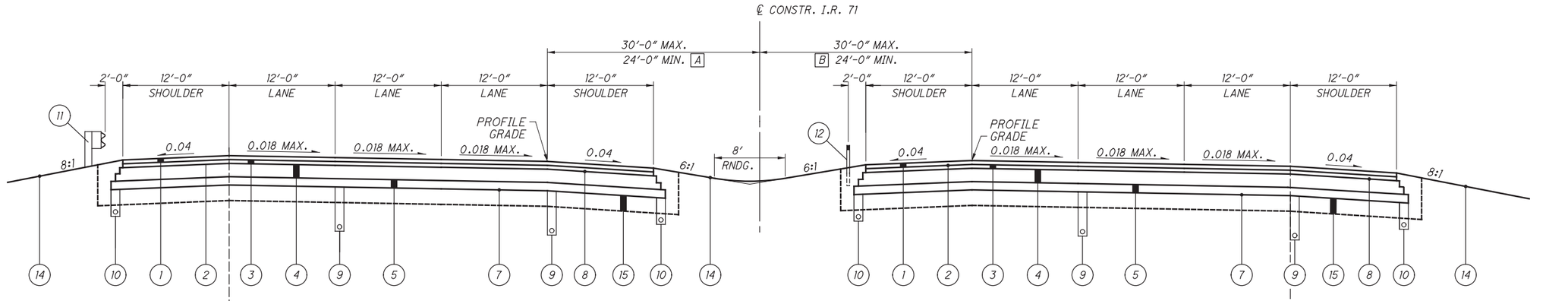

SUPERELEVATED SECTION - I.R. 71
FULL DEPTH FLEXIBLE PAVEMENT BUILDUP
STA. 345+96.40 TO STA. 381+85.29

A 30′ STA. 345+96.40 TO STA. 369+50.00
VARIES 30′ TO 24′ STA. 369+50.00 TO STA. 373+70.00
24′ STA. 373+70.00 TO STA. 381+85.29

B 30′ STA. 345+96.40 TO STA. 353+60.00
VARIES 30′ TO 24′ STA. 353+60.00 TO STA. 357+80.00
24′ STA. 357+80.00 TO STA. 381+85.29

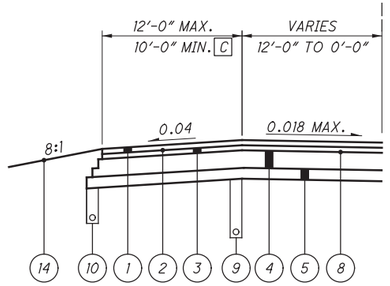

SPEED CHANGE LANE
STA. 345+96.40 TO STA. 369+40.00

C 10′ STA. 345+96.40 TO 368+40.00
VARIES 10′ TO 12′ STA. 368+40.00 TO 369+40.00

D 8′ STA. 345+96.40 TO 348+23.21
VARIES 8′ TO 12′ STA. 348+23.21 TO STA. 350+23.21

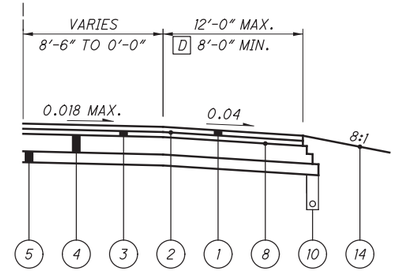

SPEED CHANGE LANE
STA. 345+96.40 TO STA. 350+23.21

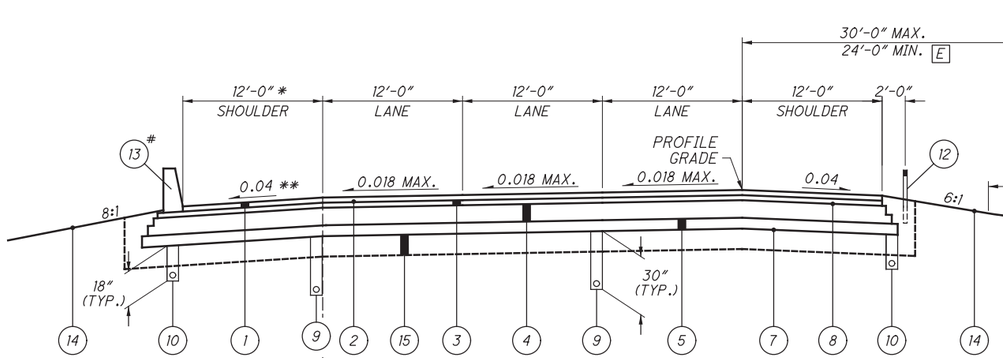

SUPERELEVATED SECTION - I.R. 71
FULL DEPTH FLEXIBLE PAVEMENT BUILDUP

NORTHBOUND:
STA. 450+56.81 TO STA. 477+24.52
STA. 479+01.67 TO STA. 494+31.13

SOUTHBOUND:
STA. 450+56.81 TO STA. 476+87.01
STA. 478+65.08 TO STA. 494+31.13

E 24′ STA. 450+56.81 TO STA. 471+00.00
VARIES 24′ TO 30′ STA. 471+00.00 TO STA. 475+20.00
30′ STA. 475+20.00 TO STA. 494+31.13

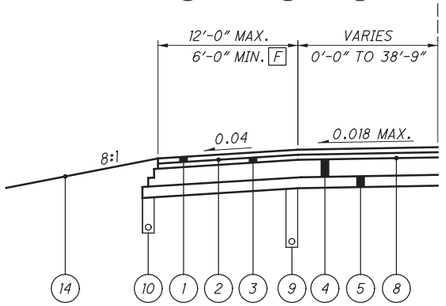

SPEED CHANGE LANE
STA. 479+35.68 TO STA. 494+11.18

F VARIES 12′ TO 8′ STA. 479+35.68 TO STA. 480+35.68
8′ STA. 480+35.68 TO 491+85.52
VARIES 8′ TO 6′ STA. 491+85.52 TO 492+35.92
6′ STA. 492+35.92 TO 494+11.18

* SHOULDER WIDTHS

NORTHBOUND:
VARIES 12′ TO 15′ STA. 475+20.00 TO STA. 477+15.33
15′ STA. 478+93.19 TO STA. 479+11.00
VARIES 15′ TO 12′ STA. 479+11.00 TO STA. 481+31.00

SOUTHBOUND:
VARIES 12′ TO 25′-2″ STA. 471+00.00 TO 475+79.17
25′-2″ STA. 475+79.17 TO 476+76.40
25′-2″ STA. 478+30.10 TO 478+43.51
VARIES 25′-2″ TO 12′ STA. 478+43.51 TO 479+35.68

\# CONCRETE BARRIER LOCATIONS

NORTHBOUND:
STA. 463+49.95 TO STA. 477+52.46

SOUTHBOUND:
STA. 478+30.10 TO STA. 489+09.60

** TRANSITION SLOPE FROM 0.04 TO 0.018 IN 110′ PRIOR TO APPROACH SLAB AND FROM 0.018 TO 0.04 IN 110′ AFTER APPROACH SLAB

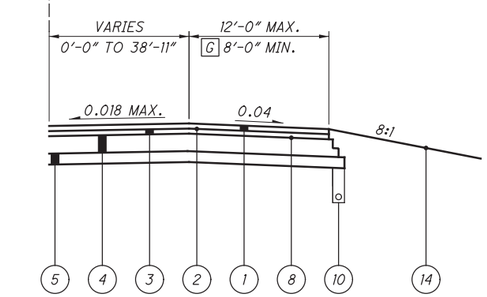

SPEED CHANGE LANE
STA. 483+00.00 TO STA. 490+97.72

G VARIES 12′ TO 8′ STA. 483+00.00 TO 484+00.00
8′ STA. 484+00.00 TO 490+97.72

FOR LEGEND, SEE SHEET 8

TYPICAL SECTIONS FLEXIBLE PAVEMENT - I.R. 71

FRA-71-5.29

P:\84868\roadway\sheets\84868GY003.dgn 3/27/2015 2:29:00 PM kfahy

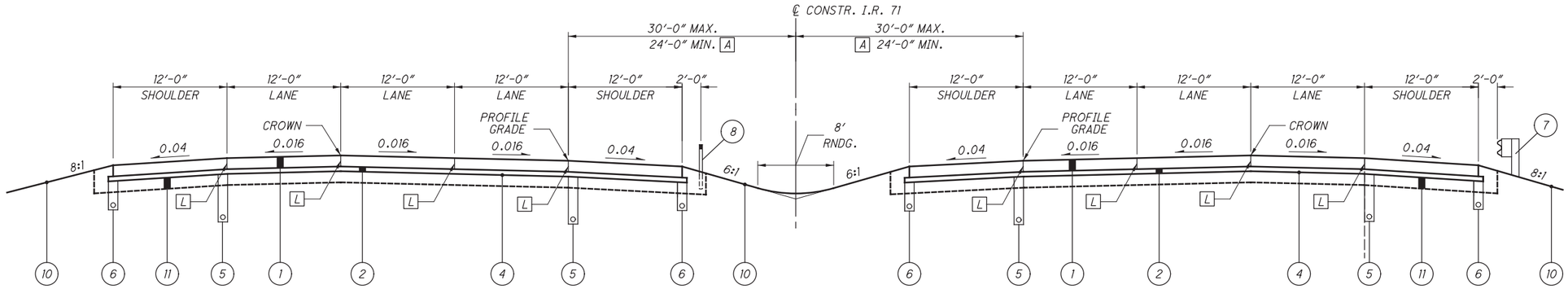

NORMAL SECTION - I.R. 71
FULL DEPTH RIGID PAVEMENT BUILDUP

STA. 279+31.20 TO STA. 283+62.38
STA. 325+40.42 TO STA. 345+96.40
STA. 381+85.29 TO STA. 450+56.81
STA. 494+31.13 TO STA. 509+00.00

A 30' STA. 279+31.20 TO STA. 283+62.38
STA. 325+40.42 TO STA. 345+96.40
STA. 494+31.13 TO STA. 509+00.00
24' STA. 381+85.29 TO STA. 450+56.81

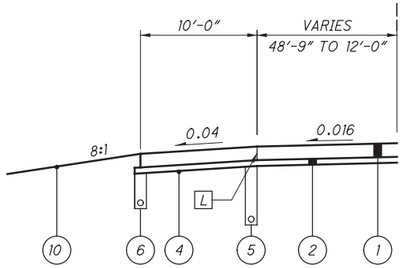

SPEED CHANGE LANE
STA. 334+28.96 TO STA. 345+96.40

B 6' STA. 333+35.53 TO 335+17.04
VARIES 6' TO 8' STA. 335+17.04 TO STA. 335+66.37
8' STA. 335+66.37 TO 345+96.40

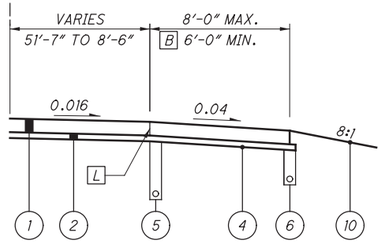

SPEED CHANGE LANE
STA. 333+35.53 TO STA. 345+96.40

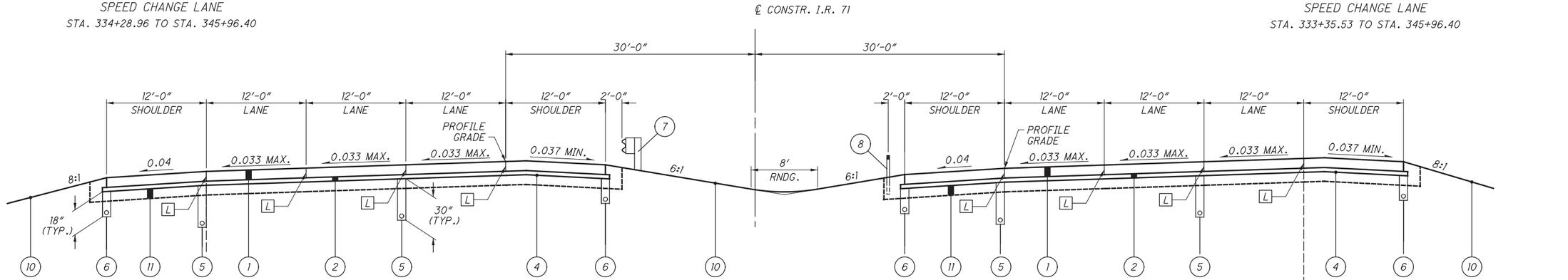

SUPERELEVATED SECTION - I.R. 71
FULL DEPTH RIGID PAVEMENT BUILDUP

STA. 283+62.38 TO STA. 325+40.42

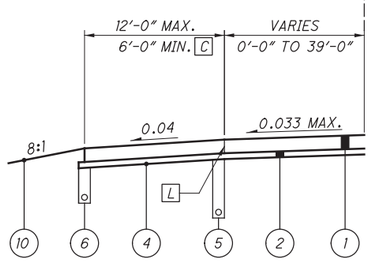

SPEED CHANGE LANE
STA. 288+28.00 TO STA. 309+60.42

C VARIES 12' TO 8' STA. 288+28.00 TO STA. 290+28.00
8' STA. 290+28.00 TO 306+62.24
VARIES 8' TO 6' STA. 306+62.24 TO 307+12.54
6' STA. 307+12.54 TO 309+60.42

L LONGITUDINAL JOINT PER SCD BP-2.1

D VARIES 12' TO 8' STA. 304+00.00 TO 305+00.00
8' STA. 305+00.00 TO 312+08.96

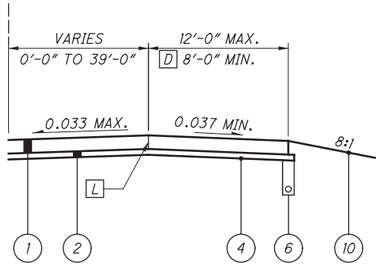

SPEED CHANGE LANE
STA. 304+00.00 TO STA. 312+08.96

PROPOSED RIGID PAVEMENT LEGEND

1. ITEM 452 - 14" NON-REINFORCED CONCRETE PAVEMENT
2. ITEM 304 - 6" AGGREGATE BASE
3. NOT USED
4. ITEM 204 - PROOF ROLLING
5. ITEM 605 - 6" SHALLOW UNDERDRAIN, 707.31
6. ITEM 605 - 6" BASE PIPE UNDERDRAIN, 707.31
7. ITEM 606 - GUARDRAIL, TYPE MGS
8. ITEM 606 - GUARDRAIL, MISC.: TENSIONED CABLE WITH CONCRETE FOUNDATION LINE POST (SOCKETED)
9. ITEM 622 - CONCRETE BARRIER, TYPE D
10. ITEM 659 - SEEDING AND MULCHING
11. ITEM 206 - CEMENT STABLIZED SUBGRADE 14" DEEP

P:\84868\roadway\sheets\84868GY004.dgn 3/27/2015 2:29:00 PM kfahy

TYPICAL SECTIONS RIGID PAVEMENT - I.R. 71

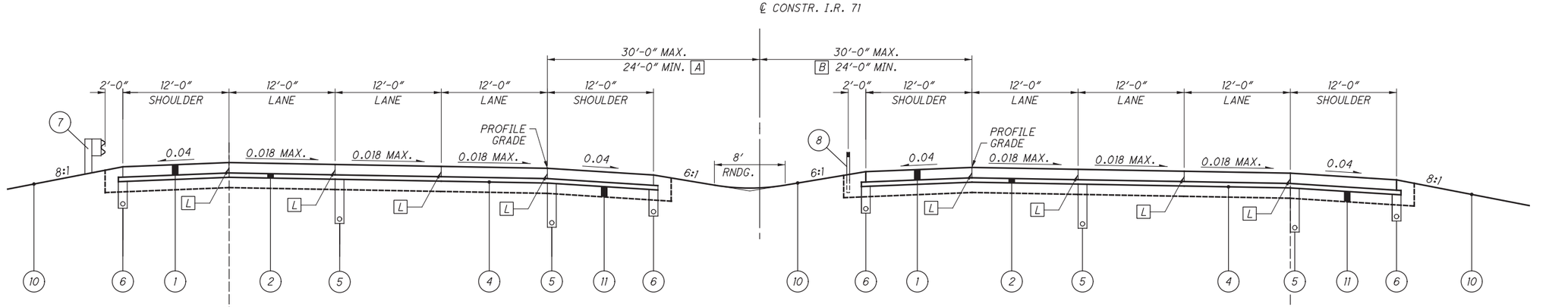

SUPERELEVATED SECTION - I.R. 71
FULL DEPTH RIGID PAVEMENT BUILDUP
STA. 345+96.40 TO STA. 381+85.29

A 30' STA. 345+96.40 TO STA. 369+50.00
VARIES 30' TO 24' STA. 369+50.00 TO STA. 373+70.00
24' STA. 373+70.00 TO STA. 381+85.29

B 30' STA. 345+96.40 TO STA. 353+60.00
VARIES 30' TO 24' STA. 353+60.00 TO STA. 357+80.00
24' STA. 357+80.00 TO STA. 381+85.29

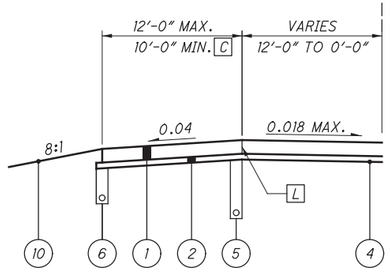

C 10' STA. 345+96.40 TO 368+40.00
VARIES 10' TO 12' STA. 368+40.00 TO 369+40.00

SPEED CHANGE LANE
STA. 345+96.40 TO STA. 369+40.00

D 8' STA. 345+96.40 TO 348+23.21
VARIES 8' TO 12' STA. 348+23.21 TO STA. 350+23.21

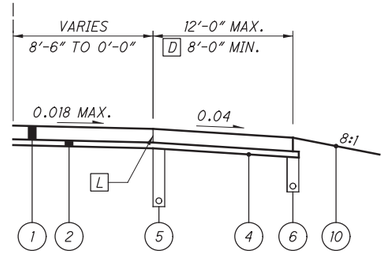

SPEED CHANGE LANE
STA. 345+96.40 TO STA. 350+23.21

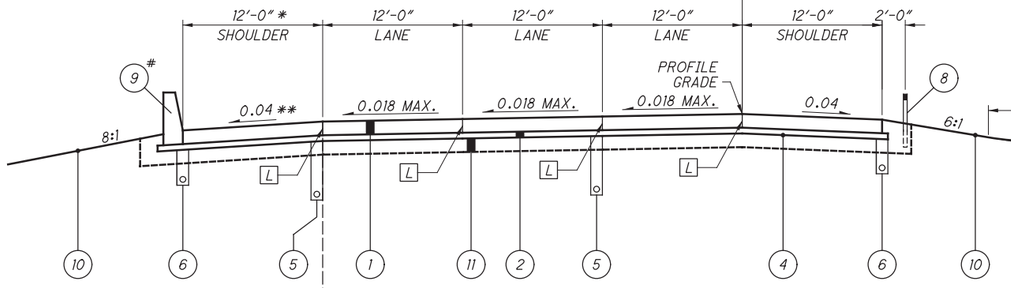

SUPERELEVATED SECTION - I.R. 71
FULL DEPTH RIGID PAVEMENT BUILDUP

NORTHBOUND:
STA. 450+56.81 TO STA. 477+24.52
STA. 479+01.67 TO STA. 494+31.13

SOUTHBOUND:
STA. 450+56.81 TO STA. 476+87.01
STA. 478+65.08 TO STA. 494+31.13

E 24' STA. 450+56.81 TO STA. 471+00.00
VARIES 24' TO 30' STA. 471+00.00 TO STA. 475+20.00
30' STA. 475+20.00 TO STA. 494+31.13

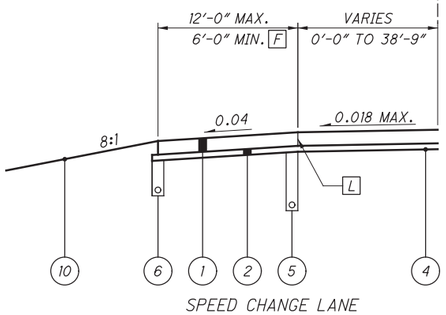

L LONGITUDINAL JOINT PER SCD BP-2.1

F VARIES 12' TO 8' STA. 479+35.68 TO STA. 480+35.68
8' STA. 480+35.68 TO 491+85.52
VARIES 8' TO 6' STA. 491+85.52 TO 492+35.92
6' STA. 492+35.92 TO 494+11.18

SPEED CHANGE LANE
STA. 479+35.68 TO STA. 494+11.18

* SHOULDER WIDTHS

NORTHBOUND:
VARIES 12' TO 15' STA. 475+20.00 TO STA. 477+15.33
15' STA. 478+93.19 TO STA. 479+11.00
VARIES 15' TO 12' STA. 479+11.00 TO STA. 481+31.00

SOUTHBOUND:
VARIES 12' TO 25'-2" STA. 471+00.00 TO 475+79.17
25'-2" STA. 475+79.17 TO 476+76.40
25'-2" STA. 478+30.10 TO 478+43.51
VARIES 25'-2" TO 12' STA. 478+43.51 TO 479+35.68

\# CONCRETE BARRIER LOCATIONS

NORTHBOUND:
STA. 463+49.95 TO STA. 477+52.46

SOUTHBOUND:
STA. 478+30.10 TO STA. 489+09.60

** TRANSITION SLOPE FROM 0.04 TO 0.018 IN 110'
PRIOR TO APPROACH SLAB AND FROM 0.018 TO 0.04
IN 110' AFTER APPROACH SLAB

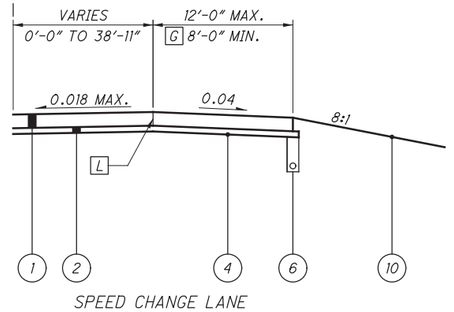

SPEED CHANGE LANE
STA. 483+00.00 TO STA. 490+97.72

G VARIES 12' TO 8' STA. 483+00.00 TO 484+00.00
8' STA. 484+00.00 TO 490+97.72

FOR LEGEND, SHEET 10

TYPICAL SECTIONS RIGID PAVEMENT - I.R. 71

FRA-71-5.29

P:\84868\roadway\sheets\84868GY005.dgn 3/27/2015 2:29:01 PM kfahy

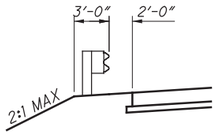

GUARDRAIL DETAIL
(LEFT)

GUARDRAIL DETAIL
(MEDIAN)
SEE PLAN VIEW FOR GUARDRAIL LOCATIONS

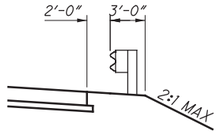

GUARDRAIL DETAIL
(RIGHT)

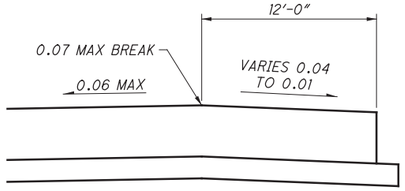

HIGH SIDE OF SUPERELEVATION
SHOULDER DETAIL
FOR PAVEMENT SLOPES OF 0.06 OR LESS

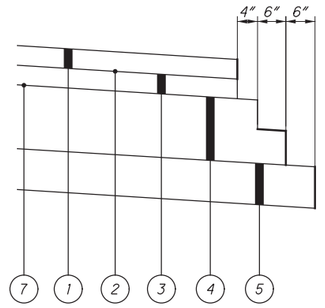

SHOULDER EDGE DETAIL
(FOR LEGEND, SEE SHEET 8)

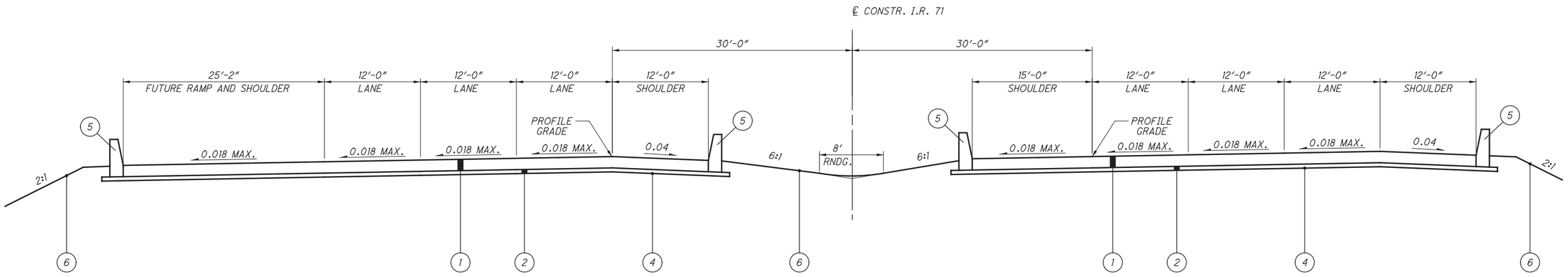

APPROACH SLAB SECTION - I.R. 71 (OVER WHITE ROAD)

NORTHBOUND: (29° 57' 17" R.F. SKEW)
STA. 477+24.52 TO STA. 477+54.44
STA. 478+71.76 TO STA. 479+01.67

SOUTHBOUND: (29° 58' 41" R.F. SKEW)
STA. 476+87.01 TO STA. 477+17.08
STA. 478+35.00 TO STA. 478+65.08

PROPOSED APPROACH SLAB LEGEND

1. ITEM 262 - REINFORCED CONCRETE APPROACH SLAB (t = 17")
2. ITEM 304 - 6" AGGREGATE BASE
3. NOT USED
4. ITEM 204 - PROOF ROLLING
5. ITEM 622 - CONCRETE BARRIER, TYPE D
6. ITEM 659 - SEEDING AND MULCHING

TYPICAL SECTION APPROACH SLABS - I.R. 71

FRA-71-5.29

P:\84868\roadway\sheets\84868GY006.dgn 3/27/2015 2:29:01 PM kfahy

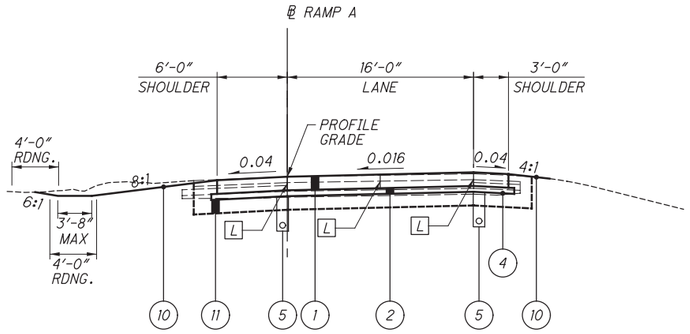

NORMAL SECTION - STRINGTOWN ROAD RAMP A

STA. 499+38.35 TO STA. 501+47.07

SEE INTERSECTION DETAILS
FOR STA. 501+47.07 TO 502+06.29

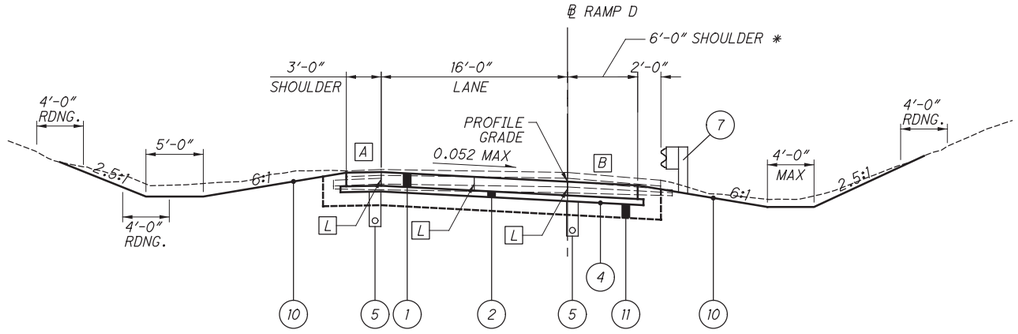

SUPERELEVATED SECTION - STRINGTOWN ROAD RAMP D

STA. 491+01.89 TO STA. 498+80.38

* VARIES 8' TO 6' STA. 491+01.89 TO 491+51.89

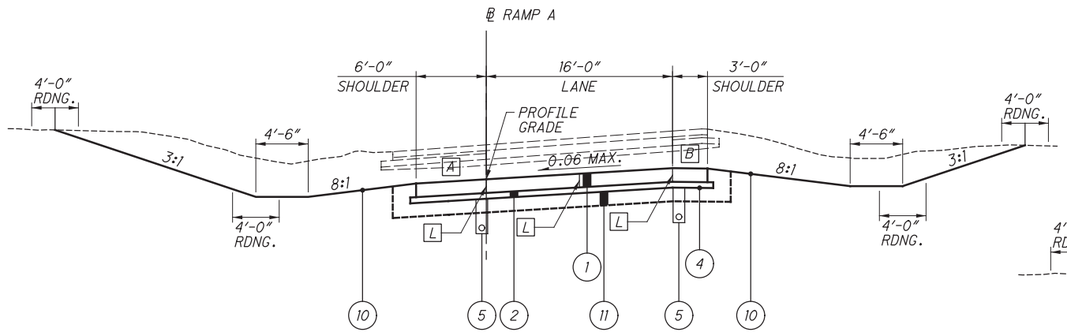

SUPERELEVATED SECTION - STRINGTOWN ROAD RAMP A

STA. 494+08.81 TO STA. 499+38.35

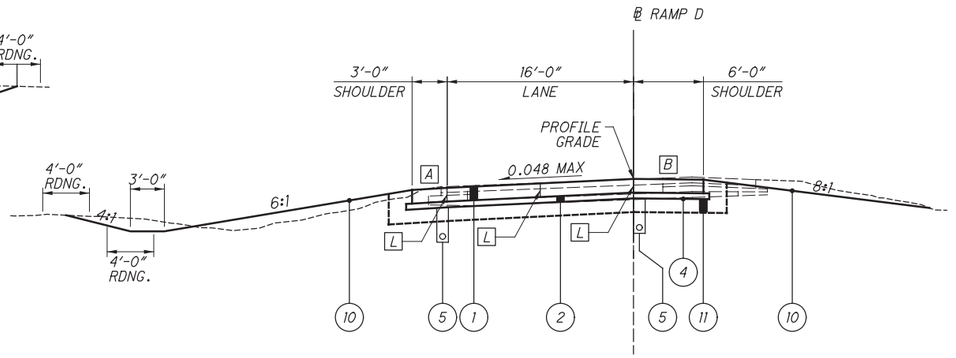

SUPERELEVATED SECTION - STRINGTOWN ROAD RAMP D

STA. 501+44.30 TO STA. 507+40.25

SEE INTERSECTION DETAILS
FOR STA. 507+40.25 TO 508+08.99

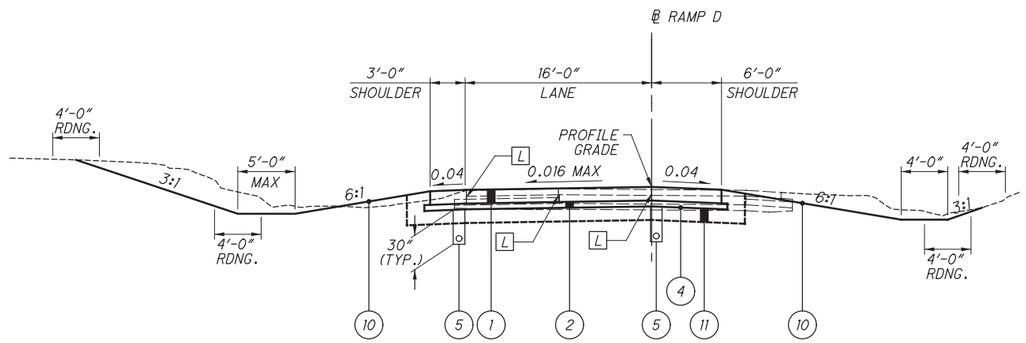

NORMAL SECTION - STRINGTOWN ROAD RAMP D

STA. 498+80.38 TO STA. 501+44.30

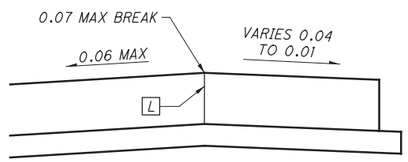

HIGH SIDE OF SUPERELEVATION
RAMP SHOULDER DETAIL

FOR PAVEMENT SLOPES OF 0.06 OR LESS

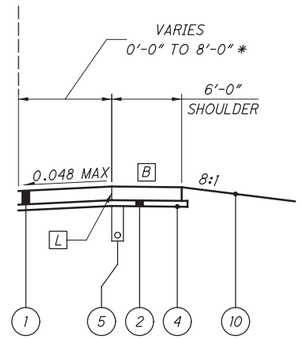

RIGHT TURN LANE

STA. 504+50.00 TO STA. 507+40.25

* VARIES 0'-0" TO 8'-0" STA. 504+50.00 TO 505+00.00
8'-0" STA. 505+00.00 TO STA. 507+40.25

L LONGITUDINAL JOINT PER SCD BP-2.1

A 0.04 OR SAME AS PAVEMENT SLOPE, WHICHEVER IS GREATER

B SEE SHOULDER DETAIL, THIS SHEET

NOTES:
1. REFER TO SCD BP-6.1 FOR PAVEMENT JOINTS AT RAMP TERMINALS.
2. FOR JOINT GUIDANCE SEE INTERSECTION DETAILS, SHEETS 450 AND 451.

FOR LEGEND SEE SHEET 10

TYPICAL SECTIONS RIGID PAVEMENT
STRINGTOWN ROAD RAMPS A & D

FRA-71-5.29

P:\84668\roadway\sheets\84668GY201.dgn 3/27/2015 2:29:02 PM kfahy

CALCULATED MJT CHECKED BAL

GENERAL NOTES

UTILITIES

LISTED BELOW ARE ALL THE UTILITIES LOCATED WITHIN THE PROJECT CONSTRUCTION LIMITS TOGETHER WITH THEIR RESPECTIVE OWNERS:

AMERICAN ELECTRIC POWER
700 MORRISON ROAD
GAHANNA, OH 43230-6642
ATTN: RICK OLESKY
614-552-1181

AT&T OHIO
111 NORTH FRONT STREET, 8TH FLOOR
COLUMBUS, OHIO 43215
ATTN: TOM ZIOMEK
(614) 223-7162

CITY OF COLUMBUS
DEPARTMENT OF UTILITIES
910 DUBLIN ROAD
COLUMBUS, OHIO 43215
ATTN: GREG DAVIES
(614) 645-8276

CITY OF GROVE CITY
3262 VENTURA BLVD.
GROVE CITY, OHIO 43123
ATTN: MIKE KELLER
614-277-3000

COLUMBIA GAS OF OHIO
3550 JOHNNY APPLESEED COURT
COLUMBUS, OH 43231
ATTN: CLAY KOENIG
614-481-1058

FRANKLIN COUNTY ENGINEER'S OFFICE
970 DUBLIN ROAD
COLUMBUS, OH 43215
ATTN: JIM JEWELL
614-525-3063

FRANKLIN TOWNSHIP
2193 FRANK ROAD
COLUMBUS, OHIO 43223
ATTN: SANDY HODGE
614-279-9411

MARATHON PIPE LINE LLC
539 S. MAIN ST. ROOM 7642
FINDLAY, OH 45840
ATTN: DAVID S. WISNER
419-421-2211
ATTN: DAN WILKIN
740-504-4703

TIME WARNER COMMUNICATIONS
3760 INTERCHANGE RD.
COLUMBUS, OH 43204
ATTN: STEPHEN RAY
614-255-6340

WIDE OPEN WEST
3675 CORPORATE DRIVE
COLUMBUS, OHIO 43231
ATTN: MARK FREY
614-948-4616

AEP - DISTRIBUTION UNDERGROUND
1 RIVERSIDE PLAZA, 12TH FLOOR
COLUMBUS, OHIO 43215
ATTN: ROY MIDDLETON
614-716-5844

AEP - AERIAL DISTRIBUTION
850 TECH CENTER DRIVE
GAHANNA, OHIO 43230
ATTN: PAUL PAXTON
614-883-6831

ODOT - TRAFFIC (DIST 6)
400 EAST WILLIAM ST
DELAWARE, OH 43015
740-833-8024

THE LOCATION OF THE UNDERGROUND UTILITIES SHOWN ON THE PLANS ARE AS OBTAINED FROM THE OWNERS AS REQUIRED BY SECTION 153.64 O.R.C.

SURVEYING PARAMETERS

PRIMARY PROJECT CONTROL MONUMENTS GOVERN ALL POSITIONING ON ODOT PROJECTS. SEE SHEET 6 FOR PROJECT CONTROL INFORMATION.

USE THE FOLLOWING PROJECT CONTROL, VERTICAL POSITIONING, AND HORIZONTAL POSITIONING PARAMETERS FOR ALL SURVEYING:

VERTICAL POSITIONING

ORTHOMETRIC HEIGHT DATUM: NAVD88
GEOID: GEOID09

HORIZONTAL POSITIONING

REFERENCE FRAME: NAD83(CORS96)
ELLIPSOID: GRS80
MAP PROJECTION: LAMBERT CONFORMAL CONIC
COORDINATE SYSTEM: OHIO STATE PLANE, SOUTH ZONE
COMBINED SCALE FACTOR: 1.0000000000
ORIGIN OF COORDINATE SYSTEM: 0,0

USE THE POSITIONING METHODS AND MONUMENT TYPE USED IN THE ORIGINAL SURVEY TO RESTORE ALL MONUMENTS RELATED TO PRIMARY PROJECT CONTROL THAT ARE DAMAGED OR DESTROYED BY CONSTRUCTION ACTIVITIES. RESTORE THE DAMAGED OR DESTROYED MONUMENTS IN ACCORDANCE WITH ITEM 623.

UNITS ARE IN U.S. SURVEY FEET.

MARATHON PIPE LINE

WHEN CONSTRUCTION ACTIVITIES ARE WITHIN FIFTY FEET (50') OF THEIR LINE, MARATHON PIPE LINE, LLC SHALL BE CONTACTED, (DAN WILKIN 740-504-4703). THERE SHALL BE NO VIBRATION ACTIVITIES WITHIN TEN FEET (10') OF THEIR LINE.

EXISTING PLANS

EXISTING PLANS ENTITLED FRA-71-3.57, FRA-71-9.03, FRA-71-9.53, FRA-62-7.29, FRA-62-07.57 MAY BE INSPECTED IN THE ODOT DISTRICT 6 OFFICE IN DELAWARE.

CLEARING AND GRUBBING

ALTHOUGH THERE ARE NO TREES OR STUMPS SPECIFICALLY MARKED FOR REMOVAL WITHIN THE LIMITS OF THE PROJECT, A LUMP SUM QUANTITY IS INCLUDED IN THE GENERAL SUMMARY FOR ITEM 201, CLEARING AND GRUBBING. ALL PROVISIONS AS SET FORTH IN THE SPECIFICATIONS UNDER THIS ITEM ARE INCLUDED IN THE LUMP SUM PRICE BID FOR ITEM 201, CLEARING AND GRUBBING.

IRON PIN REFERENCES

THE CONTRACTOR SHALL REFERENCE ALL IRON PINS AND MONUMENTS BEFORE EXCAVATING AT OR NEAR SAID IRON PINS OR MONUMENTS. IF ANY PINS OR MONUMENTS ARE DESTROYED OR DAMAGED BY THE CONTRACTOR, THEY SHALL BE ACCURATELY REPLACED BY A LICENSED SURVEYOR AT THE COMPLETION OF THE PROJECT, OR AT THE DIRECTION OF THE ENGINEER AND AT NO EXPENSE TO THE OWNER. THE COST FOR THIS WORK SHALL BE INCLUDED IN THE PRICE BID FOR VARIOUS ITEMS.

WORK LIMITS

THE WORK LIMITS SHOWN ON THESE PLANS ARE FOR PHYSICAL CONSTRUCTION ONLY. PROVIDE THE INSTALLATION AND OPERATION OF ALL WORK ZONE TRAFFIC CONTROL AND WORK ZONE TRAFFIC CONTROL DEVICES REQUIRED BY THESE PLANS WHETHER INSIDE OR OUTSIDE THESE WORK LIMITS.

CROSSINGS AND CONNECTIONS TO EXISTING PIPES AND UTILITIES

WHERE PLANS PROVIDE FOR A PROPOSED CONDUIT TO BE CONNECTED TO, OR CROSS OVER OR UNDER AN EXISTING SEWER OR UNDERGROUND UTILITY, THE CONTRACTOR SHALL LOCATE THE EXISTING PIPES OR UTILITIES BOTH AS TO LINE AND GRADE BEFORE STARTING TO LAY THE PROPOSED CONDUIT.

IF IT IS DETERMINED THAT THE ELEVATION OF THE EXISTING CONDUIT, OR EXISTING APPURTENANCE TO BE CONNECTED, DIFFERS FROM THE PLAN ELEVATION OR RESULTS IN A CHANGE IN THE PLAN CONDUIT SLOPE, THE ENGINEER SHALL BE NOTIFIED BEFORE STARTING CONSTRUCTION OF ANY PORTION OF THE PROPOSED CONDUIT WHICH WILL BE AFFECTED BY THE VARIANCE IN THE EXISTING ELEVATIONS.

IF IT IS DETERMINED THAT THE PROPOSED CONDUIT WILL INTERSECT AN EXISTING SEWER OR UNDERGROUND UTILITY IF CONSTRUCTED AS SHOWN ON THE PLAN, THE ENGINEER SHALL BE NOTIFIED BEFORE STARTING CONSTRUCTION OF ANY PORTION OF THE PROPOSED CONDUIT WHICH WOULD BE AFFECTED BY THE INTERFERENCE WITH AN EXISTING FACILITY.

PAYMENT FOR ALL THE OPERATIONS DESCRIBED ABOVE SHALL BE INCLUDED IN THE CONTRACT PRICE FOR THE PERTINENT 611 CONDUIT ITEM.

FARM DRAINS

ALL FARM DRAINS, WHICH ARE ENCOUNTERED DURING CONSTRUCTION, SHALL BE PROVIDED WITH UNOBSTRUCTED OUTLETS. EXISTING COLLECTORS WHICH ARE LOCATED BELOW THE ROADWAY DITCH ELEVATIONS, AND WHICH CROSS THE ROADWAY, SHALL BE REPLACED WITHIN THE (RIGHT OF WAY) (CONSTRUCTION) LIMITS BY ITEM 611 CONDUIT, TYPE B, ONE COMMERCIAL SIZE LARGER THAN THE EXISTING CONDUIT.

EXISTING COLLECTORS AND ISOLATED FARM DRAINS, WHICH ARE ENCOUNTERED ABOVE THE ELEVATION OF ROADWAY DITCHES, SHALL BE OUTLETTED INTO THE ROADWAY DITCH BY 611 TYPE F CONDUIT. THE OPTIMUM OUTLET ELEVATION SHALL BE ONE FOOT ABOVE THE FLOWLINE ELEVATION OF THE DITCH. LATERAL FIELD TILES WHICH CROSS THE ROADWAY SHALL BE INTERCEPTED BY 611, TYPE E CONDUIT, AND CARRIED IN A LONGITUDINAL DIRECTION TO AN ADEQUATE OUTLET OR ROADWAY CROSSING.

THE LOCATION, TYPE, SIZE AND GRADE OF REPLACEMENTS SHALL BE DETERMINED BY THE ENGINEER AND PAYMENT SHALL BE MADE ON FINAL MEASUREMENTS.

EROSION CONTROL PADS AND ANIMAL GUARDS SHALL BE PROVIDED AT THE OUTLET END OF ALL FARM DRAINS AS PER STANDARD CONSTRUCTION DRAWING DM-1.1, EXCEPT WHEN THEY OUTLET INTO A DRAINAGE STRUCTURE. PAYMENT FOR THE EROSION CONTROL PADS AND ANIMAL GUARDS AND ANY NECESSARY BENDS OR BRANCHES SHALL BE INCLUDED FOR PAYMENT IN THE PERTINENT CONDUIT ITEMS.

THE FOLLOWING ESTIMATED QUANTITIES HAVE BEEN INCLUDED IN THE GENERAL SUMMARY FOR THE WORK NOTED ABOVE:

611 6" CONDUIT, TYPE B 300 FT.

611 6" CONDUIT, TYPE E 300 FT.

611 6" CONDUIT, TYPE F 300 FT.

601 ROCK CHANNEL PROTECTION TYPE C WITH FILTER 5 CU. YD.

SPRING DRAINS

THE FOLLOWING ESTIMATED QUANTITIES HAVE BEEN CARRIED TO THE GENERAL SUMMARY FOR USE AS DIRECTED BY THE ENGINEER FOR DRAINING ANY SPRINGS SHOWN IN THE PLAN OR ENCOUNTERED DURING CONSTRUCTION. THE FOLLOWING TYPES OF PIPES MAY BE USED: 707.33, 707.41, 707.42 or 707.45 PERFORATED PER 707.31.

SPRING DRAINS SHALL BE CONSTRUCTED AS SHOWN ON STANDARD CONSTRUCTION DRAWING DM-1.1 AND PAID FOR AT THE CONTRACT PRICE FOR:

605, 6" UNCLASSIFIED PIPE UNDERDRAINS FOR SPRINGS 200 FT.

605, AGGREGATE DRAINS FOR SPRINGS 200 FT.

611, PRECAST REINFORCED CONCRETE OUTLET 10 EACH

REVIEW OF DRAINAGE FACILITIES

BEFORE ANY WORK IS STARTED ON THE PROJECT AND AGAIN BEFORE FINAL ACCEPTANCE BY THE STATE, REPRESENTATIVES OF THE STATE AND THE CONTRACTOR, ALONG WITH LOCAL REPRESENTATIVES, SHALL MAKE AN INSPECTION OF ALL EXISTING SEWERS WHICH ARE TO REMAIN IN SERVICE AND WHICH MAY BE AFFECTED BY THE WORK. THE CONDITION OF THE EXISTING CONDUITS AND THEIR APPURTENANCE SHALL BE DETERMINED FROM FIELD OBSERVATIONS. RECORDS OF THE INSPECTION SHALL BE KEPT IN WRITING BY THE STATE.

ALL NEW CONDUITS, INLETS, CATCH BASINS, AND MANHOLES CONSTRUCTED AS A PART OF THE PROJECT SHALL BE FREE OF ALL FOREIGN MATTER AND IN A CLEAN CONDITION BEFORE THE PROJECT WILL BE ACCEPTED BY THE STATE.

ALL EXISTING SEWERS INSPECTED INITIALLY BY THE ABOVE MENTIONED PARTIES SHALL BE MAINTAINED AND LEFT IN A CONDITION REASONABLY COMPARABLE TO THAT DETERMINED BY THE ORIGINAL INSPECTION. ANY CHANGE IN THE CONDITION RESULTING FROM THE CONTRACTOR'S OPERATIONS SHALL BE CORRECTED BY THE CONTRACTOR TO THE SATISFACTION OF THE ENGINEER.

PAYMENT FOR ALL OPERATIONS DESCRIBED ABOVE SHALL BE INCLUDED IN THE CONTRACT PRICE FOR THE PERTINENT 611 CONDUIT ITEMS.

POST CONSTRUCTION STORM WATER TREATMENT

THIS PLAN UTILIZES STRUCTURAL BEST MANAGEMENT PRACTICES (BMP'S) FOR POST CONSTRUCTION STORM WATER TREATMENT.

ITEM SPECIAL - PIPE CLEANOUT, OVER 48"

THIS WORK SHALL CONSIST OF REMOVING SEDIMENT AND DEBRIS FROM THE EXISTING DRAINAGE CONDUITS SPECIFIED IN THE PLANS. ALL MATERIAL REMOVED SHALL BE DISPOSED OF AS PER 105.16 AND 105.17. ALL SEWERS SHALL BE CLEANED OUT TO THE SATISFACTION OF THE ENGINEER.

CLEANOUT OF THE PIPE SHALL BE PAID FOR AT THE UNIT PRICE BID FOR ITEM SPECIAL - PIPE CLEANOUT, OVER 48". THIS PRICE SHALL INCLUDE THE COST FOR MATERIAL, EQUIPMENT, LABOR, AND ALL INCIDENTALS REQUIRED TO COMPLETE THE CLEANOUT.

THE FOLLOWING ESTIMATED QUANTITIES HAVE BEEN INCLUDED IN THE GENERAL SUMMARY FOR THE ABOVE NOTED WORK:

SPECIAL - PIPE CLEANOUT, OVER 48" 244 FT.

FRA-71-5.29

P:\84868\roadway\sheets\84868GN001.dgn 5/5/2015 8:51:13 AM mtakacs

SEEDING AND MULCHING

THE FOLLOWING QUANTITIES ARE PROVIDED TO PROMOTE GROWTH AND CARE OF PERMANENT SEEDED AREAS:

659, SOIL ANALYSIS TEST 3 EACH

659, TOPSOIL 22,729 CU. YD.

659, SEEDING AND MULCHING 204,761 SQ. YD.

659, REPAIR SEEDING AND MULCHING 10,239 SQ. YD

659, INTER-SEEDING 10,239 SQ. YD.

659, COMMERCIAL FERTILIZER 28.56 TON

659, LIME 42.31 ACRES

659, WATER 1,134 M. GAL.

659, MOWING 461 M. SQ. FT.

SEEDING AND MULCHING SHALL BE APPLIED TO ALL AREAS OF EXPOSED SOIL BETWEEN THE RIGHT-OF-WAY LINES, AND WITHIN THE CONSTRUCTION LIMITS FOR AREAS OUTSIDE THE RIGHT-OF-WAY LINES COVERED BY WORK AGREEMENT OR SLOPE EASEMENT. QUANTITY CALCULATIONS FOR SEEDING AND MULCHING ARE BASED ON THESE LIMITS.

GENERAL MAINTENANCE OF TRAFFIC DURING CONSTRUCTION

THE CONTRACTOR SHALL ADVISE THE ODOT DISTRICT 6 OFFICE A MINIMUM OF FOURTEEN (14) DAYS PRIOR TO THE FOLLOWING: THE START OF CONSTRUCTION ACTIVITIES, LANE CLOSURES, AND ROAD CLOSURES. THIS INFORMATION WILL BE PROVIDED TO THE DISTRICT 6 PUBLIC INFORMATION OFFICER (PIO) AT (740) 833-8063. THE PIO WILL, IN TURN, NOTIFY THE PUBLIC, THE LOCAL EMERGENCY SERVICES, AFFECTED SCHOOLS AND BUSINESSES, AND ANY OTHER IMPACTED LOCAL PUBLIC AGENCY OF ANY OF THE ABOVE MENTIONED ITEMS, VIA MEDIA SOURCES.

PUBLIC INVOLVEMENT

TO BE DETERMINED.

PERMITS, WATERWAY PERMITS

TO BE DETERMINED.

PERMITS, STORM WATER PERMITS

THE PROJECT IS LIKELY TO BE COVERED BY A NPDES GENERAL PERMIT. THE PERMIT WILL BE OBTAINED BY ODOT PRIOR TO CONSTRUCTION. THE PERMIT SPECIAL PROVISIONS SHALL BE ADHERED TO AND AND INCLUDED IN THE PROJECT PLANS.

CONSTRUCTION NOISE

ACTIVITIES AND LAND USE ADJACENT TO THIS PROJECT MAY BE AFFECTED BY CONSTRUCTION NOISE. IN ORDER TO MINIMIZE ANY ADVERSE CONSTRUCTION NOISE IMPACTS, DO NOT OPERATE AT ANY TIME ANY DEVICE IN SUCH A MANNER THAT THE NOISE CREATED SUBSTANTIALLY EXCEEDS THE NOISE CUSTOMARILY AND NECESSARILY ATTENDANT TO THE REASONABLE AND EFFICIENT PERFORMANCE OF SUCH EQUIPMENT.

ITEM 843 - PATCHING CONCRETE STRUCTURES WITH TROWELABLE MORTAR, AS PER PLAN

THIS ITEM SHALL CONSIST OF PATCHING THE INSIDE OF EXISTING CONCRETE PIPE CULVERTS AS PER SUPPLEMENTAL SPECIFICATION 843 WITH THE FOLLOWING ADDITIONS. THE CONTRACTOR SHALL DE-WATER THE AREA TO BE PATCHED TO PRODUCE A DRY SURFACE TO MATCH THE MANUFACTURERS RECOMMENDATIONS.

THE EXACT LIMITS OF AREAS TO BE PATCHED SHALL BE AS DIRECTED BY THE ENGINEER. THE PLANS INCLUDE LOCATIONS AND ESTIMATED QUANTITIES ON SHEETS 453,454,455,463, AND 464 FOR THE WORK DESCRIBED ABOVE TO BE USED AS DIRECTED BY THE ENGINEER.

ITEM 203 - ROADWAY MISC.: VERTICAL CLEARANCE MEASUREMENT

AFTER ALL CONSTRUCTION HAS BEEN COMPLETED, A REGISTERED SURVEYOR WILL TAKE VERTICAL CLEARANCE MEASUREMENTS AT LOCATIONS INDICATED ON THE APPROVED ODOT FORM (AVAILABLE IN THE DISTRICT 6 STRUCTURES AND PAVEMENT OFFICE). THE FINAL MEASUREMENTS SHALL BE RECORDED ON THE FORM AND SUBMITTED TO THE PROJECT ENGINEER AND THE DISTRICT 6 STRUCTURES AND PAVEMENT ENGINEER. THE RECORD SHALL BEAR THE SEAL OF THE LICENSED SURVEYOR WHO HAS TAKEN THE MEASUREMENTS. THIS WORK SHALL BE PERFORMED AT THE FOLLOWING STRUCTURES:

FRA-665-0887 S.R. 665 OVER I.R. 71
FRA-71-0768 HOOVER ROAD OVER I.R. 71
FRA-71-0903 L&R I.R. 71 OVER C.R. 134 (WHITE ROAD)
FRA-71-0953 C.R. 135 (STRINGTOWN ROAD) OVER I.R. 71

THE FOLLOWING QUANTITY HAS BEEN CARRIED TO THE GENERAL SUMMARY: ITEM 203 - ROADWAY MISC.: VERTICAL CLEARANCE MEASUREMENT, 5 EACH

BENCHING OF FOUNDATION SLOPES

ALTHOUGH CROSS-SECTIONS INDICATE SPECIFIC DIMENSIONS FOR PROPOSED BENCHING OF THE EMBANKMENT FOUNDATIONS IN CERTAIN AREAS, NO WAIVER OF THE SPECIFICATIONS IS INTENDED. BENCH ALL OTHER SLOPED EMBANKMENT AREAS AS SET FORTH IN 203.05. NO ADDITIONAL PAYMENT WILL BE MADE FOR BENCHING REQUIRED UNDER THE PROVISIONS OF 203.05.

ROUNDING

THE ROUNDING AT SLOPE BREAKPOINTS SHOWN ON THE TYPICAL SECTIONS APPLIES TO ALL CROSS-SECTIONS EVEN THOUGH OTHERWISE SHOWN.

ITEM 606 - CABLE GUARDRAIL

THIS ITEM SHALL CONSIST OF FURNISHING AND INSTALLING ANY ONE OF THE HIGH TENSION FOUR CABLE GUARDRAIL SYSTEMS AS LISTED ON THE OFFICE OF ROADWAY ENGINEERING'S WEB PAGE. PAYMENT FOR THE ABOVE WORK SHALL BE MADE AT THE UNIT PRICE BID FOR ITEM 606, GUARDRAIL, MISC., TENSIONED CABLE WITH CONCRETE FOUNDATION LINE POSTS (SOCKETED), AND ITEM 606, GUARDRAIL, MISC. TENSIONED CABLE ANCHOR TERMININAL AND SHALL INCLUDE ALL LABOR, TOOLS, EQUIPMENT AND MATERIALS NECESSARY TO CONSTRUCT A COMPLETE AND FUNCTIONAL HIGH TENSION CABLE GUARDRAIL SYSTEM NOT SEPARATELY SPECIFIED, AS REQUIRED BY THE MANUFACTURER.

INSTALLATION SHALL BE AT THE LOCATIONS SPECIFIED IN THE PLANS, IN ACCORDANCE WITH THE MANUFACTURER'S SPECIFICATIONS.

SYSTEMS SHALL HAVE A MAXIMUM DEFLECTION OF 8 FEET AND THE MAXIMUM LONGITUDINAL DISTANCE BETWEEN POSTS SHALL BE 15 FEET.

INSTALLATION WILL BE A FOUR CABLE HIGH TENSION SYSTEM INSTALLED IN SOCKETED POSTS FOUNDATION WITH A FOUR FOOT WIDE "NO MOW STRIP".

CONTRACTOR SHALL PROVIDE DELINEATORS ON THE POSTS AT A MINIMUM INTERVAL OF 100 FEET AND ON ALL ANCHOR TERMINALS.

TRANSITIONS TO W-BEAM GUARDRAIL ARE NOT ALLOWED.

REFER TO MANUFACURER FOR MAXIMUM OFFSET FROM BREAK POINT.

TORPEDO OR BULLET SPLICES ARE NOT ALLOWED. ALL CABLE SPLICES SHALL BE A SWAGED OR OPEN BODY DESIGN THAT ALLOWS FOR ANNUAL INSPECTION BETWEEN THE WEDGE AND STRANDS OF CABLE.

POSTS ARE SET IN SOCKETED CONCRETE FOUNDATIONS AND SHALL NOT BE PERMANENTLY INSTALLED UNTIL THEIR RESPECTIVE RUNS OF TENSIONED CABLE GUARDRAIL ARE READY FOR FINAL CONNECTION TO THE END TERMINAL ASSEMBLY. THE CONTRACTOR SHALL REPLACE ANY POSTS DAMAGED DURING INSTALLATION AS DETERMINED BY THE ENGINEER AT NO ADDITIONAL COST TO THE STATE.

ITEM 606 - IMPACT ATTENUATOR, TYPE 1 (UNIDIRECTIONAL OR BIDIRECTIONAL)

THIS ITEM SHALL CONSIST OF FURNISHING AND INSTALLING ANY ONE OF THE TYPE 1 IMPACT ATTENUATORS AS LISTED ON THE OFFICE OF ROADWAY ENGINEERING'S WEB PAGE. INSTALLATION SHALL BE AT THE LOCATIONS SPECIFIED IN THE PLANS, IN ACCORDANCE WITH THE MANUFACTURER'S SPECIFICATIONS.

THE FACE OF THE TYPE 1 IMPACT HEAD SHALL BE COVERED WITH A SHEET OF TYPE G REFLECTIVE SHEETING, PER CMS 730.19. PAYMENT FOR THE ABOVE WORK SHALL BE MADE AT THE UNIT PRICE BID FOR ITEM 606, IMPACT ATTENUATOR, TYPE 1 [(UNIDIRECTIONAL OR BIDIRECTIONAL)], EACH, AND SHALL INCLUDE ALL LABOR, TOOLS, EQUIPMENT AND MATERIALS NECESSARY TO CONSTRUCT A COMPLETE AND FUNCTIONAL IMPACT ATTENUATOR SYSTEM, INCLUDING ALL RELATED TRANSITIONS, HARDWARE, REFLECTIVE SHEETING AND GRADING, NOT SEPARATELY SPECIFIED, AS REQUIRED BY THE MANUFACTURER.

ITEM 606 - ANCHOR ASSEMBLY, MGS TYPE B

THIS ITEM SHALL CONSIST OF FURNISHING AND INSTALLING ANY OF THE GUARDRAIL END TERMINALS FOR TYPE MGS GUARDRAIL AS LISTED ON ROADWAY ENGINEERING'S WEB PAGE UNDER ROADSIDE SAFETY DEVICES FOR APPROVED GUARDRAIL END TREATMENTS. INSTALLATION SHALL BE AT THE LOCATIONS SPECIFIED IN THE PLANS, IN ACCORDANCE WITH THE MANUFACTURER'S SPECIFICATIONS.

REFER TO THE MANUFACTURER'S INSTRUCTIONS REGARDING THE INSTALLATION OF, AND THE GRADING AROUND, THE FOUNDATION TUBES AND GROUND STRUT. THE TOP OF ANY FOUNDATION TUBE SHOULD BE LESS THAN 4 INCHES ABOVE THE GROUND. THE PLACEMENT OF THE FOUNDATION TUBES SHOULD BE AN APPROPRIATE DEPTH BELOW THE LEVEL LINE IN ORDER TO MAINTAIN THE FINISHED GUARDRAIL HEIGHT OF 31 INCHES FROM THE EDGE OF THE SHOULDER.

ON-SITE GRADING IS REQUIRED IF THE TOP OF THE FOUNDATION TUBES OR TOP OF THE GROUND STRUT DOES PROJECT MORE THAN 4 INCHES ABOVE THE GROUND LINE.

THE FACE OF THE TYPE B IMPACT HEAD SHALL BE COVERED WITH TYPE G REFLECTIVE SHEETING, PER CMS 730.19.

PAYMENT FOR THE ABOVE WORK SHALL BE MADE AT THE UNIT PRICE BID FOR ITEM 606, ANCHOR ASSEMBLY, MGS TYPE B, EACH, AND SHALL INCLUDE ALL LABOR, TOOLS, EQUIPMENT AND MATERIALS NECESSARY TO CONSTRUCT A COMPLETE AND FUNCTIONAL ANCHOR ASSEMBLY SYSTEM, INCLUDING REFLECTIVE SHEETING AND ALL RELATED HARDWARE, GRADING, EMBANKMENT AND EXCAVATION NOT SEPARATELY SPECIFIED, AS REQUIRED BY THE MANUFACTURER.

ITEM 606 - ANCHOR ASSEMBLY, MGS TYPE E

THIS ITEM SHALL CONSIST OF FURNISHING AND INSTALLING ANY OF THE GUARDRAIL END TERMINALS FOR TYPE MGS GUARDRAIL AS LISTED ON ROADWAY ENGINEERING'S WEB PAGE UNDER ROADSIDE SAFETY DEVICES FOR APPROVED GUARDRAIL END TREATMENTS. INSTALLATION SHALL BE AT THE LOCATIONS SPECIFIED IN THE PLANS, IN ACCORDANCE WITH THE MANUFACTURER'S SPECIFICATIONS.

THE FACE OF THE TYPE E IMPACT HEAD SHALL BE COVERED WITH A SHEET OF TYPE G REFLECTIVE SHEETING, PER CMS 730.19.

REFER TO THE MANUFACTURER'S INSTRUCTIONS REGARDING THE INSTALLATION OF, AND THE GRADING AROUND THE FOUNDATION TUBES AND GROUND STRUT. THE TOP OF ANY FOUNDATION TUBE SHOULD BE LESS THAN 4 INCHES ABOVE THE GROUND. THE PLACEMENT OF THE FOUNDATION TUBES SHOULD BE AN APPROPRIATE DEPTH BELOW THE LEVEL LINE IN ORDER TO MAINTAIN THE FINISHED GUARDRAIL HEIGHT OF 31 INCHES FROM THE EDGE OF THE SHOULDER.

ON-SITE GRADING IS REQUIRED IF THE TOP OF THE FOUNDATION TUBES OR TOP OF THE GROUND STRUT DOES PROJECT MORE THAN 4 INCHES ABOVE THE GROUND LINE.

PAYMENT FOR THE ABOVE WORK SHALL BE MADE AT THE UNIT PRICE BID FOR ITEM 606, ANCHOR ASSEMBLY, MGS TYPE E, EACH, AND SHALL INCLUDE ALL LABOR, TOOLS, EQUIPMENT AND MATERIALS NECESSARY TO CONSTRUCT A COMPLETE AND FUNCTIONAL ANCHOR ASSEMBLY SYSTEM, INCLUDING ALL RELATED TRANSITIONS, REFLECTIVE SHEETING, HARDWARE, GRADING, EMBANKMENT AND EXCAVATION NOT SEPARATELY SPECIFIED, AS REQUIRED BY THE MANUFACTURER.

CALCULATED MJT
CHECKED BAL

GENERAL NOTES

FRA-71-5.29

P:\84868\roadway\sheets\84868GN002.dgn 3/27/2015 2:29:03 PM kfahy

ITEM SPECIAL MISC.: NOISE BARRIER - REFLECTIVE

THE NOISE BARRIERS SHALL BE CONSTRUCTED EARLY IN THE CONSTRUCTION PHASING OF THE PROJECT. THE CONTRACTOR SHALL COORDINATE WITH ODOT ON THE SCHEDULE OF CONSTRUCTING THE NOISE BARRIERS.

GENERAL

1. NOISE BARRIER PANELS, POSTS, AND CAPS SHALL BE CONCRETE.
2. NOISE BARRIER POSTS AND CAPS SHALL HAVE A SMOOTH FINISH.
3. ALL NOISE BARRIER POSTS AND CAPS SHALL HAVE A CLEAR SEALER APPLED PER ITEM 512 OF THE C.M.S.
4. ALL POSTS SHALL HAVE A ¾" RUSTICATION GROOVE NOT THE ½" GROOVE PER STANDARD CONSTRUCTION DRAWING NBS-1-09. THE RUSTICATION GROOVE SHALL MEET THE TOP OF THE HIGHEST ADJACENT PANEL.
5. ALL NOISE BARRIER PANELS SHALL BE REFLECTIVE ON BOTH SIDES.
6. ALL NOISE BARRIER PANELS, SHALL BE PAINTED ON BOTH SIDES THE FOLLOWING COLORS:
   RESIDENTIAL SIDE:
   NS-4, DARK NEUTRAL (TAN) #595B-10324
   NS-5 & NS-6, LIGHT GREY #595B-16515
   NS-7 & NS-9, DARK NEUTRAL (TAN) #595B-10324
   HIGHWAY SIDE:
   NS-4,NS-5,NS-6,NS-7 AND NS-9 LIGHT GREY #595B-16515
7. NOISE BARRIER PANEL TEXTURES SHALL BE ON BOTH SIDES FOR THE FOLLOWING WALLS:
   RESIDENTIAL SIDE:
   NS-4, ASHLAR, POLYMER ID, 905 SMALL AGED ASHLAR.
   NS-5 & NS-6, DRY STACK, POLYMER ID, 9110 LARGE STONE OHIO DRY STACK.
   NS-7 & NS-9, FIELDSTONE, POLYMER ID, 912 VALLEY FORGE FIELDSTONE.
   HIGHWAY SIDE:
   NS-4,NS-5,NS-6,NS-7 & NS-9 DRY STACK, POLYMER ID, 9110 LARGE STONE OHIO DRY STACK.
8. THE BACK SIDE (NON-TRAFFIC SIDE) OF THE CONCRETE PANELS AND POSTS SHALL BE COATED WITH THE APPROVED GRAFFITI GUARD SYSTEM.
9. THE NOISE BARRIER SHOP DRAWING SUBMITTAL MUST INCLUDE THE ACOUSTICAL PROFILE AND LINE OF SIGHT SHOWN IN THESE PLANS ON EACH PROFILE VIEW.
10. FOR PANEL LENGTH DEDUCTIONS FOR NOISE BARRIER POSTS SEE STANDARD CONSTRUCTION DRAWING NBS-1-09.

SAMPLE BARRIER PANEL

ONE SAMPLE OF A CONCRETE BARRIER PANEL AND POST WITH CAPS SHALL BE DELIVERED TO A LOCATION DESIGNATED BY THE ENGINEER FOR EVALUATION BY THE ENGINEER IN ACCORDANCE WITH THE ACCEPTANCE REQUIREMENTS OF THE NOISE BARRIER AS OUTLINED ON SHEET 2/13 IN THE STANDARD CONSTRUCTION DRAWING NBS-1-09.

SITE GRADING

THE CONTRACTOR SHALL PROVIDE THE FINISHED GRADES AS SHOWN IN THE PLANS. SPOILS GENERATED FROM THE DRILLED SHAFT CONSTRUCTION MAY BE WASTED ON SITE ONLY AS DIRECTED BY THE ENGINEER.

PAYMENT

IN ADDITION TO THE REQUIREMENTS OF STANDARD CONSTRUCTION DRAWING NBS-1-09, ALL OF THE ABOVE REQUIREMENT SHALL BE INCLUDED IN THE UNIT PRICE BID FOR ITEM SPECIAL - NOISE BARRIER (REFLECTIVE).

UNDERDRAIN ELEVATIONS

THE UNDERDRAIN ELEVATIONS SHOWN ON THE UNDERDRAIN SUBSUMMARY SHEETS ARE CALCULATED BASED ON THE ASPHALT CONCRETE PAVEMENT OPTION "A". THE CONTRACTOR SHALL MAKE THE NECESSARY ADJUSTMENTS TO THE ELEVATIONS IF THE CONCRETE PAVEMENT OPTION "B" IS CHOSEN.

PROTECTION OF RIGHT-OF-WAY LANDSCAPING

PRIOR TO BEGINNING WORK, THE CONTRACTOR, THE PROJECT ENGINEER, AND A REPRESENTATIVE OF THE MAINTAINING AGENCY WILL REVIEW AND RECORD ALL LANDSCAPING ITEMS WITHIN THE RIGHT OF WAY (BOTH WITHIN AND OUTSIDE THE CONSTRUCTION LIMITS) A RECORD OF THIS REVIEW WILL BE KEPT IN THE PROJECT ENGINEER'S FILES. PRIOR TO FINAL ACCEPTANCE, A FINAL REVIEW OF LANDSCAPING ITEMS WILL BE MADE.

CONSTRICT ALL ACTIVITIES, EQUIPMENT STORAGE, AND STAGING TO WITHIN THE CONSTRUCTION LIMITS. UNLESS OTHERWISE IDENTIFIED IN THE PLANS OR PROPOSAL, THE CONSTRUCTION LIMITS ARE IDENTIFIED AS 30 FEET FROM THE EDGE OF PAVEMENT.

SUBMIT A WRITTEN REQUEST TO THE PROJECT ENGINEER TO USE ANY AREA OUTSIDE THESE LIMITS. THE DOCUMENT SUBMITTED MUST CLEARLY IDENTIFY THE AREA AND EXPLAIN THE PROPOSED USE AND RESTORATION OF THE AREA. USE OF THESE AREAS FOR DISPOSAL OF WASTE MATERIAL AND CONSTRUCTION DEBRIS, EXCAVATION OF BORROW MATERIAL AND PLACEMENT OF PORTABLE PLANTS IS PROHIBITED. THE THE REQUEST MUST BE APPROVED, IN WRITING, BEFORE THE CONTRACTOR HAS PERMISSION TO USE THE AREA.

ANY ITEMS DAMAGED BEYOND THE CONSTRUCTION LIMITS AS DEFINED ABOVE WILL BE REPLACED IN KIND OR AS APPROVED BY THE PROJECT ENGINEER.

CONTRACTION AND/OR EXPANSION JOINTS

ALTHOUGH SPECIFIC LOCATIONS OF CERTAIN CONTRACTION AND EXPANSION JOINTS HAVE BEEN DETAILED ON THIS PLAN, NO WAIVER OF THE SPECIFICATIONS IS INTENDED. IN ALL CASES, THE PROVISION OF EXPANSION JOINTS AT ALL MAJOR STRUCTURES INCLUDING THE MAXIMUM SPACING BETWEEN CONTRACTION JOINTS IS IN ACCORDANCE WITH STANDARD CONSTRUCTION DRAWING BP-2.2 AND THE SPECIFICATIONS.

CONTRACTION JOINTS IN CONCRETE PAVEMENT OR BASE WIDENING

WHERE NEW CONCRETE IS PLACED ADJACENT TO EXISTING CONCRETE, PROVIDE CONTRACTION JOINTS IN THE NEW CONCRETE TO FORM CONTINUOUS JOINTS WITH THOSE IN THE EXISTING CONCRETE.

THE MAXIMUM DISTANCE BETWEEN THE JOINTS IN THE NEW CONCRETE ARE IN ACCORDANCE WITH STANDARD CONSTRUCTION DRAWING BP-2.2, IF NECESSARY, ADDITIONAL JOINTS MAY BE PROVIDED IN THE NEW CONCRETE AT APPROXIMATELY EQUAL INTERVALS BETWEEN EXISTING JOINTS THAT EXCEED THE MAXIMUM SPACING.

PART WIDTH CONSTRUCTION (ASPHALT CONCRETE)

BECAUSE OF THE NECESSITY TO BUILD THIS PROJECT UNDER TRAFFIC AND TO CONSTRUCT THE FULL PAVEMENT WIDTH IN STAGES, EXERCISE CARE TO PREVENT THE CONSTRUCTION OF A BUTT JOINT IN THE BASE COURSES. LAP LONGITUDINAL JOINTS AS SHOWN ON STANDARD CONSTRUCTION DRAWING BP-3.1.

ENVIRONMENTAL COMMITMENTS

ALL PLAN NOTES AND COMMITMENTS OBTAINED DURING THE ENVIRONMENTAL DOCMENT CLEARANCE PROCESS WILL BE ADDRESSED IN THE BID DOCUMENTS.

NOTIFICATION OF CONSTRUCTION INITIATION

AT LEAST FOURTEEN DAYS PRIOR TO STARTING INITIAL CONSTRUCTION ACTIVITIES, LANE CLOSURES AND/OR ROAD CLOSURES, THE CONTRACTOR SHALL ADVISE THE DISTRICT OFFICE OF COMMUNICATIONS VIA EMAIL AT d06.pio@dot.state.oh.us, THE DISTRICT WORK ZONE TRAFFIC MANAGER VIA EMAIL AT d06.mot@dot.state.oh.us AND THE CENTRAL OFFICE SPECIAL HAUL PERMITS SECTION BY FAX AT (614) 728-4099 OF THE ANTICIPATED START DATE OF ANY CONSTRUCTION ACTIVITIES INCLUDING BUT NOT LIMITED TO THE PLACING OF WORK ZONE SIGNS. THE NOTIFICATION SHALL ALSO INCLUDE THE PROJECT NUMBER, PID, NAME AND PHONE NUMBER OF THE CONTRACTOR, A POINT OF CONTACT AND THE ANTICIPATED IMPACT ON TRAFFIC. THE CONTRACTOR WILL IMMEDIATELY INFORM THE DISTRICT OFFICE OF COMMUNICATIONS AND THE DISTRICT WORK ZONE TRAFFIC MANAGER OF ANY AND ALL DELAYS AND/OR CHANGES REGARDING THE CONSTRUCTION INITIATION DATE.

WATERWAY PERMIT CONDITIONS

ALL CONDITIONS OF THE WATERWAY PERMIT SHALL BE ADHERED TO DURING CONSTRUCTION. A COPY OF THE PERMIT IS TO BE KEPT AT THE WORK SITE AT ALL TIMES.

HAZARDOUS WASTE DOCUMENT

ALL CONDITIONS OF THE APPROVED HAZARDOUS WASTE DOCUMENT SHALL BE IMPLEMENTED PRIOR TO/DURING/AFTER CONSTRUCTION. A COPY OF THE PERMIT IS TO BE KEPT AT THE WORK SITE AT ALL TIMES.

UNRECORDED UNTREATED NON-STORMWATER DRAINAGE

FURNISH NO CONTINUANCE FOR ANY UNRECORDED UNTREATED NON-STORMWATER DRAINAGE SUCH AS UNTREATED SEPTIC, UNTREATED WASTEWATER, UNTREATED CURTAIN/GRADIENT DRAINS, AND UNTREATED FOUNDATION FLOOR DRAINS DISTURBED BY THE WORK. PLUG ANY UNRECORDED UNTREATED NON-STORMWATER DRAINAGE WITH CLASS C CONCRETE AT THE RIGHT OF WAY LINE. PAYMENT FOR PLUGGING SHALL BE INCLUDED IN THE CONTRACT PRICE FOR THE PERTINENT 202 OR 203 ITEM.

CULVERT CHART

STATION	EXISTING CFN	PROPOSDE CFN	PROPOSED	EXISTING	CFN	COUNTY-ROUTE	MM	LAT	LONG	DESCRIPTION
282+39		250712190	68"x106" TYPE A	106"x68" ELLIPTICAL	NA	FRA-71	5.35	39°50'0.57"	83°06'0.75"	REPLACE CULVERT AND HEADWALLS
317+70	250710140			TWIN 54" RCP	NA	FRA-71	6.02	39°50'21.14"	83°05'29.02"	REPLACE HEADWALL/PATCHING
361+81		250712195		68"x106" RCP	NA	FRA-71	6.85	39°50'58.01"	83°04'58.93"	PATCHING
383+43		250712200		84" RCP	NA	FRA-71	7.26	39°51'13.69"	83°04'40.14"	REPLACE HEADWALL/PATCHING
414+39		250712205		72" RCP	NA	FRA-71	7.85	39°51'34.76"	83°04'11.36"	REPLACE CULVERT ENDS AND HEADWALLS
422+77		250712210		84" RCP	NA	FRA-71	8.01	39°51'40.47"	83°04'03.57"	REPLACE HEADWALLS
454+25		250712215	8'x4'	EX TWIN 45"x29"	NA	FRA-71	8.60	39°52'01.90"	83°03'34.31"	REPLACE CULVERT AND HEADWALLS

CALCULATED MJT | CHECKED BAL

GENERAL NOTES

FRA-71-5.29

P:\84868\roadway\sheets\84868GN003.dgn 4/1/2015 9:54:42 AM mtakacs

ITEM 614, MAINTAINING TRAFFIC

THIS ITEM SHALL CONSIST OF MAINTENANCE OF TRAFFIC ON EXISTING ROADWAYS AND RAMPS IN ACCORDANCE WITH THE OHIO MANUAL OF UNIFORM TRAFFIC CONSTROL DEVICES FOR STREETS AND HIGHWAYS, CURRENT EDITION, LATEST REVISION, THE SPECIFICATIONS, AND THE FOLLOWING:

1. A MINIMUM OF TWO LANES OF TRAFFIC IN EACH DIRECTION SHALL BE MAINTAINED AT ALL TIMES BY USE OF THE EXISTING PAVEMENT, THE COMPLETED PAVEMENT, AND ITEM 615 PAVEMENT FOR MAINTAINING TRAFFIC.

2. TWO LANES SHALL BE MAINTAINED AT ALL TIMES ON WHITE RD. EXCEPT DURING BRIDGE DECK REMOVAL AND THE PLACEMENT OF BEAMS FOR WHICH TRAFFIC MAY BE STOPPED FOR 15 MINUTE INVERVALS FROM 8 PM TO 6 AM WEEKDAYS AND ANYTIME ON WEEKENDS.

3. NO WORK SHALL BE PERFORMED AND ALL EXISTING LANES SHALL BE OPEN TO TRAFFIC DURING THE FOLLOWING DESIGNATED HOLIDAYS OR EVENTS:

NEW YEARS	LABOR DAY
MEMORIAL DAY	THANKSGIVING
FOURTH OF JULY	CHRISTMAS

THE PERIOD OF TIME THAT THE LANES ARE TO BE OPEN DEPENDS ON THE DAY OF THE WEEK ON WHICH THE HOLIDAY OR EVENT FALLS. THE FOLLOWING SCHEDULE SHALL BE USED TO DETERMINE THIS PERIOD:

DAY OF HOLIDAY TIME ALL LANES MUST OR EVENT BE OPEN TO TRAFFIC

SUNDAY 12:00N FRIDAY THROUGH 6:00 AM MONDAY
MONDAY 12:00N FRIDAY THROUGH 6:00 AM TUESDAY
TUESDAY 12:00N MONDAY THROUGH 6:00 AM WEDNESDAY
WEDNESDAY 12:00N TUESDAY THROUGH 6:00 AM THURSDAY
THURSDAY 12:00N WEDNESDAY THROUGH 6:00 AM FRIDAY
THURSDAY (THANKSGIVING ONLY)
5:00 AM WEDNESDAY THROUGH 6:00 AM MONDAY
FRIDAY 12:00 NOON THURSDAY THROUGH 6:00 AM MONDAY
SATURDAY 12:00N FRIDAY THROUGH 6:00 AM) MONDAY

NO EXTENSIONS OF TIME SHALL BE GRANTED FOR DELAYS IN MATERIAL DELIVERIES, UNLESS SUCH DELAYS ARE INDUSTRY-WIDE, OR FOR LABOR STRIKES, UNLESS SUCH STRIKES ARE AREA-WIDE.

SHOULD THE CONTRACTOR FAIL TO MEET ANY OF THESE REQUIREMENTS, THE CONTRACTOR SHALL BE ASSESSED A DISINCENTIVE IN THE AMOUNT OF $75 FOR EACH MINUTE THE ABOVE DESCRIBED LANE CLOSURE RESTRICTIONS ARE VIOLATED.

4. ALL EXISTING LANES SHALL BE OPEN TO TRAFFIC BETWEEN NOVEMBER 2 AND APRIL 4. NOVEMBER 2 SHALL BE CONSIDERED TO CONSTITUTE AN INTERIM COMPLETION DATE AND LIQUIDATED DAMAGES SHALL BE ASSESSED IN ACCORDANCE WITH CMS 108.07 FOR EACH CALENDAR DAY THAT ALL LANES ARE NOT OPEN AND AVAILABLE TO TRAFFIC.

5. LENGTH AND DURATION OF LANE CLOSURES AND RESTRICTIONS SHALL BE AT THE APPROVAL OF THE ENGINEER. IT IS THE INTENT TO MINIMIZE THE IMPACT TO THE TRAVELING PUBLIC. LANE CLOSURES OR RESTRICTIONS OVER SEGMENTS OF THE PROJECT IN WHICH NO WORK IS ANTICIPATED WITHIN A REASONABLE TIME FRAME, AS DETERMINED BY THE ENGINEER, SHALL NOT BE PERMITTED. THE LEVEL OF UTILIZATION OF MAINTENANCE OF TRAFFIC DEVICES SHALL BE COMMENSURATE WITH THE WORK IN PROGRESS.

6. ALL WORK AND TRAFFIC CONTROL DEVICES SHALL BE IN ACCORDANCE WITH CMS 614 AND OTHER APPLICABLE PORTIONS OF THE SPECIFICATIONS, AS WELL AS THE OHIO MANUAL OF UNIFORM TRAFFIC CONTROL DEVICES. PAYMENT FOR ALL LABOR, EQUIPMENT AND MATERIALS SHALL BE INCLUDED IN THE LUMP SUM CONTRACT PRICE FOR ITEM 614, MAINTAINING TRAFFIC, UNLESS SEPARATELY ITEMIZED IN THE PLAN.

NOTIFICATION OF CONSTRUCTION INITIATION

AT LEAST FOURTEEN DAYS PRIOR TO STARTING INITIAL CONSTRUCTION ACTIVITIES, LANE CLOSURES AND/OR ROAD CLOSURES, THE CONTRACTOR SHALL ADVISE THE DISTRICT OFFICE OF COMMUNICATIONS VIA EMAIL AT d06.pio@dot.state.oh.us, THE DISTRICT WORK ZONE TRAFFIC MANAGER VIA EMAIL AT d06.mot@dot.state.oh.us AND THE CENTRAL OFFICE SPECIAL HAUL PERMITS SECTION BY FAX AT (614) 728-4099 OF THE ANTICIPATED START DATE OF ANY CONSTRUCTION ACTIVITIES INCLUDING BUT NOT LIMITED TO THE PLACING OF WORK ZONE SIGNS. THE NOTIFICATION SHALL ALSO INCLUDE THE PROJECT NUMBER, PID, NAME AND PHONE NUMBER OF THE CONTRACTOR, A POINT OF CONTACT AND THE ANTICIPATED IMPACT ON TRAFFIC. THE CONTRACTOR WILL IMMEDIATELY INFORM THE DISTRICT OFFICE OF COMMUNICATIONS AND THE DISTRICT WORK ZONE TRAFFIC MANAGER OF ANY AND ALL DELAYS AND/OR CHANGES REGARDING THE CONSTRUCTION INITIATION DATE.

NOTIFICATION OF TRAFFIC RESTRICTIONS

THROUGHOUT THE DURATION OF THE PROJECT, THE CONTRACTOR SHALL NOTIFY THE PROJECT ENGINEER IN WRITING OF ALL TRAFFIC RESTRICTION AND UPCOMING MAINTENANCE OF TRAFFIC CHANGES. THE CONTRACTOR SHALL ENSURE THE WRITTEN NOTIFICATION IS SUBMITTED IN A TIMELY MANNER TO ALLOW THE PROJECT ENGINEER TO MEET THE REQUIRED TIME FRAMES SET FORTH IN THE TABLE BELOW. THIS NOTIFICATION SHALL BE RECEIVED BY THE PROJECT ENGINEER PRIOR TO THE PHYSICAL SETUP OF ANY APPLICABLE SIGNS OR MESSAGE BOARDS.

INFORMATION SHOULD INCLUDE BUT IS NOT LIMITED TO ALL CONSTRUCTION ACTIVITIES THAT IMPACT OR INTERFERE WITH TRAFFIC AND SHOULD LIST THE SPECIFIC LOCATION, TYPE OF WORK, ROAD STATUS, DATE AND TIME OF RESTRICTION, DURATION OF RESTRICTION, NUMBER OF LANES MAINTAINED, DETOUR ROUTES IF APPLICABLE, AND ANY OTHER INFORMATION REQUESTED BY THE PROJECT ENGINEER.

NOTIFICATION TIME FRAME TABLE

ITEM	DURATION OF CLOSURE	NOTIFICATION DUE TO DISTRICT 6 COMMUNICATIONS OFFICE (DAYS PRIOR TO CLOSURE)
RAMP AND ROAD CLOSURES	>= 2 WEEKS	14 CALENDAR DAYS
	> 12 HOURS AND < 2 WEEKS	7 CALENDAR DAYS
	< 12 HOURS	2 BUSINESS DAYS
LANE CLOSURES/ RESTRICTIONS	>= 2 WEEKS	7 CALENDAR DAYS
	< 2 WEEKS	2 BUSINESS DAYS

ANY UNFORESEEN CONDITIONS NOT SPECIFIED IN THE PLANS REQUIRING TRAFFIC RESTRICTIONS SHALL ALSO BE REPORTED TO THE PROJECT ENGINEER USING THE NOTIFICATION TIME FRAME TABLE.

DUST CONTROL

THE CONTRACTOR SHALL FURNISH AND APPLY WATER FOR DUST CONTROL AS DIRECTED BY THE ENGINEER. THE FOLLOWING ESTIMATED QUANTITIES HAVE BEEN INCLUDED FOR DUST CONTROL PURPOSES:

ITEM 616, WATER 630 M. GAL

ITEM 614, WORK ZONE SPEED LIMIT SIGN

THE CONTRACTOR SHALL FURNISH, INSTALL, MAINTAIN, COVER DURING SUSPENSION OF WORK, AND SUBSEQUENTLY REMOVE WORK ZONE SPEED LIMIT (R2-1) (55 MPH SPEED LIMIT) SIGNS AND SUPPORTS WITHIN THE WORK LIMITS IN ACCORDANCE WITH THE FOLLOWING REQUIREMENTS:

THE CONTRACTOR SHALL COVER OR REMOVE ANY EXISTING SPEED LIMIT SIGNS WITHIN THE REDUCED SPEED ZONE. THESE SIGNS SHALL BE RESTORED DURING SUSPENSION OR TERMINATION OF THE REDUCED SPEED LIMIT. THE EXPENSE OF COVERING OR REMOVAL AND RESTORATION OF EXISTING SPEED LIMIT OR MINIMUM SPEED LIMIT SIGNS SHALL BE INCLUDED IN THE PAY ITEM FOR THE WORK ZONE SPEED LIMIT SIGNS.

THE WORK ZONE SPEED LIMIT SIGNS MAY BE ERECTED OR UNCOVERED NO MORE THAN FOUR HOURS BEFORE THE ACTUAL START OF WORK THAT CAUSES THE WARRANTING CONDITIONS TO OCCUR. THE SIGNS SHALL BE REMOVED OR COVERED NO LATER THAN FOUR HOURS FOLLOWING REMOVAL OF THE WARRANTING CONDITIONS, OR SOONER AS DIRECTED BY THE ENGINEER. TEMPORARY SIGN COVERING AND UNCOVERING DUE TO TEMPORARY REMOVAL OF WARRANTING CONDITIONS SHALL BE GUIDED BY THE FOUR-HOUR LIMITATIONS STATED ABOVE.

CONSTRUCTION AND MATERIAL SPECIFICATIONS ITEM 614, PARAGRAPH 614.02(B), INDICATES THAT THE TWO DIRECTIONS OF A DIVIDED HIGHWAY ARE CONSIDERED SEPARATE HIGHWAY SECTIONS. THEREFORE, IF THE WORK ON A MULTI-LANE DIVIDED HIGHWAY IS LIMITED TO ONLY ONE DIRECTION, A SPEED REDUCTION IN THE DIRECTION OF THE WORK DOES NOT AUTOMATICALLY CONSTITUTE A SPEED REDUCTION IN THE OPPOSITE DIRECTION. A SPEED LIMIT REDUCTION IN THE OPPOSITE DIRECTION, IN SUCH CASE, IS APPROPRIATE ONLY IF CONDITIONS ARE EXPECTED TO HAVE AN IMPACT ON THE DIRECTIONAL TRAFFIC FLOW, AS DIRECTED BY THE ENGINEER.

THE CONTRACTOR SHALL ERECT A WORK ZONE SPEED LIMIT SIGN IN ADVANCE OF THE WARRANTING CONDITION, AS DETAILED IN THE PLANS OR AS DIRECTED BY THE ENGINEER. THE SIGN SHALL BE MOUNTED ON BOTH SIDES OF A DIRECT- IONAL ROADWAY OF DIVIDED HIGHWAYS. THE FIRST WORK ZONE SPEED LIMIT SIGN SHALL BE PLACED APPROXIMATELY 500 FEET IN ADVANCE OF THE LANE REDUCTION, SHIFT TAPER, OR OTHER ROADWAY OR SHOULDER RESTRICTION THAT WARRANTED THE WORK ZONE SPEED ZONE. ON UNDIVIDED HIGHWAYS THE SIGN SHALL BE MOUNTED ON THE RIGHT SIDE, APPROXIMATELY 250 FEET IN ADVANCE OF SUCH RESTRICTIONS. THE SIGN SHALL BE REPEATED EVERY 1 MILE. THESE SIGNS SHALL ALSO BE ERECTED IMMEDIATELY AFTER EACH OPEN ENTRANCE RAMP WITHIN THE ZONE.

THE SPEED LIMIT REDUCTION SHALL BE LIMITED TO ONLY THE PORTION OF THE PROJECT AND THE WORK THAT WARRANTED THE WORK ZONE SPEED LIMIT REDUCTION.

SPEED REDUCTION SIGNS (W3-5) SHALL BE ERECTED IN ADVANCE OF THE SPEED REDUCTION, APPROXIMATELY 1250 FEET ON MULTI-LANE HIGHWAYS.

A SIGN(S) TO INDICATE THE RESUMPTION OF THE STATUTORY SPEED LIMIT SHALL BE ERECTED AT THE END OF ANY REDUCED SPEED ZONE. THE CONTRACTOR MAY USE SIGNS AND SUPPORTS IN USED, BUT GOOD CONDITION, PROVIDED THE SIGNS MEET CURRENT ODOT SPECIFICATIONS. SIGN FACES SHALL BE RETROREFLECTORIZED WITH TYPE G SHEETING COMPLYING WITH THE REQUIREMENTS OF CMS 730.19.

WORK ZONE SPEED LIMIT SIGNS SHALL BE MOUNTED ON TWO ITEM 630, GROUND MOUNTED SUPPORTS, NO. 3 POSTS, UNLESS MOUNTED ON A TEMPORARY SIGN SUPPORT PER SCD MT 105.10.

ITEM 614, WORK ZONE SPEED LIMIT SIGN (CONT'D)

WORK ZONE SPEED LIMIT AND RELATED SIGN SIZES, PLACEMENT, SUPPORTS, ETC. SHALL BE PER THE OMUTCD, WITH TWO EXCEPTIONS: 1) EXPRESSWAY SIZE SPEED LIMIT SIGNS MAY BE USED ON FREEWAYS AND EXPRESSWAYS, IF NECESSARY; 2) THE HEIGHT OF SIGNS MOUNTED ON PORTABLE SUPPORTS SHOULD BE THE HEIGHT REQUIRED FOR GROUND-MOUNTED SIGNS BUT SHALL NOT BE MORE THAN 1 FOOT LOWER THAN THE HEIGHT REQUIRED BY THE OMUTCD, OR AS DIRECTED BY THE ENGINEER. PORTABLE SUPPORTS SHOULD NOT BE USED FOR A DURATION OF MORE THAN 3 DAYS.

WORK ZONE SPEED LIMIT SIGNS AND SUPPORTS WILL BE MEASURED AS THE NUMBER OF SIGN INSTALLATIONS, INCLUDING THE SIGNS AND NECESSARY SUPPORTS. IF A SIGN AND SUPPORT COMBINATION IS REMOVED AND REERECTED AT ANOTHER LOCATION WITHIN THE PROJECT DUE TO CHANGES IN THE SPEED ZONE AS DETAILED IN THE PLANS OR AS DIRECTED BY THE ENGINEER, IT SHALL BE CONSIDERED ANOTHER UNIT.

PAYMENT FOR ACCEPTED QUANTITIES, COMPLETE IN PLACE, WILL BE MADE AT THE CONTRACT UNIT PRICE. PAYMENT SHALL BE FULL COMPENSATION FOR ALL MATERIALS, LABOR, INCIDENTALS AND EQUIPMENT FOR FURNISHING, ERECTING, MAINTAINING, COVERING DURING SUSPENSION OF WORK, AND REMOVING THE SIGNS AND SUPPORTS. SPEED LIMIT SIGNING FOR THE POINT OF RESUMPTION OF THE STATUTORY SPEED LIMIT SHALL BE PAID FOR AS WORK ZONE SPEED LIMIT SIGNS. THE FOLLOWING ESTIMATED QUANTITY HAS BEEN CARRIED TO THE GENERAL SUMMARY.

ITEM 614, WORK ZONE SPEED LIMIT SIGN 25 EACH
ITEM 614 SPEED ZONE AHEAD SYMBOL SIGN 4 EACH

ITEM 614, REPLACEMENT SIGN

FLATSHEET SIGNS FURNISHED BY THE CONTRACTOR IN ACCORDANCE WITH THE REQUIREMENTS OF THE PLANS, SPECIFICATIONS AND PROPOSAL WHICH BECOME DAMAGED BY TRAFFIC FOR REASONS BEYOND THE CONTROL OF THE CONTRACTOR SHALL BE REPLACED IN KIND WHEN ORDERED BY THE ENGINEER. REPLACEMENT SIGNS SHALL BE NEW. OTHER MATERIALS MAY BE IN USED, BUT GOOD, CONDITION SUBJECT TO APPROVAL BY THE ENGINEER.

PAYMENT FOR THE NEW SIGNS SHALL BE MADE AT THE CONTRACT PRICE PER EACH FOR ITEM 614, REPLACEMENT SIGN, AND SHALL INCLUDE THE COST OF REMOVING AND DISPOSING OF DAMAGED SIGNS, HARDWARE AND SUPPORTS, AND PROVIDING THE NECESSARY REPLACEMENT HARDWARE, SUPPORTS, ETC.

AN ESTIMATED QUANTITY OF 20 EACH HAS BEEN PROVIDED IN THE GENERAL SUMMARY.

ITEM 614, REPLACEMENT DRUM

DRUMS FURNISHED BY THE CONTRACTOR IN ACCORDANCE WITH THE REQUIREMENTS OF THE PLANS, SPECIFICATIONS AND PROPOSAL WHICH BECOME DAMAGED BY TRAFFIC FOR REASONS BEYOND THE CONTROL OF THE CONTRACTOR SHALL BE REPLACED IN KIND WHEN ORDERED BY THE ENGINEER. REPLACEMENT DRUMS SHALL BE NEW.

PAYMENT FOR THE NEW DRUMS SHALL BE MADE AT THE CONTRACT PRICE PER EACH FOR ITEM 614, REPLACEMENT DRUM, AND SHALL INCLUDE THE COST OF REMOVING AND DISPOSING OF THE DAMAGED DRUM, AND PROVIDING AND MAINTAINING THE REPLACEMENT DRUM IN ACCORDANCE WITH THE CONTRACT REQUIREMENTS FOR THE ORIGINAL DRUM.

AN ESTIMATED QUANTITY OF 50 EACH HAS BEEN PROVIDED IN THE GENERAL SUMMARY.

CALCULATED GPD CHECKED BBD

MAINTENANCE OF TRAFFIC GENERAL NOTES

FRA-71-5.29

P:\84868\mot\sheets\84868MN001.dgn 3/27/2015 2:29:04 PM kfahy

TRENCH FOR WIDENING

TRENCH EXCAVATION FOR BASE WIDENING SHALL BE ONLY ON ONE SIDE OF THE PAVEMENT AT A TIME. THE OPEN TRENCH SHALL BE ADEQUATELY MAINTAINED AND PROTECTED WITH DRUMS OR BARRICADES AT ALL TIMES.

WORK ZONE INCREASED PENALTIES SIGN (R11-H5A)

R11-H5A-48 SIGNS SHALL BE FURNISHED, ERECTED, AND MAINTAINED IN GOOD CONDITION AND/OR REPLACED AS NECESSARY AND SUBSEQUENTLY REMOVED BY THE CONTRACTOR. SIGNS SHALL BE MOUNTED AT THE APPROPRIATE OFFSETS AND ELEVATIONS AS PRESCRIBED BY THE OHIO MANUAL OF UNIFORM TRAFFIC CONTROL DEVICES. THEY SHALL BE MAINTAINED ON SUPPORTS MEETING CURRENT SAFETY CRITERIA.

THE SIGNS MAY BE ERECTED OR UNCOVERED NO MORE THAN FOUR HOURS BEFORE THE ACTUAL START OF WORK. THE SIGNS SHALL BE REMOVED OR COVERED NO LATER THAN FOUR HOURS FOLLOWING RESTORATION OF ALL LANES TO TRAFFIC WITH NO RESTRICTIONS, OR SOONER AS DIRECTED BY THE ENGINEER. TEMPORARY SIGN COVERING AND UNCOVERING DUE TO TEMPORARY LANE RESTORATIONS SHALL BE GUIDED BY THE FOUR-HOUR LIMITATIONS STATED ABOVE. SUCH LANE RESTORATIONS SHOULD BE EXPECTED TO REMAIN IN EFFECT FOR 30 OR MORE CONSECUTIVE CALENDAR DAYS, SUCH AS DURING WINTER SHUTDOWNS.

THE SIGNS ON THE MAINLINE SHALL BE DUAL MOUNTED UNLESS NOT PHYSICALLY POSSIBLE. THE FIRST SIGN SHALL BE PLACED BETWEEN THE ROAD WORK AHEAD (W20-1)SIGN AND THE NEXT SIGN IN THE SEQUENCE. SIGNS SHALL BE ERECTED ON EACH ENTRANCE RAMP AND EVERY 2 MILES THROUGH THE CONSTRUCTION WORK LIMITS. SIGNS ON THE MAINLINE SHALL BE R11-H5A-48. SIGNS USED ON THE RAMPS SHALL BE R11-H5A-24. R11-H5A-24 SIGNS MAY BE USED IN THE MEDIAN IN LIEU OF R11-H5A-48 SIGNS IF IT IS NOT PHYSICALLY POSSIBLE TO PROVIDE R11-H5A-48 SIGNS IN THE MEDIAN.

THE CONTRACTOR MAY USE SIGNS AND SUPPORTS IN USED, BUT GOOD, CONDITION PROVIDED THE SIGNS MEET CURRENT ODOT SPECIFICATIONS. SIGN FACES SHALL BE RETROREFLECTORIZED WITH TYPE G SHEETING COMPLYING WITH THE REQUIREMENTS OF C&MS 730.19.

WORK ZONE INCREASED PENALITIES SIGNS AND SUPPORTS WILL BE MEASURED AS THE NUMBER OF SIGN INSTALLATIONS, INCLUDING THE SIGN AND NECESSARY SUPPORTS. IF A SIGN AND SUPPORT COMBINATION IS REMOVED AND REERECTED AT ANOTHER LOCATION AS DIRECTED BY THE ENGINEER, IT SHALL BE CONSIDERED ANOTHER UNIT.

PAYMENT FOR ACCEPTED QUANTITIES, COMPLETE, IN PLACE WILL BE MADE AT THE CONTRACT UNIT PRICE. PAYMENT SHALL BE FULL COMPENSATION FOR ALL MATERIALS, LABOR, INCIDENTALS AND EQUIPMENT FOR FURNISHING, ERECTING, MAINTAINING, COVERING DURING SUSPENSION OF WORK, AND REMOVAL OF THE SIGN AND SUPPORT.

ITEM 614, WORK ZONE INCREASED PENALITIES SIGN 24 EACH

ITEM 614, PORTABLE CHANGEABLE MESSAGE SIGNS, AS PER PLAN

THE CONTRACTOR SHALL FURNISH, INSTALL, MAINTAIN AND REMOVE, WHEN NO LONGER NEEDED, A CHANGEABLE MESSAGE SIGN. THE SIGN SHALL BE OF A TYPE SHOWN ON A LIST OF APPROVED PCMS UNITS AVAILABLE ON THE OFFICE OF MATERIALS MANAGEMENT WEB PAGE. THE LIST CONTAINS CLASS A AND B UNITS WITH MINIMUM LEGIBILITY DISTANCES OF 650 FEET AND 475 FEET, RESPECTIVELY.

EACH SIGN SHALL BE TRAILER-MOUNTED AND EQUIPPED WITH A FUNCTIONAL DIMMING MECHANISM, TO DIM THE SIGN DURING DARKNESS, AND A TAMPER AND VANDAL PROOF ENCLOSURE. EACH SIGN SHALL BE PROVIDED WITH APPROPRIATE TRAINING AND OPERATION INSTRUCTIONS TO ENABLE ON-SITE PERSONNEL TO OPERATE AND TROUBLESHOOT THE UNIT. THE SIGN SHALL ALSO BE CAPABLE OF BEING POWERED BY AN ELECTRICAL SERVICE DROP FROM A LOCAL UTILITY COMPANY. THE PCMS SHALL BE DELINATED IN ACCORDANCE WITH C&MS 614.3.

THE PROBABLE PCMS LOCATIONS AND WORK LIMITS FOR THOSE LOCATIONS ARE SHOWN ON SHEET(S) OF THE PLAN. PLACEMENT, OPERATION, MAINTENANCE AND ALL ACTIVATION OF THE SIGNS BY THE CONTRACTOR SHALL BE AS DIRECTED BY THE ENGINEER. THE PCMS SHALL BE LOCATED IN A HIGHLY VISIBLE POSITION YET PROTECTED FROM TRAFFIC. THE CONTRACTOR SHALL, AT THE DIRECTION OF THE ENGINEER, RELOCATE THE PCMS TO IMPROVE VISIBILITY OR ACCOMMODATE CHANGED CONDITIONS. WHEN NOT IN USE, THE PCMS SHALL BE TURNED OFF. ADDITIONALLY, WHEN NOT IN USE FOR EXTENDED PERIODS OF TIME, THE PCMS SHALL BE TURNED AWAY FROM ALL TRAFFIC.

THE ENGINEER SHALL BE PROVIDED ACCESS TO EACH SIGN UNIT AND SHALL BE PROVIDED WITH APPROPRIATE TRAINING AND OPERATION INSTRUCTIONS TO ENABLE ODOT PERSONNEL TO OPERATE AND TROUBLESHOOT THE UNIT, AND TO REVISE SIGN MESSAGES, IF NECESSARY.

THE CONTRACTOR SHALL IMPLEMENT A SYSTEM WHEREBY CHANGEABLE MESSAGES WILL BE IMPLEMENTED WITHIN _ HOURS FOLLOWING TELEPHONE NOTIFICATION FROM THE PROJECT ENGINEER TO A DESIGNATED PHONE.

ALL MESSAGES TO BE DISPLAYED ON THE SIGN WILL BE PROVIDED BY THE ENGINEER. A LIST OF ALL REQUIRED PRE-PROGRAMMED MESSAGES WILL BE GIVEN TO THE CON- TRACTOR AT THE PROJECT PRECONSTRUCTION CONFERENCE. THE SIGN SHALL HAVE THE CAPABILITY TO STORE UP TO 99 MESSAGES. MESSAGE MEMORY OR PRE-PROGRAMMED DISPLAYS SHALL NOT BE LOST AS A RESULT OF POWER FAILURES TO THE ON-BOARD COMPUTER. THE SIGN LEGEND SHALL BE CAPABLE OF BEING CHANGED IN THE FIELD. THREE-LINE PRESENTATION FORMATS WITH UP TO SIX MESSAGE PHASES SHALL BE SUPPORTED. PCMS FORMAT SHALL PERMIT THE COMPLETE MESSAGE FOR EACH PHASE TO BE READ AT LEAST TWICE. THE PCMS SHALL CONTAIN AN ACCURATE CLOCK AND PROGRAMMING LOGIC WHICH WILL ALLOW THE SIGN TO BE ACTIVATED, DEACTIVATED OR MESSAGES CHANGED AUTOMATICALLY AT DIFFERENT TIMES OF THE DAY FOR DIFFERENT DAYS OF THE WEEK.

THE PCMS SHALL CONTAIN A CELLULAR TELEPHONE DATA LINK WHICH WILL ALLOW REMOTE SIGN ACTIVATION, MESSAGE CHANGES, MESSAGE ADDITIONS AND REVISIONS TO TIME OF DAY PROGRAMS. THE SYSTEM SHALL ALSO PERMIT VERIFICATION OF CURRENT AND PROGRAMMED MESSAGES. ONE REMOTE DATA INPUT DEVICE (LAPTOP COMPUTER PLUS MODEM OR EQUIVALENT) SHALL BE FURNISHED FOR USE BY THE DISTRICT TRAFFIC ENGINEER, OR EQUIVALENT, AND SHALL BE INSURED AGAINST THEFT.

ITEM 614, PORTABLE CHANGEABLE MESSAGE SIGNS, AS PER PLAN (CONT'D)

THE PCMS UNIT SHALL BE MAINTAINED IN GOOD WORKING ORDER BY THE CONTRACTOR IN ACCORDANCE WITH THE PROVISIONS OF C&MS 614.07. THE CONTRACTOR SHALL, PRIOR TO ACTIVATING THE UNIT, MAKE ARRANGEMENTS, WITH AN AUTHORIZED SERVICE AGENT FOR THE PCMS, TO ASSURE PROMPT SERVICE IN THE EVENT OF FAILURE. ANY FAILURE SHALL NOT RESULT IN THE SIGN BEING OUT OF SERVICE FOR MORE THAN 12 HOURS, INCLUDING WEEKENDS. FAILURE TO COMPLY MAY RESULT IN AN ORDER TO STOP WORK AND OPEN ALL TRAFFIC LANES AND/OR IN THE DEPARTMENT TAKING APPROPRIATE ACTION TO SAFELY CONTROL TRAFFIC. THE ENTIRE COST TO CONTROL TRAFFIC, ACCRUED BY THE DEPARTMENT DUE TO THE CONTRACTOR'S NONCOMPLIANCE, WILL BE DEDUCTED FROM MONEYS DUE, OR TO BECOME DUE THE CONTRACTOR ON HIS CONTRACT.

THE CONTRACTOR SHALL BE RESPONSIBLE FOR 24-HOUR-PER-DAY OPERATION AND MAINTENANCE OF THESE SIGNS ON THE PROJECT FOR THE DURATION OF THE PHASES WHEN THE PLAN REQUIRES THEIR USE.

PAYMENT FOR THE ABOVE DESCRIBED ITEM SHALL BE AT THE CONTRACT UNIT PRICE. PAYMENT SHALL INCLUDE ALL LABOR, MATERIALS, EQUIPMENT, FUELS, LUBRICATING OILS, SOFTWARE, HARDWARE AND INCIDENTALS TO PERFORM THE ABOVE DESCRIBED WORK.

ITEM 614, PORTABLE CHANGEABLE MESSAGE SIGN, AS PER PLAN
48 SIGN MONTHS

ITEM 614, WORK ZONE IMPACT ATTENUATOR FOR 24" WIDE HAZARDS (UNIDIRECTIONAL OR BIDIRECTIONAL)

THIS ITEM SHALL CONSIST OF FURNISHING AND INSTALLING A NON-GATING IMPACT ATTENUATOR. FURNISH AN IMPACT ATTENUATOR FROM THE OFFICE OF ROADWAY ENGINEERING'S APPROVED LIST FOR WORK ZONE IMPACT ATTENUATORS, FROM THE ROADWAY STANDARDS WEB PAGE FOR ROADWAY STANDARDS APPROVED PRODUCTS.

INSTALLATION SHALL BE AT THE LOCATIONS SPECIFIED IN THE PLANS IN ACCORDANCE WITH THE MANUFACTURER'S SPECIFICATIONS.

THE CONTRACTOR SHALL REPAIR OR REPLACE A DAMAGED UNIT WITHIN 24 HOURS OF A DAMAGING IMPACT.

WHEN BIDIRECTIONAL DESIGNS ARE SPECIFIED, THE CONTRACTOR SHALL SUPPLY APPROPRIATE TRANSITIONS.

WHEN GATING IMPACT ATTENUATORS ARE DESIRED, THE CONTRACTOR SHALL SUBMIT DOCUMENTATION TO THE ENGINEER FOR ACCEPTANCE.

THE COST FOR THE ADDITIONAL BARRIER REQUIRED FOR A GATING IMPACT ATTENUATOR SHALL BE INCLUDED IN THE COST OF THE GATING IMPACT ATTENUATOR.

PAYMENT FOR THE ABOVE WORK SHALL BE MADE AT THE UNIT PRICE BID AND SHALL INCLUDE ALL LABOR, TOOLS, EQUIPMENT AND MATERIALS NECESSARY TO CONSTRUCT AND MAINTAIN A COMPLETE AND FUNCTIONAL IMPACT ATTENUATOR SYSTEM, INCLUDING ALL RELATED BACKUPS, TRANSITIONS, LEVELING PADS, HARDWARE AND GRADING, NOT SEPARATELY SPECIFIED, AS REQUIRED BY THE MANUFACTURER.

ITEM 614 - LAW ENFORCEMENT OFFICER (WITH PATROL CAR) FOR ENFORCEMENT IN WORK ZONES

WHEN LAW ENFORCEMENT OFFICERS (LEOS) ARE USED AS A SPEED CONTROL MEASURE IN STATIONARY WORK ZONES, THEY SHALL BE USED AS SHOWN IN THESE PLANS. LEOS CAN BE USED IN THE FORM OF: STATIONARY PATROL CAR, CIRCULATING PATROL CAR, AND/OR AIR ENFORCEMENT IN COMBINATION WITH GROUND PATROL CAR.

THE LEO WORKS AT THE DIRECTION OF THE CONTRACTOR. THE CONTRACTOR IS RESPONSIBLE FOR ARRANGING THE SERVICES OF THE LEO WITH AN OFFICIAL PATROL CAR (CAR WITH TOPMOUNTED EMERGENCY FLASHING LIGHTS AND COMPLETE MARKINGS OF THE APPROPRIATE LAW ENFORCEMENT AGENCY). THE CONTRACTOR SHOULD SCHEDULE THE LEO A MINIMUM OF ONE WEEK IN ADVANCE AND SHALL INCLUDE ANY MINIMUM SHOWUP TIME REQUIRED BY THE LAW ENFORCEMENT AGENCY INVOLVED. THE ENGINEER SHALL RESOLVE ANY ISSUES THAT MAY ARISE BETWEEN THE TWO PARTIES.

THE LEO SHALL REPORT TO THE CONTRACTOR PRIOR TO THE START OF THE SHIFT, IN ORDER TO RECEIVE INSTRUCTIONS REGARDING SPECIFIC WORK ASSIGNMENTS AS SHOWN IN THE PLANS. THE LEO IS EXPECTED TO STAY AT THE PROJECT SITE FOR THE ENTIRE DURATION OF HIS/HER SHIFT. THE LEO SHALL REPORT TO THE CONTRACTOR AT THE END IF HIS/HER SHIFT. SHOULD IT BE NECESSARY TO LEAVE THE PROJECT SITE, THE LEO SHALL NOTIFY THE ENGINEER. THE CONTRACTOR SHALL PROVIDE THE LEO WITH A TWO-WAY COMMUNICATIONS DEVICE WHICH SHALL BE RETURNED TO THE CONTRACTOR AT THE END OF HIS/HER SHIFT.

A MEETING WITH DISTRICT PERSONNEL, CENTRAL OFFICE PERSONNEL, WORKZONE TRAFFIC SUPERVISOR (IF APPLICABLE) AND APPROPRIATE LAW ENFORCEMENT AGENCIES SHALL TAKE PLACE PRIOR TO THE BEGINNING OF THE PROJECT. WORK ZONE SAFETY AND MOBILITY TRAINING SPECIFIC TO THE PROJECT WILL TAKE PLACE AT THIS TIME ALONG WITH DISTRIBUTION OF PRE-WORK ZONE CRASH ANALYSES. DURING THIS MEETING, DUTIES AND RESPONSIBILITIES OF THE LEO WILL BE DISCUSSED.

LEOS (WITH PATROL CARS) REQUIRED BY THESE PLANS SHALL BE PAID FOR ON A UNIT PRICE (HOURLY) BASIS UNDER ITEM 614, LAW ENFORCEMENT OFFICER (WITH PATROL CAR) FOR ENFORCEMENT. THE FOLLOWING ESTIMATED QUANTITIES HAVE BEEN CARRIED TO THE GENERAL SUMMARY.

ITEM 614, LAW ENFORCEMENT OFFICER WITH PATROL CAR FOR ENFORCEMENT 900 HRS

THE HOURS PAID SHALL INCLUDE ANY MINIMUM SHOW-UP TIME REQUIRED BY THE LAW ENFORCEMENT AGENCY INVOLVED.

ANY ADDITIONAL COSTS (ADMINISTRATIVE OR OTHERWISE) INCURRED BY THE CONTRACTOR TO OBTAIN THE SERVICES OF A LEO ARE INCLUDED WITH THE BID UNIT PRICE FOR ITEM 614, LAW ENFORCEMENT OFFICER WITH PATROL CAR FOR ENFORCEMENT.

CALCULATED GPD CHECKED BBD

MAINTENANCE OF TRAFFIC GENERAL NOTES

FRA-71-5.29

P:\84868\mot\sheets\84868MN002.dgn 3/27/2015 2:29:04 PM kfahy

MAINTENANCE OF TRAFFIC SIGNAL INSTALLATION

THE CONTRACTOR SHALL BE RESPONSBLE FOR MAINTAINING TRAFFIC SIGNAL INSTALLATIONS WITHIN THE PROJECT UNDER THE FOLLOWING CONDITIONS:

1. EXISTING SIGNAL INSTALLATIONS WHICH THE PLANS REQUIRE THE CONTRACTOR TO ADJUST, MODIFY, ADD ONTO OR REMOVE, OR WHICH THE CONTRACTOR ACTUALLY ADJUSTS, MODIFIES OR OTHERWISE DISTURBS. THE CONTRACTOR SHALL BE RESPONSIBLE FOR THE ENTIRE INSTALLATION (AT AN INTERSECTION) FROM THE TIME HIS OPERATIONS FIRST DISTURB THE INSTALLATION UNTIL THE INSTALLATION HAS BEEN SUBSEQUENTLY REMOVED OR MODIFIED AND THE WORK ACCEPTED.

THE CONTRACTOR SHALL CORRECT AS QUICKLY AS POSSIBLE ALL OUTAGES OR MALFUNCTIONS. HE SHALL PROVIDE THE MAINTAINING AGENCY AND THE ENGINEER SUCH ADDRESSES AND PHONE NUMBERS WHERE HIS MAINTENANCE FORCES CAN BE CONTACTED. THE CONTRACTOR SHALL PROVIDE ONE OR MORE PERSONS TO RECEIVE ALL CALLS AND DISPATCH THE NECESSARY MAINTENANCE FORCES TO CORRECT OUTAGES. SUCH A PERSON OR PERSONS MAY BE USED TO PERFORM OTHER DUTIES AS LONG AS PROMPT ATTENTION IS GIVEN TO THESE CALLS AND A PERSON IS READILY AVAILABLE CONTINUOUSLY 24 HOURS A DAY, 7 DAYS A WEEK. ALL LAMP OUTAGES, CABLE OUTAGES, ELECTRICAL FAILURES, EQUIPMENT MALFUNCTIONS AND MIS-ALIGNED SIGNAL HEADS SHALL BE CORRECTED TO THE SATIS-FACTION OF THE ENGINEER WITH THE SIGNAL BACK TO SERVICE WITHIN FOUR HOURS AFTER THE CONTRACTOR HAS BEEN NOTIFIED OF THE OUTAGE.

IN THE EVENT NEW SIGNALS ARE DAMAGED PRIOR TO ACCEPT-ANCE, ALL DAMAGED EQUIPMENT EXCEPT POLES AND CONTROL EQUIPMENT SHALL BE REPLACED BY THE CONTRACTOR TO THE SATISFACTION OF THE ENGINEER WITH THE SIGNAL BACK IN SERVICE WITHIN 8 HOURS AFTER THE CONTRACTOR'S NOTIFI-CATION OF THE OUTAGE. THE CONTRACTOR SHALL ARRANGE FOR FULL TRAFFIC CONTROL UNTIL THE SIGNAL IS BACK IN OPERATION.

IF POLES AND/OR CONTROL EQUIPMENT ARE DAMAGED AND MUST BE REPLACED, THE CONTRACTOR SHALL MAKE TEMPORARY REPAIRS AS NECESSARY TO BRING THE SIGNAL BACK INTO FULL OPERATION WITHIN THE ALLOWED 8-HOUR PERIOD, AND SHALL MAKE PERMANENT REPAIRS OR REPLACEMENT AS SOON THEREAFTER AS POSSIBLE.

NONE OF THE ABOVE SHALL BE CONSTRUED AS COLLECTIVE OR CONSECUTIVE OUTAGE TIME PERIODS AT ANY ONE LOCATION. THAT IS, WHERE MORE THAN ONE OUTAGE OCCURS AT ANY ONE LOCATION THEN THE ALLOTTED TIME LIMIT SHALL BE FOR THE WORST SINGLE OUTAGE.

WHERE OUTAGES ARE THE DIRECT RESULT OF A VEHICLE ACCI-DENT, THE RESPONSE OF THE CONTRACTOR SHALL BE AS OUT-LINED ABOVE. THE CONTRACTOR SHALL BE RESPONSIBLE FOR COLLECTION OF ANY COMPENSATION FOR THIS WORK FROM THOSE PARTIES RESPONSIBLE FOR THE DAMAGE.

WHERE THE CONTRACTOR HAS FAILED TO, OR CANNOT RESPOND TO, AN OUTAGE OR SIGNAL EQUIPMENT MALFUNCTION, AT THESE LOCATIONS WITHIN HIS RESPONSIBILITY, WITHIN PERIODS AS SPECIFIED ABOVE, THE ENGINEER MAY INVOKE THE PROVI- SIONS OF SECTION 105.15 AND ANY SUBSEQUENT BILLINGS TO THE STATE OR GROVE CITY FOR POLICE SERVICES AND MAINTENANCE SERVICES BY CITY FORCES SHALL BE DEDUCTED FROM MONIES DUE OR TO BECOME DUE THE CONTRACTOR IN ACCORDANCE WITH PROVISIONS OF SECTION 105.15.

ITEM 614 - WORK ZONE RAISED PAVEMENT MARKER, AS PER PLAN

WORK ZONE RAISED PAVEMENT MARKERS, AS PER PLAN, AND THEIR INSTALLATION SHALL CONFORM TO C&MS 614 OR C&MS 621 AS SPECIFIED HEREIN.

RAISED PAVEMENT MARKERS IN USE DURING THE SNOW- PLOWING SEASON SHALL CONFORM TO 621.

RAISED PAVEMENT MARKERS IN USE DURING THE NON-SNOW-PLOW SEASON SHALL CONFORM TO EITHER 614 OR TO 621.

THE SNOW-PLOWING SEASON SHALL RUN FROM OCTOBER 15 THROUGH APRIL 1.

IF PROJECT DELAYS, NOT THE FAULT OF ODOT, CAUSE THE WORK TO EXTEND INTO THE SNOW-PLOWING SEASON, THE CONTRACTOR SHALL BE RESPONSIBLE FOR REPLACING WORK ZONE RAISED PAVEMENT MARKERS (WZRPMS) CONFORMING TO C&MS 614, WITH RAISED PAVEMENT MARKERS CONFORMING TO 621, AS DETERMINED BY THE ENGINEER, AT THE CONTRACTOR'S EXPENSE.

THIS ITEM SHALL INCLUDE PURCHASE, INSTALLATION AND REMOVAL OF ITEM 614 WORK ZONE RAISED PAVEMENT MARKER, AS PER PLAN, INCLUDING FILLING OF ANY DEPRESSIONS CREATED IN THE PAVEMENT AS PER C&MS 621.08.

RESURFACING OF THE TRANSITION AREAS SHALL BE PERFORMED AT THE TIME THAT THE SURFACE COURSE IS BEING APPLIED TO THE ENTIRE PROJECT. PRIOR TO APPLICATION OF THE SURFACE COURSE ON THE PROJECT, THE EXISTING PAVEMENT WITHIN THE TRANSITION AREA SHALL BE REMOVED TO A DEPTH NECESSARY TO REACH THE LEVEL OF THE INTERMEDIATE COURSE OF THE PAVEMENT, AS DETERMINED BY THE ENGINEER.

THE FOLLOWING BID ITEMS SHOULD BE INCLUDED IN THE PLANS:

ITEM 254 PAVEMENT PLANING, ASPHALT CONCRETE 5300 SQ YD

ITEM 442 ASPHALT CONCRETE SURFACE COURSE, 12.5 MM, TYPE A (448) (T - 1½") 220 CU YD

ITEM 614 WORK ZONE RAISED PAVEMENT MARKER, AS PER PLAN 310 EACH

PAYMENT FOR RESURFACING WITHIN THE TRANSITION AREA SHALL BE PAID FOR UNDER THE APPROPRIATE BID ITEMS FOR THE WORK REQUIRED, AS PROVIDED FOR IN THE PLANS.

ITEM 618 - RUMBLE STRIPS (ASPHALT CONCRETE), AS PER PLAN

THE CONTRACTOR SHALL MILL 2 INCHES BY 2 FEET WIDE OF THE EXISTING ASPHALT SHOULDER IN ORDER TO REMOVE THE EXISTING RUMBLE STRIPS ALONG I.R. 71 IN THE AREA WHERE TRAFFIC IS SHIFTED. THE CONTRACTOR SHALL THEN COAT ALL MILLED HORIZONTAL AND VERTICAL WITH APPROVED AC LIQUID. NEXT THE CONTRACTOR SHALL PLACE 2 INCHES OF ITEM 441 ASPHALT CONCRETE SURFACE COURSE, TYPE 1, PG 64-28.

ONCE THE PROJECT IS COMPLETE, THE CONTRACTOR SHALL INSTALL NEW RUMBLE STRIPS AS PER THE CONSTRUCTION AND MATERIAL SPECIFICATIONS SECTION 618.

ALL COST ASSOCIATED WITH THE REMOVAL OF THE EXISTING PAVEMENT, PLACEMENT OF THE SURFACE COURSE AND INSTALLATION OF THE RUMBLE STRIPS SHALL BE INCLUDED IN UNIT PRICE BID PER FOOT OF ITEM 618 - RUMBLE STRIPS (ASPHALT CONCRETE), AS PER PLAN.

AN ESTIMATED QUANTITY OF 34865 FEET HAS BEEN CARRIED TO THE GENERAL SUBSUMMARY.

ITEM 614 - WORK ZONE RAISED PAVEMENT MARKERS ON CONCRETE SURFACES

RAISED PAVEMENT MARKERS IN WORK ZONES, INSTALLED ON TO CONCRETE SURFACES, SHALL BE ITEM 614 WORK ZONE RAISED PAVEMENT MARKERS. WZRPMS ARE INTENDED FOR USE ONLY DURING THE NON-SNOW-PLOWING SEASON. WZRPMS SHALL NOT BE PROVIDED DURING THE SNOW-PLOWING SEASON.

THE SNOW-PLOWING SEASON SHALL RUN FROM OCTOBER 15 THROUGH APRIL 1.

WHERE A TEMPORARY ALIGNMENT WILL REMAIN IN USE THROUGH THE WINTER, THE WZRPMS SHALL BE REMOVED PRIOR TO THE BEGINNING OF THE SNOW-PLOWING SEASON AND REPLACED APPROXIMATELY APRIL 1, OR AS OTHERWISE DETERMINED BY THE ENGINEER.

THIS ITEM SHALL INCLUDE PURCHASE, INSTALLATION AND REMOVAL OF ITEM 614 WORK ZONE RAISED PAVEMENT MARKERS.

AN ESTIMATED QUANTITY OF 310 EACH OF ITEM 614 WORK ZONE RAISED PAVEMENT MARKER HAS BEEN PROVIDED AND CARRIED TO THE GENERAL SUMMARY.

DELINEATION OF TEMPORARY AND PERMANENT GUARDRAIL

BARRIER REFLECTORS SHALL BE INSTALLED ON ALL TEMPORARY GUARDRAIL USED FOR TRAFFIC CONTROL AND ON ALL PERMANENT GUARDRAIL LOCATED WITHIN 5 FEET OF THE EDGE OF THE ADJACENT TRAVEL LANE. BARRIER REFLECTORS SHALL CONFORM TO C&MS 626.

OBJECT MARKERS SHALL BE INSTALLED ON ALL TEMPORARY AND PERMANENT GUARDRAIL LOCATED WITHIN 5 FEET OF THE EDGE OF THE ADJACENT TRAVEL LANE. GUARDRAIL-MOUNTING OF OBJECT MARKERS SHALL BE MADE BY INSTALLING THE OBJECT MARKERS ON THE EXTENSION BLOCKS RATHER THAN DIRECTLY ONTO THE GUARDRAIL ITSELF. OBJECT MARKERS SHALL CONFORM TO C&MS 614.03 AND THE SPACING SHALL BE APPROXIMATELY 50 FEET.

THE FOLLOWING ESTIMATED QUANITIES HAVE BEEN INCLUDED IN THE PLANS AND CARRIED TO THE GENERAL SUMMARY:

ITEM 614, BARRIER REFLECTOR, TYPE A 185 EACH
ITEM 614, OBJECT MARKER, 1 WAY 120 EACH

PAYMENT SHALL BE FULL COMPENSATION FOR ALL MATERIAL, LABOR, INCIDENTALS AND EQUIPMENT NECESSARY FOR FURNISHING, INSTALLING, MAINTAINING AND REMOVING THE ABOVE ITEM(S).

DELINEATION OF PORTABLE AND PERMANENT BARRIER

BARRIER REFLECTORS AND OBJECT MARKERS SHALL BE INSTALLED ON ALL PORTABLE BARRIER (PB) USED FOR TRAFFIC CONTROL AND ON PERMANENT CONCRETE BARRIER (INCLUDING BRIDGE PARAPETS) LOCATED WITHIN 5 FEET OF THE EDGE OF THE ADJACENT TRAVEL LANE.

BARRIER REFLECTORS SHALL CONFORM TO C&MS 626, EXCEPT THAT THE SPACING SHALL BE AS PER TRAFFIC SCD MT-101.70. OBJECT MARKERS AND THEIR INSTALLATION SHALL CONFORM TO C&MS 614.03 AND SCD MT-101.70. WHEN THE PB CONTAINS GLARE SCREEN, ONE SET OF THREE VERTICAL STRIPES OF SHEETING SHALL BE CONSIDERED EQUIVALENT TO AN OBJECT MARKER, ONE-WAY.

INCREASED BARRIER DELINEATION, AS SPECIFIED HEREIN, SHALL BE INSTALLED ON ALL PB AND CONCRETE PERMANENT BARRIER LOCATED WITHIN 5 FEET OF THE EDGE OF THE TRAVELED LANE ALONG TAPERS AND TRANSITION AREAS AND ALONG CURVES (OUTSIDE ONLY) WITH DEGREE OF CURVATURE GREATER THAN OR EQUAL TO 3 DEGREES.

THE INCREASED BARRIER DELINEATION SHALL CONSIST OF EITHER DELINEATION PANELS OR THE TRIPLE STACKING OF WORK ZONE BARRIER REFLECTORS.

DELINEATION PANELS SHALL CONSIST OF PANELS OF ELINEATION, APPROXIMATELY 34 INCHES LONG AND 6 INCHES WIDE AND SHALL BE "CRIMPED." PANELS SHALL BE INSTALLED AND SPACED PER TRAFFIC SCD MT-101.70.

TRIPLE-STACKED BARRIER REFLECTORS SHALL CONSIST OF ALIGNING THREE BARRIER REFLECTORS VERTICALLY, AT LOCATIONS WHERE A SINGLE BARRIER REFLECTOR WOULD BE OTHERWISE ATTACHED. THERE SHALL BE NO OPEN SPACE BETWEEN THE ADJACENT BARRIER REFLECTORS. THE TRIPLE-STACKED BARRIER REFLECTORS SHALL CONFORM TO C&MS 626, EXCEPT THAT THEY SHALL BE SPACED AND ALIGNED PER TRAFFIC SCD MT-101.70.

THE FOLLOWING ESTIMATED QUANTITIES HAVE BEEN INCLUDED IN THE PLANS AND CARRIED TO THE GENERAL SUMMARY:

ITEM 614, BARRIER REFLECTOR, TYPE B 3160 EACH
ITEM 614, OBJECT MARKER, 1-WAY 3110 EACH

PAYMENT SHALL BE FULL COMPENSATION FOR ALL MATERIAL, LABOR, INCIDENTALS AND EQUIPMENT NECESSARY FOR FURNISHING, INSTALLING, MAINTAINING AND REMOVING EACH OF THE ABOVE ITEMS.

ALONG RUNS OF INCREASED BARRIER DELINEATION WHERE THIS ITEM IS PROVIDED, THE QUANTITY SHALL BE MEASURED AS THE ENTIRE LENGTH OF THE RUN OF INCREASED BARRIER DELINEATION, INCLUDING THE SPACES BETWEEN THE INDIVIDUAL DELINEATION PANELS OR STACKS OF BARRIER REFLECTORS.

CALCULATED GPD CHECKED BBD

MAINTENANCE OF TRAFFIC GENERAL NOTES

FRA-71-5.29

P:\84868\mot\sheets\84868MN003.dgn 3/27/2015 2:29:05 PM kfahy

WORKSITE TRAFFIC SUPERVISOR

SUBJECT TO APPROVAL OF THE ENGINEER, THE CONTRACTOR SHALL EMPLOY AND IDENTIFY (SOMEONE OTHER THAN THE SUPERINTENDENT) A CERTIFIED WORKSITE TRAFFIC SUPER- VISOR (WTS) BEFORE STARTING WORK IN THE FIELD. THE WTS SHALL BE CERTIFIED FROM ONE OF THE FOLLOWING ORGANIZA- TIONS:

1. AMERICAN TRAFFIC SAFETY SERVICE ASSOCIATION (ATSSA), PHONE NUMBER 1-800-272-8772, CERTIFIED TRAFFIC CON-TROL SUPERVISOR (TCS).

2. NATIONAL HIGHWAY INSTITUTE, DESIGN AND OPERATION OF WORK ZONE TRAFFIC CONTROL, PHONE NUMBER 1-703- 235-0528.

3. THE OHIO CONTRACTORS ASSOCIATION, TRAFFIC CONTROL SUPERVISOR (OCA/TCS) WORK ZONE CLASS, ONLY IF TAKEN AFTER MAY 5, 2004, PHONE NUMBER 1-800-229-1388.

4. OHIO LABORERS TRAINING, TRAFFIC CONTROL SUPERVISORS CLASS, PHONE NUMBER 1-740-599-7915.

A COPY OF EACH WTSS CERTIFICATION AND 24-HOUR CONTACT INFORMATION SHALL BE PROVIDED TO THE ENGINEER AT THE PRECONSTRUCTION CONFERENCE. IF THE DESIGNATED WTS WILL NOT BE AVAILABLE FULL TIME (24/7) THE CONTRACTOR MAY DESIGNATE AN ALTERNATE WTS TO BE AVAILABLE WHEN THE PRIMARY IS OFF DUTY. EACH WTS SHALL HAVE A CURRENT WTS CERTIFICATION (WITH AN EXPIRATION DATE NO MORE THAN 5 YEARS FROM THE DATE OF ISSUE) FROM ANY OF THE APPROVED ORGANIZATIONS.

THE WTS POSITION HAS THE RESPONSIBILITY OF MONITORING TRAFFIC CONTROL DEFICIENCIES FOR THE ENTIRE WORK ZONE. THE DUTIES OF THE WTS ARE AS FOLLOWS:

1. BE AVAILABLE ON A 24-HOUR PER DAY BASIS, AND BE ABLE TO BE ON SITE FOR ALL EMERGENCY TRAFFIC CONTROL NEEDS WITHIN ONE HOUR OF NOTIFICATION BY POLICE OR PROJECT STAFF AND BE PREPARED TO EFFECT CORRECTIVE MEASURES IMMEDIATELY ON EXISTING WORK ZONE TRAFFIC CONTROL DEVICES.

2. ATTEND PRECONSTRUCTION MEETING AND ALL PROJECT MEETINGS WHERE TRAFFIC CONTROL MANAGEMENT IS DISCUSSED.

3. BE AVAILABLE FOR MEETINGS OR DISCUSSIONS WITH THE ENGINEER UPON REQUEST OR WITHIN 36 HOURS.

4. COORDINATE A TRAFFIC INCIDENT MANAGEMENT MEETING EACH YEAR BEFORE CONSTRUCTION WORK BEGINS WITH ODOT AND THE SAFETY FORCES THAT WILL RESPOND TO INCIDENTS ON THE PROJECT. ITEMS TO BE DISCUSSED WILL BE THE:

A. TRAFFIC INCIDENT MANAGEMENT PLAN (TIMP);

B. EMERGENCY RESPONSE AND NOTIFICATION;

C. PROJECT WORK/PHASING CONCERNS (E.G., RAMP CLOSURES); AND

D. RESPONDERS CONCERNS.

5. BE AWARE OF, AND COORDINATE IF NECESSARY, ALL TRAFFIC CONTROL OPERATIONS, INCLUDING THOSE OF SUBCONTRACTORS AND SUPPLIERS.

WORKSITE TRAFFIC SUPERVISOR (CONT'D)

6. COORDINATE PROJECT ACTIVITIES WITH ALL LAW ENFORCE- MENT OFFICERS (LEOS). A WTS SHALL ALSO BE THE MAIN CONTACT PERSON WITH THE LEOS WHILE THEY ARE ON THE PROJECT.

7. COORDINATE MEETINGS WITH ODOT PERSONNEL, LEOS AND OTHER APPLICABLE ENTITIES BEFORE EACH PLAN PHASE SWITCH TO DISCUSS WORK ZONE TRAFFIC CONTROL.

8. ENSURE COMPLIANCE WITH THE CONTRACT DOCUMENTS FOR SIGNS, BARRICADES, TEMPORARY CONCRETE BARRIER, PAVEMENT MARKINGS, PORTABLE MESSAGE SIGNS, AND OTHER TRAFFIC CONTROL DEVICES ON A DAILY BASIS; AND FACILITATE ANY CORRECTIVE ACTION NECESSARY.

9. NOTIFY THE CONTRACTOR OF THE NEED FOR CLEANING AND MAINTENANCE OF ALL TRAFFIC CONTROL DEVICES, INCLUD- ING THE COVERING AND REMOVAL OF INAPPLICABLE SIGNS.

10. INSPECT, EVALUATE, PROPOSE NECESSARY MODIFICATIONS TO, AND DOCUMENT THE EFFECTIVENESS OF, THE TRAFFIC CONTROL DEVICES AND/OR TRAFFIC OPERATIONS ON A DAILY BASIS (7 DAYS A WEEK). IN ADDITION, A WEEKLY NIGHT INSPECTION OF THE WORK ZONE SETUP FOR DAYTIME WORK OPERATIONS; AND ONE DAYTIME INSPECTION PER WEEK FOR NIGHTTIME PROJECTS. THIS SHALL INCLUDE (BUT NOT BE LIMITED TO) DOCUMENTATION ON THE FOLLOWING PROJECT EVENTS:

A. INITIAL TRAFFIC CONTROL SETUP (DAY AND NIGHT REVIEW).

B. DAILY TRAFFIC CONTROL SETUP AND REMOVAL.

C. WHEN CONSTRUCTION STAGING CAUSES A CHANGE IN THE TRAFFIC CONTROL SETUP.

D. CRASH OCCURRENCES WITHIN THE CONSTRUCTION AREA.

E. REMOVAL OF TRAFFIC CONTROL DEVICES AT THE END OF A PHASE OR PROJECT.

F. ALL OTHER EMERGENCY TRAFFIC CONTROL NEEDS.

11. COMPLETE THE DEPARTMENT APPROVED LONG TERM IN- SPECTION FORM (CA-D-8) AFTER EACH INSPECTION AS REQUIRED IN # 10 AND SUBMIT IT TO THE ENGINEER THE FOLLOWING WORK DAY. THESE REPORTS SHALL INCLUDE A CHECKLIST OF ALL TRAFFIC CONTROL MAINTENANCE ITEMS TO BE REVIEWED. A COPY OF THE FORM WILL BE PROVIDED AT THE PRE- CONSTRUCTION MEETING. ANY DEFICIENCIES OBSERVED SHALL BE NOTED, ALONG WITH RECOMMENDED CORRECTIVE ACTIONS AND THE DATES BY WHICH SUCH CORRECTIONS WERE, OR WILL BE, COMPLETED. A COPY OF THIS DOCUMENT CAN BE FOUND IN THE CURRENT REVISION OF THE DEPARTMENT OF TRANSPORTATION CONSTRUCTION INSPECTION FORMS MANUAL.

12. VERIFY THAT ALL FLAGGING OPERATIONS ARE BEING CON- DUCTED PER THE OHIO MANUAL OF UNIFORM TRAFFIC CONTROL DEVICES.

13. HAVE COPIES OF THE ODOT TEMPORARY TRAFFIC CONTROL MANUAL AND APPLICABLE STANDARDS AND SPECIFICATIONS INCLUDED IN THE CONTRACT DOCUMENTS AVAILABLE AT ALL TIMES ON THE PROJECT.

WORKSITE TRAFFIC SUPERVISOR (CONT'D)

14. IDENTIFY AND CONTACT ALL POSSIBLE RESPONSE PERSONNEL; PREPLAN AND KEEP AN UPDATED ROSTER WITH PHONE NUMBERS:

A. FEDERAL, STATE, AND LOCAL TRANSPORTATION AGENCIES (TRAFFIC MANAGEMENT CENTER);

B. REGIONAL, COUNTY OR LOCAL 911 DISPATCH; AND

C. TOWING AND RECOVERY PROVIDERS.

15. COMPLY WITH THE PROVISIONS OF OMUTCD CHAPTER 6I, CONTROL OF TRAFFIC THROUGH TRAFFIC INCIDENT MANAGEMENT AREAS.

16. PROPOSE A RESPONSE/ACTION PLAN TO:

A. ESTABLISH ALTERNATE ROUTE PLANS PER THE PROVIDED ODOT PLAYBOOK;

B. REMOVE TRAFFIC DEMAND FROM IMPACTED ROADWAY(S);

C. DIVERT TRAFFIC TO ROUTES THAT CAN ACCOMMODATE DEMANDS;

D. DETOUR TRAFFIC AWAY FROM SENSITIVE AREAS (SUCH AS SCHOOLS, HOSPITALS, ETC.);

E. DISCUSS METHODS OF DETERMINING A STAGING AREA FOR RESPONDERS WITHIN OR NEAR THE CONSTRUCTION ZONE; AND

F. DISCUSS METHODS OF DEVELOPING INGRESS AND EGRESS SITES WITHIN THE CONSTRUCTION ZONE.

THE RESPONSE/ACTION PLAN SHALL BE SUBMITTED TO ODOT FOR ACCEPTANCE BEFORE THE CONTRACTOR'S FIRST DAY OF WORK.

17. PERFORM, AT A MINIMUM, THE FOLLOWING FUNCTIONS IN INCIDENT DETECTION AND VERIFICATION:

A. CALL 911/NOTIFY TRAFFIC MANAGEMENT CENTER AND PROVIDE THE FOLLOWING:

I. LOCATION - INCLUDING MILEPOST NUMBER AND DIRECTION OF TRAVEL.

II.NUMBER AND TYPE OF VEHICLES INVOLVED.

III. ESTIMATED EXTENT OF DAMAGE OR INJURY.

IV. ESTIMATED NUMBER OF PATIENTS INVOLVED.

V. ANY POTENTIAL HAZARDOUS CONDITIONS.

VI. THE PLACARD NUMBER ON ANY HAZARDOUS MATERIALS PLACARD FROM A SAFE DISTANCE.

B. INITIATE TRAFFIC MANAGEMENT / PROVIDE TRAFFIC CONTROL.

C. ASSIST MOTORIST WITH DISABLED VEHICLES.

D. RECOMMEND ROADWAY REPAIR NEEDS

E. PROVIDE REPAIR RESOURCES.

WORKSITE TRAFFIC SUPERVISOR (CONT'D)

18. ATTEND POST-INCIDENT DEBRIEFINGS IF REQUIRED.

THE DEPARTMENT WILL DEDUCT THE PRORATED DAILY AMOUNT OF THE UNIT PRICE BID FOR THE WTS FOR ANY DAY ON WHICH THE CONTRACTOR FAILS TO PERFORM THE DUTIES SET FORTH ABOVE. SHOULD THE CONTRACTOR'S FAILURE TO PERFORM ANY OF THE DUTIES DESCRIBED ABOVE RESULT IN A MAINTENANCE OF TRAFFIC SAFETY ISSUE, THE DEPARTMENT WILL DEDUCT THE PRORATED DAILY AMOUNT FOR ITEM 614 MAINTENANCE OF TRAFFIC FROM THE CONTRACTOR'S NEXT SCHEDULED ESTIMATE.

IF THREE OR MORE FAILURES TO PERFORM THE DUTIES SET FORTH ABOVE OCCUR, THE WTS SHALL BE IMMEDIATELY RE- MOVED FROM THE WORK IN ACCORDANCE WITH C&MS 108.05.

THE FOLLOWING ESTIMATED QUANTITY HAS BEEN INCLUDED FOR THE WORKSITE TRAFFIC SUPERVISOR:

ITEM 614 WORKSITE TRAFFIC SUPERVISOR 24 MONTHS

TRUCK MOUNTED ATTENUATOR (TMA)

WHEN WORKING IN A CLOSED LANE OR SHOULDER ON A MULTILANE HIGHWAY WITHOUT POSITIVE PROTECTION, A TRUCK MOUNTED ATTENUATOR (TMA) SHALL BE PROVIDED TO PROTECT THE WORK AREA IN ACCORDANCE WITH STANDARD DRAWINGS MT-95.30, MT-95.31, MT-95.32 OR OMUTCD TYPICAL APPLICATION (TA) 4 AND TA-6. THE TMA SHALL BE PLACED IN SUCH A WAY TO ADEQUATELY PROTECT THE WORKERS INSIDE THE WORK ZONE. HE TMA IS NOT INTENDED TO BE USED AS OR SUBSTITUTED FOR THE FLASHING ARROW PANEL AT THE BEGINNING OF THE MERGE TAPER. THE TMA SHALL MEET NCHRP 350 TEST LEVEL 3 CRITERIA FOR STANDARD AND OPTIONAL TESTS AT 100 KM/H (62 MPH) FOR DESIGN IMPACTS. THE COST FOR PROVIDING THE TMA SHALL INCLUDE ALL MATERIAL, LABOR, EQUIPMENT, AND HARDWARE REPLACEMENT AND IS TO BE INCLUDED IN THE LUMP SUM CONTRACT PRICE FOR ITEM 614 MAINTAINING TRAFFIC.

WRECKER AND EMERGENCY VEHICLE ACCESS

THE CONTRACTOR SHALL MAKE PROVISIONS TO ASSIST IN THE ACCESS OF WRECKERS AND EMERGENCY VEHICLES THROUGHOUT THE WORK ZONE. THIS MAY INCLUDE, BUT NOT LIMITED TO, PROVIDING FLAGGERS OR REMOVING SECTIONS OF BARRIER TO ALLOW EMERGENCY VEHICLES AND WRECKER TO MOVE THROUGH PORTIONS OF THE WORK ZONE TO REACH ACCIDENTS AND/OR BREAKDOWNS. THE INTENT IS TO MINIMIZE EXTENDED DELAYS TO THE TRAVELLING PUBLIC AND TO PROVIDE QUICKER RESPONSE TIMES FOR WRECKERS AND EMERGENCY VEHICLES. ALL AGENTS AND EMPLOYEES OF THE CONTRACTOR SHALL BE MADE AWARE OF THIS PROVISION BEFORE WORK BEGINS.

ALL ACTIVITIES ASSOCIATED WITH ACCOMMODATING WRECKER SERVICES AND EMERGENCY VEHICLE ACCESS THROUGHOUT THE WORK ZONE SHALL BE COORDINATED BY THE WORKSITE TRAFFIC SUPERVISOR AND THE ENGINEER.

PAYMENT FOR ALL LABOR, EQUIPMENT, AND MATERIALS SHALL BE INCLUDED IN THE LUMP SUM CONTRACT PRICE FOR ITEM 614, MAINTAINING TRAFFIC.

CALCULATED GPD CHECKED BBD

MAINTENANCE OF TRAFFIC GENERAL NOTES

FRA-71-5.29

P:\84868\mot\sheets\84868MN004.dgn 3/27/2015 2:29:06 PM kfahy

SEQUENCE OF CONSTRUCTION

THE NOISE BARRIERS SHALL BE CONSTRUCTED EARLY IN THE CONSTRUCTION PHASING OF THE PROJECT. THE CONTRACTOR SHALL COORDINATE WITH ODOT ON THE SCHEDULE OF CONSTRUCTING THE NOISE BARRIERS.

PHASE 1

REMOVE EXISTING SIGNING MARKED FOR REMOVAL IN THE PLANS. INSTALL MAINTENANCE OF TRAFFIC SIGNING IN ACCORDANCE WITH THE STANDARD CONSTRUCTION DRAWINGS LISTED AND AS SHOWN IN THE PLANS.

SHIFT NORTHBOUND AND SOUTHBOUND TRAFFIC ONTO THE EXISTING INSIDE SHOULDER. THE SHIFTING OF TRAFFIC SHALL BE IN ACCORDANCE WITH THE STANDARD CONSTRUCTION DRAWINGS AND AS SHOWN IN THE PLANS. RAMP TRAFFIC SHALL BE MAINTAINED IN ACCORDANCE WITH THE STANDARD CONSTRUCTION DRAWINGS AND AS SHOWN IN THE PLANS.

PLACE TEMPORARY PAVEMENT REQUIRED FOR PHASE 2 OPERATIONS ALONG THE EXISTING EDGE OF PAVEMENT. THIS WORK WILL REQUIRE REMOVING THE EXISTING ASPHALT SHOULDERS AS SHOWN IN THE PLANS. INSTALL WORK ZONE GUARDRAIL AT LOCATION SHOWN IN THE PLANS. BARRIER REFLECTORS AND OBJECT MARKERS REQUIRED FOR PHASE 2 MAINTENANCE OF TRAFFIC OPERATIONS SHALL BE PLACED DURING THIS PHASE. GUARDRAIL BLOCKOUT REFLECTORS SHALL BE PLACED IN ACCORDANCE WITH STANDARD CONSTRUCTION DRAWING TC-61.30 AND AS SHOWN IN THE PLANS. PORTABLE CONCRETE BARRIER AND PERMANENT CONCRETE BARRIER SHALL BE DELINEATED IN ACCORDANCE WITH STANDARD CONSTRUCTION DRAWING MT-101.70.

THE DURATION FOR PHASE 1 AND PHASE 1A SHALL BE A MAXIMUM OF THIRTY (30) CALENDAR DAYS.

PHASE 1A

PRIOR TO THE START OF PHASE 1A CONSTRUCTION, RELOCATE PHASE 1 MAINTENANCE OF TRAFFIC SIGNING LOCATED ON RAMP A AND RAMP D TO THE LOCATIONS SHOWN IN THE MAINTENANCE OF TRAFFIC PLANS FOR PHASE 1A.
SHIFT RAMP A TRAFFIC ONTO THE SHOULDER AND TEMPORARY PAVEMENT CONSTRUCTED DURING THE PRIOR PHASE. SHIFT

RAMP B TRAFFIC TOWARDS THE OUTSIDE SHOULDER. THE SHIFTING OF TRAFFIC SHALL BE IN ACCORDANCE WITH THE STANDARD CONSTRUCTION DRAWINGS AND AS SHOWN IN THE PLANS. PLACE TEMPORARY PAVEMENT REQUIRED FOR PHASE 2 OPERATIONS ALONG THE EXISTING EDGE OF PAVEMENT. THIS WORK WILL REQUIRE REMOVING THE EXISTING ASPHALT SHOULDERS AS SHOWN IN THE PLANS.

THE DURATION FOR PHASE 1 AND PHASE 1A SHALL BE A MAXIMUM OF THIRTY (30) CALENDAR DAYS.

PHASE 2

PRIOR TO THE START OF PHASE 2 CONSTRUCTION, PLACE ALL TEMPORARY TRAFFIC CONTROL DEVICES AND TEMPORARY PAVEMENT MARKINGS REQUIRED FOR PHASE 2 OPERATIONS.

SHIFT NORTHBOUND AND SOUTHBOUND TRAFFIC ONTO THE OUTSIDE SHOULDERS AND TEMPORARY PAVEMENT CONSTRUCTED PRIOR TO THIS PHASE. THE SHIFTING OF TRAFFIC SHALL BE IN ACCORDANCE WITH THE STANDARD CONSTRUCTION DRAWINGS AND AS SHOWN IN THE PLANS. RAMP TRAFFIC SHALL BE MAINTAINED IN ACCORDANCE WITH THE STANDARD CONSTRUCTION DRAWINGS AND AS SHOWN IN THE PLANS.

RECONSTRUCT THE INSIDE PORTION OF I-71 NORTHBOUND AND I-71 SOUTHBOUND AS SHOWN IN THE PLANS. RECONSTRUCT THE OUTSIDE PORTION OF RAMP A AND THE OUTSIDE PORTION OF RAMP D AS SHOWN IN THE PLANS. THE INSIDE PORTIONS OF THE WHITE ROAD BRIDGES (FRA-071-0903L/R) SHALL BE RECONSTRUCTED AS SHOWN IN THE PLANS.

PLACE TEMPORARY PAVEMENT REQUIRED FOR PHASE 3 MAINTENANCE OF TRAFFIC OPERATIONS ALONG OUTSIDE EDGE OF SHOULDER ON RAMP D AS SHOWN IN THE PLANS.

OVERWINTER TRAFFIC SHALL BE MAINTAINED ACCORDING TO THE PHASE 2 MAINTENANCE OF TRAFFIC PLANS.

PHASE 3A

PRIOR TO THE START OF PHASE 3A CONSTRUCTION, PLACE ALL TEMPORARY TRAFFIC CONTROL DEVICES REQUIRED FOR PHASE 3A AND REMOVE ANY CONFLICTING TEMPORARY TRAFFIC CONTROL DEVICES. EXTEND THE PHASE 2 LANE SHIFTS ACCORDING TO THE PHASE 3A PLANS. THE SHIFTING OF TRAFFIC SHALL BE IN ACCORDANCE WITH THE STANDARD CONSTRUCTION DRAWINGS AND AS SHOWN IN THE PLANS.

PLACE TEMPORARY PAVEMENT REQUIRED FOR PHASE 3B CONSTRUCTION DRAWINGS AND AS SHOWN IN THE PLANS.

PLACE TEMPORARY PAVEMENT REQUIRED FOR PHASE 3B OPERATIONS AS SHOWN IN THE PLANS.

PHASE 3B

PRIOR TO THE START OF PHASE 3B CONSTRUCTION, PLACE ALL TEMPORARY TRAFFIC CONTROL DEVICES REQUIRED FOR PHASE 3B OPERATIONS.

SHIFT NORTHBOUND AND SOUTHBOUND TRAFFIC TOWARDS THE MEDIAN, ONTO THE TEMPORARY AND PERMANENT PAVEMENT CONSTRUCTED PRIOR TO THE START OF THIS PHASE. THE SHIFTING OF TRAFFIC SHALL BE IN ACCORDANCE WITH THE STANDARD CONSTRUCTION DRAWINGS AND AS SHOWN IN THE PLANS. RAMP TRAFFIC SHALL BE MAINTAINED IN ACCORDANCE WITH THE STANDARD CONSTRUCTION DRAWINGS AND AS SHOWN IN THE PLANS.

RECONSTUCT THE OUTSIDE PORTION OF I-71 NORTHBOUND AND I-71 SOUTHBOUND AS SHOWN IN THE PLANS.
RECONSTRUCT THE OUTSIDE PORTION OF RAMPS A, B, AND D AT S.R. 665 AND RECONSTRUCT THE INSIDE PORTION OF RAMP C AT S.R. 665 AS SHOWN IN THE PLANS.
RECONSTRUCT THE OUTSIDE PORTION OF RAMP A AND THE OUTSIDE PORTION OF RAMP D AT STRINGTOWN ROAD AS SHOWN IN THE PLANS. THE OUTSIDE PORTIONS OF THE WHITE ROAD BRIDGES (FRA-071-0903L/R) SHALL BE RECONSTRUCTED AS SHOWN IN THE PLANS.

THE ITEM 809-ADVANCED RADAR DETECTION, AND 809-STOP-BAR RADAR DETECTION SHALL BE INSTALLED AND FULLY FUNCTIONAL BEFORE ANY OF THE MILLING OF THE PAVEMENT IS PERFORMED OR EXISTING LOOP DETECTORS ARE DAMAGE. SEE THE TRAFFIC GENERAL NOTES ON SHEET 545 FOR FURTHER EXPLANATION OF THESE ITEMS.

PHASE 3C

PRIOR TO THE START OF PHASE 3C CONSTRUCTION, RELOCATE PHASE 3B MAINTENANCE OF TRAFFIC SIGNING LOCATED ON RAMP A AND RAMP D TO THE LOCATIONS SHOWN IN THE MAINTENANCE OF TRAFFIC PLANS FOR PHASE 3C.

RECONSTRUCT THE INSIDE PORTION OF RAMPS A, B, AND D AT S.R. 665 AND RECONSTRUCT THE OUTSIDE PORTION OF RAMP C AT S.R. 665 AS SHOWN IN THE PLANS.

RECONSTRUCT THE RAMP A ENTRANCE GORE AS SHOWN IN THE PLANS. RECONSTRUCT THE RAMP D EXIT GORE AND RAMP D TERMINAL AT STRINGTOWN ROAD AS SHOWN IN THE PLANS.

REMOVE TEMPORARY PAVEMENT AND EMBANKMENT USED TO MAINTAIN TRAFFIC ALONG RAMP D PRIOR TO OPENING THE RAMP TO TRAFFIC. REMOVE TEMPORARY PAVEMENT AND EMBANKMENT USED TO SHIFT TRAFFIC FOR PHASE 3B PRIOR TO OPENING MAINLINE I.R. 71 TO TRAFFIC.

ALL PROPOSED TRAFFIC CONTROL ITEMS SHOWN IN TRAFFIC CONTROL PLANS SHALL BE IN PLACE PRIOR TO THE REMOVAL OF TEMPORARY TRAFFIC CONTROL.

CALCULATED GPD
CHECKED BBD

MAINTENANCE OF TRAFFIC GENERAL NOTES

FRA-71-5.29

P:\84868\mot\sheets\84868MN005.dgn 4/1/2015 10:28:48 AM mtakacs

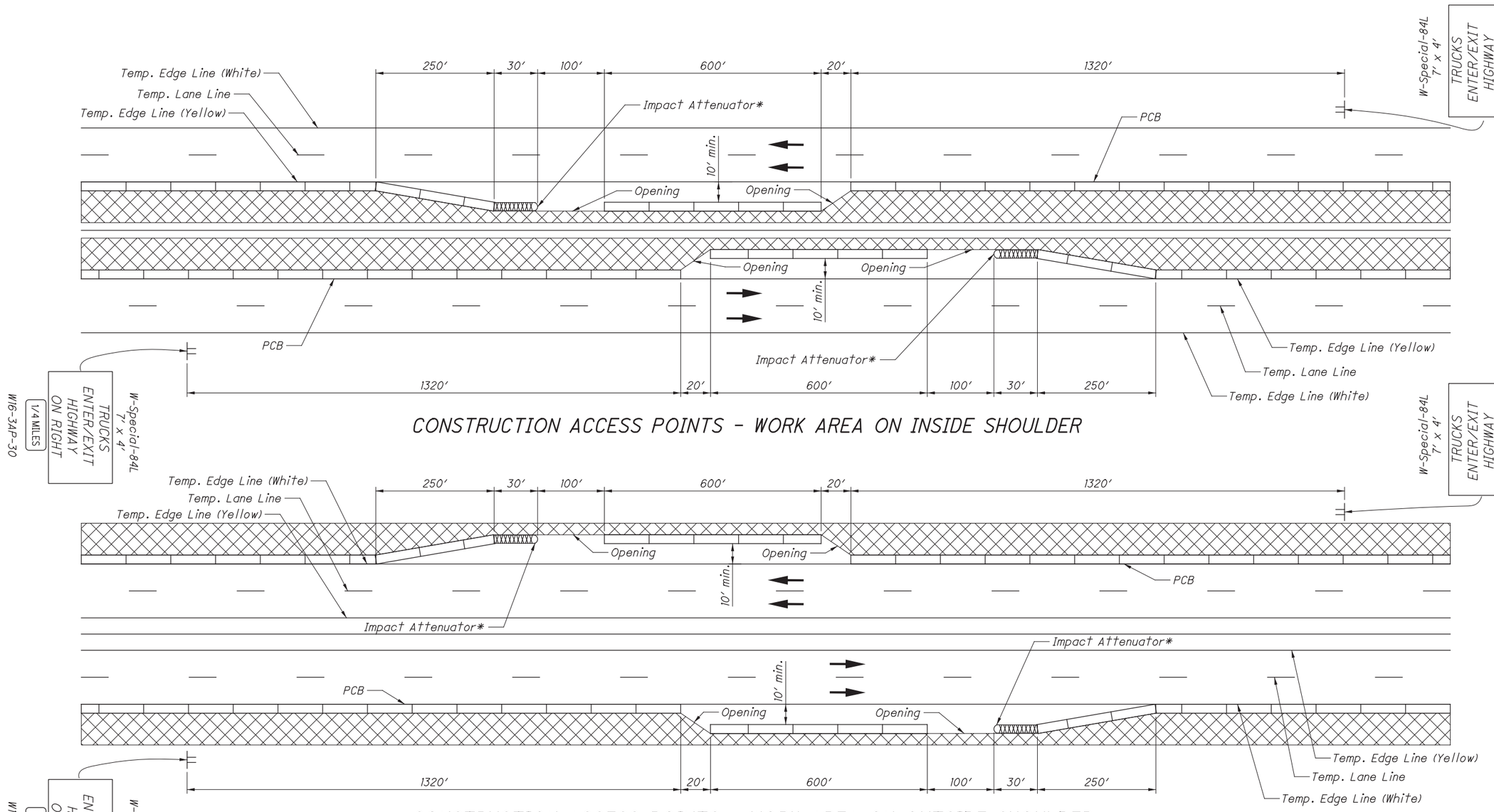

CONSTRUCTION ACCESS POINTS - WORK AREA ON INSIDE SHOULDER

CONSTRUCTION ACCESS POINTS - WORK AREA ON OUTSIDE SHOULDER

*NOTE: Impact attenuator and the last full section of PCB adjacent to the impact attenuator shall be placed parallel to traffic

W-SPECIAL-84 (R/L)

(SIGN INFORMATION SHOWN IN ENGLISH UNITS ONLY)

TABLE OF WIDTHS AND SPACES

NO BORDER, BLACK ON ORANGE; E MOD FONT

	T		R		U		C		K		S													
18.50	5.94	1.65	6.38	2.05	6.37	2.06	6.37	1.65	6.50	1.65	6.38	18.50												
	E		N		T		E		R		/		E		X		I		T					
6.67	5.94	1.65	6.38	1.67	5.94	1.65	5.94	1.65	5.94	0.55	6.47	1.10	5.94	1.65	6.94	1.65	1.60	1.65	5.94	6.67				
	H		I		G		H		W		A		Y											
14.96	6.38	2.05	1.60	2.05	6.38	2.05	6.37	1.65	8.44	0.56	8.00	0.55	8.00	14.96										
	O		N		R		I		G		H		T											
13.21	6.69	2.05	6.37	8.00	6.38	2.05	1.60	2.05	6.38	2.05	6.37	1.65	5.94	13.21										
	O		N		L		E		F		T													
15.87	6.69	2.05	6.37	8.00	6.38	1.65	5.94	1.65	5.94	1.65	5.94	15.87												

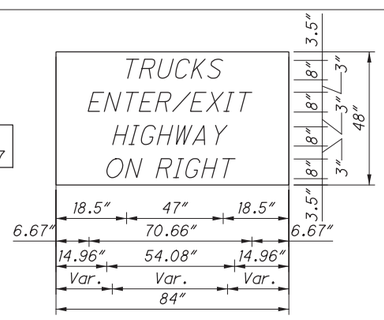

CONSTRUCTION ACCESS POINTS

Construction access point locations may be selected by the Contractor with the approval of the Engineer. The locations shall be selected for good sight distance and ease of access for entering vehicles (avoid locations just beyond crest vertical curves, on overhead structures, on upgrades, etc.). In the event that the Engineer determines that an access point does not function in a safe manner, he/she shall order it immediately closed at no cost to the State. Access points may be relocated subject to the approval of the Engineer, as necessary to accomplish construction activities.

All costs for relocation of portable concrete barrier, installation, repair, replacement and removal of impact attenuators, grading for access drives and related costs shall be included in the lump sum bid for Item 614 Maintaining Traffic.

THIS DRAWING REPLACES PIS 209563 DATED 04-16-2010.

OFFICE OF ROADWAY ENGINEERING

DESIGNED | REVIEWED

REVISION DATE 07-18-2014 | CHECKED

PIS NUMBER 209563

PLAN INSERT SHEET

CONSTRUCTION ACCESS POINTS

PIS 209563

1 / 1

22
623

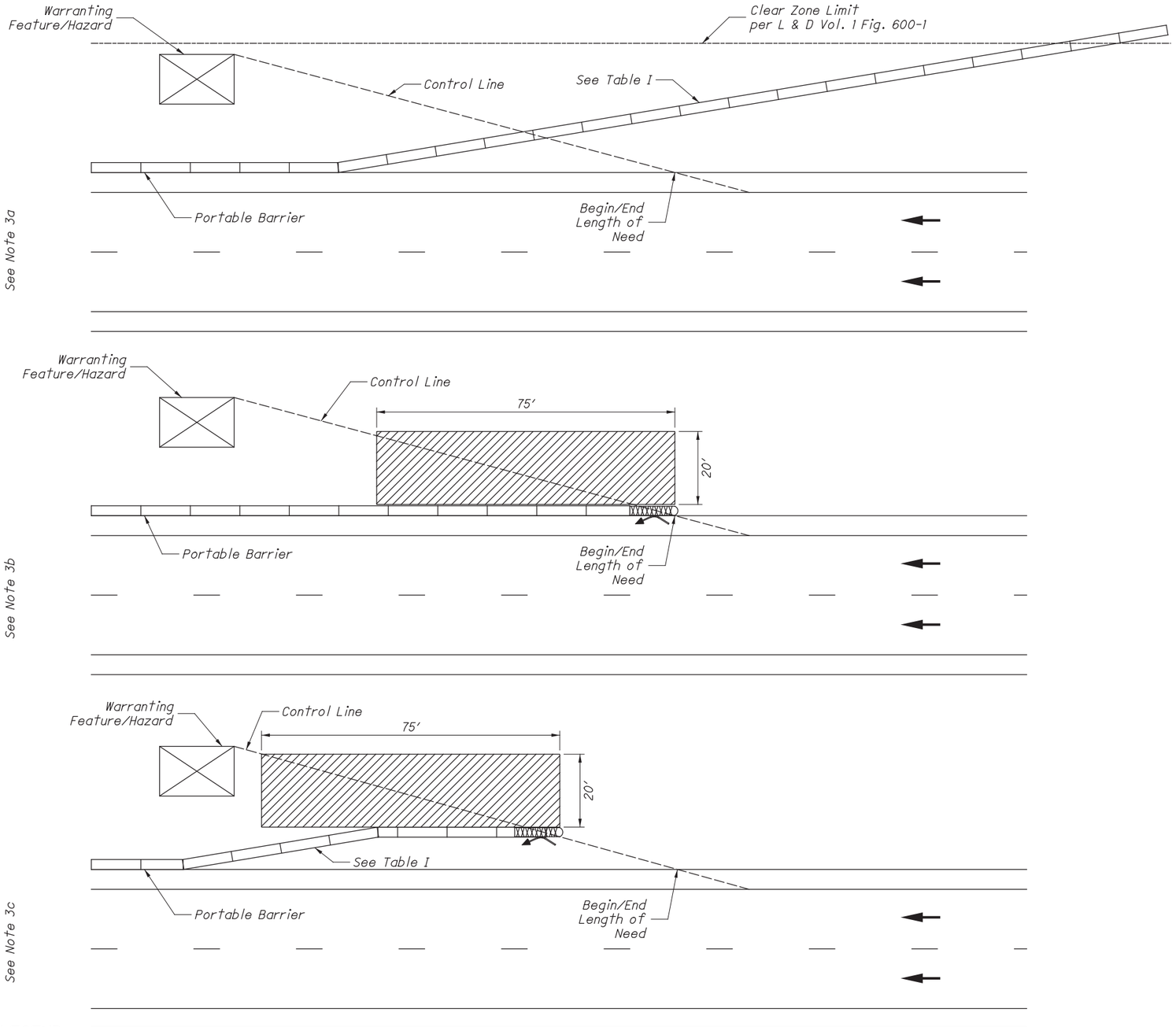

LEGEND

- RECOVERY AREA
- PORTABLE BARRIER
- NON-GATING IMPACT ATTENUATOR
- DIRECTION OF TRAVEL

NOTES:

1. Attenuators shall be installed per the manufacturer's specifications.

2. Recovery area shall have slopes 3:1 or flatter and be free of workers, hazards, equipment, drop-offs, and material storage.

3. The Contractor shall select one of the three acceptable options for terminating portable barrier:

   a) Terminate flared section of portable barrier outside clear zone with tapered end only where cross slopes are 10:1 or flatter.
   b) Terminate portable barrier with an impact attenuator. A non-gating attenuator may be included in the length of need measurement.
   c) Flare a section of portable barrier to the length of need control line and terminate with an impact attenuator. A non-gating impact attenuator may be included in the flared section of portable barrier.

4. The Contractor shall submit documentation to the Engineer, 2 weeks prior to implementation, for acceptance when:

   a) Deviating from the three acceptable options for terminating portable barrier.

      Documentation shall explain any deviations and verify that the recovery area fulfills the manufacturer's specifications and Note 2.

   b) Using a gating impact attenuator in lieu of a non-gating impact attenuator.

      The gating impact attenuator length shall not be included as part of the length of need or recovery area requirements. Additional portable barrier will need to be added. The additional cost for the additional barrier required for a gating impact attenuator shall be included in the cost of the gating impact attenuator.

      Documentation shall verify that the extended recovery area fulfills the manufacturer's specifications and and Note 2.

5. Gating impact attenuators shall not be used in gore locations or within the clear zone between bi-directional traffic.

TABLE I

SPEED LIMIT (MPH)	PB FLARE RATE MINIMUM
25	8:1
30	8:1
35	9:1
40	10:1
45	12:1
50	14:1
55	16:1
60	18:1
65	19:1
70	20:1

THIS DRAWING REPLACES PIS 2010175 DATED 7-20-2012.

OFFICE OF ROADWAY ENGINEERING

DESIGNED | REVIEWED

REVISION DATE 7-19-2013 | CHECKED

PIS NUMBER 2010175

PLAN INSERT SHEET

IMPACT ATTENUATOR PLACEMENT

FRA-71-5.29

1 / 1

23
623

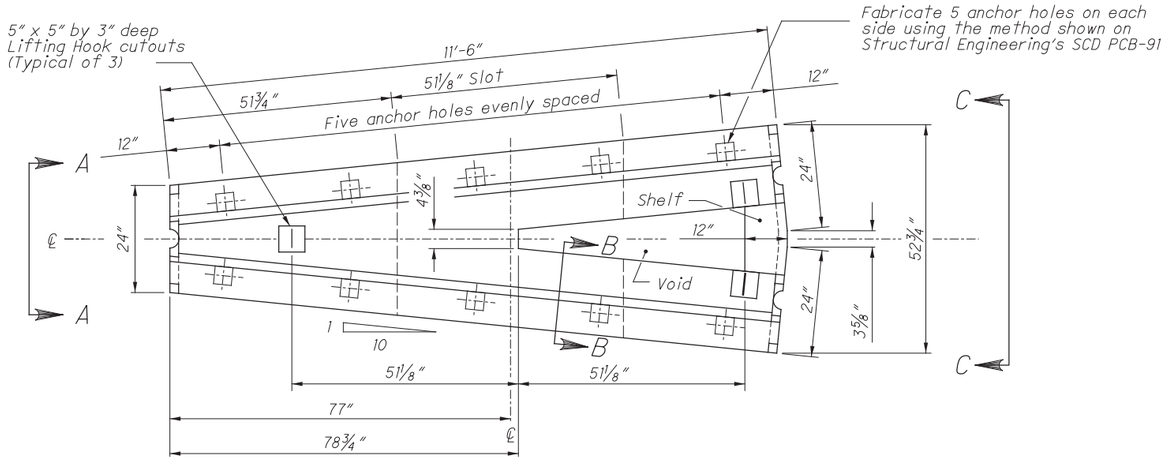

PLAN

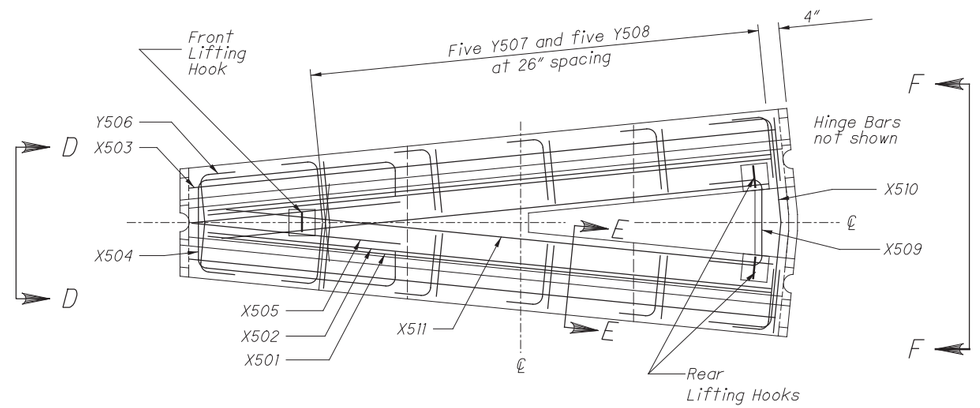

REINFORCING PLAN VIEW

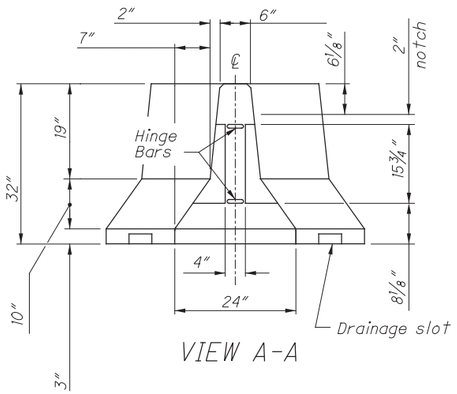

VIEW A-A

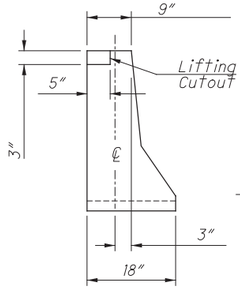

SECTION B-B

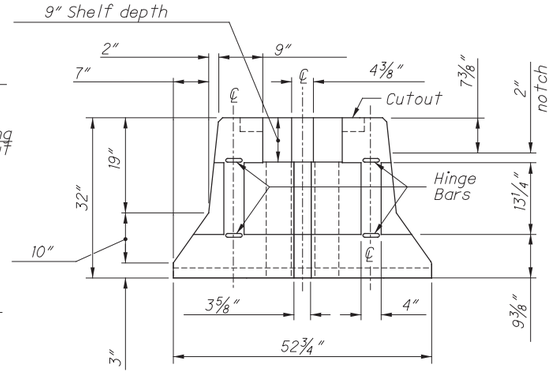

VIEW C-C

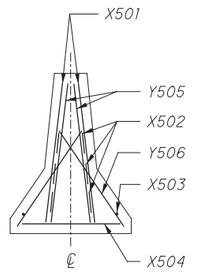

VIEW D-D

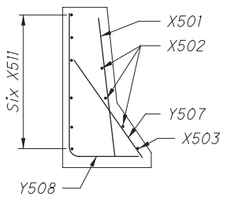

SECTION E-E

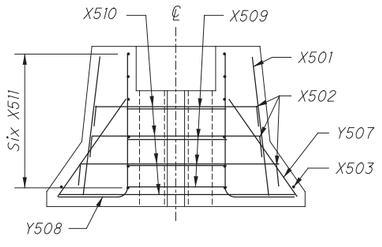

VIEW F-F

REINFORCING DETAILS

NOTES

GENERAL: This barrier segment is used to split one run of portable concrete barrier into dual runs. Attach directly to ODOT's 32" PCB; however, other approved barrier shapes may be connected to this segment by the use of an appropriate transition unit. Attach at least one standard PCB segment in between this "Y" and an Impact Attenuator. Its field application is shown in MOT plans and on MT standard drawings. Do not use this barrier in an unanchored configuration next to bridge deck edges or similiar dropoffs, anchor according to method shown on PCBDD or other approved method.

BARRIER DETAILS: Use SCD RM-4.2 for details not shown here, including the geometry of this pin and loop segment matches in every way the design of the end connections shown on the HINGED CONNECTION and JOINT CONNECTION Details (the alternate J-J Hooks connection design is permitted). Additionally, barrier edges may be radiused or chamfered as per the LEGEND Note, barrier is to be permanently marked as mentioned in the MARKINGS Note, and delineate as per the REFLECTORIZATION Note.

MATERIAL SPECIFICATIONS: The minimum design strength of the concrete is 4,000 psi and meets the requirements of CMS 499. For reinforcing steel, use ASTM A615 Grade 60 black steel and provide 2" min. rebar cover. Material specifications for the Hinge and Reinforcing Bars, as well as the Connecting Hardware may be found on SCD RM-4.2. For additional material specifications not shown here, see SCD RM-4.2 and CMS 622.

HANDLING: The fabricator is responsible for the design of a lifting system for handling segments. As a minimum, use three lifting points at the locations suggested in the Plan views, and design with a lifting factor of safety of 4. Any protrusions from the lifting hook design is not to affect the crash worthiness of the barrier. The calculations shall be signed, sealed and dated by a Registered Engineer and include these calculations with the Manufacturing Drawings required by Supplement 1073.12. Refer to Part 5 of the PCI Handbook. Approximate segment weight is 8,500 lbs [3850 kg].

PAYMENT: Payment will be made under Item 622 - Portable Barrier, "Y" Connector, Each, and will include all forms, materials and labor to cast this segment.

ALTERNATE METHOD: Contractors may choose to use a wide Impact Attenuator in lieu of the concrete "Y" alternate. The chosen unit will be a Type 2 or 3 Impact Attenuator matching the product previously called for on the project plans at the expected installation location.

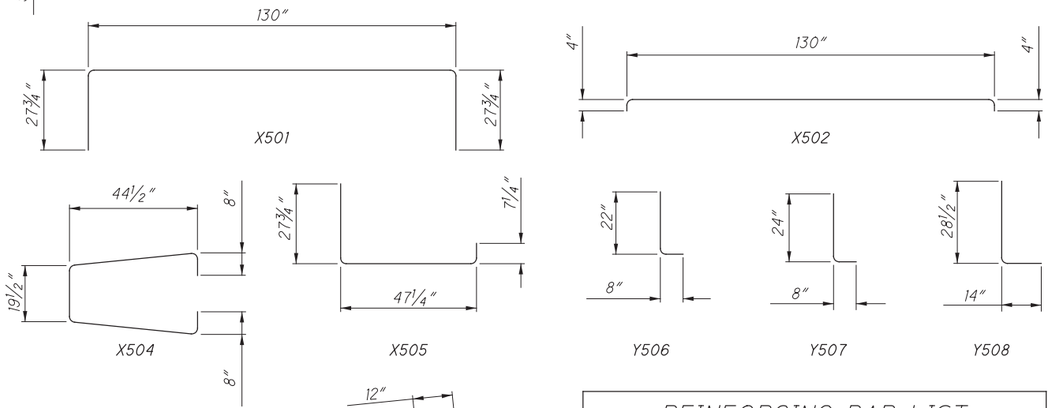

BENDING DIAGRAMS

REINFORCING BAR LIST

BAR	LENGTH	SHAPE	QUANT.
X501	185.5"	Bent	2
X502	138"	Bent	6
X503	130"	Str.	2
X504	124.5"	Bent	1
X505	82.25"	Bent	2
Y506	30"	Bent	2
Y507	32"	Bent	10
Y508	42.5"	Bent	10
X509	43.5"	Bent	4
X510	Varies	Bent	4
X511	124"	Str.	12

THIS DRAWING REPLACES Y BARRIER PLAN INSERT SHEET DATED 11-30-07

OFFICE OF ROADWAY ENGINEERING

DESIGNED | REVIEWED

REVISION DATE 4-16-10 | CHECKED

PLAN INSERT SHEET

PCB "Y" CONNECTOR SEGMENT

FRA-71-5.29

1 / 1

24
623

P:\84868\mot\sheets\84868MM003.dgn 3/27/2015 2:29:08 PM kfahy

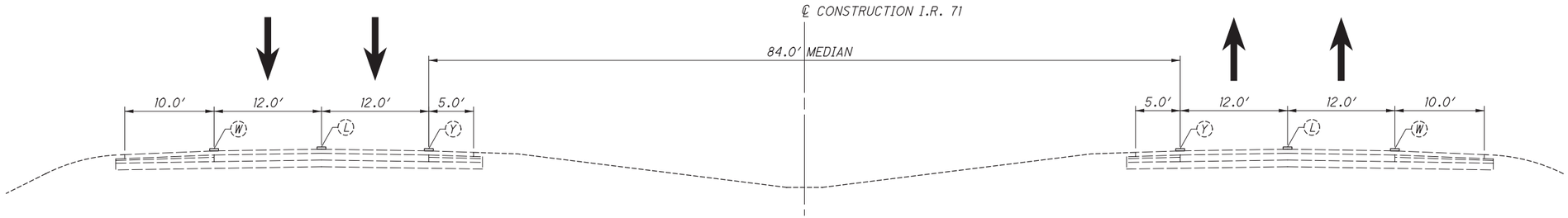

SECTION A-A

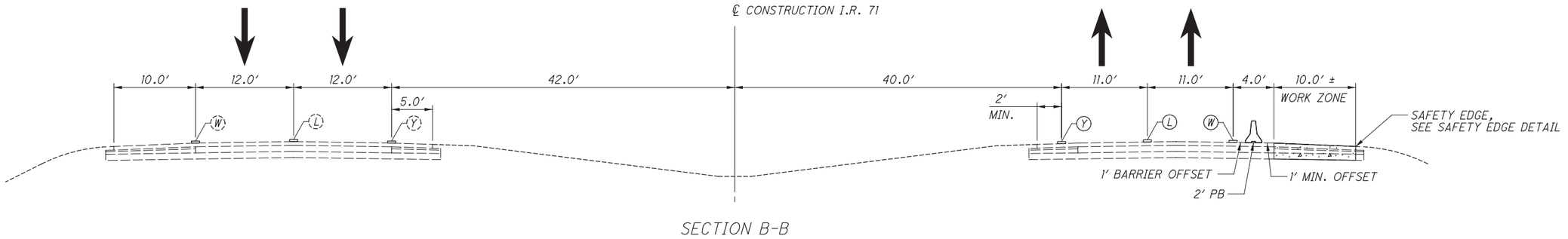

SECTION B-B

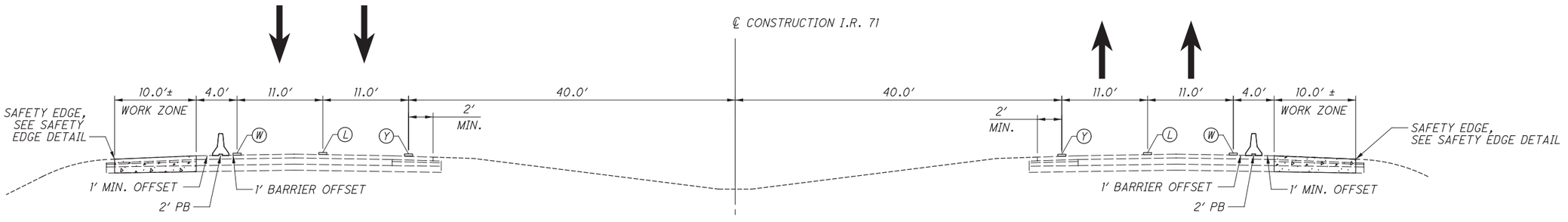

SECTION C-C

SAFETY EDGE DETAIL

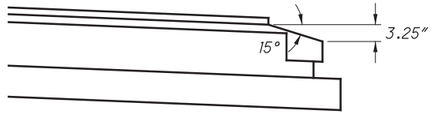

FLEXIBLE PAVEMENT

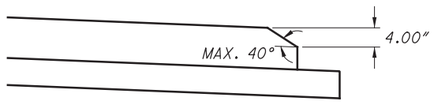

RIGID PAVEMENT

LEGEND

- (W) EXISTING EDGE LINE, WHITE
- (Y) EXISTING EDGE LINE, YELLOW
- (L) EXISTING LANE LINE
- (W) WORK ZONE EDGE LINE, WHITE, CLASS I
- (Y) WORK ZONE EDGE LINE, YELLOW, CLASS I
- (L) WORK ZONE LANE LINE, CLASS I

PAVEMENT FOR MAINTAINING TRAFFIC, CLASS A TO BE CONSTRUCTED

MAINTENANCE OF TRAFFIC - IR 71
TYPICAL SECTIONS - PHASE 1

FRA-71-5.29

25
623

P:\84668\mot\sheets\84868MY100.dgn 3/27/2015 2:29:08 PM kfahy

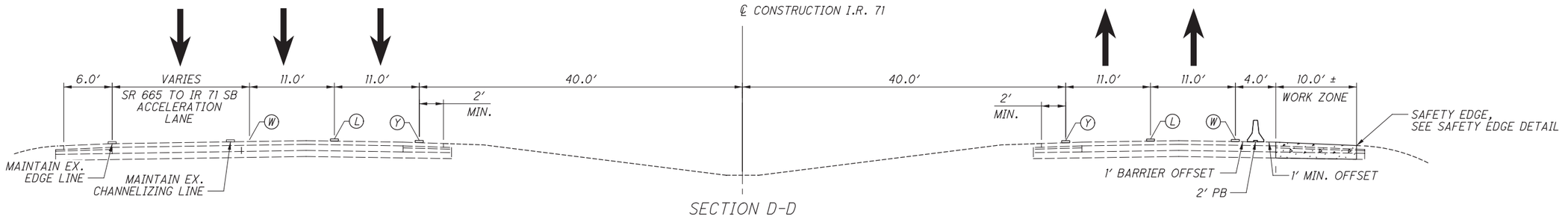

SECTION D-D

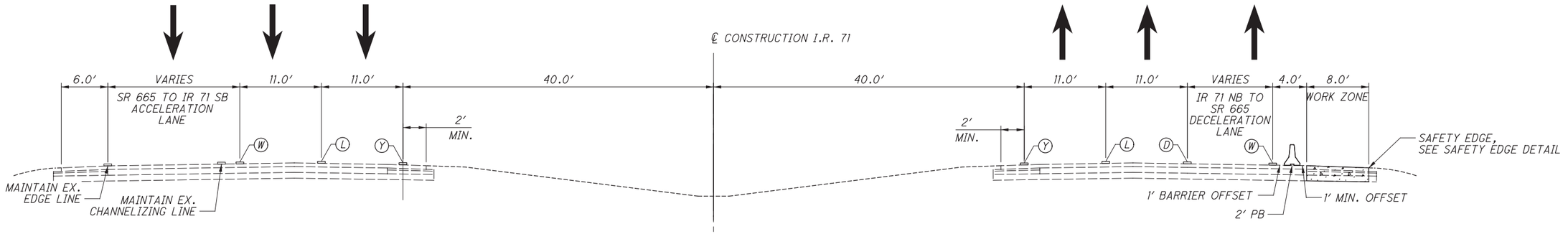

SECTION E-E

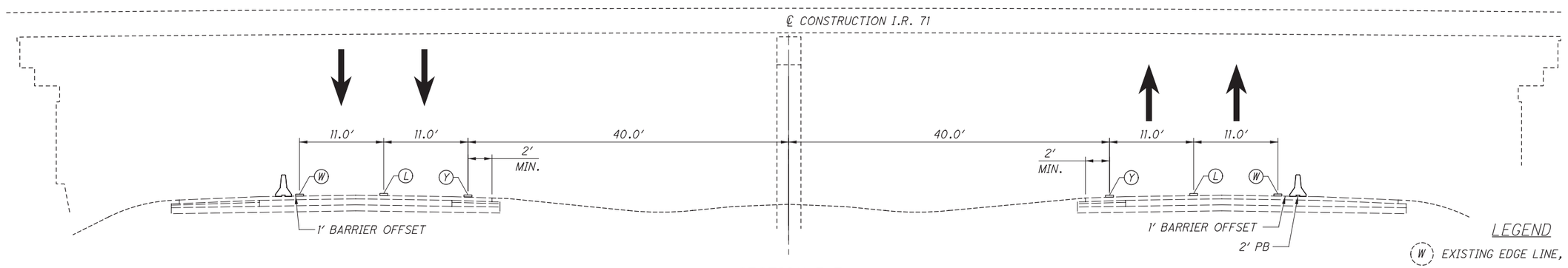

SECTION F-F

LEGEND

- (W) EXISTING EDGE LINE, WHITE
- (Y) EXISTING EDGE LINE, YELLOW
- (L) EXISTING LANE LINE
- (W) WORK ZONE EDGE LINE, WHITE, CLASS I
- (Y) WORK ZONE EDGE LINE, YELLOW, CLASS I
- (L) WORK ZONE LANE LINE, CLASS I

PAVEMENT FOR MAINTAINING TRAFFIC, CLASS A TO BE CONSTRUCTED

MAINTENANCE OF TRAFFIC - IR 71
TYPICAL SECTIONS - PHASE 1

FRA-71-5.29

P:\84868\mot\sheets\84868MY101.dgn 3/27/2015 2:29:09 PM kfahy

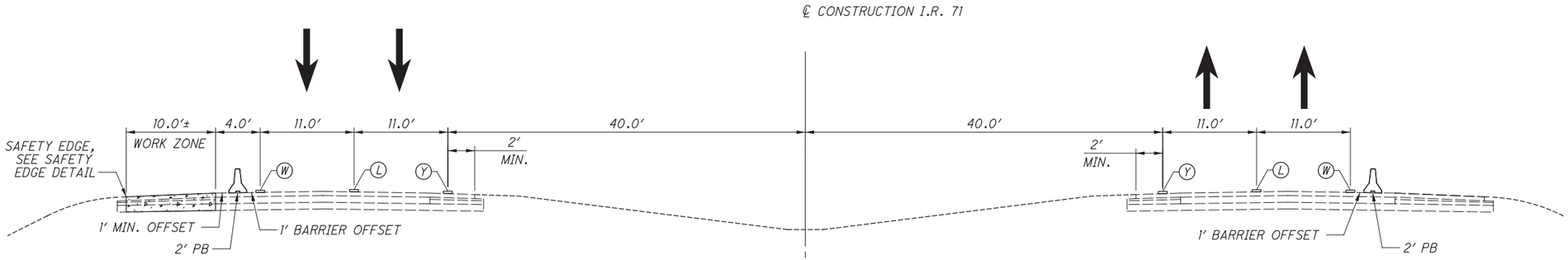

SECTION G-G

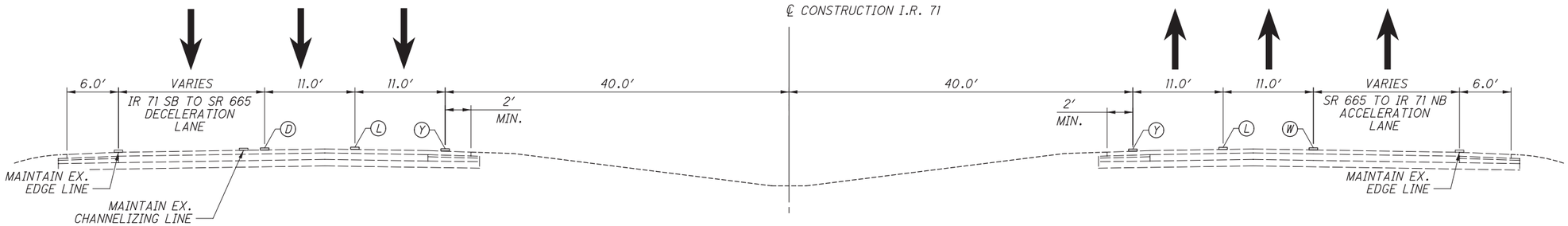

SECTION H-H

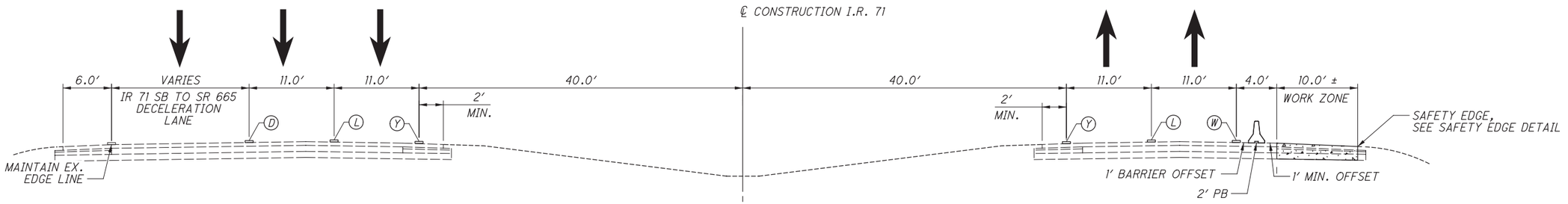

SECTION I-I

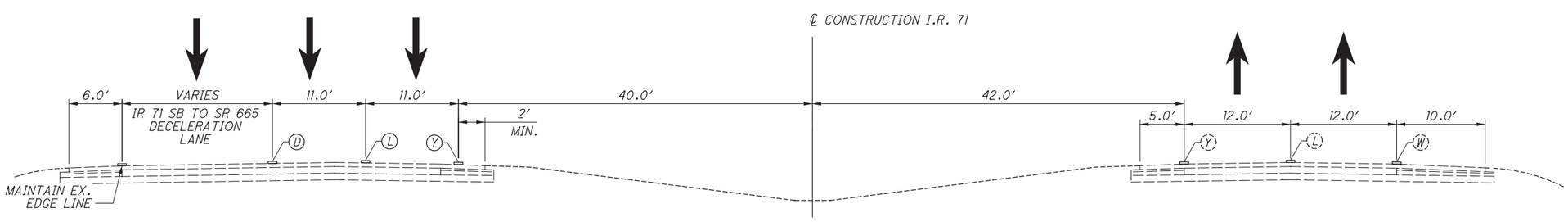

SECTION J-J

PAVEMENT FOR MAINTAINING TRAFFIC, CLASS A TO BE CONSTRUCTED

LEGEND

- (W) EXISTING EDGE LINE, WHITE
- (Y) EXISTING EDGE LINE, YELLOW
- (L) EXISTING LANE LINE
- (D) WORK ZONE DOTTED LINE, WHITE, CLASS I
- (W) WORK ZONE EDGE LINE, WHITE, CLASS I
- (Y) WORK ZONE EDGE LINE, YELLOW, CLASS I
- (L) WORK ZONE LANE LINE, CLASS I

MAINTENANCE OF TRAFFIC - IR 71
TYPICAL SECTIONS - PHASE 1

FRA-71-5.29

P:\84868\mot\sheets\84868MY102.dgn 3/27/2015 2:29:09 PM kfahy

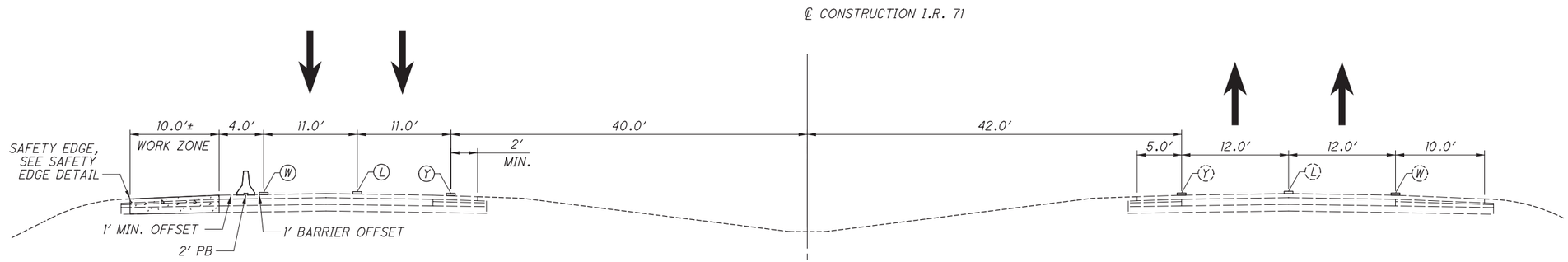

SECTION K-K

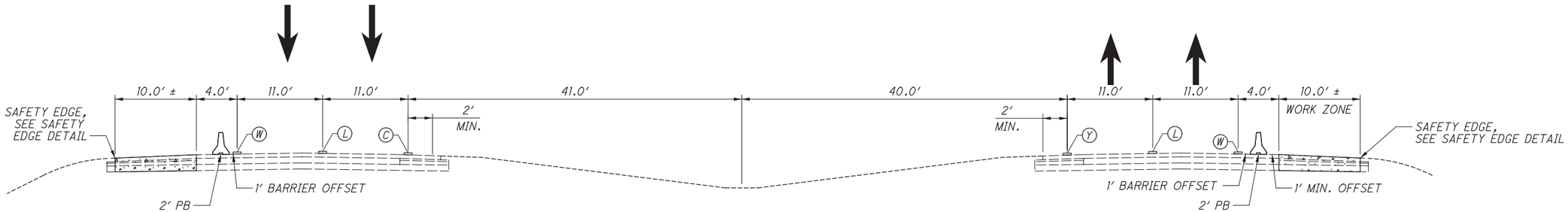

SECTION L-L

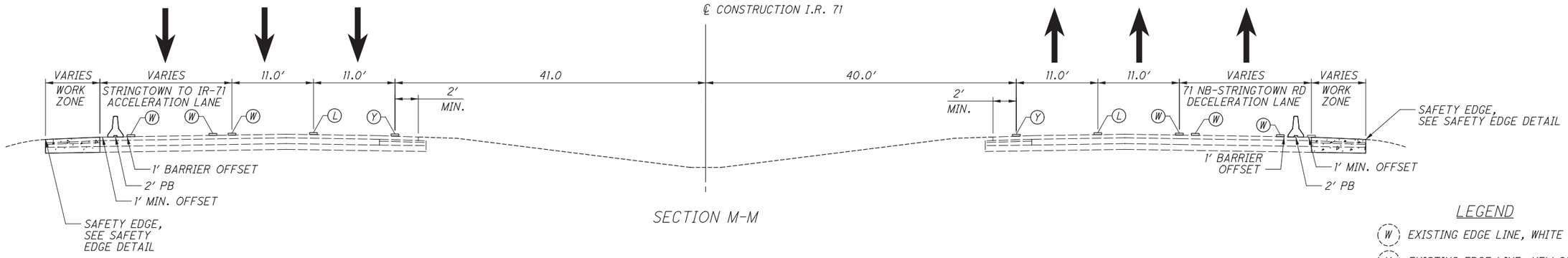

SECTION M-M

LEGEND

- (W) EXISTING EDGE LINE, WHITE
- (Y) EXISTING EDGE LINE, YELLOW
- (L) EXISTING LANE LINE
- (D) WORK ZONE DOTTED LINE, WHITE, CLASS I
- (W) WORK ZONE EDGE LINE, WHITE, CLASS I
- (Y) WORK ZONE EDGE LINE, YELLOW, CLASS I
- (L) WORK ZONE LANE LINE, CLASS I

PAVEMENT FOR MAINTAINING TRAFFIC, CLASS A TO BE CONSTRUCTED

MAINTENANCE OF TRAFFIC - IR 71
TYPICAL SECTIONS - PHASE 1

FRA-71-5.29

P:\84868\mot\sheets\84868MY103.dgn 3/27/2015 2:29:10 PM kfahy

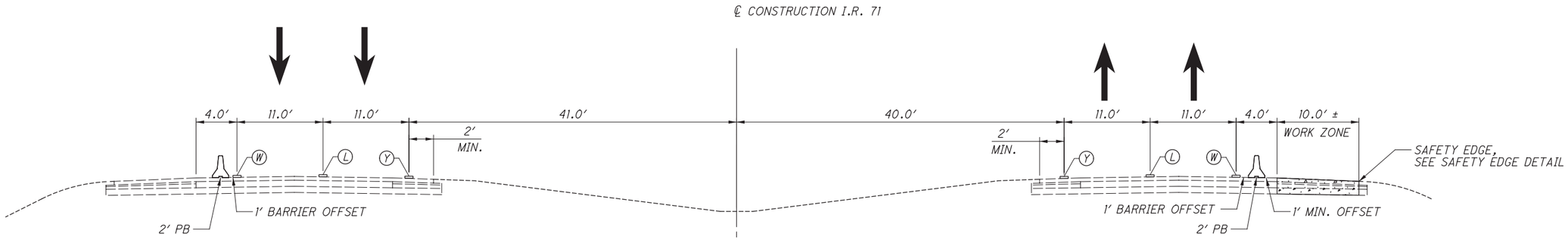

SECTION N-N

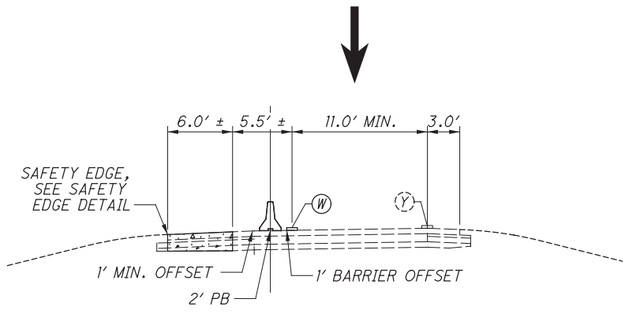

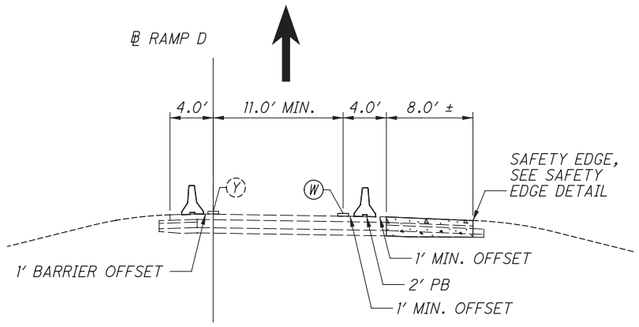

SECTION P-P

PAVEMENT FOR MAINTAINING TRAFFIC, CLASS A TO BE CONSTRUCTED

LEGEND

- (W) EXISTING EDGE LINE, WHITE
- (Y) EXISTING EDGE LINE, YELLOW
- (L) EXISTING LANE LINE
- (D) WORK ZONE DOTTED LINE, WHITE, CLASS I
- (W) WORK ZONE EDGE LINE, WHITE, CLASS I
- (Y) WORK ZONE EDGE LINE, YELLOW, CLASS I
- (L) WORK ZONE LANE LINE, CLASS I

MAINTENANCE OF TRAFFIC - IR 71
TYPICAL SECTIONS - PHASE 1

FRA-71-5.29

29
623

P:\84868\mot\sheets\84868MY104.dgn 3/27/2015 2:29:10 PM kfahy

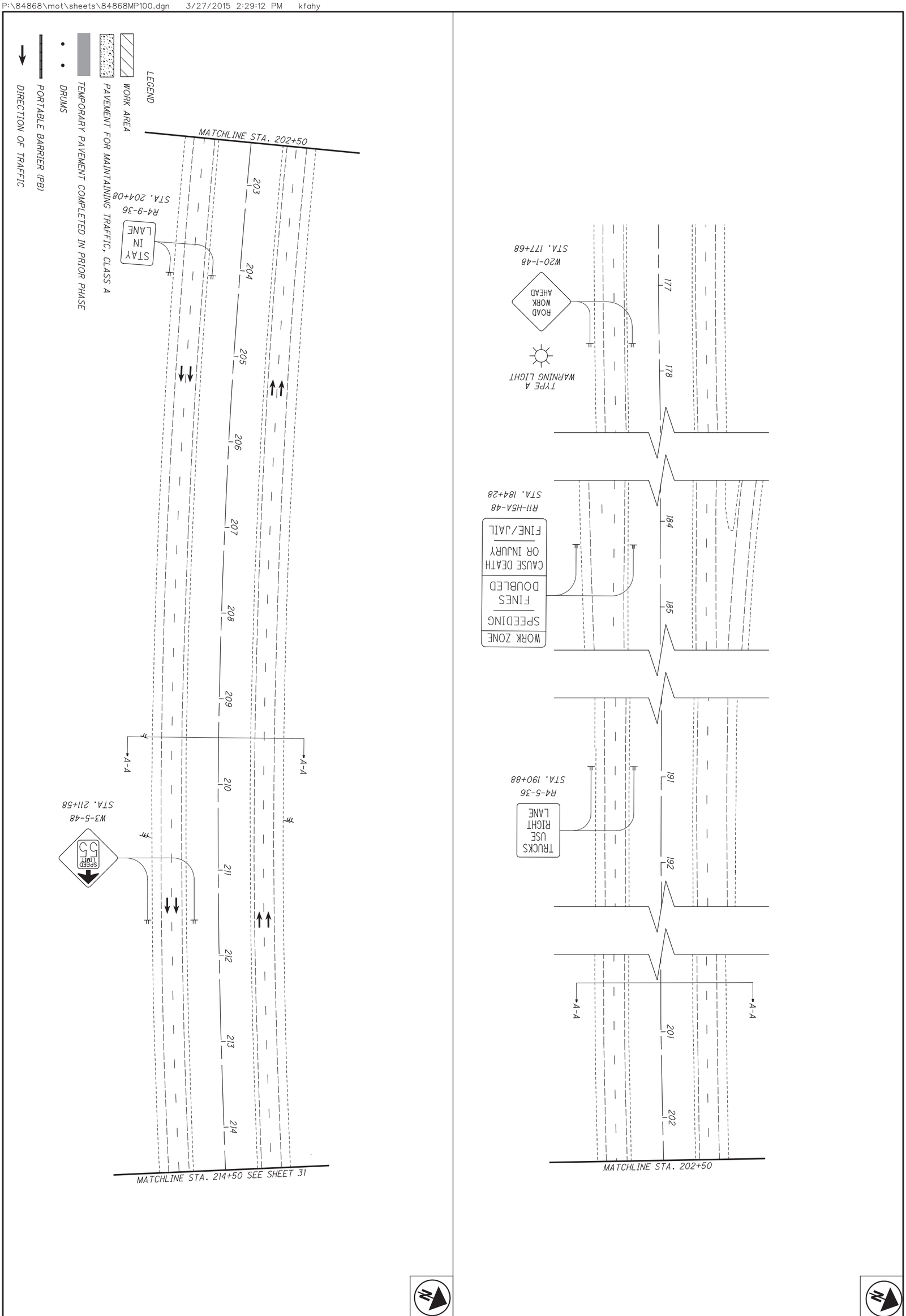

30 623	FRA-71-5.29	MAINTENANCE OF TRAFFIC - PHASE 1 STA. 190+50.00 TO STA. 214+50.00	CALCULATED GPD CHECKED BBD	0 50 25 100 HORIZONTAL SCALE IN FEET

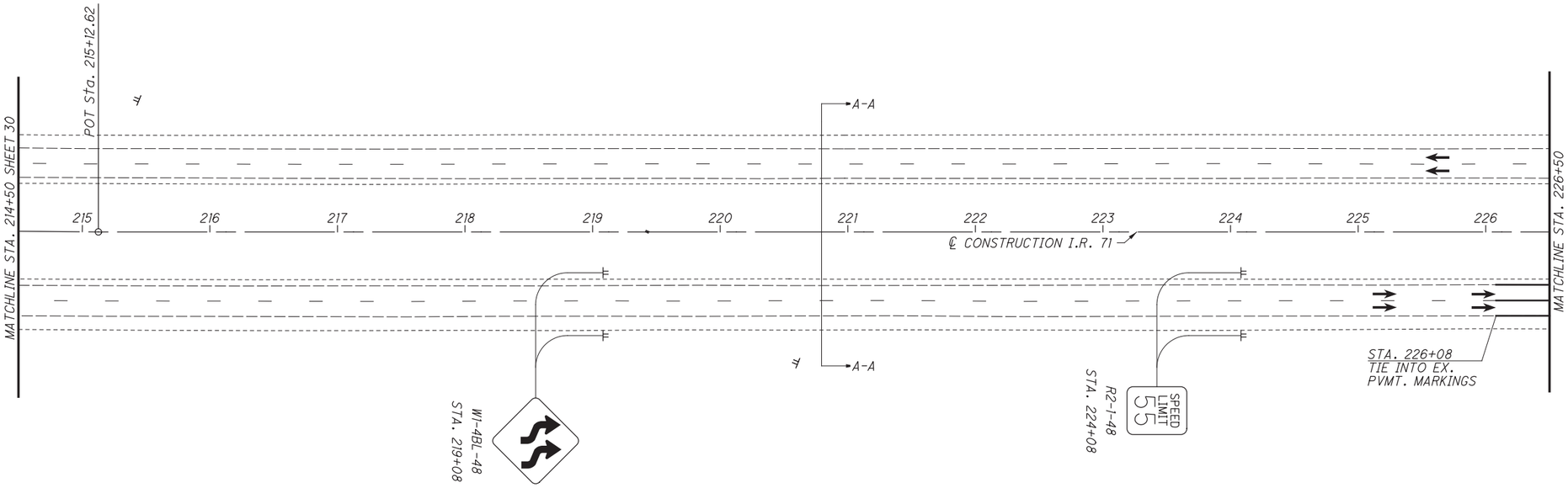

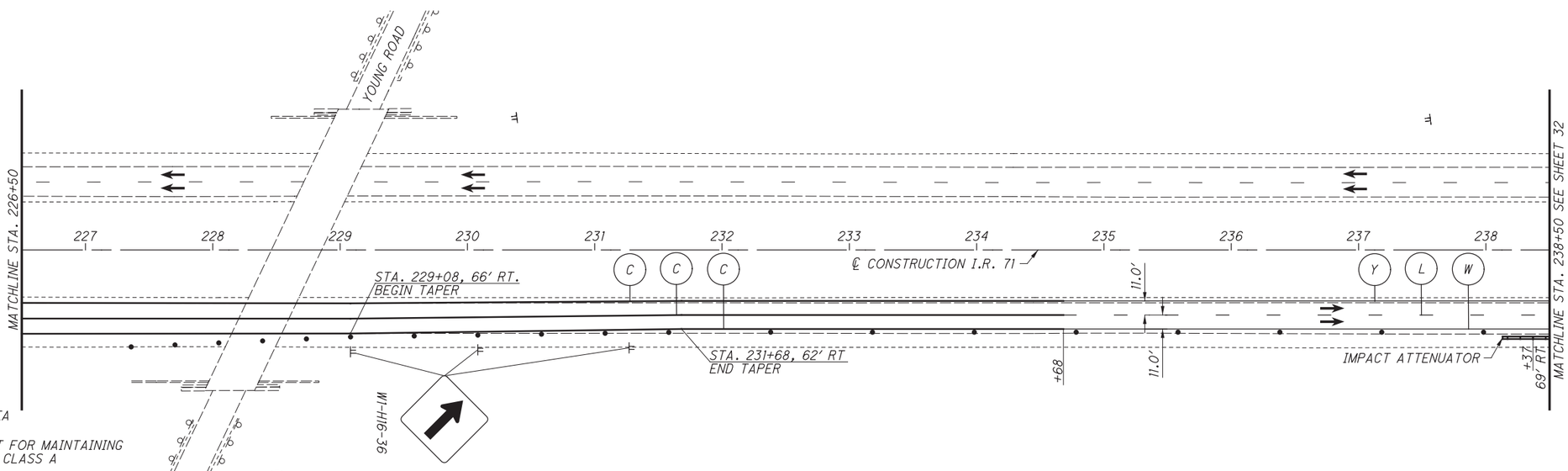

LEGEND

- WORK AREA
- PAVEMENT FOR MAINTAINING TRAFFIC, CLASS A
- TEMPORARY PAVEMENT COMPLETED IN PRIOR PHASE
- DRUMS
- PORTABLE BARRIER (PB)
- DIRECTION OF TRAFFIC

(Y) ITEM 614 - WORK ZONE EDGE LINE, CLASS 1, 642 PAINT (YELLOW)

(C) ITEM 614 - WORK ZONE CHANNELIZING LINE, CLASS 1, 642 PAINT

(L) ITEM 614 - WORK ZONE LANE LINE, CLASS 1, 642 PAINT

(D) ITEM 614 - WORK ZONE DOTTED LINE, CLASS 1, 642 PAINT

(W) ITEM 614 - WORK ZONE EDGE LINE, CLASS 1, 642 PAINT (WHITE)

HORIZONTAL SCALE IN FEET
0 25 50 100

CALCULATED GPD
CHECKED BBD

MAINTENANCE OF TRAFFIC - PHASE 1
STA. 214+50.00 TO STA. 238+50.00

FRA-71-5.29

31
623

P:\84868\mot\sheets\84868MP101.dgn 3/27/2015 2:29:13 PM kfahy

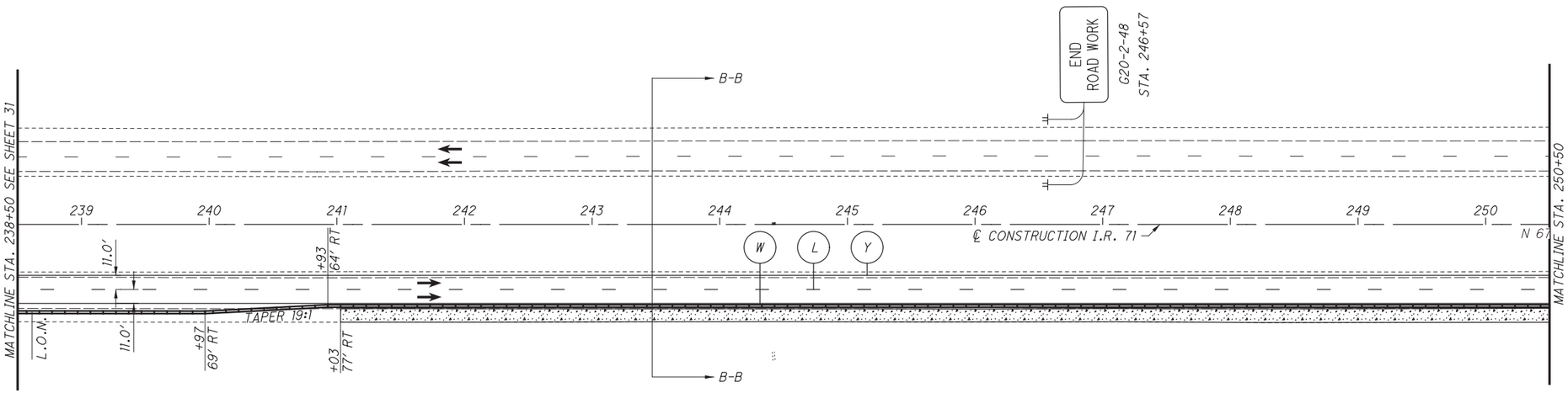

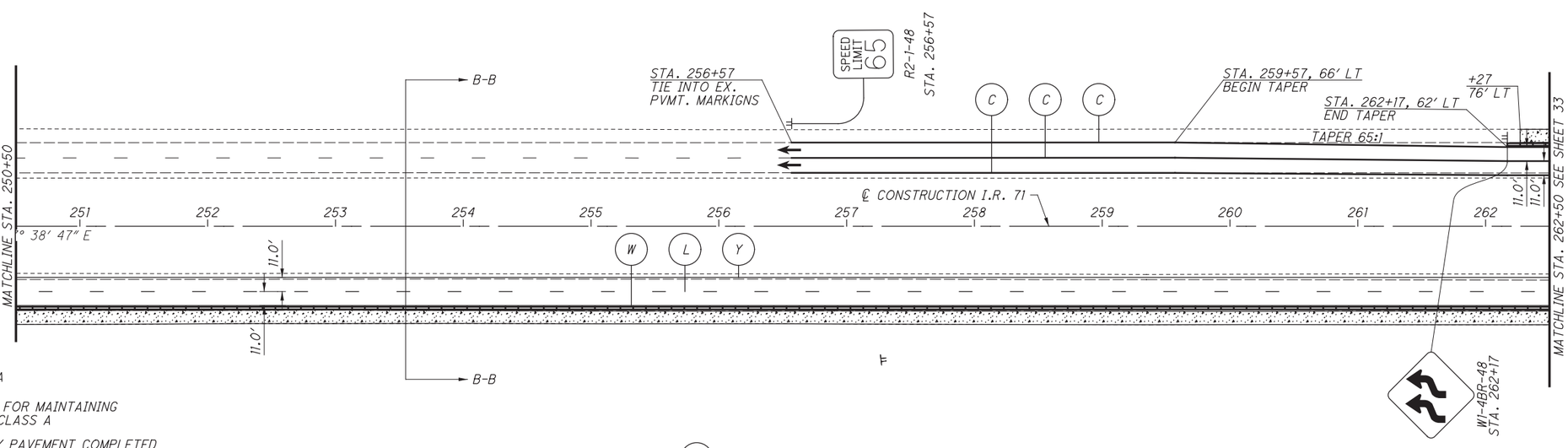

LEGEND

- WORK AREA
- PAVEMENT FOR MAINTAINING TRAFFIC, CLASS A
- TEMPORARY PAVEMENT COMPLETED IN PRIOR PHASE
- DRUMS
- PORTABLE BARRIER (PB)
- DIRECTION OF TRAFFIC

(C) ITEM 614 - WORK ZONE CHANNELIZING LINE, CLASS 1, 642 PAINT

(D) ITEM 614 - WORK ZONE DOTTED LINE, CLASS 1, 642 PAINT

(Y) ITEM 614 - WORK ZONE EDGE LINE, CLASS 1, 642 PAINT (YELLOW)

(L) ITEM 614 - WORK ZONE LANE LINE, CLASS 1, 642 PAINT

(W) ITEM 614 - WORK ZONE EDGE LINE, CLASS 1, 642 PAINT (WHITE)

HORIZONTAL SCALE IN FEET
0 25 50 100

CALCULATED GPD
CHECKED BBD

MAINTENANCE OF TRAFFIC - PHASE 1
STA. 238+50.00 TO STA. 262+50.00

FRA-71-5.29

32
623

P:\84868\mot\sheets\84868MP102.dgn 3/27/2015 2:29:13 PM kfahy

NOTES:
1 - THE ESTIMATED QUANTITY FOR ITEM 615 - PAVEMENT FOR MAINTAINING TRAFFIC, CLASS A SHALL INCLUDE THE REMOVAL OF EXISTING SHOULDERS AND PLACEMENT OF PAVEMENT FOR MAINTAINING TRAFFIC, CLASS A.

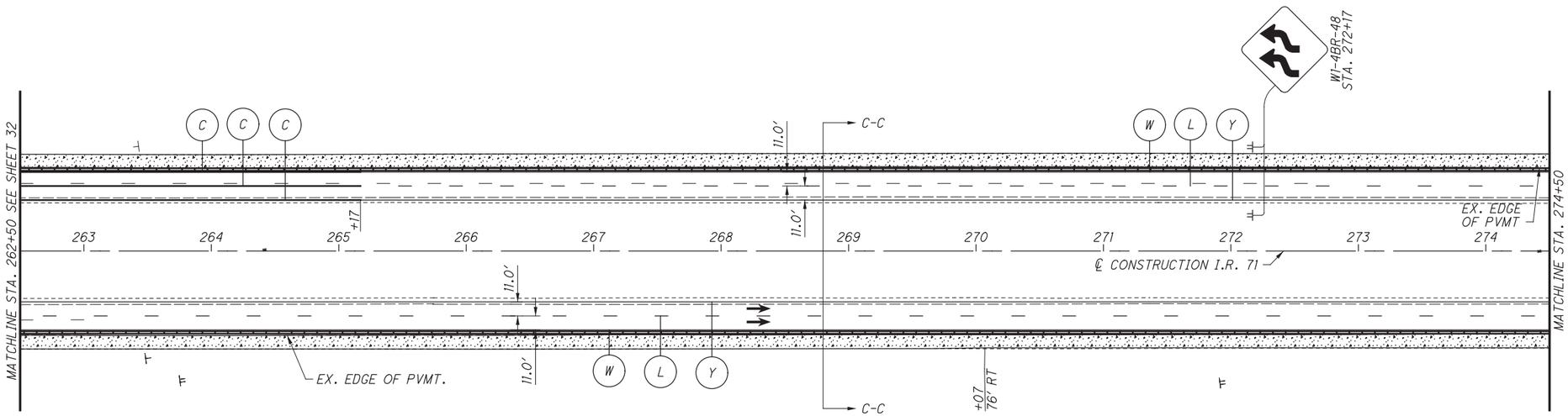

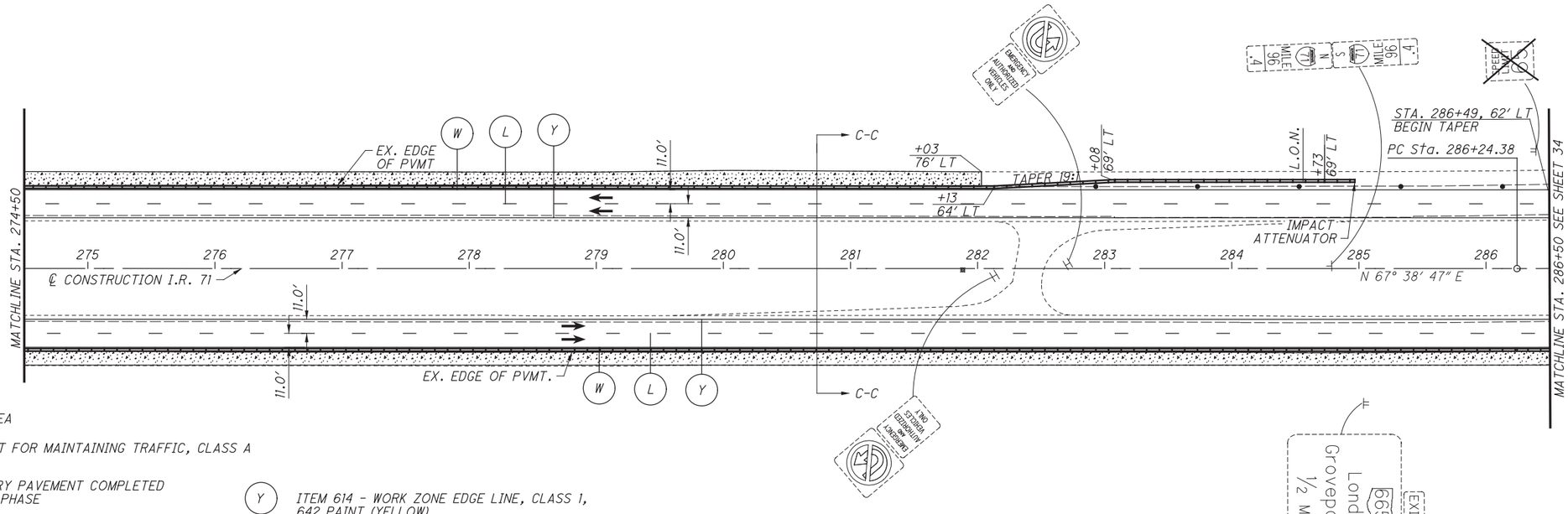

LEGEND

- WORK AREA
- PAVEMENT FOR MAINTAINING TRAFFIC, CLASS A
- TEMPORARY PAVEMENT COMPLETED IN PRIOR PHASE
- DRUMS
- PORTABLE BARRIER (PB)
- DIRECTION OF TRAFFIC

(Y) ITEM 614 - WORK ZONE EDGE LINE, CLASS 1, 642 PAINT (YELLOW)
(C) ITEM 614 - WORK ZONE CHANNELIZING LINE, CLASS 1, 642 PAINT
(D) ITEM 614 - WORK ZONE DOTTED LINE, CLASS 1, 642 PAINT
(L) ITEM 614 - WORK ZONE LANE LINE, CLASS 1, 642 PAINT
(W) ITEM 614 - WORK ZONE EDGE LINE, CLASS 1, 642 PAINT (WHITE)

HORIZONTAL SCALE IN FEET
0 25 50 100
CALCULATED GPD
CHECKED BBD

MAINTENANCE OF TRAFFIC - PHASE 1
STA. 262+50.00 TO STA. 286+50.00

FRA-71-5.29

33
623

P:\84868\mot\sheets\84868MP103.dgn 3/27/2015 2:29:14 PM kfahy

LEGEND

- WORK AREA
- PAVEMENT FOR MAINTAINING TRAFFIC, CLASS A
- TEMPORARY PAVEMENT COMPLETED IN PRIOR PHASE
- DRUMS
- PORTABLE BARRIER (PB)
- DIRECTION OF TRAFFIC

(Y) ITEM 614 - WORK ZONE EDGE LINE, CLASS 1, 642 PAINT (YELLOW)
(C) ITEM 614 - WORK ZONE CHANNELIZING LINE, CLASS 1, 642 PAINT
(D) ITEM 614 - WORK ZONE DOTTED LINE, CLASS 1, 642 PAINT
(L) ITEM 614 - WORK ZONE LANE LINE, CLASS 1, 642 PAINT
(W) ITEM 614 - WORK ZONE EDGE LINE, CLASS 1, 642 PAINT (WHITE)

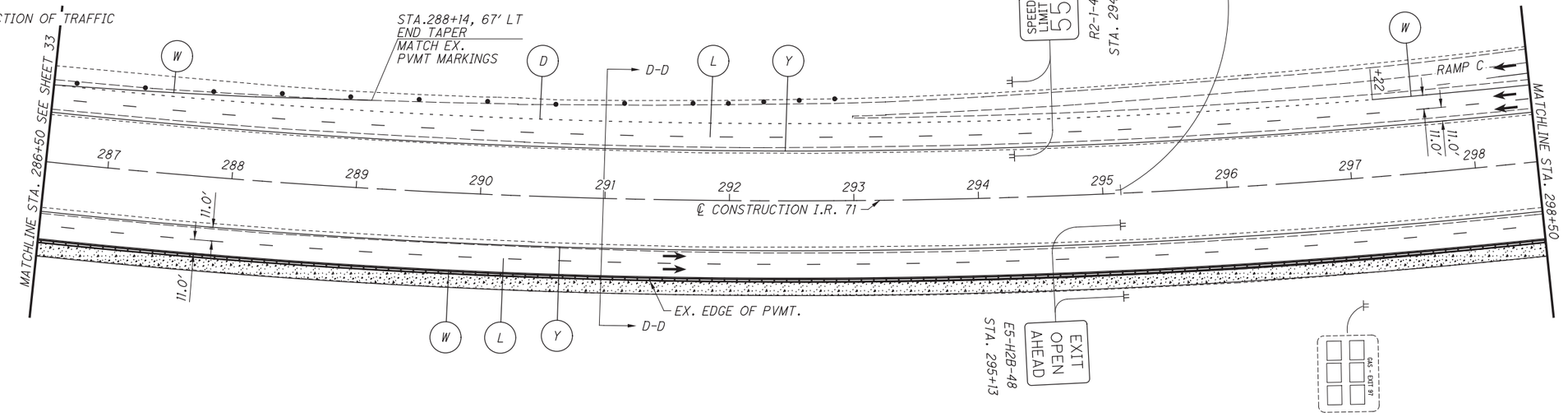

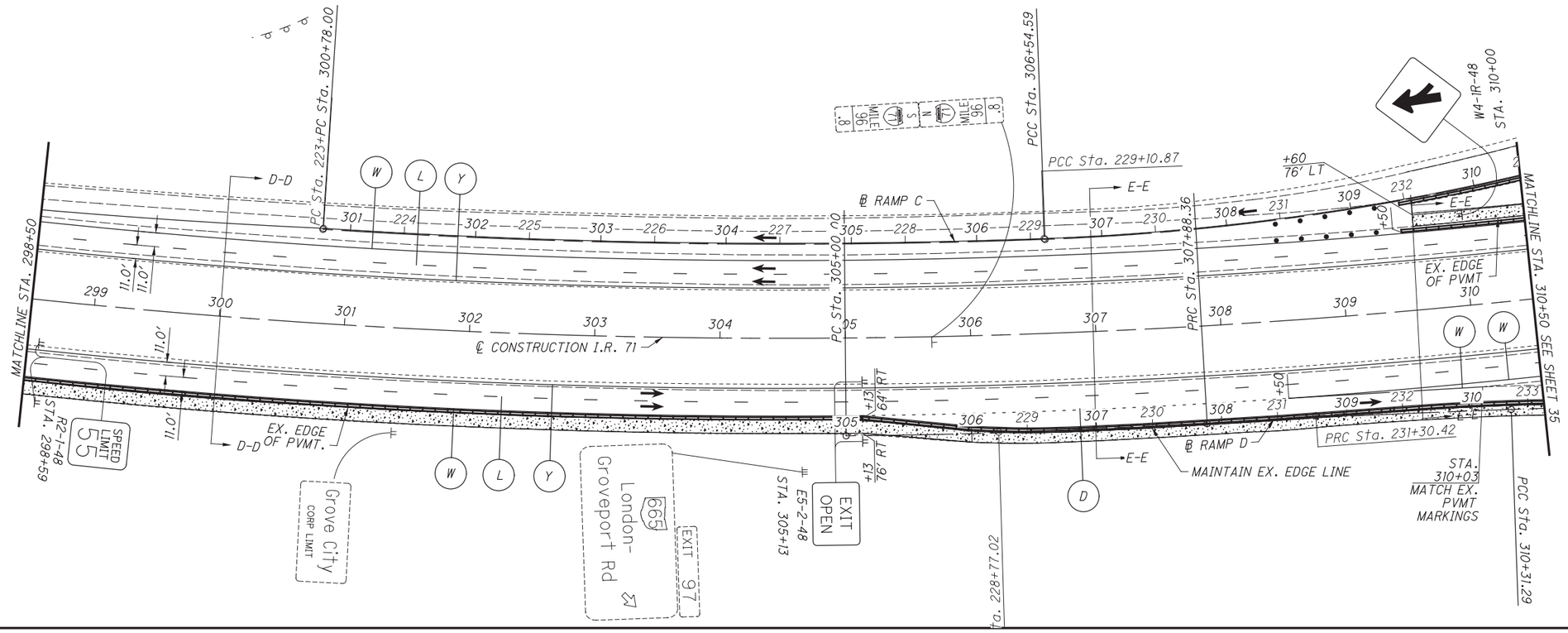

HORIZONTAL SCALE IN FEET
0 25 50 100

CALCULATED GPD
CHECKED BBD

MAINTENANCE OF TRAFFIC - PHASE 1
STA. 286+50.00 TO STA. 310+50.00

FRA-71-5.29

34
623

P:\84868\mot\sheets\84868MP104.dgn 3/27/2015 2:29:14 PM kfahy

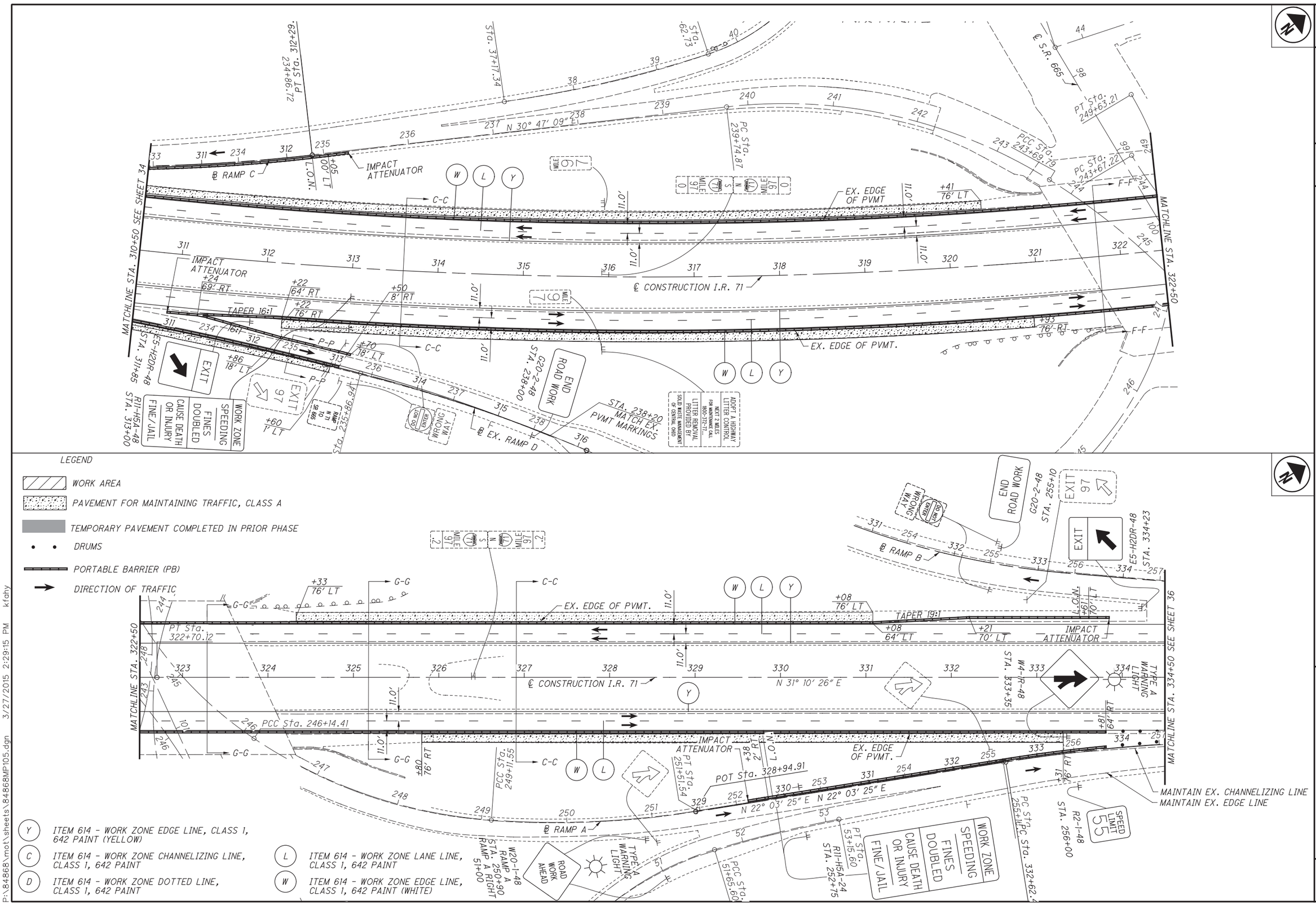

LEGEND

- WORK AREA
- PAVEMENT FOR MAINTAINING TRAFFIC, CLASS A
- TEMPORARY PAVEMENT COMPLETED IN PRIOR PHASE
- DRUMS
- PORTABLE BARRIER (PB)
- DIRECTION OF TRAFFIC

(Y) ITEM 614 - WORK ZONE EDGE LINE, CLASS 1, 642 PAINT (YELLOW)

(C) ITEM 614 - WORK ZONE CHANNELIZING LINE, CLASS 1, 642 PAINT

(D) ITEM 614 - WORK ZONE DOTTED LINE, CLASS 1, 642 PAINT

(L) ITEM 614 - WORK ZONE LANE LINE, CLASS 1, 642 PAINT

(W) ITEM 614 - WORK ZONE EDGE LINE, CLASS 1, 642 PAINT (WHITE)

MAINTAIN EX. CHANNELIZING LINE
MAINTAIN EX. EDGE LINE

MAINTENANCE OF TRAFFIC - PHASE 1
STA. 310+50.00 TO STA. 334+50.00

FRA-71-5.29

35
623

P:\84868\mot\sheets\84868MP105.dgn 3/27/2015 2:29:15 PM kfahy

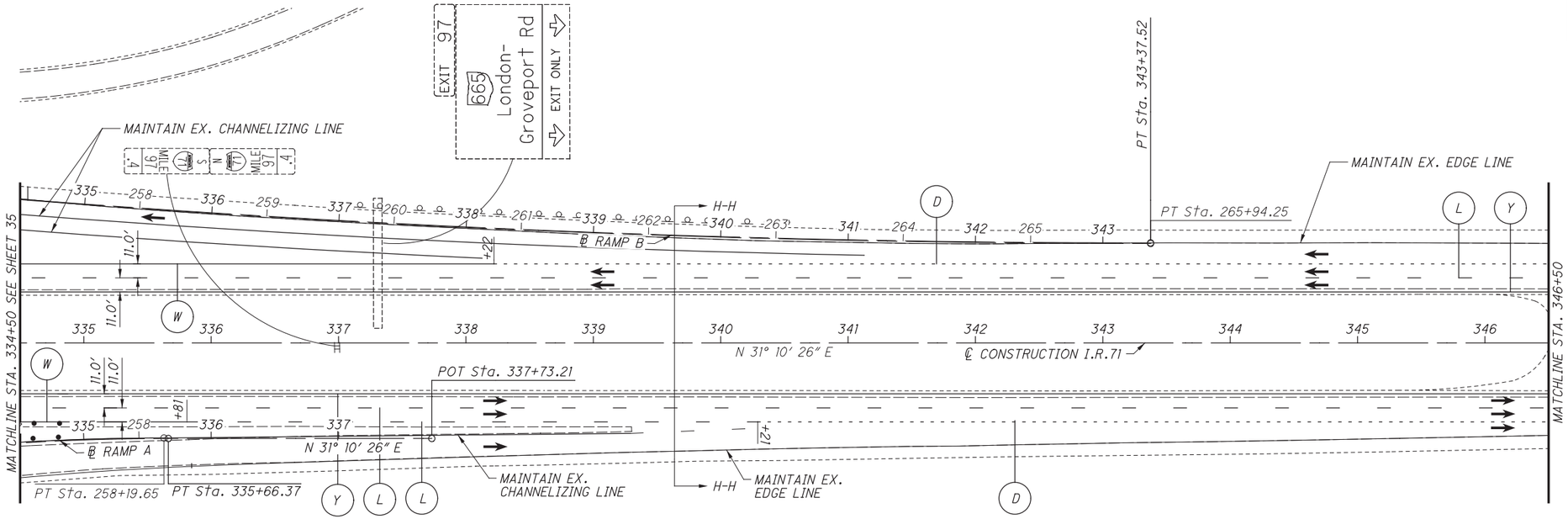

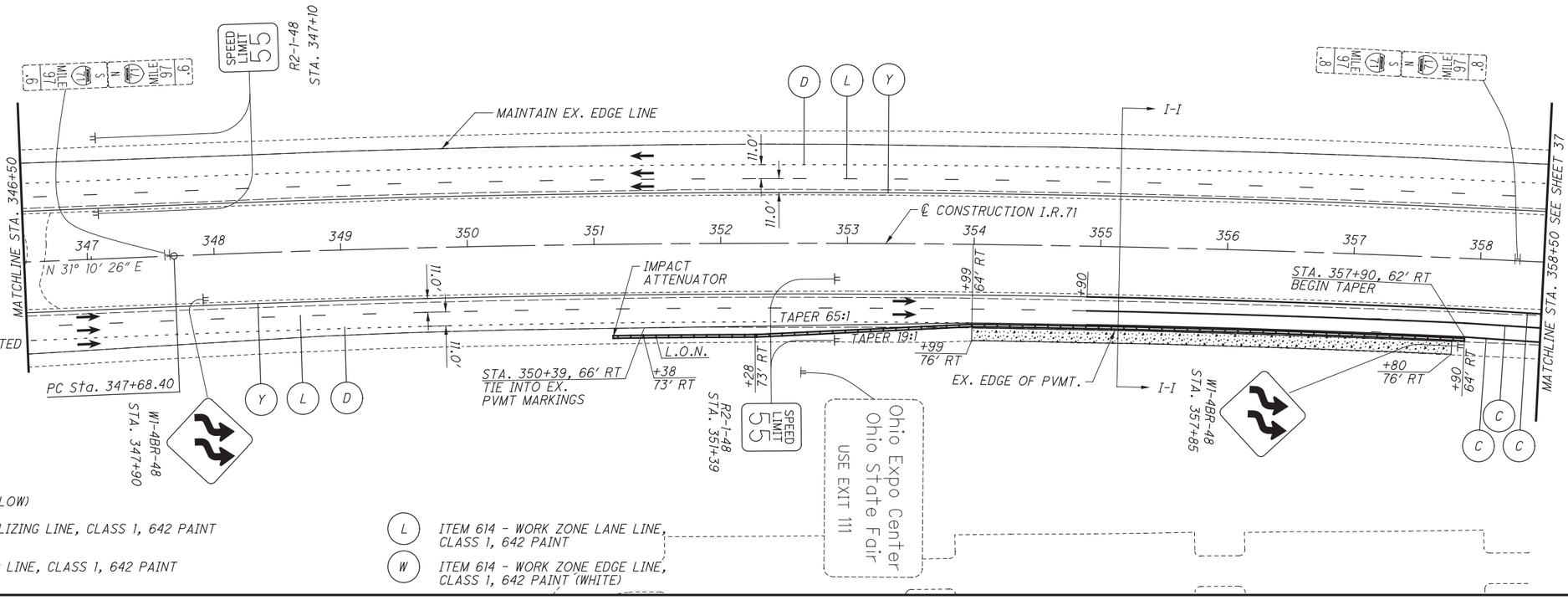

LEGEND

- WORK AREA
- PAVEMENT FOR MAINTAINING TRAFFIC, CLASS A
- TEMPORARY PAVEMENT COMPLETED IN PRIOR PHASE
- DRUMS
- PORTABLE BARRIER (PB)
- DIRECTION OF TRAFFIC
- (Y) ITEM 614 - WORK ZONE EDGE LINE, CLASS 1, 642 PAINT (YELLOW)
- (C) ITEM 614 - WORK ZONE CHANNELIZING LINE, CLASS 1, 642 PAINT
- (D) ITEM 614 - WORK ZONE DOTTED LINE, CLASS 1, 642 PAINT
- (L) ITEM 614 - WORK ZONE LANE LINE, CLASS 1, 642 PAINT
- (W) ITEM 614 - WORK ZONE EDGE LINE, CLASS 1, 642 PAINT (WHITE)

HORIZONTAL SCALE IN FEET
0 25 50 100

CALCULATED GPD
CHECKED BBD

MAINTENANCE OF TRAFFIC - PHASE 1
STA. 334+50.00 TO STA. 358+50.00

FRA-71-5.29

P:\84668\mot\sheets\84868MP106.dgn 3/27/2015 2:29:16 PM kfahy

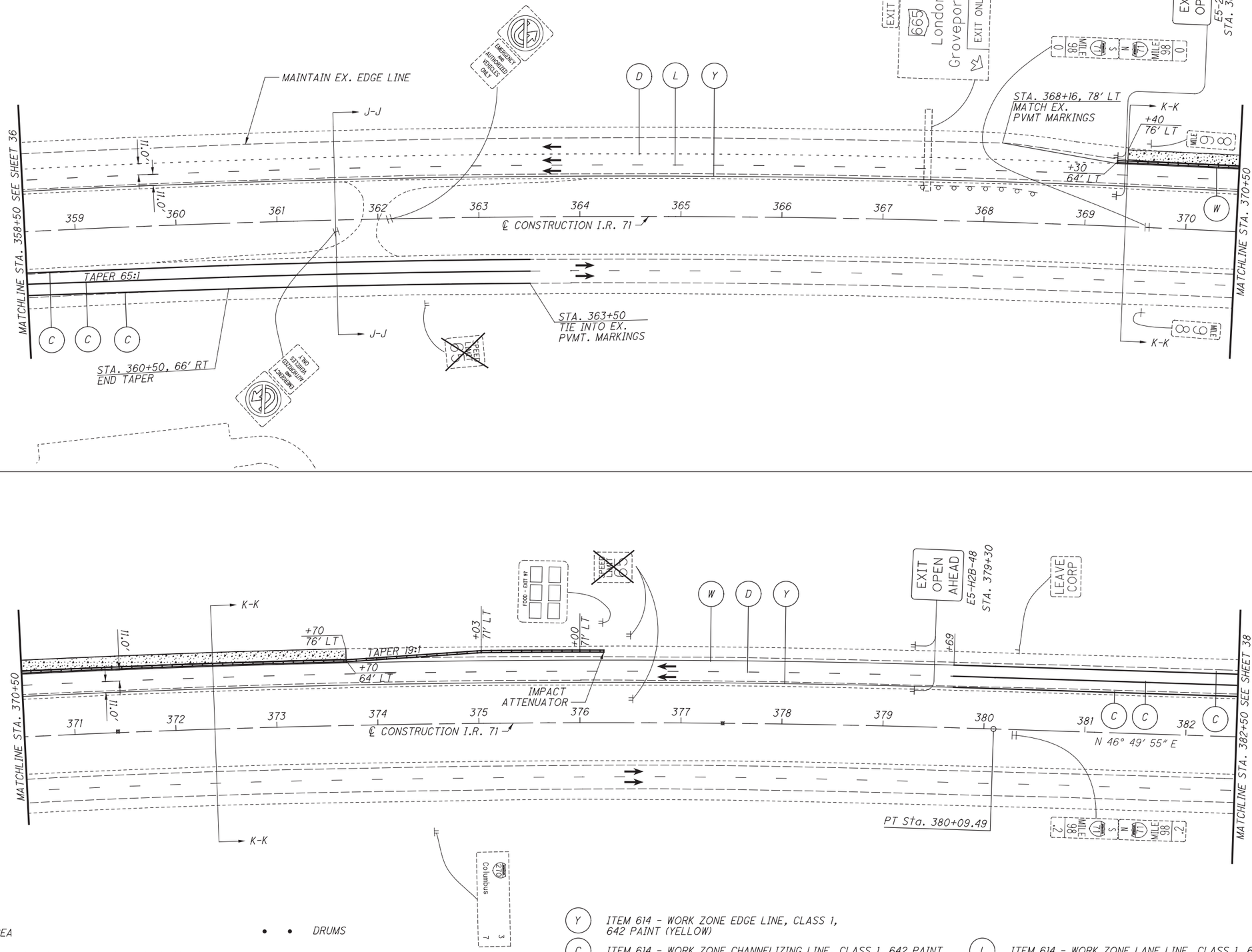

HORIZONTAL SCALE IN FEET
0 25 50 100

CALCULATED GPD
CHECKED BBD

MAINTENANCE OF TRAFFIC - PHASE 1
STA. 358+50.00 TO STA. 382+50.00

FRA-71-5.29

P:\84868\mot\sheets\84868MP107.dgn 3/27/2015 2:29:17 PM kfahy

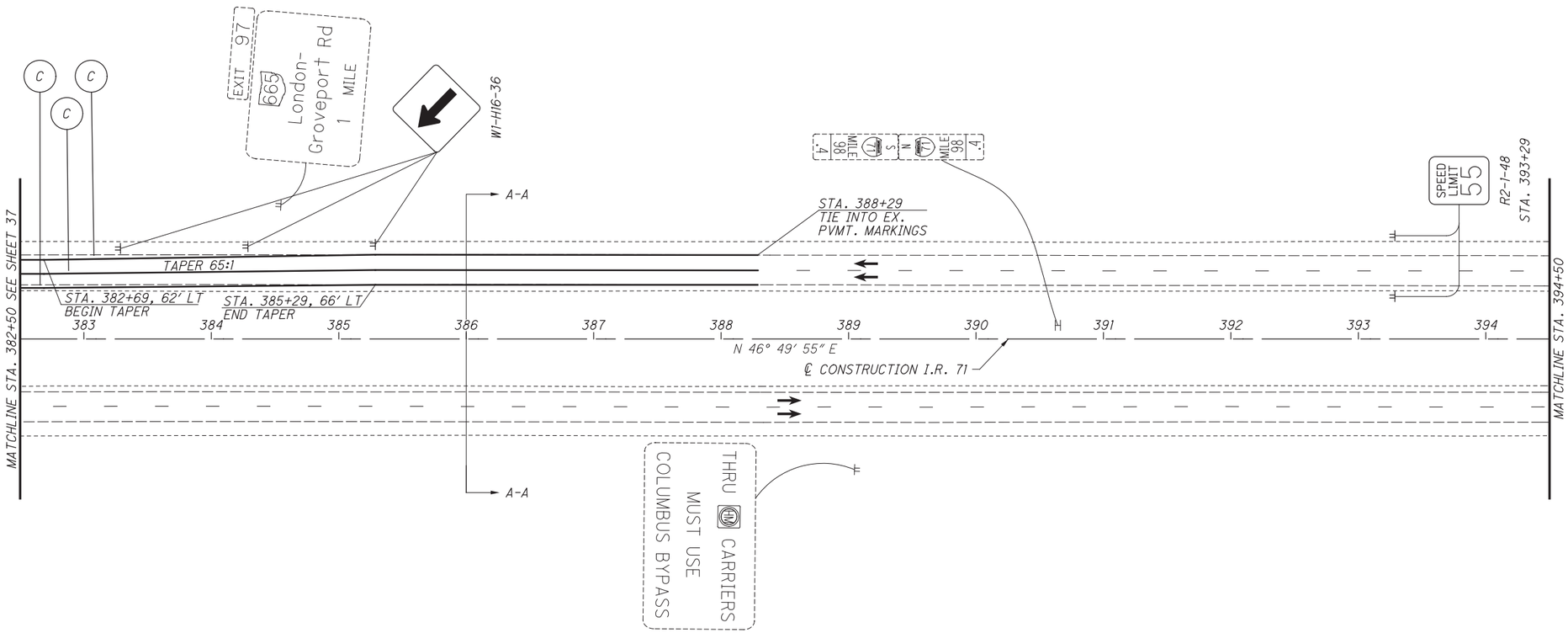

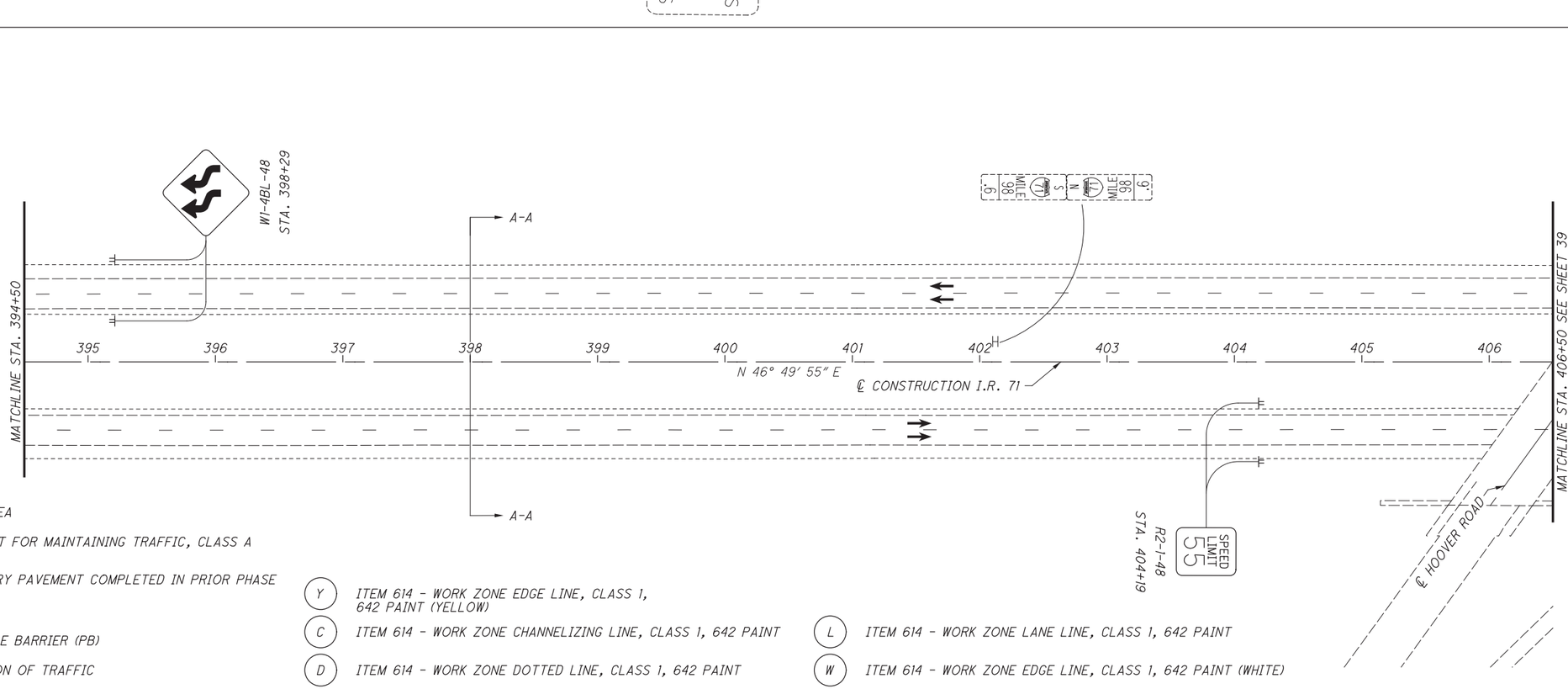

LEGEND

- WORK AREA
- PAVEMENT FOR MAINTAINING TRAFFIC, CLASS A
- TEMPORARY PAVEMENT COMPLETED IN PRIOR PHASE
- DRUMS
- PORTABLE BARRIER (PB)
- DIRECTION OF TRAFFIC

(Y) ITEM 614 - WORK ZONE EDGE LINE, CLASS 1, 642 PAINT (YELLOW)

(C) ITEM 614 - WORK ZONE CHANNELIZING LINE, CLASS 1, 642 PAINT

(D) ITEM 614 - WORK ZONE DOTTED LINE, CLASS 1, 642 PAINT

(L) ITEM 614 - WORK ZONE LANE LINE, CLASS 1, 642 PAINT

(W) ITEM 614 - WORK ZONE EDGE LINE, CLASS 1, 642 PAINT (WHITE)

HORIZONTAL SCALE IN FEET
0 25 50 100

CALCULATED GPD
CHECKED BBD

MAINTENANCE OF TRAFFIC - PHASE 1
STA. 382+50.00 TO STA. 406+50.00

FRA-71-5.29

38
623

P:\84868\mot\sheets\84868MP108.dgn 3/27/2015 2:29:17 PM kfahy

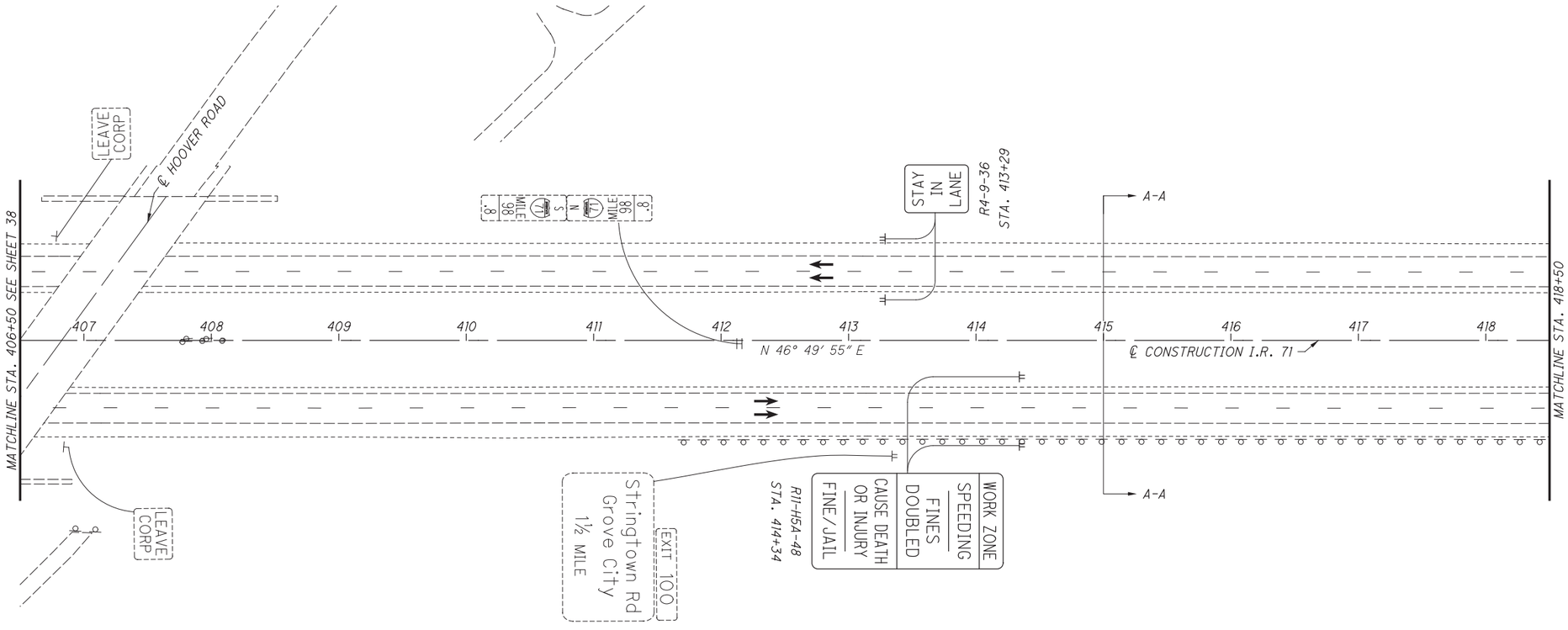

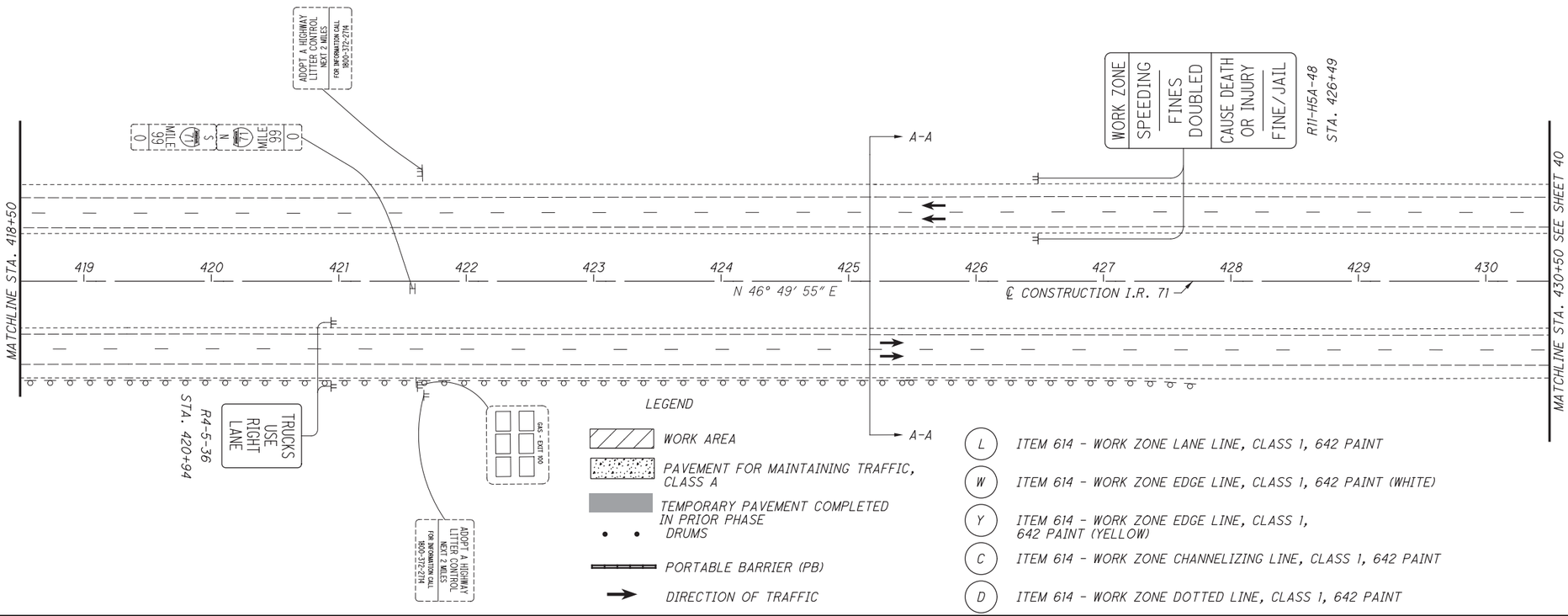

HORIZONTAL SCALE IN FEET
0 25 50 100

CALCULATED GPD
CHECKED BBD

MAINTENANCE OF TRAFFIC - PHASE 1
STA. 406+50.00 TO STA. 430+50.00

FRA-71-5.29

P:\84868\mot\sheets\84868MP109.dgn 3/27/2015 2:29:18 PM kfahy

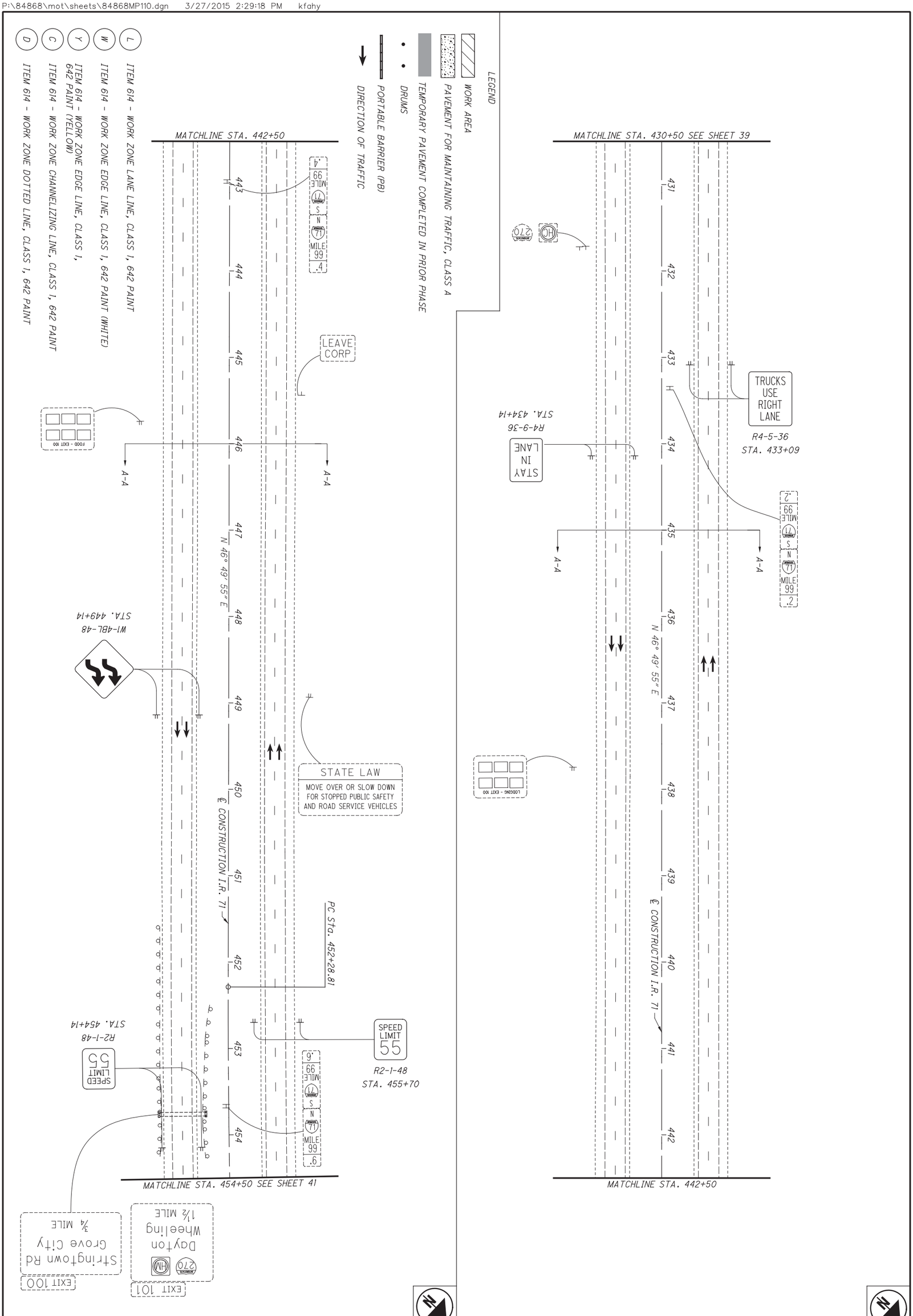

40 623	FRA-71-5.29	MAINTENANCE OF TRAFFIC - PHASE 1 STA. 430+50.00 TO STA. 454+50.00	CALCULATED GPD CHECKED BBD	0 50 25 100 HORIZONTAL SCALE IN FEET

LEGEND

- WORK AREA
- PAVEMENT FOR MAINTAINING TRAFFIC, CLASS A
- TEMPORARY PAVEMENT COMPLETED IN PRIOR PHASE
- DRUMS
- PORTABLE BARRIER (PB)
- DIRECTION OF TRAFFIC

(Y) ITEM 614 - WORK ZONE EDGE LINE, CLASS 1, 642 PAINT (YELLOW)

(C) ITEM 614 - WORK ZONE CHANNELIZING LINE, CLASS 1, 642 PAINT

(D) ITEM 614 - WORK ZONE DOTTED LINE, CLASS 1, 642 PAINT

(L) ITEM 614 - WORK ZONE LANE LINE, CLASS 1, 642 PAINT

(W) ITEM 614 - WORK ZONE EDGE LINE, CLASS 1, 642 PAINT (WHITE)

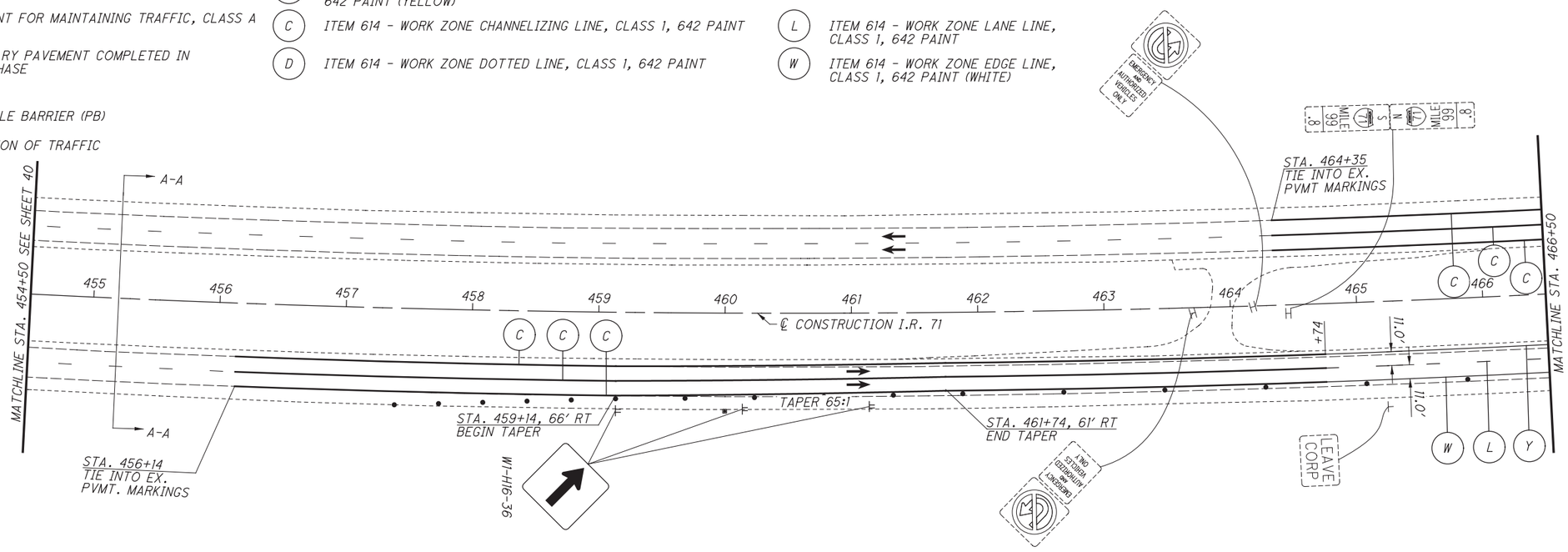

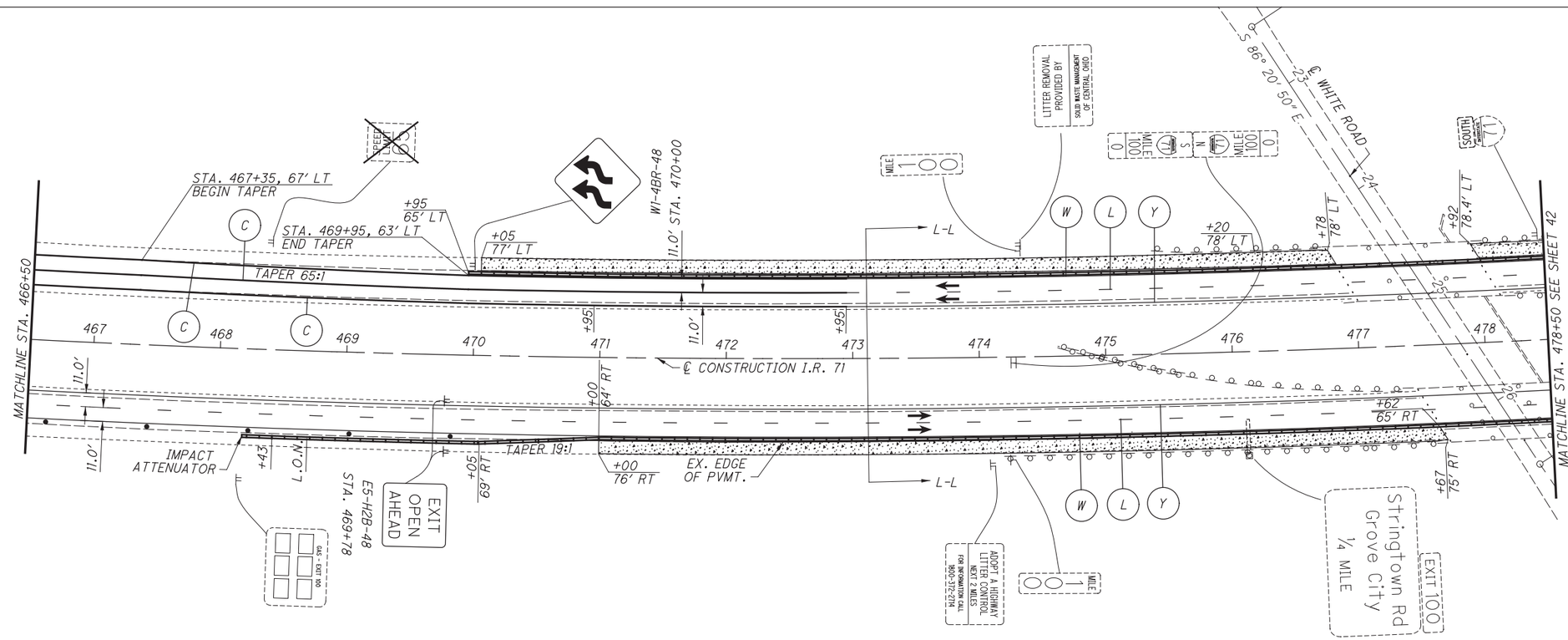

HORIZONTAL SCALE IN FEET
0 25 50 100

CALCULATED GPD
CHECKED BBD

MAINTENANCE OF TRAFFIC - PHASE 1
STA. 454+50.00 TO STA. 478+50.00

FRA-71-5.29

P:\84668\mot\sheets\84868MP111.dgn 3/27/2015 2:29:19 PM kfahy

LEGEND

- WORK AREA
- PAVEMENT FOR MAINTAINING TRAFFIC, CLASS A
- TEMPORARY PAVEMENT COMPLETED IN PRIOR PHASE
- DRUMS
- PORTABLE BARRIER (PB)
- DIRECTION OF TRAFFIC

(Y) ITEM 614 - WORK ZONE EDGE LINE, CLASS 1, 642 PAINT (YELLOW)

(C) ITEM 614 - WORK ZONE CHANNELIZING LINE, CLASS 1, 642 PAINT

(D) ITEM 614 - WORK ZONE DOTTED LINE, CLASS 1, 642 PAINT

(L) ITEM 614 - WORK ZONE LANE LINE, CLASS 1, 642 PAINT

(W) ITEM 614 - WORK ZONE EDGE LINE, CLASS 1, 642 PAINT (WHITE)

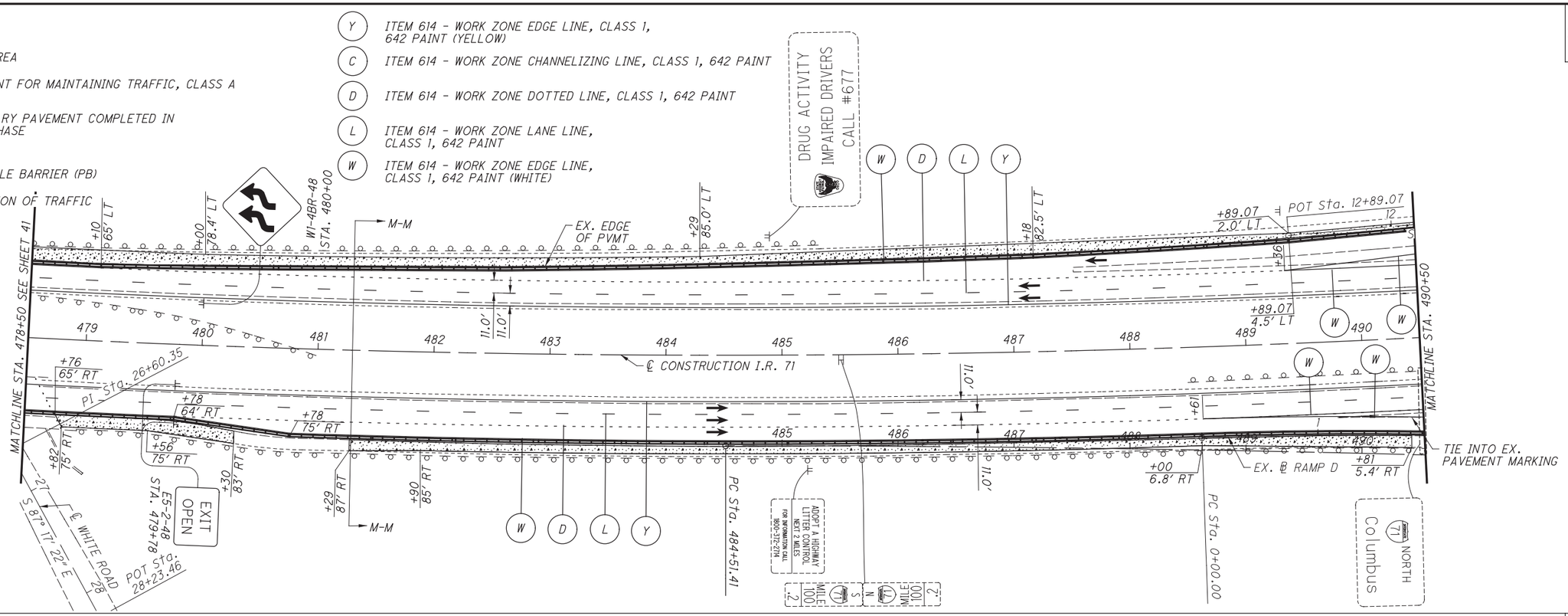

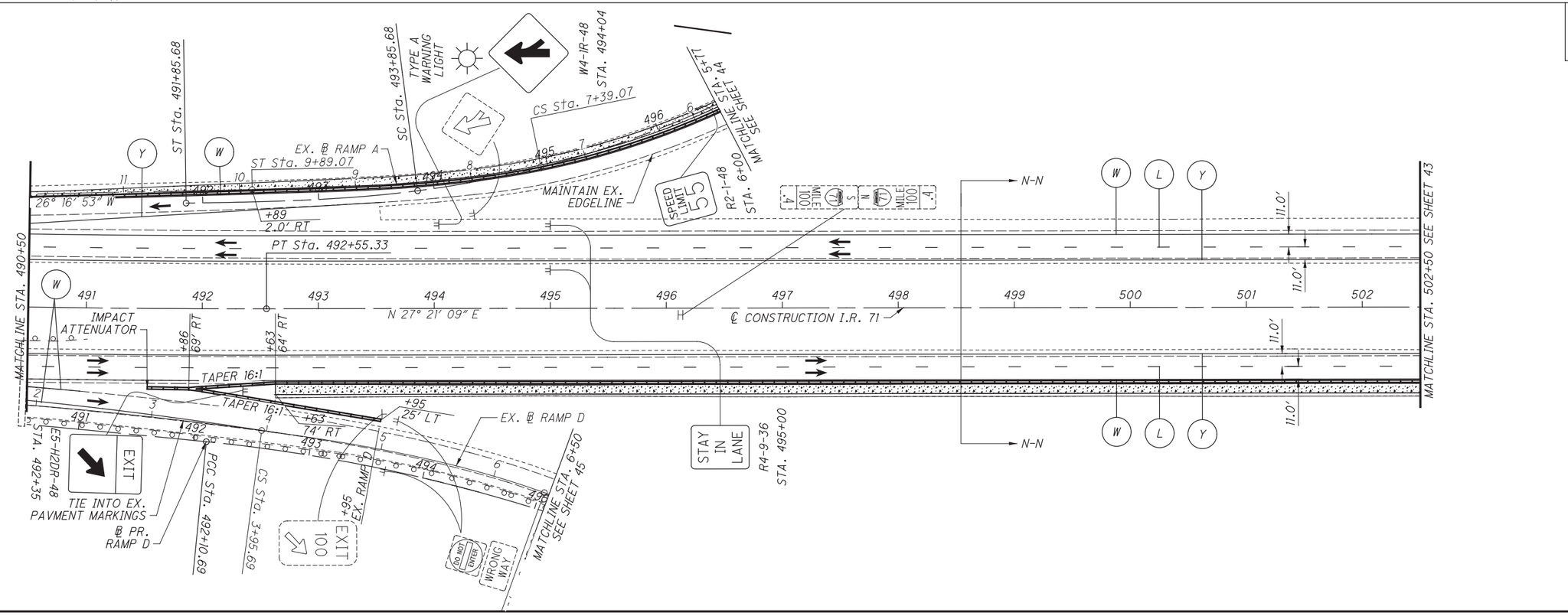

HORIZONTAL SCALE IN FEET
0 25 50 100

CALCULATED GPD
CHECKED BBD

MAINTENANCE OF TRAFFIC - PHASE 1
STA. 478+50.00 TO STA. 502+50.00

FRA-71-5.29

42
623

P:\84868\mot\sheets\84868MP112.dgn 3/27/2015 2:29:20 PM kfahy

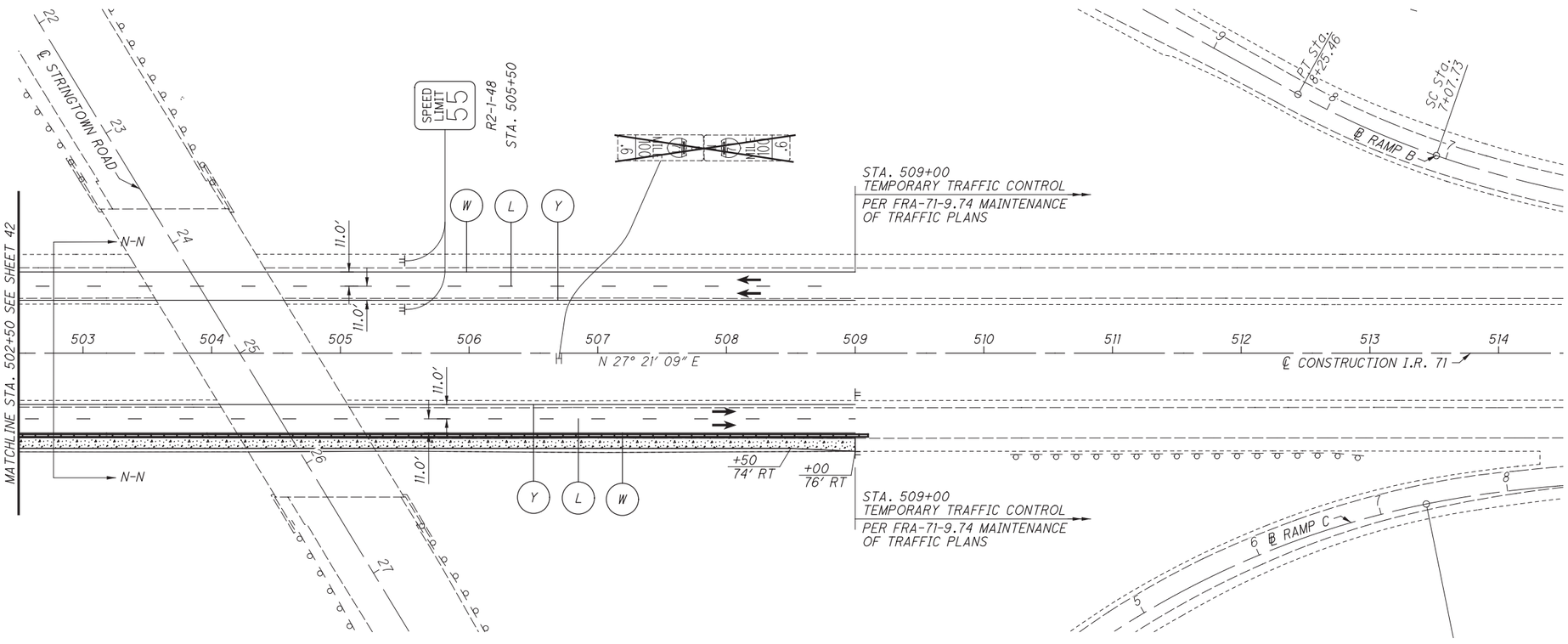

LEGEND

- WORK AREA
- PAVEMENT FOR MAINTAINING TRAFFIC, CLASS A
- TEMPORARY PAVEMENT COMPLETED IN PRIOR PHASE
- DRUMS
- PORTABLE BARRIER (PB)
- DIRECTION OF TRAFFIC

(Y) ITEM 614 - WORK ZONE EDGE LINE, CLASS 1, 642 PAINT (YELLOW)

(C) ITEM 614 - WORK ZONE CHANNELIZING LINE, CLASS 1, 642 PAINT

(D) ITEM 614 - WORK ZONE DOTTED LINE, CLASS 1, 642 PAINT

(L) ITEM 614 - WORK ZONE LANE LINE, CLASS 1, 642 PAINT

(W) ITEM 614 - WORK ZONE EDGE LINE, CLASS 1, 642 PAINT (WHITE)

HORIZONTAL SCALE IN FEET
0 25 50 100

CALCULATED GPD
CHECKED BBD

MAINTENANCE OF TRAFFIC - PHASE 1
STA. 502+50.00 TO STA. 514+50.00

FRA-71-5.29

P:\84868\mot\sheets\84868MP113.dgn 3/27/2015 2:29:21 PM kfahy

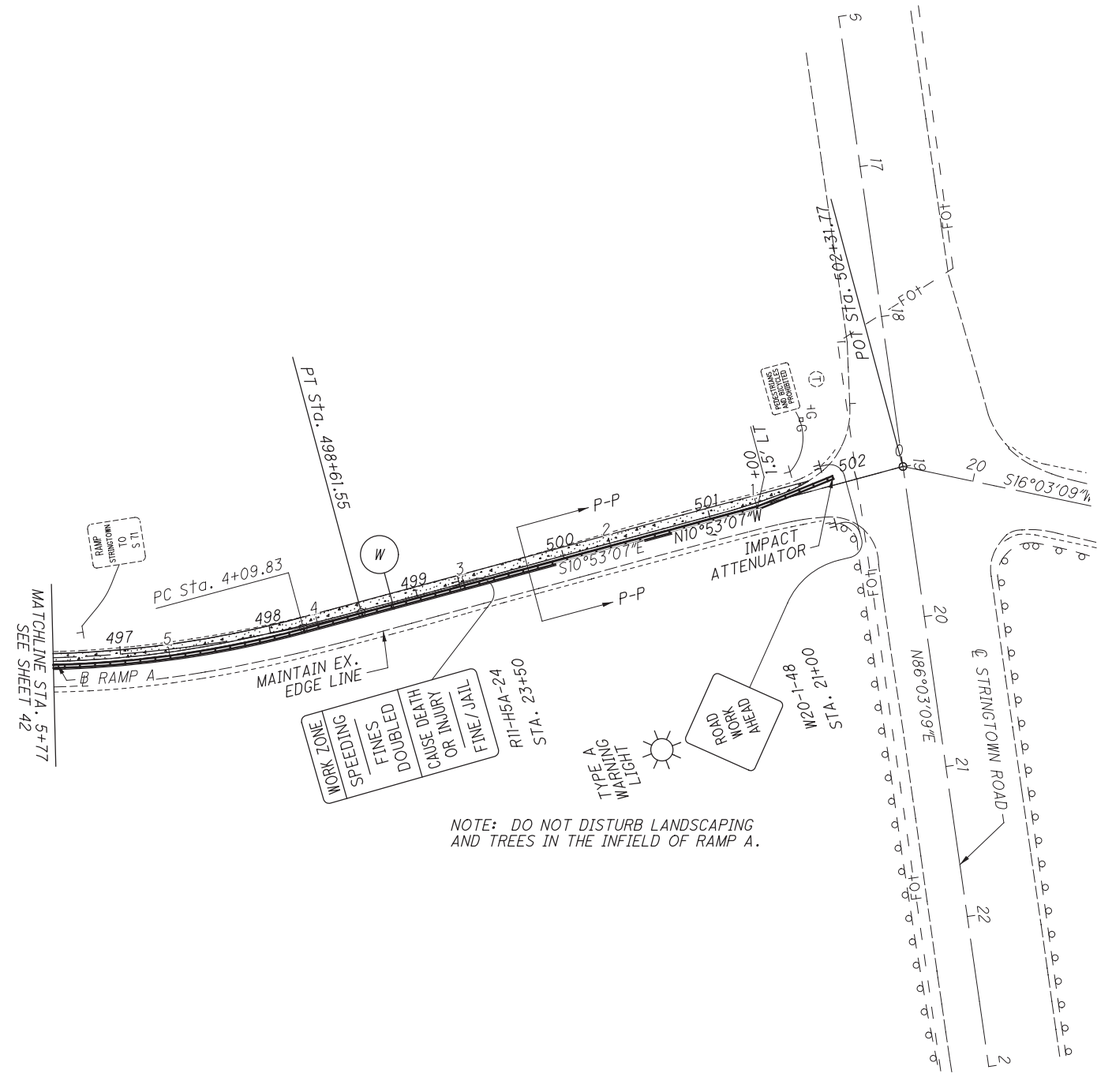

NOTE: DO NOT DISTURB LANDSCAPING AND TREES IN THE INFIELD OF RAMP A.

LEGEND

- WORK AREA
- PAVEMENT FOR MAINTAINING TRAFFIC, CLASS A
- TEMPORARY PAVEMENT COMPLETED IN PRIOR PHASE
- DRUMS
- PORTABLE BARRIER (PB)
- DIRECTION OF TRAFFIC

(Y) ITEM 614 - WORK ZONE EDGE LINE, CLASS 1, 642 PAINT (YELLOW)

(C) ITEM 614 - WORK ZONE CHANNELIZING LINE, CLASS 1, 642 PAINT

(D) ITEM 614 - WORK ZONE DOTTED LINE, CLASS 1, 642 PAINT

(L) ITEM 614 - WORK ZONE LANE LINE, CLASS 1, 642 PAINT

(W) ITEM 614 - WORK ZONE EDGE LINE, CLASS 1, 642 PAINT (WHITE)

HORIZONTAL SCALE IN FEET
0 25 50 100

CALCULATED GPD
CHECKED BBD

MAINTENANCE OF TRAFFIC - PHASE 1
RAMP A

FRA-71-5.29

44
623

P:\84668\mot\sheets\84868MP117.dgn 3/27/2015 2:29:21 PM kfahy

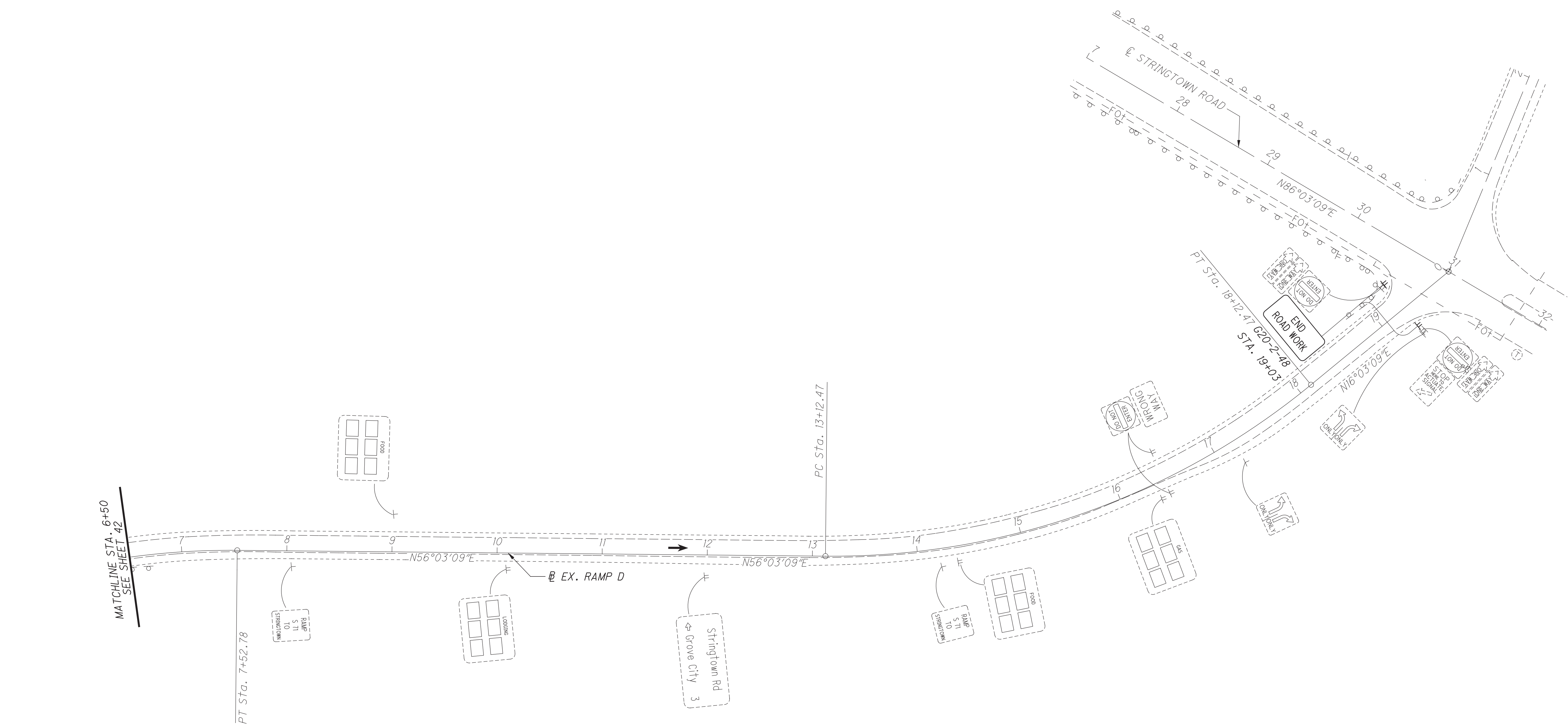

LEGEND

WORK AREA

PAVEMENT FOR MAINTAINING TRAFFIC, CLASS A

TEMPORARY PAVEMENT COMPLETED IN PRIOR PHASE

DRUMS

PORTABLE BARRIER (PB)

DIRECTION OF TRAFFIC

(Y) ITEM 614 - WORK ZONE EDGE LINE, CLASS 1, 642 PAINT (YELLOW)

(C) ITEM 614 - WORK ZONE CHANNELIZING LINE, CLASS 1, 642 PAINT

(D) ITEM 614 - WORK ZONE DOTTED LINE, CLASS 1, 642 PAINT

(L) ITEM 614 - WORK ZONE LANE LINE, CLASS 1, 642 PAINT

(W) ITEM 614 - WORK ZONE EDGE LINE, CLASS 1, 642 PAINT (WHITE)

P:\84868\mot\sheets\84868MP118.dgn 3/27/2015 2:29:22 PM kfahy

0 25 50 100
HORIZONTAL SCALE IN FEET

CALCULATED GPD
CHECKED BBD

MAINTENANCE OF TRAFFIC - PHASE 1
RAMP D

FRA-71-5.29

℄ CONSTRUCTION I.R. 71

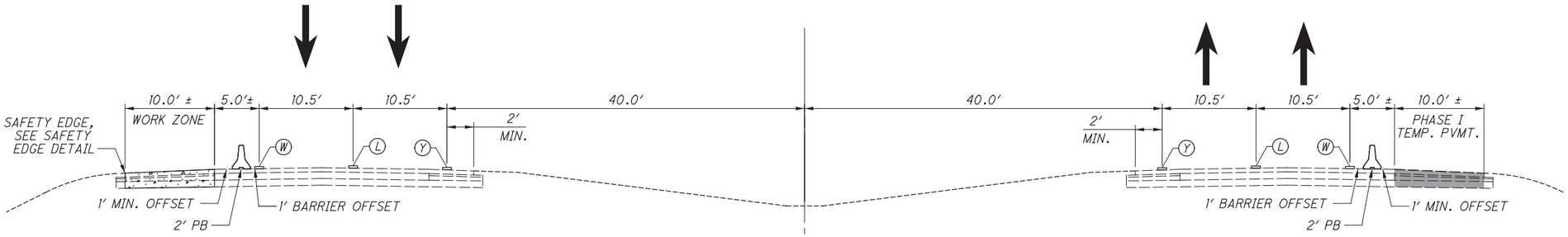

SECTION A-A

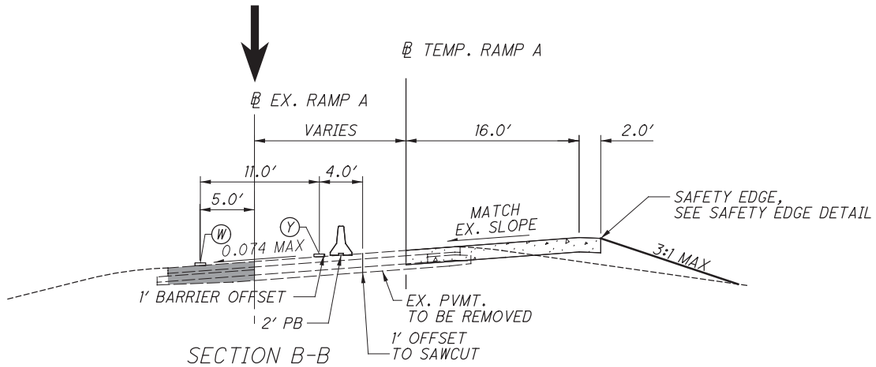

SECTION B-B

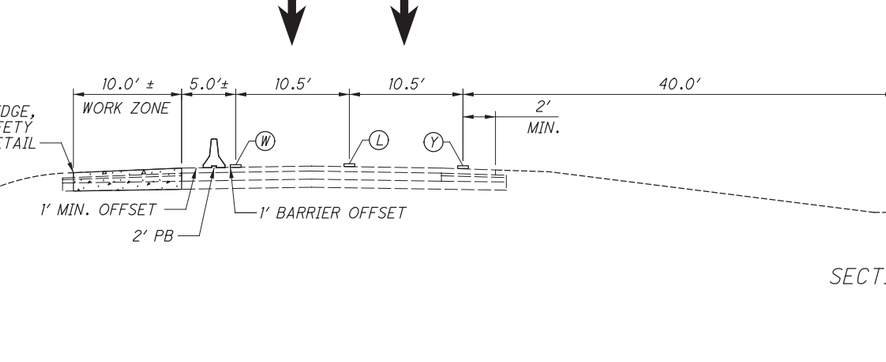

SECTION C-C

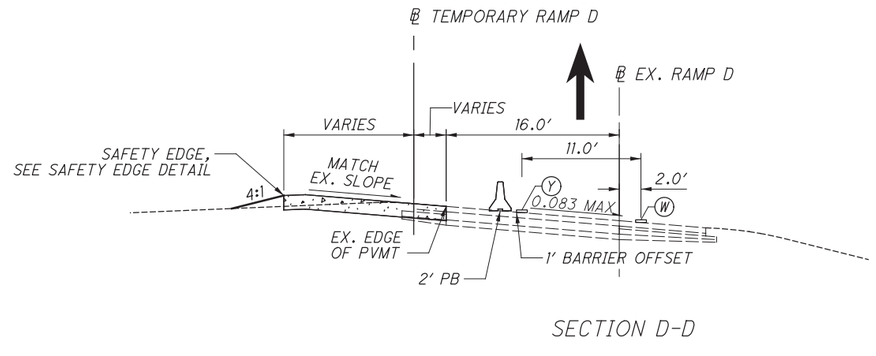

SECTION D-D

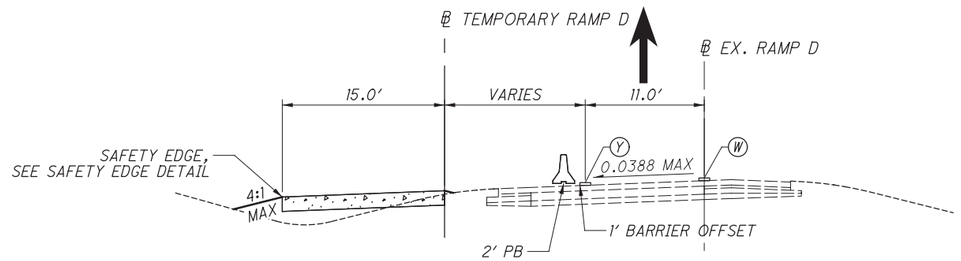

SECTION E-E

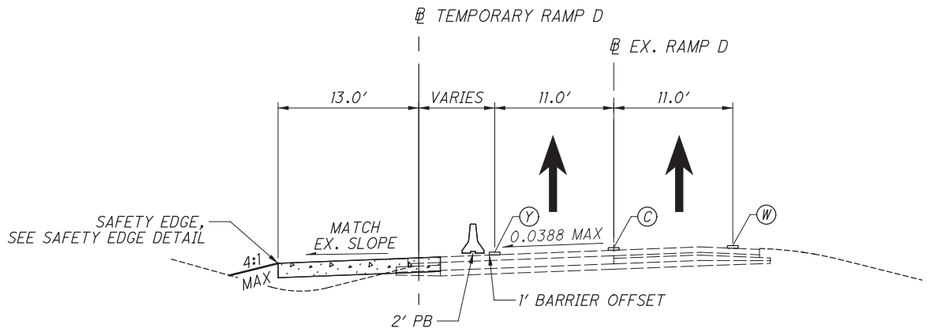

SECTION F-F

TEMPORARY PAVEMENT COMPLETED IN PRIOR PHASE

PAVEMENT FOR MAINTAINING TRAFFIC, CLASS A TO BE CONSTRUCTED

LEGEND

- (W) EXISTING EDGE LINE, WHITE
- (Y) EXISTING EDGE LINE, YELLOW
- (L) EXISTING LANE LINE
- (W) WORK ZONE EDGE LINE, WHITE, CLASS I
- (Y) WORK ZONE EDGE LINE, YELLOW, CLASS I
- (L) WORK ZONE LANE LINE, CLASS I

MAINTENANCE OF TRAFFIC - IR 71
TYPICAL SECTIONS - PHASE 1A

FRA-71-5.29

P:\84668\mot\sheets\84868MY110.dgn 3/27/2015 2:29:22 PM kfahy

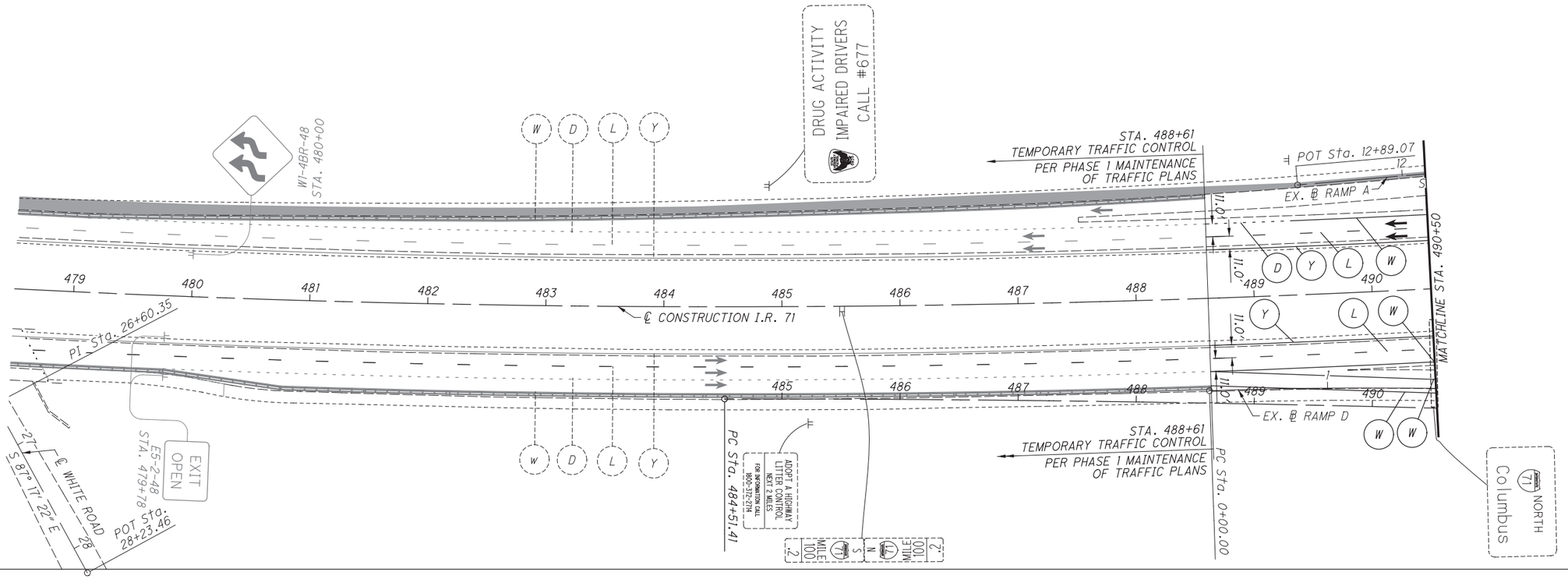

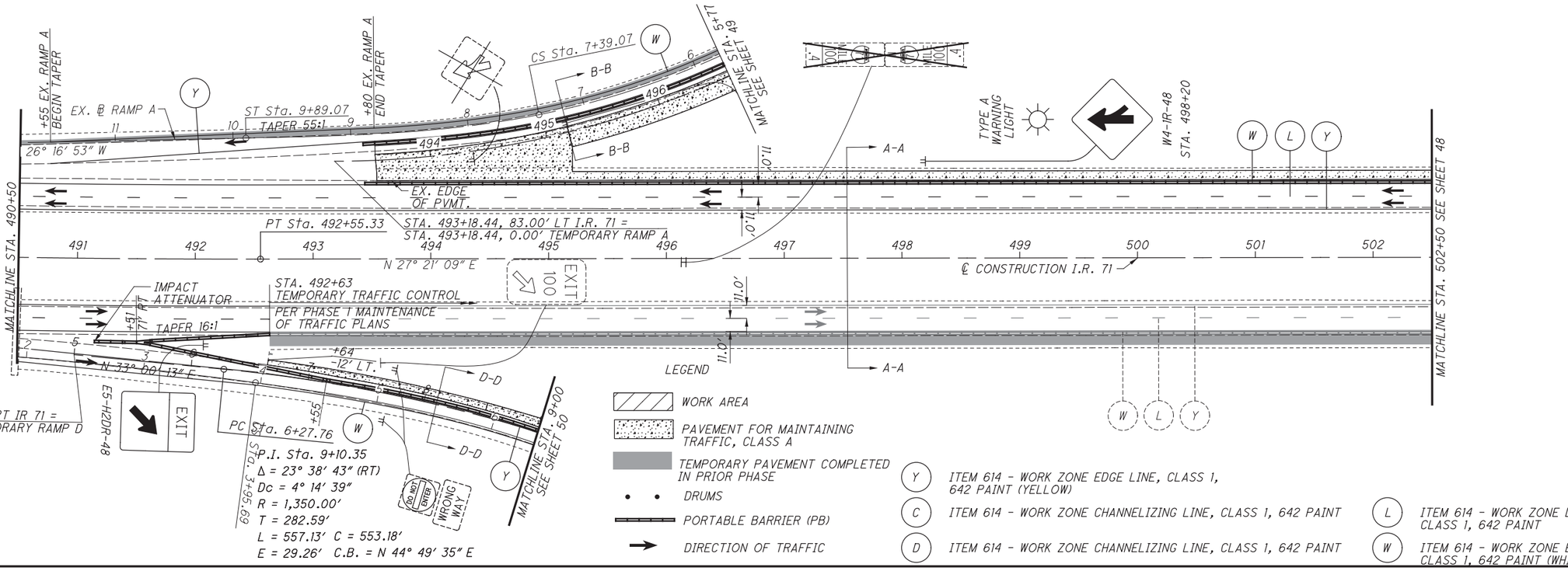

HORIZONTAL SCALE IN FEET
0 25 50 100

CALCULATED GPD
CHECKED BBD

MAINTENANCE OF TRAFFIC - PHASE 1A
STA. 478+50.00 TO STA. 502+50.00

FRA-71-5.29

P:\84668\mot\sheets\84868MP162.dgn 3/27/2015 2:29:24 PM kfahy

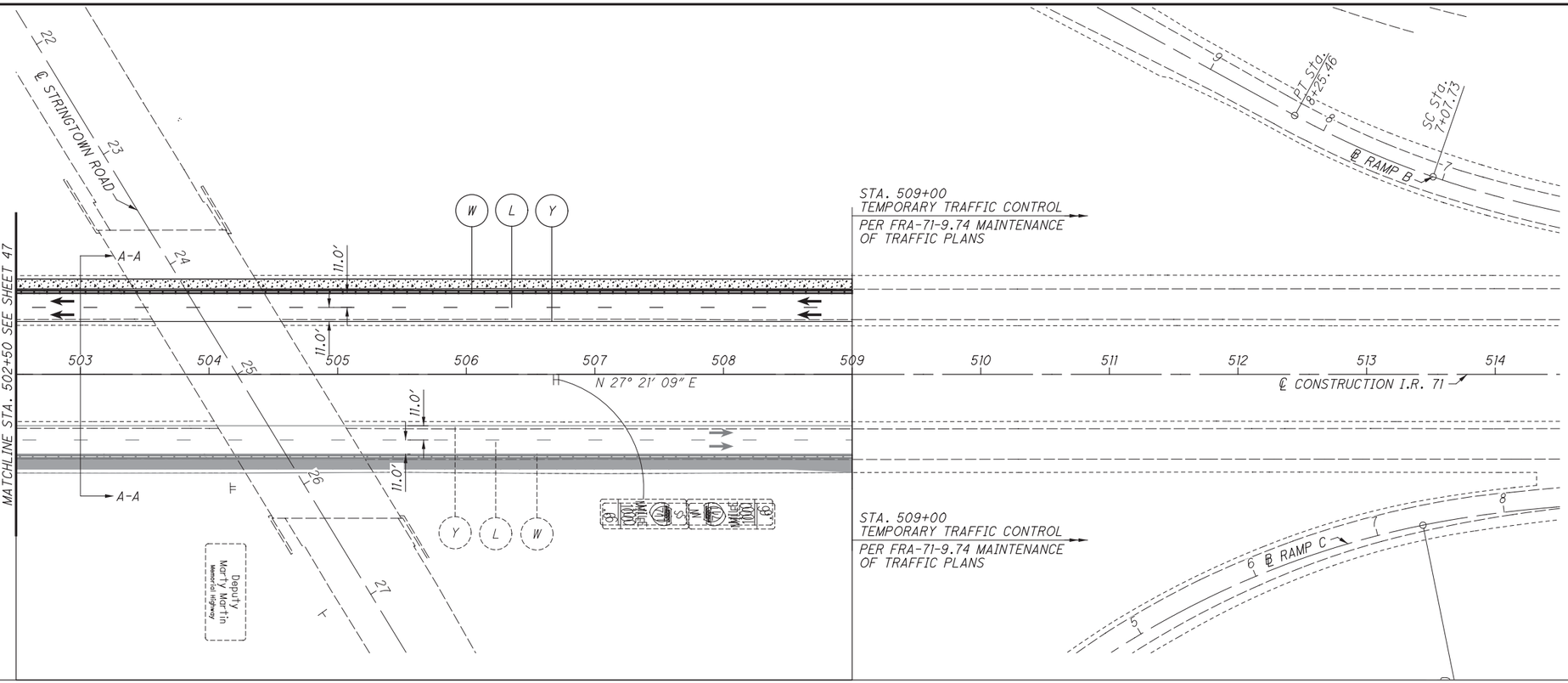

LEGEND

- WORK AREA
- PAVEMENT FOR MAINTAINING TRAFFIC, CLASS A
- TEMPORARY PAVEMENT COMPLETED IN PRIOR PHASE
- DRUMS
- PORTABLE BARRIER (PB)
- DIRECTION OF TRAFFIC

(Y) ITEM 614 - WORK ZONE EDGE LINE, CLASS 1, 642 PAINT (YELLOW)

(C) ITEM 614 - WORK ZONE CHANNELIZING LINE, CLASS 1, 642 PAINT

(D) ITEM 614 - WORK ZONE DOTTED LINE, CLASS 1, 642 PAINT

(L) ITEM 614 - WORK ZONE LANE LINE, CLASS 1, 642 PAINT

(W) ITEM 614 - WORK ZONE EDGE LINE, CLASS 1, 642 PAINT (WHITE)

HORIZONTAL SCALE IN FEET
0 25 50 100

CALCULATED GPD
CHECKED BBD

MAINTENANCE OF TRAFFIC - PHASE 1A
STA. 502+50.00 TO STA. 514+50.00

FRA-71-5.29

P:\84868\rnot\sheets\84868MP163.dgn 3/27/2015 2:29:24 PM kfahy

P:\84868\mot\sheets\84868MP167.dgn 3/27/2015 2:29:25 PM kfahy

LEGEND

WORK AREA

PAVEMENT FOR MAINTAINING TRAFFIC, CLASS A

TEMPORARY PAVEMENT COMPLETED IN PRIOR PHASE

DRUMS

PORTABLE BARRIER (PB)

DIRECTION OF TRAFFIC

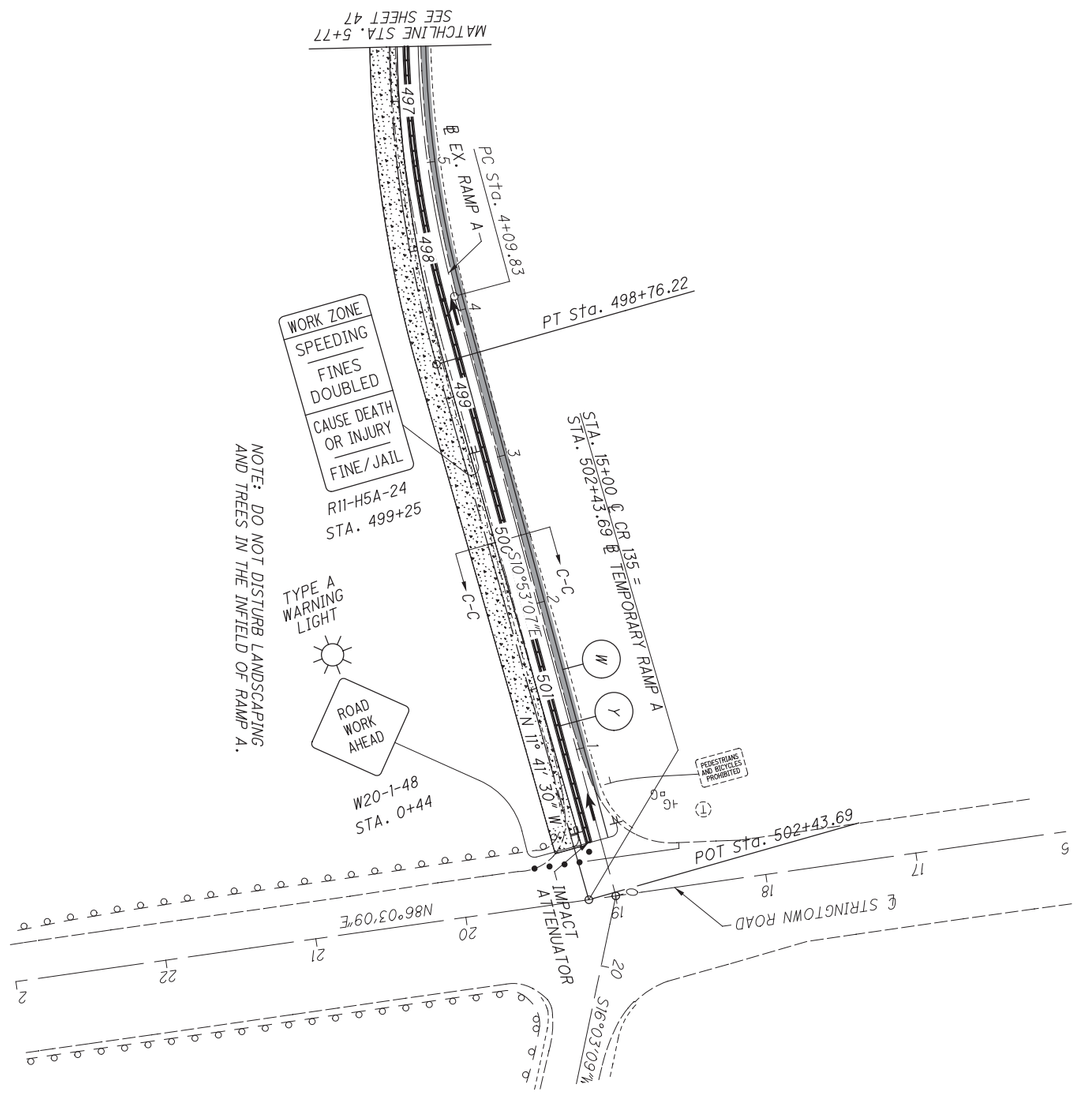

49 623	FRA-71-5.29	MAINTENANCE OF TRAFFIC - PHASE 1A RAMP A	CALCULATED GPD / CHECKED BBD	0 50 25 100 HORIZONTAL SCALE IN FEET

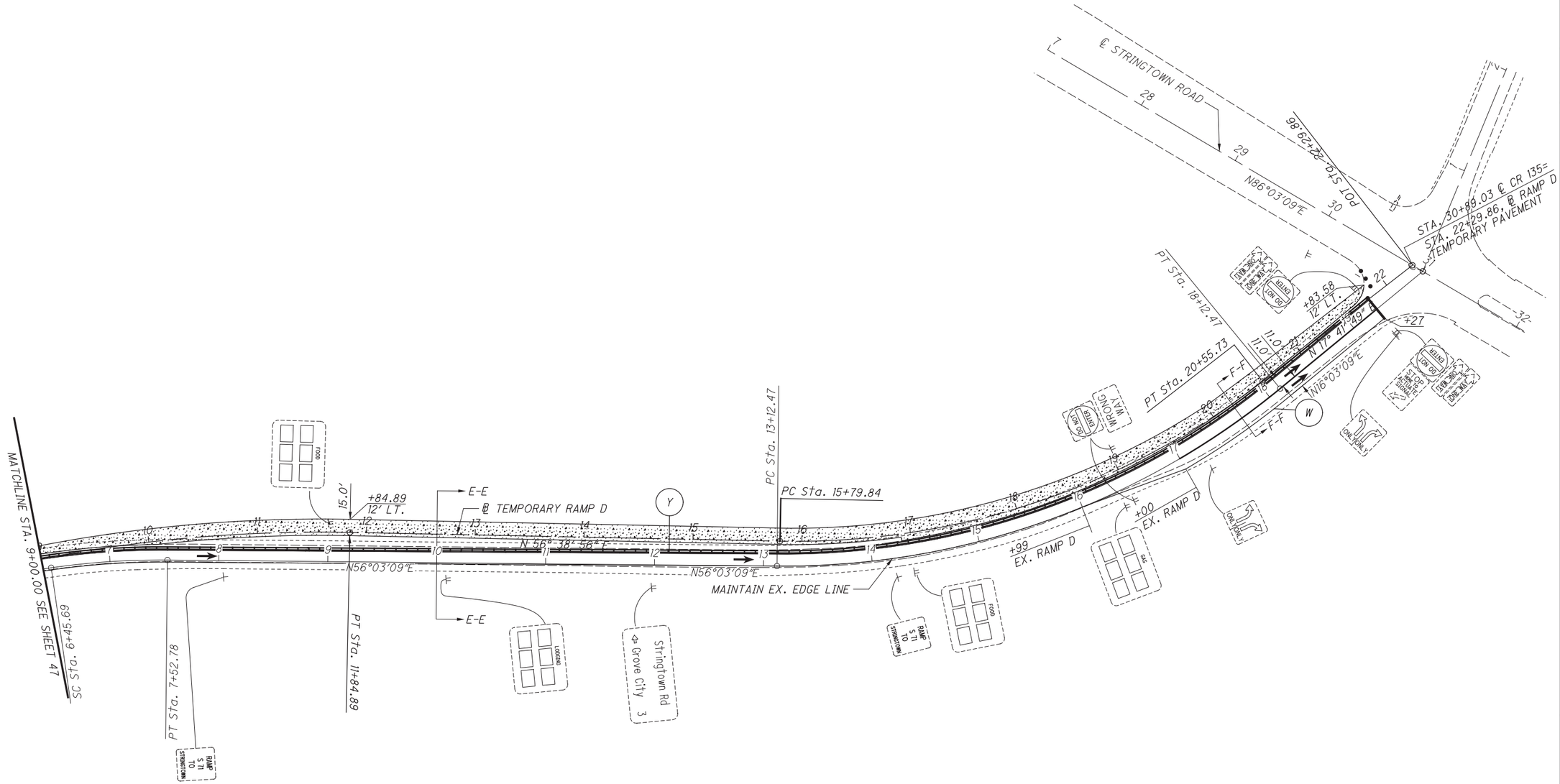

LEGEND

- WORK AREA
- PAVEMENT FOR MAINTAINING TRAFFIC, CLASS A
- TEMPORARY PAVEMENT COMPLETED IN PRIOR PHASE
- • • DRUMS
- PORTABLE BARRIER (PB)
- → DIRECTION OF TRAFFIC

(Y) ITEM 614 - WORK ZONE EDGE LINE, CLASS 1, 642 PAINT (YELLOW)

(C) ITEM 614 - WORK ZONE CHANNELIZING LINE, CLASS 1, 642 PAINT

(D) ITEM 614 - WORK ZONE CHANNELIZING LINE, CLASS 1, 642 PAINT

(L) ITEM 614 - WORK ZONE LANE LINE, CLASS 1, 642 PAINT

(W) ITEM 614 - WORK ZONE EDGE LINE, CLASS 1, 642 PAINT (WHITE)

MAINTENANCE OF TRAFFIC - PHASE 1A RAMP D

CALCULATED GPD
CHECKED BBD

HORIZONTAL SCALE IN FEET
0 25 50 100

FRA-71-5.29

50
623

P:\84868\mot\sheets\84868MP168.dgn 3/27/2015 2:29:26 PM kfahy

REFERENCE POINTS								
	GRID COORDINATES U.S. SURVEY FEET		SCALED COORDINATES U.S. SURVEY FEET					
POINT NUMBER	NORTHING	EASTING	NORTHING	EASTING	ALIGNMENT	STATION	OFFSET	DESCRIPTION
PC	683,717.183	1,813,672.720	683,717.183	1,813,672.720	TEMP. STRINGTOWN ROAD RAMP A	493+18.44	C/L	C/L MONUMENT
PT	684,259.129	1,813,747.251	684,259.129	1,813,747.251	TEMP. STRINGTOWN ROAD RAMP A	498+76.22	C/L	C/L MONUMENT
POT	684,618.979	1,813,672.783	684,618.979	1,813,672.783	TEMP. STRINGTOWN ROAD RAMP A	502+43.69	C/L	C/L MONUMENT
POT	683,445.148	1,813,716.587	683,445.148	1,813,716.587	TEMP. STRINGTOWN ROAD RAMP D	5+00.00	C/L	C/L MONUMENT
PC	683,552.292	1,813,786.177	683,552.292	1,813,786.177	TEMP. STRINGTOWN ROAD RAMP D	6+27.76	C/L	C/L MONUMENT
PT	683,944.637	1,814,176.150	683,944.637	1,814,176.150	TEMP. STRINGTOWN ROAD RAMP D	11+84.89	C/L	C/L MONUMENT
PC	684,161.768	1,814,506.062	684,161.768	1,814,506.062	TEMP. STRINGTOWN ROAD RAMP D	15+79.84	C/L	C/L MONUMENT
PT	684,533.705	1,814,788.010	684,533.705	1,814,788.010	TEMP. STRINGTOWN ROAD RAMP D	20+55.73	C/L	C/L MONUMENT
POT	684,699.593	1,814,841.031	684,699.593	1,814,841.031	TEMP. STRINGTOWN ROAD RAMP D	22+29.86	C/L	C/L MONUMENT

STRINGTOWN ROAD
TEMPORARY RAMPS A AND D CURVE DATA

C1

P.I.Sta. 496+08.65
Δ = 39° 02′ 40″ (LT)
Dc = 7° 00′ 00″
R = 818.51′
T = 290.21′
L = 557.78′
E = 49.92′
C = 547.05′
C.B. = N 7° 49′ 50″ E

C2

P.I.Sta. 9+10.35
Δ = 23° 38′ 43″ (RT)
Dc = 4° 14′ 39″
R = 1,350.00′
T = 282.59′
L = 557.13′
E = 29.26′
C = 553.18′
C.B. = N 44° 49′ 35″ E

C3

P.I.Sta. 18+27.40
Δ = 38° 57′ 08″ (LT)
Dc = 8° 11′ 06″
R = 700.00′
T = 247.55′
L = 475.89′
E = 42.48′
C = 466.78′
C.B. = N 37° 10′ 23″ E

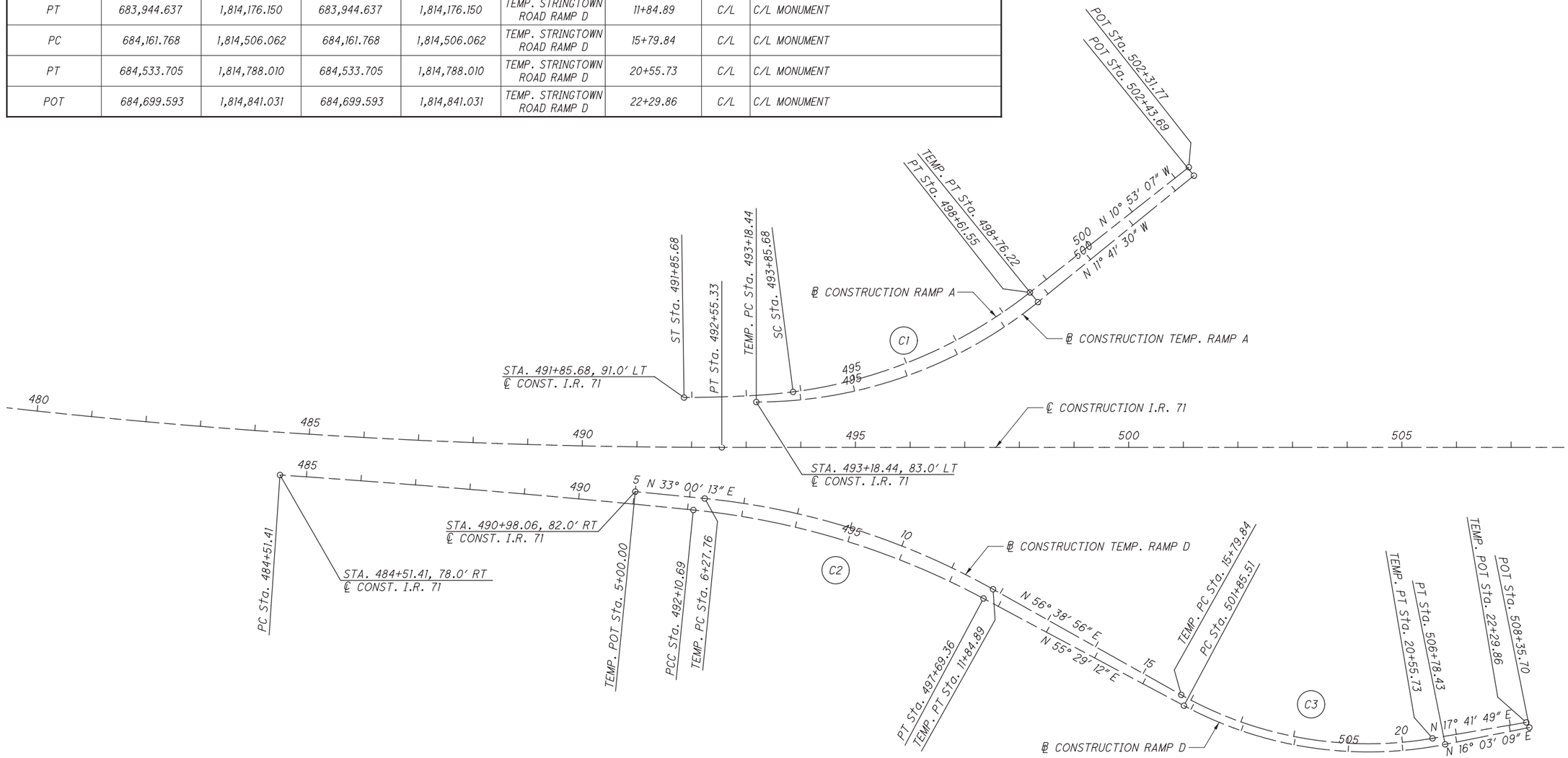

HORIZONTAL SCALE IN FEET
0 50 100 200

CALCULATED SMB
CHECKED BDD

MAINTENANCE OF TRAFFIC
TEMPORARY RAMP SCHEMATIC PLAN

FRA-71-5.29

51
623

P:\84668\mot\sheets\84868MB001.dgn 3/27/2015 2:29:26 PM kfahy

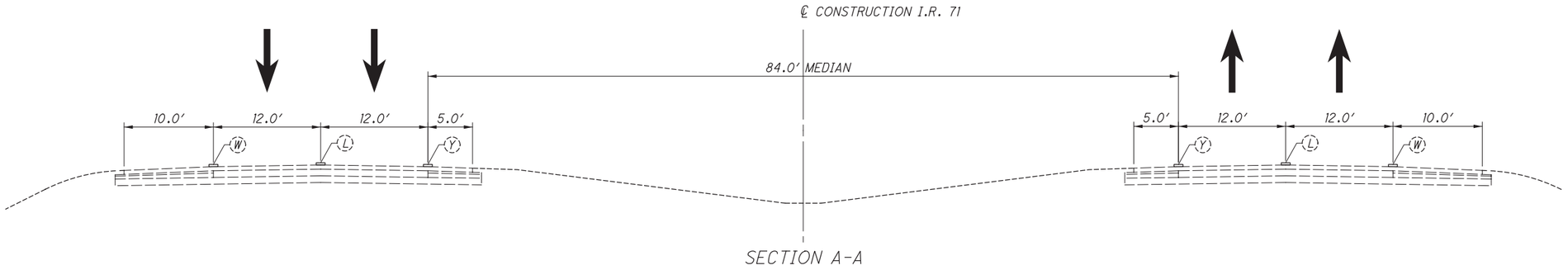

SECTION A-A

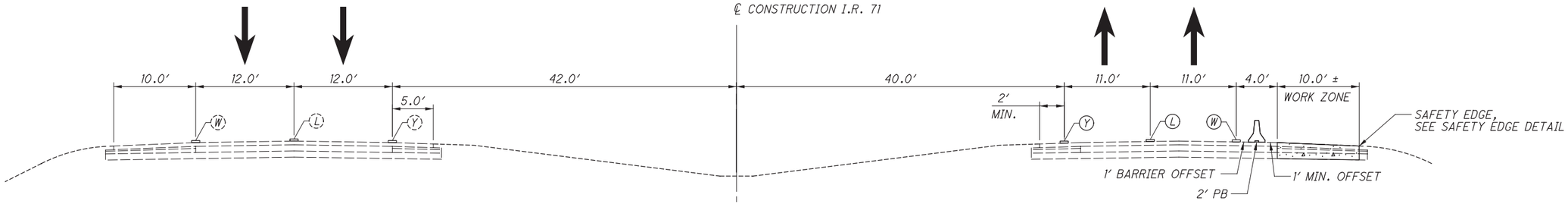

SECTION B-B

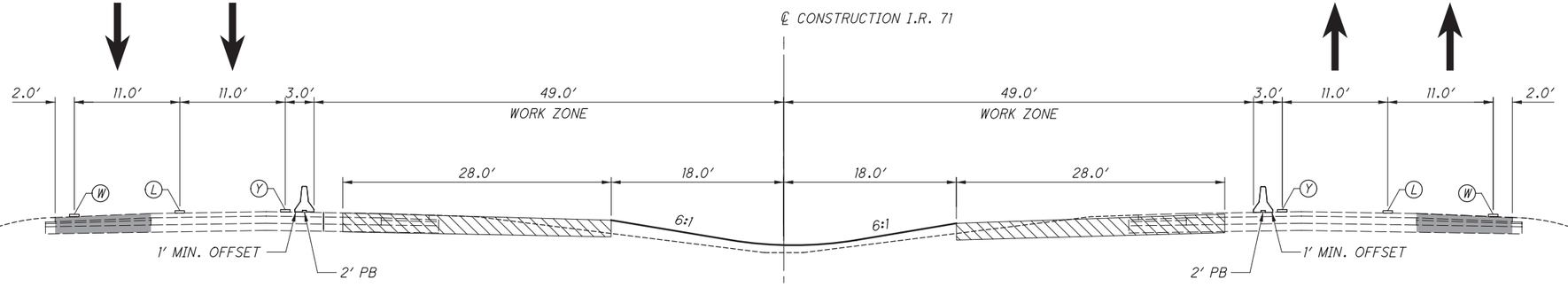

SECTION C-C

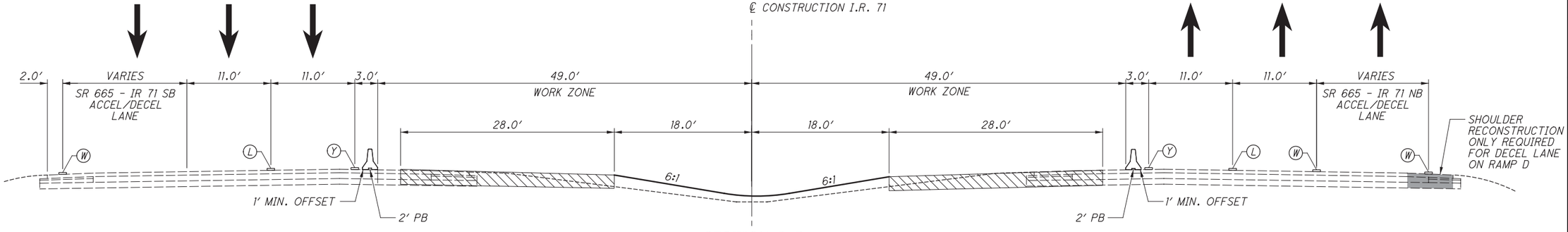

SECTION D-D

TEMPORARY PAVEMENT COMPLETED IN PRIOR PHASE

PERMANENT PAVEMENT TO BE CONSTRUCTED

LEGEND

- (W) EXISTING EDGE LINE, WHITE
- (Y) EXISTING EDGE LINE, YELLOW
- (L) EXISTING LANE LINE
- (W) WORK ZONE EDGE LINE, WHITE, CLASS I
- (Y) WORK ZONE EDGE LINE, YELLOW, CLASS I
- (L) WORK ZONE LANE LINE, CLASS I

MAINTENANCE OF TRAFFIC - IR 71
TYPICAL SECTIONS - PHASE 2

FRA-71-5.29

P:\84668\mot\sheets\84868MY200.dgn 3/27/2015 2:29:27 PM kfahy

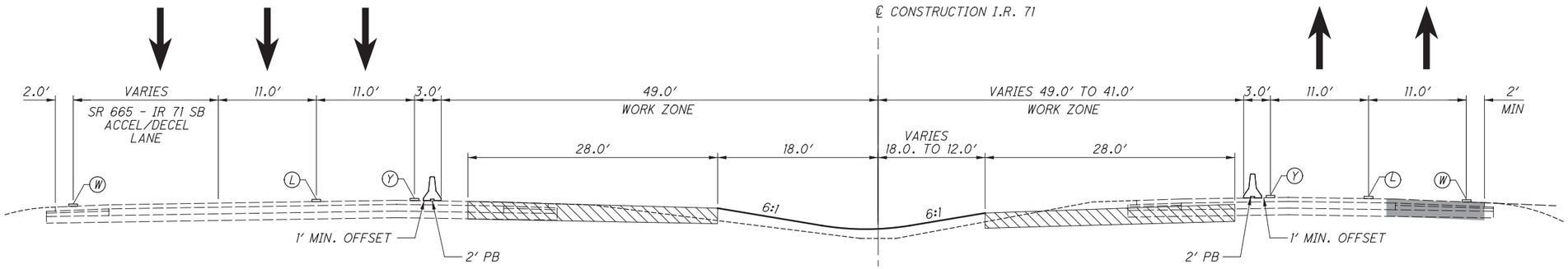

SECTION E-E

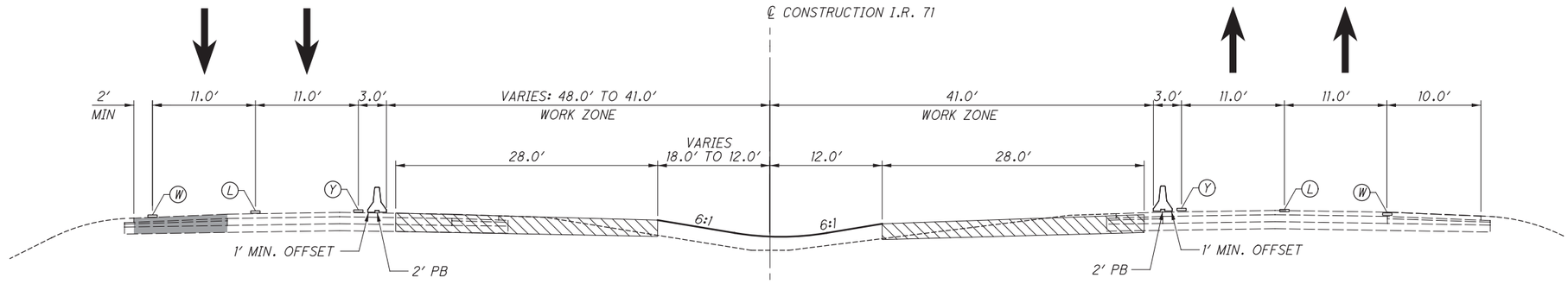

SECTION F-F

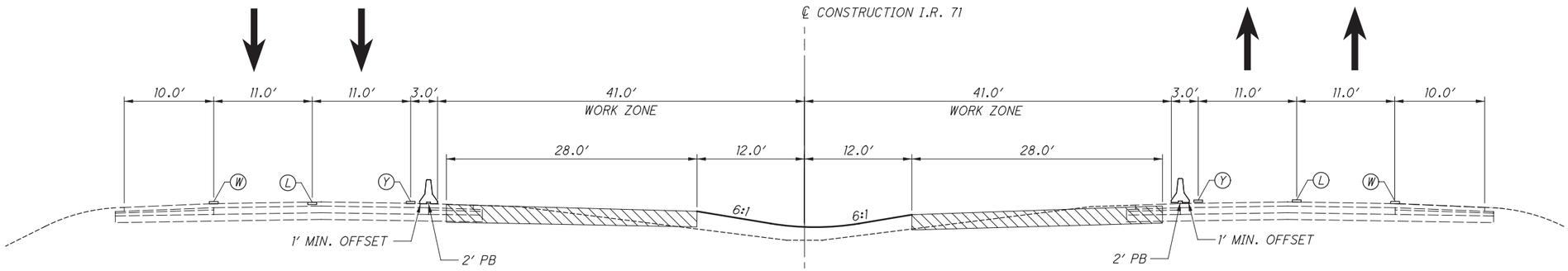

SECTION G-G

LEGEND

- (W) EXISTING EDGE LINE, WHITE
- (Y) EXISTING EDGE LINE, YELLOW
- (L) EXISTING LANE LINE
- (W) WORK ZONE EDGE LINE, WHITE, CLASS I
- (Y) WORK ZONE EDGE LINE, YELLOW, CLASS I
- (L) WORK ZONE LANE LINE, CLASS I

TEMPORARY PAVEMENT COMPLETED IN PRIOR PHASE

PERMANENT PAVEMENT TO BE CONSTRUCTED

P:\84868\mot\sheets\84868MY201.dgn 3/27/2015 2:29:27 PM kfahy

MAINTENANCE OF TRAFFIC - IR 71
TYPICAL SECTIONS - PHASE 2

FRA-71-5.29

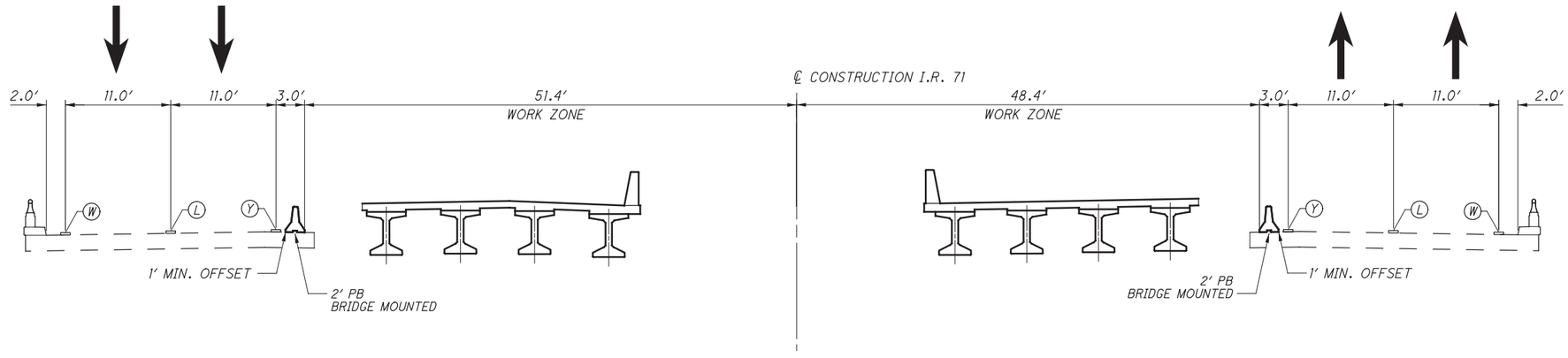

SECTION H-H

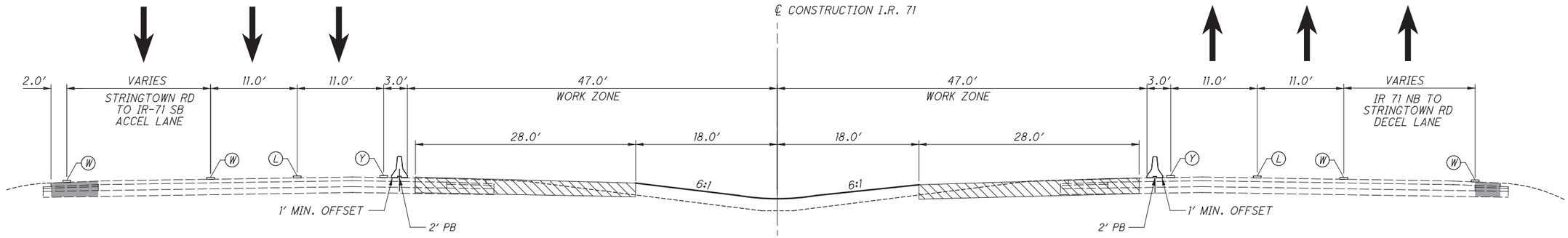

SECTION I-I

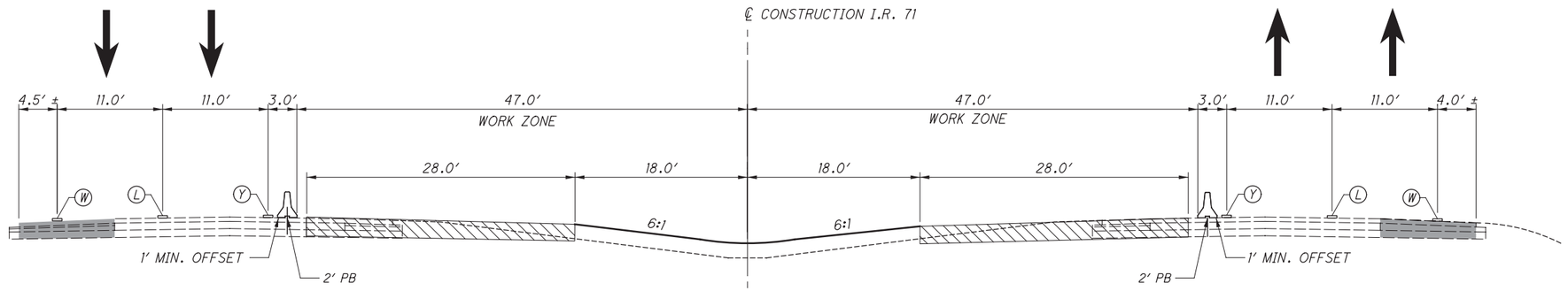

SECTION J-J

LEGEND

- (W) EXISTING EDGE LINE, WHITE
- (Y) EXISTING EDGE LINE, YELLOW
- (L) EXISTING LANE LINE
- (W) WORK ZONE EDGE LINE, WHITE, CLASS I
- (Y) WORK ZONE EDGE LINE, YELLOW, CLASS I
- (L) WORK ZONE LANE LINE, CLASS I

TEMPORARY PAVEMENT COMPLETED IN PRIOR PHASE

PERMANENT PAVEMENT TO BE CONSTRUCTED

MAINTENANCE OF TRAFFIC - IR 71
TYPICAL SECTIONS - PHASE 2

FRA-71-5.29

P:\84868\rnot\sheets\84868MY202.dgn 3/27/2015 2:29:28 PM kfahy

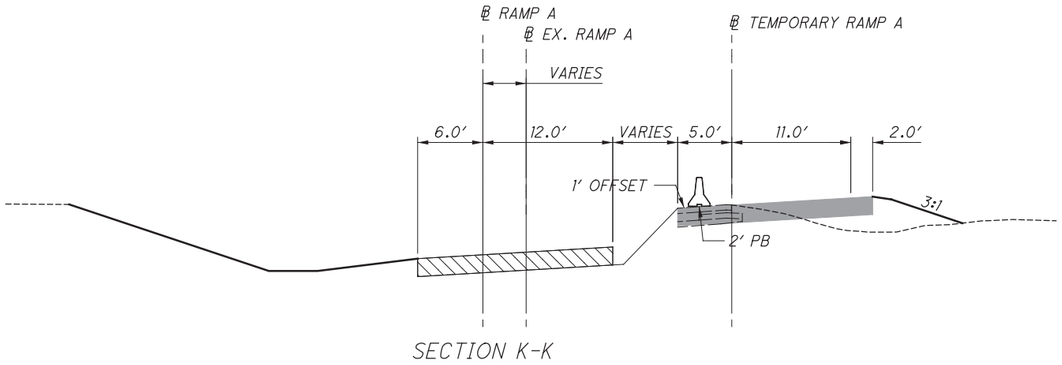

SECTION K-K

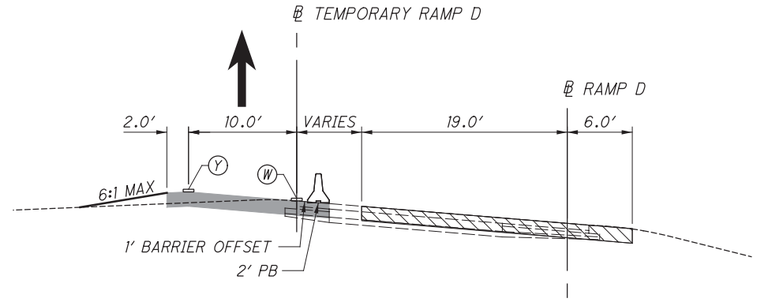

SECTION L-L

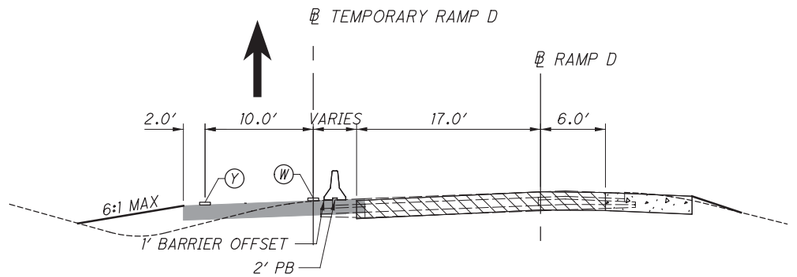

SECTION M-M

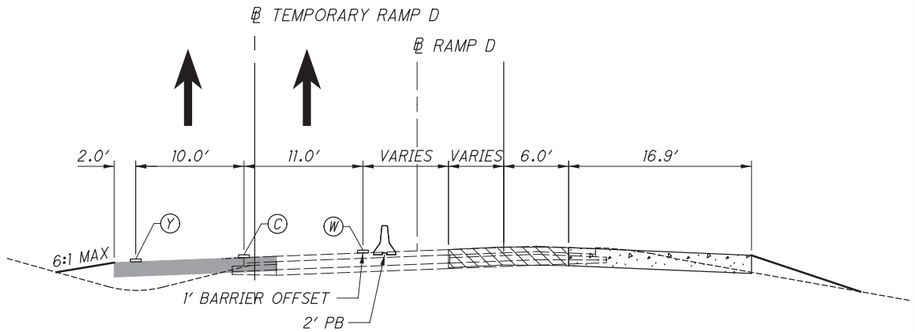

SECTION N-N

LEGEND

- (W) EXISTING EDGE LINE, WHITE
- (Y) EXISTING EDGE LINE, YELLOW
- (L) EXISTING LANE LINE
- (W) WORK ZONE EDGE LINE, WHITE, CLASS I
- (Y) WORK ZONE EDGE LINE, YELLOW, CLASS I
- (L) WORK ZONE LANE LINE, CLASS I
- TEMPORARY PAVEMENT COMPLETED IN PRIOR PHASE
- PAVEMENT FOR MAINTAINING TRAFFIC, CLASS A TO BE CONSTRUCTED
- PERMANENT PAVEMENT TO BE CONSTRUCTED

MAINTENANCE OF TRAFFIC - IR 71
TYPICAL SECTIONS - PHASE 2

FRA-71-5.29

P:\84868\mot\sheets\84868MY203.dgn 3/27/2015 2:29:28 PM kfahy

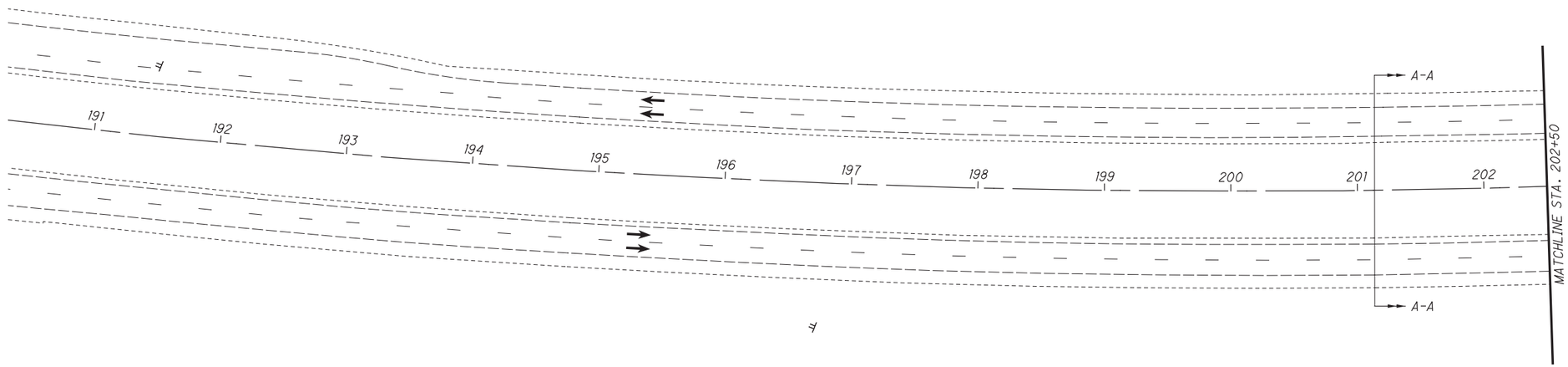

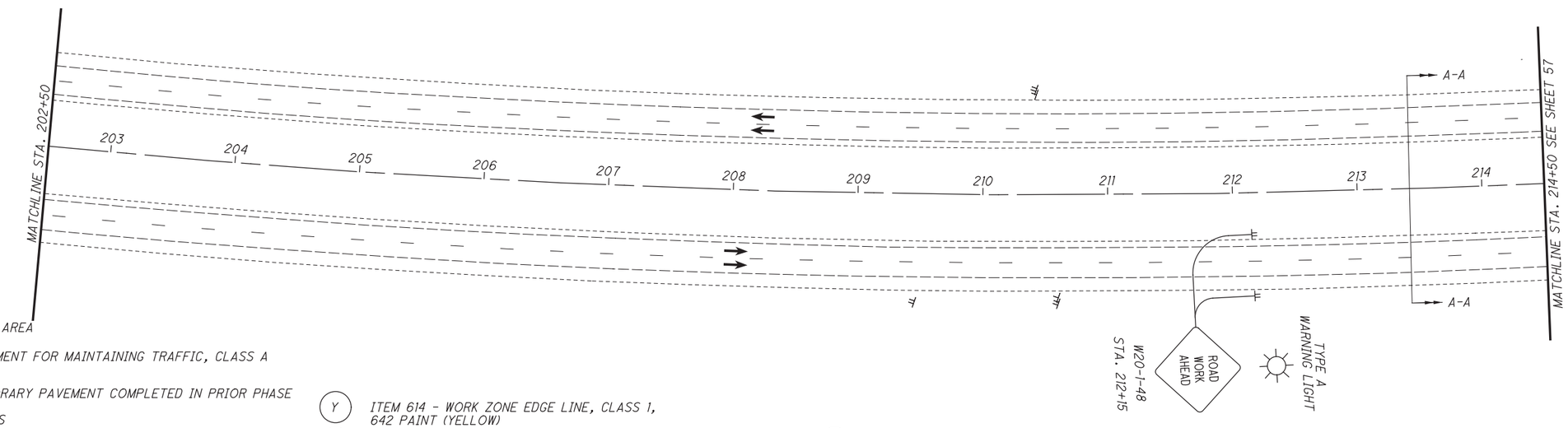

HORIZONTAL SCALE IN FEET
0 25 50 100

CALCULATED GPD
CHECKED BBD

MAINTENANCE OF TRAFFIC - PHASE 2
STA. 190+50.00 TO STA. 214+50.00

FRA-71-5.29

56
623

P:\84868\mot\sheets\84868MP200.dgn 3/27/2015 2:29:30 PM kfahy

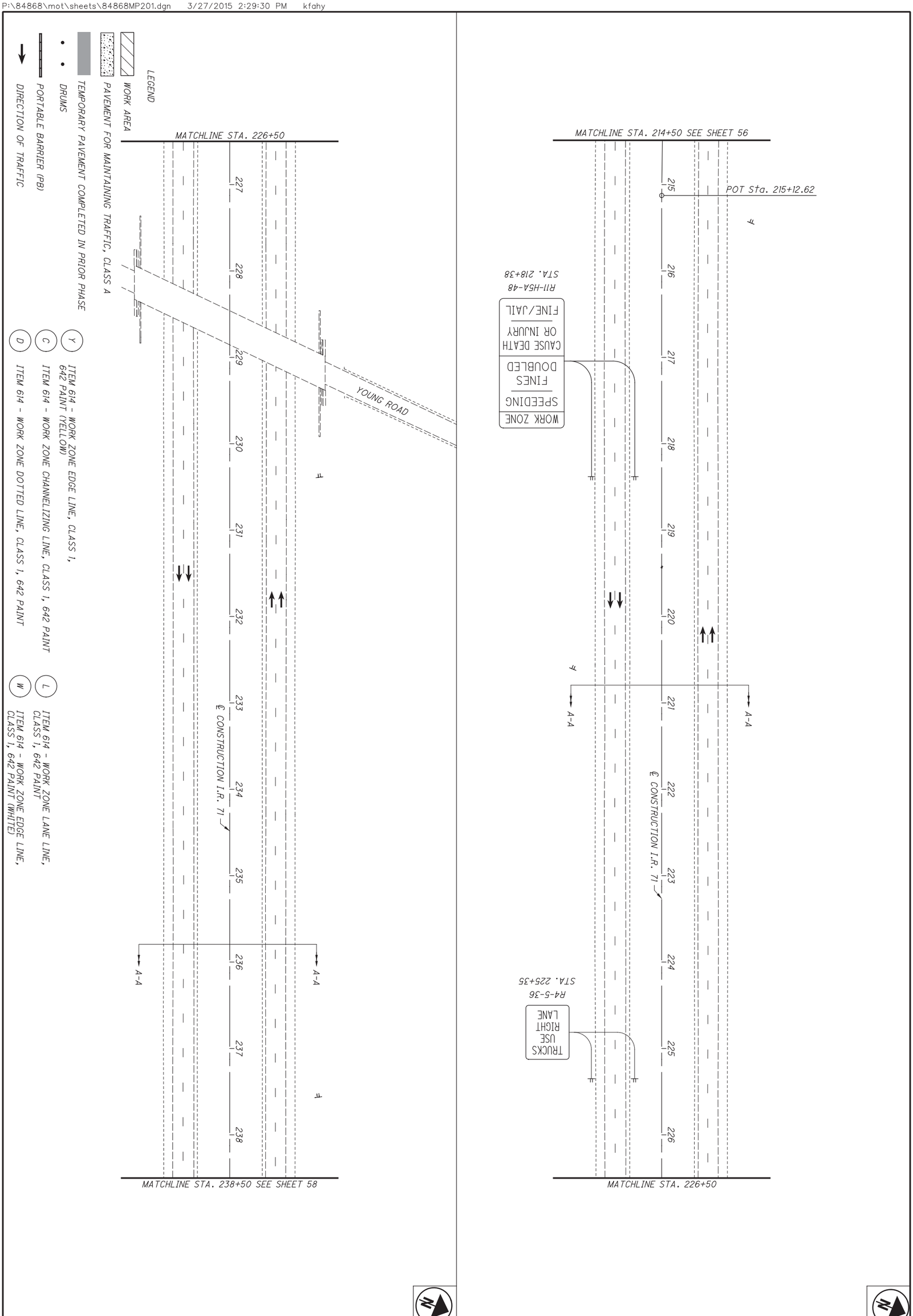

57 / 623	FRA-71-5.29	MAINTENANCE OF TRAFFIC - PHASE 2 STA. 214+50 TO STA. 238+50.00	CALCULATED GPD CHECKED BBD	0 50 25 100 HORIZONTAL SCALE IN FEET

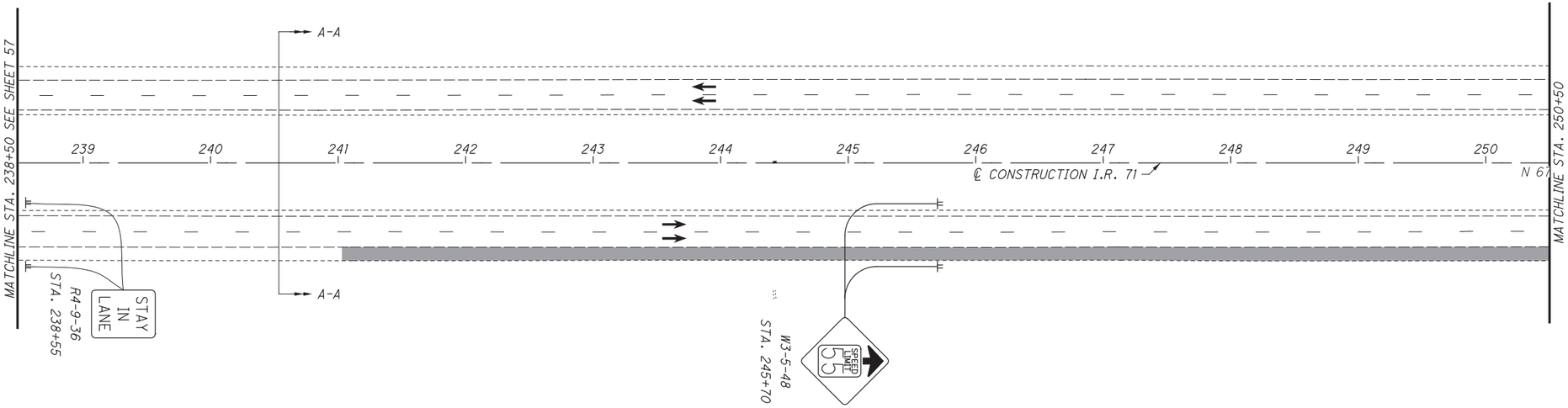

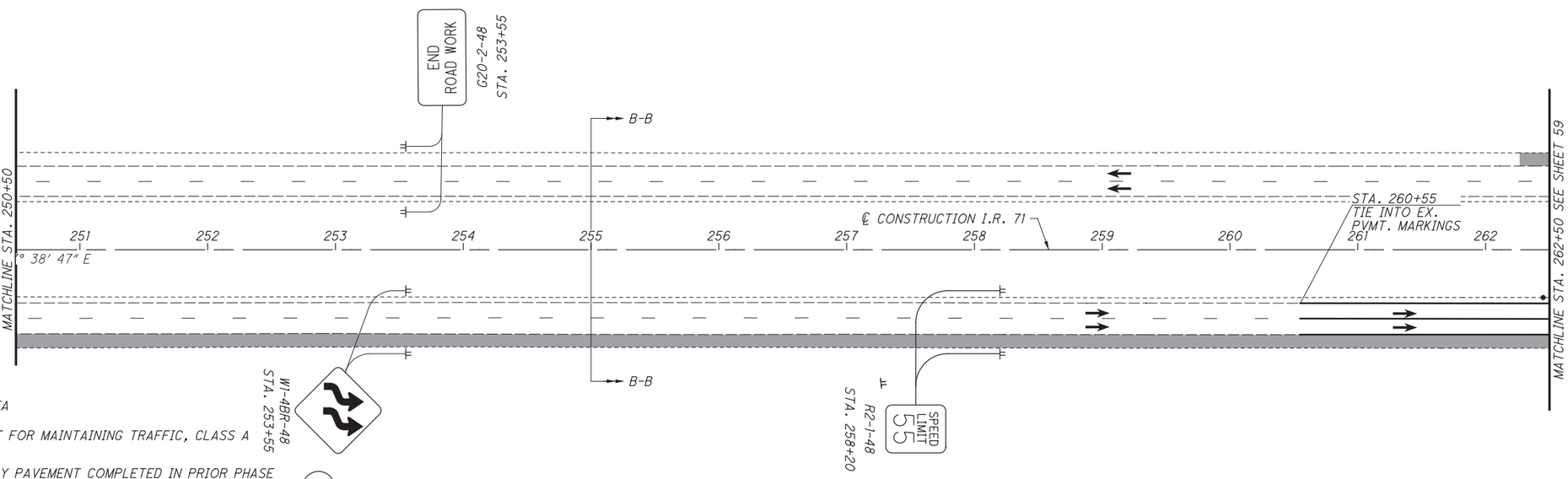

LEGEND

- WORK AREA
- PAVEMENT FOR MAINTAINING TRAFFIC, CLASS A
- TEMPORARY PAVEMENT COMPLETED IN PRIOR PHASE
- DRUMS
- PORTABLE BARRIER (PB)
- DIRECTION OF TRAFFIC

(Y) ITEM 614 - WORK ZONE EDGE LINE, CLASS 1, 642 PAINT (YELLOW)

(C) ITEM 614 - WORK ZONE CHANNELIZING LINE, CLASS 1, 642 PAINT

(D) ITEM 614 - WORK ZONE DOTTED LINE, CLASS 1, 642 PAINT

(L) ITEM 614 - WORK ZONE LANE LINE, CLASS 1, 642 PAINT

(W) ITEM 614 - WORK ZONE EDGE LINE, CLASS 1, 642 PAINT (WHITE)

HORIZONTAL SCALE IN FEET
0 25 50 100

CALCULATED GPD
CHECKED BBD

MAINTENANCE OF TRAFFIC - PHASE 2
STA. 238+50.00 TO STA. 262+50.00

FRA-71-5.29

P:\84668\mot\sheets\84868MP202.dgn 3/27/2015 2:29:31 PM kfahy

LEGEND

WORK AREA

PAVEMENT FOR MAINTAINING TRAFFIC, CLASS A

TEMPORARY PAVEMENT COMPLETED IN PRIOR PHASE

DRUMS

PORTABLE BARRIER (PB)

DIRECTION OF TRAFFIC

(Y) ITEM 614 - WORK ZONE EDGE LINE, CLASS 1, 642 PAINT (YELLOW)

(C) ITEM 614 - WORK ZONE CHANNELIZING LINE, CLASS 1, 642 PAINT

(D) ITEM 614 - WORK ZONE DOTTED LINE, CLASS 1, 642 PAINT

(L) ITEM 614 - WORK ZONE LANE LINE, CLASS 1, 642 PAINT

(W) ITEM 614 - WORK ZONE EDGE LINE, CLASS 1, 642 PAINT (WHITE)

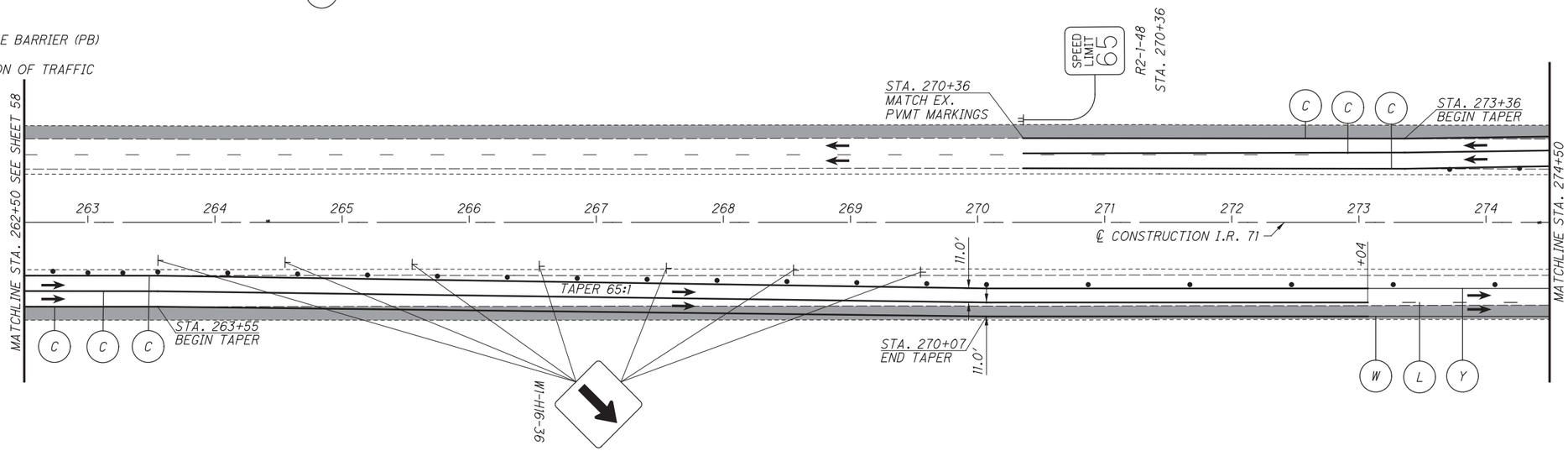

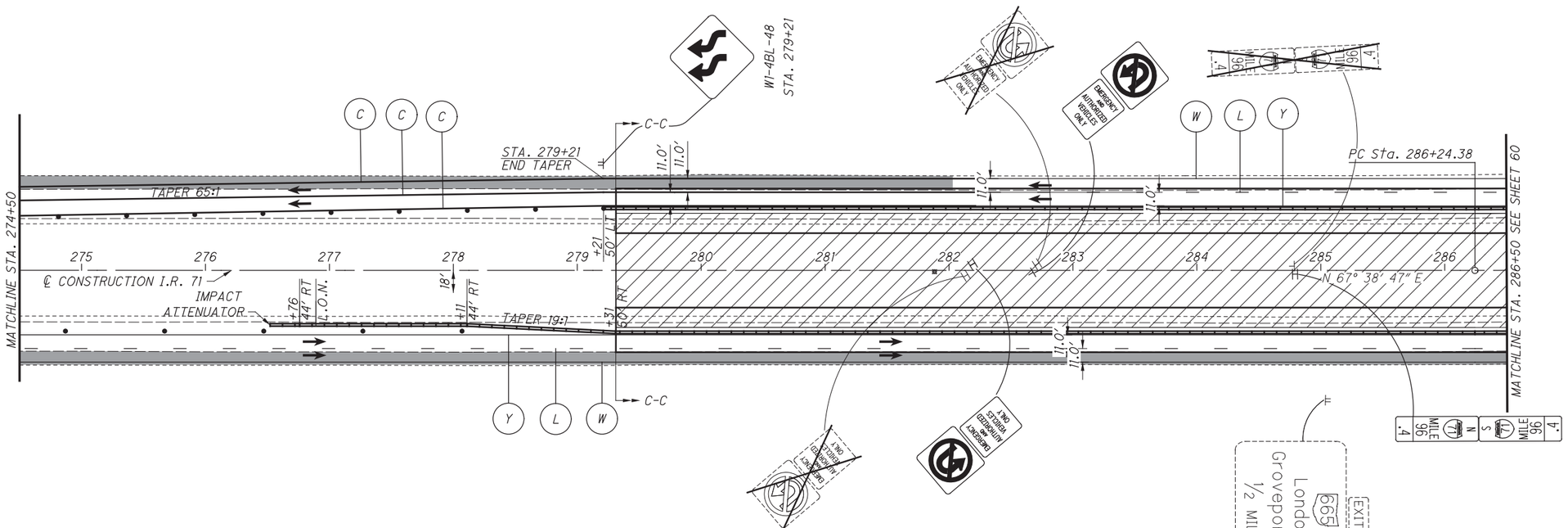

HORIZONTAL SCALE IN FEET

CALCULATED GPD

CHECKED BBD

MAINTENANCE OF TRAFFIC - PHASE 2
STA. 262+50.00 TO STA. 286+50.00

FRA-71-5.29

P:\84868\mot\sheets\84868MP203.dgn 3/27/2015 2:29:31 PM kfahy

P:\84868\mot\sheets\84868MP204.dgn 3/27/2015 2:29:32 PM kfahy

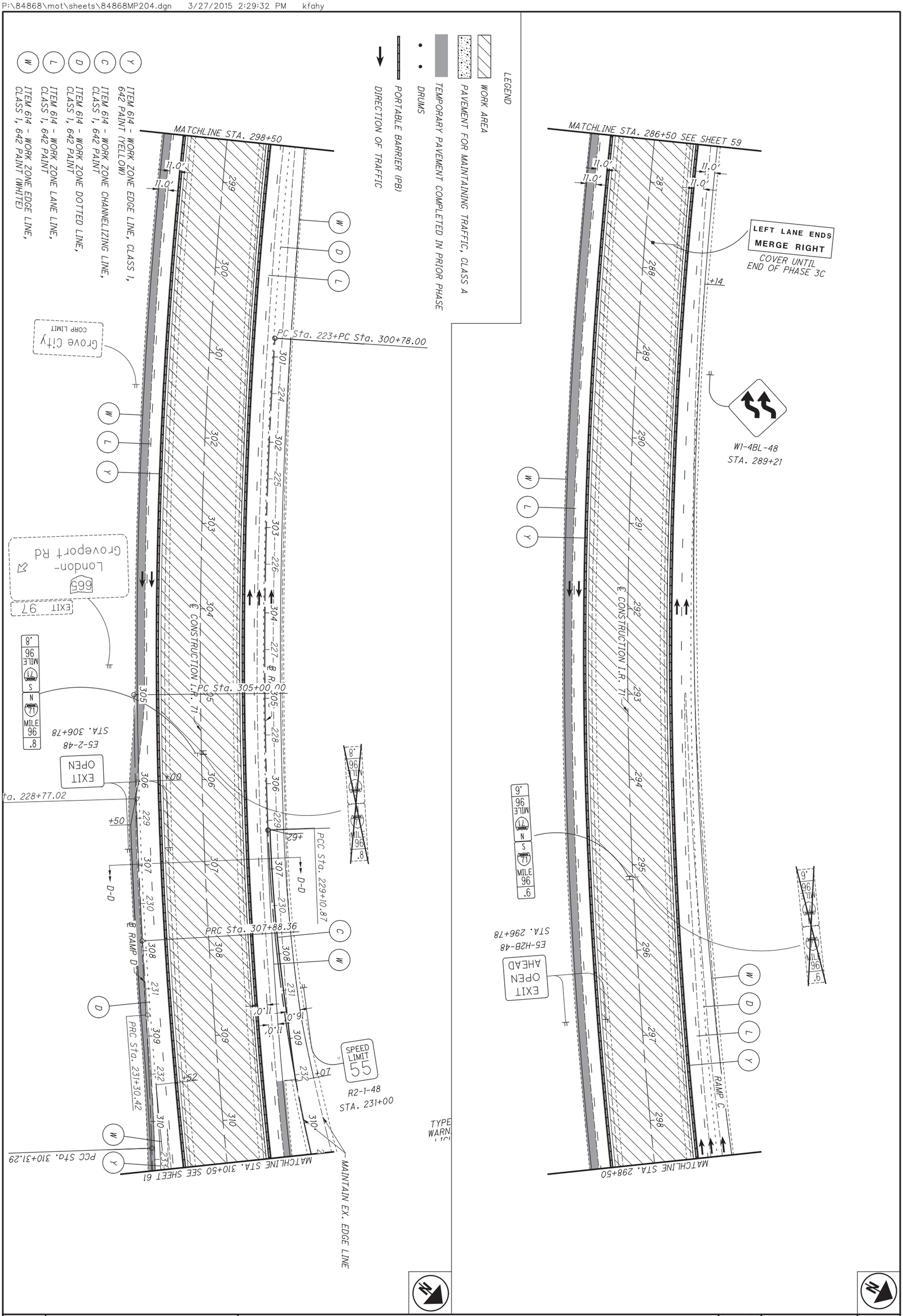

60 / 623	FRA-71-5.29	MAINTENANCE OF TRAFFIC - PHASE 2 STA. 286+50.00 TO STA. 310+50.00	CALCULATED GPD CHECKED BBD	0 50 25 100 HORIZONTAL SCALE IN FEET

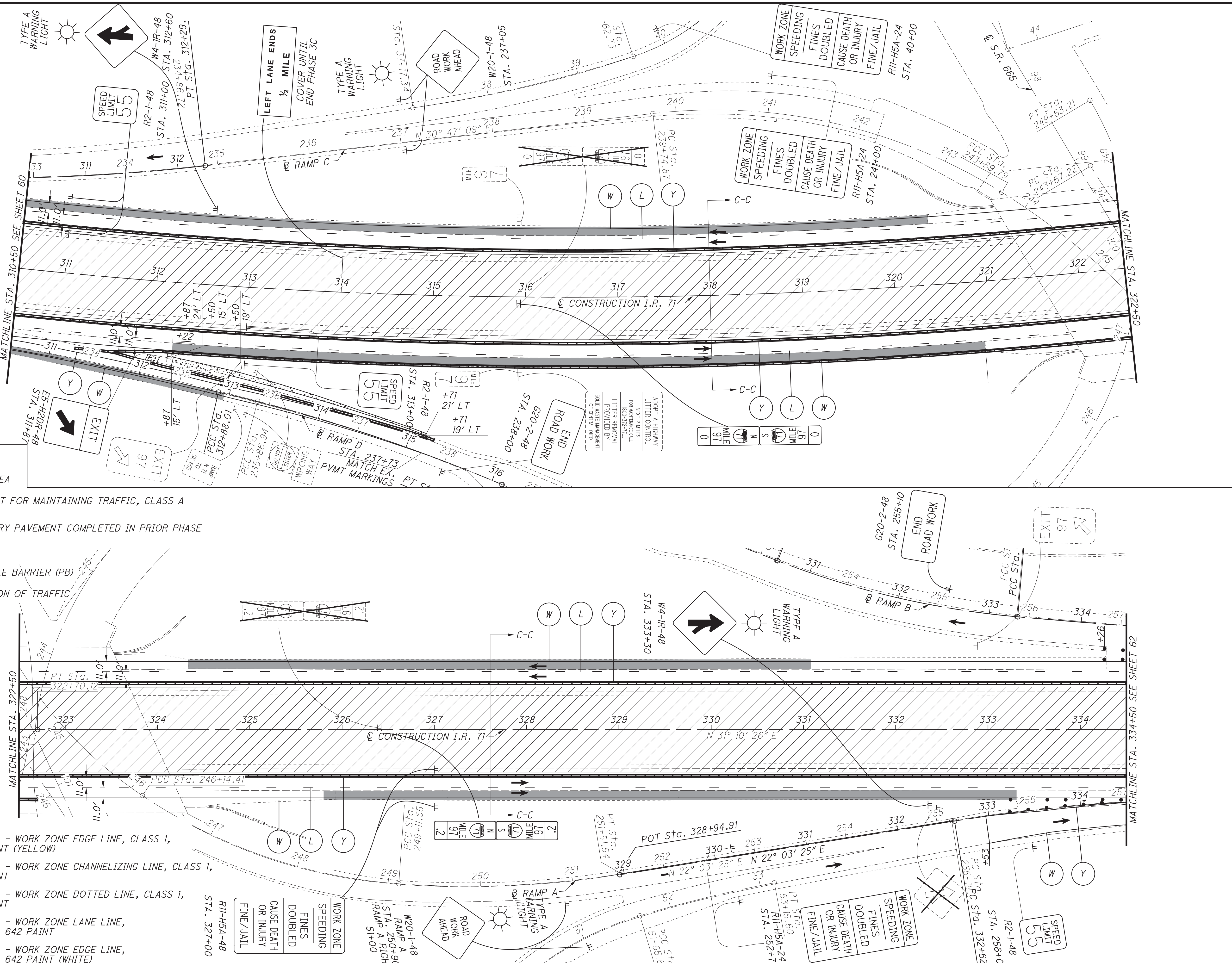

LEGEND

WORK AREA

PAVEMENT FOR MAINTAINING TRAFFIC, CLASS A

TEMPORARY PAVEMENT COMPLETED IN PRIOR PHASE

DRUMS

PORTABLE BARRIER (PB)

DIRECTION OF TRAFFIC

(Y) ITEM 614 - WORK ZONE EDGE LINE, CLASS 1, 642 PAINT (YELLOW)

(C) ITEM 614 - WORK ZONE CHANNELIZING LINE, CLASS 1, 642 PAINT

(D) ITEM 614 - WORK ZONE DOTTED LINE, CLASS 1, 642 PAINT

(L) ITEM 614 - WORK ZONE LANE LINE, CLASS 1, 642 PAINT

(W) ITEM 614 - WORK ZONE EDGE LINE, CLASS 1, 642 PAINT (WHITE)

P:\84868\mot\sheets\84868MP205.dgn 3/27/2015 2:29:33 PM kfahy

HORIZONTAL SCALE IN FEET 0 25 50 100

CALCULATED GPD CHECKED BBD

MAINTENANCE OF TRAFFIC - PHASE 2
STA. 310+50.00 TO STA. 334+50.00

FRA-71-5.29

P:\84868\mot\sheets\84868MP206.dgn 3/27/2015 2:29:33 PM kfahy

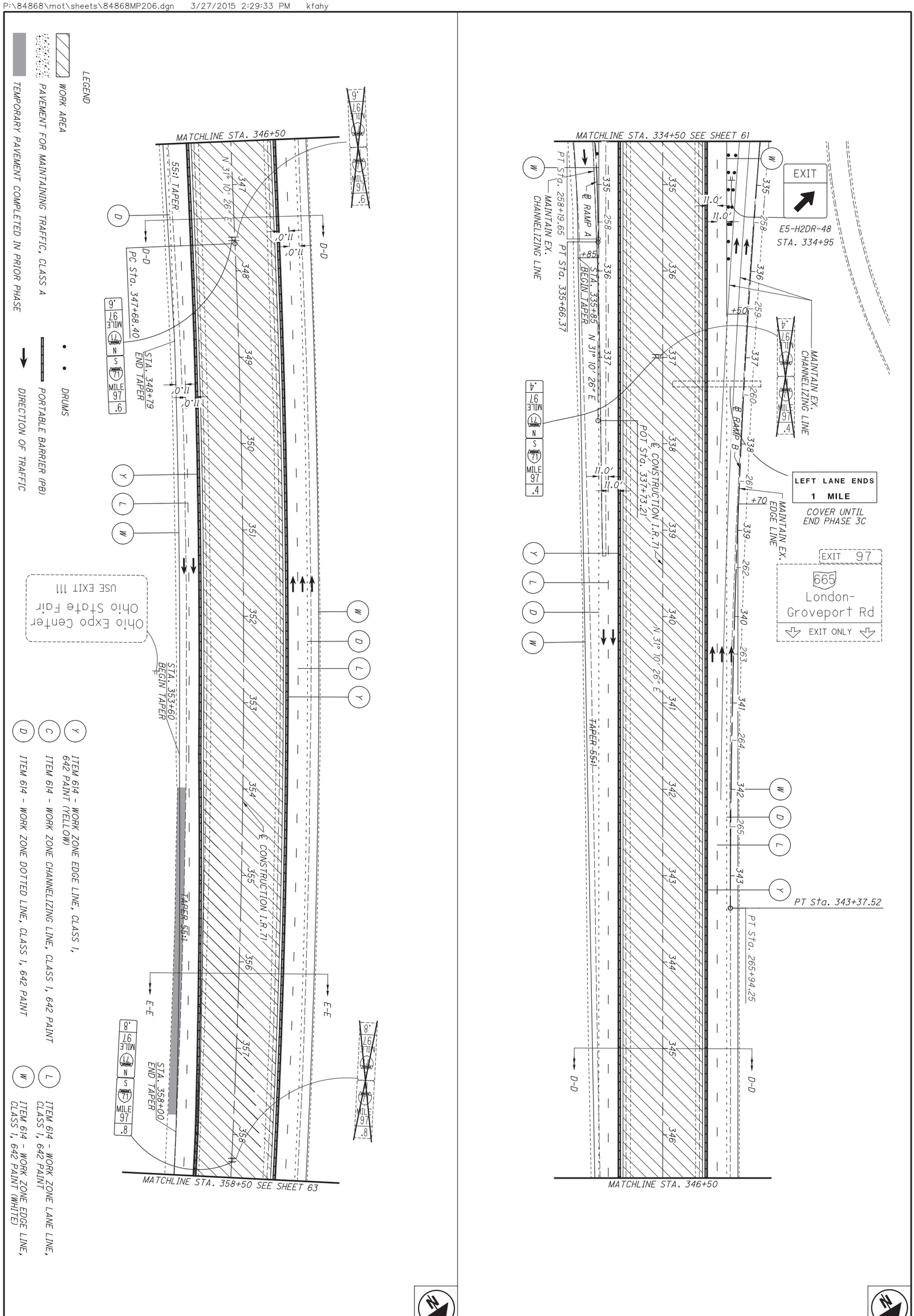

(D) ITEM 614 - WORK ZONE DOTTED LINE, CLASS I, 642 PAINT

(C) ITEM 614 - WORK ZONE CHANNELIZING LINE, CLASS I, 642 PAINT

(Y) ITEM 614 - WORK ZONE EDGE LINE, CLASS I, 642 PAINT (YELLOW)

(L) ITEM 614 - WORK ZONE LANE LINE, CLASS I, 642 PAINT

(W) ITEM 614 - WORK ZONE EDGE LINE, CLASS I, 642 PAINT (WHITE)

62 / 623	FRA-71-5.29	MAINTENANCE OF TRAFFIC - PHASE 2 STA. 334+50.00 TO STA. 358+50.00	CALCULATED GPD CHECKED BBD 0 50 25 100 HORIZONTAL SCALE IN FEET

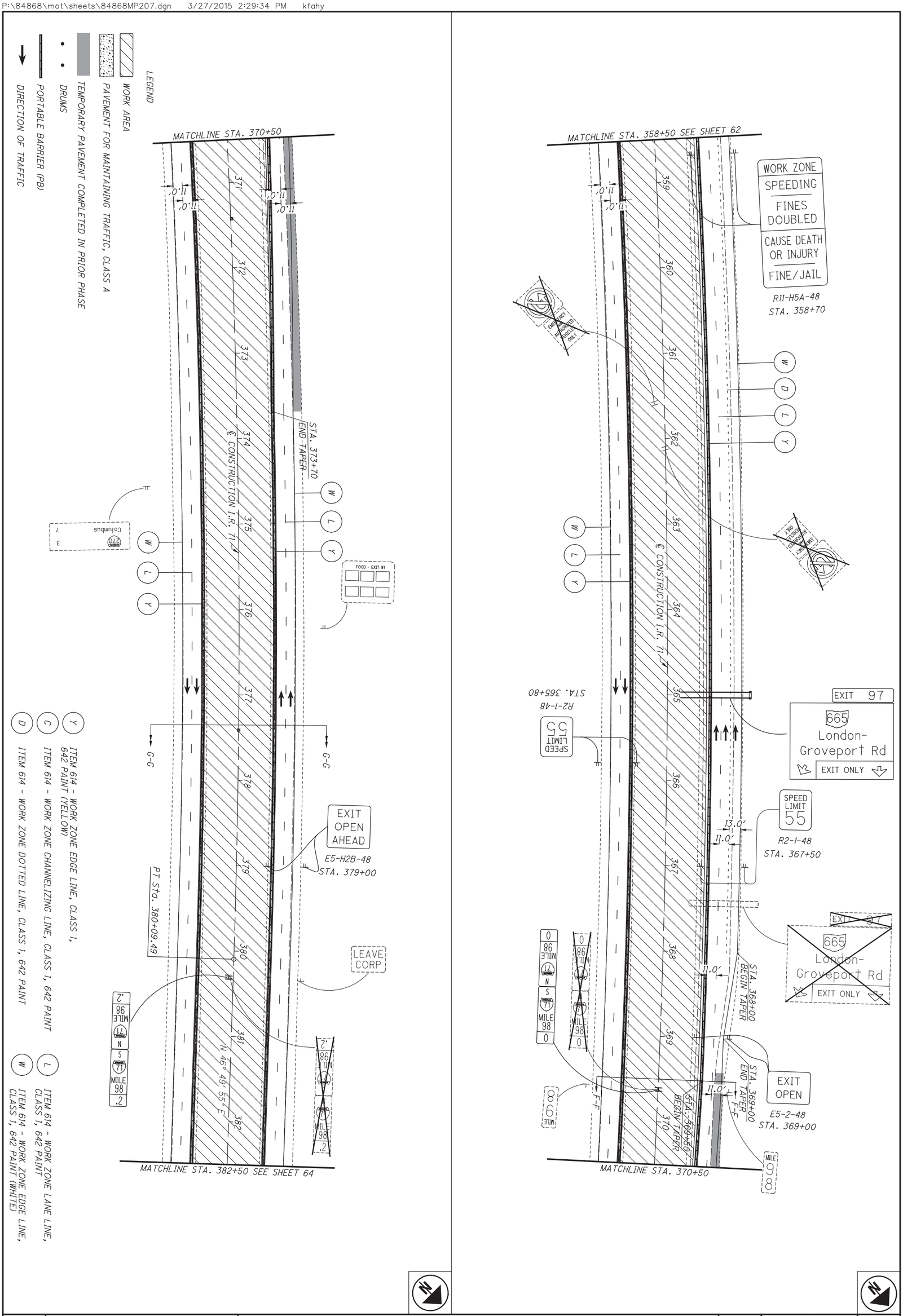

63 623	FRA-71-5.29	MAINTENANCE OF TRAFFIC - PHASE 2 STA. 358+50.00 TO STA. 382+50.00	CALCULATED GPD CHECKED BBD 0 50 25 100 HORIZONTAL SCALE IN FEET

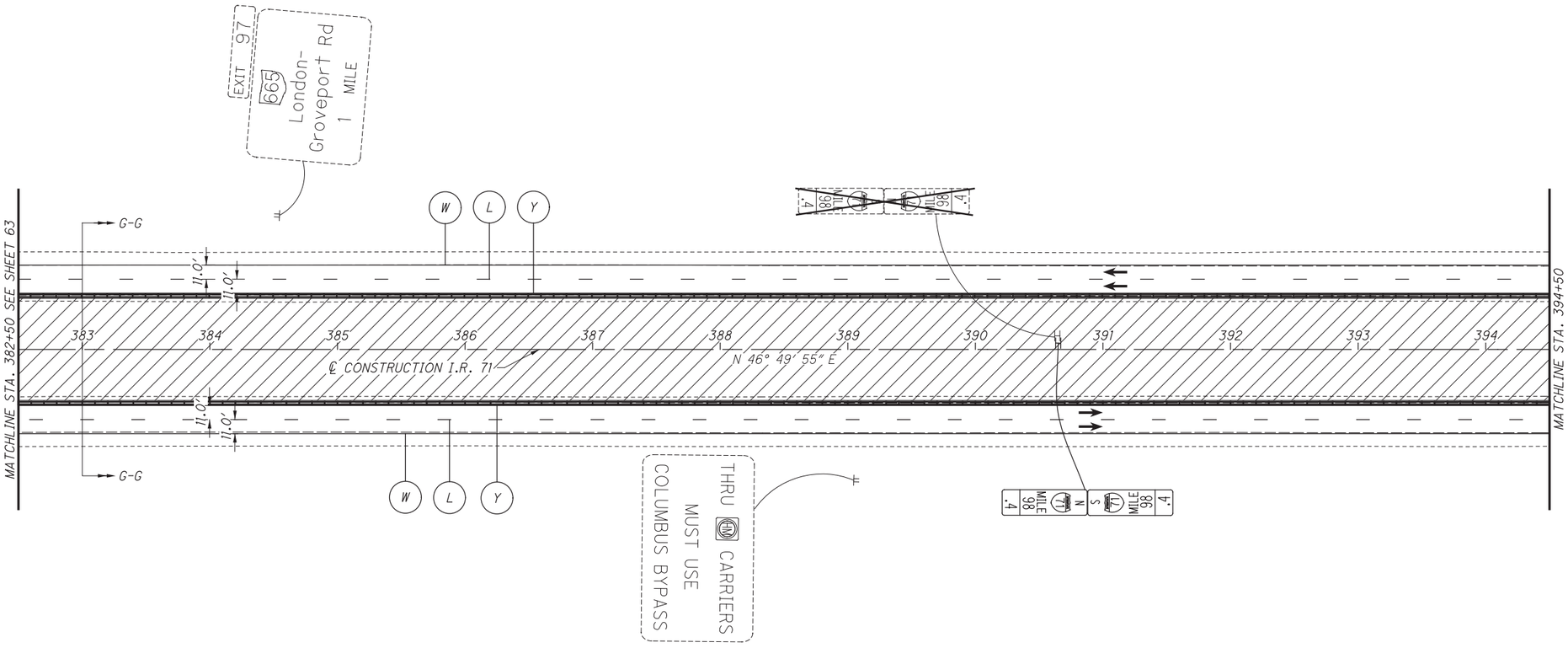

LEGEND

- WORK AREA
- PAVEMENT FOR MAINTAINING TRAFFIC, CLASS A
- TEMPORARY PAVEMENT COMPLETED IN PRIOR PHASE
- DRUMS
- PORTABLE BARRIER (PB)
- DIRECTION OF TRAFFIC

- (Y) ITEM 614 - WORK ZONE EDGE LINE, CLASS 1, 642 PAINT (YELLOW)
- (C) ITEM 614 - WORK ZONE CHANNELIZING LINE, CLASS 1, 642 PAINT
- (D) ITEM 614 - WORK ZONE DOTTED LINE, CLASS 1, 642 PAINT
- (L) ITEM 614 - WORK ZONE LANE LINE, CLASS 1, 642 PAINT
- (W) ITEM 614 - WORK ZONE EDGE LINE, CLASS 1, 642 PAINT (WHITE)

HORIZONTAL SCALE IN FEET
0 25 50 100

CALCULATED GPD
CHECKED BBD

MAINTENANCE OF TRAFFIC - PHASE 2
STA. 382+50.00 TO STA. 406+50.00

FRA-71-5.29

64
623

P:\84868\rnot\sheets\84868MP208.dgn 3/27/2015 2:29:35 PM kfahy

P:\84868\mot\sheets\84868MP209.dgn 3/27/2015 2:29:35 PM kfahy

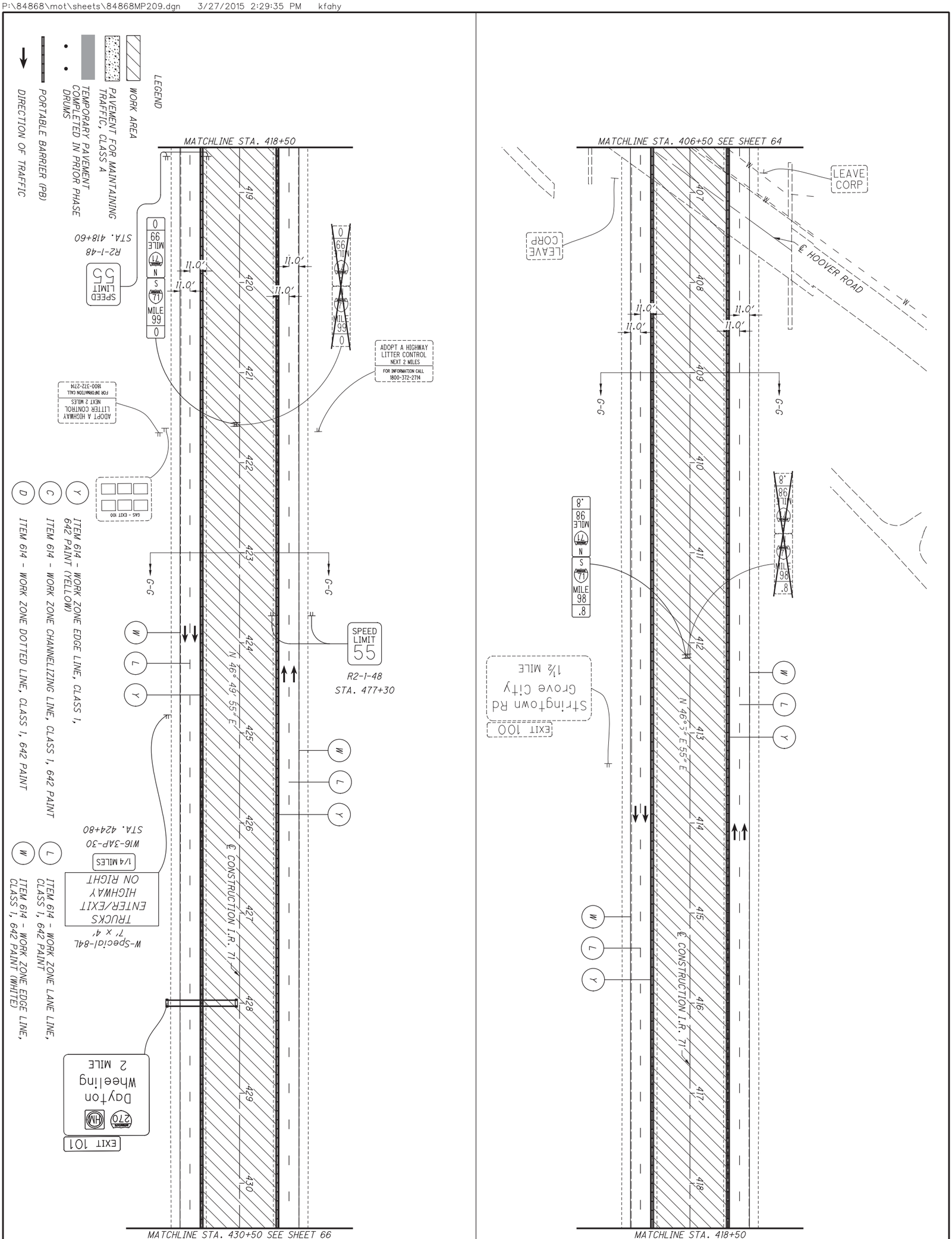

65 / 623	FRA-71-5.29	MAINTENANCE OF TRAFFIC - PHASE 2 STA. 406+50.00 TO STA. 430+50.00	CALCULATED GPD CHECKED BBD	0 50 25 100 HORIZONTAL SCALE IN FEET

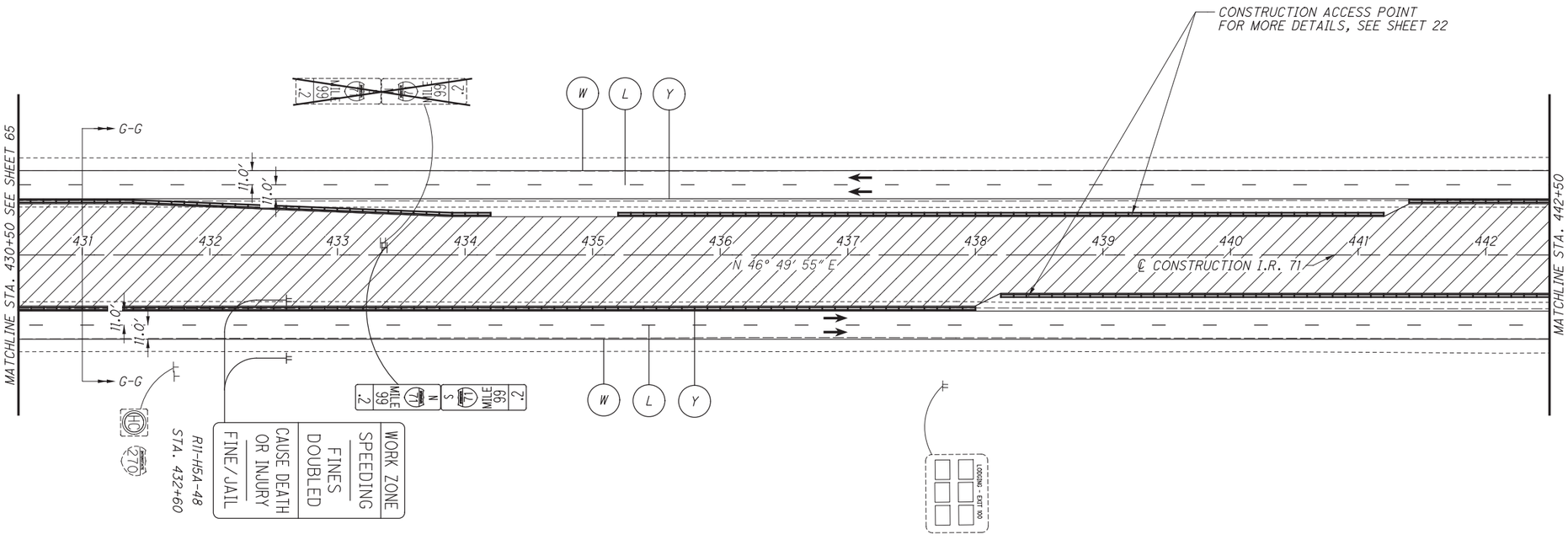

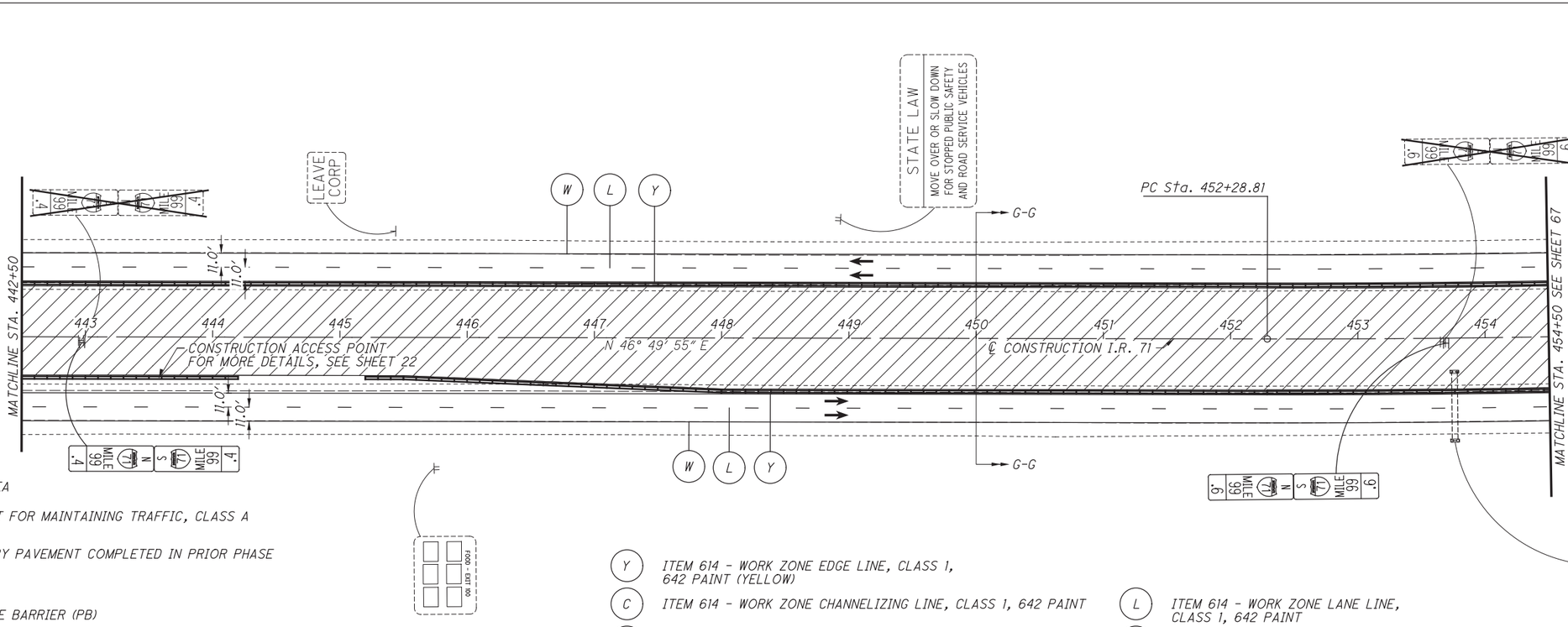

HORIZONTAL SCALE IN FEET
0 25 50 100

CALCULATED GPD
CHECKED BBD

MAINTENANCE OF TRAFFIC - PHASE 2
STA. 430+50.00 TO STA. 454+50.00

FRA-71-5.29

66
623

P:\84868\mot\sheets\84868MP210.dgn 3/27/2015 2:29:36 PM kfahy

P:\84868\mot\sheets\84868MP211.dgn 3/27/2015 2:29:36 PM kfahy

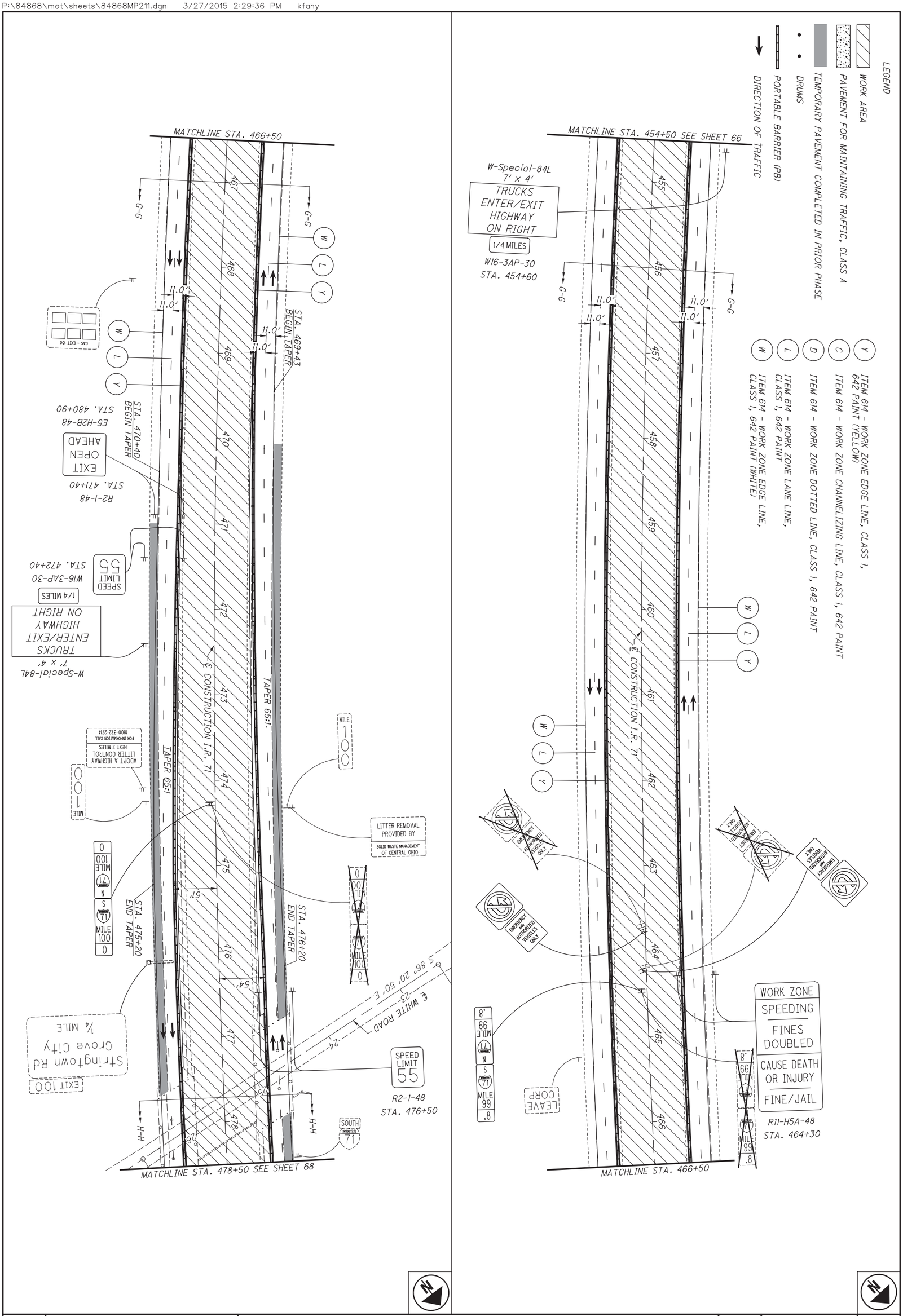

67 / 623	FRA-71-5.29	MAINTENANCE OF TRAFFIC - PHASE 2 STA. 454+50.00 TO STA. 478+50.00	CALCULATED GPD CHECKED BBD	0 25 50 100 HORIZONTAL SCALE IN FEET

P:\84868\mot\sheets\84868MP212.dgn 3/27/2015 2:29:37 PM kfahy

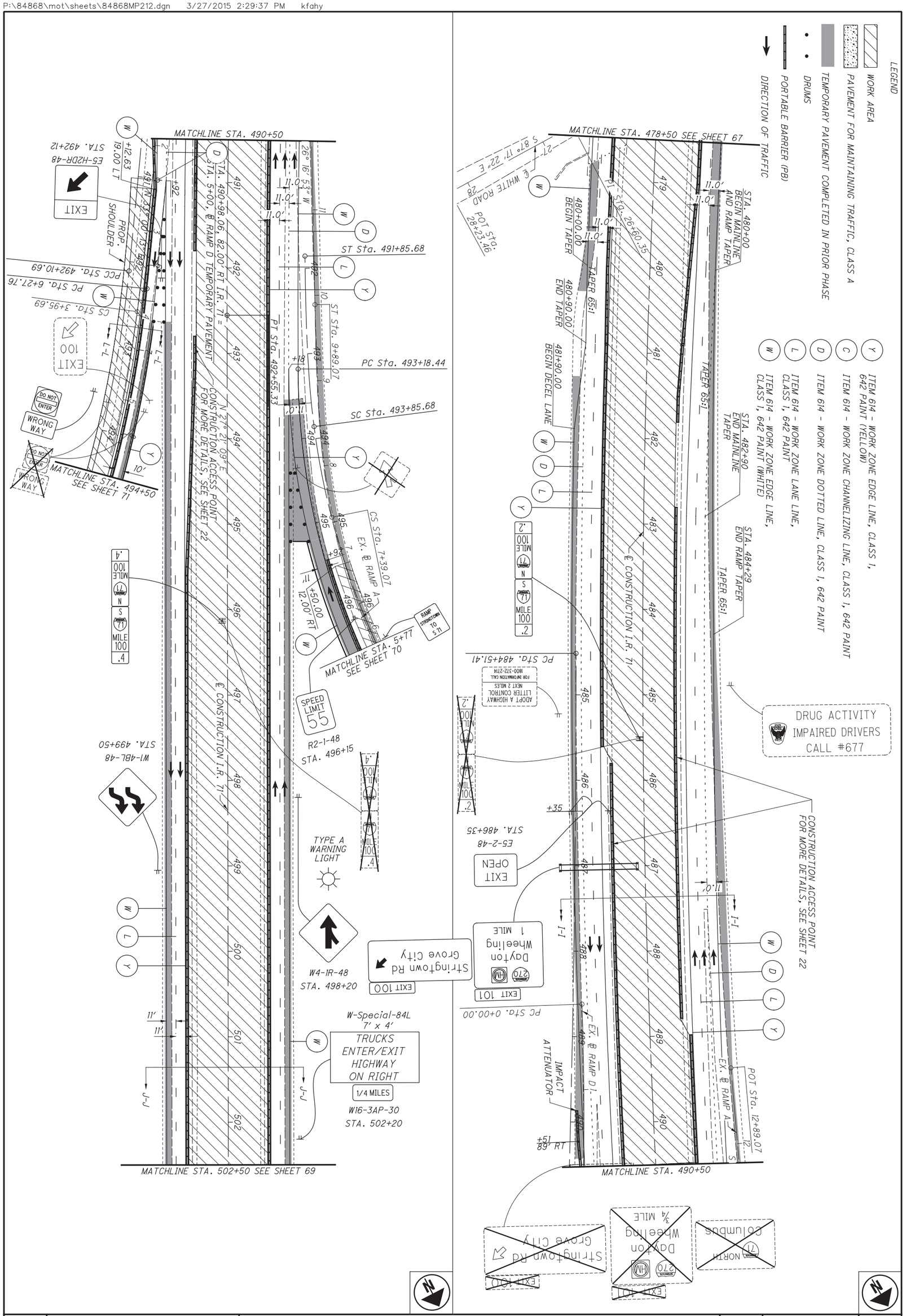

68 623	FRA-71-5.29	MAINTENANCE OF TRAFFIC - PHASE 2 STA. 478+50.00 TO STA. 502+50.00	CALCULATED GPD CHECKED BBD	0 50 25 100 HORIZONTAL SCALE IN FEET

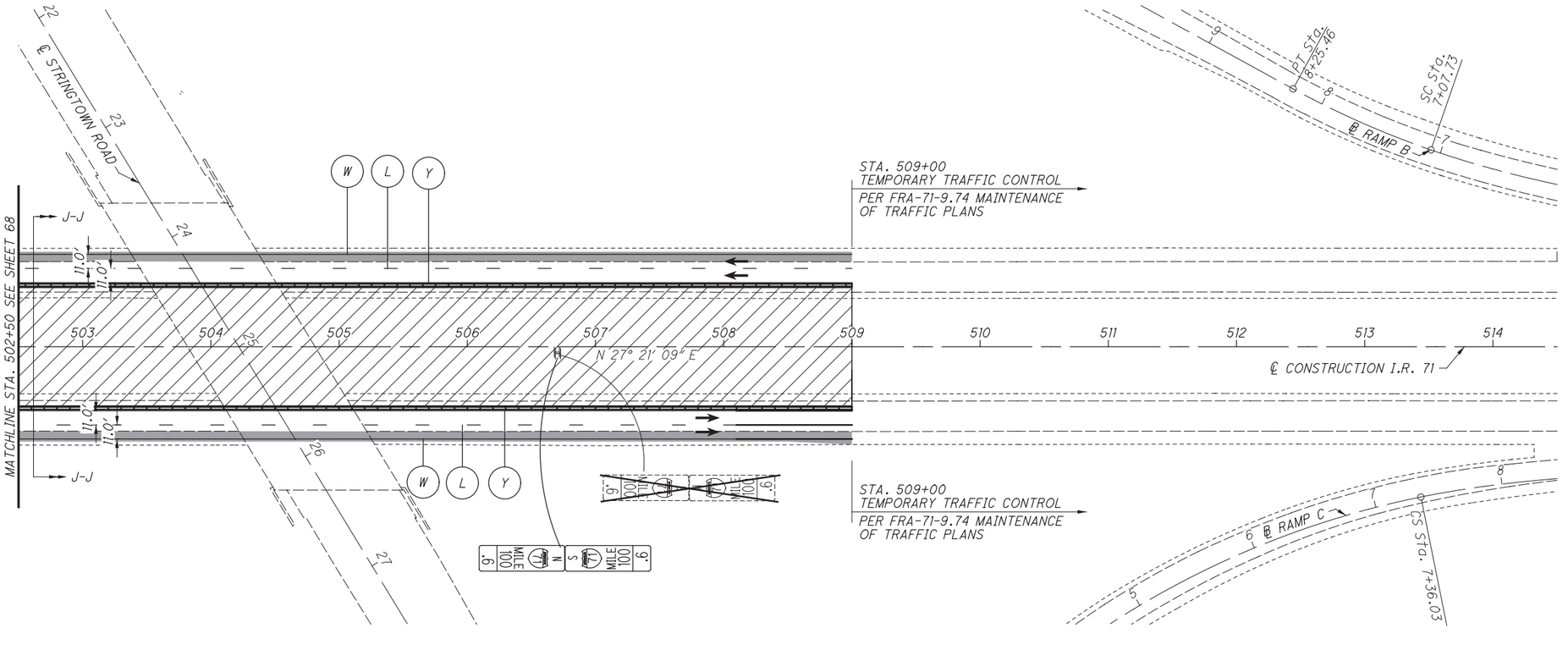

LEGEND

- WORK AREA
- PAVEMENT FOR MAINTAINING TRAFFIC, CLASS A
- TEMPORARY PAVEMENT COMPLETED IN PRIOR PHASE
- DRUMS
- PORTABLE BARRIER (PB)
- DIRECTION OF TRAFFIC

(Y) ITEM 614 - WORK ZONE EDGE LINE, CLASS 1, 642 PAINT (YELLOW)

(C) ITEM 614 - WORK ZONE CHANNELIZING LINE, CLASS 1, 642 PAINT

(D) ITEM 614 - WORK ZONE DOTTED LINE, CLASS 1, 642 PAINT

(L) ITEM 614 - WORK ZONE LANE LINE, CLASS 1, 642 PAINT

(W) ITEM 614 - WORK ZONE EDGE LINE, CLASS 1, 642 PAINT (WHITE)

HORIZONTAL SCALE IN FEET
0 25 50 100

CALCULATED GPD
CHECKED BBD

MAINTENANCE OF TRAFFIC - PHASE 2
STA. 502+50.00 TO STA. 514+50.00

FRA-71-5.29

69
623

P:\84868\mot\sheets\84868MP213.dgn 3/27/2015 2:29:38 PM kfahy

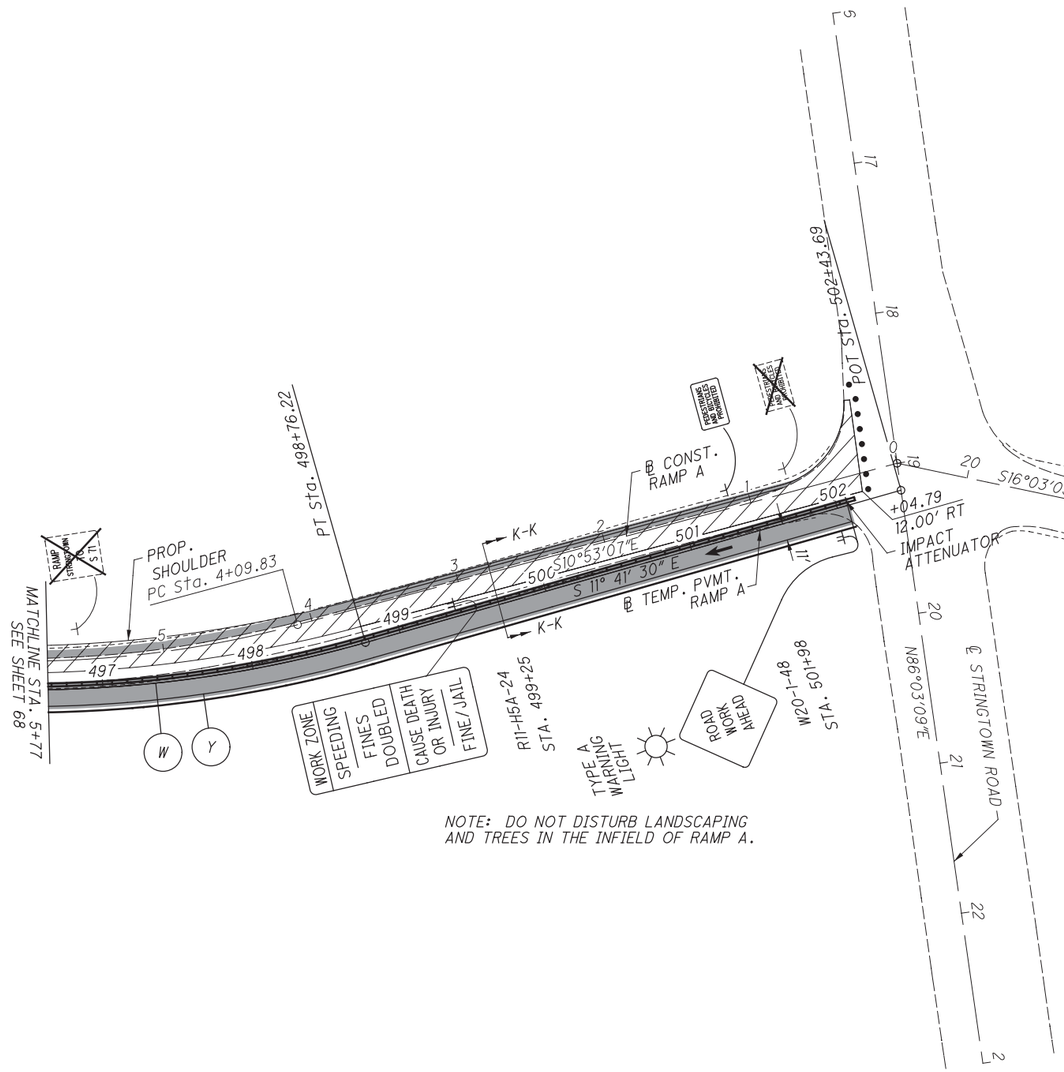

NOTE: DO NOT DISTURB LANDSCAPING AND TREES IN THE INFIELD OF RAMP A.

LEGEND

- WORK AREA
- PAVEMENT FOR MAINTAINING TRAFFIC, CLASS A
- TEMPORARY PAVEMENT COMPLETED IN PRIOR PHASE
- DRUMS
- PORTABLE BARRIER (PB)
- DIRECTION OF TRAFFIC

(Y) ITEM 614 - WORK ZONE EDGE LINE, CLASS 1, 642 PAINT (YELLOW)

(C) ITEM 614 - WORK ZONE CHANNELIZING LINE, CLASS 1, 642 PAINT

(D) ITEM 614 - WORK ZONE DOTTED LINE, CLASS 1, 642 PAINT

(L) ITEM 614 - WORK ZONE LANE LINE, CLASS 1, 642 PAINT

(W) ITEM 614 - WORK ZONE EDGE LINE, CLASS 1, 642 PAINT (WHITE)

HORIZONTAL SCALE IN FEET
0 25 50 100

CALCULATED GPD
CHECKED BBD

MAINTENANCE OF TRAFFIC - PHASE 2
RAMP A

FRA-71-5.29

70
623

P:\84668\mot\sheets\84868MP217.dgn 3/27/2015 2:29:38 PM kfahy

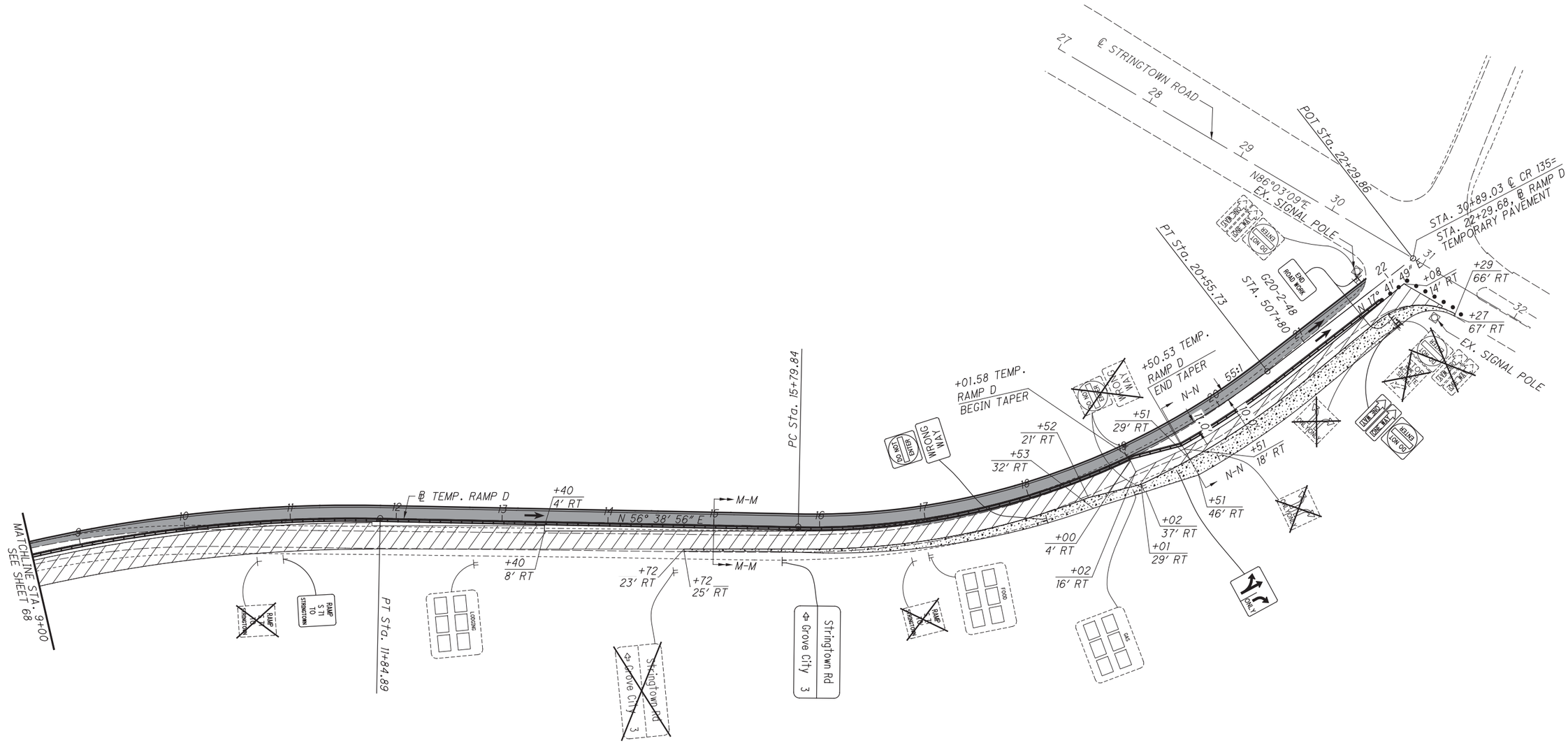

LEGEND

- WORK AREA
- PAVEMENT FOR MAINTAINING TRAFFIC, CLASS A
- TEMPORARY PAVEMENT COMPLETED IN PRIOR PHASE
- DRUMS
- PORTABLE BARRIER (PB)
- DIRECTION OF TRAFFIC

(Y) ITEM 614 - WORK ZONE EDGE LINE, CLASS 1, 642 PAINT (YELLOW)

(C) ITEM 614 - WORK ZONE CHANNELIZING LINE, CLASS 1, 642 PAINT

(D) ITEM 614 - WORK ZONE DOTTED LINE, CLASS 1, 642 PAINT

(L) ITEM 614 - WORK ZONE LANE LINE, CLASS 1, 642 PAINT

(W) ITEM 614 - WORK ZONE EDGE LINE, CLASS 1, 642 PAINT (WHITE)

HORIZONTAL SCALE IN FEET
0 25 50 100

CALCULATED GPD
CHECKED BBD

MAINTENANCE OF TRAFFIC - PHASE 2
RAMP D

FRA-71-5.29

71
623

P:\84868\mot\sheets\84868MP218.dgn 3/27/2015 2:29:39 PM kfahy

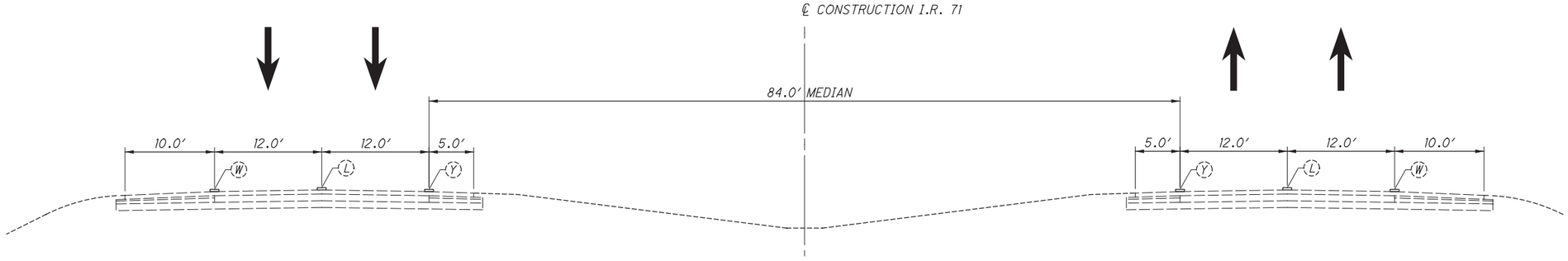

SECTION A-A

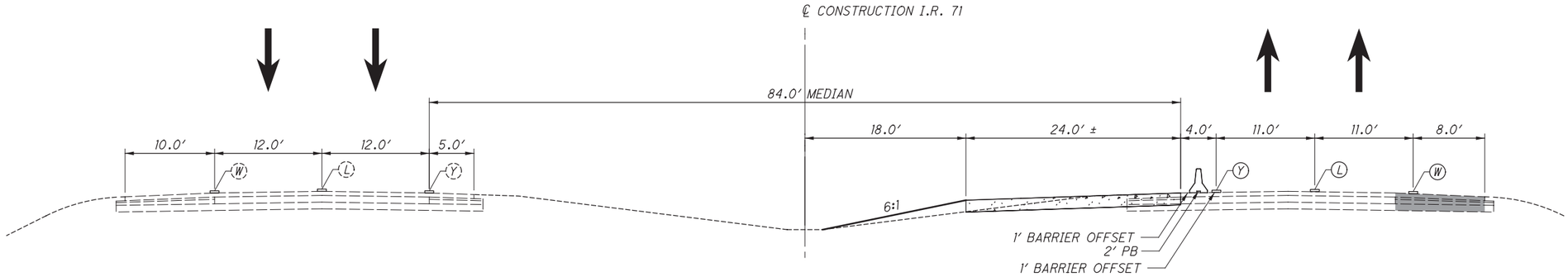

SECTION B-B

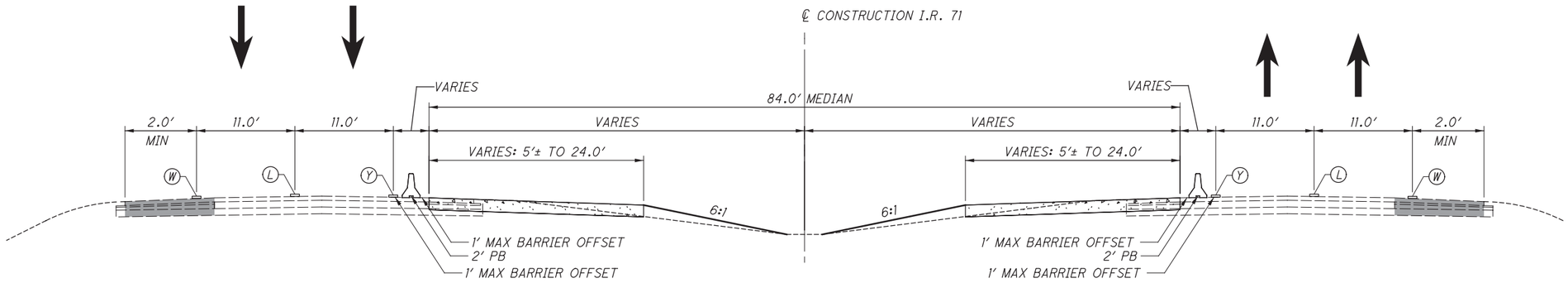

SECTION C-C

LEGEND

- (W) EXISTING EDGE LINE, WHITE
- (Y) EXISTING EDGE LINE, YELLOW
- (L) EXISTING LANE LINE
- (W) WORK ZONE EDGE LINE, WHITE, CLASS I
- (Y) WORK ZONE EDGE LINE, YELLOW, CLASS I
- (L) WORK ZONE LANE LINE, CLASS I

TEMPORARY PAVEMENT COMPLETED IN PRIOR PHASE

PAVEMENT TO BE CONSTRUCTED

MAINTENANCE OF TRAFFIC - IR 71
TYPICAL SECTIONS - PHASE 3A

FRA-71-5.29

P:\84868\rnot\sheets\84868MY300.dgn 3/27/2015 2:29:40 PM kfahy

P:\84868\mot\sheets\84868MP301.dgn 3/27/2015 2:29:41 PM kfahy

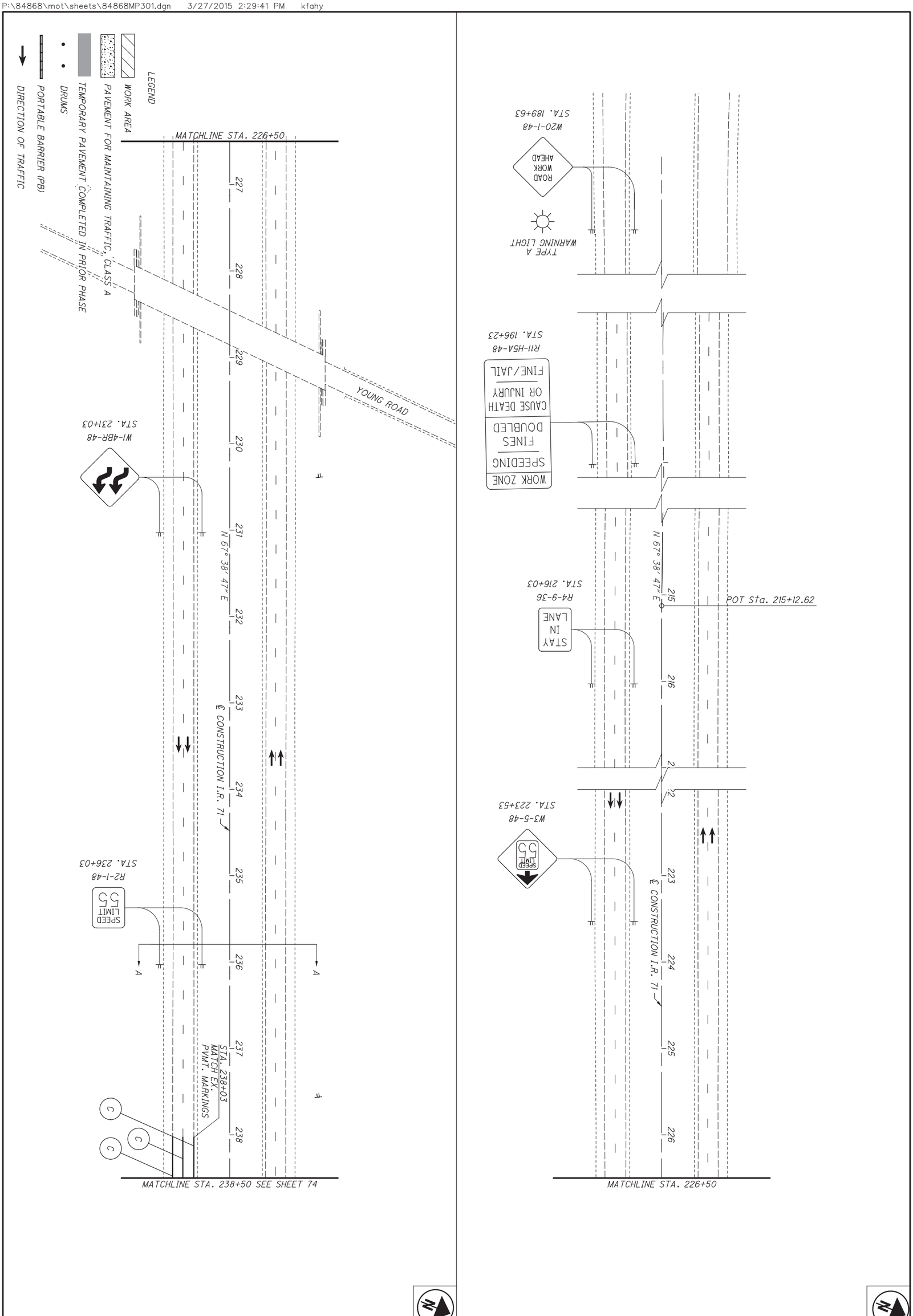

73 623	FRA-71-5.29	MAINTENANCE OF TRAFFIC - PHASE 3A STA. 189+50.00 TO STA. 238+50.00	CALCULATED GPD CHECKED BBD	0 50 25 100 HORIZONTAL SCALE IN FEET

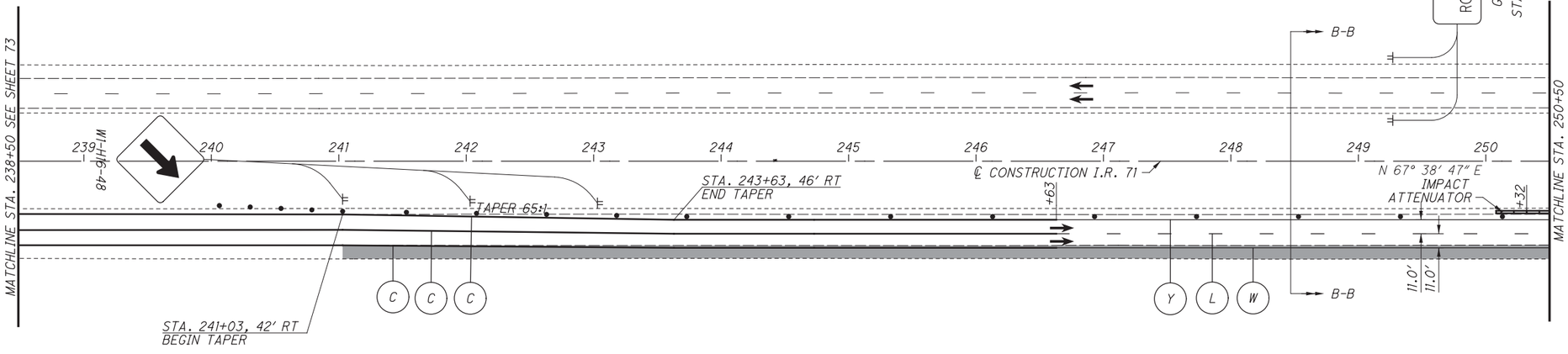

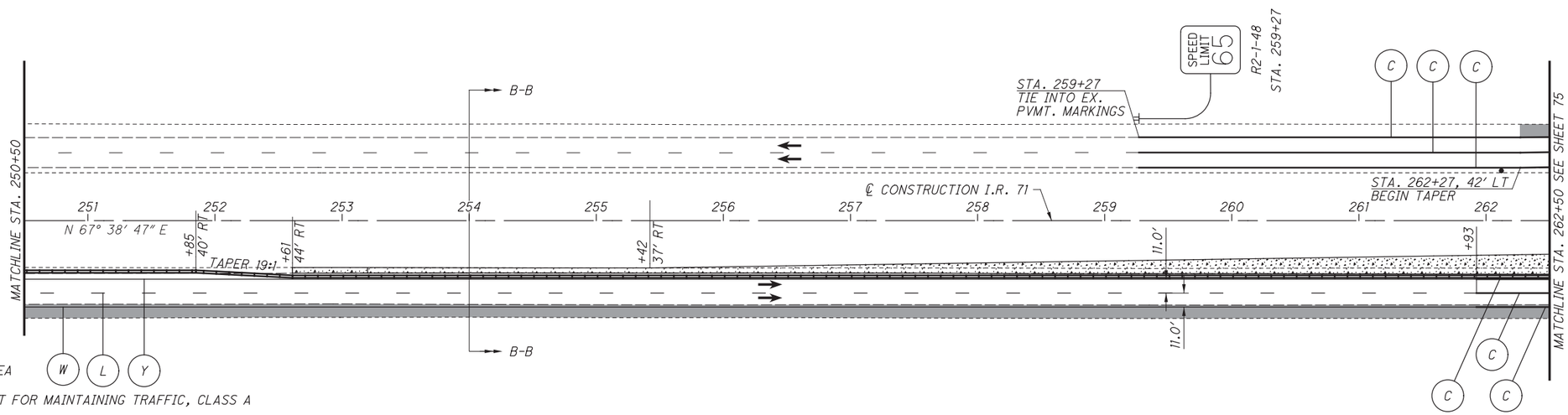

LEGEND

- WORK AREA
- PAVEMENT FOR MAINTAINING TRAFFIC, CLASS A
- TEMPORARY PAVEMENT COMPLETED IN PRIOR PHASE
- DRUMS
- PORTABLE BARRIER (PB)
- DIRECTION OF TRAFFIC

HORIZONTAL SCALE IN FEET
0 25 50 100

CALCULATED GPD
CHECKED BBD

MAINTENANCE OF TRAFFIC - PHASE 3A
STA. 238+50.00 TO STA. 262+50.00

FRA-71-5.29

74
623

P:\84868\mot\sheets\84868MP302.dgn 3/27/2015 2:29:42 PM kfahy

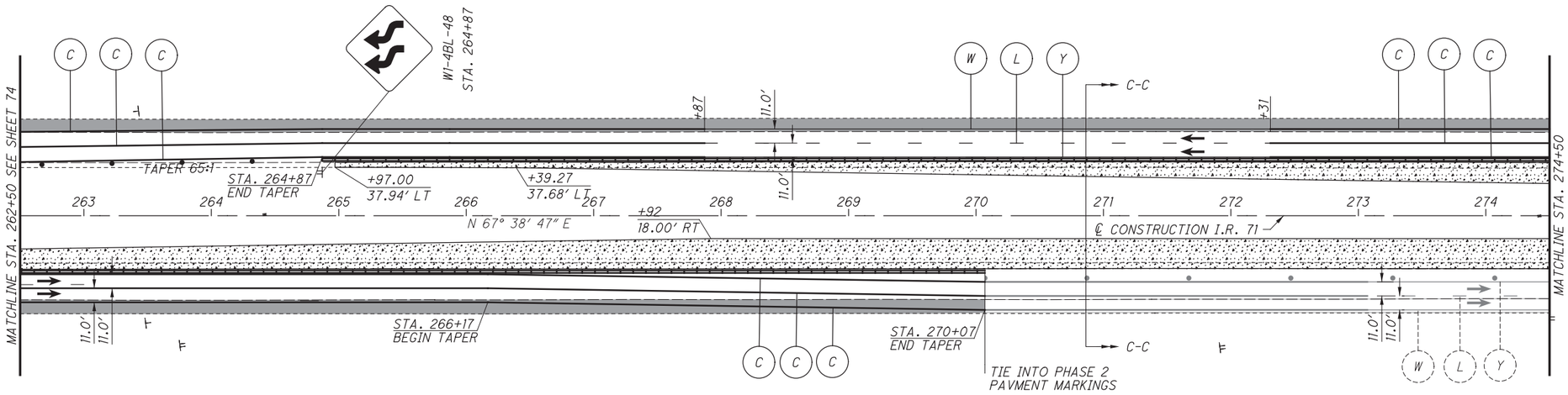

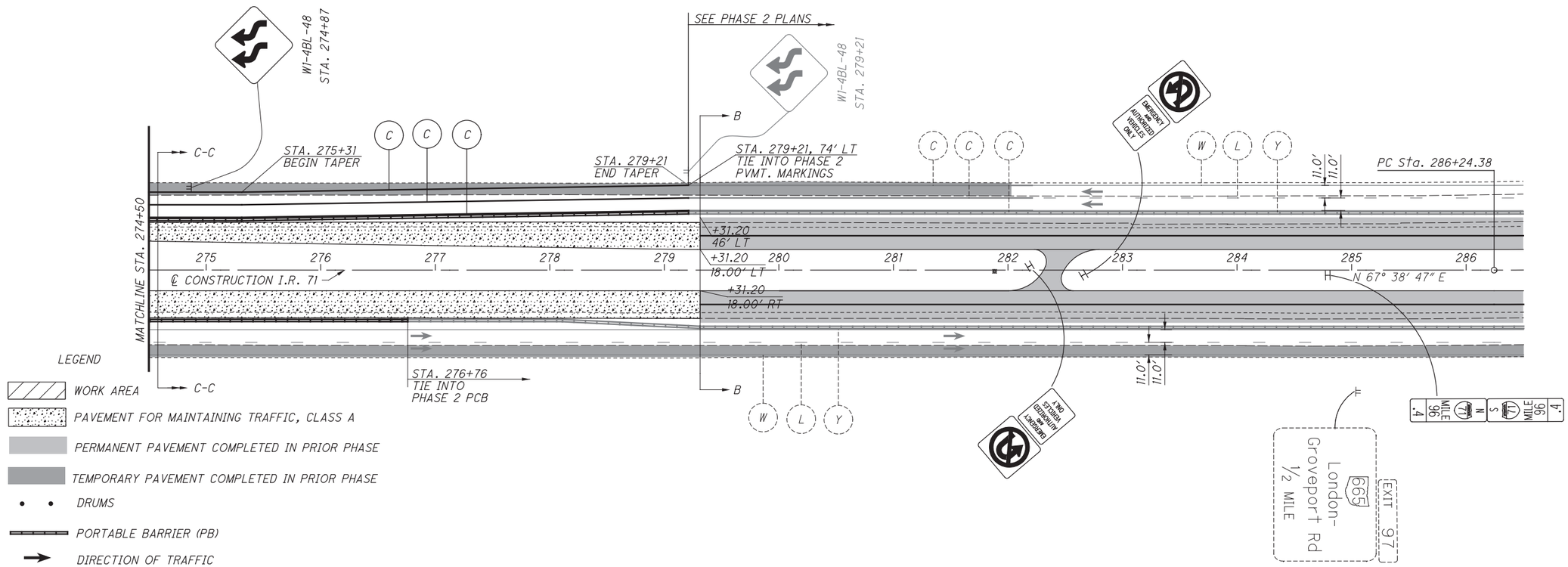

HORIZONTAL SCALE IN FEET
0 25 50 100

CALCULATED GPD
CHECKED BBD

MAINTENANCE OF TRAFFIC - PHASE 3A
STA. 262+50.00 TO STA. 286+50.00

FRA-71-5.29

P:\84868\mot\sheets\84868MP303.dgn 3/27/2015 2:29:43 PM kfahy

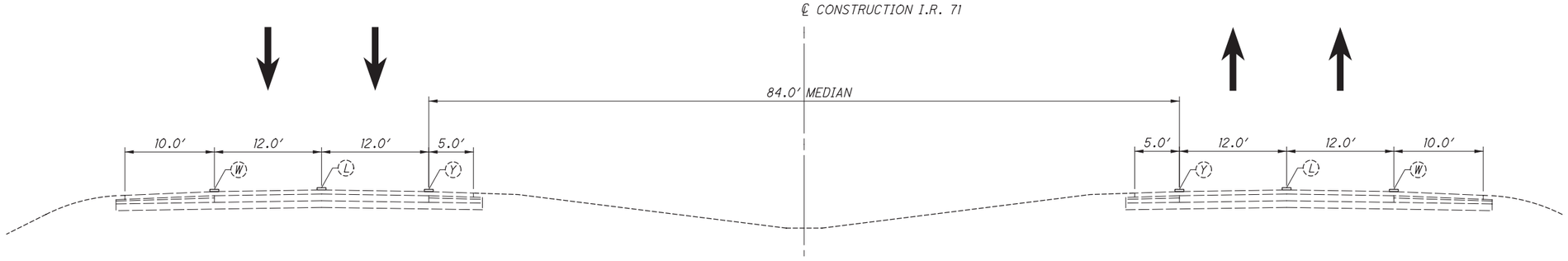

SECTION A-A

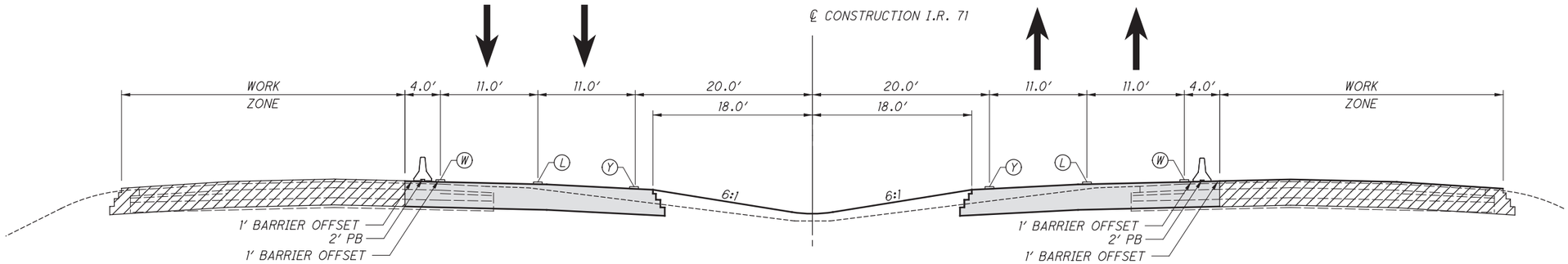

SECTION B-B

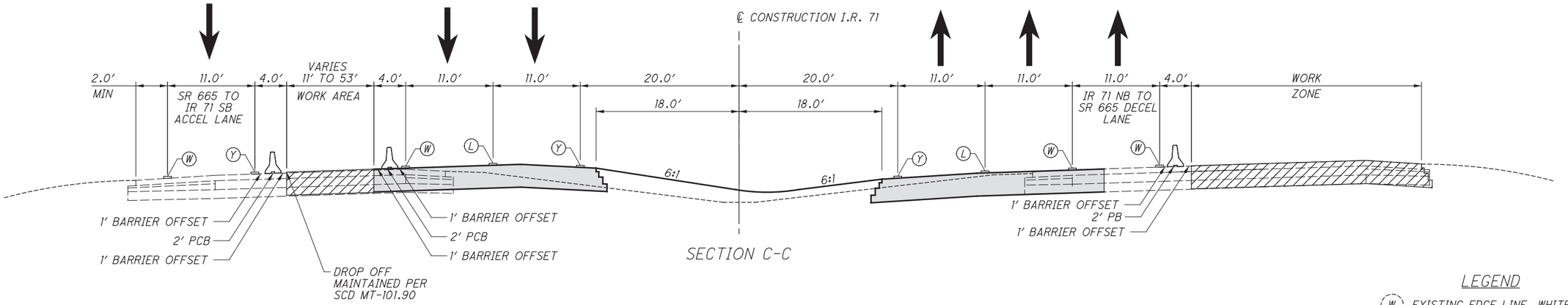

SECTION C-C

PERMANENT PAVEMENT COMPLETED IN PRIOR PHASE

TEMPORARY PAVEMENT COMPLETED IN PRIOR PHASE

PAVEMENT TO BE CONSTRUCTED

LEGEND

- (W) EXISTING EDGE LINE, WHITE
- (Y) EXISTING EDGE LINE, YELLOW
- (L) EXISTING LANE LINE
- (W) WORK ZONE EDGE LINE, WHITE, CLASS I
- (Y) WORK ZONE EDGE LINE, YELLOW, CLASS I
- (L) WORK ZONE LANE LINE, CLASS I

MAINTENANCE OF TRAFFIC - IR 71
TYPICAL SECTIONS - PHASE 3B

FRA-71-5.29

P:\84868\mot\sheets\84868MY310.dgn 3/27/2015 2:29:43 PM kfahy

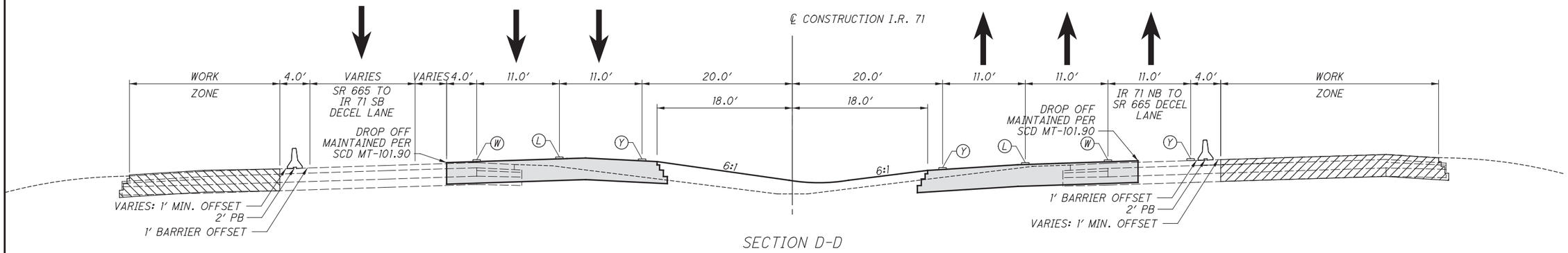

SECTION D-D

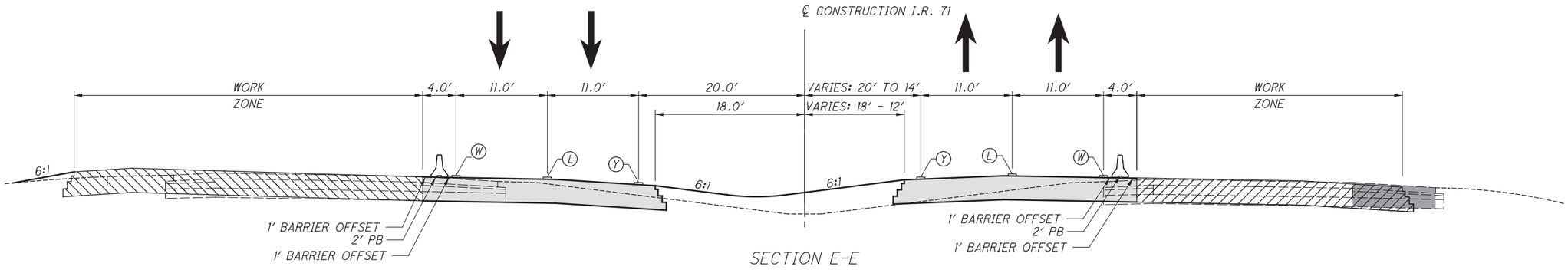

SECTION E-E

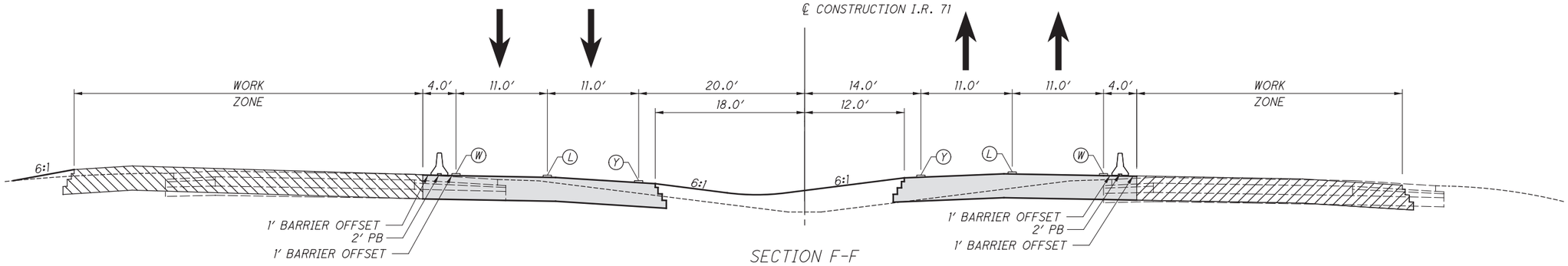

SECTION F-F

PERMANENT PAVEMENT COMPLETED IN PRIOR PHASE

TEMPORARY PAVEMENT COMPLETED IN PRIOR PHASE

PAVEMENT TO BE CONSTRUCTED

LEGEND

- (W) EXISTING EDGE LINE, WHITE
- (Y) EXISTING EDGE LINE, YELLOW
- (L) EXISTING LANE LINE
- (W) WORK ZONE EDGE LINE, WHITE, CLASS I
- (Y) WORK ZONE EDGE LINE, YELLOW, CLASS I
- (L) WORK ZONE LANE LINE, CLASS I

MAINTENANCE OF TRAFFIC - IR 71
TYPICAL SECTIONS- PHASE 3B

FRA-71-5.29

P:\84868\mot\sheets\84868MY311.dgn 3/27/2015 2:29:44 PM kfahy

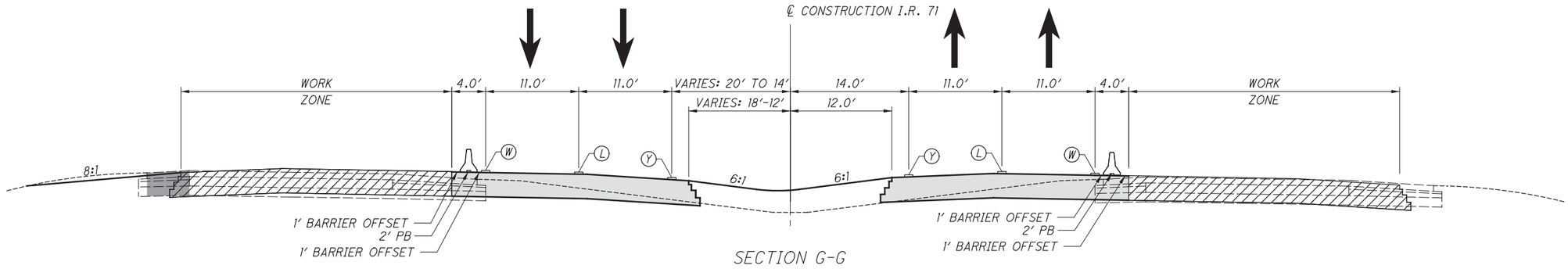

SECTION G-G

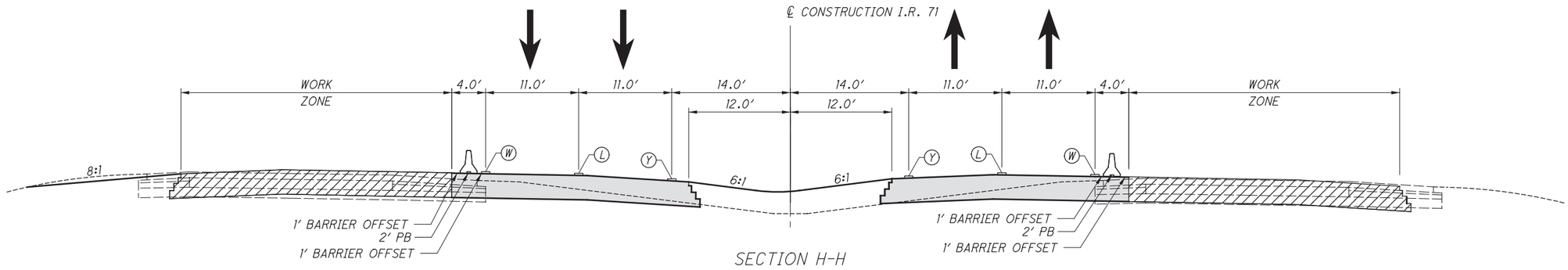

SECTION H-H

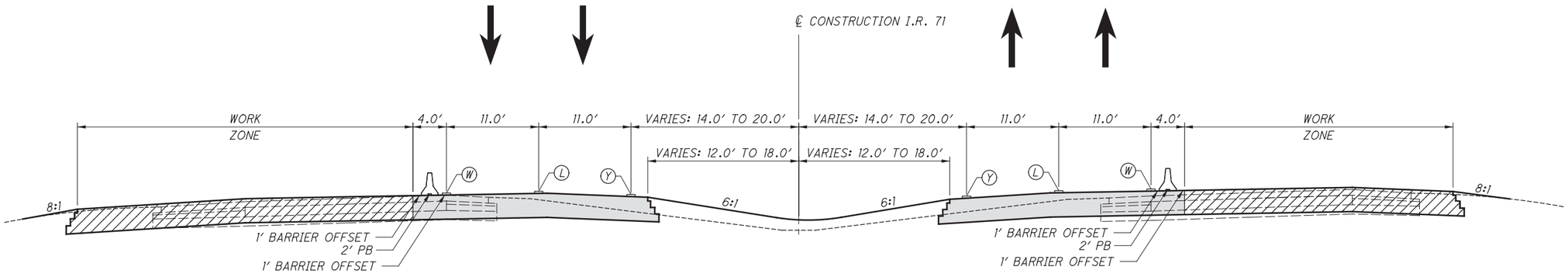

SECTION I-I

PERMANENT PAVEMENT COMPLETED IN PRIOR PHASE

TEMPORARY PAVEMENT COMPLETED IN PRIOR PHASE

PAVEMENT TO BE CONSTRUCTED

LEGEND

- (W) EXISTING EDGE LINE, WHITE
- (Y) EXISTING EDGE LINE, YELLOW
- (L) EXISTING LANE LINE
- (W) WORK ZONE EDGE LINE, WHITE, CLASS I
- (Y) WORK ZONE EDGE LINE, YELLOW, CLASS I
- (L) WORK ZONE LANE LINE, CLASS I

MAINTENANCE OF TRAFFIC - IR 71
TYPICAL SECTIONS - PHASE 3B

FRA-71-5.29

P:\84868\mot\sheets\84868MY312.dgn 3/27/2015 2:29:44 PM kfahy

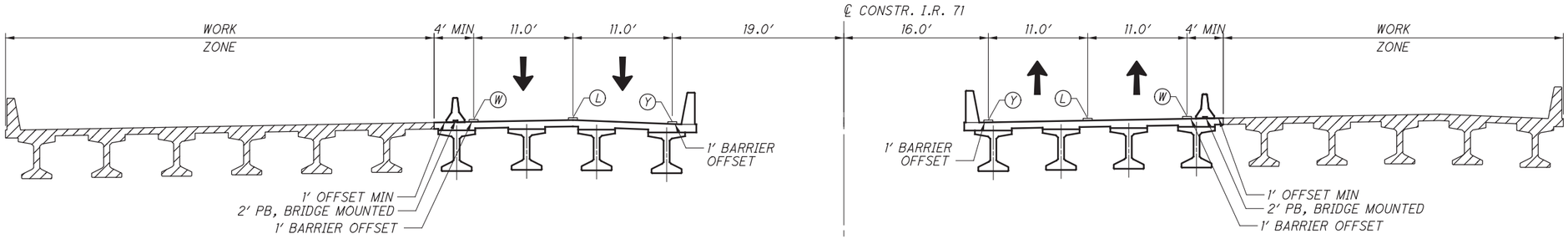

SECTION J-J

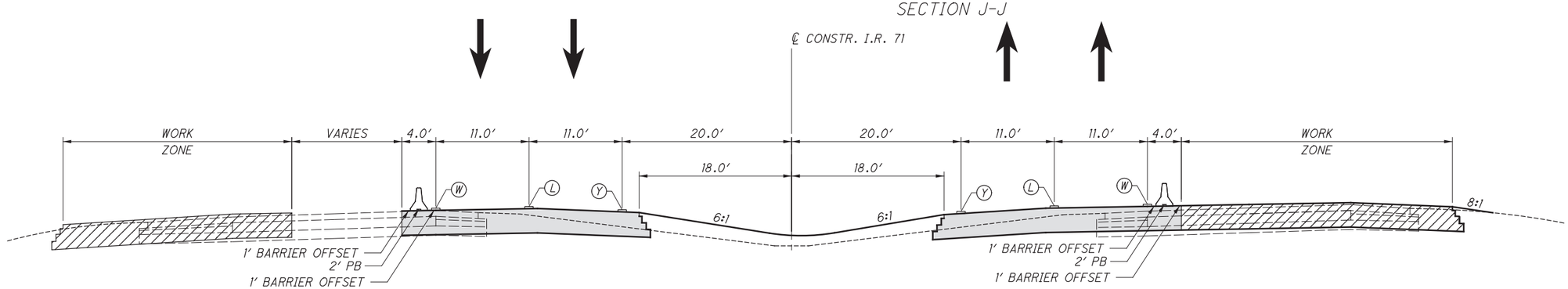

SECTION K-K

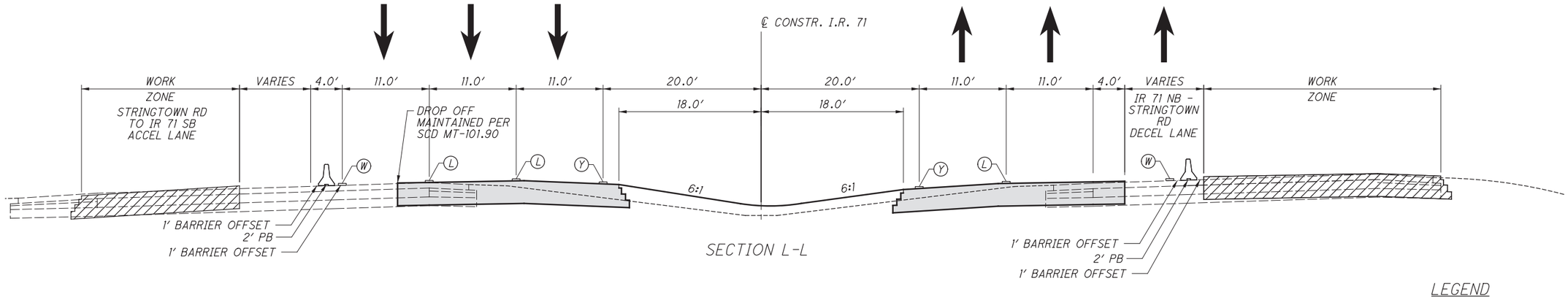

SECTION L-L

PERMANENT PAVEMENT COMPLETED IN PRIOR PHASE

TEMPORARY PAVEMENT COMPLETED IN PRIOR PHASE

PAVEMENT TO BE CONSTRUCTED

LEGEND

- (W) EXISTING EDGE LINE, WHITE
- (Y) EXISTING EDGE LINE, YELLOW
- (L) EXISTING LANE LINE
- (W) WORK ZONE EDGE LINE, WHITE, CLASS I
- (Y) WORK ZONE EDGE LINE, YELLOW, CLASS I
- (L) WORK ZONE LANE LINE, CLASS I

MAINTENANCE OF TRAFFIC - IR 71
TYPICAL SECTIONS - PHASE 3B

FRA-71-5.29

P:\84868\mot\sheets\84868MY313.dgn 3/27/2015 2:29:45 PM kfahy

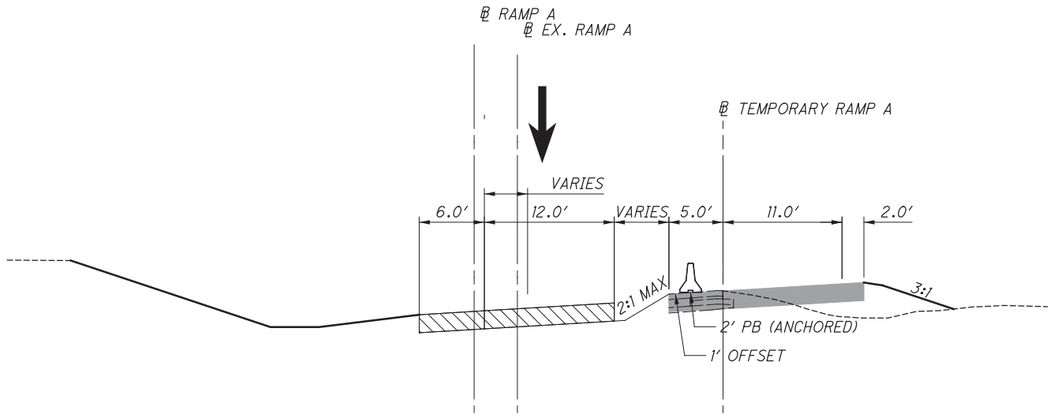

SECTION M-M

TEMPORARY PAVEMENT COMPLETED IN PRIOR PHASE

PAVEMENT TO BE CONSTRUCTED

LEGEND

(W) EXISTING EDGE LINE, WHITE

(Y) EXISTING EDGE LINE, YELLOW

(L) EXISTING LANE LINE

(W) WORK ZONE EDGE LINE, WHITE, CLASS I

(Y) WORK ZONE EDGE LINE, YELLOW, CLASS I

(L) WORK ZONE LANE LINE, CLASS I

MAINTENANCE OF TRAFFIC - IR 71
TYPICAL SECTIONS - PHASE 3B

FRA-71-5.29

80
623

P:\84868\mot\sheets\84868MY314.dgn 3/27/2015 2:29:45 PM kfahy

P:\84868\mot\sheets\84868MP351.dgn 3/27/2015 2:29:46 PM kfahy

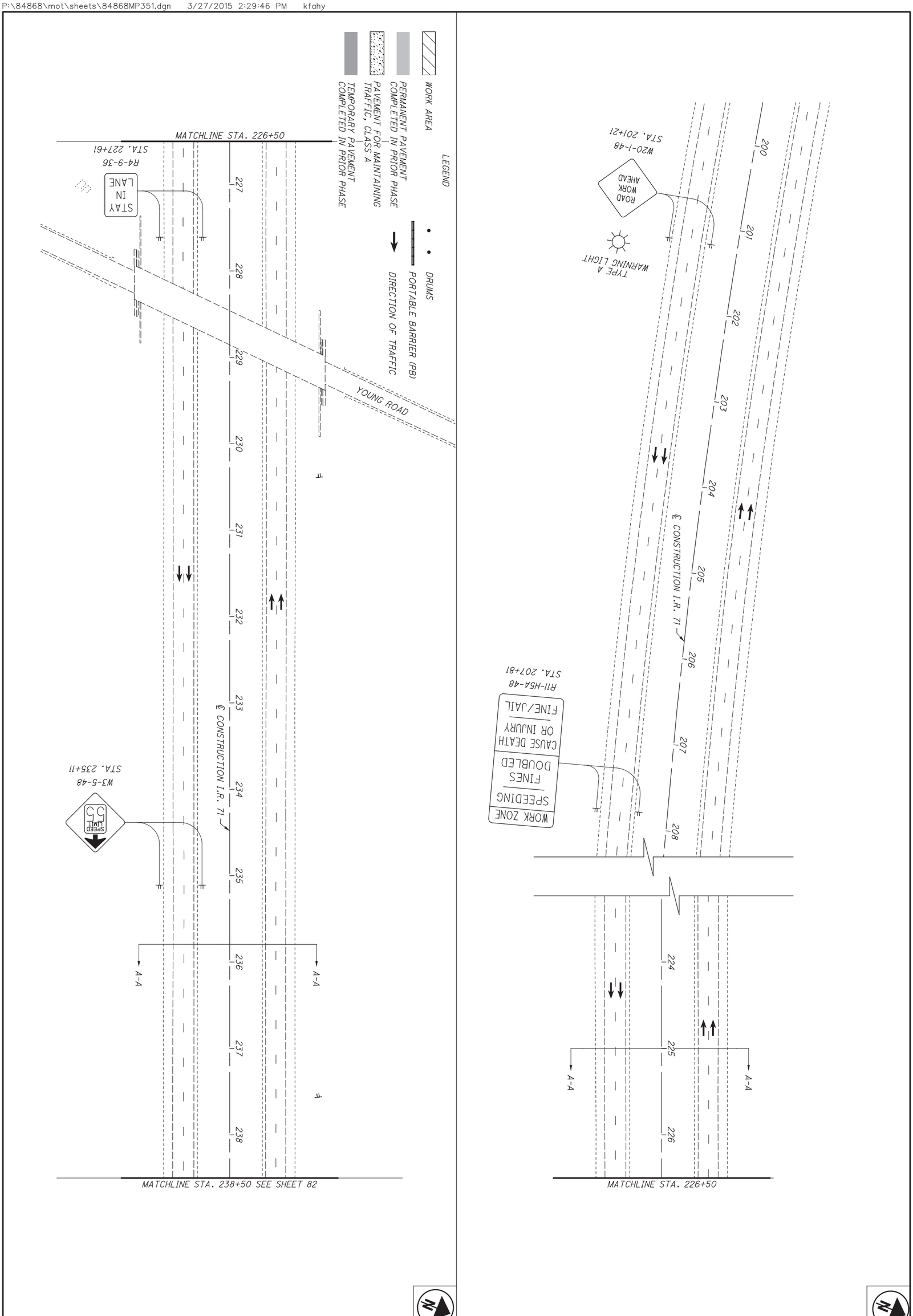

81 623	FRA-71-5.29	MAINTENANCE OF TRAFFIC - PHASE 3B STA. 199+50.00 TO STA. 238+50.00	CALCULATED GPD CHECKED BBD	0 50 25 100 HORIZONTAL SCALE IN FEET

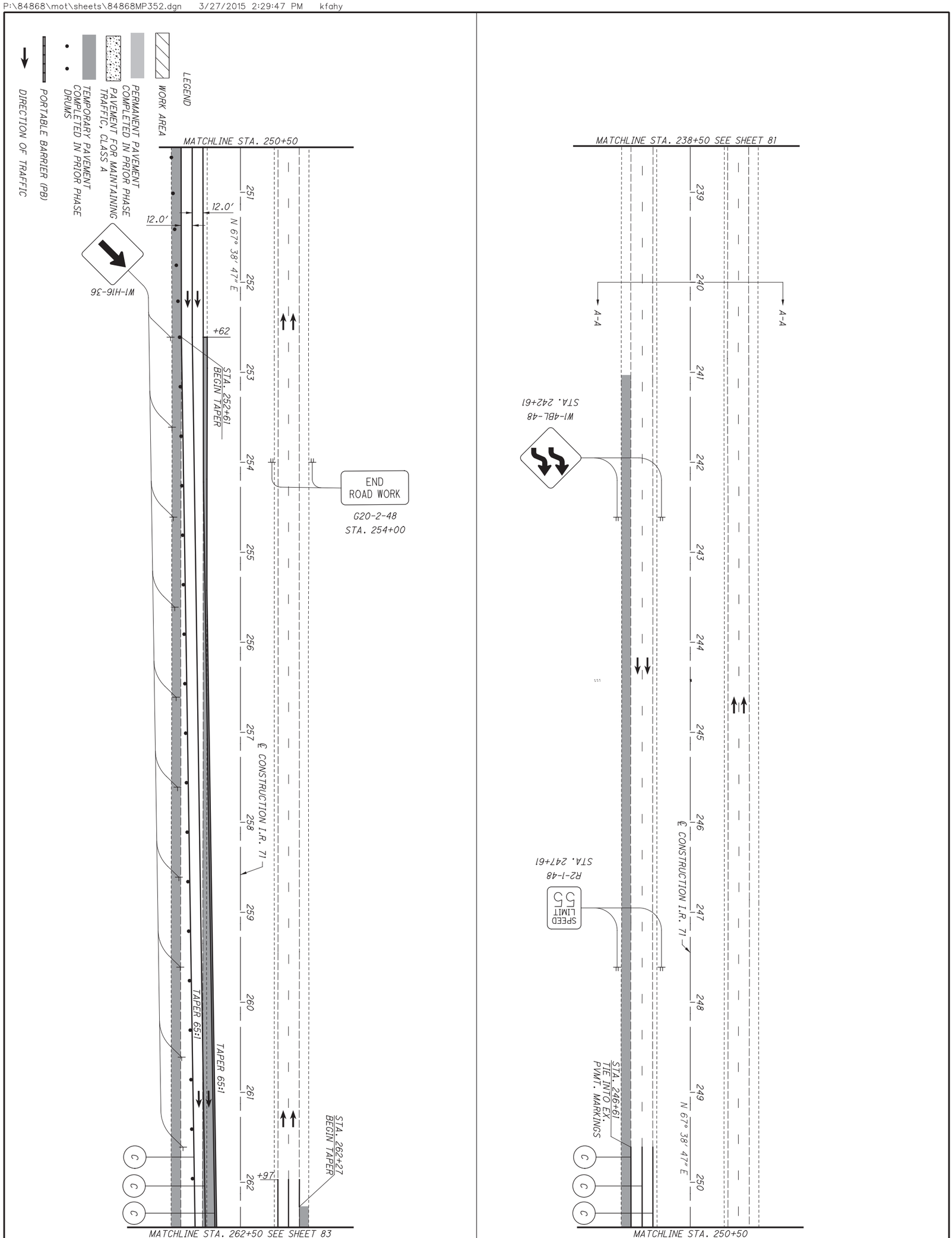
LEGEND
WORK AREA
PERMANENT PAVEMENT COMPLETED IN PRIOR PHASE
PAVEMENT FOR MAINTAINING TRAFFIC, CLASS A
TEMPORARY PAVEMENT COMPLETED IN PRIOR PHASE
DRUMS
PORTABLE BARRIER (PB)
DIRECTION OF TRAFFIC
MATCHLINE STA. 250+50
MATCHLINE STA. 238+50 SEE SHEET 81
MATCHLINE STA. 262+50 SEE SHEET 83
MATCHLINE STA. 250+50
12.0'
12.0'
N 67° 38' 47" E
N 67° 38' 47" E
W1-H16-36
W1-4BL-48
STA. 242+61
A-A
A-A
+62
STA. 252+61
BEGIN TAPER
END
ROAD WORK
G20-2-48
STA. 254+00
℄ CONSTRUCTION I.R. 71
℄ CONSTRUCTION I.R. 71
R2-1-48
STA. 247+61
SPEED LIMIT 45
STA. 246+61
TIE INTO EX. PVMT. MARKINGS
TAPER 65:1
TAPER 65:1
STA. 262+27
BEGIN TAPER
+97
239
240
241
242
243
244
245
246
247
248
249
250
251
252
253
254
255
256
257
258
259
260
261
262

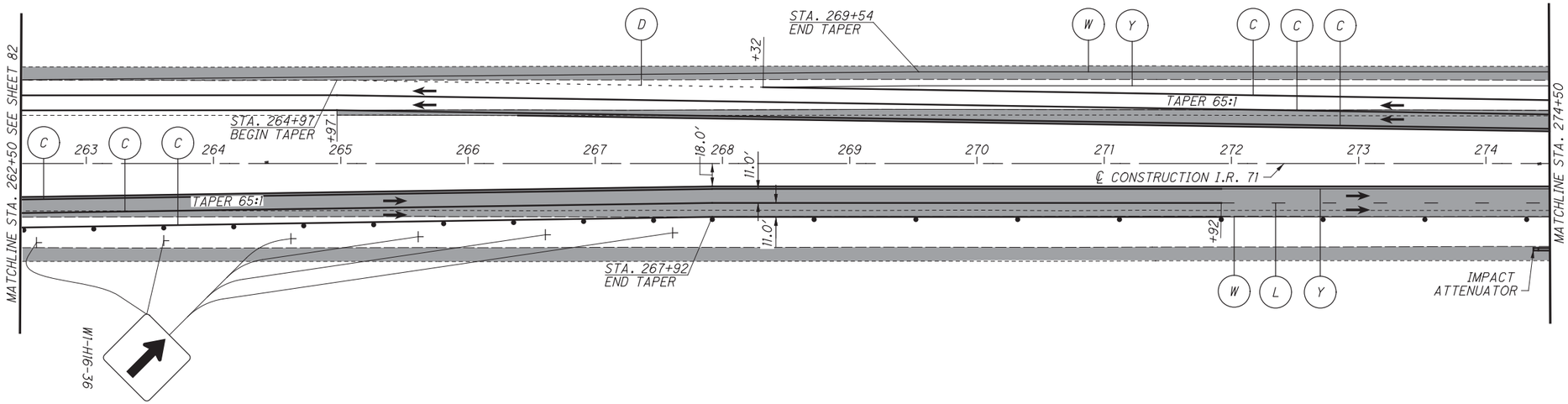

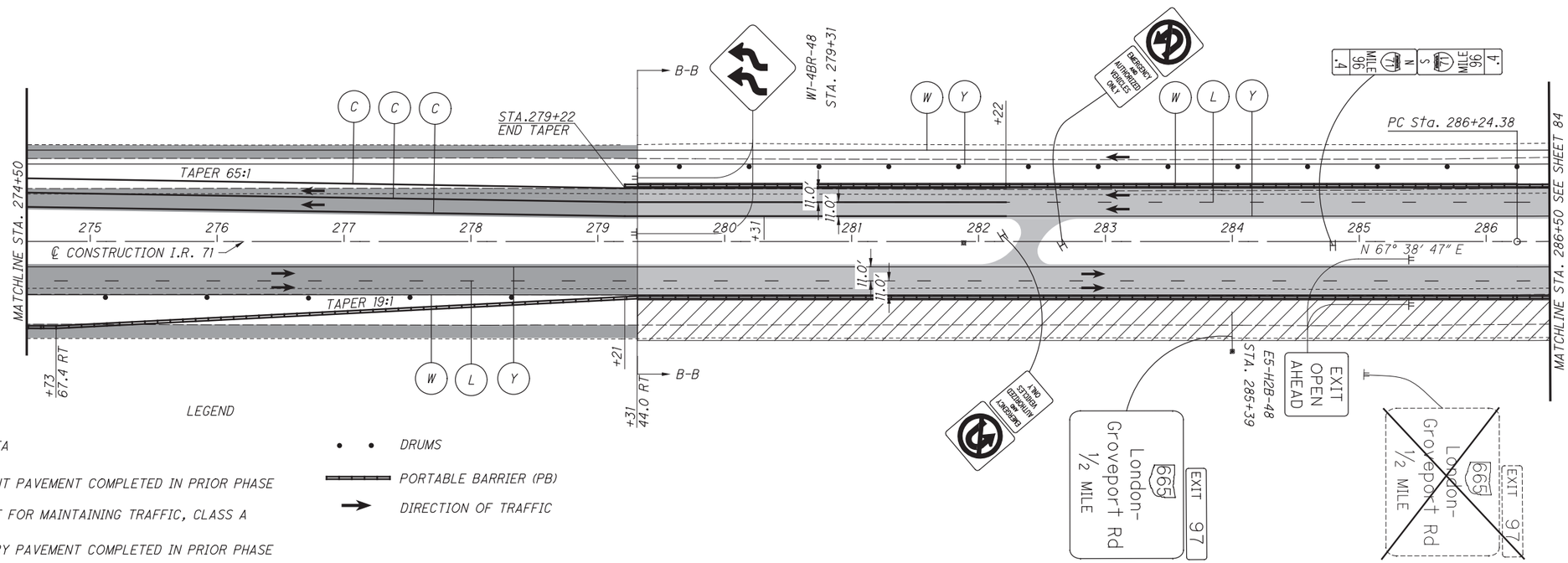

HORIZONTAL SCALE IN FEET
0 25 50 100

CALCULATED GPD
CHECKED BBD

MAINTENANCE OF TRAFFIC - PHASE 3B
STA. 262+50.00 TO STA. 286+50.00

FRA-71-5.29

83
623

P:\84868\mot\sheets\84868MP353.dgn 3/27/2015 2:29:47 PM kfahy

P:\84868\mot\sheets\84868MP354.dgn 3/27/2015 2:29:48 PM kfahy

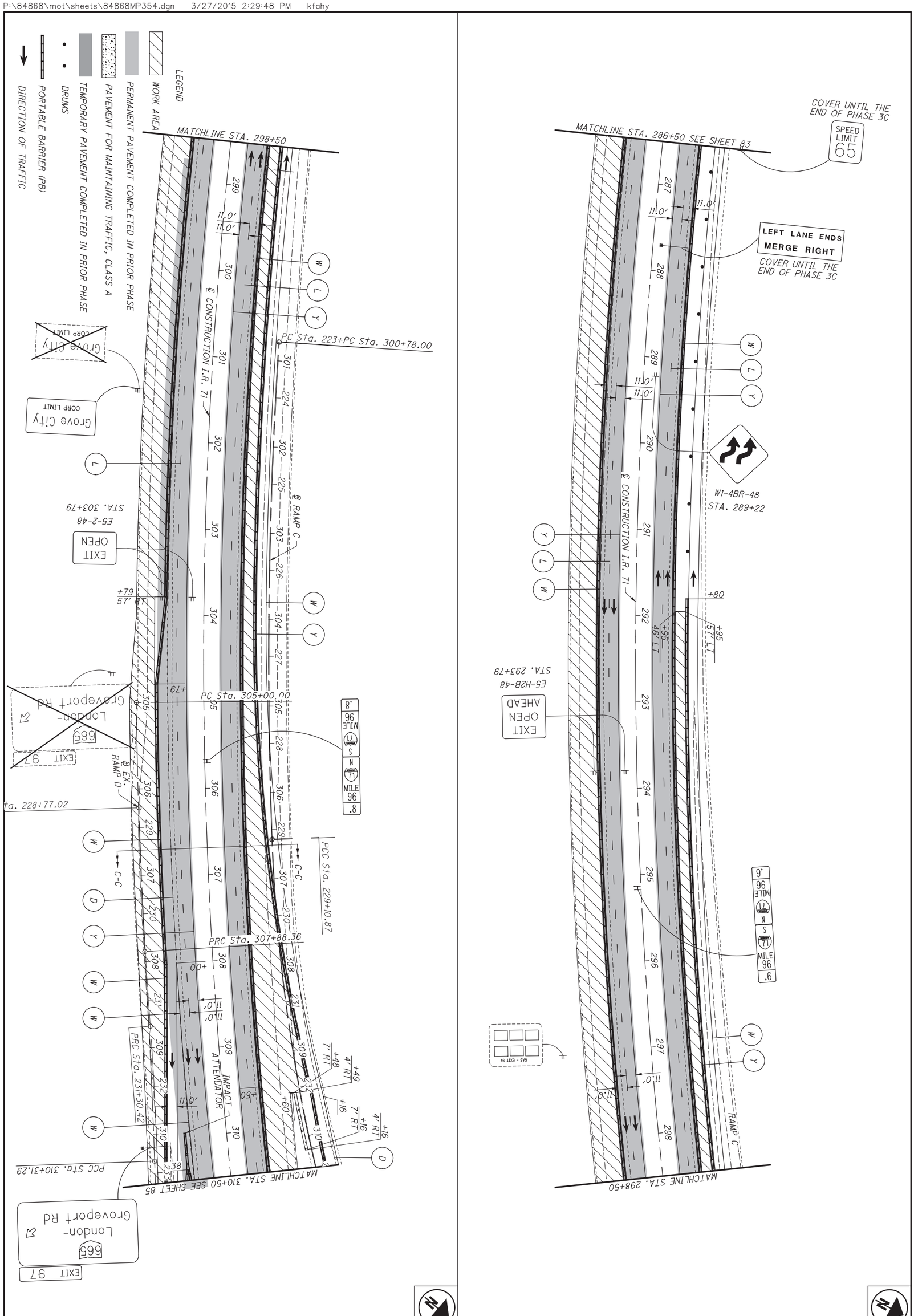

84 / 623	FRA-71-5.29	MAINTENANCE OF TRAFFIC - PHASE 3B STA. 286+50.00 TO STA. 310+50.00	CALCULATED GPD CHECKED BBD	0 50 25 100 HORIZONTAL SCALE IN FEET

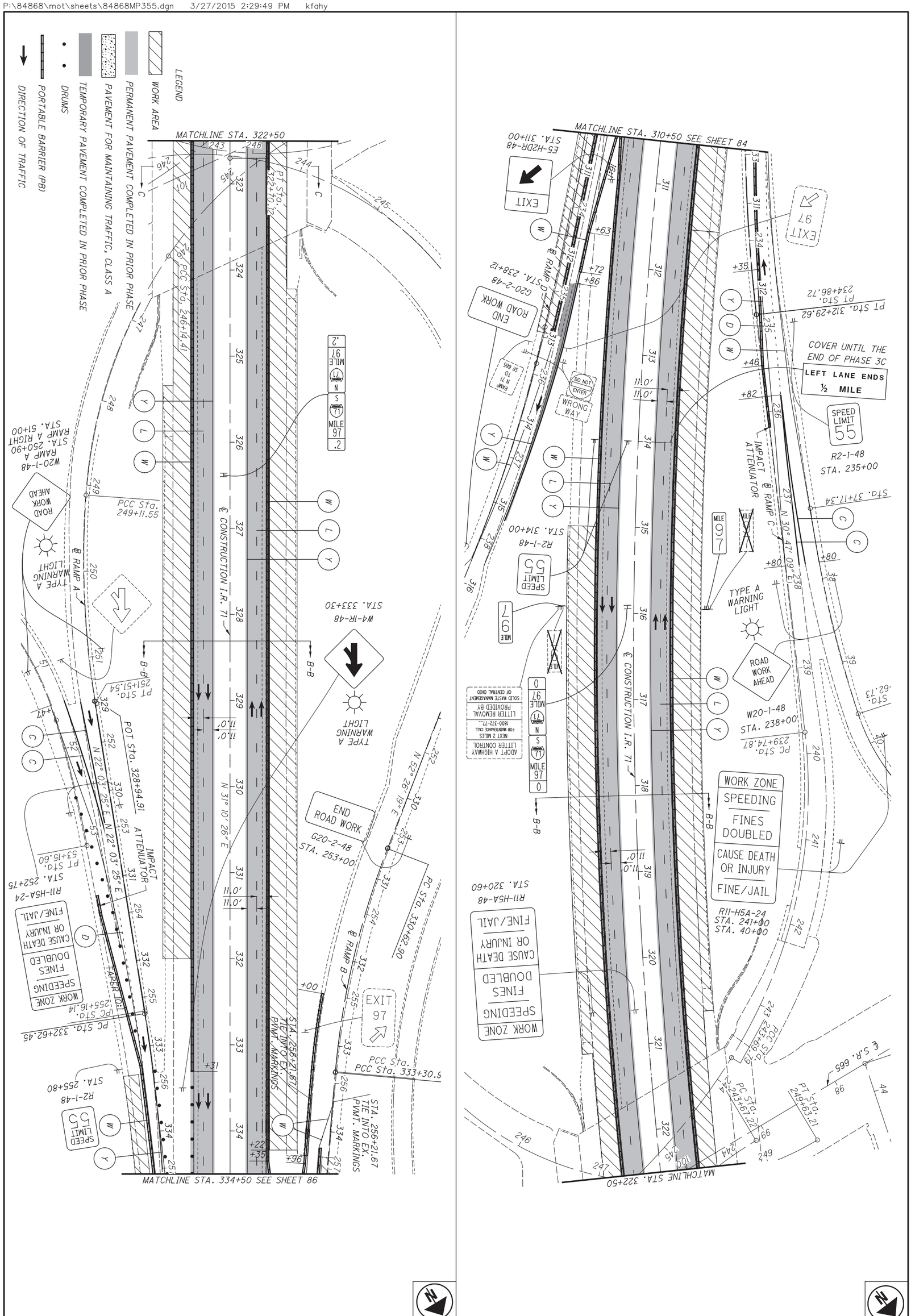

85 / 623	FRA-71-5.29	MAINTENANCE OF TRAFFIC - PHASE 3B STA. 310+50.00 TO STA. 334+50.00	CALCULATED GPD CHECKED BBD	0 50 25 100 HORIZONTAL SCALE IN FEET

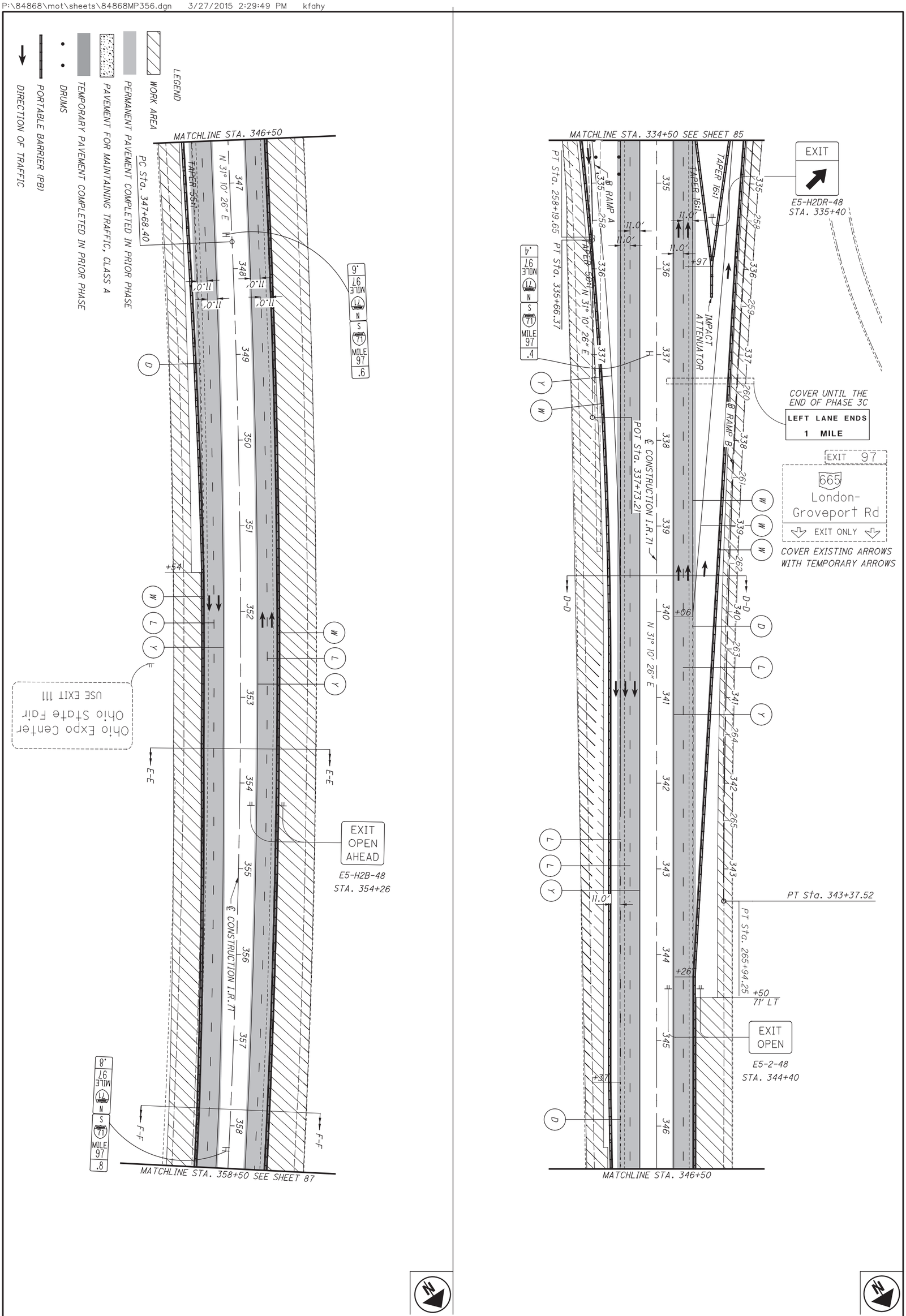

86 / 623	FRA-71-5.29	MAINTENANCE OF TRAFFIC - PHASE 3B STA. 334+50.00 TO STA. 358+50.00	CALCULATED GPD CHECKED BBD	0 50 25 100 HORIZONTAL SCALE IN FEET

P:\84868\mot\sheets\84868MP357.dgn 3/27/2015 2:29:50 PM kfahy

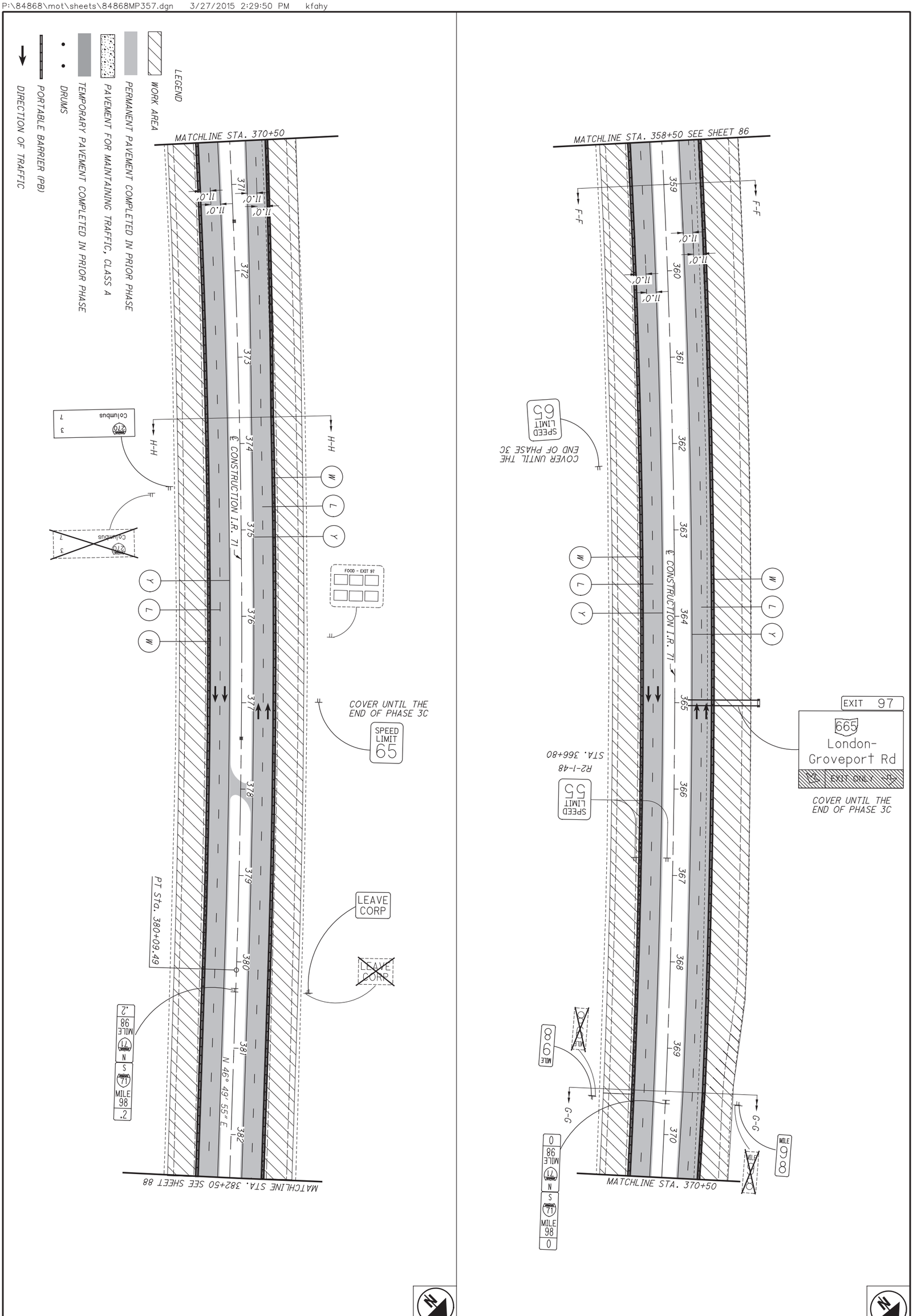

87 / 623	FRA-71-5.29	MAINTENANCE OF TRAFFIC - PHASE 3B STA. 358+50.00 TO STA. 382+50.00	CALCULATED GPD CHECKED BBD	0 50 25 100 HORIZONTAL SCALE IN FEET

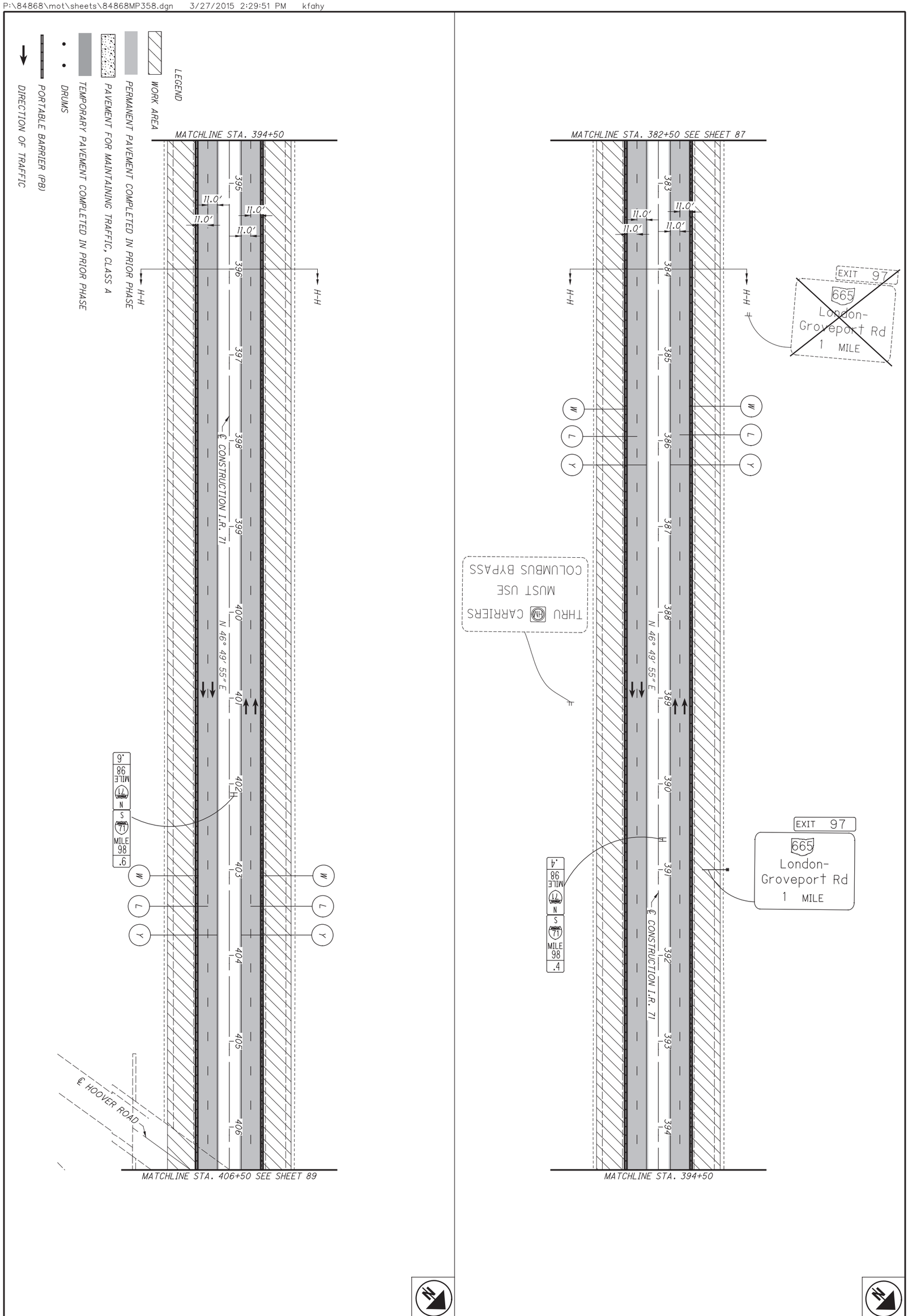

88 623	FRA-71-5.29	MAINTENANCE OF TRAFFIC - PHASE 3B STA. 382+50.00 TO STA. 406+50.00	CALCULATED GPD CHECKED BBD	0 50 25 100 HORIZONTAL SCALE IN FEET

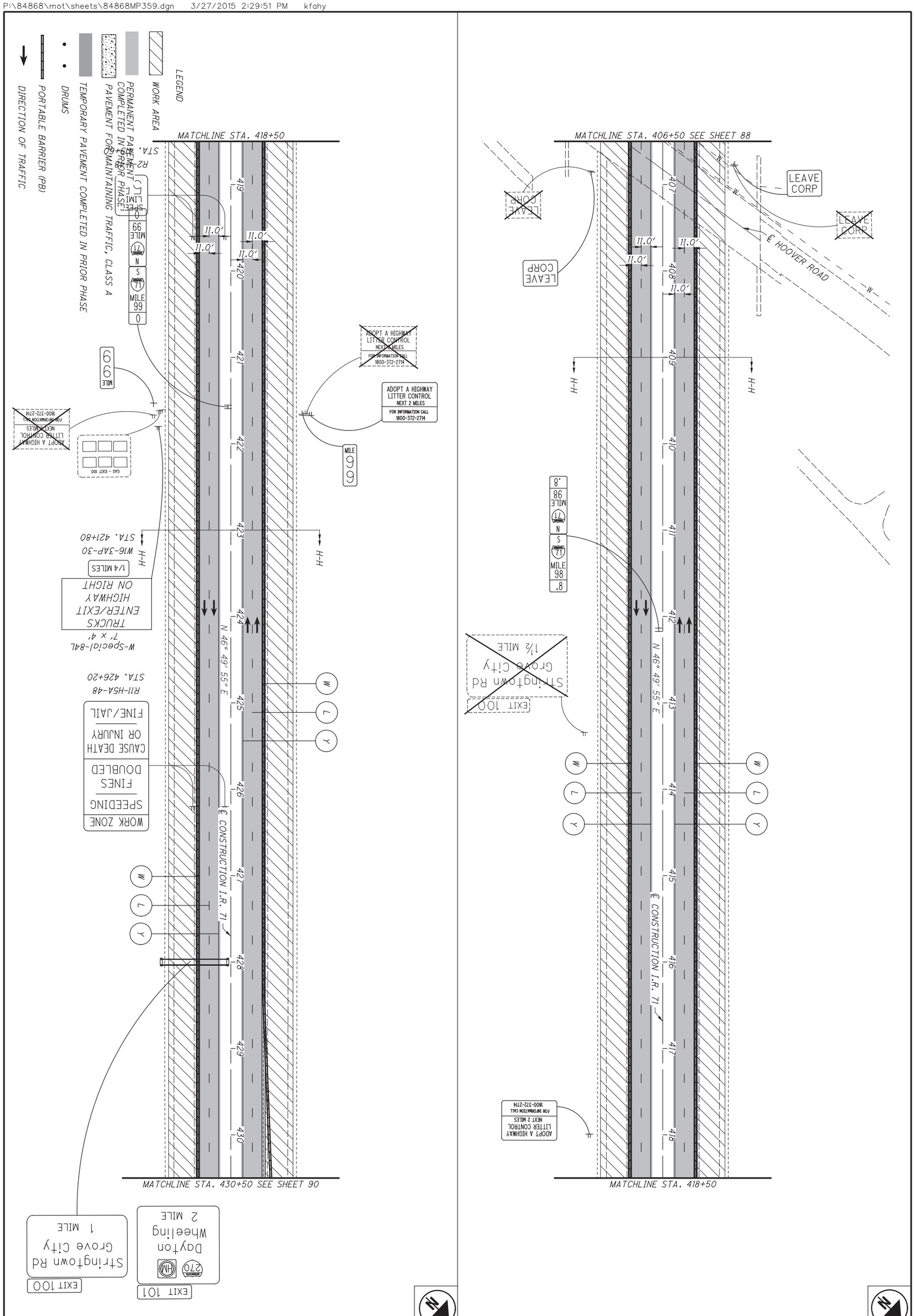

FRA-71-5.29

MAINTENANCE OF TRAFFIC - PHASE 3B
STA. 406+50.00 TO STA. 430+50.00

CALCULATED GPD
CHECKED BBD

0 50
25 100
HORIZONTAL SCALE IN FEET

P:\84868\mot\sheets\84868MP360.dgn 3/27/2015 2:29:52 PM kfahy

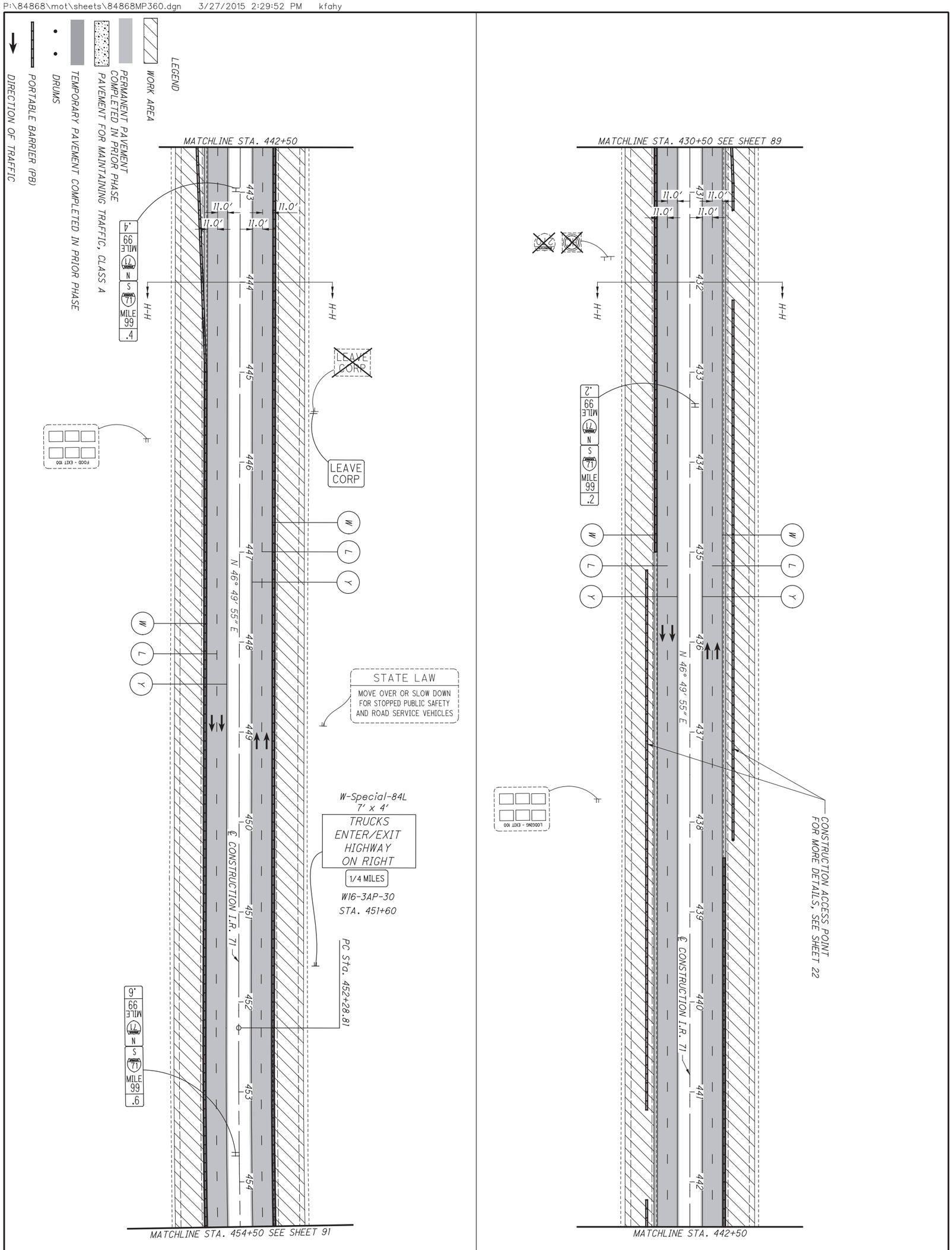

90 623	FRA-71-5.29	MAINTENANCE OF TRAFFIC - PHASE 3B STA. 430+50.00 TO STA. 454+50.00	CALCULATED GPD CHECKED BBD	0 50 25 100 HORIZONTAL SCALE IN FEET

P:\84868\mot\sheets\84868MP361.dgn 3/27/2015 2:29:53 PM kfahy

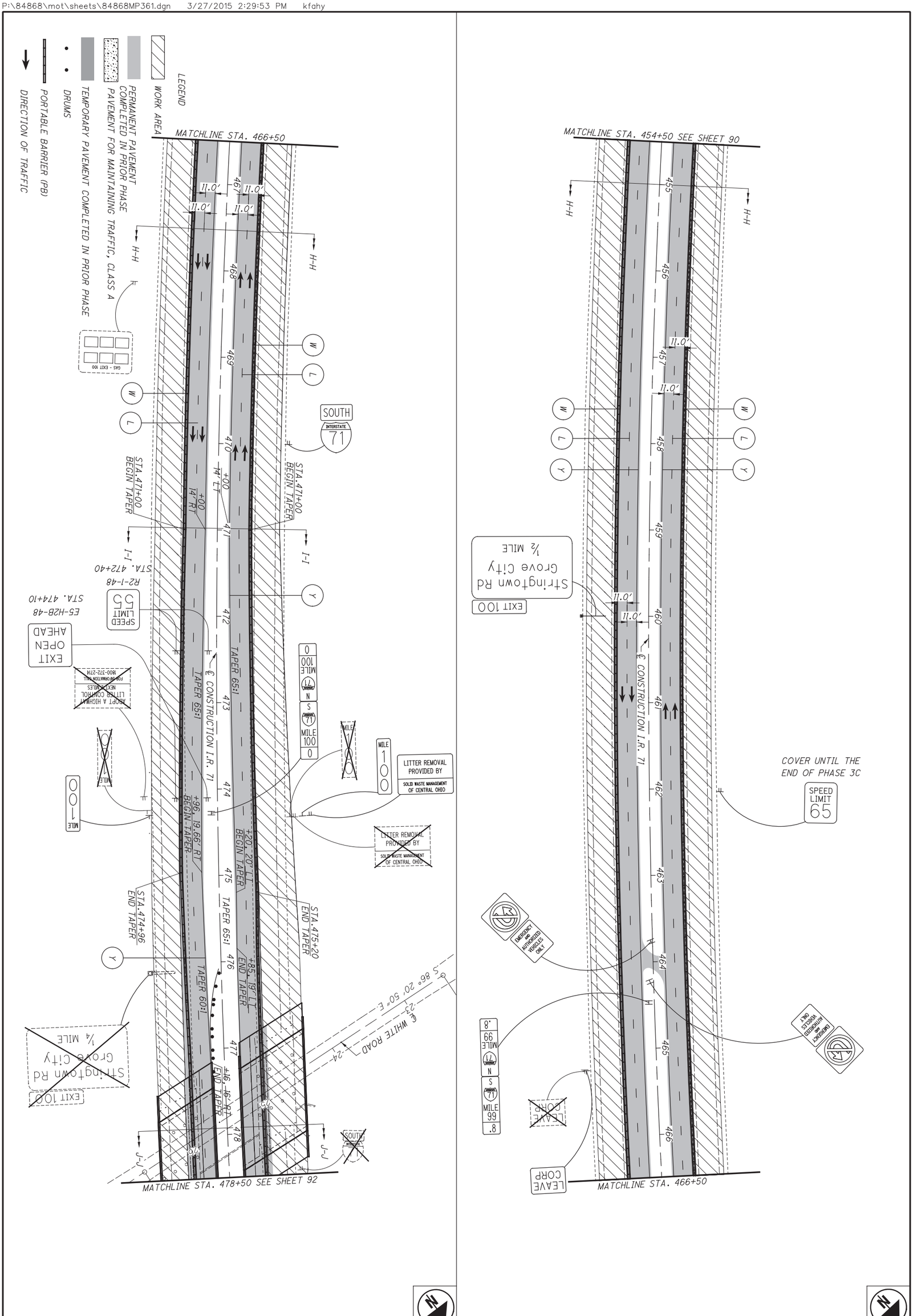

91 623	FRA-71-5.29	MAINTENANCE OF TRAFFIC - PHASE 3B STA. 454+50.00 TO STA. 478+50.00	CALCULATED GPD CHECKED BBD	0 50 25 100 HORIZONTAL SCALE IN FEET

P:\84868\mot\sheets\84868MP362.dgn 3/27/2015 2:29:53 PM kfahy

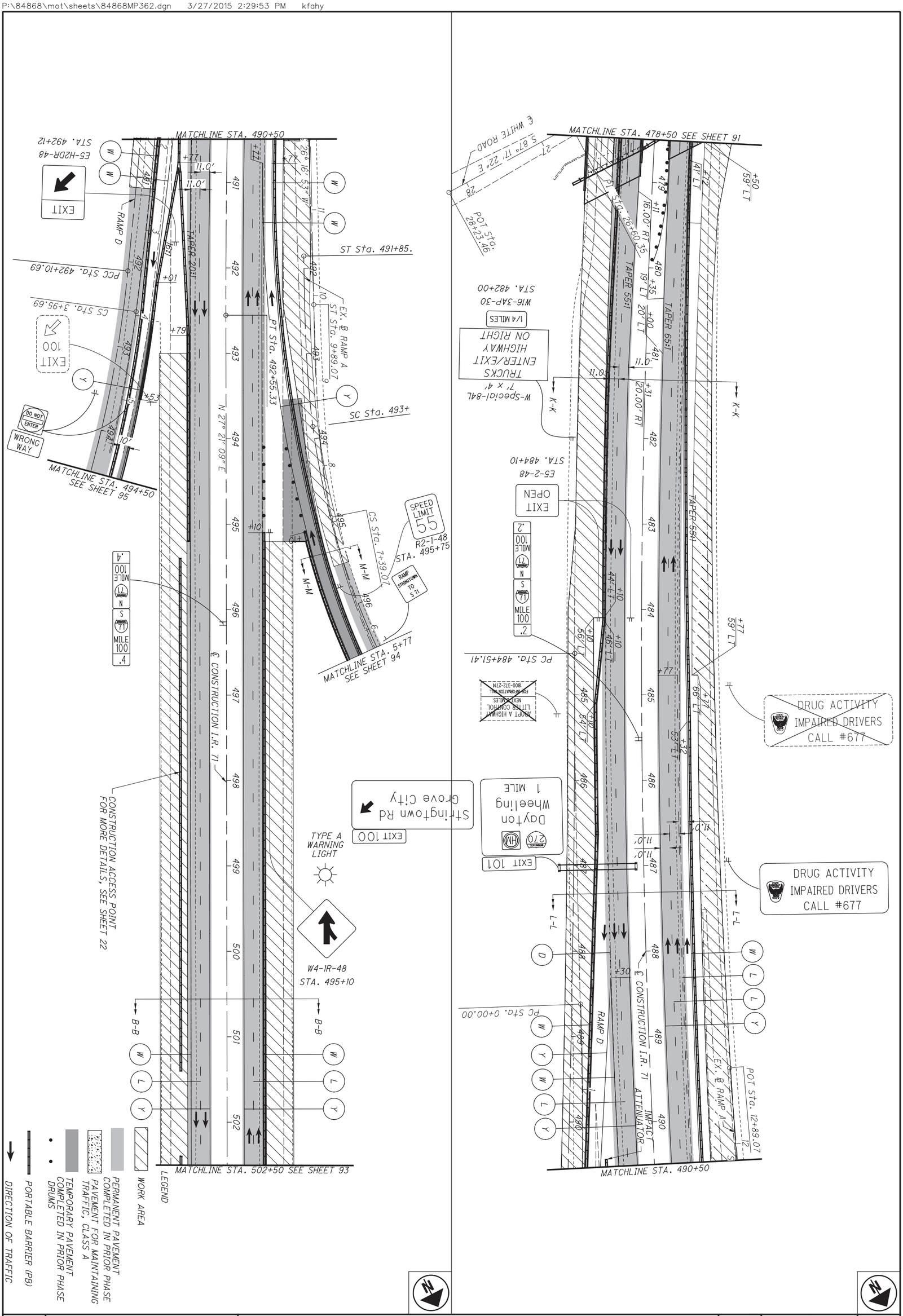

92
623

FRA-71-5.29

MAINTENANCE OF TRAFFIC - PHASE 3B
STA. 478+50.00 TO STA. 502+50.00

CALCULATED GPD
CHECKED BBD

0 50
25 100
HORIZONTAL SCALE IN FEET

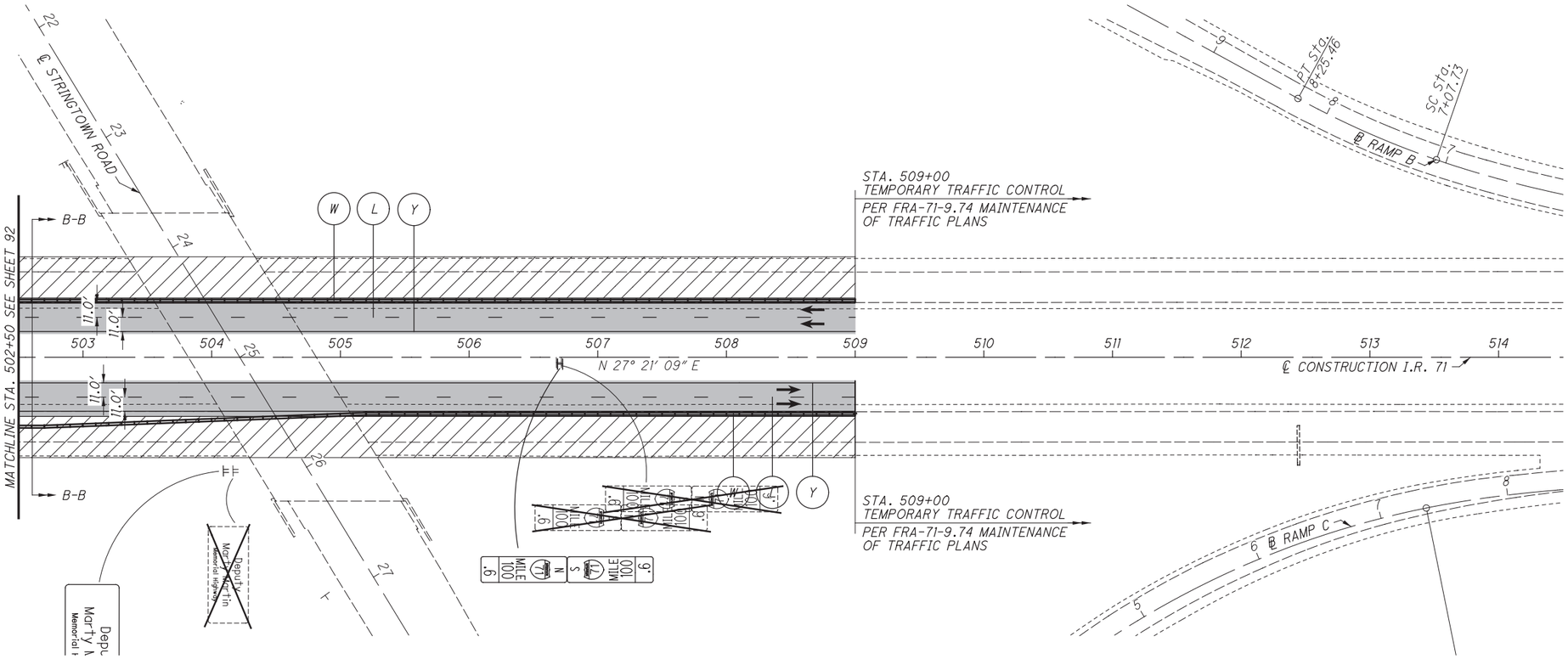

LEGEND

- WORK AREA
- PERMANENT PAVEMENT COMPLETED IN PRIOR PHASE
- PAVEMENT FOR MAINTAINING TRAFFIC, CLASS A
- TEMPORARY PAVEMENT COMPLETED IN PRIOR PHASE
- DRUMS
- PORTABLE BARRIER (PB)
- DIRECTION OF TRAFFIC

HORIZONTAL SCALE IN FEET
0 25 50 100

CALCULATED GPD
CHECKED BBD

MAINTENANCE OF TRAFFIC - PHASE 3B
STA. 502+50.00 TO STA. 514+50.00

FRA-71-5.29

93
623

P:\84868\mot\sheets\84868MP363.dgn 3/27/2015 2:29:54 PM kfahy

P:\84868\mot\sheets\84868MP367.dgn 3/27/2015 2:29:55 PM kfahy

LEGEND

- WORK AREA
- PERMANENT PAVEMENT COMPLETED IN PRIOR PHASE
- PAVEMENT FOR MAINTAINING TRAFFIC, CLASS A
- TEMPORARY PAVEMENT COMPLETED IN PRIOR PHASE
- DRUMS
- PORTABLE BARRIER (PB)
- DIRECTION OF TRAFFIC

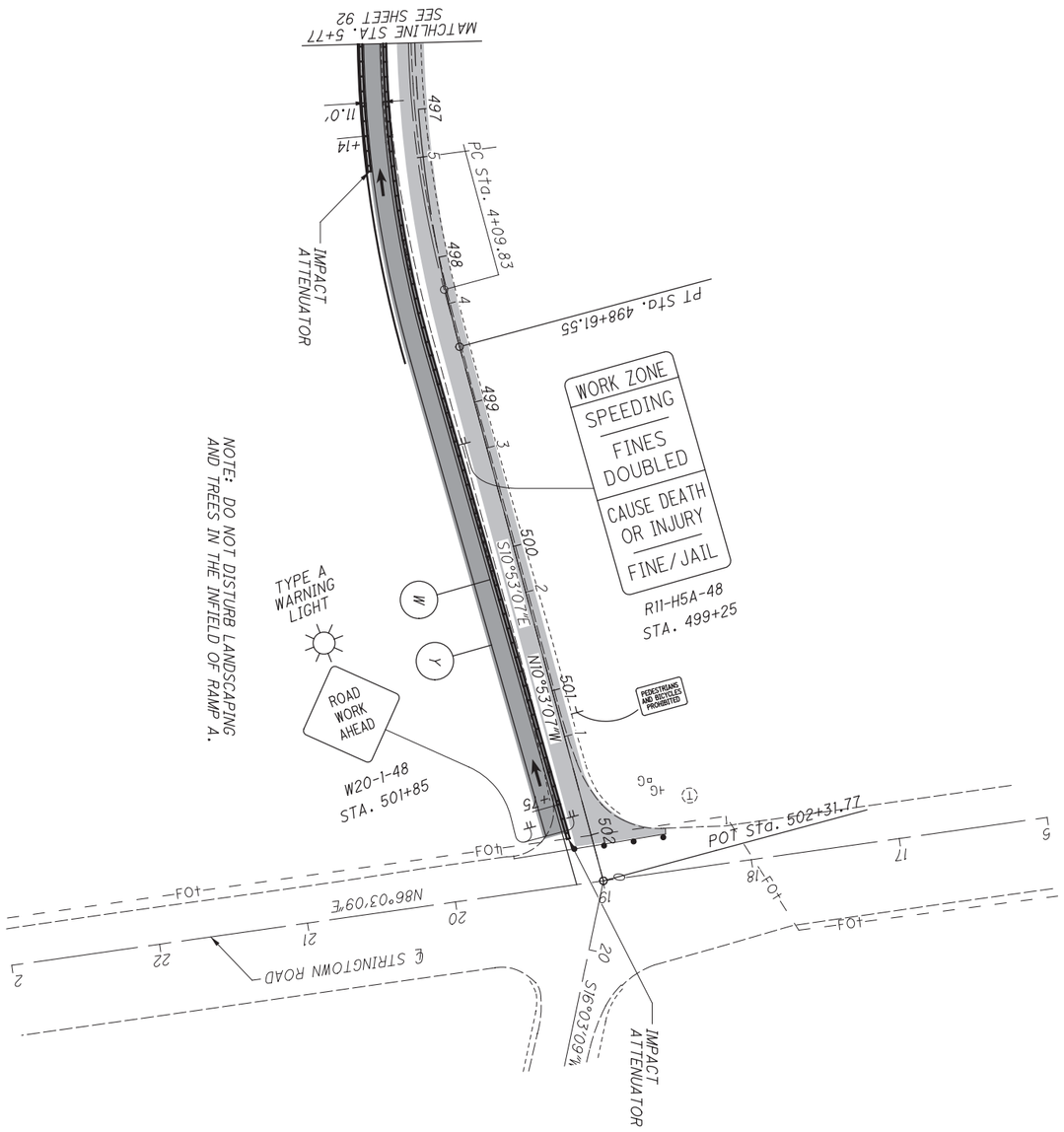

94 / 623	FRA-71-5.29	MAINTENANCE OF TRAFFIC - PHASE 3B RAMP A	CALCULATED GPD CHECKED BBD	0 50 25 100 HORIZONTAL SCALE IN FEET

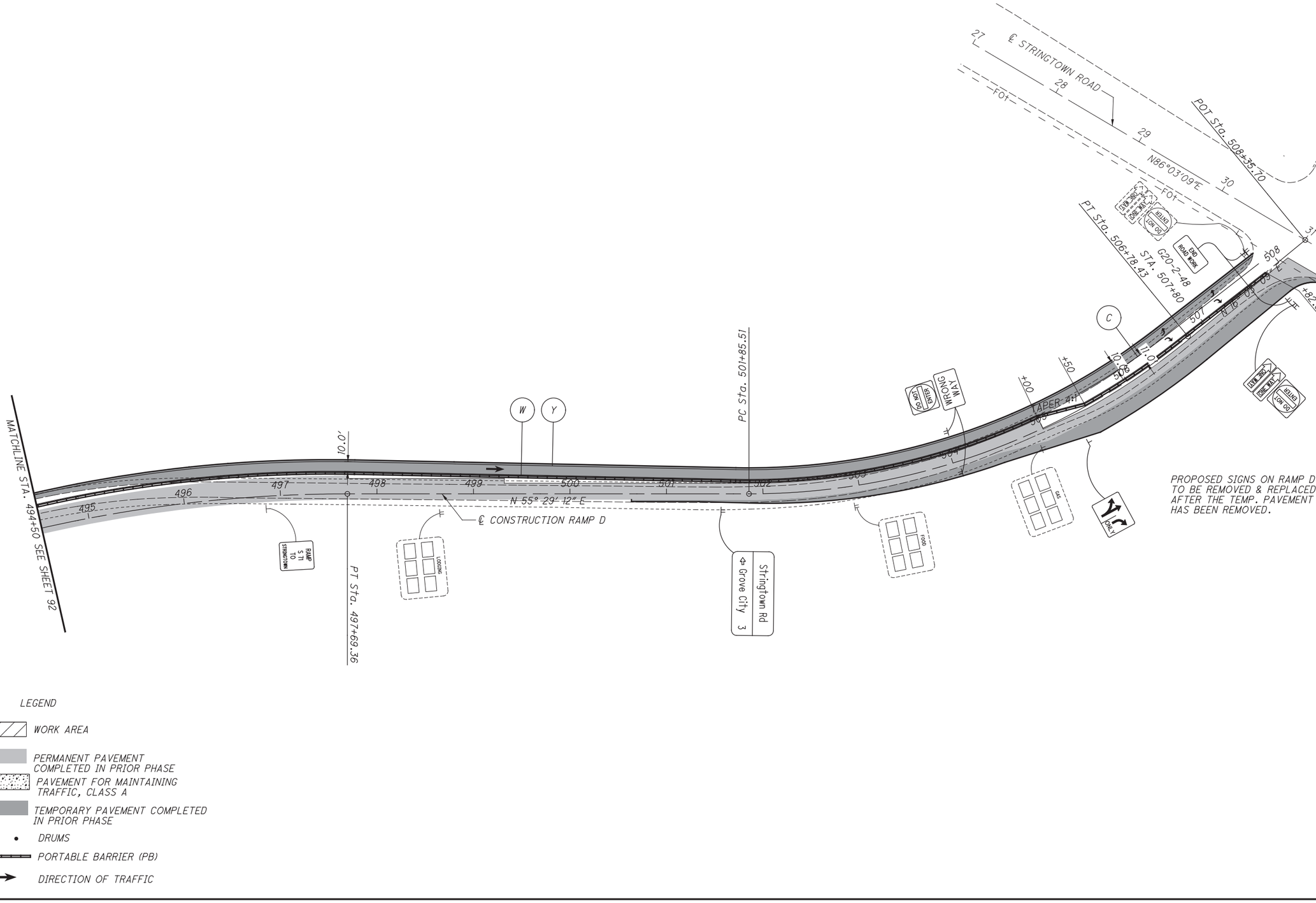

PROPOSED SIGNS ON RAMP D TO BE REMOVED & REPLACED AFTER THE TEMP. PAVEMENT HAS BEEN REMOVED.

LEGEND

- WORK AREA
- PERMANENT PAVEMENT COMPLETED IN PRIOR PHASE
- PAVEMENT FOR MAINTAINING TRAFFIC, CLASS A
- TEMPORARY PAVEMENT COMPLETED IN PRIOR PHASE
- DRUMS
- PORTABLE BARRIER (PB)
- DIRECTION OF TRAFFIC

HORIZONTAL SCALE IN FEET
0 25 50 100

CALCULATED GPD
CHECKED BBD

MAINTENANCE OF TRAFFIC - PHASE 3B RAMP D

FRA-71-5.29

95
623

P:\84868\rnot\sheets\84868MP368.dgn 3/27/2015 2:29:55 PM kfahy

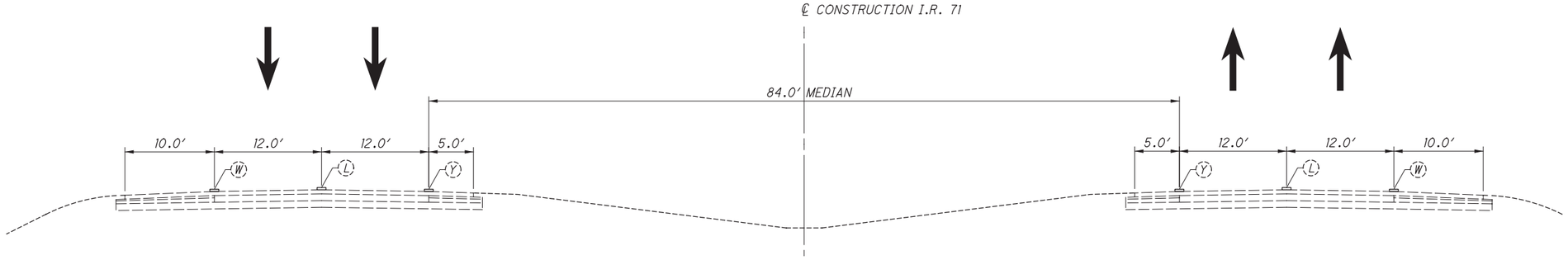

SECTION A-A

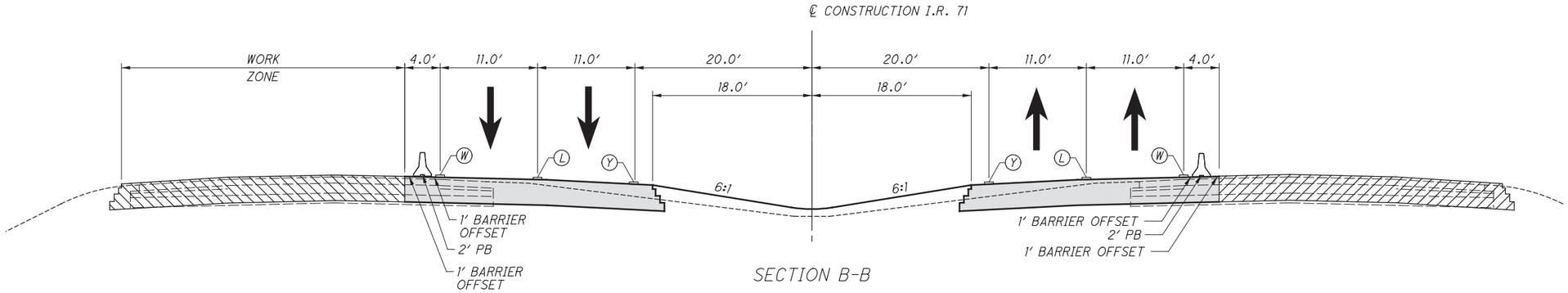

SECTION B-B

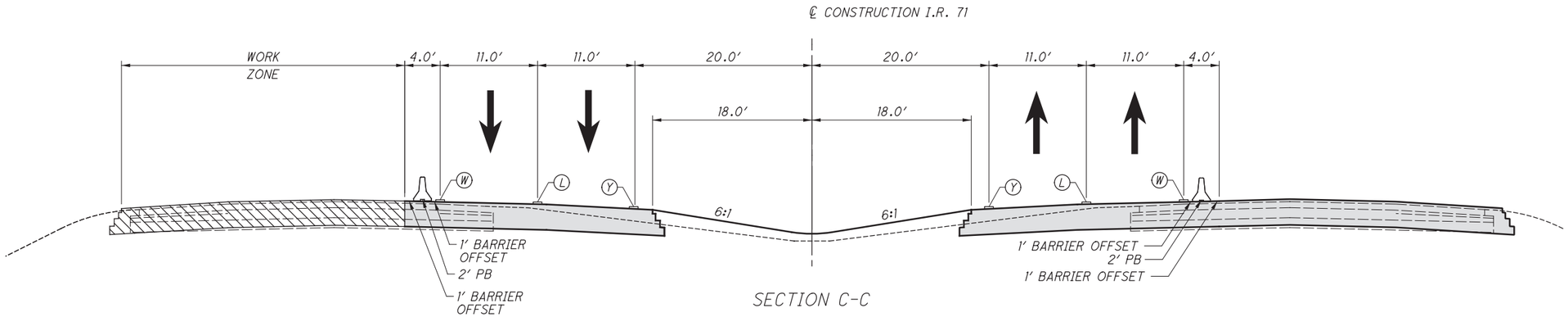

SECTION C-C

LEGEND

- (W) EXISTING EDGE LINE, WHITE
- (Y) EXISTING EDGE LINE, YELLOW
- (L) EXISTING LANE LINE
- (W) WORK ZONE EDGE LINE, WHITE, CLASS I
- (Y) WORK ZONE EDGE LINE, YELLOW, CLASS I
- (L) WORK ZONE LANE LINE, CLASS I

PERMANENT PAVEMENT COMPLETED IN PRIOR PHASE

PAVEMENT TO BE CONSTRUCTED

P:\84868\mot\sheets\84868MY320.dgn 3/27/2015 2:29:56 PM kfahy

MAINTENANCE OF TRAFFIC - IR 71
TYPICAL SECTIONS - PHASE 3C

FRA-71-5.29

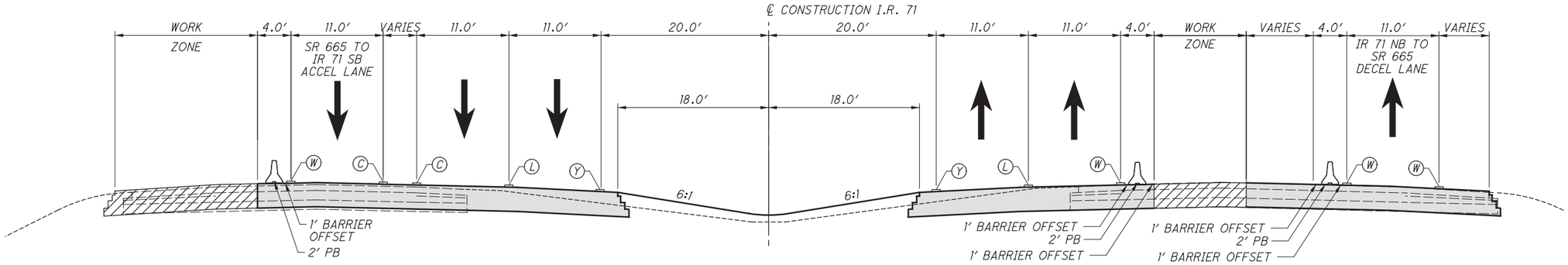

SECTION D-D

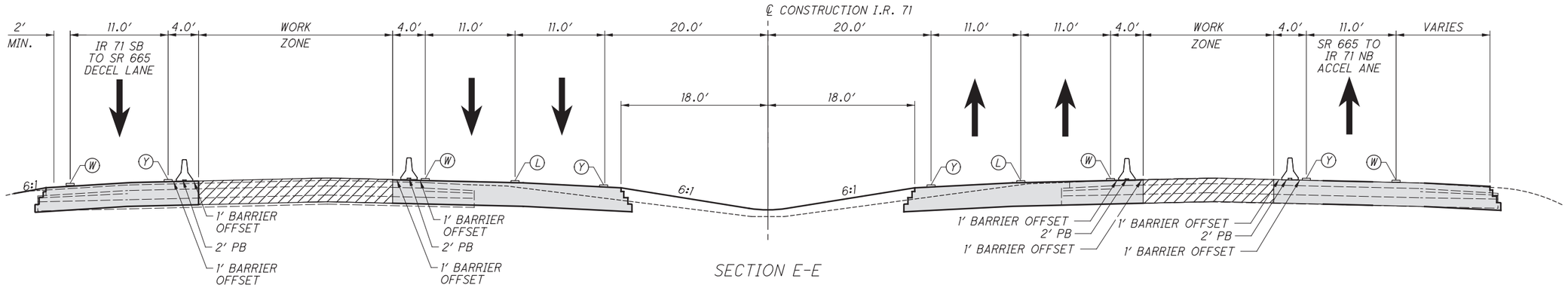

SECTION E-E

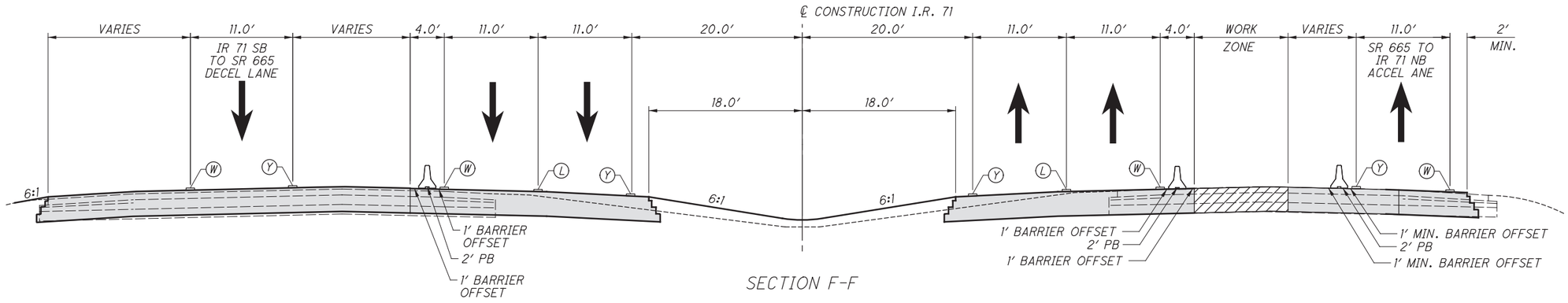

SECTION F-F

LEGEND

- (W) EXISTING EDGE LINE, WHITE
- (Y) EXISTING EDGE LINE, YELLOW
- (L) EXISTING LANE LINE
- (W) WORK ZONE EDGE LINE, WHITE, CLASS I
- (Y) WORK ZONE EDGE LINE, YELLOW, CLASS I
- (L) WORK ZONE LANE LINE, CLASS I

PERMANENT PAVEMENT COMPLETED IN PRIOR PHASE

PAVEMENT TO BE CONSTRUCTED

P:\84868\mot\sheets\84868MY321.dgn 3/27/2015 2:29:56 PM kfahy

MAINTENANCE OF TRAFFIC - IR 71
TYPICAL SECTIONS - PHASE 3C

FRA-71-5.29

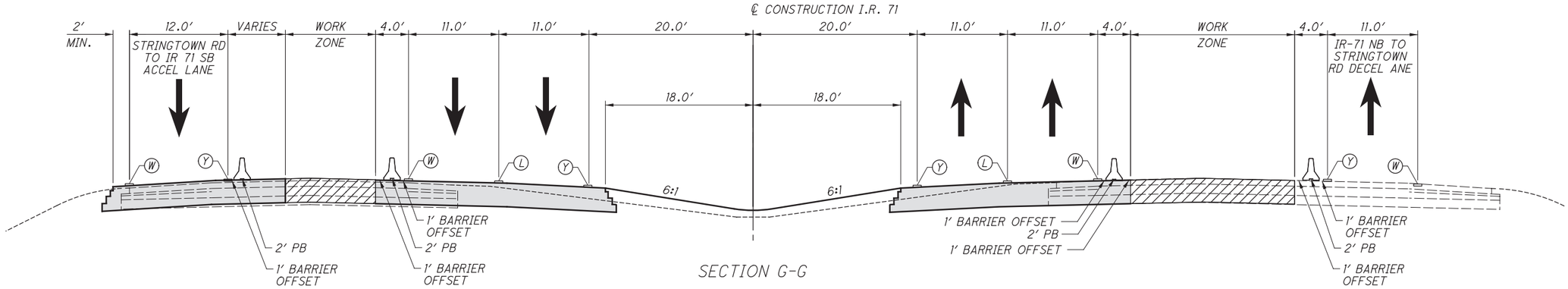

SECTION G-G

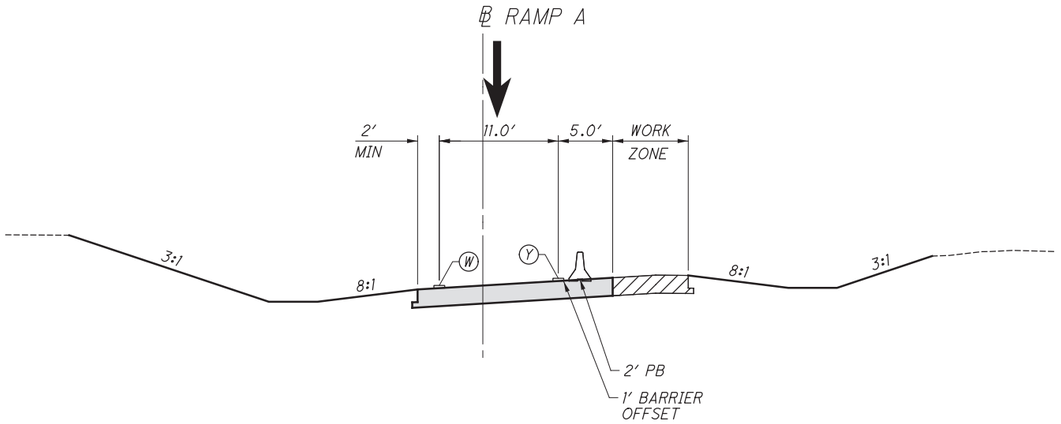

SECTION H-H

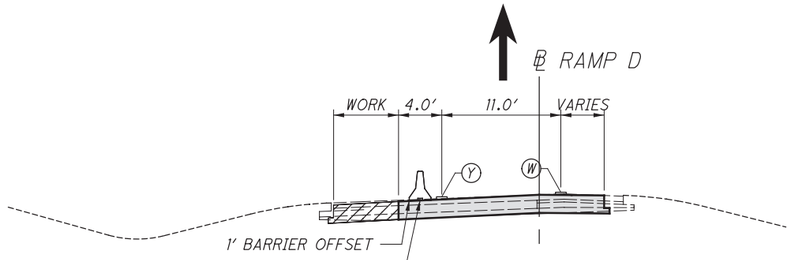

SECTION I-I

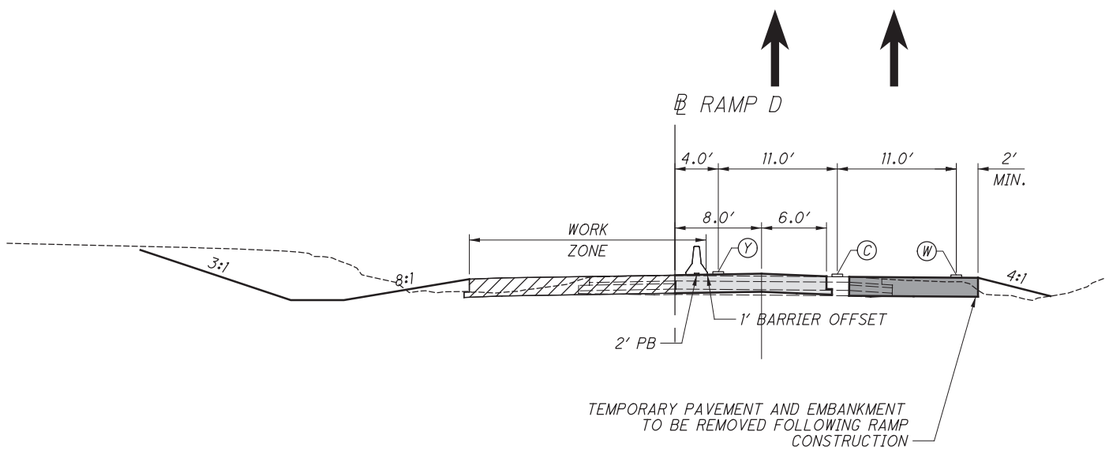

SECTION J-J

TEMPORARY PAVEMENT COMPLETED IN PRIOR PHASE

PERMANENT PAVEMENT COMPLETED IN PRIOR PHASE

PAVEMENT TO BE CONSTRUCTED

LEGEND

- (W) EXISTING EDGE LINE, WHITE
- (Y) EXISTING EDGE LINE, YELLOW
- (L) EXISTING LANE LINE
- (W) WORK ZONE EDGE LINE, WHITE, CLASS I
- (Y) WORK ZONE EDGE LINE, YELLOW, CLASS I
- (L) WORK ZONE LANE LINE, CLASS I

MAINTENANCE OF TRAFFIC - IR 71
TYPICAL SECTIONS - PHASE 3C

FRA-71-5.29

98
623

P:\84868\mot\sheets\84868MY322.dgn 3/27/2015 2:29:57 PM kfahy

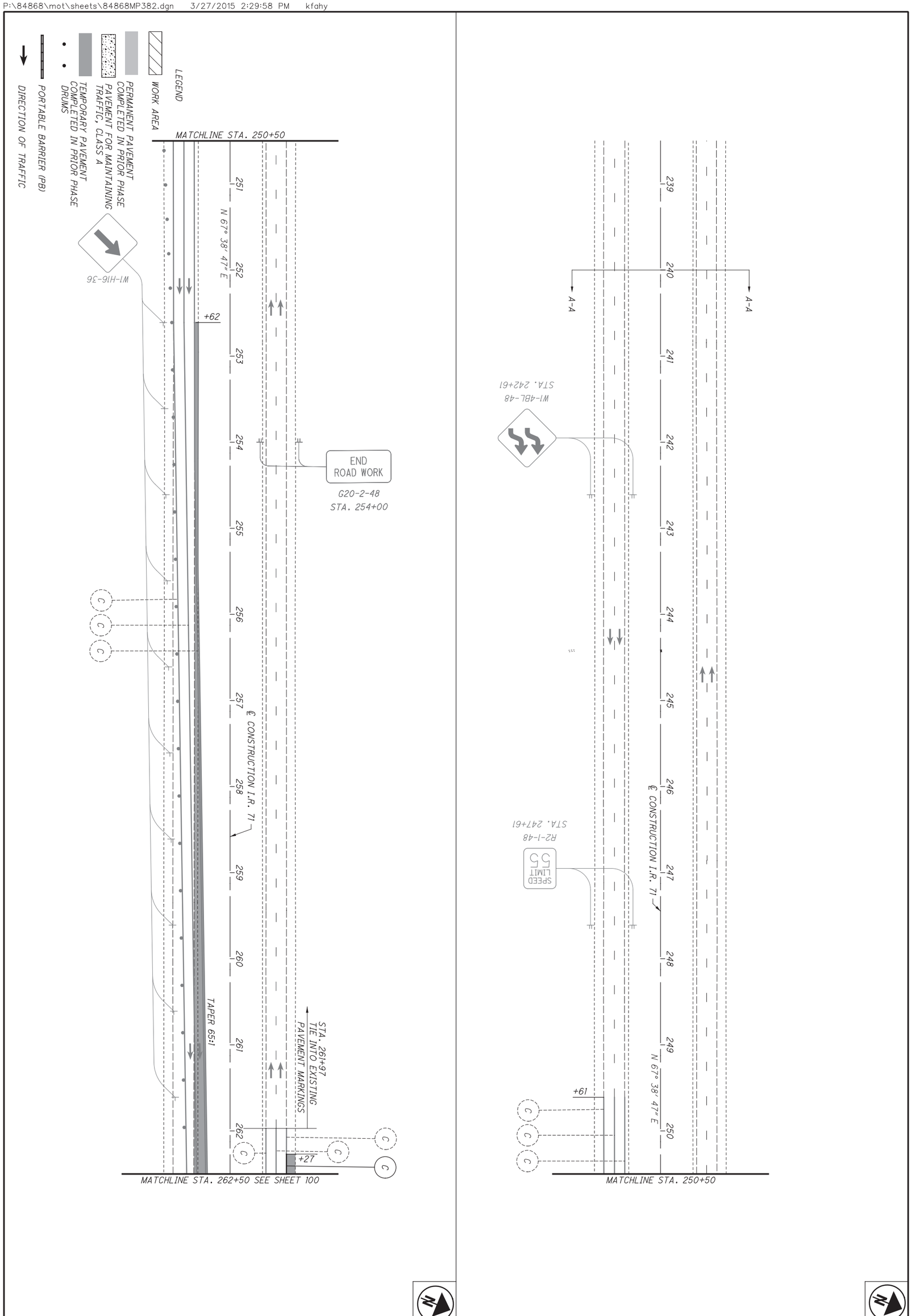

99 623	FRA-71-5.29	MAINTENANCE OF TRAFFIC - PHASE 3C STA. 238+50.00N TO STA. 262+50.00	CALCULATED GPD CHECKED BBD 0 50 25 100 HORIZONTAL SCALE IN FEET

P:\84868\mot\sheets\84868MP383.dgn 3/27/2015 2:29:59 PM kfahy

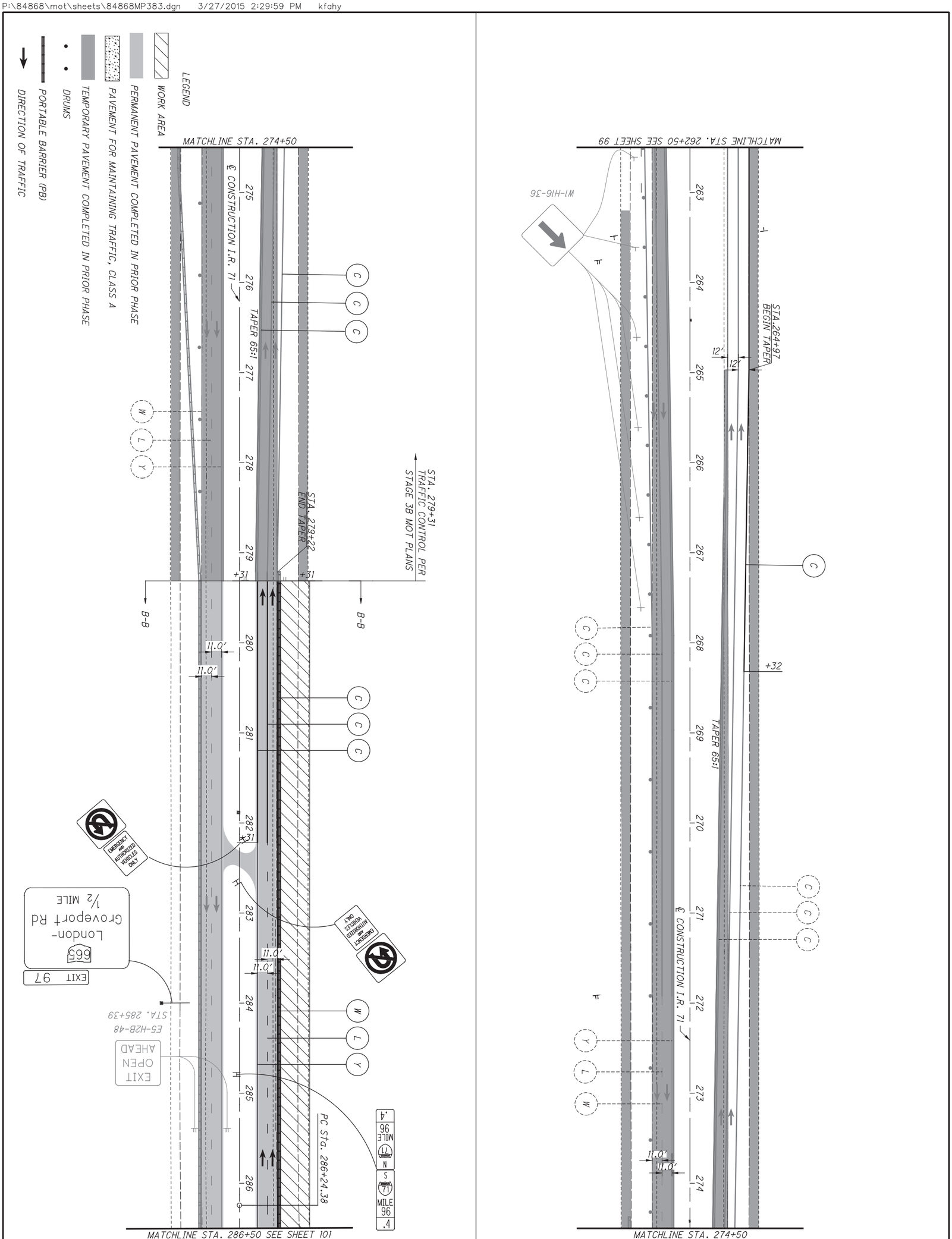

100 623	FRA-71-5.29	MAINTENANCE OF TRAFFIC - PHASE 3C STA. 262+50.00 TO STA. 286+50.00	CALCULATED GPD CHECKED BBD	0 50 25 100 HORIZONTAL SCALE IN FEET

P:\84868\mot\sheets\84868MP384.dgn 3/27/2015 2:30:07 PM kfahy

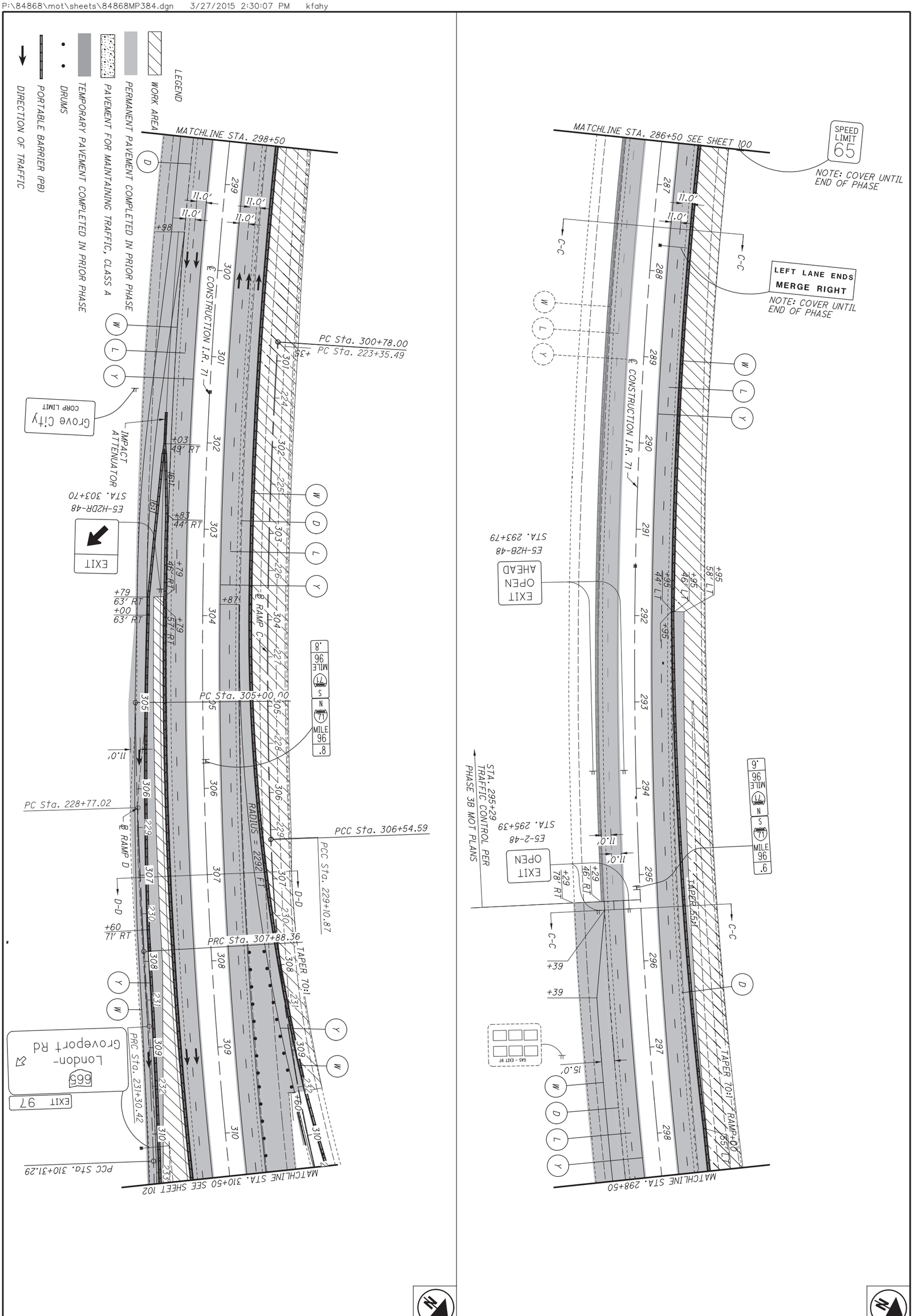

101 623	FRA-71-5.29	MAINTENANCE OF TRAFFIC - PHASE 3C STA. 286+50.00 TO STA. 310+50.00	CALCULATED GPD CHECKED BBD	0 50 25 100 HORIZONTAL SCALE IN FEET

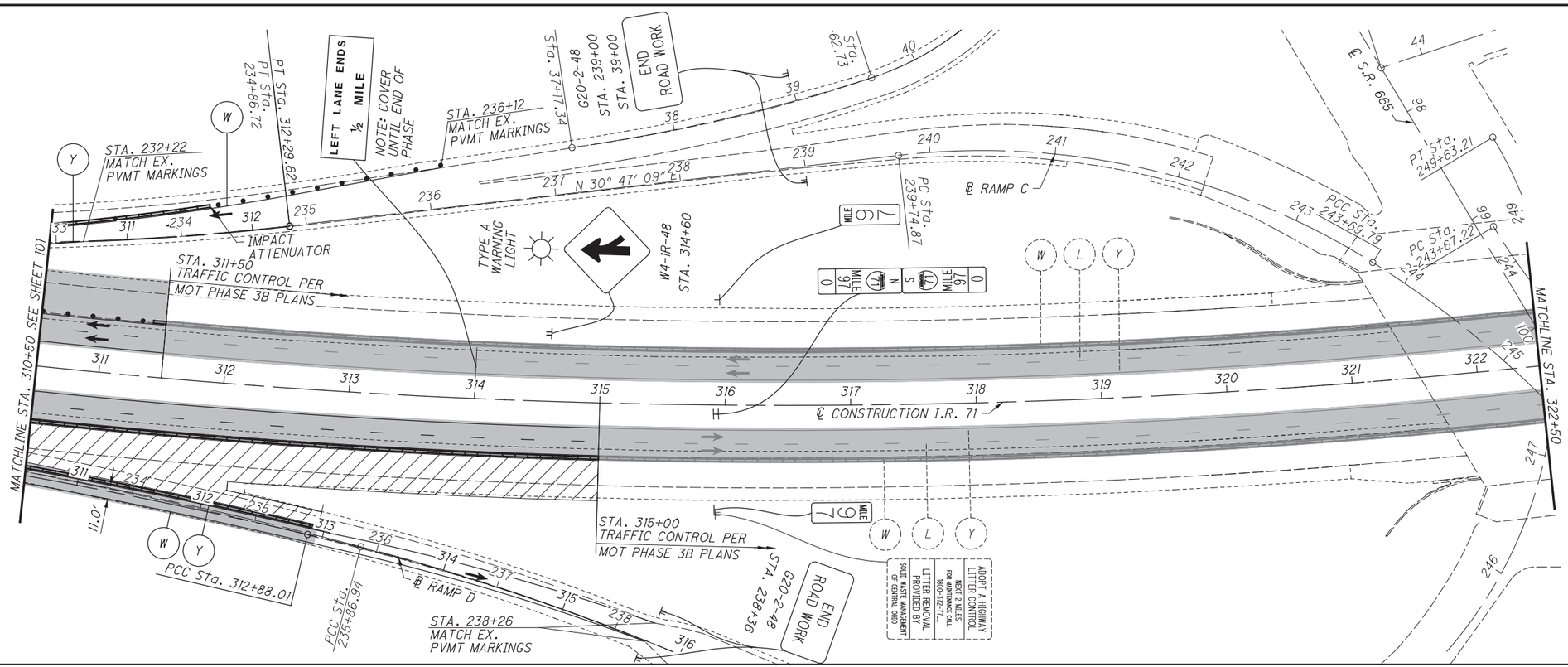

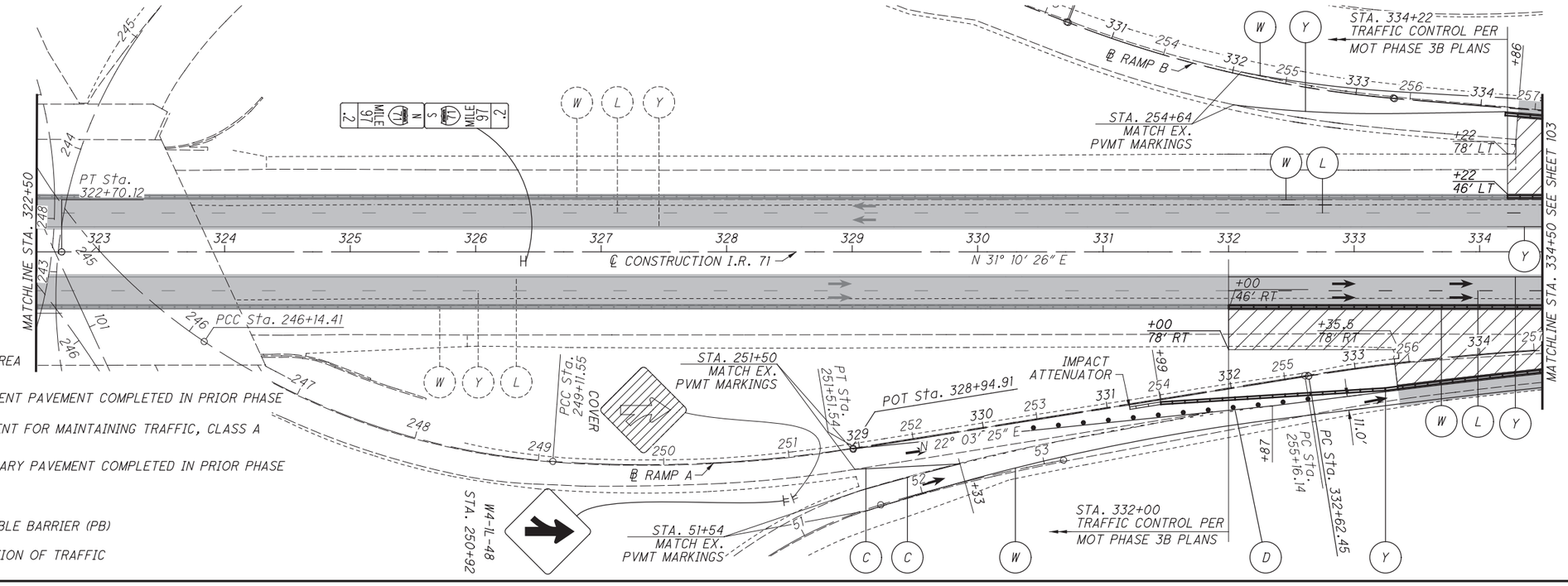

HORIZONTAL SCALE IN FEET
0 25 50 100

CALCULATED GPD
CHECKED BBD

MAINTENANCE OF TRAFFIC - PHASE 3C
STA. 310+50.00 TO STA. 334+50.00

FRA-71-5.29

102
623

P:\84668\mot\sheets\84868MP385.dgn 3/27/2015 2:30:08 PM kfahy

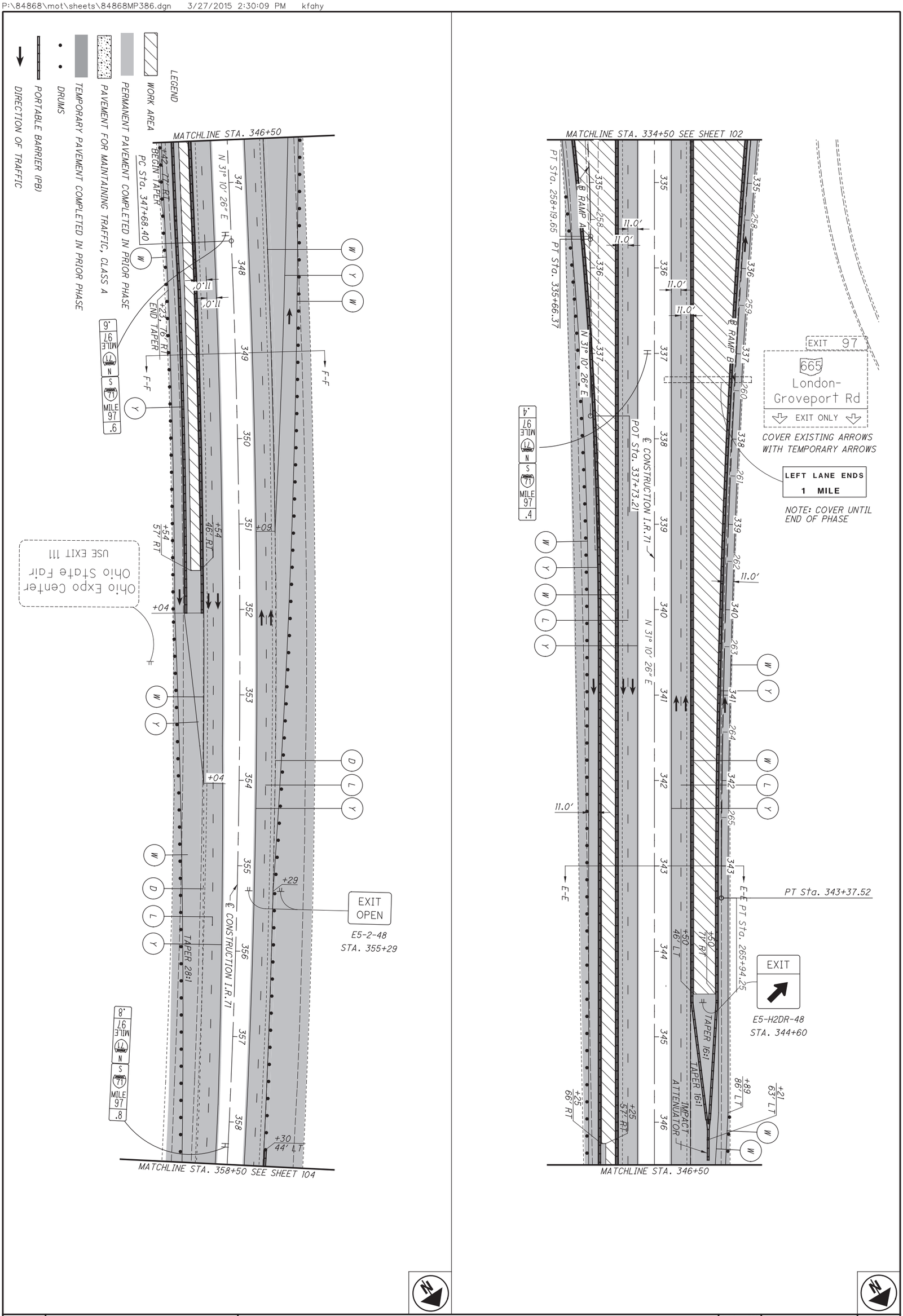

103 623	FRA-71-5.29	MAINTENANCE OF TRAFFIC - PHASE 3C STA. 334+50.00 TO STA. 358+50.00	CALCULATED GPD CHECKED BBD	0 50 25 100 HORIZONTAL SCALE IN FEET

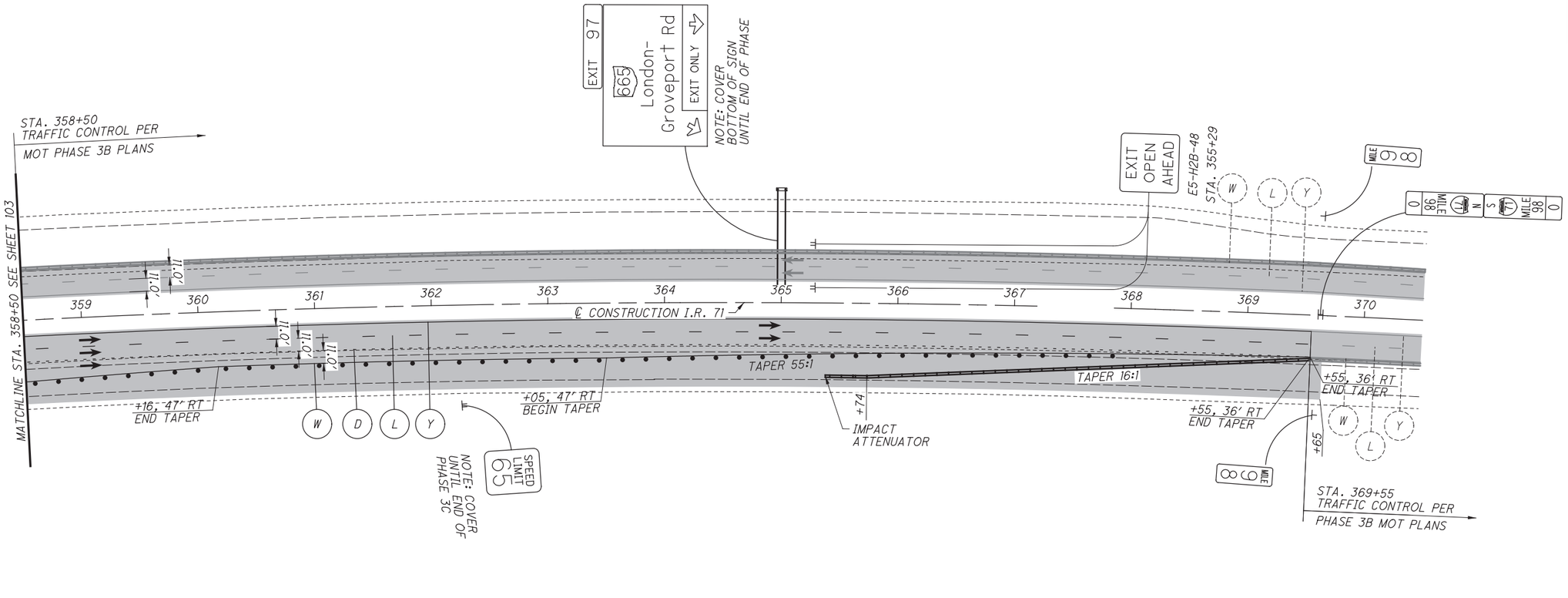

LEGEND

- WORK AREA
- PERMANENT PAVEMENT COMPLETED IN PRIOR PHASE
- PAVEMENT FOR MAINTAINING TRAFFIC, CLASS A
- TEMPORARY PAVEMENT COMPLETED IN PRIOR PHASE
- DRUMS
- PORTABLE BARRIER (PB)
- DIRECTION OF TRAFFIC

HORIZONTAL SCALE IN FEET
0 25 50 100

CALCULATED GPD
CHECKED BBD

MAINTENANCE OF TRAFFIC - PHASE 3C
STA. 358+50.00 TO STA. 370+50.00

FRA-71-5.29

104
623

P:\84668\mot\sheets\84868MP387.dgn 3/27/2015 2:30:10 PM kfahy

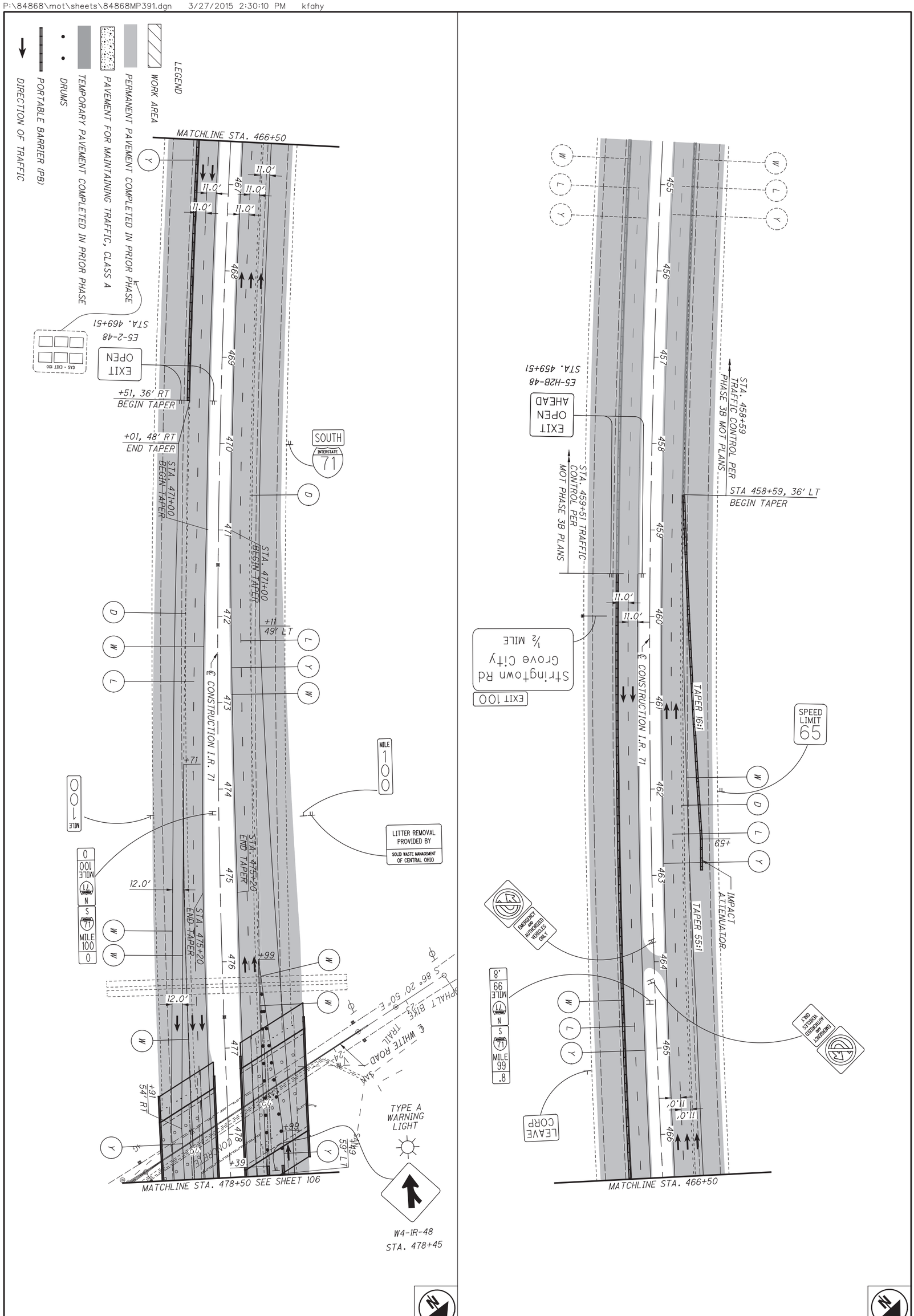

105 623	FRA-71-5.29	MAINTENANCE OF TRAFFIC - PHASE 3C STA. 454+50.00 TO STA. 478+50.00	CALCULATED GPD CHECKED BBD 0 50 25 100 HORIZONTAL SCALE IN FEET

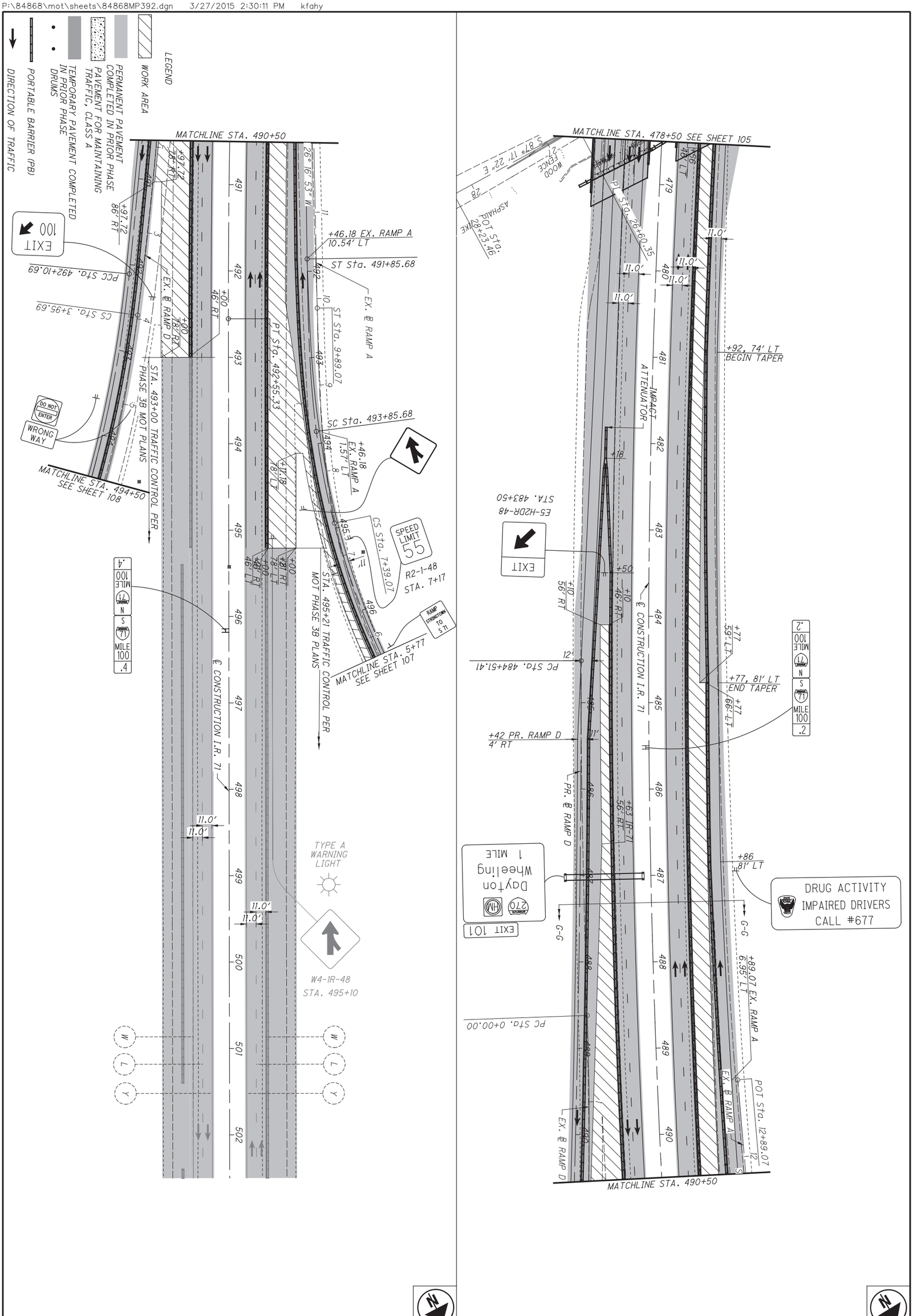

106 623	FRA-71-5.29	MAINTENANCE OF TRAFFIC - PHASE 3C STA. 478+50.00 TO STA. 502+50.00	CALCULATED GPD CHECKED BBD	0 50 25 100 HORIZONTAL SCALE IN FEET

P:\84868\mot\sheets\84868MP397.dgn 3/27/2015 2:30:12 PM kfahy

LEGEND

WORK AREA

PERMANENT PAVEMENT COMPLETED IN PRIOR PHASE

PAVEMENT FOR MAINTAINING TRAFFIC, CLASS A

TEMPORARY PAVEMENT COMPLETED IN PRIOR PHASE

DRUMS

PORTABLE BARRIER (PB)

DIRECTION OF TRAFFIC

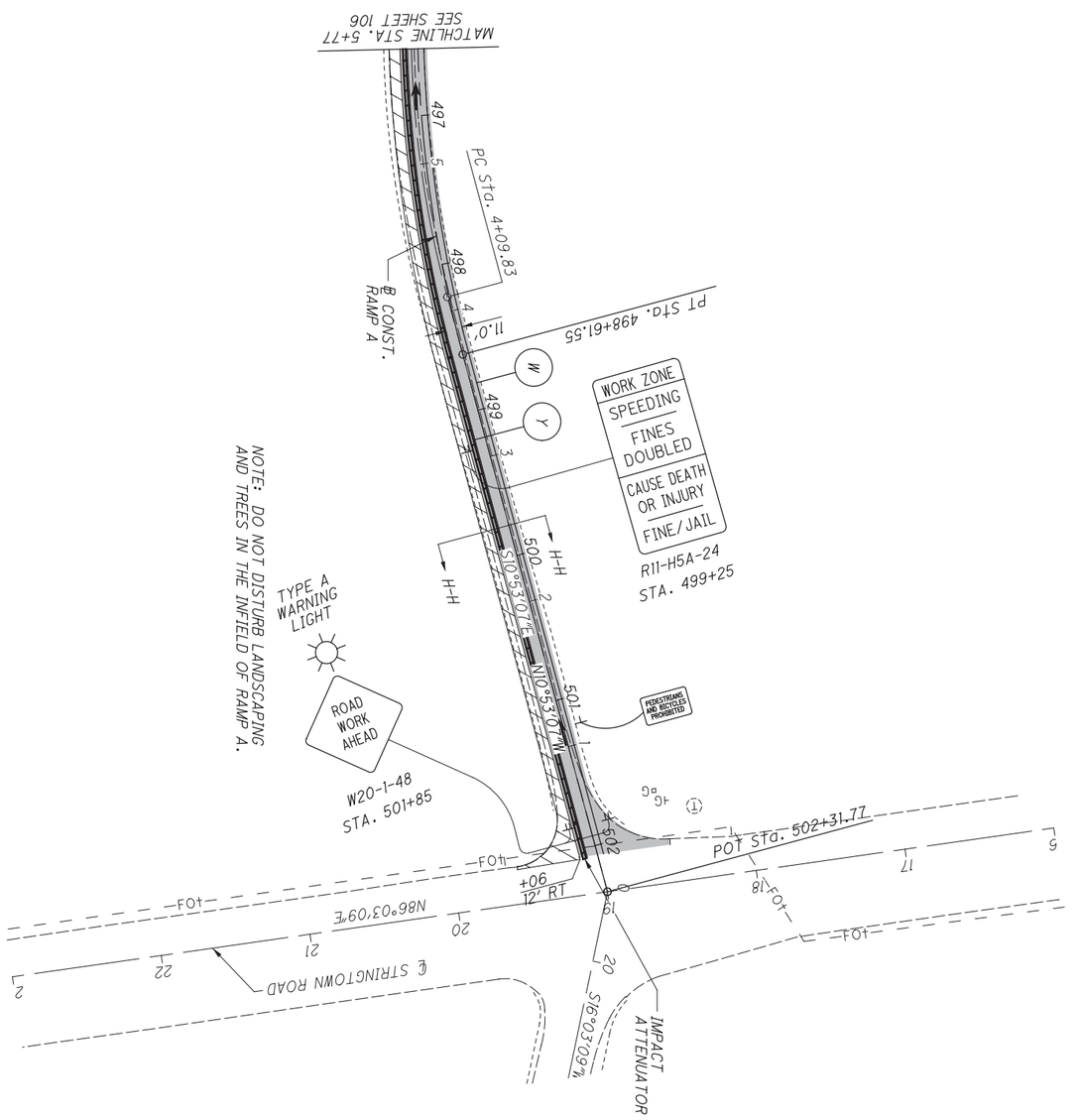

107 / 623	FRA-71-5.29	MAINTENANCE OF TRAFFIC - PHASE 3C RAMP A	CALCULATED GPD CHECKED BBD	0 50 25 100 HORIZONTAL SCALE IN FEET

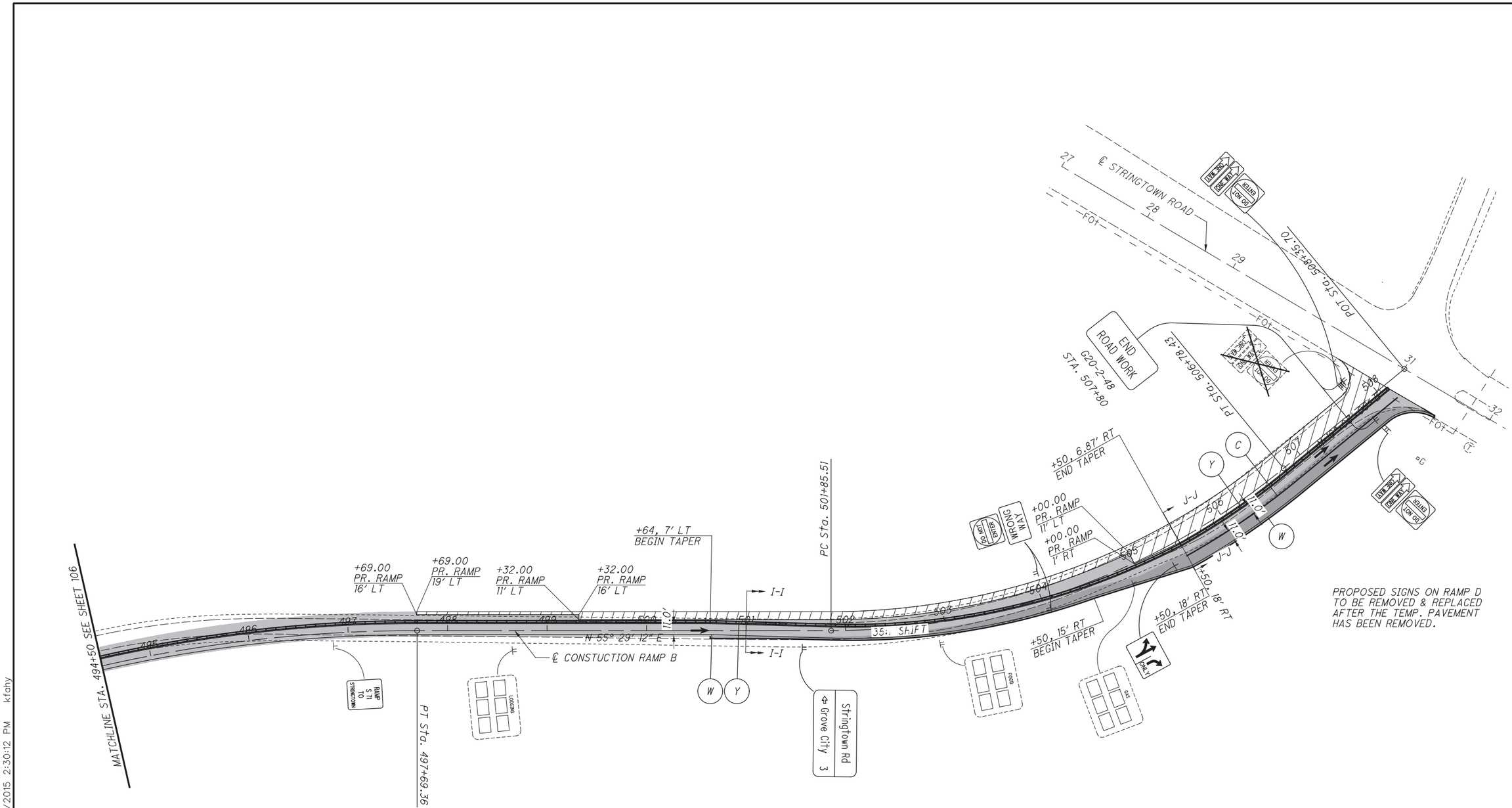

PROPOSED SIGNS ON RAMP D TO BE REMOVED & REPLACED AFTER THE TEMP. PAVEMENT HAS BEEN REMOVED.

LEGEND

- WORK AREA
- PERMANENT PAVEMENT COMPLETED IN PRIOR PHASE
- PAVEMENT FOR MAINTAINING TRAFFIC, CLASS A
- TEMPORARY PAVEMENT COMPLETED IN PRIOR PHASE
- DRUMS
- PORTABLE BARRIER (PB)
- DIRECTION OF TRAFFIC

HORIZONTAL SCALE IN FEET
0 25 50 100

CALCULATED GPD
CHECKED BBD

MAINTENANCE OF TRAFFIC - PHASE 3C RAMP D

FRA-71-5.29

108
623

P:\84868\mot\sheets\84868MP398.dgn 3/27/2015 2:30:12 PM kfahy

SHEET NO.	STATION TO STATION		614								615		622													
			WORK ZONE IMPACT ATTENUATOR, (BI)DIRECTIONAL)	WORK ZONE LANE LINE, CLASS 1, 642 PAINT	WORK ZONE EDGE LINE, WHITE, CLASS 1, 642 PAINT	WORK ZONE EDGE LINE, YELLOW, CLASS 1, 642 PAINT	WORK ZONE CHANNELIZING LINE, CLASS 1, 642 PAINT	WORK ZONE DOTTED LINE, CLASS 1, 642 PAINT	WORK ZONE STOP LINE, CLASS 1, 642 PAINT		PAVEMENT FOR MAINTAINING TRAFFIC, CLASS A		PORTABLE BARRIER, 32"	PORTABLE BARRIER "Y" CONNECTOR											
			EA	FT	FT	FT	FT	FT	FT		SQ YD		FT	EA												
	PHASE 1																									
31	226+08.17	234+68.17					2580																			
31	234+68.17	238+50.00		382	382	382																				
31	238+37.00	238+50.00	1										10													
32	238+50.00	262+50.00		2400	2400	2400							2400													
32	241+03.00	262+50.00									2500															
32	256+57.00	262+50.00					1779																			
32	262+17.00	262+50.00											30													
32	262+27.00	262+50.00									26															
33	262+50.00	286+50.00		2400	2400	2400							2400													
33	262+50.00	265+17.00					801						800													
33	262+50.00	282+03.00									2320															
33	262+50.00	284+73.00	1										2220													
33	265+17.00	286+50.00		2133	2133	2133																				
34	286+50.00	310+50.00		4800	2428	4800					2728		2430													
34	286+50.00	289+08.27			257																					
34	286+50.00	297+22.00						1062																		
34	297+22.00	310+50.00			1314																					
34	305+13.00	308+50.00						341																		
34	308+50.00	310+03.25			155																					
34	308+50.00	310+50.00			203																					
34	309+50.00	310+50.00											200													
34	309+59.90	310+50.00									90															
35	310+50.00	334+50.00		4800	4800	4800																				
35	310+50.00	235+50.26 "EX 665 RAMP D"									210															
35	310+50.00	235+60.20 "EX 665 RAMP D"											250													
35	310+50.00	238+20.20 "EX 665 RAMP D"			508																					
35	232+94.30 "EX 665 RAMP C"	235+28.85 "EX 665 RAMP C"	1										210													
35	310+50.00	320+40.85									1006															
35	310+50.00	333+84.83	1										2300													
35	310+88.78	235+70.00 "EX 665 RAMP D"	1										190	1												
35	311+35.65	333+81.00											2260													
35	312+22.00	320+93.26									1019															
35	324+33.00	331+08.00									800															
35	325+80.00	333+31.00									840															
35	252+14.08 "EX 665 RAMP A"	256+37.78 "EX 665 RAMP A"	1										400													
36	334+50.00	358+50.00		2405		2404																				
36	334+50.00	358+50.00				2038	359																			
36	334+50.00	358+50.00		2037			359																			
36	334+50.00	358+50.00		449	222		359	1367																		
36	334+50.00	358+50.00			372			2034																		
36	351+14.27	357+90.00	1										650													
36	351+39.00	353+99.00			259																					
36	353+98.97	357+80.00									418															
37	358+50.00	382+50.00				2126	282																			
37	358+50.00	382+50.00				2128	282																			
37	358+50.00	382+50.00			1045		282	1086																		
37	358+50.00	363+50.00					1494																			
37	368+16.00	369+30.00			116																					
37	369+30.00	376+23.69	1										670													
37	369+40.00	373+69.72									504															
38	382+50.00	388+28.69					1737																			
SUBTOTALS CARRIED TO SHEET 115			8	21806	18994	25611	10314	5890	0		12461		17420	1												

CALCULATED KRF
CHECKED BBD

MAINTENANCE OF TRAFFIC SUBSUMMARY

FRA-71-5.29

P:\84868\mot\sheets\84868MS001.dgn 3/27/2015 2:30:13 PM kfahy

SHEET NO.	STATION TO STATION		614 WORK ZONE IMPACT ATTENUATOR, (BI)DIRECTIONAL) EA	614 WORK ZONE LANE LINE, CLASS 1, 642 PAINT FT	614 WORK ZONE EDGE LINE, WHITE, CLASS 1, 642 PAINT FT	614 WORK ZONE EDGE LINE, YELLOW, CLASS 1, 642 PAINT FT	614 WORK ZONE CHANNELIZING LINE, CLASS 1, 642 PAINT FT	614 WORK ZONE DOTTED LINE, CLASS 1, 642 PAINT FT	614 WORK ZONE STOP LINE, CLASS 1, 642 PAINT FT	615 PAVEMENT FOR MAINTAINING TRAFFIC, CLASS A SQ YD	622 PORTABLE BARRIER, 32" FT	622 PORTABLE BARRIER "Y" CONNECTOR EA
	PHASE 1 CONT.											
41	456+14.00	478+50.00			1384		865					
41	456+14.00	478+50.00		1382			864					
41	456+14.00	478+50.00				1381	863					
41	464+35.00	478+50.00				554	857					
41	464+35.00	478+50.00		553			857					
41	464+35.00	478+50.00			553		856					
41	468+19.36	478+50.00	1								1010	
41	469+95.00	478+50.00									850	
41	470+05.00	476+84.49								795		
41	471+00.00	477+67.47								784		
41	477+91.74	478+50.00								70		
42	478+50.00	502+50.00		4800		4800						
42	478+50.00	502+50.00			1520			888				
42	478+50.00	502+50.00			1373			1021				
42	478+50.00	490+49.25									1210	
42	478+50.00	5+77.00 "EX 135 RAMP A"									1800	
42	478+50.00	5+77.00 "EX 135 RAMP A"								636		
42	478+76.35	480+30.00								181		
42	479+10.06	5+77.00 "EX 135 RAMP A"			1739							
42	479+78.14	4+11.10 "EX 135 RAMP D"			1299							
42	481+29.00	490+39.00								744		
42	488+61.00	490+95.17			236							
42	489+36.00	8+78.67 "EX 135 RAMP A"			418							
42	491+53.03	4+95.00 "EX 135 RAMP D"	1								170	1
42	492+00.00	502+50.00									1050	
42	492+63.00	502+50.00								895		
43	502+50.00	509+00.00		1300	1300	1300						
43	502+50.00	509+10.00									660	
43	502+50.00	509+00.00								589		
44	5+77.00 "EX 135 RAMP A"	1+00.00 "EX 135 RAMP A"			478							
44	5+77.00 "EX 135 RAMP A"	0+46.57 "EX 135 RAMP A"	1								510	
44	5+77.00 "EX 135 RAMP A"	0+62.67 "EX 135 RAMP A"								304		
	PHASE 1A											
47	488+61.00	9+00.00 "TEMP 135 RAMP D"			637							
47	488+61.00	9+00.00 "TEMP 135 RAMP D"				640						
47	491+15.00	492+63.00	1								110	1
47	491+62.11	9+00.00 "TEMP 135 RAMP D"									340	
47	6+64.09 "TEMP 135 RAMP D"	9+00.00 "TEMP 135 RAMP D"								153		
47	11+55.00 "EX 135 RAMP A"	5+77.00 "EX 135 RAMP A"				581						
47	11+55.00 "EX 135 RAMP A"	5+77.00 "EX 135 RAMP A"			577							
47	8+89.95 "EX 135 RAMP A"	5+77.00 "EX 135 RAMP A"									320	
47	493+44.00	502+50.00									910	
47	493+54.20	502+50.00								1213		
47	7+17.82 "EX RAMP A"	5+77.00 "EX 135 RAMP A"								291		
48	502+50.00	509+00.00								556	650	
49	5+77.00 "EX 135 RAMP A"	0+62.51 "EX 135 RAMP A"								1092		
49	5+77.00 "EX 135 RAMP A"	0+38.87 "EX 135 RAMP A"			537	540					540	
50	9+00.00 "TEMP 135 RAMP D"	21+79.55 "TEMP 135 RAMP D"			1292	1283					1280	
50	9+00.00 "TEMP 135 RAMP D"	21+83.58 "TEMP 135 RAMP D"								2025		
48	19+54.44 "TEMP 135 RAMP D"	21+79.23 "TEMP 135 RAMP D"					228					
50	21+79.23 "TEMP 135 RAMP D"								22			
	SUBTOTALS CARRIED TO SHEET 115		4	8035	13343	11079	5390	1909	22	10328	11410	2

CALCULATED KRF
CHECKED BBD

MAINTENANCE OF TRAFFIC SUBSUMMARY

FRA-71-5.29

P:\84868\mot\sheets\84868MS002.dgn 3/27/2015 2:30:13 PM kfahy

SHEET NO.	STATION TO STATION		614								615		622												
			WORK ZONE IMPACT ATTENUATOR, (BI)DIRECTIONAL)	WORK ZONE LANE LINE, CLASS 1, 642 PAINT	WORK ZONE EDGE LINE, WHITE, CLASS 1, 642 PAINT	WORK ZONE EDGE LINE, YELLOW, CLASS 1, 642 PAINT	WORK ZONE CHANNELIZING LINE, CLASS 1, 642 PAINT	WORK ZONE DOTTED LINE, CLASS 1, 642 PAINT	WORK ZONE STOP LINE, CLASS 1, 642 PAINT		PAVEMENT FOR MAINTAINING TRAFFIC, CLASS A		PORTABLE BARRIER, 32"	PORTABLE BARRIER "Y" CONNECTOR										
			EA	FT	FT	FT	FT	FT	FT		SQ YD		FT	EA											
	PHASE 2																								
58	260+55.00	262+50.00					585																		
59	262+50.00	273+07.00					3171																		
59	270+36.03	282+21.04					3556																		
59	273+07.00	286+50.00		1343	1343	1343																			
59	276+52.17	286+50.00	1										980												
59	279+21.20	286+50.00											730												
59	282+21.12	286+50.00		429	429	429																			
60	286+50.00	310+50.00		4800		4800							4800												
60	286+50.00	310+50.00			2075			356																	
60	286+50.00	310+50.00			545			1824																	
60	288+14.10	232+07.35 "EX 665 RAMP C"			2114																				
60	306+00.00	310+50.00			458																				
60	306+61.50	232+07.35 "EX 665 RAMP C"					296																		
60	309+51.52	310+50.00				100																			
61	310+50.00	334+50.00		4800	4800	4800							4800												
61	310+50.00	237+73.35 "EX 665 RAMP D"			460	463																			
61	311+18.33	315+00.00	1										350	1											
61	311+65.01	237+81.07 "EX 665 RAMP D"											360												
61	234+85.47 "EX 665 RAMP D"	237+71.07 "EX 665 RAMP D"									155														
61	255+53.35 "EX RAMP A"	334+50.00			150	153																			
62	334+50.00	358+50.00		4800		4800							4800												
62	334+50.00	358+50.00			1100			1294																	
62	334+50.00	358+50.00			200			2206																	
62	334+50.00	334+85.00				135																			
62	334+50.00	348+79.00			1429																				
62	338+69.65	358+50.00			1988																				
63	358+50.00	382+50.00		4800	2388	4800							4800												
63	358+50.00	382+50.00			1356			1056																	
63	358+50.00	369+00.00			1059																				
64	382+50.00	406+50.00		4800	4800	4800							4800												
65	406+50.00	430+50.00		4800	4800	4800							4800												
66	430+50.00	454+50.00		4800	4800	4800							4800												
67	454+50.00	478+50.00		4800	4800	4800							4800												
68	478+50.00	502+50.00		4800		4800							4800												
68	478+50.00	502+50.00			1394			1015																	
68	478+50.00	502+50.00			1089			1311																	
68	480+00.34	5+77.00 "EX 135 RAMP A"			1655																				
68	480+90.00	8+52.53 "TEMP 135 RAMP D"			1368																				
68	489+83.08	8+52.53 "TEMP 135 RAMP D"	1										440												
68	490+98.91	8+52.53 "TEMP 135 RAMP D"				354																			
68	493+18.44	5+77.00 "EX 135 RAMP A"				350																			
68	6+92.11 "EX 135 RAMP A"	5+77.00 "EX 135 RAMP A"											120												
69	502+50.00	509+00.00		1300	1300	1300							1300												
70	5+77.00 "EX 135 RAMP A"	0+33.30 "EX 135 RAMP A"	1		543	545							520												
SUBTOTALS CARRIED TO SHEET 115			4	46272	48443	48372	7608	9062	0		155		48000	1											

CALCULATED KRF
CHECKED BBD

MAINTENANCE OF TRAFFIC SUBSUMMARY

FRA-71-5.29

P:\84868\mot\sheets\84868MS003.dgn 3/27/2015 2:30:14 PM kfahy

SHEET NO.	STATION TO STATION		614 WORK ZONE IMPACT ATTENUATOR, (BI)DIRECTIONAL)	614 WORK ZONE LANE LINE, CLASS 1, 642 PAINT	614 WORK ZONE EDGE LINE, WHITE, CLASS 1, 642 PAINT	614 WORK ZONE EDGE LINE, YELLOW, CLASS 1, 642 PAINT	614 WORK ZONE CHANNELIZING LINE, CLASS 1, 642 PAINT	614 WORK ZONE DOTTED LINE, CLASS 1, 642 PAINT	614 WORK ZONE STOP LINE, CLASS 1, 642 PAINT		615 PAVEMENT FOR MAINTAINING TRAFFIC, CLASS A		622 PORTABLE BARRIER, 32"	622 PORTABLE BARRIER "Y" CONNECTOR
			EA	FT	FT	FT	FT	FT	FT		SQ YD		FT	EA
	PHASE 2 CONT.													
71	8+52.53 "TEMP 135 RAMP D"	21+80.60 "TEMP 135 RAMP D"			1331	1324							1330	
71	14+72.38 "TEMP 135 RAMP D"	22+29.09 "TEMP 135 RAMP D"									858			
71	19+50.53 "TEMP 135 RAMP D"	21+80.60 "TEMP 135 RAMP D"					230							
71	21+80.60 "TEMP 135 RAMP D"								22					
	PHASE 3A													
73	238+03.00	238+50.00					141							
74	238+50.00	246+63.00					2439							
74	246+63.00	261+92.53		1530	1530	1530								
74	250+08.17	262+50.00	1										1220	
74	252+61.00	262+50.00									905			
74	259+27.00	262+50.00					969							
74	261+92.53	262+50.00					173							
75	262+50.00	270+07.00					2445							
75	262+50.00	276+76.00											1430	
75	262+50.00	279+31.20									4192			
75	262+50.00	267+87.00					1611							
75	264+87.00	279+21.20											1430	
75	264+97.00	279+31.20									2116			
75	267+87.00	272+31.00		444	444	444								
75	272+31.00	279+21.20					2071							
	PHASE 3B													
82	249+60.98	262+50.00					3867							
82	261+97.00	262+50.00					159							
82	262+27.00	262+50.00						23						
83	262+50.00	270+92.00					2526							
83	262+50.00	268+31.96						582						
83	262+50.00	282+21.54					3944							
83	262+50.00	286+50.00			2400									
83	268+31.96	282+21.54					1390							
83	268+31.96	286+50.00				1818								
83	270+92.00	286+50.00		1558	1588	1588								
83	274+37.37	286+50.00	1										1190	
83	279+21.20	286+50.00											730	
83	282+21.54	286+50.00		428	428	428								
84	286+50.00	310+50.00		4800	2400	4800							2400	
84	286+50.00	310+50.00			1976			424						
84	286+50.00	233+12.18 "EX 665 RAMP D"											2420	
84	286+50.00	232+97.94 "EX 665 RAMP C"			2370									
84	291+80.00	232+96.23 "EX 665 RAMP C"				2375								
84	291+80.00	232+95.98 "EX 665 RAMP C"											1850	
84	303+79.00	233+12.02 "EX 665 RAMP D"			253									
84	308+00.00	233+11.15 "EX 665 RAMP D"			679									
84	232+05.58 "EX 665 RAMP C"	232+72.78 "EX 665 RAMP C"									23			
84	232+16.07 "EX 665 RAMP C"	232+97.62 "EX 665 RAMP C"						81						
84	309+95.47	310+50.00	1										20	1
85	310+50.00	334+50.00		4800	4800	4800							2390	
85	310+50.00	333+30.94											2290	
85	310+50.00	234+71.96 "EX 665 RAMP D"											160	
85	233+11.15 "EX 665 RAMP D"	238+25.62 "EX 665 RAMP D"			176	344								
85	233+12.02 "EX 665 RAMP D"	238+25.62 "EX 665 RAMP D"			515									
85	233+12.18 "EX 665 RAMP D"	235+60.05 "EX 665 RAMP D"											250	
	SUBTOTALS CARRIED TO SHEET 115		3	13560	20890	19451	21965	1110	22		8094		19110	1

CALCULATED KRF
CHECKED BBD

MAINTENANCE OF TRAFFIC SUBSUMMARY

FRA-71-5.29

P:\84868\mot\sheets\84868MS004.dgn 3/27/2015 2:30:14 PM kfahy

SHEET NO.	STATION TO STATION		614 WORK ZONE IMPACT ATTENUATOR, (BI)DIRECTIONAL) EA	614 WORK ZONE LANE LINE, CLASS 1, 642 PAINT FT	614 WORK ZONE EDGE LINE, WHITE, CLASS 1, 642 PAINT FT	614 WORK ZONE EDGE LINE, YELLOW, CLASS 1, 642 PAINT FT	614 WORK ZONE CHANNELIZING LINE, CLASS 1, 642 PAINT FT	614 WORK ZONE DOTTED LINE, CLASS 1, 642 PAINT FT	614 WORK ZONE STOP LINE, CLASS 1, 642 PAINT FT	615 PAVEMENT FOR MAINTAINING TRAFFIC, CLASS A SQ YD	622 PORTABLE BARRIER, 32" FT	622 PORTABLE BARRIER "Y" CONNECTOR EA
	PHASE 3B CONT.											
85	232+95.98 "EX 665 RAMP C"	236+18.04 "EX 665 RAMP C"	1								320	
85	232+96.23 "EX 665 RAMP C"	237+80.39 "EX 665 RAMP C"				483						
85	232+97.62 "EX 665 RAMP C"	235+82.34 "EX 665 RAMP C"						283				
85	232+97.94 "EX 665 RAMP C"	237+80.39 "EX 665 RAMP C"			480							
85	235+82.34 "EX 665 RAMP C"	237+80.39 "EX 665 RAMP C"					396					
85	51+47.42 "EX 665 RAMP AR"	257+06.12 "EX 665 RAMP A"			560							
85	51+47.42 "EX 665 RAMP AR"	253+17.29 "EX 665 RAMP A"					174					
85	251+50.34 "EX 665 RAMP A"	255+88.57 "EX 665 RAMP A"					167	271				
85	251+50.34 "EX 665 RAMP A"	257+06.78 "EX 665 RAMP A"				557						
85	253+75.18 "EX 665 RAMP A"	257+06.00 "EX 665 RAMP A"	1								310	
85	255+00.00 "EX 665 RAMP B"	257+07.99 "EX 665 RAMP B"									210	
85	256+21.67 "EX 665 RAMP B"	257+06.77 "EX 665 RAMP B"			86							
85	256+21.67 "EX 665 RAMP B"	257+07.70 "EX 665 RAMP B"			86							
85	256+76.67 "EX 665 RAMP B"	257+06.62 "EX 665 RAMP B"									30	
86	334+50.00	358+50.00		4800		4800						
86	334+50.00	358+50.00		320	1473			604				
86	334+50.00	358+50.00			1984			420				
86	334+50.00	336+32.83	1								150	1
86	257+06.00 "EX 665 RAMP A"	358+50.00									2400	
86	257+06.78 "EX 665 RAMP A"	351+54.00			1704							
86	257+06.12 "EX 665 RAMP A"	340+69.33				621						
86	257+06.62 "EX 665 RAMP B"	335+85.50									140	
86	257+06.77 "EX 665 RAMP B"	340+06.00			558							
86	257+07.70 "EX 665 RAMP B"	344+26.00			978							
86	257+07.99 "EX 665 RAMP B"	358+50.00									2410	
87	358+50.00	382+50.00		4800	4800	4800					4800	
88	382+50.00	406+50.00		4800	4800	4800					4800	
89	406+50.00	430+50.00		4800	4800	4800					4800	
90	430+50.00	454+50.00		4800	4800	4800					4800	
91	454+50.00	478+50.00		4800	4800	4800					4800	
92	478+50.00	502+50.00		4800		4800						
92	478+50.00	502+50.00			1983			422				
92	478+50.00	502+50.00		598	1194			603				
92	478+50.00	491+12.63 "PR 135 RAMP D"									1270	
92	478+50.00	6+92.11 "EX 135 RAMP A"									1690	
92	478+72.00	5+77.00 "EX 135 RAMP A"			1789							
92	484+10.00	491+12.63 "PR 135 RAMP D"			704							
92	488+30.00	492+53.29 "PR 135 RAMP D"				425						
92	490+41.34	502+50.00	1								1180	1
92	490+88.46	493+55.38 "PR 135 RAMP D"									270	
92	490+76.84	5+77.00 "EX 135 RAMP A"				594						
92	7+28.42 "EX 135 RAMP A"	5+77.00 "EX 135 RAMP A"									160	
92	495+10.00	502+50.00									740	
93	502+50.00	509+00.00		1300	1300	1300					1300	
94	5+77.00 "EX 135 RAMP A"	4+95.35 "EX 135 RAMP A"	1								60	
94	5+77.00 "EX 135 RAMP A"	0+39.03 "EX 135 RAMP A"			543	546						
	SUBTOTALS CARRIED TO SHEET 115		5	35818	39422	38126	737	2603	0	0	36640	2

CALCULATED KRF
CHECKED BBD

SUMMARY OF TRAFFIC SUBSUMMARY

MAINTENANCE OF

FRA-71-5.29

P:\84868\mot\sheets\84868MS005.dgn 3/27/2015 2:30:15 PM kfahy

SHEET NO.	STATION TO STATION		614								615		622													
			WORK ZONE IMPACT ATTENUATOR, (BI)DIRECTIONAL)	WORK ZONE LANE LINE, CLASS 1, 642 PAINT	WORK ZONE EDGE LINE, WHITE, CLASS 1, 642 PAINT	WORK ZONE EDGE LINE, YELLOW, CLASS 1, 642 PAINT	WORK ZONE CHANNELIZING LINE, CLASS 1, 642 PAINT	WORK ZONE DOTTED LINE, CLASS 1, 642 PAINT	WORK ZONE STOP LINE, CLASS 1, 642 PAINT		PAVEMENT FOR MAINTAINING TRAFFIC, CLASS A		PORTABLE BARRIER, 32"	PORTABLE BARRIER "Y" CONNECTOR										
			EA	FT	FT	FT	FT	FT	FT		SQ YD		FT	EA												
	PHASE 3C																									
99	261+97.00	262+50.00					53																			
100	262+50.00	268+31.96					582																			
101	291+95.00	303+86.79						1183																		
101	291+95.00	232+96.11 "EX 665 RAMP C"											1840													
101	291+95.00	232+96.37 "EX 665 RAMP C"			1840																					
101	295+39.00	299+59.00						423																		
101	295+39.00	233+13.66 "EX 665 RAMP D"			1532																					
101	299+59.00	233+12.78 "EX 665 RAMP D"				1104																				
101	301+67.47	310+50.00	1										850	1												
101	302+14.40	233+12.62 "EX 665 RAMP D"											840													
101	303+79.00	308+00.00			424																					
101	303+86.79	232+94.48 "EX 665 RAMP C"				659																				
102	310+50.00	311+00.57											50													
102	233+12.62 "EX 665 RAMP D"	235+60.11 "EX 665 RAMP D"											250													
102	233+12.78 "EX 665 RAMP D"	238+25.62 "EX 665 RAMP D"				515																				
102	233+13.66 "EX 665 RAMP D"	238+25.62 "EX 665 RAMP D"			511																					
102	232+94.48 "EX 665 RAMP C"	232+94.48 "EX 665 RAMP C"				27																				
102	232+96.11 "EX 665 RAMP C"	236+11.83 "EX 665 RAMP C"			315																					
102	232+96.37 "EX 665 RAMP C"	234+24.58 "EX 665 RAMP C"	1										100													
102	51+53.74 "EX 665 RAMP AR"	253+33.22 "EX 665 RAMP A"					84																			
102	51+53.74 "EX 665 RAMP AR"	257+04.81 "EX 665 RAMP A"			548																					
102	231+50.40 "EX 665 RAMP A"	253+33.22 "EX 665 RAMP A"					83																			
102	231+50.40 "EX 665 RAMP A"	254+86.83 "EX 665 RAMP A"				337																				
102	253+33.22 "EX 665 RAMP A"	254+86.83 "EX 665 RAMP A"						253																		
102	253+74.37 "EX 665 RAMP A"	257+05.61 "EX 665 RAMP A"	1										310													
102	254+86.83 "EX 665 RAMP A"	257+05.48 "EX 665 RAMP A"				217																				
102	254+63.37 "EX 665 RAMP B"	257+05.25 "EX 665 RAMP B"			241																					
102	254+63.37 "EX 665 RAMP B"	257+06.11 "EX 665 RAMP B"				246																				
102	256+76.67 "EX 665 RAMP B"	257+06.26 "EX 665 RAMP B"											30													
102	333+30.94	334+50.00											120													
102	334+35.00	334+50.00											10													
103	334+50.00	351+54.00											1700													
103	334+50.00	346+44.33	1										1160	1												
103	257+04.81 "EX 665 RAMP A"	358+50.00			2396																					
103	257+05.48 "EX 665 RAMP A"	354+04.00				1953																				
103	257+05.61 "EX 665 RAMP A"	352+04.00											1750													
103	257+05.25 "EX 665 RAMP B"	355+29.00			2085																					
103	257+06.11 "EX 665 RAMP B"	351+09.00				1662																				
103	257+06.26 "EX 665 RAMP B"	345+96.99											1150													
103	340+06.00	344+26.00			420																					
103	342+38.04	351+54.00			915																					
103	351+09.00	355+29.00						422																		
103	354+04.00	358+50.00						445																		
104	358+50.00	369+55.00			1101			1102																		
104	365+38.23	369+55.00	1										390													
	SUBTOTALS CARRIED TO SHEET 115		5	0	12328	6720	802	3828	0		0		10550	2												

CALCULATED KRF
CHECKED BBD

SUMMARY OF TRAFFIC MAINTENANCE SUBSUMMARY

FRA-71-5.29

P:\84868\mot\sheets\84868MS006.dgn 3/27/2015 2:30:15 PM kfahy

SHEET NO.	STATION TO STATION		614 WORK ZONE IMPACT ATTENUATOR, (BI)DIRECTIONAL) EA	614 WORK ZONE LANE LINE, CLASS 1, 642 PAINT FT	614 WORK ZONE EDGE LINE, WHITE, CLASS 1, 642 PAINT FT	614 WORK ZONE EDGE LINE, YELLOW, CLASS 1, 642 PAINT FT	614 WORK ZONE CHANNELIZING LINE, CLASS 1, 642 PAINT FT	614 WORK ZONE DOTTED LINE, CLASS 1, 642 PAINT FT	614 WORK ZONE STOP LINE, CLASS 1, 642 PAINT FT	615 PAVEMENT FOR MAINTAINING TRAFFIC, CLASS A SQ YD	622 PORTABLE BARRIER, 32" FT	622 PORTABLE BARRIER "Y" CONNECTOR EA
	PHASE 3C CONT.											
105	458+58.55	462+94.75	1								410	
105	458+58.55	478+50.00			1984							
105	458+58.55	478+50.00			251			1735				
105	469+51.00	478+50.00			903							
105	469+51.00	478+50.00			480			422				
105	473+71.16	478+50.00		480	481	480						
105	475+20.00	458+50.00		330		330						
105	475+98.55	458+50.00			251	253						
105	478+39.00	478+50.00									20	
106	478+50.00	481+33.47		284	284	284						
106	478+50.00	494+50.00 "PR 135 RAMP D"			1603	1605						
106	478+50.00	480+99.72		250		250						
106	478+50.00	490+76.84			1223							
106	478+50.00	495+10.00									1660	
106	478+50.00	5+77.00 "EX 135 RAMP A"			1801	1795					1800	
106	481+52.33	492+79.00	1								1070	1
106	482+29.46	494+50.00 "PR 135 RAMP D"									1220	
106	484+09.84	488+30.00			422							
107	5+77.00 "EX 135 RAMP A"	0+25.00 "EX 135 RAMP A"			550	553					530	1
108	494+50.00 "PR 135 RAMP D"	508+10.80 "PR 135 RAMP D"				1365					1360	
108	494+50.00 "PR 135 RAMP D"	508+29.49 "PR 135 RAMP D"			1404							
108	505+50.00 "PR 135 RAMP D"	508+10.80 "PR 135 RAMP D"					265					
108	508+10.80 "PR 135 RAMP D"							28				
SUBTOTALS CARRIED FROM THIS SHEET			2	1344	11637	6915	265	2185	0	0	8070	2
SUBTOTALS CARRIED FROM SHEET 109			8	21806	18994	25611	10314	5890	0	12461	17420	1
SUBTOTALS CARRIED FROM SHEET 110			4	8035	13343	11079	5390	1909	22	10328	11410	2
SUBTOTALS CARRIED FROM SHEET 111			4	46272	48443	48372	7608	9062	0	155	48000	1
SUBTOTALS CARRIED FROM SHEET 112			3	13560	20890	19451	21965	1110	22	8094	19110	1
SUBTOTALS CARRIED FROM SHEET 113			5	35818	39422	38126	737	2603	0	0	36640	2
SUBTOTALS CARRIED FROM SHEET 114			5	0	12328	6720	802	3828	0	0	10550	2
SUBTOTALS CARRIED TO GENERAL SUMMARY			31	24.03 MI	60.86 MI		47081	26587	44	31038	151200	11

CALCULATED KRF
CHECKED BBD

MAINTENANCE OF TRAFFIC SUBSUMMARY

FRA-71-5.29

P:\84868\mot\sheets\84868MS007.dgn 3/27/2015 2:30:16 PM kfahy

SHEET NUMBER									PARTICIPATION					ITEM	ITEM EXT	GRAND TOTAL	UNIT	DESCRIPTION	SEE SHEET NO.
RDWY CALC	15	122	125	124	128	489	490		01/IMS/ PV	02/NHS/ PV	03/IMS/ BR	04/IMS/ BR	05/ NHS/ BR						
																		ROADWAY	
									LS	LS				201	11000	LS		CLEARING AND GRUBBING	
					LS						LS			202	11000	LS		STRUCTURE REMOVED	
					LS						LS			202	11200	LS		PORTIONS OF STRUCTURE REMOVED	
		11			10				9	2	10			202	20010	21	EACH	HEADWALL REMOVED	
223960									179168	44792				202	23000	223960	SY	PAVEMENT REMOVED	
132589									106071	26518				202	23900	132589	SY	CONCRETE BASE REMOVED	
		253							202	51				202	30000	253	SF	WALK REMOVED	
		124							99	25				202	32000	124	FT	CURB REMOVED	
		9516							7613	1903				202	35100	9516	FT	PIPE REMOVED, 24" AND UNDER	
		83			691				66	17	691			202	35200	774	FT	PIPE REMOVED, OVER 24"	
		5814							4651	1163				202	38000	5814	FT	GUARDRAIL REMOVED	
		556							445	111				202	38300	556	FT	GUARDRAIL REMOVED, BARRIER DESIGN	
		7							6	1				202	42000	7	EACH	ANCHOR ASSEMBLY REMOVED, TYPE A	
		5							4	1				202	42010	5	EACH	ANCHOR ASSEMBLY REMOVED, TYPE E	
		4							3	1				202	42040	4	EACH	ANCHOR ASSEMBLY REMOVED, TYPE T	
		2							2					202	42050	2	EACH	ANCHOR ASSEMBLY REMOVED, TYPE B	
		7							6	1				202	47000	7	EACH	BRIDGE TERMINAL ASSEMBLY REMOVED	
		33							26	7				202	58100	33	EACH	CATCH BASIN REMOVED	
					244						244			202	20270130	244	FT	SPECIAL - PIPE CLEANOUT OVER 48"	14
						1785			1428	357				202	75000	1785	FT	FENCE REMOVED	
				11939			66		9604	2401				203	10000	12005	CY	EXCAVATION	
				482			1117		1279	320				203	20000	1599	CY	EMBANKMENT	
																		OPTION A: ASPHALT PAVEMENT	
				121447					97158	24289				203	10000	121447	CY	EXCAVATION	
				35994					28795	7199				203	20000	35994	CY	EMBANKMENT	
				9145					7316	1829				203	20001	9145	CY	EMBANKMENT, AS PER PLAN	585
																		OPTION B: CONCRETE PAVEMENT	
				109774					87819	21955				203	10000	109774	CY	EXCAVATION	
				36482					29186	7296				203	20000	36482	CY	EMBANKMENT	
				9249					7399	1850				203	20001	9249	CY	EMBANKMENT, AS PER PLAN	585
	5								4	1				203	98600	5	EACH	ROADWAY, MISC.:VERTICAL CLEARANCE MEASUREMENT	15
173									138	35				204	45000	173	HOUR	PROOF ROLLING	
10233									8186	2047				206	10500	10233	TON	CEMENT	
344466									275573	68893				206	11000	344466	SY	CURING COAT	
344466									275573	68893				206	15010	344466	SY	CEMENT STABILIZED SUBGRADE, 12 INCHES DEEP	
									LS	LS				206	30000	LS		MIXTURE DESIGN FOR CHEMICALLY STABILIZED SOILS	
					206						206			209	10000	206	FT	DITCH CLEANOUT	
			9731.25						7785	1946.25				606	15050	9731.25	FT	GUARDRAIL, TYPE MGS	
			175						140	35				606	15550	175	FT	GUARDRAIL, BARRIER DESIGN, TYPE MGS	
			2						2					606	26050	2	EACH	ANCHOR ASSEMBLY, MGS TYPE B	
			16						13	3				606	26150	16	EACH	ANCHOR ASSEMBLY, MGS TYPE E	
			19						15	4				606	26550	19	EACH	ANCHOR ASSEMBLY, MGS TYPE T	
			4						3	1				606	35002	4	EACH	MGS BRIDGE TERMINAL ASSEMBLY, TYPE 1	
			1						1					606	35102	1	EACH	MGS BRIDGE TERMINAL ASSEMBLY, TYPE 2	
			4						3	1				606	60012	4	EACH	IMPACT ATTENUATOR, TYPE 1 (BIDIRECTIONAL)	
			22919						18335	4584				606	98000	22919	FT	GUARDRAIL, MISC.:TENSIONED CABLE WITH CONCRETE FOUNDATION LINE POST	15
			26						21	5				606	98100	26	EACH	GUARDRAIL, MISC.:TENSIONED CABLE END TERMINAL	15
			129						103	26				608	10000	129	SF	4" CONCRETE WALK	
			124						99	25				608	52000	124	SF	CURB RAMP	
			2347						1878	469				622	10160	2347	FT	CONCRETE BARRIER, SINGLE SLOPE, TYPE D	
			2						2					622	25000	2	EACH	CONCRETE BARRIER END SECTION, TYPE D	
			2						2					622	25050	2	EACH	CONCRETE BARRIER, END ANCHORAGE, REINFORCED, TYPE D	
									LS	LS				623	11000	LS		PROVIDING ELECTRONIC INSTRUMENTATION	
									13	3				623	11100	16	HOUR	TECHNICAL ASSISTANCE	
			184						147	37				626	00100	184	EACH	BARRIER REFLECTOR	
									LS	LS				878	25000	LS		INSPECTION AND COMPACTION TESTING OF UNBOUND MATERIALS	

CALCULATED BAL
CHECKED BBD

GENERAL SUMMARY

FRA-71-5.29

\\colserv04\projects\84868\roadway\sheets\84868GG001.dgn 5/5/2015 10:17:24 PM teberhardt

SHEET NUMBER									PARTICIPATION					ITEM	ITEM EXT	GRAND TOTAL	UNIT	DESCRIPTION	SEE SHEET NO.
14	15	124	126	128	482	579	489	490	01/IMS/ PV	02/NHS/ PV	03/IMS/ BR	04/IMS/ BR	05/ NHS/ BR						
																		EROSION CONTROL	
				58							58			601	11000	58	SY	RIPRAP USING 6" REINFORCED CONCRETE SLAB	
				113	56		27		66	17	113			601	21050	196	SY	TIED CONCRETE BLOCK MAT, TYPE 1	
				9							9			601	21060	9	SY	TIED CONCRETE BLOCK MAT, TYPE 2	
				64							64			601	32100	64	CY	ROCK CHANNEL PROTECTION, TYPE B WITH FILTER	
5			7						10	2				601	32200	12	CY	ROCK CHANNEL PROTECTION, TYPE C WITH FILTER	
	3								2	1				659	00100	3	EACH	SOIL ANALYSIS TEST	
	22729								18183	4546				659	00300	22729	CY	TOPSOIL	
		204761						9666	171542	42885				659	10000	214427	SY	SEEDING AND MULCHING	
	10239								8191	2048				659	14000	10239	SY	REPAIR SEEDING AND MULCHING	
	10239								8191	2048				659	15000	10239	SY	INTER-SEEDING	
	28.56								23	5.56				659	20000	28.56	TON	COMMERCIAL FERTILIZER	
	42.31								34	8.31				659	31000	42.31	ACRE	LIME	
	1134								907	227				659	35000	1134	MGAL	WATER	
	461								369	92				659	40000	461	MSF	MOWING	
				6267					5014	1253				670	00700	6267	SY	DITCH EROSION PROTECTION	
									LS	LS				832	15000	LS		STORM WATER POLLUTION PREVENTION PLAN	
									544000	136000				832	30000	680000	EACH	EROSION CONTROL	
																		DRAINAGE	
				LS							LS			503	11100	LS		COFFERDAMS AND EXCAVATION BRACING	
				LS							LS			503	21300	LS		UNCLASSIFIED EXCAVATION (WINGWALL FOOTING)	
				2734							2734			509	10000	2734	LB	EPOXY COATED REINFORCING STEEL	
				20							20			511	46510	20	CY	CLASS QC1 CONCRETE, FOOTING	
				7							7			511	46610	7	CY	CLASS QC1 CONCRETE, HEADWALL	
				561							561			512	10100	561	SY	SEALING OF CONCRETE SURFACES (EPOXY-URETHANE)	
				541							541			512	33000	541	SY	TYPE 2 WATERPROOFING	
				26							26			516	13600	26	SF	1" PREFORMED EXPANSION JOINT FILLER	
				LS							LS			518	21230	LS		POROUS BACKFILL WITH FILTER FABRIC	
			6.82	44.72					6	1.94	43.6			602	20000	51.54	CY	CONCRETE MASONRY	
					94120				75296	18824				605	11100	94120	FT	6" SHALLOW PIPE UNDERDRAINS, 707.31	
							5163		4130	1033				605	13300	5163	FT	6" UNCLASSIFIED PIPE UNDERDRAINS, 707.31	
200									160	40				605	13402	200	FT	6" UNCLASSIFIED PIPE UNDERDRAINS FOR SPRINGS	
					91050				72840	18210				605	14000	91050	FT	6" BASE PIPE UNDERDRAINS, 707.31	
200									160	40				605	32200	200	FT	AGGREGATE DRAINS FOR SPRINGS	
						80			64	16				611	00400	80	FT	4" CONDUIT, TYPE E	
					2248				1798	450				611	00510	2248	FT	6" CONDUIT, TYPE F FOR UNDERDRAIN OUTLETS	
300									240	60				611	00900	300	FT	6" CONDUIT, TYPE B	
300									240	60				611	01400	300	FT	6" CONDUIT, TYPE E	
300					2832		427		2847	712				611	01500	3559	FT	6" CONDUIT, TYPE F	
			998						798	200				611	05900	998	FT	15" CONDUIT, TYPE B	
			257						206	51				611	06100	257	FT	15" CONDUIT, TYPE C	
			781						625	156				611	07400	781	FT	18" CONDUIT, TYPE B	
			1025						820	205				611	07600	1025	FT	18" CONDUIT, TYPE C	
			98						78	20				611	08900	98	FT	21" CONDUIT, TYPE B	
			3111						2489	622				611	09100	3111	FT	21" CONDUIT, TYPE C	
			214						171	43				611	10400	214	FT	24" CONDUIT, TYPE B	
			3201						2561	640				611	10600	3201	FT	24" CONDUIT, TYPE C	
			112						90	22				611	11900	112	FT	27" CONDUIT, TYPE B	
			1329						1063	266				611	12100	1329	FT	27" CONDUIT, TYPE C	
				15					15					611	13200	15	FT	30" CONDUIT, TYPE A	
			221						177	44				611	13400	221	FT	30" CONDUIT, TYPE B	
			15						12	3				611	13600	15	FT	30" CONDUIT, TYPE C	
			32						26	6				611	16600	32	FT	36" CONDUIT, TYPE C	

CALCULATED BAL
CHECKED BBD

GENERAL SUMMARY

FRA-71-5.29

P:\84868\roadway\sheets\84868GG002.dgn 3/27/2015 2:30:17 PM kfahy

SHEET NUMBER									PARTICIPATION					ITEM	ITEM EXT	GRAND TOTAL	UNIT	DESCRIPTION	SEE SHEET NO.
RDWY CALC	14	125	126	128	482	579		489	01/IMS/ PV	02/NHS/ PV	03/IMS/ BR	04/IMS/ BR	05/ NHS/ BR						
																		DRAINAGE	
			83						66	17				611	19400	83	FT	42" CONDUIT, TYPE B	
				64							64			611	26000	64	FT	72" CONDUIT, TYPE A	
				300							300			611	53600	300	FT	68" X 106" CONDUIT, TYPE A, 706.04	
				212							212			611	94800	212	FT	8' X 4' CONDUIT, TYPE A, 706.05	
			44						35	9				611	98300	44	EACH	CATCH BASIN, NO. 5	
			9						7	2				611	98341	9	EACH	CATCH BASIN, NO. 5A	
			3						2	1				611	98410	3	EACH	CATCH BASIN, NO. 8	
			4						3	1				611	99114	4	EACH	INLET, NO. 3 FOR SINGLE SLOPE BARRIER, TYPE D	
			8						6	2				611	99574	8	EACH	MANHOLE, NO. 3	
	10				33			15	46	12				611	99710	58	EACH	PRECAST REINFORCED CONCRETE OUTLET	
				377							377			843	50001	377	SF	PATCHING CONCRETE STRUCTURES WITH TROWELABLE MORTAR, AS PER PLAN	15
																		PAVEMENT	
1372									1098	274				304	20000	1372	CY	AGGREGATE BASE	
8202									6562	1640				452	17020	8202	SY	14" NON-REINFORCED CONCRETE PAVEMENT, CLASS QC1 WITH QC/QA	
																		OPTION A: ASPHALT PAVEMENT	
108879									87103	21776				302	46000	108879	CY	ASPHALT CONCRETE BASE, PG64-22	
56209									44967	11242				304	20000	56209	CY	AGGREGATE BASE	
24044									19235	4809				407	10000	24044	GAL	TACK COAT	
12824									10259	2565				407	14000	12824	GAL	TACK COAT FOR INTERMEDIATE COURSE	
13359									10687	2672				442	10000	13359	CY	ASPHALT CONCRETE SURFACE COURSE, 12.5MM, TYPE A (446)	
15584									12467	3117				442	10100	15584	CY	ASPHALT CONCRETE INTERMEDIATE COURSE, 19MM, TYPE A (446)	
		89							71	18				609	24510	89	FT	CURB, TYPE 4-C	
17.3									14	3.3				618	40600	17.3	MILE	RUMBLE STRIPS, (ASPHALT CONCRETE)	
																		OPTION B: CONCRETE PAVEMENT	
56209									44967	11242				304	20000	56209	CY	AGGREGATE BASE	
315									252	63				SPECIAL	45130000	315	FT	PRESSURE RELIEF JOINT, TYPE A	
320021									256017	64004				452	17020	320021	SY	14" NON-REINFORCED CONCRETE PAVEMENT, CLASS QC1 WITH QC/QA	
		89							71	18				609	24000	89	FT	CURB, TYPE 4-A	
17.3									14	3.3				618	40700	17.3	MILE	RUMBLE STRIPS, (CONCRETE)	
																		LIGHTING	
						24			19	5				625	00480	24	EACH	CONNECTION, UNFUSED PERMANENT	
						12			10	2				625	15200	12	EACH	LIGHT TOWER FOUNDATION, 36" X 25' DEEP	
						1674			1339	335				625	23200	1674	FT	NO. 4 AWG 5000 VOLT DISTRIBUTION CABLE	
						4635			3708	927				625	24320	4635	FT	1-1/2" DUCT CABLE WITH THREE NO. 4 AWG 5000 VOLT CABLES	
						341			273	68				625	25902	341	FT	CONDUIT, JACKED OR DRILLED, 725.04	
						4520			3616	904				625	29002	4520	FT	TRENCH, 24" DEEP	
						4			3	1				625	30700	4	EACH	PULL BOX, 725.08, 18"	
						24			19	5				625	32000	24	EACH	GROUND ROD	
						1			1					625	33000	1	EACH	STRUCTURE GROUNDING SYSTEM	
						12			10	2				625	35020	12	EACH	RE-ERECT EXISTING LIGHT TOWER	
						4520			3616	904				625	36000	4520	FT	PLASTIC CAUTION TAPE	
						LS			LS	LS				SPECIAL	62540000	LS		MAINTAIN EXISTING LIGHTING	576
						12			10	2				625	75350	12	EACH	LIGHT TOWER REMOVED	
						12			10	2				625	75540	12	EACH	LIGHT TOWER FOUNDATION REMOVED	

CALCULATED BAL
CHECKED BBD

GENERAL SUMMARY

FRA-71-5.29

P:\84868\roadway\sheets\84868GG003.dgn 3/27/2015 2:30:17 PM kfahy

SHEET NUMBER									PARTICIPATION					ITEM	ITEM EXT	GRAND TOTAL	UNIT	DESCRIPTION	SEE SHEET NO.
		547		488					01/IMS/ PV	02/NHS/ PV	03/IMS/ BR	04/IMS/ BR	05/ NHS/ BR						
																		TRAFFIC CONTROL	
		931							745	186				621	00100	931	EACH	RPM	
		14							11	3				625	32000	14	EACH	GROUND ROD	
		293.9							235	58.9				630	02100	293.9	FT	GROUND MOUNTED SUPPORT, NO. 2 POST	
		990.2							792	198.2				630	03100	990.2	FT	GROUND MOUNTED SUPPORT, NO. 3 POST	
		29.9							24	5.9				630	04100	29.9	FT	GROUND MOUNTED SUPPORT, NO. 4 POST	
		147.2							118	29.2				630	07500	147.2	FT	GROUND MOUNTED STRUCTURAL BEAM SUPPORT, W10X22	
		61							49	12				630	08004	61	FT	ONE WAY SUPPORT, NO. 3 POST	
		12							10	2				630	08600	12	EACH	SIGN POST REFLECTOR	
		8							6	2				630	09000	8	EACH	BREAKAWAY STRUCTURAL BEAM CONNECTION	
		1							1					630	09051	1	EACH	TRIANGULAR SLIP BASE CONNECTION, AS PER PLAN	545
		3							2	1				630	20800	3	EACH	OVERHEAD SIGN SUPPORT, TYPE TC-12.30, DESIGN 8	
		2							2					630	21000	2	EACH	OVERHEAD SIGN SUPPORT, TYPE TC-12.30, DESIGN 10	
		1							1					630	21200	1	EACH	OVERHEAD SIGN SUPPORT, TYPE TC-12.30, DESIGN 12	
		4							3	1				630	45500	4	EACH	OVERHEAD SIGN SUPPORT, TYPE TC-7.65, DESIGN 8	
		4							3	1				630	75000	4	EACH	SIGN ATTACHMENT ASSEMBLY	
		830.25							664	166.25				630	80100	830.25	SF	SIGN, FLAT SHEET	
		243							194	49				630	80200	243	SF	SIGN, GROUND MOUNTED EXTRUSHEET	
		1189							951	238				630	80224	1189	SF	SIGN, OVERHEAD EXTRUSHEET	
		7.5							6	1.5				630	80400	7.5	SF	SIGN, PERMANENT OVERLAY	
		8							6	2				630	84500	8	EACH	GROUND MOUNTED STRUCTURAL BEAM SUPPORT FOUNDATION	
		14							11	3				630	84510	14	EACH	RIGID OVERHEAD SIGN SUPPORT FOUNDATION	
		1							1					630	84600	1	EACH	GROUND MOUNTED PIPE SUPPORT FOUNDATION	
		116							93	23				630	84900	116	EACH	REMOVAL OF GROUND MOUNTED SIGN AND DISPOSAL	
		6							5	1				630	85400	6	EACH	REMOVAL OF GROUND MOUNTED MAJOR SIGN AND DISPOSAL	
		3							2	1				630	85600	3	EACH	REMOVAL OF GROUND MOUNTED MAJOR SIGN AND REERECTION	
		97							78	19				630	86002	97	EACH	REMOVAL OF GROUND MOUNTED POST SUPPORT AND DISPOSAL	
		20							16	4				630	86102	20	EACH	REMOVAL OF GROUND MOUNTED STRUCTURAL BEAM SUPPORT AND DISPOSAL	
		1							1					630	87100	1	EACH	REMOVAL OF OVERHEAD MOUNTED SIGN AND REERECTION	
		7							6	1				630	87400	7	EACH	REMOVAL OF OVERHEAD MOUNTED SIGN AND DISPOSAL	
		1							1					630	89706	1	EACH	REMOVAL OF OVERHEAD SIGN SUPPORT AND DISPOSAL, TYPE TC-12.30	
		4							3	1				630	89802	4	EACH	REMOVAL OF OVERHEAD SIGN SUPPORT AND DISPOSAL, TYPE TC-7.65	
		1							1					630	97700	1	EACH	SIGNING, MISC.:STRUCTURAL PIPE SUPPORT, PER TC-41.45	545
		1							1					630	97700	1	EACH	SIGNING, MISC.:RELOCATION OF REPEATER STATION	545
		32							26	6				646	10400	32	FT	STOP LINE	
		3							2	1				646	20300	3	EACH	LANE ARROW	
																		OPTION A: ASPHALT PAVEMENT	
		17.71							14	3.71				644	00104	17.71	MILE	EDGE LINE, 6"	
		17.06							14	3.06				644	00204	17.06	MILE	LANE LINE, 6"	
		6486							5189	1297				644	00404	6486	FT	CHANNELIZING LINE, 12"	
		505							404	101				644	00700	505	FT	TRANSVERSE/DIAGONAL LINE	
		5299							4239	1060				644	01510	5299	FT	DOTTED LINE, 6"	
		2728							2182	546				644	01520	2728	FT	DOTTED LINE, 12"	
		1.08							0.86	0.22				646	10010	1.08	MILE	EDGE LINE, 6"	
		0.13							0.1	0.03				646	10110	0.13	MILE	LANE LINE, 6"	
		250							200	50				646	10310	250	FT	CHANNELIZING LINE, 12"	
																		OPTION B: CONCRETE PAVEMENT	
		18.79							15.03	3.76				646	10010	18.79	MILE	EDGE LINE, 6"	
		17.19							13.75	3.44				646	10110	17.19	MILE	LANE LINE, 6"	
		6736							5389	1347				646	10310	6736	FT	CHANNELIZING LINE, 12"	
		505							404	101				646	10600	505	FT	TRANSVERSE/DIAGONAL LINE	
		5299							4239	1060				646	20504	5299	FT	DOTTED LINE, 6"	
		2728							2182	546				646	20510	2728	FT	DOTTED LINE, 12"	
																		TRAFFIC SIGNALS	
		LS							LS	LS				632	90300	LS		SIGNALIZATION, MISC.:REMOVAL OF LOOP LEAD-IN CABLE	545
		1							1					632	90400	1	EACH	SIGNALIZATION, MISC.:CDMA MODEM, FURNISH ONLY	546
		1							1					809	69000	1	EACH	ADVANCE DETECTION	546
		1							1					809	69100	1	EACH	STOP-BAR DETECTION	546
																		NOISE BARRIERS	
				1080					864	216				SPECIAL	60610200	1080	SF	NOISE BARRIER (REFLECTIVE), 10' HEIGHT AND UNDER	488
				21956					17565	4391				SPECIAL	60610210	21956	SF	NOISE BARRIER (REFLECTIVE), OVER 10' TO 14' HEIGHT	488
				101992					81594	20398				SPECIAL	60610220	101992	SF	NOISE BARRIER (REFLECTIVE), OVER 14' TO 20' HEIGHT	488

CALCULATED BAL
CHECKED BBD

GENERAL SUMMARY

FRA-71-5.29

P:\84868\roadway\sheets\84868G004.dgn 3/27/2015 2:30:17 PM kfahy

SHEET NUMBER	PARTICIPATION					ITEM	ITEM EXT	GRAND TOTAL	UNIT	DESCRIPTION	SEE SHEET NO.
	01/IMS/ PV	02/NHS/ PV	03/IMS/ BR	04/IMS/ BR	05/NHS/ BR						
										STRUCTURE 20 FOOT SPAN AND OVER (FRA-71-0903 L)	
LS				LS	LS	202	11003	LS		STRUCTURE REMOVED, OVER 20 FOOT SPAN, AS PER PLAN	585
134				107	27	202	22900	134	SY	APPROACH SLAB REMOVED	
524				419	105	202	23500	524	SY	WEARING COURSE REMOVED	
LS				LS	LS	503	11101	LS		COFFERDAMS AND EXCAVATION BRACING, AS PER PLAN	585
LS				LS	LS	503	21300	LS		UNCLASSIFIED EXCAVATION (WINGWALL FOOTING)	
LS				LS	LS	505	11100	LS		PILE DRIVING EQUIPMENT MOBILIZATION	
4635				3708	927	507	00600	4635	FT	14" CAST-IN-PLACE REINFORCED CONCRETE PILES, DRIVEN	
4975				3980	995	507	00650	4975	FT	14" CAST-IN-PLACE REINFORCED CONCRETE PILES, FURNISHED	
100843				80674	20169	509	10001	100843	LB	EPOXY COATED REINFORCING STEEL, AS PER PLAN	608
455				364	91	511	21539	455	CY	CLASS QC2 CONCRETE WITH QC/QA, SUPERSTRUCTURE, AS PER PLAN	608
36				29	7	511	34448	36	CY	CLASS QC2 CONCRETE, BRIDGE DECK (PARAPET)	
270				216	54	511	43512	270	CY	CLASS QC1 CONCRETE WITH QC/QA, ABUTMENT INCLUDING FOOTING	
143				114	29	511	45602	143	CY	CLASS QC4 MASS CONCRETE, SUBSTRUCTURE WITH QC/QA	
782				626	156	512	10100	782	SY	SEALING OF CONCRETE SURFACES (EPOXY-URETHANE)	
12				10	2	512	33000	12	SY	TYPE 2 WATERPROOFING	
10				8	2	515	15100	10	EACH	DRAPED STRAND PRESTRESSED CONCRETE BRIDGE I-BEAM MEMBERS, LEVEL 3, TYPE WF54-49	
										(LENGTH = 114'-8")	
27				22	5	515	20000	27	EACH	INTERMEDIATE DIAPHRAGMS	
21				17	4	516	13600	21	SF	1" PREFORMED EXPANSION JOINT FILLER	
155				124	31	516	13900	155	SF	2" PREFORMED EXPANSION JOINT FILLER	
216				173	43	516	14020	216	FT	SEMI-INTEGRAL ABUTMENT EXPANSION JOINT SEAL	
10				8	2	516	44201	10	EACH	ELASTOMERIC BEARING WITH INTERNAL LAMINATES AND LOAD PLATE (NEOPRENE), AS PER PLAN	605
										(15" x 30" x 3.186" WITH 16" x 31" x 2.0" LOAD PLATE)	
10				8	2	516	44201	10	EACH	ELASTOMERIC BEARING WITH INTERNAL LAMINATES AND LOAD PLATE (NEOPRENE), AS PER PLAN	605
										(15" x 30" x 3.186" WITH 16" x 31" x 2.094" LOAD PLATE)	
197				158	39	518	21200	197	CY	POROUS BACKFILL WITH FILTER FABRIC	
245				196	49	518	40000	245	FT	6" PERFORATED CORRUGATED PLASTIC PIPE	
24				19	5	518	40011	24	FT	6" NON-PERFORATED CORRUGATED PLASTIC PIPE, INCLUDING SPECIALS, AS PER PLAN	595, 598
1				1		523	20000	1	EACH	DYNAMIC LOAD TESTING	
504				403	101	526	30011	504	SY	REINFORCED CONCRETE APPROACH SLABS WITH QC/QA (T=17"), AS PER PLAN	618
444				355	89	601	20000	444	SY	CRUSHED AGGREGATE SLOPE PROTECTION	
										STRUCTURE 20 FOOT SPAN AND OVER (FRA-71-0903 R)	
LS				LS	LS	202	11003	LS		STRUCTURE REMOVED, OVER 20 FOOT SPAN, AS PER PLAN	585
134				107	27	202	22900	134	SY	APPROACH SLAB REMOVED	
524				419	105	202	23500	524	SY	WEARING COURSE REMOVED	
LS				LS	LS	503	11101	LS		COFFERDAMS AND EXCAVATION BRACING, AS PER PLAN	585
LS				LS	LS	503	21300	LS		UNCLASSIFIED EXCAVATION (WINGWALL FOOTING)	
LS				LS	LS	505	11100	LS		PILE DRIVING EQUIPMENT MOBILIZATION	
4305				3444	861	507	00600	4305	FT	14" CAST-IN-PLACE REINFORCED CONCRETE PILES, DRIVEN	
4620				3696	924	507	00650	4620	FT	14" CAST-IN-PLACE REINFORCED CONCRETE PILES, FURNISHED	
89058				71246	17812	509	10001	89058	LB	EPOXY COATED REINFORCING STEEL, AS PER PLAN	608
397				318	79	511	21539	397	CY	CLASS QC2 CONCRETE WITH QC/QA, SUPERSTRUCTURE, AS PER PLAN	608
36				29	7	511	34448	36	CY	CLASS QC2 CONCRETE, BRIDGE DECK (PARAPET)	
257				206	51	511	43512	257	CY	CLASS QC1 CONCRETE WITH QC/QA, ABUTMENT INCLUDING FOOTING	
133				106	27	511	45602	133	CY	CLASS QC4 MASS CONCRETE, SUBSTRUCTURE WITH QC/QA	
777				622	155	512	10100	777	SY	SEALING OF CONCRETE SURFACES (EPOXY-URETHANE)	
11				9	2	512	33000	11	SY	TYPE 2 WATERPROOFING	
9				7	2	515	15100	9	EACH	DRAPED STRAND PRESTRESSED CONCRETE BRIDGE I-BEAM MEMBERS, LEVEL 3, TYPE WF54-49	
										(LENGTH = 114'-8")	
24				19	5	515	20000	24	EACH	INTERMEDIATE DIAPHRAGMS	
21				17	4	516	13600	21	SF	1" PREFORMED EXPANSION JOINT FILLER	
117				94	23	516	13900	117	SF	2" PREFORMED EXPANSION JOINT FILLER	
191				153	38	516	14020	191	FT	SEMI-INTEGRAL ABUTMENT EXPANSION JOINT SEAL	
9				7	2	516	44201	9	EACH	ELASTOMERIC BEARING WITH INTERNAL LAMINATES AND LOAD PLATE (NEOPRENE), AS PER PLAN	605
										(15" x 30" x 3.186" WITH 16" x 31" x 2.0" LOAD PLATE)	
9				7	2	516	44201	9	EACH	ELASTOMERIC BEARING WITH INTERNAL LAMINATES AND LOAD PLATE (NEOPRENE), AS PER PLAN	605
										(15" x 30" x 3.186" WITH 16" x 31" x 2.094" LOAD PLATE)	

CALCULATED BAL
CHECKED BBD

GENERAL SUMMARY

FRA-71-5.29

120
623

P:\84868\roadway\sheets\84868GG005.dgn 4/6/2015 1:03:22 PM mtakacs

SHEET NUMBER									PARTICIPATION					ITEM	ITEM EXT	GRAND TOTAL	UNIT	DESCRIPTION	SEE SHEET NO.
	17	18	19	20	115	586			01/IMS/PV	02/NHS/PV	04/IMS/BR	05/NHS/BR	06/IMS/OT						
																		STRUCTURE 20 FOOT SPAN AND OVER (FRA-71-0903 R) CON'T.	
						189					151	38		518	21200	189	CY	POROUS BACKFILL WITH FILTER FABRIC	
						233					186	47		518	40000	233	FT	6" PERFORATED CORRUGATED PLASTIC PIPE	
						24					19	5		518	40011	24	FT	6" NON-PERFORATED CORRUGATED PLASTIC PIPE, INCLUDING SPECIALS, AS PER PLAN	595,598
						1					1			523	20000	1	EACH	DYNAMIC LOAD TESTING	
						436					349	87		526	30011	436	SY	REINFORCED CONCRETE APPROACH SLABS WITH QC/QA (T=17"), AS PER PLAN	618
						375					300	75		601	20000	375	SY	CRUSHED AGGREGATE SLOPE PROTECTION	
																		MAINTENANCE OF TRAFFIC	
			5300						4240	1060				254	01000	5300	SY	PAVEMENT PLANING, ASPHALT CONCRETE	
			220						176	44				442	20000	220	CY	ASPHALT CONCRETE SURFACE COURSE, 12.5MM, TYPE A (448)	
									LS	LS				614	11000	LS		MAINTAINING TRAFFIC	
		900							720	180				614	11120	900	HOUR	LAW ENFORCEMENT OFFICER WITH PATROL CAR FOR ENFORCEMENT	
				24					19	5				614	11500	24	MNTH	WORKSITE TRAFFIC SUPERVISOR	
					31				25	6				614	12338	31	EACH	WORK ZONE IMPACT ATTENUATOR (BIDIRECTIONAL)	
	4								3	1				614	12410	4	EACH	SPEED ZONE AHEAD SYMBOL SIGN	
	25								20	5				614	12470	25	EACH	WORK ZONE SPEED LIMIT SIGN	
		24							19	5				614	12484	24	EACH	WORK ZONE INCREASED PENALTIES SIGN	
	20								16	4				614	12500	20	EACH	REPLACEMENT SIGN	
	50								40	10				614	12600	50	EACH	REPLACEMENT DRUM	
			310						248	62				614	12800	310	EACH	WORK ZONE RAISED PAVEMENT MARKER	
			310						248	62				614	12801	310	EACH	WORK ZONE RAISED PAVEMENT MARKER, AS PER PLAN	19
			185						148	37				614	13200	185	EACH	BARRIER REFLECTOR, TYPE A	
			3160						2528	632				614	13300	3160	EACH	BARRIER REFLECTOR, TYPE B	
			3230						2584	646				614	13350	3230	EACH	OBJECT MARKER, ONE WAY	
		48							38	10				614	18601	48	SNMT	PORTABLE CHANGEABLE MESSAGE SIGN, AS PER PLAN	18
					24.03				19	5.03				614	20100	24.03	MILE	WORK ZONE LANE LINE, CLASS I, 642 PAINT	
					60.86				49	11.86				614	22100	60.86	MILE	WORK ZONE EDGE LINE, CLASS I, 642 PAINT	
					47081				37665	9416				614	23200	47081	FT	WORK ZONE CHANNELIZING LINE, CLASS I, 642 PAINT	
					26587				21270	5317				614	24200	26587	FT	WORK ZONE DOTTED LINE, CLASS I, 642 PAINT	
					44				35	9				614	26200	44	FT	WORK ZONE STOP LINE, CLASS I, 642 PAINT	
									LS	LS				615	10000	LS		ROADS FOR MAINTAINING TRAFFIC	
					31038				24830	6208				615	20000	31038	SY	PAVEMENT FOR MAINTAINING TRAFFIC, CLASS A	
	630								504	126				616	10000	630	MGAL	WATER	
			34865						27892	6973				618	40101	34865	FT	RUMBLE STRIPS, (ASPHALT CONCRETE), AS PER PLAN	19
					151200				120960	30240				622	41000	151200	FT	PORTABLE BARRIER, 32"	
					11				9	2				622	41050	11	EACH	PORTABLE BARRIER, "Y" CONNECTOR	
																		INCIDENTALS	
									LS	LS				SPECIAL	10810000	LS		CPM PROGRESS SCHEDULE	
									19	5				619	16020	24	MNTH	FIELD OFFICE, TYPE C	
									LS	LS				623	10000	LS		CONSTRUCTION LAYOUT STAKES AND SURVEYING	
									LS	LS				624	10000	LS		MOBILIZATION	
														SPECIAL	69098000	1	EACH	MISC.:UTILITY SPOT LOCATES	
													LS	SPECIAL	69098400	LS		MISC.:AS-BUILT 3D MODEL	
													LS	SPECIAL	69098400	LS		MISC.:4D BASELINE MODEL	

CALCULATED BAL
CHECKED BBD

GENERAL SUMMARY

FRA-71-5.29

121
623

\\colserv04\projects\B4868\roadway\sheets\B4868GG006.dgn 5/5/2015 10:20:36 PM teberhardt

REF. NO.	SHEET NO.	STATION TO STATION		SIDE		202															
						GUARDRAIL REMOVED	GUARDRAIL REMOVED, BARRIER DESIGN	ANCHOR ASSEMBLY REMOVED, TYPE T	ANCHOR ASSEMBLY REMOVED, TYPE E	ANCHOR ASSEMBLY REMOVED, TYPE B	ANCHOR ASSEMBLY REMOVED, TYPE A	BRIDGE TERMINAL ASSEMBLY REMOVED	PIPE REMOVED, 24" AND UNDER	PIPE REMOVED, OVER 24"	CATCH BASIN REMOVED	HEADWALL REMOVED	CURB REMOVED	WALK REMOVED		
						FT	FT	EACH	EACH	EACH	EACH	EACH	FT	FT	EACH	EACH	FT	SF		
		IR 71																		
R1	133	281+88.25	281+88.32	C/RT									113.3		1					
R2	134-135	291+42.71	301+41.03	C									998.3		1					
R3	135-136	301+41.03	311+42.86	C									1001.8		1					
R4	136	311+42.86	317+42.48	C									599.6		1					
R5	136	317+42.48	317+42.92	RT									114.4		1	1				
R6	136	318+43.31	318+43.44	RT									114.6			1				
R7	136	318+43.44	320+92.37	C									248.9		1					
R8	136	320+92.37	321+44.32	C									53.4		1					
R9	136-137	321+44.32	323+92.95	C									248.6		1					
R10	137	323+84.64	325+63.83	LT		181.3				1		1								
R11	137	323+92.95	324+46.22	C									55.0		1					
R12	137	324+46.22	329+43.48	C									497.3		1					
R12A	138	337+12.35	340+52.50	LT		341.3		1	1											
R13	138	346+43.30	346+44.67	C/RT									107.9		2					
R14	139	355+43.42	355+43.61	C/LT									128.1		1	1				
R15	140	361+43.08	361+43.49	C/RT									109.0		1	1				
R16	140	367+24.01	368+52.03	LT		128.7		1		1										
R17	141	371+42.59	371+43.45	C/RT									106.9		1	1				
R18	141	377+41.26	377+42.45	C/RT									109.7		1	1				
R19	142	386+40.51	386+43.08	C/RT									108.6		1	1				
R20	143	395+51.03	398+15.35	RT		264.5		2												
R21	143	396+40.01	405+11.53	C									871.5		1					
R22	143	405+11.53	405+36.67	C/RT									99.1		2					
R23	144-145	411+60.46	427+72.51	RT		1617.9			1		1									
R24	145	424+40.42	424+41.60	C/RT									109.1		1	1				
R25	146-147	434+40.27	444+40.45	C									1000.2		1					
R26	147	444+40.45	453+40.06	C									889.6		1					
R27	147	452+49.75	454+26.48	C		177.7					2									
R28	147	453+40.06	453+42.46	C/RT									115.5		1	1				
R29	148	463+40.54	463+42.23	C/RT									116.0		1					
R30		NOT USED																		
R31	149	474+18.08	477+60.27	RT		344.5			1			1								
R32	149	474+62.21	477+33.94	C			276.4				1	1								
R33	149	475+38.09	476+69.96	LT		131.1					1	1								
R34	149	476+64.02	476+66.56	C/RT									130.6		1	1				
R35	149-150	477+99.29	485+35.69	LT		731.2			1			1								
R36	149-150	478+23.39	480+98.44	C			278.9				1	1								
R37	150	478+93.58	484+51.41	RT		562.5						1								
R38	150	478+94.53	479+19.22	C/RT									105.0		1					
R39	150-151	488+49.12	491+01.13	C		252.7			1		1									
R40	150	489+12.89	489+40.87	C									44.7							
R41	150	489+40.87	489+42.91	C/RT									139.4		1	1				
R42	151	495+03.60	495+42.55	C									43.9		1					
R43	151-152	495+42.55	505+94.43	C									1051.9		1					
		RAMP A																		
R44	398	495+35.90	495+79.47	C									84.0		2					
R45	398	501+70.34	501+98.20	RT													48.6			
R46	398	501+87.23	501+97.29	RT														77.3		
R47	398	501+91.34	502+06.99	LT													32.0			
R48	398	501+91.75	502+00.63	LT														76.7		
		RAMP D																		
R49	407-408	484+51.41	495+28.80	RT		1080.5														
R50	407	494+38.93	494+41.11	C										82.6	1					
R51	409	507+83.84	507+90.50	LT													16.1			
R52	409	507+83.45	507+90.04	LT														37.0		
R53	409	508+02.59	508+21.43	RT													26.4			
R54	409	508+05.17	508+16.51	RT														61.2		
TOTALS CARRIED TO GENERAL SUMMARY						5814	556	4	5	2	7	7	9516	83	33	11	124	253		

CALCULATED MJT
CHECKED BAL

REMOVALS SUBSUMMARY

FRA-71-5.29

P:\84868\roadway\sheets\84868GS001.dgn 3/27/2015 2:30:19 PM kfahy

EARTHWORK

SHEET NO.	LOCATION	203 EXCAVATION	203 EMBANKMENT	659 SEEDING AND MULCHING
		CY	CY	SY
	I.R. 71			
153		0	0	0
154		72	30	108
155		445	149	751
156		516	329	945
157		637	223	1072
158		631	221	977
159		577	155	827
160		583	129	756
161		566	157	773
162		528	191	772
163		527	183	778
164		496	179	784
165		463	192	772
166		467	173	783
167		495	157	805
168		492	176	777
169		506	149	783
170		494	168	744
171		481	176	772
172		517	150	688
173		498	134	743
174		495	143	750
175		498	170	690
176		608	154	677
177		606	135	701
178		485	176	672
179		483	203	750
180		459	233	683
181		442	233	657
182		419	229	728
183		426	226	778
184		436	199	694
185		228	96	335
186		367	181	633
187		371	134	645
188		451	134	661
189		329	110	524
190		487	135	750
191		492	126	789
192		502	139	706
193		670	155	889
194		905	108	1211
195		869	129	989
196		819	83	840
197		642	173	711
198		832	164	545
199		992	54	512
200		737	91	545
201		532	195	745
202		509	84	728
SUBTOTAL "A"		26082	7813	35948

EARTHWORK

SHEET NO.	LOCATION	203 EXCAVATION	203 EMBANKMENT	659 SEEDING AND MULCHING
		CY	CY	SY
	I.R. 71			
203		449	177	689
204		439	166	784
205		444	131	639
206		442	154	744
207		421	150	666
208		429	145	773
209		373	111	594
210		305	94	421
211		253	78	354
212		449	184	778
213		420	260	1033
214		421	206	944
215		432	240	1045
216		464	184	805
217		522	167	872
218		558	182	1006
219		526	176	834
220		524	170	906
221		495	165	894
222		487	163	755
223		497	151	839
224		581	144	883
225		607	166	827
226		593	232	1155
227		585	203	905
228		614	163	844
229		621	156	862
230		603	167	799
231		587	175	833
232		566	154	694
233		548	167	755
234		553	186	750
235		573	177	856
236		559	189	844
237		567	209	877
238		575	188	906
239		707	79	883
240		602	195	883
241		585	189	878
242		594	168	871
243		596	156	788
244		573	173	777
245		545	177	695
246		556	175	828
247		523	170	750
248		518	166	782
249		538	129	827
250		524	168	778
251		535	165	756
252		557	139	773
SUBTOTAL "B"		26035	8379	40434

EARTHWORK

SHEET NO.	LOCATION	203 EXCAVATION	203 EMBANKMENT	659 SEEDING AND MULCHING
		CY	CY	SY
	I.R. 71			
253		536	151	728
254		521	143	762
255		520	129	800
256		528	140	744
257		558	133	777
258		499	154	744
259		436	163	684
260		432	151	694
261		418	153	661
262		405	164	644
263		405	157	734
264		420	118	762
265		432	126	711
266		459	125	678
267		452	140	688
268		434	150	689
269		414	158	673
270		412	154	683
271		413	152	667
272		437	146	716
273		455	127	744
274		452	97	733
275		432	159	749
276		411	162	700
277		390	179	700
278		391	170	689
279		412	156	683
280		434	146	656
281		445	138	639
282		493	106	683
283		703	6	777
284		848	0	761
285		766	2	756
286		725	40	827
287		690	94	800
288		645	124	760
289		644	126	761
290		662	103	772
291		744	60	922
292		818	124	927
293		655	120	766
294		654	127	850
295		657	126	867
296		639	120	773
297		612	134	739
298		581	156	733
299		584	160	766
300		613	167	878
301		826	120	884
302		780	146	962
SUBTOTAL "C"		27292	6402	37496

EARTHWORK

SHEET NO.	LOCATION	203 EXCAVATION	203 EMBANKMENT	659 SEEDING AND MULCHING
		CY	CY	SY
	I.R. 71			
303		567	189	900
304		594	146	850
305		600	120	772
306		598	120	772
307		550	132	755
308		524	143	722
309		533	141	738
310		537	143	750
311		521	125	760
312		549	88	794
313		506	144	800
314		494	147	778
315		501	148	777
316		489	153	760
317		514	144	755
318		518	139	739
319		506	135	716
320		486	145	705
321		486	125	700
322		488	97	695
323		479	136	694
324		471	139	694
325		476	140	705
326		469	139	695
327		469	139	733
328		508	136	733
329		529	148	733
330		551	146	772
331		552	134	794
332		483	176	739
333		445	209	773
334		405	214	733
335		390	233	784
336		394	236	779
337		382	224	700
338		361	210	662
339		358	203	628
340		371	179	644
341		473	64	606
342		373	165	640
343		361	188	651
344		340	245	629
345		328	231	612
346		330	238	678
347		314	247	706
348		317	212	728
349		331	137	662
350		286	203	984
351		144	394	1083
352		14	1056	1117
SUBTOTAL "D"		22265	9245	37329

CALCULATED MJT
CHECKED BAL

EARTHWORK SUBSUMMARY

FRA-71-5.29

123
623

P:\84868\roadway\sheets\84868GS010.dgn 3/27/2015 2:30:19 PM kfahy

EARTHWORK

SHEET NO.	LOCATION	203 EXCAVATION	203 EMBANKMENT	659 SEEDING AND MULCHING
		CY	CY	SY
	I.R. 71			
353		0	2424	1383
354		0	589	292
355		0	889	547
356		0	2330	1074
357		0	1806	1205
358		0	1069	1034
359		17	591	760
360		192	319	900
361		165	102	400
362		364	97	544
363		398	115	745
364		427	240	1356
365		238	141	722
366		264	140	806
367		298	124	878
368		353	135	983
369		451	163	1050
370		596	208	1066
371		717	163	1089
372		738	70	1073
373		698	41	961
374		641	31	758
375		26	1	29
376		892	54	1023
377		954	47	1073
378		550	27	561
379		621	24	572
380		125	5	121
381		339	19	414
382		860	69	995
383		546	47	584
384		989	65	1161
385		888	63	1139
386		850	61	1077
387		745	82	923
388		668	82	856
389		619	72	811
390		591	98	817
391		606	130	678
392		671	100	728
393		511	86	712
394		418	149	618
395		377	119	649
396		370	113	705
397		0	0	0
SUBTOTAL "E"		19773	13300	35872

EARTHWORK

SHEET NO.	LOCATION	203 EXCAVATION	203 EMBANKMENT	659 SEEDING AND MULCHING
		CY	CY	SY
	RAMP A			
399		198	0	192
400		784	82	827
401		1529	0	1050
402		1716	0	1028
403		1479	0	1039
404		1145	0	1132
405		186	39	603
406		7	6	46
	RAMP D			
410		219	6	262
411		511	35	744
412		540	50	828
413		518	5	883
414		568	28	1195
415		179	10	690
416		222	11	794
417		297	11	821
418		311	10	817
419		279	20	879
420		314	32	860
421		215	44	689
422		187	49	717
423		174	37	627
424		139	7	368
425		127	0	333
426		78	0	247
427		17	0	11
SUBTOTAL "F"		11939	482	17682

CONCRETE PAVEMENT CORRECTION

STATION	STATION	203 EXCAVATION	203 EMBANKMENT
		CY	CY
279+31.20	309+60.42	-1660	37
309+60.42	324+28.96	-1282	28
324+28.96	477+06.05	-7264	329
478+83.52	490+97.72	-537	177
490+97.72	494+11.18	-186	5
494+11.18	509+00.00	-744	16
TOTALS		-11673	592

EARTHWORK

LOCATION	203 EXCAVATION	203 EMBANKMENT	659 SEEDING AND MULCHING
	CY	CY	SY
GENERAL PLAN QUANTITIES			
SUBTOTAL "A"			35948
SUBTOTAL "B"			40434
SUBTOTAL "C"			37496
SUBTOTAL "D"			37329
SUBTOTAL "E"			35872
SUBTOTAL "F"	11939	482	17682
GRAND TOTAL TO GEN SUM	11939	482	204761
ASPHALT CONCRETE OPTION "A"			
SUBTOTAL "A"	26082	7813	0
SUBTOTAL "B"	26035	8379	0
SUBTOTAL "C"	27292	6402	0
SUBTOTAL "D"	22265	9245	0
SUBTOTAL "E"	19773	13300	0
EMBANKMENT, AS PER PLAN		-9145	9145
GRAND TOTAL TO GEN SUM	121447	35994	9145
CONCRETE OPTION "B"			
SUBTOTAL "A"	26082	7813	0
SUBTOTAL "B"	26035	8379	0
SUBTOTAL "C"	27292	6402	0
SUBTOTAL "D"	22265	9245	0
SUBTOTAL "E"	19773	13300	0
CORRECTION	-11673	592	0
EMBANKMENT, AS PER PLAN		-9249	9249
GRAND TOTAL TO GEN SUM	109774	36482	9249

CALCULATED MJT
CHECKED BAL

EARTHWORK SUBSUMMARY

FRA-71-5.29

P:\84868\roadway\sheets\84868GS011.dgn 3/27/2015 2:30:20 PM kfahy

REF. NO.	SHEET NO.	STATION TO STATION		SIDE	606										608		609	622			626	
					GUARDRAIL, TYPE MGS	GUARDRAIL, BARRIER DESIGN TYPE 5	ANCHOR ASSEMBLY, MGS TYPE B	ANCHOR ASSEMBLY, MGS TYPE E	ANCHOR ASSEMBLY, MGS TYPE T	MGS BRIDGE TERMINAL ASSEMBLY, TYPE 1	MGS BRIDGE TERMINAL ASSEMBLY, TYPE 2	IMPACT ATTENUATOR, TYPE 1 (BIDIRECTIONAL)	GUARDRAIL, MISC.: TENSIONED CABLE WITH CONCRETE FOUNDATION LINE POST	GUARDRAIL, MISC.: TENSIONED CABLE ANCHOR TERMINAL	4" CONCRETE WALK	CURB RAMP	CURB, TYPE 4C	CONCRETE BARRIER, SINGLE SLOPE, TYPE D	CONCRETE BARRIER, END SECTION, TYPE D	CONCRETE BARRIER, END ANCHORAGE, REINFORCED, TYPE D	BARRIER REFLECTOR, TYPE A	BARRIER REFLECTOR, TYPE B
					FT	FT	EACH	EACH	EACH	EACH	EACH	EACH	FT	EACH	SF	SF	FT	FT	EACH	EACH	EACH	EACH
		I.R. 71																				
GR1	133	279+31.20	282+12.07	RT									281	2								
GR2	133-135	282+52.08	312+44.71	RT									3000	2								
GR3	133	282+50.39	284+12.89	RT	100			1	1												3	
GR4	134	287+57.54	289+20.49	LT	100			1	1												3	
GR5	134-136	295+93.72	317+74.82	LT	2112.50			1	1												23	
																					3	
GR6	135	307+82.97	309+67.50	RT	125			1	1												3	
GR7	136-138	311+44.92	341+41.88	RT									3000	2								
GR8	136-137	320+43.63	323+99.57	RT	262.50	50			1			1									7	
GR9	136-137	321+44.44	325+00.73	LT	262.50	50			1			1									7	
GR10	137-139	325+74.40	348+61.77	LT	2225			1	1												46	
GR10A	138	337+12.35	339+87.09	LT	337.50			1	1													
GR11	138-140	340+41.88	360+43.28	RT									2000	2								
GR12	140-141	359+43.23	377+75.00	RT									1830	2								
GR13	140	364+83.26	366+70.51	LT	125			1	1												3	
GR14	140	364+83.34	366+69.42	LT	125			1	1												3	
GR15	141-144	378+25.00	408+24.80	LT									3000	2								
GR16	142	390+87.50	392+49.09	LT	100			1	1												3	
GR17	143	395+92.05	398+17.05	RT	162.50			1	1												3	
GR18	144-145	407+24.80	428+32.50	LT									2108	2								
GR19	145	419+55.00	428+17.50	RT	800			1	1												9	
GR20	145	426+55.00	428+17.50	RT	100			1	1												3	
GR21	145	427+82.50	430+07.50	LT	100			1	1												3	
GR22	145-147	429+57.50	452+00.00	LT									2243	2								
GR23	147-148	451+00.00	463+75.00	LT									1275	2								
GR24	148	458+90.36	463+49.95	RT	387.50			1		1											5	
B1	148-149	463+49.95	477+52.46	RT														1363	1	1		14
C1	148	463+31.91	463+49.95	RT													19					
GR25	148-149	464+25.00	477+24.10	LT									1298	2								
GR26	149	476+08.14	477+31.73	LT/RT	62.50		1			1												
C2	149	477+13.60	477+31.73														19					
B2	149-150	478+30.10	489+09.60	LT														984	1	1		11
C3	150	489+09.60	489+27.88	LT													19					
GR27	150-151	489+09.60	492+11.95	LT	225			1		1											3	
GR28	150	478+55.87	479+92.23	LT	75		1			1							19				3	
C4	150	478+55.87	478+74.05	LT																		
GR29	150	478+77.20	485+54.94	RT									532	2								
GR30	150-151	479+12.82	495+10.72 RAMP D	RT	1568.75				1		1										17	
C5	150	479+28.66	479+41.63	RT													13					
GR31	150	485+05.01	487+17.23	RT	150			1	1												3	
GR32	150-152	486+67.27	504+90.11	RT									1824	2								
GR33	152	502+96.56	504+90.11	LT/RT	112.50	37.50			1			1									3	
GR34	152	503+77.61	505+71.16	LT/RT	112.50	37.50			1			1									3	
GR35	152	503+72.12	509+00.00	LT									528	2								
		RAMP A																				
SW1	398	501+92.49		RT											33	37						
SW2	398	501+98.34		LT											42	28						
		RAMP D																				
SW3	409	508+14.24		RT											36	30						
SW4	409	507+86.21		LT											18	29						
TOTALS CARRIED TO GENERAL SUMMARY					9731.25	175	2	16	19	4	1	4	22919	26	129.0	124.0	89	2347	2	2	159	25

CALCULATED MJT
CHECKED BAL

ROADWAY SUBSUMMARY

FRA-71-5.29

125
623

P:\84868\roadway\sheets\84868GS002.dgn 3/27/2015 2:30:20 PM kfahy

REF. NO.	SHEET NO.	ALIGHNMENT	STATION TO STATION		601	602	611																	
					ROCK CHANNEL PROTECTION, TYPE C, WITH FILTER	CONCRETE MASONRY	15" CONDUIT, TYPE B	15" CONDUIT, TYPE C	18" CONDUIT, TYPE B	18" CONDUIT, TYPE C	21" CONDUIT, TYPE B	21" CONDUIT TYPE C	24" CONDUIT TYPE B	24" CONDUIT TYPE C	27" CONDUIT TYPE B	27" CONDUIT TYPE C	30" CONDUIT TYPE B	30" CONDUIT TYPE C	36" CONDUIT TYPE C	42" CONDUIT TYPE B	CATCH BASIN, NO. 5	CATCH BASIN, NO. 5A	CATCH BASIN, NO. 8	INLET, NO. 3 FOR SINGLE SLOPE BARRIER, TYPE D	MANHOLE, NO. 3
					CY	CY	FT	FT	FT	FT	FT	FT	FT	FT	FT	FT	FT	FT	FT	FT	EA	EA	EA	EA	EA
D65	133	I.R. 71	279+31.20	281+88.32				257													1				
D1	133	I.R. 71	281+88.32	281+88.25		0.31			113												1				
D2	134	I.R. 71	291+42.71	294+10.76						268											1				
D3	134	I.R. 71	294+10.76	297+00.00						289											1				
D4	134-135	I.R. 71	297+00.00	300+00.00										300							1				
D5	135	I.R. 71	300+00.00	301+41.03										141							1				
D6	135	I.R. 71	301+41.03	304+00.00										259							1				
D7	135	I.R. 71	304+00.00	307+00.00										300								1			
D8	135	I.R. 71	307+00.00	310+00.00												300						1			
D9	135-136	I.R. 71	310+00.00	311+42.86												143						1			
D10	136	I.R. 71	311+42.86	314+00.00												259						1			
D11	136	I.R. 71	314+00.00	317+27.14												327						1			
D12	136	I.R. 71	317+27.14			0.45											111					1			
D14	136	I.R. 71	318+43.44			0.45											110					1			
D14A	136	I.R. 71	318+43.44	320+00.00										157											
D15	136	I.R. 71	320+00.00	321+44.32										145							1				
D16	136-137	I.R. 71	321+44.32	323+92.95										249											1
D17	137	I.R. 71	323+92.95	325+50.00										157											1
D13	137	I.R. 71	325+50.00	326+50.00								100									1				
D18	137	I.R. 71	326+50.00	329+43.48								293									1				
D19	137	I.R. 71	329+43.48																		1				
D20	138	I.R. 71	346+43.30	346+44.05		0.31			105												1				
D21	139	I.R. 71	355+43.42	355+43.61		0.25	126														1				
D22	140	I.R. 71	361+43.08	361+43.49		0.25	113														1				
D23	141	I.R. 71	371+42.59	371+43.47		0.25	109														1				
D24	141	I.R. 71	377+41.26	377+41.62		0.31			108												1				
D25	142	I.R. 71	386+40.51	386+43.08		0.31			109												1				
D26	143	I.R. 71	396+40.01	399+40.01								300									1				
D27	143	I.R. 71	399+40.01	402+40.01								300									1				
D28	143	I.R. 71	402+40.01	405+11.53								272									1				
D29	143	I.R. 71	405+11.53	405+36.67							98										1				
D29A	143	I.R. 71	405+36.67																			1			
D46	144	I.R. 71	413+91.46							8											1				
D52	145	I.R. 71	423+50.00	424+40.42						90											1				
D47	145	I.R. 71	424+40.42	424+40.00	1.6	0.31			111												1				
D31	146	I.R. 71	434+40.27	437+40.27								300									1				
D32	146	I.R. 71	437+40.27	440+40.27								300									1				
D33	146-147	I.R. 71	440+40.27	443+40.27										300							1				
D34	147	I.R. 71	443+40.27	444+40.27										100							1				
D35	147	I.R. 71	444+40.27	447+40.45										300							1				
D36	147	I.R. 71	447+40.45	450+40.45										300							1				
D37	147	I.R. 71	450+40.45	453+40.06												300					1				
D38	147	I.R. 71	453+40.06	453+42.38		0.49									112						1				
D54	147	I.R. 71	454+27.00	454+26.98		1.12												15							
D39	148-149	I.R. 71	463+75.00	466+80.00						305											1				
D39A	149	I.R. 71	466+80.00	469+90.00								310									1				
D39B	149	I.R. 71	469+90.00	472+93.00								303									1				
D40	149	I.R. 71	472+93.00	472+82.00									75								1				
D58	149	I.R. 71	472+82.00		1.6	0.43								46										1	
D55	150	I.R. 71	480+50.00				77																	1	
D41	150	I.R. 71	480+50.00			0.31			110												1				
D56	150	I.R. 71	485+50.00	486+50.00			117																	1	
D63	150	I.R. 71	486+50.00	489+50.00			301																		1
D57	150	I.R. 71	488+78.00	12+98.20 RAMP A			71																	1	
D45	150	RAMP A	12+99.76	12+98.20					35												1				
D64	150	RAMP A	12+98.20 RAMP A	489+50.00					90																1
D42	150	I.R. 71	489+50.00		1.6	0.43							139								1				
D51	407	RAMP D	5+81.97	5+80.11	2.2	0.84													8	83		1			
D49	398	RAMP A	6+52.16 RAMP A	495+84.64															8				1		
D50	398	RAMP A	6+98.10	6+52.16			84																1		
D53	151	I.R. 71	494+52.79	495+17.58						65											1				
D43	151	I.R. 71	495+17.58	495+42.55								25							16						1
D44	151	I.R. 71	495+42.55	497+00.00										157									1		1
D62	151	I.R. 71	497+00.00	500+00.00								300									1				
D61	151-152	I.R. 71	500+00.00	502+90.00										290							1				
D60	152	I.R. 71	502+90.00	503+15.00								27									1				
D60A	152	I.R. 71	503+15.00	505+70.00								255													1
D48A	152	I.R. 71	505+70.00	505+94.43								26													1
D48	152	I.R. 71	505+94.43																		1				
TOTALS CARRIED TO GENERAL SUMMARY					7	6.82	998	257	781	1025	98	3111	214	3201	112	1329	221	15	32	83	44	9	3	4	8

CALCULATED LMR
CHECKED KEW

DRAINAGE SUBSUMMARY

FRA-71-5.29

P:\84868\drainage\sheets\84868DS101.dgn 3/27/2015 2:30:21 PM kfahy

REF. NO.	SHEET NO.	ALIGNMENT	STATION TO STATION		202					209	503		509	511			512		516	518	601				602	611				670	843
					STRUCTURE REMOVED	PORTIONS OF STRUCTURE REMOVED	HEADWALL REMOVED	PIPE REMOVED OVER 24"	PIPE CLEANOUT	DITCH CLEANOUT	COFFERDAMS AND EXCAVATION BRACING	UNCLASSIFIED EXCAVATION (WINGWALL FOOTING)	EPOXY COATED REINFORCING STEEL	CLASS QC1 CONCRETE, FOOTING		CLASS QC1 CONCRETE, HEADWALL	SEALING OF CONCRETE SURFACES (EPOXY-URETHANE)	TYPE 2 WATERPROOFING	1" PREFORMED EXPANSION JOINT FILLER	POROUS BACKFILL WITH FILTER FABRIC	TIED CONCRETE BLOCK MAT, TYPE 1, WITH FILTER	TIED CONCRETE BLOCK MAT, TYPE 2, WITH FILTER	RIPRAP USING 6" CONCRETE REINFORCED SLAB	ROCK CHANNEL PROTECTION, TYPE B, WITH FILTER	CONCRETE MASONRY	30" CONDUIT TYPE A	72" CONDUIT, TYPE A	68" X 106" CONDUIT, TYPE A, 706.04	8' X 4" CONDUIT, TYPE A, 706.05	DITCH EROSION PROTECTION	PATCHING CONCRETE STRUCTURES WITH TROWELABLE MORTAR, AS PER PLAN
					LUMP	LUMP	EACH	FT	FT	FT	LUMP	LUMP	LB		CY		CY	SY	SY	SF	LUMP	SY	SY	SY	CY	CY	FT	FT	FT	FT	SY	SF
EC1	133	I.R. 71	280+38.32	281+88.32																										136.8	
EC2	134	I.R. 71	289+92.71	291+42.71																										120.0	
EC3	134	I.R. 71	292+61.00	294+41.00																										120.0	
EC4	134	I.R. 71	295+50.00	297+00.00																										120.0	
EC5	135	I.R. 71	298+50.00	301+41.00																										219.9	
EC6	135	I.R. 71	302+50.00	304+00.00																										101.7	
EC7	135	I.R. 71	305+50.00	307+00.00																										85.8	
EC8	135-136	I.R. 71	308+50.00	311+42.86																										173.8	
EC9	136	I.R. 71	312+50.00	314+00.00																										101.7	
EC10	136	I.R. 71	315+77.13	321+50.00																										541.9	
EC11	137	I.R. 71	325+50.00	328+00.00																										171.9	
EC12	137	I.R. 71	329+50.00	330+93.48																										117.4	
EC13	138	I.R. 71	344+93.38	346+43.30																										115.7	
EC14	139	I.R. 71	353+93.42	355+43.42																										116.7	
EC15	140	I.R. 71	359+93.08	361+43.08																										116.7	
EC16	140-141	I.R. 71	369+92.59	371+42.59																										116.7	
EC17	141	I.R. 71	375+92.26	377+41.26																										109.3	
EC18	142	I.R. 71	384+90.51	386+38.51																										65.8	
EC19	143	I.R. 71	394+90.01	396+38.01																										65.8	
EC20	143	I.R. 71	397+90.01	399+38.01																										65.8	
EC21	143	I.R. 71	400+90.01	402+38.01																										65.8	
EC22	143	I.R. 71	403+61.53	405+09.53																										65.8	
EC23	144	I.R. 71	412+41.46	413+89.46																										65.8	
EC24	145	I.R. 71	422+00.00	423+48.00																										65.8	
EC25	145	I.R. 71	423+52.00	424+38.42																										38.4	
EC26	146	I.R. 71	432+90.27	434+38.27																										33.8	
EC27	146	I.R. 71	435+90.27	437+38.27																										34.0	
EC28	146	I.R. 71	438+90.27	440+38.27																										65.8	
EC29	146-147	I.R. 71	441+90.27	443+38.27																										65.8	
EC30	147	I.R. 71	443+42.27	444+38.45																										43.0	
EC31	147	I.R. 71	449+40.45	450+38.45																										43.6	
EC32	147	I.R. 71	451+90.06	453+38.06																										65.8	
EC33	148	I.R. 71	462+25.00	463+73.00																										65.8	
EC34	148	I.R. 71	465+20.00	466+78.00																										70.2	
EC35	149	I.R. 71	468+40.00	469+88.00																										65.8	
EC36	149	I.R. 71	471+43.00	472+91.00																										65.8	
EC37	150	I.R. 71	479+00.00	480+48.00																										65.8	
EC38	150	I.R.71	479+41.63	479+45.60																		8.7									
EC39	150	I.R. 71	488+00.00	489+48.00																										65.8	
EC40	151	I.R. 71	493+02.79	494+50.79																										65.8	
EC41	151	I.R. 71	494+54.79	495+40.55																										38.1	
EC42	151	I.R. 71	495+44.55	496+92.55																										65.8	
EC43	151	I.R. 71	497+02.00	498+50.00																										65.8	
EC44	151	I.R. 71	500+02.00	501+50.00																										65.8	
EC45	152	I.R. 71	503+02.00	503+81.70																										35.8	
EC46	152	I.R. 71	505+96.43	507+44.43																										65.8	
EC47	398	RAMP A	496+50.00	500+00.00																										437.1	
EC48	407-408	RAMP D	487+00.00	496+00.00																		113								1074.7	
EC49	408	RAMP D	495+00.00	498+00.00																										394.2	
EC50	408	RAMP D	499+00.00	500+00.00																										122.2	
TOTALS CARRIED TO NEXT SHEET					LUMP	LUMP	0	0	0	0	LUMP	LUMP	0		0.0		0.0	0	0	0	LUMP	113	9	0	0	0.00	0.00	0	0	0	6267	0

CALCULATED LMR
CHECKED KEW

DRAINAGE SUBSUMMARY

FRA-71-5.29

P:\84868\drainage\sheets\84868DS102.dgn 3/27/2015 2:30:21 PM kfahy

REF. NO.	SHEET NO.	ALIGHN MENT	STATION TO STATION	202					209	503		509	511		512		516	518	601				602	611				670	843
				STRUCTURE REMOVED	PORTIONS OF STRUCTURE REMOVED	HEADWALL REMOVED	PIPE REMOVED OVER 24"	SPECIAL - PIPE CLEANOUT, OVER 48"	DITCH CLEANOUT	COFFERDAMS AND EXCAVATION BRACING	UNCLASSIFIED EXCAVATION (WINGWALL FOOTING)	EPOXY COATED REINFORCING STEEL		CLASS QC1 CONCRETE, FOOTING	CLASS QC1 CONCRETE, HEADWALL	SEALING OF CONCRETE SURFACES (EPOXY-URETHANE)	TYPE 2 WATERPROOFING	1" PREFORMED EXPANSION JOINT FILLER	POROUS BACKFILL WITH FILTER FABRIC	TIED CONCRETE BLOCK MAT, TYPE 1, WITH FILTER	TIED CONCRETE BLOCK MAT, TYPE 2, WITH FILTER	RIPRAP USING 6" CONCRETE REINFORCED SLAB	ROCK CHANNEL PROTECTION, TYPE B, WITH FILTER	CONCRETE MASONRY	30" CONDUIT TYPE A	72" CONDUIT, TYPE A	68" X 106" CONDUIT, TYPE A, 706.04	8' X 4' CONDUIT, TYPE A, 706.05	DITCH EROSION PROTECTION	PATCHING CONCRETE STRUCTURES WITH TROWELABLE MORTAR, AS PER PLAN
				LUMP	LUMP	EACH	FT	FT	FT	LUMP	LUMP	LB		CY	CY	SY	SY	SF	LUMP	SY	SY	SY	CY	CY	FT	FT	FT	FT	SY	SF
			CULVERTS																											
	452	I.R. 71	282+39.00			2	267																39	5.4			300			
	453	I.R. 71	317+70.00			1			206															2.1						6
	454	I.R. 71	361+81.00																											16
	455	I.R. 71	383+43.00			1																9		4						2
	456	I.R. 71	414+39.00		LUMP	2		244														14		16		64				
	457	I.R. 71	422+77.00			2																19	25	4.1						
	459	I.R. 71	454+25.00	LUMP		1	424			LUMP	LUMP	2734		20	7	561	541	26	LUMP					1.12	15			212		
	463	I.R. 71	476+28.00			1																		12						73
	464	I.R. 71	482+42.00																			16								280
TOTALS CARRIED FROM THIS SHEET				LUMP	LUMP	10	691	244	206	LUMP	LUMP	2734		20.0	7.0	561	541	26	LUMP	0	0	58	64	44.72	15	64	300	212	0	377
TOTALS CARRIED FROM PREVIOUS SHEET				LUMP	LUMP	0	0	0	0	LUMP	LUMP	0		0	0	0	0	0	LUMP	113	9	0	0	0	0	0	0	0	6267	0
TOTALS CARRIED TO GENERAL SUMMARY				LUMP	LUMP	10	691	244	206	LUMP	LUMP	2734		20.0	7.0	561	541	26	LUMP	113	9	58	64	44.72	15	64	300	212	6267	377

CALCULATED LMR
CHECKED KEW

DRAINAGE SUBSUMMARY

FRA-71-5.29

P:\84868\drainage\sheets\84868DS103.dgn 5/5/2015 10:16:41 AM mtakacs

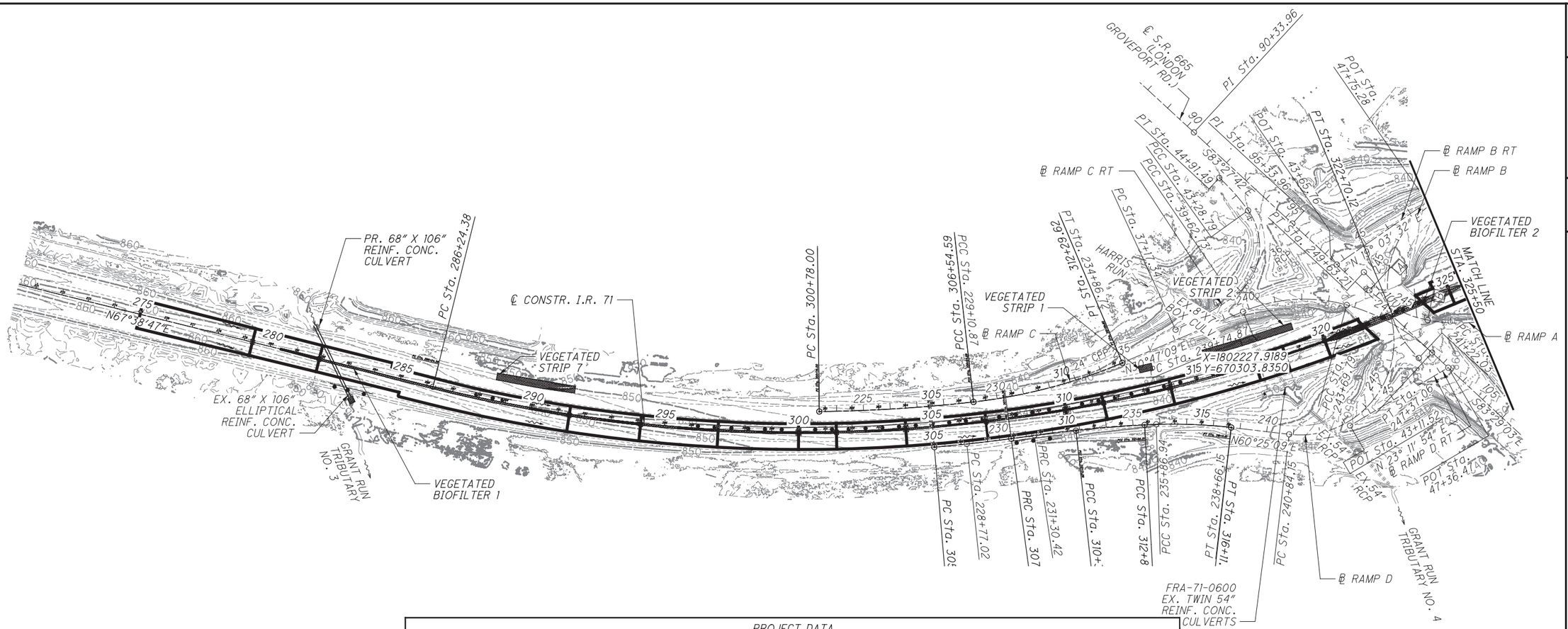

PROJECT DATA				
TOTAL AREA (RIGHT OF WAY)	224 ACRES	RUNOFF COEFFICIENT FOR PRE-CONSTRUCTION SITE		0.66
PROJECT EARTH DISTURBED AREA	115.48 ACRES	ROUNNOFF COEFFICIENT FOR POST CONSTRUCTION SITE		0.74
ESTIMATED CONTRACTOR EARTH DISTURBED AREA	1 ACRES	POST CONSTRUCTION BMPS: VEGETATED BIOFILTERS AND VEGETATED BIOSTRIPS WERE UTILIZED TO MEET NPDES POST CONSTRUCTION REQUIREMENTS. SEE DRAINAGE CALCS FOR ADDITIONAL DETAILS.		
NOTICE OF INTENT EARTH DISTURBED AREA	116.48 ACRES			
IMPERVIOUS (PAVED)AREA FOR PRE-CONSTRUCTION SITE	47 ACRES	IMMEDIATE RECEIVING WATERS		GRANT RUN
IMPERVIOUS (PAVED) AREA FOR POST CONSTRUCTION SITE	68 ACRES	SUBSEQUENT RECEIVING WATERS		SCIOTO RIVER
PROJECT DESCRIPTION	FULL DEPTH PAVEMENT REPLACEMENT	LAND USE IS COMMERCIAL AND INDUSTRIAL		COMMERCIAL AND INDUSTRIAL

BMP TYPE	LATITUDE/LONGITUDE BEGIN		END		EDA TREATMENT CREDIT (ACRES)
VEGETATED STRIPS 1	41.504369	83.107577	41.504583	83.107339	0.04
VEGETATED STRIPS 2	41.504892	83.107011	41.505657	83.106264	0.59
VEGETATED STRIPS 3	41.512817	83.099859	41.515186	83.097688	1.76
VEGETATED STRIPS 4	41.526427	83.083563	41.526709	83.099822	0.17
VEGETATED STRIPS 5	41.533825	83.073245	41.533352	83.073130	0.42
VEGETATED STRIPS 6	41.541058	83.066241	41.541176	83.066156	0.1
VEGETATED STRIPS 7	41.500375	83.114563	41.500745	83.113595	0.61
VEGETATED BIOFILTER 1	41.499468	83.116644	41.505139	83.106381	6.49
VEGETATED BIOFILTER 2	41.505139	83.106381	41.509997	83.102449	4.39
VEGETATED BIOFILTER 3	41.509997	83.102449	41.518693	83.093973	8.58
			TREATMENT PROVIDED		23.10
			TREATMENT REQUIRED		23.1

PROJECT DESCRIPTION

THIS PROJECT INCLUDES: 4.35 MILES OF FULL DEPTH PAVEMENT REPLACEMENT, THE ADDITION OF ONE LANE IN EACH DIRECTION IN THE MEDIAN OF I.R. 71, REPLACEMENT OF THE I.R. 71 SOUTHBOUND ON-RAMP AND I.R. 71 NORTHBOUND OFF-RAMP AT THE STRINGTOWN ROAD INTERCHANGE, THE REHABILITATION OF STRUCTURES OVER WHITE ROAD, AND THE ADDITION OF NOISE WALLS. A PROPOSED DRAINAGE SYSTEM, GUARDRAIL, LIGHTING, AND CULVERTS WILL ALSO BE ADDED TO THE PROJECT.

LEGEND

- INLET
- CATCH BASIN
- MANHOLE
- VEGETATED BIOFILTER
- VEGETATED BIOSTRIP

NOTES:

THE CENTER OF THE PROJECT IS AT 39.2856347, -83.074373.

THIS PROJECT CAN BE FOUND ON THE COMMERCIAL POINT AND WEST COLUMBUS USGS QUADRANGLE MAPS (MAP NUMBER 17S).

HORIZONTAL SCALE IN FEET
0 100 200 400

CALCULATED LMR
CHECKED GPD

PROJECT SITE PLAN
I.R. 71 BEGIN PROJECT TO STA. 325+50

FRA-71-5.29

129
623

P:\84868\drainage\sheets\84868DE001.dgn 3/27/2015 2:30:29 PM kfahy

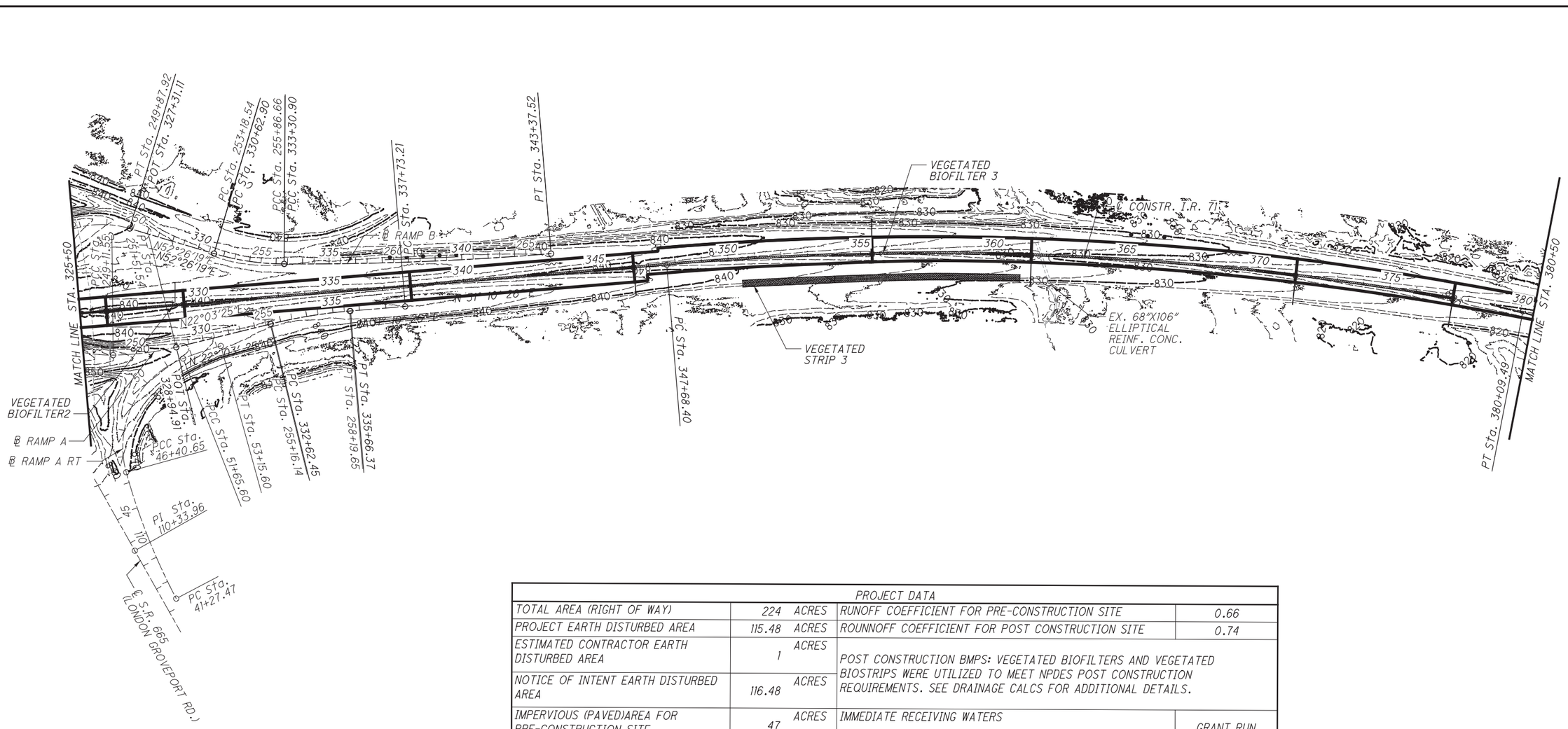

PROJECT DESCRIPTION

THIS PROJECT INCLUDES: 4.35 MILES OF FULL DEPTH PAVEMENT REPLACEMENT, THE ADDITION OF ONE LANE IN EACH DIRECTION IN THE MEDIAN OF I.R. 71, REPLACEMENT OF THE I.R. 71 SOUTHBOUND ON-RAMP AND I.R. 71 NORTHBOUND OFF-RAMP AT THE STRINGTOWN ROAD INTERCHANGE, THE REHABILITATION OF STRUCTURES OVER WHITE ROAD, AND THE ADDITION OF NOISE WALLS. A PROPOSED DRAINAGE SYSTEM, GUARDRAIL, LIGHTING, AND CULVERTS WILL ALSO BE ADDED TO THE PROJECT.

LEGEND

- INLET
- CATCH BASIN
- MANHOLE
- VEGETATED BIOFILTER
- VEGETATED BIOSTRIP

PROJECT DATA				
TOTAL AREA (RIGHT OF WAY)	224 ACRES	RUNOFF COEFFICIENT FOR PRE-CONSTRUCTION SITE	0.66	
PROJECT EARTH DISTURBED AREA	115.48 ACRES	ROUNNOFF COEFFICIENT FOR POST CONSTRUCTION SITE	0.74	
ESTIMATED CONTRACTOR EARTH DISTURBED AREA	1 ACRES	POST CONSTRUCTION BMPS: VEGETATED BIOFILTERS AND VEGETATED BIOSTRIPS WERE UTILIZED TO MEET NPDES POST CONSTRUCTION REQUIREMENTS. SEE DRAINAGE CALCS FOR ADDITIONAL DETAILS.		
NOTICE OF INTENT EARTH DISTURBED AREA	116.48 ACRES			
IMPERVIOUS (PAVED)AREA FOR PRE-CONSTRUCTION SITE	47 ACRES	IMMEDIATE RECEIVING WATERS	GRANT RUN	
IMPERVIOUS (PAVED) AREA FOR POST CONSTRUCTION SITE	68 ACRES	SUBSEQUENT RECEIVING WATERS	SCIOTO RIVER	
PROJECT DESCRIPTION	FULL DEPTH PAVEMENT REPLACEMENT	LAND USE IS COMMERCIAL AND INDUSTRIAL	COMMERCIAL AND INDUSTRIAL	

BMP TYPE	LATITUDE/LONGITUDE BEGIN		LATITUDE/LONGITUDE END		EDA TREATMENT CREDIT (ACRES)
VEGETATED STRIPS 1	41.504369	83.107577	41.504583	83.107339	0.04
VEGETATED STRIPS 2	41.504892	83.107011	41.505657	83.106264	0.59
VEGETATED STRIPS 3	41.512817	83.099859	41.515186	83.097688	1.76
VEGETATED STRIPS 4	41.526427	83.083563	41.526709	83.099822	0.17
VEGETATED STRIPS 5	41.533825	83.073245	41.533352	83.073130	0.42
VEGETATED STRIPS 6	41.541058	83.066241	41.541176	83.066156	0.1
VEGETATED STRIPS 7	41.500375	83.114563	41.500745	83.113595	0.61
VEGETATED BIOFILTER 1	41.499468	83.116644	41.505139	83.106381	6.49
VEGETATED BIOFILTER 2	41.505139	83.106381	41.509997	83.102449	4.39
VEGETATED BIOFILTER 3	41.509997	83.102449	41.518693	83.093973	8.58
			TREATMENT PROVIDED		23.10
			TREATMENT REQUIRED		23.1

HORIZONTAL SCALE IN FEET
0 100 200 400

CALCULATED LMR
CHECKED GPD

PROJECT SITE PLAN
I.R. 71 STA. 325+50 TO STA. 380+50

FRA-71-5.29

130
623

P:\84868\drainage\sheets\84868DE002.dgn 3/27/2015 2:30:34 PM kfahy

PROJECT DESCRIPTION

THIS PROJECT INCLUDES: 4.35 MILES OF FULL DEPTH PAVEMENT REPLACEMENT, THE ADDITION OF ONE LANE IN EACH DIRECTION IN THE MEDIAN OF I.R. 71, REPLACEMENT OF THE I.R. 71 SOUTHBOUND ON-RAMP AND I.R. 71 NORTHBOUND OFF-RAMP AT THE STRINGTOWN ROAD INTERCHANGE, THE REHABILITATION OF STRUCTURES OVER WHITE ROAD, AND THE ADDITION OF NOISE WALLS. A PROPOSED DRAINAGE SYSTEM, GUARDRAIL, LIGHTING, AND CULVERTS WILL ALSO BE ADDED TO THE PROJECT.

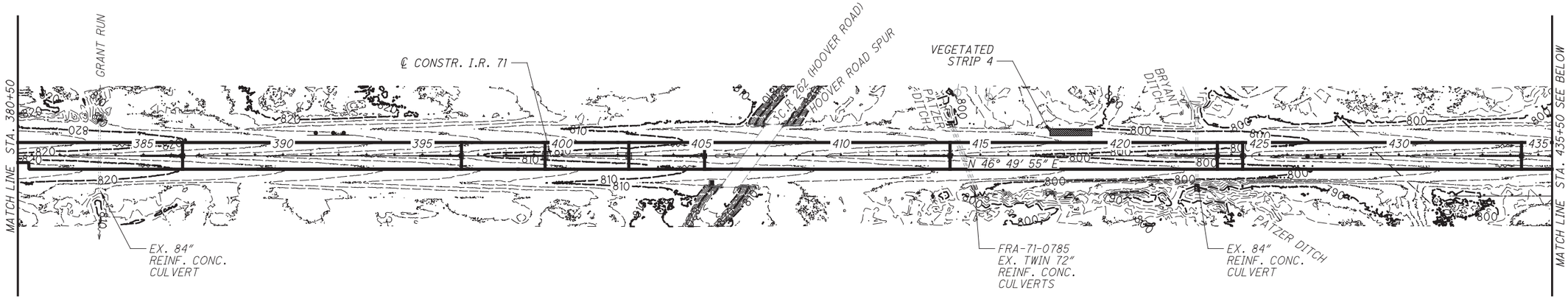

BMP TYPE	LATITUDE/LONGITUDE BEGIN		LATITUDE/LONGITUDE END		EDA TREATMENT CREDIT (ACRES)
VEGETATED STRIPS 1	41.504369	83.107577	41.504583	83.107339	0.04
VEGETATED STRIPS 2	41.504892	83.107011	41.505657	83.106264	0.59
VEGETATED STRIPS 3	41.512817	83.099859	41.515186	83.097688	1.76
VEGETATED STRIPS 4	41.526427	83.083563	41.526709	83.099822	0.17
VEGETATED STRIPS 5	41.533825	83.073245	41.533352	83.073130	0.42
VEGETATED STRIPS 6	41.541058	83.066241	41.541176	83.066156	0.1
VEGETATED STRIPS 7	41.500375	83.114563	41.500745	83.113595	0.61
VEGETATED BIOFILTER 1	41.499468	83.116644	41.505139	83.106381	6.49
VEGETATED BIOFILTER 2	41.505139	83.106381	41.509997	83.102449	4.39
VEGETATED BIOFILTER 3	41.509997	83.102449	41.518693	83.093973	8.58
TREATMENT PROVIDED					23.10
TREATMENT REQUIRED					23.1

PROJECT DATA					
TOTAL AREA (RIGHT OF WAY)	224	ACRES	RUNOFF COEFFICIENT FOR PRE-CONSTRUCTION SITE	0.66	
PROJECT EARTH DISTURBED AREA	115.48	ACRES	ROUNNOFF COEFFICIENT FOR POST CONSTRUCTION SITE	0.74	
ESTIMATED CONTRACTOR EARTH DISTURBED AREA	1	ACRES	POST CONSTRUCTION BMPS: VEGETATED BIOFILTERS AND VEGETATED BIOSTRIPS WERE UTILIZED TO MEET NPDES POST CONSTRUCTION REQUIREMENTS. SEE DRAINAGE CALCS FOR ADDITIONAL DETAILS.		
NOTICE OF INTENT EARTH DISTURBED AREA	116.48	ACRES			
IMPERVIOUS (PAVED)AREA FOR PRE-CONSTRUCTION SITE	47	ACRES	IMMEDIATE RECEIVING WATERS	GRANT RUN	
IMPERVIOUS (PAVED) AREA FOR POST CONSTRUCTION SITE	68	ACRES	SUBSEQUENT RECEIVING WATERS	SCIOTO RIVER	
PROJECT DESCRIPTION	FULL DEPTH PAVEMENT REPLACEMENT		LAND USE IS COMMERCIAL AND INDUSTRIAL	COMMERCIAL AND INDUSTRIAL	

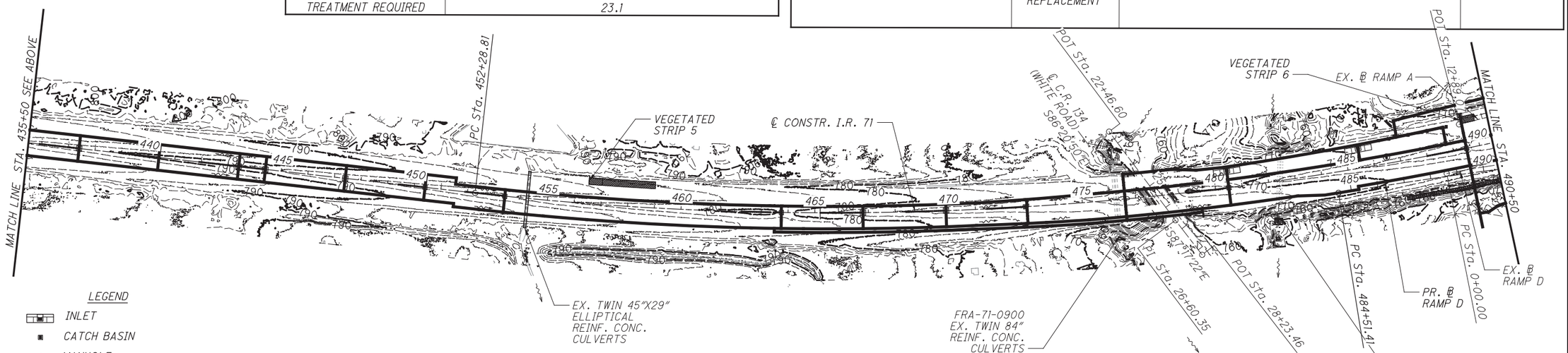

LEGEND

- INLET
- CATCH BASIN
- MANHOLE
- VEGETATED BIOFILTER
- VEGETATED BIOSTRIP

HORIZONTAL SCALE IN FEET: 0, 100, 200, 400

CALCULATED LMR | CHECKED GPD

PROJECT SITE PLAN
I.R. 71 STA. 380+50 TO STA. 490+50
FRA-71-5.29

131
623

P:\84868\drainage\sheets\84868DE003.dgn 3/27/2015 2:30:37 PM kfahy

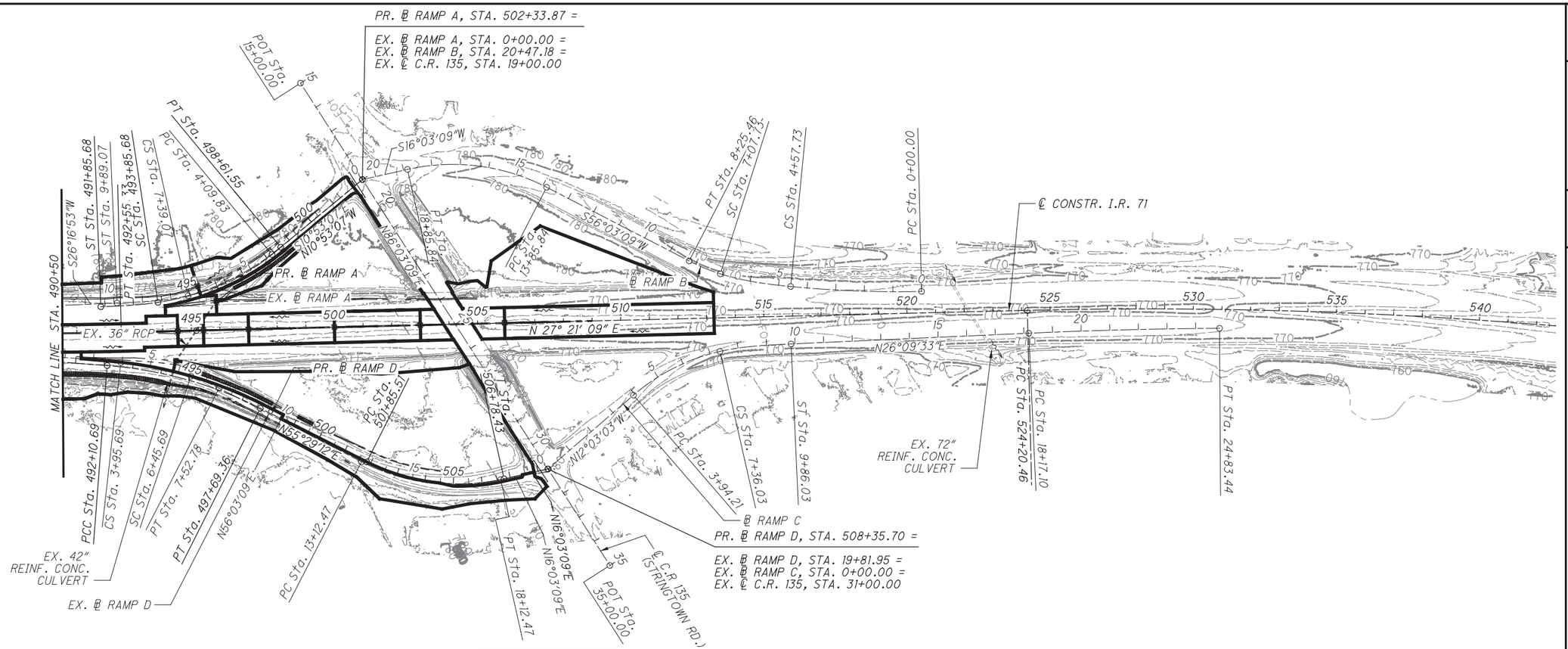

PROJECT DATA					
TOTAL AREA (RIGHT OF WAY)	224	ACRES	RUNOFF COEFFICIENT FOR PRE-CONSTRUCTION SITE		0.66
PROJECT EARTH DISTURBED AREA	115.48	ACRES	ROUNNOFF COEFFICIENT FOR POST CONSTRUCTION SITE		0.74
ESTIMATED CONTRACTOR EARTH DISTURBED AREA	1	ACRES	POST CONSTRUCTION BMPS: VEGETATED BIOFILTERS AND VEGETATED BIOSTRIPS WERE UTILIZED TO MEET NPDES POST CONSTRUCTION REQUIREMENTS. SEE DRAINAGE CALCS FOR ADDITIONAL DETAILS.		
NOTICE OF INTENT EARTH DISTURBED AREA	116.48	ACRES			
IMPERVIOUS (PAVED)AREA FOR PRE-CONSTRUCTION SITE	47	ACRES	IMMEDIATE RECEIVING WATERS		GRANT RUN
IMPERVIOUS (PAVED) AREA FOR POST CONSTRUCTION SITE	68	ACRES	SUBSEQUENT RECEIVING WATERS		SCIOTO RIVER
PROJECT DESCRIPTION	FULL DEPTH PAVEMENT REPLACEMENT		LAND USE IS COMMERCIAL AND INDUSTRIAL		COMMERCIAL AND INDUSTRIAL

BMP TYPE	LATITUDE/LONGITUDE BEGIN		LATITUDE/LONGITUDE END		EDA TREATMENT CREDIT (ACRES)
VEGETATED STRIPS 1	41.504369	83.107577	41.504583	83.107339	0.04
VEGETATED STRIPS 2	41.504892	83.107011	41.505657	83.106264	0.59
VEGETATED STRIPS 3	41.512817	83.099859	41.515186	83.097688	1.76
VEGETATED STRIPS 4	41.526427	83.083563	41.526709	83.099822	0.17
VEGETATED STRIPS 5	41.533825	83.073245	41.533352	83.073130	0.42
VEGETATED STRIPS 6	41.541058	83.066241	41.541176	83.066156	0.1
VEGETATED STRIPS 7	41.500375	83.114563	41.500745	83.113595	0.61
VEGETATED BIOFILTER 1	41.499468	83.116644	41.505139	83.106381	6.49
VEGETATED BIOFILTER 2	41.505139	83.106381	41.509997	83.102449	4.39
VEGETATED BIOFILTER 3	41.509997	83.102449	41.518693	83.093973	8.58
			TREATMENT PROVIDED		23.10
			TREATMENT REQUIRED		23.1

PROJECT DESCRIPTION

THIS PROJECT INCLUDES: 4.35 MILES OF FULL DEPTH PAVEMENT REPLACEMENT, THE ADDITION OF ONE LANE IN EACH DIRECTION IN THE MEDIAN OF I.R. 71, REPLACEMENT OF THE I.R. 71 SOUTHBOUND ON-RAMP AND I.R. 71 NORTHBOUND OFF-RAMP AT THE STRINGTOWN ROAD INTERCHANGE, THE REHABILITATION OF STRUCTURES OVER WHITE ROAD, AND THE ADDITION OF NOISE WALLS. A PROPOSED DRAINAGE SYSTEM, GUARDRAIL, LIGHTING, AND CULVERTS WILL ALSO BE ADDED TO THE PROJECT.

LEGEND

- INLET
- CATCH BASIN
- MANHOLE
- VEGETATED BIOFILTER
- VEGETATED BIOSTRIP

HORIZONTAL SCALE IN FEET
0 100 200 400

CALCULATED LMR
CHECKED GPD

PROJECT SITE PLAN
I.R. 71 STA. 490+50 TO END PROJECT

FRA-71-5.29

132
623

P:\84868\drainage\sheets\84868DE004.dgn 3/27/2015 2:30:41 PM kfahy

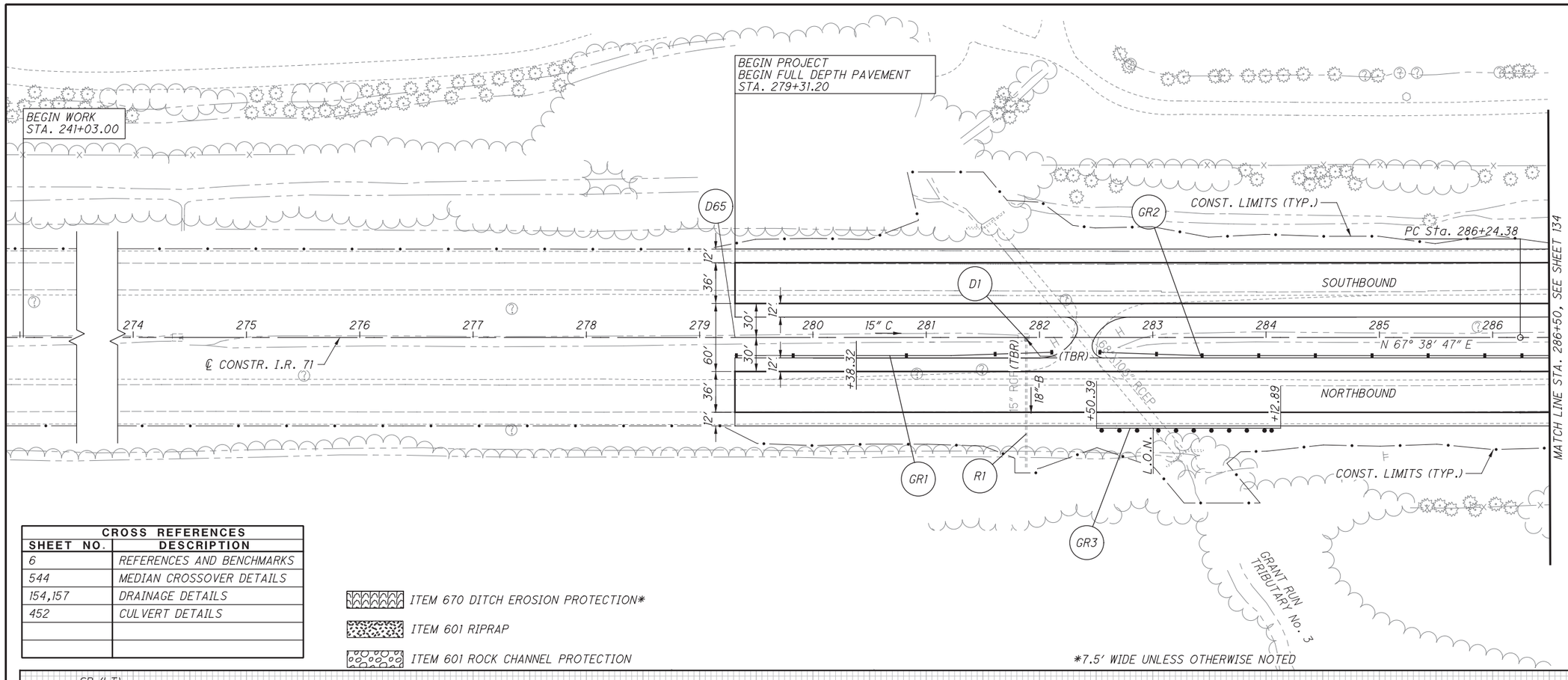

CROSS REFERENCES	
SHEET NO.	DESCRIPTION
6	REFERENCES AND BENCHMARKS
544	MEDIAN CROSSOVER DETAILS
154,157	DRAINAGE DETAILS
452	CULVERT DETAILS

ITEM 670 DITCH EROSION PROTECTION*

ITEM 601 RIPRAP

ITEM 601 ROCK CHANNEL PROTECTION

*7.5' WIDE UNLESS OTHERWISE NOTED

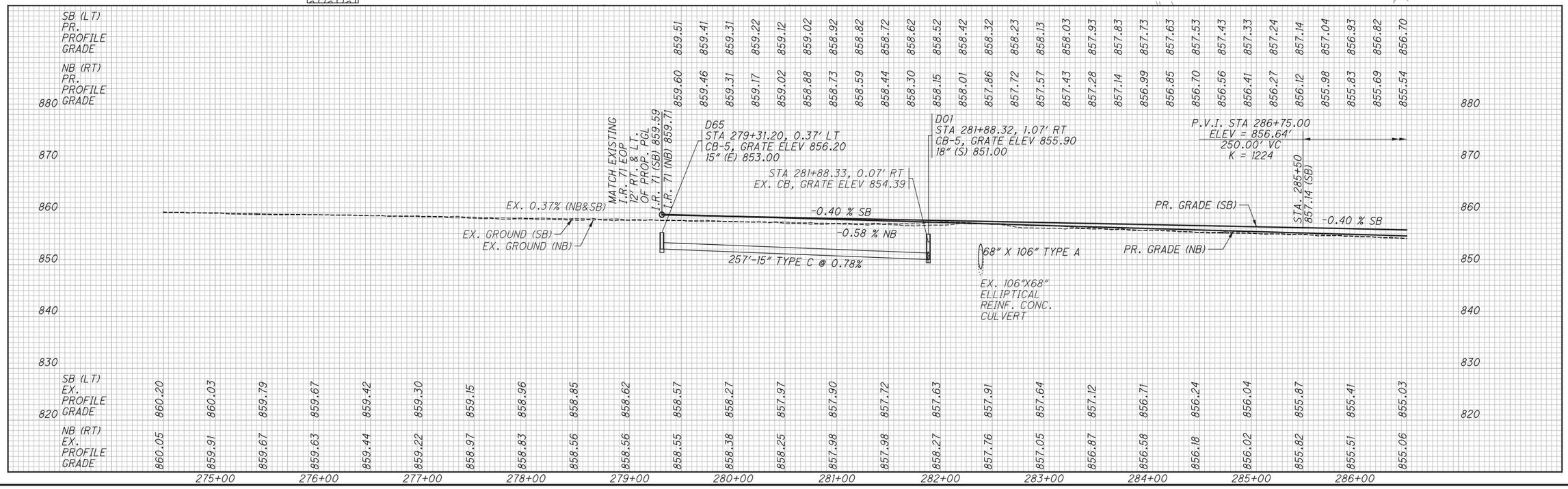

HORIZONTAL SCALE IN FEET
0 25 50 100

CALCULATED CDS
CHECKED GPD

PLAN AND PROFILE
BEGIN PROJECT TO STA. 286+50.00

FRA-71-5.29

133
623

P:\84868\roadway\sheets\84868GP001.dgn 3/27/2015 2:30:45 PM kfahy

CROSS REFERENCES	
SHEET NO.	DESCRIPTION
6	REFERENCES AND BENCHMARKS
166,169,172	DRAINAGE DETAILS

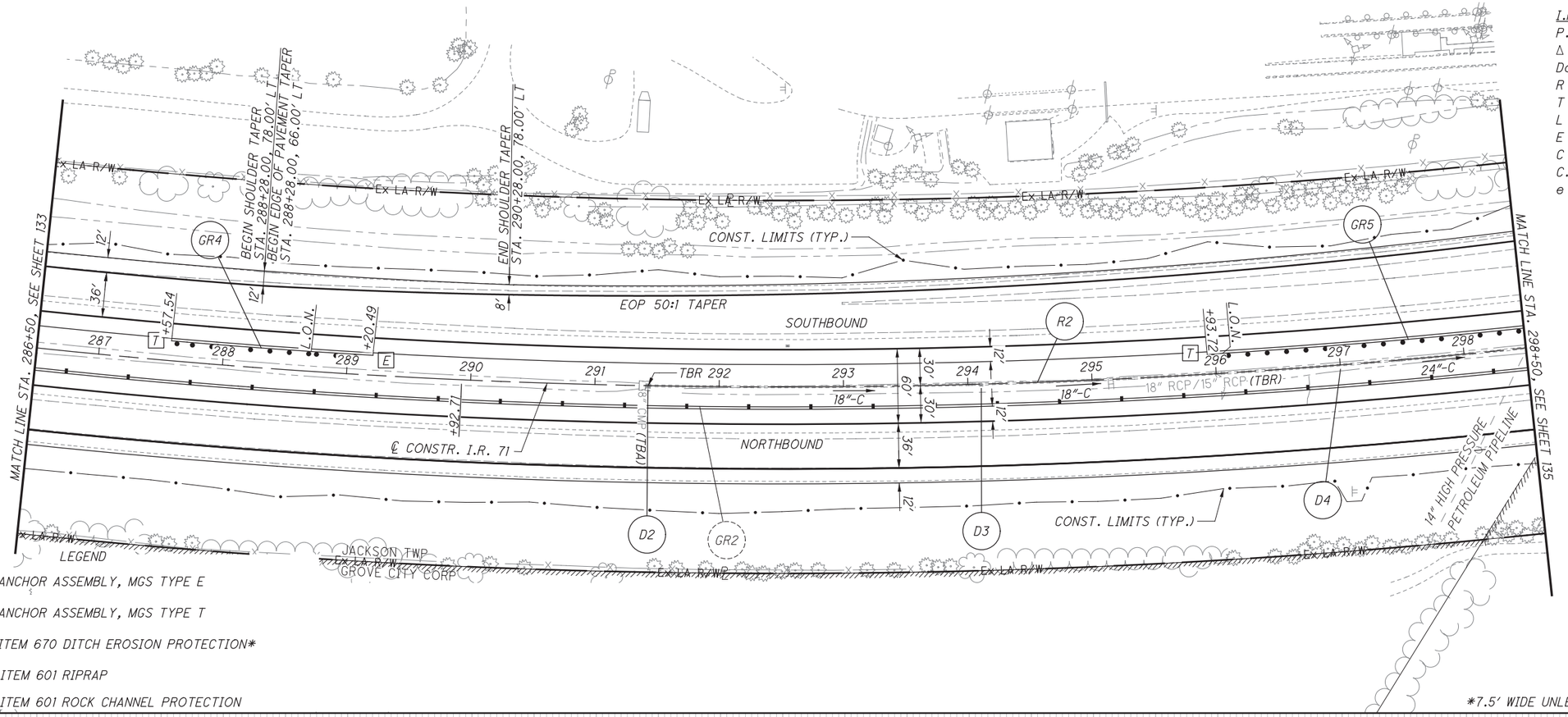

I.R. 71
P.I. Sta. 305+11.40
Δ = 36° 28′ 21″ (LT)
Dc = 1° 00′ 01″
R = 5,727.20′
T = 1,887.03′
L = 3,645.74′
E = 302.87′
C = 3,584.50′
C.B. = N 49° 24′ 36″ E
e max = 0.033

LEGEND

- E ANCHOR ASSEMBLY, MGS TYPE E
- T ANCHOR ASSEMBLY, MGS TYPE T
- ITEM 670 DITCH EROSION PROTECTION*
- ITEM 601 RIPRAP
- ITEM 601 ROCK CHANNEL PROTECTION

*7.5′ WIDE UNLESS OTHERWISE NOTED

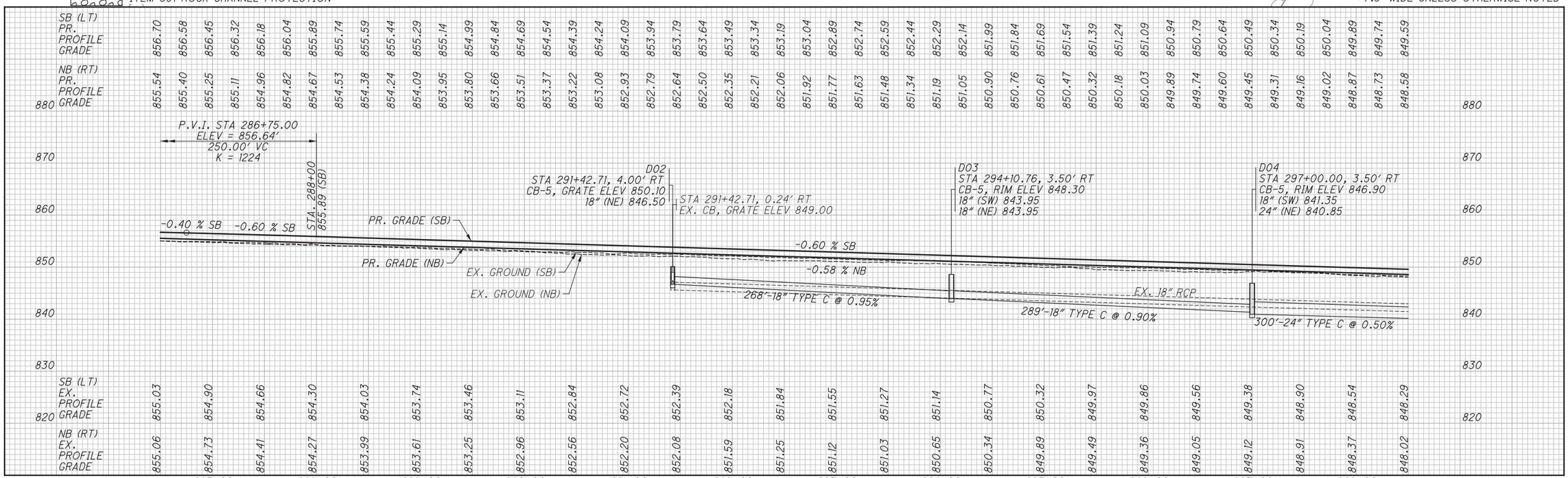

HORIZONTAL SCALE IN FEET
0 25 50 100

CALCULATED CDS CHECKED GPD

PLAN AND PROFILE
STA. 286+50.00 TO STA. 298+50.00

FRA-71-5.29

134
623

P:\84868\roadway\sheets\84868GP002.dgn 3/27/2015 2:30:46 PM kfahy

CROSS REFERENCES	
SHEET NO.	DESCRIPTION
6	REFERENCES AND BENCHMARKS
175,176,179, 182,185	DRAINAGE DETAILS

I.R. 71
P.I. Sta. 305+11.40
Δ = 36° 28′ 21″ (LT)
Dc = 1° 00′ 01″
R = 5,727.20′
T = 1,887.03′
L = 3,645.74′
E = 302.87′
C = 3,584.50′
C.B. = N 49° 24′ 36″ E
e max = 0.033

RAMP C AT S.R. 665
P.I. Sta. 303+66.55
Δ = 5° 50′ 42″ (LT)
Dc = 1° 00′ 49″
R = 5,652.20′
T = 288.55′
L = 576.59′
E = 7.36′
C = 576.34′
C.B. = N 50° 10′ 54″ E
e max = 0.033

RAMP C AT S.R. 665
P.I. Sta. 309+44.10
Δ = 16° 28′ 24″ (LT)
Dc = 2° 51′ 53″
R = 2,000.00′
T = 289.51′
L = 575.03′
E = 20.85′
C = 573.05′
C.B. = N 39° 01′ 21″ E
e max = 0.055

RAMP D AT S.R. 665
P.I. Sta. 306+44.21
Δ = 2° 50′ 46″ (LT)
Dc = 0° 59′ 13″
R = 5,805.20′
T = 144.21′
L = 288.36′
E = 1.79′
C = 288.33′
C.B. = N 47° 27′ 33″ E
e max = 0.033

RAMP D AT S.R. 665
P.I. Sta. 309+09.83
Δ = 1° 20′ 10″ (RT)
Dc = 0° 33′ 00″
R = 10,417.41′
T = 121.47′
L = 242.93′
E = 0.71′
C = 242.92′
C.B. = N 46° 42′ 16″ E
e max = 0.016

RAMP D AT S.R. 665
P.I. Sta. 311+59.68
Δ = 3° 12′ 33″ (RT)
Dc = 1° 15′ 00″
R = 4,583.66′
T = 128.40′
L = 256.72′
E = 1.80′
C = 256.69′
C.B. = N 48° 58′ 37″ E
e max = 0.024

LEGEND

- E — ANCHOR ASSEMBLY, MGS TYPE E
- T — ANCHOR ASSEMBLY, MGS TYPE T
- ITEM 601 RIPRAP
- ITEM 601 ROCK CHANNEL PROTECTION
- ITEM 670 DITCH EROSION PROTECTION*

*7.5′ WIDE UNLESS OTHERWISE NOTED

HORIZONTAL SCALE IN FEET: 0, 25, 50, 100

CALCULATED CDS | CHECKED GPD

PLAN AND PROFILE
STA. 298+50.00 TO STA. 310+50.00

FRA-71-5.29

135 / 623

P:\84868\roadway\sheets\84868GP003.dgn 3/27/2015 2:30:47 PM kfahy

CROSS REFERENCES	
SHEET NO.	DESCRIPTION
6	REFERENCES AND BENCHMARKS
187,190,193, 194,196,197	DRAINAGE DETAILS
453	CULVERT DETAILS

I.R. 71
P.I. Sta. 305+11.40
Δ = 36° 28′ 21″ (LT)
Dc = 1° 00′ 01″
R = 5,727.20′
T = 1,887.03′
L = 3,645.74′
E = 302.87′
C = 3,584.50′
C.B. = N 49° 24′ 36″ E
e max = 0.033

NOTE: PIER PROTECTION AT FRA-665-0887 SHALL BE AS PER SCD MGS 6.2

LEGEND
- [E] ANCHOR ASSEMBLY, MGS TYPE E
- [T] ANCHOR ASSEMBLY, MGS TYPE T
- [I] IMPACT ATTENUATOR, TYPE 1, BI-DIRECTIONAL
- ITEM 670 DITCH EROSION PROTECTION
- ITEM 601 ROCK CHANNEL PROTECTION
- ITEM 601 RIPRAP

RAMP D AT S.R. 665
P.I. Sta. 311+59.68
Δ = 3° 12′ 33″ (RT)
Dc = 1° 15′ 00″
R = 4,583.66′
T = 128.40′
L = 256.72′
E = 1.80′
C = 256.69′
C.B. = N 48° 58′ 37″ E
e max = 0024

RAMP D AT S.R. 665
P.I. Sta. 314+50.20
Δ = 9° 42′ 16″ (RT)
Dc = 2° 59′ 56″
R = 1,910.50′
T = 162.19′
L = 323.59′
E = 6.87′
C = 323.21′
C.B. = N 55° 26′ 01″ E
e max = 0.024

*7.5′ WIDE UNLESS OTHERWISE NOTED

P.V.I. STA 311+40.00
ELEV = 841.10′
250.00′ VC
K = 1268

P.V.I. STA 316+75.00
ELEV = 836.94′
600.00′ VC
K = 455

P.V.I. STA 317+90.00
ELEV = 837.95′
250.00′ VC
K = 245

P.V.I. STA 321+05.00
ELEV = 839.27′
260.00′ VC
K = 2111

D10 STA 311+42.86, 2.70′ RT
CB-5A, GRATE ELEV 838.10
27″ (SW) 833.76
27″ (NE) 833.76

STA 311+42.86, 0.14′ RT
EX. CB
GRATE EL 837.04

D11 STA 314+00.00, 3.50′ RT
CB-5A, RIM ELEV 836.60
27″ (SW) 832.35
27″ (NE) 832.35

D12 STA 317+27.14, 3.10′ RT
CB-5A, GRATE ELEV 835.35
27″ (SW) 830.20
30″ (SE) 830.45

STA 317+42.48, 0.23′ RT
EX. CB, GRATE ELEV 834.12

D14 STA 318+43.44, 3.20′ RT
CB-5A, GRATE ELEV 835.30
30″ (SE) 829.70
24″ (NE) 830.20

STA 318+43.44, 0.45′ LT
EX. CB, GRATE ELEV 834.09

D15 STA 320+00.00, 3.00′ RT
CB-5, GRATE ELEV 835.80
24″ (SW) 831.70
24″ (NE) 831.70

STA 321+44.32, 12.96′ LT
EX. CB, GRATE ELEV 837.29

D16 FRA-665-0887
STA 321+44.32, 10.00′ RT
MH-3, RIM ELEV 837.50
24″ (SW) 832.02
24″ (NE) 832.02

S.R. 665 (LONDON-GROVEPORT RD.)

FRA-71-0600
EX. TWIN 54″ CONC. CULV.
CULVERT TO BE CLEANED OUT

FRA-71-0600
EX. TWIN 54″ REINF. CONC. CULVERTS

PLAN AND PROFILE
STA. 310+50.00 TO STA. 322+50.00

FRA-71-5.29

136
623

CALCULATED CDS CHECKED GPD

HORIZONTAL SCALE IN FEET 0 25 50 100

P:\84868\roadway\sheets\84868GP004.dgn 3/27/2015 2:30:48 PM kfahy

CROSS REFERENCES	
SHEET NO.	DESCRIPTION
6	REFERENCES AND BENCHMARKS
200-202,205	DRAINAGE DETAILS

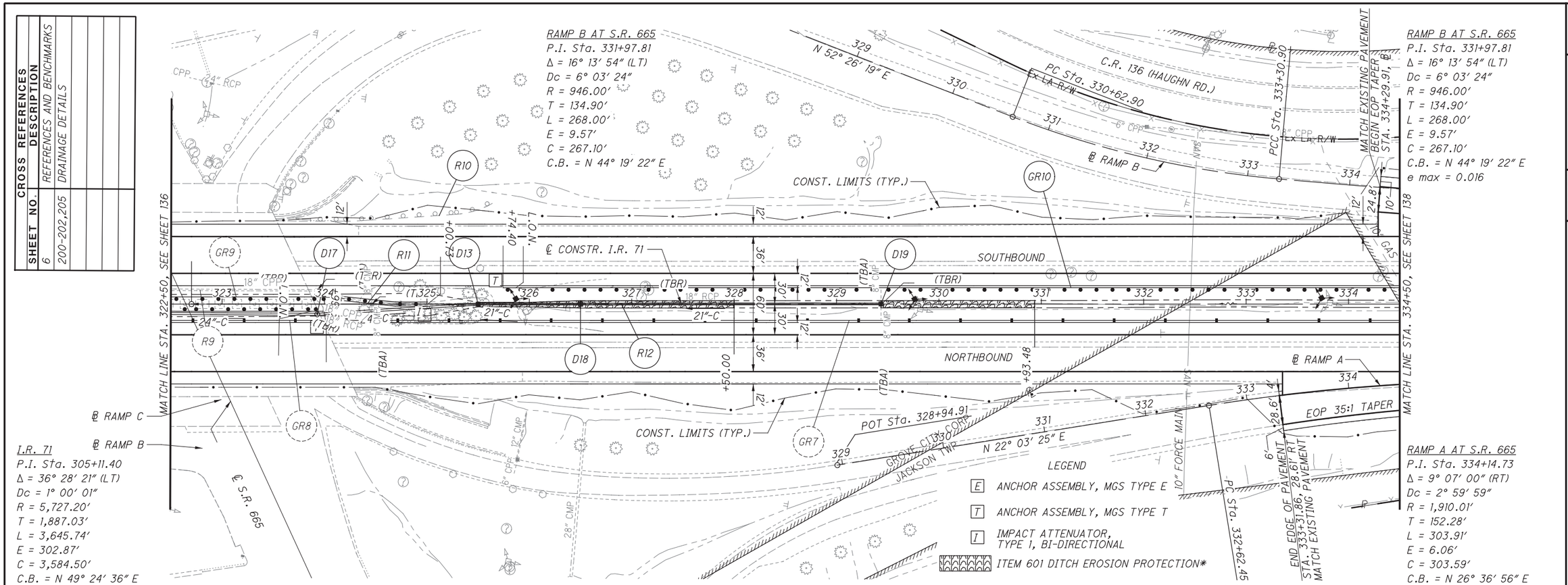

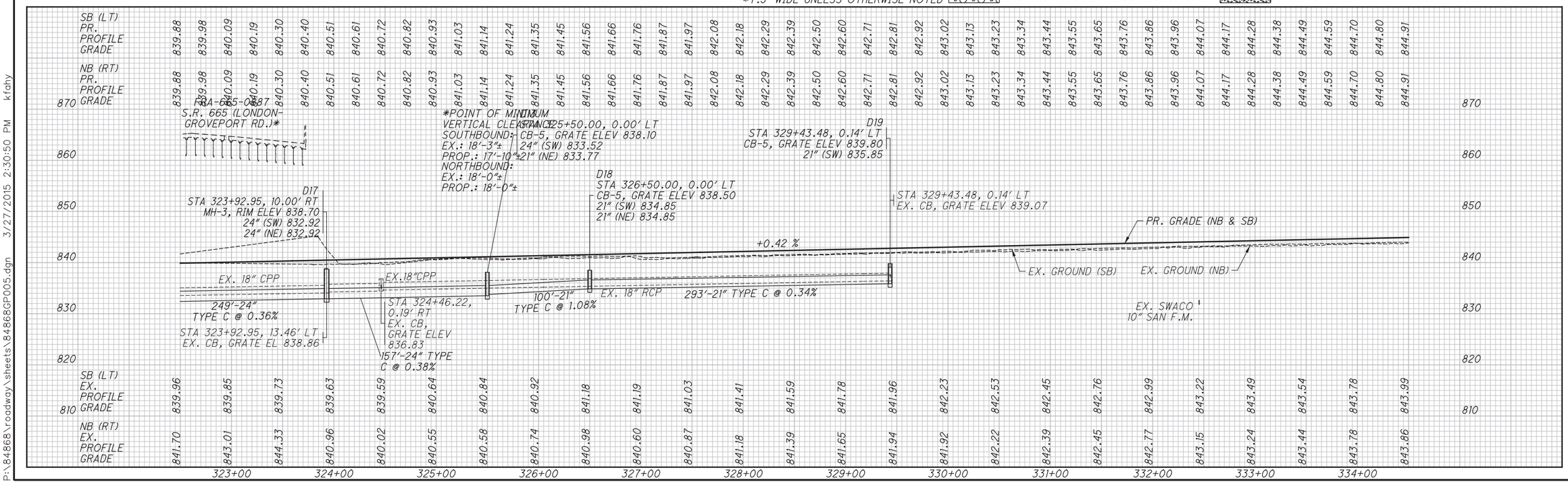

P:\84866\roadway\sheets\84866GP005.dgn 3/27/2015 2:30:50 PM kfahy

CROSS REFERENCES	
SHEET NO.	DESCRIPTION
6	REFERENCES AND BENCHMARKS
223	DRAINAGE DETAILS

RAMP B AT S.R. 665
P.I. Sta. 338+34.54
Δ = 5° 01′ 59″ (LT)
Dc = 0° 30′ 00″
R = 11,459.16′
T = 503.63′
L = 1,006.62′
E = 11.06′
C = 1,006.30′
C.B. = N 33° 41′ 25″ E
e max = 0.016

RAMP A AT S.R. 665
P.I. Sta. 334+14.73
Δ = 9° 07′ 00″ (RT)
Dc = 2° 59′ 59″
R = 1,910.01′
T = 152.28′
L = 303.91′
E = 6.06′
C = 303.59′
C.B. = N 26° 36′ 56″ E
e max = 0.055

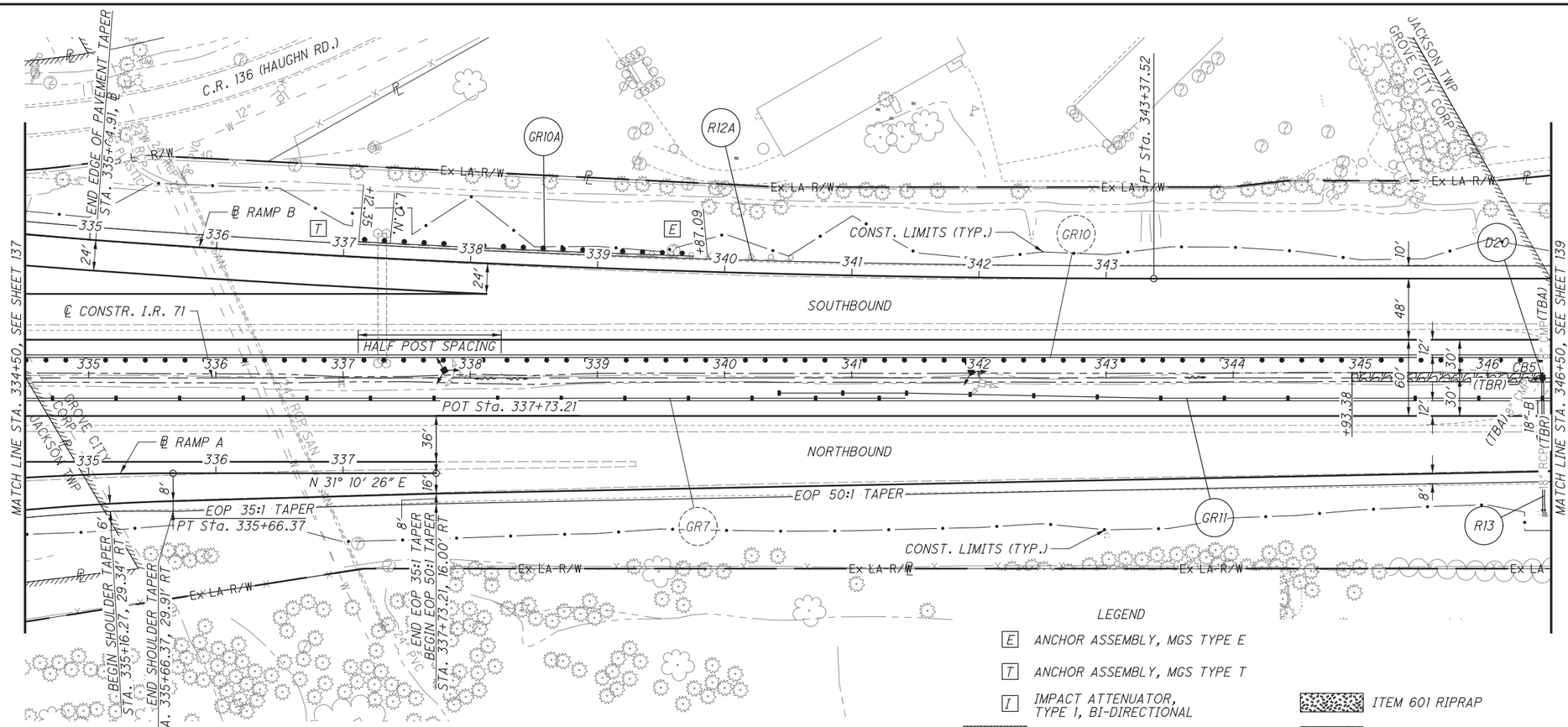

LEGEND

- [E] ANCHOR ASSEMBLY, MGS TYPE E
- [T] ANCHOR ASSEMBLY, MGS TYPE T
- [I] IMPACT ATTENUATOR, TYPE I, BI-DIRECTIONAL
- ITEM 601 RIPRAP
- ITEM 670 DITCH EROSION PROTECTION*
- ITEM 601 ROCK CHANNEL PROTECTION

*7.5′ WIDE UNLESS OTHERWISE NOTED

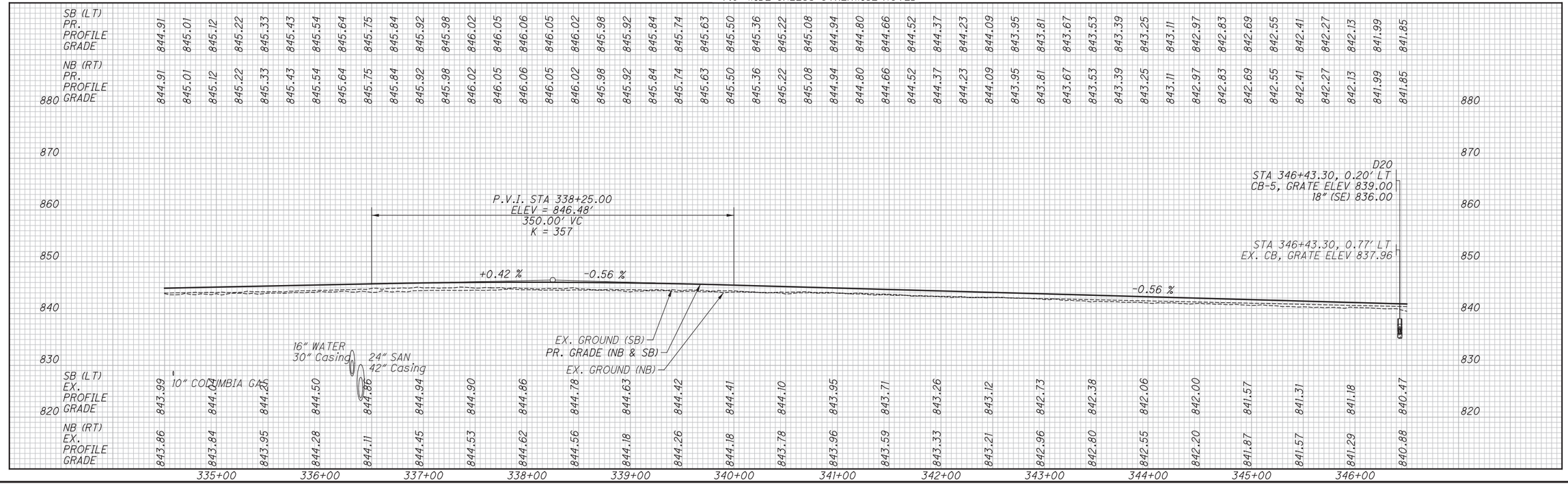

HORIZONTAL SCALE IN FEET: 0, 25, 50, 100

CALCULATED CDS | CHECKED GPD

PLAN AND PROFILE
STA. 334+50.00 TO STA. 346+50.00

FRA-71-5.29

138
623

P:\84866\roadway\sheets\84866GP006.dgn 3/27/2015 2:30:52 PM kfahy

CROSS REFERENCES	
SHEET NO.	DESCRIPTION
6	REFERENCES AND BENCHMARKS
232	DRAINAGE DETAILS

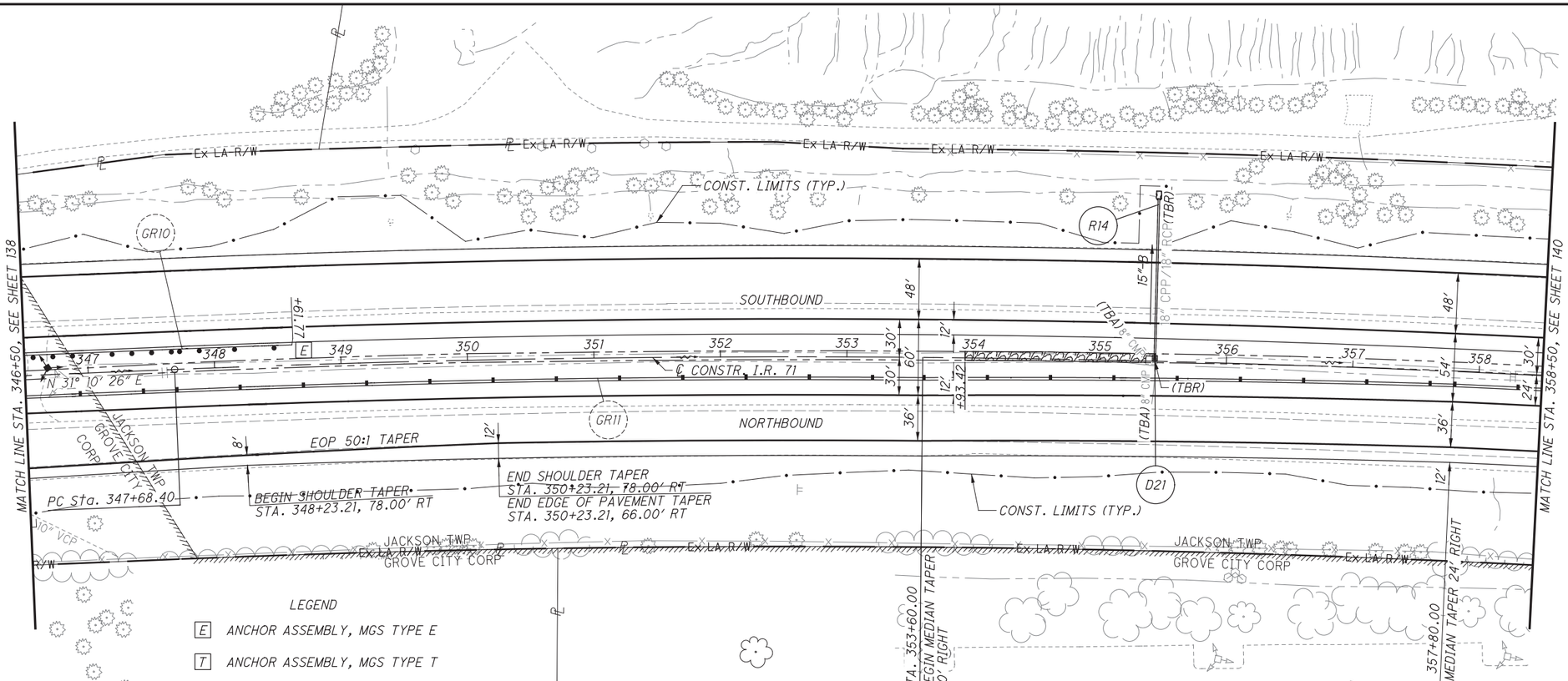

I.R. 71
P.I. Sta. 363+99.11
Δ = 15° 39' 29" (RT)
Dc = 0° 28' 59"
R = 11,859.72'
T = 1,630.71'
L = 3,241.09'
E = 111.59'
e max = 0.018
C = 3,231.02'
C.B. = N 39° 00' 10" E

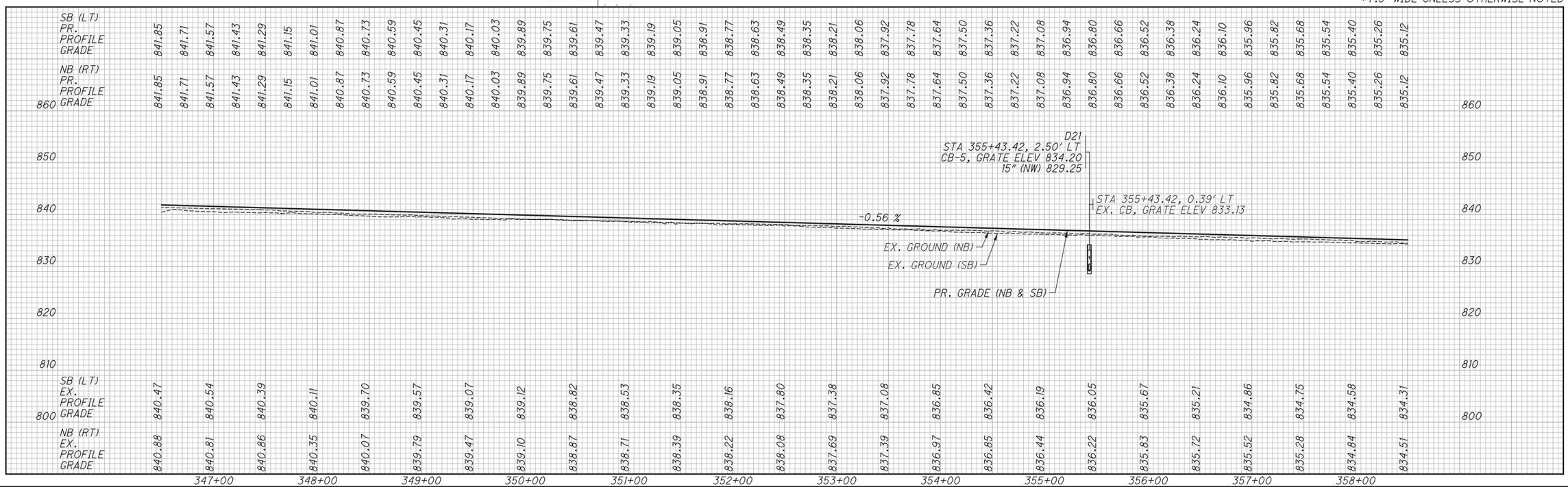

HORIZONTAL SCALE IN FEET
0 25 50 100

CALCULATED CDS
CHECKED GPD

PLAN AND PROFILE
STA. 346+50.00 TO STA. 358+50.00

FRA-71-5.29

139
623

P:\84868\roadway\sheets\84868GP007.dgn 3/27/2015 2:30:53 PM kfahy

CROSS REFERENCES	
SHEET NO.	DESCRIPTION
6	REFERENCES AND BENCHMARKS
238	DRAINAGE DETAILS
454	CULVERT DETAILS

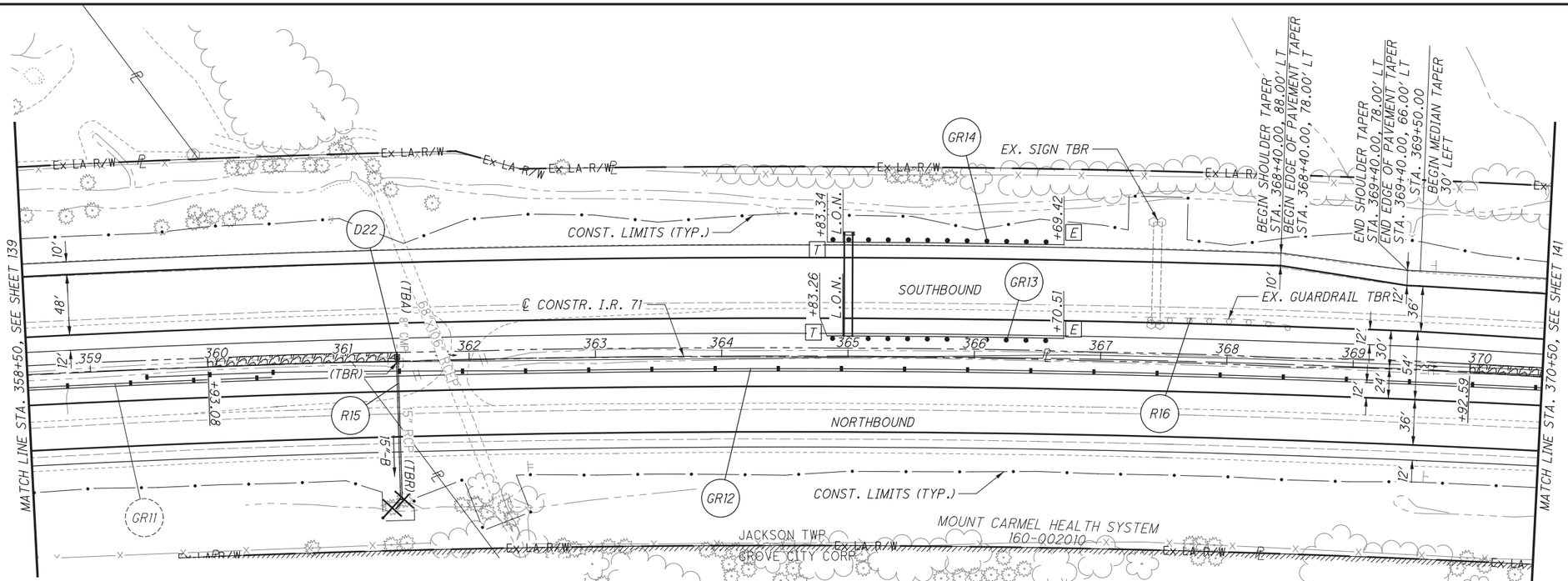

I.R. 71
P.I. Sta. 363+99.11
Δ = 15° 39' 29" (RT)
Dc = 0° 28' 59"
R = 11,859.72'
T = 1,630.71'
L = 3,241.09'
E = 111.59'
e max = 0.018
C = 3,231.02'
C.B. = N 39° 00' 10" E

LEGEND

- [E] ANCHOR ASSEMBLY, MGS TYPE E
- [T] ANCHOR ASSEMBLY, MGS TYPE T
- [I] IMPACT ATTENUATOR, TYPE 1, BI-DIRECTIONAL
- ITEM 601 RIPRAP
- ITEM 670 DITCH EROSION PROTECTION*
- ITEM 601 ROCK CHANNEL PROTECTION

*7.5' WIDE UNLESS OTHERWISE NOTED

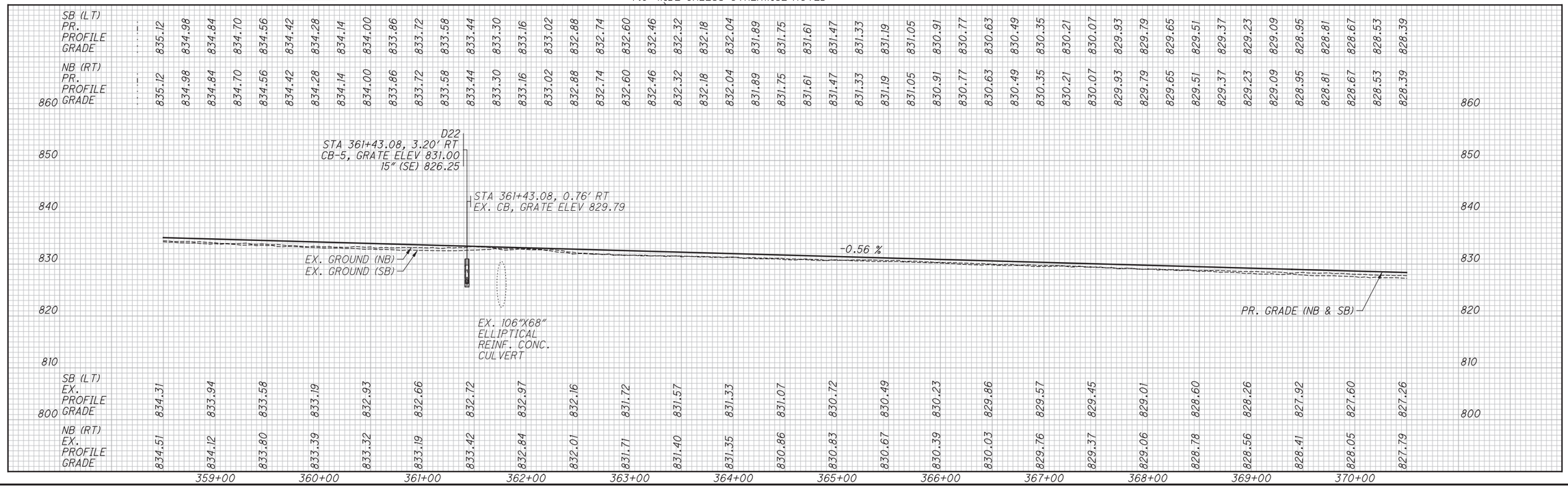

N

HORIZONTAL SCALE IN FEET
0 25 50 100

CALCULATED CDS
CHECKED GPD

PLAN AND PROFILE
STA. 358+50.00 TO STA. 370+50.00

FRA-71-5.29

140
623

P:\84668\roadway\sheets\84668GP008.dgn 3/27/2015 2:30:54 PM kfahy

CROSS REFERENCES	
SHEET NO.	DESCRIPTION
6	REFERENCES AND BENCHMARKS
544	MEDIAN CROSSOVER DETAILS
248,254	DRAINAGE DETAILS

I.R. 71
P.I. Sta. 363+99.11
Δ = 15° 39′ 29″ (RT)
Dc = 0° 28′ 59″
R = 11,859.72′
T = 1,630.71′
L = 3,241.09′
E = 111.59′
e max = 0.018
C = 3,231.02′
C.B. = N 39° 00′ 10″ E

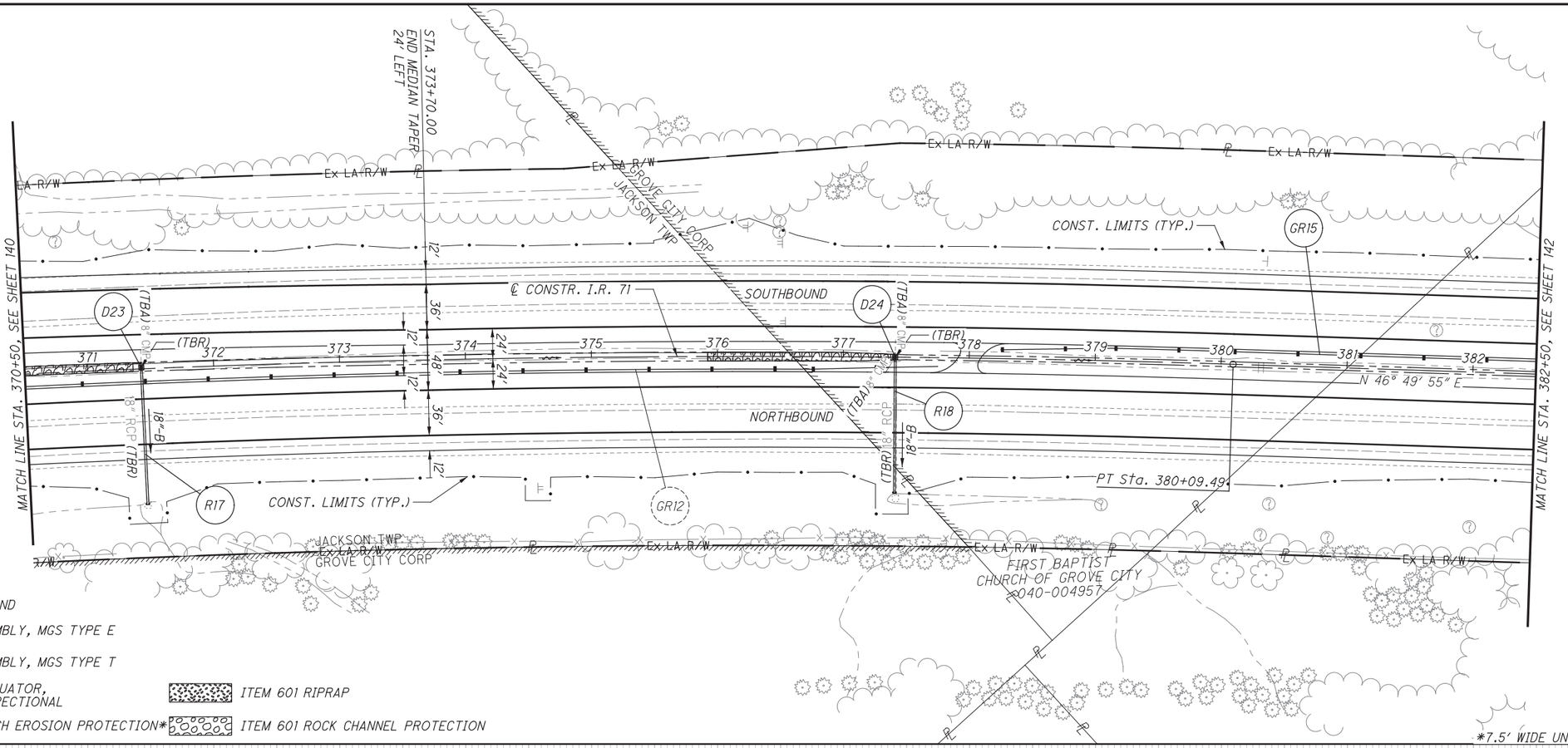

LEGEND

- [E] ANCHOR ASSEMBLY, MGS TYPE E
- [T] ANCHOR ASSEMBLY, MGS TYPE T
- [I] IMPACT ATTENUATOR, TYPE 1, BI-DIRECTIONAL
- ITEM 601 RIPRAP
- ITEM 670 DITCH EROSION PROTECTION*
- ITEM 601 ROCK CHANNEL PROTECTION

*7.5′ WIDE UNLESS OTHERWISE NOTED

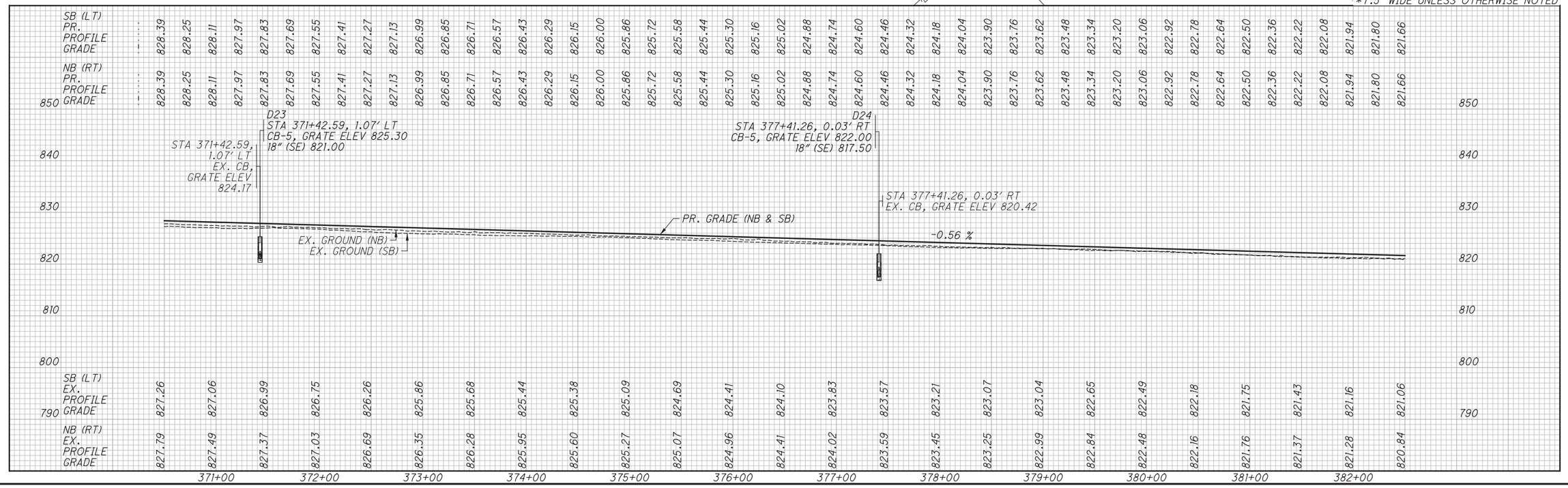

PLAN AND PROFILE
STA. 370+50.00 TO STA. 382+50.00

HORIZONTAL SCALE IN FEET
0 25 50 100

CALCULATED CDS
CHECKED GPD

FRA-71-5.29

141
623

P:\84668\roadway\sheets\84668GP009.dgn 3/27/2015 2:30:54 PM kfahy

CROSS REFERENCES	
SHEET NO.	DESCRIPTION
6	REFERENCES AND BENCHMARKS
263	DRAINAGE DETAILS
455	CULVERT DETAILS

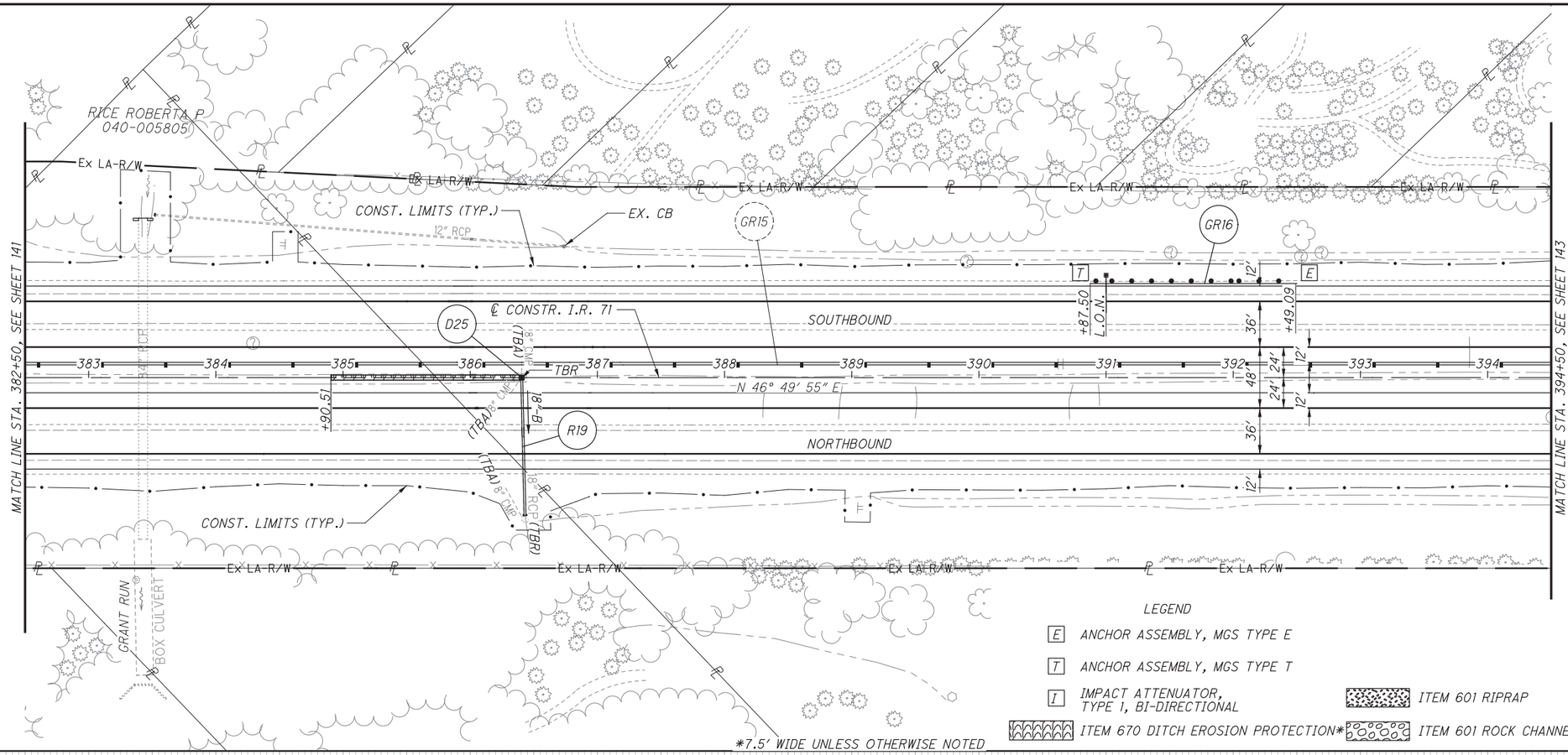

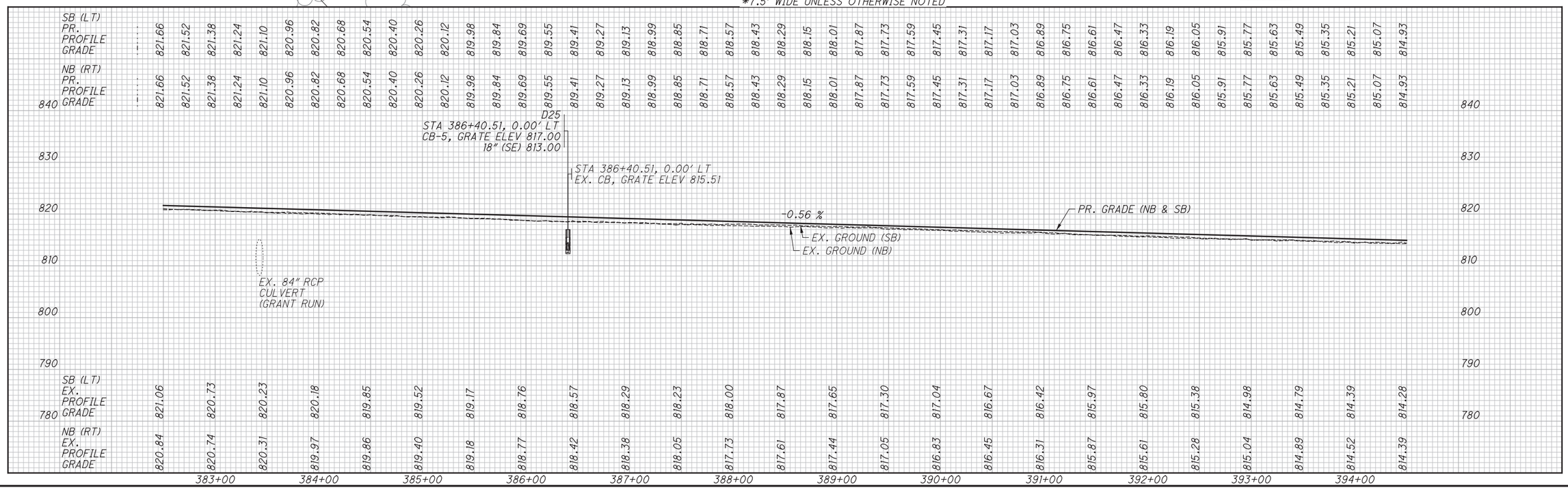

HORIZONTAL SCALE IN FEET
0 25 50 100

CALCULATED CDS
CHECKED GPD

PLAN AND PROFILE
STA. 382+50.00 TO STA. 394+50.00

FRA-71-5.29

142
623

P:\84868\roadway\sheets\84868GP010.dgn 3/27/2015 2:30:55 PM kfahy

CROSS REFERENCES	
SHEET NO.	DESCRIPTION
6	REFERENCES AND BENCHMARKS
273,276,279, 282	DRAINAGE DETAILS

RUOFF CHARLES G & RUOFF TONYA J 040-006756

WIDNER MICHAEL D & WIDNER SUZANNE E 040-006757

JACKSON TOWNSHIP 040-004976

Ex LA R/W

℄ CONSTR. I.R. 71

SOUTHBOUND

NORTHBOUND

MATCH LINE STA. 394+50, SEE SHEET 142

MATCH LINE STA. 406+50, SEE SHEET 144

CONST. LIMITS (TYP.)

GR15 D29 D26 R21 R20 R22 GR17 D27 D28 D29A

(TBA) 8" CMP

(TBR) 18" RCP

21"-C

N 46° 49' 55" E

+90.01 +61.53 +50.29 +17.05

L.O.N.

DND

21"-B

(TR) 30" RCP

(TR) 21" CPP

CB5

TR

EX. GUARDRAIL TBR

EX. DMS SIGN

STRUCTURE NO. FRA-71-0768

GROVE CITY CORP. JACKSON TWP.

C.R. 262 (HOOVER RD.)

HOOVER RD. SPUR

NOTE: EX. PIER PROTECTION FOR THE HOOVER RD. OVERPASS INCLUDING GUARDRAIL AND CONCRETE TO REMAIN

LEGEND

[E] ANCHOR ASSEMBLY, MGS TYPE E

[T] ANCHOR ASSEMBLY, MGS TYPE T

[I] IMPACT ATTENUATOR, TYPE 1, BI-DIRECTIONAL

ITEM 601 RIPRAP

ITEM 670 DITCH EROSION PROTECTION*

ITEM 601 ROCK CHANNEL PROTECTION

*7.5' WIDE UNLESS OTHERWISE NOTED

	395	396	397	398	399	400	401	402	403	404	405	406
SB (LT) PR. PROFILE GRADE	814.93	814.79	814.65	814.51	814.37	814.23	814.09	813.95	813.81	813.67	813.53	813.39
NB (RT) PR. PROFILE GRADE	814.93	814.79	814.65	814.51	814.37	814.23	814.09	813.95	813.81	813.67	813.53	813.39
SB (LT) EX. PROFILE GRADE	814.28	813.90	813.58	813.29	812.92	812.55	812.30	812.05	811.78	811.55	811.49	811.07
NB (RT) EX. PROFILE GRADE	814.39	814.10	813.80	813.57	813.38	813.10	812.67	812.28	812.14	811.76	811.43	811.05

	395+00	396+00	397+00	398+00	399+00	400+00	401+00	402+00	403+00	404+00	405+00	406+00
SB (LT) PR. PROFILE GRADE	813.24	813.10	812.96	812.82	812.68	812.54	812.40	812.26	812.12	811.98	811.84	811.70
NB (RT) PR. PROFILE GRADE	813.24	813.10	812.96	812.82	812.68	812.54	812.40	812.26	812.12	811.98	811.84	811.70
SB (LT) EX. PROFILE GRADE	810.68	810.42	810.31	809.78	809.97	809.58	809.05	808.86	808.44	808.28	808.67	808.31
NB (RT) EX. PROFILE GRADE	810.87	810.49	810.25	809.95	809.66	809.33	809.16	809.26	808.81	808.53	807.95	807.93

	407	408	409	410	411	412	413	414	415	416	417	418
SB (LT) PR. PROFILE GRADE	811.56	811.42	811.28	811.14	811.00	810.86	810.72	810.58	810.44	810.30	810.16	810.02
NB (RT) PR. PROFILE GRADE	811.56	811.42	811.28	811.14	811.00	810.86	810.72	810.58	810.44	810.30	810.16	810.02
SB (LT) EX. PROFILE GRADE	807.98	807.89	807.80	807.71	807.62	807.53	807.44	807.35	807.26	807.17	807.08	806.99
NB (RT) EX. PROFILE GRADE	807.98	807.89	807.80	807.71	807.62	807.53	807.44	807.35	807.26	807.17	807.08	806.99

	407+00	408+00	409+00	410+00	411+00	412+00	413+00	414+00	415+00	416+00	417+00	418+00

D26 STA 396+40.01, 0.39' LT CB-5, GRATE ELEV 811.50 21" (NE) 807.15

D27 STA 399+40.01, 0.00' RT CB-5, RIM ELEV 809.70 21" (SW) 805.50 21" (NE) 805.50

D28 STA 402+40.01, 0.00' RT CB-5, RIM ELEV 808.50 21" (SW) 803.85 21" (NE) 803.85

D29 STA 405+11.53, 0.40' RT CB-5, GRATE ELEV 806.60 21" (SW) 802.05 21" (SE) 802.05

STA 396+40.01, 0.39' LT EX. CB, GRATE ELEV 809.94

PR. GRADE (NB & SB)

EX. GROUND (NB)

EX. GROUND (SB)

300'-21" TYPE C @ 0.55%

-0.56 %

300'-21" TYPE C @ 0.55%

EX. 18" RCP

272'-21" TYPE C @ 0.66%

STA 405+11.53, 0.40' RT EX. CB, GRATE ELEV 805.02

EX. WATER

EX. 12" WATER WITH 24" CASING

STA 405+00 ELEV 809.04

P.V.I. STA 407+00.00 ELEV = 807.92'

400.00' VC K = 3309

PLAN AND PROFILE
STA. 394+50.00 TO STA. 406+50.00

FRA-71-5.29

143
623

HORIZONTAL SCALE IN FEET 0 25 50 100

CALCULATED CDS CHECKED GPD

P:\84868\roadway\sheets\84868GP011.dgn 3/27/2015 2:30:56 PM kfahy

CROSS REFERENCES	
SHEET NO.	DESCRIPTION
6	REFERENCES AND BENCHMARKS
291	DRAINAGE DETAILS
456	CULVERT DETAILS

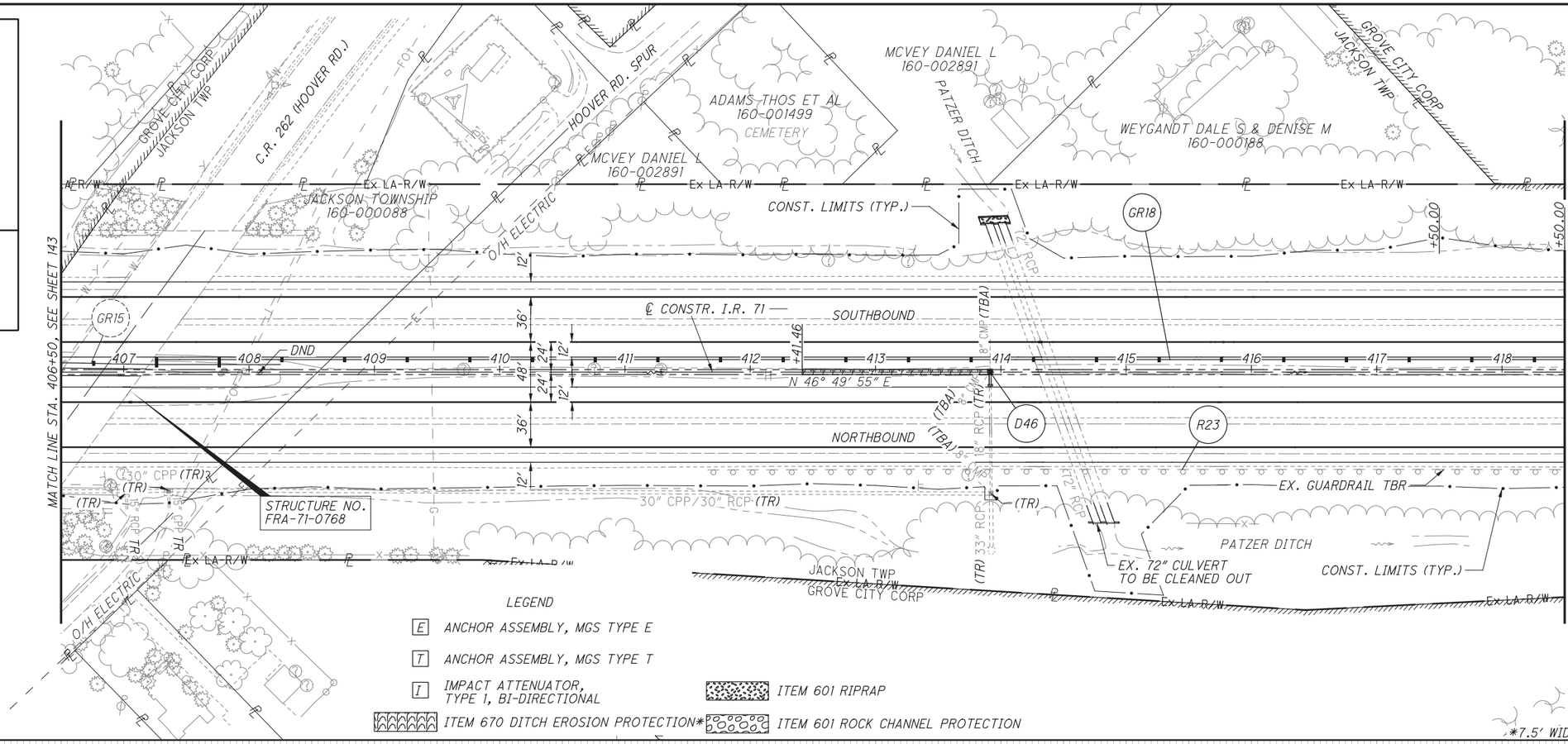

LEGEND

- [E] ANCHOR ASSEMBLY, MGS TYPE E
- [T] ANCHOR ASSEMBLY, MGS TYPE T
- [I] IMPACT ATTENUATOR, TYPE 1, BI-DIRECTIONAL
- ITEM 601 RIPRAP
- ITEM 670 DITCH EROSION PROTECTION*
- ITEM 601 ROCK CHANNEL PROTECTION

*7.5' WIDE UNLESS OTHERWISE NOTED

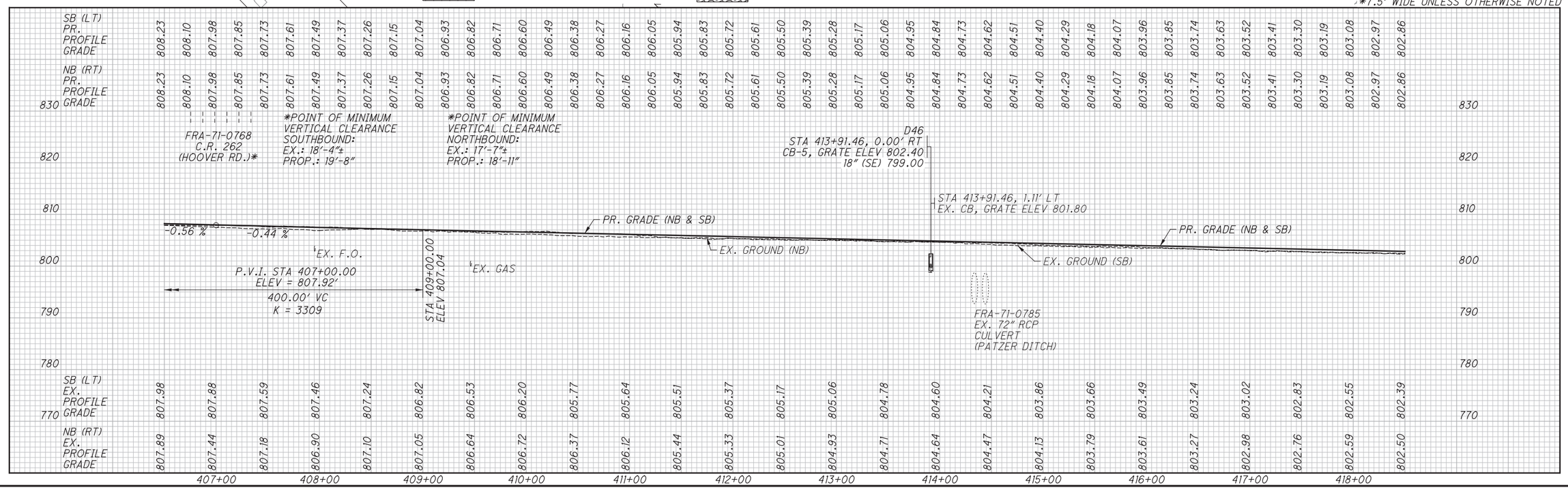

HORIZONTAL SCALE IN FEET: 0, 25, 50, 100

CALCULATED CDS | CHECKED GPD

PLAN AND PROFILE
STA. 406+50.00 TO STA. 418+50.00

FRA-71-5.29

144
623

P:\84868\roadway\sheets\84868GP012.dgn 3/27/2015 2:30:57 PM kfahy

CROSS REFERENCES	
SHEET NO.	DESCRIPTION
6	REFERENCES AND BENCHMARKS
300-301	DRAINAGE DETAILS
457	CULVERT DETAILS

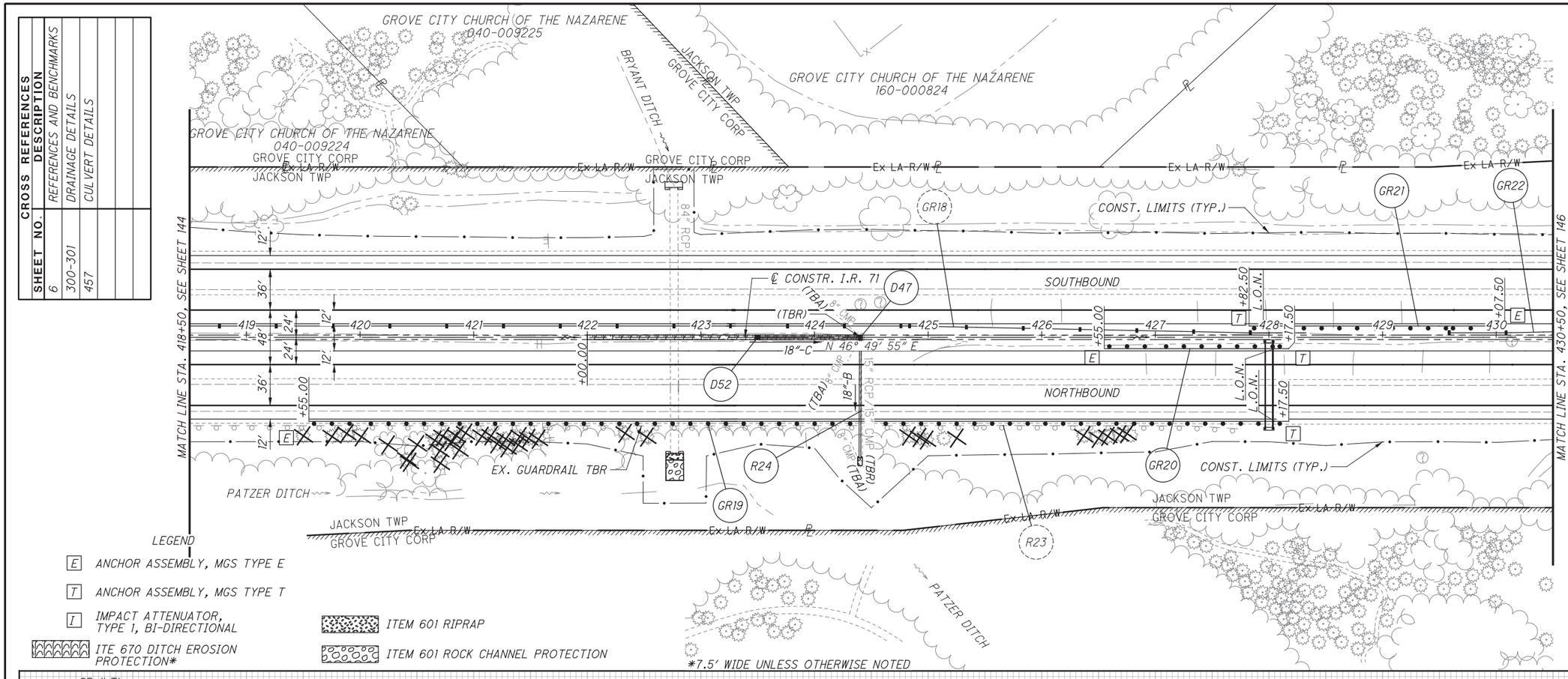

LEGEND

- E — ANCHOR ASSEMBLY, MGS TYPE E
- T — ANCHOR ASSEMBLY, MGS TYPE T
- I — IMPACT ATTENUATOR, TYPE 1, BI-DIRECTIONAL
- ITE 670 DITCH EROSION PROTECTION*
- ITEM 601 RIPRAP
- ITEM 601 ROCK CHANNEL PROTECTION

*7.5' WIDE UNLESS OTHERWISE NOTED

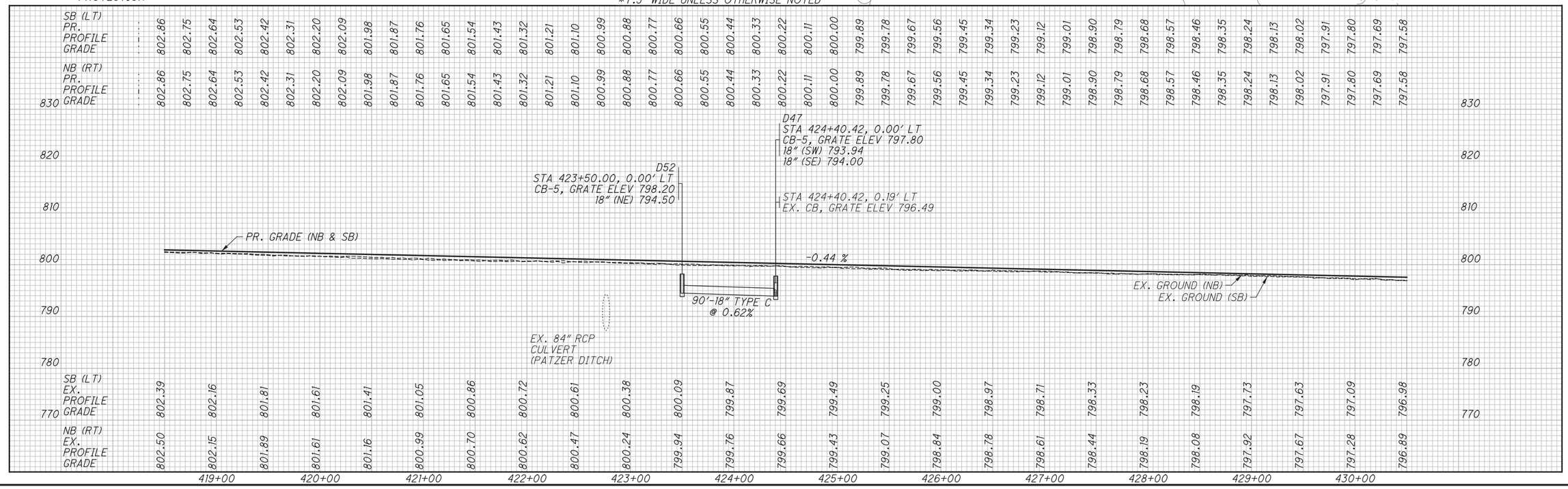

CALCULATED CDS
CHECKED GPD

HORIZONTAL SCALE IN FEET
0 25 50 100

PLAN AND PROFILE
STA. 418+50.00 TO STA. 430+50.00

FRA-71-5.29

145
623

P:\84868\roadway\sheets\84868GP013.dgn 3/27/2015 2:30:58 PM kfahy

CROSS REFERENCES	
SHEET NO.	DESCRIPTION
6	REFERENCES AND BENCHMARKS
311,314,317	DRAINAGE DETAILS
483 - 543	NOISE BARRIER DETAILS

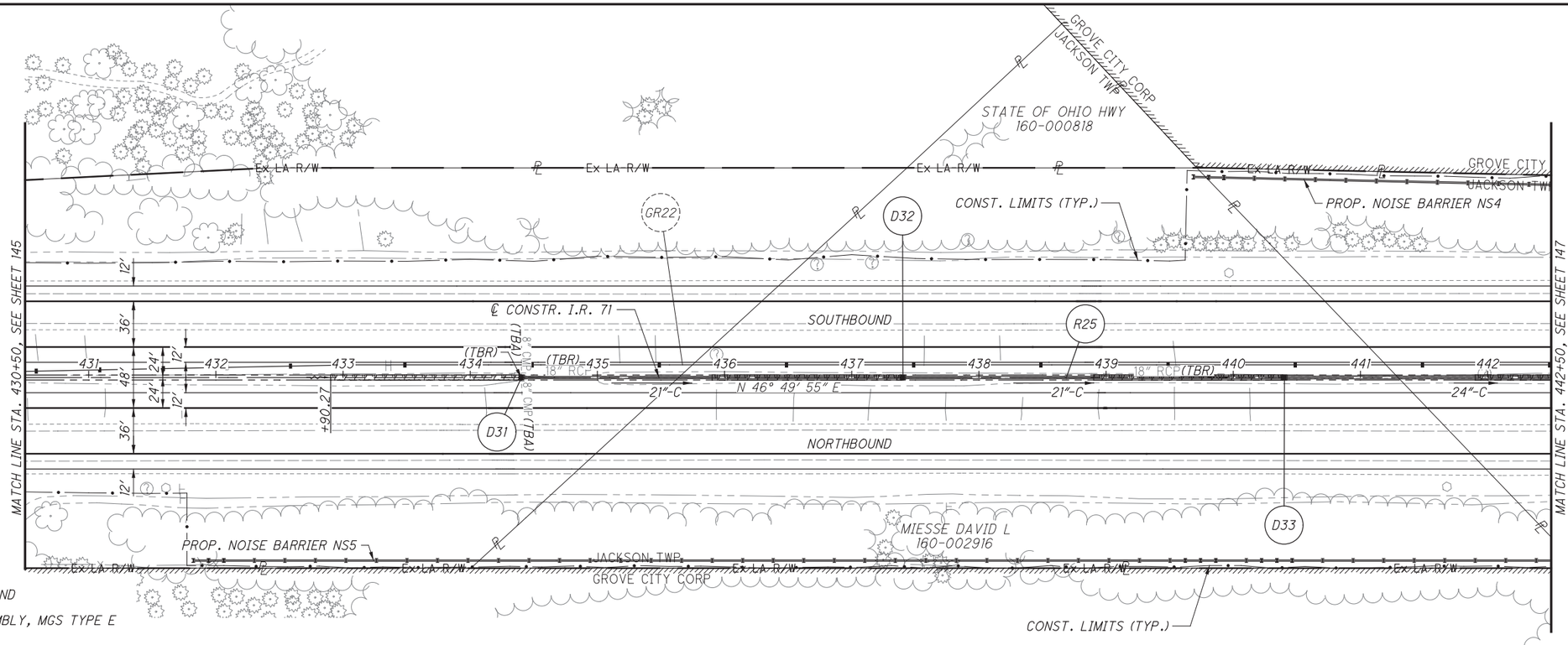

LEGEND

- [E] ANCHOR ASSEMBLY, MGS TYPE E
- [T] ANCHOR ASSEMBLY, MGS TYPE T
- [I] IMPACT ATTENUATOR, TYPE 1, BI-DIRECTIONAL
- ITEM 670 DITCH EROSION PROTECTION*
- ITEM 601 RIPRAP
- ITEM 601 ROCK CHANNEL PROTECTION

*7.5' WIDE UNLESS OTHERWISE NOTED

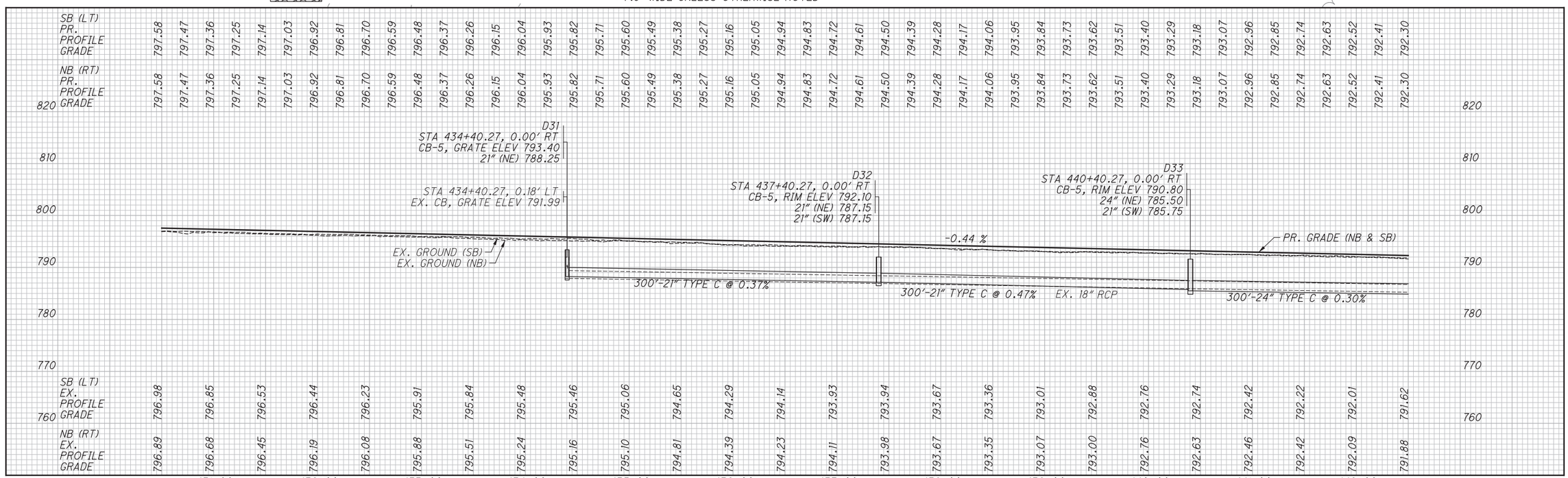

HORIZONTAL SCALE IN FEET: 0, 25, 50, 100

CALCULATED CDS CHECKED GPD

PLAN AND PROFILE
STA. 430+50.00 TO STA. 442+50.00

FRA-71-5.29

146
623

P:\84866\roadway\sheets\84866GP014.dgn 3/27/2015 2:30:59 PM kfahy

CROSS REFERENCES	
SHEET NO.	DESCRIPTION
6	REFERENCES AND BENCHMARKS
320,321,324, 327,330	DRAINAGE DETAILS
458	CULVERT DETAILS
483 - 543	NOISE BARRIER DETAILS

I.R. 71
P.I. Sta. 472+61.69
Δ = 19° 28′ 45″ (LT)
Dc = 0° 29′ 02″
R = 11,843.51′
T = 2,032.88′
L = 4,026.53′
E = 173.20′
e max = 0.018
C = 4,007.16′
C.B. = N 37° 05′ 32″ E

HORIZONTAL SCALE IN FEET
0 25 50 100

CALCULATED CDS
CHECKED GPD

PLAN AND PROFILE
STA. 442+50.00 TO STA. 454+50.00

FRA-71-5.29

147
623

MCKNIGHT JEFFREY A 040-007897
WARNER GREGORY W & LISA A 040-009390
CARTER SHARON E 040-009389
TRAPHAGAN ROBERT C 040-009388
MALLORY DOUGLAS P & MALLORY SHAREN D 040-009387
KINGSBURY GREGORY A & KINGSBURY REBECCA A 040-009386
EYERMAN PHERABA (AFDT) 160-002917
GEYER EDWARD F & MARY E 040-009230
HENDRICKS STACY J & HENDRICKS MICHAEL P 040-014622
M/I HOMES OF CENTRAL OHIO LLC 040-014623
040-014621 040-014620 040-014619 040-014618 040-014617 040-014616 040-014615 040-014614
KARUAH PRESTON B & KARUAH DAVIS 040-014613
KECK TIMOTHY J & EDWIN JACOB 040-014612
GROSS MICHAEL D & PERSICO KATHRYN 040-014611
040-014610

PROP. NOISE BARRIER NS4
PROP. NOISE BARRIER NS5
CONST. LIMITS (TYP.)
Ex LA R/W
CORP
JACKSON TWP / GROVE CITY CORP
℄ CONSTR. I.R. 71
SOUTHBOUND
NORTHBOUND
N 46° 49′ 55″ E
PC Sta. 452+28.81
EX. GUARDRAIL TO BE REMOVED
EX. GUARDRAIL TO REMAIN
MATCH LINE STA. 442+50, SEE SHEET 146
MATCH LINE STA. 454+50, SEE SHEET 148
R25 R26 R27 R28
GR22 GR23
D34 D35 D36 D37 D38 D54
18" RCP (TBR)
24"-C
18"/21" RCP (TBR)
27"-C
18" CMP (TBA)
24" RCP (TBR)
45"x29" RCP (TBR)
4'X8'-A
4'X8'-B
+90.45
+40.45
+90.06
12' 36' 48' 24' 12' 27'

LEGEND

- [E] ANCHOR ASSEMBLY, MGS TYPE E
- [T] ANCHOR ASSEMBLY, MGS TYPE T
- [I] IMPACT ATTENUATOR, TYPE I, BI-DIRECTIONAL
- ITEM 670 DITCH EROSION PROTECTION*
- ITEM 601 RIPRAP
- ITEM 601 ROCK CHANNEL PROTECTION

*7.5' WIDE UNLESS OTHERWISE NOTED

	443+00	444+00	445+00	446+00	447+00	448+00	449+00	450+00	451+00	452+00	453+00	454+00
SB (LT) PR. PROFILE GRADE	792.30	792.19	792.08	791.97	791.86	791.75	791.64	791.53	791.42	791.31	791.20	791.09
NB (RT) PR. PROFILE GRADE	792.30	792.19	792.08	791.97	791.86	791.75	791.64	791.53	791.42	791.31	791.20	791.09
	790.98	790.87	790.76	790.65	790.54	790.43	790.32	790.21	790.10	789.99	789.88	789.77
	789.66	789.55	789.44	789.33	789.22	789.11	789.00	788.89	788.78	788.67	788.56	788.45
	788.34	788.23	788.12	788.01	787.90	787.79	787.68	787.57	787.46	787.35	787.24	787.13
	787.02											
SB (LT) EX. PROFILE GRADE	791.62	791.50	791.24	791.02	790.63	790.58	790.33	790.24	790.02	789.79	789.59	789.21
NB (RT) EX. PROFILE GRADE	791.88	791.48	791.42	791.11	790.82	790.66	790.39	790.18	789.83	789.61	789.34	789.11
	788.96	788.79	788.44	788.14	788.05	787.95	787.58	787.38	787.01	786.78	786.69	786.48
	786.13											

D34 STA 443+40.27, 0.00′ RT
CB-5, RIM ELEV 789.60
24″ (SW) 784.60
24″ (NE) 784.60

D35 STA 444+40.45, 0.00′ LT
CB-5, GRATE ELEV 789.00
24″ (NE) 783.9
24″ (SW) 783.9

STA 444+40.45, 0.09′ LT
EX. CB, GRATE ELEV 787.51

D36 STA 447+40.45, 0.00′ LT
CB-5, RIM ELEV 787.70
24″ (SW) 782.60
24″ (NE) 782.60

D37 STA 450+40.45, 0.00′ LT
CB-5, RIM ELEV 786.30
27″ (NE) 780.70
24″ (SW) 780.95

D38 STA 453+40.06, 0.00′ RT
CB-5, GRATE ELEV 785.30
27″ (SE) 779.65
27″ (SW) 779.65

STA 453+40.06, 1.15′ LT
EX. CB, GRATE ELEV 783.38

PR. GRADE (NB & SB)
EX. GROUND (SB)
EX. GROUND (NB)
-0.44 %
EX. 18" RCP
300′-24″ TYPE C @ 0.30%
100′-24″ TYPE C @ 0.70%
300′-24″ TYPE C @ 0.43%
300′-24″ TYPE C @ 0.55%
EX. 21" RCP
300′-27″ TYPE C @ 0.35%
4′ X 8′ CONDUIT TYPE A
EX. TWIN 45″X29″ REINF. CONC. CULVERTS

P:\84866\roadway\sheets\84866GP015.dgn 3/27/2015 2:31:00 PM kfahy

CROSS REFERENCES	
SHEET NO.	DESCRIPTION
6	REFERENCES AND BENCHMARKS
544	MEDIAN CROSSOVER DETAILS
340	DRAINAGE DETAILS
483 - 543	NOISE BARRIER DETAILS

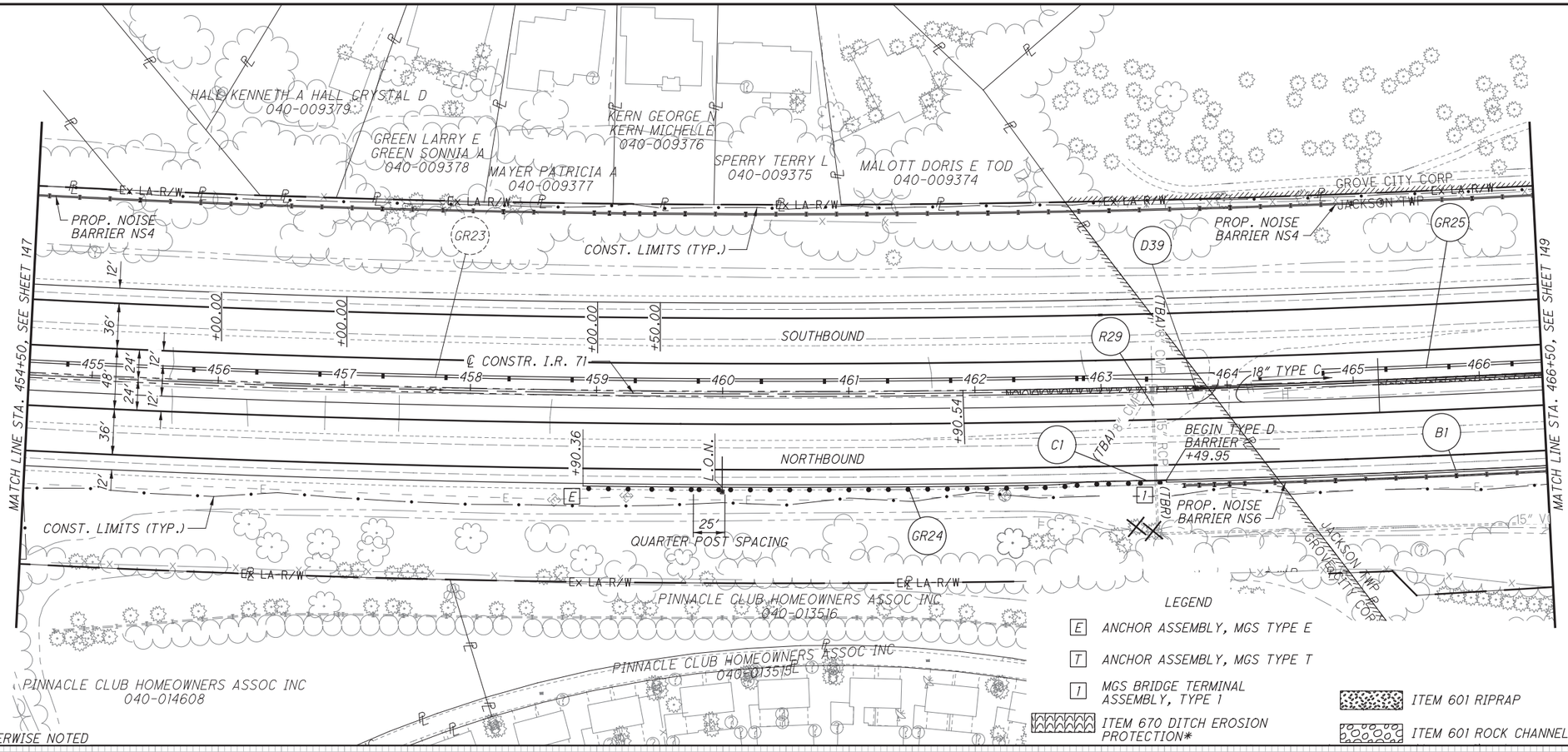

LEGEND

- E — ANCHOR ASSEMBLY, MGS TYPE E
- T — ANCHOR ASSEMBLY, MGS TYPE T
- 1 — MGS BRIDGE TERMINAL ASSEMBLY, TYPE 1
- ITEM 670 DITCH EROSION PROTECTION*
- ITEM 601 RIPRAP
- ITEM 601 ROCK CHANNEL PROTECTION

*7.5' WIDE UNLESS OTHERWISE NOTED

I.R. 71
P.I. Sta. 472+61.69
Δ = 19° 28' 45" (LT)
Dc = 0° 29' 02"
R = 11,843.51'
T = 2,032.88'
L = 4,026.53'
E = 173.20'
e max = 0.018
C = 4,007.16'
C.B. = N 37° 05' 32" E

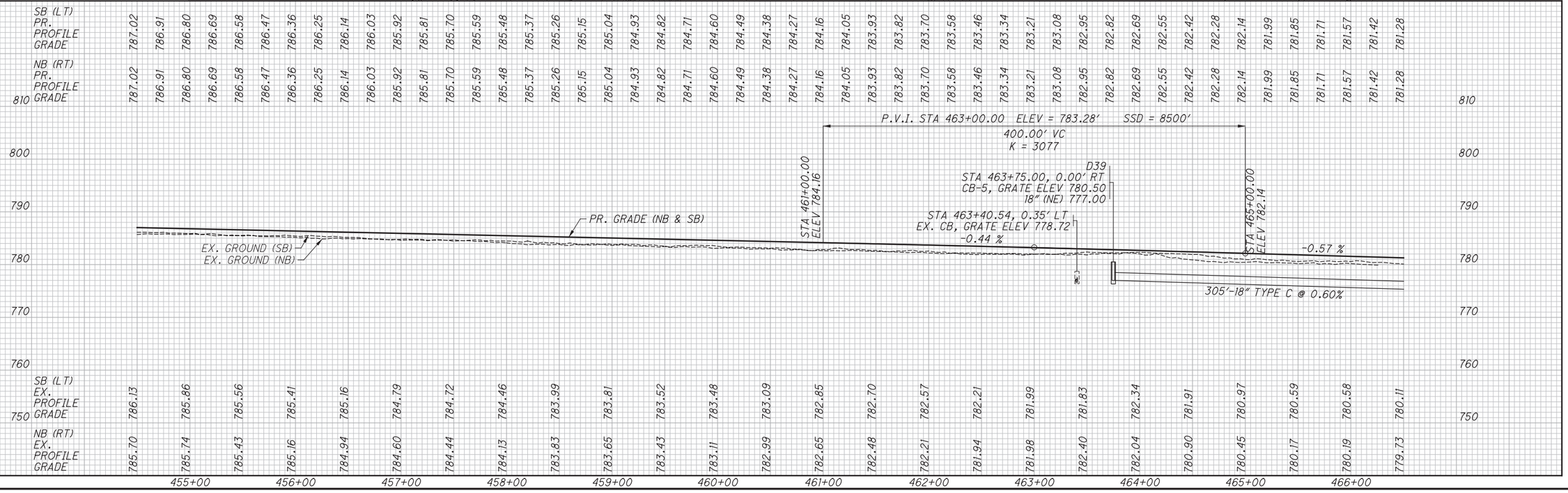

HORIZONTAL SCALE IN FEET
0 25 50 100

CALCULATED CDS
CHECKED GPD

PLAN AND PROFILE
STA. 454+50.00 TO STA. 466+50.00

FRA-71-5.29

148
623

P:\84668\roadway\sheets\84668GP016.dgn 3/27/2015 2:31:02 PM kfahy

CROSS REFERENCES	
SHEET NO.	DESCRIPTION
6	REFERENCES AND BENCHMARKS
344,347,350	DRAINAGE DETAILS
463	CULVERT DETAILS
483 - 543	NOISE BARRIER DETAILS

I.R. 71
P.I. Sta. 472+61.69
Δ = 19° 28′ 45″ (LT)
Dc = 0° 29′ 02″
R = 11,843.51′
T = 2,032.88′
L = 4,026.53′
E = 173.20′
e max = 0.018
C = 4,007.16′
C.B. = N 37° 05′ 32″ E

HORIZONTAL SCALE IN FEET
0 25 50 100

CALCULATED CDS
CHECKED GPD

PLAN AND PROFILE
STA. 466+50.00 TO STA. 478+50.00

FRA-71-5.29

LEGEND

- [E] ANCHOR ASSEMBLY, MGS TYPE E
- [T] ANCHOR ASSEMBLY, MGS TYPE T
- [J] PRESSURE RELIEF JOINT, TYPE A
- [B] ANDCHOR ASSEMBLY, MSG TYPE B
- [1] MGS BRIDGE TERMINAL ASSEMBLY, TYPE 1
- ITEM 601 ROCK CHANNEL PROTECTION
- ITEM 670 DITCH EROSION PROTECTION*
- ITEM 601 RIPRAP

*7.5′ WIDE UNLESS OTHERWISE NOTED

- [C] BEGIN SHLDR TAPER STA. 477+00.73, 18′ RT.
- [D] END SHLDR TAPER STA. 477+15.73, 15′ RT.

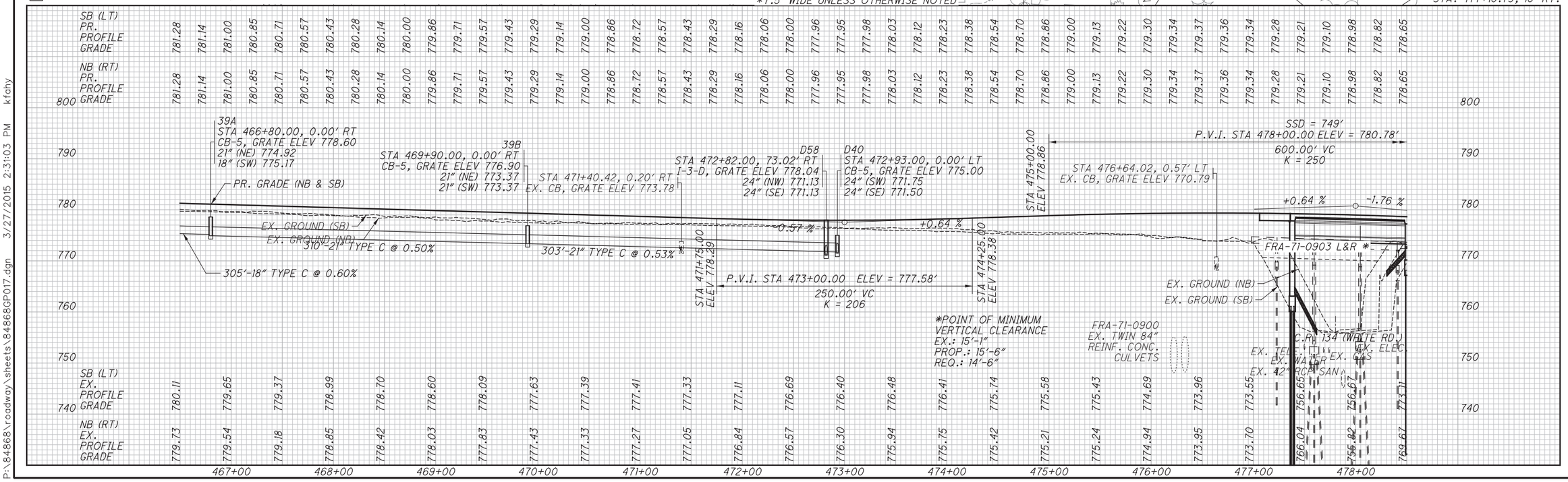

P:\84868\roadway\sheets\84868GP017.dgn 3/27/2015 2:31:03 PM kfahy

CROSS REFERENCES	
SHEET NO.	DESCRIPTION
6	REFERENCES AND BENCHMARKS
398	RAMP A PLAN & PROFILE
	RAMP D PLAN & PROFILE
446 - 449	INTERCHANGE DETAILS
364,365,371	DRAINAGE DETAILS
464	CULVERT DETAILS
483 - 543	NOISE BARRIER DETAILS

I.R. 71
P.I. Sta. 472+61.69
Δ = 19° 28′ 45″ (LT)
Dc = 0° 29′ 02″
R = 11,843.51′
T = 2,032.88′
L = 4,026.53′
E = 173.20′
e max = 0.018
C = 4,007.16′
C.B. = N 37° 05′ 32″ E

HORIZONTAL SCALE IN FEET
0 25 50 100

CALCULATED CDS
CHECKED GPD

LEGEND

- [E] ANCHOR ASSEMBLY, MGS TYPE E
- [T] ANCHOR ASSEMBLY, MGS TYPE T
- [B] ANCHOR ASSEMBLY, MSG TYPE B
- [1] MGS BRIDGE TERMINAL ASSEMBLY, TYPE 1
- [2] MGS BRIDGE TERMINAL ASSEMBLY, TYPE 2
- [J] PRESSURE RELIEF JOINT, TYPE A
- ITEM 601 ROCK CHANNEL PROTECTION
- ITEM 670 DITCH EROSION PROTECTION*
- ITEM 601 RIPRAP

*7.5′ WIDE UNLESS OTHERWISE NOTED

PLAN AND PROFILE
STA. 478+50.00 TO STA. 490+50.00

FRA-71-5.29

150
623

P:\84868\roadway\sheets\84868GP018.dgn 3/27/2015 2:31:06 PM kfahy

I.R. 71
P.I. Sta. 472+61.69
Δ = 19° 28′ 45″ (LT)
Dc = 0° 29′ 02″
R = 11,843.51′
T = 2,032.88′
L = 4,026.53′
E = 173.20′
e max = 0.018
C = 4,007.16′
C.B.=N37°05′32″E

CROSS REFERENCES	
SHEET NO.	DESCRIPTION
6	REFERENCES AND BENCHMARKS
398	RAMP A PLAN & PROFILE
407 - 409	RAMP D PLAN & PROFILE
446 - 449	INTERCHANGE DETAILS
483 - 543	NOISE BARRIER DETAILS
381,382,384, 387	DRAINAGE DETAILS

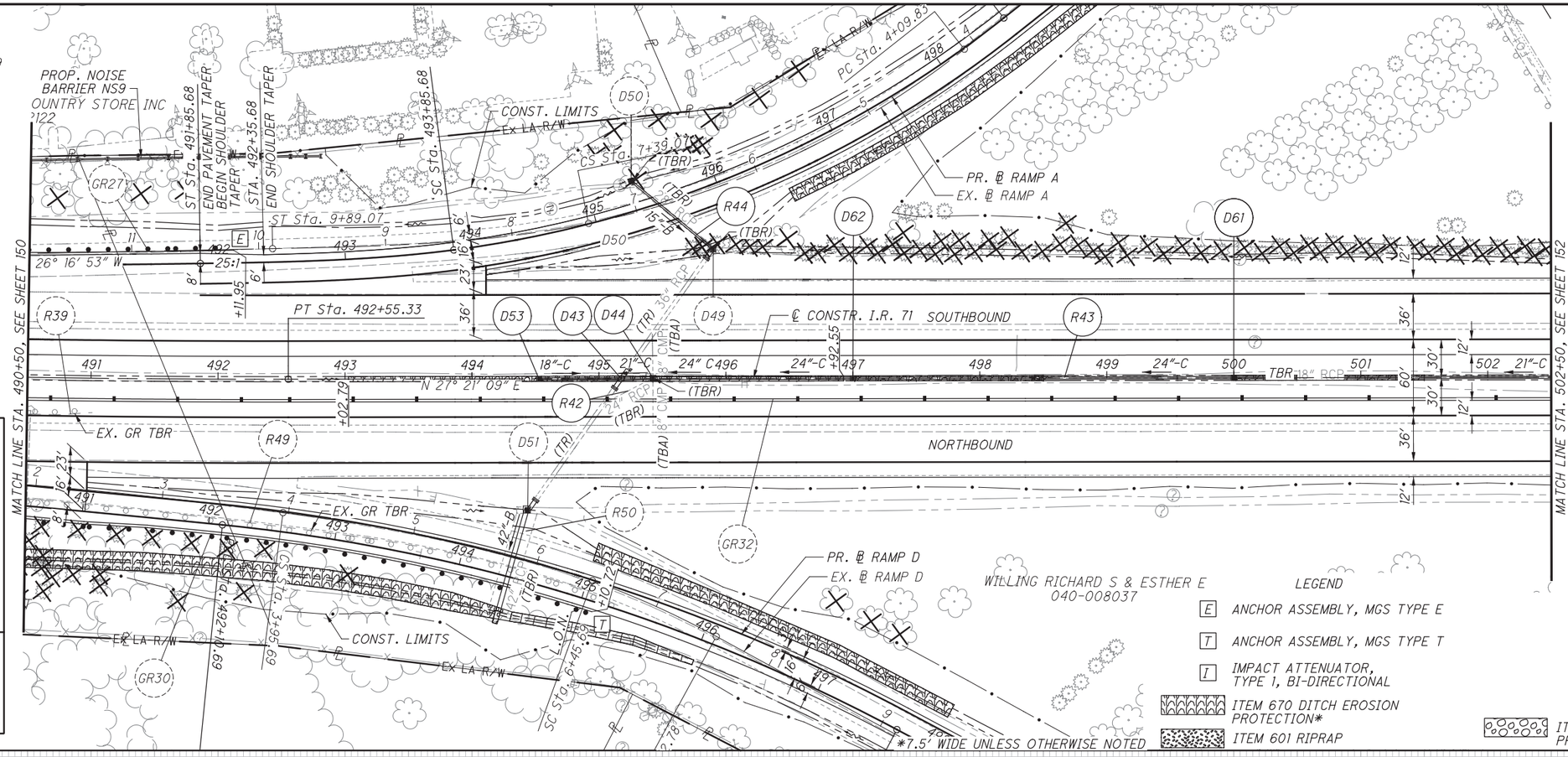

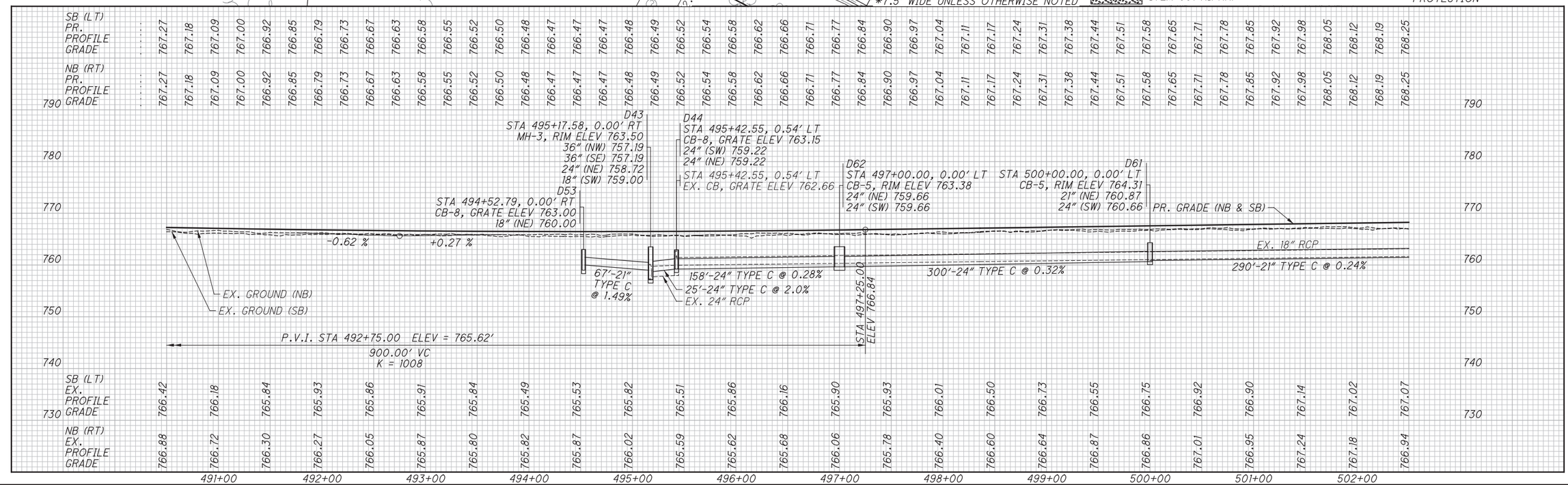

HORIZONTAL SCALE IN FEET
0 25 50 100
CALCULATED CDS
CHECKED GPD

PLAN AND PROFILE
STA. 490+50.00 TO STA. 502+50.00

FRA-71-5.29

151
623

P:\84868\roadway\sheets\84868GP019.dgn 3/27/2015 2:31:10 PM kfahy

CROSS REFERENCES	
SHEET NO.	DESCRIPTION
6	REFERENCES AND BENCHMARKS
390,393	DRAINAGE DETAILS

STRUCTURE NO. FRA-71-0953

END PROJECT
END FULL DEPTH PAVEMENT
STA. 509+00

BEGIN PROJECT FRA-71-9.74
STA. 431+57.34

END WORK
STA. 509+04.00

MATCH LINE STA. 502+50, SEE SHEET 151

℄ I.R. 71, STA. 504+21.80 =
℄ C.R. 135 (STRINGTOWN RD.), STA. 25+00.00

℄ C.R. 134 (STRINGTOWN RD.)

℄ RAMP B

℄ RAMP C

℄ CONSTR. I.R. 71

MARLANE DR.

EX LA-R/W

EX LA-R/W ℄

NORTH PLAZA IN

SOUTHBOUND

NORTHBOUND

N 27° 21' 09" E

(TBA)

(TBR)

CONST. LIMITS

LEGEND

- [E] ANCHOR ASSEMBLY, MGS TYPE E
- [T] ANCHOR ASSEMBLY, MGS TYPE T
- [I] IMPACT ATTENUATOR, TYPE 1, BI-DIRECTIONAL
- ITEM 670 DITCH EROSION PROTECTION*
- ITEM 601 RIPRAP
- ITEM 601 ROCK CHANNEL PROTECTION

*7.5' WIDE UNLESS OTHERWISE NOTED

*POINT OF MINIMUM VERTICAL CLEARANCE SOUTHBOUND:
EX.: 19'-1"±
PROP.: 19'-3"

*POINT OF MINIMUM VERTICAL CLEARANCE NORTHBOUND:
EX.: 17'-7"±
PROP.: 17'-10"

FRA-71-0953
C.R. 135 (STRINGTOWN RD.)*

D60A
STA 503+15.00, 10.00' RT
MH-3, RIM ELEV 767.50
21" (NE) 761.63
21" (SW) 761.63

D48A
STA 505+70.00, 9.09' RT
MH-3, RIM ELEV 767.75
21" (N) 762.18
21" (SW) 762.18

D48
STA 505+94.43, 0.87' LT
CB-5, GRATE ELEV 765.85
21" (SW) 762.24
STA 505+94.43, 0.87' LT
EX. CB, GRATE ELEV 765.09

D60
STA 502+90.00, 0.00' LT
CB-5, GRATE ELEV 765.08
21" (NE) 761.57
21" (SW) 761.57

16" COLUMBIA GAS
EX. 18" RCP
255'-21" TYPE C @ 0.21%
27'-21" TYPE C @ 0.22%
26'-21" TYPE C @ 0.22%
+0.27 %
PR. GRADE (NB & SB)
EX. 0.22% (NB&SB)
EX. GROUND (NB)
EX. GROUND (SB)

END FRA-71-5.29 | BEGIN FRA-71-9.74

I.R. 71 (SB) 770.03
I.R. 71 (NB) 770.03

STA 513+42.41, 1.31' RT
EX. CB, GRATE ELEV 766.84

THE PROFILE GRADE LINE (PGL) VARIES BETWEEN PROJECTS FRA-71-5.29 AND FRA-71-9.74. IN FRA-71-5.29 THE PGL IS LOCATED ALONG THE EDGE OF PAVEMENT. IN FRA-71-9.74 THE PGL IS LOCATED 24 FEET AWAY FROM THE EDGE OF PAVEMENT, AT THE CROWN OF THE ROADWAY. THIS AREA IS NORMAL CROWN WITH NO SUPERELEVATION. THEREFORE, THE PROFILE OF FRA-71-9.74 SHOULD BE 0.384 FEET (24*0.016 = 0.384) HIGHER THAN THE PROFILE FOR FRA-71-5.29.

	503+00	504+00	505+00	506+00	507+00	508+00	509+00	510+00	511+00	512+00	513+00	514+00
SB (LT) PR. PROFILE GRADE	768.25	768.32	768.39	768.46	768.52	768.59	768.66	768.73	768.79	768.86	768.93	769.00
NB (RT) PR. PROFILE GRADE	768.25	768.32	768.39	768.46	768.52	768.59	768.66	768.73	768.79	768.86	768.93	769.00
SB (LT) EX. PROFILE GRADE	767.07	767.11	767.60	768.20	768.48	768.20	767.79	768.34	768.16	768.12	768.17	768.16
NB (RT) EX. PROFILE GRADE	766.94	767.23	767.54	768.06	768.14	768.39	768.19	768.10	768.21	768.27	768.42	768.52

	769.06	769.13	769.20	769.27	769.33	769.41	769.48	769.55	769.61	769.68	769.75	769.83	769.89	769.96	770.03
SB (LT) PR. PROFILE GRADE	769.06	769.13	769.20	769.27	769.33	769.41	769.48	769.55	769.61	769.68	769.75	769.83	769.89	769.96	770.03
NB (RT) PR. PROFILE GRADE	769.06	769.13	769.20	769.27	769.33	769.41	769.48	769.55	769.61	769.68	769.75	769.83	769.89	769.96	770.03
SB (LT) EX. PROFILE GRADE	768.62	768.71	768.92	769.11	768.96	769.37	769.26	769.46	769.37	769.86	769.84	770.11	769.91		
NB (RT) EX. PROFILE GRADE	768.66	768.60	769.00	769.06	769.17	769.19	769.43	769.59	769.60	769.57	769.73	769.87	769.79		

800 790 780 770 760 750 740

CALCULATED CDS
CHECKED GPD

HORIZONTAL SCALE IN FEET
0 25 50 100

PLAN AND PROFILE
STA. 502+50.00 TO END PROJECT
FRA-71-5.29

P:\84868\roadway\sheets\84868GP020.dgn 3/27/2015 3:22:12 PM mtakacs

SEEDING	
END WIDTH	SQ. YDS.

ITEM 615 - PAVEMENT FOR MAINTAINING TRAFFIC, CLASS A AND GRADING

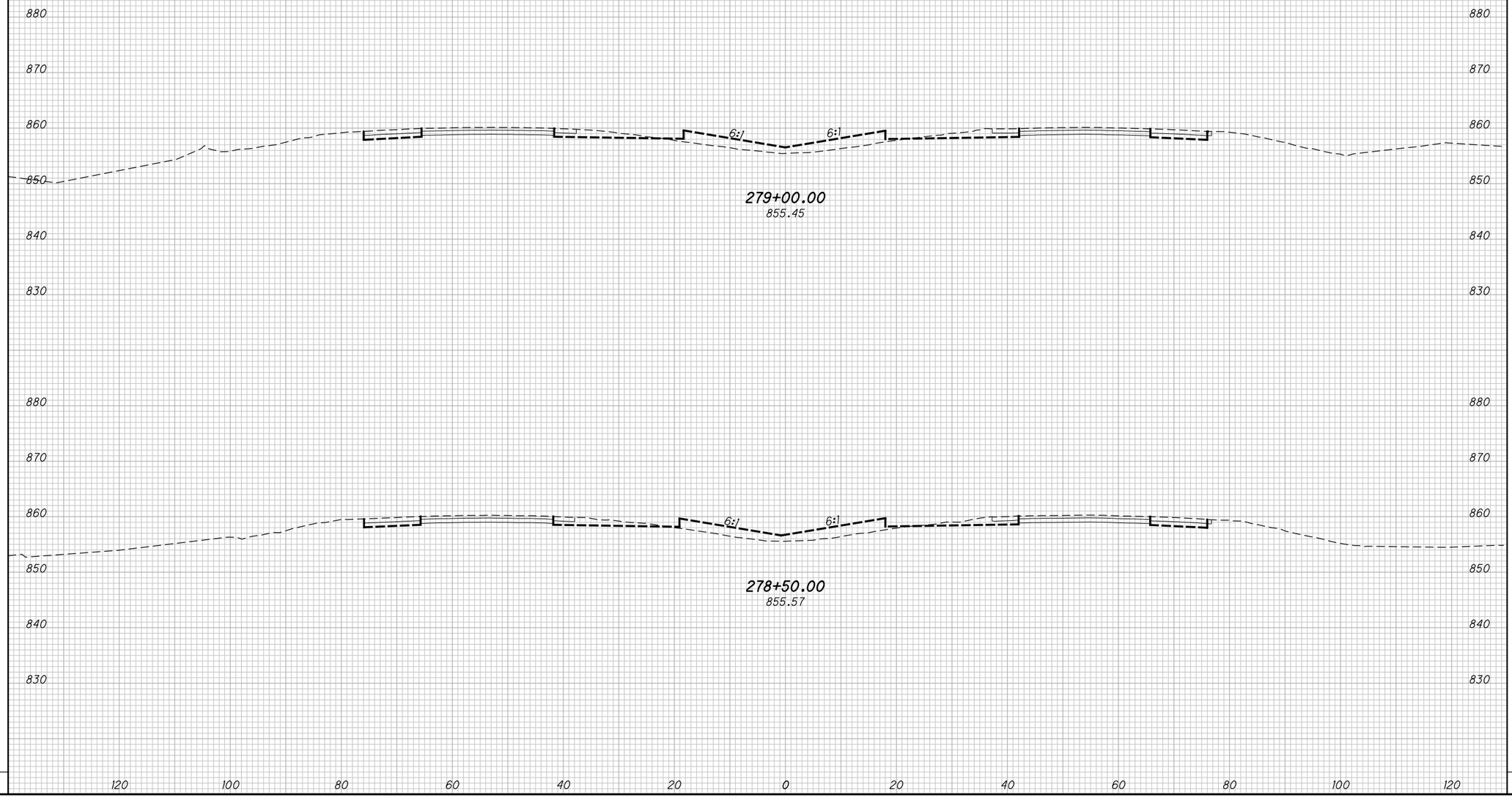

END AREA		VOLUME	
CUT	FILL	CUT	FILL

CALCULATED DWB
CHECKED BAL

CROSS SECTIONS - I.R. 71
STA. 278+50.00 TO STA. 279+00.00

FRA-71-5.29

153
623

P:\84868\roadway\sheets\84868XS001.dgn 12/17/2014 3:26:03 PM kfahy

SEEDING	
END WIDTH	SQ. YDS.
65	108
	39
	0
108	

ITEM 615 - PAVEMENT FOR MAINTAINING TRAFFIC, CLASS A AND GRADING

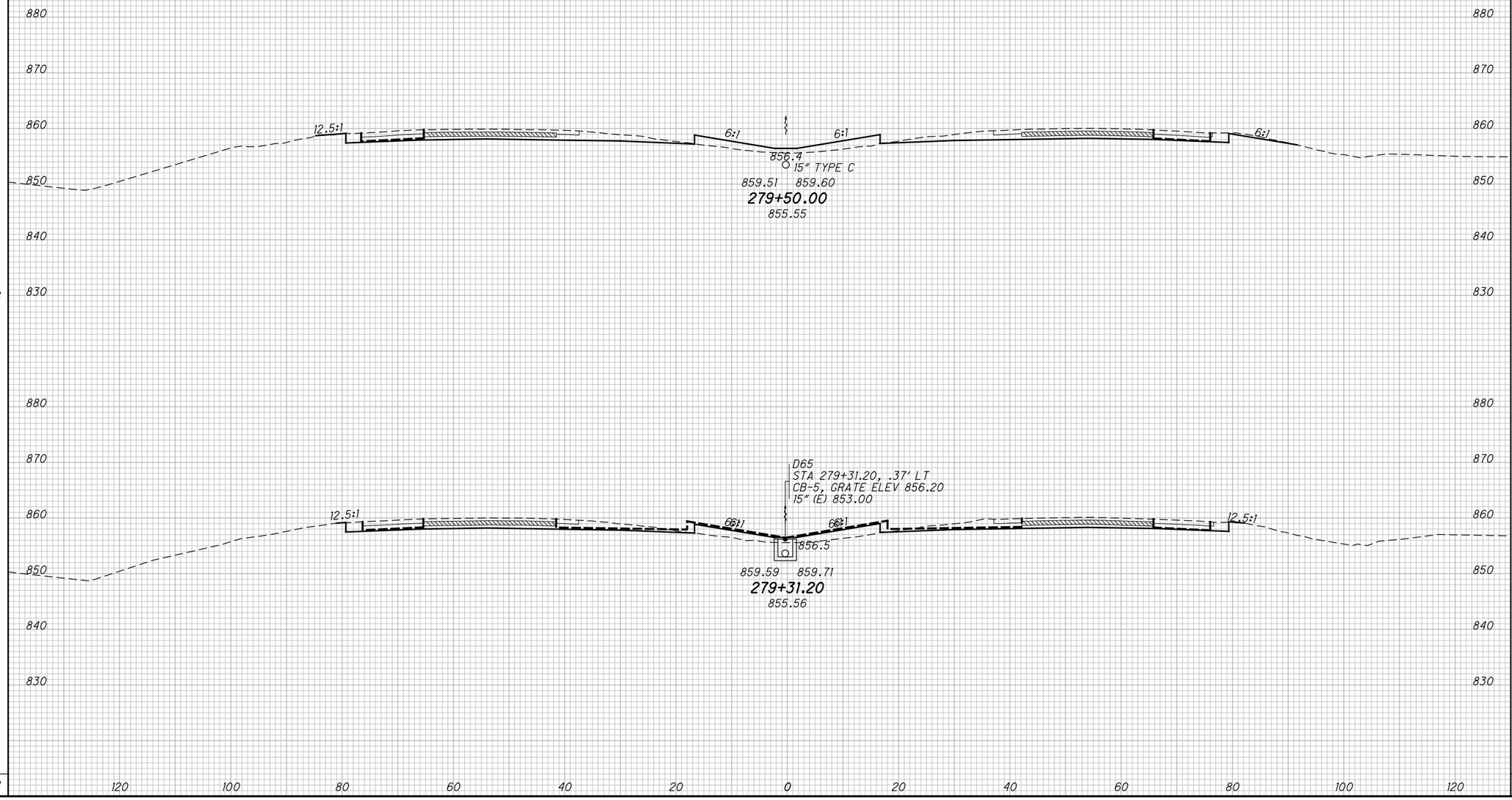

END AREA	
CUT	FILL
105	42
102	45

VOLUME	
CUT	FILL
72	30
0	0
72	30

CALCULATED DWB
CHECKED BAL

CROSS SECTIONS - I.R. 71
STA. 279+31.20 TO STA. 279+50.00

FRA-71-5.29

154
623

P:\84868\roadway\sheets\84868XS001.dgn 12/17/2014 3:26:03 PM kfahy

SEEDING	
END WIDTH	SQ. YDS.
66	378
68	373
	751

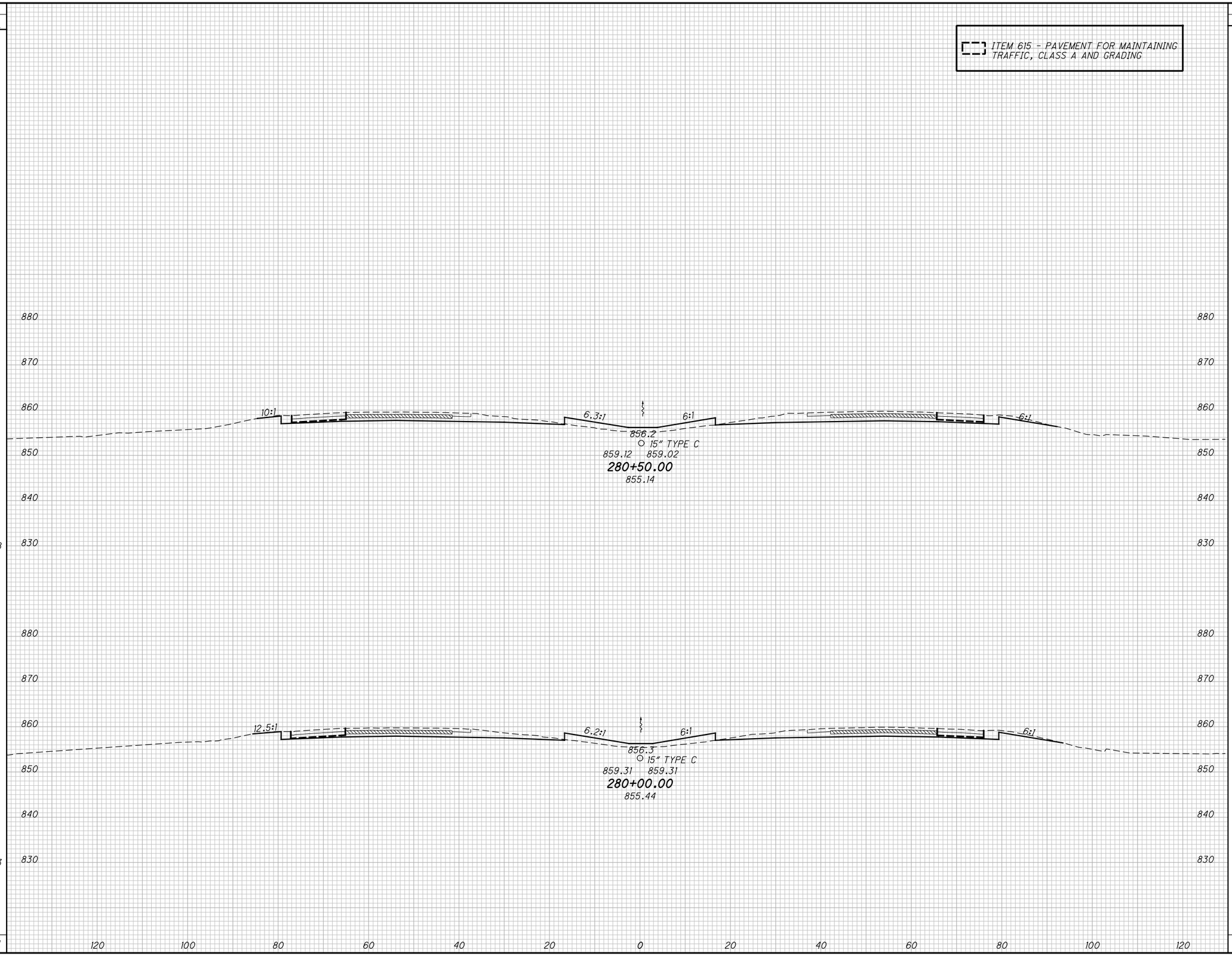

END AREA	
CUT	FILL
132	41
122	39

VOLUME	
CUT	FILL
235	74
210	75
445	149

CALCULATED DWB
CHECKED BAL

CROSS SECTIONS - I.R. 71
STA. 280+00.00 TO STA. 280+50.00

FRA-71-5.29

155
623

P:\84868\roadway\sheets\84868XS001.dgn 12/17/2014 3:26:04 PM kfahy

SEEDING	
END WIDTH	SQ. YDS.
100	522
86	423
	945

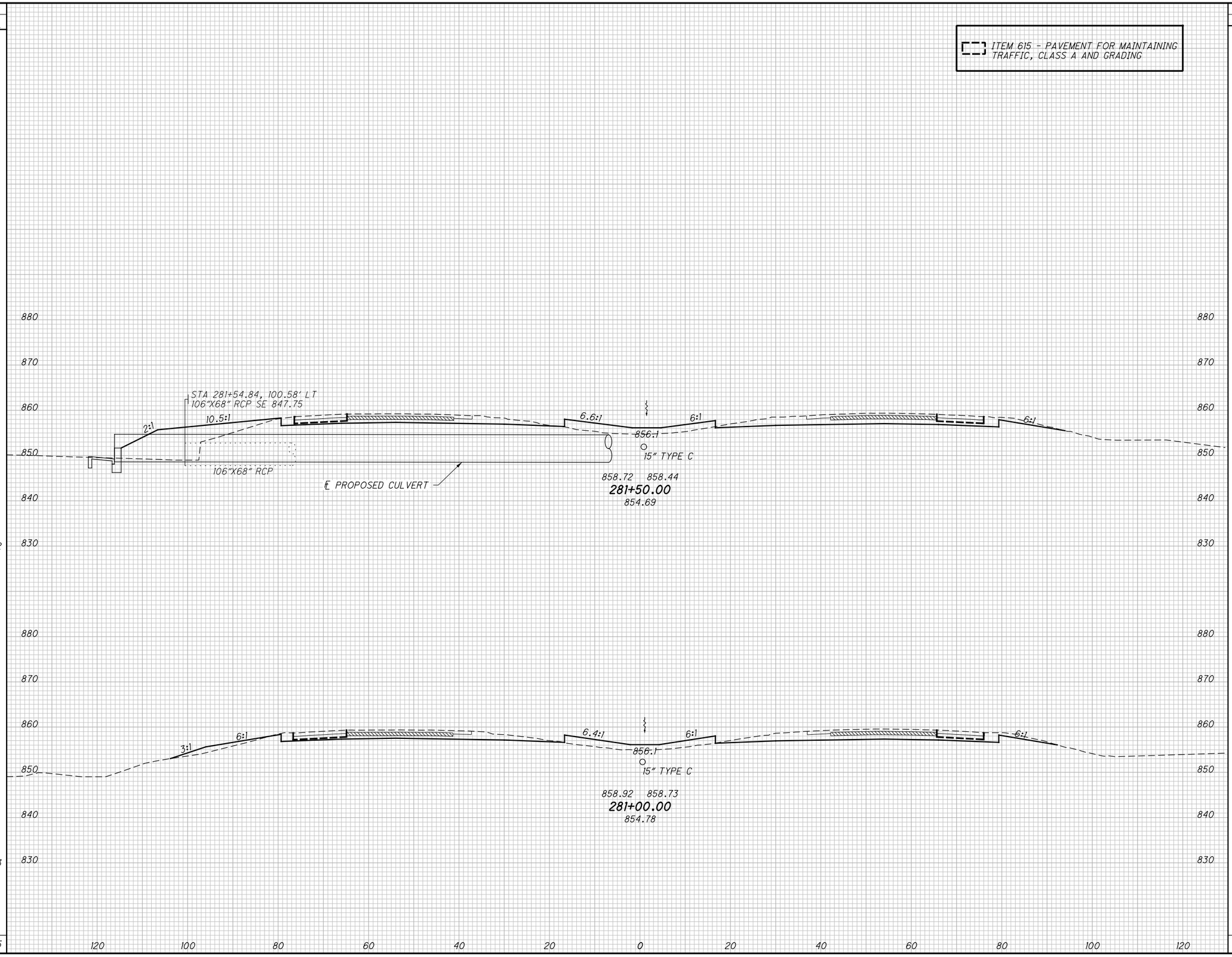

END AREA	
CUT	FILL
147	188
139	63

VOLUME	
CUT	FILL
265	233
251	96
516	329

CALCULATED DWB
CHECKED BAL

CROSS SECTIONS - I.R. 71
STA. 281+00.00 TO STA. 281+50.00

FRA-71-5.29

156
623

P:\84868\roadway\sheets\84868XS001.dgn 12/17/2014 3:26:05 PM kfahy

SEEDING	
END WIDTH	SQ. YDS.
79	505
103	567
	1072

ITEM 615 - PAVEMENT FOR MAINTAINING TRAFFIC, CLASS A AND GRADING

880
870
860
850
840
830

7.2' BMP
8:1
9.1:1
8.5:1
6:1
856.0
858.33 857.86
282+50.00
856.95
68"x106" RCP

880
870
860
850
840
830

D1
STA 281+88.33, 0.07' RT
EX. CB, GRATE ELEV 854.39'
15" S 850.49
STA 281+88.32, 1.07' RT
CB-5, GRATE ELEV 855.90
18" (S) 851.00
15" (W) 851.00
7.0' BMP
STA 281+88.32, 114.4' RT
HW-2.1 OR HW-2.2
18" (N) 850.00
STA 281+88.25, 114.37' RT
15" RCP N 850.80
3:1
6:1
9.1:1
8:1
6:1
2:1
856.2
858.52 858.15
282+00.00
855.63
68"x106" RCP
113'-18" TYPE B @ 0.88% EX. 15" RCP

120 100 80 60 40 20 0 20 40 60 80 100 120

END AREA		VOLUME	
CUT	FILL	CUT	FILL
200	0		
171	26	343	25
		294	198
		637	223

CALCULATED DWB
CHECKED BAL

CROSS SECTIONS - I.R. 71
STA. 282+00.00 TO STA. 282+50.00

FRA-71-5.29

157
623

P:\84868\roadway\sheets\84868XS001.dgn 12/17/2014 3:26:06 PM kfahy

SEEDING		END AREA		VOLUME		CALCULATED DWB
END WIDTH	SQ. YDS.	CUT	FILL	CUT	FILL	CHECKED BAL
75	483	153	50	294	134	
97	494	165	94	337	87	
	977			631	221	

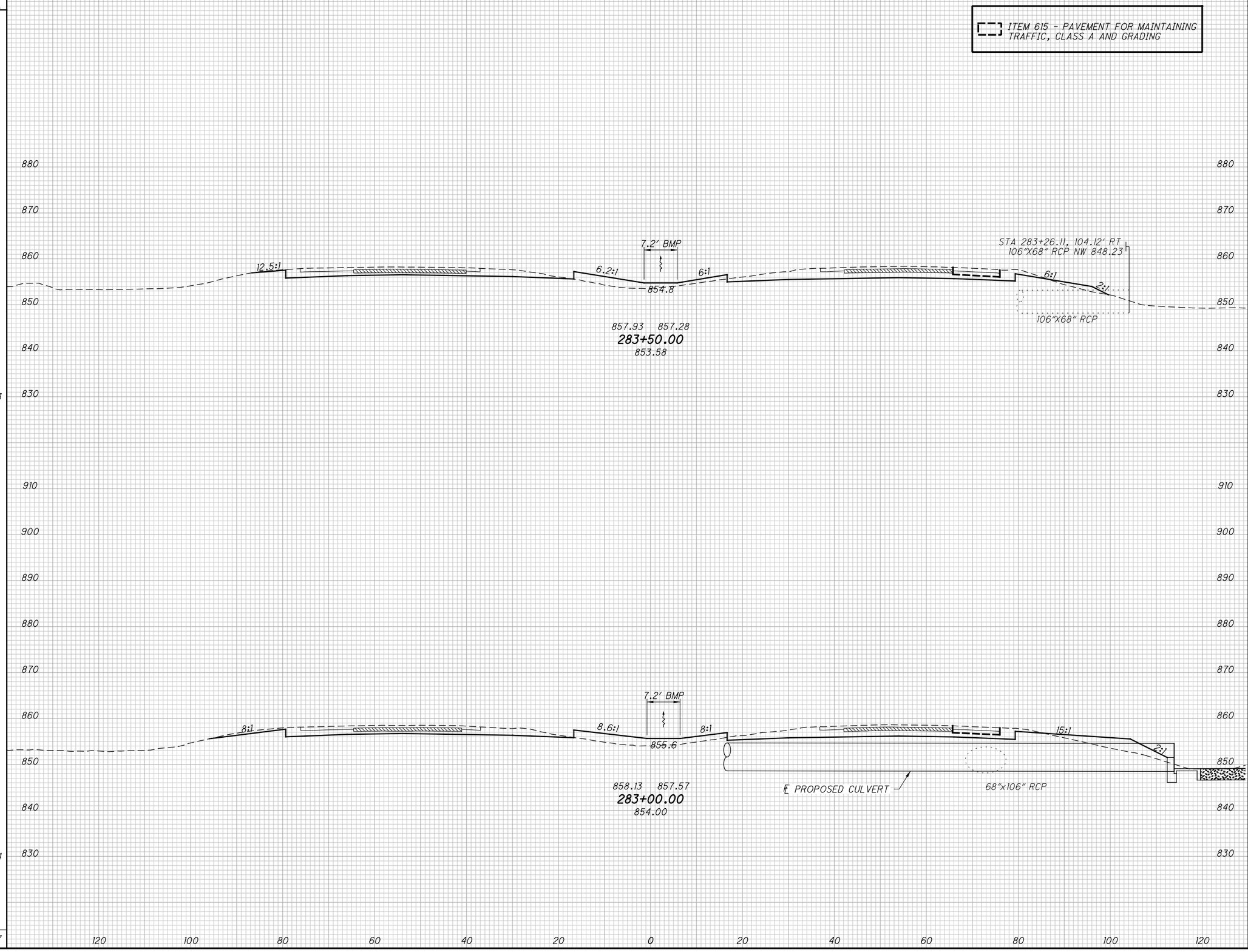

CROSS SECTIONS - I.R. 71
STA. 283+00.00 TO STA. 283+50.00

FRA-71-5.29

P:\84868\roadway\sheets\84868XS001.dgn 12/17/2014 3:26:07 PM kfahy

SEEDING	
END WIDTH	SQ. YDS.
69	405
76	422
	827

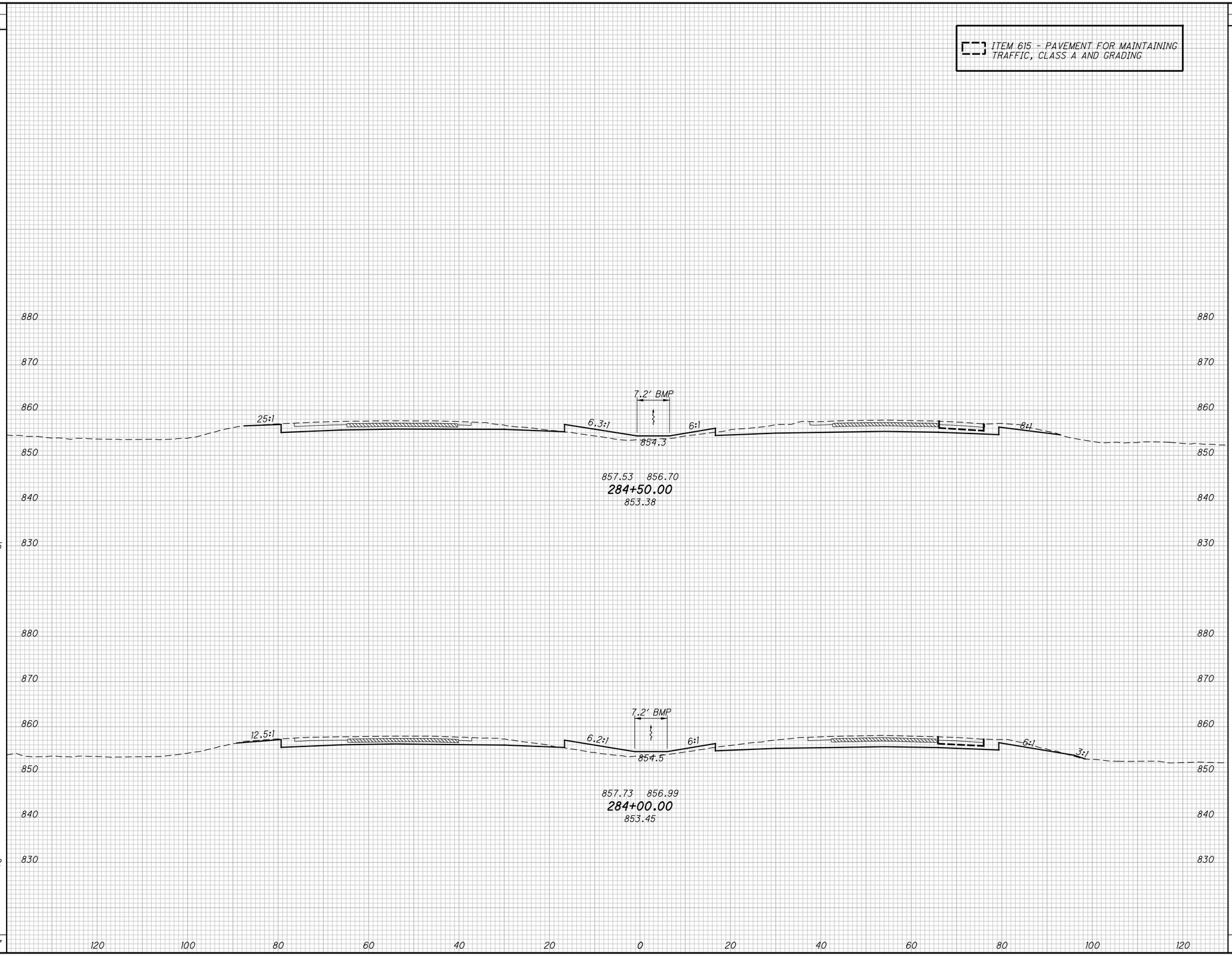

END AREA	
CUT	FILL
156	36
157	41

VOLUME	
CUT	FILL
290	71
287	84
577	155

CALCULATED DWB
CHECKED BAL

CROSS SECTIONS - I.R. 71
STA. 284+00.00 TO STA. 284+50.00

FRA-71-5.29

159
623

P:\84868\roadway\sheets\84868XS001.dgn 12/17/2014 3:26:08 PM kfahy

SEEDING	
END WIDTH	SQ. YDS.
61	367
70	389
	756

ITEM 615 - PAVEMENT FOR MAINTAINING TRAFFIC, CLASS A AND GRADING

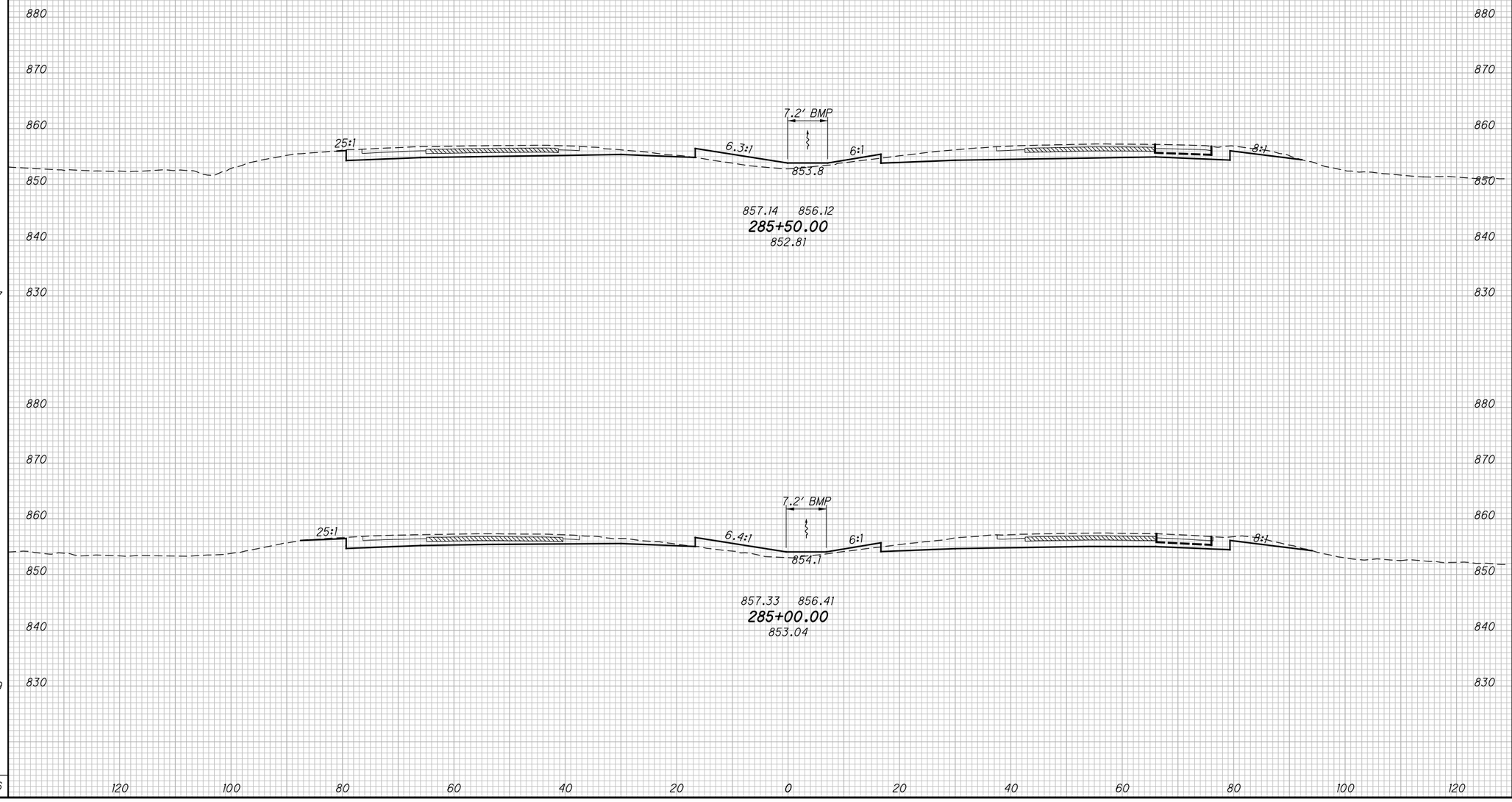

END AREA		VOLUME	
CUT	FILL	CUT	FILL
158	35	292	64
158	34	291	65
		583	129

CALCULATED DWB
CHECKED BAL

CROSS SECTIONS - I.R. 71
STA. 285+00.00 TO STA. 285+50.00

FRA-71-5.29

160
623

P:\84868\roadway\sheets\84868XS001.dgn 12/17/2014 3:26:09 PM kfahy

SEEDING END WIDTH	SEEDING SQ. YDS.
66	395
74	378
	773

ITEM 615 - PAVEMENT FOR MAINTAINING TRAFFIC, CLASS A AND GRADING

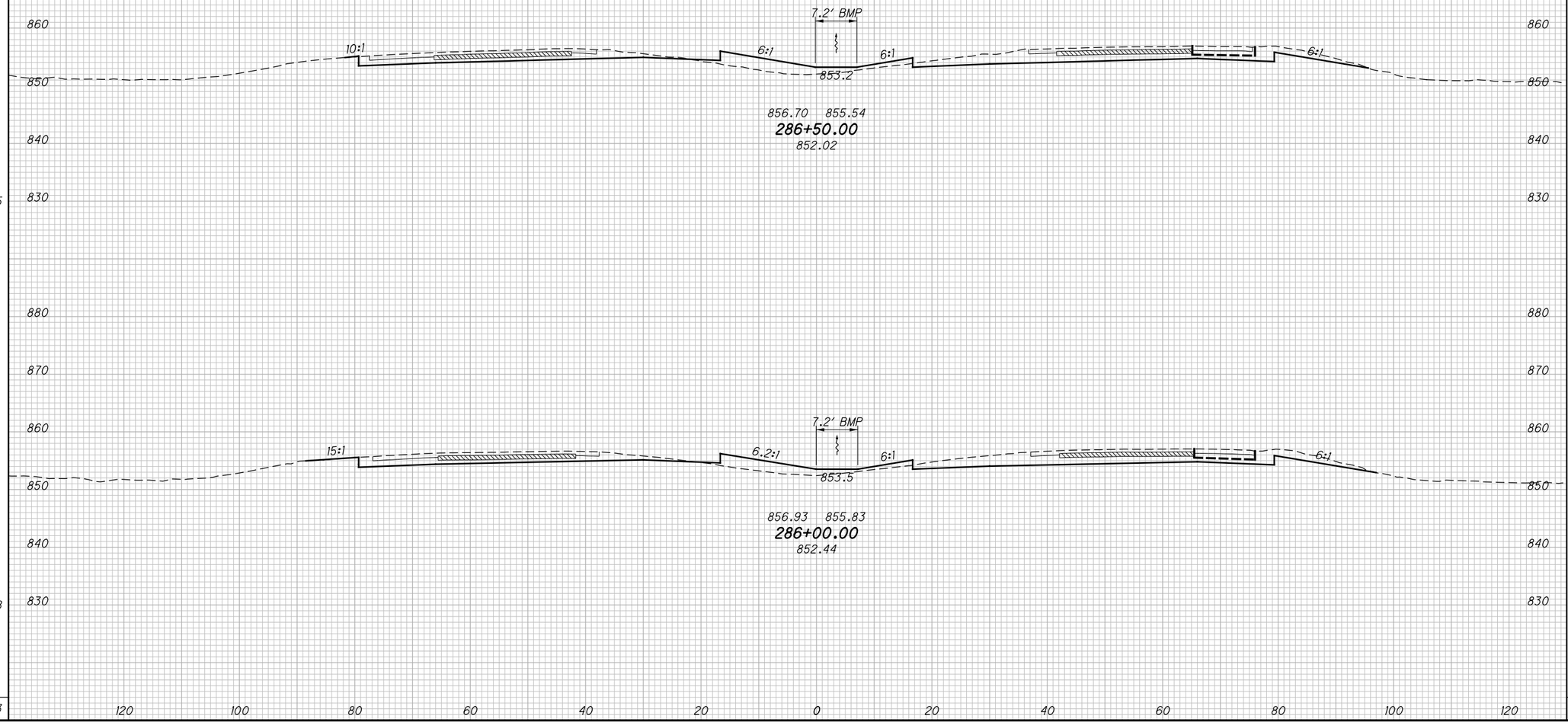

END AREA CUT	END AREA FILL	VOLUME CUT	VOLUME FILL
145	49		
154	43		
		277	85
		289	72
		566	157

CALCULATED DWB
CHECKED BAL

CROSS SECTIONS - I.R. 71
STA. 286+00.00 TO STA. 286+50.00

FRA-71-5.29

161
623

P:\84868\roadway\sheets\84868XS001.dgn 12/17/2014 3:26:10 PM kfahy

SEEDING		END AREA		VOLUME	
END WIDTH	SQ. YDS.	CUT	FILL	CUT	FILL
67		141	53		
	389			262	97
72		142	52		
	383			266	94
	772			528	191

ITEM 615 - PAVEMENT FOR MAINTAINING TRAFFIC, CLASS A AND GRADING

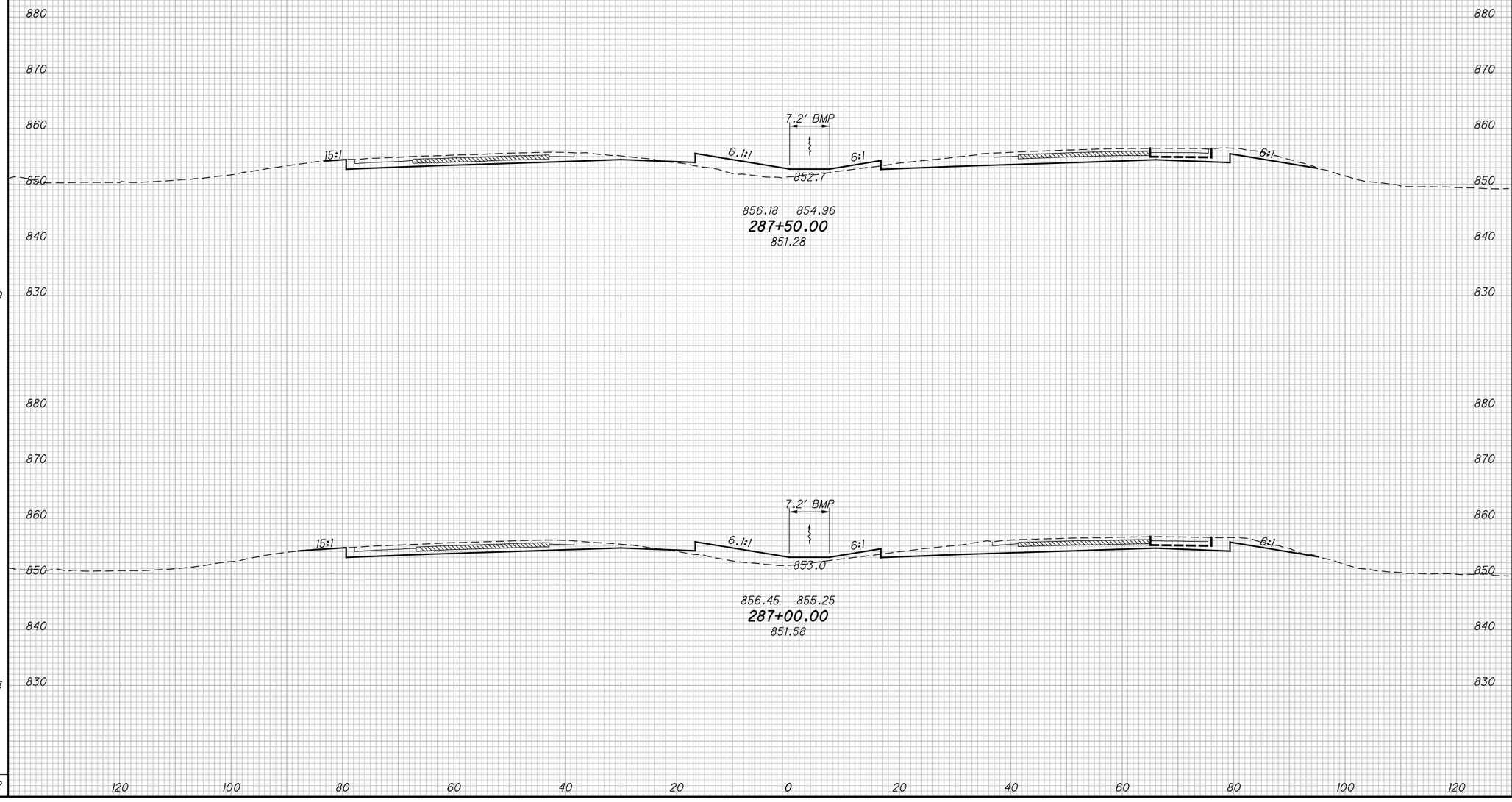

CALCULATED DWB
CHECKED BAL

CROSS SECTIONS - I.R. 71
STA. 287+00.00 TO STA. 287+50.00

FRA-71-5.29

162
623

P:\84868\roadway\sheets\84868XS001.dgn 12/17/2014 3:26:11 PM kfahy

SEEDING			END AREA		VOLUME	
STA.	END WIDTH	SQ. YDS.	CUT	FILL	CUT	FILL
288+50.00	72		142	45		
288+00.00	70	395	143	50	264	88
		383			263	95
		778			527	183

ITEM 615 - PAVEMENT FOR MAINTAINING TRAFFIC, CLASS A AND GRADING

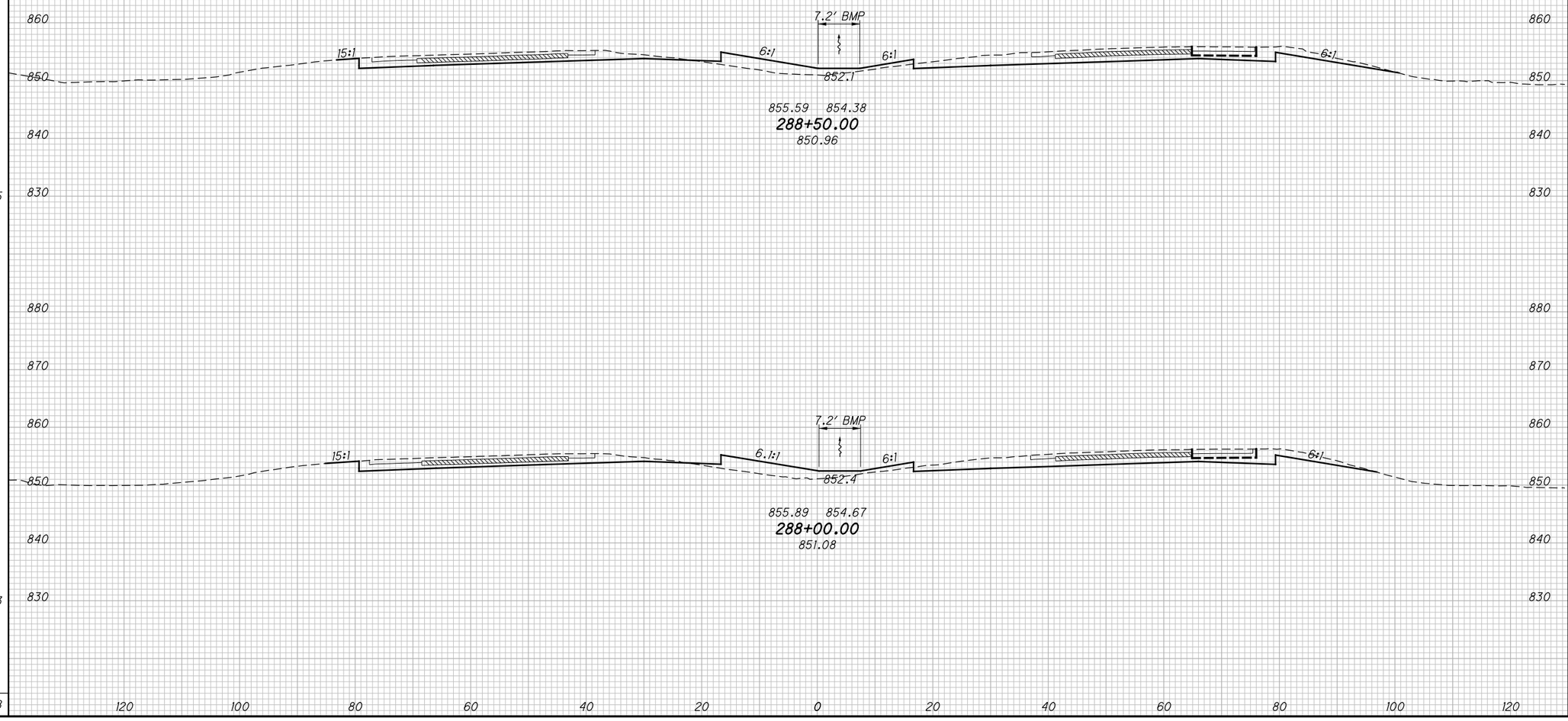

CALCULATED DWB
CHECKED BAL

CROSS SECTIONS - I.R. 71
STA. 288+00.00 TO STA. 288+50.00

FRA-71-5.29

163
623

P:\84868\roadway\sheets\84868XS001.dgn 12/17/2014 3:26:12 PM kfahy

SEEDING		END AREA		VOLUME	
END WIDTH	SQ. YDS.	CUT	FILL	CUT	FILL
71		125	49		
	389			240	91
68		134	50		
	395			256	88
	784			496	179

ITEM 615 - PAVEMENT FOR MAINTAINING TRAFFIC, CLASS A AND GRADING

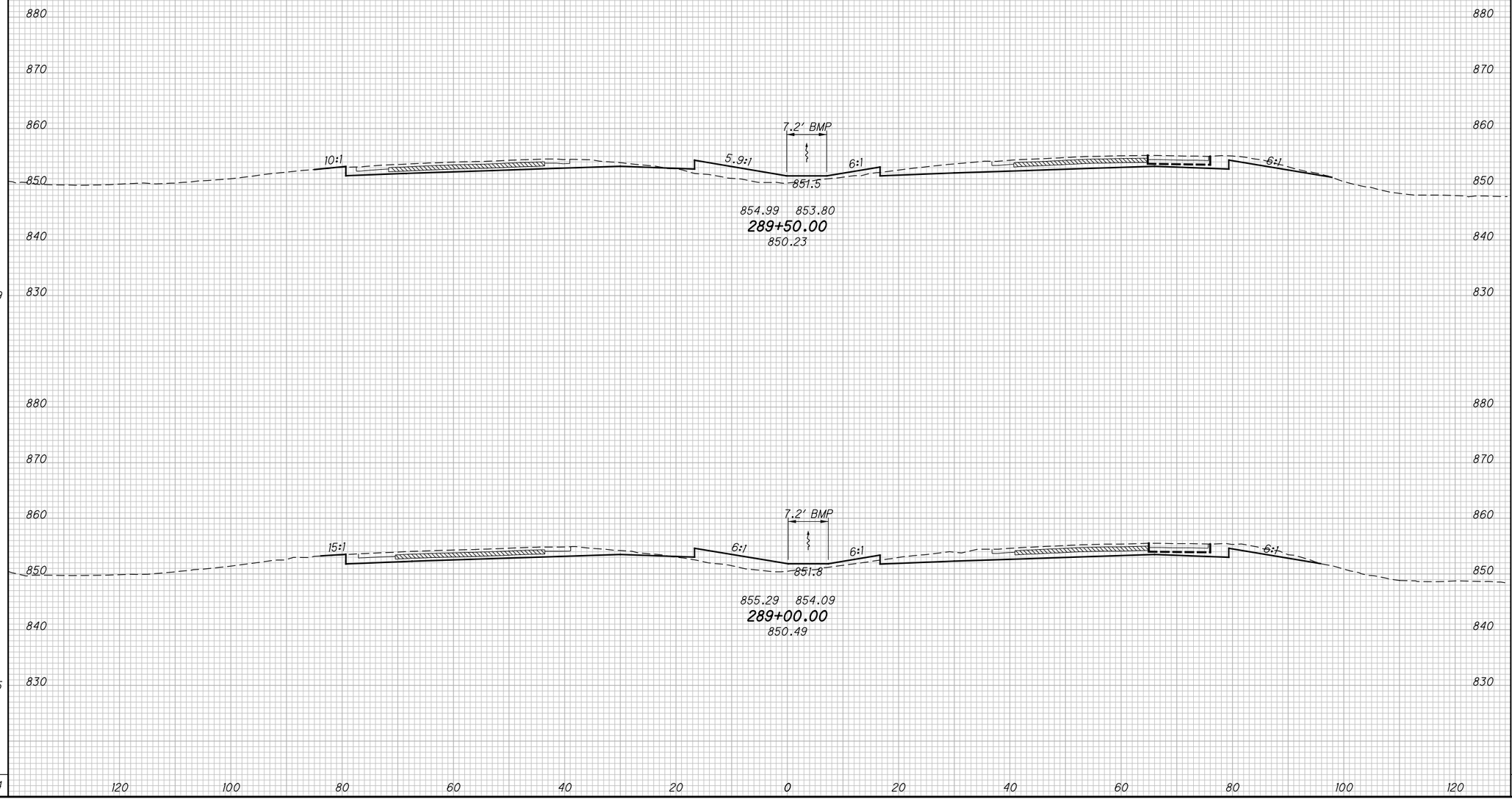

CALCULATED DWB
CHECKED BAL

CROSS SECTIONS - I.R. 71
STA. 289+00.00 TO STA. 289+50.00

FRA-71-5.29

164
623

P:\84868\roadway\sheets\84868XS001.dgn 12/17/2014 3:26:13 PM kfahy

SEEDING		END AREA		VOLUME	
END WIDTH	SQ. YDS.	CUT	FILL	CUT	FILL
66	378	122	56	230	99
70	394	126	51	233	93
	772			463	192

CALCULATED DWB
CHECKED BAL

ITEM 615 - PAVEMENT FOR MAINTAINING TRAFFIC, CLASS A AND GRADING

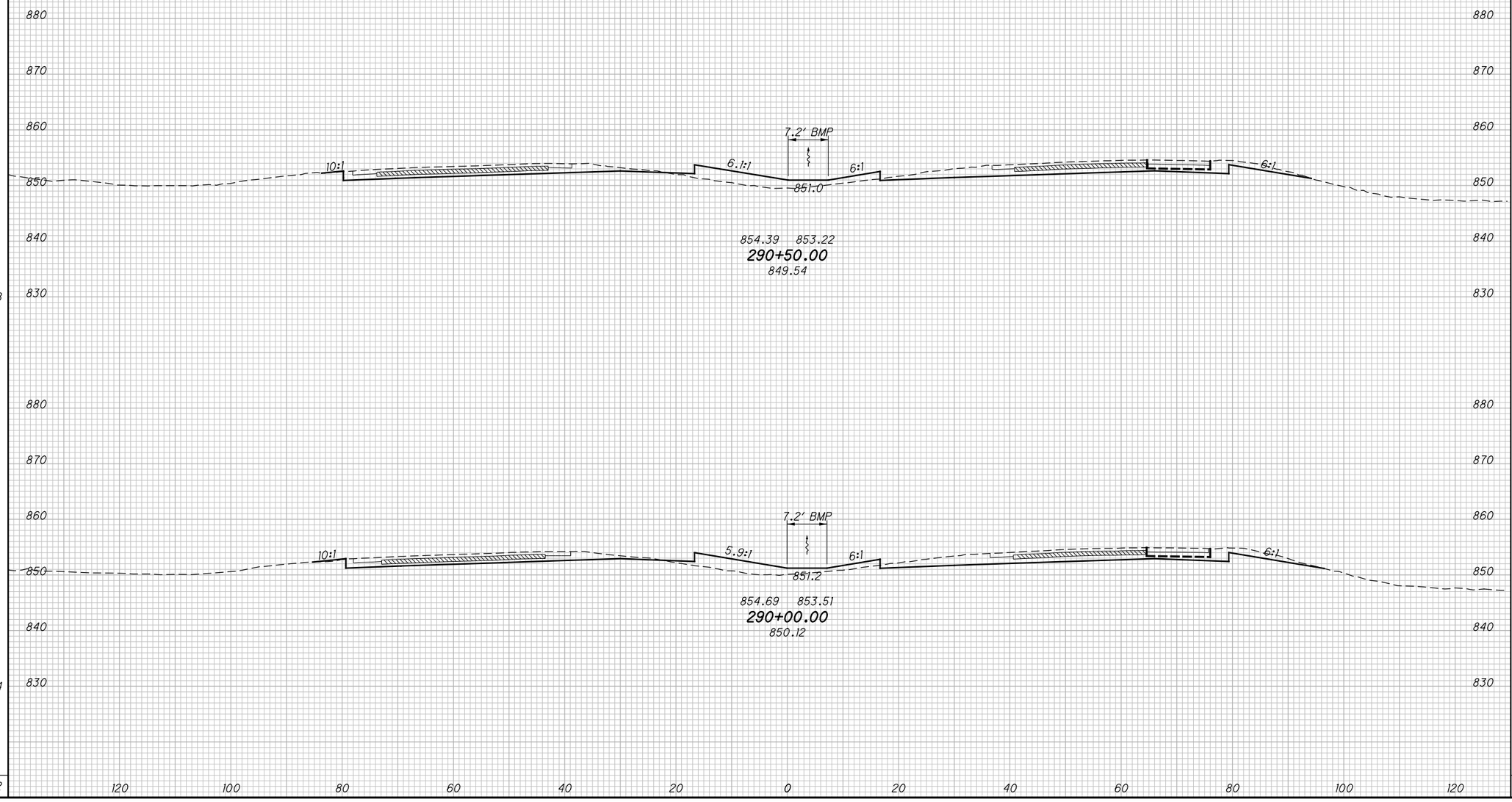

CROSS SECTIONS - I.R. 71
STA. 290+00.00 TO STA. 290+50.00

FRA-71-5.29

P:\84868\roadway\sheets\84868XS001.dgn 12/17/2014 3:26:14 PM kfahy

SEEDING		END AREA		VOLUME		CALCULATED	CHECKED
END WIDTH	SQ. YDS.	CUT	FILL	CUT	FILL	DWB	BAL
76	405	135	27	240	73		
70	378	124	53	227	100		
	783			467	173		

ITEM 615 - PAVEMENT FOR MAINTAINING TRAFFIC, CLASS A AND GRADING

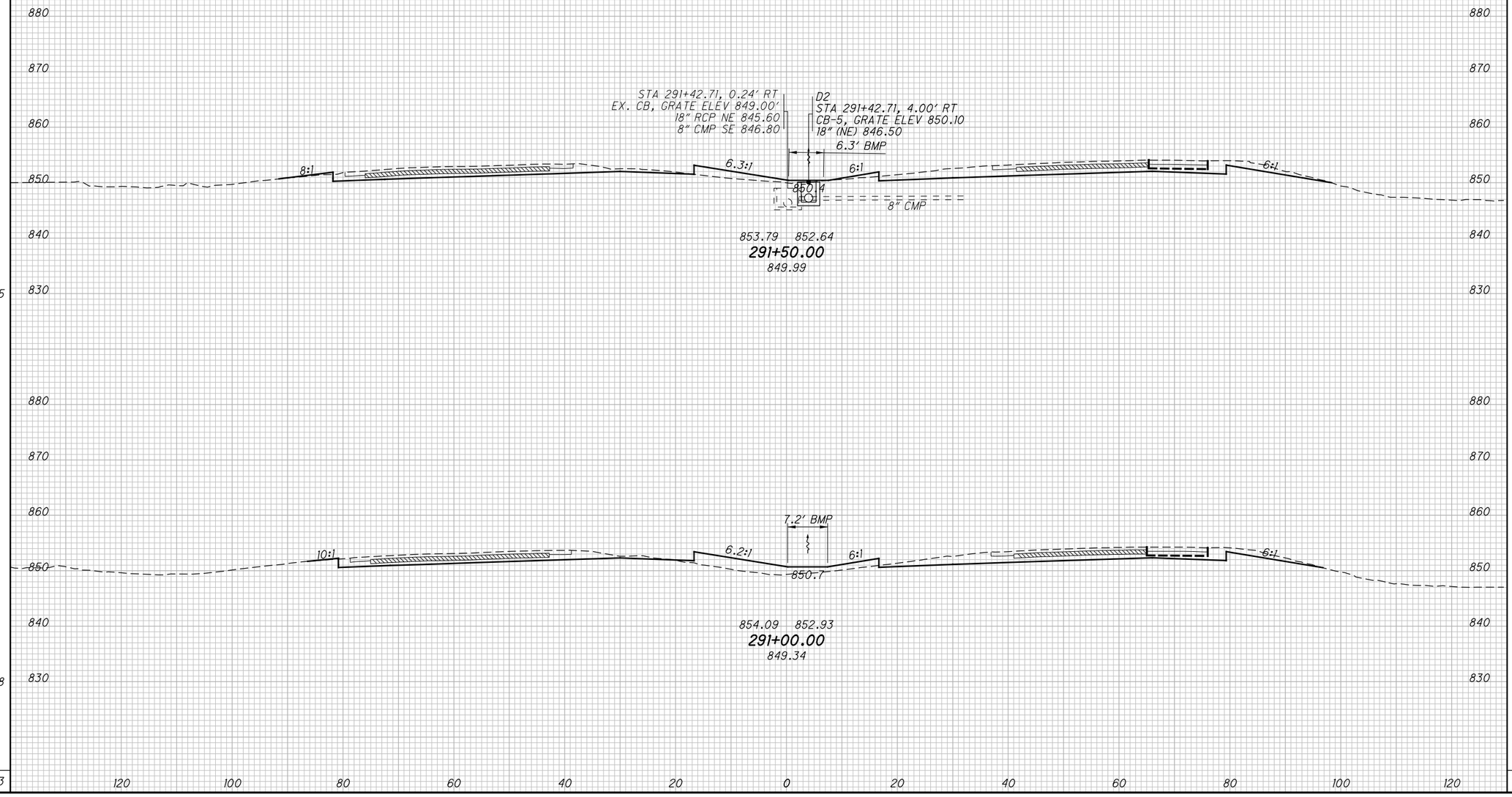

P:\84868\roadway\sheets\84868XS001.dgn 12/17/2014 3:26:15 PM ktahy

CROSS SECTIONS - I.R. 71
STA. 291+00.00 TO STA. 291+50.00

FRA-71-5.29

166
623

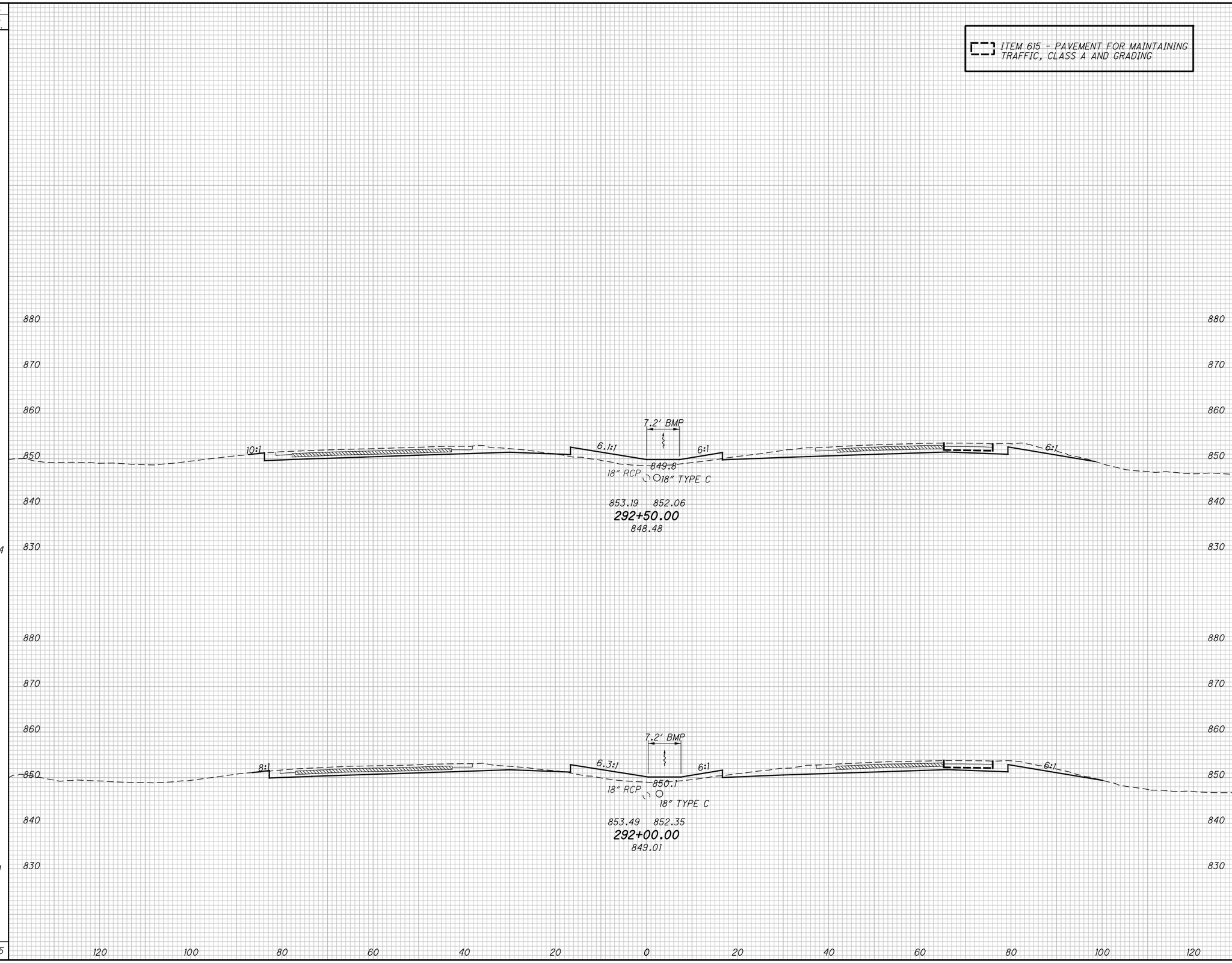

SEEDING END WIDTH	SEEDING SQ. YDS.	END AREA CUT	END AREA FILL	VOLUME CUT	VOLUME FILL
70		133	51		
	394			246	90
72		133	46		
	411			249	67
	805			495	157

CALCULATED DWB
CHECKED BAL

CROSS SECTIONS - I.R. 71
STA. 292+00.00 TO STA. 292+50.00

FRA-71-5.29

P:\84868\roadway\sheets\84868XS001.dgn 12/17/2014 3:26:16 PM kfahy

SEEDING	
END WIDTH	SQ. YDS.
77	
	400
65	
377	
777	

ITEM 615 - PAVEMENT FOR MAINTAINING TRAFFIC, CLASS A AND GRADING

880
870
860
850
840
830

7.2' BMP
12.5:1
6.1:1
6:1
6:1
849.2
18" RCP
18" TYPE C
852.59 851.48
293+50.00
848.05

880
870
860
850
840
830

7.2' BMP
12.5:1
6.1:1
6:1
6:1
849.5
18" RCP
18" TYPE C
852.89 851.77
293+00.00
848.11

120 100 80 60 40 20 0 20 40 60 80 100 120

END AREA		VOLUME	
CUT	FILL	CUT	FILL
135	44		
132	48		
		247	85
		245	91
		492	176

CALCULATED DWB
CHECKED BAL

CROSS SECTIONS - I.R. 71
STA. 293+00.00 TO STA. 293+50.00

FRA-71-5.29

168
623

P:\84868\roadway\sheets\84868XS001.dgn 12/17/2014 3:26:29 PM kfahy

SEEDING		END AREA		VOLUME	
END WIDTH	SQ. YDS.	CUT	FILL	CUT	FILL
67	378	135	40	253	73
68	405	138	38	253	76
	783			506	149

CALCULATED DWB
CHECKED BAL

ITEM 615 - PAVEMENT FOR MAINTAINING TRAFFIC, CLASS A AND GRADING

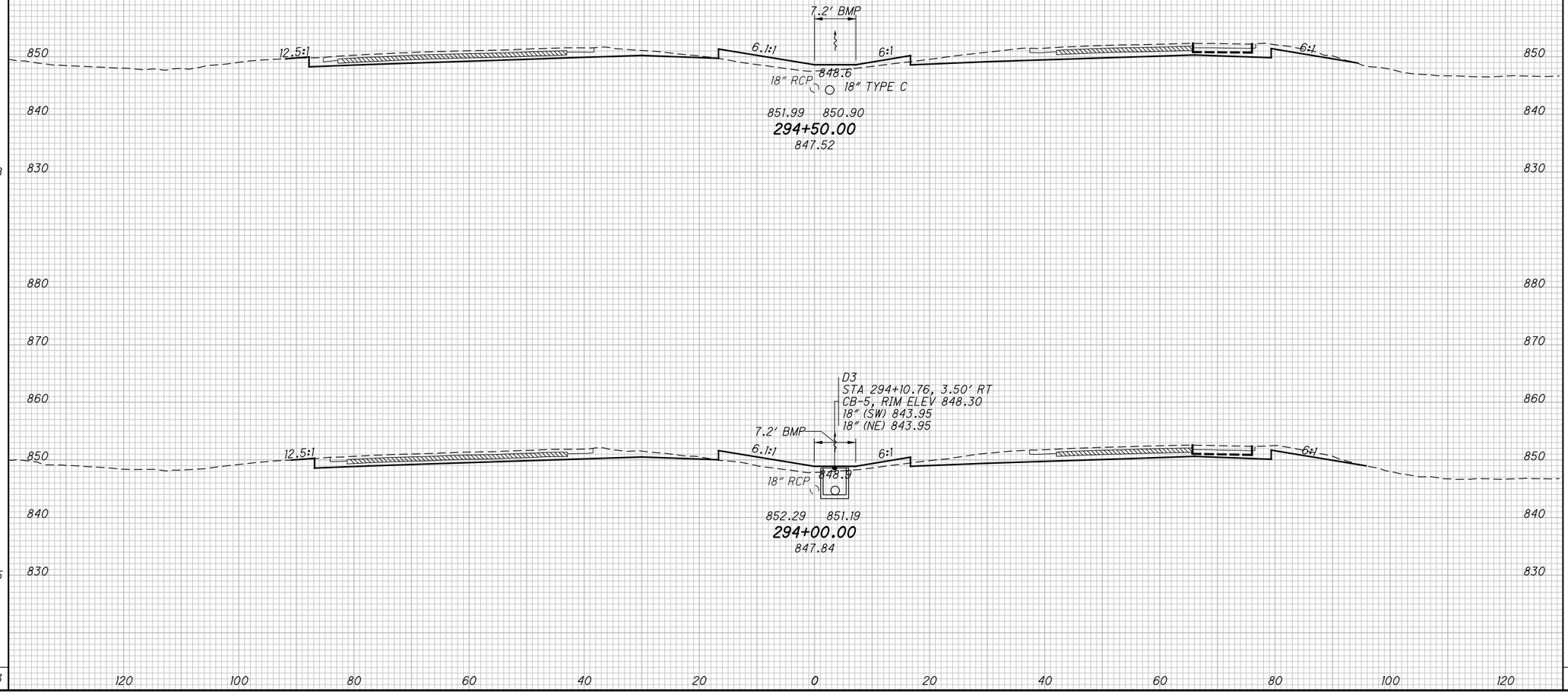

CROSS SECTIONS - I.R. 71
STA. 294+00.00 TO STA. 294+50.00

FRA-71-5.29

169
623

P:\84868\roadway\sheets\84868XS001.dgn 12/17/2014 3:26:30 PM kfahy

SEEDING		END AREA		VOLUME	
END WIDTH	SQ. YDS.	CUT	FILL	CUT	FILL

CALCULATED DWB
CHECKED BAL

ITEM 615 - PAVEMENT FOR MAINTAINING TRAFFIC, CLASS A AND GRADING

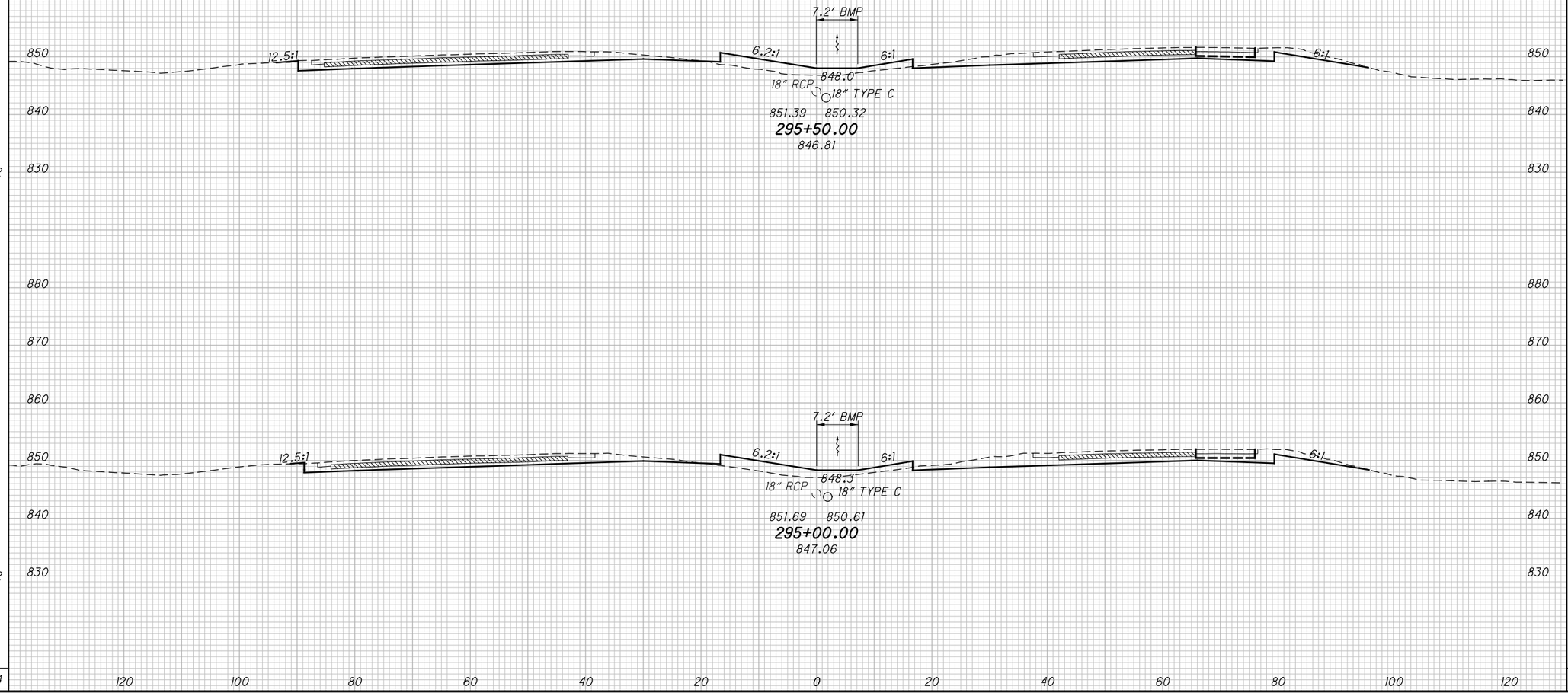

67						128	49
	372					244	88
66						135	46
	372					250	80
	744					494	168

CROSS SECTIONS - I.R. 71
STA. 295+00.00 TO STA. 295+50.00

FRA-71-5.29

170
623

P:\84868\roadway\sheets\84868XS001.dgn 12/17/2014 3:26:31 PM kfahy

SEEDING END WIDTH	SEEDING SQ. YDS.	END AREA CUT	END AREA FILL	VOLUME CUT	VOLUME FILL
65		135	42		
	383			244	85
72		128	50		
	389			237	91
	772			481	176

CALCULATED DWB
CHECKED BAL

CROSS SECTIONS - I.R. 71
STA. 296+00.00 TO STA. 296+50.00

FRA-71-5.29

P:\84868\roadway\sheets\84868XS001.dgn 12/17/2014 3:26:32 PM kfahy

SEEDING	
END WIDTH	SQ. YDS.
64	344
59	344
	688

ITEM 615 - PAVEMENT FOR MAINTAINING TRAFFIC, CLASS A AND GRADING

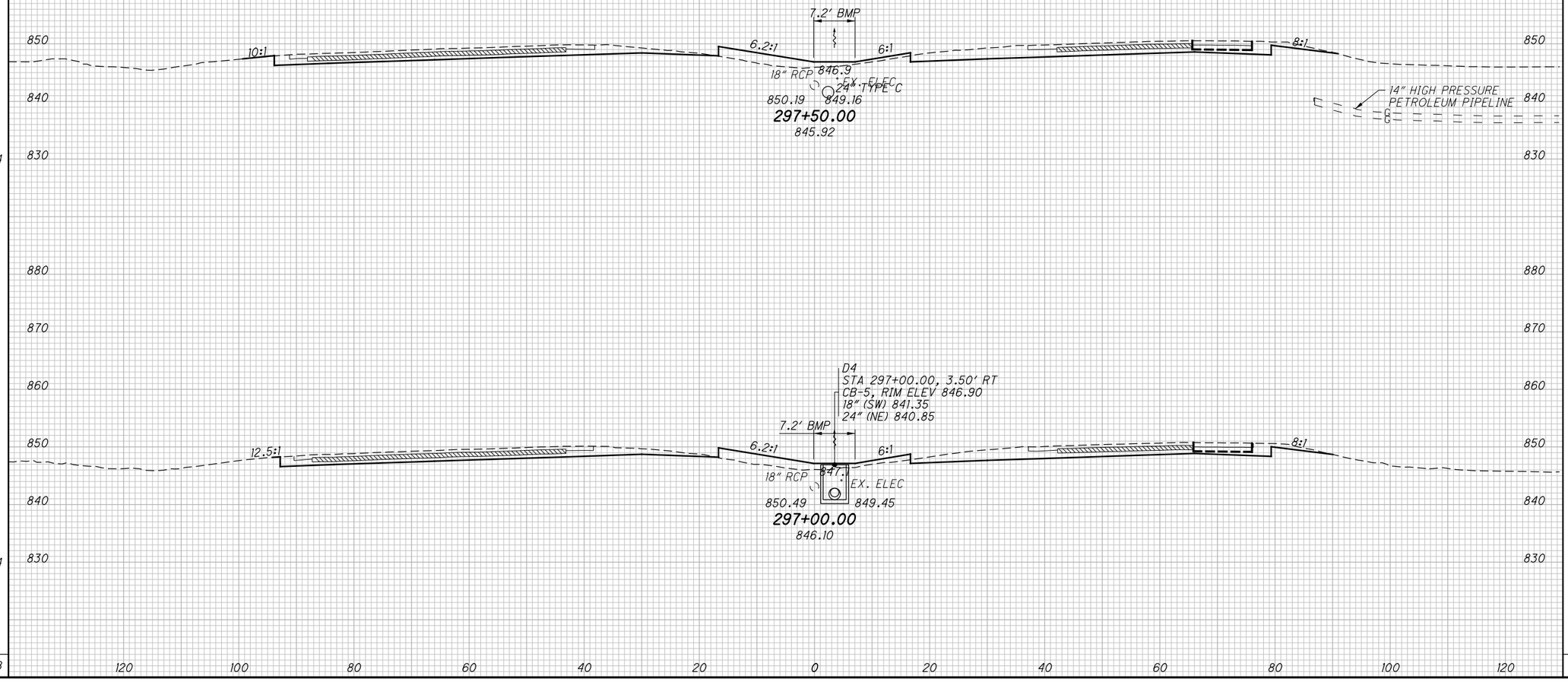

END AREA		VOLUME	
CUT	FILL	CUT	FILL
143	37		
140	41		
		262	73
		255	77
		517	150

CALCULATED DWB
CHECKED BAL

CROSS SECTIONS - I.R. 71
STA. 297+00.00 TO STA. 297+50.00

FRA-71-5.29

172
623

P:\84868\roadway\sheets\84868XS001.dgn 12/17/2014 3:26:33 PM kfahy

SEEDING	
END WIDTH	SQ. YDS.
77	388
	743
62	355

ITEM 615 - PAVEMENT FOR MAINTAINING TRAFFIC, CLASS A AND GRADING

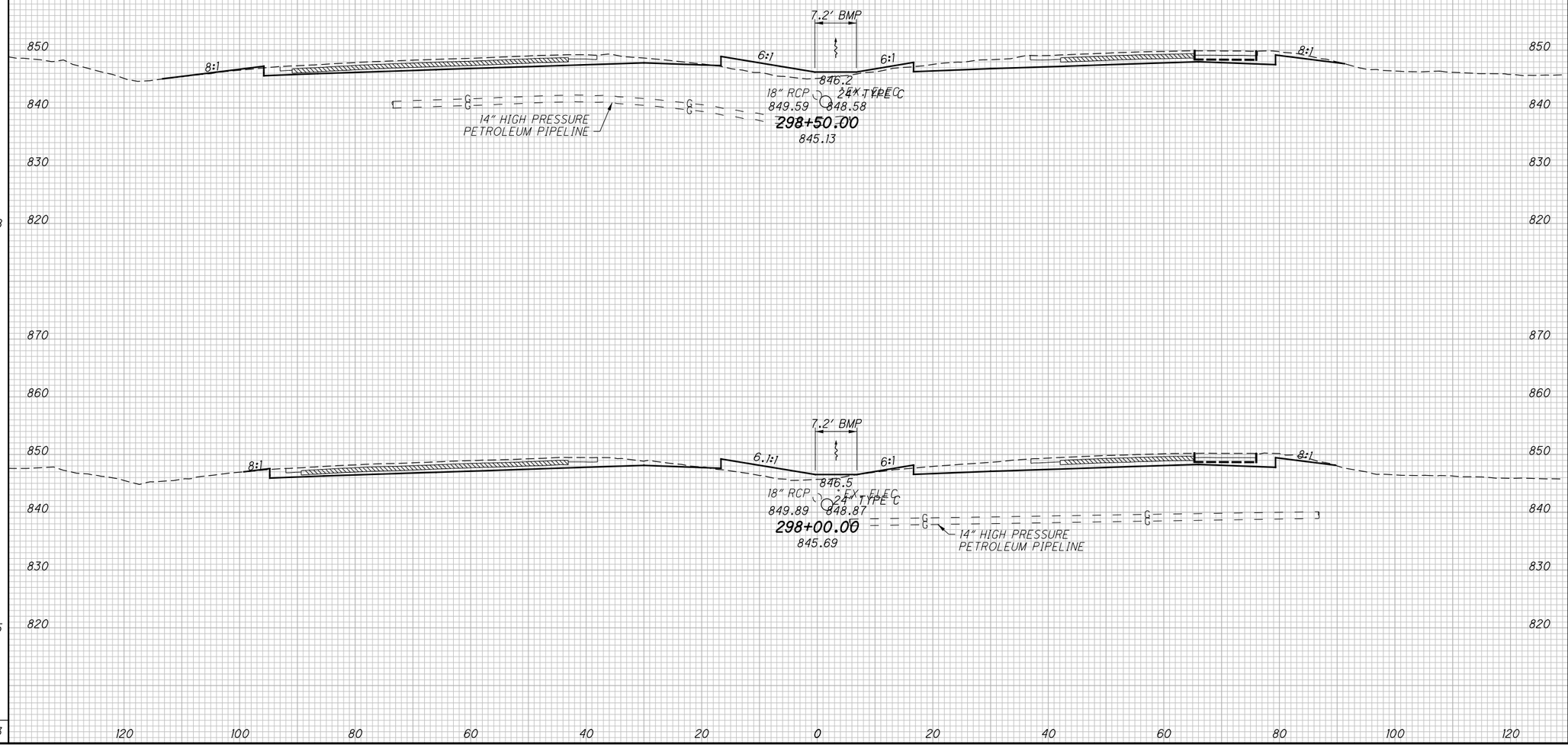

END AREA	
CUT	FILL
130	40
133	34

VOLUME	
CUT	FILL
243	68
255	66
498	134

CALCULATED DWB
CHECKED BAL

CROSS SECTIONS - I.R. 71
STA. 298+00.00 TO STA. 298+50.00

FRA-71-5.29

173
623

P:\84868\roadway\sheets\84868XS001.dgn 12/17/2014 3:26:34 PM kfahy

SEEDING	
END WIDTH	SQ. YDS.
61	350
65	400
	750

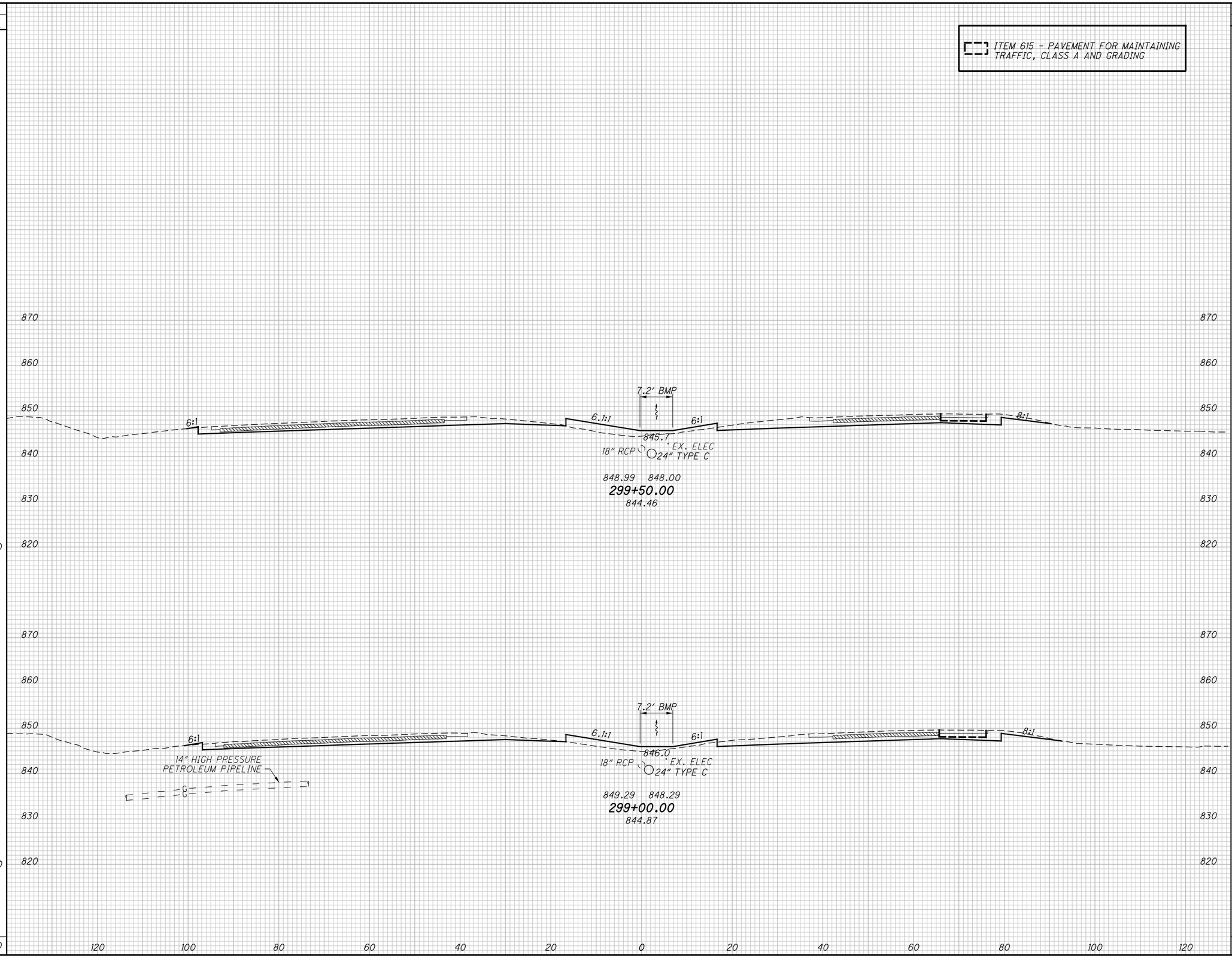

END AREA	
CUT	FILL
140	43
133	36

VOLUME	
CUT	FILL
252	73
243	70
495	143

CALCULATED DWB
CHECKED BAL

CROSS SECTIONS - I.R. 71
STA. 299+00.00 TO STA. 299+50.00

FRA-71-5.29

174
623

P:\84868\roadway\sheets\84868XS001.dgn 12/17/2014 3:26:34 PM kfahy

SEEDING	
END WIDTH	SQ. YDS.
60	
	345
63	
	345
	690

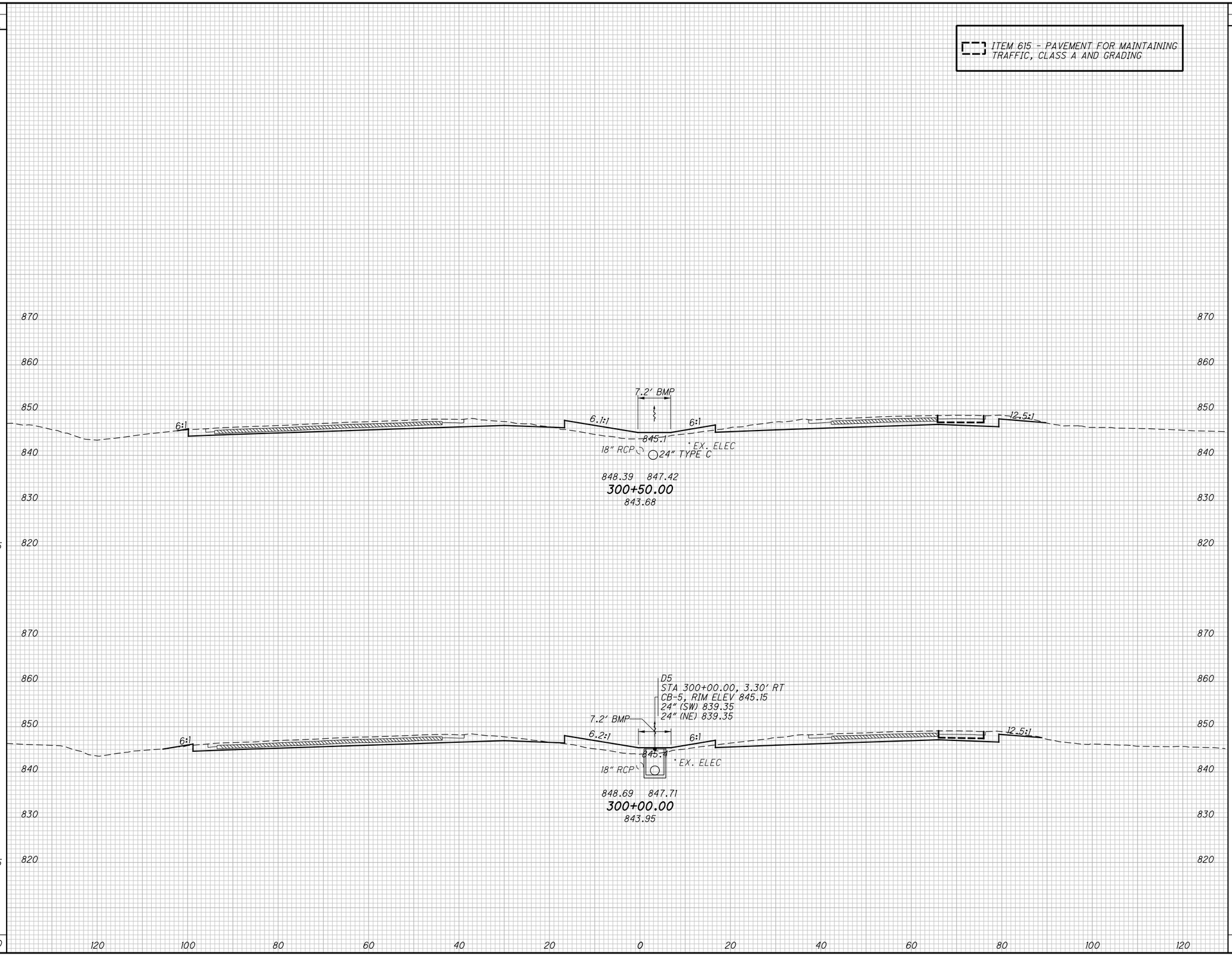

END AREA	
CUT	FILL
136	49
131	46

VOLUME	
CUT	FILL
247	88
251	82
498	170

CALCULATED DWB
CHECKED BAL

CROSS SECTIONS - I.R. 71
STA. 300+00.00 TO STA. 300+50.00

FRA-71-5.29

175
623

P:\84868\roadway\sheets\84868XS001.dgn 12/17/2014 3:26:35 PM kfahy

SEEDING	
END WIDTH	SQ. YDS.
61	339
60	338
	677

ITEM 615 - PAVEMENT FOR MAINTAINING TRAFFIC, CLASS A AND GRADING

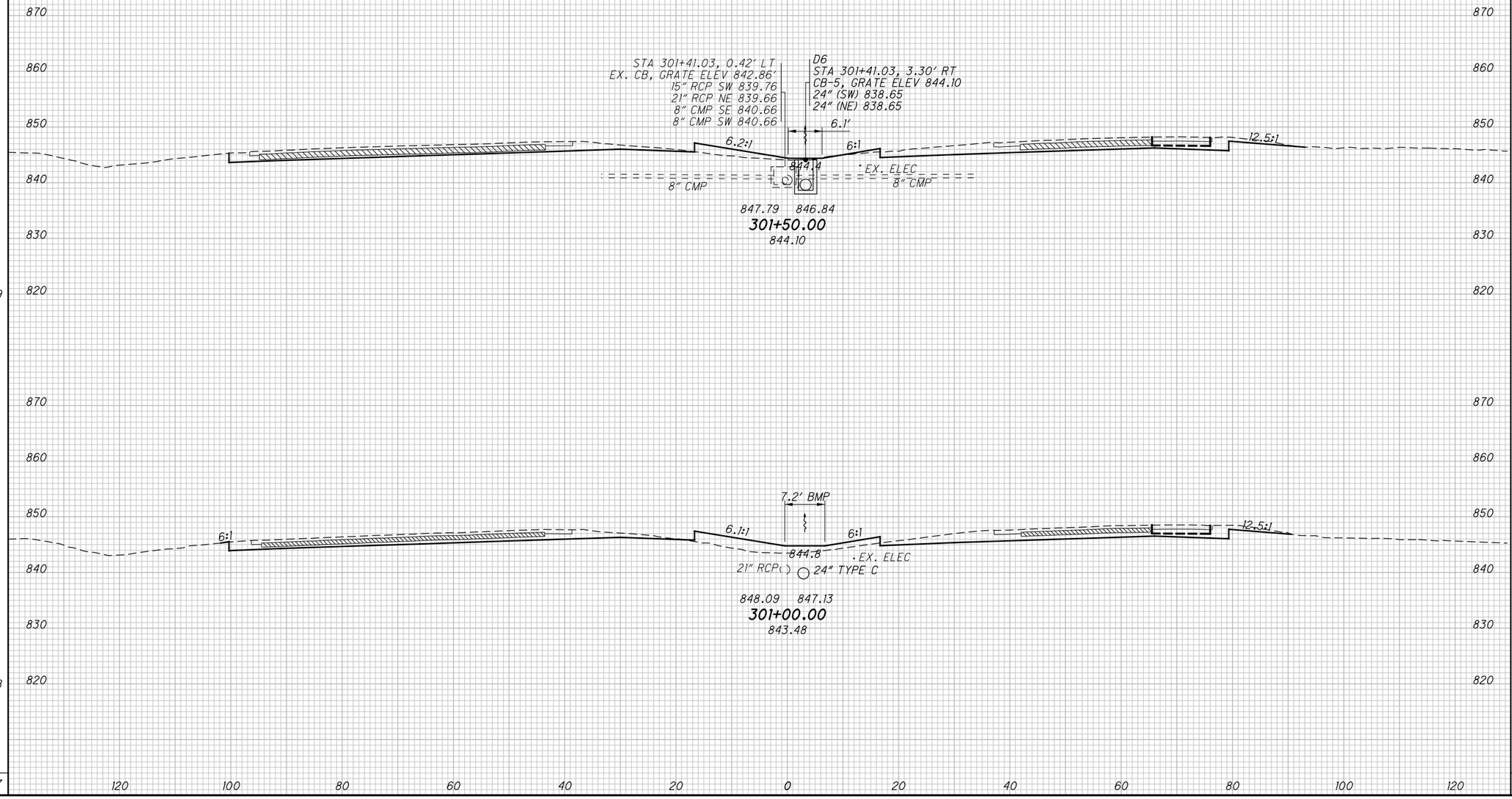

END AREA		VOLUME	
CUT	FILL	CUT	FILL
252	22		
		358	64
135	48		
		250	90
		608	154

CALCULATED DWB
CHECKED BAL

CROSS SECTIONS - I.R. 71
STA. 301+00.00 TO STA. 301+50.00

FRA-71-5.29

176
623

P:\84868\roadway\sheets\84868XS001.dgn 12/17/2014 3:26:36 PM kfahy

SEEDING	
END WIDTH	SQ. YDS.
56	345
66	356
	701

ITEM 615 - PAVEMENT FOR MAINTAINING TRAFFIC, CLASS A AND GRADING

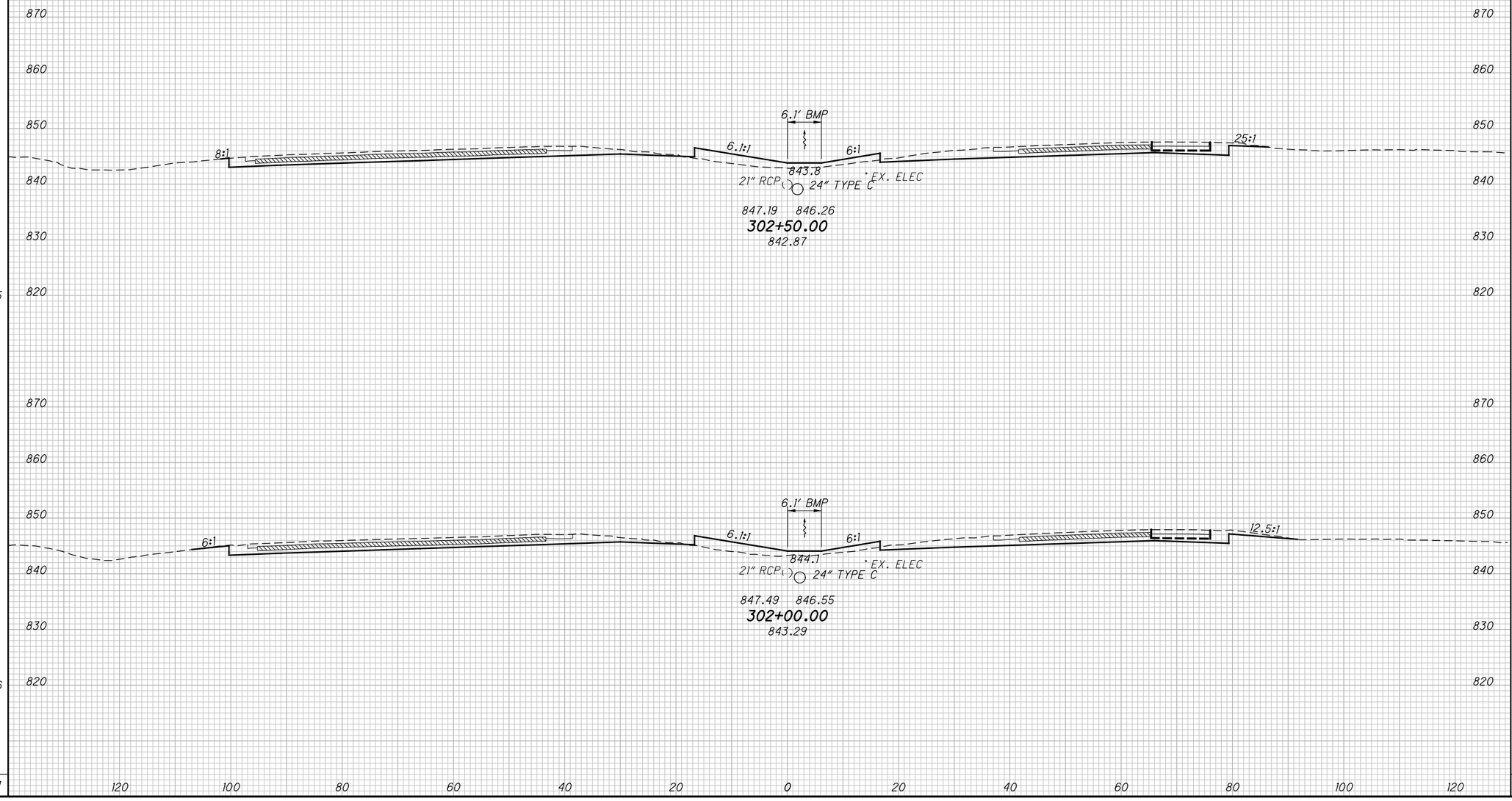

END AREA	
CUT	FILL
129	42
137	41

VOLUME	
CUT	FILL
246	77
360	58
606	135

CALCULATED DWB
CHECKED BAL

CROSS SECTIONS - I.R. 71
STA. 302+00.00 TO STA. 302+50.00

FRA-71-5.29

177
623

P:\84868\roadway\sheets\84868XS001.dgn 12/17/2014 3:26:37 PM kfahy

SEEDING	
END WIDTH	SQ. YDS.
71	355
57	317
	672

ITEM 615 - PAVEMENT FOR MAINTAINING TRAFFIC, CLASS A AND GRADING

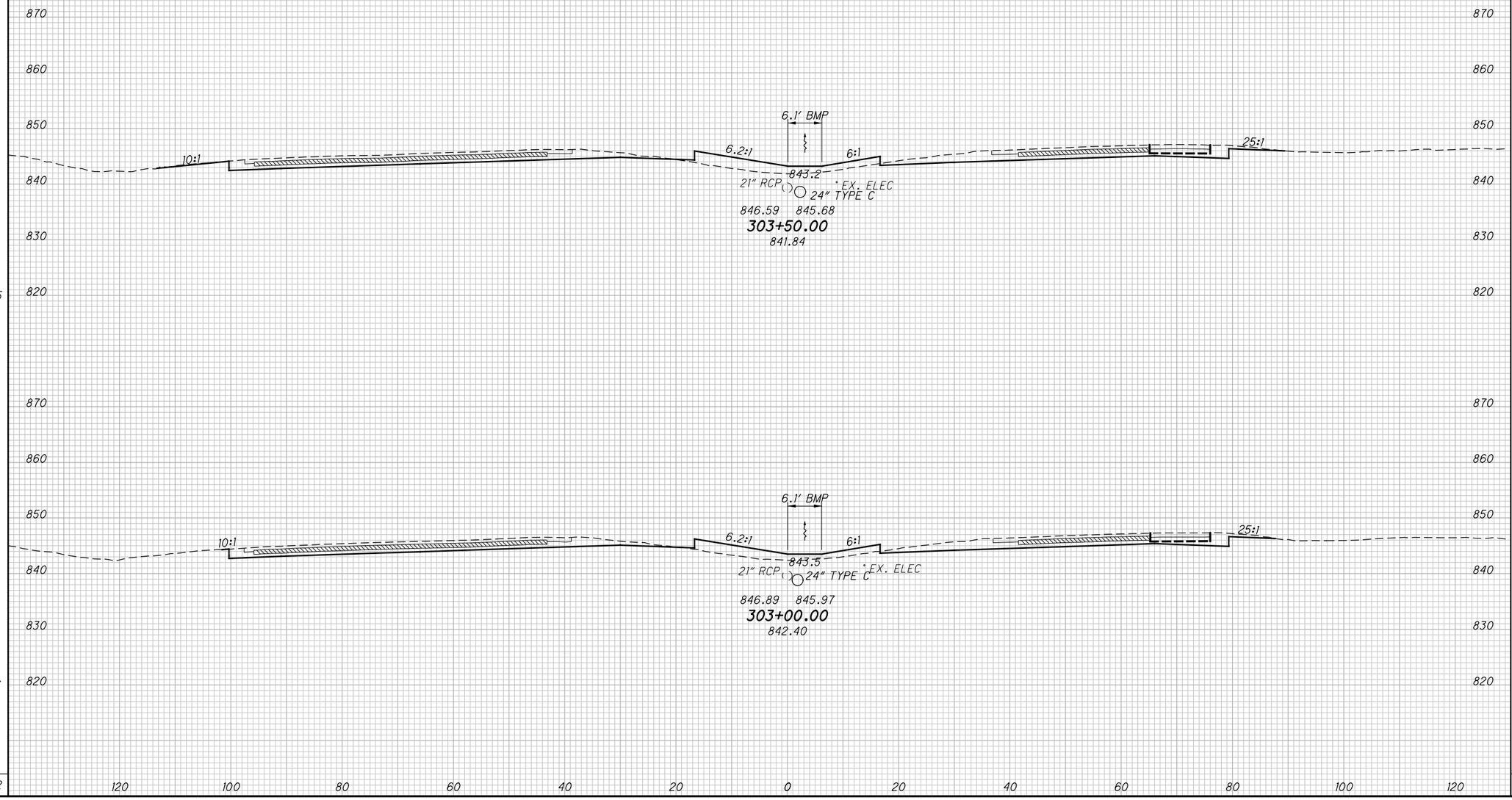

END AREA	
CUT	FILL
133	53
131	47

VOLUME	
CUT	FILL
245	93
240	83
485	176

CALCULATED DWB
CHECKED BAL

CROSS SECTIONS - I.R. 71
STA. 303+00.00 TO STA. 303+50.00

FRA-71-5.29

178
623

P:\84868\roadway\sheets\84868XS001.dgn 12/17/2014 3:26:38 PM kfahy

SEEDING		END AREA		VOLUME	
END WIDTH	SQ. YDS.	CUT	FILL	CUT	FILL
55	356	126	57	238	103
71	394	131	55	245	100
	750			483	203

CALCULATED DWB
CHECKED BAL

ITEM 615 - PAVEMENT FOR MAINTAINING TRAFFIC, CLASS A AND GRADING

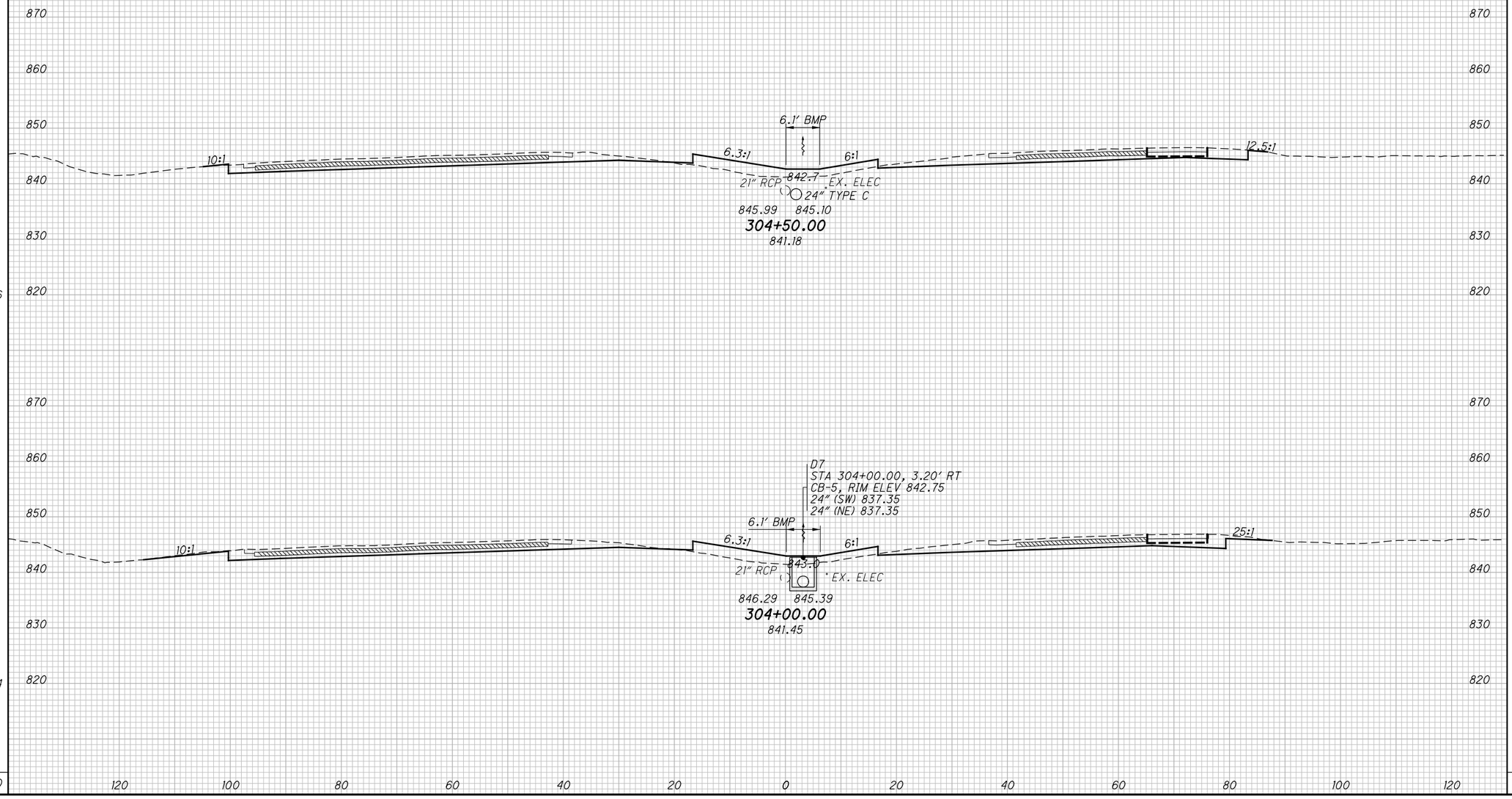

CROSS SECTIONS - I.R. 71
STA. 304+00.00 TO STA. 304+50.00

FRA-71-5.29

P:\84868\roadway\sheets\84868XS001.dgn 12/17/2014 3:26:39 PM kfahy

SEEDING		END AREA		VOLUME	
END WIDTH	SQ. YDS.	CUT	FILL	CUT	FILL
56					
	344			227	120
66		125	66		
	339			232	113
	683			459	233

CALCULATED DWB
CHECKED BAL

ITEM 615 - PAVEMENT FOR MAINTAINING TRAFFIC, CLASS A AND GRADING

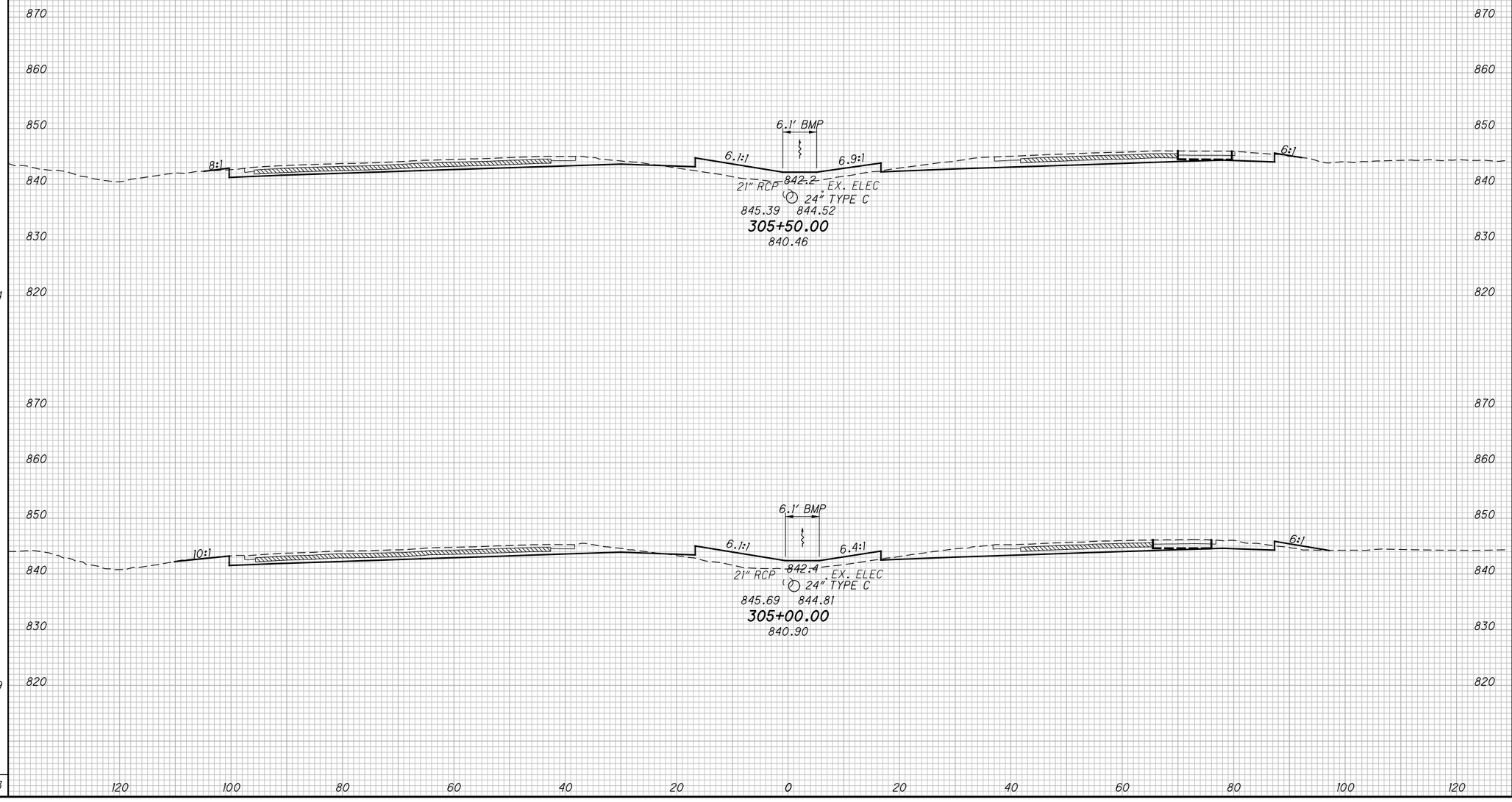

CROSS SECTIONS - I.R. 71
STA. 305+00.00 TO STA. 305+50.00

FRA-71-5.29

180
623

P:\84868\roadway\sheets\84868XS001.dgn 12/17/2014 3:26:40 PM kfahy

SEEDING		END AREA		VOLUME	
END WIDTH	SQ. YDS.	CUT	FILL	CUT	FILL
61		114	65		
59		121	62		
	334			218	117
	323			224	116
	657			442	233

CALCULATED DWB | CHECKED BAL

ITEM 615 - PAVEMENT FOR MAINTAINING TRAFFIC, CLASS A AND GRADING

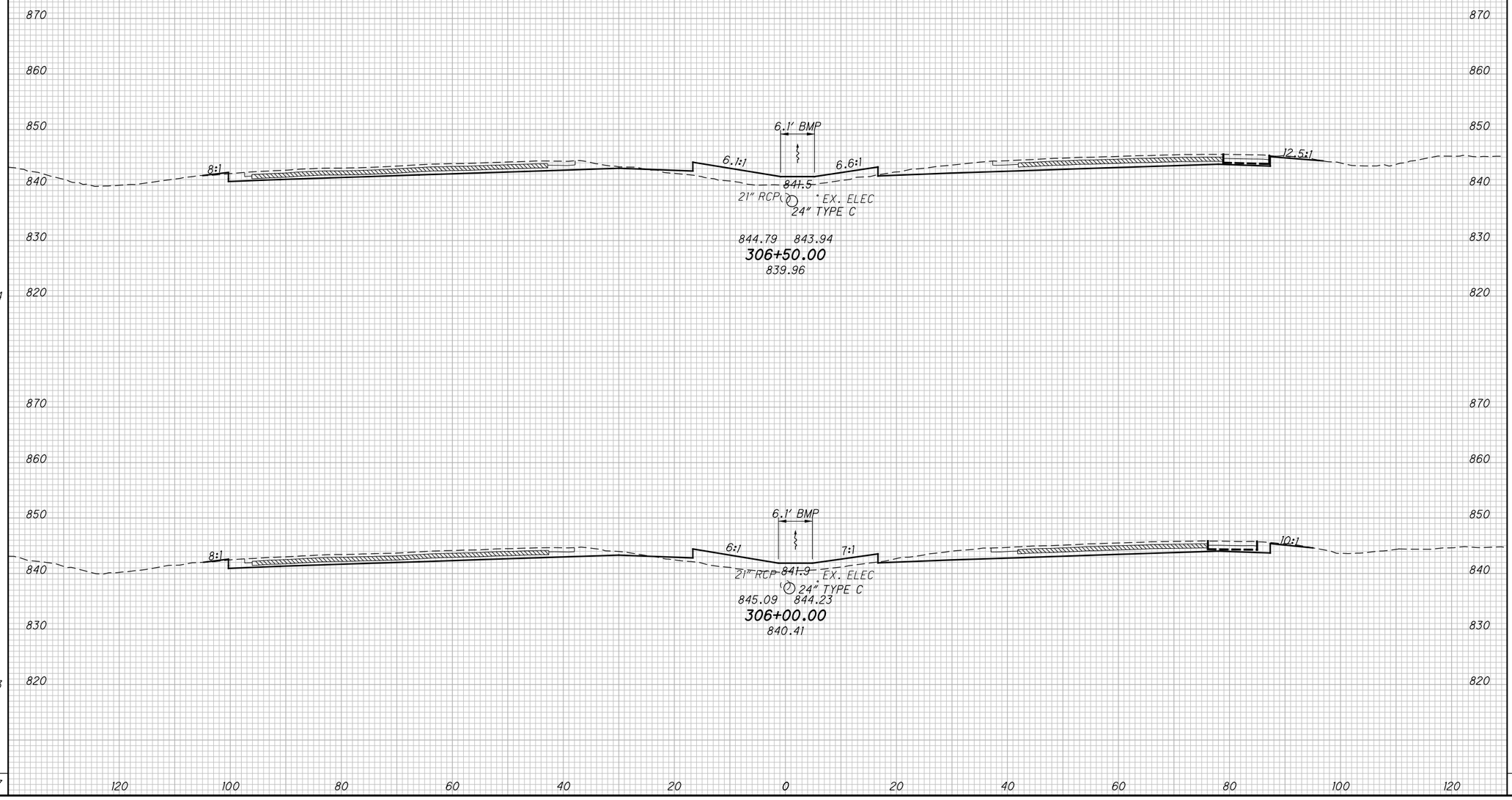

CROSS SECTIONS - I.R. 71
STA. 306+00.00 TO STA. 306+50.00

FRA-71-5.29

181
623

P:\84868\roadway\sheets\84868XS001.dgn 12/17/2014 3:26:41 PM kfahy

SEEDING	
END WIDTH	SQ. YDS.
74	384
63	344
	728

ITEM 615 - PAVEMENT FOR MAINTAINING TRAFFIC, CLASS A AND GRADING

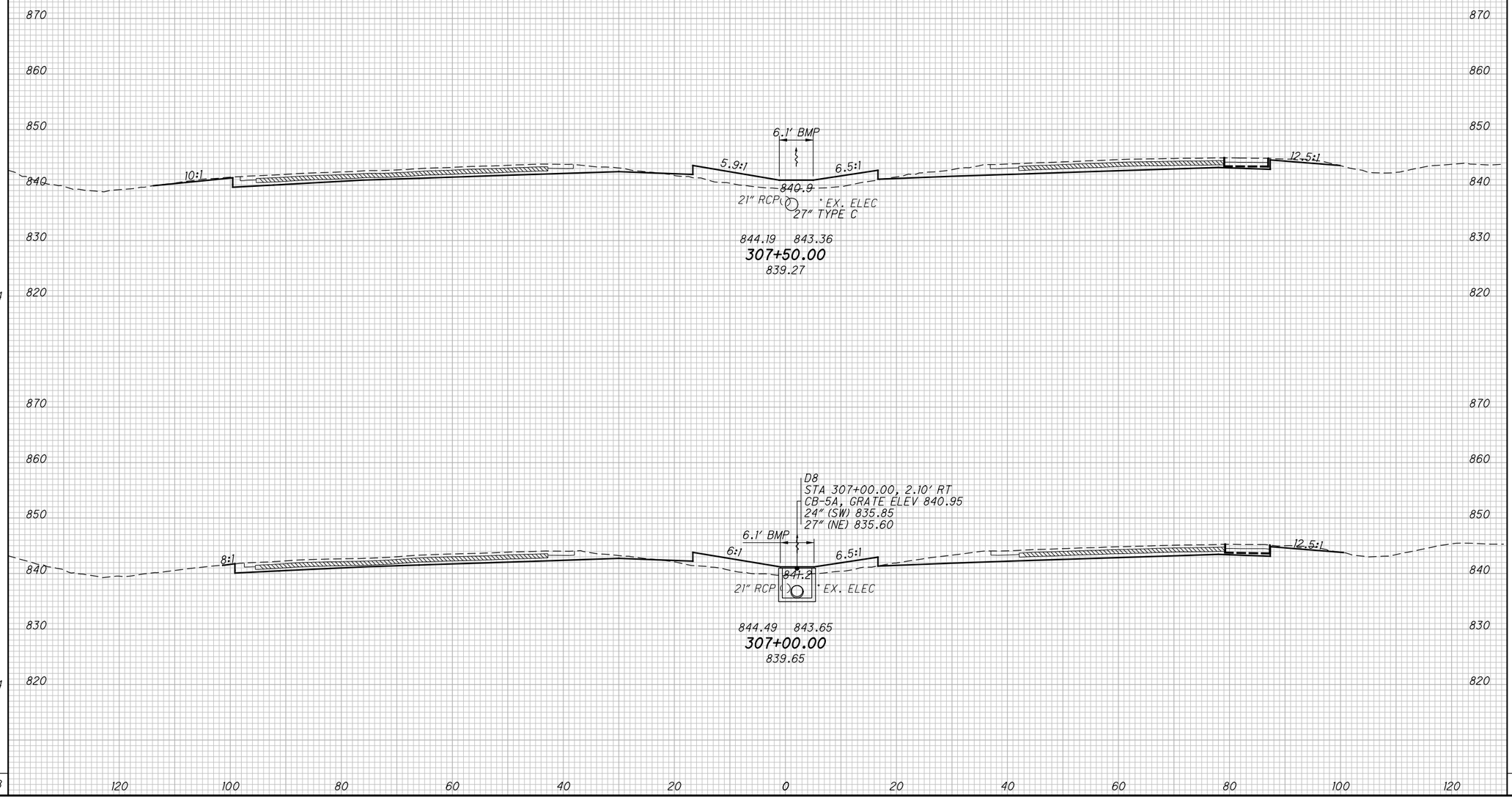

END AREA		VOLUME	
CUT	FILL	CUT	FILL
113	64		
113	59		
		209	114
		210	115
		419	229

CALCULATED DWB
CHECKED BAL

CROSS SECTIONS - I.R. 71
STA. 307+00.00 TO STA. 307+50.00

FRA-71-5.29

182
623

P:\84868\roadway\sheets\84868XS001.dgn 12/17/2014 3:26:42 PM kfahy

SEEDING	
END WIDTH	SQ. YDS.
59	367
73	411
	778

ITEM 615 - PAVEMENT FOR MAINTAINING TRAFFIC, CLASS A AND GRADING

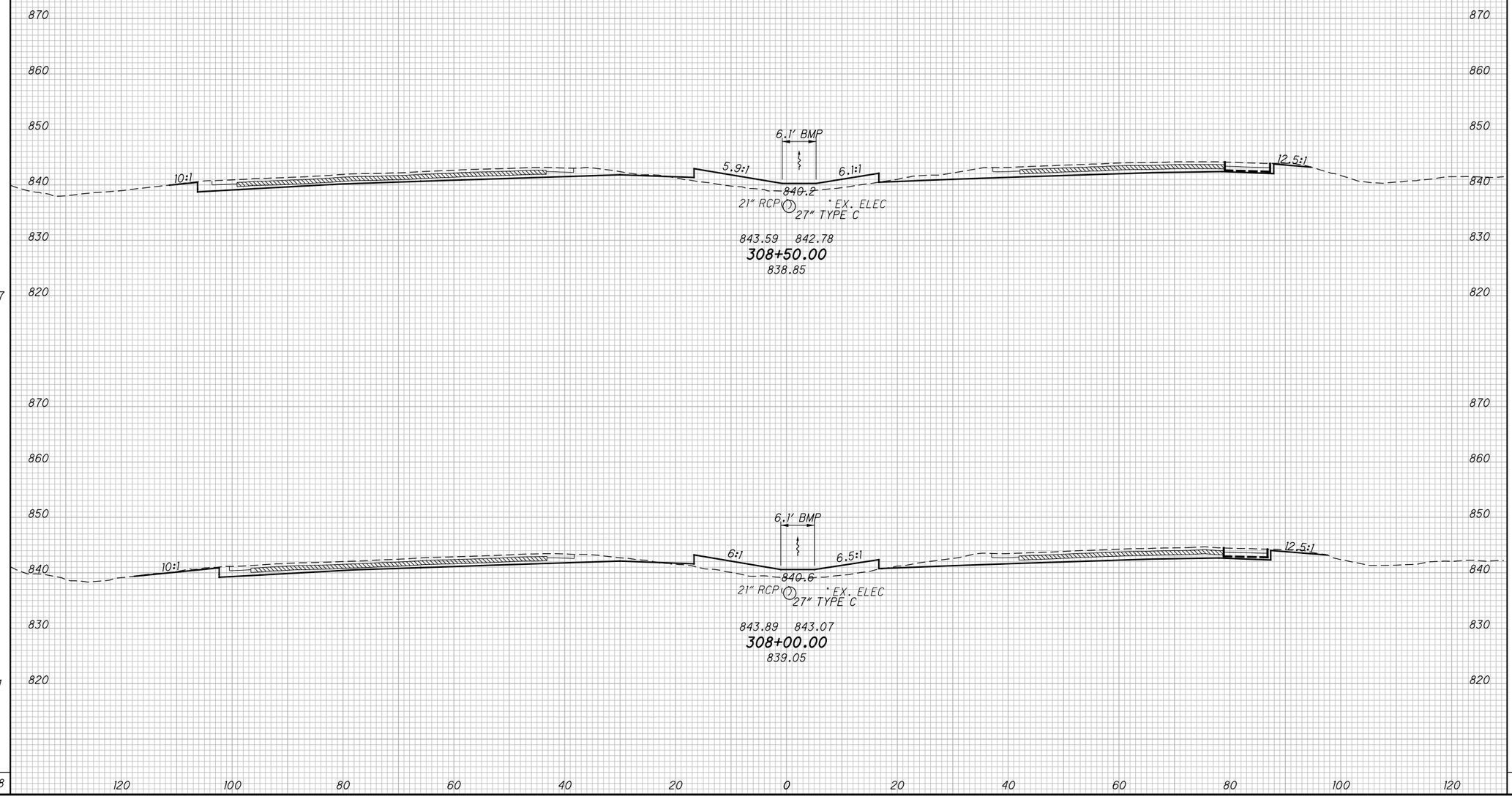

END AREA	
CUT	FILL
114	57
117	62

VOLUME	
CUT	FILL
213	110
213	116
426	226

CALCULATED DWB
CHECKED BAL

CROSS SECTIONS - I.R. 71
STA. 308+00.00 TO STA. 308+50.00

FRA-71-5.29

183
623

P:\84868\roadway\sheets\84868XS001.dgn 12/17/2014 3:26:43 PM kfahy

SEEDING	
END WIDTH	SQ. YDS.
53	339
68	355
	694

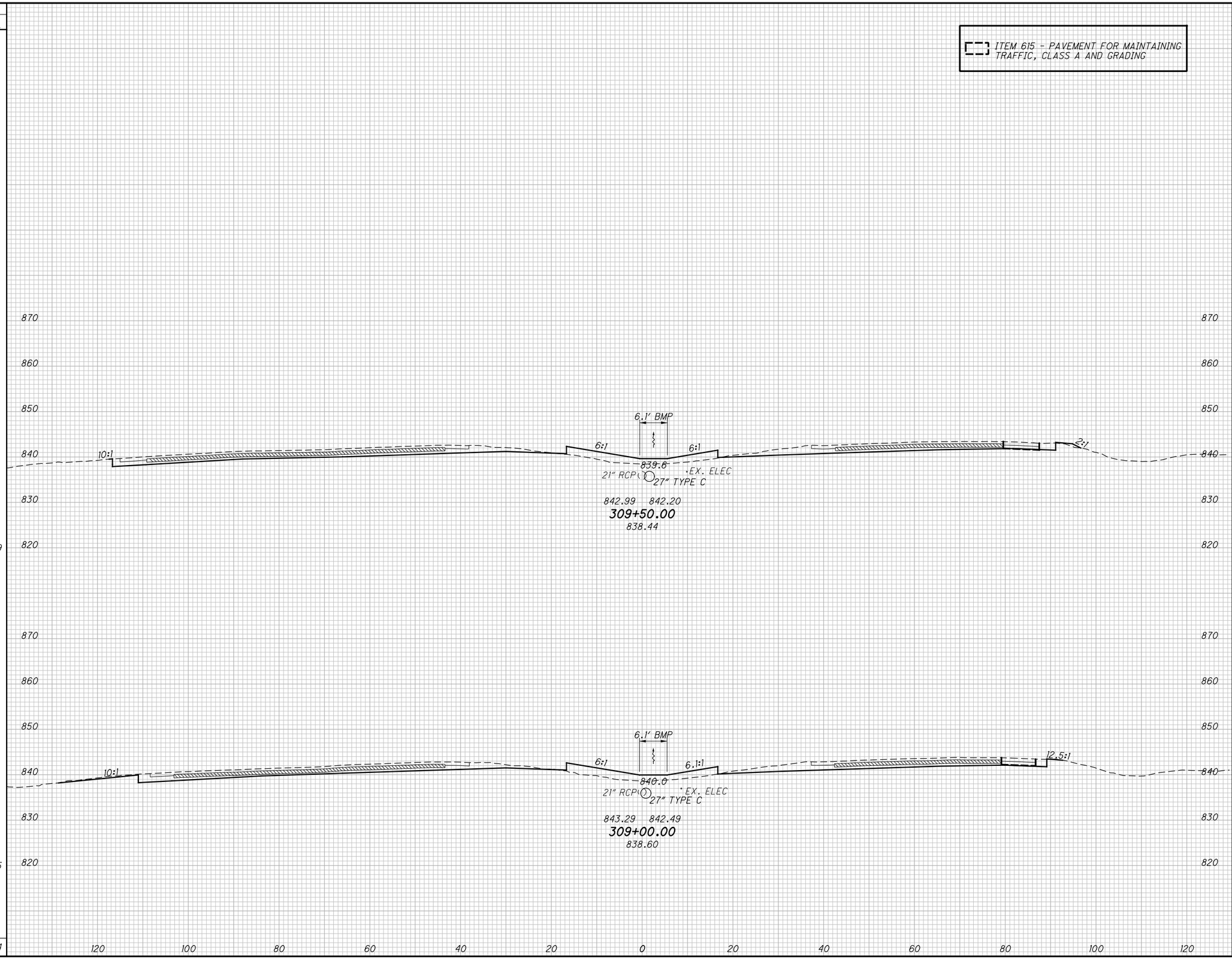

END AREA	
CUT	FILL
118	52
120	53

VOLUME	
CUT	FILL
220	97
216	102
436	199

CALCULATED DWB
CHECKED BAL

CROSS SECTIONS - I.R. 71
STA. 309+00.00 TO STA. 309+50.00

FRA-71-5.29

184
623

P:\84868\roadway\sheets\84868XS001.dgn 12/17/2014 3:26:44 PM kfahy

SEEDING	
END WIDTH	SQ. YDS.
60	268
61	67
	335

ITEM 615 - PAVEMENT FOR MAINTAINING TRAFFIC, CLASS A AND GRADING

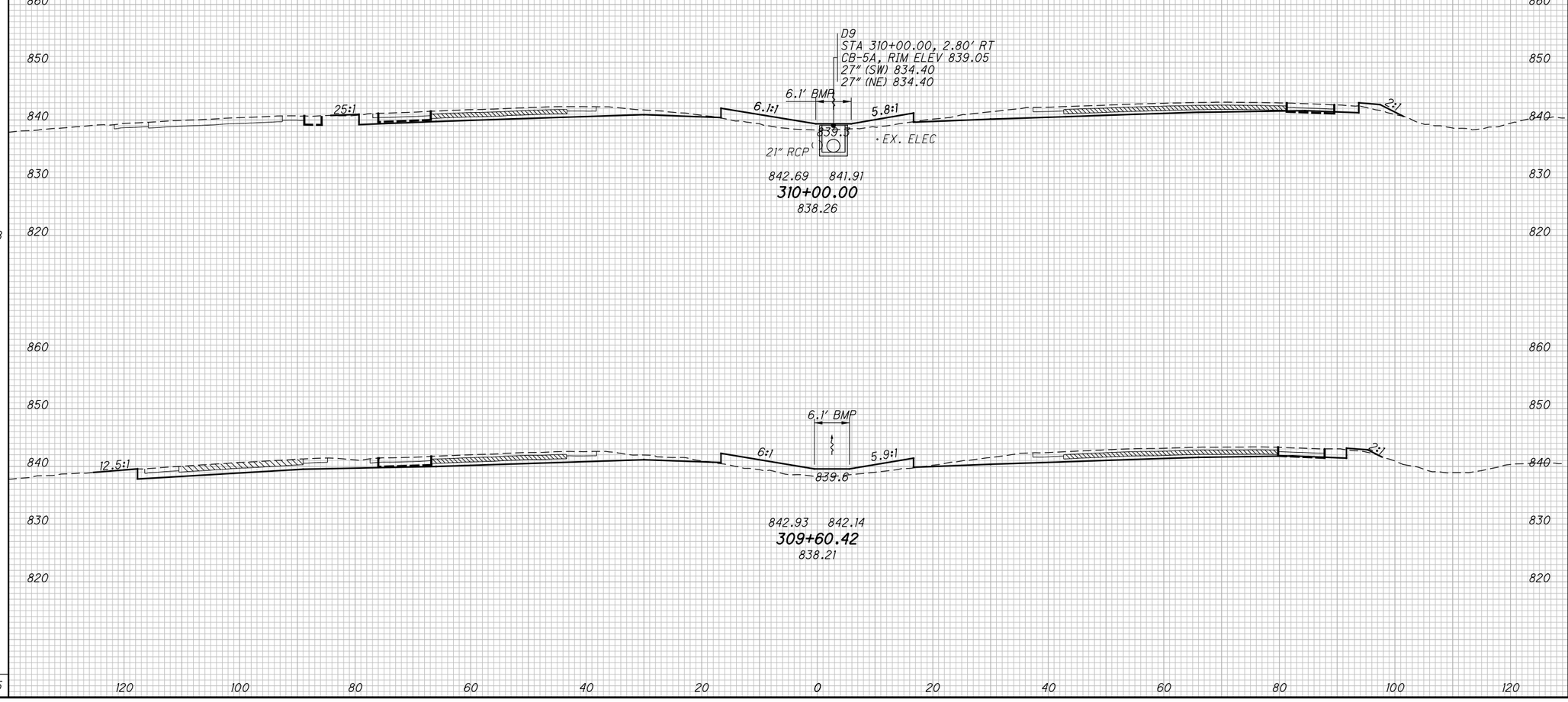

END AREA		VOLUME	
CUT	FILL	CUT	FILL
103	52		
141	52	178	76
		50	20
		228	96

CALCULATED DWB
CHECKED BAL

CROSS SECTIONS - I.R. 71
STA. 309+60.42 TO STA. 310+00.00

FRA-71-5.29

185
623

P:\84868\roadway\sheets\84868XS001.dgn 12/17/2014 3:26:45 PM kfahy

SEEDING		END AREA		VOLUME	
END WIDTH	SQ. YDS.	CUT	FILL	CUT	FILL
56		97	46		
	311			181	88
56		98	49		
	322			186	93
	633			367	181

ITEM 615 - PAVEMENT FOR MAINTAINING TRAFFIC, CLASS A AND GRADING

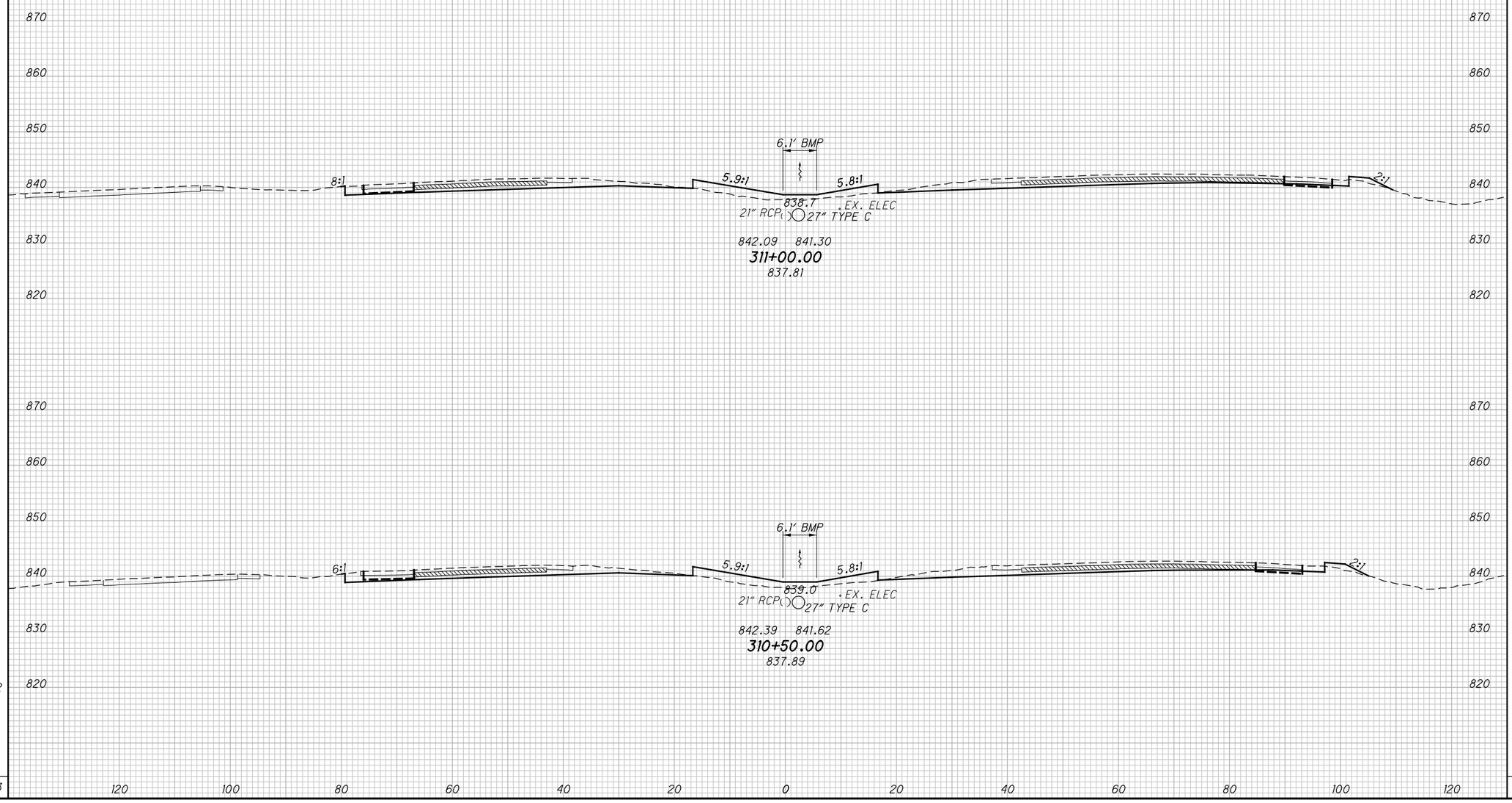

CALCULATED DWB
CHECKED BAL

CROSS SECTIONS - I.R. 71
STA. 310+50.00 TO STA. 311+00.00

FRA-71-5.29

186
623

P:\84868\roadway\sheets\84868XS001.dgn 12/17/2014 3:26:45 PM kfahy

SEEDING	
END WIDTH	SQ. YDS.
56	
323	
60	
322	
	645

ITEM 615 - PAVEMENT FOR MAINTAINING TRAFFIC, CLASS A AND GRADING

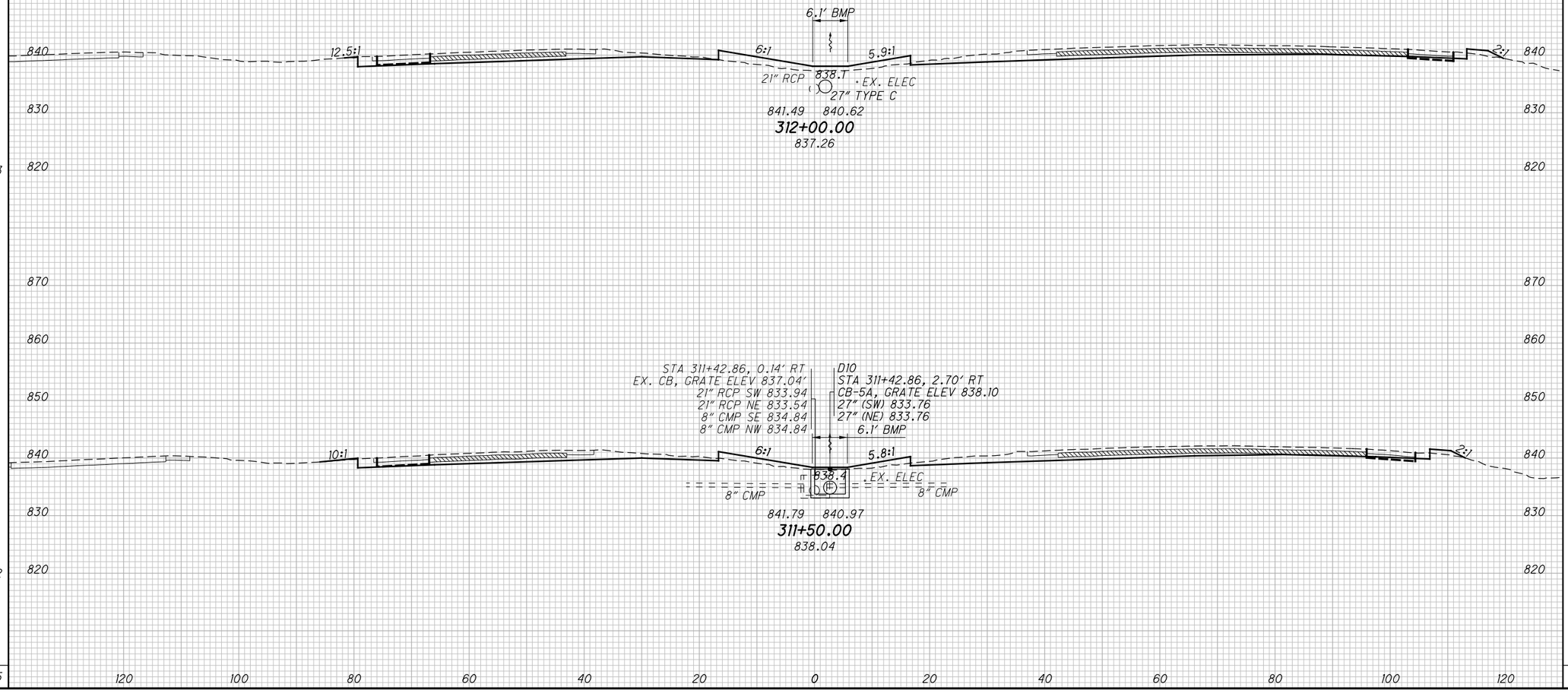

END AREA		VOLUME	
CUT	FILL	CUT	FILL
101	42		
101	29		
		371	134

CALCULATED DWB
CHECKED BAL

CROSS SECTIONS - I.R. 71
STA. 311+50.00 TO STA. 312+00.00

FRA-71-5.29

187
623

P:\84868\roadway\sheets\84868XS001.dgn 12/17/2014 3:26:46 PM kfahy

SEEDING		END AREA		VOLUME	
END WIDTH	SQ. YDS.	CUT	FILL	CUT	FILL
86	301	254	45	245	56
70	301	131	44	173	64
61	59	96	41	33	14
	661			451	134

ITEM 615 - PAVEMENT FOR MAINTAINING TRAFFIC, CLASS A AND GRADING

6.1' BMP
10:1 6:1 6:1 12.5:1 12.5:1
21" RCP 837.5
EX. ELEC
27" TYPE C
839.98 840.99
312+84.35
836.34

6.1' BMP
12.5:1 6:1 6:1 25:1 25:1
21" RCP 837.8
EX. ELEC
27" TYPE C
841.19 840.24
312+50.00
836.84

6.1' BMP
12.5:1 5.9:1 6:1 8:1
838.0
841.44 840.55
312+08.96
837.20

860 850 840 830 820 870 860 850 840 830 820 860 850 840 830 820

120 100 80 60 40 20 0 20 40 60 80 100 120

CALCULATED DWB
CHECKED BAL

CROSS SECTIONS - I.R. 71
STA. 312+08.96 TO STA. 312+84.35

FRA-71-5.29

188
623

P:\84868\roadway\sheets\84868XS001.dgn 12/17/2014 3:26:47 PM kfahy

SEEDING	
END WIDTH	SQ. YDS.
60	383
76	524
	141

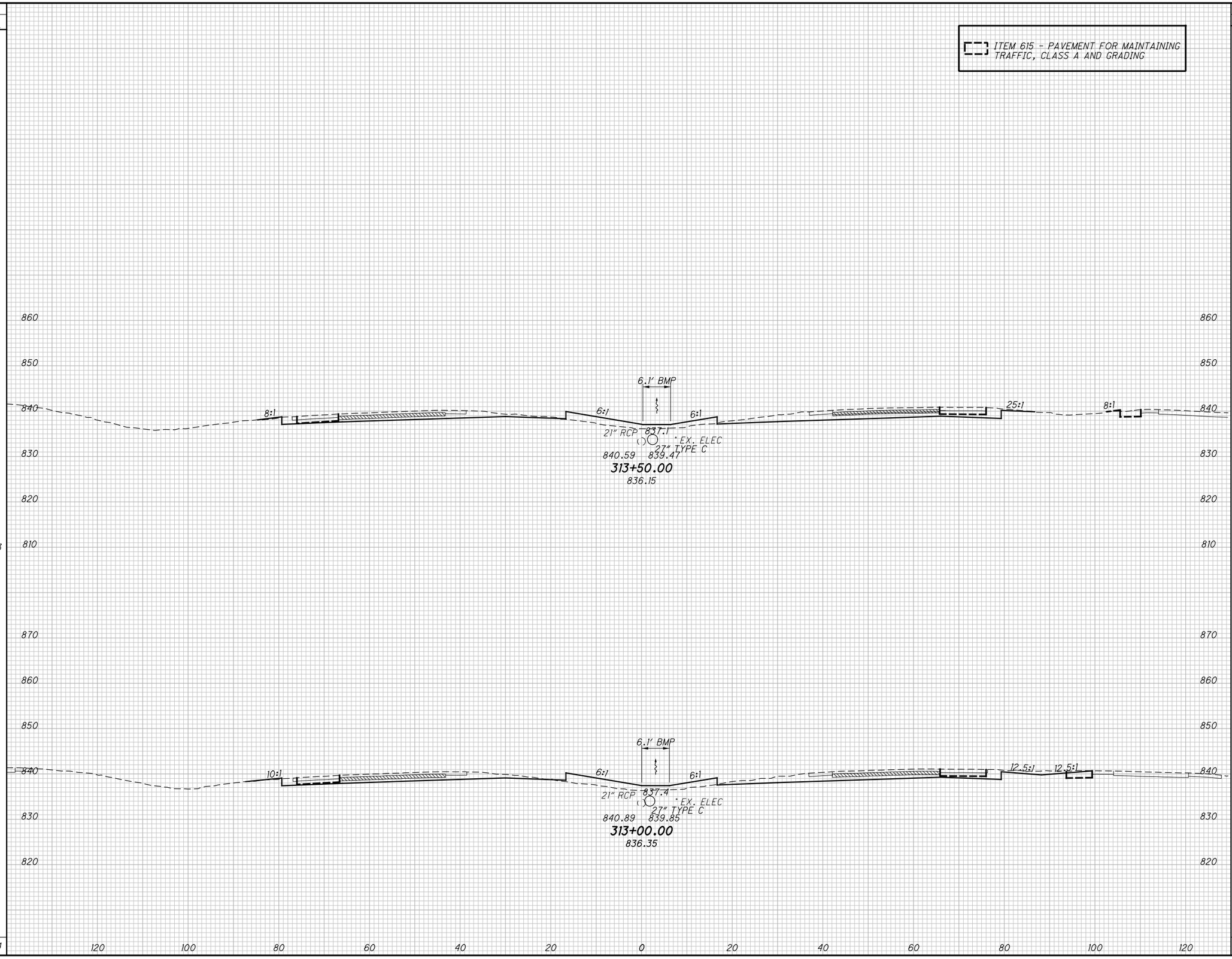

END AREA	
CUT	FILL
119	42
120	47

VOLUME	
CUT	FILL
221	83
108	27
329	110

CALCULATED DWB
CHECKED BAL

CROSS SECTIONS - I.R. 71
STA. 313+00.00 TO STA. 313+50.00

FRA-71-5.29

189
623

P:\84868\roadway\sheets\84868XS001.dgn 12/17/2014 3:26:48 PM kfahy

SEEDING	
END WIDTH	SQ. YDS.
79	400
65	350
	750

ITEM 615 - PAVEMENT FOR MAINTAINING TRAFFIC, CLASS A AND GRADING

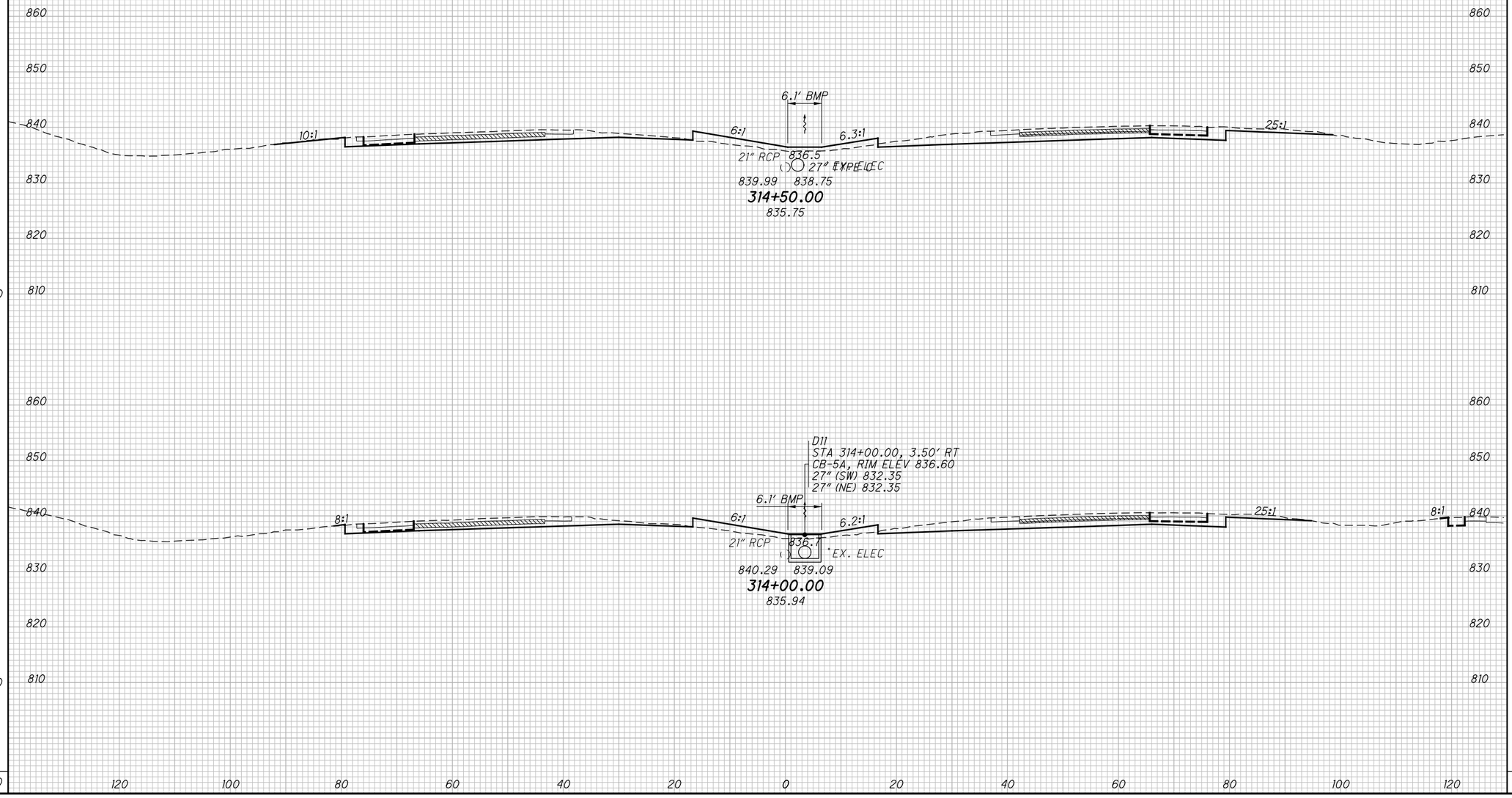

END AREA		VOLUME	
CUT	FILL	CUT	FILL
140	34		
133	35		
		253	64
		234	71
		487	135

CALCULATED DWB
CHECKED BAL

CROSS SECTIONS - I.R. 71
STA. 314+00.00 TO STA. 314+50.00

FRA-71-5.29

190
623

P:\84868\roadway\sheets\84868XS001.dgn 12/17/2014 3:26:49 PM kfahy

SEEDING	
END WIDTH	SQ. YDS.
60	367
	422
72	789

END AREA	
CUT	FILL
130	36
131	33

VOLUME	
CUT	FILL
241	64
251	62
492	126

CALCULATED DWB
CHECKED BAL

CROSS SECTIONS - I.R. 71
STA. 315+00.00 TO STA. 315+50.00

FRA-71-5.29

191
623

P:\84868\roadway\sheets\84868XS001.dgn 12/17/2014 3:26:50 PM kfahy

SEEDING	
END WIDTH	SQ. YDS.
58	
	350
67	
	356
	706

ITEM 615 - PAVEMENT FOR MAINTAINING TRAFFIC, CLASS A AND GRADING

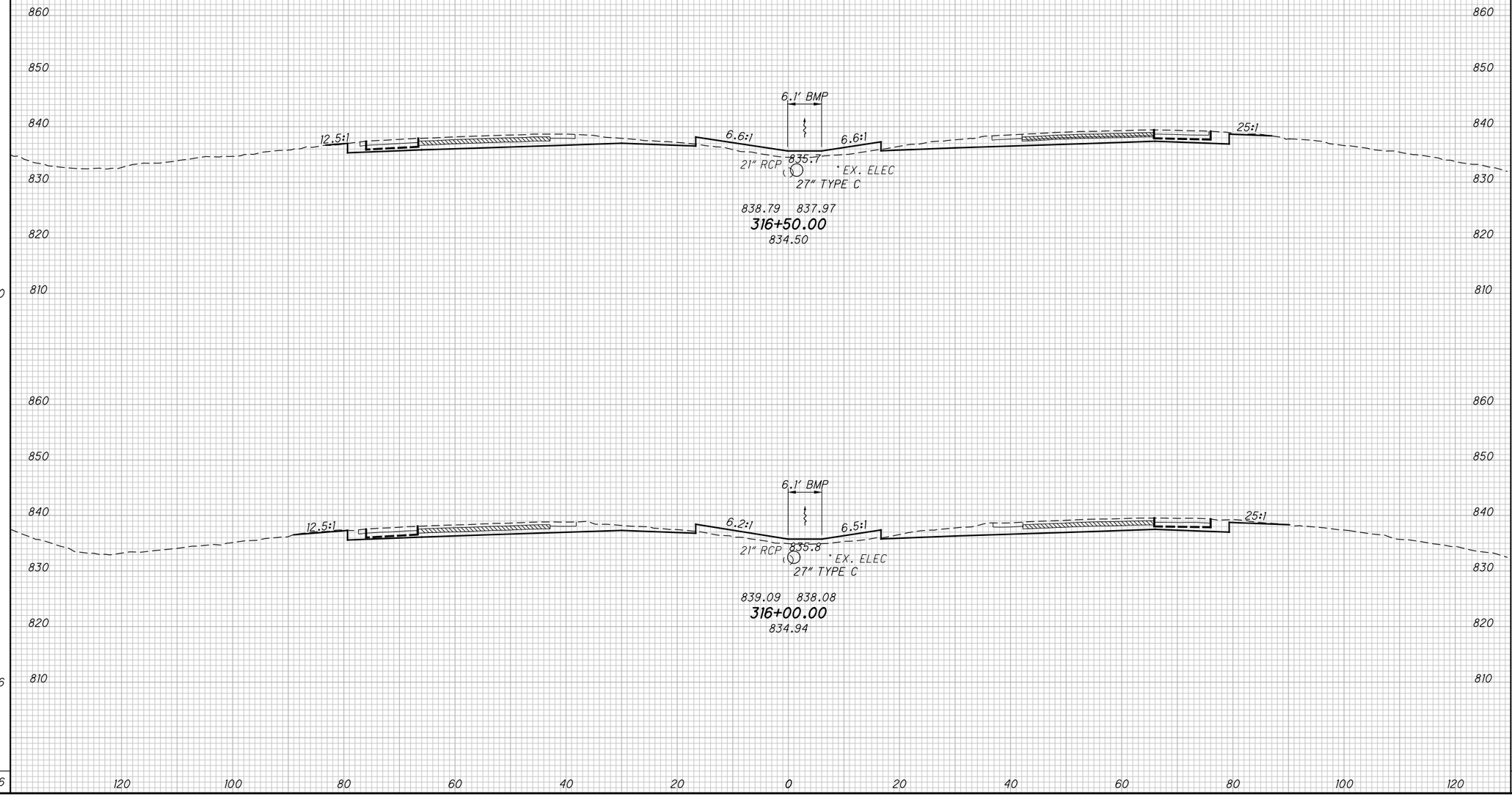

END AREA	
CUT	FILL
138	41
137	36

VOLUME	
CUT	FILL
255	72
247	67
502	139

CALCULATED DWB
CHECKED BAL

CROSS SECTIONS - I.R. 71
STA. 316+00.00 TO STA. 316+50.00

FRA-71-5.29

192
623

P:\84868\roadway\sheets\84868XS001.dgn 12/17/2014 3:26:51 PM klahy

SEEDING	
END WIDTH	SQ. YDS.
114	522
74	367
	889

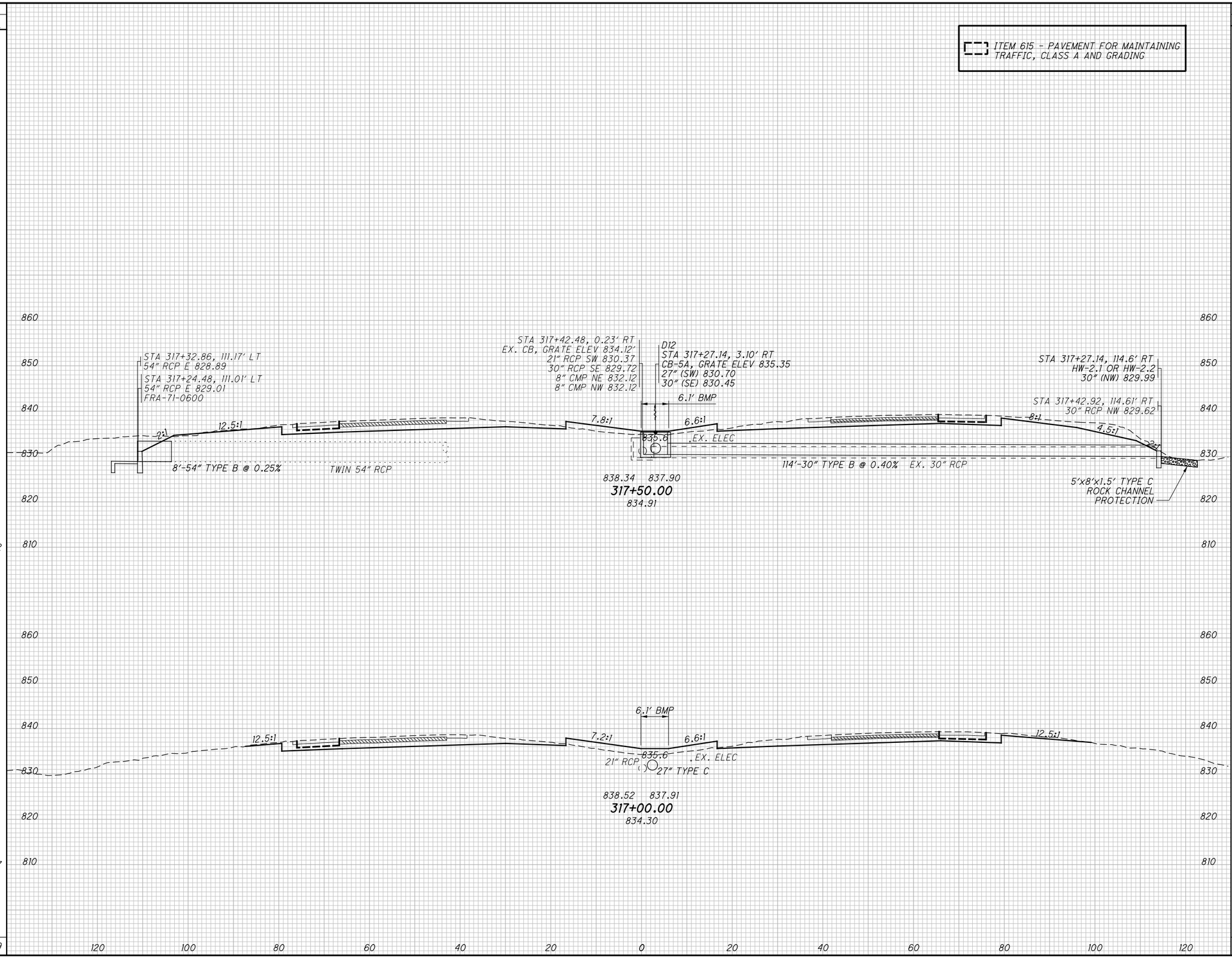

END AREA		VOLUME	
CUT	FILL	CUT	FILL
273	37		
156	45	397	75
		273	80
		670	155

CALCULATED DWB
CHECKED BAL

CROSS SECTIONS - I.R. 71
STA. 317+00.00 TO STA. 317+50.00

FRA-71-5.29

193
623

P:\84868\roadway\sheets\84868XS001.dgn 12/17/2014 3:26:52 PM kfahy

SEEDING	
END WIDTH	SQ. YDS.
111	600
105	611
	1211

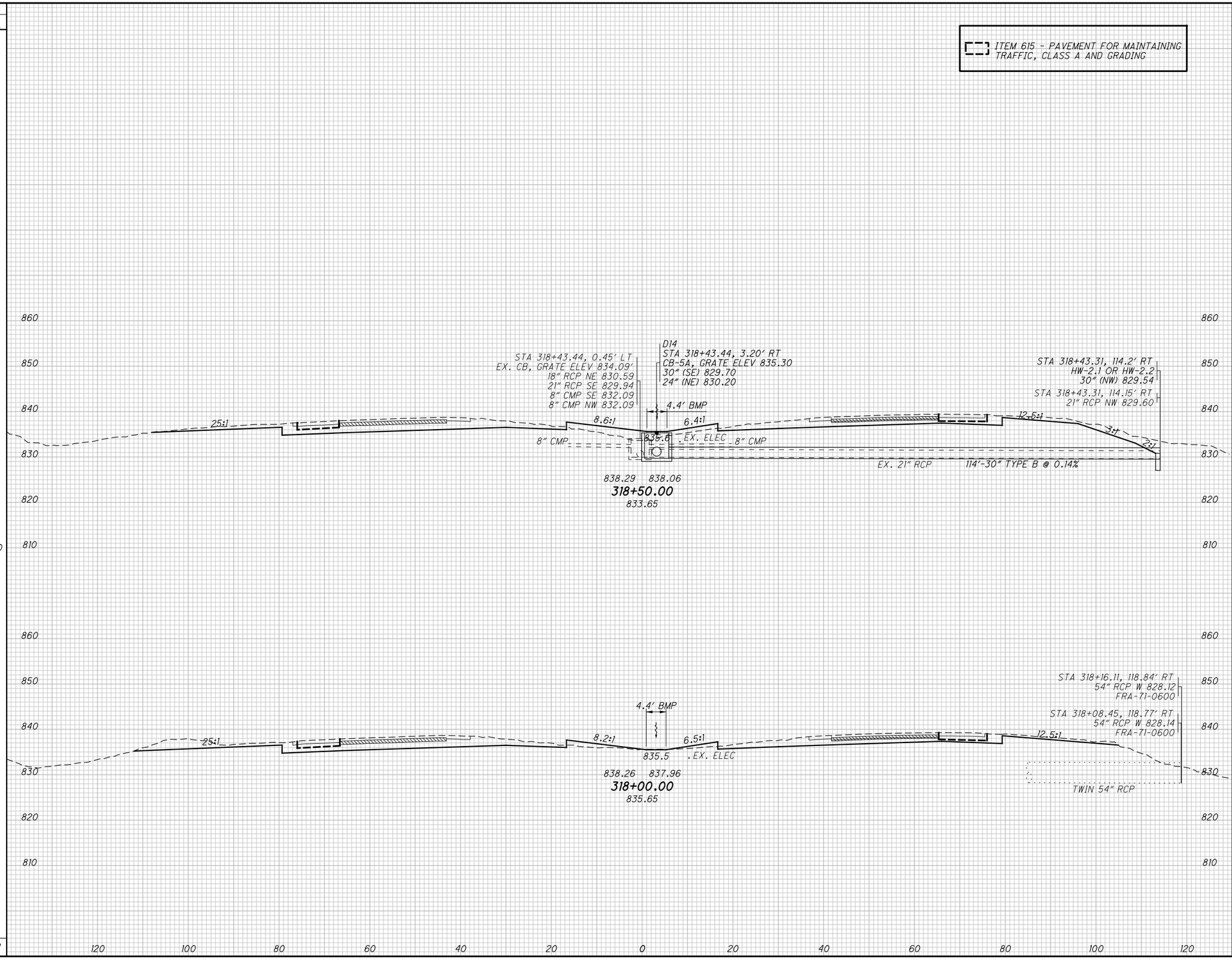

END AREA		VOLUME	
CUT	FILL	CUT	FILL
276	47		
214	17		
		905	108
		454	59
		451	49

CALCULATED DWB
CHECKED BAL

CROSS SECTIONS - I.R. 71
STA. 318+00.00 TO STA. 318+50.00

FRA-71-5.29

P:\84868\roadway\sheets\84868XS001.dgn 12/17/2014 3:26:53 PM kfahy

SEEDING		END AREA		VOLUME	
END WIDTH	SQ. YDS.	CUT	FILL	CUT	FILL
71	439	234	18	415	51
	85	214	37	454	78
	989			869	129

CALCULATED DWB
CHECKED BAL

ITEM 615 - PAVEMENT FOR MAINTAINING TRAFFIC, CLASS A AND GRADING

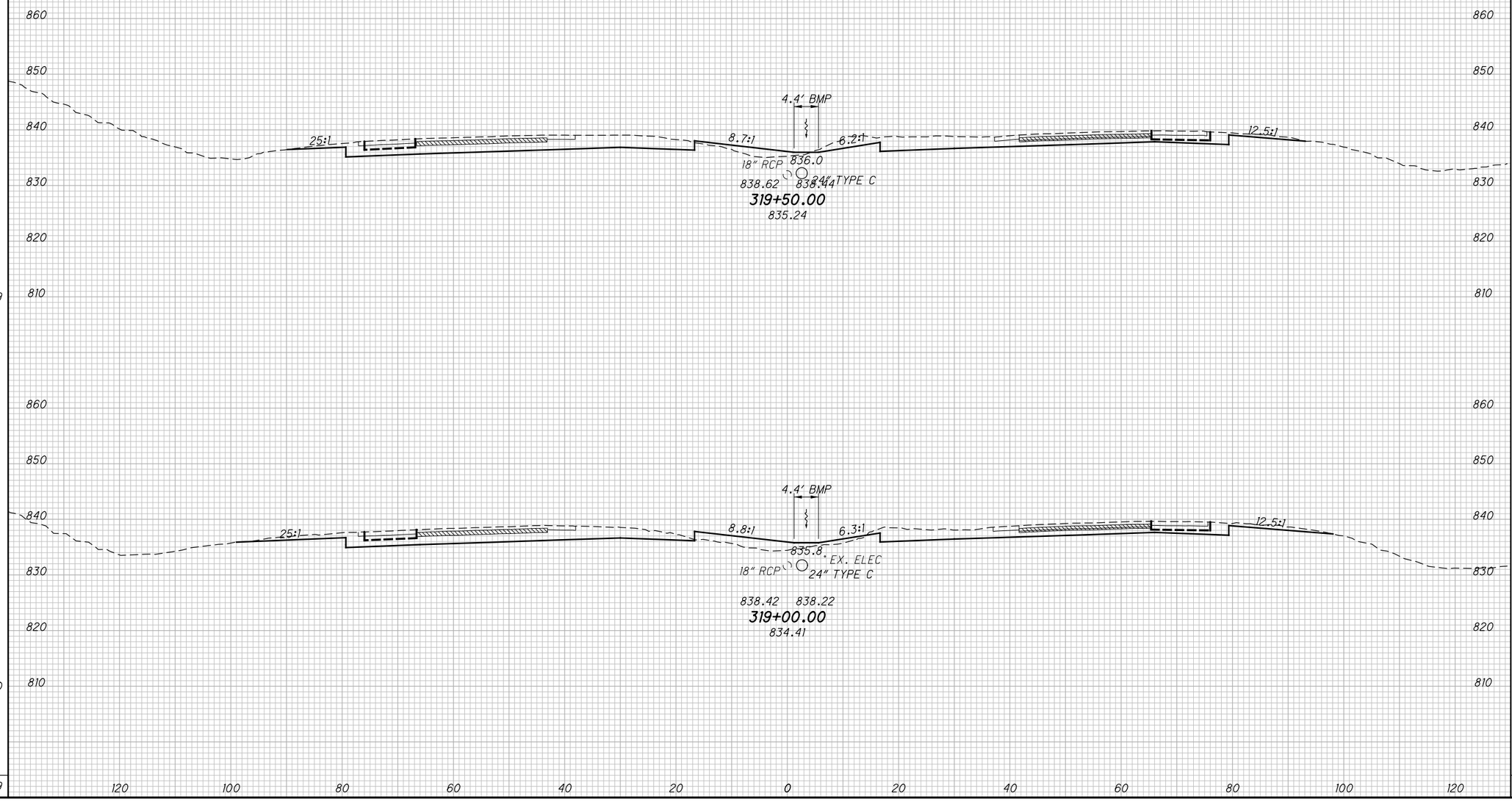

CROSS SECTIONS - I.R. 71
STA. 319+00.00 TO STA. 319+50.00

FRA-71-5.29

195
623

P:\84868\roadway\sheets\84868XS001.dgn 12/17/2014 3:26:54 PM kfahy

SEEDING		END AREA		VOLUME	
END WIDTH	SQ. YDS.	CUT	FILL	CUT	FILL
69		188	54		
80	417	232	9	388	58
	423			431	25
				819	83

CALCULATED DWB | CHECKED BAL

ITEM 615 - PAVEMENT FOR MAINTAINING TRAFFIC, CLASS A AND GRADING

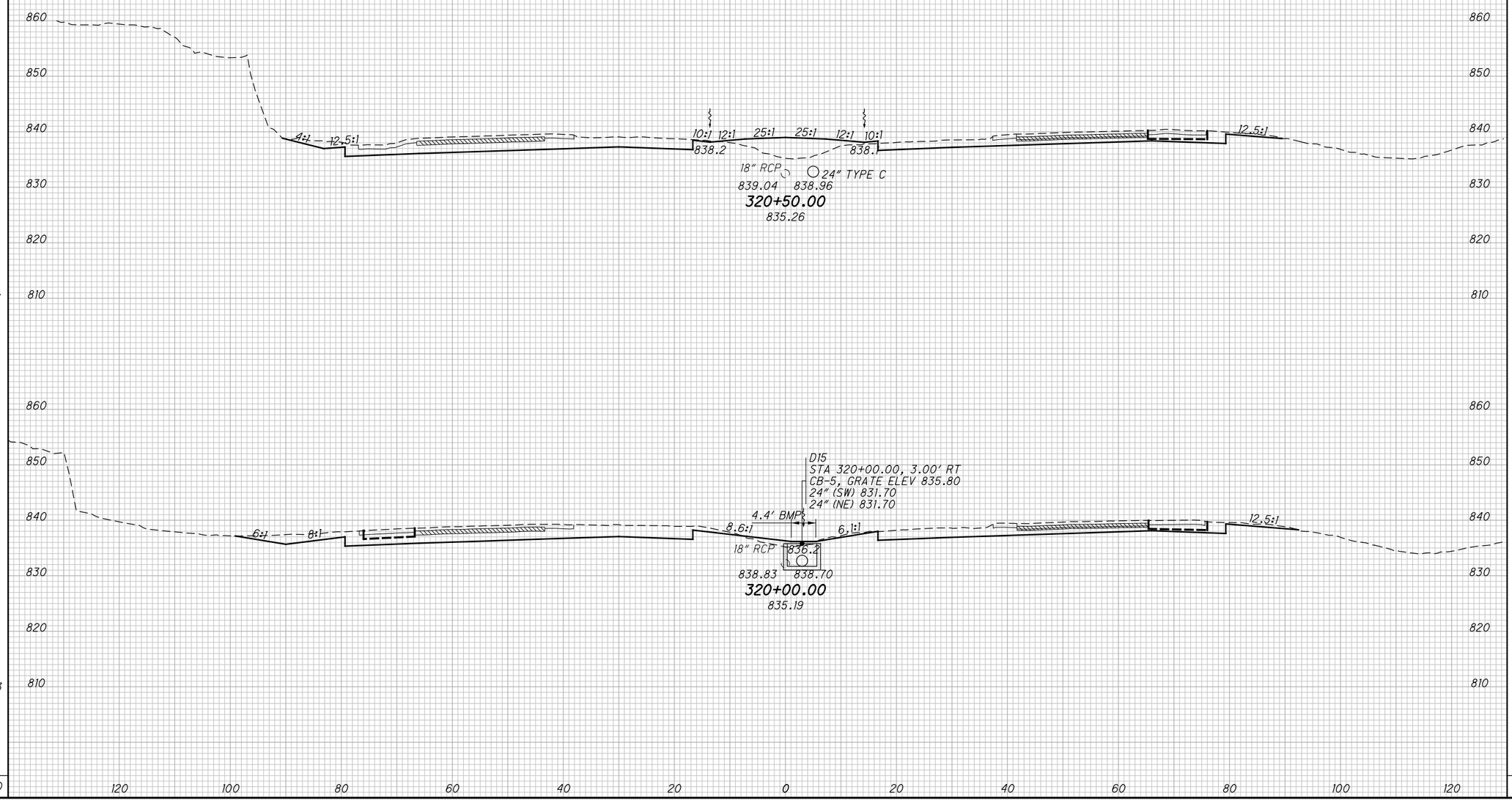

CROSS SECTIONS - I.R. 71
STA. 320+00.00 TO STA. 320+50.00

FRA-71-5.29

196
623

P:\84868\roadway\sheets\84868XS001.dgn 12/17/2014 3:26:55 PM kfahy

SEEDING	
END WIDTH	SQ. YDS.
58	339
64	372
	711

END AREA	
CUT	FILL
167	29
169	52

VOLUME	
CUT	FILL
311	75
331	98
642	173

CALCULATED DWB
CHECKED BAL

ITEM 615 - PAVEMENT FOR MAINTAINING TRAFFIC, CLASS A AND GRADING

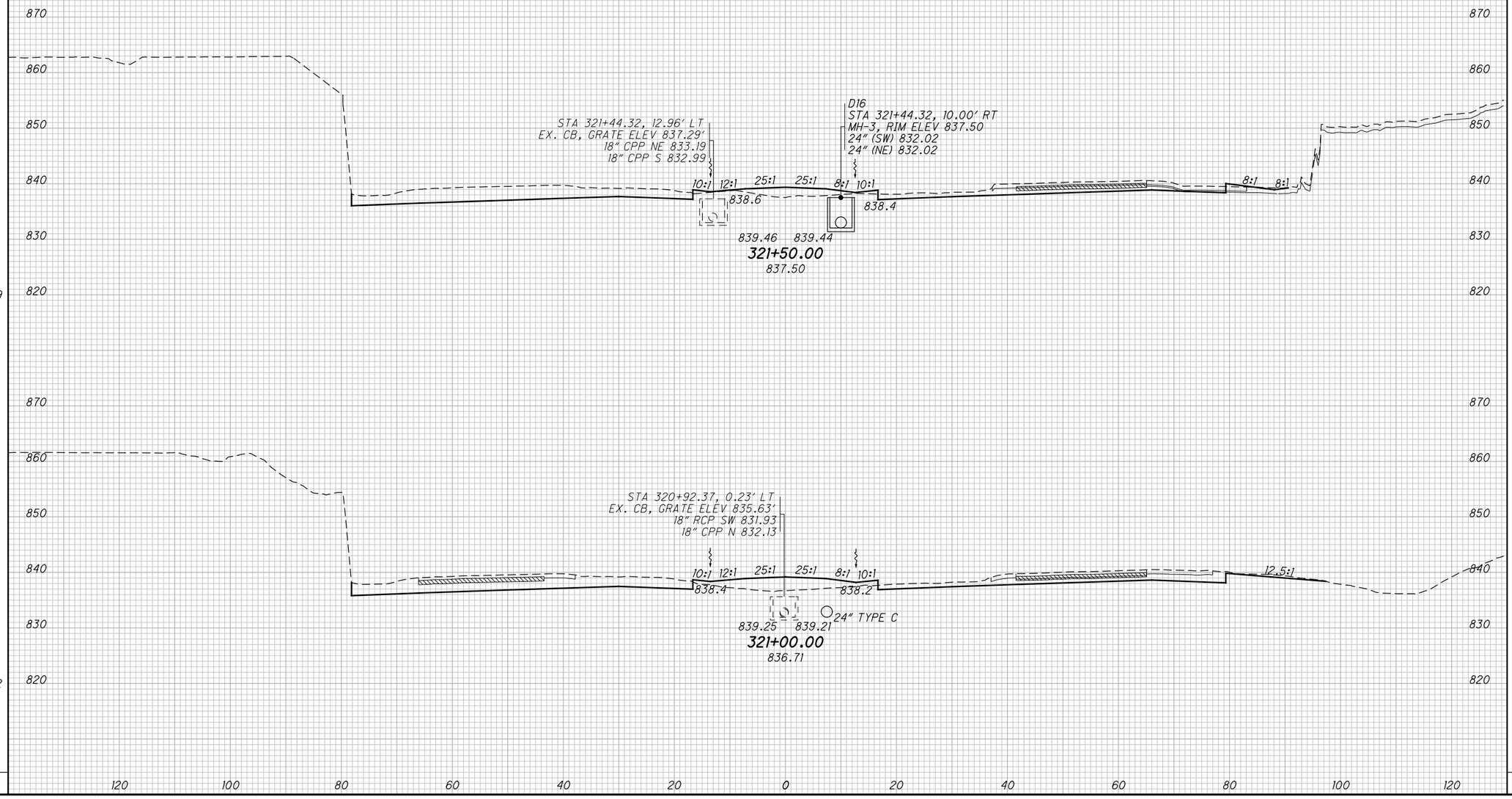

CROSS SECTIONS - I.R. 71
STA. 321+00.00 TO STA. 321+50.00

FRA-71-5.29

197
623

P:\84868\roadway\sheets\84868XS001.dgn 12/17/2014 3:26:56 PM kfahy

SEEDING	
END WIDTH	SQ. YDS.
46	256
46	289
	545

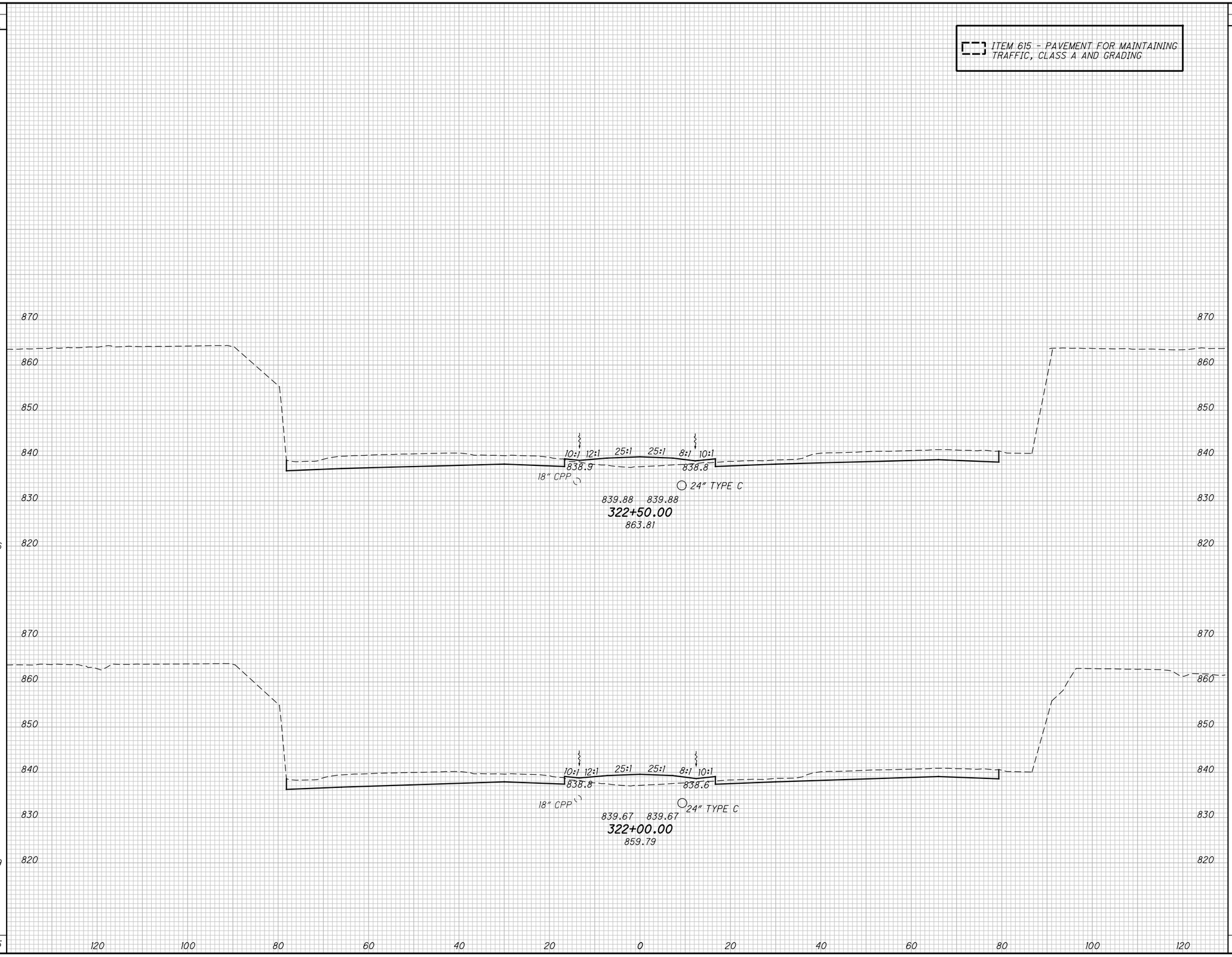

END AREA	
CUT	FILL
260	44
236	52

VOLUME	
CUT	FILL
459	89
373	75
832	164

CALCULATED DWB
CHECKED BAL

CROSS SECTIONS - I.R. 71
STA. 322+00.00 TO STA. 322+50.00

FRA-71-5.29

198
623

P:\84868\roadway\sheets\84868XS001.dgn 12/17/2014 3:26:56 PM kfahy

SEEDING	
END WIDTH	SQ. YDS.
46	256
46	256
	512

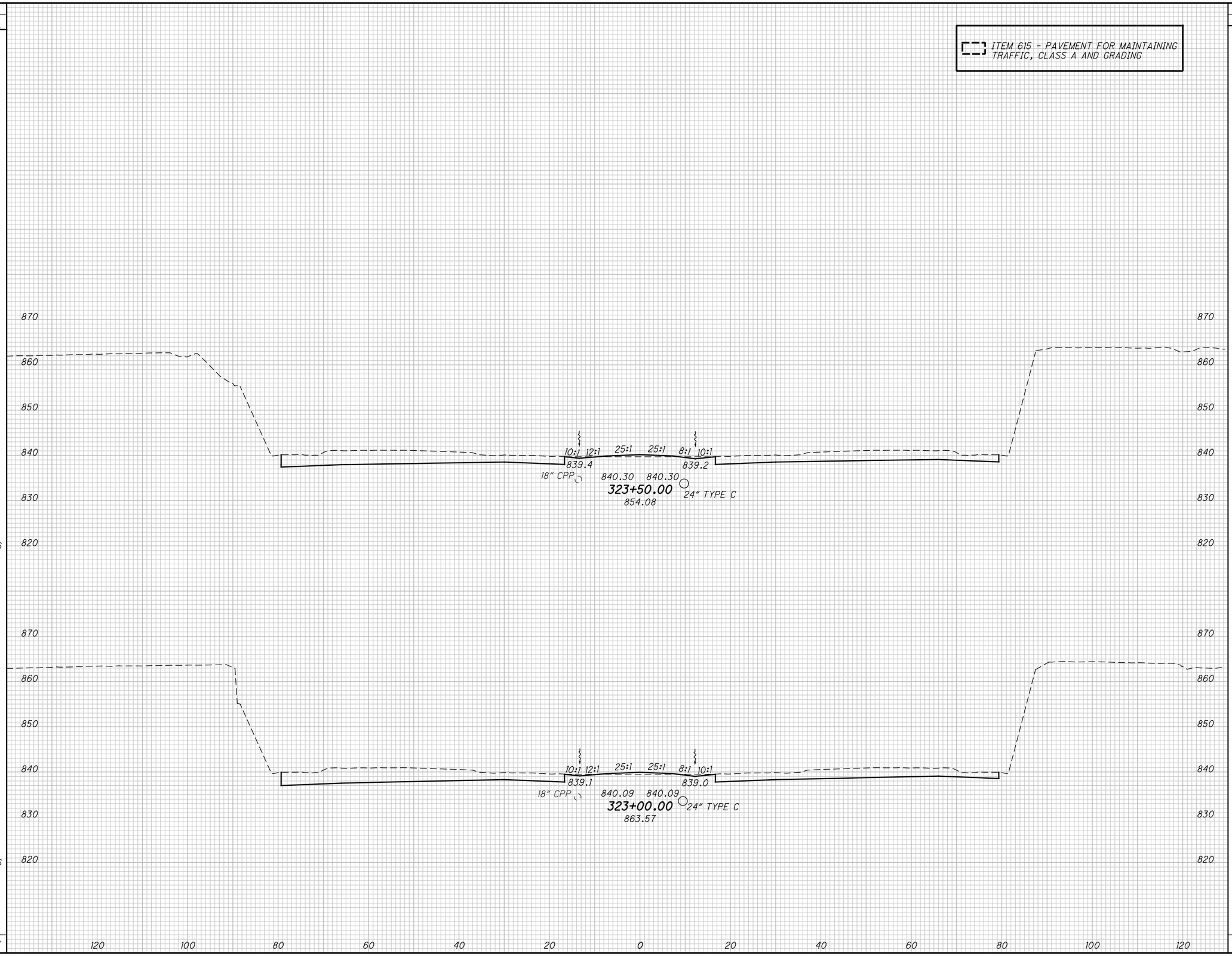

END AREA	
CUT	FILL
269	5
271	4

VOLUME	
CUT	FILL
500	9
492	45
992	54

CALCULATED DWB
CHECKED BAL

CROSS SECTIONS - I.R. 71
STA. 323+00.00 TO STA. 323+50.00

FRA-71-5.29

199
623

P:\84868\roadway\sheets\84868XS001.dgn 12/17/2014 3:26:57 PM kfahy

SEEDING	
END WIDTH	SQ. YDS.
49	278
50	267
	545

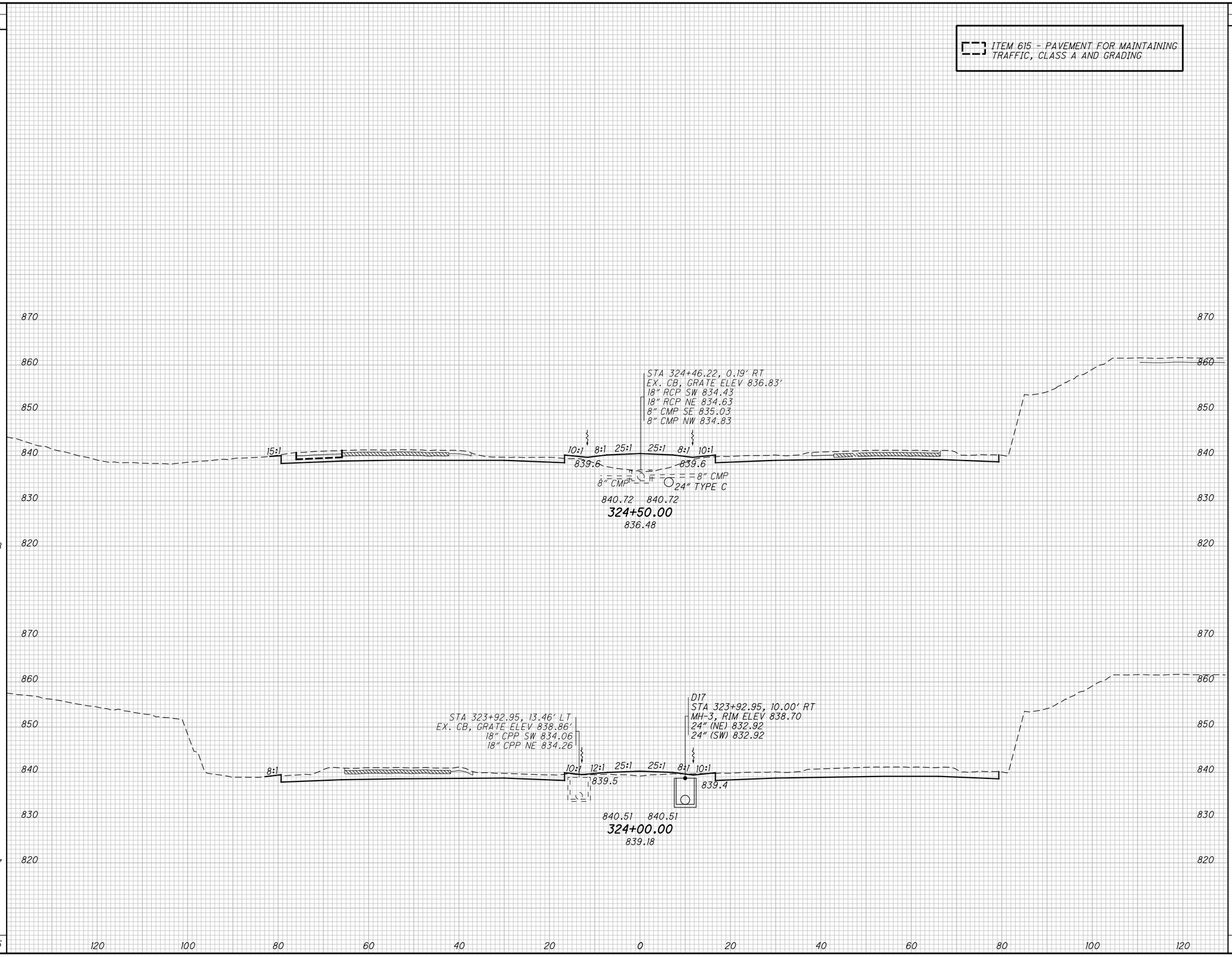

END AREA		VOLUME	
CUT	FILL	CUT	FILL
139	68		
194	12	308	75
		429	16
		737	91

CALCULATED DWB
CHECKED BAL

CROSS SECTIONS - I.R. 71
STA. 324+00.00 TO STA. 324+50.00

FRA-71-5.29

200
623

P:\84868\roadway\sheets\84868XS001.dgn 12/17/2014 3:26:58 PM kfahy

SEEDING	
END WIDTH	SQ. YDS.
74	406
71	339
	745

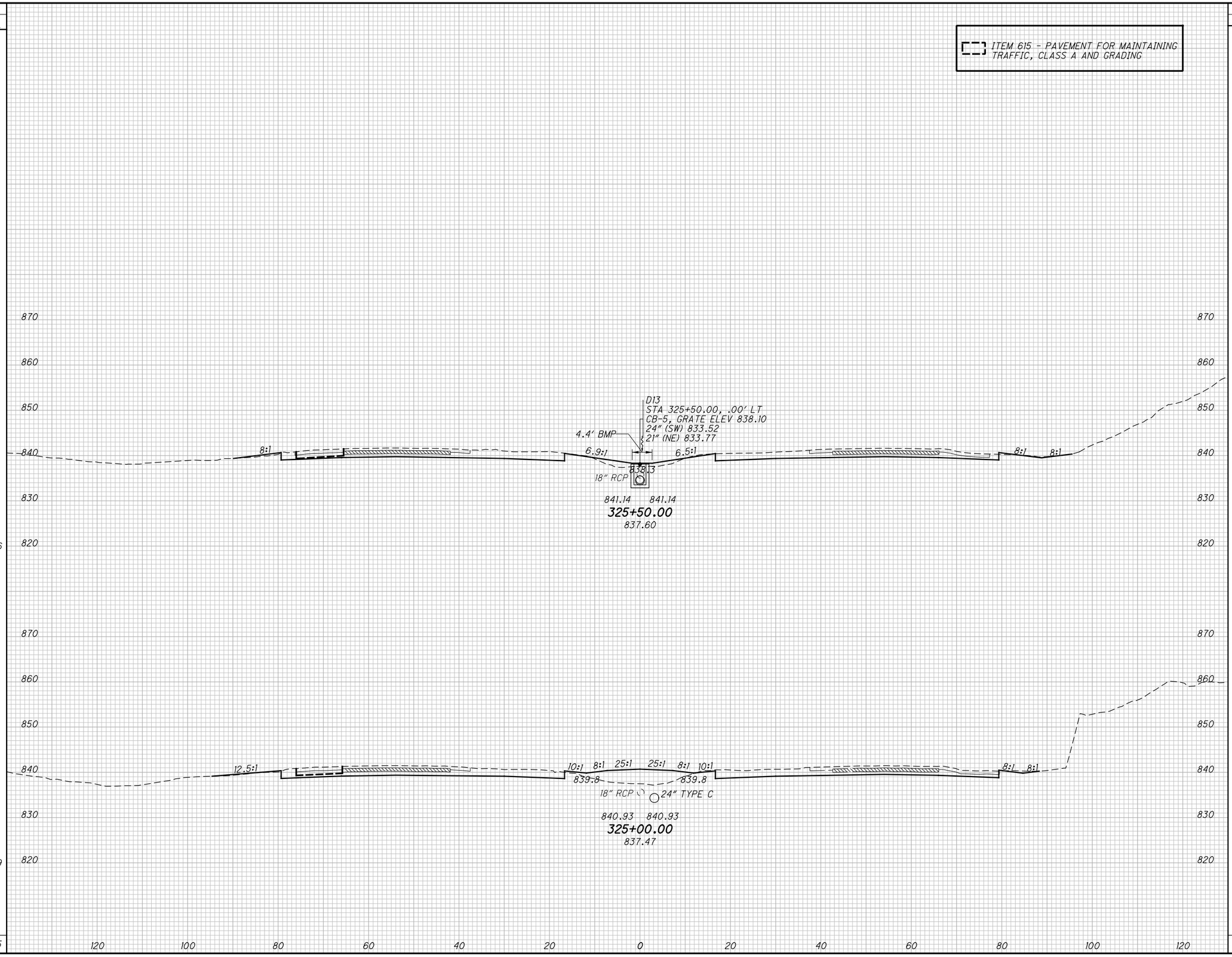

END AREA	
CUT	FILL
139	19
148	61

VOLUME	
CUT	FILL
266	75
266	120
532	195

CALCULATED DWB
CHECKED BAL

CROSS SECTIONS - I.R. 71
STA. 325+00.00 TO STA. 325+50.00

FRA-71-5.29

201
623

P:\84868\roadway\sheets\84868XS001.dgn 12/17/2014 3:26:59 PM kfahy

SEEDING	
END WIDTH	SQ. YDS.
64	350
60	378
	728

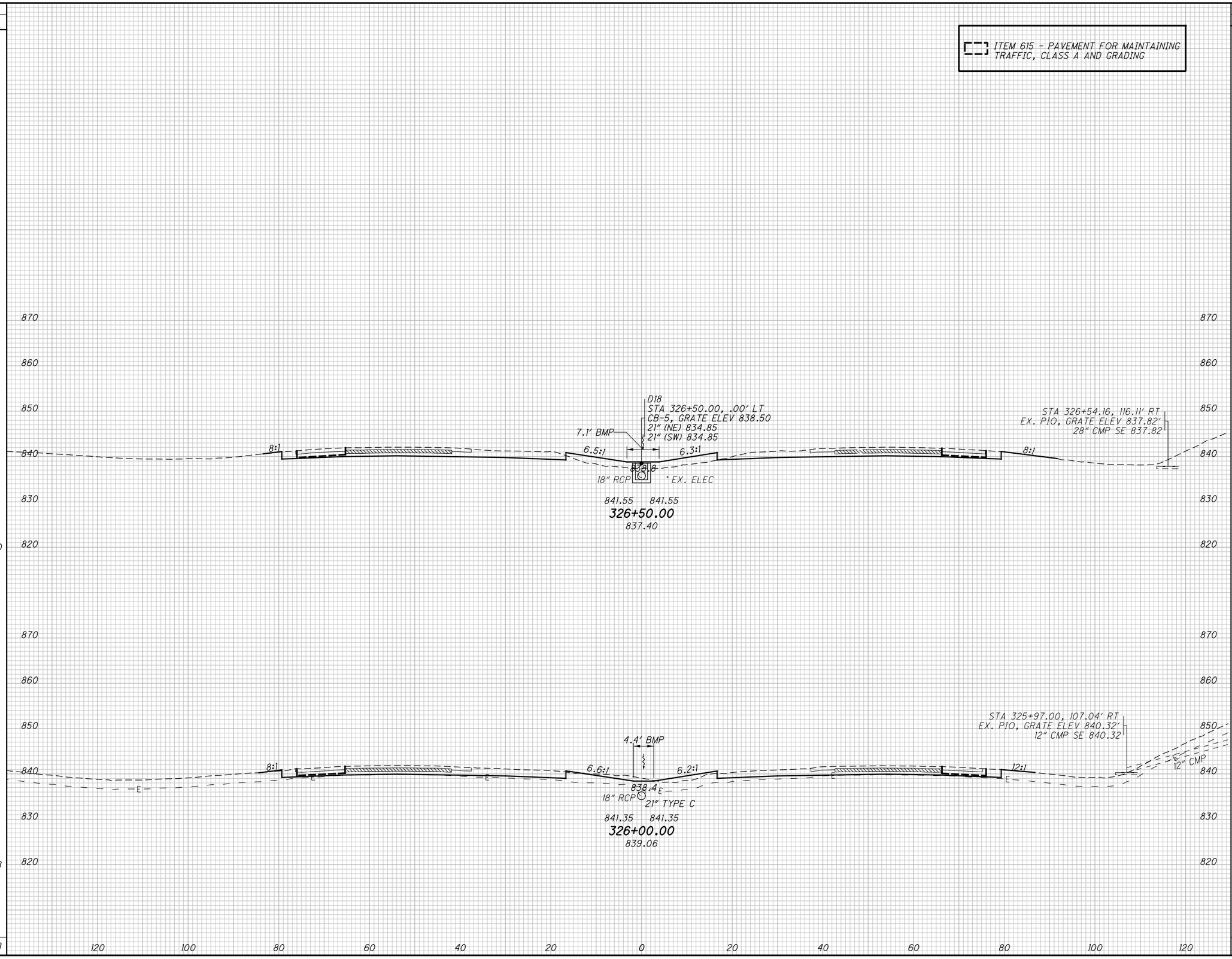

END AREA		VOLUME	
CUT	FILL	CUT	FILL
130	50		
141	11		
		250	56
		259	28
		509	84

CALCULATED DWB
CHECKED BAL

CROSS SECTIONS - I.R. 71
STA. 326+00.00 TO STA. 326+50.00

FRA-71-5.29

202
623

P:\84868\roadway\sheets\84868XS002.dgn 12/17/2014 3:27:01 PM kfahy

SEEDING	
END WIDTH	SQ. YDS.
67	350
57	339
	689

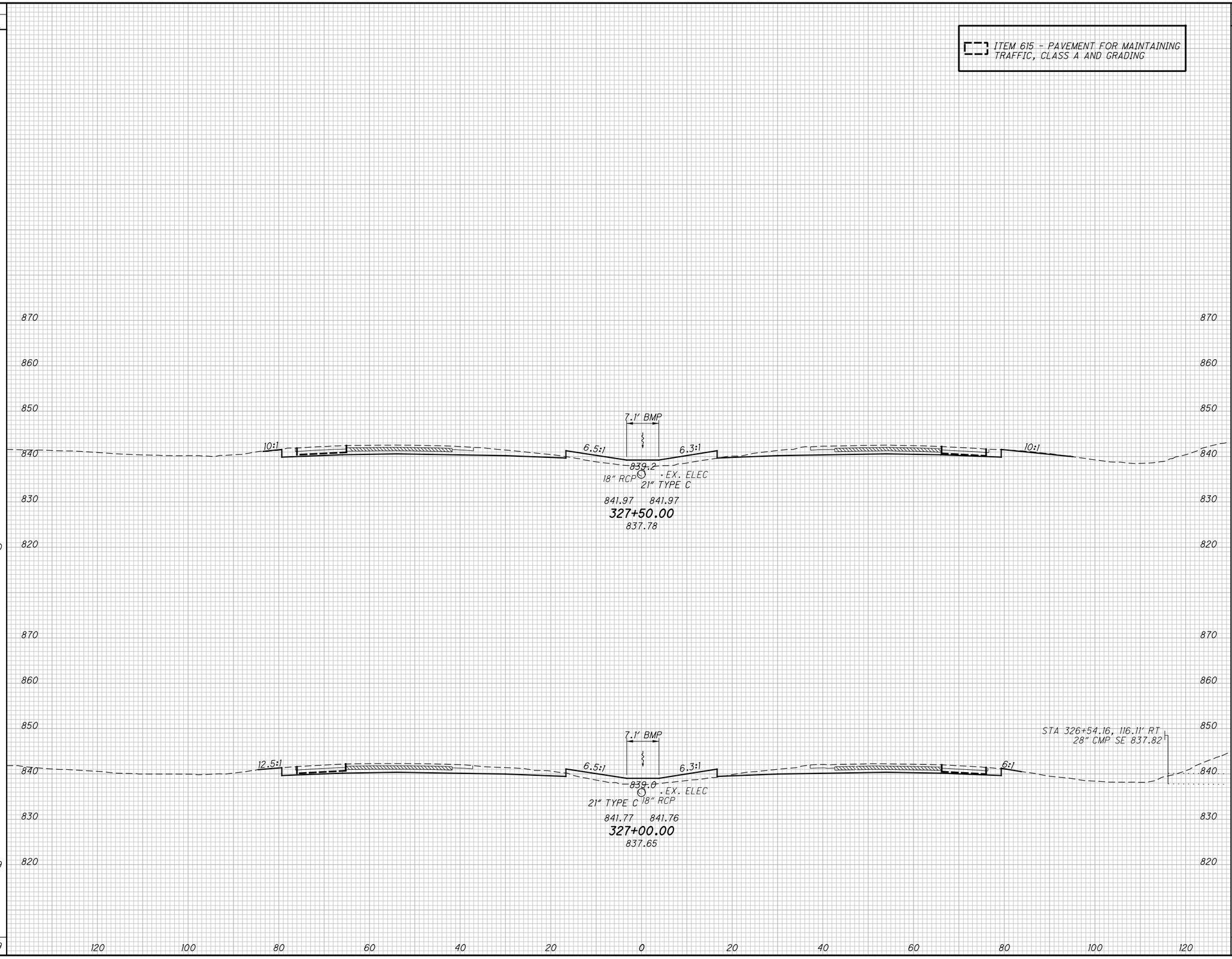

END AREA	
CUT	FILL
118	49
119	46

VOLUME	
CUT	FILL
219	88
230	89
449	177

CALCULATED DWB
CHECKED BAL

CROSS SECTIONS - I.R. 71
STA. 327+00.00 TO STA. 327+50.00

FRA-71-5.29

203
623

P:\84868\roadway\sheets\84868XS002.dgn 12/17/2014 3:27:02 PM kfahy

ITEM 615 - PAVEMENT FOR MAINTAINING TRAFFIC, CLASS A AND GRADING

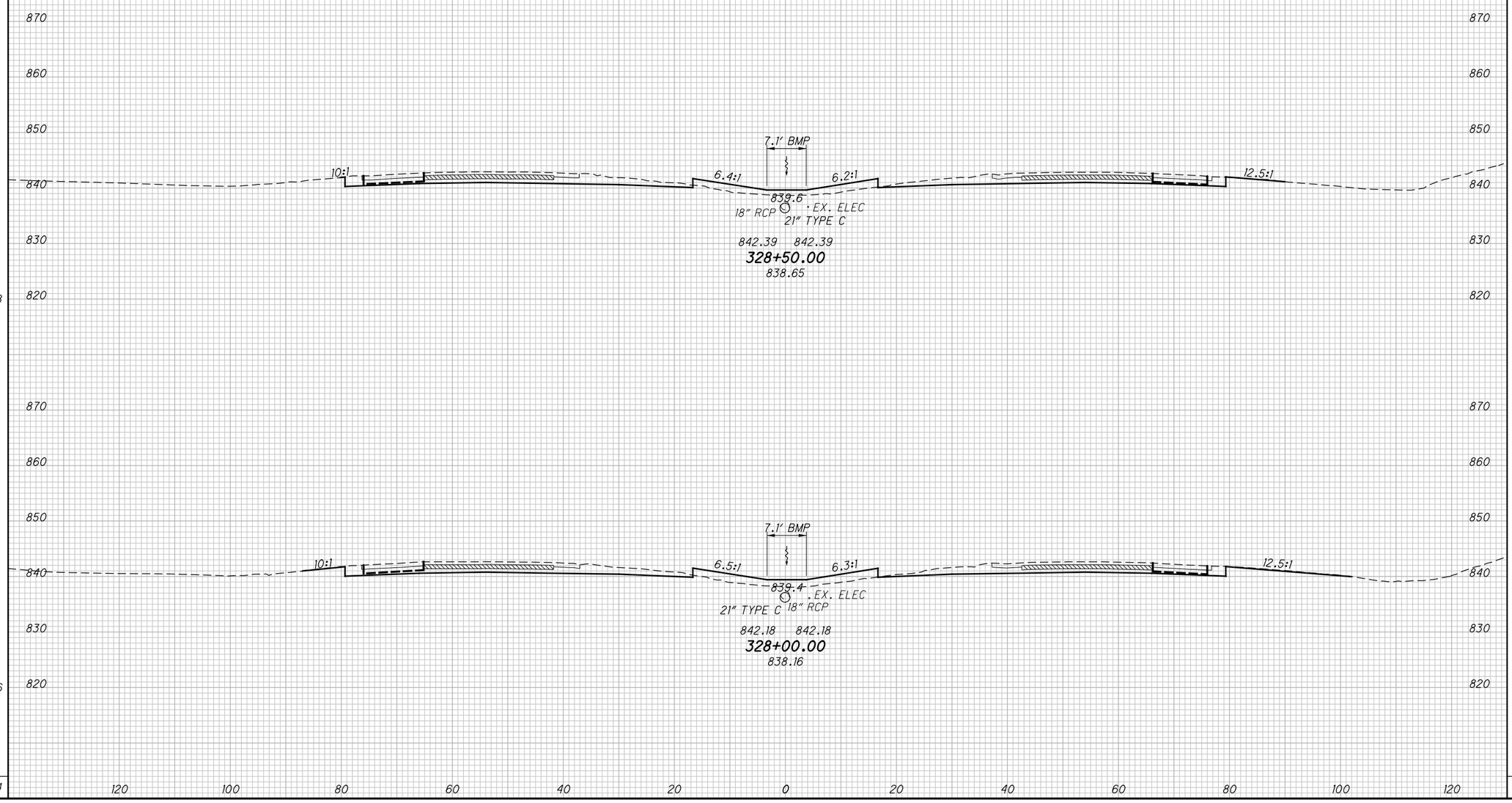

SEEDING END WIDTH	SEEDING SQ. YDS.	END AREA CUT	END AREA FILL	VOLUME CUT	VOLUME FILL
58		117	40		
378				219	79
77		120	46		
406				220	87
784				439	166

CALCULATED DWB
CHECKED BAL

CROSS SECTIONS - I.R. 71
STA. 328+00.00 TO STA. 328+50.00

FRA-71-5.29

204
623

P:\84868\roadway\sheets\84868XS002.dgn 12/17/2014 3:27:03 PM kfahy

SEEDING	
END WIDTH	SQ. YDS.
53	311
58	328
	639

ITEM 615 - PAVEMENT FOR MAINTAINING TRAFFIC, CLASS A AND GRADING

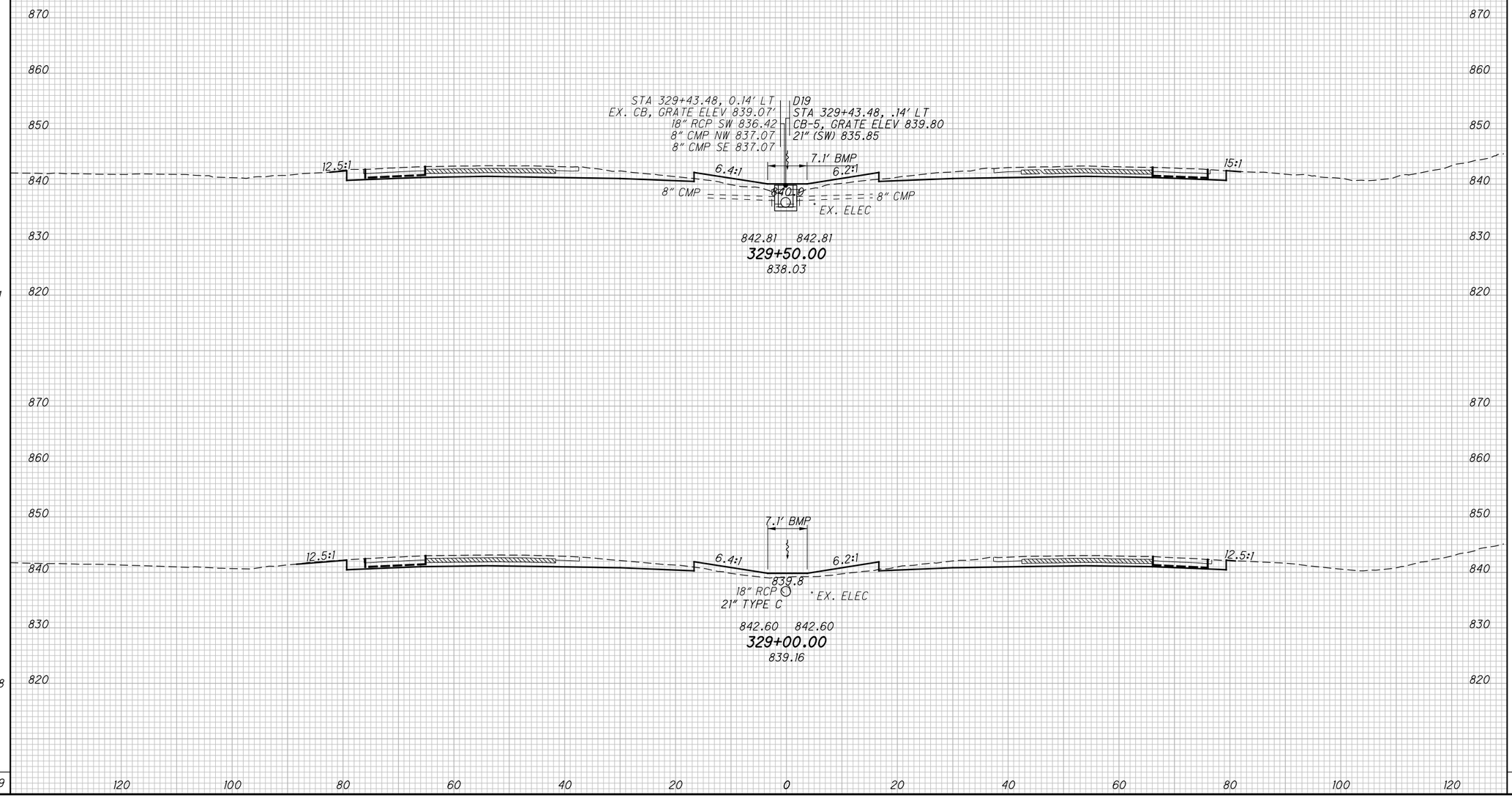

END AREA		VOLUME	
CUT	FILL	CUT	FILL
121	38		
121	32		
		224	65
		220	66
		444	131

CALCULATED DWB
CHECKED BAL

CROSS SECTIONS - I.R. 71
STA. 329+00.00 TO STA. 329+50.00

FRA-71-5.29

205
623

P:\84868\roadway\sheets\84868XS002.dgn 12/17/2014 3:27:04 PM kfahy

SEEDING		END AREA		VOLUME		CALCULATED	CHECKED
END WIDTH	SQ. YDS.	CUT	FILL	CUT	FILL	DWB	BAL

ITEM 615 - PAVEMENT FOR MAINTAINING TRAFFIC, CLASS A AND GRADING

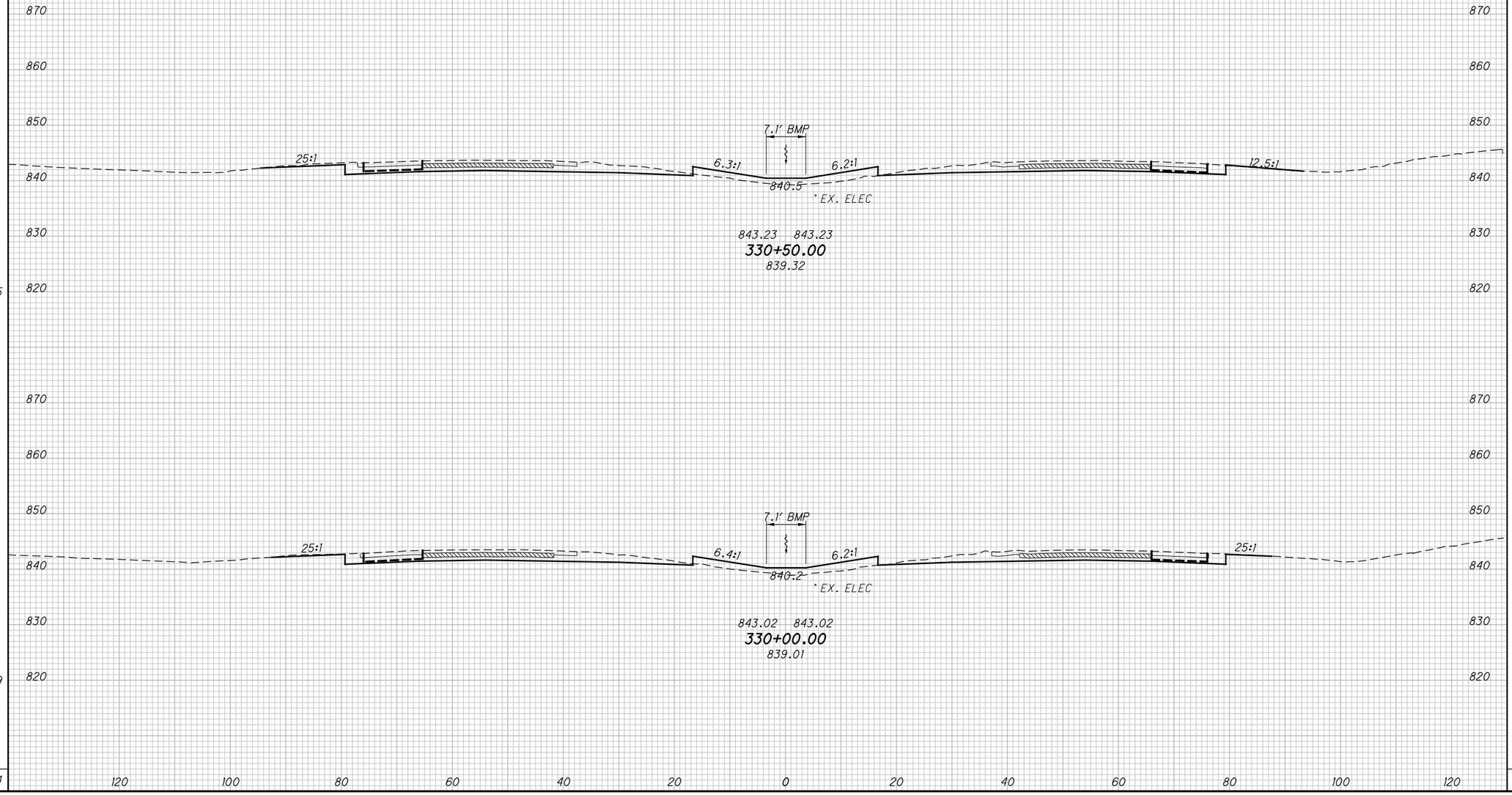

SEEDING END WIDTH	SEEDING SQ. YDS.	END AREA CUT	END AREA FILL	VOLUME CUT	VOLUME FILL
76			119	43	
	405			220	79
69			119	42	
	339			222	75
	744			442	154

CROSS SECTIONS - I.R. 71
STA. 330+00.00 TO STA. 330+50.00

FRA-71-5.29

206
623

P:\84868\roadway\sheets\84868XS002.dgn 12/17/2014 3:27:05 PM kfahy

SEEDING	
END WIDTH	SQ. YDS.
51	300
56	366
	666

ITEM 615 - PAVEMENT FOR MAINTAINING TRAFFIC, CLASS A AND GRADING

870
860
850
840
830
820

7.1' BMP
25:1
6.3:1
6.2:1
25:1
840.9
EX. ELEC

843.65 843.65
331+50.00
839.90

7.1' BMP
25:1
6.3:1
6.2:1
25:1
840.7
EX. ELEC

843.44 843.44
331+00.00
839.46

120 100 80 60 40 20 0 20 40 60 80 100 120

END AREA	
CUT	FILL
111	38
113	41

VOLUME	
CUT	FILL
207	73
214	77
421	150

CALCULATED DWB
CHECKED BAL

CROSS SECTIONS - I.R. 71
STA. 331+00.00 TO STA. 331+50.00

FRA-71-5.29

207
623

P:\84868\roadway\sheets\84868XS002.dgn 12/17/2014 3:27:06 PM kfahy

SEEDING	
END WIDTH	SQ. YDS.
69	412
79	361
	773

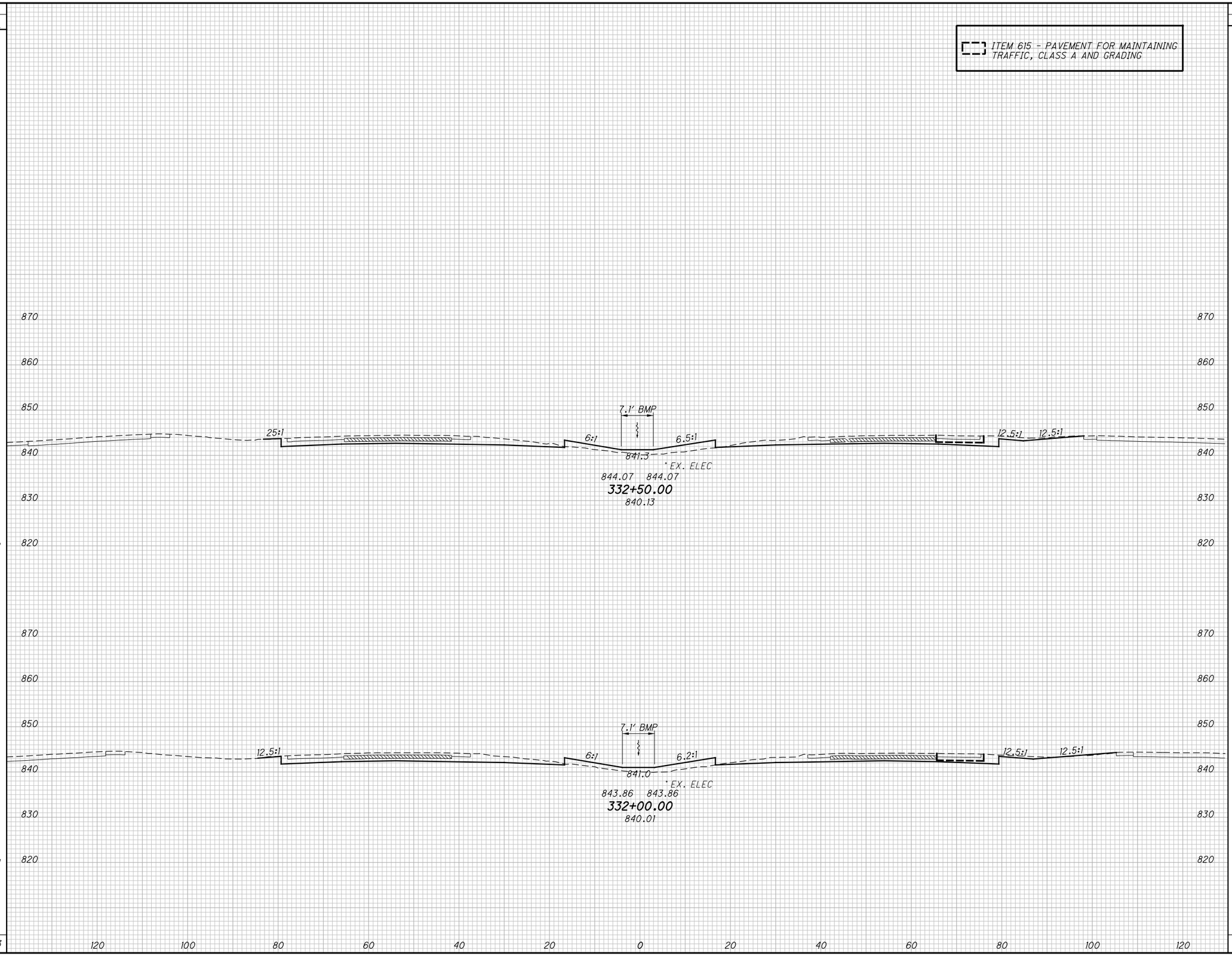

END AREA	
CUT	FILL
119	39
116	40

VOLUME	
CUT	FILL
218	73
211	72
429	145

CALCULATED DWB
CHECKED BAL

CROSS SECTIONS - I.R. 71
STA. 332+00.00 TO STA. 332+50.00

FRA-71-5.29

208
623

P:\84868\roadway\sheets\84868XS002.dgn 12/17/2014 3:27:07 PM kfahy

SEEDING	
END WIDTH	SQ. YDS.
56	
	233
61	
	361
	594

ITEM 615 - PAVEMENT FOR MAINTAINING TRAFFIC, CLASS A AND GRADING

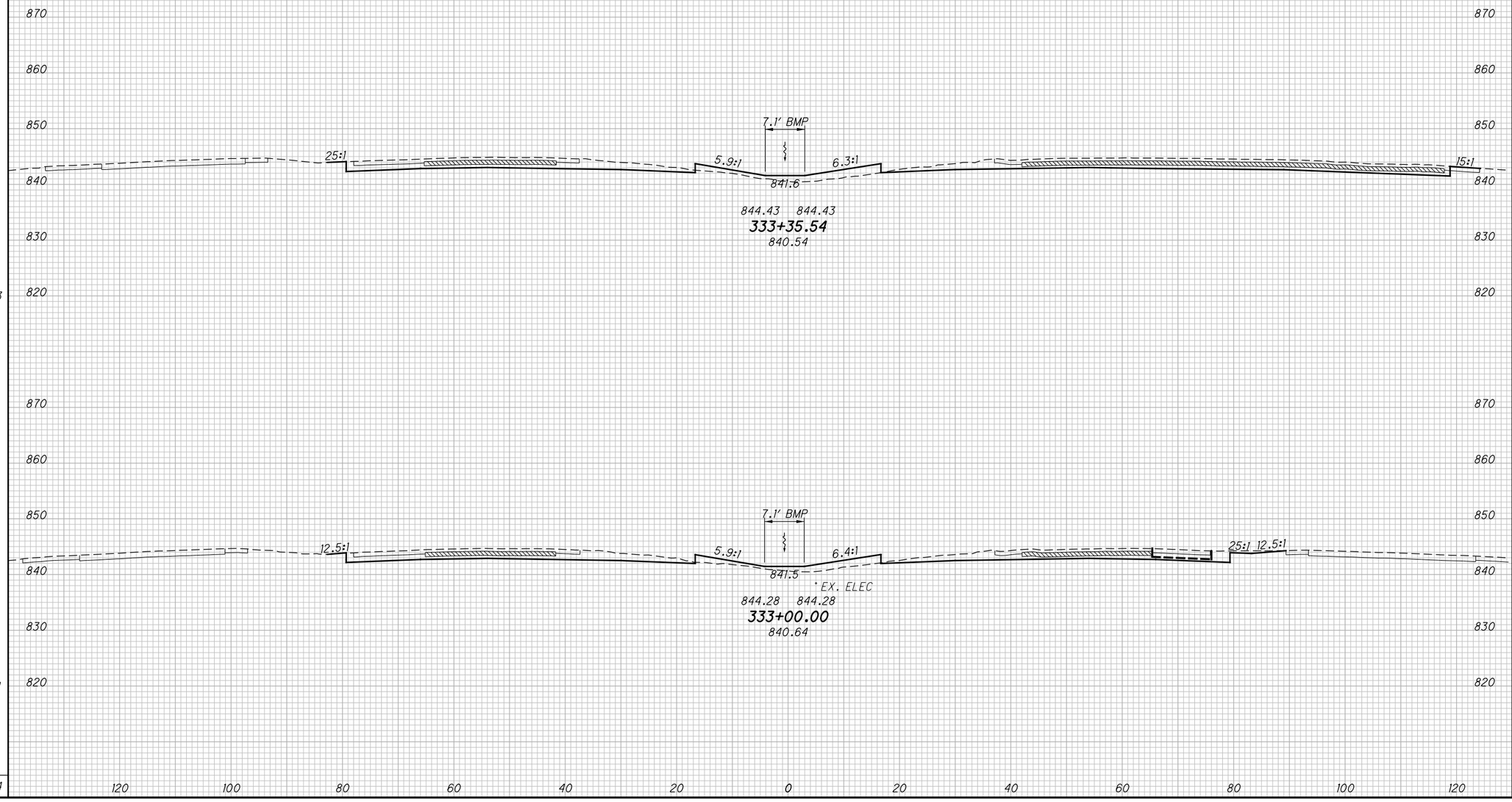

END AREA		VOLUME	
CUT	FILL	CUT	FILL
121	36		
115	33		
		156	45
		217	66
		373	111

CALCULATED DWB
CHECKED BAL

CROSS SECTIONS - I.R. 71
STA. 333+00.00 TO STA. 333+35.54

FRA-71-5.29

209
623

P:\84868\roadway\sheets\84868XS002.dgn 12/17/2014 3:27:08 PM kfahy

SEEDING	
END WIDTH	SQ. YDS.
67	
	333
53	
	88
	421

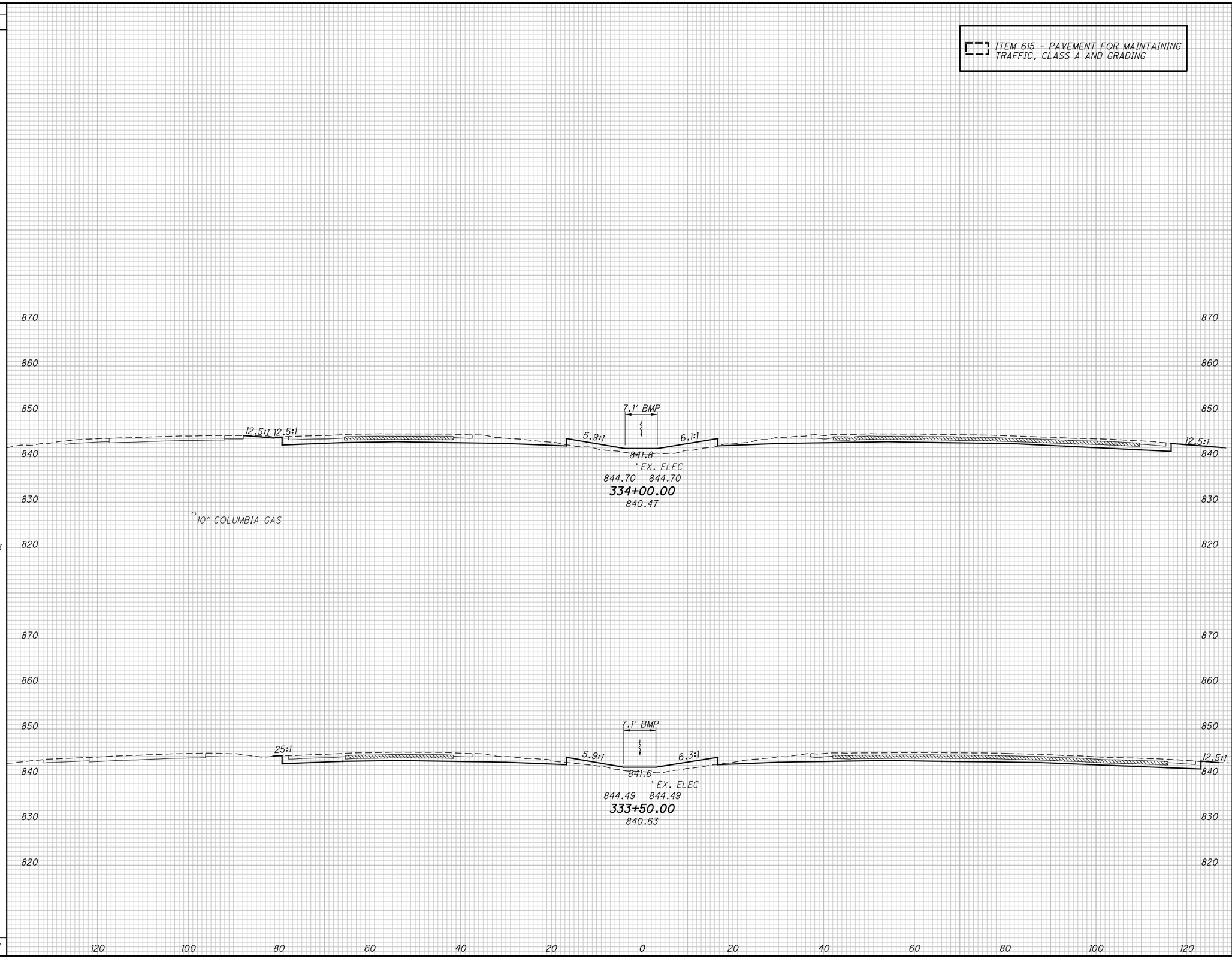

END AREA	
CUT	FILL
127	43
130	37

VOLUME	
CUT	FILL
238	74
67	20
305	94

CALCULATED DWB
CHECKED BAL

CROSS SECTIONS - I.R. 71
STA. 333+50.00 TO STA. 334+00.00

FRA-71-5.29

210
623

P:\84868\roadway\sheets\84868XS002.dgn 12/17/2014 3:27:09 PM kfahy

SEEDING	
END WIDTH	SQ. YDS.
61	
63	
	145
	209
	354

ITEM 615 - PAVEMENT FOR MAINTAINING TRAFFIC, CLASS A AND GRADING

END AREA	
CUT	FILL
141	39
140	43

VOLUME	
CUT	FILL
110	32
143	46
253	78

CALCULATED DWB
CHECKED BAL

CROSS SECTIONS - I.R. 71
STA. 334+28.96 TO STA. 334+50.00

FRA-71-5.29

211
623

P:\84868\roadway\sheets\84868XS002.dgn 12/17/2014 3:27:10 PM kfahy

SEEDING		END AREA		VOLUME	
END WIDTH	SQ. YDS.	CUT	FILL	CUT	FILL
92		110	76		
	433			210	109
63		117	42		
	345			239	75
	778			449	184

CALCULATED DWB
CHECKED BAL

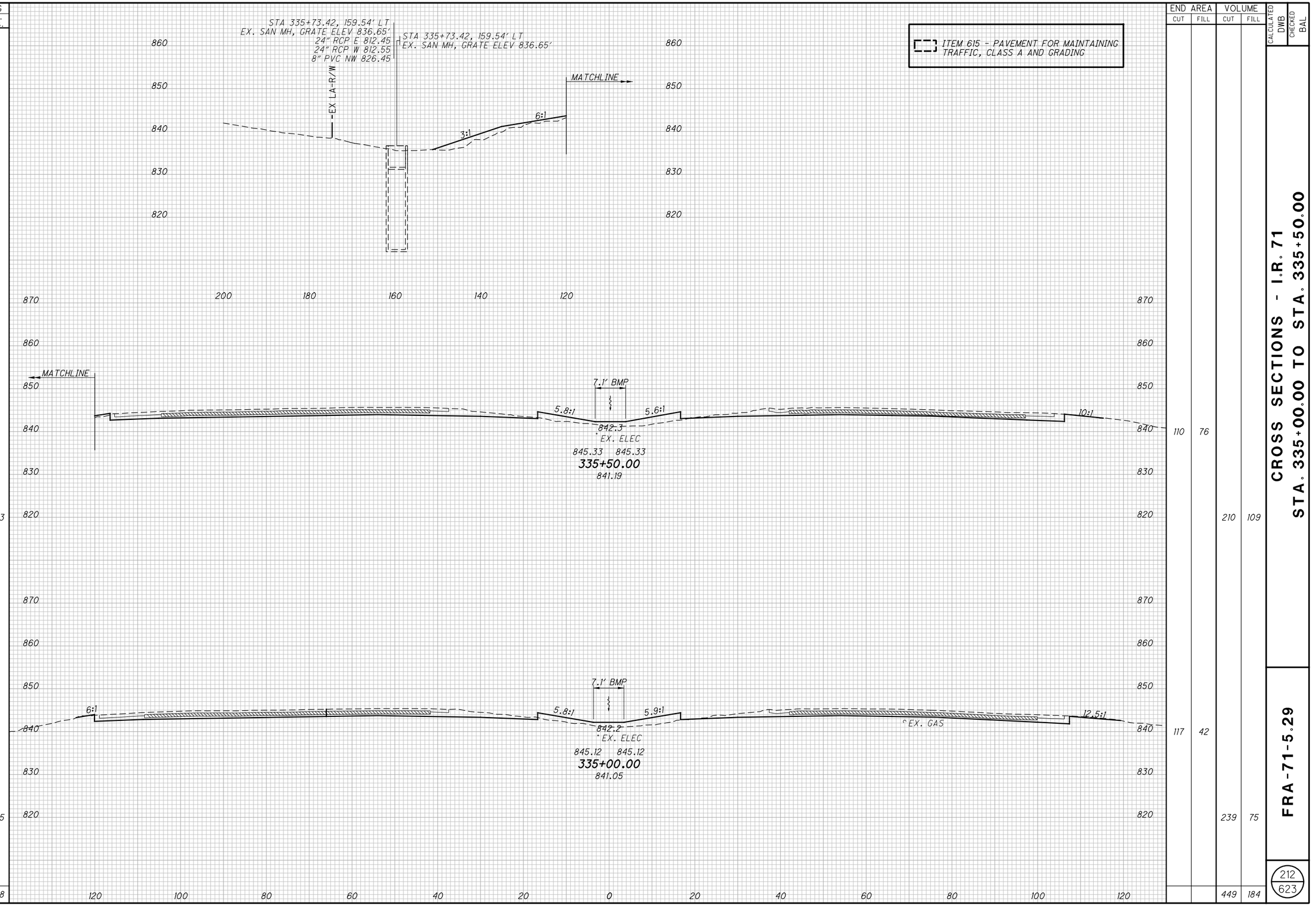

CROSS SECTIONS - I.R. 71
STA. 335+00.00 TO STA. 335+50.00

FRA-71-5.29

212
623

P:\84868\roadway\sheets\84868XS002.dgn 12/17/2014 3:27:11 PM kfahy

SEEDING		END AREA		VOLUME	
END WIDTH	SQ. YDS.	CUT	FILL	CUT	FILL
95		110	59		
	522			210	122
91		117	73		
	511			210	138
	1033			420	260

ITEM 615 - PAVEMENT FOR MAINTAINING TRAFFIC, CLASS A AND GRADING

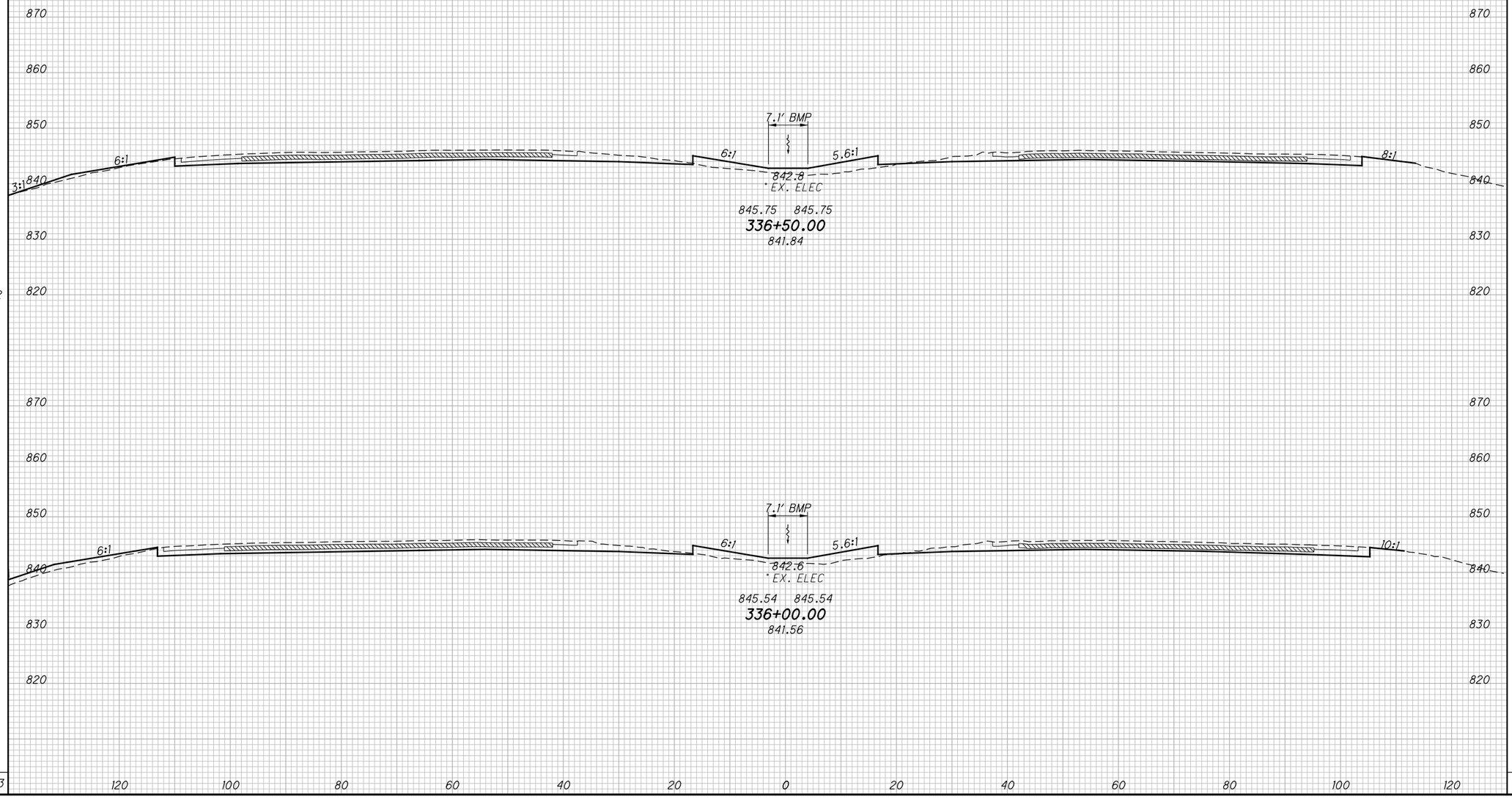

CALCULATED DWB
CHECKED BAL

CROSS SECTIONS - I.R. 71
STA. 336+00.00 TO STA. 336+50.00

FRA-71-5.29

213
623

P:\84868\roadway\sheets\84868XS002.dgn 12/17/2014 3:27:12 PM kfahy

SEEDING END WIDTH	SEEDING SQ. YDS.	END AREA CUT	END AREA FILL	VOLUME CUT	VOLUME FILL
76	444	113	59	212	103
84	500	116	53	209	103
	944			421	206

ITEM 615 - PAVEMENT FOR MAINTAINING TRAFFIC, CLASS A AND GRADING

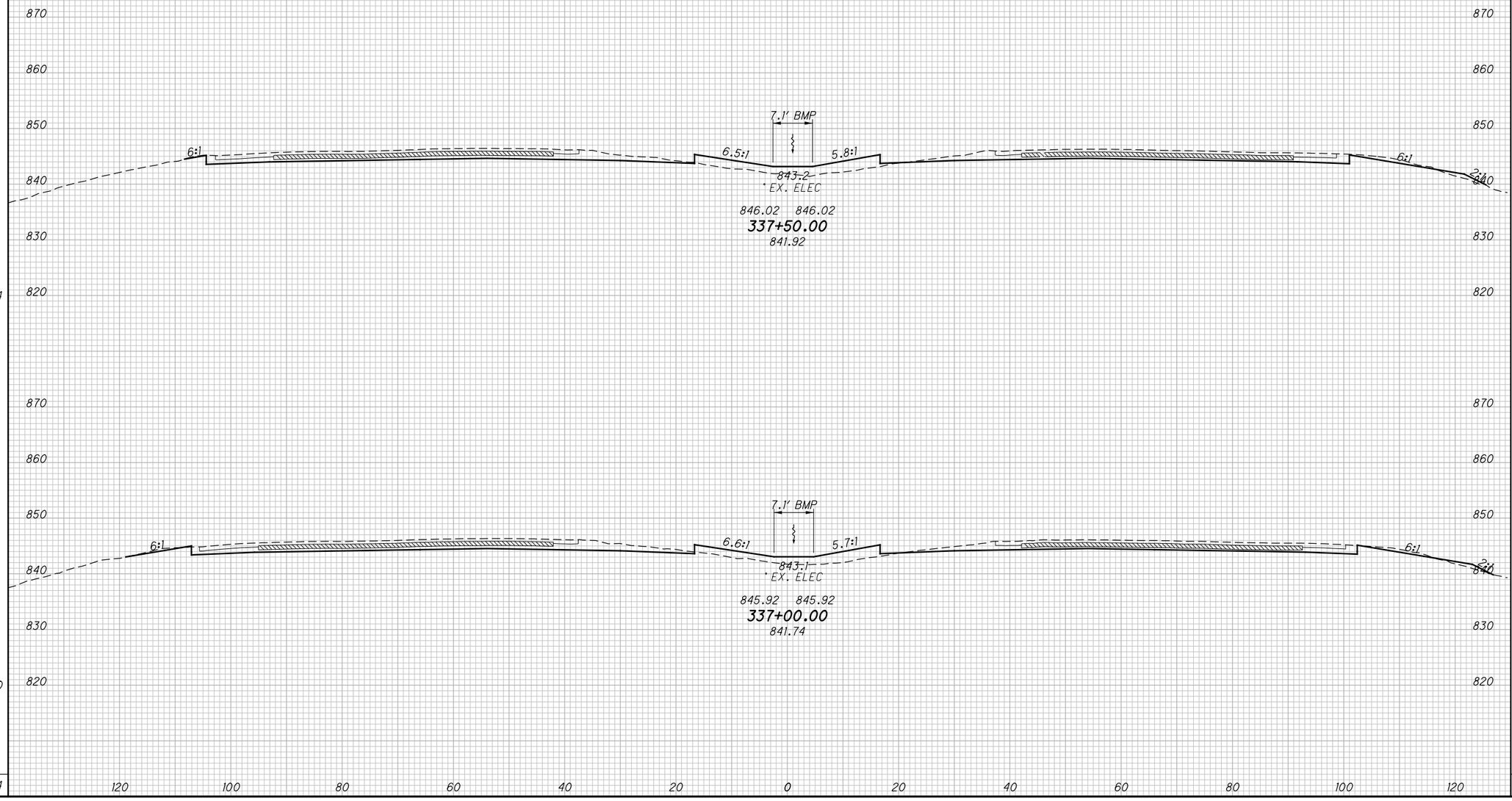

CALCULATED DWB
CHECKED BAL

CROSS SECTIONS - I.R. 71
STA. 337+00.00 TO STA. 337+50.00

FRA-71-5.29

214
623

P:\84868\roadway\sheets\84868XS002.dgn 12/17/2014 3:27:13 PM kfahy

SEEDING		END AREA		VOLUME		CALCULATED DWB
END WIDTH	SQ. YDS.	CUT	FILL	CUT	FILL	CHECKED BAL
72		120	61			
	517			219	121	
112		116	70			
	528			213	119	
	1045			432	240	

ITEM 615 - PAVEMENT FOR MAINTAINING TRAFFIC, CLASS A AND GRADING

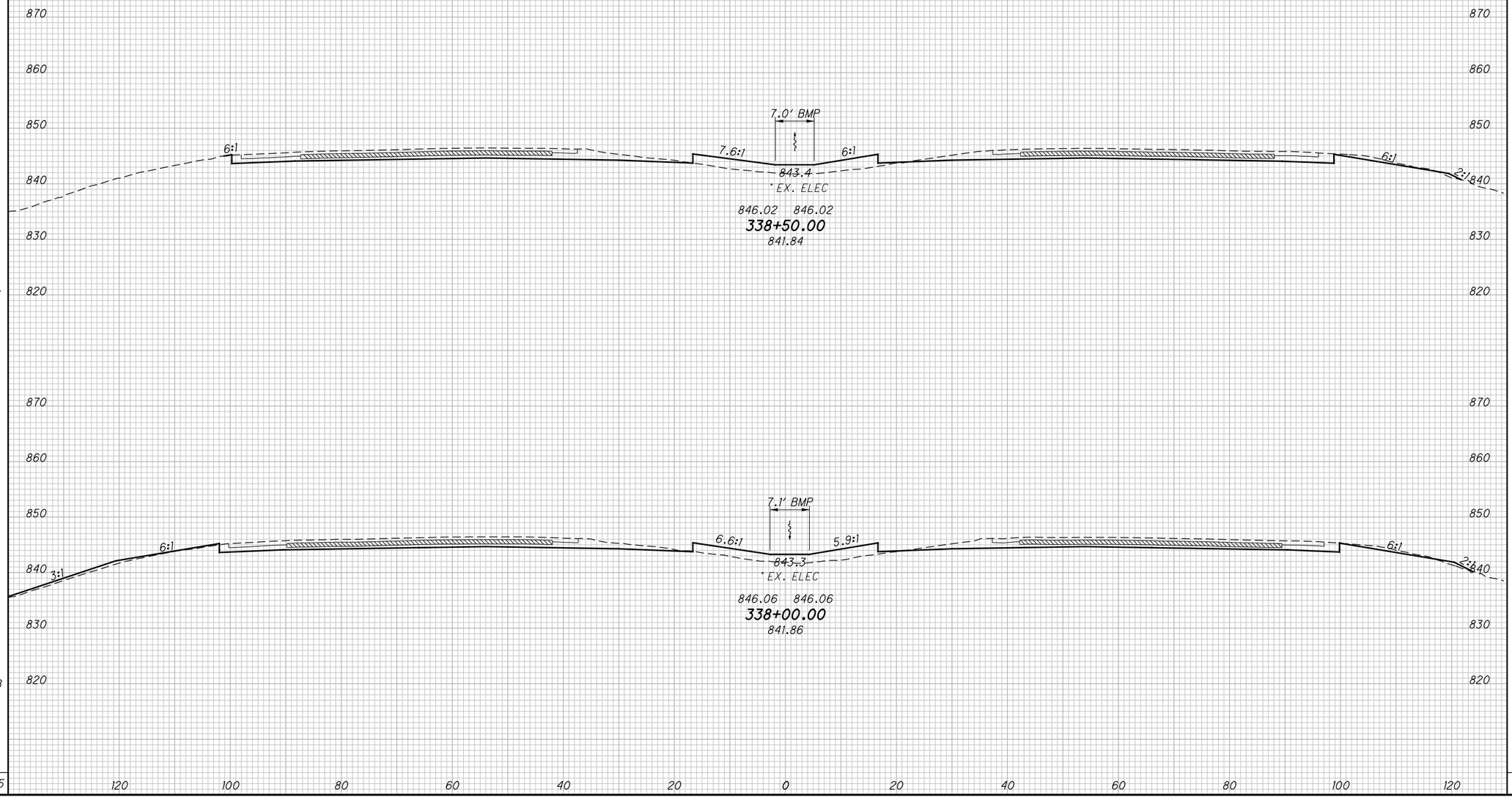

CROSS SECTIONS - I.R. 71
STA. 338+00.00 TO STA. 338+50.00

FRA-71-5.29

215
623

P:\84868\roadway\sheets\84868XS002.dgn 12/17/2014 3:27:14 PM kfahy

SEEDING	
END WIDTH	SQ. YDS.
69	
	400
74	
	405
805	

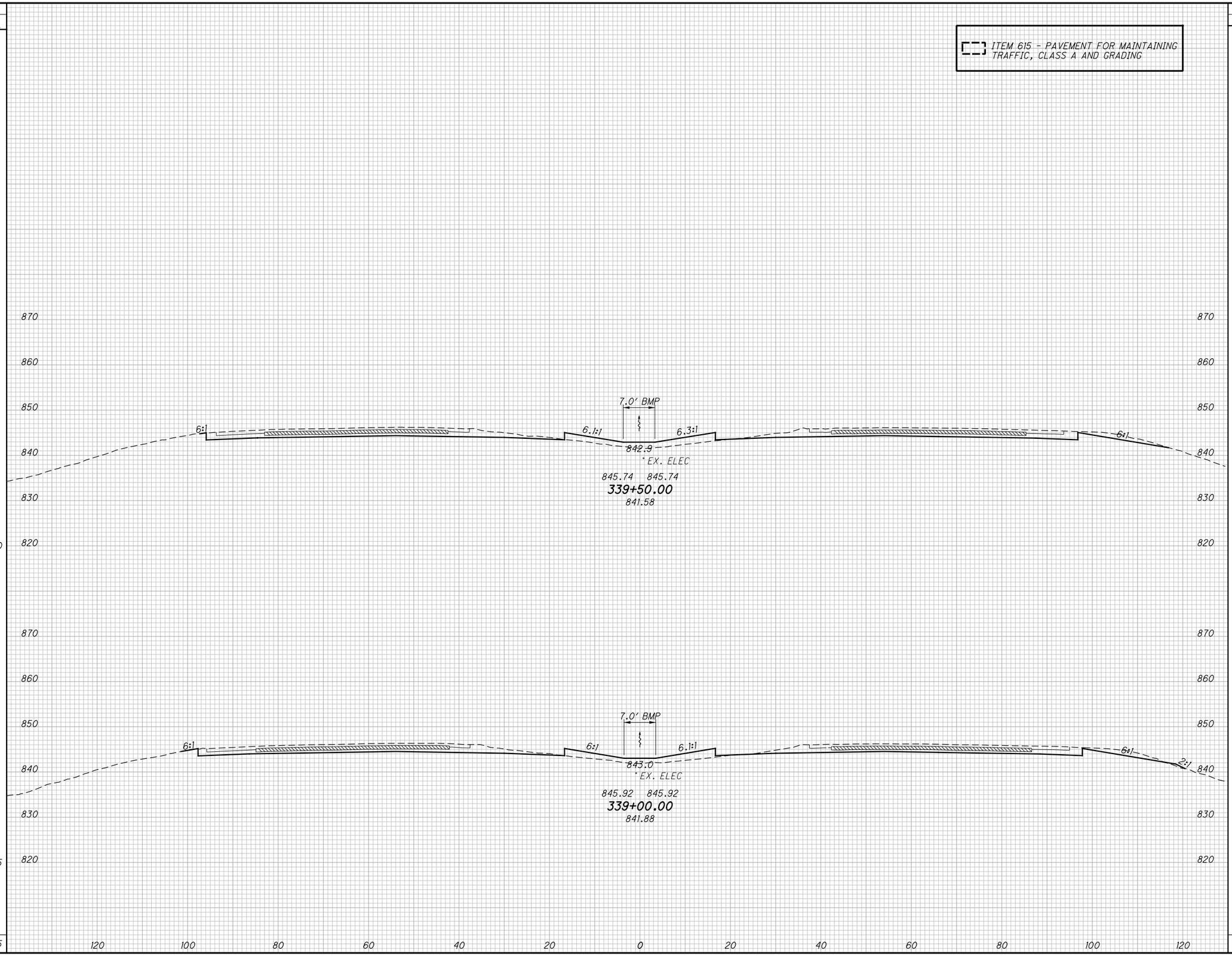

END AREA	
CUT	FILL
133	46
125	46

VOLUME	
CUT	FILL
238	85
226	99
464	184

CALCULATED DWB
CHECKED BAL

CROSS SECTIONS - I.R. 71
STA. 339+00.00 TO STA. 339+50.00

FRA-71-5.29

216
623

P:\84868\roadway\sheets\84868XS002.dgn 12/17/2014 3:27:15 PM kfahy

SEEDING	
END WIDTH	SQ. YDS.
72	439
86	433
872	

END AREA	
CUT	FILL
148	42
142	46
522	167

VOLUME	
CUT	FILL
268	82
254	85

CALCULATED DWB
CHECKED BAL

CROSS SECTIONS - I.R. 71
STA. 340+00.00 TO STA. 340+50.00

FRA-71-5.29

217
623

P:\84868\roadway\sheets\84868XS002.dgn 12/17/2014 3:27:16 PM kfahy

SEEDING	
END WIDTH	SQ. YDS.
77	
	511
106	
	495
	1006

ITEM 615 - PAVEMENT FOR MAINTAINING TRAFFIC, CLASS A AND GRADING

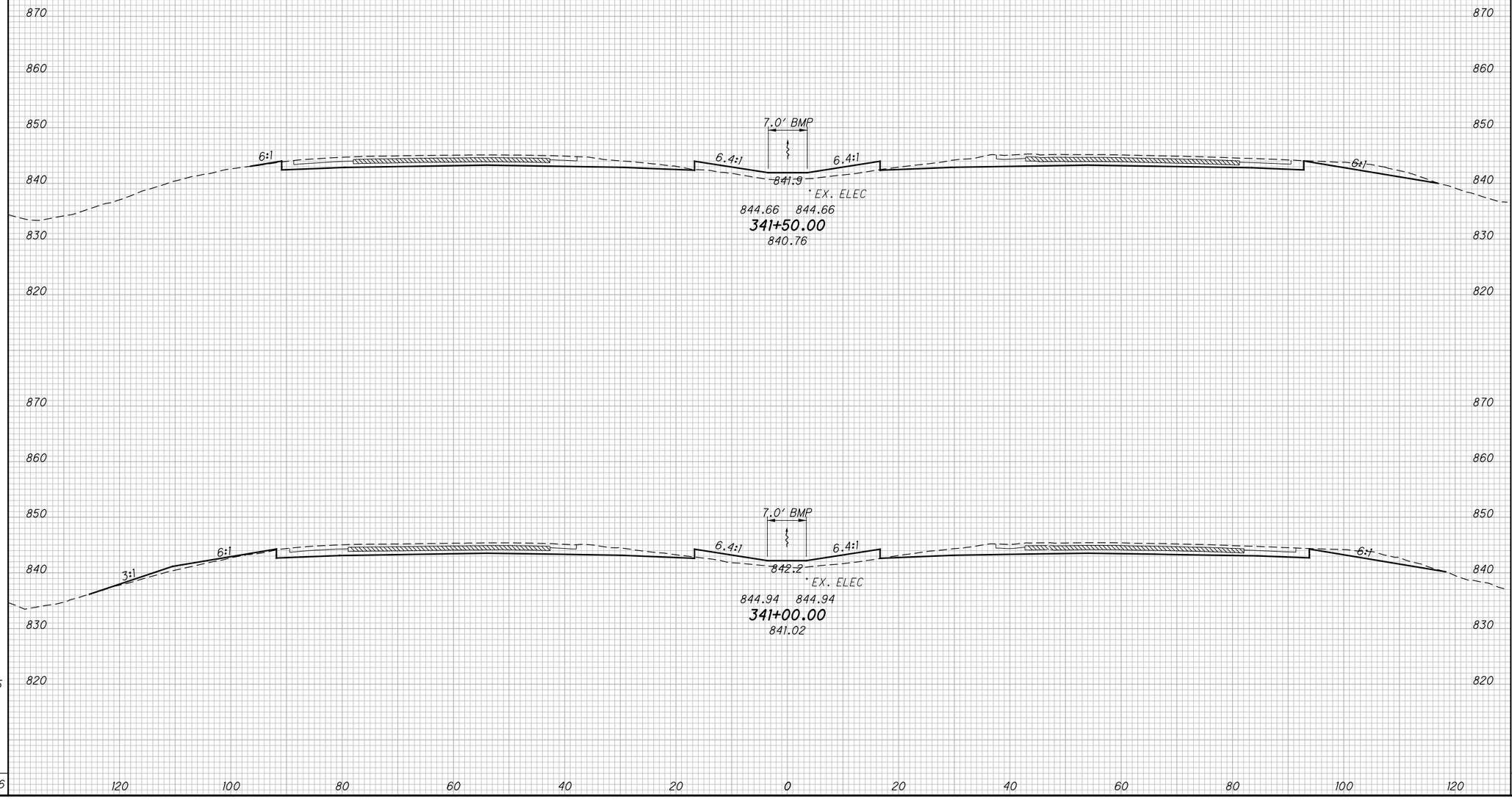

END AREA	
CUT	FILL
152	43
151	56

VOLUME	
CUT	FILL
281	91
277	91
558	182

CALCULATED DWB
CHECKED BAL

CROSS SECTIONS - I.R. 71
STA. 341+00.00 TO STA. 341+50.00

FRA-71-5.29

218
623

P:\84868\roadway\sheets\84868XS002.dgn 12/17/2014 3:27:17 PM kfahy

SEEDING		END AREA		VOLUME		
END WIDTH	SQ. YDS.	CUT	FILL	CUT	FILL	
						CALCULATED DWB
						CHECKED BAL
77		139	49			
73		139	49			
	834			526	176	

ITEM 615 - PAVEMENT FOR MAINTAINING TRAFFIC, CLASS A AND GRADING

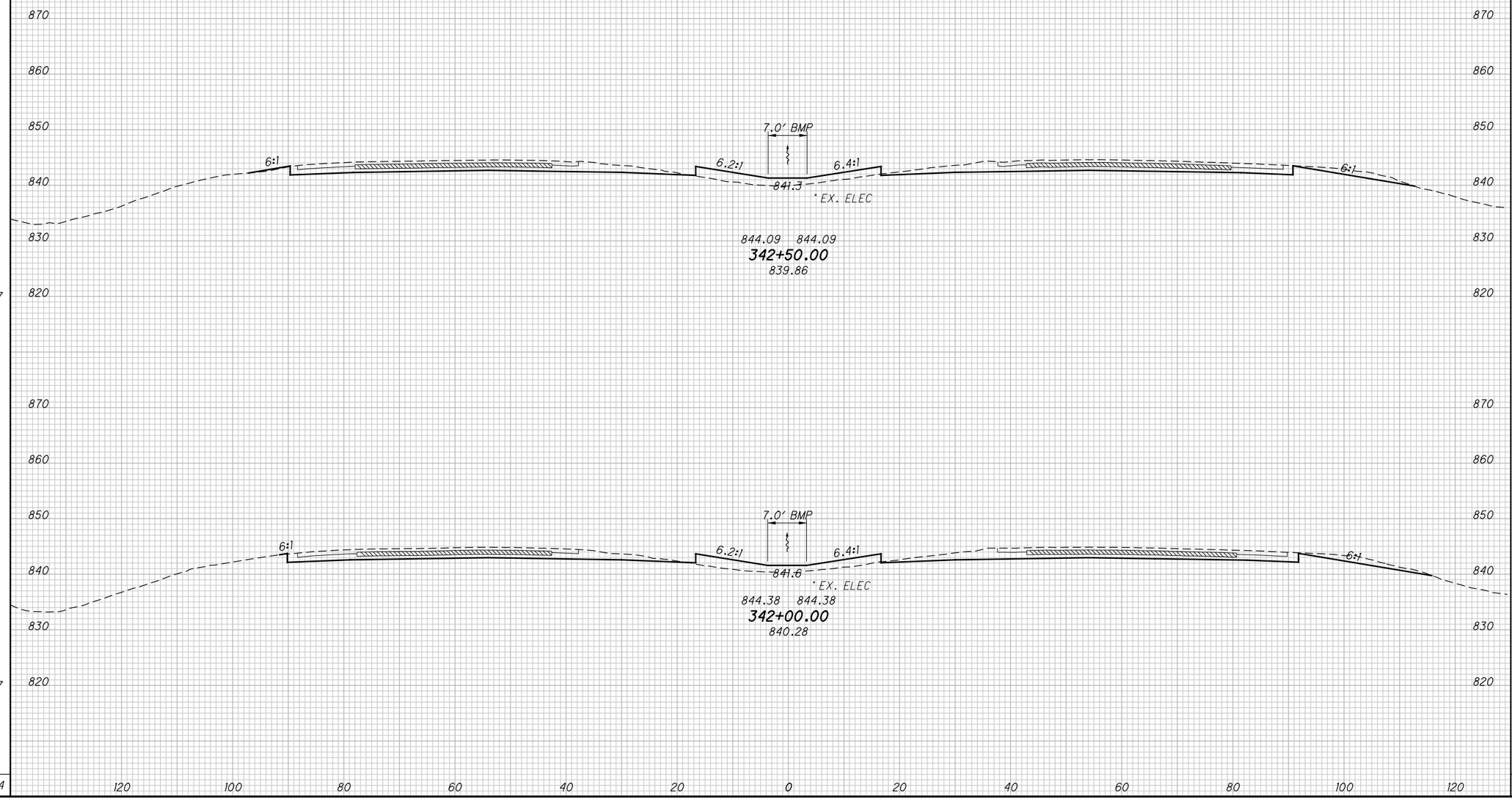

CROSS SECTIONS - I.R. 71
STA. 342+00.00 TO STA. 342+50.00

FRA-71-5.29

219
623

P:\84868\roadway\sheets\84868XS002.dgn 12/17/2014 3:27:18 PM kfahy

SEEDING	
END WIDTH	SQ. YDS.
87	467
81	439
	906

ITEM 615 - PAVEMENT FOR MAINTAINING TRAFFIC, CLASS A AND GRADING

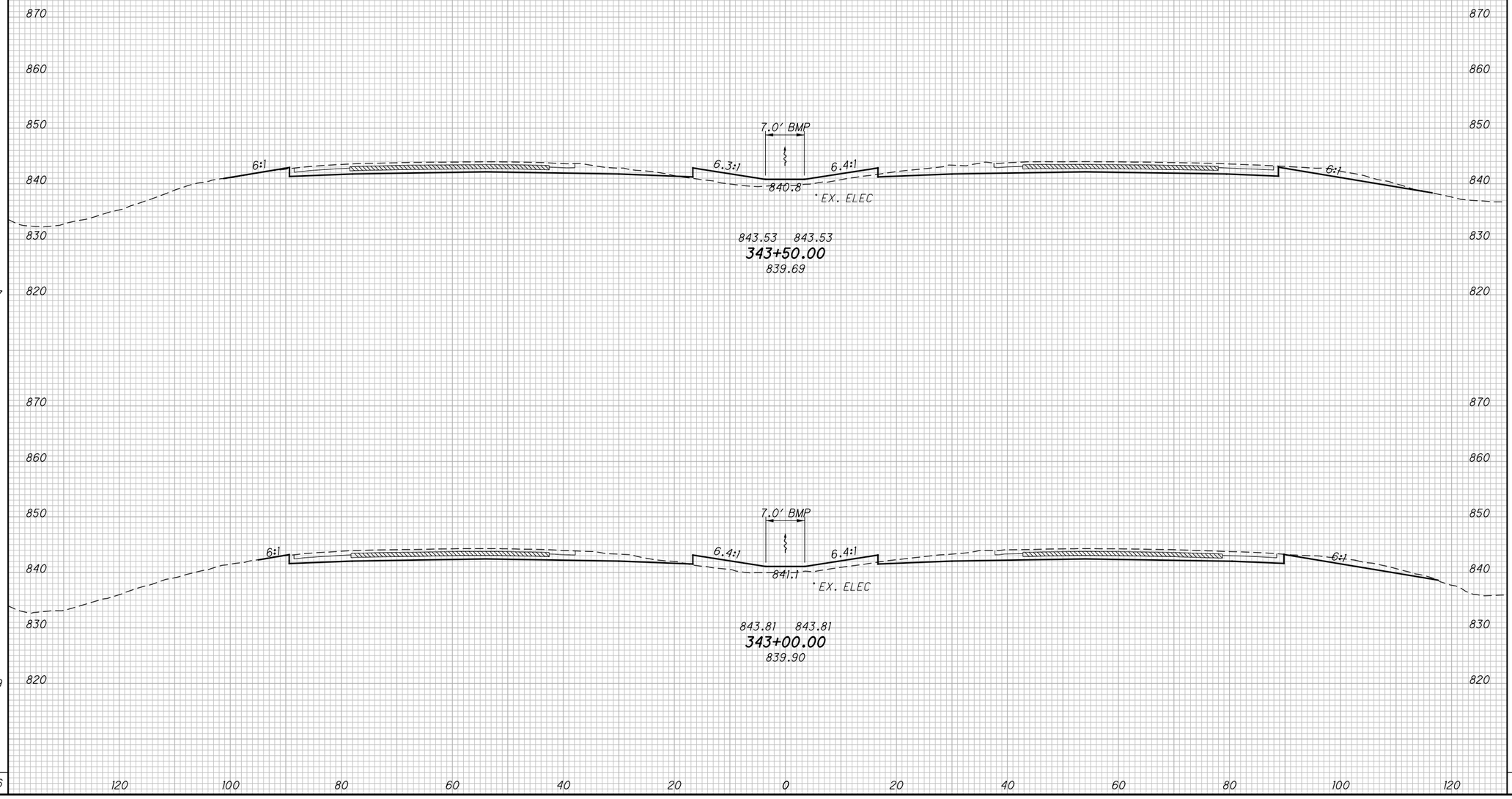

END AREA		VOLUME	
CUT	FILL	CUT	FILL
141	46		
143	44		
		263	83
		261	87
		524	170

CALCULATED DWB
CHECKED BAL

CROSS SECTIONS - I.R. 71
STA. 343+00.00 TO STA. 343+50.00

FRA-71-5.29

220
623

P:\84868\roadway\sheets\84868XS002.dgn 12/17/2014 3:27:19 PM kfahy

SEEDING	
END WIDTH	SQ. YDS.
75	433
79	461
	894

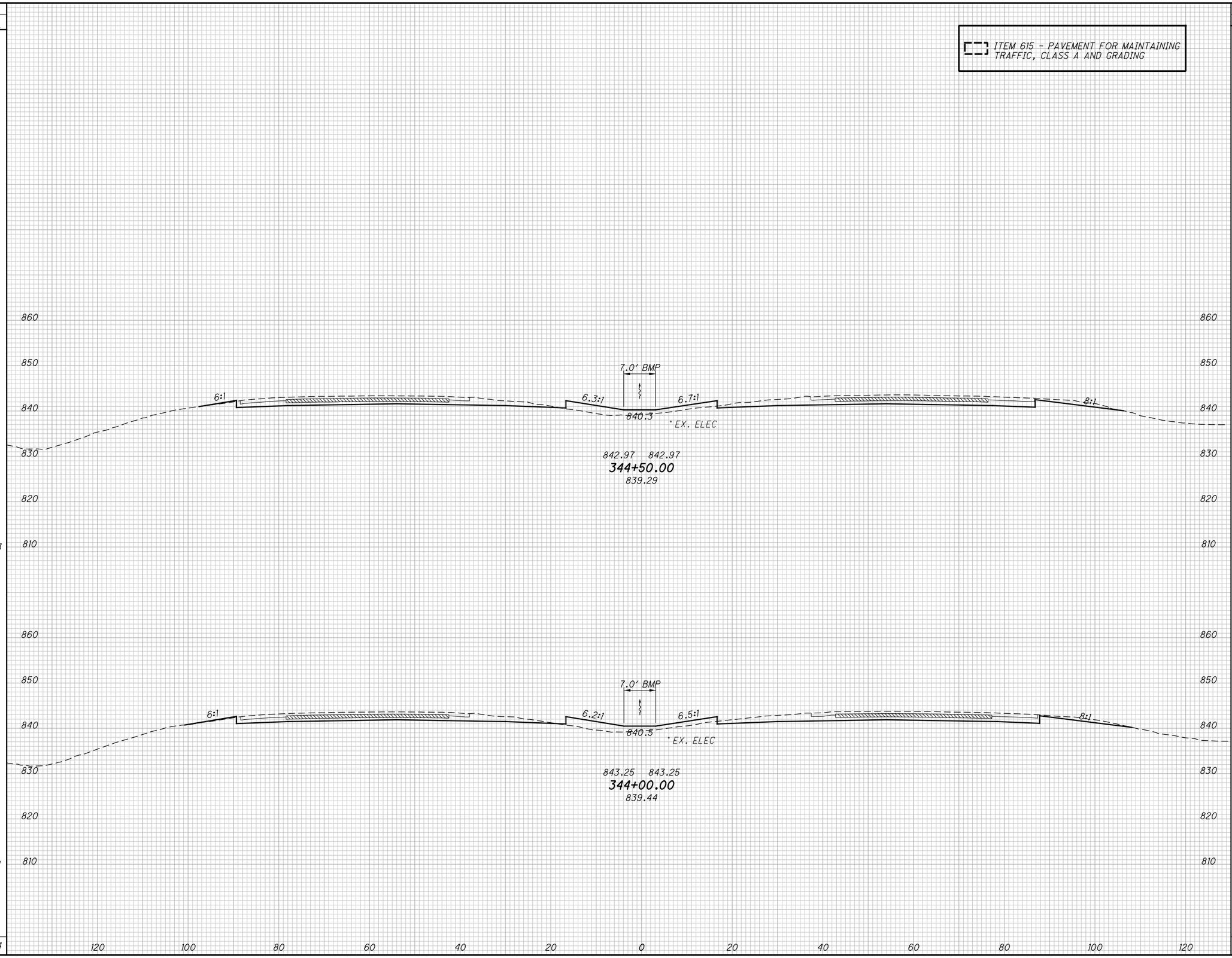

END AREA	
CUT	FILL
135	43
129	45

VOLUME	
CUT	FILL
245	81
250	84
495	165

CALCULATED DWB
CHECKED BAL

CROSS SECTIONS - I.R. 71
STA. 344+00.00 TO STA. 344+50.00

FRA-71-5.29

221
623

P:\84868\roadway\sheets\84868XS002.dgn 12/17/2014 3:27:20 PM kfahy

SEEDING		END AREA		VOLUME	
END WIDTH	SQ. YDS.	CUT	FILL	CUT	FILL
64		125	47		
	361			239	83
65		133	43		
	394			248	80
	755			487	163

ITEM 615 - PAVEMENT FOR MAINTAINING TRAFFIC, CLASS A AND GRADING

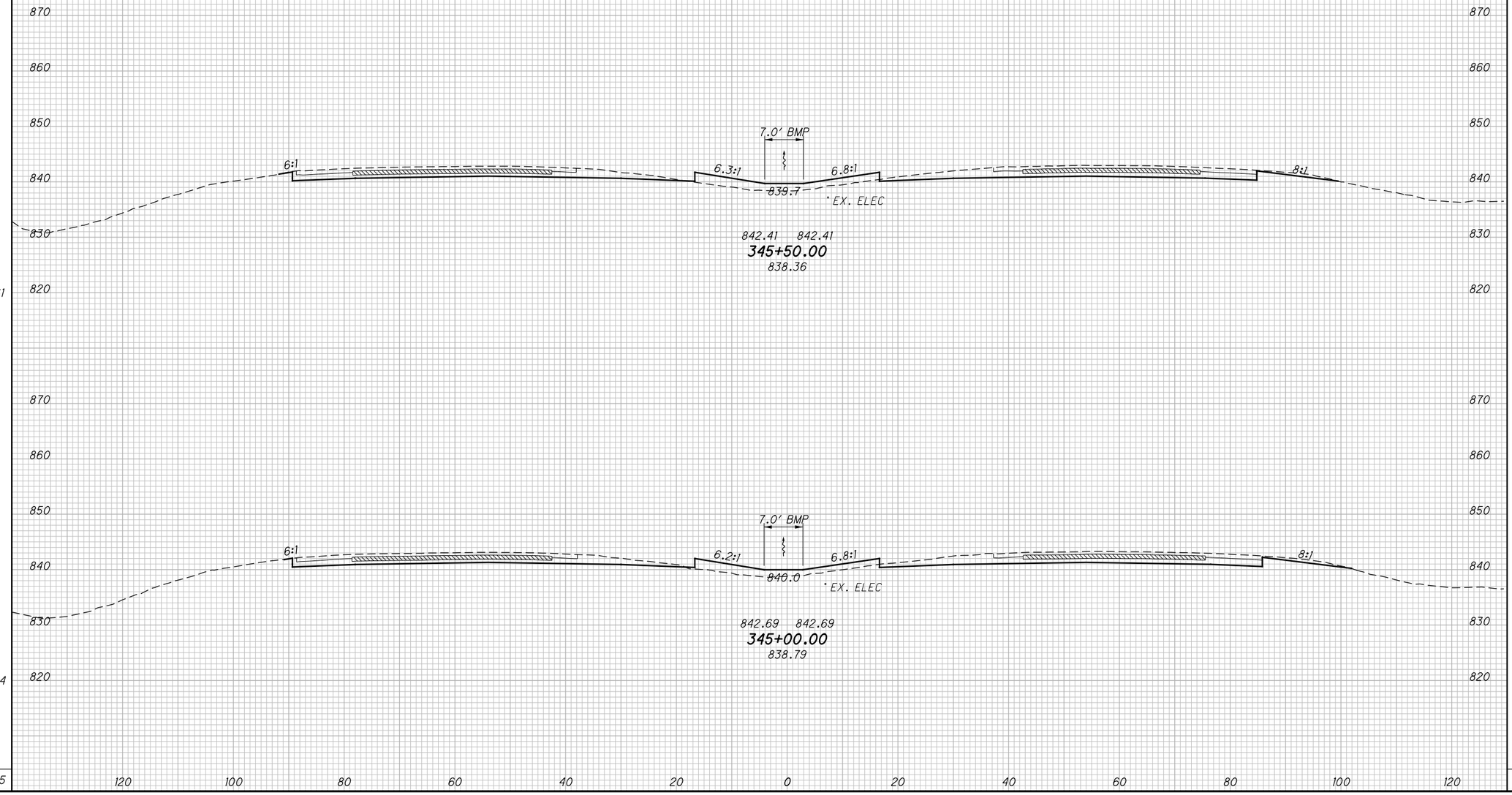

CALCULATED DWB
CHECKED BAL

CROSS SECTIONS - I.R. 71
STA. 345+00.00 TO STA. 345+50.00

FRA-71-5.29

222
623

P:\84868\roadway\sheets\84868XS002.dgn 12/17/2014 3:27:21 PM kfahy

SEEDING	
END WIDTH	SQ. YDS.
77	439
79	400
	839

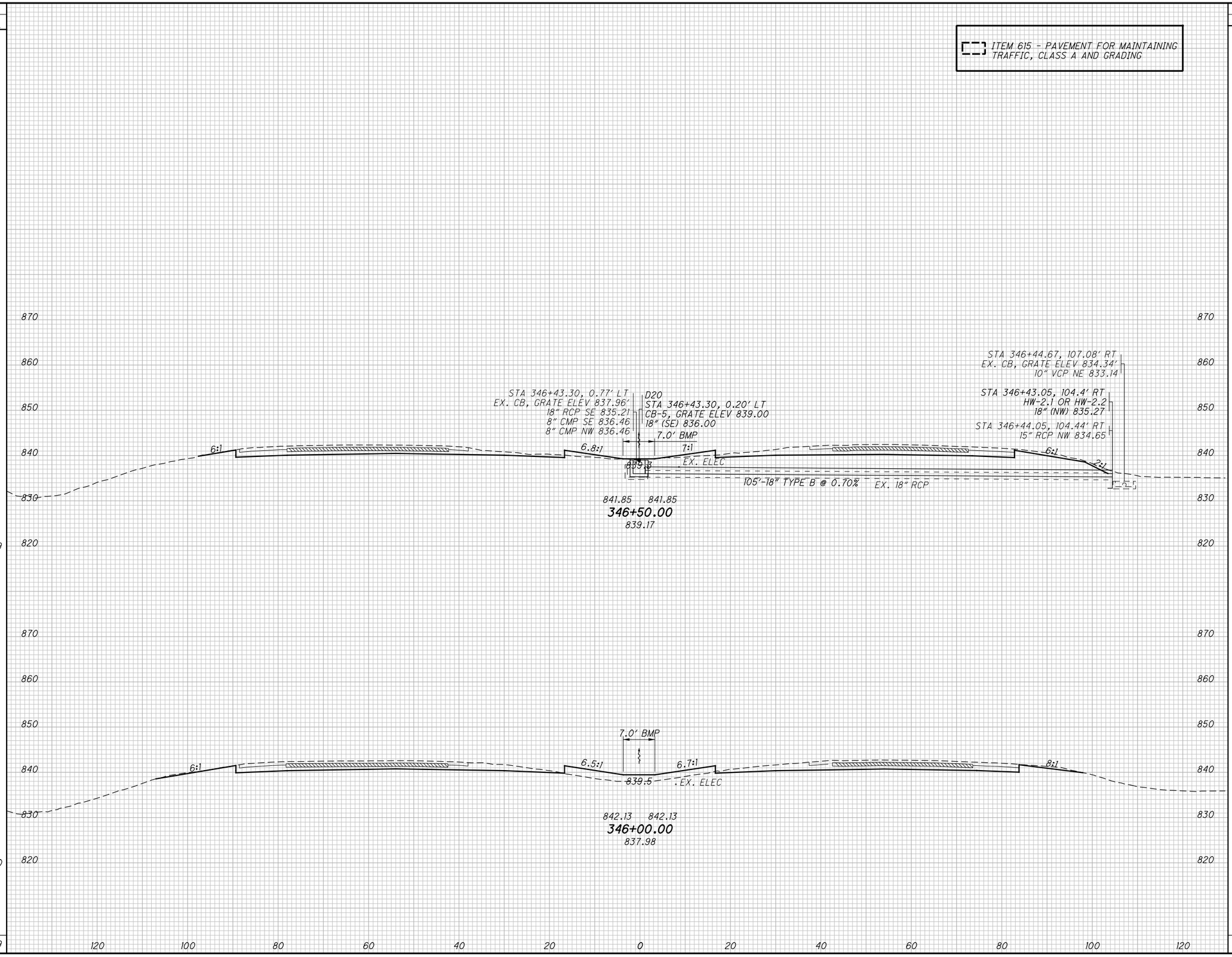

END AREA		VOLUME	
CUT	FILL	CUT	FILL
147	16		
132	51		
		258	61
		239	90
		497	151

CALCULATED DWB
CHECKED BAL

CROSS SECTIONS - I.R. 71
STA. 346+00.00 TO STA. 346+50.00

FRA-71-5.29

223
623

P:\84868\roadway\sheets\84868XS002.dgn 12/17/2014 3:27:22 PM kfahy

SEEDING END WIDTH	SEEDING SQ. YDS.	END AREA CUT	END AREA FILL	VOLUME CUT	VOLUME FILL
70	433	167	45	300	86
85	450	157	47	281	58
	883			581	144

ITEM 615 - PAVEMENT FOR MAINTAINING TRAFFIC, CLASS A AND GRADING

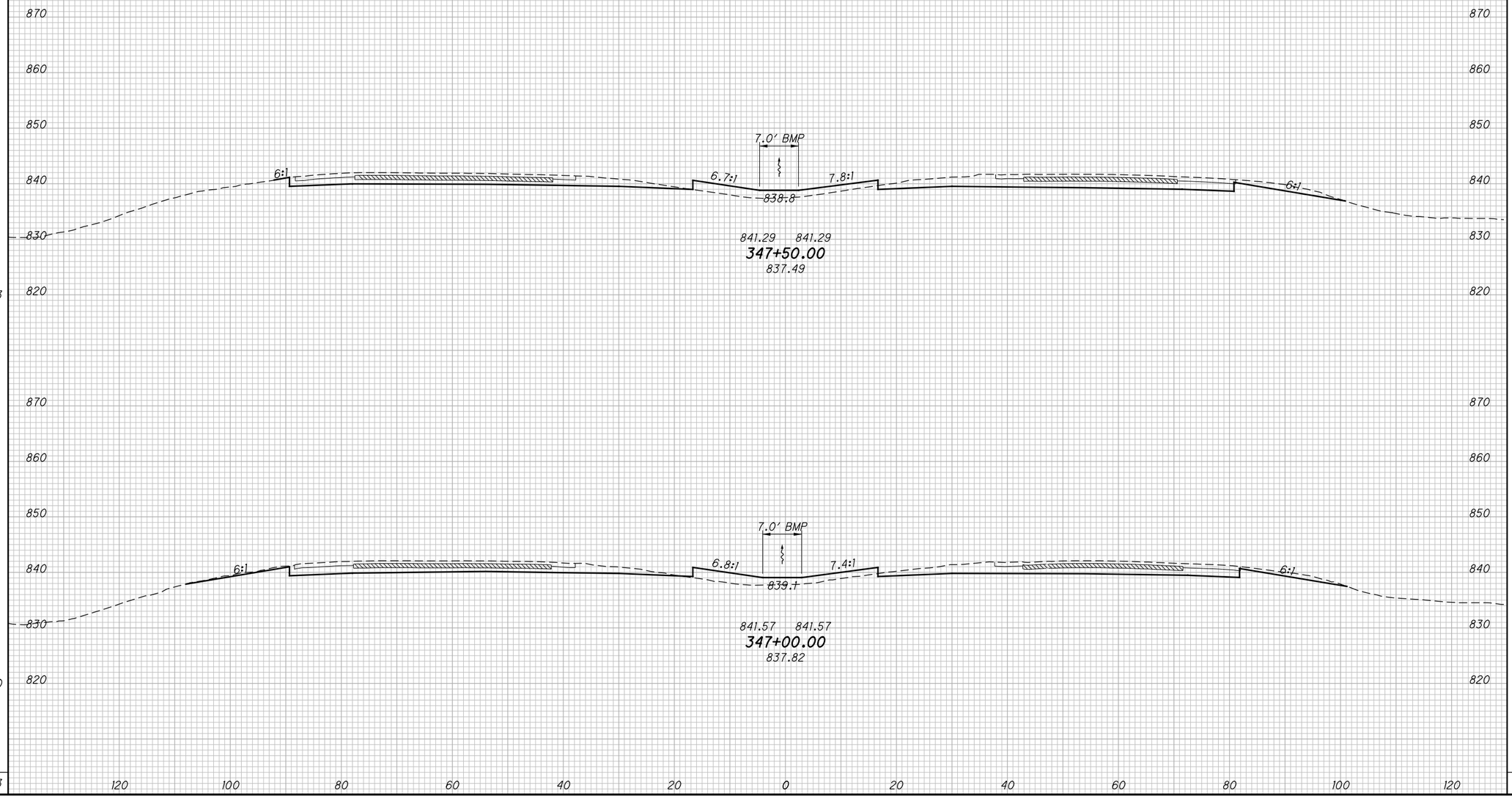

CALCULATED DWB
CHECKED BAL

CROSS SECTIONS - I.R. 71
STA. 347+00.00 TO STA. 347+50.00

FRA-71-5.29

224
623

P:\84868\roadway\sheets\84868XS002.dgn 12/17/2014 3:27:23 PM kfahy

SEEDING		END AREA		VOLUME	
END WIDTH	SQ. YDS.	CUT	FILL	CUT	FILL
85	433	162	47	301	84
71	394	164	44	306	82
	827			607	166

ITEM 615 - PAVEMENT FOR MAINTAINING TRAFFIC, CLASS A AND GRADING

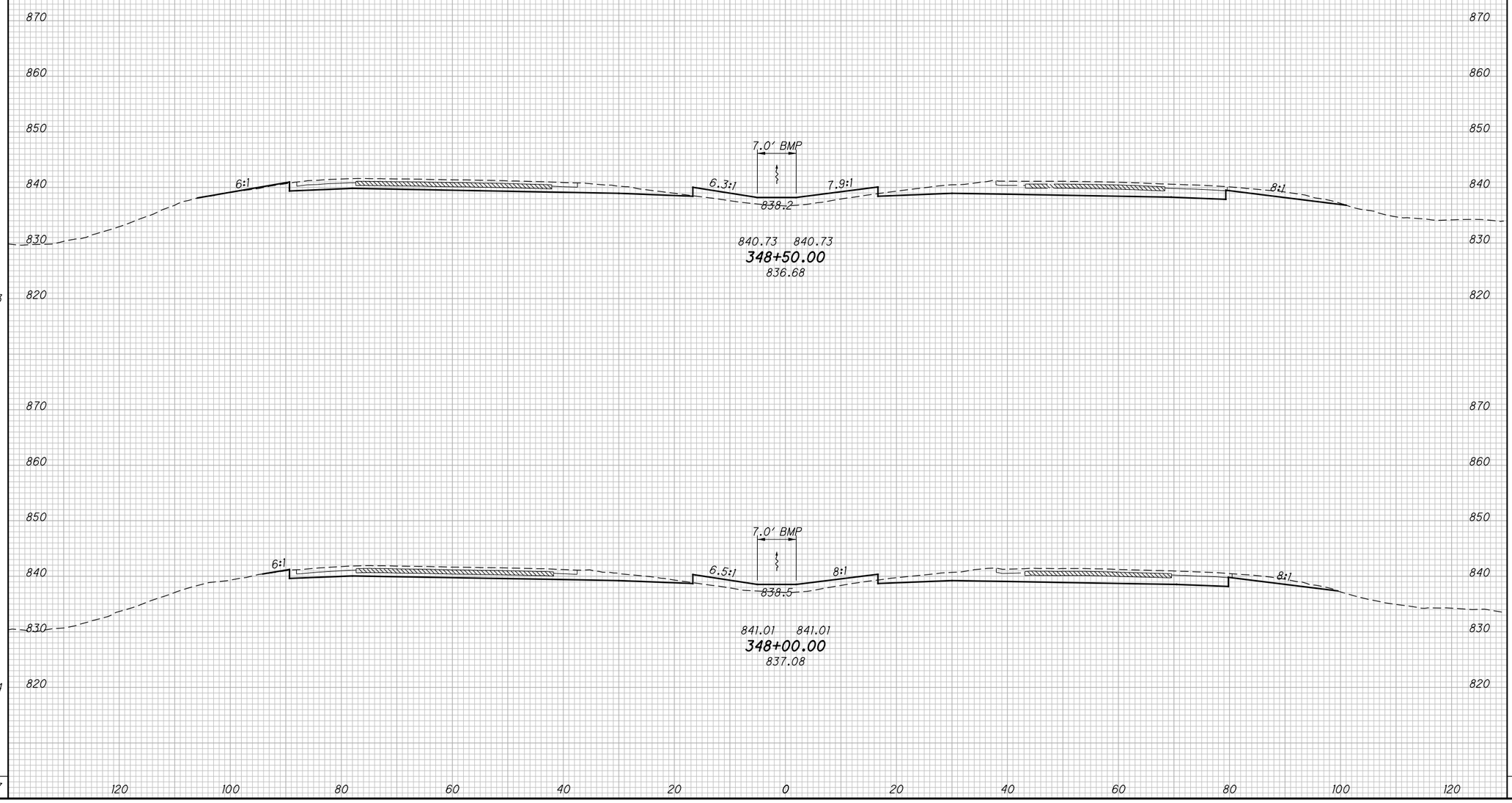

CALCULATED DWB
CHECKED BAL

CROSS SECTIONS - I.R. 71
STA. 348+00.00 TO STA. 348+50.00

FRA-71-5.29

225
623

P:\84868\roadway\sheets\84868XS002.dgn 12/17/2014 3:27:24 PM ktahy

SEEDING END WIDTH	SEEDING SQ. YDS.	END AREA CUT	END AREA FILL	VOLUME CUT	VOLUME FILL
109		156	72		
	611			294	127
110		161	66		
	544			299	105
	1155			593	232

CALCULATED DWB
CHECKED BAL

CROSS SECTIONS - I.R. 71
STA. 349+00.00 TO STA. 349+50.00

FRA-71-5.29

P:\84868\roadway\sheets\84868XS002.dgn 12/17/2014 3:27:25 PM kfahy

SEEDING		END AREA		VOLUME	
END WIDTH	SQ. YDS.	CUT	FILL	CUT	FILL
75	405	162	45	295	89
70	500	157	51	290	114
	905			585	203

CALCULATED DWB
CHECKED BAL

ITEM 615 - PAVEMENT FOR MAINTAINING TRAFFIC, CLASS A AND GRADING

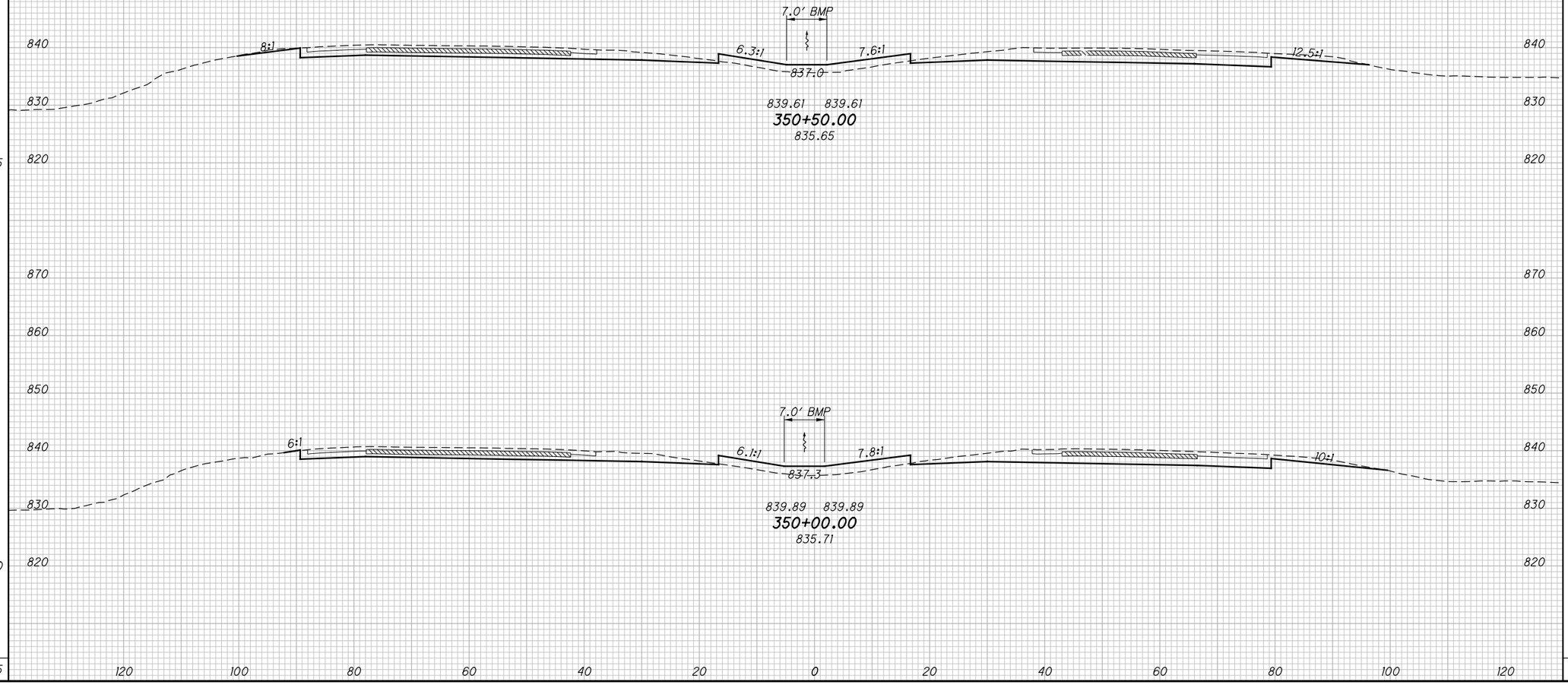

CROSS SECTIONS - I.R. 71
STA. 350+00.00 TO STA. 350+50.00

FRA-71-5.29

227
623

P:\84868\roadway\sheets\84868XS002.dgn 12/17/2014 3:27:26 PM kfahy

SEEDING		END AREA		VOLUME	
END WIDTH	SQ. YDS.	CUT	FILL	CUT	FILL
83		167	42		
	433			309	80
72		167	45		
	411			305	83
	844			614	163

ITEM 615 - PAVEMENT FOR MAINTAINING TRAFFIC, CLASS A AND GRADING

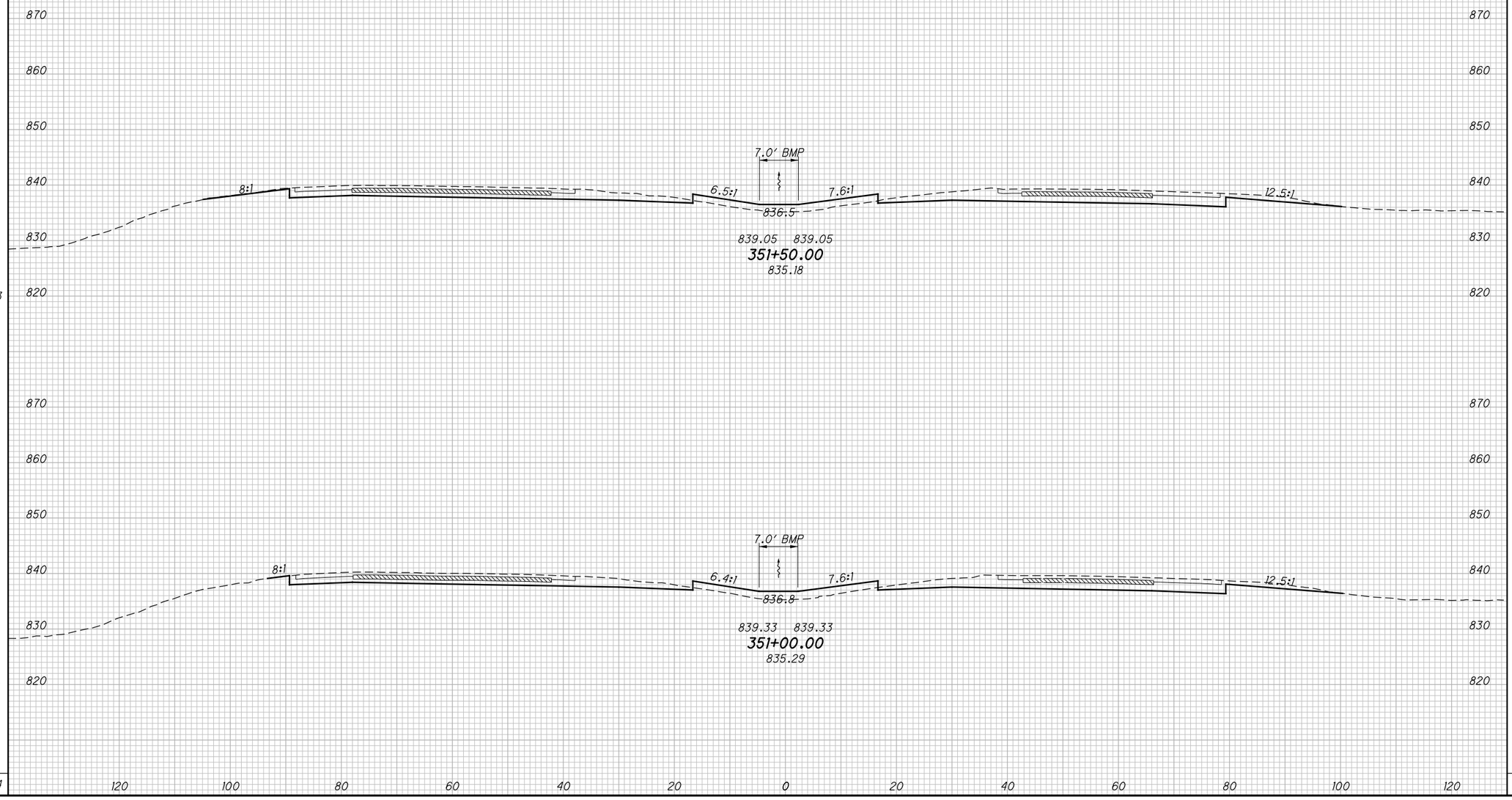

CALCULATED DWB
CHECKED BAL

CROSS SECTIONS - I.R. 71
STA. 351+00.00 TO STA. 351+50.00

FRA-71-5.29

228
623

P:\84868\roadway\sheets\84868XS002.dgn 12/17/2014 3:27:27 PM kfahy

SEEDING		END AREA		VOLUME		CALCULATED	CHECKED
END WIDTH	SQ. YDS.	CUT	FILL	CUT	FILL	DWB	BAL
66	406	163	44	309	79		
80	456	171	41	312	77		
	862			621	156		

ITEM 615 - PAVEMENT FOR MAINTAINING TRAFFIC, CLASS A AND GRADING

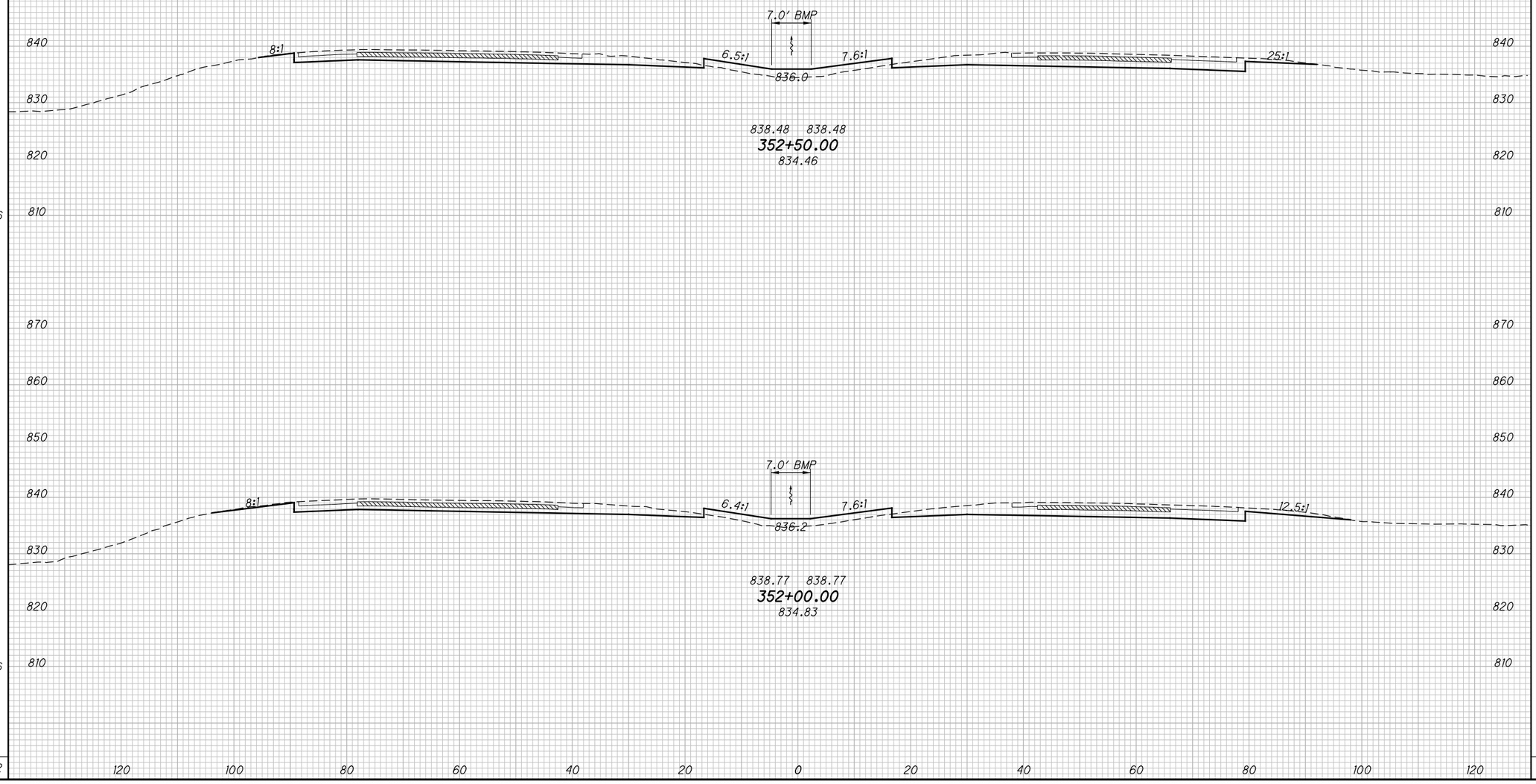

CROSS SECTIONS - I.R. 71
STA. 352+00.00 TO STA. 352+50.00

FRA-71-5.29

229
623

P:\84868\roadway\sheets\84868XS002.dgn 12/17/2014 3:27:28 PM kfahy

SEEDING		END AREA		VOLUME		CALCULATED DWB
END WIDTH	SQ. YDS.	CUT	FILL	CUT	FILL	CHECKED BAL
72	411	162	47	301	85	
74	388	163	45	302	82	
	799			603	167	

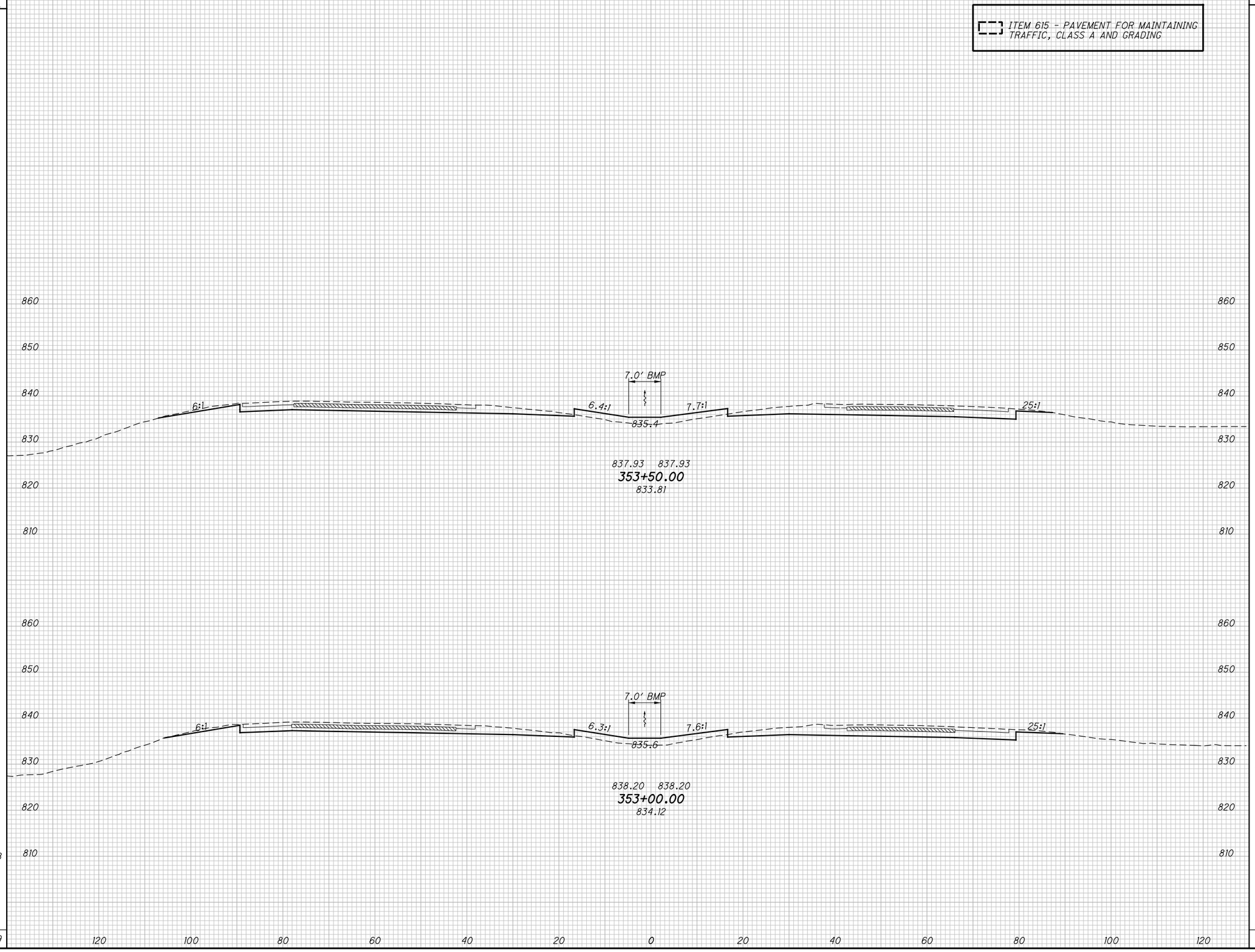

P:\84868\roadway\sheets\84868XS002.dgn 12/17/2014 3:27:29 PM kfahy

CROSS SECTIONS - I.R. 71
STA. 353+00.00 TO STA. 353+50.00

FRA-71-5.29

230
623

SEEDING		END AREA		VOLUME		CALCULATED DWB
END WIDTH	SQ. YDS.	CUT	FILL	CUT	FILL	CHECKED BAL
76		155	47			
	422			290	88	
75		159	47			
	411			297	87	
833				587	175	

ITEM 615 - PAVEMENT FOR MAINTAINING TRAFFIC, CLASS A AND GRADING

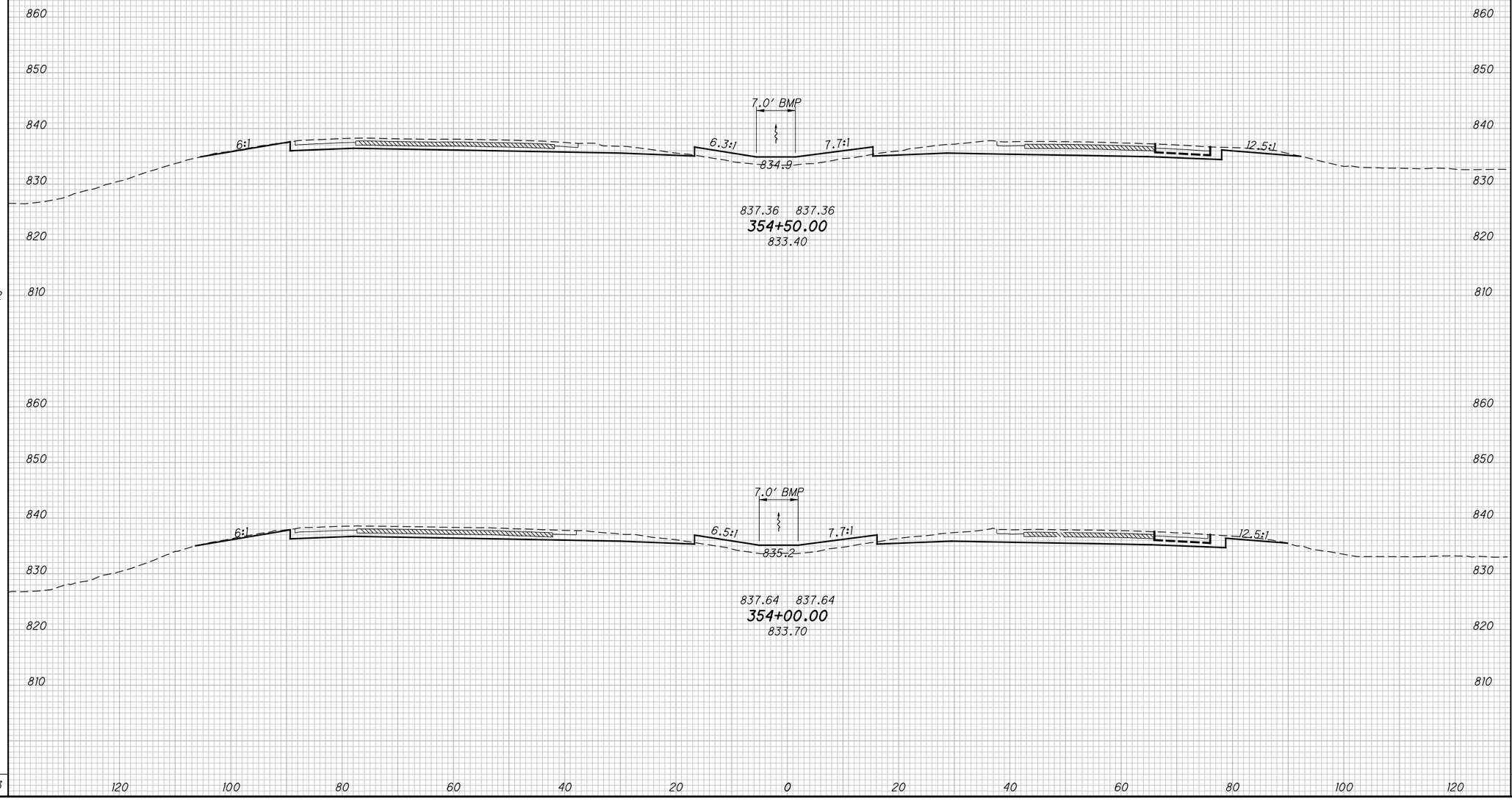

CROSS SECTIONS - I.R. 71
STA. 354+00.00 TO STA. 354+50.00

FRA-71-5.29

231
623

P:\84868\roadway\sheets\84868XS002.dgn 12/17/2014 3:27:30 PM kfahy

SEEDING	
END WIDTH	SQ. YDS.
55	
	317
59	
	377
	694

ITEM 615 - PAVEMENT FOR MAINTAINING TRAFFIC, CLASS A AND GRADING

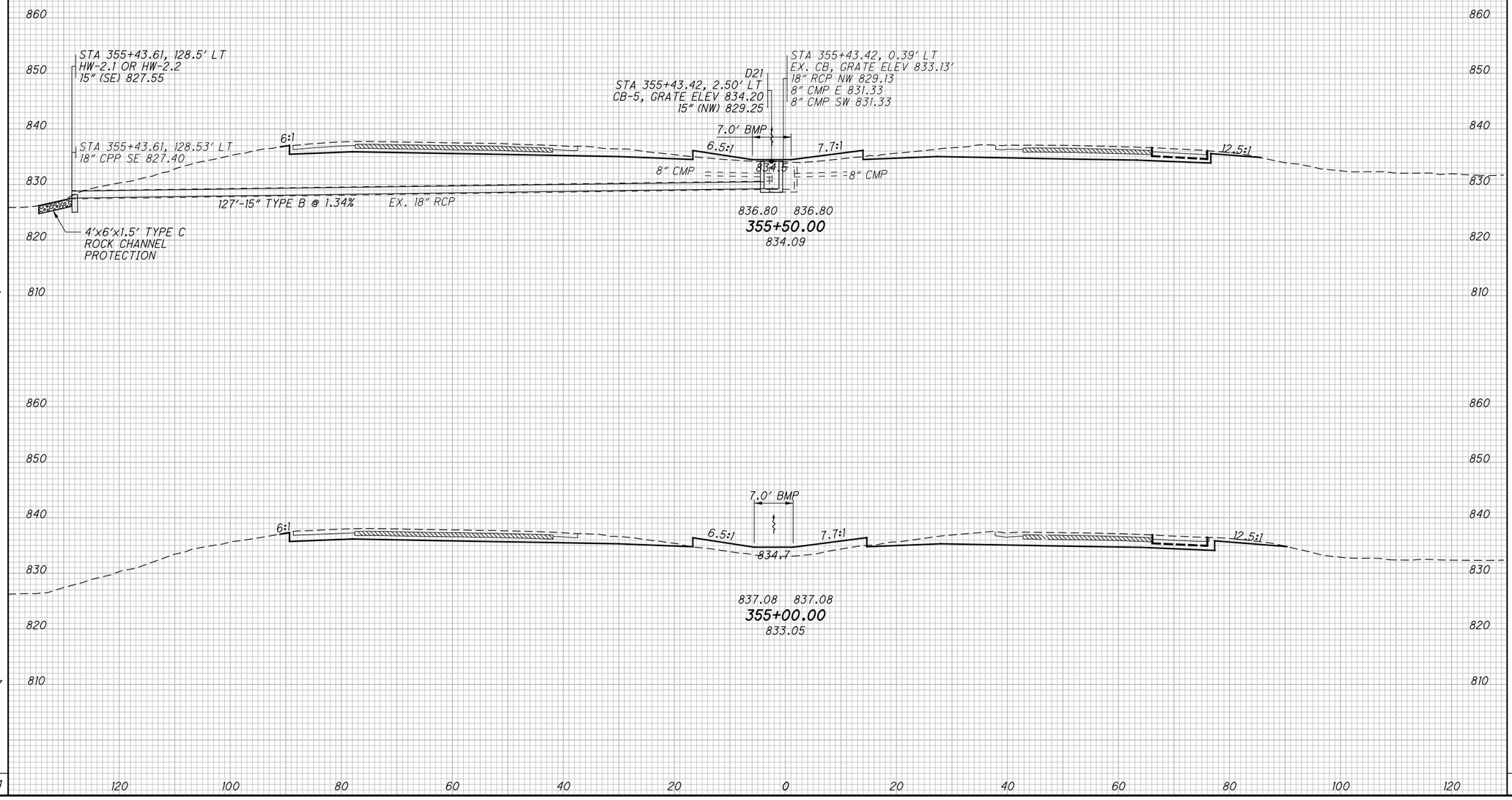

END AREA		VOLUME	
CUT	FILL	CUT	FILL
151	22		
		281	65
153	48		
		285	89
		566	154

CALCULATED DWB
CHECKED BAL

CROSS SECTIONS - I.R. 71
STA. 355+00.00 TO STA. 355+50.00

FRA-71-5.29

232
623

P:\84868\roadway\sheets\84868XS002.dgn 12/17/2014 3:27:31 PM kfahy

SEEDING	
END WIDTH	SQ. YDS.
66	394
74	361
	755

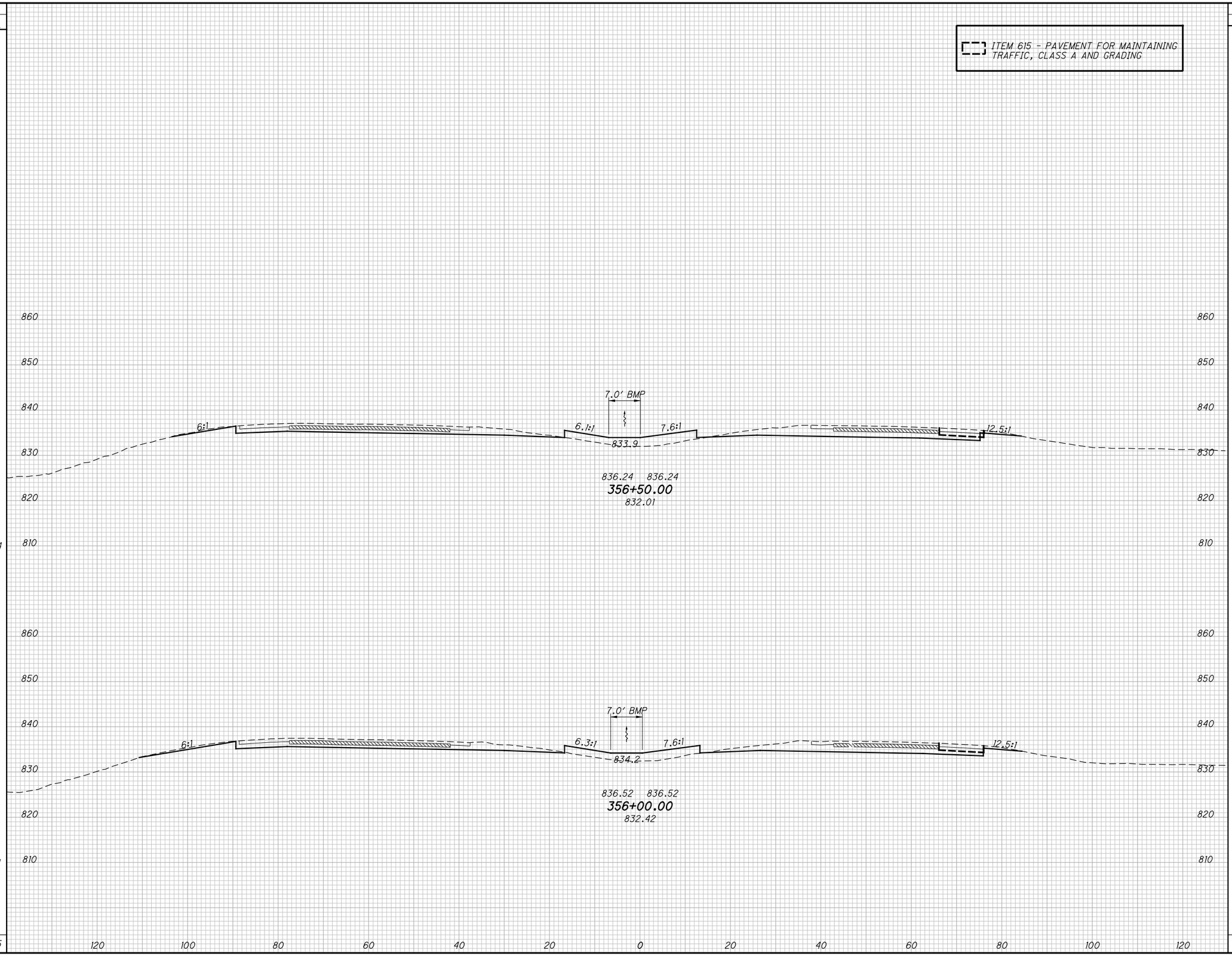

END AREA	
CUT	FILL
144	55
149	52

VOLUME	
CUT	FILL
271	99
277	68
548	167

CALCULATED DWB
CHECKED BAL

CROSS SECTIONS - I.R. 71
STA. 356+00.00 TO STA. 356+50.00

FRA-71-5.29

233
623

P:\84868\roadway\sheets\84868XS002.dgn 12/17/2014 3:27:32 PM kfahy

SEEDING	
END WIDTH	SQ. YDS.
76	389
63	361
	750

ITEM 615 - PAVEMENT FOR MAINTAINING TRAFFIC, CLASS A AND GRADING

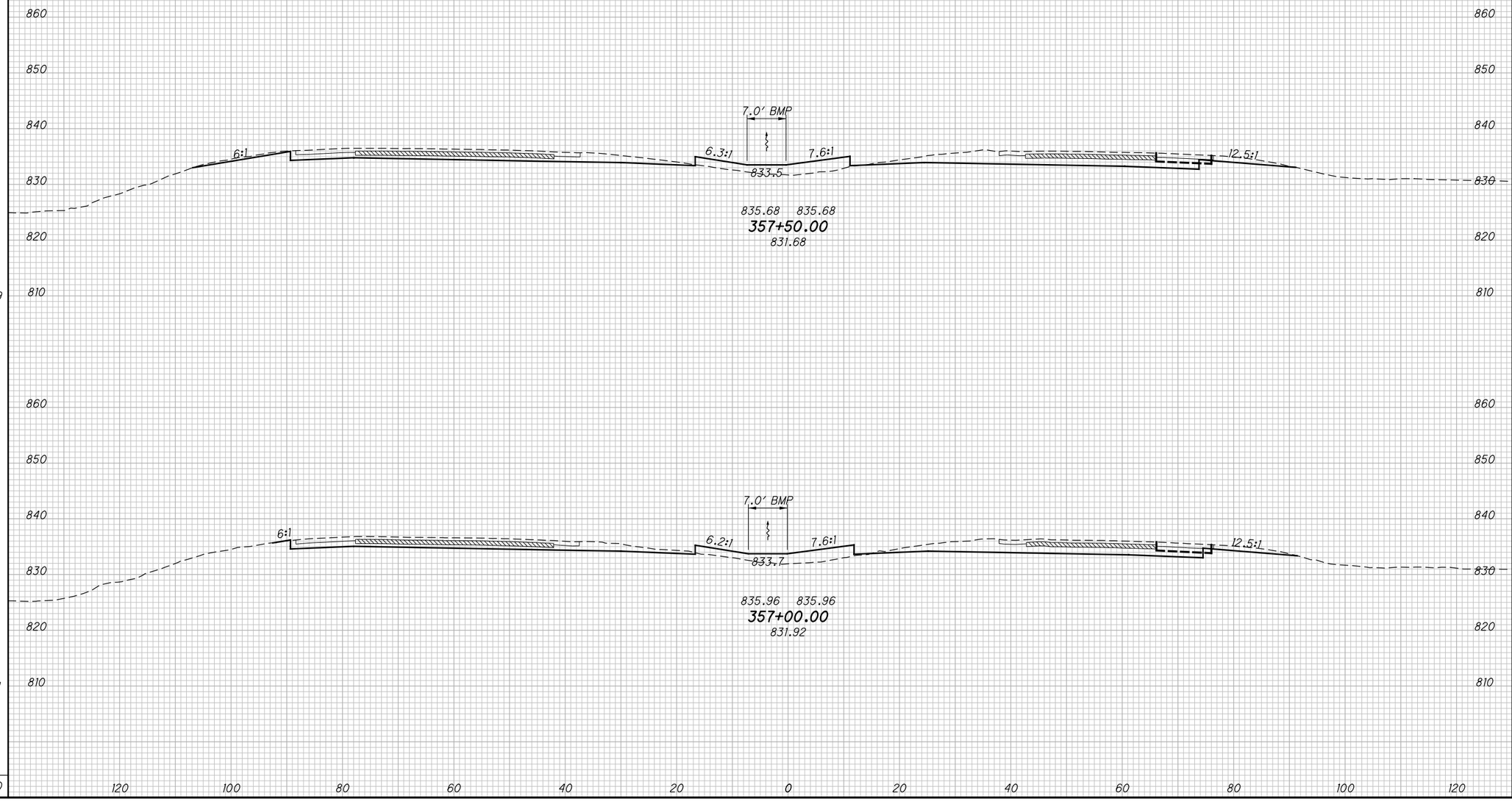

END AREA		VOLUME	
CUT	FILL	CUT	FILL
157	48		
148	49		
		282	90
		271	96
		553	186

CALCULATED DWB
CHECKED BAL

CROSS SECTIONS - I.R. 71
STA. 357+00.00 TO STA. 357+50.00

FRA-71-5.29

234
623

P:\84868\roadway\sheets\84868XS002.dgn 12/17/2014 3:27:32 PM kfahy

SEEDING	
END WIDTH	SQ. YDS.
76	428
78	428
	856

ITEM 615 - PAVEMENT FOR MAINTAINING TRAFFIC, CLASS A AND GRADING

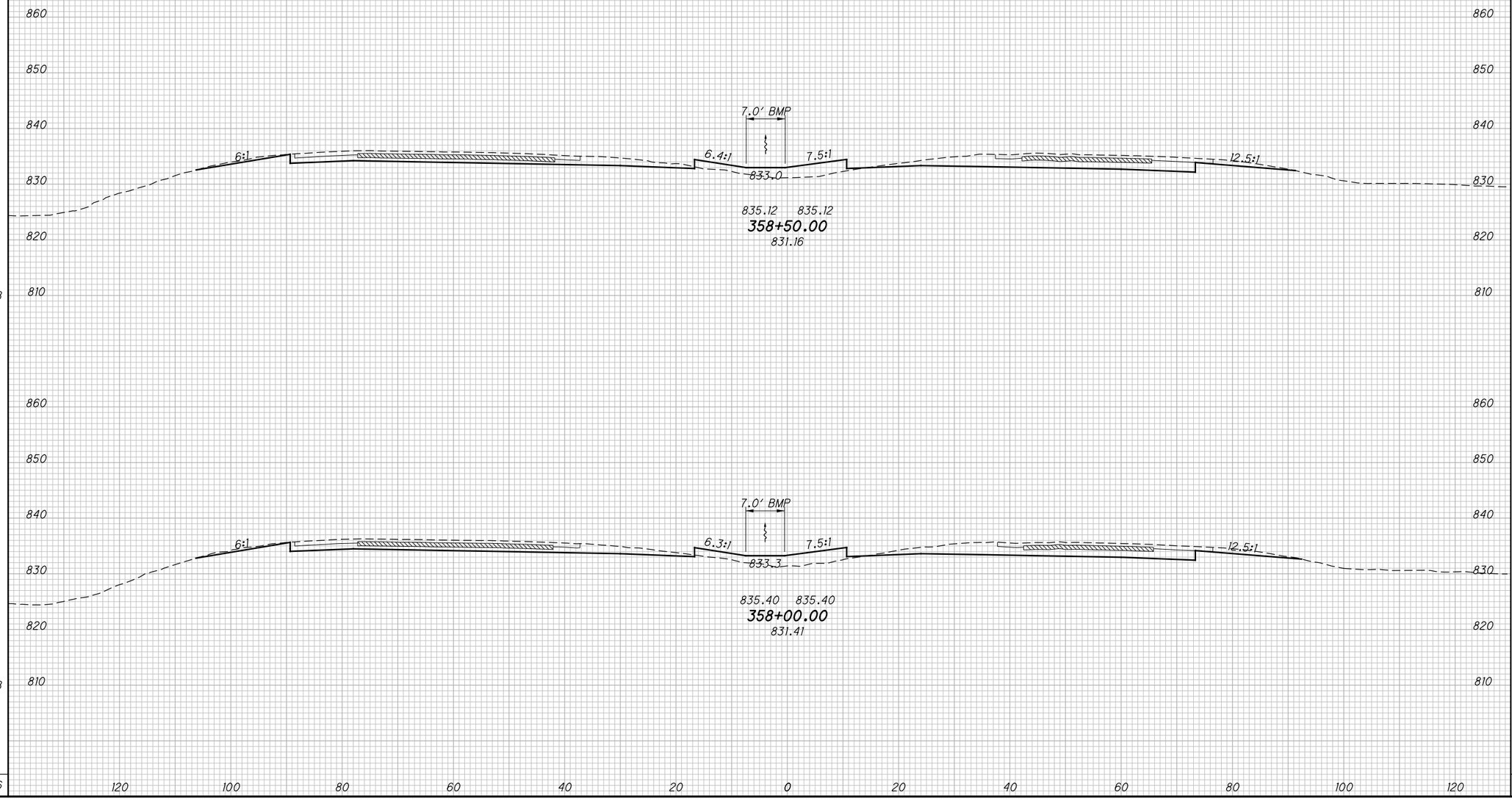

END AREA	
CUT	FILL
152	47
155	48

VOLUME	
CUT	FILL
284	88
289	89
573	177

CALCULATED DWB
CHECKED BAL

CROSS SECTIONS - I.R. 71
STA. 358+00.00 TO STA. 358+50.00

FRA-71-5.29

235
623

P:\84868\roadway\sheets\84868XS002.dgn 12/17/2014 3:27:33 PM kfahy

SEEDING			END AREA		VOLUME		
	END WIDTH	SQ. YDS.	CUT	FILL	CUT	FILL	
76			150	55			
75			151	51			
	844				559	189	

ITEM 615 - PAVEMENT FOR MAINTAINING TRAFFIC, CLASS A AND GRADING

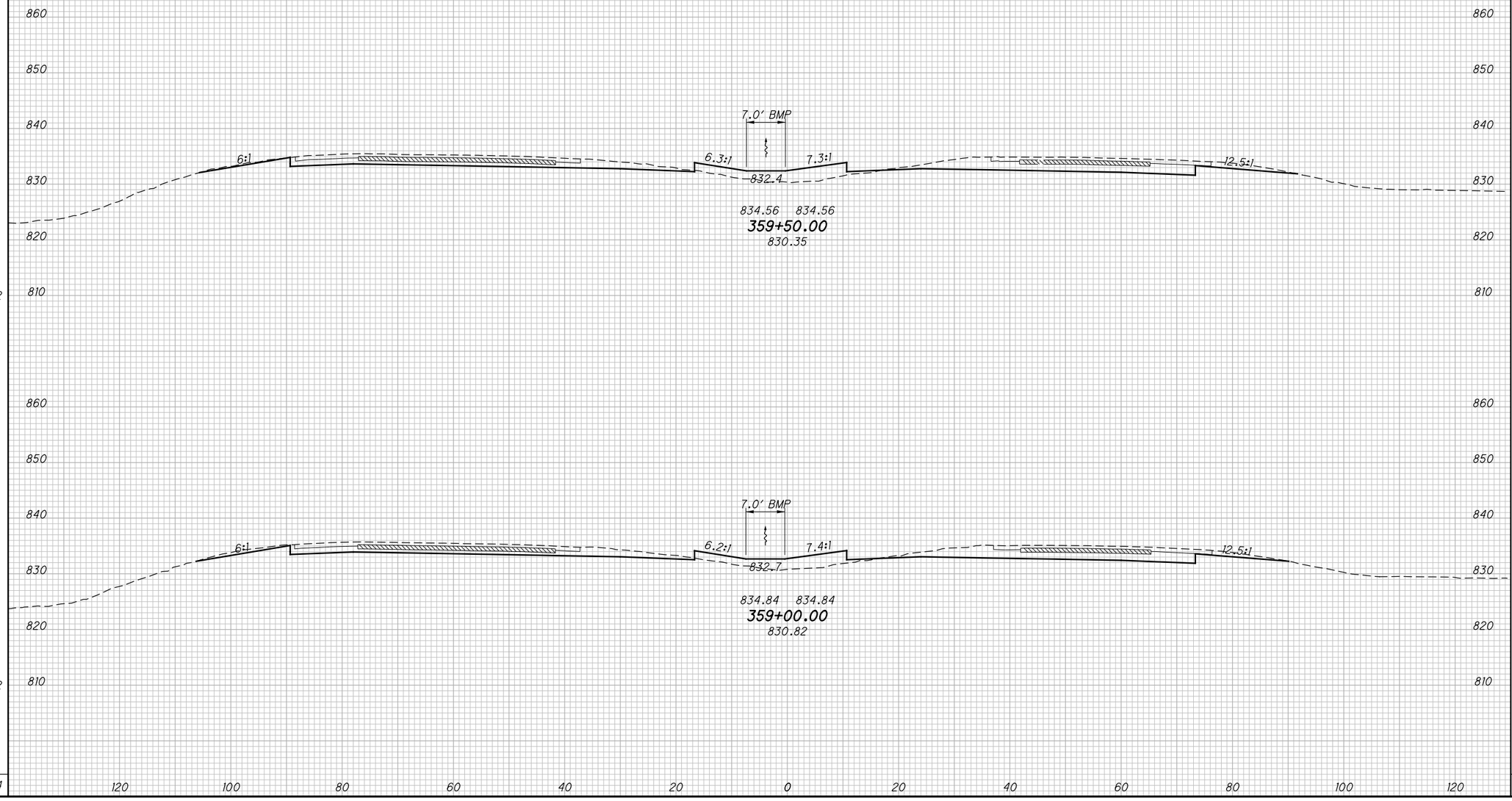

CALCULATED DWB
CHECKED BAL

CROSS SECTIONS - I.R. 71
STA. 359+00.00 TO STA. 359+50.00

FRA-71-5.29

236
623

P:\84868\roadway\sheets\84868XS002.dgn 12/17/2014 3:27:34 PM kfahy

SEEDING	
END WIDTH	SQ. YDS.
80	444
	433
	877

ITEM 615 - PAVEMENT FOR MAINTAINING TRAFFIC, CLASS A AND GRADING

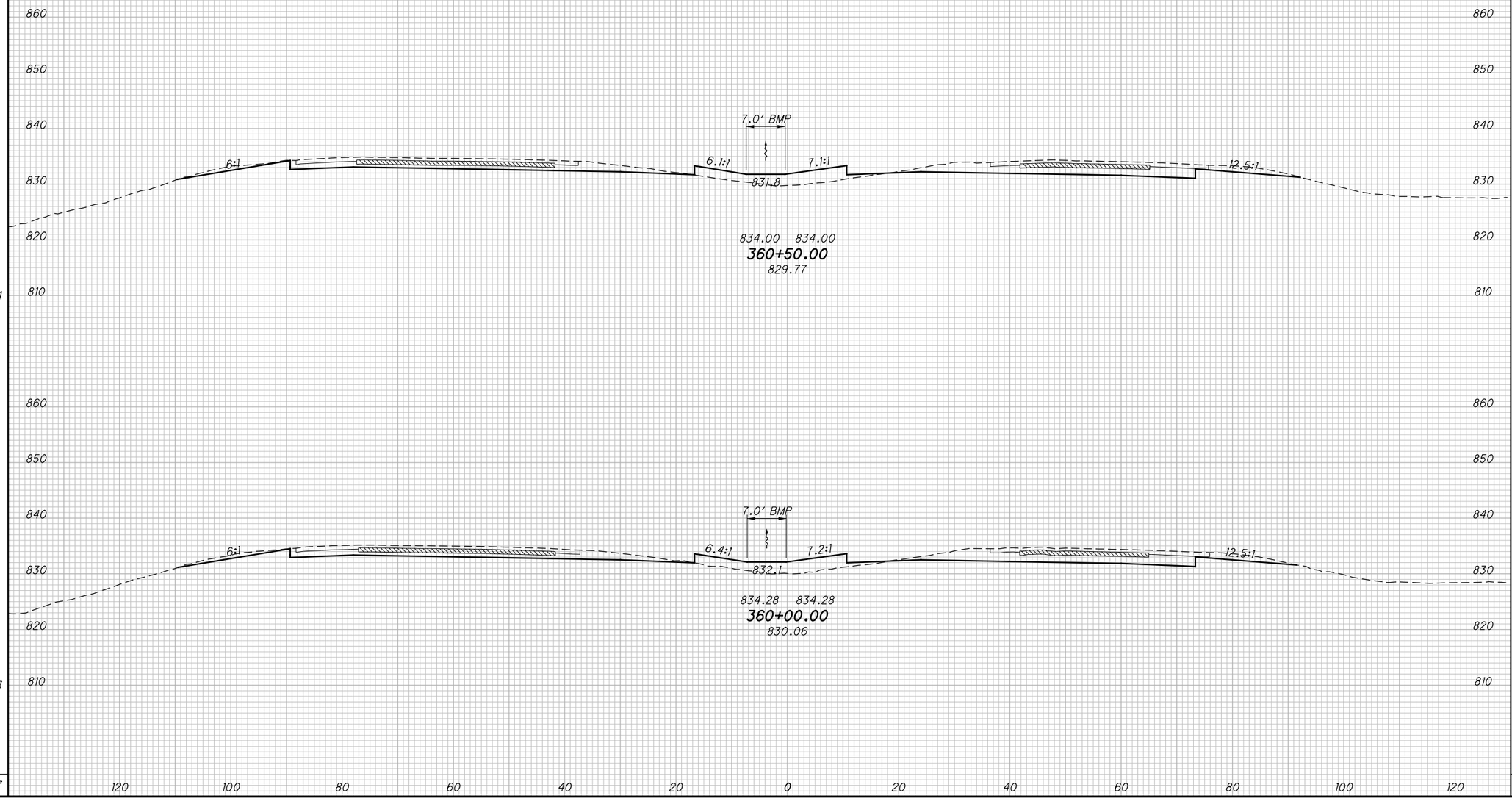

END AREA		VOLUME	
CUT	FILL	CUT	FILL
150	56		
156	57		
		283	105
		284	104
		567	209

CALCULATED DWB
CHECKED BAL

CROSS SECTIONS - I.R. 71
STA. 360+00.00 TO STA. 360+50.00

FRA-71-5.29

237
623

P:\84868\roadway\sheets\84868XS002.dgn 12/17/2014 3:27:35 PM kfahy

SEEDING		END AREA		VOLUME	
END WIDTH	SQ. YDS.	CUT	FILL	CUT	FILL
79	450	164	36	294	85
83	456	154	56	281	103
	906			575	188

CALCULATED DWB
CHECKED BAL

ITEM 615 - PAVEMENT FOR MAINTAINING TRAFFIC, CLASS A AND GRADING

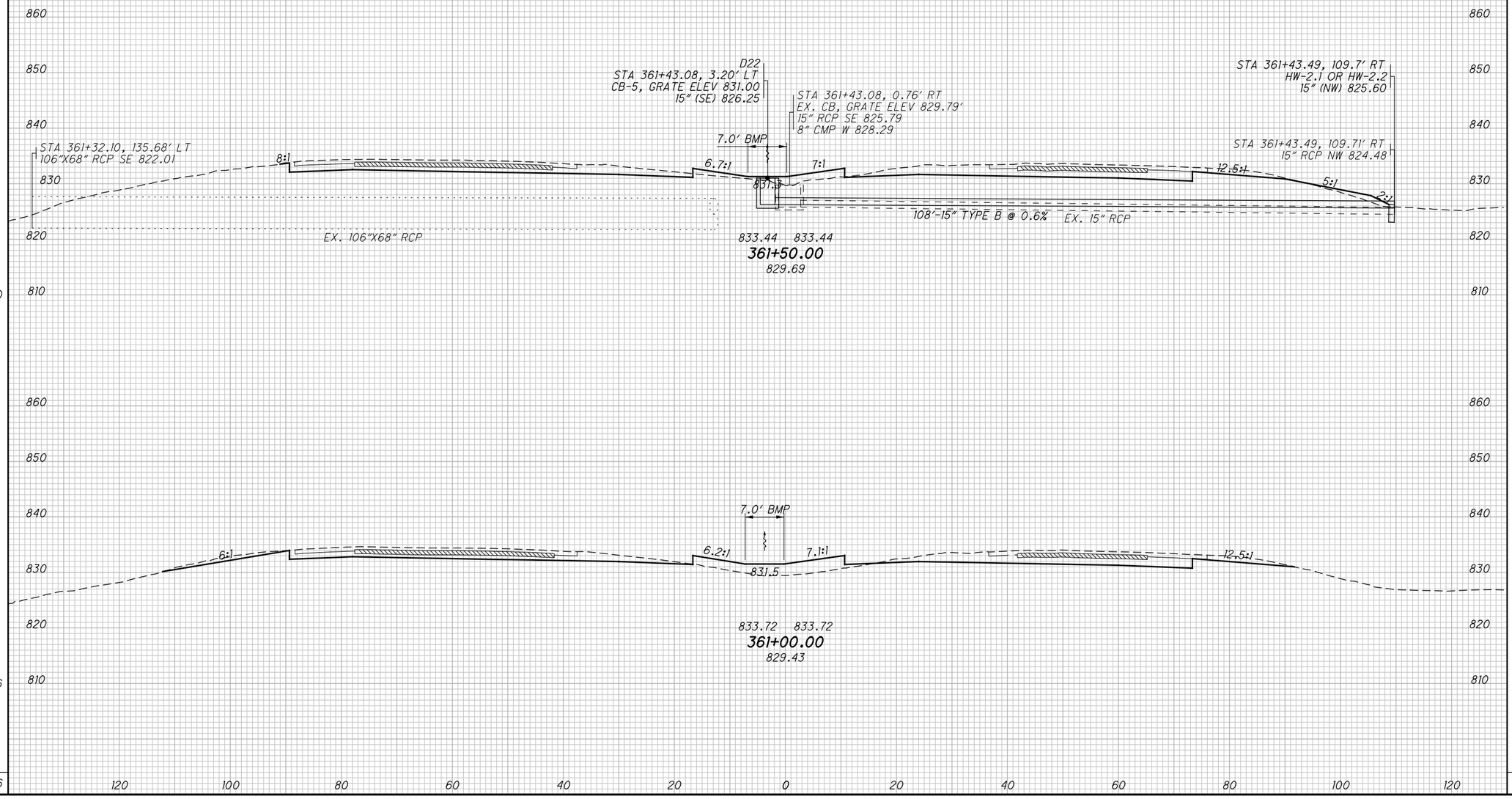

CROSS SECTIONS - I.R. 71
STA. 361+00.00 TO STA. 361+50.00

FRA-71-5.29

238
623

P:\84868\roadway\sheets\84868XS002.dgn 12/17/2014 3:27:36 PM kfahy

SEEDING	
END WIDTH	SQ. YDS.
81	444
78	439
	883

ITEM 615 - PAVEMENT FOR MAINTAINING TRAFFIC, CLASS A AND GRADING

860
850
840
830
820
810

7.0' BMP
6:1
6.4:1
6.9:1
12.5:1
830.7
832.88 832.88
362+50.00
828.95

8:1
6.9:1
7:1
12.5:1
831.0
833.16 833.16
362+00.00
832.17
STA 362+20.70, 109.93' RT
106"x68" RCP SE 821.37
EX. 106"X68" RCP

120 100 80 60 40 20 0 20 40 60 80 100 120

END AREA		VOLUME	
CUT	FILL	CUT	FILL
165	48	354	45
217	0	353	34
		707	79

CALCULATED DWB
CHECKED BAL

CROSS SECTIONS - I.R. 71
STA. 362+00.00 TO STA. 362+50.00

FRA-71-5.29

239
623

P:\84868\roadway\sheets\84868XS002.dgn 12/17/2014 3:27:37 PM kfahy

SEEDING		END AREA		VOLUME	
END WIDTH	SQ. YDS.	CUT	FILL	CUT	FILL
74		156	52		
	433			297	99
81		165	55		
	450			305	96
	883			602	195

ITEM 615 - PAVEMENT FOR MAINTAINING TRAFFIC, CLASS A AND GRADING

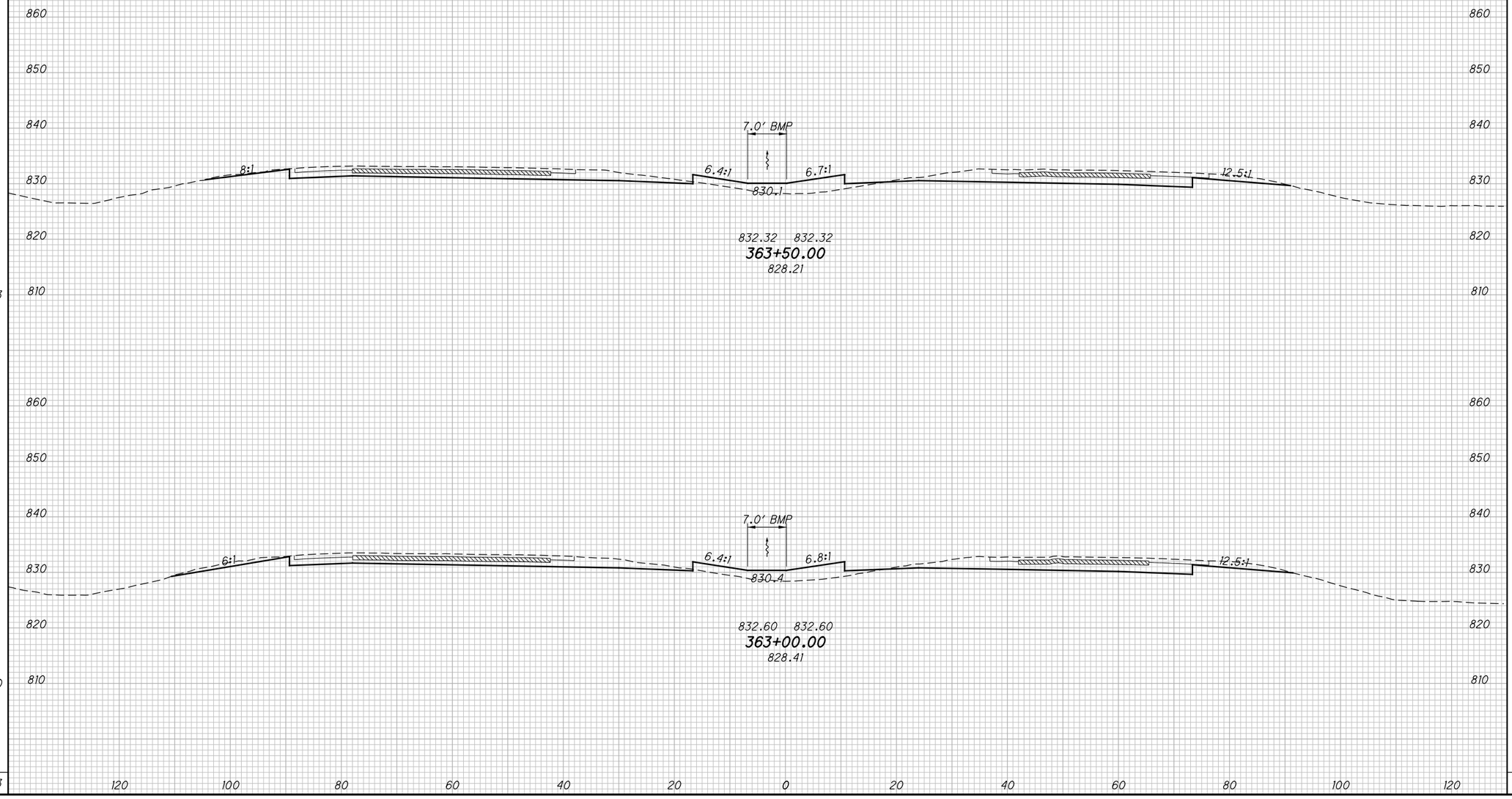

CALCULATED DWB
CHECKED BAL

CROSS SECTIONS - I.R. 71
STA. 363+00.00 TO STA. 363+50.00

FRA-71-5.29

240
623

P:\84868\roadway\sheets\84868XS002.dgn 12/17/2014 3:27:38 PM kfahy

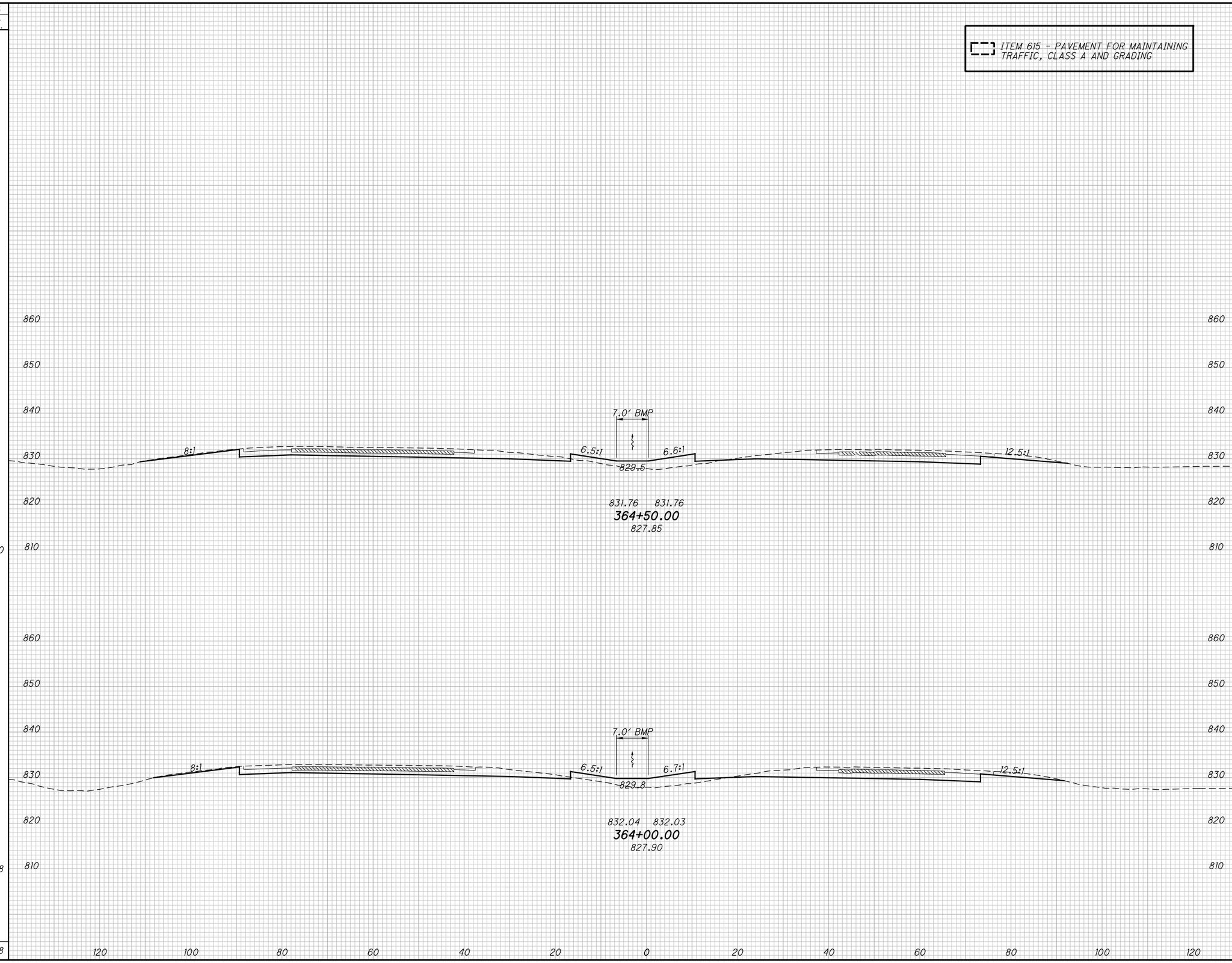

SEEDING END WIDTH	SEEDING SQ. YDS.	END AREA CUT	END AREA FILL	VOLUME CUT	VOLUME FILL
82		160	47		
	450			294	92
78		159	53		
	428			291	97
	878			585	189

CALCULATED DWB
CHECKED BAL

CROSS SECTIONS - I.R. 71
STA. 364+00.00 TO STA. 364+50.00

FRA-71-5.29

P:\84868\roadway\sheets\84868XS002.dgn 12/17/2014 3:27:39 PM kfahy

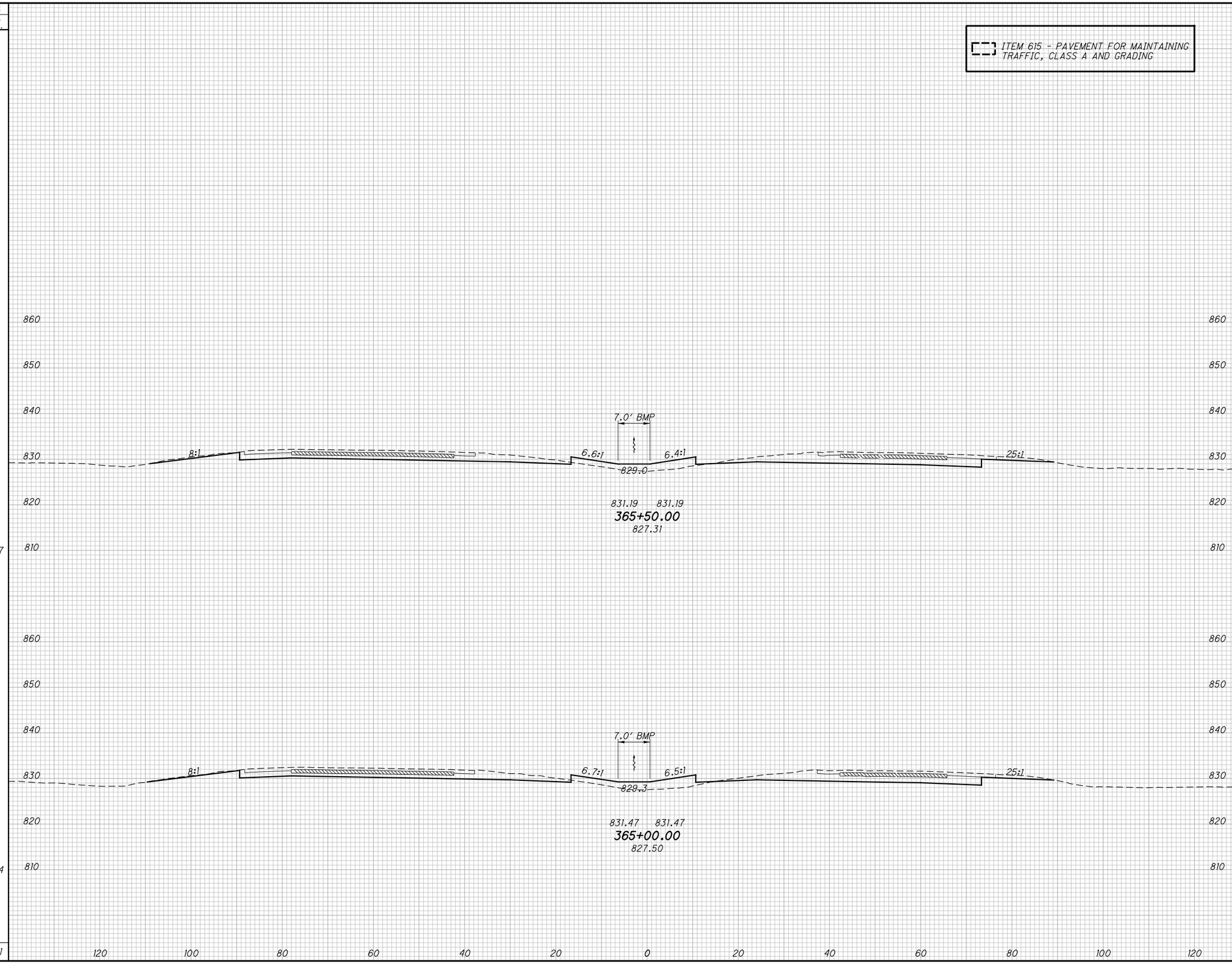

SEEDING END WIDTH	SEEDING SQ. YDS.	END AREA CUT	END AREA FILL	VOLUME CUT	VOLUME FILL
76		164	41		
	427			299	81
77		160	47		
	444			295	87
	871			594	168

CALCULATED DWB
CHECKED BAL

CROSS SECTIONS - I.R. 71
STA. 365+00.00 TO STA. 365+50.00

FRA-71-5.29

P:\84868\roadway\sheets\84868XS002.dgn 12/17/2014 3:27:40 PM kfahy

SEEDING		END AREA		VOLUME	
END WIDTH	SQ. YDS.	CUT	FILL	CUT	FILL
74		158	46		
	394			295	80
66		161	41		
	394			301	76
	788			596	156

ITEM 615 - PAVEMENT FOR MAINTAINING TRAFFIC, CLASS A AND GRADING

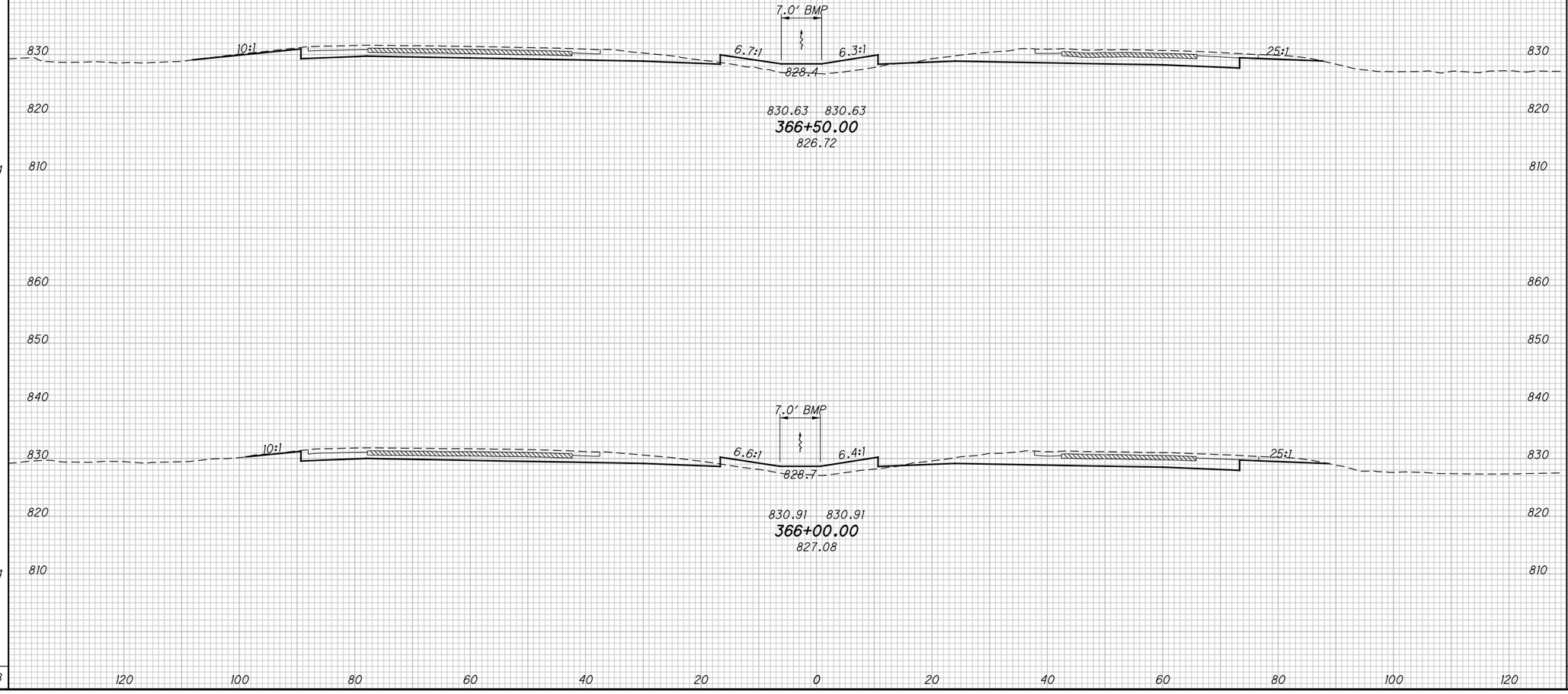

CALCULATED DWB
CHECKED BAL

CROSS SECTIONS - I.R. 71
STA. 366+00.00 TO STA. 366+50.00

FRA-71-5.29

243
623

P:\84868\roadway\sheets\84868XS002.dgn 12/17/2014 3:27:41 PM kfahy

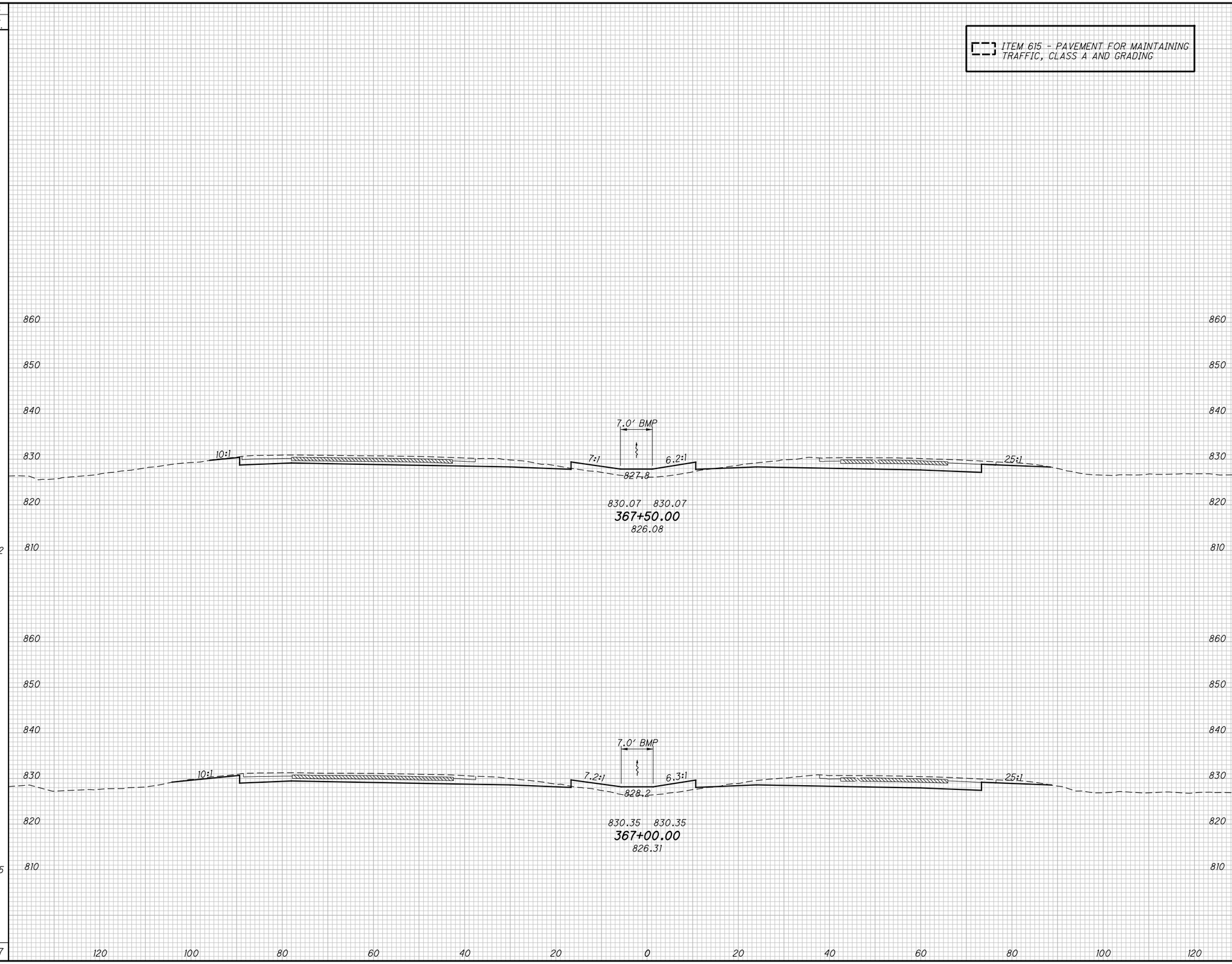

SEEDING END WIDTH	SEEDING SQ. YDS.	END AREA CUT	END AREA FILL	VOLUME CUT	VOLUME FILL
63		150	46		
	372			283	87
71		156	47		
	405			290	86
	777			573	173

CALCULATED DWB
CHECKED BAL

CROSS SECTIONS - I.R. 71
STA. 367+00.00 TO STA. 367+50.00

FRA-71-5.29

P:\84868\roadway\sheets\84868XS002.dgn 12/17/2014 3:27:42 PM kfahy

SEEDING END WIDTH	SEEDING SQ. YDS.	END AREA CUT	END AREA FILL	VOLUME CUT	VOLUME FILL
68		147	50		
	356			271	90
58		146	48		
	339			274	87
	695			545	177

ITEM 615 - PAVEMENT FOR MAINTAINING TRAFFIC, CLASS A AND GRADING

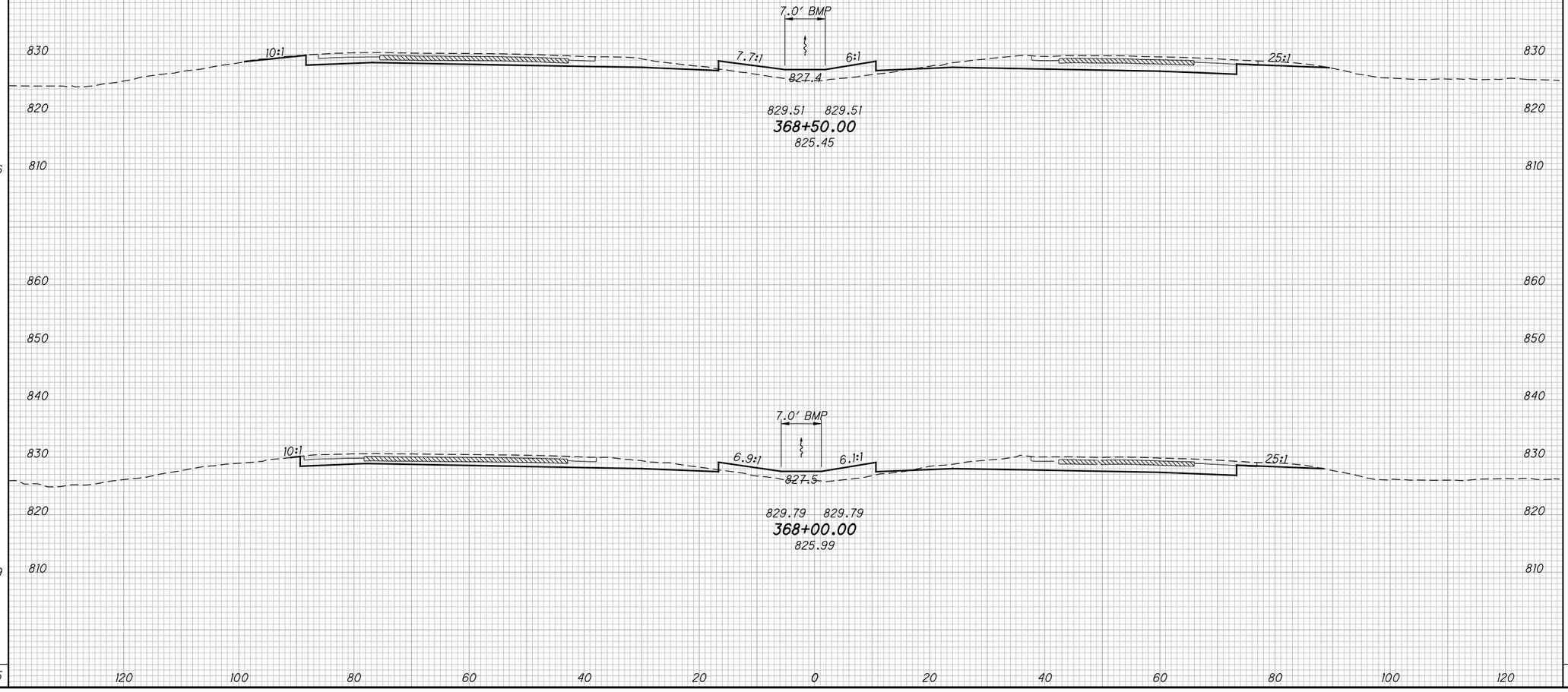

CALCULATED DWB
CHECKED BAL

CROSS SECTIONS - I.R. 71
STA. 368+00.00 TO STA. 368+50.00

FRA-71-5.29

245
623

P:\84868\roadway\sheets\84868XS002.dgn 12/17/2014 3:27:43 PM kfahy

SEEDING		END AREA		VOLUME		CALCULATED DWB	CHECKED BAL
END WIDTH	SQ. YDS.	CUT	FILL	CUT	FILL		
74		149	45				
	422			279	85		
77		153	47				
	406			277	90		
	828			556	175		

ITEM 615 - PAVEMENT FOR MAINTAINING TRAFFIC, CLASS A AND GRADING

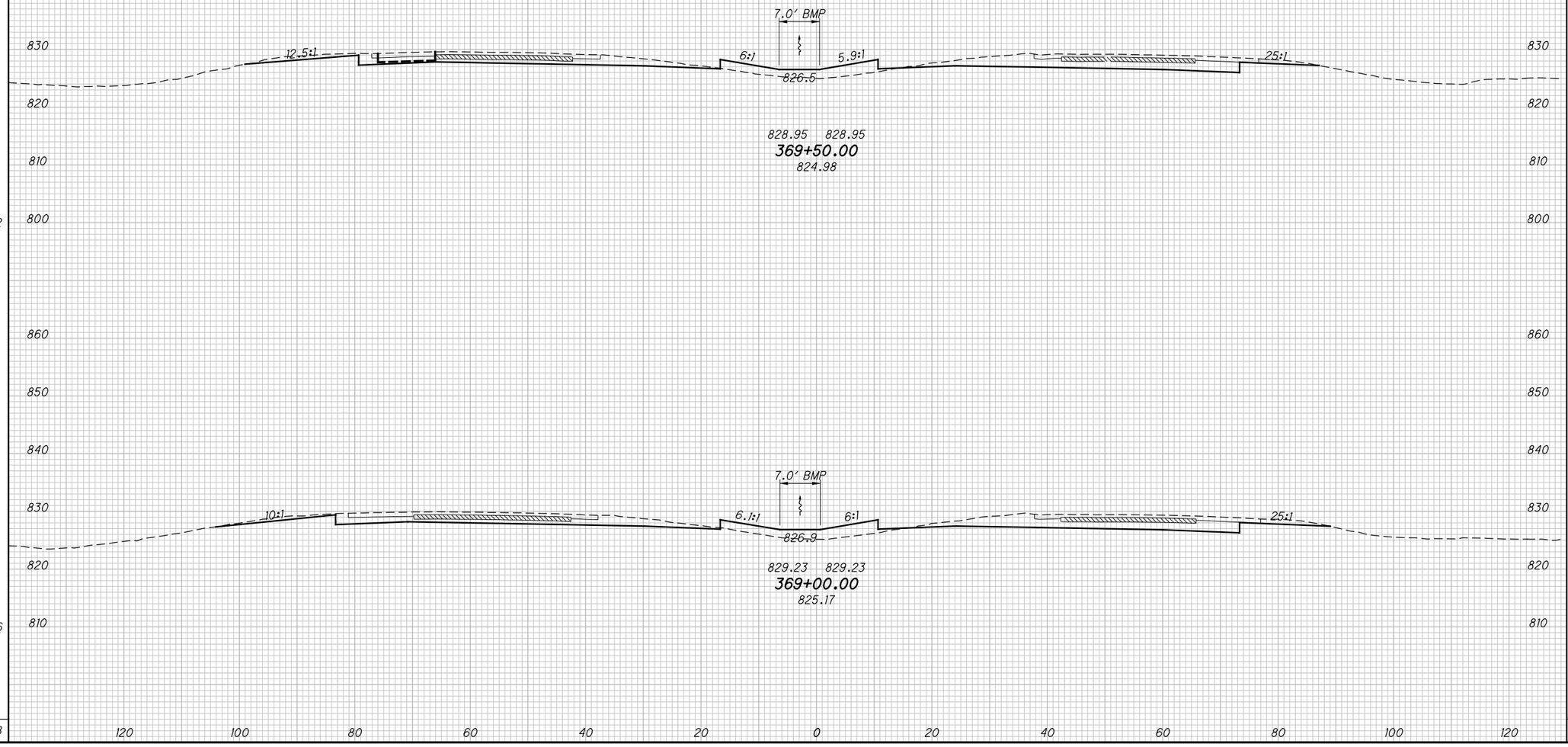

CROSS SECTIONS - I.R. 71
STA. 369+00.00 TO STA. 369+50.00

FRA-71-5.29

246
623

P:\84868\roadway\sheets\84868XS002.dgn 12/17/2014 3:27:44 PM kfahy

SEEDING		END AREA		VOLUME	
END WIDTH	SQ. YDS.	CUT	FILL	CUT	FILL
63		137	47		
	361			256	86
66		140	47		
	389			267	84
	750			523	170

ITEM 615 - PAVEMENT FOR MAINTAINING TRAFFIC, CLASS A AND GRADING

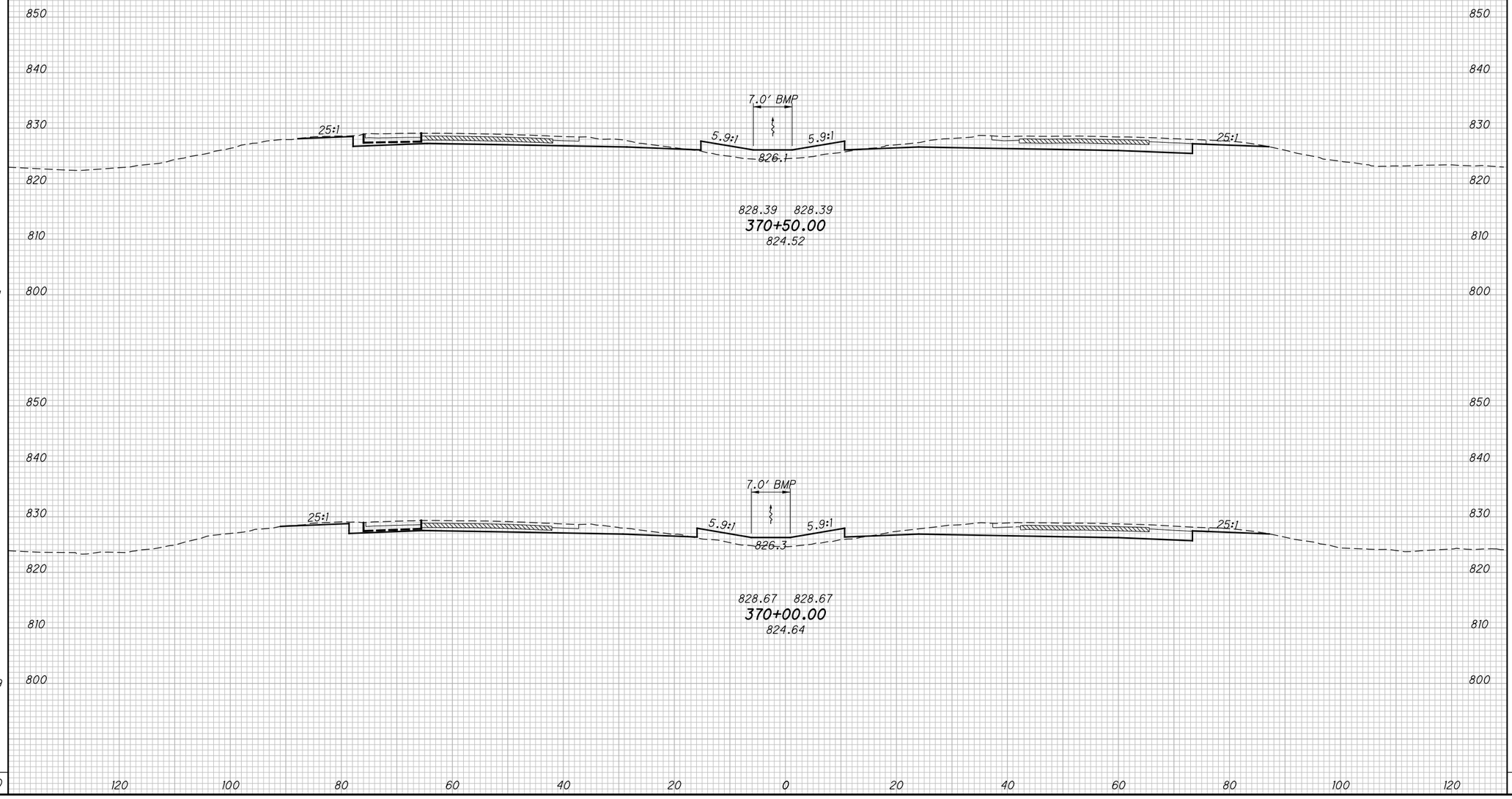

CALCULATED DWB
CHECKED BAL

CROSS SECTIONS - I.R. 71
STA. 370+00.00 TO STA. 370+50.00

FRA-71-5.29

247
623

P:\84868\roadway\sheets\84868XS002.dgn 12/17/2014 3:27:45 PM kfahy

SEEDING	
END WIDTH	SQ. YDS.
89	
	427
64	
	355
	782

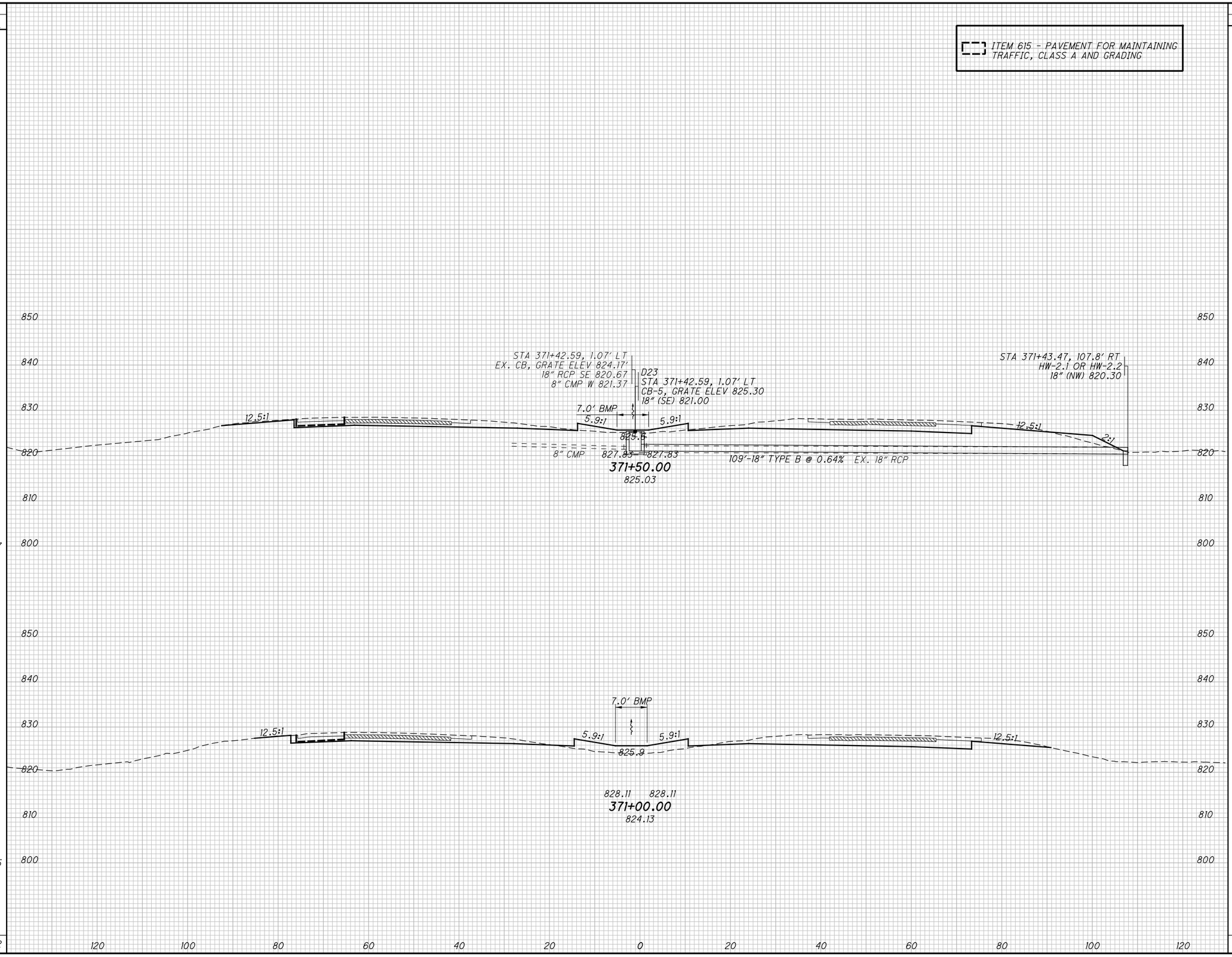

END AREA		VOLUME	
CUT	FILL	CUT	FILL
148	36		
		264	78
137	48		
		254	88
		518	166

CALCULATED DWB
CHECKED BAL

CROSS SECTIONS - I.R. 71
STA. 371+00.00 TO STA. 371+50.00

FRA-71-5.29

248
623

P:\84868\roadway\sheets\84868XS002.dgn 12/17/2014 3:27:46 PM kfahy

SEEDING	
END WIDTH	SQ. YDS.
68	383
70	444
	827

ITEM 615 - PAVEMENT FOR MAINTAINING TRAFFIC, CLASS A AND GRADING

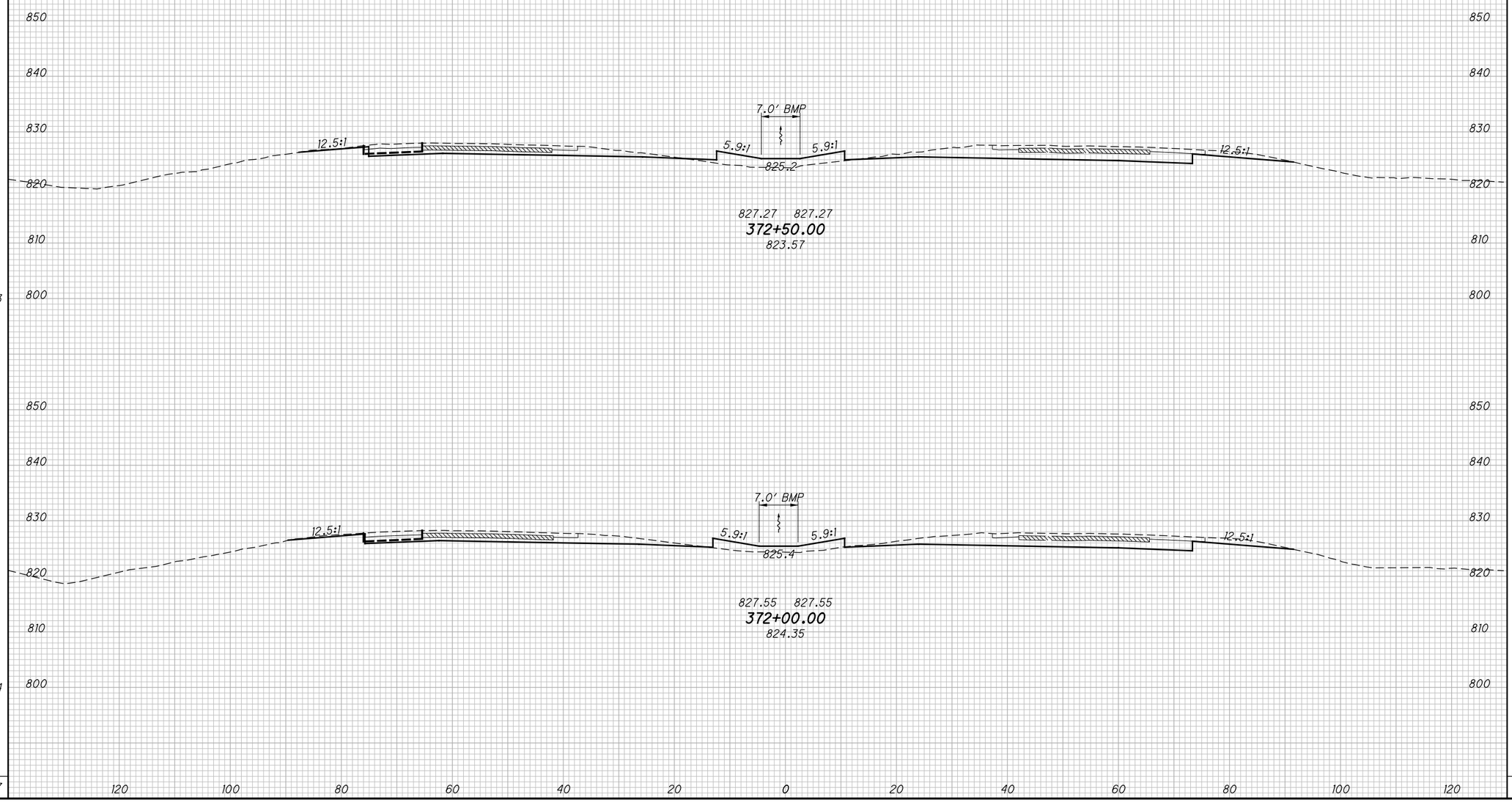

END AREA	
CUT	FILL
141	41
146	31

VOLUME	
CUT	FILL
266	67
272	62
538	129

CALCULATED DWB
CHECKED BAL

CROSS SECTIONS - I.R. 71
STA. 372+00.00 TO STA. 372+50.00

FRA-71-5.29

249
623

P:\84868\roadway\sheets\84868XS002.dgn 12/17/2014 3:27:47 PM kfahy

SEEDING	
END WIDTH	SQ. YDS.
67	389
72	389
	778

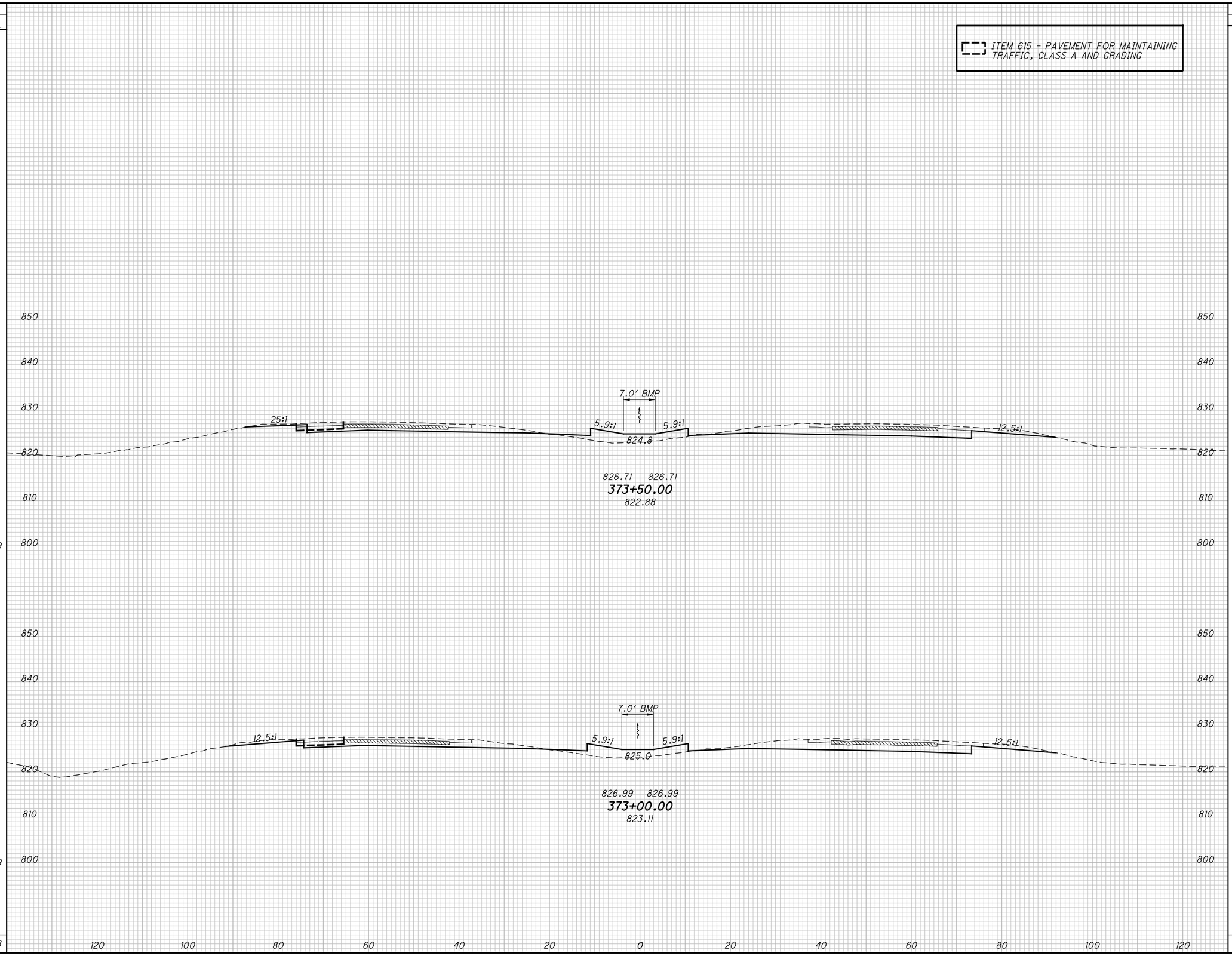

END AREA	
CUT	FILL
141	47
143	47

VOLUME	
CUT	FILL
262	87
262	81
524	168

CALCULATED DWB
CHECKED BAL

CROSS SECTIONS - I.R. 71
STA. 373+00.00 TO STA. 373+50.00

FRA-71-5.29

250
623

P:\84868\roadway\sheets\84868XS002.dgn 12/17/2014 3:27:48 PM kfahy

SEEDING	
END WIDTH	SQ. YDS.
68	378
68	378
	756

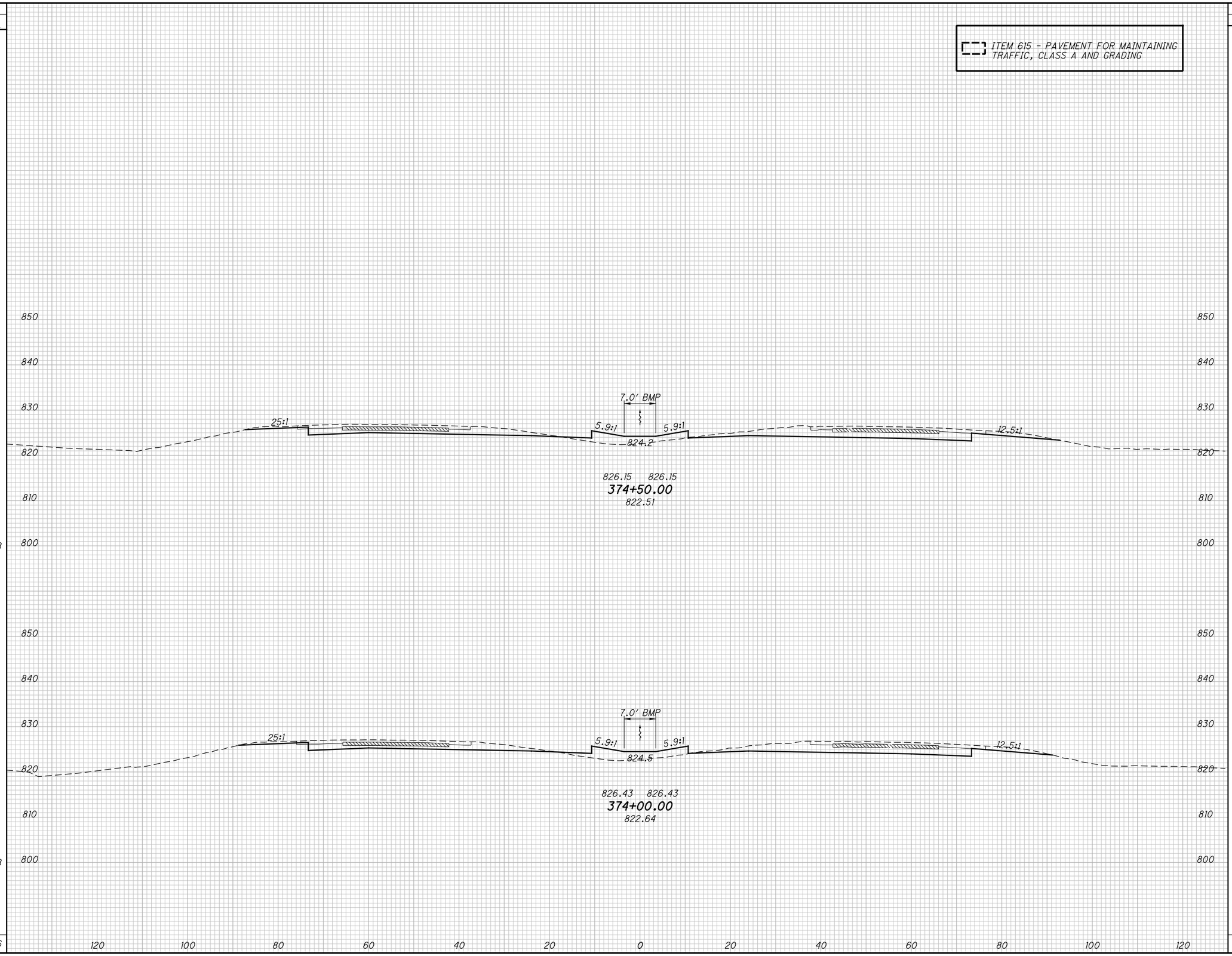

END AREA	
CUT	FILL
148	40
144	45

VOLUME	
CUT	FILL
271	79
264	86
535	165

CALCULATED	CHECKED
DWB	BAL

CROSS SECTIONS - I.R. 71
STA. 374+00.00 TO STA. 374+50.00

FRA-71-5.29

251
623

P:\84868\roadway\sheets\84868XS002.dgn 12/17/2014 3:27:49 PM kfahy

SEEDING	
END WIDTH	SQ. YDS.
70	389
69	384
	773

ITEM 615 - PAVEMENT FOR MAINTAINING TRAFFIC, CLASS A AND GRADING

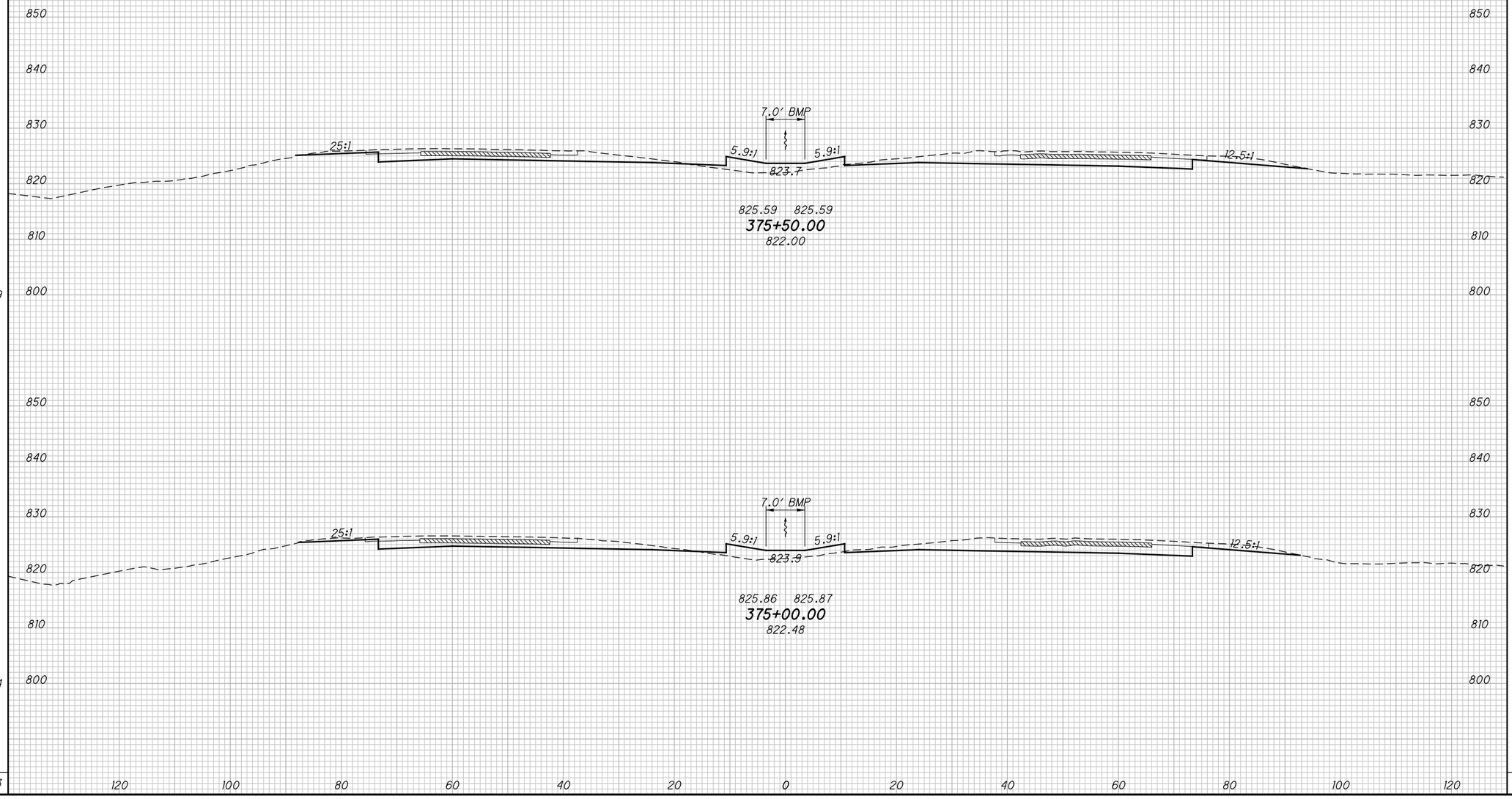

END AREA	
CUT	FILL
152	39
150	35

VOLUME	
CUT	FILL
280	69
277	70
557	139

CALCULATED DWB
CHECKED BAL

CROSS SECTIONS - I.R. 71
STA. 375+00.00 TO STA. 375+50.00

FRA-71-5.29

252
623

P:\84868\roadway\sheets\84868XS002.dgn 12/17/2014 3:27:50 PM kfahy

SEEDING	
END WIDTH	SQ. YDS.
64	356
64	372
	728

ITEM 615 - PAVEMENT FOR MAINTAINING TRAFFIC, CLASS A AND GRADING

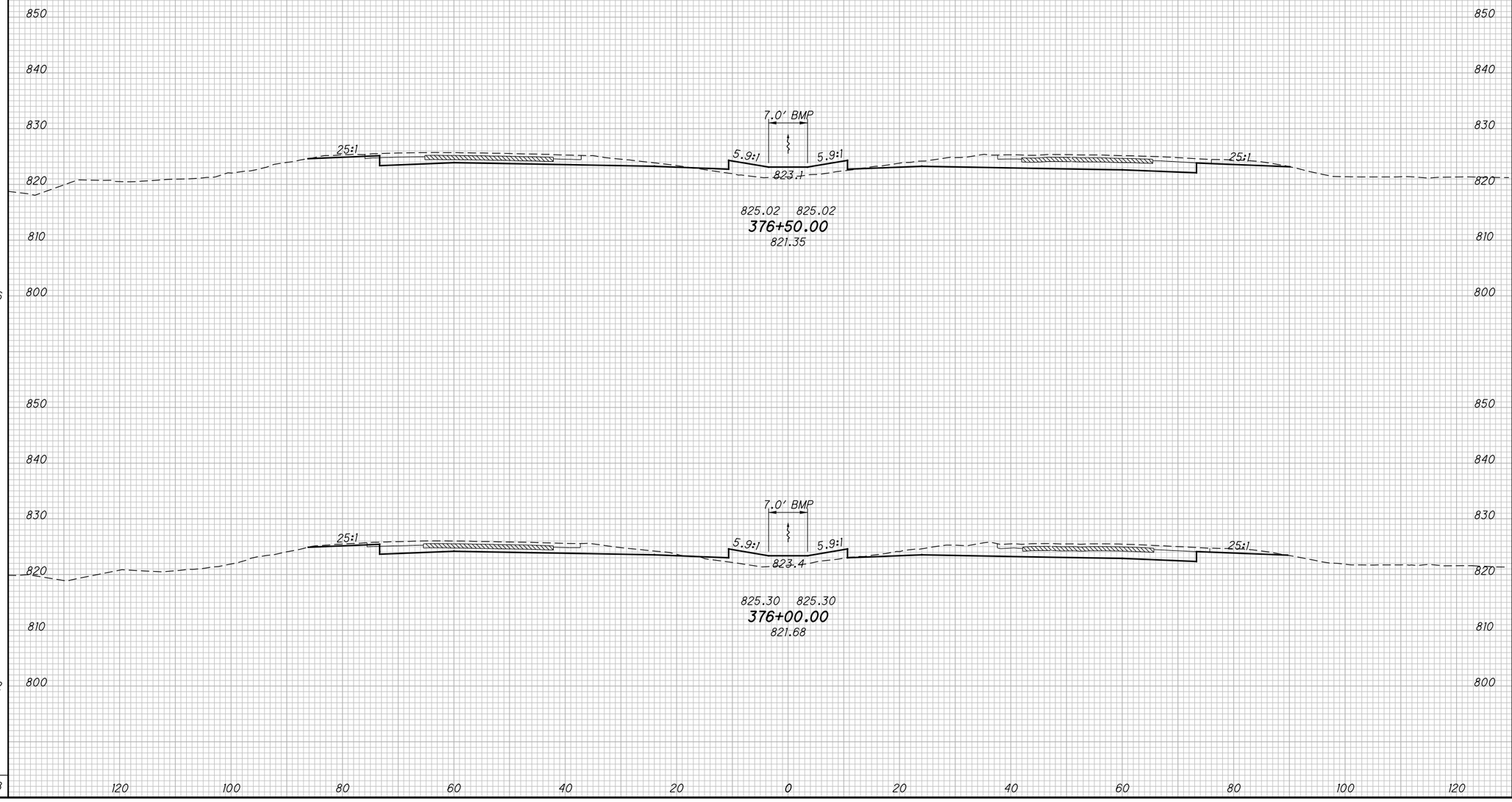

END AREA	
CUT	FILL
141	42
143	41

VOLUME	
CUT	FILL
263	77
273	74
536	151

CALCULATED DWB
CHECKED BAL

CROSS SECTIONS - I.R. 71
STA. 376+00.00 TO STA. 376+50.00

FRA-71-5.29

253
623

P:\84868\roadway\sheets\84868XS003.dgn 12/17/2014 3:27:52 PM kfahy

SEEDING	
END WIDTH	SQ. YDS.
82	406
	64
	356
	762

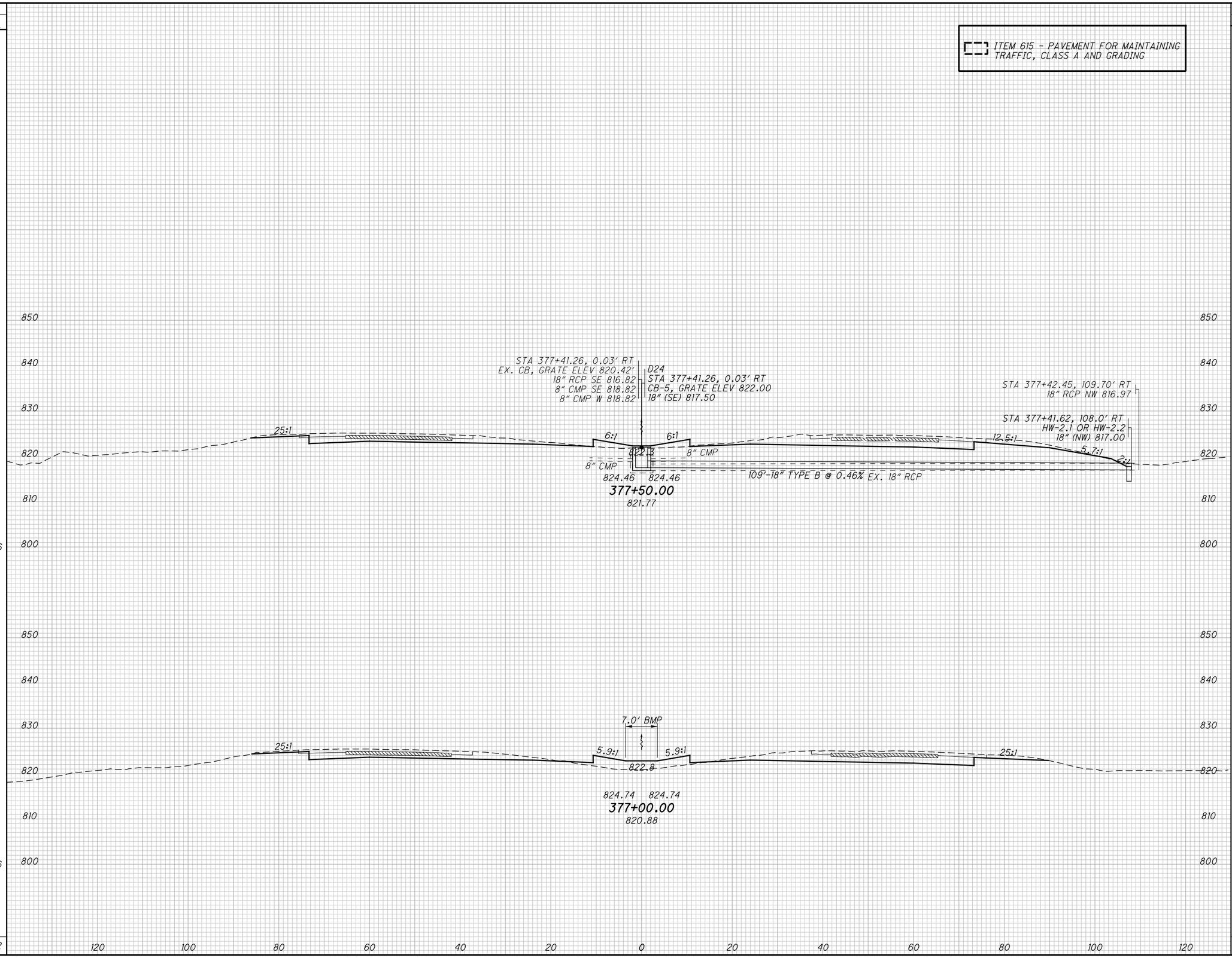

END AREA	
CUT	FILL
149	22
136	45

VOLUME	
CUT	FILL
264	62
257	81
521	143

CALCULATED DWB
CHECKED BAL

CROSS SECTIONS - I.R. 71
STA. 377+00.00 TO STA. 377+50.00

FRA-71-5.29

254
623

P:\84868\roadway\sheets\84868XS003.dgn 12/17/2014 3:27:53 PM kfahy

SEEDING		END AREA		VOLUME	
END WIDTH	SQ. YDS.	CUT	FILL	CUT	FILL
68		138	42		
	378			255	74
68		138	38		
	422			265	55
	800			520	129

ITEM 615 - PAVEMENT FOR MAINTAINING TRAFFIC, CLASS A AND GRADING

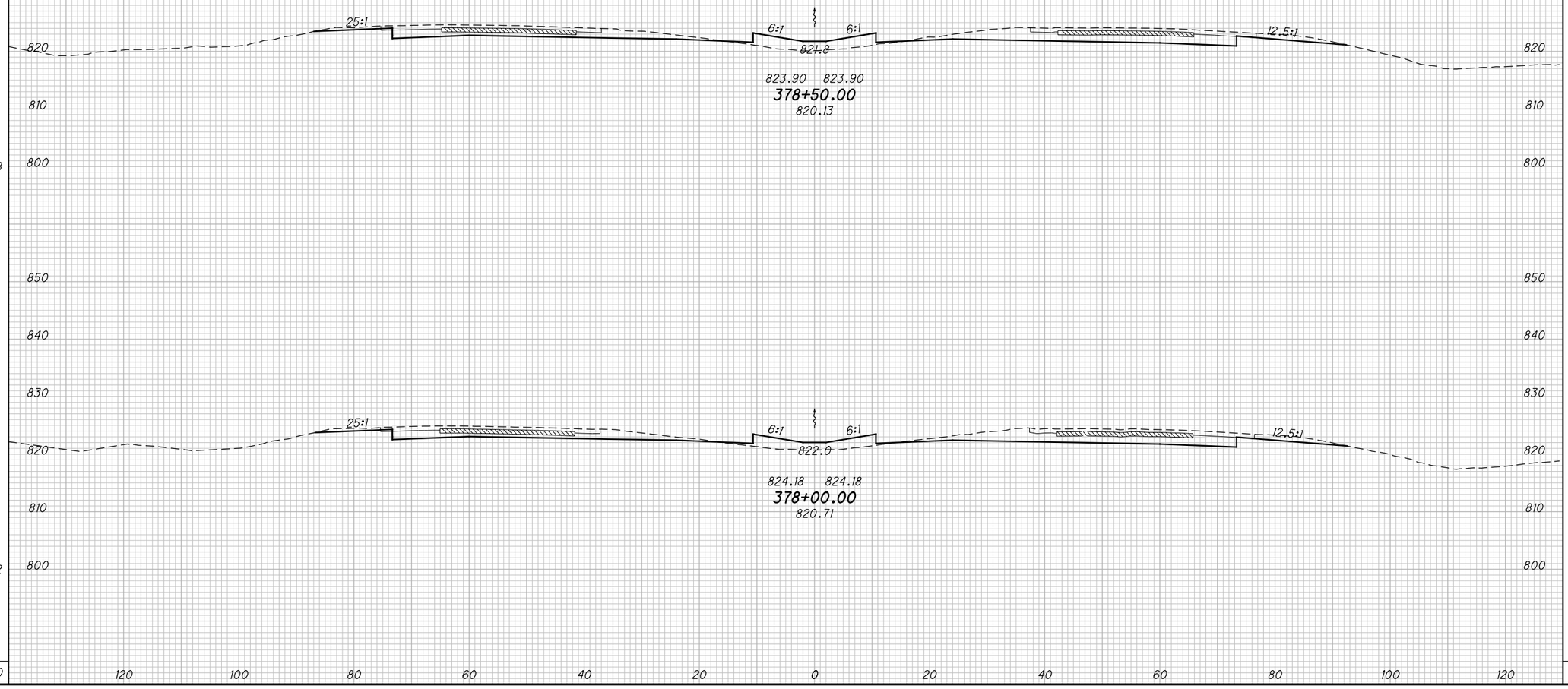

CALCULATED DWB
CHECKED BAL

CROSS SECTIONS - I.R. 71
STA. 378+00.00 TO STA. 378+50.00

FRA-71-5.29

255
623

P:\84868\roadway\sheets\84868XS003.dgn 12/17/2014 3:27:54 PM kfahy

SEEDING		END AREA		VOLUME	
END WIDTH	SQ. YDS.	CUT	FILL	CUT	FILL
67		146	37		
	372			268	68
65		143	37		
	372			260	72
	744			528	140

ITEM 615 - PAVEMENT FOR MAINTAINING TRAFFIC, CLASS A AND GRADING

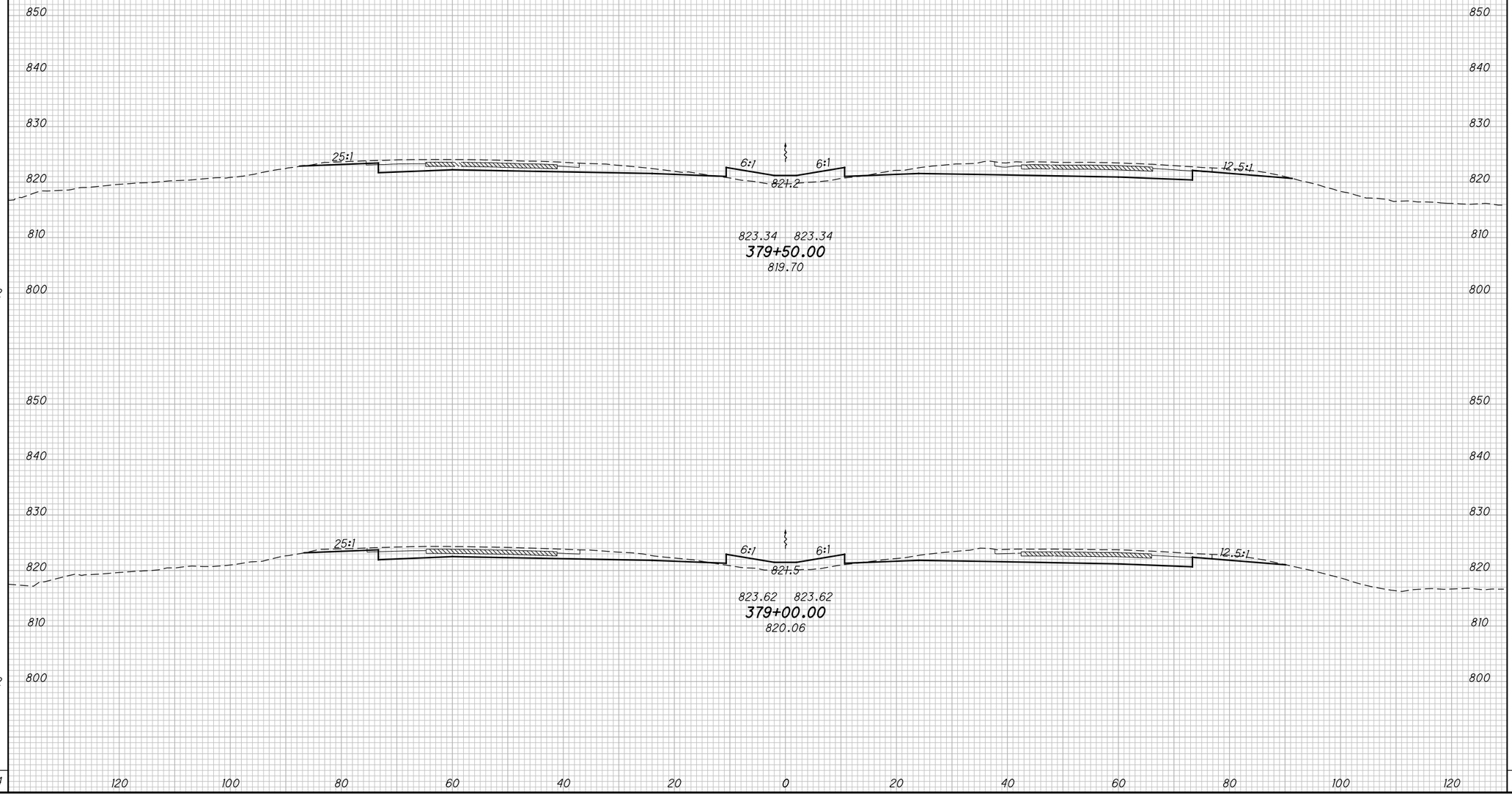

CALCULATED DWB
CHECKED BAL

CROSS SECTIONS - I.R. 71
STA. 379+00.00 TO STA. 379+50.00

FRA-71-5.29

256
623

P:\84868\roadway\sheets\84868XS003.dgn 12/17/2014 3:27:55 PM kfahy

SEEDING		END AREA		VOLUME		
END WIDTH	SQ. YDS.	CUT	FILL	CUT	FILL	
						ITEM 615 - PAVEMENT FOR MAINTAINING TRAFFIC, CLASS A AND GRADING
71		149	37			
394				280	67	
70		153	35			
383				278	66	
777				558	133	

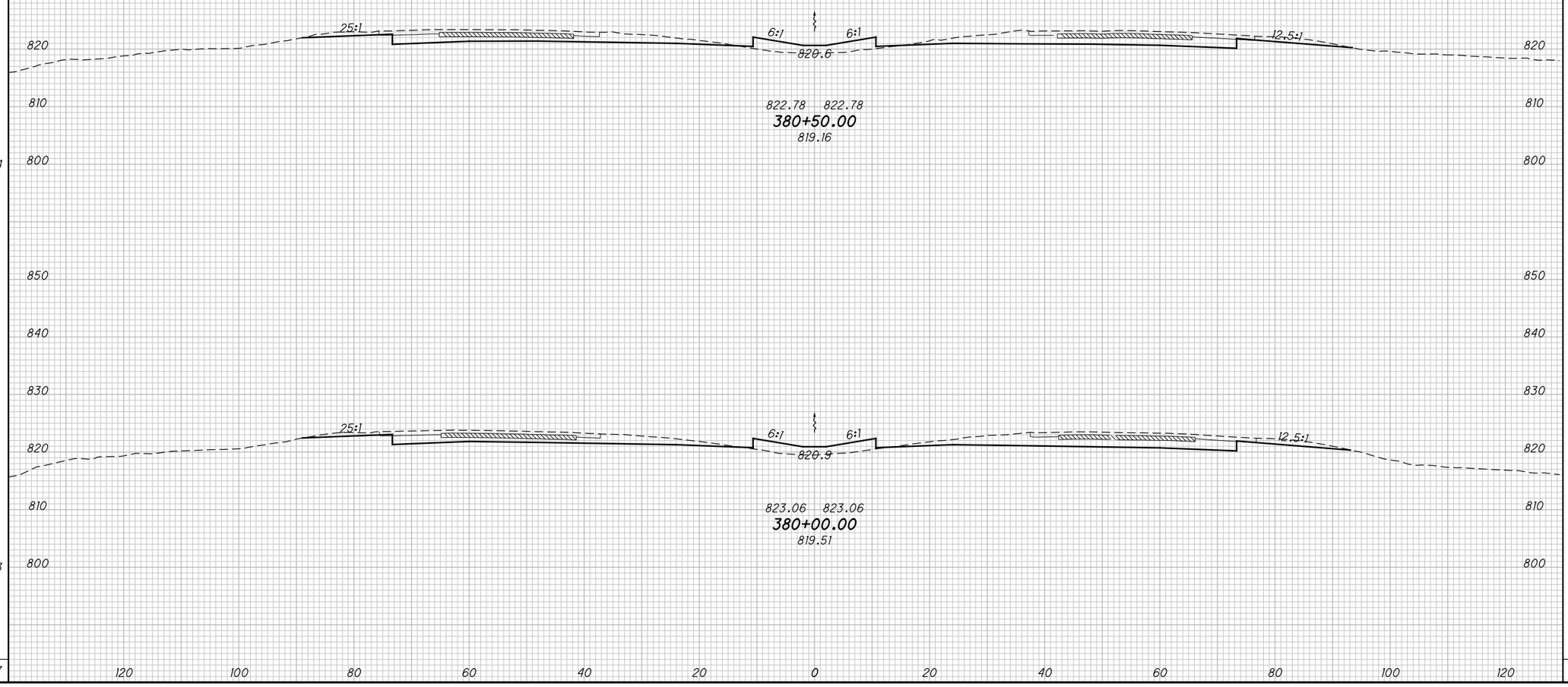

CALCULATED DWB
CHECKED BAL

CROSS SECTIONS - I.R. 71
STA. 380+00.00 TO STA. 380+50.00

FRA-71-5.29

257
623

P:\84868\roadway\sheets\84868XS003.dgn 12/17/2014 3:27:56 PM kfahy

SEEDING		END AREA		VOLUME	
END WIDTH	SQ. YDS.	CUT	FILL	CUT	FILL
63		122	46		
	361			237	81
66		134	41		
	383			262	73
	744			499	154

ITEM 615 - PAVEMENT FOR MAINTAINING TRAFFIC, CLASS A AND GRADING

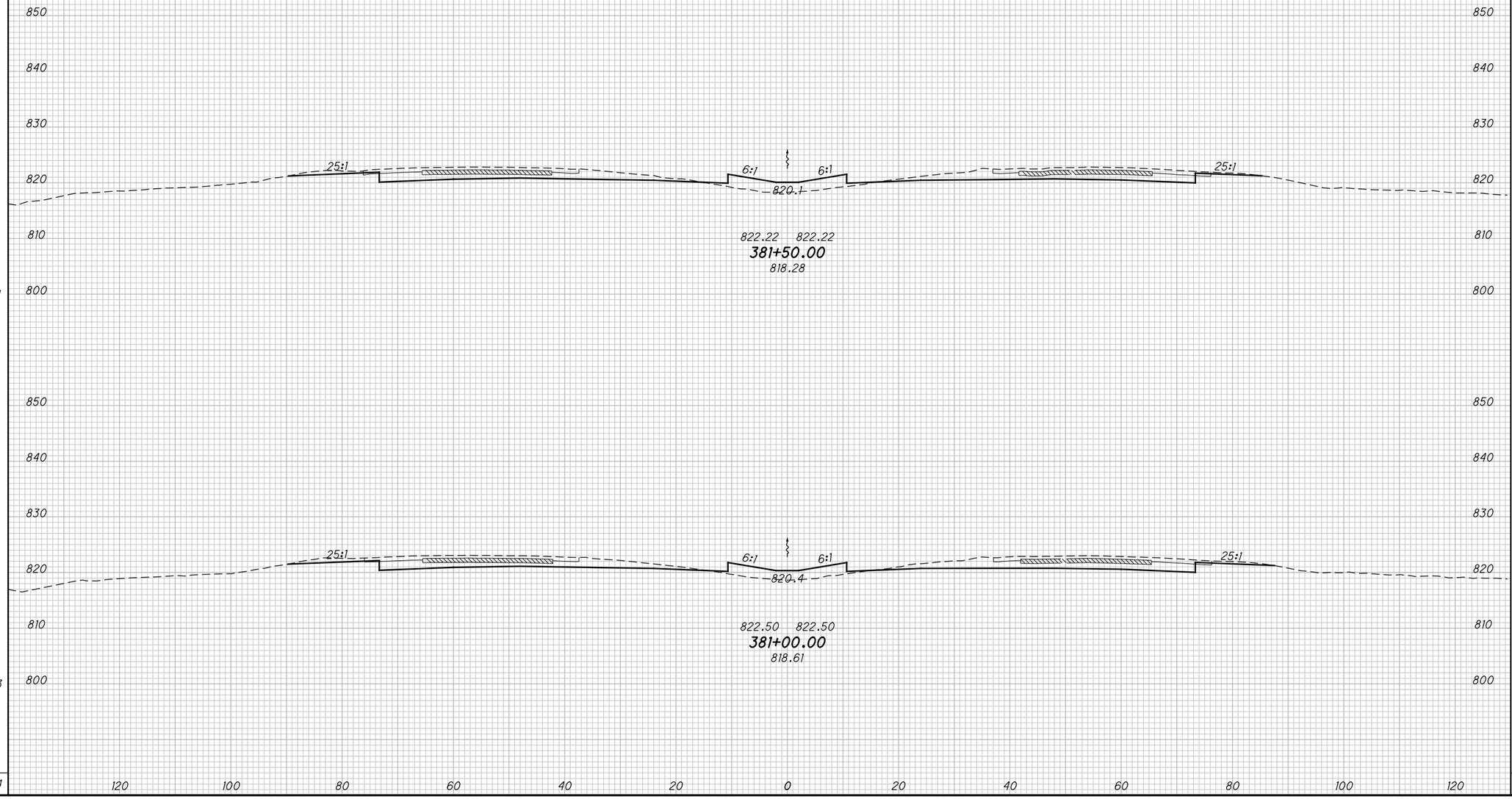

CALCULATED DWB
CHECKED BAL

CROSS SECTIONS - I.R. 71
STA. 381+00.00 TO STA. 381+50.00

FRA-71-5.29

258
623

P:\84868\roadway\sheets\84868XS003.dgn 12/17/2014 3:27:57 PM kfahy

SEEDING		END AREA		VOLUME	
END WIDTH	SQ. YDS.	CUT	FILL	CUT	FILL
61		118	42		
	339			216	80
60		116	44		
	345			220	83
	684			436	163

ITEM 615 - PAVEMENT FOR MAINTAINING TRAFFIC, CLASS A AND GRADING

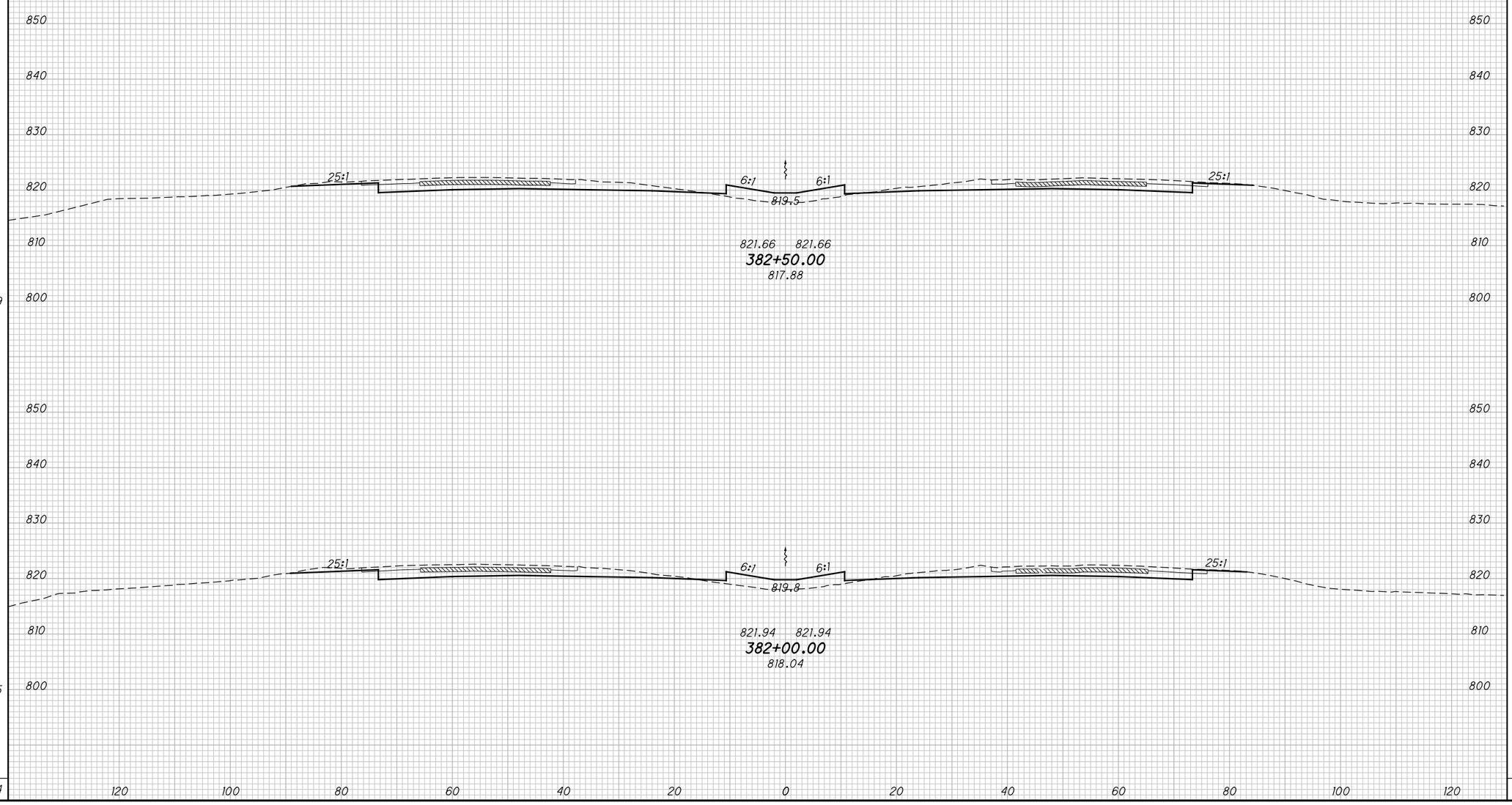

CALCULATED DWB
CHECKED BAL

CROSS SECTIONS - I.R. 71
STA. 382+00.00 TO STA. 382+50.00

FRA-71-5.29

259
623

P:\84868\roadway\sheets\84868XS003.dgn 12/17/2014 3:27:58 PM kfahy

SEEDING	
END WIDTH	SQ. YDS.
63	350
62	344
	694

ITEM 615 - PAVEMENT FOR MAINTAINING TRAFFIC, CLASS A AND GRADING

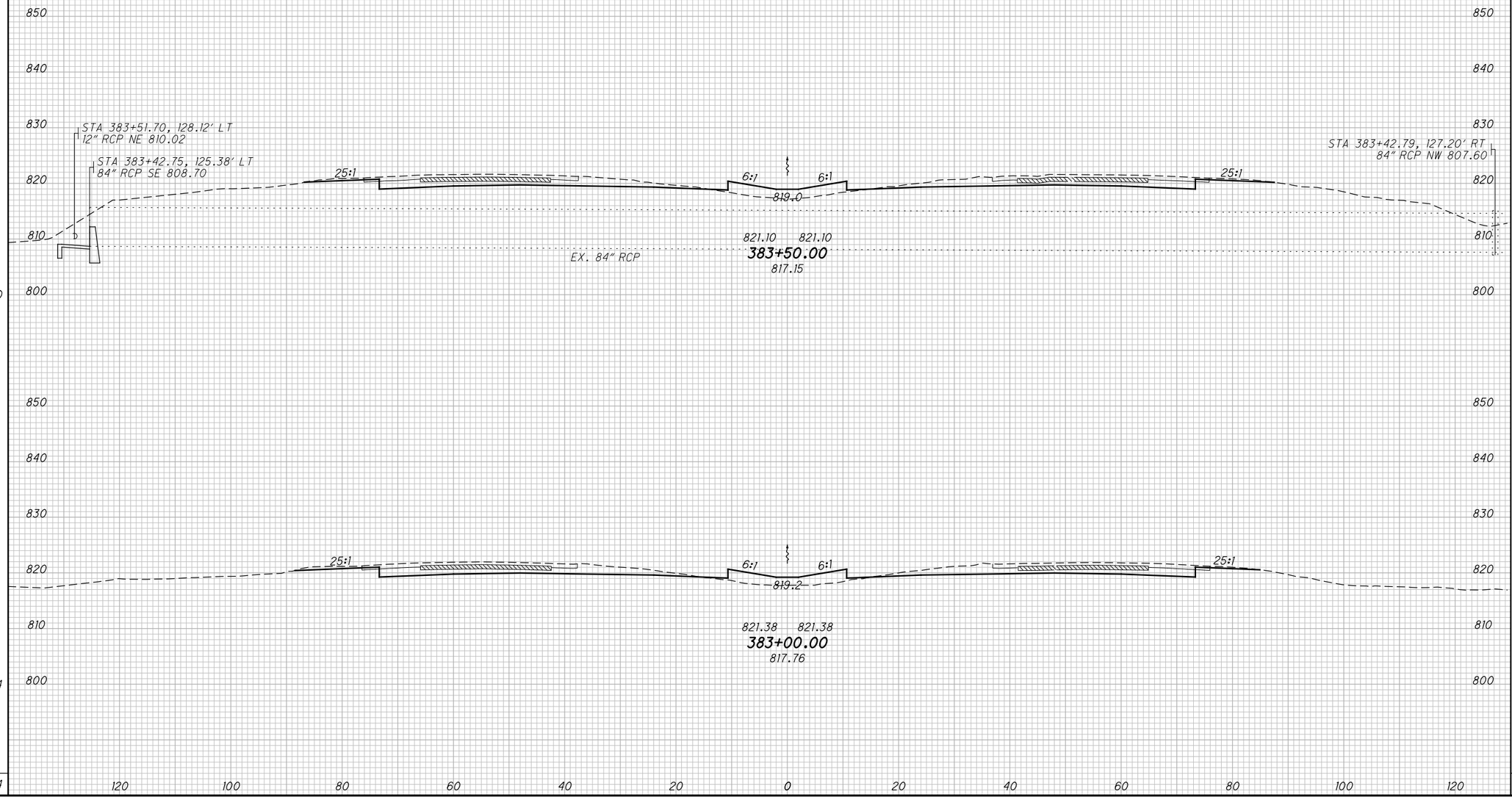

END AREA		VOLUME	
CUT	FILL	CUT	FILL
113	40		
		214	75
118	41		
		218	76
		432	151

CALCULATED DWB
CHECKED BAL

CROSS SECTIONS - I.R. 71
STA. 383+00.00 TO STA. 383+50.00

FRA-71-5.29

260
623

P:\84868\roadway\sheets\84868XS003.dgn 12/17/2014 3:27:59 PM kfahy

SEEDING	
END WIDTH	SQ. YDS.
57	322
59	339
	661

ITEM 615 - PAVEMENT FOR MAINTAINING TRAFFIC, CLASS A AND GRADING

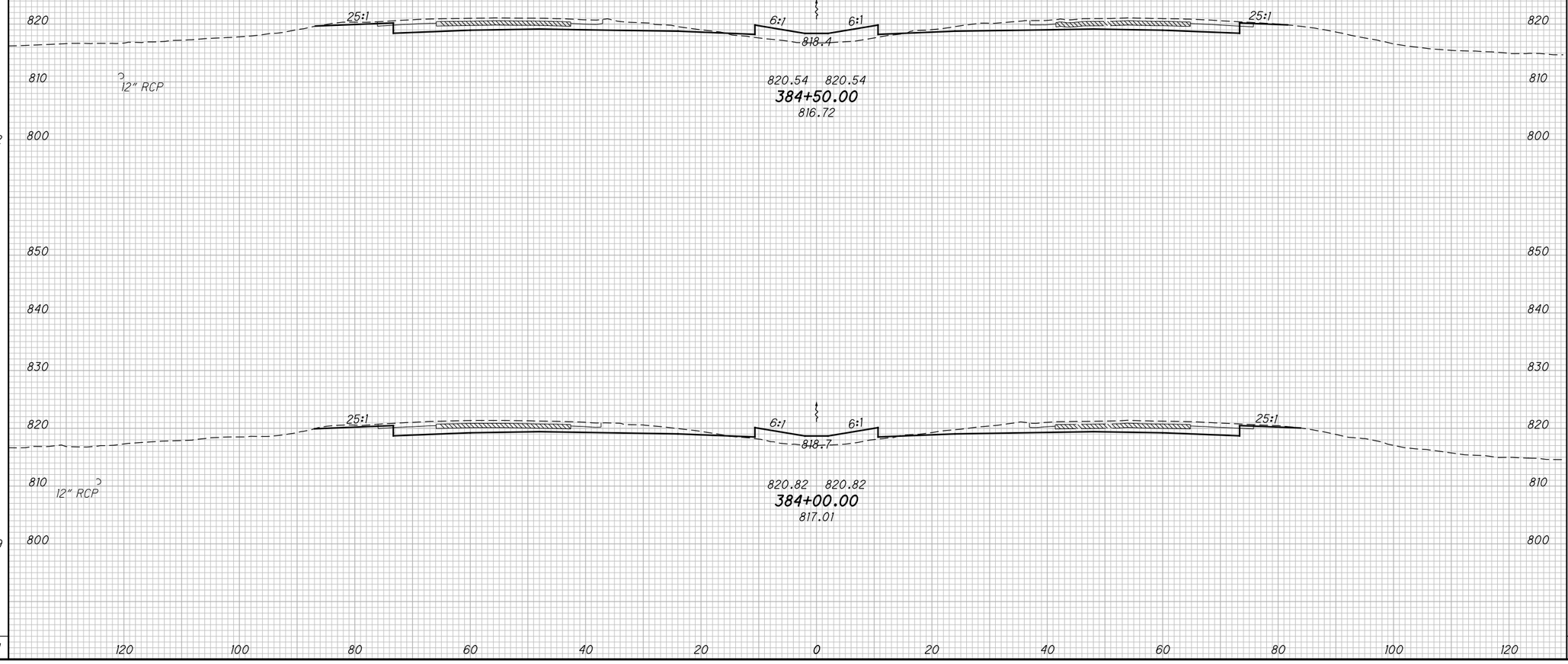

END AREA		VOLUME	
CUT	FILL	CUT	FILL
110	43		
		208	78
114	41		
		210	75
		418	153

CALCULATED DWB
CHECKED BAL

CROSS SECTIONS - I.R. 71
STA. 384+00.00 TO STA. 384+50.00

FRA-71-5.29

261
623

P:\84868\roadway\sheets\84868XS003.dgn 12/17/2014 3:28:00 PM kfahy

SEEDING END WIDTH	SEEDING SQ. YDS.	END AREA CUT	END AREA FILL	VOLUME CUT	VOLUME FILL
57	322	108	43	201	82
58	322	110	45	204	82
	644			405	164

ITEM 615 - PAVEMENT FOR MAINTAINING TRAFFIC, CLASS A AND GRADING

850 840 830 820 810 800

25:1 6:1 6:1 25:1

817.8

12" RCP

819.98 819.98

385+50.00

816.21

817.1

12" RCP

820.26 820.26

385+00.00

816.42

120 100 80 60 40 20 0 20 40 60 80 100 120

CALCULATED DWB

CHECKED BAL

CROSS SECTIONS - I.R. 71

STA. 385+00.00 TO STA. 385+50.00

FRA-71-5.29

262
623

P:\84868\roadway\sheets\84868XS003.dgn 12/17/2014 3:28:01 PM kfahy

SEEDING	
END WIDTH	SQ. YDS.
82	
61	
	734

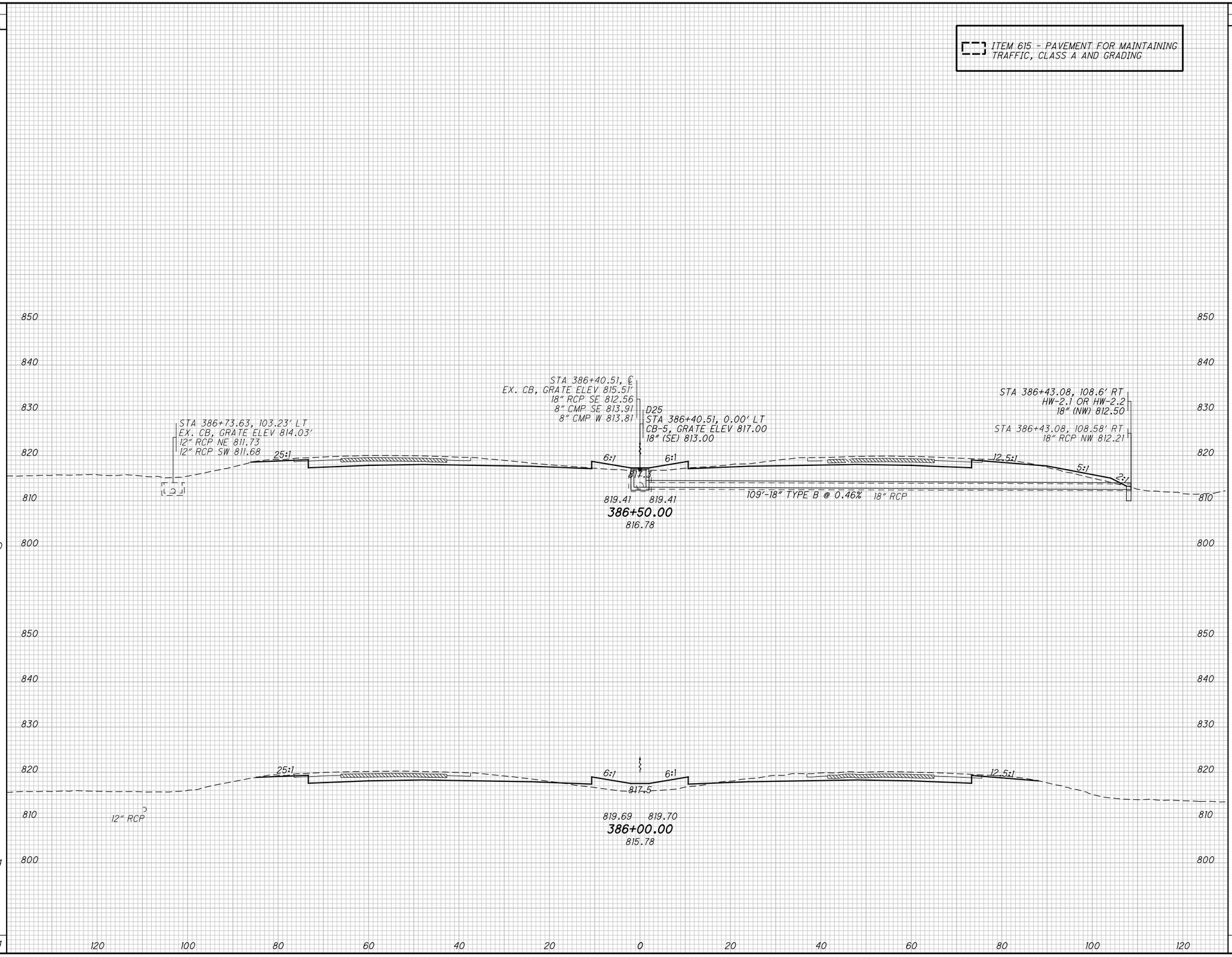

END AREA		VOLUME	
CUT	FILL	CUT	FILL
117	31		
107	47		
		207	73
		198	84
		405	157

CALCULATED DWB
CHECKED BAL

CROSS SECTIONS - I.R. 71
STA. 386+00.00 TO STA. 386+50.00

FRA-71-5.29

263
623

P:\84868\roadway\sheets\84868XS003.dgn 12/17/2014 3:28:02 PM kfahy

SEEDING	
END WIDTH	SQ. YDS.
63	
	356
63	
	406
	762

ITEM 615 - PAVEMENT FOR MAINTAINING TRAFFIC, CLASS A AND GRADING

850
840
830
820
810
800

25:1 6:1 6:1 12.5:1
816.7
818.85 818.85
387+50.00
815.43

STA 386+73.63, 103.23' LT
EX. CB, GRATE ELEV 814.03'
12" RCP NE 811.73
12" RCP SW 811.68

25:1 6:1 6:1 12.5:1
817.0
819.13 819.13
387+00.00
815.92

120 100 80 60 40 20 0 20 40 60 80 100 120

END AREA		VOLUME	
CUT	FILL	CUT	FILL
113	34		
112	31	208	60
		212	58
		420	118

CALCULATED DWB
CHECKED BAL

CROSS SECTIONS - I.R. 71
STA. 387+00.00 TO STA. 387+50.00

FRA-71-5.29

264
623

P:\84868\roadway\sheets\84868XS003.dgn 12/17/2014 3:28:03 PM kfahy

SEEDING		END AREA		VOLUME		CALCULATED DWB
END WIDTH	SQ. YDS.	CUT	FILL	CUT	FILL	CHECKED BAL
61		122	33			
	355			220	63	
65		116	34			
	356			212	63	
	711			432	126	

ITEM 615 - PAVEMENT FOR MAINTAINING TRAFFIC, CLASS A AND GRADING

850 840 830 820 810 800 790

25:1 6:1 6:1 25:1

816.1

818.29 818.29
388+50.00
814.80

25:1 6:1 6:1 12.5:1

816.4

818.57 818.57
388+00.00
815.10

120 100 80 60 40 20 0 20 40 60 80 100 120

CROSS SECTIONS - I.R. 71
STA. 388+00.00 TO STA. 388+50.00

FRA-71-5.29

265
623

P:\84868\roadway\sheets\84868XS003.dgn 12/17/2014 3:28:04 PM kfahy

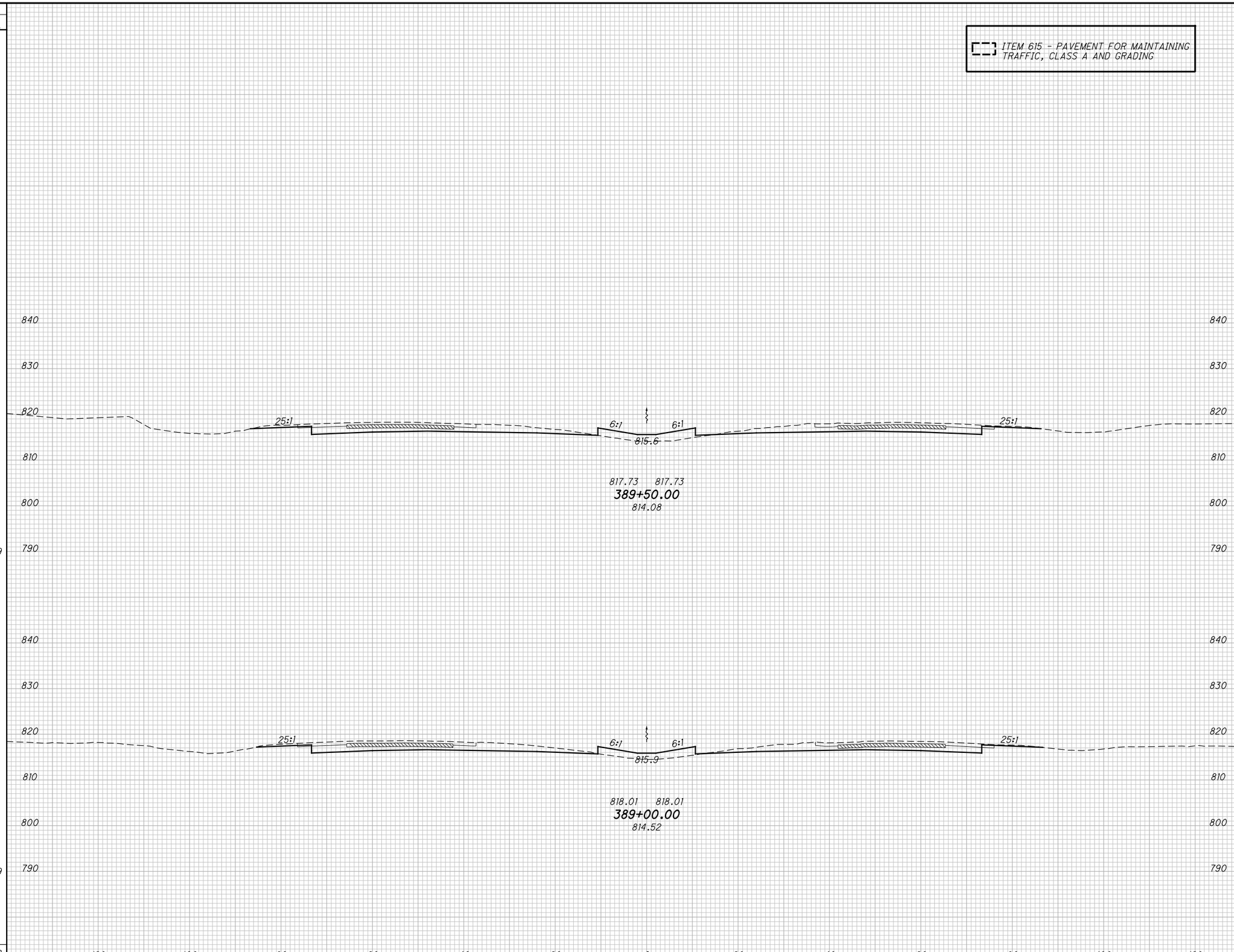

SEEDING END WIDTH	SEEDING SQ. YDS.	END AREA CUT	END AREA FILL	VOLUME CUT	VOLUME FILL
61		123	37		
	339			230	64
60		126	32		
	339			229	61
	678			459	125

CALCULATED DWB
CHECKED BAL

CROSS SECTIONS - I.R. 71
STA. 389+00.00 TO STA. 389+50.00

FRA-71-5.29

P:\84868\roadway\sheets\84868XS003.dgn 12/17/2014 3:28:05 PM kfahy

SEEDING		END AREA		VOLUME	
END WIDTH	SQ. YDS.	CUT	FILL	CUT	FILL
62	344	120	39	225	71
62	344	123	38	227	69
	688			452	140

CALCULATED DWB
CHECKED BAL

ITEM 615 - PAVEMENT FOR MAINTAINING TRAFFIC, CLASS A AND GRADING

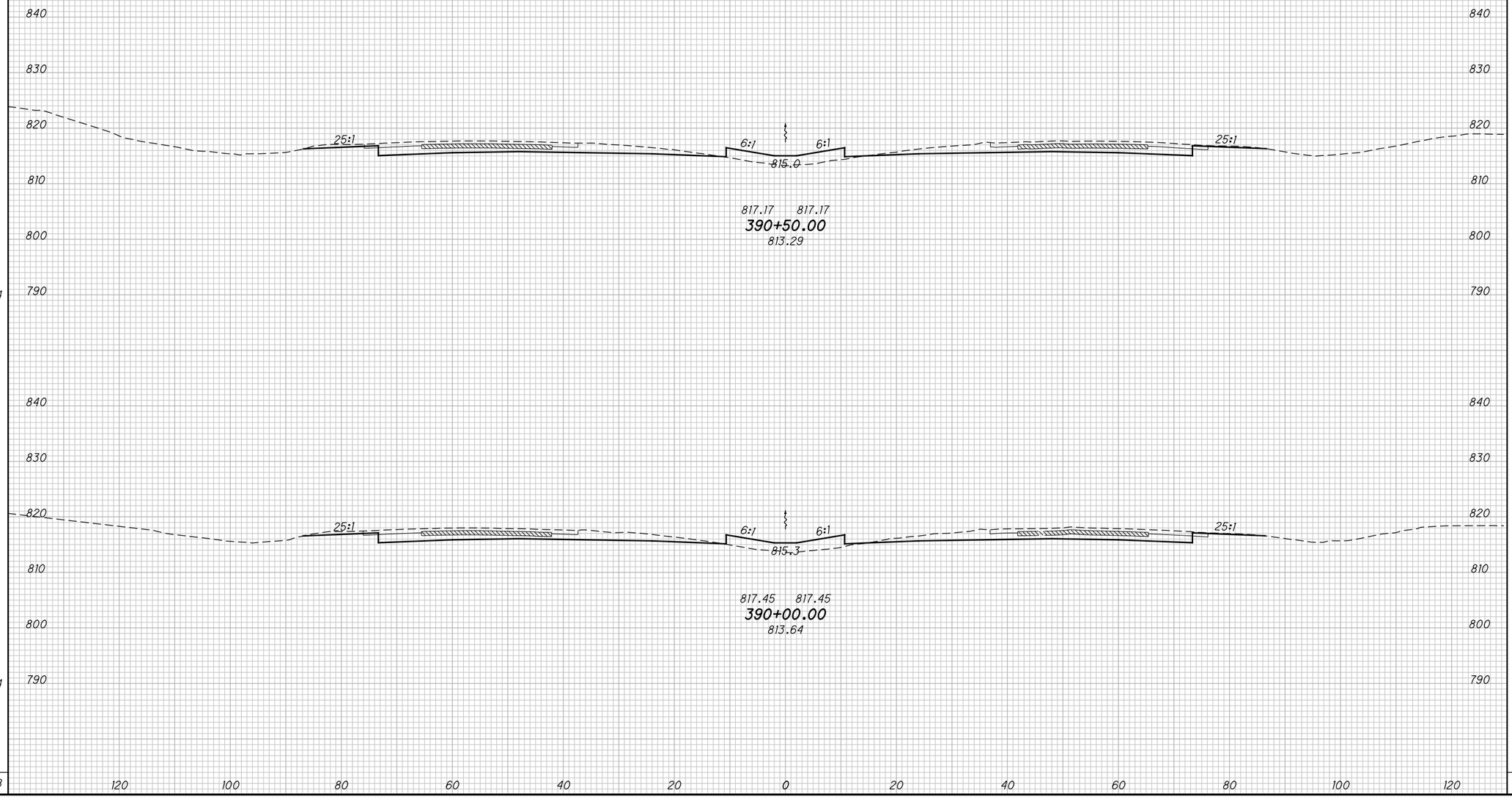

CROSS SECTIONS - I.R. 71
STA. 390+00.00 TO STA. 390+50.00

FRA-71-5.29

267
623

P:\84868\roadway\sheets\84868XS003.dgn 12/17/2014 3:28:06 PM kfahy

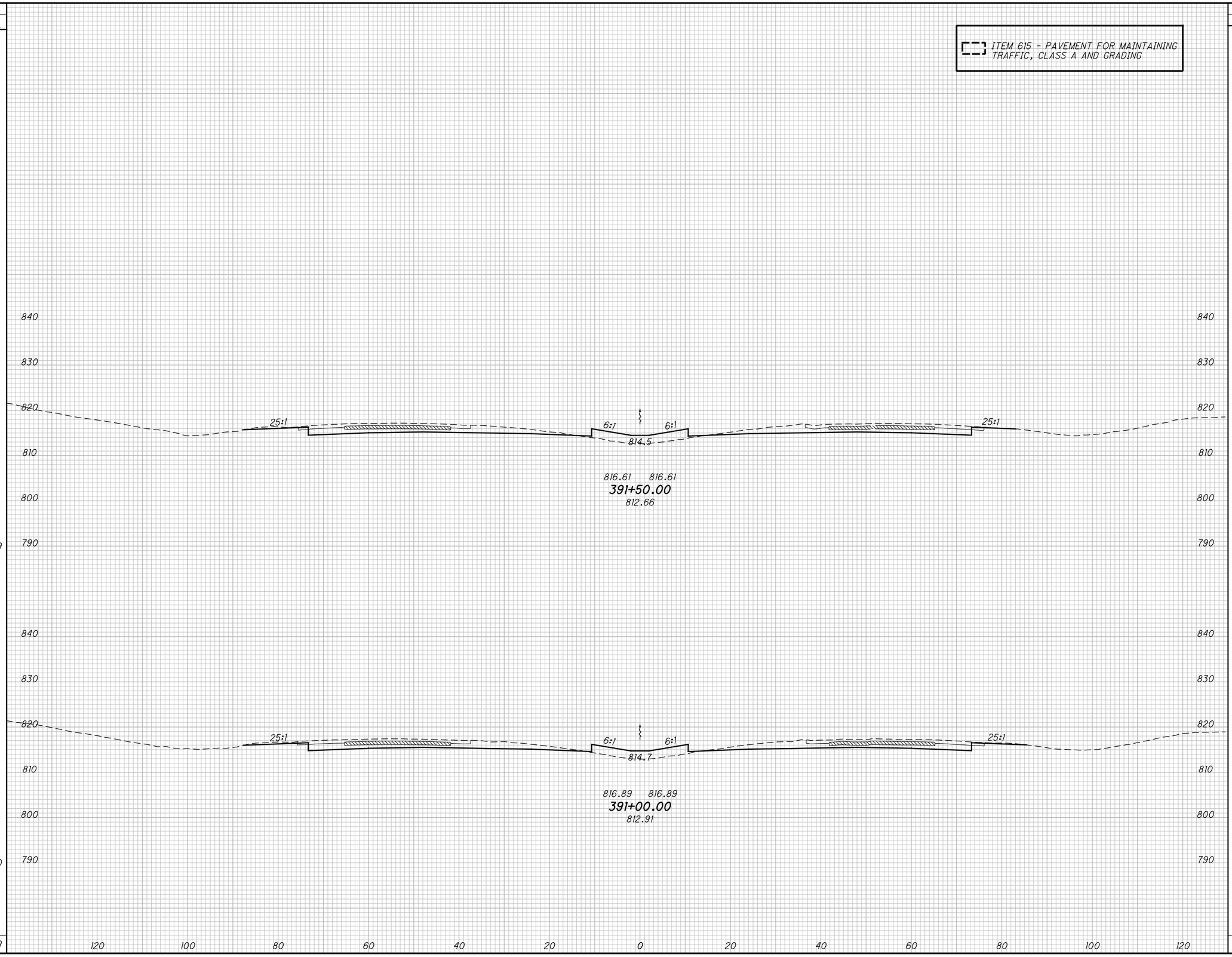

SEEDING END WIDTH	SEEDING SQ. YDS.	END AREA CUT	END AREA FILL	VOLUME CUT	VOLUME FILL
59		113	42		
	339			214	77
62		118	41		
	350			220	73
	689			434	150

CALCULATED DWB
CHECKED BAL

CROSS SECTIONS - I.R. 71
STA. 391+00.00 TO STA. 391+50.00

FRA-71-5.29

P:\84868\roadway\sheets\84868XS003.dgn 12/17/2014 3:28:19 PM kfahy

SEEDING	
END WIDTH	SQ. YDS.
61	339
60	334
	673

ITEM 615 - PAVEMENT FOR MAINTAINING TRAFFIC, CLASS A AND GRADING

840
830
820
810
800
790

25:1 6:1 6:1 25:1

813.9

816.05 816.05
392+50.00
812.09

814.2

816.33 816.33
392+00.00
812.50

120 100 80 60 40 20 0 20 40 60 80 100 120

END AREA	
CUT	FILL
112	42
111	43

VOLUME	
CUT	FILL
206	79
208	79
414	158

CALCULATED DWB
CHECKED BAL

CROSS SECTIONS - I.R. 71
STA. 392+00.00 TO STA. 392+50.00

FRA-71-5.29

269
623

P:\84868\roadway\sheets\84868XS003.dgn 12/17/2014 3:28:20 PM kfahy

SEEDING	
END WIDTH	SQ. YDS.
60	339
62	344
	683

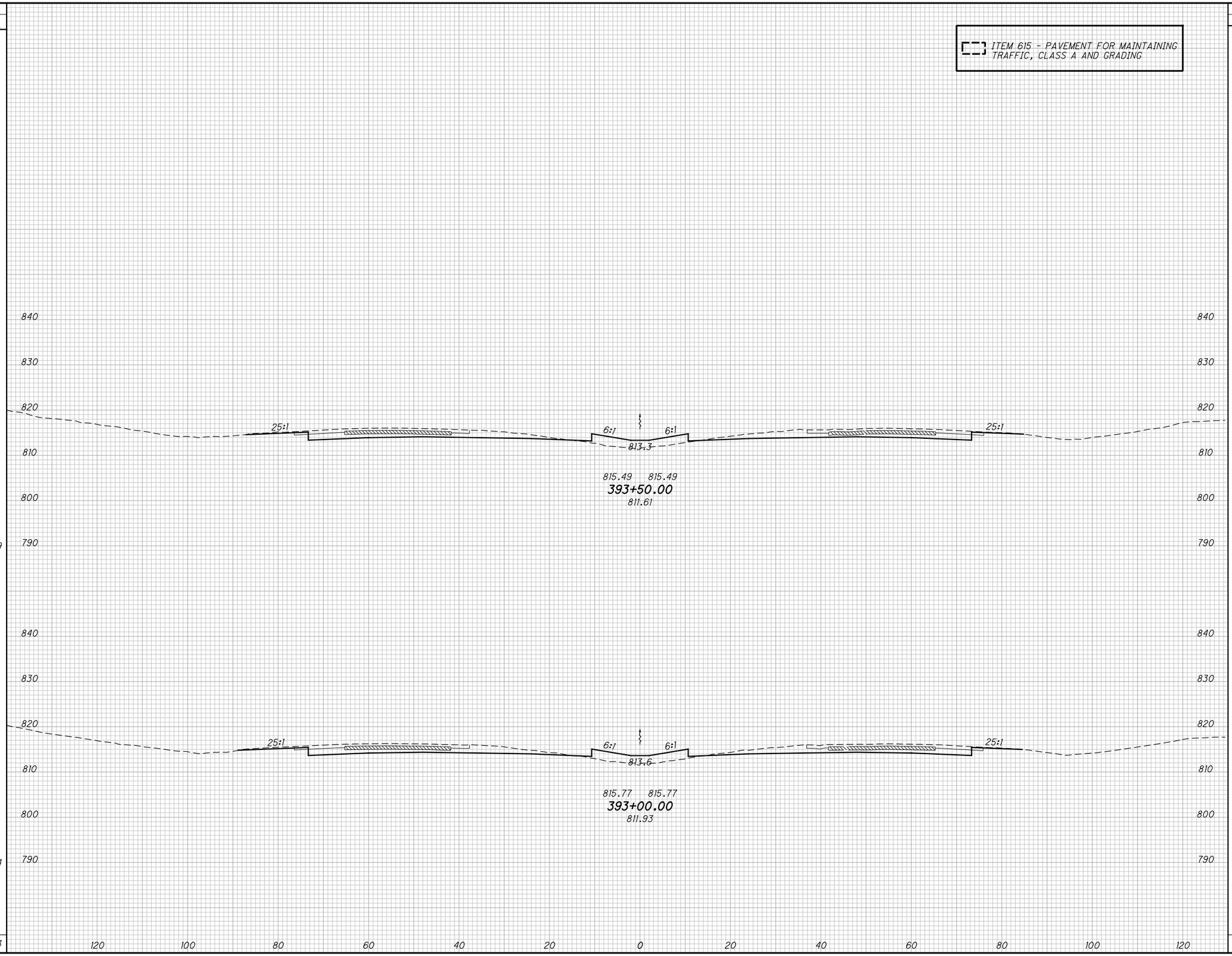

END AREA	
CUT	FILL
111	40
111	42

VOLUME	
CUT	FILL
206	76
206	78
412	154

CALCULATED DWB
CHECKED BAL

CROSS SECTIONS - I.R. 71
STA. 393+00.00 TO STA. 393+50.00

FRA-71-5.29

270
623

P:\84868\roadway\sheets\84868XS003.dgn 12/17/2014 3:28:21 PM kfahy

SEEDING	
END WIDTH	SQ. YDS.
62	
	339
58	
	328
	667

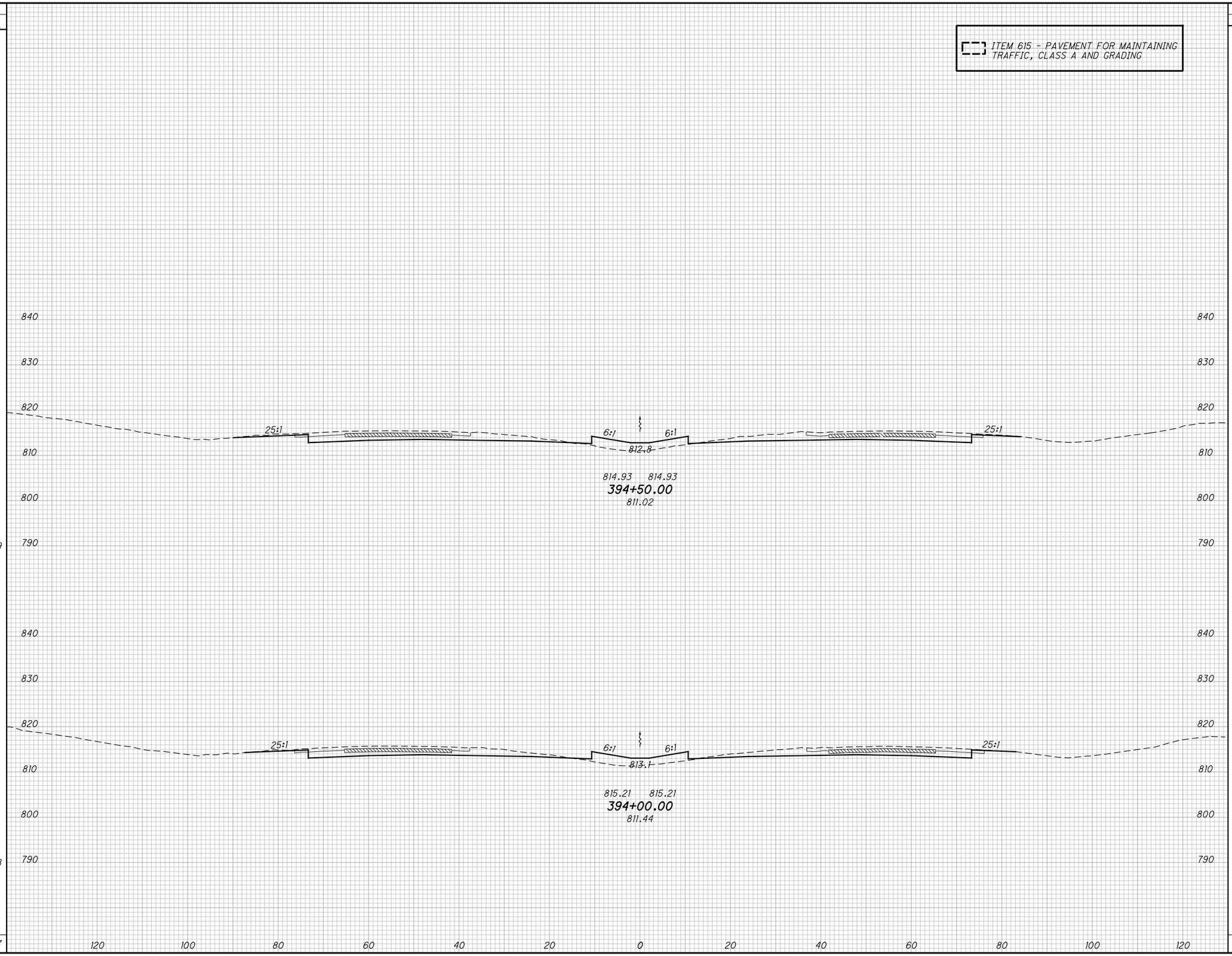

END AREA	
CUT	FILL
116	40
109	41

VOLUME	
CUT	FILL
209	76
204	76
413	152

CALCULATED DWB
CHECKED BAL

CROSS SECTIONS - I.R. 71
STA. 394+00.00 TO STA. 394+50.00

FRA-71-5.29

271
623

P:\84868\roadway\sheets\84868XS003.dgn 12/17/2014 3:28:22 PM kfahy

SEEDING		END AREA		VOLUME	
END WIDTH	SQ. YDS.	CUT	FILL	CUT	FILL
64	361	121	41	221	73
65	355	117	38	216	73
	716			437	146

ITEM 615 - PAVEMENT FOR MAINTAINING TRAFFIC, CLASS A AND GRADING

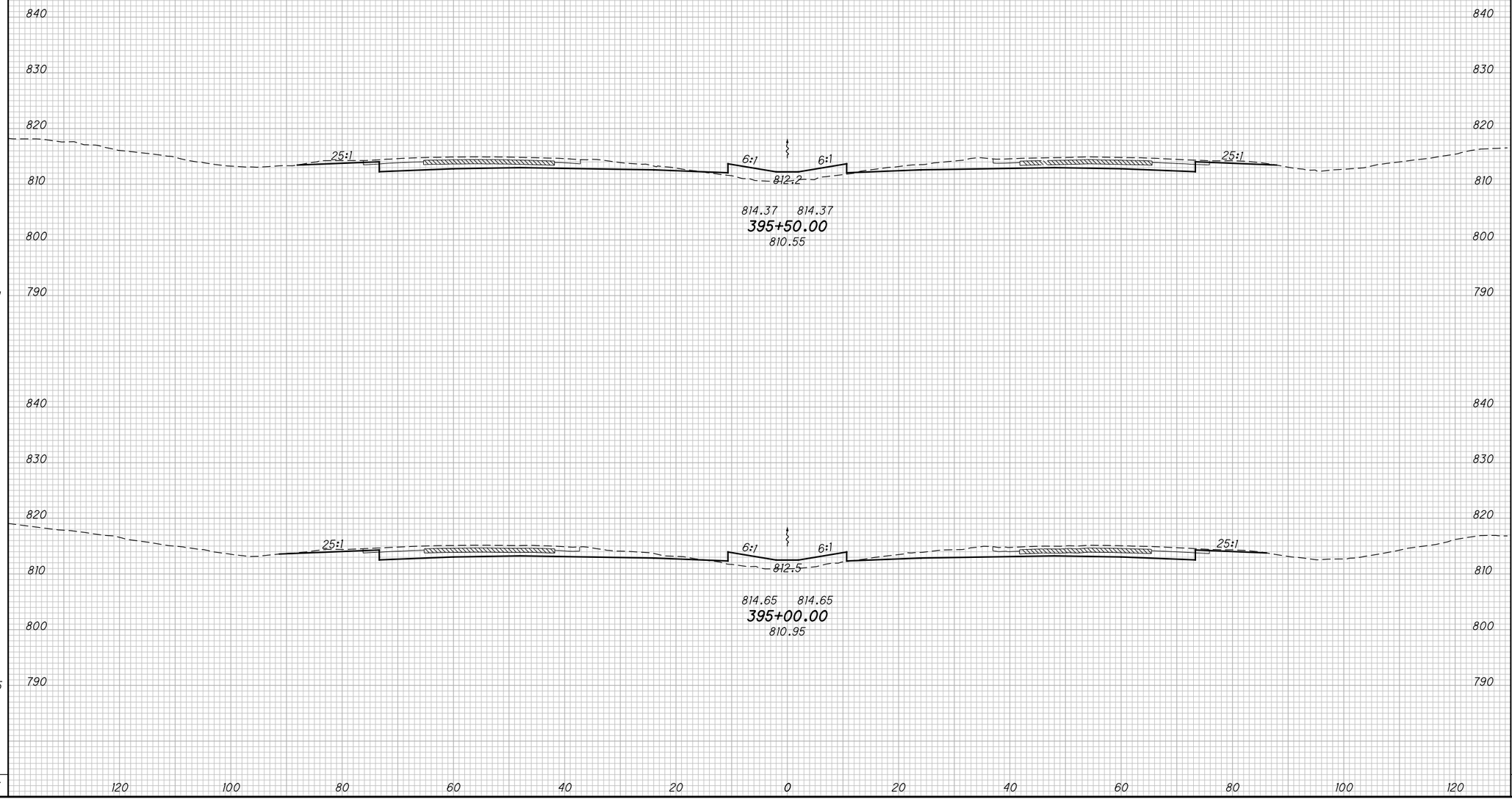

CALCULATED DWB
CHECKED BAL

CROSS SECTIONS - I.R. 71
STA. 395+00.00 TO STA. 395+50.00

FRA-71-5.29

272
623

P:\84868\roadway\sheets\84868XS003.dgn 12/17/2014 3:28:23 PM kfahy

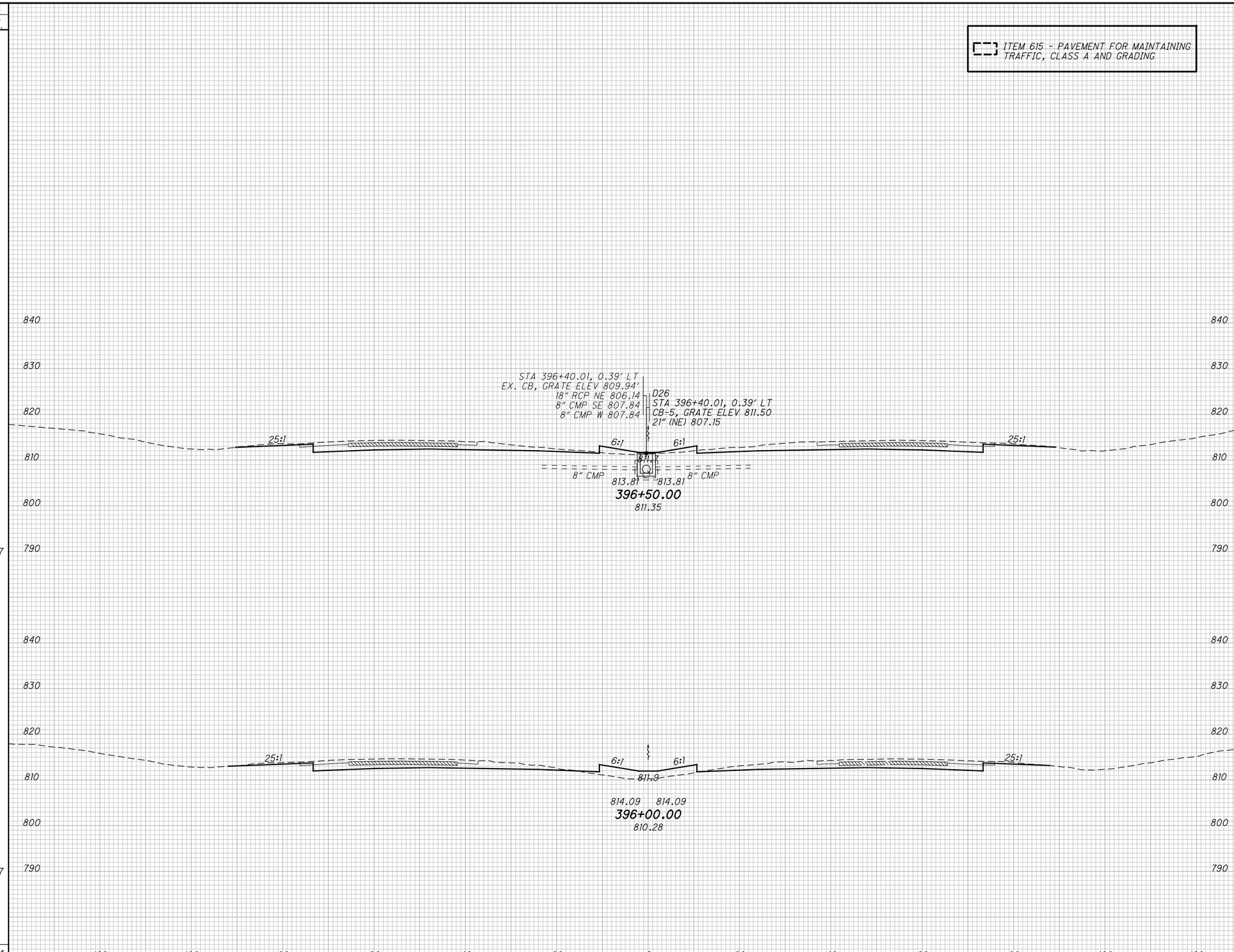

SEEDING END WIDTH	SEEDING SQ. YDS.	END AREA CUT	END AREA FILL	VOLUME CUT	VOLUME FILL
67		127	16		
	377			230	52
68		121	40		
	367			225	75
	744			455	127

CALCULATED DWB
CHECKED BAL

CROSS SECTIONS - I.R. 71
STA. 396+00.00 TO STA. 396+50.00

FRA-71-5.29

P:\84868\roadway\sheets\84868XS003.dgn 12/17/2014 3:28:23 PM kfahy

ITEM 615 - PAVEMENT FOR MAINTAINING TRAFFIC, CLASS A AND GRADING

SEEDING		END AREA		VOLUME	
END WIDTH	SQ. YDS.	CUT	FILL	CUT	FILL
64	361	115	41	220	60
65	372	124	24	232	37
	733			452	97

840 830 820 810 800 790

25:1 6:1 6:1 25:1 8H:1

18" RCP 21" TYPE C

813.24 813.25

397+50.00

809.60

811.4

813.53 813.53

397+00.00

810.66

120 100 80 60 40 20 0 20 40 60 80 100 120

CALCULATED DWB CHECKED BAL

CROSS SECTIONS - I.R. 71
STA. 397+00.00 TO STA. 397+50.00

FRA-71-5.29

274
623

P:\84868\roadway\sheets\84868XS003.dgn 12/17/2014 3:28:24 PM kfahy

SEEDING	
END WIDTH	SQ. YDS.
63	
	372
70	
	377
	749

ITEM 615 - PAVEMENT FOR MAINTAINING TRAFFIC, CLASS A AND GRADING

840
830
820
810
800
790

25:1 6:1 6:1 25:1

810.5

18" RCP 21" TYPE C

812.68 812.68

398+50.00

808.82

840
830
820
810
800
790

25:1 6:1 6:1 25:1

810.8

18" RCP 21" TYPE C

812.97 812.96

398+00.00

809.05

120 100 80 60 40 20 0 20 40 60 80 100 120

END AREA		VOLUME	
CUT	FILL	CUT	FILL
115	42		
119	45		
		216	80
		216	79
		432	159

CALCULATED DWB
CHECKED BAL

CROSS SECTIONS - I.R. 71
STA. 398+00.00 TO STA. 398+50.00

FRA-71-5.29

P:\84868\roadway\sheets\84868XS003.dgn 12/17/2014 3:28:25 PM kfahy

SEEDING	
END WIDTH	SQ. YDS.
62	350
63	350
	700

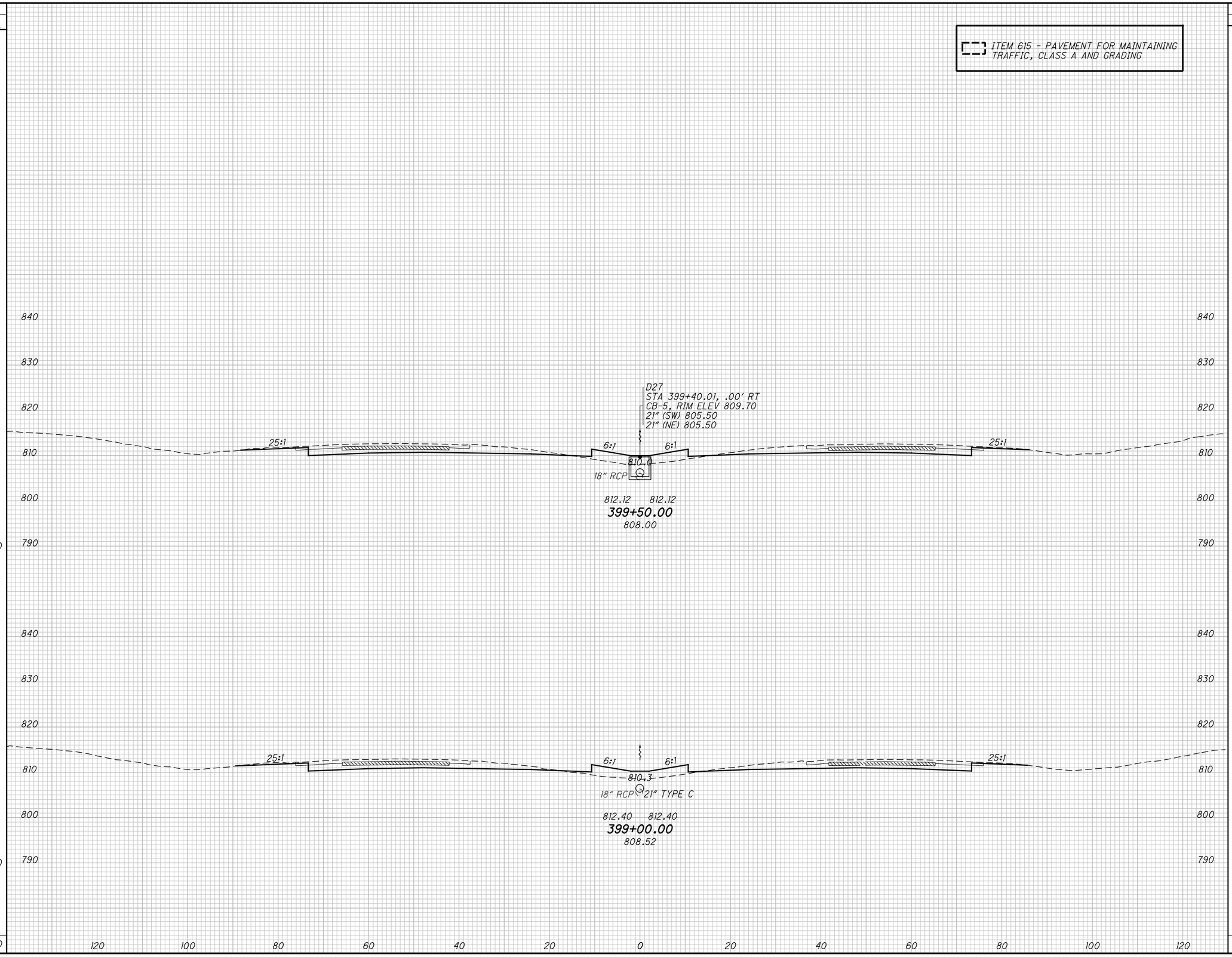

END AREA		VOLUME	
CUT	FILL	CUT	FILL
112	46		
109	43		
		204	83
		207	79
		411	162

CALCULATED DWB
CHECKED BAL

CROSS SECTIONS - I.R. 71
STA. 399+00.00 TO STA. 399+50.00

FRA-71-5.29

276
623

P:\84868\roadway\sheets\84868XS003.dgn 12/17/2014 3:28:26 PM kfahy

SEEDING	
END WIDTH	SQ. YDS.
63	350
63	350
	700

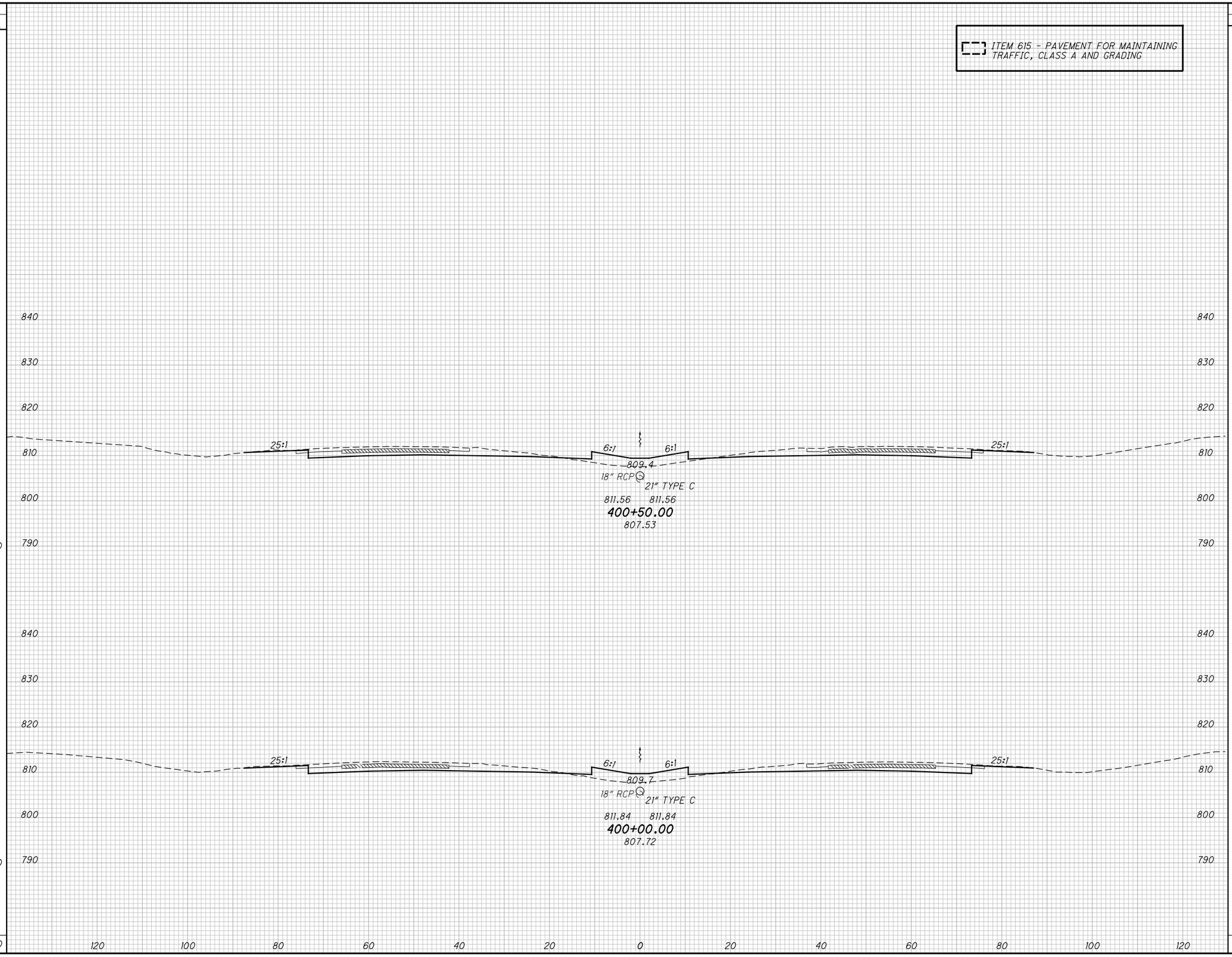

END AREA		VOLUME	
CUT	FILL	CUT	FILL
103	47	191	90
103	50	199	89
		390	179

CALCULATED DWB
CHECKED BAL

CROSS SECTIONS - I.R. 71
STA. 400+00.00 TO STA. 400+50.00

FRA-71-5.29

277
623

P:\84868\roadway\sheets\84868XS003.dgn 12/17/2014 3:28:27 PM kfahy

SEEDING	
END WIDTH	SQ. YDS.
59	339
63	350
	689

ITEM 615 - PAVEMENT FOR MAINTAINING TRAFFIC, CLASS A AND GRADING

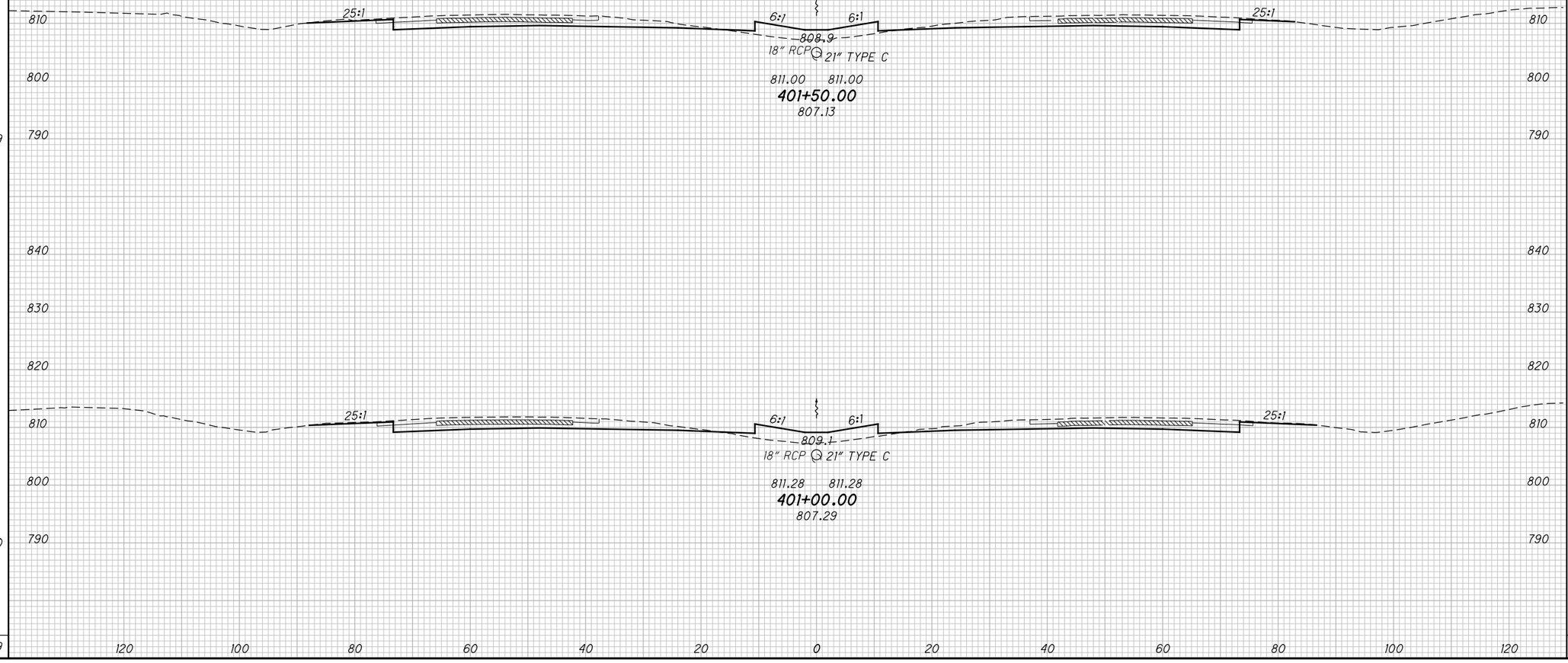

END AREA	
CUT	FILL
107	43
106	47

VOLUME	
CUT	FILL
198	83
193	87
391	170

CALCULATED DWB
CHECKED BAL

CROSS SECTIONS - I.R. 71
STA. 401+00.00 TO STA. 401+50.00

FRA-71-5.29

278
623

P:\84868\roadway\sheets\84868XS003.dgn 12/17/2014 3:28:28 PM kfahy

SEEDING	
END WIDTH	SQ. YDS.
62	344
61	339
	683

ITEM 615 - PAVEMENT FOR MAINTAINING TRAFFIC, CLASS A AND GRADING

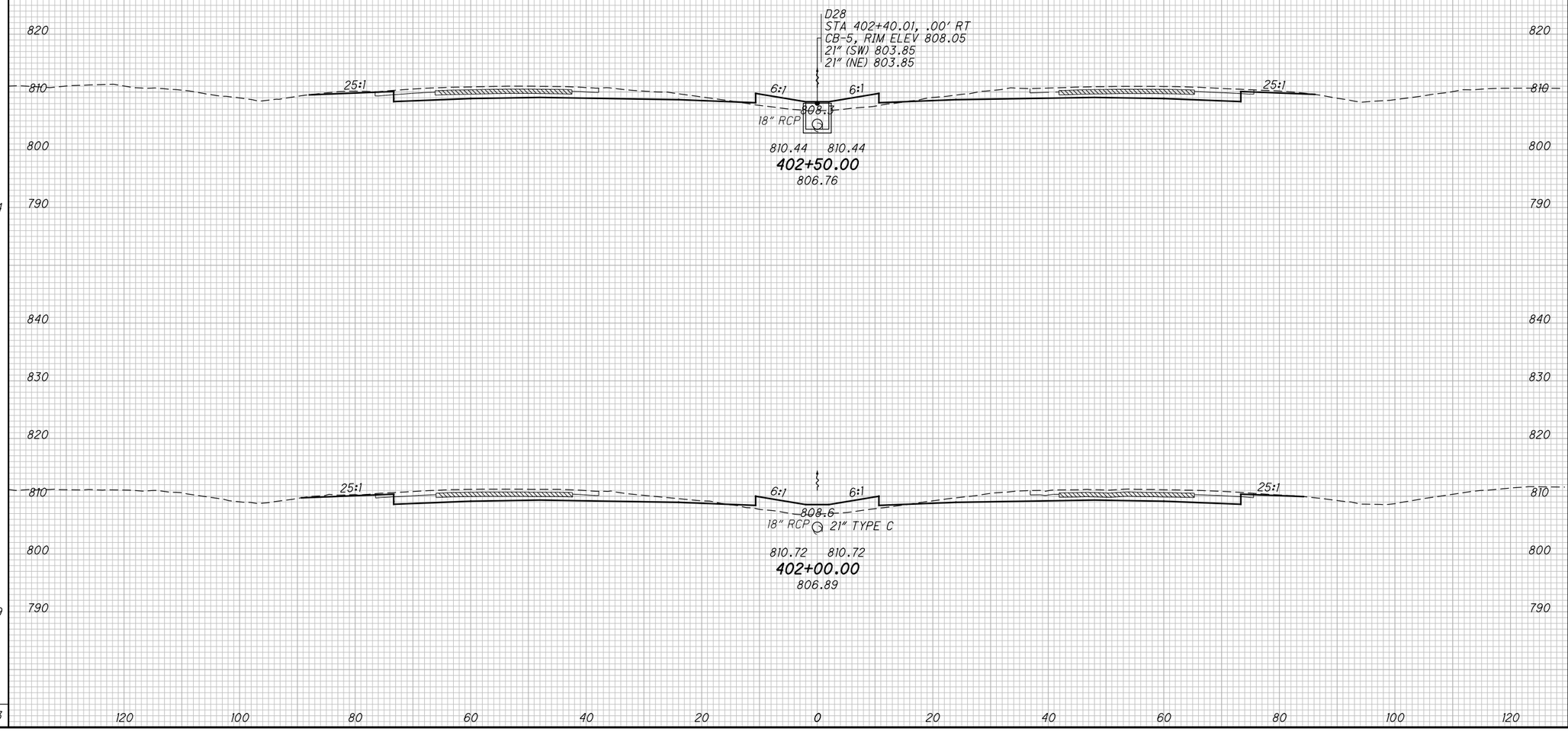

END AREA		VOLUME	
CUT	FILL	CUT	FILL
119	39		
		211	76
109	43		
		201	80
		412	156

CALCULATED DWB
CHECKED BAL

CROSS SECTIONS - I.R. 71
STA. 402+00.00 TO STA. 402+50.00

FRA-71-5.29

279
623

P:\84868\roadway\sheets\84868XS003.dgn 12/17/2014 3:28:29 PM kfahy

SEEDING		END AREA		VOLUME	
END WIDTH	SQ. YDS.	CUT	FILL	CUT	FILL
54	317	114	43	215	75
59	339	118	38	219	71
	656			434	146

CALCULATED DWB
CHECKED BAL

ITEM 615 - PAVEMENT FOR MAINTAINING TRAFFIC, CLASS A AND GRADING

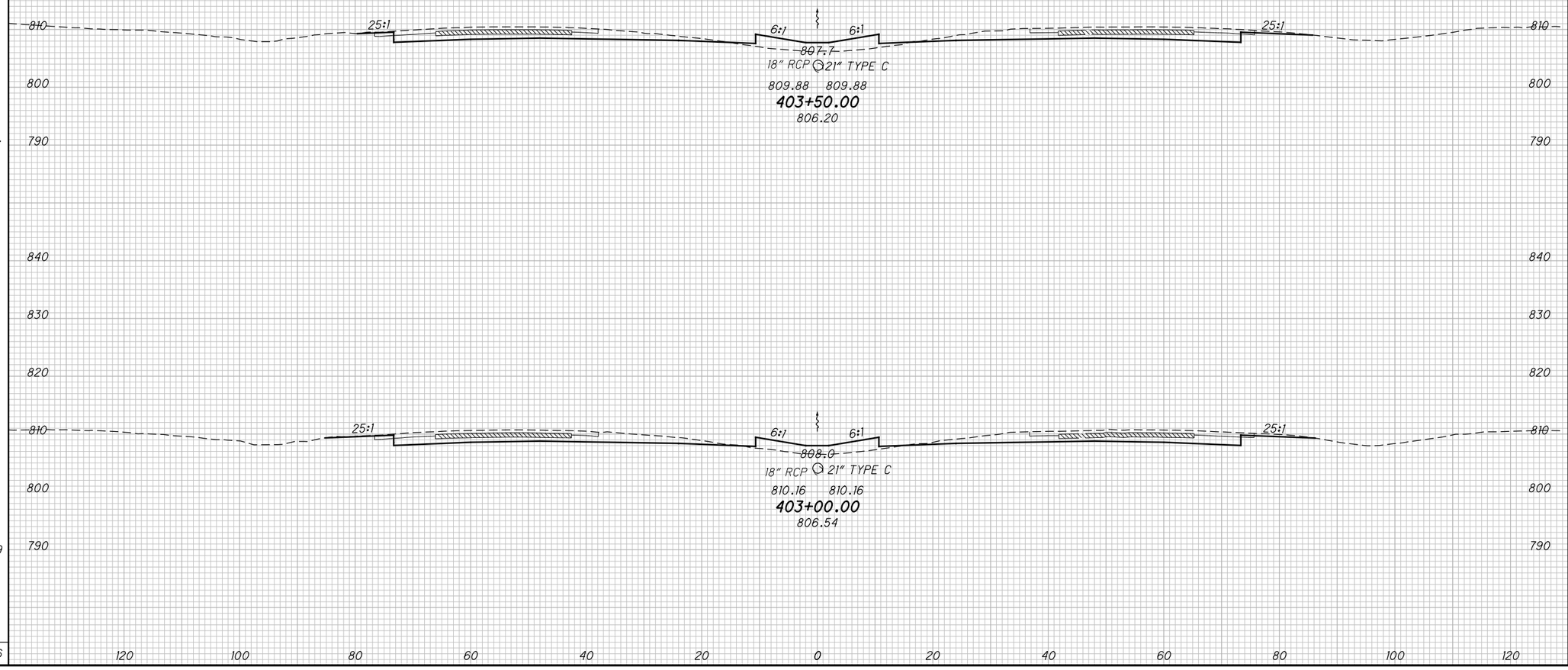

CROSS SECTIONS - I.R. 71
STA. 403+00.00 TO STA. 403+50.00

FRA-71-5.29

280
623

P:\84868\roadway\sheets\84868XS003.dgn 12/17/2014 3:28:30 PM kfahy

SEEDING	
END WIDTH	SQ. YDS.
59	327
58	312
	639

ITEM 615 - PAVEMENT FOR MAINTAINING TRAFFIC, CLASS A AND GRADING

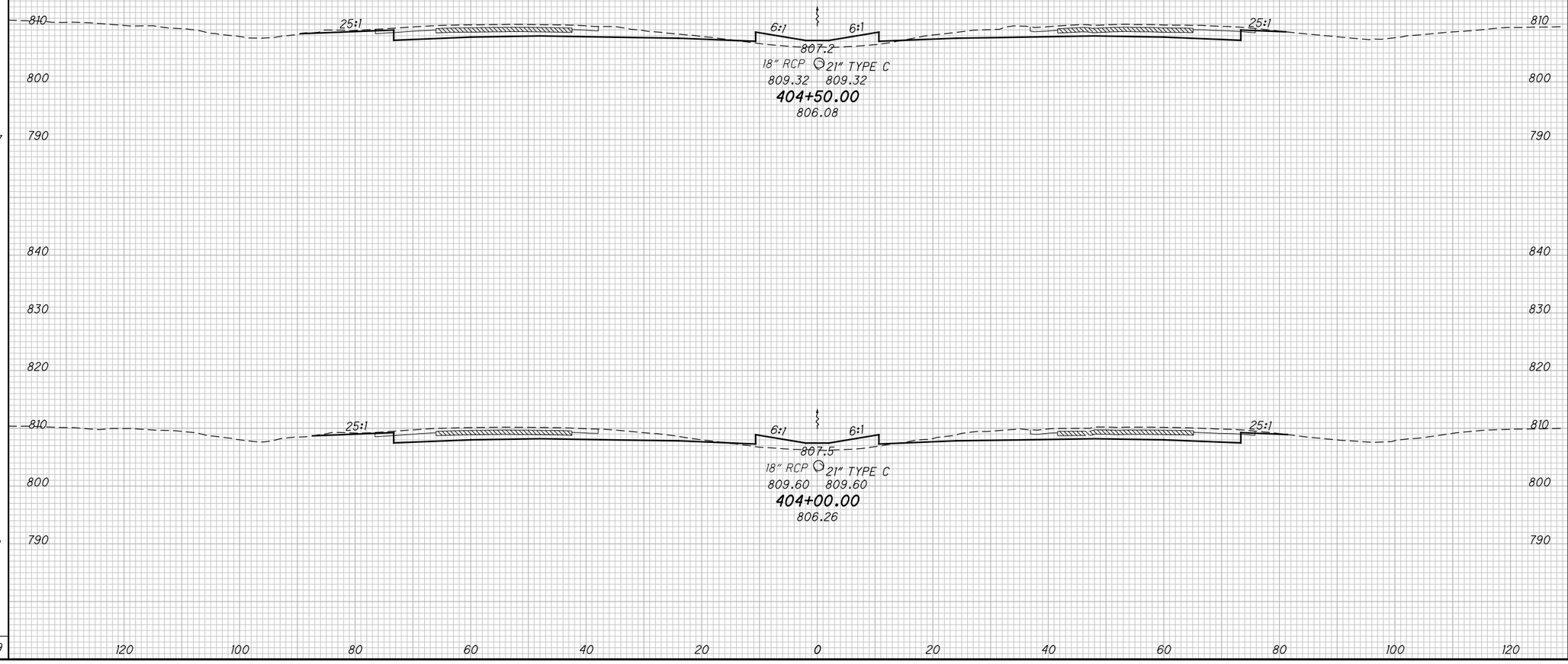

END AREA		VOLUME	
CUT	FILL	CUT	FILL
124	35		
122	36		
		227	65
		218	73
		445	138

CALCULATED DWB
CHECKED BAL

CROSS SECTIONS - I.R. 71
STA. 404+00.00 TO STA. 404+50.00

FRA-71-5.29

281
623

P:\84868\roadway\sheets\84868XS003.dgn 12/17/2014 3:28:31 PM kfahy

SEEDING END WIDTH	SEEDING SQ. YDS.
55	333
65	350
	683

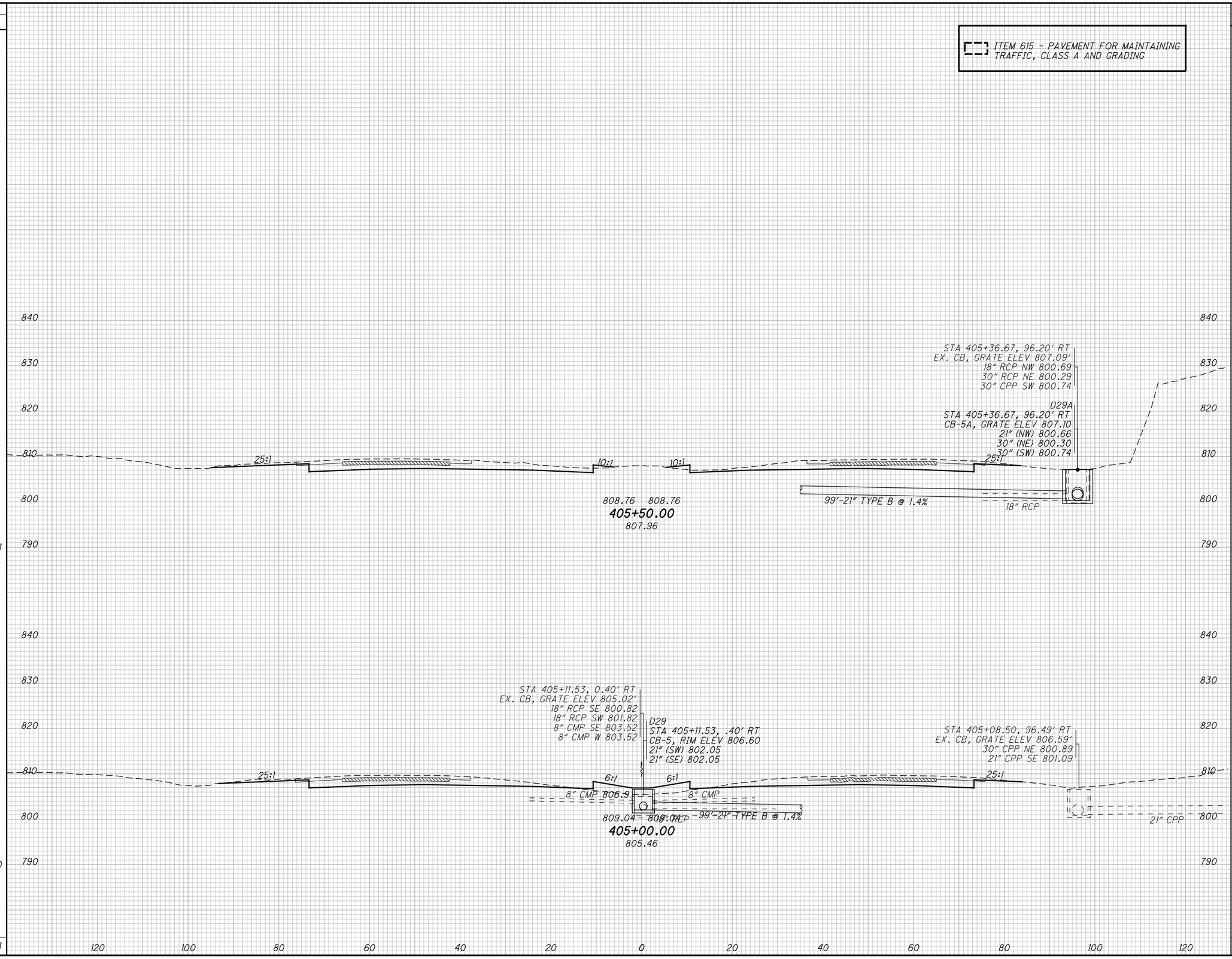

END AREA CUT	END AREA FILL	VOLUME CUT	VOLUME FILL
148	5	258	39
130	38	235	67
		493	106

CALCULATED DWB
CHECKED BAL

CROSS SECTIONS - I.R. 71
STA. 405+00.00 TO STA. 405+50.00

FRA-71-5.29

282
623

P:\84868\roadway\sheets\84868XS003.dgn 12/17/2014 3:28:32 PM kfahy

SEEDING	
END WIDTH	SQ. YDS.
67	
	405
78	
	372
	777

ITEM 615 - PAVEMENT FOR MAINTAINING TRAFFIC, CLASS A AND GRADING

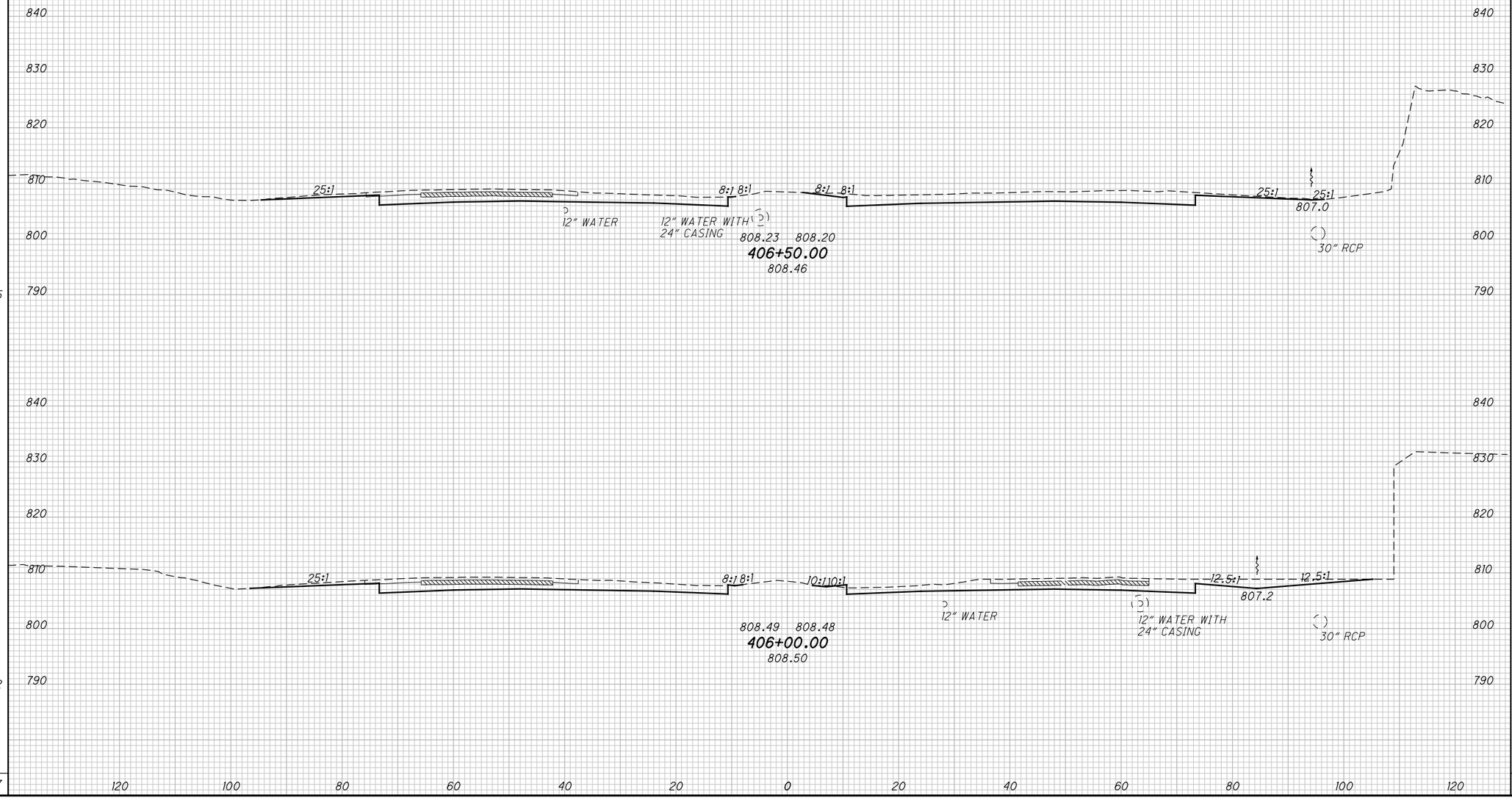

END AREA		VOLUME	
CUT	FILL	CUT	FILL
212	0		
		381	1
200	1		
		322	5
		703	6

CALCULATED DWB
CHECKED BAL

CROSS SECTIONS - I.R. 71
STA. 406+00.00 TO STA. 406+50.00

FRA-71-5.29

283
623

P:\84868\roadway\sheets\84868XS003.dgn 12/17/2014 3:28:33 PM kfahy

SEEDING	
END WIDTH	SQ. YDS.
73	389
66	372
	761

ITEM 615 - PAVEMENT FOR MAINTAINING TRAFFIC, CLASS A AND GRADING

840
830
820
810
800
790

8:1 12.5:1 8:1 8:1 8:1 50:1

806.3

STA 407+35.76, 94.54' RT
EX. CB, GRATE ELEV 806.73'
30" CPP SW 799.03
30" CPP NE 798.98
15" CPP SE 801.53

15" CPP

807.73 807.70
407+50.00
807.61

8:1 25:1 8:1 8:1 25:1

12" WATER

12" WATER WITH 24" CASING

STA 407+02.07, 95.66' RT
EX. CB, GRATE ELEV 806.65'
30" CPP NE 799.55
30" RCP SW 799.55
15" RCP SE 801.45

15" RCP

807.98 807.92
407+00.00
807.75

120 100 80 60 40 20 0 20 40 60 80 100 120

END AREA		VOLUME	
CUT	FILL	CUT	FILL
237	0	436	0
234	0	412	0
		848	0

CALCULATED DWB
CHECKED BAL

CROSS SECTIONS - I.R. 71
STA. 407+00.00 TO STA. 407+50.00

FRA-71-5.29

284
623

P:\84868\roadway\sheets\84868XS003.dgn 12/17/2014 3:28:34 PM kfahy

SEEDING	
END WIDTH	SQ. YDS.
72	378
62	378
	756

ITEM 615 - PAVEMENT FOR MAINTAINING TRAFFIC, CLASS A AND GRADING

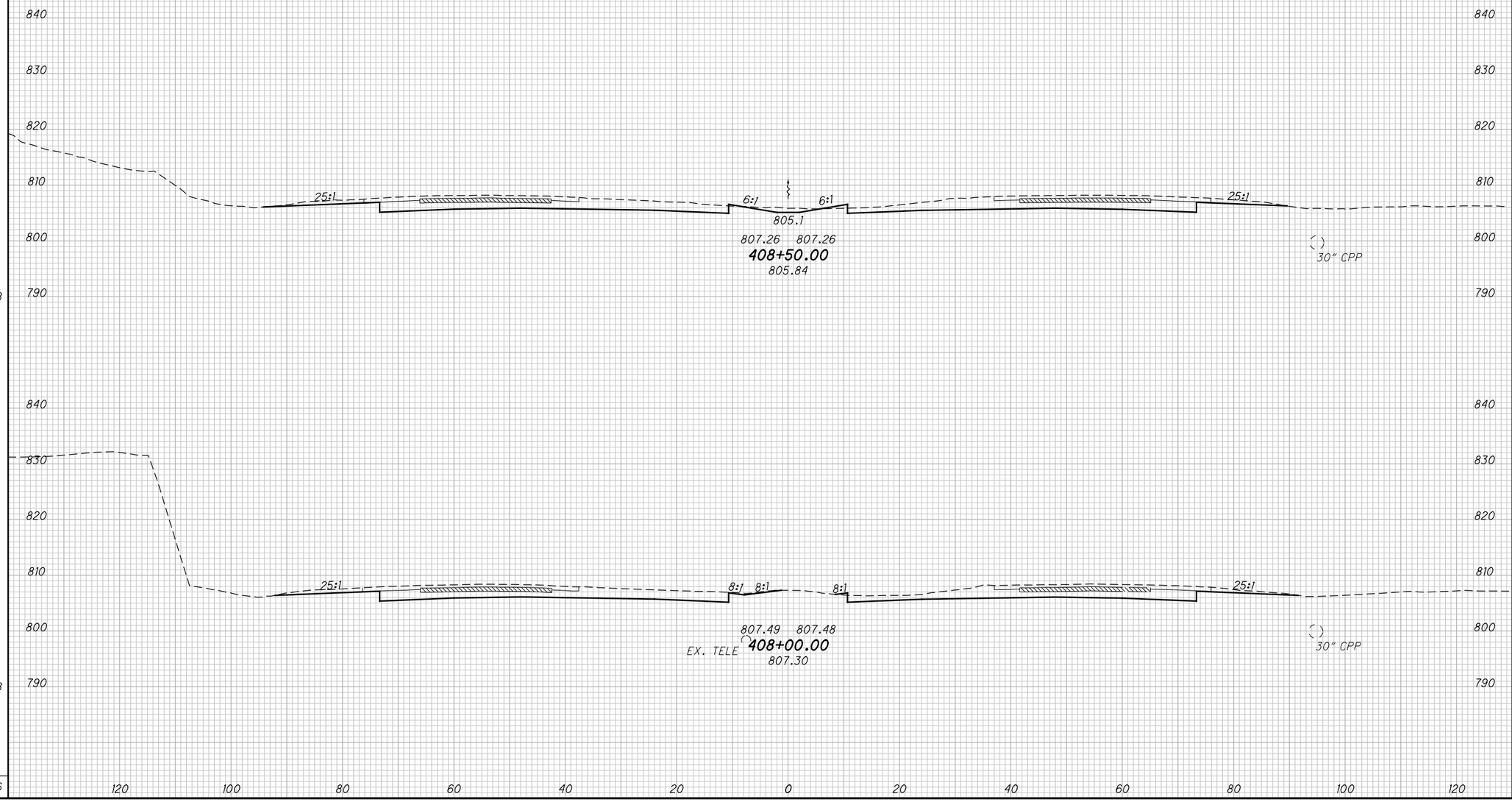

END AREA		VOLUME	
CUT	FILL	CUT	FILL
204	2		
		368	2
193	0		
		398	0
		766	2

CALCULATED DWB
CHECKED BAL

CROSS SECTIONS - I.R. 71
STA. 408+00.00 TO STA. 408+50.00

FRA-71-5.29

285
623

P:\84868\roadway\sheets\84868XS003.dgn 12/17/2014 3:28:35 PM kfahy

SEEDING		END AREA		VOLUME	
END WIDTH	SQ. YDS.	CUT	FILL	CUT	FILL
75	416	190	21	356	29
75	411	194	10	369	11
	827			725	40

ITEM 615 - PAVEMENT FOR MAINTAINING TRAFFIC, CLASS A AND GRADING

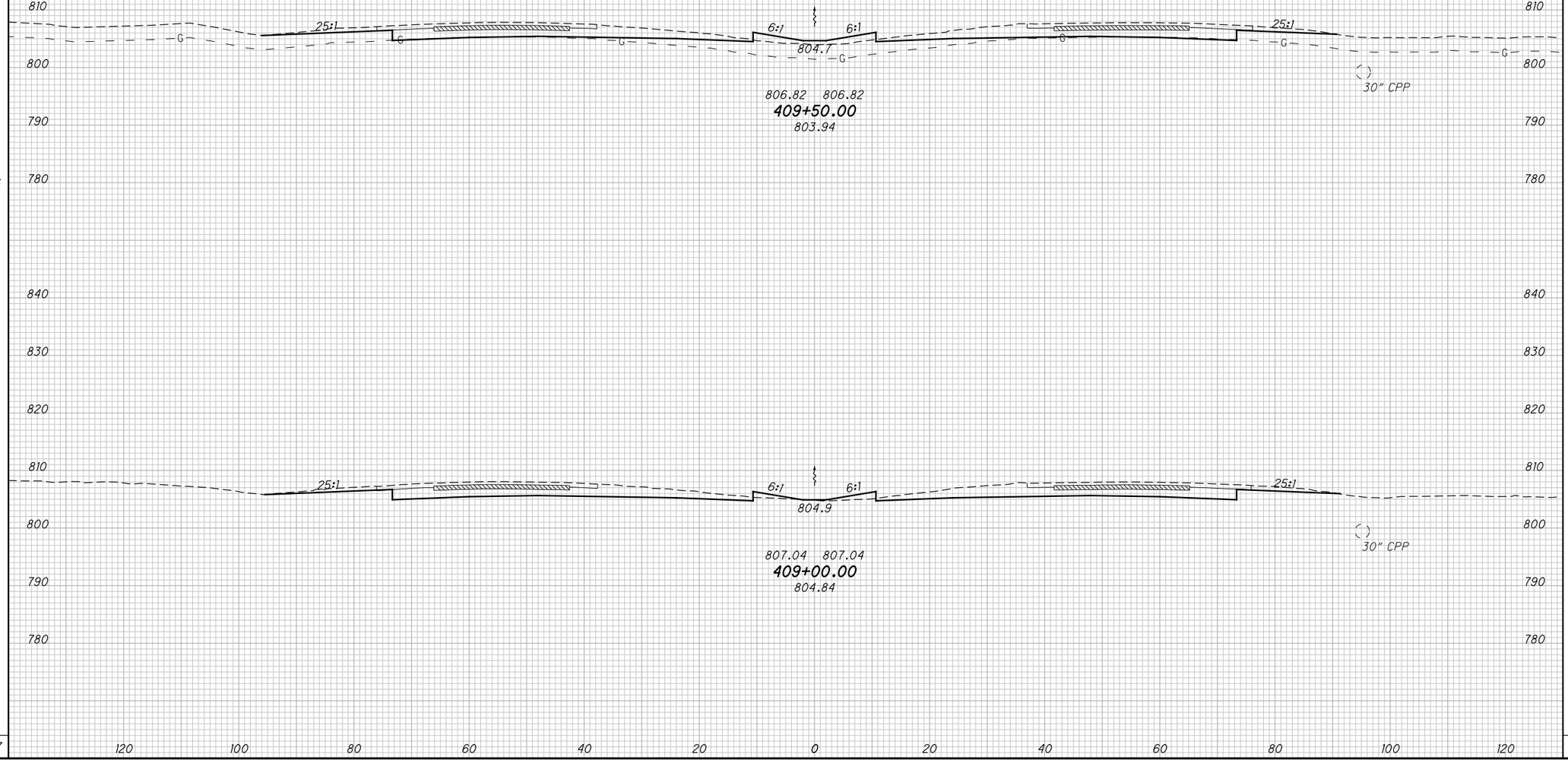

P:\84868\roadway\sheets\84868XS003.dgn 12/17/2014 3:28:36 PM kfahy

CALCULATED DWB
CHECKED BAL

CROSS SECTIONS - I.R. 71
STA. 409+00.00 TO STA. 409+50.00

FRA-71-5.29

286
623

SEEDING	
END WIDTH	SQ. YDS.
67	389
71	411
800	

ITEM 615 - PAVEMENT FOR MAINTAINING TRAFFIC, CLASS A AND GRADING

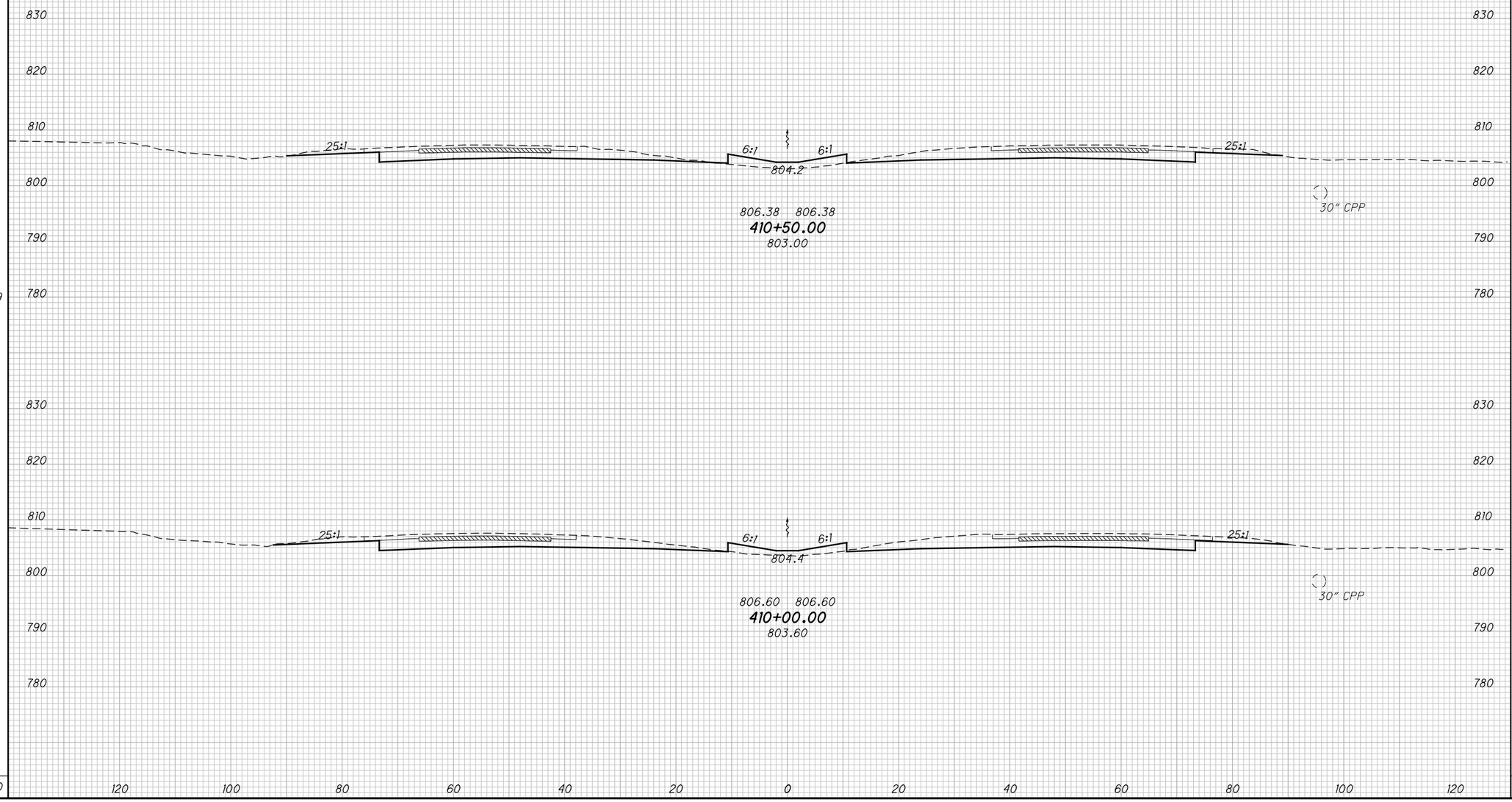

END AREA	
CUT	FILL
175	30
190	25

VOLUME	
CUT	FILL
338	51
352	43
690	94

CALCULATED DWB
CHECKED BAL

CROSS SECTIONS - I.R. 71
STA. 410+00.00 TO STA. 410+50.00

FRA-71-5.29

287
623

P:\84868\roadway\sheets\84868XS003.dgn 12/17/2014 3:28:37 PM kfahy

SEEDING	
END WIDTH	SQ. YDS.
69	383
69	377
	760

ITEM 615 - PAVEMENT FOR MAINTAINING TRAFFIC, CLASS A AND GRADING

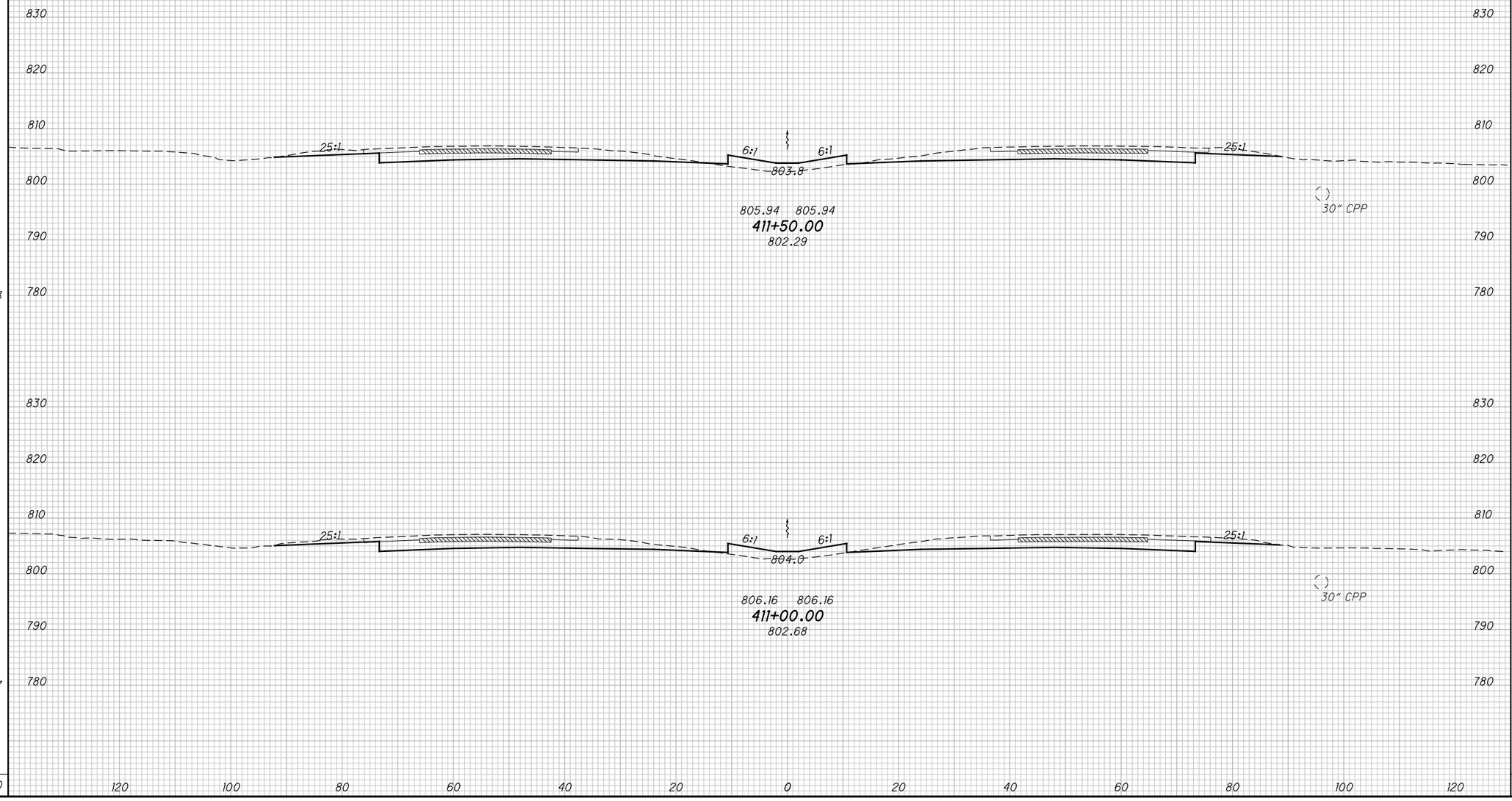

END AREA	
CUT	FILL
172	36
175	34

VOLUME	
CUT	FILL
321	65
324	59
645	124

CALCULATED DWB
CHECKED BAL

CROSS SECTIONS - I.R. 71
STA. 411+00.00 TO STA. 411+50.00

FRA-71-5.29

288
623

P:\84868\roadway\sheets\84868XS003.dgn 12/17/2014 3:28:38 PM kfahy

SEEDING		END AREA		VOLUME	
END WIDTH	SQ. YDS.	CUT	FILL	CUT	FILL
67		177	30		
	378			324	60
69		173	35		
	383			320	66
	761			644	126

ITEM 615 - PAVEMENT FOR MAINTAINING TRAFFIC, CLASS A AND GRADING

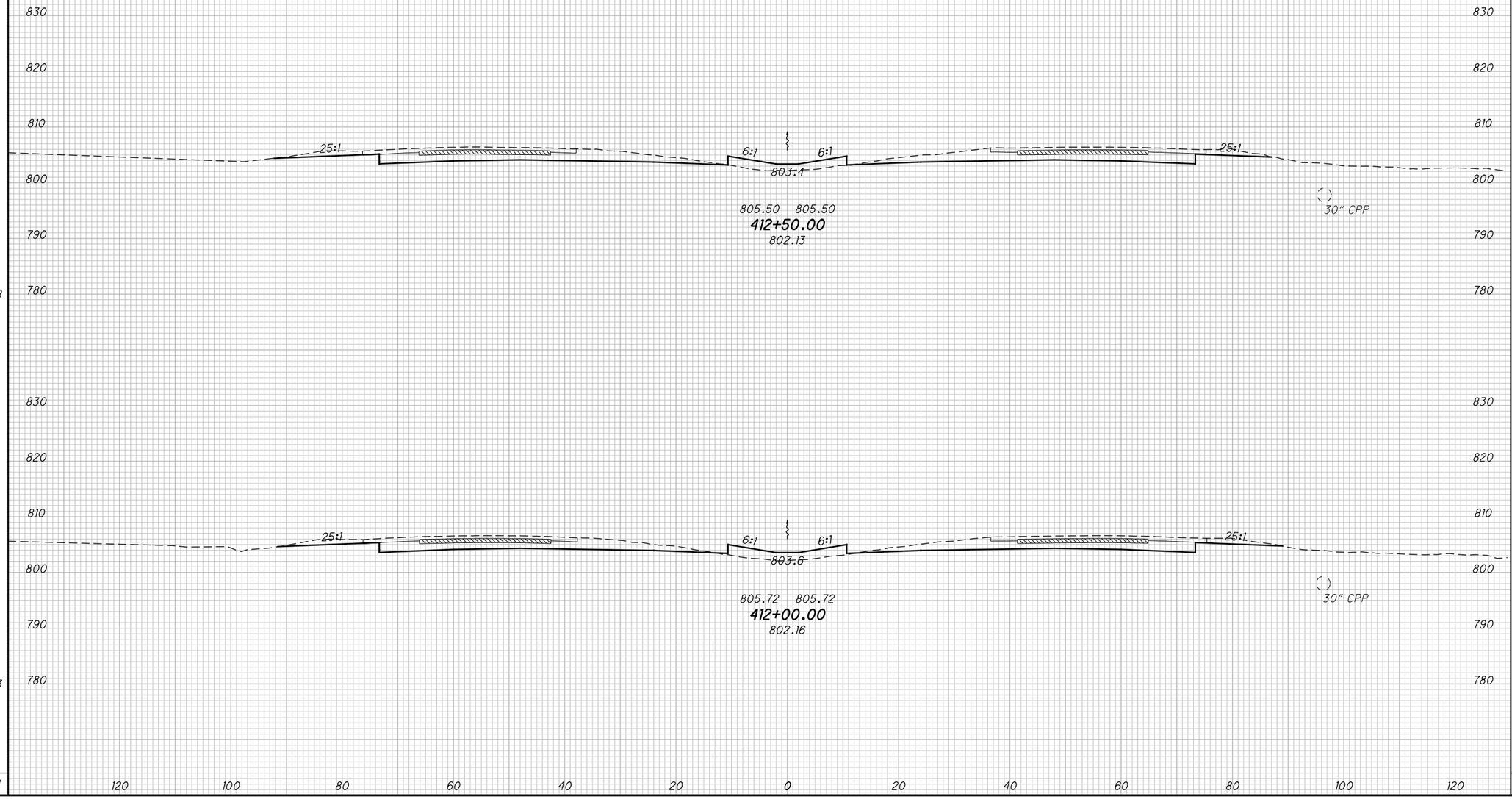

CALCULATED DWB
CHECKED BAL

CROSS SECTIONS - I.R. 71
STA. 412+00.00 TO STA. 412+50.00

FRA-71-5.29

289
623

P:\84868\roadway\sheets\84868XS003.dgn 12/17/2014 3:28:38 PM kfahy

SEEDING		END AREA		VOLUME	
END WIDTH	SQ. YDS.	CUT	FILL	CUT	FILL
72		181	26		
	394			333	49
68		179	28		
	378			329	54
	772			662	103

CALCULATED DWB
CHECKED BAL

ITEM 615 - PAVEMENT FOR MAINTAINING TRAFFIC, CLASS A AND GRADING

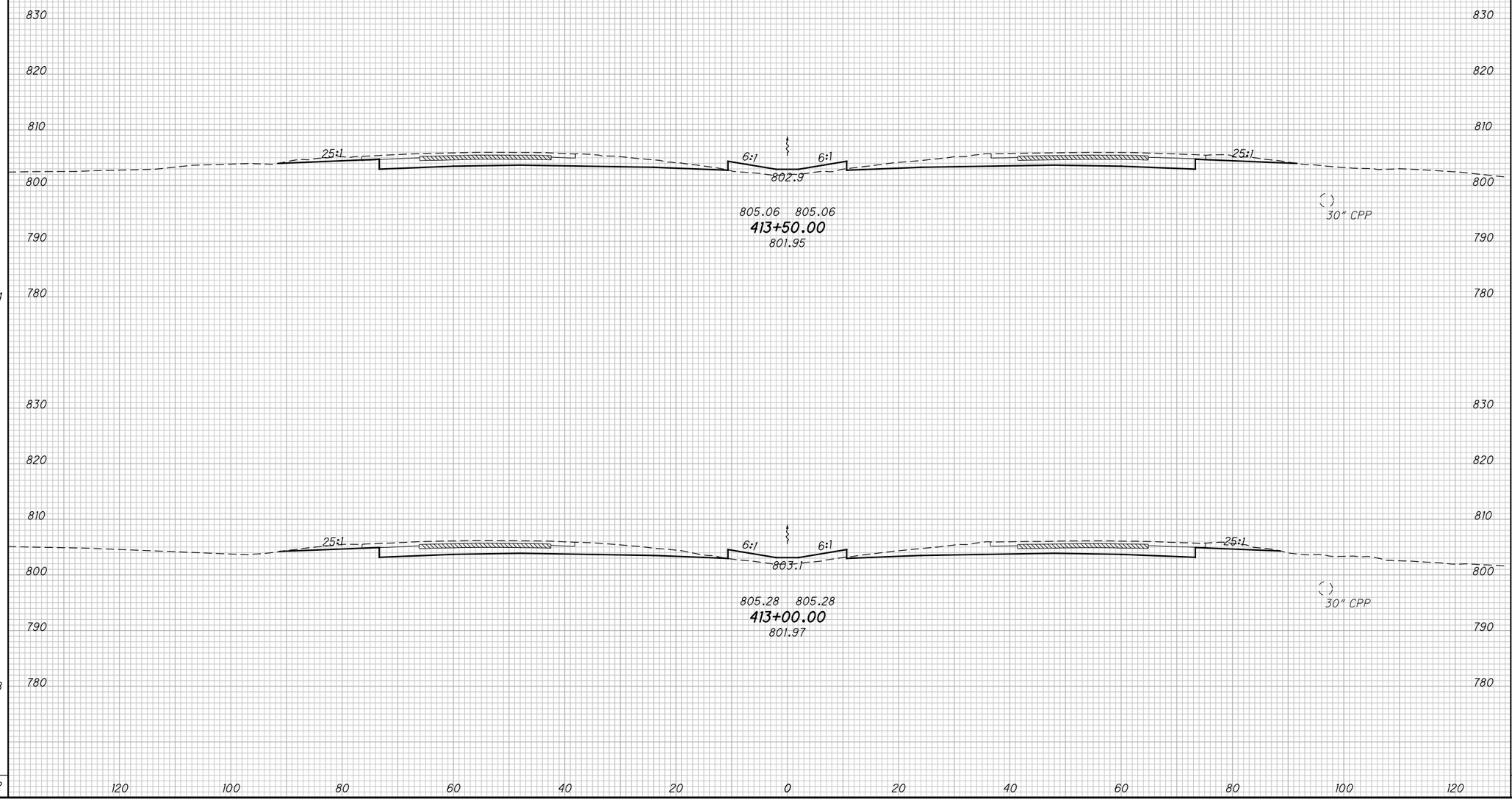

CROSS SECTIONS - I.R. 71
STA. 413+00.00 TO STA. 413+50.00

FRA-71-5.29

290
623

P:\84868\roadway\sheets\84868XS003.dgn 12/17/2014 3:28:39 PM kfahy

SEEDING	
END WIDTH	SQ. YDS.
66	
96	
450	
472	
	922

ITEM 615 - PAVEMENT FOR MAINTAINING TRAFFIC, CLASS A AND GRADING

830
820
810
800
790
780
830
820
810
800
790
780
830
820
810
800
790
780

25:1
6:1
6:1
802.5
804.62 804.62
414+50.00
801.84
72" RCP
72" RCP
25:1

STA 414+00.79, 119.21' LT
72" RCP SE 793.40
STA 413+90.63, 118.80' LT
72" RCP SE 793.20
10:1
2:1
EX. TWIN 72" RCP

STA 413+91.46, 1.11' LT
EX. CB, GRATE ELEV 801.80'
18" RCP SE 798.80
8" CMP SE 799.80
8" CMP W 799.80
D46
STA 413+91.46, 0.00' RT
CB-5, GRATE ELEV 802.40
18" (SE) 799.00
6:1
6:1
802.17
8" CMP
8" CMP
8'-18" TYPE C @ 5.25%
804.84 804.84
414+00.00
802.93
STA 413+91.46, 8.00' RT
INV. = 798.58
CONNECT WITH
MASONRY COLLAR
PER DM-1.1
18" RCP

STA 413+92.21, 97.05' RT
EX. CB, GRATE ELEV 803.19'
30" RCP SW 795.89
33" RCP SE 795.64
18" RCP NW 795.89
8" CMP W 799.99
25:1
8" CMP
EX. 33" RCP

120 100 80 60 40 20 0 20 40 60 80 100 120

END AREA		VOLUME	
CUT	FILL	CUT	FILL
183	19		
220	10		
373	27		
371	33		
		744	60

CALCULATED DWB
CHECKED BAL

CROSS SECTIONS - I.R. 71
STA. 414+00.00 TO STA. 414+50.00

FRA-71-5.29

291
623

P:\84868\roadway\sheets\84868XS003.dgn 12/17/2014 3:28:40 PM kfahy

SEEDING	
END WIDTH	SQ. YDS.
67	466
100	461
	927

ITEM 615 - PAVEMENT FOR MAINTAINING TRAFFIC, CLASS A AND GRADING

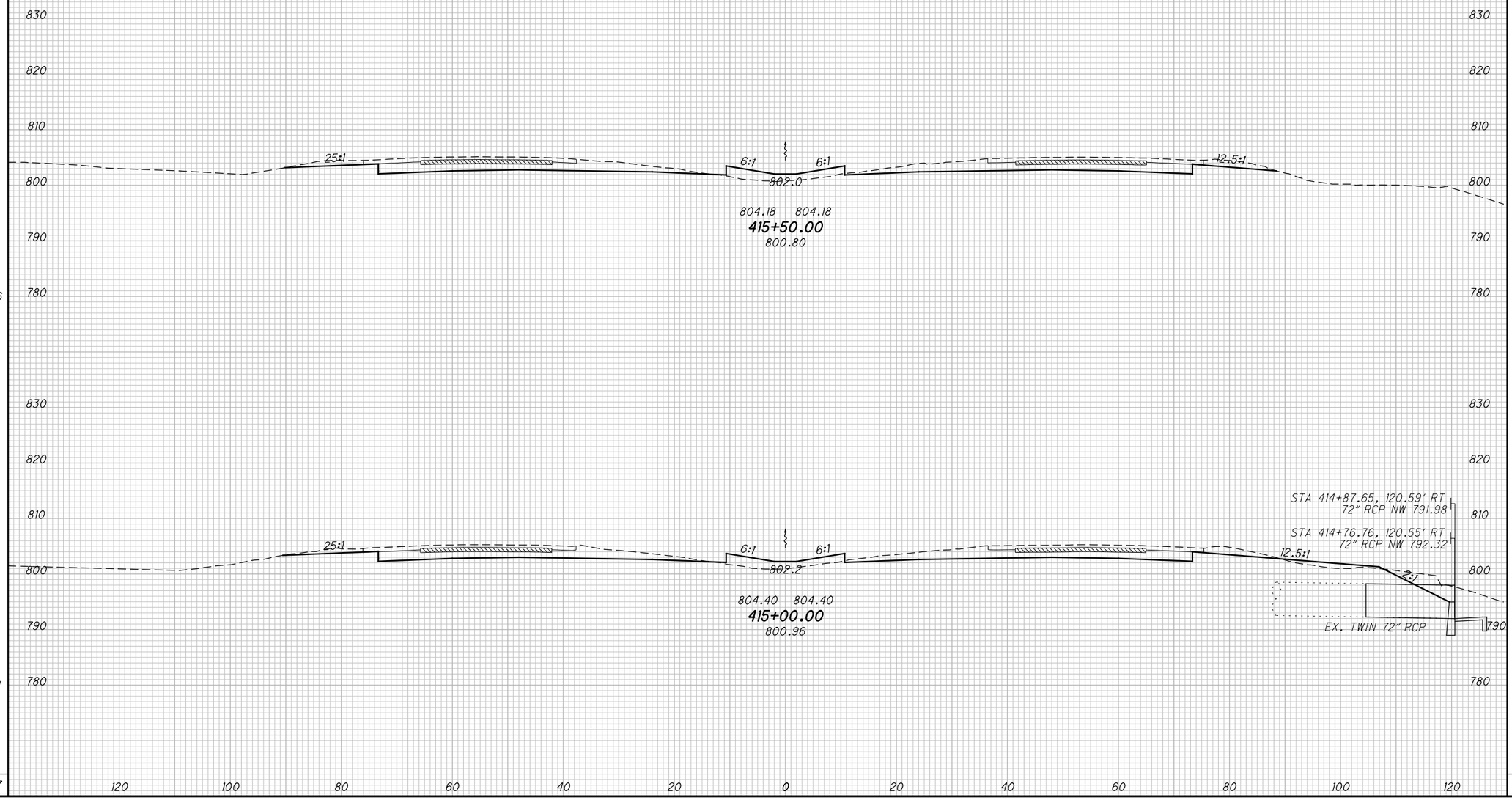

END AREA	
CUT	FILL
176	32
406	68
263	41
412	56
818	124

VOLUME	
CUT	FILL

CALCULATED	CHECKED
DWB	BAL

CROSS SECTIONS - I.R. 71
STA. 415+00.00 TO STA. 415+50.00

FRA-71-5.29

292
623

P:\84868\roadway\sheets\84868XS003.dgn 12/17/2014 3:28:41 PM kfahy

SEEDING	
END WIDTH	SQ. YDS.
73	389
67	377
	766

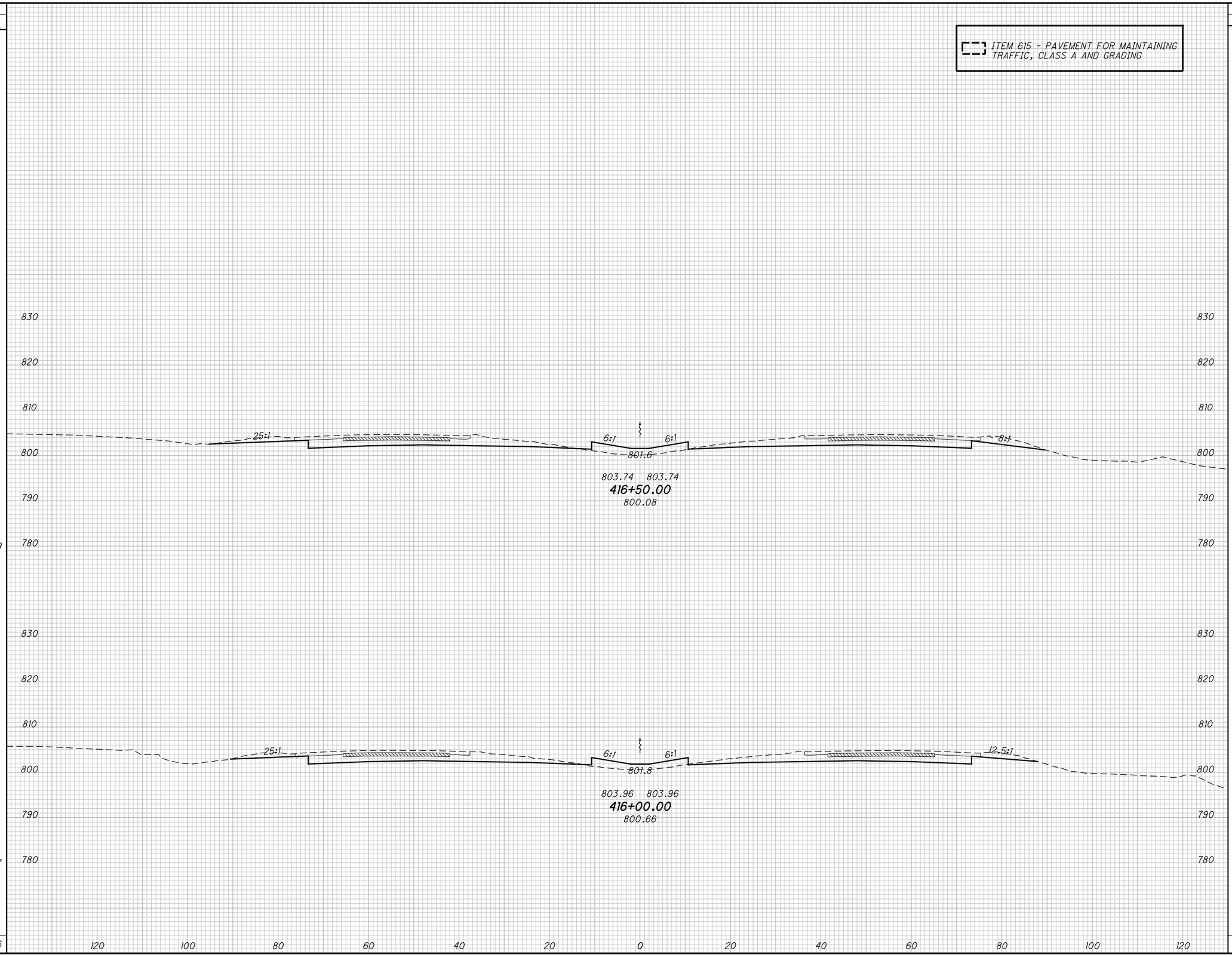

END AREA	
CUT	FILL
181	36
175	31

VOLUME	
CUT	FILL
330	62
325	58
655	120

CALCULATED DWB
CHECKED BAL

CROSS SECTIONS - I.R. 71
STA. 416+00.00 TO STA. 416+50.00

FRA-71-5.29

293
623

P:\84868\roadway\sheets\84868XS003.dgn 12/17/2014 3:28:42 PM kfahy

SEEDING		END AREA		VOLUME	
END WIDTH	SQ. YDS.	CUT	FILL	CUT	FILL
83	439	173	34	323	63
74	411	176	34	331	64
	850			654	127

ITEM 615 - PAVEMENT FOR MAINTAINING TRAFFIC, CLASS A AND GRADING

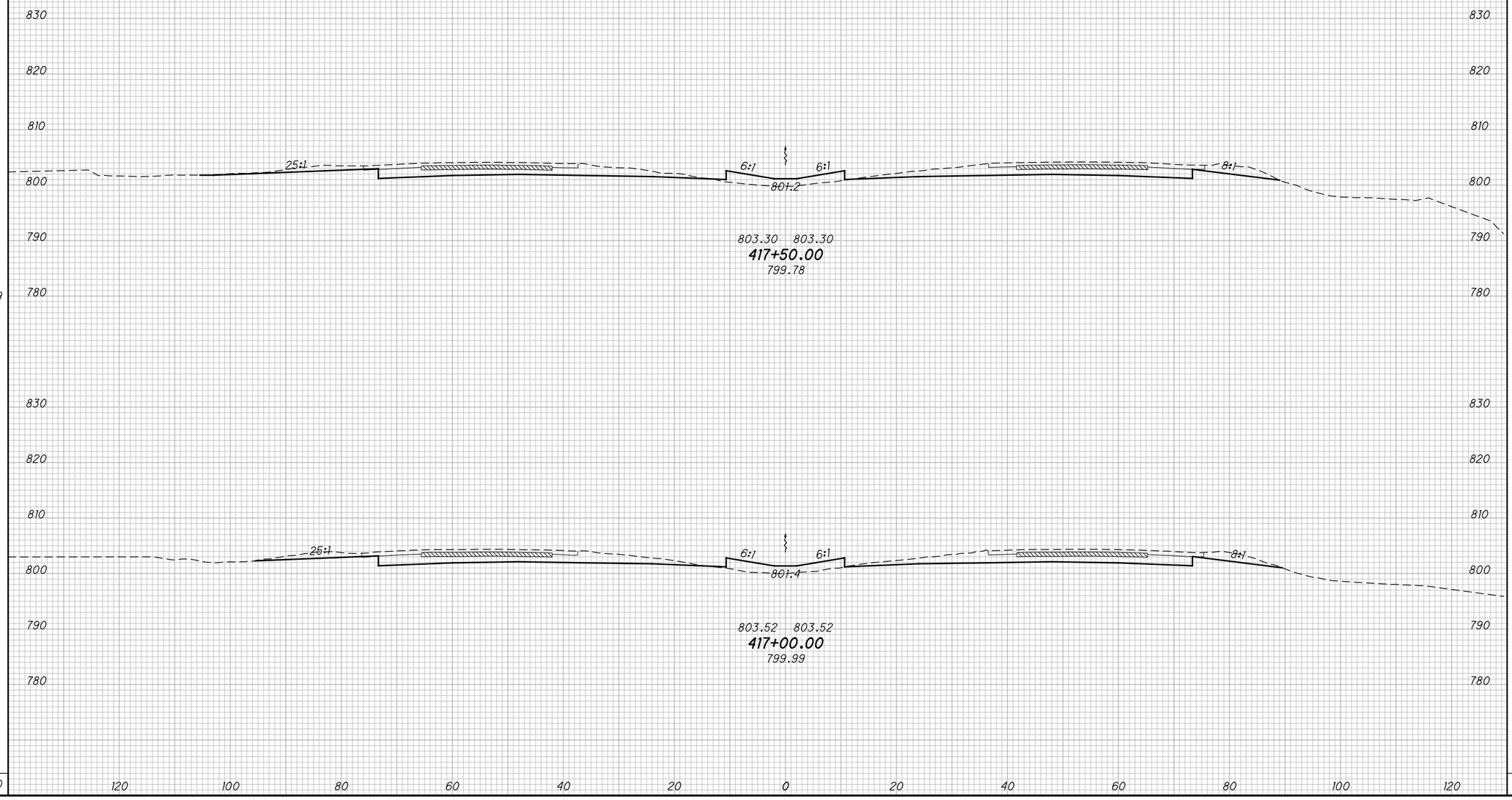

CALCULATED DWB
CHECKED BAL

CROSS SECTIONS - I.R. 71
STA. 417+00.00 TO STA. 417+50.00

FRA-71-5.29

294
623

P:\84868\roadway\sheets\84868XS003.dgn 12/17/2014 3:28:43 PM kfahy

SEEDING		END AREA		VOLUME		
END WIDTH	SQ. YDS.	CUT	FILL	CUT	FILL	
						CALCULATED DWB
						CHECKED BAL
73	422	179	32	331	62	
77	445	178	35	326	64	
	867			657	126	

ITEM 615 - PAVEMENT FOR MAINTAINING TRAFFIC, CLASS A AND GRADING

830
820
810
800
790
780

25:1 6:1 6:1 6:1

800.7

802.86 802.86
418+50.00
799.50

800.9

803.08 803.08
418+00.00
799.53

120 100 80 60 40 20 0 20 40 60 80 100 120

CROSS SECTIONS - I.R. 71
STA. 418+00.00 TO STA. 418+50.00

FRA-71-5.29

295
623

P:\84868\roadway\sheets\84868XS003.dgn 12/17/2014 3:28:44 PM kfahy

SEEDING		END AREA		VOLUME	
END WIDTH	SQ. YDS.	CUT	FILL	CUT	FILL
66	378	167	34	314	61
69	395	173	31	325	59
	773			639	120

CALCULATED DWB
CHECKED BAL

ITEM 615 - PAVEMENT FOR MAINTAINING TRAFFIC, CLASS A AND GRADING

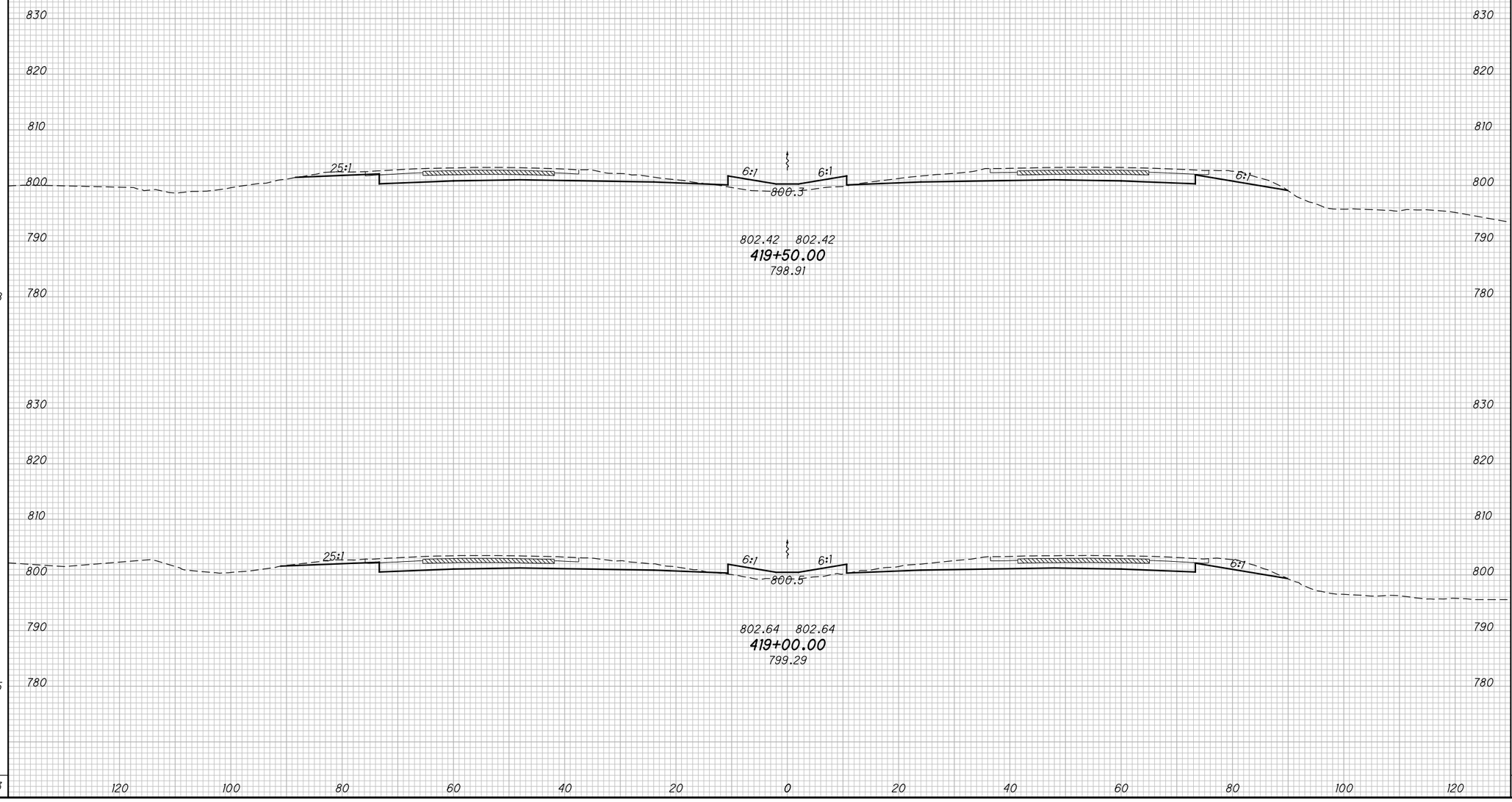

CROSS SECTIONS - I.R. 71
STA. 419+00.00 TO STA. 419+50.00

FRA-71-5.29

296
623

P:\84868\roadway\sheets\84868XS003.dgn 12/17/2014 3:28:45 PM kfahy

SEEDING		END AREA		VOLUME	
END WIDTH	SQ. YDS.	CUT	FILL	CUT	FILL
69		165	38		
	372			305	69
65		165	36		
	367			307	65
	739			612	134

ITEM 615 - PAVEMENT FOR MAINTAINING TRAFFIC, CLASS A AND GRADING

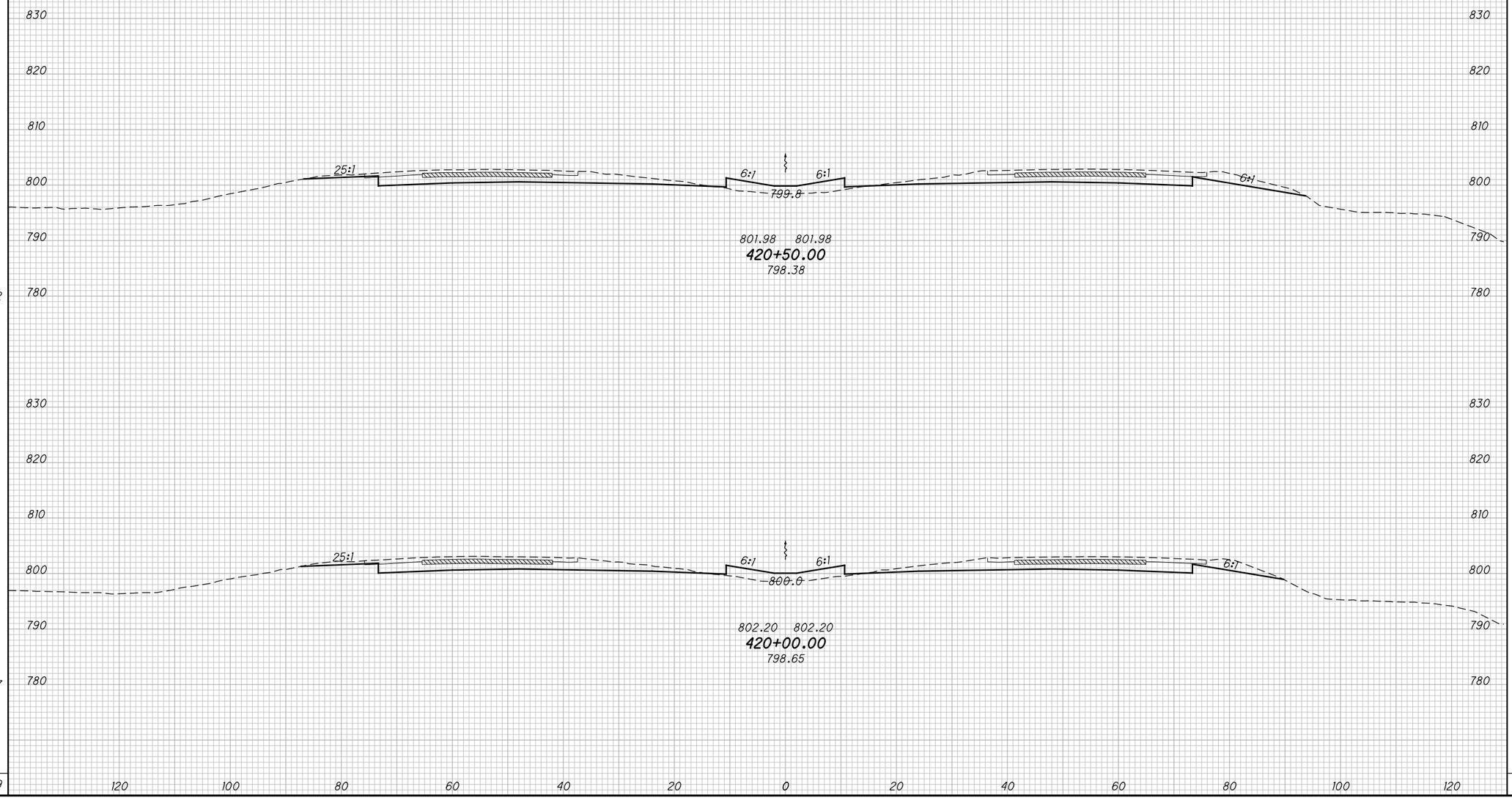

CALCULATED DWB
CHECKED BAL

CROSS SECTIONS - I.R. 71
STA. 420+00.00 TO STA. 420+50.00

FRA-71-5.29

297
623

P:\84868\roadway\sheets\84868XS003.dgn 12/17/2014 3:28:46 PM kfahy

SEEDING		END AREA		VOLUME	
END WIDTH	SQ. YDS.	CUT	FILL	CUT	FILL
64	361	151	46	284	82
65	372	156	43	297	74
	733			581	156

CALCULATED DWB
CHECKED BAL

ITEM 615 - PAVEMENT FOR MAINTAINING TRAFFIC, CLASS A AND GRADING

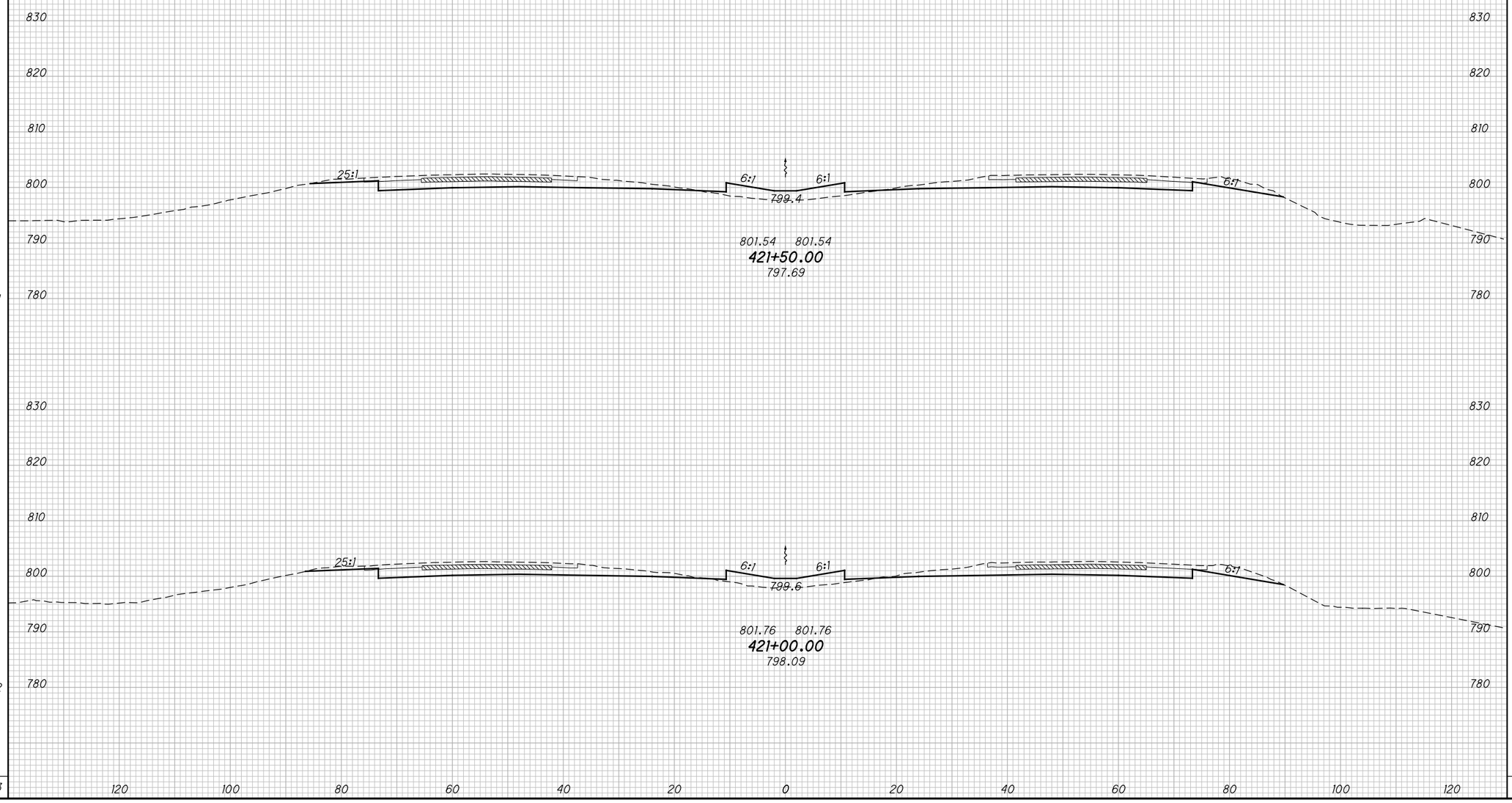

CROSS SECTIONS - I.R. 71
STA. 421+00.00 TO STA. 421+50.00

FRA-71-5.29

298
623

P:\84868\roadway\sheets\84868XS003.dgn 12/17/2014 3:28:47 PM ktahy

SEEDING	
END WIDTH	SQ. YDS.
79	405
66	361
	766

ITEM 615 - PAVEMENT FOR MAINTAINING TRAFFIC, CLASS A AND GRADING

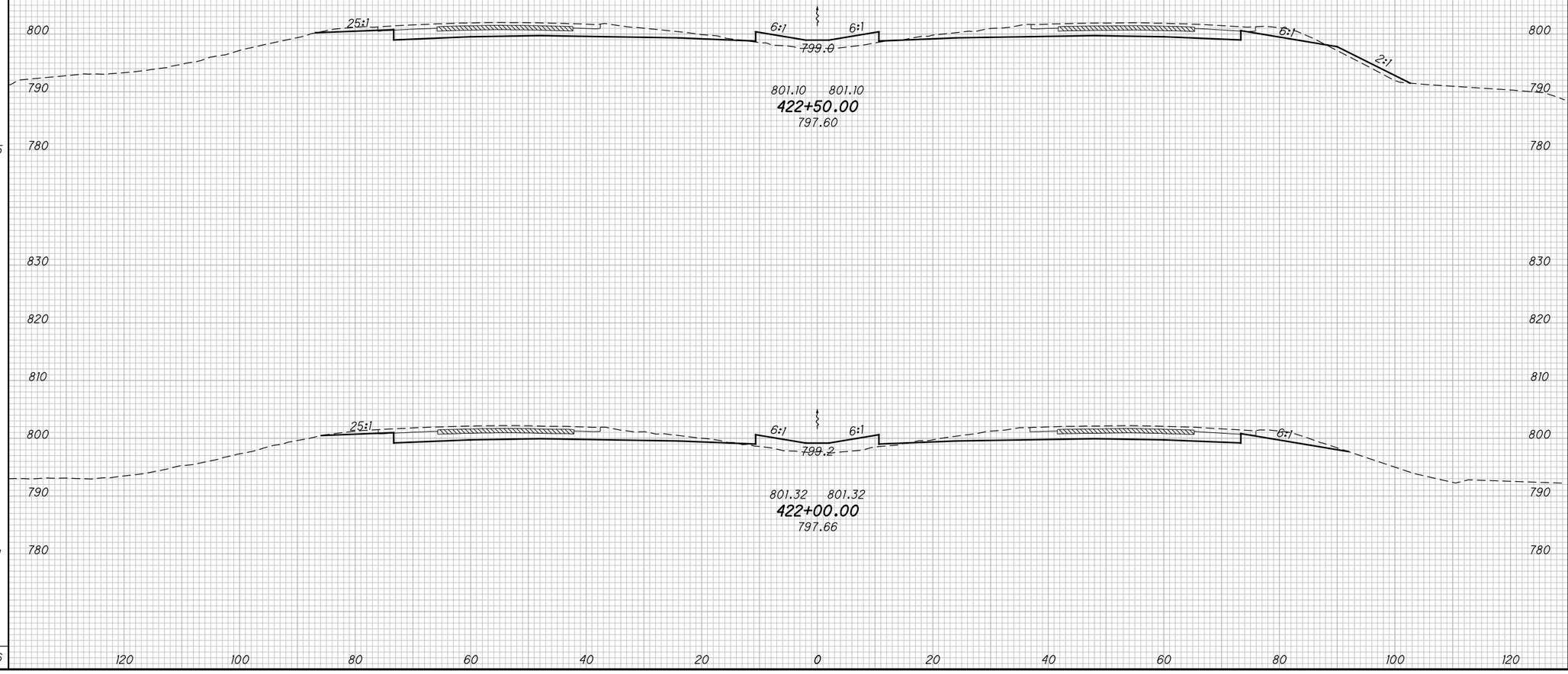

END AREA	
CUT	FILL
163	45
159	41

VOLUME	
CUT	FILL
297	80
287	80
584	160

CALCULATED DWB
CHECKED BAL

CROSS SECTIONS - I.R. 71
STA. 422+00.00 TO STA. 422+50.00

FRA-71-5.29

299
623

P:\84868\roadway\sheets\84868XS003.dgn 12/17/2014 3:28:48 PM kfahy

SEEDING		END AREA		VOLUME	
END WIDTH	SQ. YDS.	CUT	FILL	CUT	FILL
71	428	170	39	310	81
83	450	165	48	303	86
	878			613	167

CALCULATED DWB
CHECKED BAL

ITEM 615 - PAVEMENT FOR MAINTAINING TRAFFIC, CLASS A AND GRADING

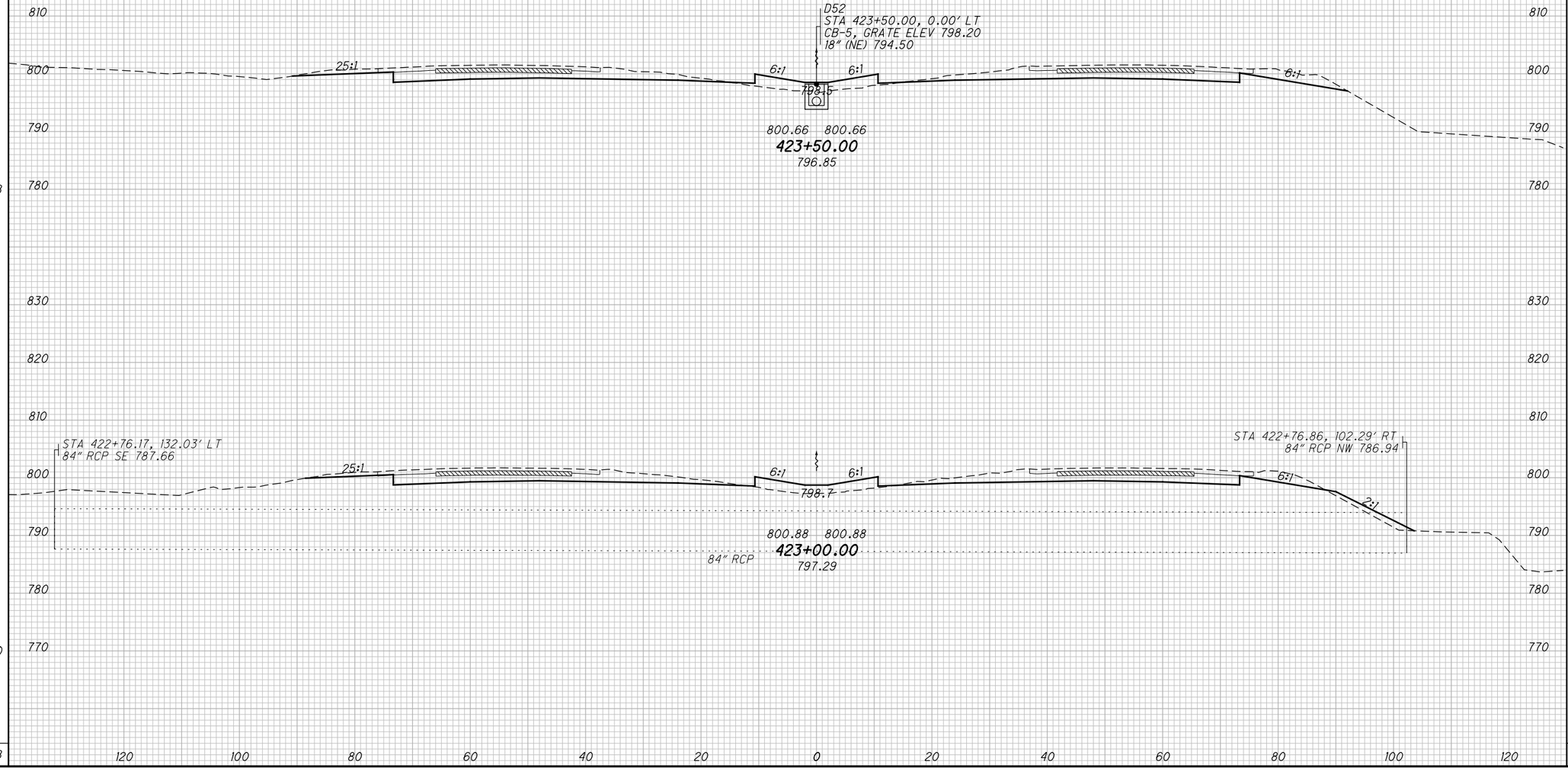

CROSS SECTIONS - I.R. 71
STA. 423+00.00 TO STA. 423+50.00

FRA-71-5.29

300
623

P:\84868\roadway\sheets\84868XS003.dgn 12/17/2014 3:28:49 PM kfahy

SEEDING	
END WIDTH	SQ. YDS.
92	473
77	411
	884

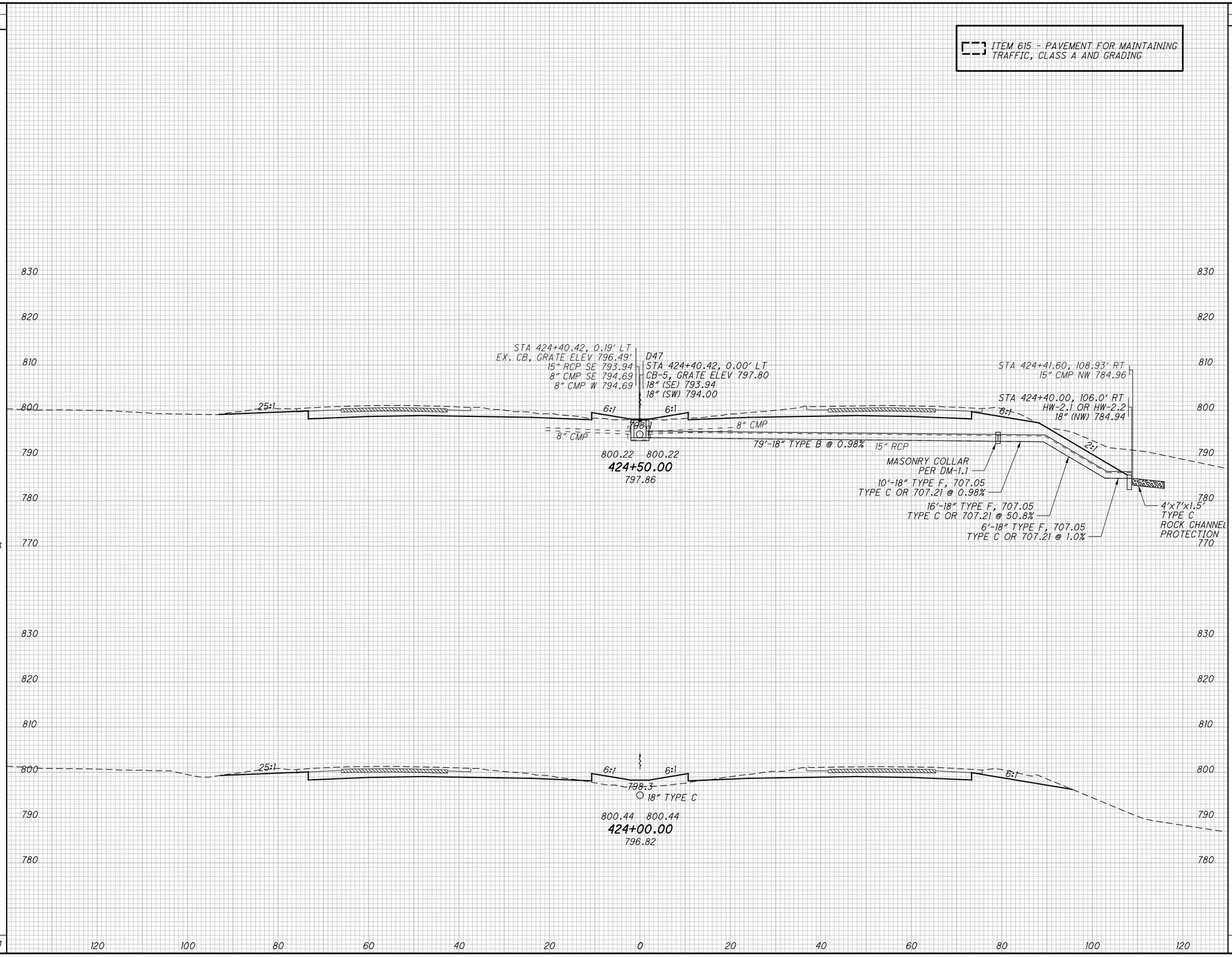

END AREA		VOLUME	
CUT	FILL	CUT	FILL
370	14		
		506	48
176	38		
		320	72
		826	120

CALCULATED DWB
CHECKED BAL

CROSS SECTIONS - I.R. 71
STA. 424+00.00 TO STA. 424+50.00

FRA-71-5.29

301
623

P:\84868\roadway\sheets\84868XS003.dgn 12/17/2014 3:28:50 PM kfahy

SEEDING		END AREA		VOLUME	
END WIDTH	SQ. YDS.	CUT	FILL	CUT	FILL
82	467	154	53	290	91
84	495	159	45	490	55
	962			780	146

ITEM 615 - PAVEMENT FOR MAINTAINING TRAFFIC, CLASS A AND GRADING

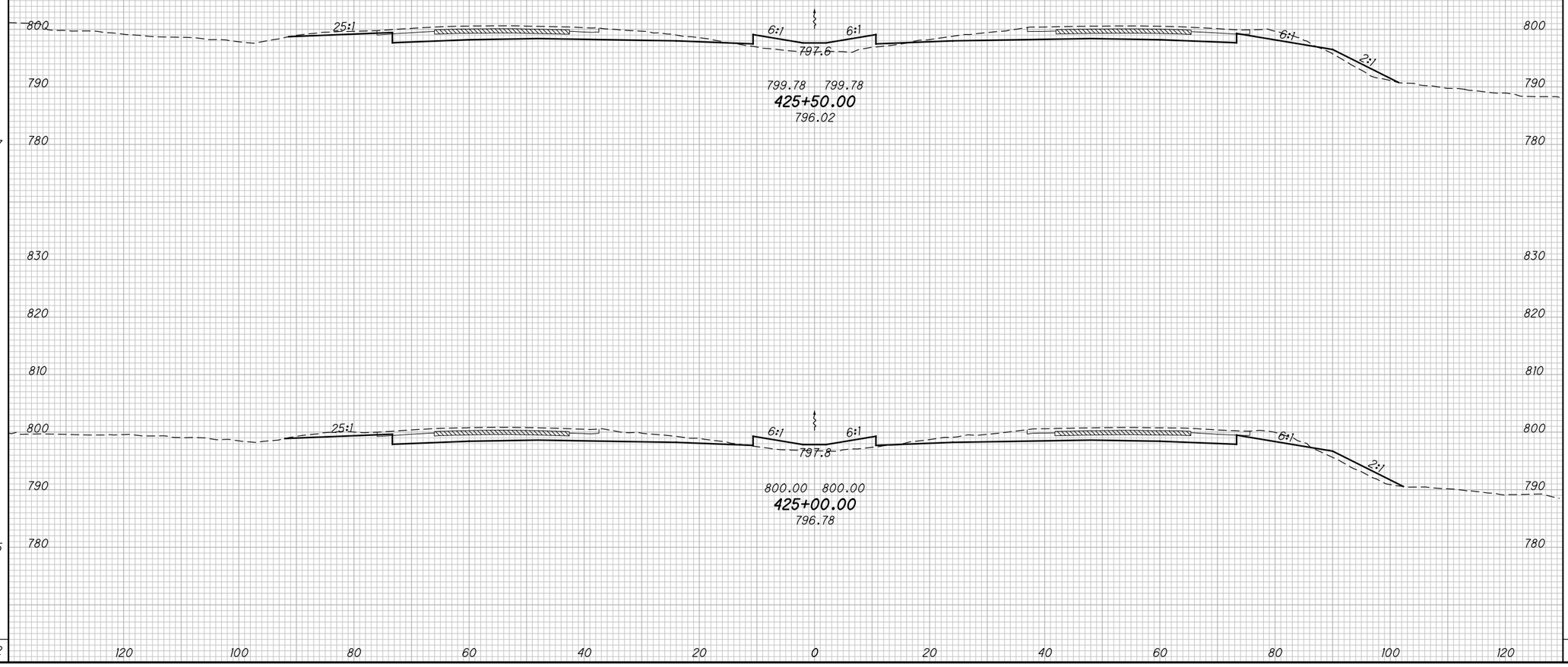

CALCULATED DWB
CHECKED BAL

CROSS SECTIONS - I.R. 71
STA. 425+00.00 TO STA. 425+50.00

FRA-71-5.29

302
623

P:\84868\roadway\sheets\84868XS003.dgn 12/17/2014 3:28:51 PM kfahy

SEEDING	
END WIDTH	SQ. YDS.
79	445
81	455
	900

ITEM 615 - PAVEMENT FOR MAINTAINING TRAFFIC, CLASS A AND GRADING

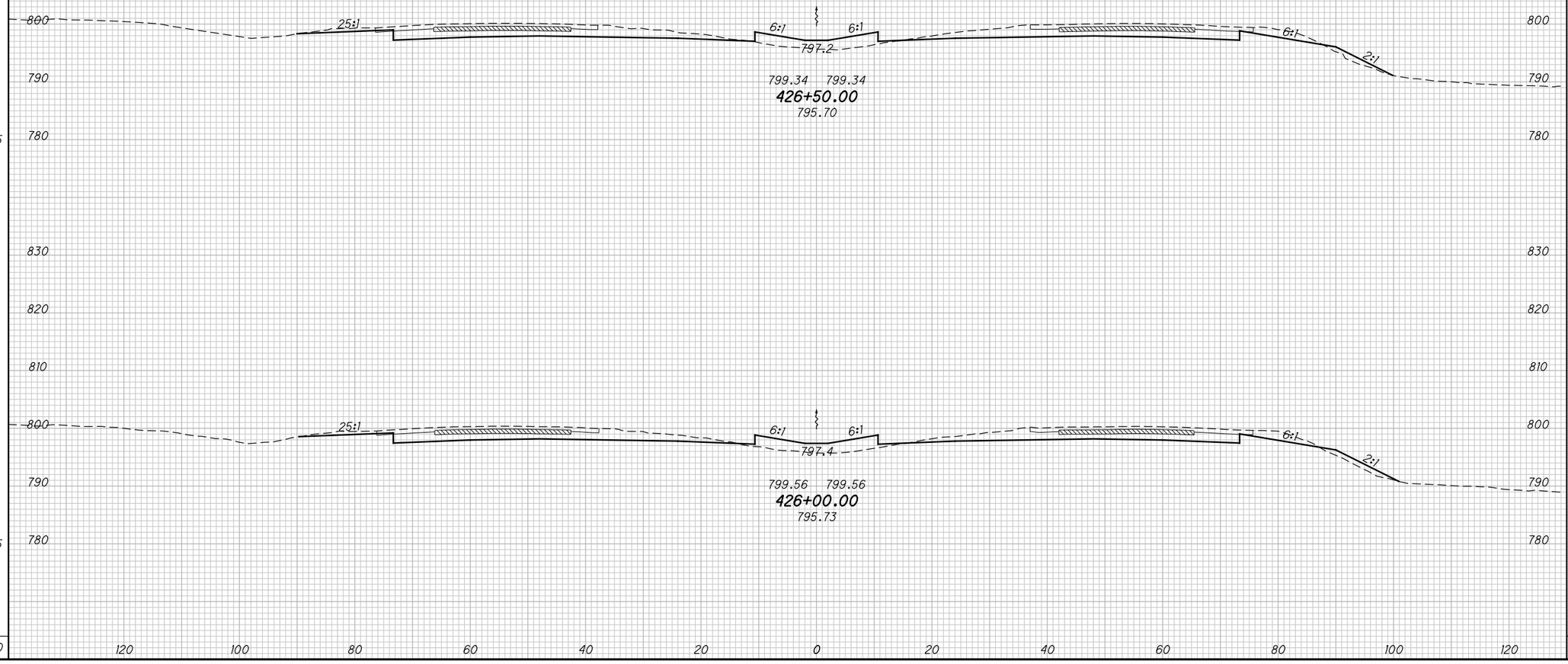

END AREA	
CUT	FILL
155	46
152	52

VOLUME	
CUT	FILL
284	91
283	98
567	189

CALCULATED	CHECKED
DWB	BAL

CROSS SECTIONS - I.R. 71
STA. 426+00.00 TO STA. 426+50.00

FRA-71-5.29

303
623

P:\84868\roadway\sheets\84868XS004.dgn 12/17/2014 3:28:53 PM kfahy

SEEDING	
END WIDTH	SQ. YDS.
67	406
79	444
	850

ITEM 615 - PAVEMENT FOR MAINTAINING TRAFFIC, CLASS A AND GRADING

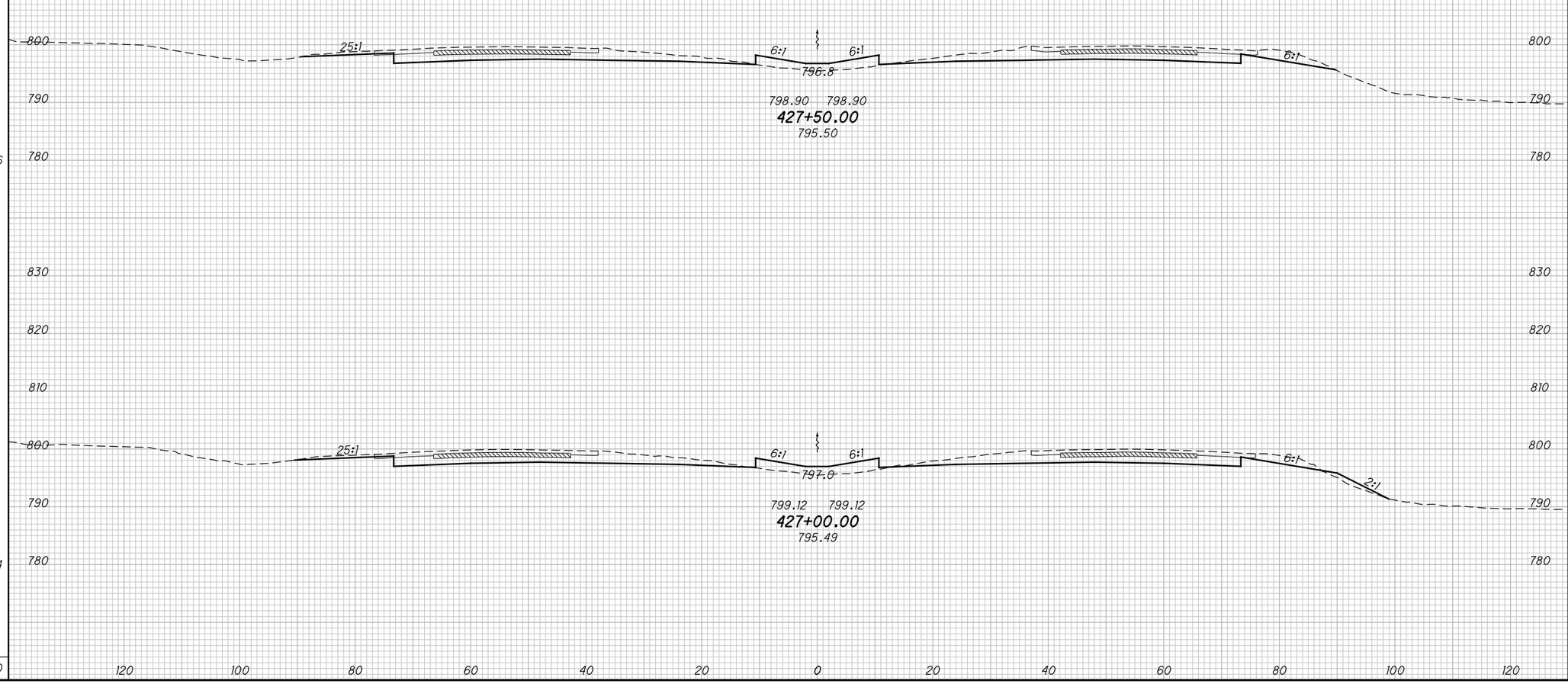

END AREA	
CUT	FILL
164	31
161	41

VOLUME	
CUT	FILL
301	66
293	80
594	146

CALCULATED DWB
CHECKED BAL

CROSS SECTIONS - I.R. 71
STA. 427+00.00 TO STA. 427+50.00

FRA-71-5.29

304
623

P:\84868\roadway\sheets\84868XS004.dgn 12/17/2014 3:28:54 PM kfahy

SEEDING	
END WIDTH	SQ. YDS.
73	394
68	378
	772

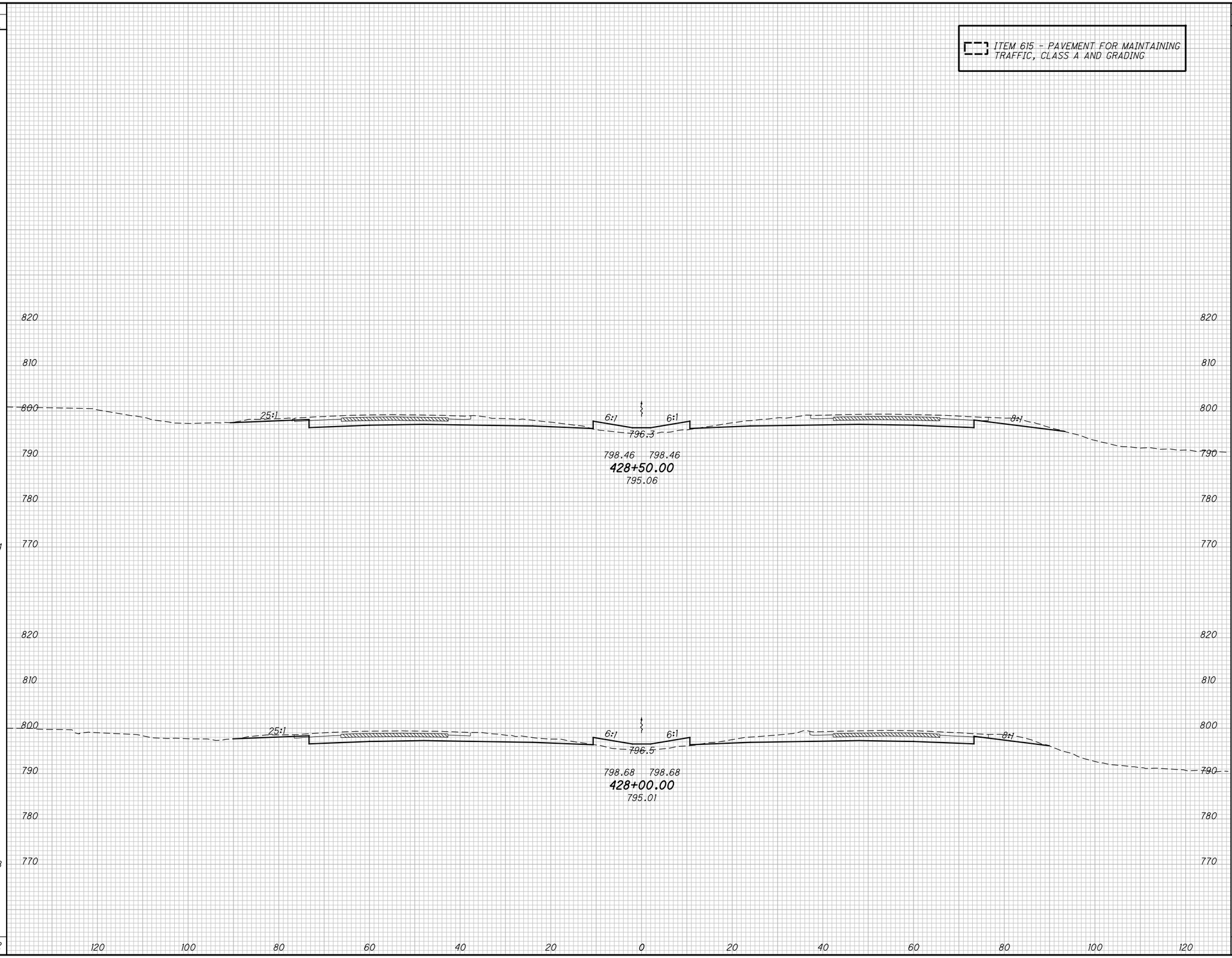

END AREA	
CUT	FILL
168	33
158	33

VOLUME	
CUT	FILL
302	61
298	59
600	120

CALCULATED DWB
CHECKED BAL

CROSS SECTIONS - I.R. 71
STA. 428+00.00 TO STA. 428+50.00

FRA-71-5.29

305
623

P:\84868\roadway\sheets\84868XS004.dgn 12/17/2014 3:28:55 PM kfahy

SEEDING	
END WIDTH	SQ. YDS.
68	378
68	394
	772

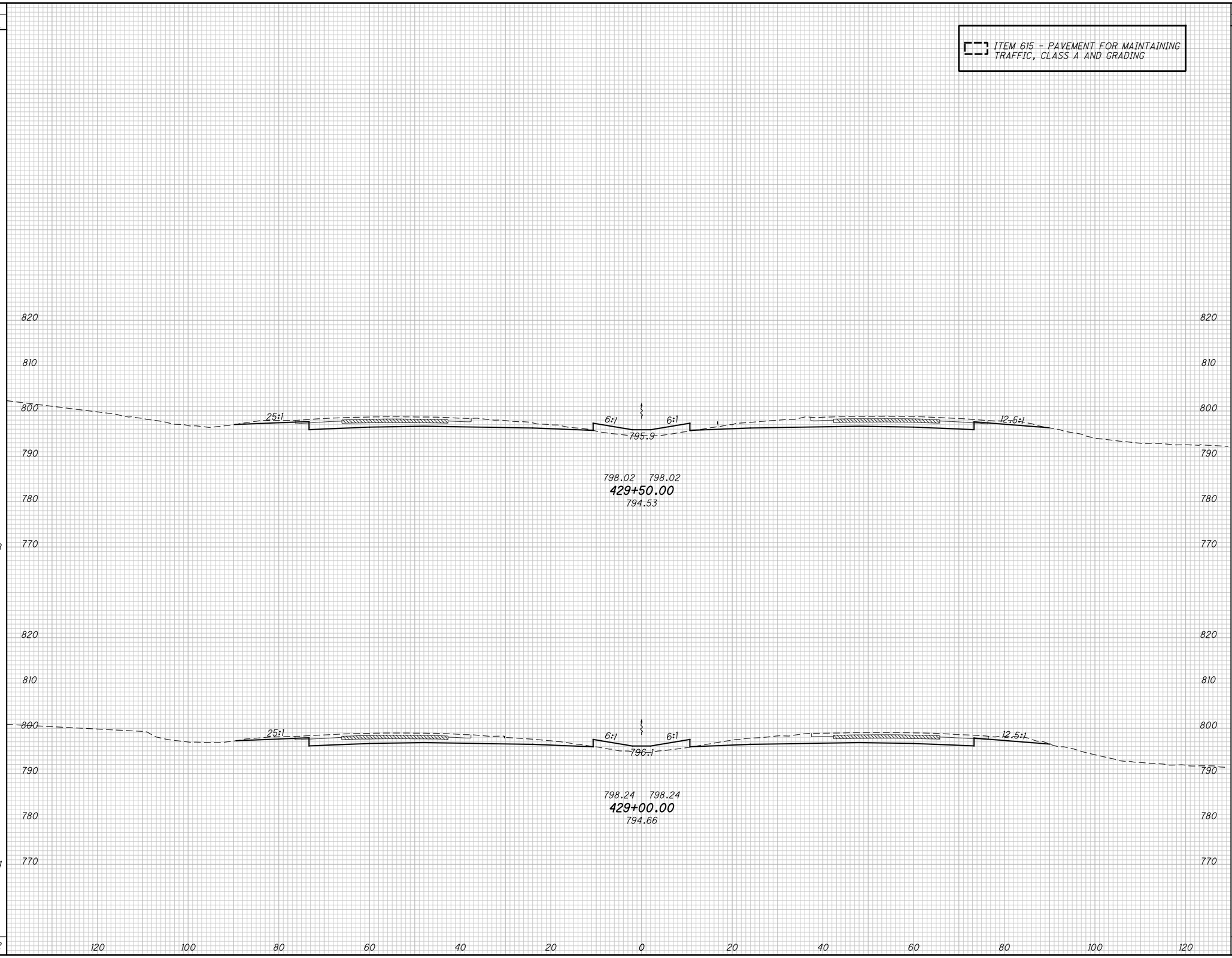

END AREA	
CUT	FILL
156	33
161	32

VOLUME	
CUT	FILL
294	60
304	60
598	120

CALCULATED DWB
CHECKED BAL

CROSS SECTIONS - I.R. 71
STA. 429+00.00 TO STA. 429+50.00

FRA-71-5.29

306
623

P:\84868\roadway\sheets\84868XS004.dgn 12/17/2014 3:28:56 PM kfahy

SEEDING		END AREA		VOLUME	
END WIDTH	SQ. YDS.	CUT	FILL	CUT	FILL
64	372	139	38	267	68
68	383	150	36	283	64
	755			550	132

CALCULATED DWB
CHECKED BAL

ITEM 615 - PAVEMENT FOR MAINTAINING TRAFFIC, CLASS A AND GRADING

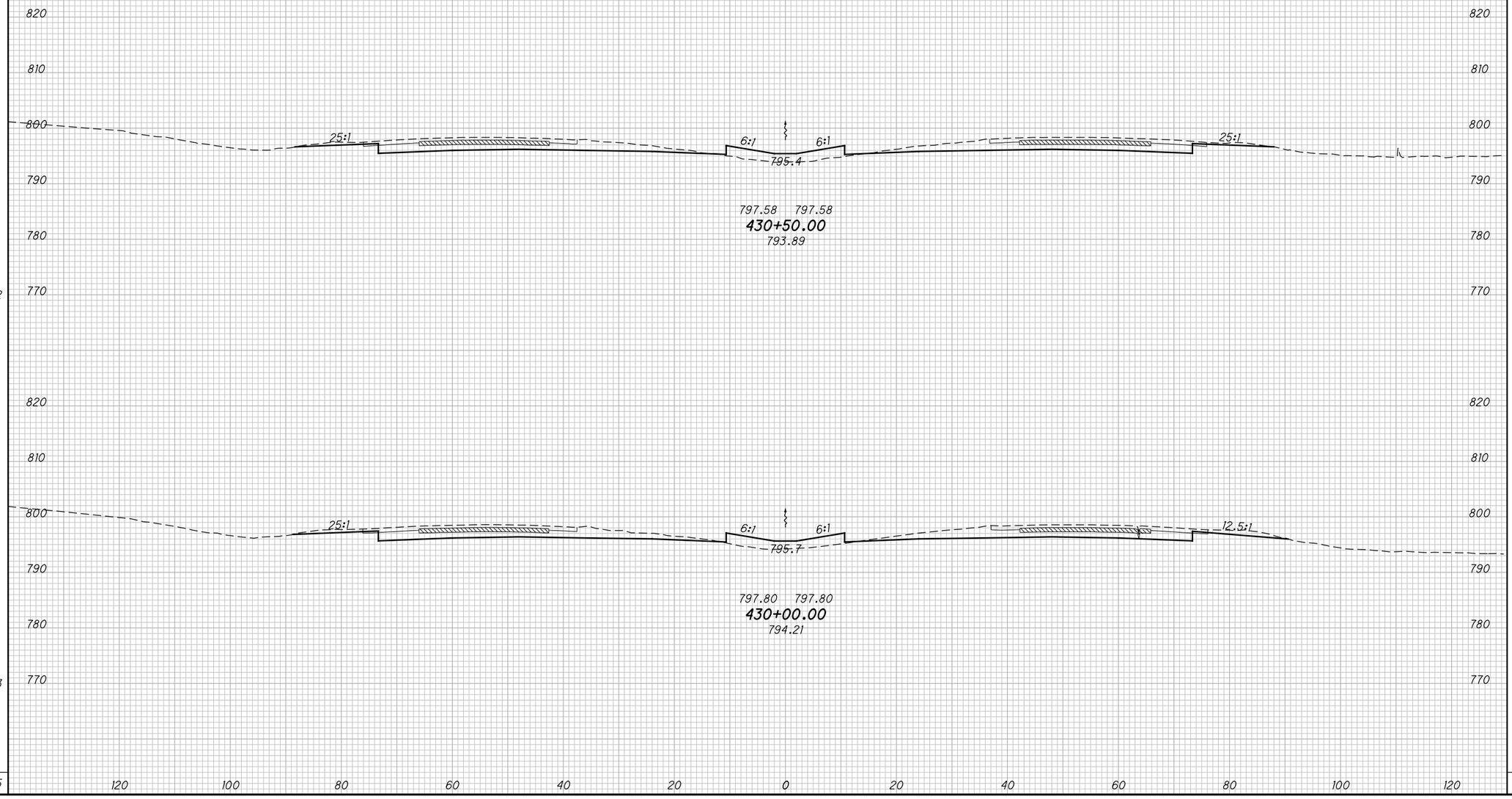

CROSS SECTIONS - I.R. 71
STA. 430+00.00 TO STA. 430+50.00

FRA-71-5.29

307
623

P:\84868\roadway\sheets\84868XS004.dgn 12/17/2014 3:28:57 PM kfahy

SEEDING	
END WIDTH	SQ. YDS.
65	361
65	361
	722

END AREA	
CUT	FILL
143	39
143	39

VOLUME	
CUT	FILL
264	72
260	71
524	143

CALCULATED	CHECKED
DWB	BAL

CROSS SECTIONS - I.R. 71
STA. 431+00.00 TO STA. 431+50.00

FRA-71-5.29

308
623

P:\84868\roadway\sheets\84868XS004.dgn 12/17/2014 3:28:58 PM kfahy

SEEDING	
END WIDTH	SQ. YDS.
65	372
67	366
	738

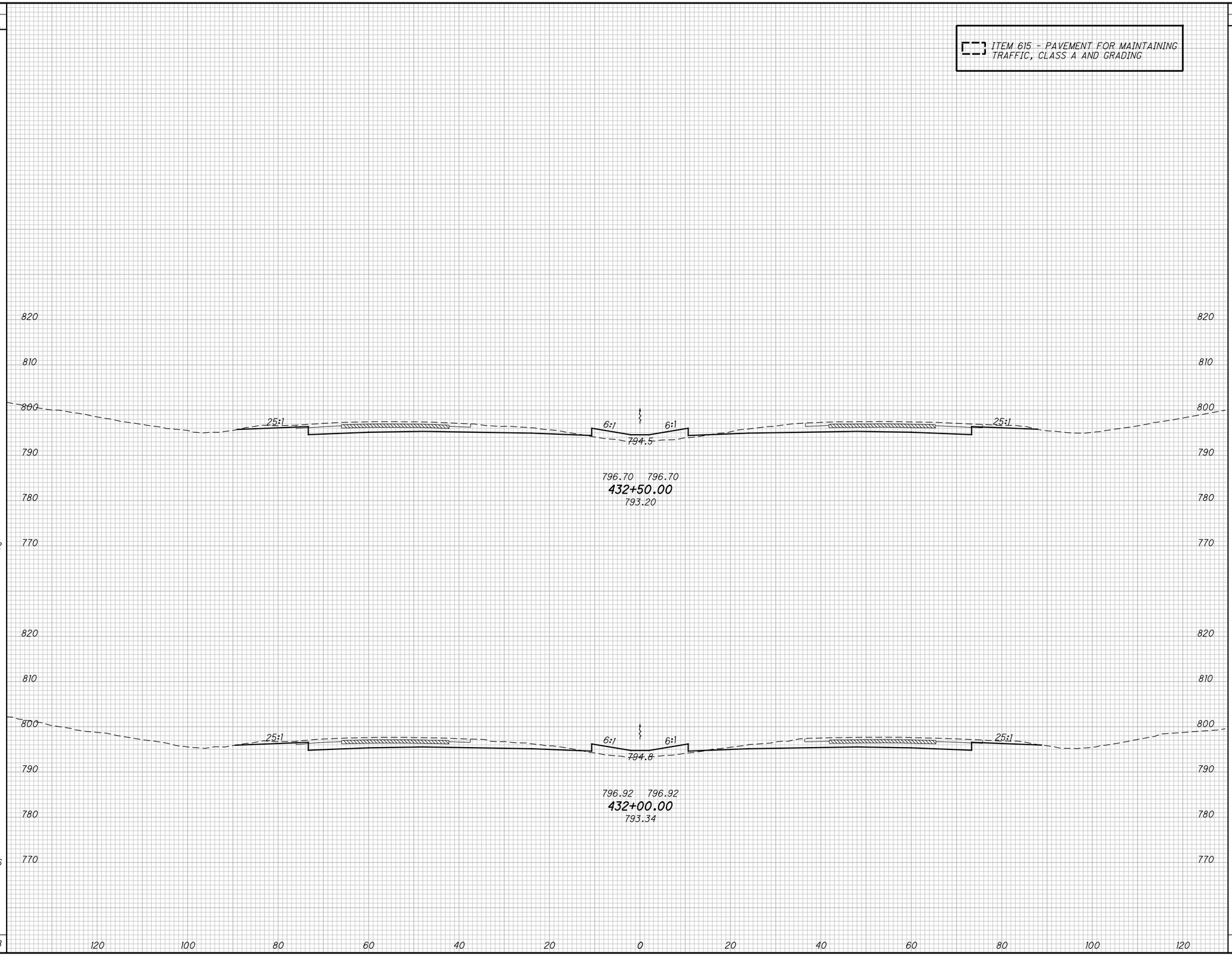

END AREA	
CUT	FILL
146	37
144	38

VOLUME	
CUT	FILL
268	70
265	71
533	141

CALCULATED DWB
CHECKED BAL

CROSS SECTIONS - I.R. 71
STA. 432+00.00 TO STA. 432+50.00

FRA-71-5.29

309
623

P:\84868\roadway\sheets\84868XS004.dgn 12/17/2014 3:28:59 PM kfahy

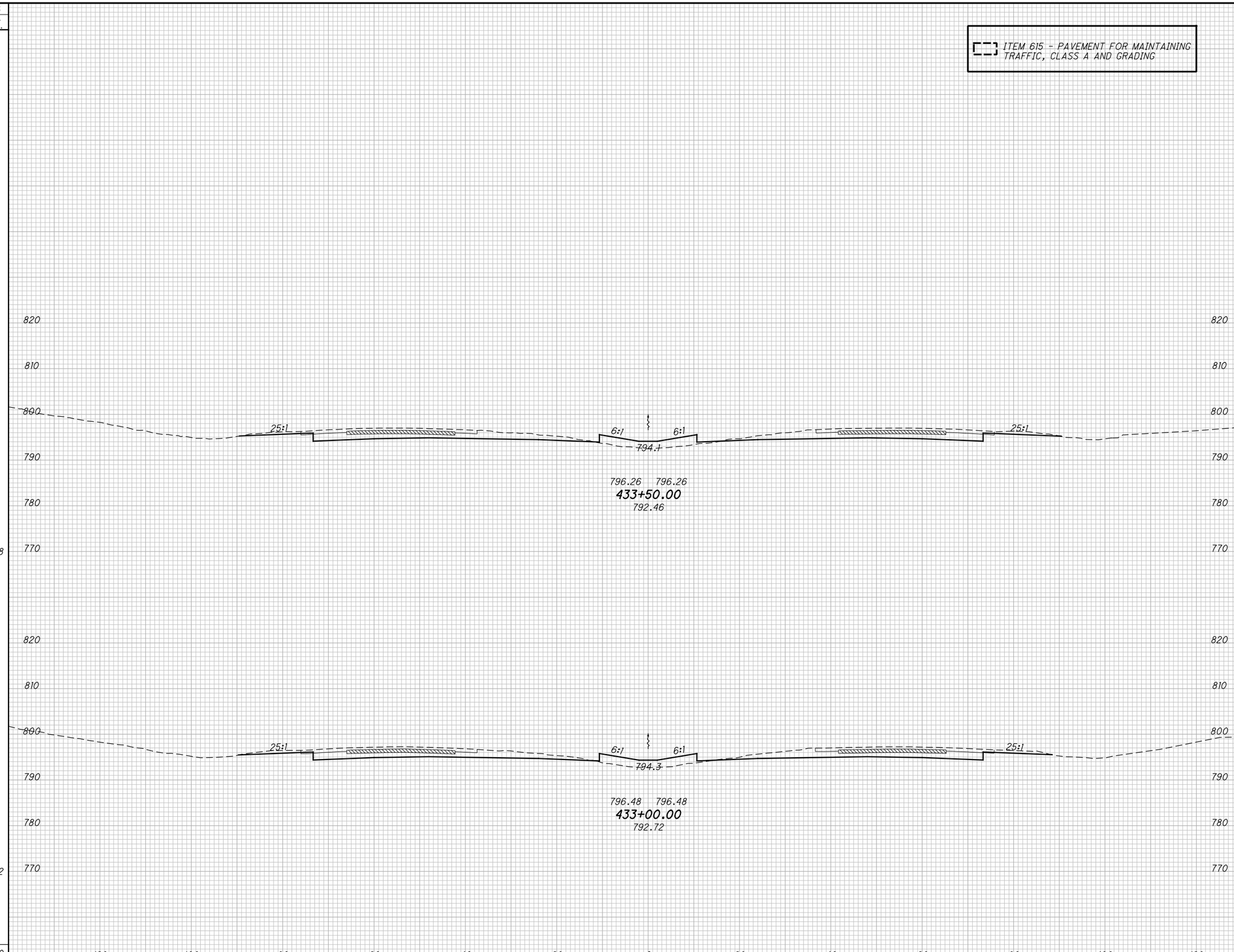

SEEDING END WIDTH	SEEDING SQ. YDS.	END AREA CUT	END AREA FILL	VOLUME CUT	VOLUME FILL
69		143	39		
	378			267	72
67		146	39		
	372			270	71
	750			537	143

CALCULATED DWB
CHECKED BAL

CROSS SECTIONS - I.R. 71
STA. 433+00.00 TO STA. 433+50.00

FRA-71-5.29

P:\84868\roadway\sheets\84868XS004.dgn 12/17/2014 3:29:00 PM kfahy

SEEDING	
END WIDTH	SQ. YDS.
67	377
68	383

ITEM 615 - PAVEMENT FOR MAINTAINING TRAFFIC, CLASS A AND GRADING

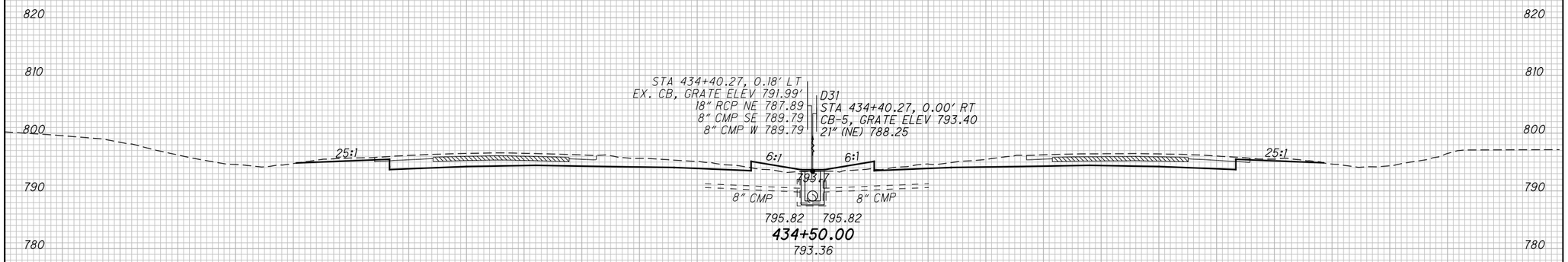

END AREA		VOLUME	
CUT	FILL	CUT	FILL
146	16		
137	40		
		262	52
		259	73
		521	125

CALCULATED DWB
CHECKED BAL

CROSS SECTIONS - I.R. 71
STA. 434+00.00 TO STA. 434+50.00

FRA-71-5.29

311
623

P:\84868\roadway\sheets\84868XS004.dgn 12/17/2014 3:29:00 PM kfahy

SEEDING		END AREA		VOLUME		CALCULATED DWB
END WIDTH	SQ. YDS.	CUT	FILL	CUT	FILL	CHECKED BAL
72	405	145	34	274	52	
73	389	151	23	275	36	
794				549	88	

ITEM 615 - PAVEMENT FOR MAINTAINING TRAFFIC, CLASS A AND GRADING

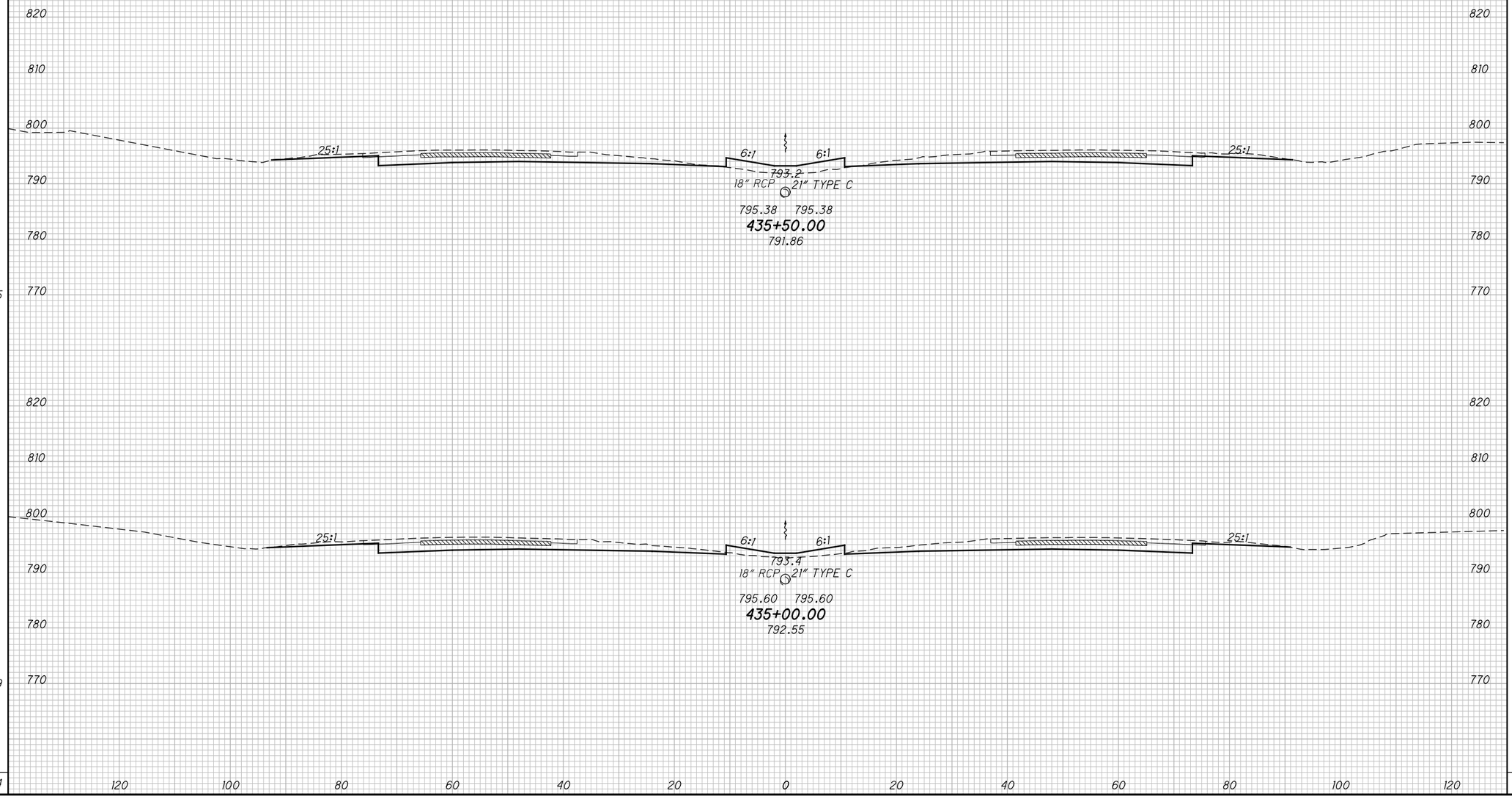

CROSS SECTIONS - I.R. 71
STA. 435+00.00 TO STA. 435+50.00

FRA-71-5.29

P:\84868\roadway\sheets\84868XS004.dgn 12/17/2014 3:29:01 PM kfahy

SEEDING		END AREA		VOLUME		CALCULATED DWB
END WIDTH	SQ. YDS.	CUT	FILL	CUT	FILL	CHECKED BAL
68	394	133	41	247	75	
73	406	135	40	259	69	
800				506	144	

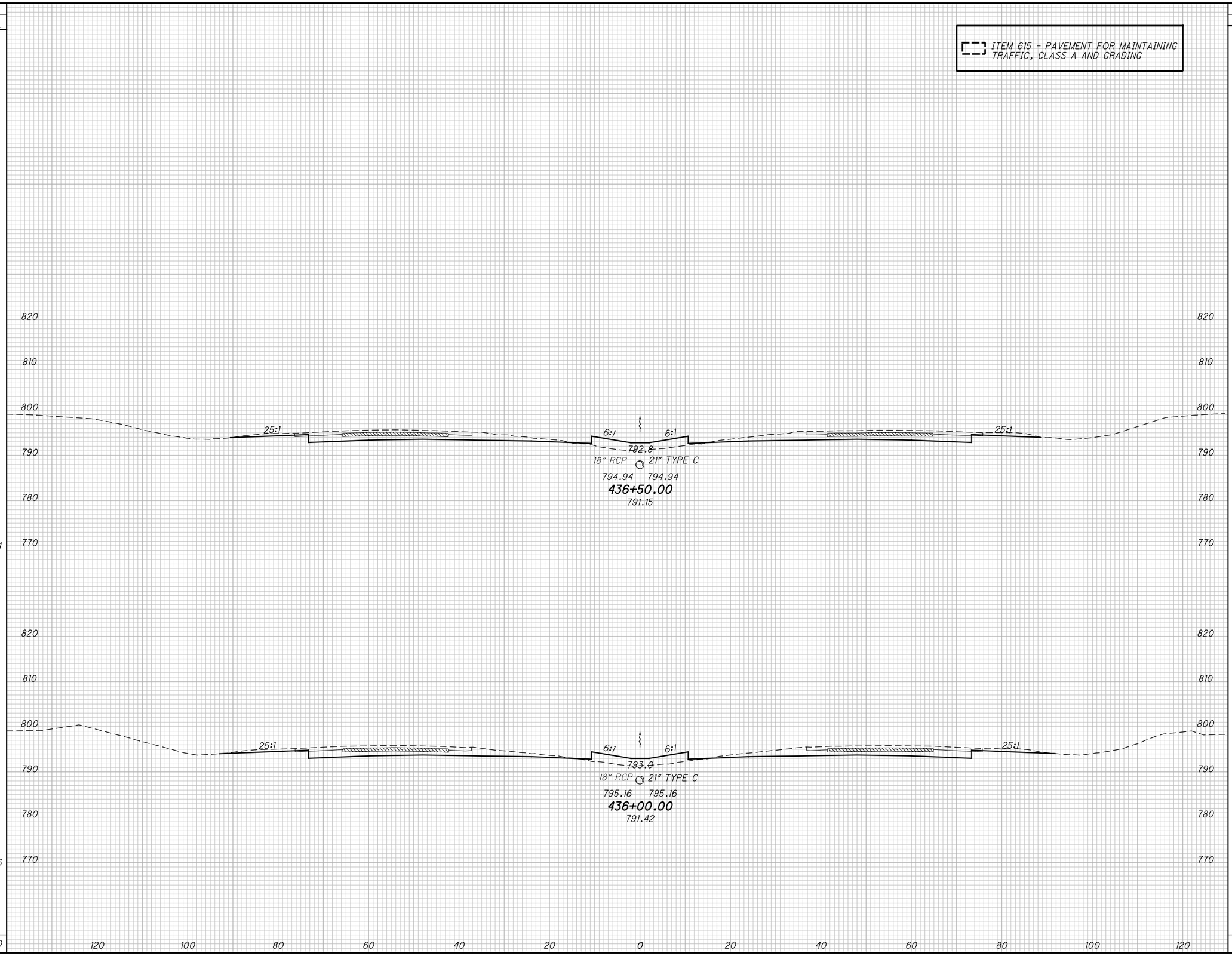

CROSS SECTIONS - I.R. 71
STA. 436+00.00 TO STA. 436+50.00

FRA-71-5.29

313
623

P:\84868\roadway\sheets\84868XS004.dgn 12/17/2014 3:29:02 PM kfahy

SEEDING	
END WIDTH	SQ. YDS.
68	389
71	389
778	

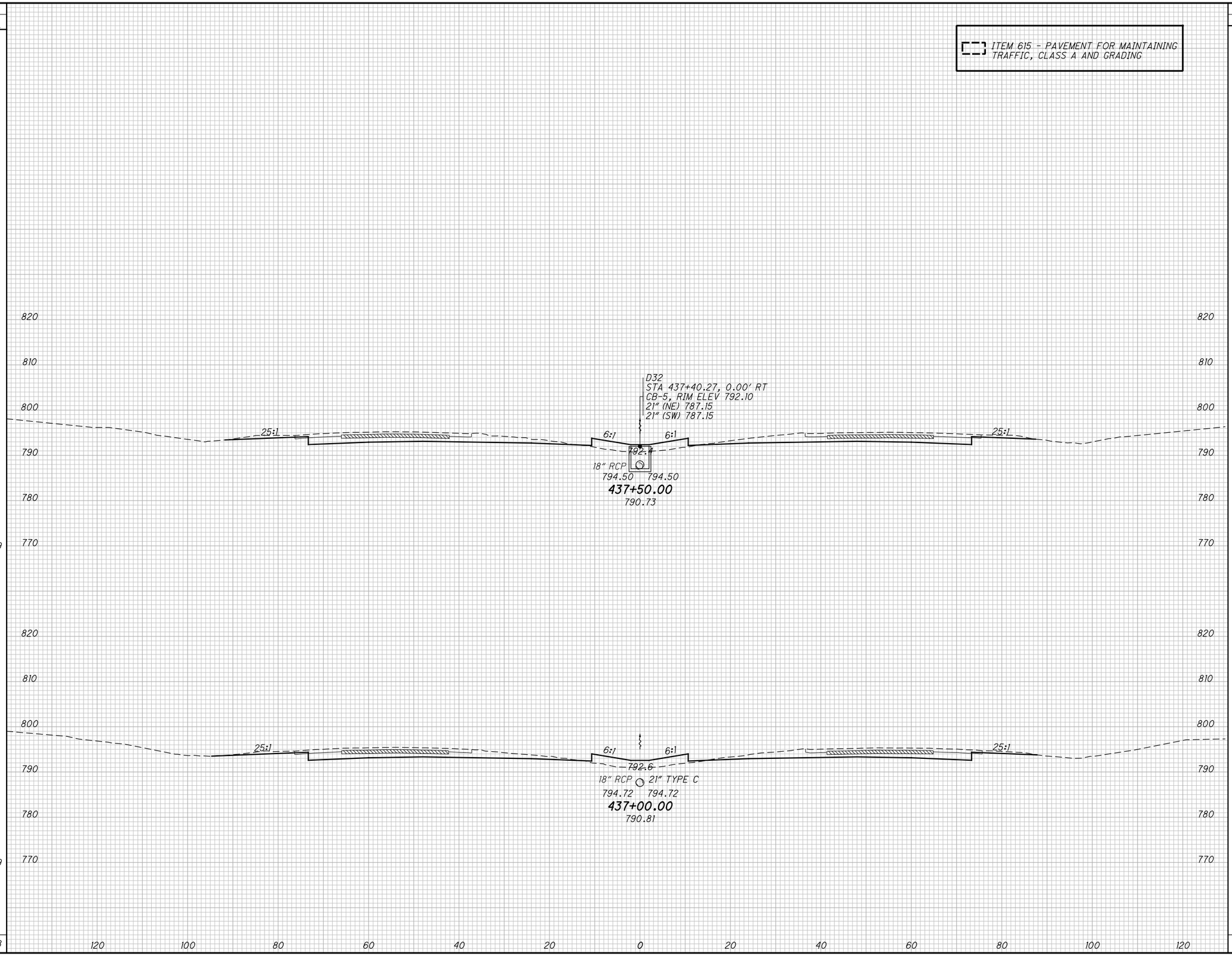

END AREA		VOLUME	
CUT	FILL	CUT	FILL
138	38		
131	40		
		250	72
		244	75
		494	147

CALCULATED DWB
CHECKED BAL

CROSS SECTIONS - I.R. 71
STA. 437+00.00 TO STA. 437+50.00

FRA-71-5.29

314
623

P:\84868\roadway\sheets\84868XS004.dgn 12/17/2014 3:29:03 PM kfahy

SEEDING	
END WIDTH	SQ. YDS.
69	388
70	389
777	

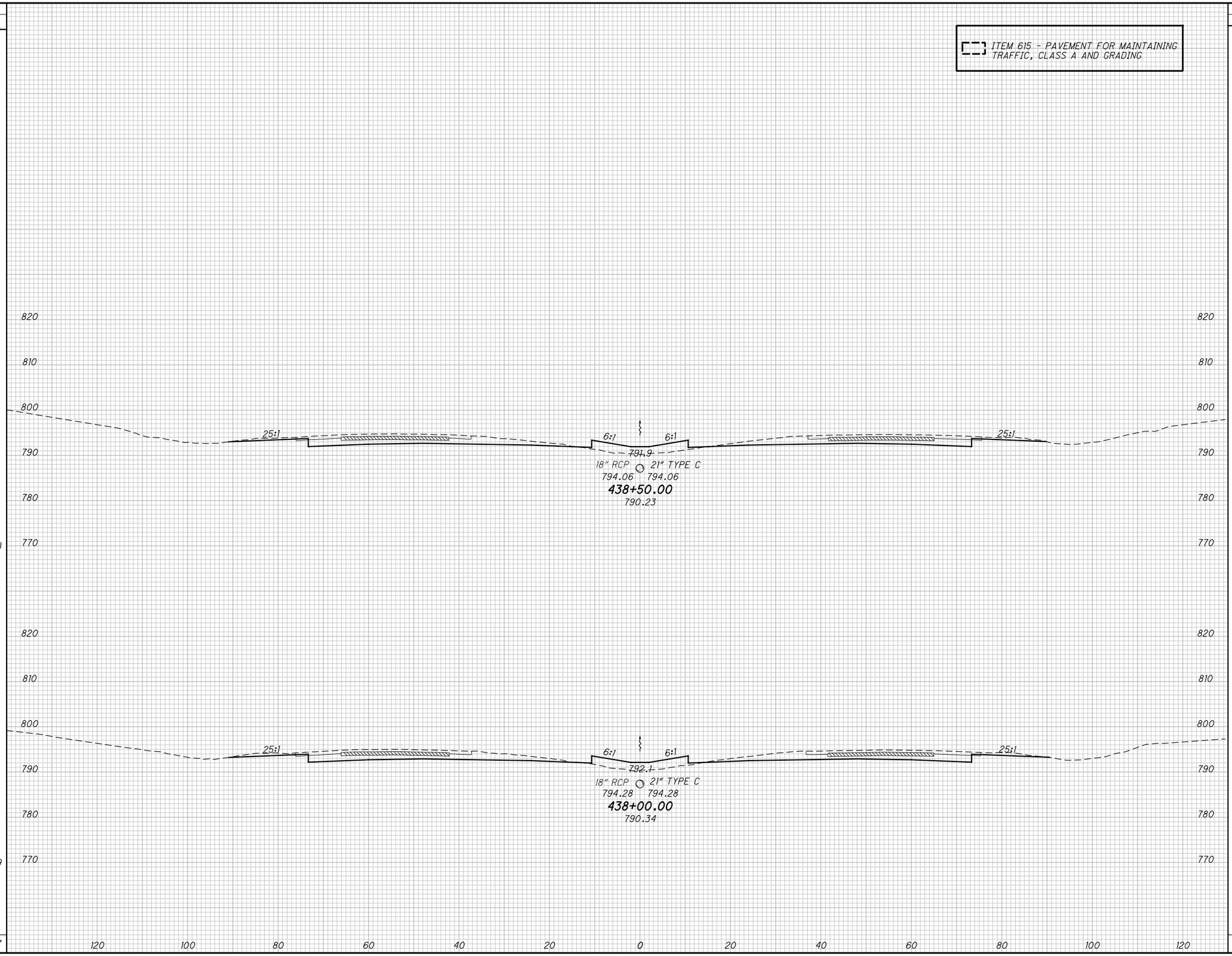

END AREA	
CUT	FILL
130	40
136	41

VOLUME	
CUT	FILL
247	75
254	73
501	148

CALCULATED DWB
CHECKED BAL

CROSS SECTIONS - I.R. 71
STA. 438+00.00 TO STA. 438+50.00

FRA-71-5.29

315
623

P:\84868\roadway\sheets\84868XS004.dgn 12/17/2014 3:29:04 PM kfahy

SEEDING	
END WIDTH	SQ. YDS.
67	377
68	383
760	

ITEM 615 - PAVEMENT FOR MAINTAINING TRAFFIC, CLASS A AND GRADING

820
810
800
790
780
770

25:1 6:1 6:1 25:1

791.5

18" RCP 21" TYPE C

793.62 793.62

439+50.00

789.75

791.7

18" RCP 21" TYPE C

793.84 793.84

439+00.00

790.10

120 100 80 60 40 20 0 20 40 60 80 100 120

END AREA		VOLUME	
CUT	FILL	CUT	FILL
135	41		
132	42		
489	153		
247	77		
242	76		

CALCULATED DWB
CHECKED BAL

CROSS SECTIONS - I.R. 71
STA. 439+00.00 TO STA. 439+50.00

FRA-71-5.29

316
623

P:\84868\roadway\sheets\84868XS004.dgn 12/17/2014 3:29:05 PM kfahy

SEEDING	
END WIDTH	SQ. YDS.
68	378
68	377
	755

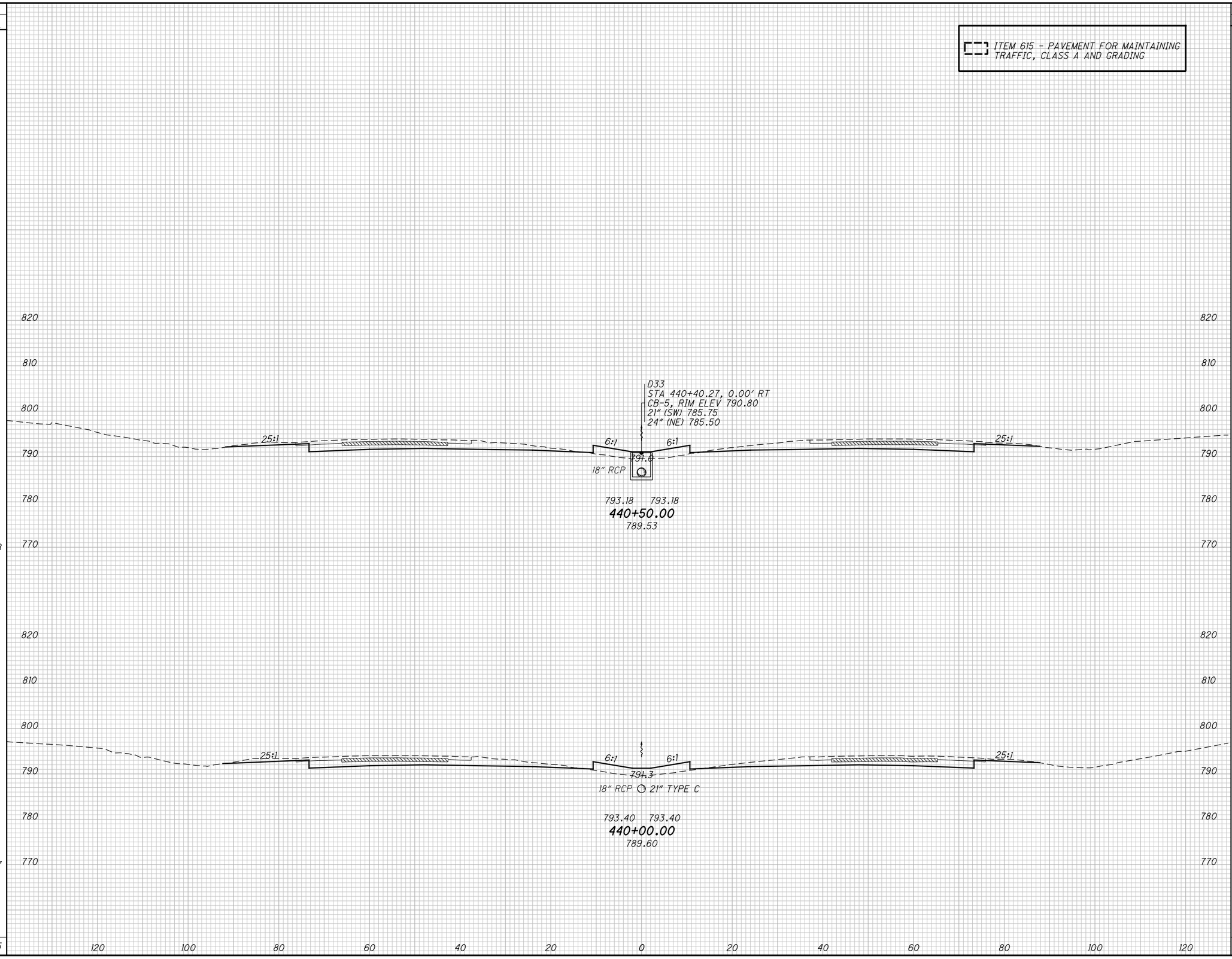

END AREA	
CUT	FILL
141	37
139	38

VOLUME	
CUT	FILL
260	70
254	74
514	144

CALCULATED DWB
CHECKED BAL

CROSS SECTIONS - I.R. 71
STA. 440+00.00 TO STA. 440+50.00

FRA-71-5.29

317
623

P:\84868\roadway\sheets\84868XS004.dgn 12/17/2014 3:29:06 PM kfahy

SEEDING	
END WIDTH	SQ. YDS.
65	367
65	372
	739

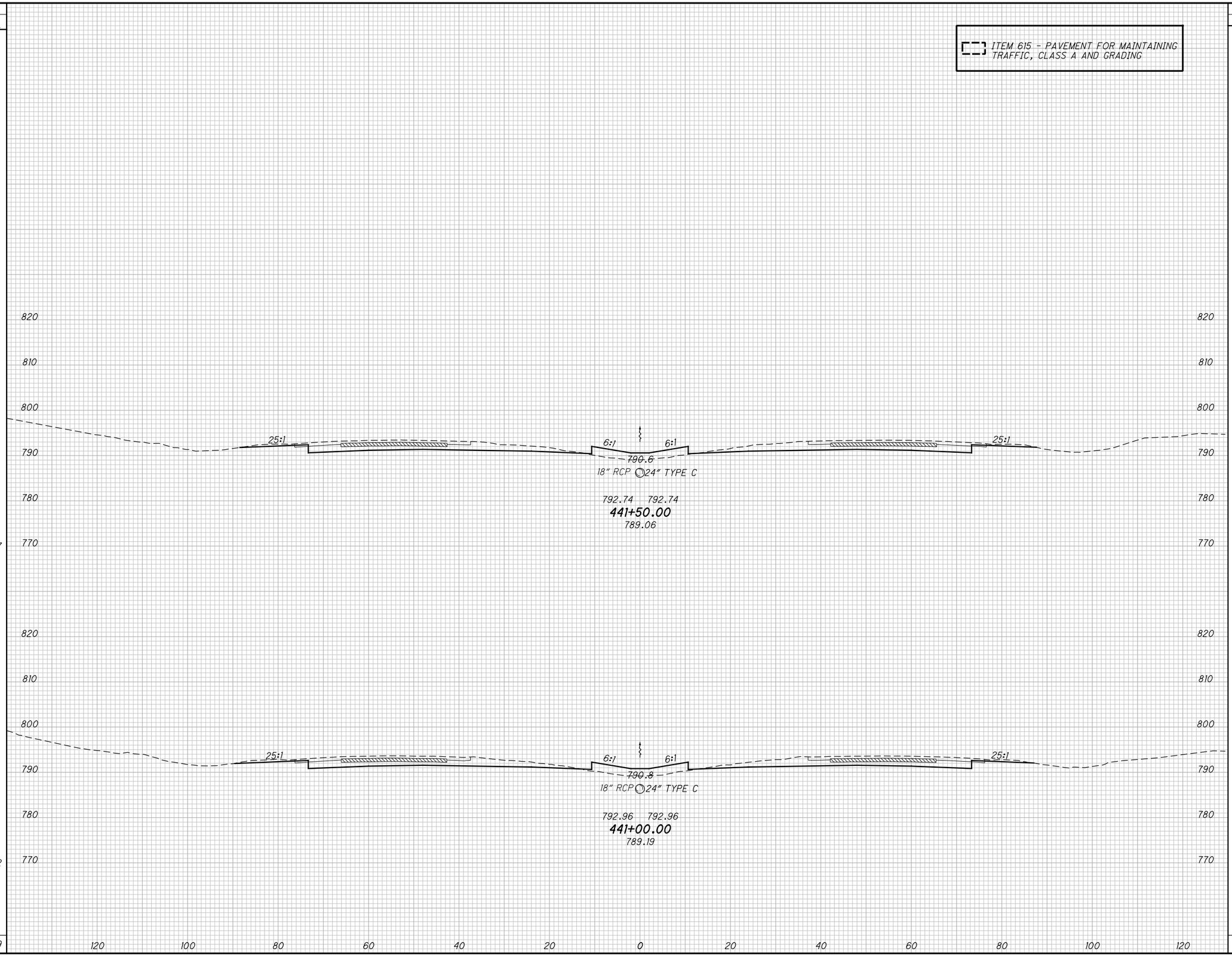

END AREA	
CUT	FILL
140	36
139	39

VOLUME	
CUT	FILL
258	69
260	70
518	139

CALCULATED DWB
CHECKED BAL

CROSS SECTIONS - I.R. 71
STA. 441+00.00 TO STA. 441+50.00

FRA-71-5.29

318
623

P:\84868\roadway\sheets\84868XS004.dgn 12/17/2014 3:29:07 PM kfahy

SEEDING		END AREA		VOLUME		
END WIDTH	SQ. YDS.	CUT	FILL	CUT	FILL	
						CALCULATED DWB
						CHECKED BAL
63	355	133	37	250	68	
64	361	137	36	256	67	
	716			506	135	

ITEM 615 - PAVEMENT FOR MAINTAINING TRAFFIC, CLASS A AND GRADING

820
810
800
790
780
770

25:1 6:1 6:1 25:1

790.1

18" RCP 24" TYPE C

792.30 792.30

442+50.00

788.56

790.4

18" RCP 24" TYPE C

792.52 792.52

442+00.00

788.96

120 100 80 60 40 20 0 20 40 60 80 100 120

CROSS SECTIONS - I.R. 71
STA. 442+00.00 TO STA. 442+50.00

FRA-71-5.29

319
623

P:\84868\roadway\sheets\84868XS004.dgn 12/17/2014 3:29:08 PM kfahy

SEEDING	
END WIDTH	SQ. YDS.
61	350
64	355
	705

ITEM 615 - PAVEMENT FOR MAINTAINING TRAFFIC, CLASS A AND GRADING

820
810
800
790
780
770

D34
STA 443+40.27, 0.00' RT
CB-5, RIM ELEV 789.60
24" (SW) 784.60
24" (NE) 784.60

25:1 6:1 6:1 25:1
789.7
18" RCP

791.86 791.86
443+50.00
788.19

25:1 6:1 6:1 25:1
789.9
18" RCP 24" TYPE C

792.08 792.08
443+00.00
788.24

120 100 80 60 40 20 0 20 40 60 80 100 120

END AREA		VOLUME	
CUT	FILL	CUT	FILL
129	40	241	74
132	40	245	71
		486	145

CALCULATED DWB
CHECKED BAL

CROSS SECTIONS - I.R. 71
STA. 443+00.00 TO STA. 443+50.00

FRA-71-5.29

320
623

P:\84868\roadway\sheets\84868XS004.dgn 12/17/2014 3:29:09 PM kfahy

SEEDING		END AREA		VOLUME	
END WIDTH	SQ. YDS.	CUT	FILL	CUT	FILL
62	350	135	15	246	51
63	350	130	40	240	74
	700			486	125

ITEM 615 - PAVEMENT FOR MAINTAINING TRAFFIC, CLASS A AND GRADING

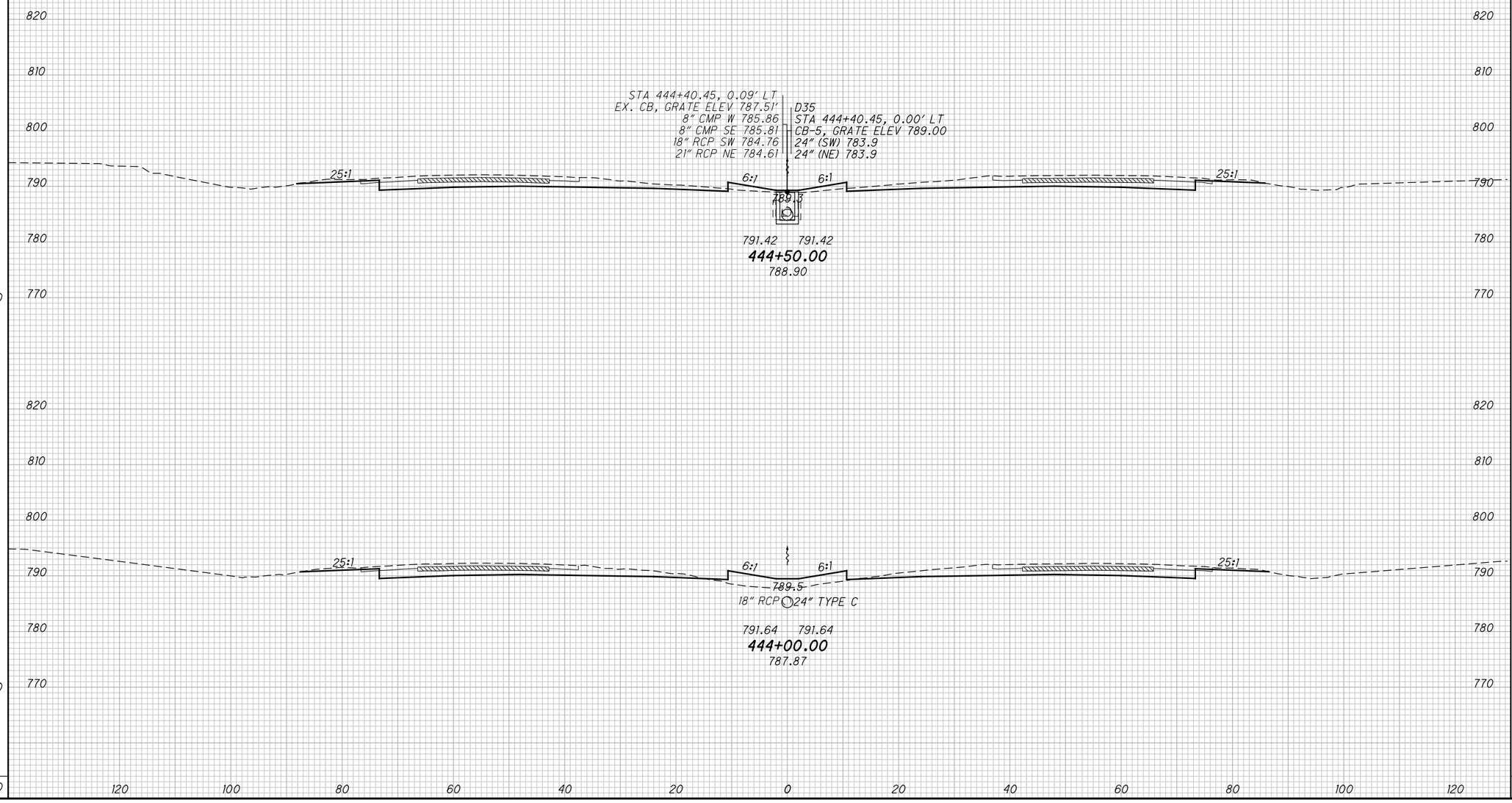

CALCULATED DWB
CHECKED BAL

CROSS SECTIONS - I.R. 71
STA. 444+00.00 TO STA. 444+50.00

FRA-71-5.29

P:\84868\roadway\sheets\84868XS004.dgn 12/17/2014 3:29:10 PM kfahy

SEEDING	
END WIDTH	SQ. YDS.
63	350
62	345
	695

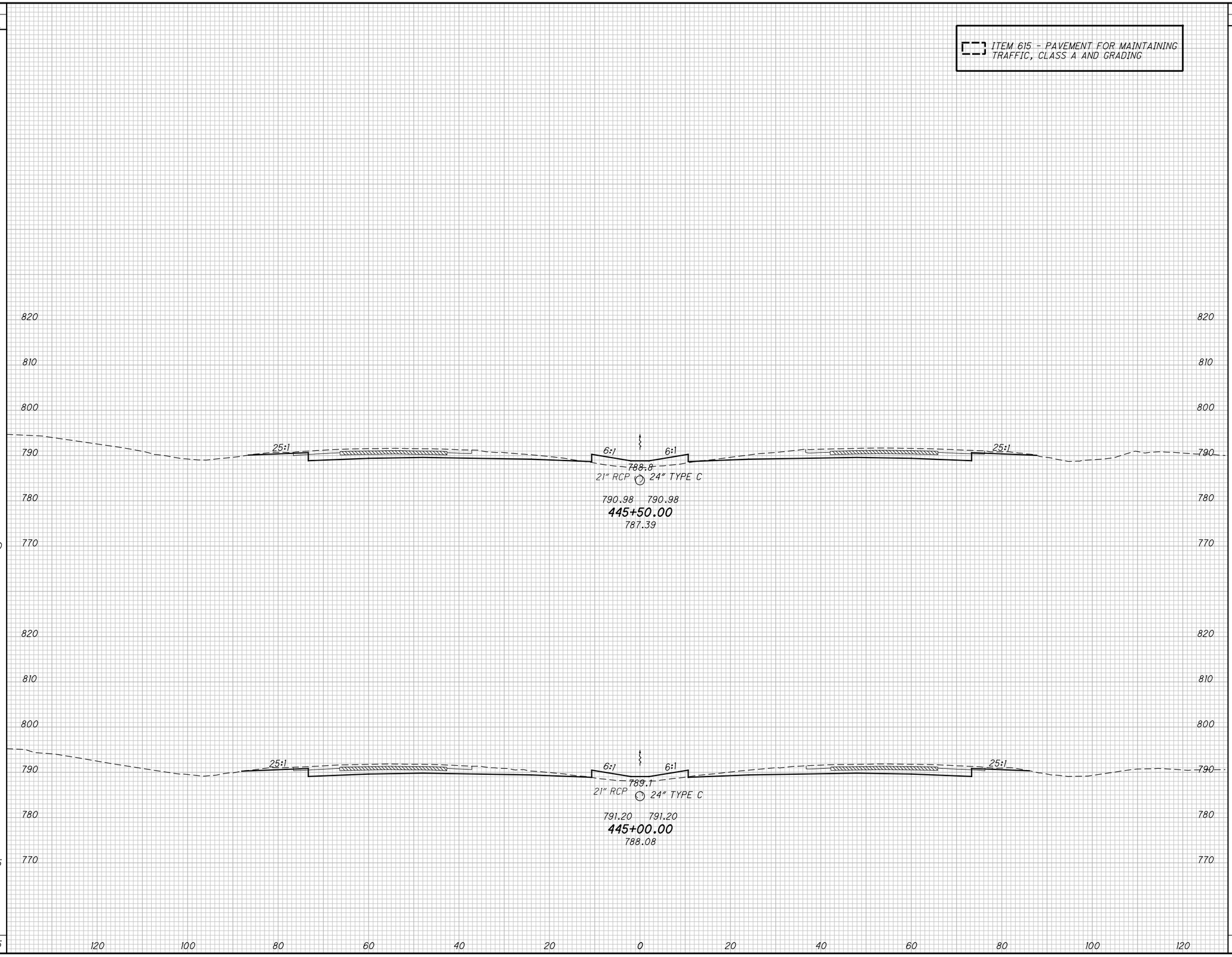

END AREA	
CUT	FILL
129	36
131	27

VOLUME	
CUT	FILL
241	58
247	39
488	97

CALCULATED	CHECKED
DWB	BAL

CROSS SECTIONS - I.R. 71
STA. 445+00.00 TO STA. 445+50.00

FRA-71-5.29

322
623

P:\84868\roadway\sheets\84868XS004.dgn 12/17/2014 3:29:11 PM kfahy

SEEDING		END AREA		VOLUME	
END WIDTH	SQ. YDS.	CUT	FILL	CUT	FILL
62	344	127	37	239	69
62	350	131	37	240	67
	694			479	136

CALCULATED DWB
CHECKED BAL

ITEM 615 - PAVEMENT FOR MAINTAINING TRAFFIC, CLASS A AND GRADING

820
810
800
790
780
770

25:1 6:1 6:1 25:1

788.4
21" RCP 24" TYPE C
790.54 790.54
446+50.00
786.93

788.6
21" RCP 24" TYPE C
790.76 790.76
446+00.00
787.04

120 100 80 60 40 20 0 20 40 60 80 100 120

CROSS SECTIONS - I.R. 71
STA. 446+00.00 TO STA. 446+50.00

FRA-71-5.29

323
623

P:\84868\roadway\sheets\84868XS004.dgn 12/17/2014 3:29:12 PM kfahy

SEEDING	
END WIDTH	SQ. YDS.
64	350
61	344
	694

ITEM 615 - PAVEMENT FOR MAINTAINING TRAFFIC, CLASS A AND GRADING

D36
STA 447+40.45, 0.00' LT
CB-5, RIM ELEV 787.70
24" (NE) 782.60
24" (SW) 782.60

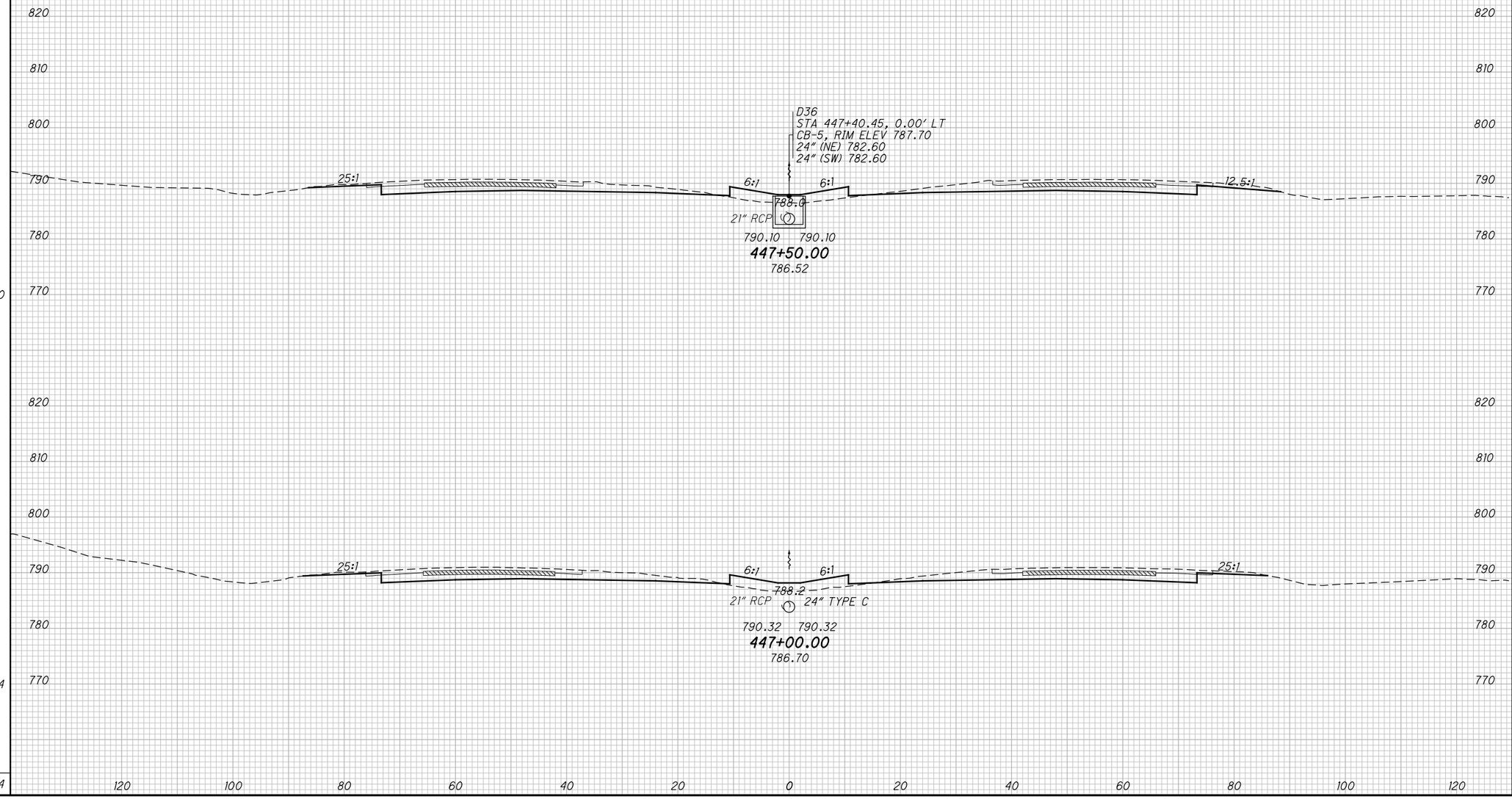

END AREA	
CUT	FILL
128	38
127	38

VOLUME	
CUT	FILL
236	70
235	69
471	139

CALCULATED DWB
CHECKED BAL

CROSS SECTIONS - I.R. 71
STA. 447+00.00 TO STA. 447+50.00

FRA-71-5.29

324
623

P:\84868\roadway\sheets\84868XS004.dgn 12/17/2014 3:29:13 PM kfahy

SEEDING	
END WIDTH	SQ. YDS.
63	350
62	355
	705

ITEM 615 - PAVEMENT FOR MAINTAINING TRAFFIC, CLASS A AND GRADING

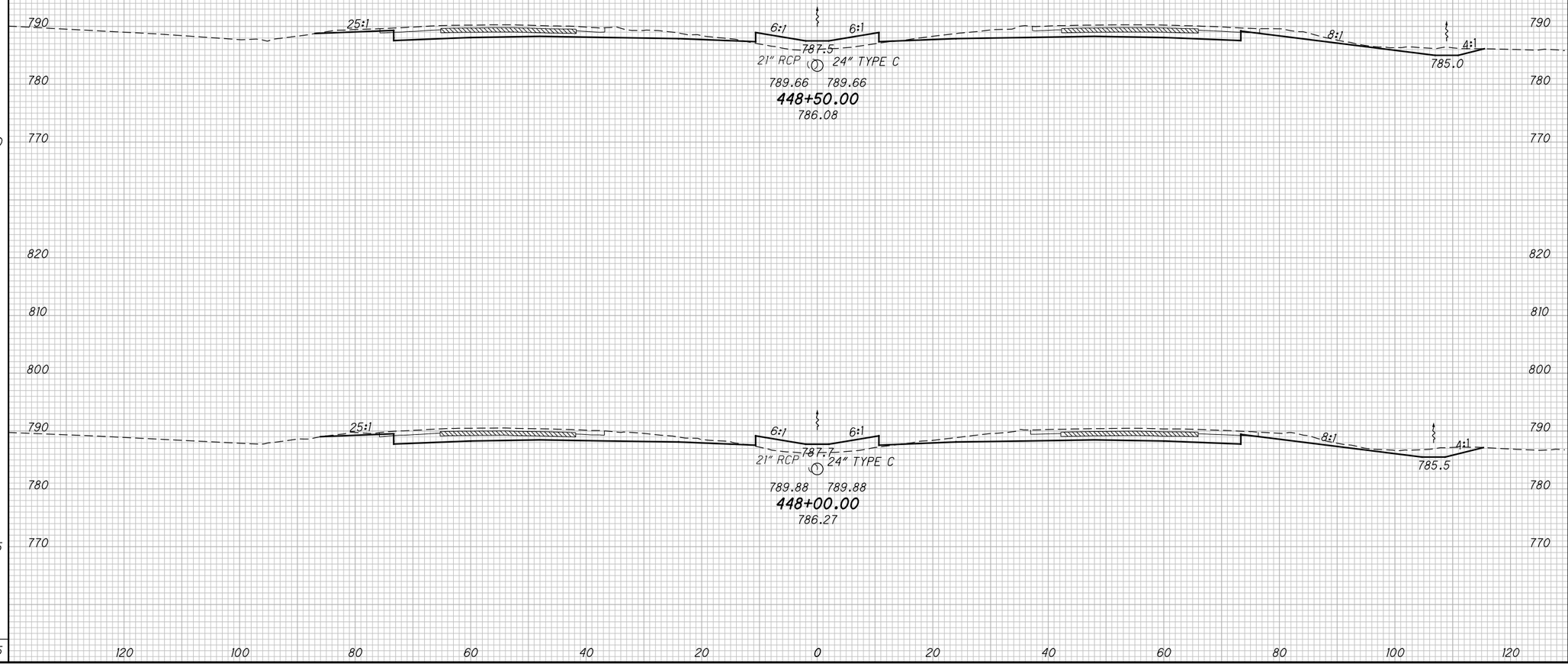

END AREA	
CUT	FILL
130	37
128	38

VOLUME	
CUT	FILL
239	70
237	70
476	140

CALCULATED DWB
CHECKED BAL

CROSS SECTIONS - I.R. 71
STA. 448+00.00 TO STA. 448+50.00

FRA-71-5.29

325
623

P:\84868\roadway\sheets\84868XS004.dgn 12/17/2014 3:29:14 PM kfahy

SEEDING	
END WIDTH	SQ. YDS.
63	345
61	350
	695

ITEM 615 - PAVEMENT FOR MAINTAINING TRAFFIC, CLASS A AND GRADING

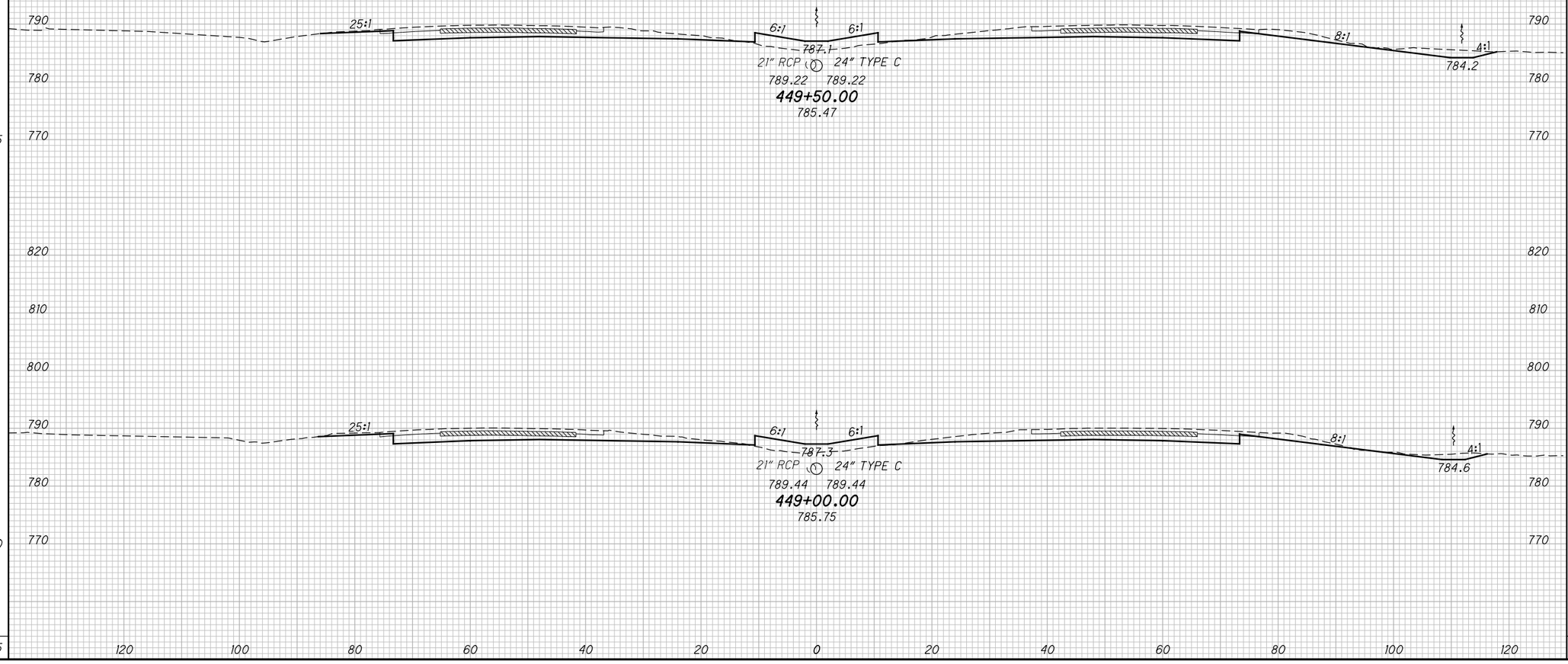

END AREA		VOLUME	
CUT	FILL	CUT	FILL
125	38	232	70
125	37	237	69
		469	139

CALCULATED DWB
CHECKED BAL

CROSS SECTIONS - I.R. 71
STA. 449+00.00 TO STA. 449+50.00

FRA-71-5.29

326
623

P:\84868\roadway\sheets\84868XS004.dgn 12/17/2014 3:29:15 PM kfahy

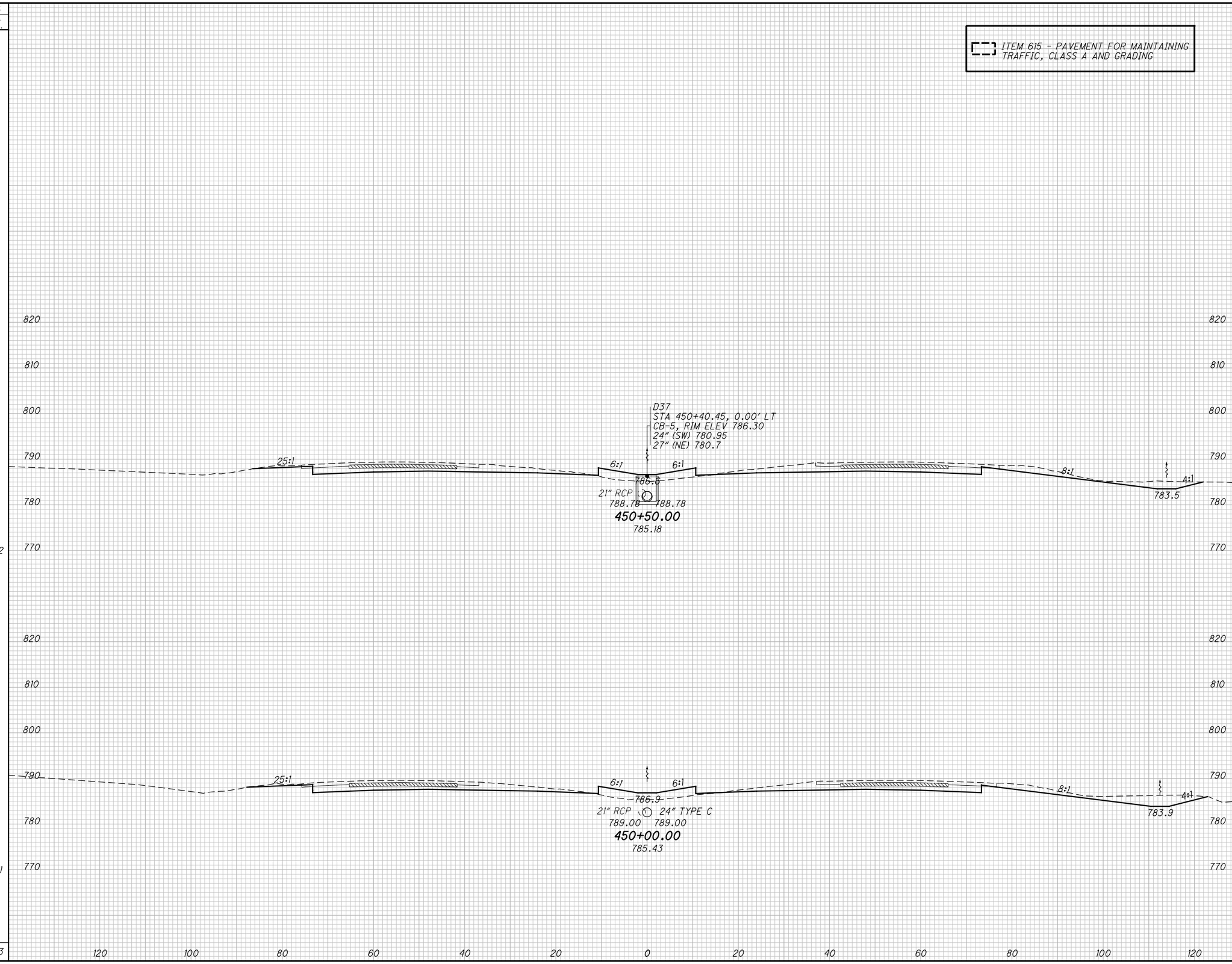

SEEDING END WIDTH	SEEDING SQ. YDS.	END AREA CUT	END AREA FILL	VOLUME CUT	VOLUME FILL
67		131	37		
	372			237	69
66		126	38		
	361			232	70
	733			469	139

CALCULATED DWB
CHECKED BAL

CROSS SECTIONS - I.R. 71
STA. 450+00.00 TO STA. 450+50.00

FRA-71-5.29

P:\84868\roadway\sheets\84868XS004.dgn 12/17/2014 3:29:16 PM kfahy

SEEDING		END AREA		VOLUME		CALCULATED	CHECKED
END WIDTH	SQ. YDS.	CUT	FILL	CUT	FILL	DWB	BAL
66	367	144	37	260	68		
65	366	137	37	248	68		
	733			508	136		

ITEM 615 - PAVEMENT FOR MAINTAINING TRAFFIC, CLASS A AND GRADING

820 810 800 790 780 770 760

25:1 6:1 6:1 8:1 4:1

786.2
21" RCP 27" TYPE C
788.34 788.34
451+50.00
784.77
783.0

786.4
21" RCP 27" TYPE C
788.56 788.56
451+00.00
785.04
783.3

120 100 80 60 40 20 0 20 40 60 80 100 120

CROSS SECTIONS - I.R. 71
STA. 451+00.00 TO STA. 451+50.00

FRA-71-5.29

328
623

P:\84868\roadway\sheets\84868XS004.dgn 12/17/2014 3:29:17 PM kfahy

SEEDING		END AREA		VOLUME		CALCULATED DWB	CHECKED BAL
END WIDTH	SQ. YDS.	CUT	FILL	CUT	FILL		
66	367	143	41	264	76		
65	366	143	41	265	72		
	733			529	148		

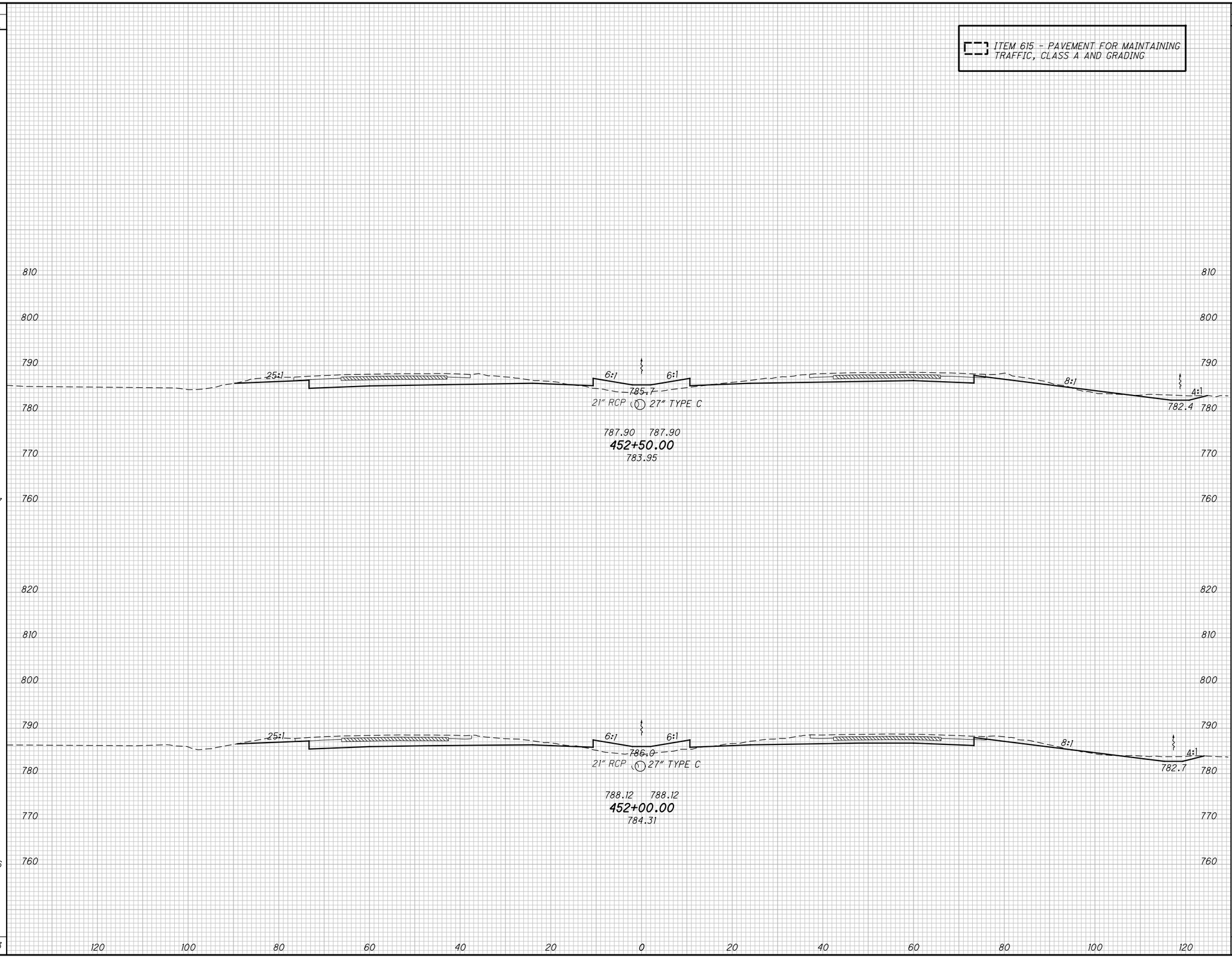

CROSS SECTIONS - I.R. 71
STA. 452+00.00 TO STA. 452+50.00

FRA-71-5.29

P:\84868\roadway\sheets\84868XS004.dgn 12/17/2014 3:29:18 PM kfahy

SEEDING	
END WIDTH	SQ. YDS.
88	772
	417
61	
	355

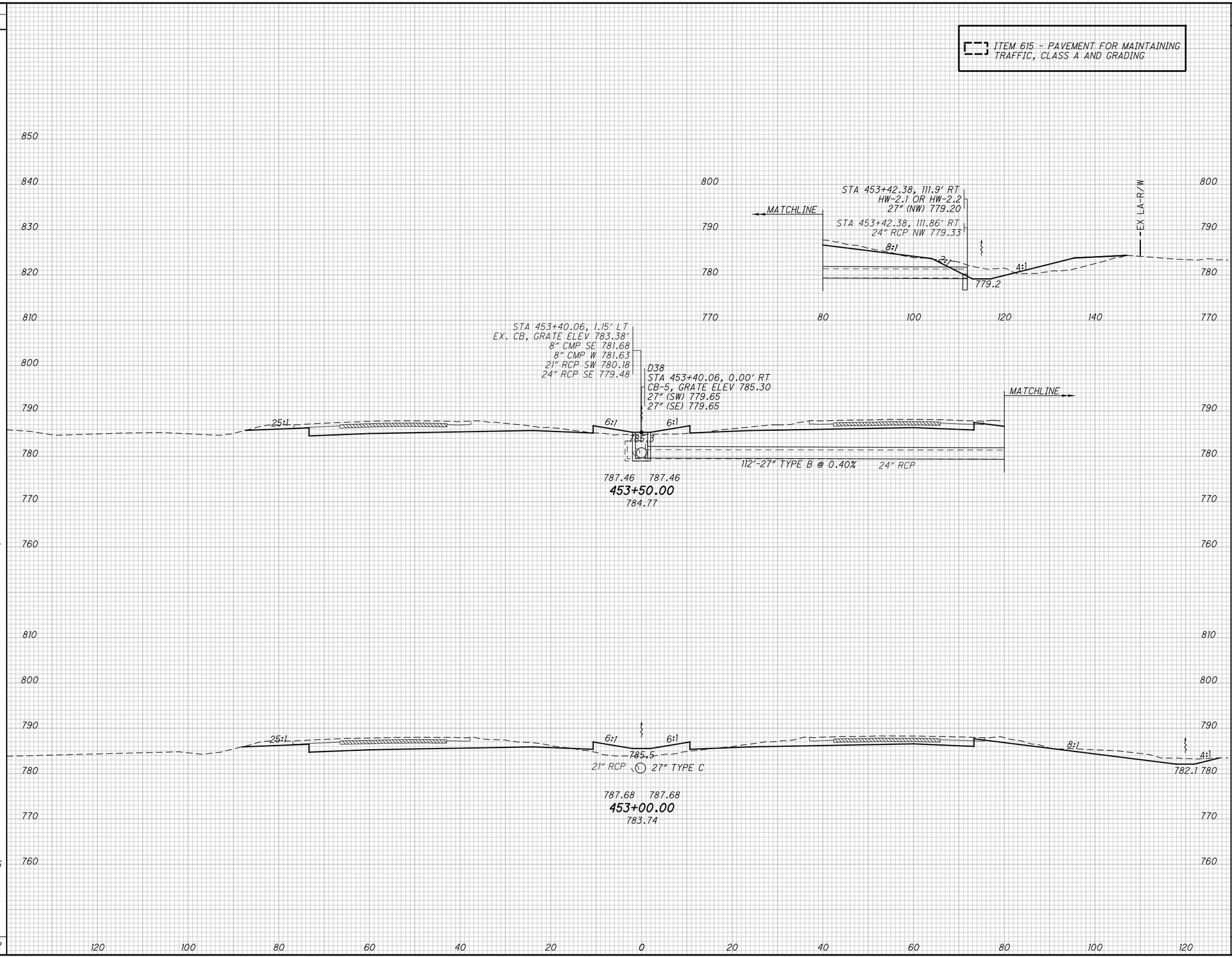

END AREA	
CUT	FILL
174	26
139	45
551	146

VOLUME	
CUT	FILL
290	66
261	80

CALCULATED DWB
CHECKED BAL

CROSS SECTIONS - I.R. 71
STA. 453+00.00 TO STA. 453+50.00

FRA-71-5.29

330
623

P:\84868\roadway\sheets\84868XS004.dgn 12/17/2014 3:29:19 PM kfahy

SEEDING	
END WIDTH	SQ. YDS.
65	366
	428
65	
	794

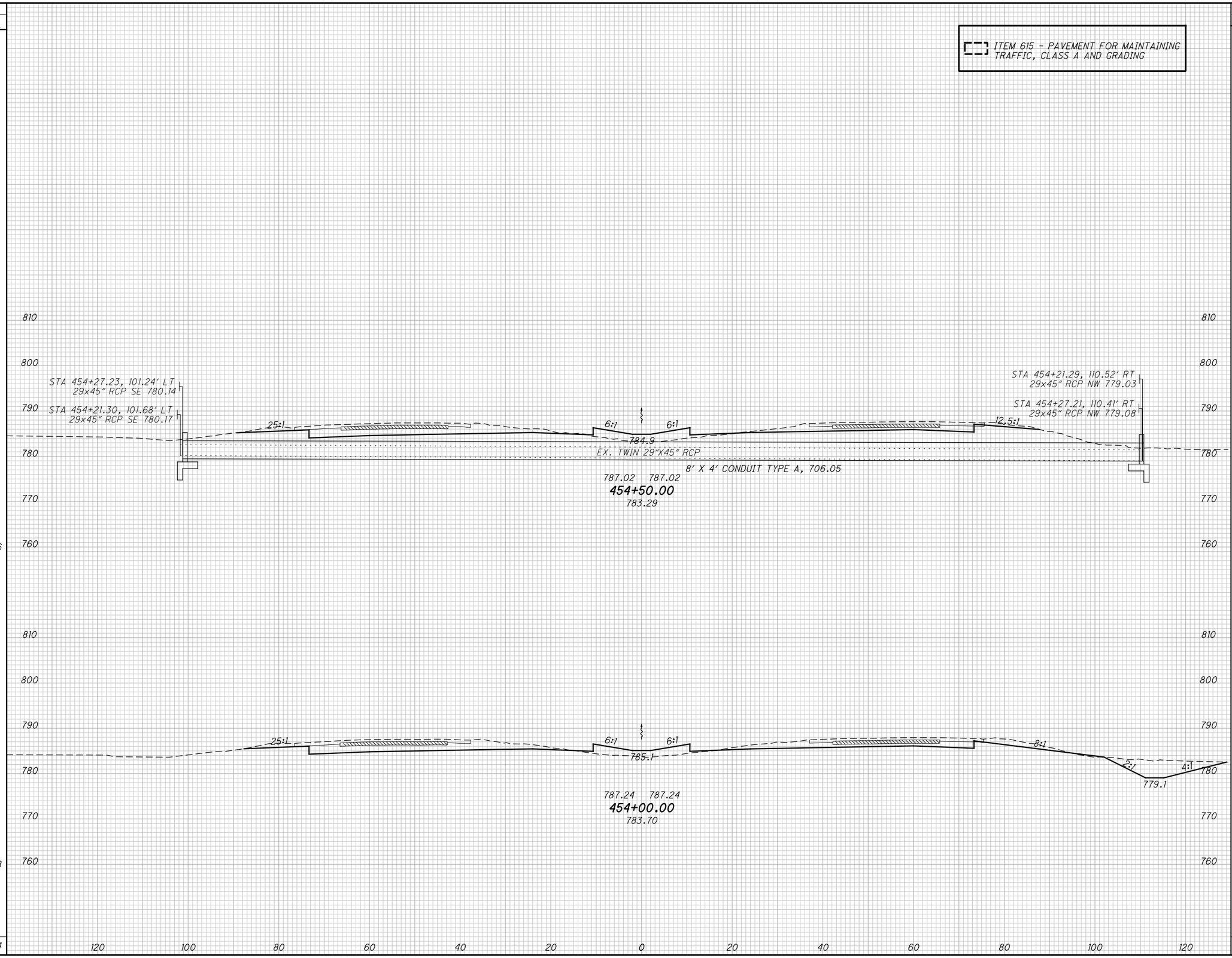

END AREA	
CUT	FILL
133	43
145	38
552	134

VOLUME	
CUT	FILL
257	75
295	59

CALCULATED DWB
CHECKED BAL

CROSS SECTIONS - I.R. 71
STA. 454+00.00 TO STA. 454+50.00

FRA-71-5.29

331
623

P:\84868\roadway\sheets\84868XS004.dgn 12/17/2014 3:29:20 PM kfahy

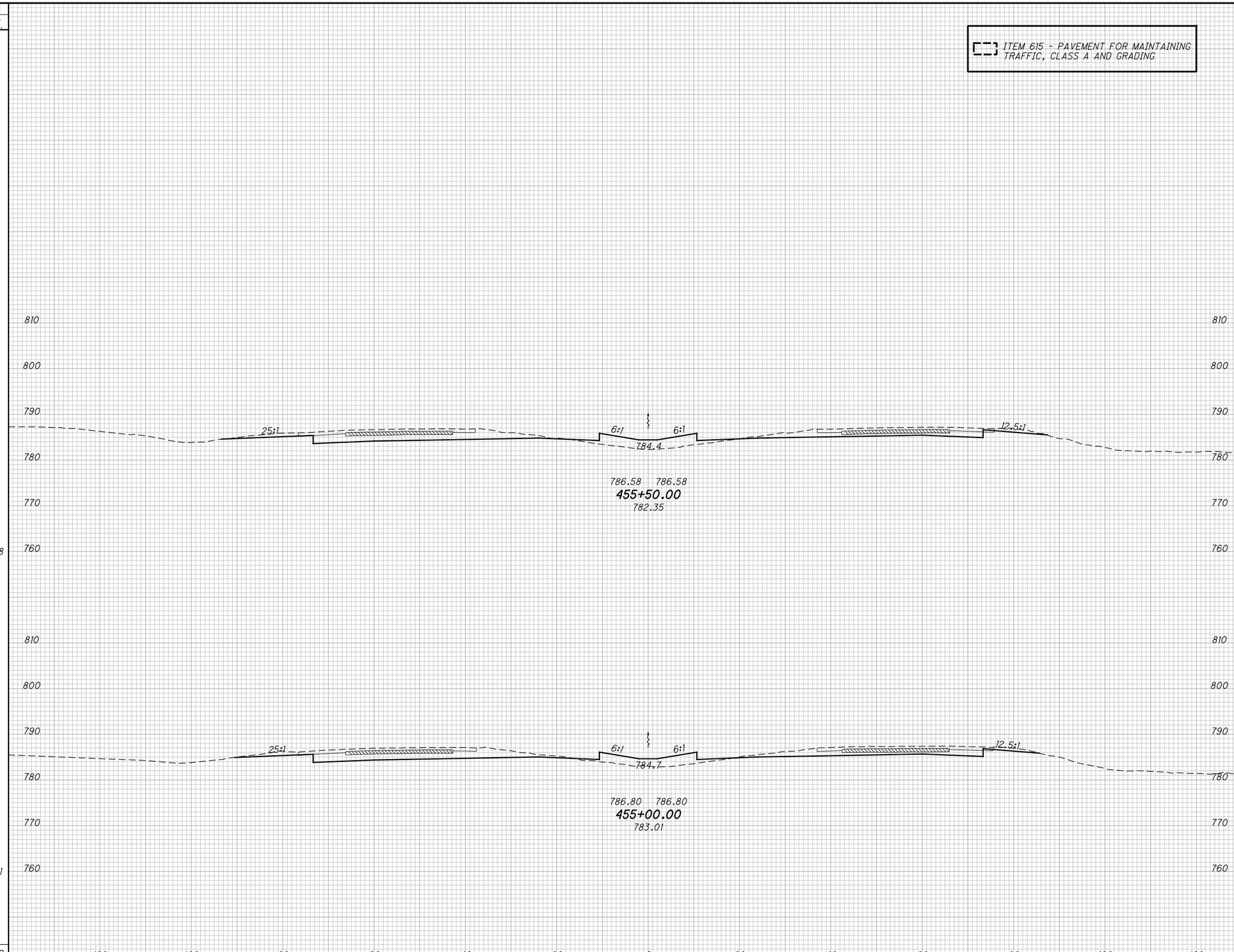

SEEDING END WIDTH	SEEDING SQ. YDS.	END AREA CUT	END AREA FILL	VOLUME CUT	VOLUME FILL
70		126	54		
	378			238	93
65		131	47		
	361			245	83
	739			483	176

CALCULATED DWB
CHECKED BAL

CROSS SECTIONS - I.R. 71
STA. 455+00.00 TO STA. 455+50.00

FRA-71-5.29

P:\84868\roadway\sheets\84868XS004.dgn 12/17/2014 3:29:21 PM kfahy

SEEDING		END AREA		VOLUME	
END WIDTH	SQ. YDS.	CUT	FILL	CUT	FILL
68	384	114	58	217	106
69	389	120	58	228	103
	773			445	209

CALCULATED DWB
CHECKED BAL

ITEM 615 - PAVEMENT FOR MAINTAINING TRAFFIC, CLASS A AND GRADING

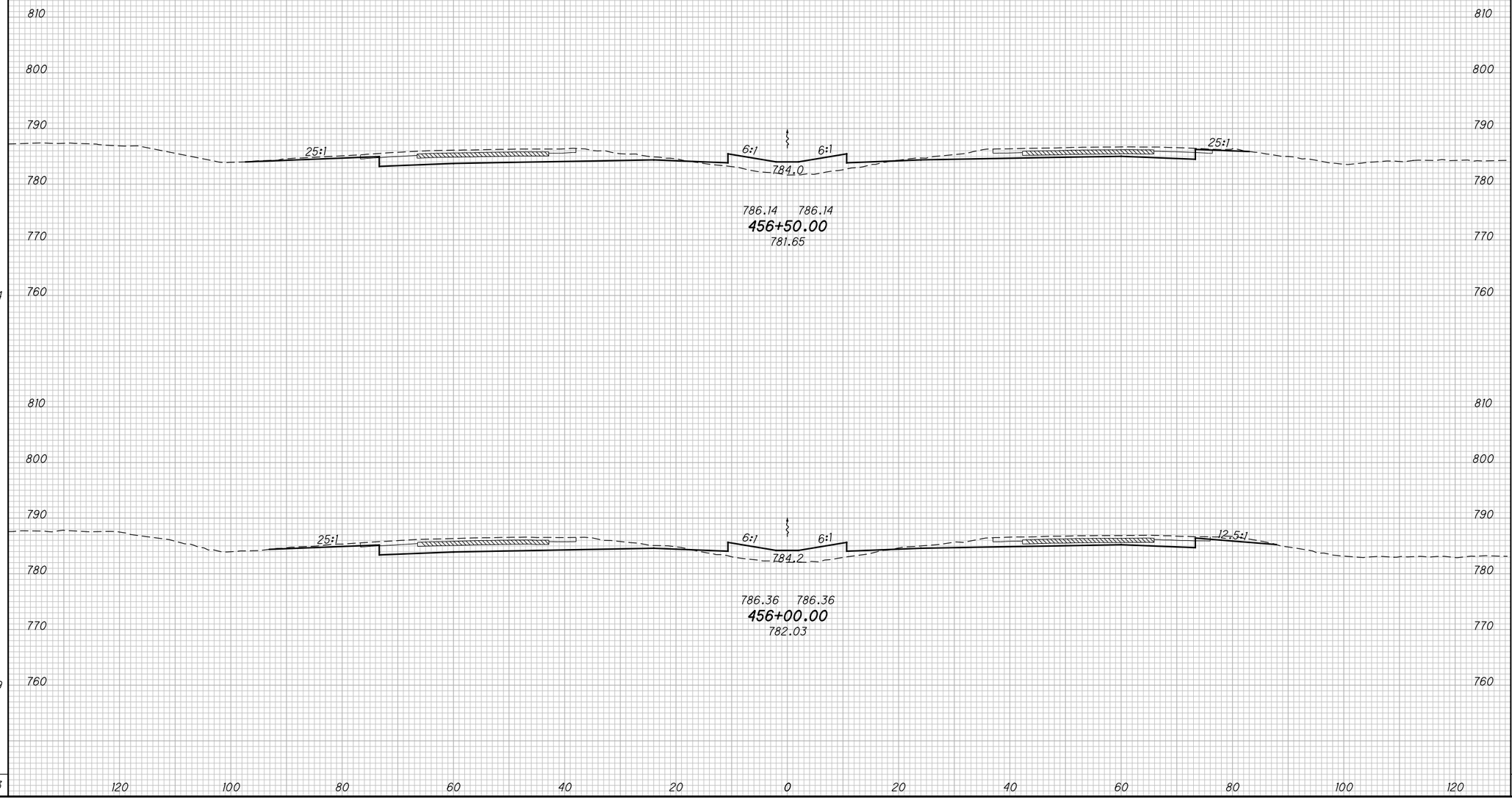

CROSS SECTIONS - I.R. 71
STA. 456+00.00 TO STA. 456+50.00

FRA-71-5.29

P:\84868\roadway\sheets\84868XS004.dgn 12/17/2014 3:29:21 PM kfahy

SEEDING		END AREA		VOLUME	
END WIDTH	SQ. YDS.	CUT	FILL	CUT	FILL
68	366	108	61	200	109
63	367	108	56	205	105
	733			405	214

CALCULATED DWB
CHECKED BAL

ITEM 615 - PAVEMENT FOR MAINTAINING TRAFFIC, CLASS A AND GRADING

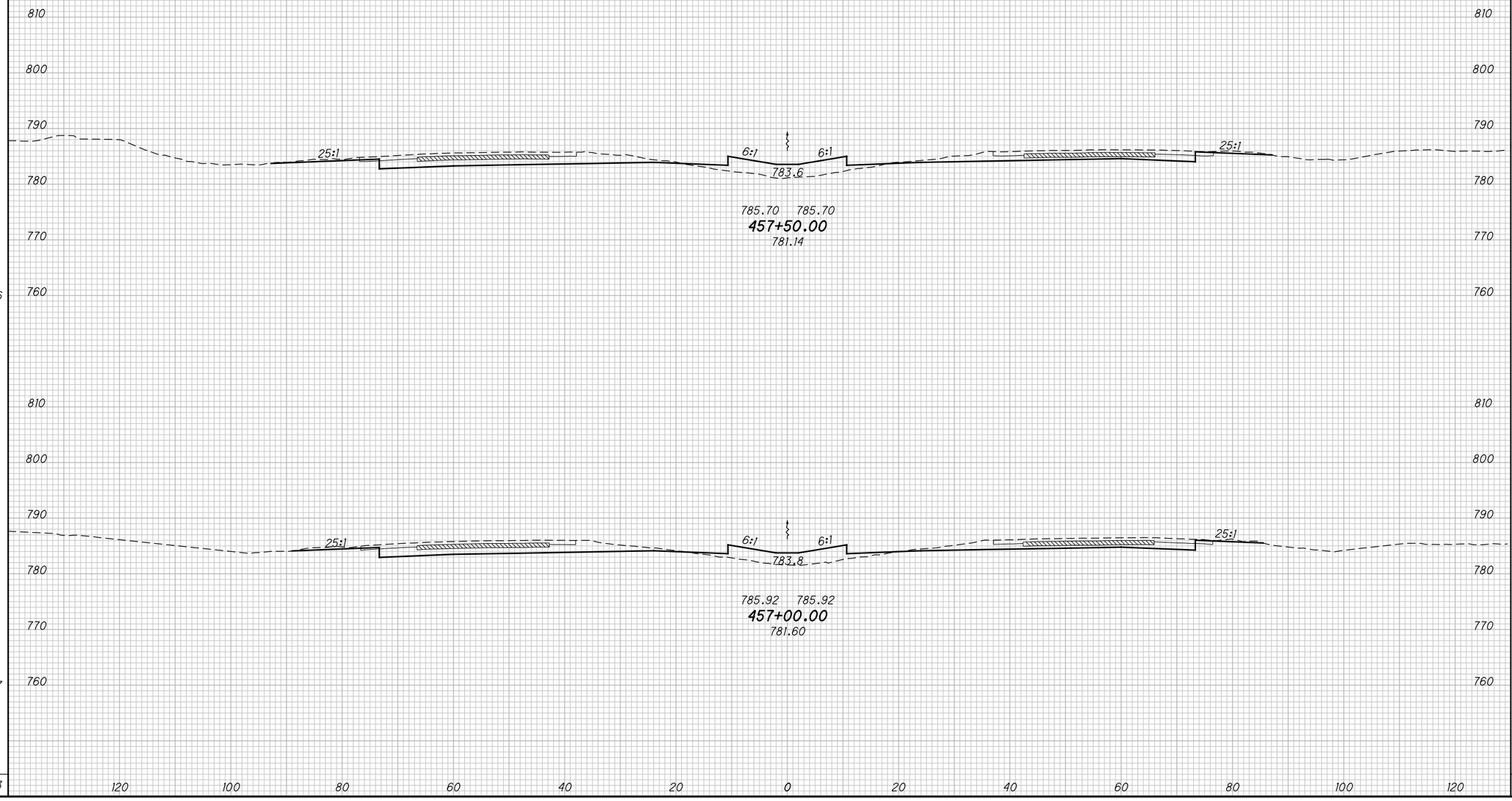

CROSS SECTIONS - I.R. 71
STA. 457+00.00 TO STA. 457+50.00

FRA-71-5.29

P:\84868\roadway\sheets\84868XS004.dgn 12/17/2014 3:29:22 PM kfahy

SEEDING	
END WIDTH	SQ. YDS.
70	395
71	389
784	

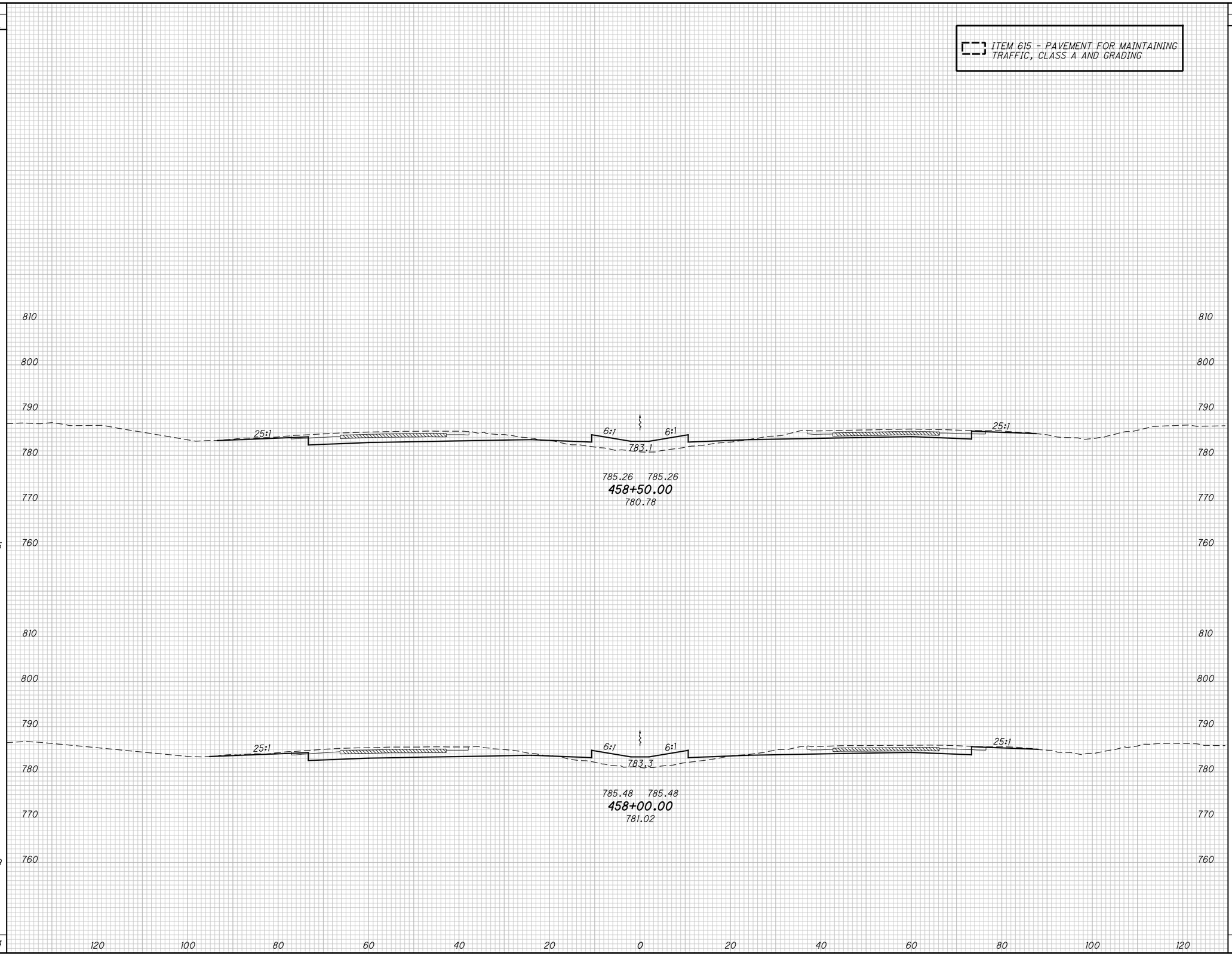

END AREA	
CUT	FILL
101	66
106	63

VOLUME	
CUT	FILL
192	119
198	114
390	233

CALCULATED DWB
CHECKED BAL

CROSS SECTIONS - I.R. 71
STA. 458+00.00 TO STA. 458+50.00

FRA-71-5.29

335
623

P:\84868\roadway\sheets\84868XS004.dgn 12/17/2014 3:29:23 PM kfahy

SEEDING	
END WIDTH	SQ. YDS.
65	384
72	395
	779

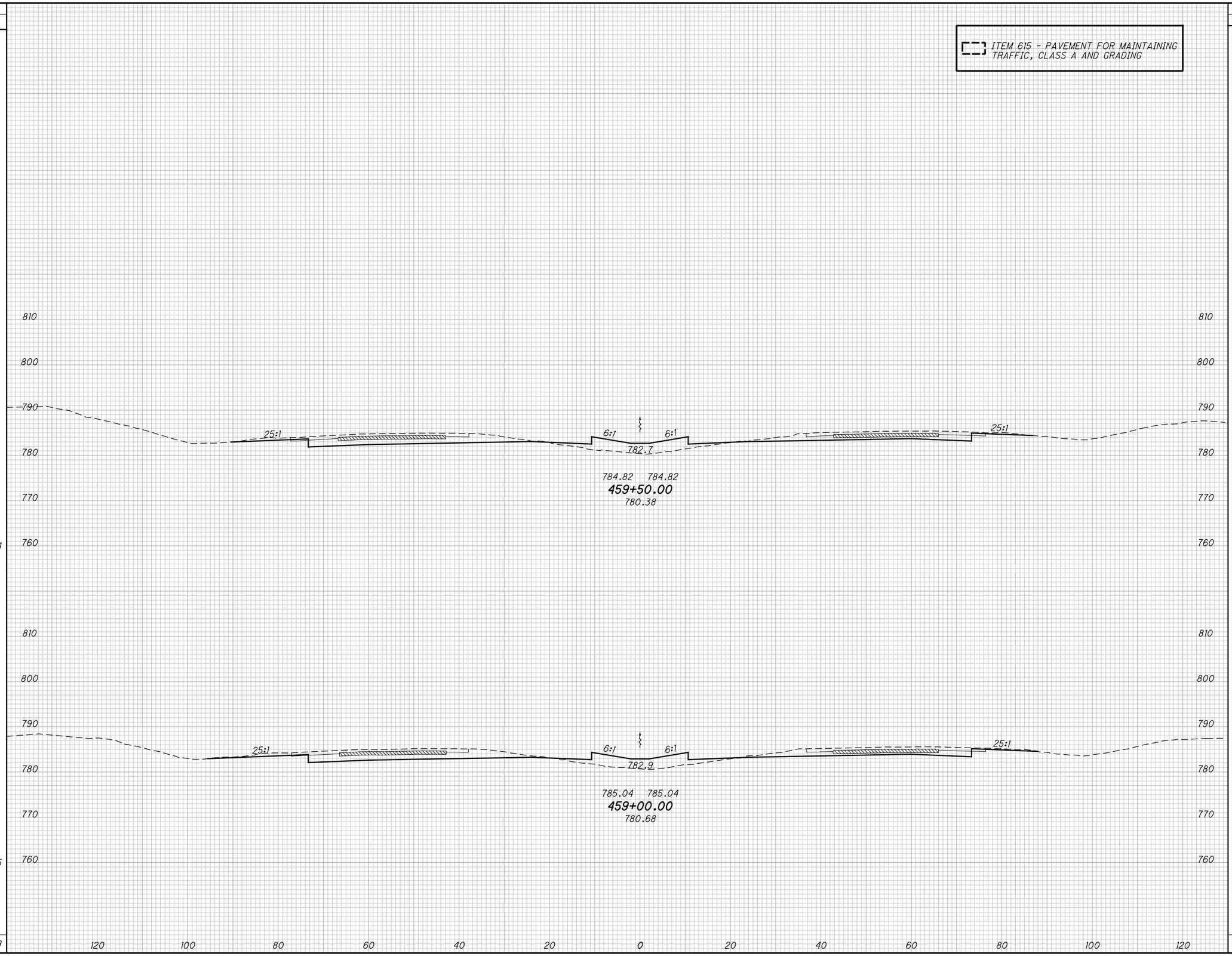

END AREA	
CUT	FILL
105	63
110	63

VOLUME	
CUT	FILL
199	117
195	119
394	236

CALCULATED DWB
CHECKED BAL

CROSS SECTIONS - I.R. 71
STA. 459+00.00 TO STA. 459+50.00

FRA-71-5.29

336
623

P:\84868\roadway\sheets\84868XS004.dgn 12/17/2014 3:29:24 PM kfahy

SEEDING	
END WIDTH	SQ. YDS.
63	
	344
61	
	356
	700

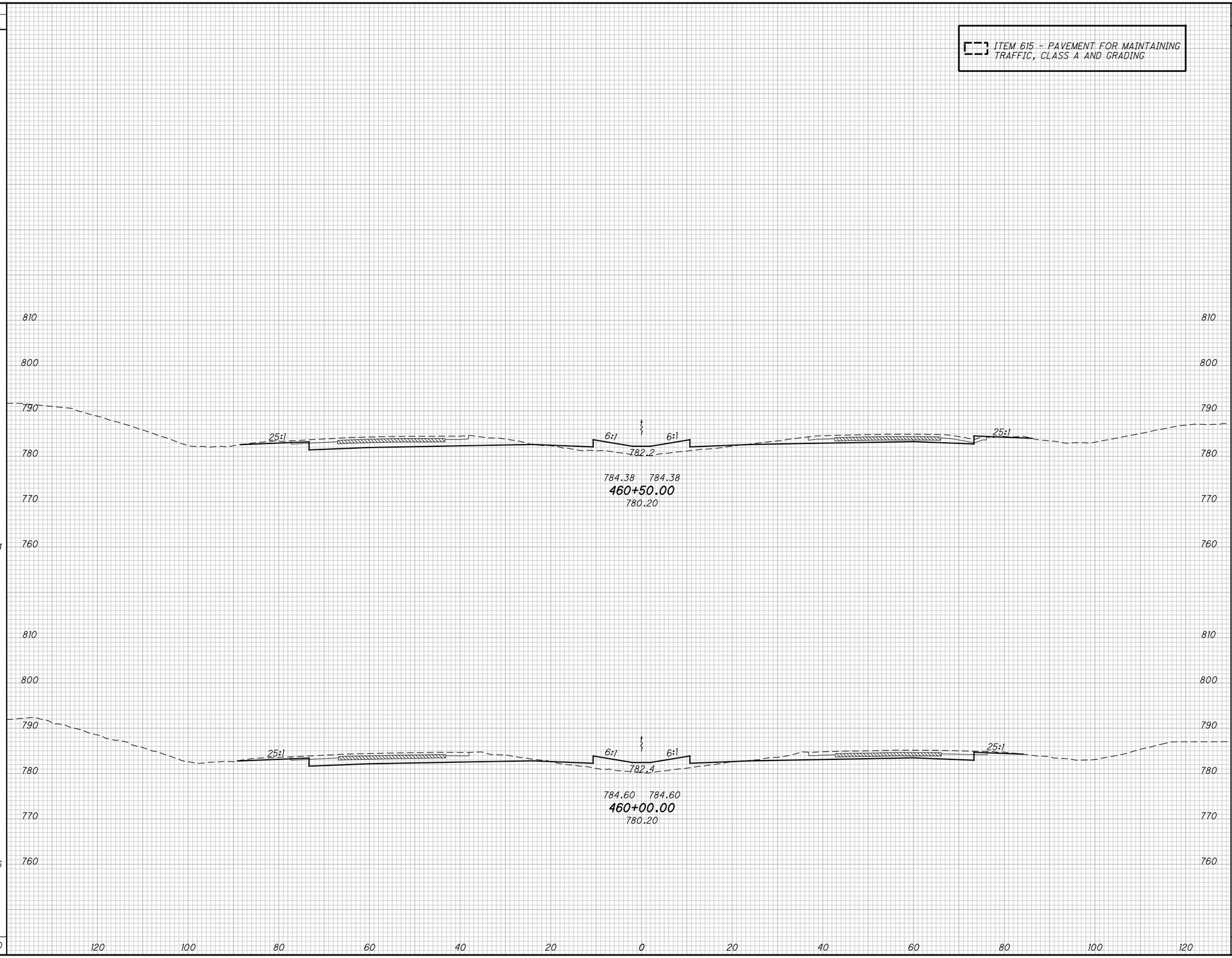

END AREA	
CUT	FILL
97	57
105	61

VOLUME	
CUT	FILL
187	109
195	115
382	224

CALCULATED DWB
CHECKED BAL

CROSS SECTIONS - I.R. 71
STA. 460+00.00 TO STA. 460+50.00

FRA-71-5.29

337
623

P:\84868\roadway\sheets\84868XS004.dgn 12/17/2014 3:29:25 PM kfahy

SEEDING	
END WIDTH	SQ. YDS.
61	328
55	334
	662

END AREA	
CUT	FILL
97	55
98	57

VOLUME	
CUT	FILL
181	104
180	106
361	210

CALCULATED DWB
CHECKED BAL

CROSS SECTIONS - I.R. 71
STA. 461+00.00 TO STA. 461+50.00

FRA-71-5.29

338
623

P:\84868\roadway\sheets\84868XS004.dgn 12/17/2014 3:29:26 PM kfahy

SEEDING	
END WIDTH	SQ. YDS.
58	
	311
52	
	317
	628

ITEM 615 - PAVEMENT FOR MAINTAINING TRAFFIC, CLASS A AND GRADING

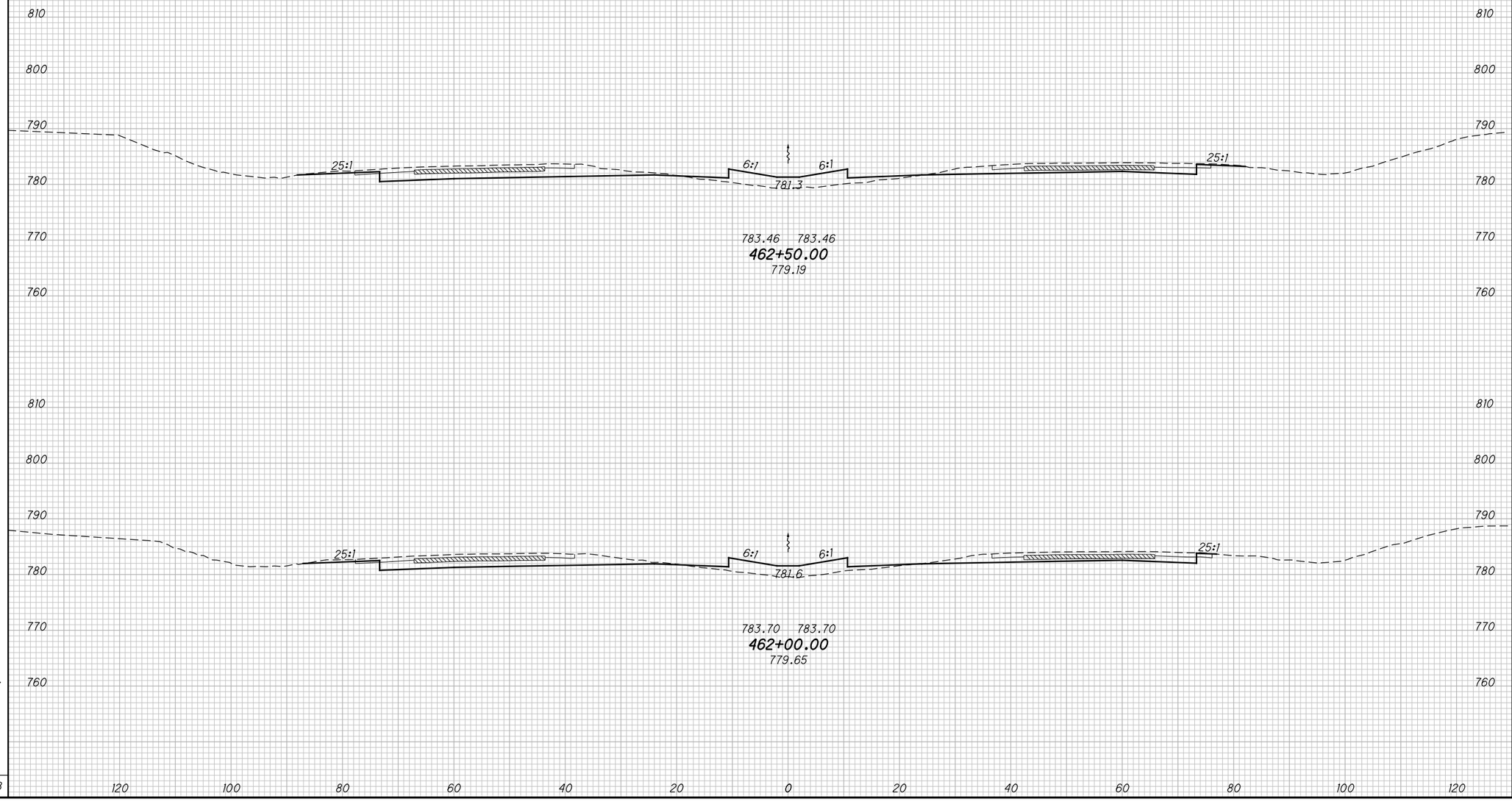

END AREA	
CUT	FILL
96	59
96	53

VOLUME	
CUT	FILL
179	103
179	100
358	203

CALCULATED DWB
CHECKED BAL

CROSS SECTIONS - I.R. 71
STA. 462+00.00 TO STA. 462+50.00

FRA-71-5.29

339
623

P:\84868\roadway\sheets\84868XS004.dgn 12/17/2014 3:29:27 PM kfahy

SEEDING	
END WIDTH	SQ. YDS.
	57
	322
	58
	322
	644

ITEM 615 - PAVEMENT FOR MAINTAINING TRAFFIC, CLASS A AND GRADING

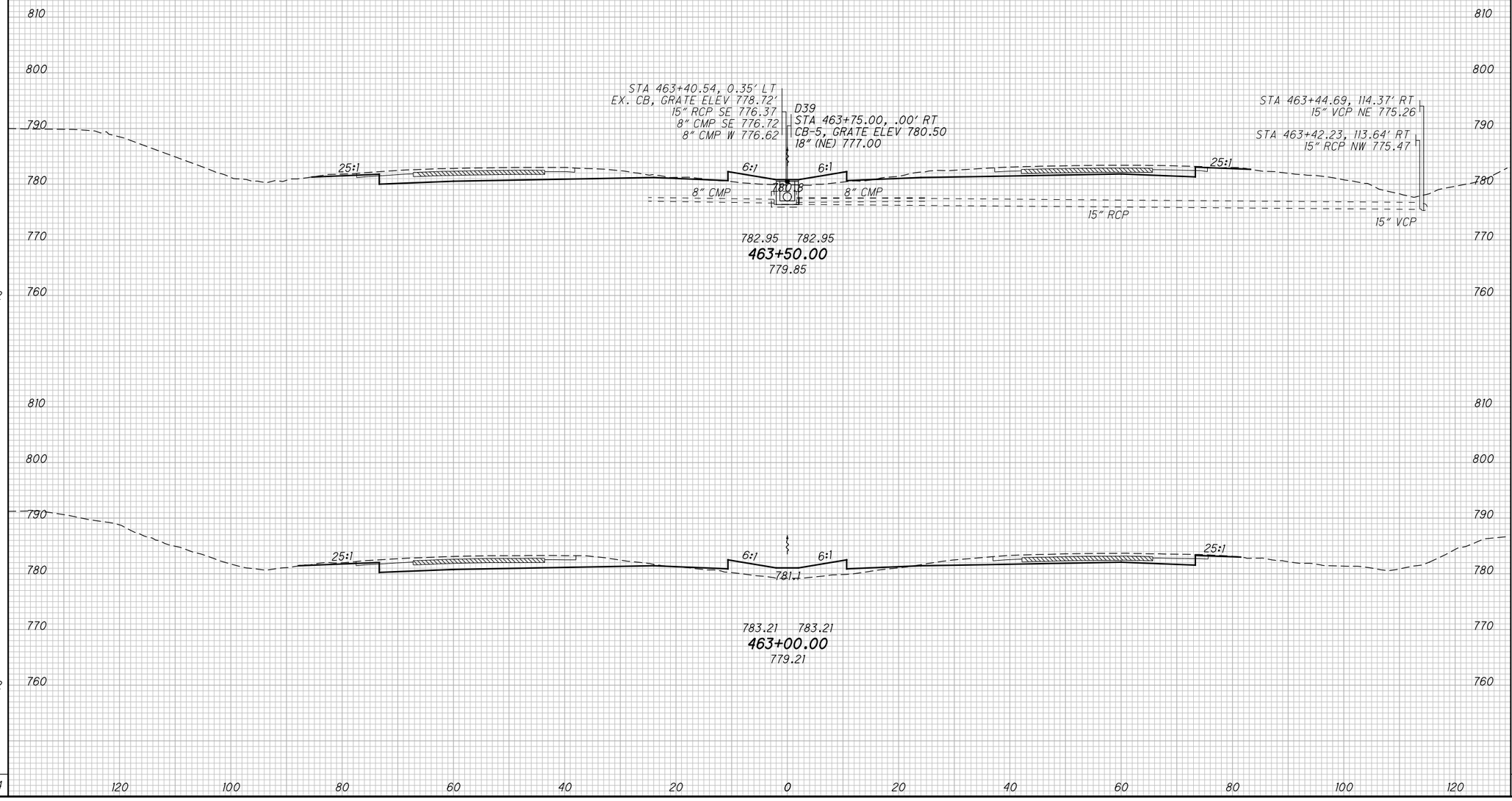

END AREA	
CUT	FILL
108	30
98	52

VOLUME	
CUT	FILL
191	76
180	103
371	179

CALCULATED DWB
CHECKED BAL

CROSS SECTIONS - I.R. 71
STA. 463+00.00 TO STA. 463+50.00

FRA-71-5.29

340
623

P:\84868\roadway\sheets\84868XS004.dgn 12/17/2014 3:29:28 PM kfahy

SEEDING	
END WIDTH	SQ. YDS.
58	306
51	300
	606

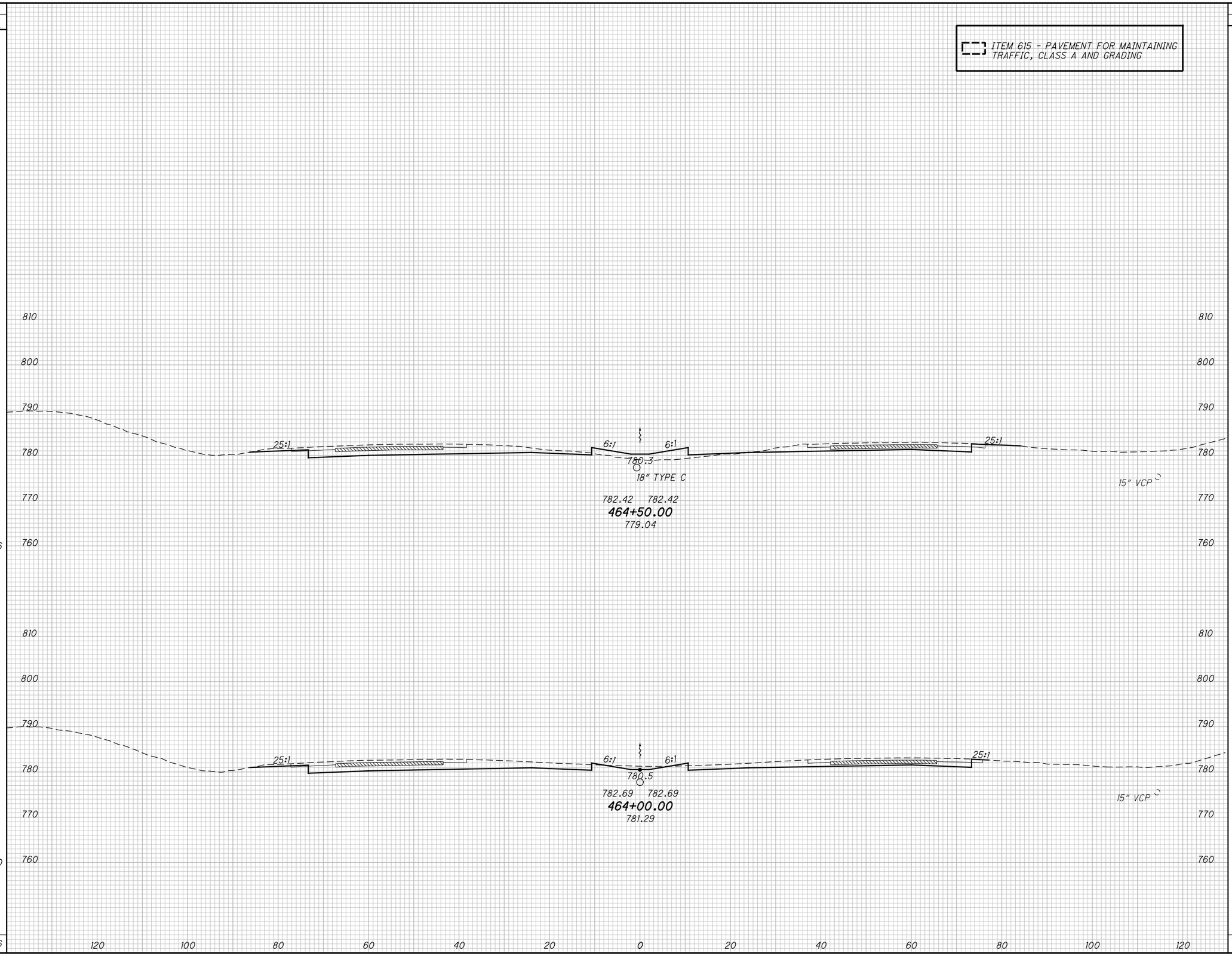

END AREA		VOLUME	
CUT	FILL	CUT	FILL
111	36		
145	2		
		238	35
		235	29
		473	64

CALCULATED DWB
CHECKED BAL

CROSS SECTIONS - I.R. 71
STA. 464+00.00 TO STA. 464+50.00

FRA-71-5.29

341
623

P:\84868\roadway\sheets\84868XS004.dgn 12/17/2014 3:29:29 PM kfahy

SEEDING		END AREA		VOLUME		CALCULATED DWB	CHECKED BAL
END WIDTH	SQ. YDS.	CUT	FILL	CUT	FILL		
56		97	46				
56	317			180	87		
56	323	97	48	193	78		
	640			373	165		

ITEM 615 - PAVEMENT FOR MAINTAINING TRAFFIC, CLASS A AND GRADING

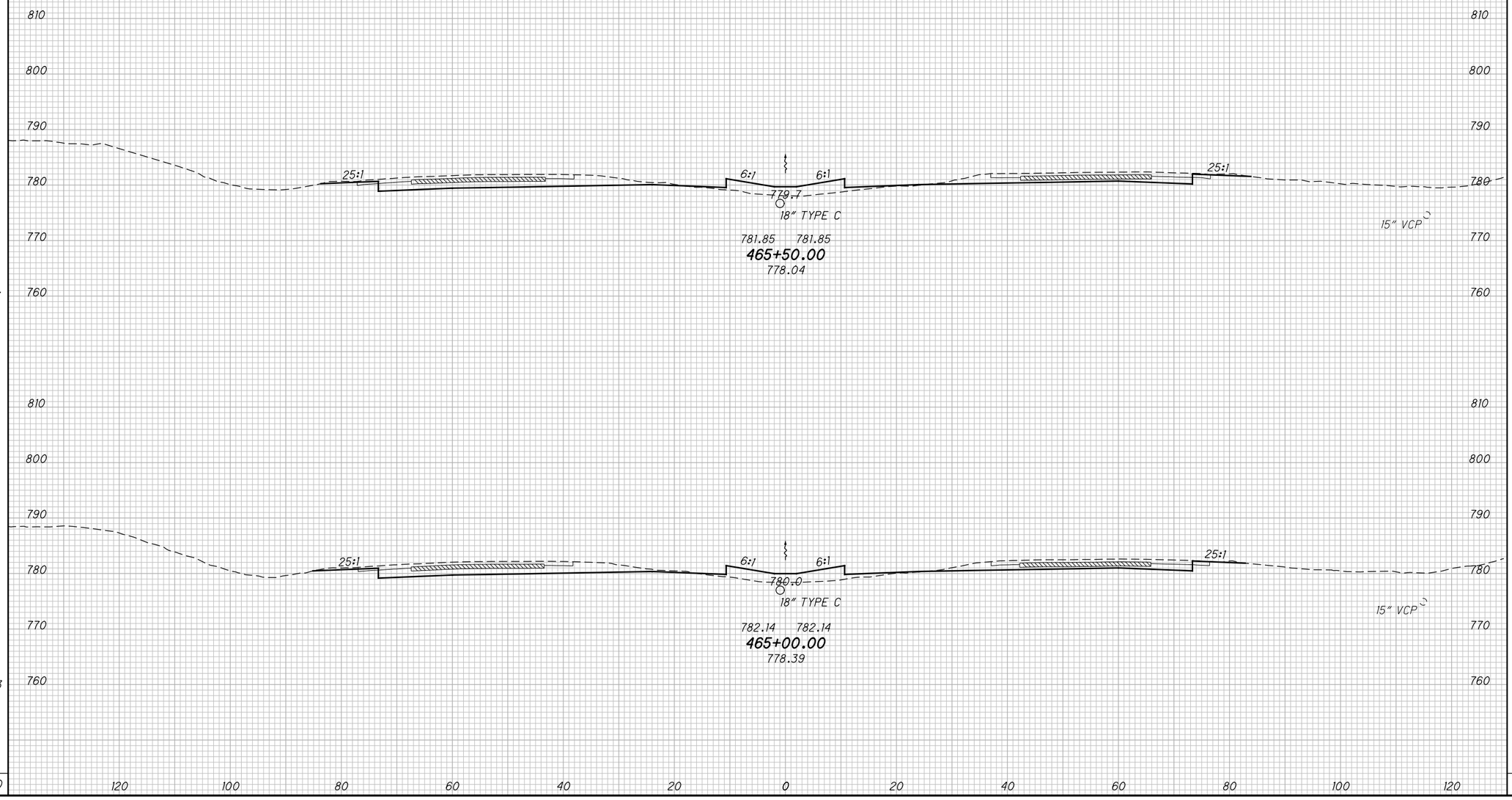

CROSS SECTIONS - I.R. 71
STA. 465+00.00 TO STA. 465+50.00

FRA-71-5.29

342
623

P:\84868\roadway\sheets\84868XS004.dgn 12/17/2014 3:29:30 PM kfahy

SEEDING		END AREA		VOLUME	
END WIDTH	SQ. YDS.	CUT	FILL	CUT	FILL
58	328	92	61	178	101
59	323	101	49	183	87
	651			361	188

CALCULATED DWB
CHECKED BAL

ITEM 615 - PAVEMENT FOR MAINTAINING TRAFFIC, CLASS A AND GRADING

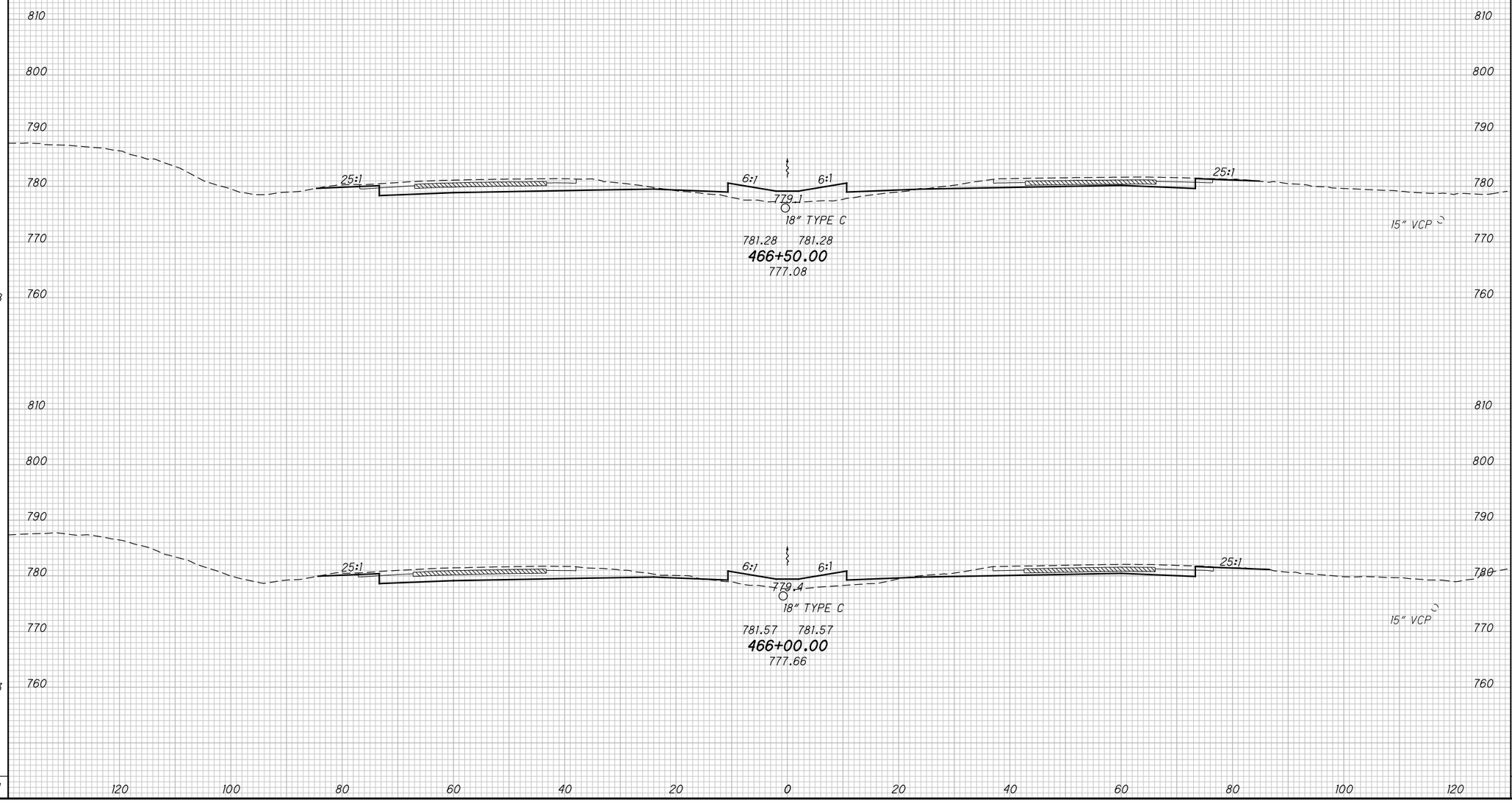

CROSS SECTIONS - I.R. 71
STA. 466+00.00 TO STA. 466+50.00

FRA-71-5.29

343
623

P:\84868\roadway\sheets\84868XS004.dgn 12/17/2014 3:29:31 PM kfahy

SEEDING	
END WIDTH	SQ. YDS.
56	312
56	317
	629

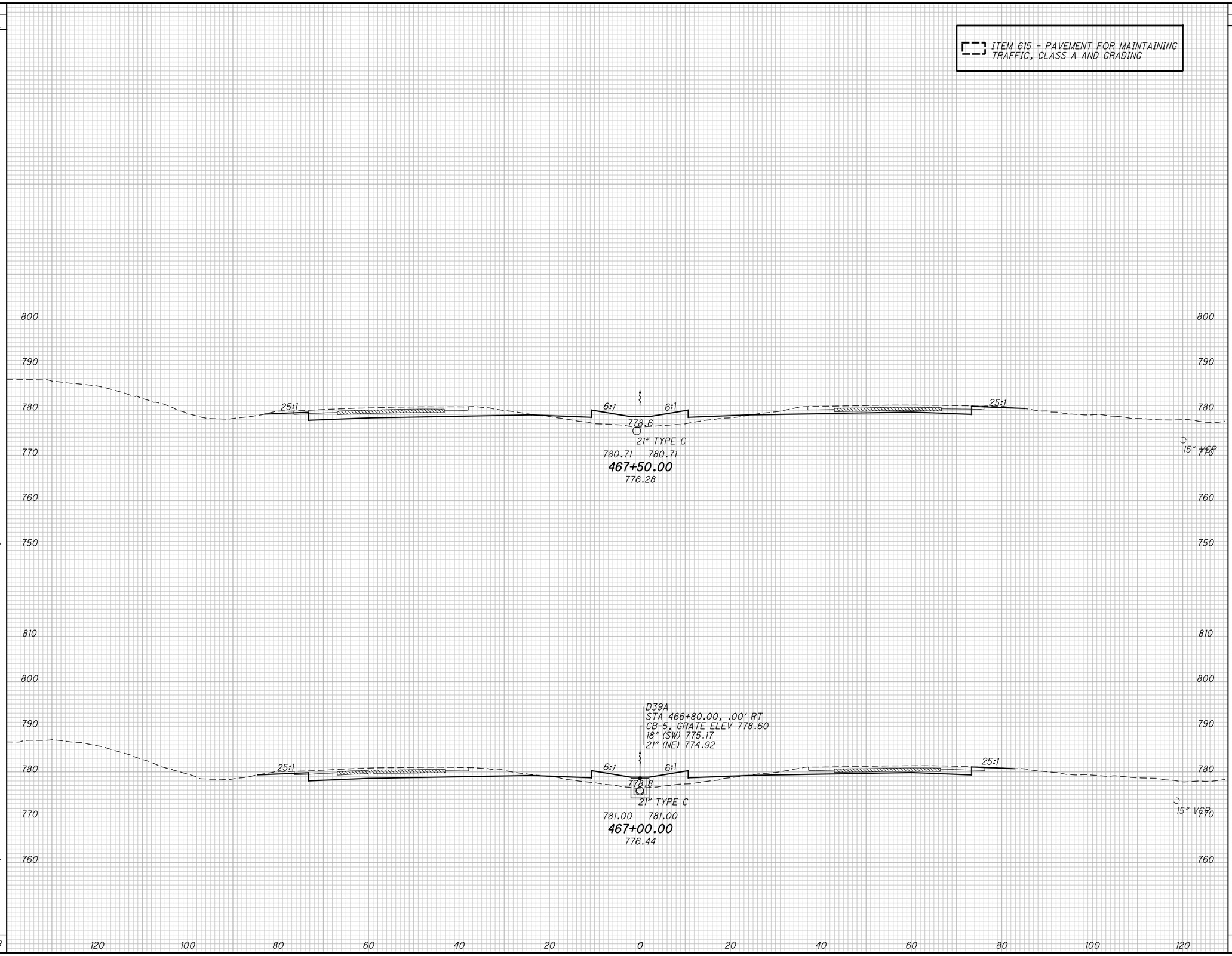

END AREA	
CUT	FILL
91	69
92	67

VOLUME	
CUT	FILL
170	126
170	119
340	245

CALCULATED DWB
CHECKED BAL

CROSS SECTIONS - I.R. 71
STA. 467+00.00 TO STA. 467+50.00

FRA-71-5.29

344
623

P:\84868\roadway\sheets\84868XS004.dgn 12/17/2014 3:29:32 PM kfahy

SEEDING		END AREA		VOLUME	
END WIDTH	SQ. YDS.	CUT	FILL	CUT	FILL
55	306	85	61	161	112
54	306	89	60	167	119
	612			328	231

CALCULATED DWB
CHECKED BAL

ITEM 615 - PAVEMENT FOR MAINTAINING TRAFFIC, CLASS A AND GRADING

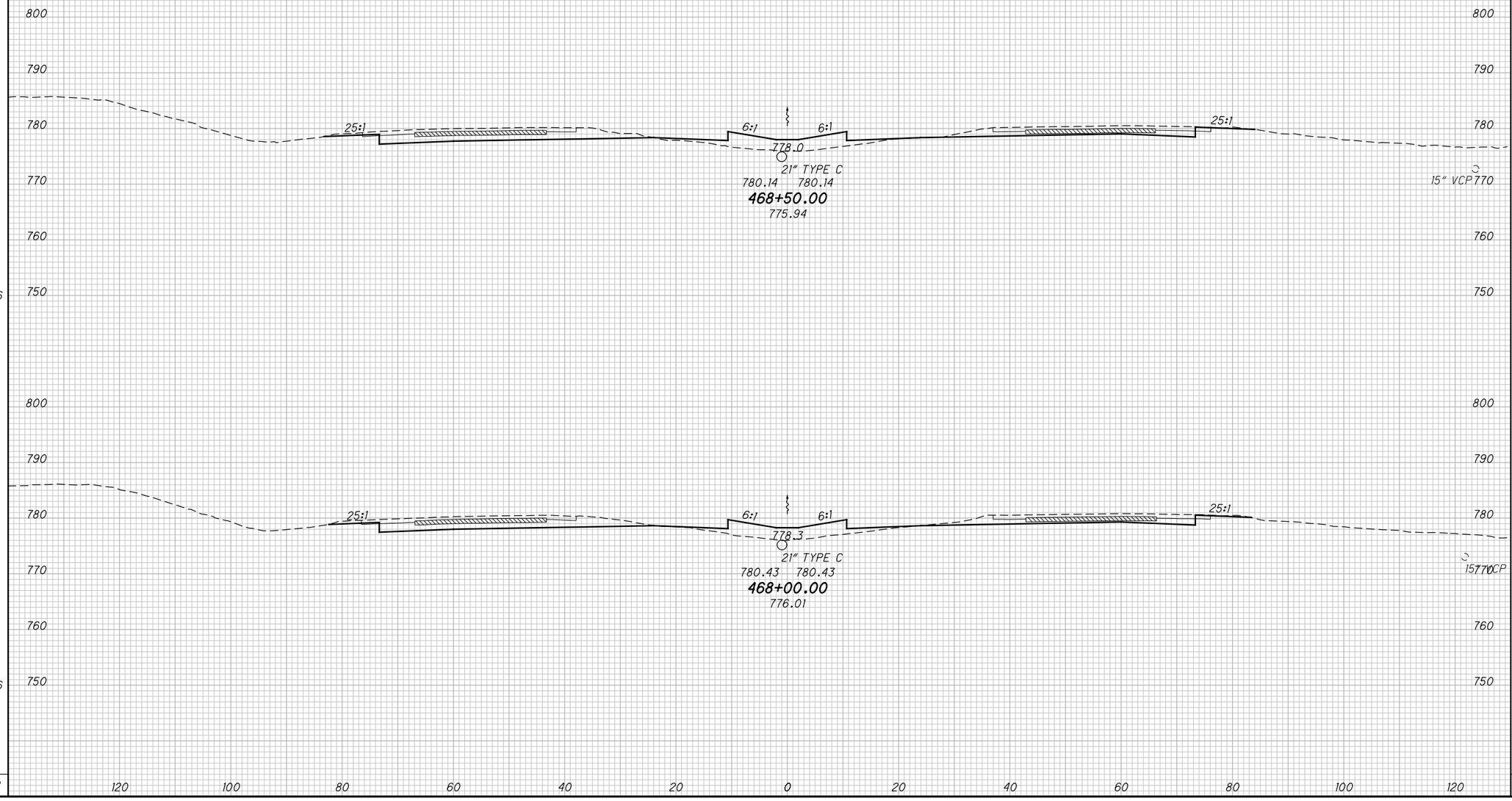

CROSS SECTIONS - I.R. 71
STA. 468+00.00 TO STA. 468+50.00

FRA-71-5.29

345
623

P:\84868\roadway\sheets\84868XS004.dgn 12/17/2014 3:29:33 PM kfahy

SEEDING	
END WIDTH	SQ. YDS.
62	678

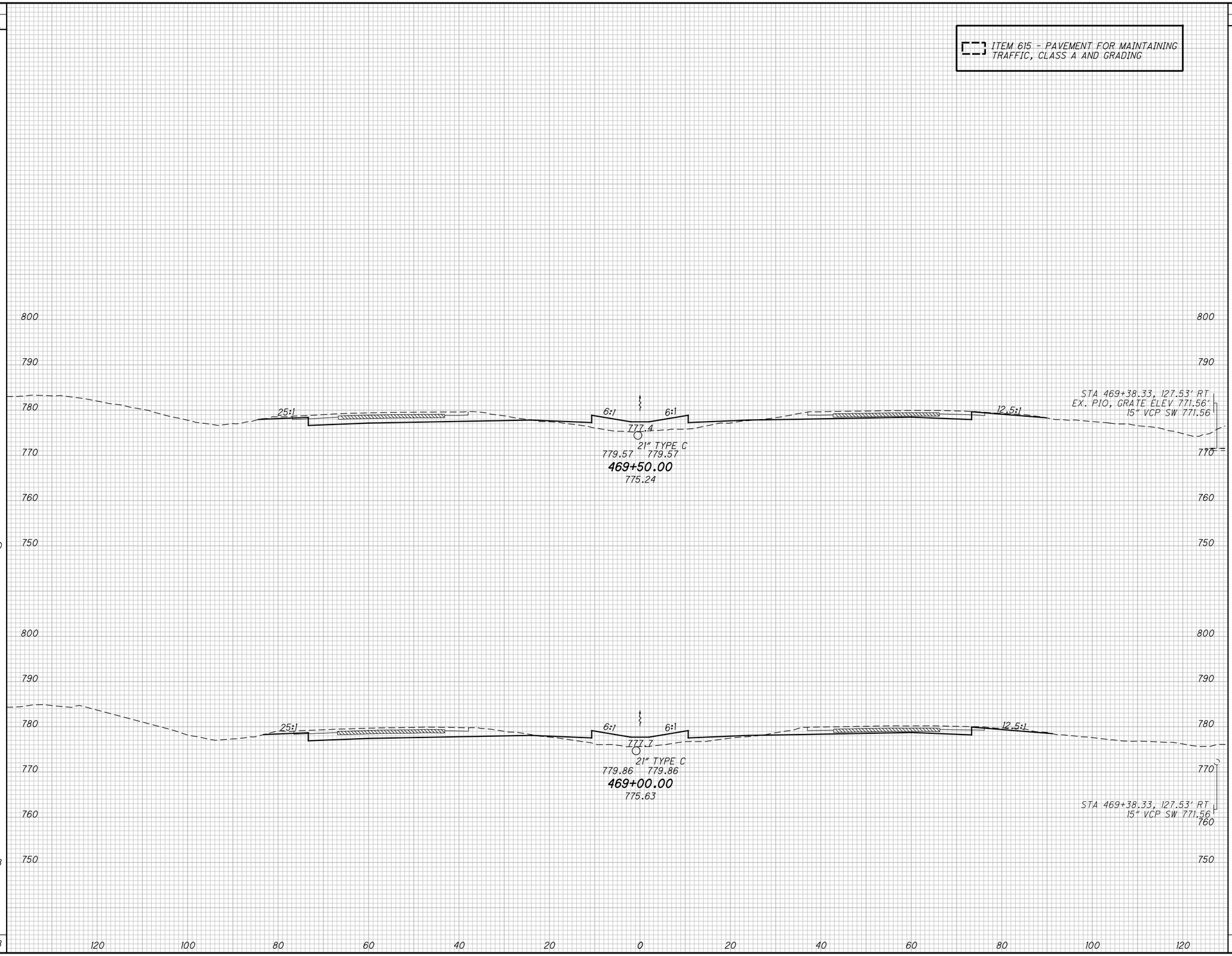

SEEDING	
END WIDTH	SQ. YDS.
62	350
62	328

END AREA	
CUT	FILL
88	67
92	64

VOLUME	
CUT	FILL
166	122
164	116
330	238

CALCULATED DWB
CHECKED BAL

CROSS SECTIONS - I.R. 71
STA. 469+00.00 TO STA. 469+50.00

FRA-71-5.29

346
623

P:\84868\roadway\sheets\84868XS004.dgn 12/17/2014 3:29:34 PM kfahy

SEEDING	
END WIDTH	SQ. YDS.
64	356
63	350
	706

ITEM 615 - PAVEMENT FOR MAINTAINING TRAFFIC, CLASS A AND GRADING

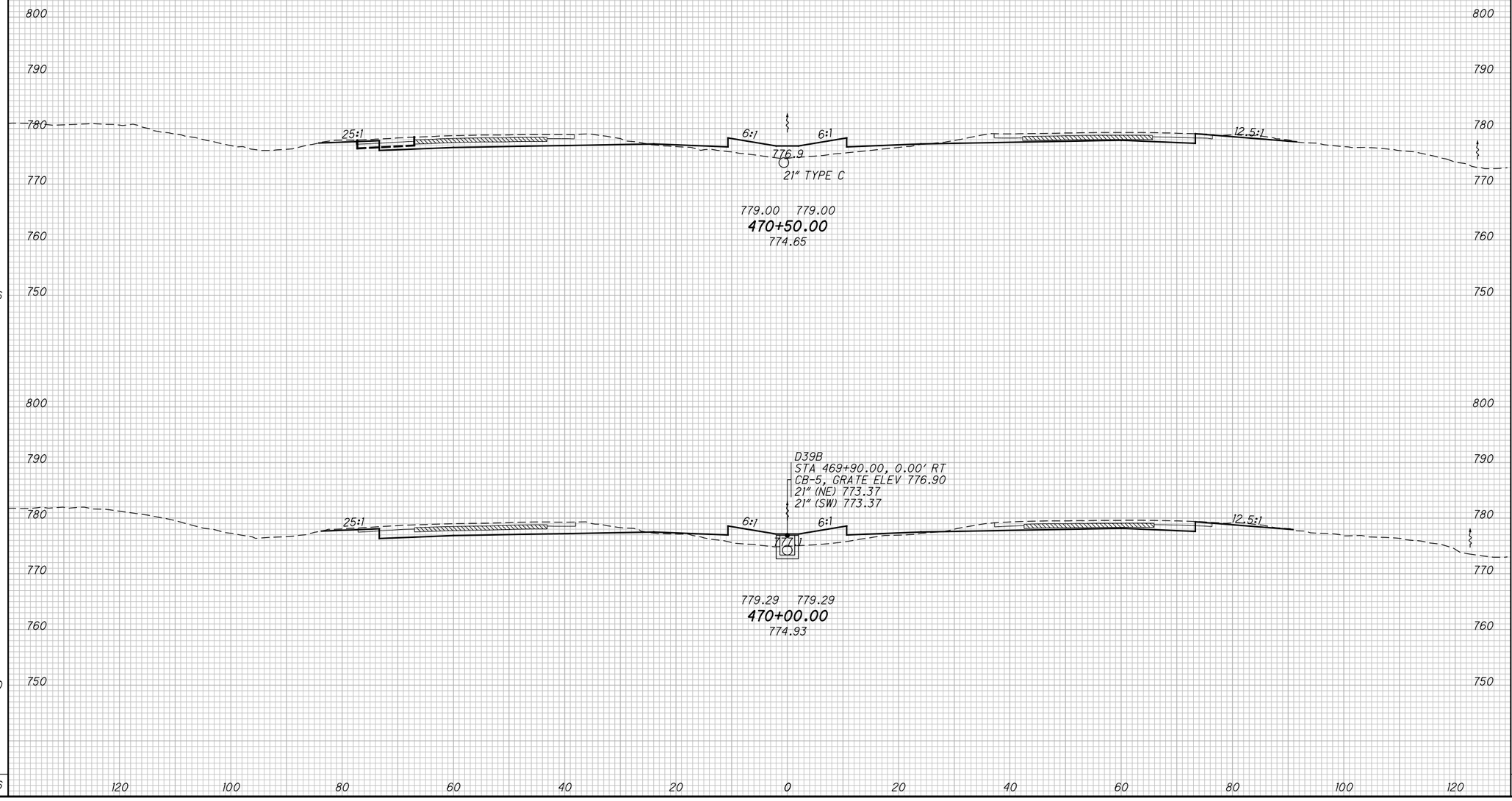

END AREA	
CUT	FILL
84	64
84	68

VOLUME	
CUT	FILL
155	122
159	125
314	247

CALCULATED DWB
CHECKED BAL

CROSS SECTIONS - I.R. 71
STA. 470+00.00 TO STA. 470+50.00

FRA-71-5.29

347
623

P:\84868\roadway\sheets\84868XS004.dgn 12/17/2014 3:29:35 PM kfahy

SEEDING		END AREA		VOLUME	
END WIDTH	SQ. YDS.	CUT	FILL	CUT	FILL
62	361	88	45	160	97
67	367	85	60	157	115
	728			317	212

CALCULATED DWB | CHECKED BAL

ITEM 615 - PAVEMENT FOR MAINTAINING TRAFFIC, CLASS A AND GRADING

STA 471+40.42, 0.20' RT
EX. CB, GRATE ELEV 773.78'
15" RCP SE 771.43
8" CMP SE 772.18
8" CMP W 772.08

STA 471+41.72, 125.29' RT
15" RCP NW 770.58

12.5:1 6:1 6:1 12.5:1
8" CMP 8" CMP
776.2
21" TYPE C
15" RCP

778.43 778.43
471+50.00
774.43

25:1 6:1 6:1 12.5:1
776.6
21" TYPE C

778.72 778.72
471+00.00
774.35

840 830 820 810 800 790 780 770 760 750

120 100 80 60 40 20 0 20 40 60 80 100 120

CROSS SECTIONS - I.R. 71
STA. 471+00.00 TO STA. 471+50.00

FRA-71-5.29

348
623

P:\84868\roadway\sheets\84868XS004.dgn 12/17/2014 3:29:36 PM kfahy

SEEDING	
END WIDTH	SQ. YDS.
53	
	317
61	
	345
	662

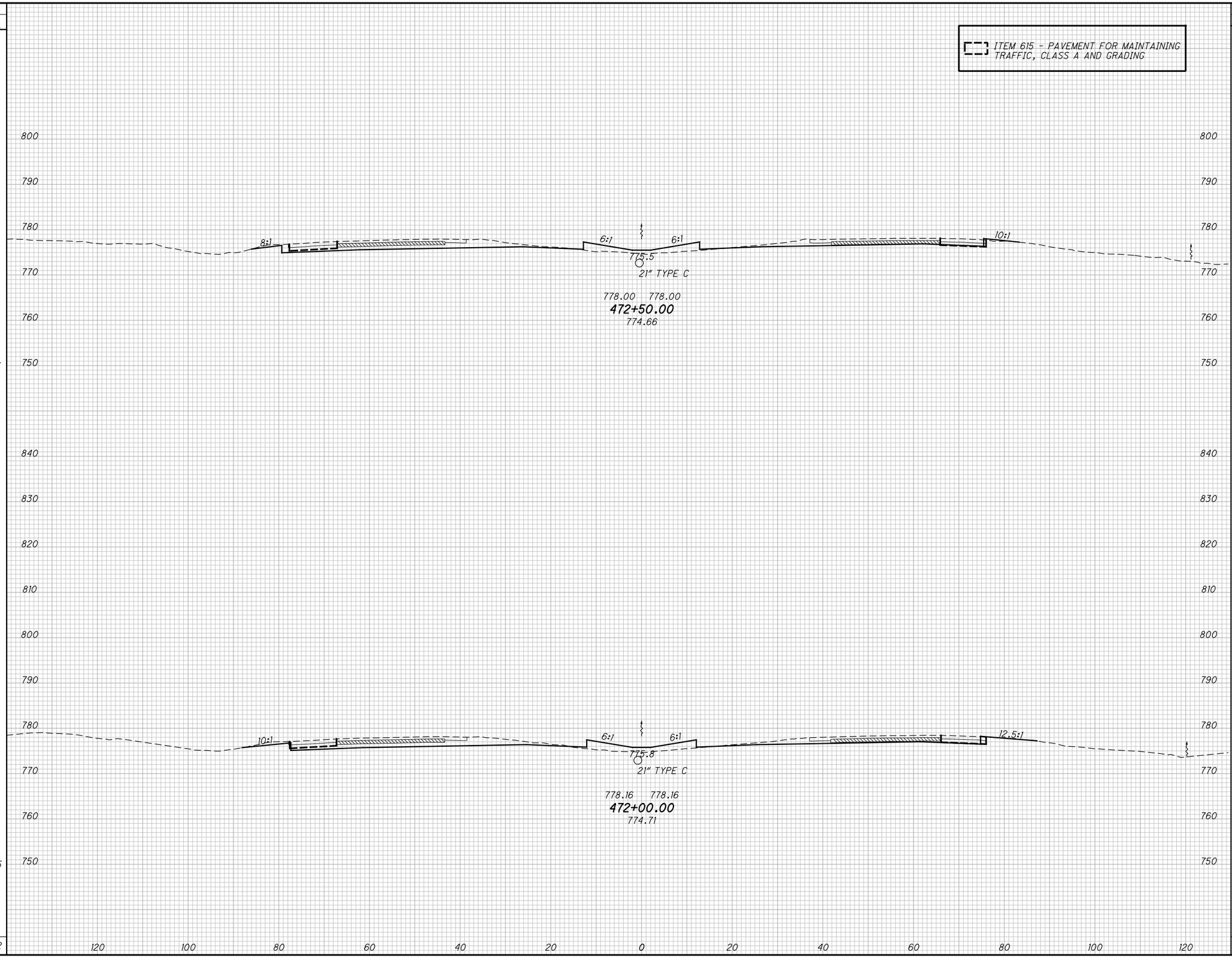

END AREA	
CUT	FILL
83	33
94	35

VOLUME	
CUT	FILL
163	63
168	74
331	137

CALCULATED DWB
CHECKED BAL

CROSS SECTIONS - I.R. 71
STA. 472+00.00 TO STA. 472+50.00

FRA-71-5.29

349
623

P:\84868\roadway\sheets\84868XS004.dgn 12/17/2014 3:29:37 PM kfahy

SEEDING	
END WIDTH	SQ. YDS.
92	
	545
103	
	439
	984

ITEM 615 - PAVEMENT FOR MAINTAINING TRAFFIC, CLASS A AND GRADING

4:1 6:1 774.1 6:1 6:1 775.3 6:1 3:1

778.03 778.03
473+50.00
774.57

MATCHLINE

STA 472+82.00, 120.0' RT
HW-2.1 OR HW-2.2
24" (NW) 770.87

10:1 2:1 3:1

EX LA-R/W

5' X 1.5 X 4'
ROCK CHANNEL
PROTECTION
TYPE C

D40
STA 472+93.00, .00' LT
CB-5, GRATE ELEV 775.00
24" (SE) 771.5
21" (SW) 771.75

D58
STA 472+82.00, 73.02' RT
I-3-D, GRATE ELEV 778.04
24" (NW) 771.13
24" (SE) 771.13

MATCHLINE

6:1 6:1 6:1 10:1

75'-24" TYPE B @ 0.50%

45'-24" TYPE C @ 0.57%

777.95 777.95
473+00.00
774.73

800 790 780 770 760 750 840 830 820 810 800 790 780 770 760 750

120 100 80 60 40 20 0 20 40 60 80 100 120

END AREA	
CUT	FILL
50	63
88	62

VOLUME	
CUT	FILL
128	115
158	88
286	203

CALCULATED DWB
CHECKED BAL

CROSS SECTIONS - I.R. 71
STA. 473+00.00 TO STA. 473+50.00

FRA-71-5.29

350
623

P:\84868\roadway\sheets\84868XS004.dgn 12/17/2014 3:29:38 PM kfahy

SEEDING	
END WIDTH	SQ. YDS.
106	
95	561
	522
	1083

ITEM 615 - PAVEMENT FOR MAINTAINING TRAFFIC, CLASS A AND GRADING

800
790
780
770
760
750

4:1 6:1 8:1 8:1 3:1

772.9 776.2

778.54 778.54

474+50.00

775.24

4:1 6:1 6:1 6:1 3:1

773.4 775.4

778.23 778.23

474+00.00

774.75

120 100 80 60 40 20 0 20 40 60 80 100 120

END AREA	
CUT	FILL
15	192
45	86

VOLUME	
CUT	FILL
56	257
88	137
144	394

CALCULATED DWB

CHECKED BAL

CROSS SECTIONS - I.R. 71
STA. 474+00.00 TO STA. 474+50.00

FRA-71-5.29

351
623

P:\84868\roadway\sheets\84868XS004.dgn 12/17/2014 3:29:39 PM kfahy

SEEDING	
END WIDTH	SQ. YDS.
96	544
98	573
	1117

END AREA	
CUT	FILL
0	387
0	618
0	281
14	438

VOLUME	
CUT	FILL
14	1056

CALCULATED DWB
CHECKED BAL

CROSS SECTIONS - I.R. 71
STA. 475+00.00 TO STA. 475+50.00

FRA-71-5.29

352
623

P:\84868\roadway\sheets\84868XS004.dgn 12/17/2014 3:29:40 PM kfahy

SEEDING	
END WIDTH	SQ. YDS.
164	
	783
118	
	600
	1383

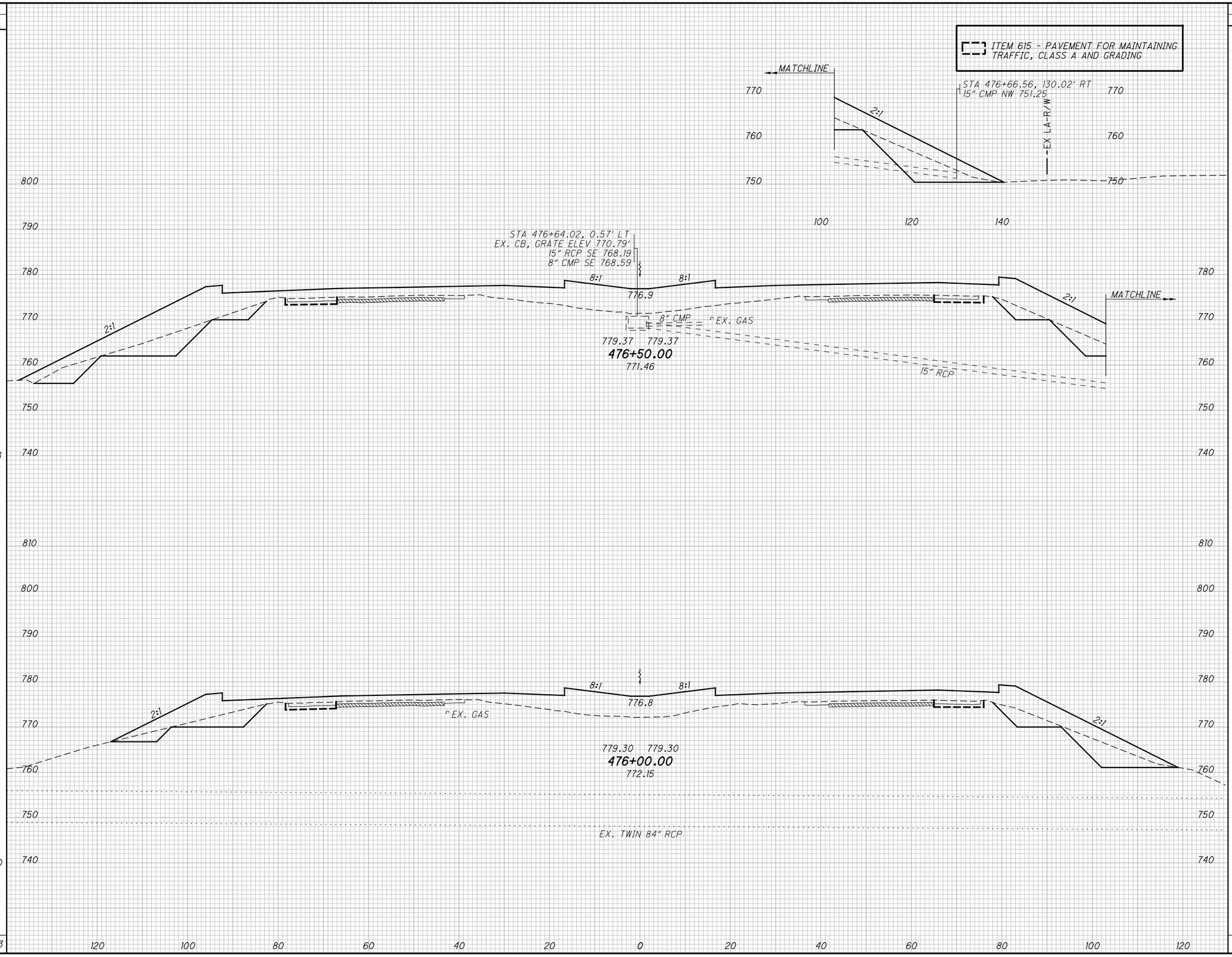

END AREA	
CUT	FILL
0	988
0	622
	0

VOLUME	
CUT	FILL
0	1490
0	934
0	2424

CALCULATED DWB
CHECKED BAL

CROSS SECTIONS - I.R. 71
STA. 476+00.00 TO STA. 476+50.00

FRA-71-5.29

353
623

P:\84868\roadway\sheets\84868XS005.dgn 12/17/2014 3:29:41 PM kfahy

SEEDING	
END WIDTH	SQ. YDS.
74	0
158	292
	292

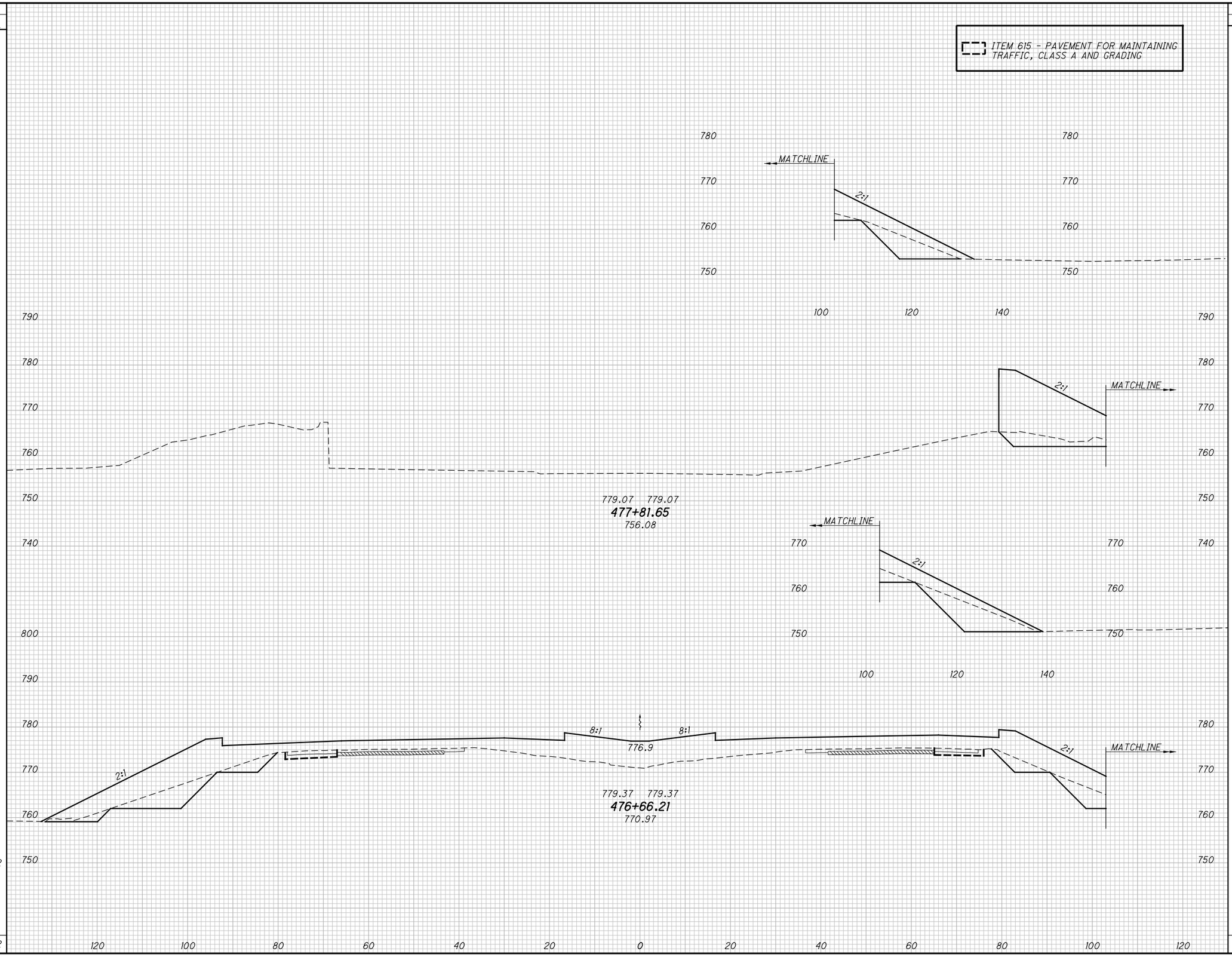

END AREA	
CUT	FILL
0	334
0	0
0	973
0	589

VOLUME	
CUT	FILL
0	0
0	589

CALCULATED DWB
CHECKED BAL

CROSS SECTIONS - I.R. 71
STA. 476+66.21 TO STA. 477+81.65

FRA-71-5.29

354
623

P:\84868\roadway\sheets\84868XS005.dgn 12/17/2014 3:29:42 PM kfahy

SEEDING END WIDTH	SEEDING SQ. YDS.
68	359
73	188
	547

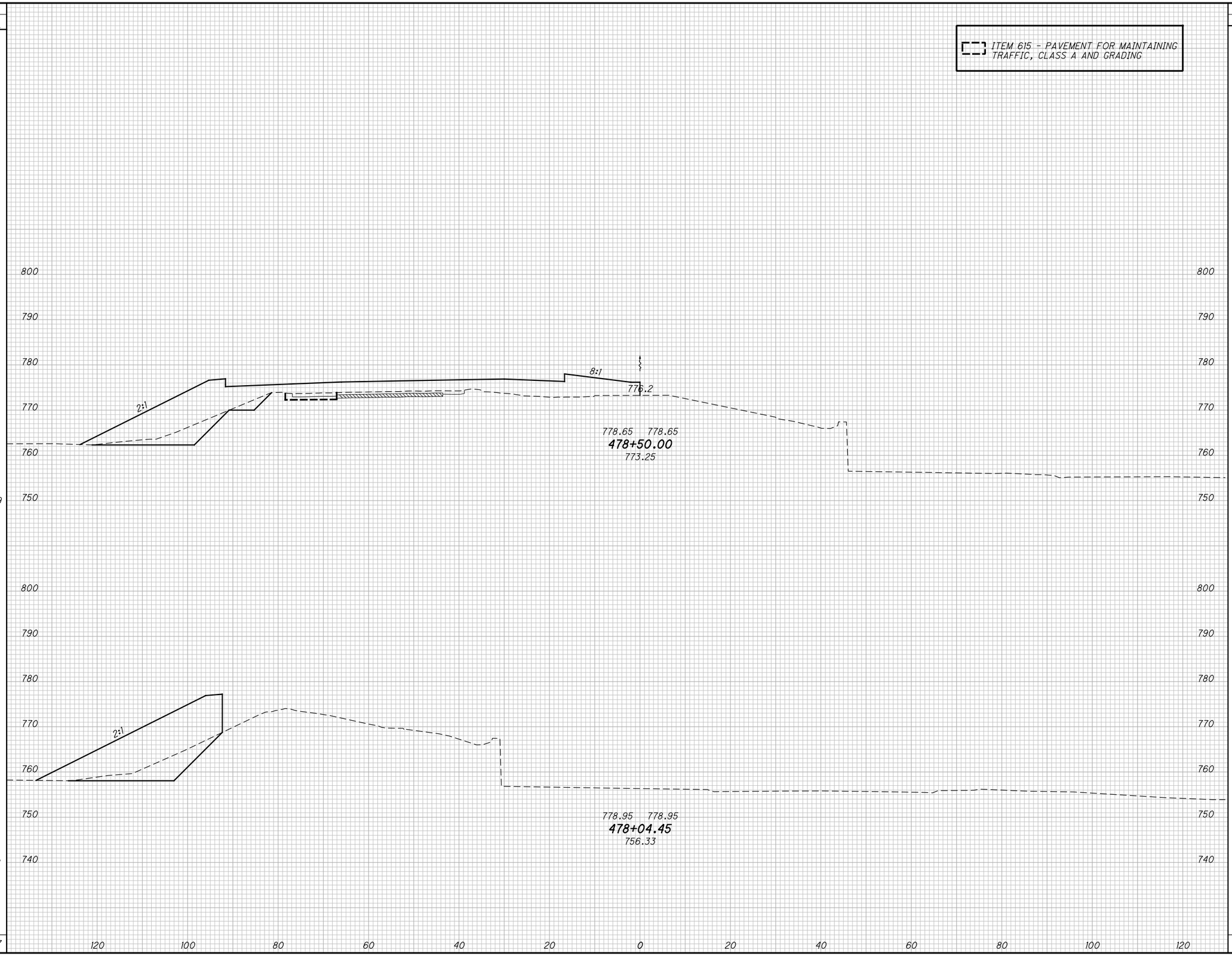

END AREA CUT	END AREA FILL	VOLUME CUT	VOLUME FILL
0	450	0	625
0	292	0	264
		0	889

CALCULATED DWB
CHECKED BAL

CROSS SECTIONS - I.R. 71
STA. 478+04.45 TO STA. 478+50.00

FRA-71-5.29

355
623

P:\84868\roadway\sheets\84868XS005.dgn 12/17/2014 3:29:43 PM kfahy

SEEDING	
END WIDTH	SQ. YDS.
114	563
104	511
	1074

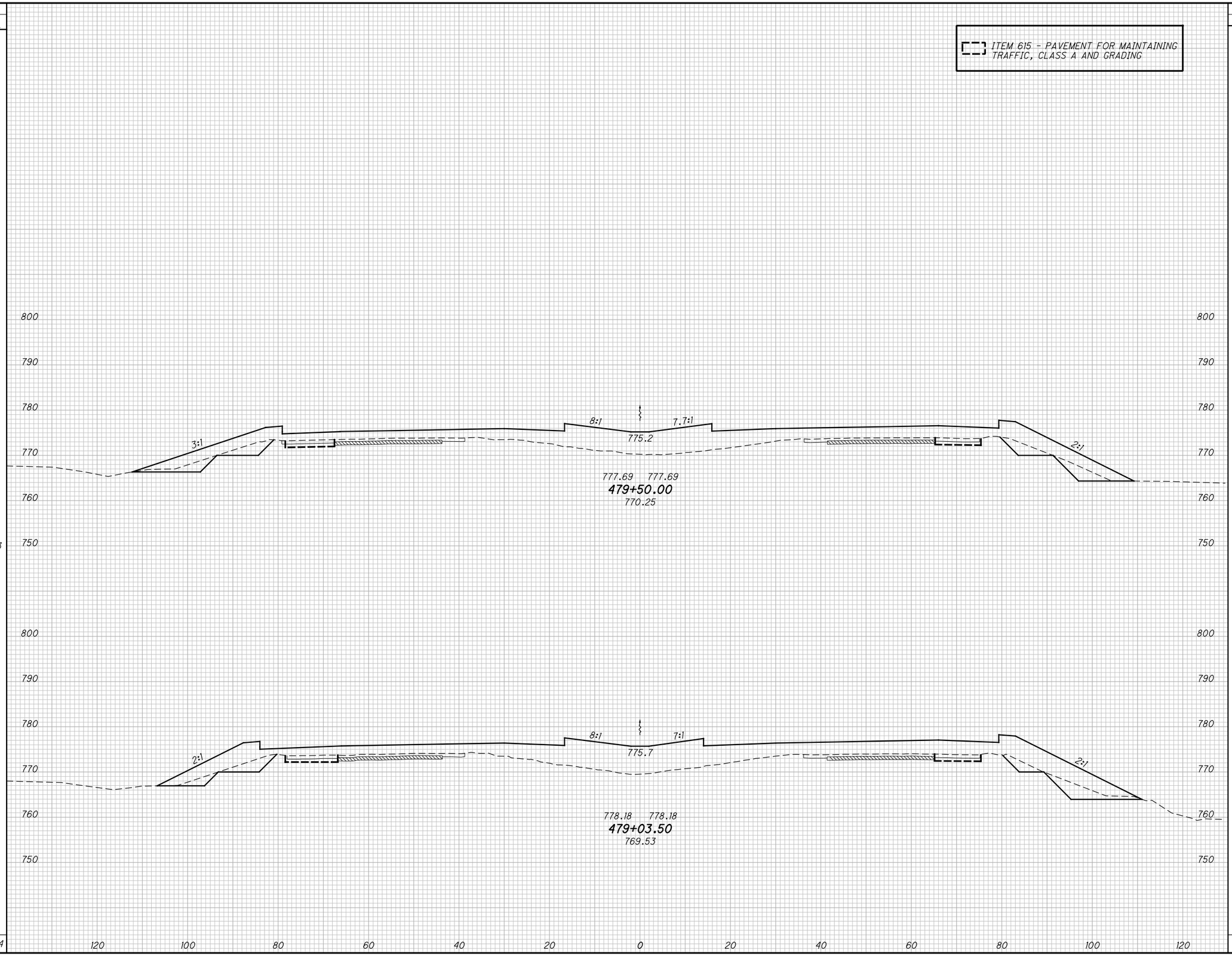

END AREA	
CUT	FILL
0	628
0	726

VOLUME	
CUT	FILL
0	1165
0	1165
0	2330

CALCULATED DWB
CHECKED BAL

CROSS SECTIONS - I.R. 71
STA. 479+03.50 TO STA. 479+50.00

FRA-71-5.29

356
623

P:\84868\roadway\sheets\84868XS005.dgn 12/17/2014 3:29:44 PM kfahy

SEEDING	
END WIDTH	SQ. YDS.
99	583
110	622
	1205

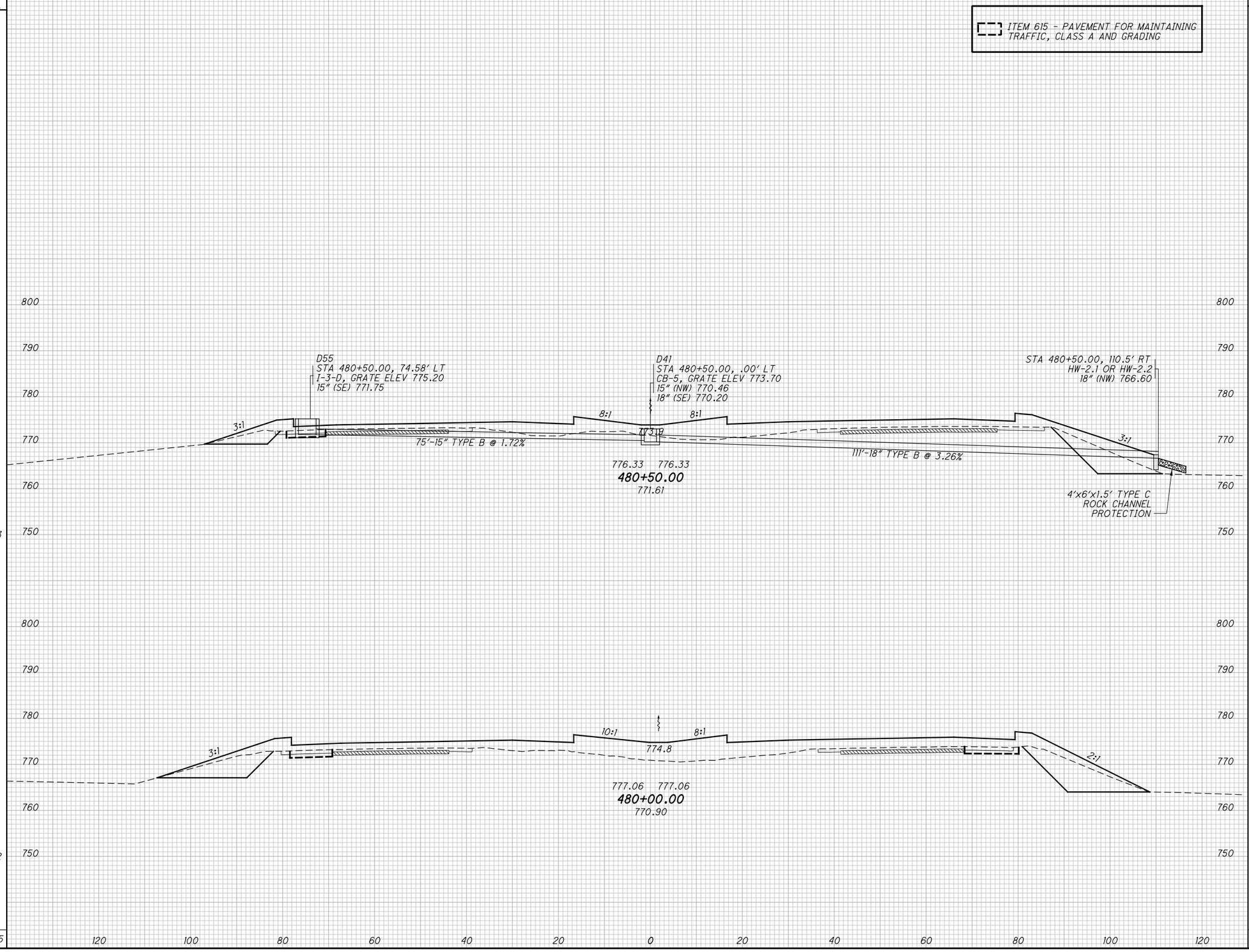

END AREA		VOLUME	
CUT	FILL	CUT	FILL
0	401		
0	798		
0	461		
0	1008		
0	1806		

CALCULATED DWB
CHECKED BAL

CROSS SECTIONS - I.R. 71
STA. 480+00.00 TO STA. 480+50.00

FRA-71-5.29

357
623

P:\84868\roadway\sheets\84868XS005.dgn 12/17/2014 3:29:44 PM kfahy

SEEDING		END AREA		VOLUME		
END WIDTH	SQ. YDS.	CUT	FILL	CUT	FILL	
72	478	0	190	0	437	
100	556	0	282	0	632	
	1034			0	1069	

CALCULATED DWB
CHECKED BAL

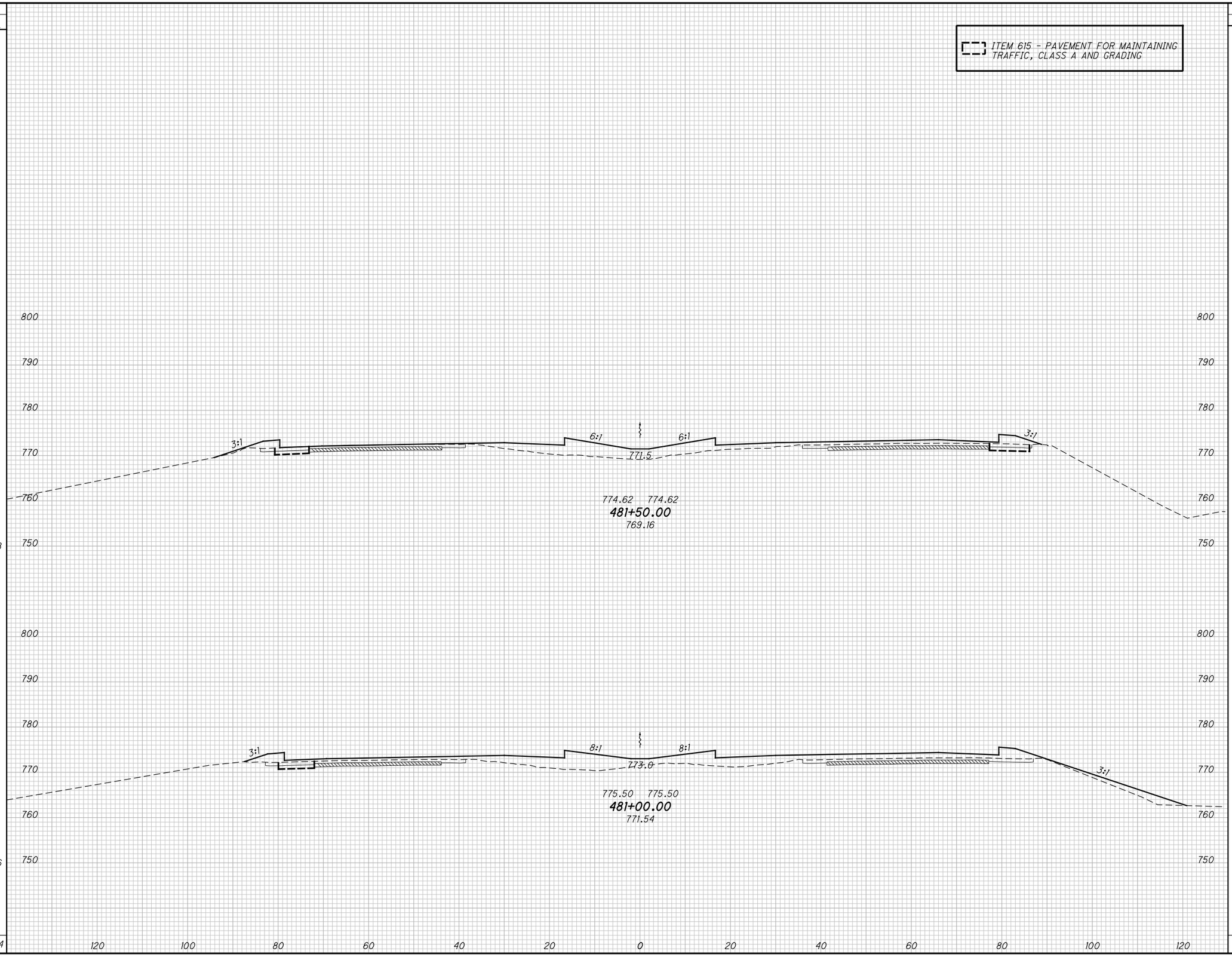

CROSS SECTIONS - I.R. 71
STA. 481+00.00 TO STA. 481+50.00

FRA-71-5.29

358
623

P:\84868\roadway\sheets\84868XS005.dgn 12/17/2014 3:29:45 PM kfahy

SEEDING	
END WIDTH	SQ. YDS.
75	383
	62
	377
	760

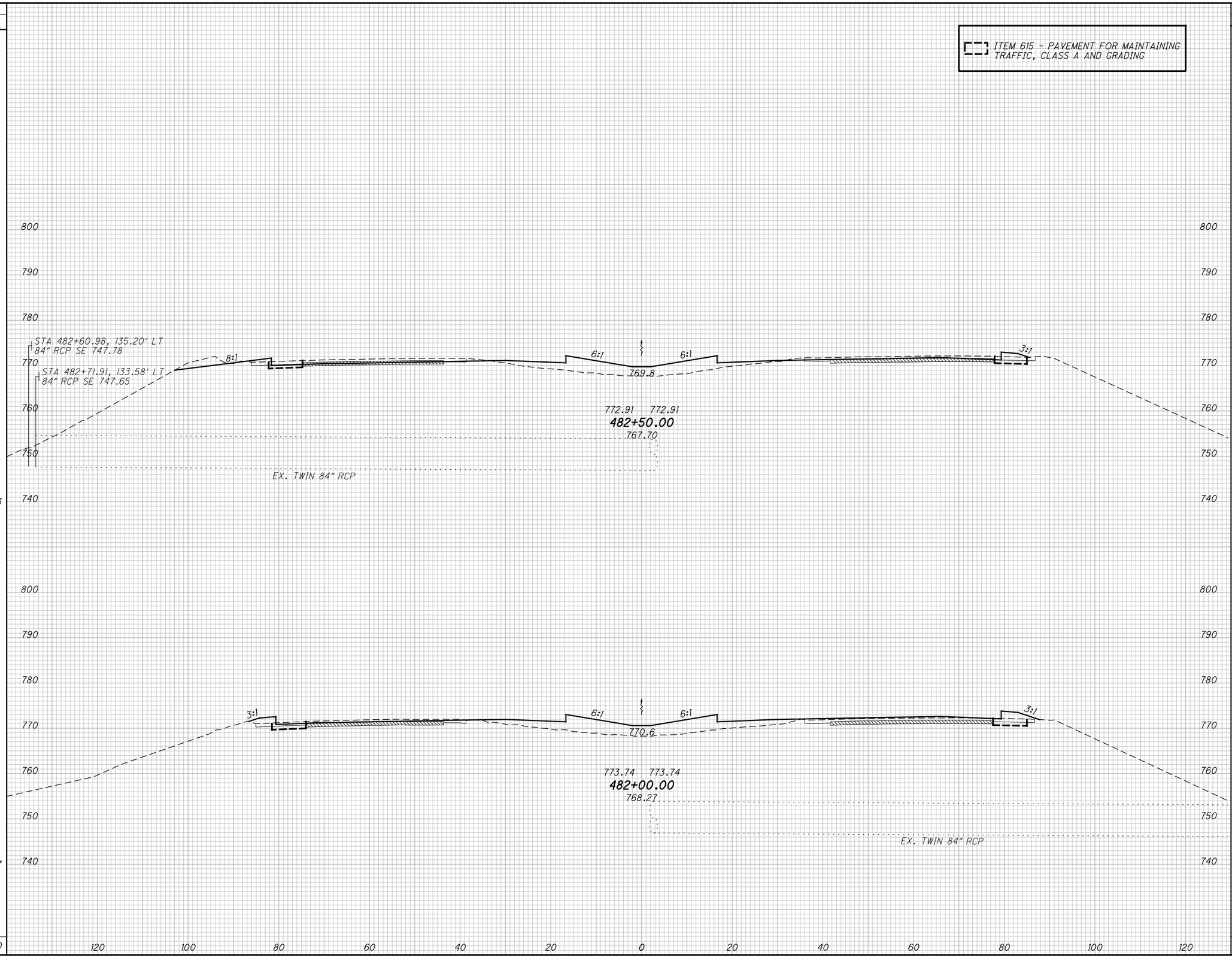

END AREA	
CUT	FILL
18	120
0	164

VOLUME	
CUT	FILL
17	263
0	328
17	591

CALCULATED DWB
CHECKED BAL

CROSS SECTIONS - I.R. 71
STA. 482+00.00 TO STA. 482+50.00

FRA-71-5.29

359
623

P:\84868\roadway\sheets\84868XS005.dgn 12/17/2014 3:29:46 PM kfahy

SEEDING		END AREA		VOLUME		CALCULATED	CHECKED
END WIDTH	SQ. YDS.	CUT	FILL	CUT	FILL	DWB	BAL
84	461	96	63	132	133		
81	439	47	80	60	186		
	900			192	319		

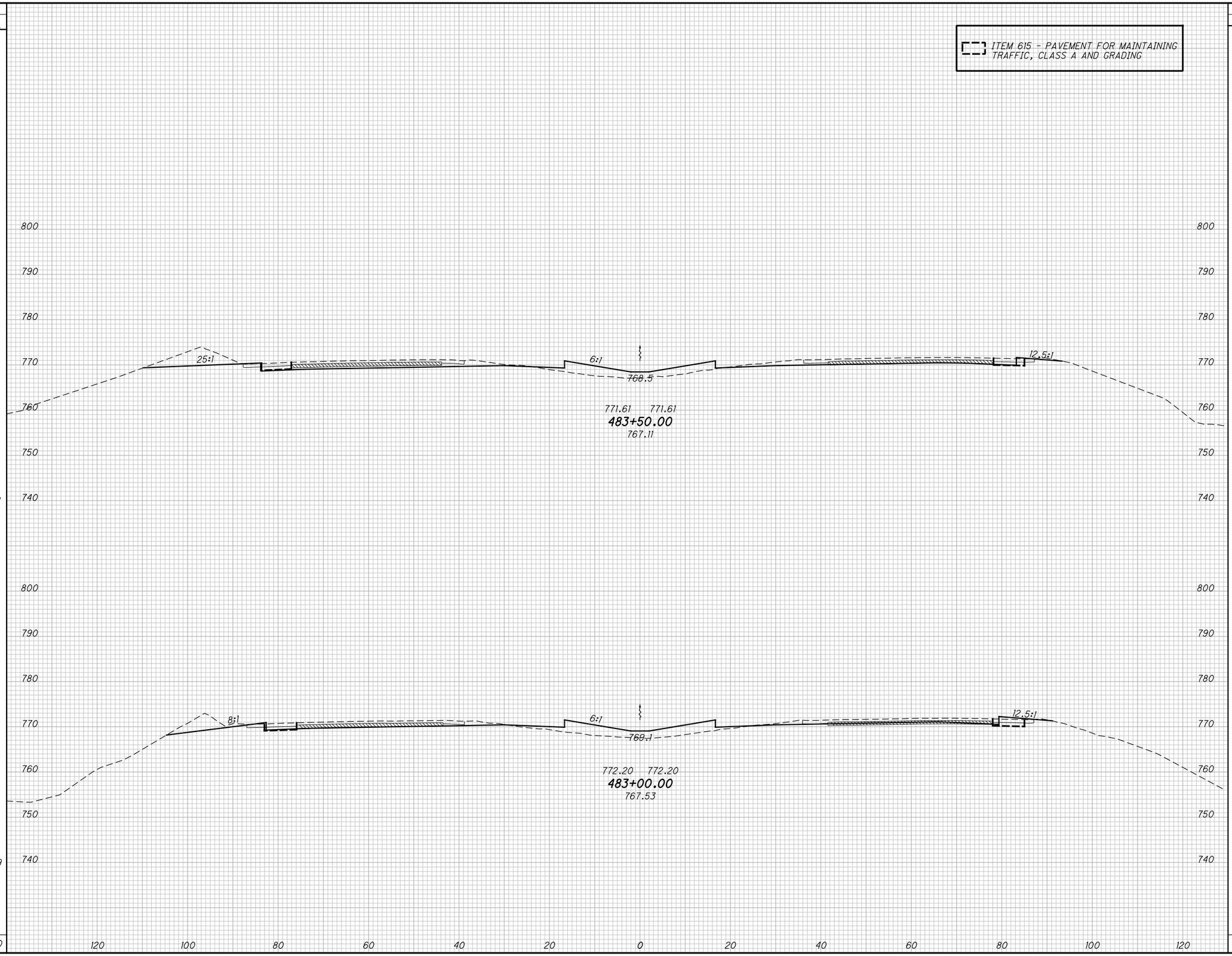

CROSS SECTIONS - I.R. 71
STA. 483+00.00 TO STA. 483+50.00

FRA-71-5.29

360
623

P:\84868\roadway\sheets\84868XS005.dgn 12/17/2014 3:29:47 PM kfahy

SEEDING	
END WIDTH	SQ. YDS.
59	400
	400

ITEM 615 - PAVEMENT FOR MAINTAINING TRAFFIC, CLASS A AND GRADING

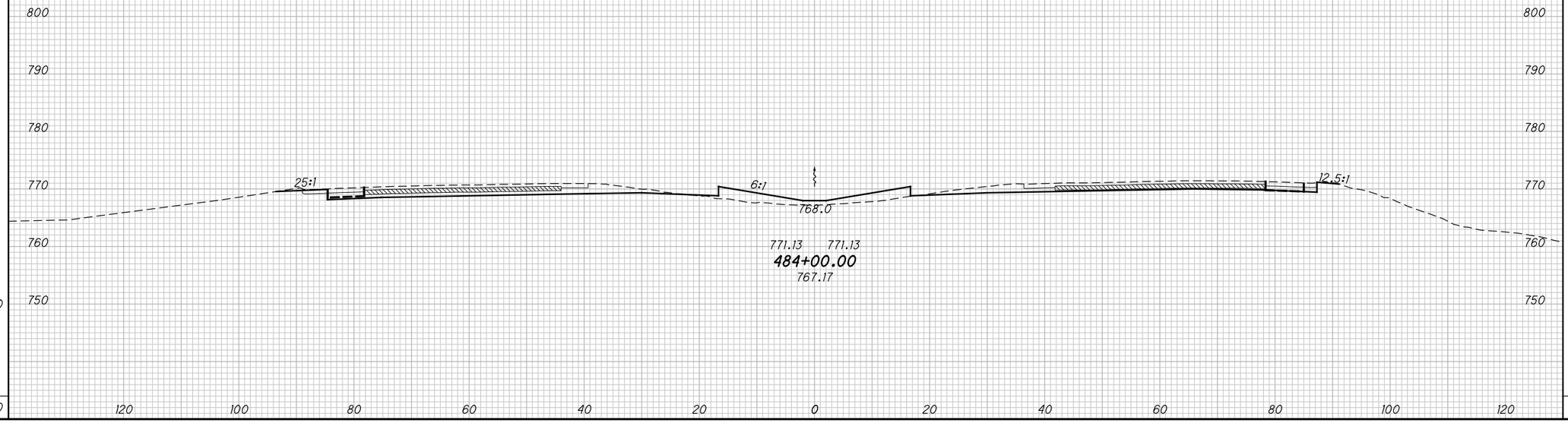

END AREA	
CUT	FILL
83	47

VOLUME	
CUT	FILL
165	102
165	102

CALCULATED DWB
CHECKED BAL

CROSS SECTIONS - I.R. 71
STA. 484+00.00

FRA-71-5.29

361
623

P:\84868\roadway\sheets\84868XS005.dgn 12/17/2014 3:29:47 PM kfahy

SEEDING	
END WIDTH	SQ. YDS.
135	544
	544

ITEM 615 - PAVEMENT FOR MAINTAINING TRAFFIC, CLASS A AND GRADING

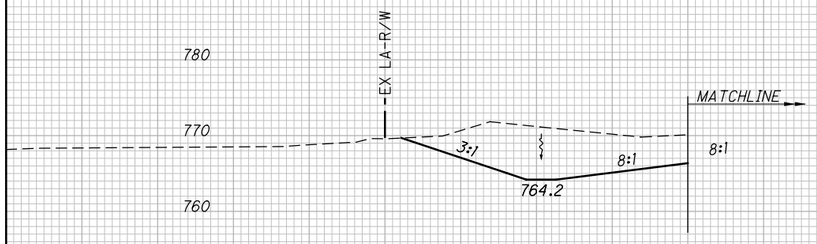

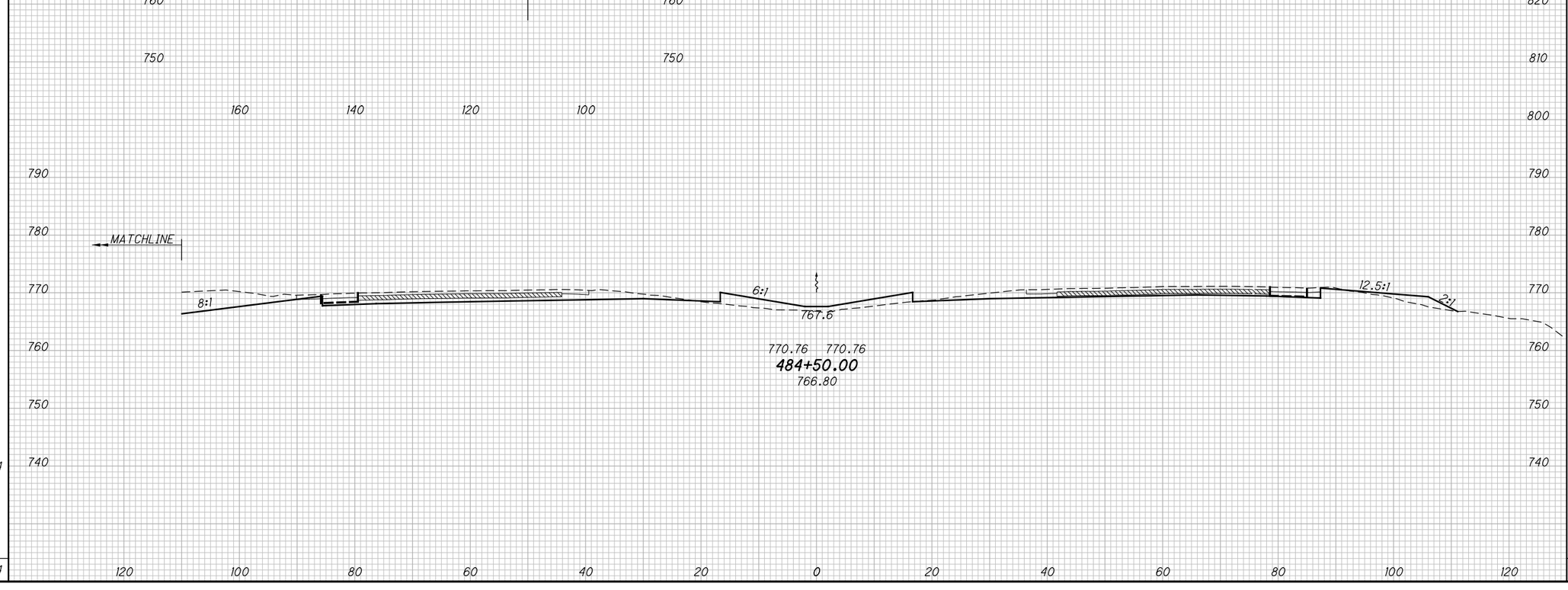

END AREA		VOLUME	
CUT	FILL	CUT	FILL
	310	58	
		364	97
		364	97

CALCULATED DWB
CHECKED BAL

CROSS SECTIONS - I.R. 71
STA. 484+50.00

FRA-71-5.29

362
623

P:\84868\roadway\sheets\84868XS005.dgn 12/17/2014 3:29:48 PM kfahy

SEEDING	
END WIDTH	SQ. YDS.
131	
	745

ITEM 615 - PAVEMENT FOR MAINTAINING TRAFFIC, CLASS A AND GRADING

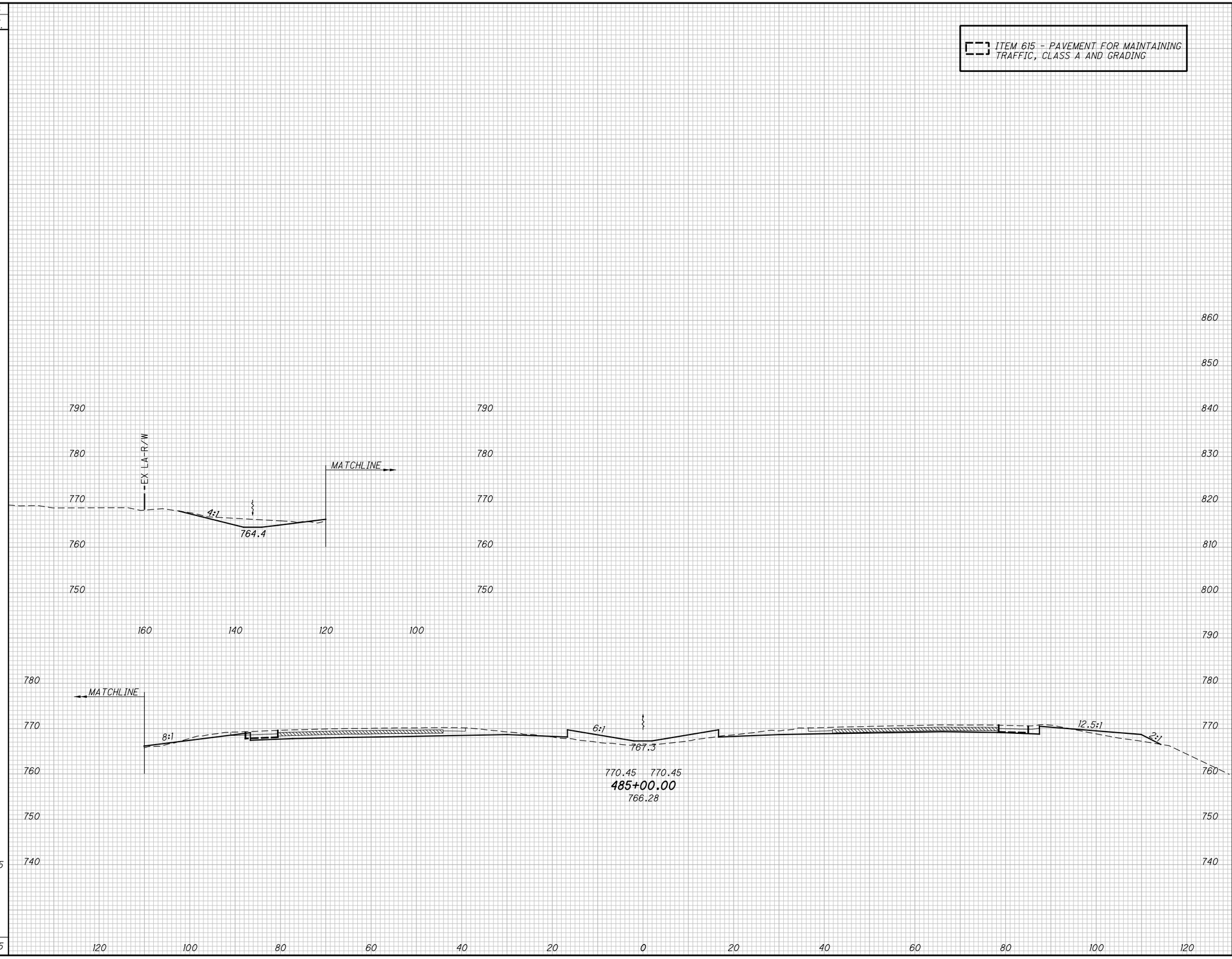

END AREA		VOLUME	
CUT	FILL	CUT	FILL
119	66		
		398	115
		398	115

CALCULATED DWB
CHECKED BAL

CROSS SECTIONS - I.R. 71
STA. 485+00.00

FRA-71-5.29

P:\84868\roadway\sheets\84868XS005.dgn 12/17/2014 3:29:49 PM kfahy

SEEDING		END AREA		VOLUME	
END WIDTH	SQ. YDS.	CUT	FILL	CUT	FILL
122	667	127	66	217	120
117	689	108	64	210	120
	1356			427	240

CALCULATED DWB | CHECKED BAL

ITEM 615 - PAVEMENT FOR MAINTAINING TRAFFIC, CLASS A AND GRADING

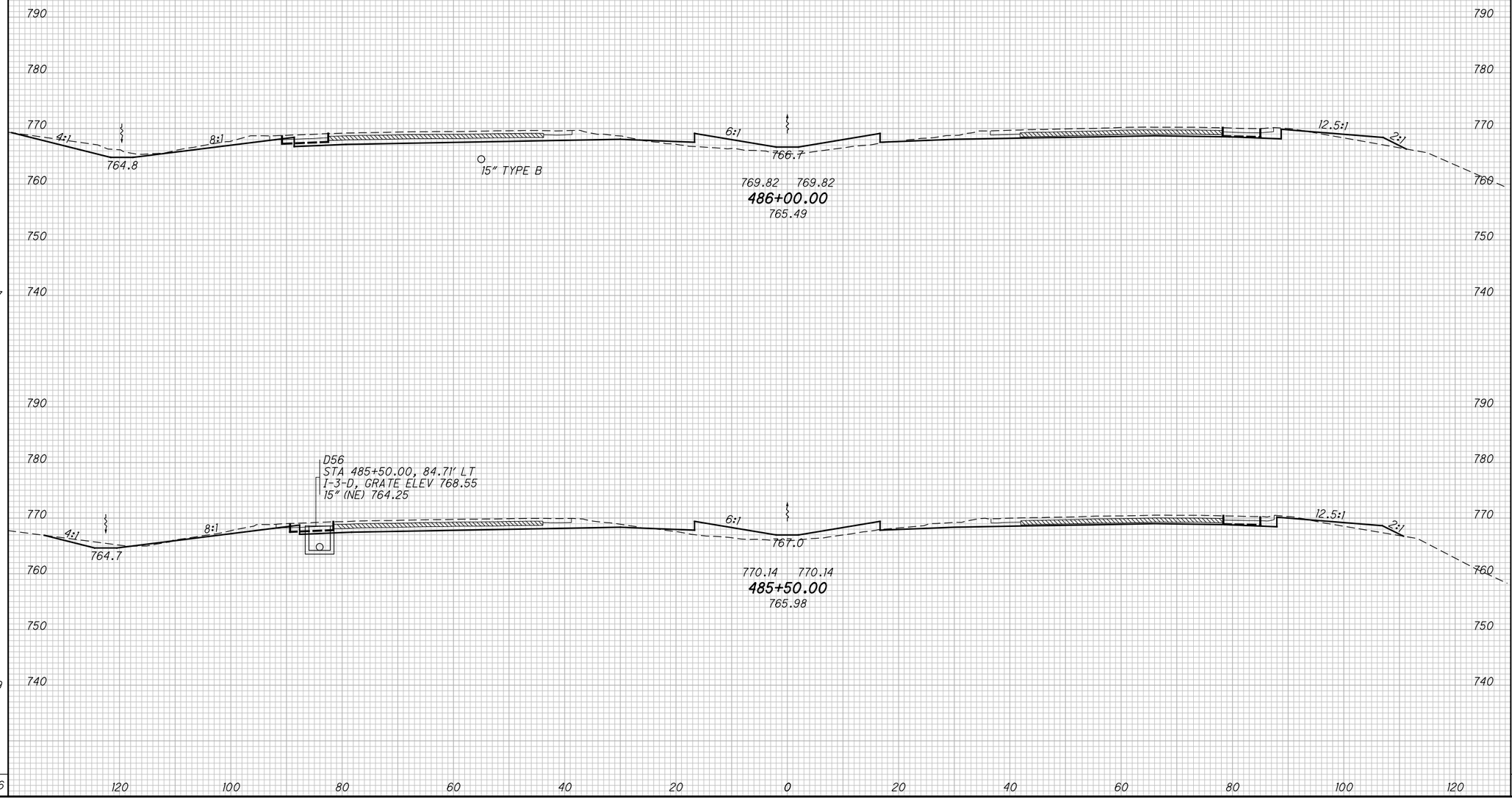

CROSS SECTIONS - I.R. 71
STA. 485+50.00 TO STA. 486+00.00

FRA-71-5.29

364
623

P:\84868\roadway\sheets\84868XS005.dgn 12/17/2014 3:29:50 PM kfahy

SEEDING	
END WIDTH	SQ. YDS.
137	722

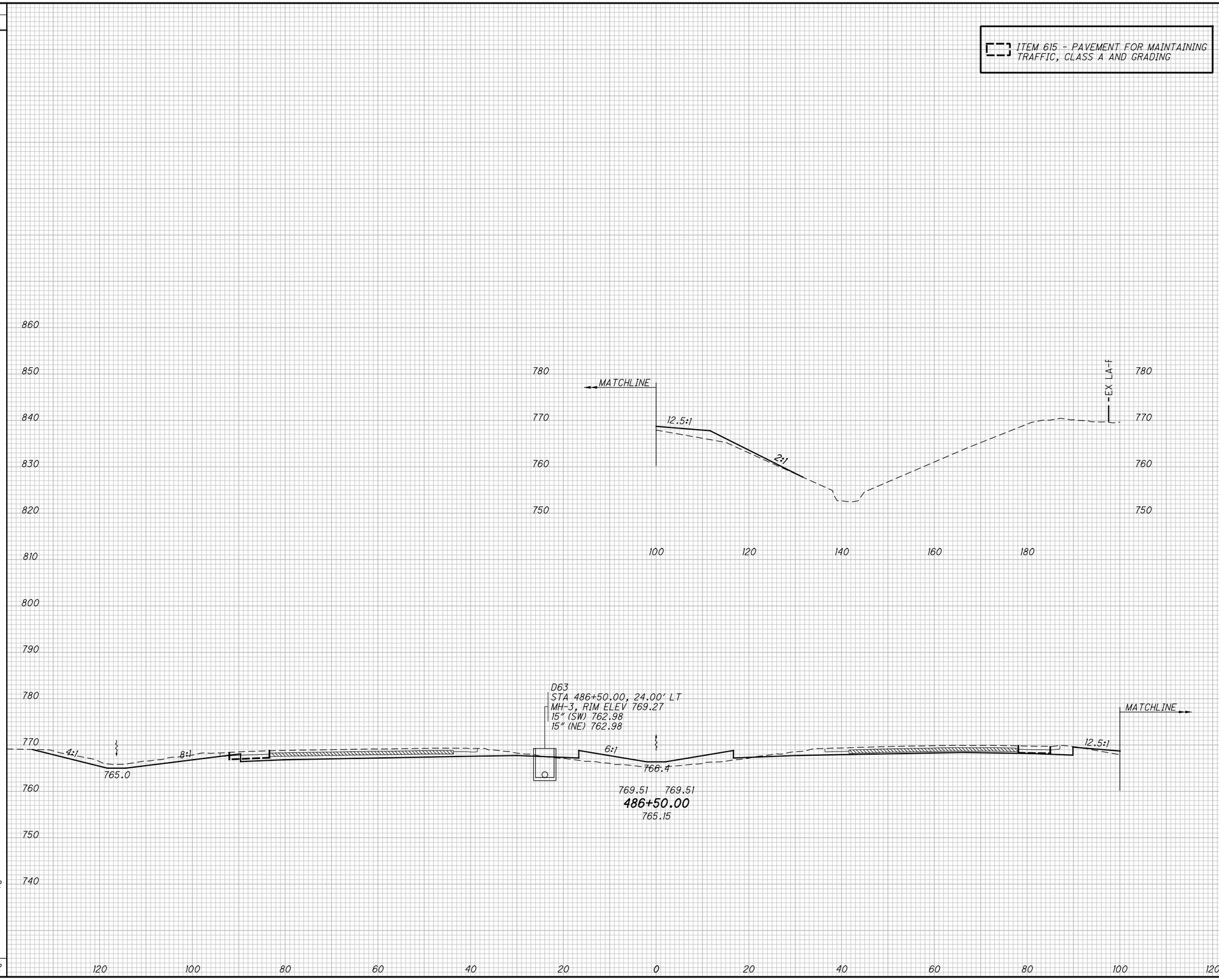

END AREA		VOLUME	
CUT	FILL	CUT	FILL
131	86	238	141
		238	141

CALCULATED DWB
CHECKED BAL

CROSS SECTIONS - I.R. 71
STA. 486+50.00

FRA-71-5.29

365
623

P:\84868\roadway\sheets\84868XS005.dgn 12/17/2014 3:29:50 PM kfahy

SEEDING	
END WIDTH	SQ. YDS.
151	806
	806

ITEM 615 - PAVEMENT FOR MAINTAINING TRAFFIC, CLASS A AND GRADING

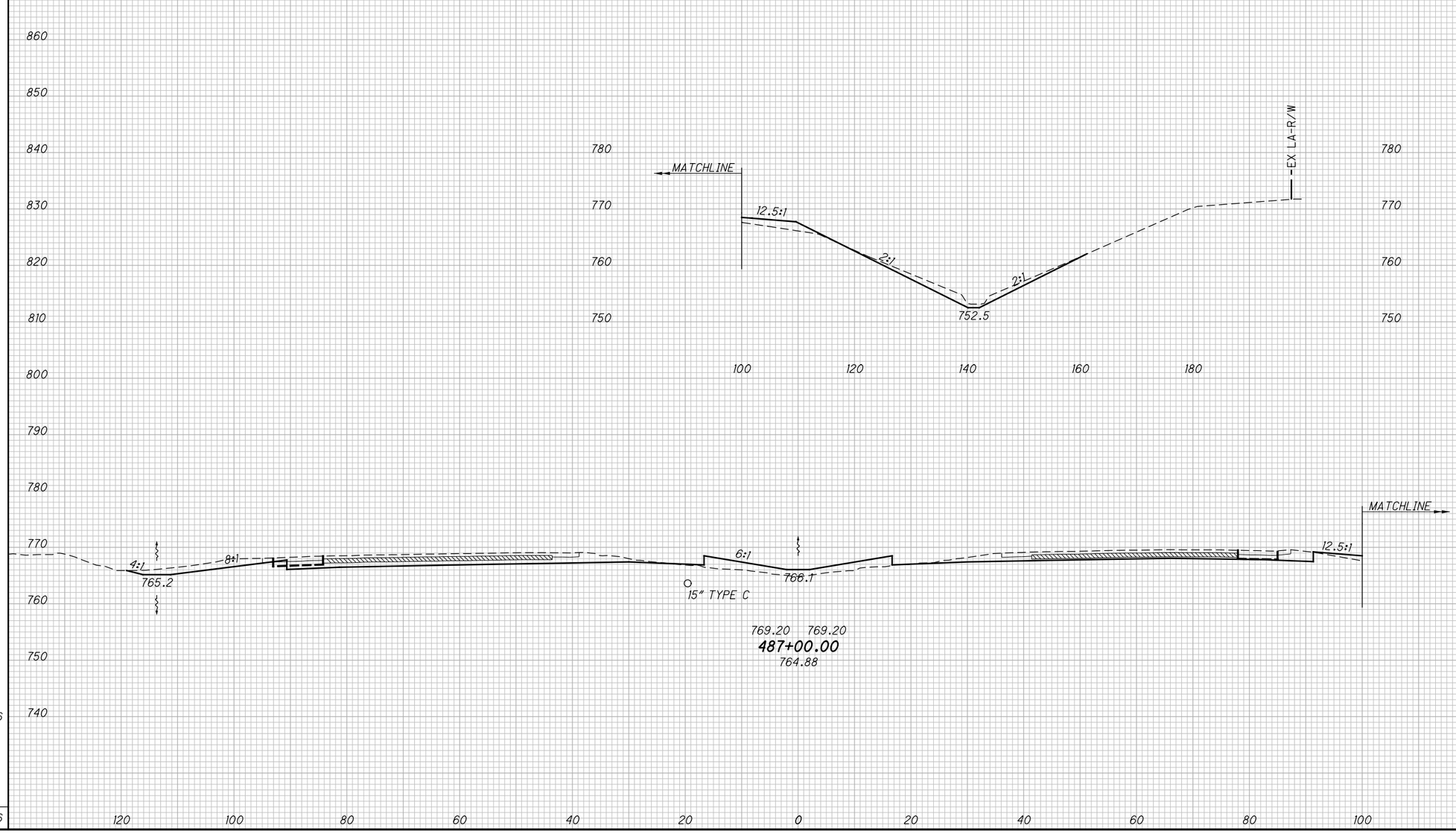

END AREA		VOLUME	
CUT	FILL	CUT	FILL
154	66		
		264	140
		264	140

CALCULATED DWB
CHECKED BAL

CROSS SECTIONS - I.R. 71
STA. 487+00.00

FRA-71-5.29

366
623

P:\84868\roadway\sheets\84868XS005.dgn 12/17/2014 3:29:51 PM kfahy

SEEDING	
END WIDTH	SQ. YDS.
164	878
	878

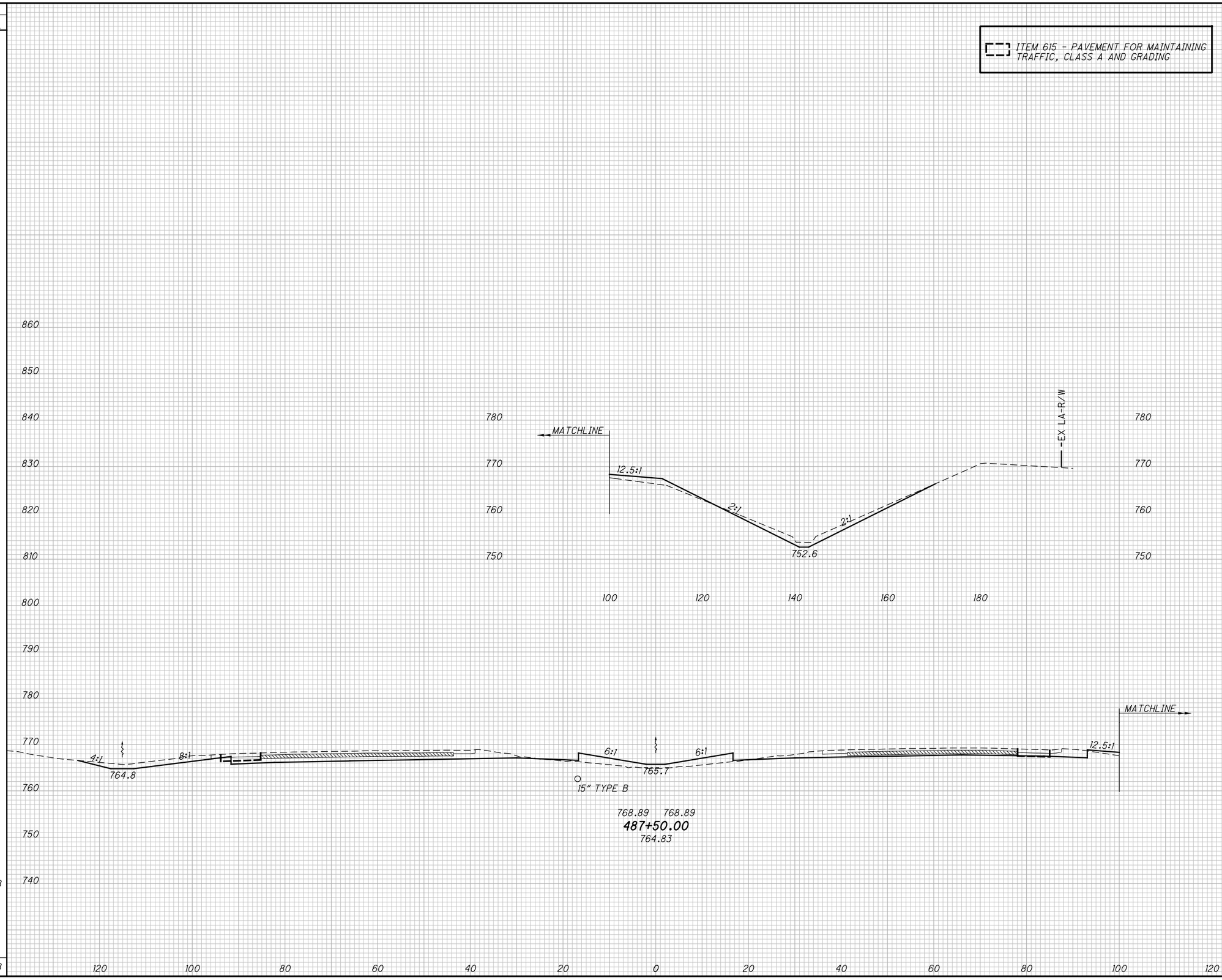

END AREA		VOLUME	
CUT	FILL	CUT	FILL
168	68		
		298	124
		298	124

CALCULATED DWB
CHECKED BAL

CROSS SECTIONS - I.R. 71
STA. 487+50.00

FRA-71-5.29

367
623

P:\84868\roadway\sheets\84868XS005.dgn 12/17/2014 3:29:52 PM kfahy

SEEDING	
END WIDTH	SQ. YDS.
	188
	983
	983

ITEM 615 - PAVEMENT FOR MAINTAINING TRAFFIC, CLASS A AND GRADING

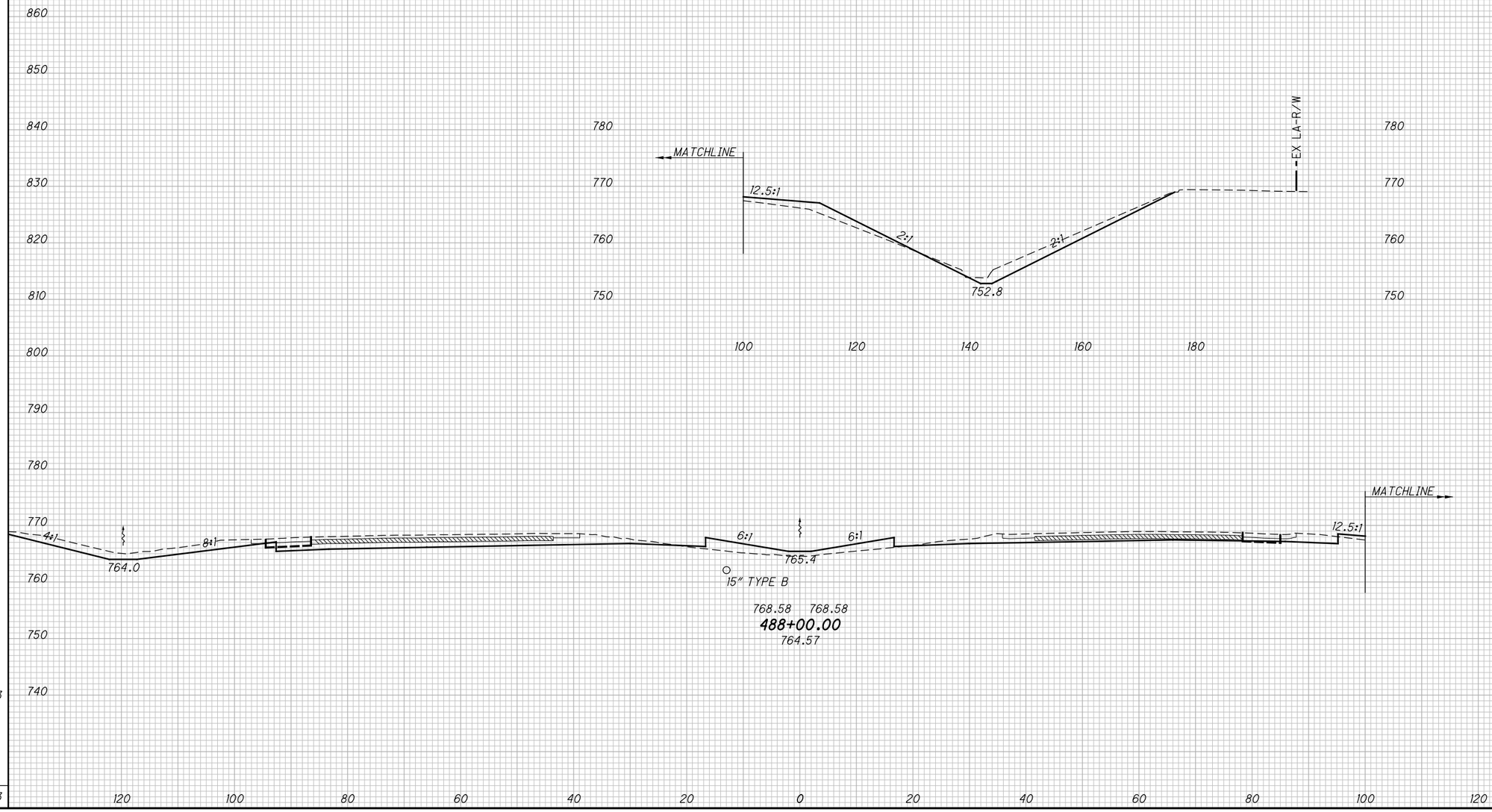

END AREA		VOLUME	
CUT	FILL	CUT	FILL
213	78		
		353	135
		353	135

CALCULATED DWB
CHECKED BAL

CROSS SECTIONS - I.R. 71
STA. 488+00.00

FRA-71-5.29

P:\84868\roadway\sheets\84868XS005.dgn 12/17/2014 3:30:05 PM kfahy

SEEDING	
END WIDTH	SQ. YDS.
189	1050
	1050

END AREA	
CUT	FILL
274	98

VOLUME	
CUT	FILL
451	163
451	163

CALCULATED DWB

CHECKED BAL

ITEM 615 - PAVEMENT FOR MAINTAINING TRAFFIC, CLASS A AND GRADING

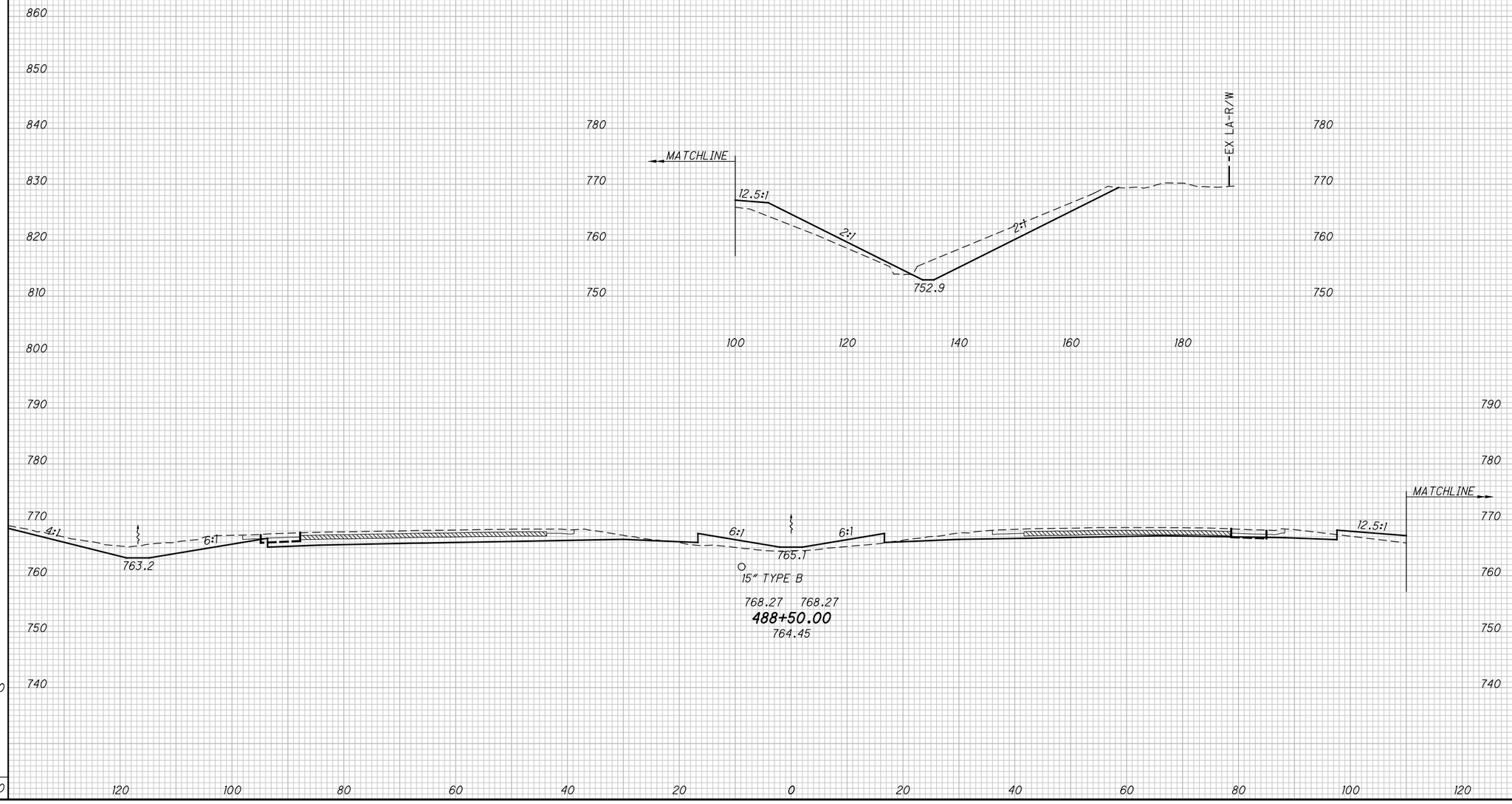

CROSS SECTIONS - I.R. 71
STA. 488+50.00

FRA-71-5.29

369
623

P:\84868\roadway\sheets\84868XS005.dgn 12/17/2014 3:30:05 PM kfahy

SEEDING	
END WIDTH	SQ. YDS.
195	1066
1066	

ITEM 615 - PAVEMENT FOR MAINTAINING TRAFFIC, CLASS A AND GRADING

EX LA-R/W

MATCHLINE

12.5:1

2:1

2:1

753.0

MATCHLINE

D57
STA 489+00.00, 91.' LT
I-3-D, GRATE ELEV 766.58
15" (NE) 762.22

3:1

6:1

762.4

6:1

6:1

764.8

15" TYPE B

767.98 767.98

489+00.00

764.05

12.5:1

860 850 840 830 820 810 800 790 780 770 760 750 740

780 770 760 750

100 120 140 160 180

780 770 760 750 740

120 100 80 60 40 20 0 20 40 60 80 100 120

END AREA		VOLUME	
CUT	FILL	CUT	FILL
369	126	596	208
		596	208

CALCULATED DWB

CHECKED BAL

CROSS SECTIONS - I.R. 71
STA. 489+00.00

FRA-71-5.29

370
623

P:\84868\roadway\sheets\84868XS005.dgn 12/17/2014 3:30:06 PM kfahy

SEEDING	
END WIDTH	SQ. YDS.
196	1089
	1089

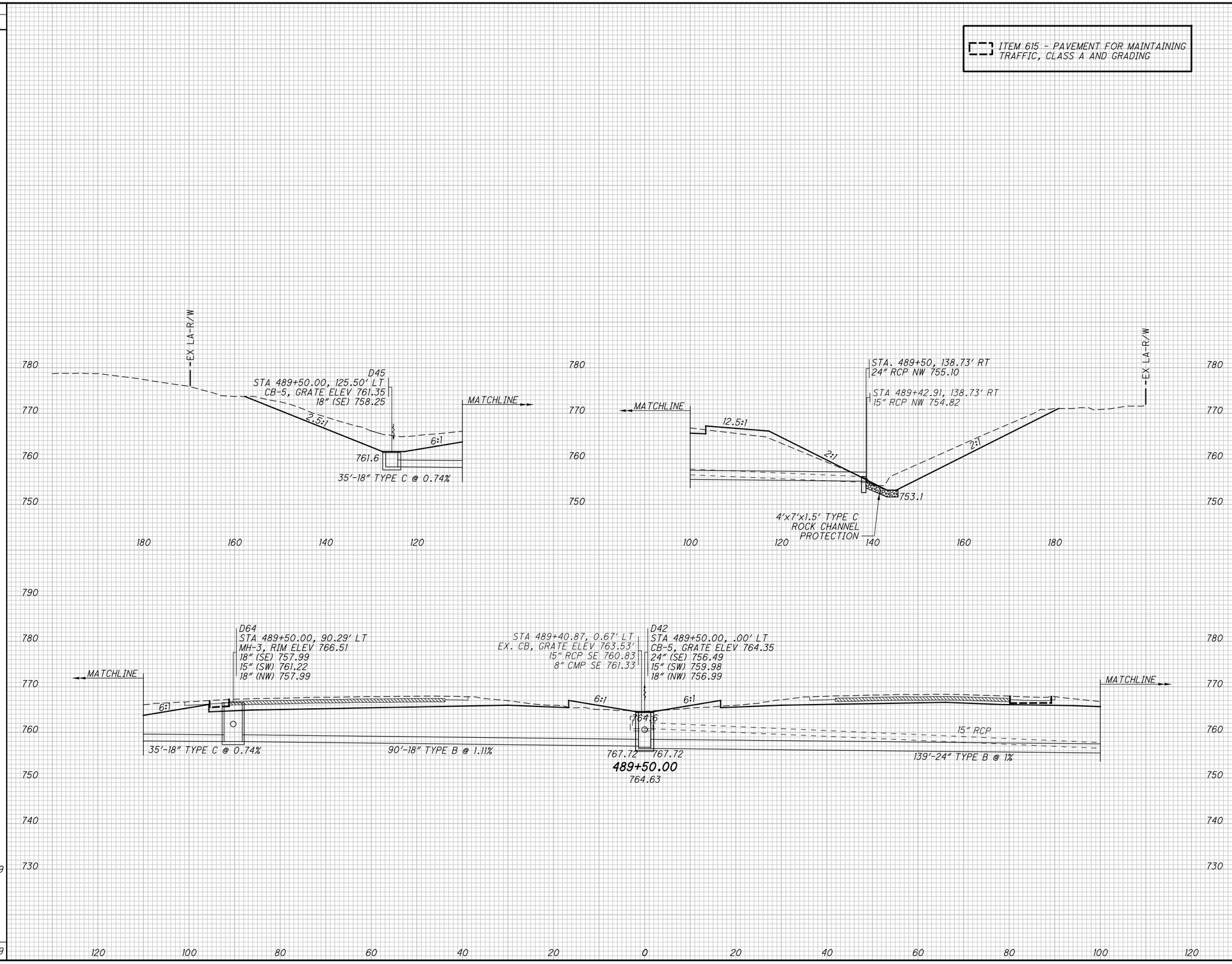

END AREA		VOLUME	
CUT	FILL	CUT	FILL
406	50	717	163
		717	163

CALCULATED DWB
CHECKED BAL

CROSS SECTIONS - I.R. 71
STA. 489+50.00

FRA-71-5.29

371
623

P:\84868\roadway\sheets\84868XS005.dgn 12/17/2014 3:30:07 PM kfahy

SEEDING	
END WIDTH	SQ. YDS.
190	1073
	1073

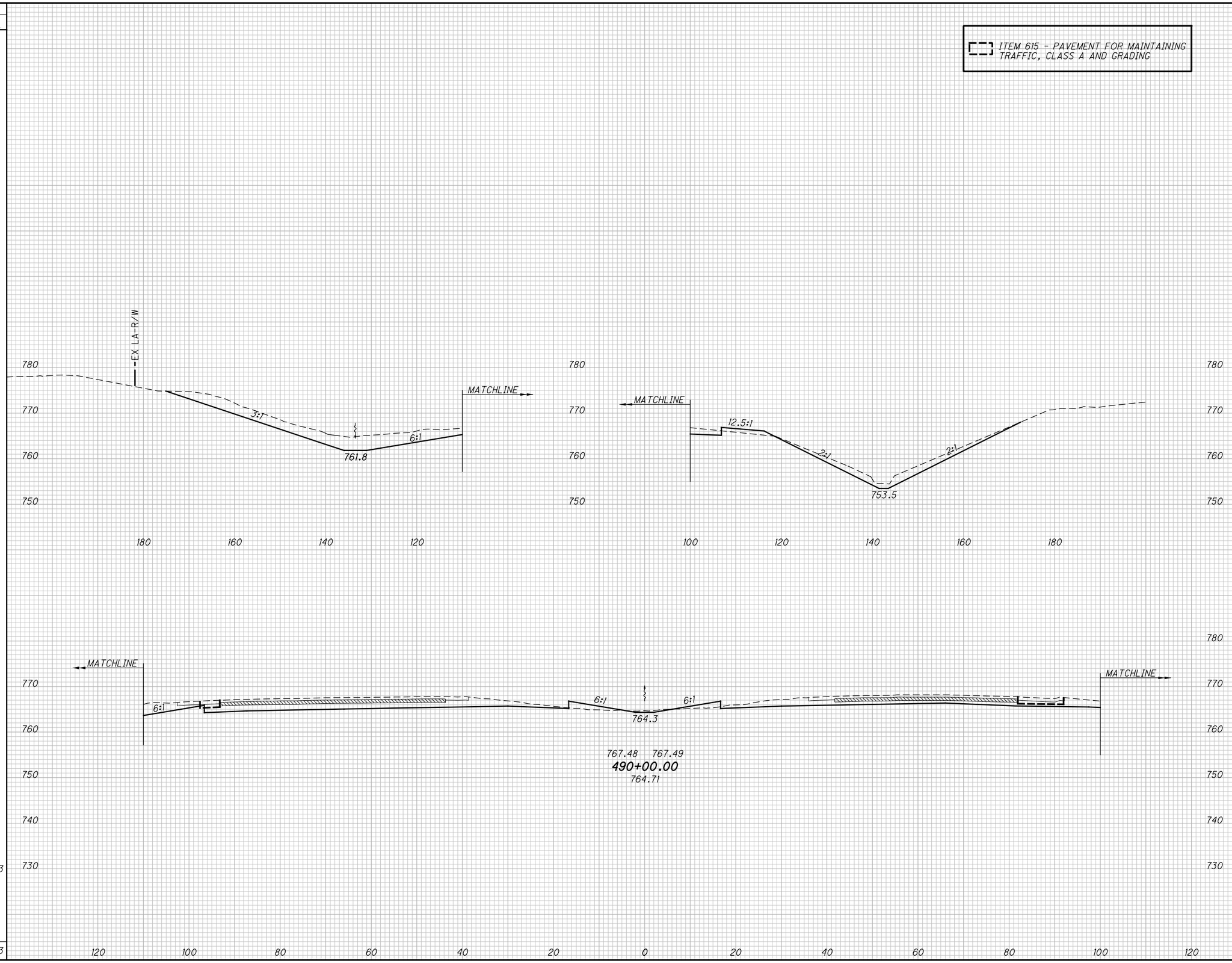

END AREA	
CUT	FILL
392	26

VOLUME	
CUT	FILL
738	70
738	70

CALCULATED DWB
CHECKED BAL

CROSS SECTIONS - I.R. 71
STA. 490+00.00

FRA-71-5.29

372
623

P:\84868\roadway\sheets\84868XS005.dgn 12/17/2014 3:30:08 PM kfahy

SEEDING	
END WIDTH	SQ. YDS.
	155
	961
	961

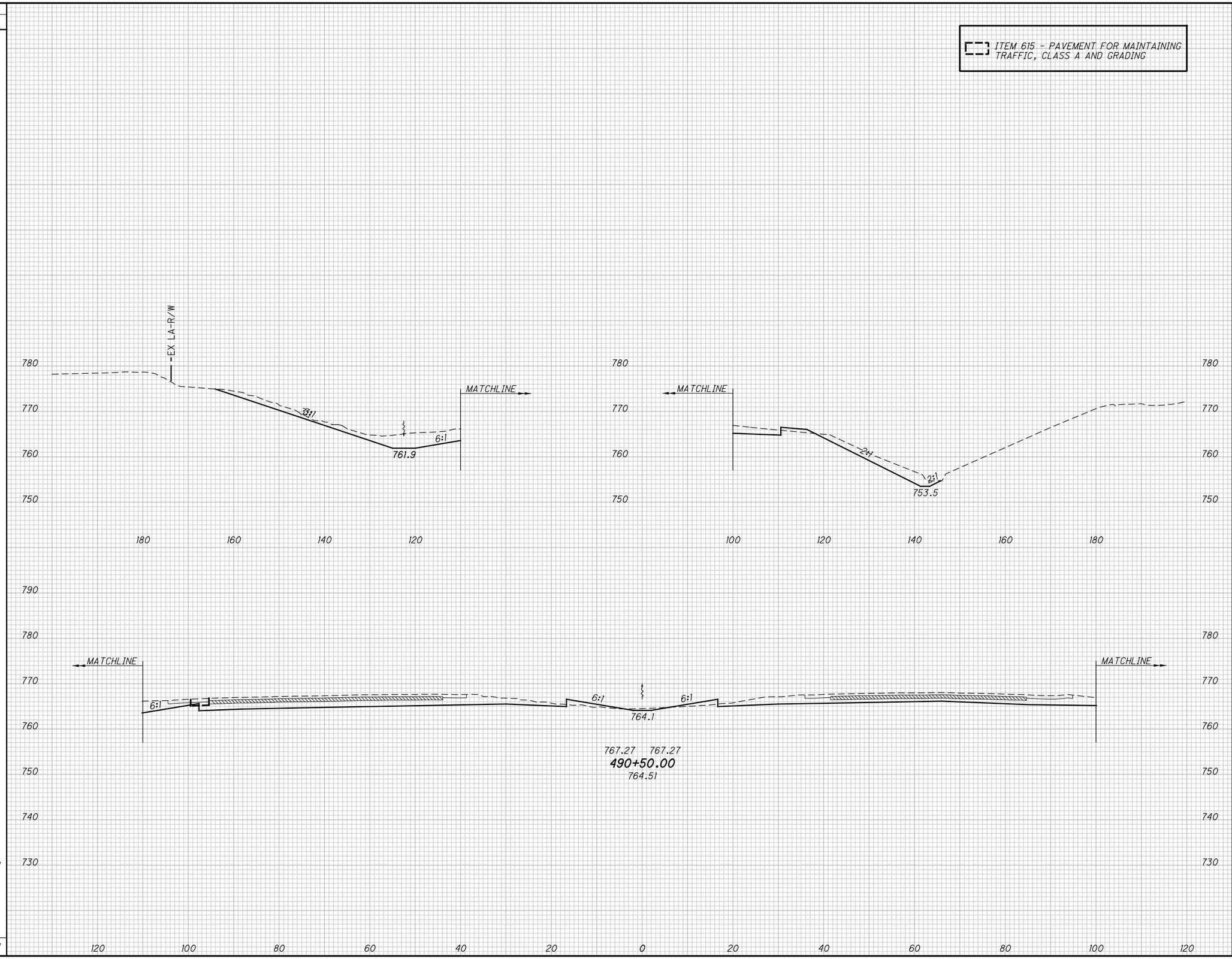

END AREA		VOLUME	
CUT	FILL	CUT	FILL
362	19		
		698	41
		698	41

CALCULATED DWB
CHECKED BAL

CROSS SECTIONS - I.R. 71
STA. 490+50.00

FRA-71-5.29

373
623

P:\84868\roadway\sheets\84868XS005.dgn 12/17/2014 3:30:08 PM kfahy

SEEDING	
END WIDTH	SQ. YDS.
130	758
	758

ITEM 615 - PAVEMENT FOR MAINTAINING TRAFFIC, CLASS A AND GRADING

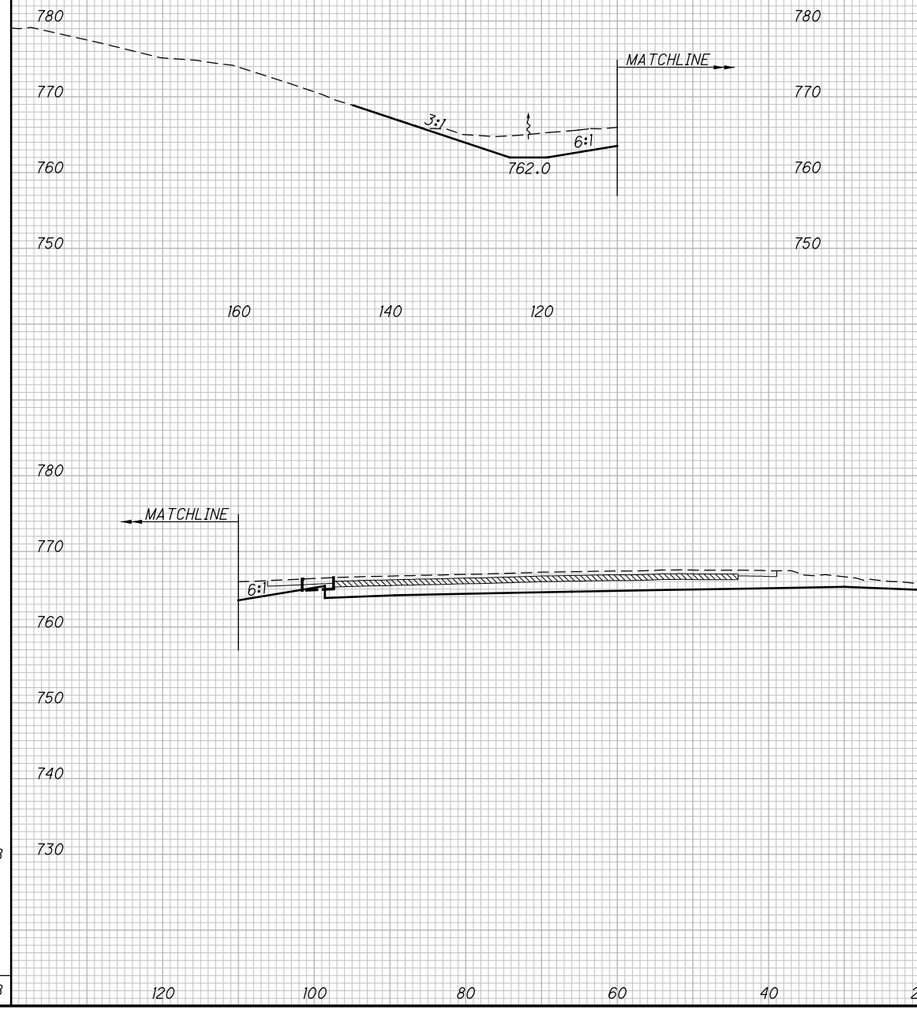

END AREA	
CUT	FILL
364	17

VOLUME	
CUT	FILL
641	31
641	31

CALCULATED DWB
CHECKED BAL

CROSS SECTIONS - I.R. 71
STA. 490+97.72

FRA-71-5.29

374
623

P:\84868\roadway\sheets\84868XS005.dgn 12/17/2014 3:30:09 PM kfahy

SEEDING	
END WIDTH	SQ. YDS.
101	
	29
	29

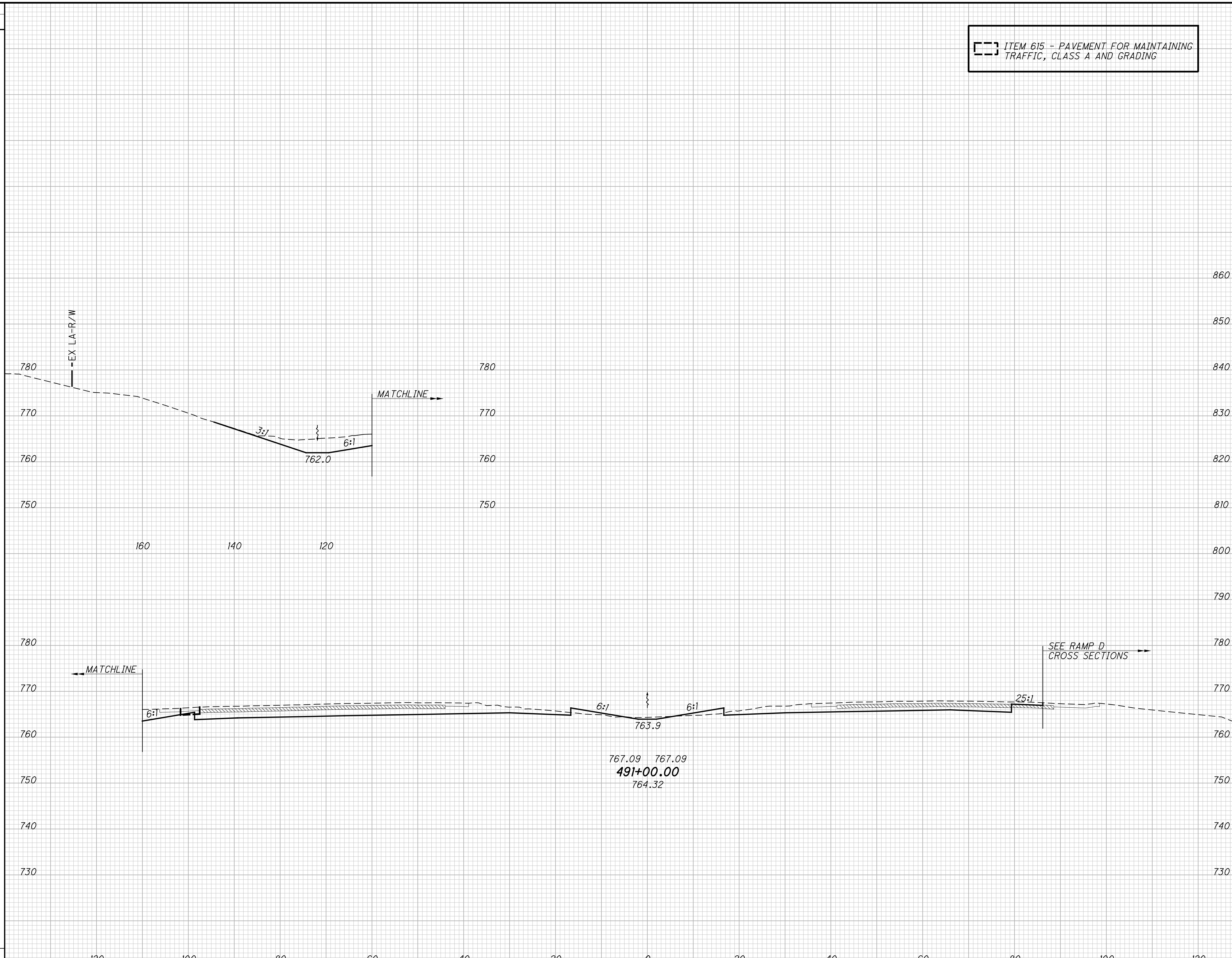

END AREA		VOLUME	
CUT	FILL	CUT	FILL
248	14		
		26	1
		26	1

CALCULATED DWB
CHECKED BAL

CROSS SECTIONS - I.R. 71
STA. 491+00.00

FRA-71-5.29

P:\84868\roadway\sheets\84868XS005.dgn 12/17/2014 3:30:10 PM kfahy

SEEDING	
END WIDTH	SQ. YDS.
90	495
87	528
	1023

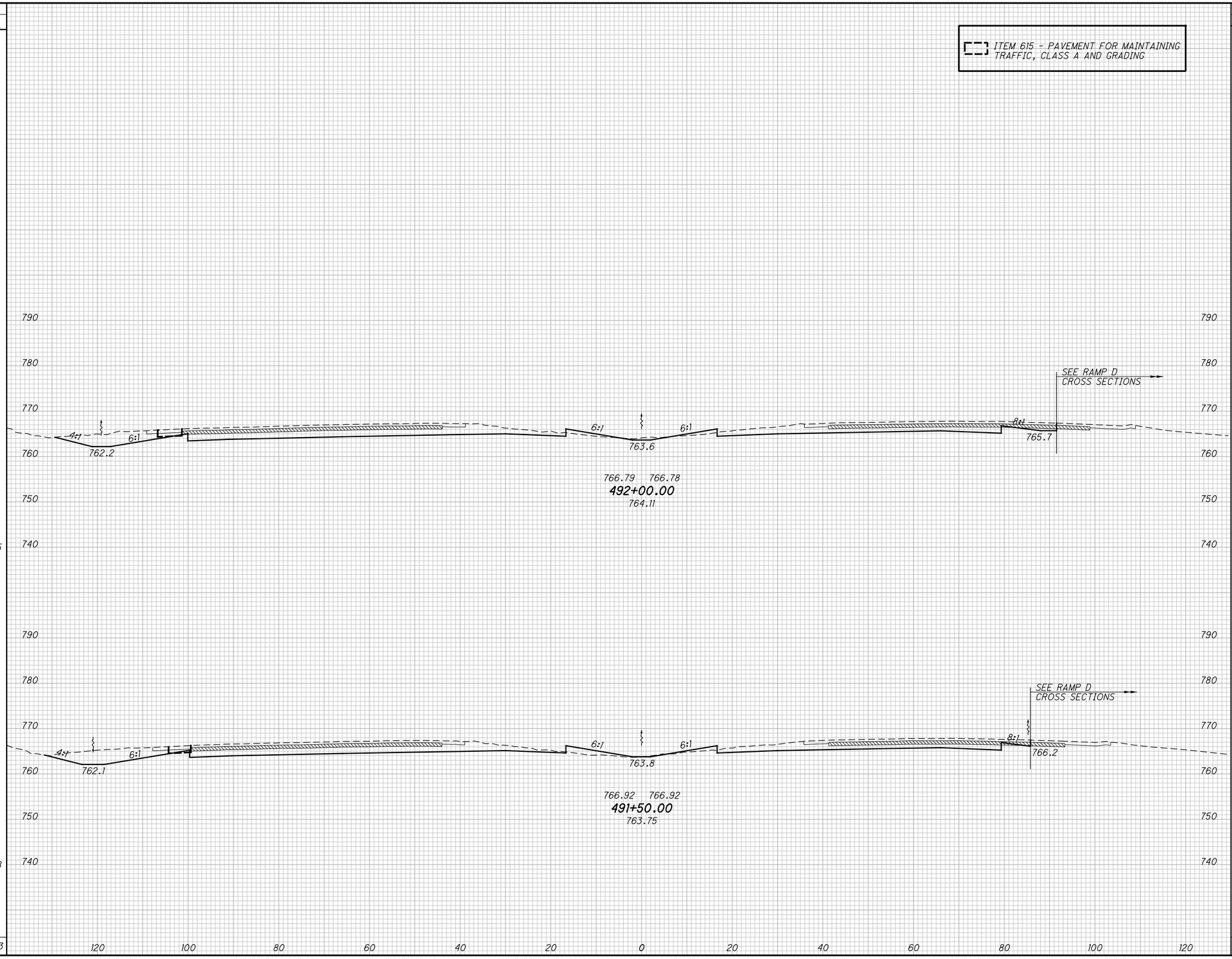

END AREA		VOLUME	
CUT	FILL	CUT	FILL
245	11		
235	17		
		892	54
		445	26
		447	28

CALCULATED DWB
CHECKED BAL

CROSS SECTIONS - I.R. 71
STA. 491+50.00 TO STA. 492+00.00

FRA-71-5.29

376
623

P:\84868\roadway\sheets\84868XS005.dgn 12/17/2014 3:30:11 PM kfahy

SEEDING	
END WIDTH	SQ. YDS.
100	550
96	523
	1073

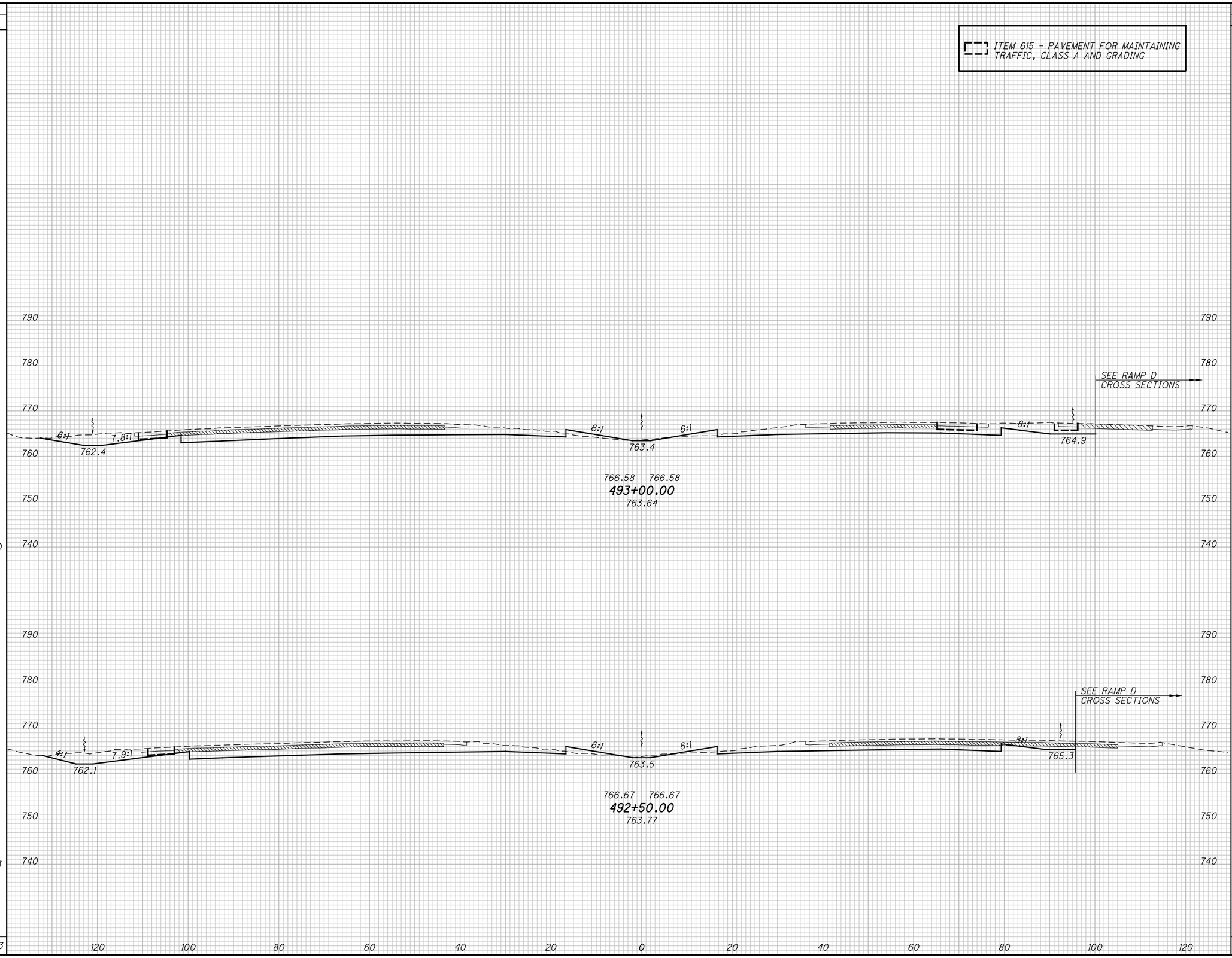

END AREA	
CUT	FILL
285	14
250	13

VOLUME	
CUT	FILL
495	25
459	22
954	47

CALCULATED DWB
CHECKED BAL

CROSS SECTIONS - I.R. 71
STA. 492+50.00 TO STA. 493+00.00

FRA-71-5.29

377
623

P:\84868\roadway\sheets\84868XS005.dgn 12/17/2014 3:30:11 PM kfahy

SEEDING	
END WIDTH	SQ. YDS.
101	561
	561

ITEM 615 - PAVEMENT FOR MAINTAINING TRAFFIC, CLASS A AND GRADING

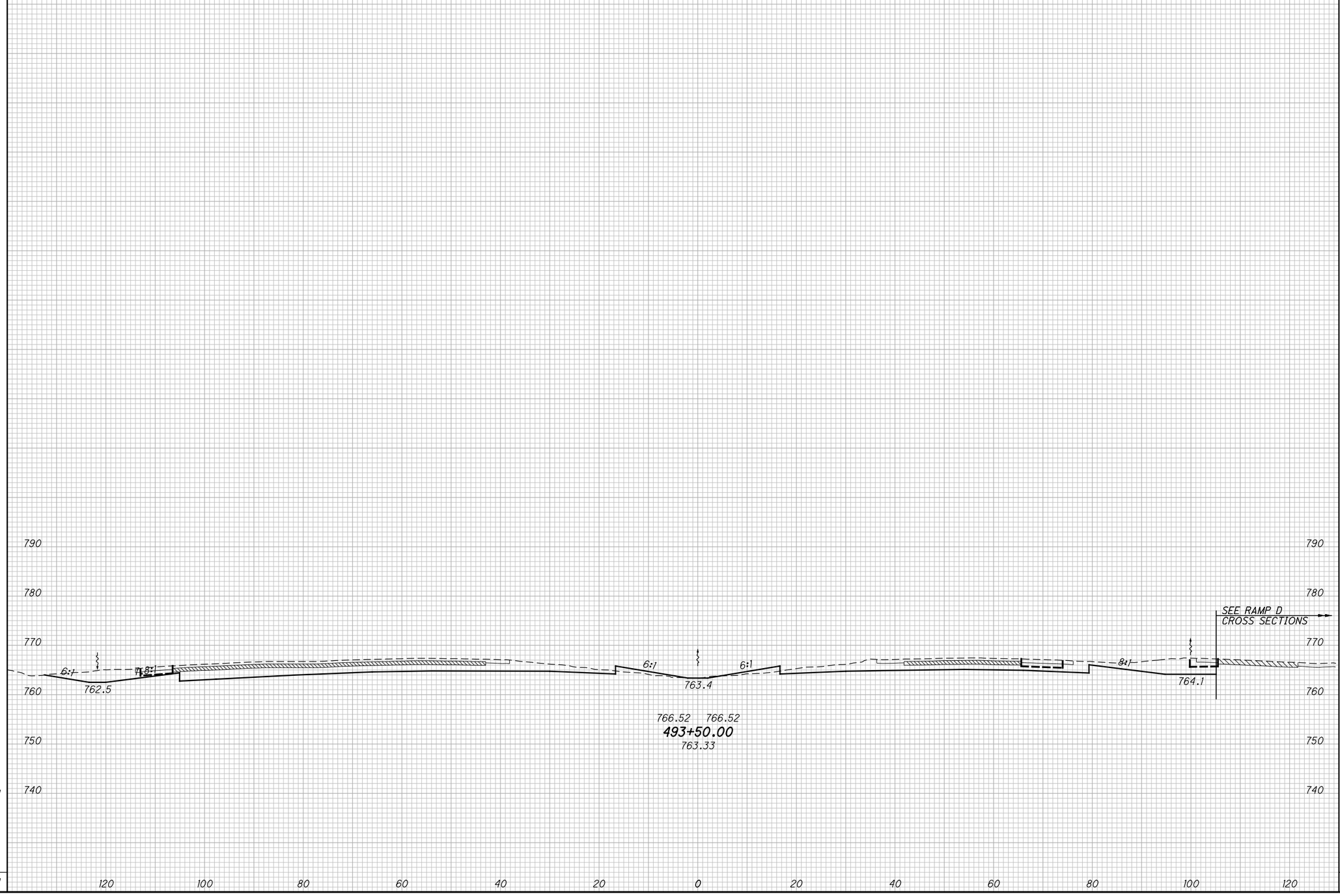

END AREA	
CUT	FILL
309	15

VOLUME	
CUT	FILL
550	27
550	27

CALCULATED DWB
CHECKED BAL

CROSS SECTIONS - I.R. 71
STA. 493+50.00

FRA-71-5.29

P:\84868\roadway\sheets\84868XS005.dgn 12/17/2014 3:30:12 PM kfahy

SEEDING	
END WIDTH	SQ. YDS.
	105
	572
	572

ITEM 615 - PAVEMENT FOR MAINTAINING TRAFFIC, CLASS A AND GRADING

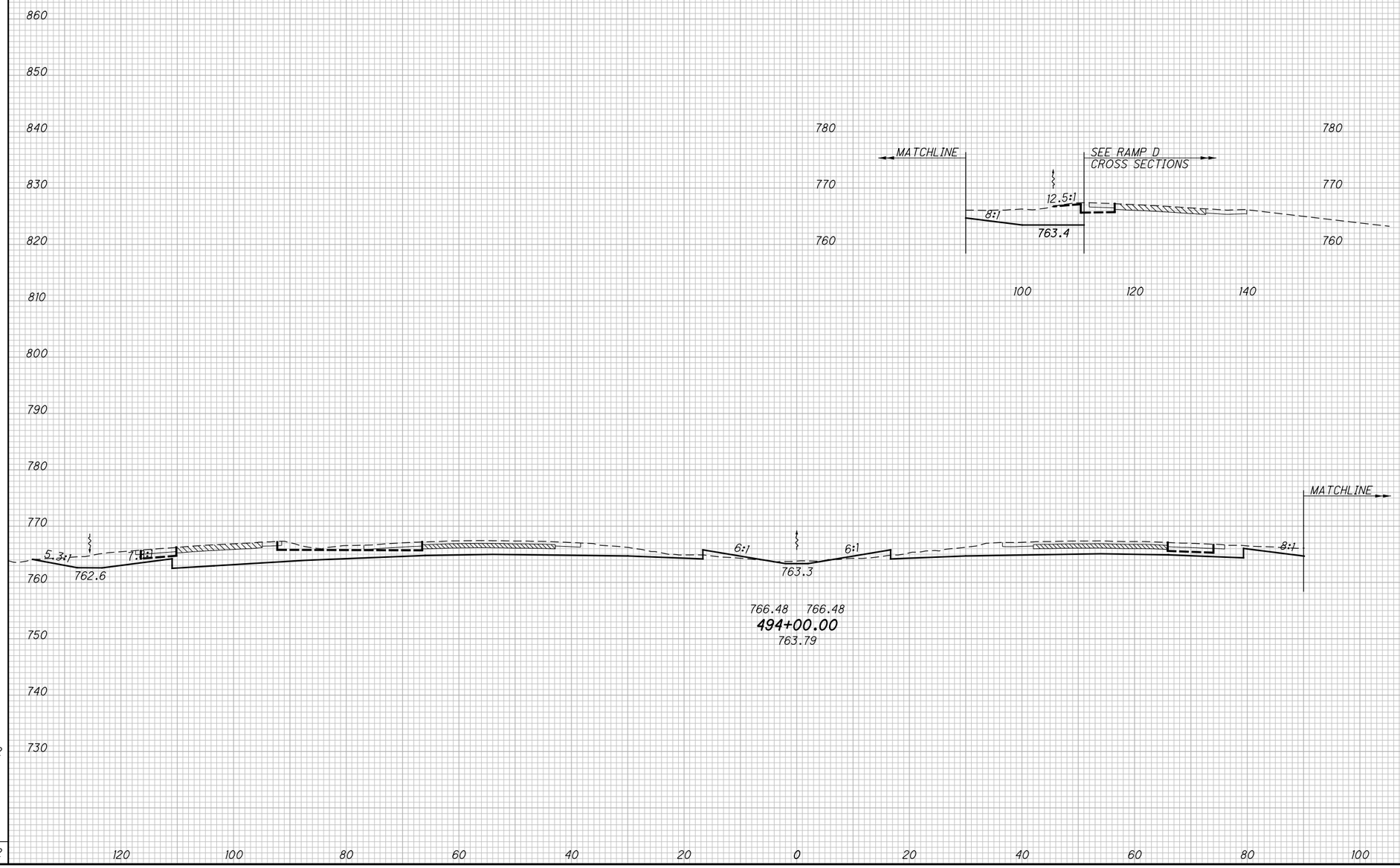

END AREA		VOLUME	
CUT	FILL	CUT	FILL
362	11		
		621	24

CALCULATED DWB
CHECKED BAL

CROSS SECTIONS - I.R. 71
STA. 494+00.00

FRA-71-5.29

379
623

P:\84868\roadway\sheets\84868XS005.dgn 12/17/2014 3:30:13 PM kfahy

SEEDING	
END WIDTH	SQ. YDS.
88	121
	121

ITEM 615 - PAVEMENT FOR MAINTAINING TRAFFIC, CLASS A AND GRADING

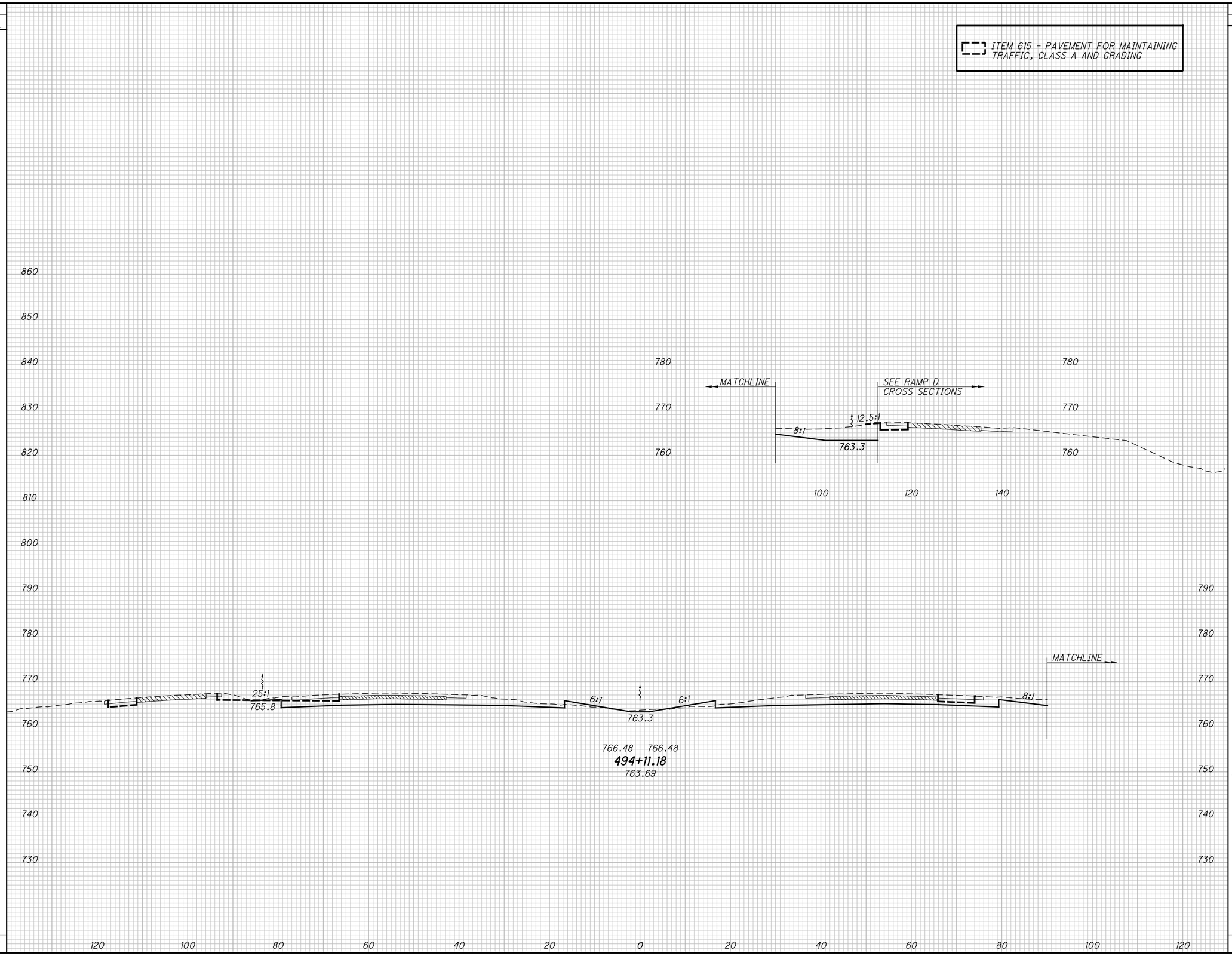

END AREA	
CUT	FILL
240	11

VOLUME	
CUT	FILL
125	5
125	5

CALCULATED	CHECKED
DWB	BAL

CROSS SECTIONS - I.R. 71
STA. 494+11.18

FRA-71-5.29

380
623

P:\84868\roadway\sheets\84868XS005.dgn 12/17/2014 3:30:14 PM kfahy

SEEDING	
END WIDTH	SQ. YDS.
	102
	414
	414

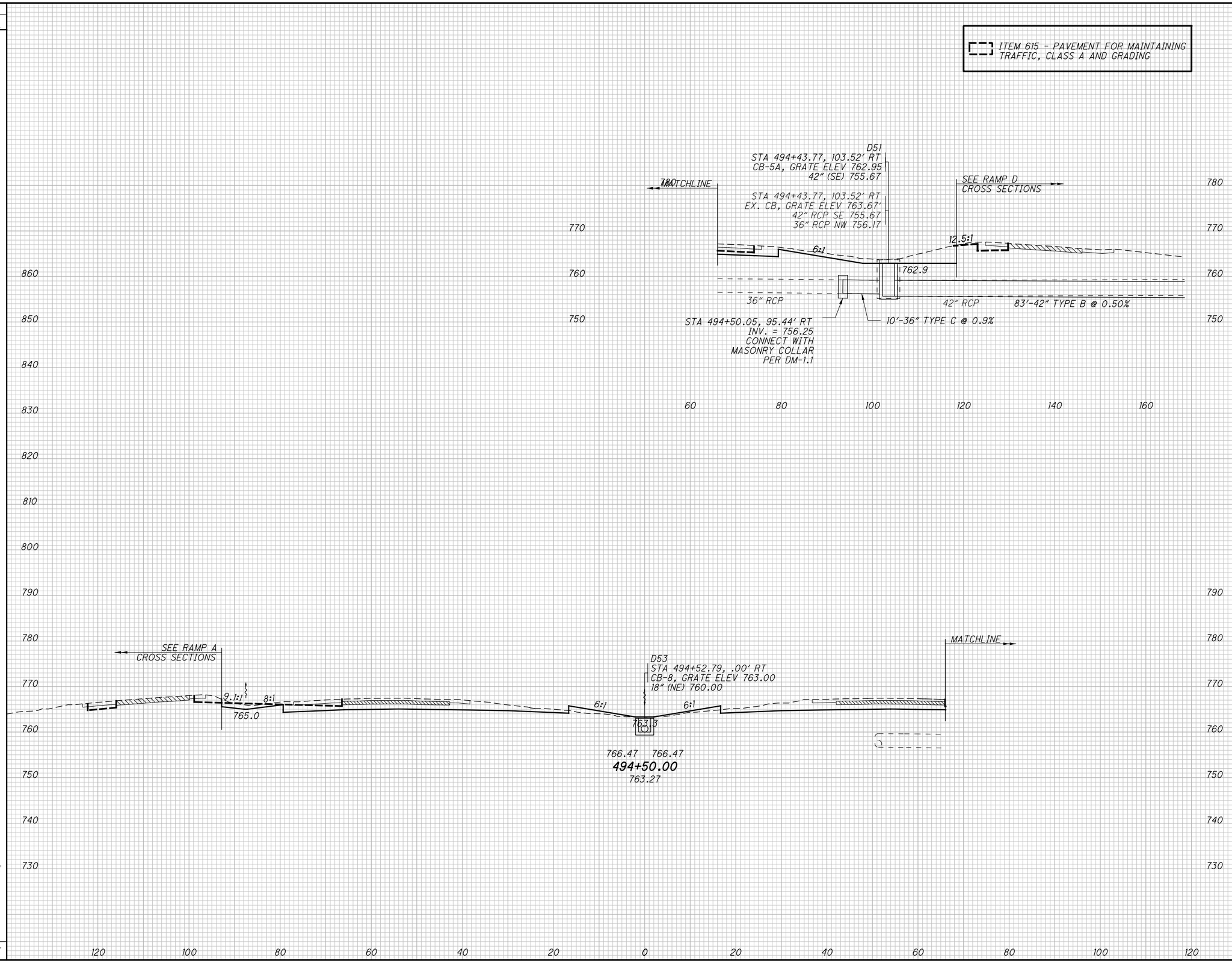

END AREA		VOLUME	
CUT	FILL	CUT	FILL
232	16	339	19
		339	19

CALCULATED DWB
CHECKED BAL

CROSS SECTIONS - I.R. 71
STA. 494+50.00

FRA-71-5.29

381
623

P:\84868\roadway\sheets\84868XS005.dgn 12/17/2014 3:30:14 PM kfahy

SEEDING	
END WIDTH	SQ. YDS.
95	995
79	489
	506

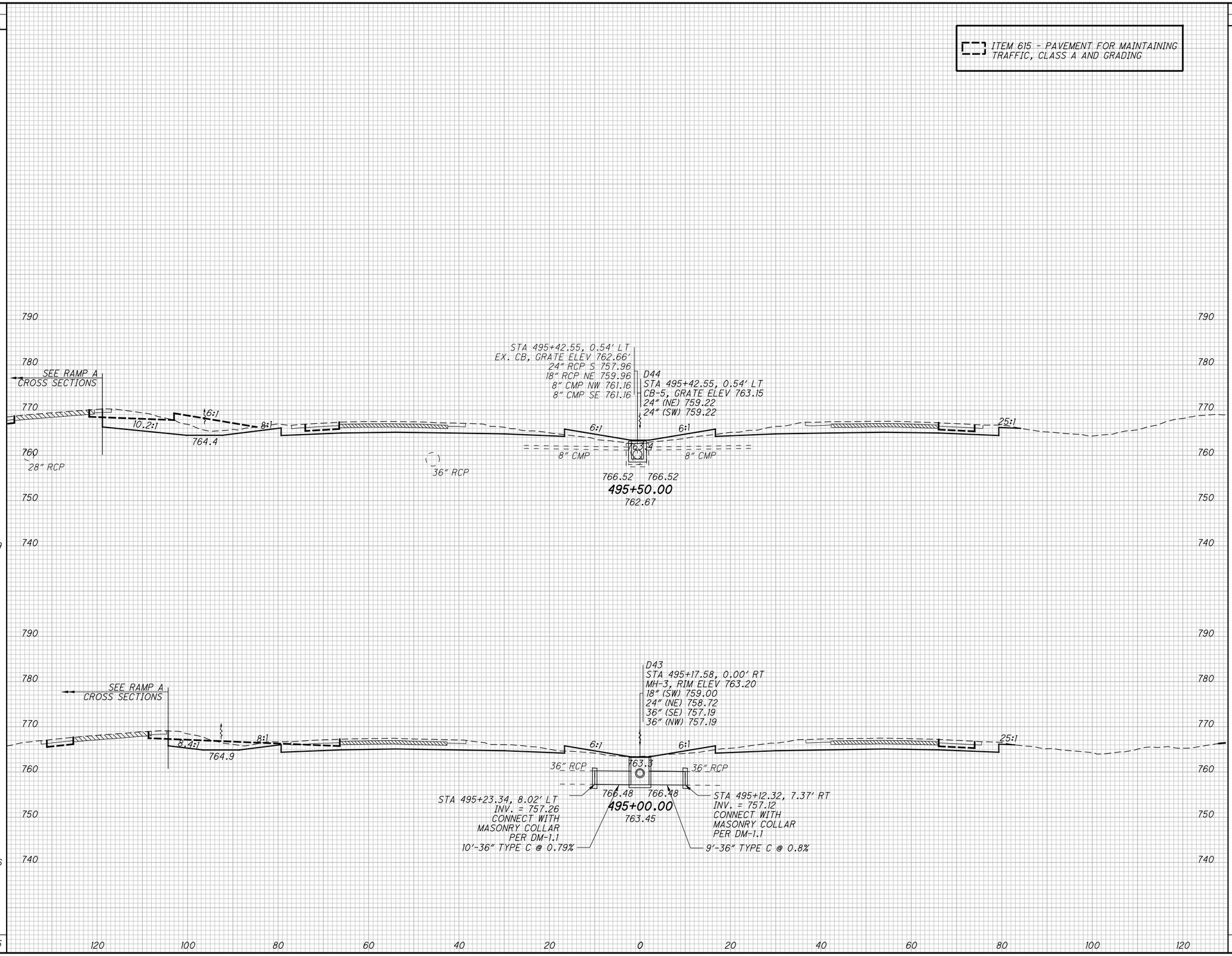

END AREA	
CUT	FILL
259	30
219	14

VOLUME	
CUT	FILL
443	41
417	28
860	69

CALCULATED DWB
CHECKED BAL

CROSS SECTIONS - I.R. 71
STA. 495+00.00 TO STA. 495+50.00

FRA-71-5.29

382
623

P:\84868\roadway\sheets\84868XS005.dgn 12/17/2014 3:30:15 PM kfahy

SEEDING	
END WIDTH	SQ. YDS.
	114
	584

ITEM 615 - PAVEMENT FOR MAINTAINING TRAFFIC, CLASS A AND GRADING

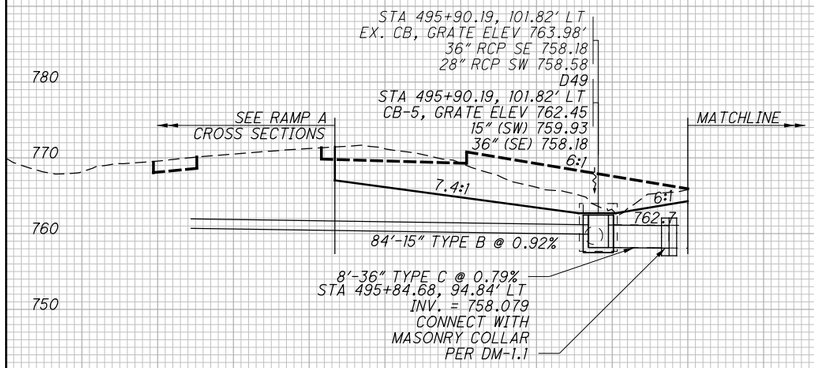

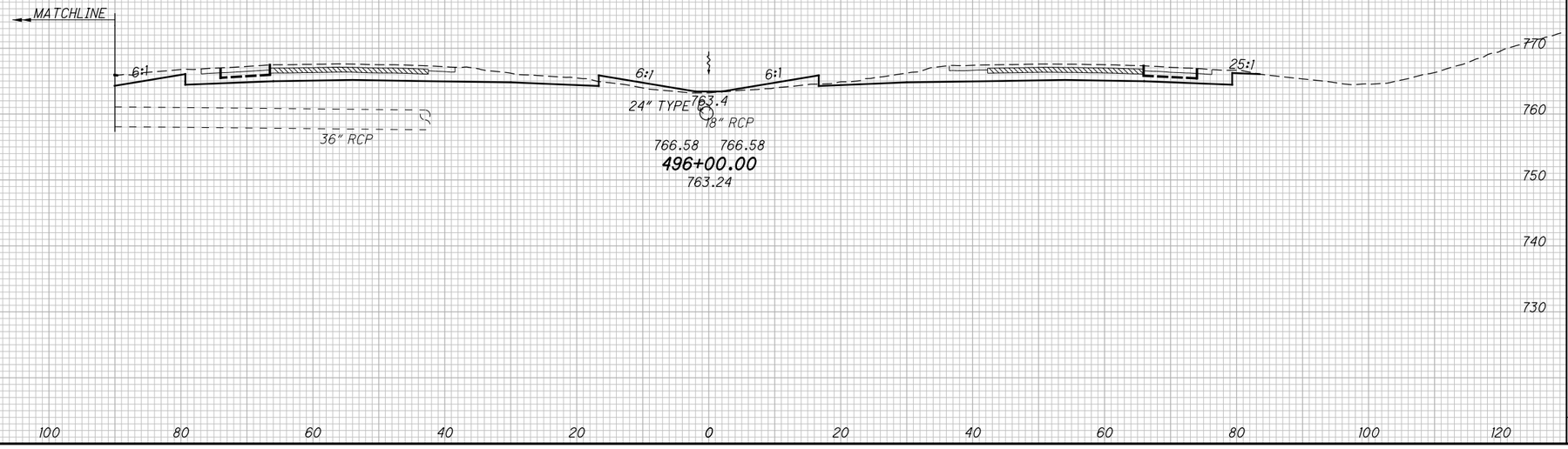

END AREA		VOLUME	
CUT	FILL	CUT	FILL
330	21		
		546	47

CALCULATED DWB
CHECKED BAL

CROSS SECTIONS - I.R. 71
STA. 496+00.00

FRA-71-5.29

383
623

P:\84868\roadway\sheets\84868XS005.dgn 12/17/2014 3:30:16 PM kfahy

SEEDING	
END WIDTH	SQ. YDS.
109	
	572
97	
	589
	1161

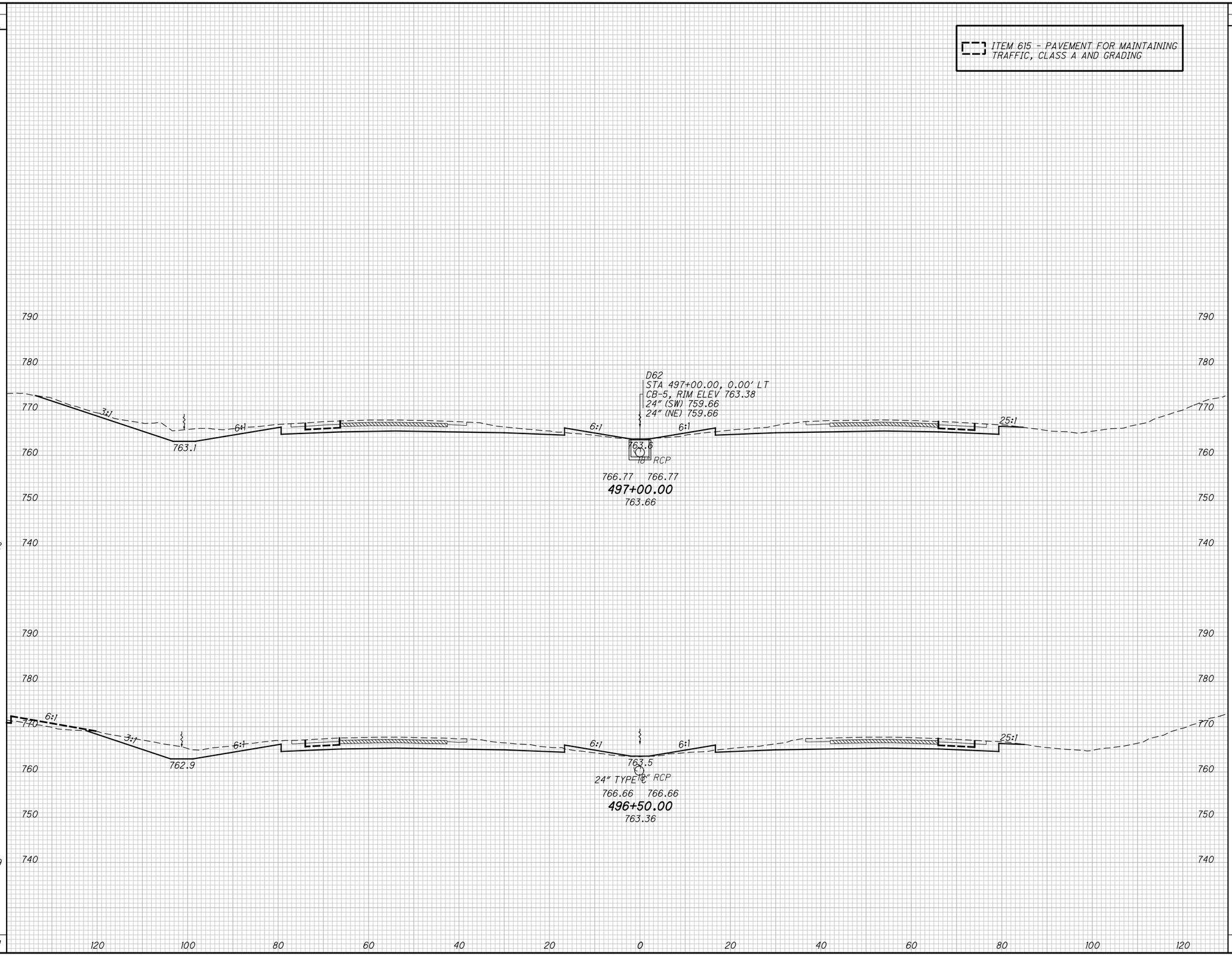

END AREA	
CUT	FILL
249	14
245	17

VOLUME	
CUT	FILL
457	29
532	36
989	65

CALCULATED DWB
CHECKED BAL

CROSS SECTIONS - I.R. 71
STA. 496+50.00 TO STA. 497+00.00

FRA-71-5.29

384
623

P:\84868\roadway\sheets\84868XS005.dgn 12/17/2014 3:30:17 PM kfahy

SEEDING	
END WIDTH	SQ. YDS.
100	556
99	583
	1139

END AREA	
CUT	FILL
229	14
240	20

VOLUME	
CUT	FILL
435	31
453	32
888	63

CALCULATED DWB
CHECKED BAL

CROSS SECTIONS - I.R. 71
STA. 497+50.00 TO STA. 498+00.00

FRA-71-5.29

385
623

P:\84868\roadway\sheets\84868XS005.dgn 12/17/2014 3:30:17 PM kfahy

SEEDING	
END WIDTH	SQ. YDS.
87	522
100	555
	1077

END AREA	
CUT	FILL
221	18
234	17

VOLUME	
CUT	FILL
421	32
429	29
850	61

CALCULATED DWB
CHECKED BAL

CROSS SECTIONS - I.R. 71
STA. 498+50.00 TO STA. 499+00.00

FRA-71-5.29

386
623

P:\84868\roadway\sheets\84868XS005.dgn 12/17/2014 3:30:18 PM kfahy

SEEDING	
END WIDTH	SQ. YDS.
79	450
82	473
	923

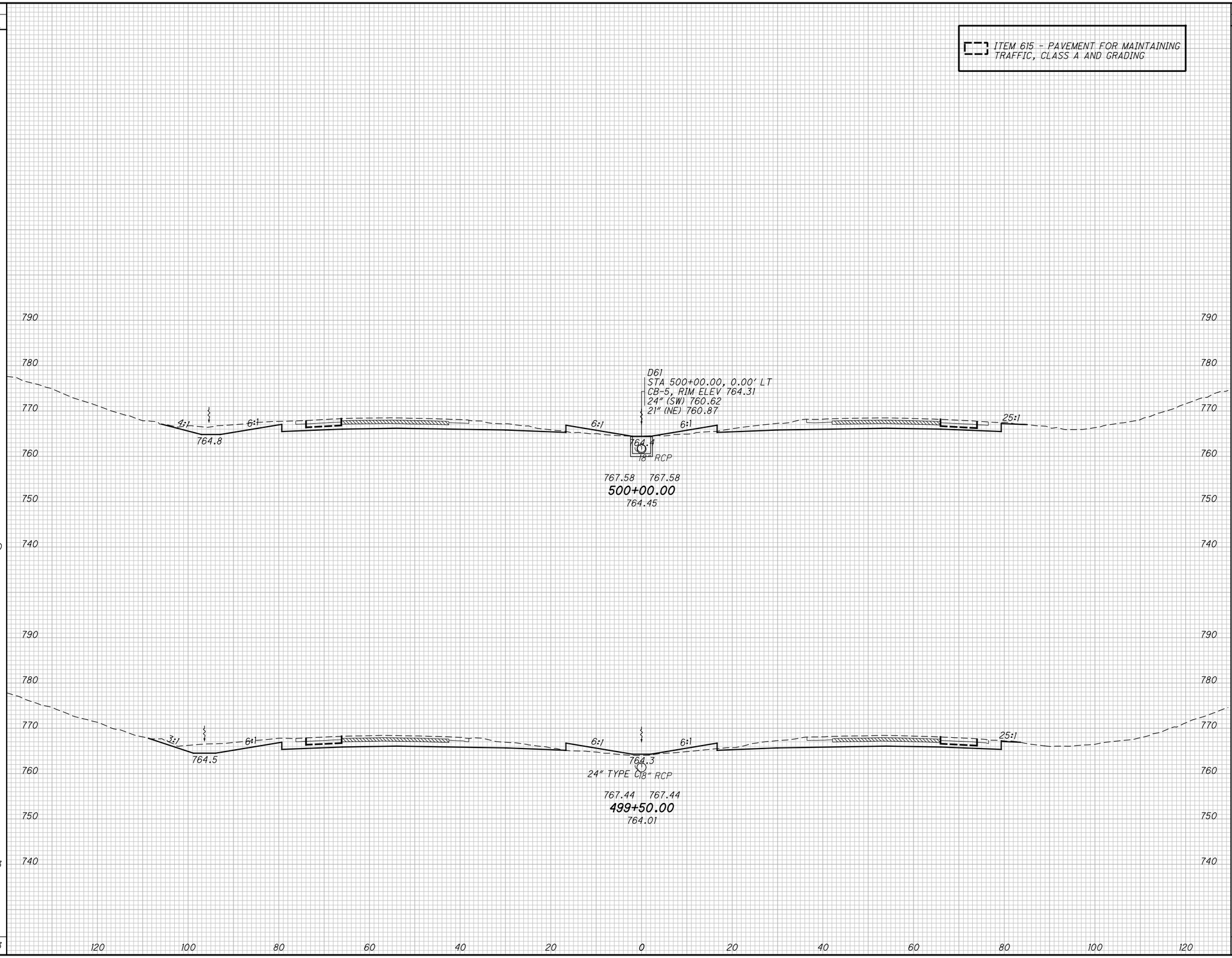

END AREA		VOLUME	
CUT	FILL	CUT	FILL
188	22		
198	25		
		357	43
		388	39
		745	82

CALCULATED DWB
CHECKED BAL

CROSS SECTIONS - I.R. 71
STA. 499+50.00 TO STA. 500+00.00

FRA-71-5.29

387
623

P:\84868\roadway\sheets\84868XS005.dgn 12/17/2014 3:30:19 PM kfahy

SEEDING	
END WIDTH	SQ. YDS.
75	422
	434
	856

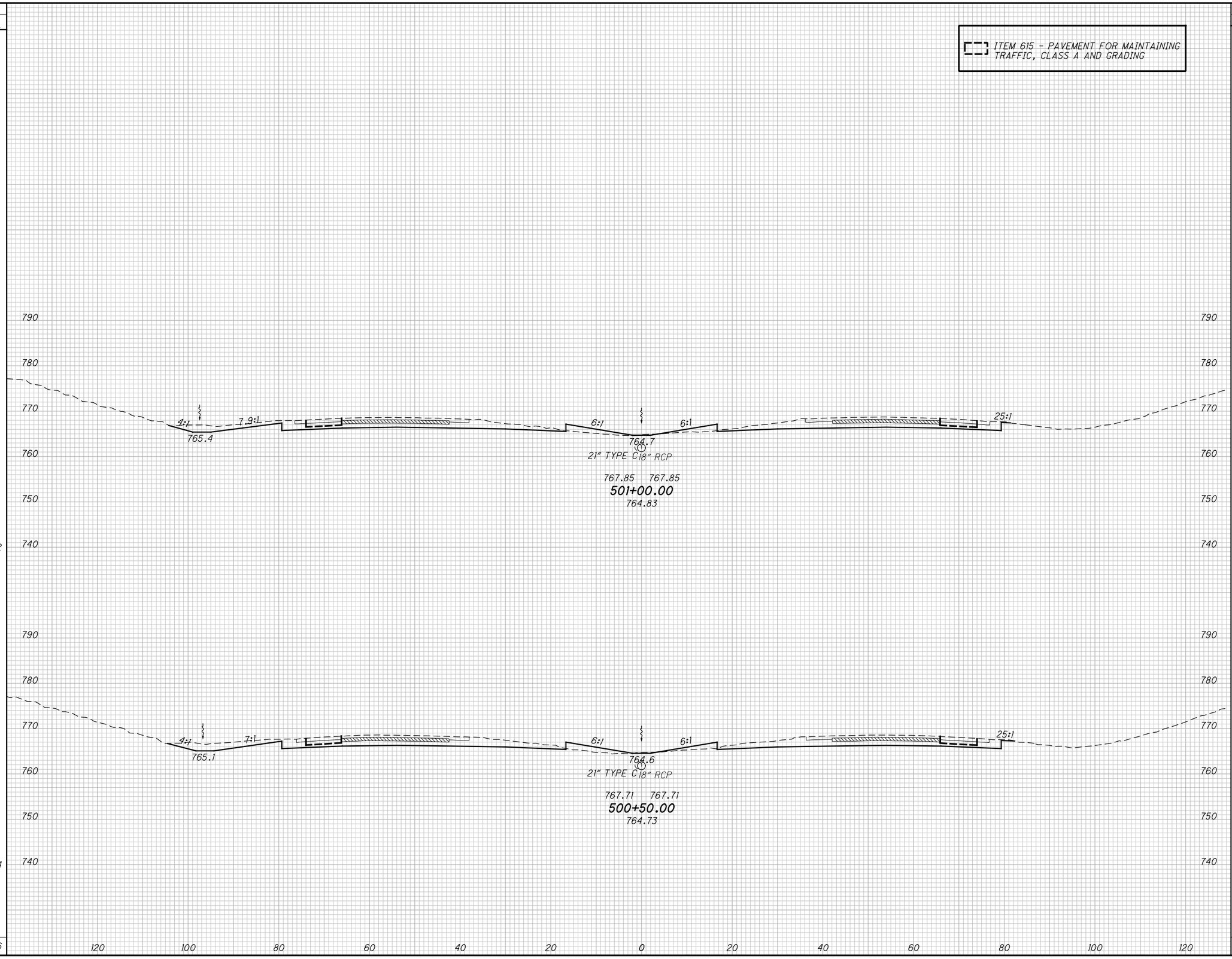

END AREA	
CUT	FILL
168	22
183	22

VOLUME	
CUT	FILL
325	41
343	41
668	82

CALCULATED	CHECKED
DWB	BAL

CROSS SECTIONS - I.R. 71
STA. 500+50.00 TO STA. 501+00.00

FRA-71-5.29

388
623

P:\84868\roadway\sheets\84868XS005.dgn 12/17/2014 3:30:20 PM kfahy

SEEDING	
END WIDTH	SQ. YDS.
71	400
72	411
	811

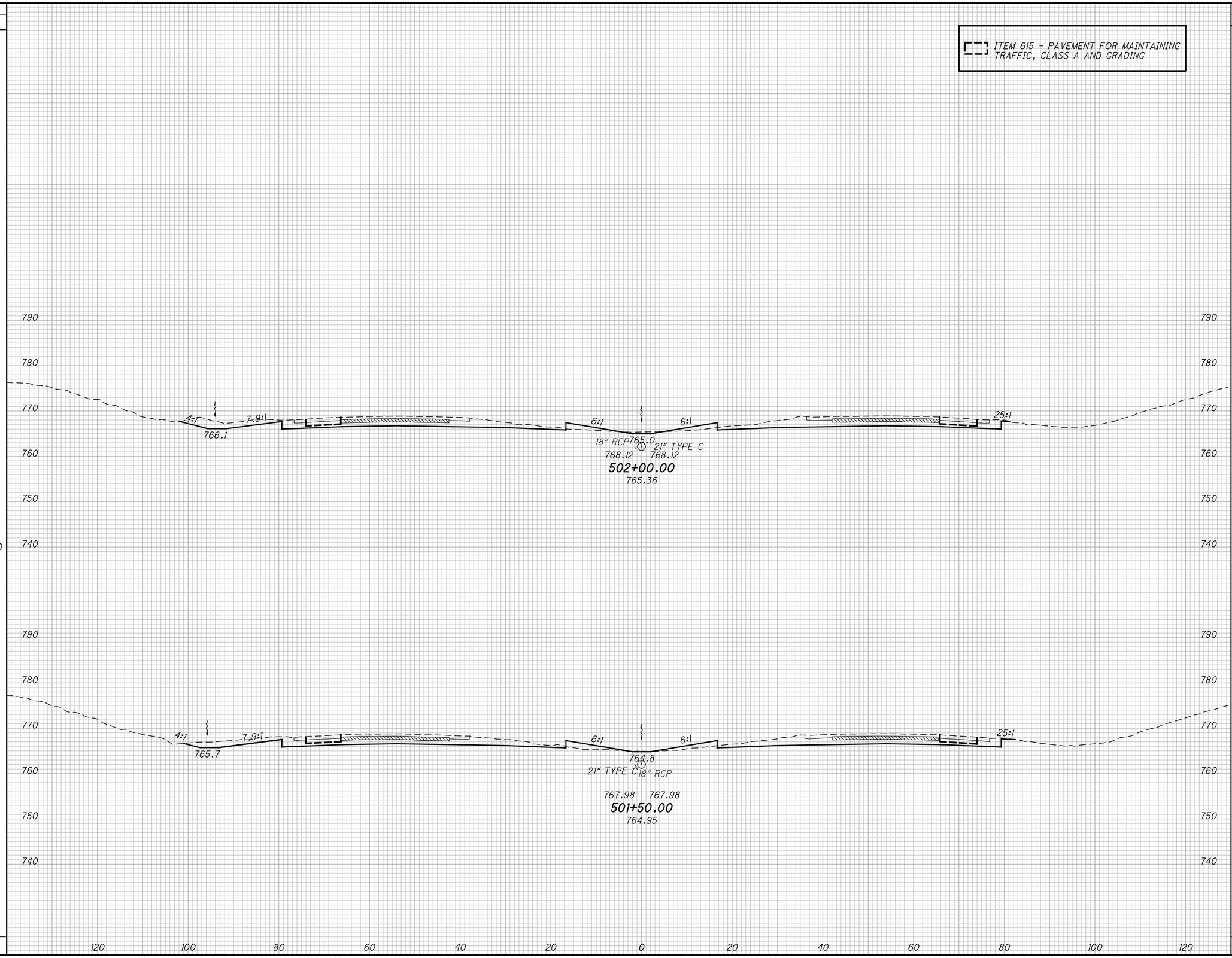

END AREA	
CUT	FILL
169	16
166	20

VOLUME	
CUT	FILL
310	33
309	39
619	72

CALCULATED DWB
CHECKED BAL

CROSS SECTIONS - I.R. 71
STA. 501+50.00 TO STA. 502+00.00

FRA-71-5.29

389
623

P:\84868\roadway\sheets\84868XS005.dgn 12/17/2014 3:30:20 PM kfahy

SEEDING	
END WIDTH	SQ. YDS.
69	406
76	411
	817

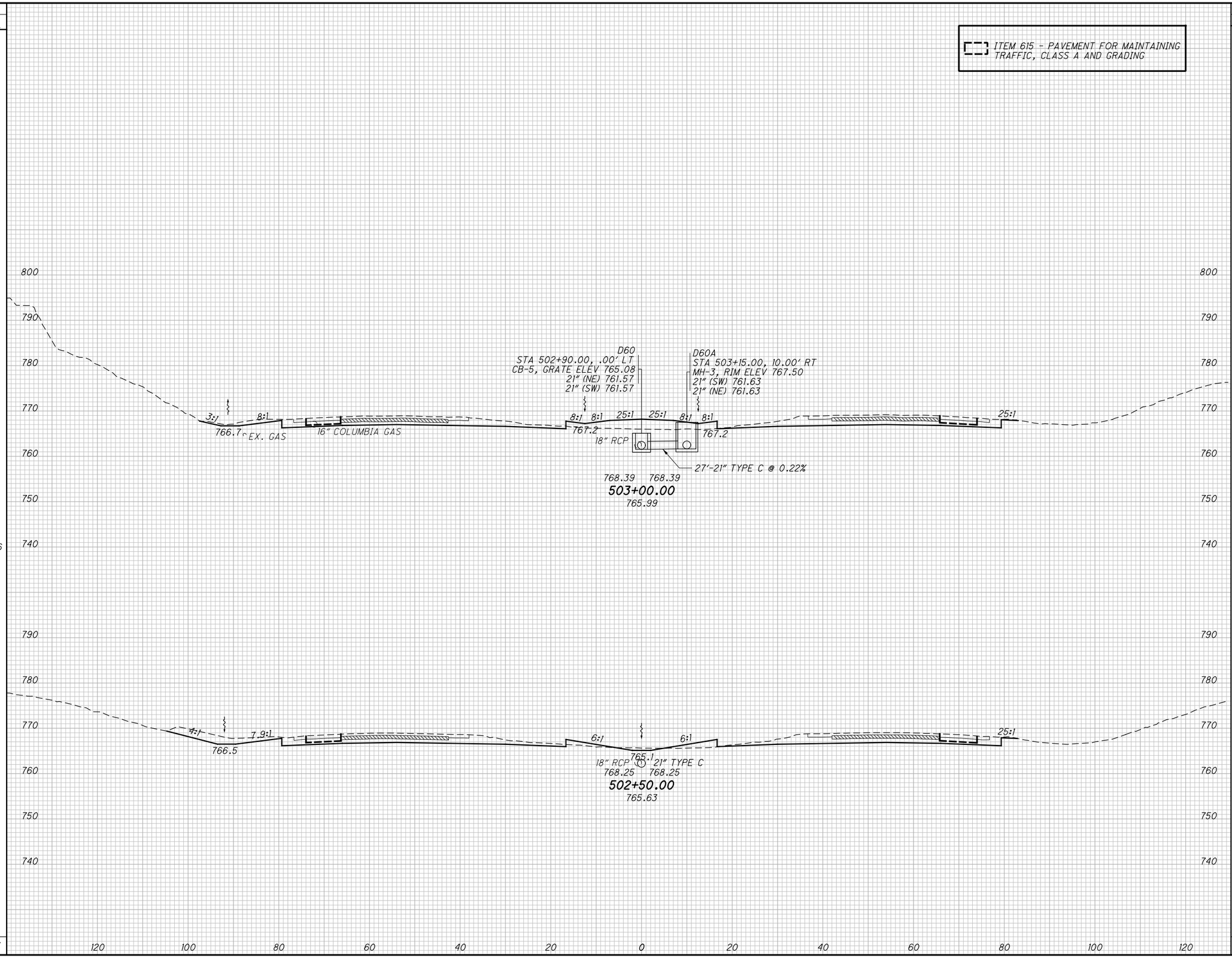

END AREA	
CUT	FILL
135	55
167	17

VOLUME	
CUT	FILL
280	67
311	31
591	98

CALCULATED DWB
CHECKED BAL

CROSS SECTIONS - I.R. 71
STA. 502+50.00 TO STA. 503+00.00

FRA-71-5.29

390
623

P:\84868\roadway\sheets\84868XS005.dgn 12/17/2014 3:30:21 PM kfahy

SEEDING		END AREA		VOLUME	
END WIDTH	SQ. YDS.	CUT	FILL	CUT	FILL
58	322	168	29	318	53
57	356	176	28	288	77
	678			606	130

ITEM 615 - PAVEMENT FOR MAINTAINING TRAFFIC, CLASS A AND GRADING

800 790 780 770 760 750 740

25:1 8:1 8:1 25:1 25:1 8:1 8:1 25:1

767.5 767.5

18" RCP

768.66 768.66 21" TYPE C

504+00.00

767.49

EX. GAS

16" COLUMBIA GAS

767.4 767.4

18" RCP

EX. GAS

16" COLUMBIA GAS

768.52 768.52 21" TYPE C

503+50.00

766.92

120 100 80 60 40 20 0 20 40 60 80 100 120

CALCULATED DWB CHECKED BAL

CROSS SECTIONS - I.R. 71

STA. 503+50.00 TO STA. 504+00.00

FRA-71-5.29

391
623

P:\84868\roadway\sheets\84868XS005.dgn 12/17/2014 3:30:22 PM kfahy

SEEDING	
END WIDTH	SQ. YDS.
83	400
60	328
	728

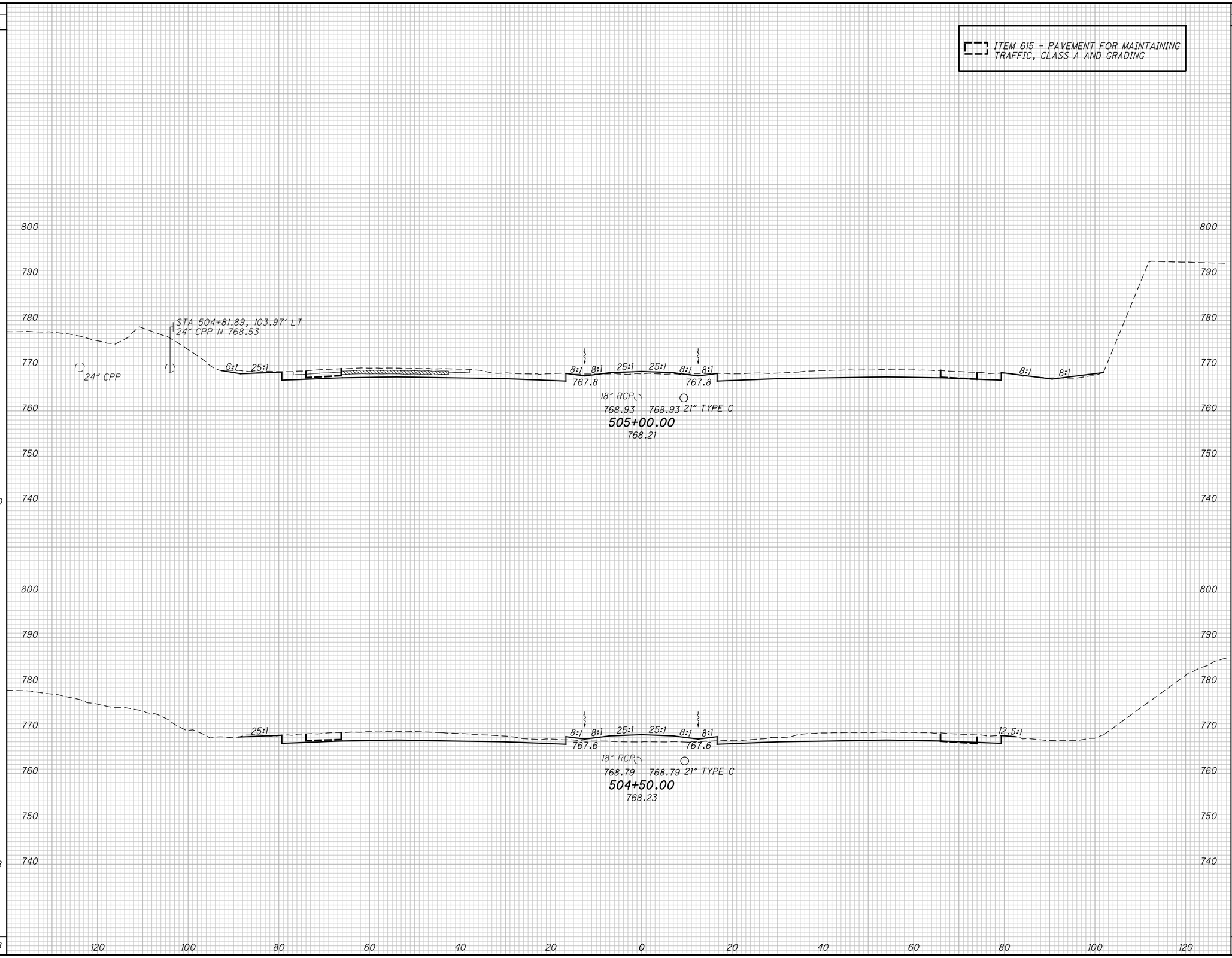

END AREA	
CUT	FILL
171	9
193	35

VOLUME	
CUT	FILL
337	41
334	59
671	100

CALCULATED DWB
CHECKED BAL

CROSS SECTIONS - I.R. 71
STA. 504+50.00 TO STA. 505+00.00

FRA-71-5.29

392
623

P:\84868\roadway\sheets\84868XS005.dgn 12/17/2014 3:30:23 PM kfahy

SEEDING		END AREA		VOLUME		CALCULATED	CHECKED
END WIDTH	SQ. YDS.	CUT	FILL	CUT	FILL	DWB	BAL
52	312	123	34	233	54		
59	400	129	25	278	32		
	712			511	86		

ITEM 615 - PAVEMENT FOR MAINTAINING TRAFFIC, CLASS A AND GRADING

STA 505+94.43, 0.87' LT
EX. CB, GRATE ELEV 765.09'
18" RCP SW 762.49
8" CMP E 763.29
8" CMP W 763.29

D48
STA 505+94.43, 0.87' LT
CB-5, GRATE ELEV 765.85
21" (S) 762.24

15:1 6:1 6:1 25:1

8" CMP 8" CMP

769.20 769.20
506+00.00
764.86

STA 505+34.61, 123.86' LT
EX. MH, GRATE ELEV 777.48'
24" CPP S 768.58
24" CPP SW 768.68

D48A
STA 505+70.00, 9.09' RT
MH-3, RIM ELEV 767.75
21" (SW) 762.18
21" (N) 762.18

25:1 8:1 8:1 25:1 25:1 8:1 8:1 12.5:1

767.9 767.9

18" RCP

769.06 769.06
505+50.00
767.55

800 790 780 770 760 750 740

120 100 80 60 40 20 0 20 40 60 80 100 120

CROSS SECTIONS - I.R. 71
STA. 505+50.00 TO STA. 506+00.00

FRA-71-5.29

393
623

P:\84868\roadway\sheets\84868XS005.dgn 12/17/2014 3:30:23 PM kfahy

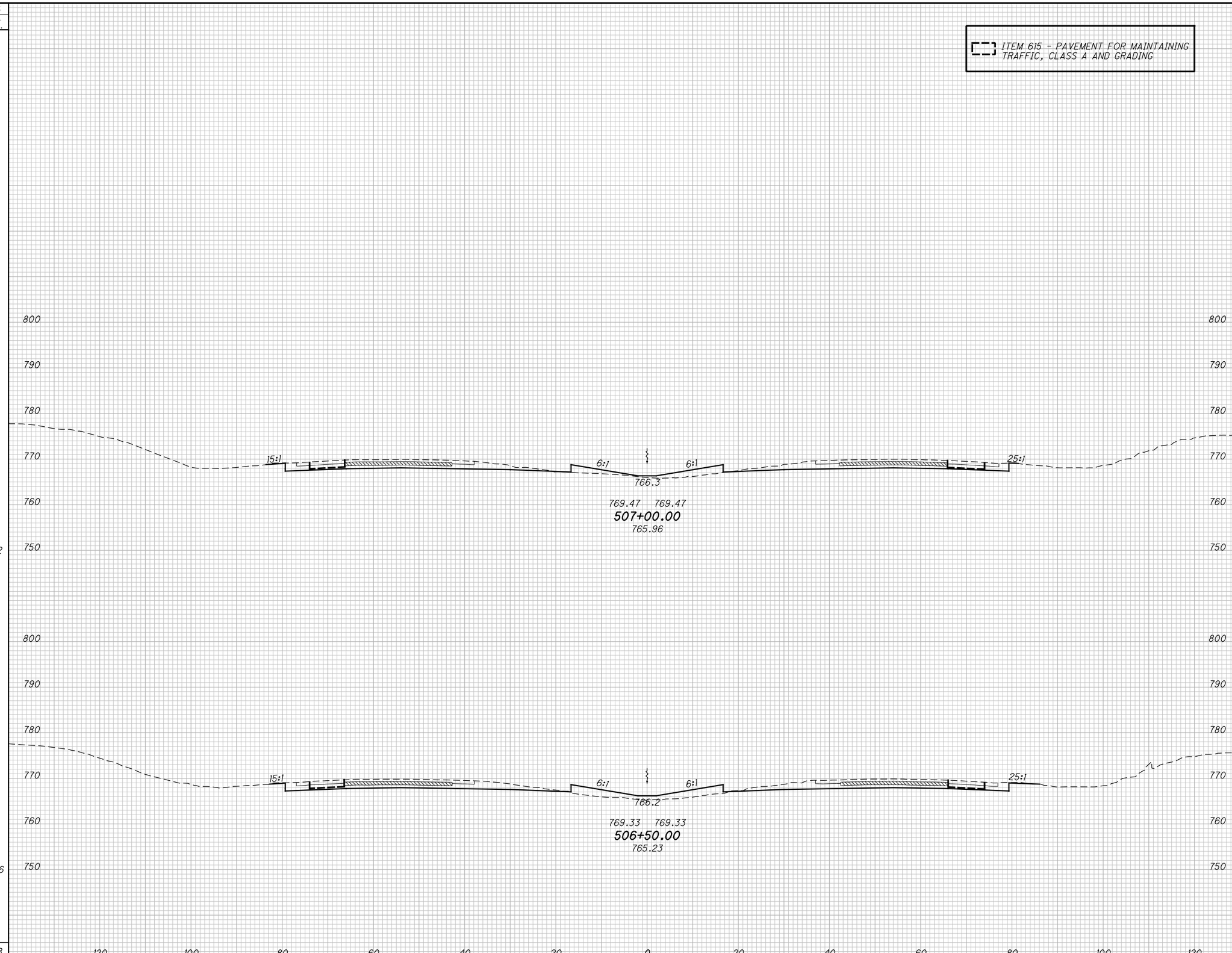

SEEDING END WIDTH	SEEDING SQ. YDS.	END AREA CUT	END AREA FILL	VOLUME CUT	VOLUME FILL
54		104	33		
	312			200	74
57		113	47		
	306			218	75
	618			418	149

CALCULATED DWB
CHECKED BAL

CROSS SECTIONS - I.R. 71
STA. 506+50.00 TO STA. 507+00.00

FRA-71-5.29

P:\84868\roadway\sheets\84868XS005.dgn 12/17/2014 3:30:24 PM kfahy

SEEDING	
END WIDTH	SQ. YDS.
68	344
56	305
	649

ITEM 615 - PAVEMENT FOR MAINTAINING TRAFFIC, CLASS A AND GRADING

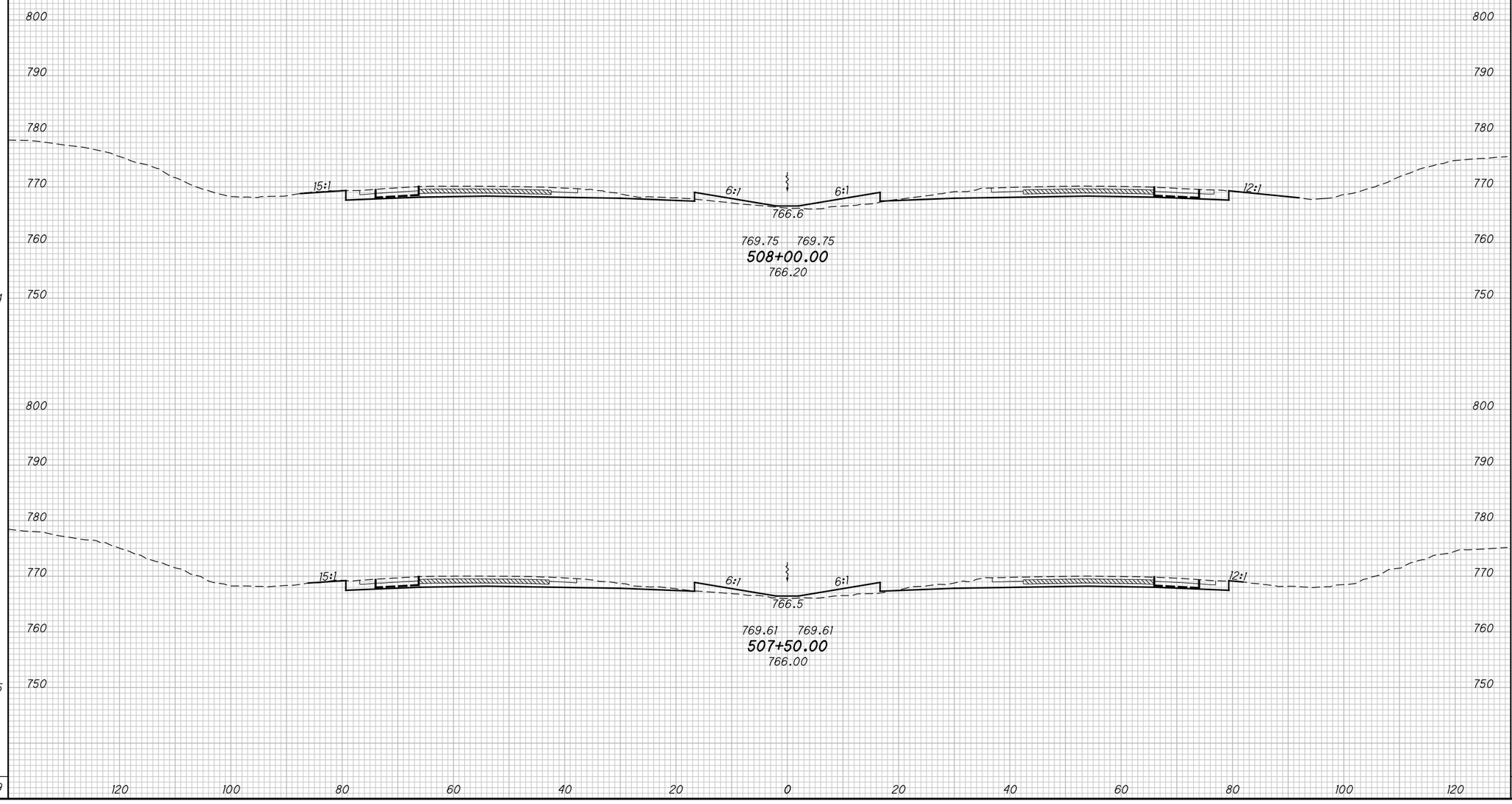

END AREA	
CUT	FILL
101	32
101	33

VOLUME	
CUT	FILL
187	59
190	60
377	119

CALCULATED DWB
CHECKED BAL

CROSS SECTIONS - I.R. 71
STA. 507+50.00 TO STA. 508+00.00

FRA-71-5.29

395
623

P:\84868\roadway\sheets\84868XS005.dgn 3/31/2015 9:05:08 AM mtokacs

SEEDING		END AREA		VOLUME		
END WIDTH	SQ. YDS.	CUT	FILL	CUT	FILL	
						CALCULATED DWB / CHECKED BAL
62	344	100	27	184	54	
61	361	99	32	186	59	
	705			370	113	

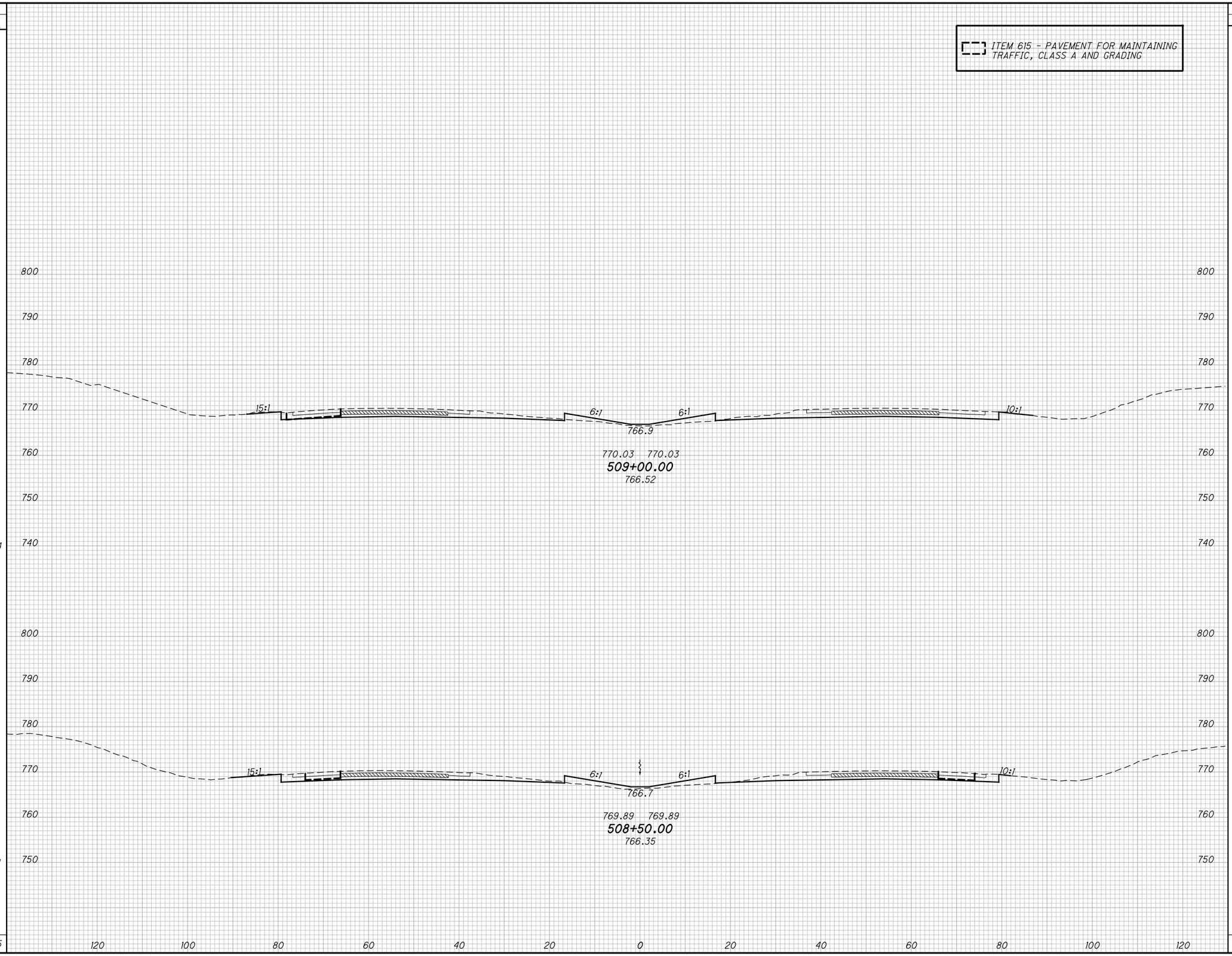

CROSS SECTIONS - I.R. 71
STA. 508+50.00 TO STA. 509+00.00

FRA-71-5.29

396
623

P:\84868\roadway\sheets\84868XS005.dgn 3/31/2015 9:05:45 AM mtakacs

SEEDING	
END WIDTH	SQ. YDS.

ITEM 615 - PAVEMENT FOR MAINTAINING TRAFFIC, CLASS A AND GRADING

800
790
780
770
760
750

510+00.00
766.54

509+50.00
766.56

140 120 100 80 60 40 20 0 20 40 60 80 100 120

END AREA	
CUT	FILL

VOLUME	
CUT	FILL

CALCULATED	CHECKED
DWB	BAL

CROSS SECTIONS - I.R. 71
STA. 509+50.00 TO STA. 510+00.00

FRA-71-5.29

P:\84868\roadway\sheets\84868XS005.dgn 12/17/2014 3:30:26 PM kfahy

EX. RAMP A
P.I. Sta. 8+22.65
Ls = 250.00'
θ s = 10° 13' 53"
LT = 166.95'
ST = 83.59'
x = 249.20'
y = 14.85'
k = 124.87'
p = 3.72'

EX. RAMP A
P.I. Sta. 5+77.55
Δ = 26° 56' 53" (RT)
Dc = 8° 11' 06"
R = 700.00'
T = 167.72'
L = 329.23'
E = 19.81'
C = 326.21'
C.B. = S 2° 34' 34" W

PR. RAMP A
P.I. STA. 493+19.10
Ls = 200.00'
θ s = 6° 30' 00"
LT = 133.42'
ST = 66.75'
x = 199.74'
y = 7.56'
k = 99.96'
p = 1.89'

P.I. Sta. 495+81.80
Δ = 37° 25' 53" (LT)
Dc = 6° 30' 00"
R = 881.47'
Δc = 30° 55' 53" (LT)
Lc = 475.87'
Es = 50.22'
e max = 0.060
C = 470.11'
C.B. = N 24° 22' 47" E
C.B. = N 4° 34' 50" E

PR. ℄ RAMP A, STA. 502+33.87 =
EX. ℄ RAMP A, STA. 0+00.00 =
EX. ℄ RAMP B, STA. 20+47.18 =
EX. ℄ C.R. 135, STA. 19+00.00

CRACKER BARREL OLD COUNTRY STORE INC
040-002122

PATEL DINESH
040-000903

CITY OF GROV
040-0C

℄ C.R. 134 (STRINGTOWN RD.)

MARLANE DR.

Ex LA-R/W

POT Sta. 12+89.07

ST Sta. 491+85.68

SC Sta. 493+85.68

CS Sta. 7+39.07

PC Sta. 4+09.83

PT Sta. 492+55.33

PT Sta. 498+61.55

POT Sta. 502+31.17

S 26° 16' 53" W

℄ CONST. I.R. 71

℄ RAMP A

℄ RAMP B

S16°03'09"W

S10°53'07"E

N10°53'07"W

N86°03'09"

Sta. 18+85.84

END WORK
STA. 502+08.30

CONST. LIMITS (TYP.)

(TBR) EX. ℄ RAMP A

(TBR) 15" RCP

(TR) 36" RCP

24" RCP

N 27° 21' 09" E

CB5

MH3

18"-C

D50

D49

R44

R45

R46

R47

SW1

SW2

CROSS REFERENCES	
SHEET NO.	DESCRIPTION
6	REFERENCES AND BENCHMARKS
151	I.R. 71 PLAN & PROFILE
450	INTERSECTION DETAILS
383,400	DRAINAGE DETAILS

LEGEND

RIPRAP

ITEM 670 DITCH EROSION PROTECTION*

ROCK CHANNEL PROTECTION

*7.5' WIDE UNLESS OTHERWISE NOTED

764.68 764.69 764.77 764.91 765.11 765.39 765.72 766.13 766.59 767.13 767.73 768.39 769.12 769.91 770.78 771.70 772.69 773.75 774.84 775.93 777.02 778.11 779.20 780.29 781.38 782.47 783.53 784.49 785.33 786.05 786.65 787.13

MATCH TO I.R. 71 EDGE OF PAVEMENT
STA 494+08.81
ELEV 764.71

STA 495+35.90, 23.37' LT
CB-8, GRATE ELEV 762.05
15" (NE) 760.70

D50

STA 495+80.60, 45.02' RT
EX. CB, GRATE ELEV 763.98
EX. 36" RCP SE 758.18
EX. 28" RCP SW 758.58

D49
STA 495+90.19, 101.82' LT
CB-8, GRATE ELEV 762.45
15" (SW) 759.93

EXISTING GROUND

PR. GRADE

-0.25 %

+4.36 %

84'-15" TYPE B
@ 0.92%

EX. 28" RCP

STA 494+10.00
ELEV 764.71

P.V.I. STA 496+30.00 ELEV = 764.16'
440.00' VC
K = 96

STA 498+50.00
ELEV 773.75

P.V.I. STA 501+30.00
ELEV = 785.95'
SSD = 473'
K = 52
140.00' VC

STA 500+60.00
ELEV 782.90

+4.36 %

+1.68%

+1.63%

STA 502+00.00
ELEV 787.13

MATCH TO STRINGTOWN RD
STA 502+08.30
ELEV 787.23
℄ C.R. 135
STRINGTOWN RD.

EX. TELE
EX. GAS
EX. F.O.
EX. ELEC.

800 790 780 770 760 750 740

766.38 766.29 766.11 766.28 766.70 767.15 767.74 768.56 769.69 771.14 772.63 774.25 775.87 777.41 778.84 780.26 781.58 782.71 784.06 785.55 787.14

492+00 493+00 494+00 495+00 496+00 497+00 498+00 499+00 500+00 501+00 502+00

N

0 25 50 100 HORIZONTAL SCALE IN FEET

CALCULATED CDS
CHECKED GPD

PLAN AND PROFILE - RAMP A
STA. 494+02.09 TO STA. 502+08.30

FRA-71-5.29

398
623

P:\84868\roadway\sheets\84868GP101.dgn 3/27/2015 2:35:28 PM kfahy

SEEDING	
END WIDTH	SQ. YDS.
42	192
42	0
	192

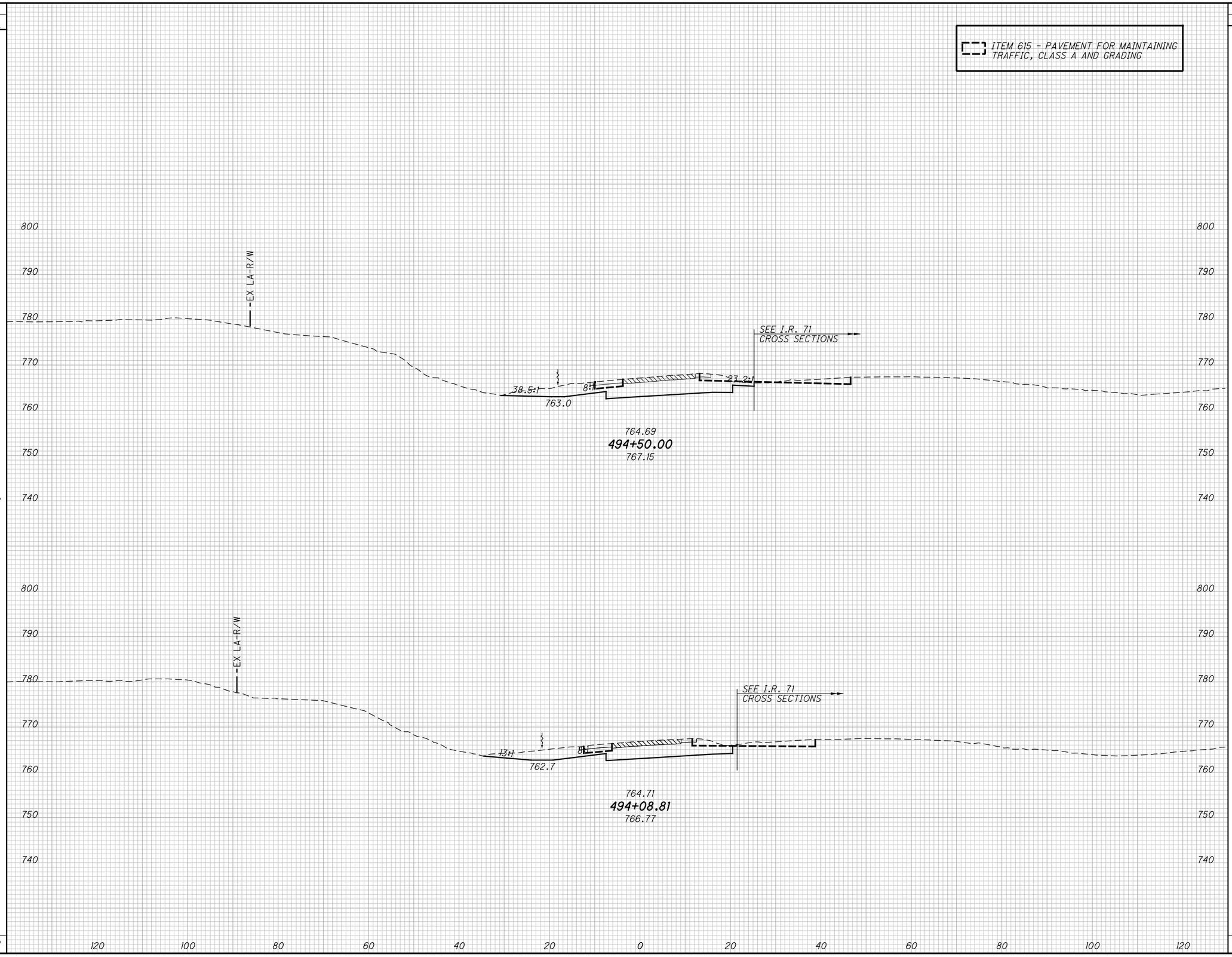

END AREA	
CUT	FILL
137	0
122	0

VOLUME	
CUT	FILL
198	0
0	0
198	0

CALCULATED DWB
CHECKED BAL

CROSS SECTIONS - RAMP A AT STRINGTOWN RD
STA. 494+08.81 TO STA. 494+50.00

FRA-71-5.29

399
623

P:\84868\roadway\sheets\84868XS101.dgn 12/17/2014 3:30:46 PM kfahy

SEEDING	
END WIDTH	SQ. YDS.
101	494
76	333
	827

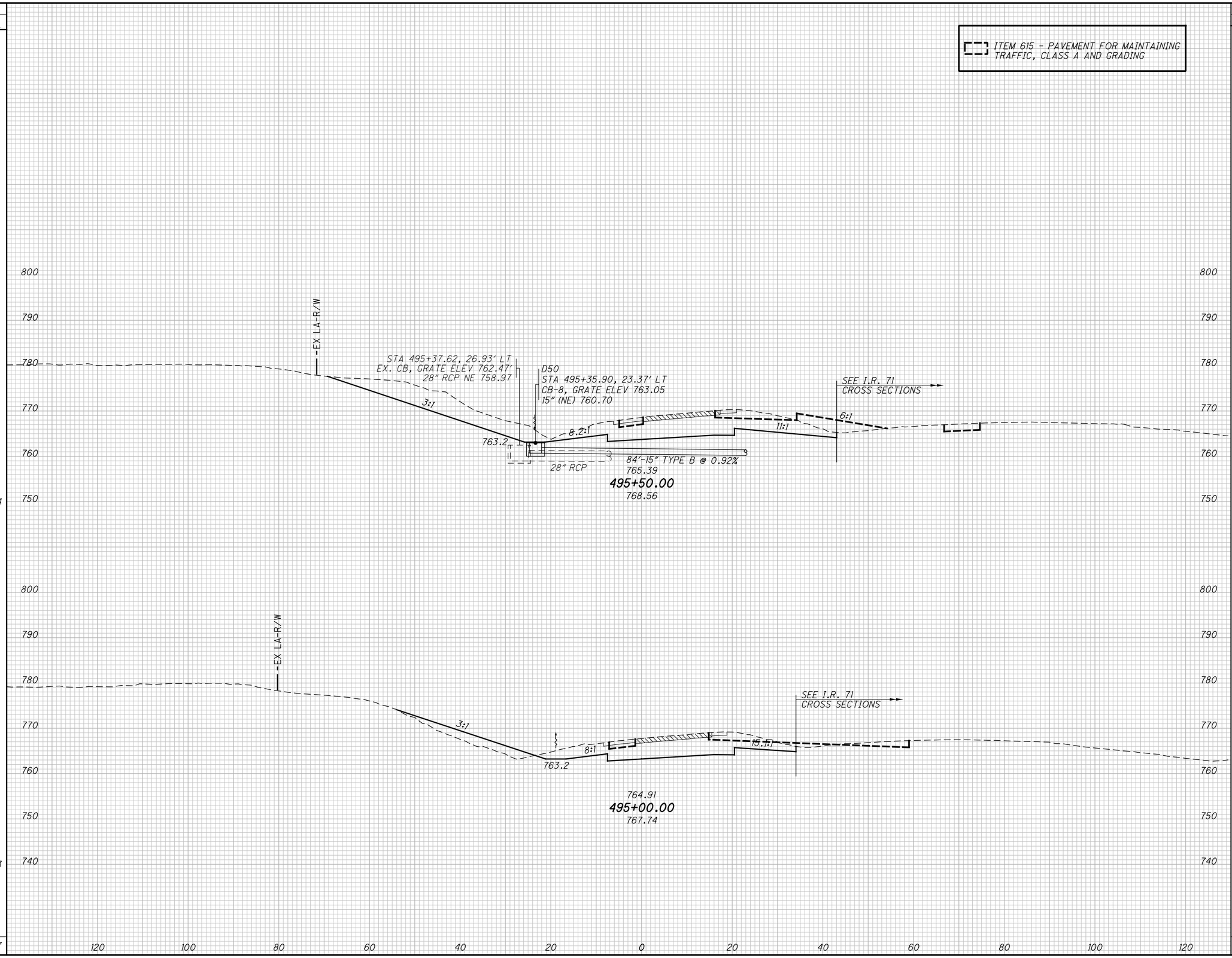

END AREA		VOLUME	
CUT	FILL	CUT	FILL
367	0	499	41
171	45	285	41
		784	82

CALCULATED DWB
CHECKED BAL

CROSS SECTIONS - RAMP A AT STRINGTOWN RD
STA. 495+00.00 TO STA. 495+50.00

FRA-71-5.29

P:\84868\roadway\sheets\84868XS101.dgn 12/17/2014 3:30:46 PM kfahy

SEEDING	
END WIDTH	SQ. YDS.
85	500
95	550
	1050

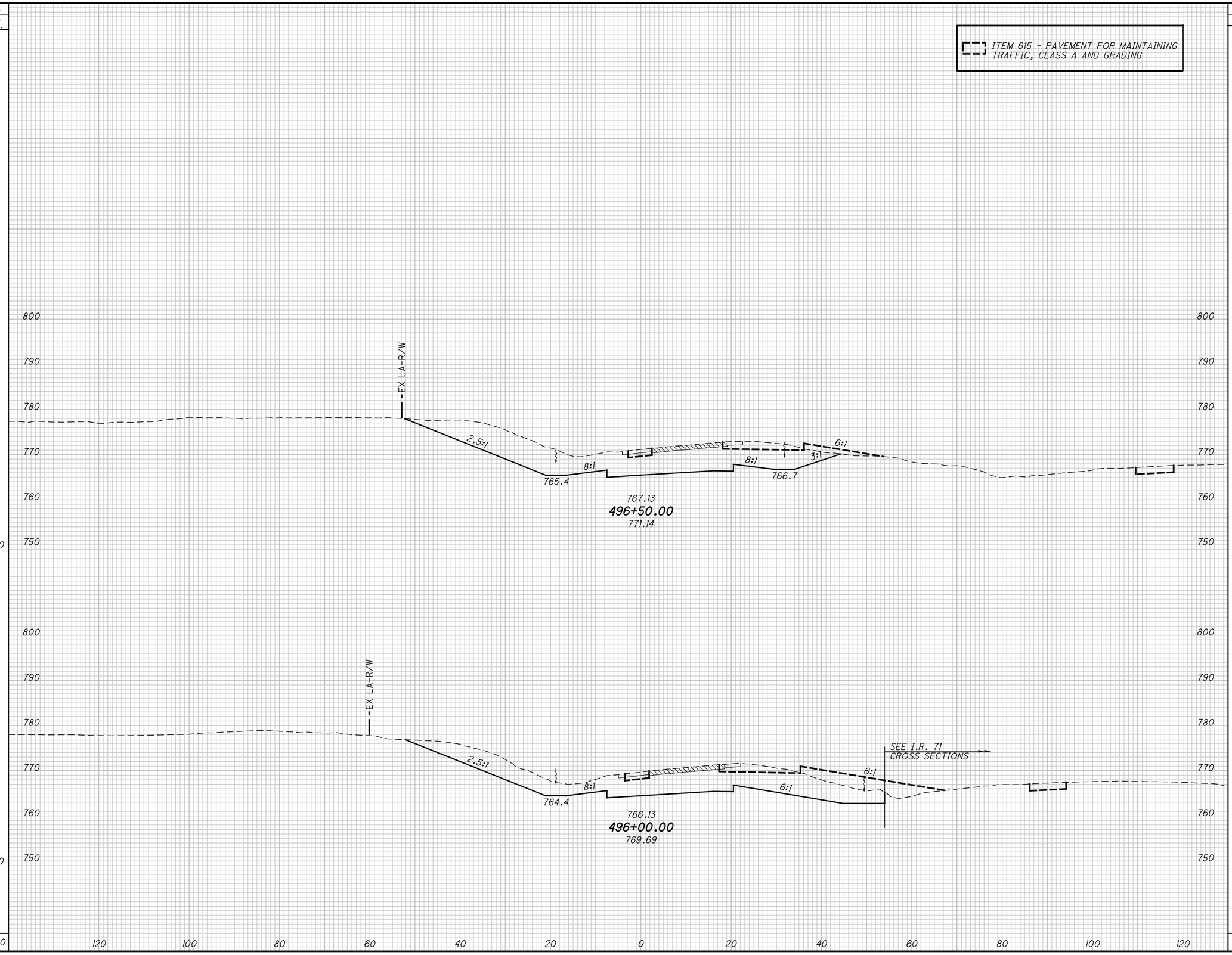

END AREA		VOLUME	
CUT	FILL	CUT	FILL
441	0		
421	0		
		799	0
		730	0
		1529	0

CALCULATED DWB
CHECKED BAL

CROSS SECTIONS - RAMP A AT STRINGTOWN RD
STA. 496+00.00 TO STA. 496+50.00

FRA-71-5.29

401
623

P:\84868\roadway\sheets\84868XS101.dgn 12/17/2014 3:30:47 PM kfahy

SEEDING	
END WIDTH	SQ. YDS.
103	539
90	489
	1028

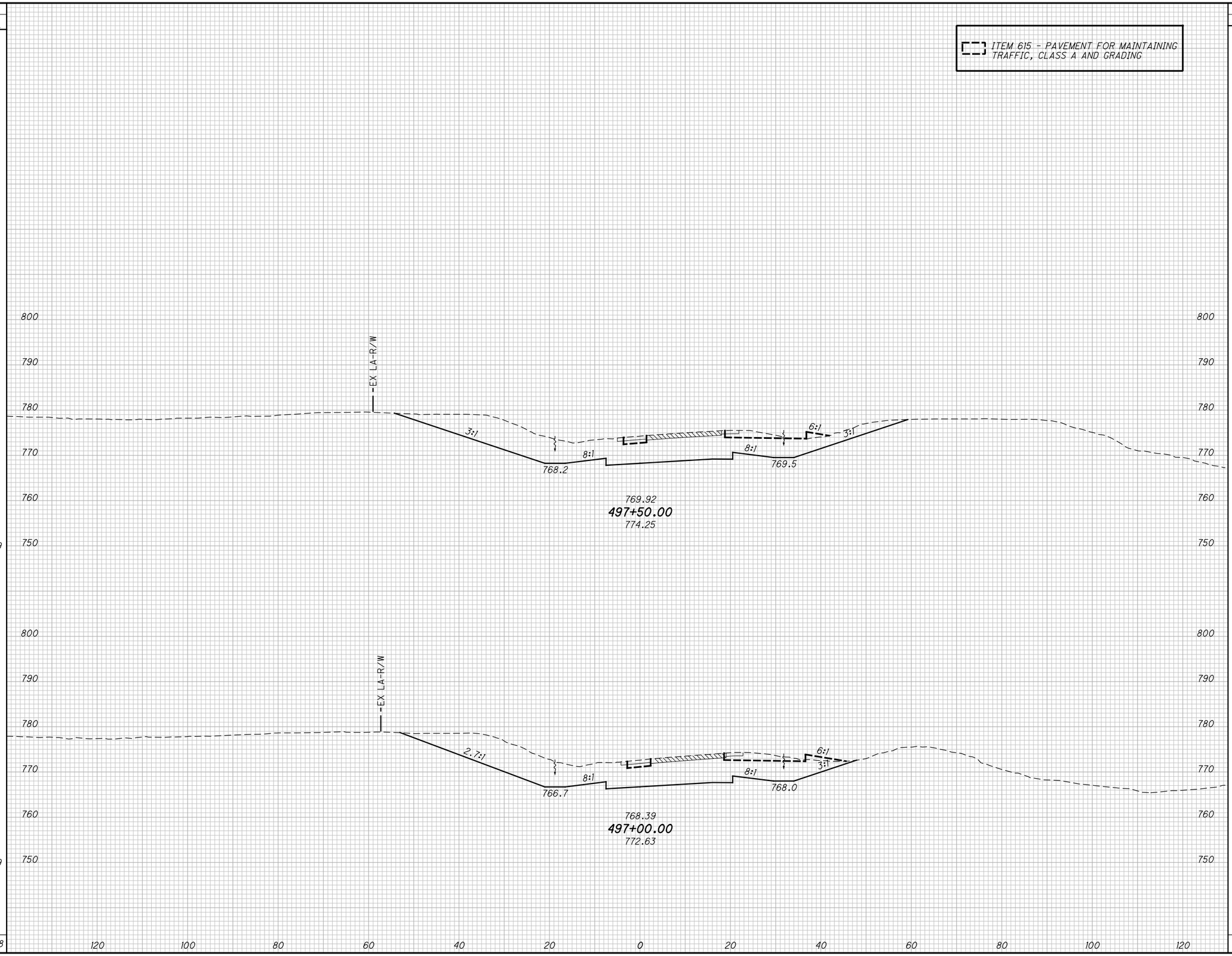

END AREA		VOLUME	
CUT	FILL	CUT	FILL
475	0		
468	0		
		874	0
		842	0
		1716	0

CALCULATED DWB
CHECKED BAL

CROSS SECTIONS - RAMP A AT STRINGTOWN RD
STA. 497+00.00 TO STA. 497+50.00

FRA-71-5.29

P:\84868\roadway\sheets\84868XS101.dgn 12/17/2014 3:30:47 PM kfahy

SEEDING	
END WIDTH	SQ. YDS.
82	
	489
93	
	550
	1039

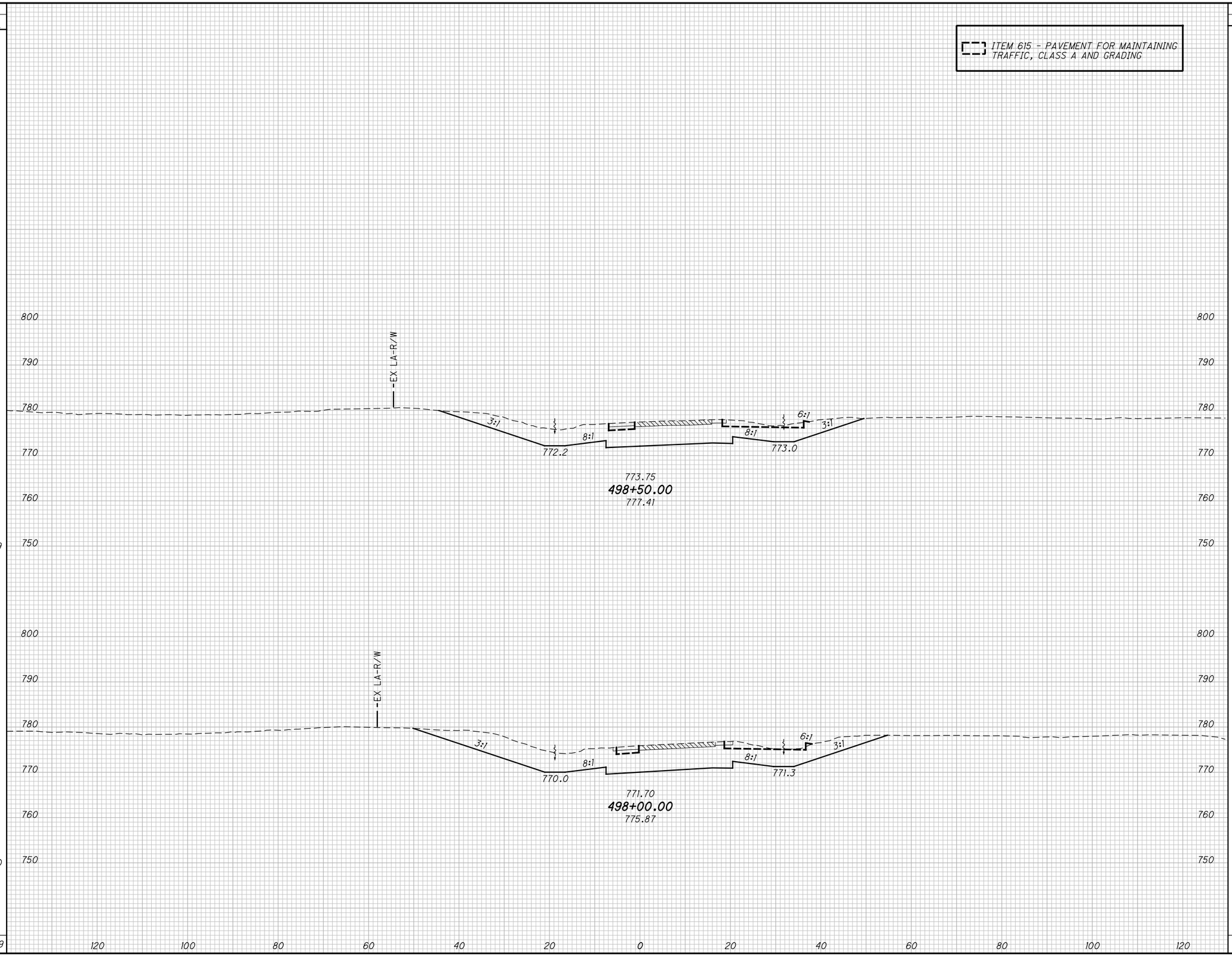

END AREA		VOLUME	
CUT	FILL	CUT	FILL
319	0		
		667	0
402	0		
		812	0
		1479	0

CALCULATED DWB
CHECKED BAL

CROSS SECTIONS - RAMP A AT STRINGTOWN RD STA. 498+00.00 TO STA. 498+50.00

FRA-71-5.29

403
623

P:\84868\roadway\sheets\84868XS101.dgn 12/17/2014 3:30:47 PM kfahy

SEEDING END WIDTH	SEEDING SQ. YDS.
53	327
63	378
72	427
	1132

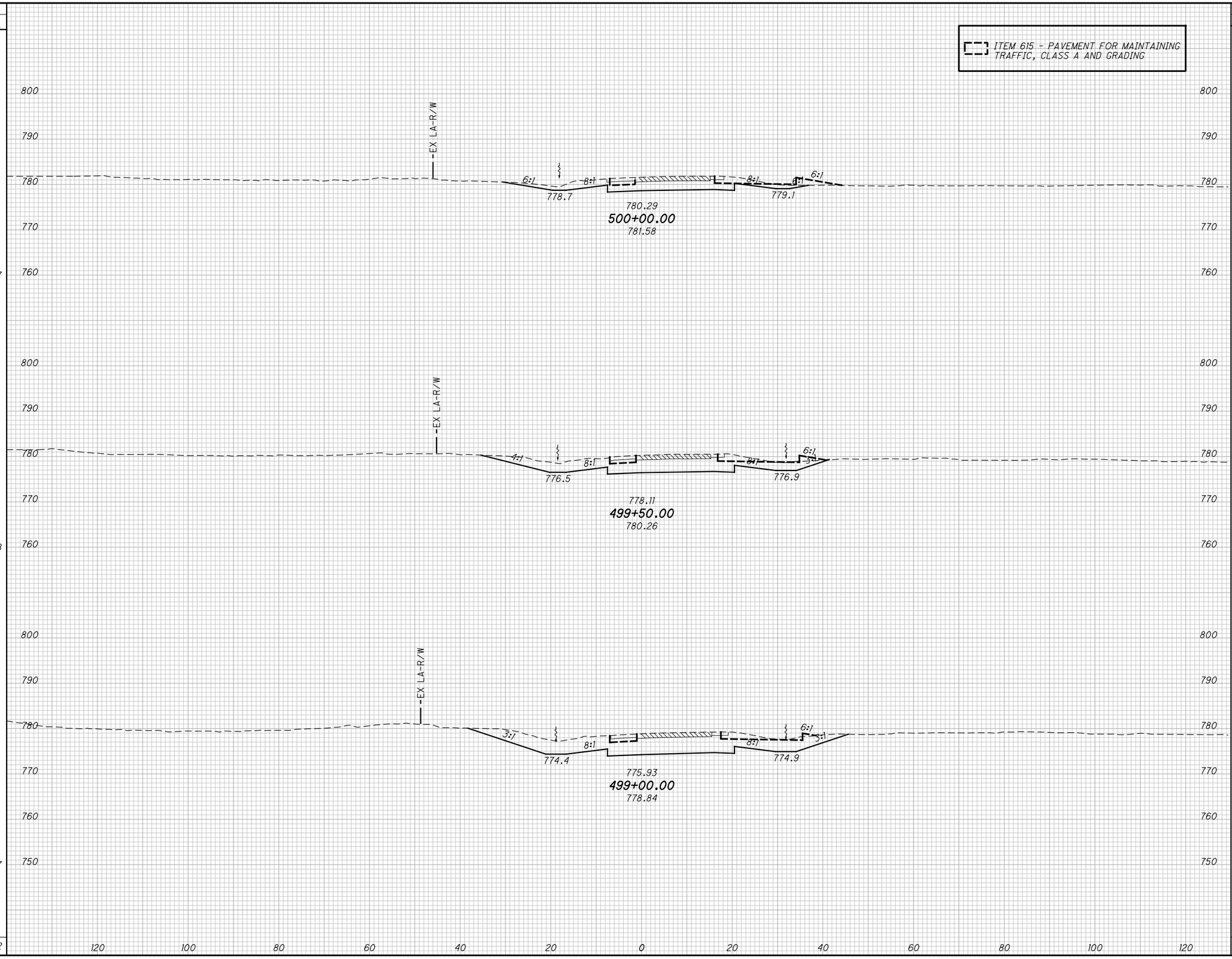

END AREA CUT	END AREA FILL	VOLUME CUT	VOLUME FILL
98	0		
167	0		
243	0		
		245	0
		380	0
		520	0
		1145	0

CALCULATED DWB
CHECKED BAL

CROSS SECTIONS - RAMP A AT STRINGTOWN RD
STA. 499+00.00 TO STA. 500+00.00

FRA-71-5.29

404
623

P:\84868\roadway\sheets\84868XS101.dgn 12/17/2014 3:30:47 PM kfahy

SEEDING		END AREA		VOLUME	
END WIDTH	SQ. YDS.	CUT	FILL	CUT	FILL
36	193	9	16	17	26
37	183	11	14	44	13
28	227	37	0	125	0
	603			186	39

ITEM 615 - PAVEMENT FOR MAINTAINING TRAFFIC, CLASS A AND GRADING

EX LA-R/W

SEE INTERSECTION DETAILS

785.97
501+47.07
785.43

784.49
501+00.00
784.06

782.46
500+50.00
782.71

6:1 4:1 8:1

800 790 780 770 760

120 100 80 60 40 20 0 20 40 60 80 100 120

CALCULATED DWB
CHECKED BAL

CROSS SECTIONS - RAMP A AT STRINGTOWN RD
STA. 500+50.00 TO STA. 501+47.07

FRA-71-5.29

405
623

P:\84868\roadway\sheets\84868XS101.dgn 12/17/2014 3:30:48 PM kfahy

SEEDING	
END WIDTH	SQ. YDS.
0	35
36	11
	46

ITEM 615 - PAVEMENT FOR MAINTAINING TRAFFIC, CLASS A AND GRADING

END WORK
STA. 502+08.30

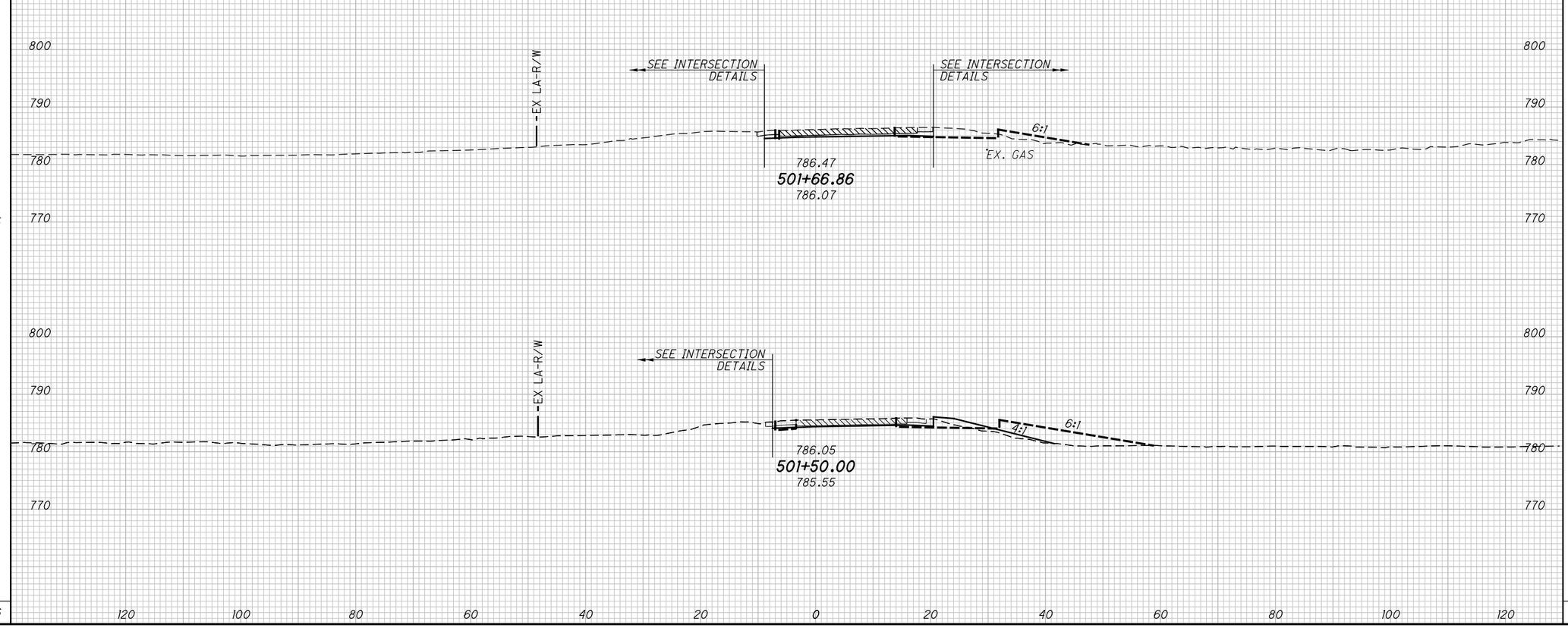

END AREA		VOLUME	
CUT	FILL	CUT	FILL
11	0	6	4
9	13	1	2
		7	6

CALCULATED DWB
CHECKED BAL

CROSS SECTIONS - RAMP A AT STRINGTOWN RD
STA. 501+50.00 TO STA. 501+66.86

FRA-71-5.29

406
623

P:\84868\roadway\sheets\84868XS101.dgn 12/17/2014 3:30:48 PM kfahy

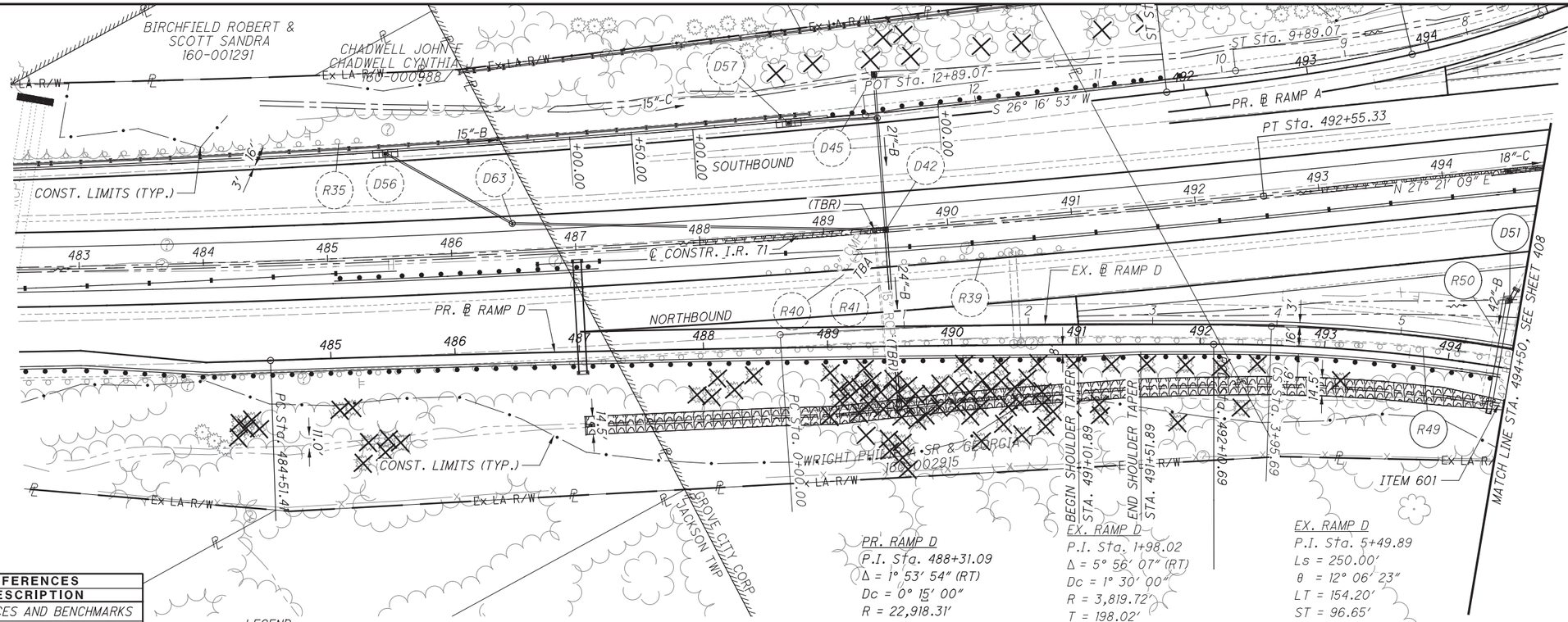

CROSS REFERENCES	
SHEET NO.	DESCRIPTION
6	REFERENCES AND BENCHMARKS
150-151	I.R. 71 PLAN & PROFILE
413	DRAINAGE DETAILS

LEGEND

RIPRAP

ITEM 670 DITCH EROSION PROTECTION*

ROCK CHANNEL PROTECTION

ITEM 601 TIED CONCRETE BLOCK MAT, TYPE 1, WITH FILTER

PR. RAMP D
P.I. Sta. 488+31.09
Δ = 1° 53' 54" (RT)
Dc = 0° 15' 00"
R = 22,918.31'
T = 379.68'
L = 759.28'
E = 3.14'
e max = 0.014
C = 759.25'
C.B. = N 32° 11' 27" E

EX. RAMP D
P.I. Sta. 1+98.02
Δ = 5° 56' 07" (RT)
Dc = 1° 30' 00"
R = 3,819.72'
T = 198.02'
L = 395.69'
E = 5.13'
C = 395.51'
C.B. = N 32° 12' 47" E

LUCAS STATE STREET STRINGTOWN LTD
040-005957

EX. RAMP D
P.I. Sta. 5+49.89
Ls = 250.00'
θ = 12° 06' 23"
LT = 154.20'
ST = 96.65'
x = 248.70'
y = 20.27'
k = 124.81'
p = 3.04'

*7.5' WIDE UNLESS OTHERWISE NOTED

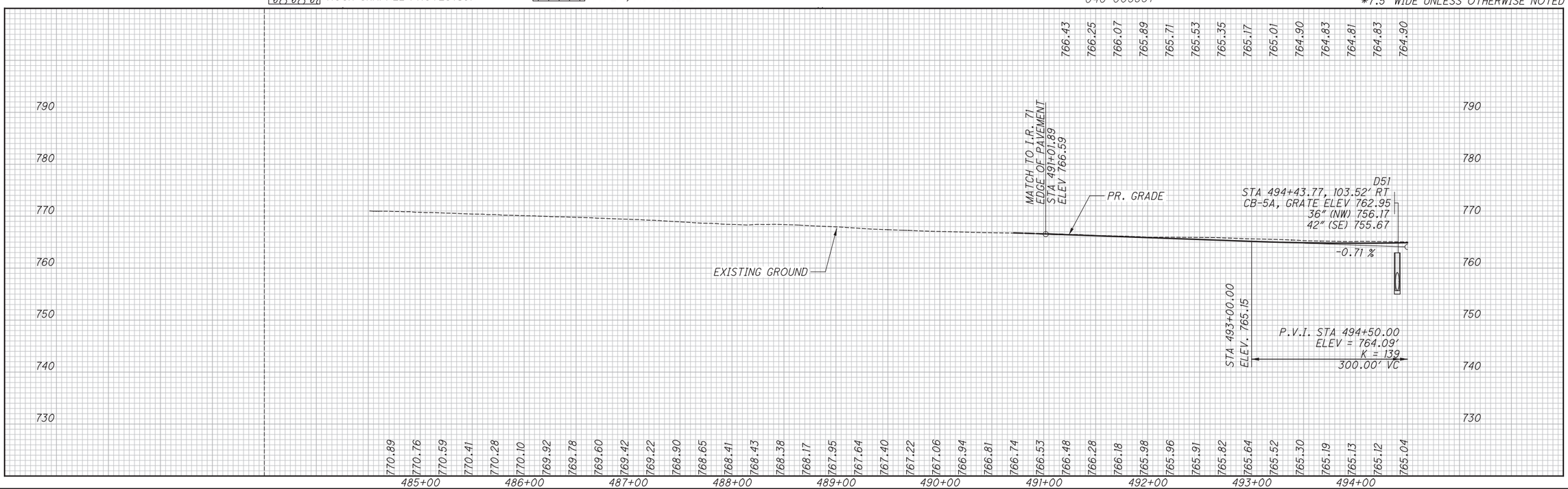

HORIZONTAL SCALE IN FEET
0 25 50 100

CALCULATED CDS
CHECKED GPD

PLAN AND PROFILE - RAMP D
STA. 484+51.41 TO STA. 494+50.00

FRA-71-5.29

407
623

P:\84868\roadway\sheets\84868GP201.dgn 3/27/2015 2:35:42 PM kfahy

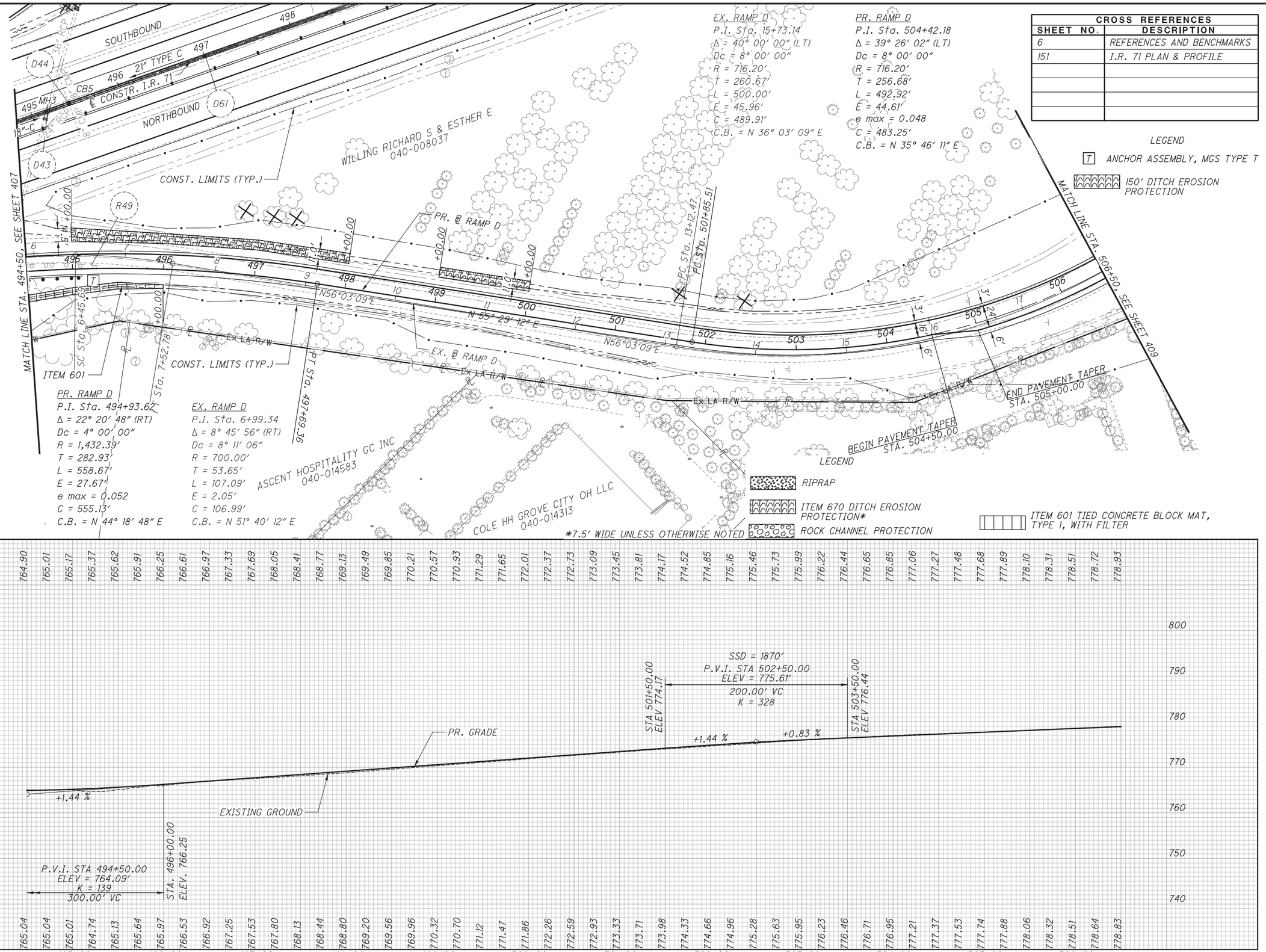

EX. RAMP D
P.I. Sta. 15+73.14
Δ = 40° 00' 00" (LT)
Dc = 8° 00' 00"
R = 716.20'
T = 260.67'
L = 500.00'
E = 45.96'
C = 489.91'
C.B. = N 36° 03' 09" E

PR. RAMP D
P.I. Sta. 504+42.18
Δ = 39° 26' 02" (LT)
Dc = 8° 00' 00"
R = 716.20'
T = 256.68'
L = 492.92'
E = 44.61'
e max = 0.048
C = 483.25'
C.B. = N 35° 46' 11" E

CROSS REFERENCES	
SHEET NO.	DESCRIPTION
6	REFERENCES AND BENCHMARKS
151	I.R. 71 PLAN & PROFILE

LEGEND

T ANCHOR ASSEMBLY, MGS TYPE T

150' DITCH EROSION PROTECTION

LEGEND

RIPRAP

ITEM 670 DITCH EROSION PROTECTION*

ROCK CHANNEL PROTECTION

ITEM 601 TIED CONCRETE BLOCK MAT, TYPE 1, WITH FILTER

PR. RAMP D
P.I. Sta. 494+93.62
Δ = 22° 20' 48" (RT)
Dc = 4° 00' 00"
R = 1,432.39'
T = 282.93'
L = 558.67'
E = 27.67'
e max = 0.052
C = 555.13'
C.B. = N 44° 18' 48" E

EX. RAMP D
P.I. Sta. 6+99.34
Δ = 8° 45' 56" (RT)
Dc = 8° 11' 06"
R = 700.00'
T = 53.65'
L = 107.09'
E = 2.05'
C = 106.99'
C.B. = N 51° 40' 12" E

PLAN AND PROFILE - RAMP D
STA. 494+50.00 TO STA. 506+50.00

CALCULATED CDS
CHECKED GPD

HORIZONTAL SCALE IN FEET
0 25 50 100

FRA-71-5.29

408
623

P:\84868\roadway\sheets\84868GP202.dgn 3/27/2015 2:35:43 PM kfahy

EX. RAMP D
P.I. Sta. 15+73.14
Δ = 40° 00′ 00″ (LT)
Dc = 8° 00′ 00″
R = 716.20′
T = 260.67′
L = 500.00′
E = 45.96′
C = 489.91′
C.B. = N 36° 03′ 09″ E

PR. RAMP D
P.I. Sta. 504+42.18
Δ = 39° 26′ 02″ (LT)
Dc = 8° 00′ 00″
R = 716.20′
T = 256.68′
L = 492.92′
E = 44.61′
e max = 0.048
C = 483.25′
C.B. = N 35° 46′ 11″ E

CROSS REFERENCES	
SHEET NO.	DESCRIPTION
6	REFERENCES AND BENCHMARKS
451	INTERSECTION DETAIL

HORIZONTAL SCALE IN FEET
0 25 50 100

CALCULATED CDS CHECKED GPD

PLAN AND PROFILE - RAMP D
STA. 506+50.00 TO STA. 508+12.29

FRA-71-5.29

409
623

P:\84868\roadway\sheets\84868GP203.dgn 3/27/2015 2:35:44 PM kfahy

SEEDING	
END WIDTH	SQ. YDS.
59	262
38	0
	262

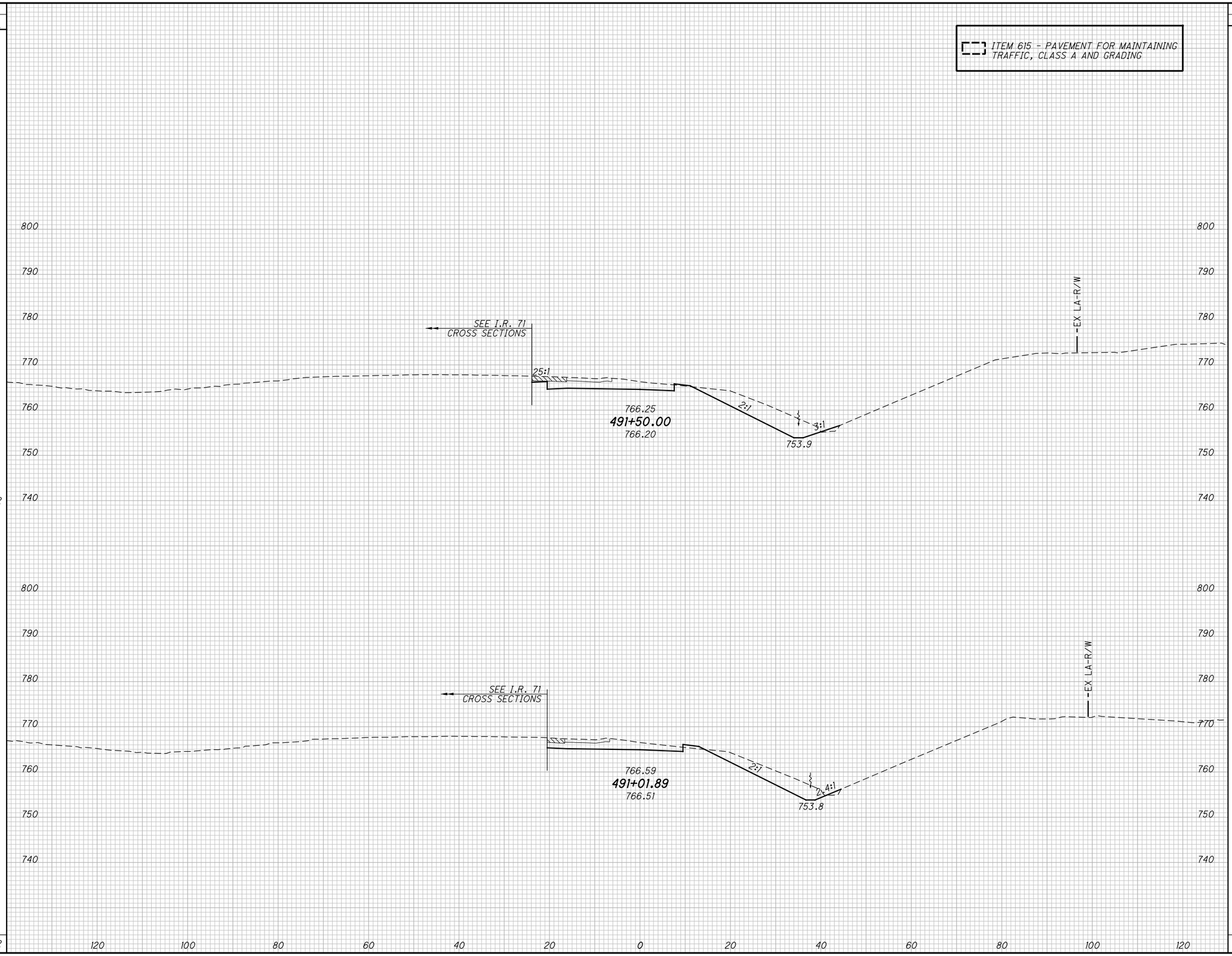

END AREA	
CUT	FILL
136	3
110	4

VOLUME	
CUT	FILL
219	6
0	0
219	6

CALCULATED DWB
CHECKED BAL

CROSS SECTIONS - RAMP D AT STRINGTOWN RD
STA. 491+01.89 TO STA. 491+50.00

FRA-71-5.29

410
623

P:\84868\roadway\sheets\84868XS201.dgn 12/17/2014 3:30:54 PM kfahy

SEEDING		END AREA		VOLUME	
END WIDTH	SQ. YDS.	CUT	FILL	CUT	FILL
75	394	139	18	257	24
65	350	139	9	254	11
	744			511	35

ITEM 615 - PAVEMENT FOR MAINTAINING TRAFFIC, CLASS A AND GRADING

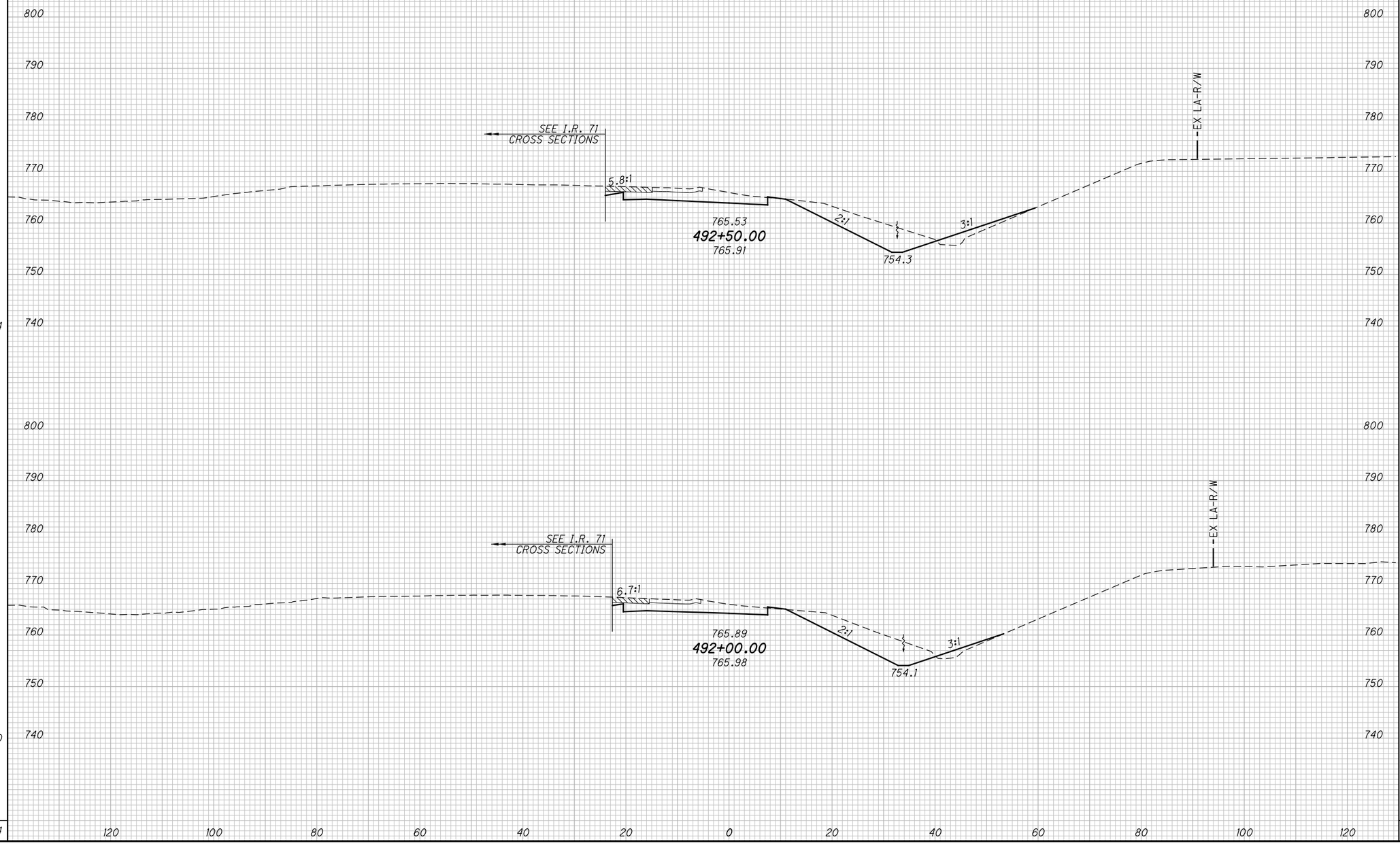

CALCULATED DWB
CHECKED BAL

CROSS SECTIONS - RAMP D AT STRINGTOWN RD
STA. 492+00.00 TO STA. 492+50.00

FRA-71-5.29

411
623

P:\84868\roadway\sheets\84868XS201.dgn 12/17/2014 3:30:55 PM kfahy

SEEDING		END AREA		VOLUME	
END WIDTH	SQ. YDS.	CUT	FILL	CUT	FILL
69	406	143	4	272	19
76	422	151	16	268	31
	828			540	50

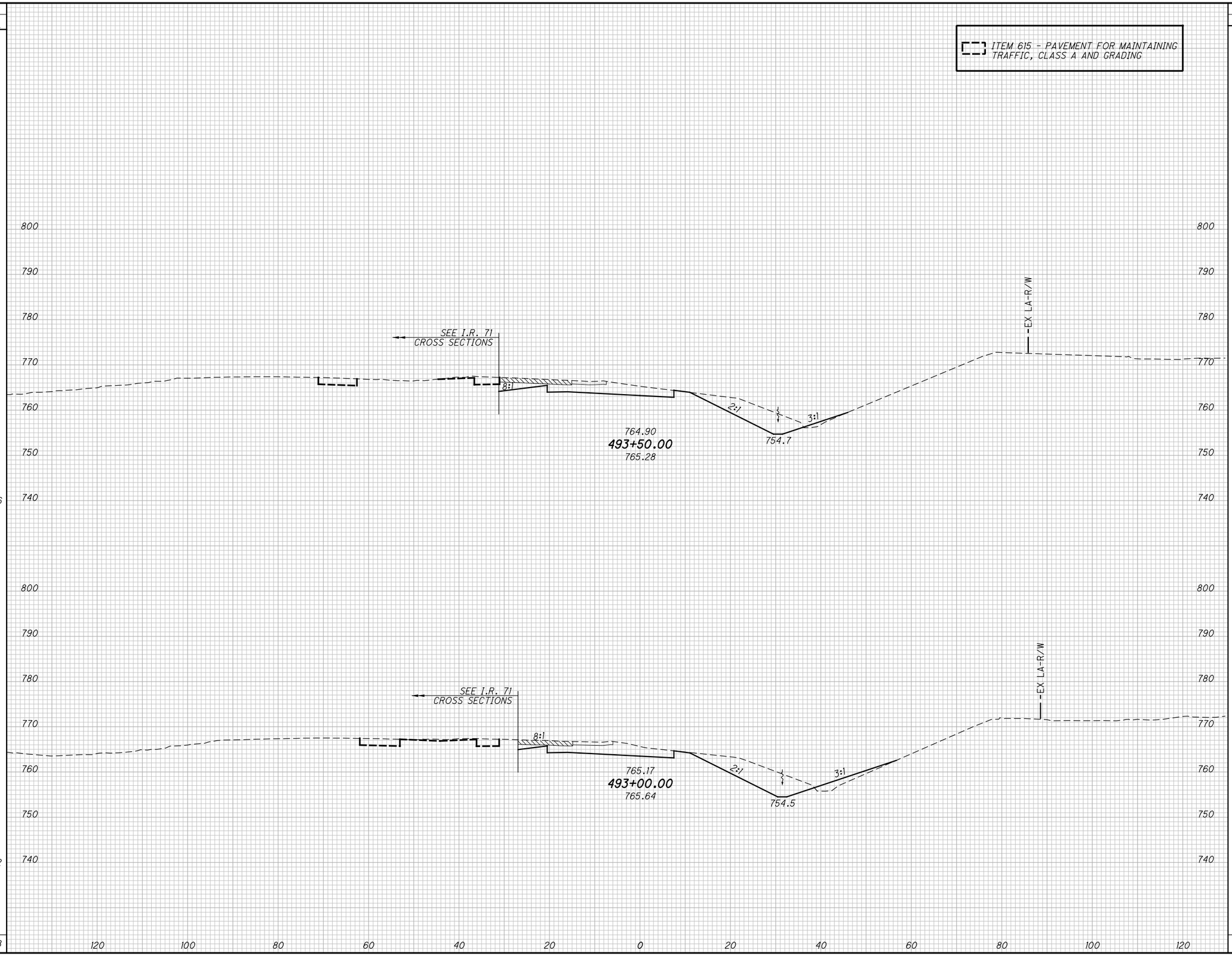

CALCULATED DWB
CHECKED BAL

CROSS SECTIONS - RAMP D AT STRINGTOWN RD
STA. 493+00.00 TO STA. 493+50.00

FRA-71-5.29

412
623

P:\84868\roadway\sheets\84868XS201.dgn 12/17/2014 3:30:55 PM kfahy

SEEDING	
END WIDTH	SQ. YDS.
102	
	489
73	
	394
	883

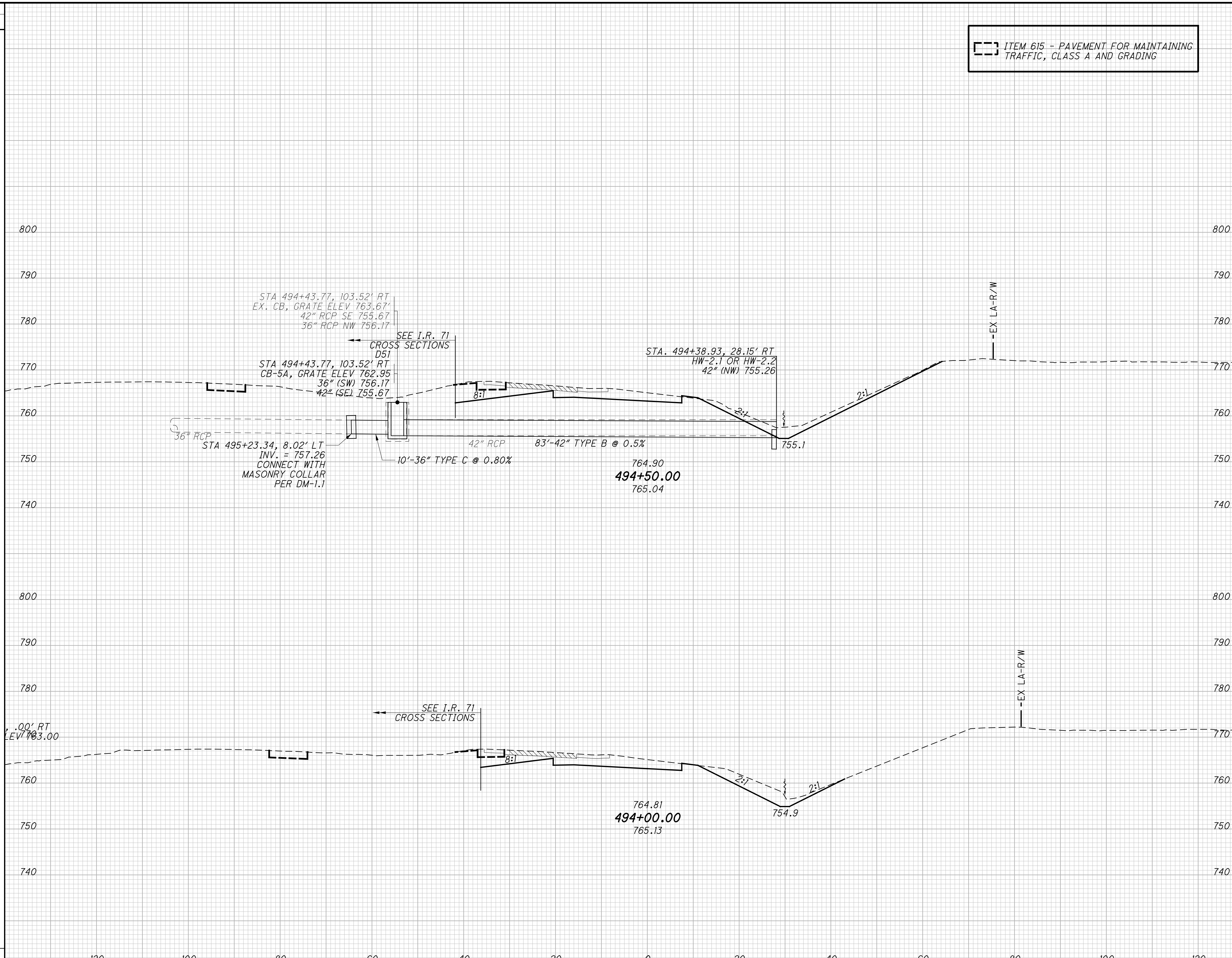

END AREA		VOLUME	
CUT	FILL	CUT	FILL
151	1		
		262	1
133	0		
		256	4
		518	5

CALCULATED DWB
CHECKED BAL

CROSS SECTIONS - RAMP D AT STRINGTOWN RD
STA. 494+00.00 TO STA. 494+50.00

FRA-71-5.29

P:\84868\roadway\sheets\84868XS201.dgn 12/17/2014 3:30:55 PM kfahy

SEEDING	
END WIDTH	SQ. YDS.
53	322
63	384
73	489
	1195

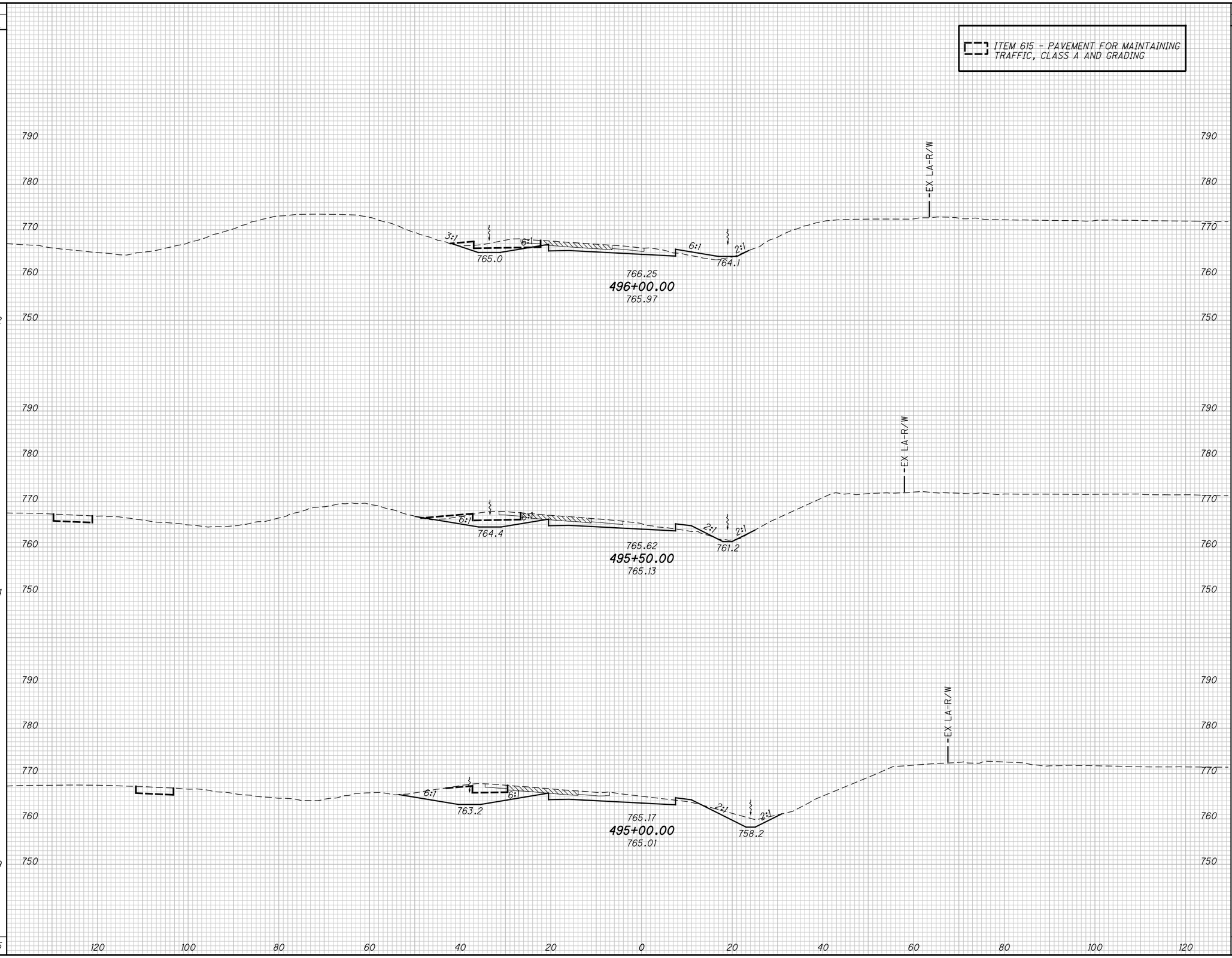

END AREA	
CUT	FILL
54	9
71	8
133	3

VOLUME	
CUT	FILL
116	16
189	9
263	3
568	28

CALCULATED DWB
CHECKED BAL

CROSS SECTIONS - RAMP D AT STRINGTOWN RD
STA. 495+00.00 TO STA. 496+00.00

FRA-71-5.29

414
623

P:\84868\roadway\sheets\84868XS201.dgn 12/17/2014 3:30:56 PM kfahy

SEEDING	
END WIDTH	SQ. YDS.
74	373
60	317
	690

ITEM 615 - PAVEMENT FOR MAINTAINING TRAFFIC, CLASS A AND GRADING

800
790
780
770
760
750

EX LA-R/W

3:1
6:1
6:1
3:1
766.4
765.4
767.69
497+00.00
767.53

EX LA-R/W

2.5:1
6:1
6:1
2.5:1
765.7
764.8
766.97
496+50.00
766.92

120 100 80 60 40 20 0 20 40 60 80 100 120

END AREA		VOLUME	
CUT	FILL	CUT	FILL
55	1		
42	1		
		90	1
		89	9
		179	10

CALCULATED DWB
CHECKED BAL

CROSS SECTIONS - RAMP D AT STRINGTOWN RD
STA. 496+50.00 TO STA. 497+00.00

FRA-71-5.29

415
623

P:\84868\roadway\sheets\84868XS201.dgn 12/17/2014 3:30:56 PM kfahy

SEEDING	
END WIDTH	SQ. YDS.
71	394
69	400
	794

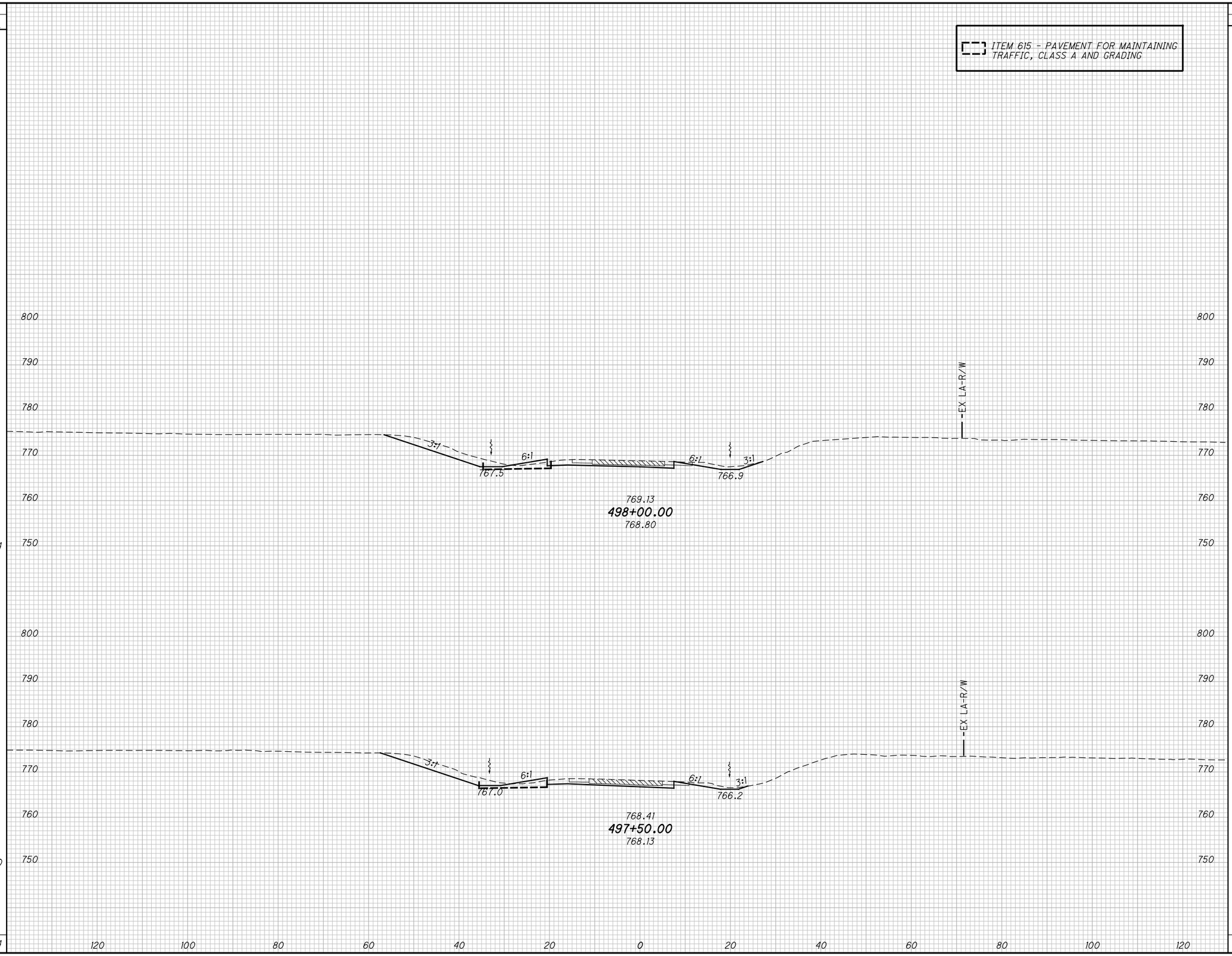

END AREA		VOLUME	
CUT	FILL	CUT	FILL
63	4	115	7
61	4	107	4
		222	11

CALCULATED DWB
CHECKED BAL

CROSS SECTIONS - RAMP D AT STRINGTOWN RD
STA. 497+50.00 TO STA. 498+00.00

FRA-71-5.29

416
623

P:\84868\roadway\sheets\84868XS201.dgn 12/17/2014 3:30:56 PM kfahy

SEEDING	
END WIDTH	SQ. YDS.
86	433
68	388
	821

END AREA		VOLUME	
CUT	FILL	CUT	FILL
98	2		
80	3		
		297	11
		165	5
		132	6

CALCULATED DWB
CHECKED BAL

CROSS SECTIONS - RAMP D AT STRINGTOWN RD
STA. 498+50.00 TO STA. 499+00.00

FRA-71-5.29

417
623

P:\84868\roadway\sheets\84868XS201.dgn 12/17/2014 3:30:57 PM kfahy

SEEDING	
END WIDTH	SQ. YDS.
77	395
65	422
	817

ITEM 615 - PAVEMENT FOR MAINTAINING TRAFFIC, CLASS A AND GRADING

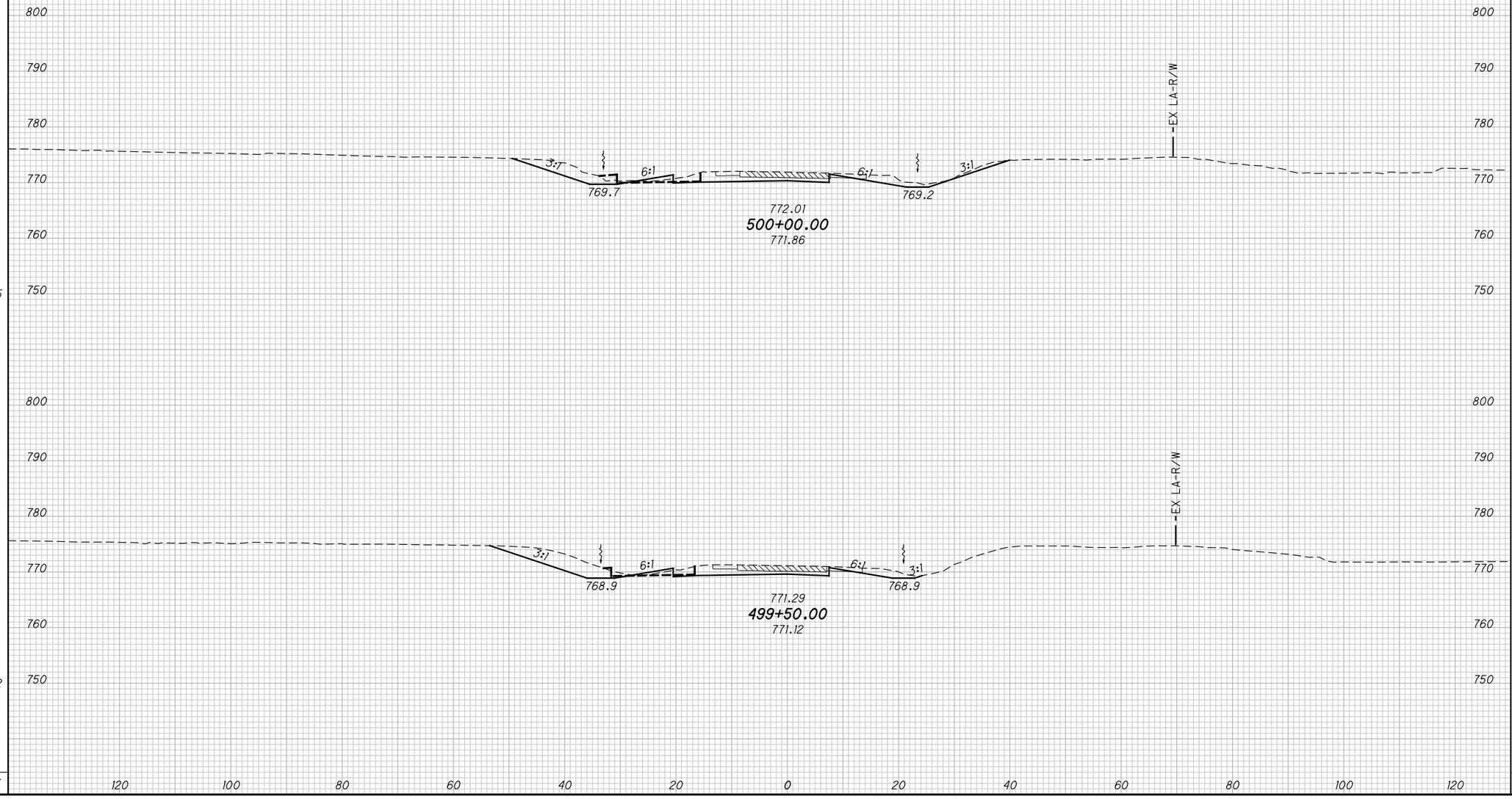

END AREA	
CUT	FILL
71	3
84	3

VOLUME	
CUT	FILL
143	5
168	5
311	10

CALCULATED DWB
CHECKED BAL

CROSS SECTIONS - RAMP D AT STRINGTOWN RD
STA. 499+50.00 TO STA. 500+00.00

FRA-71-5.29

418
623

P:\84868\roadway\sheets\84868XS201.dgn 12/17/2014 3:30:57 PM kfahy

SEEDING	
END WIDTH	SQ. YDS.
80	445
78	434
	879

ITEM 615 - PAVEMENT FOR MAINTAINING TRAFFIC, CLASS A AND GRADING

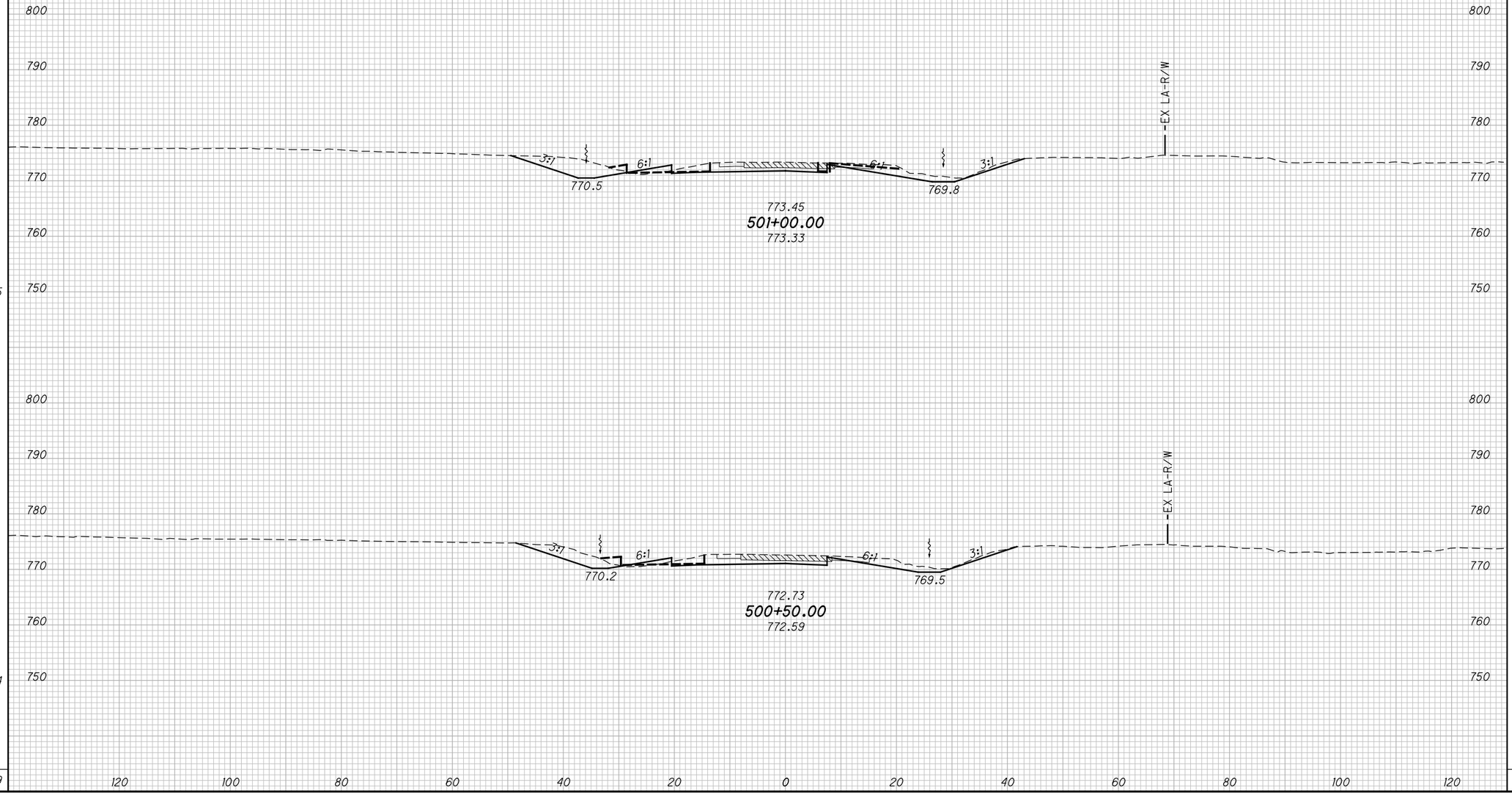

END AREA		VOLUME	
CUT	FILL	CUT	FILL
86	7		
72	6		
		147	12
		132	8
		279	20

CALCULATED DWB
CHECKED BAL

CROSS SECTIONS - RAMP D AT STRINGTOWN RD
STA. 500+50.00 TO STA. 501+00.00

FRA-71-5.29

419
623

P:\84868\roadway\sheets\84868XS201.dgn 12/17/2014 3:30:58 PM kfahy

SEEDING END WIDTH	SEEDING SQ. YDS.
61	405
84	455
	860

ITEM 615 - PAVEMENT FOR MAINTAINING TRAFFIC, CLASS A AND GRADING

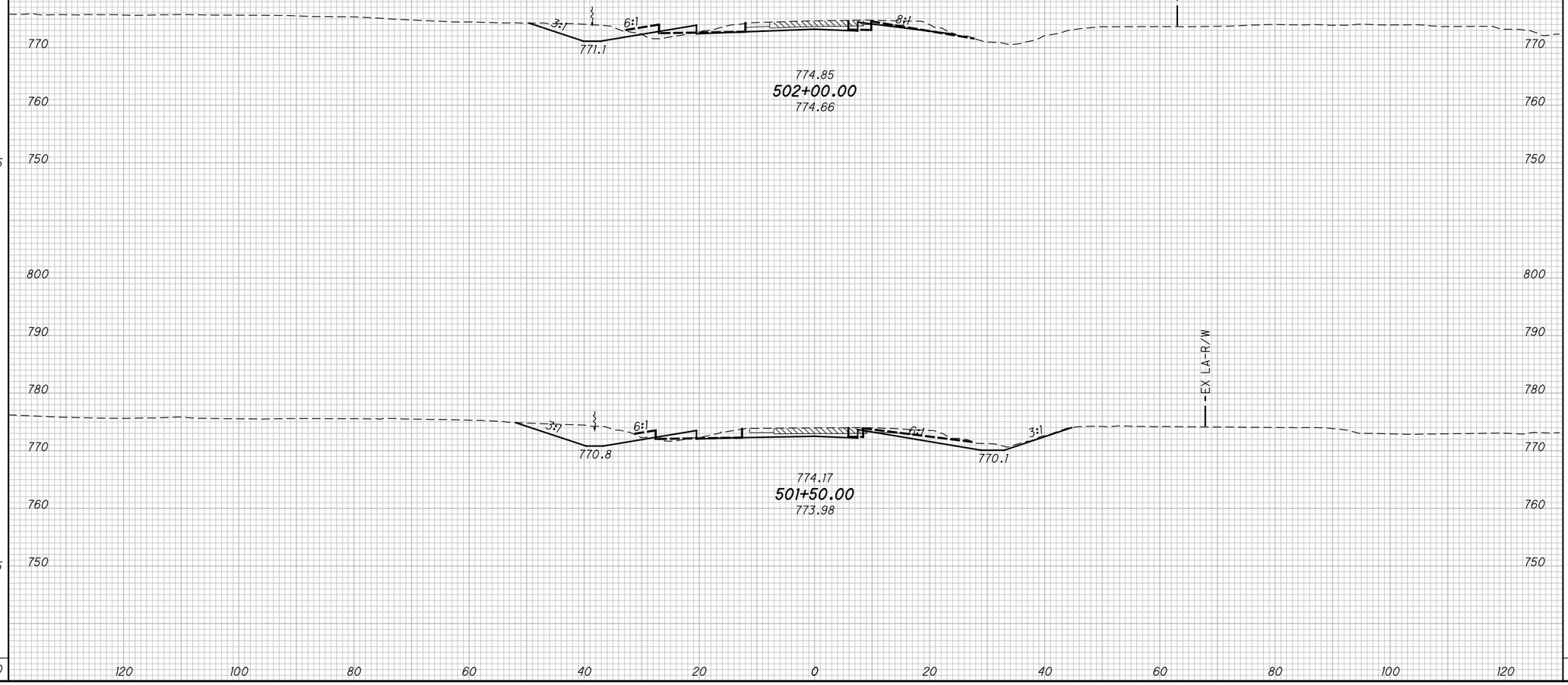

END AREA CUT	END AREA FILL	VOLUME CUT	VOLUME FILL
63	11		
95	8		
		146	18
		168	14
		314	32

CALCULATED DWB
CHECKED BAL

CROSS SECTIONS - RAMP D AT STRINGTOWN RD
STA. 501+50.00 TO STA. 502+00.00

FRA-71-5.29

420
623

P:\84868\roadway\sheets\84868XS201.dgn 12/17/2014 3:30:58 PM kfahy

SEEDING	
END WIDTH	SQ. YDS.
65	350
59	339
	689

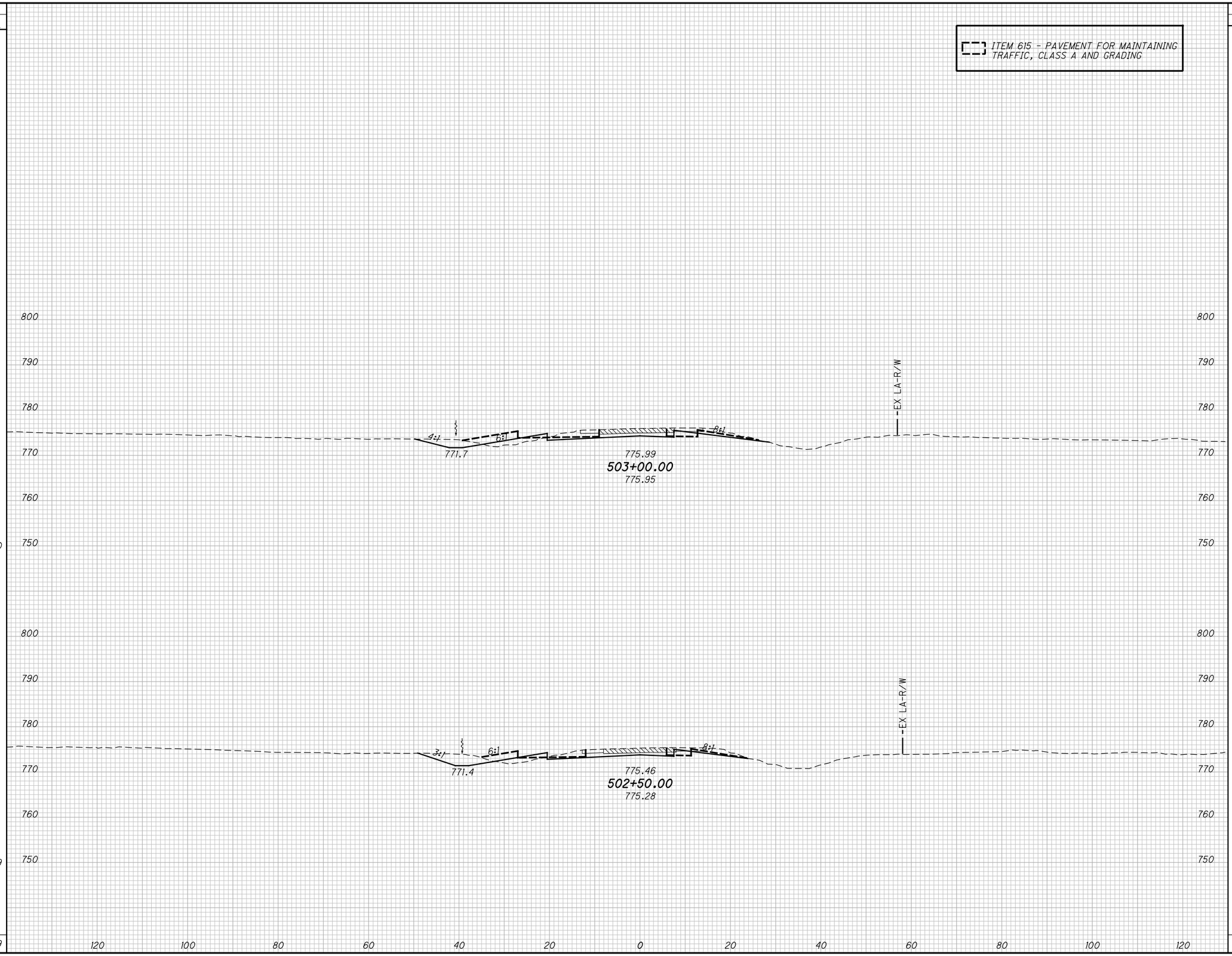

END AREA	
CUT	FILL
55	14
57	11

VOLUME	
CUT	FILL
104	23
111	21
215	44

CALCULATED	CHECKED
DWB	BAL

CROSS SECTIONS - RAMP D AT STRINGTOWN RD
STA. 502+50.00 TO STA. 503+00.00

FRA-71-5.29

421
623

P:\84868\roadway\sheets\84868XS201.dgn 12/17/2014 3:30:58 PM kfahy

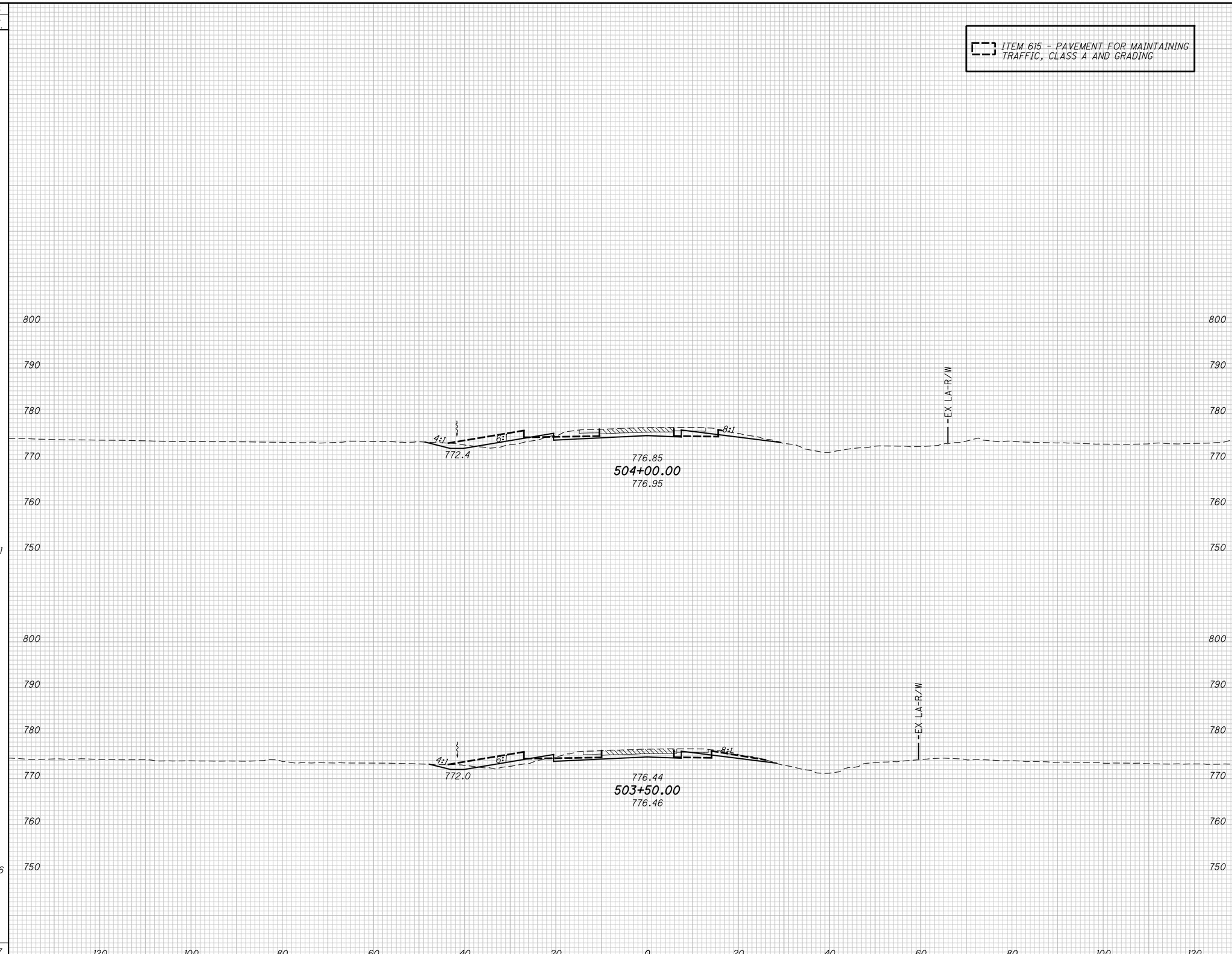

SEEDING END WIDTH	SEEDING SQ. YDS.	END AREA CUT	END AREA FILL	VOLUME CUT	VOLUME FILL
65		50	13		
	361			91	24
63		49	13		
	356			96	25
	717			187	49

CALCULATED DWB
CHECKED BAL

CROSS SECTIONS - RAMP D AT STRINGTOWN RD
STA. 503+50.00 TO STA. 504+00.00

FRA-71-5.29

P:\84868\roadway\sheets\84868XS201.dgn 12/17/2014 3:30:59 PM kfahy

SEEDING	
END WIDTH	SQ. YDS.
33	266
63	361
	627

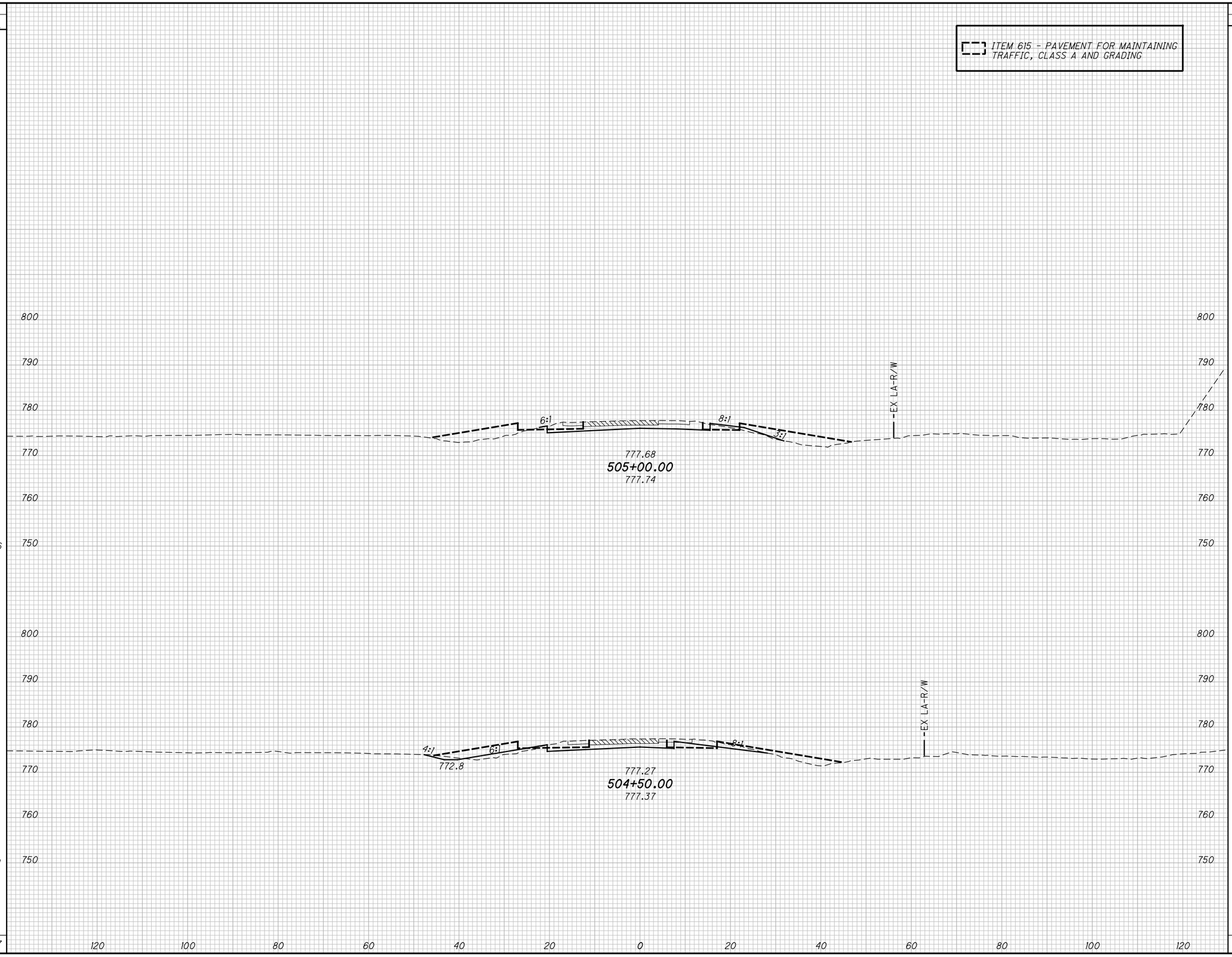

END AREA	
CUT	FILL
41	6
49	11

VOLUME	
CUT	FILL
83	15
91	22
174	37

CALCULATED DWB
CHECKED BAL

CROSS SECTIONS - RAMP D AT STRINGTOWN RD
STA. 504+50.00 TO STA. 505+00.00

FRA-71-5.29

423
623

P:\84868\roadway\sheets\84868XS201.dgn 12/17/2014 3:30:59 PM kfahy

SEEDING	
END WIDTH	SQ. YDS.
25	
	173
36	
	195
	368

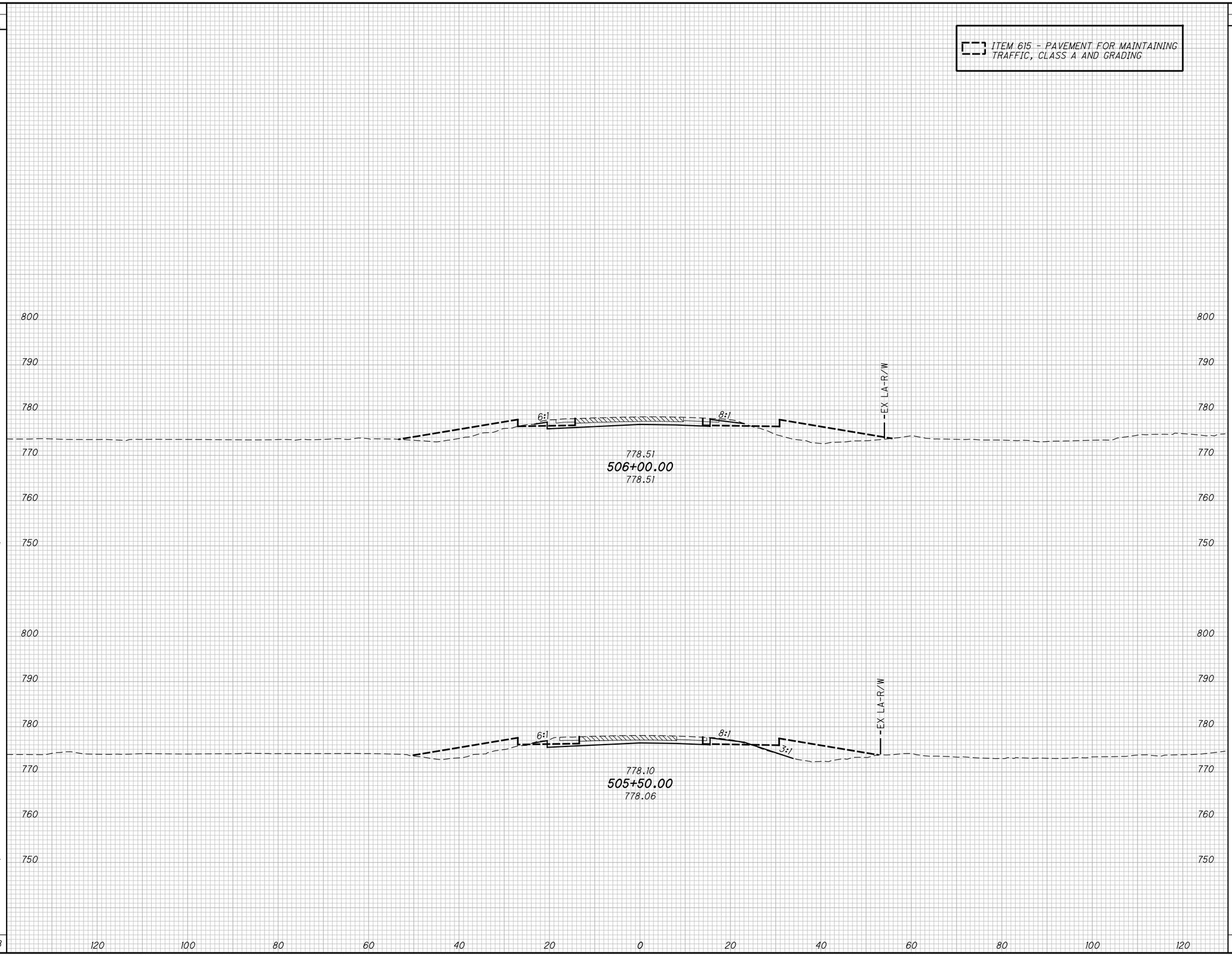

END AREA	
CUT	FILL
37	0
36	1

VOLUME	
CUT	FILL
68	1
71	6
139	7

CALCULATED DWB
CHECKED BAL

CROSS SECTIONS - RAMP D AT STRINGTOWN RD
STA. 505+50.00 TO STA. 506+00.00

FRA-71-5.29

424
623

P:\84868\roadway\sheets\84868XS201.dgn 12/17/2014 3:30:59 PM kfahy

SEEDING		END AREA		VOLUME	
END WIDTH	SQ. YDS.	CUT	FILL	CUT	FILL
35		34	0		
	183			62	0
29		33	0		
	150			65	0
	333			127	0

ITEM 615 - PAVEMENT FOR MAINTAINING TRAFFIC, CLASS A AND GRADING

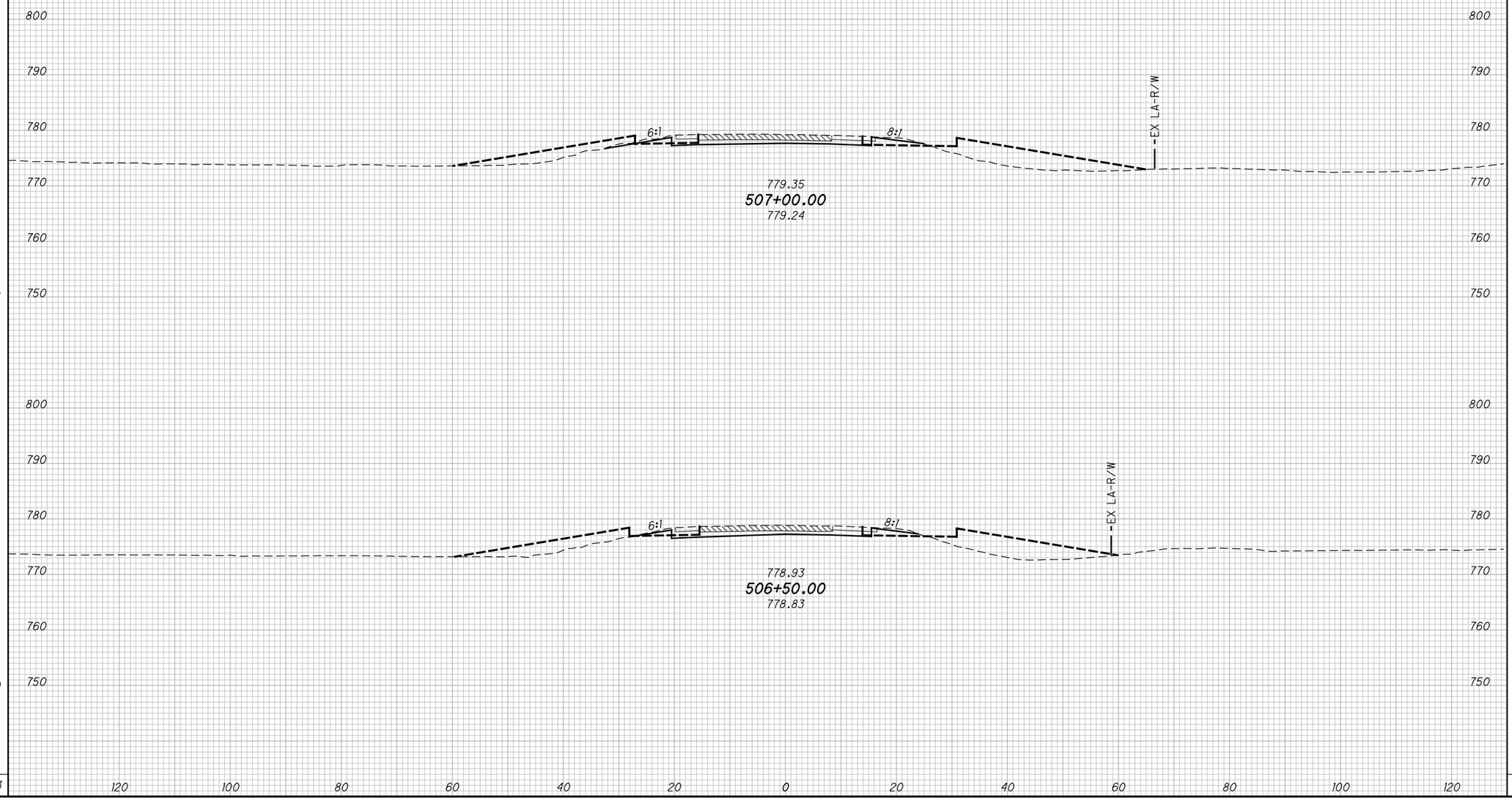

CALCULATED DWB
CHECKED BAL

CROSS SECTIONS - RAMP D AT STRINGTOWN RD
STA. 506+50.00 TO STA. 507+00.00

FRA-71-5.29

425
623

P:\84868\roadway\sheets\84868XS201.dgn 12/17/2014 3:31:00 PM kfahy

SEEDING		END AREA		VOLUME	
END WIDTH	SQ. YDS.	CUT	FILL	CUT	FILL
25	35	61	0	16	0
40	212	33	0	62	0
	247			78	0

CALCULATED DWB
CHECKED BAL

ITEM 615 - PAVEMENT FOR MAINTAINING TRAFFIC, CLASS A AND GRADING

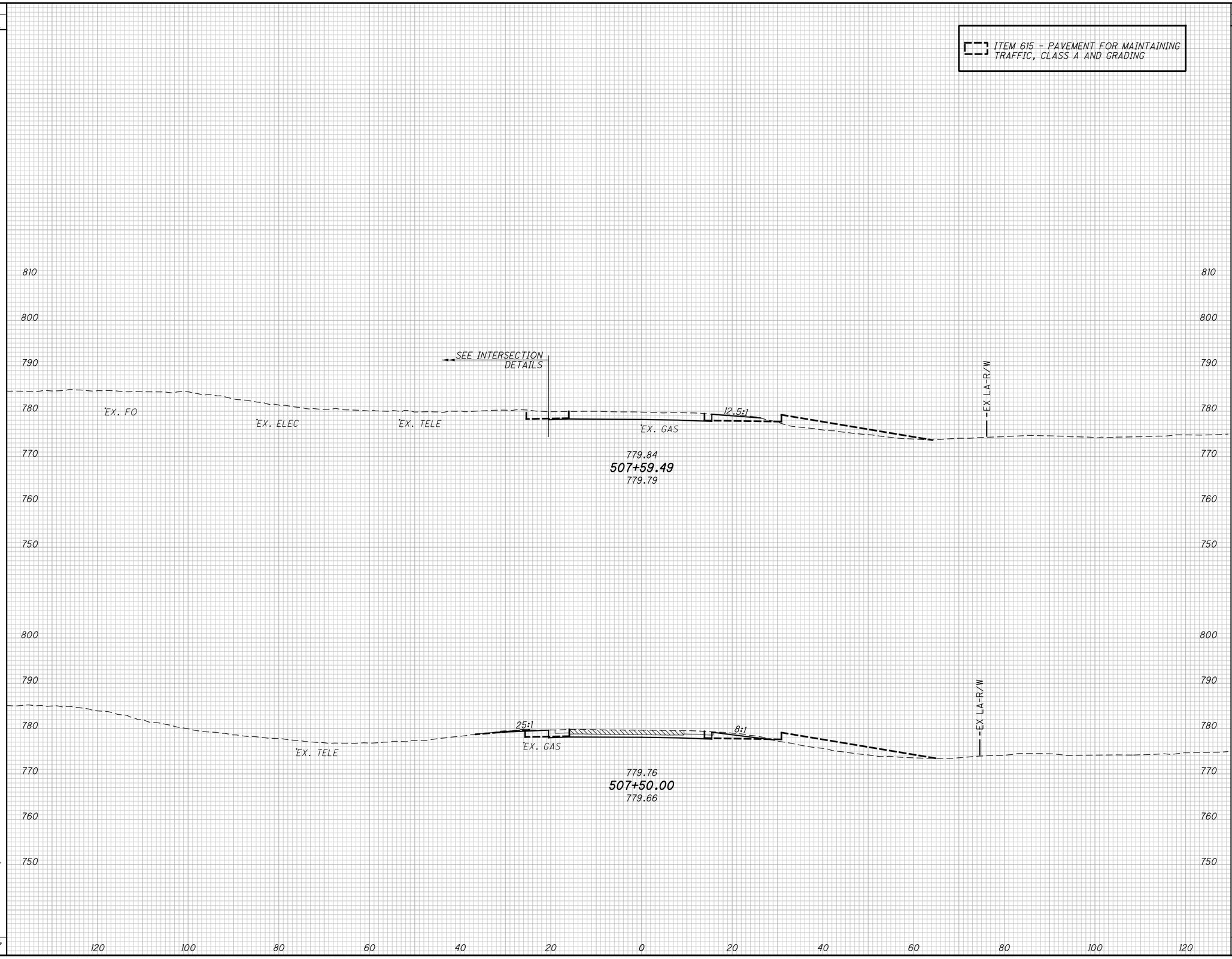

CROSS SECTIONS - RAMP D AT STRINGTOWN RD
STA. 507+50.00 TO STA. 507+59.49

FRA-71-5.29

426
623

P:\84868\roadway\sheets\84868XS201.dgn 12/17/2014 3:31:00 PM kfahy

SEEDING	
END WIDTH	SQ. YDS.
0	11
	11

ITEM 615 - PAVEMENT FOR MAINTAINING TRAFFIC, CLASS A AND GRADING

END WORK STA. 507+67.30

810
800
790
780
770
760
750

SEE INTERSECTION DETAILS

SEE INTERSECTION DETAILS

EX. FO

EX. TELE

EX. ELEC

EX. GAS

EX LA-R/W

779.90

507+67.30

779.87

120 100 80 60 40 20 0 20 40 60 80 100 120

END AREA		VOLUME	
CUT	FILL	CUT	FILL
58	0	17	0
		17	0

CALCULATED DWB

CHECKED BAL

CROSS SECTIONS - RAMP D AT STRINGTOWN RD
STA. 507+67.30 TO END WORK

FRA-71-5.29

427
623

P:\84868\roadway\sheets\84868XS201.dgn 12/17/2014 3:31:01 PM kfahy

SUPERELEVATION TABLE

P.I. STA. 305+11.40 | Dc = 1°00'01"

REMARKS	OUTSIDE EDGE - ELEVATION	ELEVATION CORRECTION	CROSS SLOPE	TRANSITION RATE	WIDTH	CROWN LINE - ELEVATION	ELEVATION CORRECTION	CROSS SLOPE	TRANSITION RATE	WIDTH	INSIDE EDGE (PROFILE GRADE) ELEVATION	OFFSET	STATION	INSIDE EDGE (PROFILE GRADE) OFFSET	ELEVATION	- CROWN LINE WIDTH	TRANSITION RATE	CROSS SLOPE	ELEVATION CORRECTION	ELEVATION	- OUTSIDE EDGE WIDTH	TRANSITION RATE	CROSS SLOPE	ELEVATION CORRECTION	ELEVATION	REMARKS
N.C.	858.07	-0.19	-0.0160		12	858.26	0.38	0.0160		24	857.88	30.00	283+62.38	30.00	857.21	24		0.0160	0.38	857.59	12		-0.0160	-0.19	857.40	
	857.97	-0.19	-0.0160		12	858.16	0.33	0.0139	▲	24	857.83	30.00	283+75.00	30.00	857.14	24		0.0160	0.38	857.52	12		-0.0160	-0.19	857.33	
	857.77	-0.19	-0.0160		12	857.96	0.23	0.0097		24	857.73	30.00	284+00.00	30.00	856.99	24		0.0160	0.38	857.37	12		-0.0160	-0.19	857.18	
	857.57	-0.19	-0.0160		12	857.76	0.13	0.0056		24	857.63	30.00	284+25.00	30.00	856.85	24		0.0160	0.38	857.23	12		-0.0160	-0.19	857.04	
	857.37	-0.19	-0.0160		12	857.56	0.03	0.0014		24	857.53	30.00	284+50.00	30.00	856.70	24		0.0160	0.38	857.08	12		-0.0160	-0.19	856.89	
1/2 FLAT	857.31	-0.19	-0.0160		12	857.50	0.00	0.0000		24	857.50	30.00	284+58.38	30.00	856.65	24		0.0160	0.38	857.03	12		-0.0160	-0.19	856.84	N.C.
	857.17	-0.19	-0.0160		12	857.36	-0.07	-0.0028		24	857.43	30.00	284+75.00	30.00	856.56	24		0.0160	0.38	856.94	12	▲	-0.0105	-0.13	856.82	
	856.97	-0.19	-0.0160		12	857.16	-0.17	-0.0069		24	857.33	30.00	285+00.00	30.00	856.41	24		0.0160	0.38	856.79	12		-0.0021	-0.03	856.77	
	856.93	-0.19	-0.0160		12	857.12	-0.19	-0.0080		24	857.31	30.00	285+06.38	30.00	856.37	24		0.0160	0.38	856.75	12		0.0000	0.00	856.75	1/2 FLAT
	856.78	-0.19	-0.0160		12	856.97	-0.27	-0.0111		24	857.24	30.00	285+25.00	30.00	856.27	24		0.0160	0.38	856.65	12		0.0062	0.07	856.73	
	856.58	-0.19	-0.0160		12	856.77	-0.37	-0.0153		24	857.14	30.00	285+50.00	30.00	856.12	24		0.0160	0.38	856.50	12		0.0145	0.17	856.68	
R.C.	856.54	-0.19	-0.0160		12	856.74	-0.38	-0.0160	250	24	857.12	30.00	285+54.38	30.00	856.10	24		0.0160	0.38	856.48	12	250	0.0160	0.19	856.68	R.C.
	856.38	-0.22	-0.0183	▲	12	856.60	-0.44	-0.0183		24	857.04	30.00	285+75.00	30.00	855.98	24	▲	0.0183	0.44	856.42	12		0.0183	0.22	856.64	
	856.17	-0.25	-0.0211		12	856.42	-0.51	-0.0211		24	856.93	30.00	286+00.00	30.00	855.83	24		0.0211	0.51	856.34	12		0.0211	0.25	856.59	
P.C.	855.96	-0.29	-0.0238		12	856.25	-0.57	-0.0238		24	856.82	30.00	286+24.38	30.00	855.69	24		0.0238	0.57	856.26	12		0.0238	0.29	856.55	P.C.
	855.96	-0.29	-0.0238	250	12	856.25	-0.57	-0.0238		24	856.82	30.00	286+25.00	30.00	855.69	24	250	0.0238	0.57	856.26	12		0.0238	0.29	856.55	
	855.74	-0.32	-0.0266		12	856.06	-0.64	-0.0266		24	856.70	30.00	286+50.00	30.00	855.54	24		0.0266	0.64	856.18	12		0.0266	0.32	856.50	
	855.52	-0.35	-0.0294		12	855.87	-0.71	-0.0294		24	856.58	30.00	286+75.00	30.00	855.40	24		0.0294	0.71	856.11	12		0.0294	0.35	856.46	
	855.29	-0.39	-0.0322		12	855.68	-0.77	-0.0322		24	856.45	30.00	287+00.00	30.00	855.25	24		0.0322	0.77	856.02	12		0.0322	0.39	856.41	
F.S	855.22	-0.40	-0.0330	▼	12	855.62	-0.79	-0.0330	▼	24	856.41	30.00	287+07.38	30.00	855.21	24	▼	0.0330	0.79	856.00	12	▼	0.0330	0.40	856.40	F.S.
FULL SUPERELEVATION																										
F.S.	838.46	-0.40	-0.0330	▲	12	838.86	-0.79	-0.0330	▲	24	839.65	30.00	321+95.42	30.00	839.65	24	▲	0.0330	0.79	840.44	12	▲	0.0330	0.40	840.84	F.S.
	838.50	-0.39	-0.0325		12	838.89	-0.78	-0.0325		24	839.67	30.00	322+00.00	30.00	839.67	24		0.0325	0.78	840.45	12		0.0325	0.39	840.84	
	838.70	-0.36	-0.0297		12	839.06	-0.71	-0.0297		24	839.77	30.00	322+25.00	30.00	839.77	24		0.0297	0.71	840.48	12		0.0297	0.36	840.84	
	838.91	-0.32	-0.0269	250	12	839.23	-0.65	-0.0269		24	839.88	30.00	322+50.00	30.00	839.88	24	250	0.0269	0.65	840.53	12		0.0269	0.32	840.85	
P.T.	839.07	-0.30	-0.0247		12	839.37	-0.59	-0.0247		24	839.96	30.00	322+70.12	30.00	839.96	24		0.0247	0.59	840.55	12		0.0247	0.30	840.85	P.T.
	839.11	-0.29	-0.0242		12	839.40	-0.58	-0.0242		24	839.98	30.00	322+75.00	30.00	839.98	24		0.0242	0.58	840.56	12		0.0242	0.29	840.85	
	839.32	-0.26	-0.0214		12	839.58	-0.51	-0.0214		24	840.09	30.00	323+00.00	30.00	840.09	24		0.0214	0.51	840.60	12		0.0214	0.26	840.86	
	839.52	-0.22	-0.0186	▼	12	839.74	-0.45	-0.0186		24	840.19	30.00	323+25.00	30.00	840.19	24	▼	0.0186	0.45	840.64	12		0.0186	0.22	840.86	
R.C.	839.71	-0.19	-0.0160		12	839.91	-0.38	-0.0160	250	24	840.29	30.00	323+48.42	30.00	840.29	24		0.0160	0.38	840.67	12	250	0.0160	0.19	840.87	R.C.
	839.73	-0.19	-0.0160		12	839.92	-0.38	-0.0157		24	840.30	30.00	323+50.00	30.00	840.30	24		0.0160	0.38	840.68	12		0.0155	0.19	840.87	
	839.93	-0.19	-0.0160		12	840.12	-0.28	-0.0116		24	840.40	30.00	323+75.00	30.00	840.40	24		0.0160	0.38	840.78	12		0.0071	0.09	840.87	
	840.11	-0.19	-0.0160		12	840.30	-0.19	-0.0080		24	840.49	30.00	323+96.42	30.00	840.49	24		0.0160	0.38	840.87	12		0.0000	0.00	840.87	1/2 FLAT
	840.14	-0.19	-0.0160		12	840.33	-0.18	-0.0074		24	840.51	30.00	324+00.00	30.00	840.51	24		0.0160	0.38	840.89	12		-0.0012	-0.01	840.88	
	840.34	-0.19	-0.0160		12	840.53	-0.08	-0.0032		24	840.61	30.00	324+25.00	30.00	840.61	24		0.0160	0.38	840.99	12	▼	-0.0095	-0.11	840.88	
1/2 FLAT	840.50	-0.19	-0.0160		12	840.69	0.00	0.0000		24	840.69	30.00	324+44.42	30.00	840.69	24		0.0160	0.38	841.07	12		-0.0160	-0.19	840.88	N.C.
	840.55	-0.19	-0.0160		12	840.74	0.02	0.0009		24	840.72	30.00	324+50.00	30.00	840.72	24		0.0160	0.38	841.10	12		-0.0160	-0.19	840.91	
	840.75	-0.19	-0.0160		12	840.94	0.12	0.0051		24	840.82	30.00	324+75.00	30.00	840.82	24		0.0160	0.38	841.20	12		-0.0160	-0.19	841.01	
	840.96	-0.19	-0.0160		12	841.15	0.22	0.0093		24	840.93	30.00	325+00.00	30.00	840.93	24		0.0160	0.38	841.31	12		-0.0160	-0.19	841.12	
	841.16	-0.19	-0.0160		12	841.35	0.32	0.0134	▼	24	841.03	30.00	325+25.00	30.00	841.03	24		0.0160	0.38	841.41	12		-0.0160	-0.19	841.22	
N.C.	841.29	-0.19	-0.0160		12	841.48	0.38	0.0160		24	841.10	30.00	325+40.42	30.00	841.10	24		0.0160	0.38	841.48	12		-0.0160	-0.19	841.29	

CALCULATED CDS | CHECKED GPD

SUPERELEVATION TABLE
I.R. 71 - CURVE 1

FRA-71-5.29

428
623

P:\84868\roadway\sheets\84868GE001.dgn 3/27/2015 2:35:52 PM ktahy

SUPERELEVATION TABLE

P.I. STA. 363+99.11 | Dc = 0°28'59"

REMARKS	OUTSIDE EDGE - ELEVATION	ELEVATION CORRECTION	CROSS SLOPE	TRANSITION RATE	WIDTH	CROWN LINE - ELEVATION	ELEVATION CORRECTION	CROSS SLOPE	TRANSITION RATE	WIDTH	INSIDE EDGE (PROFILE GRADE) ELEVATION	OFFSET	STATION	INSIDE EDGE (PROFILE GRADE) OFFSET	ELEVATION	- CROWN LINE WIDTH	TRANSITION RATE	CROSS SLOPE	ELEVATION CORRECTION	ELEVATION	- OUTSIDE EDGE WIDTH	TRANSITION RATE	CROSS SLOPE	ELEVATION CORRECTION	ELEVATION	REMARKS
	842.15	-0.38	-0.0160		24	842.53	0.38	0.0160		24	842.15	30	345+96.40	30	842.15	24		0.0160	0.38	842.53	20.54		-0.0160	-0.33	842.21	N.C.
	842.13	-0.38	-0.0160		24	842.51	0.38	0.0160		24	842.13	30	346+00.00	30	842.13	24	▲	0.0154	0.37	842.50	20.46		-0.0160	-0.33	842.17	
	841.99	-0.38	-0.0160		24	842.37	0.38	0.0160		24	841.99	30	346+25.00	30	841.99	24		0.0112	0.27	842.26	19.96		-0.0160	-0.32	841.94	
	841.85	-0.38	-0.0160		24	842.23	0.38	0.0160		24	841.85	30	346+50.00	30	841.85	24		0.0071	0.17	842.02	19.46		-0.0160	-0.31	841.71	
	841.71	-0.38	-0.0160		24	842.09	0.38	0.0160		24	841.71	30	346+75.00	30	841.71	24		0.0029	0.07	841.78	18.96		-0.0160	-0.30	841.48	
N.C.	841.61	-0.38	-0.0160		24	841.99	0.38	0.0160		24	841.61	30	346+92.40	30	841.61	24		0.0000	0.00	841.61	18.62		-0.0160	-0.30	841.31	1/2 FLAT
	841.63	-0.32	-0.0135		24	841.95	0.38	0.0160		24	841.57	30	347+00.00	30	841.57	24	250	-0.0013	-0.03	841.54	18.46		-0.0160	-0.30	841.24	
	841.69	-0.12	-0.0051	▲	24	841.81	0.38	0.0160		24	841.43	30	347+25.00	30	841.43	24		-0.0054	-0.13	841.30	17.96		-0.0160	-0.29	841.01	
1/2 FLAT	841.72	0.00	0.0000		24	841.72	0.38	0.0160		24	841.34	30	347+40.40	30	841.34	24		-0.0080	-0.19	841.15	17.66		-0.0160	-0.28	840.87	
	841.75	0.08	0.0032		24	841.67	0.38	0.0160		24	841.29	30	347+50.00	30	841.29	24		-0.0096	-0.23	841.06	17.46		-0.0160	-0.28	840.78	
P.C.	841.80	0.22	0.0093		24	841.57	0.38	0.0160		24	841.19	30	347+68.40	30	841.19	24		-0.0127	-0.30	840.89	17.1		-0.0160	-0.27	840.61	P.C.
	841.81	0.28	0.0115	250	24	841.53	0.38	0.0160		24	841.15	30	347+75.00	30	841.15	24		-0.0138	-0.33	840.82	16.97		-0.0160	-0.27	840.55	
R.C.	841.84	0.38	0.0160		24	841.45	0.38	0.0160		24	841.07	30	347+88.40	30	841.07	24		-0.0160	-0.38	840.69	16.71		-0.0160	-0.27	840.42	R.C.
	841.83	0.41	0.0173		24	841.42	0.41	0.0170		24	841.01	30	348+00.00	30	841.01	24		-0.0171	-0.41	840.60	16.51		-0.0173	-0.29	840.31	
F.S.	841.82	0.43	0.0180	▼	24	841.39	0.42	0.0175	250	24	840.97	30	348+06.40	30	840.97	24	▼	-0.0178	-0.43	840.54	16.4	250	-0.0180	-0.30	840.25	F.S.
													FULL SUPERELEVATION													
F.S.	823.85	0.22	0.0180	▲	12	823.63	0.43	0.0180	250	24	823.20	24	379+75.29	24	823.20	24	▲	-0.0180	-0.43	822.77	12	250	-0.0180	-0.22	822.55	F.S.
R.C.	823.68	0.19	0.0160		12	823.48	0.38	0.0160		24	823.10	24	379+93.29	24	823.10	24		-0.0160	-0.38	822.72	12	▼	-0.0160	-0.19	822.52	R.C.
	823.61	0.17	0.0138		12	823.44	0.38	0.0160		24	823.06	24	380+00.00	24	823.06	24		-0.0149	-0.36	822.70	12		-0.0160	-0.19	822.51	
P.T.	823.52	0.13	0.0106	250	12	823.39	0.38	0.0160		24	823.01	24	380+09.49	24	823.01	24		-0.0133	-0.32	822.69	12		-0.0160	-0.19	822.50	P.T.
	823.37	0.07	0.0054		12	823.30	0.38	0.0160		24	822.92	24	380+25.00	24	822.92	24		-0.0107	-0.26	822.66	12		-0.0160	-0.19	822.47	
1/2 FLAT	823.21	0.00	0.0000		12	823.21	0.38	0.0160		24	822.83	24	380+41.29	24	822.83	24	250	-0.0080	-0.19	822.64	12		-0.0160	-0.19	822.45	
	823.13	-0.03	-0.0029		12	823.16	0.38	0.0160		24	822.78	24	380+50.00	24	822.78	24		-0.0065	-0.16	822.62	12		-0.0160	-0.19	822.43	
	822.89	-0.13	-0.0112		12	823.02	0.38	0.0160		24	822.64	24	380+75.00	24	822.64	24		-0.0024	-0.06	822.58	12		-0.0160	-0.19	822.39	
N.C.	822.75	-0.19	-0.0160	▼	12	822.94	0.38	0.0160		24	822.56	24	380+89.29	24	822.56	24		0.0000	0.00	822.56	12		-0.0160	-0.19	822.37	1/2 FLAT
	822.69	-0.19	-0.0160		12	822.88	0.38	0.0160		24	822.50	24	381+00.00	24	822.50	24		0.0018	0.04	822.54	12		-0.0160	-0.19	822.35	
	822.55	-0.19	-0.0160		12	822.74	0.38	0.0160		24	822.36	24	381+25.00	24	822.36	24		0.0060	0.14	822.50	12		-0.0160	-0.19	822.31	
	822.41	-0.19	-0.0160		12	822.60	0.38	0.0160		24	822.22	24	381+50.00	24	822.22	24		0.0101	0.24	822.46	12		-0.0160	-0.19	822.27	
	822.27	-0.19	-0.0160		12	822.46	0.38	0.0160		24	822.08	24	381+75.00	24	822.08	24		0.0143	0.34	822.42	12		-0.0160	-0.19	822.23	
	822.21	-0.19	-0.0160		12	822.40	0.38	0.0160		24	822.02	24	381+85.29	24	822.02	24	▼	0.0160	0.38	822.40	12		-0.0160	-0.19	822.21	N.C.

CALCULATED CDS | CHECKED GPD

SUPERELEVATION TABLE
I.R. 71 - CURVE 2

FRA-71-5.29

P:\84868\roadway\sheets\84868GE002.dgn 3/27/2015 2:35:53 PM kfahy

SUPERELEVATION TABLE

P.I. STA. 472+61.69 | Dc = 0°29'02"

REMARKS	OUTSIDE EDGE - ELEVATION	ELEVATION CORRECTION	CROSS SLOPE	TRANSITION RATE	WIDTH	CROWN LINE - ELEVATION	ELEVATION CORRECTION	CROSS SLOPE	TRANSITION RATE	WIDTH	INSIDE EDGE (PROFILE GRADE) ELEVATION	OFFSET	STATION	INSIDE EDGE (PROFILE GRADE) OFFSET	ELEVATION	- CROWN LINE WIDTH	TRANSITION RATE	CROSS SLOPE	ELEVATION CORRECTION	ELEVATION	- OUTSIDE EDGE WIDTH	TRANSITION RATE	CROSS SLOPE	ELEVATION CORRECTION	ELEVATION	REMARKS
N.C.	788.94	-0.19	-0.0160		12	789.13	0.38	0.0160	▲	24	788.75	24	450+56.81	24	788.75	24		0.0160	0.38	789.13	12		-0.0160	-0.19	788.94	
	788.79	-0.19	-0.0160		12	788.98	0.31	0.0130		24	788.67	24	450+75.00	24	788.67	24		0.0160	0.38	789.05	12		-0.0160	-0.19	788.86	
	788.58	-0.19	-0.0160		12	788.77	0.21	0.0088		24	788.56	24	451+00.00	24	788.56	24		0.0160	0.38	788.94	12		-0.0160	-0.19	788.75	
	788.37	-0.19	-0.0160		12	788.56	0.11	0.0046		24	788.45	24	451+25.00	24	788.45	24		0.0160	0.38	788.83	12		-0.0160	-0.19	788.64	
	788.16	-0.19	-0.0160		12	788.35	0.01	0.0005		24	788.34	24	451+50.00	24	788.34	24		0.0160	0.38	788.72	12		-0.0160	-0.19	788.53	
1/2 FLAT	788.13	-0.19	-0.0160		12	788.32	0.00	0.0000	250	24	788.32	24	451+52.81	24	788.32	24		0.0160	0.38	788.70	12	▲	-0.0160	-0.19	788.51	N.C.
	787.95	-0.19	-0.0160		12	788.14	-0.09	-0.0037		24	788.23	24	451+75.00	24	788.23	24		0.0160	0.38	788.61	12		-0.0086	-0.10	788.51	
	787.74	-0.19	-0.0160		12	787.93	-0.19	-0.0079		24	788.12	24	452+00.00	24	788.12	24		0.0160	0.38	788.50	12		-0.0003	0.00	788.50	
	787.73	-0.19	-0.0160		12	787.92	-0.19	-0.0080		24	788.11	24	452+00.81	24	788.11	24		0.0160	0.38	788.49	12		0.0000	0.00	788.49	1/2 FLAT
	787.53	-0.19	-0.0160		12	787.72	-0.29	-0.0120		24	788.01	24	452+25.00	24	788.01	24		0.0160	0.38	788.39	12	250	0.0081	0.10	788.49	
P.C.	787.49	-0.19	-0.0160		12	787.69	-0.30	-0.0127		24	787.99	24	452+28.81	24	787.99	24		0.0160	0.38	788.37	12		0.0093	0.11	788.49	P.C.
R.C.	787.32	-0.19	-0.0160		12	787.52	-0.38	-0.0160		24	787.90	24	452+48.81	24	787.90	24		0.0160	0.38	788.28	12		0.0160	0.19	788.48	R.C.
	787.32	-0.19	-0.0161	250 ▲▼	12	787.51	-0.39	-0.0161		24	787.90	24	452+50.00	24	787.90	24	250 ▲▼	0.0161	0.39	788.29	12		0.0161	0.19	788.48	
F.S.	787.17	-0.22	-0.0180		12	787.39	-0.43	-0.0180	▼	24	787.82	24	452+66.81	24	787.82	24		0.0180	0.43	788.25	12	▼	0.0180	0.22	788.47	F.S.
FULL SUPERELEVATION																										
F.S.	766.08	-0.22	-0.0180	250 ▲▼	12	766.30	-0.43	-0.0180	▲	24	766.73	30	492+21.13	30	766.73	24	250 ▲▼	0.0180	0.43	767.16	12	▲	0.0180	0.22	767.38	F.S.
	766.10	-0.21	-0.0176		12	766.31	-0.42	-0.0176		24	766.73	30	492+25.00	30	766.73	24		0.0176	0.42	767.15	12		0.0176	0.21	767.36	
R.C.	766.11	-0.19	-0.0160		12	766.31	-0.38	-0.0160		24	766.69	30	492+39.13	30	766.69	24		0.0160	0.38	767.07	12		0.0160	0.19	767.27	R.C.
	766.14	-0.19	-0.0160		12	766.33	-0.34	-0.0142		24	766.67	30	492+50.00	30	766.67	24		0.0160	0.38	767.05	12		0.0124	0.15	767.20	
P.T.	766.15	-0.19	-0.0160		12	766.34	-0.32	-0.0133		24	766.66	30	492+55.33	30	766.66	24		0.0160	0.38	767.04	12		0.0106	0.13	767.17	P.T.
	766.20	-0.19	-0.0160		12	766.39	-0.24	-0.0100		24	766.63	30	492+75.00	30	766.63	24		0.0160	0.38	767.01	12	250	0.0040	0.05	767.06	
	766.22	-0.19	-0.0160		12	766.41	-0.19	-0.0080		24	766.60	30	492+87.13	30	766.60	24		0.0160	0.38	766.98	12		0.0000	0.00	766.98	1/2 FLAT
	766.25	-0.19	-0.0160		12	766.44	-0.14	-0.0059		24	766.58	30	493+00.00	30	766.58	24		0.0160	0.38	766.96	12	▼	-0.0043	-0.05	766.91	
	766.32	-0.19	-0.0160		12	766.51	-0.04	-0.0017		24	766.55	30	493+25.00	30	766.55	24		0.0160	0.38	766.93	12		-0.0126	-0.15	766.78	
1/2 FLAT	766.35	-0.19	-0.0160		12	766.54	0.00	0.0000		24	766.54	30	493+35.13	30	766.54	24		0.0160	0.38	766.92	12		-0.0160	-0.19	766.73	N.C.
	766.39	-0.19	-0.0160		12	766.58	0.06	0.0025		24	766.52	30	493+50.00	30	766.52	24		0.0160	0.38	766.90	12		-0.0160	-0.19	766.71	
	766.47	-0.19	-0.0160		12	766.66	0.16	0.0066		24	766.50	30	493+75.00	30	766.50	24		0.0160	0.38	766.88	12		-0.0160	-0.19	766.69	
	766.55	-0.19	-0.0160		12	766.74	0.26	0.0108		24	766.48	30	494+00.00	30	766.48	24		0.0160	0.38	766.86	12		-0.0160	-0.19	766.67	
	766.64	-0.19	-0.0160		12	766.83	0.36	0.0150		24	766.47	30	494+25.00	30	766.47	24		0.0160	0.38	766.85	12		-0.0160	-0.19	766.66	
N.C.	766.66	-0.19	-0.0160		12	766.85	0.38	0.0160		24	766.47	30	494+31.13	30	766.47	24		0.0160	0.38	766.85	12		-0.0160	-0.19	766.66	

CALCULATED CDS | CHECKED GPD

SUPERELEVATION TABLE
I.R. 71 - CURVE 3

FRA-71-5.29

430
623

P:\84868\roadway\sheets\84868GE003.dgn 3/27/2015 2:35:53 PM kfahy

RAMP A SUPERELEVATION TABLE

P.I. STA. 495+81.80 | Dc = 6°30'00"

LEFT SIDE					CENTERLINE CONTROL		RIGHT SIDE					REMARKS
EDGE ELEVATION	TRANSITION RATE	ELEVATION CORRECTION	CROSS SLOPE	WIDTH	STATION	PROFILE GRADE	WIDTH	CROSS SLOPE	ELEVATION CORRECTION	TRANSITION RATE	EDGE ELEVATION	
					SEE INTERCHANGE DETAILS							
					497+97.55	*771.61*	*16*	*0.0600*	*0.96*		*772.57*	*F.S.*
					498+00.00	*771.70*	*16*	*0.0592*	*0.95*		*772.65*	
					498+25.00	*772.69*	*16*	*0.0514*	*0.82*		*773.52*	
					498+50.00	*773.75*	*16*	*0.0436*	*0.70*		*774.45*	
					498+61.55	*774.25*	*16*	*0.0400*	*0.64*	*200*	*774.89*	*P.T.*
					498+75.00	*774.84*	*16*	*0.0358*	*0.57*		*775.41*	
					499+00.00	*775.93*	*16*	*0.0280*	*0.45*		*776.38*	
					499+25.00	*777.02*	*16*	*0.0202*	*0.32*		*777.34*	
					499+38.35	*777.60*	*16*	*0.0160*	*0.26*		*777.86*	*N.C.*

RAMP D SUPERELEVATION TABLE

P.I. STA. 494+93.62 | Dc = 4°00'00"

REMARKS	LEFT SIDE					CENTERLINE CONTROL		RIGHT SIDE				
	EDGE ELEVATION	TRANSITION RATE	ELEVATION CORRECTION	CROSS SLOPE	WIDTH	STATION	PROFILE GRADE	WIDTH	CROSS SLOPE	ELEVATION CORRECTION	TRANSITION RATE	EDGE ELEVATION
						SEE INTERCHANGE DETAILS						
	766.82		*0.22*	*0.0140*	*16*	*491+01.89*	*766.60*					
	766.66		*0.22*	*0.0140*	*16*	*491+25.00*	*766.43*					
F.S.	*766.51*		*0.22*	*0.0140*	*16*	*491+44.56*	*766.29*					
	766.50		*0.25*	*0.0157*	*16*	*491+50.00*	*766.25*					
	766.45		*0.38*	*0.0235*	*16*	*491+75.00*	*766.07*					
	766.39	*200*	*0.50*	*0.0313*	*16*	*492+00.00*	*765.89*					
P.C.C.	*766.36*		*0.55*	*0.0347*	*16*	*492+10.69*	*765.81*					
	766.31		*0.68*	*0.0422*	*16*	*492+34.78*	*765.64*					
	766.28		*0.75*	*0.0470*	*16*	*492+50.00*	*765.53*					
F.S.	*766.24*		*0.83*	*0.0520*	*16*	*492+66.16*	*765.41*					
						FULL SUPERELEVATION						
F.S.	*768.72*		*0.83*	*0.0520*	*16*	*497+13.89*	*767.89*					
	768.82		*0.78*	*0.0485*	*16*	*497+25.00*	*768.05*					
	769.06		*0.65*	*0.0407*	*16*	*497+50.00*	*768.41*					
P.T.	*769.24*		*0.55*	*0.0347*	*16*	*497+69.36*	*768.69*					
	769.29		*0.53*	*0.0329*	*16*	*497+75.00*	*768.77*					
	769.53		*0.40*	*0.0251*	*16*	*498+00.00*	*769.13*					
	769.76	*200*	*0.28*	*0.0173*	*16*	*498+25.00*	*769.49*					
	770.00		*0.15*	*0.0095*	*16*	*498+50.00*	*769.85*					
	770.23		*0.03*	*0.0017*	*16*	*498+75.00*	*770.21*					
FLAT	*770.29*		*0.00*	*0.0000*	*16*	*498+80.38*	*770.29*					
	770.47		*-0.10*	*-0.0062*	*16*	*499+00.00*	*770.57*					
	770.70		*-0.22*	*-0.0140*	*16*	*499+25.00*	*770.93*					
N.C.	*770.76*		*-0.26*	*-0.0160*	*16*	*499+31.49*	*771.02*					

RAMP D SUPERELEVATION TABLE

P.I. STA. 504+42.18 | Dc = 8°00'00"

REMARKS	LEFT SIDE					CENTERLINE CONTROL		RIGHT SIDE				
	EDGE ELEVATION	TRANSITION RATE	ELEVATION CORRECTION	CROSS SLOPE	WIDTH	STATION	PROFILE GRADE	WIDTH	CROSS SLOPE	ELEVATION CORRECTION	TRANSITION RATE	EDGE ELEVATION
N.C.	*773.83*		*-0.26*	*-0.0160*	*16*	*501+44.30*	*774.09*					
	773.88		*-0.29*	*-0.0182*	*16*	*501+50.00*	*774.17*					
	774.07	*161*	*-0.45*	*-0.0279*	*16*	*501+75.00*	*774.52*					
P.C.	*774.15*		*-0.51*	*-0.0320*	*16*	*501+85.51*	*774.66*					
	774.25		*-0.60*	*-0.0376*	*16*	*502+00.00*	*774.85*					
F.S.	*774.41*		*-0.77*	*-0.0480*	*16*	*502+26.73*	*775.18*					
						FULL SUPERELEVATION						
F.S.	*777.88*		*-0.77*	*-0.0480*	*16*	*506+16.60*	*778.65*					
	778.01		*-0.72*	*-0.0447*	*16*	*506+25.00*	*778.72*					
	778.37		*-0.56*	*-0.0350*	*16*	*506+50.00*	*778.93*					
	778.73		*-0.41*	*-0.0253*	*16*	*506+75.00*	*779.14*					
P.T.	*778.79*	*161*	*-0.38*	*-0.0240*	*16*	*506+78.43*	*779.17*					
	779.10		*-0.25*	*-0.0156*	*16*	*507+00.00*	*779.35*					
	779.46		*-0.09*	*-0.0059*	*16*	*507+25.00*	*779.55*					
FLAT	*779.68*		*0.00*	*0.0000*	*16*	*507+40.25*	*779.68*					
						SEE INTERSECTION DETAILS						

CALCULATED CDS | CHECKED GPD

SUPERELEVATION TABLE
C.R. 135 - RAMPS A & D

FRA-71-5.29

431
623

P:\84868\roadway\sheets\84868GE004.dgn 3/27/2015 2:35:54 PM kfahy

I.R. 71
P.I. Sta. 305+11.40
Δ = 36° 28′ 21″ (LT)
Dc = 1° 00′ 01″
R = 5,727.20′
T = 1,887.03′
L = 3,645.74′
E = 302.87′
C = 3,584.50′
C.B. = N 49° 24′ 36″ E
e max = 0.033

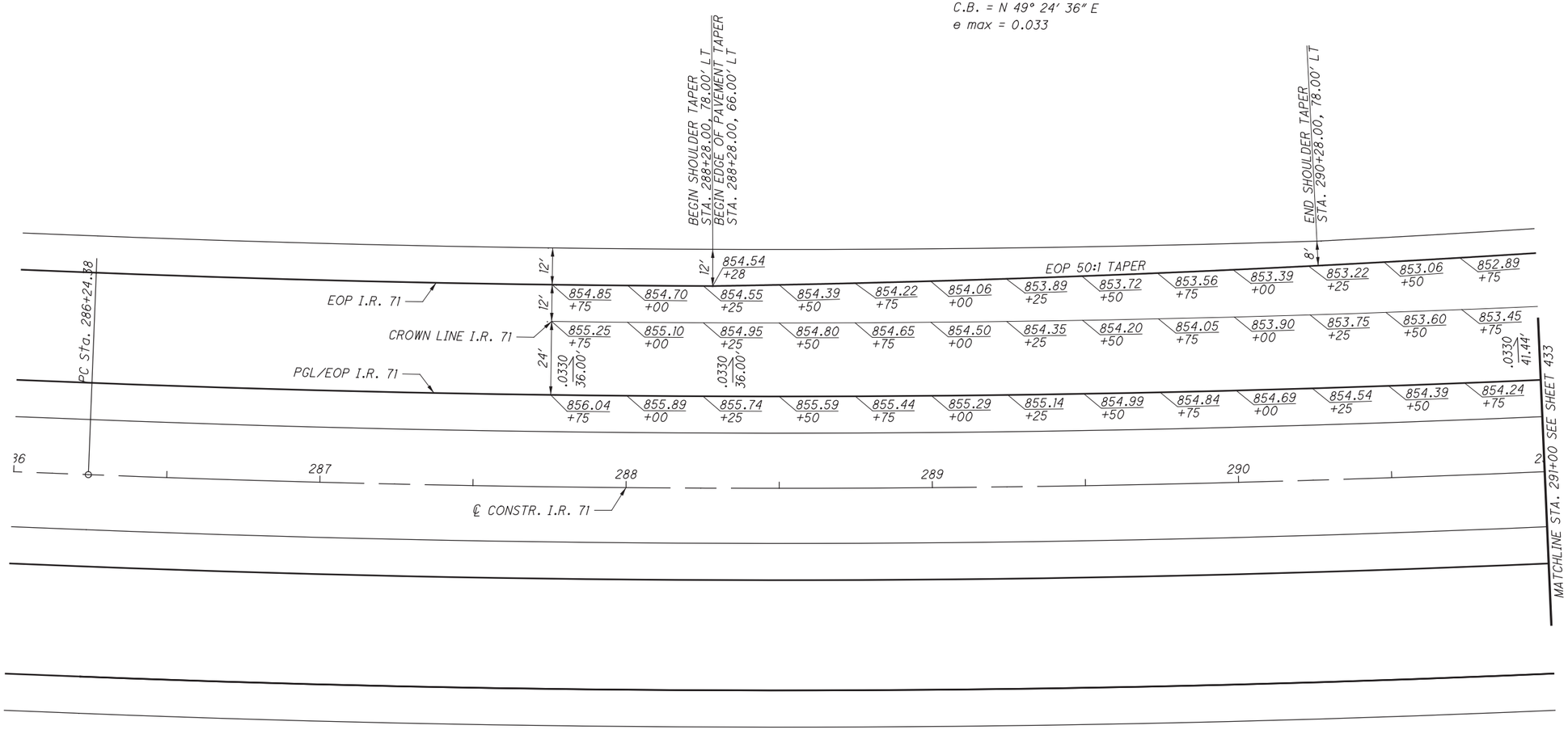

P:\84868\roadway\sheets\84868GI201.dgn 3/27/2015 2:35:55 PM kfahy

HORIZONTAL SCALE IN FEET
0 10 20 40

CALCULATED DWB
CHECKED BAL

INTERCHANGE DETAILS
RAMPS C & D AT S.R. 665

FRA-71-5.29

I.R. 71
P.I. Sta. 305+11.40
Δ = 36° 28′ 21″ (LT)
Dc = 1° 00′ 01″
R = 5,727.20′
T = 1,887.03′
L = 3,645.74′
E = 302.87′
C = 3,584.50′
C.B. = N 49° 24′ 36″ E
e max = 0.033

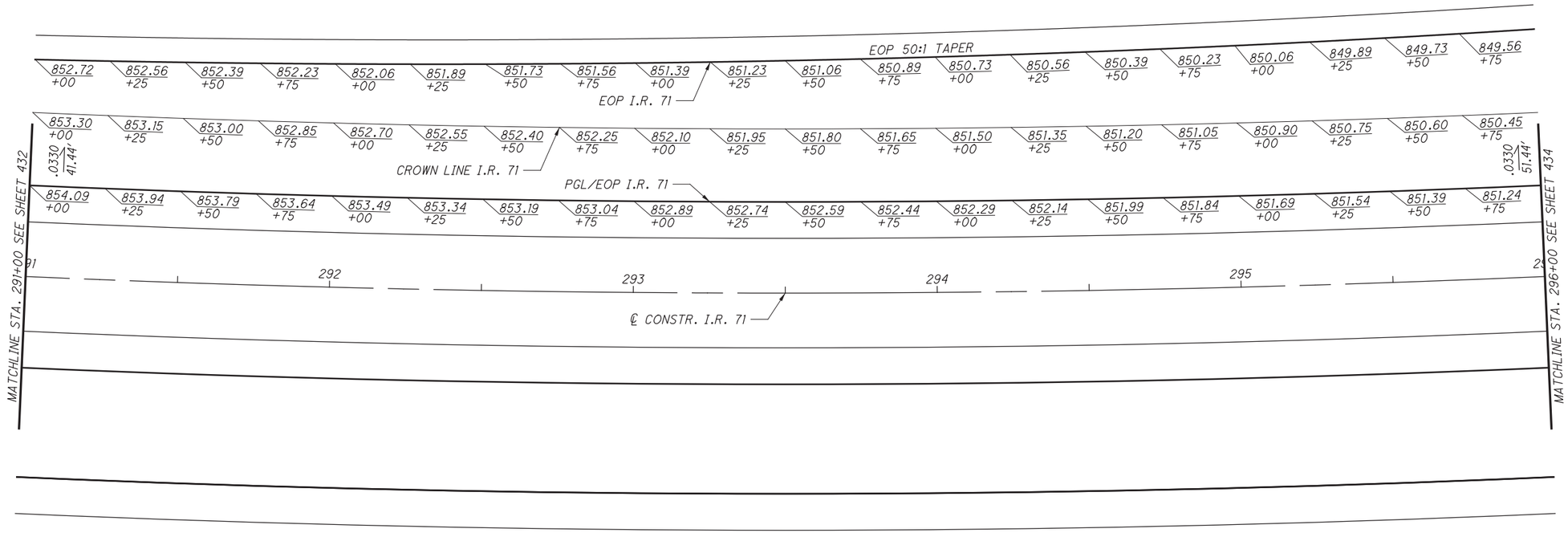

HORIZONTAL SCALE IN FEET
0 10 20 40

CALCULATED DWB
CHECKED BAL

INTERCHANGE DETAILS
RAMPS C & D AT S.R. 665

FRA-71-5.29

I.R. 71
P.I. Sta. 305+11.40
Δ = 36° 28′ 21″ (LT)
Dc = 1° 00′ 01″
R = 5,727.20′
T = 1,887.03′
L = 3,645.74′
E = 302.87′
C = 3,584.50′
C.B. = N 49° 24′ 36″ E
e max = 0.033

RAMP C AT S.R. 665
P.I. Sta. 303+66.55
Δ = 5° 50′ 42″ (LT)
Dc = 1° 00′ 49″
R = 5,652.20′
T = 288.55′
L = 576.59′
E = 7.36′
C = 576.34′
C.B. = N 50° 10′ 54″ E
e max = 0.033

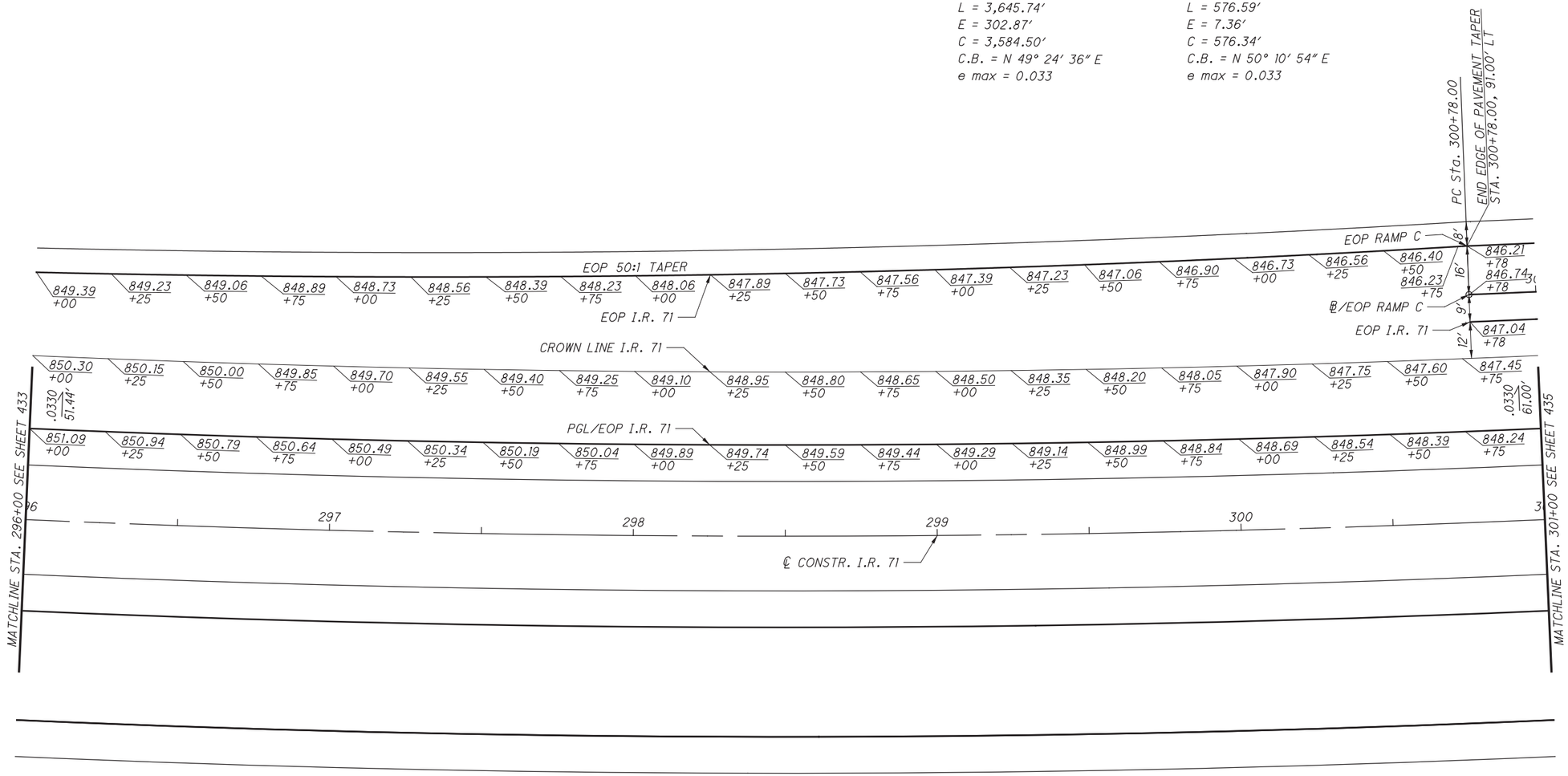

P:\84868\roadway\sheets\84868GI203.dgn 3/27/2015 2:35:56 PM kfahy

CALCULATED DWB
CHECKED BAL

HORIZONTAL SCALE IN FEET
0 10 20 40

INTERCHANGE DETAILS
RAMPS C & D AT S.R. 665

FRA-71-5.29

I.R. 71
P.I. Sta. 305+11.40
Δ = 36° 28′ 21″ (LT)
Dc = 1° 00′ 01″
R = 5,727.20′
T = 1,887.03′
L = 3,645.74′
E = 302.87′
C = 3,584.50′
C.B. = N 49° 24′ 36″ E
e max = 0.033

RAMP C AT S.R. 665
P.I. Sta. 303+66.55
Δ = 5° 50′ 42″ (LT)
Dc = 1° 00′ 49″
R = 5,652.20′
T = 288.55′
L = 576.59′
E = 7.36′
C = 576.34′
C.B. = N 50° 10′ 54″ E
e max = 0.033

RAMP D AT S.R. 665
P.I. Sta. 306+44.21
Δ = 2° 50′ 46″ (LT)
Dc = 0° 59′ 13″
R = 5,805.20′
T = 144.21′
L = 288.36′
E = 1.79′
C = 288.33′
C.B. = N 47° 27′ 33″ E
e max = 0.033

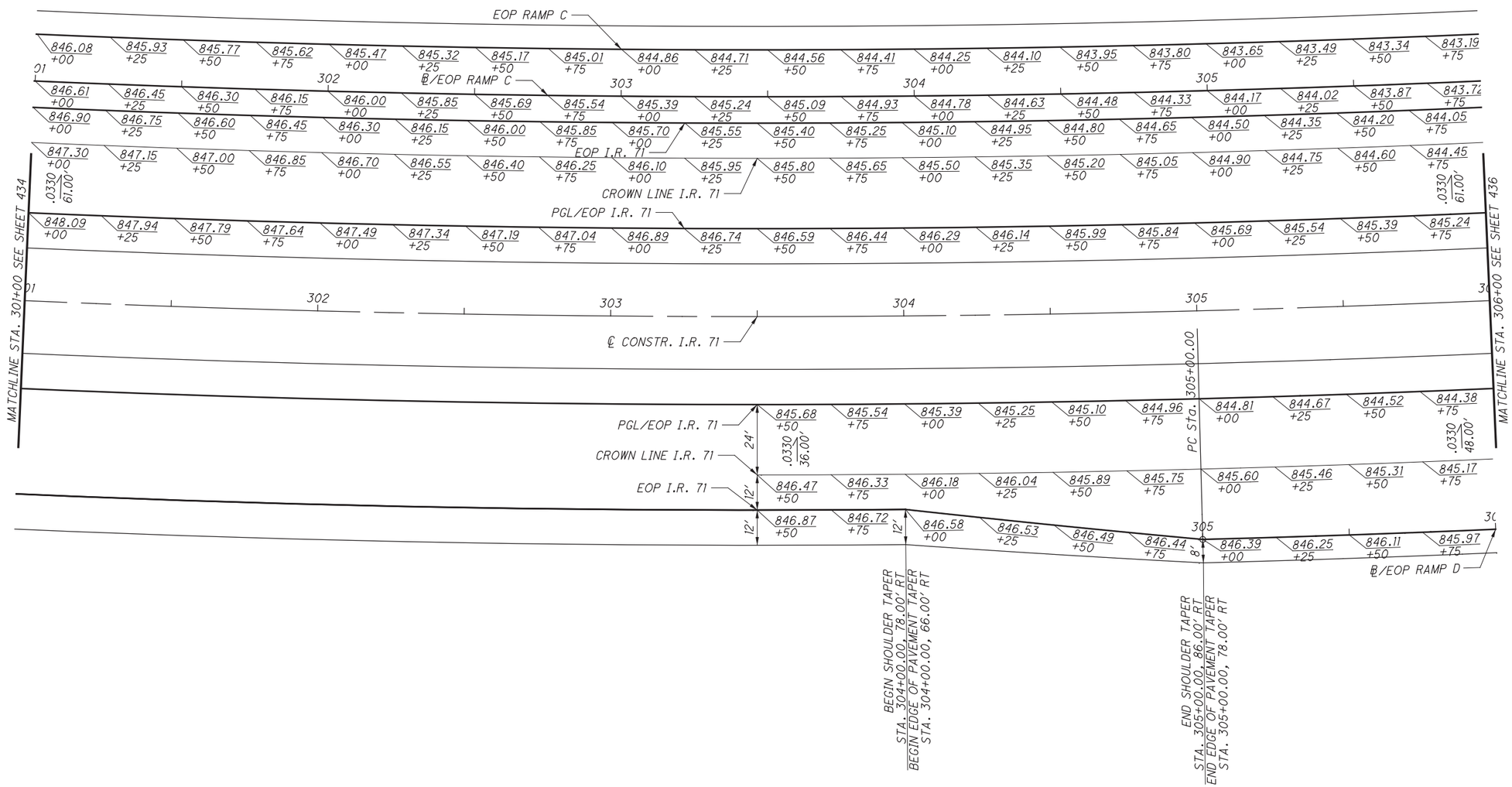

HORIZONTAL SCALE IN FEET
0 10 20 40

CALCULATED DWB
CHECKED BAL

INTERCHANGE DETAILS
RAMPS C & D AT S.R. 665

FRA-71-5.29

P:\84868\roadway\sheets\84868GI204.dgn 3/27/2015 2:35:56 PM kfahy

I.R. 71
P.I. Sta. 305+11.40
Δ = 36° 28′ 21″ (LT)
Dc = 1° 00′ 01″
R = 5,727.20′
T = 1,887.03′
L = 3,645.74′
E = 302.87′
C = 3,584.50′
C.B. = N 49° 24′ 36″ E
e max = 0.033

RAMP C AT S.R. 665
P.I. Sta. 303+66.55
Δ = 5° 50′ 42″ (LT)
Dc = 1° 00′ 49″
R = 5,652.20′
T = 288.55′
L = 576.59′
E = 7.36′
C = 576.34′
C.B. = N 50° 10′ 54″ E
e max = 0.033

RAMP C AT S.R. 665
P.I. Sta. 309+44.10
Δ = 16° 28′ 24″ (LT)
Dc = 2° 51′ 53″
R = 2,000.00′
T = 289.51′
L = 575.03′
E = 20.85′
C = 573.05′
C.B. = N 39° 01′ 21″ E
e max = 0.055

RAMP D AT S.R. 665
P.I. Sta. 306+44.21
Δ = 2° 50′ 46″ (LT)
Dc = 0° 59′ 13″
R = 5,805.20′
T = 144.21′
L = 288.36′
E = 1.79′
C = 288.33′
C.B. = N 47° 27′ 33″ E
e max = 0.033

RAMP D AT S.R. 665
P.I. Sta. 309+09.83
Δ = 1° 20′ 10″ (RT)
Dc = 0° 33′ 00″
R = 10,417.41′
T = 121.47′
L = 242.93′
E = 0.71′
C = 242.92′
C.B. = N 46° 42′ 16″ E
e max = 0.016

RAMP D AT S.R. 665
P.I. Sta. 311+59.68
Δ = 3° 12′ 33″ (RT)
Dc = 1° 15′ 00″
R = 4,583.66′
T = 128.40′
L = 256.72′
E = 1.80′
C = 256.69′
C.B. = N 48° 58′ 37″ E
e max = 0.024

HORIZONTAL SCALE IN FEET
0 10 20 40
CALCULATED DWB
CHECKED BAL

INTERCHANGE DETAILS
RAMPS C & D AT S.R. 665

FRA-71-5.29

436
623

P:\84868\roadway\sheets\84868GI205.dgn 3/27/2015 2:35:57 PM kfahy

I.R. 71
P.I. Sta. 305+11.40
Δ = 36° 28′ 21″ (LT)
Dc = 1° 00′ 01″
R = 5,727.20′
T = 1,887.03′
L = 3,645.74′
E = 302.87′
C = 3,584.50′
C.B. = N 49° 24′ 36″ E
e max = 0.033

RAMP D AT S.R. 665
P.I. Sta. 311+59.68
Δ = 3° 12′ 33″ (RT)
Dc = 1° 15′ 00″
R = 4,583.66′
T = 128.40′
L = 256.72′
E = 1.80′
C = 256.69′
C.B. = N 48° 58′ 37″ E
e max = 0.024

RAMP D AT S.R. 665
P.I. Sta. 314+50.20
Δ = 9° 42′ 16″ (RT)
Dc = 2° 59′ 56″
R = 1,910.50′
T = 162.19′
L = 323.59′
E = 6.87′
C = 323.21′
C.B. = N 55° 26′ 01″ E
e max = 0.024

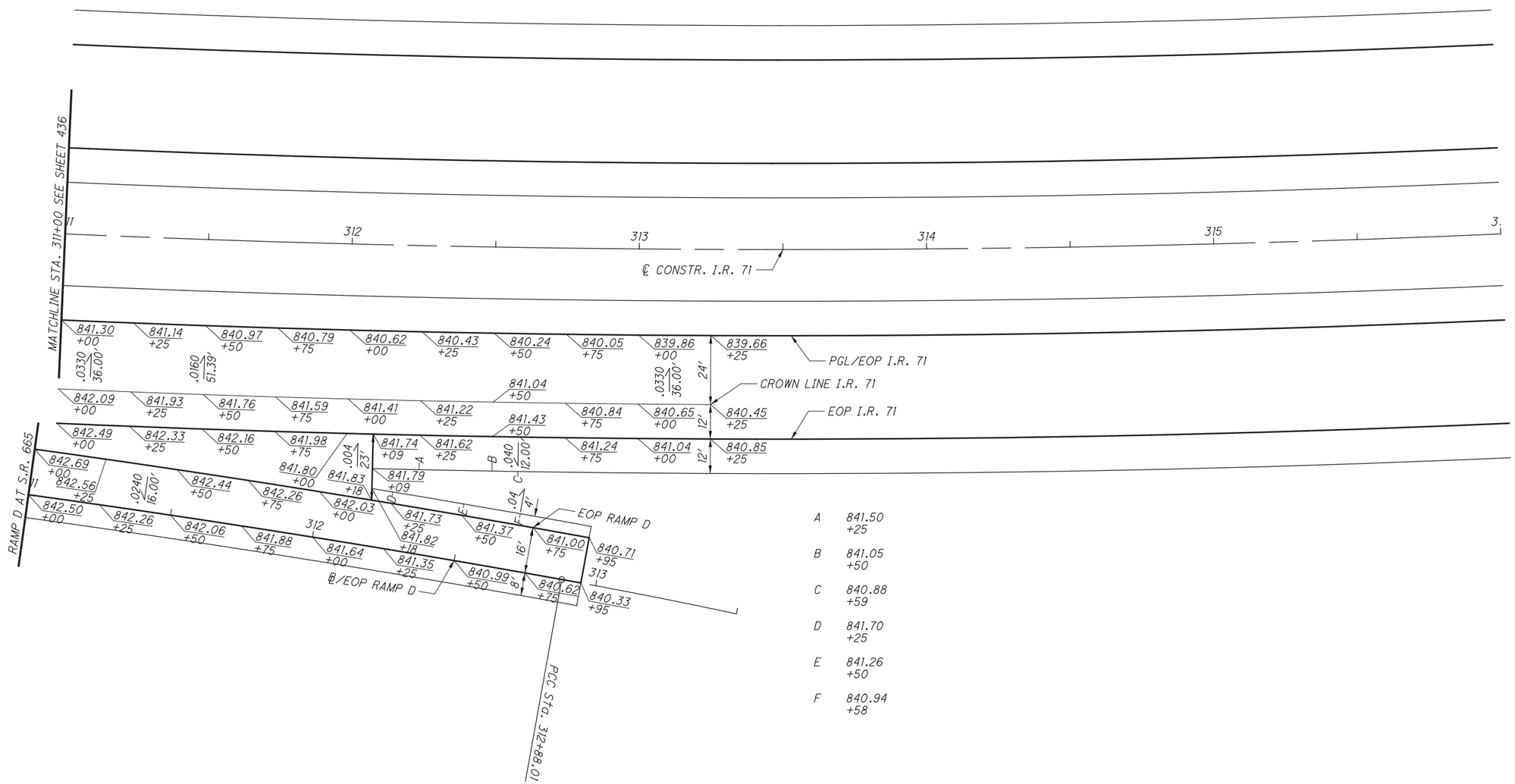

A	841.50 +25
B	841.05 +50
C	840.88 +59
D	841.70 +25
E	841.26 +50
F	840.94 +58

HORIZONTAL SCALE IN FEET
0 10 20 40

CALCULATED DWB
CHECKED BAL

INTERCHANGE DETAILS
RAMPS C & D AT S.R. 665

FRA-71-5.29

437
623

P:\84868\roadway\sheets\84868GI206.dgn 3/27/2015 2:35:57 PM kfahy

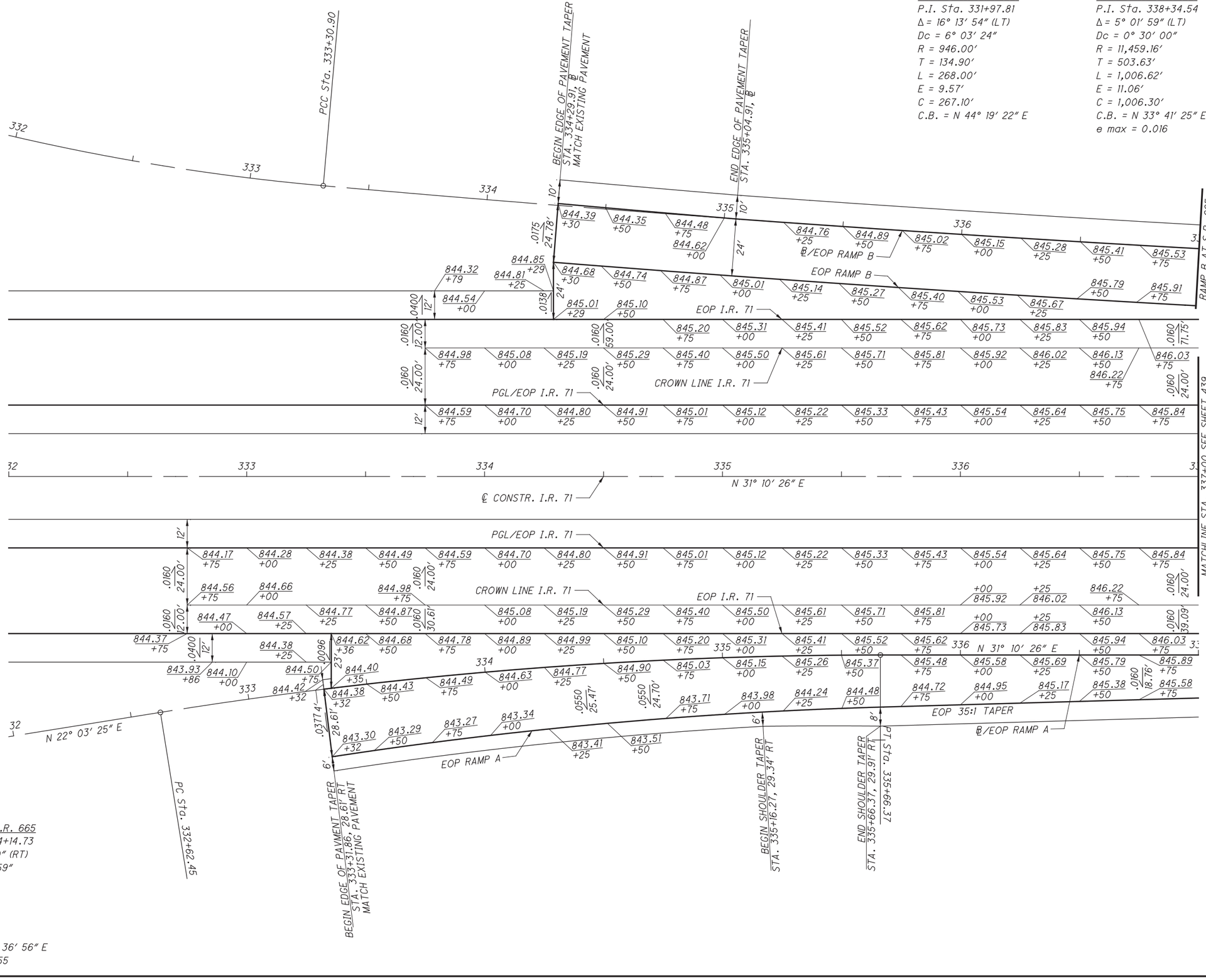

HORIZONTAL SCALE IN FEET

CALCULATED DWB
CHECKED BAL

INTERCHANGE DETAILS
RAMPS A & B AT S.R. 665

FRA-71-5.29

438
623

P:\84868\roadway\sheets\84868GI207.dgn 3/27/2015 2:35:58 PM kfahy

RAMP B AT S.R. 665
P.I. Sta. 338+34.54
Δ = 5° 01′ 59″ (LT)
Dc = 0° 30′ 00″
R = 11,459.16′
T = 503.63′
L = 1,006.62′
E = 11.06′
C = 1,006.30′
C.B. = N 33° 41′ 25″ E
e max = 0.016

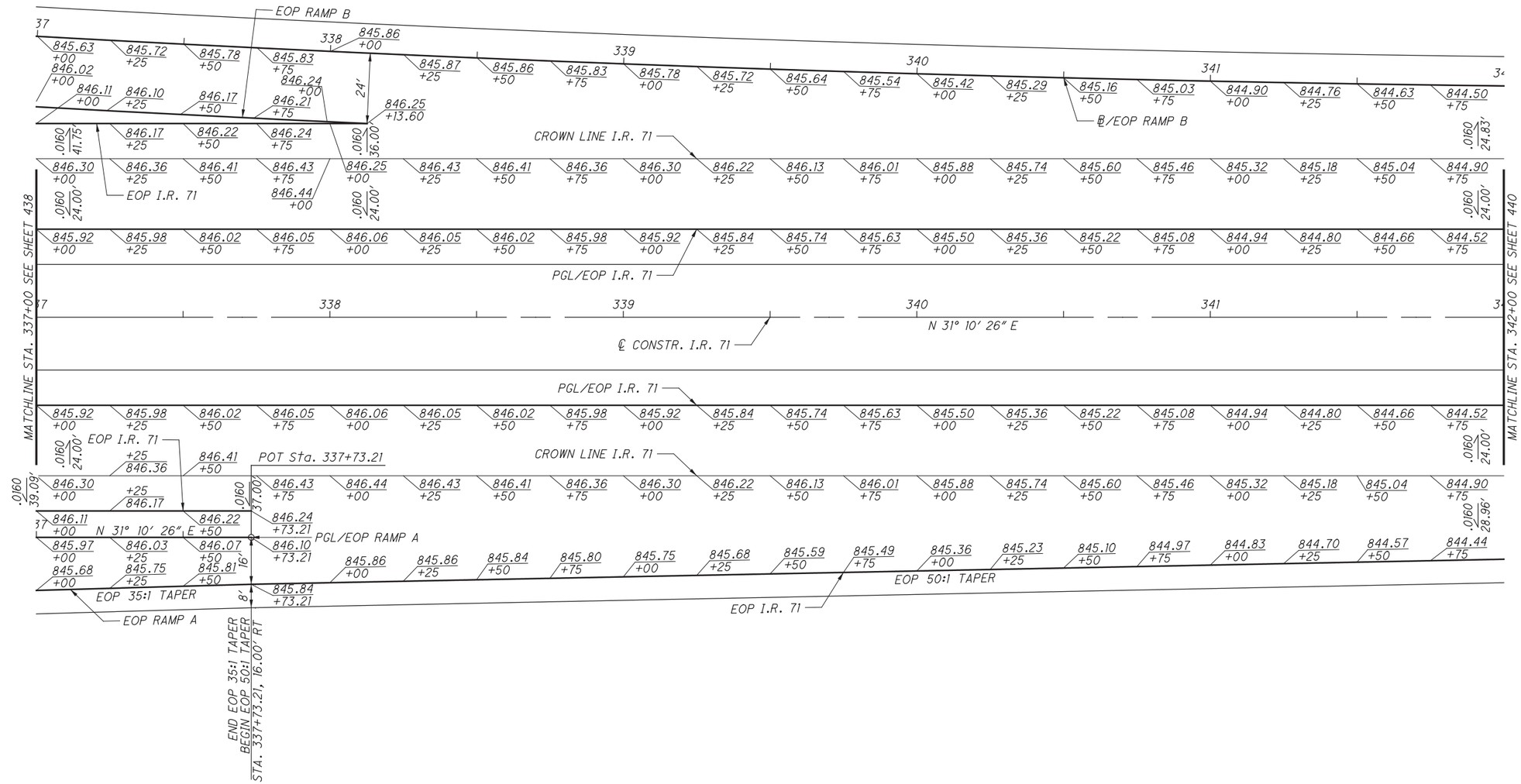

HORIZONTAL SCALE IN FEET
0 10 20 40

CALCULATED DWB
CHECKED BAL

INTERCHANGE DETAILS
RAMPS A & B AT S.R. 665

FRA-71-5.29

439
623

P:\84868\roadway\sheets\84868GI208.dgn 3/27/2015 2:35:58 PM kfahy

RAMP B AT S.R. 665
P.I. Sta. 338+34.54
Δ = 5° 01′ 59″ (LT)
Dc = 0° 30′ 00″
R = 11,459.16′
T = 503.63′
L = 1,006.62′
E = 11.06′
C = 1,006.30′
C.B. = N 33° 41′ 25″ E
e max = 0.016

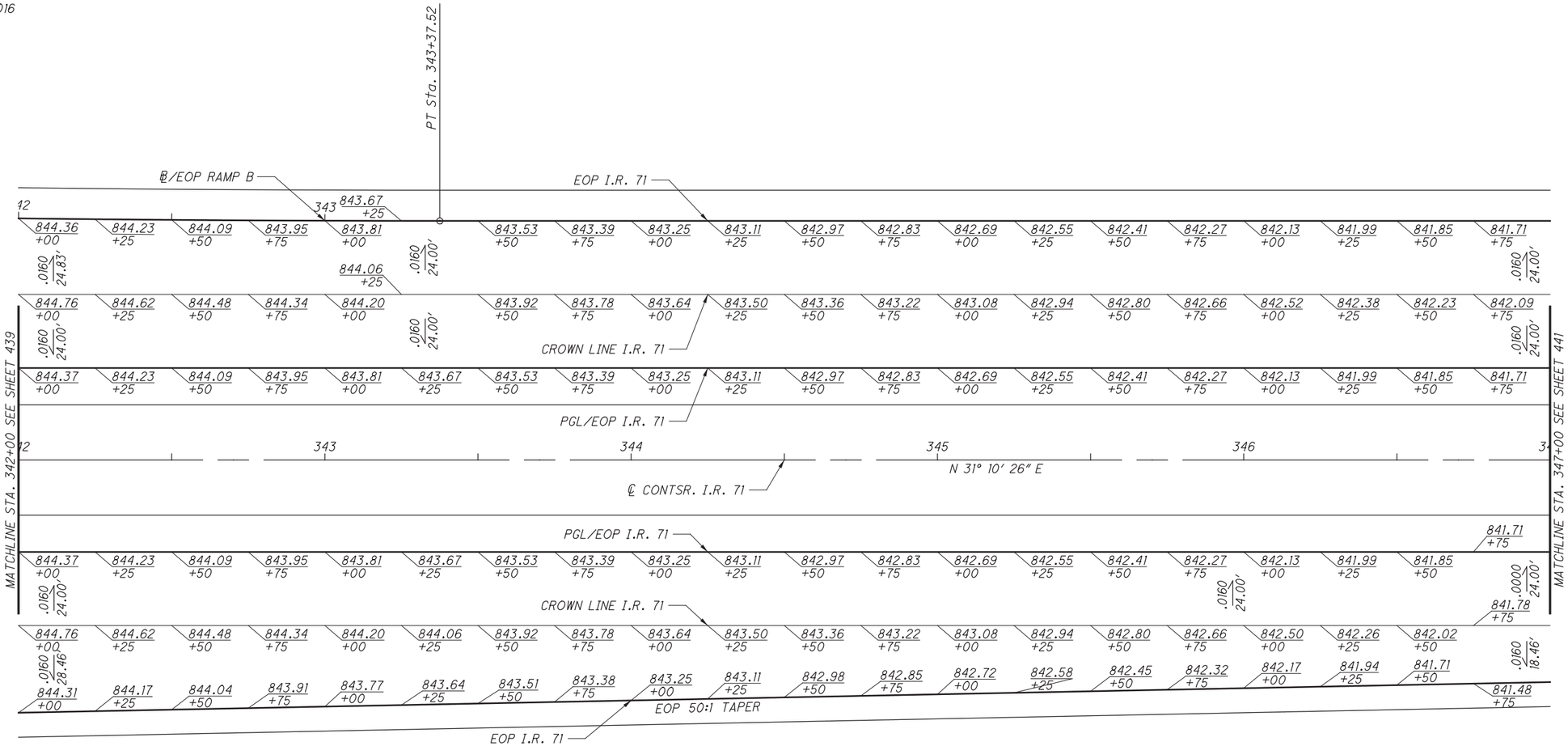

P:\84868\roadway\sheets\84868GI209.dgn 3/27/2015 2:35:59 PM kfahy

HORIZONTAL SCALE IN FEET
0 10 20 40
CALCULATED DWB
CHECKED BAL

INTERCHANGE DETAILS
RAMPS A & B AT S.R. 665

FRA-71-5.29

I.R. 71
P.I. Sta. 363+99.11
Δ = 15° 39′ 29″ (RT)
Dc = 0° 28′ 59″
R = 11,859.72′
T = 1,630.71′
L = 3,241.09′
E = 111.59′
C = 3,231.02′
C.B. = N 39° 00′ 10″ E
e max = 0.018

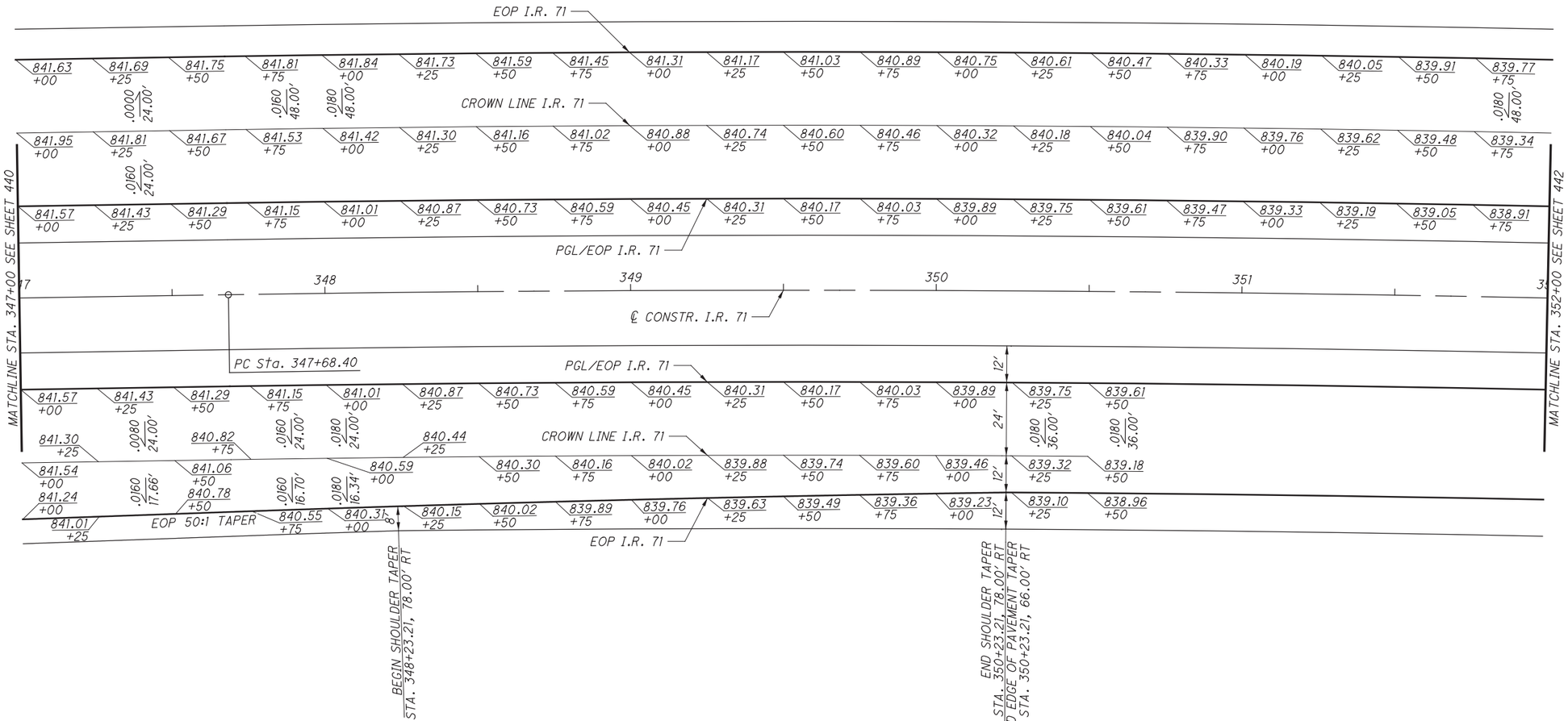

P:\84868\roadway\sheets\84868GI210.dgn 3/27/2015 2:36:00 PM kfahy

HORIZONTAL SCALE IN FEET
0 10 20 40
CALCULATED DWB
CHECKED BAL

INTERCHANGE DETAILS
RAMPS C & D AT S.R. 665

FRA-71-5.29

441
623

I.R. 71
P.I. Sta. 363+99.11
Δ = 15° 39′ 29″ (RT)
Dc = 0° 28′ 59″
R = 11,859.72′
T = 1,630.71′
L = 3,241.09′
E = 111.59′
C = 3,231.02′
C.B. = N 39° 00′ 10″ E
e max = 0.018

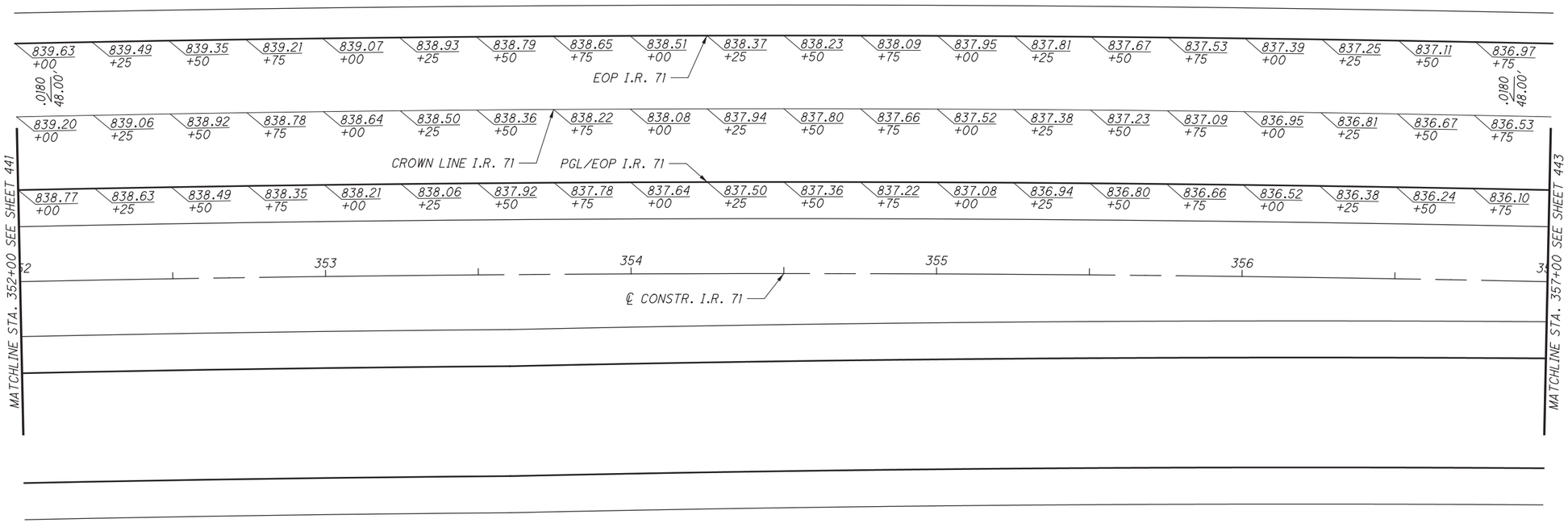

HORIZONTAL SCALE IN FEET
0 10 20 40

CALCULATED DWB
CHECKED BAL

INTERCHANGE DETAILS
RAMPS A & B AT S.R. 665

FRA-71-5.29

442
623

P:\84868\roadway\sheets\84868GI211.dgn 3/27/2015 2:36:00 PM kfahy

I.R. 71
P.I. Sta. 363+99.11
Δ = 15° 39′ 29″ (RT)
Dc = 0° 28′ 59″
R = 11,859.72′
T = 1,630.71′
L = 3,241.09′
E = 111.59′
C = 3,231.02′
C.B. = N 39° 00′ 10″ E
e max = 0.018

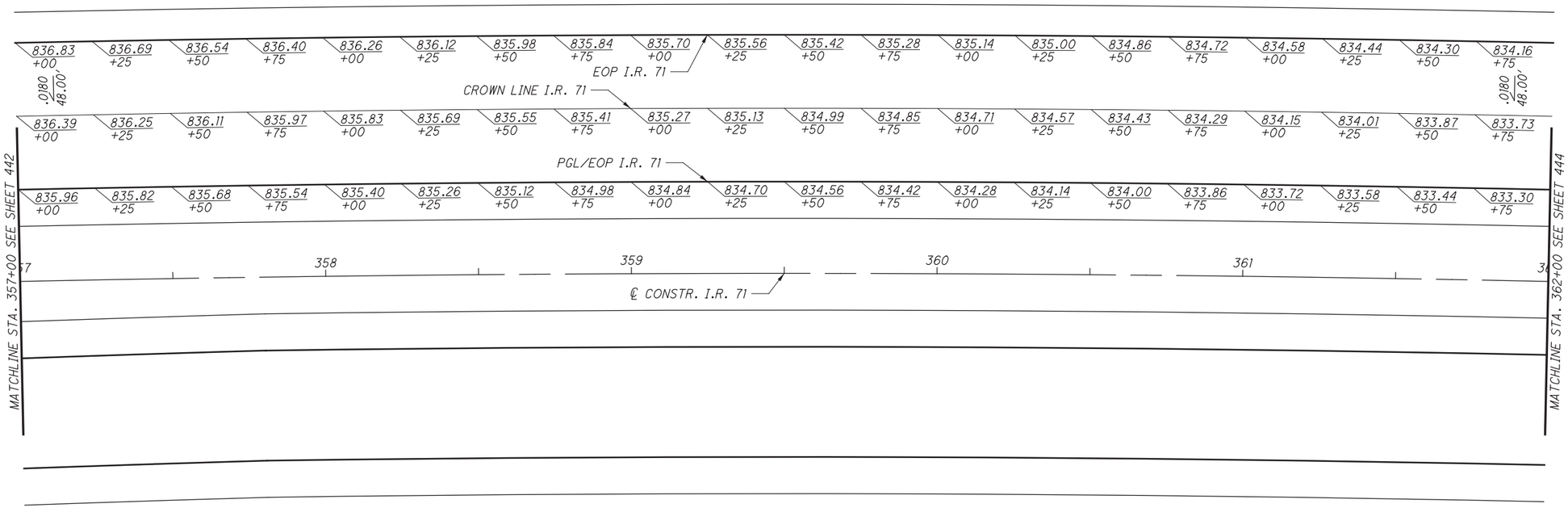

HORIZONTAL SCALE IN FEET
0 10 20 40

CALCULATED DWB
CHECKED BAL

INTERCHANGE DETAILS
RAMPS A & B AT S.R. 665

FRA-71-5.29

443
623

P:\84868\roadway\sheets\84868GI212.dgn 3/27/2015 2:36:01 PM kfahy

I.R. 71
P.I. Sta. 363+99.11
Δ = 15° 39′ 29″ (RT)
Dc = 0° 28′ 59″
R = 11,859.72′
T = 1,630.71′
L = 3,241.09′
E = 111.59′
C = 3,231.02′
C.B. = N 39° 00′ 10″ E
e max = 0.018

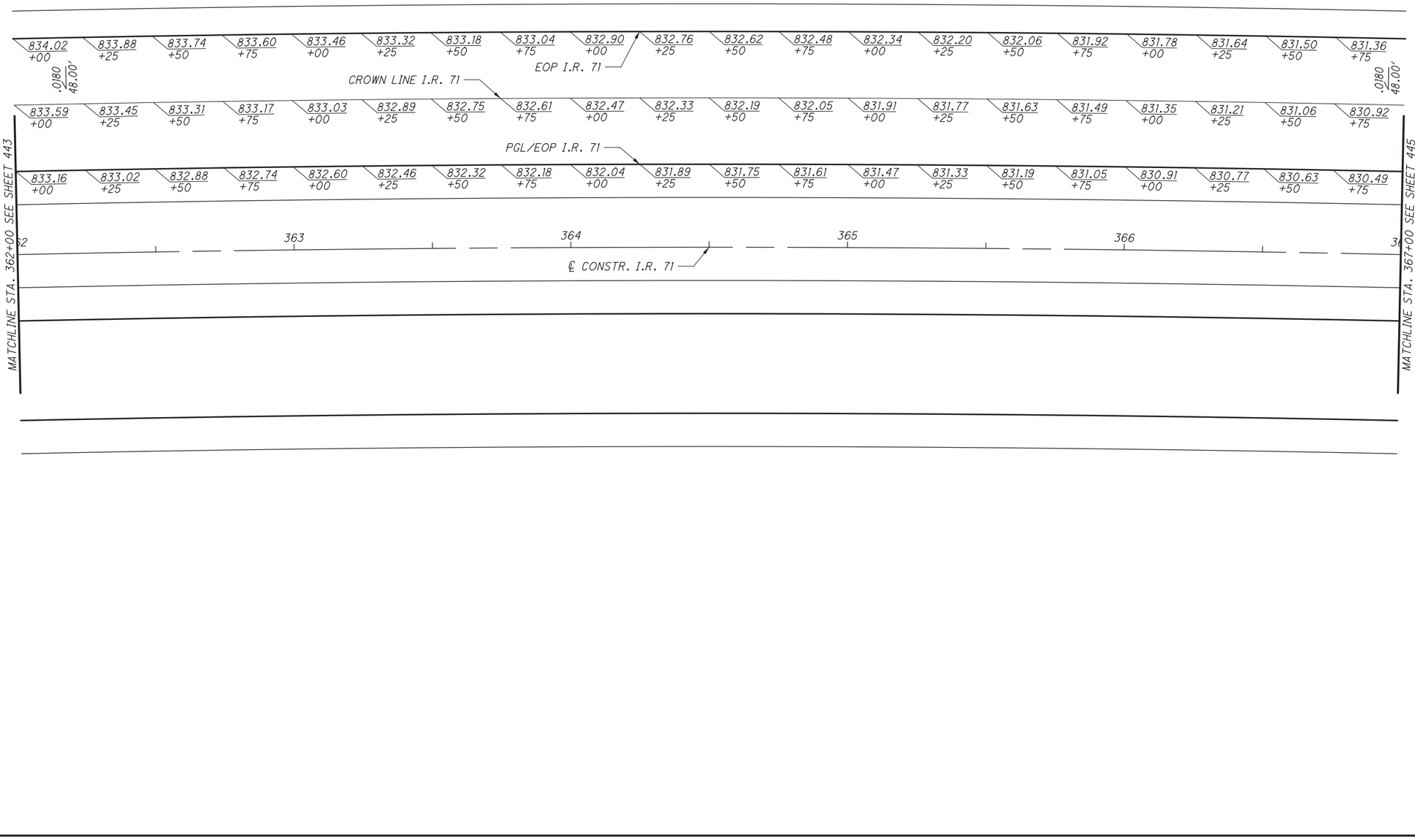

P:\84868\roadway\sheets\84868GI213.dgn 3/27/2015 2:36:01 PM kfahy

HORIZONTAL SCALE IN FEET
0 10 20 40

CALCULATED DWB
CHECKED BAL

INTERCHANGE DETAILS
RAMPS A & B AT S.R. 665

FRA-71-5.29

I.R. 71
P.I. Sta. 363+99.11
Δ = 15° 39′ 29″ (RT)
Dc = 0° 28′ 59″
R = 11,859.72′
T = 1,630.71′
L = 3,241.09′
E = 111.59′
C = 3,231.02′
C.B. = N 39° 00′ 10″ E
e max = 0.018

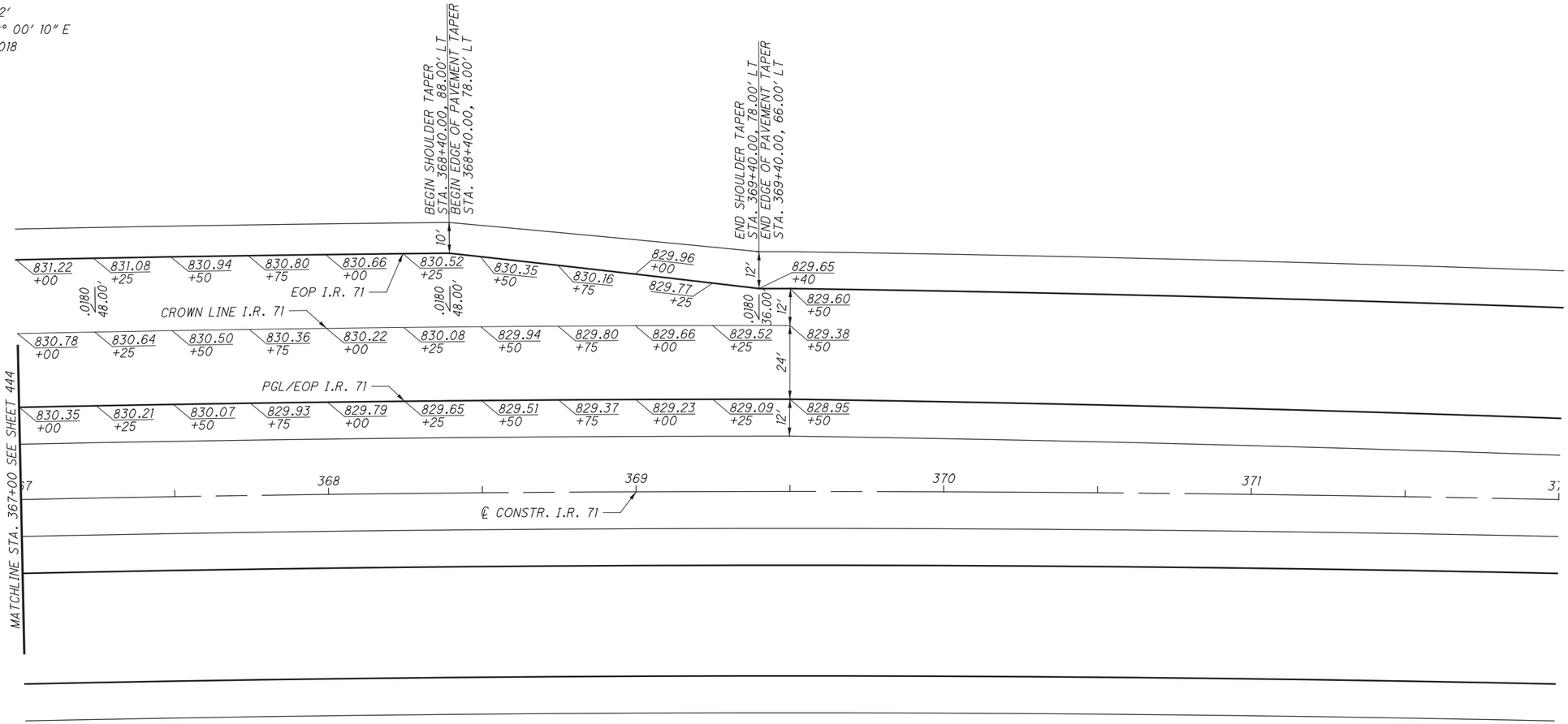

HORIZONTAL SCALE IN FEET
0 10 20 40

CALCULATED DWB
CHECKED BAL

INTERCHANGE DETAILS
RAMPS A & B AT S.R. 665

FRA-71-5.29

445
623

P:\84868\roadway\sheets\84868gl214.dgn 3/27/2015 2:36:02 PM kfahy

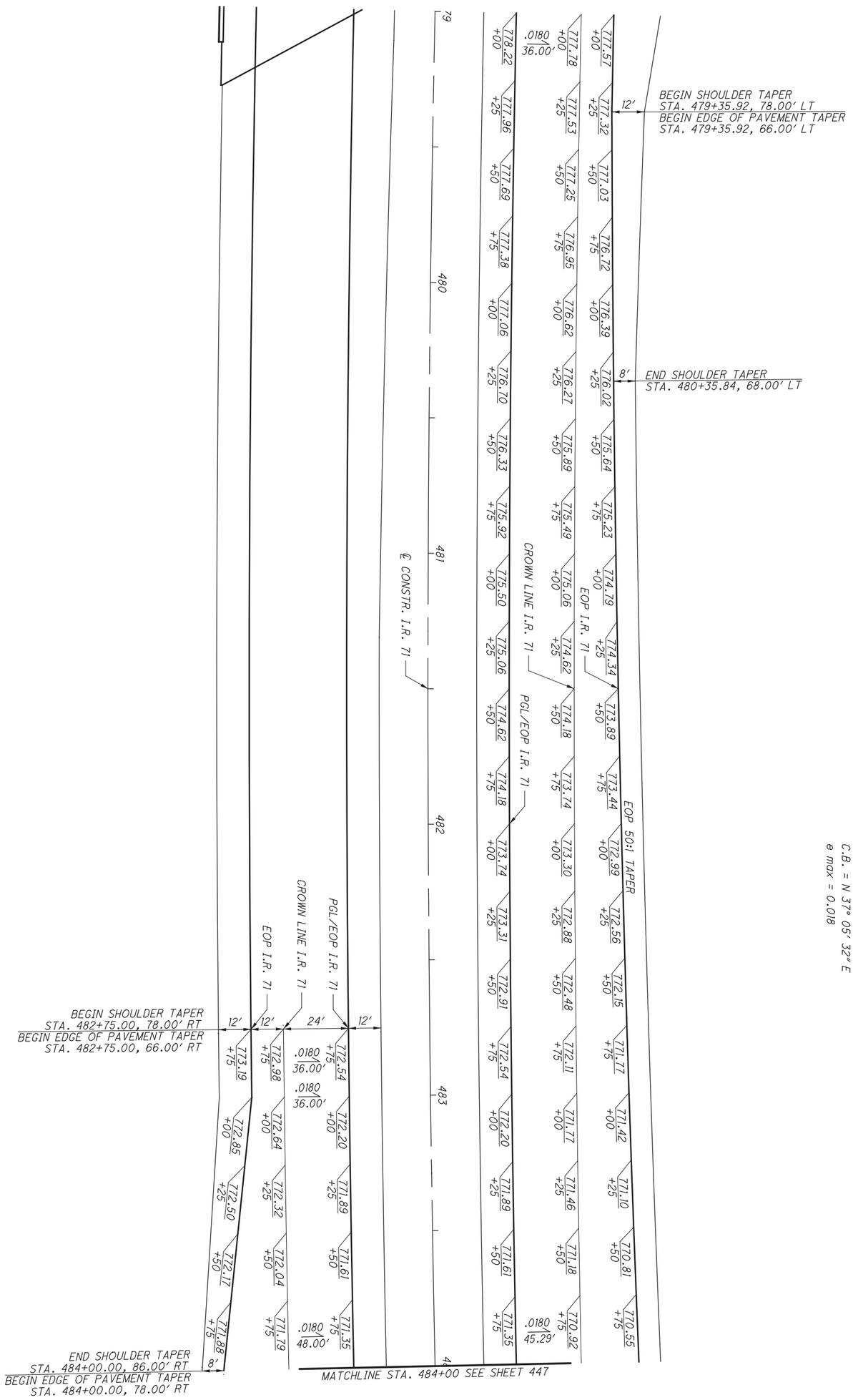

L.R. 71
P.I. Sta. 472+61.69
Δ = 19° 28' 45" (LT)
Dc = 0° 29' 02"
R = 11,843.51'
T = 2,032.88'
L = 4,026.53'
E = 173.20'
C = 4,007.16'
C.B. = N 37° 05' 32" E
e max = 0.018

I.R. 71
P.I. Sta. 472+61.69
Δ = 19° 28′ 45″ (LT)
Dc = 0° 29′ 02″
R = 11,843.51′
T = 2,032.88′
L = 4,026.53′
E = 173.20′
C = 4,007.16′
C.B. = N 37° 05′ 32″ E
e max = 0.018

RAMP D AT STRINGTOWN RD
P.I. Sta. 488+31.09
Δ = 1° 53′ 54″ (RT)
Dc = 0° 15′ 00″
R = 22,918.31′
T = 379.68′
L = 759.28′
E = 3.14′
C = 759.25′
C.B. = N 32° 11′ 27″ E
e max = 0.014

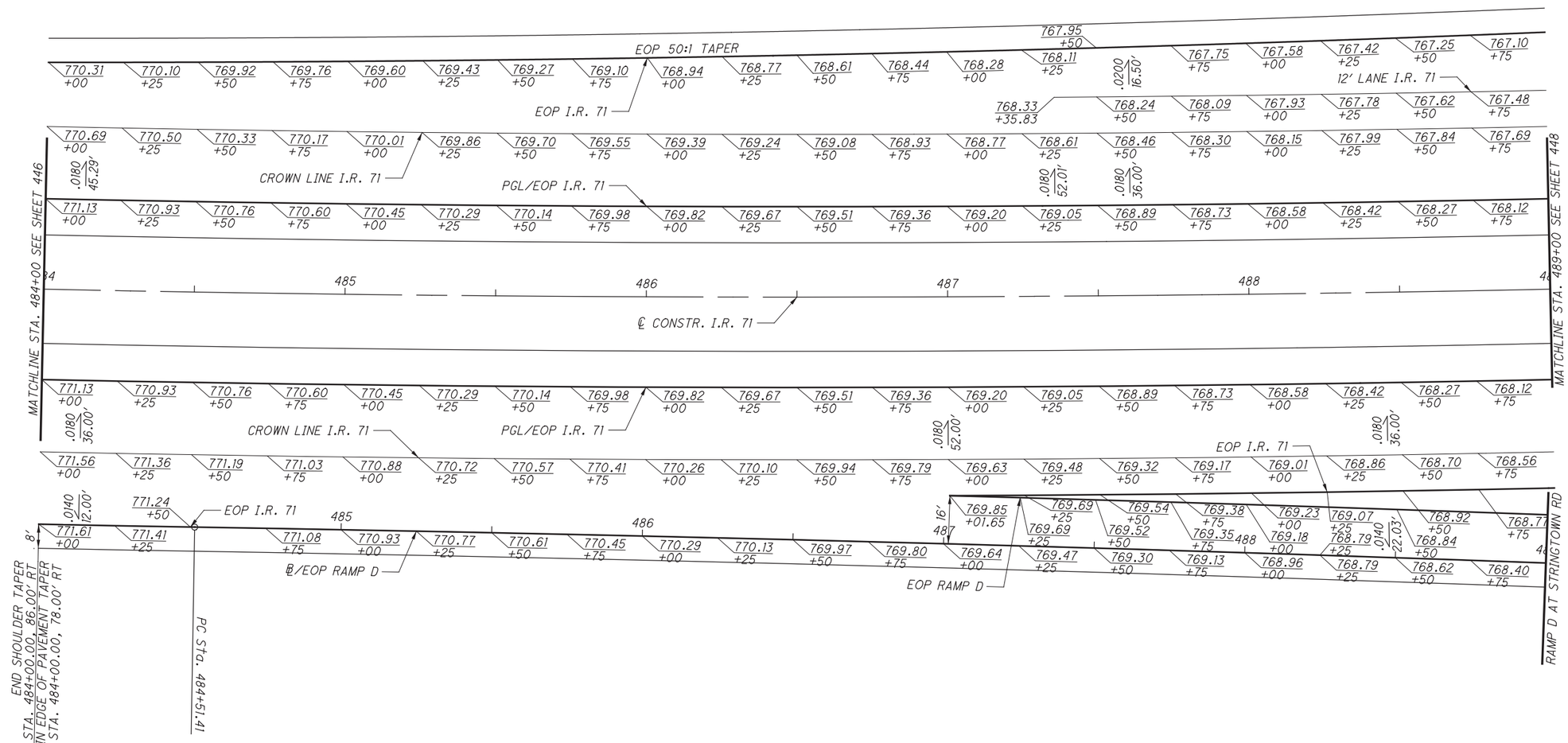

HORIZONTAL SCALE IN FEET
0 10 20 40

CALCULATED DWB
CHECKED BAL

INTERCHANGE DETAILS
RAMPS A & D AT STRINGTOWN RD

FRA-71-5.29

447
623

P:\84868\roadway\sheets\84868GI02.dgn 3/27/2015 2:36:03 PM kfahy

I.R. 71
P.I. Sta. 472+61.69
Δ = 19° 28′ 45″ (LT)
Dc = 0° 29′ 02″
R = 11,843.51′
T = 2,032.88′
L = 4,026.53′
E = 173.20′
C = 4,007.16′
C.B. = N 37° 05′ 32″ E
e max = 0.018

RAMP A AT STRINGTOWN RD
P.I. STA. 493+19.10
Ls = 200.00′
f s = 6° 30′ 00″
LT = 133.42′
ST = 66.75′
x = 199.74′
y = 7.56′
k = 99.96′
p = 1.89′

P.I. Sta. 495+81.80
Δ = 37° 25′ 53″ (LT)
Dc = 6° 30′ 00″
R = 881.47′
Δc = 30° 55′ 53″ (LT)
Lc = 475.87′
Es = 50.22′
emax = 0.060
C = 470.11′
C.B. 1 = N 24° 22′ 47″ E
C.B. = N 4° 34′ 50″ E

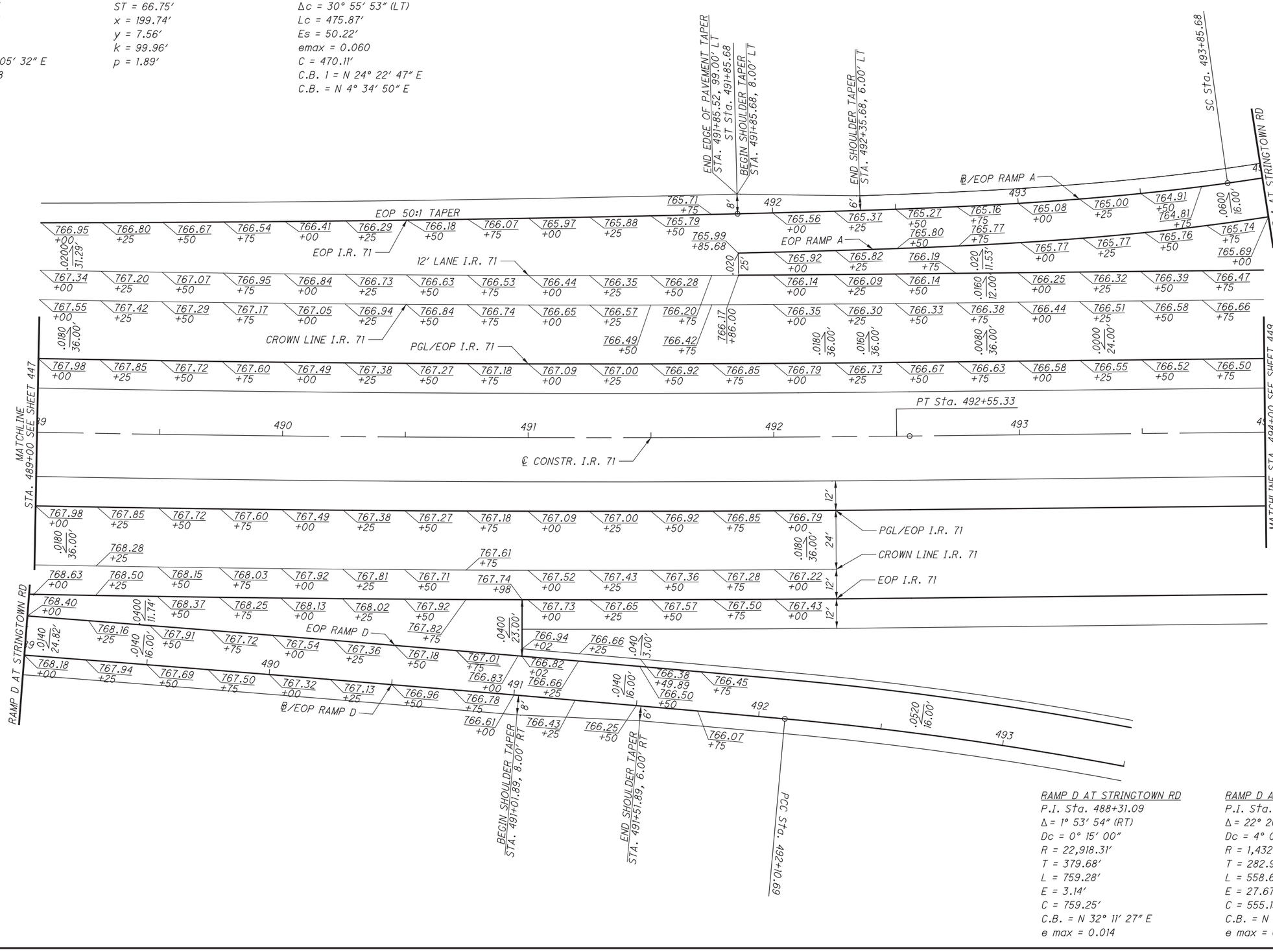

RAMP D AT STRINGTOWN RD
P.I. Sta. 488+31.09
Δ = 1° 53′ 54″ (RT)
Dc = 0° 15′ 00″
R = 22,918.31′
T = 379.68′
L = 759.28′
E = 3.14′
C = 759.25′
C.B. = N 32° 11′ 27″ E
e max = 0.014

RAMP D AT STRINGTOWN RD
P.I. Sta. 494+93.62
Δ = 22° 20′ 48″ (RT)
Dc = 4° 00′ 00″
R = 1,432.39′
T = 282.93′
L = 558.67′
E = 27.67′
C = 555.13′
C.B. = N 44° 18′ 48″ E
e max = 0.052

HORIZONTAL SCALE IN FEET 0 10 20 40

CALCULATED DWB
CHECKED BAL

INTERCHANGE DETAILS
RAMPS A & D AT STRINGTOWN RD

FRA-71-5.29

P:\84868\roadway\sheets\84868G1103.dgn 3/27/2015 2:36:03 PM kfahy

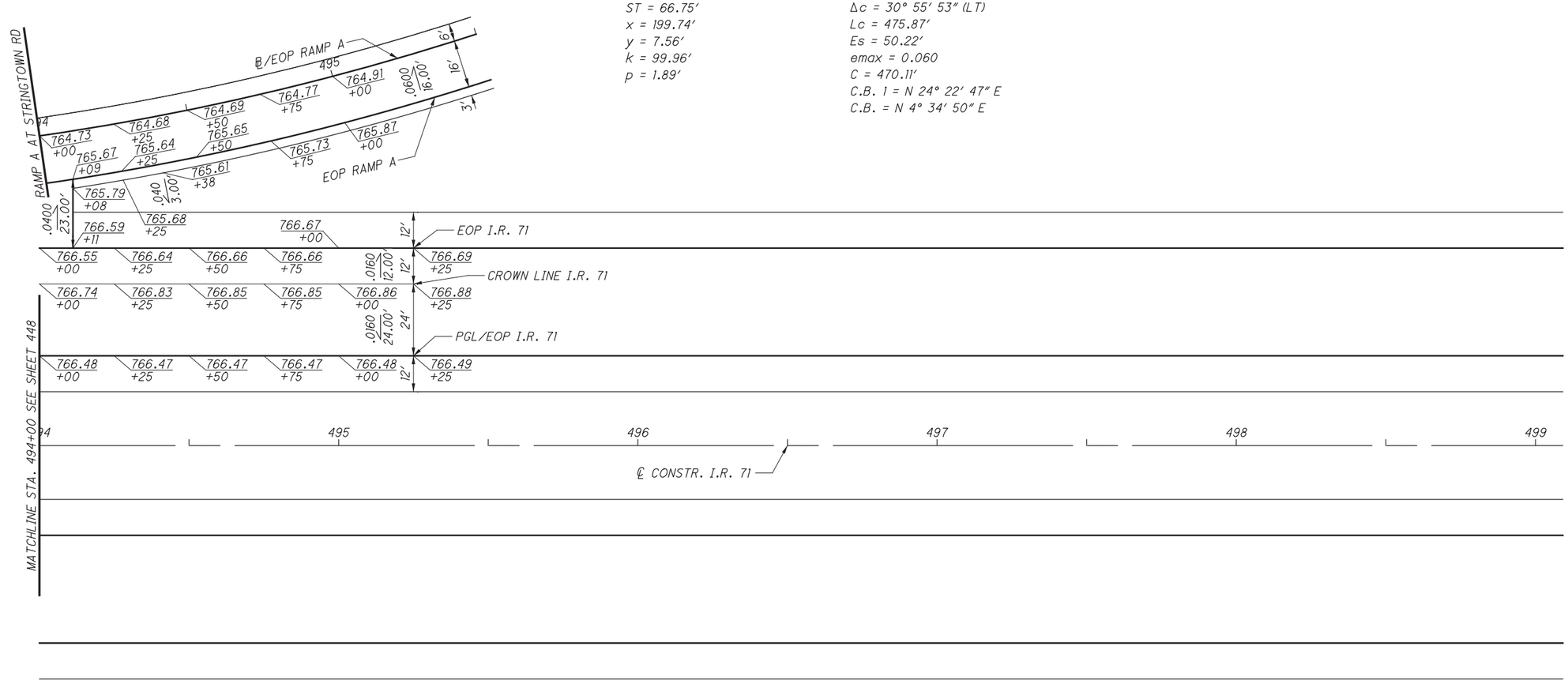

RAMP A AT STRINGTOWN RD

P.I. STA. 493+19.10
Ls = 200.00′
f s = 6° 30′ 00″
LT = 133.42′
ST = 66.75′
x = 199.74′
y = 7.56′
k = 99.96′
p = 1.89′

P.I. Sta. 495+81.80
Δ = 37° 25′ 53″ (LT)
Dc = 6° 30′ 00″
R = 881.47′
Δc = 30° 55′ 53″ (LT)
Lc = 475.87′
Es = 50.22′
emax = 0.060
C = 470.11′
C.B. 1 = N 24° 22′ 47″ E
C.B. = N 4° 34′ 50″ E

HORIZONTAL SCALE IN FEET
0 10 20 40

CALCULATED DWB
CHECKED GPD

INTERCHANGE DETAILS
RAMPS A & D AT STRINGTOWN RD

FRA-71-5.29

449
623

P:\84868\roadway\sheets\84868GI104.dgn 3/27/2015 2:36:04 PM kfahy

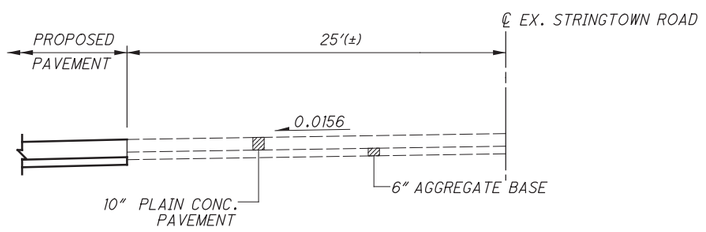

TYPICAL SECTION OF ADJOINING PAVEMENT
STA. 18+47.62 TO STA. 19+56.91

STA. 501+47.07, 63.07', LT. ℄ PR. RAMP D =
STA. 18+47.62, 91.7' RT. ℄ EX. STRINGTOWN ROAD
Δ = 77° 19' 49"
R = 63.07'
L = 85.13'

STA. 501+66.86, 49.43' RT. ℄ PR. RAMP D =
STA. 19+56.91, 58.47' RT. ℄ EX. STRINGTOWN ROAD
Δ = 97° 12' 49"
R = 33.43'
L = 56.71'

PR. ℄ RAMP A, STA. 502+31.77 =
EX. ℄ RAMP A, STA. 0+00.00 =
EX. ℄ RAMP B, STA. 20+47.18 =
EX. ℄ C.R. 135, STA. 19+00.00

℄ EX. RAMP A
S16°03'09"W

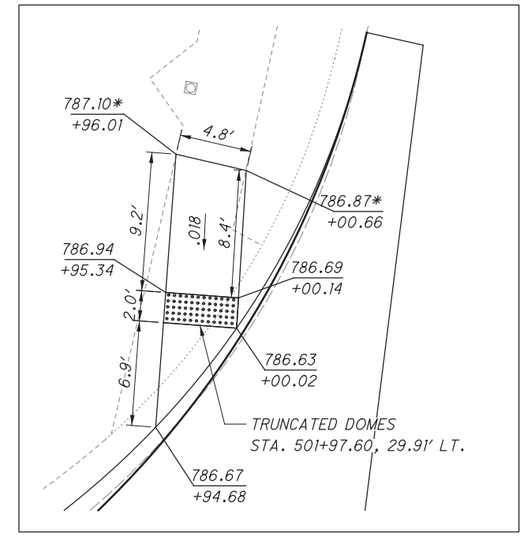

SCALE 1" = 5'

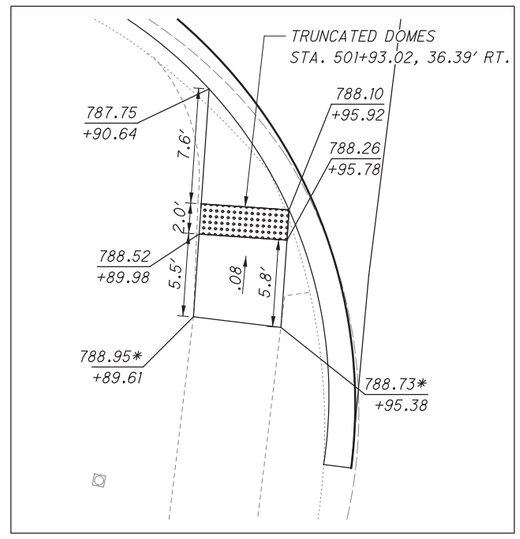

SCALE 1" = 5'

* - EXISTING ELEVATION

(L) STANDARD LONGITUDINAL JOINT AS PER BP-2.1

(S) STANDARD LONGITUDINAL JOINT AS PER BP-2.1 WITHOUT TIE BARS

ALL TRANSVERSE JOINTS ARE AT 15' SPACING

ALL TRANSVERSE JOINTS ARE CONTRACTION JOINTS AS PER BP-2.2 UNLESS OTHERWISE NOTED

REMAINING RAMP, MAINLINE AND RAMP TERMINAL JOINTS AS SHOWN ON BP-2.1, BP-2.2, & BP-6.1.

HORIZONTAL SCALE IN FEET
0 5 10 20

CALCULATED LMR
CHECKED GPD

INTERSECTION DETAIL
RAMP A & STRINGTOWN RD.

FRA-71-5.29

450
623

P:\84868\roadway\sheets\84868GI301.dgn 3/27/2015 2:36:06 PM kfahy

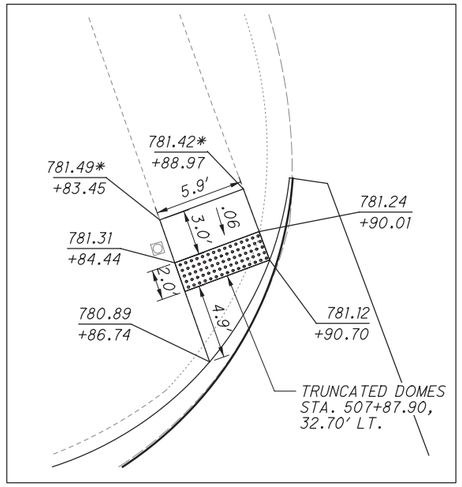

SCALE 1" = 5'

SCALE 1" = 5'

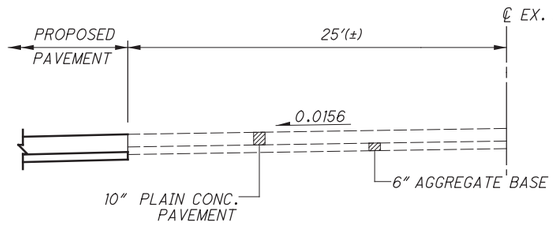

TYPICAL SECTION OF ADJOINING PAVEMENT
STA. 30+38.08 TO STA. 31+51.93

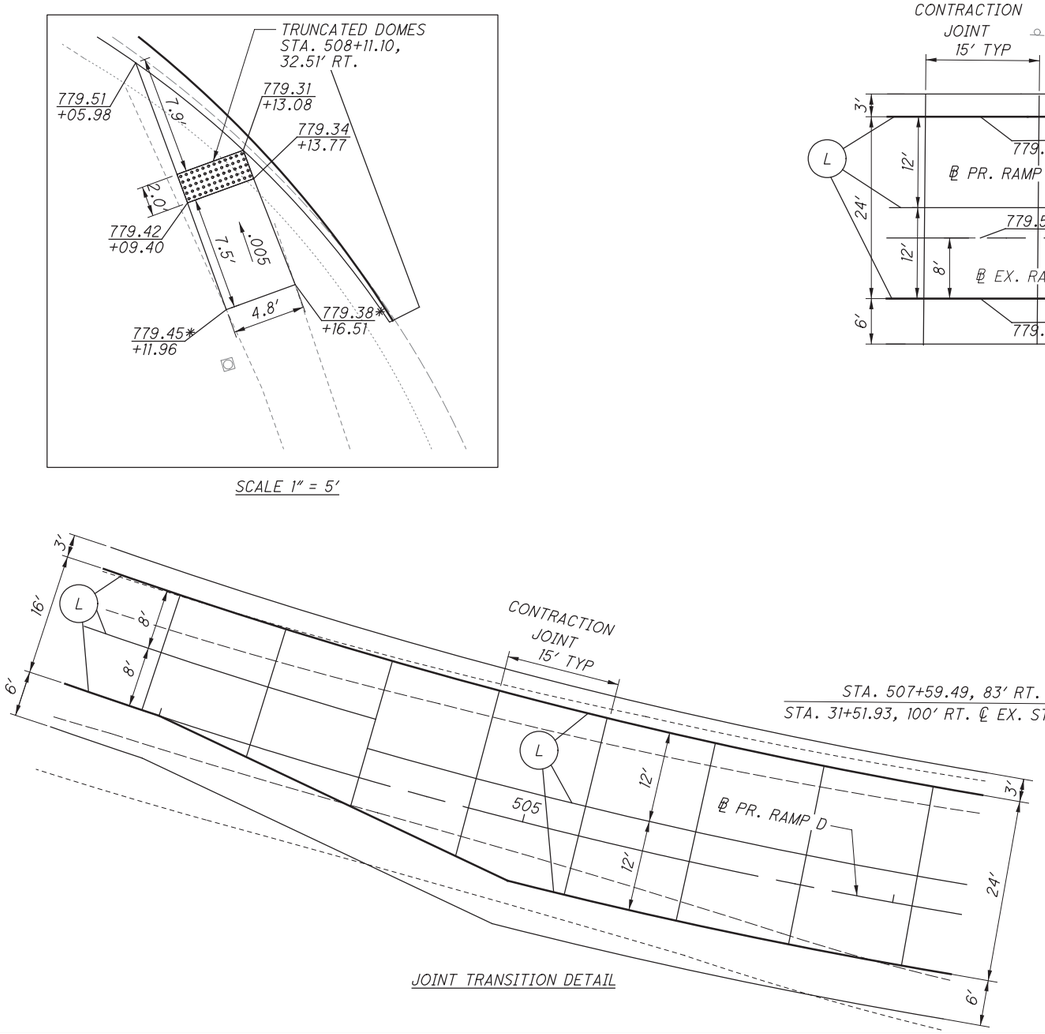

JOINT TRANSITION DETAIL

STA. 507+59.49, 83' RT. ℄ PR. RAMP D =
STA. 31+51.93, 100' RT. ℄ EX. STRINGTOWN ROAD
Δ = 57° 47' 26"
R = 75.00'
L = 75.65'

STA. 507+67.30, 41' LT. ℄ PR. RAMP D =
STA. 30+38.08, 50.25' RT. ℄ EX. STRINGTOWN ROAD
Δ = 85° 42' 23"
R = 25.00'
L = 37.40'

PR. ℄ RAMP D, STA. 508+35.70 =

EX. ℄ RAMP D, STA. 19+81.95 =
EX. ℄ RAMP C, STA. 0+00.00 =
EX. ℄ C.R. 135, STA. 31+00.00

* - EXISTING ELEVATION

(L) STANDARD LONGITUDINAL JOINT AS PER BP-2.1

(S) STANDARD LONGITUDINAL JOINT AS PER BP-2.1 WITHOUT TIE BARS

ALL TRANSVERSE JOINTS ARE AT 15' SPACING

ALL TRANSVERSE JOINTS ARE CONTRACTION JOINTS AS PER BP-2.2 UNLESS OTHERWISE NOTED

REMAINING RAMP, MAINLINE AND RAMP TERMINAL JOINTS AS SHOWN ON BP-2.1, BP-2.2, & BP-6.1.

HORIZONTAL SCALE IN FEET
0 5 10 20

CALCULATED LMR
CHECKED GPD

INTERSECTION DETAIL RAMP D & STRINGTOWN RD.

FRA-71-5.29

451
623

P:\84868\roadway\sheets\84868GI302.dgn 3/27/2015 2:36:06 PM kfahy

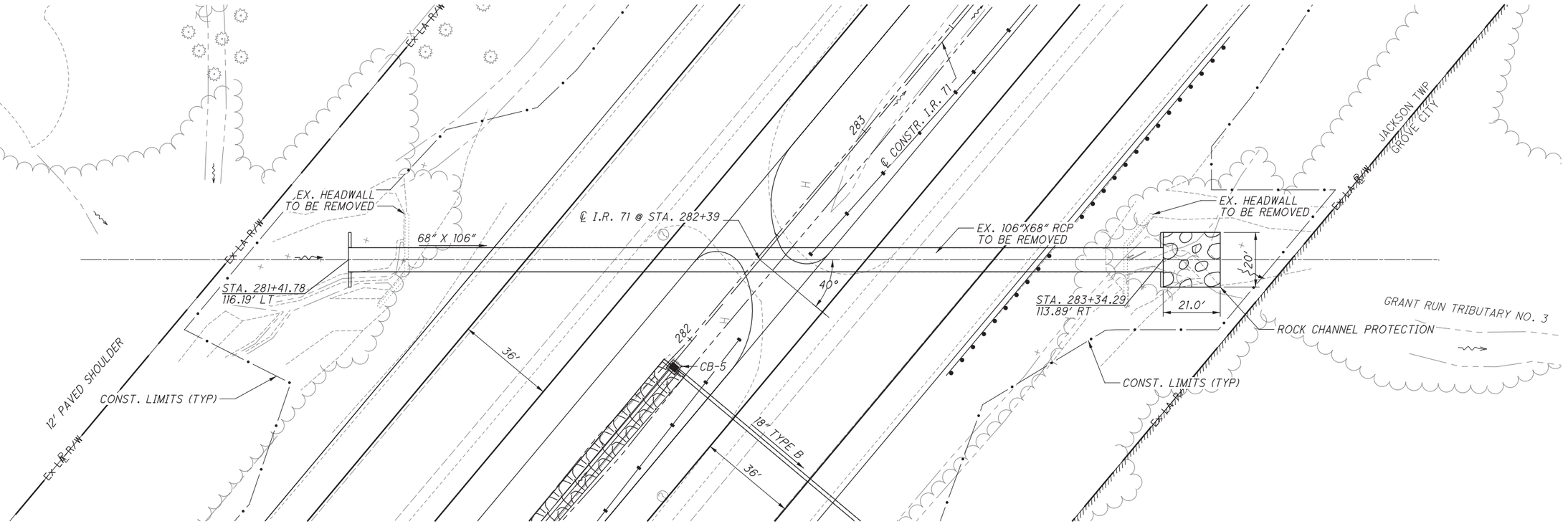

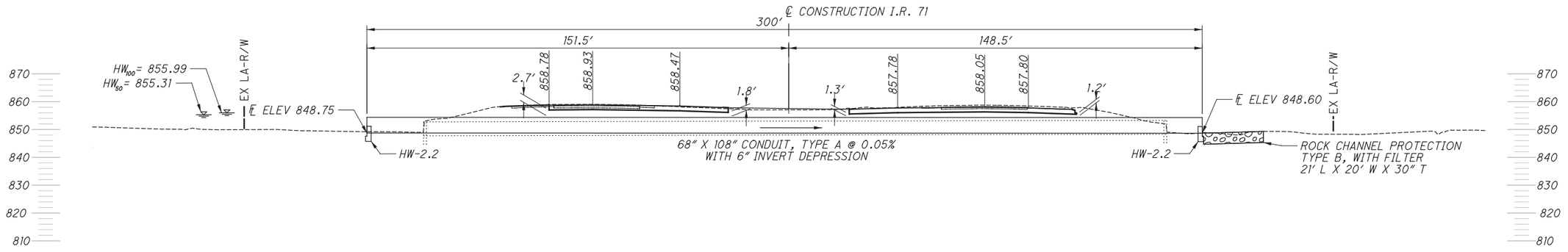

PROPOSED STRUCTURE	
TYPE:	68" X 106" CONDUIT, TYPE A, 706.04
LENGTH:	300'
SKEW:	40° R.F.
WEARING SURFACE:	
pH:	8
SERVICE LIFE:	75 YEARS
NON-ABRASIVE	

EXISTING STRUCTURE	
TYPE:	68" X 106" ELLIPTICAL REINF. CONC.
LENGTH:	267'
SKEW:	40° R.F.
WEARING SURFACE:	ASPHALT CONCRETE
YEAR BUILT:	----

HYDRAULIC DESIGN DATA			
DRAINAGE AREA:	=	627	AC
Q50	=	210	CFS
Q100	=	237	CFS
HW50	=	855.31	
HW100	=	855.99	
V50	=	9.26	FPS
V100	=	9.92	FPS

ESTIMATED QUANTITIES CARRIED TO THE DRAINAGE SUBSUMMARY

ITEM	QUANTITY	UNIT	DESCRIPTION
202	267	FT	PIPE REMOVED, OVER 24"
202	2	EACH	HEADWALL REMOVED
601	39	CU YD	ROCK CHANNEL PROTECTION, TYPE B, WITH FILTER
602	5.4	CU YD	CONCRETE MASONRY
611	300	FT	68" X 106" CONDUIT, TYPE B, 706.04

HORIZONTAL SCALE IN FEET
0 10 20 40
CALCULATED GPD
CHECKED KEW

CULVERT DETAIL STA. 282+39

FRA-71-5.29

P:\84868\drainage\sheets\84868DC001.dgn 3/27/2015 2:36:07 PM kfahy

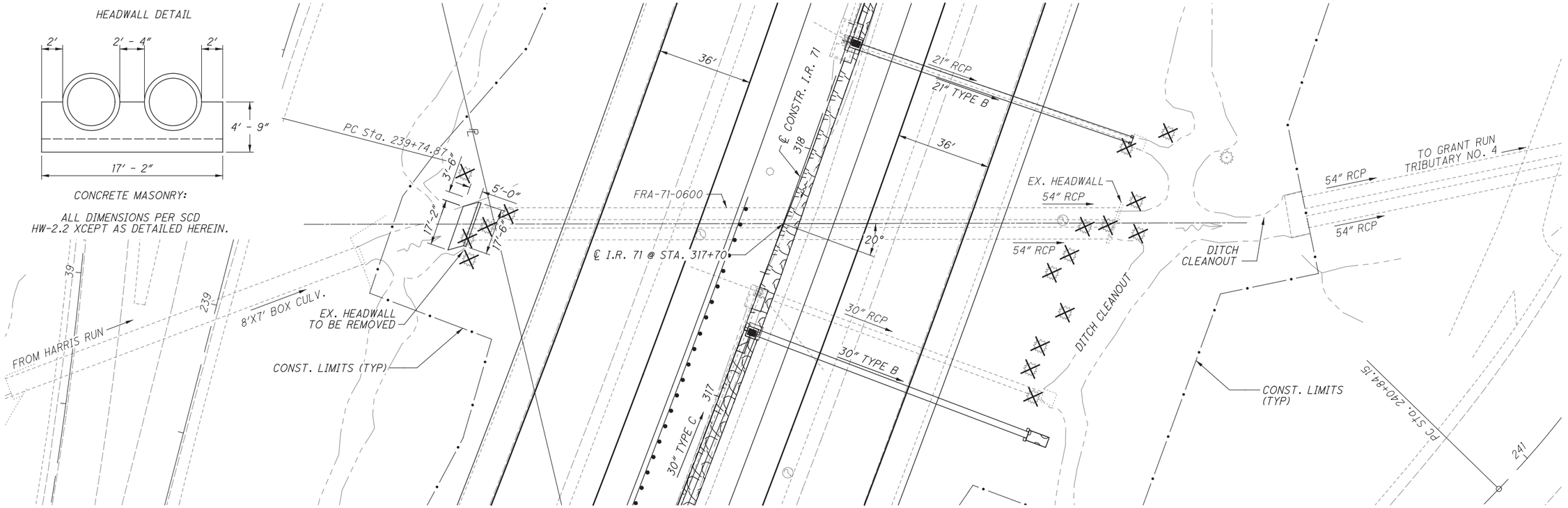

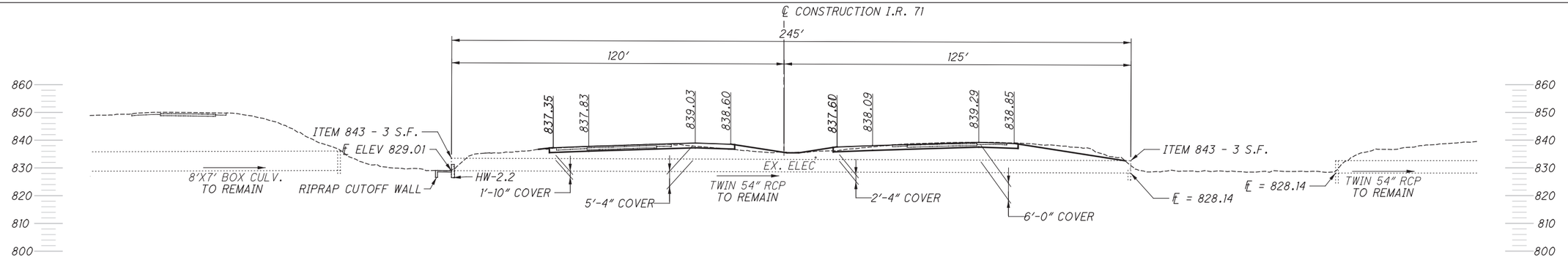

EXISTING STRUCTURE	
TYPE:	TWIN 54" RCP
LENGTH:	245' X 2
SKEW:	20° R.F
WEARING SURFACE:	ASPHALT CONCRETE
YEAR BUILT:	1959

ESTIMATED QUANTITIES CARRIED TO THE DRAINAGE SUBSUMMARY

ITEM	QUANTITY	UNIT	DESCRIPTION
202	1	EACH	HEADWALL REMOVED
209	206	FT	DITCH CLEANOUT
602	2.1	CU. YD.	CONRETE MASONRY
843	6	SF	PATCHING CONCRETE STRUCTURES WITH TROWELABLE MORTAR, AS PER PLAN

CALCULATED GPD CHECKED KEW

CULVERT DETAIL STA. 317+70

FRA-71-5.29

P:\84868\drainage\sheets\84868DC002.dgn 3/27/2015 2:36:08 PM kfahy

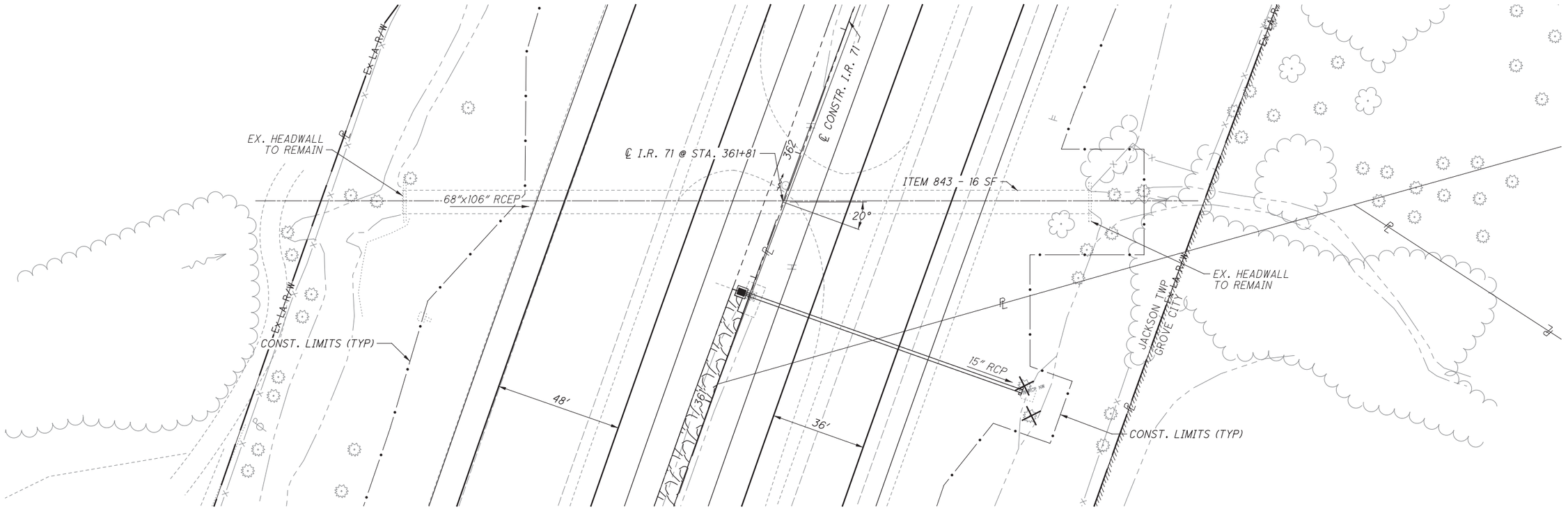

℄ CONSTRUCTION I.R. 71

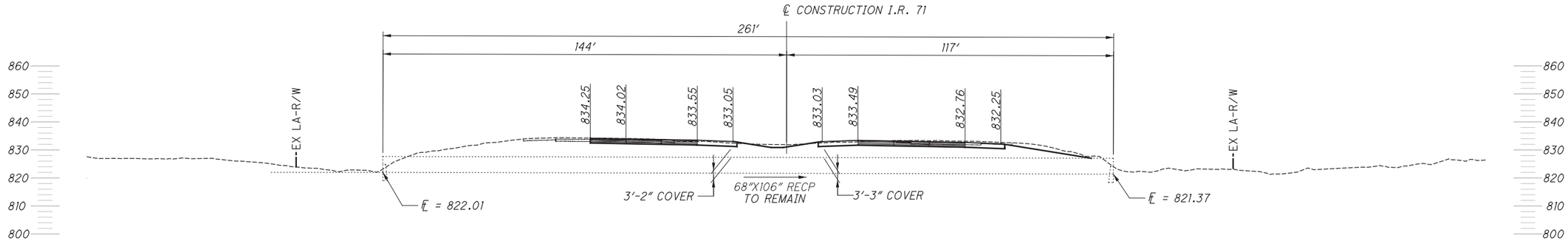

EXISTING STRUCTURE	
TYPE:	68"x106" RCEP
LENGTH:	261'
SKEW:	20° R.F.
WEARING SURFACE:	ASPHALT CONCRETE
YEAR BUILT:	1959

ESTIMATED QUANTITIES CARRIED TO THE DRAINAGE SUBSUMMARY

ITEM	QUANTITY	UNIT	DESCRIPTION
843	16	SF	PATCHING CONCRETE STRUCTURES WITH TROWELABLE MORTAR, AS PER PLAN

N

0 10 20 40 HORIZONTAL SCALE IN FEET

CALCULATED LMR CHECKED KEW

CULVERT DETAIL STA. 361+81

FRA-71-5.29

P:\84868\drainage\sheets\84868DC003.dgn 3/27/2015 2:36:09 PM kfahy

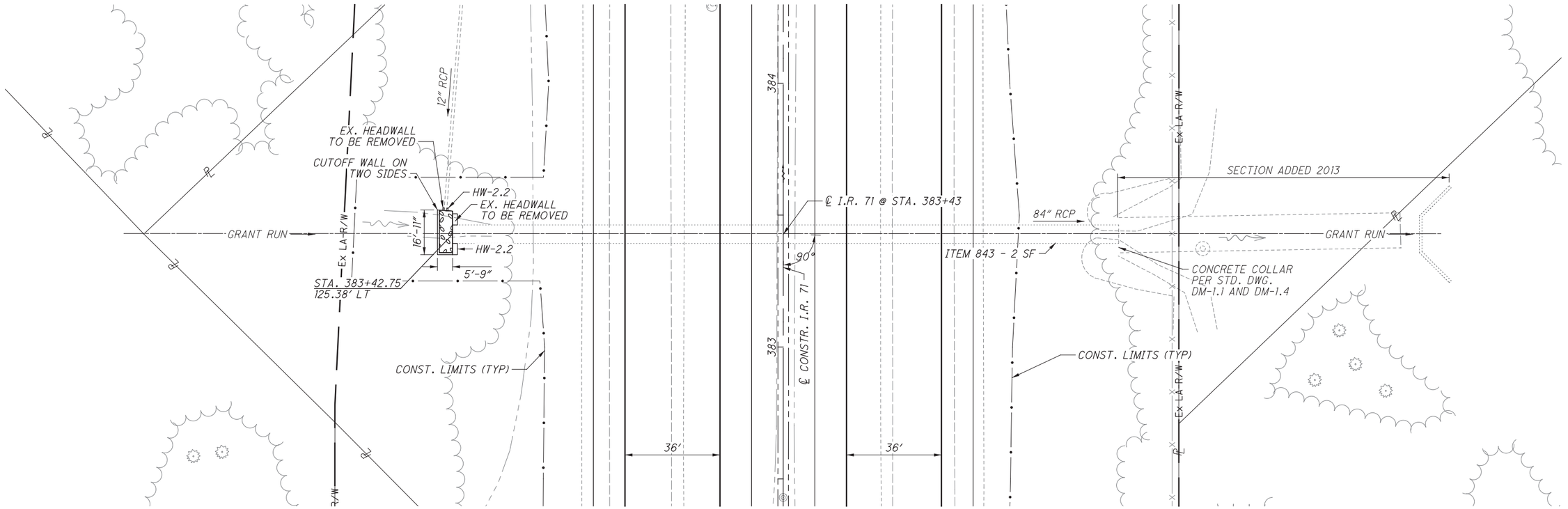

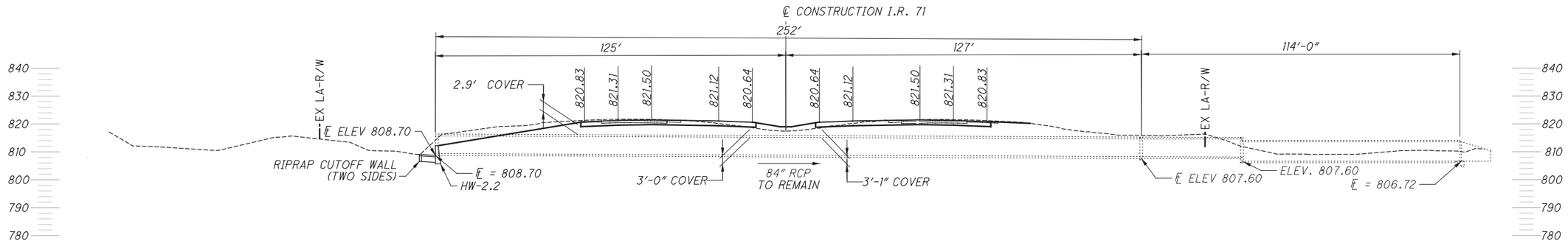

EXISTING STRUCTURE	
TYPE:	84" RCP
LENGTH:	252'
SKEW:	0°
WEARING SURFACE:	ASPHALT CONCRETE
YEAR BUILT:	1959

ESTIMATED QUANTITIES CARRIED TO THE DRAINAGE SUBSUMMARY

ITEM	QUANTITY	UNIT	DESCRIPTION
202	1	EACH	HEADWALL REMOVED
602	4	CY	CONRETE MASONRY
601	9	SY	RIPRAP USING 6" REINFORCED CONCRETE SLAB
843	2	SF	PATCHING CONCRETE STRUCTURES WITH TROWELABLE MORTAR, AS PER PLAN

N

0 10 20 40 HORIZONTAL SCALE IN FEET

CALCULATED GPD CHECKED KEW

CULVERT DETAIL STA. 383+43

FRA-71-5.29

P:\84868\drainage\sheets\84868DC004.dgn 3/27/2015 2:36:09 PM kfahy

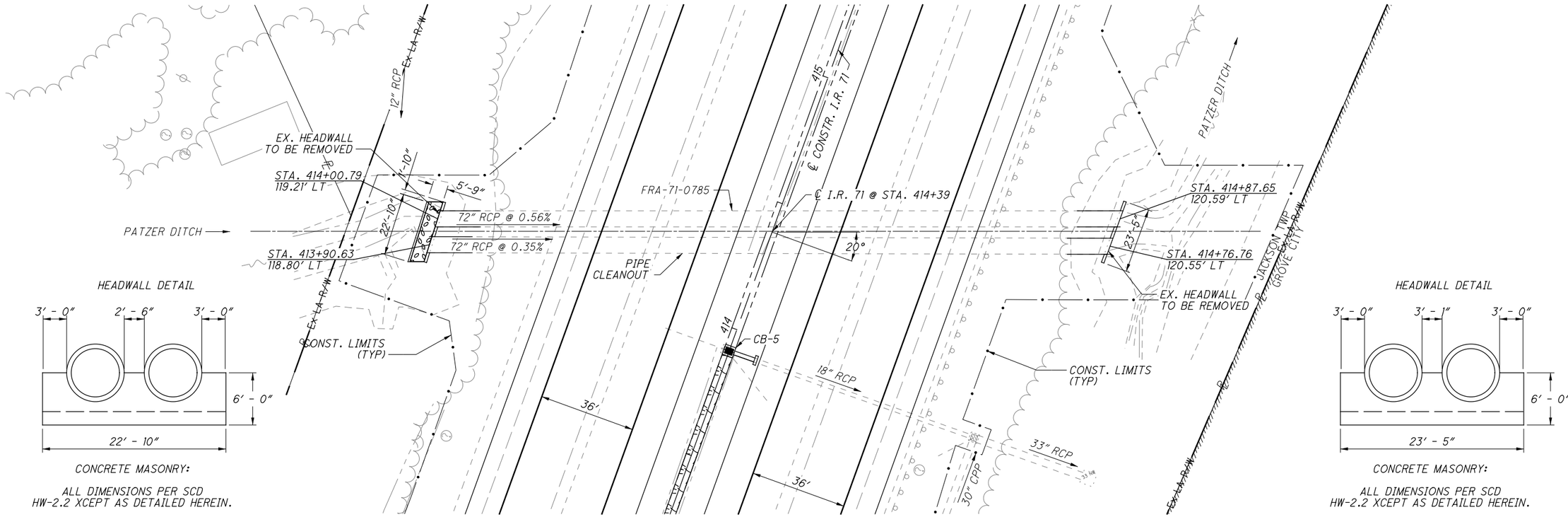

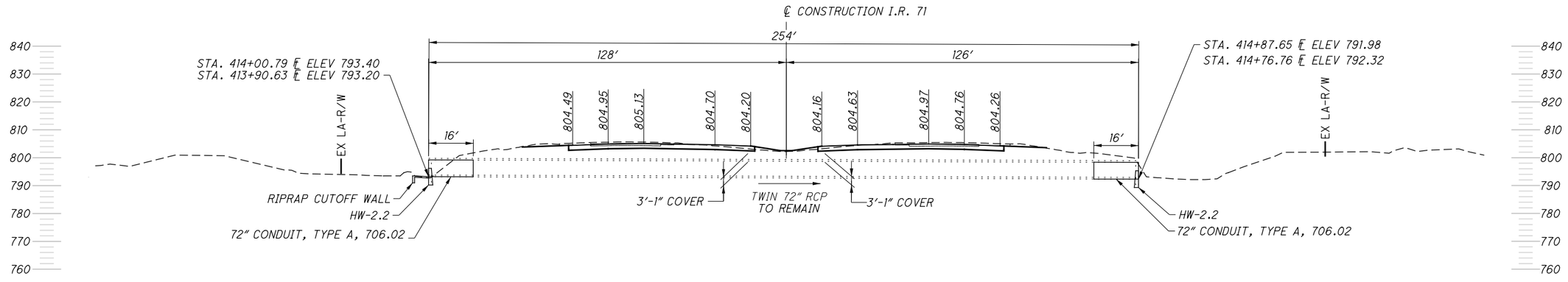

EXISTING STRUCTURE	
TYPE:	TWIN 72" RCP
LENGTH:	255' X 2
SKEW:	20° R.F.
WEARING SURFACE:	ASPHALT CONCRETE
YEAR BUILT:	1959

THIS EXISTING CULVERT SHOULD BE REMOVED BACK TO THE FIRST JOINT AT THE OUTLET END AND THE SECOND JOINT AT THE INLET END OF THE CULVERT, MEASURE IN THE FIELD AND PROVIDE A MASSONRY COLLAR PER DM-1.1 AT CONNECTION. MATCH EXISTING MATERIAL FOR CULVERT EXTENSION

ESTIMATED QUANTITIES CARRIED TO THE DRAINAGE SUBSUMMARY

ITEM	QUANTITY	UNIT	DESCRIPTION
202	244	FT	SPECIAL - PIPE CLEANOUT, OVER 48"
202	2	EACH	HEADWALL REMOVED
202	-	LUMP	PORTIONS OF STRUCTURE REMOVED
602	16	CY	CONRETE MASONRY
601	14	SY	RIPRAP USING 6" REINFORCED CONCRETE SLAB
611	64	FT	72" CONDUIT, TYPE A

HORIZONTAL SCALE IN FEET
0 10 20 40

CALCULATED GPD
CHECKED KEW

CULVERT DETAIL
STA. 414+39

FRA-71-5.29

456
623

P:\84868\drainage\sheets\84868DC005.dgn 5/5/2015 12:08:42 PM mtakacs

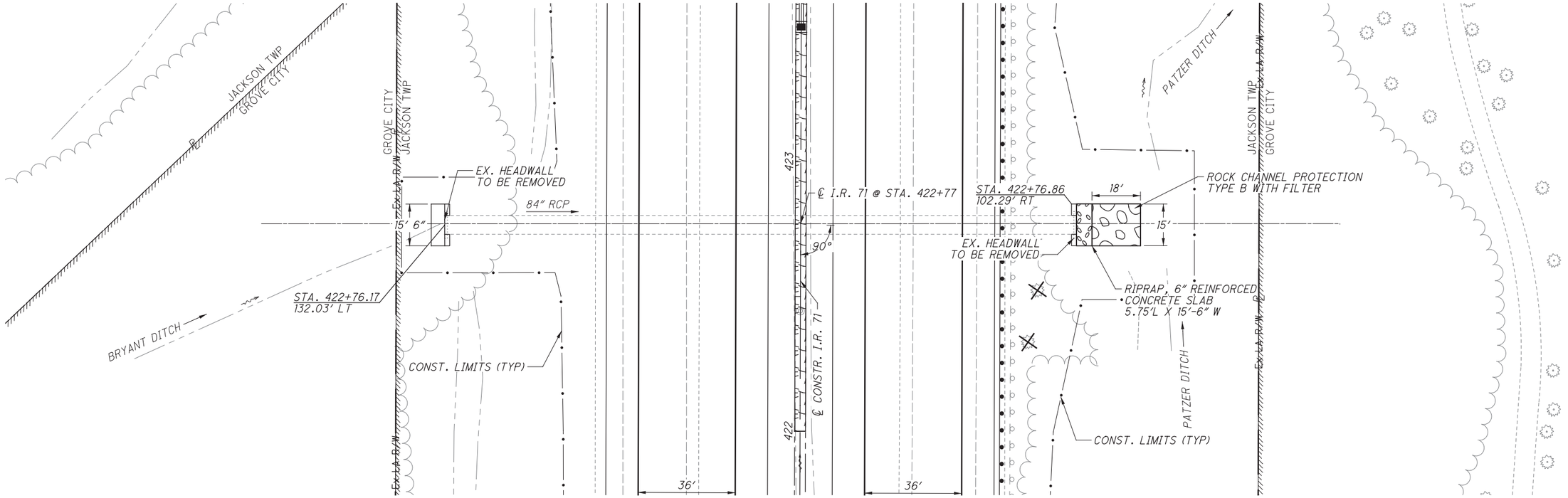

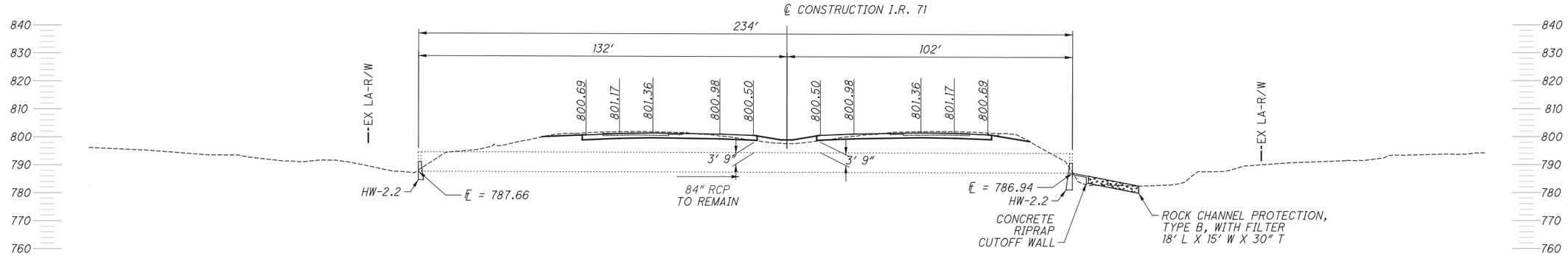

EXISTING STRUCTURE	
TYPE:	84" RCP
LENGTH:	234'
SKEW:	0°
WEARING SURFACE:	ASPHALT CONCRETE
YEAR BUILT:	----

ESTIMATED QUANTITIES CARRIED TO THE DRAINAGE SUBSUMMARY

ITEM	QUANTITY	UNIT	DESCRIPTION
202	2	EACH	HEADWALL REMOVED
602	4.1	CY	CONRETE MASONRY
601	19	SY	RIPRAP USING 6" REINFORCED CONCRETE SLAB
601	25	CY	ROCK CHANNEL PROTECTION, TYPE B WITH FILTER

HORIZONTAL SCALE IN FEET
0 10 20 40

CALCULATED LMR
CHECKED KEW

CULVERT DETAIL STA. 422+77

FRA-71-5.29

P:\84868\drainage\sheets\84868DC006.dgn 3/27/2015 2:36:10 PM kfahy

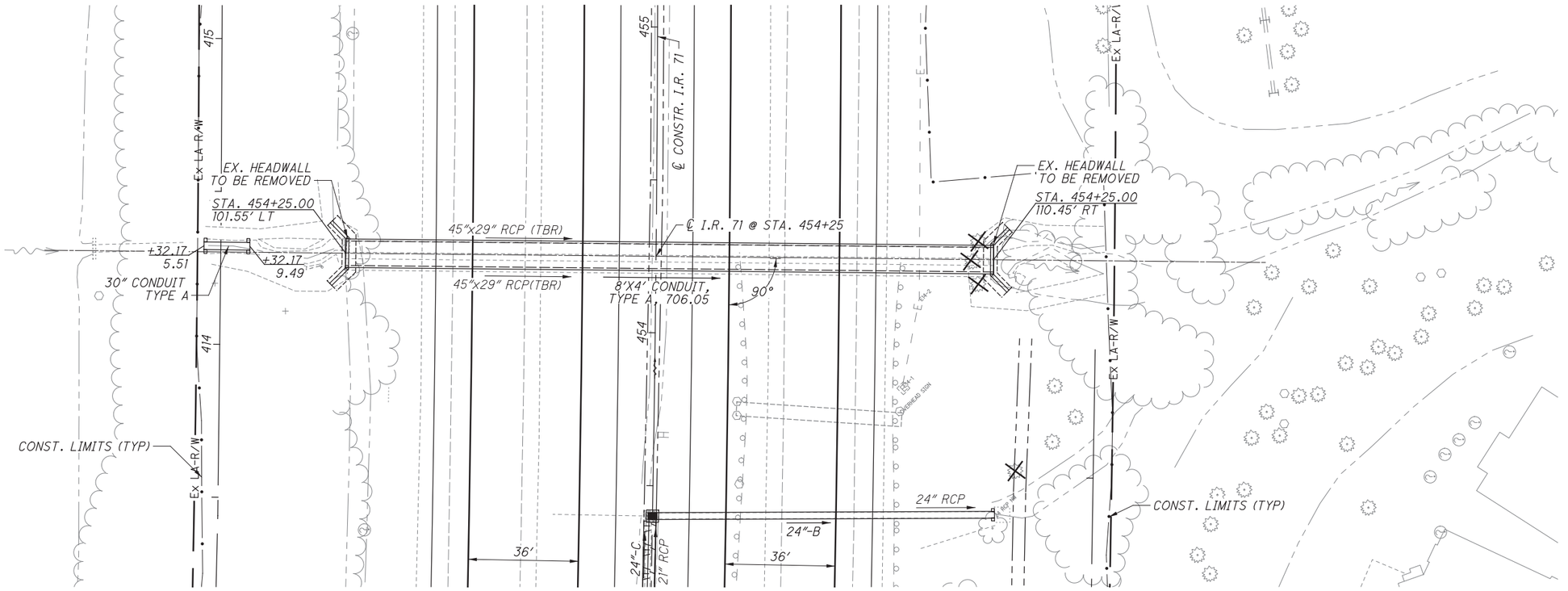

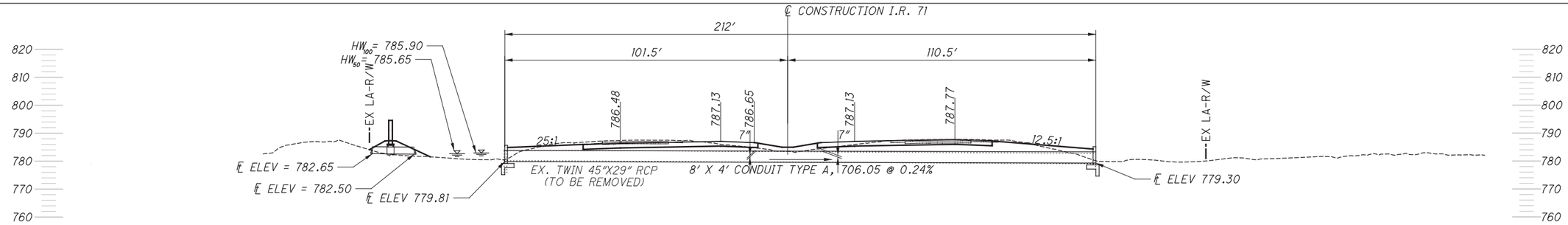

PROPOSED STRUCTURE	
TYPE:	8' X 4' CONDUIT, TYPE A, 706.05
LENGTH:	212'
SKEW:	0°
WEARING SURFACE:	--------
pH:	8
SERVICE LIFE:	75 YEARS
NON-ABRASIVE	

EXISTING STRUCTURE	
TYPE:	TWIN 45" X 29" ERCP
LENGTH:	212'
SKEW:	0°
WEARING SURFACE:	ASPHALT CONCRETE
YEAR BUILT:	----

HYDRAULIC DESIGN DATA			
DRAINAGE AREA:	=	58	AC
Q50	=	78.5	CFS
Q100	=	91.2	CFS
HW50	=	782.65	
HW100	=	782.9	
V50	=	4.6	FPS
V100	=	5	FPS

HORIZONTAL SCALE IN FEET
0 10 20 40

CALCULATED LMR
CHECKED KEW

CULVERT DETAIL
STA. 454+25

FRA-71-5.29

458
623

P:\84868\drainage\sheets\84868DC007.dgn 3/27/2015 2:36:11 PM kfahy

GENERAL NOTES

DESIGN SPECIFICATIONS: THIS STANDARD DRAWING CONFORMS TO "STANDARD SPECIFICATIONS FOR HIGHWAY BRIDGES" ADOPTED BY THE AMERICAN ASSOCIATION OF STATE HIGHWAY AND TRANSPORTATION OFFICIALS, 2002 AND THE ODOT BRIDGE DESIGN MANUAL.

DESIGN DATA: THE FOLLOWING DESIGN DATA IS ASSUMED:

INTERNAL ANGLE OF FRICTION ( ) = 30 DEGREES
COEFFICIENT OF FRICTION ( ) = 0.30
UNIT WEIGHT OF SOIL = 120 PCF
UNIT WEIGHT OF CONCRETE = 150 PCF
SLOPE OF BACKFILL = 2:1 (TYPE A & B HEADWALLS)
HEIGHT OF LIVE LOAD SURCHARGE = 2 FT (TYPE C HEADWALLS)
MAXIMUM FOUNDATION BEARING PRESSURE = 2000 P.S.F.

CONCRETE CLASS C - COMPRESSIVE STRENGTH 4000 PSI
(FOOTING, WINGWALL AND FORESLOPE WALL)

REINFORCING STEEL - ASTM A615, A616, OR A617
GRADE 60 MINIMUM YIELD STRENGTH
60,000 PSI (ALL REINFORCING SHALL BE EPOXY COATED)

PRECAST CONCRETE: AT THE OPTION OF THE CONTRACTOR, PRECAST WINGWALLS MAY BE USED PROVIDED THEY ARE SIZED TO MEET THE SOIL PARAMETERS AND MEET OR EXCEED THE MATERIAL STRENGTHS SPECIFIED HEREIN. THE CONTRACTOR SHALL SUBMIT DESIGNS AND SHOP DRAWINGS TO THE OFFICE OF STRUCTURAL ENGINEERING FOR APPROVAL.

FORESLOPE WALL ANCHOR DOWELS: ANCHOR PER CMS 510 WITH NONSHRINK, NONMETALLIC GROUT CONFORMING TO CMS 705.20 AND TO A DEPTH SPECIFIED ON SHEET 6/6. PAYMENT FOR DOWEL HOLES, GROUT AND INSTALLATION SHALL BE INCLUDED WITH ITEM 511.

AS AN ALTERNATIVE TO RESIN BONDING, THREADED INSERTS OR NONPROTRUDING MECHANICAL CONNECTORS CAST INTO THE CULVERT BY THE MANUFACTURER MAY BE USED PROVIDED THEY CAN RESIST AN ULTIMATE PULL-OUT STRENGTH OF 12 KIPS AND MAINTAIN A MINIMUM COVER OF 3 INCHES AT THE BOTTOM OF THE CULVERT SLAB. MECHANICAL CONNECTORS MUST PROVIDE AN "L-SHAPED" BAR INSIDE THE CULVERT WITH A MINIMUM HORIZONTAL LENGTH OF 12 INCHES. PAYMENT FOR INSERTS OR MECHANICAL CONNECTORS SHALL BE INCLUDED WITH ITEM 611.

BACKFILL LIMITATION: WHEN THE DESIGN HEIGHT IS GREATER THAN 10 FT, THE BACKFILL BEHIND THE WINGWALLS SHALL NOT BE PLACED HIGHER THAN THE ELEVATION OF THE SOIL ABOVE THE TOE. WHEN THE SOIL ABOVE THE TOE IS AT ITS FINISHED ELEVATION, THE REMAINDER OF THE BACKFILL MAY BE PLACED.

POROUS BACKFILL WITH FILTER FABRIC 1'-6" THICK SHALL BE PLACED BEHIND THE WINGWALLS ONLY AND SHALL EXTEND TO 12" BELOW THE EMBANKMENT SURFACE. GEOTEXTILE FABRIC SHALL BE PLACED BETWEEN THE POROUS BACKFILL AND REPLACED EXCAVATION ADJACENT TO THE STRUCTURE. IT SHALL TURN UNDER THE BOTTOM OF THE POROUS BACKFILL AND RETURN 6" ABOVE THE TOP ELEVATION OF THE WEEPHOLE.

WEEPHOLES SHALL BE PLACED 6" TO 12" ABOVE THE NORMAL WATER ELEVATION OR GROUND LINE AND SHALL HAVE A MAXIMUM SPACING OF 10'-0". A MINIMUM OF ONE WEEPHOLE SHALL BE PROVIDED PER WINGWALL.

PREFORMED EXPANSION JOINT FILLER: PREFORMED EXPANSION JOINT FILLER (PEJF) CONFORMING TO CMS 705.03, 1 INCH THICK, SHALL BE PLACED ABOVE THE FOOTING BETWEEN THE SIDES OF THE BOX CULVERT AND THE ENDS OF THE WINGWALLS. PAYMENT FOR MATERIALS AND INSTALLATION SHALL BE INCLUDED WITH ITEM 516 - 1" PREFORMED EXPANSION JOINT FILLER.

SEALING OF FORESLOPE WALL AND WINGWALLS: ALL EXPOSED FORESLOPE WALL AND WINGWALL CONCRETE SHALL BE SEALED WITH EPOXY-URETHANE SEALER. THE LIMITS SHALL BE AS SHOWN IN THE DIAGRAMS BELOW. PAYMENT FOR THE EPOXY-URETHANE SEALER SHALL BE PER ITEM 512 - SEALING OF CONCRETE SURFACES.

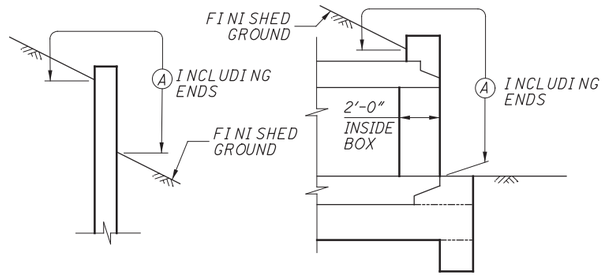

WINGWALL

FORESLOPE WALL AND PRECAST BOX
(CULVERT OUTLET BEVEL SHOWN)

LIMITS OF ITEM 512-SEALING CONCRETE SURFACES
(A) - SEAL ENTIRE CONCRETE SURFACE AREA

WATERPROOFING: TYPE 2 WATERPROOFING, PER CMS 512.09 AND 711.25, SHALL EXTEND VERTICALLY DOWN THE ENTIRE SIDES OF THE PRECAST CULVERT SECTIONS FOR ALL PORTIONS OF THE CULVERT WHICH SHALL BE IN CONTACT WITH THE BACKFILL. PAYMENT FOR THE MEMBRANE WATERPROOFING SHALL BE AT THE CONTRACT PRICE BID PER SQUARE YARD FOR ITEM 512 - TYPE 2 WATERPROOFING.

IF PAVEMENT IS NOT PLACED DIRECTLY ON TOP OF THE CULVERT, TYPE 2 WATERPROOFING, PER CMS 512.09 AND 711.25 SHALL BE APPLIED TO THE ENTIRE TOP SURFACE OF THE PRECAST CULVERT SECTIONS AND SHALL EXTEND ONE FOOT VERTICALLY DOWN THE SIDES FOR ALL PORTIONS OF THE CULVERT WHICH SHALL BE IN CONTACT WITH THE BACKFILL. PAYMENT FOR THE MEMBRANE WATERPROOFING SHALL BE AT THE CONTRACT PRICE BID PER SQUARE YARD FOR ITEM 512 - TYPE 2 WATERPROOFING.

IF PAVEMENT IS TO BE USED DIRECTLY ON TOP OF THE CULVERT, TYPE 3 WATERPROOFING, PER CMS 512.10 AND 711.29 SHALL BE APPLIED TO THE ENTIRE TOP SURFACE OF THE PRECAST CULVERT SECTIONS AND SHALL EXTEND ONE FOOT VERTICALLY DOWN THE SIDES FOR ALL PORTIONS OF THE CULVERT WHICH SHALL BE IN CONTACT WITH THE BACKFILL. PAYMENT FOR THE MEMBRANE WATERPROOFING SHALL BE AT THE CONTRACT PRICE BID PER SQUARE YARD FOR ITEM 512 - TYPE 3 WATERPROOFING.

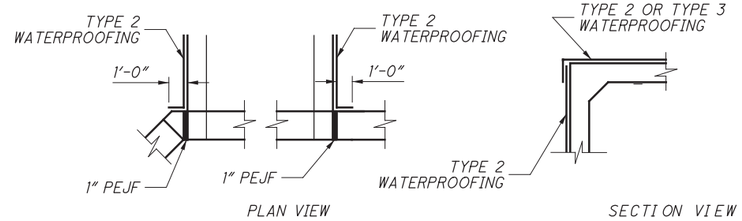

PLAN VIEW SECTION VIEW

WATERPROOFING DETAILS

BASIS OF PAYMENT: ALL LABOR, EQUIPMENT AND INCIDENTALS REQUIRED TO CONSTRUCT THE FOOTING, CUTOFF WALL, WINGWALLS AND FORESLOPE WALL SHALL BE INCLUDED WITH ITEM 511 - CLASS C CONCRETE (RET-WALL/ WINGWALL- INCLUDING FOOTING). PAYMENT FOR REINFORCING STEEL SHALL BE INCLUDED WITH ITEM 509 - EPOXY COATED REINFORCING STEEL.

ESTIMATED QUANTITIES

ITEM	ITEM EXT	TOTAL	UNIT	DESCRIPTION
202		1	EACH	HEADWALL REMOVED
202		424	LIN. FT.	PIPE REMOVED, OVER 24"
202	11000	LUMP		STRUCTURE REMOVED
503	11100	LUMP		COFFERDAMS AND EXCAVATION BRACING
503	21300	LUMP		UNCLASSIFIED EXCAVATION (WINGWALL FOOTING)
509	10000	2734	LB.	EPOXY COATED REINFORCING STEEL
511	46510	20	CU. YD.	CLASS QC1 CONCRETE, FOOTING
511	46610	7	CU. YD.	CLASS QC1 CONCRETE, HEADWALL
512	10100	561	SQ. YD.	SEALING OF CONCRETE SURFACES (EPOXY-URETHANE)
512	33000	541	SQ. YD.	TYPE 2 WATERPROOFING
516	13600	26	SQ. FT.	1" PREFORMED EXPANSION JOINT FILLER
518	21230	LUMP		POROUS BACKFILL WITH FILTER FABRIC
602	20000	1.12	CU. YD.	CONCRETE MASONRY
611	20000	15	LIN. FT.	30" CONDUIT, TYPE A
611	94800	212	LIN. FT.	8'-0" SPAN 4'-0" RISE CONDUIT, TYPE A, 706.05,

NOTE: TOTALS CARRIED TO DRAINAGE SUBSUMMARY

CALCULATED LMP
CHECKED ENB

HEADWALL DETAILS

FRA-71-5.29

459
623

P:\84868\drainage\sheets\84868DD001.dgn 3/27/2015 2:36:11 PM kfahy

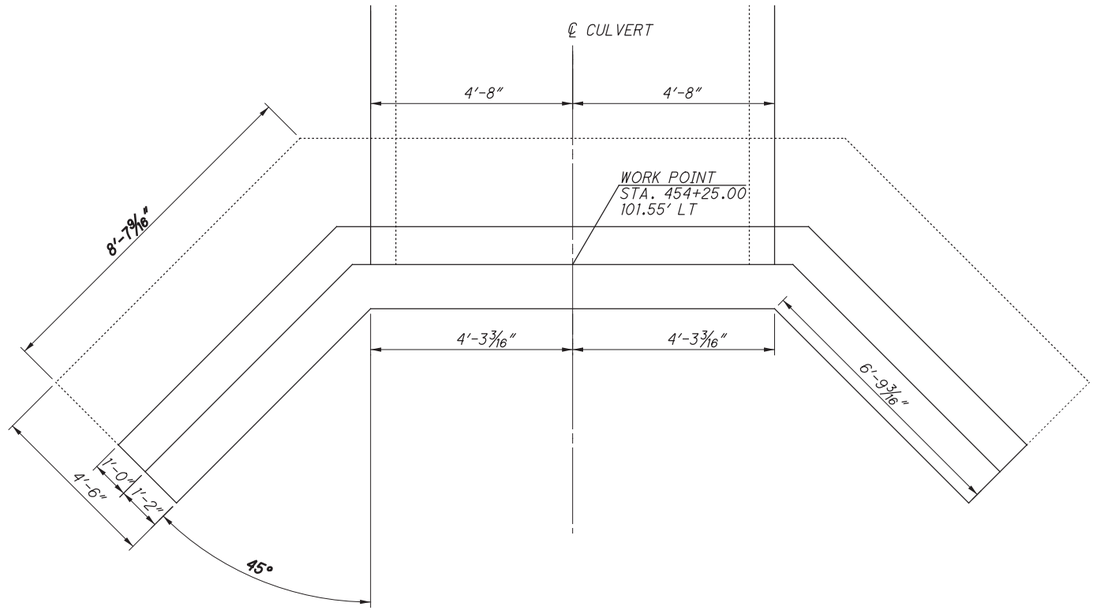

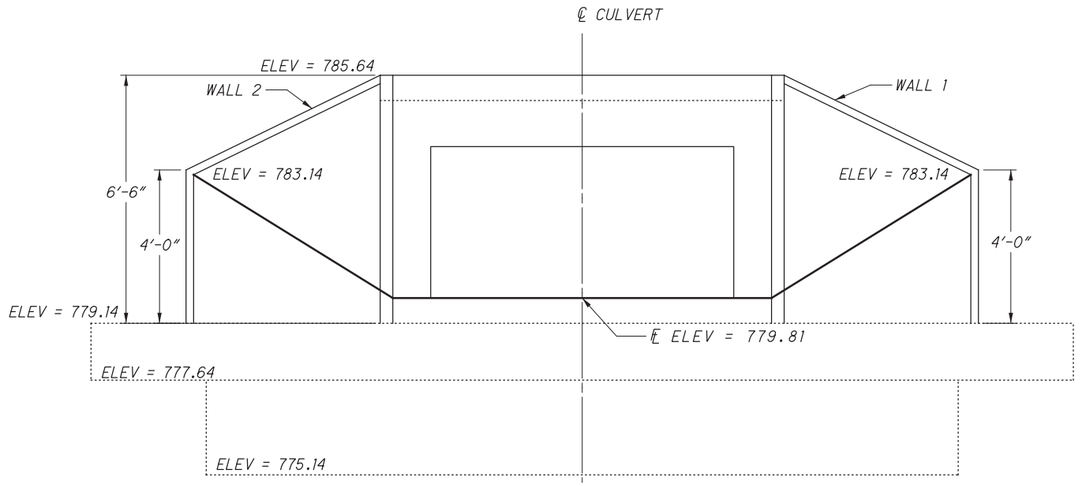

INLET ELEVATION

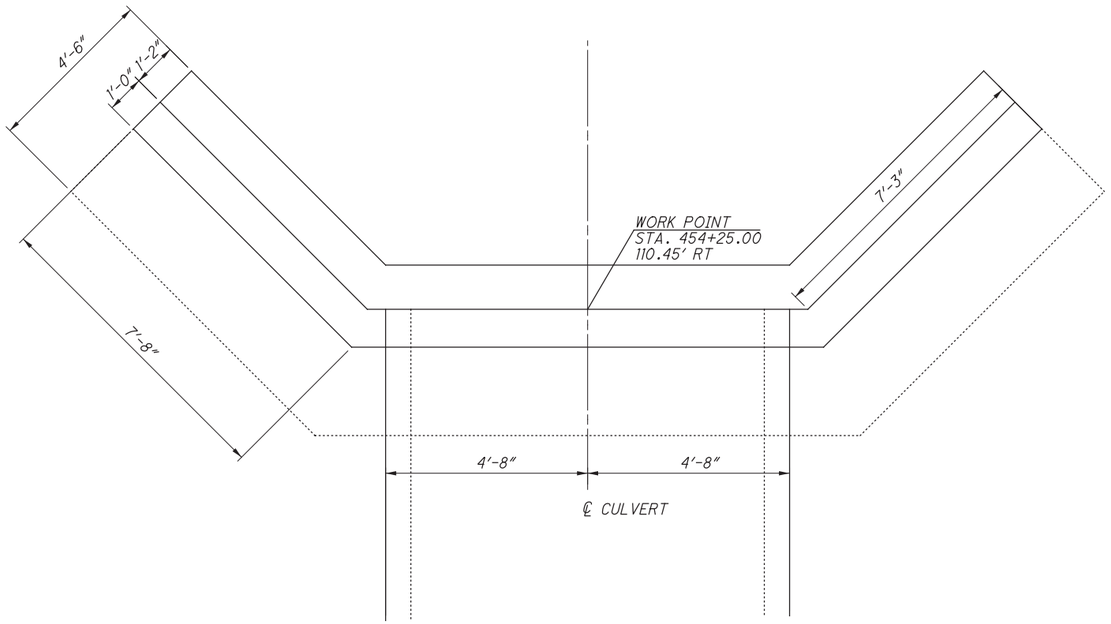

CULVERT & WINGWALL LAYOUT

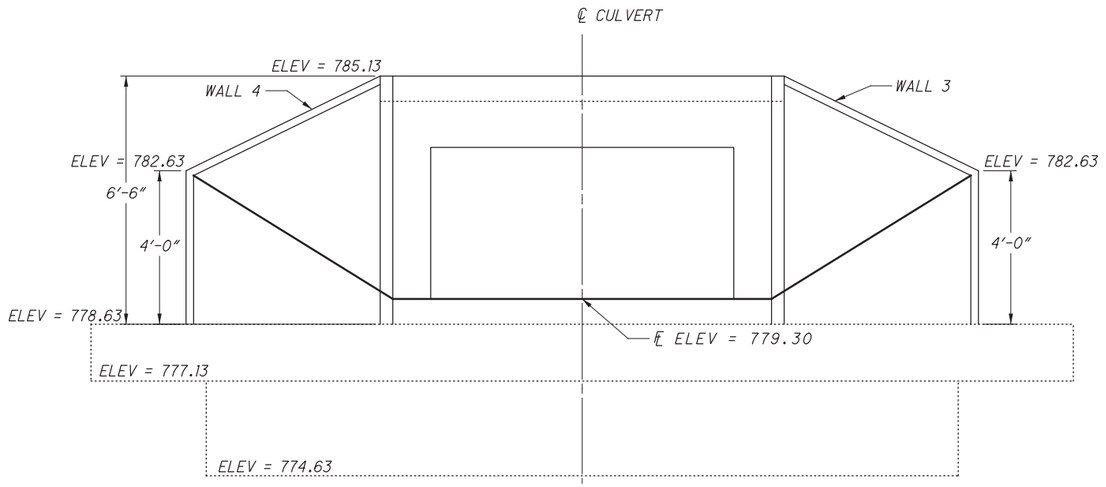

OUTLET ELEVATION

FIGURES DRAWN TO 0.5 SCALE

P:\84868\drainage\sheets\84868DD002.dgn 3/27/2015 2:36:12 PM ktahy

CALCULATED LMP
CHECKED ENB

HEADWALL DETAILS

FRA-71-5.29

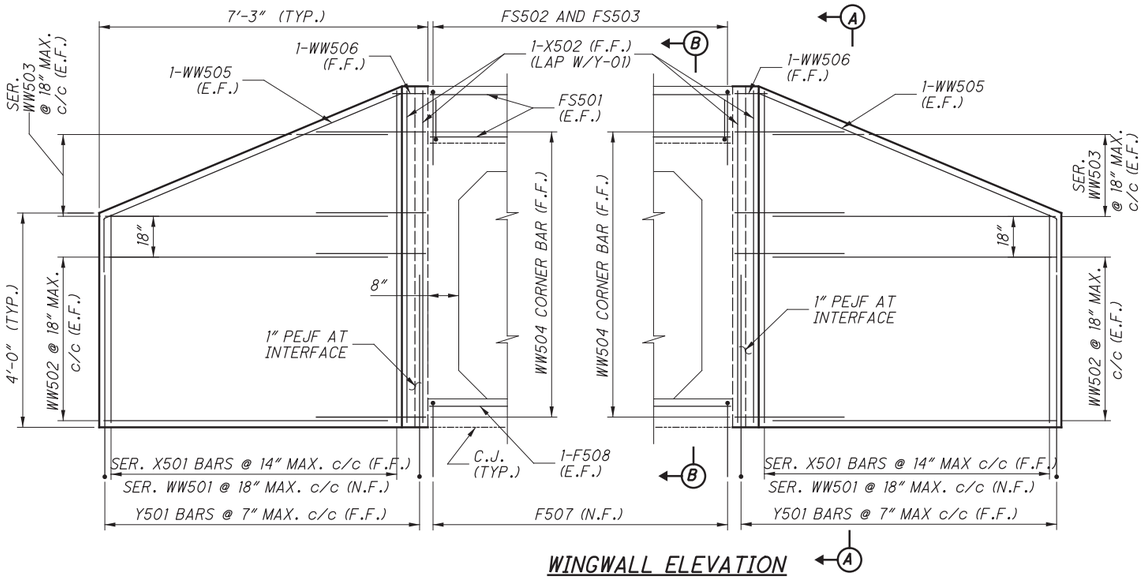

WINGWALL ELEVATION

(FOOTING NOT SHOWN)

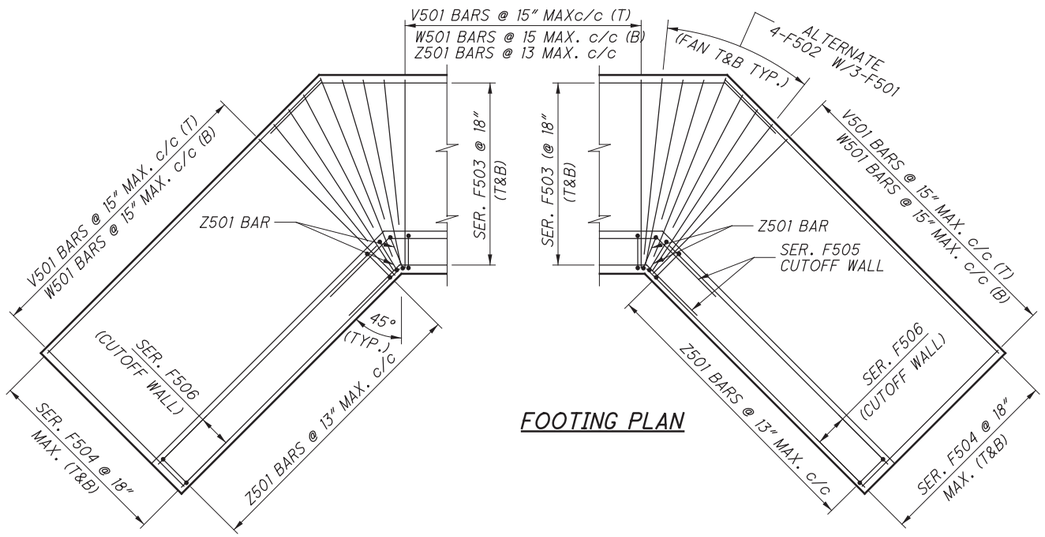

FOOTING PLAN

NOTES

1. FOR CULVERT LOCATION PLAN, SEE SHEET 458.
2. THE BAR SIZE NUMBER IS SPECIFIED ON THE PLANS IN THE BAR MARK COLUMN. THE FIRST DIGIT INDICATES THE BAR SIZE NUMBER. FOR EXAMPLE, WW501 IS A NO.5 BAR. BAR DIMENSIONS SHOWN ARE OUT TO OUT. ALL REINFORCING STEEL SHALL BE EPOXY COATED.
3. THE LAP SPLICE LENGTHS USED IN THESE DETAILS ARE AS FOLLOWS: 2'-5" FOR #5 BARS; 2'-11" FOR #6 BARS.

LEGEND:

C.J.	CONSTRUCTION JOINT	N.F.	NEAR FACE
CLR.	CLEAR	SER.	SERIES
DIA.	DIAMETER	STR.	STRAIGHT
E.F.	EACH FACE	(T)	TOP
F.F.	FAR FACE	(B)	BOTTOM
MAX.	MAXIMUM	T&B	TOP AND BOTTOM
MIN.	MINIMUM	TYP.	TYPICAL
PEJF	PREFORMED EXPANSION JOINT FILLER	INC.	INCREMENT

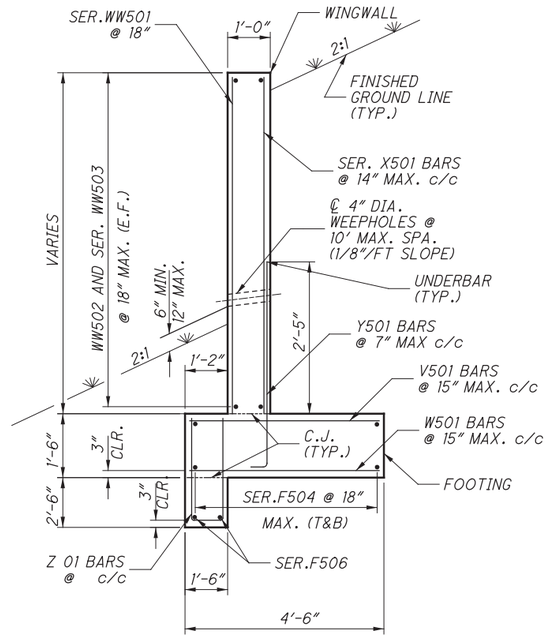

SECTION A-A

(POROUS BACKFILL NOT SHOWN FOR CLARITY)

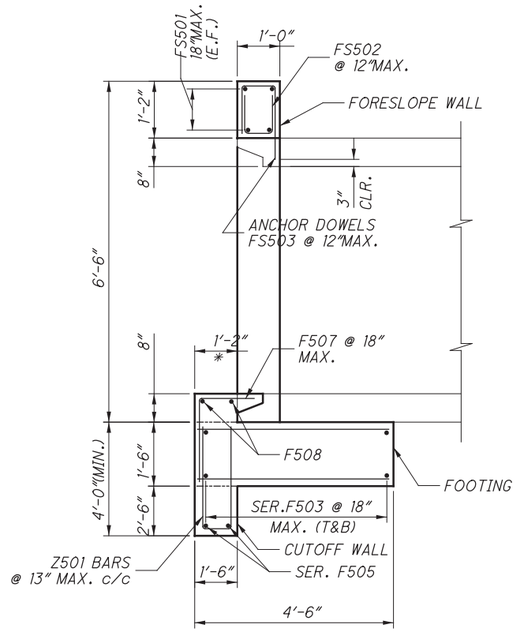

SECTION B-B

(CULVERT INLET BEVEL SHOWN)

CALCULATED LMP
CHECKED ENB

HEADWALL DETAILS

FRA-71-5.29

461
623

P:\84868\drainage\sheets\84868DD003.dgn 3/27/2015 2:36:12 PM kfahy

TYPE A HEADWALL REINFORCING SCHEDULE									
BAR MARK	NUMBER	LENGTH	WEIGHT (LBS.)	TYPE	BAR TYPE DIMENSIONS				INC.
					A	B	C	D	
WINGWALLS									
	2	3'- 10"							
X501	SERIES	TO	128	STR.					0'- 6 "
	of 6	6'- 4"							
X502	4	6'- 4"	54	STR.					
Y501	26	4'- 1"	220	1	0'- 6"	3'- 8"			
	2	3'- 10"							
WW501	SERIES	TO	128	STR.					0'- 6 "
	of 6	6'- 4"							
WW502	12	6'- 11"	174	STR.					
	4	3'- 6"							
WW503	SERIES	TO	88	STR.					3'- 5 "
	of 2	6'- 11"							
WW504	10	3'- 6"	74	2	0'- 7"	0'- 2 "	2'- 1/4"	2'- 10 "	
WW505	4	9'- 9"	82	3	2'- 5"	2'- 4"	6'- 11"		
WW506	2	1'- 1"	6	4	0'- 7"	0'- 2 "			
FOOTING & CUTOFF WALL									
V501	19	4'- 2"	166	STR.					
W501	19	4'- 2"	166	STR.					
Z501	23	8'- 2"	392	5	3'- 7"	1'- 2"			
F501	12	3'- 10"	96	STR.					
F502	16	2'- 11"	98	STR.					
	2	12'- 9"					7'- 10 1/4"		
F503	SERIES	TO	242	6	1'- 9"	1'- 9"	TO		1'- 1 7/8"
	of 4	16'- 3"					11'- 3 3/4"		
	4	6'- 3"							
F504	SERIES	TO	238	STR.					0'- 6 3/4"
	of 4	7'- 11"							
	1	12'- 9"					7'- 10 1/4"		
F505	SERIES	TO	56	6	1'- 9"	1'- 9"	TO		0'- 11 1/2"
	2	13'- 9"					8'- 9 3/4"		
	2	6'- 3"							
F506	SERIES	TO	54	STR.					0'- 5 "
	2	6'- 8"							
F507	7	3'- 11"	58	1	2'- 2"	1'- 10"			
F508	2	9'- 0"	38	STR.					
FORESLOPE WALL									
FS501	4	9'- 0"	76	STR.					
FS502	10	2'- 1"	44	5	0'- 10"	0'- 8"			
FS503	10	2'- 8"	56	7	0'- 10"	0'- 8"	1'- 5"		
		TOTAL	2,734						

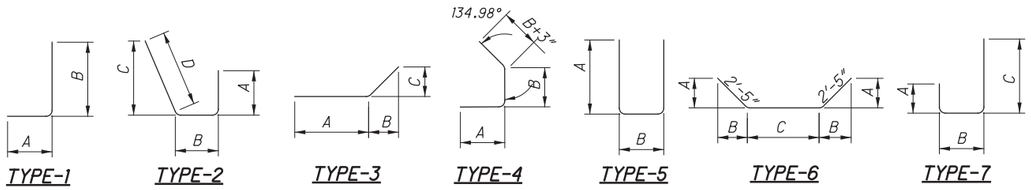

P:\84868\drainage\sheets\84868DD004.dgn 3/27/2015 2:36:13 PM kfahy

CALCULATED LMP
CHECKED ENB

HEADWALL DETAILS

FRA-71-5.29

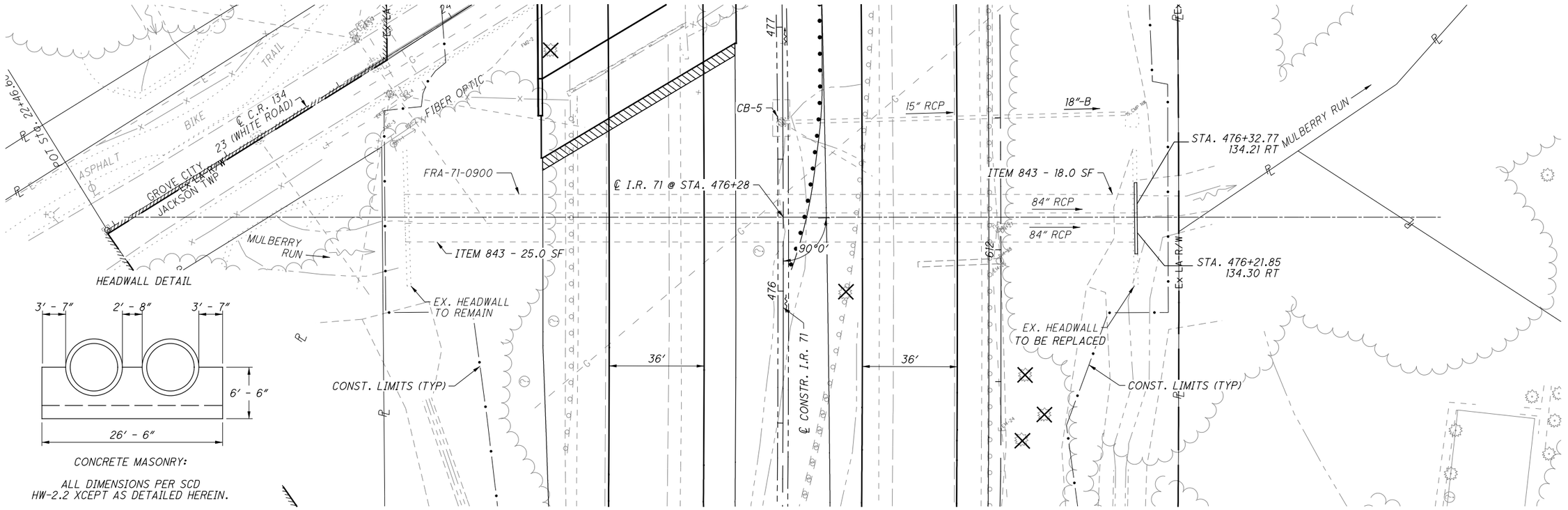

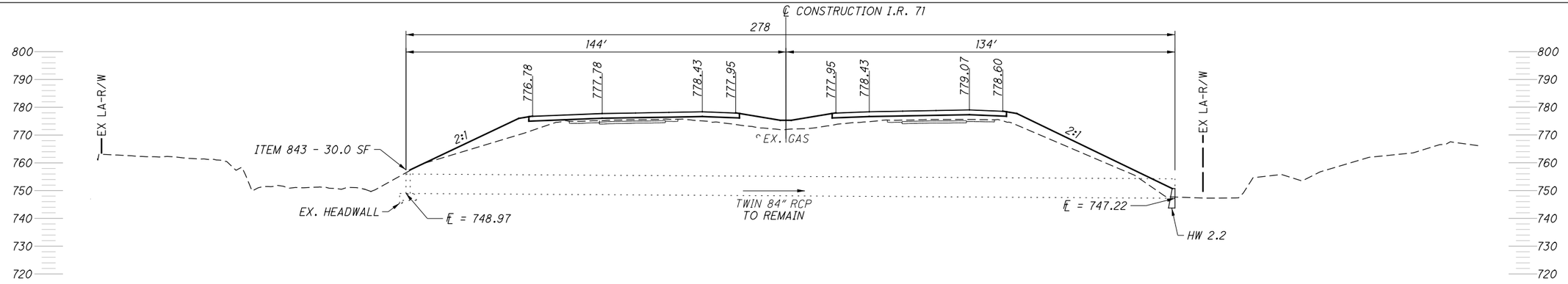

PROPOSED STRUCTURE	
TYPE:	N/A
LENGTH:	
SKEW:	
WEARING SURFACE:	

EXISTING STRUCTURE	
TYPE:	TWIN 84″ RCP
LENGTH:	278′ X 2
SKEW:	0°
WEARING SURFACE:	ASPHALT CONCRETE
YEAR BUILT:	1960

HYDRAULIC DESIGN DATA			
DRAINAGE AREA:	=	..	AC
Q50	=	..	CFS
Q100	=	..	CFS
HW50	=	..	
HW100	=	..	
V50	=	..	FPS
V100	=	..	FPS

ESTIMATED QUANTITIES CARRIED TO THE DRAINAGE SUBSUMMARY

ITEM	QUANTITY	UNIT	DESCRIPTION
202	1	EACH	HEADWALL REMOVED
602	12	CY	CONRETE MASONRY
843	73	SF	PATCHING CONCRETE STRUCTURES WITH TROWELABLE MORTAR, AS PER PLAN

HORIZONTAL SCALE IN FEET
0 10 20 40

CALCULATED LMR
CHECKED KEW

CULVERT DETAIL
STA. 476+28

FRA-71-5.29

463
623

P:\84868\drainage\sheets\84868DC008.dgn 3/30/2015 8:32:36 AM mtakacs

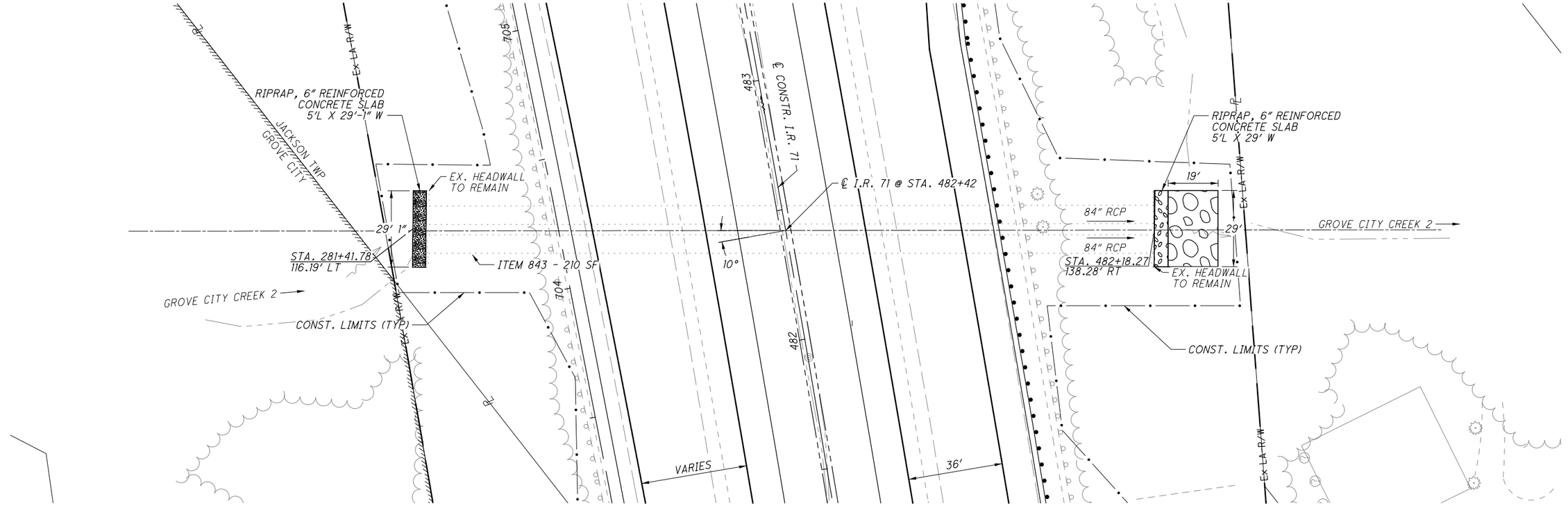

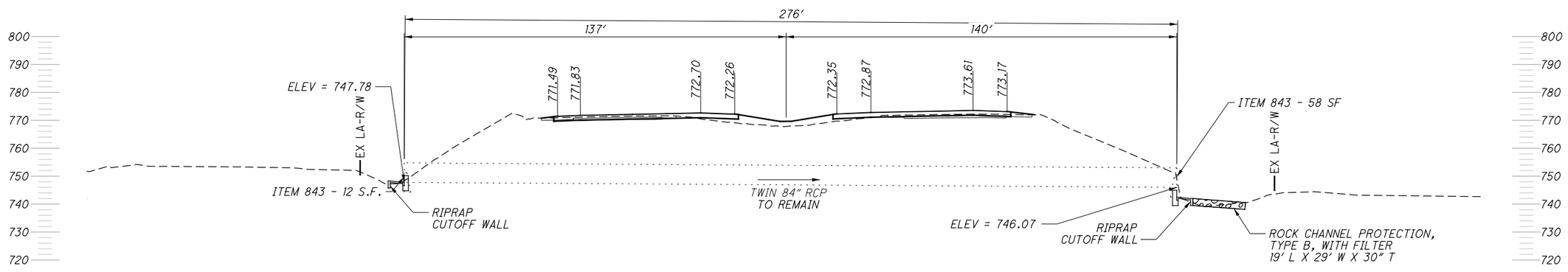

EXISTING STRUCTURE	
TYPE:	TWIN 84" RCP
LENGTH:	276' X 2
SKEW:	10° L.F.
WEARING SURFACE:	ASPHALT CONCRETE
YEAR BUILT:	----

ESTIMATED QUANTITIES CARRIED TO THE DRAINAGE SUBSUMMARY

ITEM	QUANTITY	UNIT	DESCRIPTION
601	16	SY	RIPRAP USING 6" REINFORCED CONCRETE SLAB
843	280	SF	PATCHING CONCRETE STRUCTURES WITH TROWELABLE
			MORTAR, AS PER PLAN

0 10 20 40 HORIZONTAL SCALE IN FEET

CALCULATED LMR CHECKED KEW

CULVERT DETAIL STA. 482+42

FRA-71-5.29

464
623

P:\84868\drainage\sheets\84868DC009.dgn 3/30/2015 9:16:57 AM mtakacs

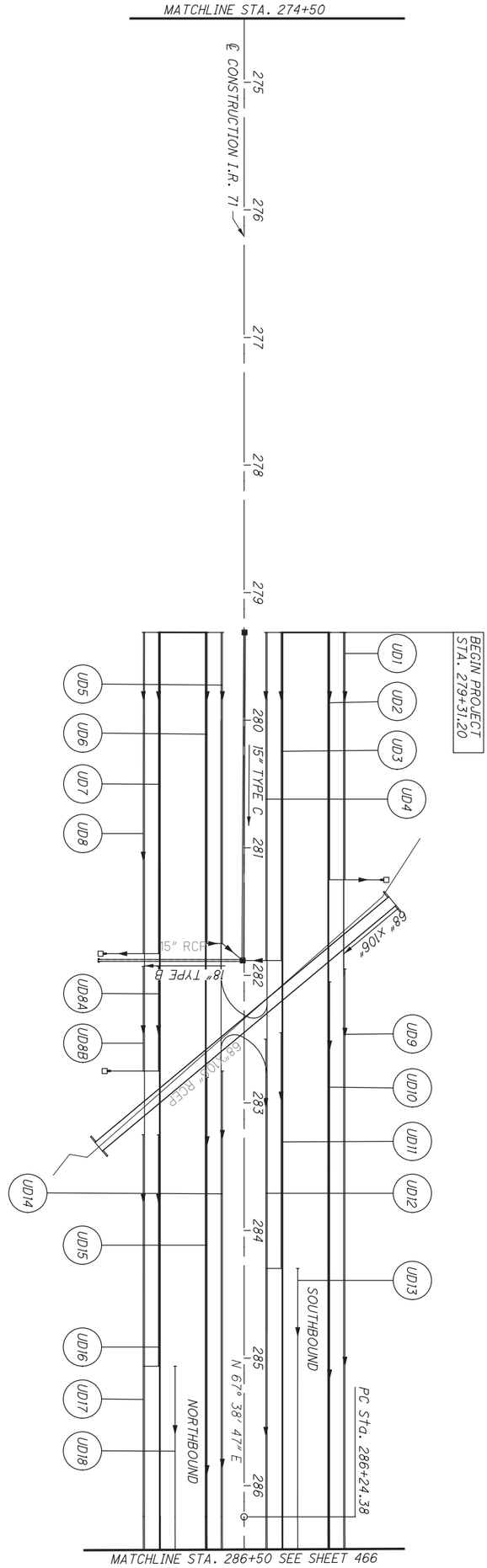

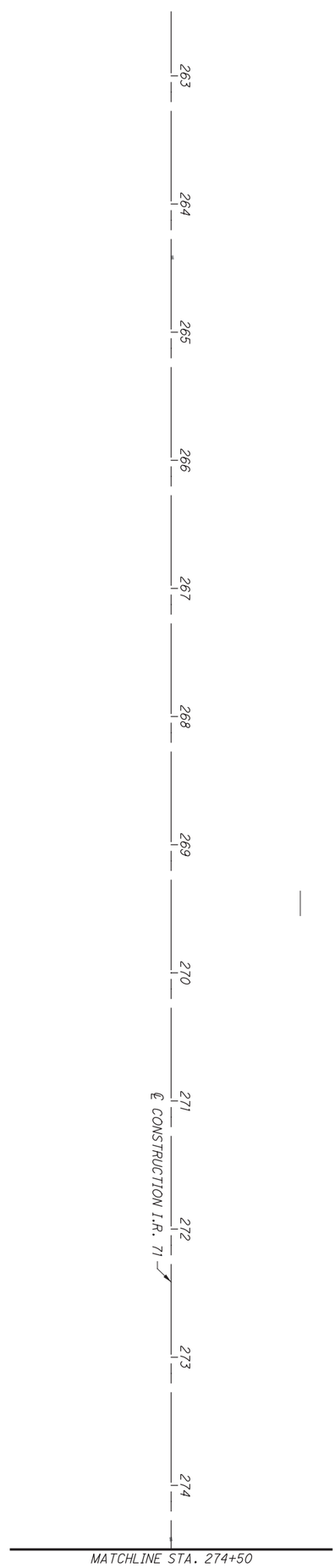

FRA-71-5.29

UNDERDRAIN DETAILS
STA. 262+50.00 TO STA. 286+50.00

CALCULATED LMR
CHECKED KEW

0 25 50 100
HORIZONTAL SCALE IN FEET

P:\84868\drainage\sheets\84868DP004.dgn 3/27/2015 2:36:17 PM kfahy

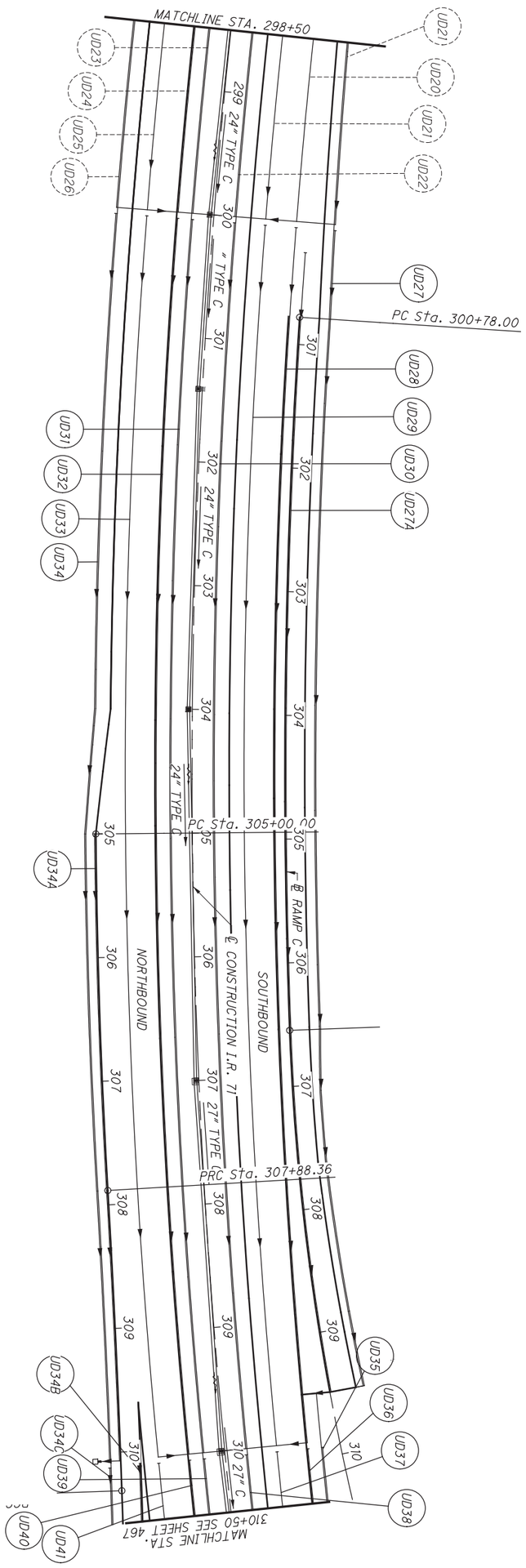

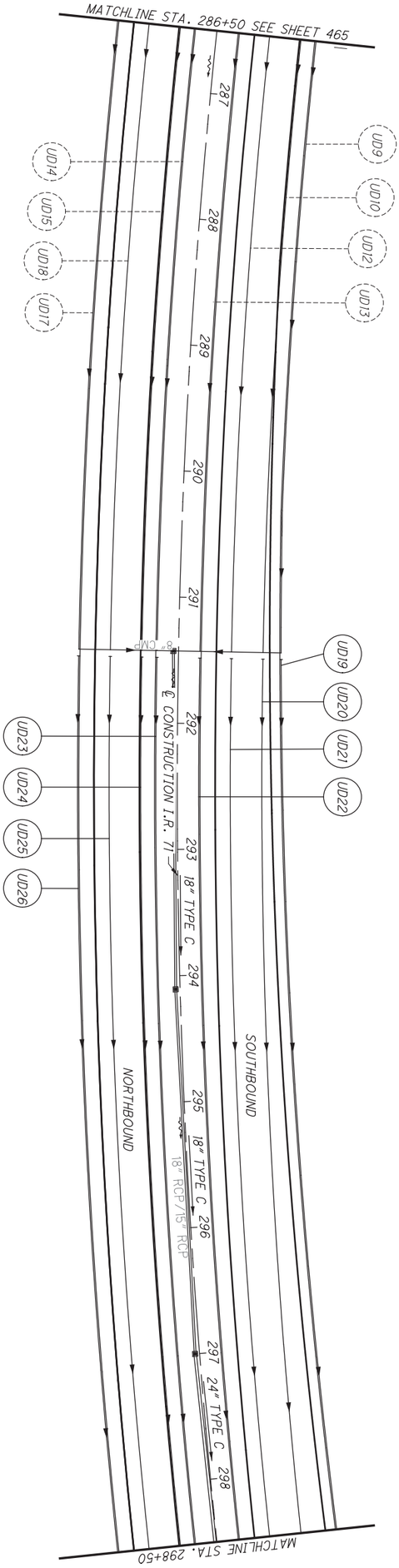

466 / 623	FRA-71-5.29	UNDERDRAIN DETAILS STA. 286+50.00 TO STA. 310+50.00	CALCULATED LMR CHECKED KEW	0 50 25 100 HORIZONTAL SCALE IN FEET

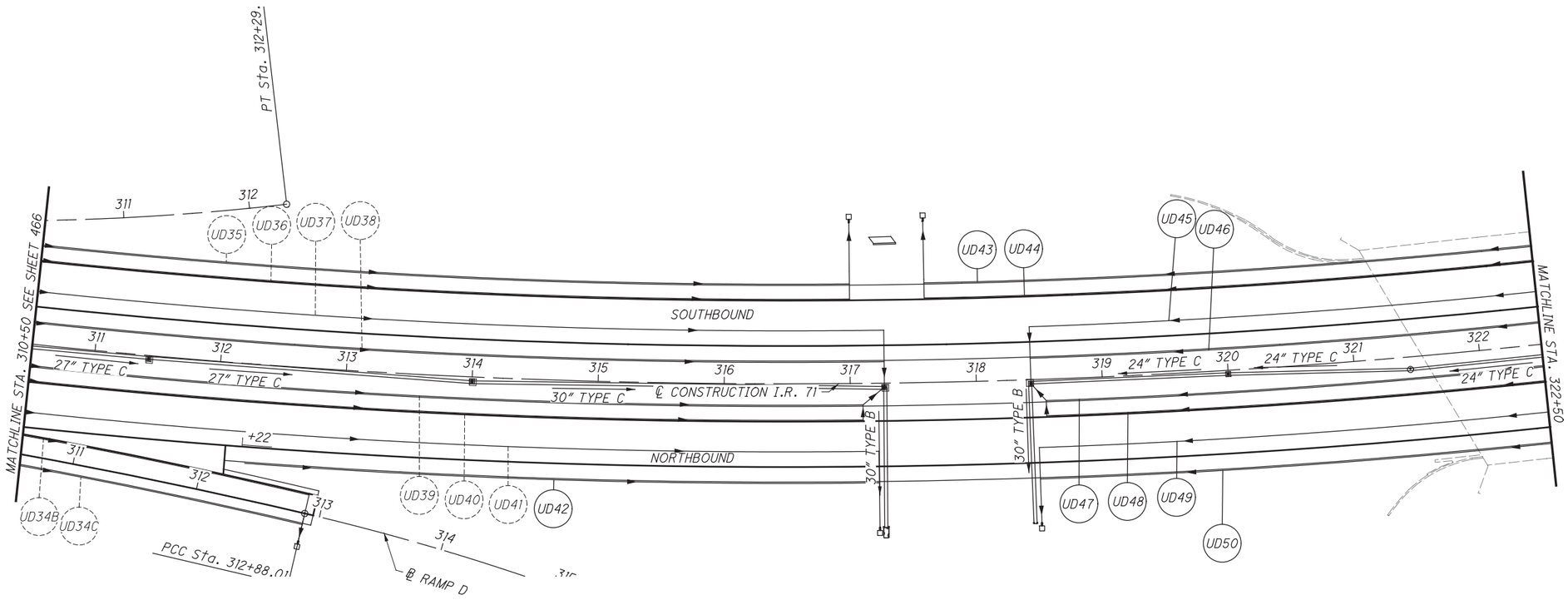

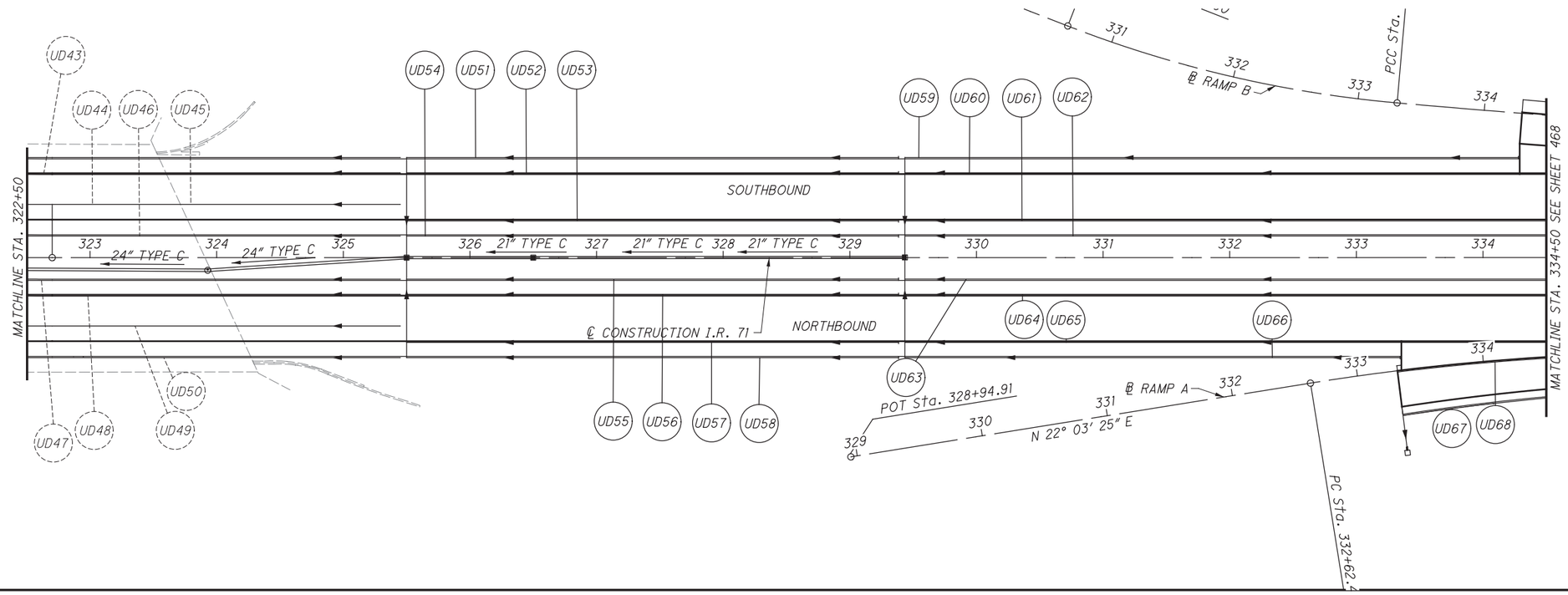

HORIZONTAL SCALE IN FEET
0 25 50 100

CALCULATED GPD
CHECKED KEW

UNDERDRAIN DETAILS
STA. 310+50.00 TO STA. 334+50.00

FRA-71-5.29

467
623

P:\84868\drainage\sheets\84868DP005.dgn 3/27/2015 2:36:17 PM kfahy

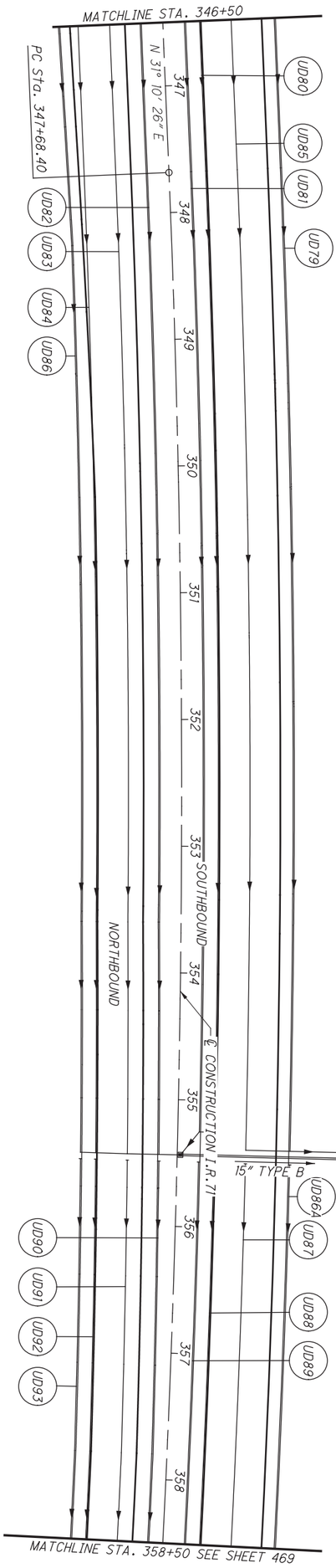

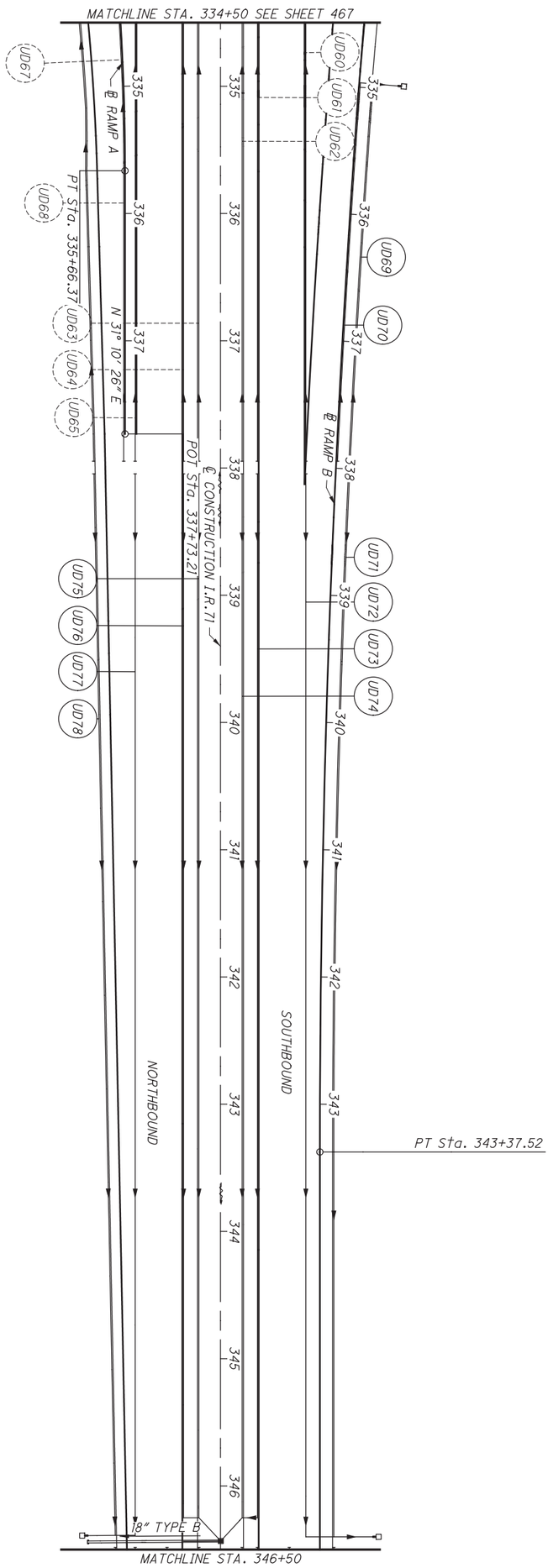

FRA-71-5.29

UNDERDRAIN DETAILS
STA. 334+50.00 TO STA. 358+50.00

CALCULATED LMR
CHECKED KEW

0 25 50 100
HORIZONTAL SCALE IN FEET

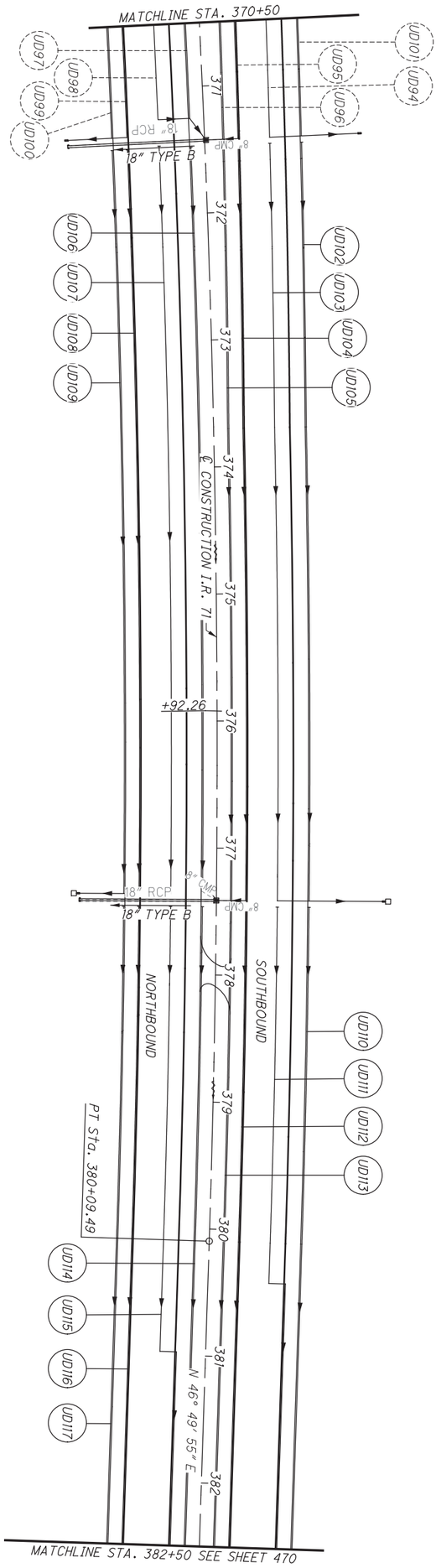

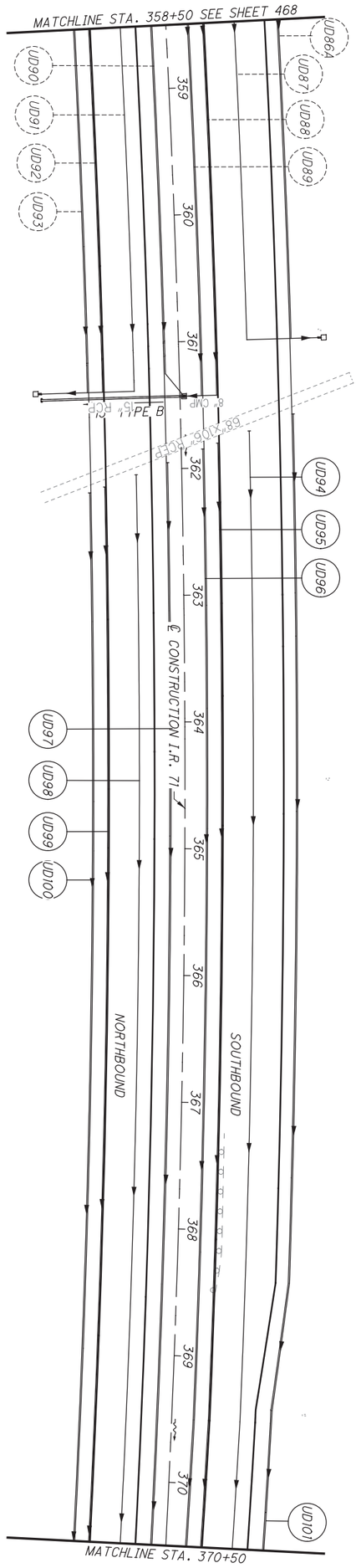

FRA-71-5.29

UNDERDRAIN DETAILS
STA. 358+50.00 TO STA. 382+50.00

CALCULATED LMR
CHECKED KEW

0 50
25 100
HORIZONTAL SCALE IN FEET

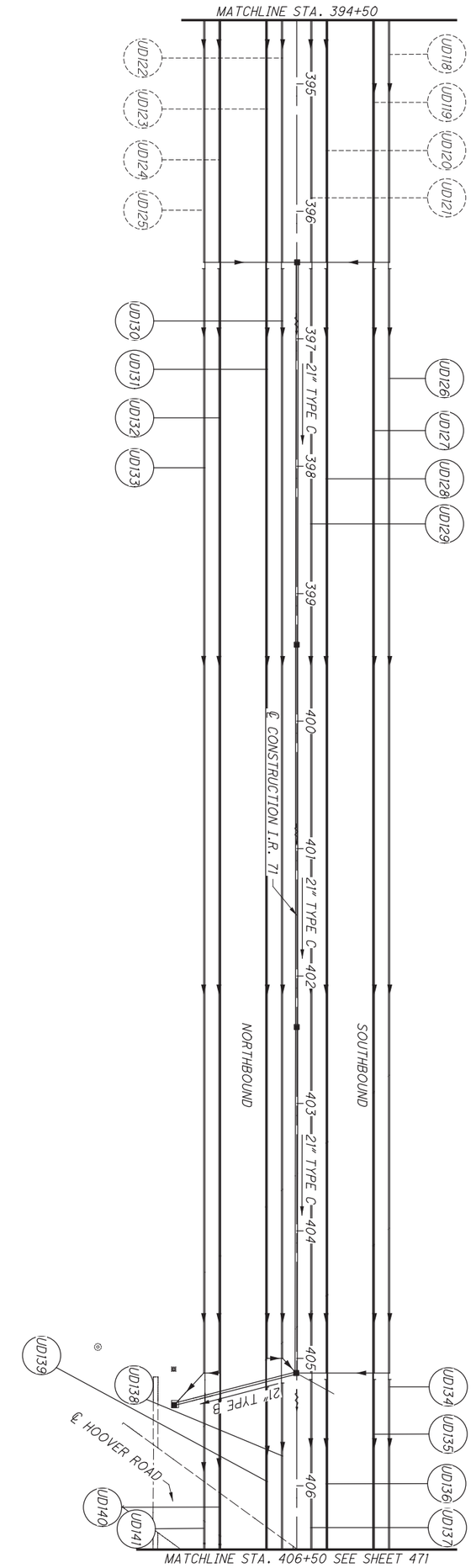

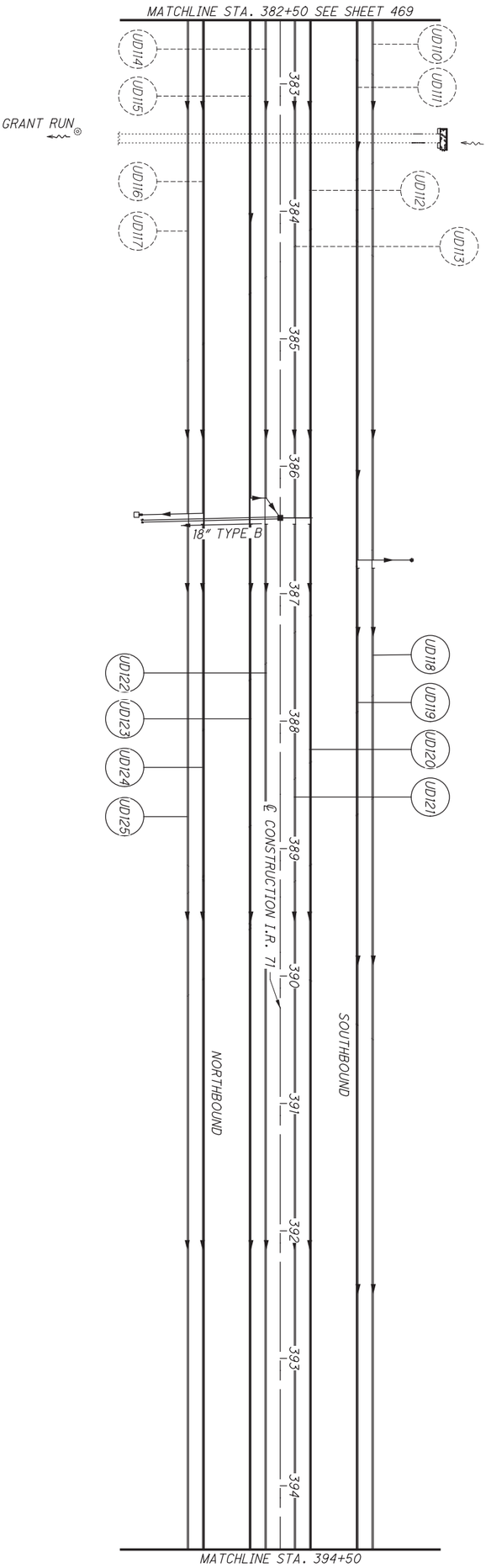

FRA-71-5.29

UNDERDRAIN DETAILS
STA. 382+50.00 TO STA. 406+50.00

CALCULATED LMR
CHECKED KEW

0 25 50 100
HORIZONTAL SCALE IN FEET

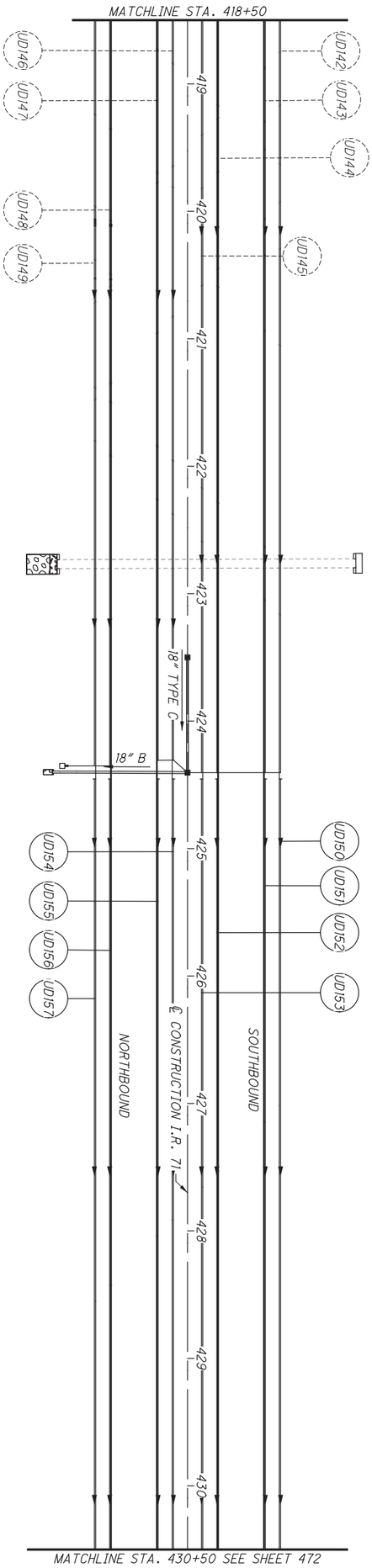

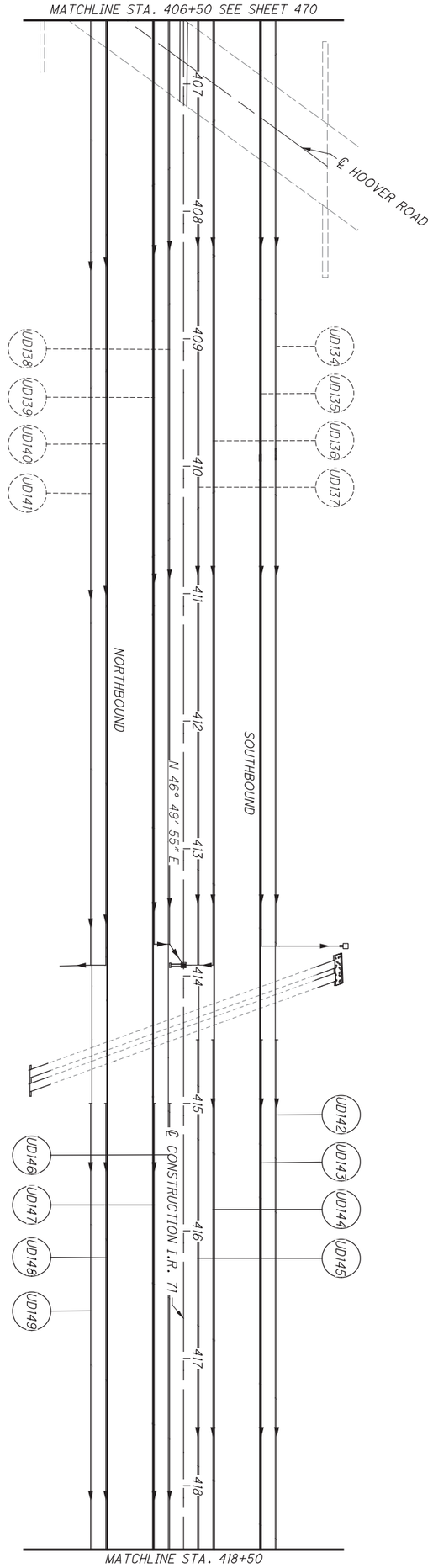

FRA-71-5.29

UNDERDRAIN DETAILS
STA. 406+50.00 TO STA. 430+50.00

CALCULATED LMR
CHECKED KEW

0 25 50 100
HORIZONTAL SCALE IN FEET

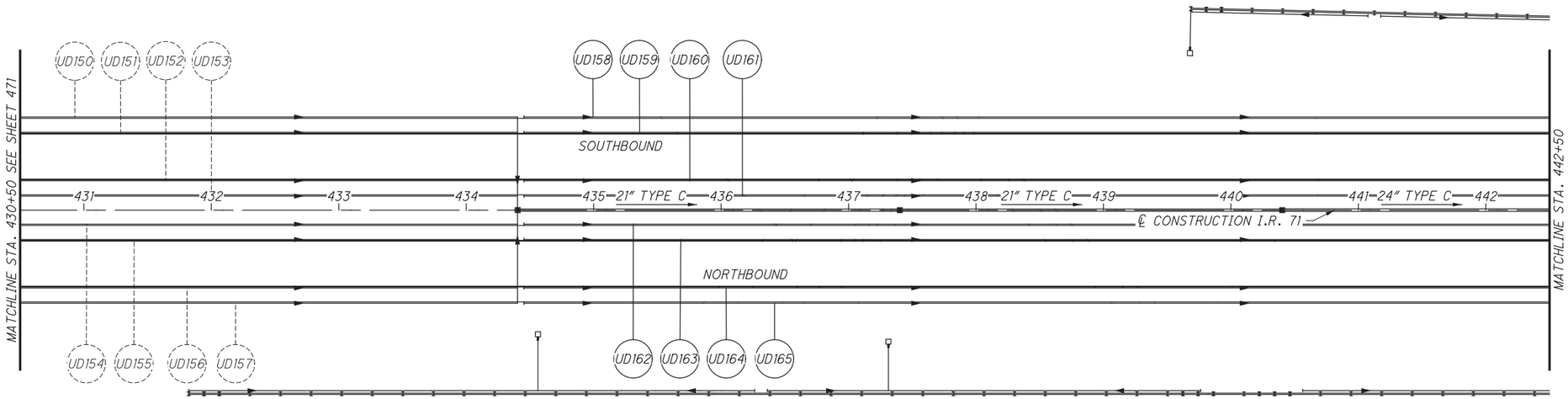

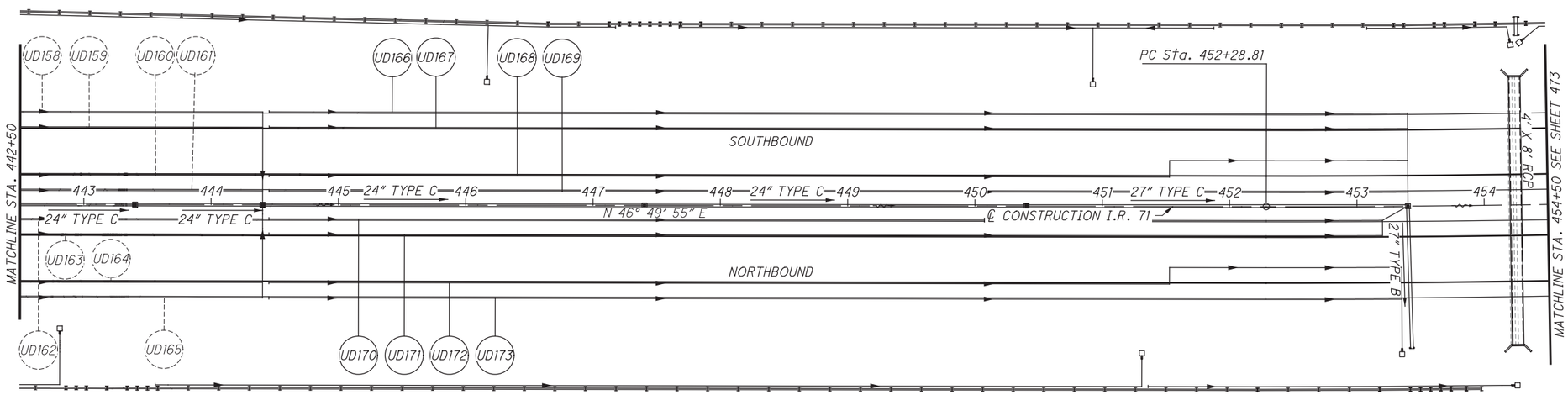

NOTE: UNDERDRAINS FOR THE NOISEWALL ARE NUMBERED AND QUANTIFIED IN THE NOISEWALL SHEETS. SEE SHEETS 489 THROUGH 543 FOR DETAILS.

HORIZONTAL SCALE IN FEET
0 25 50 100

CALCULATED LMR
CHECKED KEW

UNDERDRAIN DETAILS
STA. 430+50.00 TO STA. 454+50.00

FRA-71-5.29

472
623

P:\84668\drainage\sheets\84868DP010.dgn 3/27/2015 2:36:20 PM kfahy

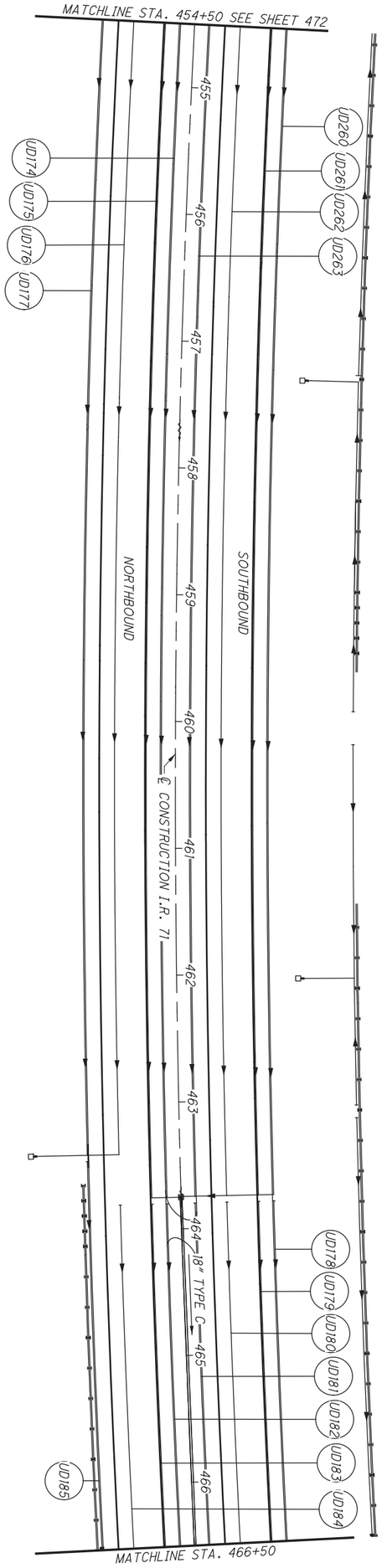

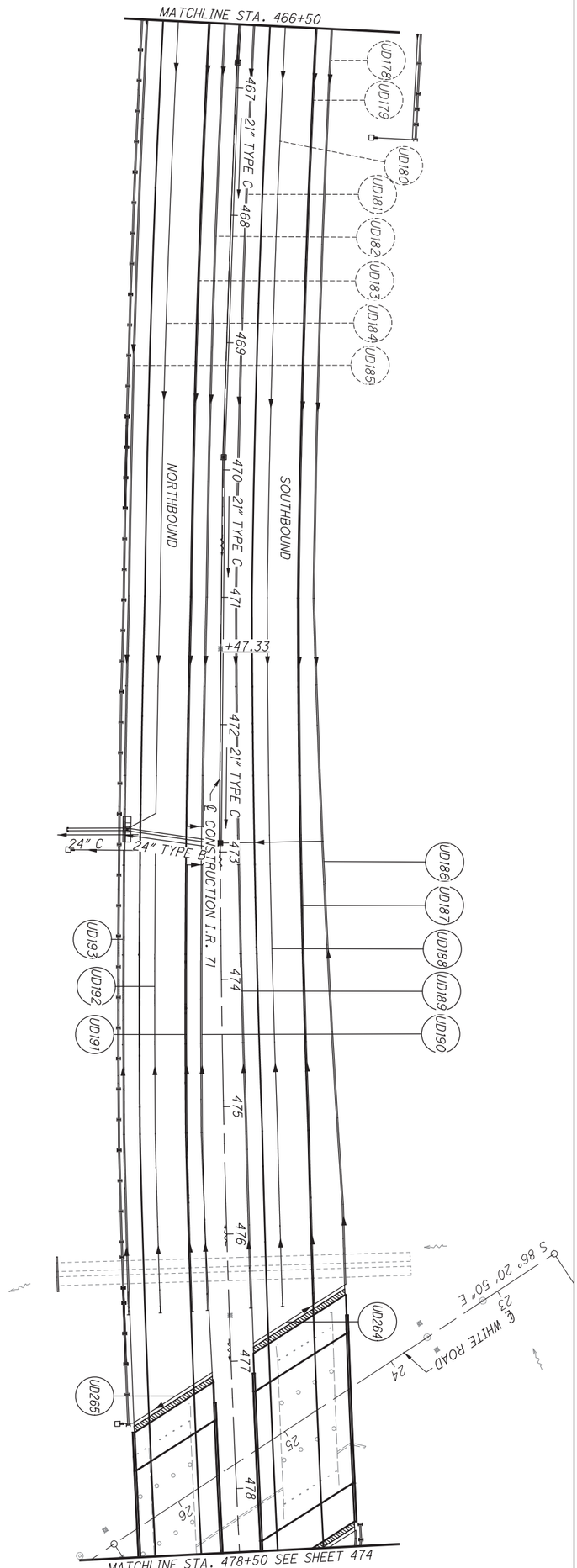

NOTE: UNDERDRAINS FOR THE NOISEWALL ARE NUMBERED AND QUANTIFIED IN THE NOISEWALL SHEETS. SEE SHEETS 489 THROUGH 543 FOR DETAILS.

FRA-71-5.29

UNDERDRAIN DETAILS
STA. 454+50.00 TO STA. 478+50.00

CALCULATED LMR
CHECKED KEW

0 25 50 100
HORIZONTAL SCALE IN FEET

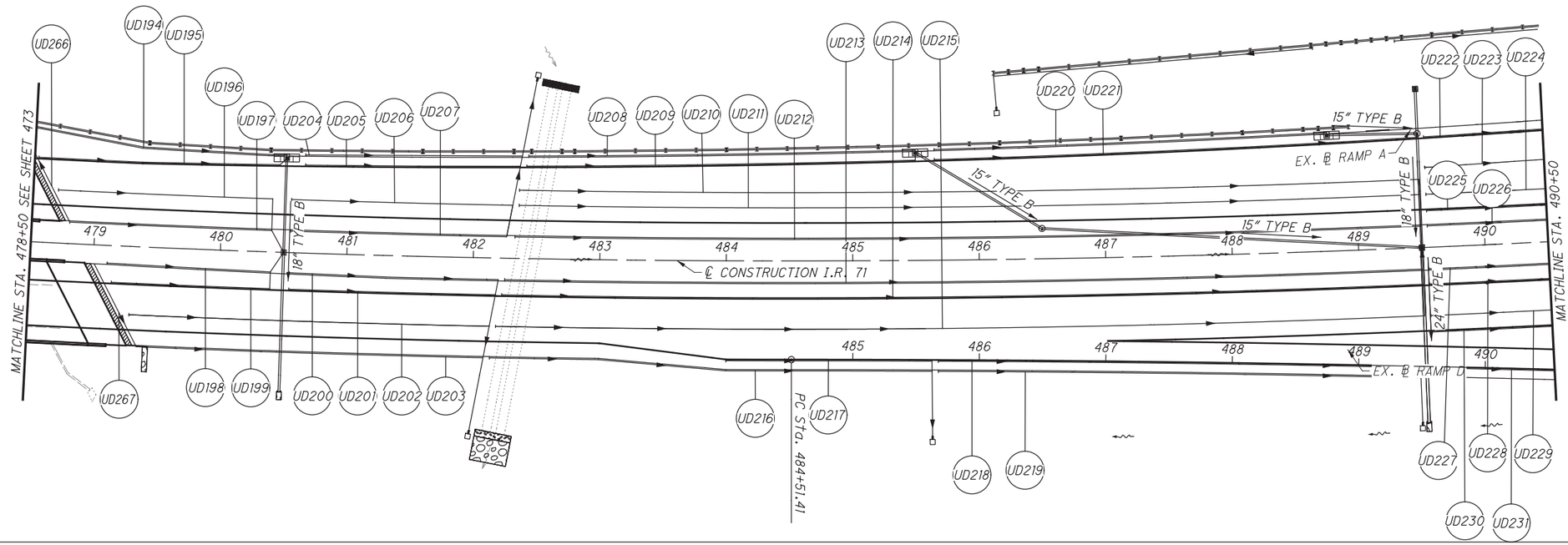

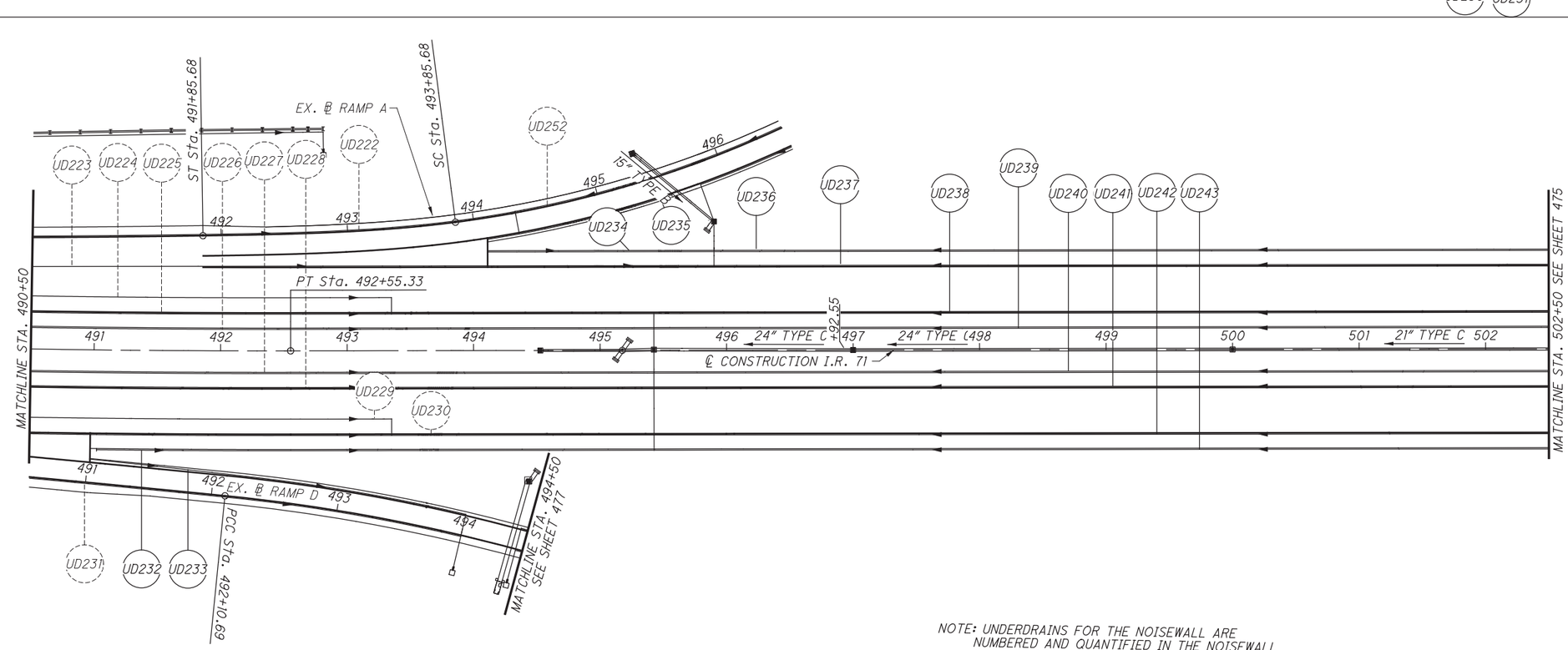

NOTE: UNDERDRAINS FOR THE NOISEWALL ARE NUMBERED AND QUANTIFIED IN THE NOISEWALL SHEETS. SEE SHEETS 489 THROUGH 543 FOR DETAILS.

HORIZONTAL SCALE IN FEET
0 25 50 100

CALCULATED LMR
CHECKED KEW

UNDERDRAIN DETAILS
STA. 478+50.00 TO STA. 502+50.00

FRA-71-5.29

474
623

P:\84868\drainage\sheets\84868DP012.dgn 3/27/2015 2:36:22 PM kfahy

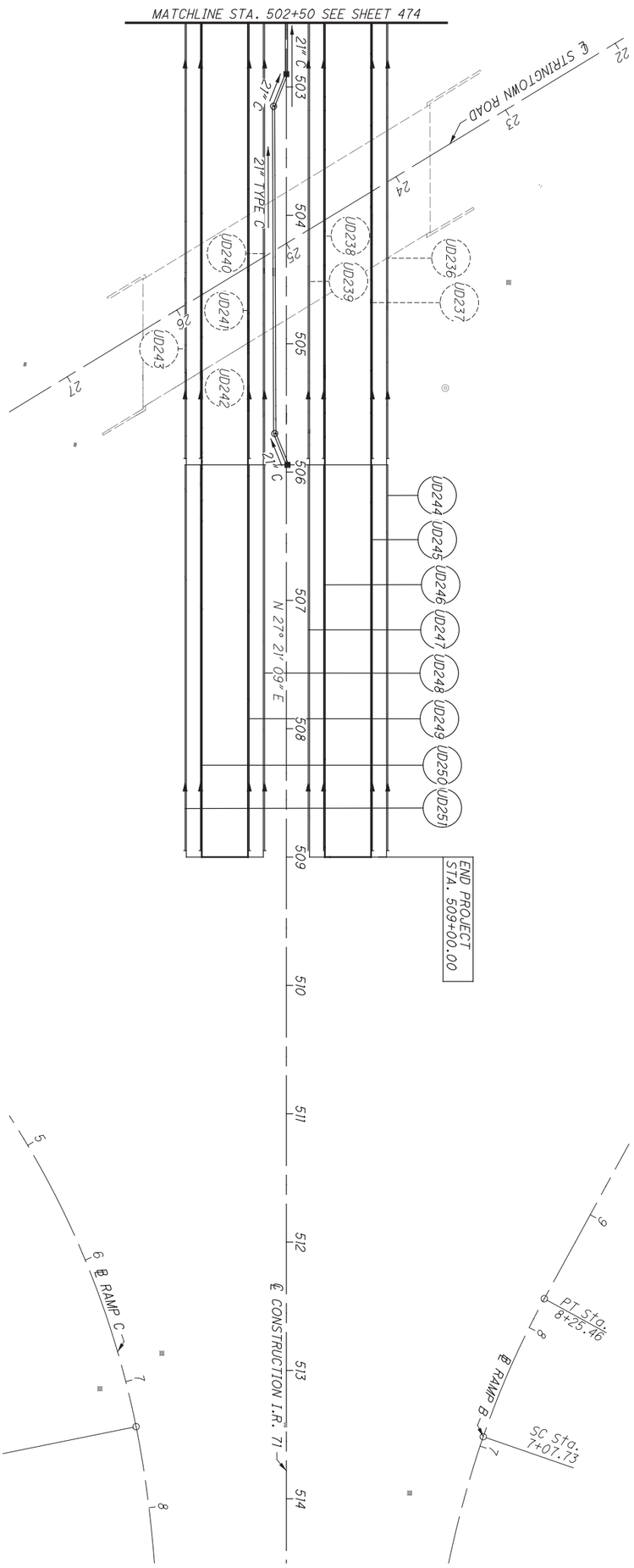

475 / 623	FRA-71-5.29	UNDERDRAIN DETAILS STA. 502+50.00 TO END PROJECT	CALCULATED LMR CHECKED KEW	0 50 25 100 HORIZONTAL SCALE IN FEET

P:\84868\drainage\sheets\84868DP017.dgn 3/27/2015 2:36:24 PM kfahy

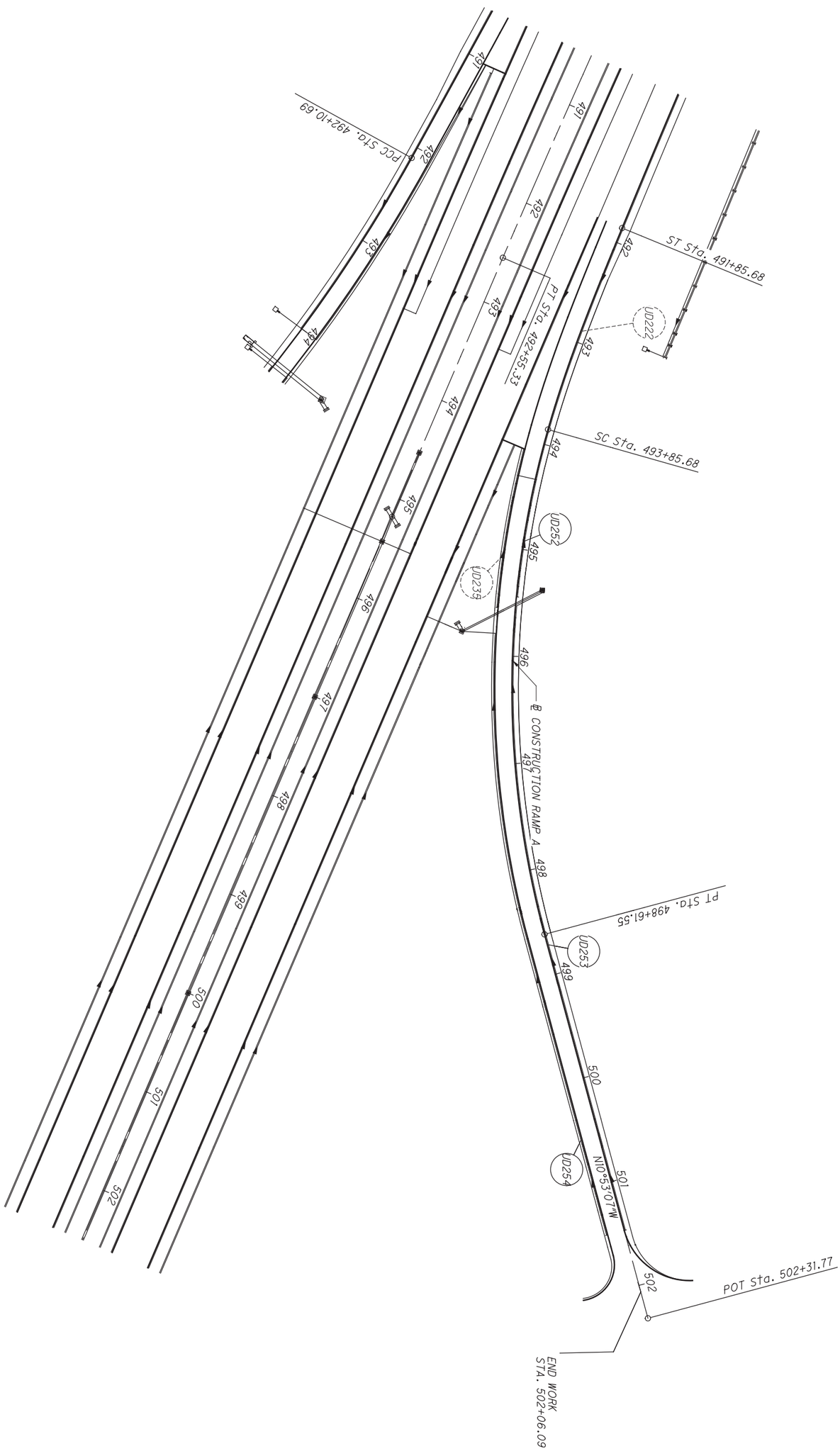

476 / 623	FRA-71-5.29	UNDERDRAIN DETAILS RAMP A	CALCULATED LMR CHECKED KEW	0 50 25 100 HORIZONTAL SCALE IN FEET

P:\84868\drainage\sheets\84868DP018.dgn 3/27/2015 2:36:24 PM kfahy

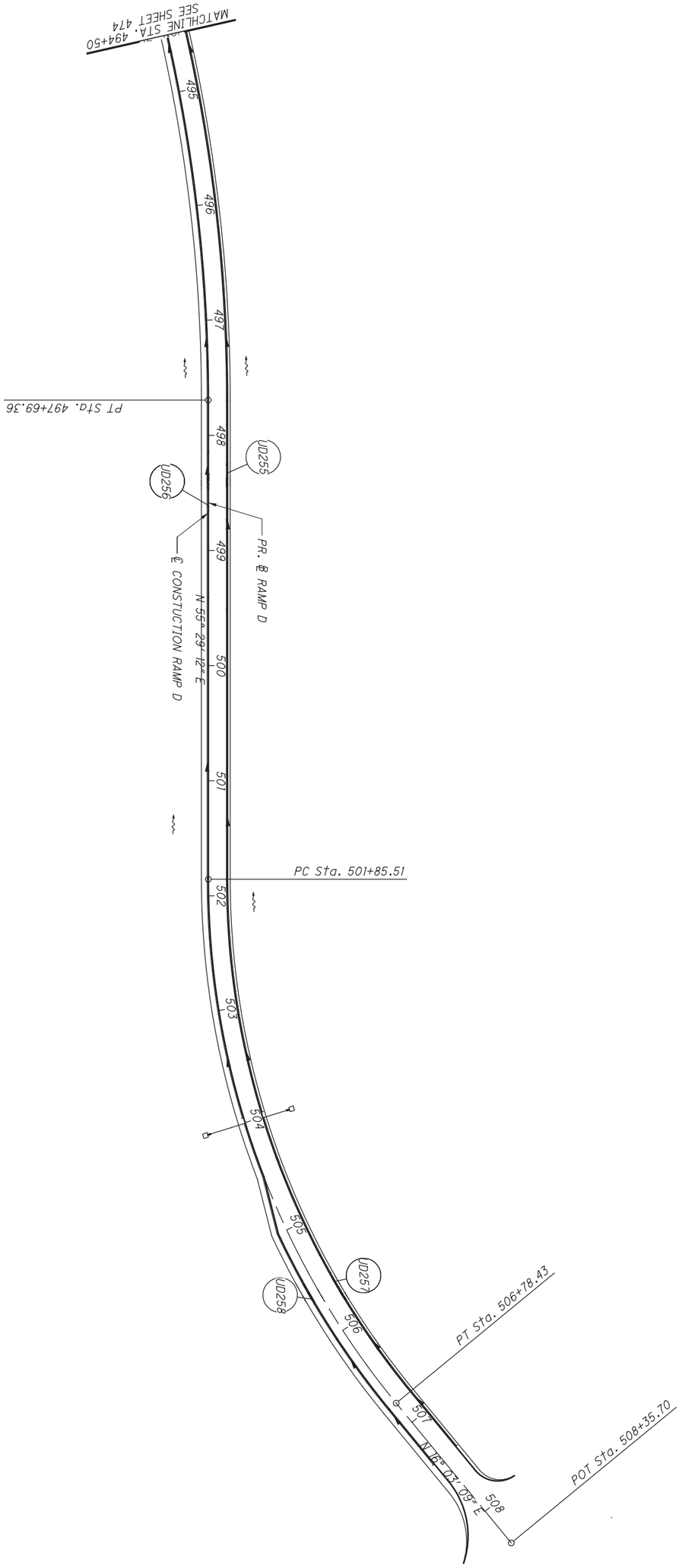

477 / 623	FRA-71-5.29	UNDERDRAIN DETAILS RAMP D	CALCULATED LMR CHECKED KEW	0 50 25 100 HORIZONTAL SCALE IN FEET

SHEET NO.	REFERENCE NO.	ROADWAY	STATION	SIDE	OFFSET	INVERT	STATION	SIDE	OFFSET	INVERT	OUTLET TYPE	601	605	605	605	611	611	611	BENDS AND BRANCHES (FOR INFORMATION ONLY)						
			FROM				TO					TIED CONCRETE BLOCK MAT, TYPE 1	6" BASE PIPE UNDERDRAINS, 707.31	6" SHALLOW PIPE UNDERDRAINS, 707.31	6" UNCLASSIFIED PIPE UNDERDRAINS, 707.31	6" CONDUIT, TYPE F	6" CONDUIT, TYPE F FOR UNDERDRAIN OUTLETS	PRECAST REINFORCED CONCRETE OUTLET	PLUG	TEE	45° WYE	CROSS	90° BEND	45° BEND	30° BEND
			FROM	LT/RT	FT	FT	TO	LT/RT	FT	FT		SY	FT	FT	FT	FT	FT	EACH	EACH	EACH	EACH	EACH	EACH	EACH	EACH
465	UD1	I.R. 71	279+31.20	LT	79.00	855.99	281+25.03	LT	107.22	854.29	OUTLET	1.8	194				28	1	1						
465	UD2	I.R. 71	279+31.20	LT	67.00	855.47	281+25.00	LT	79.00	854.80	UD1			194		12			1	1			1		
465	UD3	I.R. 71	279+31.20	LT	29.00	855.28	281+88.32	LT	17.00	853.93	UD4			257		12			1	1			1		
465	UD4	I.R. 71	279+31.20	LT	17.00	856.67	281+88.32	RT	1.07	853.50	CB		257				18		1						
465	UD5	I.R. 71	279+31.20	RT	17.00	855.79	281+88.32	RT	1.07	853.50	CB		244				21		1						
465	UD6	I.R. 71	279+31.20	RT	29.00	855.40	281+75.00	RT	17.00	853.40	UD5			244		12			1	1			1		
465	UD7	I.R. 71	279+31.20	RT	67.00	855.59	281+83.00	RT	79.00	853.65	UD8			252		12			1	1			1		
465	UD8	I.R. 71	279+31.20	RT	78.79	856.15	281+83.00	RT	108.22	853.10	OUTLET	1.8	252				29	1	1						
465	UD8A	I.R. 71	281+93.00	RT	67.00	854.07	282+74.99	RT	79.00	853.12	UD8B			82			12		1	1			1		
465	UD8B	I.R. 71	281+93.00	RT	79.00	854.59	282+74.96	RT	105.00	852.86	OUTLET	1.8	82				26	1	1						
465-466	UD9	I.R. 71	281+95.00	LT	79.00	855.09	291+42.71	LT	67.00	849.73	UD10		941			25			1	1			1		
465-466	UD10	I.R. 71	282+05.00	LT	67.00	854.65	291+42.71	LT	42.00	849.32	UD13			932					1	1					
465	UD11	I.R. 71	282+45.00	LT	29.00	854.32	284+29.69	LT	17.00	852.85	UD12			185		12			1	1			1		
465-466	UD12	I.R. 71	282+50.00	LT	17.00	854.73	291+42.71	RT	4.00	848.50	CB		891				21		1						
465-466	UD13	I.R. 71	284+29.69	LT	42.00	853.55	291+42.71	LT	17.00	849.10	UD12			709			25		1	1					
465-466	UD14	I.R. 71	282+75.03	RT	17.00	853.84	291+42.71	RT	4.00	847.60	CB		869				13		1						
465-466	UD15	I.R. 71	282+80.02	RT	29.00	853.38	291+42.71	RT	17.00	847.77	UD14			865		12			1	1					
465	UD16	I.R. 71	283+25.00	RT	67.00	853.31	285+06.38	RT	79.00	852.42	UD17			181		12			1	1			1		
465-466	UD17	I.R. 71	283+25.00	RT	79.00	853.82	291+42.71	RT	54.00	850.21	UD18		826			25			1	1			1		
465-466	UD18	I.R. 71	285+06.38	RT	54.00	852.49	291+42.71	RT	29.00	848.37	UD15			641		25			1	1					
466	UD19	I.R. 71	291+48.00	LT	81.40	848.81	300+00.00	LT	67.00	844.32	UD20		839			33			1	1			1		
466	UD20	I.R. 71	291+48.00	LT	67.00	848.31	300+00.00	LT	42.00	844.03	UD22		852			25			1	1					
466	UD21	I.R. 71	291+48.00	LT	42.00	849.14	300+00.00	LT	17.00	843.81	UD23			852		25			1	1					
466	UD22	I.R. 71	291+48.00	LT	17.00	849.92	300+00.00	RT	3.30	843.00	CB		852				20		1						
466	UD23	I.R. 71	291+48.00	RT	17.00	848.74	300+00.00	RT	3.30	842.50	CB		852				14		1						
466	UD24	I.R. 71	291+48.00	RT	29.00	848.34	300+00.00	RT	17.00	842.79	UD24			852		12			1	1					
466	UD25	I.R. 71	291+48.00	RT	54.00	849.18	300+00.00	RT	29.00	843.40	UD25			852		25			1	1					
466	UD26	I.R. 71	291+48.00	RT	79.00	850.36	300+00.00	RT	54.00	845.23	UD26		852			25			1	1			1		
466	UD27	I.R. 71	300+05.06	LT	98.54	843.33	309+60.33	LT	90.00	838.02	UD27A		937			26			1	1			1		
466	UD27A	I.R. 71	300+24.95	LT	76.00	842.33	309+60.33	LT	67.00	837.47	UD28		923			23			1	1					
466	UD28	I.R. 71	300+05.06	LT	67.00	843.22	310+00.00	LT	42.00	838.03	UD29			995		25			1	1			1		
466	UD29	I.R. 71	300+05.01	LT	42.00	844.00	310+00.00	LT	17.00	837.81	UD30			995		25			1	1					
466	UD30	I.R. 71	300+05.01	LT	17.00	844.78	310+00.00	RT	2.80	837.25	CB		995				20		1						
466	UD31	I.R. 71	300+04.99	RT	17.00	843.77	310+00.00	RT	2.80	837.25	CB		995				14		1						
466	UD32	I.R. 71	300+04.97	RT	29.00	843.37	310+00.00	RT	17.00	836.92	UD31		995			25			1	1					
466	UD33	I.R. 71	300+04.93	RT	54.00	844.20	310+00.00	RT	29.00	837.52	UD32			995		25			1	1			1		
466	UD34	I.R. 71	300+04.93	RT	79.00	845.16	309+99.11	RT	100.78	840.00	OUTLET	1.8	1010			25		1	1						
466	UD34A	I.R. 71	305+00.00	RT	79.00	841.77	309+99.54	RT	93.40	838.17	UD34			507		8			1	1			1		
466-467	UD34B	I.R. 71	310+00.00	RT	69.38	838.81	312+73.04	RT	124.25	838.73	UD34C			283		24			1	1			1		
466-467	UD34C	I.R. 71	310+05.00	RT	93.73	839.16	312+70.90	RT	137.40	836.95	OUTLET	1.8	275				8	1	1						
466-467	UD35	I.R. 71	310+05.01	LT	79.00	837.75	317+00.00	LT	128.00	829.82	OUTLET	1.8	695				49	1	1						
466-467	UD36	I.R. 71	310+05.01	LT	67.00	837.18	317+00.00	LT	79.00	833.58	UD35			695		12			1	1			1		
466-467	UD37	I.R. 71	310+05.01	LT	42.00	838.01	317+27.14	LT	17.00	833.52	UD38			722		25			1	1			1		
466-467	UD38	I.R. 71	310+05.01	LT	17.00	838.80	317+27.14	RT	3.10	833.85	CB		722				20		1						
466-467	UD39	I.R. 71	310+04.99	RT	17.00	837.88	317+27.14	RT	3.10	832.85	CB		722				14		1						
466-467	UD40	I.R. 71	310+04.97	RT	29.00	837.57	317+10.00	RT	17.00	832.99	UD39			705		12			1		1		1		
466-467	UD41	I.R. 71	310+04.97	RT	54.00	838.40	317+22.21	RT	79.00	833.54	UD42			717		25			1	1			1		
467	UD42	I.R. 71	312+25.00	RT	79.00	838.23	317+22.24	RT	114.61	833.61	OUTLET	1.8	497				36	1	1						
467	UD43	I.R. 71	325+45.00	LT	79.00	837.56	317+60.00	LT	127.81	832.20	OUTLET	1.8	785				49	1	1						
467	UD44	I.R. 71	325+45.00	LT	67.00	837.00	317+60.00	LT	79.00	832.38	UD43			785		12			1	1			1		
467	UD45	I.R. 71	325+45.00	LT	42.00	837.04	318+43.44	LT	17.00	833.40	UD46			702		25			1	1			1		
467	UD46	I.R. 71	325+45.00	LT	17.00	837.20	318+43.44	LT	3.20	832.50	CB		702				20		1						
467	UD47	I.R. 71	325+45.00	RT	17.00	837.20	318+43.44	RT	3.20	832.50	CB		702				18		1						
467	UD48	I.R. 71	325+45.00	RT	29.00	836.81	318+55.00	RT	17.00	833.16	UD47			690		12			1		1		1		
467	UD49	I.R. 71	325+45.00	RT	54.00	837.23	318+48.28	RT	79.00	834.54	UD50			697		25			1	1			1		
467	UD50	I.R. 71	325+45.00	RT	79.00	837.56	318+48.29	RT	114.00	833.10	CB		697				35		1						
TOTALS CARRIED TO SHEET 482												15.0	20,454	16586		658	510	8	56	33	2		24		

CALCULATED LMR
CHECKED KEW

UNDERDRAIN SUBSUMMARY

FRA-71-5.29

478
623

P:\84868\drainage\sheets\84868DS001.dgn 3/27/2015 2:36:25 PM kfahy

SHEET NO.	REFERENCE NO.	ROADWAY	FROM STATION	FROM SIDE	FROM OFFSET	FROM INVERT	TO STATION	TO SIDE	TO OFFSET	TO INVERT	OUTLET TYPE	601 TIED CONCRETE BLOCK MAT, TYPE 1	605 6" BASE PIPE UNDERDRAINS, 707.31	605 6" SHALLOW PIPE UNDERDRAINS, 707.31	605 6" UNCLASSIFIED PIPE UNDERDRAINS, 707.31	611 6" CONDUIT, TYPE F	611 6" CONDUIT, TYPE F FOR UNDERDRAIN OUTLETS	611 PRECAST REINFORCED CONCRETE OUTLET	BENDS AND BRANCHES (FOR INFORMATION ONLY) PLUG	TEE	45° WYE	CROSS	90° BEND	45° BEND	30° BEND
			FROM	LT/RT	FT	FT	TO	LT/RT	FT	FT		SY	FT	FT	FT	FT	FT	EACH	EACH	EACH	EACH	EACH	EACH	EACH	EACH
467	UD51	I.R. 71	329+38.48	LT	79.00	839.21	325+50.00	LT	67.00	838.02	UD52		388						1	1			1		
467	UD52	I.R. 71	329+38.48	LT	67.00	838.65	325+50.00	LT	29.00	836.83	UD53			388					1	1					
467	UD53	I.R. 71	329+38.48	LT	42.00	838.45	325+50.00	LT	17.00	836.22	UD54			388					1	1					
467	UD54	I.R. 71	329+38.48	LT	17.00	838.85	325+50.00	LT	0.00	835.50	CB		388						1						
467	UD55	I.R. 71	329+38.48	RT	17.00	838.85	325+50.00	RT	0.00	835.50	CB		388						1						
467	UD56	I.R. 71	329+38.48	RT	29.00	738.45	325+50.00	RT	17.00	836.22	UD55			388		12			1	1					
467	UD57	I.R. 71	329+38.48	RT	67.00	838.65	325+50.00	RT	29.00	836.82	UD56			388		38			1	1					
467	UD58	I.R. 71	329+38.48	RT	79.00	839.21	325+50.00	RT	67.00	838.02	UD57		388			12			1	1			1		
467	UD59	I.R. 71	334+27.96	LT	79.00	841.57	329+43.48	LT	67.00	839.67	UD60		484			12			1	1			1		
467-468	UD60	I.R. 71	337+94.65	LT	67.00	843.04	329+43.48	LT	29.00	839.58	UD61		851			38			1	1					
467-468	UD61	I.R. 71	337+94.65	LT	29.00	842.50	329+43.48	LT	17.00	837.98	UD62			851		12			1	1					
467-468	UD62	I.R. 71	337+94.65	LT	17.00	842.22	329+43.48	LT	0.14	837.75	CB		851				17		1						
467-468	UD63	I.R. 71	337+94.65	RT	17.00	842.14	329+43.48	LT	0.14	737.75	CB		851				17		1						
467-468	UD64	I.R. 71	337+94.65	RT	29.00	841.75	329+43.48	RT	17.00	837.87	UD63			851		12			1	1					
467-468	UD65	I.R. 71	337+94.65	RT	67.00	841.98	329+43.48	RT	29.00	838.48	UD64			851		38			1	1					
467	UD66	I.R. 71	333+34.53	RT	79.00	841.22	329+43.48	RT	67.00	839.67	UD65		391			12			1	1			1		
467-468	UD67	I.R. 71	337+94.65	RT	76.00	841.85	333+36.84	RT	124.72	840.11	UD68			462		35			1	1			1		
467-468	UD68	I.R. 71	337+94.65	RT	99.57	842.43	333+40.25	RT	152.17	839.50	OUTLET	1.8	458				29	1	1						
468	UD69	I.R. 71	337+94.65	LT	101.88	842.59	334+99.78	LT	139.34	840.04	OUTLET	1.8	297				24	1	1						
468	UD70	I.R. 71	337+94.65	LT	91.87	841.98	334+98.14	LT	119.90	839.93	UD69			298		10			1	1			1		
468	UD71	I.R. 71	338+04.65	LT	101.41	842.43	346+40.00	LT	119.50	834.10	OUTLET	1.8	835				31	1	1						
468	UD72	I.R. 71	338+04.65	LT	67.00	841.96	346+43.10	LT	29.00	837.23	UD71			838		22			1	1			1		
468	UD73	I.R. 71	338+04.65	LT	29.00	841.75	346+25.00	LT	17.00	837.07	UD74			820		12			1	1					
468	UD74	I.R. 71	338+04.65	LT	17.00	842.14	346+43.30	LT	0.20	837.00	CB		839				17		1						
468	UD75	I.R. 71	338+04.65	RT	17.00	842.14	346+43.30	LT	0.20	837.00	CB		839				17		1						
468	UD76	I.R. 71	338+04.65	RT	29.00	841.75	346+25.00	RT	17.00	837.07	UD75			820		12			1	1			1		
468	UD77	I.R. 71	338+04.65	RT	67.00	841.96	346+39.05	RT	82.69	836.35	UD78			834		16			1	1			1		
468	UD78	I.R. 71	338+04.65	RT	99.37	842.27	346+39.05	RT	104.48	836.34	OUTLET	1.8	834				23	1	1						
468	UD79	I.R. 71	346+48.30	LT	89.00	838.19	355+38.66	LT	128.54	827.53	OUTLET	1.8					40	1	1						
468	UD80	I.R. 71	346+48.30	LT	29.00	837.55	355+25.00	LT	17.00	832.03	UD81			877		12			1	1			1		
468	UD81	I.R. 71	346+48.30	LT	17.00	837.94	355+43.42	LT	2.50	831.50	CB		895				15		1						
468	UD82	I.R. 71	346+48.30	RT	17.00	837.94	355+43.42	LT	2.50	831.50	CB		895				19		1						
468	UD83	I.R. 71	346+82.30	RT	42.00	837.68	355+43.48	RT	14.38	831.92	UD82			861		25			1	1					
468	UD84	I.R. 71	346+48.30	RT	67.00	837.56	355+43.57	RT	39.38	832.35	UD83			895		25			1	1					
468	UD85	I.R. 71	347+40.30	LT	54.00	837.97	355+38.59	LT	89.00	833.06	UD79			798		40			1	1			1		
468	UD86	I.R. 71	347+40.31	RT	82.50	837.94	355+43.32	RT	64.38	832.88	UD84		803			12			1	1			1		
468-469	UD86A	I.R. 71	355+49.21	LT	88.00	834.00	361+00.00	LT	110.60	829.90	OUTLET	1.8	551				22	1	1						
468-469	UD87	I.R. 71	355+49.21	LT	54.00	832.97	361+00.00	LT	39.00	829.35	UD86A		551			15			1	1			1		
468-469	UD88	I.R. 71	355+48.76	LT	29.00	832.50	361+42.99	LT	17.00	828.56	UD89			594		12			1	1					
468-469	UD89	I.R. 71	355+48.76	LT	17.00	832.89	361+43.08	LT	3.20	828.00	CB		594				14		1						
468-469	UD90	I.R. 71	355+48.76	RT	14.30	832.88	361+43.08	LT	3.20	828.00	CB		575				23		1						1
468-469	UD91	I.R. 71	355+48.59	RT	39.31	832.33	361+38.28	RT	61.00	828.55	UD92			590		25			1	1			1		
468-469	UD92	I.R. 71	355+48.42	RT	64.31	831.85	361+38.32	RT	73.00	828.11	UD93			590		12			1	1					
468-469	UD93	I.R. 71	355+48.34	RT	76.31	832.10	361+38.44	RT	109.73	826.16	OUTLET	1.8	590				37	1	1						
469	UD94	I.R. 71	361+71.71	LT	54.00	829.48	371+42.33	LT	76.25	823.77	UD101			971		25			1	1			1		
469	UD95	I.R. 71	361+80.71	LT	29.00	828.96	371+42.55	LT	14.25	822.96	UD96			962		12			1	1			1		
469	UD96	I.R. 71	361+85.04	LT	17.00	829.32	371+42.59	LT	1.07	822.50	CB		958				16		1						
469	UD97	I.R. 71	361+95.19	RT	11.00	829.27	371+42.59	LT	1.07	822.50	CB		947				12		1						
469	UD98	I.R. 71	362+04.29	RT	36.00	828.65	371+25.00	RT	11.00	823.05	UD97			921		25			1	1			1		
469	UD99	I.R. 71	362+13.43	RT	61.00	828.12	371+38.16	RT	73.00	822.50	UD100			925		12			1	1			1		
469	UD100	I.R. 71	362+17.84	RT	73.00	828.66	371+38.42	RT	107.87	820.30	OUTLET	1.8	921				35	1	1						
469	UD101	I.R. 71	361+59.17	LT	89.00	830.58	371+42.17	LT	121.25	821.97	OUTLET	1.8	983				46	1	1						
469	UD102	I.R. 71	371+47.30	LT	76.18	824.74	377+40.80	LT	131.00	819.57	OUTLET	1.8	594				58	1	1						
469	UD103	I.R. 71	371+47.16	LT	51.18	824.01	377+41.00	LT	73.00	820.41	UD102			594		25			1	1			1		
469	UD104	I.R. 71	371+47.50	LT	26.18	823.53	377+41.21	LT	11.00	819.60	UD105			594		12			1	1			1		
469	UD105	I.R. 71	371+47.54	LT	14.18	823.93	377+41.26	RT	0.03	819.00	CB		594				11		1						
TOTALS CARRIED TO SHEET 482												18.0	19,536	18,352		582	523	10	56	30			20		1

CALCULATED LMR CHECKED KEW

UNDERDRAIN SUBSUMMARY

FRA-71-5.29

P:\84868\drainage\sheets\84868DS002.dgn 3/27/2015 2:36:25 PM kfahy

SHEET NO.	REFERENCE NO.	ROADWAY	STATION	SIDE	OFFSET	INVERT	STATION	SIDE	OFFSET	INVERT	OUTLET TYPE	601	605	605	605	611	611	611	BENDS AND BRANCHES (FOR INFORMATION ONLY)						
			FROM				TO					TIED CONCRETE BLOCK MAT, TYPE 1	6" BASE PIPE UNDERDRAINS, 707.31	6" SHALLOW PIPE UNDERDRAINS, 707.31	6" UNCLASSIFIED PIPE UNDERDRAINS, 707.31	6" CONDUIT, TYPE F	6" CONDUIT, TYPE F FOR UNDERDRAIN OUTLETS	PRECAST REINFORCED CONCRETE OUTLET	PLUG	TEE	45° WYE	CROSS	90° BEND	45° BEND	30° BEND
			FROM	LT/RT	FT	FT	TO	LT/RT	FT	FT		SY	FT	FT	FT	FT	FT	EACH	EACH	EACH	EACH	EACH	EACH	EACH	EACH
469	UD106	I.R. 71	371+47.65	RT	11.00	823.92	377+41.26	RT	0.03	819.00	CB		578				20		1						1
469	UD107	I.R. 71	371+45.92	RT	36.00	823.37	377+41.30	RT	11.00	819.58	UD108			595		25			1	1			1		
469	UD108	I.R. 71	371+47.85	RT	61.00	822.88	377+36.44	RT	73.00	819.14	UD109			589		12			1	1					
469	UD109	I.R. 71	371+47.90	RT	73.00	823.44	377+36.57	RT	108.04	817.00	OUTLET	1.8	589				35	1	1						
469-470	UD110	I.R. 71	377+45.99	LT	73.00	821.38	386+73.63	LT	103.24	813.00	OUTLET		929				30		1						
469-470	UD111	I.R. 71	377+46.03	LT	48.00	820.65	386+73.63	LT	73.00	814.72	UD110			928		25			1	1			3		
469-470	UD112	I.R. 71	377+46.17	LT	23.00	820.17	386+40.52	LT	11.00	814.55	UD113			894		12			1	1			1		
469-470	UD113	I.R. 71	377+46.22	LT	11.00	820.57	386+40.51	LT	0.00	814.00	CB		894				11		1						
469-470	UD114	I.R. 71	377+46.30	RT	11.00	820.57	386+40.51	LT	0.00	814.00	CB		894				19		1						
469-470	UD115	I.R. 71	377+46.35	RT	36.00	820.00	386+25.00	RT	11.00	814.64	UD114			879		25			1	1			3		
469-470	UD116	I.R. 71	377+46.49	RT	61.00	819.52	386+37.24	RT	73.00	814.93	UD117			891		12			1	1			1		
469-470	UD117	I.R. 71	377+46.53	RT	73.00	820.08	386+38.08	RT	108.69	813.45	OUTLET	1.8	892				36	1	1						
470	UD118	I.R. 71	386+43.78	LT	73.00	815.69	396+40.01	LT	61.00	810.74	UD119		996			12			1	1			1		
470	UD119	I.R. 71	386+44.07	LT	61.00	815.13	396+40.01	LT	23.00	809.55	UD120			996		38			1	1					
470	UD120	I.R. 71	386+45.51	LT	23.00	815.13	396+40.01	LT	11.00	808.95	UD121			995		12			1	1					
470	UD121	I.R. 71	386+45.51	LT	11.00	815.52	396+40.01	LT	0.39	812.00	CB		995				11		1						
470	UD122	I.R. 71	386+45.51	RT	11.00	815.52	396+40.01	LT	0.39	812.00	CB		995				11		1						
470	UD123	I.R. 71	386+45.51	RT	23.00	815.13	396+40.01	RT	11.00	808.95	UD122			995		12			1	1					
470	UD124	I.R. 71	386+45.51	RT	61.00	815.32	396+40.01	RT	23.00	809.55	UD123			995		38			1	1					
470	UD125	I.R. 71	386+45.51	RT	73.00	815.88	396+40.01	RT	61.00	810.74	UD124		995			12			1	1			1		
470	UD126	I.R. 71	396+45.01	LT	73.00	810.28	405+11.53	LT	61.00	805.86	UD127		867			12			1	1			1		
470	UD127	I.R. 71	396+45.01	LT	61.00	809.72	405+11.53	LT	23.00	804.66	UD128			867		38			1	1					
470	UD128	I.R. 71	396+45.01	LT	23.00	809.52	405+11.53	LT	11.00	804.06	UD129			867		12			1	1					
470	UD129	I.R. 71	396+45.01	LT	11.00	809.92	405+11.53	LT	11.00	803.50	CB		867				11		1						
470	UD130	I.R. 71	396+45.01	RT	11.00	809.92	405+11.53	RT	11.00	803.50	CB		867				11		1						
470	UD131	I.R. 71	396+45.01	RT	23.00	809.52	405+00.00	RT	11.00	804.12	UD130			855		12			1	1			1		
470	UD132	I.R. 71	396+45.01	RT	61.00	809.72	405+11.53	RT	73.00	804.42	UD133			867		12			1		1		1		
470	UD133	I.R. 71	396+45.01	RT	73.00	810.28	405+36.67	RT	96.20	801.25	CB		867				34		1						
470-471	UD134	I.R. 71	405+16.53	LT	73.00	805.39	413+76.46	LT	123.00	798.24	OUTLET	1.8	860				50	1	1						
470-471	UD135	I.R. 71	405+16.53	LT	61.00	804.83	413+76.46	LT	73.00	800.39	UD134			860		12			1	1			1		
470-471	UD136	I.R. 71	405+16.53	LT	23.00	804.64	413+91.46	LT	11.00	799.96	UD137			875		12			1	1			1		
470-471	UD137	I.R. 71	405+16.53	LT	11.00	805.03	413+91.46	LT	0.00	799.75	CB		875				11		1						
470-471	UD138	I.R. 71	405+19.41	LT	11.00	805.02	413+91.46	LT	0.00	799.75	CB		872				11		1						
470-471	UD139	I.R. 71	405+22.48	RT	23.00	804.60	413+75.00	RT	11.00	800.03	UD138			853		12			1		1		1		
470-471	UD140	I.R. 71	405+32.22	RT	61.00	804.74	413+91.46	RT	73.00	800.32	UD141			859		12			1	1			1		
470-471	UD141	I.R. 71	405+35.30	RT	73.00	805.28	413+92.21	RT	97.05	796.00	CB		857				24		1						
471	UD142	I.R. 71	414+50.00	LT	73.00	801.06	424+40.42	LT	61.00	797.14	UD143		990			12			1	1			1		
471	UD143	I.R. 71	414+50.00	LT	61.00	800.50	424+40.42	LT	23.00	795.95	UD144			990		38			1	1					
471	UD144	I.R. 71	414+50.00	LT	23.00	800.31	424+40.42	LT	11.00	795.34	UD145			990		12			1	1					
471	UD145	I.R. 71	414+50.00	LT	11.00	800.70	424+40.42	LT	0.00	795.00	CB		990				11		1						
471	UD146	I.R. 71	415+00.00	RT	11.00	800.48	424+40.42	RT	0.00	795.00	CB		940				11		1						
471	UD147	I.R. 71	415+00.00	RT	23.00	800.09	424+30.53	RT	11.00	795.39	UD146			931		12			1	1			1		
471	UD148	I.R. 71	415+00.00	RT	61.00	800.28	424+35.07	RT	73.00	799.75	UD149			935		12			1	1			1		
471	UD149	I.R. 71	415+00.00	RT	73.00	800.84	424+35.13	RT	94.00	794.80	OUTLET	1.8	935				21	1	1						
471-472	UD150	I.R. 71	424+45.42	LT	73.00	796.68	434+40.27	LT	61.00	792.74	UD151		995			12			1	1			1		
471-472	UD151	I.R. 71	424+45.42	LT	61.00	796.11	434+40.27	LT	23.00	791.55	UD152			995		38			1	1					
471-472	UD152	I.R. 71	424+45.42	LT	23.00	795.93	434+40.27	LT	11.00	790.94	UD153			995		12			1	1					
471-472	UD153	I.R. 71	424+45.42	LT	11.00	796.32	434+40.27	LT	0.00	790.50	CB		995				11		1						
471-472	UD154	I.R. 71	424+45.42	RT	11.00	796.32	434+40.27	RT	0.00	790.50	CB		995				11		1						
471-472	UD155	I.R. 71	424+45.42	RT	23.00	795.93	434+40.27	RT	11.00	790.94	UD154			995		12			1	1					
471-472	UD156	I.R. 71	424+45.42	RT	61.00	796.12	434+40.27	RT	23.00	791.55	UD155			995		38			1	1					
471-472	UD157	I.R. 71	424+45.42	RT	73.00	796.68	434+40.27	RT	61.00	792.74	UD156		995			12			1	1			1		
472	UD158	I.R. 71	434+45.27	LT	73.00	792.28	444+40.45	LT	61.00	788.34	UD159		995			12			1	1			1		
472	UD159	I.R. 71	434+45.27	LT	61.00	791.72	444+40.45	LT	23.00	787.15	UD160			995		38			1	1					
472	UD160	I.R. 71	434+45.27	LT	23.00	791.53	444+40.45	LT	11.00	786.54	UD161			995		12			1	1					
TOTALS CARRIED TO SHEET 482												6.0	24,517	25,473		641	389	4	55	33	2		24		1

CALCULATED LMR
CHECKED KEW

UNDERDRAIN SUBSUMMARY

FRA-71-5.29

480
623

P:\84868\drainage\sheets\84868DS003.dgn 3/27/2015 2:36:26 PM kfahy

SHEET NO.	REFERENCE NO.	ROADWAY	STATION	SIDE	OFFSET	INVERT	STATION	SIDE	OFFSET	INVERT	OUTLET TYPE	601	605	605	605	611	611	611	BENDS AND BRANCHES (FOR INFORMATION ONLY)						
			FROM				TO					TIED CONCRETE BLOCK MAT, TYPE 1	6" BASE PIPE UNDERDRAINS, 707.31	6" SHALLOW PIPE UNDERDRAINS, 707.31	6" UNCLASSIFIED PIPE UNDERDRAINS, 707.31	6" CONDUIT, TYPE F	6" CONDUIT, TYPE F FOR UNDERDRAIN OUTLETS	PRECAST REINFORCED CONCRETE OUTLET	PLUG	TEE	45° WYE	CROSS	90° BEND	45° BEND	30° BEND
			FROM	LT/RT	FT	FT	TO	LT/RT	FT	FT		SY	FT	FT	FT	FT	FT	EACH	EACH	EACH	EACH	EACH	EACH	EACH	EACH
472	UD161	I.R. 71	434+45.27	LT	11.00	791.92	444+40.45	RT	0.09	784.50	CB		995				11		1						
472	UD162	I.R. 71	434+45.27	RT	11.00	791.92	444+40.45	RT	0.09	784.50	CB		995				11		1						
472	UD163	I.R. 71	434+45.27	RT	23.00	791.53	444+40.45	RT	11.00	786.54	UD162			995		12			1	1					
472	UD164	I.R. 71	434+45.27	RT	61.00	791.72	444+40.45	RT	23.00	787.15	UD163			995		38			1	1					
472	UD165	I.R. 71	434+45.27	RT	73.00	792.28	444+40.45	RT	61.00	788.34	UD164		995			12			1	1			1		
472	UD166	I.R. 71	444+45.45	LT	73.00	787.88	453+40.26	LT	61.00	783.54	UD167		895			12			1	1			1		
472	UD167	I.R. 71	444+45.45	LT	61.00	791.32	453+40.18	LT	36.00	783.01	UD168			895		25			1	1					
472	UD168	I.R. 71	444+45.45	LT	23.00	787.13	453+40.09	LT	11.00	782.58	UD169			895		25			1	1			2		
472	UD169	I.R. 71	444+45.45	LT	11.00	787.52	453+40.06	LT	0.00	782.00	CB		895				11		1						
472	UD170	I.R. 71	444+45.45	RT	11.00	787.52	453+40.06	RT	0.00	782.00	CB		875				23		1						
472	UD171	I.R. 71	444+45.45	RT	23.00	787.13	453+20.04	RT	11.00	782.67	UD170			875		12			1	1			1		
472	UD172	I.R. 71	444+45.45	RT	61.00	787.32	453+34.84	RT	73.00	783.42	UD173			889		25			1	1			3		
472	UD173	I.R. 71	444+45.45	RT	73.00	787.88	453+34.72	RT	112.08	779.50	OUTLET	1.8	889				39	1	1						
473	UD174	I.R. 71	454+50.00	RT	11.00	783.10	463+75.00	RT	11.00	778.91	CB		925				11		1	1					
473	UD175	I.R. 71	454+50.00	RT	23.00	782.71	463+75.00	RT	23.00	778.51	UD174			925		12			1				1		
473	UD176	I.R. 71	454+50.00	RT	48.00	783.18	463+40.38	RT	48.00	779.17	UD177			890		25			1				1		
473	UD177	I.R. 71	454+50.00	RT	73.00	783.91	463+40.29	RT	73.00	779.90	OUTLET	1.8	890				40	1	1	1					
473	UD178	I.R. 71	463+80.00	LT	73.00	778.40	472+91.84	LT	80.67	773.36	UD186		912						1						
473	UD179	I.R. 71	463+80.00	LT	61.00	777.84	472+92.09	LT	63.75	773.00	UD187			912					1						
473	UD180	I.R. 71	463+80.00	LT	36.00	778.31	472+92.45	LT	38.75	773.47	UD188			912					1						
473	UD181	I.R. 71	463+80.00	LT	11.00	778.88	472+92.80	LT	13.76	774.03	UD189		913						1						
473	UD182	I.R. 71	463+80.00	RT	11.00	778.88	472+79.96	RT	13.57	774.04	CB		900				19		1		1				
473	UD183	I.R. 71	463+80.00	RT	23.00	778.49	472+79.92	RT	25.57	773.65	UD182			900		12			1				1		
473	UD184	I.R. 71	463+79.98	RT	48.00	778.96	472+69.57	RT	50.42	774.13	I-3D			890		26			1					1	
473	UD185	I.R. 71	463+45.26	RT	73.00	781.65	472+81.98	RT	75.60	776.63	I-3D		937						1						
473	UD186	I.R. 71	472+91.84	LT	80.67	775.13	476+42.43	LT	92.19	776.20	UD187		351			17			1	1					
473	UD187	I.R. 71	472+92.09	LT	63.75	773.00	476+56.66	LT	67.00	774.41	UD188			365		25			1			1			
473	UD188	I.R. 71	472+92.45	LT	38.75	773.47	476+58.17	LT	42.00	774.88	UD189			366		25			1			1			
473	UD189	I.R. 71	472+92.80	LT	13.76	774.03	476+58.68	LT	17.00	775.45	CB		366				14		1			1			
473	UD190	I.R. 71	473+10.01	RT	14.00	774.04	476+59.36	RT	17.00	775.58	CB		349				22		1		1				
473	UD191	I.R. 71	473+10.01	RT	26.00	773.65	476+59.60	RT	29.00	775.06	UD190			350		12			1				1		
473	UD192	I.R. 71	472+98.70	RT	50.84	774.12	476+60.10	RT	54.00	775.53	UD193			361		25			1				1		
473	UD193	I.R. 71	472+98.35	RT	75.83	774.85	476+60.60	RT	79.00	776.27	OUTLET	1.8	362				40	1	1	1					
474	UD194	I.R. 71	478+37.21	LT	92.17	773.82	480+49.95	LT	77.24	772.05	I-3D		213						1						
474	UD195	I.R. 71	478+53.00	LT	67.00	773.67	480+44.96	LT	69.19	771.41	I-3D			192		8			1					1	
474	UD196	I.R. 71	478+69.89	LT	42.00	774.00	480+39.96	LT	42.00	771.99	UD197			170			25		1				1		
474	UD197	I.R. 71	478+79.97	LT	17.00	774.48	480+39.98	LT	17.00	772.56	CB		160				20		1		1				
474	UD198	I.R. 71	479+11.01	RT	14.00	774.07	480+40.02	RT	15.76	772.52	CB		129				19		1		1				
474	UD199	I.R. 71	479+15.00	RT	29.00	773.76	480+40.03	RT	29.00	772.17	UD198			125		13			1				1		
474	UD200	I.R. 71	480+55.00	RT	15.96	772.29	482+20.08	RT	17.00	769.48	UD201		165			12			1				1		
474	UD201	I.R. 71	480+55.00	RT	29.00	771.94	482+17.98	RT	29.00	769.12	UD202			163		25			1	1					
474	UD202	I.R. 71	479+30.00	RT	54.00	774.07	482+13.62	RT	54.00	769.66	UD203			284		25			1	1					
474	UD203	I.R. 71	479+36.77	RT	79.00	774.73	482+09.28	RT	79.00	770.47	OUTLET	1.8	273				59	1	1	1					
474	UD204	I.R. 71	480+65.04	LT	77.59	771.90	482+37.41	LT	81.04	768.86	OUTLET	1.8	172				61	1	1	1					
474	UD205	I.R. 71	480+65.20	LT	69.59	771.18	482+35.98	LT	73.00	768.17	UD204			171		12			1	1					
474	UD206	I.R. 71	480+55.01	LT	42.00	771.86	482+30.48	LT	42.00	768.84	UD205			175		33			1	1					
474	UD207	I.R. 71	480+55.00	LT	17.00	772.43	482+26.06	LT	17.00	769.48	UD206		171			25			1				1		
474	UD208	I.R. 71	482+42.54	LT	81.14	768.78	485+49.96	LT	87.29	765.78	I-3D		307						1						
474	UD209	I.R. 71	482+41.11	LT	73.11	768.08	485+50.09	LT	79.29	765.06	I-3D			309		8			1				1		
474	UD210	I.R. 71	482+35.57	LT	54.00	768.44	489+50.00	LT	54.00	763.02	UD211			714		12			1				1		
474	UD211	I.R. 71	482+35.57	LT	42.00	768.65	489+50.00	LT	42.00	763.24	UD212			714		25			1	1					
474	UD212	I.R. 71	482+32.65	LT	17.00	769.27	489+50.00	LT	17.00	763.81	CB		717				17		1	1					
474	UD213	I.R. 71	482+25.15	RT	17.00	769.39	489+50.00	RT	17.00	763.81	CB		725				17		1	1					
474	UD214	I.R. 71	482+23.05	RT	29.00	769.03	489+50.00	RT	29.00	763.41	UD213			727		12			1	1					
474	UD215	I.R. 71	482+18.67	RT	54.00	769.58	489+50.00	RT	54.00	763.88	UD214			731		25			1				1		
TOTALS CARRIED TO SHEET 482												9.0	16,476	16,891		575	459	5	55	22	4	3	20	2	

CALCULATED LMR
CHECKED KEW

UNDERDRAIN SUBSUMMARY

FRA-71-5.29

481
623

P:\84868\drainage\sheets\84868DS004.dgn 3/27/2015 2:36:26 PM kfahy

SHEET NO.	REFERENCE NO.	ROADWAY	FROM STATION	FROM SIDE	FROM OFFSET	FROM INVERT	TO STATION	TO SIDE	TO OFFSET	TO INVERT	OUTLET TYPE	601 TIED CONCRETE BLOCK MAT, TYPE 1	605 6" BASE PIPE UNDERDRAINS, 707.31	605 6" SHALLOW PIPE UNDERDRAINS, 707.31	605 6" UNCLASSIFIED PIPE UNDERDRAINS, 707.31	611 6" CONDUIT, TYPE F	611 6" CONDUIT, TYPE F FOR UNDERDRAIN OUTLETS	611 PRECAST REINFORCED CONCRETE OUTLET	BENDS AND BRANCHES (FOR INFORMATION ONLY) PLUG	TEE	45° WYE	CROSS	90° BEND	45° BEND	30° BEND
			FROM	LT/RT	FT	FT	TO	LT/RT	FT	FT		SY	FT	FT	FT	FT	FT	EACH	EACH	EACH	EACH	EACH	EACH	EACH	EACH
474	UD216	I.R. 71	482+14.32	RT	79.00	770.39	485+61.85	LT	87.79	766.94	OUTLET	1.8	348				51		1	1					
474	UD217	I.R. 71	484+00.00	RT	79.00	767.30	485+61.86	RT	79.79	766.22	UD216			162		8			1				1		
474	UD218	I.R. 71	485+66.82	RT	79.86	766.19	489+45.04	RT	94.77	763.38	UD219			378		8			1				1		
474	UD219	I.R. 71	485+66.82	RT	87.86	766.91	489+45.04	RT	102.78	764.10	OUTLET	1.8	378				36	1	1	1					
474	UD220	I.R. 71	485+65.06	LT	87.59	765.58	488+77.95	LT	93.85	763.49	I-3D		313						1						
474	UD221	I.R. 71	485+65.19	LT	79.59	764.86	489+50.00	LT	87.29	762.36	MH			385		8			1				1		
474	UD222	I.R. 71/RAMP A	489+55.04	LT	87.39	762.33	494+33.62	LT	1.00	760.35	UD252			479					1						
474	UD223	I.R. 71	489+55.02	LT	63.21	762.83	495+90.19	LT	67.00	762.44	UD237			635					1						
474	UD224	I.R. 71	489+55.01	LT	42.00	763.21	493+35.13	LT	42.00	762.27	UD225			380		13			1				1		
474	UD225	I.R. 71	489+55.01	LT	29.00	763.39	495+42.55	LT	29.00	762.20	UD238			588					1						
474	UD226	I.R. 71	489+55.01	LT	17.00	763.78	495+42.55	LT	17.00	762.59	UD239		588						1						
474	UD227	I.R. 71	489+54.98	RT	17.00	763.78	495+42.55	LT	17.00	762.59	UD240		588						1						
474	UD228	I.R. 71	489+54.98	RT	29.00	763.39	495+42.55	RT	29.00	762.20	UD241			588					1						
474	UD229	I.R. 71	489+54.98	RT	54.00	763.86	493+35.13	RT	54.00	762.65	UD230			380		13			1	1					
474	UD230	I.R. 71	489+54.98	RT	67.00	764.04	495+42.55	RT	67.00	762.39	UD242			588					1						
474	UD231	RAMP D	489+58.93	RT	1.00	763.31	494+00.00	RT	1.00	760.49	OUTLET	1.8		441			25	1	1	1					
474	UD232	I.R. 71	491+02.69	RT	79.00	763.97	495+42.55	RT	79.00	762.95	UD243		479						1						
474	UD233	RAMP D	491+01.40	LT	18.50	762.66	494+00.00	L	17.00	761.35	UD231			299		18			1				1		
474	UD234	I.R. 71	494+11.18	LT	79.00	764.57	495+90.19	LT	79.00	764.77	UD236		179						1						
474	UD235	RAMP A	494+08.81	RT	17.00	763.21	495+55.81	RT	17.00	763.91	UD234			147			9		1				2		
474-475	UD236	I.R. 71	495+90.19	LT	79.00	763.00	505+89.43	LT	79.00	765.61	CB		999				23		1			1			
474-475	UD237	I.R. 71	495+90.19	LT	67.00	762.44	505+89.43	LT	67.00	765.05	UD236			999		12			1	1					
474-475	UD238	I.R. 71	495+42.55	LT	29.00	762.20	505+89.43	LT	29.00	764.86	UD239			1047		12			1	1					
474-475	UD239	I.R. 71	495+42.55	RT	17.00	762.76	505+89.43	LT	17.00	765.42	CB		1047				17		1			1			
474-475	UD240	I.R. 71	495+42.55	RT	17.00	762.76	505+89.43	RT	17.00	765.42	CB		1047				18		1			1			
474-475	UD241	I.R. 71	495+42.55	RT	29.00	762.20	505+89.43	RT	29.00	764.86	UD240			1047		12			1			1			
474-475	UD242	I.R. 71	495+42.55	RT	67.00	762.39	505+89.43	RT	67.00	765.05	UD241			1047		38			1			1			
474-475	UD243	I.R. 71	495+42.55	RT	79.00	762.95	505+89.43	RT	79.00	765.61	UD242		1047			12			1	1					
475	UD244	I.R. 71	505+94.43	LT	79.00	765.63	508+95.00	LT	79.00	766.44	UD245		301			12			1				1		
475	UD245	I.R. 71	505+94.43	LT	67.00	765.07	508+95.00	LT	67.00	765.88	UD246			301		38			1	1					
475	UD246	I.R. 71	505+94.43	LT	29.00	764.87	508+95.00	LT	29.00	765.68	UD247			301		12			1	1					
475	UD247	I.R. 71	505+94.43	LT	17.00	765.27	508+95.00	LT	17.00	766.08	CB		301				16		1	1					
475	UD248	I.R. 71	505+94.43	RT	17.00	765.27	508+95.00	RT	17.00	766.08	CB		301				18		1	1					
475	UD249	I.R. 71	505+94.43	RT	29.00	764.87	508+95.00	RT	29.00	765.68	UD248			301		12			1	1					
475	UD250	I.R. 71	505+94.43	RT	67.00	765.07	508+95.00	RT	67.00	765.88	UD249			301		38			1	1					
475	UD251	I.R. 71	505+94.43	RT	79.00	765.63	508+95.00	RT	79.00	766.44	UD250		301			12			1				1		
476	UD252	RAMP A	494+33.62	LT	1.00	760.34	495+44.46	LT	1.00	760.99	UD235			111		18			1	1					
476	UD253	RAMP A	495+52.76	LT	1.00	761.18	501+47.07	LT	1.00	781.76	CB			594			28		1					1	
476	UD254	RAMP A	495+79.48	RT	17.00	762.57	501+47.07	RT	17.00	782.01	CB			568			31		1				1		
477	UD255	RAMP D	494+44.57	LT	17.00	761.52	503+95.47	LT	17.00	771.83	UD256			951		18			1				1		
477	UD256	RAMP D	494+44.58	RT	1.00	760.66	503+95.66	RT	1.00	772.61	OUTLET	1.8		951			24	1	1	1					
477	UD257	RAMP D	504+00.00	LT	17.00	771.87	507+40.00	LT	17.00	775.47	OUTLET	1.8		340			21	1	1				1		
477	UD258	RAMP D	504+00.00	RT	1.00	772.65	507+40.00	RT	9.00	775.34	OUTLET	1.8		340			31	1	1				1		
473	UD260	I.R. 71	454+50.00	LT	73.00	782.62	463+75.00	LT	73.00	778.43	UD261		925			12			1				1		
473	UD261	I.R. 71	454+50.00	LT	61.00	782.06	463+75.00	LT	61.00	777.87	UD262			925		25			1	1					
473	UD262	I.R. 71	454+50.00	LT	36.00	782.53	463+75.00	LT	36.00	778.34	UD263			925		25			1	1					
473	UD263	I.R. 71	454+50.00	LT	11.00	783.10	463+75.00	LT	11.00	778.91	CB		925				11		1	1					
473	UD264	I.R. 71	476+86.37	LT	18.00	777.05	476+42.43	LT	92.19	776.20	UD186			86											1
473	UD265	I.R. 71	477+08.13	RT	15.12	775.98	477+45.33	RT	86.86	775.17	OUTLET			74			8	1							
474	UD266	I.R. 71	478+79.51	LT	18.00	774.67	478+37.21	LT	92.17	773.82	UD194			85									1		
474	UD267	I.R. 71	479+00.79	RT	15.00	774.86	479+36.77	RT	79.00	774.73	UD203			74											1
TOTALS ON THIS SHEET												7.2	10067.0	16818.0	0.0	376.0	367.0	6.0	47	18	0	5	14	1	0
TOTALS CARRIED FROM SHEET 478												15.0	20454.0	16586.0	0	658.0	510.0	8.0	56	33	2	0	24	0	0
TOTALS CARRIED FROM SHEET 479												18.0	19536.0	18352.0	0	582.0	523.0	10.0	56	30	0	0	20	0	1
TOTALS CARRIED FROM SHEET 480												6.0	24517.0	25473.0	0	641.0	389.0	4.0	55	33	2	0	24	0	1
TOTALS CARRIED FROM SHEET 481												9.0	16476.0	16891.0	0	575.0	459.0	5.0	55	22	4	3	20	2	0
TOTALS CARRIED TO GENERAL SUMMARY												56	91,050	94,120	0	2,832	2,248	33	269	136	8	13	115	4	4

CALCULATED LMR
CHECKED KEW

UNDERDRAIN SUBSUMMARY

FRA-71-5.29

482
623

P:\84868\drainage\sheets\84668DS005.dgn 3/27/2015 2:36:27 PM kfahy

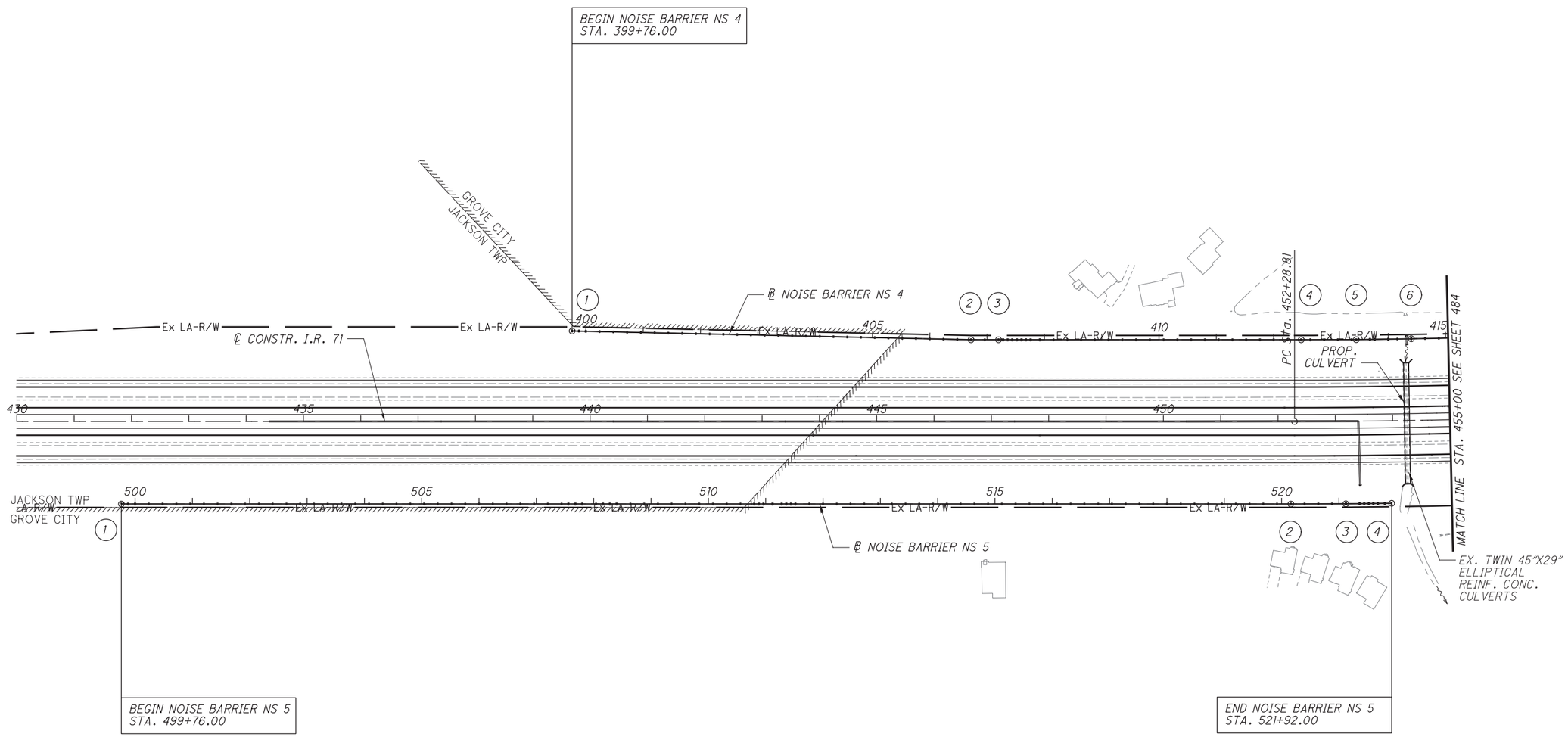

LEGEND

(1) NOISE BARRIER P.I. LOCATION

NOTE:
FOR NOISE BARRIER BASELINE GEOMETRY AND I.R. 71 REFERENCE POINTS, SEE SHEET 486

HORIZONTAL SCALE IN FEET
0 50 100 200

NOISE BARRIER SCHEMATIC PLAN

FRA-71-5.29

483
623

P:\84868\roadway\sheets\84868GB103.dgn 3/27/2015 2:36:29 PM kfahy

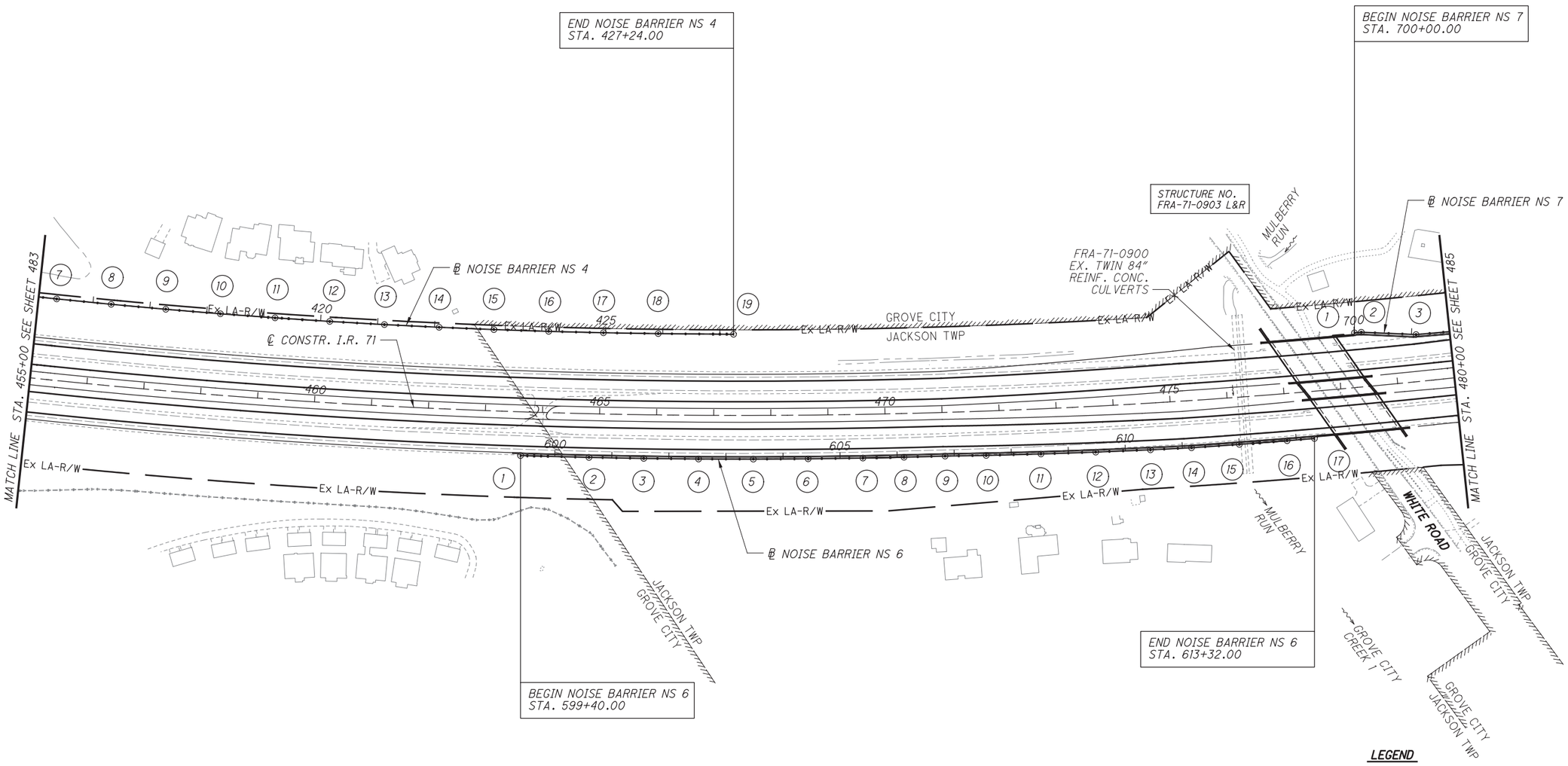

NOTE:
FOR NOISE BARRIER BASELINE GEOMETRY AND
I.R. 71 REFERENCE POINTS, SEE SHEET 486

HORIZONTAL
SCALE IN FEET
0 50 100 200

NOISE BARRIER SCHEMATIC PLAN

FRA-71-5.29

484
623

P:\84868\roadway\sheets\84868GB104.dgn 3/27/2015 2:36:30 PM kfahy

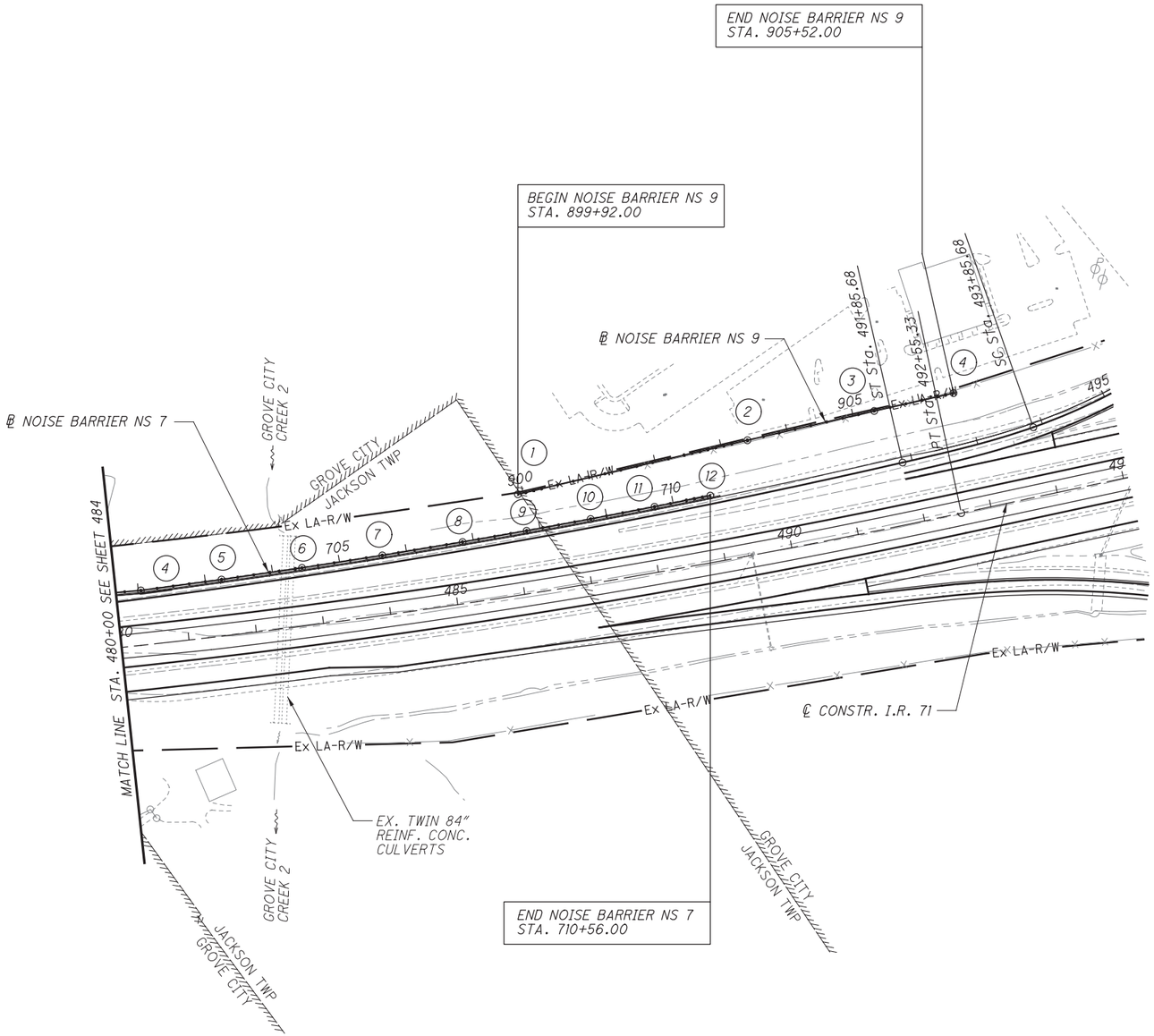

LEGEND

(1) NOISE BARRIER P.I. LOCATION

NOTE:
FOR NOISE BARRIER BASELINE GEOMETRY AND I.R. 71 REFERENCE POINTS, SEE SHEET 486

HORIZONTAL SCALE IN FEET
0 50 100 200

NOISE BARRIER SCHEMATIC PLAN

FRA-71-5.29

P:\84868\roadway\sheets\84868GB105.dgn 3/27/2015 2:36:31 PM kfahy

NOISE BARRIER BASELINE GEOMETRY

P.I. NO.	NOISE BARRIER STATION	I.R.-71 STATION	I.R.-71 OFFSET	NORTHING	EASTING	BEARING
	WALL NS 4					
1	399+76.00	439+68.61	157.82′ LT.	679679.5725	1810273.6235	N 48°-05′-31″ E
2	406+72.00	446+64.44	142.52′ LT.	680144.4579	1810791.5981	N 46°-51′-08″ E
3	407+20.00	447+12.44	142.50′ LT.	680177.2843	1810826.6185	N 46°-49′-55″ E
4	412+48.00	452+40.58	142.50′ LT.	680538.5107	1811211.7151	N 46°-42′-58″ E
5	413+44.00	453+37.75	142.20′ LT.	680604.3296	1811281.5998	N 45°-57′-03″ E
6	414+40.00	454+34.92	142.40′ LT.	680671.0760	1811350.5992	N 45°-36′-00″ E
7	415+36.00	455+32.09	142.40′ LT.	680738.2682	1811419.2131	N 45°-07′-47″ E
8	416+32.00	456+29.25	142.40′ LT.	680805.9723	1811487.2243	N 44°-39′-34″ E
9	417+28.00	457+26.42	142.40′ LT.	680874.2569	1811554.7018	N 44°-11′-21″ E
10	418+24.00	458+23.59	142.40′ LT.	680943.0930	1811621.6165	N 43°-43′-08″ E
11	419+20.00	459+20.76	142.40′ LT.	681012.4761	1811687.9640	N 43°-14′-55″ E
12	420+16.00	460+17.93	142.40′ LT.	681082.4014	1811753.7399	N 42°-46′-42″ E
13	421+12.00	461+15.10	142.40′ LT.	681152.8642	1811818.9394	N 42°-18′-29″ E
14	422+08.00	462+12.27	142.41′ LT.	681223.8598	1811883.5585	N 41°-50′-16″ E
15	423+04.00	463+09.43	142.41′ LT.	681295.3834	1811947.5927	N 41°-22′-03″ E
16	424+00.00	464+06.60	142.41′ LT.	681367.4829	1812010.9767	N 40°-53′-50″ E
17	424+96.00	465+03.77	142.42′ LT.	681439.9951	1812073.8892	N 40°-25′-37″ E
18	425+92.00	466+00.94	142.42′ LT.	681513.0736	1812132.6217	N 39°-57′-17″ E
19	427+24.00	467+34.55	142.23′ LT.	681614.2584	1812220.9111	
	WALL NS 5					
1	499+76.00	431+82.28	144.00′ RT.	678921.4800	1809906.6055	N 46°-49′-55″ E
2	520+16.00	452+22.28	144.00′ RT.	680317.1277	1811394.4791	N 46°-37′-58″ E
3	521+12.00	453+17.21	144.00′ RT.	680383.0483	1811464.2678	N 46°-12′-47″ E
4	521+92.00	453+96.25	144.00′ RT.	680438.4068	1811522.0214	
	WALL NS 6					
1	599+40.00	463+63.87	76.70′ RT.	681190.9535	1812147.7193	N 40°-59′-48″ E
2	600+60.00	464+83.10	76.58′ RT.	681281.5227	1812226.4406	N 40°-31′-59″ E
3	601+56.00	465+78.49	76.58′ RT.	681354.4855	1812288.8298	N 40°-04′-18″ E
4	602+52.00	466+73.87	76.58′ RT.	681427.9486	1812350.6293	N 39°-36′-36″ E
5	603+48.00	467+69.25	76.58′ RT.	681501.9070	1812411.8351	N 39°-08′-55″ E
6	604+44.00	468+64.64	76.58′ RT.	681576.3561	1812472.4431	N 38°-41′-14″ E
7	605+40.00	469+60.02	76.58′ RT.	681651.2910	1812532.4496	N 38°-17′-00″ E
8	606+12.00	470+31.56	76.58′ RT.	681707.8079	1812577.0571	N 37°-53′-39″ E
9	606+84.00	471+03.10	76.53′ RT.	681764.6264	1812621.2799	N 38°-33′-49″ E
10	607+56.00	471+74.62	77.76′ RT.	681820.9245	1812666.1634	N 37°-56′-27″ E
11	608+52.00	472+69.98	79.01′ RT.	681896.6242	1812725.2017	N 37°-32′-20″ E
12	609+48.00	473+65.33	80.37′ RT.	681972.7566	1812783.6816	N 37°-04′-39″ E
13	610+44.00	474+60.67	81.73′ RT.	682049.3473	1812841.5596	N 36°-36′-46″ E
14	611+16.00	475+32.16	82.69′ RT.	682107.1301	1812884.5139	N 35°-23′-52″ E
15	612+00.00	476+15.58	82.54′ RT.	682175.6132	1812933.1576	N 35°-06′-10″ E
16	612+84.00	476+99.00	82.57′ RT.	682244.3249	1812981.4745	N 34°-43′-37″ E
17	613+32.00	477+46.67	82.54′ RT.	682283.7853	1813008.8053	
	WALL NS 7					
1	700+00.00	478+32.78	95.67′ LT.	682455.5512	1812910.5184	N 34°-12′-19″ E
2	700+12.00	478+44.88	95.67′ LT.	682465.4756	1812917.2643	N 41°-53′-13″ E
3	701+08.00	479+40.68	82.40′ LT.	682536.9439	1812981.3601	N 34°-35′-34″ E
4	702+04.00	480+37.34	80.53′ LT.	682615.9719	1813035.8361	N 31°-48′-02″ E
5	703+24.00	481+58.14	82.95′ LT.	682717.9585	1813099.0988	N 31°-12′-53″ E
6	704+44.00	482+78.97	85.36′ LT.	682820.5861	1813161.2886	N 30°-37′-48″ E
7	705+64.00	483+99.83	87.78′ LT.	682923.8430	1813222.4278	N 30°-02′-43″ E
8	706+84.00	485+20.71	90.20′ LT.	683027.7187	1813282.5098	N 29°-31′-08″ E
9	707+80.00	486+17.44	92.13′ LT.	683111.2573	1813329.8098	N 29°-03′-02″ E
10	708+76.00	487+14.18	94.06′ LT.	683195.1797	1813376.4257	N 28°-34′-57″ E
11	709+72.00	488+10.94	96.00′ LT.	683279.4801	1813422.3543	N 28°-03′-37″ E
12	710+56.00	488+95.61	97.69′ LT.	683353.5487	1813461.9756	

NOISE BARRIER BASELINE GEOMETRY

P.I. NO.	NOISE BARRIER STATION	I.R.-71 STATION	I.R.-71 OFFSET	NORTHING	EASTING	BEARING
	WALL NS 9					
1	899+92.00	486+13.10	147.41′ LT.	683135.5636	1813279.9780	N 26°-13′-53″ E
2	903+40.00	489+65.19	167.90′ LT.	683447.7250	1813433.7937	N 26°-27′-18″ E
3	905+32.00	491+59.91	174.04′ LT.	683619.6197	1813519.3284	N 26°-48′-36″ E
4	906+52.00	492+81.30	175.55′ LT.	683726.7207	1813573.4521	

BENCHMARKS FOR ℄ I.R.-71

DESCRIPTION	STATION	OFFSET	NORTHING	EASTING	ELEVATION
℄ MONUMENT	432+44.77	0.01′ LT.	679069.2611	1809853.6610	792.63
℄ MONUMENT	442+43.91	0.03′ RT.	679752.7896	1810582.4091	788.11
℄ MONUMENT	452+23.96	0.01′ RT.	680423.2954	1811297.1969	784.00
℄ MONUMENT	462+92.98	0.17′ LT.	681188.6376	1812043.0192	778.48
℄ MONUMENT	467+42.78	0.18′ LT.	681530.1663	1812335.6768	775.71
CHISELED "X" ON MH	477+42.18	159.32′ LT.	682417.6600	1812807.3300	757.66
RESET ℄ MONUMENT	478+38.59	97.98′ RT.	682351.4500	1813073.9100	755.19
CHISELED "X" ON CB	479+00.61	121.32′ LT.	682390.2400	1813128.3000	758.92
℄ MONUMENT	492+50.49	0.01′ LT.	683618.6951	1813715.2075	763.57

CALCULATED MJT CHECKED BBD

NOISE BARRIER GEOMETRY AND REFERENCES

FRA-71-5.29

P:\84868\roadway\sheets\84868GB106.dgn 3/27/2015 2:36:32 PM kfahy

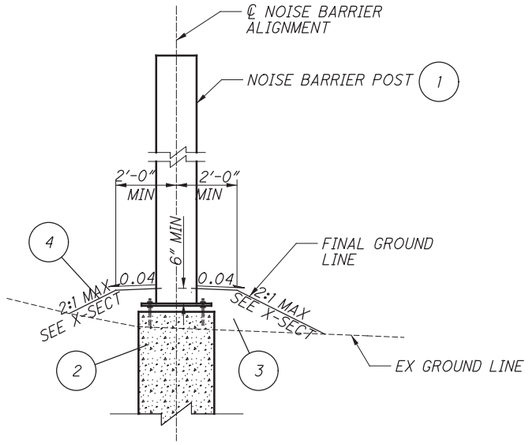

TYPICAL FILL SECTION

BARRIER NS 4

STA. 399+76.00 TO STA. 400+99.75 = 123.75′
STA. 401+26.08 TO STA. 403+06.22 = 180.14′
STA. 403+62.64 TO STA. 407+06.20 = 343.56′
STA. 407+48.35 TO STA. 409+84.92 = 236.57′
STA. 410+16.08 TO STA. 411+39.63 = 123.55′
STA. 411+52.00 TO STA. 416+57.69 = 505.69′
STA. 417+62.48 TO STA. 427+14.00 = 951.52′
= 2464.78′

BARRIER NS 5

STA. 500+33.10 TO STA. 504+95.40 = 462.30′
STA. 505+07.04 TO STA. 505+39.75 = 32.71′
STA. 505+56.02 TO STA. 506+45.00 = 88.98′
STA. 506+55.00 TO STA. 507+13.42 = 58.42′
STA. 508+03.88 TO STA. 510+38.69 = 234.81′
STA. 510+45.39 TO STA. 511+06.94 = 61.55′
STA. 511+50.35 TO STA. 521+92.00 = 1041.65′
= 1980.42′

BARRIER NS 9

STA. 900+17.29 TO STA. 901+45.20 = 127.91′
STA. 902+16.11 TO STA. 903+45.00 = 128.89′
STA. 903+55.00 TO STA. 906+52.00 = 297.00′
= 553.80′

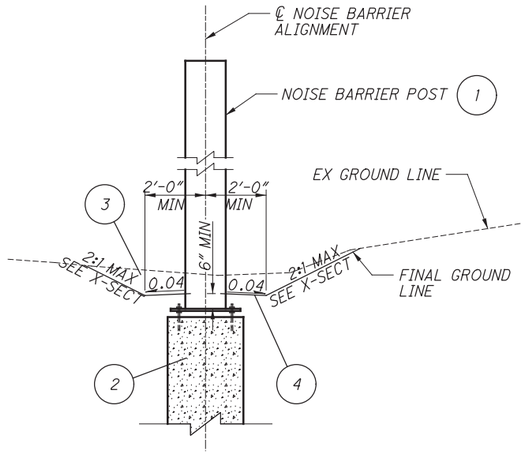

TYPICAL CUT SECTION

BARRIER NS 4

STA. 400+99.75 TO STA. 401+26.08 = 26.33′
STA. 403+06.22 TO STA. 403+62.64 = 56.42′
STA. 407+06.20 TO STA. 407+48.35 = 42.15′
STA. 409+84.92 TO STA. 410+16.08 = 31.16′
STA. 416+57.69 TO STA. 417+62.48 = 104.79′
= 260.85′

BARRIER NS 5

STA. 500+15.00 TO STA. 500+33.10 = 18.10′
STA. 504+95.40 TO STA. 505+07.04 = 11.64′
STA. 505+39.75 TO STA. 505+56.02 = 16.27′
STA. 507+13.42 TO STA. 507+43.98 = 30.56′
STA. 510+38.69 TO STA. 510+45.39 = 6.70′
STA. 511+06.94 TO STA. 511+50.35 = 43.41′
= 126.68′

BARRIER NS 9

STA. 899+92.00 TO STA. 900+17.29 = 25.29′

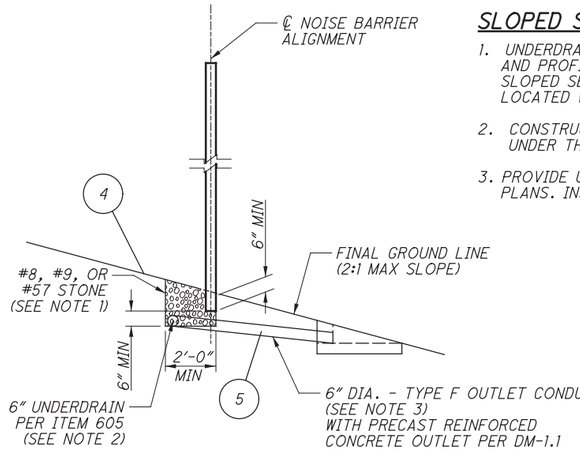

TYPICAL SLOPED SECTION

BARRIER NS 4

STA. 411+39.63 TO STA. 411+52.00 = 12.37′
STA. 427+14.00 TO STA. 427+24.00 = 10.00′
= 22.37′

BARRIER NS 5

STA. 499+76.00 TO STA. 500+15.00 = 39.00′
STA. 506+45.00 TO STA. 506+55.00 = 10.00′
STA. 507+43.98 TO STA. 508+03.88 = 59.90′
= 108.90′

BARRIER NS 9

STA. 901+45.20 TO STA. 902+16.11 = 70.91′
STA. 903+45.00 TO STA. 903+55.00 = 10.00′
= 80.91′

SLOPED SECTION DRAINAGE NOTES:

1. UNDERDRAIN SHALL BE LOCATED AS SHOWN IN THE NOISE BARRIER PLAN AND PROFILE SHEETS. UNDERDRAIN DETAILS SHOWN ON THE TYPICAL SLOPED SECTION AND NOTED BELOW SHALL BE UTILIZED FOR UNDERDRAINS LOCATED WITHIN THE LIMITS SHOWN ON THE TYPICAL CUT OR FILL SECTIONS.
2. CONSTRUCT A TRENCH WITH A MINIMUM LONGITUDINAL SLOPE OF 1.0% UNDER THE NOISE BARRIER PANELS AS SHOWN IN THE TYPICAL ELEVATION.
3. PROVIDE UNDERDRAIN SLOPE OF 1% MINIMUM OR AS SPECIFIED IN PROJECT PLANS. INSTALL IN ACCORDANCE WITH ITEM 605.

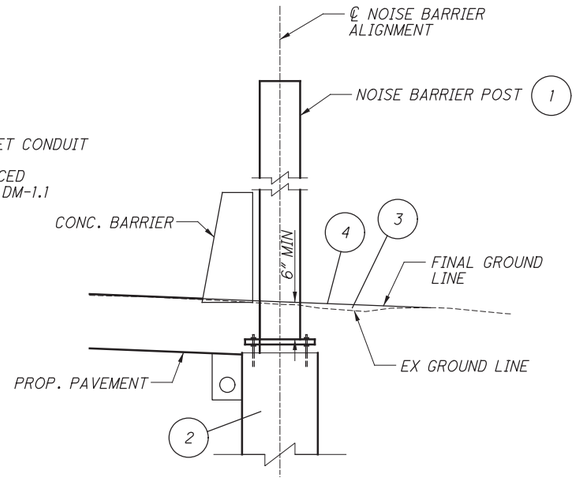

TYPICAL SECTION AT SHOULDER

BARRIER NS 6

STA. 599+40.00 TO STA. 613+32.00 = 1392.00′

BARRIER NS 7

STA. 700+00.00 TO STA. 710+56.00 = 1056.00′

LEGEND

1. ITEM SPECIAL - NOISE BARRIER
2. ITEM 524 - DRILLED SHAFT
3. ITEM 203 - EXCAVATION & EMBANKMENT
4. ITEM 659 - SEEDING & MULCHING
5. ITEM 605 - 6" UNCLASSIFIED PIPE UNDERDRAIN

NOTE: ITEMS 1, AND 2 ARE INCLUDED WITH ITEM 1, NOISE BARRIER, FOR PAYMENT.

NOISE BARRIER TYPICAL SECTIONS

FRA-71-5.29

P:\84868\roadway\sheets\84868GY101.dgn 3/27/2015 2:36:32 PM kfahy

WALL NO.	SHEET NO.	STATION TO STATION			606																
					SPECIAL-NOISE BARRIER (REFLECTIVE) 10 ' HEIGHT AND UNDER	SPECIAL-NOISE BARRIER (REFLECTIVE) OVER 10 ' TO 14' HEIGHT	SPECIAL-NOISE BARRIER (REFLECTIVE) OVER 14 ' TO 20' HEIGHT														
					S.F.	S.F.	S.F.														
NS 4	491-492	399+76	406+72		84	804	10,224														
NS 4	492	406+72	407+20				792														
NS 4	492-493	407+20	412+48				9160														
NS 4	493-494	412+48	413+44				1736														
NS 4	494	413+44	414+40				1528														
NS 4	494	414+40	415+36				1440														
NS 4	494	415+36	416+32				1584														
NS 4	494	416+32	417+28				1632														
NS 4	494-495	417+28	418+24				1728														
NS 4	495	418+24	419+20				1692														
NS 4	495	419+20	420+16				1512														
NS 4	495	420+16	421+12				1488														
NS 4	495	421+12	422+08				1536														
NS 4	495-496	422+08	423+04				1512														
NS 4	496	423+04	424+00				1464														
NS 4	496	424+00	424+96				1512														
NS 4	496	424+96	425+92				1560														
NS 4	496	425+92	427+24		192	168	1656														
NS 5	507-511	499+76	520+16		168	8784	21,156														
NS 5	511	520+16	521+12			1008	360														
NS 5	511	521+12	521+92		84	764	120														
NS 6	520	599+40	600+60		168	156	1500														
NS 6	520	600+60	601+56				1728														
NS 6	520	601+56	602+52				1560														
NS 6	520	602+52	603+48			1008	360														
NS 6	520-521	603+48	604+44				1440														
NS 6	521	604+44	605+40			1440															
NS 6	521	605+40	606+12				1128														
NS 6	521	606+12	606+84				1080														
NS 6	521	606+84	607+56				1152														
NS 6	521	607+56	608+52				1536														
NS 6	521-522	608+52	609+48				1584														
NS 6	522	609+48	610+44				1536														
NS 6	522	610+44	611+16				1104														
NS 6	522	611+16	612+00				1260														
NS 6	522	612+00	612+84				1260														
NS 6	522	612+84	613+32				720														
NS 7	529	700+00	700+12			156															
NS 7	529	700+12	701+08			1248															
NS 7	529	701+08	702+04			1320															
NS 7	529	702+04	703+24			672	1080														
NS 7	529	703+24	704+44				1872														
NS 7	529-530	704+44	705+64				2016														
NS 7	530	705+64	706+84				2136														
NS 7	530	706+84	707+80				1728														
NS 7	530	707+80	708+76				1728														
NS 7	530	708+76	709+72				1800														
NS 7	530	709+72	710+56		96	144	1092														
NS 9	535	899+92	902+40		144	780	4200														
NS 9	535-536	902+40	905+32			2352															
NS 9	536	905+32	906+52		144	1152															
TOTALS CARRIED TO GENERAL SUMMARY					1080	21,956	101,992														

CALCULATED MJT
CHECKED BBD

NOISE BARRIER SUBSUMMARY

FRA-71-5.29

488
623

P:\84868\roadway\sheets\84868GS401.dgn 3/27/2015 2:36:33 PM kfahy

REF. NO.	SHEET NO.	STATION TO STATION			202			601		611					605											
					FENCE REMOVED			TIED CONCRETE BLOCK MAT, TYPE 1		6" CONDUIT, TYPE F		PRECAST REINFORCED CONCRETE OUTLET			6" UNCLASSIFIED PIPE UNDERDRAINS, 707.31											
					FT			S.Y.		FT		EACH			FT											
		NOISE BARRIER NS 4 STATIONING																								
R1	494-495	416+35	418+65		230																					
R2	495-496	422+87	427+24		437																					
		NOISE BARRIER NS 5 STATIONING																								
R3	507	499+47	499+96		49																					
R4	508	505+40	505+85		45																					
R5	509-510	511+48	516+33		485																					
		NOISE BARRIER NS 9 STATIONING																								
R7	535-536	901+13	906+52		539																					
		NOISE BARRIER NS 4 STATIONING																								
UD1	491	399+76	401+15					1.8		28		1			139											
UD2	491-492	401+25	407+25					1.8		40		1			600											
UD3	492-493	407+75	411+95					1.8		40		1			420											
UD4	494	413+50	414+25					1.8		10		1			110											
UD5	494	414+50	417+25					1.8		16		1			275											
UD6	494-495	417+30	419+90					1.8		40		1			260											
UD7	495	420+10	423+00					1.8		40		1			290											
UD8	496	423+10	427+24					1.8		28		1			414											
		NOISE BARRIER NS 5 STATIONING																								
UD9	507-508	499+76	504+20					1.8		40		1			444											
UD10	508	504+30	507+70					1.8		34		1			340											
UD11	509	508+50	510+75					1.8		40		1			225											
UD12	509-511	511+50	519+25					1.8		22		1			775											
UD13	511	519+30	522+16					1.8		10		1			276											
		NOISE BARRIER NS 9 STATIONING																								
UD14	535	899+92	902+45					1.8		25		1			253											
UD15	535-536	903+10	906+52					1.8		14		1			342											
TOTALS CARRIED TO GENERAL SUMMARY					1785			27		427		15			5163											

CALCULATED MJT
CHECKED BBD

NOISE BARRIER SUBSUMMARY

FRA-71-5.29

489
623

P:\84868\roadway\sheets\84868GS402.dgn 3/27/2015 2:36:33 PM kfahy

SHEET NO.	STATION FROM	STATION TO	203 EXCAVATION CU. YD.	203 EMBANKMENT CU. YD.	659 SEEDING AND MULCHING SQ. YD.
	NOISE BARRIER NS 4				
497	399+76.00	400+50.00	0	6	79
497	401+00.00	402+00.00	2	11	174
498	402+50.00	403+50.00	2	34	209
498	404+00.00	405+00.00	2	7	171
499	405+50.00	406+50.00	0	29	197
499	407+00.00	408+00.00	4	25	217
500	408+50.00	409+50.00	0	12	187
500	410+00.00	411+00.00	18	15	201
501	411+50.00	412+00.00	0	14	120
501	412+50.00	413+50.00	4	7	179
502	414+00.00	415+00.00	2	139	323
502	415+50.00	416+50.00	0	32	187
503	417+00.00	418+00.00	7	4	162
503	418+50.00	419+50.00	0	9	168
504	420+00.00	421+00.00	0	29	190
504	421+50.00	422+50.00	0	104	306
505	423+00.00	424+00.00	0	64	254
505	424+50.00	425+50.00	0	34	207
506	426+00.00	427+00.00	0	19	179
506	427+24.00		0	2	26
	NOISE BARRIER NS 5				
512	499+76.00	500+50.00	0	3	71
512	501+00.00	502+00.00	0	34	208
513	502+50.00	503+50.00	0	25	189
513	504+00.00	504+50.00	0	15	125
514	505+00.00	506+00.00	12	7	176
514	506+50.00	507+50.00	0	10	171
515	508+00.00	509+00.00	2	9	170
515	509+50.00	510+50.00	0	11	176
516	511+00.00	512+00.00	2	28	195
516	512+50.00	513+50.00	0	42	225
517	514+00.00	515+00.00	0	42	217
517	515+50.00	516+50.00	0	51	240
518	517+00.00	518+00.00	0	57	237
518	518+50.00	519+50.00	0	40	215
519	520+00.00	521+00.00	0	47	222
519	521+50.00	521+92.00	2	43	163
SUBTOTALS THIS COLUMN			59	1060	6736

SHEET NO.	STATION FROM	STATION TO	203 EXCAVATION CU. YD.	203 EMBANKMENT CU. YD.	659 SEEDING AND MULCHING SQ. YD.
	NOISE BARRIER NS 6				
523	599+40.00	600+00.00	0	0	54
523	600+50.00	601+50.00	0	0	135
524	602+00.00	603+00.00	0	0	135
524	603+50.00	604+00.00	0	0	90
525	604+50.00	605+50.00	0	0	135
525	606+00.00	607+00.00	0	0	135
526	607+50.00	608+50.00	0	0	135
526	609+00.00	610+00.00	0	0	135
527	610+50.00	611+50.00	0	0	135
527	612+00.00	612+50.00	0	0	90
528	613+00.00	613+32.00	0	0	74
	NOISE BARRIER NS 7				
531	700+00.00	701+00.00	0	0	90
531	701+50.00	702+50.00	0	0	135
532	703+00.00	704+00.00	0	0	135
532	704+50.00	705+50.00	0	0	135
533	706+00.00	707+00.00	0	0	135
533	707+50.00	708+50.00	0	0	135
534	709+00.00	710+00.00	0	0	135
534	710+50.00	710+56.00	0	0	51
	NOISE BARRIER NS 9				
537	899+92.00	900+50.00	5	2	58
537	901+00.00	902+00.00	1	11	168
538	902+50.00	903+50.00	1	14	162
538	904+00.00	905+00.00	0	19	176
539	905+50.00	906+52.00	0	11	162
SUBTOTALS THIS COLUMN			7	57	2930
SUBTOTALS COLUMN 1			59	1060	6736
TOTALS TO GENERAL SUMMARY			66	1117	9666

CALCULATED MJT
CHECKED BBD

NOISE BARRIER EARTHWORK SUBSUMMARY

FRA-71-5.29

490
623

P:\84868\roadway\sheets\84868GS403.dgn 3/27/2015 2:36:34 PM kfahy

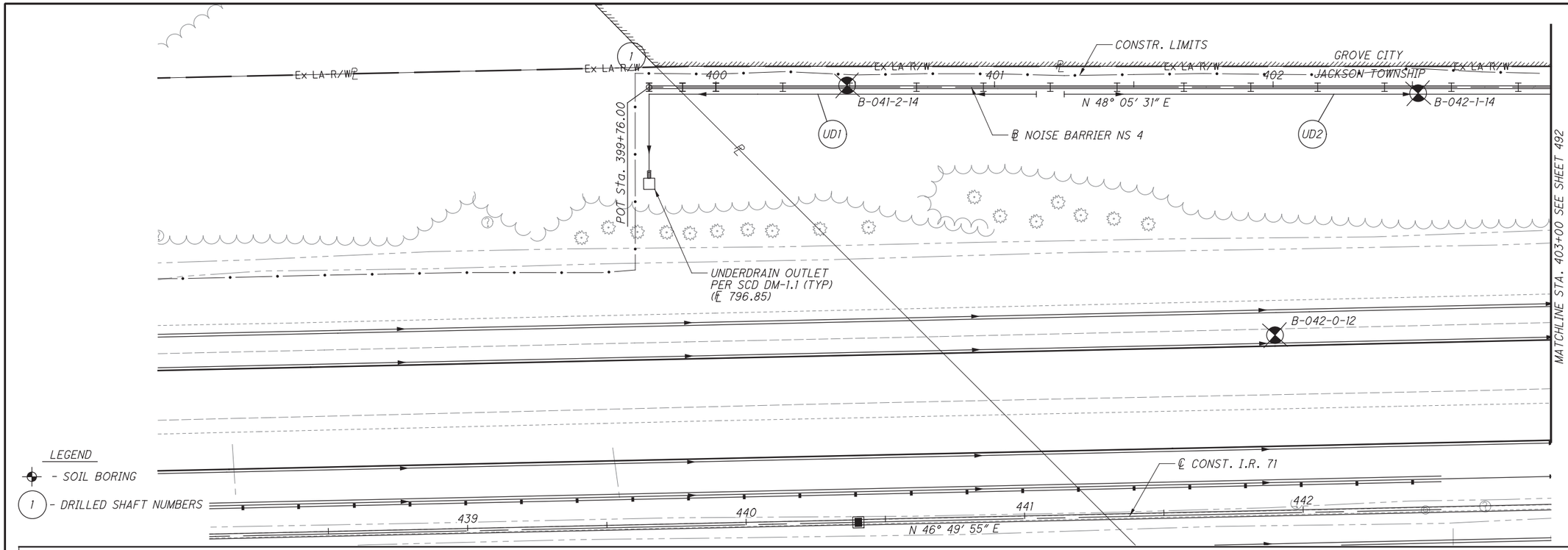

TOP OF WALL ELEV.	805.75	809.75	813.75	813.75	813.75	813.75	813.75	813.75	813.75	813.75	813.75	813.75	812.75	812.75	812.75
ACOUSTIC PROFILE ELEV.			812.20	812.58	813.12	813.66	814.21	814.03	813.55	813.06	812.58	812.17	811.79	811.42	811.04
BOTTOM OF WALL ELEV.	798.75	798.75	798.75	798.75	798.75	798.75	799.75	799.75	798.75	798.75	797.75	797.75	796.75	796.75	795.75
PANEL NO.	1	2		4	5	6	7	8	9	10	11	12	13	14	15

2 PANELS @ 12′ = 24′

28 PANELS @ 24′ = 672′

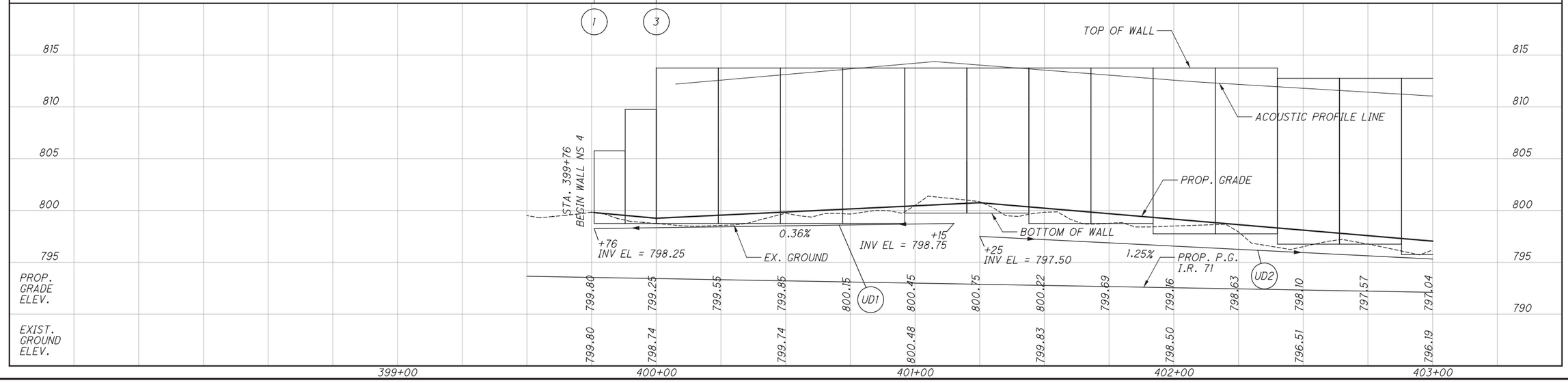

PROP. GRADE ELEV.	799.80	799.25	799.55	799.85	800.15	800.45	800.75	800.22	799.69	799.16	798.63	798.10	797.57	797.04	
EXIST. GROUND ELEV.	799.80	798.74		799.74		800.48		799.83		798.50		796.51		796.19	

399+00 400+00 401+00 402+00 403+00

HORIZONTAL SCALE IN FEET
0 10 20 40

CALCULATED MJT
CHECKED BBD

PLAN AND PROFILE NOISE BARRIER NS 4
STA. 399+76.00 TO STA. 403+00.00

FRA-71-5.29

491
623

P:\84868\roadway\sheets\84868GP401.dgn 3/27/2015 2:36:36 PM kfahy

PLAN AND PROFILE NOISE BARRIER NS 4
STA. 403+00.00 TO STA. 408+00.00

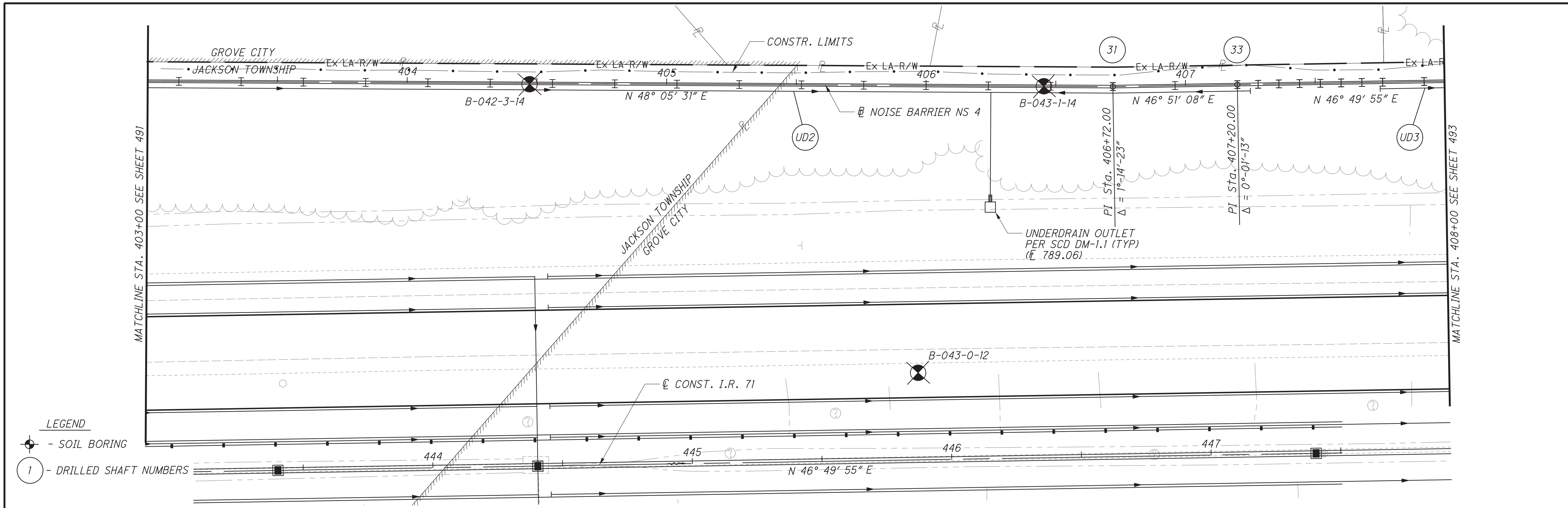

PANEL NO.	15	16	17	18	19	20	21	22	23	24	25	26	27	28	29	30	31	32	33	34	35	36	37	38	39	40	41
TOP OF WALL ELEV.	812.75	812.75	812.75	812.75	811.75	811.75	811.75	811.75	811.75	810.75	810.75	810.75	810.75	810.75	810.75	810.75	810.75	810.75	810.75	809.75	809.75	809.75	809.75	809.75	809.75	808.75	808.75
BOTTOM OF WALL ELEV.	795.75	795.75	794.75	794.75	794.75	794.75	794.75	794.75	794.75	794.75	794.75	793.75	793.75	793.75	793.75	793.75	793.75	794.75	795.75	794.75	793.75	792.75	791.75	790.75	789.75	789.75	789.75

ACOUSTIC PROFILE ELEV.

811.04	810.74	810.46	810.19	809.92	809.88	809.95	810.02	810.09	809.82	809.40	808.98	808.56	808.79	809.31	809.82	810.34	809.46	807.95	806.44	804.93

28 PANELS @ 24′ = 672′ · 2 PANELS @ 24′ = 48′ · 7 PANELS @ 8′ = 56′ · 1 PANEL @ 16′ = 16′ · 19 PANELS @ 24′ = 456′

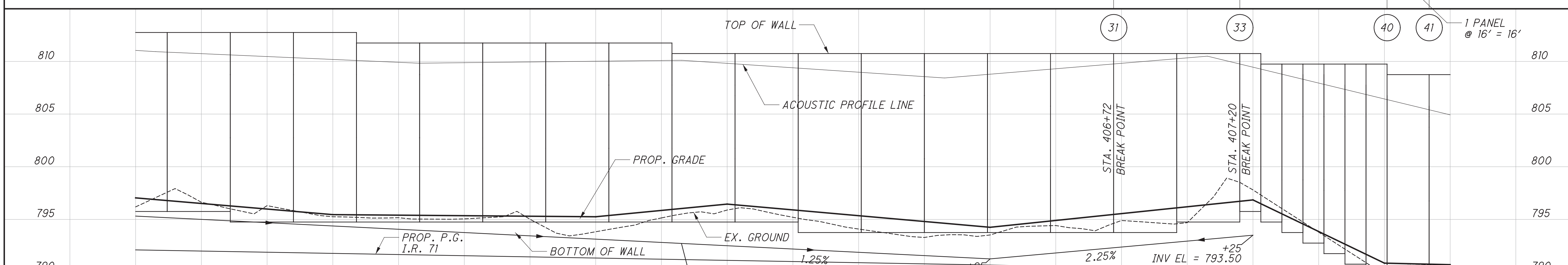

STATION	PROP. GRADE ELEV.	EXIST. GROUND ELEV.
403+00	797.04	796.19
403+25	796.51	
403+50	795.98	796.31
403+75	795.45	
404+00	795.40	795.16
404+25	795.35	
404+50	795.30	795.01
404+75	795.25	
405+00	795.85	795.14
405+25	796.45	
405+50	795.90	795.21
405+75	795.35	
406+00	794.80	793.28
406+25	794.25	
406+50	794.90	794.42
406+75	795.55	
407+00	796.20	794.69
407+25	796.85	
407+50	793.85	793.78
407+75	790.85	
408+00	790.70	790.57

HORIZONTAL SCALE IN FEET: 0 10 20 40

CALCULATED MJT CHECKED BBD

FRA-71-5.29

P:\84868\roadway\sheets\84868GP402.dgn 3/27/2015 2:36:36 PM kfahy

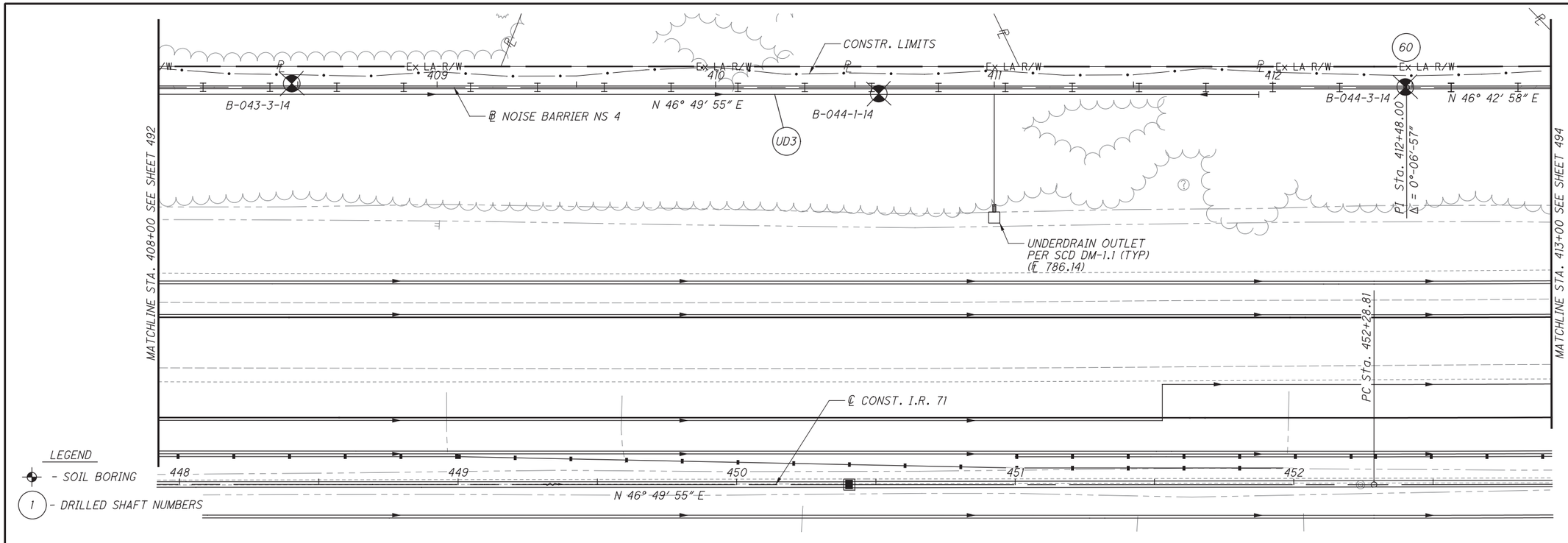

TOP OF WALL ELEV.	808.75	808.75	807.75	807.75	807.75	806.75	806.75	806.75	805.75	805.75	804.75	804.75	803.75	803.75	802.75	802.75	802.75	802.75	801.75	801.75	801.75	801.75	
ACOUSTIC PROFILE ELEV.	804.93	804.37	804.25	804.12	804.00	804.13	804.37	804.61	804.85	804.48	803.85	803.21	802.58	802.19	801.91	801.63	801.35	800.87	800.30	799.73	799.16		
BOTTOM OF WALL ELEV.	789.75	789.75	789.75	788.75	788.75	788.75	788.75	788.75	788.75	788.75	787.75	787.75	787.75	787.75	786.75	786.75	786.75	785.75	785.75	784.75	783.75	782.75	
PANEL NO.		42	43	44	45	46	47	48	49	50	51	52	53	54	55	56	57	58	59	60	61	62	

19 PANELS @ 24′ = 456′ — 3 PANELS @ 24′ = 72′

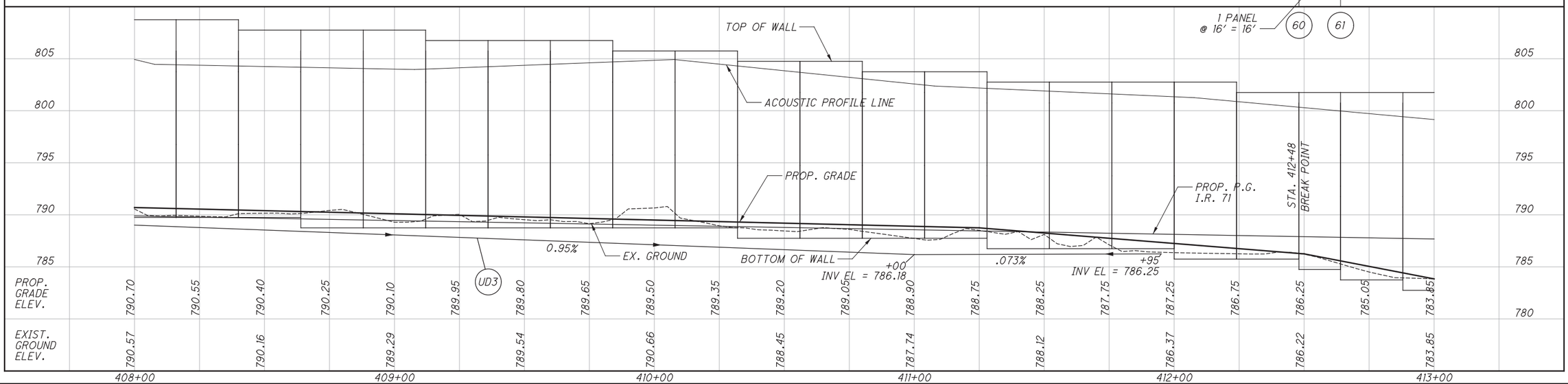

HORIZONTAL SCALE IN FEET
0 10 20 40

CALCULATED MJT
CHECKED BBD

PLAN AND PROFILE NOISE BARRIER NS 4
STA. 408+00.00 TO STA. 413+00.00

FRA-71-5.29

493
623

P:\84868\roadway\sheets\84868GP403.dgn 3/27/2015 2:36:37 PM kfahy

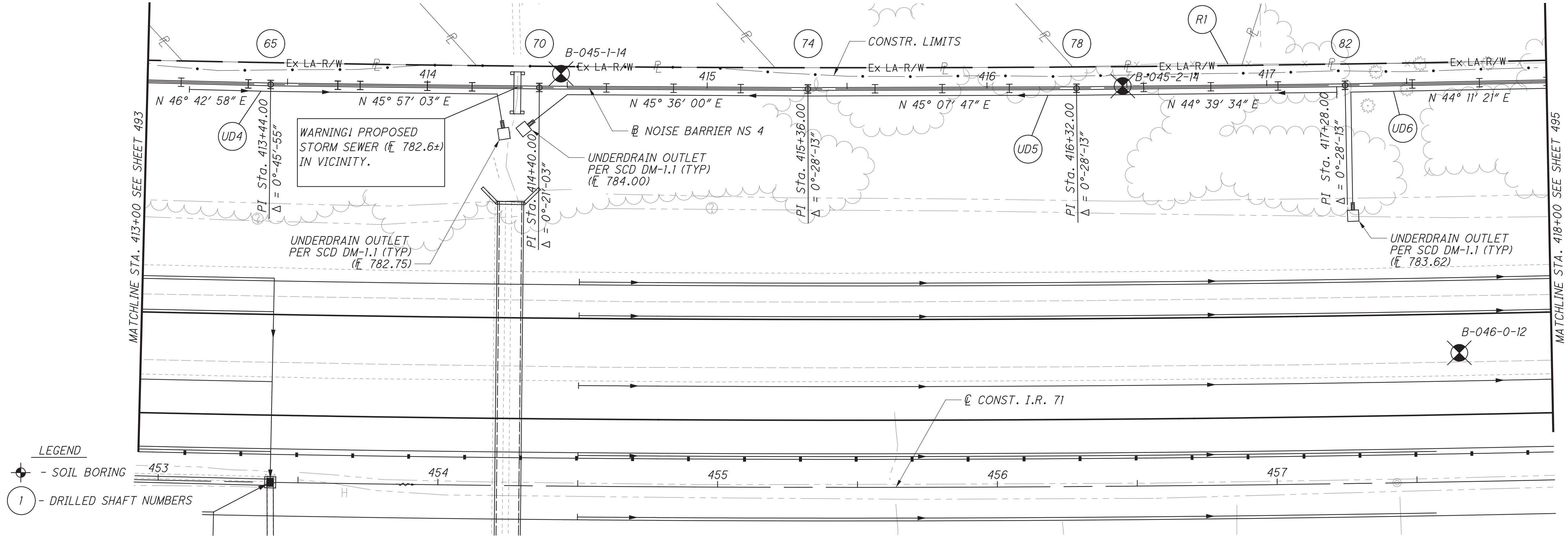

	62	63	64	65	66	67	68	69	70	71	72	73	74	75	76	77	78	79	80	81	82	83	84
TOP OF WALL ELEV.	801.75	801.75	801.75	801.75	801.75	801.75	801.75	801.75	801.75	801.75	801.75	801.75	802.75	802.75	803.75	803.75	803.75	803.75	803.75	803.75	803.75	803.75	803.75
BOTTOM OF WALL ELEV.	782.75	783.75	783.75	784.75	784.75	785.75	786.75	786.75	786.75	786.75	786.75	786.75	786.75	786.75	786.75	786.75	786.75	786.75	786.75	786.75	785.75	785.75	785.75
PANEL NO.	62	63	64	65	66	67	68	69	70	71	72	73	74	75	76	77	78	79	80	81	82	83	84

ACOUSTIC PROFILE ELEV.	799.16	799.12	799.29	799.46	799.63	799.80	799.98	800.16	800.34	800.87	801.47	802.07	802.67	802.69	802.64	802.58	802.53	802.34	802.15	801.95	801.76

3 PANELS @ 24′ = 72′ | 1 PANEL @ 24′ = 24′ | 1 PANEL @ 24′ = 24′ | 1 PANEL @ 24′ = 24′ | 4 PANELS @ 24′ = 96′ | 4 PANELS @ 24′ = 96′ | 4 PANELS @ 24′ = 96′ | 4 PANELS @ 24′ = 96′

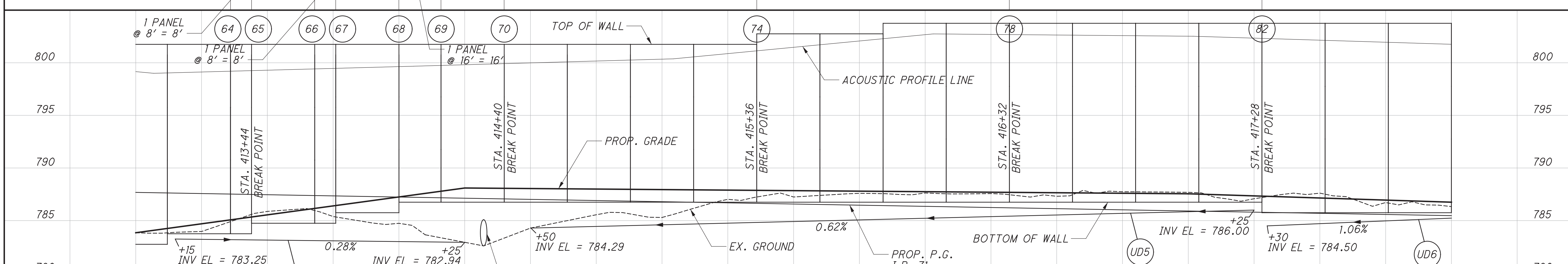

PROP. GRADE ELEV.	783.85	784.70	785.55	786.40	787.25	788.10	788.05	788.00	787.95	787.90	787.85	787.80	787.75	787.70	787.65	787.60	787.55	787.35	787.15	786.95	786.75
EXIST. GROUND ELEV.	783.85		785.88		784.74		784.29		785.30		787.25		787.63		787.31		787.69		787.61		786.33
STATION	413+00				414+00				415+00				416+00				417+00				418+00

HORIZONTAL SCALE IN FEET 0 10 20 40

CALCULATED MJT | CHECKED BBD

PLAN AND PROFILE NOISE BARRIER NS 4
STA. 413+00.00 TO STA. 418+00.00

FRA-71-5.29

P:\84868\roadway\sheets\84868GP404.dgn 3/27/2015 2:36:38 PM kfahy

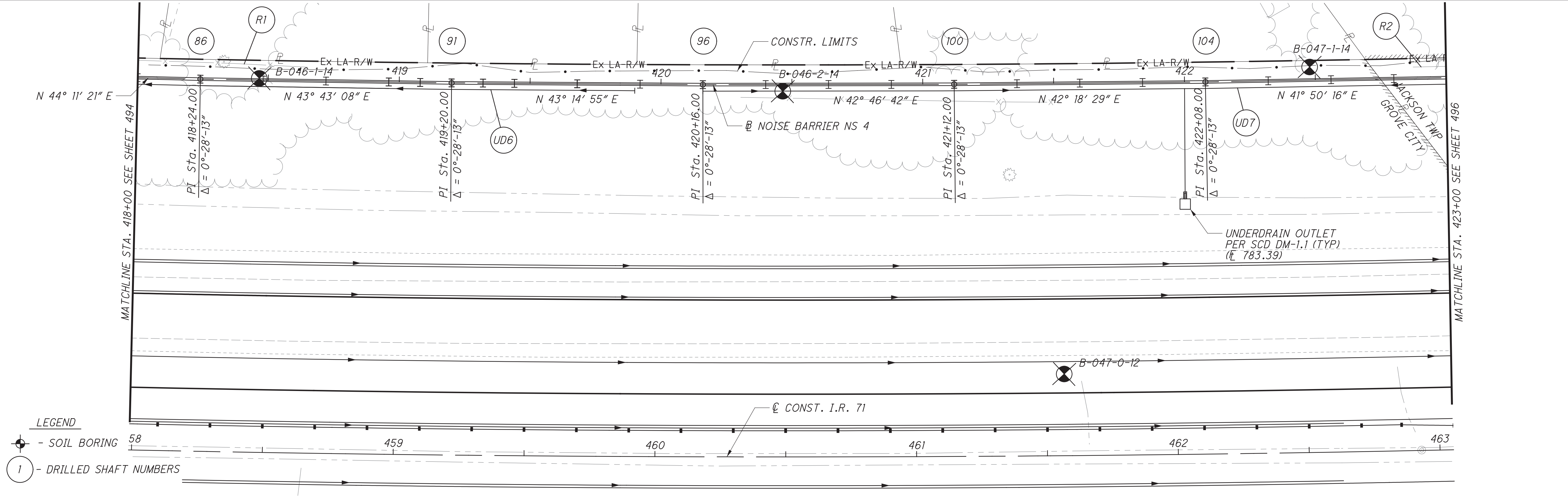

PANEL NO.	TOP OF WALL ELEV.	BOTTOM OF WALL ELEV.
85	803.75	785.75
86	803.75	785.75
87	803.75	786.75
88	804.75	786.75
89	804.75	786.75
90	804.75	787.75
91	804.75	787.75
92	805.75	788.75
93	805.75	789.75
94	805.75	790.75
95	805.75	790.75
96	805.75	790.75
97	805.75	790.75
98	805.75	789.75
99	805.75	789.75
100	805.75	789.75
101	805.75	789.75
102	805.75	789.75
103	805.75	789.75
104	805.75	789.75
105	805.75	789.75
106	805.75	789.75
107	805.75	790.75

4 PANELS @ 24′ = 96′ | 3 PANELS @ 24′ = 72′ | 2 PANELS @ 12′ = 24′ | 2 PANELS @ 12′ = 24′ | 3 PANELS @ 24′ = 72′ | 4 PANELS @ 24′ = 96′ | 4 PANELS @ 24′ = 96′ | 4 PANELS @ 24′ = 96′

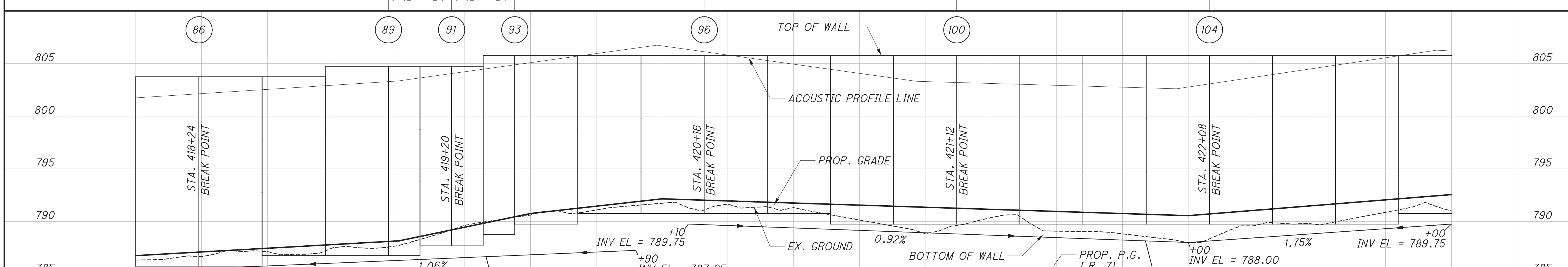

STATION	ACOUSTIC PROFILE ELEV.	PROP. GRADE ELEV.	EXIST. GROUND ELEV.
418+00	801.76	786.75	786.33
418+25	802.14	787.10	
418+50	802.55	787.45	787.14
418+75	802.95	787.80	
419+00	803.36	788.15	787.71
419+25	804.23	789.45	
419+50	805.09	790.75	790.61
419+75	805.95	791.45	
420+00	806.68	792.15	791.73
420+25	805.81	791.95	
420+50	804.94	791.75	791.31
420+75	804.07	791.55	
421+00	803.29	791.35	788.84
421+25	803.11	791.15	
421+50	802.93	790.95	789.07
421+75	802.76	790.75	
422+00	802.77	790.55	787.96
422+25	803.70	791.05	
422+50	804.63	791.55	789.67
422+75	805.55	792.05	
423+00	806.19	792.55	790.99

HORIZONTAL SCALE IN FEET 0 10 20 40

CALCULATED MJT | CHECKED BBD

PLAN AND PROFILE NOISE BARRIER NS 4
STA. 418+00.00 TO STA. 423+00.00

FRA-71-5.29

P:\84868\roadway\sheets\84868GP405.dgn 3/27/2015 2:36:39 PM kfahy

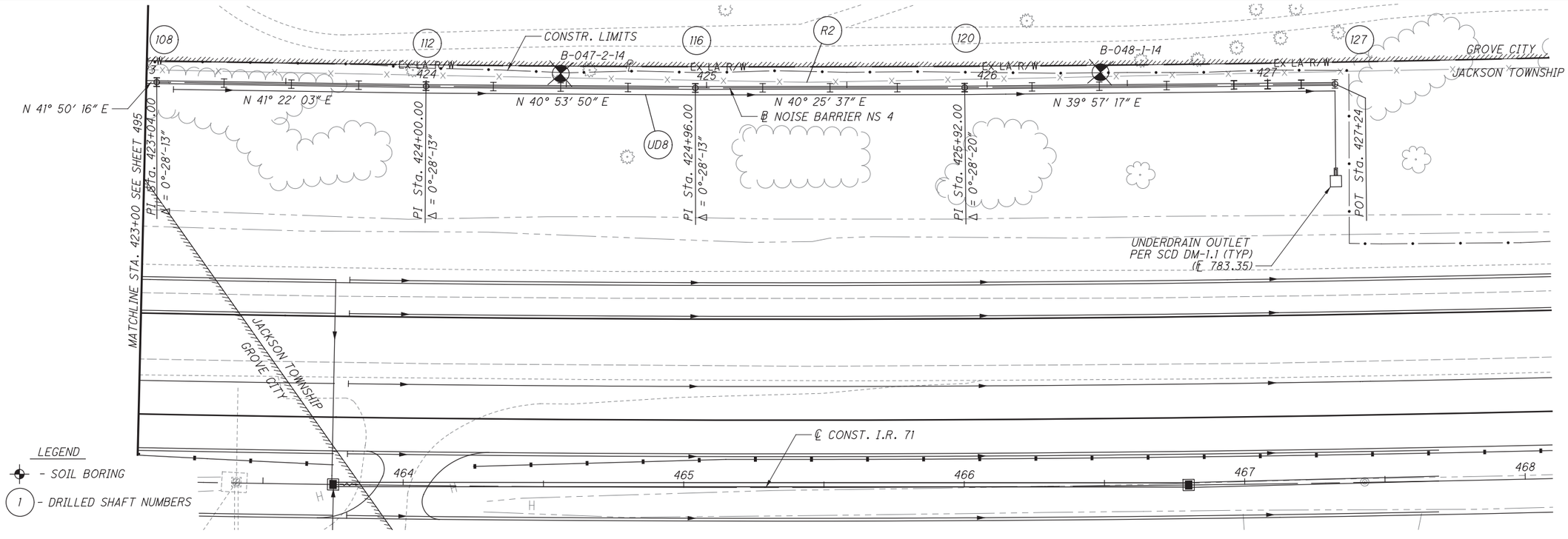

TOP OF WALL ELEV.	805.75	805.75	805.75	805.75	805.75	805.75	804.75	804.75	804.75	804.75	803.75	803.75	803.75	803.75	803.75	803.75	803.75	803.75	799.75	795.75	791.75		
ACOUSTIC PROFILE ELEV.	806.19	805.85	805.50	805.15	804.80	804.45	804.10	803.75	803.43	803.19	802.94	802.69	802.49	802.36	802.22	802.09	802.01						
BOTTOM OF WALL ELEV.	790.75	790.75	790.75	790.75	789.75	789.75	789.75	788.75	788.75	788.75	787.75	787.75	786.75	786.75	786.75	786.75	785.75	785.75	785.75	785.75			
PANEL NO.	107	108	109	110	111	112	113	114	115	116	117	118	119	120	121	122	123	124	125	126			
4 PANELS @ 24′ = 96′		4 PANELS @ 24′ = 96′				4 PANELS @ 24′ = 96′				4 PANELS @ 24′ = 96′				4 PANELS @ 24′ = 96′				3 PANELS @ 12′ = 36′					

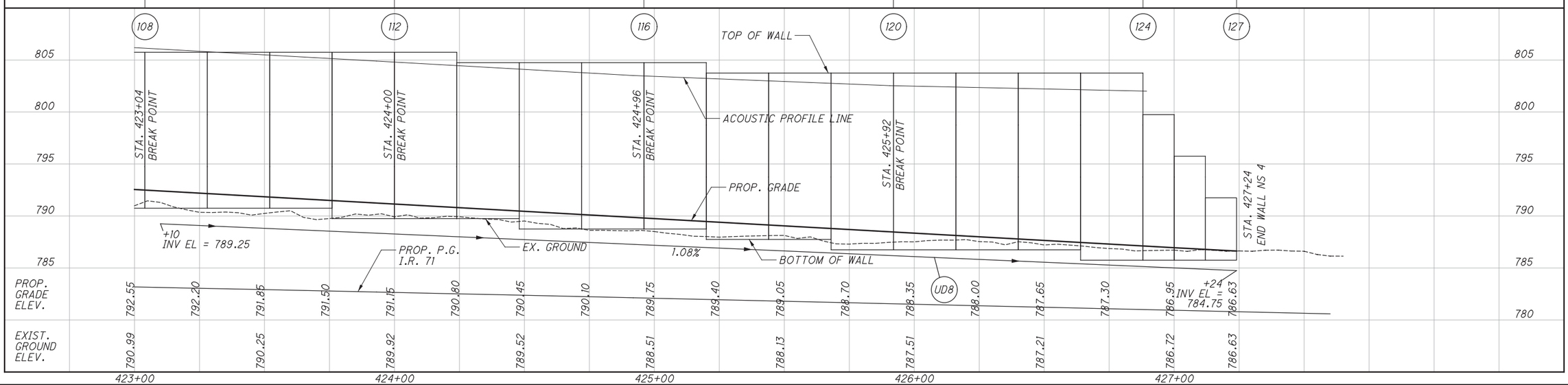

P:\84868\roadway\sheets\84868GP406.dgn 3/27/2015 2:36:39 PM kfahy

HORIZONTAL SCALE IN FEET
0 10 20 40

CALCULATED MJT
CHECKED BBD

PLAN AND PROFILE NOISE BARRIER NS 4
STA. 423+00.00 TO STA. 427+24.00

FRA-71-5.29

496
623

SEEDING END WIDTH	SEEDING SQ. YDS.	END AREA CUT	END AREA FILL	VOLUME CUT	VOLUME FILL
9	53	0	1	0	4
10	26	0	3	0	2
9	26	0	1	0	2
9	79	0	1	0	6

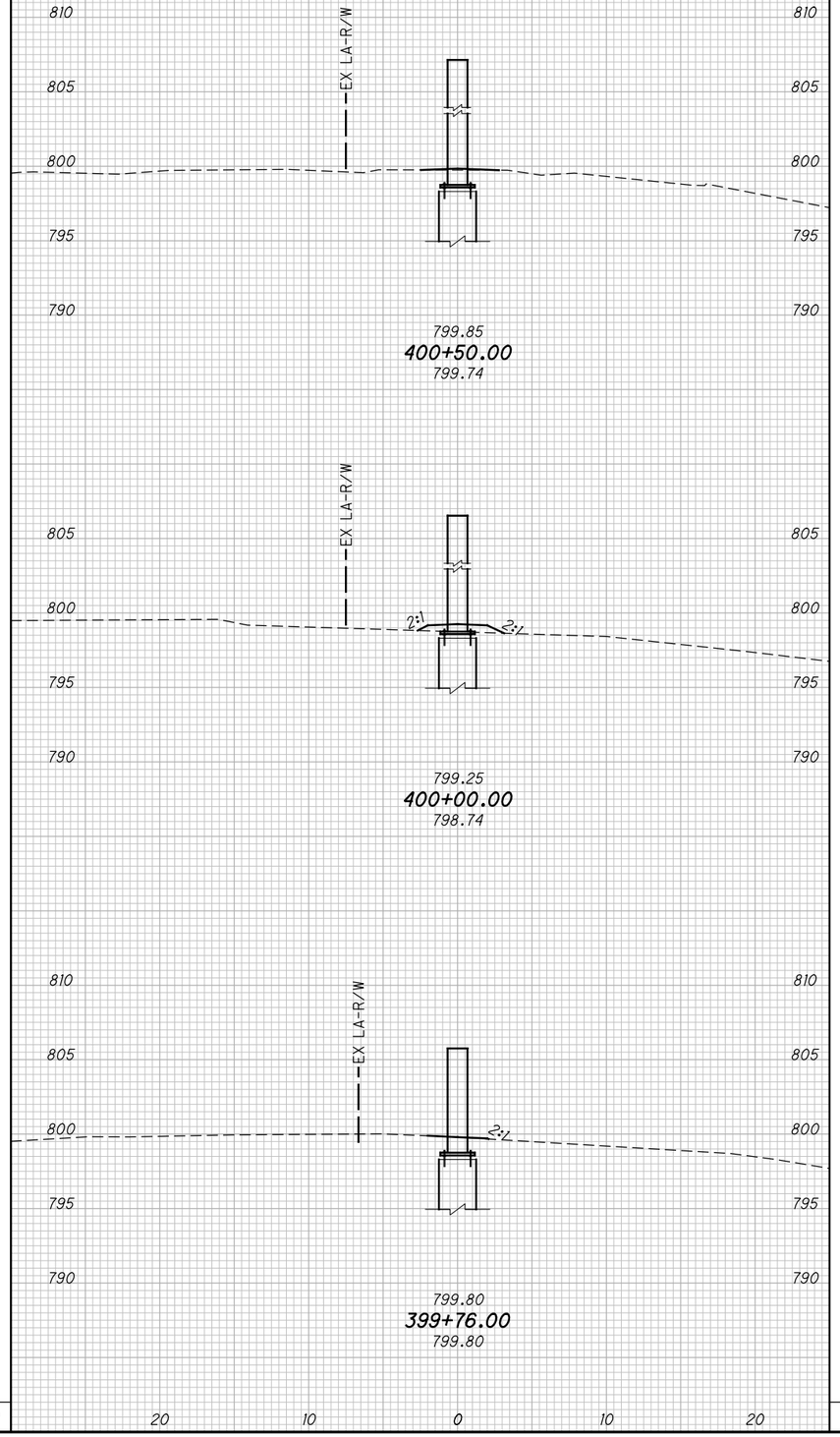

SEEDING END WIDTH	SEEDING SQ. YDS.	END AREA CUT	END AREA FILL	VOLUME CUT	VOLUME FILL
11	59	0	4	0	6
10	59	0	2	1	3
11	56	1	1	1	2
11	174	1	1	2	11

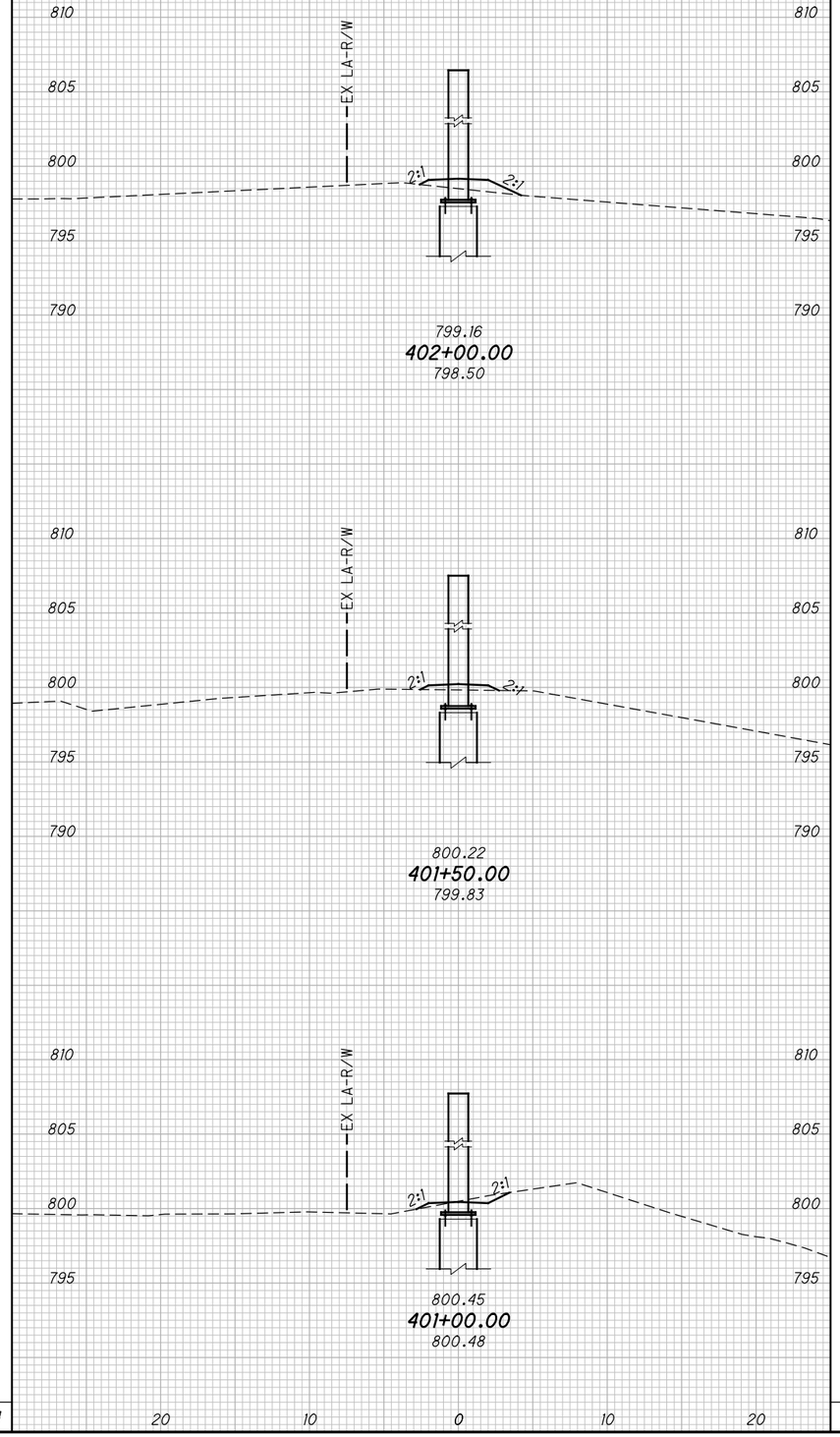

CALCULATED MJT
CHECKED BBD

CROSS SECTIONS NOISE BARRIER NS 4
STA. 399+76.00 TO STA. 402+00.00

FRA-71-5.29

497
623

P:\84868\roadway\sheets\84868XS401.dgn 12/17/2014 3:32:15 PM kfahy

SEEDING END WIDTH	SEEDING SQ. YDS.	END AREA CUT	END AREA FILL	VOLUME CUT	VOLUME FILL
10	61	2	0	2	5
12	75	0	5	0	15
15	73	0	11	0	14
	209			2	34

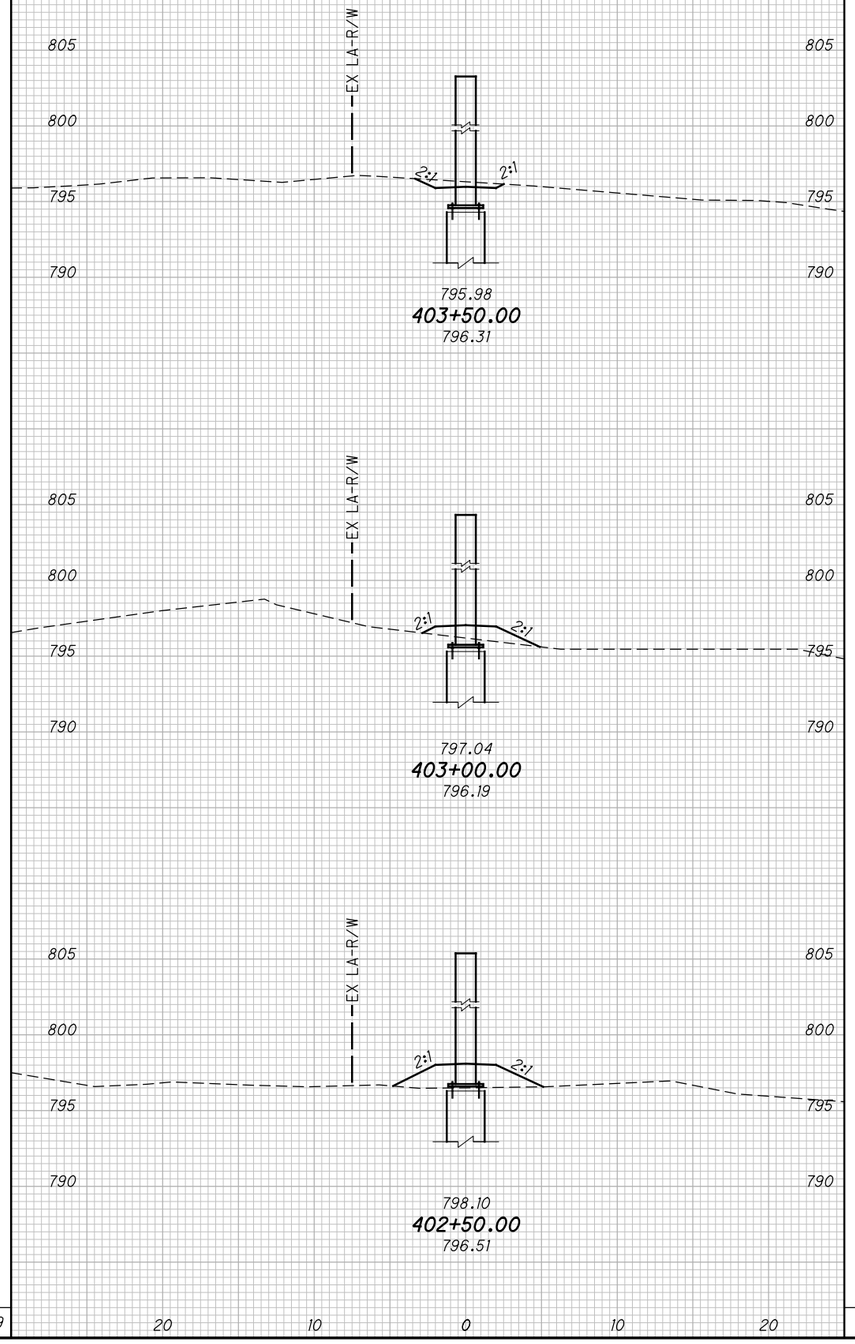

SEEDING END WIDTH	SEEDING SQ. YDS.	END AREA CUT	END AREA FILL	VOLUME CUT	VOLUME FILL
11	59	0	3	0	4
10	56	0	1	0	2
10	56	0	1	2	1
	171			2	7

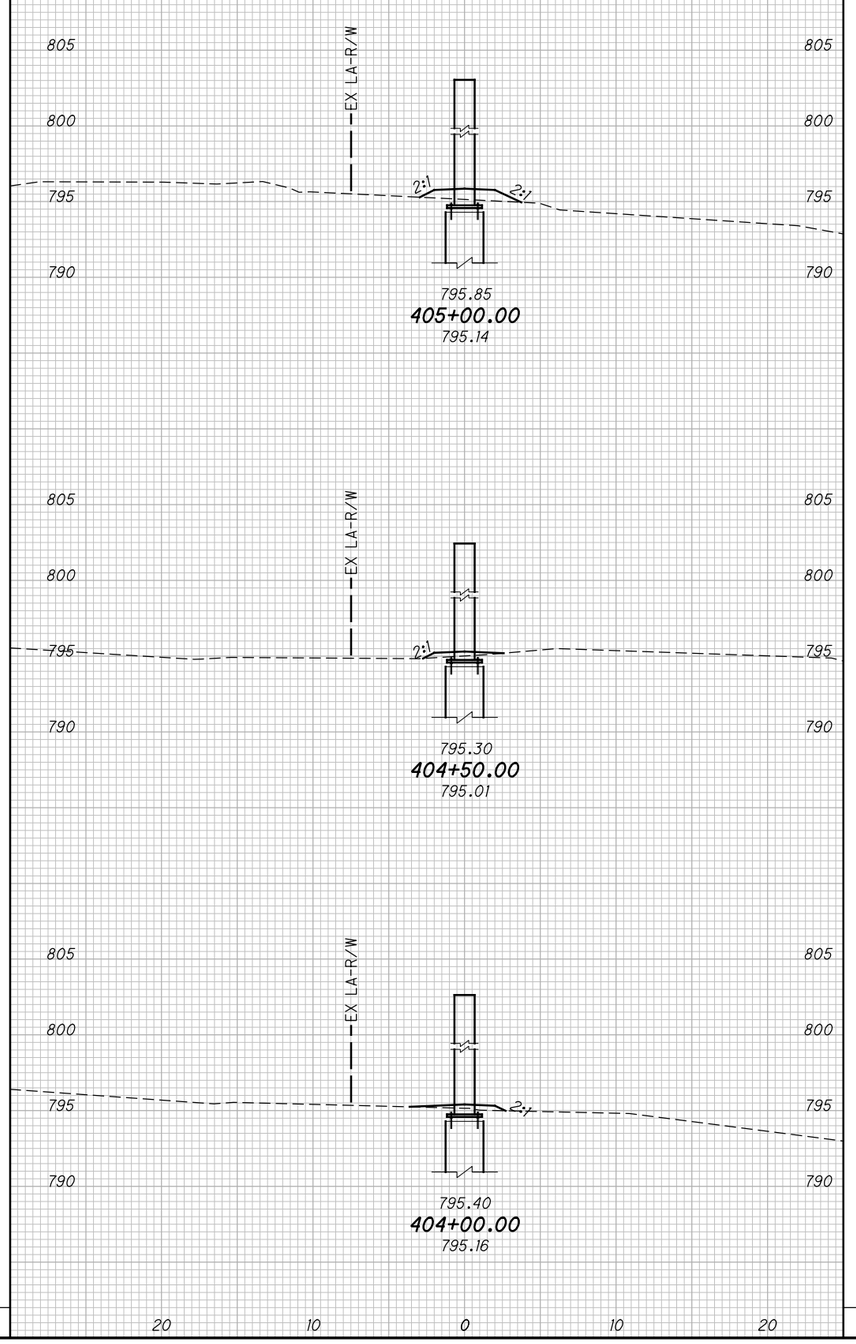

CALCULATED MJT
CHECKED BBD

CROSS SECTIONS NOISE BARRIER NS 4
STA. 402+50.00 TO STA. 405+00.00

FRA-71-5.29

498
623

P:\84868\roadway\sheets\84868XS401.dgn 12/17/2014 3:32:15 PM kfahy

SEEDING END WIDTH	SEEDING SQ. YDS.	END AREA CUT	END AREA FILL	VOLUME CUT	VOLUME FILL
10	67	0	2	0	11
14	69	0	10	0	12
11	61	0	3	0	6
	197			0	29

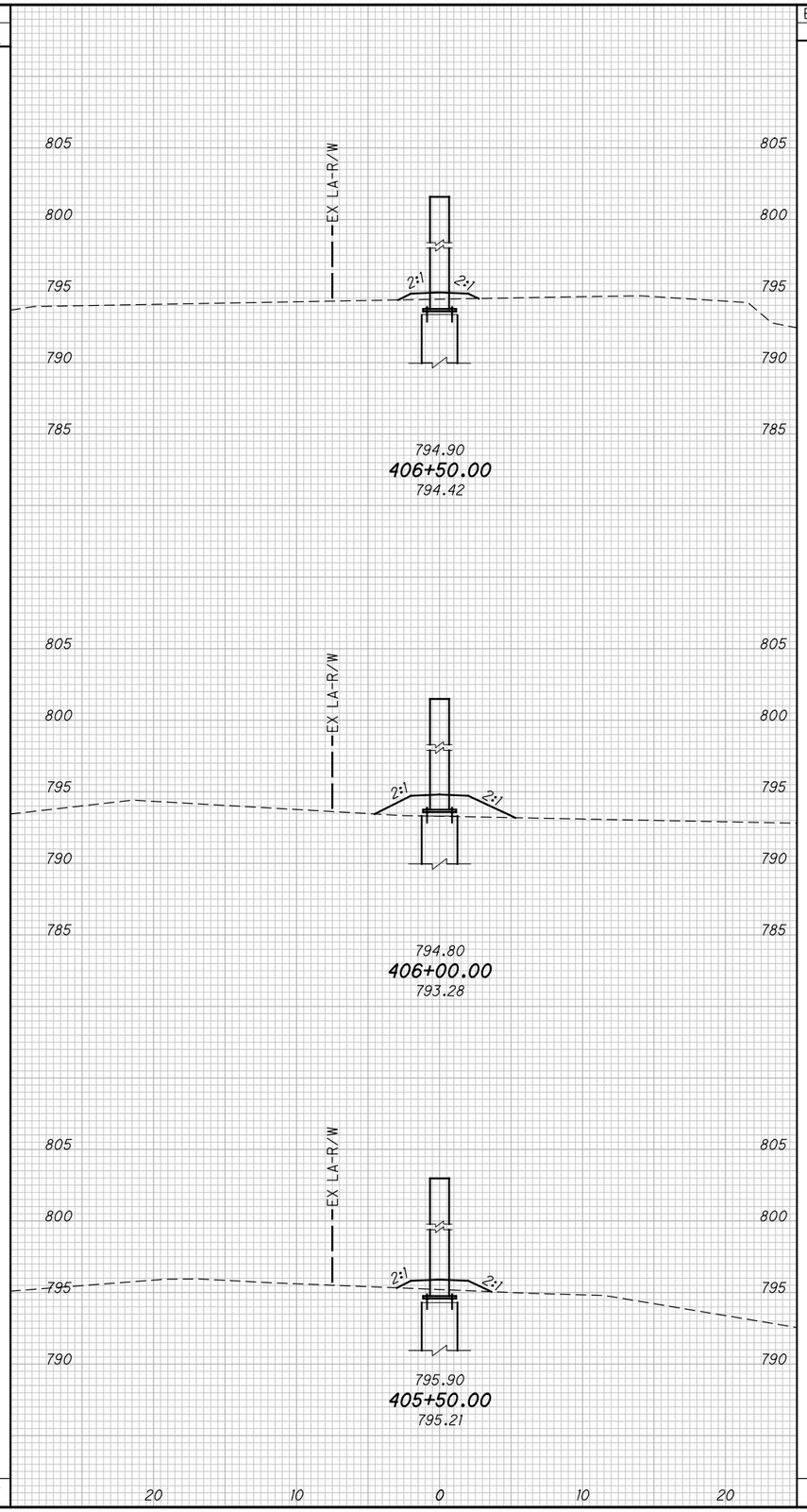

SEEDING END WIDTH	SEEDING SQ. YDS.	END AREA CUT	END AREA FILL	VOLUME CUT	VOLUME FILL
12	64	0	1	1	2
11	78	1	1	2	10
17	75	1	12	1	13
	217			4	25

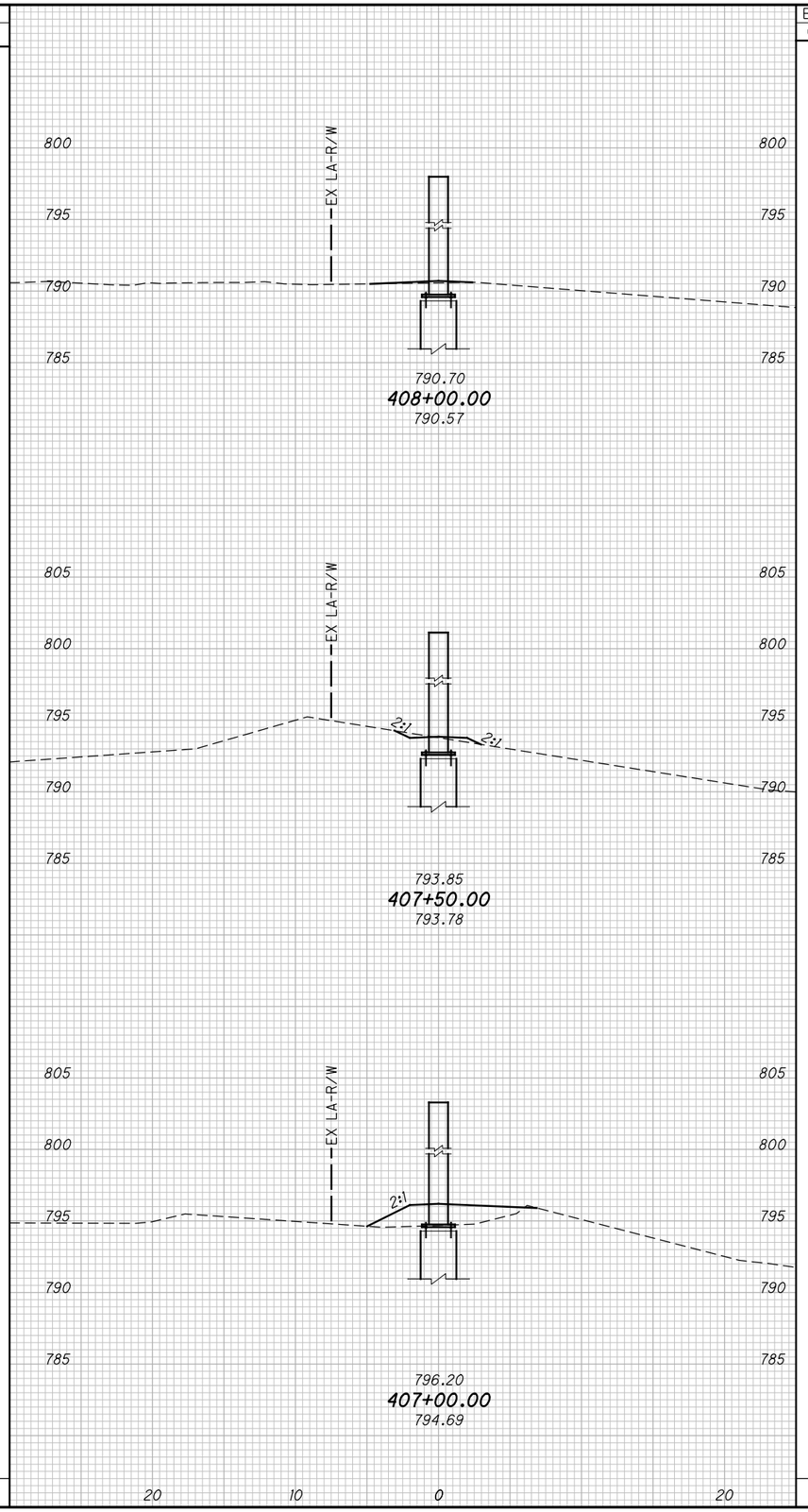

CALCULATED MJT
CHECKED BBD

CROSS SECTIONS NOISE BARRIER NS 4
STA. 405+50.00 TO STA. 408+00.00

FRA-71-5.29

499
623

P:\84868\roadway\sheets\84868XS401.dgn 12/17/2014 3:32:15 PM kfahy

SEEDING END WIDTH	SEEDING SQ. YDS.	END AREA CUT	END AREA FILL	VOLUME CUT	VOLUME FILL
9	59	0	1	0	5
12	64	0	4	0	5
11	64	0	1	0	2
	187			0	12

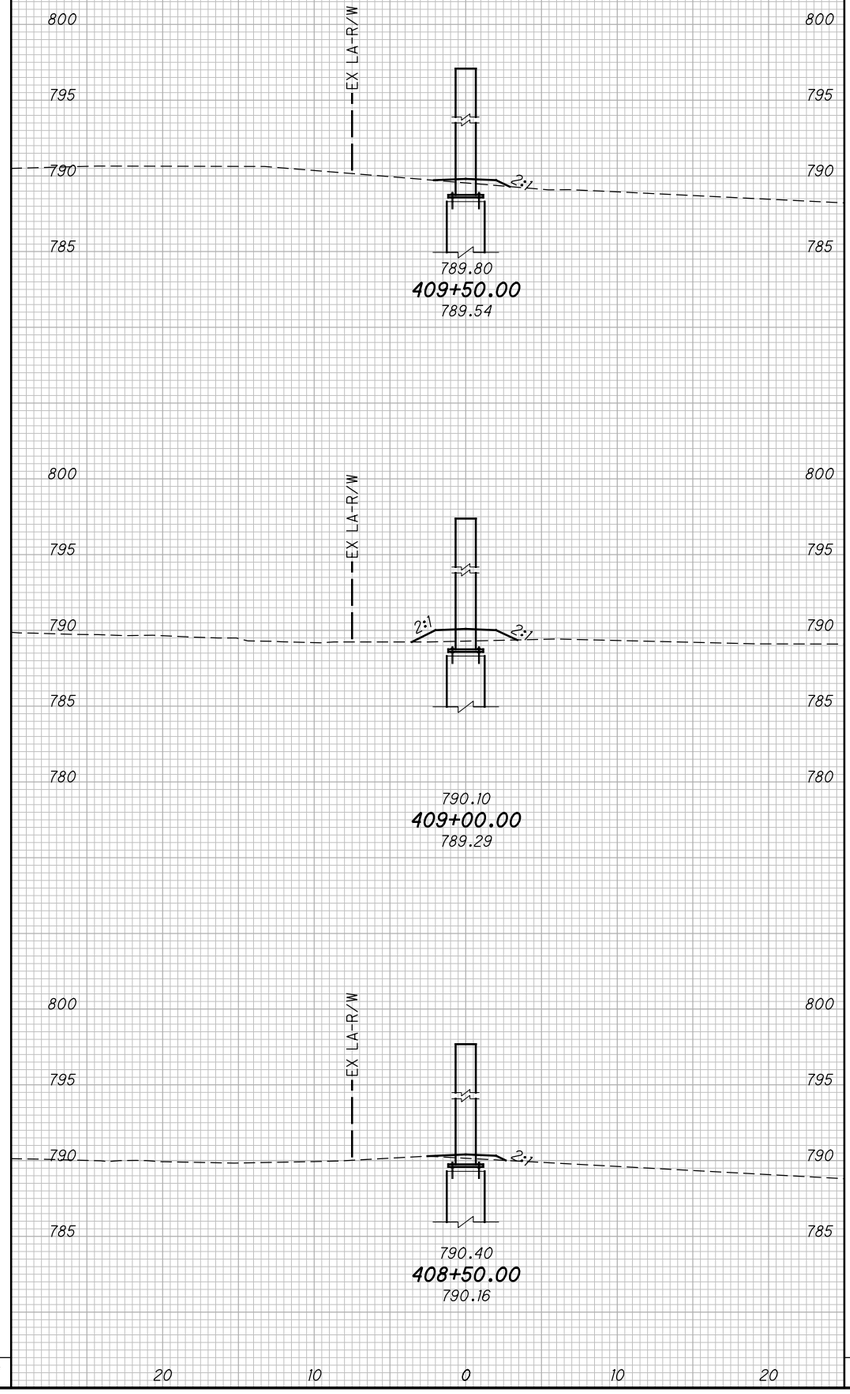

SEEDING END WIDTH	SEEDING SQ. YDS.	END AREA CUT	END AREA FILL	VOLUME CUT	VOLUME FILL
13	67	0	7	0	10
11	70	0	4	9	4
14	64	9	0	9	1
	201			18	15

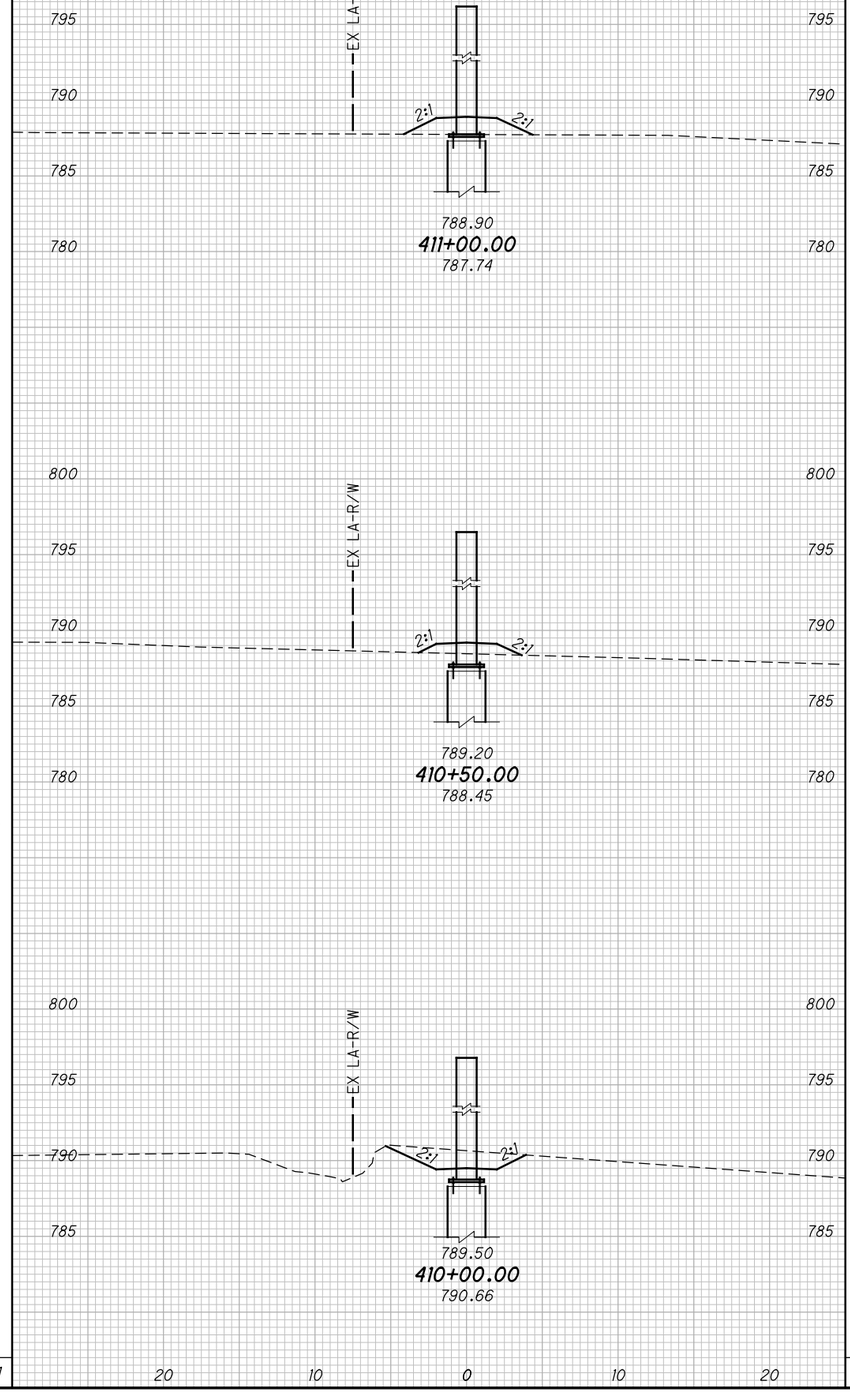

CALCULATED MJT
CHECKED BBD

CROSS SECTIONS NOISE BARRIER NS 4
STA. 408+50.00 TO STA. 411+00.00

FRA-71-5.29

500
623

P:\84868\roadway\sheets\84868XS401.dgn 12/17/2014 3:32:16 PM kfahy

P:\84868\roadway\sheets\84868XS401.dgn 12/17/2014 3:32:16 PM kfahy

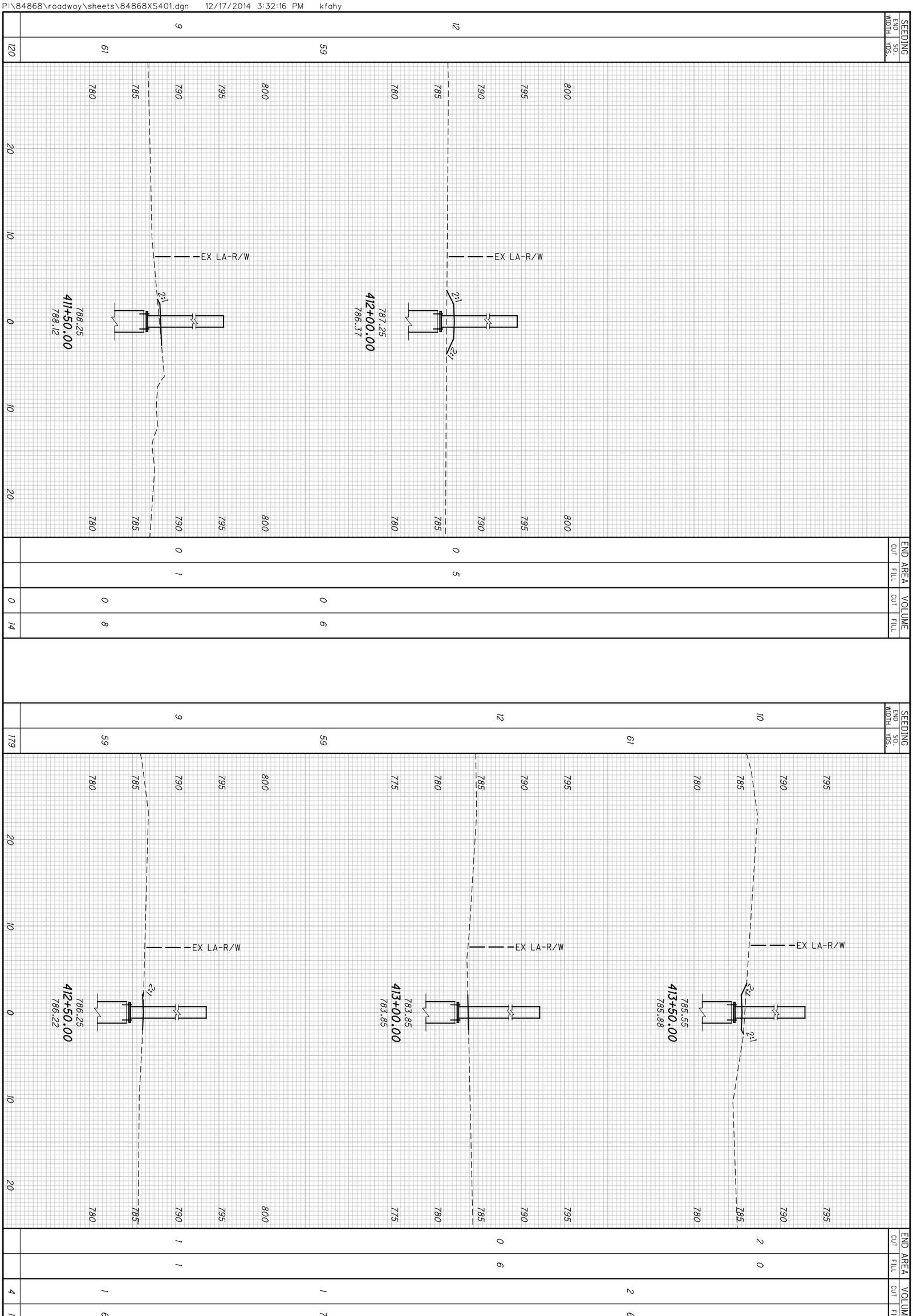

501
623

FRA-71-5.29

CROSS SECTIONS NOISE BARRIER NS 4
STA. 411+50.00 TO STA. 413+50.00

CALCULATED MJT
CHECKED BBD

SEEDING		END AREA		VOLUME	
END WIDTH	SQ. YDS.	CUT	FILL	CUT	FILL
20	122	0	24	0	59

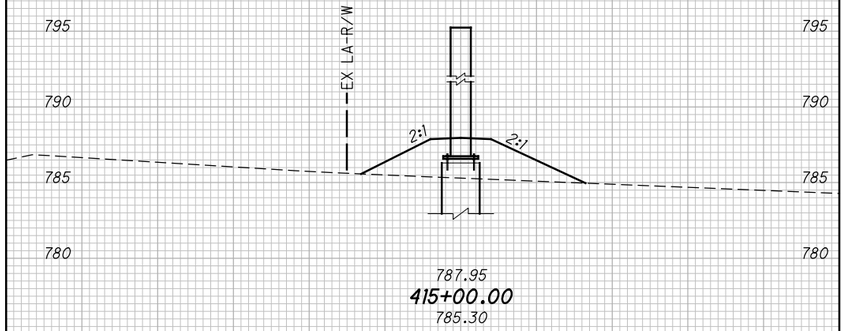

SEEDING		END AREA		VOLUME	
END WIDTH	SQ. YDS.	CUT	FILL	CUT	FILL
24	120	0	39	0	58

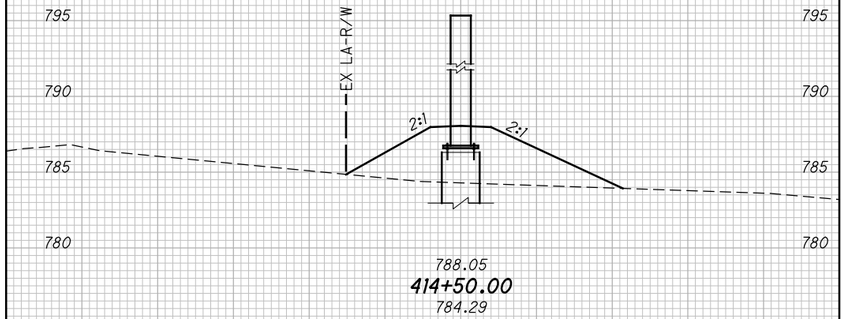

SEEDING		END AREA		VOLUME	
END WIDTH	SQ. YDS.	CUT	FILL	CUT	FILL
19	81	0	23	2	22

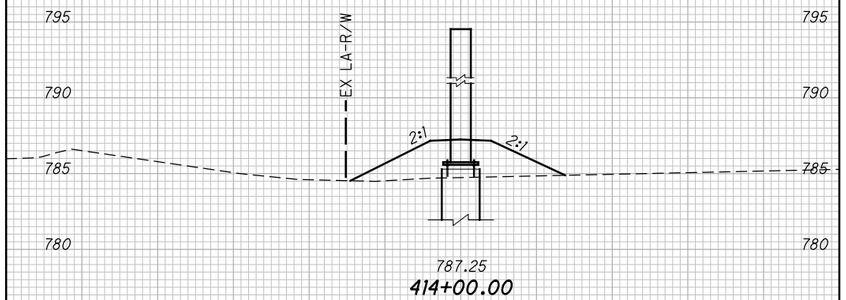

SEEDING		END AREA		VOLUME	
END WIDTH	SQ. YDS.	CUT	FILL	CUT	FILL
323				2	139

SEEDING		END AREA		VOLUME	
END WIDTH	SQ. YDS.	CUT	FILL	CUT	FILL
9	50	0	2	0	3

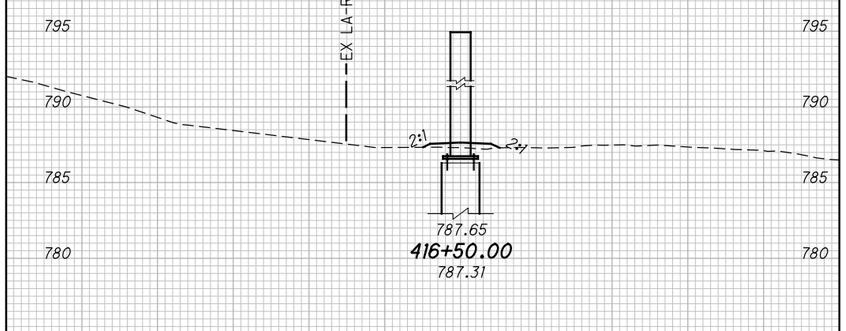

SEEDING		END AREA		VOLUME	
END WIDTH	SQ. YDS.	CUT	FILL	CUT	FILL
9	53	0	1	0	4

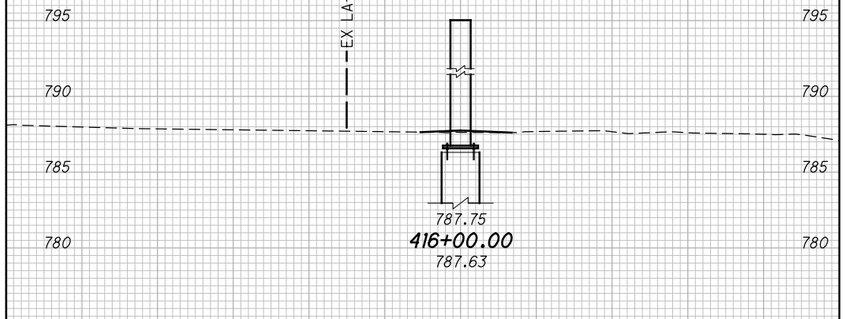

SEEDING		END AREA		VOLUME	
END WIDTH	SQ. YDS.	CUT	FILL	CUT	FILL
10	84	0	3	0	25

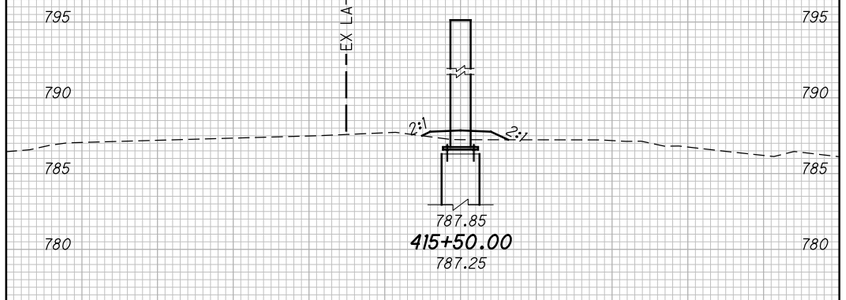

SEEDING		END AREA		VOLUME	
END WIDTH	SQ. YDS.	CUT	FILL	CUT	FILL
187				0	32

CALCULATED MJT
CHECKED BBD

CROSS SECTIONS NOISE BARRIER NS 4
STA. 414+00.00 TO STA. 416+50.00

FRA-71-5.29

502
623

P:\84868\roadway\sheets\84868XS401.dgn 12/17/2014 3:32:17 PM kfahy

SEEDING END WIDTH	SEEDING SQ. YDS.	END AREA CUT	END AREA FILL	VOLUME CUT	VOLUME FILL
11	59	0	2	3	2
10	53	3	0	3	0
9	50	1	0	1	2
	162			7	4

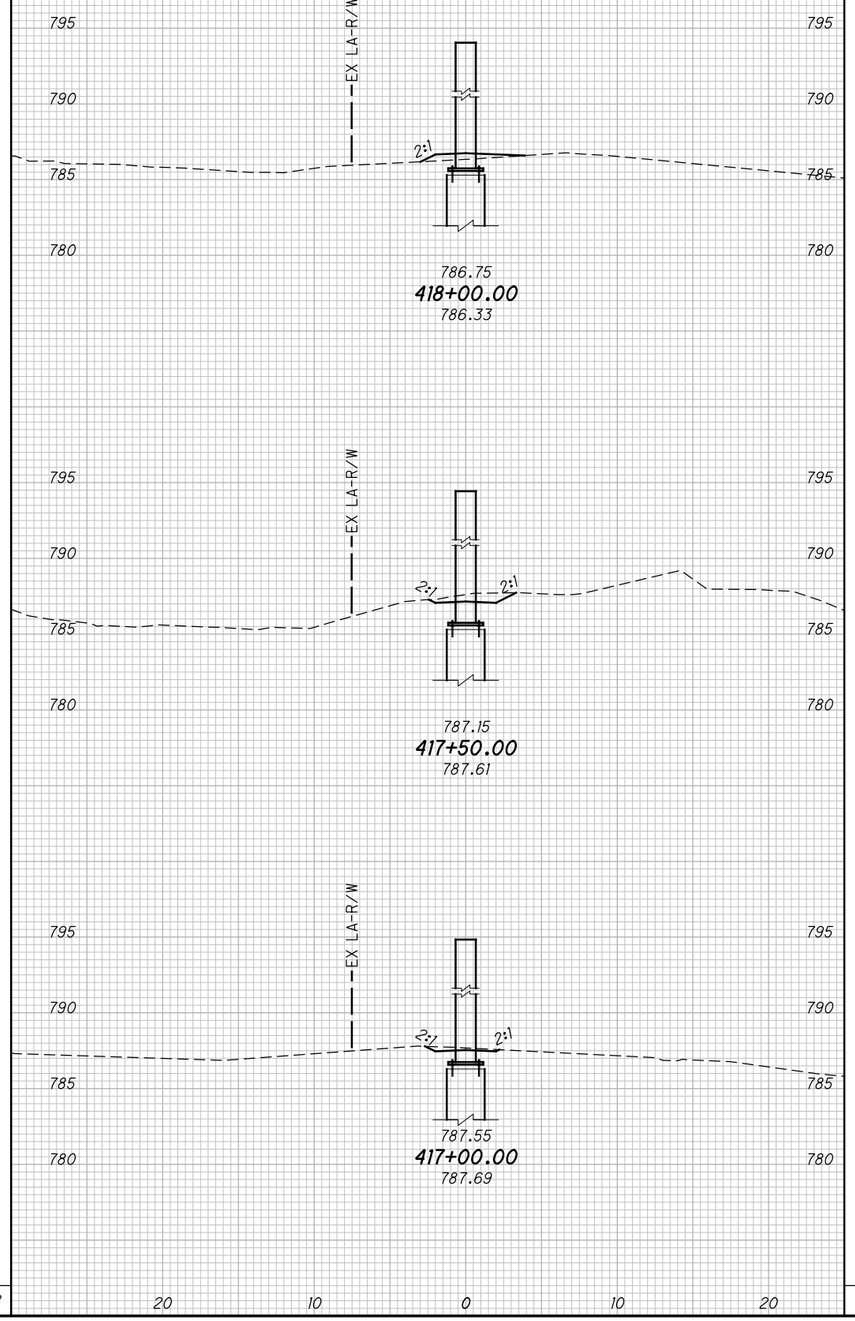

SEEDING END WIDTH	SEEDING SQ. YDS.	END AREA CUT	END AREA FILL	VOLUME CUT	VOLUME FILL
9	56	0	1	0	3
11	56	0	2	0	3
9	56	0	1	0	3
	168			0	9

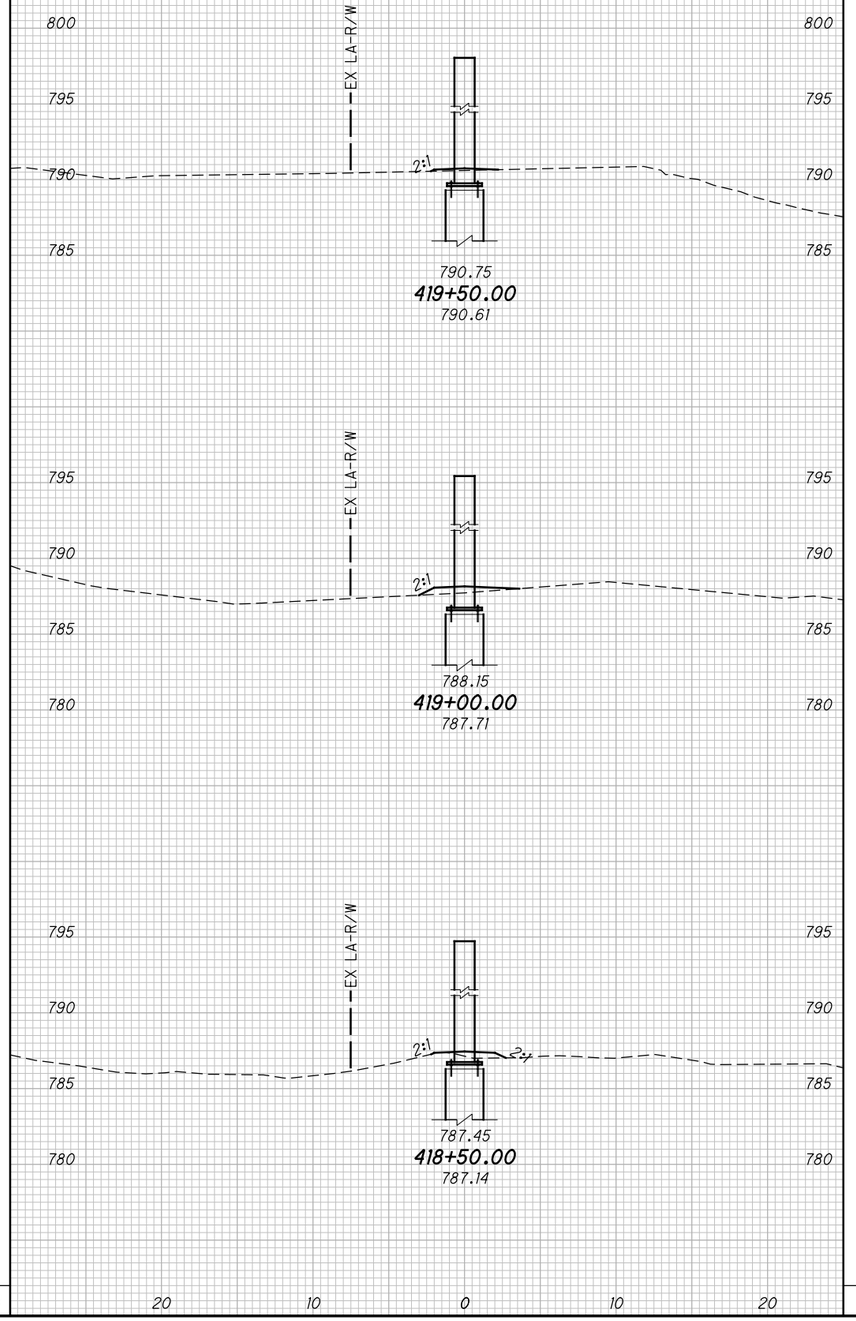

CALCULATED MJT
CHECKED BBD

CROSS SECTIONS NOISE BARRIER NS 4
STA. 417+00.00 TO STA. 419+50.00

FRA-71-5.29

503
623

P:\84868\roadway\sheets\84868XS401.dgn 12/17/2014 3:32:17 PM kfahy

SEEDING END WIDTH	SEEDING SQ. YDS.	END AREA CUT	END AREA FILL	VOLUME CUT	VOLUME FILL
19	78	0	22	0	22
9	56	0	2	0	4
11	56	0	2	0	3
	190			0	29

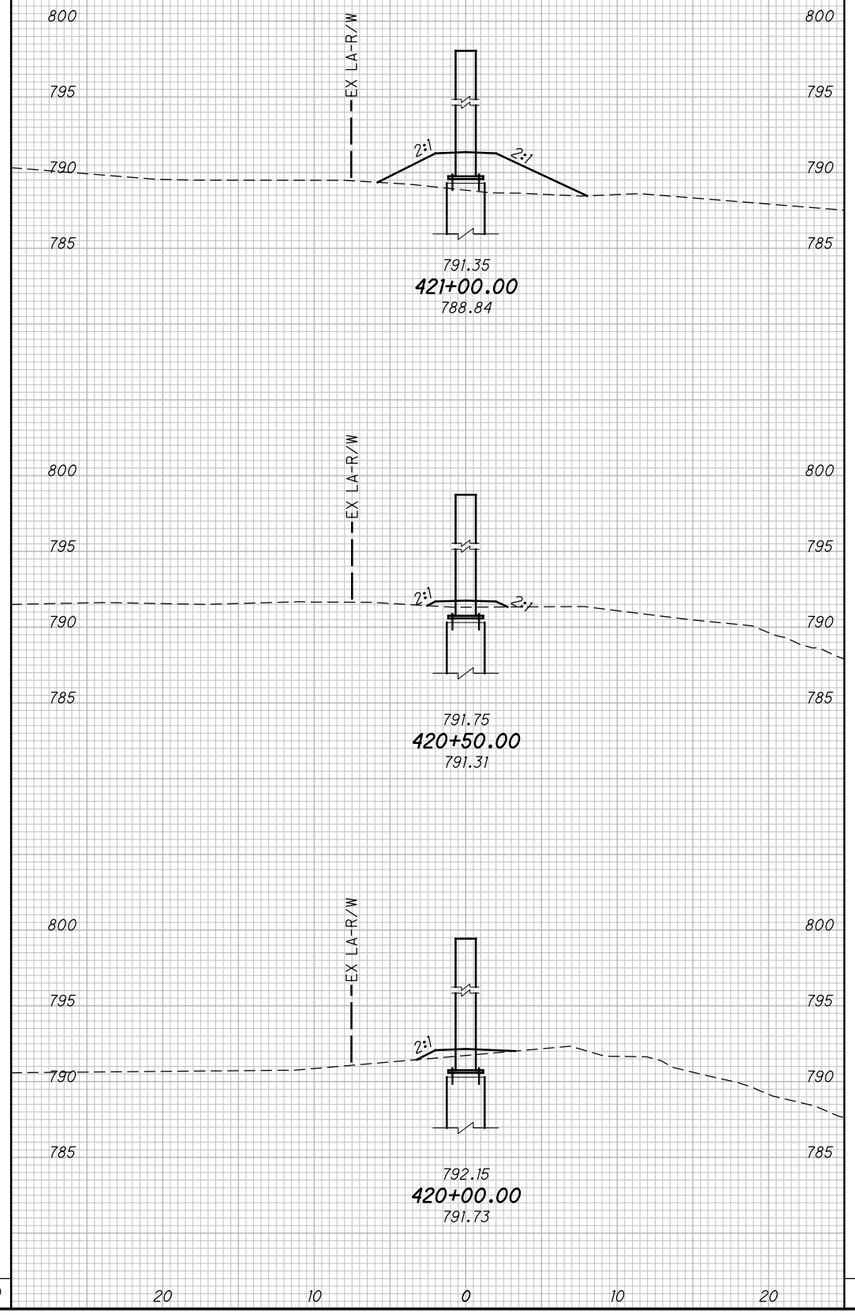

SEEDING END WIDTH	SEEDING SQ. YDS.	END AREA CUT	END AREA FILL	VOLUME CUT	VOLUME FILL
17	103	0	15	0	35
20	103	0	23	0	35
17	100	0	15	0	34
	306			0	104

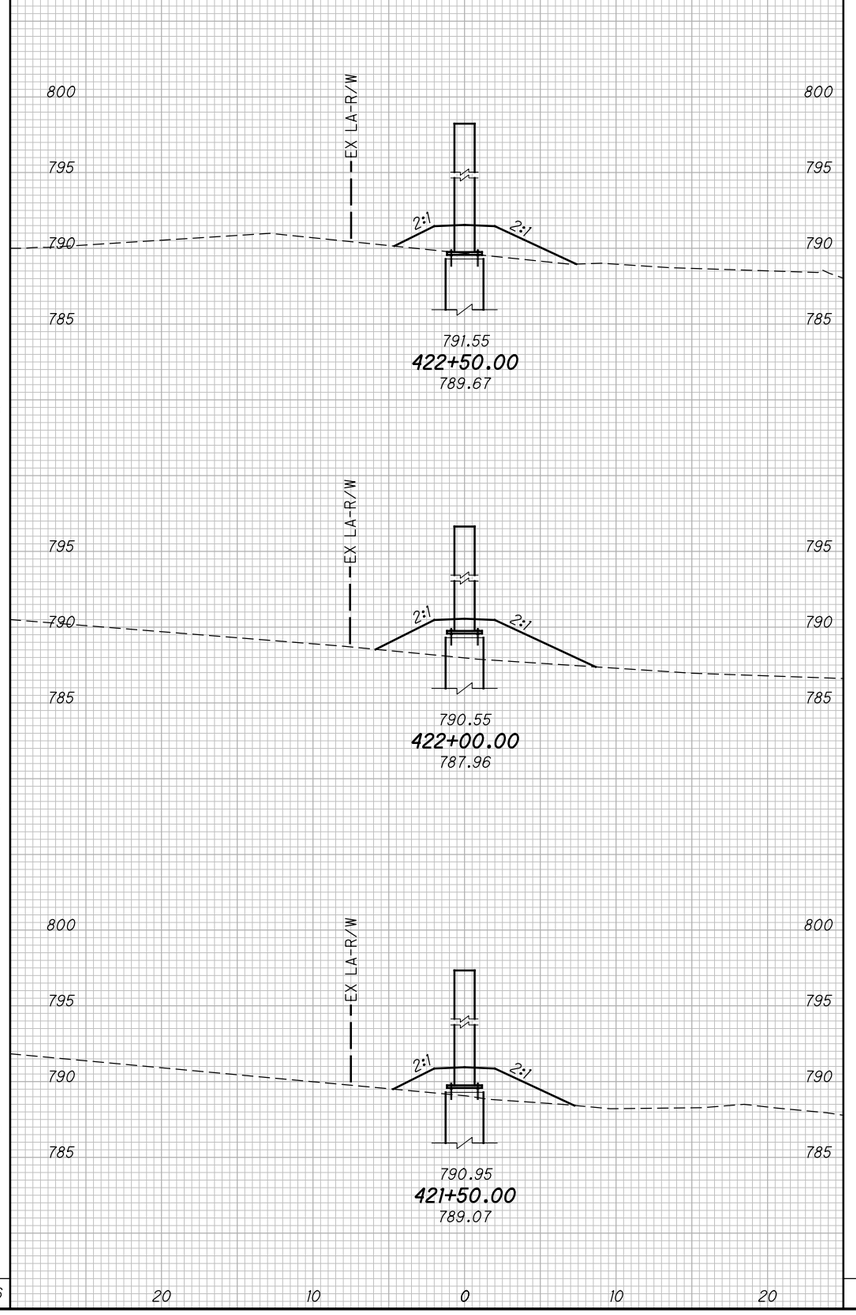

CALCULATED MJT
CHECKED BBD

CROSS SECTIONS NOISE BARRIER NS 4
STA. 420+00.00 TO STA. 422+50.00

FRA-71-5.29

504
623

P:\84868\roadway\sheets\84868XS401.dgn 12/17/2014 3:32:18 PM kfahy

SEEDING END WIDTH	SEEDING SQ. YDS.	END AREA CUT	END AREA FILL	VOLUME CUT	VOLUME FILL
14	84	0	8	0	20
16	84	0	13	0	21
14	86	0	10	0	23
	254			0	64

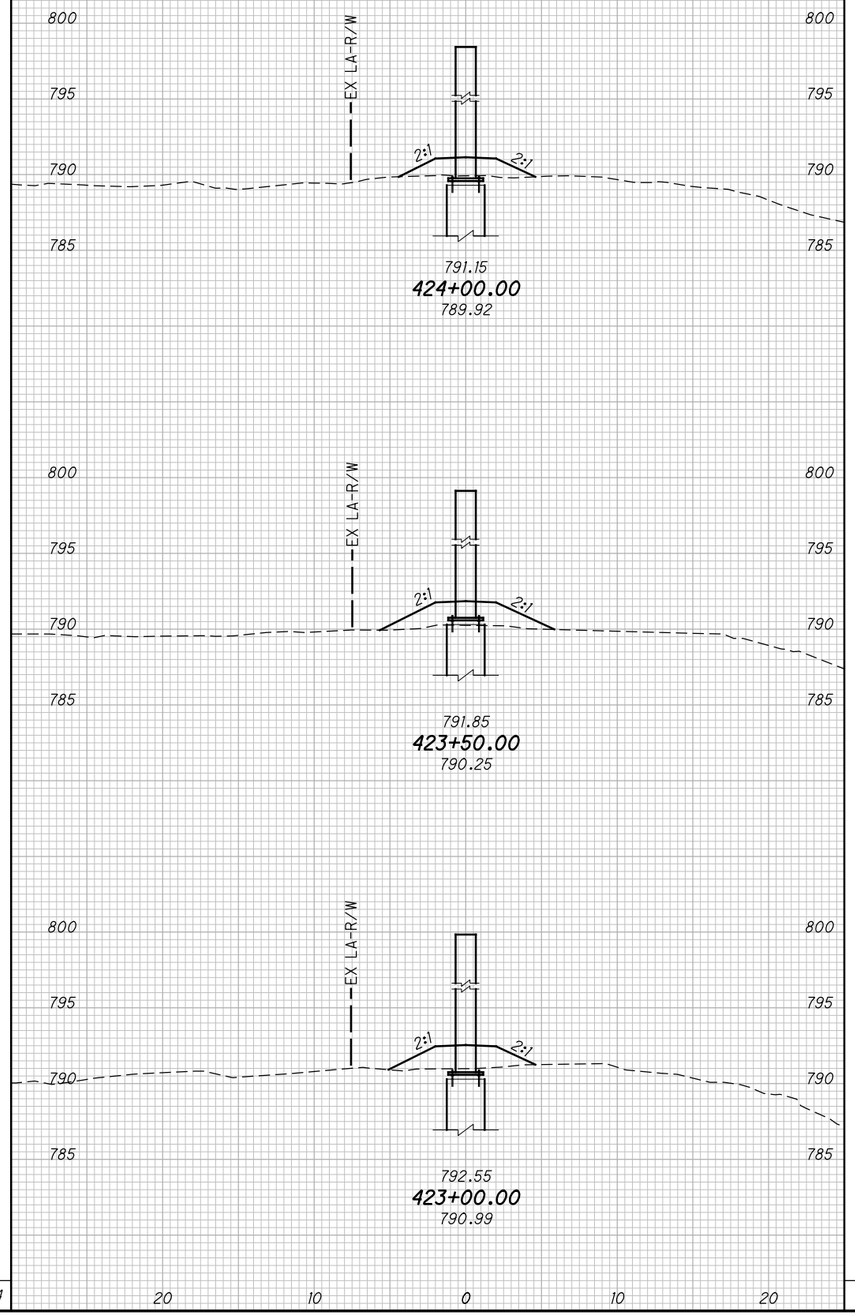

SEEDING END WIDTH	SEEDING SQ. YDS.	END AREA CUT	END AREA FILL	VOLUME CUT	VOLUME FILL
12	70	0	5	0	11
13	67	0	7	0	11
11	70	0	5	0	12
	207			0	34

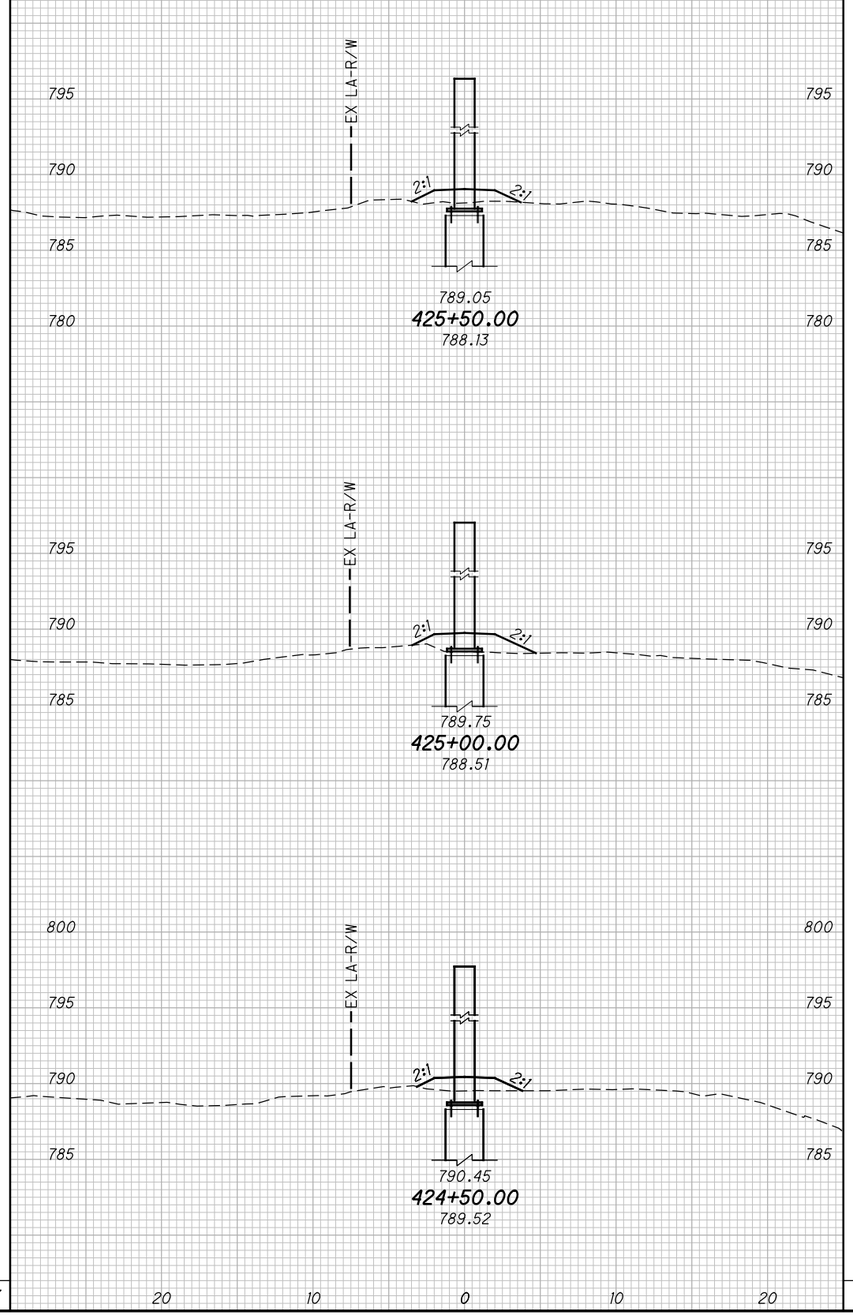

CALCULATED MJT
CHECKED BBD

CROSS SECTIONS NOISE BARRIER NS 4
STA. 423+00.00 TO STA. 425+50.00

FRA-71-5.29

505
623

P:\84868\roadway\sheets\84868XS401.dgn 12/17/2014 3:32:18 PM kfahy

SEEDING END WIDTH	SEEDING SQ. YDS.	END AREA CUT	END AREA FILL	VOLUME CUT	VOLUME FILL
10	56	0	2	0	4
10	59	0	2	0	6
11	64	0	4	0	9
	179			0	19

SEEDING END WIDTH	SEEDING SQ. YDS.	END AREA CUT	END AREA FILL	VOLUME CUT	VOLUME FILL
9	26	0	1	0	2
	26			0	2

CALCULATED MJT
CHECKED BBD

CROSS SECTIONS NOISE BARRIER NS 4
STA. 426+00.00 TO STA. 427+24.00

FRA-71-5.29

506
623

P:\84868\roadway\sheets\84868XS401.dgn 12/17/2014 3:32:18 PM kfahy

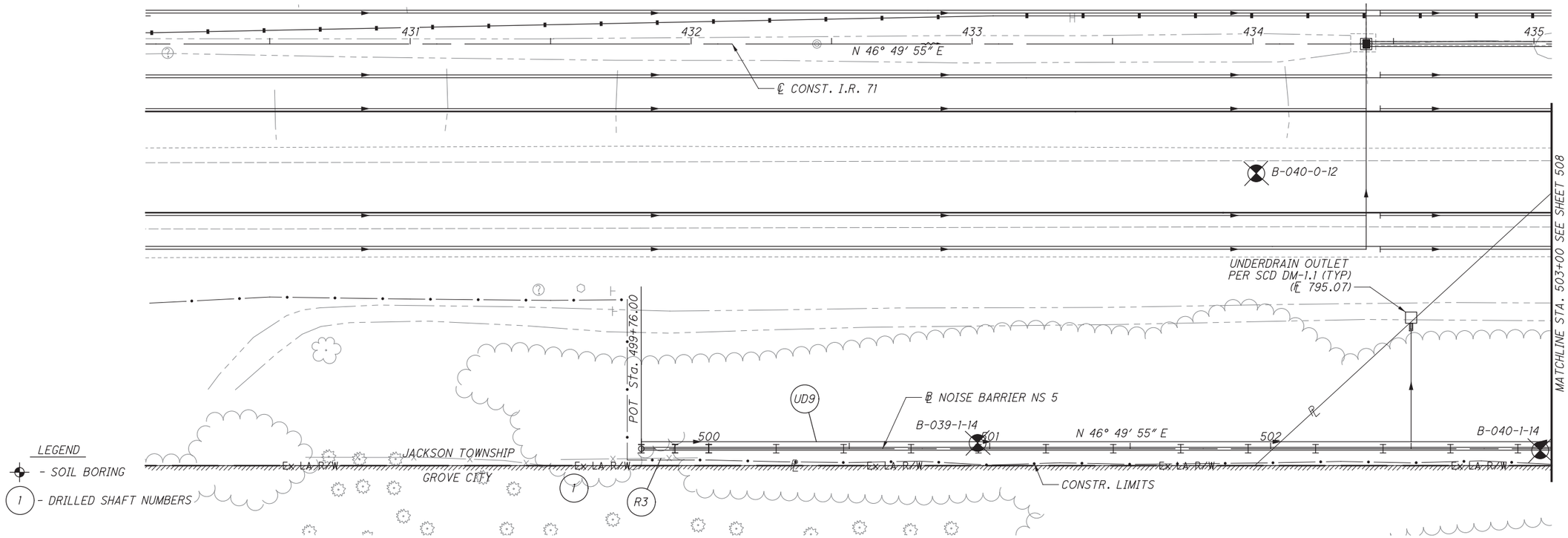

TOP OF WALL ELEV.	804.75	808.75	812.75	812.75	812.75	812.75	812.75	812.75	812.75	812.75	812.75	812.75	812.75	812.75	812.75
ACOUSTIC PROFILE ELEV.							812.85	812.07	811.44	811.28	811.18	811.23	811.29	811.34	811.43
BOTTOM OF WALL ELEV.	799.75	799.75	799.75	799.75	799.75	798.75	798.75	797.75	797.75	797.75	797.75	797.75	797.75	797.75	797.75
PANEL NO.	1	2	3	4	5	6	7	8	9	10	11	12	13	14	15

2 PANELS @ 12′ = 24′
31 PANELS @ 24′ = 744′

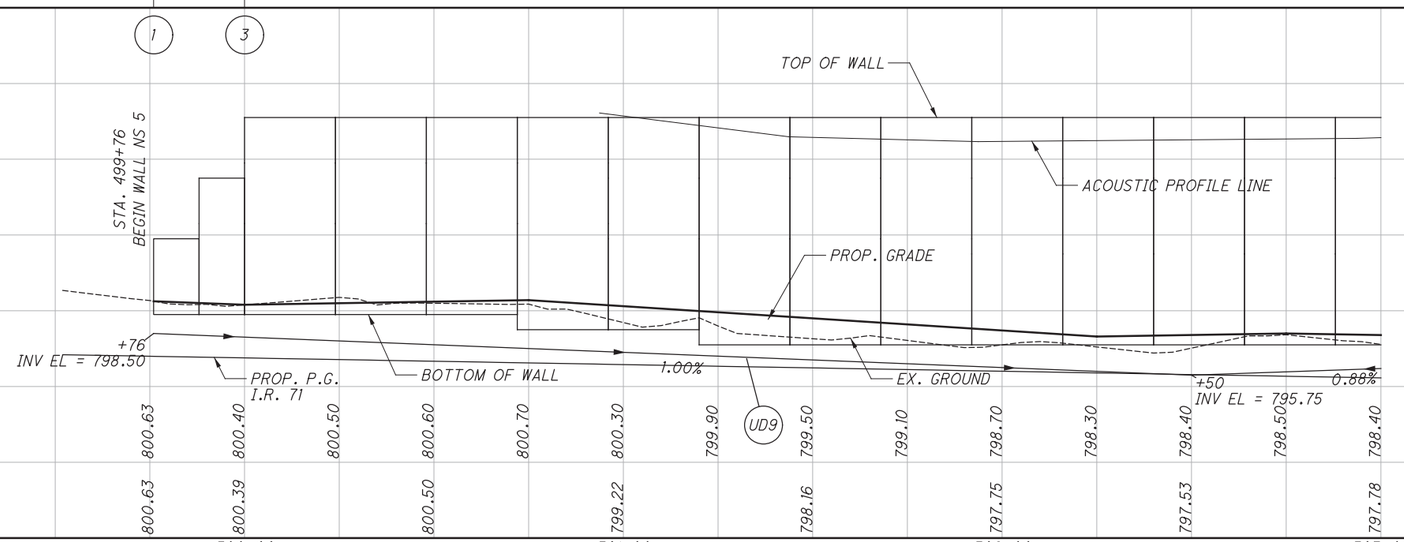

PROP. GRADE ELEV.	800.63	800.40	800.50	800.60	800.70	800.30	799.90	UD9	799.50	799.10	798.70	798.30	798.40	798.50	798.40
EXIST. GROUND ELEV.	800.63	800.39	800.50	799.22	798.16	797.75	797.53	797.78							

500+00 501+00 502+00 503+00

P:\84868\roadway\sheets\84868GP501.dgn 3/27/2015 2:36:54 PM kfahy

HORIZONTAL SCALE IN FEET
0 10 20 40

CALCULATED MJT
CHECKED BBD

PLAN AND PROFILE NOISE BARRIER NS 5
STA. 499+76.00 TO STA. 503+00.00

FRA-71-5.29

507
623

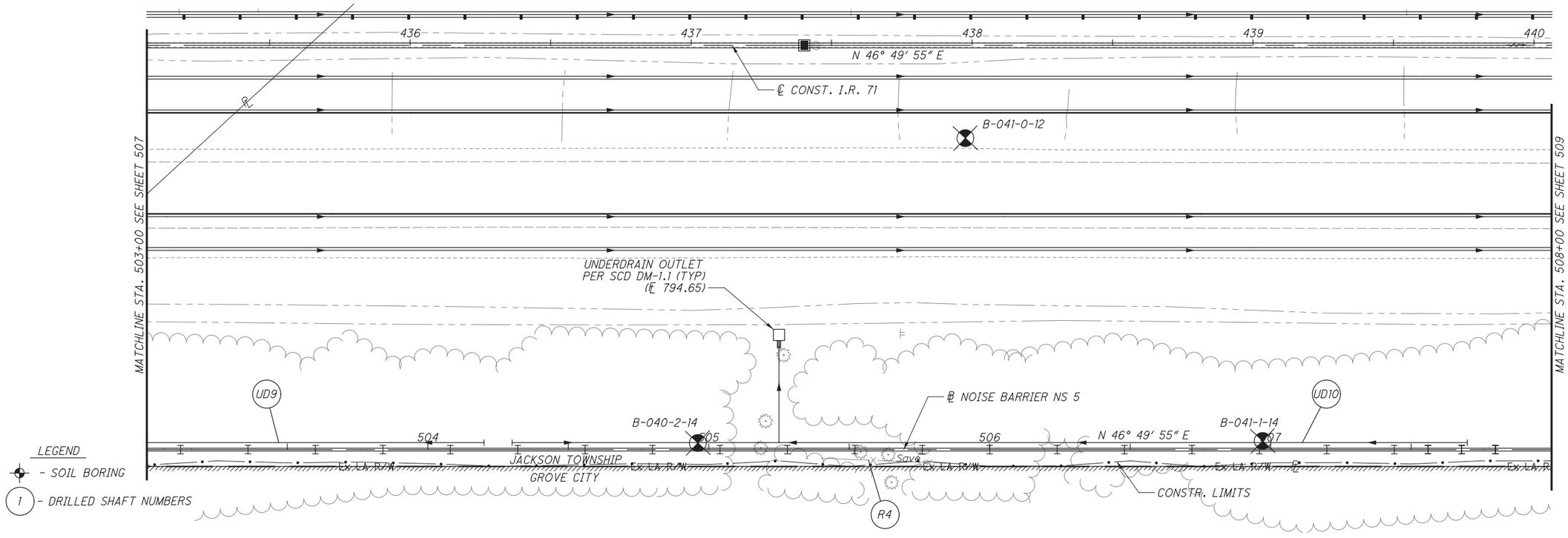

TOP OF WALL ELEV.	812.75	812.75	812.75	812.75	812.75	812.75	812.75	812.75	812.75	812.75	812.75	812.75	812.75	812.75	812.75	812.75	812.75	812.75	812.75	812.75	812.75	812.75	812.75	812.75	812.75	812.75
ACOUSTIC PROFILE ELEV.	811.43	811.62	811.81	812.00	812.10	811.93	811.76	811.59	811.44	811.36	811.28	811.20	811.21	811.46	811.72	811.97	812.19	812.30	812.41		812.53		812.31			
BOTTOM OF WALL ELEV.	797.75	797.75	797.75	797.75	797.75	798.75	797.75	796.75	796.75	796.75	796.75	796.75	796.75	797.75	798.75	798.75	797.75	797.75	797.75	797.75	798.75		797.75			
PANEL NO.	15	16	17	18	19	20	21	22	23	24	25	26	27	28	29	30	31	32	33	34	35	36	37			

31 PANELS @ 24′ = 744′ | 3 PANELS @ 12′ = 36′ | 1 PANEL @ 24′ = 24′

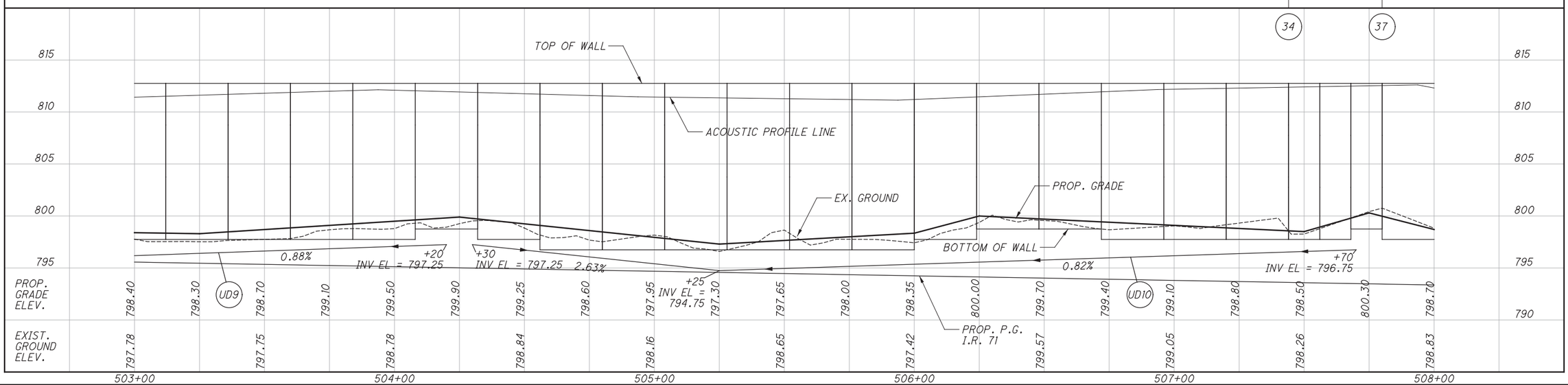

P:\84868\roadway\sheets\84868GP502.dgn 3/27/2015 2:36:55 PM kfahy

HORIZONTAL SCALE IN FEET
0 10 20 40

CALCULATED MJT
CHECKED BBD

PLAN AND PROFILE NOISE BARRIER NS 5
STA. 503+00.00 TO STA. 508+00.00

FRA-71-5.29

508
623

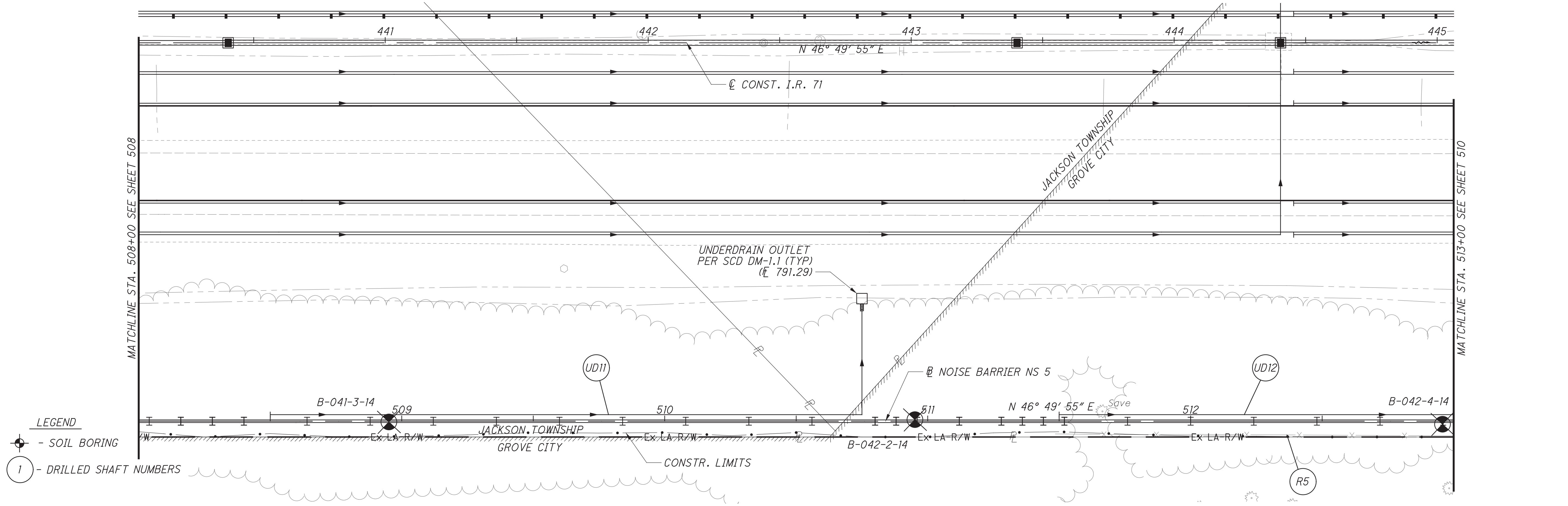

PANEL NO.	37	38	39	40	41	42	43	44	45	46	47	48	49	50	51	52	53	54	55	56	57	58	59	60	61	62	63	64
TOP OF WALL ELEV.	812.75	812.75	811.75	811.75	810.75	810.75	809.75	809.75	809.75	809.75	809.75	809.75	809.75	809.75	808.75	808.75	808.75	808.75	807.75	807.75	807.75	807.75	806.75	806.75	806.75	806.75	805.75	805.75
BOTTOM OF WALL ELEV.	797.75	796.75	795.75	794.75	794.75	793.75	793.75	793.75	793.75	793.75	793.75	793.75	793.75	793.75	793.75	793.75	794.75	795.75	794.75	793.75	792.75	792.75	792.75	791.75	791.75	791.75	790.75	790.75

1 PANEL @ 24′ = 24′ | 3 PANELS @ 12′ = 36′ | 10 PANELS @ 24′ = 240′ | 2 PANELS @ 8′ = 16′ | 2 PANELS @ 16′ = 32′ | 3 PANELS @ 8′ = 24′ | 36 PANELS @ 24′ = 864′

STATION	ACOUSTIC PROFILE ELEV.	PROP. GRADE ELEV.	EXIST. GROUND ELEV.
508+00	812.31	798.70	798.83
508+25	811.12	797.10	
508+50	809.93	795.50	795.18
508+75	808.74	795.25	
509+00	807.93	795.00	794.19
509+25	808.24	794.75	
509+50	808.55	794.50	794.34
509+75	808.86	795.00	
510+00	809.04	795.50	795.26
510+25	808.82	795.10	
510+50	808.60	794.70	794.03
510+75	808.38	794.30	
511+00	808.06	796.25	794.83
511+25	807.41	798.20	
511+50	806.76	793.95	793.98
511+75	806.11	793.65	
512+00	805.54	793.35	792.17
512+25	805.23	793.05	
512+50	804.91	792.75	791.40
512+75	804.60	792.45	
513+00	804.31	792.15	790.97

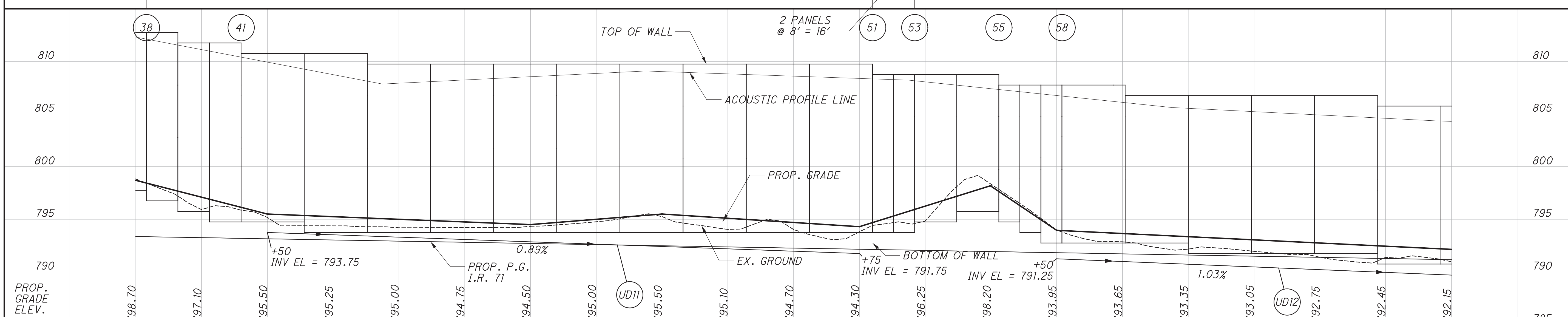

HORIZONTAL SCALE IN FEET 0 10 20 40

CALCULATED MJT CHECKED BBD

PLAN AND PROFILE NOISE BARRIER NS 5
STA. 508+00.00 TO STA. 513+00.00

FRA-71-5.29

P:\84868\roadway\sheets\84868GP503.dgn 3/27/2015 2:36:56 PM kfahy

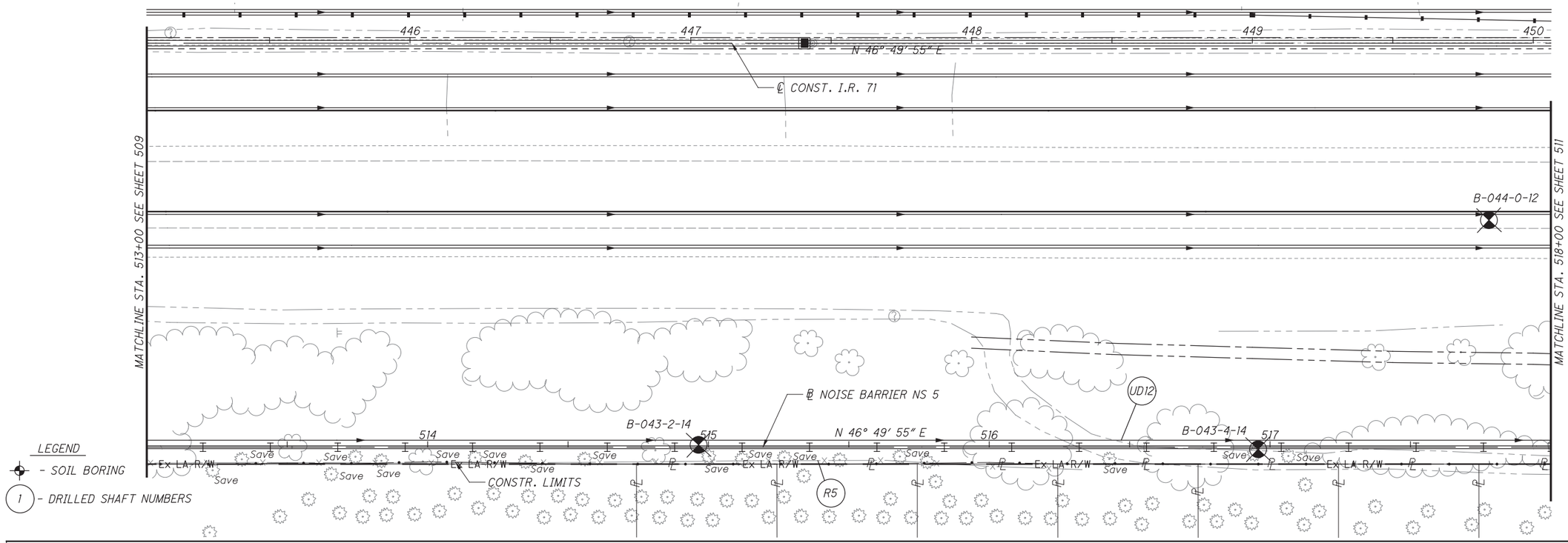

TOP OF WALL ELEV.	805.75	804.75	804.75	804.75	804.75	803.75	803.75	802.75	802.75	801.75	801.75	801.75	801.75	801.75	801.75	800.75	800.75	800.75	799.75	799.75	799.75	799.75
ACOUSTIC PROFILE ELEV.	804.31	804.08	803.86	803.64	803.42	803.19	802.69	802.19	801.69	801.20	800.98	800.76	800.53	800.31	799.95	799.59	799.23	798.87	798.74	798.65	798.56	
BOTTOM OF WALL ELEV.	790.75	790.75	790.75	789.75	789.75	789.75	788.75	788.75	788.75	788.75	787.75	787.75	787.75	786.75	786.75	786.75	786.75	785.75	785.75	785.75	784.75	
PANEL NO.	64	65	66	67	68	69	70	71	72	73	74	75	76	77	78	79	80	81	82	83	84	

36 PANELS @ 24′ = 864′

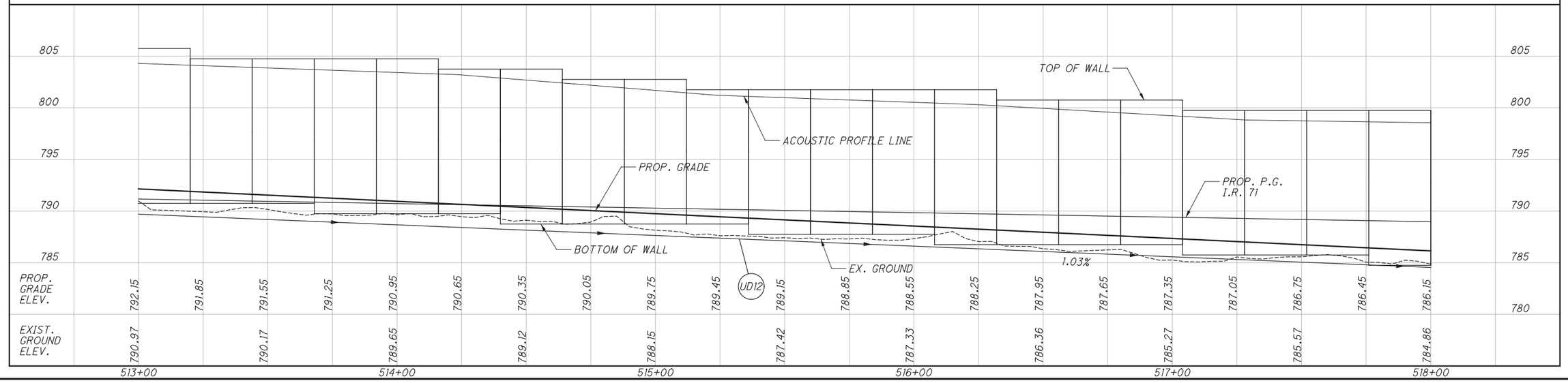

PROP. GRADE ELEV.	792.15	791.85	791.55	791.25	790.95	790.65	790.35	790.05	789.75	789.45	UD12	789.15	788.85	788.55	788.25	787.95	787.65	787.35	787.05	786.75	786.45	786.15
EXIST. GROUND ELEV.	790.97		790.17		789.65		789.12		788.15			787.42		787.33		786.36		785.27		785.57		784.86

P:\84868\roadway\sheets\84868GP504.dgn 3/27/2015 2:36:56 PM kfahy

CALCULATED MJT
CHECKED BBD

HORIZONTAL SCALE IN FEET
0 10 20 40

PLAN AND PROFILE NOISE BARRIER NS 5
STA. 513+00.00 TO STA. 518+00.00

FRA-71-5.29

510
623

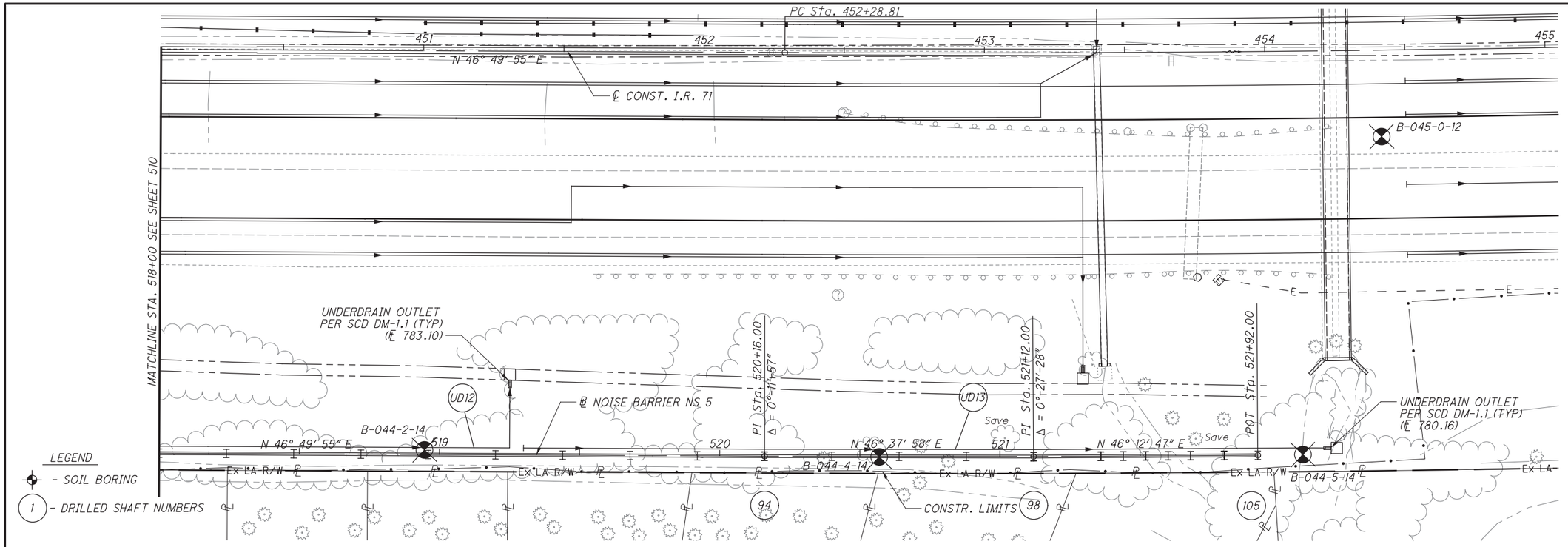

TOP OF WALL ELEV.	799.75	799.75	799.75	798.75	798.75	798.75	798.75	798.75	798.75	798.75	798.75	797.75	797.75	797.75	796.75	796.75	796.75	796.75	796.75	792.75	788.75				
ACOUSTIC PROFILE ELEV.	798.56	798.47	798.29	798.10	797.90	797.71	797.52	797.39	797.28	797.16	797.05	796.93	796.46	795.91	795.55	796.00									
BOTTOM OF WALL ELEV.	784.75	784.75	784.75	783.75	783.75	783.75	783.75	783.75	783.75	783.75	783.75	783.75	783.75	783.75	783.75	783.75	782.75	781.75	781.75	781.75					
PANEL NO.	85	86	87	88	89	90	91	92	93	94	95	96	97	98	99	100	101	102	103	104					
	36 PANELS @ 24' = 864'										4 PANELS @ 24' = 96'				1 PANEL @ 24' = 24'	4 PANELS @ 8' = 32'			2 PANELS @ 12' = 24'						

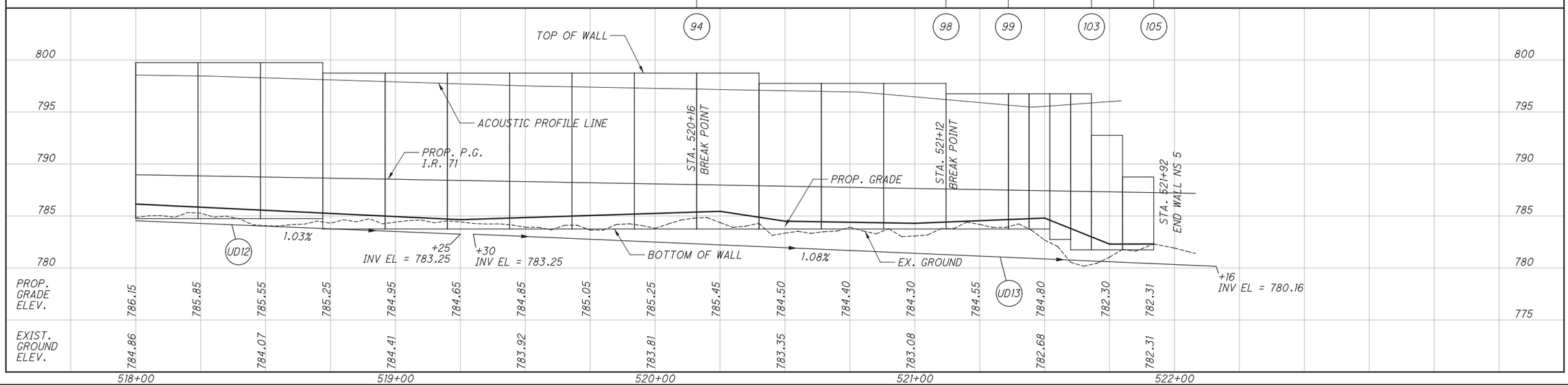

HORIZONTAL SCALE IN FEET
0 10 20 40

CALCULATED MJT
CHECKED BBD

PLAN AND PROFILE NOISE BARRIER NS 5
STA. 518+00.00 TO STA. 521+92.00

FRA-71-5.29

511
623

P:\84868\roadway\sheets\84868GP505.dgn 3/27/2015 2:36:57 PM kfahy

SEEDING END WIDTH	SEEDING SQ. YDS.	END AREA CUT	END AREA FILL	VOLUME CUT	VOLUME FILL
9		0	1		
	48			0	2
8		0	1		
	23			0	1
9		0	1		
	71			0	3

SEEDING END WIDTH	SEEDING SQ. YDS.	END AREA CUT	END AREA FILL	VOLUME CUT	VOLUME FILL
12		0	5		
	72			0	13
14		0	9		
	75			0	14
13		0	6		
	61			0	7
	208			0	34

CALCULATED MJT
CHECKED BBD

CROSS SECTIONS NOISE BARRIER NS 5
STA. 499+76.00 TO STA. 502+00.00

FRA-71-5.29

512
623

P:\84868\roadway\sheets\84868XS501.dgn 12/17/2014 3:32:24 PM kfahy

SEEDING END WIDTH	SEEDING SQ. YDS.	END AREA CUT	END AREA FILL	VOLUME CUT	VOLUME FILL
12		0	5		
	61			0	8
10		0	3		
	61			0	8
12		0	5		
	67			0	9
	189			0	25

SEEDING END WIDTH	SEEDING SQ. YDS.	END AREA CUT	END AREA FILL	VOLUME CUT	VOLUME FILL
11		0	2		
	61			0	6
11		0	4		
	64			0	9
	125			0	15

CALCULATED MJT
CHECKED BBD

CROSS SECTIONS NOISE BARRIER NS 5
STA. 502+50.00 TO STA. 504+50.00

FRA-71-5.29

513
623

P:\84868\roadway\sheets\84868XS501.dgn 12/17/2014 3:32:25 PM kfahy

SEEDING END WIDTH	SEEDING SQ. YDS.	END AREA CUT	END AREA FILL	VOLUME CUT	VOLUME FILL
12		0	5		
	64			5	5
11		5	0		
	56			6	0
9		1	0		
	56			1	2
	179			12	7

SEEDING END WIDTH	SEEDING SQ. YDS.	END AREA CUT	END AREA FILL	VOLUME CUT	VOLUME FILL
11		0	1		
	59			0	2
10		0	1		
	53			0	2
9		0	1		
	59			0	6
	171			0	10

CALCULATED MJT
CHECKED BBD

CROSS SECTIONS NOISE BARRIER NS 5
STA. 505+00.00 TO STA. 507+50.00

FRA-71-5.29

514
623

P:\84868\roadway\sheets\84868XS501.dgn 12/17/2014 3:32:25 PM kfahy

SEEDING END WIDTH	SEEDING SQ. YDS.	END AREA CUT	END AREA FILL	VOLUME CUT	VOLUME FILL
12		0	4		
	64			0	6
11		0	2		
	53			1	2
8		1	0		
	53			1	1
	170			2	9

SEEDING END WIDTH	SEEDING SQ. YDS.	END AREA CUT	END AREA FILL	VOLUME CUT	VOLUME FILL
11		0	3		
	61			0	4
11		0	1		
	56			0	2
9		0	1		
	59			0	5
	176			0	11

CALCULATED MJT
CHECKED BBD

CROSS SECTIONS NOISE BARRIER NS 5
STA. 508+00.00 TO STA. 510+50.00

FRA-71-5.29

515
623

P:\84868\roadway\sheets\84868XS501.dgn 12/17/2014 3:32:26 PM kfahy

SEEDING END WIDTH	SEEDING SQ. YDS.	END AREA CUT	END AREA FILL	VOLUME CUT	VOLUME FILL
13		0	7		
	59			1	7
8		1	0		
	64			1	9
15		0	10		
	72			0	12
	195			2	28

SEEDING END WIDTH	SEEDING SQ. YDS.	END AREA CUT	END AREA FILL	VOLUME CUT	VOLUME FILL
14		0	8		
	75			0	14
13		0	7		
	75			0	14
14		0	8		
	75			0	14
	225			0	42

CALCULATED MJT
CHECKED BBD

CROSS SECTIONS NOISE BARRIER NS 5
STA. 511+00.00 TO STA. 513+50.00

FRA-71-5.29

516
623

P:\84868\roadway\sheets\84868XS501.dgn 12/17/2014 3:32:26 PM kfahy

SEEDING END WIDTH	SEEDING SQ. YDS.	END AREA CUT	END AREA FILL	VOLUME CUT	VOLUME FILL
14	75	0	9	0	15
13	70	0	7	0	13
12	72	0	7	0	14
	217			0	42

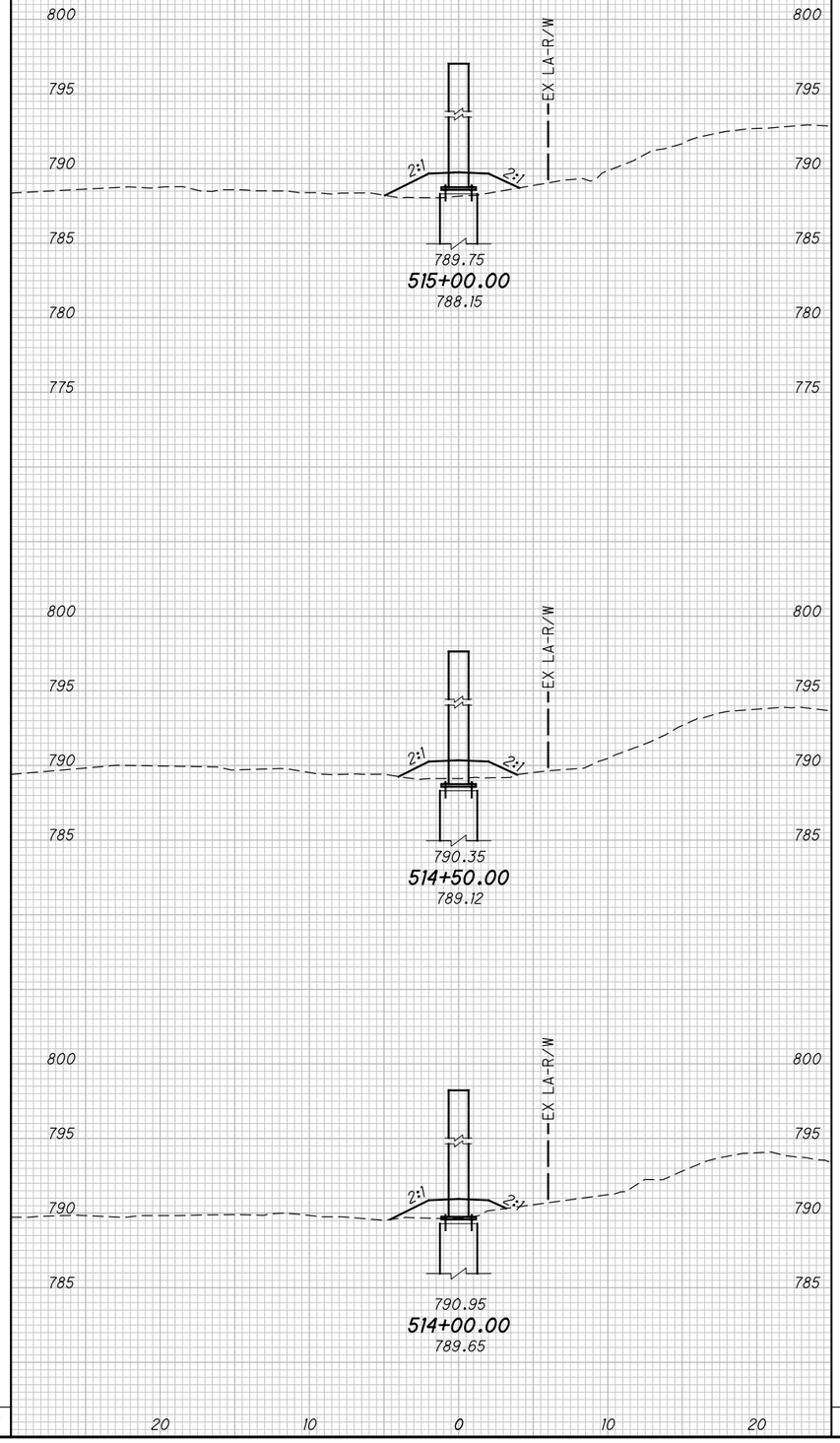

SEEDING END WIDTH	SEEDING SQ. YDS.	END AREA CUT	END AREA FILL	VOLUME CUT	VOLUME FILL
14	78	0	9	0	15
14	81	0	7	0	17
15	81	0	11	0	19
	240			0	51

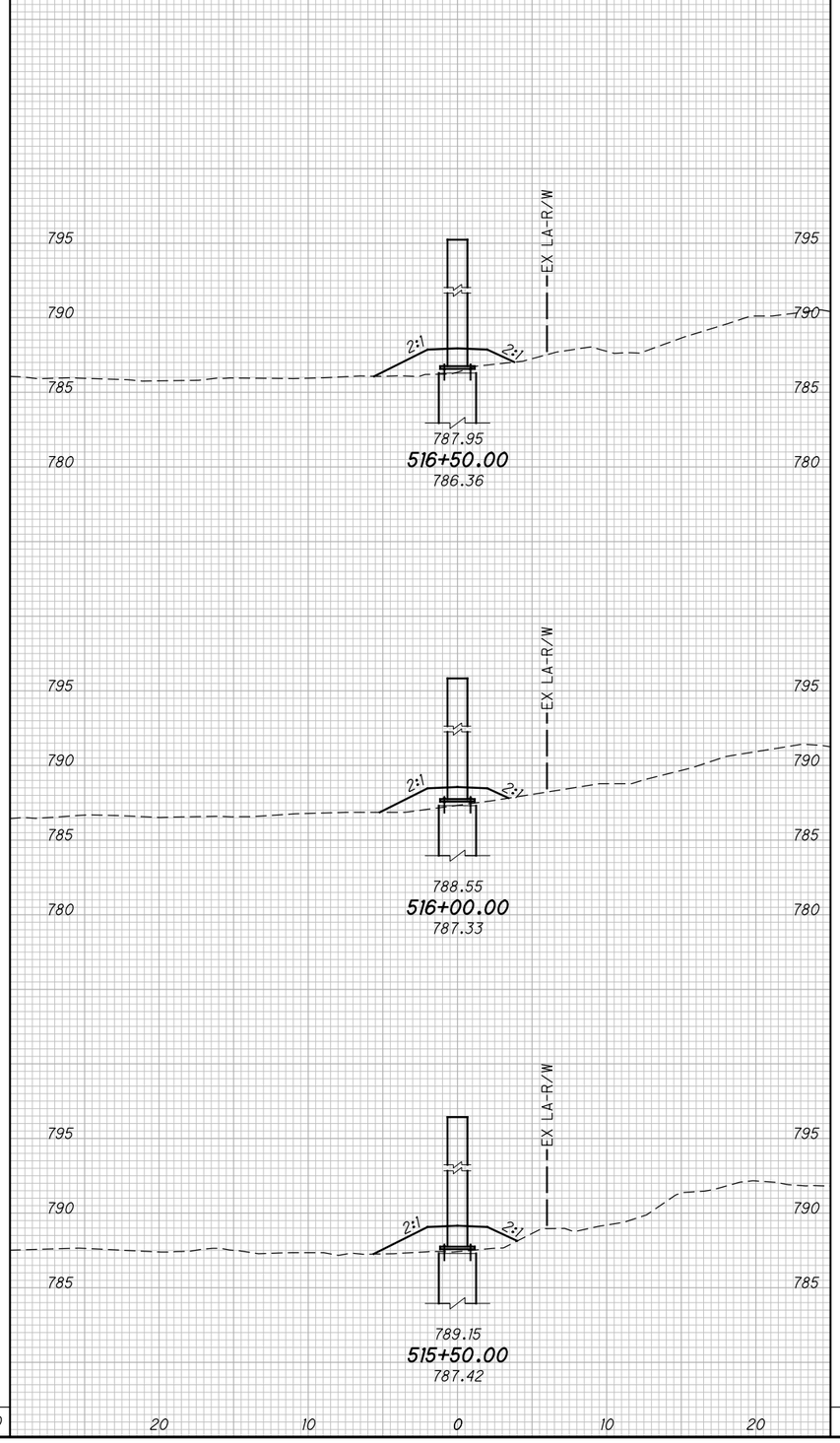

CALCULATED MJT
CHECKED BBD

CROSS SECTIONS NOISE BARRIER NS 5
STA. 514+00.00 TO STA. 516+50.00

FRA-71-5.29

517
623

P:\84868\roadway\sheets\84868XS501.dgn 12/17/2014 3:32:26 PM kfahy

SEEDING END WIDTH	SEEDING SQ. YDS.	END AREA CUT	END AREA FILL	VOLUME CUT	VOLUME FILL
15		0	9		
	78			0	15
13		0	7		
	78			0	20
15		0	14		
	81			0	22
	237			0	57

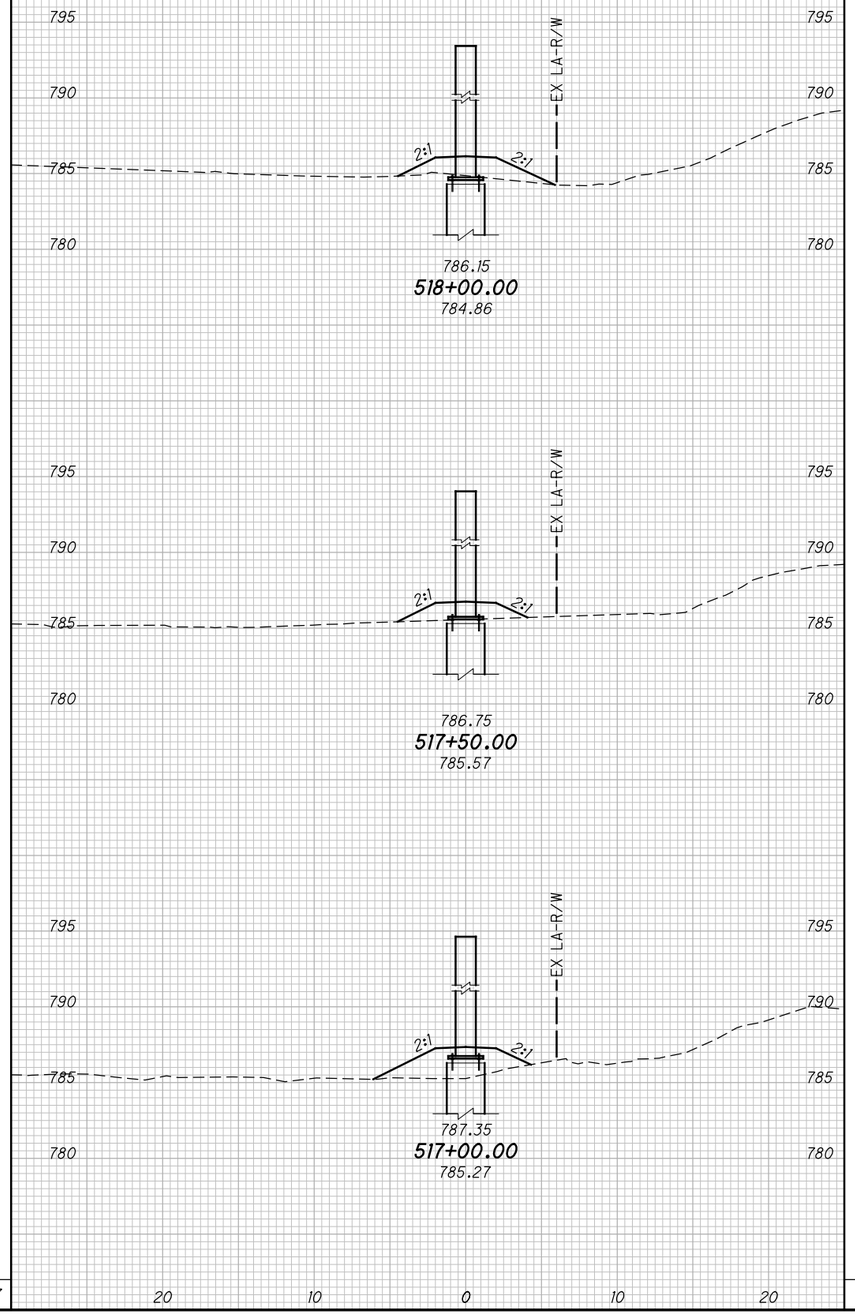

SEEDING END WIDTH	SEEDING SQ. YDS.	END AREA CUT	END AREA FILL	VOLUME CUT	VOLUME FILL
12		0	5		
	61			0	8
10		0	3		
	70			0	13
15		0	11		
	84			0	19
	215			0	40

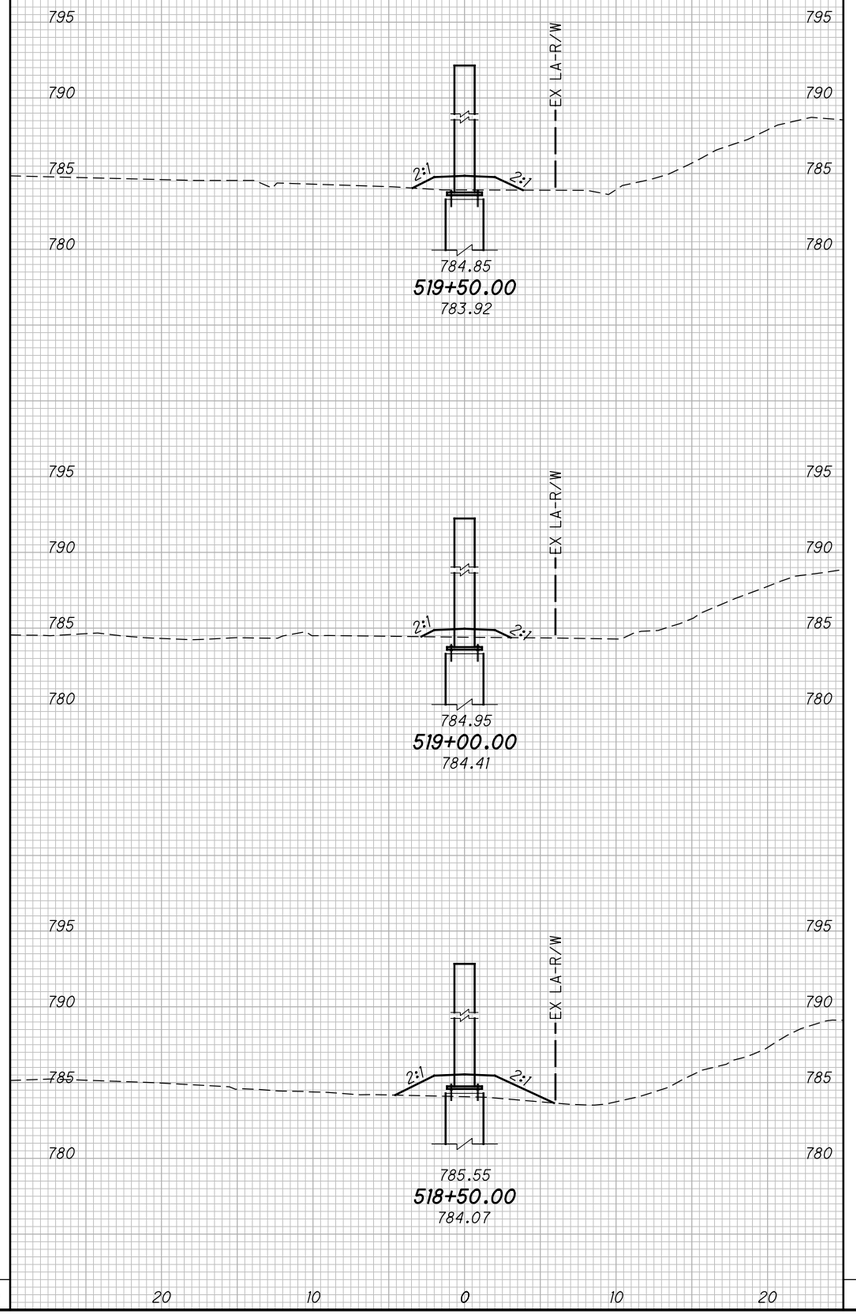

CALCULATED MJT
CHECKED BBD

CROSS SECTIONS NOISE BARRIER NS 5
STA. 517+00.00 TO STA. 519+50.00

FRA-71-5.29

518
623

P:\84868\roadway\sheets\84868XS501.dgn 12/17/2014 3:32:27 PM kfahy

SEEDING END WIDTH	SEEDING SQ. YDS.	END AREA CUT	END AREA FILL	VOLUME CUT	VOLUME FILL
14	75	0	8	0	14
13	75	0	7	0	16
14	72	0	10	0	17
	222			0	47

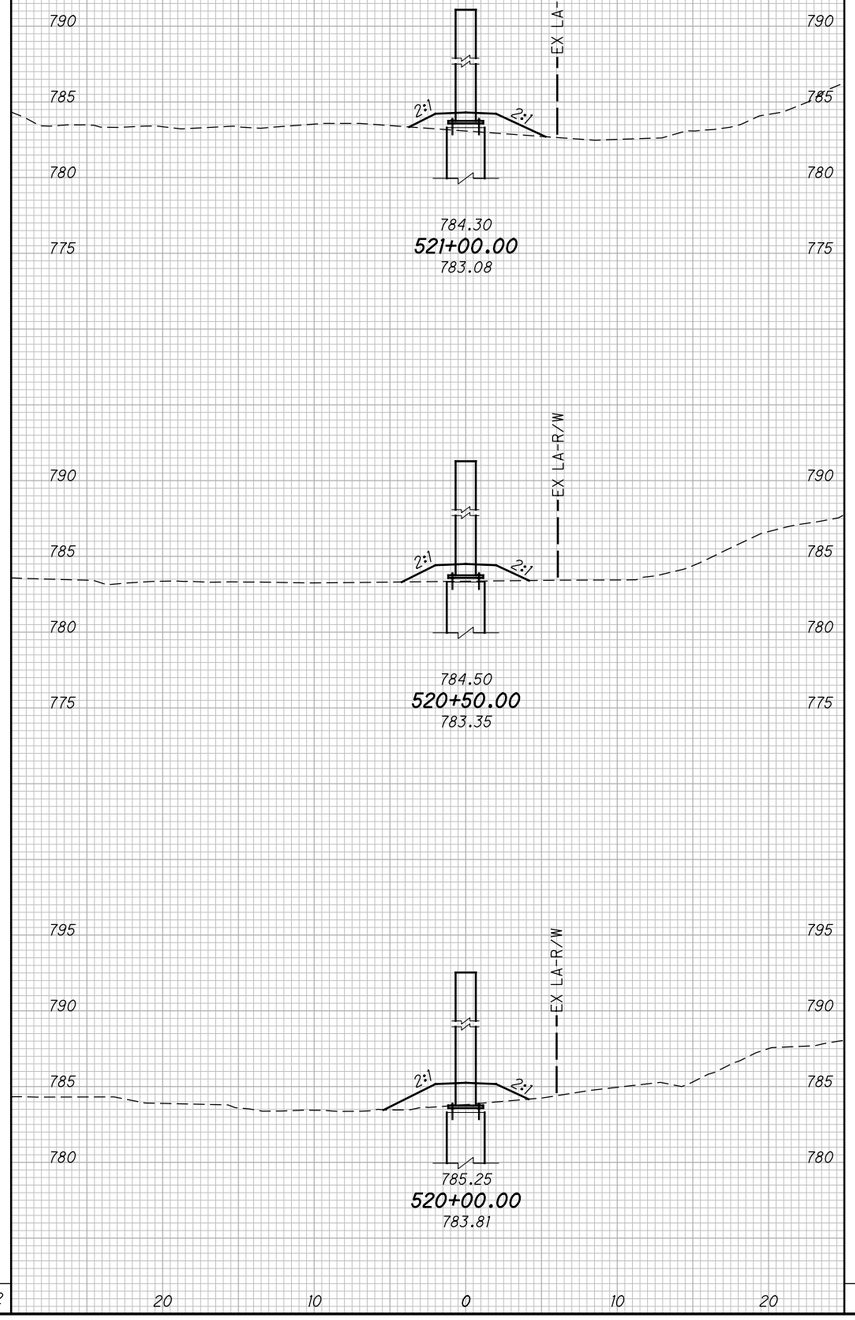

SEEDING END WIDTH	SEEDING SQ. YDS.	END AREA CUT	END AREA FILL	VOLUME CUT	VOLUME FILL
9	68	0	1	0	17
20	95	0	20	0	26
	163			0	43

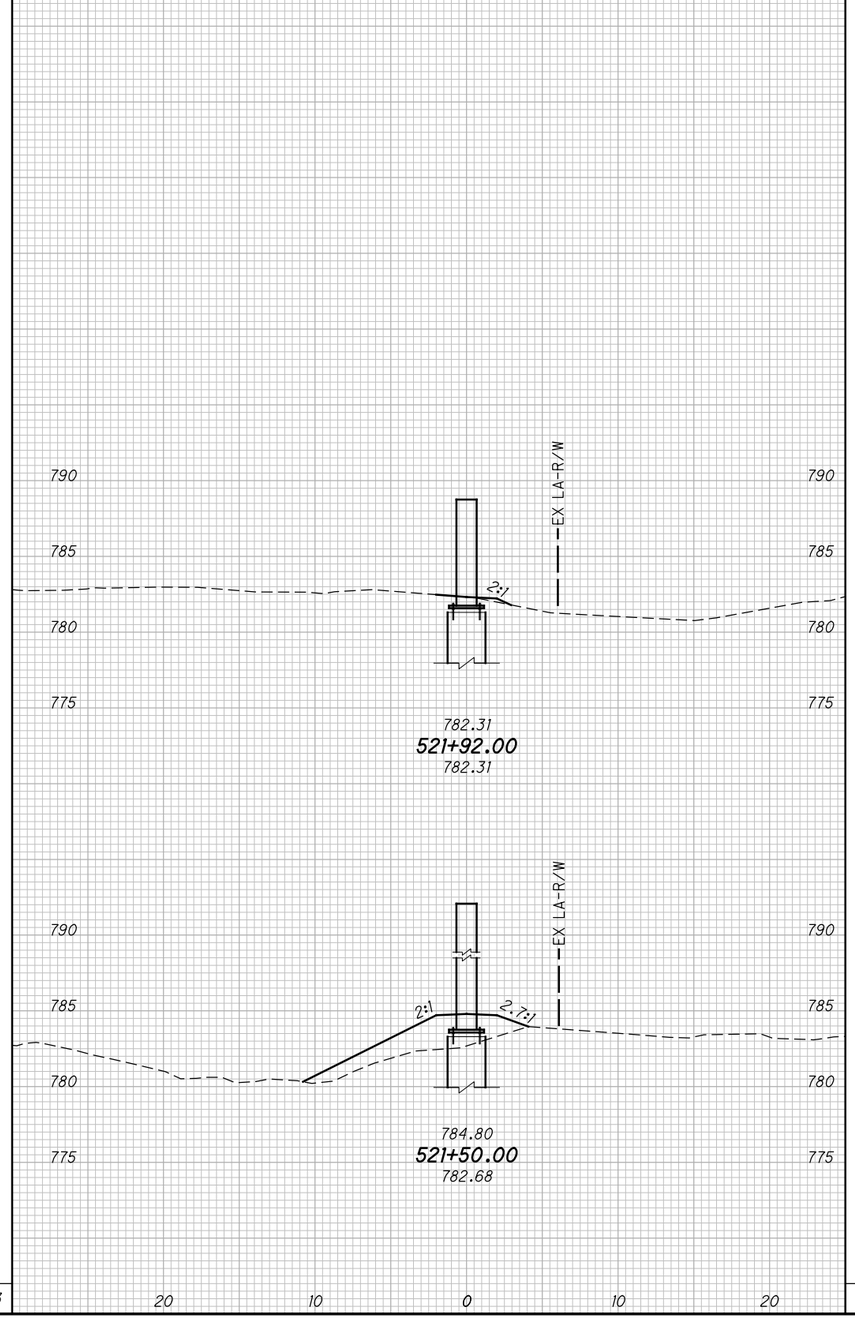

CALCULATED MJT
CHECKED BBD

CROSS SECTIONS NOISE BARRIER NS 5
STA. 520+00.00 TO STA. 521+92.00

FRA-71-5.29

519
623

P:\84868\roadway\sheets\84868XS501.dgn 12/17/2014 3:32:27 PM kfahy

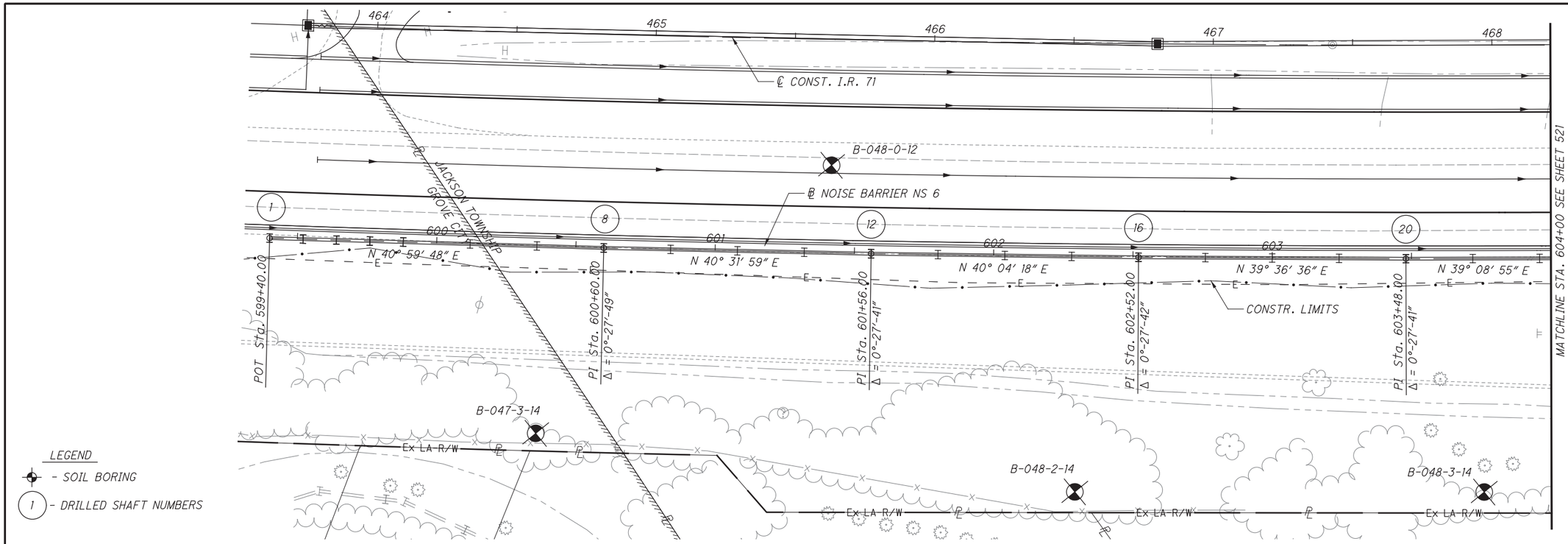

TOP OF WALL ELEV.	787.00	791.00	795.00	799.00	799.00	799.00	799.00	799.00	799.00	799.00	799.00	798.00	797.00	796.00	795.00	795.00	794.00	794.00	794.00	794.00	794.00	
ACOUSTIC PROFILE ELEV.					802.66	802.20	801.64	800.58	799.53	798.47	797.42	796.54	795.69	794.83	794.39	794.03	793.66	793.17	792.65	792.13	791.89	
BOTTOM OF WALL ELEV.	782.00	782.00	782.00	782.00	781.00	781.00	781.00	781.00	781.00	781.00	781.00	781.00	780.00	780.00	780.00	780.00	780.00	780.00	780.00	779.00	779.00	
PANEL NO.	1	2	3	4	5	6	7	8	9	10	11	12	13	14	15	16	17	18	19	20	21	

4 PANELS @ 12′ = 48′ | 3 PANELS @ 24′ = 72′ | 4 PANELS @ 24′ = 96′ | 4 PANELS @ 24′ = 96′ | 4 PANELS @ 24′ = 96′ | 4 PANELS @ 24′ = 96′

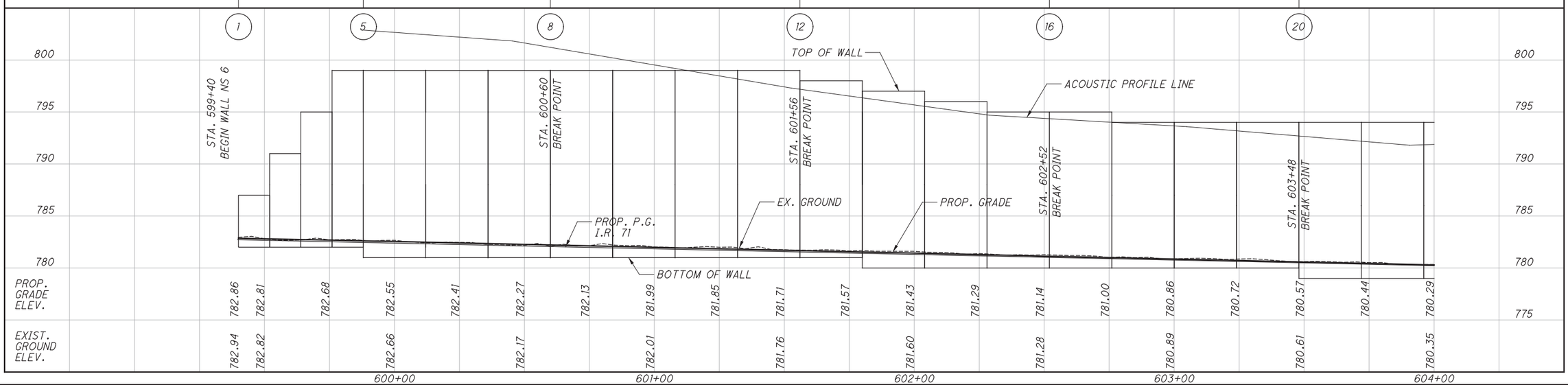

PROP. GRADE ELEV.	782.86	782.81	782.68	782.55	782.41	782.27	782.13	781.99	781.85	781.71	781.57	781.43	781.29	781.14	781.00	780.86	780.72	780.57	780.44	780.29		
EXIST. GROUND ELEV.	782.94	782.82		782.66		782.17		782.01		781.76		781.60		781.28		780.89		780.61		780.35		

HORIZONTAL SCALE IN FEET
0 10 20 40

CALCULATED MJT
CHECKED BBD

PLAN AND PROFILE NOISE BARRIER NS 6
STA. 599+40.00 TO STA. 604+00.00

FRA-71-5.29

520
623

P:\84868\roadway\sheets\84868GP601.dgn 3/27/2015 2:37:03 PM kfahy

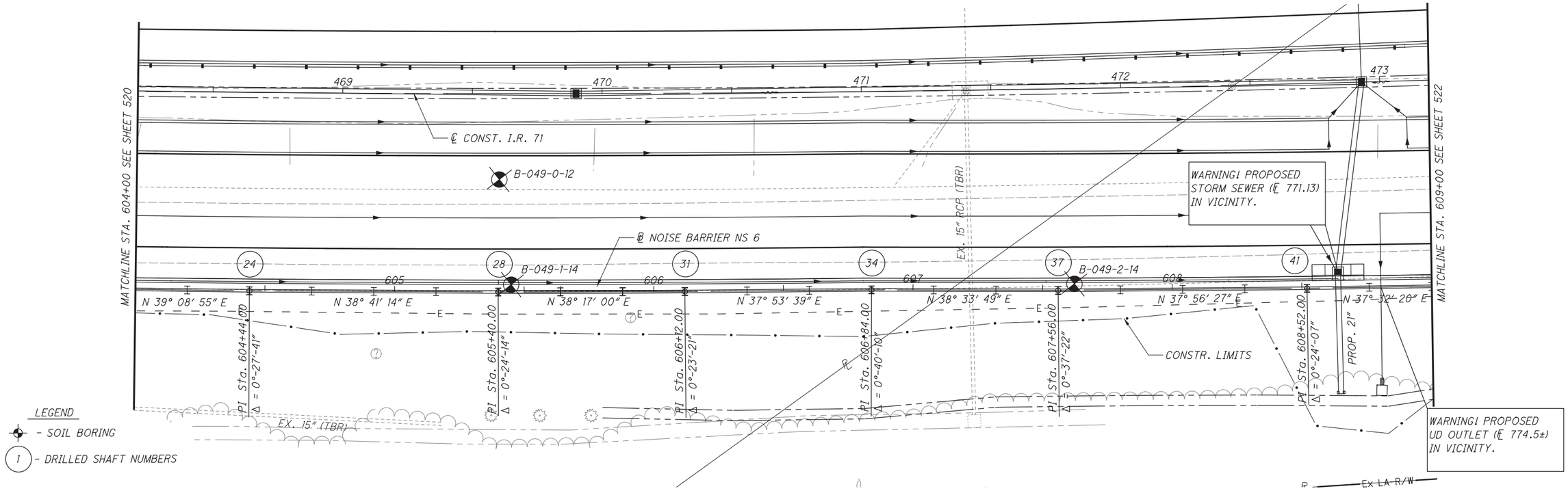

TOP OF WALL ELEV.	794.00	794.00	794.00	794.00	794.00	794.00	794.00	794.00	793.00	793.00	793.00	793.00	793.00	793.00	793.00	793.00	793.00	793.00	793.00	793.00	793.00	793.00	793.00	793.00
ACOUSTIC PROFILE ELEV.	791.89	792.08	792.28	792.22	792.06	791.91	791.75	791.59	792.00	792.56	793.11	793.66	793.68	793.53	793.39	793.24	793.08	792.92	792.75	792.59	792.43			
BOTTOM OF WALL ELEV.	779.00	779.00	779.00	779.00	779.00	779.00	778.00	778.00	778.00	778.00	778.00	778.00	777.00	777.00	777.00	777.00	777.00	777.00	777.00	777.00	776.00			
PANEL NO.	22	23	24	25	26	27	28	29	30	31	32	33	34	35	36	37	38	39	40	41	42			
	4 PANELS @ 24' = 96'		6 PANELS @ 24' = 144'				3 PANELS @ 24' = 72'			3 PANELS @ 24' = 72'			3 PANELS @ 24' = 72'			4 PANELS @ 24' = 96'				4 PANELS @ 24' = 96'				

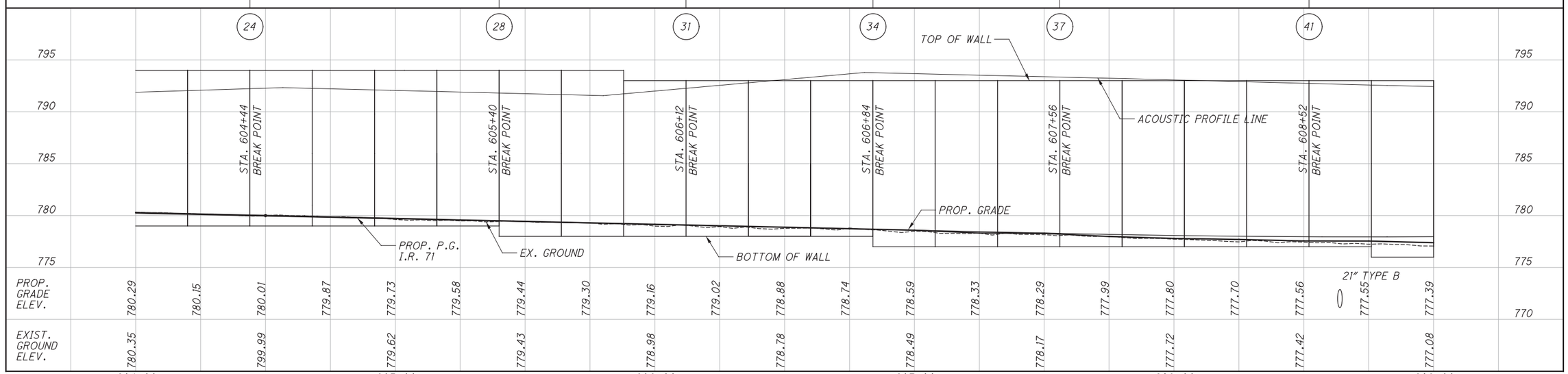

PROP. GRADE ELEV.	780.29	780.15	780.01	779.87	779.73	779.58	779.44	779.30	779.16	779.02	778.88	778.74	778.59	778.33	778.29	777.99	777.80	777.70	777.56	777.55	777.39			
EXIST. GROUND ELEV.	780.35		799.99		779.62		779.43		778.98		778.78		778.49		778.17		777.72		777.42		777.08			

CALCULATED MJT
CHECKED BBD

HORIZONTAL SCALE IN FEET
0 10 20 40

PLAN AND PROFILE NOISE BARRIER NS 6
STA. 604+00.00 TO STA. 609+00.00

FRA-71-5.29

521
623

P:\84868\roadway\sheets\84868GP602.dgn 3/27/2015 2:37:03 PM kfahy

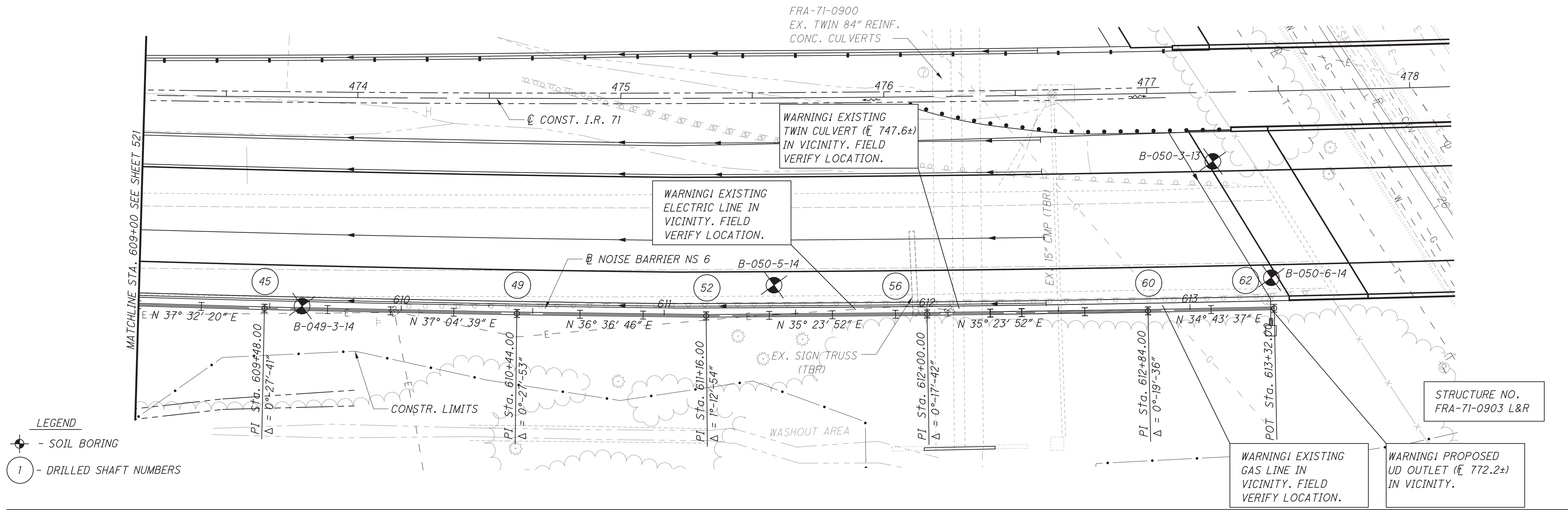

PANEL NO.	43	44	45	46	47	48	49	50	51	52	53	54	55	56	57	58	59	60	61
TOP OF WALL ELEV.	793.00	793.00	793.00	793.00	793.00	793.00	793.00	793.00	793.00	793.00	793.00	793.00	793.00	793.00	793.00	793.00	793.00	793.00	793.00
BOTTOM OF WALL ELEV.	776.00	777.00	777.00	777.00	777.00	777.00	777.00	778.00	778.00	778.00	778.00	778.00	778.00	778.00	778.00	778.00	778.00	778.00	778.00

4 PANELS @ 24′ = 96′ | 4 PANELS @ 24′ = 96′ | 3 PANELS @ 24′ = 72′ | 3 PANELS @ 24′ = 72′ | 1 PANEL @ 12′ = 12′ | 1 PANEL @ 24′ = 24′ | 1 PANEL @ 12′ = 12′ | 2 PANELS @ 24′ = 48′ | 2 PANELS @ 24′ = 48′

ACOUSTIC PROFILE ELEV.	792.43	792.29	792.14	791.99	791.87	791.76	791.65	791.55	791.38	791.19	791.00	790.81	790.61	790.41	790.20	790.05	789.94	789.85	789.81
PROP. GRADE ELEV.	777.39	777.82	777.89	778.00	778.13	778.29	778.45	778.61	778.76	778.88	778.99	779.08	779.13	779.17	779.17	779.15	779.11	779.04	779.02
EXIST. GROUND ELEV.	777.08		776.81		776.24		775.84		775.54		774.96		774.02		773.43		773.74		773.36

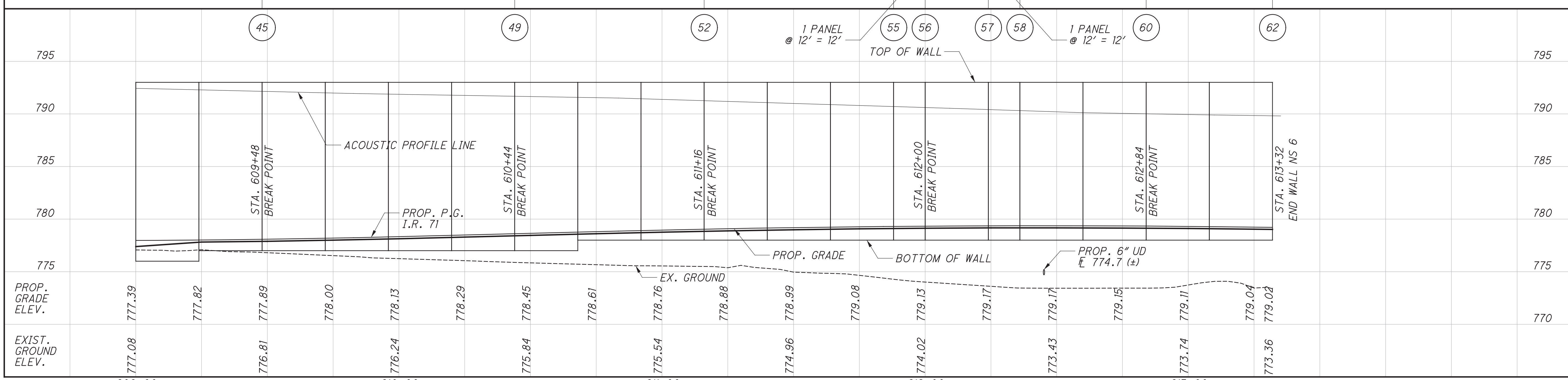

HORIZONTAL SCALE IN FEET 0 10 20 40

CALCULATED MJT
CHECKED BBD

PLAN AND PROFILE NOISE BARRIER NS 6
STA. 609+00.00 TO STA. 613+32.00

FRA-71-5.29

P:\84868\roadway\sheets\84868GP603.dgn 3/27/2015 2:37:04 PM kfahy

SEEDING END WIDTH	SEEDING SQ. YDS.	END AREA CUT	END AREA FILL	VOLUME CUT	VOLUME FILL
8	54	0	0	0	0
8	54	0	0	0	0
8	54	0	0	0	0
8	45	0	0	0	0
8	45	0	0	0	0
8	45	0	0	0	0
8	135	0	0	0	0

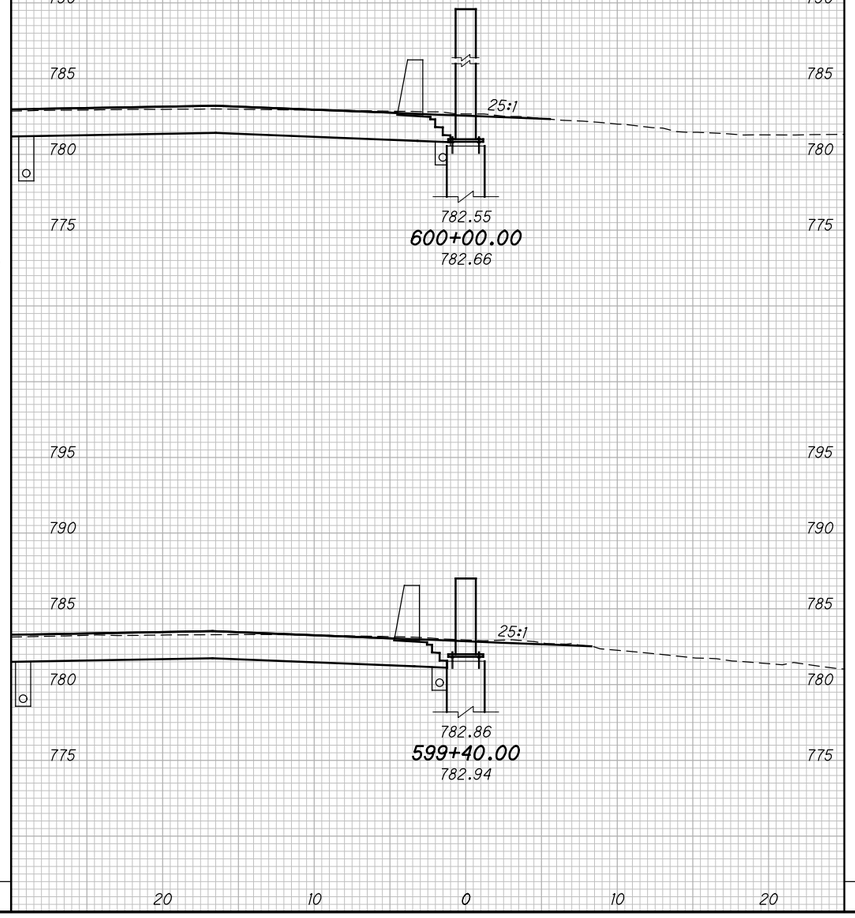

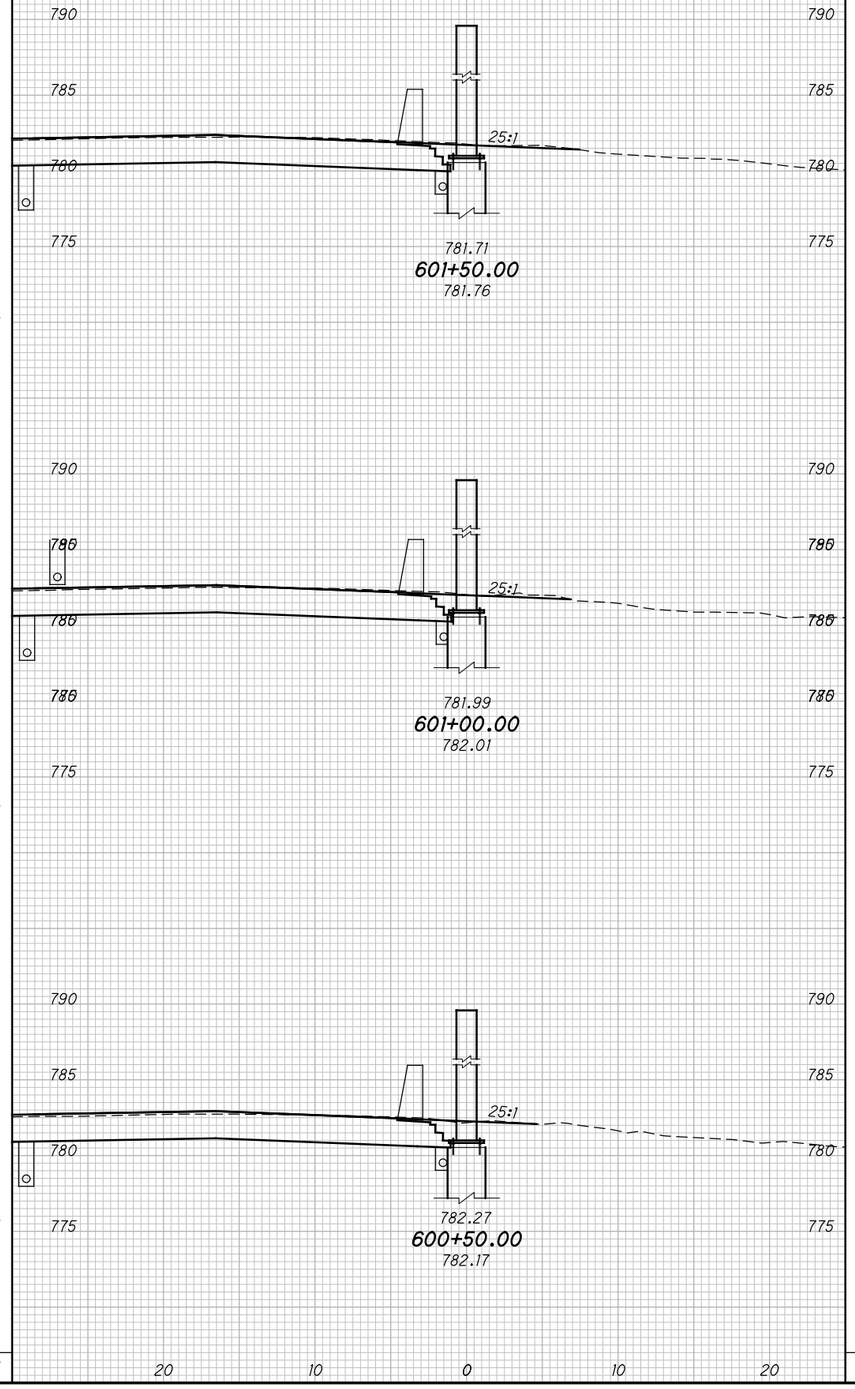

CALCULATED MJT
CHECKED BBD

CROSS SECTIONS NOISE BARRIER NS 6
STA. 599+40.00 TO STA. 601+50.00

FRA-71-5.29

523
623

P:\84868\roadway\sheets\84868XS601.dgn 3/31/2015 9:41:20 AM mtakacs

SEEDING END WIDTH	SEEDING SQ. YDS.	END AREA CUT	END AREA FILL	VOLUME CUT	VOLUME FILL
8	45	0	0	0	0
8	45	0	0	0	0
8	45	0	0	0	0
8	45	0	0	0	0
	135			0	0

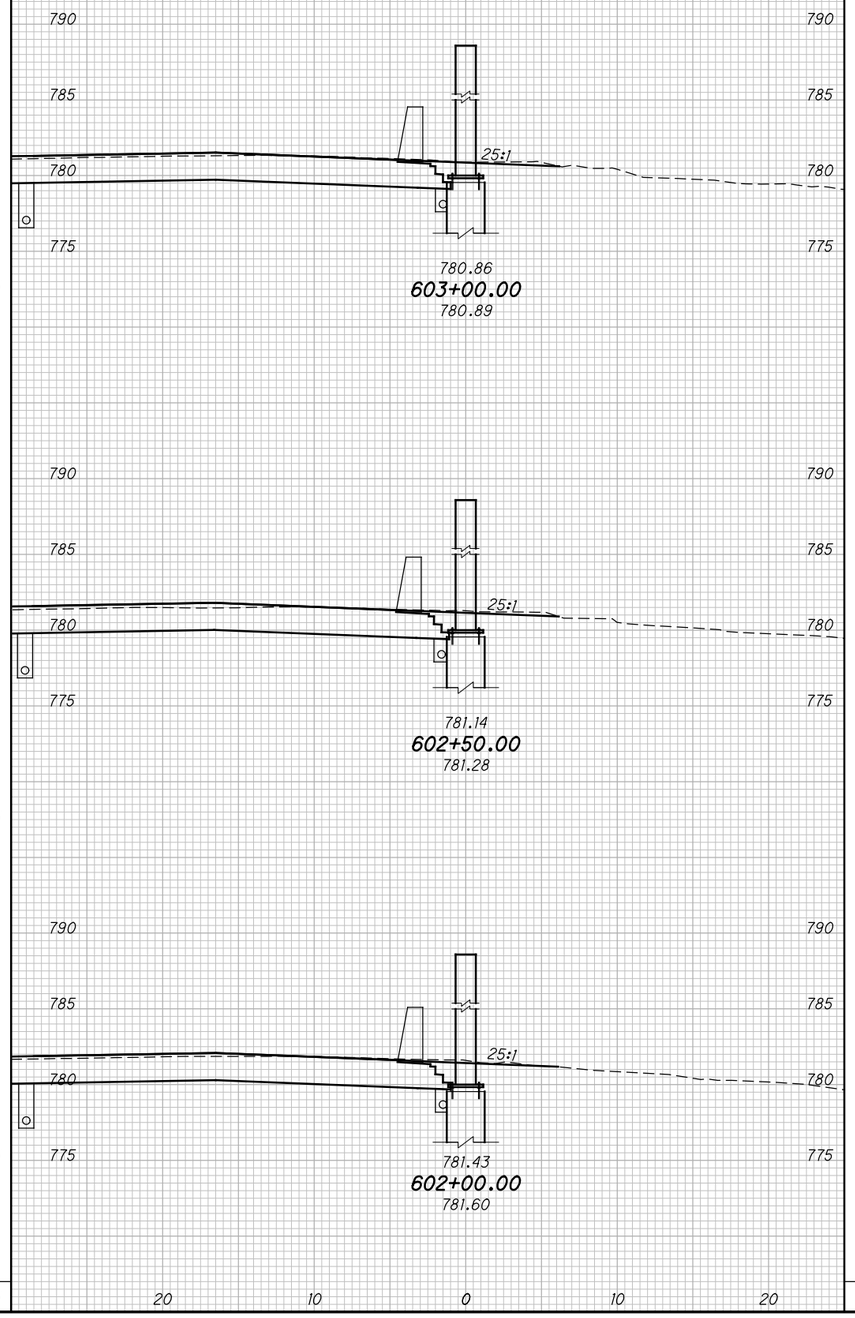

SEEDING END WIDTH	SEEDING SQ. YDS.	END AREA CUT	END AREA FILL	VOLUME CUT	VOLUME FILL
8	45	0	0	0	0
8	45	0	0	0	0
8	45	0	0	0	0
	90			0	0

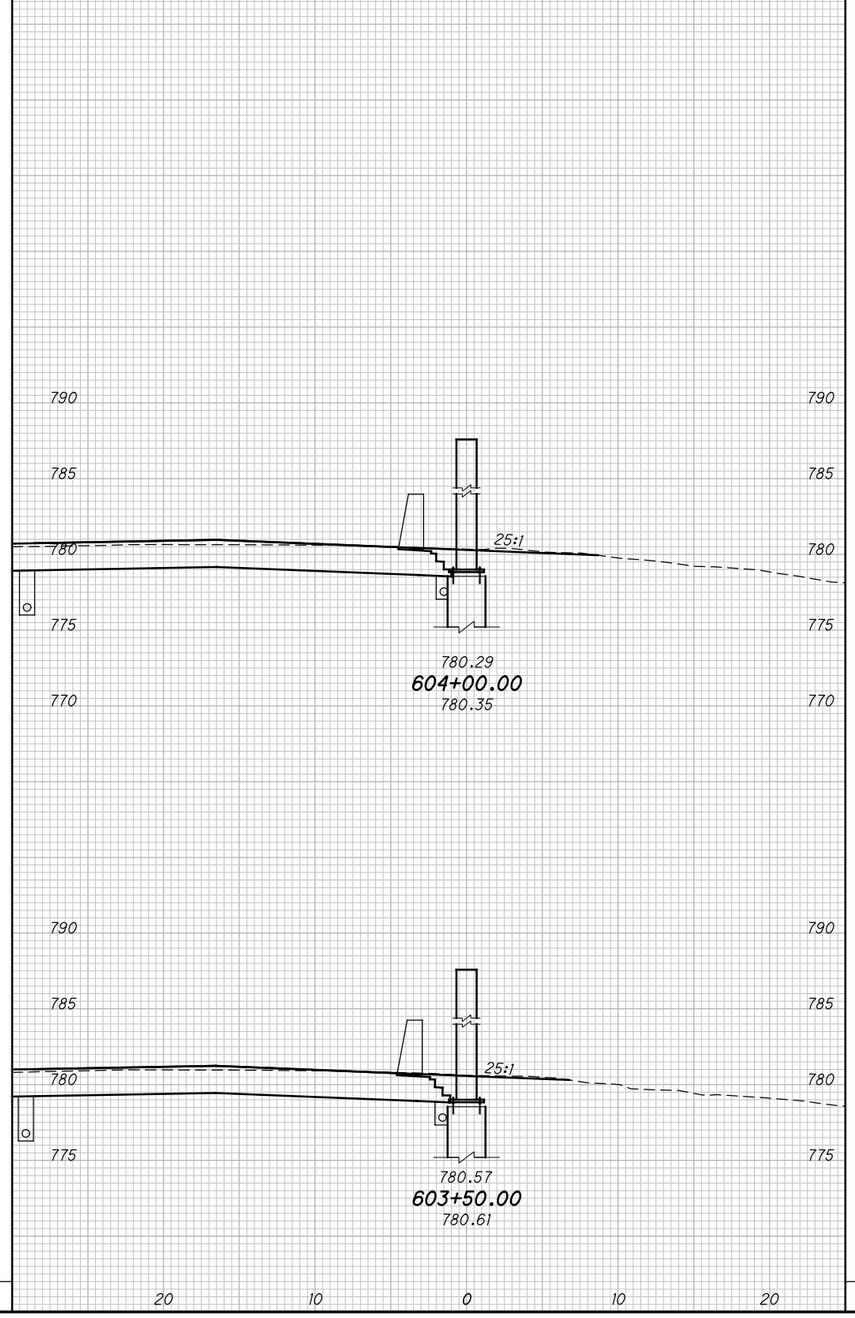

CALCULATED MJT
CHECKED BBD

CROSS SECTIONS NOISE BARRIER NS 6
STA. 602+00.00 TO STA. 604+00.00

FRA-71-5.29

524
623

P:\84868\roadway\sheets\84868XS601.dgn 3/31/2015 9:42:15 AM mtakacs

SEEDING END WIDTH	SEEDING SQ. YDS.	END AREA CUT	END AREA FILL	VOLUME CUT	VOLUME FILL
8	45	0	0	0	0
8	45	0	0	0	0
8	45	0	0	0	0
8	45	0	0	0	0
	135			0	0

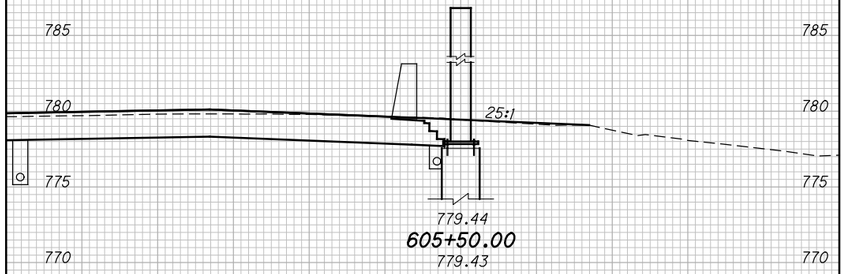

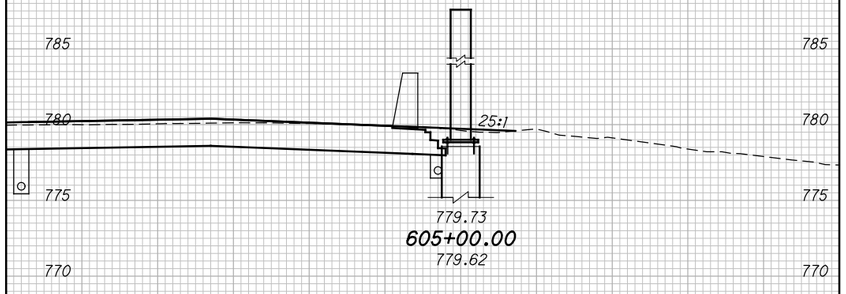

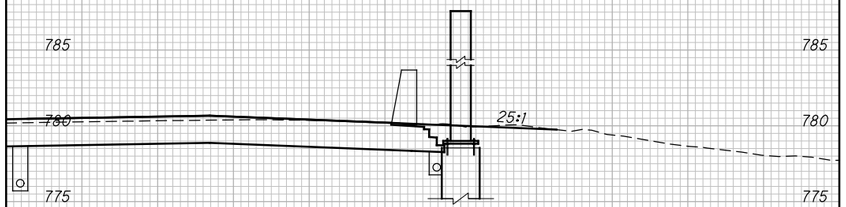

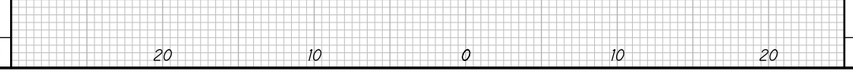

SEEDING END WIDTH	SEEDING SQ. YDS.	END AREA CUT	END AREA FILL	VOLUME CUT	VOLUME FILL
8	45	0	0	0	0
8	45	0	0	0	0
8	45	0	0	0	0
8	45	0	0	0	0
	135			0	0

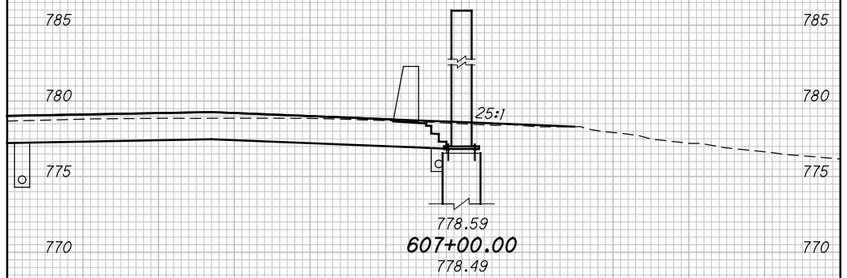

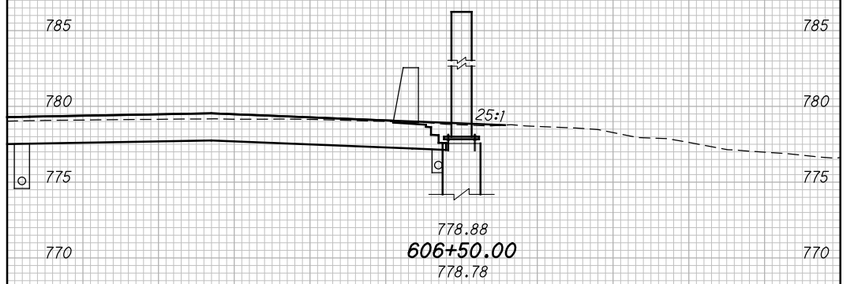

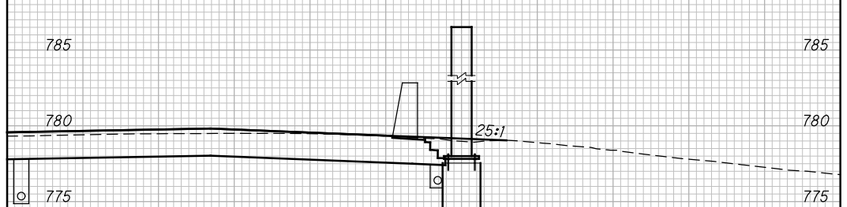

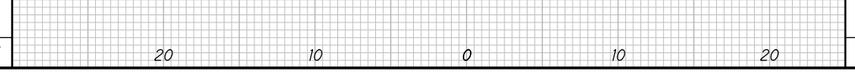

CALCULATED MJT
CHECKED BBD

CROSS SECTIONS NOISE BARRIER NS 6
STA. 604+50.00 TO STA. 607+00.00

FRA-71-5.29

525
623

P:\84868\roadway\sheets\84868XS601.dgn 3/31/2015 9:42:44 AM mtakacs

SEEDING END WIDTH	SEEDING SQ. YDS.	785	780	775	770	785	780	775	770	END AREA CUT	END AREA FILL	VOLUME CUT	VOLUME FILL
8	45		8:1							0	0	0	0
					777.56 **608+50.00** 777.42								
8	45		10:1							0	0	0	0
					777.80 **608+00.00** 777.72								
8	45		25:1							0	0	0	0
					778.29 **607+50.00** 778.17								
	135	20	10	0	10	20				0	0	0	0

SEEDING END WIDTH	SEEDING SQ. YDS.	785	780	775	770	785	780	775	770	END AREA CUT	END AREA FILL	VOLUME CUT	VOLUME FILL
8	45		12:1 3:1							0	0	0	0
					778.13 **610+00.00** 776.24								
8	45		12:1 3:1							0	0	0	0
					777.89 **609+50.00** 776.81								
8	45		6:1							0	0	0	0
					777.39 **609+00.00** 777.08								
	135	20	10	0	10	20				0	0	0	0

CALCULATED MJT | CHECKED BBD

CROSS SECTIONS NOISE BARRIER NS 6
STA. 607+50.00 TO STA. 610+00.00

FRA-71-5.29

526
623

P:\84868\roadway\sheets\84868XS601.dgn 3/31/2015 9:43:17 AM mtakacs

SEEDING END WIDTH	SEEDING SQ. YDS.	END AREA CUT	END AREA FILL	VOLUME CUT	VOLUME FILL
8	45	0	0	0	0
8	45	0	0	0	0
8	45	0	0	0	0
8	45	0	0	0	0
	135			0	0

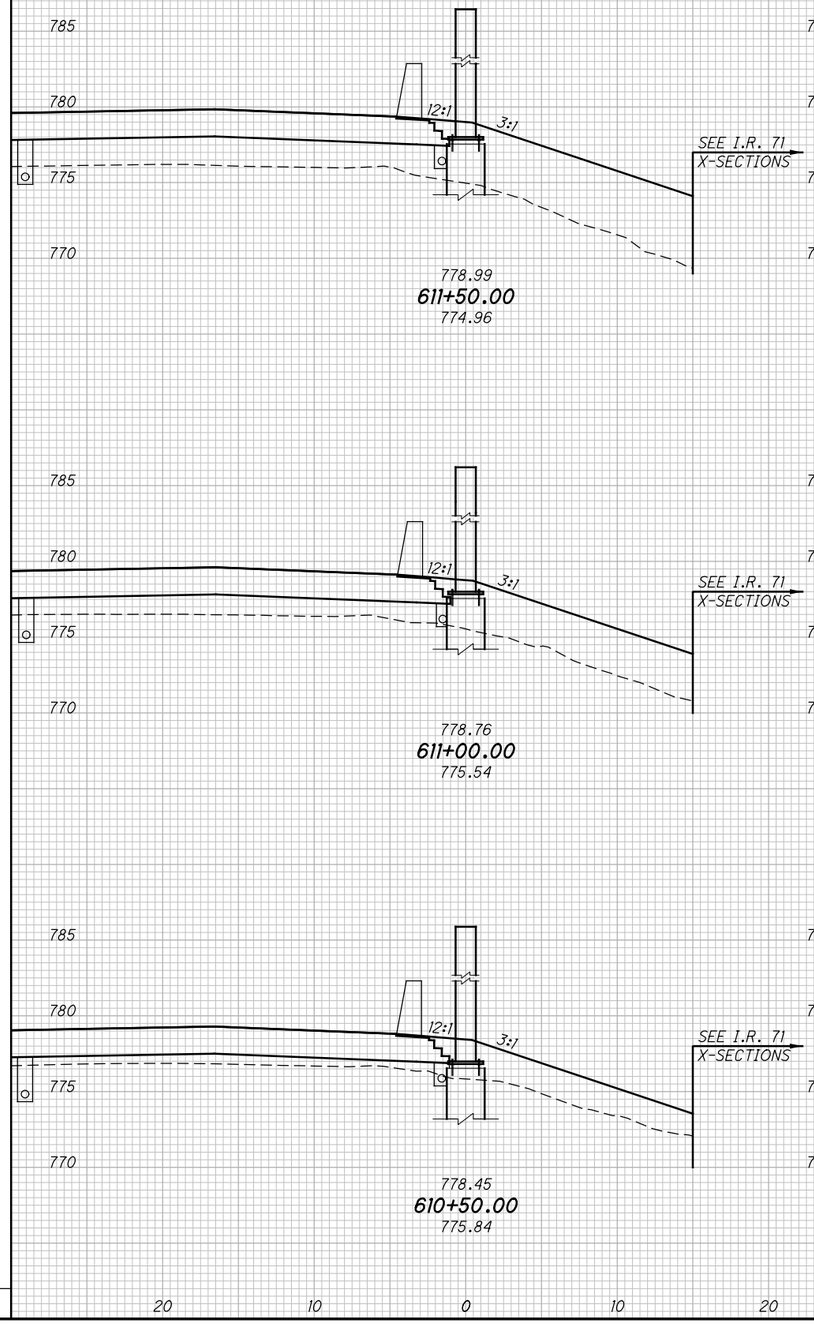

SEEDING END WIDTH	SEEDING SQ. YDS.	END AREA CUT	END AREA FILL	VOLUME CUT	VOLUME FILL
8	90	0	0	0	0
8	45	0	0	0	0
8	45	0	0	0	0

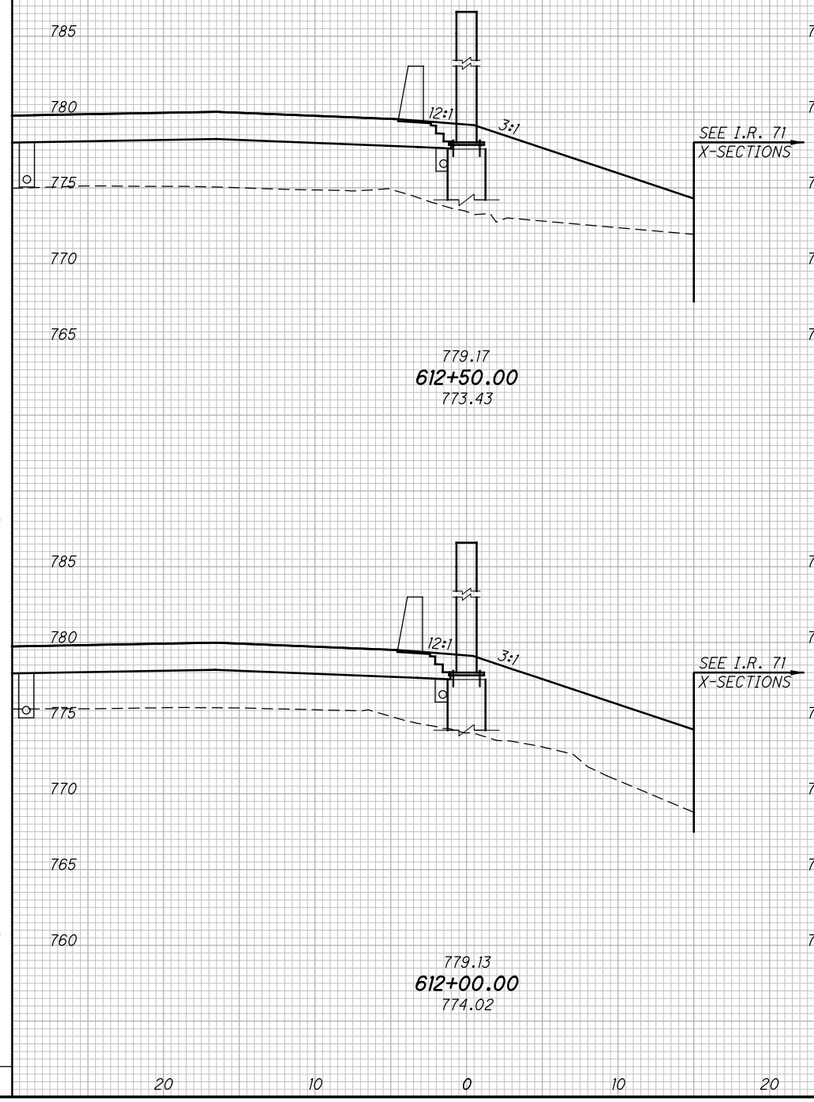

CALCULATED MJT
CHECKED BBD

CROSS SECTIONS NOISE BARRIER NS 6
STA. 610+50.00 TO STA. 612+50.00

FRA-71-5.29

527
623

P:\84868\roadway\sheets\84868XS601.dgn 3/31/2015 9:43:55 AM mtakacs

SEEDING		END AREA		VOLUME	
END WIDTH	SQ. YDS.	CUT	FILL	CUT	FILL
8		0	0		
	29			0	0
8		0	0		
	45			0	0
74				0	0

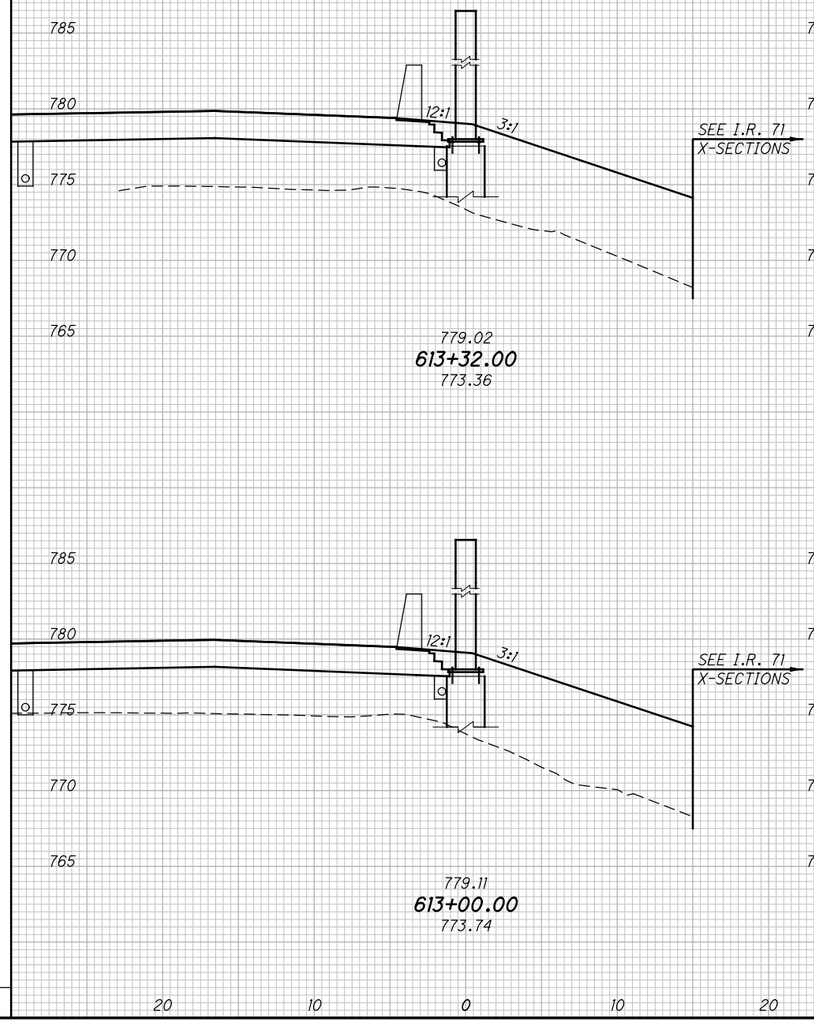

SEEDING		END AREA		VOLUME	
END WIDTH	SQ. YDS.	CUT	FILL	CUT	FILL

END AREA		VOLUME	
CUT	FILL	CUT	FILL

CALCULATED MJT
CHECKED BBD

CROSS SECTIONS NOISE BARRIER NS 6
STA. 613+00.00 TO STA. 613+32.00

FRA-71-5.29

528
623

P:\84868\roadway\sheets\84868XS601.dgn 3/31/2015 9:44:28 AM mtakacs

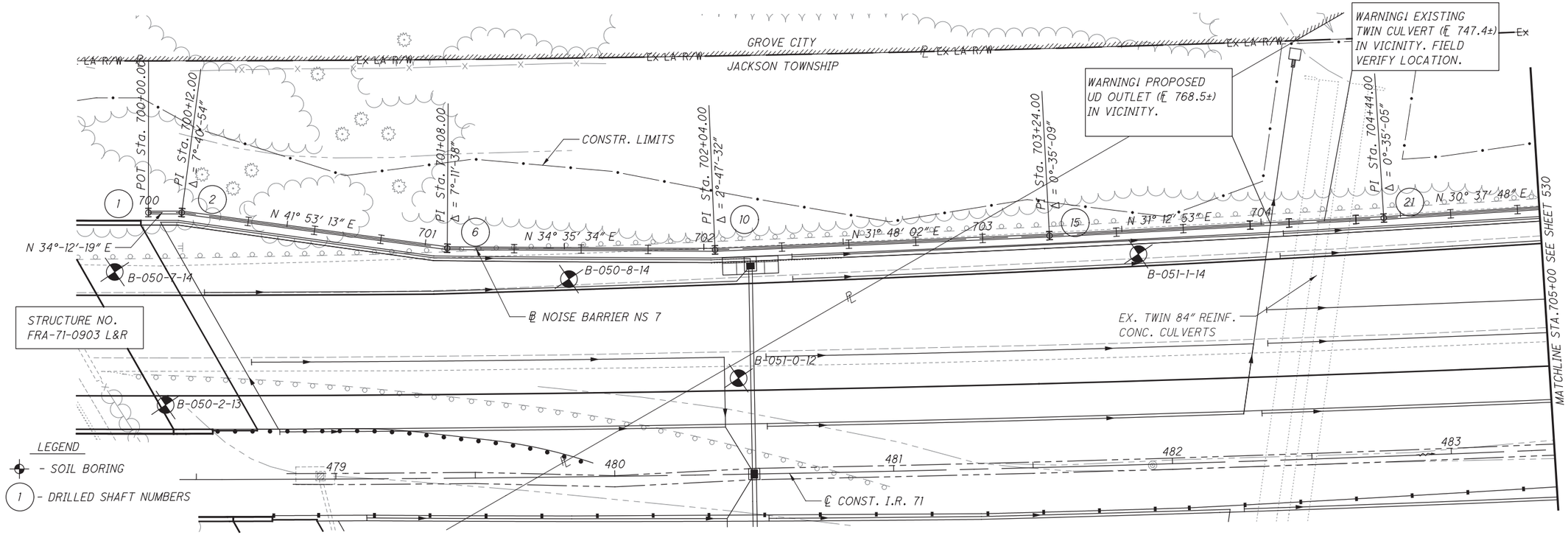

TOP OF WALL ELEV.	788.50	788.50	788.50	788.50	788.50	788.50	788.50	788.50	788.50	787.50	787.50	787.50	787.50	787.50	786.50	786.50	786.50	786.50	786.50	786.50	786.50	786.50
ACOUSTIC PROFILE ELEV.	788.56	788.42	788.27	788.13	787.99	787.84	787.70	787.56	787.45	787.39	787.34	787.29	787.11	786.68	786.24	785.81	785.59	785.71	785.84	785.97	785.87	785.44
BOTTOM OF WALL ELEV.	775.50	775.50	775.50	775.50	775.50	775.50	774.50	774.50	774.50	773.50	773.50	772.50	772.50	772.50	771.50	771.50	770.50	770.50	770.50	770.50	769.50	769.50
PANEL NO.	1	2	3	4	5	6	7	8	9	10	11	12	13	14	15	16	17	18	19	20	21	22	23

4 PANELS @ 24' = 96' | 4 PANELS @ 24' = 96' | 5 PANELS @ 24' = 120' | 3 PANELS @ 24' = 72' | 1 PANEL @ 24' =24' | 5 PANELS @ 24' = 120'

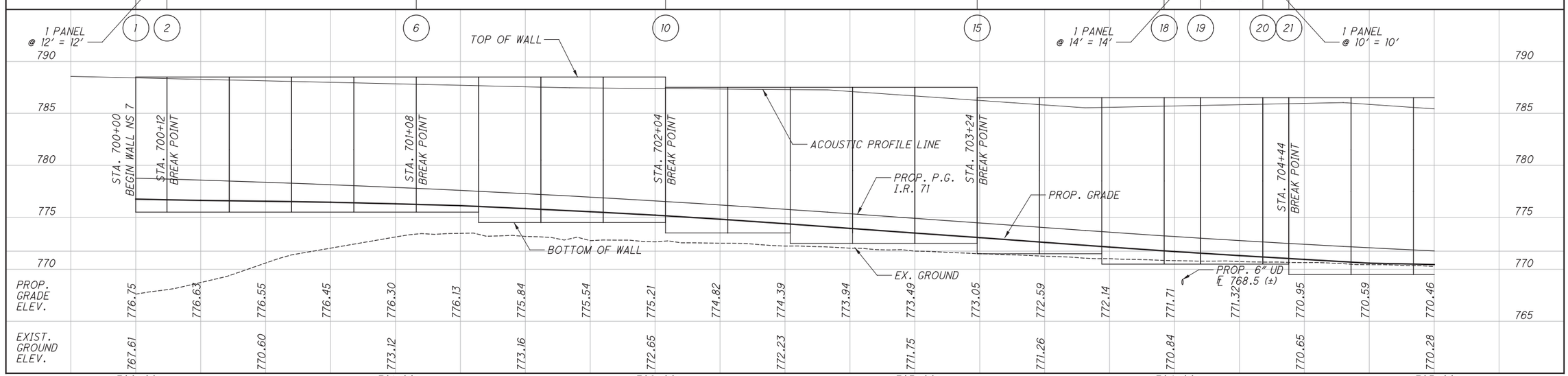

PROP. GRADE ELEV.	776.75	776.63	776.55	776.45	776.30	776.13	775.84	775.54	775.21	774.82	774.39	773.94	773.49	773.05	772.59	772.14	771.71	771.32	770.95	770.59	770.46	
EXIST. GROUND ELEV.	767.61		770.60		773.12		773.16		772.65		772.23		771.75		771.26		770.84		770.65		770.28	

700+00 | 701+00 | 702+00 | 703+00 | 704+00 | 705+00

HORIZONTAL SCALE IN FEET
0 10 20 40

CALCULATED MJT | CHECKED BBD

PLAN AND PROFILE NOISE BARRIER NS 7
STA. 700+00.00 TO STA. 705+00.00

FRA-71-5.29

529
623

P:\84868\roadway\sheets\84868GP701REV.dgn 3/27/2015 2:37:09 PM kfahy

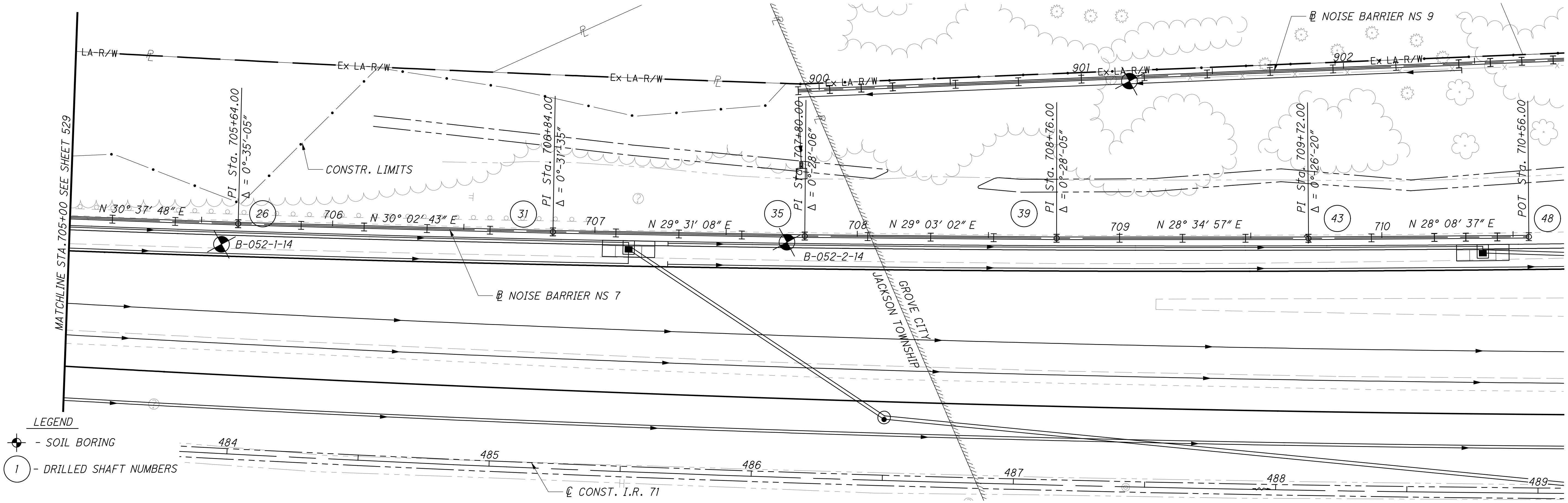

PANEL NO.	23	24	25	26	27	28	29	30	31	32	33	34	35	36	37	38	39	40	41	42	43	44	45	46	47
TOP OF WALL ELEV.	786.50	785.50	785.50	785.50	785.50	785.50	785.50	785.50	785.50	785.50	785.50	785.50	785.50	784.50	784.50	784.50	784.50	784.50	784.50	784.50	784.50	784.50	780.50	776.50	772.50
BOTTOM OF WALL ELEV.	769.50	769.50	768.50	768.50	767.50	767.50	767.50	767.50	767.50	767.50	767.50	767.50	767.50	766.50	766.50	766.50	766.50	765.50	765.50	765.50	765.50	765.50	765.50	764.50	764.50

ACOUSTIC PROFILE ELEV.																						
785.44	785.01	784.58	784.25	784.06	783.87	783.68	783.72	784.05	784.38	784.71	784.95	785.10	785.24	785.39	785.51	785.44	785.37	785.30	785.23	785.64	786.09	786.54

5 PANELS @ 24' = 120' | 5 PANELS @ 24' = 120' | 4 PANELS @ 24' = 96' | 4 PANELS @ 24' = 96' | 4 PANELS @ 24' = 96' | 2 PANELS @ 24' = 48' | 3 PANELS @ 12' = 36'

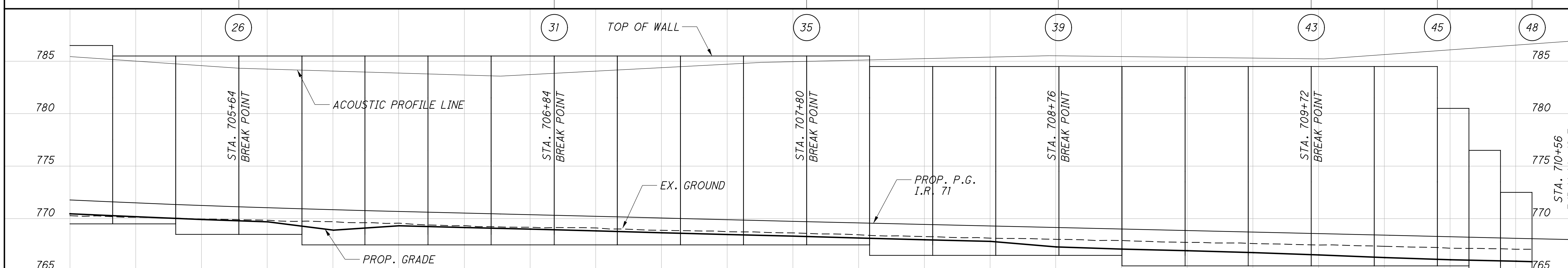

PROP. GRADE ELEV.																							
770.46	770.18	769.92	769.70	768.91	769.32	769.16	769.00	768.83	768.66	768.49	768.33	768.16	767.99	767.83	767.31	767.10	766.94	766.77	766.55	766.29	766.09	765.94	765.91

EXIST. GROUND ELEV.												
770.28	769.96	769.71	769.35	769.13	768.76	768.46	768.14	767.92	767.63	767.37	767.08	767.08

705+00 706+00 707+00 708+00 709+00 710+00

CALCULATED MJT
CHECKED BBD

PLAN AND PROFILE NOISE BARRIER NS 7
STA. 705+00.00 TO STA. 710+56.00

FRA-71-5.29

530 / 623

P:\84868\roadway\sheets\84868GP702REV.dgn 3/30/2015 8:40:54 AM mtakacs

SEEDING END WIDTH	SEEDING SQ. YDS.	END AREA CUT	END AREA FILL	VOLUME CUT	VOLUME FILL
8		0	0		
	45			0	0
8		0	0		
	45			0	0
8		0	0		
	45			0	0
8		0	0		
	90			0	0

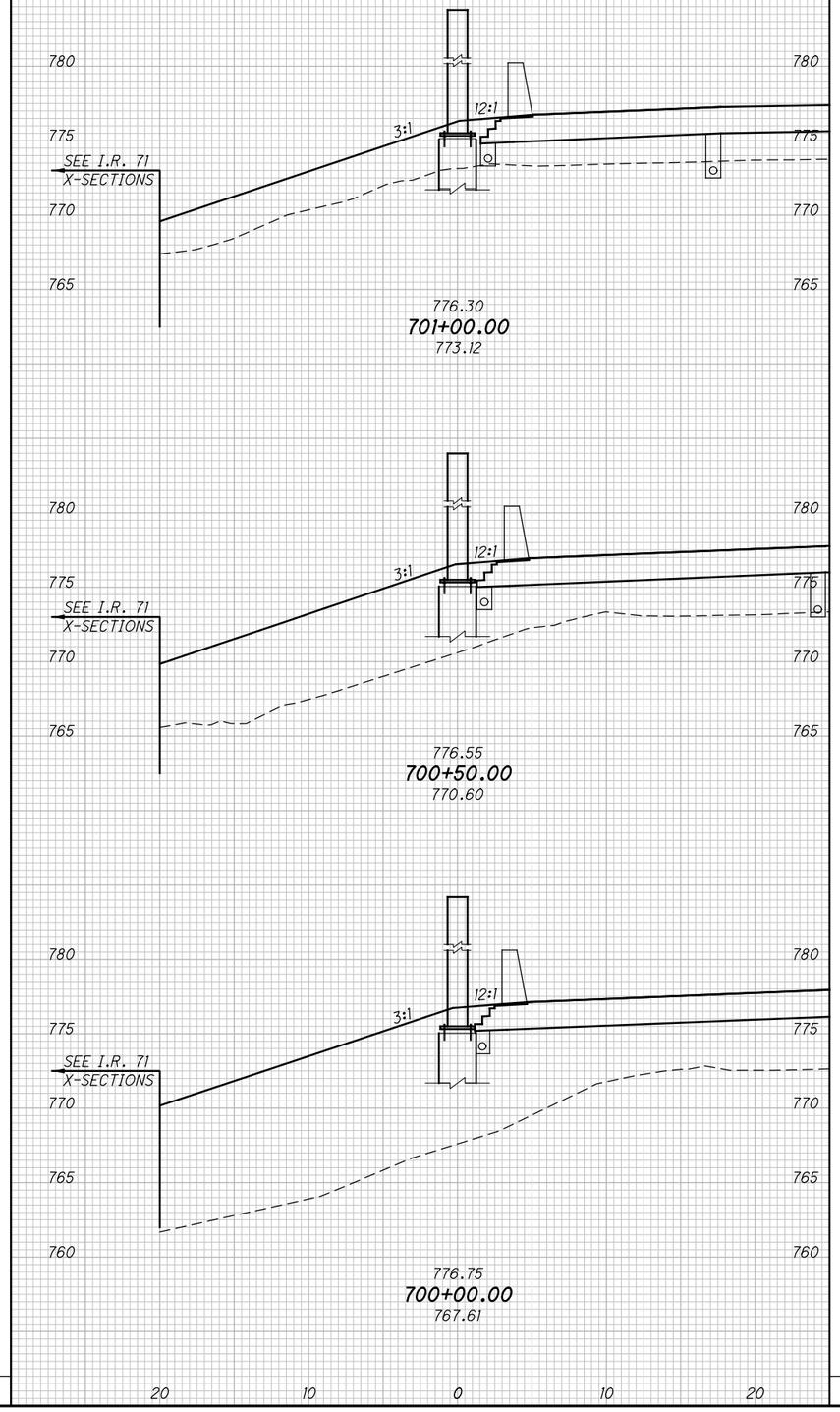

SEEDING END WIDTH	SEEDING SQ. YDS.	END AREA CUT	END AREA FILL	VOLUME CUT	VOLUME FILL
8		0	0		
	45			0	0
8		0	0		
	45			0	0
8		0	0		
	45			0	0
8		0	0		
	135			0	0

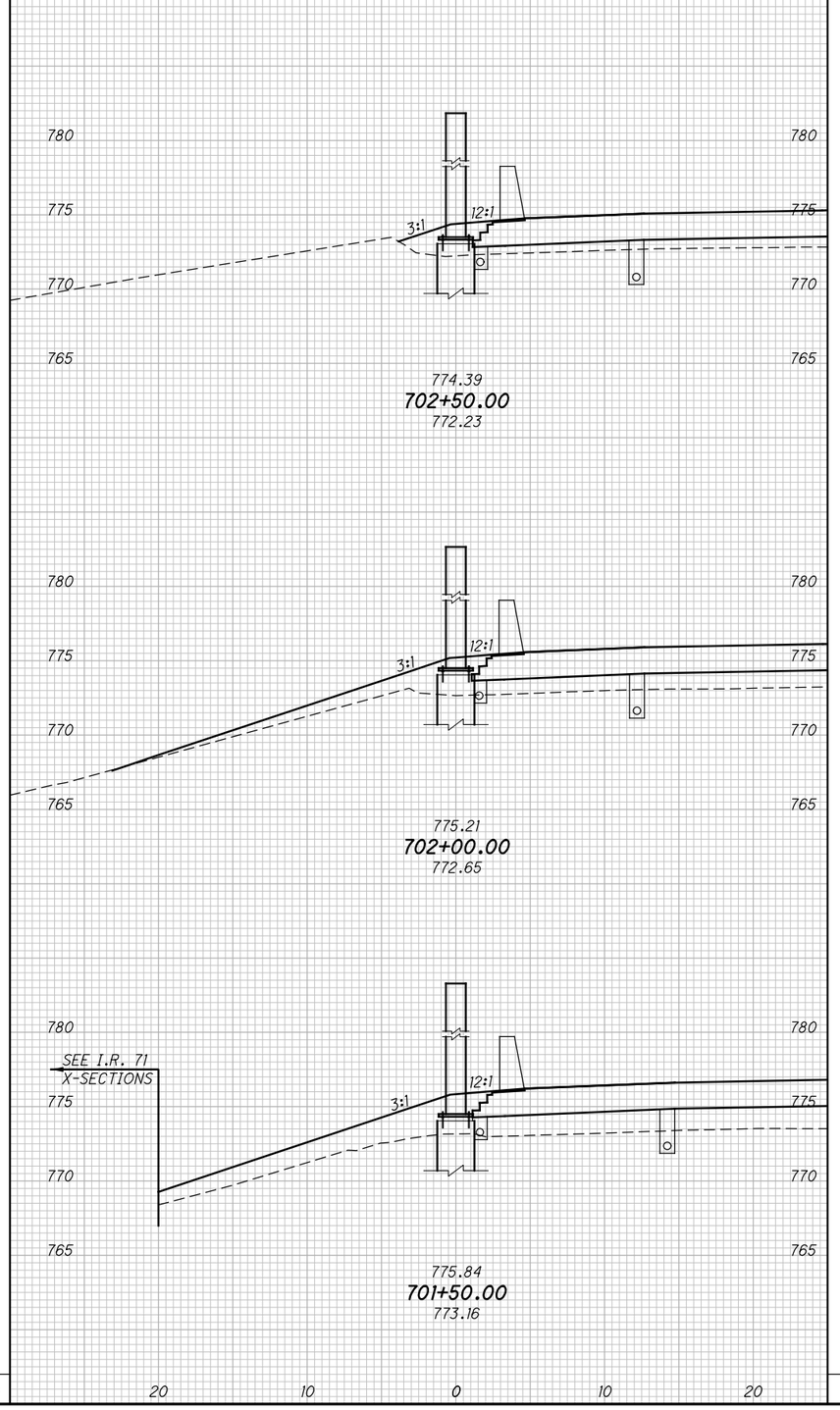

CALCULATED MJT
CHECKED BBD

CROSS SECTIONS NOISE BARRIER NS 7
STA. 700+00.00 TO STA. 702+50.00

FRA-71-5.29

531
623

P:\84868\roadway\sheets\84868XS701REV.dgn 3/31/2015 9:47:13 AM mtakacs

SEEDING END WIDTH	SEEDING SQ. YDS.	END AREA CUT	END AREA FILL	VOLUME CUT	VOLUME FILL
8					
	45			0	0
8		0	0		
	45			0	0
8		0	0		
	45			0	0
	135			0	0

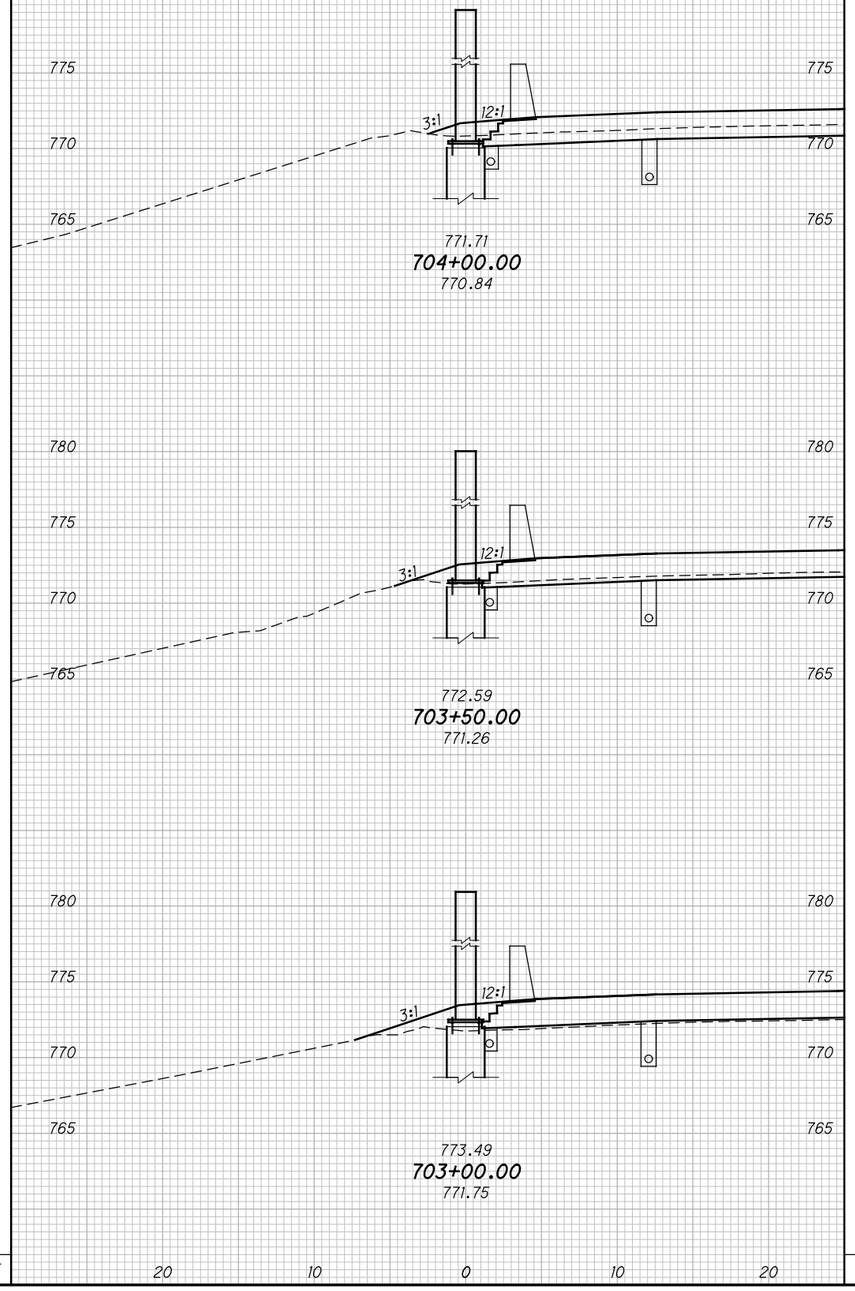

SEEDING END WIDTH	SEEDING SQ. YDS.	END AREA CUT	END AREA FILL	VOLUME CUT	VOLUME FILL
8					
	45			0	0
8		0	0		
	45			0	0
8		0	0		
	45			0	0
	135			0	0

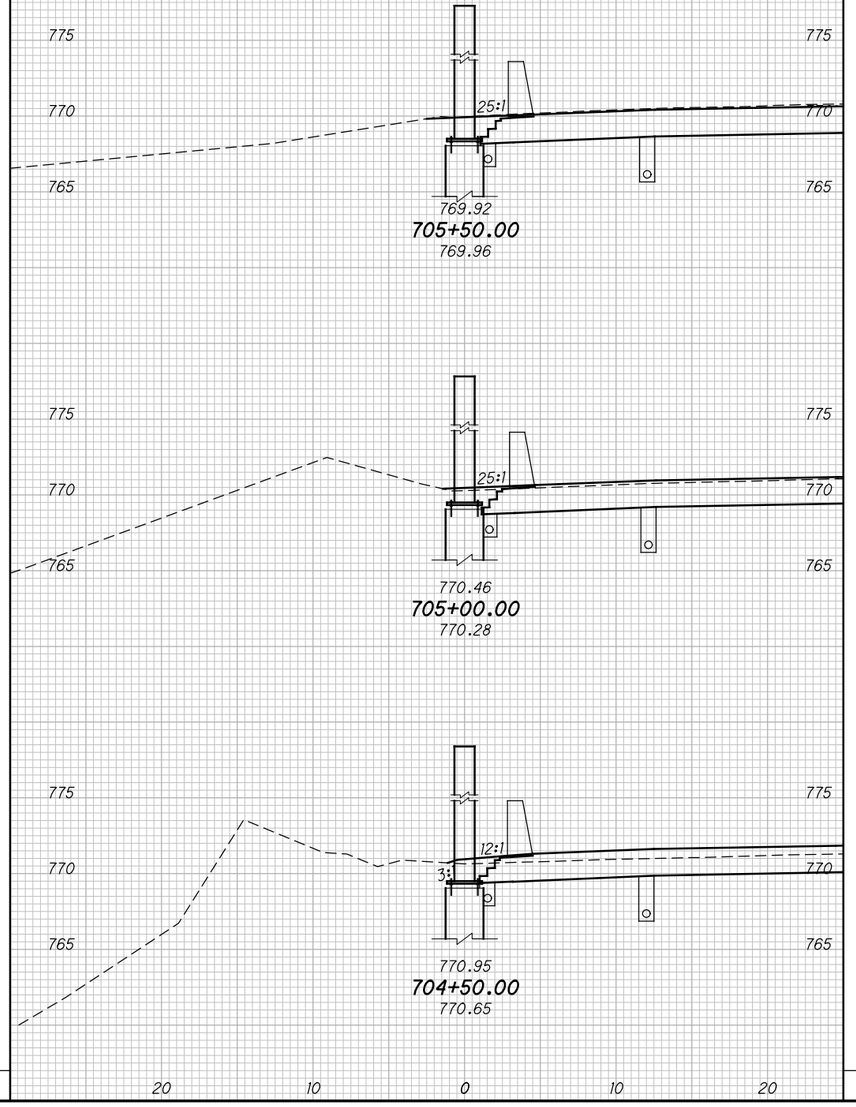

CALCULATED MJT
CHECKED BBD

CROSS SECTIONS NOISE BARRIER NS 7
STA. 703+00.00 TO STA. 705+50.00

FRA-71-5.29

532
623

P:\84868\roadway\sheets\84868XS701REV.dgn 3/31/2015 9:47:42 AM mtokacs

SEEDING END WIDTH	SEEDING SQ. YDS.	END AREA CUT	END AREA FILL	VOLUME CUT	VOLUME FILL
8		0	0		
	45			0	0

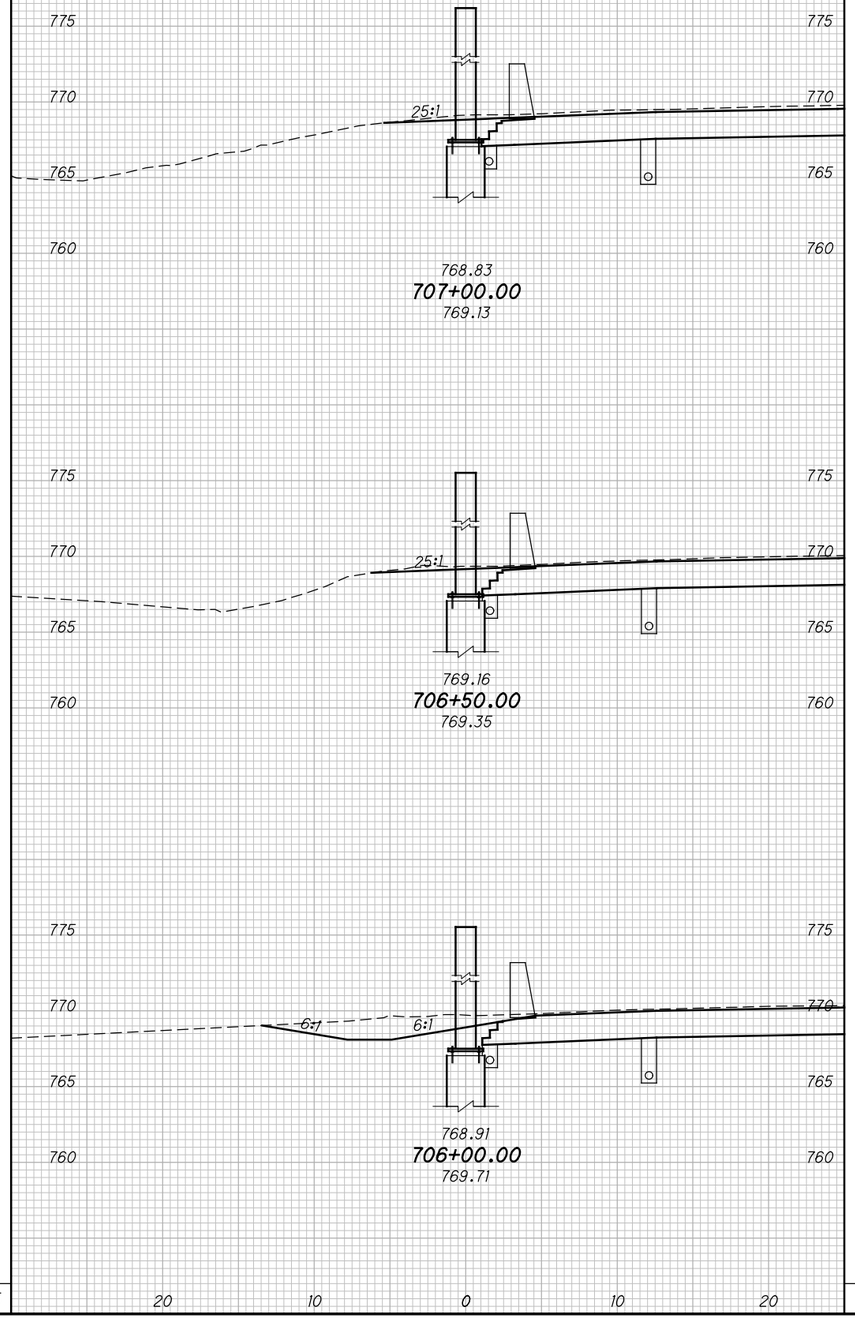

SEEDING END WIDTH	SEEDING SQ. YDS.	END AREA CUT	END AREA FILL	VOLUME CUT	VOLUME FILL
8		0	0		
	45			0	0

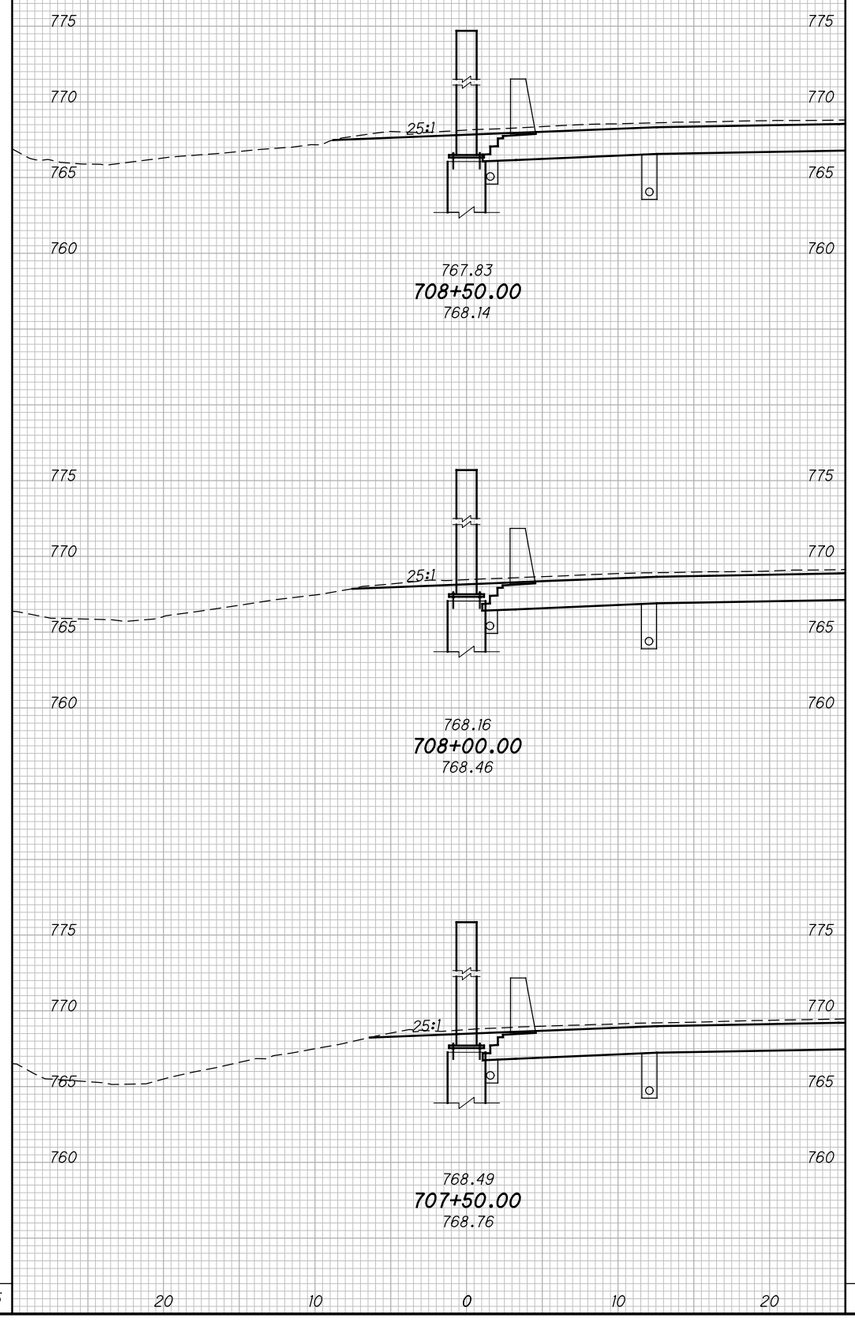

	135			0	0

	135			0	12

CALCULATED MJT
CHECKED BBD

CROSS SECTIONS NOISE BARRIER NS 7
STA. 706+00.00 TO STA. 708+50.00

FRA-71-5.29

533
623

P:\84868\roadway\sheets\84868XS701REV.dgn 3/31/2015 9:48:17 AM mtakacs

SEEDING END WIDTH	SEEDING SQ. YDS.	END AREA CUT	END AREA FILL	VOLUME CUT	VOLUME FILL
8		0	0		
	45			0	0
8		0	0		
	45			0	0
8		0	0		
	45			0	0
	135			0	0

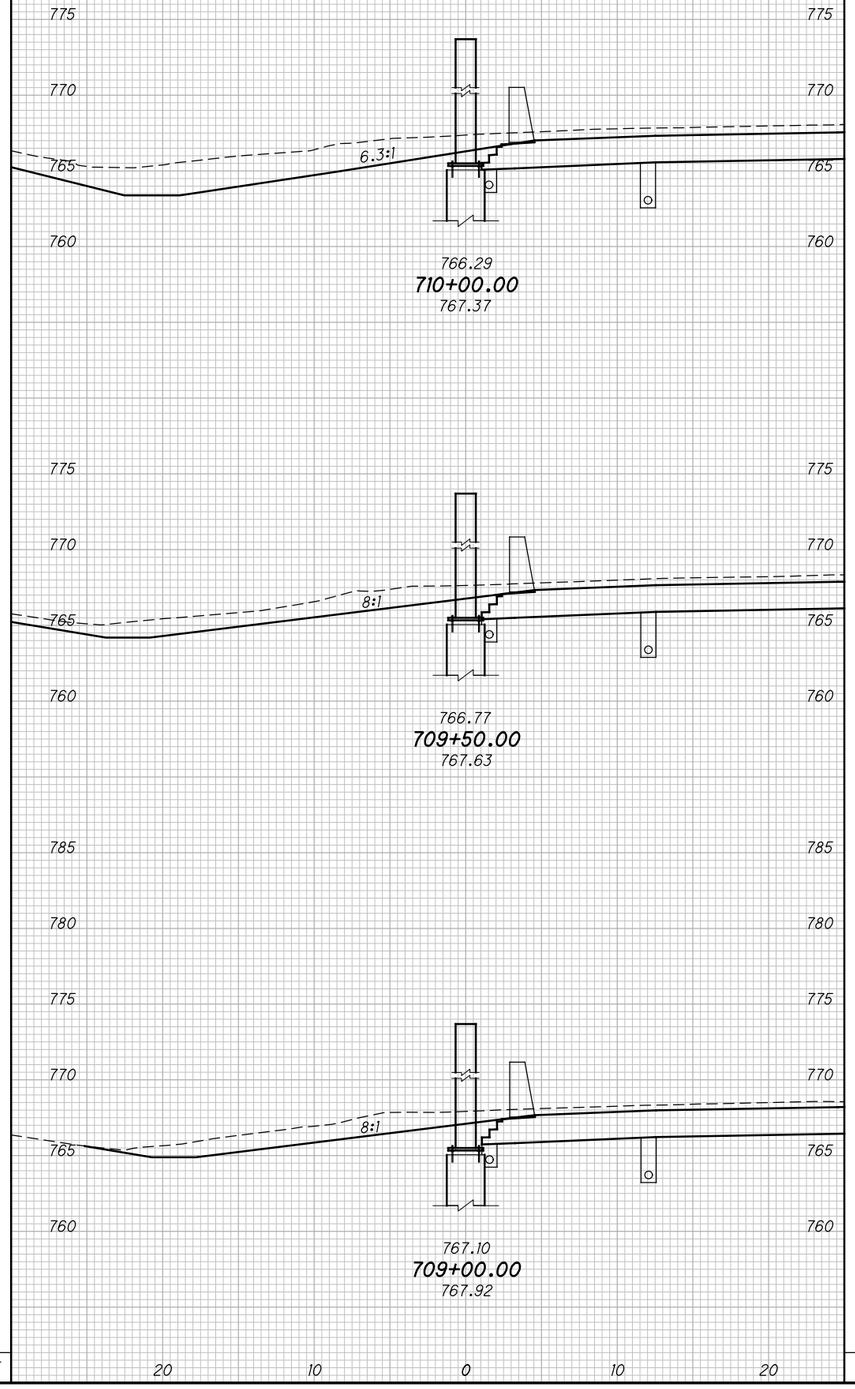

SEEDING END WIDTH	SEEDING SQ. YDS.	END AREA CUT	END AREA FILL	VOLUME CUT	VOLUME FILL
8		0	0		
	51			0	0
6				0	0
8		0	0		
	45			0	0
				0	0

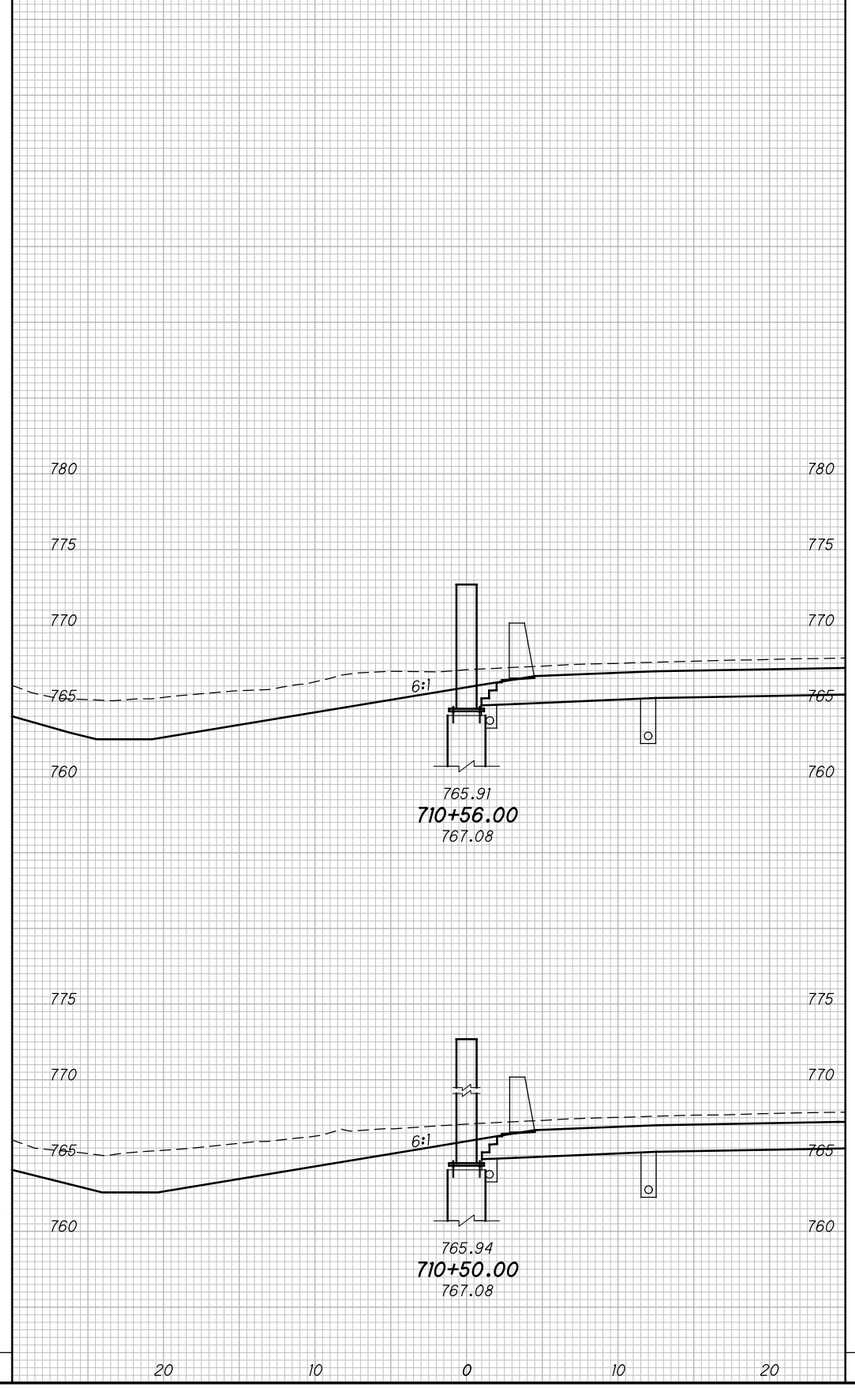

CALCULATED MJT
CHECKED BBD

CROSS SECTIONS NOISE BARRIER NS 7
STA. 709+00.00 TO STA. 710+56.00

FRA-71-5.29

534
623

P:\84868\roadway\sheets\84868XS701REV.dgn 3/31/2015 9:48:49 AM mtokocs

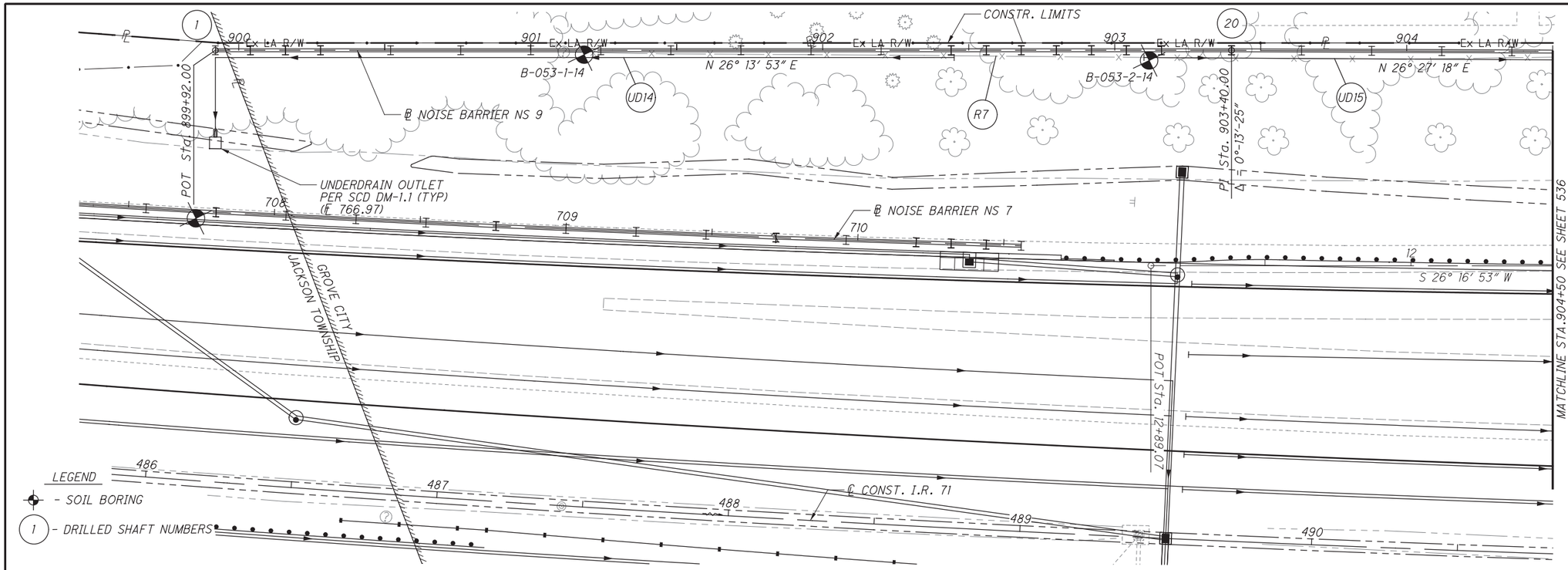

TOP OF WALL ELEV.		772.50	776.50	780.50	784.50	784.50	784.50	785.50	785.50	785.50	786.50	786.50	786.50	787.50	787.50	787.50	787.50	787.50	787.50	787.50	787.50	787.50	787.50	787.50
ACOUSTIC PROFILE ELEV.	784.95	785.10		785.24	785.39	785.51	785.44	785.37	785.30	785.23	785.64	786.09	786.54	786.99		787.36	787.72	788.09	788.43	787.98	787.53	787.08		
BOTTOM OF WALL ELEV.		768.50	768.50	768.50	768.50	769.50	769.50	769.50	769.50	769.50	769.50	770.50	770.50	770.50	771.50	771.50	772.50	773.50	774.50	774.50	774.50	774.50	775.50	775.50	775.50
PANEL NO.		1	2	3	4	5	6	7	8	9	10	11	12	13	14	15	16	17	18	19	20	21	22	23	24
		3 PANELS @ 12′ = 36′			9 PANELS @ 24′ = 216′									6 PANELS @ 12′ = 72′						1 PANEL @ 24′ = 24′	8 PANELS @ 24′ = 192′				

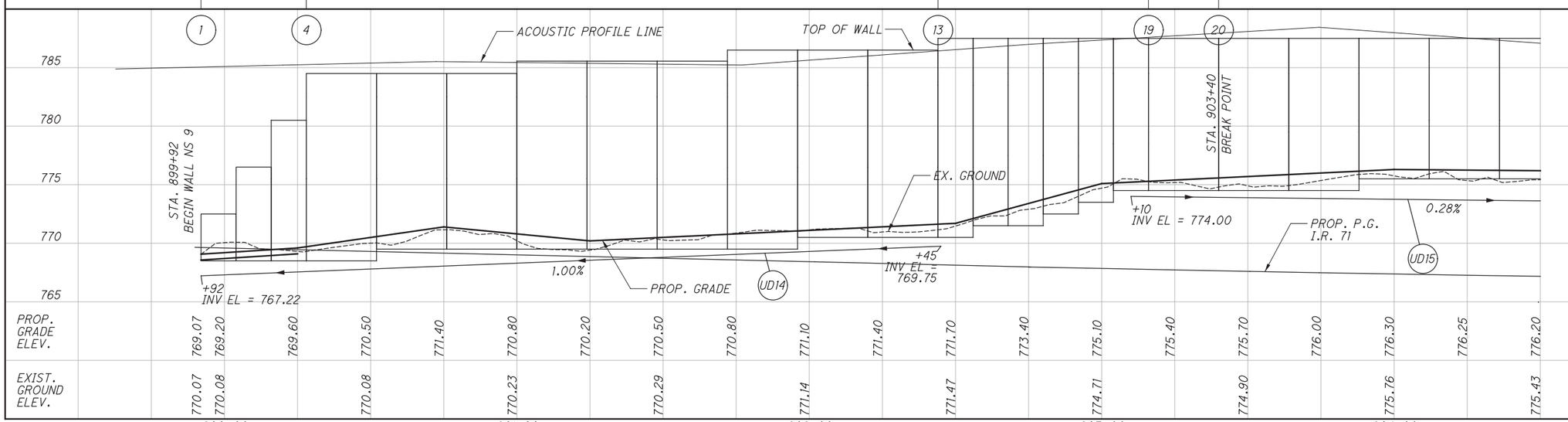

PROP. GRADE ELEV.		769.07	769.20	769.60	770.50	771.40	770.80	770.20	770.50	770.80	771.10	771.40	771.70	773.40	775.10	775.40	775.70	776.00	776.30	776.25	776.20			
EXIST. GROUND ELEV.		770.07	770.08		770.08		770.23		770.29		771.14		771.47		774.71		774.90		775.76		775.43			
		900+00					901+00				902+00				903+00				904+00					

P:\84868\roadway\sheets\84868GP901REV.dgn 3/27/2015 2:37:14 PM kfahy

HORIZONTAL SCALE IN FEET
0 10 20 40

CALCULATED MJT
CHECKED BBD

PLAN AND PROFILE NOISE BARRIER NS 9
STA. 899+92.00 TO STA. 904+50.00

FRA-71-5.29

535
623

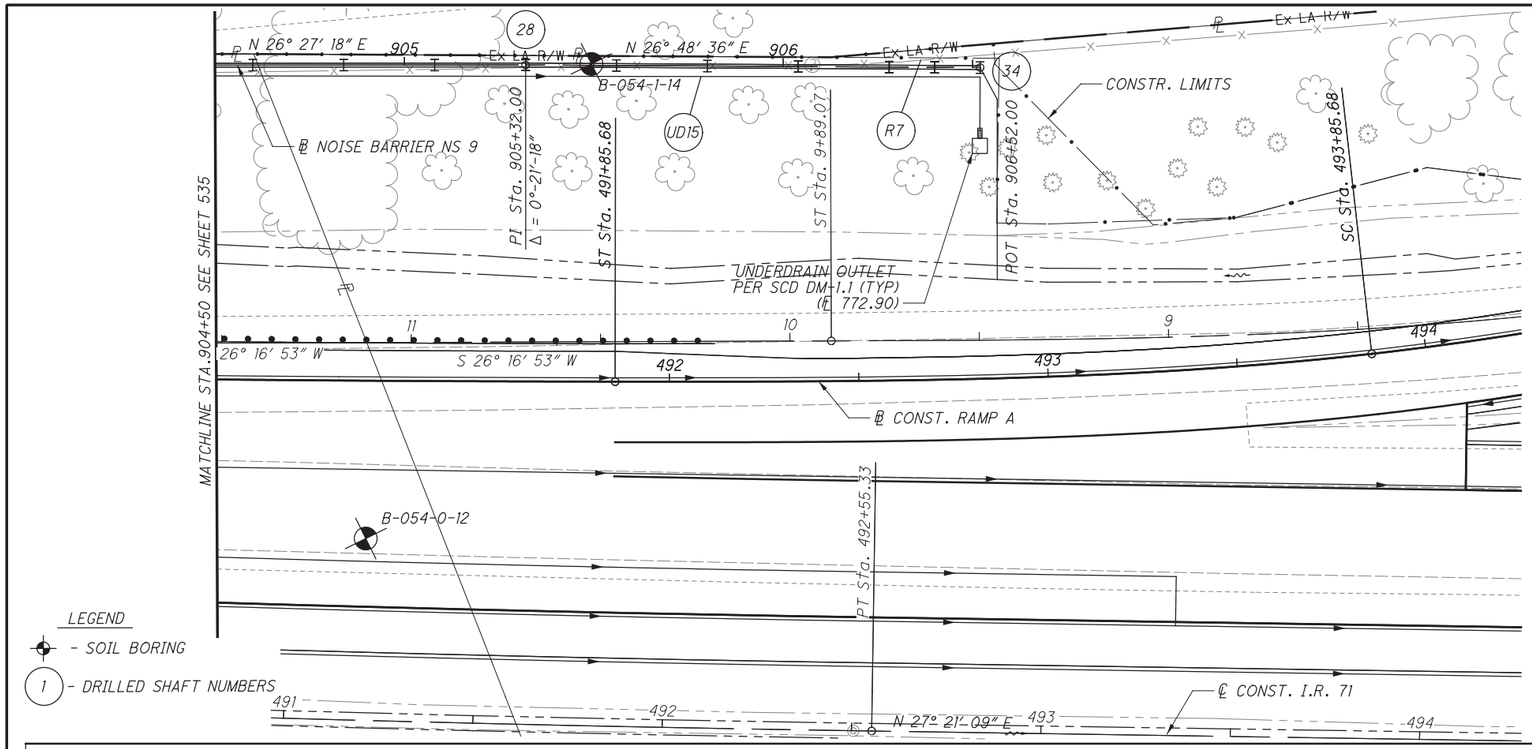

TOP OF WALL ELEV.	787.50	787.50	787.50	787.50	787.50	787.50	787.50	787.50	783.50	779.50
ACOUSTIC PROFILE ELEV.	787.08	786.63	786.18	785.77	785.71	785.73	786.27	786.72		
BOTTOM OF WALL ELEV.	775.50	775.50	775.50	775.50	775.50	775.50	775.50	775.50	775.50	775.50
PANEL NO.	24	25	26	27	28	29	30	31	32	33

8 PANELS @ 24′ = 192′ | 4 PANELS @ 24′ = 96′ | 2 PANELS @ 12′ = 24′

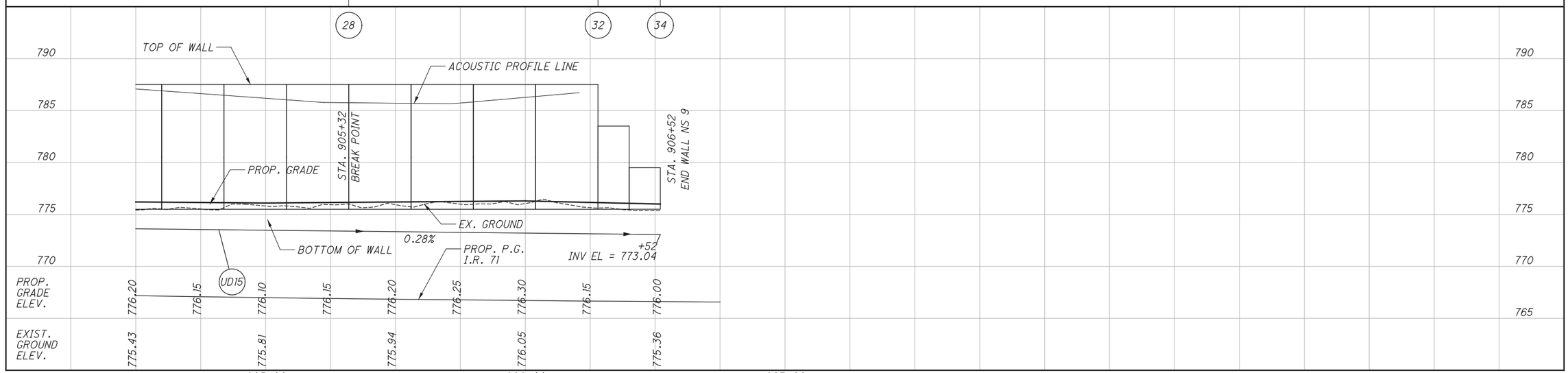

P:\84868\roadway\sheets\84868GP902REV.dgn 3/27/2015 2:37:15 PM kfahy

HORIZONTAL SCALE IN FEET
0 10 20 40

CALCULATED MJT
CHECKED BBD

PLAN AND PROFILE NOISE BARRIER NS 9
STA. 904+50.00 TO STA. 906+52.00

FRA-71-5.29

536
623

SEEDING END WIDTH	SEEDING SQ. YDS.	END AREA CUT	END AREA FILL	VOLUME CUT	VOLUME FILL
9	50	0	2	4	2
9	8	4	0	1	0
9	9	1	0		
	58			5	2

SEEDING END WIDTH	SEEDING SQ. YDS.	END AREA CUT	END AREA FILL	VOLUME CUT	VOLUME FILL
9	53	1	1	1	2
10	59	0	1	0	4
11	56	0	3	0	5
	168			1	11

CALCULATED MJT
CHECKED BBD

CROSS SECTIONS NOISE BARRIER NS 9
STA. 899+92.00 TO STA. 902+00.00

FRA-71-5.29

537
623

P:\84868\roadway\sheets\84868XS901REV.dgn 12/17/2014 3:32:42 PM kfahy

SEEDING END WIDTH	SEEDING SQ. YDS.	END AREA CUT	END AREA FILL	VOLUME CUT	VOLUME FILL
11	59	0	5	0	7
10	53	0	2	0	4
9	50	0	2	1	3
	162			1	14

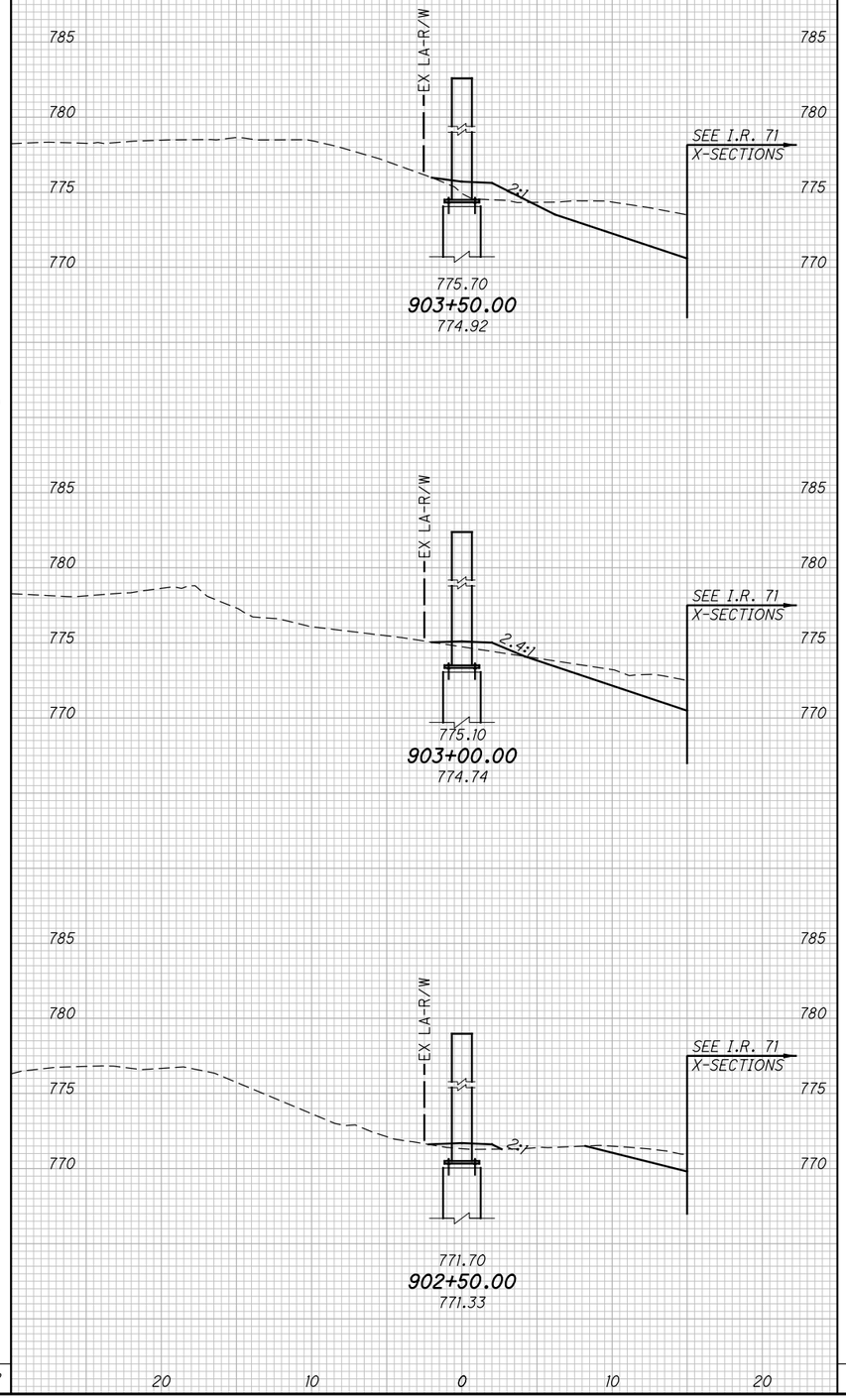

SEEDING END WIDTH	SEEDING SQ. YDS.	END AREA CUT	END AREA FILL	VOLUME CUT	VOLUME FILL
10	56	0	2	0	5
10	59	0	3	0	6
11	61	0	3	0	8
	176			0	19

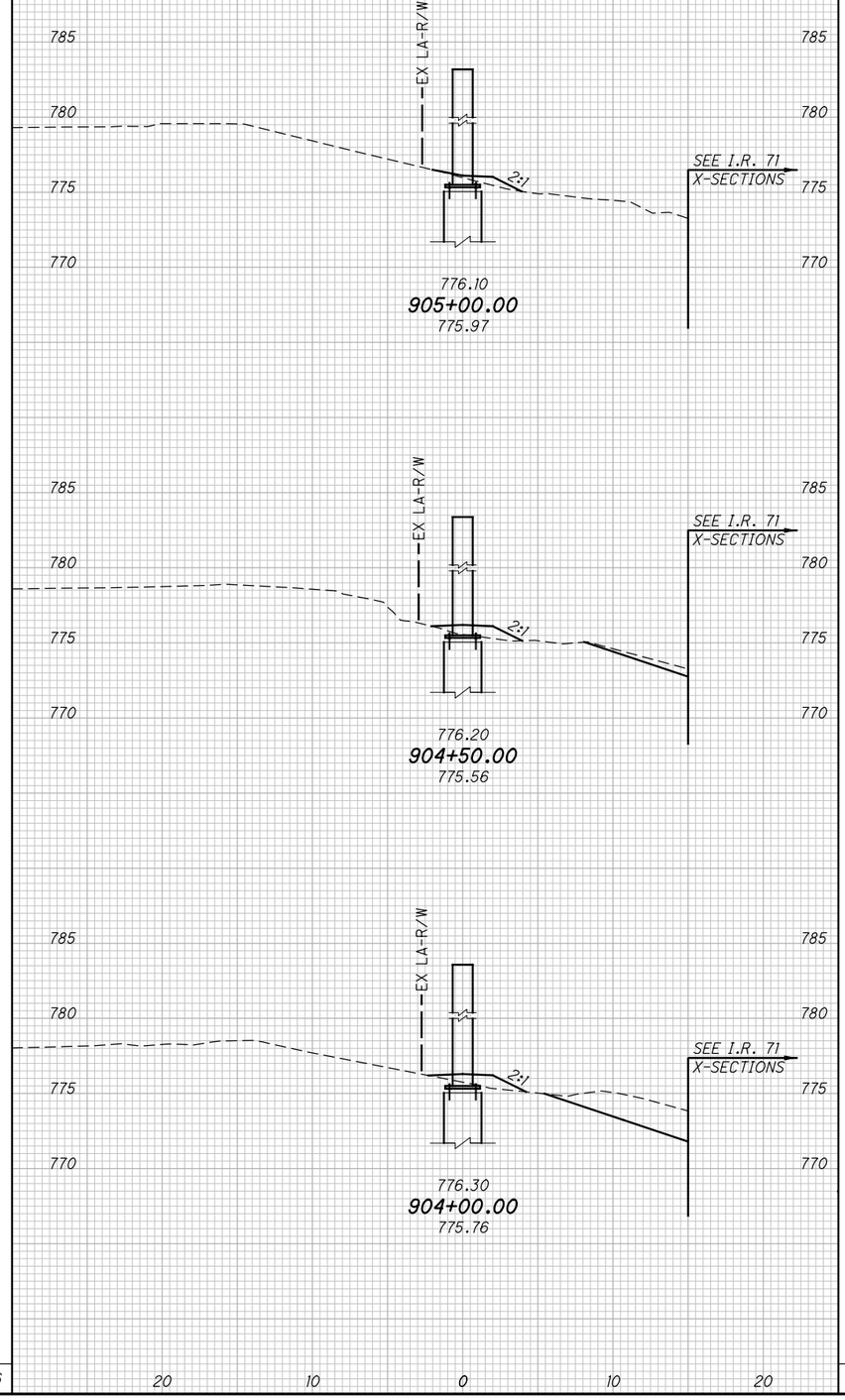

CALCULATED MJT
CHECKED BBD

CROSS SECTIONS NOISE BARRIER NS 9
STA. 902+50.00 TO STA. 905+00.00

FRA-71-5.29

538
623

P:\84868\roadway\sheets\84868XS901REV.dgn 12/17/2014 3:32:43 PM kfahy

SEEDING		END AREA		VOLUME	
END WIDTH	SQ. YDS.	CUT	FILL	CUT	FILL
10	53	0	3	0	4
9	53	0	1	0	3
10	56	0	2	0	4
	162			0	11

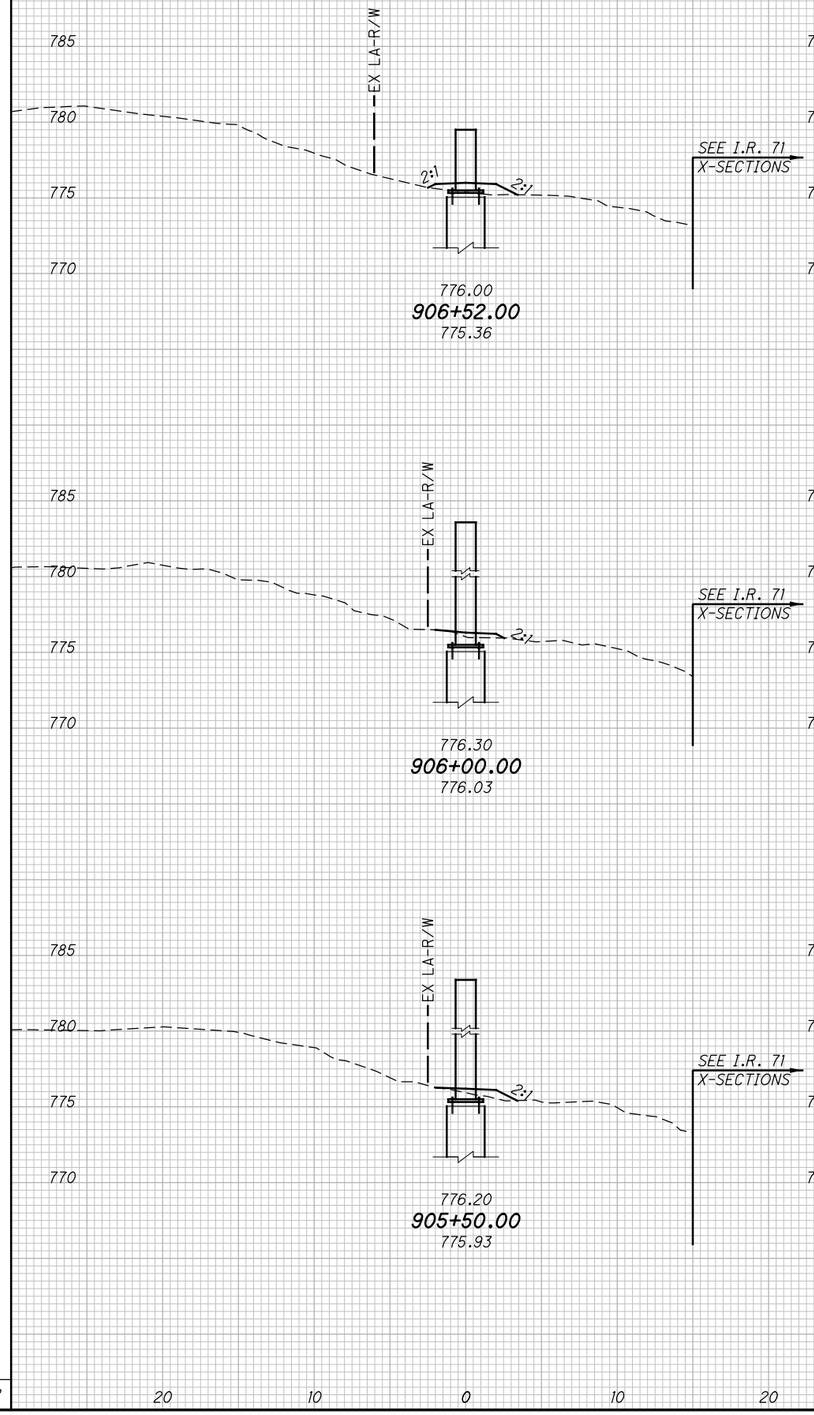

SEEDING		END AREA		VOLUME	
END WIDTH	SQ. YDS.	CUT	FILL	CUT	FILL

END AREA		VOLUME	
CUT	FILL	CUT	FILL

CALCULATED MJT
CHECKED BBD

CROSS SECTIONS NOISE BARRIER NS 9
STA. 905+50.00 TO STA. 906+52.00

FRA-71-5.29

539
623

P:\84868\roadway\sheets\84868XS901REV.dgn 12/17/2014 3:32:43 PM kfahy

NOISE BARRIER NS 4

DRILLED SHAFT NO.	WORKPOINT STATION	TOP OF DRILLED SHAFT ELEVATION	SHAFT LENGTH (FEET)
1	399+76.00	798.52	9.00
2	399+88.00	798.47	9.00
3	400+00.00	798.44	9.00
4	400+24.00	798.44	9.00
5	400+48.00	798.44	9.00
6	400+72.00	798.44	9.00
7	400+96.00	798.44	9.00
8	401+20.00	799.44	9.00
9	401+44.00	798.44	9.00
10	401+68.00	798.44	9.00
11	401+92.00	797.44	9.00
12	402+16.00	797.44	9.00
13	402+40.00	796.44	9.00
14	402+64.00	796.44	9.00
15	402+88.00	795.30	9.00
16	403+12.00	795.30	9.00
17	403+36.00	794.30	9.00
18	403+60.00	794.30	11.00
19	403+84.00	794.30	11.00
20	404+08.00	794.30	11.00
21	404+32.00	794.30	11.00
22	404+56.00	794.30	11.00
23	404+80.00	794.30	11.00
24	405+04.00	794.30	11.00
25	405+28.00	794.44	11.00
26	405+52.00	793.30	11.00
27	405+76.00	793.30	13.00
28	406+00.00	793.30	13.00
29	406+24.00	793.30	13.00
30	406+48.00	793.30	13.00
31	406+72.00	793.30	13.00
32	406+96.00	793.30	13.00
33	407+20.00	794.47	13.00
34	407+28.00	794.47	9.00
35	407+36.00	793.47	9.00
36	407+44.00	792.33	9.00
37	407+52.00	791.33	9.00
38	407+60.00	790.33	9.00
39	407+68.00	789.33	9.00
40	407+76.00	789.33	13.00
41	407+92.00	789.33	13.00
42	408+16.00	789.44	13.00
43	408+40.00	789.44	13.00
44	408+64.00	788.30	13.00
45	408+88.00	788.30	13.00

NOISE BARRIER NS 4 CONT.

DRILLED SHAFT NO.	WORKPOINT STATION	TOP OF DRILLED SHAFT ELEVATION	SHAFT LENGTH (FEET)
46	409+12.00	788.30	13.00
47	409+36.00	788.30	13.00
48	409+60.00	788.30	9.00
49	409+84.00	788.30	9.00
50	410+08.00	788.30	9.00
51	410+32.00	787.30	9.00
52	410+56.00	787.30	9.00
53	410+80.00	787.30	9.00
54	411+04.00	787.44	9.00
55	411+28.00	786.30	9.00
56	411+52.00	786.44	9.00
57	411+76.00	786.44	9.00
58	412+00.00	785.30	9.00
59	412+24.00	785.30	9.00
60	412+48.00	784.30	9.00
61	412+64.00	783.30	9.00
62	412+88.00	782.30	9.00
63	413+12.00	782.30	9.00
64	413+36.00	783.30	9.00
65	413+44.00	783.33	9.00
66	413+68.00	784.44	9.00
67	413+76.00	784.44	9.00
68	414+00.00	785.44	9.00
69	414+16.00	786.44	9.00
70	414+40.00	786.44	9.00
71	414+64.00	786.44	9.00
72	414+88.00	786.44	9.00
73	415+12.00	786.44	9.00
74	415+36.00	786.44	9.00
75	415+60.00	786.44	9.00
76	415+84.00	786.30	9.00
77	416+08.00	786.30	9.00
78	416+32.00	786.30	9.00
79	416+56.00	786.30	9.00
80	416+80.00	786.30	9.00
81	417+04.00	786.30	9.00
82	417+28.00	785.30	9.00
83	417+52.00	785.30	9.00
84	417+76.00	785.30	13.00
85	418+00.00	785.30	13.00
86	418+24.00	785.30	13.00
87	418+48.00	785.30	13.00
88	418+72.00	786.30	13.00
89	418+96.00	786.30	13.00
90	419+08.00	786.33	13.00

NOISE BARRIER NS 4 CONT.

DRILLED SHAFT NO.	WORKPOINT STATION	TOP OF DRILLED SHAFT ELEVATION	SHAFT LENGTH (FEET)
91	419+20.00	787.33	13.00
92	419+32.00	787.33	13.00
93	419+44.00	788.30	13.00
94	419+68.00	789.30	12.00
95	419+92.00	790.44	12.00
96	420+16.00	790.44	12.00
97	420+40.00	790.44	12.00
98	420+64.00	789.44	12.00
99	420+88.00	789.44	12.00
100	421+12.00	789.44	12.00
101	421+36.00	789.30	12.00
102	421+60.00	789.30	12.00
103	421+84.00	789.30	12.00
104	422+08.00	789.30	12.00
105	422+32.00	789.30	12.00
106	422+56.00	789.30	12.00
107	422+80.00	789.30	12.00
108	423+04.00	790.44	12.00
109	423+28.00	790.44	12.00
110	423+52.00	790.44	12.00
111	423+76.00	789.44	12.00
112	424+00.00	789.44	12.00
113	424+24.00	789.44	12.00
114	424+48.00	788.44	12.00
115	424+72.00	788.44	12.00
116	424+96.00	788.44	12.00
117	425+20.00	787.30	12.00
118	425+44.00	787.44	12.00
119	425+68.00	786.30	12.00
120	425+92.00	786.30	12.00
121	426+16.00	786.30	12.00
122	426+40.00	786.30	12.00
123	426+64.00	785.30	12.00
124	426+88.00	785.30	12.00
125	427+00.00	785.47	12.00
126	427+12.00	785.47	9.00
127	427+24.00	785.52	9.00

CALCULATED MJT
CHECKED BBD

NOISE BARRIER DATA TABLES

FRA-71-5.29

P:\84868\roadway\sheets\84868GM401.dgn 3/27/2015 2:37:16 PM kfahy

NOISE BARRIER NS 5

DRILLED SHAFT NO.	WORKPOINT STATION	TOP OF DRILLED SHAFT ELEVATION	SHAFT LENGTH (FEET)
1	499+76.00	799.52	9.00
2	499+88.00	799.47	9.00
3	500+00.00	799.44	9.00
4	500+24.00	799.44	9.00
5	500+48.00	799.44	9.00
6	500+72.00	798.44	9.00
7	500+96.00	798.44	9.00
8	501+20.00	797.44	9.00
9	501+44.00	797.44	9.00
10	501+68.00	797.44	9.00
11	501+92.00	797.44	9.00
12	502+16.00	797.44	9.00
13	502+40.00	797.44	9.00
14	502+64.00	797.44	9.00
15	502+88.00	797.44	9.00
16	503+12.00	797.44	9.00
17	503+36.00	797.44	9.00
18	503+60.00	797.44	9.00
19	503+84.00	797.44	9.00
20	504+08.00	797.44	13.00
21	504+32.00	797.44	13.00
22	504+56.00	796.44	13.00
23	504+80.00	796.44	13.00
24	505+04.00	796.30	13.00
25	505+28.00	796.44	13.00
26	505+52.00	796.44	13.00
27	505+76.00	796.44	13.00
28	506+00.00	796.44	9.00
29	506+24.00	797.44	9.00
30	506+48.00	798.44	9.00
31	506+72.00	797.44	9.00
32	506+96.00	797.44	9.00
33	507+20.00	797.44	9.00
34	507+44.00	797.44	9.00
35	507+56.00	797.47	9.00
36	507+68.00	797.47	9.00
37	507+80.00	797.47	9.00
38	508+04.00	796.44	9.00
39	508+16.00	795.33	9.00
40	508+28.00	794.33	9.00
41	508+40.00	794.30	9.00
42	508+64.00	793.30	9.00
43	508+88.00	793.30	9.00
44	509+12.00	793.44	9.00
45	509+36.00	793.44	9.00

NOISE BARRIER NS 5 CONT.

DRILLED SHAFT NO.	WORKPOINT STATION	TOP OF DRILLED SHAFT ELEVATION	SHAFT LENGTH (FEET)
46	509+60.00	793.44	9.00
47	509+84.00	793.44	9.00
48	510+08.00	793.44	11.00
49	510+32.00	793.30	11.00
50	510+56.00	793.30	11.00
51	510+80.00	793.30	11.00
52	510+88.00	793.47	11.00
53	510+96.00	793.47	11.00
54	511+12.00	794.47	11.00
55	511+28.00	794.47	11.00
56	511+36.00	793.47	11.00
57	511+44.00	792.47	11.00
58	511+52.00	792.44	11.00
59	511+76.00	792.44	11.00
60	512+00.00	791.44	11.00
61	512+24.00	791.44	11.00
62	512+48.00	791.44	11.00
63	512+72.00	790.44	11.00
64	512+96.00	790.44	11.00
65	513+20.00	790.44	11.00
66	513+44.00	790.44	11.00
67	513+68.00	789.44	11.00
68	513+92.00	789.44	11.00
69	514+16.00	789.44	13.00
70	514+40.00	788.44	13.00
71	514+64.00	788.44	13.00
72	514+88.00	788.44	13.00
73	515+12.00	788.44	13.00
74	515+36.00	787.44	13.00
75	515+60.00	787.44	13.00
76	515+84.00	787.44	13.00
77	516+08.00	786.44	13.00
78	516+32.00	786.44	13.00
79	516+56.00	786.44	13.00
80	516+80.00	786.44	13.00
81	517+04.00	785.44	13.00
82	517+28.00	785.44	13.00
83	517+52.00	785.44	13.00
84	517+76.00	784.44	13.00
85	518+00.00	784.44	13.00
86	518+24.00	784.44	13.00
87	518+48.00	784.44	13.00
88	518+72.00	783.44	13.00
89	518+96.00	783.44	13.00
90	519+20.00	783.44	13.00

NOISE BARRIER NS 5 CONT.

DRILLED SHAFT NO.	WORKPOINT STATION	TOP OF DRILLED SHAFT ELEVATION	SHAFT LENGTH (FEET)
91	519+44.00	783.44	13.00
92	519+68.00	783.44	13.00
93	519+92.00	783.44	13.00
94	520+16.00	783.44	13.00
95	520+40.00	783.44	13.00
96	520+64.00	783.44	10.00
97	520+88.00	783.44	10.00
98	521+12.00	783.44	10.00
99	521+36.00	783.44	10.00
100	521+44.00	783.47	10.00
101	521+52.00	782.47	10.00
102	521+60.00	781.47	10.00
103	521+68.00	780.47	10.00
104	521+80.00	780.47	10.00
105	521+92.00	780.52	10.00

CALCULATED MJT
CHECKED BBD

NOISE BARRIER DATA TABLES

FRA-71-5.29

541
623

P:\84868\roadway\sheets\84868GM501.dgn 3/27/2015 2:37:17 PM kfahy

NOISE BARRIER NS 6

DRILLED SHAFT NO.	WORKPOINT STATION	TOP OF DRILLED SHAFT ELEVATION	SHAFT LENGTH (FEET)
1	599+40.00	781.77	10.00
2	599+52.00	781.72	10.00
3	599+64.00	781.72	10.00
4	599+76.00	781.58	10.00
5	599+88.00	780.55	13.00
6	600+12.00	780.55	13.00
7	600+36.00	780.55	13.00
8	600+60.00	780.55	13.00
9	600+84.00	780.55	13.00
10	601+08.00	780.55	13.00
11	601+32.00	780.55	13.00
12	601+56.00	780.55	13.00
13	601+80.00	779.55	13.00
14	602+04.00	779.55	13.00
15	602+28.00	779.69	13.00
16	602+52.00	779.69	13.00
17	602+76.00	779.69	13.00
18	603+00.00	779.69	13.00
19	603+24.00	779.69	13.00
20	603+48.00	778.69	13.00
21	603+72.00	778.69	13.00
22	603+96.00	778.69	13.00
23	604+20.00	778.69	13.00
24	604+44.00	778.69	13.00
25	604+68.00	778.69	13.00
26	604+92.00	778.69	13.00
27	605+16.00	778.69	13.00
28	605+40.00	777.69	13.00
29	605+64.00	777.69	13.00
30	605+88.00	777.69	13.00
31	606+12.00	777.69	13.00
32	606+36.00	777.69	13.00
33	606+60.00	777.69	13.00
34	606+84.00	776.69	13.00
35	607+08.00	776.69	13.00
36	607+32.00	776.69	13.00
37	607+56.00	776.69	13.00
38	607+80.00	776.69	13.00
39	608+04.00	776.69	13.00
40	608+28.00	776.69	13.00
41	608+52.00	776.69	13.00
42	608+76.00	775.69	13.00
43	609+00.00	775.69	13.00
44	609+24.00	775.69	13.00
45	609+48.00	776.69	13.00

NOISE BARRIER NS 6 CONT.

DRILLED SHAFT NO.	WORKPOINT STATION	TOP OF DRILLED SHAFT ELEVATION	SHAFT LENGTH (FEET)
46	609+72.00	776.69	13.00
47	609+96.00	776.69	13.00
48	610+20.00	776.69	13.00
49	610+44.00	776.69	13.00
50	610+68.00	776.69	15.00
51	610+92.00	777.69	15.00
52	611+16.00	777.69	15.00
53	611+40.00	777.69	18.00
54	611+64.00	777.69	18.00
55	611+88.00	777.69	18.00
56	612+00.00	777.69	18.00
57	612+24.00	777.69	18.00
58	612+36.00	777.69	18.00
59	612+60.00	777.69	18.00
60	612+84.00	777.69	18.00
61	613+08.00	777.69	18.00
62	613+32.00	777.77	18.00

CALCULATED MJT
CHECKED BBD

NOISE BARRIER DATA TABLES

FRA-71-5.29

542
623

P:\84868\roadway\sheets\84868GM601.dgn 3/27/2015 2:37:17 PM kfahy

NOISE BARRIER NS 7

DRILLED SHAFT NO.	WORKPOINT STATION	TOP OF DRILLED SHAFT ELEVATION	SHAFT LENGTH (FEET)
1	700+00.00	775.27	15.00
2	700+12.00	775.19	15.00
3	700+36.00	775.19	15.00
4	700+60.00	775.19	15.00
5	700+84.00	775.19	15.00
6	701+08.00	775.19	15.00
7	701+32.00	774.19	15.00
8	701+56.00	774.19	15.00
9	701+80.00	774.19	15.00
10	702+04.00	773.19	15.00
11	702+28.00	773.19	15.00
12	702+52.00	772.19	15.00
13	702+76.00	772.19	22.00
14	703+00.00	772.19	22.00
15	703+24.00	771.19	22.00
16	703+48.00	771.19	22.00
17	703+72.00	770.19	22.00
18	703+96.00	770.19	22.00
19	704+10.00	770.19	22.00
20	704+34.00	770.19	22.00
21	704+44.00	769.05	22.00
22	704+68.00	769.05	15.00
23	704+92.00	769.05	15.00
24	705+16.00	769.05	15.00
25	705+40.00	768.05	15.00
26	705+64.00	768.05	15.00
27	705+88.00	767.05	15.00
28	706+12.00	767.05	15.00
29	706+36.00	767.05	15.00
30	706+60.00	767.05	15.00
31	706+84.00	767.05	15.00
32	707+08.00	767.05	15.00
33	707+32.00	767.05	15.00
34	707+56.00	767.05	15.00
35	707+80.00	767.05	15.00
36	708+04.00	766.05	15.00
37	708+28.00	766.05	15.00
38	708+52.00	766.05	15.00
39	708+76.00	766.05	15.00
40	709+00.00	765.05	9.00
41	709+24.00	765.05	9.00
42	709+48.00	765.05	9.00
43	709+72.00	765.05	9.00
44	709+96.00	765.05	9.00
45	710+20.00	765.05	9.00

NOISE BARRIER NS 7 CONT.

DRILLED SHAFT NO.	WORKPOINT STATION	TOP OF DRILLED SHAFT ELEVATION	SHAFT LENGTH (FEET)
46	710+32.00	764.08	9.00
47	710+44.00	764.22	9.00
48	710+56.00	764.27	9.00

NOISE BARRIER NS 9

DRILLED SHAFT NO.	WORKPOINT STATION	TOP OF DRILLED SHAFT ELEVATION	SHAFT LENGTH (FEET)
1	899+92.00	768.27	9.00
2	900+04.00	768.22	9.00
3	900+16.00	768.22	9.00
4	900+28.00	768.05	9.00
5	900+52.00	768.05	9.00
6	900+76.00	769.05	9.00
7	901+00.00	769.05	9.00
8	901+24.00	769.05	9.00
9	901+48.00	769.05	9.00
10	901+72.00	769.05	9.00
11	901+96.00	769.05	9.00
12	902+20.00	770.05	10.00
13	902+44.00	770.05	10.00
14	902+56.00	770.08	10.00
15	902+68.00	771.22	10.00
16	902+80.00	771.22	10.00
17	902+92.00	772.22	10.00
18	903+04.00	773.22	10.00
19	903+16.00	774.19	10.00
20	903+40.00	774.19	10.00
21	903+64.00	774.19	10.00
22	903+88.00	774.19	10.00
23	904+12.00	775.19	10.00
24	904+36.00	775.19	7.00
25	904+60.00	775.19	7.00
26	904+84.00	775.19	7.00
27	905+08.00	775.19	7.00
28	905+32.00	775.19	7.00
29	905+56.00	775.19	7.00
30	905+80.00	775.19	7.00
31	906+04.00	775.19	7.00
32	906+28.00	775.19	7.00
33	906+40.00	775.22	7.00
34	906+52.00	775.27	7.00

CALCULATED MJT
CHECKED BBD

NOISE BARRIER DATA TABLES

FRA-71-5.29

543
623

P:\84868\roadway\sheets\84868GM701REV.dgn 3/27/2015 2:37:18 PM kfahy

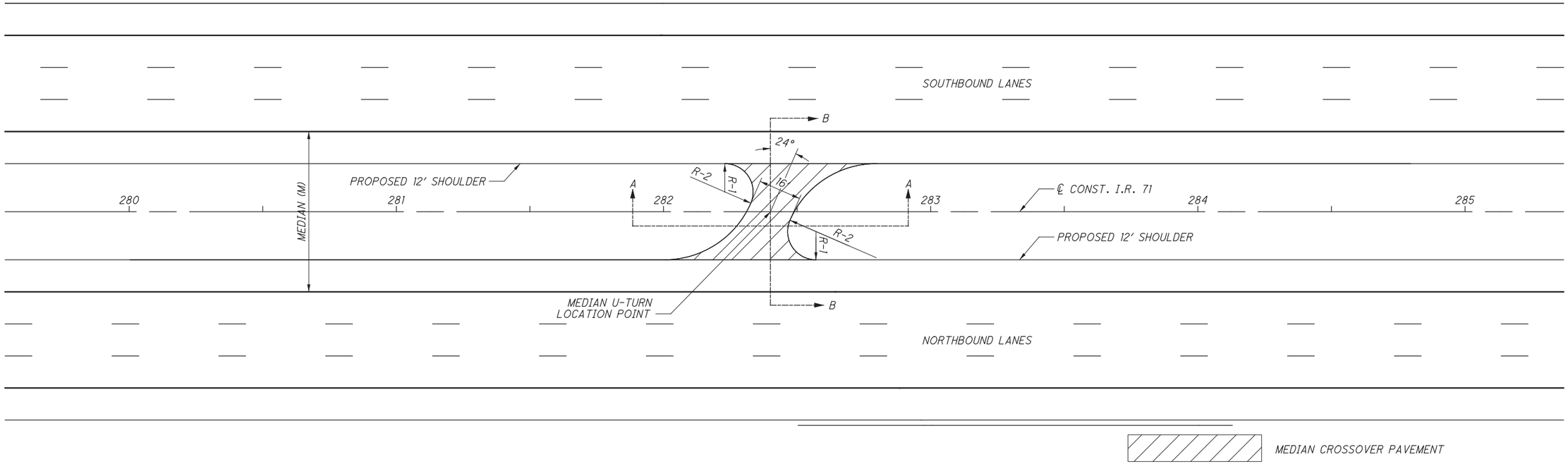

MEDIAN CROSSOVER PAVEMENT

MEDIAN U-TURN
LOCATIONS:
STA. 282+40.00
STA. 378+00.00
STA. 464+00.00

NOTE:

PAVEMENT BUILDUP AND EDGE COURSE TO BE SAME AS THE MAINLINE TREATED SHOULDER BUILDUP AND EDGE COURSE.

CONCRETE PAVEMENT OPTION SHOWN. ASPHALT PAVEMENT OPTION AS SHOWN ON I.R. 71 TYPICAL SECTIONS.

SEE MAINLINE TYPICAL SHEET 8 & 10

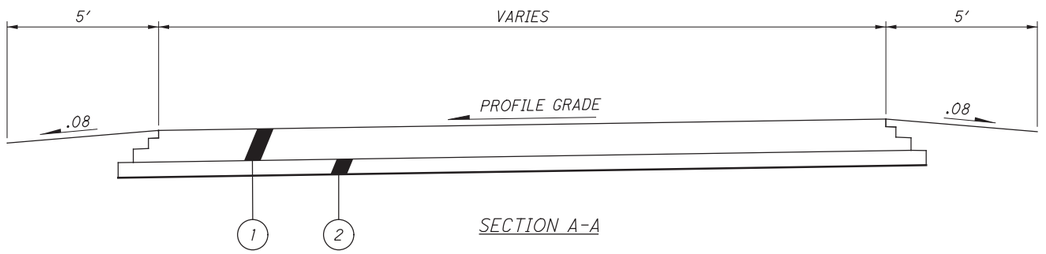

SECTION A-A

DIMENSIONS APPLICABLE TO MEDIAN WIDTH			
M	D	R-1	R-2
60'	14.40"	35.24'	10.59'
48'	11.52"	25.33'	6.29'

LEGEND

1. ITEM 454 - 9" NON-REINFORCED CONCRETE PAVEMENT
2. ITEM 304 - 6" AGGREGATE BASE
3. ITEM 204 - SUBGRADE COMPACTION

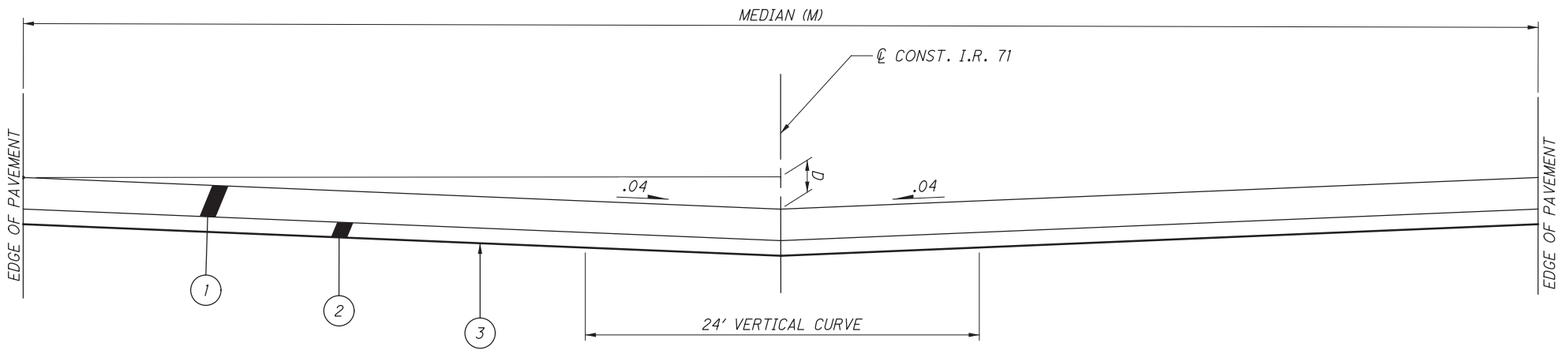

SECTION B-B

PROPOSED MEDIAN CROSSOVER DETAILS

CALCULATED CDS
CHECKED BBD

FRA-71-5.29

544
623

P:\84868\roadway\sheets\84868GM002.dgn 3/27/2015 2:37:18 PM kfahy

REFERENCE LOCATION SIGNS

THE LOCATION OF REFERENCE LOCATION SIGNS ON THE PLANS ARE APPROXIMATE AND A MORE PRECISE LOCATION WILL BE PROVIDED BY THE DEPARTMENT. THE CONTRACTOR SHALL NOTIFY THE ENGINEER AT LEAST 30 DAYS IN ADVANCE OF THE PLANNED DATE OF REFERENCE LOCATION SIGN INSTALLATION. THE ENGINEER WILL CONTACT THE OFFICE OF TECHNICAL SERVICES WHICH WILL LOCATE THE LONGITUDINAL POSITION OF REFERENCE LOCATION SIGNS BY MEANS OF A PAINT MARK ON THE PAVEMENT EDGE. ALTERNATE MARKS WILL NOT BE PROVIDED ON DIVIDED HIGHWAYS AND THE CONTRACTOR SHALL SET REFERENCE LOCATION SIGNS FOR THE OPPOSITE ROADWAY ACROSS FROM THE PROVIDED MARK. DELINEATORS WHOSE NORMAL POSITION FALLS WITHIN 50 FEET OF A REFERENCE LOCATION SIGN SHALL BE OMITTED.

RAISED PAVEMENT MARKERS

INSTALL RAISED PAVEMENT MARKERS ACCORDING TO STANDARD CONSTRUCTION DRAWINGS: TC-65.10 AND TC-65.11.

ITEM 630 SIGNING, MISC.: STRUCTURAL PIPE SUPPORT, PER TC-41.15

THIS ITEM OF WORK SHALL INCLUDE ALL WORK NECESSARY TO INSTAL A STRUCTURAL PIPE SIGN SUPPORT, AS PER TC-41.15. SIGN PLACEMENT AND HEIGHT OF SIGN SHALL BE MADE IN CONFORMANCE WITH APPLICABLE STANDARD DRAWINGS..

PAYMENT SHALL BE FOR EACH STRUCTURAL PIPE SUPPORT, IN PLACE, AS PER THE PLANS.

ITEM 630 TRIANGULAR SLIP BASE CONNECTION, AS PER PLAN

IN ADDITION TO THE WORK DETAILED IN CMS 630 AND THE STANDARD CONSTRUCTION DRAWING TC-41.15, THIS ITEM OF WORK SHALL INCLUDE FIELD WELDING THREE 1" LENGTH WELDS WITH 1/4" WIDTH EVENLY SPACED AROUND THE PERIMETER OF THE STRUCTURAL PIPE WHERE IT MEETS THE SLIP BASE CASTING. THE WELDING SHALL OCCUR AFTER THE SIGN HAS BEEN ATTACHED AND PROPERLY ALIGNED WITH THE ROADWAY. A SPRAY GALVANIZATION TO THE WELD SHALL BE APPLIED.

PAYMENT SHALL BE FOR EACH TRIANGULAR SLIP BASE CONNECTION, AS PER PLAN IN PLACE PER THE PLANS.

OPTIONAL BID FOR PAVEMENT MARKINGS

THE CONTRACTOR SHALL USE ITEM 644 (THERMOPLASTIC) PAVEMENT MARKINGS ON ALL ASPHALT PAVEMENT SURFACES, AND TYPE 646 (EPOXY) PAVEMENT MARKINGS ON ALL CONCRETE PAVEMENT SURFACES.

THE CONTRACTOR SHALL BID ON THE 'ASPHALT OPTION" QUANTITIES, IF ASPHALT PAVEMENT IS SELECTED, OR THE "CONCRETE PAVEMENT OPTION" QUANTITIES, IF THE CONCRETE PAVEMENT OPTION IS SELECTED.

ITEM 632 SIGNALIZATION, MISC.: REMOVAL OF LOOP LEAD-IN CABLE

THIS ITEM OF WORK SHALL CONSIST OF REMOVING AND DISPOSING OF EXISTING LOOP LEAD-IN CABLE WHERE RADAR DETECTION IS BEING INSTALLED TO REPLACE THAT DETECTION. THIS ITEM SHALL INCLUDE ALL UNLASHING/RELASHING OF MESSENGER CABLE TO REMOVE THE EXISTING LOOP LEAD-IN CABLE. THE LOOP LEAD-IN CABLE SHALL BE REMOVED BETWEEN THE LOOP SPLICE AND THE CONTROLLER CABINET WHICH INCLUDES ALL UNDERGROUND AND OVERHEAD RUNS. ANY CONDUIT LEFT EMPTY AFTER THE REMOVAL OF THE LOOP LEAD-IN CABLE SHALL HAVE A PULL WIRE INSTALLED.

PAYMENT FOR THIS ITEM SHALL BE MADE AT THE CONTRACT UNIT BID PRICE.

SIGNING, MISC.: RELOCATION OF REPEATER STATION

THE EXISTING WIRELESS REPEATER STATION MOUNTED ON THE EXISTING CAN TILEVER ON I-71 NORTHBOUND (STATION 476+10) SHALL BE RELOCATED TO PROPOSED CANTILEVER OH-4 AT STATION 460+00.

PAYMENT SHALL BE MADE AT THE UNIT PRICE, WHICH SHALL INCLUDE ALL LABOR AND MATERIAL NECESSARY TO RELOCATE THE REPEATER STATION, INCLUDING ALL CONNECTIONS TESTED AND ACCEPTED.

A QUANTITY OF 1 EACH HAS BEEN CARRIED TO THE GENERAL SUMMARY FOR THIS PURPOSE.

PAVEMENT MARKING LEGEND

- ELW - EDGE LINE, WHITE, 6"
- ELY - EDGE LINE, YELLOW, 6"
- LL - LANE LINE, 6"
- TLY - TRANSVERSE LINE, YELLOW, 6"
- CH - CHANNELIZING LINE, 12"
- DLW - DOTTED LINE, WHITE, 6" (2' LINES WITH 6' SPACING)
- DWD - DOTTED LINE, WHITE, 12" (3' LINES WITH 9' SPACING)
- ⟵ - DIRECTION OF TRAVEL
- XX - DASHED ELLIPSE DENOTES THAT PAVEMENT MARKING IS CONTINUED FROM THE PREVIOUS SHEET

SIGN LEGEND

- INTERSTATE 71 - EXISTING SIGN, TO REMAIN
- INTERSTATE 71 (crossed out) - EXISTING SIGN, TO BE REMOVED
- INTERSTATE 71 - PROPOSED NEW SIGN
- ┤ - SINGLE POST INSTALLATION
- ⫤ - DUAL POST INSTALLATION
- M-1 - MAJOR (EXTRUSHEET) SIGN
- SR-4 - SIGN REMOVAL
- SN-1 - SIGN, FLAT SHEET
- GM-1 - GROUND MOUNTED MAJOR SIGN, ON BEAM SUPPORTS
- OV-1 - SIGN, OVERLAY

CALCULATED MJH CHECKED KAE

TRAFFIC CONTROL GENERAL NOTES

FRA-71-5.29

545 623

P:\84868\traffic\sheets\545-84868TN001.dgn 3/30/2015 9:37:54 AM mtakacs

NEW TRAFFIC SIGNAL INSTALLATION:

THIS WORK CONSISTS OF FURNISHING AND INSTALLING TRAFFIC SIGNAL EQUIPMENT, COMPLETE AND READY FOR SERVICE. THIS WORK ALSO INCLUDES NECESSARY EXCAVATION AND BACKFILL, DISPOSAL OF DISCARDED MATERIALS, RESTORATION OF DISTURBED FACILITIES AND SURFACES TO A CONDITION EQUAL TO THAT EXISTING BEFORE THE WORK STARTED, AND ELECTRICAL TESTING AS SPECIFIED.

PULL BOXES, CONDUITS, GROUND RODS, AND CABLE SPLICING KITS REQUIRED FOR TRAFFIC SIGNAL EQUIPMENT INSTALLATIONS ARE SPECIFIED IN ITEM 625.

BEFORE ANY WORK IS STARTED ON THE TRAFFIC SIGNAL, THE DISTRICT SIX TRAFFIC ENGINEER (740-833-8198) AND THE CONTRACTORS REPRESENTATIVE SHALL REVIEW AND RESOLVE ANY POTENTIAL PROBLEMS AT THE LOCATION WHERE THE NEW SIGNAL WILL BE CONSTRUCTED.

ALL OF THE REQUIRED PERMANENT SIGNS SHALL BE ERECTED AND THE REQUIRED PERMANENT PAVEMENT MARKINGS SHALL BE IN PLACE PRIOR TO THE FINAL ACCEPTANCE OF THE TRAFFIC SIGNAL.

PRIOR TO THE FINAL ACCEPTANCE OF THE COMPLETED TRAFFIC SIGNAL, THE DISTRICT SIX ROADWAY SERVICES REPRESENTATIVE AND THE CONTRACTORS REPRESENTATIVE, SHALL INSPECT AND RESOLVE ANY EXISTING PROBLEMS PRIOR TO THE ACCEPTANCE OF EACH NEW SIGNAL BY THE OHIO DEPARTMENT OF TRANSPORTATION.

ITEM 809 STOP-BAR RADAR DETECTION:

THIS ITEM OF WORK SHALL CONSIST OF FURNISHING AND INSTALLING A WAVETRONIX SMARTSENSOR MATRIX DETECTION UNIT. THE DETECTION UNIT SHALL INCLUDE THE FOLLOWING:

* POWER SHALL BE PROVIDED FROM THE TRAFFIC CABINET.

* ALL REQUIRED INPUTS CARDS SHALL BE INCLUDED IN THE TRAFFIC CABINET AND SHALL BE COMPATIBLE WITH CALTRANS, NEMA TS1 AND NEMA TS2 DETECTOR RACKS. THE CARDS SHALL PROVIDE TRUE PRESENCE DETECTOR CALLS OR CONTACT CLOSURE TO THE TRAFFIC CONTROLLER.

* THE UNIT SHALL BE MOUNTED DIRECTLY TO A POLE OR MAST ARM, AS RECOMMENDED BY THE MANUFACTURER. CABLE(S) SHALL BE PROVIDED AS REQUIRED AND RECOMMENDED BY THE MANUFACTURER.

* SURGE PROTECTION DEVICES, AS RECOMMENDED BY THE MANUFACTURER SHALL BE INCLUDED BOTH AT THE POLE WHERE THE UNIT IS LOCATED TO PROTECT THE UNIT AND IN THE TRAFFIC CABINET TO PROTECT THE CABINET ELECTRONICS.

* THE MANUFACTURER'S REPRESENTATIVE SHALL BE ON SITE DURING INSTALLATION AND TESTING AND SHALL PROVIDE ONSITE TRAINING ON THE SETUP, OPERATION AND MAINTENANCE OF THE UNIT.

* A SERIAL TO ETHERNET COMMUNICATIONS MODULE AND ETHERNET CABLE (MIN. 7 FEET)

* THE POWER SUPPLY AND COMMUNICATION MODULES SHALL BE SECURED TO A SINGLE PANEL THAT CAN BE MOUNTED INTERIOR TO THE TRAFFIC CABINET. THE PANEL SHALL INCLUDE MODULAR-PLUG STYLE CONNECTIONS FOR A UP TO FOUR (4) SENSOR CABLES. ADDITIONAL SENSORS MAY BE HARD-WIRED TO THE COMMUNICATION MODULES, AS NECESSARY.

* PRIOR TO PROGRAMMING, THE CONTRACTOR SHALL CONTACT THE ODOT DISTRICT 6 DISTRICT TRAFFIC ENGINEER AT 740-833-8198. A DISTRICT 6 TRAFFIC DEPARTMENT REPRESENTATIVE SHALL BE PRESENT DURING THE PROGRAMMING OF THE SYSTEM.

PAYMENT FOR ITEM 809 STOP-BAR RADAR DETECTION SHALL BE MADE AT THE CONTRACT UNIT PRICE FOR EACH UNIT, COMPLETE AND IN PLACE INCLUDING ALL REQUIRED CABINET HARDWARE, MOUNTING BRACKETS, CABLES, CONDUIT AND CONNECTIONS TESTED AND ACCEPTED.

ITEM 809 ADVANCE RADAR DETECTION

THIS ITEM OF WORK SHALL CONSIST OF FURNISHING AND INSTALLING A WAVETRONIX SMARTSENSOR ADVANCE DETECTION UNIT (MODEL SS-200E). THE DETECTION UNIT SHALL INCLUDE THE FOLLOWING:

* POWER SHALL BE PROVIDED FROM THE TRAFFIC CABINET.

* ALL REQUIRED INPUTS CARDS SHALL BE INCLUDED IN THE TRAFFIC CABINET AND SHALL BE COMPATIBLE WITH CALTRANS, NEMA TS1 AND NEMA TS2 DETECTOR RACKS. THE CARDS SHALL PROVIDE TRUE PRESENCE DETECTOR CALLS OR CONTACT CLOSURE TO THE TRAFFIC CONTROLLER.

* THE UNIT SHALL BE MOUNTED DIRECTLY TO A POLE OR MAST ARM, AS RECOMMENDED BY THE MANUFACTURER. CABLE(S) SHALL BE PROVIDED AS REQUIRED AND RECOMMENDED BY THE MANUFACTURER.

* SURGE PROTECTION DEVICES, AS RECOMMENDED BY THE MANUFACTURER SHALL BE INCLUDED BOTH AT THE POLE WHERE THE UNIT IS LOCATED TO PROTECT THE UNIT AND IN THE TRAFFIC CABINET TO PROTECT THE CABINET ELECTRONICS.

* THE MANUFACTURER'S REPRESENTATIVE SHALL BE ON SITE DURING INSTALLATION AND TESTING AND SHALL PROVIDE ONSITE TRAINING ON THE SETUP, OPERATION AND MAINTENANCE OF THE UNIT.

* A SERIAL TO ETHERNET COMMUNICATIONS MODULE AND ETHERNET CABLE (MIN. 7 FEET)

* THE POWER SUPPLY AND COMMUNICATION MODULES SHALL BE SECURED TO A SINGLE PANEL THAT CAN BE MOUNTED INTERIOR TO THE TRAFFIC CABINET. THE PANEL SHALL INCLUDE MODULAR-PLUG STYLE CONNECTIONS FOR A UP TO FOUR (4) SENSOR CABLES. ADDITIONAL SENSORS MAY BE HARD-WIRED TO THE COMMUNICATION MODULES, AS NECESSARY.

* PRIOR TO PROGRAMMING, THE CONTRACTOR SHALL CONTACT THE ODOT DISTRICT 6 DISTRICT TRAFFIC ENGINEER AT 740-833-8198. A DISTRICT 6 TRAFFIC DEPARTMENT REPRESENTATIVE SHALL BE PRESENT DURING THE PROGRAMMING OF THE SYSTEM.

PAYMENT FOR ITEM 809 ADVANCE RADAR DETECTION SHALL BE MADE AT THE CONTRACT UNIT PRICE FOR EACH UNIT, COMPLETE AND IN PLACE INCLUDING ALL REQUIRED CABINET HARDWARE, MOUNTING BRACKETS, CABLES, CONDUIT, CONNECTIONS TESTED AND ACCEPTED, AND ANY OTHER NECESSARY HARDWARE TO ESTABLISH A FULLY FUNCTIONAL DETECTION SYSTEM.

ITEM 632, SIGNALIZATION, MISC.: CDMA MODEM, FURNISH ONLY

FURNISH A CDMA MODEM, TWO ANTENNAS WITH A 10-FOOT CABLE, AND A 10' ETHERNET CABLE FOR REMOTE WIRELESS CELLULAR COMMUNICATION. FOR NETWORK CONSISTENCY CDMA MODEMS SHALL BE THE SIERRA WIRELESS AIRLINK GX440 ETHERNET MODEL.

THIS ITEM SHALL INCLUDE THE FURNISHING OF A COMTROL ROCKETLINX ES8105 ETHERNET SWITCH WITH ALL POWER SUPPLIES NECESSARY TO FUNCTION.

THIS ITEM SHALL INCLUDE THE FURNISHING AND INSTALLATION OF A MOUNTING BRACKET FOR THE ANTENNA WITH ALL NECESSARY HARDWARE INCLUDING BUT NOT LIMITED TO SPRING NUTS, WASHERS, AND BOLTS THAT INSTALLS TO THE MOUNTING CHANNEL ON THE SIDE OF THE SIGNAL CABINET.

THE CDMA MODEM EQUIPMENT AND ETHERNET SWITCH SHALL BE DELIVERED TO ODOT DISTRICT 6 TRAFFIC FOR PROGRAMMING AND INSTALLATION.

ODOT DISTRICT 6 TRAFFIC
ATTN: KRAIG SHREWSBERRY
400 E. WILLIAM ST.
DELAWARE, OH 43015

THE CONTRACTOR SHALL PROVIDE THE MODEM SERIAL NUMBERS AND NECESSARY ESN NUMBERS FOR ODOT TO ESTABLISH WIRELESS SERVICE.

THE DEPARTMENT WILL MEASURE "SIGNALIZATION, MISC.: CDMA MODEM, FURNISH ONLY" BY THE NUMBER OF COMPLETE UNITS FURNISHED AND RECEIVED BY ODOT D-6 TRAFFIC.

MAINTENANCE OF TRAFFIC SIGNAL INSTALLATION

THE CONTRACTOR SHALL BE RESPONSIBLE FOR MAINTAINING TRAFFIC SIGNAL INSTALLATIONS WITHIN THE PROJECT UNDER THE FOLLOWING CIRCUMSTANCES:

1. EXISTING SIGNAL INSTALLATION WHICH THE PLANS REQUIRE THE CONTRACTOR TO ADJUST, MODIFY, ADD ONTO OR REMOVE OR WHICH THE CONTRACTOR ACTUALLY ADJUSTS, MODIFIES, OR OTHERWISE DISTURBS: THE CONTRACTOR SHALL BE RESPONSIBLE FOR THE ENTIRE INSTALLATION (AT AN INTERSECTION) FROM THE TIME THE CONTRACTOR'S OPERATIONS FIRST DISTURB THE INSTALLATION UNTIL THE INSTALLATION HAS BEEN SUBSEQUENTLY REMOVED OR MODIFIED AND THE WORK IS ACCEPTED.

2. NEW SIGNAL INSTALLATION OR DEVICE, INSTALLED BY THE CONTRACTOR: THE CONTRACTOR SHALL BE RESPONSIBLE FOR MAINTENANCE OF THIS FROM THE TIME OF INSTALLATION UNTIL THE WORK IS ACCEPTED.

THE CONTRACTOR SHALL CORRECT AS QUICKLY AS POSSIBLE ALL OUTAGES OR MALFUNCTIONS AND PROVIDE THE MAINTAINING AGENCY AND THE ENGINEER SUCH WITH THE NAME(S) AND PHONE NUMBER(S) OF THE CONTRACTORS REPRESENTATIVE(S) TO RECEIVE ALL CALLS AND DISPATCH THE NECESSARY MAINTENANCE FORCES TO CORRECT OUTAGES. SUCH A PERSON OR PERSONS MUST GIVE PROMPT ATTENTION TO THESE CALLS AND BE READILY AVAILABLE CONTINUOUSLY 24 HOURS A DAY, 7 DAYS A WEEK. ALL LAMP OUTAGES, CABLE OUTAGES, ELECTRICAL FAILURES, EQUIPMENT MALFUNCTIONS AND MISALIGNED SIGNAL HEADS SHALL BE CORRECTED TO THE SATISFACTION OF THE ENGINEER WITH THE SIGNAL BACK IN SERVICE WITHIN FOUR HOURS AFTER THE CONTRACTOR HAS BEEN NOTIFIED OF AN OUTAGE.

IN THE EVENT NEW SIGNALS ARE DAMAGED PRIOR TO ACCEPTANCE, ALL DAMAGED EQUIPMENT EXCEPT POLES AND CONTROL EQUIPMENT SHALL BE REPLACED BY THE CONTRACTOR TO THE SATISFACTION OF THE ENGINEER WITH THE NEW SIGNAL BACK IN SERVICE WITHIN 8 HOURS AFTER THE CONTRACTOR HAS BEEN NOTIFIED OF THE OUTAGE. THE CONTRACTOR SHALL ARRANGE FOR FULL TRAFFIC CONTROL UNTIL THE SIGNAL IS BACK IN OPERATION.

IF POLES AND/OR CONTROLLERS ARE DAMAGED AND MUST BE REPLACED, THE CONTRACTOR SHALL MAKE TEMPORARY REPAIRS AS NECESSARY TO BRING THE SIGNAL BACK INTO OPERATION WITHIN THE ALLOWED 8 HOUR TIME PERIOD, AND SHALL MAKE PERMANENT REPAIRS OR REPLACEMENT AS SOON THEREAFTER AS POSSIBLE.

NONE OF THE ABOVE SHALL BE CONSTRUED AS COLLECTIVE OR CONSECUTIVE OUTAGE TIME PERIODS AT ANY ONE LOCAITON. THAT IS, WHERE MORE THAN ONE OUTAGE OCCURS AT ANY ONE LOCATION THEN THE ALLOTTED TIME LIMIT SHALL BE FOR THE WORST SINGLE OUTAGE.

WHERE OUTAGES ARE THE DIRECT RESULT OF A VEHICLE ACCIDENT THE RESPONSE OF THE CONTRACTOR SHALL BE AS OUTLINED ABOVE. THE CONTRACTOR SHALL BE RESPONSIBLE FOR THE COLLECTION OF ANY COMPENSATION FOR THIS WORK FROM THOSE PARTIES RESPONSIBLE FOR THE DAMAGE.

WHERE THE CONTRACTOR HAS FAILED OR CANNOT RESPOND TO AN OUTAGE OR SIGNAL EQUIPMENT MALFUNCTION, AT THESE LOCATIONS WITHIN HIS RESPONSIBILITY, WITHIN PERIODS AS SPECIFIED ABOVE, THE ENGINEER MAY INVOKE THE PROVISIONS OF SECTION 105.15 AND ANY SUBSEQUENT BILLINGS TO THE STATE FOR POLICE SERVICES AND MAINTENANCE SERVICES BY THE PROVIDING AGENCY FORCES SHALL BE DEDUCTED FROM MONIES DUE OR TO BECOME DUE THE CONTRACTOR IN ACCORDANCE WITH PROVISIONS OF SECTION 105.15.

ANY VEHICULAR TRAFFIC SIGNAL HEAD EITHER NEW OR EXISTING THAT WILL BE OUT OF OPERATION SHALL BE COVERED IN THE MANNER DESCRIBED IN 632.25.

THE CONTRACTOR SHALL MAINTAIN COMPLETE RECORDS OF MALFUNCTIONS INCLUDING:
1. TIME OF NOTIFICATION OF MALFUNCTION;
2. TIME OF WORK CREWS ARRIVAL TO CORRECT THE MALFUNCTION;
3. ACTIONS TAKEN TO CORRECT THE MALFUNCTION, INCLUDING A LIST OF PARTS REPAIRED AND REPLACED;
4. A DIAGNOSIS OR REASON FOR THE MALFUNCTION AND PROBABILITY OF REOCCURRENCE;
5. TIME OF COMPLETION OF THE REPAIR AND SYSTEM RESTORED TO FULL SERVICE.

A COPY OF THESE RECORDS SHALL BE PROVIDED TO THE ENGINEER WITHIN THREE (3) WORKING DAYS FOLLOWING COMPLETION OF EACH REPAIR.

ALL COSTS RESULTING FROM THE ABOVE REQUIREMENTS SHALL BE CONSIDERED TO BE INCLUDED IN THE LUMP SUM PRICE BID FOR ITEM 614, MAINTAINING TRAFFIC.

CALCULATED MJH CHECKED KAE

TRAFFIC CONTROL GENERAL NOTES

FRA-71-5.29

SHEET NUMBER													ITEM	ITEM EXT.	GRAND TOTAL	UNIT	DESCRIPTION	SEE SHEET NO.
						545	548	549	550	551	552	577						
																	QUANTITIES - TRAFFIC CONTROL	
							931						621	00100	931	EACH	RPM	
											14		625	32000	14	EACH	GROUND ROD	
										293.9			630	02100	293.9	FT	GROUND MOUNTED SUPPORT, NO. 2 POST	
										1033.2			630	03100	1033.2	FT	GROUND MOUNTED SUPPORT, NO. 3 POST	
										29.9			630	04100	29.9	FT	GROUND MOUNTED SUPPORT, NO. 4 POST	
										61.0			630	08004	61.0	FT	ONE WAY SUPPORT, NO. 3 POST	
											147.2		630	07500	147.2	FT	GROUND MOUNTED STRUCTURAL BEAM SUPPORT, W10X22	
										12			630	08600	12	EACH	SIGN POST REFLECTOR	
											8		630	09000	8	EACH	BREAKAWAY STRUCTURAL BEAM CONNECTION	
											1		630	09051	1	EACH	TRANGULAR SLIP BASE CONNECTION, AS PER PLAN	545
											3		630	20800	3	EACH	OVERHEAD SIGN SUPPORT, TYPE TC-12.30, DESIGN 8	
											2		630	21000	2	EACH	OVERHEAD SIGN SUPPORT, TYPE TC-12.30, DESIGN 10	
											1		630	21200	1	EACH	OVERHEAD SIGN SUPPORT, TYPE TC-12.30, DESIGN 12	
											4		630	45500	4	EACH	OVERHEAD SIGN SUPPORT, TYPE TC-7.65, DESIGN 8	
											4		630	75000	4	EACH	SIGN ATTACHMENT ASSEMBLY	
										830.25			630	80100	830.25	SQ FT	SIGN, FLAT SHEET	
											243		630	80200	243	SQ FT	SIGN, GROUND MOUNTED EXTRUSHEET	
											1189		630	80224	1189	SQ FT	SIGN, OVERHEAD EXTRUSHEET	
											7.5		630	80400	7.5	SQ FT	SIGN, PERMANENT OVERLAY	
											8		630	84500	8	EACH	GROUND MOUNTED STRUCTURAL BEAM SUPPORT FOUNDATION	
											14		630	84510	14	EACH	RIGID OVERHEAD SIGN SUPPORT FOUNDATION	
											1		630	84600	1	EACH	GROUND MOUNTED PIPE SUPPORT FOUNDATION	
								47	69				630	84900	116	EACH	REMOVAL OF GROUND MOUNTED SIGN AND DISPOSAL	
								4	2				630	85400	6	EACH	REMOVAL OF GROUND MOUNTED MAJOR SIGN AND DISPOSAL	
								2	1				630	85600	3	EACH	REMOVAL OF GROUND MOUNTED MAJOR SIGN AND REERCTION	
								44	53				630	86002	97	EACH	REMOVAL OF GROUND MOUNTED POST SUPPORT AND DISPOSAL	
								14	6				630	86102	20	EACH	REMOVAL OF GROUND MOUNTED STRUCTURAL BEAM SUPPORT AND DISPOSAL	
									1				630	87100	1	EACH	REMOVAL OF OVERHEAD MOUNTED SIGN AND REERCTION	
								6	1				630	87400	7	EACH	REMOVAL OF OVERHEAD MOUNTED SIGN AND DISPOSAL	
								1					630	89706	1	EACH	REMOVAL OF OVERHEAD SIGN SUPPORT AND DISPOSAL, TYPE TC-12.30	
								2	2				630	89802	4	EACH	REMOVAL OF OVERHEAD SIGN SUPPORT AND DISPOSAL, TYPE TC-7.65	
											1		630	97700	1	EACH	SIGNING, MISC.: STRUCTURAL PIPE SUPPORT, PER TC-41.15	
						1							630	97700	1	EACH	SIGNING, MISC.: RELOCATION OF REPEATER STATION	545
							32						646	10400	32	FT	STOP LINE	
							3						646	20300	3	EACH	LANE ARROW	
																	TRAFFIC SIGNAL QUANTITIES	
												LUMP	632	90300	LUMP		SIGNALIZATION, MISC.: REMOVAL OF LOOP LEAD-IN CABLE	545
												1	632	90400	1	EACH	SIGNALIZATION, MISC.: CDMA MODEM, FURNISH ONLY	546
												1	809	69000	1	EACH	ADVANCE DETECTION	546
												1	809	69100	1	EACH	STOP BAR DETECTION	546
																	QUANTITIES - ASPHALT PAVEMENT OPTION	
							17.71						644	00104	17.71	MI	EDGE LINE, 6"	
							17.06						644	00204	17.06	MI	LANE LINE, 6"	
							6486						644	00404	6486	FT	CHANNELIZING LINE, 12"	
							505						644	00700	505	FT	TRANSVERSE/DIAGONAL LINE	
							5299						644	01510	5299	FT	DOTTED LINE, 6"	
							2728						644	01520	2728	FT	DOTTED LINE, 12"	
							1.08						646	10010	1.08	MI	EDGE LINE, 6"	
							0.13						646	10110	0.13	MI	LANE LINE, 6"	
							250						646	10310	250	FT	CHANNELIZING LINE, 12"	
																	ALTERNATE QUANTITIES - CONCRETE PAVEMENT OPTION	
							18.79						646	10010	18.79	MI	EDGE LINE, 6"	
							17.19						646	10110	17.19	MI	LANE LINE, 6"	
							6736						646	10310	6736	FT	CHANNELIZING LINE, 12"	
							505						646	10600	505	FT	TRANSVERSE/DIAGONAL LINE	
							5299						646	20504	5299	FT	DOTTED LINE, 6"	
							2728						646	20510	2728	FT	DOTTED LINE, 12"	

CALCULATED MJH
CHECKED KAE

TRAFFIC CONTROL PLAN - SUB-SUMMARY

FRA-71-5.29

547
623

P:\84868\traffic\sheets\547-84868TG001.dgn 3/30/2015 9:39:40 AM mtakacs

SHEET NO.	REFERENCE NO.	LOCATION	STATION FROM	STATION TO	SIDE	621 RPM WHITE EACH	621 RPM WHITE/RED EACH	621 RPM YELLOW/RED EACH	621 SPACING	644 EDGE LINE, 6" WHITE FT	644 EDGE LINE, 6" YELLOW FT	644 LANE LINE, 6" FT	644 CHANNELIZING LINE, 12" FT	644 TRANSVERSE/DIAGONAL LINE FT	644 DOTTED LINE, 6" FT	644 DOTTED LINE, 12" FT	646 EDGE LINE, 6" WHITE FT	646 EDGE LINE, 6" YELLOW FT	646 LANE LINE, 6" FT	646 CHANNELIZING LINE, 12" FT	646 STOP LINE, 24" FT	646 LANE ARROW EACH
553-564	LL-1	NB I-71	280+50	509+00	RT	191			120			22672							178			
553-564	LL-2	NB I-71	279+31	509+00	RT	192			120			22791							178			
553,554	ELW-1	NB I-71/RAMP D (SR 665)	279+31	313+15	RT					3384												
554,555	ELW-2	NB I-71	312+10	333+31	RT					2121												
556-564	ELW-3	NB I-71	333+31	491+02	RT					15771							178					
562-564	ELW-4	NB I-71	490+98	509+00	RT					1802												
562-564	ELW-5	RAMP D (STRINGTOWN)	491+02	508+23	RT												1736					
553-564	ELY-1	NB I-71	279+31	509+00	RT						22791							178				
554	ELY-2	RAMP D (SR 665)	312+10	312+85	LT			2	80		77											
562-564	ELY-3	RAMP D (STRINGTOWN)	490+98	507+92	LT			23	80									1660				
554	CH-1	NB I-71	309+56	312+10	RT		7		40				254									
554	CH-2	↓	309+56	312+10	RT		7		40				254									
556	CH-3	↓	333+31	337+72	RT								441									
556	CH-4	↓	333+31	337+72	RT		12		40				441									
562	CH-5	↓	487+02	490+98	RT		11		40				396									
562	CH-6	↓	487+02	490+98	RT		11		40				396									
564	CH-7	RAMP D (STRINGTOWN)	505+32	507+82	LT		8		40											250		3
564	SL-1	RAMP D (STRINGTOWN)	507+82																		32	
554	DLW-1	NB I-71	304+00	309+56	RT										556							
556	DLW-2	NB I-71	337+72	350+23	RT										1251							
561,562	DLW-3	NB I-71	483+00	487+02	RT										402							
553-563	LL-3	SB I-71	279+31	509+00	LT	192			120			22791							178			
553-563	LL-4	↓	287+70	509+00	LT	186			120			21952							178			
553,554	ELW-6	↓	279+31	309+59	LT					3028												
554-556	ELW-7	↓	309+59	334+22	LT					2463												
556-562	ELW-8	↓	324+22	502+09	LT					17787							178					
557-563	ELW-9	↓	494+11	509+00	LT					1489												
557-563	ELW-10	RAMP A (SPRINGTOWN)	494+09	502+09	LT												823					
553-563	ELY-4	SB I-71	279+31	509+00	LT						22791							178				
563,564	ELY-5	RAMP A (SPRINGTOWN)	494+11	501+92	LT			10	80									794				
553,554	CH-8	SB I-71	300+77	309+59	LT								882									
553,554	CH-9	↓	300+77	309+59	LT		23		40				882									
556	CH-10	↓	334+22	338+22	LT		11		40				400									
556	CH-11	↓	334+22	338+22	LT		11		40				400									
556	CH-12	↓	334+22	342+12	LT		21		40				790									
562	CH-13	↓	489+36	494+11	LT								475									
562	CH-14	↓	489+36	494+11	LT		13		40				475									
553	DLW-4	↓	279+31	287+70	LT										839							
553	DLW-5	↓	288+27	300+77	LT										1250							
561,562	DLW-6	↓	479+35	489+36	LT										1001							
556,557	DWD-1	↓	342+12	369+40	LT											2728						
553	TLW-1	↓	279+31	287+70	LT									505								
		SUB-TOTAL				761	135	35		47845	45659	90206					2915	2810	712			
		TOTALS TO SHEET 547				**931**				**17.71 (MI)**		**17.08 (MI)**	**6486**	**505**	**5299**	**2728**	**1.08 (MI)**		**0.13 (MI)**	**250**	**32**	**3**

CALCULATED MJH
CHECKED KAE

FREEWAY PAVEMENT MARKING SUBSUMMARY

FRA-71-5.29

SIGN REMOVAL SUB-SUMMARY

SHEET NO.	REFERENCE NO.	LOCATION	STATION	630 REMOVAL OF GROUND MOUNTED SIGN AND DISPOSAL (EACH)	REMOVAL OF GROUND MOUNTED MAJOR SIGN AND DISPOSAL (EACH)	REMOVAL OF GROUND MOUNTED MAJOR SIGN AND REERECTION (EACH)	REMOVAL OF GROUND MOUNTED POST SUPPORT AND DISPOSAL (EACH)	REMOVAL OF GROUND MOUNTED STRUCTURAL BEAM SUPPORT AND DISPOSAL (EACH)	REMOVAL OF OVERHEAD MOUNTED SIGN AND REERECTION (EACH)	REMOVAL OF OVERHEAD MOUNTED SIGN AND DISPOSAL (EACH)	REMOVAL OF OVERHEAD SIGN SUPPORT AND DISPOSAL, TYPE TC-12.30 (EACH)	REMOVAL OF OVERHEAD SIGN SUPPORT AND DISPOSAL, TYPE TC-7.65 (EACH)				
553	R-1	NB I-71	282+13	2			1									
	R-2		285+05			1		2								
	R-3		301+43	1			2									
554	R-4		304+67			1		3								
555	R-5		315+92	1			1									
556	R-6		349+10	1			1									
557	R-7		361+58	2			1									
	R-8		362+44	1			2									
	R-9		369+59	1			1									
	R-10		374+56		1			2								
	R-11		380+56	1			1									
558	R-12		406+84	1			1									
	R-13		413+34		1			2								
5559	R-14		421+67	1			1									
	R-15		421+67	1			2									
	R-16		431+71	1			1									
	R-17		431+72	1			1									
560	R-18		445+57	1			1									
	R-19		453+76							2		1				
	R-20		463+70	2			1									
	R-21		465+22	1			1									
561	R-22		474+08	1			2									
	R-23		474+24	1			1									
	R-24		476+11							1	1					
	R-25		485+22	1			2									
	R-26		485+51	2			1									
562	R-27		489+60	1			2									
	R-28		490+50							3		1				
	R-29		493+57	1				1								
564	R-30		504+17		1			2								
	R-31		506+70	2			1									
562	R-32	STRINGTOWN RAMP D	493+71	4			4									
	R-33		496+59	1			1									
564	R-34		500+54		1			2								
	R-35		502+80	1			1									
	R-36		505+00	4			4									
	R-37		505+77	1			1									
	R-38		507+77	3			2									
	R-39		507+79	4			2									
	R-40		507+79	1			1									
TOTALS TO SHEET 547				47	4	2	44	14		6	1	2				

CALCULATED MJH
CHECKED KAE

SIGN REMOVAL SUBSUMMARY

FRA-71-5.29

SIGN REMOVAL SUB-SUMMARY

SHEET NO.	REFERENCE NO.	LOCATION	STATION	630 REMOVAL OF GROUND MOUNTED SIGN AND DISPOSAL EACH	630 REMOVAL OF GROUND MOUNTED MAJOR SIGN AND DISPOSAL EACH	630 REMOVAL OF GROUND MOUNTED MAJOR SIGN AND REERECTION EACH	630 REMOVAL OF GROUND MOUNTED POST SUPPORT AND DISPOSAL EACH	630 REMOVAL OF GROUND MOUNTED STRUCTURAL BEAM SUPPORT AND DISPOSAL EACH	630 REMOVAL OF OVERHEAD MOUNTED SIGN AND REERECTION EACH	630 REMOVAL OF OVERHEAD MOUNTED SIGN AND DISPOSAL EACH	630 REMOVAL OF OVERHEAD SIGN SUPPORT AND DISPOSAL, TYPE TC-7.65 EACH					
553	R-41	SB I-71	282+71	2			1									
	R-42		284+79	2			1									
	R-43		286+42	1			2									
	R-44		295+14	2			1									
	R-45		300+75	1			1									
554	R-46		305+69	2			1									
	R-47		310+94	1			2									
555	R-48		315+94	2			3									
	R-49		315+92	2			1									
	R-50		326+38	2			1									
556	R-51		336+99	2			1									
	R-52		337+32							1	1					
	R-53		347+60	2			1									
	R-54		349+10	1			1									
	R-55		358+27	2			1									
557	R-56		362+11	2			1									
	R-57		367+43						1		1					
	R-58		369+62	2			1									
	R-59		369+62	1			1									
	R-60		376+50	1			2									
	R-61		380+34	1			1									
	R-62		380+34	2			1									
	R-63		384+55			1		2								
558	R-64		390+64	2			1									
	R-65		402+12	2			1									
	R-66		406+79	1			1									
	R-67		412+14	2			1									
559	R-68		421+58	2			1									
	R-69		421+66	3			2									
	R-70		433+36	2			1									
	R-71		442+96	2			1									
560	R-72		445+44	1			1									
	R-73		448+93		1			2								
	R-74		453+67	2			1									
	R-75		463+97	1			1									
	R-76		464+18	2			1									
	R-77		464+46	2			1									
	R-78		468+36	1			2									
561	R-79		474+33	2			3									
	R-80		474+27	2			1									
	R-81		478+45	1			2									
	R-82		484+88		1			2								
562	R-83		489+34	1			1									
	R-84		494+37	1			2									
	R-85		496+15	2			1									
562	R-84	STRINGTOWN RAMP A	496+75	1			1									
563	R-87		501+59	1			1									
TOTALS TO SHEET 547				69	2	1	53	6	1	1	2					

CALCULATED MJH
CHECKED KAE

SIGN REMOVAL SUBSUMMARY

FRA-71-5.29

MINOR SIGNING SUB-SUMMARY - COLUMN "A"

SHEET NO.	REFERENCE NO.	LOCATION	STATION	630							
					GROUND MOUNTED SUPPORT, NO. 2 POST	GROUND MOUNTED SUPPORT, NO. 3 POST	GROUND MOUNTED SUPPORT, NO. 4 POST	ONE WAY SUPPORT, NO. 3 POST	SIGN POST REFLECTOR	SIGN, FLAT SHEET	
					FT	FT	FT	FT	EACH	SQ FT	
553	SN-01	NB I-71	282+17			13.5				14	
	SN-02		284+80			15.5				15	
	SN-03		295+15			15.5				15	
	SN-04		301+50			14.5/14.9				24	
554	SN-05		305+69			15.5				15	
555	SN-06		315+93		14.5					3	
	SN-07		315+93			15.5				15	
	SN-08		326+38			15.5				15	
556	SN-09		336+99			15.5				15	
	SN-10		347+60			15.5				15	
	SN-11		349+08		12.5					1	
	SN-12		357+00			16.0/16.4				13.5	
	SN-13		358+28			15.5				15	
557	SN-14		362+25			16.5/16.9				20	
	SN-15		369+62		14.5					3	
	SN-16		369+62			15.5				15	
	SN-17		377+75			13.5				14	
	SN-18		380+35			15.5				15	
	SN-19		380+54		12.5					1	
558	SN-20		390+65			15.5				15	
	SN-21		402+12			15.5				15	
	SN-22		406+85		12.5					1	
	SN-23		412+15			15.5				15	
559	SN-24		418+00		14.0/14.4					10	
	SN-25		421+57			15.5				15	
	SN-26		421+57		14.5					3	
	SN-27		433+37			15.5				15	
	SN-28		442+97			15.5				15	
560	SN-29		445+55		12.5					1	
	SN-30		453+69			15.5				15	
	SN-31		463+76			13.5				14	
	SN-32		464+47			15.5				15	
	SN-33		465+17		12.5					1	
561	SN-34		474+28			15.5				15	
	SN-35		485+52			15.5				15	
562	SN-36		489+58		12.5					1	
	SN-37		496+16			15.5				15	
564	SN-38		504+09			13.0/13.0				12.5	
	SN-39		506+71			15.5				15	
562	SN-40	RAMP D (S-TOWN)	493+61			12.5/12.5			2	24.75	
	SN-41		493+61				14.8/15.2		2	24.75	
	SN-42		496+84			14.0				6.25	
564	SN-43		504+00			16.8/16.8			2	17.5	
	SN-44		504+00			16.8/16.8			2	17.5	
	SN-45		505+35			14.0				7.5	
	SN-46		507+76					15.3/15.3	2	29.5	
	SN-47		507+82					15.3/15.3	2	29.5	
TOTAL - COLUMN "A"					146.9	653.2	29.9	61.0	12	624.25	

MINOR SIGNING SUB-SUMMARY - COLUMN "B"

SHEET NO.	REFERENCE NO.	LOCATION	STATION	630							
					GROUND MOUNTED SUPPORT, NO. 2 POST	GROUND MOUNTED SUPPORT, NO. 3 POST	GROUND MOUNTED SUPPORT, NO. 4 POST	ONE WAY SUPPORT, NO. 3 POST	SIGN POST REFLECTOR	SIGN, FLAT SHEET	
					FT	FT	FT	FT	EACH	SQ FT	
553	SN-48	WB I-70	280+00			16.5/16.9				20	
	SN-49		282+72			13.5				14	
	SN-50		286+00			16.0/16.4				13.5	
	SN-51		300+73		12.5					1	
554	SN-52		310+90			15.5/15.9				16	
555	SN-53		315+93		14.5	14.0/14.4				13	
556	SN-54		349+06		12.5					1	
557	SN-55		369+62		14.5					3	
	SN-56		378+24			13.5				14	
	SN-57		380+34			13.5				6	
558	SN-58		406+77		12.5					1	
559	SN-59		421+67			14.0/14.4				10	
	SN-60		421+67		14.5					3	
560	SN-61		445+46		12.5					1	
	SN-62		464+00		12.5					1	
	SN-63		464+23			14.5/14.9				14	
	SN-64		466+01			16.5/16.9				20	
	SN-65		470+00			16.0/16.4				13.5	
561	SN-66		474+28		15.5	16.0/16.4				14	
562	SN-67		489+27		12.5					1	
	SN-68		494+73			15.5/15.9				16	
562	SN-69	RAMP A (S-TOWN)	496+50			14.0				6.25	
563	SN-70		501+20		13.0					3.75	
TOTAL - COLUMN "B"					147	380				206	
TOTAL - COLUMN "A"					146.9	653.2	29.9	61.0	12	624.25	
TOTALS TO SHEET 547					**293.9**	**1033.2**	**29.9**	**61**	**12**	**830.25**	

CALCULATED MJH
CHECKED KAE

MINOR SIGNING SUBSUMMARY

FRA-71-5.29

OVERHEAD SIGNING SUB-SUMMARY

SHEET NO.	REFERENCE NO.	LOCATION	STATION	625	630							
				GROUND ROD	OVERHEAD SIGN SUPPORT, TYPE TC-12.30, DESIGN 8	OVERHEAD SIGN SUPPORT, TYPE TC-12.30, DESIGN 10	OVERHEAD SIGN SUPPORT, TYPE TC-12.30, DESIGN 12	OVERHEAD SIGN SUPPORT, TYPE TC-7.65, DESIGN 8	SIGN ATTACHMENT ASSEMBLY	SIGN, OVERHEAD EXTRUSHEET	SIGN, PERMANENT OVERLAY	RIGID OVERHEAD SIGN SUPPORT FOUNDATION
				EACH	EACH	EACH	EACH	EACH	EACH	SQ FT	SQ FT	EACH
553	OH-1	NB I-71	284+00	1		1			1			1
554	OH-2		309+56	1			1		1			1
559	OH-3		428+00	2				1				2
	M-01									77		
	E1-H1									20		
	M-02									152		
	E1-H1									22.5		
560	OH-4		460+00	1	1							1
	M-03									152		
	E1-H1									22.5		
562	OH-5		487+00	2				1				2
	M-04									77		
	E1-H1									20		
	M-05									132		
	E1-H1									22.5		
553	OH-6	SB I-71	287+70	1	1							1
	M-06									80		
554	OH-7		314+00	1	1							1
	M-07									80		
556	OH-8		338+27	2				1				2
	M-08									80		
	M-09									234		
	E1-H1									17.5		
557	OH-9		365+00	2				1	1			2
	OV-1										7.5	
558	OH-10		391+00	1		1			1			1
TOTALS TO SHEET 547				14	3	2	1	4	4	1189	7.5	14

GROUND MOUNTED MAJOR SIGNS

SHEET NO.	REFERENCE NO.	LOCATION	STATION	630						
				GROUND MOUNTED STRUCTURAL BEAM SUPPORT, W10X12	BREAKAWAY STRUCTURAL BEAM CONNECTION, AS PER PLAN	TRIANGULAR SLIP BASE CONNECTION, AS PER PLAN	SIGN, GROUND MOUNTED EXTRUSHEET	GROUND MOUNTED STRUCTURAL BEAM SUPPORT FOUNDATION	GROUND MOUNTED PIPE SUPPORT FOUNDATION	SIGNING, MISC.: STRUCTURAL PIPE SUPPORT, PER TC-41.15
				FT	EACH	EACH	SQ FT	EACH	EACH	EACH
557	GM-1	NB I-71	375+00	17.9/19.4	2		70	2		
562	GM-2	NB I-71	492+25			1	35		1	1
564	GM-3	RAMP D (S-TOWN)	501+50	18.3/19.7	2		48	2		
559	GM-4	SB I-71	432+00	17.2/17.4	2		40	2		
560	GM-5	SB I-71	448+00	18.3/19.0	2		50	2		
TOTALS TO SHEET 547				147.2	8	1	243	8	1	1

CALCULATED MJH
CHECKED KAE

MAJOR SIGNING SUBSUMMARY

FRA-71-5.29

P:\84868\traffic\sheets\553-84868TP001.dgn 3/30/2015 10:20:13 AM mtakacs

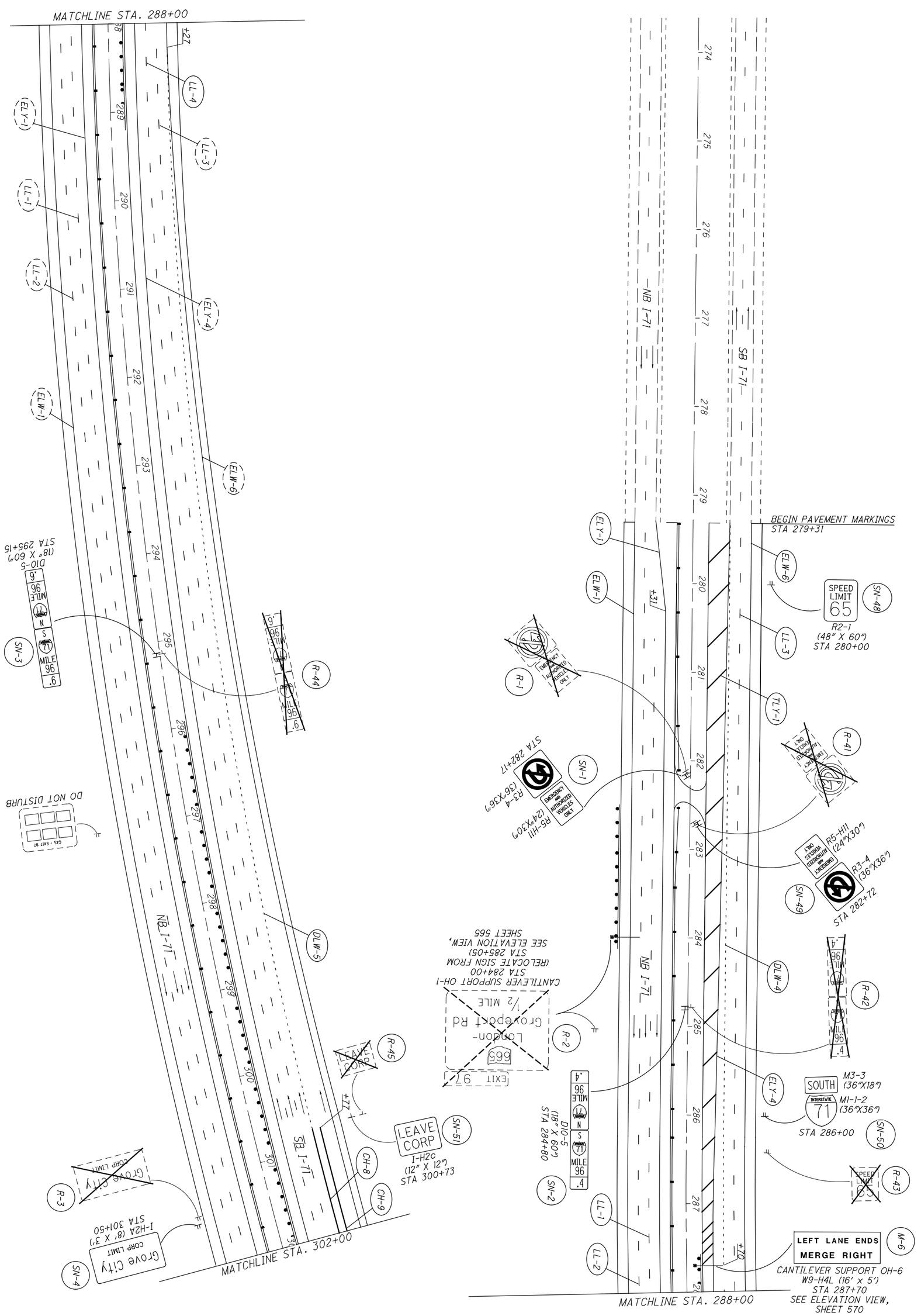

553 623	FRA-71-5.29	TRAFFIC CONTROL PLAN BEGIN PROJECT TO STA. 302+00	CALCULATED MJH CHECKED KAE	0 50 25 100 HORIZONTAL SCALE IN FEET

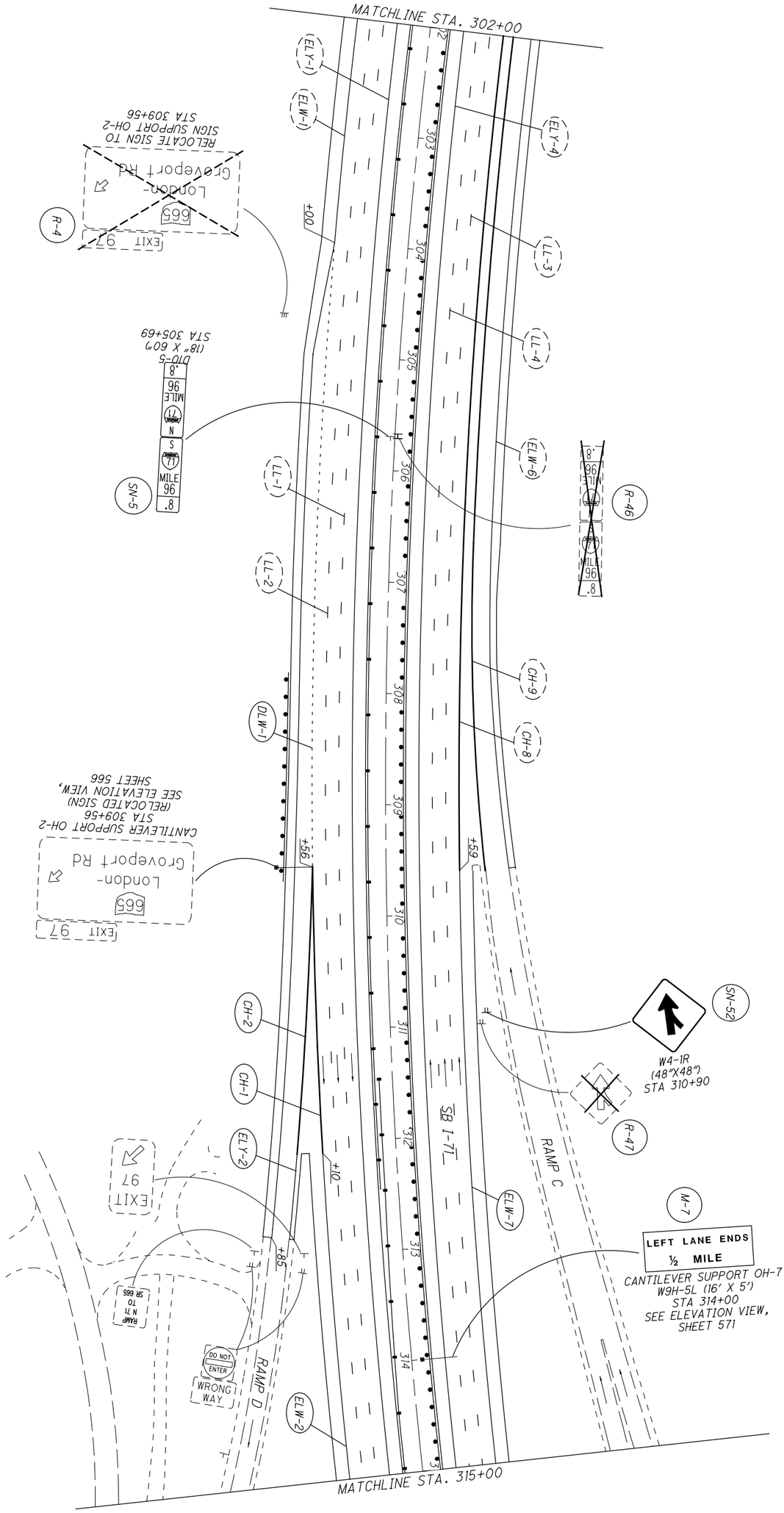

554 623	FRA-71-5.29	TRAFFIC CONTROL PLAN STA. 302+00 TO STA. 315+00	CALCULATED MJH / CHECKED KAE	0 50 25 100 HORIZONTAL SCALE IN FEET

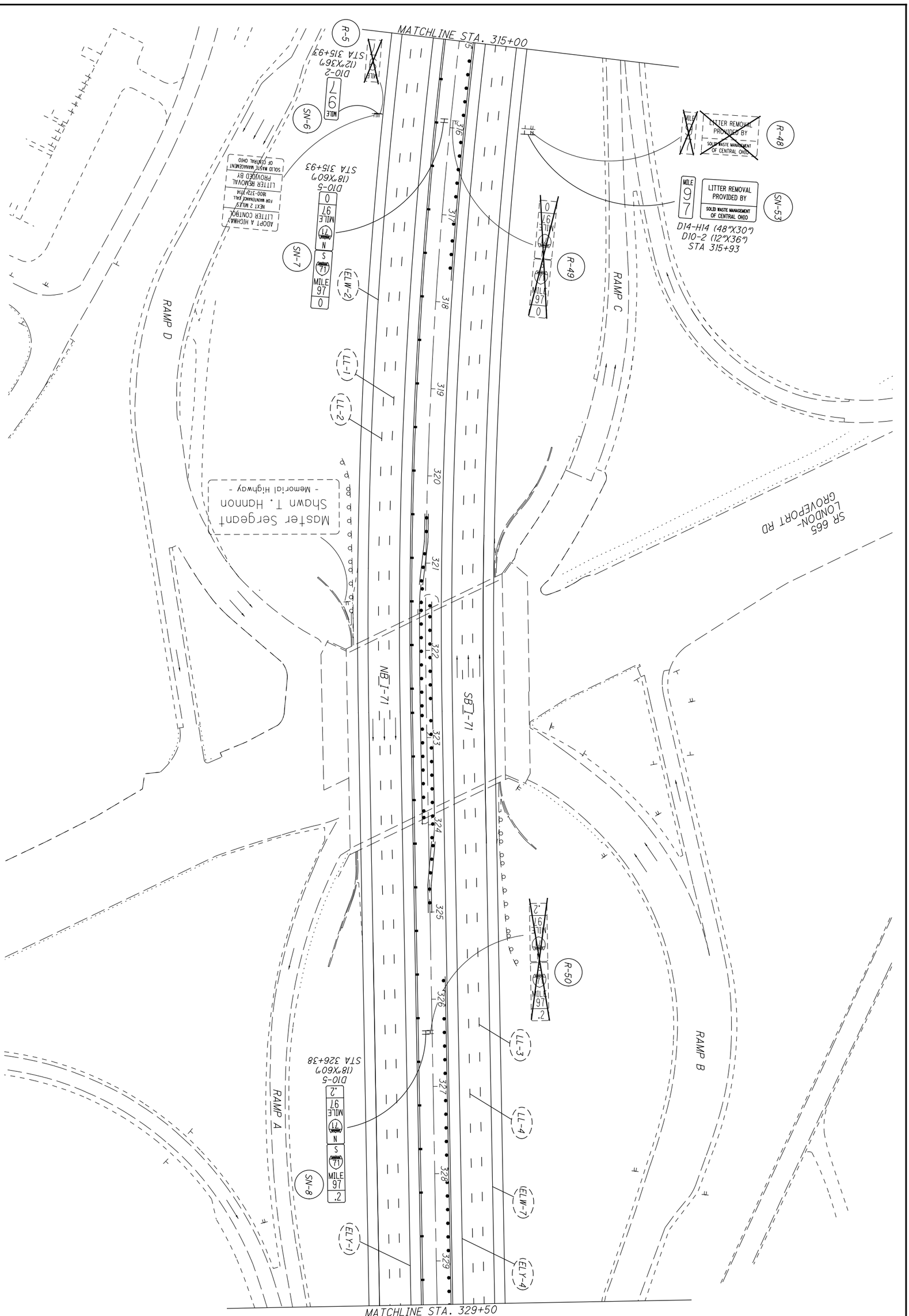

555
623

FRA-71-5.29

TRAFFIC CONTROL PLAN
STA. 315+00 TO STA. 329+50

CALCULATED MJH
CHECKED KAE

0 50
25 100
HORIZONTAL SCALE IN FEET

P:\84868\traffic\sheets\556-84868TP004.dgn 3/30/2015 10:22:28 AM mtakacs

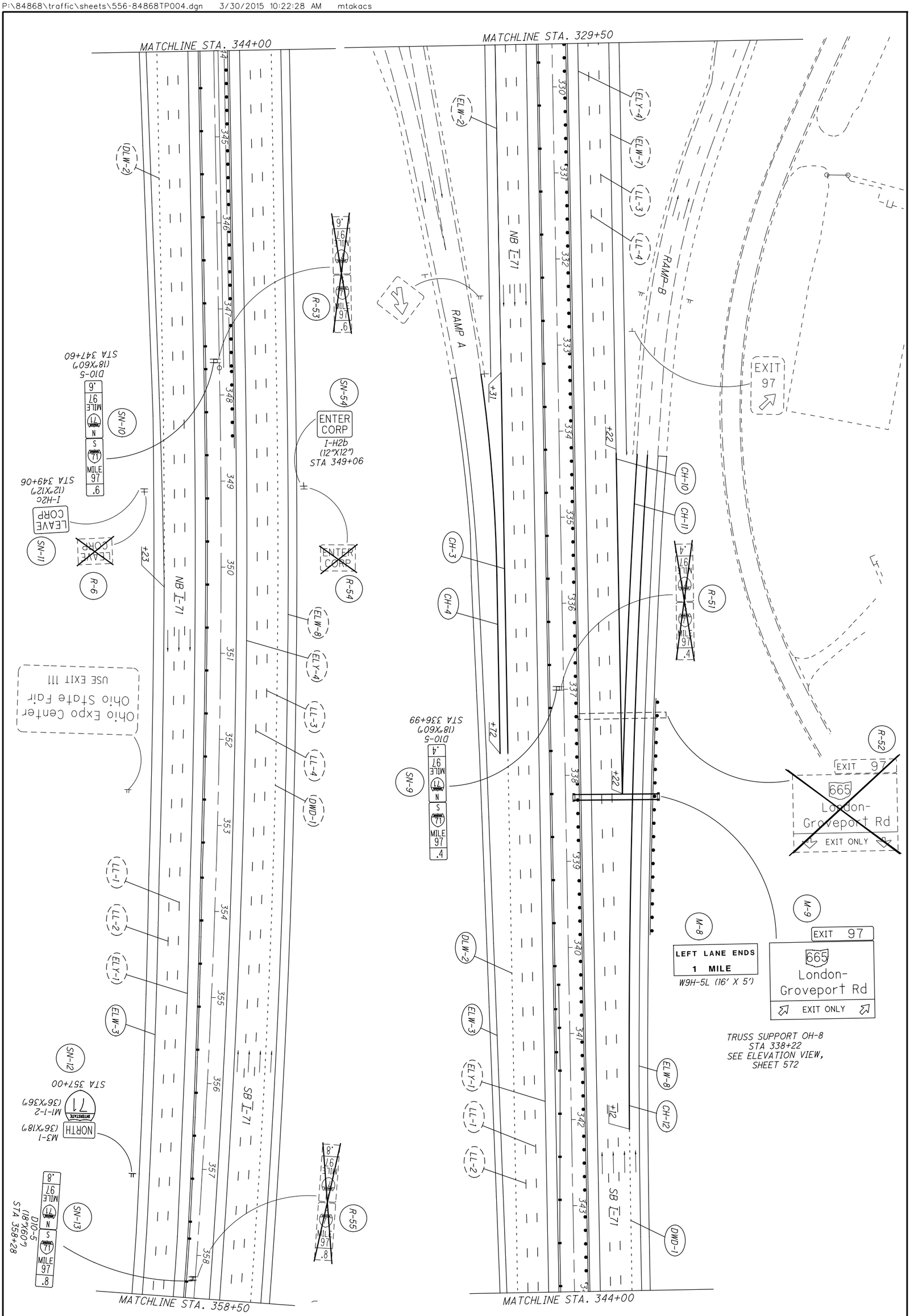

556 / 623	FRA-71-5.29	TRAFFIC CONTROL PLAN STA. 329+50 TO STA. 358+50	CALCULATED MJH CHECKED KAE	0 50 25 100 HORIZONTAL SCALE IN FEET

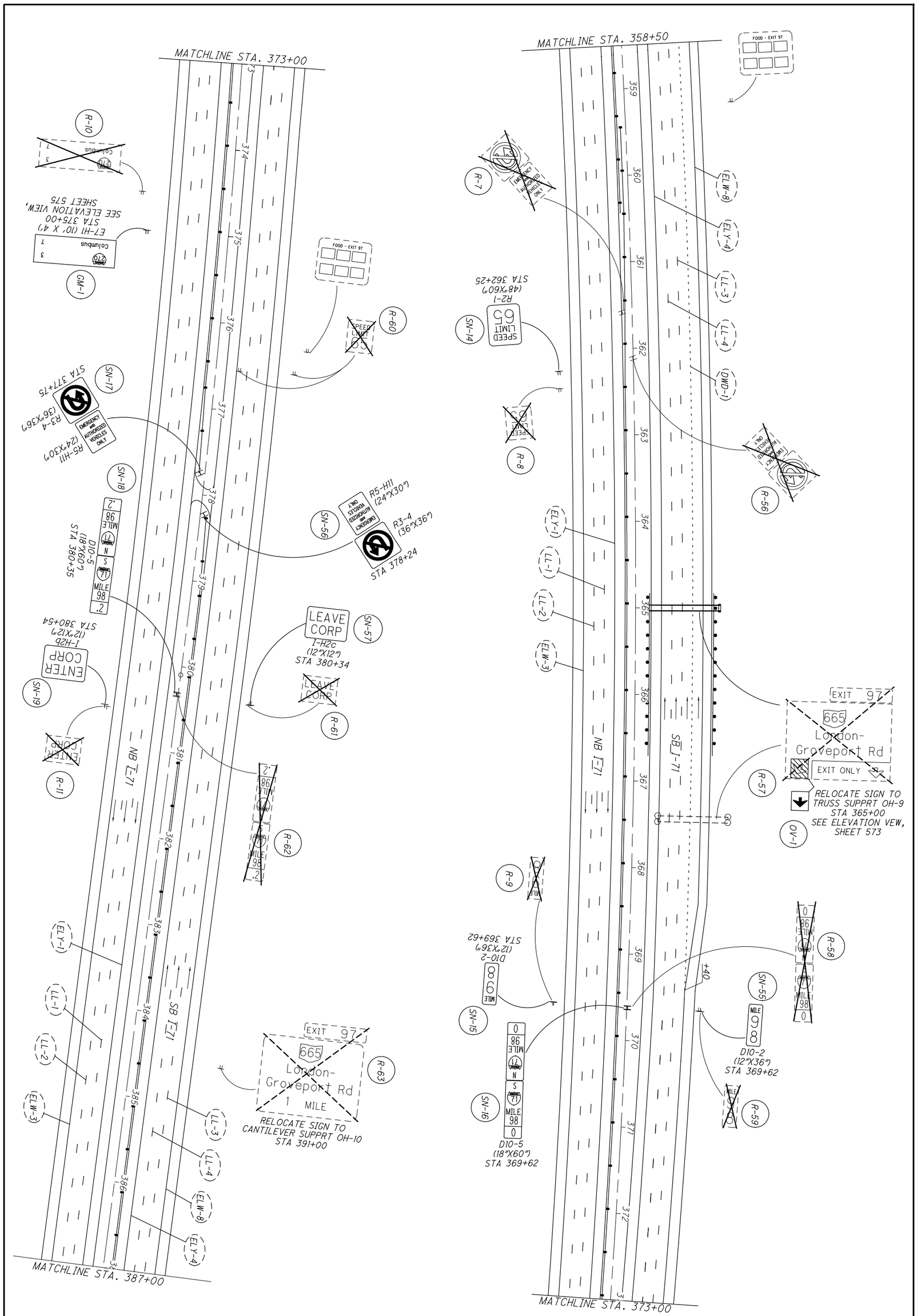

557 / 623	FRA-71-5.29	TRAFFIC CONTROL PLAN STA. 358+50 TO STA. 387+00	CALCULATED MJH CHECKED KAE	0 50 25 100 HORIZONTAL SCALE IN FEET

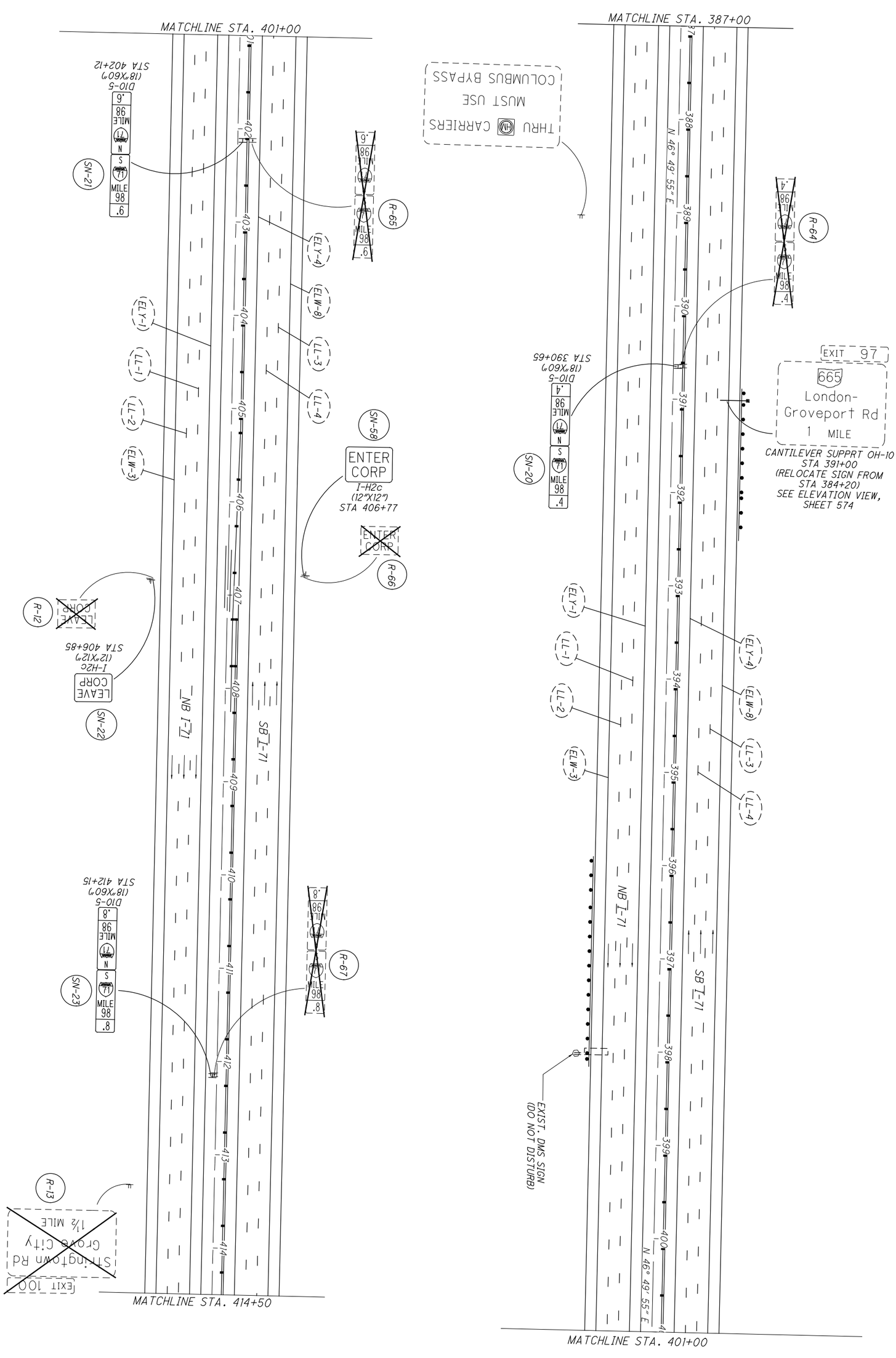

558 / 623	FRA-71-5.29	TRAFFIC CONTROL PLAN STA. 387+00 TO STA. 414+50	CALCULATED MJH CHECKED KAE	0 50 25 100 HORIZONTAL SCALE IN FEET

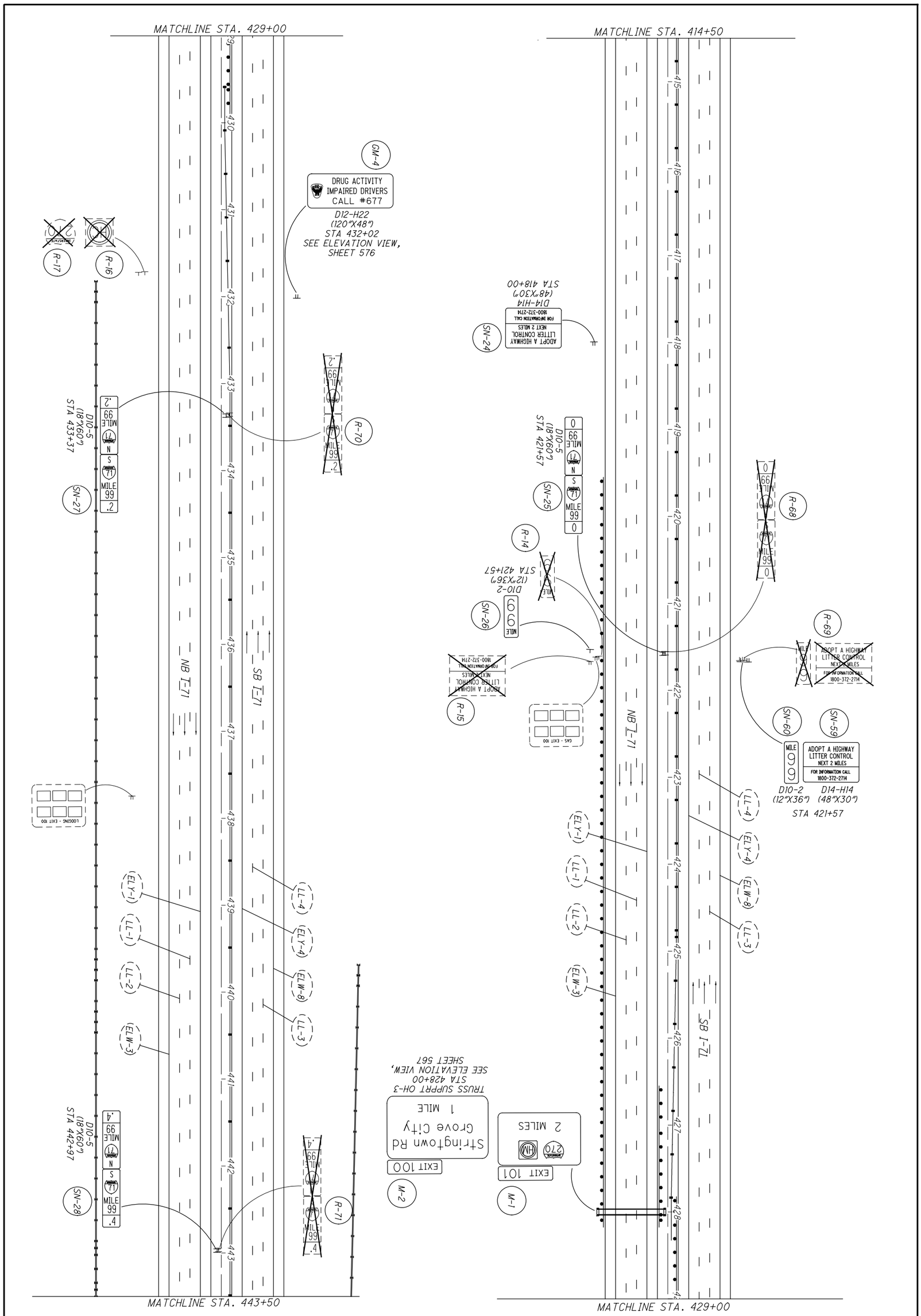

559 / 623	FRA-71-5.29	TRAFFIC CONTROL PLAN STA. 414+50 TO STA. 443+50	CALCULATED MJH CHECKED KAE	0 50 25 100 HORIZONTAL SCALE IN FEET

P:\84868\traffic\sheets\560-84868TP008.dgn 3/30/2015 10:48:05 AM mtakacs

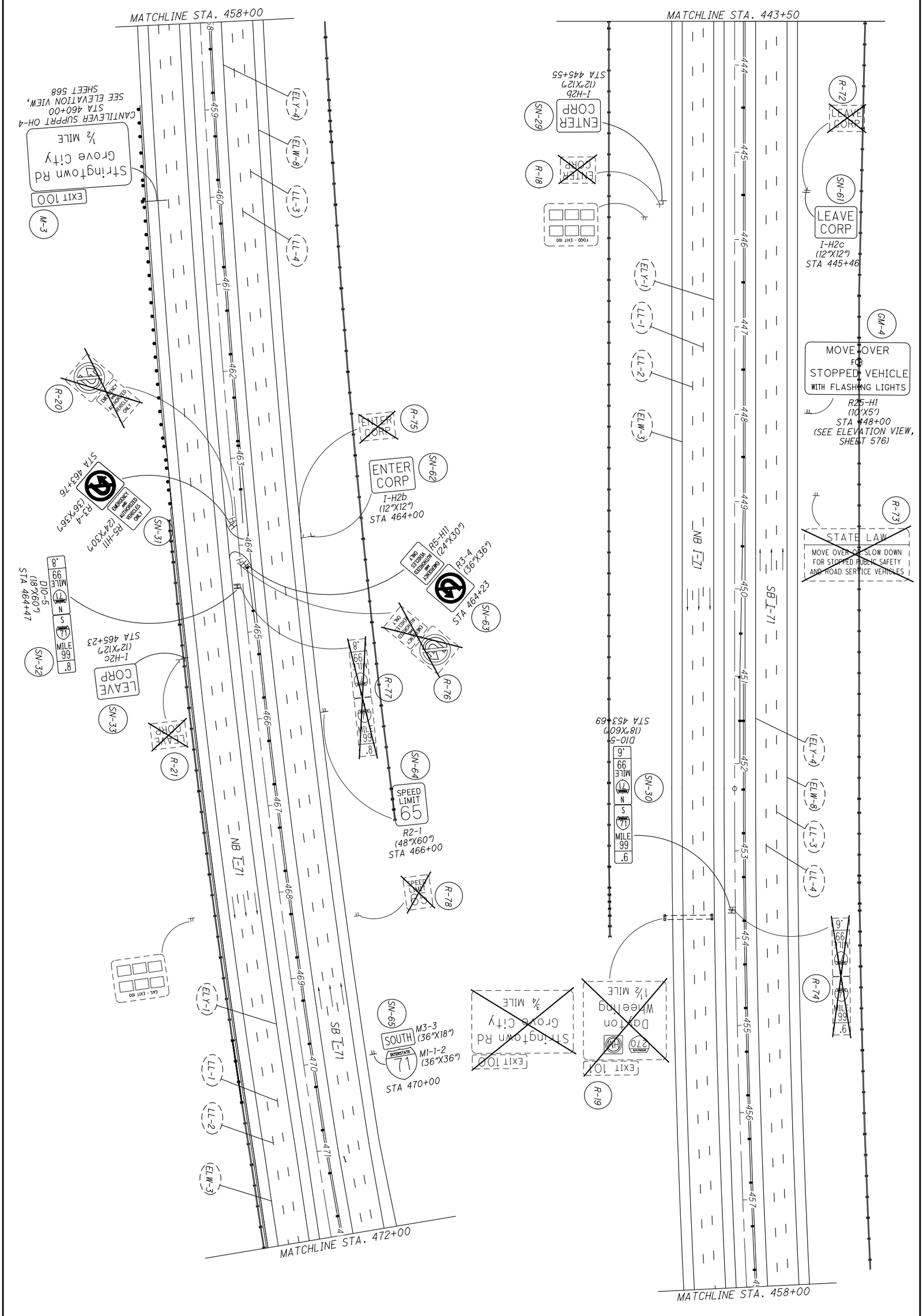

560 / 623	FRA-71-5.29	TRAFFIC CONTROL PLAN STA. 443+50 TO STA. 472+00	CALCULATED MJH CHECKED KAE	0 50 25 100 HORIZONTAL SCALE IN FEET

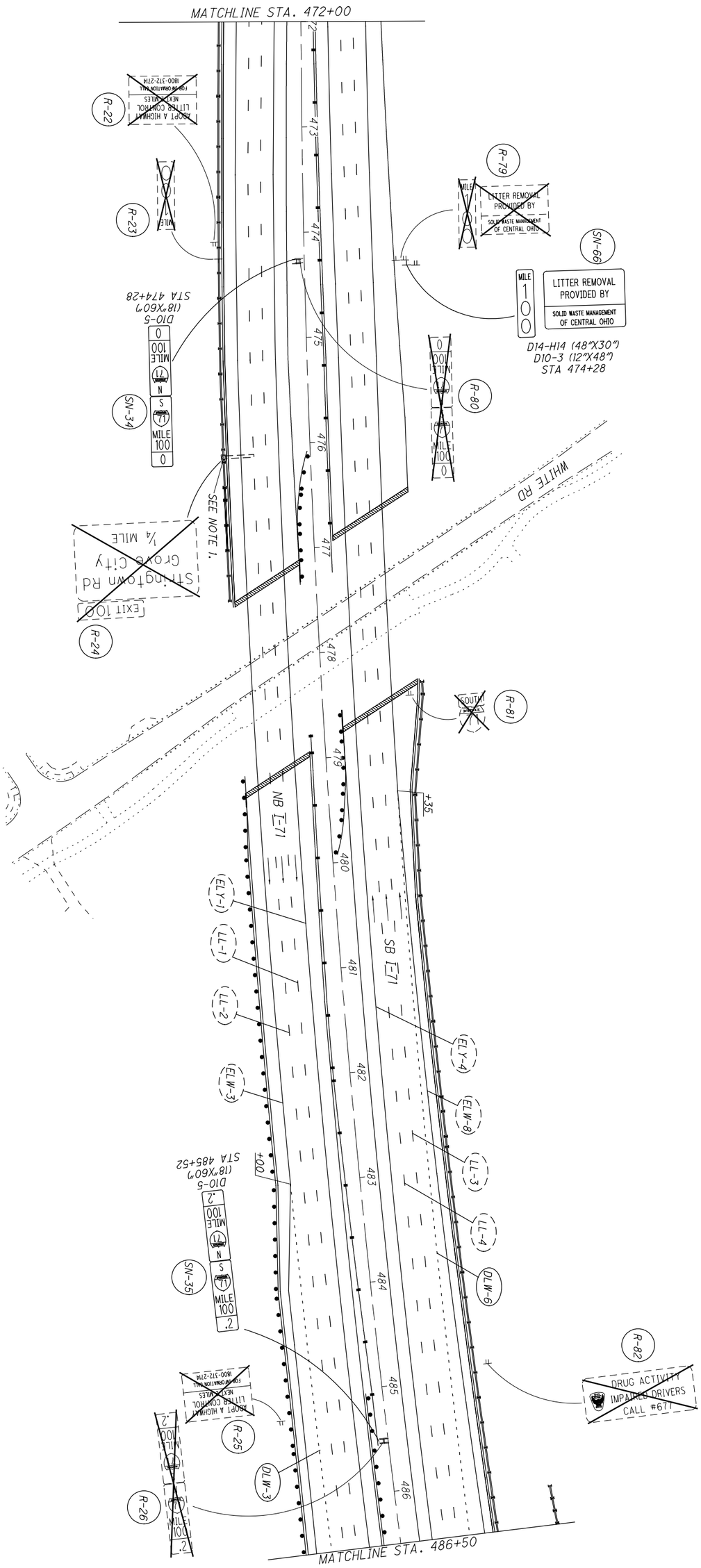

NOTES:
1) RELOCATE EXISTING REPEATER STATION TO OH-4 (STATION 460+00). SEE TRAFFIC CONTROL GENERAL NOTES FOR ADDITIONAL INFORMATION.

561 623	FRA-71-5.29	TRAFFIC CONTROL PLAN STA. 472+00 TO STA. 486+50	CALCULATED MJH / CHECKED KAE	0 50 25 100 HORIZONTAL SCALE IN FEET

P:\84868\traffic\sheets\562-84868TP010.dgn 3/30/2015 10:50:18 AM mtakacs

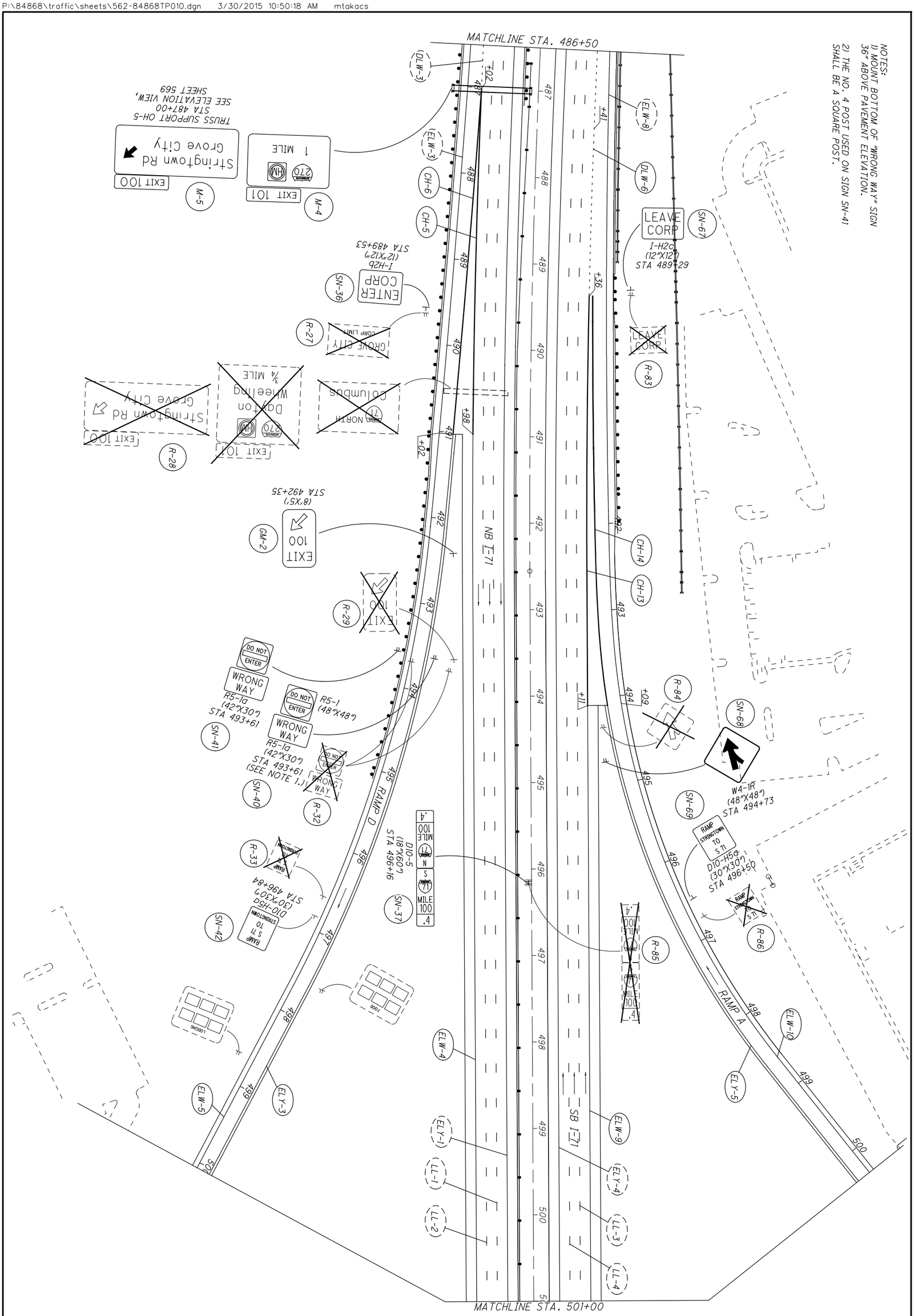

562 623	FRA-71-5.29	TRAFFIC CONTROL PLAN STA. 486+50 TO STA. 501+00	CALCULATED MJH CHECKED KAE	0 50 25 100 HORIZONTAL SCALE IN FEET

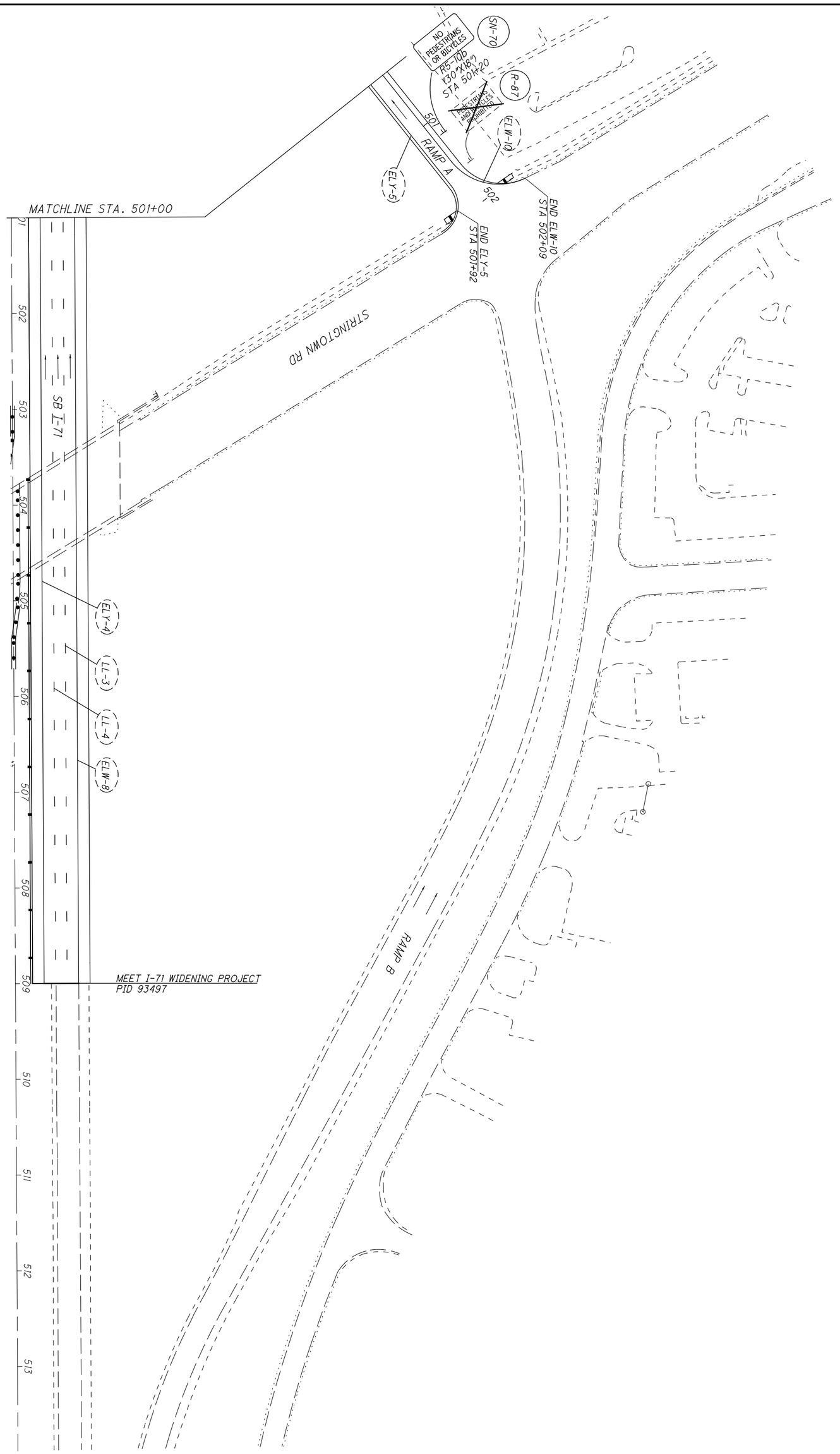

563 / 623	FRA-71-5.29	TRAFFIC CONTROL PLAN STA. 501+00 TO END PROJECT (SB)	CALCULATED MJH CHECKED KAE	0 50 25 100 HORIZONTAL SCALE IN FEET

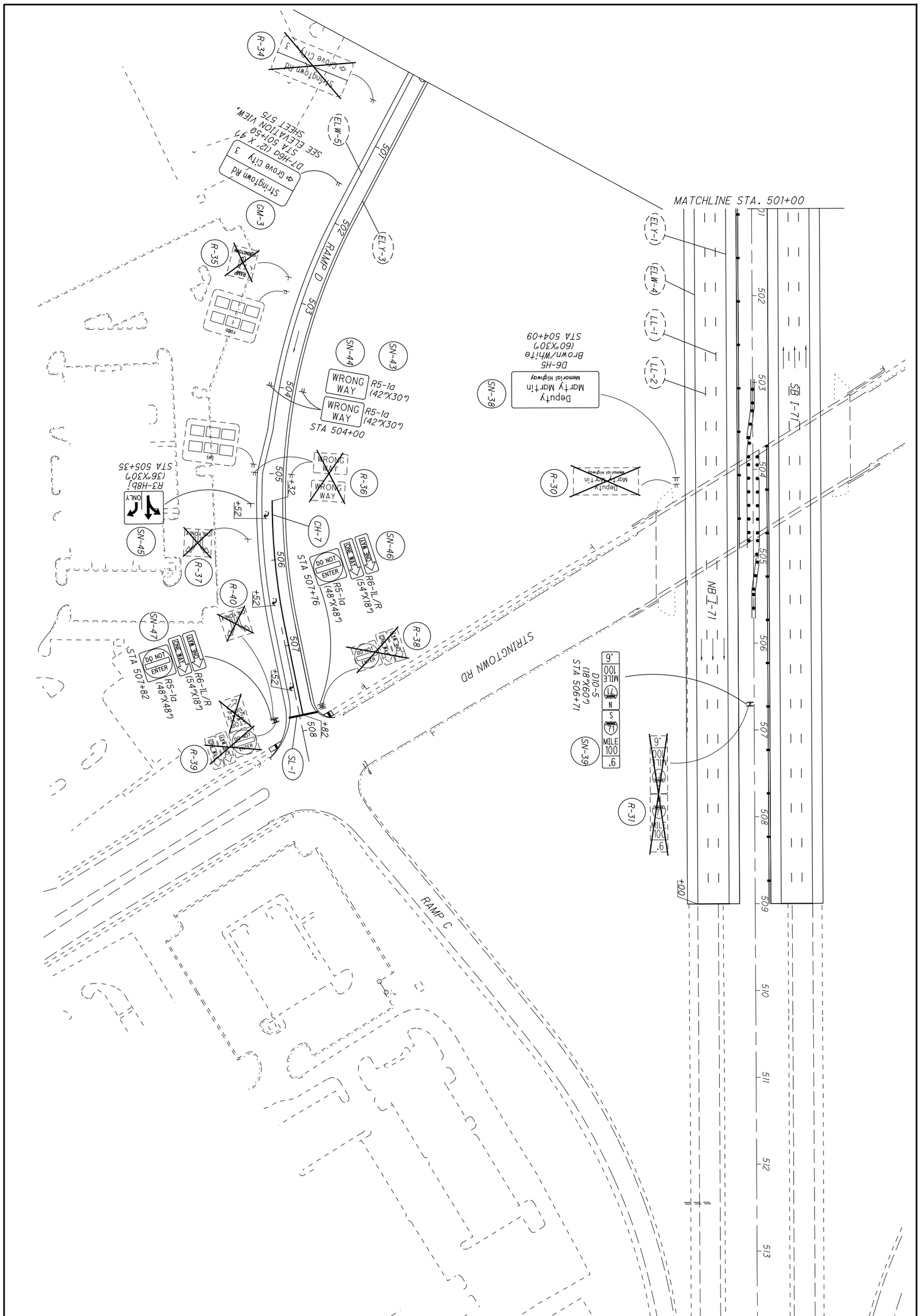

564 / 623	FRA-71-5.29	TRAFFIC CONTROL PLAN STA. 501+00 TO END PROJECT (NB)	CALCULATED MJH CHECKED KAE	0 50 25 100 HORIZONTAL SCALE IN FEET

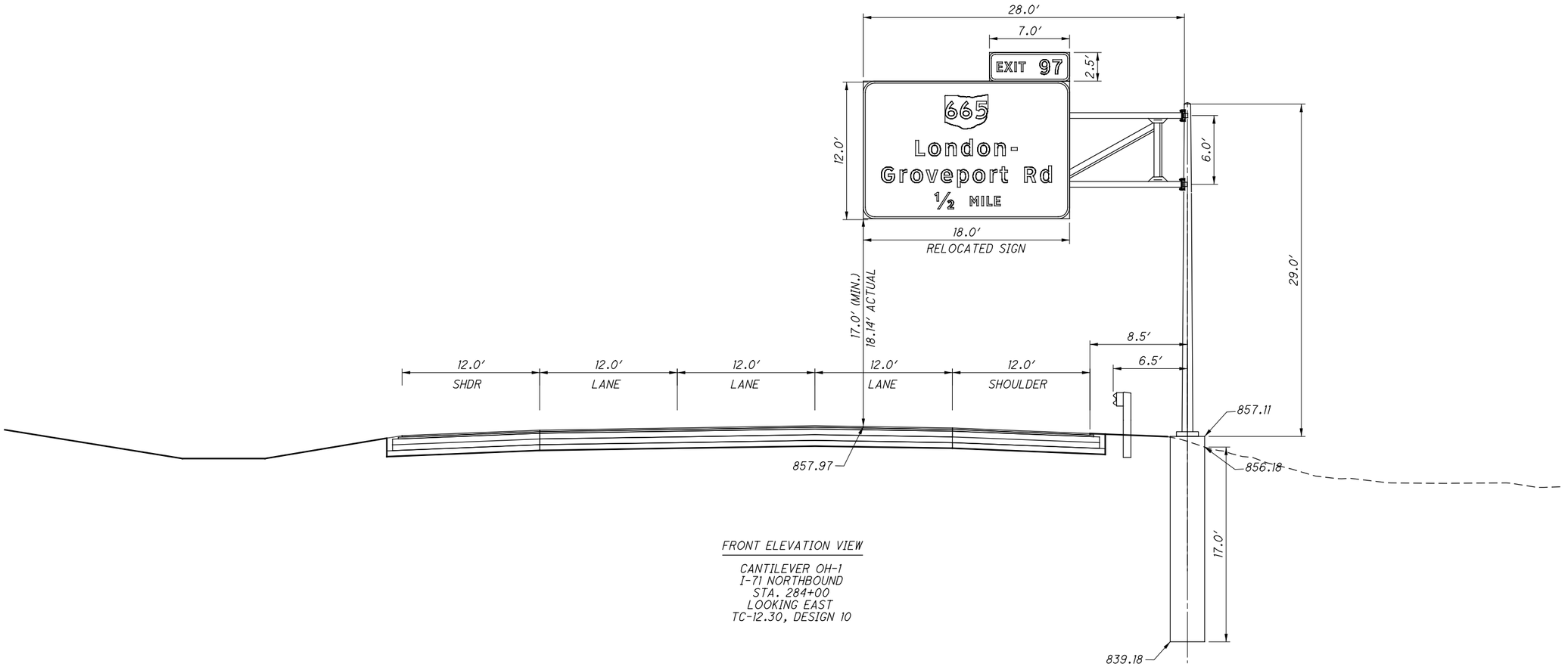

FRONT ELEVATION VIEW

CANTILEVER OH-1
I-71 NORTHBOUND
STA. 284+00
LOOKING EAST
TC-12.30, DESIGN 10

CANTILEVER SIGN OH-1
STA 284+00, I-71 NORTHBOUND

CALCULATED MJH
CHECKED KAE

0 2.5 5 10
HORIZONTAL SCALE IN FEET

FRA-71-5.29

565
623

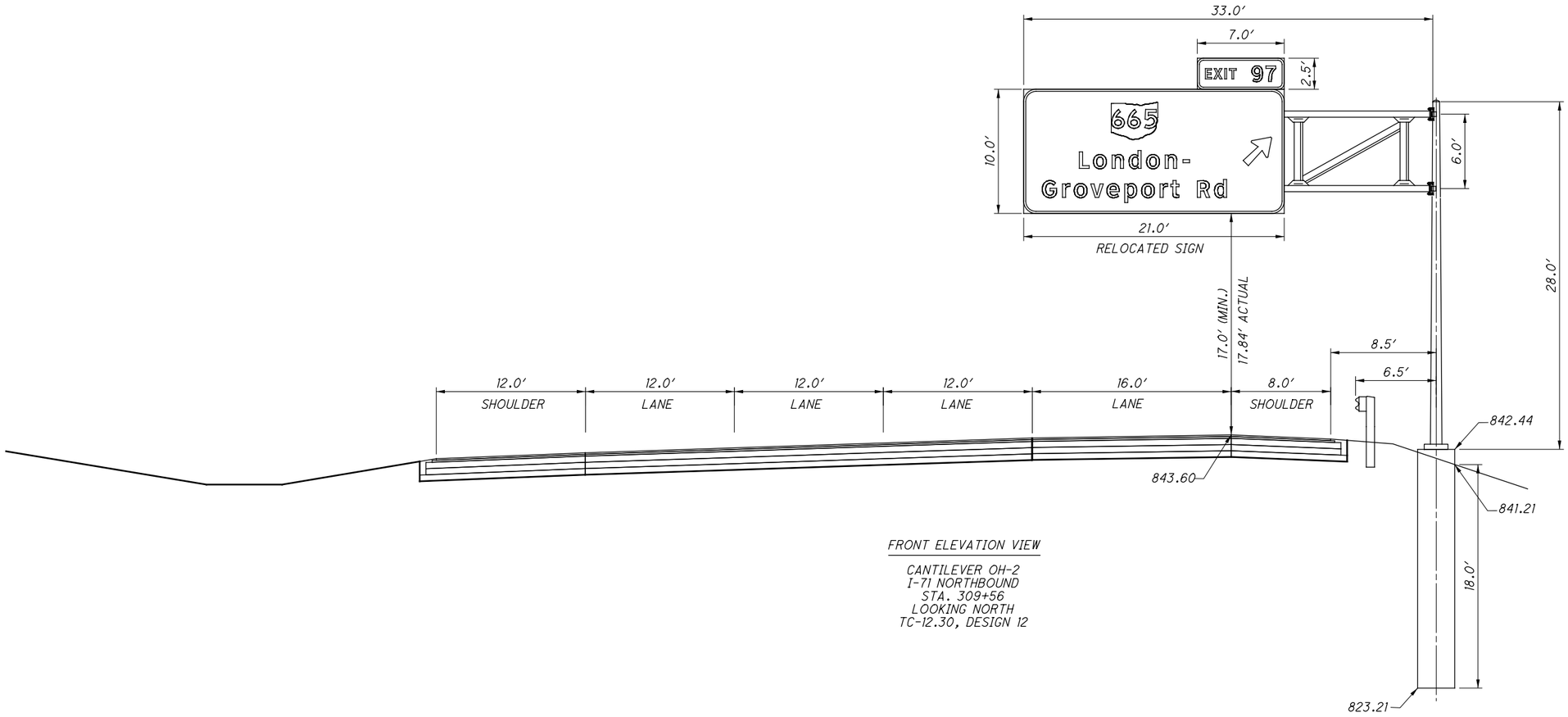

FRONT ELEVATION VIEW

CANTILEVER OH-2
I-71 NORTHBOUND
STA. 309+56
LOOKING NORTH
TC-12.30, DESIGN 12

CALCULATED MJH
CHECKED KAE

0 2.5 5 10
HORIZONTAL SCALE IN FEET

CANTILEVER SIGN OH-2
STA 309+56, I-71 NORTHBOUND

FRA-71-5.29

566
623

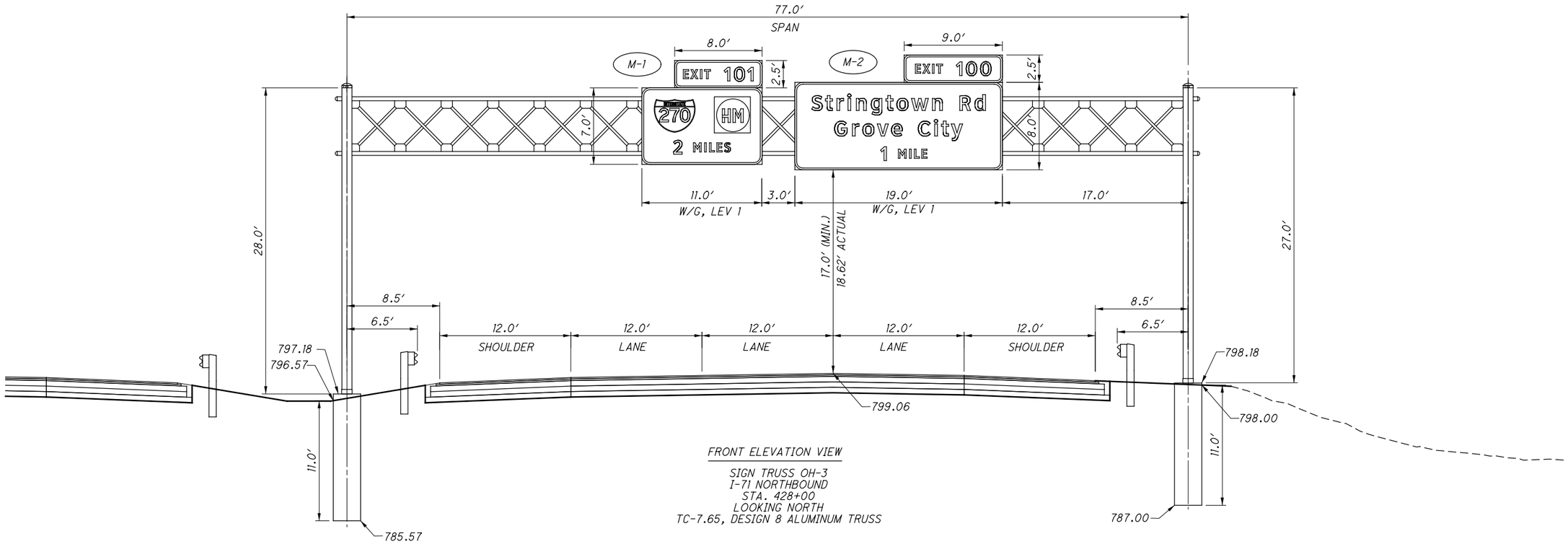

FRONT ELEVATION VIEW

SIGN TRUSS OH-3
I-71 NORTHBOUND
STA. 428+00
LOOKING NORTH
TC-7.65, DESIGN 8 ALUMINUM TRUSS

CALCULATED MJH
CHECKED KAE

0 2.5 5 10
HORIZONTAL SCALE IN FEET

OVERHEAD SIGN TRUSS OH-3
STA 428+00, I-71 NORTHBOUND

FRA-71-5.29

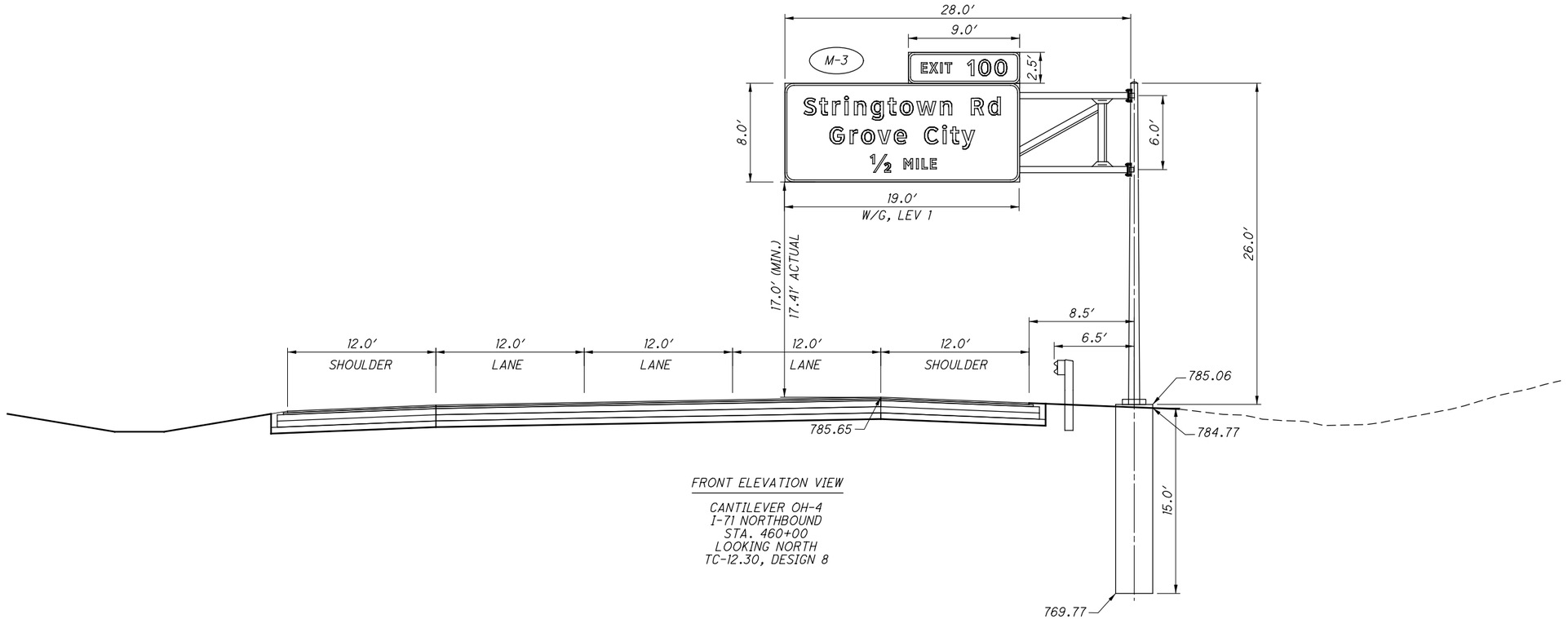

FRONT ELEVATION VIEW

CANTILEVER OH-4
I-71 NORTHBOUND
STA. 460+00
LOOKING NORTH
TC-12.30, DESIGN 8

CANTILEVER SIGN OH-4
STA 460+00, I-71 NORTHBOUND

CALCULATED M.JH
CHECKED KAE

0 2.5 5 10
HORIZONTAL SCALE IN FEET

FRA-71-5.29

568
623

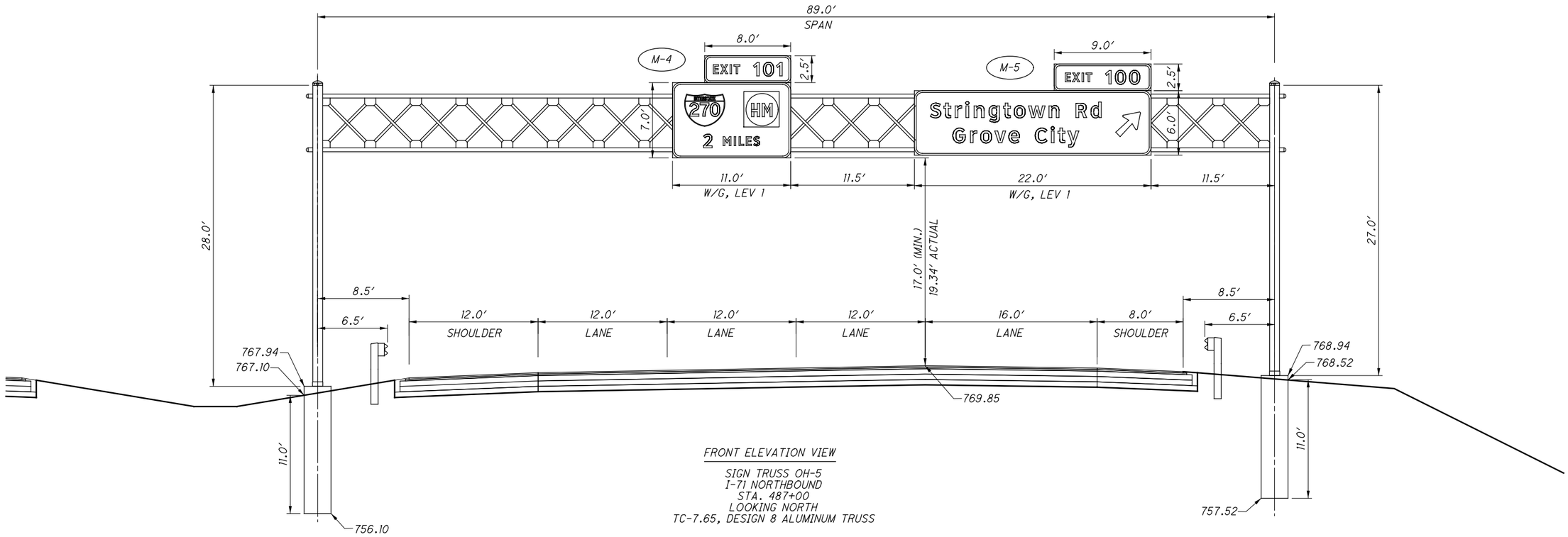

FRONT ELEVATION VIEW

SIGN TRUSS OH-5
I-71 NORTHBOUND
STA. 487+00
LOOKING NORTH
TC-7.65, DESIGN 8 ALUMINUM TRUSS

CALCULATED MJH
CHECKED KAE

0 2.5 5 10
HORIZONTAL SCALE IN FEET

OVERHEAD SIGN TRUSS OH-5
STA 487+00, I-71 NORTHBOUND

FRA-71-5.29

569
623

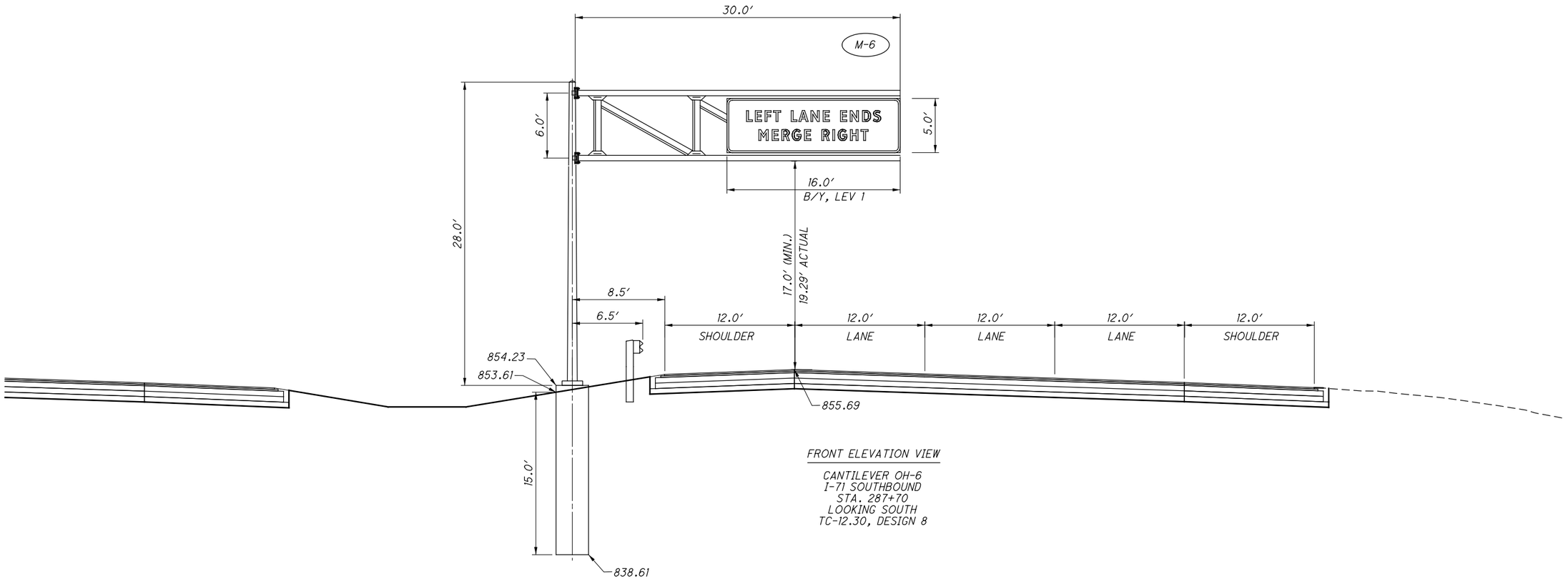

FRONT ELEVATION VIEW

CANTILEVER OH-6
I-71 SOUTHBOUND
STA. 287+70
LOOKING SOUTH
TC-12.30, DESIGN 8

CALCULATED MJH
CHECKED KAE

0 2.5 5 10
HORIZONTAL SCALE IN FEET

CANTILEVER SIGN OH-6
STA 287+70, I-71 SOUTHBOUND

FRA-71-5.29

570
623

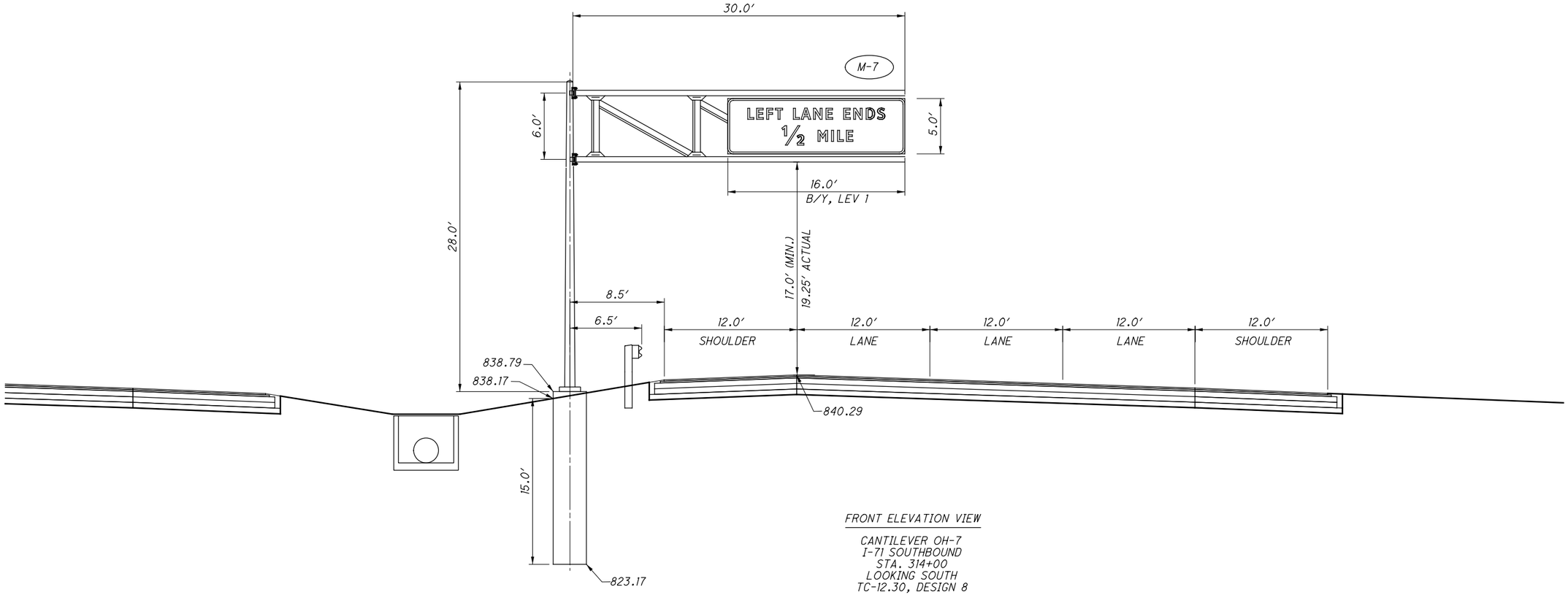

FRONT ELEVATION VIEW

CANTILEVER OH-7
I-71 SOUTHBOUND
STA. 314+00
LOOKING SOUTH
TC-12.30, DESIGN 8

CALCULATED M.JH
CHECKED KAE

0 2.5 5 10
HORIZONTAL SCALE IN FEET

CANTILEVER SIGN OH-7
STA 314+00, I-71 SOUTHBOUND

FRA-71-5.29

571
623

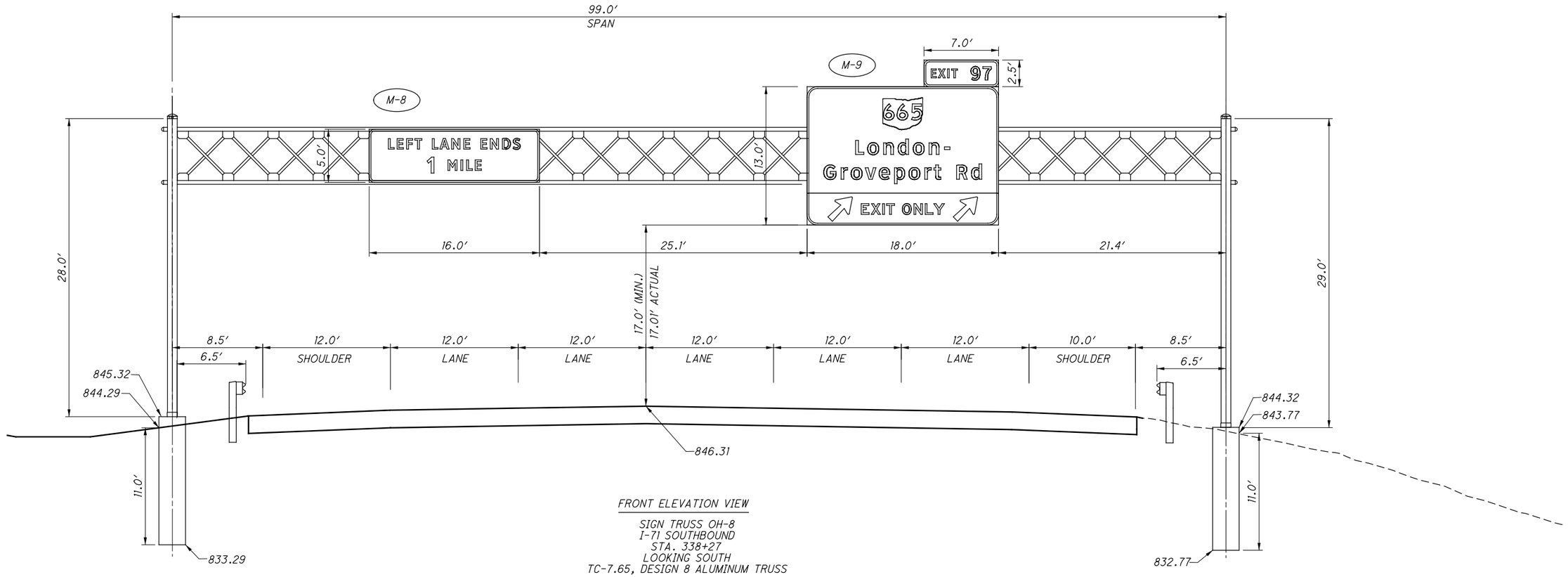

FRONT ELEVATION VIEW

SIGN TRUSS OH-8
I-71 SOUTHBOUND
STA. 338+27
LOOKING SOUTH
TC-7.65, DESIGN 8 ALUMINUM TRUSS

HORIZONTAL SCALE IN FEET
0 2.5 5 10

CALCULATED MJH
CHECKED KAE

OVERHEAD SIGN TRUSS OH-8
STA 338+27, I-71 SOUTHBOUND

FRA-71-5.29

572
623

OVERLAY 1

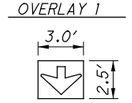

TYPE C-1 ARROW
W/G

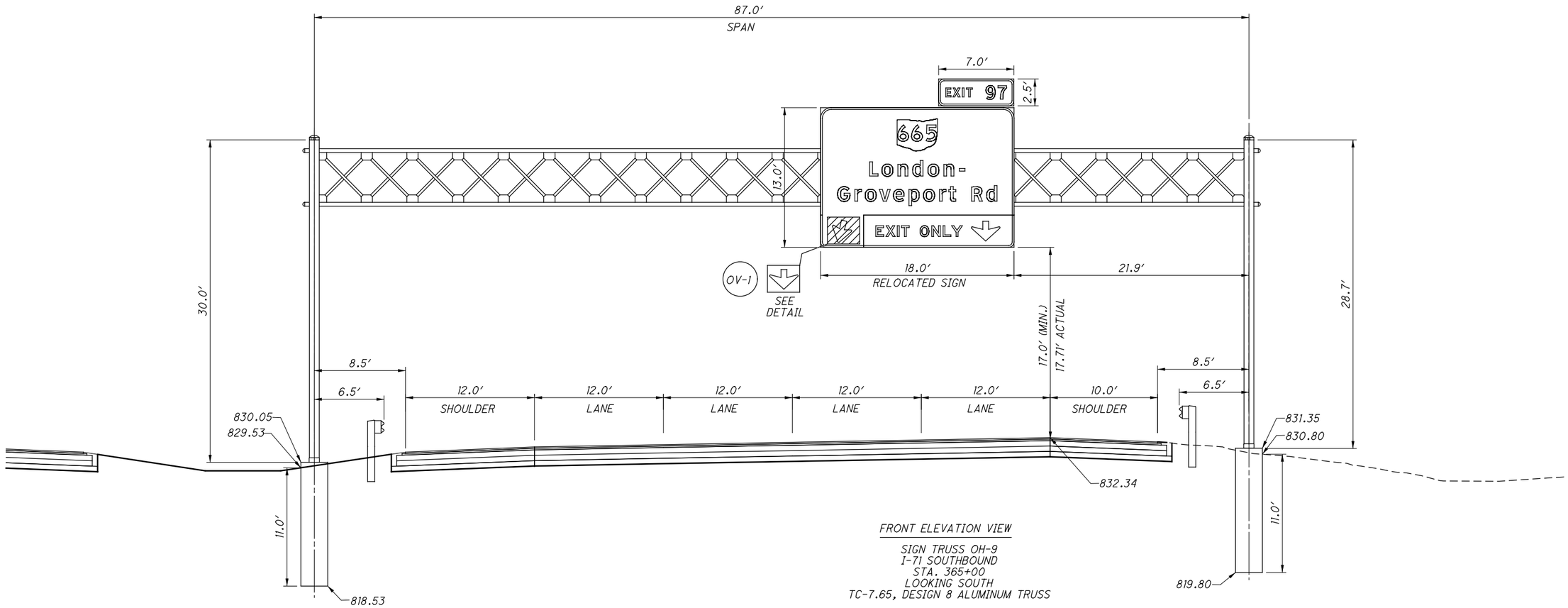

FRONT ELEVATION VIEW

SIGN TRUSS OH-9
I-71 SOUTHBOUND
STA. 365+00
LOOKING SOUTH
TC-7.65, DESIGN 8 ALUMINUM TRUSS

HORIZONTAL SCALE IN FEET
0 2.5 5 10

CALCULATED MJH
CHECKED KAE

OVERHEAD SIGN TRUSS OH-9
STA 365+00, I-71 SOUTHBOUND

FRA-71-5.29

573
623

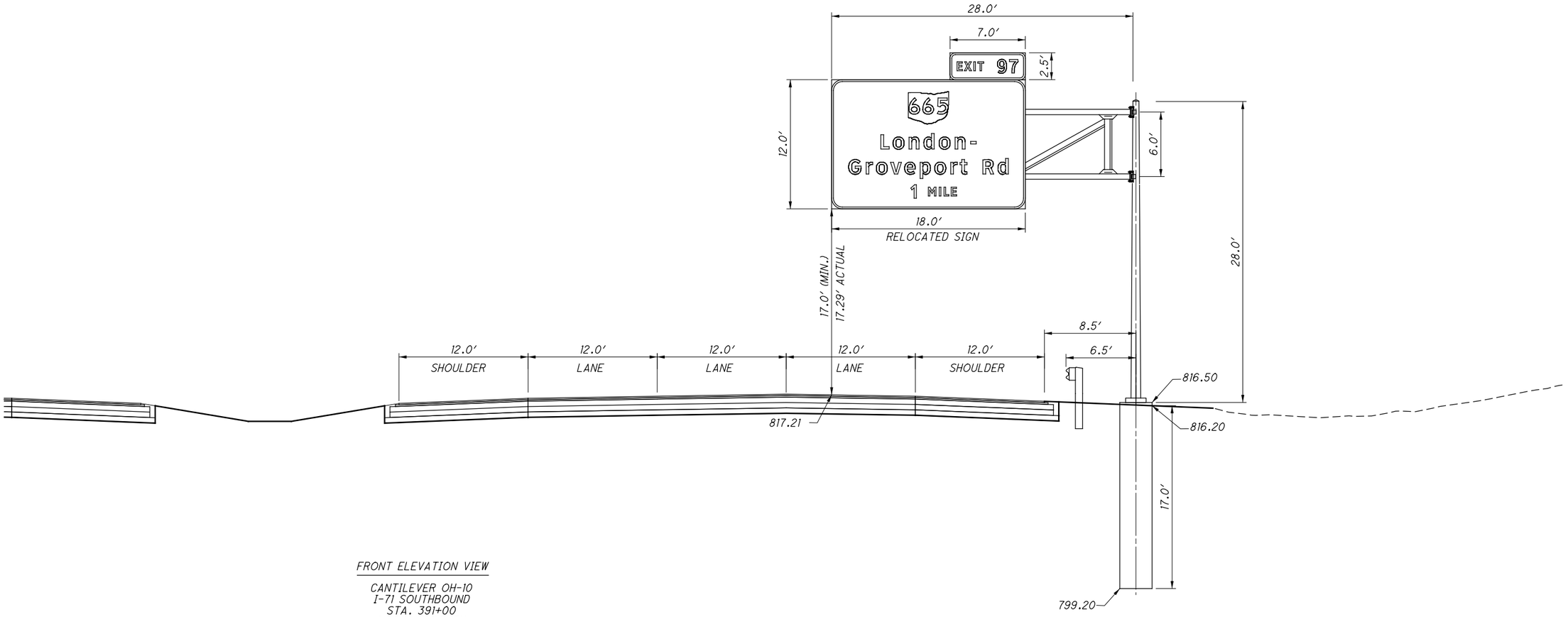

FRONT ELEVATION VIEW

CANTILEVER OH-10
I-71 SOUTHBOUND
STA. 391+00
LOOKING SOUTH
TC-12.30, DESIGN 10

CALCULATED MJH
CHECKED KAE

0 2.5 5 10
HORIZONTAL SCALE IN FEET

CANTILEVER SIGN OH-10
STA 391+00, I-71 SOUTHBOUND

FRA-71-5.29

574
623

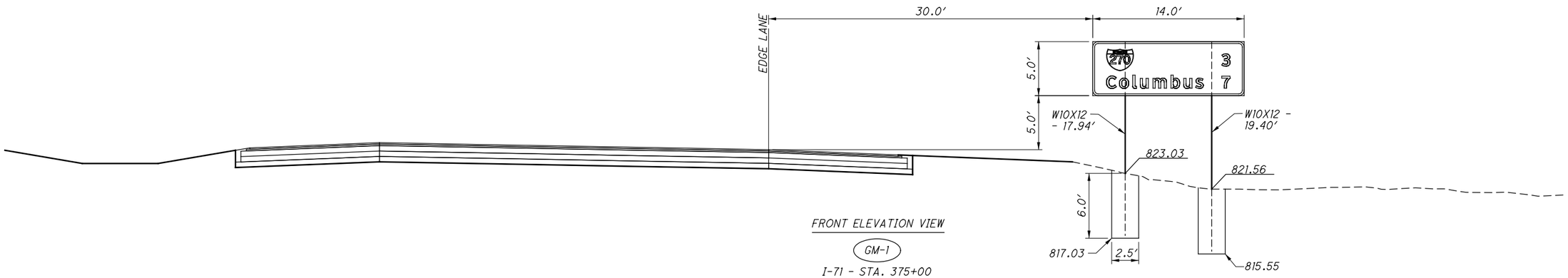

FRONT ELEVATION VIEW

GM-1

I-71 - STA. 375+00
LOOKING NORTH

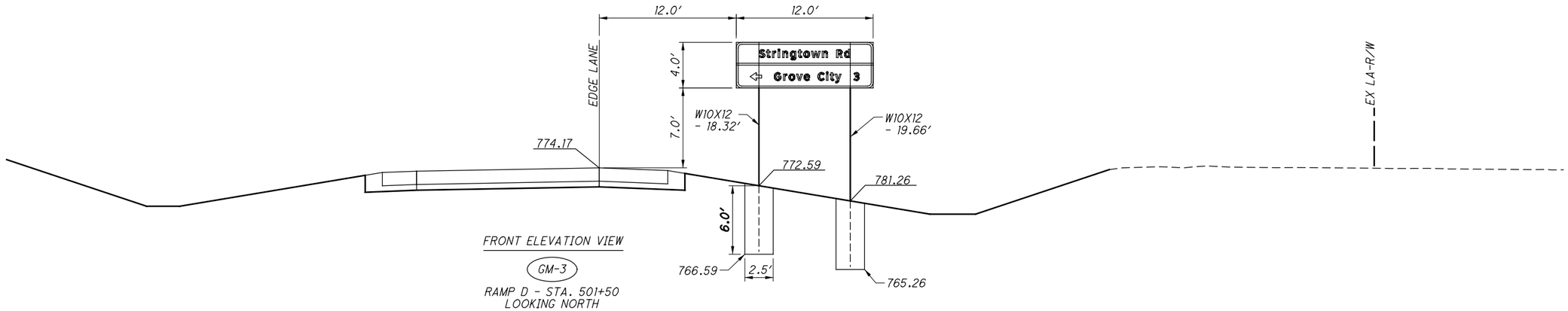

FRONT ELEVATION VIEW

GM-3

RAMP D - STA. 501+50
LOOKING NORTH

HORIZONTAL SCALE IN FEET
0 2.5 5 10

CALCULATED M.JH
CHECKED KAE

GROUND MOUNTED SIGN ELEVATIONS SIGNS GM-1 AND GM-3

FRA-71-5.29

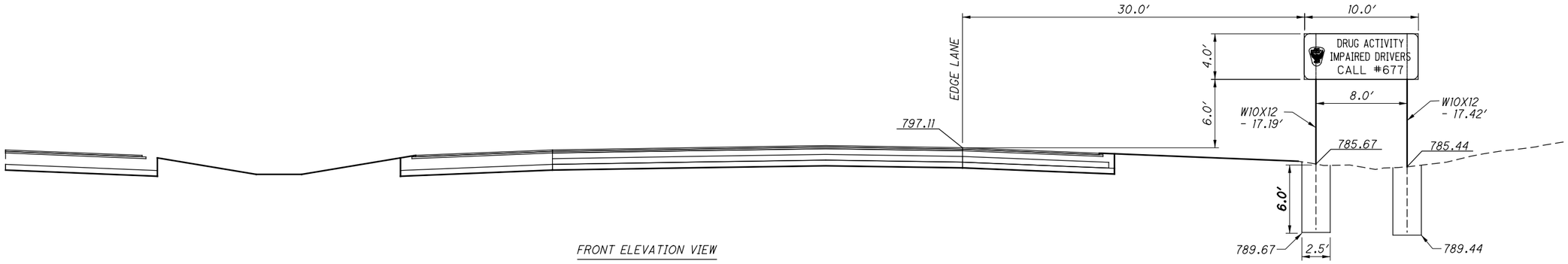

FRONT ELEVATION VIEW

GM-4

I-71 - STA. 432+00
LOOKING SOUTH

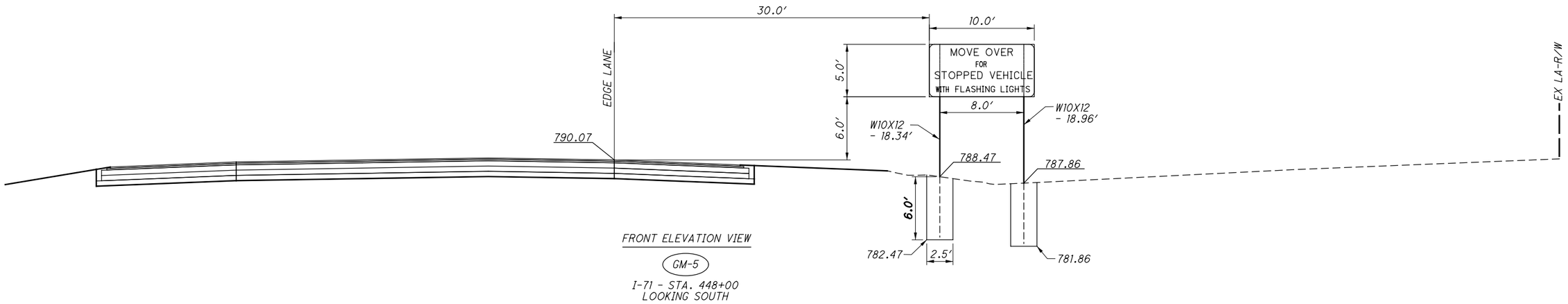

FRONT ELEVATION VIEW

GM-5

I-71 - STA. 448+00
LOOKING SOUTH

HORIZONTAL SCALE IN FEET
0 2.5 5 10

CALCULATED MJH
CHECKED KAE

GROUND MOUNTED SIGN ELEVATIONS
SIGNS GM-4 AND GM-5

FRA-71-5.29

576
623

NOTES:
1) THE ITEMS 809-ADVANCE RADAR DETECTION, AND 809-STOP-BAR RADAR DETECTION SHALL BE INSTALLED AND FULLY FUNCTIONAL BEFORE ANY OF THE MILLING OF THE PAVEMENT IS PERFORMED OR EXISTING LOOP DETECTORS ARE DAMAGED.

2) PROVIDE STOP BAR ZONES, ONE IN EACH LANE, AS DIRECTED BY THE ENGINEER.

ITEM	QUANTITY	UNIT	ITEM DESCRIPTION
632	LUMP		SIGNALIZATION, MISC.: REMOVAL OF LOOP LEAD-IN CABLE
632	1	EACH	SIGNALIZATION, MISC.: CDMA MODEM, FURNISH ONLY
809	1	EACH	ADVANCE RADAR DETECTION
809	1	EACH	STOP BAR RADAR DETECTION

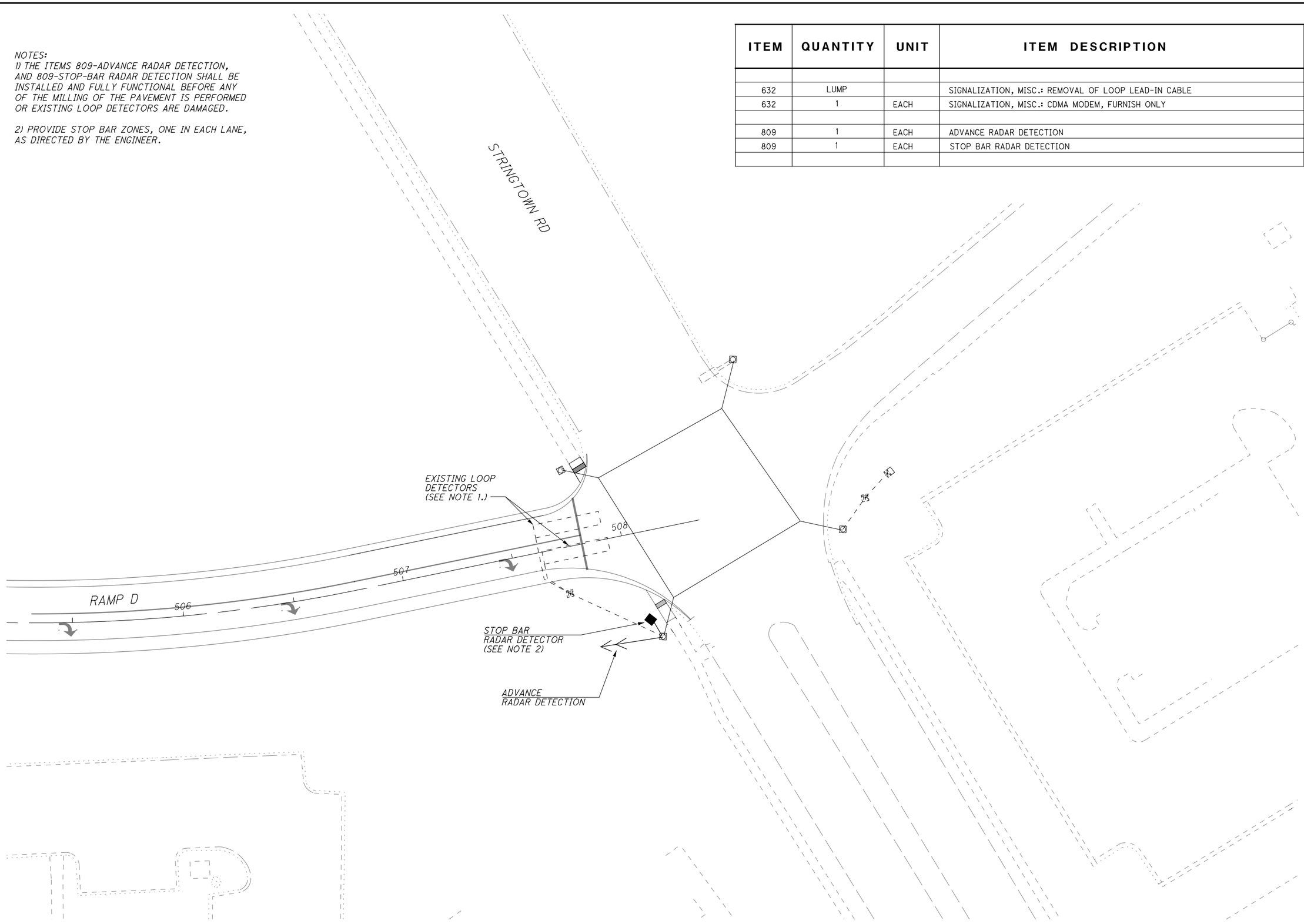

HORIZONTAL SCALE IN FEET
0 25 50 100

CALCULATED MJH
CHECKED KAE

TRAFFIC SIGNAL PLAN
STRINGTOWN RD AT RAMP D

FRA-71-5.29

625, SPECIAL, MAINTAIN EXISTING LIGHTING

EXISTING ROADWAYS WHICH ARE TO REMAIN OPEN TO TRAFFIC DURING CONSTRUCTION OF THIS PROJECT AND WHICH ARE LIGHTED SHALL HAVE THE LIGHTING MAINTAINED AS DESCRIBED HEREIN.

BEFORE ANY WORK IS STARTED IN THE IMMEDIATE VICINITY OF THE EXISTING LIGHTING CIRCUITS, REPRESENTATIVES OF ODOT, THE MAINTAINING AGENCY AND THE CONTRACTOR SHALL MAKE A VISUAL INSPECTION OF THE EXISTING ROADWAY LIGHTING CIRCUITS TO BE MAINTAINED. DURING THIS INSPECTION, A WRITTEN RECORD OF THE CONDITION OF EXISTING LIGHTING SHALL BE MADE BY ODOT'S REPRESENTATIVE. THIS WRITTEN REPORT SHALL NOTE INDIVIDUAL LUMINAIRES WHICH ARE NOT IN WORKING ORDER, INDIVIDUAL POLES WHICH ARE NOT STANDING, AND INDIVIDUAL CIRCUITS WHICH ARE NOT IN WORKING ORDER. THE COMPLETED REPORT SHALL BE SIGNED BY THE REPRESENTATIVES OF ODOT, THE MAINTAINING AGENCY AND THE CONTRACTOR.

IF, AS A RESULT OF THIS INSPECTION, IT IS DETERMINED THAT THE CONDITION OF THE EXISTING SYSTEM IS BELOW THAT REQUIRED FOR THE SAFETY OF THE TRAVELING PUBLIC, THEN THE MAINTAINING AGENCY SHALL MAKE THE REPAIRS NECESSARY TO RETURN THE SYSTEM TO AN ACCEPTABLE CONDITION. FOLLOWING THESE REPAIRS, THE SYSTEM SHALL AGAIN BE INSPECTED AND A REPORT SHALL BE MADE AND SIGNED AS OUTLINED HEREIN.

WHEN THE EXISTING SYSTEM IS IN AN ACCEPTABLE CONDITION, IT SHALL BE TURNED OVER TO THE CONTRACTOR WHO SHALL THEN BE REQUIRED TO MAINTAIN THE EXISTING LIGHTING TO THE CONDITION OUTLINED IN THIS REPORT WITH THE EXCEPTION OF KNOCKDOWNS DUE TO TRAFFIC ACCIDENTS.

REPLACEMENT OF KNOCKED DOWNED UNITS SHALL BE DONE ONLY WHEN THE ENGINEER HAS DETERMINED THAT THE REPLACEMENT OF THE KNOCKED DOWN UNIT IS NECESSARY AND SHALL BE PAID SEPARATELY ON A UNIT BASIS.

BETTERMENTS SHALL BE COVERED IN ITEMS OF WORK PERTAINING TO THE CONSTRUCTION OF PERMANENT IMPROVEMENT.

WHEN THE SEQUENCE OF CONSTRUCTION ACTIVITIES REQUIRES, OR SHOULD THE CONTRACTOR DESIRE, THE REMOVAL OF THE EXISTING LIGHTING BEFORE THE NEW LIGHTING IS OPERATIONAL, THE CONTRACTOR SHALL BE RESPONSIBLE FOR PROVIDING TEMPORARY LIGHTING OF THIS PORTION OF THE ROADWAY.

PRIOR TO INSTALLING SUCH LIGHTING, THE CONTRACTOR SHALL PREPARE AND SUBMIT FOUR SETS OF THE TEMPORARY LIGHTING PLAN TO THE ENGINEER FOR REVIEW AND APPROVAL.

THIS PLAN SHALL SHOW LOCATIONS OF POLES, LENGTHS OF BRACKET ARMS, STYLES OF LUMINAIRES, MOUNTING HEIGHTS, WIRING METHODS AND OTHER PERTINENT INFORMATION. THE TEMPORARY LIGHTING SHALL PROVIDE AN AVERAGE INITIAL INTENSITY OF 1.2 FOOTCANDLES (13 LUX) WITH AN AVERAGE TO MINIMUM UNIFORMITY NOT TO EXCEED 3:1. MOUNTING HEIGHT OF TEMPORARY LUMINAIRES SHALL NOT BE LESS THAN 30 FEET (9 METERS), AND THE MINIMUM OVERHEAD CONDUCTOR CLEARANCE SHALL BE 20 FEET (6 METERS).

TEMPORARY OVERHEAD CONSTRUCTION SHALL NOT BE LESS THAN GRADE "A" FOR STRENGTH REQUIREMENTS AS DEFINED BY THE NATIONAL ELECTRIC SAFETY CODE. WOOD POLES WITH OVERHEAD WIRING MAY BE USED. HOWEVER, TEMPORARY LIGHTING SHALL MEET FEDERAL AND STATE SAFETY CRITERIA. IF BREAKAWAY POLES ARE USED TO MEET THESE CRITERIA, THEN UNDERGROUND WIRING SHALL BE USED. RECONDITIONED OR USED MATERIALS MAY BE FURNISHED FOR TEMPORARY LIGHTING.

ALL MATERIALS NECESSARY TO COMPLETE THE TEMPORARY LIGHTING SHALL BE FURNISHED AND INSTALLED BY THE CONTRACTOR. WHEN NO LONGER NEEDED, THE TEMPORARY LIGHTING INSTALLATION SHALL BE REMOVED AND PROPERLY DISPOSED OF BY THE CONTRACTOR.

WHEN THE PROJECT BEGINS AND THE CONTRACTOR HAS TAKEN OVER THE MAINTENANCE OF THE EXISTING SYSTEM, HE SHALL PROVIDE ALL REQUIRED LAYOUTS AND LOCATIONS OF THE EXISTING AND PROPOSED LIGHTING CIRCUITS WITHIN THE PROJECT LIMITS.

THE MAINTAINING AGENCY WILL PAY FOR ELECTRICAL ENERGY CONSUMED BY EXISTING POWER SERVICES AND BY PROPOSED PERMANENT POWER SERVICES AFTER ACCEPTANCE OF THE LIGHTING WORK. THE CONTRACTOR WILL PAY FOR ELECTRICAL ENERGY, INSTALLATION, REMOVAL AND MAINTENANCE OF ANY TEMPORARY POWER SERVICES.

THE LUMP SUM PRICE BID FOR ITEM SPECIAL "MAINTAIN EXISTING LIGHTING" SHALL INCLUDE PAYMENT FOR ALL LABOR, EQUIPMENT, MATERIAL AND INCIDENTALS NECESSARY TO MAINTAIN THE EXISTING LIGHTING AS SPECIFIED HEREIN.

GROUNDING AND BONDING

THE REQUIREMENTS OF THE CONSTRUCTION AND MATERIAL SPECIFICATIONS (C&MS) AND THE HL AND TC SERIES OF STANDARD CONSTRUCTION DRAWINGS ARE MODIFIED AS FOLLOWS:

1. ALL METALLIC PARTS CONTAINING ELECTRICAL CONDUCTORS SHALL BE PERMANENTLY JOINED TO FORM AN EFFECTIVE GROUND FAULT CURRENT PATH BACK TO THE GROUNDED CONDUCTOR IN THE POWER SERVICE DISCONNECT SWITCH.
   A. PROVIDE AN EQUIPMENT GROUNDING CONDUCTOR IN METALLIC CONDUITS (725.04) IN ADDITION TO THE CONDUCTORS SPECIFIED AND BOND THE CONDUIT TO THIS GROUNDING CONDUCTOR.
2. CONDUITS.
   A. THE 725.04 CONDUIT SHALL HAVE GROUNDING BUSHINGS INSTALLED AT ALL TERMINATION POINTS. THE BUSHING MATERIAL SHALL BE COMPATIBLE WITH GALVANIZED STEEL CONDUIT AND THE GROUNDING LUG MATERIAL SHALL BE COMPATIBLE FOR USE WITH COPPER WIRE. THREADED OR COMPRESSION TYPE BUSHINGS MAY BE USED.
   B. THE 725.05 CONDUIT SHALL HAVE THE INSIDE AND OUTSIDE DIAMETERS OF THE CONDUIT DEBURRED AT ALL TERMINATION POINTS.
   C. BOTH ENDS OF METALLIC CONDUIT SHALL BE BONDED TO THE EQUIPMENT GROUNDING CONDUCTOR.
   D. METALLIC CONDUIT MAY BE BONDED TO METALLIC BOXES THROUGH THE USE OF CONDUIT FITTINGS UL APPROVED FOR THIS TYPE OF CONNECTION, WITH THE BOX BONDED TO THE EQUIPMENT GROUNDING CONDUCTOR.
3. WIRE FOR GROUNDING AND BONDING.
   A. USE INSULATED, COPPER WIRE FOR THE EQUIPMENT GROUNDING CONDUCTOR. BONDING JUMPERS IN BOXES AND ENCLOSURES MAY BE BARE OR INSULATED COPPER WIRE. WIRE SIZE SHALL BE AS FOLLOWS:
      I. USE 4 AWG BETWEEN THE POWER SERVICE AND SUPPORTS, POLES, PEDESTALS, CONTROLLER OR FLASHER CABINETS.
      II. USE A MINIMUM 8 AWG BETWEEN LOOP DETECTOR PULL BOXES AND THE FIRST CONDUIT THAT REQUIRES A LARGER SIZE AS SPECIFIED IN 3.A.I ABOVE.
      III. USE A MINIMUM 8 AWG BETWEEN THE "PREPARE TO STOP WHEN FLASHING" INSTALLATION (INCLUDING SUPPORT) AND THE FIRST CONDUIT THAT REQUIRES A LARGER SIZE AS SPECIFIED IN 3.A.I ABOVE.
      IV. THE INSULATION SHALL BE GREEN OR GREEN WITH YELLOW STRIPE(S). FOR 4 AWG OR LARGER, INSULATION MAY ALSO BE BLACK WITH GREEN TAPE/LABELS INSTALLED AT ALL ACCESS POINTS.
   B. IN A HIGHWAY LIGHTING SYSTEM, THE EQUIPMENT GROUNDING CONDUCTOR SHALL BE THE SAME WIRE SIZE AS THE DUCT CABLE OR DISTRIBUTION CABLE CIRCUIT CONDUCTORS, WITH THE MINIMUM CONDUCTOR SIZE OF 4 AWG. BONDING JUMPERS WILL BE MINIMUM SIZE 4 AWG.
4. GROUND ROD.
   A. A 3/4 INCH SCHEDULE 40 PVC CONDUIT WILL BE USED IN FOUNDATIONS AND CONCRETE WALLS FOR THE GROUNDING CONDUCTOR (GROUND WIRE) RACEWAY TO THE GROUND ROD. SHOULD METALLIC CONDUIT BE USED, BOTH ENDS OF THE CONDUIT SHALL BE BONDED TO THE GROUNDING CONDUCTOR.
   B. THE TYPICAL GROUNDING CONDUCTOR (GROUND WIRE) SHALL BE 4 AWG INSULATED, COPPER.
5. PAYMENT.
   A. ALL MATERIALS AND WORK REQUIRED TO COMPLETE THE EFFECTIVE GROUND FAULT CURRENT PATH SYSTEM ARE INCIDENTAL TO THE CONDUCTORS INSTALLED.

   B. WORK ON BRIDGES MAY BE INCLUDED IN THE BID ITEM FOR "ITEM 625, STRUCTURE GROUNDING."

   C. IN A 3-WIRE HIGHWAY LIGHTING SYSTEM, THE THIRD CONDUCTOR OF THE DUCT CABLE OR DISTRIBUTION CABLE WILL BE USED AS THE EQUIPMENT GROUNDING CONDUCTOR AND MAY AS SUCH BE PART OF THE CABLE BID ITEM.

HIGH VOLTAGE TEST

THE HIGH VOLTAGE TEST SHALL NOT BE PERFORMED ON ANY CIRCUITS CONSTRUCTED BY THIS PROJECT WHICH INCLUDE EXISTING DISTRIBUTION CABLE, SINCE THE TEST COULD DAMAGE THE PORTION OF THE COMPLETED CIRCUIT WHICH HAD BEEN IN SERVICE PRIOR TO THIS PROJECT. THE HIGH VOLTAGE TEST SHALL BE PERFORMED ON ALL NEW 3-WIRE CIRCUITS (WHERE ALL THREE OF THE CONDUCTORS ARE NEW) INSTALLED ON THIS PROJECT.

UNDERDRAINS FOR PULL BOXES

REFERENCE IS MADE TO STANDARD CONSTRUCTION DRAWINGS FOR DETAILS ON DRAINING PULL BOXES. UNDERDRAINS FOR PULL BOXES SHALL BE USED AS DIRECTED BY THE ENGINEER AND SHALL BE PROVIDED WHERE A SATISFACTORY OUTLET DOES NOT EXCEED 20 FEET. AN ESTIMATED QUANTITY OF 80 LINEAR FEET OF ITEM 611 - 4" CONDUIT, TYPE E, IS INCLUDED IN THE LIGHTING SUB-SUMMARY FOR THIS PURPOSE.

CALCULATED MJH
CHECKED KAE

LIGHTING GENERAL NOTES

FRA-71-5.29

SHEET NUMBER FROM LIGHTING PLAN														ITEM	ITEM EXT.	GRAND TOTAL	UNIT	DESCRIPTION	SEE SHEET NO.
												578	580						
																		LIGHTING	
												80		611	00400	80	EACH	4" CONDUIT, TYPE E	
													24	625	00480	24	EACH	CONNECTION, UNFUSED PERMANENT	
													12	625	15200	12	EACH	LIGHT TOWER FOUNDATION, 36" X 25' DEEP	
													1674	625	23200	1674	FT	NO. 4 AWG 5000 VOLT DISTRIBUTION CABLE	
													4635	625	24320	4635	FT	1-½" DUCT CABLE WITH THREE NO. 4 AWG 5000 VOLT CABLES	
													341	625	25902	341	FT	CONDUIT, JACKED OR DRILLED, 725.04: 3"	
													4520	625	29002	4520	FT	TRENCH, 24" DEEP	
													4	625	30700	4	EACH	PULL BOX, 725.08, 18"	
													24	625	32000	24	EACH	GROUND ROD	
													1	625	33000	1	EACH	STRUCTURE GROUNDING SYSTEM	
													12	625	35020	12	EACH	RE-ERECT EXISTING LIGHT TOWER	
													4520	625	36000	4520	FT	PLASTIC CAUTION TAPE	
												LUMP		SPECIAL	62540000	LUMP		MAINTAIN EXISTING LIGHTING	
													12	625	75350	12	EACH	LIGHT TOWER REMOVED	
													12	625	75540	12	EACH	LIGHT TOWER FOUNDATION REMOVED	

CALCULATED MJH
CHECKED KAE

LIGHTING SUBSUMMARY

FRA-71-5.29

579
623

P:\84868\admin\reviews\final tracings\2015-03-27.FRA-71-5.29 Final Revisions\Electronic Files\lighting\sheets\579-84868LG001.dgn 3/30/2015 10:53:02 AM mtakacs

P:\84868\admin\reviews\final tracings\2015-03-27.FRA-71-5.29 Final Revisions\Electronic Files\lighting\sheets\580-84868LS001.dgn 3/30/2015 10:54:18 AM mtakacs

SHEET NO.	LOCATION	SIDE	CALL-OUT	625												
				CONNECTION, UNFUSED PERMANENT	LIGHT TOWER FOUNDATION, 36" X 25' DEEP	NO. 4 AWG 5000 VOLT DISTRIBUTION CABLE	1-½" DUCT CABLE WITH THREE NO. 4 AWG 5000 VOLT CABLES	CONDUIT, JACKED OR DRILLED: 725.04, 3"	TRENCH, 24" DEEP	PULL BOX, 725.08, 18"	GROUND ROD	STRUCTURE GROUNDNG SYSTEM	RE-ERECT EXISTING LIGHT TOWER	PLASTIC CAUTION TAPE	LIGHT TOWER REMOVED	LIGHT TOWER FOUNDATION REMOVED
	FROM - TO			EACH	EACH	FT	FT	FT	FT	EACH	EACH	EACH	EACH	FT	EACH	EACH
	CIRCUIT BB															
582	STA 296+07	LT	01		1		5				2		1		1	1
	STA 296+07 TO STA 299+90	LT	01-02				383		383					383		
	STA 299+90	LT	02		1		10				2		1		1	1
	STA 299+90 TO STA 303+62	LT	02-03				372		372					372		
	STA 303+62	LT	03		1		10				2		1		1	1
	STA 303+62 TO STA 307+35	LT	03-04				373		373					373		
	STA 307+35	LT	04		1		10				2		1		1	1
	STA 307+35 TO STA 311+65	LT	04-05				430		430					430		
	STA 311+65	LT	05		1		10				2		1		1	1
582-583	STA 311+65 TO STA 316+00	LT	05-06				433		433					433		
583	STA 316+00	LT	06		1		10				2		1		1	1
	STA 311+65 TO STA 316+00	RT&LT	06-07				433		433					433		
	STA 319+20	RT	07	3		15	5			1						
	STA 319+20 TO STA 319+10	RT&LT	07-08			228		76								
	STA 319+10	LT	08	3		15				1						
	CIRCUIT BA															
	STA 319+20	RT	09	3		15				1						
	STA 319+30 TO STA 319+20	RT	09-07			282		94								
	STA 319+20	RT	07			15										
	STA 319+20 TO STA 319+10	RT&LT	07-08			228										
	STA 319+10	LT	08	3		15										
	CIRCUIT CA															
	STA 325+93	LT	10	3		15										
	STA 325+93 TO STA 326+03	LT	10-11			240		80								
	STA 326+03	RT	11	3		30	5			1						
	STA 326+03 TO STA 325+87	LT	11-12				16		16					16		
	STA 325+87	LT	12		1		5				2		1		1	1
	STA 326+03 TO STA 325+94	LT&RT	11-13			273		91								
	STA 325+94	RT	13	3		15										
	CIRCUIT CB															
583	STA 325+94	RT	13	3		15										
	STA 325+94 TO STA 326+03	RT&LT	13-11			273										
583-584	STA 326+03 TO STA 329+76	LT	11-14				389		389					389		
584	STA 329+76	LT	14		1		10				2		1		1	1
	STA 329+76 TO STA 333+73	LT	14-15				397		397					397		
	333+73	LT	15		1		10				2		1		1	1
	STA 333+73 TO STA 337+79	LT	15-16				406		406					406		
	337+79	LT	16		1		10				2		1		1	1
	STA 337+79 TO STA 341+93	LT	16-17				414		414					414		
	341+93	LT	17		1		10				2		1		1	1
	STA 341+93 TO STA 346+67	LT	17-18				474		474					474		
	346+67	LT	18		1		5				2		1		1	1
	STRUCTURE FRA-71-0903L&R											1				
TOTALS TO SHEET 579				24	12	1674	4635	341	4520	4	24	1	12	4520	12	12

CALCULATED MJH
CHECKED GM

LIGHTING SUBSUMMARY

FRA-71-5.29

LEGEND

- EXISTING LIGHT TOWER
- RELOCATED LIGHT TOWER
- EXISTING LIGHTING CONTROL CENTER
- EXISTING PULL BOX
- PROPOSED PULL BOX

WIRING LEGEND

- PROPOSED CONDUIT (JACKED UNDER PAVEMENT)
- EXISTING LIGHTING CIRCUIT (TO BE REMOVED OR ABANDONED)
- EXISTING LIGHTING CIRCUIT (TO REMAIN)
- PROPOSED DUCT CABLE (3/C, #4 AWG UNLESS OTHERWISE NOTED)

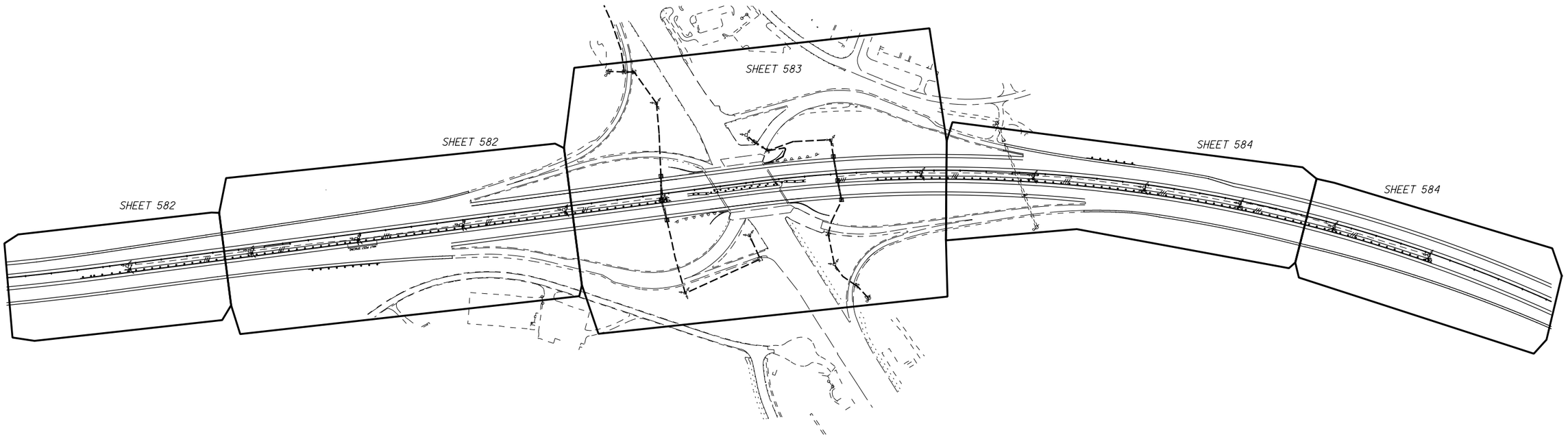

HORIZONTAL SCALE IN FEET
0 100 200 400

CALCULATED M.JH
CHECKED KAE

LIGHTING PLAN SCHEMATIC
SR 665 INTERCHANGE

FRA-71-5.29

581
623

SB I-71

NB I-71

288 289 290 291 292 293 294 295 296 297 298 299 300

RELOCATE LIGHT TOWER BB6
TO PROPOSED FOUNDATION
STA 296+07, 8.5' LT
01

CIRCUIT BB,
#4 AWG, IN TRENCH= 383'

REMOVE OR
ABANDON EXISTING
CIRCUIT (TYP.)

02 RELOCATE LIGHT TOWER BB5
TO PROPOSED FOUNDATION
STA 299+90, 8.5' LT

MATCHLINE STA. 301+00

MATCHLINE STA. 301+00

RELOCATE LIGHT TOWER BB4
TO PROPOSED FOUNDATION
STA 303+62, 8.5' LT
03

CIRCUIT BB,
#4 AWG, IN TRENCH= 372'

CIRCUIT BB,
#4 AWG, IN TRENCH= 373'

RELOCATE LIGHT TOWER BB3
TO PROPOSED FOUNDATION
STA 307+35, 8.5' LT
04

CIRCUIT BB, #4 AWG,
IN TRENCH= 430'

CIRCUIT BB, #4 AWG,
IN TRENCH= 433'

EXIST. OHP
ELECTRIC

RAMP C

SB I-71

NB I-71

RAMP D

302 303 304 305 306 307 308 309 310 311 312 313 314

05 RELOCATE LIGHT TOWER BB2
TO PROPOSED FOUNDATION
STA 311+65, 8.5' LT

MATCHLINE STA. 315+00

HORIZONTAL
SCALE IN FEET
0 25 50 100

CALCULATED M.JH
CHECKED KAE

LIGHTING PLAN
STA. 288+00 TO STA. 315+00

FRA-71-5.29

582
623

NOTES:
1) STATION AND OFFSET IS APPROXIMATE. THE CONTRACTOR SHALL PHYSICALLY LOCATE THE EXISTING CIRCUIT, AND PLACE PULL BOX DIRECTLY OVER EXISTING DISTRIBUTION CABLE. SPLICE PROPOSED DIST. CABLE TO EXISTING CIRCUIT (TO REMAIN) WITH (3)-PERMANENT UNFUSED CONNECTIONS, IN PROPOSED PULL BOX.

EXISTING CONTROL CENTER "B"

SR 665 LONDON-GROVEPORT RD

EXISTING CIRCUIT CA TO REMAIN

RAMP C

RAMP B

EXISTING CIRCUITS BA & BB TO REMAIN

08 PULL BOX, 18" W/(6)- UNFUSED CONNECTIONS STA 319+10, 84' LT (SEE NOTE 1.)

RELOCATE LIGHT TOWER BB1 TO PROPOSED FOUNDATION STA 316+00, 8.5' LT 06

12 RELOCATE LIGHT TOWER CA3 TO PROPOSED FOUNDATION STA 325+87, 8.5' LT (CONNECT TO CIRCUIT CA)

PULL BOX, 18" W/(3)- UNFUSED CONNECTIONS STA 325+93, 85' LT (SEE NOTE 1.) 10

MATCHLINE STA. 315+00

CIRCUIT BB, #4 AWG, IN TRENCH= 322'

316 317 318 319 320 321 322 323 324 325 327 328 329

3" CONDUIT (JACKED) WITH CIRCUITS BA & BB = 76'

SB I-71

3" CONDUIT (JACKED) WITH CIRCUIT CA= 80'

CIRCUIT CB, #4 AWG, IN TRENCH= 389'

MATCHLINE STA. 329+50

REMOVE OR ABANDON EXISTING CIRCUIT (TYP.)

3" CONDUIT (JACKED) WITH CIRCUITS BA= 94'

NB I-71

3" CONDUIT (JACKED) WITH CIRCUITS CA & CB= 91'

PULL BOX, 18" W/(3)- UNFUSED CONNECTIONS STA 326+03, 8' LT 11

07 PULL BOX, 18" W/(3)- UNFUSED CONNECTIONS STA 319+20, 9' LT

09 PULL BOX, 18" W/(3)- UNFUSED CONNECTIONS STA 319+30, 84' RT (SEE NOTE 1.)

EXISTING CIRCUIT BA REMAIN

PULL BOX, 18" W/(6)- UNFUSED CONNECTIONS STA 325+94, 85' RT (SEE NOTE 1.) 13

RAMP A

RAMP D

EXISTING CIRCUITS CA & CB TO REMAIN

EXISTING CONTROL CENTER "C"

N

0 25 50 100 HORIZONTAL SCALE IN FEET

CALCULATED M.J.H CHECKED K.A.E

LIGHTING PLAN
STA. 315+00 TO STA. 329+50

FRA-71-5.29

583
623

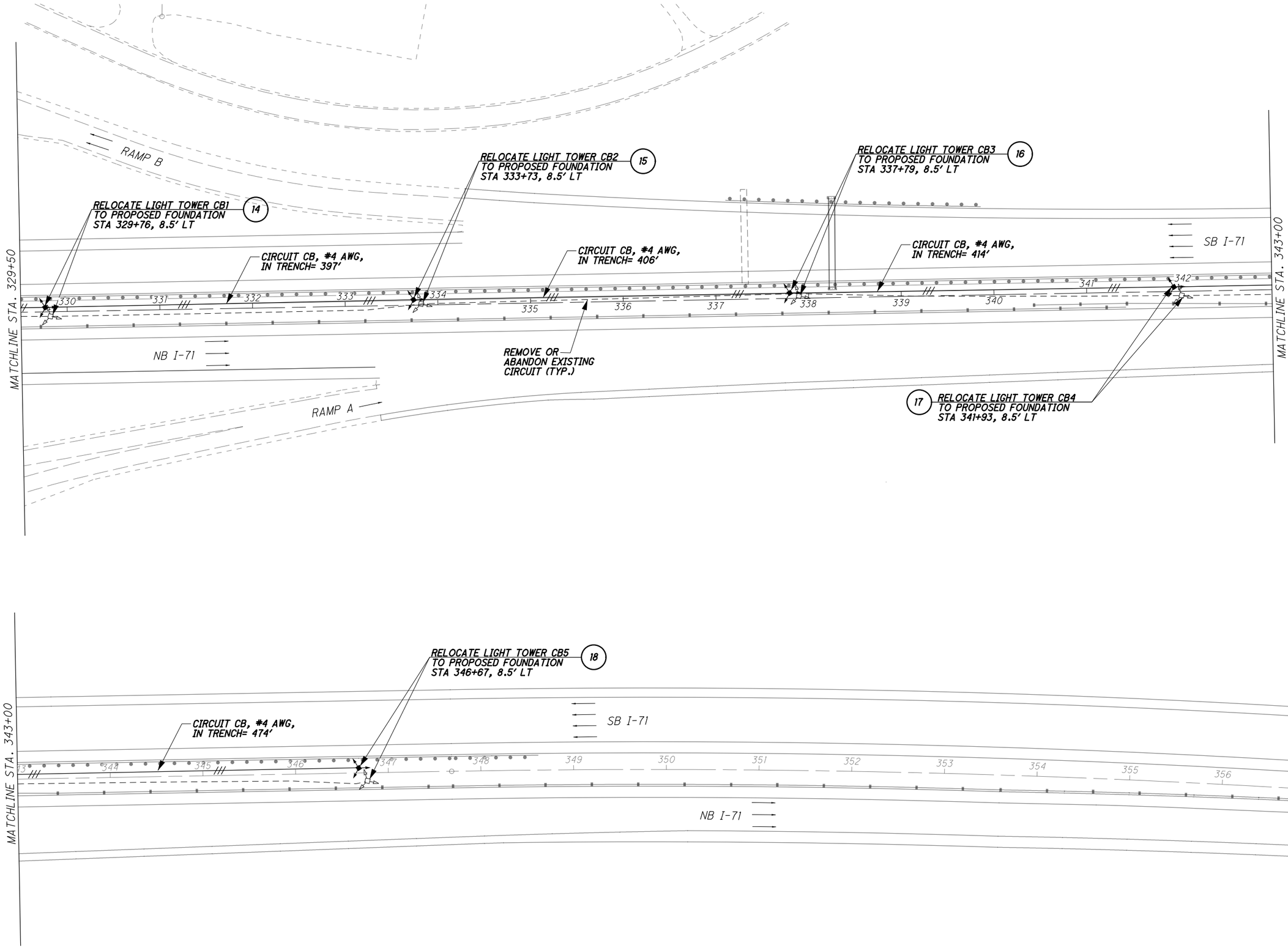

HORIZONTAL SCALE IN FEET
0 25 50 100

CALCULATED M.JH
CHECKED KAE

LIGHTING PLAN
STA. 329+50 TO STA. 357+00

FRA-71-5.29

584
623

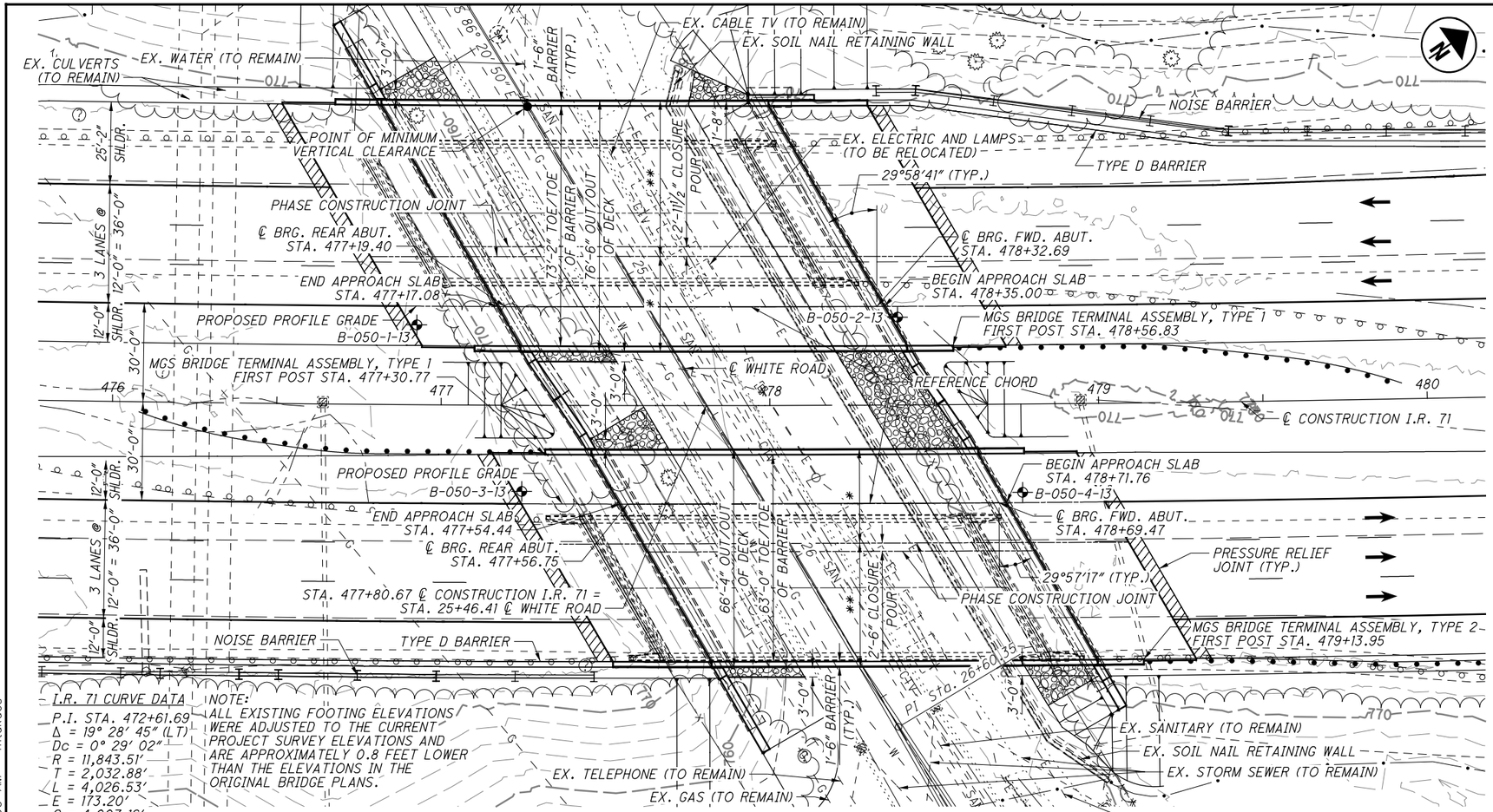

I.R. 71 CURVE DATA
P.I. STA. 472+61.69
Δ = 19° 28' 45" (LT)
Dc = 0° 29' 02"
R = 11,843.51'
T = 2,032.88'
L = 4,026.53'
E = 173.20'
C = 4,007.16'
C.B. = N 37° 05' 32" E

NOTE:
ALL EXISTING FOOTING ELEVATIONS WERE ADJUSTED TO THE CURRENT PROJECT SURVEY ELEVATIONS AND ARE APPROXIMATELY 0.8 FEET LOWER THAN THE ELEVATIONS IN THE ORIGINAL BRIDGE PLANS.

PLAN

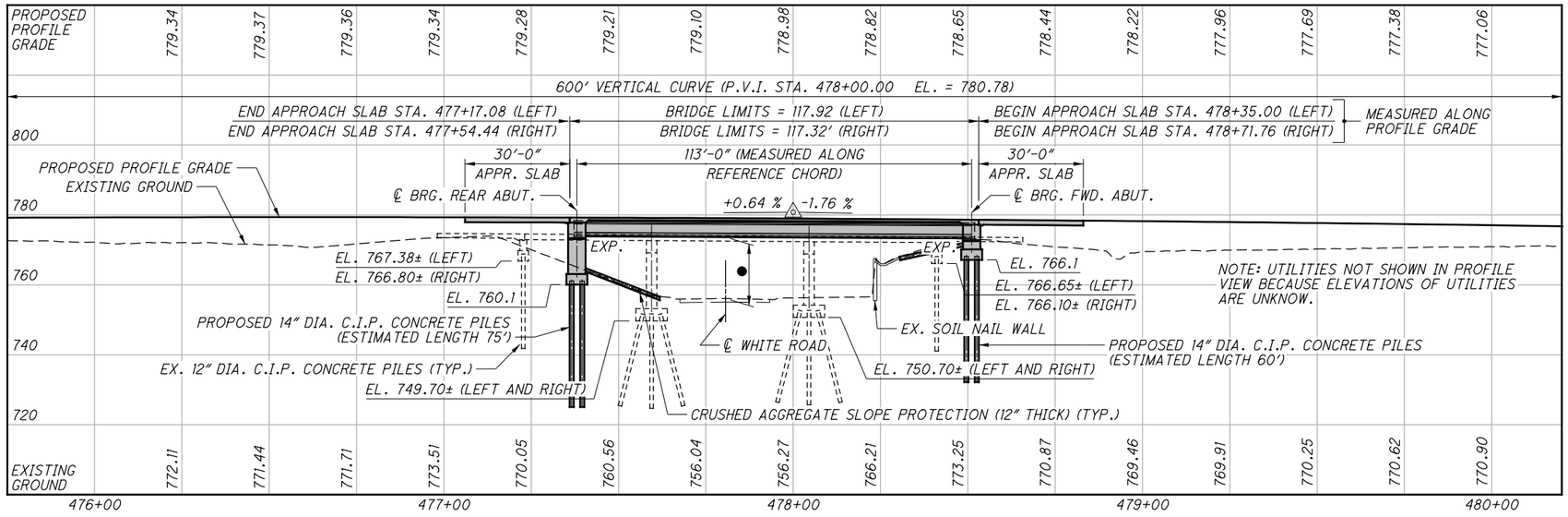

PROFILE ALONG ℄ CONSTRUCTION I.R. 71

BENCHMARK DATA

BENCHMARK "A" STA. 479+00.61, ELEV. 758.92, OFFSET 121.32' RT.
CHISELED SQUARE ON NW CORNER OF CATCH BASIN
BENCHMARK "B" STA. 477+42.18, ELEV. 757.66, OFFSET 159.32' LT.
CHISELED "X" ON SE RIM OF SANITARY MANHOLE

FOR ADDITIONAL BENCHMARK INFORMATION. SEE ROADWAY PLAN SHEET (6/623)

NOTES

EARTHWORK LIMITS SHOWN ARE APPROXIMATE. ACTUAL SLOPES SHALL CONFORM TO PLAN CROSS SECTIONS.

I.R. 71 DESIGN TRAFFIC:
2016 ADT = 70,250 2016 ADTT = 17,563
2036 ADT = 100,680 2036 ADTT = 25,170
DIRECTIONAL DISTRIBUTION = 50%

WHITE ROAD DESIGN TRAFFIC:
2011 ADT = 6,080 2011 ADTT = 244
2031 ADT = 7,210 2031 ADTT = 289
DIRECTIONAL DISTRIBUTION = 52%
(DATA TAKEN FROM RECENT FRA-71-9.06 PROJECT)

LEGEND

* - PHASE 2 CONSTRUCTION
** - PHASE 3B CONSTRUCTION
● 14.50' REQUIRED MINIMUM VERTICAL CLEARANCE
15.50' ACTUAL MINIMUM VERTICAL CLEARANCE
⌖ BORING LOCATION

EXISTING STRUCTURE

TYPE: 3-SPAN CONTINUOUS REINFORCED CONCRETE SLAB AND REINFORCED CONCRETE CAP AND COLUMN PIERS AND CAPPED PILE ABUTMENT

SPANS: 36'-0"± - 45'-0"± - 36'-0"± (MEASURED ALONG CHORD)
ROADWAY: 42'-0" F/F OF PARAPETS / 39'-8" T/T OF SAFETY CURB
LOADING: CF2000 (57) ADEQUATE FOR AASHO ALTERNATE LOADING
SKEW: 30° 00' 00" RT. FWD.
APPROACH SLABS: AS-1-54 (25'-0" LONG)
ALIGNMENT: CHORD OF 0° 29' 00" LEFT CURVE
CROWN: 3/16" PER FT.
WEARING SURFACE: BITUMINOUS ASPHALT CONCRETE
STRUCTURAL FILE NUMBER: 2507080 (LEFT) / 2507110 (RIGHT)
DATE BUILT: 1960
DISPOSITION: TO BE REPLACED IN PHASES

PROPOSED STRUCTURE

TYPE: SINGLE-SPAN PRESTRESSED CONCRETE I-BEAM (WF54-49) WITH COMPOSITE REINFORCED CONCRETE DECK AND SEMI-INTEGRAL ABUTMENTS

SPAN: 113'-0" C/C ABUT. BEARINGS (MEASURED ALONG REFERENCE CHORD)
ROADWAY: 73'-2" (LEFT) / 63'-0" (RIGHT) TOE/TOE OF BARRIER
LOADING: HL-93 WITH 60 PSF FUTURE WEARING SURFACE
SKEW: 29° 58' 41" RT. FWD. (LEFT) / 29° 57' 17" RT. FWD. (RIGHT) MEASURED NORMAL TO REFERENCE CHORD
APPROACH SLABS: 30'-0" LONG (AS-1-81) MEASURED ALONG PROFILE GRADE
ALIGNMENT: 0° 29' 02" LEFT CURVE
SUPERELEVATION: 0.018 FT/FT
WEARING SURFACE: 1" MONOLITHIC CONCRETE
COORDINATES: LATITUDE N39° 52' 20" LONGITUDE W83° 03' 15"

E.L. ROBINSON ENGINEERING
1801 Watermark Drive, Suite 310 - Columbus, Ohio 43215
www.elrobinsonengineering.com

DESIGNED TJE | DRAWN TJE | REVIEWED RER | DATE 08-05-14
CHECKED BMG | REVISED | STRUCTURE FILE NUMBER 2510000L/2510001R

FRA-071-0903R STA. 477+54.44 STA. 478+71.76
FRA-071-0903L STA. 477+17.08 STA. 478+35.00

SITE PLAN
BRIDGE NO. FRA-071-0903L/R OVER WHITE ROAD

FRA-71-5.29
PID No. 84868

P:\84868\structures\FRA071_0903C\sheets\071_0903CSP001.dgn 3/30/2015 10:59:30 AM mtakacs

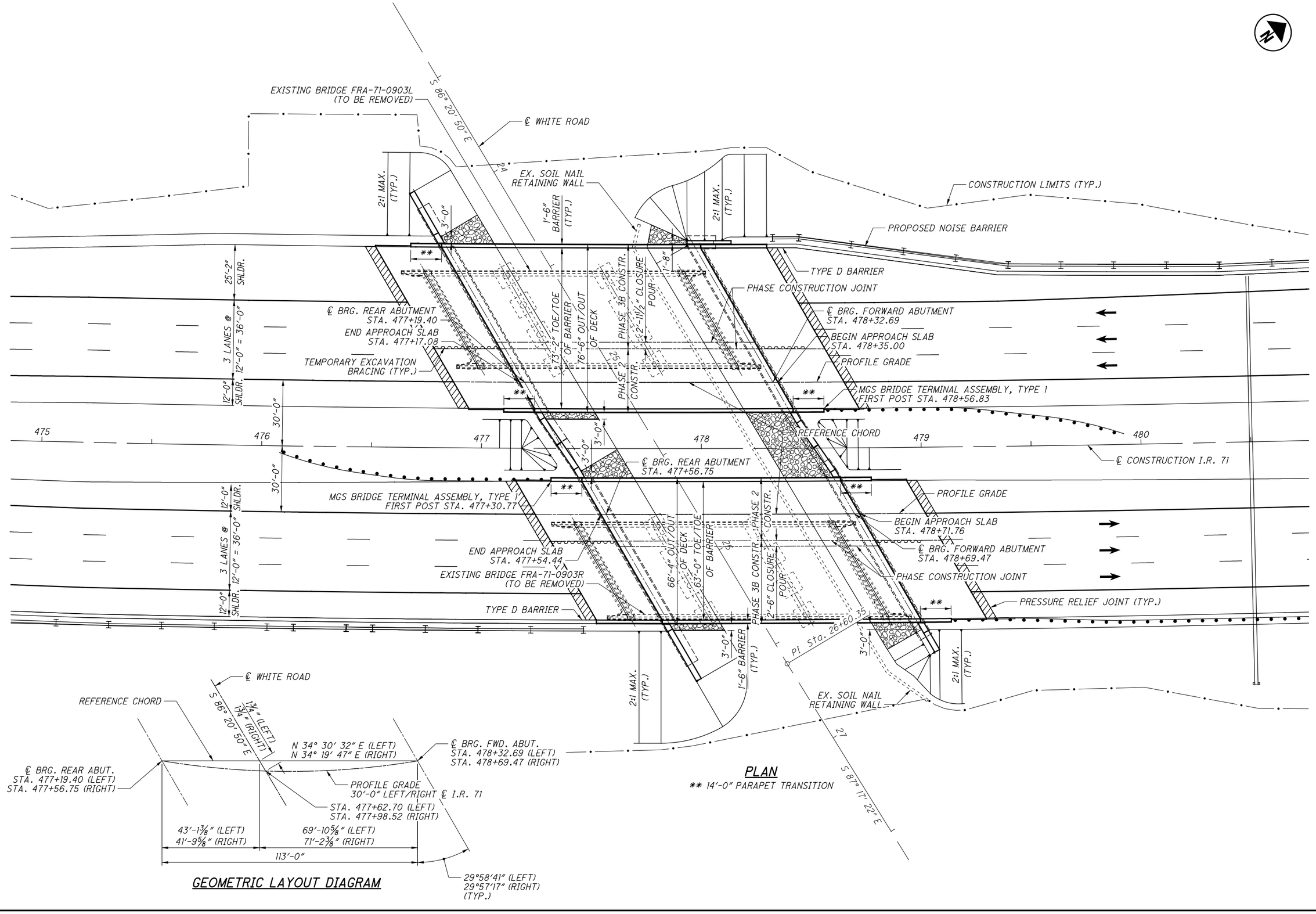

GEOMETRIC LAYOUT DIAGRAM

PLAN

** 14′-0″ PARAPET TRANSITION

P:\84868\structures\FRA071_0903C\sheets\071_0903CGP001.dgn 3/30/2015 11:00:56 AM mtakacs

E.L. ROBINSON ENGINEERING
1801 Watermark Drive, Suite 310 - Columbus, Ohio 43215
www.elrobinsonengineering.com

DESIGNED	DRAWN	REVIEWED	DATE
TJE	TJE	RER	08-05-14
CHECKED	REVISED	STRUCTURE FILE NUMBER	
BMG		2510000L/2510001R	

GENERAL PLAN
BRIDGE NO. FRA-071-0903L/R
OVER WHITE ROAD

FRA-71-5.29
PID No. 84868

2 / 39

586
623

STANDARD DRAWINGS AND SUPPLEMENTAL SPECIFICATIONS:

REFER TO THE FOLLOWING STANDARD BRIDGE DRAWING(S):

AS-1-81	REVISED 1-18-13
PSID-1-13	REVISED 10-18-13
SBR-1-13	REVISED 1-17-14
SICD-1-96	REVISED 7-19-02

AND TO THE FOLLOWING SUPPLEMENTAL SPECIFICATION(S):

800	DATED 7-18-14
832	DATED 1-17-14

DESIGN SPECIFICATIONS:

THIS STRUCTURE CONFORMS TO THE "LRFD BRIDGE DESIGN SPECIFICATIONS" ADOPTED BY THE AMERICAN ASSOCIATION OF STATE HIGHWAY AND TRANSPORTATION OFFICIALS, 2012 - 6th EDITION INCLUDING THE 2013 INTERIM SPECIFICATIONS AND THE ODOT BRIDGE DESIGN MANUAL, 2007.

OPERATIONAL IMPORTANCE:

A LOAD MODIFIER OF 1.00 HAS BEEN ASSUMED FOR THE DESIGN OF THIS STRUCTURE IN ACCORDANCE WITH THE AASHTO LRFD BRIDGE DESIGN SPECIFICATIONS, ARTICLE 1.3.5 AND THE ODOT BRIDGE DESIGN MANUAL, 2007.

DESIGN LOADING:

HL-93
FUTURE WEARING SURFACE (FWS) OF 0.060 KIPS/SQ. FT.

DESIGN DATA:

CONCRETE CLASS QC2 - COMPRESSIVE STRENGTH 4.5 KSI (SUPERSTRUCTURE)
CONCRETE CLASS QC1 AND QC4 - COMPRESSIVE STRENGTH 4.0 KSI (SUBSTRUCTURE)
REINFORCING STEEL - MINIMUM YIELD STRENGTH 60 KSI
STRUCTURAL STEEL - ASTM A709 GRADE 50 - YIELD STRENGTH 50 KSI

CONCRETE FOR PRESTRESSED BEAMS:
COMPRESSIVE STRENGTH (FINAL) - 8.0 KSI
COMPRESSIVE STRENGTH (RELEASE) - 6.5 KSI

WELDED WIRE FABRIC:
YIELD STRENGTH - 70 KSI

PRESTRESSING STRAND:
AREA = 0.217 SQ. IN.
ULTIMATE STRENGTH = 270 KSI
INITIAL STRESS = 202.5 KSI (LOW RELAXATION STRANDS)

DECK PROTECTION METHOD:

EPOXY COATED REINFORCING STEEL
2 ½" CONCRETE COVER

MONOLITHIC WEARING SURFACE:

MONOLITHIC WEARING SURFACE IS ASSUMED, FOR DESIGN PURPOSES, TO BE 1 INCH THICK.

MAINTENANCE OF TRAFFIC:

SEE ROADWAY PLANS FOR ADDITIONAL MAINTENANCE OF TRAFFIC NOTES AND DETAILS.

EXISTING BRIDGE PLANS:

EXISTING BRIDGE PLANS MAY BE INSPECTED IN THE OFFICE OF STRUCTURAL ENGINEERING IN COLUMBUS, OHIO OR THE ODOT DISTRICT SIX OFFICE IN DELAWARE, OHIO.

UTILITY LINES:

THE UTILITIES SHALL BEAR ALL EXPENSE INVOLVED IN RELOCATING (INSTALLING) THE AFFECTED UTILITY LINES UNLESS DETERMINED OTHERWISE BY THE DISTRICT UTILITY COORDINATOR. THE CONTRACTOR AND UTILITIES ARE TO COOPERATE BY ARRANGING THEIR WORK IN SUCH A MANNER THAT INCONVENIENCE TO EITHER WILL BE HELD TO A MINIMUM.

PILE DRIVING CONSTRAINTS

PRIOR TO DRIVING PILES AT THE ABUTMENTS, CONSTRUCT THE BRIDGE APPROACH EMBANKMENT BEHIND THE ABUTMENTS UP AT A 1:1 SLOPE FROM THE TOP OF THE HEEL OF THE FOOTING TO THE SUBGRADE ELEVATION AND FOR A MINIMUM DISTANCE OF 250 FEET BEHIND THE ABUTMENTS. DO NOT BEGIN THE INSTALLATION OF THE ABUTMENT PILES UNTIL AFTER THE ABOVE REQUIRED EMBANKMENT HAS BEEN CONSTRUCTED. AFTER THE FOOTING AND BREASTWALL HAVE BEEN CONSTRUCTED, CONSTRUCT THE EMBANKMENT IMMEDIATELY BEHIND THE ABUTMENTS UP TO THE BEAM SEAT ELEVATION AND ON A 1:1 SLOPE UP TO THE SUBGRADE ELEVATION PRIOR TO SETTING THE BEAMS ON THE ABUTMENTS.

PILE DESIGN LOADS (ULTIMATE BEARING VALUE):

THE ULTIMATE BEARING VALUE IS 390 KIPS PER PILE FOR THE REAR ABUTMENT PILES AND 328 KIPS PER PILE FOR THE FORWARD ABUTMENT PILES.

ABUTMENT PILES:
14" C.I.P. PILES 80 FEET LONG, ORDER LENGTH (REAR ABUTMENT)
14" C.I.P. PILES 65 FEET LONG, ORDER LENGTH (FORWARD ABUTMENT)
2 DYNAMIC LOAD TESTING ITEMS

DECK PLACEMENT DESIGN ASSUMPTIONS:

THE FOLLOWING ASSUMPTIONS OF CONSTRUCTION MEANS AND METHODS WERE MADE FOR THE ANALYSIS AND DESIGN OF THE SUPERSTRUCTURE. THE CONTRACTOR IS RESPONSIBLE FOR THE DESIGN OF THE FALSEWORK SUPPORT SYSTEM WITHIN THESE PARAMETERS AND WILL ASSUME RESPONSIBILITY FOR SUPERSTRUCTURE ANALYSIS FOR DEVIATION FROM THESE DESIGN ASSUMPTIONS.

AN EIGHT WHEEL FINISHING MACHINE WITH A MAXIMUM WHEEL LOAD OF 1.21 KIPS FOR A TOTAL MACHINE LOAD OF 9.20 KIPS (FOR PHASE 3B - LEFT BRIDGE).

A MINIMUM OUT-TO-OUT WHEEL SPACING AT EACH END OF THE MACHINE OF 103".

A MAXIMUM SPACING OF OVERHANG FALSEWORK BRACKETS OF 48".

A MAXIMUM DISTANCE FROM THE CENTERLINE OF THE FASCIA GIRDER TO THE FACE OF THE SAFETY HANDRAIL OF 65".

ITEM 202, STRUCTURE REMOVED, OVER 20 FOOT SPAN, AS PER PLAN:

THIS STRUCTURE IS SUBJECT TO TESTING FOR ASBESTOS. THE CONTRACTOR SHALL USE A STATE CERTIFIED ASBESTOS INSPECTOR TO INSPECT AND SAMPLE THE BRIDGE FOR THE PRESENCE OF ASBESTOS. THE SAMPLES WILL BE PROVIDED TO THE CONTRACTOR FOR TESTING. THE COST TO INSPECT AND SAMPLE THE BRIDGE FOR THE PRESENCE OF ASBESTOS, TO DELIVER THE SAMPLES TO A TEST LAB, AND TO TEST THE SAMPLES FOR ASBESTOS WILL BE INCLUDED IN THIS PAY ITEM. THE CONTRACTOR SHALL COMPLETE THE "OHIO ENVIRONMENTAL PROTECTION AGENCY NOTIFICATION OF DEMOLITION AND RENOVATION" AFTER THE TESTING IS COMPLETE AND SEND THE FORM TO THE OHIO EPA 10 DAYS PRIOR TO DEMOLITION OR RENOVATION ACTIVITIES.

THE EXISTING SOIL NAIL WALL AT THE FORWARD ABUTMENT OF THE EXISTING AND PROPOSED BRIDGES IS TO REMAIN INTACT AND UNDAMAGED. THE CONTRACTOR SHALL ACCURATELY LOCATE THE SOIL NAILS TO AVOID INTEREFERENCE DURING PILE DRIVING OPERATIONS.

THE EXISTING TELEPHONE LINE BETWEEN THE EXISTING REAR ABUTMENT AND PIER 1 SHALL REMAIN.

ITEM 203 EMBANKMENT, AS PER PLAN:

PLACE AND COMPACT EMBANKMENT MATERIAL IN 6 INCH LIFTS FOR THE CONSTRUCTION OF THE APPROACH EMBANKMENT BETWEEN STATIONS 476+17 TO 479+72

ITEM 503, COFFERDAMS AND EXCAVATION BRACING, AS PER PLAN:

THE DESIGN SHOWN ON THE PLANS FOR TEMPORARY SUPPORT OF EXCAVATION IS ONE REPRESENTATIVE DESIGN THAT MAY BE USED TO CONSTRUCT THE PROJECT. THE CONTRACTOR MAY CONSTRUCT THE DESIGN SHOWN ON THE PLANS OR PREPARE AN ALTERNATE DESIGN TO SUPPORT THE SIDES OF EXCAVATIONS. IF CONSTRUCTING AN ALTERNATE DESIGN FOR TEMPORARY SUPPORT OF EXCAVATION, PREPARE AND PROVIDE PLANS IN ACCORDANCE WITH C&MS 501.05. THE DEPARTMENT WILL PAY FOR THE TEMPORARY SUPPORT OF EXCAVATION AT THE CONTRACT LUMP SUM PRICE FOR COFFERDAMS AND EXCAVATION BRACING. NO ADDITIONAL PAYMENT WILL BE MADE FOR PROVIDING AN ALTERNATE DESIGN.

ABBREVIATIONS:

ABUT. - ABUTMENT
APPR. - APPROACH
APPROX. - APPROXIMATELY
B - BOTTOM
B.F. - BACK FACE
BRG. - BEARING
BOT. - BOTTOM
BTWN - BETWEEN
C/C - CENTER TO CENTER
C.I.P. - CAST-IN-PLACE
C.J. - CONSTRUCTION JOINT
CLR. - CLEAR
CONC. - CONCRETE
CONSTR. - CONSTRUCTION
CVN - CHARPY V-NOTCH
DIA. - DIAMETER
DIM. - DIMENSION
DWG. - DRAWING
E.F. - EACH FACE
EL. OR ELEV. - ELEVATION
EOP - EDGE OF PAVEMENT
EQ. - EQUAL
EX. - EXISTING
EXP. - EXPANSION
F.F. - FRONT FACE
FT. - FOOT OR FEET
FWD. - FORWARD
INV. - INVERT
JT. - JOINT
LT. - LEFT
MIN. - MINIMUM
MAX. - MAXIMUM
NO. - NUMBER
N.P.C.P.P. - NON-PERFORATED CORRUGATED PLASTIC PIPE
O/O - OUT TO OUT
P.C.P.P. - PERFORATED CORRUGATED PLASTIC PIPE
P.E.J.F. - PREFORMED EXPANSION JOINT FILLER
PROP. - PROPOSED
RT. - RIGHT
SER. - SERIES
SHLDR - SHOULDER
SPA. - SPACE OR SPACES
STA. - STATION
STD. - STANDARD
T - TOP
TEMP. - TEMPORARY
T.O.S. - TOP OF SLOPE
T/T - TOE TO TOE
TYP. - TYPICAL
U.N.O. - UNLESS NOTED OTHERWISE
VAR. - VARIES

\\colser04\projects\84868\structures\FRA071_0903C\sheets\071_0903CGN001.dgn 12/17/2014 9:01:12 AM teberhardt

E.L. ROBINSON ENGINEERING
1801 Watermark Drive, Suite 310 - Columbus, Ohio 43215
www.elrobinsonengineering.com

DESIGNED TJE | DRAWN DTA | CHECKED DFT | REVIEWED RER | DATE 08-05-14 | REVISED | STRUCTURE FILE NUMBER 25100001/25100001R

GENERAL NOTES
BRIDGE NO. FRA-71-0903L/R
OVER WHITE ROAD

FRA-71-5.29
PID No. 84868

ESTIMATED QUANTITIES

				FRA-71-0903L				FRA-71-0903R				
ITEM	EXTENSION	UNIT	DESCRIPTION	ABUT.	SUPER.	GEN.	TOTAL	ABUT.	SUPER.	GEN.	TOTAL	AS PER PLAN REFERENCE SHEET NO.
202	11003		STRUCTURE REMOVED, OVER 20 FOOT SPAN, AS PER PLAN			LUMP	LUMP			LUMP	LUMP	3, 5, 6
202	22900	SQ YD	APPROACH SLAB REMOVED			134	134			134	134	
202	23500	SQ YD	WEARING COURSE REMOVED			524	524			524	524	
503	11101		COFFERDAMS AND EXCAVATION BRACING, AS PER PLAN			LUMP	LUMP			LUMP	LUMP	3
503	21300		UNCLASSIFIED EXCAVATION			LUMP	LUMP			LUMP	LUMP	
505	11100		PILE DRIVING EQUIPMENT MOBILIZATION	LUMP			LUMP	LUMP			LUMP	
507	00600	FT	14" CAST-IN-PLACE REINFORCED CONCRETE PILES, DRIVEN	4635			4635	4305			4305	
507	00650	FT	14" CAST-IN-PLACE REINFORCED CONCRETE PILES, FURNISHED	4975			4975	4620			4620	
509	10001	POUND	EPOXY COATED REINFORCING STEEL, AS PER PLAN	20,868	79,975		100,843	19,603	69,455		89,058	26
511	21539	CU YD	CLASS QC2 CONCRETE WITH QC/QA, SUPERSTRUCTURE, AS PER PLAN		455		455		397		397	26
511	34448	CU YD	CLASS QC2 CONCRETE, BRIDGE DECK (PARAPET)		36		36		36		36	
511	43512	CU YD	CLASS QC1 CONCRETE WITH QC/QA, ABUTMENT INCLUDING FOOTING	270			270	257			257	
511	45602	CU YD	CLASS QC4 MASS CONCRETE, SUBSTRUCTURE WITH QC/QA	143			143	133			133	
512	10050	SQ YD	SEALING OF CONCRETE SURFACES (NON-EPOXY)	275	507		782	279	498		777	
512	33000	SQ YD	TYPE 2 WATERPROOFING	4	8		12	4	7		11	
515	15100	EACH	DRAPED STRAND PRESTRESSED CONCRETE BRIDGE I-BEAM MEMBERS, LEVEL 3, TYPE WF54-49 (LENGTH = 114'-8")		10		10		9		9	
515	20000	EACH	INTERMEDIATE DIAPHRAGMS		27		27		24		24	
516	13600	SQ FT	1" PREFORMED EXPANSION JOINT FILLER			21	21			21	21	
516	13900	SQ FT	2" PREFORMED EXPANSION JOINT FILLER	155			155	117			117	
516	14020	FT	SEMI-INTEGRAL ABUTMENT EXPANSION JOINT SEAL	216			216	191			191	
516	44201	EACH	ELASTOMERIC BEARING WITH INTERNAL LAMINATES AND LOAD PLATE (NEOPRENE), AS PER PLAN		10		10		9		9	23
			(15" x 30" x 3.186" WITH 16" x 31" x 2.0" LOAD PLATE)									
516	44201	EACH	ELASTOMERIC BEARING WITH INTERNAL LAMINATES AND LOAD PLATE (NEOPRENE), AS PER PLAN		10		10		9		9	23
			(15" x 30" x 3.186" WITH 16" x 31" x 2.094" BEVELED LOAD PLATE)									
518	21200	CU YD	POROUS BACKFILL WITH FILTER FABRIC	197			197	189			189	
518	40000	FT	6" PERFORATED CORRUGATED PLASTIC PIPE	245			245	233			233	
518	40011	FT	6" NON-PERFORATED CORRUGATED PLASTIC PIPE, INCLUDING SPECIALS, AS PER PLAN	24			24	24			24	13, 16
523	20000	EACH	DYNAMIC LOAD TESTING	1			1	1			1	
526	30011	SQ YD	REINFORCED CONCRETE APPROACH SLABS WITH QC/QA (T=17"), AS PER PLAN*			504	504			436	436	36
601	20000	SQ YD	CRUSHED AGGREGATE SLOPE PROTECTION			444	444			375	375	

* THE COST OF THE APPROACH SLAB PARAPET/CURB CONCRETE, REINFORCING STEEL, AND SEALING SHALL BE INCLUDED WITH ITEM 526, REINFORCED CONCRETE APPROACH SLABS (T=17"), AS PER PLAN.

E.L. ROBINSON ENGINEERING
1801 Watermark Drive, Suite 310 • Columbus, Ohio 43215
www.elrobinsonengineering.com

DATE 08-05-14
REVIEWED RER
STRUCTURE FILE NUMBER 2510000L/2510001R
DRAWN DTA
REVISED
DESIGNED TJE
CHECKED DFT

ESTIMATED QUANTITIES
BRIDGE NO. FRA-71-0903L/R
OVER WHITE ROAD

FRA-71-5.29
PID No. 84868

P:\84868\structures\FRA071_0903C\sheets\071_0903CEQ001.dgn 3/30/2015 11:02:07 AM mtakacs

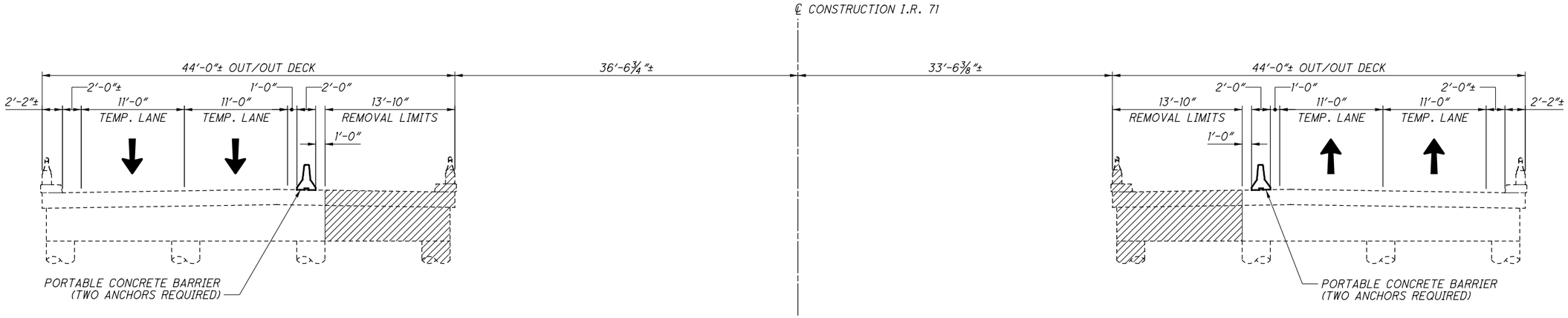

LEFT BRIDGE

PHASE 2 REMOVAL

RIGHT BRIDGE

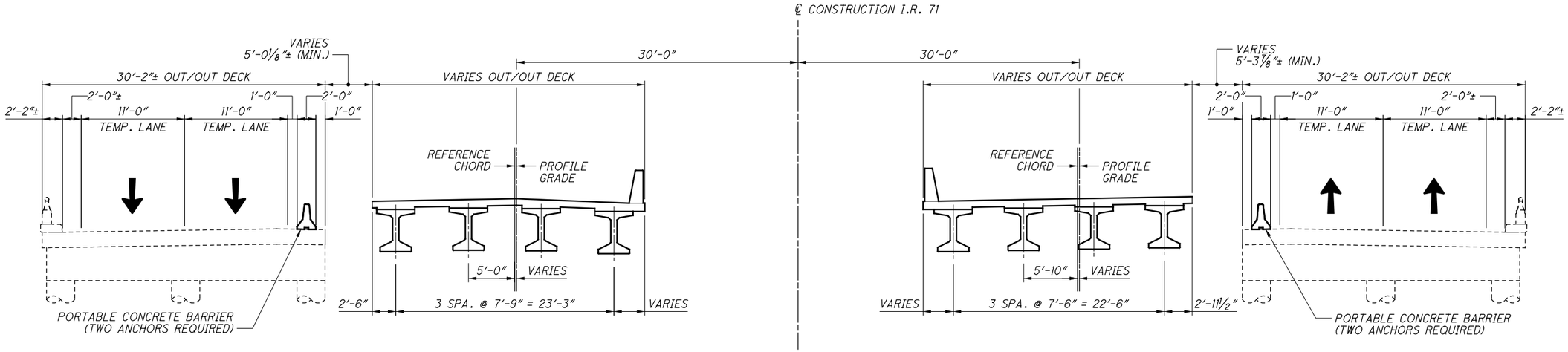

LEFT BRIDGE

PHASE 2 CONSTRUCTION

RIGHT BRIDGE

PHASE 2 REMOVAL

1. INSTALL PORTABLE BARRIERS AS SHOWN.
2. REMOVE EXISTING SUPERSTRUCTURE AND SUBSTRUCTURE TO THE LIMITS SHOWN IN THE PLANS.
3. INSTALL TEMPORARY EXCAVATION BRACING.

PHASE 2 CONSTRUCTION

1. CONSTRUCT PROPOSED ABUTMENTS TO THE LIMITS SHOWN IN THE PLANS.
2. INSTALL BEARINGS, CONCRETE BEAMS, AND INTERMEDIATE DIAPHRAGMS.
3. CONSTRUCT THE CONCRETE DECK AND PARAPETS TO THE LIMITS SHOWN IN THE PLANS.
4. SEAL CONCRETE SURFACES.

LEGEND:

- INDICATES AREAS TO BE REMOVED AS PER ITEM 202 - STRUCTURE REMOVED, OVER 20 FOOT SPAN, AS PER PLAN.

E.L. ROBINSON ENGINEERING
1801 Watermark Drive, Suite 310 • Columbus, Ohio 43215
www.elrobinsonengineering.com

DESIGNED	DRAWN	REVIEWED	DATE
TJE	TJE	RER	08-05-14
CHECKED	REVISED	STRUCTURE FILE NUMBER	
BMG		25100001/25100001R	

PHASE CONSTRUCTION DETAILS (1 OF 2)
BRIDGE NO. FRA-071-0903L/R
OVER WHITE ROAD

FRA-71-5.29
PID No. 84868

5 / 39

589
623

\\colserv04\projects\84868\structures\FRA071_0903C\sheets\071_0903CPC001.dgn 12/17/2014 9:01:14 AM teberhardt

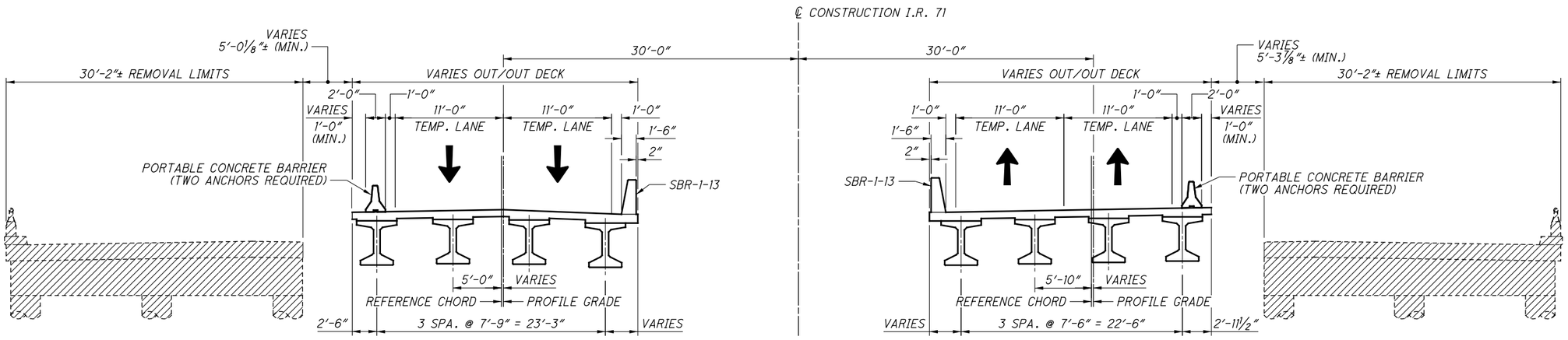

LEFT BRIDGE

PHASE 3B REMOVAL

RIGHT BRIDGE

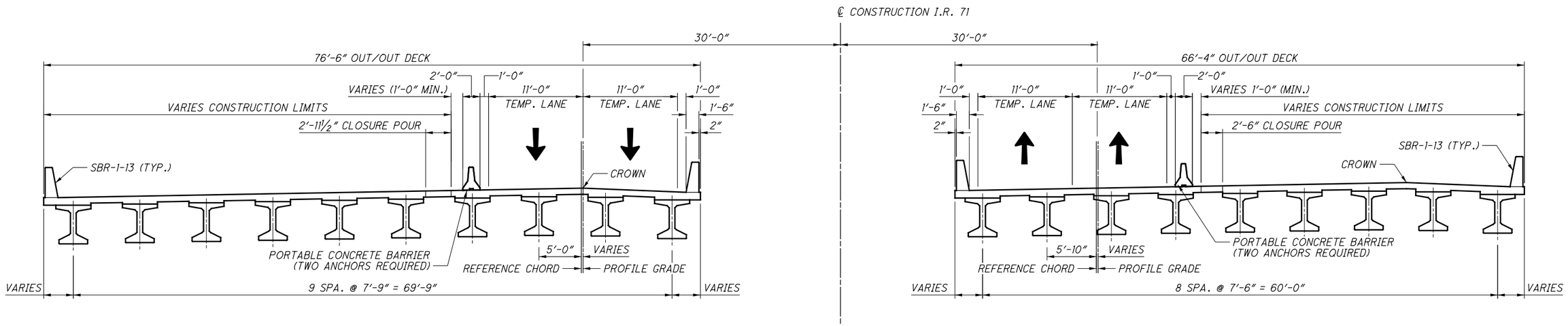

LEFT BRIDGE

PHASE 3B CONSTRUCTION

RIGHT BRIDGE

PHASE 3B REMOVAL

1. INSTALL PORTABLE BARRIERS AS SHOWN.
2. REMOVE EXISTING SUPERSTRUCTURE AND SUBSTRUCTURE TO THE LIMITS SHOWN IN THE PLANS.

PHASE 3B CONSTRUCTION

1. CONSTRUCT PROPOSED ABUTMENTS TO THE LIMITS SHOWN IN THE PLANS.
2. INSTALL BEARINGS, CONCRETE BEAMS, AND INTERMEDIATE DIAPHRAGMS EXCEPT FOR THE INTERMEDIATE DIAPHRAGMS BENEATH THE CLOSURE POURS.
3. CONSTRUCT THE CONCRETE DECK AND PARAPETS TO THE LIMITS SHOWN IN THE PLANS.
4. INSTALL INTERMEDIATE DIAPHRAGMS BENEATH THE CLOSURE POURS.
5. CONSTRUCT THE NEW DECK WITHIN THE LIMITS OF THE CLOSURE POURS AND APPLY HMWM SEALER.
6. SEAL CONCRETE SURFACES.

LEGEND:

- INDICATES AREAS TO BE REMOVED AS PER ITEM 202 - STRUCTURE REMOVED, OVER 20 FOOT SPAN, AS PER PLAN.

E.L. ROBINSON ENGINEERING
1801 Watermark Drive, Suite 310 - Columbus, Ohio 43215
www.elrobinsonengineering.com

DESIGNED TJE | DRAWN TJE | REVIEWED RER | DATE 08-05-14
CHECKED BMG | REVISED | STRUCTURE FILE NUMBER 25100001/25100001R

PHASE CONSTRUCTION DETAILS (2 OF 2)
BRIDGE NO. FRA-071-0903L/R
OVER WHITE ROAD

FRA-71-5.29
PID No. 84868

6 / 39

590
623

\\colserv04\projects\84868\structures\FRA071_0903C\sheets\071_0903CPC002.dgn 12/17/2014 9:01:15 AM teberhardt

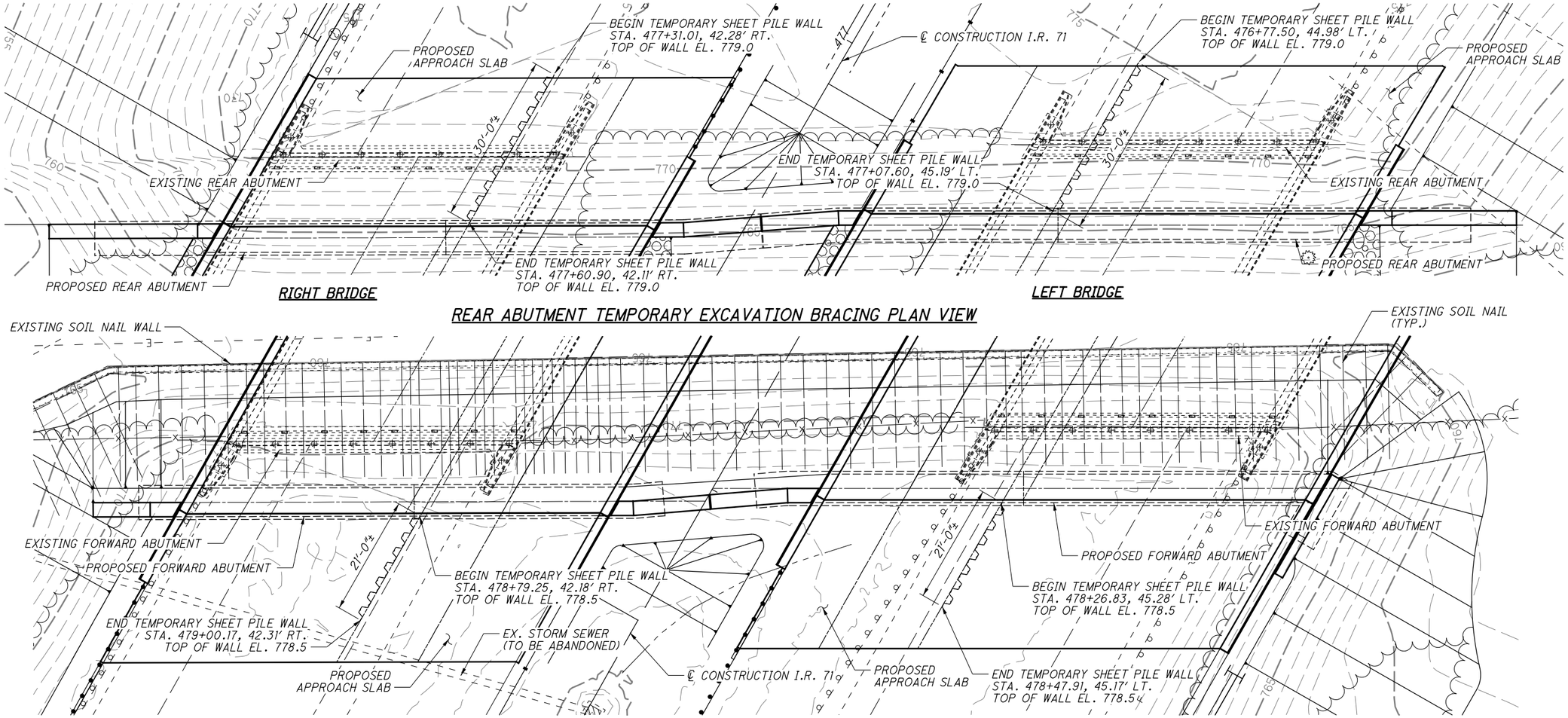

REAR ABUTMENT TEMPORARY EXCAVATION BRACING PLAN VIEW

FORWARD ABUTMENT TEMPORARY EXCAVATION BRACING PLAN VIEW

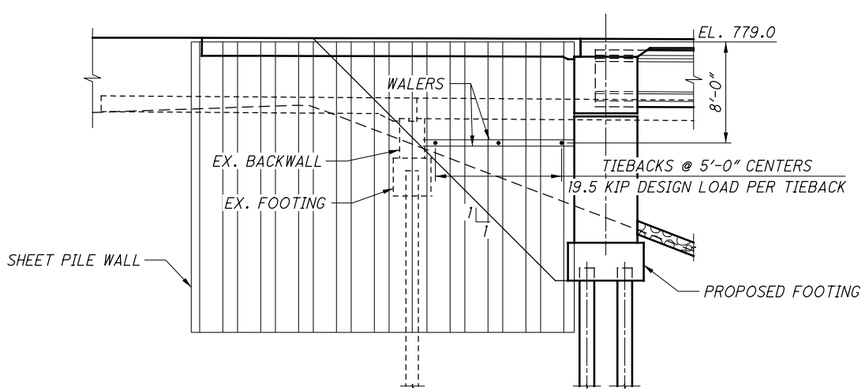

REAR ABUTMENT TEMPORARY EXCAVATION BRACING ELEVATION VIEW

* FORWARD ABUTMENT DOES NOT REQUIRE ANCHORS

NOTES:

1. THE STEEL SHEET PILING SHALL CONFORM TO ASTM A328 AND SHALL HAVE THE FOLLOWING:

LOCATION	REAR ABUTMENT	FORWARD ABUTMENT
SECTION MODULUS REQUIRED (in³/ft)	7.7	7.7
MINIMUM YIELD STRESS, Fy (KSI)	39.0	39.0
TOP OF SHEETING ELEVATION	779.0	778.5
BOTTOM OF SHEETING ELEVATION	756.0	758.5
DESIGN EXCAVATION DEPTH (ft)	19.0	12.5

2. THE TEMPORARY SHEET PILING INCLUDING INSTALLATION, SHALL BE PAID FOR UNDER ITEM 503 - COFFERDAMS AND EXCAVATION BRACING, AS PER PLAN.

3. THE CONTRACTOR, AT HIS OWN EXPENSE, MAY PROVIDE AN ALTERNATE DESIGN FOR THE TEMPORARY SHEETING. FOR THE ALTERNATE DESIGN, THE CONTRACTOR SHALL SUBMIT FOUR (4) SETS OF CALCULATIONS AND DRAWINGS. THE DETAILED DRAWINGS SHALL SHOW SIZES OF ALL STRUCTURAL MEMBERS AND DETAILS OF THE CONNECTIONS. THE DRAWINGS AND CALCULATIONS SHALL BE PREPARED BY A PROFESSIONAL ENGINEER REGISTERED IN THE STATE OF OHIO AND SHALL BEAR HIS SEAL AND SIGNATURE. THE DRAWINGS AND CALCULATIONS SHALL BE SUBMITTED A MINIMUM OF SIX (6) WEEKS PRIOR TO THE START OF CONSTRUCTION.

E.L. ROBINSON ENGINEERING
1801 Watermark Drive, Suite 310 - Columbus, Ohio 43215
www.elrobinsonengineering.com

DESIGNED BMG | DRAWN BMG | CHECKED MRV | REVIEWED RER | DATE 08-05-14
REVISED | STRUCTURE FILE NUMBER 25100001/25100001R

TEMPORARY EXCAVATION BRACING DETAILS
BRIDGE NO. FRA-071-0903L/R
OVER WHITE ROAD

FRA-71-5.29
PID No. 84868

P:\84868\structures\FRA071_0903C\sheets\071_0903CMD001.dgn 3/30/2015 11:03:50 AM mtakacs

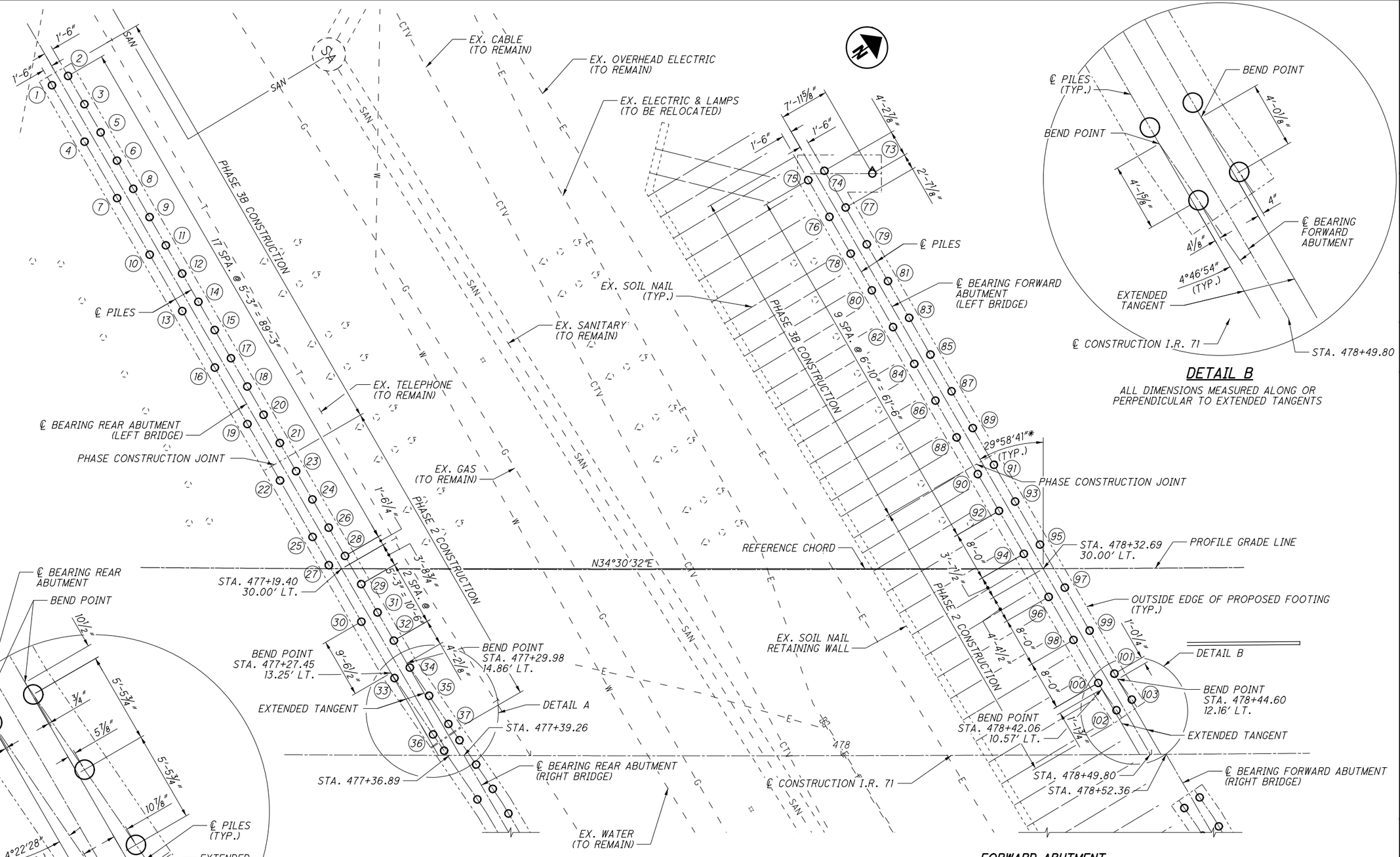

DETAIL B

ALL DIMENSIONS MEASURED ALONG OR PERPENDICULAR TO EXTENDED TANGENTS

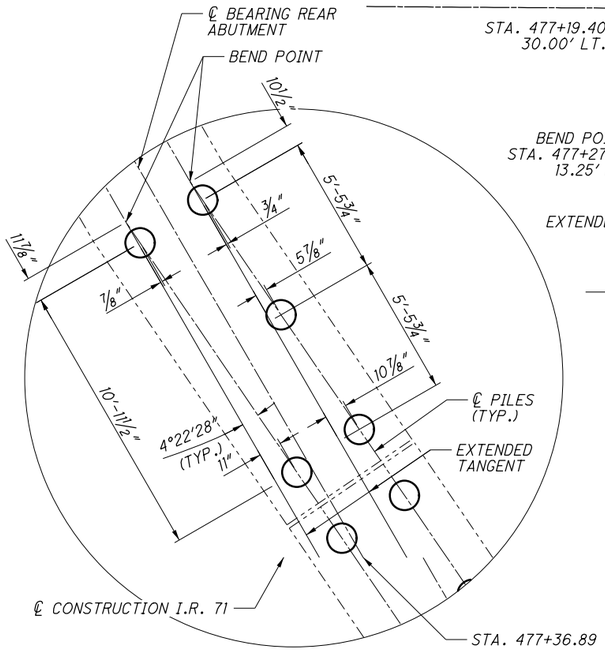

DETAIL A

ALL DIMENSIONS MEASURED ALONG OR PERPENDICULAR TO EXTENDED TANGENTS

REAR ABUTMENT

FORWARD ABUTMENT

FOUNDATION PLAN

* MEASURED NORMAL TO REFERENCE CHORD

LEGEND:

- ◌ ◌ - INDICATES AN EXISTING PILE
- ○ - 14" ϕ C.I.P. CONCRETE PILES
- ⧋ - 14" ϕ C.I.P. CONCRETE PILE AT 4:1 BATTER IN DIRECTION SHOWN
- (#) - PILE NUMBER

NOTES:

1. ALL PILES ARE 14" ϕ CAST-IN-PLACE CONCRETE PILES WITH AN ULTIMATE BEARING VALUE OF 390 KIPS PER PILE AT THE REAR ABUTMENT AND 328 KIPS PER PILE AT THE FORWARD ABUTMENT.
2. FOR PILE LAYOUT DATA, SEE SHEET 10/39.
3. FOR RIGHT BRIDGE FOUNDATION PLAN, SEE SHEET 9/39.

E.L. ROBINSON ENGINEERING
1801 Watermark Drive, Suite 310 - Columbus, Ohio 43215
www.elrobinsonengineering.com

DESIGNED	DRAWN	REVIEWED	DATE
BMG	BMG	RER	08-05-14
CHECKED	REVISED	STRUCTURE FILE NUMBER	
TJE		25100001/251000IR	

FOUNDATION PLAN - LEFT BRIDGE
BRIDGE NO. FRA-071-0903L/R
OVER WHITE ROAD

FRA-71-5.29
PID No. 84868

8 / 39

592
623

\\colserv04\projects\84868\structures\FRA071_0903C\sheets\071_0903CFP001.dgn 12/17/2014 9:01:19 AM teberhardt

\\colserv04\projects\84868\structures\FRA071_0903C\sheets\071_0903CFP002.dgn 12/17/2014 9:01:20 AM teberhardt

EX. OVERHEAD ELECTRIC (TO REMAIN)

℄ BEARING REAR ABUTMENT (LEFT BRIDGE)

DETAIL C

STA. 477+36.89

STA. 477+39.26

℄ CONSTRUCTION I.R. 71

EXTENDED TANGENT

BEND POINT STA. 477+42.89 9.18′ RT.

BEND POINT STA. 477+45.42 7.57′ RT.

EX. CABLE (TO REMAIN)

EX. ELECTRIC & LAMPS (TO BE RELOCATED)

PROFILE GRADE LINE

STA. 477+56.75 30.00′ RT.

REFERENCE CHORDE

N34°19′47″E

PHASE CONSTRUCTION JOINT

℄ PILES

EX. SOIL NAIL RETAINING WALL

EX. WATER (TO REMAIN)

EX. GAS (TO REMAIN)

EX. SANITARY (TO REMAIN)

EX. TELEPHONE (TO REMAIN)

EX. STORM SEWER (TO REMAIN)

℄ BEARING FORWARD ABUTMENT (LEFT BRIDGE)

STA. 478+49.80

STA. 478+52.36

EXTENDED TANGENT

DETAIL D

BEND POINT STA. 478+57.38 11.82′ RT.

BEND POINT STA. 478+59.93 10.22′ RT.

STA. 478+69.47 30.00′ RT.

PHASE CONSTRUCTION JOINT

℄ PILES

℄ BEARING FORWARD ABUTMENT (RIGHT BRIDGE)

OUTSIDE EDGE OF PROPOSED FOOTING (TYP.)

EX. SOIL NAIL (TYP.)

EX. STORM SEWER (TO REMAIN)

4 SPA. @ 5′-3″ = 21′-0″

14 SPA. @ 5′-3″ = 73′-6″

3 SPA. @ 6′-9″ = 20′-3″

6 SPA. @ 6′-9″ = 40′-6″

2 SPA. @ 8′-0″ = 16′-0″

PHASE 2 CONSTRUCTION

PHASE 3B CONSTRUCTION

29°57′17″* (TYP.)

2′-0 3/8″

2′-0 3/4″

3′-2 1/4″

1′-11″

1′-6 3/8″

1′-7 1/8″

1′-8″

6′-8 7/8″

1′-6″

DETAIL D

ALL DIMENSIONS MEASURED ALONG OR PERPENDICULAR TO EXTENDED TANGENTS

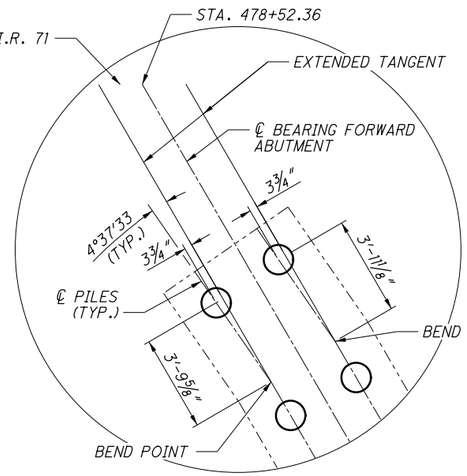

℄ BEARING REAR ABUTMENT (RIGHT BRIDGE)

10 3/4″

10 5/8″

4°13′07″ (TYP.)

4′-8 7/8″

6 1/2″

4′-8 7/8″

℄ CONSTR. I.R. 71

℄ PILES (TYP.)

STA. 477+39.26

℄ BEARING REAR ABUTMENT

EXTENDED TANGENT

2 3/8″

2′-8″

2 1/4″

9′-5 3/4″

BEND POINT

BEND POINT

2′-6 3/4″

DETAIL C

ALL DIMENSIONS MEASURED ALONG OR PERPENDICULAR TO EXTENDED TANGENTS

REAR ABUTMENT

FORWARD ABUTMENT

FOUNDATION PLAN

* MEASURED NORMAL TO REFERENCE CHORD

NOTES:

1. FOR ADDITIONAL NOTES AND LEFT BRIDGE FOUNDATION PLAN, SEE SHEET 8/39.
2. FOR PILE LAYOUT DATA, SEE SHEET 10/39.

E.L. ROBINSON ENGINEERING
1801 Watermark Drive, Suite 310 • Columbus, Ohio 43215
www.elrobinsonengineering.com

DESIGNED BMG | DRAWN BMG | CHECKED TJE | REVIEWED RER | DATE 08-05-14 | REVISED | STRUCTURE FILE NUMBER 25100001/25100001R

FOUNDATION PLAN - RIGHT BRIDGE
BRIDGE NO. FRA-071-0903L/R
OVER WHITE ROAD

FRA-71-5.29
PID No. 84868

PILE LAYOUT DATA

PILE NUMBER	STATION	OFFSET	NORTHING	EASTING	PILE NUMBER	STATION	OFFSET	NORTHING	EASTING	PILE NUMBER	STATION	OFFSET	NORTHING	EASTING	PILE NUMBER	STATION	OFFSET	NORTHING	EASTING
1	476+71.94	107.56' (L)	682331.0933	1812810.1293	41	477+41.44	7.06' (R)	682322.3924	1812943.7370	81	478+07.75	76.43' (L)	682424.1868	1812912.4116	121	478+84.07	52.72' (R)	682414.7277	1813062.0840
2	476+74.55	109.08' (L)	682334.0840	1812810.3663	42	477+43.91	5.36' (R)	682325.3924	1812943.7452	82	478+08.56	69.01' (L)	682420.6563	1812918.9866	122	478+84.79	60.07' (R)	682411.2215	1813068.5855
3	476+77.24	104.56' (L)	682333.6692	1812815.5999	43	477+46.44	9.32' (R)	682325.2302	1812948.4459	83	478+11.17	70.50' (L)	682423.6469	1812919.2236	123	478+87.39	58.59' (R)	682414.2128	1813068.8144
4	476+77.32	98.51' (L)	682330.2639	1812820.5965	44	477+46.50	15.37' (R)	682321.8385	1812953.4517	84	478+11.97	63.08' (L)	682420.1165	1812925.7986	124	478+88.11	65.94' (R)	682410.7066	1813075.3158
5	476+79.92	100.03' (L)	682333.2545	1812820.8335	45	477+49.09	13.85' (R)	682324.8298	1812953.6806	85	478+14.59	64.57' (L)	682423.1071	1812926.0356	125	478+90.71	64.46' (R)	682413.6979	1813075.5447
6	476+82.60	95.51' (L)	682332.8398	1812826.0671	46	477+51.73	18.39' (R)	682324.4293	1812958.9153	86	478+15.38	57.15' (L)	682419.5767	1812932.6105	126	478+91.42	71.81' (R)	682410.1917	1813082.0462
7	476+82.68	89.46' (L)	682329.4344	1812831.0637	47	477+51.78	24.44' (R)	682321.0375	1812963.9211	87	478+18.00	58.64' (L)	682422.5673	1812932.8475	127	478+94.02	70.33' (R)	682413.1829	1813082.2750
8	476+85.28	90.98' (L)	682332.4250	1812831.3007	48	477+54.37	22.93' (R)	682324.0288	1812964.1500	88	478+18.79	51.22' (L)	682419.0369	1812939.4225	128	478+95.35	78.77' (R)	682409.5814	1813090.0229
9	476+87.96	86.45' (L)	682332.0103	1812836.5343	49	477+57.01	27.46' (R)	682323.6283	1812969.3847	89	478+21.41	52.71' (L)	682422.0275	1812939.6595	129	478+97.94	77.29' (R)	682412.5727	1813090.2517
10	476+88.03	80.41' (L)	682328.6050	1812841.5309	50	477+57.06	33.51' (R)	682320.2365	1812974.3905	90	478+22.20	45.29' (L)	682418.4971	1812946.2345	130	478+99.26	85.72' (R)	682408.9711	1813097.9995
11	476+90.64	81.92' (L)	682331.5956	1812841.7679	51	477+59.64	32.00' (R)	682323.2278	1812974.6194	91	478+24.81	46.78' (L)	682421.4877	1812946.4715	131	479+01.86	84.25' (R)	682411.9624	1813098.2284
12	476+93.31	77.39' (L)	682331.1809	1812847.0015	52	477+62.28	36.53' (R)	682322.8273	1812979.8541	92	478+25.60	39.36' (L)	682417.9573	1812953.0465					
13	476+93.38	71.35' (L)	682327.7755	1812851.9981	53	477+62.33	42.58' (R)	682319.4355	1812984.8599	93	478+28.22	40.84' (L)	682420.9479	1812953.2835					
14	476+95.98	72.86' (L)	682330.7661	1812852.2351	54	477+64.91	41.07' (R)	682322.4268	1812985.0888	94	478+29.58	32.41' (L)	682417.3253	1812961.0215					
15	476+98.65	68.33' (L)	682330.3514	1812857.4686	55	477+67.54	45.61' (R)	682322.0263	1812990.3235	95	478+32.19	33.90' (L)	682420.3159	1812961.2585					
16	476+98.72	62.29' (L)	682326.9460	1812862.4653	56	477+67.58	51.66' (R)	682318.6345	1812995.3293	96	478+33.56	25.46' (L)	682416.6933	1812968.9965					
17	477+01.32	63.80' (L)	682329.9367	1812862.7022	57	477+70.17	50.15' (R)	682321.6258	1812995.5582	97	478+36.17	26.95' (L)	682419.6840	1812969.2335					
18	477+03.98	59.27' (L)	682329.5219	1812867.9358	58	477+72.79	54.69' (R)	682321.2253	1813000.7929	98	478+37.53	18.51' (L)	682416.0614	1812976.9715					
19	477+04.05	53.23' (L)	682326.1166	1812872.9324	59	477+72.83	60.74' (R)	682317.8335	1813005.7987	99	478+40.14	20.00' (L)	682419.0520	1812977.2085					
20	477+06.65	54.74' (L)	682329.1072	1812873.1694	60	477+75.42	59.23' (R)	682320.8248	1813006.0276	100	478+41.49	11.56' (L)	682415.4294	1812984.9465					
21	477+09.31	50.21' (L)	682328.6925	1812878.4030	61	477+78.04	63.77' (R)	682320.4243	1813011.2623	101	478+44.10	13.04' (L)	682418.4200	1812985.1835					
22	477+09.37	44.16' (L)	682325.2871	1812883.3996	62	477+78.08	69.82' (R)	682317.0326	1813016.2681	102	478+44.40	7.15' (L)	682415.3573	1812990.2304					
23	477+11.97	45.68' (L)	682328.2777	1812883.6366	63	477+80.66	68.31' (R)	682320.0238	1813016.4970	103	478+46.88	8.84' (L)	682418.3573	1812990.2172					
24	477+14.62	41.14' (L)	682327.8630	1812888.8702	64	477+83.28	72.85' (R)	682319.6233	1813021.7317	104	478+55.23	8.67' (R)	682415.4412	1813009.3969					
25	477+14.68	35.10' (L)	682324.4577	1812893.8668	65	477+83.31	78.90' (R)	682316.2316	1813026.7376	105	478+57.71	6.97' (R)	682418.4412	1813009.3837					
26	477+17.28	36.61' (L)	682327.4483	1812894.1038	66	477+85.89	77.40' (R)	682319.2228	1813026.9664	106	478+58.14	13.15' (R)	682415.3409	1813014.7429					
27	477+17.33	30.56' (L)	682324.0429	1812899.1004	67	477+88.50	81.94' (R)	682318.8223	1813032.2011	107	478+60.75	11.66' (R)	682418.3322	1813014.9717					
28	477+19.93	32.07' (L)	682327.0336	1812899.3374	68	477+88.54	87.98' (R)	682315.4306	1813037.2070	108	478+61.49	19.01' (R)	682414.8260	1813021.4732					
29	477+22.58	27.54' (L)	682326.6188	1812904.5710	69	477+91.12	86.48' (R)	682318.4218	1813037.4358	109	478+64.09	17.52' (R)	682417.8172	1813021.7020					
30	477+22.64	21.49' (L)	682323.2135	1812909.5676	70	477+93.73	91.03' (R)	682318.0213	1813042.6705	110	478+64.83	24.87' (R)	682414.3111	1813028.2035					
31	477+25.23	23.00' (L)	682326.2041	1812909.8046	71	477+93.76	97.07' (R)	682314.6296	1813047.6764	111	478+67.43	23.39' (R)	682417.3023	1813028.4324					
32	477+27.88	18.46' (L)	682325.7894	1812915.0382	72	477+96.33	95.57' (R)	682317.6208	1813047.9052	112	478+68.16	30.74' (R)	682413.7961	1813034.9339					
33	477+28.01	12.43' (L)	682322.4570	1812920.0705	73	478+05.26	93.75' (L)	682431.9239	1812896.7154	113	478+70.76	29.25' (R)	682416.7874	1813035.1627					
34	477+30.48	14.13' (L)	682325.4570	1812920.0787	74	477+97.48	94.21' (L)	682425.8062	1812891.9757	114	478+71.50	36.60' (R)	682413.2812	1813041.6642					
35	477+33.61	9.60' (L)	682325.4420	1812925.5786	75	477+94.86	92.72' (L)	682422.8155	1812891.7387	115	478+74.09	35.12' (R)	682416.2725	1813041.8930					
36	477+34.26	3.37' (L)	682322.4270	1812931.0704	76	477+98.29	86.79' (L)	682422.2757	1812898.5507	116	478+74.83	42.47' (R)	682412.7663	1813048.3945					
37	477+36.73	5.07' (L)	682325.4270	1812931.0786	77	478+00.91	88.28' (L)	682425.2664	1812898.7876	117	478+77.42	40.98' (R)	682415.7575	1813048.6234					
38	477+36.05	0.76' (L)	682322.4183	1812934.2371	78	478+01.71	80.86' (L)	682421.7359	1812905.3626	118	478+78.15	48.33' (R)	682412.2514	1813055.1248					
39	477+38.52	2.47' (L)	682325.4183	1812934.2453	79	478+04.33	82.36' (L)	682424.7266	1812905.5996	119	478+80.75	46.85' (R)	682415.2426	1813055.3537					
40	477+41.22	1.45' (R)	682325.4054	1812938.9953	80	478+05.14	74.94' (L)	682421.1961	1812912.1746	120	478+81.47	54.20' (R)	682411.7364	1813061.8552					

LEGEND:

(L) - LEFT OF ℄ CONSTRUCTION I.R. 71

(R) - RIGHT OF ℄ CONSTRUCTION I.R. 71

NOTES:

1. FOR PILE LAYOUT, SEE SHEETS 8/39 AND 9/39.
2. PILES 1 THRU 71 REAR ABUTMENT, PILES 73 THRU 131 FORWARD ABUTMENT.

E.L. ROBINSON ENGINEERING
1801 Watermark Drive, Suite 310 - Columbus, Ohio 43215
www.elrobinsonengineering.com

DESIGNED BMG | DRAWN BMG | CHECKED TJE | REVIEWED RER | DATE 08-05-14 | REVISED | STRUCTURE FILE NUMBER 25100001/25100001R

FOUNDATION PLAN DATA
BRIDGE NO. FRA-071-0903L/R
OVER WHITE ROAD

FRA-71-5.29
PID No. 84868

\\colserv04\projects\84868\structures\FRA071_0903C\sheets\071_0903CFP003.dgn 12/17/2014 9:01:21 AM teberhardt

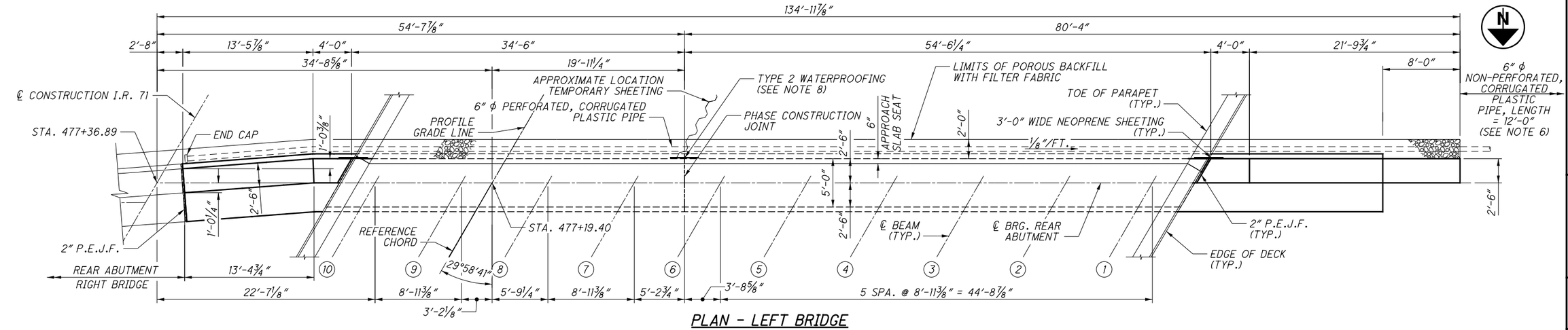

PLAN - LEFT BRIDGE

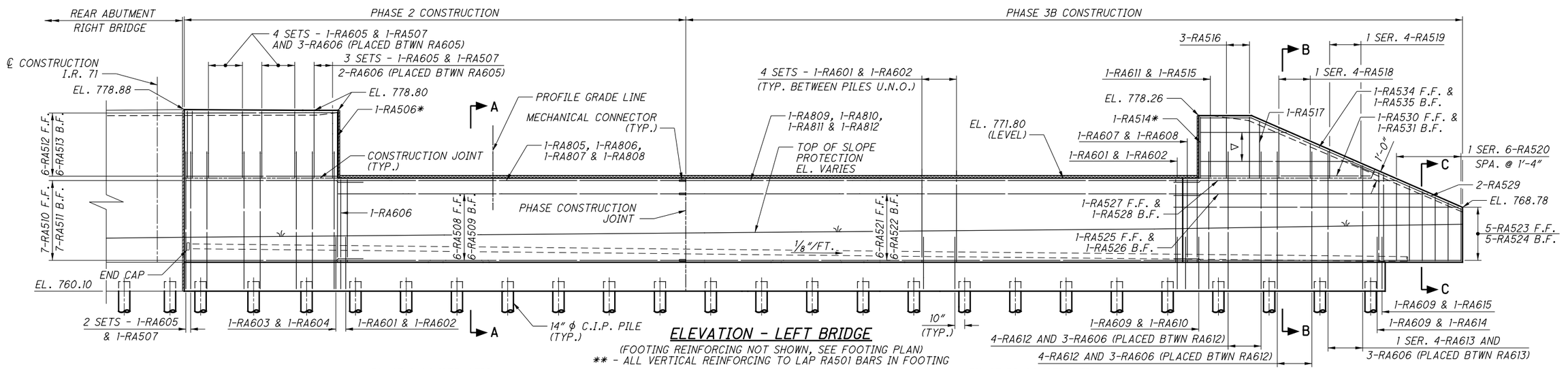

ELEVATION - LEFT BRIDGE

(FOOTING REINFORCING NOT SHOWN, SEE FOOTING PLAN)
** - ALL VERTICAL REINFORCING TO LAP RA501 BARS IN FOOTING

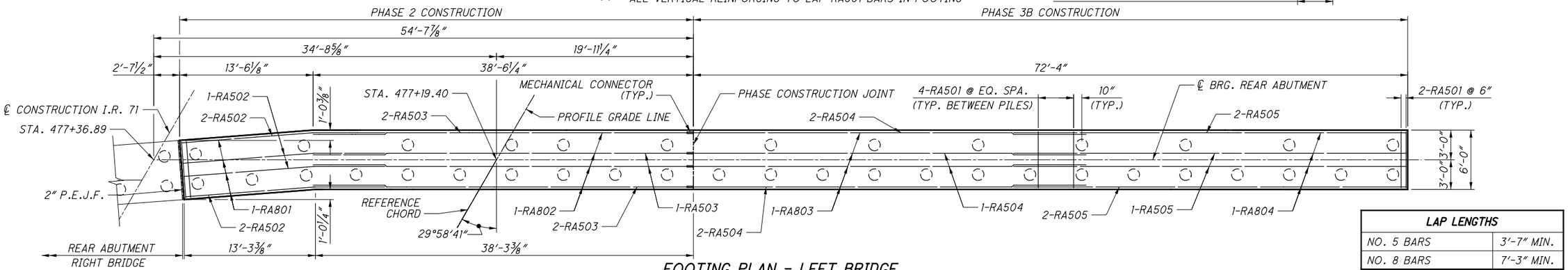

FOOTING PLAN - LEFT BRIDGE

LAP LENGTHS	
NO. 5 BARS	3'-7" MIN.
NO. 8 BARS	7'-3" MIN.

LEGEND:

* - PLACED PARELLEL TO BEAMS

▽ - 1 SER. 3-RA532 F.F.
1 SER. 3-RA533 B.F.

(1) TO (10) - DENOTES BEAM NUMBER

NOTES:

1. MECHANICAL CONNECTORS SHALL BE CAPABLE OF DEVELOPING 125 PERCENT OF THE YIELD STRENGTH OF THE BARS JOINED.
2. FOR SECTION A-A THRU C-C, SEE SHEET 13/39 .
3. FOR PILE LAYOUT AND NOTES, SEE SHEETS 8/39 AND 9/39 .
4. FOR ADDITIONAL SEMI-INTEGRAL ABUTMENT DETAILS, SEE ODOT STD. DRAWING SICD-1-96.
5. FOR DIAPHRAGM REINFORCEMENT AND DETAILS, SEE SHEETS 32/39 AND 33/39 .
6. 6" N.P.C.P.P. AT ENDS SPLICED TO PERFORATED PIPE AND OUTLET AS SHOWN IN PIPE TERMINATION DETAIL ON SHEET 13/39 .
7. FOR REINFORCING BAR SCHEDULE, SEE SHEETS 37/39 THRU 39/39 .
8. TYPE 2 WATERPROOFING (3'-0" WIDE) SHALL BE USED TO SEAL THE PHASE CONSTRUCTION JOINT FROM THE TOP OF FOOTING TO BELOW THE SEMI-INTEGRAL JOINT. NEOPRENE SHEETING SHALL BE USED TO SEAL THE SEMI-INTEGRAL JOINT.

E.L. ROBINSON ENGINEERING
1801 Watermark Drive, Suite 310 - Columbus, Ohio 43215
www.elrobinsonengineering.com

DESIGNED TJE | DRAWN BMG | REVIEWED RER | DATE 08-05-14
CHECKED AME | REVISED | STRUCTURE FILE NUMBER 25100001/25100001R

REAR ABUTMENT PLAN AND ELEVATION - LEFT BRIDGE
BRIDGE NO. FRA-071-0903L/R
OVER WHITE ROAD

FRA-71-5.29
PID No. 84868

11 / 39

595
623

\\colser04\projects\84868\structures\FRA071_0903C\sheets\071_0903CAR001.dgn 12/17/2014 9:01:22 AM teberhardt

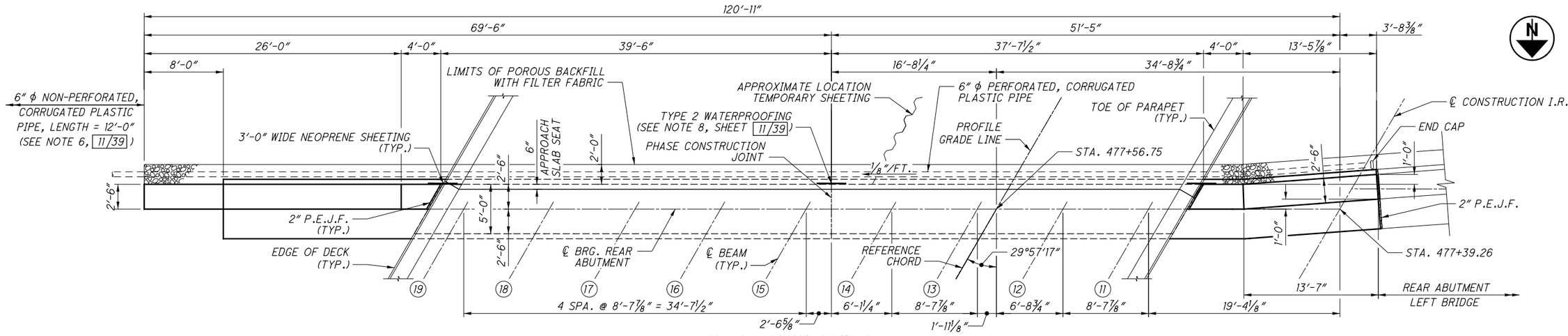

PLAN - RIGHT BRIDGE

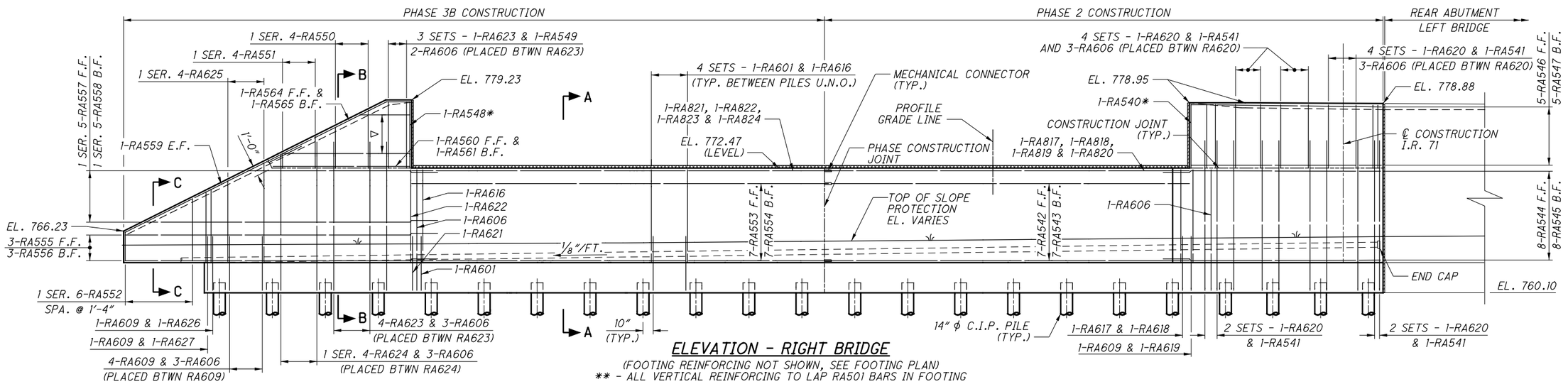

ELEVATION - RIGHT BRIDGE

(FOOTING REINFORCING NOT SHOWN, SEE FOOTING PLAN)
** - ALL VERTICAL REINFORCING TO LAP RA501 BARS IN FOOTING

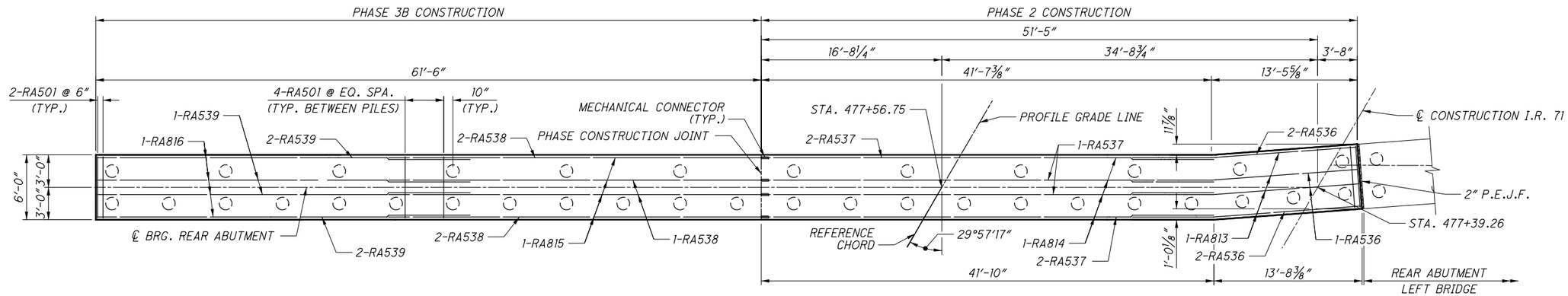

FOOTING PLAN - RIGHT BRIDGE

LEGEND:

* - PLACED PARELLEL TO BEAMS

▽ - 1 SER. 4-RA562 F.F.
1 SER. 4-RA563 B.F.

(11) TO (19) - DENOTES BEAM NUMBER

LAP LENGTHS	
NO. 5 BARS	3'-7" MIN.
NO. 8 BARS	7'-3" MIN.

NOTES:

1. FOR NOTES, SEE SHEET 11/39.
2. FOR SECTIONS A-A, B-B AND C-C, SEE SHEET 13/39.

E.L. ROBINSON ENGINEERING
1801 Watermark Drive, Suite 310 - Columbus, Ohio 43215
www.elrobinsonengineering.com

DESIGNED TJE | DRAWN BMG | CHECKED AME | REVIEWED RER | DATE 08-05-14
STRUCTURE FILE NUMBER 25100001/25100001R

REAR ABUTMENT PLAN AND ELEVATION - RIGHT BRIDGE
BRIDGE NO. FRA-071-0903L/R
OVER WHITE ROAD

FRA-71-5.29
PID No. 84868

\\colserv04\projects\84868\structures\FRA071_0903C\sheets\071_0903CAR002.dgn 12/17/2014 9:01:23 AM teberhardt

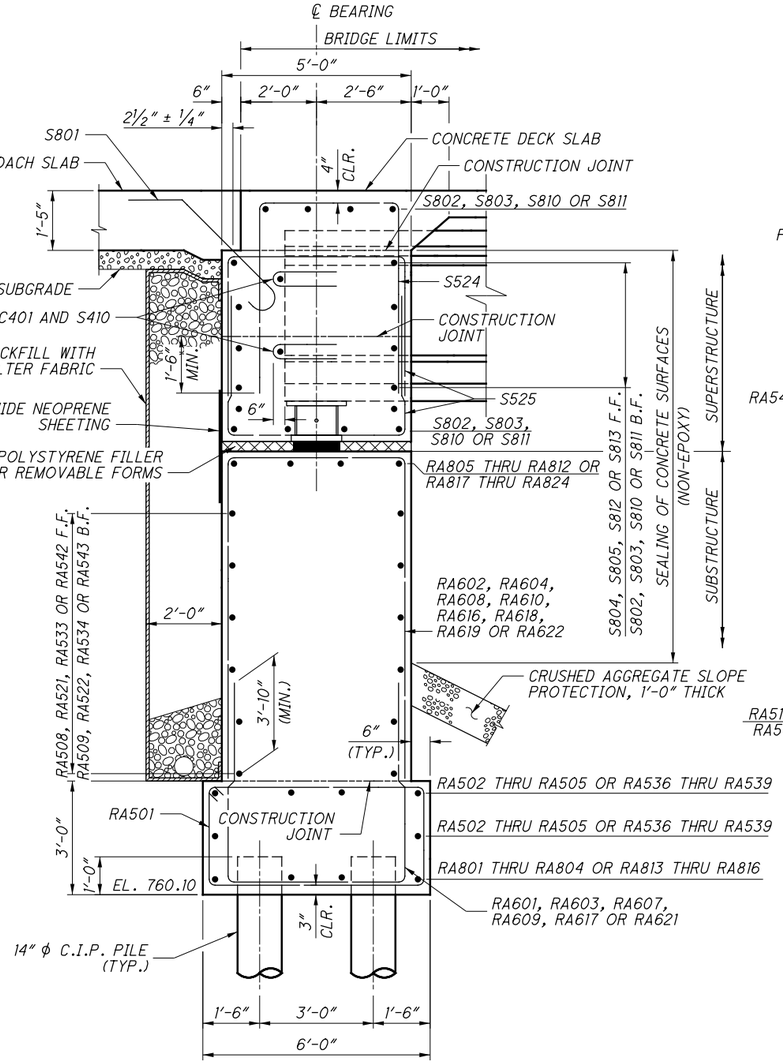

SECTION A-A

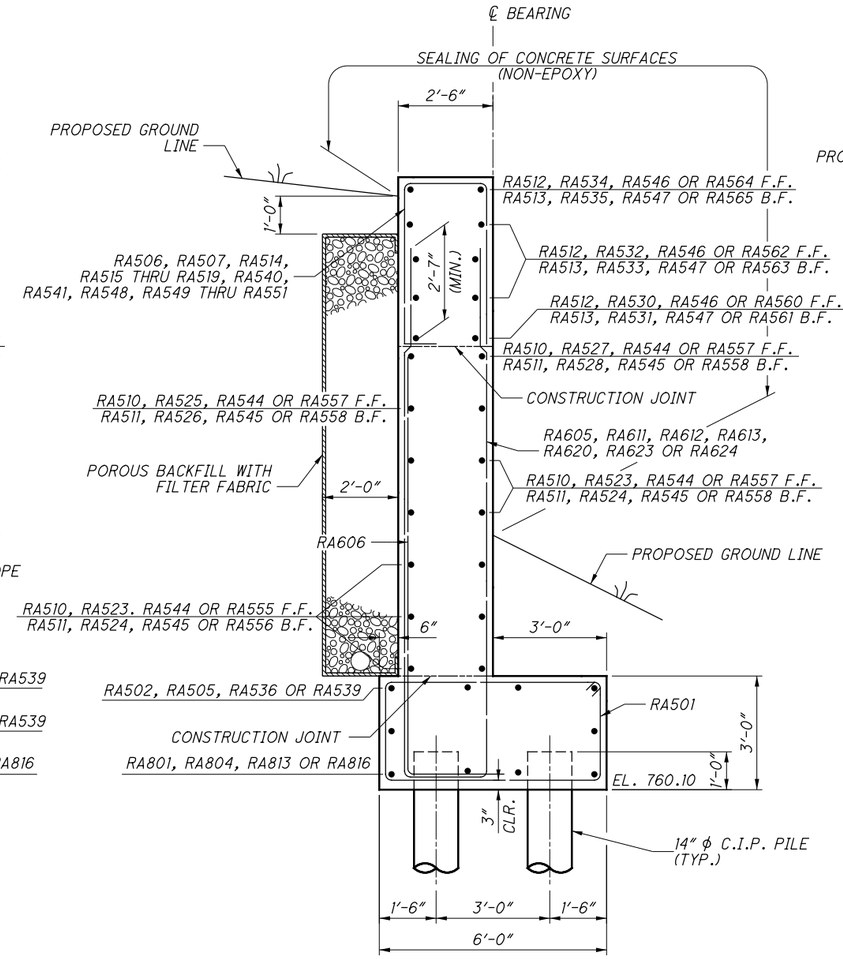

SECTION B-B

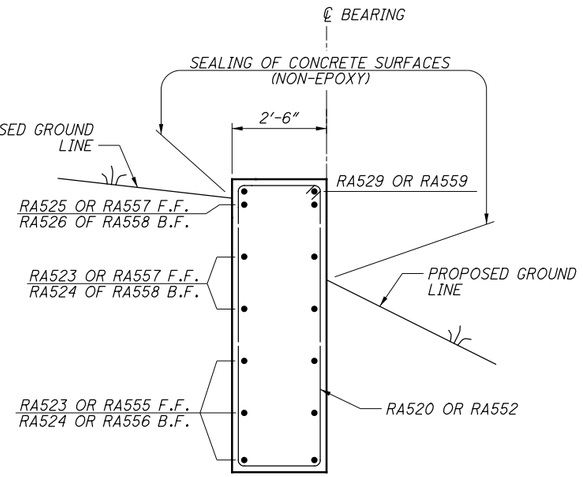

SECTION C-C

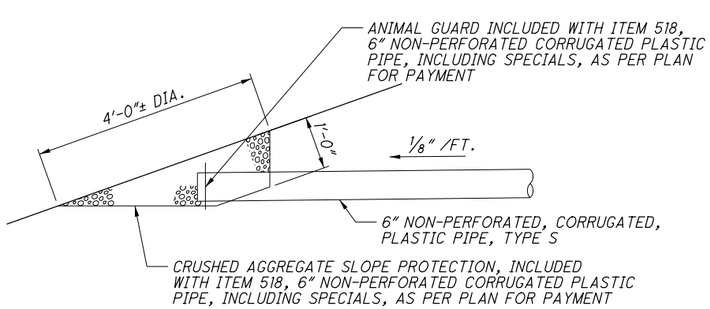

TERMINATION OF 6″ N.P.C.P.P. DETAIL

NOTES:

1. FOR DIAPHRAGM DETAILS AND REINFORCEMENT, SEE SHEET 32/39.
2. FOR ADDITIONAL BEARING DETAILS, SEE SHEET 23/39.
3. FOR LOCATIONS OF SECTIONS A-A THRU C-C, SEE SHEETS 11/39 AND 12/39.
4. FOR ADDITIONAL DETAILS SEE ODOT STD. DWG. SICD-1-96 AND PSID-1-13.

E.L. ROBINSON ENGINEERING
1801 Watermark Drive, Suite 310 - Columbus, Ohio 43215
www.elrobinsonengineering.com

DESIGNED TJE | DRAWN BMG | CHECKED AME | REVIEWED RER | DATE 08-05-14
STRUCTURE FILE NUMBER 2510000L/2510001R | REVISED

REAR ABUTMENT DETAILS
BRIDGE NO. FRA-071-0903L/R
OVER WHITE ROAD

FRA-71-5.29
PID No. 84868

13 / 39

597
623

\\colserv04\projects\84868\structures\FRA071_0903C\sheets\071_0903CAR003.dgn 12/17/2014 9:01:25 AM teberhardt

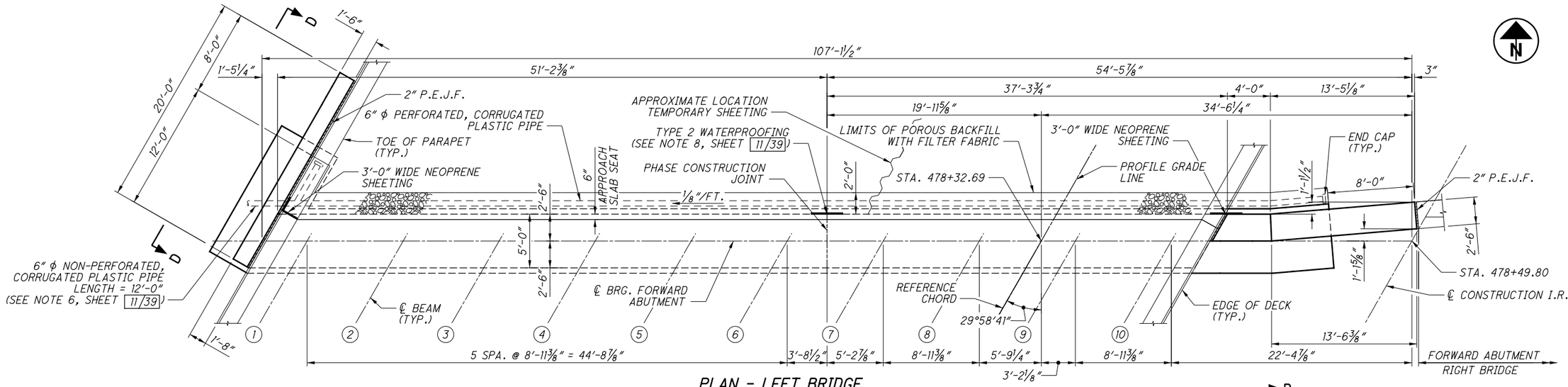

PLAN - LEFT BRIDGE

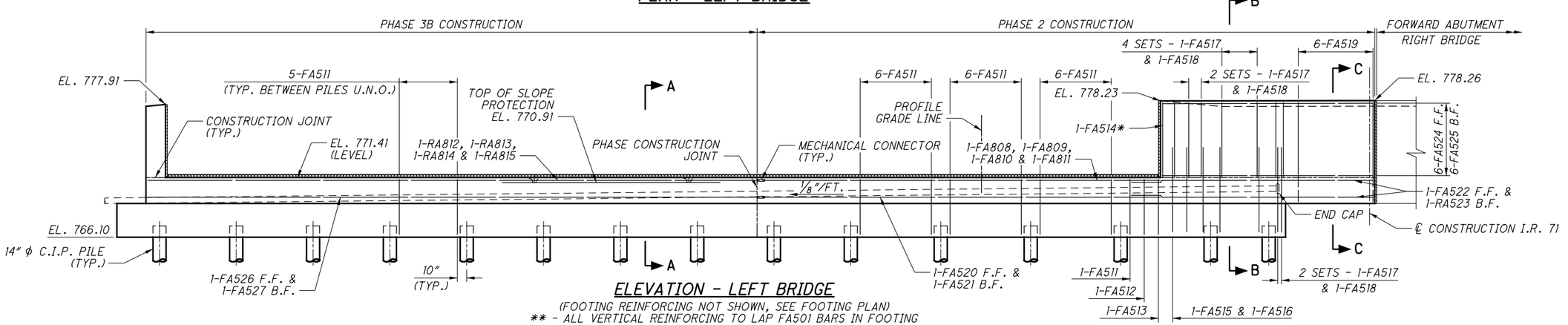

ELEVATION - LEFT BRIDGE

(FOOTING REINFORCING NOT SHOWN, SEE FOOTING PLAN)
** - ALL VERTICAL REINFORCING TO LAP FA501 BARS IN FOOTING

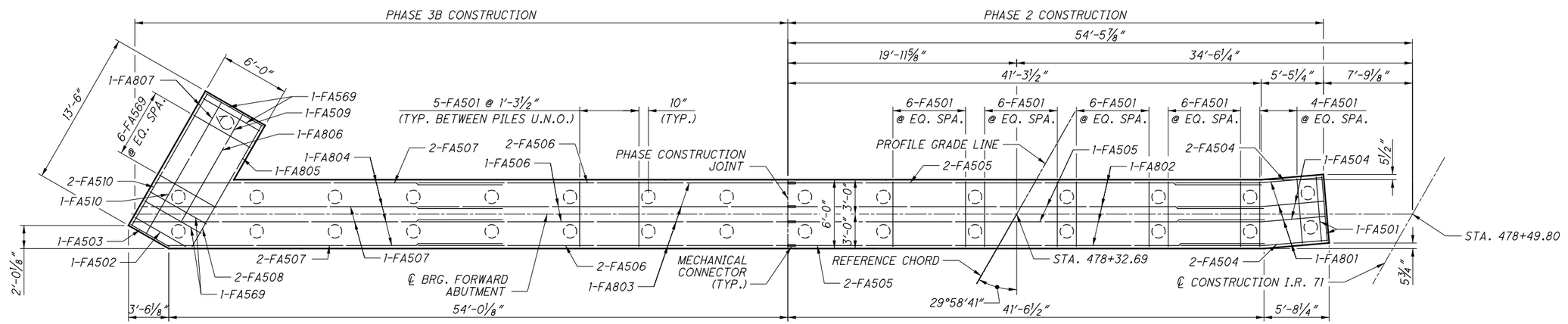

FOOTING PLAN - LEFT BRIDGE

LEGEND:

* - PLACED PARELLEL TO BEAMS

(1) TO (10) - DENOTES BEAM NUMBER

LAP LENGTHS	
NO. 5 BARS	3'-7" MIN.
NO. 8 BARS	7'-3" MIN.

NOTES:

1. FOR NOTES, SEE SHEET 11/39.
2. FOR SECTION A-A THRU C-C, SEE SHEET 16/39 .
3. FOR VIEW D-D, SEE SHEET 17/39.

E.L. ROBINSON ENGINEERING
1801 Watermark Drive, Suite 310 - Columbus, Ohio 43215
www.elrobinsonengineering.com

DESIGNED TJE | DRAWN BMG | CHECKED AME | REVIEWED RER | DATE 08-05-14 | REVISED | STRUCTURE FILE NUMBER 25100001/25100001R

FORWARD ABUTMENT PLAN AND ELEVATION - LEFT BRIDGE

BRIDGE NO. FRA-071-0903L/R
OVER WHITE ROAD

FRA-71-5.29
PID No. 84868

\\colserv04\projects\84868\structures\FRA071_0903C\sheets\071_0903CAF001.dgn 12/17/2014 9:01:26 AM teberhardt

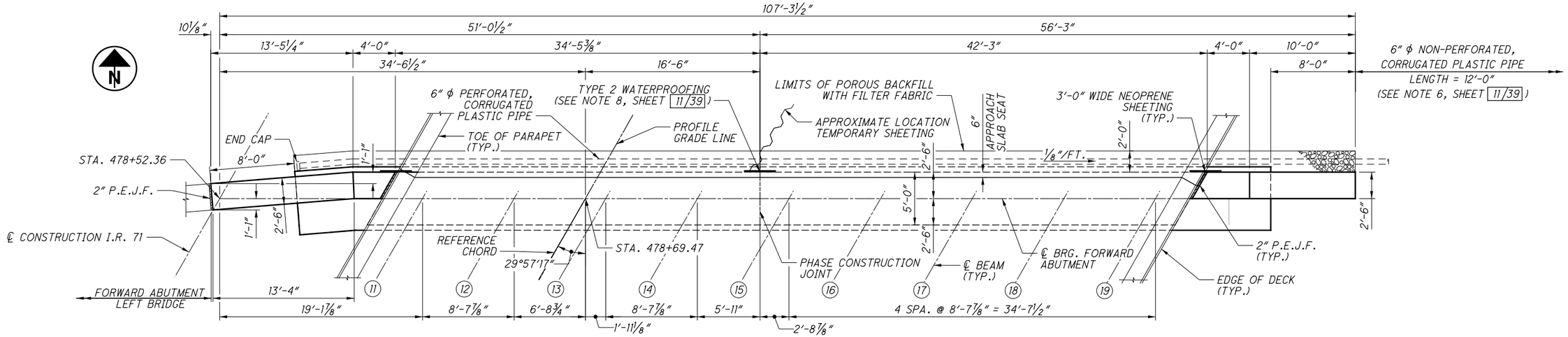

PLAN - RIGHT BRIDGE

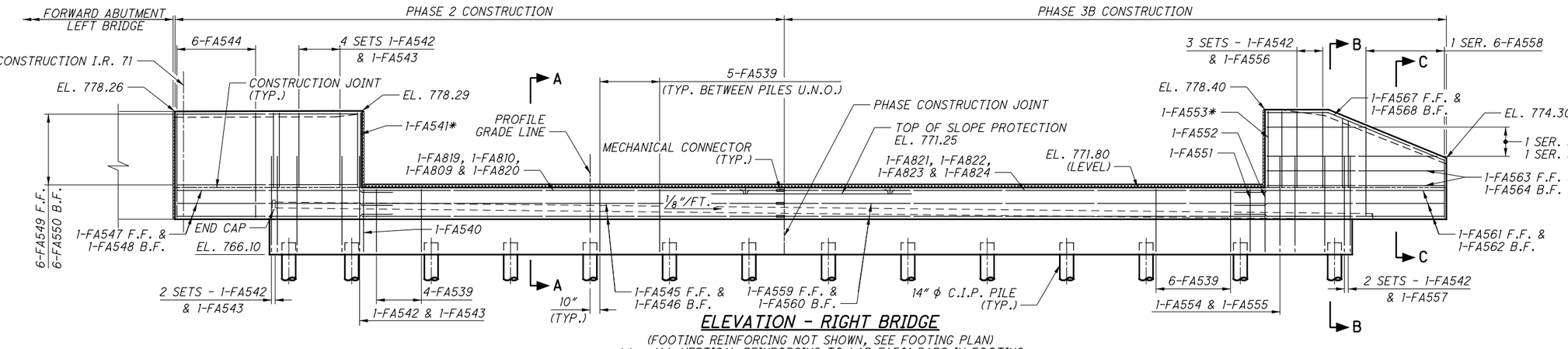

ELEVATION - RIGHT BRIDGE

(FOOTING REINFORCING NOT SHOWN, SEE FOOTING PLAN)
** - ALL VERTICAL REINFORCING TO LAP FA501 BARS IN FOOTING

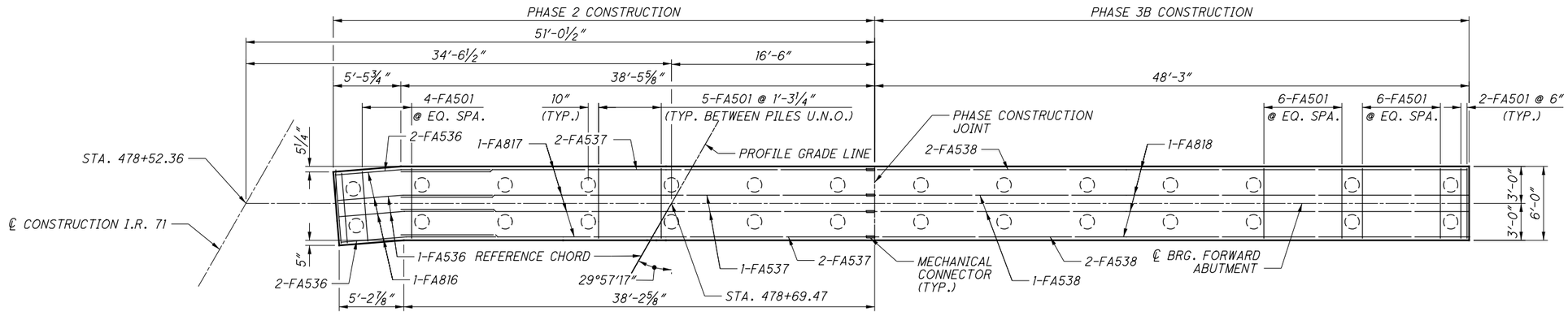

FOOTING PLAN - RIGHT BRIDGE

LEGEND:

* - PLACED PARELLEL TO BEAMS

(11) TO (19) - DENOTES BEAM NUMBER

LAP LENGTHS	
NO. 5 BARS	3'-7" MIN.
NO. 8 BARS	7'-3" MIN.

NOTES:

1. FOR NOTES, SEE SHEET 11/39.
2. FOR SECTION A-A THRU C-C, SEE SHEET 16/39 .

E.L. ROBINSON ENGINEERING
1801 Watermark Drive, Suite 310 • Columbus, Ohio 43215
www.elrobinsonengineering.com

DESIGNED TJE | DRAWN BMG | CHECKED AME | REVIEWED RER | DATE 08-05-14
REVISED | STRUCTURE FILE NUMBER 25100001/25100001R

FORWARD ABUTMENT PLAN AND ELEVATION - RIGHT BRIDGE
BRIDGE NO. FRA-071-0903L/R CARRYING ROAD OVER WHITE ROAD

FRA-71-5.29
PID No. 84868

\\colserv04\projects\84868\structures\FRA071_0903C\sheets\071_0903CAF002.dgn 12/17/2014 9:01:27 AM teberhardt

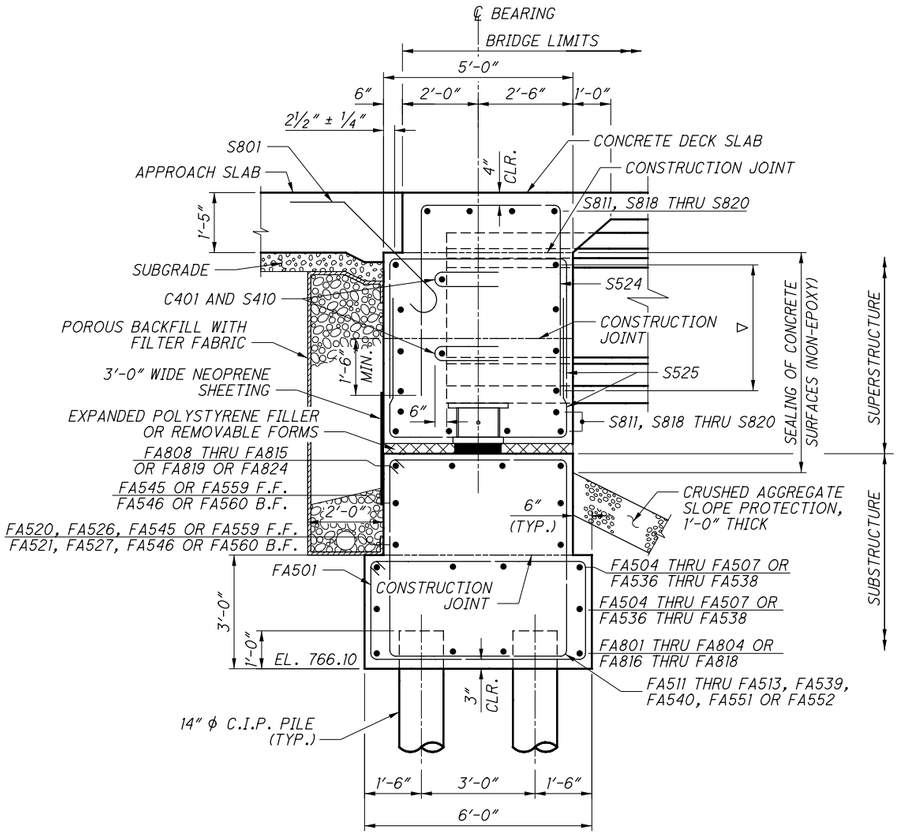

SECTION A-A

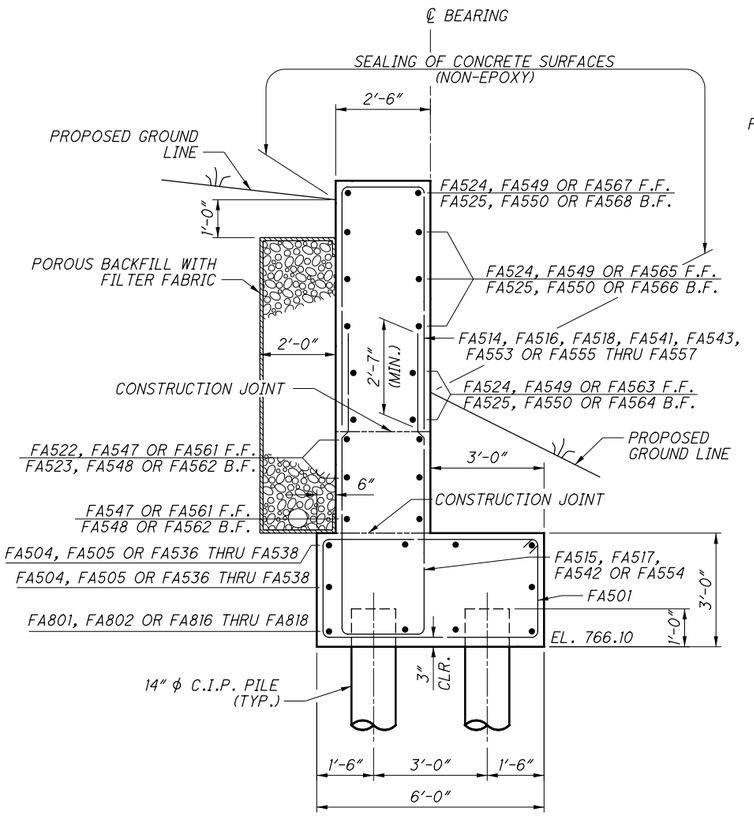

SECTION B-B

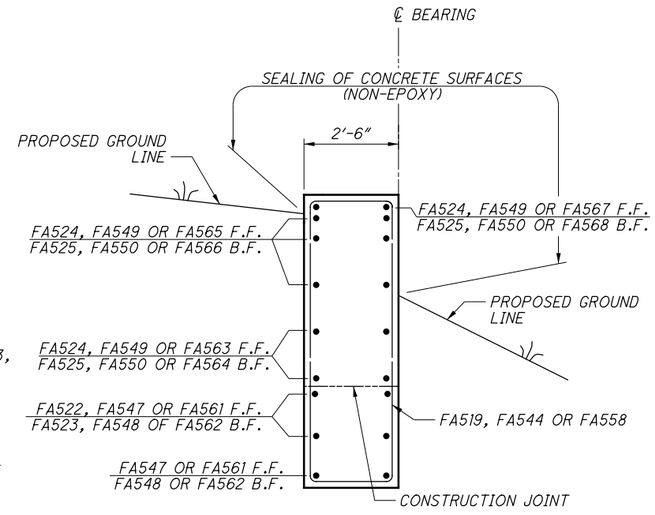

SECTION C-C

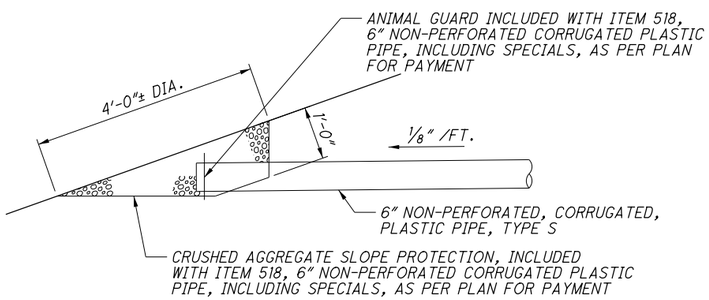

TERMINATION OF 6" N.P.C.P.P. DETAIL

LEGEND:

∇ - S804, S805, S812 OR S813 F.F.
S811 OR S818 THRU S820 B.F.

NOTES:

1. FOR DIAPHRAGM DETAILS AND REINFORCEMENT, SEE SHEET 33/39.
2. FOR ADDITIONAL BEARING DETAILS, SEE SHEET 23/39.
3. FOR LOCATIONS OF SECTIONS A-A THRU C-C, SEE SHEETS 14/39 AND 15/39.
4. FOR VIEW D-D AND ADDITIONAL DETAILS, SEE SHEET 17/39.
5. FOR ADDITIONAL DETAILS SEE ODOT STD. DWG. SICD-1-96 AND PSID-1-13.

E.L. ROBINSON ENGINEERING
1801 Watermark Drive, Suite 310 • Columbus, Ohio 43215
www.elrobinsonengineering.com

DESIGNED	DRAWN	REVIEWED	DATE
TJE	BMG	RER	08-05-14
CHECKED	REVISED	STRUCTURE FILE NUMBER	
AME		2510000L/2510001R	

FORWARD ABUTMENT DETAILS (1 OF 2)
BRIDGE NO. FRA-071-0903L/R
OVER WHITE ROAD

FRA-71-5.29
PID No. 84868

16 / 39

600
623

\\colserv04\projects\84868\structures\FRA071_0903C\sheets\071_0903CAF003.dgn 12/17/2014 9:01:28 AM teberhardt

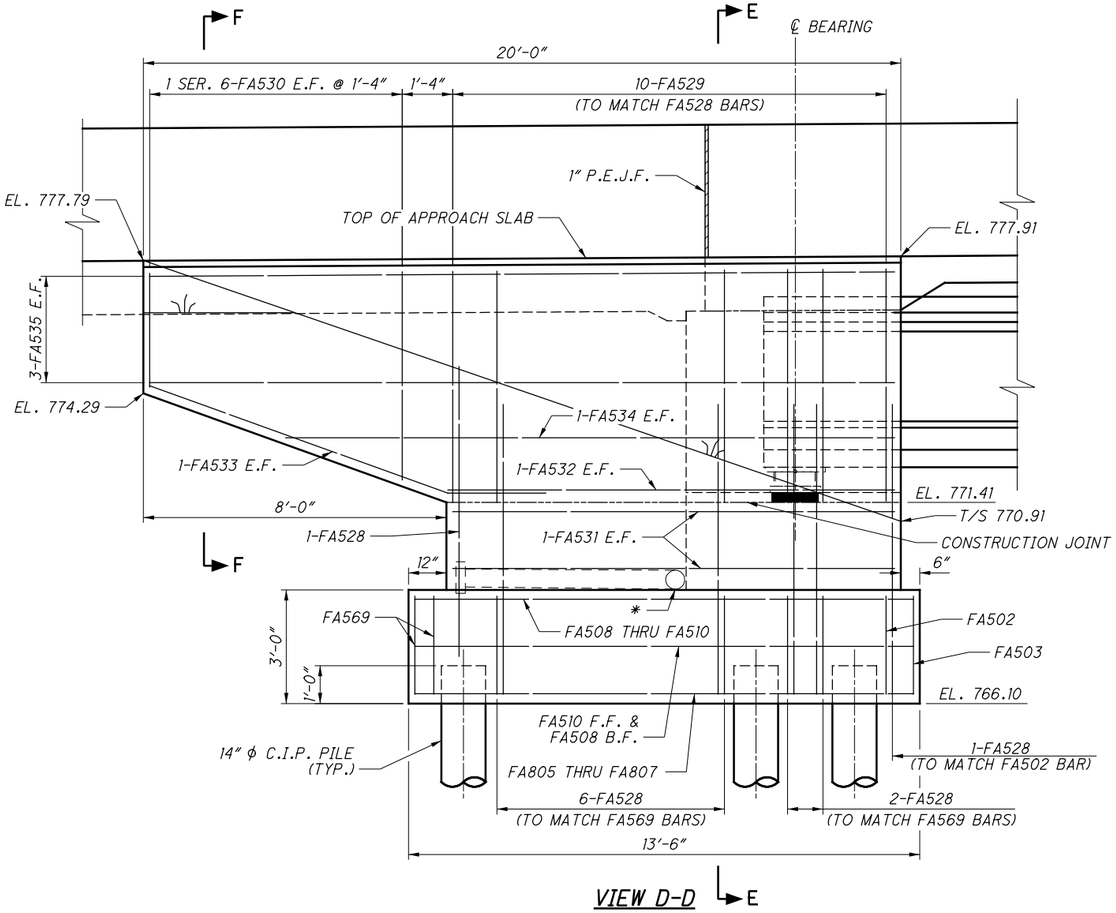

VIEW D-D ► E

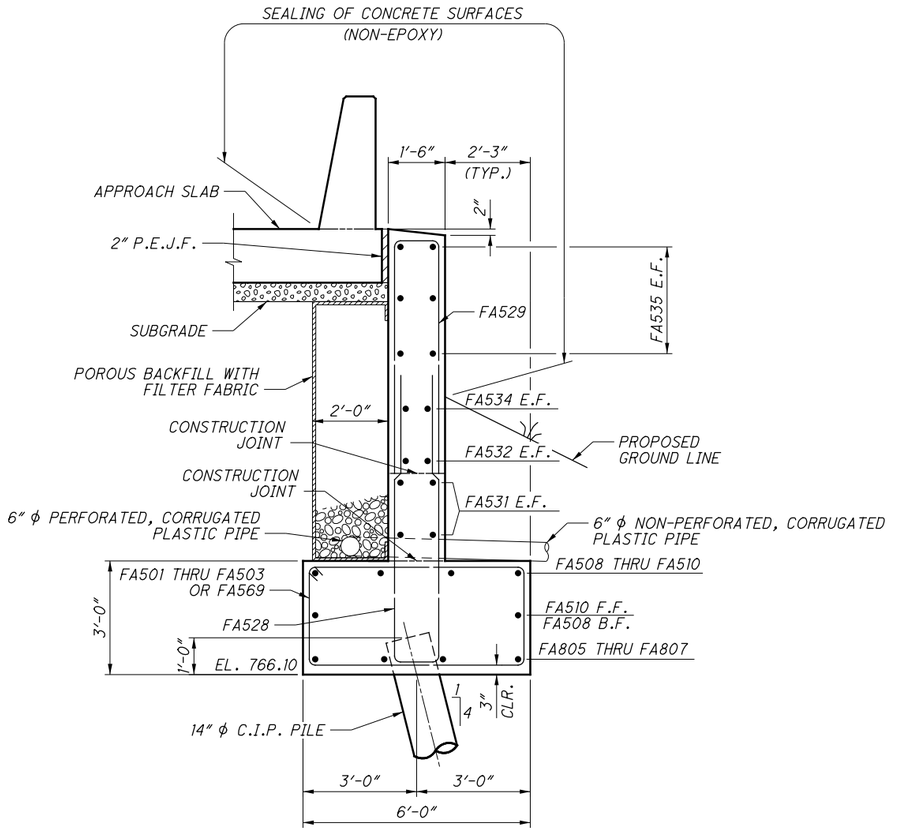

SECTION E-E

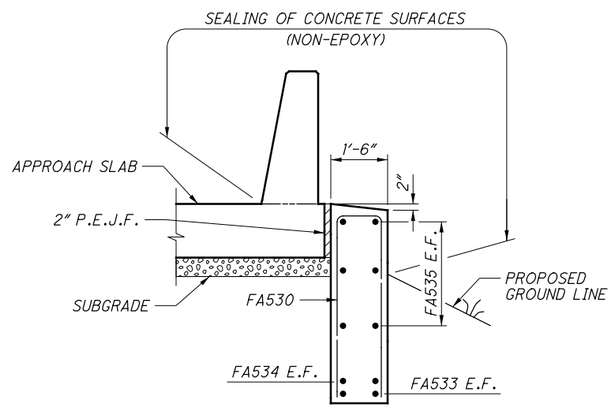

SECTION F-F

LEGEND:

* - 6" ϕ NON-PERFORATED, CORRUGATED PLASTIC PIPE TO EXTEND THROUGH WINGWALL

NOTES:

1. FOR DIAPHRAGM DETAILS AND REINFORCEMENT, SEE SHEET 33/39.
2. FOR ADDITIONAL BEARING DETAILS, SEE SHEET 23/39.
3. FOR LOCATION OF VIEW D-D, SEE SHEET 14/39.
4. FOR ADDITIONAL DETAILS SEE ODOT STD. DWG. SICD-1-96.

E.L. ROBINSON ENGINEERING
1801 Watermark Drive, Suite 310 - Columbus, Ohio 43215
www.elrobinsonengineering.com

DESIGNED	DRAWN	REVIEWED	DATE
TJE	BMG	RER	08-05-14
CHECKED	REVISED	STRUCTURE FILE NUMBER	
AME		25100001/25100001R	

FORWARD ABUTMENT DETAILS (2 OF 2)

BRIDGE NO. FRA-071-0903L/R
OVER WHITE ROAD

FRA-71-5.29
PID No. 84868

17 / 39

601
623

\\colserv04\projects\84868\structures\FRA071_0903C\sheets\071_0903CAF004.dgn 12/17/2014 9:01:29 AM teberhardt

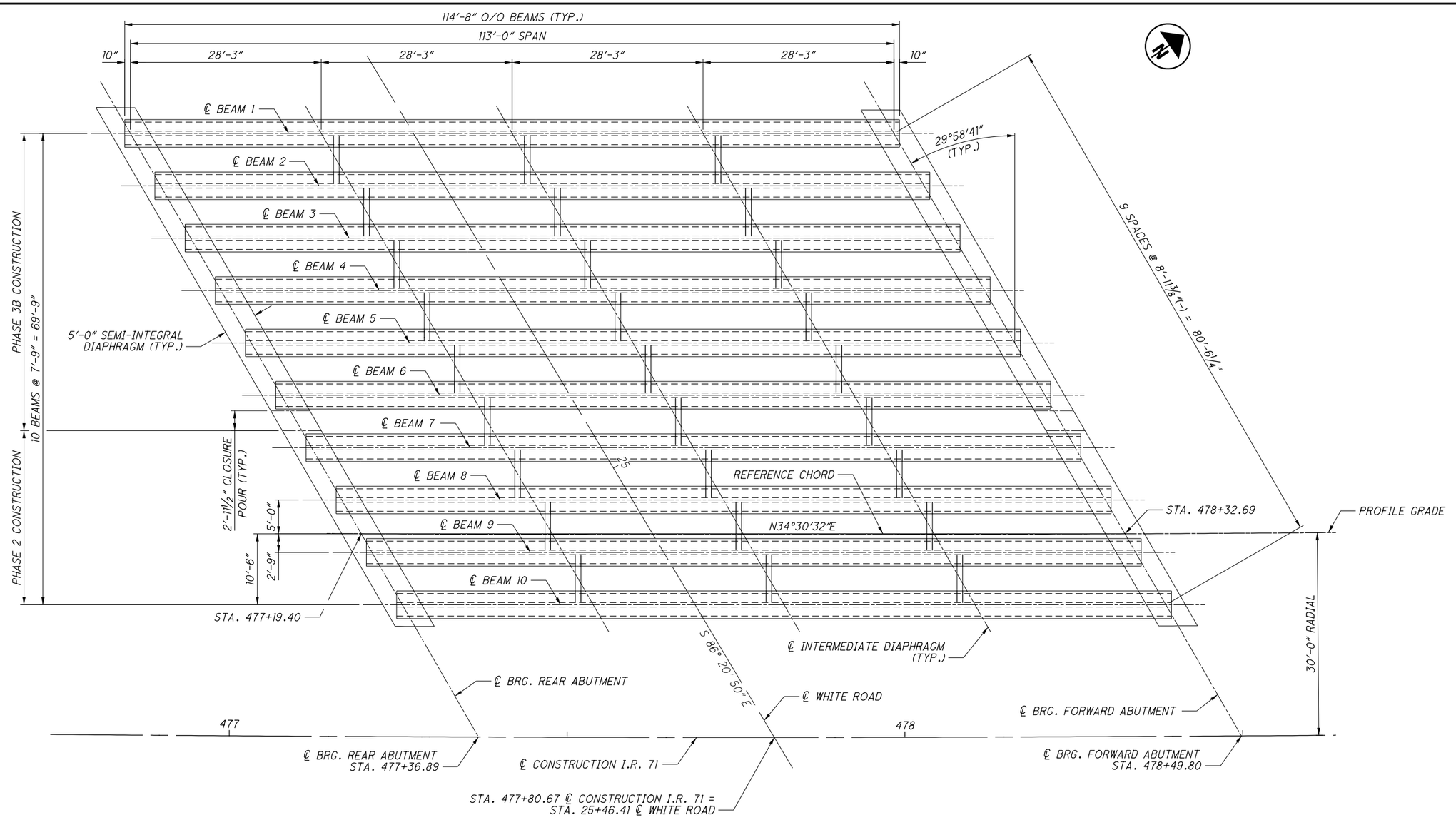

LEFT BRIDGE FRAMING PLAN

NOTES:

1. FOR PRESTRESSED I-BEAM SECTIONS AND DETAILS, SEE SHEET 20/39.
2. FOR PRESTRESSED I-BEAM ELEVATION, SEE SHEET 21/39.
3. FOR BEARING DETAILS, SEE SHEET 23/39.
4. FOR PRESTRESSED I-BEAM DEFLECTION AND CAMBER INFORMATION, SEE SHEET 21/39.
5. FOR FINAL DECK ELEVATIONS, SEE SHEET 30/39.
6. FOR TOP OF HAUNCH ELEVATIONS AND SCREED ELEVATION TABLE, SEE SHEETS 28/39 AND 29/39.
7. FOR INTERMEDIATE DIAPHRAGM DETAILS, SEE SHEET 22/39.
8. THE INTERMEDIATE DIAPHRAGMS BETWEEN BEAMS 6 AND 7 SHALL BE PLACED AFTER THE DECK IS CONSTRUCTED IN PHASE 3B.

\\colserv04\projects\84868\structures\FRA071_0903C\sheets\071_0903CSD001.dgn 12/17/2014 9:01:29 AM teberhardt

E.L. ROBINSON ENGINEERING
1801 Watermark Drive, Suite 310 - Columbus, Ohio 43215
www.elrobinsonengineering.com

DESIGNED	DRAWN	REVIEWED	DATE
TJE	DTA	RER	08-05-14
CHECKED	REVISED	STRUCTURE FILE NUMBER	
BMG		25100001/2510001R	

FRAMING PLAN (1 OF 2)
BRIDGE NO. FRA-071-0903L/R
OVER WHITE ROAD

FRA-71-5.29
PID No. 84868

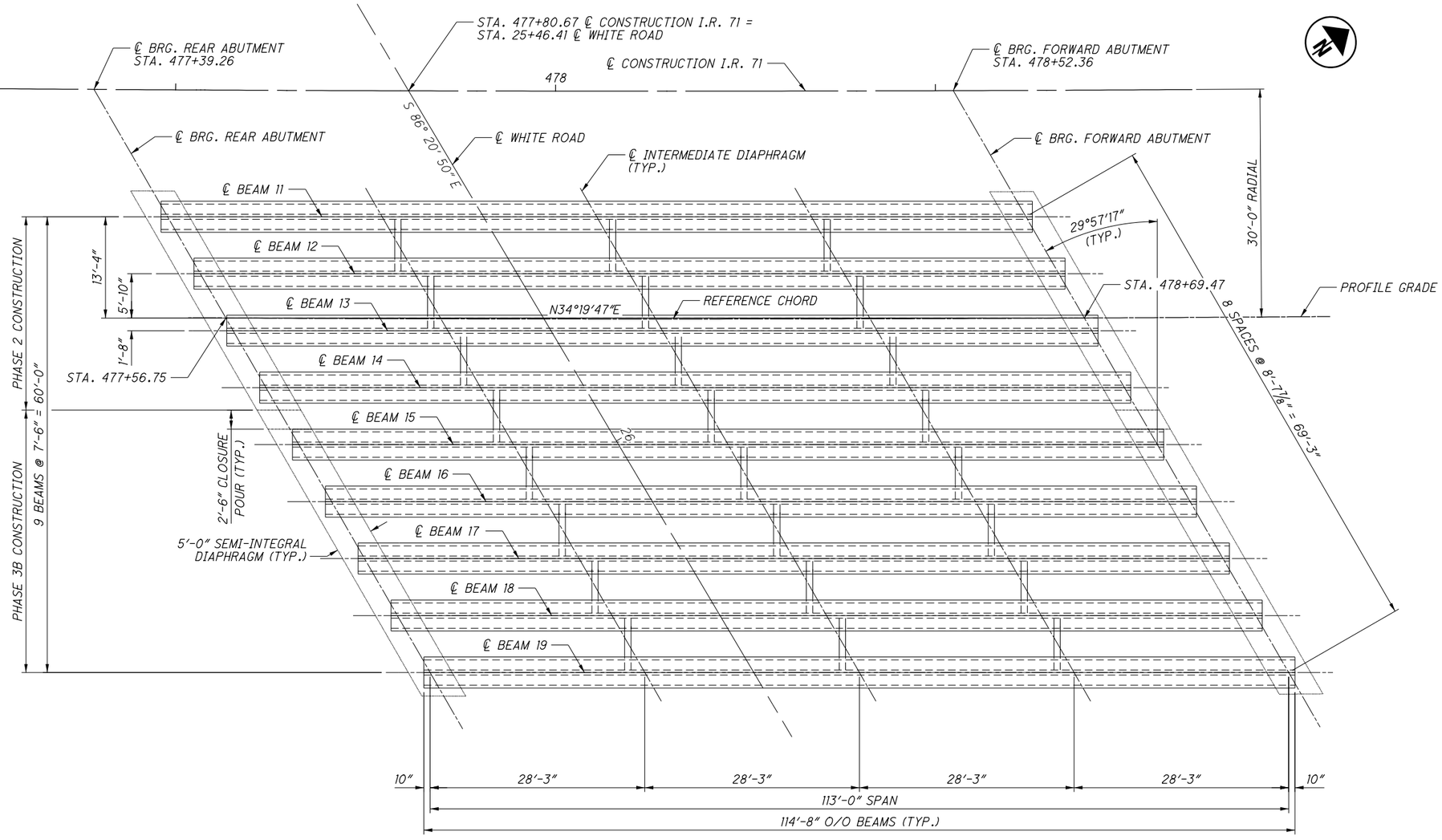

RIGHT BRIDGE FRAMING PLAN

NOTES:

1. FOR PRESTRESSED I-BEAM SECTIONS AND DETAILS, SEE SHEET 20/39.
2. FOR PRESTRESSED I-BEAM ELEVATIONS, SEE SHEET 21/39.
3. FOR BEARING DETAILS, SEE SHEET 23/39.
4. FOR PRESTRESSED I-BEAM DEFLECTION AND CAMBER INFORMATION, SEE SHEET 21/39.
5. FOR FINAL DECK ELEVATIONS, SEE SHEET 31/39.
6. FOR TOP OF HAUNCH ELEVATIONS AND SCREED ELEVATION TABLE, SEE SHEETS 28/39 AND 29/39.
7. FOR INTERMEDIATE DIAPHRAGM DETAILS, SEE SHEET 22/39.
8. THE INTERMEDIATE DIAPHRAGMS BETWEEN BEAMS 14 AND 15 SHALL BE PLACED AFTER THE DECK IS CONSTRUCTED IN PHASE 3B.

\\colserv04\projects\84868\structures\FRA071_0903C\sheets\071_0903CSD002.dgn 12/17/2014 9:01:30 AM teberhardt

E.L. ROBINSON ENGINEERING
1801 Watermark Drive, Suite 310 - Columbus, Ohio 43215
www.elrobinsonengineering.com

DESIGNED	DRAWN	REVIEWED	DATE
TJE	DTA	RER	08-05-14
CHECKED	REVISED	STRUCTURE FILE NUMBER	
BMG		2510000L/2510001R	

FRAMING PLAN (2 OF 2)
BRIDGE NO. FRA-071-0903L/R
OVER WHITE ROAD

FRA-71-5.29
PID No. 84868

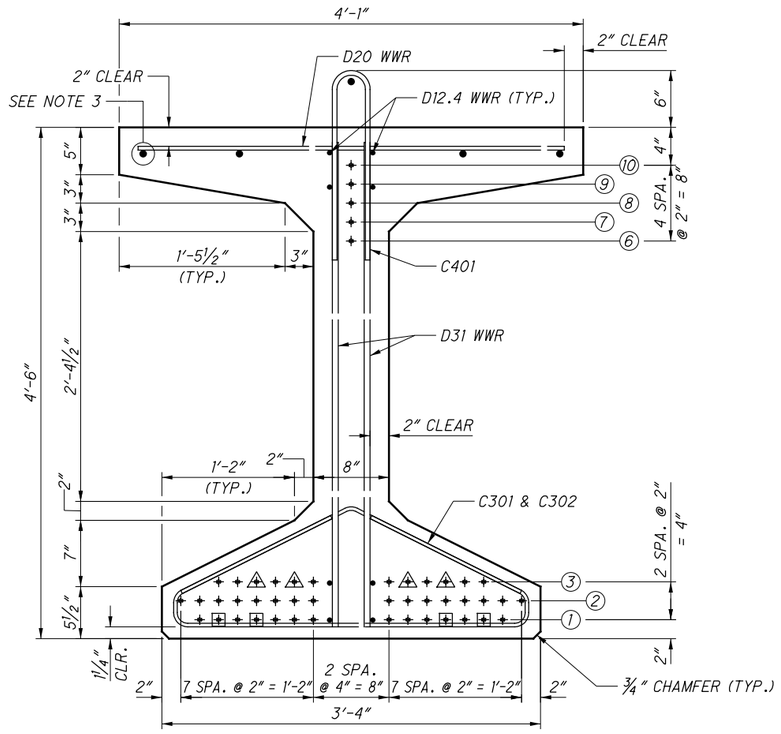

WF54-49 END SECTION

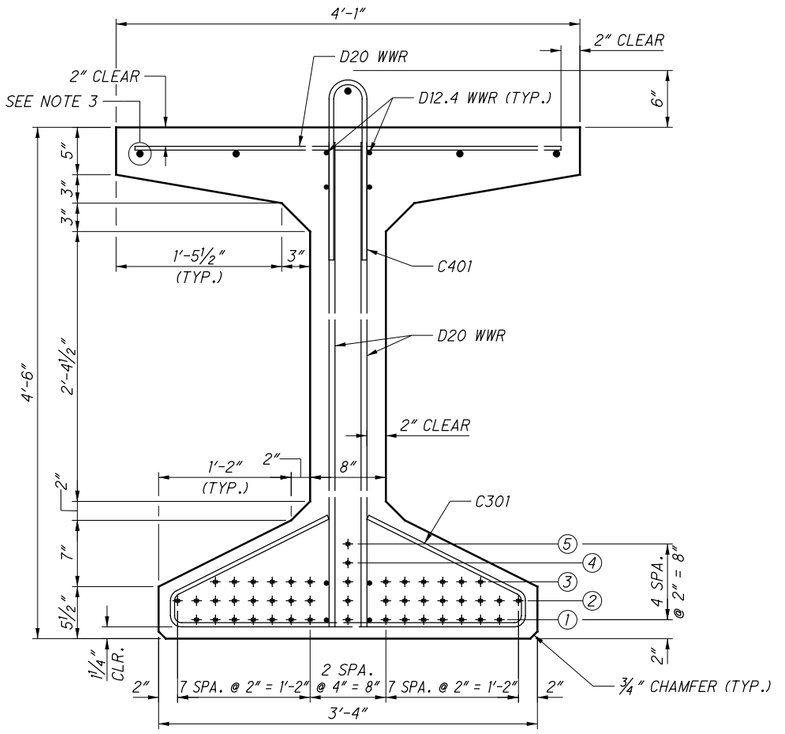

WF54-49 MID-SPAN SECTION

BAR BENDING DIMENSIONS						
		DIMENSIONS *				
MARK	TYPE	A	B	C	D	R
C301	2	3'-1½"	3½"	7½"	1'-3"	-
C302	3	9"	1'-6"	-	-	-
C401 **	1	4"	1'-8"	-	-	1½"

* ALL DIMENSIONS ARE OUT TO OUT
** SHALL BE EPOXY COATED

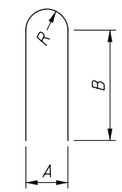

TYPE-1

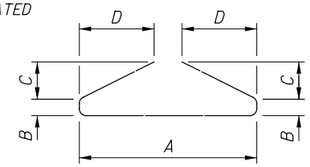

TYPE-2

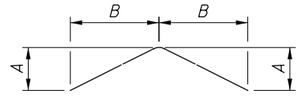

TYPE-3

BEAM PRESTRESSING STRANDS, MATERIALS, AND REINFORCEMENT																		
BEAM MARK	NUMBER OF STRANDS PER ROW													TOTAL STRANDS	CONCRETE STRENGTHS		C301 BARS REQ'D	C302 BARS REQ'D	C401 BARS REQ'D	WEIGHT (LBS)
	END SECTION								MID-SPAN SECTION						f'ci	f'c	BARS PER BEAM			
	①	②	③	⑥	⑦	⑧	⑨	⑩	①	②	③	④	⑤							
B1 - B19	14	16	12	1	1	1	1	1	15	17	13	1	1	47	6500 psi	8000 psi	141	102	59	122,120

LEGEND:

(9) - INDICATES STRAND ROW
⚠ - STRAND DEBONDED 7'-0" EACH END
⊡ - STRAND DEBONDED 14'-0" EACH END

NOTES:

1. FOR ADDITIONAL DETAILS AND NOTES, SEE ODOT STANDARD DRAWING PSID-1-13.
2. ALL PRESTRESSING STRANDS SHALL BE ASTM A416, GRADE 270 SEVEN WIRE, UNCOATED, LOW RELAXATION STRANDS, WITH A DIAMETER OF 0.6 INCHES AND A NOMINAL AREA OF 0.217 SQUARE INCHES.
3. FOUR CONTINUOUS D31 BARS SHALL BE PROVIDED IN THE TOP FLANGE AS SHOWN FOR THE FULL LENGTH OF THE BEAM PER PSID-1-13.

E.L. ROBINSON ENGINEERING
1801 Watermark Drive, Suite 310 - Columbus, Ohio 43215
www.elrobinsonengineering.com

DESIGNED TJE | DRAWN DTA | REVIEWED RER | DATE 08-05-14
CHECKED BMG | REVISED | STRUCTURE FILE NUMBER 25100001/25100001R

PRESTRESSED I-BEAM DETAILS (1 OF 2)
BRIDGE NO. FRA-071-0903L/R
OVER WHITE ROAD

FRA-71-5.29
PID No. 84868

20 / 39
604
623

\\colserv04\projects\84868\structures\FRA071_0903C\sheets\071_0903CSD003.dgn 12/17/2014 9:01:31 AM teberhardt

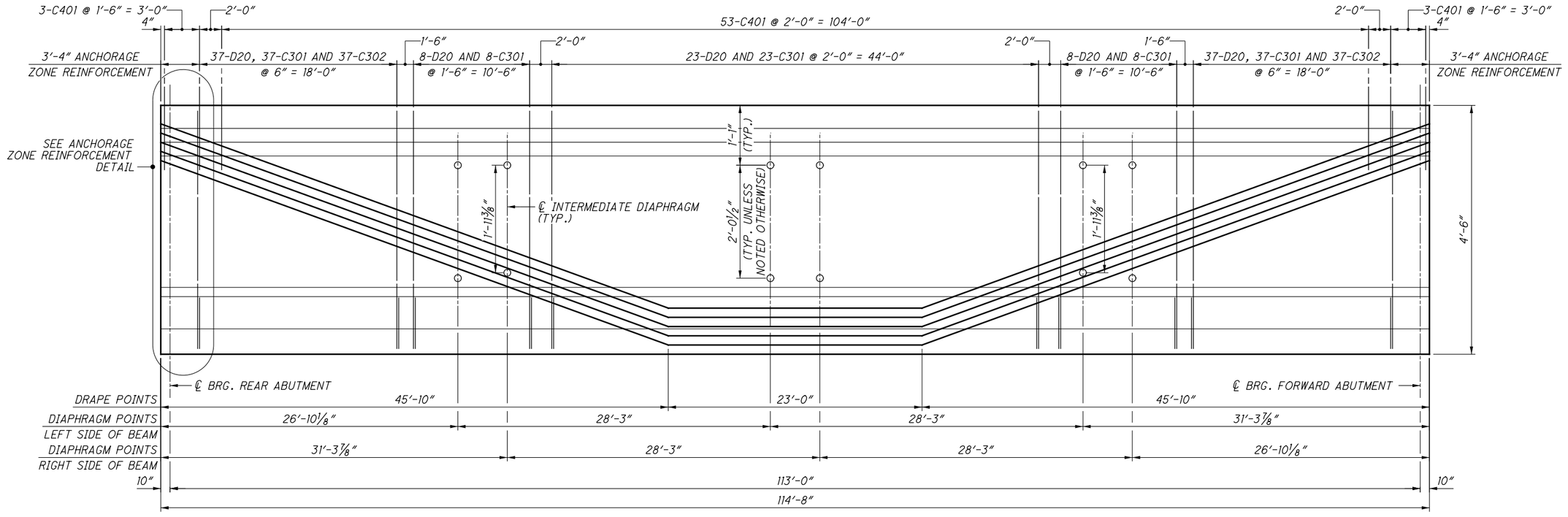

BEAM ELEVATION

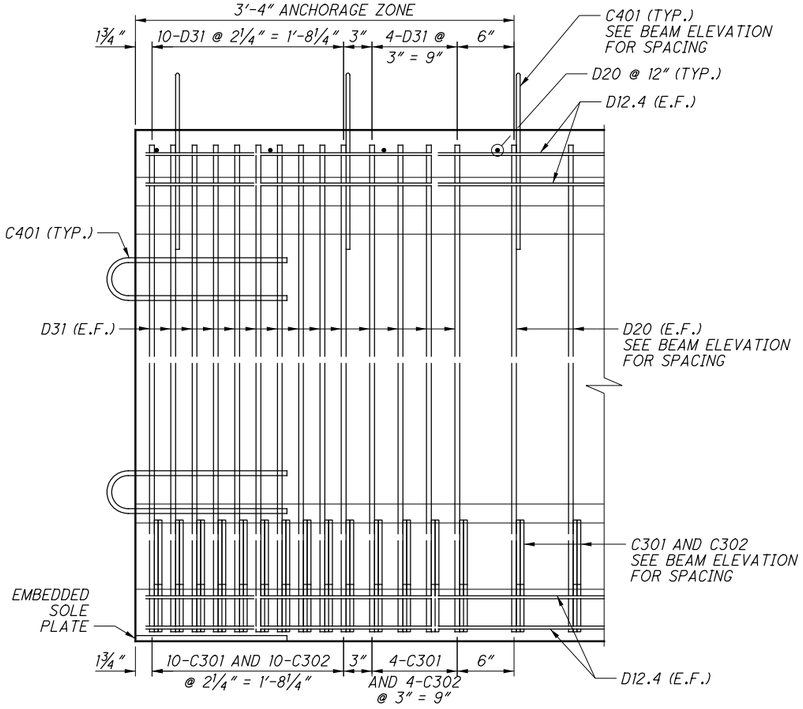

ANCHORAGE ZONE REINFORCEMENT DETAIL

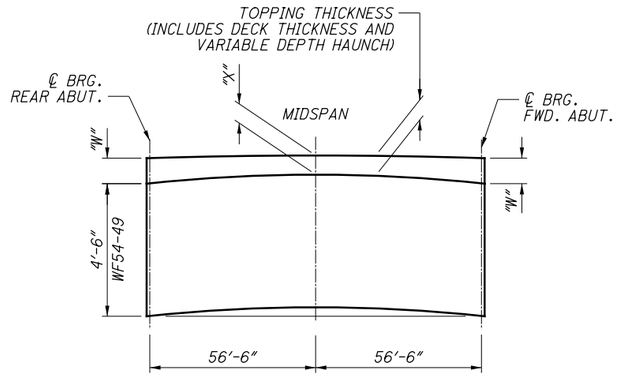

CAMBER DIAGRAM

TOPPING THICKNESS TABLE					
LEFT BRIDGE			RIGHT BRIDGE		
BEAM	"W"	"X"	BEAM	"W"	"X"
B1	12.78"	10.94"	B11	12.86"	10.94"
B2	12.71"	10.94"	B12	12.76"	10.94"
B3	12.72"	10.94"	B13	12.76"	10.94"
B4	12.72"	10.94"	B14	12.76"	10.94"
B5	12.72"	10.94"	B15	12.77"	10.94"
B6	12.72"	10.94"	B16	12.77"	10.94"
B7	12.72"	10.94"	B17	12.77"	10.94"
B8	12.72"	10.94"	B18	13.21"	11.48"
B9	13.17"	11.48"	B19	13.31"	11.48"
B10	13.23"	11.48"			

NOTES:

1. FOR ADDITIONAL DETAILS AND NOTES, SEE ODOT STANDARD DRAWING PSID-1-13.
2. ALL PRESTRESSING STRANDS SHALL BE ASTM A416, GRADE 270 SEVEN WIRE, UNCOATED, LOW RELAXATION STRANDS, WITH A DIAMETER OF 0.6 INCHES AND NOMINAL AREA OF 0.217 SQUARE INCHES.
3. INITIAL FORCE PER STRAND = 43,942 POUNDS/STRAND / TOTAL HOLD-DOWN CAPACITY REQUIRED = 16,766 POUNDS
4. DECK SLAB THICKNESS FOR CONCRETE QUANTITY: THE ESTIMATED QUANTITY OF DECK CONCRETE IS MEASURED ACCORDING TO C&MS 511. IN ADDITION TO THE DESIGN SLAB THICKNESS, THE QUANTITY INCLUDES A VARIABLE HAUNCH THICKNESS THAT PROVIDES AN ALLOWANCE FOR: VERTICAL GRADE ADJUSTMENT, BEAM CAMBER AND ADDITIONAL SACRIFICIAL HAUNCH THICKNESS.
5. CAMBER:

   ESTIMATED CAMBER AT DAY 0 (D_0) IS 2.75 INCHES.

   ESTIMATED CAMBER AT DAY 30 (D_{30}) IS 4.41 INCHES.

   DEFLECTION DUE TO REMAINING DEAD LOAD (E.G. CONCRETE DECK, CROSSFRAMES, DIAPHRAGMS, BARRIERS, UTILITIES, ETC.) IS 1.86 INCHES FOR BEAMS 1 THRU 10 AND 1.81 INCHES FOR BEAMS 11 THRU 19.

   THE BEAM SEAT ELEVATIONS ASSUME ESTIMATED CAMBER D_{30} WITH A SACRIFICIAL HAUNCH THICKNESS OF 2 INCHES.

\\colser04\projects\84868\structures\FRA071_0903C\sheets\071_0903CSD004.dgn 12/17/2014 9:01:32 AM tebernardt

E.L. ROBINSON ENGINEERING
1801 Watermark Drive, Suite 310 • Columbus, Ohio 43215
www.elrobinsonengineering.com

DESIGNED TJE | DRAWN DTA | REVIEWED RER | DATE 08-05-14
CHECKED BMG | REVISED | STRUCTURE FILE NUMBER 25100001/25100001R

PRESTRESSED I-BEAM DETAILS (2 OF 2)
BRIDGE NO. FRA-071-0903L/R
OVER WHITE ROAD

FRA-71-5.29
PID No. 84868

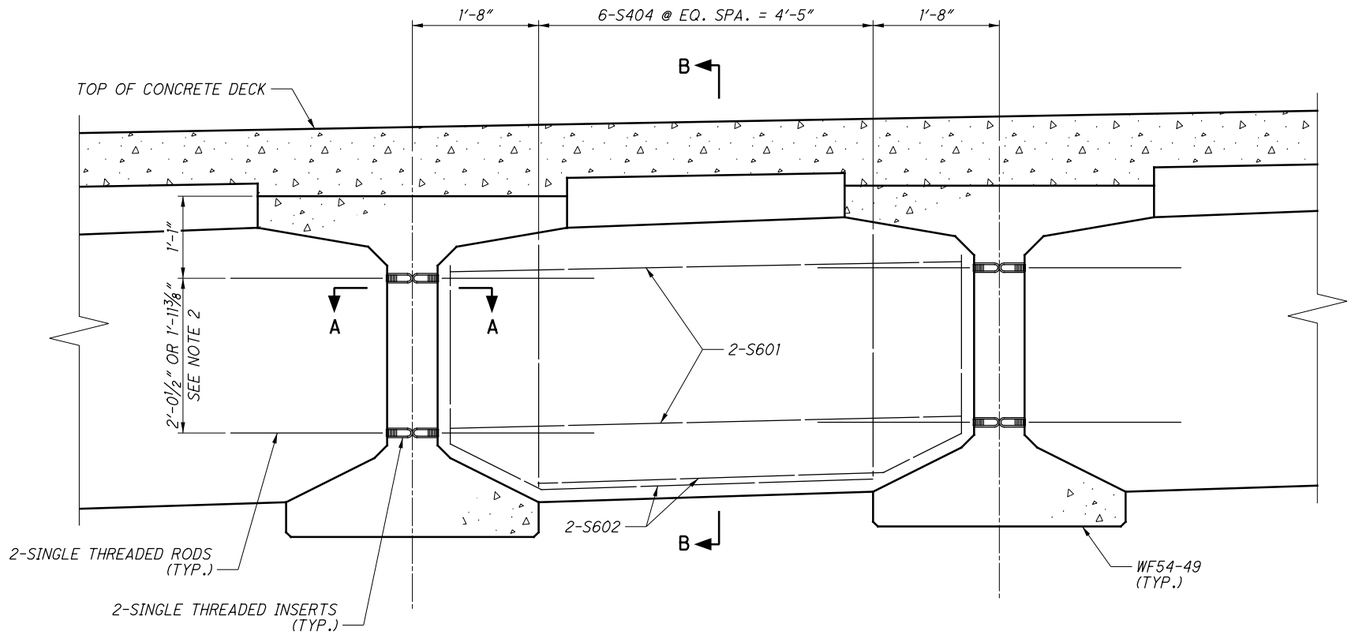

LEFT (SOUTHBOUND) BRIDGE INTERMEDIATE DIAPHRAGM PART ELEVATION

(LOOKING UPSTATION)

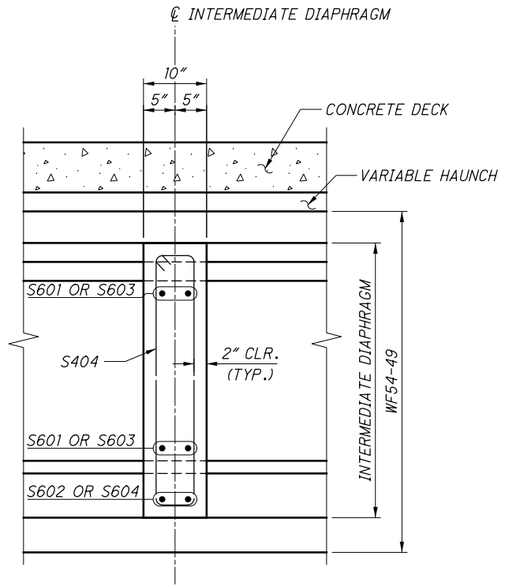

SECTION B-B

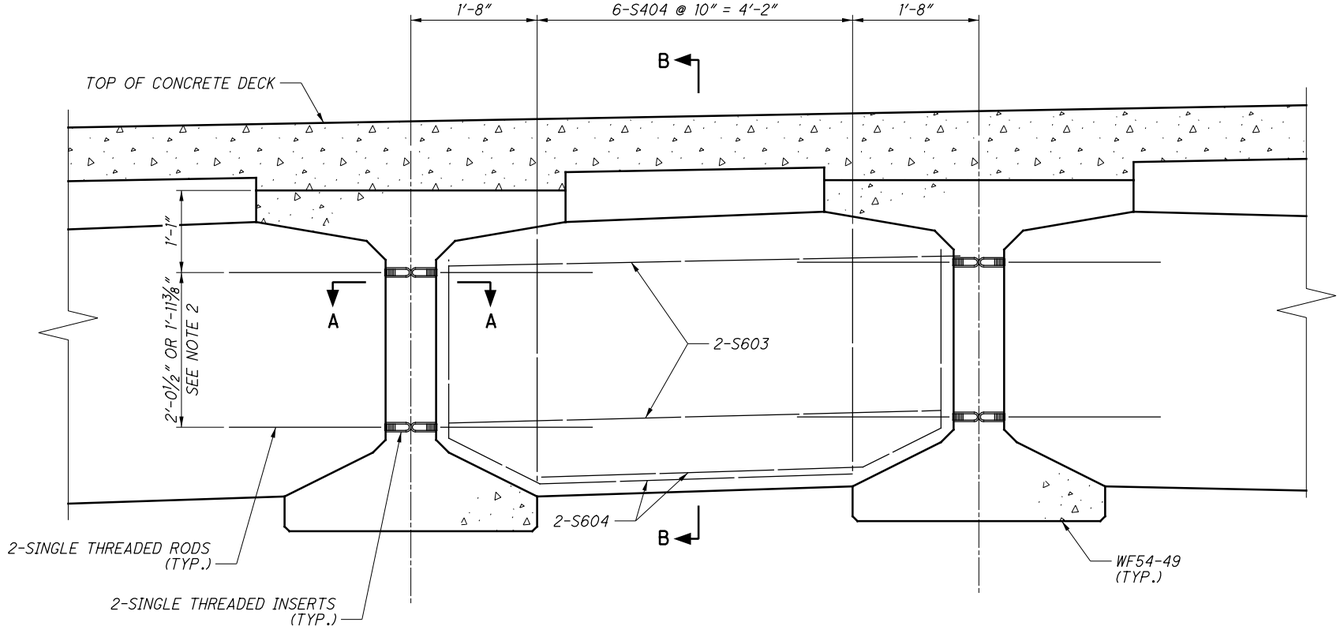

RIGHT (NORTHBOUND) BRIDGE INTERMEDIATE DIAPHRAGM PART ELEVATION

(LOOKING UPSTATION)

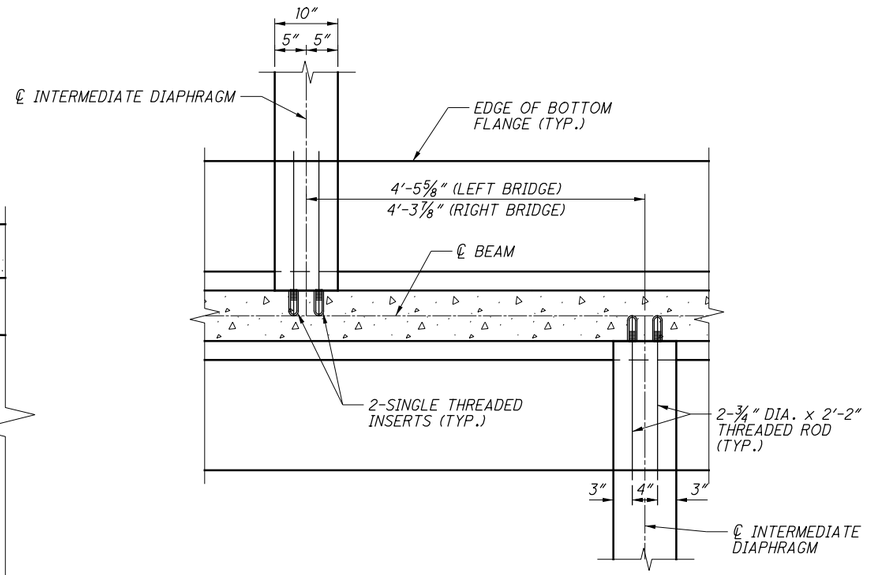

SECTION A-A

NOTES:

1. FOR ADDITIONAL DETAILS AND NOTES NOT SHOWN, SEE ODOT STANDARD DRAWING PSID-1-13.
2. SEE BEAM ELEVATION FOR LOCATIONS AND DISTANCES BETWEEN THREADED INSERTS.

E.L. ROBINSON ENGINEERING
1801 Watermark Drive, Suite 310 • Columbus, Ohio 43215
www.elrobinsonengineering.com

DESIGNED	DRAWN	REVIEWED	DATE
TJE	DTA	RER	08-05-14
CHECKED	REVISED	STRUCTURE FILE NUMBER	
BMG		25100001/25100001R	

INTERMEDIATE DIAPHRAGM DETAILS
BRIDGE NO. FRA-071-0903L/R
OVER WHITE ROAD

FRA-71-5.29
PID No. 84868

\\colserv04\projects\84868\structures\FRA071_0903C\sheets\071_0903CSD007.dgn 12/17/2014 9:01:33 AM teberhardt

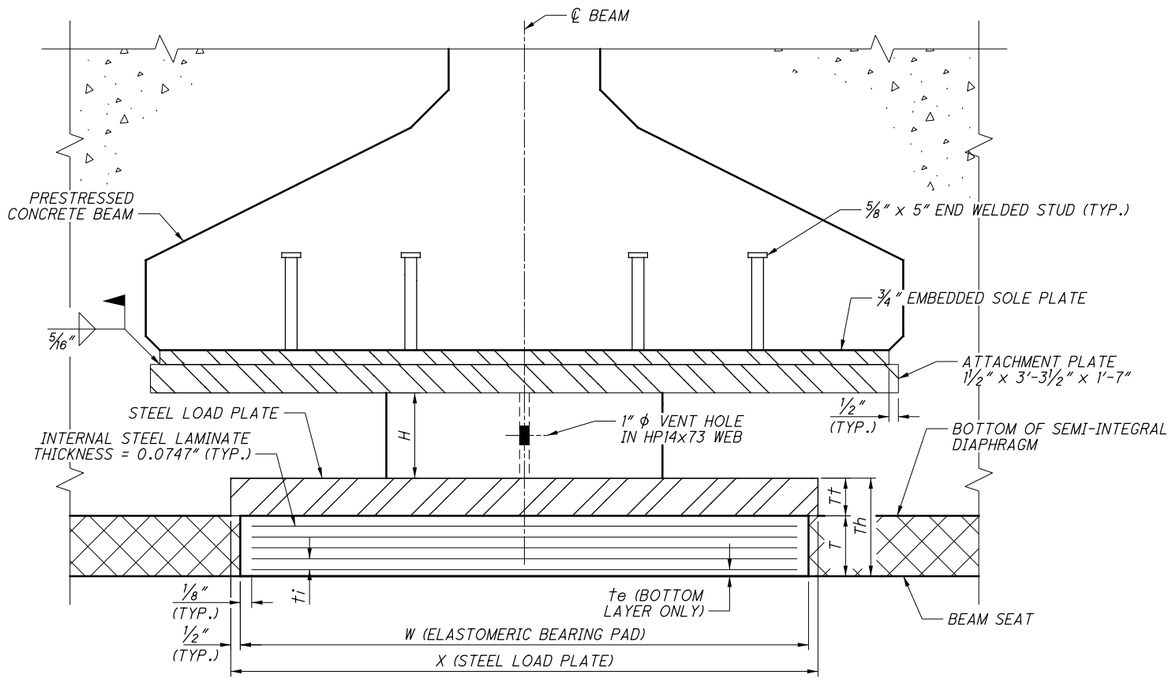

SECTION A-A

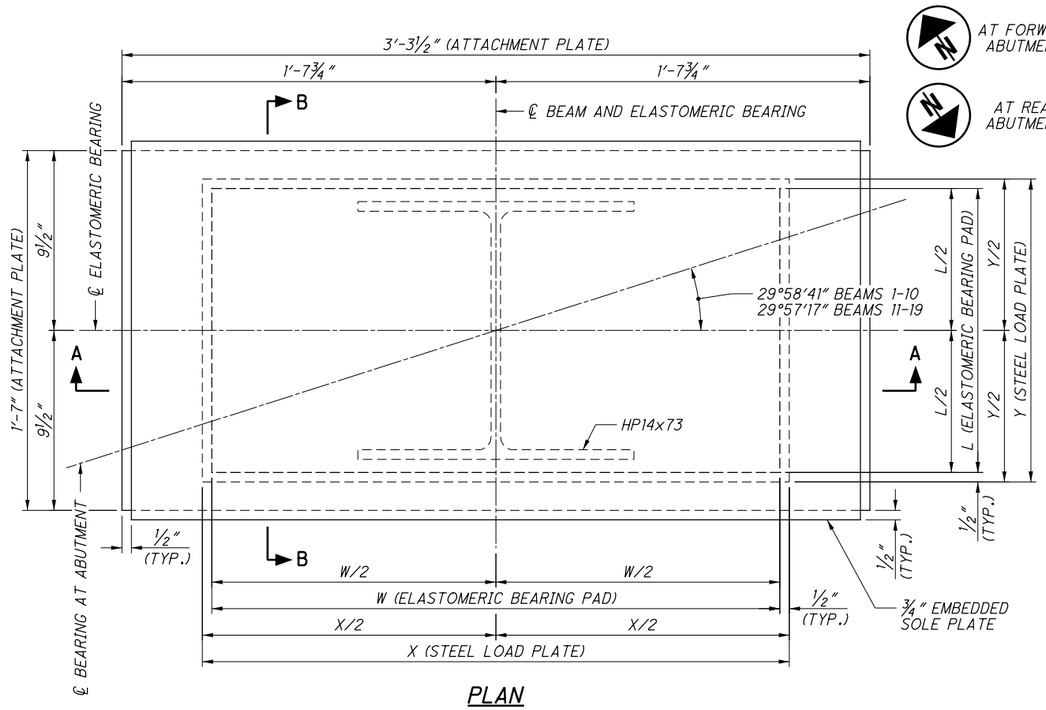

PLAN

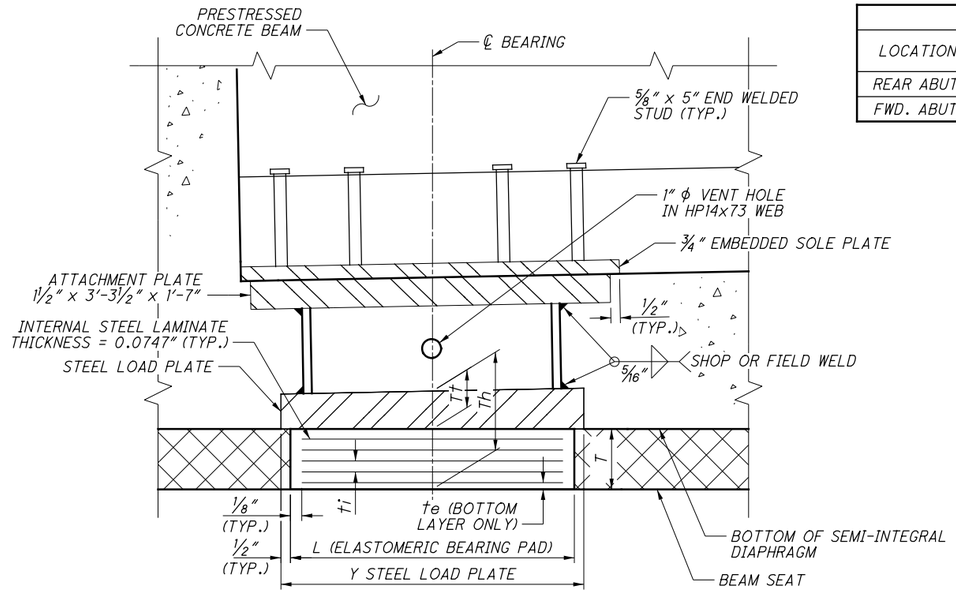

SECTION B-B

HP 14x73 HEIGHT, H (INCHES)																			
LOCATION	BEAM 1	BEAM 2	BEAM 3	BEAM 4	BEAM 5	BEAM 6	BEAM 7	BEAM 8	BEAM 9	BEAM 10	BEAM 11	BEAM 12	BEAM 13	BEAM 14	BEAM 15	BEAM 16	BEAM 17	BEAM 18	BEAM 19
REAR ABUT.	4.50	6.17	7.76	9.35	10.93	12.50	14.06	15.61	14.80	10.89	4.50	6.02	7.43	8.84	10.24	11.63	13.01	11.79	7.85
FWD. ABUT.	4.50	5.93	7.30	8.65	10.00	11.33	12.66	13.98	12.92	8.76	4.50	5.80	7.00	8.18	9.36	10.54	11.70	10.12	5.93

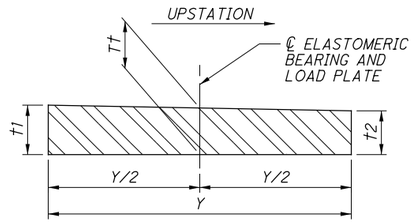

BEVELED LOAD PLATE DETAIL

ELASTOMERIC BEARING DATA																		
													STEEL LOAD PLATE					
LOCATION	TYPE	NO. REQ'D.	DL(KIP)	LL W/O IMPACT (KIP)	MAX DESIGN LOAD (DL+LL)	L (IN.)	W (IN.)	ti (IN.)	NO. OF ti's	te (IN.)	NO. INTERNAL LAMINATES	T (IN.)	X (IN.)	Y (IN.)	Tt (IN.)	t1 (IN.)	t2 (IN.)	Th (IN.)
REAR ABUT.	EXP	19	214.0	108.1	322.1	15.00	30.00	0.50	5	0.313	5	3.186	31.00	16.00	2.000	N/A	N/A	5.186
FWD. ABUT.	EXP	19	214.0	108.1	322.1	15.00	30.00	0.50	5	0.313	5	3.186	31.00	16.00	2.094	2.188	2.000	5.280

NOTES:

1. ELASTOMERIC BEARINGS: THE ELASTOMER SHALL HAVE A HARDNESS OF 50 DUROMETER. THE BEARINGS WERE DESIGNED IN ACCORDANCE WITH SECTION 14.7.6 (METHOD A) OF THE AASHTO LRFD BRIDGE DESIGN SPECIFICATIONS. THE LONGTERM COMPRESSION PROOF LOAD TEST (AASHTO STANDARD SPECIFICATIONS FOR HIGHWAY BRIDGES, DIVISION II, SECTION 18.7.2.6) IS NOT REQUIRED.
2. THE STEEL LOAD PLATE SHALL BE BONDED BY VULCANIZATION TO THE ELASTOMER DURING THE MOLDING PROCESS.
3. TOTAL DESIGN LOAD FOR BEARINGS EQUALS THE SUM OF THE DEAD LOADS AND LIVE LOADS TABULATED IN THE BEARING TABLE. IMPACT IS NOT INCLUDED. LOADS ARE UNFACTORED.
4. BASIS OF PAYMENT: THE UNIT BID PRICE SHALL INCLUDE THE LOAD PLATE, HP SHAPE, STEEL ATTACHMENT PLATE, AND ALL MATERIALS, LABOR, TESTING AND INCIDENTALS NECESSARY TO FURNISH AND INSTALL LAMINATED ELASTOMERIC BEARINGS. FOR THE ABUTMENTS, PAYMENT WILL BE MADE AT THE CONTRACT PRICE FOR ITEM 516, EACH, ELASTOMERIC BEARINGS WITH INTERNAL LAMINATES AND LOAD PLATE (NEOPRENE), AS PER PLAN.
5. THE LOAD PLATES, HP SHAPES, AND STEEL ATTACHMENT PLATES SHALL MEET THE REQUIREMENTS OF ASTM A709 GRADE 50.
6. LOAD PLATES, HP SHAPES AND ELASTOMERIC BEARINGS SHALL BE CENTERED ABOUT ℄ BEARING AND ℄ BEAM.
7. ALL BEARINGS SHALL BE MARKED PRIOR TO SHIPPING. THE MARKS SHALL INCLUDE THE BEARING LOCATION ON THE BRIDGE, AND A DIRECTION ARROW THAT POINTS UP-STATION. ALL MARKS SHALL BE PERMANENT AND BE VISIBLE AFTER THE BEARING IS INSTALLED.
8. FOR ADDITIONAL EMBEDDED LOAD PLATE NOTES AND DETAILS, REFER TO STD. DWG. PSID-1-13.

E.L. ROBINSON ENGINEERING
1801 Watermark Drive, Suite 310 • Columbus, Ohio 43215
www.elrobinsonengineering.com

DESIGNED	DRAWN	REVIEWED	DATE
TJE	TJE	RER	08-05-14
CHECKED	REVISED	STRUCTURE FILE NUMBER	
BMG		25100OOL/251000IR	

ELASTOMERIC BEARING DETAILS

BRIDGE NO. FRA-071-0903L/R
OVER WHITE ROAD

FRA-71-5.29
PID No. 84868

\\colserv04\projects\84868\structures\FRA071_0903C\sheets\071_0903CBR001.dgn 12/17/2014 9:01:34 AM teberhardt

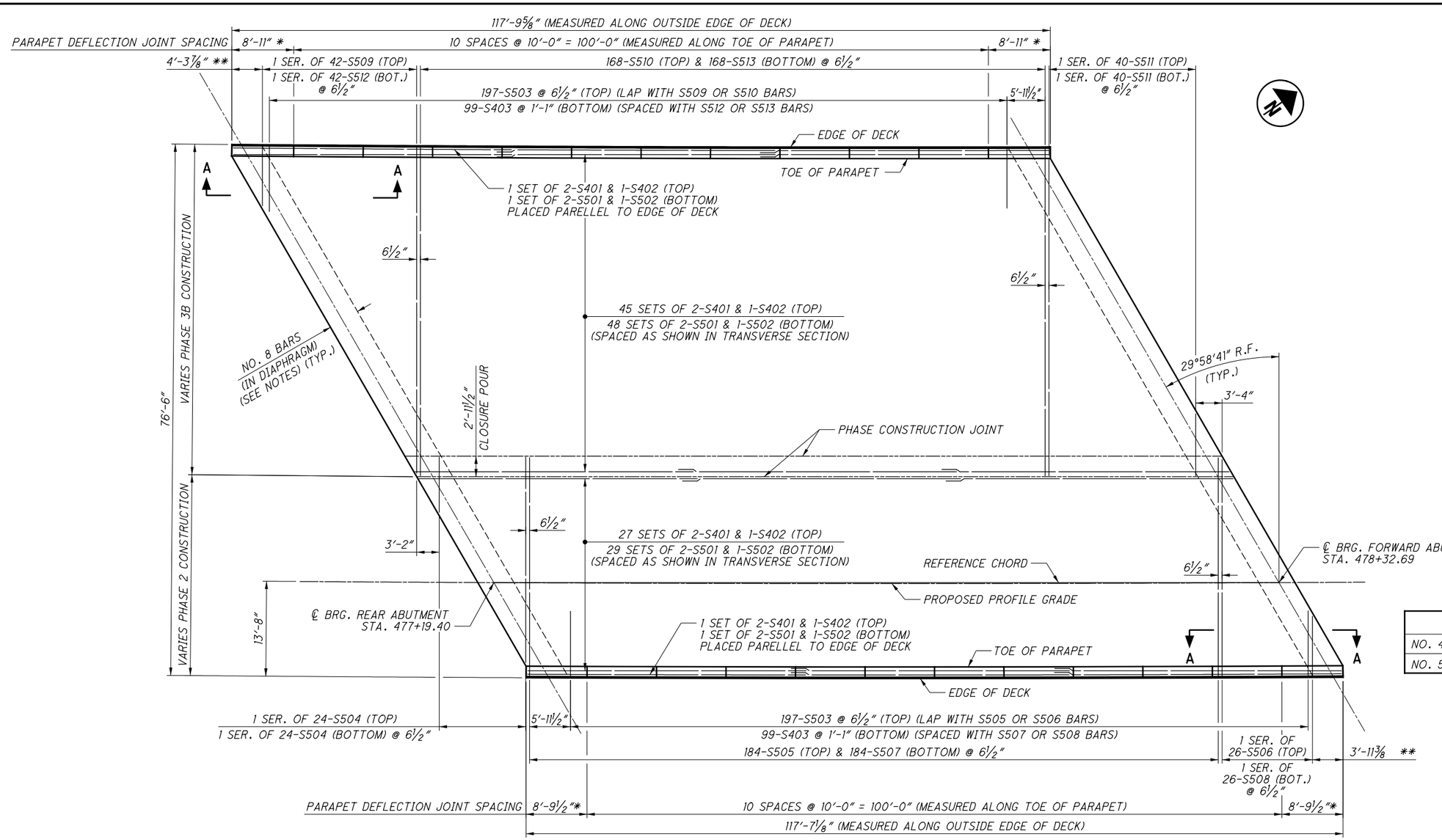

REQUIRED LAP LENGTHS	
NO. 4 BARS	2'-0" MIN.
NO. 5 BARS	2'-7" MIN.

LEFT BRIDGE DECK PLAN

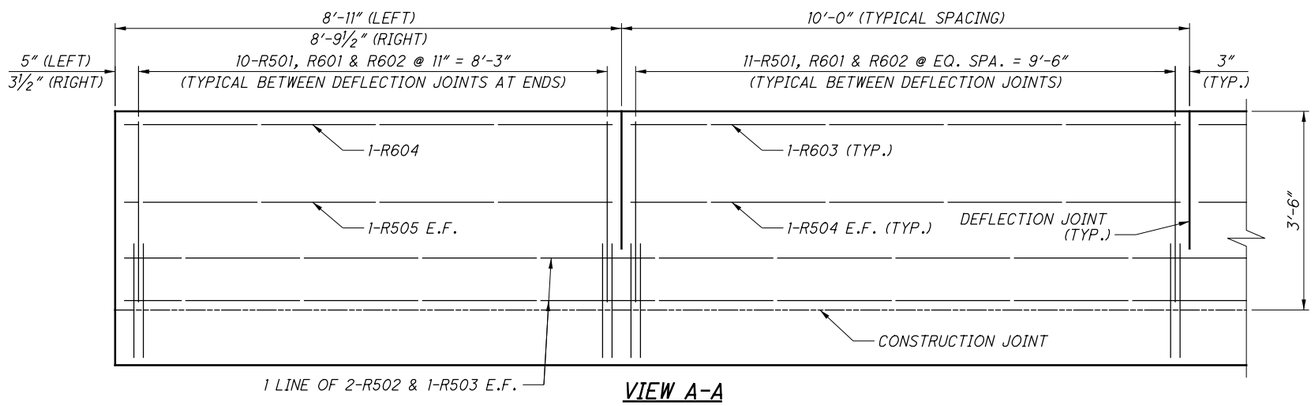

VIEW A-A

LEGEND

* - MEASURED ALONG TOE OF PARAPET
** - MEASURED ALONG OUTSIDE EDGE OF DECK

NOTES:

1. FOR TRANSVERSE SECTION AND ADDITIONAL NOTES, SEE SHEET 26/39.
2. FOR REINFORCING SCHEDULE, SEE SHEETS 37/39 THRU 39/39.
3. FOR SCREED ELEVATION DETAILS, SEE SHEET 28/39.
4. FOR FINAL DECK SURFACE ELEVATIONS, SEE SHEET 30/39.
5. FOR APPROACH SLAB PLANS, SEE SHEETS 34/39 THRU 35/39.
6. FOR PARAPET SECTIONS, SEE SHEET 27/39.
7. FOR RIGHT BRIDGE (NORTHBOUND) DECK PLAN, SEE SHEET 25/39.
8. FOR SEMI-INTEGRAL DIAPHRAGM DETAILS, SEE SHEETS 32/39 AND 33/39.

E.L. ROBINSON ENGINEERING
1801 Watermark Drive, Suite 310 - Columbus, Ohio 43215
www.elrobinsonengineering.com

DESIGNED TJE | DRAWN DTA | REVIEWED RER | DATE 08-05-14
CHECKED BMG | REVISED | STRUCTURE FILE NUMBER 25100001/251000IR

DECK PLAN (1 OF 2)
BRIDGE NO. FRA-071-0903L/R
OVER WHITE ROAD

FRA-71-5.29
PID No. 84868

\\colserv04\projects\84868\structures\FRA071_0903C\sheets\071_0903CDP001.dgn 12/17/2014 9:01:34 AM teberhardt

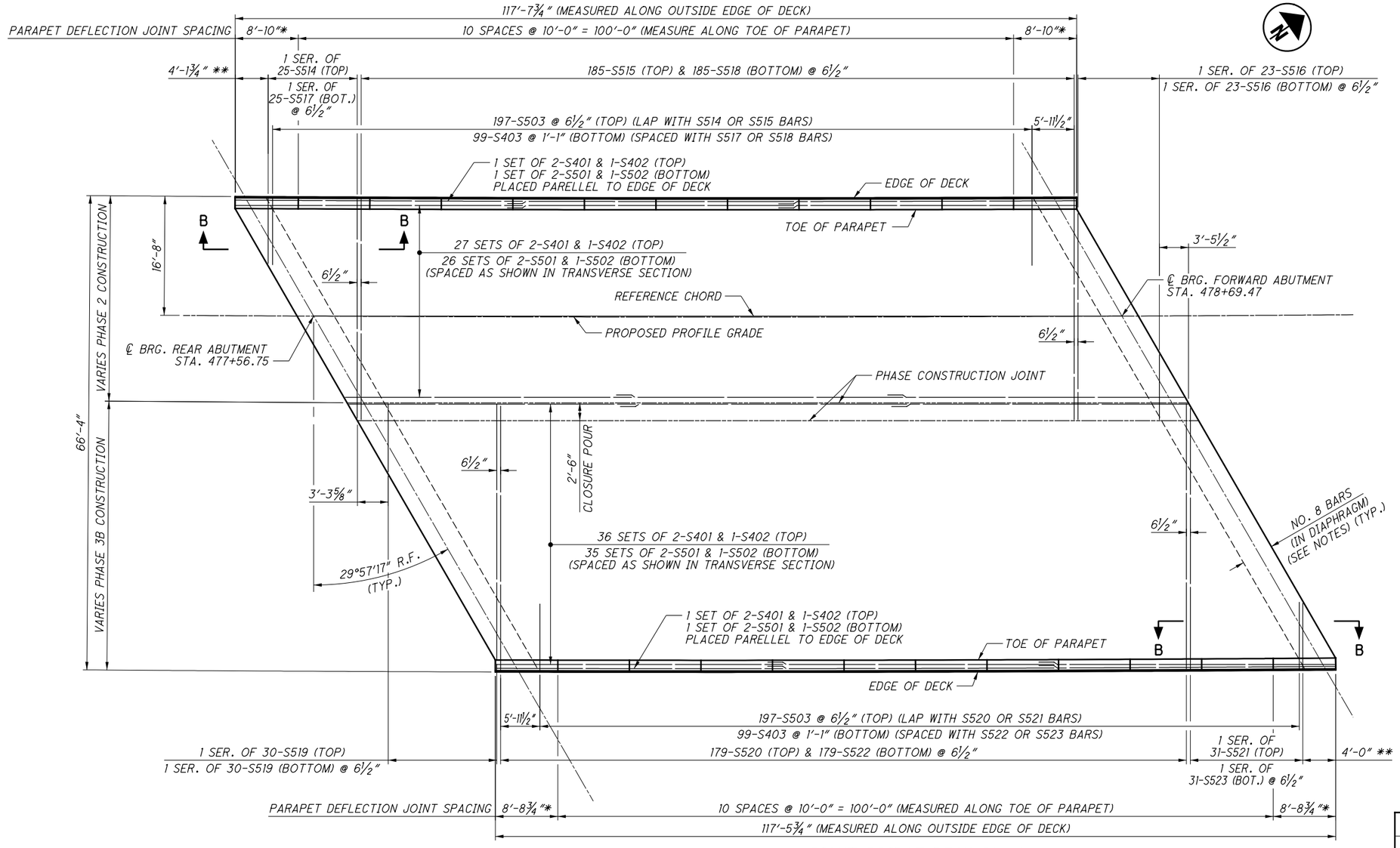

RIGHT BRIDGE DECK PLAN

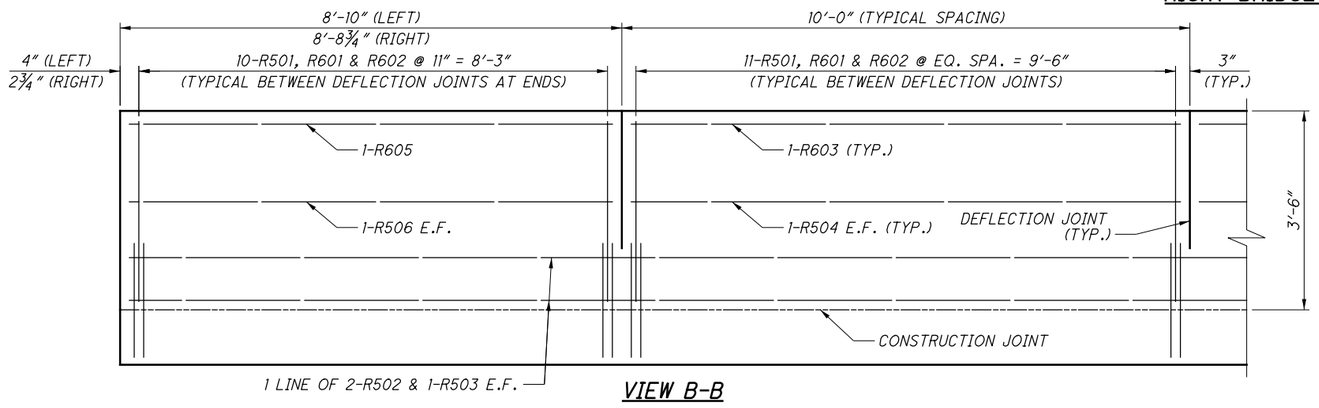

VIEW B-B

REQUIRED LAP LENGTHS	
NO. 4 BARS	2'-0" MIN.
NO. 5 BARS	2'-7" MIN.

LEGEND

* - MEASURED ALONG TOE OF PARAPET
** - MEASURED ALONG OUTSIDE EDGE OF DECK

NOTES:

1. FOR TRANSVERSE SECTION AND ADDITIONAL NOTES, SEE SHEET 26/39.
2. FOR REINFORCING SCHEDULE, SEE SHEET 37/39 THRU 39/39.
3. FOR SCREED ELEVATION DETAILS, SEE SHEET 28/39.
4. FOR FINAL DECK SURFACE ELEVATIONS, SEE SHEET 31/39.
5. FOR APPROACH SLAB PLANS, SEE SHEETS 34/39 THRU 35/39.
6. FOR PARAPET SECTIONS, SEE SHEET 27/39.
7. FOR LEFT BRIDGE (SOUTHBOUND) DECK PLAN, SEE SHEET 24/39.
8. FOR SEMI-INTEGRAL DIAPHRAGM DETAILS, SEE SHEETS 32/39 AND 33/39.

E.L. ROBINSON ENGINEERING
1801 Watermark Drive, Suite 310 - Columbus, Ohio 43215
www.elrobinsonengineering.com

DESIGNED TJE | DRAWN DTA | REVIEWED RER | DATE 08-05-14
CHECKED BMG | REVISED | STRUCTURE FILE NUMBER 25100001L/251000IR

DECK PLAN (2 OF 2)
BRIDGE NO. FRA-071-0903L/R
OVER WHITE ROAD

FRA-71-5.29
PID No. 84868

25 / 39

609
623

\\colserv04\projects\84868\structures\FRA071_0903C\sheets\071_0903CDP002.dgn 12/17/2014 9:01:35 AM teberhardt

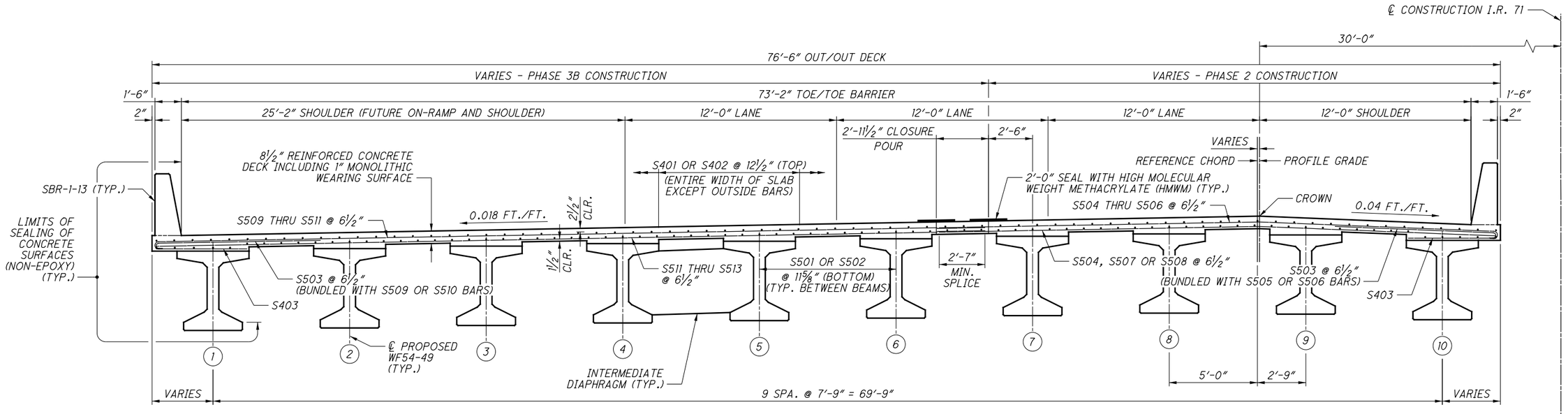

LEFT BRIDGE

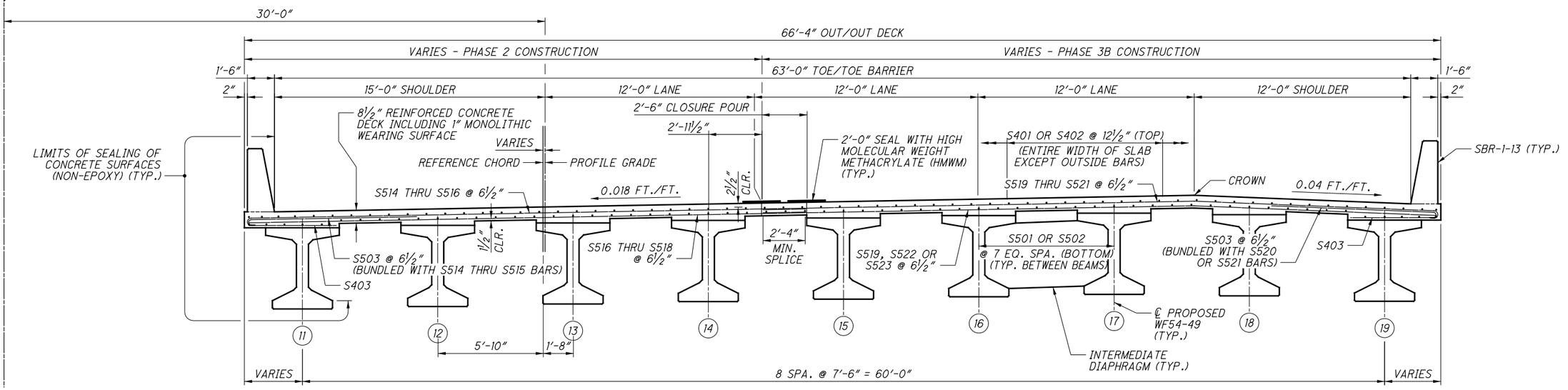

RIGHT BRIDGE

NOTES:

1. FOR DECK PLANS, SEE SHEETS 24/39 AND 25/39 .
2. FOR REINFORCEMENT SCHEDULE, SEE SHEETS 37/39 THRU 39/39.
3. FOR SCREED AND TOP OF HAUNCH ELEVATIONS, SEE SHEETS 28/39 AND 29/39.
4. FOR FINAL DECK SURFACE ELEVATIONS, SEE SHEETS 30/39 AND 31/39.
5. FOR PARAPET AND OVERHANG REINFORCING, SEE SHEET 27/39.
6. DECK SLAB THICKNESS FOR CONCRETE QUANTITY: THE ESTIMATED QUANTITY OF DECK CONCRETE IS MEASURED ACCORDING TO C&MS 511. IN ADDITION TO THE DESIGN SLAB THICKNESS, THE QUANTITY INCLUDES A VARIABLE HAUNCH THICKNESS THAT PROVIDES AN ALLOWANCE FOR: VERTICAL GRADE ADJUSTMENT, BEAM CAMBER AND ADDITIONAL SACRIFICIAL HAUNCH THICKNESS.
7. FOR LAP LENGTH TABLE, SEE SHEETS 24/39 AND 25/39.
8. FOR PARAPET ELEVATIONS, INCLUDING JOINT SPACING AND REINFORCING, SEE SHEETS 24/39 AND 25/39.
9. FOR INTERMEDIATE DIAPHRAGM DETAILS, SEE SHEET 22/39.
10. THE TRANSVERSE DECK REINFORCING BARS SHALL BE FIELD BENT TO CONFORM TO THE ROADWAY CROSS SLOPES. FIELD BENDING SHALL BE INCLUDED WITH ITEM 509 - EPOXY COATED REINFORCING STEEL, AS PER PLAN FOR PAYMENT.
11. THE HMWM SEAL AT THE CLOSURE POUR JOINTS SHALL BE INCLUDED WITH ITEM 511, CLASS QC2 CONCRETE WITH QC/QA, SUPERSTRUCTURE, AS PER PLAN FOR PAYMENT.

E.L. ROBINSON ENGINEERING
1801 Watermark Drive, Suite 310 • Columbus, Ohio 43215
www.elrobinsonengineering.com

DESIGNED	DRAWN	REVIEWED	DATE
TJE	TJE	RER	08-05-14
CHECKED	REVISED	STRUCTURE FILE NUMBER	
BMG		25100001/25100001R	

TRANSVERSE SECTION
BRIDGE NO. FRA-071-0903L/R
OVER WHITE ROAD

FRA-71-5.29
PID No. 84868

\\colserv04\projects\84868\structures\FRA071_0903C\sheets\071_0903CTS001.dgn 12/17/2014 9:01:36 AM teberhardt

\\colserv04\projects\84868\structures\FRA071_0903C\sheets\071_0903CDP003.dgn 12/17/2014 9:01:37 AM teberhardt

PARAPET AND OVERHANG DETAIL - LEFT BRIDGE

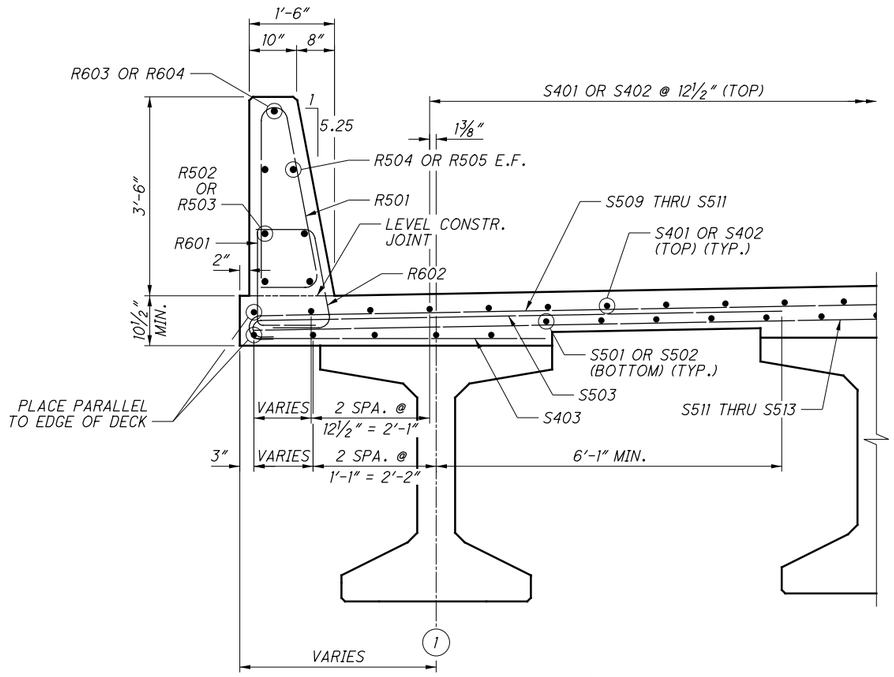

LEFT OVERHANG

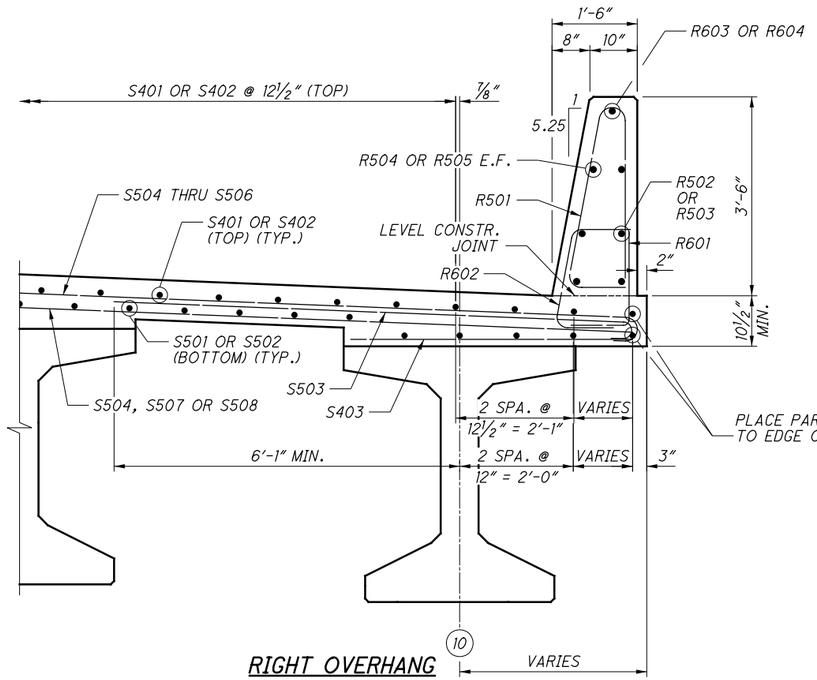

RIGHT OVERHANG

DECK OVERHANG DIMENSIONS				
LOCATION	BEAM 1	BEAM 10	BEAM 11	BEAM 19
℄ BRG. REAR ABUT.	3'-9⅝"	3'-2⅜"	3'-4½"	3'-1⅛"
0.10L	3'-8⅝"	3'-2⅛"	3'-3¾"	3'-1½"
0.20L	3'-7¾"	3'-3¼"	3'-3¼"	3'-1⅝"
0.30L	3'-7"	3'-3½"	3'-2⅞"	3'-1⅝"
0.40L	3'-6⅜"	3'-3⅝"	3'-2⅝"	3'-1½"
0.50L	3'-6"	3'-3⅝"	3'-2⅜"	3'-1¼"
0.60L	3'-5⅝"	3'-3½"	3'-2⅜"	3'-0⅞"
0.70L	3'-5½"	3'-3¼"	3'-2½"	3'-0⅜"
0.80L	3'-5⅜"	3'-2¾"	3'-2¾"	2'-11¾"
0.90L	3'-5½"	3'-2¼"	3'-3⅛"	2'-11"
℄ BRG. FWD. ABUT.	3'-5⅝"	3'-1⅝"	3'-3⅝"	2'-10⅛"

PARAPET AND OVERHANG DETAIL - RIGHT BRIDGE

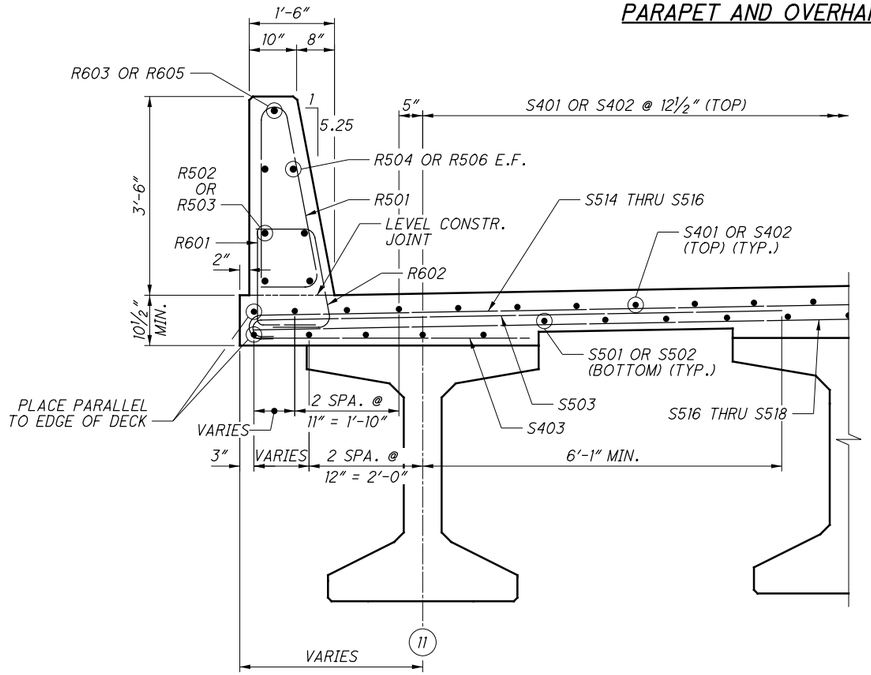

LEFT OVERHANG

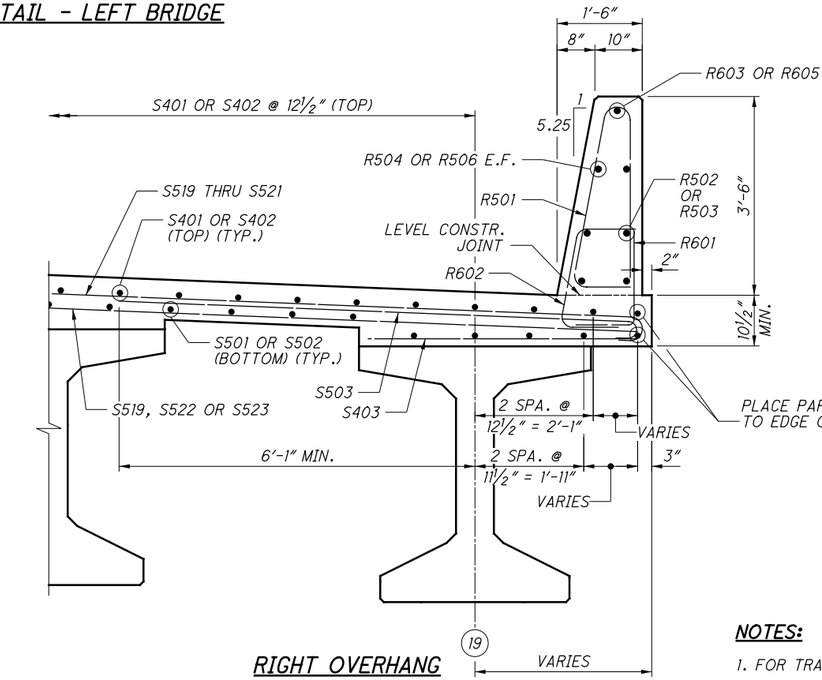

RIGHT OVERHANG

NOTES:

1. FOR TRANSVERSE SECTION AND ADDITIONAL NOTES, SEE SHEET 26/39.
2. FOR REINFORCING SCHEDULE, SEE SHEETS 37/39 THRU 39/39.
3. FOR PARAPET ELEVATIONS, SEE SHEETS 24/39 AND 25/39.
4. FOR ADDITIONAL PARAPET DETAILS NOT SHOWN, SEE ODOT STANDARD DRAWING SBR-1-13.

E.L. ROBINSON ENGINEERING
1801 Watermark Drive, Suite 310 - Columbus, Ohio 43215
www.elrobinsonengineering.com

DESIGNED TJE | DRAWN DTA | REVIEWED RER | DATE 08-05-14
CHECKED BMG | REVISED | STRUCTURE FILE NUMBER 25100001L/251000IR

OVERHANG DETAILS
BRIDGE NO. FRA-071-0903L/R
OVER WHITE ROAD

FRA-71-5.29
PID No. 84868

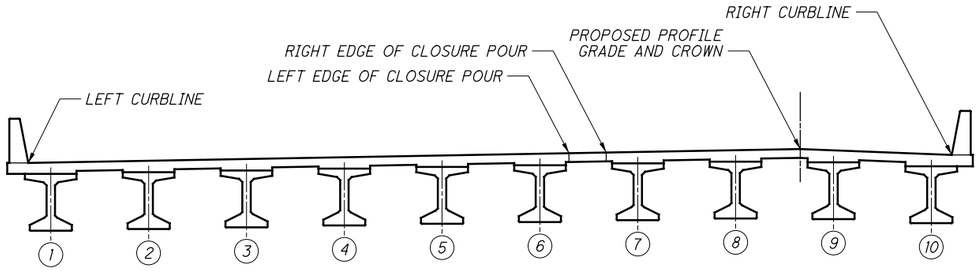

LEFT BRIDGE

℄ CONSTRUCTION I.R. 71

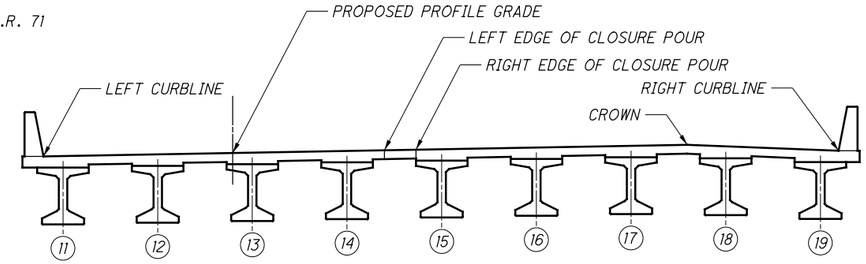

RIGHT BRIDGE

TYPICAL CROSS SECTION

SCREED ELEVATIONS - LEFT BRIDGE

LOCATION		℄ BRG. REAR ABUT.	0.10L	0.20L	0.30L	0.40L	0.50L	0.60L	0.70L	0.80L	0.90L	℄ BRG. FWD. ABUT.
LEFT CURBLINE	STATION	476+83.42	476+94.86	477+06.29	477+17.71	477+29.13	477+40.54	477+51.94	477+63.34	477+74.73	477+86.12	477+97.50
	ELEVATION	778.26	778.29	778.31	778.32	778.32	778.29	778.24	778.18	778.09	777.99	777.89
LEFT EDGE OF CLOSURE POUR	STATION	477+08.77	477+20.12	477+31.46	477+42.81	477+54.15	477+65.50	477+76.85	477+88.19	477+99.54	478+10.89	478+22.23
	ELEVATION	778.99	779.01	779.03	779.03	779.01	778.97	778.91	778.84	778.74	778.63	778.51
RIGHT EDGE OF CLOSURE POUR	STATION	477+10.50	477+21.84	477+33.19	477+44.53	477+55.87	477+67.22	477+78.56	477+89.90	478+01.25	478+12.59	478+23.93
	ELEVATION	779.04	779.06	779.08	779.08	779.06	779.02	778.96	778.88	778.78	778.67	778.56
PROFILE GRADE/ CROWN	STATION	477+19.40	477+30.76	477+42.11	477+53.46	477+64.79	477+76.13	477+87.45	477+98.77	478+10.08	478+21.39	478+32.69
	ELEVATION	779.30	779.31	779.33	779.32	779.30	779.26	779.19	779.11	779.01	778.89	778.77
RIGHT CURBLINE	STATION	477+26.41	477+37.75	477+49.09	477+60.42	477+71.74	477+83.06	477+94.37	478+05.67	478+16.97	478+28.26	478+39.55
	ELEVATION	778.80	778.81	778.82	778.81	778.78	778.74	778.67	778.59	778.48	778.37	778.24

SCREED ELEVATIONS - RIGHT BRIDGE

LOCATION		℄ BRG. REAR ABUT.	0.10L	0.20L	0.30L	0.40L	0.50L	0.60L	0.70L	0.80L	0.90L	℄ BRG. FWD. ABUT.
LEFT CURBLINE	STATION	477+48.02	477+59.34	477+70.65	477+81.96	477+93.26	478+04.55	478+15.84	478+27.12	478+38.39	478+49.66	478+60.93
	ELEVATION	778.94	778.94	778.94	778.92	778.88	778.83	778.75	778.66	778.55	778.42	778.29
PROFILE GRADE	STATION	477+56.75	477+68.05	477+79.34	477+90.63	478+01.91	478+13.19	478+24.45	478+35.72	478+46.97	478+58.22	478+69.47
	ELEVATION	779.18	779.18	779.17	779.15	779.11	779.05	778.97	778.88	778.76	778.63	778.49
LEFT EDGE OF CLOSURE POUR	STATION	477+63.77	477+75.03	477+86.29	477+97.55	478+08.81	478+20.07	478+31.33	478+42.59	478+53.85	478+65.11	478+76.37
	ELEVATION	779.37	779.37	779.36	779.33	779.29	779.23	779.14	779.04	778.92	778.79	778.65
RIGHT EDGE OF CLOSURE POUR	STATION	477+65.22	477+76.47	477+87.73	477+98.99	478+10.25	478+21.51	478+32.76	478+44.02	478+55.28	478+66.54	478+77.79
	ELEVATION	779.41	779.40	779.39	779.37	779.32	779.26	779.18	779.08	778.96	778.82	778.68
CROWN	STATION	477+77.60	477+88.85	478+00.10	478+11.34	478+22.58	478+33.81	478+45.03	478+56.25	478+67.46	478+78.66	478+89.86
	ELEVATION	779.74	779.73	779.71	779.68	779.63	779.57	779.48	779.37	779.25	779.11	778.96
RIGHT CURBLINE	STATION	477+84.52	477+95.76	478+06.99	478+18.21	478+29.43	478+40.65	478+51.86	478+63.06	478+74.25	478+85.44	478+96.63
	ELEVATION	779.23	779.21	779.19	779.15	779.10	779.03	778.94	778.83	778.70	778.56	778.42

NOTES:

1. SCREED ELEVATIONS SHOWN REPRESENT THE THEORETICAL DECK SURFACE LOCATION PRIOR TO DEFLECTIONS CAUSED BY DECK PLACEMENT AND OTHER ANTICIPATED DEAD LOADS.
2. FOR KEY PLANS, SEE SHEETS 30/39 AND 31/39.

E.L. ROBINSON ENGINEERING
1801 Watermark Drive, Suite 310 - Columbus, Ohio 43215
www.elrobinsonengineering.com

DESIGNED TJE | DRAWN TJE | CHECKED BMG | REVIEWED RER | DATE 08-05-14 | REVISED | STRUCTURE FILE NUMBER 2510000L/2510000IR

SCREED ELEVATIONS
BRIDGE NO. FRA-071-0903L/R OVER WHITE ROAD

FRA-71-5.29
PID No. 84868

28/39

612/623

\\colserv04\projects\84868\structures\FRA071_0903C\sheets\071_0903CSD008.dgn 12/17/2014 9:01:37 AM tebernhardt

TOP OF HAUNCH ELEVATIONS - LEFT BRIDGE

LOCATION		℄ BRG. REAR ABUT.	0.10L	0.20L	0.30L	0.40L	0.50L	0.60L	0.70L	0.80L	0.90L	℄ BRG. FWD. ABUT.
BEAM 1	STATION	476+84.68	476+96.07	477+07.45	477+18.84	477+30.22	477+41.61	477+53.00	477+64.38	477+75.77	477+87.15	477+98.54
	ELEVATION	777.59	777.62	777.64	777.65	777.64	777.61	777.56	777.50	777.41	777.31	777.21
BEAM 2	STATION	476+89.24	477+00.62	477+12.00	477+23.38	477+34.76	477+46.13	477+57.51	477+68.89	477+80.27	477+91.65	478+03.03
	ELEVATION	777.72	777.75	777.77	777.78	777.77	777.74	777.69	777.62	777.53	777.43	777.32
BEAM 3	STATION	476+93.80	477+05.17	477+16.54	477+27.91	477+39.28	477+50.65	477+62.02	477+73.39	477+84.77	477+96.14	478+07.51
	ELEVATION	777.85	777.88	777.90	777.91	777.90	777.86	777.81	777.74	777.65	777.55	777.44
BEAM 4	STATION	476+98.35	477+09.71	477+21.07	477+32.44	477+43.80	477+55.16	477+66.53	477+77.89	477+89.25	478+00.62	478+11.98
	ELEVATION	777.98	778.01	778.03	778.03	778.02	777.99	777.93	777.86	777.77	777.66	777.55
BEAM 5	STATION	477+02.89	477+14.25	477+25.60	477+36.96	477+48.32	477+59.67	477+71.03	477+82.38	477+93.74	478+05.09	478+16.45
	ELEVATION	778.12	778.14	778.16	778.16	778.14	778.11	778.05	777.98	777.88	777.78	777.66
BEAM 6	STATION	477+07.43	477+18.78	477+30.13	477+41.47	477+52.82	477+64.17	477+75.52	477+86.87	477+98.22	478+09.57	478+20.91
	ELEVATION	778.25	778.27	778.28	778.28	778.27	778.23	778.17	778.09	778.00	777.89	777.77
BEAM 7	STATION	477+11.96	477+23.30	477+34.64	477+45.98	477+57.33	477+68.67	477+80.01	477+91.35	478+02.69	478+14.03	478+25.37
	ELEVATION	778.38	778.40	778.41	778.41	778.39	778.35	778.29	778.21	778.11	778.00	777.88
BEAM 8	STATION	477+16.49	477+27.82	477+39.15	477+50.49	477+61.82	477+73.15	477+84.49	477+95.82	478+07.16	478+18.49	478+29.82
	ELEVATION	778.51	778.52	778.54	778.53	778.51	778.47	778.41	778.33	778.23	778.11	777.99
BEAM 9	STATION	477+21.01	477+32.33	477+43.66	477+54.99	477+66.31	477+77.64	477+88.96	478+00.29	478+11.62	478+22.94	478+34.27
	ELEVATION	778.48	778.49	778.51	778.50	778.48	778.44	778.37	778.29	778.19	778.07	777.94
BEAM 10	STATION	477+25.52	477+36.84	477+48.16	477+59.48	477+70.80	477+82.11	477+93.43	478+04.75	478+16.07	478+27.39	478+38.71
	ELEVATION	778.16	778.17	778.18	778.17	778.14	778.10	778.03	777.95	777.84	777.73	777.60

TOP OF HAUNCH ELEVATIONS - RIGHT BRIDGE

LOCATION		℄ BRG. REAR ABUT.	0.10L	0.20L	0.30L	0.40L	0.50L	0.60L	0.70L	0.80L	0.90L	℄ BRG. FWD. ABUT.
BEAM 11	STATION	477+49.02	477+60.30	477+71.58	477+82.87	477+94.15	478+05.44	478+16.72	478+28.00	478+39.29	478+50.57	478+61.86
	ELEVATION	778.26	778.26	778.26	778.23	778.20	778.14	778.07	777.97	777.86	777.74	777.60
BEAM 12	STATION	477+53.37	477+64.65	477+75.92	477+87.20	477+98.48	478+09.75	478+21.03	478+32.31	478+43.59	478+54.86	478+66.14
	ELEVATION	778.38	778.38	778.38	778.35	778.32	778.26	778.18	778.08	777.97	777.84	777.70
BEAM 13	STATION	477+57.72	477+68.99	477+80.26	477+91.53	478+02.80	478+14.07	478+25.34	478+36.61	478+47.88	478+59.15	478+70.42
	ELEVATION	778.50	778.50	778.49	778.47	778.43	778.37	778.29	778.19	778.07	777.94	777.80
BEAM 14	STATION	477+62.06	477+73.32	477+84.59	477+95.85	478+07.11	478+18.37	478+29.64	478+40.90	478+52.16	478+63.43	478+74.69
	ELEVATION	778.62	778.61	778.60	778.58	778.54	778.48	778.39	778.29	778.18	778.04	777.90
BEAM 15	STATION	477+66.40	477+77.65	477+88.91	478+00.16	478+11.42	478+22.68	478+33.93	478+45.19	478+56.44	478+67.70	478+78.95
	ELEVATION	778.73	778.73	778.72	778.69	778.65	778.58	778.50	778.40	778.28	778.14	778.00
BEAM 16	STATION	477+70.73	477+81.98	477+93.23	478+04.48	478+15.72	478+26.97	478+38.22	478+49.47	478+60.72	478+71.97	478+83.22
	ELEVATION	778.85	778.84	778.83	778.80	778.75	778.69	778.60	778.50	778.38	778.24	778.10
BEAM 17	STATION	477+75.06	477+86.30	477+97.54	478+08.78	478+20.02	478+31.26	478+42.51	478+53.75	478+64.99	478+76.23	478+87.47
	ELEVATION	778.96	778.95	778.94	778.91	778.86	778.80	778.71	778.60	778.48	778.34	778.20
BEAM 18	STATION	477+79.38	477+90.61	478+01.85	478+13.08	478+24.32	478+35.55	478+46.78	478+58.02	478+69.25	478+80.49	478+91.72
	ELEVATION	778.90	778.89	778.87	778.84	778.79	778.72	778.63	778.52	778.40	778.25	778.10
BEAM 19	STATION	477+83.69	477+94.92	478+06.15	478+17.38	478+28.60	478+39.83	478+51.06	478+62.28	478+73.51	478+84.74	478+95.97
	ELEVATION	778.58	778.57	778.54	778.51	778.46	778.39	778.29	778.18	778.05	777.91	777.76

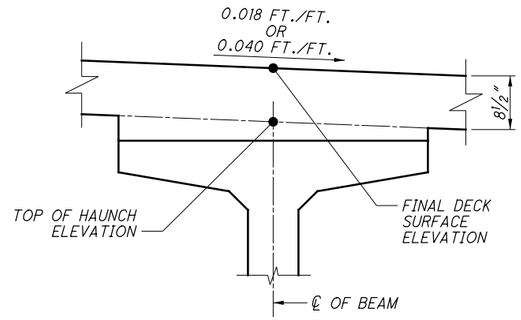

DECK HAUNCH DETAIL

NOTES:

1. TOP OF HAUNCH ELEVATIONS SHOWN REPRESENT THE THEORETICAL LOCATION OF THE BOTTOM OF THE DECK ABOVE THE BEAM/GIRDER HAUNCH PRIOR TO DEFLECTIONS CAUSED BY DECK PLACEMENT AND OTHER ANTICIPATED DEAD LOADS.
2. FOR TYPICAL CROSS SECTION, SEE SHEET 28/39.
3. FOR KEY PLANS, SEE SHEETS 30/39 AND 31/39.

E.L. ROBINSON ENGINEERING
1801 Watermark Drive, Suite 310 - Columbus, Ohio 43215
www.elrobinsonengineering.com

DESIGNED TJE | DRAWN TJE | REVIEWED RER | DATE 08-05-14
CHECKED BMG | REVISED | STRUCTURE FILE NUMBER 25100001/25100001R

TOP OF HAUNCH ELEVATIONS
BRIDGE NO. FRA-071-0903L/R
OVER WHITE ROAD

FRA-71-5.29
PID No. 84868

\\colserv04\projects\84868\structures\FRA071_0903C\sheets\071_0903CSD009.dgn 12/17/2014 9:01:38 AM teberhardt

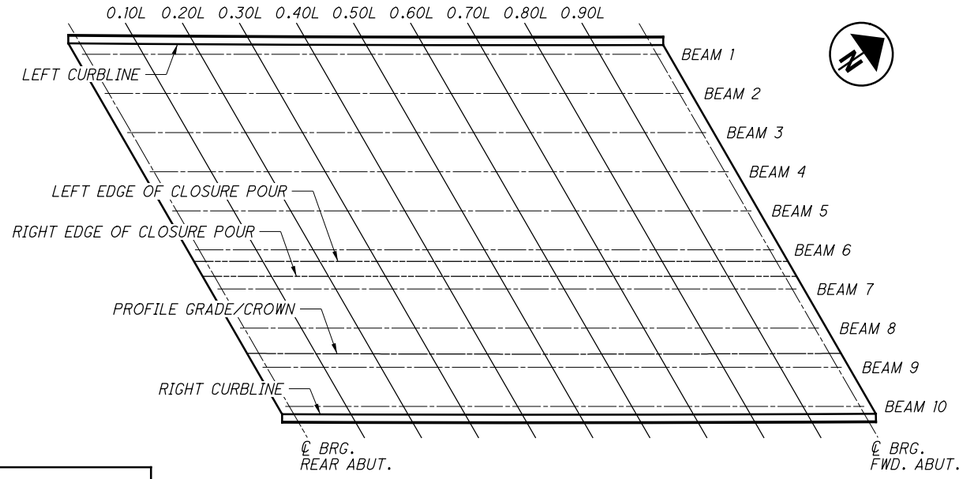

KEY PLAN - LEFT BRIDGE

FINAL DECK SURFACE ELEVATIONS - LEFT BRIDGE

LOCATION		℄ BRG. REAR ABUT.	0.10L	0.20L	0.30L	0.40L	0.50L	0.60L	0.70L	0.80L	0.90L	℄ BRG. FWD. ABUT.
LEFT CURBLINE	STATION	476+83.42	476+94.86	477+06.29	477+17.71	477+29.13	477+40.54	477+51.94	477+63.34	477+74.73	477+86.12	477+97.50
	ELEVATION	778.26	778.24	778.22	778.20	778.17	778.14	778.10	778.05	778.00	777.95	777.89
BEAM 1	STATION	476+84.68	476+96.07	477+07.45	477+18.84	477+30.22	477+41.61	477+53.00	477+64.38	477+75.77	477+87.15	477+98.54
	ELEVATION	778.29	778.28	778.26	778.23	778.20	778.17	778.13	778.08	778.03	777.98	777.92
BEAM 2	STATION	476+89.24	477+00.62	477+12.00	477+23.38	477+34.76	477+46.13	477+57.51	477+68.89	477+80.27	477+91.65	478+03.03
	ELEVATION	778.43	778.41	778.39	778.36	778.33	778.29	778.25	778.20	778.15	778.09	778.03
BEAM 3	STATION	476+93.80	477+05.17	477+16.54	477+27.91	477+39.28	477+50.65	477+62.02	477+73.39	477+84.77	477+96.14	478+07.51
	ELEVATION	778.56	778.54	778.52	778.49	778.45	778.41	778.37	778.32	778.27	778.21	778.14
BEAM 4	STATION	476+98.35	477+09.71	477+21.07	477+32.44	477+43.80	477+55.16	477+66.53	477+77.89	477+89.25	478+00.62	478+11.98
	ELEVATION	778.69	778.67	778.65	778.61	778.58	778.54	778.49	778.44	778.38	778.32	778.26
BEAM 5	STATION	477+02.89	477+14.25	477+25.60	477+36.96	477+48.32	477+59.67	477+71.03	477+82.38	477+93.74	478+05.09	478+16.45
	ELEVATION	778.82	778.80	778.77	778.74	778.70	778.66	778.61	778.56	778.50	778.44	778.37
BEAM 6	STATION	477+07.43	477+18.78	477+30.13	477+41.47	477+52.82	477+64.17	477+75.52	477+86.87	477+98.22	478+09.57	478+20.91
	ELEVATION	778.96	778.93	778.90	778.87	778.83	778.78	778.73	778.68	778.62	778.55	778.48
LEFT EDGE OF CLOSURE POUR	STATION	477+08.77	477+20.12	477+31.46	477+42.81	477+54.15	477+65.50	477+76.85	477+88.19	477+99.54	478+10.89	478+22.23
	ELEVATION	778.99	778.97	778.94	778.90	778.86	778.82	778.77	778.71	778.65	778.58	778.51
RIGHT EDGE OF CLOSURE POUR	STATION	477+10.50	477+21.84	477+33.19	477+44.53	477+55.87	477+67.22	477+78.56	477+89.90	478+01.25	478+12.59	478+23.93
	ELEVATION	779.04	779.02	778.99	778.95	778.91	778.86	778.81	778.75	778.69	778.63	778.56
BEAM 7	STATION	477+11.96	477+23.30	477+34.64	477+45.98	477+57.33	477+68.67	477+80.01	477+91.35	478+02.69	478+14.03	478+25.37
	ELEVATION	779.09	779.06	779.03	778.99	778.95	778.90	778.85	778.79	778.73	778.66	778.59
BEAM 8	STATION	477+16.49	477+27.82	477+39.15	477+50.49	477+61.82	477+73.15	477+84.49	477+95.82	478+07.16	478+18.49	478+29.82
	ELEVATION	779.21	779.19	779.15	779.11	779.07	779.02	778.97	778.91	778.84	778.77	778.70
PROFILE GRADE/ CROWN	STATION	477+19.40	477+30.76	477+42.11	477+53.46	477+64.79	477+76.13	477+87.45	477+98.77	478+10.08	478+21.39	478+32.69
	ELEVATION	779.30	779.27	779.23	779.19	779.15	779.10	779.04	778.98	778.92	778.85	778.77
BEAM 9	STATION	477+21.01	477+32.33	477+43.66	477+54.99	477+66.31	477+77.64	477+88.96	478+00.29	478+11.62	478+22.94	478+34.27
	ELEVATION	779.18	779.16	779.12	779.08	779.04	778.99	778.93	778.87	778.80	778.73	778.65
BEAM 10	STATION	477+25.52	477+36.84	477+48.16	477+59.48	477+70.80	477+82.11	477+93.43	478+04.75	478+16.07	478+27.39	478+38.71
	ELEVATION	778.86	778.83	778.80	778.76	778.71	778.66	778.60	778.53	778.46	778.39	778.31
RIGHT CURBLINE	STATION	477+26.41	477+37.75	477+49.09	477+60.42	477+71.74	477+83.06	477+94.37	478+05.67	478+16.97	478+28.26	478+39.55
	ELEVATION	778.80	778.77	778.73	778.69	778.64	778.59	778.53	778.46	778.40	778.32	778.24

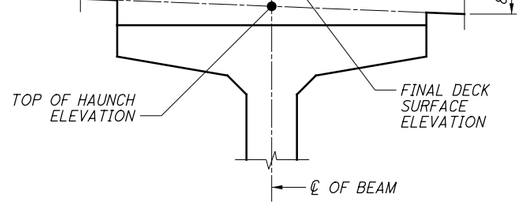

DECK HAUNCH DETAIL

NOTES:

1. FINAL DECK SURFACE ELEVATIONS SHOWN REPRESENT THE DECK SURFACE LOCATION AFTER ALL ANTICIPATED DEAD LOAD DEFLECTIONS HAVE OCCURRED.
2. FOR SCREED ELEVATIONS AND TOP OF HAUNCH ELEVATIONS, SEE SHEETS 28/39 AND 29/39.

E.L. ROBINSON ENGINEERING
1801 Watermark Drive, Suite 310 • Columbus, Ohio 43215
www.elrobinsonengineering.com

DESIGNED	DRAWN	REVIEWED	DATE
TJE	TJE	RER	08-05-14
CHECKED	REVISED	STRUCTURE FILE NUMBER	
BMG		25100001L/251000IR	

FINAL DECK SURFACE ELEVATIONS - LEFT BRIDGE
BRIDGE NO. FRA-071-0903L/R
OVER WHITE ROAD

FRA-71-5.29
PID No. 84868

\\colserv04\projects\84868\structures\FRA071_0903C\sheets\071_0903CSD010.dgn 12/17/2014 9:01:39 AM teberhardt

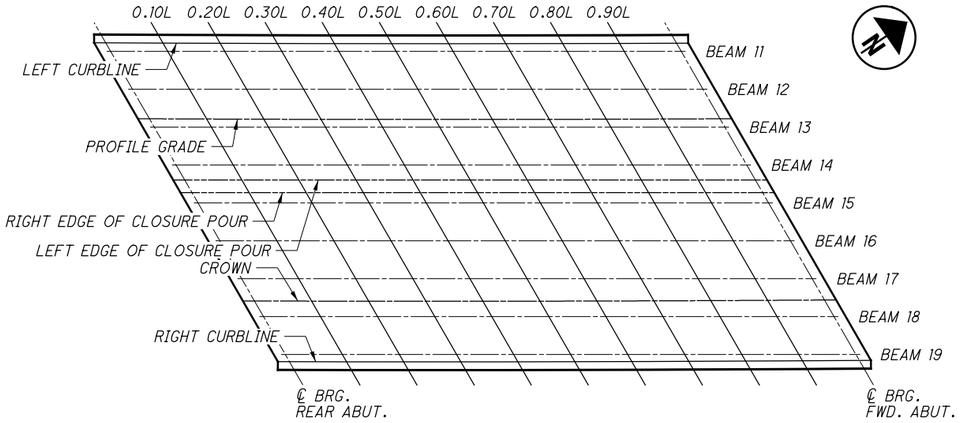

KEY PLAN - RIGHT BRIDGE

FINAL DECK SURFACE ELEVATIONS - RIGHT BRIDGE

LOCATION		℄ BRG. REAR ABUT.	0.10L	0.20L	0.30L	0.40L	0.50L	0.60L	0.70L	0.80L	0.90L	℄ BRG. FWD. ABUT.
LEFT CURBLINE	STATION	477+48.02	477+59.34	477+70.65	477+81.96	477+93.26	478+04.55	478+15.84	478+27.12	478+38.39	478+49.66	478+60.93
	ELEVATION	778.94	778.90	778.85	778.80	778.74	778.68	778.61	778.54	778.46	778.38	778.29
BEAM 11	STATION	477+49.02	477+60.30	477+71.58	477+82.87	477+94.15	478+05.44	478+16.72	478+28.00	478+39.29	478+50.57	478+61.86
	ELEVATION	778.97	778.93	778.88	778.82	778.77	778.70	778.63	778.56	778.48	778.40	778.31
BEAM 12	STATION	477+53.37	477+64.65	477+75.92	477+87.20	477+98.48	478+09.75	478+21.03	478+32.31	478+43.59	478+54.86	478+66.14
	ELEVATION	779.09	779.04	778.99	778.94	778.88	778.81	778.74	778.67	778.59	778.50	778.41
PROFILE GRADE	STATION	477+56.75	477+68.05	477+79.34	477+90.63	478+01.91	478+13.19	478+24.45	478+35.72	478+46.97	478+58.22	478+69.47
	ELEVATION	779.18	779.13	779.08	779.03	778.97	778.90	778.83	778.75	778.67	778.58	778.49
BEAM 13	STATION	477+57.72	477+68.99	477+80.26	477+91.53	478+02.80	478+14.07	478+25.34	478+36.61	478+47.88	478+59.15	478+70.42
	ELEVATION	779.21	779.16	779.11	779.05	778.99	778.92	778.85	778.77	778.69	778.60	778.51
BEAM 14	STATION	477+62.06	477+73.32	477+84.59	477+95.85	478+07.11	478+18.37	478+29.64	478+40.90	478+52.16	478+63.43	478+74.69
	ELEVATION	779.32	779.28	779.22	779.16	779.10	779.03	778.96	778.88	778.79	778.71	778.61
LEFT EDGE OF CLOSURE POUR	STATION	477+63.77	477+75.03	477+86.29	477+97.55	478+08.81	478+20.07	478+31.33	478+42.59	478+53.85	478+65.11	478+76.37
	ELEVATION	779.37	779.32	779.27	779.21	779.14	779.07	779.00	778.92	778.83	778.74	778.65
RIGHT EDGE OF CLOSURE POUR	STATION	477+65.22	477+76.47	477+87.73	477+98.99	478+10.25	478+21.51	478+32.76	478+44.02	478+55.28	478+66.54	478+77.79
	ELEVATION	779.41	779.36	779.30	779.24	779.18	779.11	779.03	778.95	778.87	778.78	778.68
BEAM 15	STATION	477+66.40	477+77.65	477+88.91	478+00.16	478+11.42	478+22.68	478+33.93	478+45.19	478+56.44	478+67.70	478+78.95
	ELEVATION	779.44	779.39	779.33	779.27	779.21	779.14	779.06	778.98	778.90	778.81	778.71
BEAM 16	STATION	477+70.73	477+81.98	477+93.23	478+04.48	478+15.72	478+26.97	478+38.22	478+49.47	478+60.72	478+71.97	478+83.22
	ELEVATION	779.56	779.50	779.45	779.38	779.32	779.24	779.17	779.08	779.00	778.90	778.81
BEAM 17	STATION	477+75.06	477+86.30	477+97.54	478+08.78	478+20.02	478+31.26	478+42.51	478+53.75	478+64.99	478+76.23	478+87.47
	ELEVATION	779.67	779.62	779.56	779.49	779.42	779.35	779.27	779.19	779.10	779.00	778.91
CROWN	STATION	477+77.60	477+88.85	478+00.10	478+11.34	478+22.58	478+33.81	478+45.03	478+56.25	478+67.46	478+78.66	478+89.86
	ELEVATION	779.74	779.68	779.62	779.56	779.49	779.41	779.33	779.25	779.16	779.06	778.96
BEAM 18	STATION	477+79.38	477+90.61	478+01.85	478+13.08	478+24.32	478+35.55	478+46.78	478+58.02	478+69.25	478+80.49	478+91.72
	ELEVATION	779.61	779.55	779.49	779.43	779.35	779.28	779.20	779.11	779.01	778.92	778.81
BEAM 19	STATION	477+83.69	477+94.92	478+06.15	478+17.38	478+28.60	478+39.83	478+51.06	478+62.28	478+73.51	478+84.74	478+95.97
	ELEVATION	779.29	779.23	779.17	779.10	779.03	778.95	778.86	778.77	778.68	778.58	778.47
RIGHT CURBLINE	STATION	477+84.52	477+95.76	478+06.99	478+18.21	478+29.43	478+40.65	478+51.86	478+63.06	478+74.25	478+85.44	478+96.63
	ELEVATION	779.23	779.17	779.10	779.04	778.96	778.88	778.80	778.71	778.62	778.52	778.42

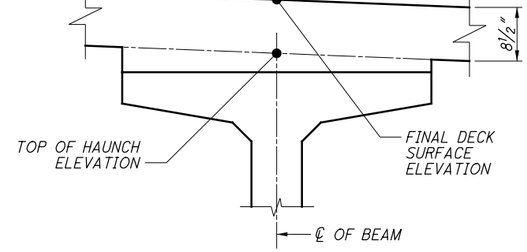

DECK HAUNCH DETAIL

NOTES:

1. FINAL DECK SURFACE ELEVATIONS SHOWN REPRESENT THE DECK SURFACE LOCATION AFTER ALL ANTICIPATED DEAD LOAD DEFLECTIONS HAVE OCCURRED.
2. FOR SCREED ELEVATIONS AND TOP OF HAUNCH ELEVATIONS, SEE SHEETS 28/39 AND 29/39.

E.L. ROBINSON ENGINEERING
1801 Watermark Drive, Suite 310 • Columbus, Ohio 43215
www.elrobinsonengineering.com

REVIEWED RER DATE 08-05-14
STRUCTURE FILE NUMBER 25100001/2510001R
DRAWN TJE REVISED
DESIGNED TJE CHECKED BMG

FINAL DECK SURFACE ELEVATIONS - RIGHT BRIDGE
BRIDGE NO. FRA-071-0903L/R OVER WHITE ROAD

FRA-71-5.29
PID No. 84868

31/39
615/623

\\colserv04\projects\84868\structures\FRA071_0903C\sheets\071_0903CSD011.dgn 12/17/2014 9:01:40 AM teberhardt

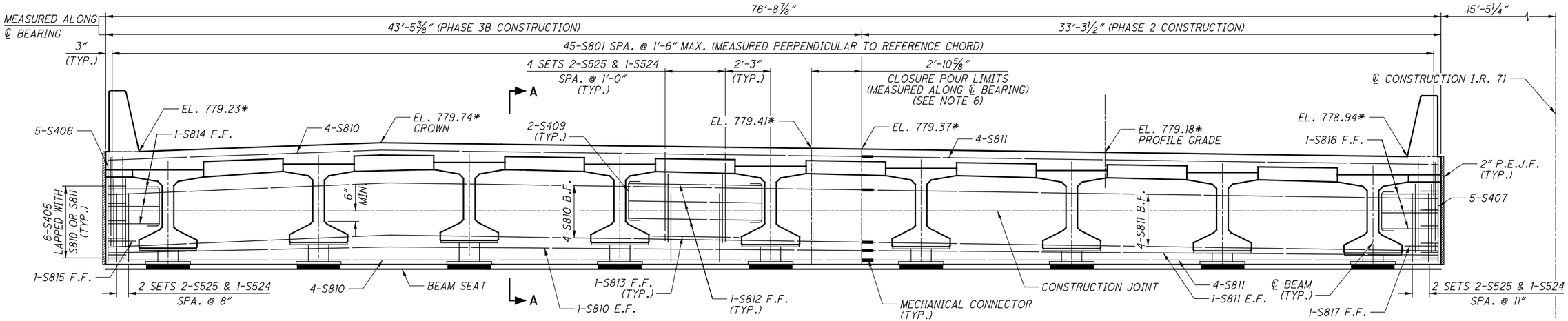

DIAPHRAGM ELEVATION - RIGHT BRIDGE

* - ELEVATIONS GIVING AT ℄ BEARING

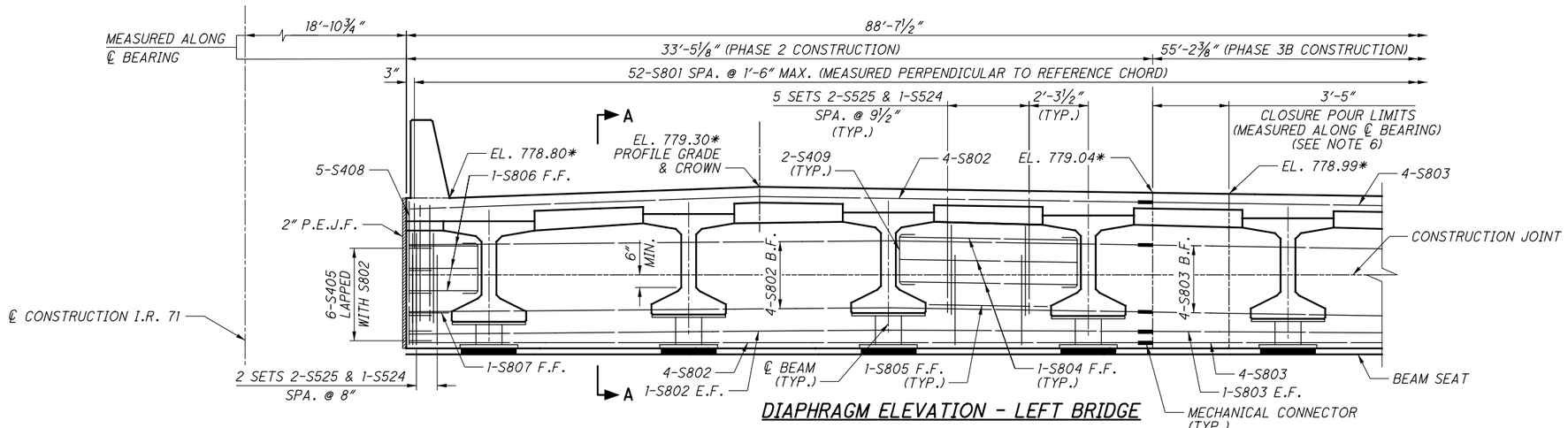

DIAPHRAGM ELEVATION - LEFT BRIDGE

* - ELEVATIONS GIVING AT ℄ BEARING

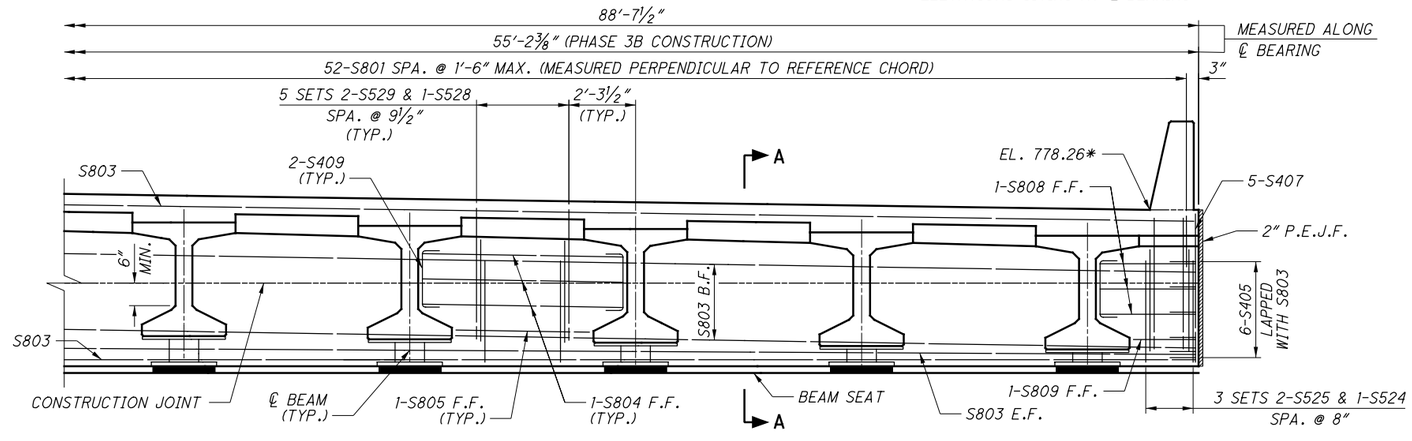

DIAPHRAGM ELEVATION - LEFT BRIDGE

* - ELEVATIONS GIVING AT ℄ BEARING

NOTES:

1. MECHANICAL CONNECTORS SHALL BE CAPABLE OF DEVELOPING 125 PERCENT OF THE YIELD STRENGTH OF THE BARS JOINED.
2. FOR SECTION A-A, SEE SHEET 13/39 AND 16/39 .
3. PLACE VERTICAL BARS PARALLEL TO BEAMS.
4. FOR REINFORCING BAR SCHEDULE, SEE SHEETS 37/39 THRU 39/39 .
5. FOR ADDITIONAL DETAILS AND NOTES NOT SHOWN, SEE ODOT STANDARD DRAWING PSID-1-13 AND SICD-1-96.
6. SEAL DIAPHRAGM CONSTRUCTION JOINTS WITH TYPE 2 WATERPROOFING 3′-0″ WIDE FROM TOP OF BREASTWALL TO BOTTOM OF APPROACH SLAB.
7. ABUTMENT DIAPHRAGM CONCRETE, PHASED CONSTRUCTION: PLACE THE DIAPHRAGM CONCRETE ENCASING THE STRUCTURAL MEMBER ENDS OF AN INDIVIDUAL PHASE AFTER THE DECK PLACEMENT IN THE ADJACENT SPAN IS COMPLETE. PROCEDURES THAT PLACE THE ABUTMENT DIAPHRAGM WITH THE DECK CONCRETE MAY BE APPROVED BY THE ENGINEER IF THE PLACEMENT SUBMITTAL CAN ASSURE THAT THE DECK CONCRETE IN THE ADJACENT SPAN WILL BE PLACED BEFORE CONCRETE IN THE DIAPHRAGM HAS REACHED ITS INITIAL SET. PLACE CLOSURE POUR CONCRETE IN THE DIAPHRAGM AND DECK CONCURRENTLY.

E.L. ROBINSON ENGINEERING
1901 Watermark Drive, Suite 310 - Columbus, Ohio 43215
www.elrobinsonengineering.com

DESIGNED BMG | DRAWN BMG | CHECKED TJE | REVIEWED RER | DATE 08-05-14
STRUCTURE FILE NUMBER 2510000L/2510000R
REVISED

REAR ABUTMENT DIAPHRAGM DETAILS
BRIDGE NO. FRA-071-0903L/R
OVER WHITE ROAD

FRA-71-5.29
PID No. 84868

32 / 39

616 / 623

\\colserv04\projects\84868\structures\FRA071_0903C\sheets\071_0903CSD005.dgn 12/17/2014 9:01:40 AM tebernardt

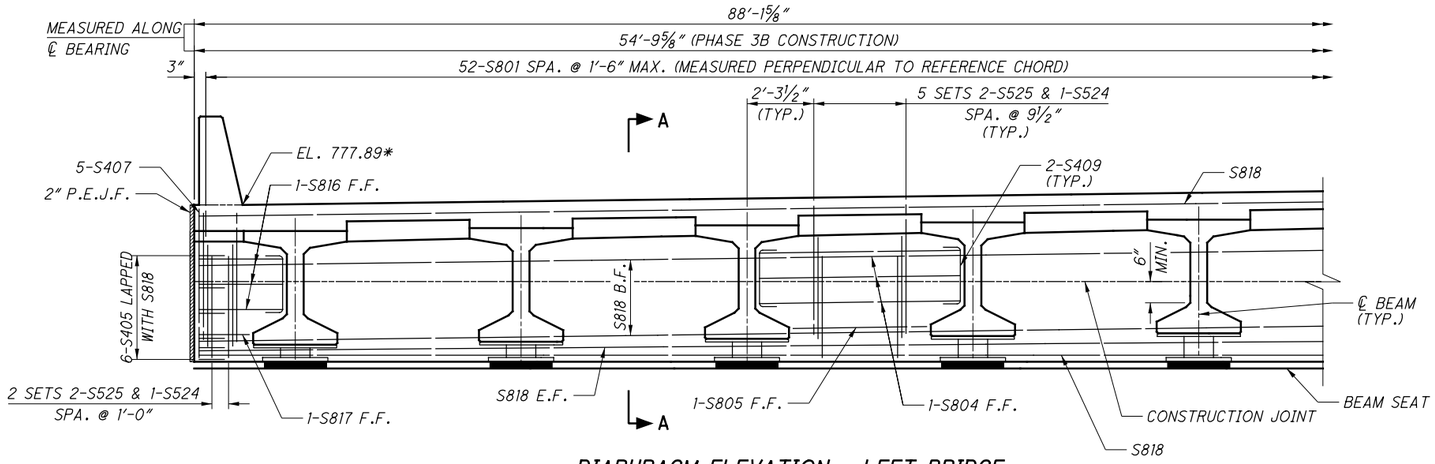

DIAPHRAGM ELEVATION - LEFT BRIDGE

* - ELEVATIONS GIVING AT ℄ BEARING

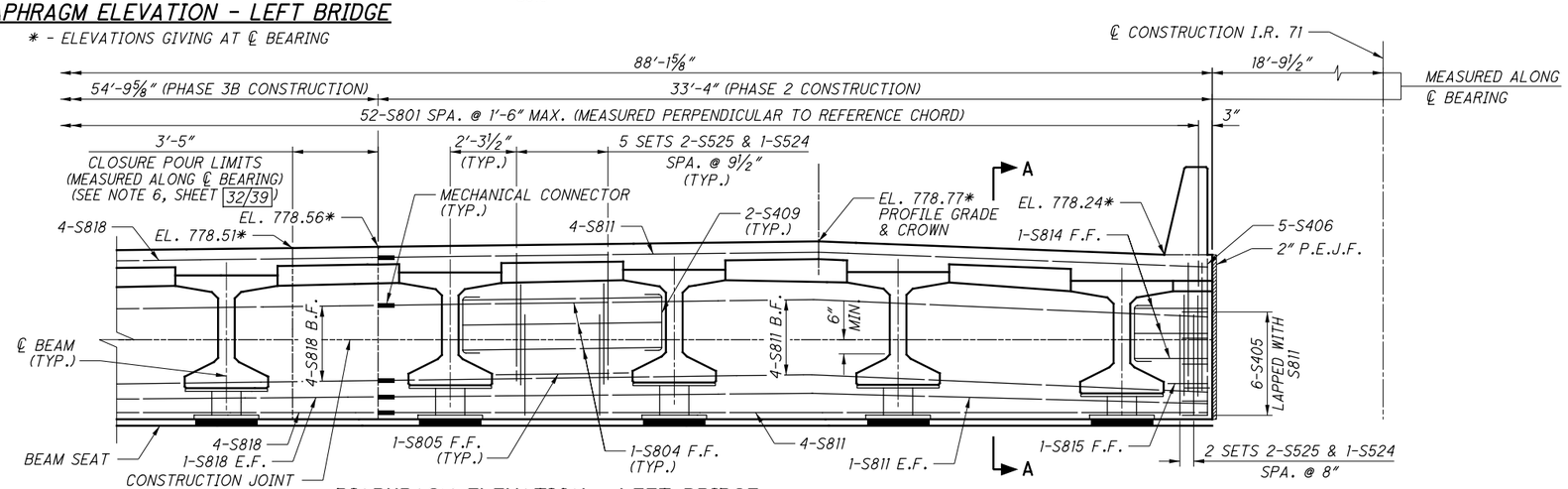

DIAPHRAGM ELEVATION - LEFT BRIDGE

* - ELEVATIONS GIVING AT ℄ BEARING

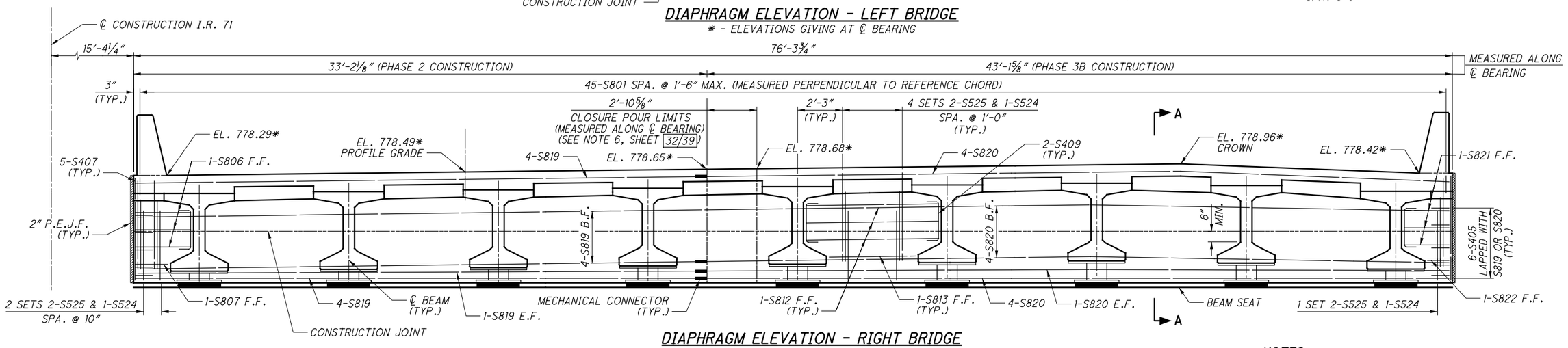

DIAPHRAGM ELEVATION - RIGHT BRIDGE

* - ELEVATIONS GIVING AT ℄ BEARING

NOTES:

1. FOR NOTES, SEE SHEET 32/39.
2. FOR SECTION A-A, SEE SHEET 13/39 AND 16/39 .

E.L. ROBINSON ENGINEERING
1901 Watermark Drive, Suite 310 - Columbus, Ohio 43215
www.elrobinsonengineering.com

DESIGNED	DRAWN	REVIEWED	DATE
BMG	BMG	RER	08-05-14
CHECKED	REVISED	STRUCTURE FILE NUMBER	
TJE		25100001/2510001R	

FORWARD ABUTMENT DIAPHRAGM DETAILS

BRIDGE NO. FRA-071-0903L/R
OVER WHITE ROAD

FRA-71-5.29
PID No. 84868

33 / 39

617
623

\\colserv04\projects\84868\structures\FRA071_0903C\sheets\071_0903CSD006.dgn 12/17/2014 9:01:41 AM teberhardt

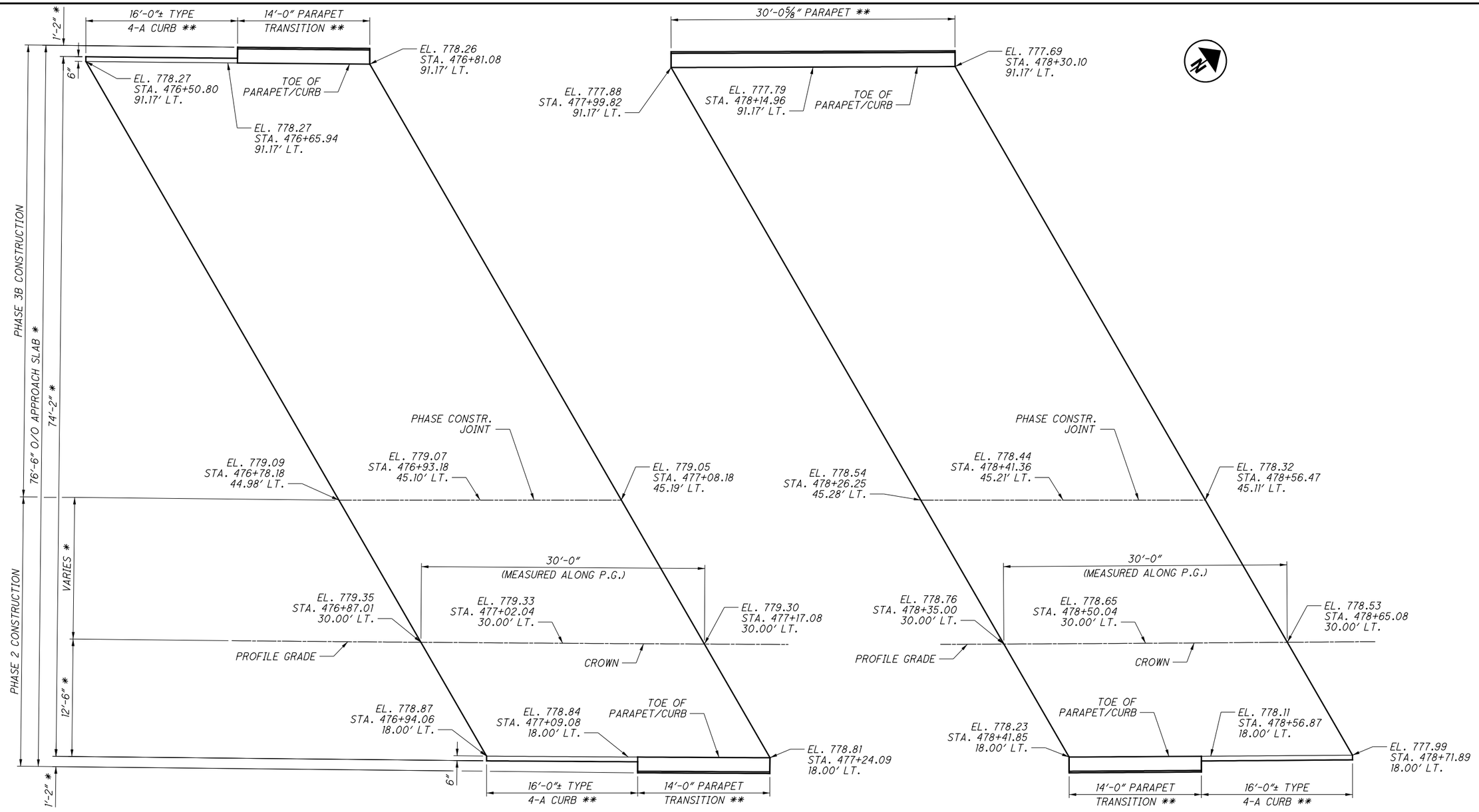

APPROACH SLAB PLAN - LEFT (SOUTHBOUND) BRIDGE

LEGEND:

* - MEASURED RADIALLY
** - MEASURED ALONG TOE OF PARAPET/CURB

NOTES:

1. THE COST OF THE APPROACH SLAB PARAPET/CURB CONCRETE, REINFORCING STEEL, AND SEALING SHALL BE INCLUDED WITH ITEM 526, REINFORCED CONCRETE APPROACH SLABS (T=17"), AS PER PLAN.

2. FOR ADDITIONAL NOTES AND PARAPET AND CURB DETAILS, SEE SHEET 36/39 .

E.L. ROBINSON ENGINEERING
1801 Watermark Drive, Suite 310 - Columbus, Ohio 43215
www.elrobinsonengineering.com

DESIGNED	DRAWN	REVIEWED	DATE
DTA	DTA	RER	08-05-14
CHECKED	REVISED	STRUCTURE FILE NUMBER	
TJE		2510000L/2510001R	

APPROACH SLAB DETAILS (1 OF 3)
BRIDGE NO. FRA-071-0903L/R
OVER WHITE ROAD

FRA-71-5.29
PID No. 84868

34/39

618/623

\\colserv04\projects\84868\structures\FRA071_0903C\sheets\071_0903CAS001.dgn 12/17/2014 9:01:42 AM teberhardt

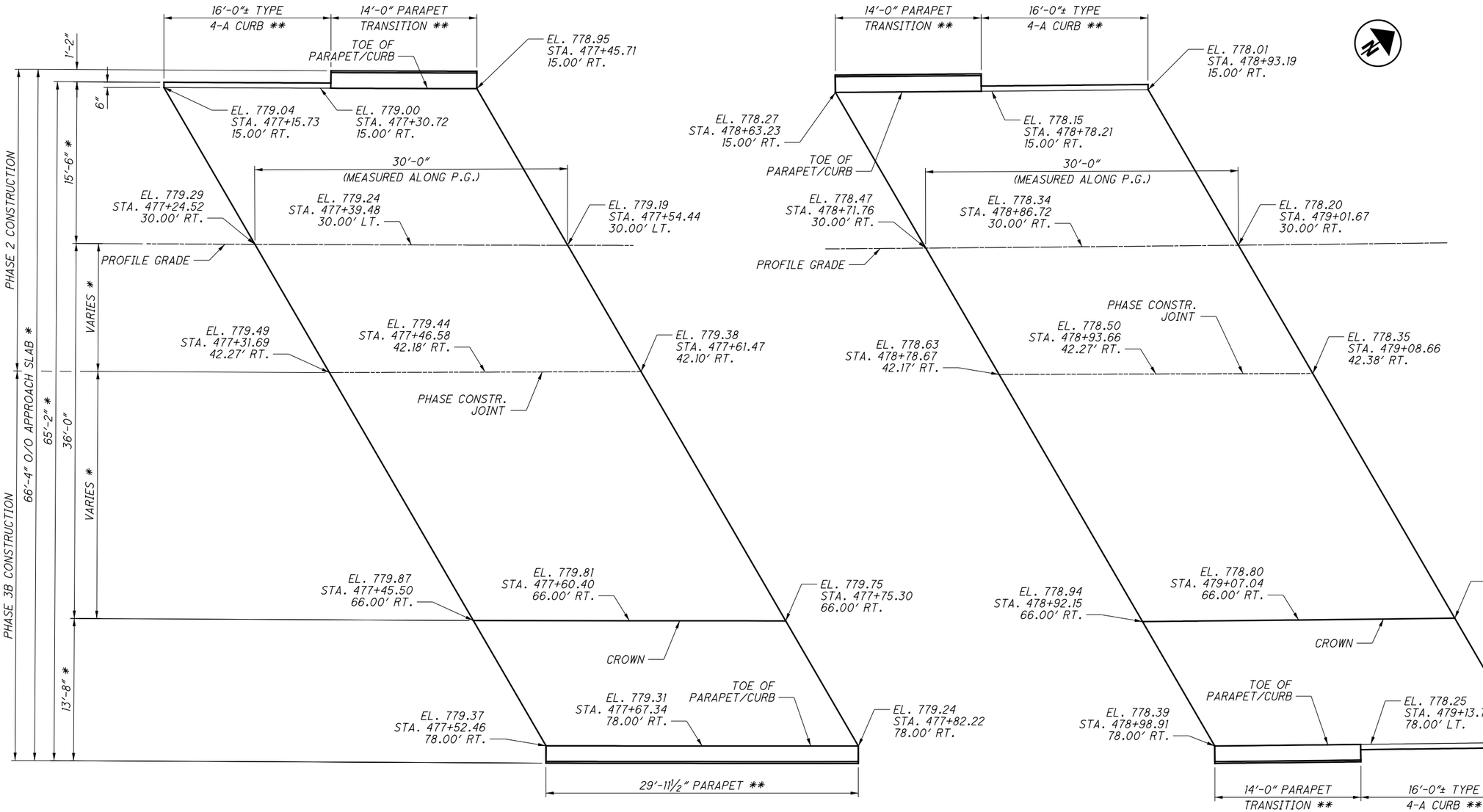

APPROACH SLAB PLAN - RIGHT (NORTHBOUND) BRIDGE

LEGEND:

* - MEASURED RADIALLY
** - MEASURED ALONG TOE OF PARAPET/CURB

NOTES:

1. THE COST OF THE APPROACH SLAB PARAPET/CURB CONCRETE, REINFORCING STEEL, AND SEALING SHALL BE INCLUDED WITH ITEM 526, REINFORCED CONCRETE APPROACH SLABS (T=17"), AS PER PLAN.
2. FOR ADDITIONAL NOTES AND PARAPET AND CURB DETAILS, SEE SHEET 36/39 .

E.L. ROBINSON ENGINEERING
1801 Watermark Drive, Suite 310 - Columbus, Ohio 43215
www.elrobinsonengineering.com

DESIGNED DTA | DRAWN DTA | REVIEWED RER | DATE 08-05-14
CHECKED TJE | REVISED | STRUCTURE FILE NUMBER 2510000L/2510001R

APPROACH SLAB DETAILS (2 OF 3)
BRIDGE NO. FRA-071-0903L/R
OVER WHITE ROAD

FRA-71-5.29
PID No. 84868

35 / 39

619 / 623

\\colserv04\projects\84868\structures\FRA071_0903C\sheets\071_0903CAS002.dgn 12/17/2014 9:01:43 AM teberhardt

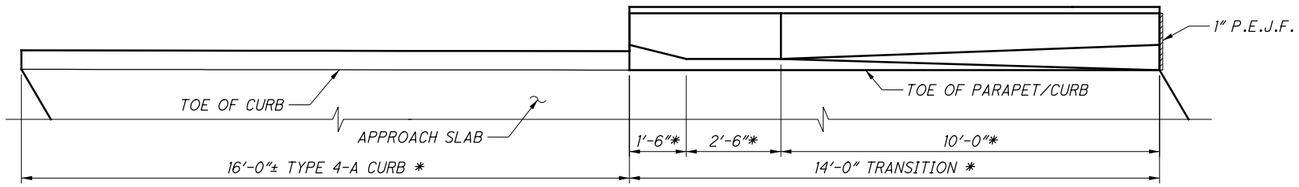

TYPICAL PARAPET TRANSITION PLAN

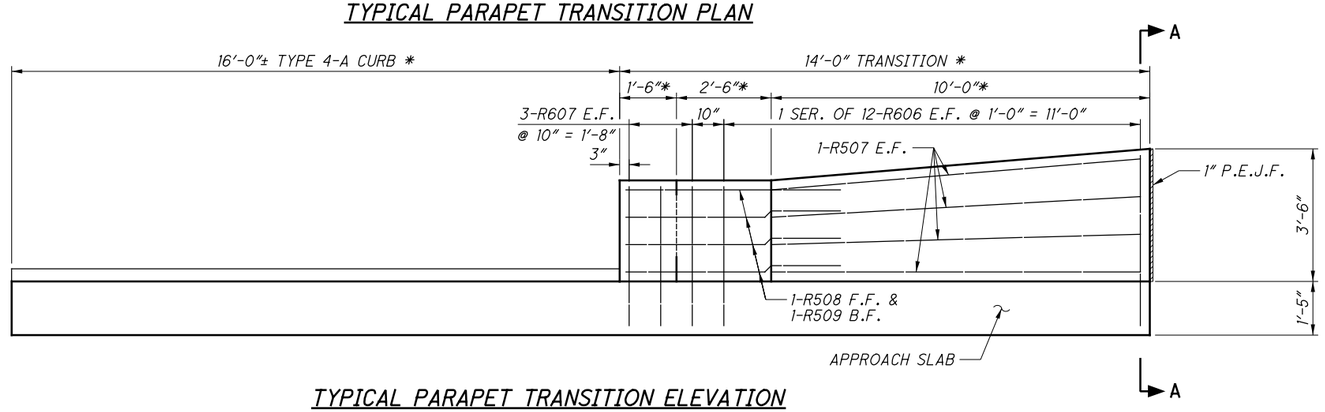

TYPICAL PARAPET TRANSITION ELEVATION

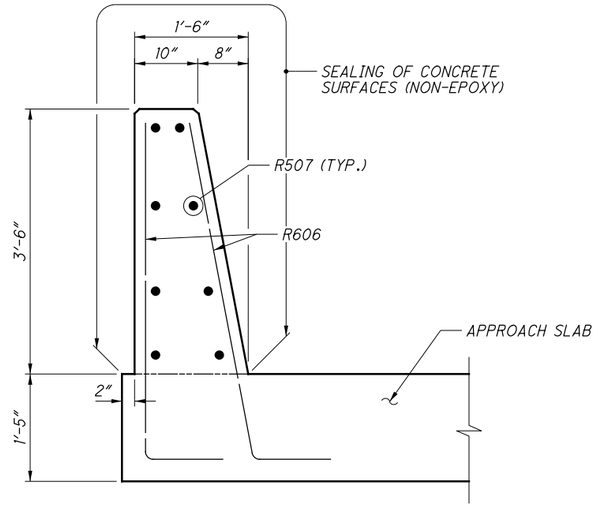

SECTION A-A

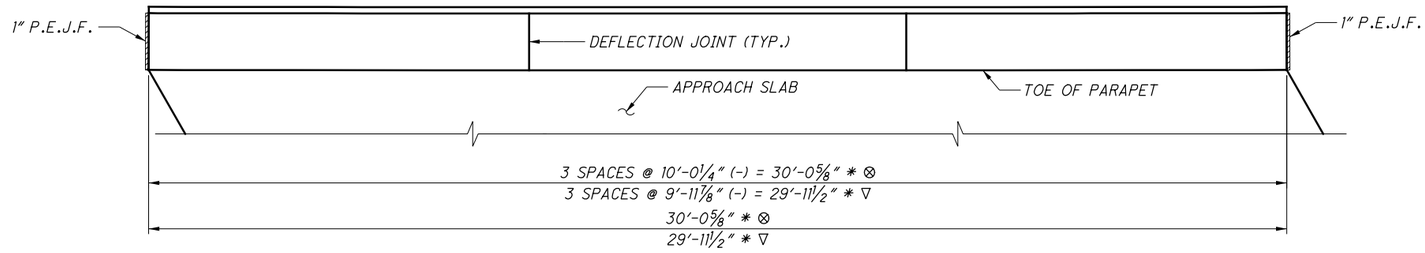

TYPICAL PARAPET PLAN

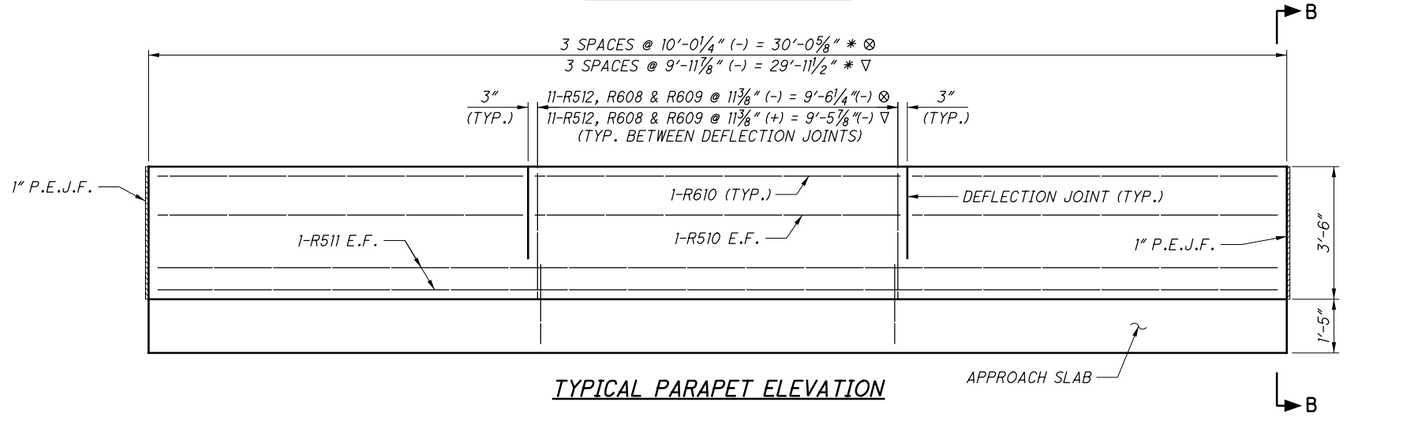

TYPICAL PARAPET ELEVATION

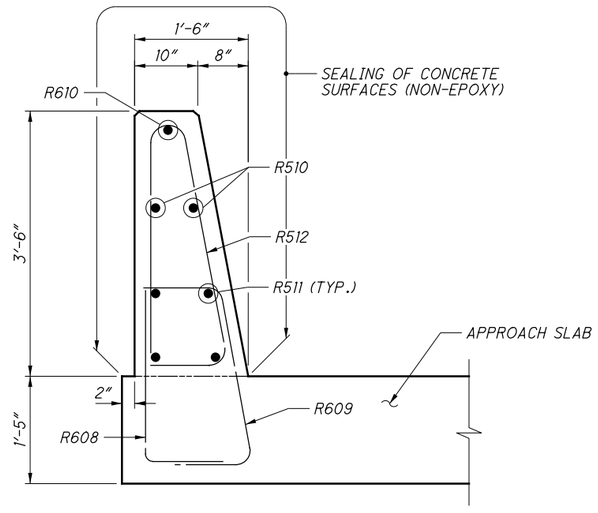

SECTION B-B

LEGEND:

* - MEASURED ALONG TOE OF PARAPET/CURB

⊗ - LEFT BRIDGE, FORWARD APPROACH SLAB, LEFT PARAPET

∇ - RIGHT BRIDGE, REAR APPROACH SLAB, RIGHT PARAPET

NOTES:

1. SEE ODOT STD. DWG. AS-1-81 FOR ADDITIONAL APPROACH SLAB DETAILS.
2. SEE ODOT STD. DWG. SBR-1-13 FOR ADDITIONAL PARAPET DETAILS.
3. FOR BRIDGE TERMINAL ASSEMBLIES SEE ROADWAY STANDARD DRAWINGS MGS-3.1 AND MGS-3.2. SEE ROADWAY PLANS FOR DETAILS AND PAYMENT.
4. THE COST OF THE APPROACH SLAB PARAPET/CURB CONCRETE, REINFORCING STEEL, AND SEALING SHALL BE INCLUDED WITH ITEM 526, REINFORCED CONCRETE APPROACH SLABS (T=17"), AS PER PLAN.

E.L. ROBINSON ENGINEERING
1801 Watermark Drive, Suite 310 - Columbus, Ohio 43215
www.elrobinsonengineering.com

DESIGNED	DRAWN	REVIEWED	DATE
DTA	DTA	RER	08-05-14
CHECKED	REVISED	STRUCTURE FILE NUMBER	
TJE		25100001/25100001R	

APPROACH SLAB DETAILS (3 OF 3)

BRIDGE NO. FRA-071-0903L/R
OVER WHITE ROAD

FRA-71-5.29
PID No. 84868

\\colserv04\projects\84868\structures\FRA071_0903C\sheets\071_0903CAS003.dgn 12/17/2014 9:01:44 AM tebernardt

MARK	NUMBER TOTAL	LENGTH	WEIGHT	TYPE	DIMENSIONS						
					A	B	C	D	E	R	INC
REAR ABUTMENT											
RA501	188	17′-2″	3366	3	5′-8″	2′-7″					
RA502	6	16′-10″	105	19	3′-8″	13′-1 ½″	1′-0″				
RA503	6	38′-6″	241	35	38′-6″						
RA504	6	38′-0″	238	36	38′-0″						
RA505	6	38′-0″	238	STR							
RA506	1	15′-9″	16	2	6′-9″	2′-6″	6′-9″				
RA507	13	15′-5″	209	2	6′-9″	2′-2″	6′-9″				
RA508	6	36′-10″	231	35	36′-10″						
RA509	6	34′-3″	214	35	34′-3″						
RA510	7	18′-3″	133	19	5′-0″	13′-3″	1′-0″				
RA511	7	21′-1″	154	19	7′-10″	13′-3″	1′-0″				
RA512	6	15′-7″	98	19	2′-4″	13′-3″	1′-0″				
RA513	6	16′-10″	105	19	3′-7″	13′-3″	1′-0″				
RA514	1	14′-7″	15	2	6′-2″	2′-6″	6′-2″				
RA515	1	13′-7″	14	2	6′-2″	1′-6″	6′-2″				
RA516	3	14′-3″	45	2	6′-2″	2′-2″	6′-2″				
RA517	1	13′-5″	14	2	5′-9″	2′-2″	5′-9″				
	1 SR	8′-9″			3′-5″		3′-5″				
RA518	OF	TO	43	2	TO	2′-2″	TO				0′-6 ¼″
	4	11′-11″			5′-0″		5′-0″				
	1 SR	4′-3″			1′-2″		1′-2″				
RA519	OF	TO	24	2	TO	2′-2″	TO				0′-6 ¼″
	4	7′-5″			2′-9″		2′-9″				
	1 SR	15′-8″				5′-4″					
RA520	OF	TO	116	3	2′-2″	TO					0′-7″
	6	21′-6″				8′-3″					
RA521	6	51′-4″	321	36	51′-4″						
RA522	6	53′-11″	337	36	53′-11″						
RA523	5	29′-5″	153	STR							
RA524	5	30′-0″	156	STR							
RA525	1	26′-0″	27	STR							
RA526	1	26′-6″	28	STR							
RA527	1	22′-9″	24	STR							
RA528	1	23′-4″	24	STR							
RA529	2	13′-7″	28	STR							
RA530	1	17′-4″	18	STR							
RA531	1	16′-2″	17	STR							
	1 SR	8′-8″									
RA532	OF	TO	38	STR							3′-5 ½″
	3	15′-7″									
	1 SR	7′-6″									
RA533	OF	TO	34	STR							3′-5 ½″
	3	14′-5″									
RA534	1	18′-8″	19	19	5′-1″	12′-6″	5′-5″				
RA535	1	17′-5″	18	19	3′-10″	12′-6″	5′-5″				
RA536	6	17′-0″	106	19	3′-8″	13′-4″	1′-0″				
RA537	6	41′-10″	262	35	41′-10″						
RA538	6	32′-6″	203	36	32′-6″						
RA539	6	32′-6″	203	STR							
RA540	1	14′-7″	15	2	6′-2″	2′-6″	6′-2″				
RA541	16	14′-1″	235	2	6′-1″	2′-2″	6′-1″				
RA542	7	34′-5″	251	35	34′-5″						
RA543	7	37′-1″	271	35	37′-1″						
RA544	8	21′-3″	177	19	7′-10″	13′-5″	1′-0″				
RA545	8	21′-7″	180	19	8′-3″	13′-4″	1′-0″				
RA546	5	18′-7″	97	19	5′-2″	13′-5″	1′-0″				
RA547	5	17′-3″	90	19	3′-11″	13′-4″	1′-0″				
RA548	1	15′-3″	16	2	6′-6″	2′-6″	6′-6″				
RA549	3	14′-11″	47	2	6′-6″	2′-2″	6′-6″				
	1 SR	9′-7″			3′-10″		3′-10″				
RA550	OF	TO	48	2	TO	2′-2″	TO				0′-7 ¼″
	4	13′-3″			5′-8″		5′-8″				
	1 SR	4′-5″			1′-3″		1′-3″				
RA551	OF	TO	26	2	TO	2′-2″	TO				0′-7″
	4	7′-11″			3′-0″		3′-0″				

MARK	NUMBER TOTAL	LENGTH	WEIGHT	TYPE	DIMENSIONS						
					A	B	C	D	E	R	INC
REAR ABUTMENT (CONTINUED)											
	1 SR	10′-8″				2′-10″					
RA552	OF	TO	88	3	2′-2″	TO					0′-8″
	6	17′-4″				6′-2″					
RA553	7	41′-10″	305	36	41′-10″						
RA554	7	39′-3″	287	36	39′-3″						
RA555	3	30′-11″	97	STR							
RA556	3	33′-9″	106	STR							
	1 SR	18′-8″									
RA557	OF	TO	124	STR							2′-7″
	5	29′-0″									
	1 SR	21′-6″									
RA558	OF	TO	139	STR							2′-7″
	5	31′-10″									
RA559	2	19′-8″	41	STR							
RA560	1	13′-8″	14	STR							
RA561	1	14′-10″	15	STR							
	1 SR	5′-0″									
RA562	OF	TO	37	STR							2′-6 ¼″
	4	12′-7″									
	1 SR	6′-2″									
RA563	OF	TO	42	STR							2′-6 ¼″
	4	13′-9″									
RA564	1	15′-3″	16	19	2′-5″	11′-6″	5′-9″				
RA565	1	16′-5″	17	19	3′-7″	11′-6″	5′-9″				
RA601	123	17′-10″	3295	2	6′-9″	4′-8″	6′-9″				
RA602	66	21′-2″	2098	2	8′-5″	4′-8″	8′-5″				
RA603	1	14′-4″	22	2	6′-9″	1′-2″	6′-9″				
RA604	1	17′-8″	27	2	8′-5″	1′-2″	8′-5″				
RA605	13	30′-6″	596	2	14′-4″	2′-2″	14′-4″				
RA606	40	11′-11″	716	1	1′-0″	11′-1″					
RA607	1	16′-10″	25	2	6′-9″	3′-8″	6′-9″				
RA608	1	20′-2″	30	2	8′-5″	3′-8″	8′-5″				
RA609	10	15′-4″	230	2	6′-9″	2′-2″	6′-9″				
RA610	1	18′-8″	28	2	8′-5″	2′-2″	8′-5″				
RA611	1	29′-8″	45	2	14′-3″	1′-6″	14′-3″				
RA612	8	30′-4″	364	2	14′-3″	2′-2″	14′-3″				
	1 SR	27′-2″			12′-8″		12′-8″				
RA613	OF	TO	173	2	TO	2′-2″	TO				0′-6 ¼″
	4	30′-4″			14′-3″		14′-3″				
RA614	1	20′-0″	30	2	9′-1″	2′-2″	9′-1″				
RA615	1	19′-6″	29	2	8′-10″	2′-2″	8′-10″				
RA616	57	22′-6″	1926	2	9′-1″	4′-8″	9′-1″				
RA617	1	16′-3″	24	2	6′-9″	3′-1″	6′-9″				
RA618	1	20′-11″	31	2	9′-1″	3′-1″	9′-1″				
RA619	1	20′-0″	30	2	9′-1″	2′-2″	9′-1″				
RA620	16	31′-10″	765	2	15′-0″	2′-2″	15′-0″				
RA621	1	14′-8″	22	2	6′-9″	1′-6″	6′-9″				
RA622	1	19′-4″	29	2	9′-1″	1′-6″	9′-1″				
RA623	7	32′-2″	338	2	15′-2″	2′-2″	15′-2″				
	1 SR	28′-8″			13′-5″		13′-5″				
RA624	OF	TO	183	2	TO	2′-2″	TO				0′-7″
	4	32′-2″			15′-2″		15′-2″				
	1 SR	17′-10″			8′-0″		8′-0″				
RA625	OF	TO	118	2	TO	2′-2″	TO				0′-7″
	4	21′-4″			9′-9″		9′-9″				
RA626	1	16′-2″	24	2	7′-2″	2′-2″	7′-2″				
RA627	1	15′-8″	24	2	6′-11″	2′-2″	6′-11″				
RA801	4	20′-6″	219	19	7′-4″	13′-1 ½″	1′-0″				
RA802	4	38′-6″	411	35	38′-6″						
RA803	4	39′-10″	425	36	39′-10″						
RA804	4	39′-10″	425	STR							
RA805	1	36′-10″	98	35	36′-10″						

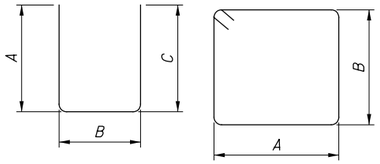

TYPE-2 TYPE-3

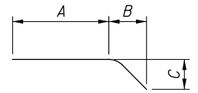

TYPE-19

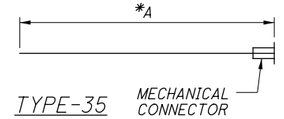

TYPE-35

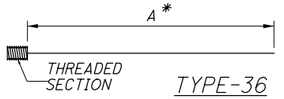

TYPE-36

* REINFORCING BAR UTILIZES A MECHANICAL CONNECTOR. BAR LENGTH ADJUSTMENT AND/OR END PREPARATION MAY BE NECESSARY DEPENDING UPON THE TYPE OF CONNECTOR USED.

NOTES:

THE BAR SIZE NUMBER IS SPECIFIED ON THE PLANS IN THE BAR MARK COLUMN. THE FIRST DIGIT WHERE THREE DIGITS ARE USED, AND THE FIRST TWO DIGIT WHERE FOUR ARE USED INDICATES THE BAR SIZE NUMBER. FOR EXAMPLE, S601:

S: LOCATION OF THE BARS IN THE STRUCTURE (SUPERSTRUCTURE)
6: BAR SIZE DIMENSION NO. 6
01: SEQUENCE NUMBER

BAR DIMENSIONS SHOWN ARE OUT TO OUT UNLESS OTHERWISE NOTED. "STD." WRITTEN IN PLACE OF A DIMENSION INDICATES A STANDARD BAR BEND AT THE END OF THE BAR. ALL REINFORCING STEEL IS TO BE EPOXY COATED. STRAIGHT ARE INDICATED BY "STR".

E.L. ROBINSON ENGINEERING
1801 Watermark Drive, Suite 310 - Columbus, Ohio 43215
www.elrobinsonengineering.com

DESIGNED TJE | DRAWN DTA | REVIEWED RER | DATE 08-05-14
CHECKED BMG | REVISED | STRUCTURE FILE NUMBER 25100001L/251000IR

REINFORCING STEEL LIST

BRIDGE NO. FRA-71-0903L/R
OVER WHITE ROAD

FRA-71-5.29
PID No. 84868

\\colserv04\projects\84868\structures\FRA071_0903C\sheets\071_0903CRL001.dgn 12/17/2014 9:01:44 AM teberhardt

MARK	NUMBER TOTAL	LENGTH	WEIGHT	TYPE	DIMENSIONS A	B	C	D	E	R	INC
REAR ABUTMENT (CONTINUED)											
RA806	1	36′-0″	96	35	36′-0″						
RA807	1	35′-1″	94	35	35′-1″						
RA808	1	34′-2″	91	35	34′-2″						
RA809	1	51′-3″	137	36	51′-3″						
RA810	1	52′-2″	139	36	52′-2″						
RA811	1	53′-1″	142	36	53′-1″						
RA812	1	53′-11″	144	36	53′-11″						
RA813	4	20′-8″	221	19	7′-4″	13′-4″	1′-0″				
RA814	4	41′-10″	447	35	41′-10″						
RA815	4	34′-5″	368	36	34′-5″						
RA816	4	34′-5″	368	STR							
RA817	1	34′-5″	92	35	34′-5″						
RA818	1	35′-4″	94	35	35′-4″						
RA819	1	36′-2″	97	35	36′-2″						
RA820	1	37′-0″	99	35	37′-0″						
RA821	1	41′-10″	112	36	41′-10″						
RA822	1	40′-11″	109	36	40′-11″						
RA823	1	40′-1″	107	36	40′-1″						
RA824	1	39′-3″	105	36	39′-3″						
		SUB-TOTAL	26,278								

MARK	NUMBER TOTAL	LENGTH	WEIGHT	TYPE	DIMENSIONS A	B	C	D	E	R	INC
FORWARD ABUTMENT											
FA501	145	17′-2″	2596	3	5′-8″	2′-7″					
FA502	1	15′-9″	16	3	5′-1″	2′-5 ½″					
FA503	1	13′-3″	14	3	3′-10″	2′-5 ½″					
FA504	6	9′-0″	56	19	3′-8″	5′-3 ½″	0′-5 ½″				
FA505	6	41′-8″	261	35	41′-8″						
FA506	6	30′-7″	191	36	30′-7″						
FA507	6	30′-7″	191	STR							
FA508	2	12′-1″	25	STR							
FA509	1	10′-10″	11	STR							
FA510	3	13′-2″	41	STR							
FA511	64	19′-8″	1313	3	4′-8″	4′-10″					
FA512	1	18′-8″	19	3	4′-2″	4′-10″					
FA513	1	14′-2″	15	3	1′-11″	4′-10″					
FA514	1	15′-2″	16	2	6′-6″	2′-5″	6′-6″				
FA515	1	16′-9″	17	2	7′-10″	1′-4″	7′-10″				
FA516	1	14′-1″	15	2	6′-6″	1′-4″	6′-6″				
FA517	8	17′-7″	147	2	7′-10″	2′-2″	7′-10″				
FA518	8	14′-11″	124	2	6′-6″	2′-2″	6′-6″				
FA519	6	22′-6″	141	3	2′-2″	8′-9″					
FA520	1	34′-2″	36	35	34′-2″						
FA521	1	36′-9″	38	35	36′-9″						
FA522	2	21′-3″	44	19	7′-10″	13′-4″	1′-1 ½″				
FA523	2	21′-7″	45	19	8′-3″	13′-3″	1′-1 ½″				
FA524	6	18′-7″	116	19	5′-2″	13′-4″	1′-1 ½″				
FA525	6	17′-3″	108	19	3′-11″	13′-3″	1′-1 ½″				
FA526	1	53′-11″	56	36	53′-11″						
FA527	1	52′-10″	55	36	52′-10″						
FA528	10	16′-7″	173	2	7′-10″	1′-2″	7′-10″				
FA529	10	12′-11″	135	2	6′-0″	1′-2″	6′-0″				
	1 SR	6′-11″			3′-0″		3′-0″				
FA530	OF	TO	59	2	TO	1′-2″	TO				0′-6″
	6	11′-11″			5′-6″		5′-6″				
FA531	4	11′-8″	49	STR							
FA532	2	11′-9″	25	STR							
FA533	2	11′-11″	25	19	3′-7″	7′-10 ½″	2′-10″				
FA534	2	16′-0″	33	STR							
FA535	6	19′-8″	123	STR							
FA536	6	8′-9″	55	19	3′-8″	5′-1″	0′-5″				

MARK	NUMBER TOTAL	LENGTH	WEIGHT	TYPE	DIMENSIONS A	B	C	D	E	R	INC
FORWARD ABUTMENT (CONTINUED)											
FA537	6	38′-6″	241	35	38′-6″						
FA538	6	48′-1″	301	36	48′-1″						
FA539	55	20′-6″	1176	3	4′-8″	5′-3″					
FA540	1	14′-2″	15	3	1′-6″	5′-3″					
FA541	1	14′-6″	15	2	6′-2″	2′-5″	6′-2″				
FA542	12	18′-11″	237	2	8′-6″	2′-2″	8′-6″				
FA543	7	14′-1″	103	2	6′-1″	2′-2″	6′-1″				
FA544	6	22′-8″	142	3	2′-2″	8′-10″					
FA545	2	36′-9″	77	35	36′-9″						
FA546	2	34′-3″	71	35	34′-3″						
FA547	3	18′-4″	57	19	5′-1″	13′-2″	1′-1″				
FA548	3	21′-1″	66	19	7′-9″	13′-3″	1′-1″				
FA549	6	15′-8″	98	19	2′-5″	13′-2″	1′-1″				
FA550	6	16′-11″	106	19	3′-7″	13′-3″	1′-1″				
FA551	1	18′-8″	19	3	3′-9″	5′-3″					
FA552	1	15′-6″	16	3	2′-2″	5′-3″					
FA553	1	14′-10″	15	2	6′-4″	2′-5″	6′-4″				
FA554	1	18′-5″	19	2	8′-6″	1′-8″	8′-6″				
FA555	1	13′-11″	15	2	6′-3″	1′-8″	6′-3″				
FA556	3	14′-5″	45	2	6′-3″	2′-2″	6′-3″				
FA557	2	13′-1″	27	2	5′-7″	2′-2″	5′-7″				
	1 SR	14′-10″				4′-11″					
FA558	OF	TO	110	3	2′-2″	TO					0′-6 ½″
	6	20′-4″				7′-8″					
FA559	2	39′-1″	82	36							
FA560	2	41′-8″	87	36							
FA561	3	17′-8″	55	STR							
FA562	3	18′-1″	57	STR							
FA563	2	14′-10″	31	STR							
FA564	2	13′-9″	29	STR							
	1 SR	8′-3″									
FA565	OF	TO	35	STR							3′-0″
	3	14′-3″									
	1 SR	7′-1″									
FA566	OF	TO	32	STR							3′-0″
	3	13′-1″									
FA567	1	15′-8″	16	19	5′-0″	9′-10 ½″	4′-0 ½″				
FA568	1	14′-6″	15	19	3′-10″	9′-10 ½″	4′-0 ½″				
FA569	10	16′-11″	176	3	5′-8″	2′-5 ½″					
FA801	4	12′-8″	135	19	7′-4″	5′-3 ½″	0′-5 ½″				
FA802	4	41′-8″	445	35	41′-8″						
FA803	4	32′-5″	346	36	32′-5″						
FA804	4	32′-5″	346	STR							
FA805	1	12′-1″	32	STR							
FA806	1	10′-10″	29	STR							
FA807	2	13′-2″	70	STR							
FA808	1	34′-2″	91	35	34′-2″						
FA809	2	35′-0″	187	35	35′-0″						
FA810	2	35′-10″	191	35	35′-10″						
FA811	1	36′-9″	98	35	36′-9″						
FA812	1	53′-11″	144	36	53′-11″						
FA813	1	54′-6″	146	36	54′-6″						
FA814	1	53′-8″	143	36	53′-8″						
FA815	1	52′-10″	141	36	52′-10″						
FA816	4	12′-5″	133	19	7′-4″	5′-1″	0′-5″				
FA817	4	38′-6″	411	35	38′-6″						
FA818	4	48′-1″	514	36	48′-1″						
FA819	1	36′-8″	98	35	36′-8″						
FA820	1	34′-4″	92	35	34′-4″						
FA821	1	39′-1″	104	36	39′-1″						
FA822	1	40′-0″	107	36	40′-0″						
FA823	1	40′-10″	109	36	40′-10″						
FA824	1	41′-8″	111	36	41′-8″						
		SUB-TOTAL	14,193								

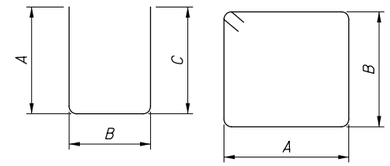

* REINFORCING BAR UTILIZES A MECHANICAL CONNECTOR. BAR LENGTH ADJUSTMENT AND/OR END PREPARATION MAY BE NECESSARY DEPENDING UPON THE TYPE OF CONNECTOR USED.

NOTES:

THE BAR SIZE NUMBER IS SPECIFIED ON THE PLANS IN THE BAR MARK COLUMN. THE FIRST DIGIT WHERE THREE DIGITS ARE USED, AND THE FIRST TWO DIGIT WHERE FOUR ARE USED INDICATES THE BAR SIZE NUMBER. FOR EXAMPLE, S601:

S: LOCATION OF THE BARS IN THE STRUCTURE (SUPERSTRUCTURE)
6: BAR SIZE DIMENSION NO. 6
01: SEQUENCE NUMBER

BAR DIMENSIONS SHOWN ARE OUT TO OUT UNLESS OTHERWISE NOTED. "STD." WRITTEN IN PLACE OF A DIMENSION INDICATES A STANDARD BAR BEND AT THE END OF THE BAR. ALL REINFORCING STEEL IS TO BE EPOXY COATED. STRAIGHT ARE INDICATED BY "STR".

E.L. ROBINSON ENGINEERING
1801 Watermark Drive, Suite 310 - Columbus, Ohio 43215
www.elrobinsonengineering.com

DESIGNED TJE | DRAWN DTA | CHECKED BMG | REVIEWED RER | DATE 08-05-14
REVISED | STRUCTURE FILE NUMBER 25100001L/25100001R

REINFORCING STEEL LIST

BRIDGE NO. FRA-71-0903L/R
OVER WHITE ROAD

FRA-71-5.29
PID No. 84868

\\colser04\projects\84868\structures\FRA071_0903C\sheets\071_0903CRL002.dgn 12/17/2014 9:01:45 AM teberhardt

MARK	NUMBER TOTAL	LENGTH	WEIGHT	TYPE	DIMENSIONS A	B	C	D	E	R	INC
SUPERSTRUCTURE											
S401	278	40'-0"	7428	STR							
S402	139	42'-0"	3900	STR							
S403	396	4'-6"	1190	STR							
S404	306	7'-10"	1601	3	0'-6"	3'-2"					
S405	48	7'-2"	230	34	1'-0"	4'-8"	2'-8"				
S406	10	6'-2"	41	STR							
S407	25	5'-10"	97	STR							
S408	5	6'-4"	21	STR							
S409	152	3'-4"	338	2	0'-8"	2'-2"	0'-8"				
S410	76	4'-0"	203	STR							
S501	284	40'-0"	11848	STR							
S502	142	43'-0"	6369	STR							
S503	788	10'-3"	8424	16	9'-8"						
	2 SR	8'-0"									
S504	OF	TO	941	STR							0'-11 1/4"
	24	29'-7"									
S505	184	32'-2"	6173	16	31'-7"						
	1 SR	8'-7"			8'-0"						
S506	OF	TO	551	16	TO						0'-11 1/4"
	26	32'-1"			31'-6"						
S507	184	31'-7"	6061	STR							
	1 SR	8'-0"									
S508	OF	TO	536	STR							0'-11 1/4"
	26	31'-6"									
	1 SR	9'-2"			8'-7"						
S509	OF	TO	1241	16	TO						0'-11 1/4"
	42	47'-7"			47'-0"						
S510	168	47'-9"	8367	16	47'-2"						
	2 SR	8'-3"									
S511	OF	TO	2218	STR							0'-11 1/4"
	40	44'-11"									
	1 SR	8'-7"									
S512	OF	TO	1217	STR							0'-11 1/4"
	42	47'-0"									
S513	168	47'-2"	8265	STR							
	1 SR	8'-11"			8'-4"						
S514	OF	TO	526	16	TO						0'-11 1/4"
	25	31'-5"			30'-10"						
S515	185	31'-6"	6078	16	30'-11"						
	2 SR	8'-1"									
S516	OF	TO	884	STR							0'-11 1/4"
	23	28'-9"									
	1 SR	8'-4"									
S517	OF	TO	511	STR							0'-11 1/4"
	25	30'-10"									
S518	185	30'-11"	5966	STR							
	2 SR	7'-9"									
S519	OF	TO	1338	STR							0'-11 1/4"
	30	35'-0"									
S520	179	37'-10"	7063	16	37'-3"						
	1 SR	8'-8"			8'-1"						
S521	OF	TO	738	16	TO						0'-11 3/8"
	31	37'-0"			36'-5"						
S522	179	37'-3"	6954	STR							
	1 SR	8'-1"									
S523	OF	TO	719	STR							0'-11 3/8"
	31	36'-5"									
S524	170	14'-8"	2601	2	5'-2"	4'-7"	5'-2"				
S525	340	13'-1"	4640	2	4'-0"	5'-4"	4'-0"				
S601	108	6'-9"	1095	STR							
S602	108	7'-11"	1284	13	4'-6"	1'-1 1/2"	0'-6 1/2"	2'-3"			
S603	96	6'-6"	937	STR							
S604	96	7'-8"	1105	13	4'-3"	1'-1 1/2"	0'-6 1/2"	2'-3"			

MARK	NUMBER TOTAL	LENGTH	WEIGHT	TYPE	DIMENSIONS A	B	C	D	E	R	INC
SUPERSTRUCTURE											
S801	194	5'-5"	2806	18	3'-3"	1'-0"	1'-0"				
S802	14	33'-2"	1240	35	33'-2"						
S803	14	54'-11"	2053	36	54'-11"						
S804	54	7'-9"	1117	STR							
S805	18	4'-8"	224	STR							
S806	6	2'-11"	47	STR							
S807	2	1'-5"	8	STR							
S808	3	3'-7"	29	STR							
S809	1	2'-0"	5	STR							
S810	14	43'-2"	1614	36	43'-2"						
S811	28	33'-1"	2473	35	33'-1"						
S812	48	7'-6"	961	STR							
S813	16	4'-5"	189	STR							
S814	6	2'-9"	44	STR							
S815	2	1'-3"	7	STR							
S816	6	3'-1"	49	STR							
S817	2	1'-7"	8	STR							
S818	14	54'-7"	2040	36	54'-7"						
S819	14	33'-0"	1234	35	33'-0"						
S820	14	42'-11"	1604	36	42'-11"						
S821	3	2'-6"	20	STR							
S822	1	0'-11"	2	STR							
SUB-TOTAL			137,473								

MARK	NUMBER TOTAL	LENGTH	WEIGHT	TYPE	DIMENSIONS A	B	C	D	E	R	INC
PARAPET											
R501	520	7'-4"	3977	23	0'-11"	3'-3"	3'-0"			0'-2 3/4"	
R502	32	40'-0"	1335	STR							
R503	16	43'-2"	720	STR							
R504	80	9'-8"	807	STR							
R505	8	8'-5"	70	STR							
R506	8	8'-4"	70	STR							
R601	520	2'-5"	1888	1	1'-0"	1'-6 1/2"					
R602	520	3'-1"	2408	37	1'-6 1/2"	0'-11"	1'-0"				
R603	40	9'-8"	581	STR							
R604	4	8'-5"	51	STR							
R605	4	8'-4"	50	STR							
SUB-TOTAL			11,957								

MARK	NUMBER TOTAL	LENGTH	WEIGHT	TYPE	DIMENSIONS A	B	C	D	E	R	INC
APPROACH SLAB											
R507	48	10'-0"	501	STR							
R508	24	5'-8"	142	25	1'-10"	2'-5"	1'-4 1/4"	0'-1 1/2"	0'-5"		
R509	24	5'-8"	142	STR							
R510	12	9'-7"	120	STR							
R511	8	29'-7"	247	STR							
R512	66	7'-4"	505	23	0'-11"	3'-3"	3'-0"			0'-2 3/4"	
	12 SR	4'-0"				3'-1 1/2"					
R606	OF	TO	964	1	1'-0"	TO					0'-1"
	12	4'-11"				4'-0 1/2"					
R607	36	4'-1"	221	1	1'-0"	3'-2 1/2"					
R608	66	2'-6"	248	1	1'-0"	1'-7 1/2"					
R609	66	3'-3"	322	37	1'-7 1/2"	0'-11"	1'-0"				
R610	6	9'-7"	86	STR							
SUB-TOTAL			3,498	(FOR INFORMATION ONLY - NOT INCLUDED IN REINFORCING STEEL QUANTITY)							

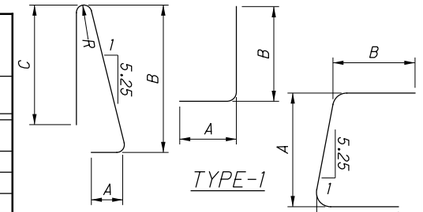

* REINFORCING BAR UTILIZES A MECHANICAL CONNECTOR. BAR LENGTH ADJUSTMENT AND/OR END PREPARATION MAY BE NECESSARY DEPENDING UPON THE TYPE OF CONNECTOR USED.

NOTES:

THE BAR SIZE NUMBER IS SPECIFIED ON THE PLANS IN THE BAR MARK COLUMN. THE FIRST DIGIT WHERE THREE DIGITS ARE USED, AND THE FIRST TWO DIGIT WHERE FOUR ARE USED INDICATES THE BAR SIZE NUMBER. FOR EXAMPLE, S601:

S: LOCATION OF THE BARS IN THE STRUCTURE (SUPERSTRUCTURE)
6: BAR SIZE DIMENSION NO. 6
01: SEQUENCE NUMBER

BAR DIMENSIONS SHOWN ARE OUT TO OUT UNLESS OTHERWISE NOTED. "STD." WRITTEN IN PLACE OF A DIMENSION INDICATES A STANDARD BAR BEND AT THE END OF THE BAR. ALL REINFORCING STEEL IS TO BE EPOXY COATED. STRAIGHT ARE INDICATED BY "STR".

E.L. ROBINSON ENGINEERING
1801 Watermark Drive, Suite 310 - Columbus, Ohio 43215
www.elrobinsonengineering.com

DESIGNED TJE | DRAWN DTA | CHECKED BMG | REVIEWED RER | DATE 08-05-14 | REVISED | STRUCTURE FILE NUMBER 25100001/25100001R

REINFORCING STEEL LIST
BRIDGE NO. FRA-71-0903L/R
OVER WHITE ROAD

FRA-71-5.29
PID No. 84868

39 / 39

623
623

\\colser\v04\projects\84868\structures\FRA071_0903C\sheets\071_0903CRL003.dgn 12/17/2014 9:01:46 AM teberhardt

PROJECT DESCRIPTION

PROPOSED RECONSTRUCTION OF EXISTING LANES AND ADDITION OF THIRD LANE IN THE MEDIAN, IN EACH DIRECTION.

HISTORIC RECORDS

HISTORIC RECORDS WERE OBTAINED FROM 2007 FOR THE RECONSTRUCTION OF THE INTERCHANGE AT I-71 AND SR 665 (PID 79331) OTHER HISTORIC SOIL PROFILE INFORMATION WAS AVAILABLE FROM THE 1950'S FOR THE ORIGINAL CONSTRUCTION OF THE INTERSTATE, BUT WAS NOT REPRESENTATIVE OF THE EXISITNG EMBNAKMENT/SUBGRADE SOIL.

GEOLOGY

THE PROJECT SITE IS LOCATED IN THE COLUMBUS LOWLAND AREA OF THE SOUTHERN OHIO LOAMY TILL PLAIN PHYSIOGRAPHIC REGION. THIS AREA IS GENERALLY A RELATIVELY FLAT-LYING LOWLAND AREA GENERALLY SLOPING TOWARDS THE SCIOTO RIVER VALLEY. THE OVERBURDEN SOIL AT THE PROJECT SITE CONSISTS OF GROUND MORAINES DEPOSITED BY THE WISCONSINAN GLACIER, CUT BY STREAM VALLEYS. THE NATURAL SOILS ARE OFTEN HARD OR VERY DENSE DUE TO THE PAST WEIGHT OF UP TO 3,000 FEET OF ICE. THE SURFACE TOPOGRAPHY AT THE SITE IS GENERALLY AROUND ELEVATION 760 TO 770 FEET OUTSIDE THE LIMITS OF THE HIGHWAY EMBANKMENT.

THE UNDERLYING BEDROCK REPORTEDLY CONSISTS OF LIMESTONE AND DOLOMITE FROM THE DEVONIAN-AGE COLUMBUS LIMESTONE FORMATION AND THE UPPER SILURIAN-AGE SALINA GROUP. THESE ROCKS ARE COLORED LIGHT GRAY TO BROWN. THE BEDROCK TOPOGRAPHY MAP OF OHIO FROM ODNR INDICATES THAT THE TOP OF BEDROCK ELEVATION AT THE PROJECT SITE IS BETWEEN 600 AND 650 FEET.

THE PROJECT SITE IS OUTSIDE THE LIMITS OF THE PROBABLE KARST AREAS IN OHIO AS IDENTIFIED BY ODNR. THERE ARE NO ABANDONED UNDERGROUND MINES REPORTED IN THE VICINITY OF THE PROJECT SITE.

RECONNAISSANCE

THE SITE IS LOCATED IN JACKSON TOWNSHIP, FRANKLIN COUNTY, NEAR GROVE CITY, OHIO. THE EXISTING IR 71 IS A FOUR-LANE, ASPHALT PAVED ROADWAY RUNNING NORTH-TO-SOUTH. THE ROADWAY TRAVERSES PRIMARILY RESIDENTIAL PROPERTIES WITH SCATTERED AGRICULTURAL AREAS. RECONNAISSANCE WORK WAS PERFORMED BY STANTEC TO LAYOUT BORING LOCATIONS.

SUBSURFACE EXPLORATION

BETWEEN SEPTEMBER 24, 2012 AND OCTOBER 5, 2012, A TOTAL OF 61 BORINGS WERE DRILLED BY STANTEC. OF THIS TOTAL, 30 BORINGS WERE ADVANCED WITHIN THE EXISTING TRAFFIC LANES AND 31 BORINGS WERE ADVANCED WITHIN THE MEDIAN AT THE APPROXIMATE CENTERLINE OF THE PROPOSED LANES. THE BORINGS WERE DRILLED WITH TWO CME 45C TRUCK-MOUNTED ROTARY DRILL RIGS, USING SOLID STEM (FLIGHT) AUGERS TO ADVANCE THE BORINGS THROUGH THE SOIL. AN 8-INCH-DIAMETER PAVEMENT CORE WAS OBTAINED AT ALL BORING LOCATIONS WITHIN THE EXISTING PAVEMENT. THE AGGREGATE BASE MATERIAL ENCOUNTERED BELOW THE PAVEMENT AFTER THE CORE WAS OBTAINED WAS AUGERED THROUGH TO THE APPROXIMATE TOP OF SUBGRADE ELEVATION WHERE SPT SAMPLING WAS INITIATED. SAMPLING BEGAN BELOW THE TOPSOIL FOR THE BORINGS PERFORMED WITHIN THE MEDIAN. DISTURBED SOIL SAMPLES WERE OBTAINED IN ACCORDANCE WITH THE STANDARD PENETRATION TEST (AASHTO T206) AT 1.5-FOOT INTERVALS FOR THE FULL DEPTH OF THE BORINGS. THE HAMMER SYSTEMS USED WERE AUTOMATIC DROP HAMMERS AND WERE CALIBRATED ON OCTOBER 4, 2012. DURING THE CALIBRATION, THE AVERAGE MEASURED DRILL ROD ENERGY RATIO (ER) WAS 86.2 AND 88.7 PERCENT. MEASURED BLOW COUNTS (NM) FROM THE STANDARD PENETRATION TEST WERE ADJUSTED ON THE BORING LOG TO AN EQUIVALENT STANDARD ENERGY RATIO OF 60 PERCENT (N60), USING THE EQUATION N60 = NM (ER/60). ADDITIONAL TESTING FOR SULFATE CONTENT WAS CONDUCTED ON SELECTED SPT SAMPLES IN ACCORDANCE WITH TEX-145-E "SULFATE IN SOILS - COLORIMETRIC METHOD" AS PUBLISHED BY THE TEXAS DEPARTMENT OF TRANSPORTATION.NO UNDISTURBED SOIL SAMPLES WERE OBTAINED, AND BEDROCK WAS NOT ENCOUNTERED.

EXPLORATION FINDINGS

IN GENERAL, BORINGS PERFORMED IN THE PAVEMENT ENCOUNTED APPROXIMATELY 6 INCHES OF ASPHALT, OVERLAYING 9 INCHES OF CONCRETE. THE AGGREGATE BASE WAS APPROXIMATELY 6 INCHES THICK AT MOST LOCATIONS. THE MAXIMUM ASPHALT THICKNESS OBSERVED WAS 7 INCHES AND THE MAXIMUM CONCRETE THICKNESS WAS 11 INCHES. MINIMUM THICKNESSES WERE 5 INCHES AND 7 INCHES, RESPECTIVELY.

BORINGS IN THE MEDIAN ENCOUNTERED 3 TO 6 INCHES OF TOPSOIL. BELOW THE TOPSOIL, THE SOILS WERE CLASSIFIED AS FINE-GRAINED, COHESIVE SOILS AND INCLUDED SANDY SILT (A-4A, 50% OF TESTED SAMPLES), SILT AND CLAY (A-6A, 27%), SILTY CLAY (A-6B, 17%) AND CLAY (A-7-6, 6%). THE CONSISTENCY GENERALLY RANGED FROM VERY STIFF TO HARD. FIVE BORINGS CONTAINED ZONES OF SOFT TO STIFF SOILS. HAND PENETROMETER VALUES VARIED BETWEEN 0.5 AND GREATER THAN 4.5 TONS PER SQUARE FOOT (TSF) WITH THE MAJORITY BEING ABOVE 4.5 TSF. STANDARD PENETRATION TEST, N-VALUES (N60) RANGED FROM 7 BLOWS PER FOOT (BPF) TO 137 BPF, WITH AN AVERAGE OF 30 BPF. LIQUID LIMITS RANGED FROM 17 TO 54 WITH AN AVERAGE OF 28 AND PLASTIC LIMITS RANGED FROM 10 TO 21 WITH AN AVERAGE OF 15. MOISTURE CONTENTS RANGED FROM 6 TO 26 PERCENT WITH AN AVERAGE OF 13.3 PERCENT. THREE OF THE SAMPLES TESTED FOR SULFATES SHOWED RESULTS GREATER THAN 3000 PARTS PER MILLION. GROUNDWATER WAS NOT ENCOUNTERED IN ANY OF THE BORINGS DURING DRILLING. NONE OF THE BORINGS ENCOUNTERED BEDROCK.

LEGEND

DESCRIPTION	ODOT CLASS	CLASSIFIED MECH.	CLASSIFIED VISUAL
SANDY SILT	A-4a	71	50
SILT AND CLAY	A-6a	38	21
SILTY CLAY	A-6b	24	23
CLAY	A-7-6	8	7
	TOTAL	141	101

PAVEMENT OR BASE = X = APPROXIMATE THICKNESS — VISUAL

SOD AND TOPSOIL = X = APPROXIMATE THICKNESS — VISUAL

PROJECT BORING LOCATION - PLAN VIEW

HISTORIC BORING LOCATION - PLAN VIEW - FRA-71-6.09, 2007

DRIVE SAMPLE AND/OR ROCK CORE BORING PLOTTED TO VERTICAL SCALE ONLY. HORIZONTAL BAR INDICATES A CHANGE IN STRATIGRAPHY.

WC INDICATES WATER CONTENT IN PERCENT.

N_{60} INDICATES STANDARD PENETRATION RESISTANCE NORMALIZED TO 60% DRILL ROD ENERGY RATIO.

X/Y/D" NUMBER OF BLOWS FOR STANDARD PENETRATION TEST (*SPT*):
X= NUMBER OF BLOWS FOR 6 INCHES (UNCORRECTED)
Y/D"= NUMBER OF BLOWS (UNCORRECTED) FOR D" OF PENETRATION AT REFUSAL

● INDICATES A PLASTIC MATERIAL WITH A MOISTURE CONTENT EQUAL TO OR GREATER THAN THE LIQUID LIMIT MINUS 3.

▼— INDICATES STATIC WATER ELEVATION.

W— INDICATES FREE WATER ELEVATION.

* INDICATES A SAMPLE TAKEN WITHIN 3 FT OF PROPOSED GRADE.

SS INDICATES A SPLIT SPOON SAMPLE.

NP INDICATES A NON-PLASTIC SAMPLE.

HISTORIC BORING DESCRIPTION	ODOT CLASS	CLASSIFIED MECH.	CLASSIFIED VISUAL
GRAVEL AND/OR STONE FRAGMENTS	A-1-a	-	1
GRAVEL AND/OR STONE FRAGMENTS WITH SAND	A-1-b	3	5
GRAVEL AND/OR STONE FRAGMENTS WITH SAND AND SILT	A-2-4	-	6
GRAVEL AND/OR STONE FRAG. WITH SAND AND ELASTIC SILT	A-2-5	1	-
COARSE AND FINE SAND	A-3a	-	1
SANDY SILT	A-4a	41	90
SILT	A-4b	-	3
SILT AND CLAY	A-6a	13	7
SILTY CLAY	A-6b	3	14
	TOTAL	61	127

AVAILABLE INFORMATION

ALL AVAILABLE SOIL AND BEDROCK INFORMATION THAT CAN BE CONVENIENTLY SHOWN ON THE GEOTECHNICAL EXPLORATION SHEETS HAS BEEN SO REPORTED. ADDITIONAL EXPLORATIONS MAY HAVE BEEN MADE TO STUDY SOME SPECIAL ASPECT OF THE PROJECT. COPIES OF THIS DATA, IF ANY, MAY BE INSPECTED IN THE DISTRICT DEPUTY DIRECTOR'S OFFICE OR THE OFFICE OF GEOTECHNICAL ENGINEERING AT 1980 WEST BROAD STREET.

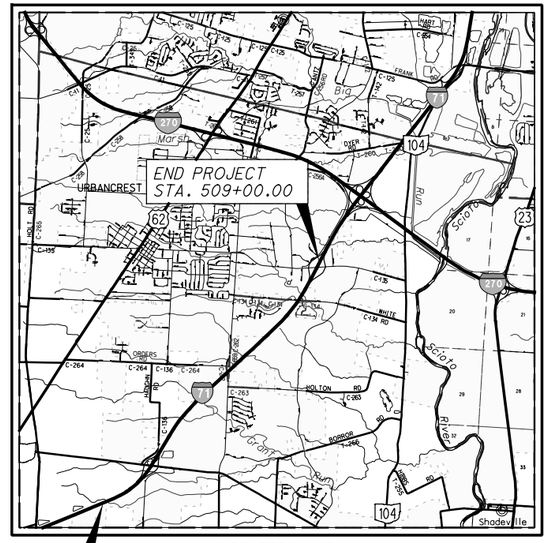

LOCATION MAP
SCALE IN MILES
0 1 2 3 4

N

PARTICLE SIZE DEFINITIONS

12"	3"	2.0 mm	0.42 mm	0.074 mm	0.005 mm
BOULDERS	COBBLES	GRAVEL	COARSE SAND	FINE SAND	SILT	CLAY
		No. 10 SIEVE	No. 40 SIEVE	No. 200 SIEVE		

INDEX OF SHEETS

LOCATION FROM STA.	LOCATION TO STA.	PLAN VIEW SHEET	PROFILE SHEET
I.R. 71			
241+03	286+50	10	10
286+50	298+50	11	11
298+50	310+50	12	12
310+50	322+50	13	14
322+50	334+50	15	16
334+50	346+50	17	17
346+50	358+50	18	18
358+50	370+50	19	19
370+50	382+50	20	20
382+50	394+50	21	21
394+50	406+50	22	22
406+50	418+50	23	23
418+50	430+50	24	24
430+50	442+50	25	25
442+50	454+50	26	26
454+50	466+50	27	27
466+50	478+50	28	28
478+50	490+50	29	29
490+50	502+50	30	30
502+50	514+50	31	31
514+50	END	32	32

SPECIFICATIONS

THIS GEOTECHNICAL EXPLORATION WAS PERFORMED IN ACCORDANCE WITH THE STATE OF OHIO, DEPARTMENT OF TRANSPORTATION, OFFICE OF GEOTECHNICAL ENGINEERING, SPECIFICATIONS FOR GEOTECHNICAL EXPLORATIONS, DATED JAN. 2012 .

RECON. - STANTEC 9/2012
DRILLING - STANTEC 9-10/2012
DRAWN - LJS - 12/2014
REVIEWED - PAN - 12/2014

E.L. ROBINSON ENGINEERING
1901 Watermark Drive, Suite 310 - Columbus, Ohio 43215
www.elrobinsonengineering.com

PID NO. 84868

SOIL PROFILE

FRA-71-5.29

P:\84868\geotechnical\sheets\84868IC001.dgn 12/16/2014 10:44:57 AM pnarsavage

SUMMARY OF SOIL TEST DATA

EXPLORATION NO. / STATION & OFFSET	FROM	-	TO	SAMPLE ID	% REC	HP TSF	% GR	% CS	% FS	% SILT	% CLAY	LL	PL	PI	% WC	ODOT CLASS (GI)	SULFATE PPM
B-001-0-12	0.5	-	2.0	SS-1	100	4.5	22	9	13	30	26	29	17	12	9	A-6a (5) *	5573
STA. 279+08, 32' RT	2.0	-	3.5	SS-2	83	4.5	12	10	14	32	32	26	13	13	10	A-6a (7) *	
NORTHING = 668205	3.5	-	5.0	SS-3	17		SAME AS SS-2								10	A-6a (VISUAL)	
EASTING = 1799336	5.0	-	6.5	SS-4	67	2.5 - 3.5	SAME AS SS-2								14	A-6a (VISUAL)	
B-002-0-12	2.0	-	3.5	SS-1	89	4.5+	15	10	15	35	25	23	14	9	9	A-4a (5) *	513
STA. 283+07, 63' LT	3.5	-	5.0	SS-2	83	4.0 - 4.5	12	9	14	33	32	28	15	13	14	A-6a (7)	
NORTHING = 668444	5.0	-	6.5	SS-3	89	2.5 - 4.5+	13	9	12	30	36	31	15	16	17	A-6b (9)	
EASTING = 1799669	6.5	-	8.0	SS-4	100	3.0 - 3.5	SAME AS SS-3								23	A-6b (VISUAL)	
B-003-0-12	0.5	-	2.0	SS-1	100	4.5+	18	11	16	33	22	22	14	8	6	A-4a (4) *	9973
STA. 287+14, 34' LT	2.0	-	3.5	SS-2	100	4.5+	40	9	10	26	15	21	11	10	8	A-4a (1) *	
NORTHING = 668573	3.5	-	5.0	SS-3	72	4.5	SAME AS SS-2								15	A-4a (VISUAL)	
EASTING = 1800056	5.0	-	6.5	SS-4	61	3.5	SAME AS SS-2								25	A-4a (VISUAL)	
B-004-0-12	2.0	-	3.5	SS-1	100	4.5+	11	11	16	36	26	23	14	9	10	A-4a (5) *	507
STA. 291+15, 60' RT	3.5	-	5.0	SS-2	94	4.5+	17	13	15	34	21	21	13	8	9	A-4a (4)	
NORTHING = 668659	5.0	-	6.5	SS-3	94	4.5+	SAME AS SS-2								10	A-4a (VISUAL)	
EASTING = 1800459	6.5	-	8.0	SS-4	100	3.5 - 3.75	SAME AS SS-2								13	A-4a (VISUAL)	
B-005-0-12	0.5	-	2.0	SS-1	100	4.5	9	6	12	39	34	30	17	13	10	A-6a (9) *	<100
STA. 295+11, 32' RT	2.0	-	3.5	SS-2	78	4.5	13	11	16	29	31	24	14	10	15	A-4a (5) *	
NORTHING = 668879	3.5	-	5.0	SS-3	100	4.0 - 4.5+	35	10	12	15	28	38	19	19	21	A-6b (4)	
EASTING = 1800794	5.0	-	6.5	SS-4	100		SAME AS SS-3								21	A-6b (VISUAL)	
B-006-0-12	2.0	-	3.5	SS-1	67	3.5	6	3	9	25	57	51	21	30	26	A-7-6 (18) *	<100
STA. 299+29, 48' RT	3.5	-	5.0	SS-2	100	3.5 - 4.5	7	10	12	31	40	40	18	22	18	A-6b (12)	
NORTHING = 669175	5.0	-	6.5	SS-3	89	4.5	SAME AS SS-2								14	A-6b (VISUAL)	
EASTING = 1801099	6.5	-	8.0	SS-4	89	4.5	SAME AS SS-2								12	A-6b (VISUAL)	
B-007-0-12	0.5	-	2.0	SS-1	100	4.5+	14	8	14	32	32	30	17	13	10	A-6a (7) *	<100
STA. 303+02, 34' RT	2.0	-	3.5	SS-2	100	4.5+	14	9	15	34	28	22	15	7	11	A-4a (5) *	
NORTHING = 669388	3.5	-	5.0	SS-3	100	4.5	30	11	12	27	20	21	15	6	12	A-4a (2)	
EASTING = 1801402	5.0	-	6.5	SS-4	100		SAME AS SS-3								12	A-4a (VISUAL)	
B-008-0-12	2.0	-	3.5	SS-1	89	3.5 - 4.5	17	10	15	32	26	24	16	8	15	A-4a (5) *	<100
STA. 306+96, 46' RT	3.5	-	5.0	SS-2	44	4	11	13	15	32	29	24	14	10	15	A-4a (5)	
NORTHING = 669587	5.0	-	6.5	SS-3	100		9	12	20	42	17	19	16	3	15	A-4a (5)	
EASTING = 1801751	6.5	-	8.0	SS-4	100		SAME AS SS-3								14	A-4a (VISUAL)	
B-009-0-12	0.5	-	2.0	SS-1	100	4.5+	11	9	15	37	28	26	16	10	9	A-4a (6) *	207
STA. 310+91, 33' RT	2.0	-	3.5	SS-2	100	4.0 - 4.5	17	12	16	31	24	22	15	7	11	A-4a (4) *	
NORTHING = 669878	3.5	-	5.0	SS-3	83	4.5	SAME AS SS-2								11	A-4a (VISUAL)	
EASTING = 1802023	5.0	-	6.5	SS-4	67	4.5	SAME AS SS-2								12	A-4a (VISUAL)	
B-010-0-12	2.0	-	3.5	SS-1	67	4.0 - 4.5+	17	10	14	34	25	24	15	9	13	A-4a (5) *	<100
STA. 314+85, 64' LT	3.5	-	5.0	SS-2	89	4.5+	10	13	17	35	25	22	13	9	12	A-4a (5)	
NORTHING = 670238	5.0	-	6.5	SS-3	78	4.5	SAME AS SS-2								12	A-4a (VISUAL)	
EASTING = 1802208	6.5	-	8.0	SS-4	100	4.0 - 4.5	SAME AS SS-2								13	A-4a (VISUAL)	
B-011-0-12	0.5	-	2.0	SS-1	100	4.5	23	10	12	28	27	32	17	15	14	A-6a (6) *	200
STA. 318+81, 34' LT	2.0	-	3.5	SS-2	83	2.75 - 3.5	12	5	14	35	34	37	16	21	20	A-6b (11) *	
NORTHING = 670533	3.5	-	5.0	SS-3	100	4.5	SAME AS SS-2								12	A-6b (VISUAL)	
EASTING = 1802469	5.0	-	6.5	SS-4	100	2.75 - 3.0	SAME AS SS-2								12	A-6b (VISUAL)	
B-012-0-12	2.0	-	3.5	SS-1	72	3.5 - 4.0	16	11	10	35	28	28	17	11	15	A-6a (6) *	<100
STA. 324+42, 62' RT	3.5	-	5.0	SS-2	50		22	32	9	24	13	27	13	14	11	A-6a (1)	
NORTHING = 670954	5.0	-	6.5	SS-3	78	2.5	10	10	13	36	31	25	16	9	12	A-4a (6)	
EASTING = 1802851	6.5	-	8.0	SS-4	89	0.5 - 1.75	SAME AS SS-3								14	A-4a (VISUAL)	
B-013-0-12	0.5	-	2.0	SS-1	100	2.5 - 4.5	14	7	12	37	30	31	18	13	17	A-6a (8) *	<100
STA. 326+73, 33' RT	2.0	-	3.5	SS-2	78	4.5	13	7	12	33	35	31	15	16	10	A-6b (9) *	
NORTHING = 671167	3.5	-	5.0	SS-3	83	2.0 - 4.0	28	2	5	32	33	54	18	36	23	A-7-6 (16)	
EASTING = 1802945	5.0	-	6.5	SS-4	78	2.25 - 3.0	SAME AS SS-3								25	A-7-6 (VISUAL)	
B-014-0-12	2.0	-	3.5	SS-1	67	4.5+	14	12	16	35	23	21	14	7	8	A-4a (5) *	800
STA. 330+35, 47' LT	3.5	-	5.0	SS-2	28	2.5	18	11	11	24	36	38	16	22	15	A-6b (10)	
NORTHING = 671518	5.0	-	6.5	SS-3	83	2.5 - 3.5	2	5	11	33	49	40	16	24	24	A-6b (14)	
EASTING = 1803065	6.5	-	8.0	SS-4	100	4.5	SAME AS SS-3								16	A-6b (VISUAL)	

SUMMARY OF SOIL TEST DATA

EXPLORATION NO. / STATION & OFFSET	FROM	-	TO	SAMPLE ID	% REC	HP TSF	% GR	% CS	% FS	% SILT	% CLAY	LL	PL	PI	% WC	ODOT CLASS (GI)	SULFATE PPM
B-015-0-12	0.5	-	2.0	SS-1	100	4.5+	10	10	14	40	26	29	19	10	12	A-4a (6) *	1533
STA. 334+10, 32' LT	2.0	-	3.5	SS-2	100	4.5+	18	12	14	35	21	21	13	8	9	A-4a (4) *	
NORTHING = 671832	3.5	-	5.0	SS-3	100	4.5+	SAME AS SS-2								13	A-4a (VISUAL)	
EASTING = 1803271	5.0	-	6.5	SS-4	100		SAME AS SS-2								18	A-4a (VISUAL)	
B-016-0-12	2.0	-	3.5	SS-1	78	4.5+	19	8	13	32	28	23	14	9	9	A-4a (5) *	1140
STA. 338+56, 46' RT	3.5	-	5.0	SS-2	89	4.5	17	11	14	31	27	24	14	10	11	A-4a (5)	
NORTHING = 672172	5.0	-	6.5	SS-3	83	3.5 - 4.5	9	8	14	35	34	31	15	16	12	A-6b (9)	
EASTING = 1803568	6.5	-	8.0	SS-4	100	3.0 - 4.5	SAME AS SS-3								15	A-6b (VISUAL)	
B-017-0-12	0.5	-	2.0	SS-1	100	4.5+	13	9	14	35	29	28	16	12	10	A-6a (7) *	2267
STA. 342+51, 32' RT	2.0	-	3.5	SS-2	100	4.5+	12	10	15	37	26	24	13	11	9	A-6a (6) *	
NORTHING = 672518	3.5	-	5.0	SS-3	67	4.5+	SAME AS SS-2								10	A-6a (VISUAL)	
EASTING = 1803762	5.0	-	6.5	SS-4	67	4.5+	SAME AS SS-2								11	A-6a (VISUAL)	
B-018-0-12	2.0	-	3.5	SS-1	83	4.5+	11	12	16	37	24	21	14	7	9	A-4a (5) *	527
STA. 346+81, 62' LT	3.5	-	5.0	SS-2	67	2.5 - 4.5	13	14	16	33	24	21	11	10	14	A-4a (4)	
NORTHING = 672934	5.0	-	6.5	SS-3	72	4.5	15	11	15	32	27	25	13	12	14	A-6a (6)	
EASTING = 1803903	6.5	-	8.0	SS-4	44	4.5+	SAME AS SS-3								13	A-6a (VISUAL)	
B-019-0-12	0.5	-	2.0	SS-1	100	4.5+	9	11	16	33	31	30	15	15	10	A-6a (8) *	273
STA. 350+83, 34' LT	2.0	-	3.5	SS-2	67	4.5+	16	11	16	32	25	27	16	11	16	A-6a (5) *	
NORTHING = 673262	3.5	-	5.0	SS-3	100	3.0 - 4.5	3	4	13	34	46	48	15	33	20	A-7-6 (18)	
EASTING = 1804140	5.0	-	6.5	SS-4	100	4.5+	SAME AS SS-3								16	A-7-6 (VISUAL)	
B-020-0-12	2.0	-	3.5	SS-1	56	4.5	21	10	13	31	25	25	15	10	15	A-4a (4) *	1513
STA. 354+82, 62' RT	3.5	-	5.0	SS-2	17		23	10	10	33	24	29	16	13	12	A-6a (6)	
NORTHING = 673541	5.0	-	6.5	SS-3	50		SAME AS SS-2								22	A-6a (VISUAL)	
EASTING = 1804441	6.5	-	8.0	SS-4	56	4.5	SAME AS SS-2								18	A-6a (VISUAL)	
B-021-0-12	0.5	-	2.0	SS-1	100	4.5+	26	10	12	30	22	24	15	9	9	A-4a (3) *	2147
STA. 358+79, 35' RT	2.0	-	3.5	SS-2	89	4.5+	29	9	15	25	22	24	15	9	9	A-4a (2) *	
NORTHING = 673879	3.5	-	5.0	SS-3	83	4.5+	SAME AS SS-2								8	A-4a (VISUAL)	
EASTING = 1804648	5.0	-	6.5	SS-4	100	2.0 - 4.5+	SAME AS SS-2								13	A-4a (VISUAL)	
B-022-0-12	2.0	-	3.5	SS-1	83	4.5	23	9	14	31	23	22	14	8	10	A-4a (4) *	1147
STA. 362+75, 46' LT	3.5	-	5.0	SS-2	78	4.5+	15	11	14	31	29	23	13	10	10	A-4a (5)	
NORTHING = 674242	5.0	-	6.5	SS-3	78	4.5+	SAME AS SS-2								13	A-4a (VISUAL)	
EASTING = 1804825	6.5	-	8.0	SS-4	78	3.5 - 4.5+	SAME AS SS-2								15	A-4a (VISUAL)	
B-023-0-12	0.5	-	2.0	SS-1	78	4.5+	12	5	13	40	30	30	18	12	16	A-6a (8) *	420
STA. 366+73, 33' LT	2.0	-	3.5	SS-2	28		28	11	12	32	17	23	14	9	7	A-4a (3) *	
NORTHING = 674541	3.5	-	5.0	SS-3	100	4.0 + 4.5+	SAME AS SS-2								18	A-4a (VISUAL)	
EASTING = 1805089	5.0	-	6.5	SS-4	100	4.5+	SAME AS SS-2								24	A-4a (VISUAL)	
B-024-0-12	2.0	-	3.5	SS-1	78	4.5	9	8	15	35	33	23	13	10	10	A-4a (7) *	1173
STA. 370+70, 46' RT	3.5	-	5.0	SS-2	89	4.5	16	12	14	36	22	21	13	8	9	A-4a (5)	
NORTHING = 674788	5.0	-	6.5	SS-3	94	4.5+	SAME AS SS-2								9	A-4a (VISUAL)	
EASTING = 1805410	6.5	-	8.0	SS-4	100		SAME AS SS-2								12	A-4a (VISUAL)	
B-025-0-12	0.5	-	2.0	SS-1	100	1.5 - 2.0	13	11	14	36	26	28	17	11	7	A-6a (6) *	<100
STA. 374+67, 34'RT	2.0	-	3.5	SS-2	100	4.5+	19	11	13	33	24	20	15	5	8	A-4a (4) *	
NORTHING = 675084	3.5	-	5.0	SS-3	83	4.5	SAME AS SS-2								15	A-4a (VISUAL)	
EASTING = 1805673	5.0	-	6.5	SS-4	100	2.0 - 3.5	SAME AS SS-2								20	A-4a (VISUAL)	
B-026-0-12	2.0	-	3.5	SS-1	67	4.5	7	8	14	36	35	30	16	14	15	A-6a (9) *	<100
STA. 378+65, 62' LT	3.5	-	5.0	SS-2	83	2.5 - 4.5	4	9	13	32	42	36	13	23	17	A-6b (13)	
NORTHING = 675433	5.0	-	6.5	SS-3	89	2.5 - 3.5	4	7	13	32	44	41	17	24	15	A-7-6 (14)	
EASTING = 1805888	6.5	-	8.0	SS-4	100	3.5 - 4.5	SAME AS SS-3								20	A-7-6 (VISUAL)	
B-027-0-12	0.5	-	2.0	SS-1	100	4.5+	1	5	12	39	43	34	18	16	15	A-6b (10) *	320
STA. 382+64, 33' LT	2.0	-	3.5	SS-2	100	4.5	5	8	13	35	39	34	11	23	15	A-6b (13) *	
NORTHING = 675686	3.5	-	5.0	SS-3	83	2.5 - 4.0	SAME AS SS-2								14	A-6b (VISUAL)	
EASTING = 1806199	5.0	-	6.5	SS-4	78	2.5 - 4.5	SAME AS SS-2								18	A-6b (VISUAL)	
B-028-0-12	2.0	-	3.5	SS-1	89	4.5	9	8	15	36	32	27	15	12	12	A-6a (7) *	<100
STA. 386+60, 61' RT	3.5	-	5.0	SS-2	67	3.5 - 4.0	13	8	12	36	31	30	15	15	20	A-6a (8)	
NORTHING = 675888	5.0	-	6.5	SS-3	72	3.0 - 4.0	8	9	13	40	30	28	15	13	19	A-6a (8)	
EASTING = 1806552	6.5	-	8.0	SS-4	83	2.0 - 2.5	SAME AS SS-3								24	A-6a (VISUAL)	

DRAWN LJS CHECKED PAN

SOIL PROFILE

SUMMARY OF SOIL TEST DATA

FRA-71-5.29

2 / 32

P:\84868\geotechnical\sheets\84868D001.dgn 12/16/2014 10:44:59 AM pnarsavage

SUMMARY OF SOIL TEST DATA

EXPLORATION NO. / STATION & OFFSET	FROM	-	TO	SAMPLE ID	% REC	HP TSF	% GR	% CS	% FS	% SILT	% CLAY	LL	PL	PI	% WC	ODOT CLASS (GI)	SULFATE PPM
B-029-0-12	0.5	-	2.0	SS-1	100	3.0 - 4.5+	11	10	14	34	31	27	15	12	10	A-6a (7) *	<100
STA. 390+54, 33' RT	2.0	-	3.5	SS-2	100	4.5+	16	10	15	37	22	23	15	8	11	A-4a (5) *	
NORTHING = 676179	3.5	-	5.0	SS-3	72	4.5+	15	12	14	38	21	18	14	4	10	A-4a (5)	
EASTING = 1806820	5.0	-	6.5	SS-4	89	2.5 - 4.5+	SAME AS SS-3								10	A-4a (VISUAL)	
B-030-0-12	2.0	-	3.5	SS-1	67	4.5	27	9	12	29	23	23	15	8	12	A-4a (3) *	<100
STA. 394+50, 43' LT	3.5	-	5.0	SS-2	89	4.5	10	10	15	34	31	23	14	9	11	A-4a (6)	
NORTHING = 676504	5.0	-	6.5	SS-3	72	4.5	SAME AS SS-2								13	A-4a (VISUAL)	
EASTING = 1807056	6.5	-	8.0	SS-4	100	4.5+	SAME AS SS-2								11	A-4a (VISUAL)	
B-031-0-12	0.5	-	2.0	SS-1	100	3.0 - 3.5	16	13	16	33	22	22	15	7	8	A-4a (4) *	<100
STA. 398+45, 33' LT	2.0	-	3.5	SS-2	89	4.5+	17	11	15	36	21	21	15	6	10	A-4a (4) *	
NORTHING = 676767	3.5	-	5.0	SS-3	67	4.5+	SAME AS SS-2								11	A-4a (VISUAL)	
EASTING = 1807352	5.0	-	6.5	SS-4	94	4.5	SAME AS SS-2								11	A-4a (VISUAL)	
B-032-0-12	2.0	-	3.5	SS-1	78	4.5+	15	8	16	34	27	26	16	10	13	A-4a (5) *	<100
STA. 402+43, 46' RT	3.5	-	5.0	SS-2	100	4.5+	20	10	14	30	26	27	15	12	13	A-6a (5)	
NORTHING = 676982	5.0	-	6.5	SS-3	100	3.0 - 4.0	SAME AS SS-2								14	A-6a (VISUAL)	
EASTING = 1807696	6.5	-	8.0	SS-4	100		SAME AS SS-2								13	A-6a (VISUAL)	
B-033-0-12	0.5	-	2.0	SS-1	100	4.5+	16	8	11	32	33	35	19	16	13	A-6b (8) *	<100
STA. 407+64, 33' RT	2.0	-	3.5	SS-2	67	4.5	10	3	9	35	43	48	18	30	16	A-7-6 (18) *	
NORTHING = 677348	3.5	-	5.0	SS-3	89	4.5	SAME AS SS-2								16	A-7-6 (VISUAL)	
EASTING = 1808067	5.0	-	6.5	SS-4	83	2.75 - 4.0	SAME AS SS-2								17	A-7-6 (VISUAL)	
B-034-0-12	2.0	-	3.5	SS-1	50	2.5	7	7	12	34	40	36	19	17	21	A-6b (11) *	<100
STA. 410+30, 64' LT	3.5	-	5.0	SS-2	83	2.5 - 4.5	0	2	11	33	54	50	20	30	23	A-7-6 (18)	
NORTHING = 677601	5.0	-	6.5	SS-3	61	2.5 - 3.5	SAME AS SS-2								22	A-7-6 (VISUAL)	
EASTING = 1808195	6.5	-	8.0	SS-4	50	3	SAME AS SS-2								22	A-7-6 (VISUAL)	
B-035-0-12	0.5	-	2.0	SS-1	100	4.5+	6	7	15	37	35	32	17	15	12	A-6a (9) *	<100
STA. 414+27, 34' RT	2.0	-	3.5	SS-2	89	4.5	13	9	12	33	33	35	17	18	18	A-6b (9) *	
NORTHING = 677850	3.5	-	5.0	SS-3	100	3.0 - 4.5	7	7	12	36	38	35	17	18	17	A-6b (11)	
EASTING = 1808505	5.0	-	6.5	SS-4	78	4.5	SAME AS SS-3								15	A-6b (VISUAL)	
B-036-0-12	1.5	-	3.0	SS-1	56	4.5	11	7	13	34	35	31	16	15	17	A-6a (9) *	<100
STA. 418+28, 62' RT	3.0	-	4.5	SS-2	100	3.5	5	7	12	37	39	37	17	20	15	A-6b (12)	
NORTHING = 678055	4.5	-	6.0	SS-3	61	2.5 - 3.0	SAME AS SS-2								13	A-6b (VISUAL)	
EASTING = 1808863	6.0	-	7.5	SS-4	83	2.5 - 4.0	SAME AS SS-2								19	A-6b (VISUAL)	
B-037-0-12	0.5	-	2.0	SS-1	83	3.5 - 4	38	10	10	23	19	28	16	12	10	A-6a (2) *	247
STA. 422+19, 32' RT	2.0	-	3.5	SS-2	100	3.5 - 4.5+	24	9	13	32	22	24	13	11	14	A-6a (4) *	
NORTHING = 678344	3.5	-	5.0	SS-3	100	4.5	SAME AS SS-2								13	A-6a (VISUAL)	
EASTING = 1809128	5.0	-	6.5	SS-4	94	4.5	SAME AS SS-2								15	A-6a (VISUAL)	
B-038-0-12	2.0	-	3.5	SS-1	67	3.5	25	7	12	28	28	30	16	14	16	A-6a (6) *	213
STA. 426+09, 46' LT	3.5	-	5.0	SS-2	67	3.5 - 4.0	12	9	13	29	37	36	16	20	17	A-6b (10)	
NORTHING = 678668	5.0	-	6.5	SS-3	100	2.0 - 3.0	SAME AS SS-2								17	A-6b (VISUAL)	
EASTING = 1809359	6.5	-	8.0	SS-4	72	2.0 - 3.0	SAME AS SS-2								14	A-6b (VISUAL)	
B-039-0-12	0.5	-	2.0	SS-1	100	3.5 - 4.5+	22	8	13	29	28	30	17	13	11	A-6a (6) *	<100
STA. 430+03, 33' LT	2.0	-	3.5	SS-2	89	4.5+	17	11	15	31	26	24	15	9	12	A-4a (4) *	
NORTHING = 678929	3.5	-	5.0	SS-3	100	4.5+	SAME AS SS-2								10	A-4a (VISUAL)	
EASTING = 1809655	5.0	-	6.5	SS-4	50		SAME AS SS-2								9	A-4a (VISUAL)	
B-040-0-12	2.0	-	3.5	SS-1	67		14	8	15	35	28	27	15	12	17	A-6a (6) *	<100
STA. 434+01, 46' RT	3.5	-	5.0	SS-2	100	4.5+	11	11	19	39	20	23	15	8	12	A-4a (5)	
NORTHING = 679143	5.0	-	6.5	SS-3	67	3.5 - 4.5+	17	11	17	34	21	22	14	8	13	A-4a (4)	
EASTING = 1809999	6.5	-	8.0	SS-4	100	1.75 + 3.0	SAME AS SS-3								14	A-4a (VISUAL)	
B-041-0-12	0.5	-	2.0	SS-1	67		11	6	12	37	34	35	19	16	13	A-6b (10) *	<100
STA. 437+98, 33' RT	2.0	-	3.5	SS-2	72	4.5+	37	5	8	21	29	38	14	24	20	A-6b (8) *	
NORTHING = 679423	3.5	-	5.0	SS-3	83		SAME AS SS-2								14	A-6b (VISUAL)	
EASTING = 1810280	5.0	-	6.5	SS-4	72	3	SAME AS SS-2								15	A-6b (VISUAL)	
B-042-0-12	2.0	-	3.5	SS-1	78	4.5+	21	10	15	31	23	22	14	8	12	A-4a (4) *	<100
STA. 441+91, 64' LT	3.5	-	5.0	SS-2	83	4.5+	20	9	16	31	24	22	14	8	11	A-4a (4)	
NORTHING = 679763	5.0	-	6.5	SS-3	100	4.0 - 4.5+	SAME AS SS-2								11	A-4a (VISUAL)	
EASTING = 1810500	6.5	-	8.0	SS-4	89	4	SAME AS SS-2								12	A-4a (VISUAL)	

SUMMARY OF SOIL TEST DATA

EXPLORATION NO. / STATION & OFFSET	FROM	-	TO	SAMPLE ID	% REC	HP TSF	% GR	% CS	% FS	% SILT	% CLAY	LL	PL	PI	% WC	ODOT CLASS (GI)	SULFATE PPM
B-043-0-12	0.5	-	2.0	SS-1		4.5+	7	7	13	36	37	35	19	16	12	A-6b (10) *	<100
STA. 445+88, 34' LT	2.0	-	3.5	SS-2		4.5+	24	9	15	31	21	24	14	10	10	A-4a (3) *	
NORTHING = 680012	3.5	-	5.0	SS-3		2.0 - 4.5	SAME AS SS-2								12	A-4a (VISUAL)	
EASTING = 1810810	5.0	-	6.5	SS-4			SAME AS SS-2								7	A-4a (VISUAL)	
B-044-0-12	1.5	-	3.0	SS-1	50	2.0 - 2.5	6	7	14	37	36	30	16	14	16	A-6a (9) *	<100
STA. 449+84, 63' RT	3.0	-	4.5	SS-2	100	2.5 - 4.5	5	6	12	39	38	35	17	18	21	A-6b (11)	
NORTHING = 680213	4.5	-	6.0	SS-3	100	2.5 - 4.5	SAME AS SS-2								26	A-6b (VISUAL)	
EASTING = 1811166	6.0	-	7.5	SS-4	100	4.5	SAME AS SS-2								14	A-6b (VISUAL)	
B-045-0-12	0.5	-	2.0	SS-1	100	4.5	9	8	14	39	30	27	17	10	18	A-4a (7) *	293
STA. 454+41, 31' RT	2.0	-	3.5	SS-2	89	2.75 - 3.5	7	5	13	35	40	36	13	23	22	A-6b (13) *	
NORTHING = 680551	3.5	-	5.0	SS-3	89	1.5	SAME AS SS-2								23	A-6b (VISUAL)	
EASTING = 1811476	5.0	-	6.5	SS-4	78	1.25 - 3.0	SAME AS SS-2								25	A-6b (VISUAL)	
B-046-0-12	2.0	-	3.5	SS-1	0		CLAY									A-7-6 (VIS.) *	---
STA. 457+66, 46' LT	3.5	-	5.0	SS-2	100	2.25 - 3.0	2	3	12	30	53	49	15	34	19	A-7-6 (18)	
NORTHING = 680835	5.0	-	6.5	SS-3	100	3.0 - 4.0	10	13	17	32	28	26	14	12	13	A-6a (6)	
EASTING = 1811651	6.5	-	8.0	SS-4	83	3.0 - 3.5	SAME AS SS-3								13	A-6a (VISUAL)	
B-047-0-12	0.5	-	2.0	SS-1	100	4.5+	6	9	16	36	33	26	16	10	13	A-4a (7) *	293
STA. 461+57, 31' LT	2.0	-	3.5	SS-2	83	3.5 - 4.5+	21	12	15	30	22	22	14	8	12	A-4a (3) *	
NORTHING = 681108	3.5	-	5.0	SS-3	100	3.0 - 4.5+	21	11	16	35	17	18	14	4	8	A-4a (3)	
EASTING = 1811929	5.0	-	6.5	SS-4	100	4.5+	SAME AS SS-3								9	A-4a (VISUAL)	
B-048-0-12	2.0	-	3.5	SS-1	100	2.75 - 4.5+	11	12	19	35	23	19	13	6	12	A-4a (5) *	<100
STA. 465+64, 45' RT	3.5	-	5.0	SS-2	100	3.25 - 4.25	17	13	14	33	23	21	12	9	12	A-4a (4)	
NORTHING = 681364	5.0	-	6.5	SS-3	100	4.5+	SAME AS SS-2								13	A-4a (VISUAL)	
EASTING = 1812255	6.5	-	8.0	SS-4	100	1.5 - 2.75	SAME AS SS-2								12	A-4a (VISUAL)	
B-049-0-12	0.5	-	2.0	SS-1	50		29	9	14	27	21	22	14	8	9	A-4a (3) *	233
STA. 469+60, 33'RT	2.0	-	3.5	SS-2	100	4.5+	26	9	14	29	22	22	15	7	11	A-4a (3) *	
NORTHING = 681679	3.5	-	5.0	SS-3	83	4.5+	SAME AS SS-2								11	A-4a (VISUAL)	
EASTING = 1812499	5.0	-	6.5	SS-4	50	4.5+	SAME AS SS-2								10	A-4a (VISUAL)	
B-050-0-12	2.0	-	3.5	SS-1	78	4.0 - 4.5	10	7	17	32	34	32	16	16	17	A-6b (9) *	<100
STA. 473+60, 64' LT	3.5	-	5.0	SS-2	72	3.5 - 4.5+	20	13	16	28	23	23	14	9	12	A-4a (3)	
NORTHING = 682054	5.0	-	6.5	SS-3	83	3.5 - 4.5+	SAME AS SS-2								12	A-4a (VISUAL)	
EASTING = 1812664	6.5	-	8.0	SS-4	100	4.5+	SAME AS SS-2								12	A-4a (VISUAL)	
B-051-0-12	0.5	-	2.0	SS-1	106	4.5+	15	10	16	31	28	28	15	13	10	A-6a (6) *	<100
STA. 480+45, 34' LT	2.0	-	3.5	SS-2	50	4	12	8	16	35	29	31	15	16	9	A-6b (8) *	
NORTHING = 682597	3.5	-	5.0	SS-3	100	4	SAME AS SS-2								17	A-6b (VISUAL)	
EASTING = 1813079	5.0	-	6.5	SS-4	83	4.0 - 4.5	SAME AS SS-2								14	A-6b (VISUAL)	
B-052-0-12	1.5	-	3.0	SS-1	72	4.5+	12	8	17	33	30	27	15	12	13	A-6a (6) *	<100
STA. 483+36, 70' RT	3.0	-	4.5	SS-2	89	4.5	17	11	14	34	24	25	14	11	13	A-6a (5)	
NORTHING = 682787	4.5	-	6.0	SS-3	89	4.5+	SAME AS SS-2								9	A-6a (VISUAL)	
EASTING = 1813323	6.0	-	7.5	SS-4	100	2.5 - 4.5+	SAME AS SS-2								14	A-6a (VISUAL)	
B-053-0-12	0.5	-	2.0	SS-1	100	4.5+	13	9	17	34	27	25	15	10	11	A-4a (5) *	267
STA. 487+27, 31' RT	2.0	-	3.5	SS-2	72	4.5+	17	3	9	45	26	29	15	14	10	A-6a (9) *	
NORTHING = 683144	3.5	-	5.0	SS-3	83		SAME AS SS-2								13	A-6a (VISUAL)	
EASTING = 1813492	5.0	-	5.7	SS-4	100		SAME AS SS-2								11	A-6a (VISUAL)	
B-054-0-12	2.0	-	3.5	SS-1	78	4.5+	22	8	16	31	23	23	15	8	13	A-4a (4) *	<100
STA. 491+20, 48' LT	3.5	-	5.0	SS-2	100	1.0 - 3.5	7	9	33	31	20	18	14	4	11	A-4a (3)	
NORTHING = 683526	5.0	-	6.5	SS-3	100	3.0 - 3.5	SAME AS SS-2								6	A-4a (VISUAL)	
EASTING = 1813612	6.5	-	8.0	SS-4	100	3.0 - 3.75	SAME AS SS-2								13	A-4a (VISUAL)	
B-055-0-12	0.5	-	2.0	SS-1	100	4.5+	15	10	15	34	26	25	15	10	11	A-4a (5) *	8000
STA. 495+15, 29' LT	2.0	-	3.5	SS-2	100	4.5	12	9	15	36	28	22	11	11	11	A-6a (6) *	
NORTHING = 683867	3.5	-	5.0	SS-3	89	3.75 - 4.5	SAME AS SS-2								13	A-6a (VISUAL)	
EASTING = 1813811	5.0	-	6.5	SS-4	100	4.0 - 4.5	SAME AS SS-2								12	A-6a (VISUAL)	
B-056-0-12	2.0	-	3.5	SS-1	83	4.5+	14	8	15	34	29	24	15	9	12	A-4a (6) *	---
STA. 499+09, 46' RT	3.5	-	5.0	SS-2	100	4.5+	14	7	15	34	30	24	14	10	11	A-4a (6)	
NORTHING = 684182	5.0	-	6.5	SS-3	100	4.5+	SAME AS SS-2								11	A-4a (VISUAL)	
EASTING = 1814059																	

DRAWN LJS CHECKED PAN

SOIL PROFILE

SUMMARY OF SOIL TEST DATA

FRA-71-5.29

3 / 32

P:\84868\geotechnical\sheets\84868D002.dgn 12/16/2014 10:45:00 AM pnarsavage

SUMMARY OF SOIL TEST DATA

EXPLORATION NO. / STATION & OFFSET		FROM	-	TO	SAMPLE ID	% REC	HP TSF	% GR	% CS	% FS	% SILT	% CLAY	LL	PL	PI	% WC	ODOT CLASS (GI)	SULFATE PPM
B-057-0-12		0.5	-	2.0	SS-1	100	4.5+	11	9	19	36	25	22	14	8	9	A-4a (5) *	413
STA. 503+02, 33' RT		2.0	-	3.5	SS-2	100	3.5 - 4.5	7	8	20	36	29	22	13	9	9	A-4a (6) *	
NORTHING =	684538	3.5	-	5.0	SS-3	100	4.5+	SAME AS SS-2								9	A-4a (VISUAL)	
EASTING =	1814228	5.0	-	6.5	SS-4	100	4.5+	SAME AS SS-2								9	A-4a (VISUAL)	
B-058-0-12		2.0	-	3.5	SS-1	100	4.5+	8	8	20	36	28	21	13	8	9	A-4a (6) *	<100
STA. 506+93, 66'LT		3.5	-	5.0	SS-2	100	4.5+	3	8	21	44	24	22	10	12	9	A-6a (7)	
NORTHING =	684930	5.0	-	6.5	SS-3	100	4.5+	SAME AS SS-2								8	A-6a (VISUAL)	
EASTING =	1814320	6.5	-	8.0	SS-4	100	4.5+	SAME AS SS-2								8	A-6a (VISUAL)	
B-059-0-12		0.5	-	2.0	SS-1	100	4.5+	11	9	19	37	24	25	16	9	9	A-4a (5) *	207
STA. 510+87, 31' LT		2.0	-	3.5	SS-2	39		24	8	17	34	17	17	13	4	8	A-4a (3) *	
NORTHING =	685264	3.5	-	5.0	SS-3	100	4.5+	8	8	20	39	25	21	12	9	7	A-4a (6)	
EASTING =	1814531	5.0	-	6.5	SS-4	100	4.5+	SAME AS SS-3								8	A-4a (VISUAL)	
B-060-0-12		1.5	-	3.0	SS-1	78	4.5+	5	7	18	43	27	23	15	8	12	A-4a (7) *	<100
STA. 514+77, 63' RT		3.0	-	4.5	SS-2	100	4.5+	13	12	22	39	14	NP	NP	NP	10	A-4a (4)	
NORTHING =	685567	4.5	-	6.0	SS-3	100		17	14	23	34	12	NP	NP	NP	8	A-4a (2)	
EASTING =	1814794	6.0	-	7.0	SS-4	100		SAME AS SS-3								9	A-4a (VISUAL)	
B-061-0-12		0.5	-	2.0	SS-1	78	4.5+	3	5	13	35	44	42	17	25	18	A-7-6 (14) *	2240
STA. 518+68, 31' RT		2.0	-	3.5	SS-2	83		17	8	18	36	21	21	16	5	11	A-4a (4) *	
NORTHING =	685930	3.5	-	5.0	SS-3	100	3.0 - 4.5	6	6	27	45	16	19	15	4	16	A-4a (5)	
EASTING =	1814945	5.0	-	6.5	SS-4	78	2.5 - 3.0	SAME AS SS-3								13	A-4a (VISUAL)	

SUMMARY OF SOIL TEST DATA - HISTORIC DATA

EXPLORATION NO. / STATION & OFFSET		FROM	-	TO	SAMPLE ID	% REC	HP TSF	% GR	% CS	% FS	% SILT	% CLAY	LL	PL	PI	% WC	ODOT CLASS	(GI)
B-001-0-07		1.0	-	2.0	SS-1	67	-	26	18	13	27	16	23	16	7	12	A-4a	(2)*
		2.5	-	3.0	SS-2	33	-	21	12	13	32	22	22	14	8	12	A-4a	(0)*
NORTHING =	669493	4.0	-	4.5	SS-3A	100	-	VERY-STIFF TO HARD BROWN SANDY SILT								12	A-4a	(VISUAL)
EASTING =	1801453	4.5	-	5.3	SS-3B	80	-	MEDIUM-DENSE BROWN GRAVEL WITH SAND								15	A-1-b	(VISUAL)
		5.6	-	6.8	SS-4	87	-	VERY-STIFF TO HARD BROWN SANDY SILT								11	A-4a	(VISUAL)
B-003-0-07		1.1	-	1.9	SS-1	53	-	19	12	15	32	22	22	13	9	11	A-4a	(4)*
		2.5	-	3.8	SS-2	87	-	17	12	15	34	22	22	16	6	12	A-4a	(4)*
NORTHING =	669775	4.0	-	5.3	SS-3	87	-	VERY-STIFF TO HARD BROWN SANDY SILT								13	A-4a	(VISUAL)
EASTING =	1801715	5.5	-	6.3	SS-4	53	-	SAME AS SS-3								11	A-4a	(VISUAL)
B-004-0-07		2.0	-	3.1	SS-1	73	-	5	10	19	37	29	28	15	13	16	A-6a	(7)*
		3.5	-	4.8	SS-2	87	-	9	14	18	37	22	19	14	5	12	A-4a	(5)*
NORTHING =	670079	5.0	-	7.0	SS-3	100	-	VERY-STIFF TO HARD BROWN SANDY SILT								13	A-4a	(VISUAL)
EASTING =	1801973	6.5	-	7.0	SS-4A	100	-	SAME AS SS-3								19	A-4a	(VISUAL)
		7.0	-	7.5	SS-4B	50	-	MEDIUM-DENSE BROWN COARSE AND FINE SAND								12	A-3a	(VISUAL)
B-011-2-07		1.0	-	2.1	SS-1	73	-	VERY-STIFF BROWN SILTY CLAY (FILL)								13	A-6b	(VISUAL)
		3.5	-	4.5	SS-2	67	-	SAME AS SS-1								24	A-6b	(VISUAL)
NORTHING =	670729	6.0	-	6.6	SS-3	40	-	STIFF TO VERY-STIFF BROWN SANDY SILT								15	A-4a	(VISUAL)
EASTING =	1802742	8.5	-	9.6	SS-4	73	-	8	9	14	43	26	25	16	9	16	A-4a	(7)
		11.0	-	12.0	SS-5	67	-	VERY-STIFF TO HARD GRAY SANDY SILT								11	A-4b	(VISUAL)
		13.5	-	15.0	SS-6	100	-	SAME AS SS-5								9	A-4b	(VISUAL)
		16.0	-	16.8	SS-7	53	-	MEDIUM-DENSE GRAY SILT								18	A-4b	(VISUAL)
		18.5	-	19.6	SS-8	73	-	11	14	15	41	19	22	14	8	11	A-4a	(5)
		23.5	-	25.0	SS-9	100	-	HARD GREY SANDY SILT								11	A-4a	(VISUAL)
		28.5	-	29.0	SS-10	42	-	47	11	8		34				11	A-2-4	(VISUAL)
		33.5	-	65.0	SS-11	100	-	HARD BROWN SANDY SILT								10	A-4a	(VISUAL)
		38.5	-	39.1	SS-12	40	-	18	33	15	21	13	21	13	8	11	A-2-5	(0)
		43.5	-	44.5	SS-13	77	-	HARD BROWN SANDY SILT								10	A-4a	(VISUAL)
		48.5	-	49.5	SS-14	77	-	SAME AS SS-13								9	A-4a	(VISUAL)
		53.5	-	54.0	SS-15	100	-	SAME AS SS-13								9	A-4a	(VISUAL)

SUMMARY OF SOIL TEST DATA - HISTORIC DATA

EXPLORATION NO. / STATION & OFFSET		FROM	-	TO	SAMPLE ID	% REC	HP TSF	% GR	% CS	% FS	% SILT	% CLAY	LL	PL	PI	% WC	ODOT CLASS	(GI)
B-011-1-07		1.0	-	1.7	SS-1	47	-	VERY-STIFF TO HARD BROWN SILTY CLAY (FILL)								21	A-6a	(VISUAL)
		3.5	-	4.4	SS-2	60	-	VERY-STIFF TO HARD BROWN SANDY SILT								14	A-4a	(VISUAL)
NORTHING =	670752	6.0	-	7.0	SS-3	67	-	SAME AS SS-2								12	A-4a	(VISUAL)
EASTING =	1802553	8.5	-	10.0	SS-4	100	-	15	12	15	39	19	20	14	6	11	A-4a	(5)
		11.0	-	12.3	SS-5	87	-	VERY-STIFF TO HARD BROWN SANDY SILT								11	A-4a	(VISUAL)
		13.5	-	16.6	SS-6	73	-	MEDIUM-DENSE TO DENSE GRAY SANDY SILT								12	A-4a	(VISUAL)
		16.0	-	17.2	SS-7	80	-	12	16	15	40	17	18	14	4	10	A-4a	(4)
		18.5	-	19.8	SS-8	87	-	MEDIUM-DENSE TO DENSE GRAY SANDY SILT								9	A-4a	(VISUAL)
		23.5	-	24.5	SS-9	67	-	SAME AS SS-8								9	A-4a	(VISUAL)
		28.5	-	29.6	SS-10	73	-	HARD BROWN SANDY SILT								7	A-4a	(VISUAL)
		33.5	-	35.0	SS-11	100	-	HARD BROWN MOTTLED WITH GRAY SANDY SILT								18	A-4a	(VISUAL)
		38.5	-	39.0	SS-12	36	-	HARD GRAY SANDY SILT								8	A-4a	(VISUAL)
		43.5	-	44.9	SS-13	93	-	SAME AS SS-12								10	A-4a	(VISUAL)
		48.5	-	53.0	SS-14	80	-	SAME AS SS-12								11	A-4a	(VISUAL)
		53.5	-	55.0	SS-15	100	-	SAME AS SS-12								11	A-4a	(VISUAL)
B-011-0-07		1.0	-	2.5	SS-1	53	2.8-4.5	VERY-STIFF TO HARD BROWN SILTY CLAY (FILL)								19	A-6b	(VISUAL)
		3.5	-	5.0	SS-2	40	-	MEDIUM DENSE BROWN GRAVEL WITH SAND (FILL)								6	A-1-b	(VISUAL)
NORTHING =	670810	6.0	-	7.5	SS-3	40	0.7-1.3	9	10	16	40	25	27	15	12	19	A-6a	(7)
EASTING =	1802691	8.5	-	10.0	SS-4	100	2.7-4.5	VERY-STIFF TO HARD BROWN SANDY SILT								15	A-4a	(VISUAL)
		11.0	-	12.0	SS-5A	100	2.7-4.5	SAME AS SS-4								18	A-4a	(VISUAL)
		12.0	-	12.5	SS-5B	100	4.5	HARD GRAY SANDY SILT								10	A-4a	(VISUAL)
		13.5	-	15.0	SS-6	67	4.5	13	12	14	41	20	21	14	7	9	A-4a	(5)
		16.0	-	17.5	SS-7	71	4.5	SAME AS SS-6								8	A-4a	(VISUAL)
		18.5	-	20.0	SS-8	60	4.5	SAME AS SS-6								9	A-4a	(VISUAL)
		23.5	-	25.0	SS-9	100	4.5	SAME AS SS-6								9	A-4a	(VISUAL)
		28.5	-	30.0	SS-10	73	4.5	SAME AS SS-6								8	A-4a	(VISUAL)
		33.5	-	35.0	SS-11	100	4.5	14	11	20	36	19	23	13	10	9	A-4a	(4)
		38.5	-	40.0	SS-12	80	4.5	7	7	20	40	26	22	15	7	9	A-4a	(6)
		43.5	-	44.5	SS-13	100	4.5	SAME AS SS-12								9	A-4a	(VISUAL)
B-013-2-07		1.0	-	1.8	SS-1	53	-	VERY-STIFF BROWN SILTY CLAY								24	A-6b	(VISUAL)
		3.5	-	4.4	SS-2	60	-	SAME AS SS-1								25	A-6b	(VISUAL)
NORTHING =	670921	6.0	-	7.0	SS-3	67	-	VERY-STIFF TOO HARD BROWN SANDY SILT								11	A-4a	(VISUAL)
EASTING =	1802859	10.0	-	10.5	SS-4	100	-	23	8	13	33	21	22	15	7	11	A-4a	(4)
		11.0	-	12.0	SS-5	67	-	VERY-STIFF TO HARD BROWN SANDY SILT								16	A-4a	(VISUAL)
		13.5	-	15.0	SS-6	100	-	VERY-STIFF TO HARD GRAY SANDY SILT								12	A-4a	(VISUAL)
		16.0	-	16.6	SS-7	40	-	SAME AS SS-6								12	A-1-b	(0)
		18.5	-	20.0	SS-8	100	-	12	14	14	40	20	21	14	7	12	A-4a	(5)
		23.5	-	24.4	SS-9	60	-	HARD GRAY AND BROWN SANDY SILT									A-4a	(VISUAL)
		28.5	-	30.0	SS-10	100	-	SAME AS SS-9								10	A-4a	(VISUAL)
		33.5	-	35.0	SS-11	100	-	5	8	21	40	26	22	14	8	9	A-4a	(6)
		38.5	-	40.0	SS-12	100	-	HARD GRAY AND BROWN SANDY SILT								11	A-4a	(VISUAL)
		43.5	-	44.2	SS-13	78	-	47	9	13	31					14	A-2-4	(VISUAL)
		48.5	-	49.2	SS-14	53	-	HARD BROWNISH-GRAY SANDY SILT								10	A-4a	(VISUAL)
		53.5	-	55.0	SS-15	100	-	SAME AS SS-14								9	A-4a	(VISUAL)
B-013-0-07		1.0	-	2.5	SS-1	53	2.1-4.1	VERY STIFF BROWN SANDY SILT (FILL)								20	A-4a	(VISUAL)
		3.5	-	5.0	SS-2	33	3.6-3.9	VERY STIFF BROWN SANDY SILT								12	A-4a	(VISUAL)
NORTHING =	670933	6.0	-	7.5	SS-3	53	2.2-2.4	14	12	15	38	21	20	15	5	13	A-4a	(5)
EASTING =	1802764	8.5	-	10.0	SS-4	53	4.1-4.5	SAME AS SS-3								10	A-4a	(VISUAL)
		11.0	-	12.5	SS-5	40	4.2-4.5	VERY STIFF TO HARD BROWN AND GRAY SANDY SILT								12	A-4a	(VISUAL)
		13.5	-	15.0	SS-6	67	2.6-3.6	19	11	15	35	20	21	13	8	11	A-4a	(4)
		16.0	-	17.5	SS-7	33	4.5+	SAME AS SS-6								14	A-4a	(VISUAL)
		18.5	-	20.0	SS-8	100	3.7-4.5	SAME AS SS-6								11	A-4a	(VISUAL)
		23.5	-	25.0	SS-9	67	4.5+	HARD GRAY SANDY SILT								10	A-4a	(VISUAL)
		28.5	-	30.0	SS-10	100	4.5+	12	7	18	39	24	22	13	9	9	A-4a	(6)
		33.5	-	35.0	SS-11	100	4.5+	SAME AS SS-10								9	A-4a	(VISUAL)
		38.5	-	40.0	SS-12	100	4.5+	42	14	17	-- 27 --					11	A-2-4	(VISUAL)
		43.5	-	45.0	SS-13	67	4.5+	HARD BROWNISH GRAY SANDY SILT								10	A-4a	(VISUAL)
		48.5		50.0	SS-14	100	4.5+	SAME AS SS-13								8	A-4a	(VISUAL)
		53.5		55.0	SS-15	67	4.5	SAME AS SS-13								8	A-4a	(VISUAL)
		58.5		60.0	SS-16	100	4.5	SAME AS SS-13								8	A-4a	(VISUAL)

DRAWN LJS CHECKED PAN

SOIL PROFILE

SUMMARY OF SOIL TEST DATA

FRA-71-5.29

4 / 32

P:\84868\geotechnical\sheets\84868D003.dgn 12/16/2014 10:45:01 AM pnarsavage

SUMMARY OF SOIL TEST DATA - HISTORIC DATA

EXPLORATION NO. / STATION & OFFSET		FROM	-	TO	SAMPLE ID	% REC	HP TSF	% GR	% CS	% FS	% SILT	% CLAY	LL	PL	PI	% WC	ODOT CLASS	(GI)
B-013-1-07		1.0	-	1.7	SS-1	47	-	HARD BROWN SANDY SILT (FILL)								10	A-4a	(VISUAL)
		3.5	-	4.2	SS-2	80	-	STIFF TO VERY-STIFF BROWN SANDY SILT								13	A-4a	(VISUAL)
NORTHING =	670945	6.0	-	6.5	SS-3	33	-	11	11	16	38	24	23	16	7	12	A-4a	(5)
EASTING =	1802670	8.5	-	9.6	SS-4	73	-	STIFF TO VERY-STIFF BROWN SANDY SILT								13	A-4a	(VISUAL)
		11.0	-	11.5	SS-5	33	-	SAME AS SS-4								12	A-4a	(VISUAL)
		13.5	-	14.6	SS-6	73	-	VERY-STIFF GRAY SANDY SILT								11	A-4a	(VISUAL)
		16.0	-	16.8	SS-7	53	-	43	22	19	16					12	A-1-b	(0)
		18.5	-	19.5	SS-8	67	-	VERY-STIFF TO HARD REDDISH-BROWN SILT AND CLAY								13	A-6a	(VISUAL)
		23.5	-	24.0	SS-9	33	-	VERY-STIFF TO HARD GRAY SANDY SILT								12	A-4a	(VISUAL)
		28.5	-	29.1	SS-10	40	-	6	9	20	40	25	21	13	8	11	A-4a	(6)
		33.5	-	34.2	SS-11	47	-	VERY-STIFF TO HARD GRAY SANDY SILT								9	A-4a	(VISUAL)
		38.5	-	39.1	SS-12A	100	-	SAME AS SS-11								12	A-4a	(VISUAL)
		39.1	-	39.5	SS-12B	44	-	MEDIUM-DENSE BROWN GRAVEL WITH SAND AND SILT									A-2-4	(VISUAL)
		43.5	-	43.6	SS-13	50	-	SAME AS SS-12B								16	A-2-4	(VISUAL)
		48.5	-	50.0	SS-14	100	-	HARD GRAY SANDY SILT								9	A-4a	(VISUAL)
		53.5	-	54.5	SS-15	67	-	SAME AS SS-14								9	A-4a	(VISUAL)
		58.5	-	58.9	SS-16	53	-	SAME AS SS-14								7	A-4a	(VISUAL)
		63.5	-	64.3	SS-17	53	-	SAME AS SS-14								10	A-4a	(VISUAL)
		6.0	-	8.0	SS-18		-	8	12	17	28	25	26	17	9	15	A-4a	(6)
B-020-0-07		1.0	-	2.5	SS-1	100	-	10	13	14	39	24	25	15	10	13	A-4a	(6)
		2.5	-	4.0	SS-2	100	-	11	9	15	37	28	24	15	9	9	A-4a	(6)
NORTHING =	671978	4.0	-	5.4	SS-3	93	-	VERY STIFF TO HARD BROWN SANDY SILT (FILL)								10	A-4a	(VISUAL)
EASTING =	1803522	5.5	-	5.8	SS-4	20	-	DENSE GRAY FINE TO COARSE GRAVEL (FILL)								4	A-1-a	(VISUAL)
		8.5	-	9.4	SS-5	60	-	VERY STIFF TO HARD BROWN AND GRAY SANDY SILT (FILL)								17	A-4a	(VISUAL)
B-021-0-07		1.0	-	2.2	SS-1	80	-	18	18	14	33	17	21	14	7	8	A-4a	(3)*
		2.5	-	3.6	SS-2	73	-	8	10	15	38	29	24	15	9	10	A-4a	(6)*
NORTHING =	672388	4.0	-	5.3	SS-3	87	-	HARD BROWN SANDY SILT (FILL)								10	A-4a	(VISUAL)
EASTING =	1803557	5.5	-	7.0	SS-4	100	-	SAME AS SS-3								4	A-4a	(VISUAL)
B-022-0-07		1.0	-	2.3	SS-1	93	-	14	13	14	35	24	24	15	9	11	A-4a	(5)*
		2.5	-	4.0	SS-2	100	-	15	9	14	35	27	24	12	12	9	A-6a	(6)*
NORTHING =	672640	4.0	-	5.5	SS-3	100	-	HARD GRAY SILT AND CLAY (FILL)									A-6a	(VISUAL)
EASTING =	1803896	5.5	-	6.0	SS-4	33	-	SAME AS SS-3									A-6a	(VISUAL)
B-023-0-07		1.2	-	2.3	SS-1	80	-	28	16	14	27	15	23	15	8	9	A-4a	(1)*
		2.5	-	3.2	SS-2	47	-	8	13	16	39	24	24	16	8	10	A-4a	(6)*
NORTHING =	673088	4.0	-	5.5	SS-3	100	-	HARD BROWN SANDY SILT (FILL)									A-4a	(VISUAL)
EASTING =	1803982	5.5	-	6.5	SS-4	67	-	VERY-STIFF TO HARD BROWN SILTY CLAY									A-6a	(VISUAL)
B-024-0-07		1.0	-	2.3	SS-1	87	-	10	12	16	39	23	23	14	9	9	A-4a	(5)*
		2.5	-	3.9	SS-2	93	-	HARD BROWN SANDY SILT (FILL)									A-4a	(VISUAL)*
NORTHING =	673400	4.0	-	5.2	SS-3	80	-	1	2	6	53	38	37	20	17	20	A-6a	(11)
EASTING =	1804361	5.5	-	6.7	SS-4	80	-	HARD GRAY SILTY CLAY									A-6b	(VISUAL)
B-025-0-07		1.6	-	2.2	SS-1	40	-	7	6	18	33	36	37	18	19	17	A-6b	(10)*
		2.5	-	2.9	SS-2	26	-	VERY-STIFF TO HARD GRAY SILT AND CLAY									A-6a	(VISUAL)*
NORTHING =	673787	4.0	-	4.3	SS-3	20	-	SAME AS SS-2									A-6a	(VISUAL)
EASTING =	1804446	5.5	-	7.0	SS-4	100	-	11	11	14	35	29	27	16	11	11	A-6a	(6)
B-026-0-07		1.0	-	2.0	SS-1	67	-	12	11	15	37	25	27	16	11	12	A-6a	(6)*
		2.5	-	3.8	SS-2	87	-	17	8	14	34	27	24	13	11	9	A-6a	(6)*
NORTHING =	674134	4.0	-	5.2	SS-3	80	-	HARD GRAY AND BROWN SANDY SILT (FILL)								10	A-4a	(VISUAL)
EASTING =	1804894	5.5	-	6.0	SS-4	33	-	SAME AS SS-3								8	A-4a	(VISUAL)
		8.5	-	9.9	SS-5	93	-						46	23	23	23	A-6b	(VISUAL)
		11.0	-	11.7	SS-6	47	-	11	6	16	35	32	36	18	18	19	A-6b	(10)
		13.5	-	14.1	SS-7A	100	-	VERY STIFF TO HARD BROWN SANDY SILT								12	A-4a	(VISUAL)
		14.1	-	14.6	SS-7B	56	-	MEDIUM-DENSE BROWN GRAVEL WITH SAND AND SILT								11	A-2-4	(VISUAL)
		16.0	-	16.9	SS-8	60	-	VERY STIFF TO HARD BROWN SANDY SILT								11	A-4a	(VISUAL)
		18.5	-	19.2	SS-9	53	-	SAME AS SS-8								10	A-4a	(VISUAL)
B-027-0-07		1.0	-	1.9	SS-1	60	-	10	10	14	39	27	25	16	9	11	A-4a	(6)*
		2.5	-	4.0	SS-2	100	-	8	11	15	385	28	24	14	10	9	A-4a	(6)*
NORTHING =	674554	4.0	-	5.5	SS-3	100	-	VERY STIFF TO HARD BROWNISH-GRAY SILTY CLAY								26	A-6b	(VISUAL)
EASTING =	1805045	5.5	-	7.0	SS-4	100	-	HARD BROWN SANDY SILT								13	A-4a	(VISUAL)

SUMMARY OF SOIL TEST DATA - HISTORIC DATA

EXPLORATION NO. / STATION & OFFSET		FROM	-	TO	SAMPLE ID	% REC	HP TSF	% GR	% CS	% FS	% SILT	% CLAY	LL	PL	PI	% WC	ODOT CLASS	(GI)
B-029-0-07		1.0	-	2.4	SS-1	93	-	17	13	14	33	23	24	16	8	11	A-4a	(4)*
		2.5	-	4.0	SS-2	100	-	10	10	14	37	29	23	15	8	9	A-4a	(6)*
NORTHING =	674776	4.0	-	4.5	SS-3A	83	-	HARD BROWN AND GRAY SANDY SILT (POSSIBLE FILL)								26	A-4a	(VISUAL)
EASTING =	1805439	5.5	-	7.0	SS-4	100	-	SAME AS SS-3								13	A-4a	(VISUAL)
B-030-0-07		1.0	-	2.5	SS-1	100	-	11	13	14	34	28	27	15	12	11	A-6a	(6)*
		2.5	-	3.9	SS-2	93	-	10	9	14	37	30	29	17	12	13	A-6a	(7)*
NORTHING =	675077	4.0	-	5.1	SS-3	73	-	VERY- STIFF TO HARD BROWN SILTY CLAY (POSSIBLE FILL)								25	A-6b	(VISUAL)
EASTING =	1805723	5.5	-	7.0	SS-4	100	-	SAME AS SS-3								17	A-6b	(VISUAL)
B-031-0-07		1.0	-	1.4	SS-1	27	-	VERY-STIFF TO HARD BROWN SANDY SILT (FILL)								13	A-4a	(VISUAL)*
		2.5	-	3.4	SS-2	60	-	13	9	16	37	25	25	16	9	11	A-4a	(5)*
NORTHING =	675365	4.0	-	4.8	SS-3A	100	-	8	9	15	36	32	32	17	15	14	A-6a	(9)
EASTING =	1806015	4.8	-	5.5	SS-3B	100	-	VERY-STIFF GRAY SILTY CLAY								20	A-6b	(VISUAL)
		5.5	-	7.0	SS-4	100	-	HARD BROWN MOTTLED WITH GRAY SANDY SILT								13	A-4a	(VISUAL)
B-032-0-07		1.0	-	2.0	SS-1	67	-	16	11	14	34	25	26	15	11	10	A-6a	(5)*
		2.5	-	4.0	SS-2	100	-	6	8	14	37	35	34	17	17	15	A-6b	(10)*
NORTHING =	675652	4.0	-	5.5	SS-3	100	-	HARD BROWN MOTTLED WITH GRAY SILTY CLAY								18	A-6b	(VISUAL)
EASTING =	1806319	5.5	-	6.8	SS-4	87	-	HARD BROWN SANDY SILT								11	A-4a	(VISUAL)
		8.5	-	9.5	SS-5A	100	-	SAME AS SS-4								12	A-4a	(VISUAL)
		9.5	-	10.0	SS-5B	100	-	MEDIUM-DENSE BROWN GRAVEL WITH SAND								7	A-1-b	(VISUAL)
		11.0	-	12.1	SS-6	73	-	32	30	20	13	5	NP	NP	NP	13	A-1-b	(0)
		13.5	-	14.4	SS-7	60	-	MEDIDUM-DENSE BROWN GRAVEL WITH SAND								12	A-1-b	(VISUAL)
		16.0	-	17.2	SS-8	80	-	SAME AS SS-7								15	A-1-b	(VISUAL)
		18.5	-	20.0	SS-9	100	-	7	11	19	40	23	22	15	7	11	A-4a	(6)
		21.0	-	21.6	SS-10	40	-	HARD GRAY SANDY SILT								9	A-4a	(VISUAL)
		23.5	-	25.0	SS-11	100	-	SAME AS SS-10								10	A-4a	(VISUAL)
B-033-0-07		1.0	-	1.9	SS-1	60	-	15	8	13	34	30	32	17	15	14	A-6a	(8)*
		2.5	-	4.0	SS-2	100	-	9	9	14	36	32	31	17	14	14	A-6a	(8)*
NORTHING =	675934	4.0	-	5.5	SS-3	100	-	VERY-STIFF TO HARD BROWN SILTY CLAY								21	A-6b	(VISUAL)
EASTING =	1806619	5.5	-	6.3	SS-4	53	-	SAME AS SS-3								21	A-6b	(VISUAL)
B-034-0-07		1.0	-	2.1	SS-1	73	-	9	13	17	36	25	23	15	8	10	A-4a	(5)*
		2.5	-	3.8	SS-2	87	-	16	11	14	37	22	21	13	8	10	A-4a	(5)*
NORTHING =	676216	4.0	-	5.3	SS-3	87	-	VERY-STIFF TO HARD BROWN SANDY SILT								10	A-4a	(VISUAL)
EASTING =	1806921	5.5	-	6.6	SS-4	73	-	SAME AS SS-3								13	A-4a	(VISUAL)
B-035-0-07		1.0	-	2.1	SS-1	73	-	12	11	15	35	27	26	16	10	12	A-4a	(5)*
		2.5	-	3.9	SS-2	93	-	30	12	12	28	18	24	15	9	8	A-4a	(2)*
NORTHING =	676500	4.0	-	5.3	SS-3	87	-	VERY-STIFF TO HARD BROWN SANDY SILT (POSSIBLE FILL)								12	A-4a	(VISUAL)
EASTING =	1807225	5.5	-	6.4	SS-4	60	-	VERY-STIFF TO BROWN SANDY SILT								12	A-4a	(VISUAL)

DRAWN LJS CHECKED PAN

SOIL PROFILE

SUMMARY OF SOIL TEST DATA

FRA-71-5.29

P:\84868\geotechnical\sheets\84868D004.dgn 12/16/2014 10:45:01 AM pnorsavage

CONSOLIDATION TEST REPORT

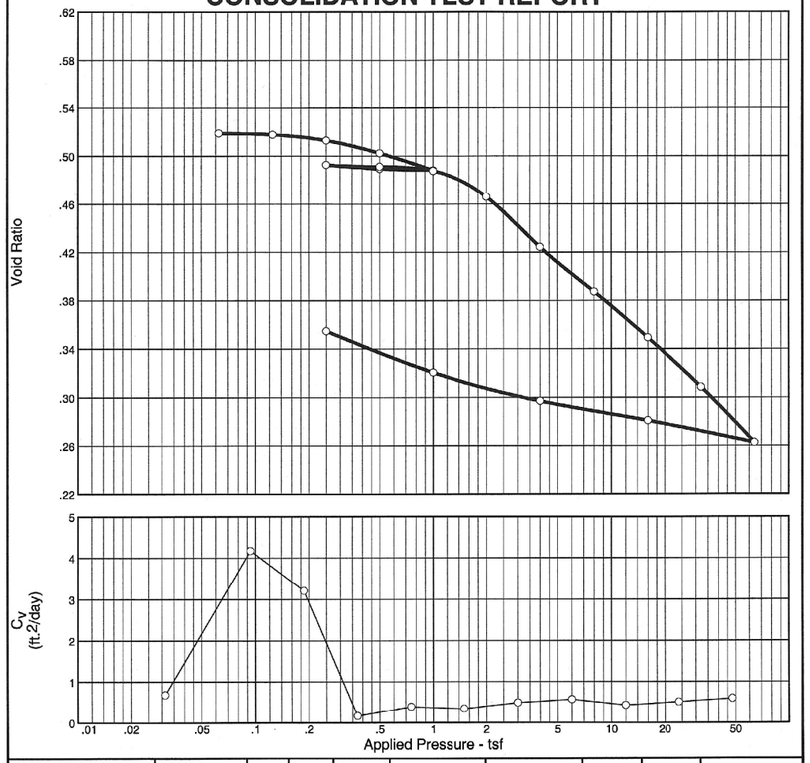

Natural		Dry Dens. (pcf)	LL	PI	Sp. Gr.	Overburden (tsf)	P_c (tsf)	C_c	C_r	Initial Void Ratio
Saturation	Moisture									
91.9 %	17.4 %	112.7	26	9	2.7421	0.41	3.81	0.15	0.01	0.518

MATERIAL DESCRIPTION	USCS	AASHTO
Stiff to very-stiff brown mottled with gray clayey silt, some fine to coarse sand, trace fine gravel.	CL	A-4

Project No. 011.11048.001 **Client:**

Project: IR 71 / SR 665 INTERCHANGE IMPROVEMENTS
FRANKLIN COUNTY, OHIO

Location: B-013-01-07

Remarks:
ODOT A-4a (6)

BBC&M Engineering, Inc.
Dublin, Ohio

1

Dial Reading vs. Time

Project No.: 011.11048.001
Project: IR 71 / SR 665 INTERCHANGE IMPROVEMENTS

Location: B-013-01-07

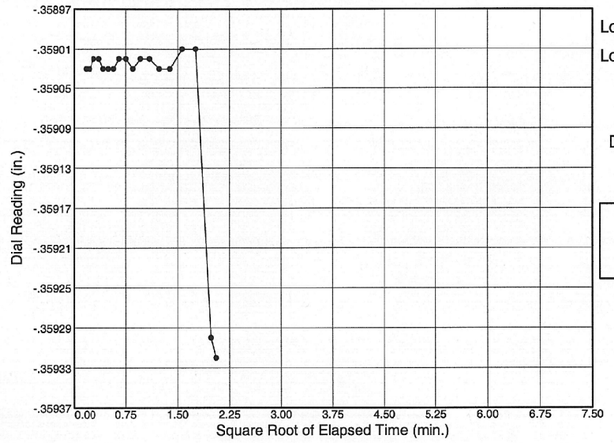

Load No.= 1
Load= 0.06 tsf
D_0 = -0.35910
D_{90} = -0.35902
D_{100} = -0.35901
T_{90} = 3.12 min.

C_v @ T_{90}
0.68 ft.2/day

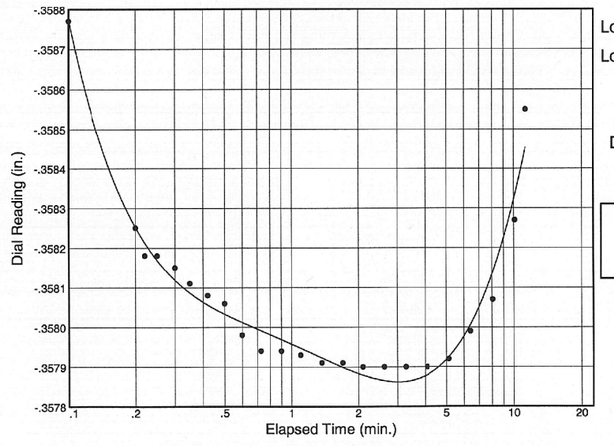

Load No.= 2
Load= 0.13 tsf
D_0 = -0.35948
D_{50} = -0.35860
D_{100} = -0.35772
T_{50} = 0.12 min.

C_v @ T_{50}
4.18 ft.2/day

BBC&M Engineering, Inc.

2

DRAWN LJS CHECKED PAN

SOIL PROFILE

LABORATORY TEST DATA (HISTORIC)

FRA-71-5.29

6 / 32

P:\84868\geotechnical\sheets\84868ID005.dgn 12/16/2014 10:45:03 AM pnarsavage

Dial Reading vs. Time

Project No.: 011.11048.001
Project: IR 71 / SR 665 INTERCHANGE IMPROVEMENTS

Location: B-013-01-07

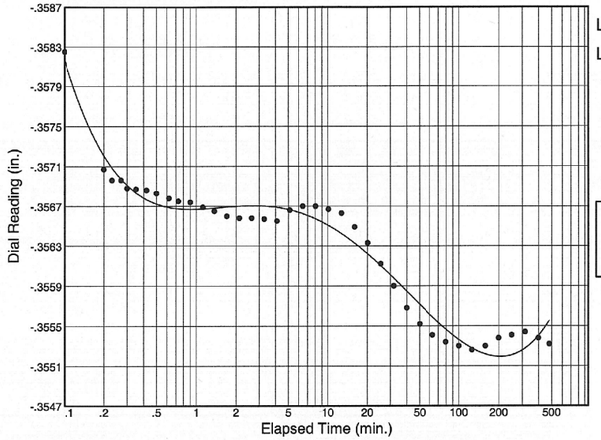

Load No.= 3
Load= 0.25 tsf
D_0 = -0.35855
D_{50} = -0.35750
D_{100} = -0.35645
T_{50} = 0.15 min.

C_v @ T_{50}
3.21 ft.^{2}/day

C_α = 0.001

Load No.= 4
Load= 0.50 tsf
D_0 = -0.35547
D_{50} = -0.35129
D_{100} = -0.34711
T_{50} = 2.93 min.

C_v @ T_{50}
0.17 ft.^{2}/day

C_α = 0.003

3

BBC&M Engineering, Inc.

Dial Reading vs. Time

Project No.: 011.11048.001
Project: IR 71 / SR 665 INTERCHANGE IMPROVEMENTS

Location: B-013-01-07

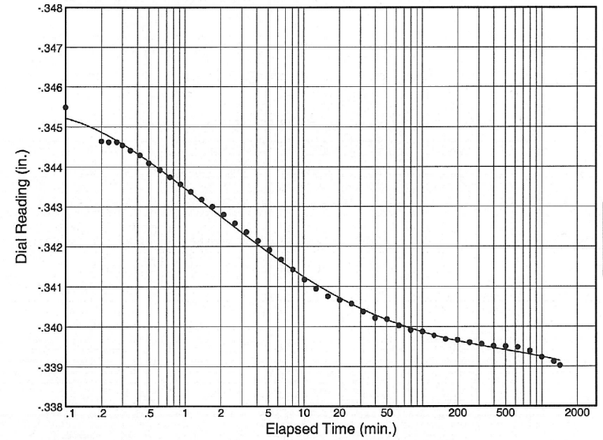

Load No.= 5
Load= 1.00 tsf
D_0 = -0.34611
D_{50} = -0.34325
D_{100} = -0.34039
T_{50} = 1.23 min.

C_v @ T_{50}
0.39 ft.^{2}/day

C_α = 0.001

Load No.= 10
Load= 2.00 tsf
D_0 = -0.33664
D_{50} = -0.33186
D_{100} = -0.32708
T_{50} = 1.37 min.

C_v @ T_{50}
0.34 ft.^{2}/day

C_α = 0.002

4

BBC&M Engineering, Inc.

DRAWN LJS CHECKED PAN

SOIL PROFILE
LABORATORY TEST DATA (HISTORIC)

FRA-71-5.29

7 / 32

P:\84868\geotechnical\sheets\84868D006.dgn 12/16/2014 10:45:09 AM pnarsavage

Dial Reading vs. Time

Project No.: 011.11048.001
Project: IR 71 / SR 665 INTERCHANGE IMPROVEMENTS

Location: B-013-01-07

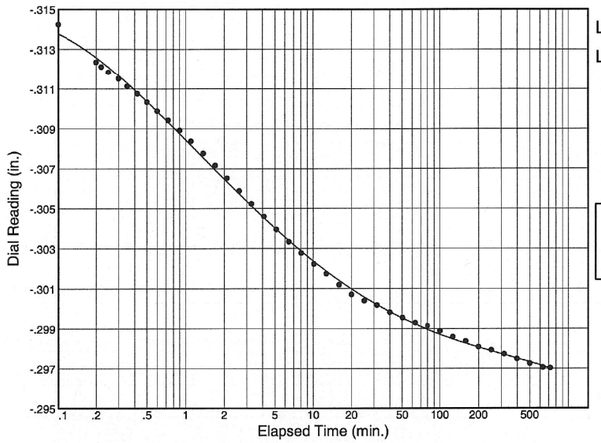

Load No.= 11
Load= 4.00 tsf
D_0 = -0.31659
D_{50} = -0.30873
D_{100} = -0.30086
T_{50} = 0.91 min.

C_v @ T_{50}
0.49 ft.^{2}/day

C_α = 0.002

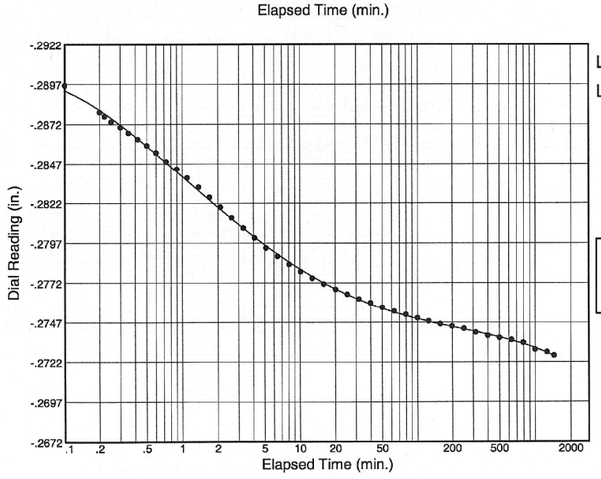

Load No.= 12
Load= 8.00 tsf
D_0 = -0.29221
D_{50} = -0.28471
D_{100} = -0.27721
T_{50} = 0.75 min.

C_v @ T_{50}
0.57 ft.^{2}/day

C_α = 0.002

BBC&M Engineering, Inc.

5

Dial Reading vs. Time

Project No.: 011.11048.001
Project: IR 71 / SR 665 INTERCHANGE IMPROVEMENTS

Location: B-013-01-07

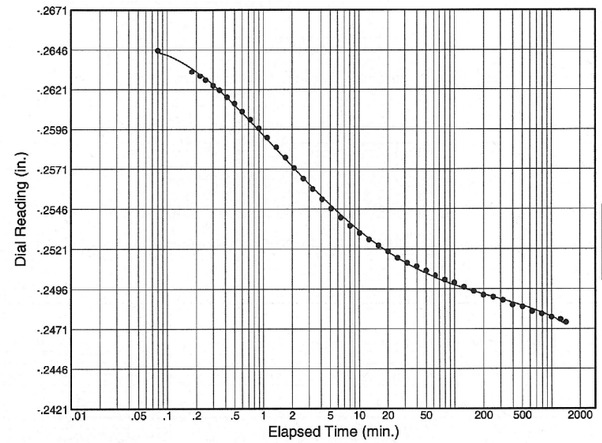

Load No.= 13
Load= 16.00 tsf
D_0 = -0.26668
D_{50} = -0.25943
D_{100} = -0.25217
T_{50} = 0.93 min.

C_v @ T_{50}
0.43 ft.^{2}/day

C_α = 0.003

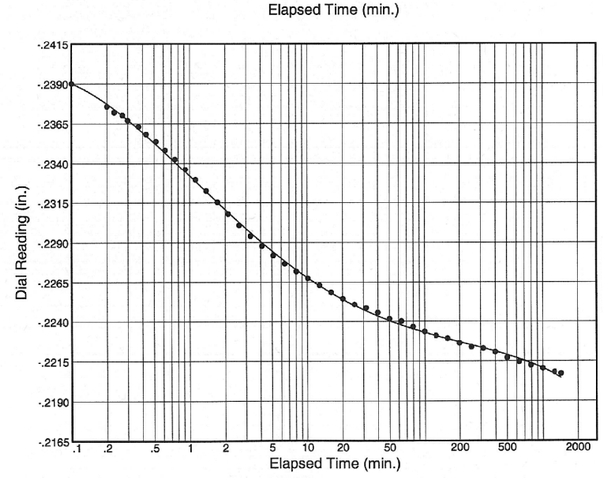

Load No.= 14
Load= 32.00 tsf
D_0 = -0.24210
D_{50} = -0.23409
D_{100} = -0.22609
T_{50} = 0.75 min.

C_v @ T_{50}
0.51 ft.^{2}/day

C_α = 0.003

BBC&M Engineering, Inc.

6

DRAWN LJS CHECKED PAN

SOIL PROFILE
LABORATORY TEST DATA (HISTORIC)

FRA-71-5.29

8 / 32

P:\84868\geotechnical\sheets\84868D007.dgn 12/16/2014 10:45:16 AM pnarsavage

Dial Reading vs. Time

Project No.: 011.11048.001
Project: IR 71 / SR 665 INTERCHANGE IMPROVEMENTS

Location: B-013-01-07

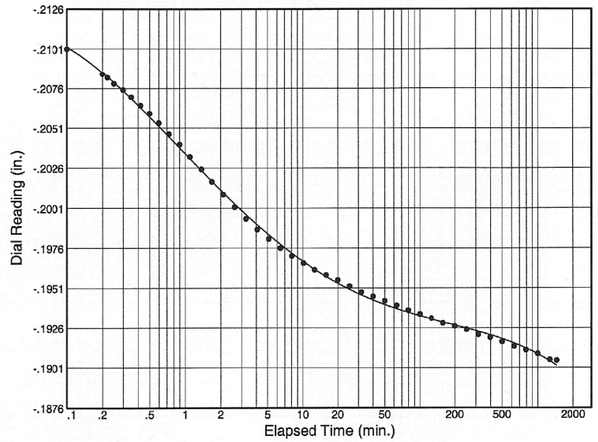

Load No.= 15
Load= 64.00 tsf
D_0 = -0.21389
D_{50} = -0.20523
D_{100} = -0.19657
T_{50} = 0.60 min.

C_v @ T_{50}
0.59 ft.^{2}/day

C_α = 0.003

BBC&M Engineering, Inc.

SOIL PROFILE
LABORATORY TEST DATA (HISTORIC)

FRA-71-5.29

9 / 32

DRAWN LJS
CHECKED PAN

P:\84868\geotechnical\sheets\84868ID008.dgn 12/16/2014 10:45:23 AM pnarsavage

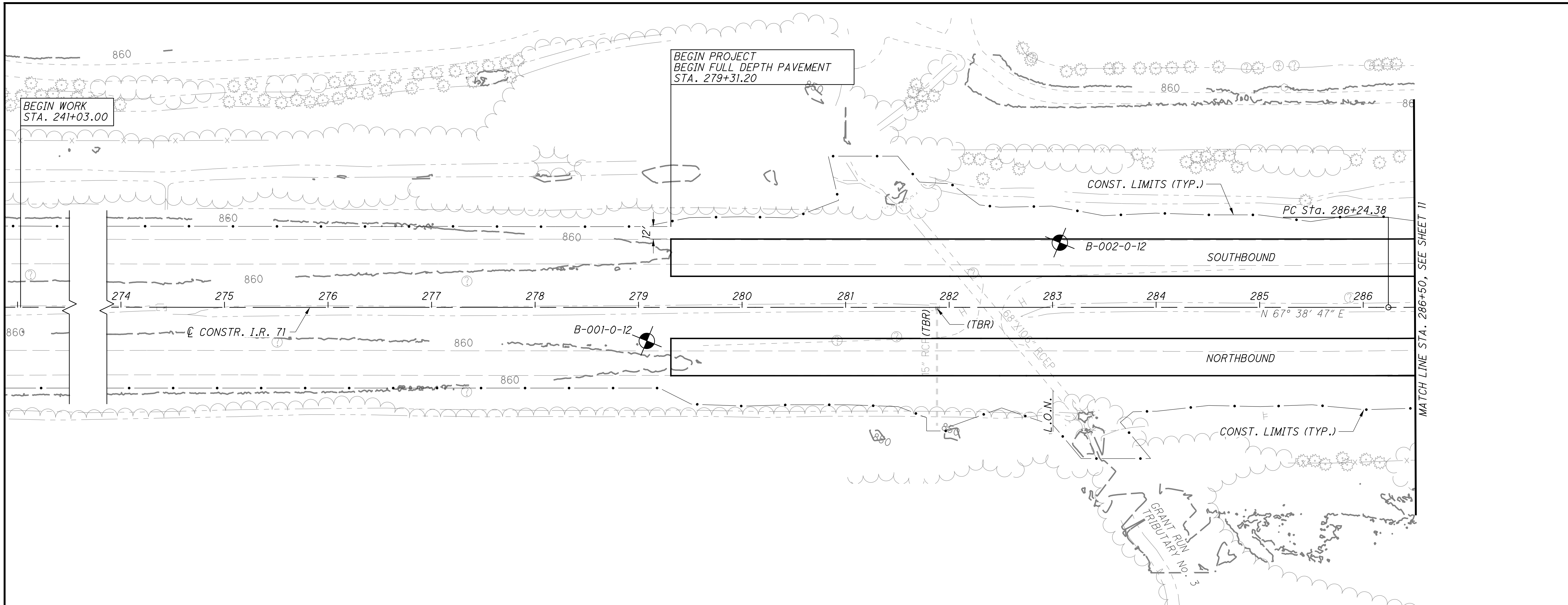

CALCULATED	LJS
CHECKED	PAN

SOIL PROFILE
BEGIN PROJECT TO STA. 286+50.00

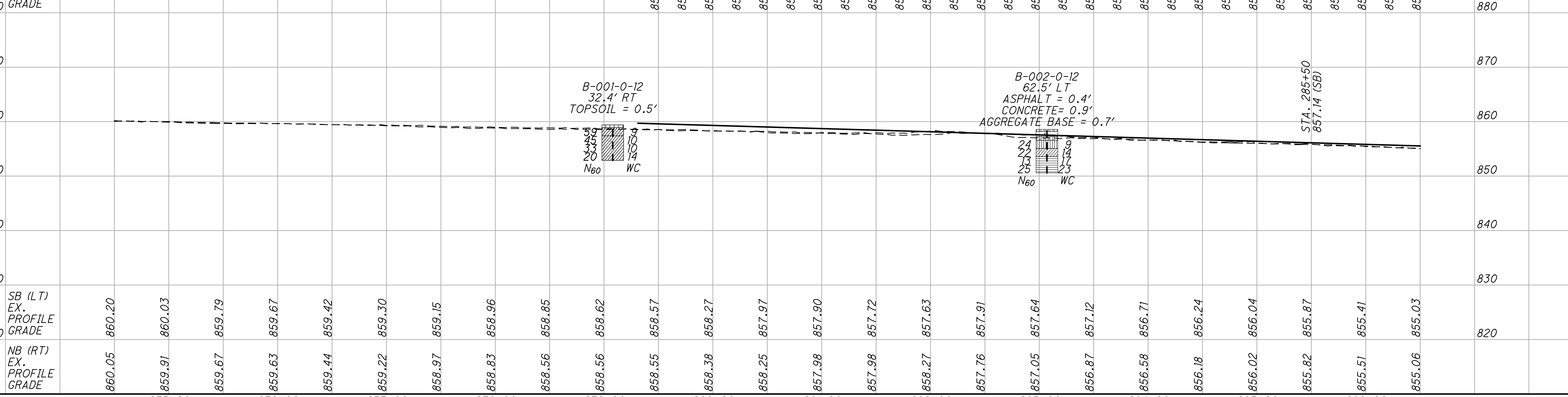

SB (LT) PR. PROFILE GRADE	859.51	859.41	859.31	859.22	859.12	859.02	858.92	858.82	858.72	858.62	858.52	858.42	858.32	858.23	858.13	858.03	857.93	857.83	857.73	857.63	857.53	857.43	857.33	857.24	857.14	857.04	856.93	856.82	856.70
NB (RT) PR. PROFILE GRADE	859.60	859.46	859.31	859.17	859.02	858.88	858.73	858.59	858.44	858.30	858.15	858.01	857.86	857.72	857.57	857.43	857.28	857.14	856.99	856.85	856.70	856.56	856.41	856.27	856.12	855.98	855.83	855.69	855.54

SB (LT) EX. PROFILE GRADE	860.20	860.03	859.79	859.67	859.42	859.30	859.15	858.96	858.85	858.62	858.57	858.27	857.97	857.90	857.72	857.63	857.91	857.64	857.12	856.71	856.24	856.04	855.87	855.41	855.03
NB (RT) EX. PROFILE GRADE	860.05	859.91	859.67	859.63	859.44	859.22	858.97	858.83	858.56	858.56	858.55	858.38	858.25	857.98	857.98	858.27	857.76	857.05	856.87	856.58	856.18	856.02	855.82	855.51	855.06

FRA-71-5.29

P:\84868\geotechnical\sheets\84868IP001.dgn 12/16/2014 10:45:36 AM pnarsavage

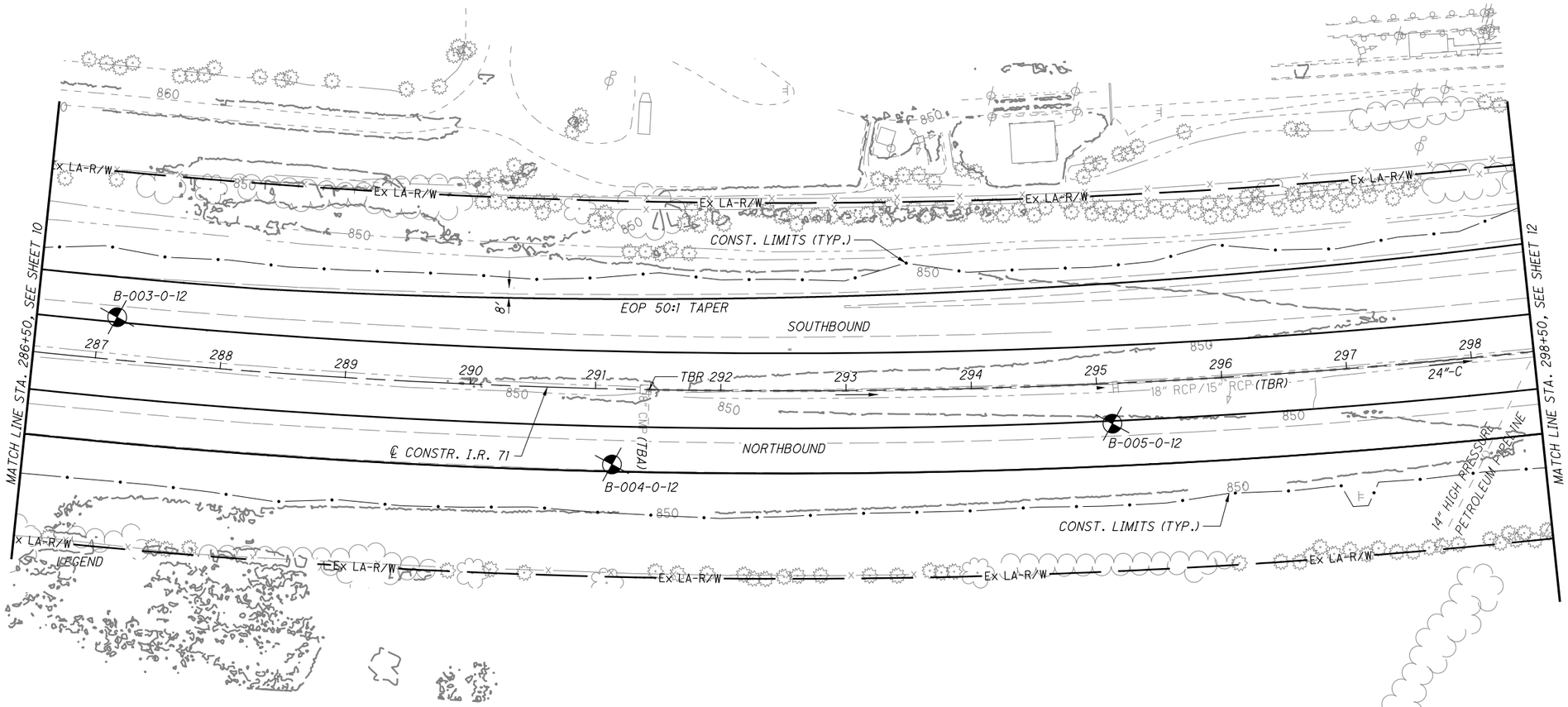

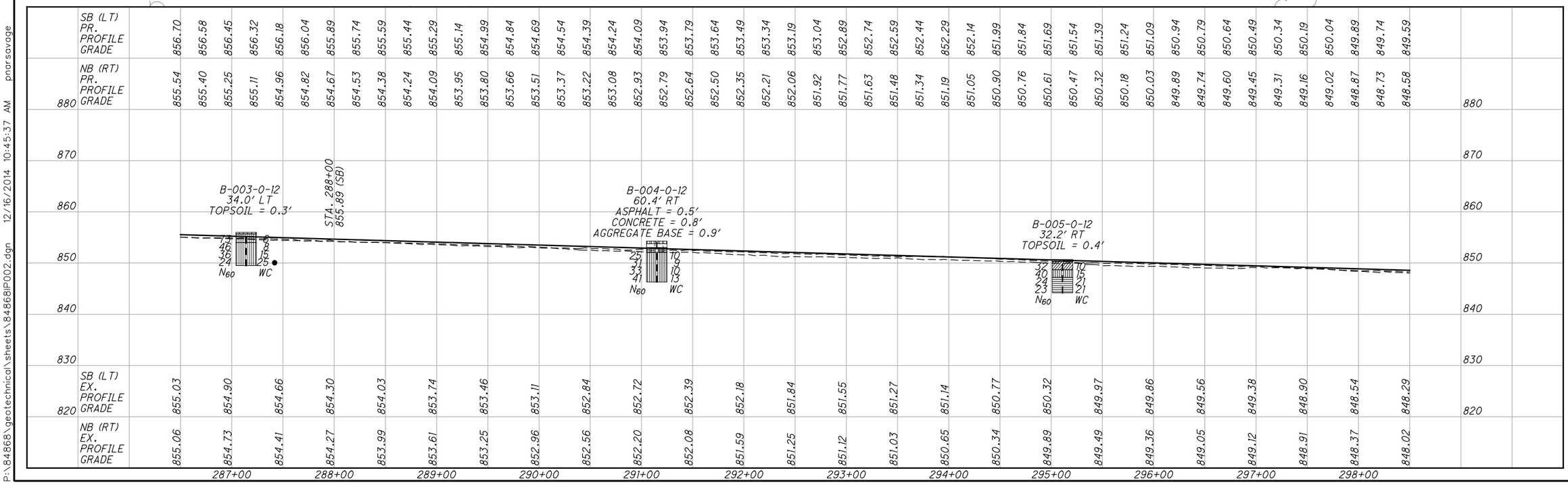

HORIZONTAL SCALE IN FEET
0 25 50 100

CALCULATED LJS
CHECKED PAN

SOIL PROFILE
STA. 286+50.00 TO STA. 298+50.00

FRA-71-5.29

11 / 32

P:\84868\geotechnical\sheets\84868IP002.dgn 12/16/2014 10:45:37 AM pnorsavage

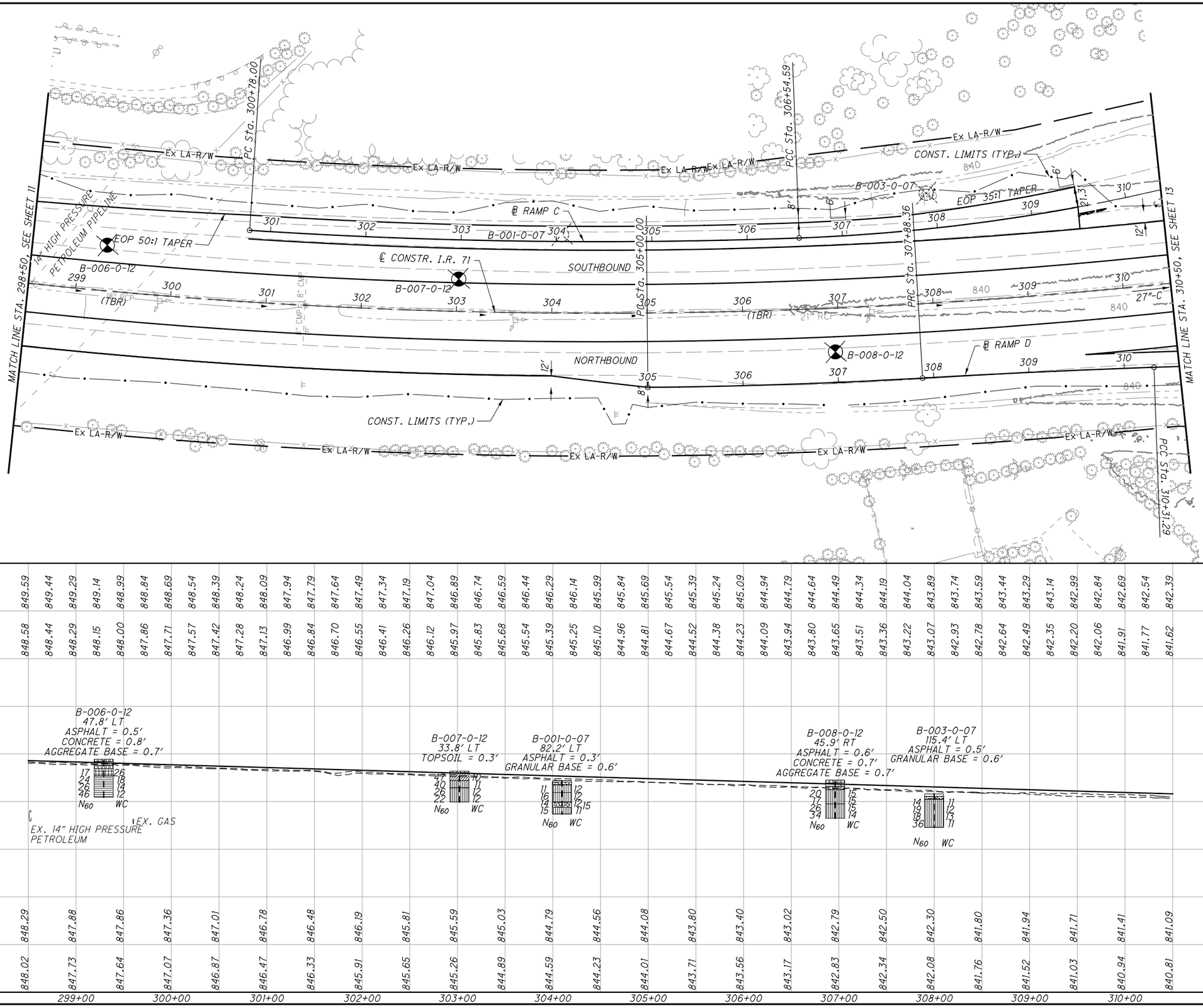

HORIZONTAL SCALE IN FEET
0 25 50 100

CALCULATED LJS
CHECKED PAN

SOIL PROFILE
STA. 298+50.00 TO STA. 310+50.00

FRA-71-5.29

12 / 32

P:\84868\geotechnical\sheets\84868IP003.dgn 12/16/2014 10:45:38 AM pnarsavage

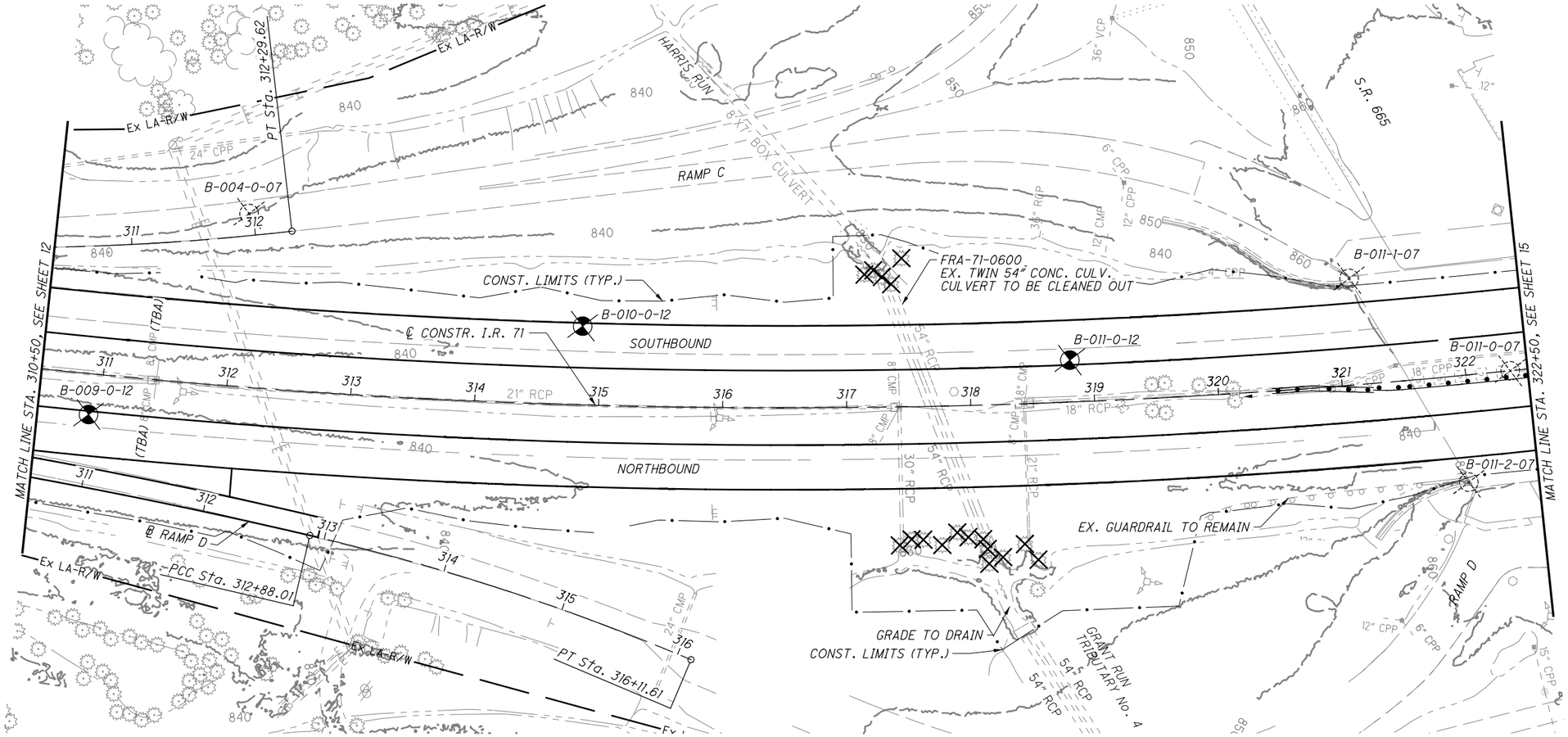

HORIZONTAL SCALE IN FEET
0 25 50 100

CALCULATED LJS
CHECKED PAN

SOIL PROFILE
STA. 310+50.00 TO STA. 322+50.00

FRA-71-5.29

13 / 32

P:\84868\geotechnical\sheets\84868IP004.dgn 12/16/2014 10:45:39 AM pnarsavage

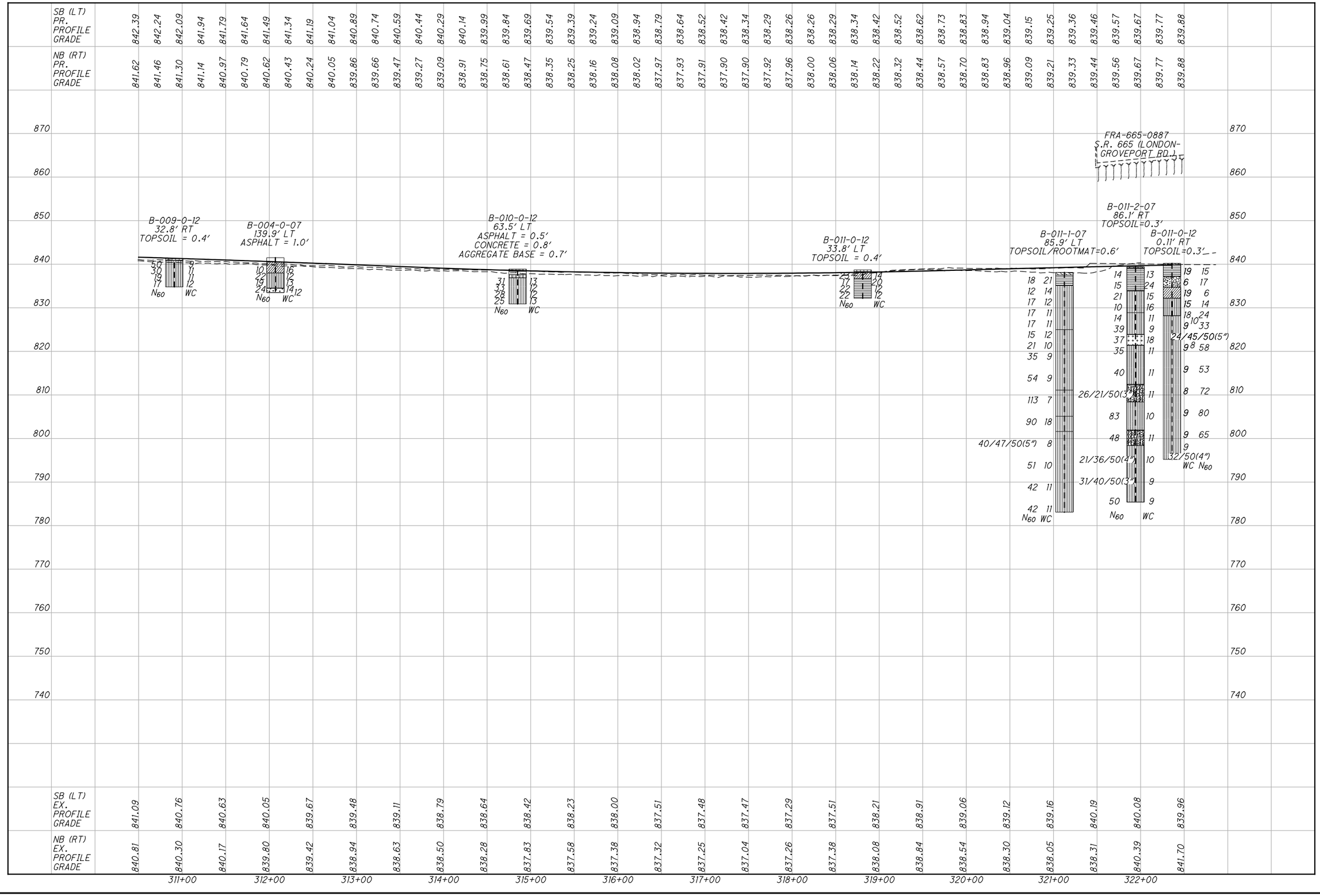

HORIZONTAL SCALE IN FEET
0 25 50 100

CALCULATED LJS
CHECKED PAN

SOIL PROFILE
STA. 310+50.00 TO STA. 322+50.00

FRA-71-5.29

14 / 32

P:\84868\geotechnical\sheets\84868IP004A.dgn 12/16/2014 10:45:41 AM pnarsavage

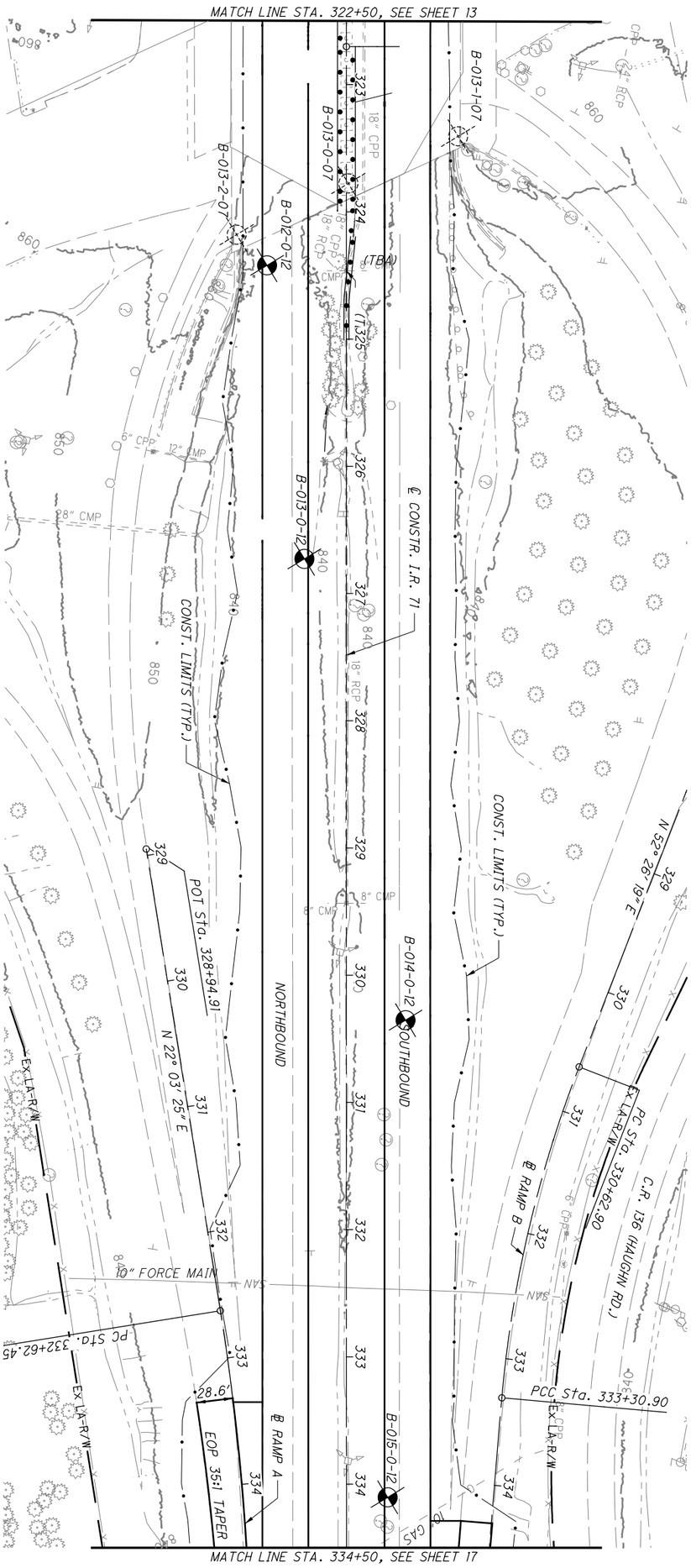

	15/32	FRA-71-5.29	SOIL PROFILE STA. 322+50.00 TO STA. 334+50.00	CALCULATED LJS CHECKED PAN	0 50 25 100 HORIZONTAL SCALE IN FEET

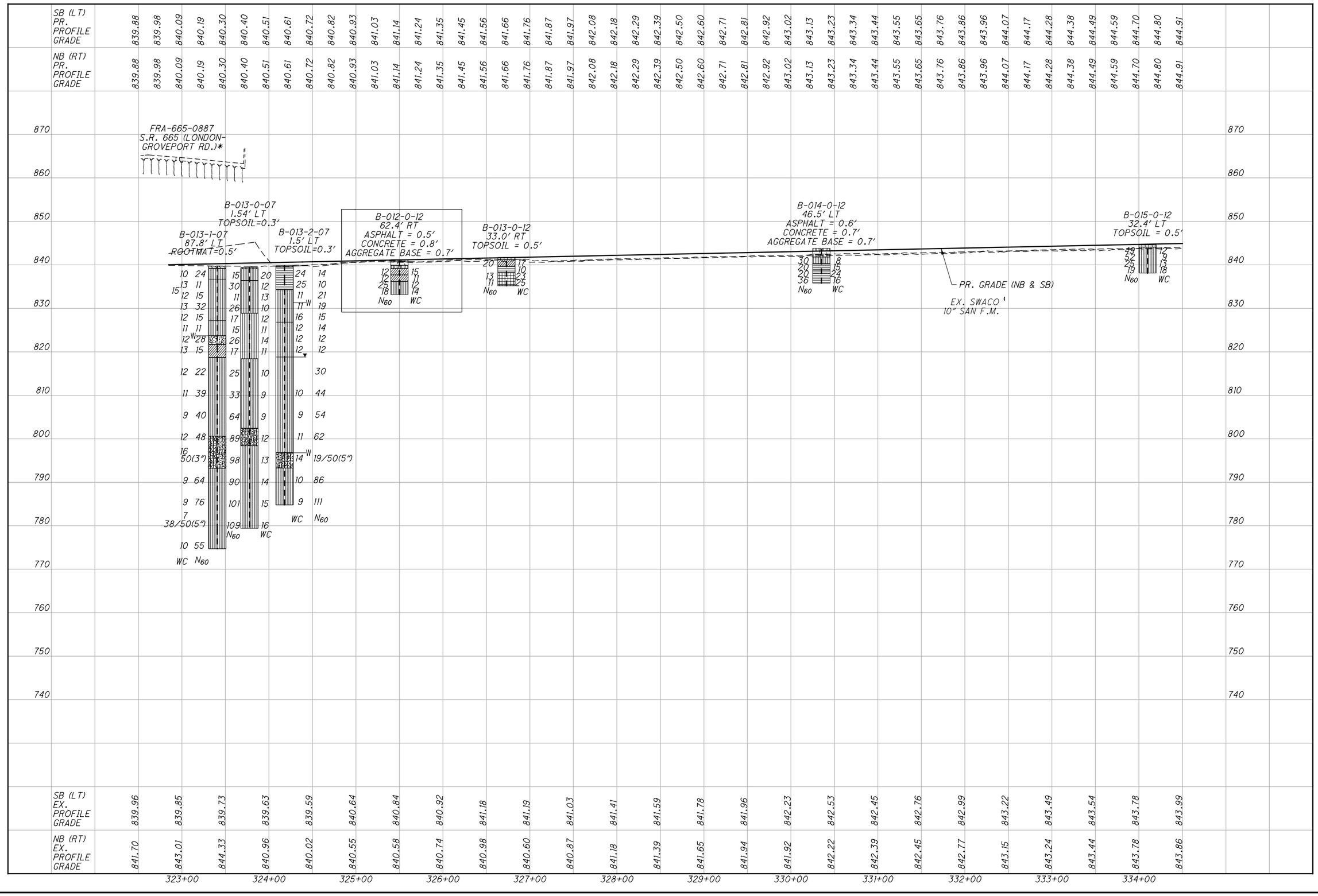

P:\84868\geotechnical\sheets\84868IP005A.dgn 12/16/2014 10:45:45 AM pnarsavage

HORIZONTAL SCALE IN FEET
0 25 50 100

CALCULATED LJS
CHECKED PAN

SOIL PROFILE
STA. 322+50.00 TO STA. 334+50.00

FRA-71-5.29

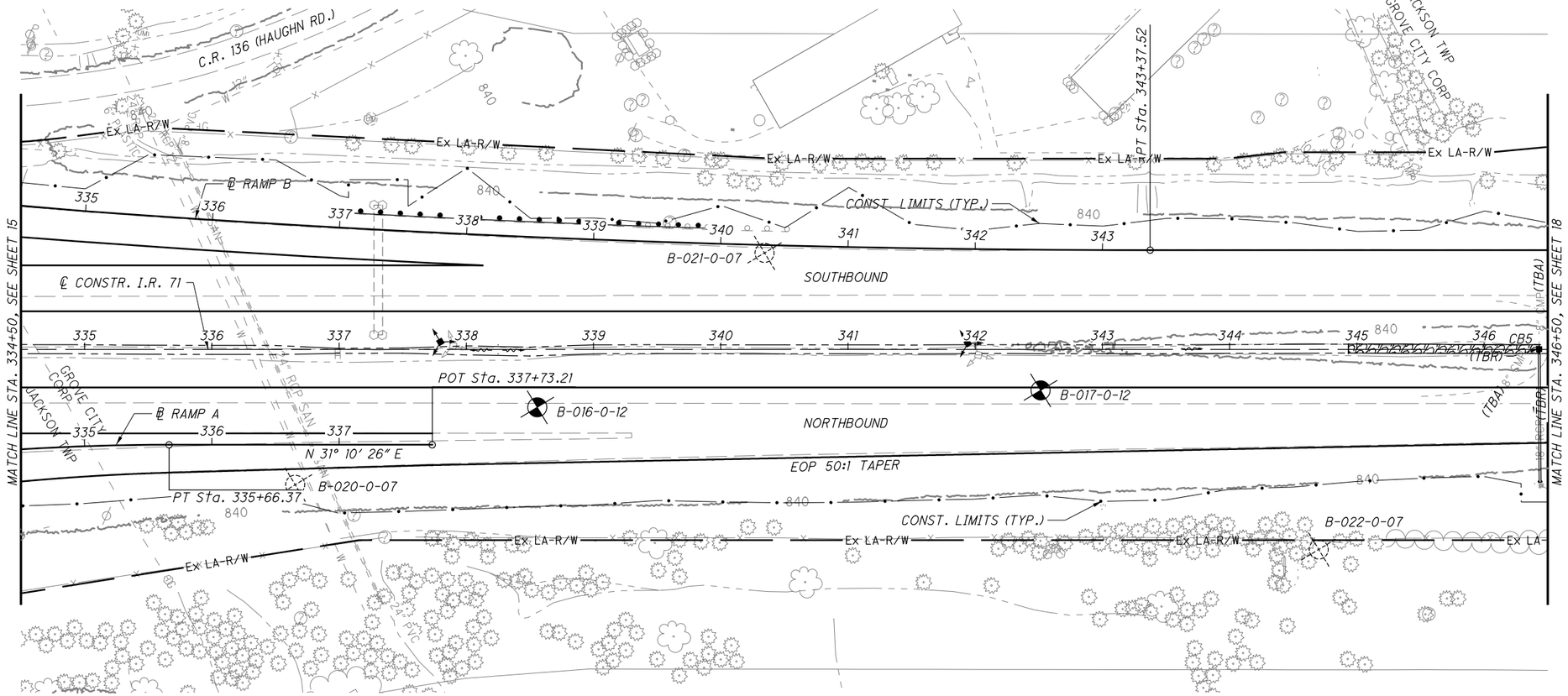

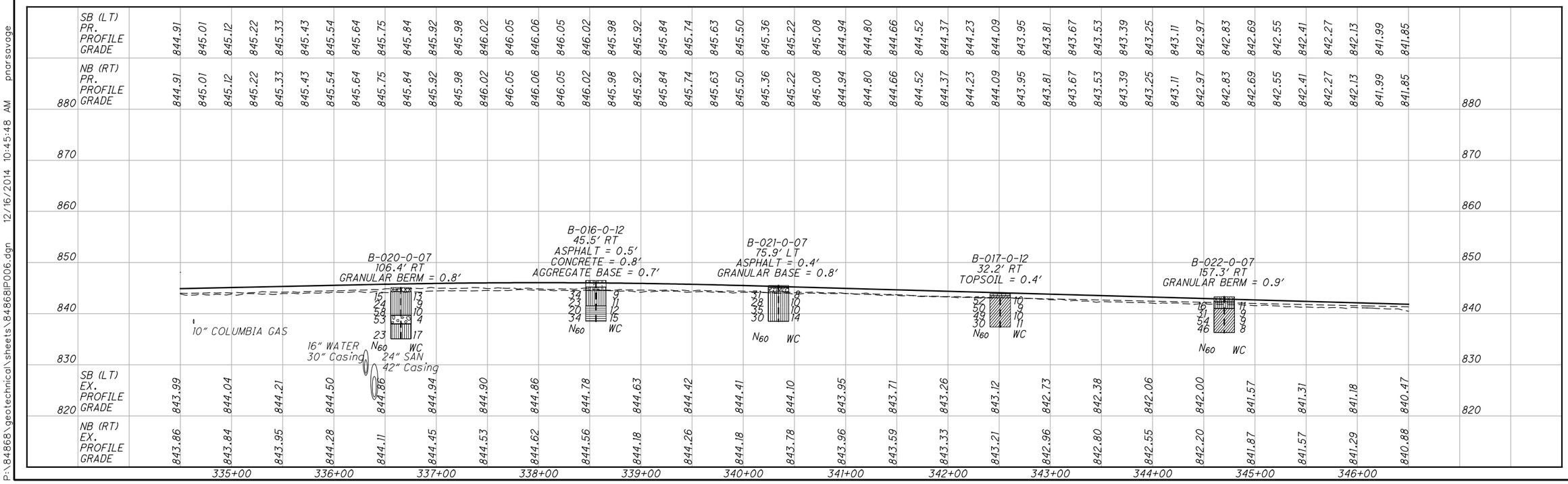

HORIZONTAL SCALE IN FEET
0 25 50 100

CALCULATED LJS
CHECKED PAN

SOIL PROFILE
STA. 334+50.00 TO STA. 346+50.00

FRA-71-5.29

17 / 32

P:\84868\geotechnical\sheets\84868IP006.dgn 12/16/2014 10:45:48 AM pnorsavage

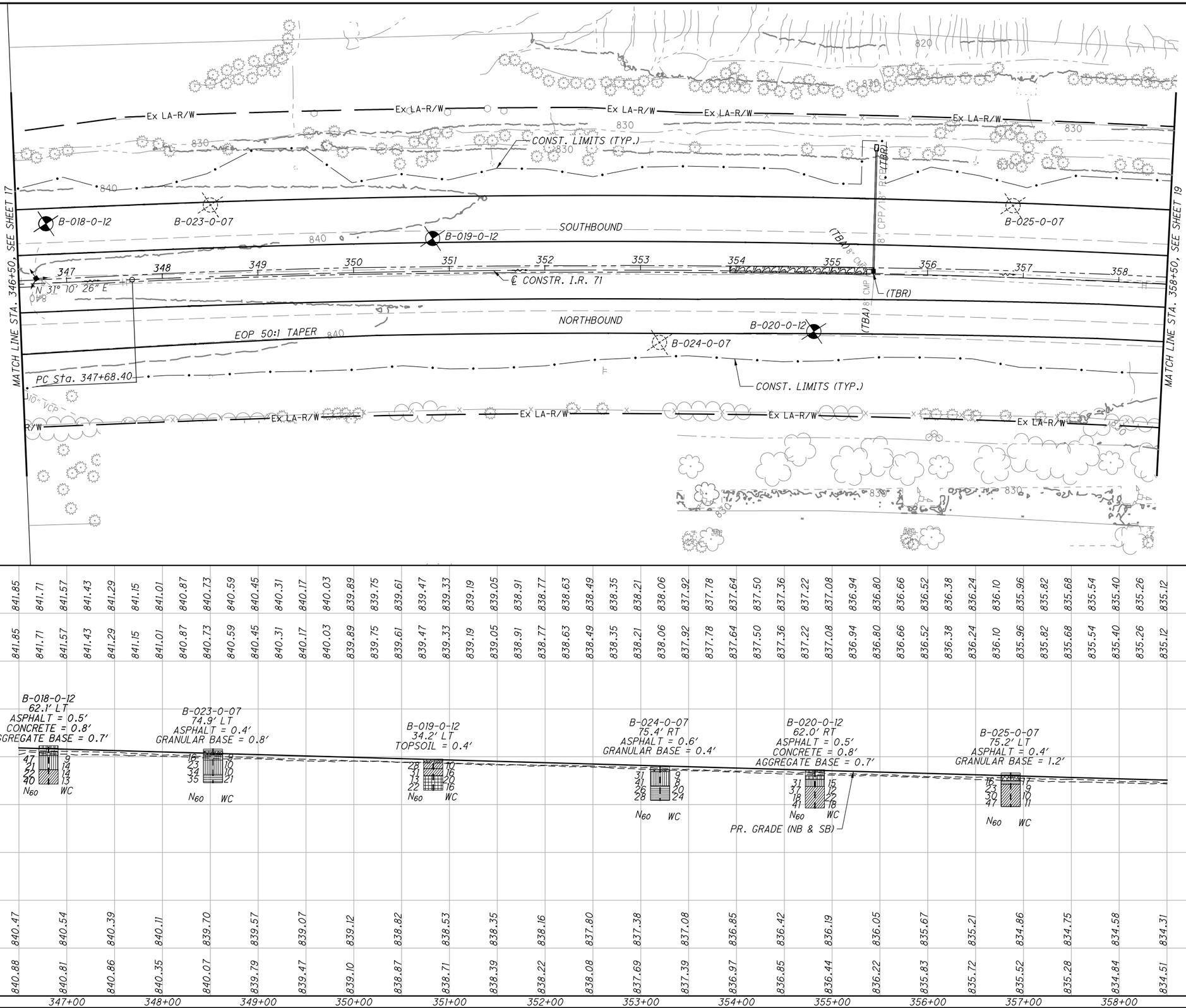

HORIZONTAL SCALE IN FEET
0 25 50 100

CALCULATED LJS
CHECKED PAN

SOIL PROFILE
STA. 346+50.00 TO STA. 358+50.00

FRA-71-5.29

18 / 32

P:\84868\geotechnical\sheets\84868IP007.dgn 12/16/2014 10:45:49 AM pnarsavage

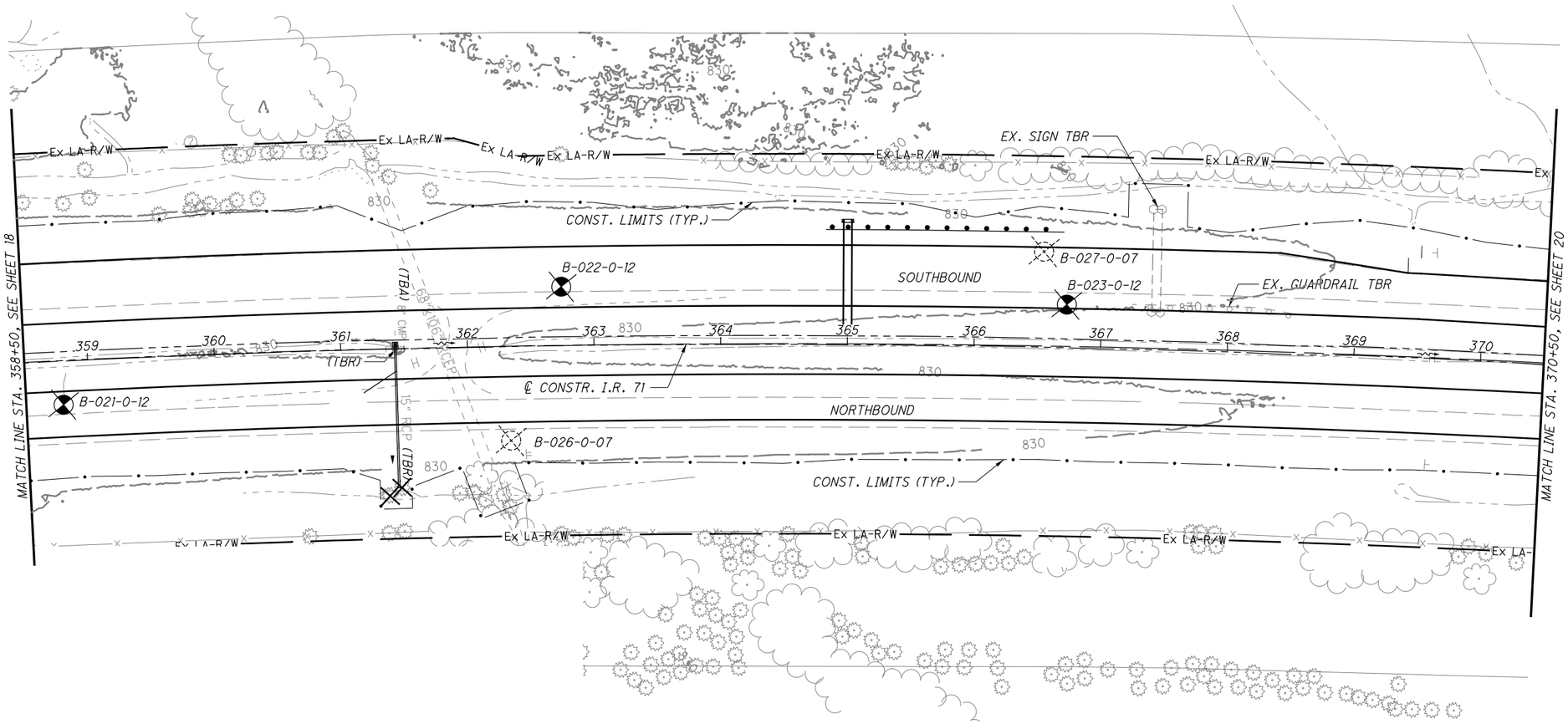

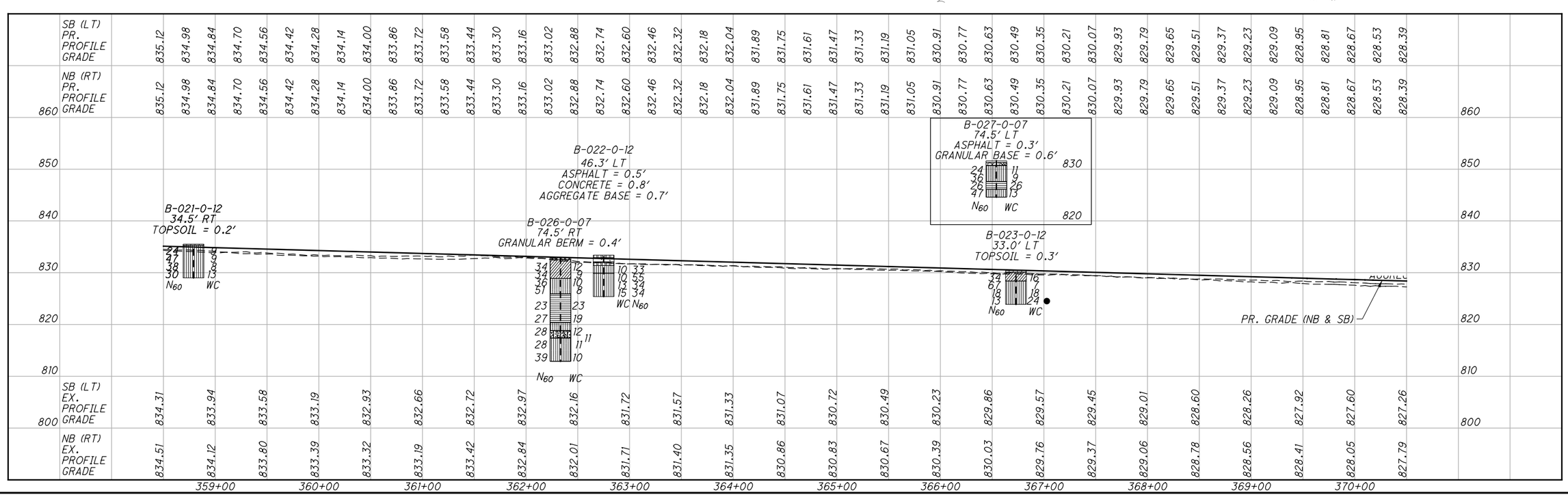

HORIZONTAL SCALE IN FEET
0 25 50 100

CALCULATED LJS
CHECKED PAN

SOIL PROFILE
STA. 358+50.00 TO STA. 370+50.00

FRA-71-5.29

19 / 32

P:\84868\geotechnical\sheets\84868IP008.dgn 12/16/2014 10:45:50 AM pnarsavage

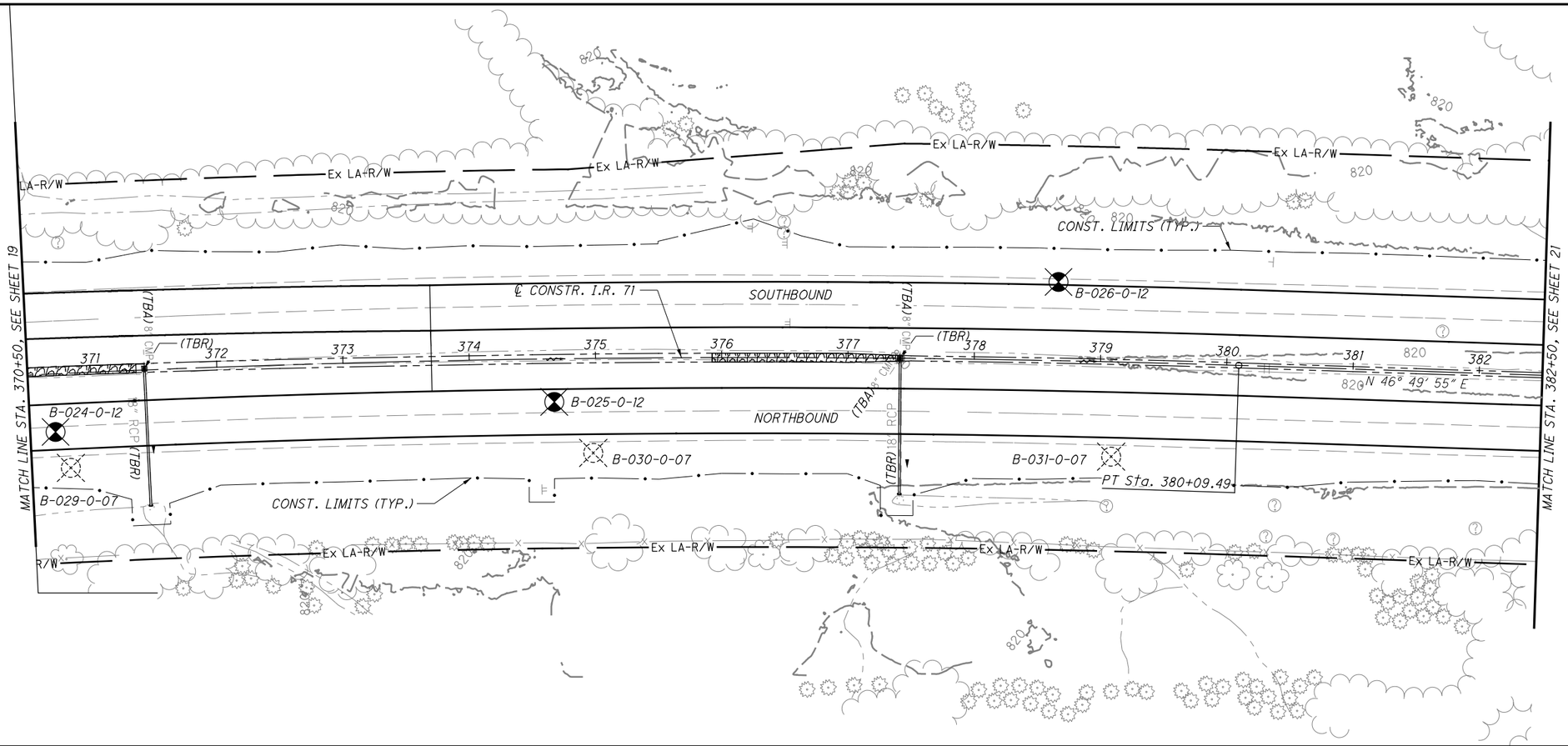

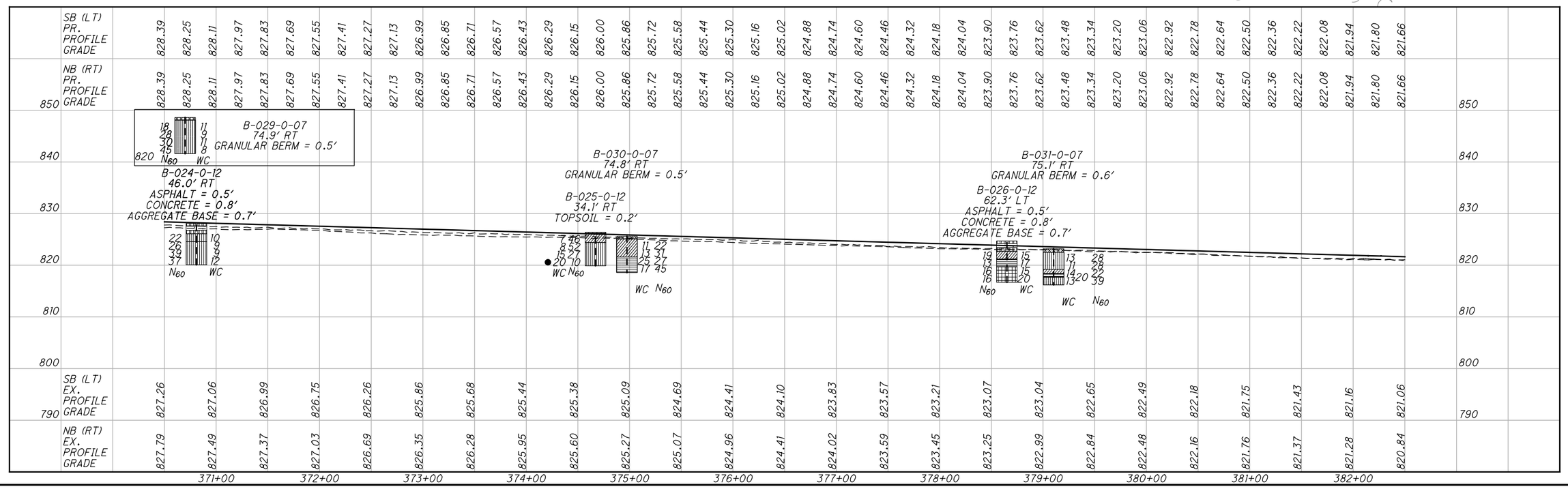

HORIZONTAL SCALE IN FEET
0 25 50 100

CALCULATED LJS
CHECKED PAN

SOIL PROFILE
STA. 370+50.00 TO STA. 382+50.00

FRA-71-5.29

20 / 32

P:\84868\geotechnical\sheets\84868IP009.dgn 12/16/2014 10:45:51 AM pnarsavage

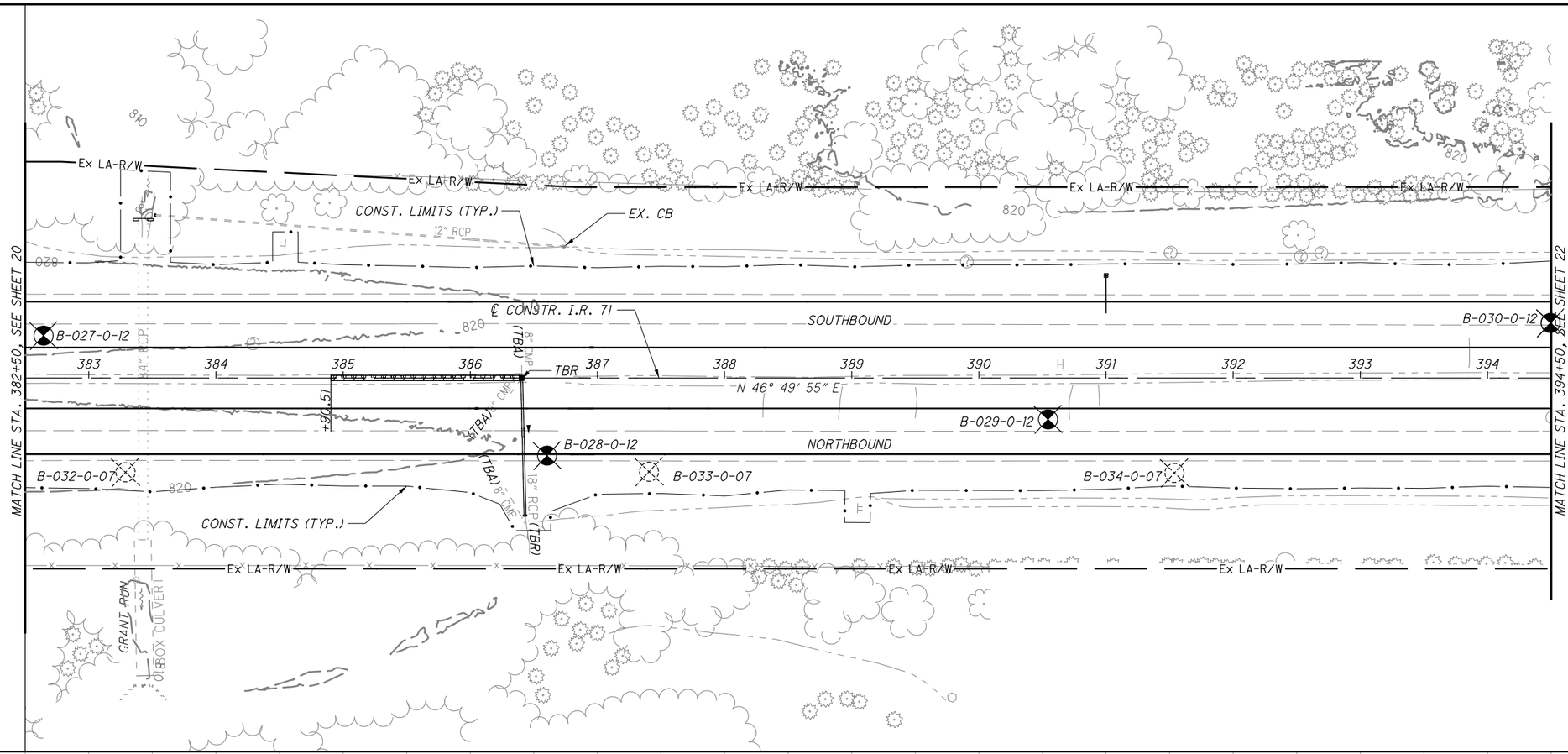

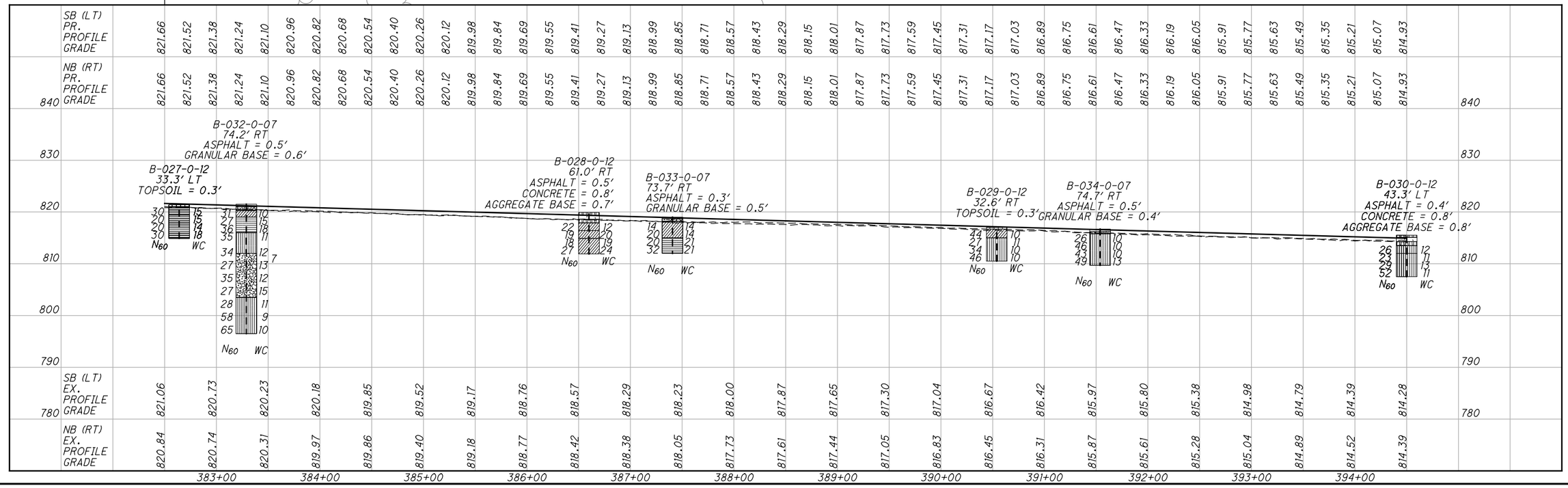

HORIZONTAL SCALE IN FEET
0 25 50 100

CALCULATED LJS
CHECKED PAN

SOIL PROFILE
STA. 382+50.00 TO STA. 394+50.00

FRA-71-5.29

21 / 32

P:\84868\geotechnical\sheets\84868IP010.dgn 12/16/2014 10:45:52 AM pnarsavage

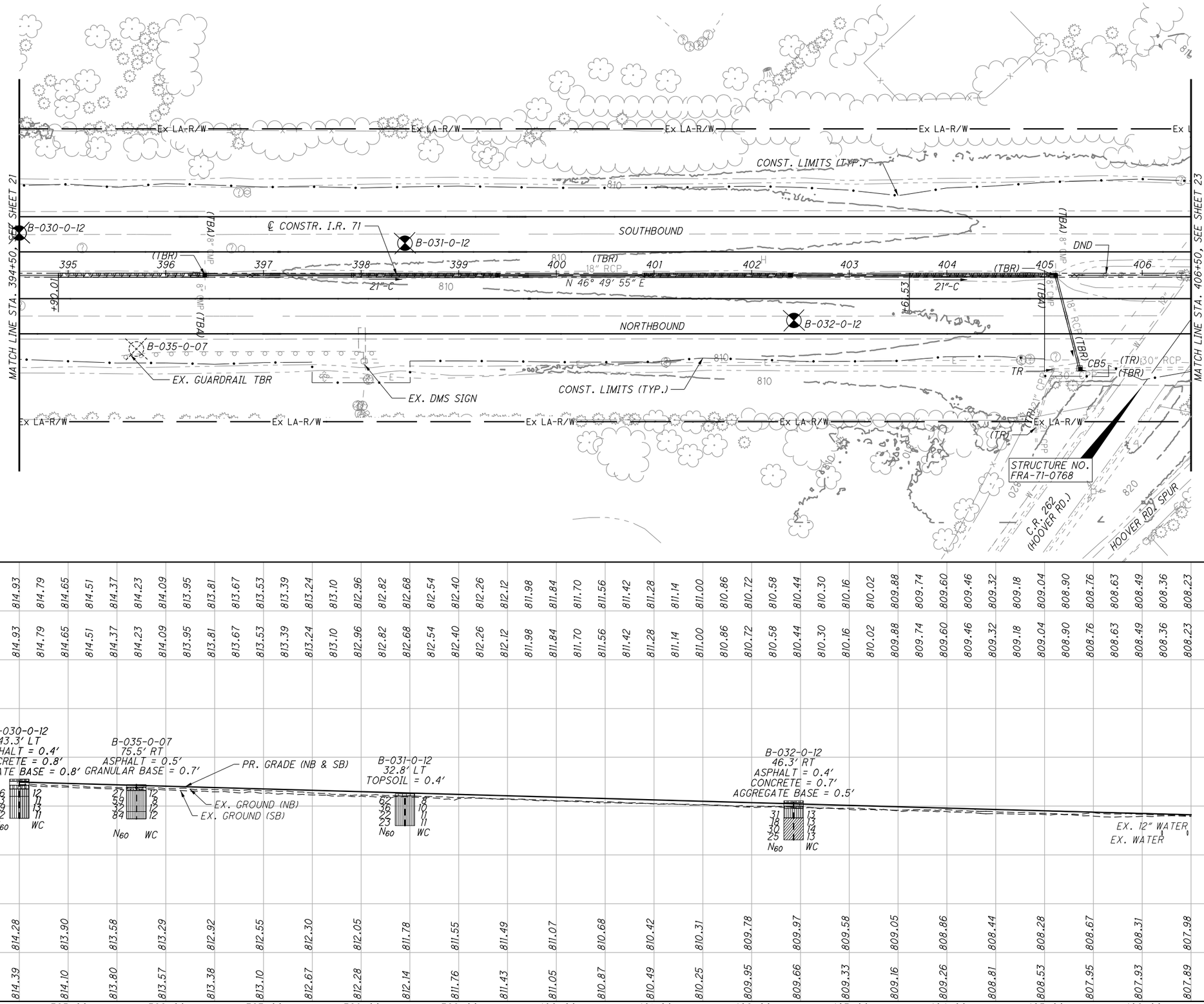

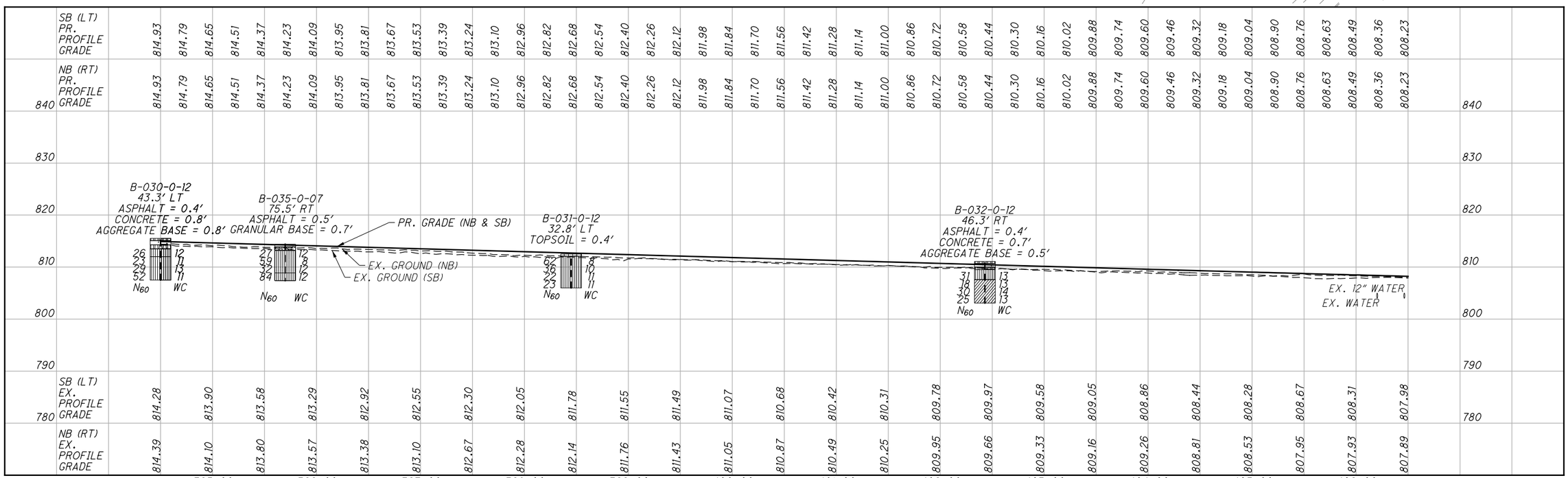

HORIZONTAL SCALE IN FEET
0 25 50 100

CALCULATED LJS
CHECKED PAN

SOIL PROFILE
STA. 394+50.00 TO STA. 406+50.00

FRA-71-5.29

22 / 32

P:\84868\geotechnical\sheets\84868IP011.dgn 12/16/2014 10:45:54 AM pnarsavage

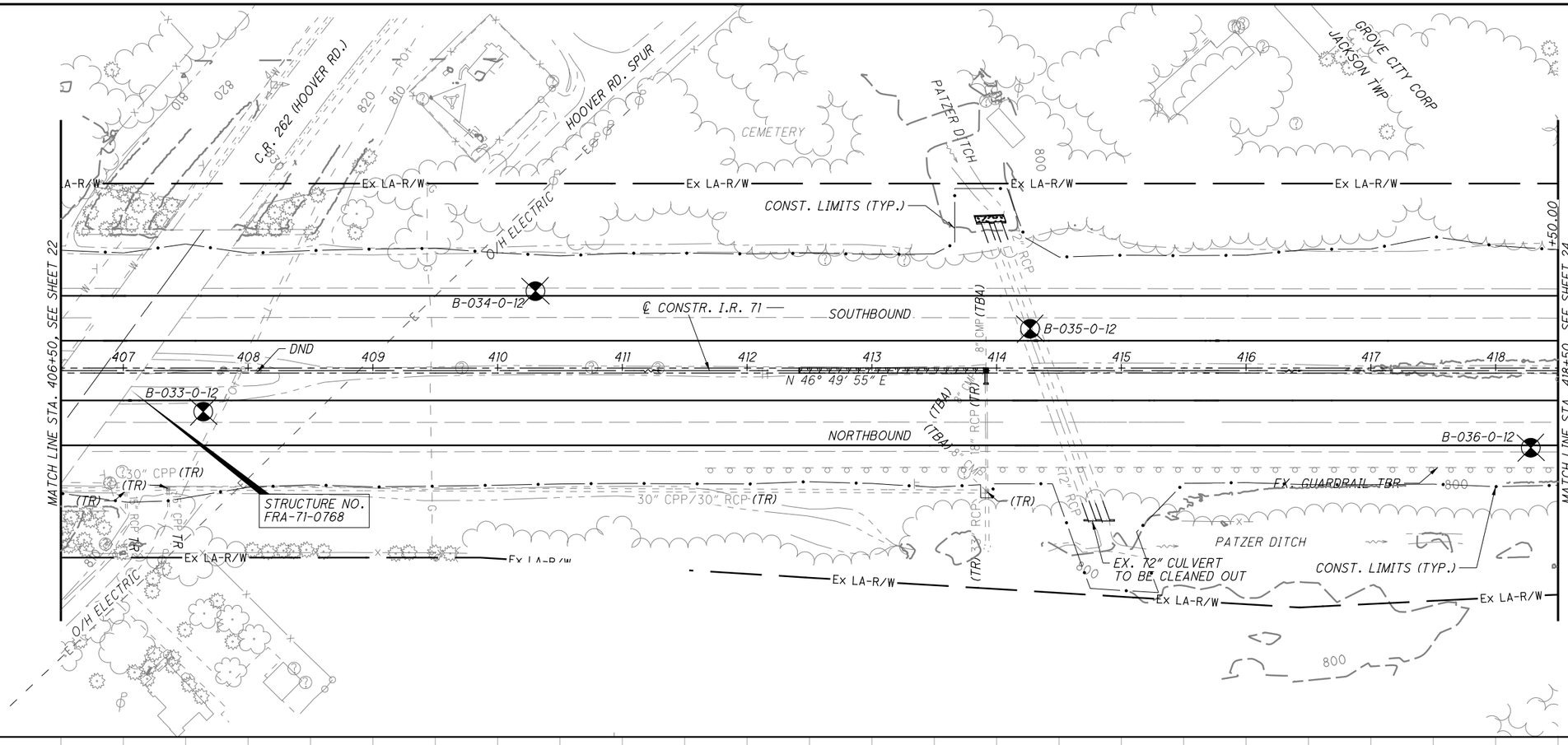

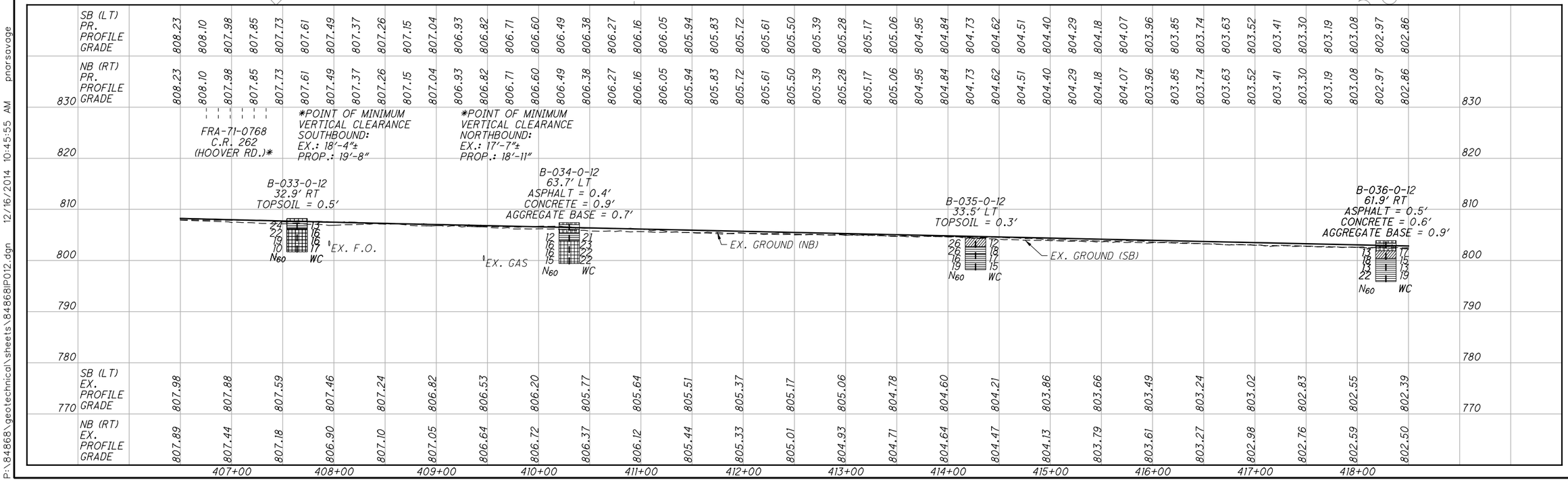

HORIZONTAL SCALE IN FEET
0 25 50 100

CALCULATED LJS
CHECKED PAN

SOIL PROFILE
STA. 406+50.00 TO STA. 418+50.00

FRA-71-5.29

23 / 32

P:\84868\geotechnical\sheets\84868IP012.dgn 12/16/2014 10:45:55 AM pnorsavage

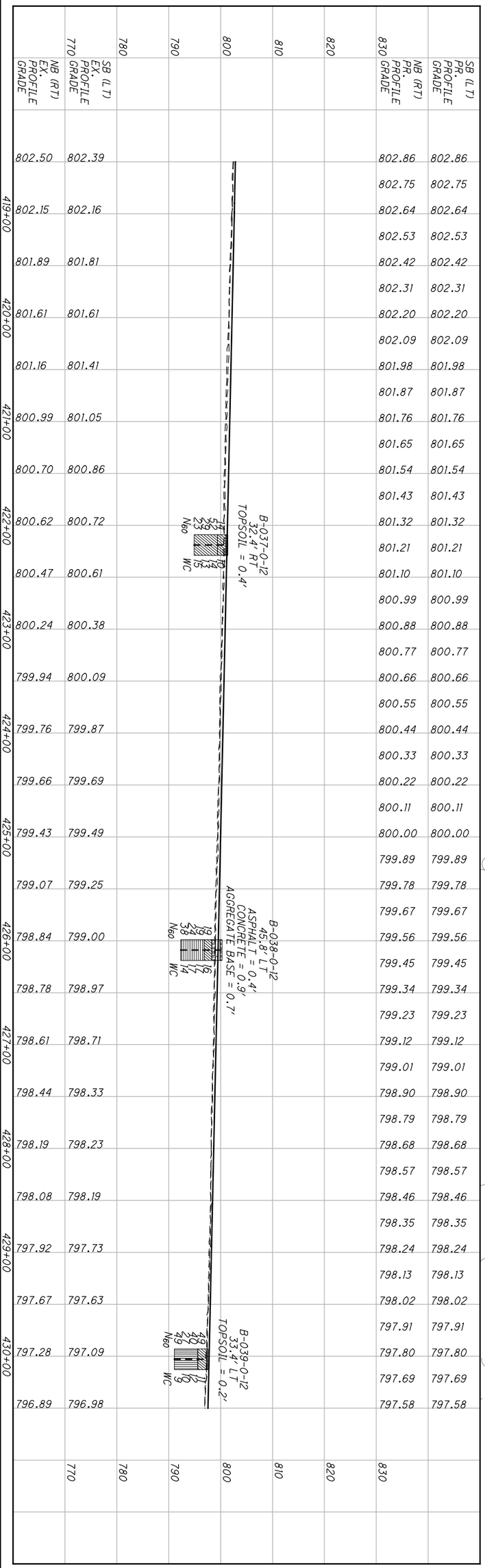

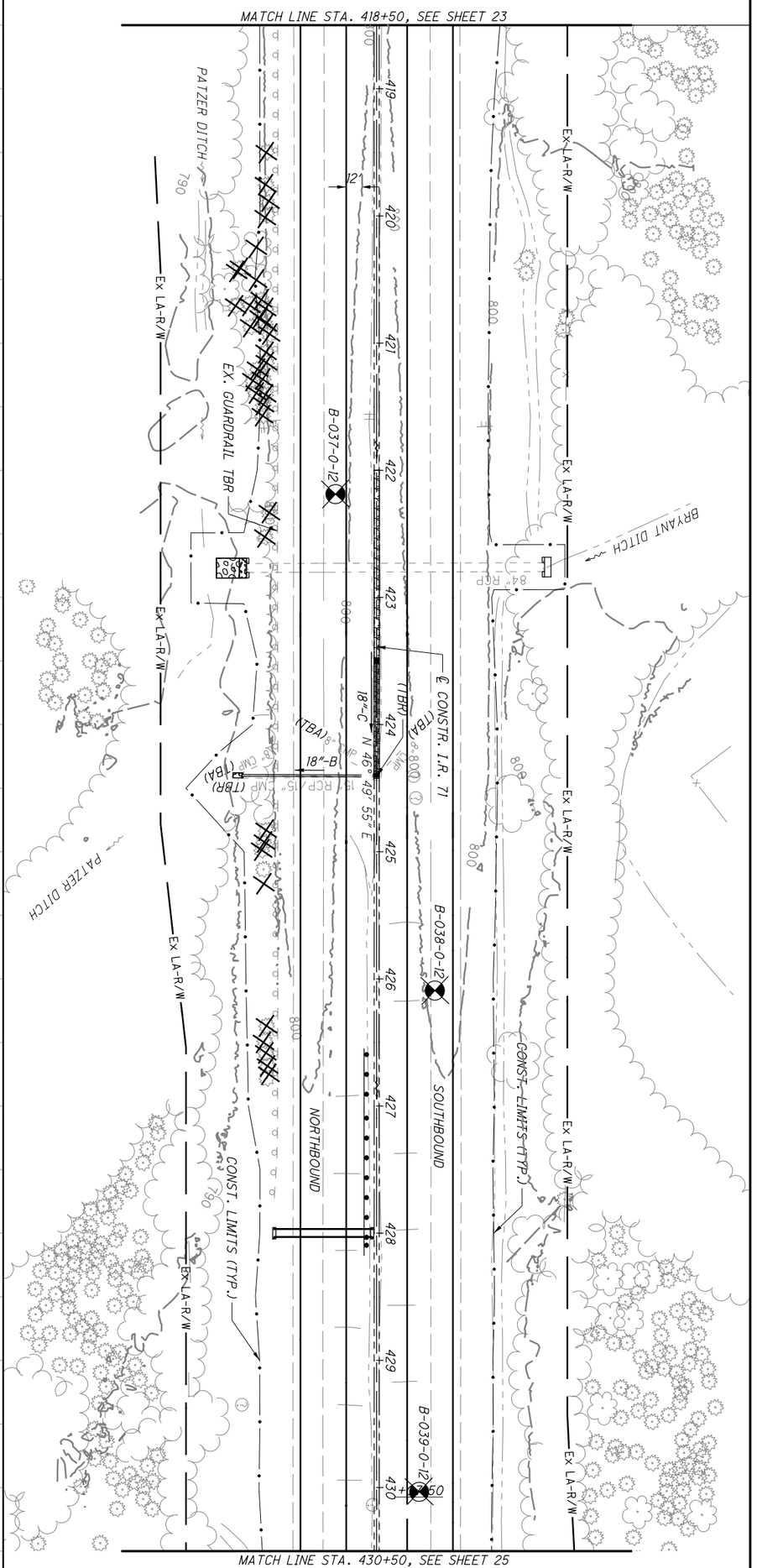

24/32	FRA-71-5.29	SOIL PROFILE STA. 418+50.00 TO STA. 430+50.00	CALCULATED LJS CHECKED PAN	0 50 25 100 HORIZONTAL SCALE IN FEET

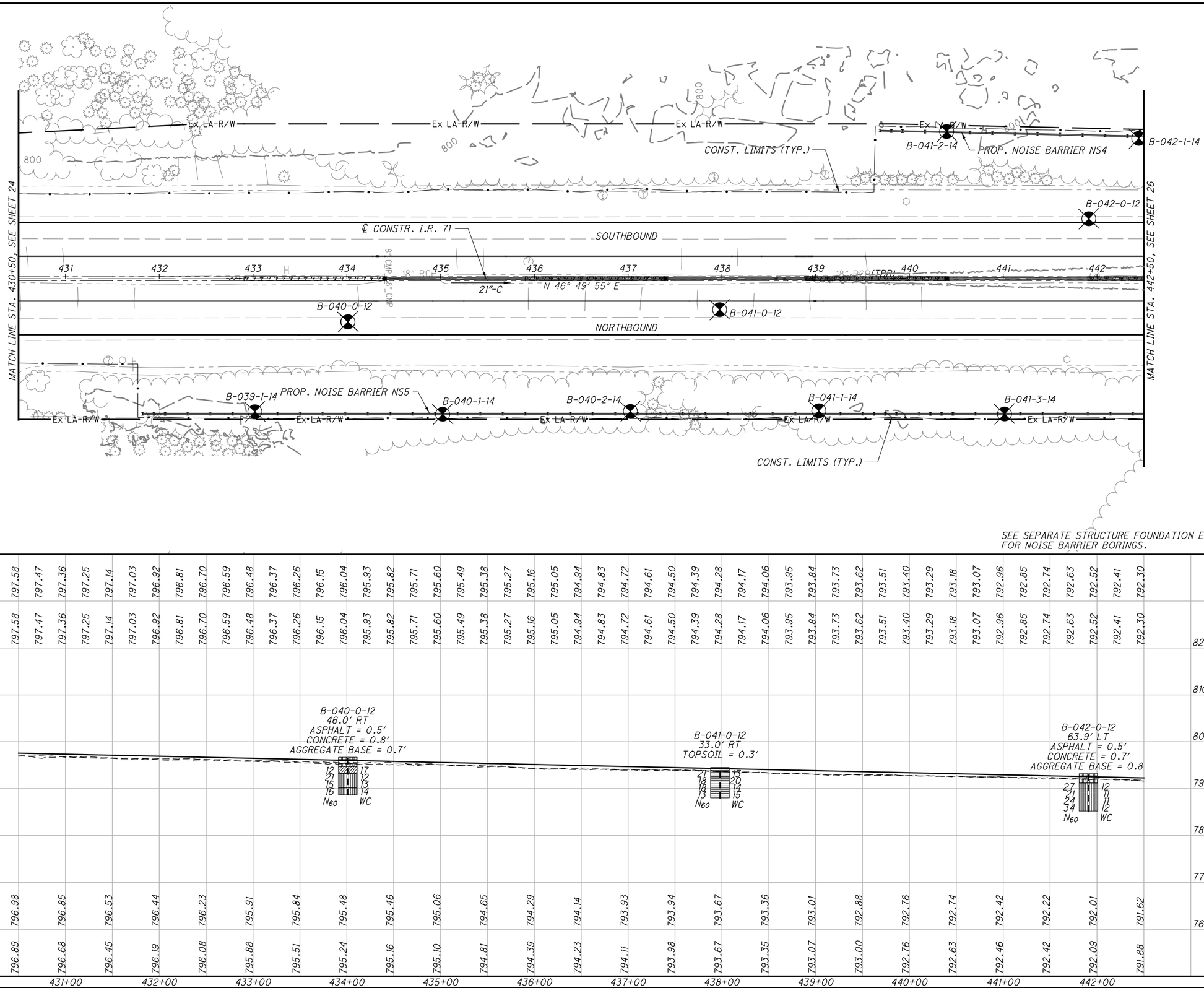

HORIZONTAL SCALE IN FEET
0 25 50 100

CALCULATED LJS
CHECKED PAN

SOIL PROFILE
STA. 430+50.00 TO STA. 442+50.00

FRA-71-5.29

25 / 32

P:\84868\geotechnical\sheets\84868P014.dgn 12/16/2014 10:45:57 AM pnarsavage

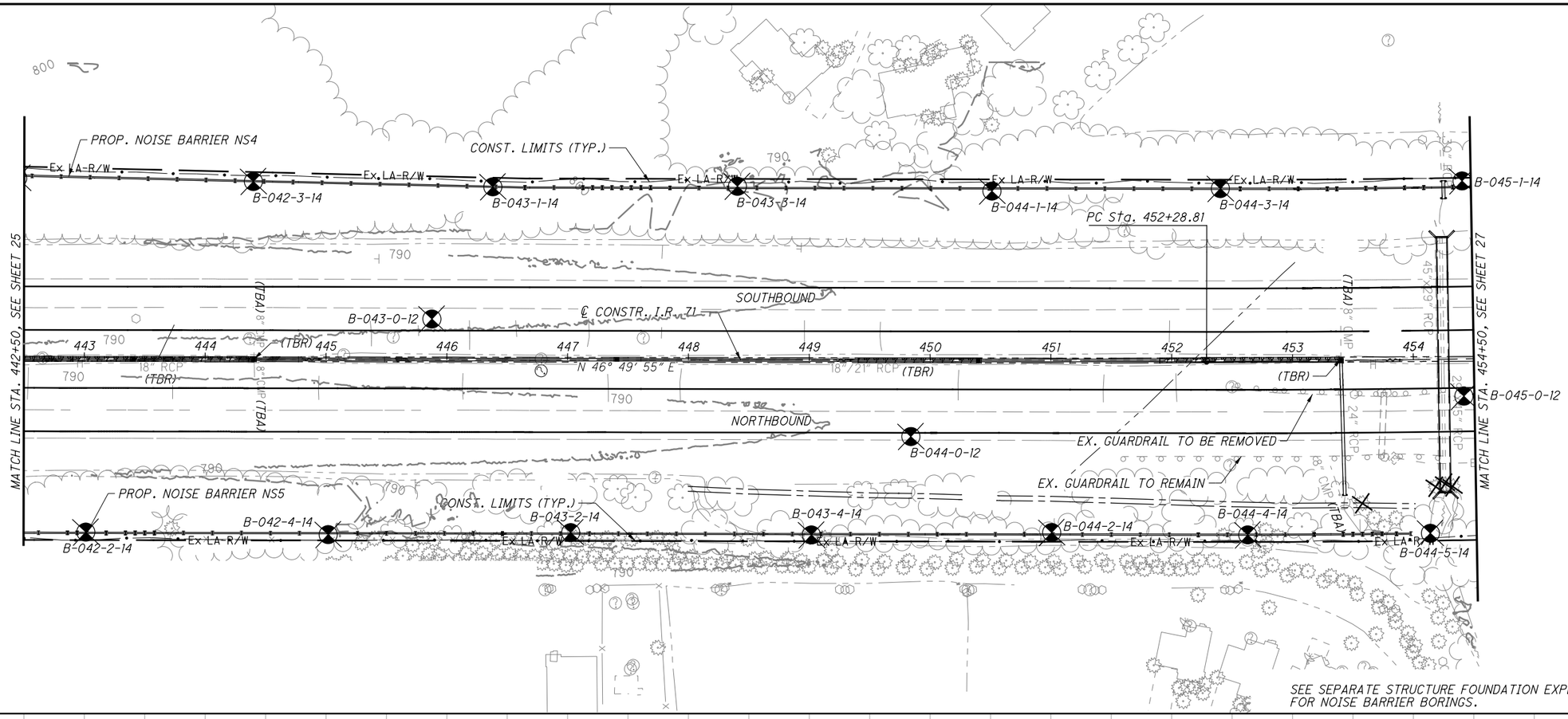

SEE SEPARATE STRUCTURE FOUNDATION EXPLORATION FOR NOISE BARRIER BORINGS.

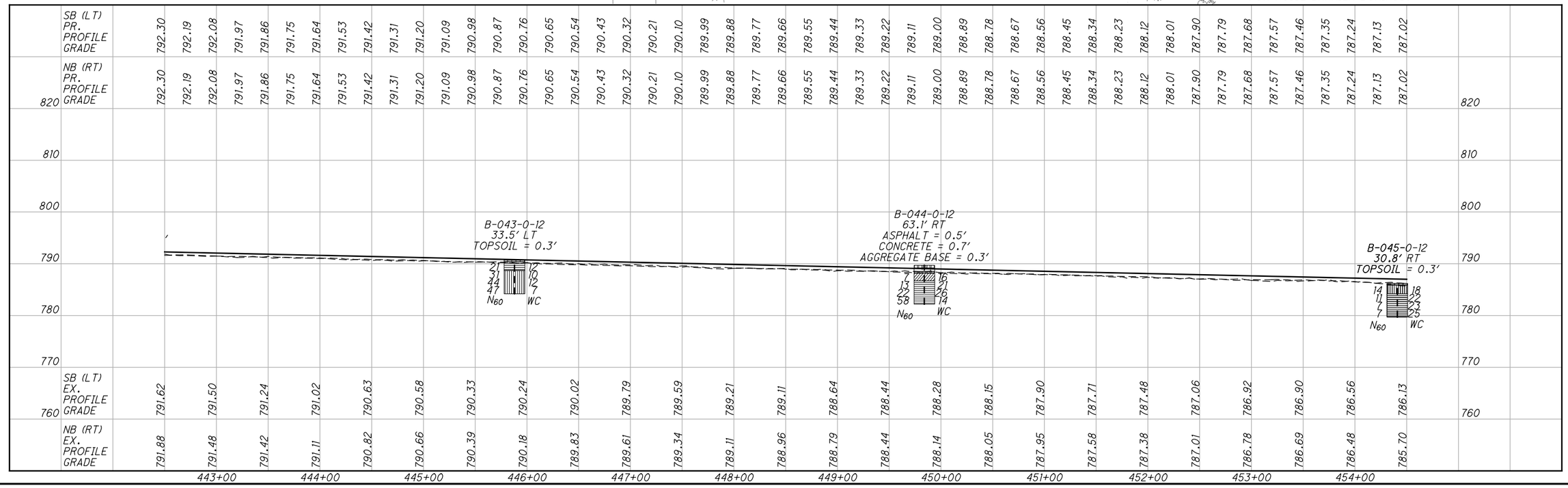

SOIL PROFILE
STA. 442+50.00 TO STA. 454+50.00

FRA-71-5.29

26 / 32

HORIZONTAL SCALE IN FEET
0 25 50 100

CALCULATED LJS
CHECKED PAN

P:\84868\geotechnical\sheets\84868IP015.dgn 12/16/2014 10:45:58 AM pnarsavage

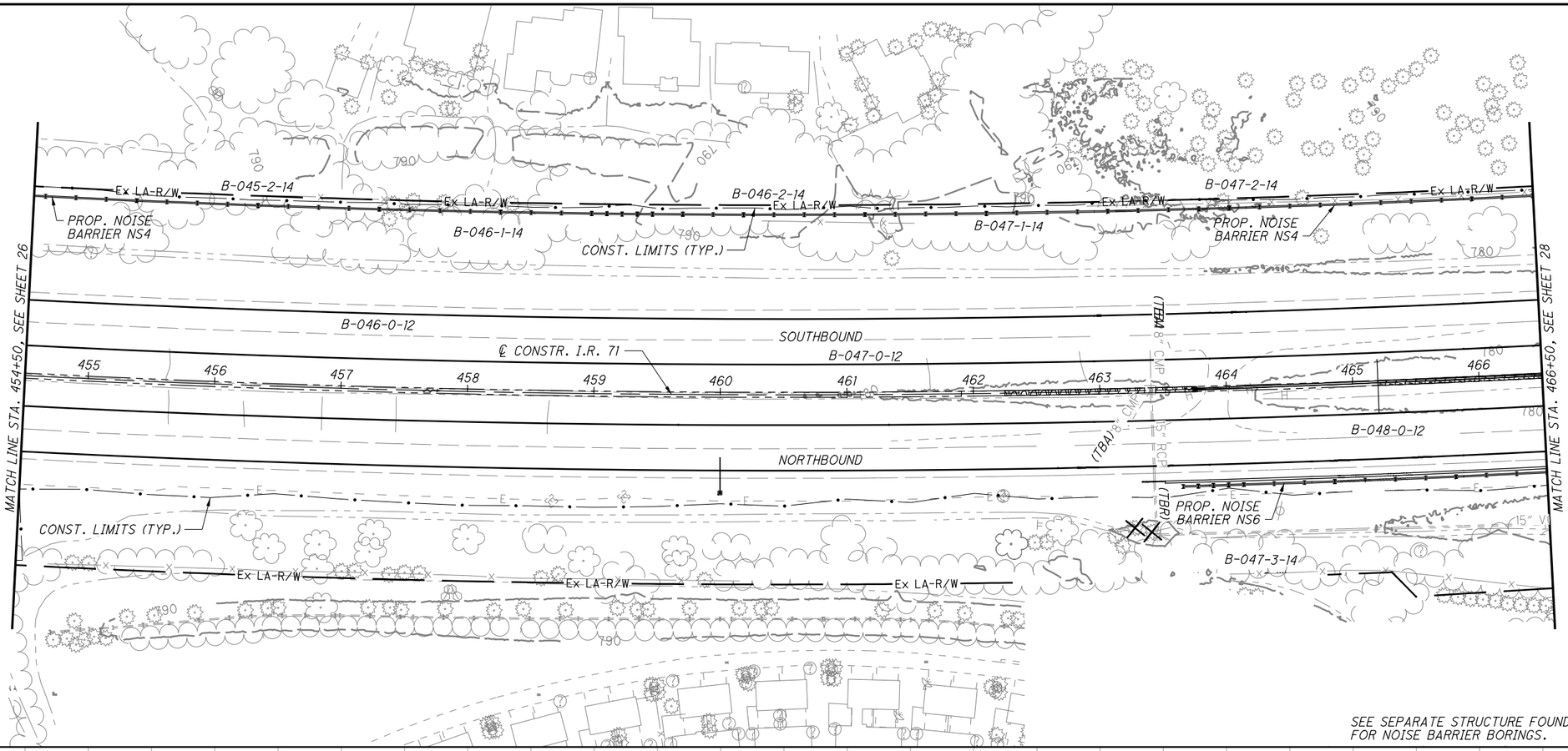

SEE SEPARATE STRUCTURE FOUNDATION EXPLORATION FOR NOISE BARRIER BORINGS.

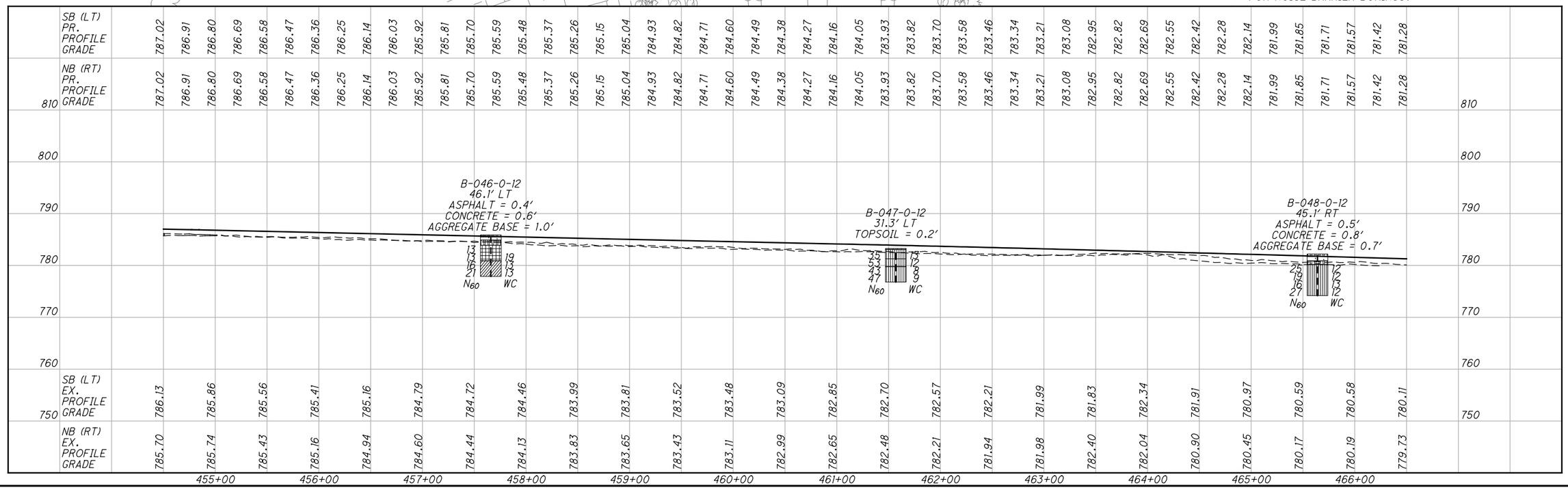

P:\84868\geotechnical\sheets\84868IP016.dgn 3/31/2015 8:26:01 AM mtakacs

HORIZONTAL SCALE IN FEET
0 25 50 100

CALCULATED LJS
CHECKED PAN

SOIL PROFILE
STA. 454+50.00 TO STA. 466+50.00

FRA-71-5.29

27 / 32

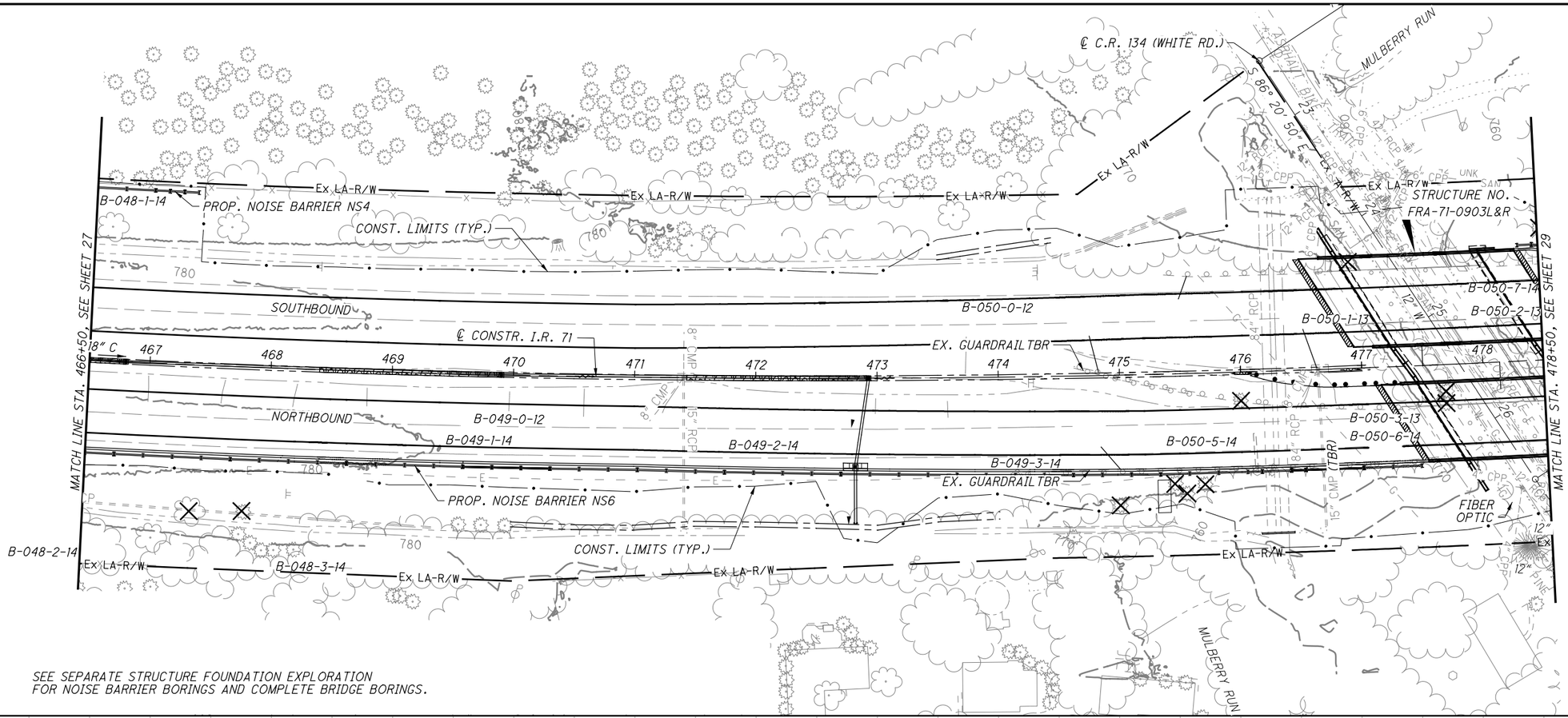

SEE SEPARATE STRUCTURE FOUNDATION EXPLORATION FOR NOISE BARRIER BORINGS AND COMPLETE BRIDGE BORINGS.

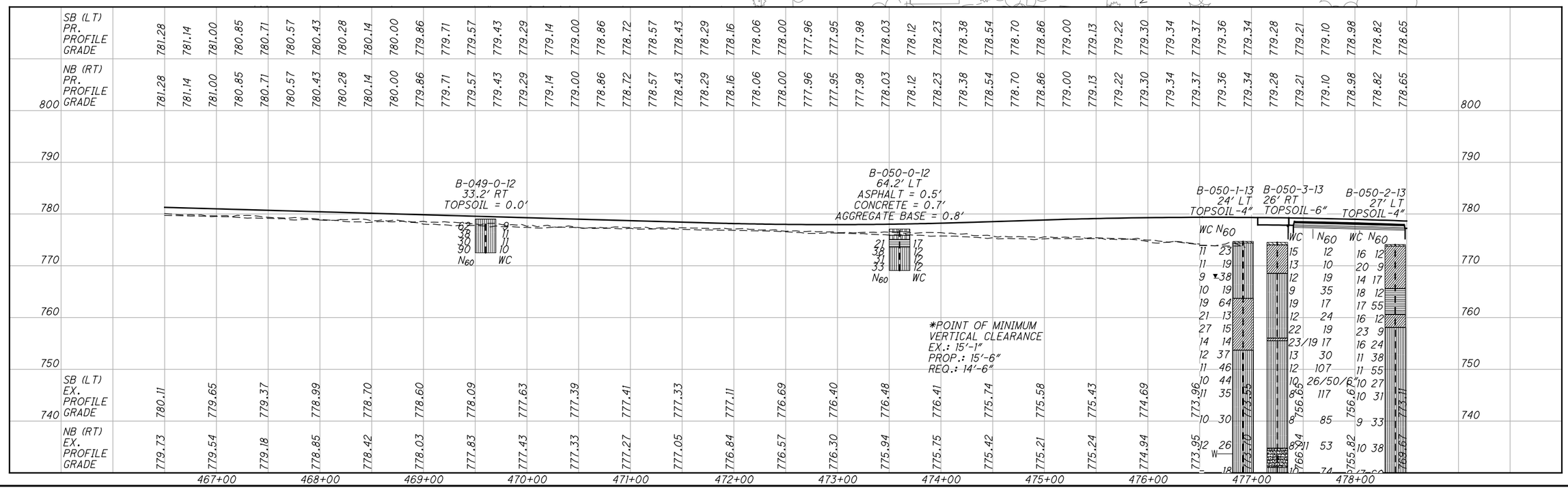

P:\84868\geotechnical\sheets\84868IP017.dgn 3/31/2015 8:26:58 AM mtokacs

HORIZONTAL SCALE IN FEET
0 25 50 100

CALCULATED LJS
CHECKED PAN

SOIL PROFILE
STA. 466+50.00 TO STA. 478+50.00

FRA-71-5.29

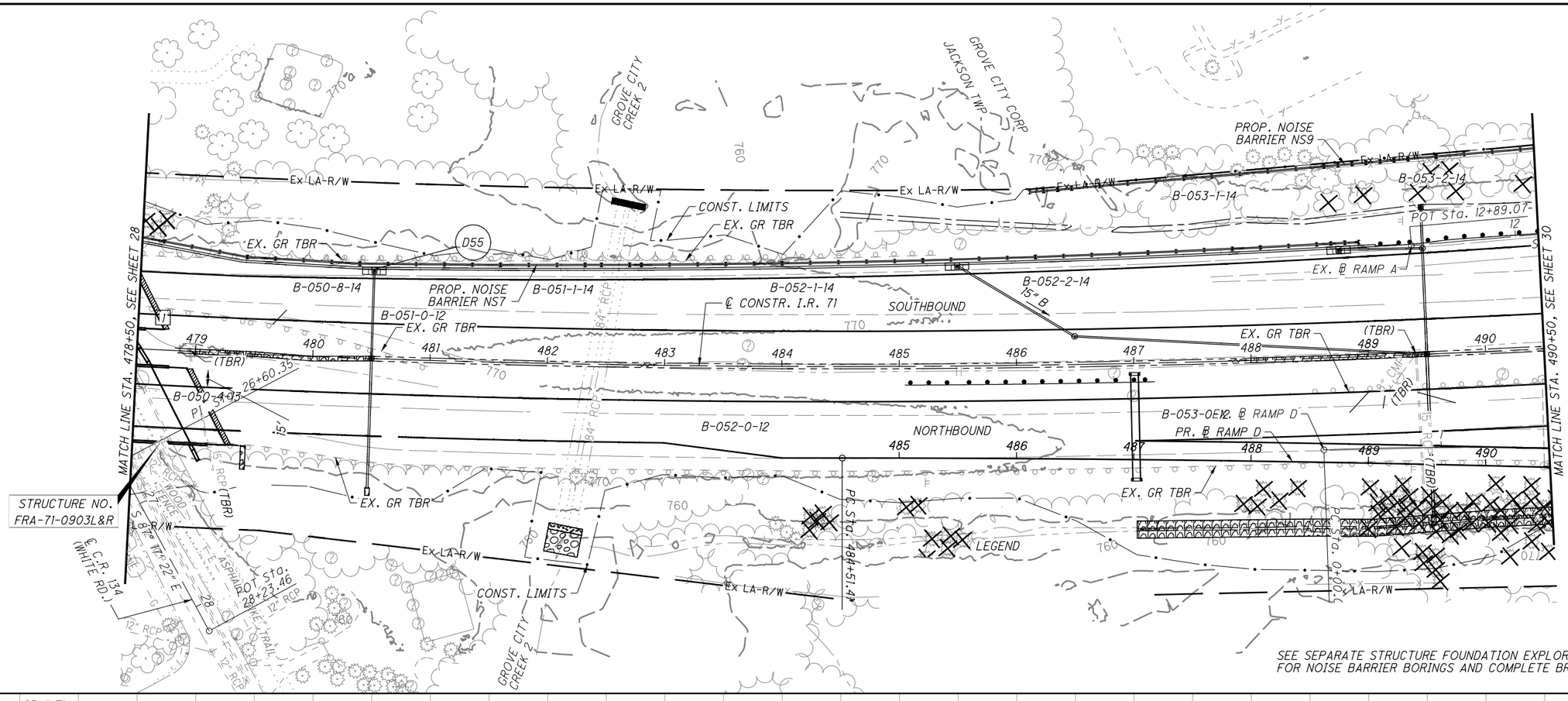

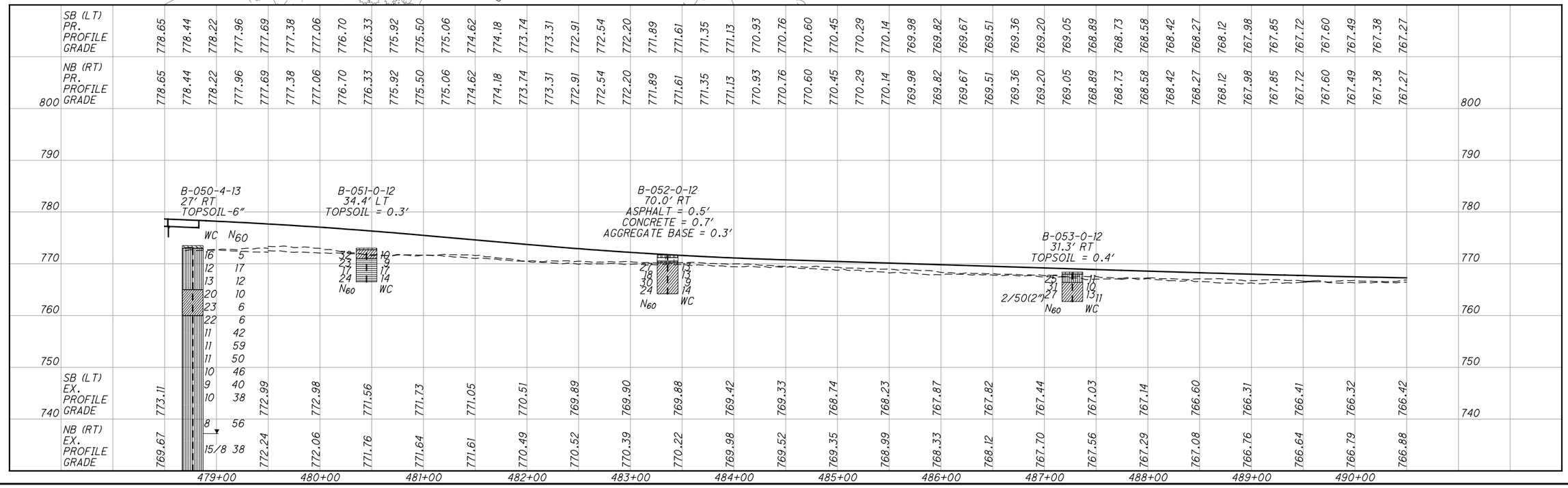

HORIZONTAL SCALE IN FEET
0 25 50 100

CALCULATED LJS
CHECKED PAN

SOIL PROFILE
STA. 478+50.00 TO STA. 490+50.00

FRA-71-5.29

29 / 32

P:\84868\geotechnical\sheets\84868IP018.dgn 3/31/2015 8:27:59 AM mtakacs

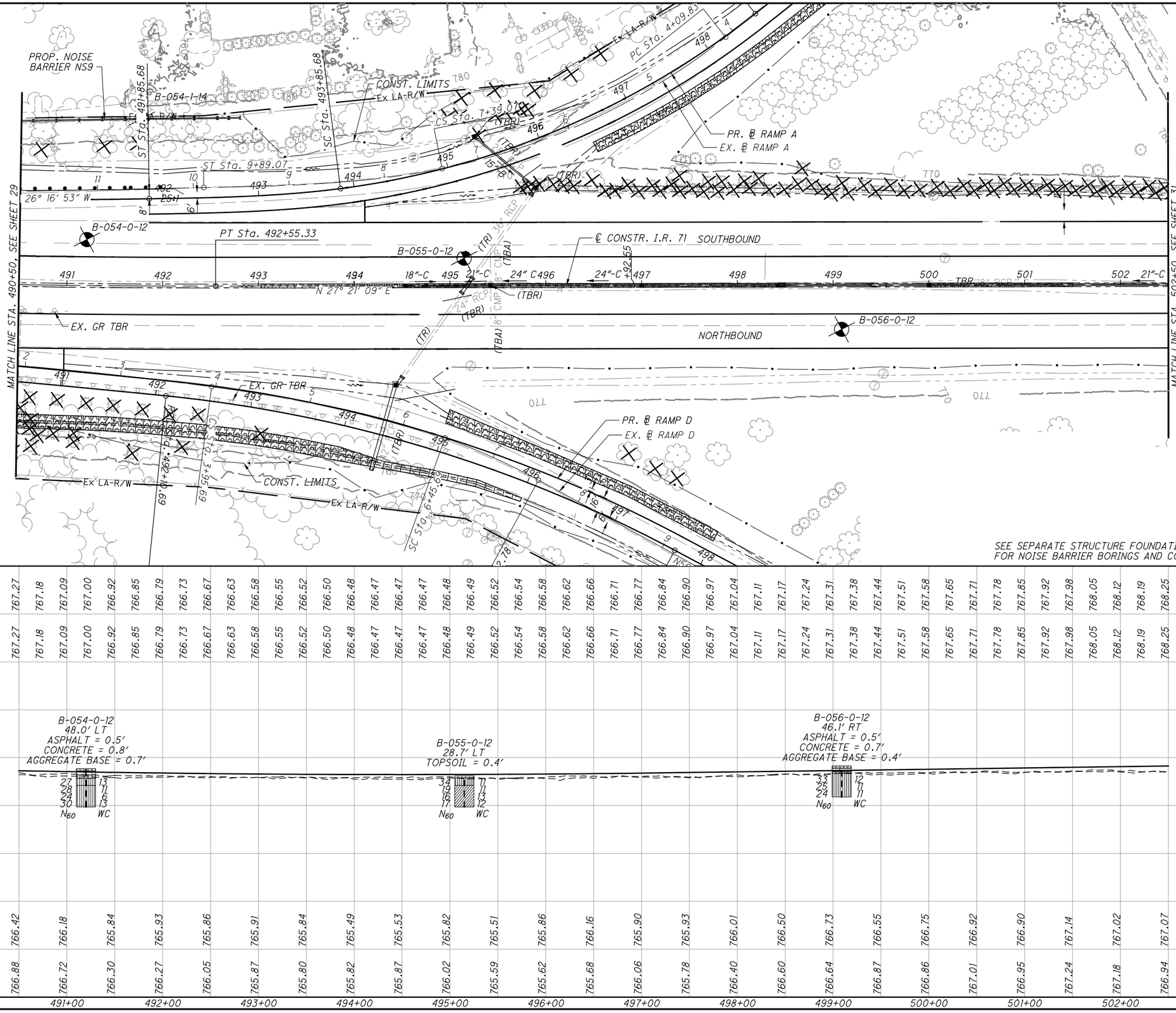

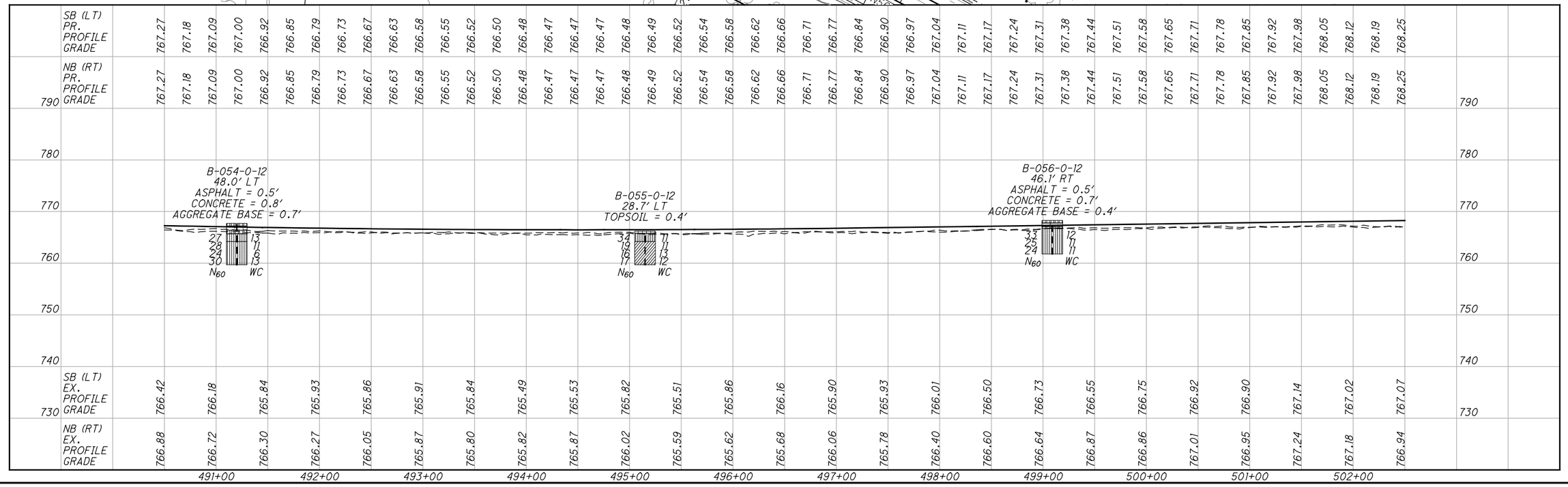

SOIL PROFILE
STA. 490+50.00 TO STA. 502+50.00

FRA-71-5.29

30 / 32

CALCULATED LJS
CHECKED PAN

HORIZONTAL SCALE IN FEET
0 25 50 100

P:\84868\geotechnical\sheets\84868IP019.dgn 12/16/2014 10:46:06 AM pnarsavage

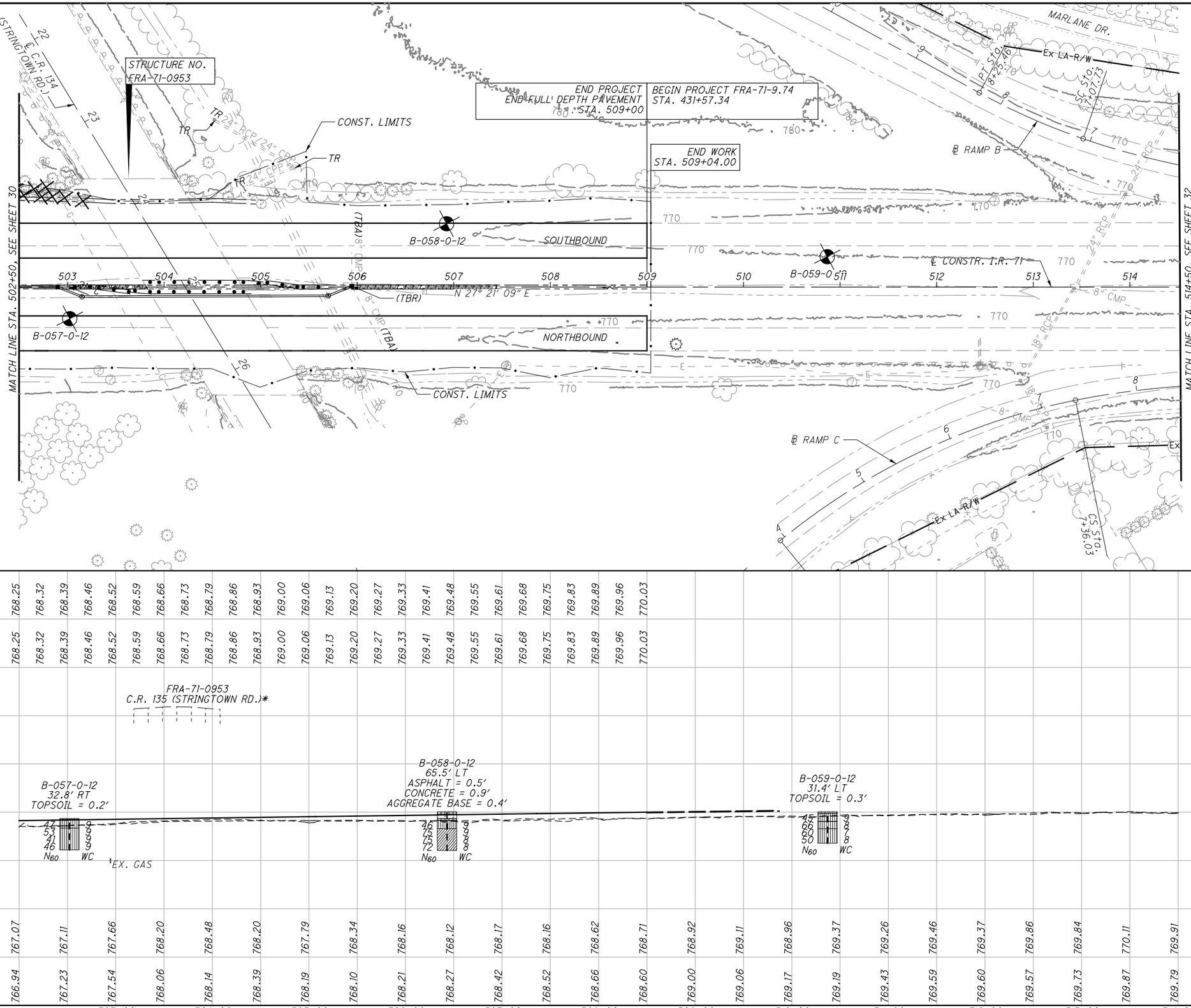

HORIZONTAL SCALE IN FEET

CALCULATED LJS
CHECKED PAN

SOIL PROFILE
STA. 502+50.00 TO STA. 514+50.00

FRA-71-5.29

31 / 32

P:\84868\geotechnical\sheets\84868IP020.dgn 12/16/2014 10:46:09 AM pnarsavage

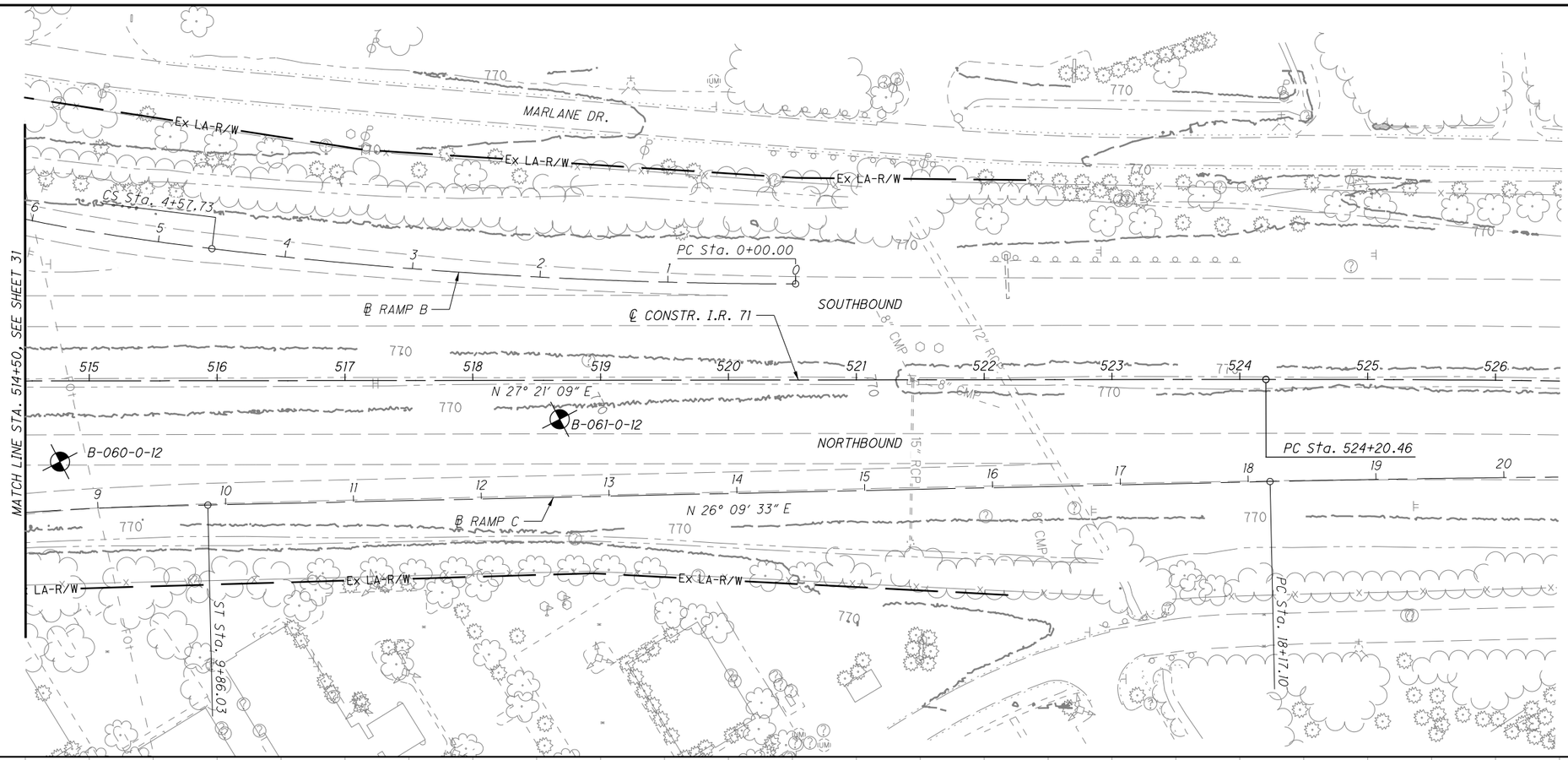

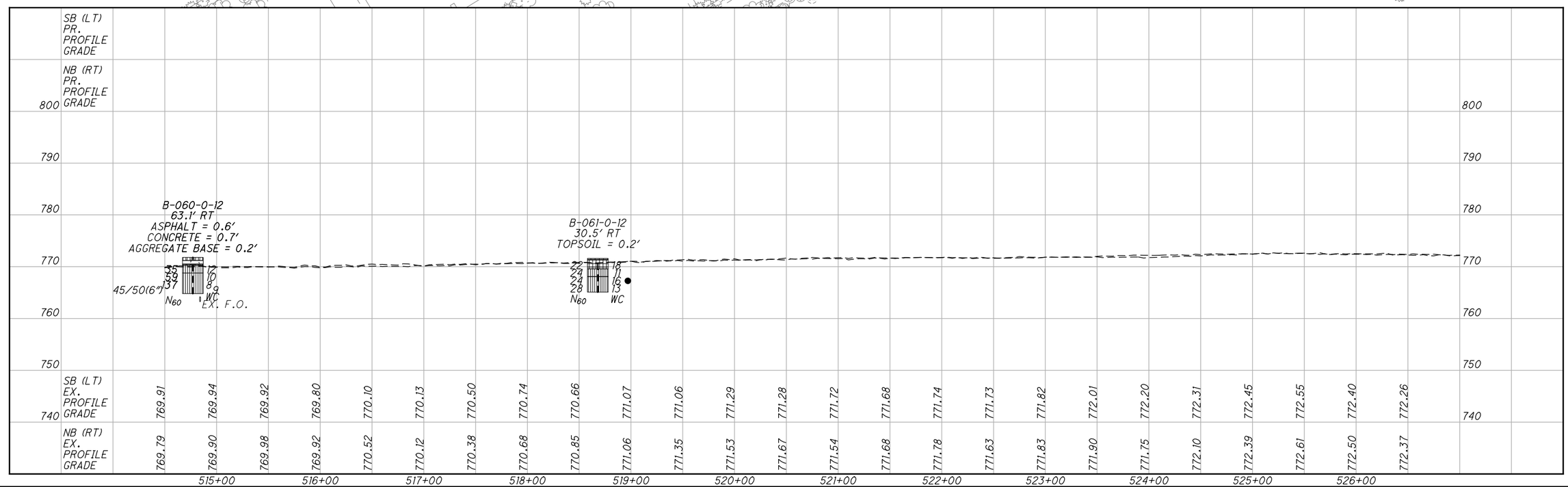

HORIZONTAL SCALE IN FEET
0 25 50 100

CALCULATED LJS
CHECKED PAN

SOIL PROFILE
STA. 514+50.00 TO END PROJECT

FRA-71-5.29

32/32

P:\84868\geotechnical\sheets\84868IP021.dgn 12/16/2014 10:46:10 AM pnarsavage

PROJECT DESCRIPTION

REPLACEMENT OF THE EXISTING THREE-SPAN STRUCTURES FRA-71-0903L/R OVER WHITE ROAD WITH PROPOSED SINGLE-SPAN TWIN STRUCTURES.

HISTORIC RECORDS

HISTORIC RECORDS WERE OBTAINED FROM 1958 FOR THE ORIGINAL BRIDGE. THEY CONSISTED OF 4 ROD PENETRATION TESTS AND 3 AUGER BORINGS. THE INFORMATION OBTAINED FROM THE 1958 RECORDS WAS RELATIVELY LIMITED, BUT MATCHED WITH THE RESULTS FROM THE CURRENT EXPLORATION. BECAUSE THE LOCATION OF THE 1958 BORINGS COULD NOT BE DETERMINED WITH ANY ACCURACY, THEY ARE NOT INCLUDED.

TWO BORINGS DRILLED BY GANNETT FLEMING IN 2009 FOR THE SOIL NAIL WALL WERE LOCATED AT THE FORWARD ABUTMENT OF THE BRIDGE. THE BORING LOGS AND PROFILES ARE INCLUDED, BUT NOT SHOWN ON THE PLAN, AS NO LOCATION INFORMATION WAS AVAILABLE FOR THESE BORINGS.

GEOLOGY

THE PROJECT SITE IS LOCATED IN THE COLUMBUS LOWLAND AREA OF THE SOUTHERN OHIO LOAMY TILL PLAIN PHYSIOGRAPHIC REGION. THIS AREA IS GENERALLY A RELATIVELY FLAT-LYING LOWLAND AREA GENERALLY SLOPING TOWARDS THE SCIOTO RIVER VALLEY. THE OVERBURDEN SOIL AT THE PROJECT SITE CONSISTS OF GROUND MORAINES DEPOSITED BY THE WISCONSINAN GLACIER, CUT BY STREAM VALLEYS. THE NATURAL SOILS ARE OFTEN HARD OR VERY DENSE DUE TO THE PAST WEIGHT OF UP TO 3,000 FEET OF ICE. THE SURFACE TOPOGRAPHY AT THE SITE IS GENERALLY AROUND ELEVATION 760 TO 770 FEET OUTSIDE THE LIMITS OF THE HIGHWAY EMBANKMENT.

THE UNDERLYING BEDROCK REPORTEDLY CONSISTS OF LIMESTONE AND DOLOMITE FROM THE DEVONIAN-AGE COLUMBUS LIMESTONE FORMATION AND THE UPPER SILURIAN-AGE SALINA GROUP. THESE ROCKS ARE COLORED LIGHT GRAY TO BROWN. THE BEDROCK TOPOGRAPHY MAP OF OHIO FROM ODNR INDICATES THAT THE TOP OF BEDROCK ELEVATION AT THE PROJECT SITE IS BETWEEN 600 AND 650 FEET.

THE PROJECT SITE IS OUTSIDE THE LIMITS OF THE PROBABLE KARST AREAS IN OHIO AS IDENTIFIED BY ODNR. THERE ARE NO ABANDONED UNDERGROUND MINES REPORTED IN THE VICINITY OF THE PROJECT SITE.

RECONNAISSANCE

THE SITE IS LOCATED IN JACKSON TOWNSHIP, FRANKLIN COUNTY, NEAR GROVE CITY, OHIO. THE EXISTING IR 71 IS A FOUR-LANE, ASPHALT PAVED ROADWAY RUNNING NORTH-TO-SOUTH THAT CROSSES OVER WHITE ROAD WITHIN THE PROJECT LIMITS. THE EXISTING BRIDGES OVER WHITE ROAD WERE CONSTRUCTED IN 1960, AND ARE THREE-SPAN, CONTINUOUS REINFORCED CONCRETE SLAB BRIDGES WITH CONCRETE CAP AND COLUMN PIERS AND CAPPED PILE ABUTMENTS. THE ROADWAY TRAVERSES PRIMARILY RESIDENTIAL PROPERTIES WITH SCATTERED AGRICULTURAL AREAS. A SOIL NAIL WALL WAS CONSTRUCTED IN THE SLOPE AT THE FORWARD ABUTMENT IN 2010 TO ALLOW ROOM FOR A BIKE PATH ALONG WHITE ROAD. RECONNAISSANCE WORK WAS PERFORMED BY E.L. ROBINSON ENGINEERING. RECONNAISSANCE TRIPS WERE MADE IN OCTOBER 2013 BY PETER NARSAVAGE AND LOUIS SCHULTE TO LAYOUT BORING LOCATIONS.

SUBSURFACE EXPLORATION

BETWEEN DECEMBER 30, 2013 AND JANUARY 20, 2014, A TOTAL OF FOUR (4) BORINGS, DESIGNATED AS B-050-1-13 THROUGH B-050-4-13, WERE DRILLED BY DLZ OHIO. THE BORINGS WERE LOCATED AT THE FORWARD AND REAR ABUTMENTS OF BOTH THE LEFT AND RIGHT BRIDGES. THE BORINGS WERE DRILLED WITH A TRUCK-MOUNTED ROTARY DRILL RIG, USING 3.25-INCH INSIDE DIAMETER HOLLOW STEM AUGERS TO ADVANCE THE BORINGS THROUGH THE SOIL. DISTURBED SOIL SAMPLES WERE OBTAINED IN ACCORDANCE WITH THE STANDARD PENETRATION TEST (AASHTO T206) AT 2.5 TO 5-FOOT INTERVALS FOR THE FULL DEPTH OF THE BORINGS. THE HAMMER SYSTEM USED WAS AN AUTOMATIC DROP HAMMER AND WAS LAST CALIBRATED ON JANUARY 27, 2012. DURING THE CALIBRATION, THE AVERAGE MEASURED DRILL ROD ENERGY RATIO (ER) WAS 77 PERCENT. MEASURED BLOW COUNTS (NM) FROM THE STANDARD PENETRATION TEST WERE ADJUSTED ON THE BORING LOG TO AN EQUIVALENT STANDARD ENERGY RATIO OF 60 PERCENT (N60), USING THE EQUATION N60 = NM (ER/60). NO UNDISTURBED SOIL SAMPLES WERE OBTAINED, AND BEDROCK WAS NOT ENCOUNTERED.

LEGEND

DESCRIPTION	ODOT CLASS	CLASSIFIED MECH.	CLASSIFIED VISUAL
GRAVEL AND/OR STONE FRAGMENTS W/ SAND	A-1-b	1	2
GRAVEL AND/OR STONE FRAGMENTS W/ SAND, SILT & CLAY	A-2-6	-	1
SANDY SILT	A-4a	18	39
SILT AND CLAY	A-6a	7	6
SILTY CLAY	A-6b	1	3
	TOTAL	27	51

PAVEMENT OR BASE = X = APPROXIMATE THICKNESS — VISUAL

SOD AND TOPSOIL = X = APPROXIMATE THICKNESS — VISUAL

PROJECT BORING LOCATION - PLAN VIEW.

DRIVE SAMPLE AND/OR ROCK CORE BORING PLOTTED TO VERTICAL SCALE ONLY. HORIZONTAL BAR INDICATES A CHANGE IN STRATIGRAPHY.

WC — INDICATES WATER CONTENT IN PERCENT.

N_{60} — INDICATES STANDARD PENETRATION RESISTANCE NORMALIZED TO 60% DRILL ROD ENERGY RATIO.

X/Y/D" — NUMBER OF BLOWS FOR STANDARD PENETRATION TEST (*SPT*):
X= NUMBER OF BLOWS FOR 6 INCHES (UNCORRECTED).
Y/D"= NUMBER OF BLOWS (UNCORRECTED) FOR D" OF PENETRATION AT REFUSAL.

▼— INDICATES STATIC WATER ELEVATION.

W— INDICATES FREE WATER ELEVATION.

* INDICATES A SAMPLE TAKEN WITHIN 3 FT OF PROPOSED GRADE.

SS INDICATES A SPLIT SPOON SAMPLE.

NP INDICATES A NON-PLASTIC SAMPLE.

EXPLORATION FINDINGS

AT THE GROUND SURFACE, THE BORINGS ENCOUNTERED 4 TO 6 INCHES OF TOPSOIL. BELOW THE TOPSOIL, THE BORINGS GENERALLY ENCOUNTERED 15 TO 20 FEET OF MEDIUM STIFF TO STIFF COHESIVE SOIL, CONSISTING OF PLASTIC SILTY SAND (A-4A), SILT AND CLAY (A-6A), AND SILTY CLAY (A-6B). FROM 6 TO 21 FEET OF THIS LAYER WAS NOTED AS POSSIBLE FILL MATERIAL, PROBABLY FROM THE ORIGINAL CONSTRUCTION OF THE HIGHWAY EMBANKMENT. BELOW THE POSSIBLE FILL, THE BORINGS GENERALLY ENCOUNTERED VERY STIFF TO HARD GLACIAL TILL, WHICH CONSISTED MAINLY OF SANDY SILT (A-4A) WITH OCCASIONAL LAYERS OF HARD SILTY CLAY (A-6B) AND DENSE TO VERY DENSE SAND AND GRAVEL SEAMS (A-1-B AND A-2-6).

GROUNDWATER WAS ENCOUNTERED AND MEASURED IN TWO OF THE FOUR BORINGS. BORING B-050-1-13 ENCOUNTERED WATER SEEPAGE AT A DEPTH OF 41 FEET IN THE SANDY SILT AND ENCOUNTERED A WET SAND AND GRAVEL SEAM AT A DEPTH OF 73.5 FEET. THE WATER LEVEL AT COMPLETION OF DRILLING IN THIS BORING WAS MEASURED AT A DEPTH OF 7.2 FEET. BORING B-050-4-13 DID NOT ENCOUNTER ANY VISIBLE SIGNS OF WATER SEEPAGE IN THE SAMPLES, BUT THE WATER LEVEL AT COMPLETION OF DRILLING IN THIS BORING WAS MEASURED AT A DEPTH OF 36.3 FEET. BORING B-050-2-13 DID NOT ENCOUNTER ANY GROUNDWATER, WHILE B-050-3-13 ENCOUNTERED WET SAND AND GRAVEL SEAMS BELOW A DEPTH OF 40 FEET, BUT DID NOT HAVE ANY MEASUREABLE WATER LEVEL AT THE COMPLETION OF DRILLING.

NONE OF THE BORINGS ENCOUNTERED BEDROCK.

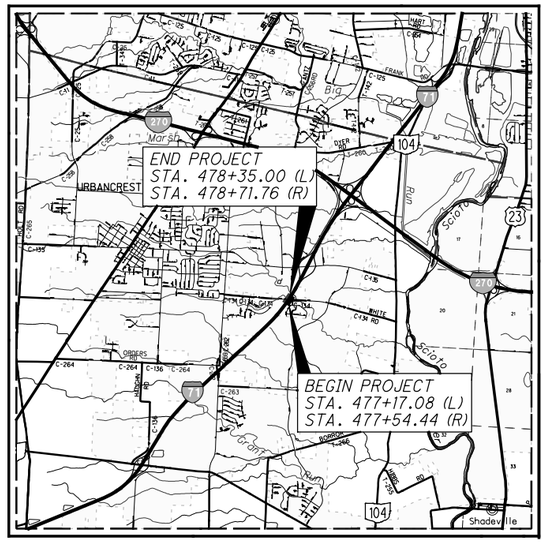

LOCATION MAP

SCALE IN MILES

0 1 2 3 4

N

PARTICLE SIZE DEFINITIONS

12"	3"	2.0 mm	0.42 mm	0.074 mm	0.005 mm
BOULDERS	COBBLES	GRAVEL	COARSE SAND	FINE SAND	SILT	CLAY
		No. 10 SIEVE	No. 40 SIEVE	No. 200 SIEVE		

SPECIFICATIONS

THIS GEOTECHNICAL EXPLORATION WAS PERFORMED IN ACCORDANCE WITH THE STATE OF OHIO, DEPARTMENT OF TRANSPORTATION, OFFICE OF GEOTECHNICAL ENGINEERING, SPECIFICATIONS FOR GEOTECHNICAL EXPLORATIONS, DATED AUGUST 2013.

AVAILABLE INFORMATION

ALL AVAILABLE SOIL AND BEDROCK INFORMATION THAT CAN BE CONVENIENTLY SHOWN ON THE GEOTECHNICAL EXPLORATION SHEETS HAS BEEN SO REPORTED. ADDITIONAL EXPLORATIONS MAY HAVE BEEN MADE TO STUDY SOME SPECIAL ASPECT OF THE PROJECT. COPIES OF THIS DATA, IF ANY, MAY BE INSPECTED IN THE DISTRICT DEPUTY DIRECTOR'S OFFICE OR THE OFFICE OF GEOTECHNICAL ENGINEERING AT 1980 WEST BROAD STREET.

RECON. - PAN/LJS 10/2013
DRILLING - DLZ 12/2013 - 1/2014
DRAWN - LJS - 6/2014
REVIEWED - PAN - 6/2014

E.L. ROBINSON ENGINEERING
1901 Watermark Drive, Suite 310 - Columbus, Ohio 43215
www.elrobinsonengineering.com

PID NO. 84868

STRUCTURE FOUNDATION EXPLORATION
BRIDGE NO. FRA-071-0903L/R OVER WHITE RD

FRA-71-5.29

P:\84868\geotechnical\sheets\84868ZC001.dgn 12/16/2014 10:46:11 AM pnarsavage

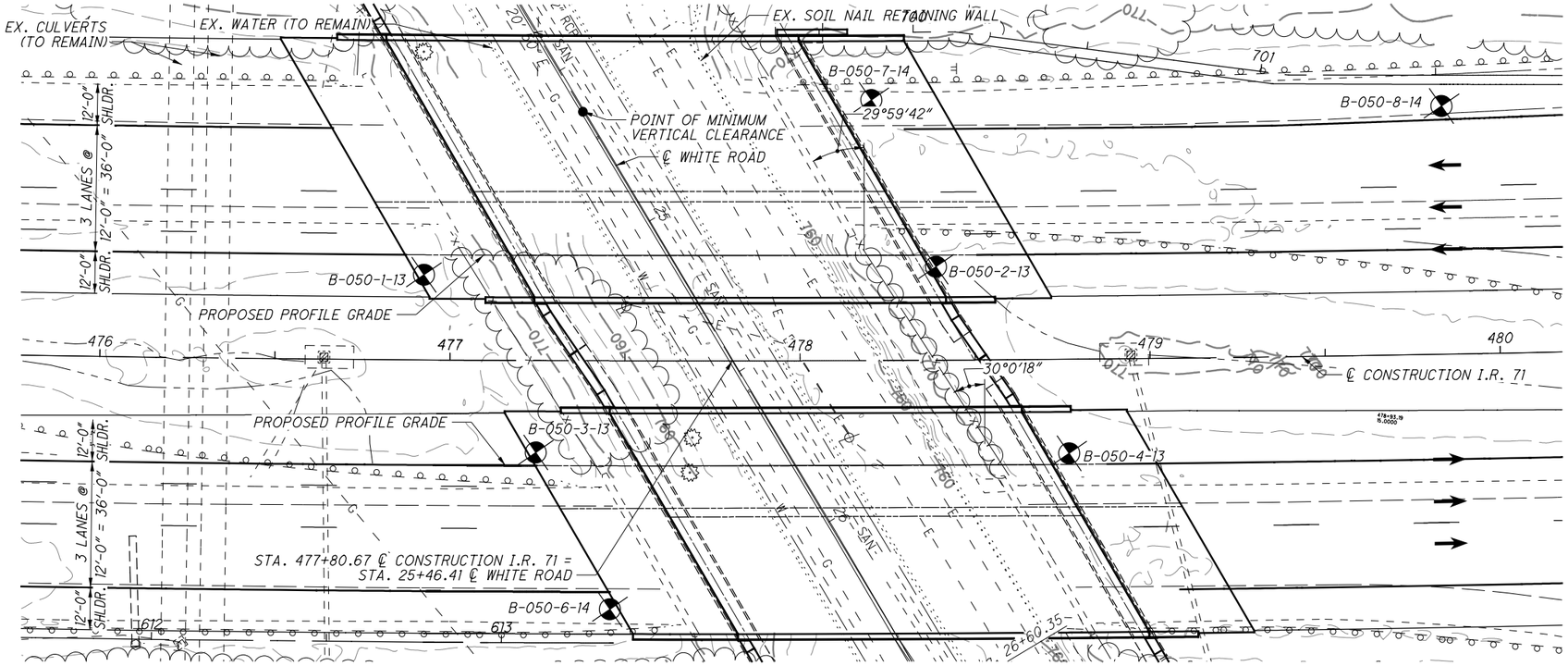

SEE SEPARATE STRUCTURE FOUNDATION EXPLORATION FOR NOISE BARRIER BORINGS

PLAN

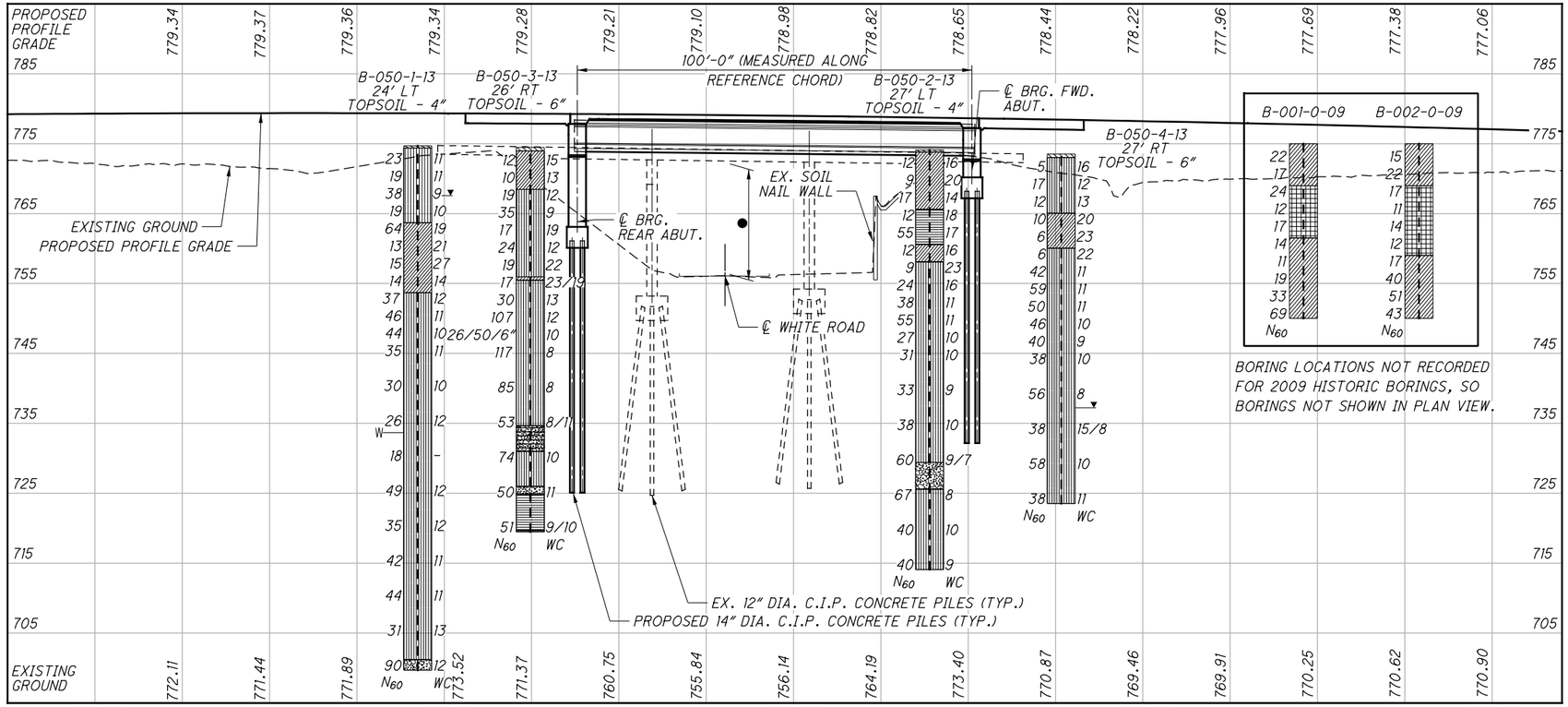

PROFILE ALONG ℄ CONSTRUCTION I.R. 71

HORIZONTAL SCALE IN FEET
0 5 10 20

DRAWN LJS CHECKED PAN

STRUCTURE FOUNDATION EXPLORATION
BRIDGE NO. FRA-071-0903L/R OVER WHITE RD

FRA-71-5.29

2 / 8

P:\84868\geotechnical\sheets\84868ZP001.dgn 12/16/2014 10:46:17 AM pnarsavage

PROJECT: FRA-71-05.29	DRILLING FIRM / OPERATOR: DLZ / K. CONRAD	DRILL RIG: CME 75 TRUCK (SN 237127)	STATION / OFFSET: 476+92, 24 LT	EXPLORATION ID B-050-1-13
TYPE: STRUCTURE	SAMPLING FIRM / LOGGER: DLZ / T. HOLFINGER	HAMMER: CME AUTOMATIC	ALIGNMENT: EX. I-71	
PID: 84868 BR ID: FRA-071-0903L/R	DRILLING METHOD: 3.25" HSA	CALIBRATION DATE: 1/27/12	ELEVATION: 774.7 (MSL) EOB: 75.0 ft.	PAGE 1 OF 2
START: 1/2/14 END: 1/8/14	SAMPLING METHOD: SPT	ENERGY RATIO (%): 77	COORD: 682300.080 N, 1812890.030 E	

MATERIAL DESCRIPTION AND NOTES	ELEV.	DEPTHS	SPT/ RQD	N_{60}	REC (%)	SAMPLE ID	HP (tsf)	GRADATION (%) GR	CS	FS	SI	CL	ATTERBERG LL	PL	PI	WC	ODOT CLASS (GI)	ABAN-DONED
Topsoil - 4"	774.4																	
POSSIBLE FILL: Medium dense to dense brown SANDY SILT (A-4a), some fine to coarse sand, trace fine gravel; damp.			4 8 10	23	72	SS-1	4.50	-	-	-	-	-	-	-	-	11	A-4a (V)	
			8 8 7	19	72	SS-2	2.50	7	12	18	38	25	22	15	7	11	A-4a (6)	
		▼	8 13 17	38	89	SS-3	4.50	-	-	-	-	-	-	-	-	9	A-4a (V)	
			3 7 8	19	56	SS-4	2.50	-	-	-	-	-	-	-	-	10	A-4a (V)	
	763.7																	
POSSIBLE FILL: Medium stiff to stiff brown SILT AND CLAY (A-6a), some fine to coarse sand, trace fine gravel; moist.			3 6 44	64	72	SS-5	1.75	7	7	15	30	41	33	18	15	19	A-6a (9)	
			6 4 6	13	67	SS-6	1.00	-	-	-	-	-	-	-	-	21	A-6a (V)	
			3 4 8	15	78	SS-7	1.25	-	-	-	-	-	-	-	-	27	A-6a (V)	
			3 4 7	14	67	SS-8	1.00	36	6	15	23	20	33	20	13	14	A-6a (2)	
	753.7																	
Medium dense to dense brown and gray SANDY SILT (A-4a), "and" fine to coarse gravel, some fine to coarse sand; damp.			3 12 17	37	100	SS-9	4.00	-	-	-	-	-	-	-	-	12	A-4a (V)	
			7 17 19	46	100	SS-10	4.50	10	10	19	35	26	21	15	6	11	A-4a (5)	
@ 26.0'-27.5', gray.			12 18 16	44	100	SS-11	4.50	-	-	-	-	-	-	-	-	10	A-4a (V)	
			5 11 16	35	100	SS-12	4.00	-	-	-	-	-	-	-	-	11	A-4a (V)	
			6 10 13	30	100	SS-13	4.50	-	-	-	-	-	-	-	-	10	A-4a (V)	
			6 10 10	26	100	SS-14	3.50	8	12	21	38	21	20	13	7	12	A-4a (5)	
		W																
			3 6 8	18	0	SS-15	-	-	-	-	-	-	-	-	-	-	A-4a (V)	
			12 17 21	49	78	SS-16	4.50	7	8	26	41	18	19	13	6	12	A-4a (5)	
			8 12 15	35	94	SS-17	4.50	-	-	-	-	-	-	-	-	12	A-4a (V)	
			12 16 17	42	100	SS-18	4.25	10	10	20	40	20	21	13	8	11	A-4a (5)	

STANDARD ODOT SOIL BORING LOG (11 X 17) - OH DOT.GDT - 6/9/14 08:48 - P:\84868\GEOTECHNICAL\FRA071_0903\ENGAPPS\GINT\1321-4019.00 FRA-71-5.29 - COPY.GPJ

PID: 84868	BR ID: FRA-071-0903L/R	PROJECT: FRA-71-05.29	STATION / OFFSET: 476+92, 24 LT	START: 1/2/14	END: 1/8/14	PG 2 OF 2	B-050-1-13

MATERIAL DESCRIPTION AND NOTES	ELEV.	DEPTHS	SPT/ RQD	N_{60}	REC (%)	SAMPLE ID	HP (tsf)	GRADATION (%) GR	CS	FS	SI	CL	ATTERBERG LL	PL	PI	WC	ODOT CLASS (GI)	ABAN-DONED
Medium dense to dense brown and gray SANDY SILT (A-4a), "and" fine to coarse gravel, some fine to coarse sand; damp. *(continued)*	714.7	61																
		62																
		63																
		64	13 15 19	44	89	SS-19	4.50	-	-	-	-	-	-	-	-	11	A-4a (V)	
		65																
		66																
		67																
		68																
		69	6 11 13	31	72	SS-20	4.00	-	-	-	-	-	-	-	-	13	A-4a (V)	
		70																
		71																
		72																
		73																
	701.2																	
Very dense gray GRAVEL WITH SAND (A-1-b), "and" fine to coarse sand, trace silty clay; wet.	699.7	74	16 33 37	90	61	SS-21	-	-	-	-	-	-	-	-	-	12	A-1-b (V)	
		EOB 75																

NOTES: NONE

ABANDONMENT METHODS, MATERIALS, QUANTITIES: USED 1 BAG BENTONITE CHIPS; TREMIED 2 BAGS BENTONITE GROUT

STANDARD ODOT SOIL BORING LOG (11 X 17) - OH DOT.GDT - 6/9/14 08:48 - P:\84868\GEOTECHNICAL\FRA071_0903\ENGAPPS\GINT\1321-4019.00 FRA-71-5.29 - COPY.GPJ

PROJECT: FRA-71-05.29	DRILLING FIRM / OPERATOR: DLZ / K. CONRAD	DRILL RIG: CME 75 TRUCK (SN 237127)	STATION / OFFSET: 478+39, 27 LT	EXPLORATION ID B-050-2-13	
TYPE: STRUCTURE	SAMPLING FIRM / LOGGER: DLZ / T. HOLFINGER	HAMMER: CME AUTOMATIC	ALIGNMENT: EX. I-71		
PID: 84868 BR ID: FRA-071-0903L/R	DRILLING METHOD: 3.25" HSA	CALIBRATION DATE: 1/27/12	ELEVATION: 774.1 (MSL) EOB: 60.0 ft.	PAGE 1 OF 1	
START: 1/9/14 END: 1/10/14	SAMPLING METHOD: SPT	ENERGY RATIO (%): 77	COORD: 682421.870 N, 1812971.010 E		

MATERIAL DESCRIPTION AND NOTES	ELEV.	DEPTHS	SPT/ RQD	N_{60}	REC (%)	SAMPLE ID	HP (tsf)	GRADATION (%) GR	CS	FS	SI	CL	ATTERBERG LL	PL	PI	WC	ODOT CLASS (GI)	ABAN-DONED
Topsoil - 4"	774.1																	
POSSIBLE FILL: Very stiff to hard brown SILT AND CLAY (A-6a), some fine to coarse sand, trace fine gravel; moist.	773.8		4 4 5	12	56	SS-1	2.50	-	-	-	-	-	-	-	-	16	A-6a (V)	
@ 3.5'-5.0', medium stiff.			2 3 4	9	39	SS-2	0.75	5	8	15	40	32	30	17	13	20	A-6a (9)	
			3 8 5	17	56	SS-3	4.50	-	-	-	-	-	-	-	-	14	A-6a (V)	
POSSIBLE FILL: Very stiff brown SILTY CLAY (A-6b), some fine to coarse sand, trace fine gravel; moist.	765.6		3 4 5	12	72	SS-4	2.75	8	8	15	34	35	33	16	17	18	A-6b (10)	
			37 33 10	55	67	SS-5	2.50	-	-	-	-	-	-	-	-	17	A-6b (V)	
POSSIBLE FILL: Medium stiff brown SILT AND CLAY (A-6a), some fine to coarse sand, trace fine gravel; moist.	760.6		6 4 5	12	28	SS-6	0.75	7	10	17	32	34	29	16	13	16	A-6a (7)	
Medium dense to dense gray SANDY SILT (A-4a), some fine to coarse sand, little fine gravel; damp. @ 16.0'-17.5', loose, organic material, color dark gray, moist.	758.1		3 3 4	9	89	SS-7	1.50	1	4	15	45	35	29	19	10	23	A-4a (8)	
@ 18.5'-26.0', color brown.			12 9 10	24	11	SS-8	1.75	-	-	-	-	-	-	-	-	16	A-4a (V)	
			10 14 16	38	89	SS-9	4.50	11	12	20	35	22	20	14	6	11	A-4a (4)	
			13 19 24	55	78	SS-10	4.50	-	-	-	-	-	-	-	-	11	A-4a (V)	
			9 10 11	27	89	SS-11	3.50	-	-	-	-	-	-	-	-	10	A-4a (V)	
			9 11 13	31	67	SS-12	4.50	15	10	17	38	20	21	13	8	10	A-4a (5)	
			11 12 14	33	89	SS-13	4.50	-	-	-	-	-	-	-	-	9	A-4a (V)	
			8 12 18	38	89	SS-14	4.50	-	-	-	-	-	-	-	-	10	A-4a (V)	
	729.4		14 23 24	60	100	SS-15A/B	4.50 NA	~ 51	~ 17	~ 11	~ 13	~ 8	~ 17	~ 14	~ 3	9 7	A-4a (V) A-1-b (0)	
Dense gray GRAVEL WITH SAND (A-1-b), some silty clay, some fine to coarse sand; damp.	725.6																	
Dense gray SANDY SILT (A-4a), some fine to coarse sand, little fine gravel; damp.			18 22 30	67	100	SS-16	4.50	-	-	-	-	-	-	-	-	8	A-4a (V)	
			10 14 17	40	89	SS-17	4.50	15	10	17	38	20	20	14	6	10	A-4a (5)	
	714.1	EOB	8 14 17	40	100	SS-18	4.50	-	-	-	-	-	-	-	-	9	A-4a (V)	

NOTES: NONE

ABANDONMENT METHODS, MATERIALS, QUANTITIES: USED 3 BAG BENTONITE CHIPS; USED SOIL CUTTINGS

STANDARD ODOT SOIL BORING LOG (11 X 17) - OH DOT.GDT - 6/9/14 08:48 - P:\84868\GEOTECHNICAL\FRA071_0903\ENGAPPS\GINT\1321-4019.00 FRA-71-5.29 - COPY.GPJ

PROJECT: FRA-71-05.29	DRILLING FIRM / OPERATOR: DLZ / K. CONRAD	DRILL RIG: CME 75 TRUCK (SN 237127)	STATION / OFFSET: 477+25, 26 RT	EXPLORATION ID B-050-3-13
TYPE: STRUCTURE	SAMPLING FIRM / LOGGER: DLZ / T. HOLFINGER	HAMMER: CME AUTOMATIC	ALIGNMENT: EX. I-71	
PID: 84868 BR ID: FRA-071-0903L/R	DRILLING METHOD: 3.25" HSA	CALIBRATION DATE: 1/27/12	ELEVATION: 774.5 (MSL) EOB: 55.0 ft.	PAGE 1 OF 1
START: 12/30/13 END: 12/31/13	SAMPLING METHOD: SPT	ENERGY RATIO (%): 77	COORD: 682297.630 N, 1812949.910 E	

MATERIAL DESCRIPTION AND NOTES	ELEV.	DEPTHS	SPT/ RQD	N_{60}	REC (%)	SAMPLE ID	HP (tsf)	GRADATION (%) GR	CS	FS	SI	CL	ATTERBERG LL	PL	PI	WC	ODOT CLASS (GI)	ABAN-DONED
Topsoil - 6"	774.0																	
POSSIBLE FILL: Very stiff brown SILT AND CLAY (A-6a), some fine to coarse sand, trace fine gravel; damp.			3 4 5	12	61	SS-1	2.75	7	9	15	34	35	30	16	14	15	A-6a (8)	
			1 3 5	10	67	SS-2	4.00	-	-	-	-	-	-	-	-	13	A-6a (V)	
	768.5																	
Medium dense brown SANDY SILT (A-4a), some fine to coarse sand, trace fine to coarse gravel; damp.			2 6 9	19	83	SS-3	3.50	9	11	18	35	27	24	17	7	12	A-4a (5)	
			4 13 14	35	78	SS-4	4.50	-	-	-	-	-	-	-	-	9	A-4a (V)	
			5 5 8	17	72	SS-5	3.50	-	-	-	-	-	-	-	-	19	A-4a (V)	
			7 10 9	24	67	SS-6	2.00	12	10	17	33	28	22	15	7	12	A-4a (5)	
@ 16.0'-21.0', dark gray, organic, moist.			3 7 8	19	72	SS-7	2.75	-	-	-	-	-	-	-	-	22	A-4a (V)	
	756.0																	
Stiff dark gray to black SILT AND CLAY (A-6a), little fine to coarse sand, trace fine gravel; moist.	755.5		2 5 8	17	78	SS-8A/B	1.50	2	4	11	45	38	32	19	13	23	A-6a (9)	
							1.50	-	-	-	-	-	-	-	-	19	A-4a (V)	
Medium dense to dense brown SANDY SILT (A-4a), some fine to coarse sand, trace fine to coarse gravel; damp. @ 19.8'-21.0', black, organic.			7 8 15	30	56	SS-9	3.50	-	-	-	-	-	-	-	-	13	A-4a (V)	
@ 23.5'-39.8', consistency change to very dense.			30 37 46	107	100	SS-10	4.50	7	12	33	35	13	NP	NP	NP	12	A-4a (3)	
			26 50	-	44	SS-11	4.50	-	-	-	-	-	-	-	-	10	A-4a (V)	
@ 28.5'-30', gray.			29 41 50	117	100	SS-12	4.50	-	-	-	-	-	-	-	-	8	A-4a (V)	
			23 31 35	85	100	SS-13	4.50	14	9	17	35	25	21	14	7	8	A-4a (5)	
			18 20 21	53	100	SS-14A/B	4.50	-	-	-	-	-	-	-	-	8	A-4a (V)	
	734.7						NA	24	29	19	-	28 -	-	-	-	11	A-2-6 (V)	
Dense gray GRAVEL WITH SAND, SILT, AND CLAY (A-2-6), "and" fine to coarse sand, "and" clay; wet.	731.0																	
Very dense gray SANDY SILT (A-4a), "and" clay, trace fine gravel; wet.			15 29 29	74	100	SS-15	-	-	-	-	-	-	-	-	-	10	A-4a (V)	
	726.0																	
Dense gray GRAVEL WITH SAND (A-1-b), "and" fine to coarse sand, trace silty clay; wet.	724.9		18 21 18	50	89	SS-16A/B	NA	53	24	11	-	12 -	-	-	-	11	A-1-b (V)	
Hard gray SILTY CLAY (A-6b), "and" fine to coarse sand, trace fine to coarse gravel; moist.							4.50	-	-	-	-	-	-	-	-	11	A-6b (V)	
			12 19 21	51	50	SS-17A/B	4.50	-	-	-	-	-	-	-	-	9	A-6b (V)	
	719.7						NA	-	-	-	-	-	-	-	-	10	A-4a (V)	
Dense gray SANDY SILT (A-4a), "and" silty clay, trace fine gravel; moist.	719.5	EOB																

NOTES: NONE

ABANDONMENT METHODS, MATERIALS, QUANTITIES: USED 2 BAG BENTONITE CHIPS; USED SOIL CUTTINGS

STANDARD ODOT SOIL BORING LOG (11 X 17) - OH DOT.GDT - 6/9/14 08:48 - P:\84868\GEOTECHNICAL\FRA071_0903\ENGAPPS\GINT\1321-4019.00 FRA-71-5.29 - COPY.GPJ

PROJECT: FRA-71-05.29	DRILLING FIRM / OPERATOR: DLZ / L. BARTLETT	DRILL RIG: CME 75 TRUCK (SN 237127)	STATION / OFFSET: 478+77, 27 RT	EXPLORATION ID B-050-4-13
TYPE: STRUCTURE	SAMPLING FIRM / LOGGER: DLZ / T. HOLFINGER	HAMMER: CME AUTOMATIC	ALIGNMENT: EX. I-71	
PID: 84868 BR ID: FRA-071-0903L/R	DRILLING METHOD: 3.25" HSA	CALIBRATION DATE: 1/27/12	ELEVATION: 773.5 (MSL) EOB: 50.0 ft.	PAGE 1 OF 1
START: 1/20/14 END: 1/20/14	SAMPLING METHOD: SPT	ENERGY RATIO (%): 77	COORD: 682423.010 N, 1813036.460 E	

MATERIAL DESCRIPTION AND NOTES	ELEV. 773.5	DEPTHS	SPT/ RQD	N_{60}	REC (%)	SAMPLE ID	HP (tsf)	GRADATION (%) GR	CS	FS	SI	CL	ATTERBERG LL	PL	PI	WC	ODOT CLASS (GI)	ABAN-DONED
Topsoil - 6"	773.0																	
POSSIBLE FILL: Loose to medium dense brown SANDY SILT (A-4a), some fine to coarse sand, trace fine gravel; damp.			3 2 2	5	39	SS-1	1.75	-	-	-	-	-	-	-	-	16	A-4a (V)	
			1 5 8	17	72	SS-2	1.75	14	16	17	31	22	25	16	9	12	A-4a (4)	
			4 6 3	12	67	SS-3	1.75	-	-	-	-	-	-	-	-	13	A-4a (V)	
	765.0																	
POSSIBLE FILL: Stiff brownish gray SILT AND CLAY (A-6a), some fine to coarse sand, trace fine gravel; moist.			2 4 4	10	72	SS-4	1.25	-	-	-	-	-	-	-	-	20	A-6a (V)	
			1 2 3	6	72	SS-5	0.50	4	8	15	42	31	32	19	13	23	A-6a (9)	
	760.0																	
Dense brown SANDY SILT (A-4a), some fine to coarse sand, trace fine gravel; damp. @ 13.5'-16.0', loose.			1 2 3	6	100	SS-6	1.25	-	-	-	-	-	-	-	-	22	A-4a (V)	
			2 14 19	42	67	SS-7	3.50	-	-	-	-	-	-	-	-	11	A-4a (V)	
			12 24 22	59	89	SS-8	4.50	7	15	19	36	23	23	14	9	11	A-4a (5)	
			13 19 20	50	100	SS-9	4.50	-	-	-	-	-	-	-	-	11	A-4a (V)	
			13 17 19	46	100	SS-10	4.50	-	-	-	-	-	-	-	-	10	A-4a (V)	
@ 26.0'-27.5', gray.			10 14 17	40	100	SS-11	4.50	-	-	-	-	-	-	-	-	9	A-4a (V)	
			10 15 15	38	100	SS-12	4.50	9	11	18	39	23	20	14	6	10	A-4a (5)	
			15 18 26	56	100	SS-13	4.50	-	-	-	-	-	-	-	-	8	A-4a (V)	
		▼																
			9 14 16	38	44	SS-14A/B	NA	7	4	38	36	15	NP	NP	NP	15	A-4a (3)	
							4.50	-	-	-	-	-	-	-	-	8	A-4a (V)	
			13 18 27	58	94	SS-15	4.50	20	13	18	31	18	21	14	7	10	A-4a (3)	
	723.5	EOB	8 15 15	38	100	SS-16	4.50	-	-	-	-	-	-	-	-	11	A-4a (V)	

NOTES: NONE

ABANDONMENT METHODS, MATERIALS, QUANTITIES: USED 2 BAG BENTONITE CHIPS; USED SOIL CUTTINGS

STANDARD ODOT SOIL BORING LOG (11 X 17) - OH DOT.GDT - 6/9/14 08:48 - P:\84868\GEOTECHNICAL\FRA071_0903\ENGAPPS\GINT\1321-4019.00 FRA-71-5.29 - COPY.GPJ

PROJECT: WHITE ROAD RETAINING WALL	DRILLING FIRM / OPERATOR: MOD / P. TUTTLE	DRILL RIG: CME 550 (ATV)	STATION / OFFSET:	EXPLORATION ID B001-0-09
TYPE: STRUCTURE	SAMPLING FIRM / LOGGER: GF / A. DALQAMOUNI	HAMMER: CME AUTOMATIC	ALIGNMENT: WHITE RD WALL	
PID: 83901 BR ID: FRA-71-9.03 L/R	DRILLING METHOD: 3.25" HSA	CALIBRATION DATE: 10/10/08	ELEVATION: 775.0 (MSL) EOB: 25.0 ft.	PAGE 1 OF 1
START: 8/27/09 END: 8/27/09	SAMPLING METHOD: SPT	ENERGY RATIO (%): 83.1	LAT / LONG: Not Recorded	

MATERIAL DESCRIPTION AND NOTES	ELEV. 775.0	DEPTHS	SPT/ RQD	N60	REC (%)	SAMPLE ID	HP (tsf)	GRADATION (%) GR	CS	FS	SI	CL	ATTERBERG LL	PL	PI	WC	ODOT CLASS (GI)	INST.
STIFF, BROWN, SILT AND CLAY, LITTLE GRAVEL		1–2	6 7 9	22	72	SS-1	3.00	–	–	–	–	–	–	–	–	–	A-6a (V)	
		3–5	4 5 7	17	83	SS-2	3.50	–	–	–	–	–	–	–	–	–	A-6a (V)	
	769.0																	
MEDIUM STIFF TO STIFF, GRAY, CLAY, TRACE GRAVEL		6–7	5 10 7	24	100	SS-3	2.50	–	–	–	–	–	–	–	–	–	A-7-6 (V)	
		9–10	5 4 5	12	61	SS-4	2.50	–	–	–	–	–	–	–	–	–	A-7-6 (V)	
		11–12	6 5 7	17	100	SS-5	2.50	–	–	–	–	–	–	–	–	–	A-7-6 (V)	
	761.5																	
MEDIUM STIFF TO STIFF, GRAY, SILT AND CLAY, TRACE GRAVEL mottled		14–15	6 5 5	14	50	SS-6	–	–	–	–	–	–	–	–	–	–	A-7-6 (V)	
		16–17	3 3 5	11	83	SS-7	1.50	–	–	–	–	–	–	–	–	–	A-6a (V)	
		19–20	4 5 9	19	83	SS-8	2.50	–	–	–	–	–	–	–	–	–	A-6a (V)	
VERY STIFF TO HARD, BROWN, LITTLE GRAVEL		21–22	6 10 14	33	100	SS-9	4.50	–	–	–	–	–	–	–	–	–	A-6a (V)	
	750.0	24–25 EOB	28 27 23	69	72	SS-10	4.50	–	–	–	–	–	–	–	–	–	A-6a (V)	

NOTES: NONE

ABANDONMENT METHODS, MATERIALS, QUANTITIES: NOT RECORDED

PROJECT: WHITE ROAD RETAINING WALL	DRILLING FIRM / OPERATOR: MOD / P. TUTTLE	DRILL RIG: CME 550 (ATV)	STATION / OFFSET:	EXPLORATION ID B002-0-09	
TYPE: STRUCTURE	SAMPLING FIRM / LOGGER: GF / A. DALQAMOUNI	HAMMER: CME AUTOMATIC	ALIGNMENT: WHITE RD WALL		
PID: 83901 3R ID: FRA-71-9.03 L/R	DRILLING METHOD: 3.25" HSA	CALIBRATION DATE: 10/10/08	ELEVATION: 775.0 (MSL) EOE: 25.0 ft.	PAGE 1 OF 1	
START: 8/27/09 END: 8/27/09	SAMPLING METHOD: SPT	ENERGY RATIO (%): 83.1	LAT / LONG: Not Recorded		

MATERIAL DESCRIPTION AND NOTES	ELEV. 775.0	DEPTHS	SPT/ RQD	N60	REC (%)	SAMPLE ID	HP (tsf)	GRADATION (%) GR	CS	FS	SI	CL	ATTERBERG LL	PL	PI	WC	ODOT CLASS (GI)	INST.
STIFF TO VERY STIFF, BROWN, SILT AND CLAY, TRACE GRAVEL		1–2	5 5 6	15	78	SS-1	3.50	–	–	–	–	–	–	–	–	–	A-6a (V)	
		3–4	10 9 7	22	56	SS-2	4.50	–	–	–	–	–	–	–	–	–	A-6a (V)	
	769.0																	
MEDIUM STIFF TO STIFF, BROWN TO GRAY, CLAY, TRACE GRAVEL		6–7	5 5 7	17	78	SS-3	2.50	–	–	–	–	–	–	–	–	–	A-7-6 (V)	
		9–10	3 3 5	11	83	SS-4	2.50	–	–	–	–	–	–	–	–	–	A-7-6 (V)	
		11–12	3 4 6	14	83	SS-5	2.00	–	–	–	–	–	–	–	–	–	A-7-6 (V)	
		13–15	3 5 4	12	100	SS-6	2.00	–	–	–	–	–	–	–	–	–	A-7-6 (V)	
	759.0																	
VERY STIFF TO HARD, BROWN, SILT AND CLAY, LITTLE SAND AND GRAVEL		16–17	3 6 6	17	100	SS-7	2.00	–	–	–	–	–	–	–	–	–	A-6a (V)	
		19–20	6 9 20	40	100	SS-8	3.00	–	–	–	–	–	–	–	–	–	A-6a (V)	
		21–22	9 19 18	51	100	SS-9	4.50	–	–	–	–	–	–	–	–	–	A-6a (V)	
	750.0	24–25 EOB	14 15 16	43	67	SS-10	4.50	–	–	–	–	–	–	–	–	–	A-6a (V)	

NOTES: NONE

ABANDONMENT METHODS, MATERIALS, QUANTITIES: NOT RECORDED

STANDARD ODOT SOIL BORING LOG (8.5 X 11) - OH DOT.GDT - 9/29/09 13:39 - G:\051717-EMHT-GROVE CITY-I-71 WHITE RD\E. ENG\GEO\3D SUBSURFACE INVEST\WHITE RD LOGS\WHITE RD GINT.GPJ

STANDARD ODOT SOIL BORING LOG (8.5 X 11) - OH DOT.GDT - 9/29/09 13:39 - G:\051717-EMHT-GROVE CITY-I-71 WHITE RD\E. PRJ WRK\E. ENG\GEO\3D SUBSURFACE INVEST\WHITE RD LOGS\WHITE RD GINT.GPJ

4440 011 FOUNDATION INVESTIGATION 2008 080 10.00

STRUCTURE FOUNDATION EXPLORATION
BRIDGE NO. FRA-071-0903L/R OVER WHITE ROAD
BORING LOGS B-001-0-09 & B-002-0-09

DRAWN LJS
CHECKED PAN

PROJECT DESCRIPTION

CONSTRUCTION OF NOISE BARRIER WALLS ALONG IR-71

GEOLOGY

THE PROJECT SITE IS LOCATED IN THE COLUMBUS LOWLAND AREA OF THE SOUTHERN OHIO LOAMY TILL PLAIN PHYSIOGRAPHIC REGION. THIS AREA IS GENERALLY A RELATIVELY FLAT-LYING LOWLAND AREA GENERALLY SLOPING TOWARDS THE SCIOTO RIVER VALLEY. THE OVERBURDEN SOIL AT THE PROJECT SITE CONSISTS OF GROUND MORAINES DEPOSITED BY THE WISCONSINAN GLACIER, CUT BY STREAM VALLEYS. THE NATURAL SOILS ARE OFTEN HARD OR VERY DENSE DUE TO THE PAST WEIGHT OF UP TO 3,000 FEET OF ICE. THE SURFACE TOPOGRAPHY AT THE SITE IS GENERALLY AROUND ELEVATION 760 TO 770 FEET OUTSIDE THE LIMITS OF THE HIGHWAY EMBANKMENT.

THE UNDERLYING BEDROCK REPORTEDLY CONSISTS OF LIMESTONE AND DOLOMITE FROM THE DEVONIAN-AGE COLUMBUS LIMESTONE FORMATION AND THE UPPER SILURIAN-AGE SALINA GROUP. THESE ROCKS ARE COLORED LIGHT GRAY TO BROWN. THE BEDROCK TOPOGRAPHY MAP OF OHIO FROM ODNR INDICATES THAT THE TOP OF BEDROCK ELEVATION AT THE PROJECT SITE IS BETWEEN 600 AND 650 FEET.

THE PROJECT SITE IS OUTSIDE THE LIMITS OF THE PROBABLE KARST AREAS IN OHIO AS IDENTIFIED BY ODNR. THERE ARE NO ABANDONED UNDERGROUND MINES REPORTED IN THE VICINITY OF THE PROJECT SITE.

RECONNAISSANCE

THE SITE IS LOCATED IN JACKSON TOWNSHIP, FRANKLIN COUNTY, NEAR GROVE CITY, OHIO. THE EXISTING IR 71 IS A FOUR-LANE, ASPHALT PAVED ROADWAY RUNNING NORTH-TO-SOUTH. THE ROADWAY TRAVERSES PRIMARILY RESIDENTIAL PROPERTIES WITH SCATTERED AGRICULTURAL AREAS. RECONNAISSANCE WORK WAS PERFORMED BY DLZ TO LAYOUT BORING LOCATIONS.

SUBSURFACE EXPLORATION

BETWEEN JUNE 24, 2014 AND AUGUST 6, 2014, A TOTAL OF 42 BORINGS, DESIGNATED AS B-039-1-14 THROUGH B-054-1-14, WERE DRILLED BY DLZ OHIO. THE BORINGS WERE LOCATED ALONG IR-71 ON THE PROPOSED ALIGNMENT OF THE NOISE BARRIERS ON THE EAST AND WEST SIDES OF THE ROADWAY. THE BORINGS WERE DRILLED WITH TRACK- AND TRUCK-MOUNTED ROTARY DRILL RIGS, USING 3.25-INCH INSIDE DIAMETER HOLLOW STEM AUGERS TO ADVANCE THE BORINGS THROUGH THE SOIL. DISTURBED SOIL SAMPLES WERE OBTAINED IN ACCORDANCE WITH THE STANDARD PENETRATION TEST (AASHTO T206) AT 2.5-FOOT INTERVALS FOR THE FULL DEPTH OF THE BORINGS. THE HAMMER SYSTEMS USED WERE AUTOMATIC DROP HAMMERS AND WERE LAST CALIBRATED ON JUNE 11 & 12, 2014. DURING THE CALIBRATION, THE AVERAGE MEASURED DRILL ROD ENERGY RATIOS (ER) WERE 71.1, 74.0, AND 78.7 PERCENT. MEASURED BLOW COUNTS (NM) FROM THE STANDARD PENETRATION TEST WERE ADJUSTED ON THE BORING LOG TO AN EQUIVALENT STANDARD ENERGY RATIO OF 60 PERCENT (N60), USING THE EQUATION N60 = NM (ER/60). NO UNDISTURBED SOIL SAMPLES WERE OBTAINED, AND BEDROCK WAS NOT ENCOUNTERED.

EXPLORATION FINDINGS

AT THE GROUND SURFACE, THE BORINGS GENERALLY ENCOUNTERED 2 TO 5 INCHES OF TOPSOIL. SOME OF THE BORINGS IN THE SHOULDER OR ROADWAY ENCOUNTERED AGGREGATE BASE OR PAVEMENT. BELOW THE SURFACE MATERIAL, THE BORINGS GENERALLY ENCOUNTERED VERY STIFF TO HARD COHESIVE SOIL, CONSISTING OF PLASTIC SILTY SAND (A-4A), SILT AND CLAY (A-6A), AND SILTY CLAY (A-6B). SOME OF THE BORINGS ALSO ENCOUNTERED LOOSE TO DENSE NON-PLASTIC SILTY SAND (A-4A). BORING B-053-2-14 ENCOUNTERED HARD, DARK BROWN ORGANIC CLAY (A-8B) FROM 3.5 TO 6 FEET.

GROUNDWATER WAS ENCOUNTERED AND MEASURED IN NINE OF THE 42 BORINGS. IN THESE BORINGS, FREE WATER WAS GENERALLY ENCOUNTERED AT DEPTHS VARYING FROM 11 TO 23.5 FEET. STATIC WATER LEVELS IN THESE BORINGS WERE GENERALLY MEASURED AT DEPTHS VARYING FROM 21.5 TO 23.5 FEET, WITH ONE BORING, B-046-1-14, HAVING A STATIC WATER LEVEL DEPTH OF ONLY 6 FEET.

NONE OF THE BORINGS ENCOUNTERED BEDROCK.

SPECIFICATIONS

THIS GEOTECHNICAL EXPLORATION WAS PERFORMED IN ACCORDANCE WITH THE STATE OF OHIO, DEPARTMENT OF TRANSPORTATION, OFFICE OF GEOTECHNICAL ENGINEERING, SPECIFICATIONS FOR GEOTECHNICAL EXPLORATIONS, DATED AUGUST 2013.

AVAILABLE INFORMATION

ALL AVAILABLE SOIL AND BEDROCK INFORMATION THAT CAN BE CONVENIENTLY SHOWN ON THE GEOTECHNICAL EXPLORATION SHEETS HAS BEEN SO REPORTED. ADDITIONAL EXPLORATIONS MAY HAVE BEEN MADE TO STUDY SOME SPECIAL ASPECT OF THE PROJECT. COPIES OF THIS DATA, IF ANY, MAY BE INSPECTED IN THE DISTRICT DEPUTY DIRECTOR'S OFFICE OR THE OFFICE OF GEOTECHNICAL ENGINEERING AT 1980 WEST BROAD STREET.

LEGEND

	DESCRIPTION	ODOT CLASS	CLASSIFIED MECH.	CLASSIFIED VISUAL
	GRAVEL AND/OR STONE FRAGMENTS	*A-1-a*	*2*	*2*
	GRAVEL AND/OR STONE FRAGMENTS WITH SAND	*A-1-b*	*2*	*6*
	GRAVEL AND/OR STONE FRAGMENTS W/ SAND AND SILT	*A-2-4*	*1*	*-*
	GRAVEL AND/OR STONE FRAGMENTS W/ SAND, SILT & CLAY	*A-2-6*	*-*	*8*
	COARSE AND FINE SAND	*A-3a*	*1*	*6*
	SANDY SILT	*A-4a*	*29*	*120*
	SILT	*A-4b*	*1*	*1*
	SILT AND CLAY	*A-6a*	*7*	*135*
	SILTY CLAY	*A-6b*	*4*	*96*
	ORGANIC CLAY	*A-8b*	*-*	*1*
		TOTAL	*47*	*375*

	PAVEMENT OR BASE = X = APPROXIMATE THICKNESS *VISUAL*
	SOD AND TOPSOIL = X = APPROXIMATE THICKNESS *VISUAL*
	PROJECT BORING LOCATION - PLAN VIEW.
	DRIVE SAMPLE AND/OR ROCK CORE BORING PLOTTED TO VERTICAL SCALE ONLY. HORIZONTAL BAR INDICATES A CHANGE IN STRATIGRAPHY.
WC	INDICATES WATER CONTENT IN PERCENT.
N_{60}	INDICATES STANDARD PENETRATION RESISTANCE NORMALIZED TO 60% DRILL ROD ENERGY RATIO.
X/Y/D"	NUMBER OF BLOWS FOR STANDARD PENETRATION TEST (*SPT*): X= NUMBER OF BLOWS FOR 6 INCHES (UNCORRECTED). Y/D"= NUMBER OF BLOWS (UNCORRECTED) FOR D" OF PENETRATION AT REFUSAL.
▼	INDICATES STATIC WATER ELEVATION.
W	INDICATES FREE WATER ELEVATION.
●	INDICATES A PLASTIC MATERIAL WITH A MOISTURE CONTENT EQUAL TO OR GREATER THAN THE LIQUID LIMIT MINUS 3.
SS	INDICATES A SPLIT SPOON SAMPLE.
NP	INDICATES A NON-PLASTIC SAMPLE.

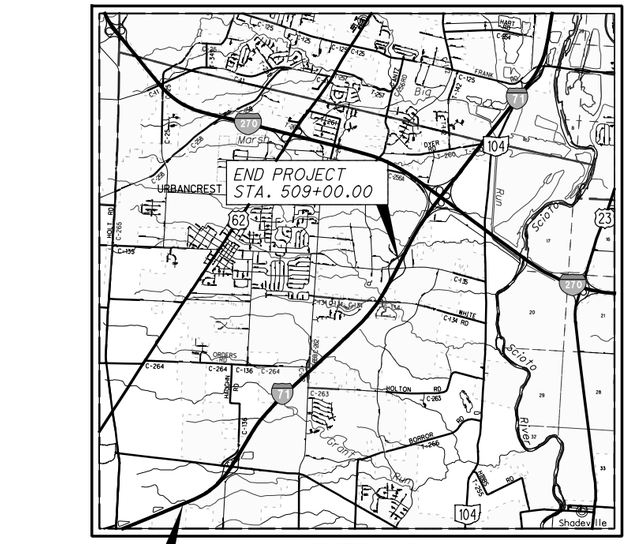

LOCATION MAP

SCALE IN MILES

0 1 2 3 4

PARTICLE SIZE DEFINITIONS

12"	3"	2.0 mm	0.42 mm	0.074 mm	0.005 mm
BOULDERS |	COBBLES |	GRAVEL |	COARSE SAND |	FINE SAND |	SILT | CLAY
		No. 10 SIEVE	No. 40 SIEVE	No. 200 SIEVE	

RECON. - DLZ 6/2014
DRILLING - DLZ 6/2014 - 8/2014
DRAWN - BMG - 10/2014
REVIEWED - PAN - 10/2014

E.L. ROBINSON ENGINEERING
1901 Watermark Drive, Suite 310 - Columbus, Ohio 43215
www.elrobinsonengineering.com

PID NO. 84868

STRUCTURE FOUNDATION EXPLORATION
NOISE WALLS

FRA-71-5.29

P:\84868\geotechnical\sheets\84868ZC101.dgn 12/16/2014 10:47:13 AM pnarsavage

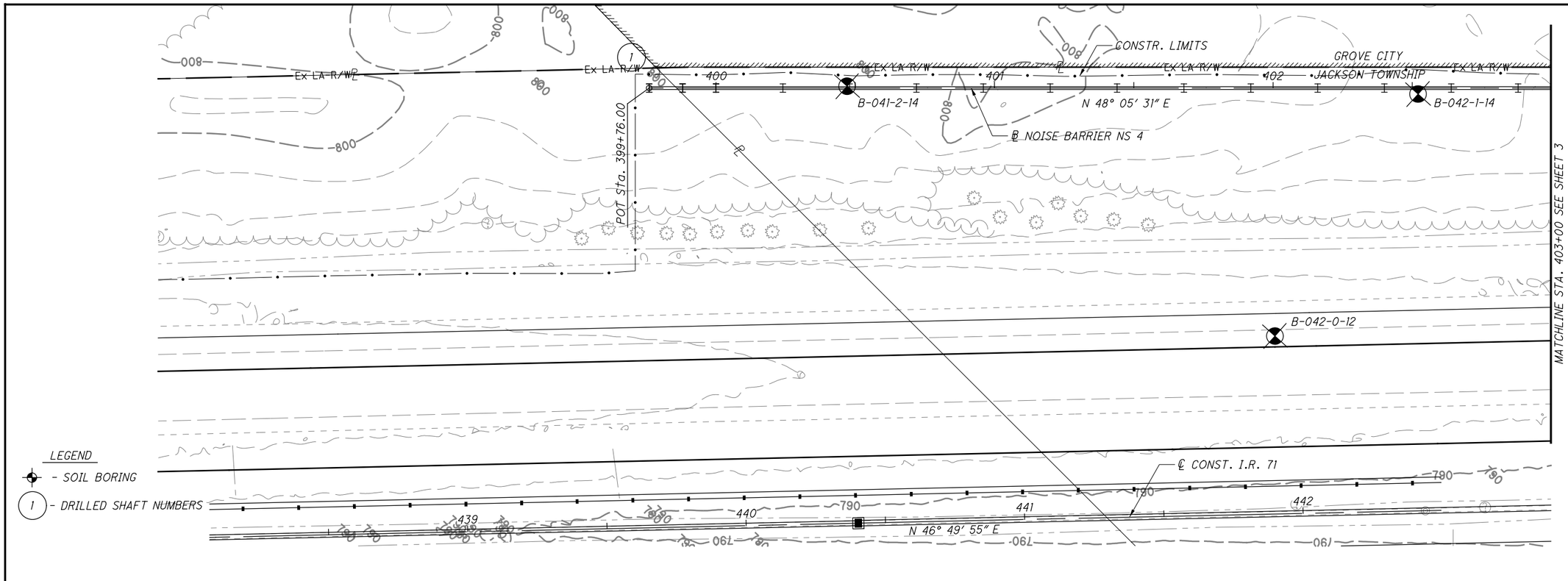

P:\84868\geotechnical\sheets\84868ZP401.dgn 12/16/2014 10:47:19 AM pnarsavage

HORIZONTAL SCALE IN FEET
0 10 20 40

DRAWN BMG
CHECKED PAN

STRUCTURE FOUNDATION EXPLORATION NS 4
STA. 399+76 TO STA. 403+00

FRA-71-5.29

2 / 41

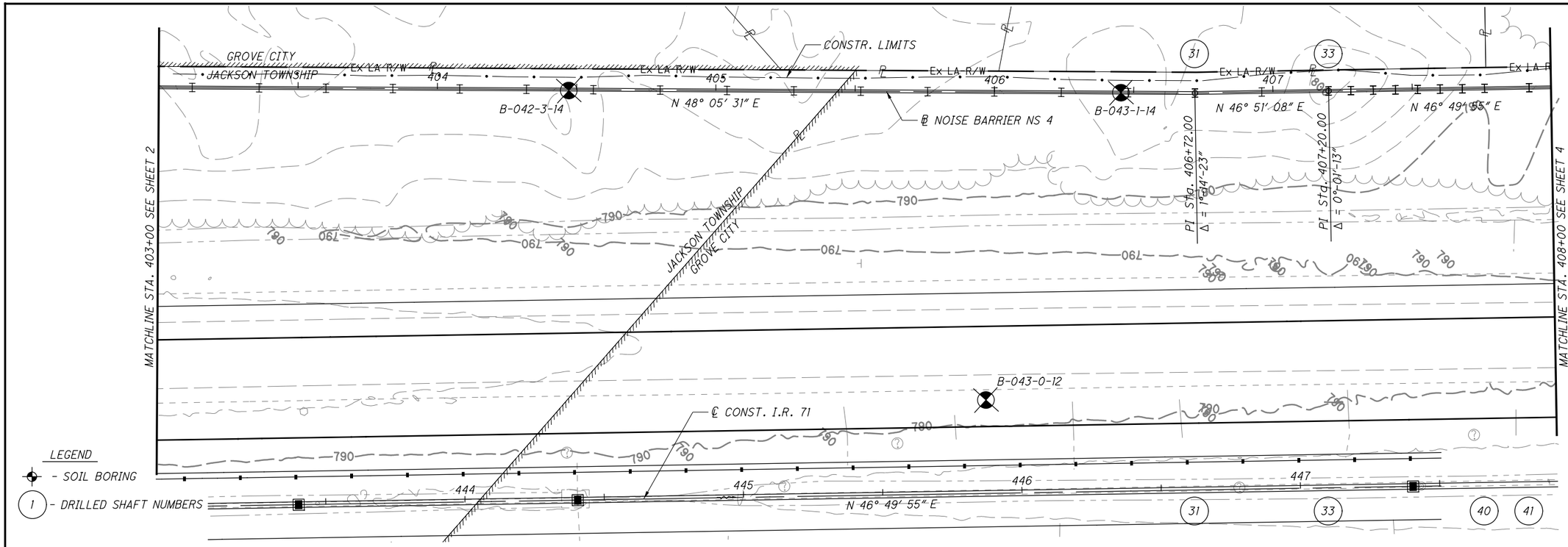

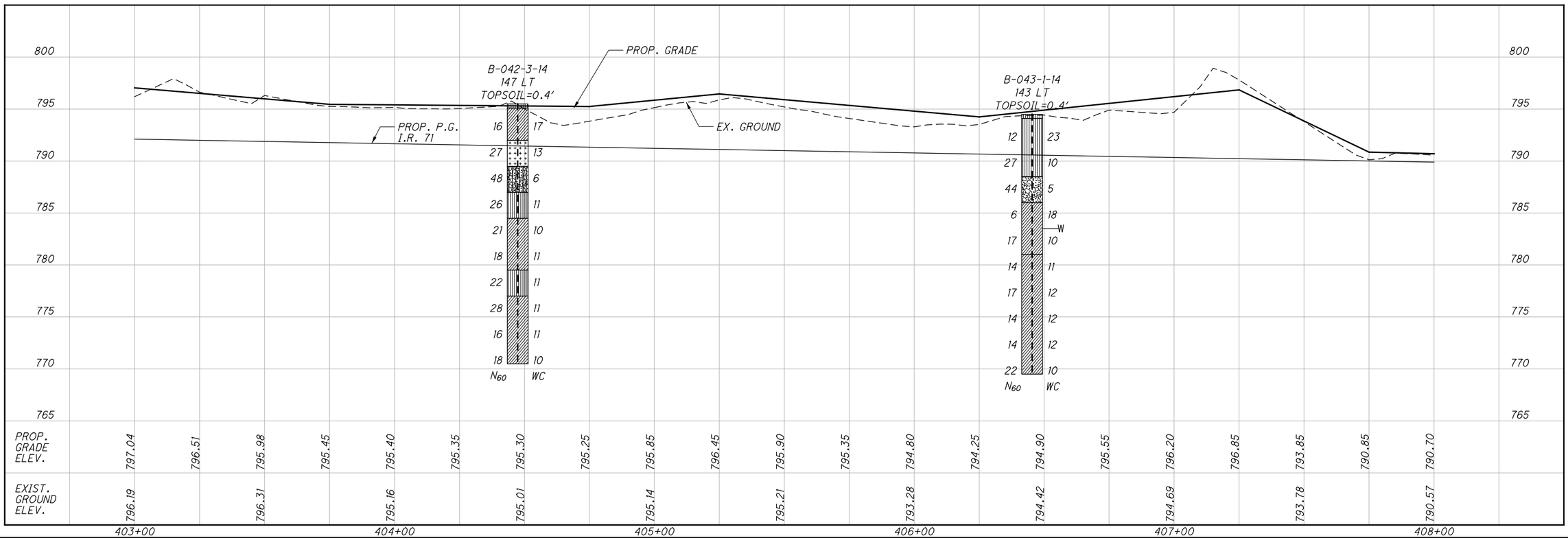

P:\84868\geotechnical\sheets\84868ZP402.dgn 12/16/2014 10:47:20 AM pnarsavage

HORIZONTAL SCALE IN FEET
0 10 20 40

DRAWN BMG
CHECKED PAN

STRUCTURE FOUNDATION EXPLORATION NS 4
STA. 403+00 TO STA. 408+00

FRA-71-5.29

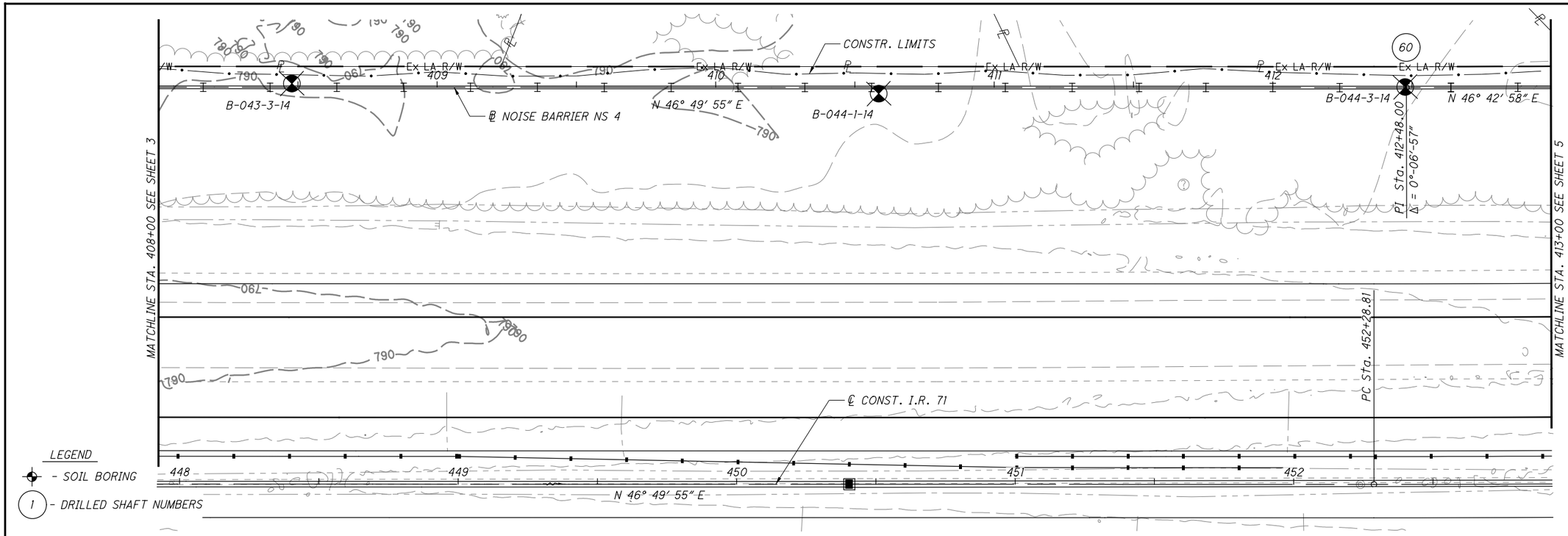

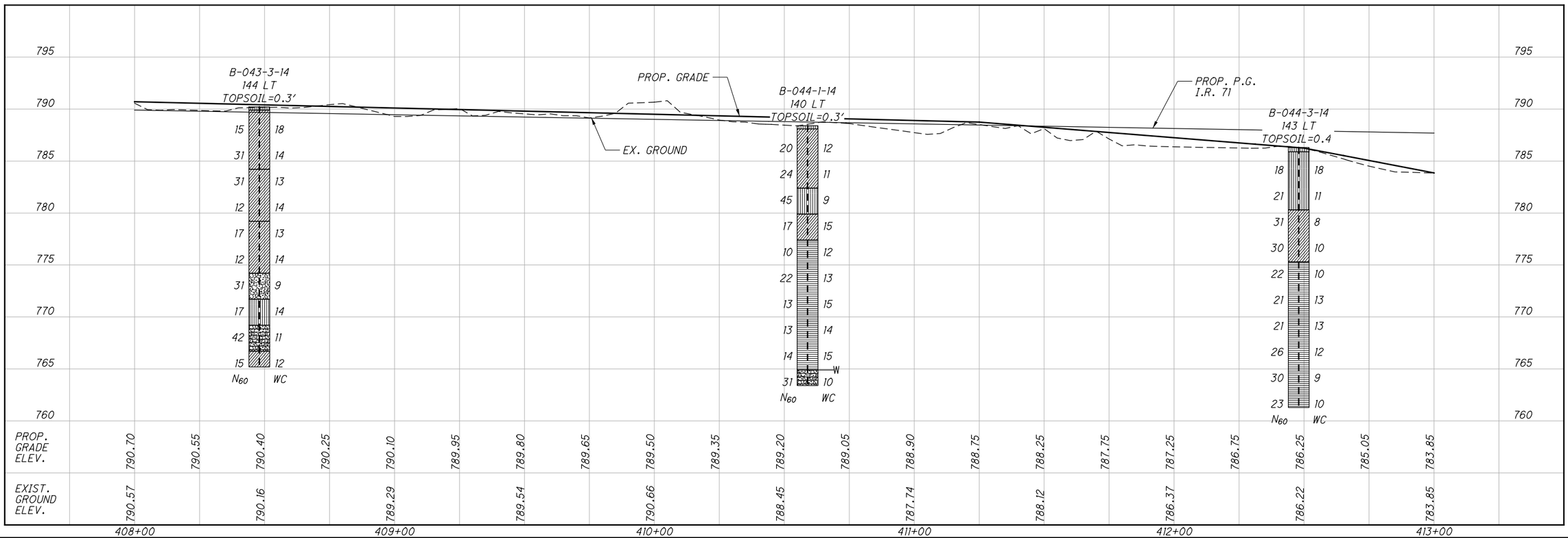

HORIZONTAL SCALE IN FEET
0 10 20 40

DRAWN BMG
CHECKED PAN

STRUCTURE FOUNDATION EXPLORATION NS 4
STA. 408+00 TO STA. 413+00

FRA-71-5.29

4 / 41

P:\84868\geotechnical\sheets\84868ZP403.dgn 12/16/2014 10:47:21 AM pnarsavage

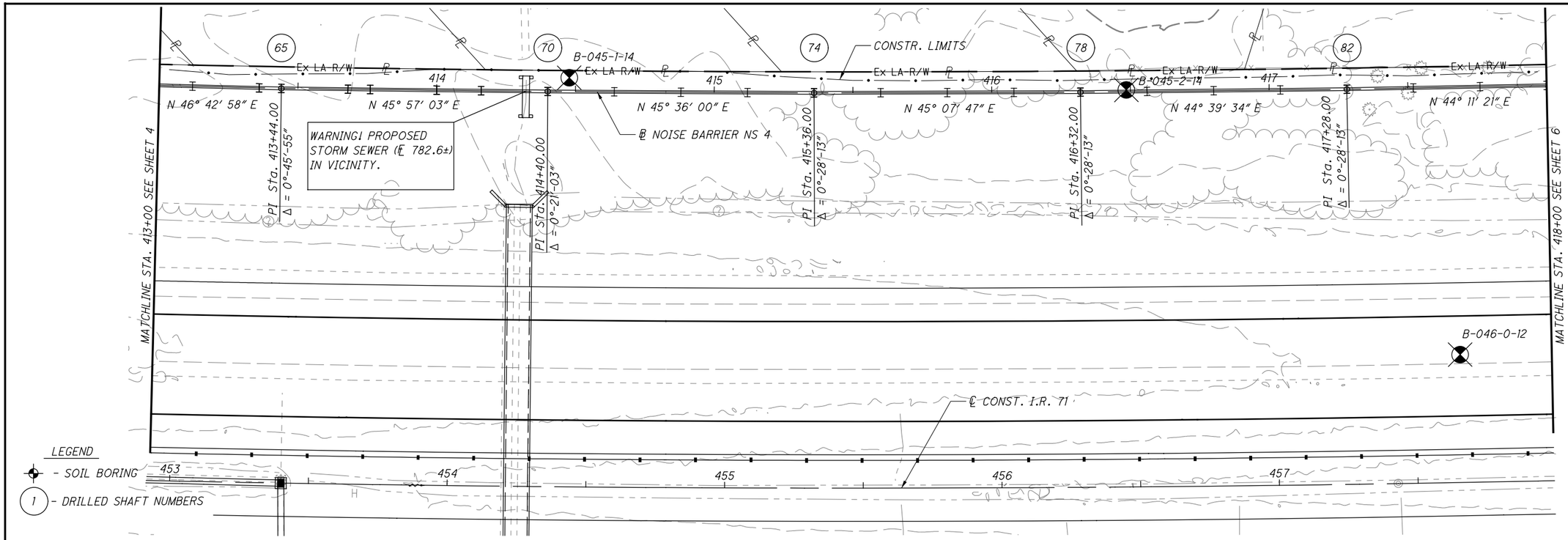

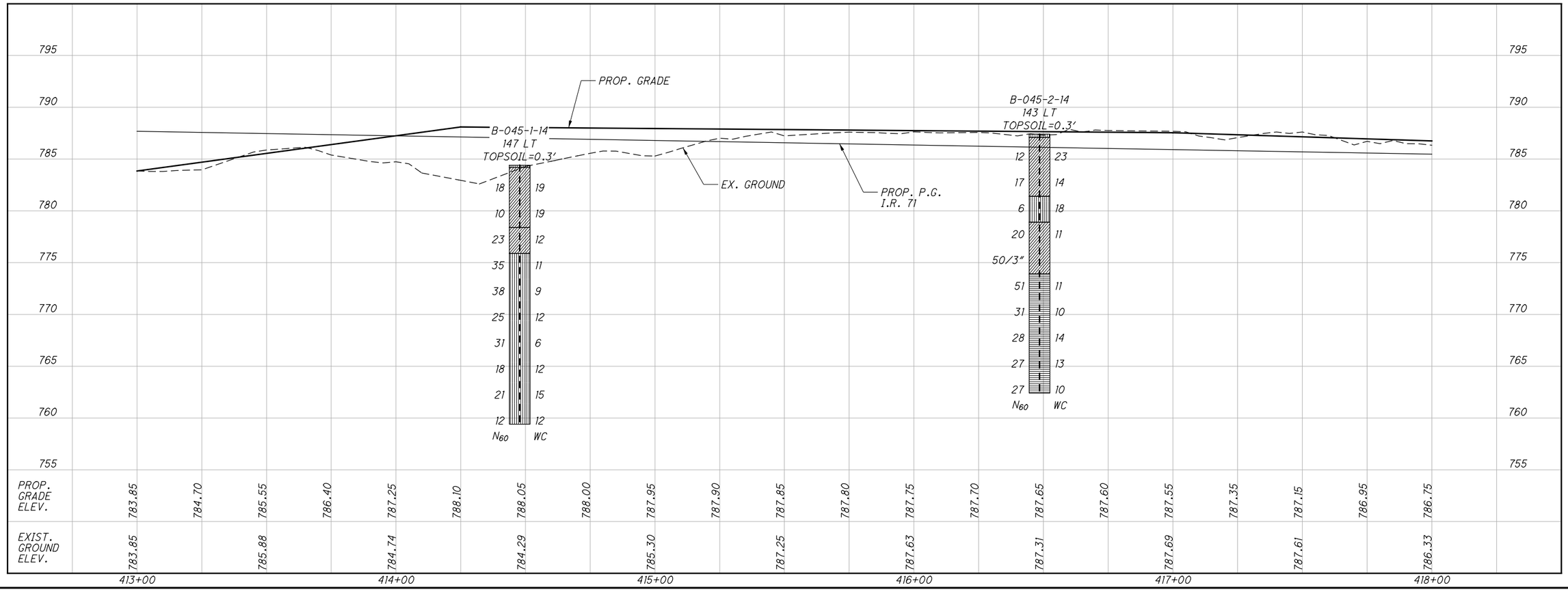

HORIZONTAL SCALE IN FEET
0 10 20 40

DRAWN BMG
CHECKED PAN

STRUCTURE FOUNDATION EXPLORATION NS 4
STA. 413+00 TO STA. 418+00

FRA-71-5.29

5 / 41

P:\84868\geotechnical\sheets\84868ZP404.dgn 12/16/2014 10:47:22 AM pnarsavage

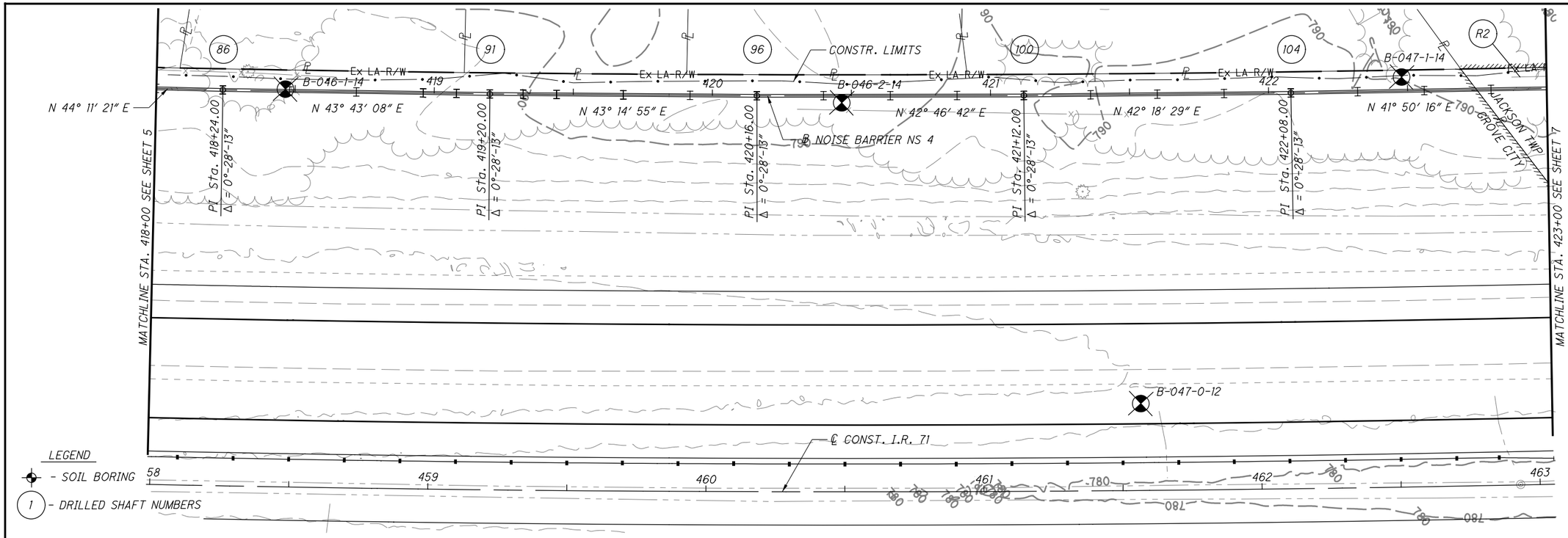

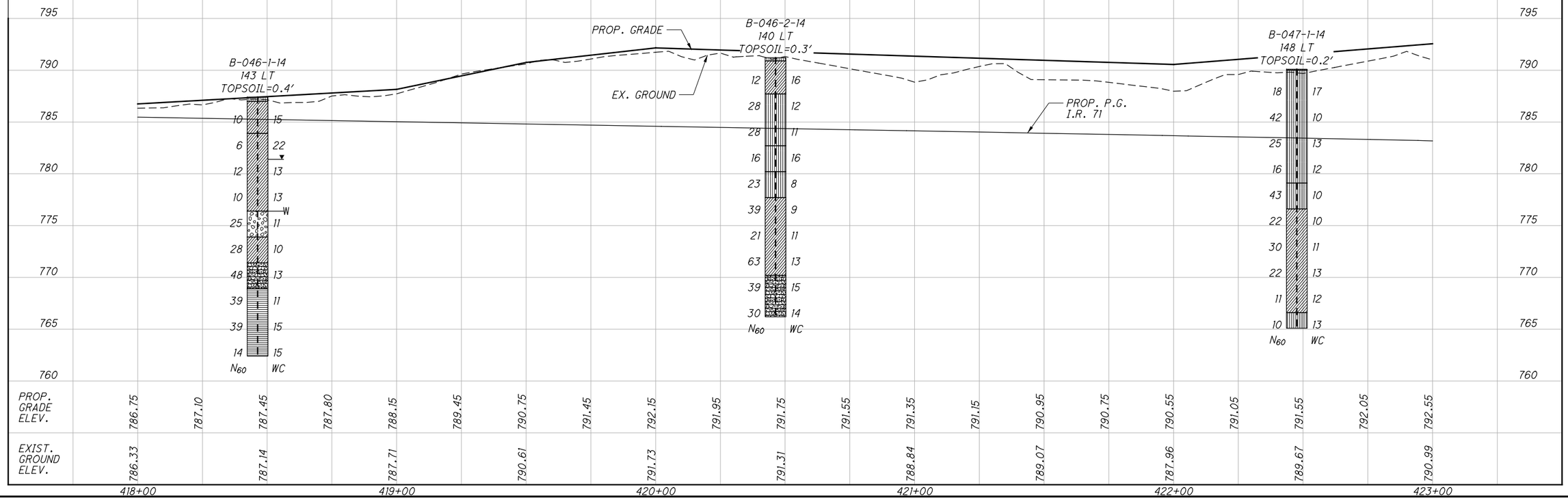

HORIZONTAL SCALE IN FEET
0 10 20 40

DRAWN BMG
CHECKED PAN

STRUCTURE FOUNDATION EXPLORATION NS 4
STA. 418+00 TO STA. 423+00

FRA-71-5.29

6 / 41

P:\84868\geotechnical\sheets\84868ZP405.dgn 12/16/2014 10:47:23 AM pnarsavage

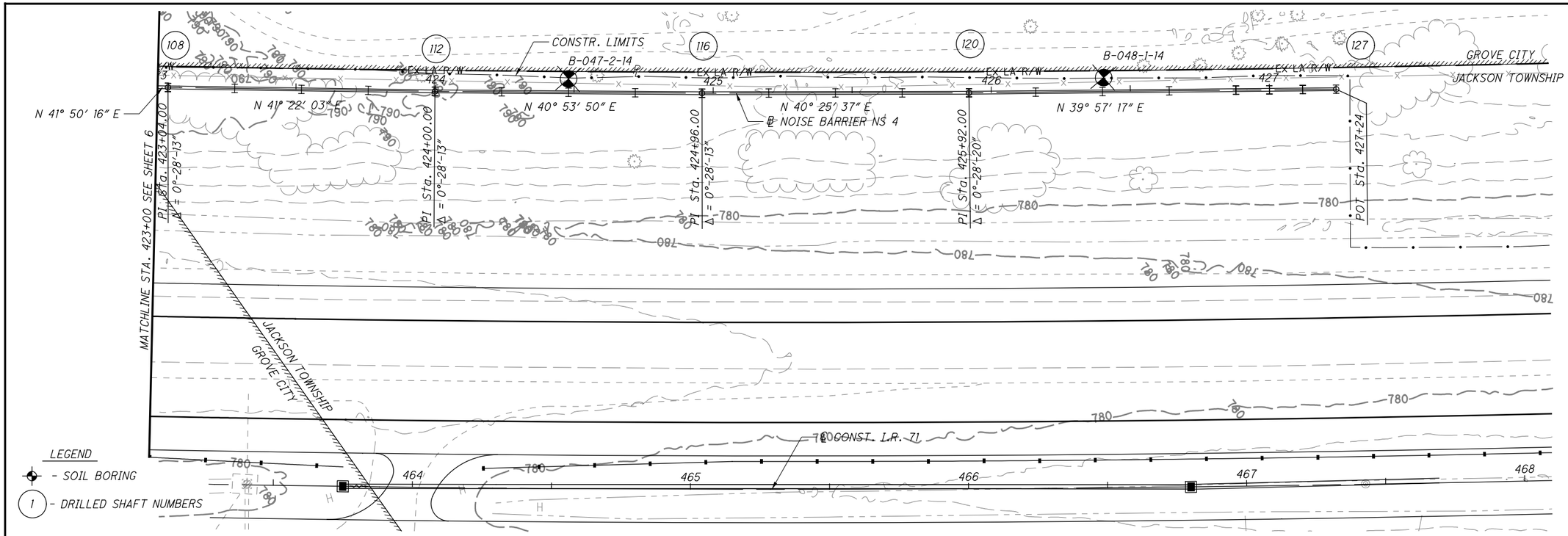

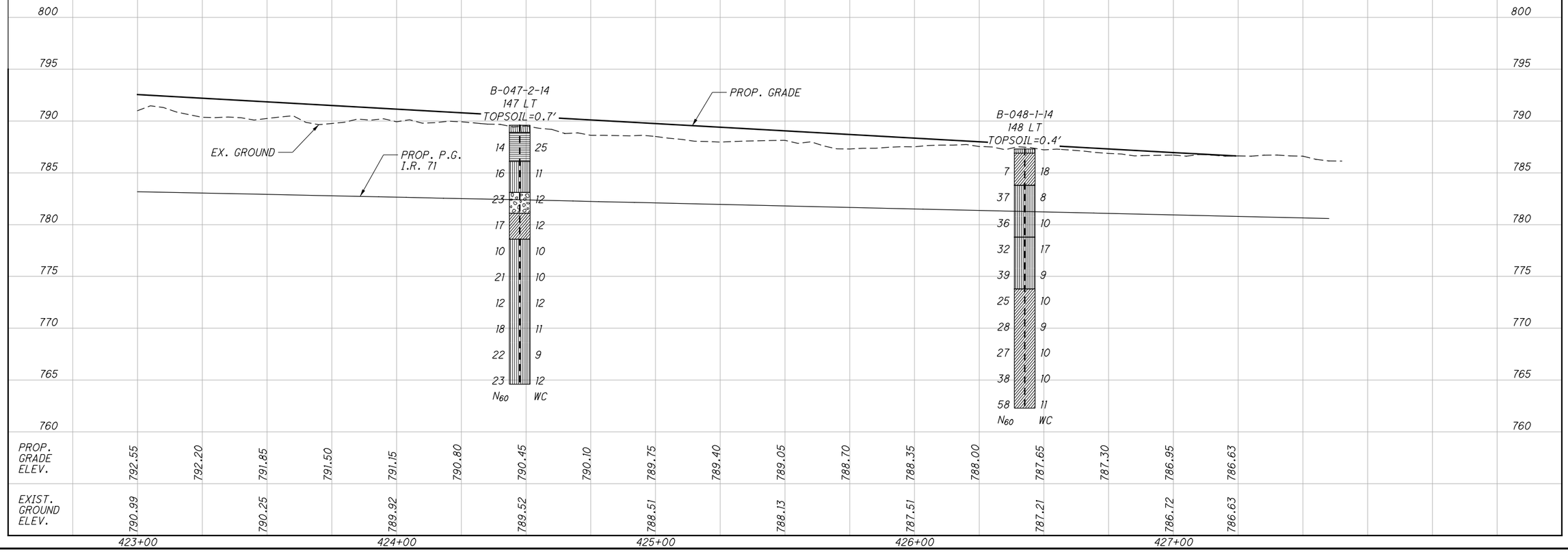

P:\84868\geotechnical\sheets\848682P406.dgn 12/16/2014 10:47:25 AM pnarsavage

HORIZONTAL SCALE IN FEET

DRAWN BMG CHECKED PAN

STRUCTURE FOUNDATION EXPLORATION NS 4
STA. 423+00 TO STA. 427+24

FRA-71-5.29

7 / 41

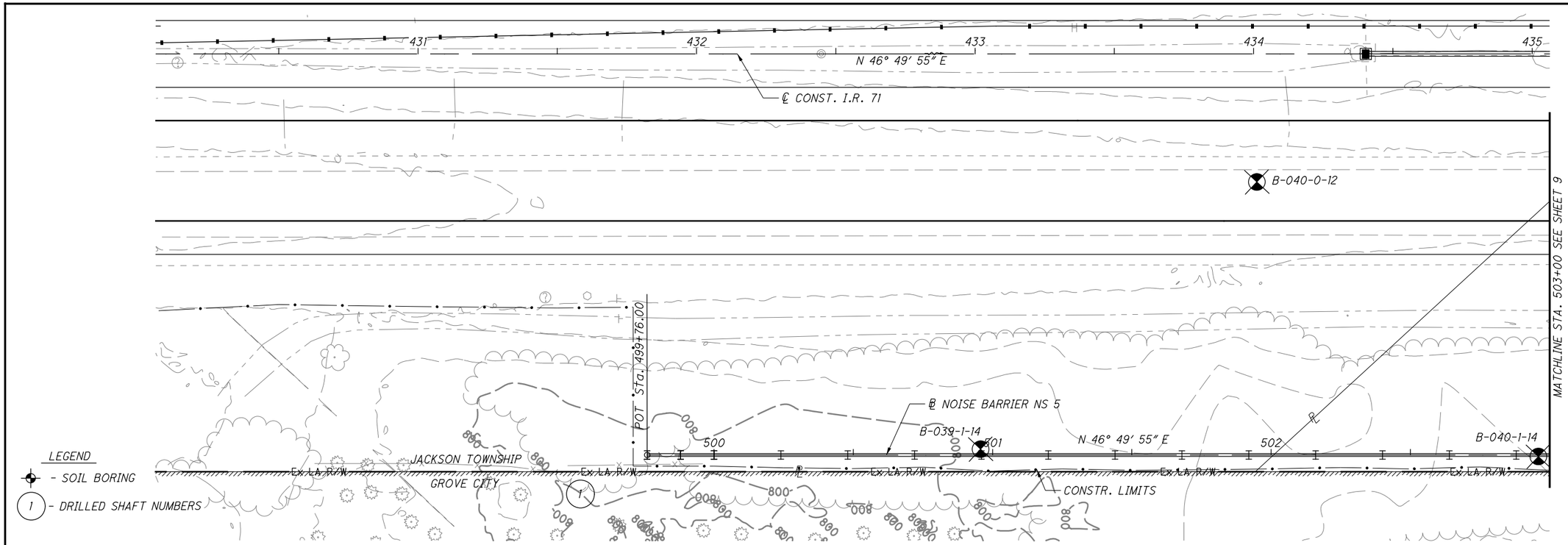

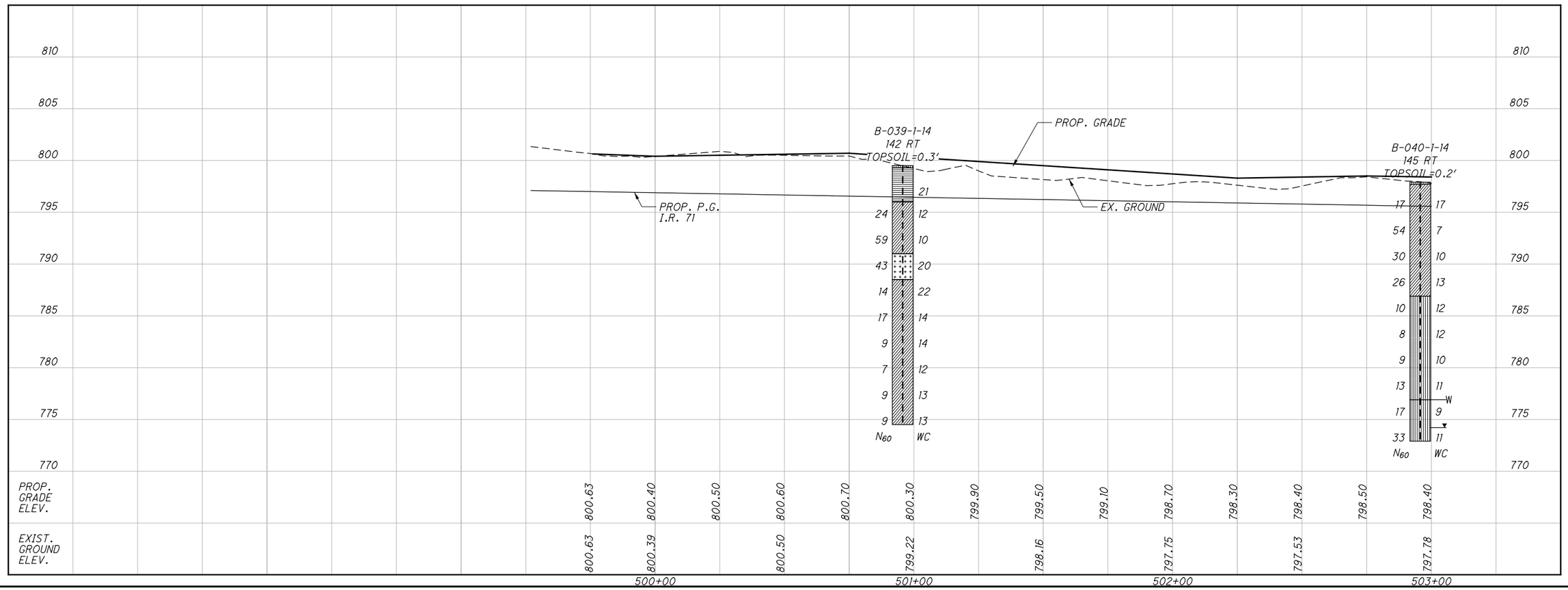

HORIZONTAL SCALE IN FEET
0 10 20 40

DRAWN BMG
CHECKED PAN

STRUCTURE FOUNDATION EXPLORATION NS 5
STA. 499+76 TO STA. 503+00

FRA-71-5.29

8 / 41

1

P:\84868\geotechnical\sheets\84868ZP501.dgn 12/16/2014 10:47:26 AM pnarsavage

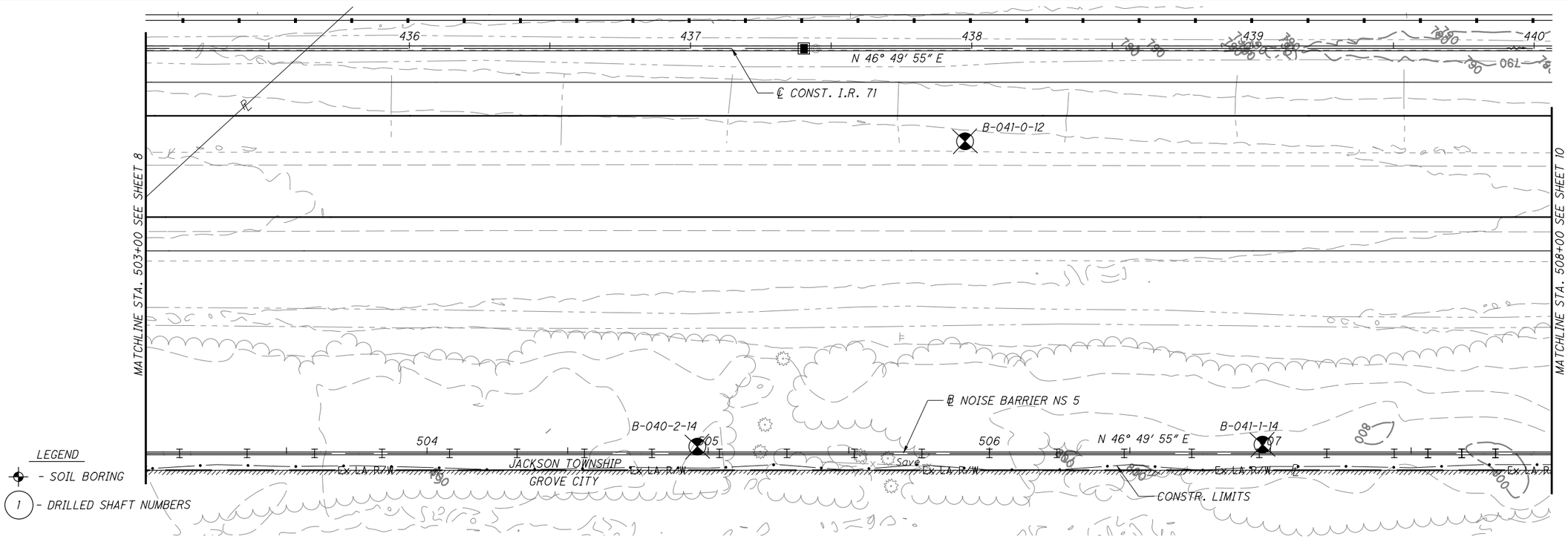

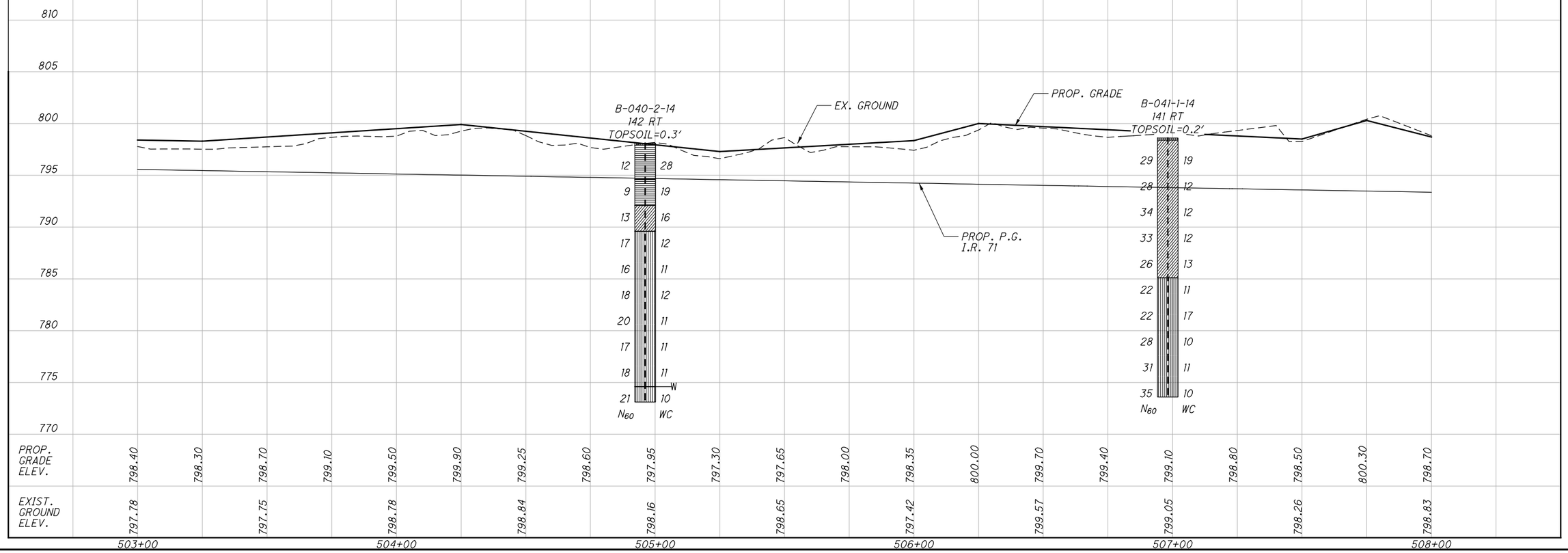

HORIZONTAL SCALE IN FEET
0 10 20 40

DRAWN BMG
CHECKED PAN

STRUCTURE FOUNDATION EXPLORATION NS 5
STA. 503+00 TO STA. 508+00

FRA-71-5.29

9 / 41

P:\84868\geotechnical\sheets\84868ZP502.dgn 12/16/2014 10:47:27 AM pnarsavage

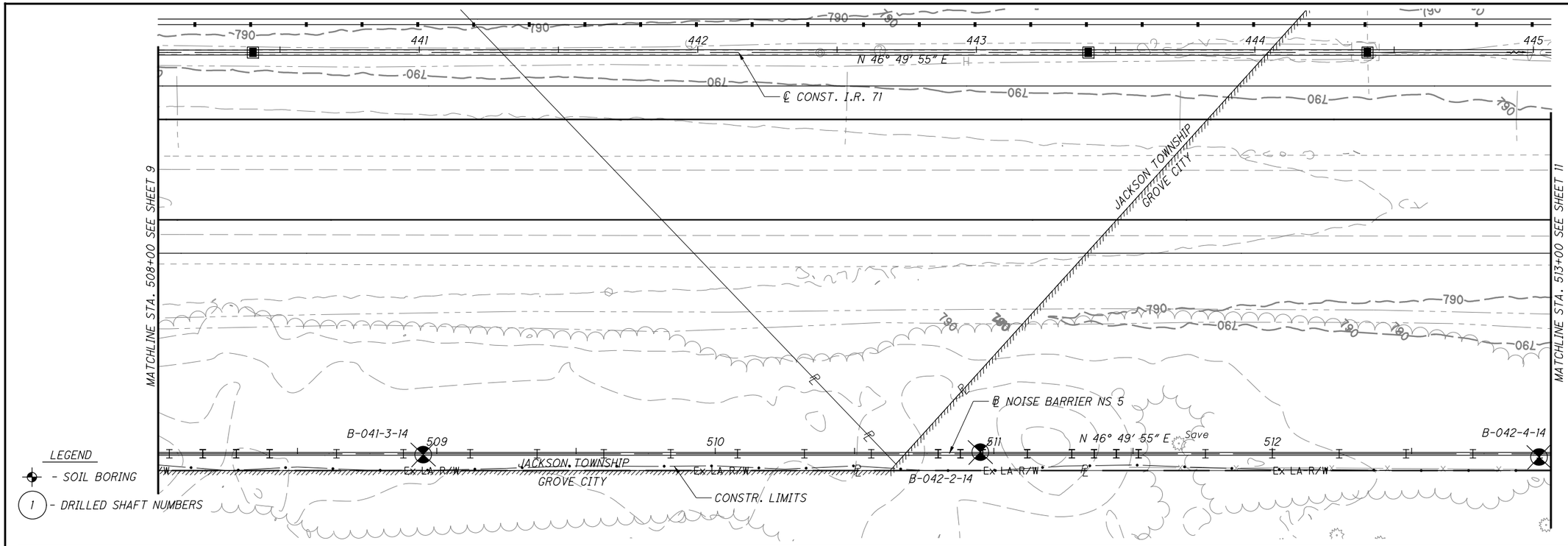

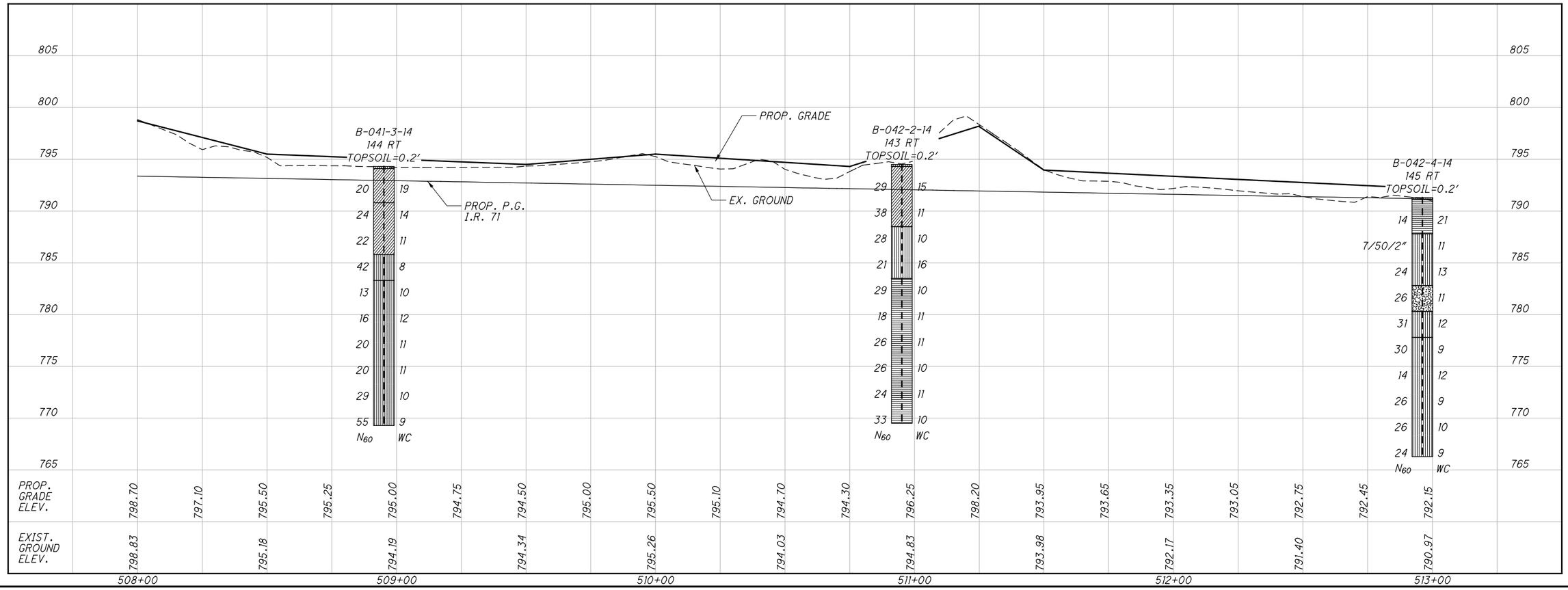

HORIZONTAL SCALE IN FEET
0 10 20 40

DRAWN BMG
CHECKED PAN

STRUCTURE FOUNDATION EXPLORATION NS 5
STA. 508+00 TO STA. 513+00

FRA-71-5.29

10 / 41

P:\84868\geotechnical\sheets\84868ZP503.dgn 12/16/2014 10:47:28 AM pnarsavage

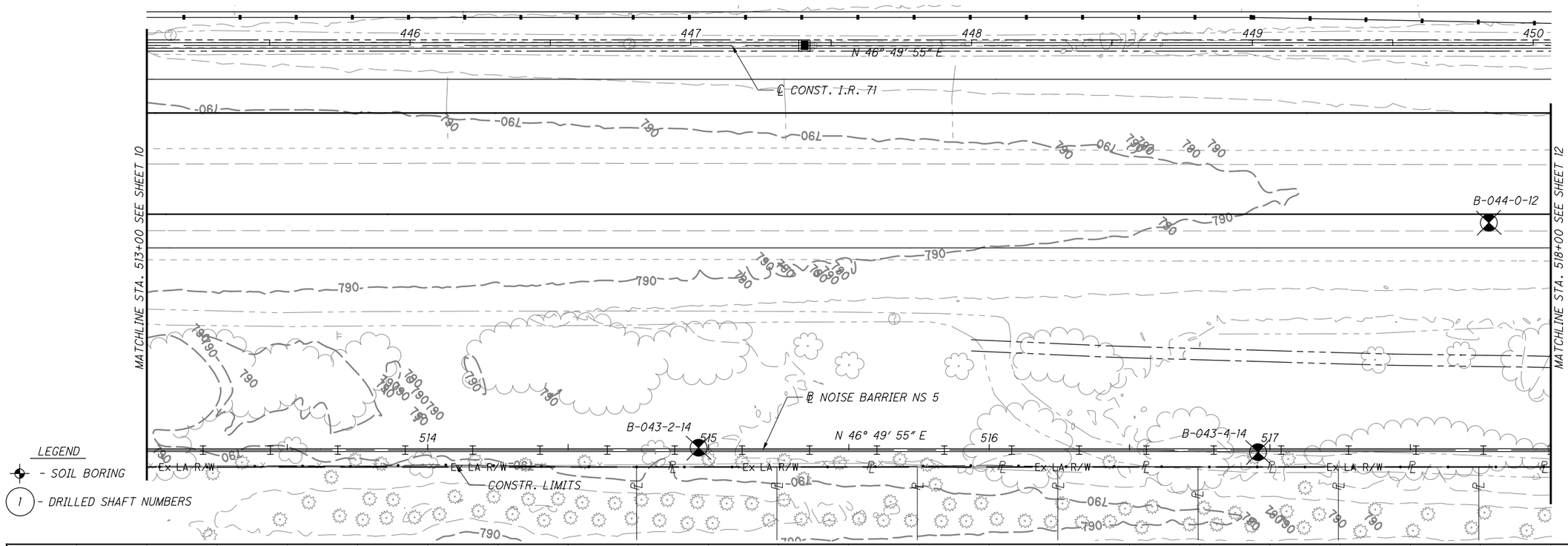

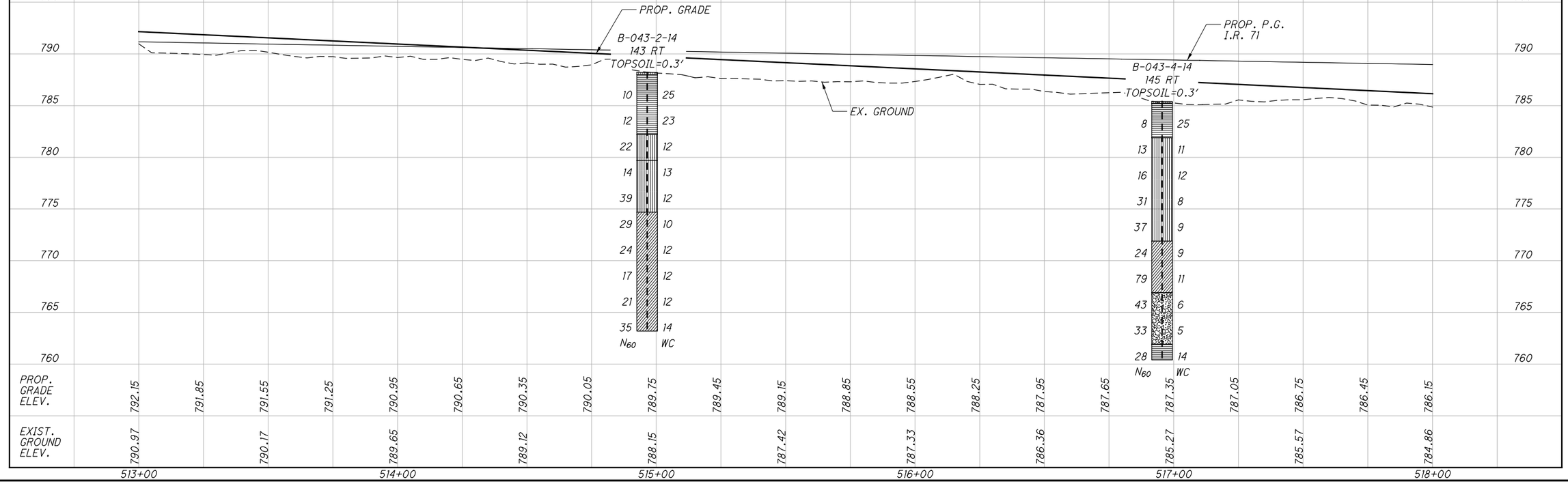

HORIZONTAL SCALE IN FEET
0 10 20 40

DRAWN BMG
CHECKED PAN

STRUCTURE FOUNDATION EXPLORATION NS 5
STA. 513+00 TO STA. 518+00

FRA-71-5.29

11 / 41

P:\84868\geotechnical\sheets\84868ZP504.dgn 12/16/2014 10:47:29 AM pnarsavage

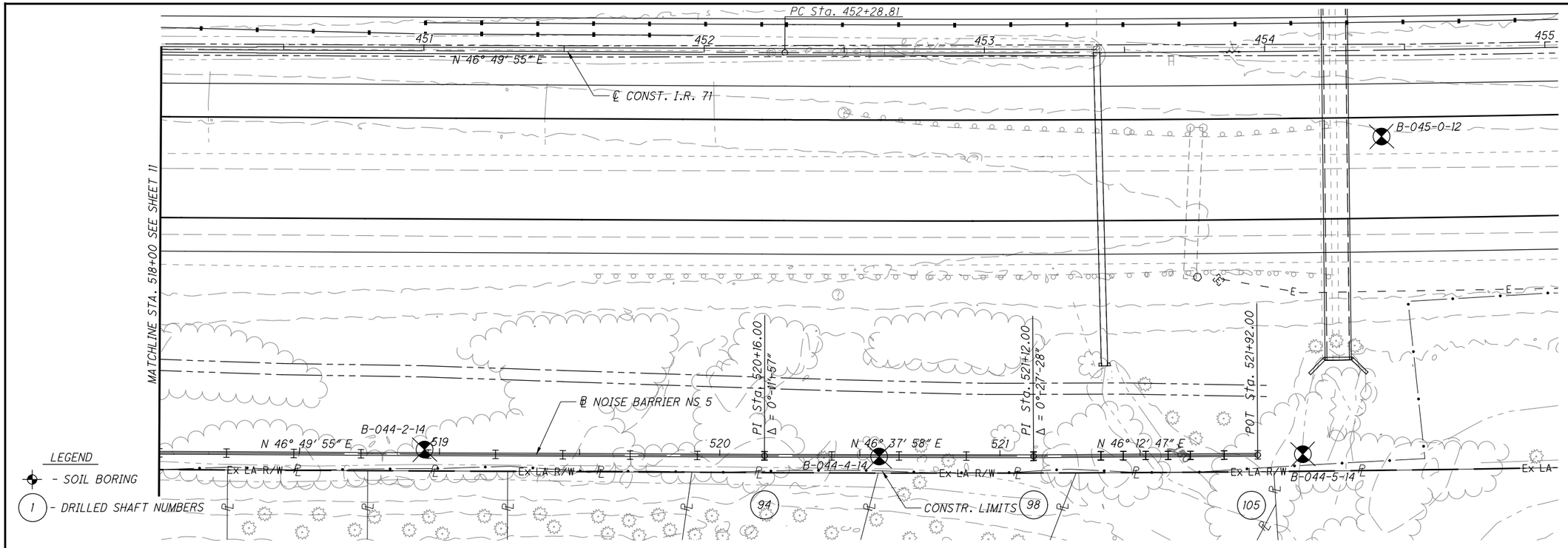

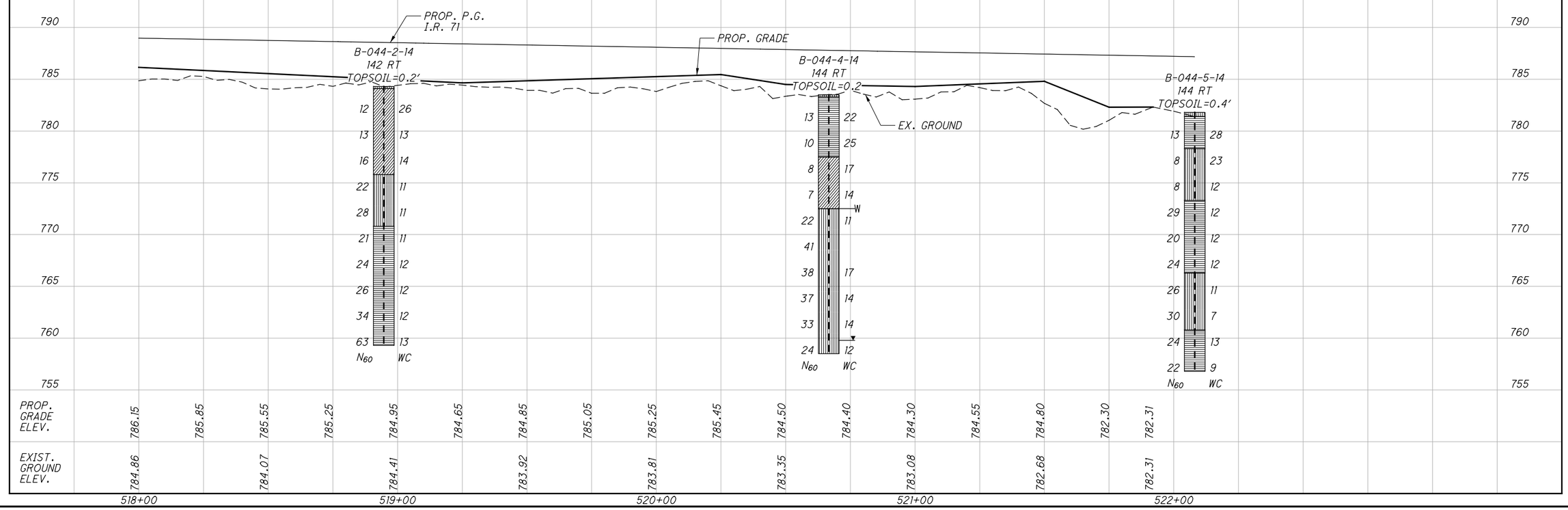

P:\84868\geotechnical\sheets\84868ZP505.dgn 12/16/2014 10:47:30 AM pnarsavage

HORIZONTAL SCALE IN FEET
0 10 20 40

DRAWN BMG
CHECKED PAN

STRUCTURE FOUNDATION EXPLORATION NS 5
STA. 518+00 TO STA. 521+92

FRA-71-5.29

12 / 41

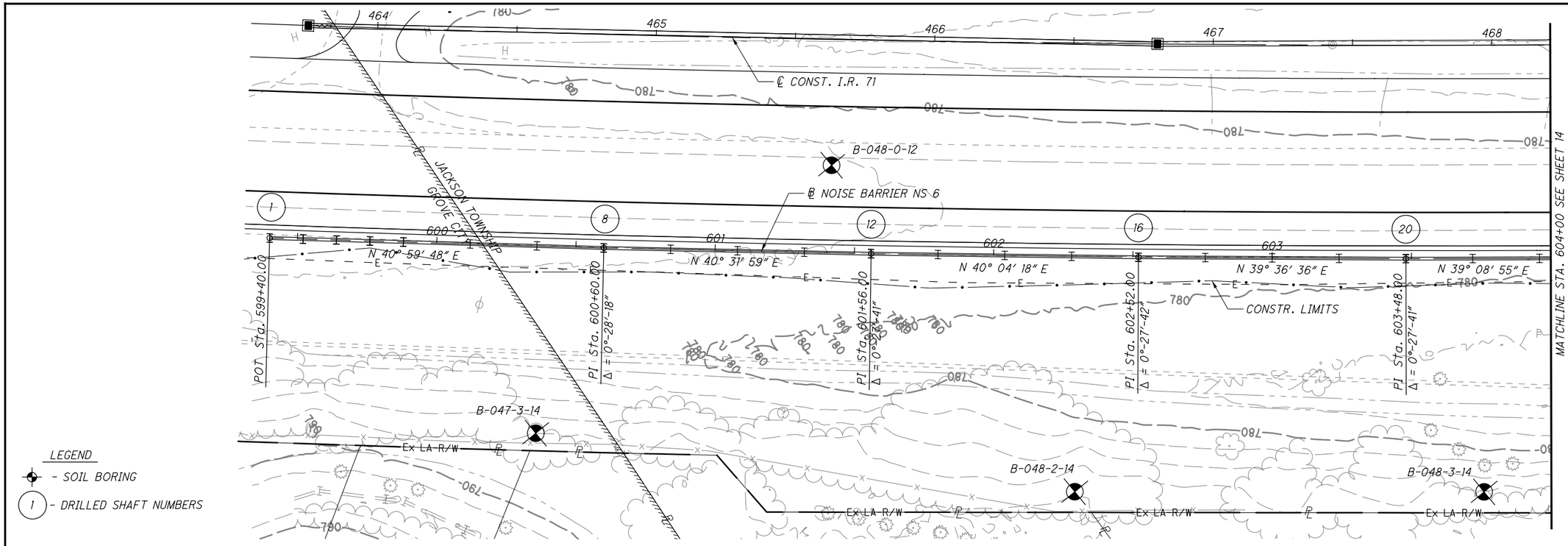

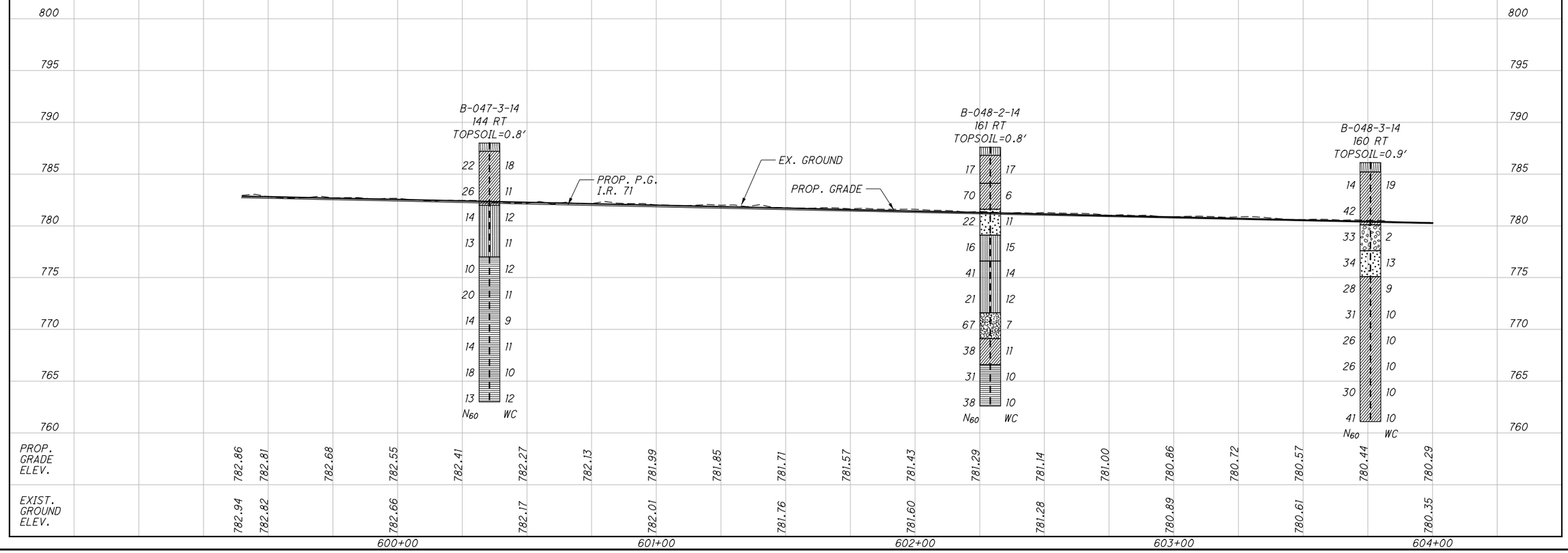

HORIZONTAL SCALE IN FEET
0 10 20 40

DRAWN BMG
CHECKED PAN

STRUCTURE FOUNDATION EXPLORATION NS 6
STA. 599+40 TO STA. 604+00

FRA-71-5.29

13 / 41

P:\84868\geotechnical\sheets\84868ZP601.dgn 3/31/2015 8:30:02 AM mtokacs

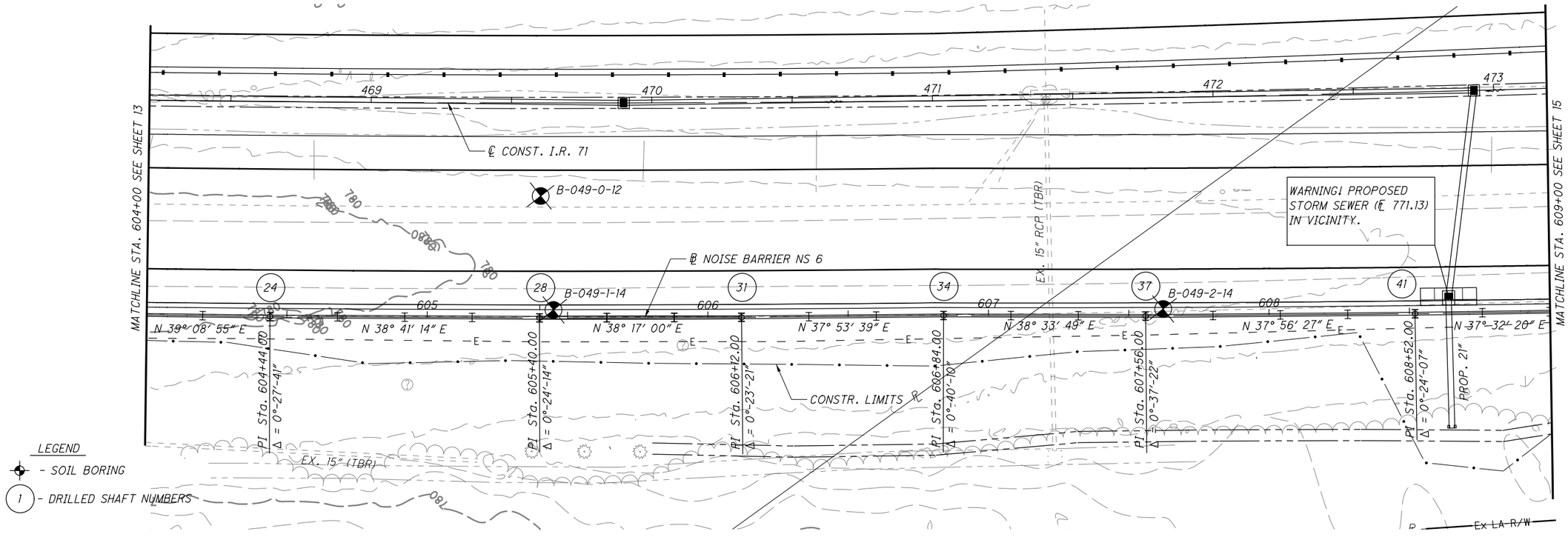

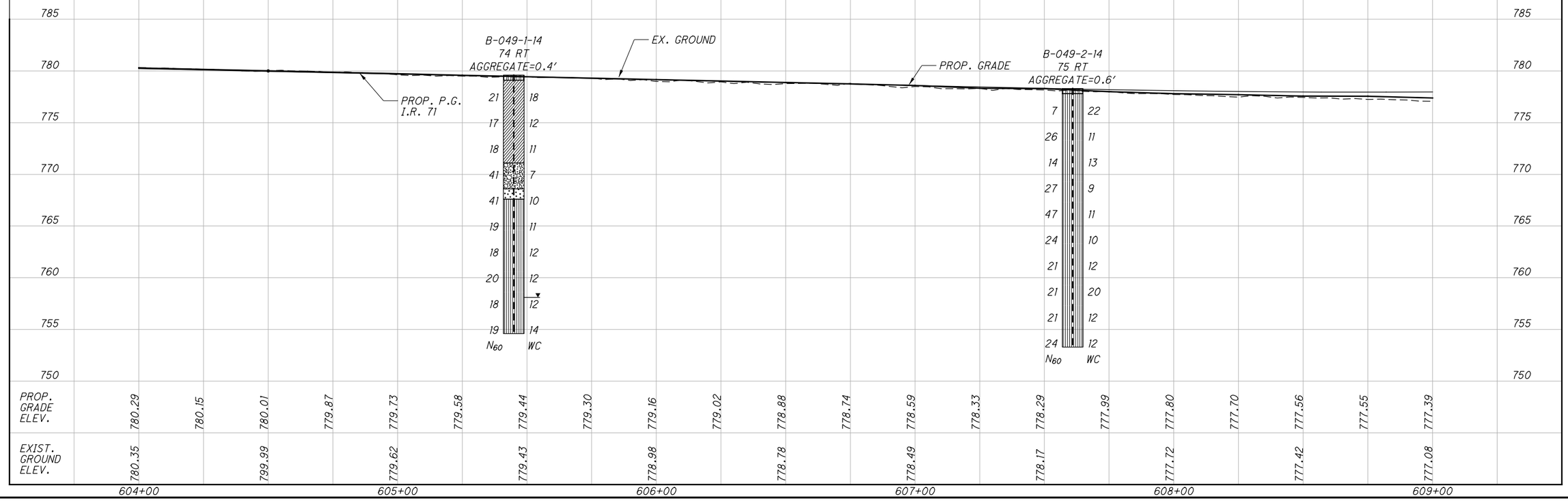

HORIZONTAL SCALE IN FEET

DRAWN BMG CHECKED PAN

STRUCTURE FOUNDATION EXPLORATION NS 6
STA. 604+00 TO STA. 609+00

FRA-71-5.29

14 / 41

P:\84868\geotechnical\sheets\84868ZP602.dgn 3/31/2015 8:30:53 AM mtakacs

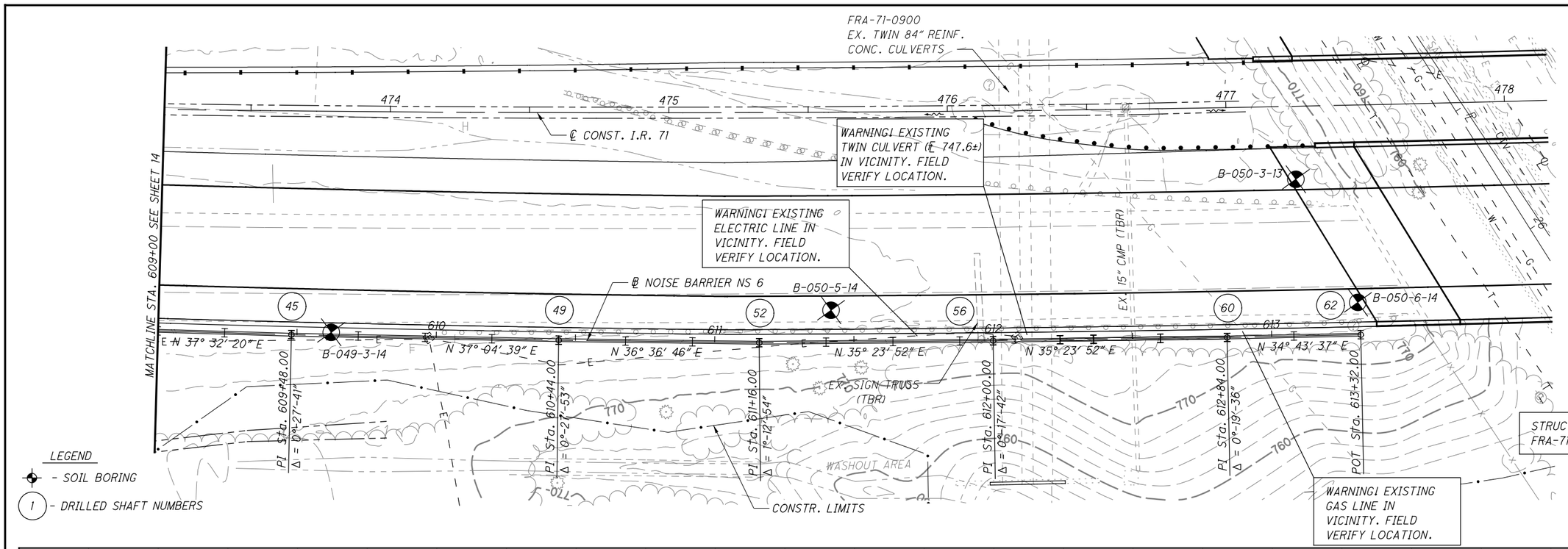

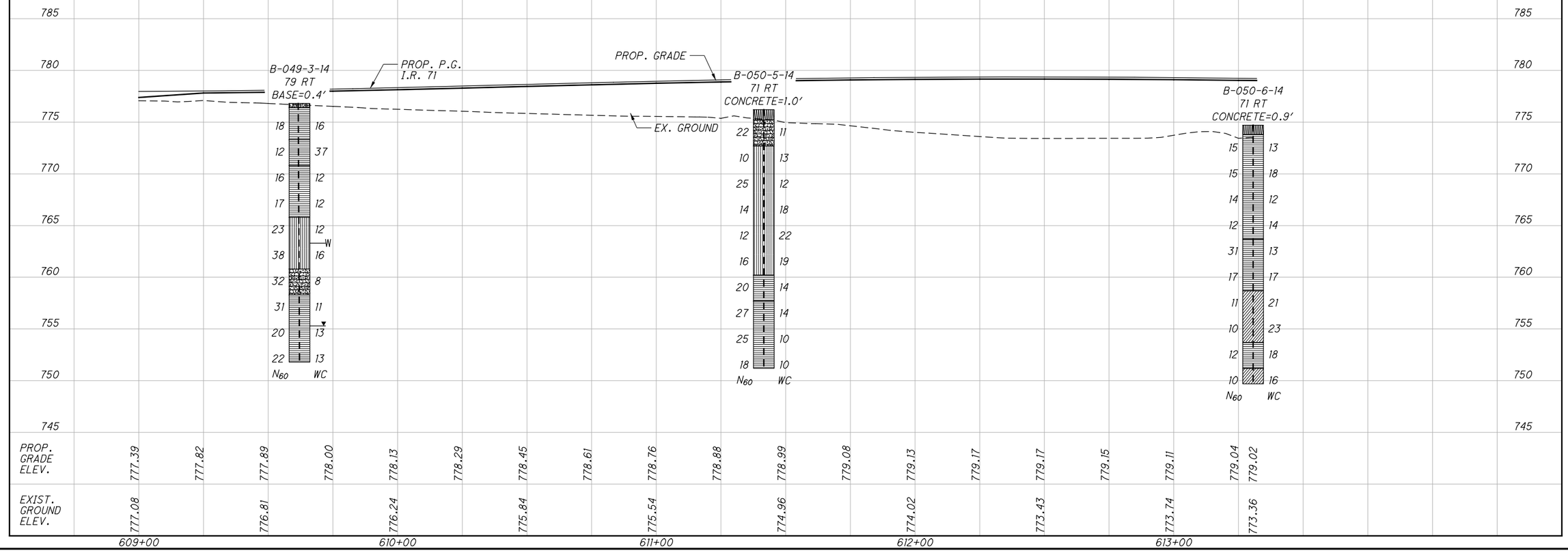

HORIZONTAL SCALE IN FEET
0 10 20 40

DRAWN BMG
CHECKED PAN

STRUCTURE FOUNDATION EXPLORATION NS 6
STA. 609+00 TO STA. 613+32

FRA-71-5.29

15 / 41

P:\84868\geotechnical\sheets\84868ZP603.dgn 3/31/2015 8:31:52 AM mtokacs

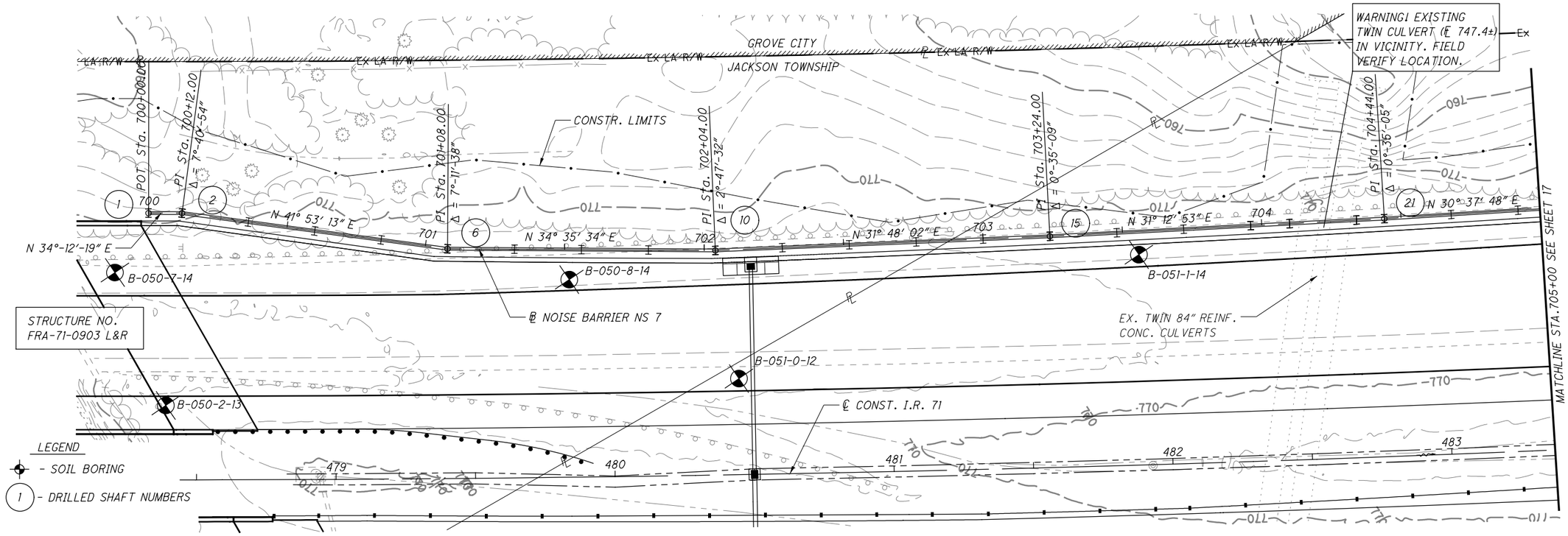

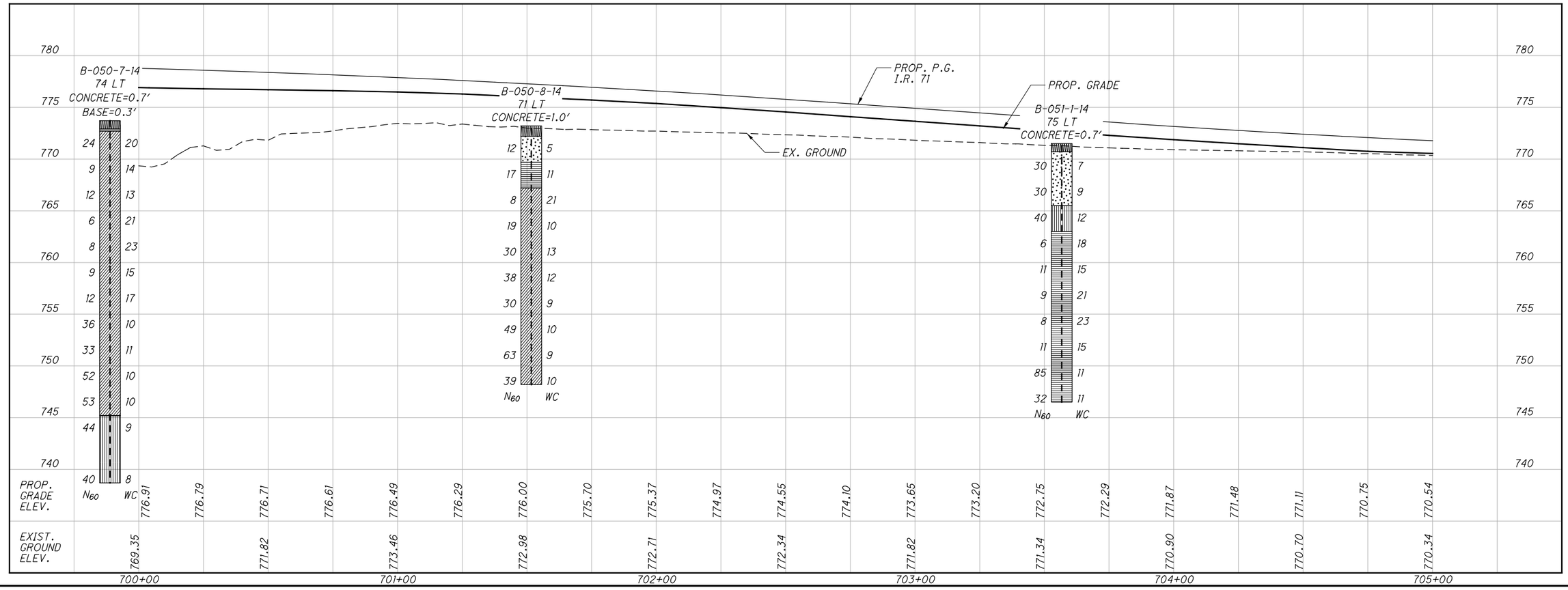

HORIZONTAL SCALE IN FEET
0 10 20 40

DRAWN BMG CHECKED PAN

STRUCTURE FOUNDATION EXPLORATION NS 7
STA. 700+00 TO STA. 705+00

FRA-71-5.29

16 / 41

P:\84868\geotechnical\sheets\84868ZP701.dgn 3/31/2015 8:32:37 AM mtokacs

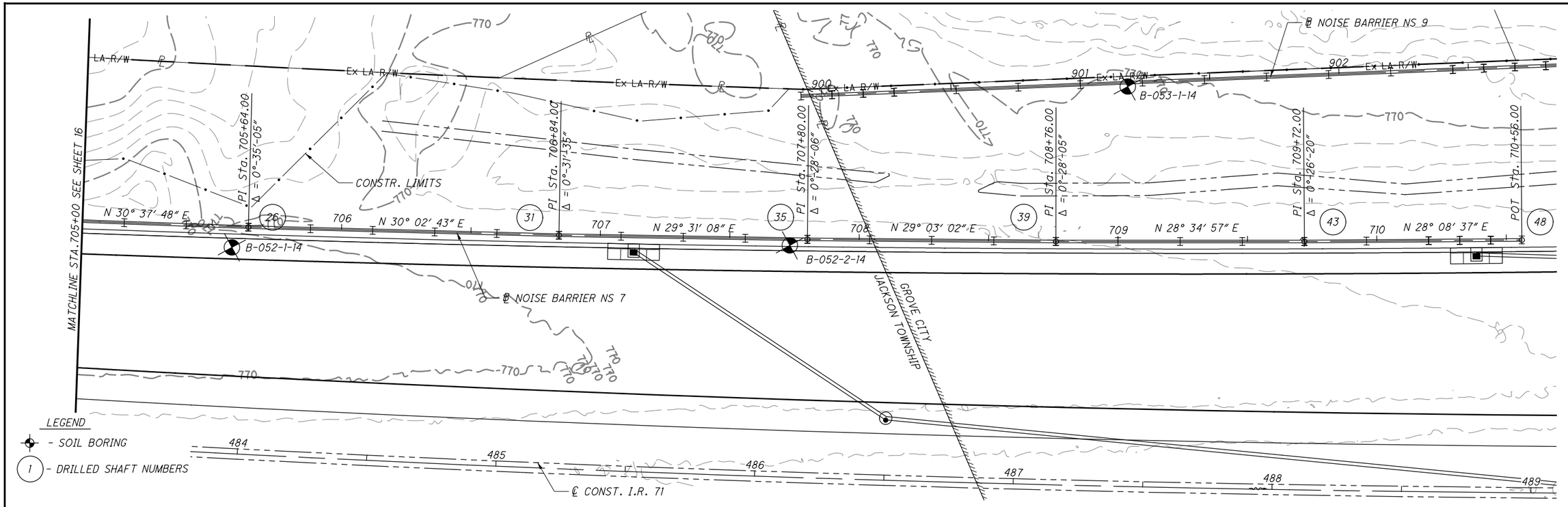

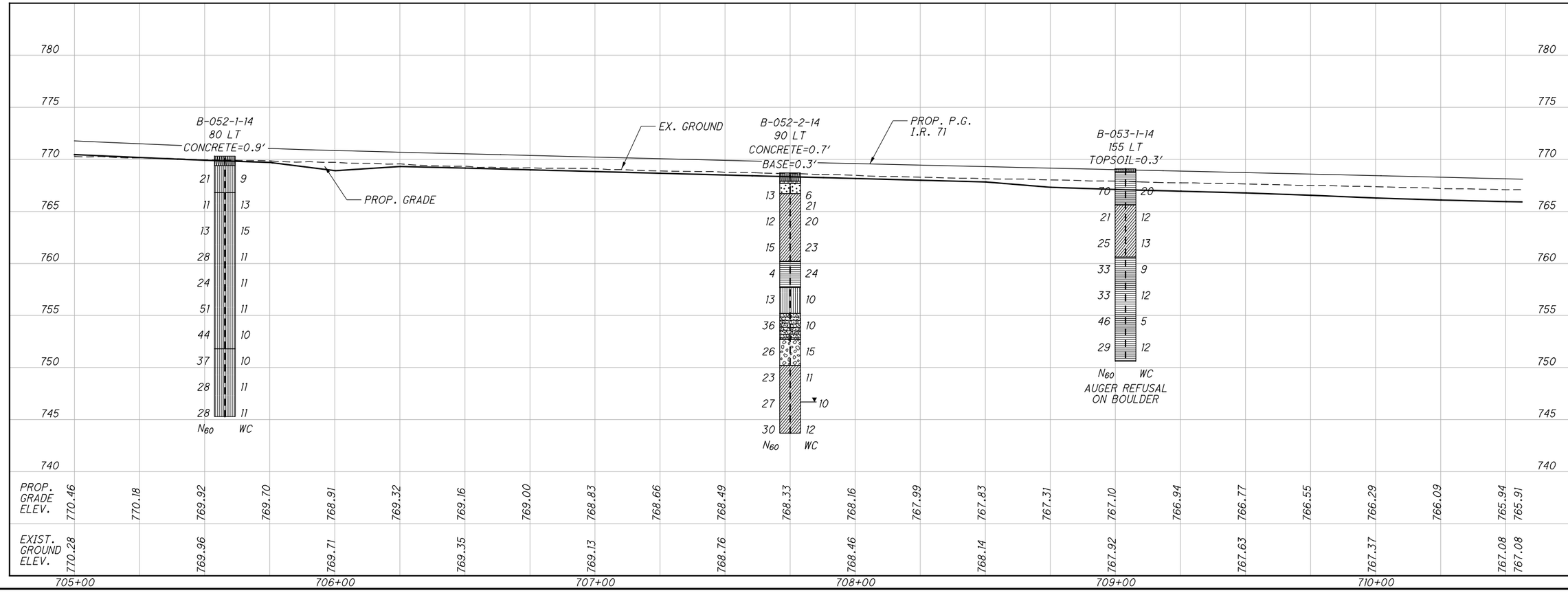

HORIZONTAL SCALE IN FEET

DRAWN BMG CHECKED PAN

STRUCTURE FOUNDATION EXPLORATION NS 7
STA. 705+00 TO STA. 710+56

FRA-71-5.29

17 / 41

P:\84868\geotechnical\sheets\84868ZP702.dgn 3/31/2015 8:33:31 AM mtakacs

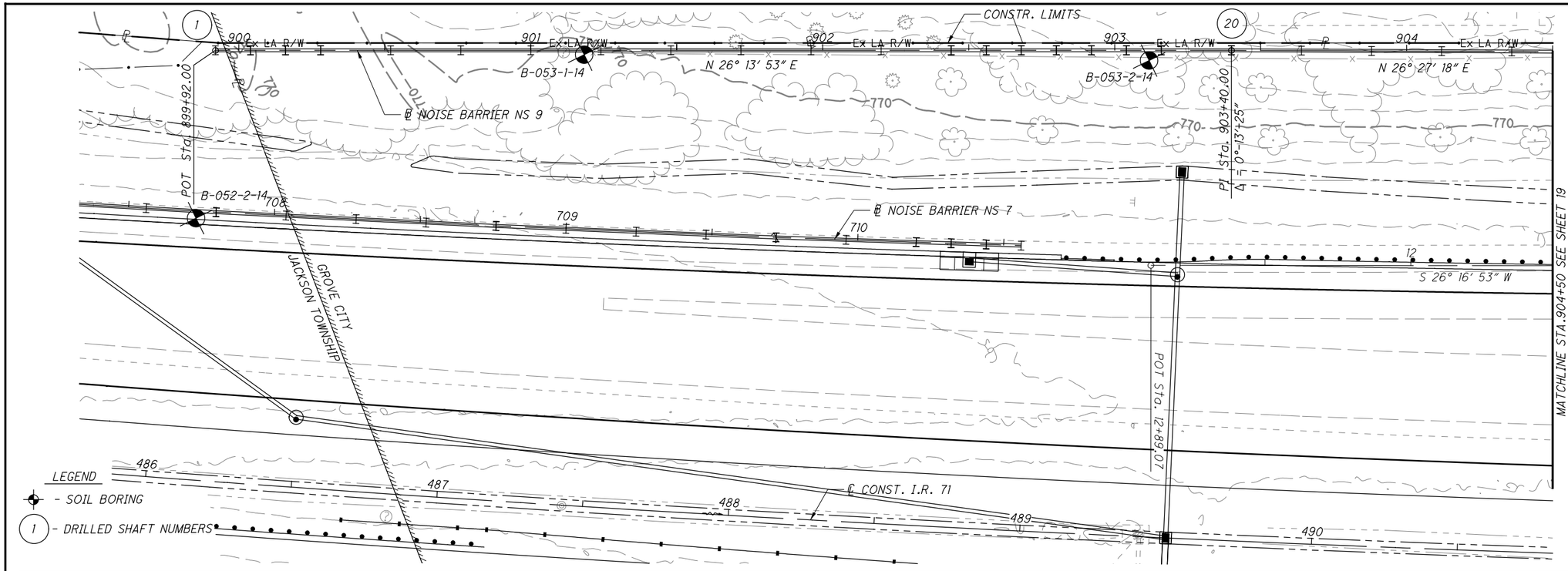

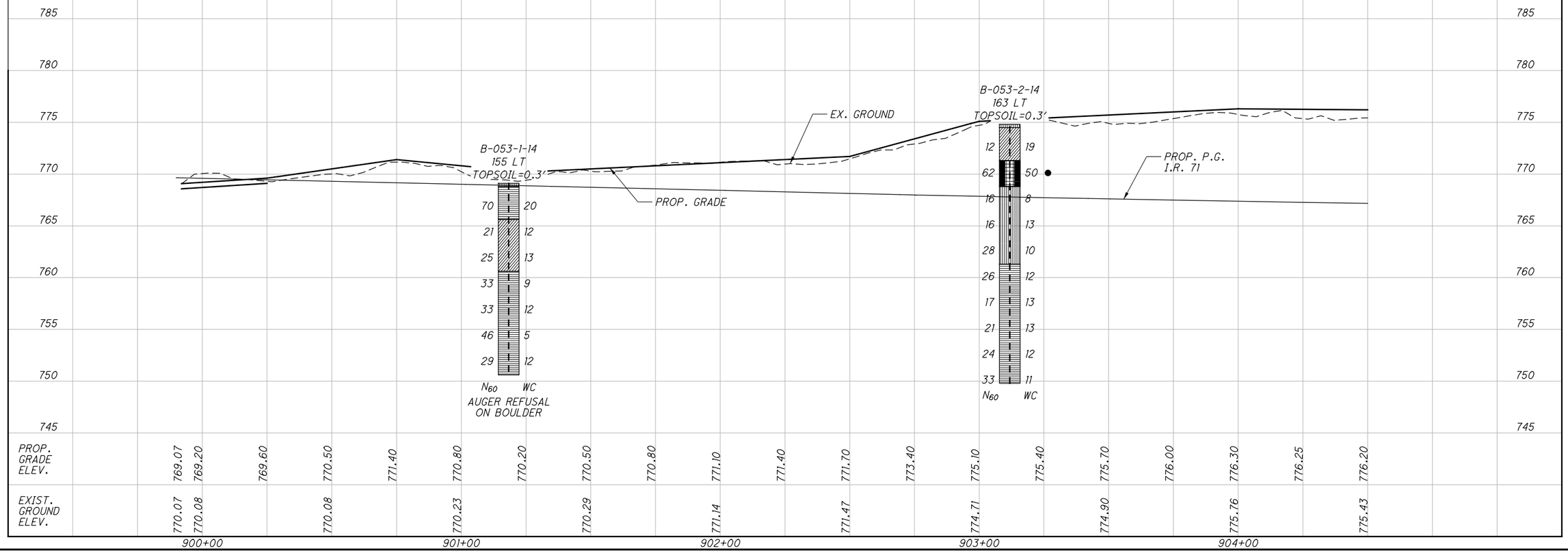

STRUCTURE FOUNDATION EXPLORATION NS 9
STA. 899+92 TO STA. 904+50

FRA-71-5.29

DRAWN BMG CHECKED PAN

HORIZONTAL SCALE IN FEET

18 / 41

P:\84868\geotechnical\sheets\84868ZP901.dgn 3/31/2015 8:34:18 AM mtakacs

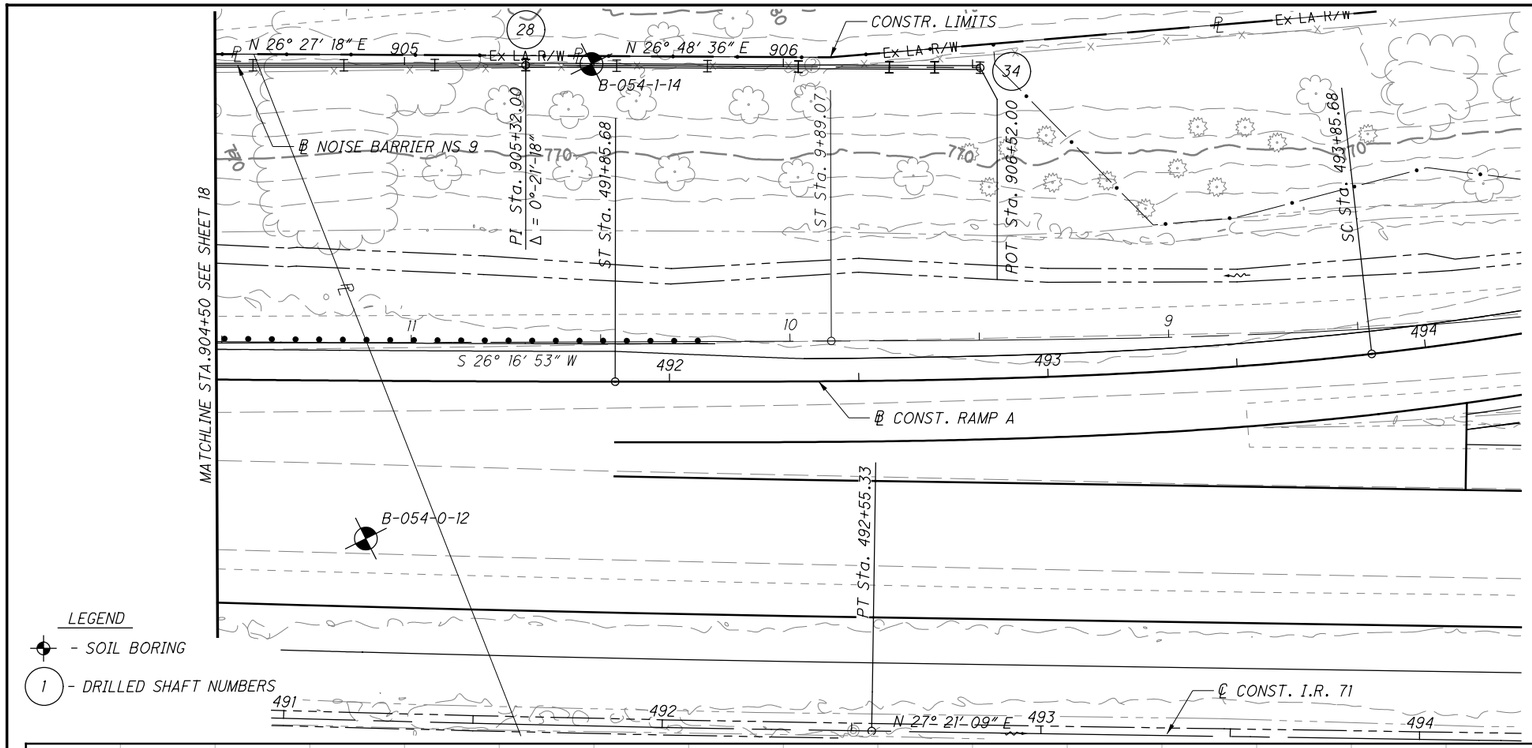

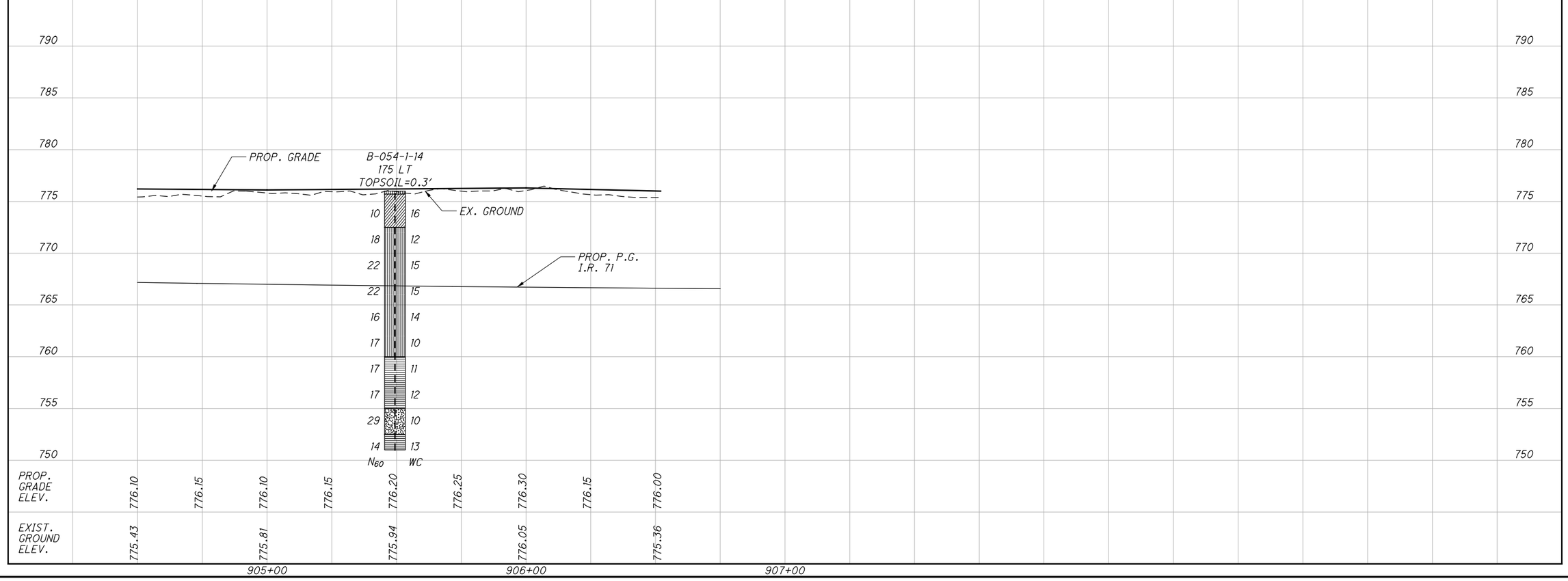

HORIZONTAL SCALE IN FEET
0 10 20 40

DRAWN BMG
CHECKED PAN

STRUCTURE FOUNDATION EXPLORATION NS 9
STA. 904+50 TO STA. 906+52

FRA-71-5.29

19 / 41

P:\84868\geotechnical\sheets\848682P902.dgn 12/16/2014 10:47:38 AM pnarsavage

PROJECT: FRA-71-05.29	DRILLING FIRM / OPERATOR: DLZ / K. CONRAD	DRILL RIG: CME 45C TRACK	STATION / OFFSET: 433+02, 142 RT	EXPLORATION ID B-039-1-14
TYPE: NOISE WALL	SAMPLING FIRM / LOGGER: DLZ / K. REINHART	HAMMER: CME AUTOMATIC	ALIGNMENT: I-71	
PID: 84868 BR ID:	DRILLING METHOD: 3.25" HSA	CALIBRATION DATE: 6/12/14	ELEVATION: 799.5 (MSL) EOB: 25.0 ft.	PAGE 1 OF 1
START: 7/29/14 END: 7/29/14	SAMPLING METHOD: SPT	ENERGY RATIO (%): 78.7	COORD: 1809992.484 N, 679004.895 E	

MATERIAL DESCRIPTION AND NOTES	ELEV. 799.5	DEPTHS	SPT/ RQD	N_{60}	REC (%)	SAMPLE ID	HP (tsf)	GRADATION (%) GR	CS	FS	SI	CL	ATTERBERG LL	PL	PI	WC	ODOT CLASS (GI)	BACK FILL
Topsoil - 3"	799.3																	
POSSIBLE FILL: Hard brown SILTY CLAY (A-6b), some fine to coarse sand, trace fine to coarse gravel; contains roots; moist.	796.0				78	SS-1	4.50	-	-	-	-	-	-	-	-	21	A-6b (V)	
POSSIBLE FILL: Hard brown SILT AND CLAY (A-6a), some fine to coarse sand, trace fine to coarse gravel; damp.	791.0		6 6 12	24	100	SS-2	4.50	-	-	-	-	-	-	-	-	12	A-6a (V)	
			14 21 24	59	94	SS-3	4.50	-	-	-	-	-	-	-	-	10	A-6a (V)	
POSSIBLE FILL: Dense brown SILT (A-4b), some clay, trace fine gravel; moist.	788.5		9 17 16	43	100	SS-4	2.00	1	1	7	58	33	25	16	9	20	A-4b (8)	
Very stiff gray SILT AND CLAY (A-6a), some to "and" fine to coarse sand, trace fine to coarse gravel; damp to moist.			3 4 7	14	100	SS-5	1.50	-	-	-	-	-	-	-	-	22	A-6a (V)	
			3 5 8	17	100	SS-6	3.00	-	-	-	-	-	-	-	-	14	A-6a (V)	
			1 3 4	9	100	SS-7	2.00	-	-	-	-	-	-	-	-	14	A-6a (V)	
			1 2 3	7	100	SS-8	2.50	-	-	-	-	-	-	-	-	12	A-6a (V)	
			2 2 5	9	100	SS-9	2.00	-	-	-	-	-	-	-	-	13	A-6a (V)	
	774.5	EOB	2 3 4	9	100	SS-10	2.00	-	-	-	-	-	-	-	-	13	A-6a (V)	

NOTES: NONE

ABANDONMENT METHODS, MATERIALS, QUANTITIES: SOIL MIXED WITH 1 BAG BENTONITE CHIPS

STANDARD OHDOT SOIL BORING LOG (8.5X11) - OH DOT.GDT - 10/17/14 09:58 - P:\84868\GEOTECHNICAL\NOISE BARRIER\ENGAPPS\GINT\1321-4019.00 FRA-71-5.29.GPJ

PROJECT: FRA-71-05.29	DRILLING FIRM / OPERATOR: DLZ / K. CONRAD	DRILL RIG: CME 45C TRACK	STATION / OFFSET: 435+02, 145 RT	EXPLORATION ID B-040-1-14
TYPE: NOISE WALL	SAMPLING FIRM / LOGGER: DLZ / K. REINHART	HAMMER: CME AUTOMATIC	ALIGNMENT: I-71	
PID: 84868 BR ID:	DRILLING METHOD: 3.25" HSA	CALIBRATION DATE: 6/12/14	ELEVATION: 797.9 (MSL) EOB: 25.0 ft.	PAGE 1 OF 1
START: 7/29/14 END: 7/29/14	SAMPLING METHOD: SPT	ENERGY RATIO (%): 78.7	COORD: 1810140.336 N, 679139.981 E	

MATERIAL DESCRIPTION AND NOTES	ELEV. 797.9	DEPTHS	SPT/ RQD	N_{60}	REC (%)	SAMPLE ID	HP (tsf)	GRADATION (%) GR	CS	FS	SI	CL	ATTERBERG LL	PL	PI	WC	ODOT CLASS (GI)	BACK FILL
Topsoil - 2"	797.7																	
POSSIBLE FILL: Hard brown SILT AND CLAY (A-6a), some to "and" fine to coarse sand, trace to little fine to coarse gravel; damp. @ 1.0'-2.5', contains roots.	786.9		5 6 7	17	89	SS-1	4.50	-	-	-	-	-	-	-	-	17	A-6a (V)	
			12 19 22	54	83	SS-2	4.50	-	-	-	-	-	-	-	-	7	A-6a (V)	
			12 11 12	30	100	SS-3	4.50	-	-	-	-	-	-	-	-	10	A-6a (V)	
			7 8 12	26	100	SS-4	4.50	-	-	-	-	-	-	-	-	13	A-6a (V)	
Very stiff to hard gray SANDY SILT (A-4a), some to "and" fine to coarse sand, trace to little fine to coarse gravel; damp.	776.9	W	4 4 4	10	100	SS-5	3.50	12	8	16	39	25	20	13	7	12	A-4a (6)	
			2 3 3	8	100	SS-6	4.00	-	-	-	-	-	-	-	-	12	A-4a (V)	
			3 4 3	9	100	SS-7	3.50	-	-	-	-	-	-	-	-	10	A-4a (V)	
			3 4 6	13	100	SS-8	4.00	-	-	-	-	-	-	-	-	11	A-4a (V)	
Medium dense gray SANDY SILT (A-4a), some to "and" clay, little fine to coarse gravel; wet.		▼ 0 hr	4 6 7	17	72	SS-9	-	-	-	-	-	-	-	-	-	9	A-4a (V)	
	772.9	EOB	9 9 16	33	89	SS-10	-	-	-	-	-	-	-	-	-	11	A-4a (V)	

NOTES: SEEPAGE FROM 21.0' TO 25.0'.

ABANDONMENT METHODS, MATERIALS, QUANTITIES: SOIL MIXED WITH 1 BAG BENTONITE CHIPS

STANDARD ODOT SOIL BORING LOG (8.5 X 11) - OH DOT.GDT - 10/22/14 08:39 - P:\84868\GEOTECHNICAL\NOISE BARRIER\ENGAPPS\GINT\1321-4019.00 FRA-71-5.29.GPJ

PROJECT: FRA-71-05.29	DRILLING FIRM / OPERATOR: DLZ / K. CONRAD	DRILL RIG: CME 45C TRACK	STATION / OFFSET: 437+02, 142 RT	EXPLORATION ID B-040-2-14
TYPE: NOISE WALL	SAMPLING FIRM / LOGGER: DLZ / K. REINHART	HAMMER: CME AUTOMATIC	ALIGNMENT: I-71	
PID: 84868 BR ID:	DRILLING METHOD: 3.25" HSA	CALIBRATION DATE: 6/12/14	ELEVATION: 798.1 (MSL) EOB: 25.0 ft.	PAGE 1 OF 1
START: 7/29/14 END: 7/29/14	SAMPLING METHOD: SPT	ENERGY RATIO (%): 78.7	COORD: 1810284.330 N, 679279.063 E	

MATERIAL DESCRIPTION AND NOTES	ELEV. 798.1	DEPTHS	SPT/ RQD	N_{60}	REC (%)	SAMPLE ID	HP (tsf)	GRADATION (%) GR	CS	FS	SI	CL	ATTERBERG LL	PL	PI	WC	ODOT CLASS (GI)	BACK FILL
Topsoil - 3"	797.9																	
FILL: Hard dark gray SILTY CLAY (A-6b), some fine to coarse sand, trace fine gravel; contains roots; moist.	794.6		4 4 5	12	89	SS-1	4.00	-	-	-	-	-	-	-	-	28	A-6b (V)	
POSSIBLE FILL: Very stiff mottled brown and gray SILTY CLAY (A-6b), some fine to coarse sand, trace fine gravel; moist.	792.1		2 3 4	9	83	SS-2	3.00	-	-	-	-	-	-	-	-	19	A-6b (V)	
Very stiff brown SILT AND CLAY (A-6a), "and" fine to coarse sand, trace fine to coarse gravel; damp.	789.6		3 5 5	13	89	SS-3	2.75	-	-	-	-	-	-	-	-	16	A-6a (V)	
Hard gray SANDY SILT(A-4A), some to "and" fine to coarse sand, trace to little fine to coarse gravel; damp.	774.6	W	4 6 7	17	100	SS-4	4.00	14	11	17	32	26	23	15	8	12	A-4a (5)	
			6 6 6	16	100	SS-5	4.50	-	-	-	-	-	-	-	-	11	A-4a (V)	
			7 7 7	18	100	SS-6	4.50	-	-	-	-	-	-	-	-	12	A-4a (V)	
			7 7 8	20	100	SS-7	4.50	-	-	-	-	-	-	-	-	11	A-4a (V)	
			5 6 7	17	100	SS-8	4.50	-	-	-	-	-	-	-	-	11	A-4a (V)	
			4 5 9	18	100	SS-9	4.50	-	-	-	-	-	-	-	-	11	A-4a (V)	
Medium dense gray SANDY SILT (A-4a), "and" clay, little fine to coarse gravel; moist.	773.1	EOB	7 8 8	21	100	SS-10	3.00	-	-	-	-	-	-	-	-	10	A-4a (V)	

NOTES: SEEPAGE FROM 23.5' TO 25.0'.

ABANDONMENT METHODS, MATERIALS, QUANTITIES: SOIL MIXED WITH 1 BAG BENTONITE CHIPS

STANDARD ODOT SOIL BORING LOG (8.5 X 11) - OH DOT.GDT - 10/22/14 08:39 - P:\84868\GEOTECHNICAL\NOISE BARRIER\ENGAPPS\GINT\1321-4019.00 FRA-71-5.29.GPJ

PROJECT: FRA-71-05.29	DRILLING FIRM / OPERATOR: DLZ / K. CONRAD	DRILL RIG: CME 45C TRACK	STATION / OFFSET: 439+04, 141 RT	EXPLORATION ID B-041-1-14
TYPE: NOISE WALL	SAMPLING FIRM / LOGGER: DLZ / K. REINHART	HAMMER: CME AUTOMATIC	ALIGNMENT: I-71	
PID: 84868 BR ID:	DRILLING METHOD: 3.25" HSA	CALIBRATION DATE: 6/12/14	ELEVATION: 798.6 (MSL) EOB: 25.0 ft.	PAGE 1 OF 1
START: 7/30/14 END: 7/30/14	SAMPLING METHOD: SPT	ENERGY RATIO (%): 78.7	COORD: 1810430.462 N, 679417.124 E	

MATERIAL DESCRIPTION AND NOTES	ELEV. 798.6	DEPTHS	SPT/ RQD	N_{60}	REC (%)	SAMPLE ID	HP (tsf)	GRADATION (%) GR	CS	FS	SI	CL	ATTERBERG LL	PL	PI	WC	ODOT CLASS (GI)	BACK FILL
Topsoil - 2"	798.4																	
POSSIBLE FILL: Hard brown SILT AND CLAY (A-6a), some to "and" fine to coarse sand, trace to little fine to coarse gravel; damp.	785.1		7 11 11	29	100	SS-1	4.50	-	-	-	-	-	-	-	-	19	A-6a (V)	
			8 9 12	28	94	SS-2	4.50	-	-	-	-	-	-	-	-	12	A-6a (V)	
			12 15 11	34	100	SS-3	4.50	-	-	-	-	-	-	-	-	12	A-6a (V)	
			5 11 14	33	89	SS-4	4.50	-	-	-	-	-	-	-	-	12	A-6a (V)	
			10 10 10	26	100	SS-5	4.50	-	-	-	-	-	-	-	-	13	A-6a (V)	
Hard gray SANDY SILT (A-4a), some to "and" fine to coarse sand, trace to little fine gravel; moist.	773.6	EOB	8 9 8	22	100	SS-6	4.50	-	-	-	-	-	-	-	-	11	A-4a (V)	
			5 8 9	22	100	SS-7	4.50	16	10	17	35	22	21	13	8	17	A-4a (4)	
			7 10 11	28	100	SS-8	4.50	-	-	-	-	-	-	-	-	10	A-4a (V)	
			10 11 13	31	100	SS-9	4.50	-	-	-	-	-	-	-	-	11	A-4a (V)	
			12 14 13	35	100	SS-10	4.50	-	-	-	-	-	-	-	-	10	A-4a (V)	

NOTES: NONE

ABANDONMENT METHODS, MATERIALS, QUANTITIES: SOIL MIXED WITH 1 BAG BENTONITE CHIPS

STANDARD OHDOT SOIL BORING LOG (8.5X11) - OH DOT.GDT - 10/17/14 09:58 - P:\84868\GEOTECHNICAL\NOISE BARRIER\ENGAPPS\GINT\1321-4019.00 FRA-71-5.29.GPJ

PROJECT: FRA-71-05.29 | DRILLING FIRM / OPERATOR: DLZ / K. CONRAD | DRILL RIG: CME 45C TRACK | STATION / OFFSET: 440+40, 157 LT | EXPLORATION ID B-041-2-14
TYPE: NOISE WALL | SAMPLING FIRM / LOGGER: DLZ / V. DEARING | HAMMER: CME AUTOMATIC | ALIGNMENT: I-71
PID: 84868 BR ID: | DRILLING METHOD: 3.25" HSA | CALIBRATION DATE: 6/12/14 | ELEVATION: 799.6 (MSL) EOB: 25.0 ft. | PAGE 1 OF 1
START: 7/28/14 END: 7/28/14 | SAMPLING METHOD: SPT | ENERGY RATIO (%): 78.7 | COORD: 1810326.078 N, 679727.524 E

MATERIAL DESCRIPTION AND NOTES	ELEV.	DEPTHS	SPT/ RQD	N_{60}	REC (%)	SAMPLE ID	HP (tsf)	GRADATION (%) GR	CS	FS	SI	CL	ATTERBERG LL	PL	PI	WC	ODOT CLASS (GI)	BACK FILL
Topsoil - 3"	799.4																	
POSSIBLE FILL: Hard brown and gray SANDY SILT (A-4a), some to "and" fine to coarse sand, trace to little fine to coarse gravel; contains roots; damp.		1	6 8 16	31	89	SS-1	4.50	-	-	-	-	-	-	-	-	9	A-4a (V)	
		2																
		3																
		4	4 10 14	31	78	SS-2	4.50	-	-	-	-	-	-	-	-	11	A-4a (V)	
	793.6	5																
Hard brown SANDY SILT (A-4a), some to "and" fine to coarse sand, trace to little fine to coarse gravel; damp to moist.		6	11 11 10	28	89	SS-3	4.50	17	11	14	35	23	21	13	8	11	A-4a (5)	
		7																
		8																
		9	6 12 15	35	89	SS-4	4.50	-	-	-	-	-	-	-	-	10	A-4a (V)	
	788.6	10																
Hard gray SILT AND CLAY (A-6a), some to "and" fine to coarse sand, trace to little fine to coarse gravel; damp to moist.		11	18 18 17	46	78	SS-5	4.50	-	-	-	-	-	-	-	-	10	A-6a (V)	
		12																
		13																
		14	11 14 14	37	100	SS-6	4.50	-	-	-	-	-	-	-	-	8	A-6a (V)	
		15																
		16																
		17	17 19 25	58	78	SS-7	4.50	-	-	-	-	-	-	-	-	9	A-6a (V)	
		18																
		19	25 24 23	62	78	SS-8	4.50	-	-	-	-	-	-	-	-	7	A-6a (V)	
		20																
		21																
		22	26 22 25	62	94	SS-9	4.50	-	-	-	-	-	-	-	-	11	A-6a (V)	
		23																
		24	14 14 17	41	100	SS-10	4.50	-	-	-	-	-	-	-	-	10	A-6a (V)	
	774.6	EOB 25																

NOTES: NONE

ABANDONMENT METHODS, MATERIALS, QUANTITIES: SOIL MIXED WITH 1 BAG BENTONITE CHIPS

STANDARD OHDOT SOIL BORING LOG (8.5X11) - OH DOT.GDT - 10/17/14 09:58 - P:\84868\GEOTECHNICAL\NOISE BARRIER\ENGAPPS\GINT\1321-4019.00 FRA-71-5.29.GPJ

PROJECT: FRA-71-05.29 | DRILLING FIRM / OPERATOR: DLZ / K. CONRAD | DRILL RIG: CME 45C TRACK | STATION / OFFSET: 441+01, 144 RT | EXPLORATION ID B-041-3-14
TYPE: NOISE WALL | SAMPLING FIRM / LOGGER: DLZ / K. REINHART | HAMMER: CME AUTOMATIC | ALIGNMENT: I-71
PID: 84868 BR ID: | DRILLING METHOD: 3.25" HSA | CALIBRATION DATE: 6/12/14 | ELEVATION: 794.3 (MSL) EOB: 25.0 ft. | PAGE 1 OF 1
START: 7/30/14 END: 7/30/14 | SAMPLING METHOD: SPT | ENERGY RATIO (%): 78.7 | COORD: 1810577.156 N, 679550.088 E

MATERIAL DESCRIPTION AND NOTES	ELEV.	DEPTHS	SPT/ RQD	N_{60}	REC (%)	SAMPLE ID	HP (tsf)	GRADATION (%) GR	CS	FS	SI	CL	ATTERBERG LL	PL	PI	WC	ODOT CLASS (GI)	BACK FILL
Topsoil - 2"	794.1																	
POSSIBLE FILL: Hard brown SILT AND CLAY (A-6a), some fine to coarse sand, trace fine gravel; contains roots; damp.		1	6 7 8	20	100	SS-1	4.50	-	-	-	-	-	-	-	-	19	A-6a (V)	
	790.8	2																
POSSIBLE FILL: Hard brown SILT AND CLAY (A-6a), some to "and" fine to coarse sand, trace fine to coarse gravel; damp.		3																
		4	4 6 12	24	83	SS-2	4.50	-	-	-	-	-	-	-	-	14	A-6a (V)	
		5																
		6																
		7	5 8 9	22	89	SS-3	4.50	-	-	-	-	-	-	-	-	11	A-6a (V)	
	785.8	8																
POSSIBLE FILL: Dense gray SANDY SILT (A-4a), "and" clay, some fine to coarse gravel; damp.		9	10 12 20	42	100	SS-4	4.50	-	-	-	-	-	-	-	-	8	A-4a (V)	
	783.3	10																
Hard gray SANDY SILT (A-4a), some to "and" fine to coarse sand, trace to little fine gravel; damp to moist.		11	5 5 5	13	100	SS-5	4.50	-	-	-	-	-	-	-	-	10	A-4a (V)	
		12																
		13																
		14	4 5 7	16	100	SS-6	4.50	8	8	15	41	28	23	14	9	12	A-4a (7)	
		15																
		16																
		17	5 7 8	20	100	SS-7	4.50	-	-	-	-	-	-	-	-	11	A-4a (V)	
		18																
		19	6 7 8	20	100	SS-8	4.50	-	-	-	-	-	-	-	-	11	A-4a (V)	
		20																
		21																
		22	10 10 12	29	100	SS-9	4.50	-	-	-	-	-	-	-	-	10	A-4a (V)	
		23																
		24	16 18 24	55	100	SS-10	4.50	-	-	-	-	-	-	-	-	9	A-4a (V)	
	769.3	EOB 25																

NOTES: NONE

ABANDONMENT METHODS, MATERIALS, QUANTITIES: SOIL MIXED WITH 1 BAG BENTONITE CHIPS

STANDARD OHDOT SOIL BORING LOG (8.5X11) - OH DOT.GDT - 10/17/14 09:58 - P:\84868\GEOTECHNICAL\NOISE BARRIER\ENGAPPS\GINT\1321-4019.00 FRA-71-5.29.GPJ

PROJECT: FRA-71-05.29	DRILLING FIRM / OPERATOR: DLZ / K. CONRAD	DRILL RIG: CME 45C TRACK	STATION / OFFSET: 442+45, 150 LT	EXPLORATION ID B-042-1-14
TYPE: NOISE WALL	SAMPLING FIRM / LOGGER: DLZ / V. DEARING	HAMMER: CME AUTOMATIC	ALIGNMENT: I-71	
PID: 84868 BR ID:	DRILLING METHOD: 3.25" HSA	CALIBRATION DATE: 6/12/14	ELEVATION: 796.6 (MSL) EOB: 25.0 ft.	PAGE 1 OF 1
START: 7/28/14 END: 7/28/14	SAMPLING METHOD: SPT	ENERGY RATIO (%): 78.7	COORD: 1810480.510 N, 679862.370 E	

MATERIAL DESCRIPTION AND NOTES	ELEV.	DEPTHS	SPT/ RQD	N_{60}	REC (%)	SAMPLE ID	HP (tsf)	GRADATION (%) GR	CS	FS	SI	CL	ATTERBERG LL	PL	PI	WC	ODOT CLASS (GI)	BACK FILL
Topsoil - 3"	796.6																	
POSSIBLE FILL: Hard brown SILT AND CLAY (A-6a), "and" fine to coarse sand, little fine to coarse gravel; damp.	796.4	1	4															
		2	8 10	24	78	SS-1	4.50	-	-	-	-	-	-	-	-	8	A-6a (V)	
	793.1	3																
POSSIBLE FILL: Dense brown SANDY SILT (A-4a), "and" fine to coarse gravel, some clay; damp.		4	12															
		5	31 18	64	83	SS-2	-	-	-	-	-	-	-	-	-	12	A-4a (V)	
	790.6	6																
POSSIBLE FILL: Hard brown SANDY SILT (A-4a), some to "and" fine to coarse sand, trace to little fine to coarse gravel; damp.		7	9															
		8	9 11	26	100	SS-3	4.50	13	10	17	35	25	23	14	9	10	A-4a (5)	
		9	8															
		10	16 23	51	100	SS-4	4.50	-	-	-	-	-	-	-	-	10	A-4a (V)	
	785.6	11																
Very stiff to hard gray SILTY CLAY (A-6b), some to "and" fine to coarse sand, trace to little fine to coarse gravel; damp to moist.		12	11 17 14	41	72	SS-5	4.50	-	-	-	-	-	-	-	-	9	A-6b (V)	
		13																
		14	6 8 12	26	100	SS-6	4.50	-	-	-	-	-	-	-	-	9	A-6b (V)	
		15																
		16	6															
		17	10 13	30	89	SS-7	3.50	-	-	-	-	-	-	-	-	9	A-6b (V)	
		18																
		19	6															
		20	9 11	26	89	SS-8	4.50	-	-	-	-	-	-	-	-	9	A-6b (V)	
		21	8															
		22	9 12	28	94	SS-9	4.50	-	-	-	-	-	-	-	-	12	A-6b (V)	
	773.1	23																
Medium dense gray SANDY SILT (A-4a), some clay, some fine gravel; moist.	771.6	24	8															
	EOB	25	9 16	33	100	SS-10	-	-	-	-	-	-	-	-	-	10	A-4a (V)	

NOTES: NONE

ABANDONMENT METHODS, MATERIALS, QUANTITIES: SOIL MIXED WITH 1 BAG BENTONITE CHIPS

STANDARD OHDOT SOIL BORING LOG (8.5X11) - OH DOT.GDT - 10/17/14 09:58 - P:\84868\GEOTECHNICAL\NOISE BARRIER\ENGAPPS\GINT\1321-4019.00 FRA-71-5.29.GPJ

PROJECT: FRA-71-05.29	DRILLING FIRM / OPERATOR: DLZ / K. CONRAD	DRILL RIG: CME 45C TRACK	STATION / OFFSET: 443+01, 143 RT	EXPLORATION ID B-042-2-14
TYPE: NOISE WALL	SAMPLING FIRM / LOGGER: DLZ / K. REINHART	HAMMER: CME AUTOMATIC	ALIGNMENT: I-71	
PID: 84868 BR ID:	DRILLING METHOD: 3.25" HSA	CALIBRATION DATE: 6/12/14	ELEVATION: 794.5 (MSL) EOB: 25.0 ft.	PAGE 1 OF 1
START: 7/31/14 END: 7/31/14	SAMPLING METHOD: SPT	ENERGY RATIO (%): 78.7	COORD: 1810722.434 N, 679687.596 E	

MATERIAL DESCRIPTION AND NOTES	ELEV.	DEPTHS	SPT/ RQD	N_{60}	REC (%)	SAMPLE ID	HP (tsf)	GRADATION (%) GR	CS	FS	SI	CL	ATTERBERG LL	PL	PI	WC	ODOT CLASS (GI)	BACK FILL
Topsoil - 2"	794.5																	
POSSIBLE FILL: Hard brown SILT AND CLAY (A-6a), some to "and" fine to coarse sand, trace to little fine to coarse gravel; damp.	794.3	1	4															
		2	10 12	29	100	SS-1	4.50	-	-	-	-	-	-	-	-	15	A-6a (V)	
		3																
		4	8															
		5	12 17	38	94	SS-2	4.50	-	-	-	-	-	-	-	-	11	A-6a (V)	
	788.5	6																
POSSIBLE FILL: Medium dense brown SANDY SILT (A-4a), little to some clay, trace fine to coarse gravel; damp to moist.		7	7															
		8	10 11	28	100	SS-3	4.50	-	-	-	-	-	-	-	-	10	A-4a (V)	
		9	10 9															
		10	7	21	72	SS-4	4.50	6	18	35	28	13	NP	NP	NP	16	A-4a (1)	
	783.5	11																
Hard gray SILTY CLAY (A-6b), some to "and" fine to coarse sand, trace fine to coarse gravel; damp.		12	8 12 10	29	100	SS-5	4.50	-	-	-	-	-	-	-	-	10	A-6b (V)	
		13																
		14	5 6															
		15	8	18	100	SS-6	4.50	-	-	-	-	-	-	-	-	11	A-6b (V)	
		16	6															
		17	7 13	26	100	SS-7	4.50	-	-	-	-	-	-	-	-	11	A-6b (V)	
		18																
		19	7															
		20	10 10	26	100	SS-8	4.50	-	-	-	-	-	-	-	-	10	A-6b (V)	
		21	8															
		22	8 10	24	100	SS-9	4.50	-	-	-	-	-	-	-	-	11	A-6b (V)	
	769.5	23																
	EOB	24	9															
		25	10 15	33	100	SS-10	4.50	-	-	-	-	-	-	-	-	10	A-6b (V)	

NOTES: NONE

ABANDONMENT METHODS, MATERIALS, QUANTITIES: SOIL MIXED WITH 1 BAG BENTONITE CHIPS

STANDARD OHDOT SOIL BORING LOG (8.5X11) - OH DOT.GDT - 10/17/14 09:58 - P:\84868\GEOTECHNICAL\NOISE BARRIER\ENGAPPS\GINT\1321-4019.00 FRA-71-5.29.GPJ

PROJECT: FRA-71-05.29 | DRILLING FIRM / OPERATOR: DLZ / K. CONRAD | DRILL RIG: CME 75 TRUCK | STATION / OFFSET: 444+40, 147 LT | EXPLORATION ID B-042-3-14
TYPE: NOISE WALL | SAMPLING FIRM / LOGGER: DLZ / A. MIDDLETON | HAMMER: CME AUTOMATIC | ALIGNMENT: I-71
PID: 84868 BR ID: | DRILLING METHOD: 3.25" HSA | CALIBRATION DATE: 6/11/14 | ELEVATION: 795.4 (MSL) EOB: 25.0 ft. | PAGE 1 OF 1
START: 7/25/14 END: 7/25/14 | SAMPLING METHOD: SPT | ENERGY RATIO (%): 74 | COORD: 1810624.500 N, 679994.038 E

MATERIAL DESCRIPTION AND NOTES	ELEV. 795.4	DEPTHS	SPT/ RQD	N_{60}	REC (%)	SAMPLE ID	HP (tsf)	GRADATION (%) GR	CS	FS	SI	CL	ATTERBERG LL	PL	PI	WC	ODOT CLASS (GI)	BACK FILL
Topsoil - 5"	795.0	1	3 5 8	16	72	SS-1	4.00	-	-	-	-	-	-	-	-	17	A-6a (V)	
POSSIBLE FILL: Hard brown and gray SILT AND CLAY (A-6a), "and" fine to coarse sand, trace fine to coarse gravel; damp.	791.9	2																
POSSIBLE FILL: Medium dense brown SILT (A-4b), some clay, little fine to coarse sand; damp.	789.4	3	8 11 11	27	100	SS-2	-	-	-	-	-	-	-	-	-	13	A-4b (V)	
POSSIBLE FILL: Dense brown GRAVEL WITH SAND AND SILT (A-2-4), some silty clay, some fine to coarse sand; damp.	786.9	4	11 23 16	48	100	SS-3	-	47	10	10	- 33 -		NP	NP	NP	6	A-2-4 (0)	
Dense brown and gray SANDY SILT (A-4a), "and" clay, trace fine to coarse gravel; damp.	784.4	5	10 9 12	26	89	SS-4	-	-	-	-	-	-	-	-	-	11	A-4a (V)	
Hard gray SILT AND CLAY (A-6a), some to "and" fine to coarse sand, trace fine to coarse gravel; damp.	779.4	6	8 9 8	21	83	SS-5	4.00	-	-	-	-	-	-	-	-	10	A-6a (V)	
		7	8 7 8	18	94	SS-6	4.00	-	-	-	-	-	-	-	-	11	A-6a (V)	
Medium dense gray SANDY SILT (A-4a), "and" clay, little fine to coarse gravel; damp.	776.9	8	8 9 9	22	89	SS-7	-	-	-	-	-	-	-	-	-	11	A-4a (V)	
Hard gray SILT AND CLAY (A-6a), some to "and" fine to coarse sand, trace fine to coarse gravel; damp.		9	10 11 12	28	44	SS-8	4.00	-	-	-	-	-	-	-	-	11	A-6a (V)	
		10	6 5 8	16	100	SS-9	4.00	-	-	-	-	-	-	-	-	11	A-6a (V)	
	770.4	EOB 25	6 7 8	18	100	SS-10	4.00	-	-	-	-	-	-	-	-	10	A-6a (V)	

NOTES: NONE

ABANDONMENT METHODS, MATERIALS, QUANTITIES: SOIL MIXED WITH 1 BAG BENTONITE CHIPS

STANDARD OHDOT SOIL BORING LOG (8.5X11) - OH DOT.GDT - 10/17/14 09:58 - P:\84868\GEOTECHNICAL\NOISE BARRIER\ENGAPPS\GINT\1321-4019.00 FRA-71-5.29.GPJ

PROJECT: FRA-71-05.29 | DRILLING FIRM / OPERATOR: DLZ / K. CONRAD | DRILL RIG: CME 45C TRACK | STATION / OFFSET: 445+02, 145 RT | EXPLORATION ID B-042-4-14
TYPE: NOISE WALL | SAMPLING FIRM / LOGGER: DLZ / K. REINHART | HAMMER: CME AUTOMATIC | ALIGNMENT: I-71
PID: 84868 BR ID: | DRILLING METHOD: 3.25" HSA | CALIBRATION DATE: 6/12/14 | ELEVATION: 791.3 (MSL) EOB: 25.0 ft. | PAGE 1 OF 1
START: 8/1/14 END: 8/1/14 | SAMPLING METHOD: SPT | ENERGY RATIO (%): 78.7 | COORD: 1810869.944 N, 679823.564 E

MATERIAL DESCRIPTION AND NOTES	ELEV. 791.3	DEPTHS	SPT/ RQD	N_{60}	REC (%)	SAMPLE ID	HP (tsf)	GRADATION (%) GR	CS	FS	SI	CL	ATTERBERG LL	PL	PI	WC	ODOT CLASS (GI)	BACK FILL
Topsoil - 2"	791.1	1	3 4 7	14	100	SS-1	4.50	-	-	-	-	-	-	-	-	21	A-6b (V)	
POSSIBLE FILL: Hard brown SILTY CLAY (A-6b), some fine to coarse sand, trace fine to coarse gravel; contains roots; moist.	787.8	2																
POSSIBLE FILL: Medium dense brown SANDY SILT (A-4a), some clay, little to some fine to coarse gravel; damp.		3																
@ 3.5'-5.0', very dense, poor recovery- probable boulder/cobble zone.	782.8	4	7 50/2"	-	39	SS-2	4.50	-	-	-	-	-	-	-	-	11	A-4a (V)	
		5																
		6	11 8 10	24	89	SS-3	4.50	17	10	16	32	25	24	14	10	13	A-4a (4)	
POSSIBLE FILL: Medium dense brown GRAVEL WITH SAND (A-1-b), some silty clay, some fine to coarse sand; damp.		7	7 8 12	26	33	SS-4	4.50	-	-	-	-	-	-	-	-	11	A-1-b (V)	
@ 8.5'-10.0', poor recovery- probable boulder/cobble zone.	780.3	8																
Medium dense brown and gray SANDY SILT (A-4a), "and" clay, some fine to coarse gravel; damp.	777.8	9	16 10 14	31	100	SS-5	4.50	-	-	-	-	-	-	-	-	12	A-4a (V)	
Medium dense gray SANDY SILT (A-4a), "and" clay, little to some fine to coarse gravel; damp.		10	9 11 12	30	100	SS-6	4.50	-	-	-	-	-	-	-	-	9	A-4a (V)	
		11	4 5 6	14	100	SS-7	4.50	-	-	-	-	-	-	-	-	12	A-4a (V)	
		12																
		13	10 9 11	26	100	SS-8	4.50	-	-	-	-	-	-	-	-	9	A-4a (V)	
		14																
		15	10 10 10	26	100	SS-9	4.50	-	-	-	-	-	-	-	-	10	A-4a (V)	
		16																
		17	9 10 8	24	100	SS-10	4.50	-	-	-	-	-	-	-	-	9	A-4a (V)	
	766.3	EOB 25																

NOTES: NONE

ABANDONMENT METHODS, MATERIALS, QUANTITIES: SOIL MIXED WITH 1 BAG BENTONITE CHIPS

STANDARD ODOT SOIL BORING LOG (8.5 X 11) - OH DOT.GDT - 10/22/14 08:39 - P:\84868\GEOTECHNICAL\NOISE BARRIER\ENGAPPS\GINT\1321-4019.00 FRA-71-5.29.GPJ

PROJECT: FRA-71-05.29 | DRILLING FIRM / OPERATOR: DLZ / K. CONRAD | DRILL RIG: CME 75 TRUCK | STATION / OFFSET: 446+38, 143 LT | EXPLORATION ID B-043-1-14
TYPE: NOISE WALL | SAMPLING FIRM / LOGGER: DLZ / A. MIDDLETON | HAMMER: CME AUTOMATIC | ALIGNMENT: I-71 | PAGE 1 OF 1
PID: 84868 BR ID: | DRILLING METHOD: 3.25" HSA | CALIBRATION DATE: 6/11/14 | ELEVATION: 794.4 (MSL) EOB: 25.0 ft.
START: 7/25/14 END: 7/25/14 | SAMPLING METHOD: SPT | ENERGY RATIO (%): 74 | COORD: 1810771.818 N, 680126.693 E

MATERIAL DESCRIPTION AND NOTES	ELEV. 794.4	DEPTHS	SPT/ RQD	N_{60}	REC (%)	SAMPLE ID	HP (tsf)	GRADATION (%) GR	CS	FS	SI	CL	ATTERBERG LL	PL	PI	WC	ODOT CLASS (GI)	BACK FILL
Topsoil - 5"	794.0																	
POSSIBLE FILL: Loose to medium dense brown SANDY SILT (A-4a), "and" clay, trace to little fine to coarse gravel; damp. @ 1.0'-2.5', trace roots.		1	4 5 5	12	83	SS-1	4.00	-	-	-	-	-	-	-	-	23	A-4a (V)	
		2																
		3																
		4	6 10 12	27	89	SS-2	4.00	-	-	-	-	-	-	-	-	10	A-4a (V)	
	788.4	5																
POSSIBLE FILL: Dense brown GRAVEL WITH SAND (A-1-b), "and" fine to coarse sand, some silty clay; damp.	785.9	6	21 18 18	44	100	SS-3	-	-	-	-	-	-	-	-	-	5	A-1-b (V)	
		7																
		8																
Medium stiff to stiff brown SILT AND CLAY (A-6a), "and" fine to coarse gravel, little fine to coarse sand; damp to moist.		9	2 2 3	6	78	SS-4	0.50	43	12	7	25	13	28	17	11	18	A-6a (1)	
		10																
W		11	9 6 8	17	50	SS-5	1.00	-	-	-	-	-	-	-	-	10	A-6a (V)	
	780.9	12																
Very stiff to hard brown SILT AND CLAY (A-6a), some to "and" fine to coarse sand, trace to little fine to coarse gravel; damp to moist.		13																
		14	6 6 5	14	100	SS-6	3.50	-	-	-	-	-	-	-	-	11	A-6a (V)	
		15																
		16																
		17	4 5 9	17	94	SS-7	3.75	-	-	-	-	-	-	-	-	12	A-6a (V)	
		18																
		19	4 5 6	14	94	SS-8	3.50	-	-	-	-	-	-	-	-	12	A-6a (V)	
		20																
		21																
		22	5 6 5	14	100	SS-9	2.75	-	-	-	-	-	-	-	-	12	A-6a (V)	
		23																
	769.4	24	7 8 10	22	100	SS-10	4.00	-	-	-	-	-	-	-	-	10	A-6a (V)	
	EOB	25																

NOTES: SEEPAGE FROM 11.0' TO 12.5'.
ABANDONMENT METHODS, MATERIALS, QUANTITIES: SOIL MIXED WITH 1 BAG BENTONITE CHIPS

STANDARD ODOT SOIL BORING LOG (8.5 X 11) - OH DOT.GDT - 10/22/14 08:40 - P:\84868\GEOTECHNICAL\NOISE BARRIER\ENGAPPS\GINT\1321-4019.00 FRA-71-5.29.GPJ

PROJECT: FRA-71-05.29 | DRILLING FIRM / OPERATOR: DLZ / K. CONRAD | DRILL RIG: CME 45C TRACK | STATION / OFFSET: 447+03, 143 RT | EXPLORATION ID B-043-2-14
TYPE: NOISE WALL | SAMPLING FIRM / LOGGER: DLZ / K. REINHART | HAMMER: CME AUTOMATIC | ALIGNMENT: I-71 | PAGE 1 OF 1
PID: 84868 BR ID: | DRILLING METHOD: 3.25" HSA | CALIBRATION DATE: 6/12/14 | ELEVATION: 788.2 (MSL) EOB: 25.0 ft.
START: 8/1/14 END: 8/1/14 | SAMPLING METHOD: SPT | ENERGY RATIO (%): 78.7 | COORD: 1811014.991 N, 679962.338 E

MATERIAL DESCRIPTION AND NOTES	ELEV. 788.2	DEPTHS	SPT/ RQD	N_{60}	REC (%)	SAMPLE ID	HP (tsf)	GRADATION (%) GR	CS	FS	SI	CL	ATTERBERG LL	PL	PI	WC	ODOT CLASS (GI)	BACK FILL
Topsoil - 3"	788.0																	
POSSIBLE FILL: Hard brown SILTY CLAY (A-6b), some fine to coarse sand, trace fine to coarse gravel; contains roots; moist.		1	4 4 4	10	100	SS-1	4.50	-	-	-	-	-	-	-	-	25	A-6b (V)	
		2																
		3																
		4	3 5 4	12	100	SS-2	4.50	-	-	-	-	-	-	-	-	23	A-6b (V)	
	782.2	5																
POSSIBLE FILL: Medium dense brown and gray SANDY SILT (A-4a), "and" clay, little fine to coarse gravel; damp.		6	6 8 9	22	89	SS-3	4.00	-	-	-	-	-	-	-	-	12	A-4a (V)	
	779.7	7																
Hard brown SANDY SILT (A-4a), some to "and" fine to coarse sand, little to some fine to coarse gravel; damp.		8																
		9	5 5 6	14	72	SS-4	4.00	15	9	16	36	24	22	14	8	13	A-4a (5)	
		10																
		11																
		12	10 16 14	39	44	SS-5	4.50	-	-	-	-	-	-	-	-	12	A-4a (V)	
	774.7	13																
Hard gray SILT AND CLAY (A-6a), some to "and" fine to coarse sand, trace to little fine to coarse gravel; damp.		14	6 9 13	29	100	SS-6	4.50	-	-	-	-	-	-	-	-	10	A-6a (V)	
		15																
		16																
		17	9 8 10	24	33	SS-7	4.50	-	-	-	-	-	-	-	-	12	A-6a (V)	
		18																
		19	5 6 7	17	100	SS-8	4.50	-	-	-	-	-	-	-	-	12	A-6a (V)	
		20																
		21																
		22	6 7 9	21	100	SS-9	4.50	-	-	-	-	-	-	-	-	12	A-6a (V)	
		23																
	763.2	24	10 13 14	35	100	SS-10	4.50	-	-	-	-	-	-	-	-	14	A-6a (V)	
	EOB	25																

NOTES: NONE
ABANDONMENT METHODS, MATERIALS, QUANTITIES: SOIL MIXED WITH 1 BAG BENTONITE CHIPS

STANDARD OHDOT SOIL BORING LOG (8.5X11) - OH DOT.GDT - 10/17/14 09:58 - P:\84868\GEOTECHNICAL\NOISE BARRIER\ENGAPPS\GINT\1321-4019.00 FRA-71-5.29.GPJ

PROJECT: FRA-71-05.29 | DRILLING FIRM / OPERATOR: DLZ / K. CONRAD | DRILL RIG: CME 75 TRUCK | STATION / OFFSET: 448+40, 144 LT | EXPLORATION ID B-043-3-14
TYPE: NOISE WALL | SAMPLING FIRM / LOGGER: DLZ / A. MIDDLETON | HAMMER: CME AUTOMATIC | ALIGNMENT: I-71 | PAGE 1 OF 1
PID: 84868 BR ID: | DRILLING METHOD: 3.25" HSA | CALIBRATION DATE: 6/11/14 | ELEVATION: 790.2 (MSL) EOB: 25.0 ft.
START: 7/25/14 END: 7/25/14 | SAMPLING METHOD: SPT | ENERGY RATIO (%): 74 | COORD: 1810918.932 N, 680265.727 E

MATERIAL DESCRIPTION AND NOTES	ELEV.	DEPTHS	SPT/ RQD	N_{60}	REC (%)	SAMPLE ID	HP (tsf)	GRADATION (%) GR	CS	FS	SI	CL	ATTERBERG LL	PL	PI	WC	ODOT CLASS (GI)	BACK FILL
Topsoil - 3"	789.9																	
POSSIBLE FILL: Hard brown and gray SILT AND CLAY (A-6a), some to "and" fine to coarse sand, trace to little fine to coarse gravel; damp.		1	5 5 7	15	89	SS-1	4.00	-	-	-	-	-	-	-	-	18	A-6a (V)	
		2																
		3																
		4	6 12 13	31	72	SS-2	4.00	-	-	-	-	-	-	-	-	14	A-6a (V)	
	784.2	5																
Hard brown SILT AND CLAY (A-6a), some to "and" fine to coarse sand, trace fine to coarse gravel; damp.		6																
		7	10 13 12	31	94	SS-3	4.00	-	-	-	-	-	-	-	-	13	A-6a (V)	
		8																
		9	3 5 5	12	100	SS-4	4.00	-	-	-	-	-	-	-	-	14	A-6a (V)	
	779.2	10																
Very stiff to hard gray SILT AND CLAY (A-6a), little to some fine to coarse sand, trace to little fine gravel; damp to moist.		11																
		12	4 6 8	17	100	SS-5	3.75	-	-	-	-	-	-	-	-	13	A-6a (V)	
		13																
		14	4 4 6	12	100	SS-6	4.00	16	7	9	29	39	27	16	11	14	A-6a (7)	
	774.2	15																
Medium dense brown GRAVEL WITH SAND (A-1-b), "and" fine to coarse sand, some silty clay; moist.		16																
		17	13 13 12	31	89	SS-7	-	-	-	-	-	-	-	-	-	9	A-1-b (V)	
	771.7	18																
Medium dense brown SANDY SILT (A-4a), "and" fine to coarse sand, little clay; moist.		19	7 7 7	17	100	SS-8	-	-	-	-	-	-	-	-	-	14	A-4a (V)	
	769.2	20																
Dense brown GRAVEL WITH SAND, SILT, AND CLAY (A-2-6), "and" fine to coarse sand, little clay; moist.		21																
		22	10 14 20	42	100	SS-9	-	-	-	-	-	-	-	-	-	11	A-2-6 (V)	
	766.7	23																
Very stiff gray SILT AND CLAY (A-6a), some fine to coarse sand, trace fine gravel; moist.		24	5 6 6	15	100	SS-10	3.50	-	-	-	-	-	-	-	-	12	A-6a (V)	
	765.2 EOB	25																

NOTES: NONE

ABANDONMENT METHODS, MATERIALS, QUANTITIES: SOIL MIXED WITH 1 BAG BENTONITE CHIPS

PROJECT: FRA-71-05.29 | DRILLING FIRM / OPERATOR: DLZ / K. CONRAD | DRILL RIG: CME 45C TRACK | STATION / OFFSET: 449+02, 145 RT | EXPLORATION ID B-043-4-14
TYPE: NOISE WALL | SAMPLING FIRM / LOGGER: DLZ / K. REINHART | HAMMER: CME AUTOMATIC | ALIGNMENT: I-71 | PAGE 1 OF 1
PID: 84868 BR ID: | DRILLING METHOD: 3.25" HSA | CALIBRATION DATE: 6/12/14 | ELEVATION: 785.4 (MSL) EOB: 25.0 ft.
START: 8/4/14 END: 8/4/14 | SAMPLING METHOD: SPT | ENERGY RATIO (%): 78.7 | COORD: 1811161.385 N, 680097.512 E

MATERIAL DESCRIPTION AND NOTES	ELEV.	DEPTHS	SPT/ RQD	N_{60}	REC (%)	SAMPLE ID	HP (tsf)	GRADATION (%) GR	CS	FS	SI	CL	ATTERBERG LL	PL	PI	WC	ODOT CLASS (GI)	BACK FILL
Topsoil - 3"	785.2																	
POSSIBLE FILL: Very stiff brown SILTY CLAY (A-6b), little fine to coarse sand, trace fine gravel; contains roots; moist.		1																
		2	3 3 3	8	100	SS-1	2.50	-	-	-	-	-	-	-	-	25	A-6b (V)	
	781.9	3																
POSSIBLE FILL: Medium dense brown SANDY SILT (A-4a), "and" clay, trace to little fine to coarse gravel; damp.		4	4 4 6	13	100	SS-2	3.00	-	-	-	-	-	-	-	-	11	A-4a (V)	
		5																
@ 8.5'-12.5', brown to gray.		6																
		7	3 5 7	16	100	SS-3	3.50	-	-	-	-	-	-	-	-	12	A-4a (V)	
		8																
		9	7 9 15	31	89	SS-4	4.50	-	-	-	-	-	-	-	-	8	A-4a (V)	
		10																
		11																
		12	9 13 15	37	100	SS-5	4.50	-	-	-	-	-	-	-	-	9	A-4a (V)	
	771.9	13																
Hard gray SILT AND CLAY (A-6a), some to "and" fine to coarse sand, trace to little fine to coarse gravel; damp.		14	5 8 10	24	89	SS-6	4.00	-	-	-	-	-	-	-	-	9	A-6a (V)	
		15																
@ 16.0'-17.5', "and" fine to coarse gravel.		16																
		17	10 23 37	79	33	SS-7	4.50	-	-	-	-	-	-	-	-	11	A-6a (V)	
	766.9	18																
Medium dense to dense gray GRAVEL WITH SAND (A-1-b), some silty clay, trace fine to coarse sand; damp.		19	13 18 15	43	56	SS-8	4.50	69	5	5	- 21 -		NP	NP	NP	6	A-1-b (0)	
		20																
		21	15 10 15	33	22	SS-9	4.50	-	-	-	-	-	-	-	-	5	A-1-b (V)	
	761.9	22																
Hard gray SILTY CLAY (A-6b), some fine to coarse sand, some fine to coarse gravel; damp.		23																
		24	32 12 9	28	50	SS-10	4.50	-	-	-	-	-	-	-	-	14	A-6b (V)	
	760.4 EOB	25																

NOTES: NONE

ABANDONMENT METHODS, MATERIALS, QUANTITIES: SOIL MIXED WITH 1 BAG BENTONITE CHIPS

STANDARD OHDOT SOIL BORING LOG (8.5X11) - OH DOT.GDT - 10/17/14 09:58 - P:\84868\GEOTECHNICAL\NOISE BARRIER\ENGAPPS\GINT\1321-4019.00 FRA-71-5.29.GPJ

PROJECT: FRA-71-05.29	DRILLING FIRM / OPERATOR: DLZ / K. CONRAD	DRILL RIG: CME 45C TRACK	STATION / OFFSET: 450+51, 140 LT	EXPLORATION ID B-044-1-14
TYPE: NOISE WALL	SAMPLING FIRM / LOGGER: DLZ / A. MIDDLETON	HAMMER: CME AUTOMATIC	ALIGNMENT: I-71	
PID: 84868 BR ID:	DRILLING METHOD: 3.25" HSA	CALIBRATION DATE: 6/12/14	ELEVATION: 788.4 (MSL) EOB: 25.0 ft.	PAGE 1 OF 1
START: 7/24/14 END: 7/24/14	SAMPLING METHOD: SPT	ENERGY RATIO (%): 78.7	COORD: 1811075.070 N, 680407.270 E	

MATERIAL DESCRIPTION AND NOTES	ELEV.	DEPTHS	SPT/ RQD	N_{60}	REC (%)	SAMPLE ID	HP (tsf)	GRADATION (%) GR	CS	FS	SI	CL	ATTERBERG LL	PL	PI	WC	ODOT CLASS (GI)	BACK FILL
Topsoil - 4"	788.1																	
POSSIBLE FILL: Hard brown SILT AND CLAY (A-6a), some fine to coarse sand, trace to little fine to coarse gravel; damp.		1	7															
		2	6 9	20	89	SS-1	4.00	-	-	-	-	-	-	-	-	12	A-6a (V)	
		3																
		4	6															
		5	7 11	24	100	SS-2	4.00	-	-	-	-	-	-	-	-	11	A-6a (V)	
	782.4	6																
POSSIBLE FILL: Dense brown SANDY SILT (A-4a), "and" fine to coarse sand, trace clay; moist.		7	13 15 19	45	100	SS-3	-	-	-	-	-	-	-	-	-	9	A-4a (V)	
	779.9	8																
Very stiff brown SILT AND CLAY (A-6a), some fine to coarse sand, trace fine gravel; moist.		9	5															
		10	5 8	17	100	SS-4	3.50	-	-	-	-	-	-	-	-	15	A-6a (V)	
	777.4	11																
Very stiff gray SILTY CLAY (A-6b), some fine to coarse sand, trace to little fine to coarse gravel; damp to moist.		12	2 3 5	10	100	SS-5	2.50	-	-	-	-	-	-	-	-	12	A-6b (V)	
@ 13.5'-15.0', some fine to coarse gravel.		13																
		14	7 8 9	22	33	SS-6	3.25	19	7	18	24	32	40	15	25	13	A-6b (10)	
		15																
		16	3															
		17	5 5	13	100	SS-7	3.50	-	-	-	-	-	-	-	-	15	A-6b (V)	
		18																
		19	5															
		20	4 6	13	100	SS-8	3.25	-	-	-	-	-	-	-	-	14	A-6b (V)	
		21	4															
		22	5 6	14	78	SS-9	2.50	-	-	-	-	-	-	-	-	15	A-6b (V)	
	764.9 W	23																
Medium dense brown GRAVEL WITH SAND, SILT, AND CLAY (A-2-6), "and" fine to coarse sand, little silty clay; wet.		24	6															
	763.4	EOB 25	9 15	31	100	SS-10	-	-	-	-	-	-	-	-	-	10	A-2-6 (V)	

NOTES: SEEPAGE FROM 23.5' TO 25.0'.

ABANDONMENT METHODS, MATERIALS, QUANTITIES: SOIL MIXED WITH 1 BAG BENTONITE CHIPS

STANDARD ODOT SOIL BORING LOG (8.5 X 11) - OH DOT.GDT - 10/22/14 08:40 - P:\84868\GEOTECHNICAL\NOISE BARRIER\ENGAPPS\GINT\1321-4019.00 FRA-71-5.29.GPJ

PROJECT: FRA-71-05.29	DRILLING FIRM / OPERATOR: DLZ / K. CONRAD	DRILL RIG: CME 45C TRACK	STATION / OFFSET: 451+01, 142 RT	EXPLORATION ID B-044-2-14
TYPE: NOISE WALL	SAMPLING FIRM / LOGGER: DLZ / K. REINHART	HAMMER: CME AUTOMATIC	ALIGNMENT: I-71	
PID: 84868 BR ID:	DRILLING METHOD: 3.25" HSA	CALIBRATION DATE: 6/12/14	ELEVATION: 784.3 (MSL) EOB: 25.0 ft.	PAGE 1 OF 1
START: 8/4/14 END: 8/4/14	SAMPLING METHOD: SPT	ENERGY RATIO (%): 78.7	COORD: 1811304.858 N, 680235.304 E	

MATERIAL DESCRIPTION AND NOTES	ELEV.	DEPTHS	SPT/ RQD	N_{60}	REC (%)	SAMPLE ID	HP (tsf)	GRADATION (%) GR	CS	FS	SI	CL	ATTERBERG LL	PL	PI	WC	ODOT CLASS (GI)	BACK FILL
Topsoil - 2"	784.1																	
POSSIBLE FILL: Very stiff to hard brown SILT AND CLAY (A-6a), some to "and" fine to coarse sand, trace to little fine to coarse gravel; damp to moist.		1	3															
		2	4 5	12	89	SS-1	4.00	-	-	-	-	-	-	-	-	26	A-6a (V)	
		3																
		4	3 4 6	13	100	SS-2	4.50	-	-	-	-	-	-	-	-	13	A-6a (V)	
		5																
		6	4															
		7	4 8	16	67	SS-3	3.00	-	-	-	-	-	-	-	-	14	A-6a (V)	
	775.8	8																
POSSIBLE FILL: Medium dense brown and gray SANDY SILT (A-4a), some clay, some to little fine to coarse gravel; damp.		9	17 8 9	22	39	SS-4	4.50	23	9	14	32	22	24	15	9	11	A-4a (4)	
		10																
		11	13															
		12	9 12	28	83	SS-5	4.50	-	-	-	-	-	-	-	-	11	A-4a (V)	
	770.8	13																
Very stiff to hard gray SILTY CLAY (A-6b), some to "and" fine to coarse sand, trace to little fine to coarse gravel; damp.		14	7															
		15	8 8	21	56	SS-6	4.50	-	-	-	-	-	-	-	-	11	A-6b (V)	
@ 21.0'-25.0', poor recovery- probable boulder/cobble zone.		16																
		17	7 8 10	24	100	SS-7	4.50	-	-	-	-	-	-	-	-	12	A-6b (V)	
		18																
		19	8															
		20	8 12	26	100	SS-8	4.50	-	-	-	-	-	-	-	-	12	A-6b (V)	
		21	13															
		22	13 13	34	22	SS-9	4.50	-	-	-	-	-	-	-	-	12	A-6b (V)	
		23																
	759.3	EOB 24	21															
		25	25 23	63	6	SS-10	3.00	-	-	-	-	-	-	-	-	13	A-6b (V)	

NOTES: NONE

ABANDONMENT METHODS, MATERIALS, QUANTITIES: SOIL MIXED WITH 1 BAG BENTONITE CHIPS

STANDARD OHDOT SOIL BORING LOG (8.5X11) - OH DOT.GDT - 10/17/14 09:59 - P:\84868\GEOTECHNICAL\NOISE BARRIER\ENGAPPS\GINT\1321-4019.00 FRA-71-5.29.GPJ

P:\84868\geotechnical\sheets\84868ZL109.dgn 12/17/2014 2:41:10 PM fbawani

PROJECT: FRA-71-05.29
TYPE: NOISE WALL
PID: 84868 BR ID:
START: 7/24/14 END: 7/24/14

DRILLING FIRM / OPERATOR: DLZ / K. CONRAD
SAMPLING FIRM / LOGGER: DLZ / A. MIDDLETON
DRILLING METHOD: 3.25" HSA
SAMPLING METHOD: SPT

DRILL RIG: CME 75 TRUCK
HAMMER: CME AUTOMATIC
CALIBRATION DATE: 6/11/14
ENERGY RATIO (%): 74

STATION / OFFSET: 452+40, 143 LT
ALIGNMENT: I-71
ELEVATION: 786.3 (MSL) EOB: 25.0 ft.
COORD: 1811211.266 N, 680538.367 E

EXPLORATION ID B-044-3-14
PAGE 1 OF 1

MATERIAL DESCRIPTION AND NOTES	ELEV.	DEPTHS	SPT/ RQD	N_{60}	REC (%)	SAMPLE ID	HP (tsf)	GRADATION (%) GR	CS	FS	SI	CL	ATTERBERG LL	PL	PI	WC	ODOT CLASS (GI)	BACK FILL
Topsoil - 5"	785.9																	
POSSIBLE FILL: Medium dense brown and gray SANDY SILT (A-4a), "and" clay, little to some fine to coarse gravel; damp.			4 5 10	18	89	SS-1	4.00	-	-	-	-	-	-	-	-	18	A-4a (V)	
			5 7 10	21	78	SS-2	4.00	-	-	-	-	-	-	-	-	11	A-4a (V)	
	780.3																	
POSSIBLE FILL: Very stiff brown and gray SILT AND CLAY (A-6a), "and" fine to coarse gravel, little to some fine to coarse sand; damp.			8 11 14	31	72	SS-3	3.75	-	-	-	-	-	-	-	-	8	A-6a (V)	
			7 11 13	30	6	SS-4	-	-	-	-	-	-	-	-	-	10	A-6a (V)	
	775.3																	
Very stiff gray SILTY CLAY (A-6b), little to some fine to coarse sand, trace to little fine to coarse gravel; damp to moist.			8 8 10	22	100	SS-5	4.00	-	-	-	-	-	-	-	-	10	A-6b (V)	
			4 8 9	21	56	SS-6	4.00	-	-	-	-	-	-	-	-	13	A-6b (V)	
			9 8 9	21	100	SS-7	4.00	-	-	-	-	-	-	-	-	13	A-6b (V)	
			8 9 12	26	94	SS-8	4.00	15	7	11	32	35	28	12	16	12	A-6b (9)	
			11 12 12	30	100	SS-9	4.00	-	-	-	-	-	-	-	-	9	A-6b (V)	
	761.3	EOB	8 9 10	23	100	SS-10	4.00	-	-	-	-	-	-	-	-	10	A-6b (V)	

NOTES: NONE

ABANDONMENT METHODS, MATERIALS, QUANTITIES: SOIL MIXED WITH 1 BAG BENTONITE CHIPS

STANDARD OHDOT SOIL BORING LOG (8.5X11) - OH DOT.GDT - 10/17/14 09:59 - P:\84868\GEOTECHNICAL\NOISE BARRIER\ENGAPPS\GINT\1321-4019.00 FRA-71-5.29.GPJ

PROJECT: FRA-71-05.29
TYPE: NOISE WALL
PID: 84868 BR ID:
START: 8/4/14 END: 8/4/14

DRILLING FIRM / OPERATOR: DLZ / K. CONRAD
SAMPLING FIRM / LOGGER: DLZ / K. REINHART
DRILLING METHOD: 3.25" HSA
SAMPLING METHOD: SPT

DRILL RIG: CME 45C TRACK
HAMMER: CME AUTOMATIC
CALIBRATION DATE: 6/12/14
ENERGY RATIO (%): 78.7

STATION / OFFSET: 452+63, 144 RT
ALIGNMENT: I-71
ELEVATION: 783.5 (MSL) EOB: 25.0 ft.
COORD: 1811424.344 N, 680345.068 E

EXPLORATION ID B-044-4-14
PAGE 1 OF 1

MATERIAL DESCRIPTION AND NOTES	ELEV.	DEPTHS	SPT/ RQD	N_{60}	REC (%)	SAMPLE ID	HP (tsf)	GRADATION (%) GR	CS	FS	SI	CL	ATTERBERG LL	PL	PI	WC	ODOT CLASS (GI)	HOLE SEALED
Topsoil - 2"	783.3																	
POSSIBLE FILL: Very stiff to hard brown and gray SILTY CLAY (A-6b), some fine to coarse sand, trace to little fine gravel; contains roots; damp to moist.			7 4 6	13	100	SS-1	4.50	-	-	-	-	-	-	-	-	22	A-6b (V)	
			3 3 5	10	94	SS-2	3.00	-	-	-	-	-	-	-	-	25	A-6b (V)	
	777.5																	
POSSIBLE FILL: Very stiff brown SILT AND CLAY (A-6a), some to "and" fine to coarse sand, trace to little fine to coarse gravel; damp to moist.			2 3 3	8	100	SS-3	2.50	-	-	-	-	-	-	-	-	17	A-6a (V)	
			2 2 3	7	100	SS-4	2.50	-	-	-	-	-	-	-	-	14	A-6a (V)	
	772.5	W																
Hard gray SANDY SILT (A-4a), some to "and" fine to coarse sand, trace to little fine to coarse gravel; damp to moist.			10 9 8	22	100	SS-5	4.50	16	8	15	37	24	21	11	10	11	A-4a (5)	
@ 13.5'-20.0', poor recovery- probable boulder/cobble zone.			10 15 16	41	0	SS-6	-	-	-	-	-	-	-	-	-	-	A-4a (V)	
@ 13.5'-22.5', stiff.			18 12 17	38	6	SS-7	1.00	-	-	-	-	-	-	-	-	17	A-4a (V)	
@ 11.0'-25.0', splitspoon wet.			14 13 15	37	6	SS-8	1.50	-	-	-	-	-	-	-	-	14	A-4a (V)	
			20 10 15	33	44	SS-9	1.00	-	-	-	-	-	-	-	-	14	A-4a (V)	
		▼ 0 hr																
	758.5	EOB	8 11 7	24	100	SS-10	4.50	-	-	-	-	-	-	-	-	12	A-4a (V)	

NOTES: WET SPLITSPOON FROM 11.0' TO 25.0'.

ABANDONMENT METHODS, MATERIALS, QUANTITIES: TREMIED 30 GAL. BENTONITE GROUT

STANDARD ODOT SOIL BORING LOG (8.5 X 11) - OH DOT.GDT - 10/22/14 08:40 - P:\84868\GEOTECHNICAL\NOISE BARRIER\ENGAPPS\GINT\1321-4019.00 FRA-71-5.29.GPJ

PROJECT: FRA-71-05.29 | DRILLING FIRM / OPERATOR: DLZ / K. CONRAD | DRILL RIG: CME 45C TRACK | STATION / OFFSET: 454+12, 144 RT | EXPLORATION ID B-044-5-14
TYPE: NOISE WALL | SAMPLING FIRM / LOGGER: DLZ / A. MIDDLETON | HAMMER: CME AUTOMATIC | ALIGNMENT: I-71 | PAGE 1 OF 1
PID: 84868 BR ID: | DRILLING METHOD: 3.25" HSA | CALIBRATION DATE: 6/12/14 | ELEVATION: 781.8 (MSL) EOB: 25.0 ft.
START: 8/5/14 END: 8/5/14 | SAMPLING METHOD: SPT | ENERGY RATIO (%): 78.7 | COORD: 1811533.534 N, 680449.668 E

MATERIAL DESCRIPTION AND NOTES	ELEV.	DEPTHS	SPT/RQD	N_{60}	REC (%)	SAMPLE ID	HP (tsf)	GRADATION (%) GR	CS	FS	SI	CL	ATTERBERG LL	PL	PI	WC	ODOT CLASS (GI)	BACK FILL
Topsoil - 5"	781.4																	
POSSIBLE FILL: Very stiff dark brown SILTY CLAY (A-6b), little to some silt, trace to little fine sand; contains roots; damp.	778.3		8 5 5	13	78	SS-1	2.75	-	-	-	-	-	-	-	-	28	A-6b (V)	
Loose brownish gray SANDY SILT (A-4a), little to some fine to coarse sand, trace fine gravel, little to some clay; damp.	773.3		3 3 3	8	61	SS-2	3.50	-	-	-	-	-	-	-	-	23	A-4a (V)	
			1 2 4	8	67	SS-3	3.75	-	-	-	-	-	-	-	-	12	A-4a (V)	
Very stiff to hard gray SILTY CLAY (A-6b), little to some fine to coarse sand, little fine to coarse gravel; damp.	766.3		9 10 12	29	28	SS-4	3.50	-	-	-	-	-	-	-	-	12	A-6b (V)	
			4 7 8	20	50	SS-5	4.00	-	-	-	-	-	-	-	-	12	A-6b (V)	
			9 9 9	24	22	SS-6	3.75	-	-	-	-	-	-	-	-	12	A-6b (V)	
Hard gray SANDY SILT (A-4a), "and" silty clay, little fine to coarse sand; damp.	760.8		6 8 12	26	100	SS-7	4.00	17	8	11	38	26	23	14	9	11	A-4a (6)	
@ 18.5', possible cobbles (possible reason for low recovery).			10 11 12	30	17	SS-8	-	-	-	-	-	-	-	-	-	7	A-4a (V)	
Hard gray SILTY CLAY (A-6b), little to some fine to coarse sand, little fine to coarse gravel; damp.	756.8		10 8 10	24	100	SS-9	4.00	-	-	-	-	-	-	-	-	13	A-6b (V)	
		EOB	8 8 9	22	100	SS-10	4.00	-	-	-	-	-	-	-	-	9	A-6b (V)	

NOTES: NONE
ABANDONMENT METHODS, MATERIALS, QUANTITIES: NOT RECORDED

PROJECT: FRA-71-05.29 | DRILLING FIRM / OPERATOR: DLZ / K. CONRAD | DRILL RIG: CME 75 TRUCK | STATION / OFFSET: 454+43, 147 LT | EXPLORATION ID B-045-1-14
TYPE: NOISE WALL | SAMPLING FIRM / LOGGER: DLZ / A. MIDDLETON | HAMMER: CME AUTOMATIC | ALIGNMENT: I-71 | PAGE 1 OF 1
PID: 84868 BR ID: | DRILLING METHOD: 3.25" HSA | CALIBRATION DATE: 6/11/14 | ELEVATION: 784.4 (MSL) EOB: 25.0 ft.
START: 7/24/14 END: 7/24/14 | SAMPLING METHOD: SPT | ENERGY RATIO (%): 74 | COORD: 1811352.629 N, 680680.066 E

MATERIAL DESCRIPTION AND NOTES	ELEV.	DEPTHS	SPT/RQD	N_{60}	REC (%)	SAMPLE ID	HP (tsf)	GRADATION (%) GR	CS	FS	SI	CL	ATTERBERG LL	PL	PI	WC	ODOT CLASS (GI)	BACK FILL
Topsoil - 3"	784.2																	
POSSIBLE FILL: Stiff to very stiff brown and gray SILT AND CLAY (A-6a), little to some fine to coarse sand, trace fine to coarse gravel; contains roots; moist.	778.4		7 8 7	18	72	SS-1	4.00	-	-	-	-	-	-	-	-	19	A-6a (V)	
			3 3 5	10	94	SS-2	1.50	-	-	-	-	-	-	-	-	19	A-6a (V)	
Hard brown SILT AND CLAY (A-6a), some fine to coarse sand, trace fine to coarse gravel; damp.	775.9		10 10 9	23	89	SS-3	4.00	-	-	-	-	-	-	-	-	12	A-6a (V)	
Hard gray SANDY SILT (A-4a), some fine to coarse sand, trace to little fine to coarse gravel; damp.			9 13 15	35	94	SS-4	4.00	-	-	-	-	-	-	-	-	11	A-4a (V)	
@ 16.0'-17.5', poor recovery- possible boulder/cobble zone.			20 13 18	38	100	SS-5	4.00	16	10	16	33	25	23	13	10	9	A-4a (5)	
			9 10 10	25	89	SS-6	4.00	-	-	-	-	-	-	-	-	12	A-4a (V)	
			15 12 13	31	6	SS-7	-	-	-	-	-	-	-	-	-	6	A-4a (V)	
			4 7 8	18	100	SS-8	2.00	-	-	-	-	-	-	-	-	12	A-4a (V)	
			5 7 10	21	100	SS-9	3.25	-	-	-	-	-	-	-	-	15	A-4a (V)	
	759.4	EOB	4 5 5	12	100	SS-10	3.50	-	-	-	-	-	-	-	-	12	A-4a (V)	

NOTES: NONE
ABANDONMENT METHODS, MATERIALS, QUANTITIES: SOIL MIXED WITH 1 BAG BENTONITE CHIPS

STANDARD OHDOT SOIL BORING LOG (8.5X11) - OH DOT.GDT - 10/17/14 09:59 - P:\84868\GEOTECHNICAL\NOISE BARRIER\ENGAPPS\GINT\1321-4019.00 FRA-71-5.29.GPJ

PROJECT: FRA-71-05.29	DRILLING FIRM / OPERATOR: DLZ / K. CONRAD	DRILL RIG: CME 75 TRUCK	STATION / OFFSET: 456+46, 143 LT	EXPLORATION ID B-045-2-14
TYPE: NOISE WALL	SAMPLING FIRM / LOGGER: DLZ / A. MIDDLETON	HAMMER: CME AUTOMATIC	ALIGNMENT: I-71	
PID: 84868 BR ID:	DRILLING METHOD: 3.25" HSA	CALIBRATION DATE: 6/11/14	ELEVATION: 787.4 (MSL) EOB: 25.0 ft.	PAGE 1 OF 1
START: 7/23/14 END: 7/23/14	SAMPLING METHOD: SPT	ENERGY RATIO (%): 74	COORD: 1811498.395 N, 680818.160 E	

MATERIAL DESCRIPTION AND NOTES	ELEV. 787.4	DEPTHS	SPT/ RQD	N_{60}	REC (%)	SAMPLE ID	HP (tsf)	GRADATION (%) GR	CS	FS	SI	CL	ATTERBERG LL	PL	PI	WC	ODOT CLASS (GI)	BACK FILL
Topsoil - 4"	787.1																	
POSSIBLE FILL: Hard brown SILT AND CLAY (A-6a), some fine to coarse sand, trace fine gravel; damp.		1	2 4 6	12	67	SS-1	4.00	-	-	-	-	-	-	-	-	23	A-6a (V)	
		2																
		3																
		4	4 7 7	17	100	SS-2	4.00	-	-	-	-	-	-	-	-	14	A-6a (V)	
	781.4	5																
Loose brown and gray SANDY SILT (A-4a), some clay, little fine gravel; moist.		6																
		7	3 2 3	6	100	SS-3	4.00	16	8	9	45	22	24	18	6	18	A-4a (6)	
	778.9	8																
Hard brown SILT AND CLAY (A-6a), some fine to coarse sand, little fine to coarse gravel; damp.		9	4 7 9	20	83	SS-4	4.00	-	-	-	-	-	-	-	-	11	A-6a (V)	
@ 11.0'-12.5', no recovery- probable boulder/cobble zone.		10																
		11																
		12	50/3"	-	0	SS-5	-	-	-	-	-	-	-	-	-	-	A-6a (V)	
	773.9	13																
Very stiff to hard light gray SILTY CLAY (A-6b), some to "and" fine to coarse sand, trace fine to coarse gravel; damp to moist.		14	16 19 22	51	100	SS-6	4.00	-	-	-	-	-	-	-	-	11	A-6b (V)	
@ 18.5'-20.0', some fine to coarse gravel.		15																
		16	15 12 13	31	89	SS-7	3.50	-	-	-	-	-	-	-	-	10	A-6b (V)	
		17																
		18																
		19	8 10 13	28	94	SS-8	2.00	-	-	-	-	-	-	-	-	14	A-6b (V)	
		20																
		21	8 8 14	27	94	SS-9	3.50	-	-	-	-	-	-	-	-	13	A-6b (V)	
		22																
		23																
	762.4	24	5 8 14	27	100	SS-10	3.75	-	-	-	-	-	-	-	-	10	A-6b (V)	
	EOB	25																

NOTES: NONE

ABANDONMENT METHODS, MATERIALS, QUANTITIES: SOIL MIXED WITH 2 BAG BENTONITE CHIPS

PROJECT: FRA-71-05.29	DRILLING FIRM / OPERATOR: DLZ / K. CONRAD	DRILL RIG: CME 75 TRUCK	STATION / OFFSET: 458+46, 143 LT	EXPLORATION ID B-046-1-14
TYPE: NOISE WALL	SAMPLING FIRM / LOGGER: DLZ / A. MIDDLETON	HAMMER: CME AUTOMATIC	ALIGNMENT: I-71	
PID: 84868 BR ID:	DRILLING METHOD: 3.25" HSA	CALIBRATION DATE: 6/11/14	ELEVATION: 787.4 (MSL) EOB: 25.0 ft.	PAGE 1 OF 1
START: 7/23/14 END: 7/23/14	SAMPLING METHOD: SPT	ENERGY RATIO (%): 74	COORD: 1811636.718 N, 680959.802 E	

MATERIAL DESCRIPTION AND NOTES	ELEV. 787.4	DEPTHS	SPT/ RQD	N_{60}	REC (%)	SAMPLE ID	HP (tsf)	GRADATION (%) GR	CS	FS	SI	CL	ATTERBERG LL	PL	PI	WC	ODOT CLASS (GI)	HOLE SEALED
Topsoil - 5"	787.0																	
POSSIBLE FILL: Very stiff dark brown SILT AND CLAY (A-6a), little fine to coarse sand; damp.		1	4 3 5	10	83	SS-1	2.50	-	-	-	-	-	-	-	-	15	A-6a (V)	
	783.9	2																
Very stiff brown SILT AND CLAY (A-6a), some fine to coarse sand, trace to little fine to coarse gravel; damp to moist.		3																
		4	2 2 3	6	44	SS-2	3.00	-	-	-	-	-	-	-	-	22	A-6a (V)	
		5																
▼ 0 hr		6																
		7	5 5 5	12	100	SS-3	3.75	-	-	-	-	-	-	-	-	13	A-6a (V)	
		8																
		9	3 4 4	10	94	SS-4	3.50	-	-	-	-	-	-	-	-	13	A-6a (V)	
	776.4	10																
Medium dense gray GRAVEL (A-1-a), some fine to coarse sand, trace silty clay; wet.		11	W															
		12	6 10 10	25	39	SS-5	-	67	23	5	-	5 -	NP	NP	NP	11	A-1-a (0)	
	773.9	13																
Very stiff gray SILT AND CLAY (A-6a), some fine to coarse sand, little fine to coarse gravel; moist.		14	9 10 13	28	56	SS-6	3.50	-	-	-	-	-	-	-	-	10	A-6a (V)	
	771.4	15																
Dense gray GRAVEL WITH SAND, SILT, AND CLAY (A-2-6), some silty clay, little fine to coarse sand; wet.		16																
		17	22 22 17	48	28	SS-7	-	-	-	-	-	-	-	-	-	13	A-2-6 (V)	
	768.9	18																
Very stiff to hard gray SILTY CLAY (A-6b), little to some fine to coarse sand, trace fine gravel; damp to moist.		19	11 13 19	39	100	SS-8	4.00	-	-	-	-	-	-	-	-	11	A-6b (V)	
		20																
		21	11 14 18	39	50	SS-9	3.00	-	-	-	-	-	-	-	-	15	A-6b (V)	
		22																
		23																
	762.4	24	6 8 3	14	100	SS-10	2.50	-	-	-	-	-	-	-	-	15	A-6b (V)	
	EOB	25																

NOTES: SEEPAGE FROM 11.0' TO 13.5', AND 16.0' TO 18.5'.

ABANDONMENT METHODS, MATERIALS, QUANTITIES: PLACED 2 BAG BENTONITE CHIPS; TREMIED 1 BAG BENTONITE GROUT

STANDARD ODOT SOIL BORING LOG (8.5 X 11) - OH DOT.GDT - 10/22/14 08:40 - P:\84868\GEOTECHNICAL\NOISE BARRIER\ENGAPPS\GINT\1321-4019.00 FRA-71-5.29.GPJ

PROJECT: FRA-71-05.29 | DRILLING FIRM / OPERATOR: DLZ / K. CONRAD | DRILL RIG: CME 75 TRUCK | STATION / OFFSET: 460+49, 140 LT | EXPLORATION ID B-046-2-14
TYPE: NOISE WALL | SAMPLING FIRM / LOGGER: DLZ / A. MIDDLETON | HAMMER: CME AUTOMATIC | ALIGNMENT: I-71
PID: 84868 BR ID: | DRILLING METHOD: 3.25" HSA | CALIBRATION DATE: 6/11/14 | ELEVATION: 791.2 (MSL) EOB: 25.0 ft. | PAGE 1 OF 1
START: 7/23/14 END: 7/23/14 | SAMPLING METHOD: SPT | ENERGY RATIO (%): 74 | COORD: 1811776.360 N, 681103.060 E

MATERIAL DESCRIPTION AND NOTES	ELEV.	DEPTHS	SPT/ RQD	N_{60}	REC (%)	SAMPLE ID	HP (tsf)	GRADATION (%) GR	CS	FS	SI	CL	ATTERBERG LL	PL	PI	WC	ODOT CLASS (GI)	BACK FILL
Topsoil - 4"	790.9																	
POSSIBLE FILL: Very stiff brown SILT AND CLAY (A-6a), some fine to coarse sand; contains roots; damp.	787.7	1	3 5 5	12	61	SS-1	2.50	-	-	-	-	-	-	-	-	16	A-6a (V)	
Medium dense brown SANDY SILT (A-4a), little clay, little to some fine to coarse gravel; contains roots; damp to moist. @ 6.0'-7.5', "and" fine to coarse gravel.	782.7	4	4 12 11	28	100	SS-2	4.00	-	-	-	-	-	-	-	-	12	A-4a (V)	
		6	6 11 12	28	100	SS-3	-	32	11	15	25	17	22	15	7	11	A-4a (1)	
Medium dense brown SANDY SILT (A-4a), "and" fine to coarse sand, trace clay; moist.	780.2	9	4 6 7	16	56	SS-4	-	-	-	-	-	-	-	-	-	16	A-4a (V)	
Medium dense brown SANDY SILT (A-4a), "and" clay, little fine gravel; damp.	777.7	12	10 10 9	23	78	SS-5	-	-	-	-	-	-	-	-	-	8	A-4a (V)	
Very stiff to hard gray SILT AND CLAY (A-6a), some to "and" fine to coarse sand, trace fine to coarse gravel; damp to moist.		14	13 14 18	39	50	SS-6	4.00	-	-	-	-	-	-	-	-	9	A-6a (V)	
		17	15 8 9	21	89	SS-7	4.00	-	-	-	-	-	-	-	-	11	A-6a (V)	
		19	12 15 36	63	100	SS-8	3.50	-	-	-	-	-	-	-	-	13	A-6a (V)	
Medium dense to dense gray GRAVEL WITH SAND, SILT, AND CLAY (A-2-6), some silty clay, trace to little fine to coarse sand; moist.	770.2	22	40 17 15	39	44	SS-9	-	-	-	-	-	-	-	-	-	15	A-2-6 (V)	
	766.2 EOB	24	13 10 14	30	6	SS-10	-	-	-	-	-	-	-	-	-	14	A-2-6 (V)	

NOTES: NONE

ABANDONMENT METHODS, MATERIALS, QUANTITIES: SOIL MIXED WITH 1 BAG BENTONITE CHIPS

STANDARD OHDOT SOIL BORING LOG (8.5X11) - OH DOT.GDT - 10/17/14 09:59 - P:\84868\GEOTECHNICAL\NOISE BARRIER\ENGAPPS\GINT\1321-4019.00 FRA-71-5.29.GPJ

PROJECT: FRA-71-05.29 | DRILLING FIRM / OPERATOR: DLZ / K. CONRAD | DRILL RIG: CME 75 TRUCK | STATION / OFFSET: 462+53, 148 LT | EXPLORATION ID B-047-1-14
TYPE: NOISE WALL | SAMPLING FIRM / LOGGER: DLZ / V. DEARING | HAMMER: CME AUTOMATIC | ALIGNMENT: I-71
PID: 84868 BR ID: | DRILLING METHOD: 3.25" HSA | CALIBRATION DATE: 6/11/14 | ELEVATION: 790.1 (MSL) EOB: 25.0 ft. | PAGE 1 OF 1
START: 7/22/14 END: 7/22/14 | SAMPLING METHOD: SPT | ENERGY RATIO (%): 74 | COORD: 1811906.455 N, 681256.927 E

MATERIAL DESCRIPTION AND NOTES	ELEV.	DEPTHS	SPT/ RQD	N_{60}	REC (%)	SAMPLE ID	HP (tsf)	GRADATION (%) GR	CS	FS	SI	CL	ATTERBERG LL	PL	PI	WC	ODOT CLASS (GI)	BACK FILL
Topsoil - 2"	790.0																	
POSSIBLE FILL: Medium dense to dense brown and gray SANDY SILT (A-4a), some to little clay, trace to little fine to coarse gravel; damp.	779.1	2	6 6 9	18	78	SS-1	-	-	-	-	-	-	-	-	-	17	A-4a (V)	
		4	10 17 17	42	78	SS-2	-	-	-	-	-	-	-	-	-	10	A-4a (V)	
		7	10 11 9	25	83	SS-3	4.00	-	-	-	-	-	-	-	-	13	A-4a (V)	
		9	4 6 7	16	67	SS-4	4.00	18	10	17	36	19	19	15	4	12	A-4a (4)	
Dense brown and gray SANDY SILT (A-4a), "and" clay, trace fine gravel; damp.	776.6	12	14 15 20	43	72	SS-5	4.00	-	-	-	-	-	-	-	-	10	A-4a (V)	
Very stiff to hard gray SILT AND CLAY (A-6a), some to "and" fine to coarse sand, trace to little fine to coarse gravel; damp to moist.		14	6 8 10	22	94	SS-6	4.00	-	-	-	-	-	-	-	-	10	A-6a (V)	
		17	8 10 14	30	94	SS-7	4.00	-	-	-	-	-	-	-	-	11	A-6a (V)	
		19	6 8 10	22	83	SS-8	3.25	-	-	-	-	-	-	-	-	13	A-6a (V)	
	766.6	22	8 4 5	11	100	SS-9	2.50	-	-	-	-	-	-	-	-	12	A-6a (V)	
Loose gray SANDY SILT (A-4a), "and" clay, trace to little fine to coarse gravel; moist.	765.1 EOB	24	2 4 4	10	83	SS-10	1.50	-	-	-	-	-	-	-	-	13	A-4a (V)	

NOTES: NONE

ABANDONMENT METHODS, MATERIALS, QUANTITIES: SOIL MIXED WITH 1 BAG BENTONITE GROUT

STANDARD OHDOT SOIL BORING LOG (8.5X11) - OH DOT.GDT - 10/17/14 09:59 - P:\84868\GEOTECHNICAL\NOISE BARRIER\ENGAPPS\GINT\1321-4019.00 FRA-71-5.29.GPJ

PROJECT: FRA-71-05.29 | DRILLING FIRM / OPERATOR: DLZ / K. CONRAD | DRILL RIG: CME 75 TRUCK | STATION / OFFSET: 464+55, 147 LT | EXPLORATION ID B-047-2-14
TYPE: NOISE WALL | SAMPLING FIRM / LOGGER: DLZ / A. MIDDLETON | HAMMER: CME AUTOMATIC | ALIGNMENT: I-71
PID: 84868 BR ID: | DRILLING METHOD: 3.25" HSA | CALIBRATION DATE: 6/11/14 | ELEVATION: 789.6 (MSL) EOB: 25.0 ft. | PAGE 1 OF 1
START: 7/18/14 END: 7/22/14 | SAMPLING METHOD: SPT | ENERGY RATIO (%): 74 | COORD: 1812038.839 N, 681406.845 E

MATERIAL DESCRIPTION AND NOTES	ELEV.	DEPTHS	SPT/ RQD	N_{60}	REC (%)	SAMPLE ID	HP (tsf)	GRADATION (%) GR	CS	FS	SI	CL	ATTERBERG LL	PL	PI	WC	ODOT CLASS (GI)	BACK FILL
Topsoil - 8"	788.9																	
POSSIBLE FILL: Very stiff brown SILTY CLAY (A-6b), some fine to coarse sand, trace fine gravel; contains roots; moist.	786.1	1	1 3 8	14	50	SS-1	3.75	-	-	-	-	-	-	-	-	25	A-6b (V)	
POSSIBLE FILL: Medium dense brown SANDY SILT (A-4a), "and" clay, trace to little fine to coarse gravel; moist.	783.1	4	4 5 8	16	100	SS-2	4.00	-	-	-	-	-	-	-	-	11	A-4a (V)	
POSSIBLE FILL: Medium dense gray GRAVEL (A-1-a), trace fine to coarse sand, trace silty clay; damp.	781.1	7	32 10 9	23	50	SS-3A/B	3.5/NA	-	-	-	-	-	-	-	-	12	A-1-a (V)	
Hard brown SILT AND CLAY (A-6a), "and" fine to coarse sand, little fine to coarse gravel; damp.	778.6	9	4 6 8	17	67	SS-4	4.00	-	-	-	-	-	-	-	-	12	A-6a (V)	
Very stiff to hard gray SANDY SILT (A-4a), some to "and" fine to coarse sand, some to little fine to coarse gravel; damp to moist.		12	4 7 1	10	89	SS-5	4.00	-	-	-	-	-	-	-	-	10	A-4a (V)	
		14	8 9 8	21	61	SS-6	3.50	27	9	15	28	21	22	14	8	10	A-4a (3)	
		17	4 5 5	12	78	SS-7	4.00	-	-	-	-	-	-	-	-	12	A-4a (V)	
		19	6 6 9	18	83	SS-8	4.00	-	-	-	-	-	-	-	-	11	A-4a (V)	
		22	8 8 10	22	100	SS-9	4.00	-	-	-	-	-	-	-	-	9	A-4a (V)	
	764.6 EOB	25	5 9 10	23	89	SS-10	3.00	-	-	-	-	-	-	-	-	12	A-4a (V)	

NOTES: NONE

ABANDONMENT METHODS, MATERIALS, QUANTITIES: SOIL MIXED WITH 1 BAG BENTONITE CHIPS

PROJECT: FRA-71-05.29 | DRILLING FIRM / OPERATOR: DLZ / K. CONRAD | DRILL RIG: CME 45C TRACK | STATION / OFFSET: 464+61, 144 RT | EXPLORATION ID B-047-3-14
TYPE: NOISE WALL | SAMPLING FIRM / LOGGER: DLZ / A. MIDDLETON | HAMMER: CME AUTOMATIC | ALIGNMENT: I-71
PID: 84868 BR ID: | DRILLING METHOD: 3.25" HSA | CALIBRATION DATE: 6/12/14 | ELEVATION: 788.0 (MSL) EOB: 25.0 ft. | PAGE 1 OF 1
START: 8/5/14 END: 8/5/14 | SAMPLING METHOD: SPT | ENERGY RATIO (%): 78.7 | COORD: 1812262.416 N, 681220.506 E

MATERIAL DESCRIPTION AND NOTES	ELEV.	DEPTHS	SPT/ RQD	N_{60}	REC (%)	SAMPLE ID	HP (tsf)	GRADATION (%) GR	CS	FS	SI	CL	ATTERBERG LL	PL	PI	WC	ODOT CLASS (GI)	BACK FILL
Topsoil - 9"	787.2																	
POSSIBLE FILL: Hard brown SILT AND CLAY (A-6a), trace fine to coarse sand, trace fine to coarse gravel; damp.	782.0	2	6 7 10	22	83	SS-1	4.00	-	-	-	-	-	-	-	-	18	A-6a (V)	
Medium dense brown SANDY SILT (A-4a), little to some fine to coarse sand, little fine gravel; moist.	777.0	4	5 7 13	26	94	SS-2	4.00	-	-	-	-	-	-	-	-	11	A-6a (V)	
Very stiff to hard gray SILTY CLAY (A-6b), little to some fine to coarse sand, trace to little fine gravel; damp.		7	3 4 7	14	100	SS-3	-	-	-	-	-	-	-	-	-	12	A-4a (V)	
		9	3 4 6	13	83	SS-4	-	11	13	19	36	21	20	14	6	11	A-4a (4)	
		12	2 3 5	10	28	SS-5	3.75	-	-	-	-	-	-	-	-	12	A-6b (V)	
		14	6 9 6	20	78	SS-6	3.25	-	-	-	-	-	-	-	-	11	A-6b (V)	
@ 16.0'-17.5', little to some fine to coarse gravel. @ 16.0', change to little to some fine to coarse gravel.		17	6 5 6	14	72	SS-7	4.00	-	-	-	-	-	-	-	-	9	A-6b (V)	
		19	4 5 6	14	100	SS-8	4.00	-	-	-	-	-	-	-	-	11	A-6b (V)	
		22	5 7 7	18	100	SS-9	4.00	-	-	-	-	-	-	-	-	10	A-6b (V)	
	763.0 EOB	25	4 4 6	13	89	SS-10	2.50	-	-	-	-	-	-	-	-	12	A-6b (V)	

NOTES: NONE

ABANDONMENT METHODS, MATERIALS, QUANTITIES: NOT RECORDED

STANDARD OHDOT SOIL BORING LOG (8.5X11) - OH DOT.GDT - 10/17/14 09:59 - P:\84868\GEOTECHNICAL\NOISE BARRIER\ENGAPPS\GINT\1321-4019.00 FRA-71-5.29.GPJ

PROJECT: FRA-71-05.29	DRILLING FIRM / OPERATOR: DLZ / K. CONRAD	DRILL RIG: CME 75 TRUCK	STATION / OFFSET: 466+50, 148 LT	EXPLORATION ID B-048-1-14
TYPE: NOISE WALL	SAMPLING FIRM / LOGGER: DLZ / A. MIDDLETON	HAMMER: CME AUTOMATIC	ALIGNMENT: I-71	
PID: 84868 BR ID:	DRILLING METHOD: 3.25" HSA	CALIBRATION DATE: 6/11/14	ELEVATION: 787.3 (MSL) EOB: 25.0 ft.	PAGE 1 OF 1
START: 7/18/14 END: 7/18/14	SAMPLING METHOD: SPT	ENERGY RATIO (%): 74	COORD: 1812163.453 N, 681553.426 E	

MATERIAL DESCRIPTION AND NOTES	ELEV. 787.3	DEPTHS	SPT/ RQD	N_{60}	REC (%)	SAMPLE ID	HP (tsf)	GRADATION (%) GR	CS	FS	SI	CL	ATTERBERG LL	PL	PI	WC	ODOT CLASS (GI)	BACK FILL
Topsoil - 5"	786.9																	
POSSIBLE FILL: Very stiff brown and gray SILT AND CLAY (A-6a), "and" fine to coarse sand, trace fine gravel; contains roots; damp.	783.8		2 2 4	7	56	SS-1	2.00	-	-	-	-	-	-	-	-	18	A-6a (V)	
POSSIBLE FILL: Medium dense brown SANDY SILT (A-4a), "and" fine to coarse sand, trace to little fine to coarse gravel; damp to moist.	778.8		5 14 16	37	94	SS-2	-	-	-	-	-	-	-	-	-	8	A-4a (V)	
			12 14 15	36	83	SS-3	-	-	-	-	-	-	-	-	-	10	A-4a (V)	
Medium dense brown SANDY SILT (A-4A), little to some clay, some fine to coarse sand; damp. @ 11.0'-12.5', dense, poor recovery- probable boulder/cobble zone.	773.8		11 12 14	32	78	SS-4	-	17	11	9	49	14	25	19	6	17	A-4a (6)	
			18 15 17	39	11	SS-5	-	-	-	-	-	-	-	-	-	9	A-4a (V)	
Hard gray SILT AND CLAY (A-6a), some to "and" fine to coarse sand, trace to little fine to coarse gravel; damp.			9 11 9	25	22	SS-6	4.00	-	-	-	-	-	-	-	-	10	A-6a (V)	
			9 11 12	28	89	SS-7	4.00	-	-	-	-	-	-	-	-	9	A-6a (V)	
			10 10 12	27	78	SS-8	4.00	-	-	-	-	-	-	-	-	10	A-6a (V)	
			12 14 17	38	100	SS-9	4.00	-	-	-	-	-	-	-	-	10	A-6a (V)	
	762.3	EOB	16 25 22	58	100	SS-10	4.00	-	-	-	-	-	-	-	-	11	A-6a (V)	

NOTES: NONE

ABANDONMENT METHODS, MATERIALS, QUANTITIES: SOIL MIXED WITH 1 BAG BENTONITE CHIPS

STANDARD OHDOT SOIL BORING LOG (8.5X11) - OH DOT.GDT - 10/17/14 09:59 - P:\84868\GEOTECHNICAL\NOISE BARRIER\ENGAPPS\GINT\1321-4019.00 FRA-71-5.29.GPJ

PROJECT: FRA-71-05.29	DRILLING FIRM / OPERATOR: DLZ / K. CONRAD	DRILL RIG: CME 45C TRACK	STATION / OFFSET: 466+52, 161 RT	EXPLORATION ID B-048-2-14
TYPE: NOISE WALL	SAMPLING FIRM / LOGGER: DLZ / A. MIDDLETON	HAMMER: CME AUTOMATIC	ALIGNMENT: I-71	
PID: 84868 BR ID:	DRILLING METHOD: 3.25" HSA	CALIBRATION DATE: 6/12/14	ELEVATION: 787.6 (MSL) EOB: 25.0 ft.	PAGE 1 OF 1
START: 8/5/14 END: 8/5/14	SAMPLING METHOD: SPT	ENERGY RATIO (%): 78.7	COORD: 1812401.247 N, 681356.970 E	

MATERIAL DESCRIPTION AND NOTES	ELEV. 787.6	DEPTHS	SPT/ RQD	N_{60}	REC (%)	SAMPLE ID	HP (tsf)	GRADATION (%) GR	CS	FS	SI	CL	ATTERBERG LL	PL	PI	WC	ODOT CLASS (GI)	BACK FILL
Topsoil - 9"	786.8																	
POSSIBLE FILL: Hard brown SILT AND CLAY (A-6a), trace to little fine to coarse sand; contains roots; damp.	784.1		6 6 7	17	50	SS-1	-	-	-	-	-	-	-	-	-	17	A-6a (V)	
Hard brown SILT AND CLAY (A-6a), "and" gravel, little fine to coarse sand; dry to damp.	781.6		10 20 33	70	67	SS-2	-	43	9	11	23	14	25	13	12	6	A-6a (1)	
Medium dense brown COARSE AND FINE SAND (A-3a), little to some silty clay, trace fine gravel; damp to moist.	779.1		10 8 9	22	100	SS-3	-	-	-	-	-	-	-	-	-	11	A-3a (V)	
Medium dense brown SANDY SILT (A-4a), some fine to coarse sand, trace clay; moist.	776.6		2 6 6	16	100	SS-4	-	-	-	-	-	-	-	-	-	15	A-4a (V)	
Dense gray SANDY SILT (A-4a), little to some fine to coarse sand, trace to little clay, trace to little fine gravel; damp to moist.	771.6		6 14 17	41	89	SS-5	2.50	14	11	13	46	16	21	16	5	14	A-4a (5)	
			4 6 10	21	94	SS-6	4.00	-	-	-	-	-	-	-	-	12	A-4a (V)	
Very dense gray GRAVEL WITH SAND (A-1-b), some fine to coarse sand, little silty clay; moist.	769.1		14 23 28	67	100	SS-7	-	-	-	-	-	-	-	-	-	7	A-1-b (V)	
Very stiff brownish gray SILT AND CLAY (A-6a), little coarse gravel, trace to little fine to coarse sand; damp to moist.	766.6		12 14 15	38	33	SS-8	3.00	-	-	-	-	-	-	-	-	11	A-6a (V)	
Hard gray SILTY CLAY (A-6b), little fine to coarse gravel, trace to little fine to coarse sand; damp.			9 12 12	31	100	SS-9	4.00	-	-	-	-	-	-	-	-	10	A-6b (V)	
	762.6	EOB	10 14 15	38	100	SS-10	-	-	-	-	-	-	-	-	-	10	A-6b (V)	

NOTES: NONE

ABANDONMENT METHODS, MATERIALS, QUANTITIES: NOT RECORDED

STANDARD OHDOT SOIL BORING LOG (8.5X11) - OH DOT.GDT - 10/17/14 09:59 - P:\84868\GEOTECHNICAL\NOISE BARRIER\ENGAPPS\GINT\1321-4019.00 FRA-71-5.29.GPJ

PROJECT: FRA-71-05.29	DRILLING FIRM / OPERATOR: DLZ / K. CONRAD	DRILL RIG: CME 45C TRACK	STATION / OFFSET: 467+97, 160 RT	EXPLORATION ID B-048-3-14
TYPE: NOISE WALL	SAMPLING FIRM / LOGGER: DLZ / A. MIDDLETON	HAMMER: CME AUTOMATIC	ALIGNMENT: I-71	
PID: 84868 BR ID:	DRILLING METHOD: 3.25" HSA	CALIBRATION DATE: 6/12/14	ELEVATION: 786.1 (MSL) EOB: 25.0 ft.	PAGE 1 OF 1
START: 8/6/14 END: 8/6/14	SAMPLING METHOD: SPT	ENERGY RATIO (%): 78.7	COORD: 1812494.381 N, 681470.657 E	

MATERIAL DESCRIPTION AND NOTES	ELEV. 786.1	DEPTHS	SPT/ RQD	N_{60}	REC (%)	SAMPLE ID	HP (tsf)	GRADATION (%) GR	CS	FS	SI	CL	ATTERBERG LL	PL	PI	WC	ODOT CLASS (GI)	BACK FILL
Topsoil - 11"	785.2																	
POSSIBLE FILL: Hard brown SILT AND CLAY (A-6a), little fine to coarse sand; contains roots; damp.		1	6 5 6	14	44	SS-1	4.00	-	-	-	-	-	-	-	-	19	A-6a (V)	
		2																
		3																
		4	23 17 15	42	0	SS-2	-	-	-	-	-	-	-	-	-	-	A-6a (V)	
	780.1	5																
Medium dense brownish gray GRAVEL (A-1-a), trace fine to coarse sand; damp. @ 6.0', possible cobble.		6	15 13 12	33	11	SS-3	-	-	-	-	-	-	-	-	-	2	A-1-a (V)	
	777.6	7																
Medium dense brown COARSE AND FINE SAND (A-3a), little silty clay, little fine gravel; moist.		8																
	775.1	9	17 12 14	34	89	SS-4	-	6	18	45	- 31 -		NP	NP	NP	13	A-3a (0)	
Hard gray SILT AND CLAY (A-6a), little to some fine to coarse sand, little fine to coarse gravel; damp.		10																
		11	7 9 12	28	72	SS-5	4.00	-	-	-	-	-	-	-	-	9	A-6a (V)	
		12																
		13	7 10 14	31	94	SS-6	4.00	16	11	15	36	22	22	11	11	10	A-6a (5)	
		14																
		15	7 9 11	26	89	SS-7	4.00	-	-	-	-	-	-	-	-	10	A-6a (V)	
		16																
		17	7 10 10	26	100	SS-8	4.00	-	-	-	-	-	-	-	-	10	A-6a (V)	
		18																
		19	8 10 13	30	100	SS-9	4.00	-	-	-	-	-	-	-	-	10	A-6a (V)	
		20																
		21	9 14 17	41	94	SS-10	4.00	-	-	-	-	-	-	-	-	10	A-6a (V)	
	761.1	22																
	EOB	23																
		24																
		25																

NOTES: NONE

ABANDONMENT METHODS, MATERIALS, QUANTITIES: NOT RECORDED

PROJECT: FRA-71-05.29	DRILLING FIRM / OPERATOR: DLZ / K. CONRAD	DRILL RIG: CME 75 TRUCK	STATION / OFFSET: 469+65, 74 RT	EXPLORATION ID B-049-1-14
TYPE: NOISE WALL	SAMPLING FIRM / LOGGER: DLZ / A. MIDDLETON	HAMMER: CME AUTOMATIC	ALIGNMENT: I-71	
PID: 84868 BR ID:	DRILLING METHOD: 3.25" HSA	CALIBRATION DATE: 6/11/14	ELEVATION: 779.6 (MSL) EOB: 25.0 ft.	PAGE 1 OF 1
START: 7/17/14 END: 7/17/14	SAMPLING METHOD: SPT	ENERGY RATIO (%): 71.1	COORD: 1812533.353 N, 681656.951 E	

MATERIAL DESCRIPTION AND NOTES	ELEV. 779.6	DEPTHS	SPT/ RQD	N_{60}	REC (%)	SAMPLE ID	HP (tsf)	GRADATION (%) GR	CS	FS	SI	CL	ATTERBERG LL	PL	PI	WC	ODOT CLASS (GI)	BACK FILL
Aggregate - 5"	779.1																	
POSSIBLE FILL: Very stiff brown SILT AND CLAY (A-6a), some fine to coarse sand, trace gravel; damp.		1	6 7 11	21	39	SS-1	-	-	-	-	-	-	-	-	-	18	A-6a (V)	
		2																
		3																
		4	8 7 7	17	83	SS-2	-	-	-	-	-	-	-	-	-	12	A-6a (V)	
		5																
		6	8 6 9	18	100	SS-3	-	-	-	-	-	-	-	-	-	11	A-6a (V)	
	771.1	7																
Medium dense brown GRAVEL AND/OR STONE FRAGMENTS WITH SAND (A-1-b), little silt, trace clay; damp.		8																
	768.6	9	15 19 16	41	72	SS-4	-	13	50	18	11	8	NP	NP	NP	7	A-1-b (0)	
Dense brown COARSE AND FINE SAND (A-3a), little gravel, trace silt; wet.	767.6	10																
		11	13 18 17	41	83	SS-5A/B	-	-	-	-	-	-	-	-	-	10	A-3a (V)	
Very stiff gray SANDY SILT (A-4a), some fine to coarse sand, trace to little gravel; damp.		12						-	-	-	-	-	-	-	-	10	A-4a (V)	
		13																
		14	9 9 7	19	100	SS-6	-	14	9	15	43	19	23	14	9	11	A-4a (5)	
		15																
		16	8 7 8	18	94	SS-7	-	-	-	-	-	-	25	14	11	12	A-4a (V)	
		17																
		18	8 7 10	20	100	SS-8	-	-	-	-	-	-	-	-	-	12	A-4a (V)	
		19																
		20																
		21	7 6 9	18	100	SS-9	-	-	-	-	-	-	-	-	-	12	A-4a (V)	
		22																
		23																
	754.6	24	6 8 8	19	100	SS-10	-	-	-	-	-	-	-	-	-	14	A-4a (V)	
	EOB	25																

NOTES: NONE

ABANDONMENT METHODS, MATERIALS, QUANTITIES: USED 1 BAG BENTONITE CHIPS; USED 1 BAG QUICKCRETE

STANDARD OHDOT SOIL BORING LOG (8.5X11) - OH DOT.GDT - 10/17/14 09:59 - P:\84868\GEOTECHNICAL\NOISE BARRIER\ENGAPPS\GINT\1321-4019.00 FRA-71-5.29.GPJ

PROJECT: FRA-71-05.29 | DRILLING FIRM / OPERATOR: DLZ / K. CONRAD | DRILL RIG: CME 75 TRUCK | STATION / OFFSET: 471+81, 75 RT | EXPLORATION ID B-049-2-14
TYPE: NOISE WALL | SAMPLING FIRM / LOGGER: DLZ / A. MIDDLETON | HAMMER: CME AUTOMATIC | ALIGNMENT: I-71 | PAGE 1 OF 1
PID: 84868 BR ID: | DRILLING METHOD: 3.25" HSA | CALIBRATION DATE: 6/11/14 | ELEVATION: 778.3 (MSL) EOB: 25.0 ft.
START: 7/17/14 END: 7/17/14 | SAMPLING METHOD: SPT | ENERGY RATIO (%): 71.1 | COORD: 1812668.092 N, 681827.385 E

MATERIAL DESCRIPTION AND NOTES	ELEV. 778.3	DEPTHS	SPT/ RQD	N_{60}	REC (%)	SAMPLE ID	HP (tsf)	GRADATION (%) GR	CS	FS	SI	CL	ATTERBERG LL	PL	PI	WC	ODOT CLASS (GI)	BACK FILL
Aggregate - 7"	777.8																	
Stiff brown SANDY SILT (A-4a), some fine to coarse sand, little to some gravel; damp.		1	7 3 3	7	83	SS-1	2.50	-	-	-	-	-	-	-	-	22	A-4a (V)	
		2																
@ 3.5'-11.0', very stiff.		3																
		4	7 11 11	26	72	SS-2	4.00	-	-	-	-	-	-	-	-	11	A-4a (V)	
		5																
		6	6 6 6	14	89	SS-3	4.00	-	-	-	-	-	-	-	-	13	A-4a (V)	
		7																
		8																
		9	8 12 11	27	83	SS-4	4.00	29	9	13	28	21	23	13	10	9	A-4a (3)	
		10																
@ 11.0'-25.0', very stiff, gray.		11																
		12	21 23 17	47	11	SS-5	3.50	-	-	-	-	-	27	14	13	11	A-4a (V)	
		13																
		14	7 10 10	24	83	SS-6	4.00	-	-	-	-	-	-	-	-	10	A-4a (V)	
		15																
		16																
		17	6 8 10	21	89	SS-7	4.00	-	-	-	-	-	-	-	-	12	A-4a (V)	
		18																
		19	5 8 10	21	100	SS-8	4.00	-	-	-	-	-	-	-	-	20	A-4a (V)	
		20																
		21																
		22	8 8 10	21	100	SS-9	4.00	-	-	-	-	-	-	-	-	12	A-4a (V)	
		23																
		24	6 9 11	24	94	SS-10	3.50	-	-	-	-	-	-	-	-	12	A-4a (V)	
	753.3	EOB 25																

NOTES: NONE

ABANDONMENT METHODS, MATERIALS, QUANTITIES: USED 1 BAG ASPHALT PATCH; USED 1 BAG BENTONITE CHIPS; USED SOIL CUTTINGS

STANDARD OHDOT SOIL BORING LOG (8.5X11) - OH DOT.GDT - 10/17/14 09:59 - P:\84868\GEOTECHNICAL\NOISE BARRIER\ENGAPPS\GINT\13321-4019.00 FRA-71-5.29.GPJ

PROJECT: FRA-71-05.29 | DRILLING FIRM / OPERATOR: DLZ / K. CONRAD | DRILL RIG: CME 75 TRUCK | STATION / OFFSET: 473+80, 79 RT | EXPLORATION ID B-049-3-14
TYPE: NOISE WALL | SAMPLING FIRM / LOGGER: DLZ / A. MIDDLETON | HAMMER: CME AUTOMATIC | ALIGNMENT: I-71 | PAGE 1 OF 1
PID: 84868 BR ID: | DRILLING METHOD: 3.25" HSA | CALIBRATION DATE: 6/11/14 | ELEVATION: 776.8 (MSL) EOB: 25.0 ft.
START: 7/17/14 END: 7/17/14 | SAMPLING METHOD: SPT | ENERGY RATIO (%): 74 | COORD: 1812791.390 N, 681984.831 E

MATERIAL DESCRIPTION AND NOTES	ELEV. 776.8	DEPTHS	SPT/ RQD	N_{60}	REC (%)	SAMPLE ID	HP (tsf)	GRADATION (%) GR	CS	FS	SI	CL	ATTERBERG LL	PL	PI	WC	ODOT CLASS (GI)	BACK FILL
Aggregate Base - 5"	776.4																	
FILL: Hard brown and gray SILTY CLAY (A-6b), some fine to coarse sand, trace fine gravel; damp.	773.3	1	4 5 10	18	83	SS-1	4.00	-	-	-	-	-	-	-	-	16	A-6b (V)	
		2																
		3																
FILL: Hard dark brown SILTY CLAY (A-6b), some fine to coarse sand, trace fine gravel; contains organic material; moist.	770.8	4	3 4 6	12	78	SS-2	4.00	-	-	-	-	-	-	-	-	37	A-6b (V)	
		5																
		6																
POSSIBLE FILL: Very stiff to hard brown and gray SILTY CLAY (A-6b), little to some fine to coarse sand, trace to little fine to coarse gravel; moist.		7	3 6 7	16	78	SS-3	3.00	-	-	-	-	-	-	-	-	12	A-6b (V)	
		8																
		9	3 4 10	17	89	SS-4	4.00	-	-	-	-	-	-	-	-	12	A-6b (V)	
	765.8	10																
Hard brown SANDY SILT (A-4a), some fine to coarse sand, little fine to coarse gravel; damp.		11																
		12	8 9 10	23	100	SS-5	4.00	17	9	15	33	26	21	15	6	12	A-4a (5)	
@ 13.5'-15.0', "and" fine to coarse gravel.	W	13																
		14	10 17 14	38	100	SS-6	-	-	-	-	-	-	-	-	-	16	A-4a (V)	
	760.8	15																
Medium dense brown GRAVEL WITH SAND, SILT, AND CLAY (A-2-6), some silty clay, little fine to coarse sand; wet.		16																
		17	20 15 11	32	83	SS-7	-	-	-	-	-	-	-	-	-	8	A-2-6 (V)	
	758.3	18																
Hard gray SILTY CLAY (A-6b), little to some fine to coarse sand, trace to little fine to coarse gravel; damp.		19	10 11 14	31	44	SS-8	4.00	-	-	-	-	-	-	-	-	11	A-6b (V)	
		20																
	▼ 0 hr	21																
		22	6 7 9	20	94	SS-9	4.00	-	-	-	-	-	-	-	-	13	A-6b (V)	
		23																
	751.8	EOB 24	6 7 11	22	100	SS-10	4.00	-	-	-	-	-	-	-	-	13	A-6b (V)	

NOTES: SEEPAGE FROM 13.5' TO 18.5'.

ABANDONMENT METHODS, MATERIALS, QUANTITIES: SOIL MIXED WITH 1 BAG BENTONITE CHIPS; PLACED 1 BAG QUICKCRETE

STANDARD ODOT SOIL BORING LOG (8.5 X 11) - OH DOT.GDT - 10/22/14 08:41 - P:\84868\GEOTECHNICAL\NOISE BARRIER\ENGAPPS\GINT\13321-4019.00 FRA-71-5.29.GPJ

PROJECT: FRA-71-05.29 | DRILLING FIRM / OPERATOR: DLZ / K. CONRAD | DRILL RIG: CME 75 TRUCK | STATION / OFFSET: 475+58, 71 RT | EXPLORATION ID B-050-5-14
TYPE: NOISE WALL | SAMPLING FIRM / LOGGER: DLZ / A. MIDDLETON | HAMMER: CME AUTOMATIC | ALIGNMENT: I-71 | PAGE 1 OF 1
PID: 84868 BR ID: | DRILLING METHOD: 3.25" HSA | CALIBRATION DATE: 6/11/14 | ELEVATION: 776.2 (MSL) EOB: 25.0 ft.
START: 7/17/14 END: 7/17/14 | SAMPLING METHOD: SPT | ENERGY RATIO (%): 74 | COORD: 1812890.169 N, 682134.861 E

MATERIAL DESCRIPTION AND NOTES	ELEV. 776.2	DEPTHS	SPT/RQD	N_{60}	REC (%)	SAMPLE ID	HP (tsf)	GRADATION (%) GR	CS	FS	SI	CL	ATTERBERG LL	PL	PI	WC	ODOT CLASS (GI)	BACK FILL
Concrete Pavement - 12"	775.2																	
FILL: Medium dense brown and gray GRAVEL WITH SAND, SILT, AND CLAY (A-2-6), some fine to coarse sand, some silty clay; damp.	772.7		6 8 10	22	44	SS-1	-	-	-	-	-	-	-	-	-	11	A-2-6 (V)	
POSSIBLE FILL: Very stiff to hard brown and gray SANDY SILT (A-4a), little to some fine to coarse sand, trace to little fine to coarse gravel; damp to moist. @ 3.5'-5.0', trace organics. @ 13.5'-15.0', trace roots.			6 4 4	10	94	SS-2	3.75	-	-	-	-	-	-	-	-	13	A-4a (V)	
			5 8 12	25	83	SS-3	4.00	12	9	16	34	29	23	15	8	12	A-4a (6)	
			5 5 6	14	44	SS-4	4.00	-	-	-	-	-	-	-	-	18	A-4a (V)	
			6 5 5	12	89	SS-5	2.50	-	-	-	-	-	-	-	-	22	A-4a (V)	
			3 6 7	16	100	SS-6	1.50	-	-	-	-	-	-	-	-	19	A-4a (V)	
	760.2																	
Very stiff to hard brown SILTY CLAY (A-6b), some fine to coarse sand, trace fine to coarse gravel; damp.	757.7		6 7 9	20	100	SS-7	4.00	-	-	-	-	-	-	-	-	14	A-6b (V)	
Hard gray SILTY CLAY (A-6b), little to some fine to coarse sand, trace to little fine to coarse gravel; damp to moist.			9 9 13	27	100	SS-8	4.00	-	-	-	-	-	-	-	-	14	A-6b (V)	
			10 9 11	25	78	SS-9	4.00	-	-	-	-	-	-	-	-	10	A-6b (V)	
	751.2	EOB	8 8 7	18	100	SS-10	4.00	-	-	-	-	-	-	-	-	10	A-6b (V)	

NOTES: NONE

ABANDONMENT METHODS, MATERIALS, QUANTITIES: PLACED 1/4 BAG ASPHALT PATCH; SOIL MIXED WITH 1 BAG BENTONITE CHIPS

STANDARD OHDOT SOIL BORING LOG (8.5X11) - OH DOT.GDT - 10/17/14 10:00 - P:\84868\GEOTECHNICAL\NOISE BARRIER\ENGAPPS\GINT\13321-4019.00 FRA-71-5.29.GPJ

PROJECT: FRA-71-05.29 | DRILLING FIRM / OPERATOR: DLZ / K. CONRAD | DRILL RIG: CME 75 TRUCK | STATION / OFFSET: 477+46, 71 RT | EXPLORATION ID B-050-6-14
TYPE: NOISE WALL | SAMPLING FIRM / LOGGER: DLZ / A. MIDDLETON | HAMMER: CME AUTOMATIC | ALIGNMENT: I-71 | PAGE 1 OF 1
PID: 84868 BR ID: | DRILLING METHOD: 3.25" HSA | CALIBRATION DATE: 6/11/14 | ELEVATION: 774.7 (MSL) EOB: 25.0 ft.
START: 7/17/14 END: 7/17/14 | SAMPLING METHOD: SPT | ENERGY RATIO (%): 74 | COORD: 1812998.768 N, 682289.711 E

MATERIAL DESCRIPTION AND NOTES	ELEV. 774.7	DEPTHS	SPT/RQD	N_{60}	REC (%)	SAMPLE ID	HP (tsf)	GRADATION (%) GR	CS	FS	SI	CL	ATTERBERG LL	PL	PI	WC	ODOT CLASS (GI)	BACK FILL
Concrete Pavement - 11"	773.8																	
FILL: Very stiff to hard brown and gray SILTY CLAY (A-6b), little to some fine to coarse sand, trace to little fine to coarse gravel; damp. @ 8.5'-10.0', trace organics.			7 6 6	15	78	SS-1	4.00	-	-	-	-	-	-	-	-	13	A-6b (V)	
			5 5 7	15	83	SS-2	4.00	-	-	-	-	-	-	-	-	18	A-6b (V)	
			8 5 6	14	17	SS-3	3.50	-	-	-	-	-	-	-	-	12	A-6b (V)	
			4 6 4	12	72	SS-4	3.25	-	-	-	-	-	-	-	-	14	A-6b (V)	
	763.7																	
POSSIBLE FILL: Very stiff to hard brown SILTY CLAY (A-6b), little to some fine to coarse sand, trace to little fine to coarse gravel; damp.			10 12 13	31	17	SS-5	4.00	-	-	-	-	-	-	-	-	13	A-6b (V)	
	758.7		9 6 8	17	83	SS-6	3.75	14	8	16	28	34	31	13	18	17	A-6b (9)	
POSSIBLE FILL: Very stiff to hard brown and gray SILT AND CLAY (A-6a), little to some fine to coarse sand, trace to little fine to coarse gravel; damp to moist. @ 18.5'-20.0', trace roots.			5 4 5	11	89	SS-7	4.00	-	-	-	-	-	-	-	-	21	A-6a (V)	
			3 3 5	10	94	SS-8	2.75	-	-	-	-	-	-	-	-	23	A-6a (V)	
	753.7																	
POSSIBLE FILL: Hard dark brown SILTY CLAY (A-6b), some fine to coarse sand, trace fine gravel; contains organic material; damp.			5 5 5	12	67	SS-9	4.00	-	-	-	-	-	-	-	-	18	A-6b (V)	
	751.2																	
POSSIBLE FILL: Very stiff brown SILT AND CLAY (A-6a), "and" fine to coarse gravel, some fine to coarse sand; damp.	749.7	EOB	3 4 4	10	72	SS-10	3.00	-	-	-	-	-	-	-	-	16	A-6a (V)	

NOTES: NONE

ABANDONMENT METHODS, MATERIALS, QUANTITIES: PLACED 1/4 BAG ASPHALT PATCH; SOIL MIXED WITH 1/2 BAG BENTONITE CHIPS

STANDARD OHDOT SOIL BORING LOG (8.5X11) - OH DOT.GDT - 10/17/14 10:00 - P:\84868\GEOTECHNICAL\NOISE BARRIER\ENGAPPS\GINT\13321-4019.00 FRA-71-5.29.GPJ

PROJECT: FRA-71-05.29	DRILLING FIRM / OPERATOR: DLZ / K. CONRAD	DRILL RIG: CME 75 TRUCK	STATION / OFFSET: 478+21, 74 LT	EXPLORATION ID B-050-7-14
TYPE: NOISE WALL	SAMPLING FIRM / LOGGER: DLZ / A. MIDDLETON	HAMMER: CME AUTOMATIC	ALIGNMENT: I-71	
PID: 84868 BR ID:	DRILLING METHOD: 3.25" HSA	CALIBRATION DATE: 6/11/14	ELEVATION: 773.7 (MSL) EOB: 35.0 ft.	PAGE 1 OF 1
START: 7/16/14 END: 7/16/14	SAMPLING METHOD: SPT	ENERGY RATIO (%): 71.1	COORD: 1812921.350 N, 682433.620 E	

MATERIAL DESCRIPTION AND NOTES	ELEV.	DEPTHS	SPT/ RQD	N_{60}	REC (%)	SAMPLE ID	HP (tsf)	GRADATION (%) GR	CS	FS	SI	CL	ATTERBERG LL	PL	PI	WC	ODOT CLASS (GI)	BACK FILL
Concrete - 8"	773.0																	
Aggregate - 4"	772.7																	
Very stiff brown SILT AND CLAY (A-6a), little to some gravel, some fine to coarse sand; damp.		1	8 9 11	24	56	SS-1	-	-	-	-	-	-	-	-	-	20	A-6a (V)	
		2																
		3																
		4	5 4 4	9	44	SS-2	-	-	-	-	-	-	-	-	-	14	A-6a (V)	
		5																
		6																
		7	3 5 5	12	50	SS-3	-	26	9	14	28	23	29	15	14	13	A-6a (5)	
		8																
@ 8.5'-11.0', moist.		9	2 3 2	6	56	SS-4	-	-	-	-	-	-	-	-	-	21	A-6a (V)	
		10																
		11																
		12	4 3 4	8	83	SS-5	-	-	-	-	-	-	-	-	-	23	A-6a (V)	
		13																
		14	6 3 5	9	89	SS-6	-	-	-	-	-	-	-	-	-	15	A-6a (V)	
		15																
		16																
		17	7 5 5	12	11	SS-7	-	-	-	-	-	-	-	-	-	17	A-6a (V)	
		18																
		19	8 13 17	36	100	SS-8	-	-	-	-	-	-	-	-	-	10	A-6a (V)	
		20																
		21																
		22	15 15 13	33	100	SS-9	-	-	-	-	-	-	-	-	-	11	A-6a (V)	
		23																
@ 23.5'-25.0', hard.		24	13 20 24	52	100	SS-10	-	-	-	-	-	-	-	-	-	10	A-6a (V)	
		25																
		26																
		27	16 20 25	53	83	SS-11	-	-	-	-	-	-	-	-	-	10	A-6a (V)	
	745.2	28																
Hard gray SANDY SILT (A-4a), little to some fine to coarse sand, trace to little gravel; damp.		29	17 19 18	44	89	SS-12	-	14	10	18	34	24	23	13	10	9	A-4a (V)	
		30																
		31																
		32																
		33																
		34	20 17 17	40	72	SS-13	-	-	-	-	-	-	-	-	-	8	A-4a (V)	
	738.7	EOB 35																

NOTES: NONE

ABANDONMENT METHODS, MATERIALS, QUANTITIES: USED 1 BAG ASPHALT PATCH; USED 1 BAG BENTONITE CHIPS; USED 1 BAG QUICKCRETE; USED SOIL CUTTINGS

STANDARD ODOT SOIL BORING LOG (11 X 17) - OH DOT.GDT - 10/17/14 10:07 - P:\84868\GEOTECHNICAL\NOISE BARRIER\ENGAPPS\GINT\1321-4019.00 FRA-71-5.29.GPJ

PROJECT: FRA-71-05.29 | DRILLING FIRM / OPERATOR: DLZ / K. CONRAD | DRILL RIG: CME 75 TRUCK | STATION / OFFSET: 479+85, 71 LT | EXPLORATION ID B-050-8-14
TYPE: NOISE WALL | SAMPLING FIRM / LOGGER: DLZ / A. MIDDLETON | HAMMER: CME AUTOMATIC | ALIGNMENT: I-71
PID: 84868 BR ID: | DRILLING METHOD: 3.25" HSA | CALIBRATION DATE: 6/11/14 | ELEVATION: 773.2 (MSL) EOB: 25.0 ft. | PAGE 1 OF 1
START: 7/16/14 END: 7/16/14 | SAMPLING METHOD: SPT | ENERGY RATIO (%): 71.1 | COORD: 1813015.049 N, 682566.801 E

MATERIAL DESCRIPTION AND NOTES	ELEV.	DEPTHS	SPT/ RQD	N_{60}	REC (%)	SAMPLE ID	HP (tsf)	GRADATION (%) GR	CS	FS	SI	CL	ATTERBERG LL	PL	PI	WC	ODOT CLASS (GI)	BACK FILL
Concrete - 12"	772.2																	
POSSIBLE FILL: Loose brown COARSE AND FINE SAND (A-3a), some silty clay, trace gravel; damp.	769.7		8 6 4	12	44	SS-1	-	-	-	-	-	-	-	-	-	5	A-3a (V)	
Very stiff brown SILTY CLAY (A-6b), some gravel, some fine to coarse sand; damp.	767.2		4 4 10	17	61	SS-2	-	-	-	-	-	-	-	-	-	11	A-6b (V)	
Stiff brown SILT AND CLAY (A-6a), little to some fine to coarse sand, trace to little gravel; damp.			4 4 3	8	67	SS-3	-	-	-	-	-	-	-	-	-	21	A-6a (V)	
@ 8.5'-25.0', hard.			8 7 9	19	94	SS-4	-	-	-	-	-	-	-	-	-	10	A-6a (V)	
			11 11 14	30	100	SS-5	-	15	7	12	32	34	28	16	12	13	A-6a (7)	
			13 15 17	38	22	SS-6	-	-	-	-	-	-	-	-	-	12	A-6a (V)	
			6 13 12	30	89	SS-7	-	-	-	-	-	-	-	-	-	9	A-6a (V)	
			19 19 22	49	100	SS-8	-	-	-	-	-	-	-	-	-	10	A-6a (V)	
			18 28 25	63	94	SS-9	-	-	-	-	-	-	-	-	-	9	A-6a (V)	
	748.2	EOB	12 15 18	39	78	SS-10	-	-	-	-	-	-	-	-	-	10	A-6a (V)	

NOTES: NONE

ABANDONMENT METHODS, MATERIALS, QUANTITIES: USED 1 BAG ASPHALT PATCH; USED 1 BAG BENTONITE CHIPS; USED SOIL CUTTINGS

STANDARD OHDOT SOIL BORING LOG (8.5X11) - OH DOT.GDT - 10/17/14 10:00 - P:\84868\GEOTECHNICAL\NOISE BARRIER\ENGAPPS\GINT\1321-4019.00 FRA-71-5.29.GPJ

PROJECT: FRA-71-05.29 | DRILLING FIRM / OPERATOR: DLZ / K. CONRAD | DRILL RIG: CME 75 TRUCK | STATION / OFFSET: 481+90, 75 LT | EXPLORATION ID B-051-1-14
TYPE: NOISE WALL | SAMPLING FIRM / LOGGER: DLZ / A. MIDDLETON | HAMMER: CME AUTOMATIC | ALIGNMENT: I-71
PID: 84868 BR ID: | DRILLING METHOD: 3.25" HSA | CALIBRATION DATE: 6/11/14 | ELEVATION: 771.5 (MSL) EOB: 25.0 ft. | PAGE 1 OF 1
START: 7/16/14 END: 7/16/14 | SAMPLING METHOD: SPT | ENERGY RATIO (%): 71.1 | COORD: 1813122.495 N, 682740.593 E

MATERIAL DESCRIPTION AND NOTES	ELEV.	DEPTHS	SPT/ RQD	N_{60}	REC (%)	SAMPLE ID	HP (tsf)	GRADATION (%) GR	CS	FS	SI	CL	ATTERBERG LL	PL	PI	WC	ODOT CLASS (GI)	BACK FILL
Concrete - 8"	770.8																	
POSSIBLE FILL: Medium dense brown COARSE AND FINE SAND (A-3a), trace gravel, "and" silty clay; damp.	765.5		8 13 12	30	39	SS-1	-	-	-	-	-	-	-	-	-	7	A-3a (V)	
			22 13 12	30	33	SS-2	-	-	-	-	-	-	-	-	-	9	A-3a (V)	
Very stiff brown SANDY SILT (A-4a), "and" fine to coarse sand, trace gravel; damp.	763.0		5 15 19	40	50	SS-3	-	-	-	-	-	-	25	15	10	12	A-4a (V)	
Stiff brown SILTY CLAY (A-6b), some to little fine to coarse sand, trace gravel; damp.			2 2 3	6	61	SS-4	-	9	7	13	36	35	36	17	19	18	A-6b (11)	
			8 5 4	11	83	SS-5	-	-	-	-	-	-	-	-	-	15	A-6b (V)	
			4 4 4	9	78	SS-6	-	-	-	-	-	-	-	-	-	21	A-6b (V)	
			2 2 5	8	94	SS-7	-	-	-	-	-	-	-	-	-	23	A-6b (V)	
			3 5 4	11	61	SS-8	-	-	-	-	-	-	-	-	-	15	A-6b (V)	
@ 21.0'-25.0', hard.			15 39 33	85	61	SS-9	-	-	-	-	-	-	-	-	-	11	A-6b (V)	
	746.5	EOB	13 13 14	32	100	SS-10	-	-	-	-	-	-	-	-	-	11	A-6b (V)	

NOTES: NONE

ABANDONMENT METHODS, MATERIALS, QUANTITIES: USED 1 BAG ASPHALT PATCH; USED .5 BAG BENTONITE CHIPS; USED SOIL CUTTINGS

STANDARD OHDOT SOIL BORING LOG (8.5X11) - OH DOT.GDT - 10/17/14 10:00 - P:\84868\GEOTECHNICAL\NOISE BARRIER\ENGAPPS\GINT\1321-4019.00 FRA-71-5.29.GPJ

PROJECT: FRA-71-05.29 | DRILLING FIRM / OPERATOR: DLZ / K. CONRAD | DRILL RIG: CME 75 TRUCK | STATION / OFFSET: 483+94, 80 LT | EXPLORATION ID B-052-1-14
TYPE: NOISE WALL | SAMPLING FIRM / LOGGER: DLZ / A. MIDDLETON | HAMMER: CME AUTOMATIC | ALIGNMENT: I-71 | PAGE 1 OF 1
PID: 84868 BR ID: | DRILLING METHOD: 3.25" HSA | CALIBRATION DATE: 6/11/14 | ELEVATION: 770.3 (MSL) EOB: 25.0 ft.
START: 7/16/14 END: 7/16/14 | SAMPLING METHOD: SPT | ENERGY RATIO (%): 71.1 | COORD: 1813226.265 N, 682914.496 E

MATERIAL DESCRIPTION AND NOTES	ELEV. 770.3	DEPTHS	SPT/ RQD	N_{60}	REC (%)	SAMPLE ID	HP (tsf)	GR	CS	FS	SI	CL	LL	PL	PI	WC	ODOT CLASS (GI)	BACK FILL
Concrete - 11"	769.4																	
POSSIBLE FILL: Very stiff brown SANDY SILT (A-4a), "and" fine to coarse sand, trace fine to coarse gravel; damp.	766.8		9 10 8	21	61	SS-1	-	-	-	-	-	-	-	-	-	9	A-4a (V)	
Stiff brown SANDY SILT (A-4a), some fine to coarse sand, trace to little gravel; damp.			10 5 4	11	78	SS-2	-	-	-	-	-	-	-	-	-	13	A-4a (V)	
			10 5 6	13	72	SS-3	-	-	-	-	-	-	-	-	-	15	A-4a (V)	
@ 8.5'-18.5', very stiff.			8 12 12	28	89	SS-4	-	-	-	-	-	-	24	15	9	11	A-4a (V)	
			6 9 11	24	89	SS-5	-	11	12	19	36	22	22	13	9	11	A-4a (5)	
			11 19 24	51	100	SS-6	-	-	-	-	-	-	-	-	-	11	A-4a (V)	
			10 17 20	44	83	SS-7	-	-	-	-	-	-	-	-	-	10	A-4a (V)	
	751.8																	
Very stiff gray SANDY SILT (A-4a), some fine to coarse sand, trace to little gravel; damp.			12 12 19	37	94	SS-8	-	-	-	-	-	-	-	-	-	10	A-4a (V)	
			9 11 13	28	100	SS-9	-	15	8	15	39	23	22	14	8	11	A-4a (5)	
	745.3	EOB	9 11 13	28	89	SS-10	-	-	-	-	-	-	-	-	-	11	A-4a (V)	

NOTES: NONE

ABANDONMENT METHODS, MATERIALS, QUANTITIES: USED 1 BAG ASPHALT PATCH; USED 1 BAG BENTONITE CHIPS; USED SOIL CUTTINGS

PROJECT: FRA-71-05.29 | DRILLING FIRM / OPERATOR: DLZ / K. CONRAD | DRILL RIG: CME 75 TRUCK | STATION / OFFSET: 486+11, 90 LT | EXPLORATION ID B-052-2-14
TYPE: NOISE WALL | SAMPLING FIRM / LOGGER: DLZ / A. MIDDLETON | HAMMER: CME AUTOMATIC | ALIGNMENT: I-71 | PAGE 1 OF 1
PID: 84868 BR ID: | DRILLING METHOD: 3.25" HSA | CALIBRATION DATE: 6/11/14 | ELEVATION: 768.7 (MSL) EOB: 25.0 ft.
START: 7/16/14 END: 7/16/14 | SAMPLING METHOD: SPT | ENERGY RATIO (%): 71.1 | COORD: 1813328.619 N, 683104.174 E

MATERIAL DESCRIPTION AND NOTES	ELEV. 768.7	DEPTHS	SPT/ RQD	N_{60}	REC (%)	SAMPLE ID	HP (tsf)	GR	CS	FS	SI	CL	LL	PL	PI	WC	ODOT CLASS (GI)	BACK FILL
Concrete - 8"	768.0																	
Aggregate - 4"	767.7																	
POSSIBLE FILL: Medium dense brown COARSE AND FINE SAND (A-3a), some gravel, trace silt; damp.	766.7		5 5 6	13	83	SS-1A/B	-	-	-	-	-	-	-	-	-	6	A-3a (V)	
							-	-	-	-	-	-	-	-	-	21	A-6a (V)	
POSSIBLE FILL: Very stiff brown SILT AND CLAY (A-6a), some fine to coarse sand, trace gravel; damp.			4 5 5	12	72	SS-2	-	-	-	-	-	-	-	-	-	20	A-6a (V)	
			5 7 6	15	78	SS-3	-	-	-	-	-	-	-	-	-	23	A-6a (V)	
	760.2																	
Soft gray SILTY CLAY (A-6b), some fine to coarse sand, trace gravel; moist.			2 2 1	4	89	SS-4	-	-	-	-	-	-	-	-	-	24	A-6b (V)	
	757.7																	
Stiff gray SANDY SILT (A-4a), some fine to coarse sand, trace to little fine to coarse gravel; damp.			6 5 6	13	83	SS-5	-	19	15	20	29	17	19	13	6	10	A-4a (2)	
	755.2																	
Medium dense brown GRAVEL WITH SAND, SILT, AND CLAY (A-2-6); moist.			9 22 8	36	22	SS-6	-	-	-	-	-	-	24	15	9	10	A-2-6 (V)	
	752.7																	
Medium dense gray GRAVEL (A-1-a), some fine to coarse sand, trace silt; wet.			9 11 11	26	39	SS-7	-	60	21	9	5	5	17	13	4	15	A-1-a (0)	
	750.2																	
Very stiff gray SILT AND CLAY (A-6a), some fine to coarse sand, trace gravel; damp.			10 8 11	23	78	SS-8	-	-	-	-	-	-	-	-	-	11	A-6a (V)	
			5 11 12	27	100	SS-9	-	-	-	-	-	-	-	-	-	10	A-6a (V)	
@ 23.5'-25.0', moist.			15 11 14	30	100	SS-10	-	-	-	-	-	-	-	-	-	12	A-6a (V)	
	743.7	EOB																

NOTES: NONE

ABANDONMENT METHODS, MATERIALS, QUANTITIES: USED 1 BAG ASPHALT PATCH; USED 1 BAG BENTONITE CHIPS; USED 1 BAG QUICKCRETE

STANDARD OHDOT SOIL BORING LOG (8.5X11) - OH DOT.GDT - 10/17/14 10:00 - P:\84868\GEOTECHNICAL\NOISE BARRIER\ENGAPPS\GINT\1321-4019.00 FRA-71-5.29.GPJ

PROJECT: FRA-71-05.29 | DRILLING FIRM / OPERATOR: DLZ / V. DEARING | DRILL RIG: CME 45C TRACK | STATION / OFFSET: 487+41, 155 LT | EXPLORATION ID B-053-1-14
TYPE: NOISE WALL | SAMPLING FIRM / LOGGER: DLZ / A. MIDDLETON | HAMMER: CME AUTOMATIC | ALIGNMENT: I-71
PID: 84868 BR ID: | DRILLING METHOD: 3.25" HSA | CALIBRATION DATE: 6/12/14 | ELEVATION: 769.1 (MSL) EOB: 18.5 ft. | PAGE 1 OF 1
START: 6/24/14 END: 6/24/14 | SAMPLING METHOD: SPT | ENERGY RATIO (%): 78.7 | COORD: 1813337.127 N, 683248.179 E

MATERIAL DESCRIPTION AND NOTES	ELEV.	DEPTHS	SPT/ RQD	N_{60}	REC (%)	SAMPLE ID	HP (tsf)	GRADATION (%) GR	CS	FS	SI	CL	ATTERBERG LL	PL	PI	WC	ODOT CLASS (GI)	BACK FILL
Topsoil - 3"	768.8																	
POSSIBLE FILL: Very stiff brown SILTY CLAY (A-6b), some fine to coarse sand, trace fine gravel; contains organic material; damp.	765.6	1	3 3 50	70	44	SS-1	3.50	-	-	-	-	-	-	-	-	20	A-6b (V)	
Hard brown SILT AND CLAY (A-6a), some to little fine to coarse sand, trace fine to coarse gravel; damp.	760.6	4	5 4 12	21	78	SS-2	4.00	-	-	-	-	-	-	-	-	12	A-6a (V)	
		7	6 7 12	25	100	SS-3	4.00	8	8	12	35	37	26	15	11	13	A-6a (8)	
Very stiff to hard gray SILTY CLAY (A-6b), some to "and" fine to coarse sand, trace to little fine to coarse gravel; damp.		9	6 12 13	33	100	SS-4	3.50	-	-	-	-	-	-	-	-	9	A-6b (V)	
@ 13.5'-15.0', poor recovery - possible boulders/cobble.																		
@ 18.5', auger refusal - probable boulder/cobble.		12	6 13 12	33	100	SS-5	4.00	-	-	-	-	-	-	-	-	12	A-6b (V)	
		14	12 18 17	46	67	SS-6	-	-	-	-	-	-	-	-	-	5	A-6b (V)	
		17	5 9 13	29	100	SS-7	4.00	-	-	-	-	-	-	-	-	12	A-6b (V)	
	750.6	EOB																

NOTES: STRUCK BOULDER AT 18.5', AUGER REFUSAL, TERMINATED BORING.
ABANDONMENT METHODS, MATERIALS, QUANTITIES: AUGER CUTTINGS MIXED WITH 1 BAG BENTONITE CHIPS

STANDARD ODOT SOIL BORING LOG (8.5 X 11) - OH DOT.GDT - 10/22/14 08:41 - P:\84868\GEOTECHNICAL\NOISE BARRIER\ENGAPPS\GINT\1321-4019.00 FRA-71-5.29.GPJ

PROJECT: FRA-71-05.29 | DRILLING FIRM / OPERATOR: DLZ / V. DEARING | DRILL RIG: CME 45C TRACK | STATION / OFFSET: 489+37, 163 LT | EXPLORATION ID B-053-2-14
TYPE: NOISE WALL | SAMPLING FIRM / LOGGER: DLZ / A. MIDDLETON | HAMMER: CME AUTOMATIC | ALIGNMENT: I-71
PID: 84868 BR ID: | DRILLING METHOD: 3.25" HSA | CALIBRATION DATE: 6/12/14 | ELEVATION: 774.8 (MSL) EOB: 25.0 ft. | PAGE 1 OF 1
START: 6/24/14 END: 6/24/14 | SAMPLING METHOD: SPT | ENERGY RATIO (%): 78.7 | COORD: 1813424.442 N, 683420.877 E

MATERIAL DESCRIPTION AND NOTES	ELEV.	DEPTHS	SPT/ RQD	N_{60}	REC (%)	SAMPLE ID	HP (tsf)	GRADATION (%) GR	CS	FS	SI	CL	ATTERBERG LL	PL	PI	WC	ODOT CLASS (GI)	BACK FILL
Topsoil - 4"	774.5																	
POSSIBLE FILL: Hard brown SILT AND CLAY (A-6a), "and" fine to coarse sand, trace fine to coarse gravel; contains organic material; damp.	771.3	1	3 4 5	12	56	SS-1	4.00	-	-	-	-	-	-	-	-	19	A-6a (V)	
POSSIBLE FILL: Hard dark brown ORGANIC CLAY (A-8b), some fine to coarse sand, trace fine gravel; contains roots; moist.		4	13 27 20	62	11	SS-2	-	-	-	-	-	-	-	-	-	50	A-8b (V)	
@ 3.5'-5.0', poor recovery and sample quality- possible boulder/cobble	768.8																	
Hard brownish gray SANDY SILT (A-4a), some to "and" fine to coarse sand, some to little fine to coarse gravel; damp.		7	4 6 6	16	94	SS-3	3.50	-	-	-	-	-	-	-	-	8	A-4a (V)	
		9	6 5 7	16	100	SS-4	4.00	21	9	12	32	26	24	15	9	13	A-4a (5)	
		12	5 10 11	28	78	SS-5	4.00	-	-	-	-	-	-	-	-	10	A-4a (V)	
	761.3																	
Very stiff to hard gray SILTY CLAY (A-6b), some to "and" fine to coarse sand, trace to little fine to coarse gravel; damp.		14	4 9 11	26	100	SS-6	4.00	-	-	-	-	-	-	-	-	12	A-6b (V)	
		17	4 6 7	17	100	SS-7	4.00	-	-	-	-	-	-	-	-	13	A-6b (V)	
		19	4 7 9	21	94	SS-8	4.00	-	-	-	-	-	-	-	-	13	A-6b (V)	
		22	5 9 9	24	100	SS-9	3.50	-	-	-	-	-	-	-	-	12	A-6b (V)	
	749.8	24 EOB	9 12 13	33	28	SS-10	3.50	-	-	-	-	-	-	-	-	11	A-6b (V)	

NOTES: NONE
ABANDONMENT METHODS, MATERIALS, QUANTITIES: AUGER CUTTINGS MIXED WITH 1 BAG BENTONITE CHIPS

STANDARD OHDOT SOIL BORING LOG (8.5X11) - OH DOT.GDT - 10/17/14 10:00 - P:\84868\GEOTECHNICAL\NOISE BARRIER\ENGAPPS\GINT\1321-4019.00 FRA-71-5.29.GPJ

PROJECT: FRA-71-05.29	DRILLING FIRM / OPERATOR: DLZ / V. DEARING	DRILL RIG: CME 45C TRACK	STATION / OFFSET: 491+78, 175 LT	EXPLORATION ID B-054-1-14
TYPE: NOISE WALL	SAMPLING FIRM / LOGGER: DLZ / V. DEARING	HAMMER: CME AUTOMATIC	ALIGNMENT: I-71	
PID: 84868 BR ID:	DRILLING METHOD: 3.25" HSA	CALIBRATION DATE: 6/12/14	ELEVATION: 776.0 (MSL) EOB: 25.0 ft.	PAGE 1 OF 1
START: 6/27/14 END: 6/27/14	SAMPLING METHOD: SPT	ENERGY RATIO (%): 78.7	COORD: 1813526.830 N, 683635.300 E	

MATERIAL DESCRIPTION AND NOTES	ELEV.	DEPTHS	SPT/ RQD	N_{60}	REC (%)	SAMPLE ID	HP (tsf)	GRADATION (%) GR	CS	FS	SI	CL	ATTERBERG LL	PL	PI	WC	ODOT CLASS (GI)	BACK FILL
Topsoil - 4"	776.0																	
POSSIBLE FILL: Very stiff brown SILT AND CLAY (A-6a), some to "and" fine to coarse sand, trace fine gravel; damp.	775.7		2 3 5	10	56	SS-1	2.50	-	-	-	-	-	-	-	-	16	A-6a (V)	
Very stiff to hard brown SANDY SILT (A-4a), little to some fine to coarse sand, trace to little fine to coarse gravel; damp.	772.5		2 6 8	18	72	SS-2	4.50	-	-	-	-	-	-	-	-	12	A-4a (V)	
			4 7 10	22	78	SS-3	4.50	-	-	-	-	-	-	-	-	15	A-4a (V)	
			1 7 10	22	78	SS-4	4.50	-	-	-	-	-	-	-	-	15	A-4a (V)	
			3 5 7	16	89	SS-5	3.50	8	10	16	38	28	24	15	9	14	A-4a (6)	
			2 6 7	17	89	SS-6	3.75	-	-	-	-	-	-	-	-	10	A-4a (V)	
Very stiff gray SILTY CLAY (A-6b), little to some fine to coarse sand, trace to little fine to coarse gravel; damp to moist.	760.0		2 6 7	17	39	SS-7	2.00	-	-	-	-	-	-	-	-	11	A-6b (V)	
			2 6 7	17	67	SS-8	4.00	-	-	-	-	-	-	-	-	12	A-6b (V)	
Medium dense brown GRAVEL WITH SAND (A-1-b), "and" fine to coarse sand, little silty clay; damp.	755.0		5 14 8	29	78	SS-9	-	-	-	-	-	-	19	17	2	10	A-1-b (V)	
Very stiff gray SILTY CLAY (A-6b), some fine to coarse sand, trace fine to coarse gravel; damp to moist.	752.5		1 5 6	14	78	SS-10	3.25	-	-	-	-	-	-	-	-	13	A-6b (V)	
	751.0	EOB																

NOTES: NONE

ABANDONMENT METHODS, MATERIALS, QUANTITIES: AUGER CUTTINGS MIXED WITH 1 BAG BENTONITE CHIPS

STANDARD OHDOT SOIL BORING LOG (8.5X11) - OH DOT.GDT - 10/17/14 10:00 - P:\84868\GEOTECHNICAL\NOISE BARRIER\ENGAPPS\GINT\1321-4019.00 FRA-71-5.29.GPJ

SPECIAL PROVISIONS

Floodplain LD-50 and LD-51
Franklin County

CO-RT-SEC:
FRA-71-5.29

PID:
84868

DATE: 3/12/15

OHIO DEPARTMENT OF TRANSPORTATION
DISTRICT 6 • 400 EAST WILLIAM STREET • DELAWARE, OHIO • 43015 • 800.372.7714

March 12, 2015

Matthew Brown
Planning/Floodplain Administrator
Franklin County
Economic Development & Planning
150 S. Front St., FSL Suite 10
Columbus, Ohio 43215

RE: FRA-71-5.29, PID 84868
Letter of Compliance

Dear Mr. Brown;

Enclosed please find the floodplain analysis and certification forms for ODOT project FRA-71-5.29 (PID 84868). The subject roadway project encroaches upon Special Flood Hazard Areas Zone A and/or AE within your community at the locations identified in the attached report. The hydraulic calculations and No-Rise Certification Forms provide the necessary documentation of compliance to all federal, state, and local floodplain standards as required. We will be proceeding forward on this project if no concerns are brought to our attention.

If you need additional information, please contact me at rebecca.wagner@dot.state.oh.us or 740-833-8183.

Respectfully,

R. L. Wagner

Rebecca L. Wagner, P.E.
Transportation Engineer

Cc: L. Montgomery, J. Gartner, A. Turner, H. Boyer, B. Downing, Project File, Production File

Form LD-51

Form LD-50
Revised January 2015

No-Rise Certification

This is to certify that I am a qualified licensed professional engineer in the State of Ohio. It is to further certify that the attached analysis supports the fact that the proposed Roadway project:

FRA-71-5.29 (Name of Project) in the floodway will not increase the Base Flood Elevation (100-year flood), floodway elevation, or floodway widths on

BRYANT DITCH (Name of Stream) at published sections in the Flood Insurance Study for FRANKLIN COUNTY OHIO (Name of Community), dated 17 JUNE 2008 and will not increase the Base Flood Elevations (100-year flood), floodway elevations, or floodway widths at unpublished cross-sections in the vicinity of the proposed roadway project.

Engineer's Name: KEVIN WHITE

Signature: [signature] Date: 3/9/2015

Phone Number: 614-586-0642 E-MAIL: kwhite@elrobinson.com

Agency/Firm: E.L. ROBINSON ENGR.

Address: 1801 WATERMARK DR. STE 310

City: COLUMBUS State: OH Zip Code: 43215

ENGINEERS SEAL:

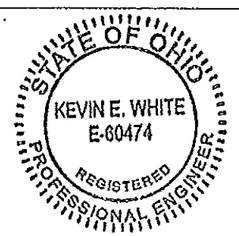

Form LD-50
Revised January 2015

No-Rise Certification

This is to certify that I am a qualified licensed professional engineer in the State of Ohio. It is to further certify that the attached analysis supports the fact that the proposed Roadway project:

FRA-71-6.29 (Name of Project) in the floodway will not increase the Base Flood Elevation (100-year flood), floodway elevation, or floodway widths on

GRANT RUN (Name of Stream) at published sections in the Flood Insurance Study for FRANKLIN COUNTY OHIO (Name of Community), dated 17 JUNE 2008 and will not increase the Base Flood Elevations (100-year flood), floodway elevations, or floodway widths at unpublished cross-sections in the vicinity of the proposed roadway project.

Engineer's Name: KEVIN WHITE

Signature: [signature] Date: 3/9/2015

Phone Number: (614) 586-0642 E-MAIL: Kwhite@elrobinson.com

Agency/Firm: E.L. Robinson Engineering

Address: 1801 Watermark Dr. STE 310

City: Columbus State: OH Zip Code: 43215

ENGINEERS SEAL:

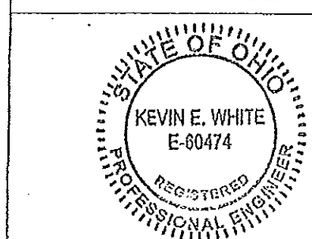

Form LD-50
Revised January 2015

No-Rise Certification

This is to certify that I am a qualified licensed professional engineer in the State of Ohio. It is to further certify that the attached analysis supports the fact that the proposed Roadway project:

FRA-71-5.29 (Name of Project) in the floodway will not increase the Base Flood Elevation (100-year flood), floodway elevation, or floodway widths on

PATZER DITCH (Name of Stream) at published sections in the Flood Insurance Study for FRANKLIN COUNTY, OHIO (Name of Community), dated 17 JUNE 2008 and will not increase the Base Flood Elevations (100-year flood), floodway elevations, or floodway widths at unpublished cross-sections in the vicinity of the proposed roadway project.

Engineer's Name: KEVIN WHITE

Signature: [signature] Date: 3/9/2015

Phone Number: (614) 586-0642 E-MAIL: KWhite@elrobinson.com

Agency/Firm: E.L. Robinson Engineering

Address: 1801 Watermark Dr. Ste. 310

City: Columbus State: OH Zip Code: 43215

ENGINEERS SEAL:

Form LD-50
Revised January 2015

No-Rise Certification

This is to certify that I am a qualified licensed professional engineer in the State of Ohio. It is to further certify that the attached analysis supports the fact that the proposed Roadway project:

FRA-71-5.29 (Name of Project) in the floodway will not increase the Base Flood Elevation (100-year flood), floodway elevation, or floodway widths on

MULBERRY RUN (Name of Stream) at published sections in the Flood Insurance Study for FRANKLIN COUNTY, OHIO (Name of Community), dated 17 JUNE 2008 and will not increase the Base Flood Elevations (100-year flood), floodway elevations, or floodway widths at unpublished cross-sections in the vicinity of the proposed roadway project.

Engineer's Name: KEVIN WHITE

Signature: [signature] Date: 3/9/2015

Phone Number: (614) 586-0642 E-MAIL: KWhite@elrobinson.com

Agency/Firm: E.L. Robinson Engineering

Address: 1801 Watermark Dr, Ste 310

City: Columbus State: OH Zip Code: 43215

ENGINEERS SEAL:

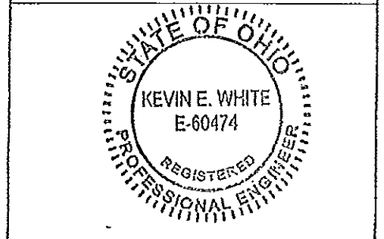

Form LD-50
Revised January 2015

No-Rise Certification

This is to certify that I am a qualified licensed professional engineer in the State of Ohio. It is to further certify that the attached analysis supports the fact that the proposed Roadway project:

FRA-71-5.29 (Name of Project) in the floodway will not increase the Base Flood Elevation (100-year flood), floodway elevation, or floodway widths on

GROVE CITY CREEK 2 (Name of Stream) at published sections in the Flood Insurance Study for FRANKLIN COUNTY OHIO (Name of Community), dated 17 JUNE 2008 and will not increase the Base Flood Elevations (100-year flood), floodway elevations, or floodway widths at unpublished cross-sections in the vicinity of the proposed roadway project.

Engineer's Name: KEVIN WHITE

Signature: [signature] Date: 3/9/2015

Phone Number: (614) 586-0642 E-MAIL: KWhite@elrobinson.com

Agency/Firm: E.L. Robinson Engineering

Address: 1801 Watermark Dr., Ste 310

City: Columbus State: OH Zip Code: 43215

ENGINEERS SEAL:

Form LD-50
Revised January 2015

No-Rise Certification

This is to certify that I am a qualified licensed professional engineer in the State of Ohio. It is to further certify that the attached analysis supports the fact that the proposed Roadway project:

FRA-71-5.29 (Name of Project) in the floodway will not increase the Base Flood Elevation (100-year flood), floodway elevation, or floodway widths on

GRANT RUN TRIBUTARY 4 (Name of Stream) at published sections in the Flood Insurance Study for FRANKLIN COUNTY OH (Name of Community), dated 17 JUNE 2008 and will not increase the Base Flood Elevations (100-year flood), floodway elevations, or floodway widths at unpublished cross-sections in the vicinity of the proposed roadway project.

Engineer's Name: KEVIN WHITE

Signature: [signature] Date: 3/9/2015

Phone Number: (614) 586-0642 E-MAIL: KWhite@elrobinson.com

Agency/Firm: E.L. Robinson Engineering

Address: 1801 Watermark Dr., Ste 310

City: Columbus State: OH Zip Code: 43215

ENGINEERS SEAL:

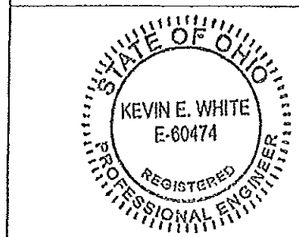

Neal-Harris, Debra

From: Grimes, Holly
Sent: Thursday, March 12, 2015 11:08 AM
To: Neal-Harris, Debra
Cc: Wagner, Rebecca
Subject: FW: PID 84868, FRA-71-5.29
Attachments: PID 84868 franklin county floodplain.pdf; PID 84868 grove city floodplain.pdf; SP_Cover_84868.doc; SP_Cover_84868-GC.doc

Deb

Here are the special provisions for the Floodplain coordination with the covers. I'll have the title sheet updated shortly.

Office of Planning and Engineering Administration
Holly G Grimes
Project Manager
District Six
Ohio Department of Transportation
400 E William St
Delaware OH 43015

(740) 833-8370
(800) 372-7714

From: Wagner, Rebecca
Sent: Thursday, March 12, 2015 10:53 AM
To: Grimes, Holly
Subject: PID 84868, FRA-71-5.29

Holly – I am sending you these files in case you need to forward to Central Office. If anything else is needed please let me know.

Thanks
Becky

SPECIAL PROVISIONS

Floodplain LD-50 and LD-51
Grove City

CO-RT-SEC:
FRA-71-5.29

PID:
84868

DATE: 3/12/15

OHIO DEPARTMENT OF TRANSPORTATION
DISTRICT 6 • 400 EAST WILLIAM STREET • DELAWARE, OHIO • 43015 • 800.372.7714

March 12, 2015

Michael Boso
Chief Building Official
Grove City
Building Division
4035 Broadway
Grove City, Ohio 43123

RE: FRA-71-5.29, PID 84868
Letter of Compliance

Dear Mr. Boso;

Enclosed please find the floodplain analysis and certification forms for ODOT project FRA-71-5.29 (PID 84868). The subject roadway project encroaches upon Special Flood Hazard Areas Zone A and/or AE within your community at the locations identified in the attached report. The hydraulic calculations and No-Rise Certification Forms provide the necessary documentation of compliance to all federal, state, and local floodplain standards as required. We will be proceeding forward on this project if no concerns are brought to our attention.

If you need additional information, please contact me at rebecca.wagner@dot.state.oh.us or 740-833-8183.

Respectfully,

Rebecca L. Wagner, P.E.
Transportation Engineer

Cc: L. Montgomery, J. Gartner, A. Turner, H. Boyer, B. Downing, Project File, Production File

Form LD-51

Form LD-50
Revised January 2015

No-Rise Certification

This is to certify that I am a qualified licensed professional engineer in the State of Ohio. It is to further certify that the attached analysis supports the fact that the proposed Roadway project:

FRA-71-5.29 (Name of Project) in the floodway will not increase the Base Flood Elevation (100-year flood), floodway elevation, or floodway widths on

BRYANT DITCH (Name of Stream) at published sections in the Flood Insurance Study for FRANKLIN COUNTY OHIO (Name of Community), dated 17 JUNE 2008 and will not increase the Base Flood Elevations (100-year flood), floodway elevations, or floodway widths at unpublished cross-sections in the vicinity of the proposed roadway project.

Engineer's Name: KEVIN WHITE

Signature: [signature] Date: 3/9/2015

Phone Number: 614-586-0642 E-MAIL: kwhite@elrobinson.com

Agency/Firm: E.L. ROBINSON ENGR.

Address: 1801 WATERMARK DR. STE 310

City: COLUMBUS State: OH Zip Code: 43215

ENGINEERS SEAL:

Form LD-50
Revised January 2015

No-Rise Certification

This is to certify that I am a qualified licensed professional engineer in the State of Ohio. It is to further certify that the attached analysis supports the fact that the proposed Roadway project:

FRA-71-5.29 (Name of Project) in the floodway will not increase the Base Flood Elevation (100-year flood), floodway elevation, or floodway widths on

GRANT RUN (Name of Stream) at published sections in the Flood Insurance Study for FRANKLIN COUNTY OHIO (Name of Community), dated 17 JUNE 2008 and will not increase the Base Flood Elevations (100-year flood), floodway elevations, or floodway widths at unpublished cross-sections in the vicinity of the proposed roadway project.

Engineer's Name: KEVIN WHITE

Signature: [signature] Date: 3/9/2015

Phone Number: (614) 586-0642 E-MAIL: Kwhite@elrobinson.com

Agency/Firm: E.L. Robinson Engineering

Address: 1801 Watermark Dr, STE 310

City: Columbus State: OH Zip Code: 43215

ENGINEERS SEAL:

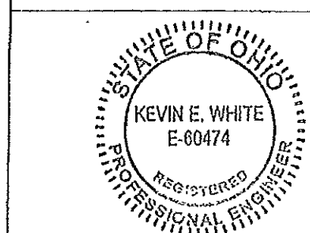

Form LD-50
Revised January 2015

No-Rise Certification

This is to certify that I am a qualified licensed professional engineer in the State of Ohio. It is to further certify that the attached analysis supports the fact that the proposed Roadway project:

FRA-71-5.29 (Name of Project) in the floodway will not increase the Base Flood Elevation (100-year flood), floodway elevation, or floodway widths on

PATZER DITCH (Name of Stream) at published sections in the Flood Insurance Study for FRANKLIN COUNTY OHIO (Name of Community), dated 17 JUNE 2008 and will not increase the Base Flood Elevations (100-year flood), floodway elevations, or floodway widths at unpublished cross-sections in the vicinity of the proposed roadway project.

Engineer's Name: KEVIN WHITE

Signature: [signature] Date: 3/9/2015

Phone Number: (614) 586-0642 E-MAIL: KWhite@elrobinson.com

Agency/Firm: E.L. Robinson Engineering

Address: 1801 Watermark Dr. Ste. 310

City: Columbus State: OH Zip Code: 43215

ENGINEERS SEAL:

STATE OF OHIO
KEVIN E. WHITE
E-60474
REGISTERED
PROFESSIONAL ENGINEER

Form LD-50
Revised January 2015

No-Rise Certification

This is to certify that I am a qualified licensed professional engineer in the State of Ohio. It is to further certify that the attached analysis supports the fact that the proposed Roadway project:

FRA-71-5.29 (Name of Project) in the floodway will not increase the Base Flood Elevation (100-year flood), floodway elevation, or floodway widths on

MULBERRY RUN (Name of Stream) at published sections in the Flood Insurance Study for FRANKLIN COUNTY OHIO (Name of Community), dated 17 JUNE 2008 and will not increase the Base Flood Elevations (100-year flood), floodway elevations, or floodway widths at unpublished cross-sections in the vicinity of the proposed roadway project.

Engineer's Name: KEVIN WHITE

Signature: [signature] Date: 3/9/2015

Phone Number: (614) 586-0642 E-MAIL: KWhite@elrobinson.com

Agency/Firm: E.L. Robinson Engineering

Address: 1801 Watermark Dr, Ste 310

City: Columbus State: OH Zip Code: 43215

ENGINEERS SEAL:

STATE OF OHIO
KEVIN E. WHITE
E-60474
REGISTERED
PROFESSIONAL ENGINEER

Form LD-50
Revised January 2015

No-Rise Certification

This is to certify that I am a qualified licensed professional engineer in the State of Ohio. It is to further certify that the attached analysis supports the fact that the proposed Roadway project:

FRA-71-5.29 (Name of Project) in the floodway will not increase the Base Flood Elevation (100-year flood), floodway elevation, or floodway widths on GROVE CITY CREEK 2 (Name of Stream) at published sections in the Flood Insurance Study for FRANKLIN COUNTY, OHIO (Name of Community), dated 17 JUNE 2008 and will not increase the Base Flood Elevations (100-year flood), floodway elevations, or floodway widths at unpublished cross-sections in the vicinity of the proposed roadway project.

Engineer's Name: KEVIN WHITE

Signature: [signature] Date: 3/9/2015

Phone Number: (614)580-0642 E-MAIL: KWhite@elrobinson.com

Agency/Firm: E.L. Robinson Engineering

Address: 1801 Watermark Dr., Ste 310

City: Columbus State: OH Zip Code: 43215

ENGINEERS SEAL:

Form LD-50
Revised January 2015

No-Rise Certification

This is to certify that I am a qualified licensed professional engineer in the State of Ohio. It is to further certify that the attached analysis supports the fact that the proposed Roadway project:

FRA-71-5.29 (Name of Project) in the floodway will not increase the Base Flood Elevation (100-year flood), floodway elevation, or floodway widths on GRANT RUN TRIBUTARY 4 (Name of Stream) at published sections in the Flood Insurance Study for FRANKLIN COUNTY, OH (Name of Community), dated 17 JUNE 2008 and will not increase the Base Flood Elevations (100-year flood), floodway elevations, or floodway widths at unpublished cross-sections in the vicinity of the proposed roadway project.

Engineer's Name: KEVIN WHITE

Signature: [signature] Date: 3/9/2015

Phone Number: (614)580-0642 E-MAIL: KWhite@elrobinson.com

Agency/Firm: E.L. Robinson Engineering

Address: 1801 Watermark Dr., Ste 310

City: Columbus State: OH Zip Code: 43215

ENGINEERS SEAL:

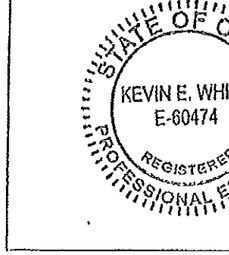

SPECIAL PROVISION

3D / 4D Modeling

FOR

CRS: FRA-71-5.29
PID: 84868

DATED: 04-24-2015

SPECIAL PROVISION - 3D/4D MODELS

DEFINITIONS

3D Model – A digital virtual model that contains representations of physical objects in 3 dimensions (x, y, and z coordinate locations based on the project datum), as surfaces or solids, of the Project utilized to show the existing surfaces and required completed surfaces of the construction project.

3D Elevations – Proposed surface coordinates depicted within the 3D Model showing roadway profile, pavement grade breaks, proposed finish pavement surfaces elevations, pavement cross slopes, edge of pavement location, finish earthwork elevations (including surface and slopes) and Utility Spot Locates, except when any such location is noted for exclusion. This definition includes northing, easting, and elevations of such points (x,y,z).

4D Model – An aggregation of virtual models and tabular information, correlating to the Critical Path Method (CPM) Progress Schedule, depicting the construction sequencing, phasing and magnitude of the work for the construction of the project. The 4D model is a combination of P6 Primavera information, tabular information, and visuals created through the use of and manipulation of the 3D Model. The purpose of the 4D Model is to show visual representation of the plan baseline schedule. The 4D Model is not required to be integrated or automated into the 3D Model.

Utility Spot Locates – A physical survey performed by the Contractor of any utilities exposed during construction, or any other project specific survey spot locate requested by the Engineer for inclusion within the As Built Model.

SCOPE

The Department is providing a 3D Model as part of the Bid Documents and Contract Documents. The 3D Model will be in multiple files and will include a Project Index Document describing the differing aspects of the 3D Model.

Any reference within this note to proposed 3D Elevations shall apply to roadway profile grades, pavement grade breaks, finish pavement surfaces elevations, pavement cross slopes, edge of pavement location, and finish earthwork elevations (including surface and slopes).

The 3D Model contractually depicts the 3D Elevations of existing surfaces and depicts the 3D Elevations of finished surfaces. The 3D model contractually depicts the proposed 3D Elevations of roadway profile grades, pavement grade breaks, finish pavement surfaces elevations, pavement cross slopes, edge of pavement location, and finish earthwork elevations (including surface and slopes) of the project (unless areas within the 3D Model are specifically excluded). The 3D Model contains surfaces and line grade strings in Land xml format.

The 3D Model depicts areas which are to be excluded from immediate use by the Contractor. These areas will need fine graded and field adjusted to meet conditions. The Department will not guarantee the accuracy of 3D Elevations which are depicted for exclusion. These areas are denoted by cross-hatching within the digital 3D Model. This will further detailed within the Project Index Document provided with the 3D Model.

The Department and Contractor shall utilize this 3D Model in determination of proposed 3D elevations and final earthwork quantities during the construction of the Project. The 3D Model shall not govern any other contract quantities.

The 3D Model shall govern when differences between information depicted within the 3D Model and the plan finished grades depicted within the Plans are noted. Any Department made changes to the model after award shall be provided in the same format as the original 3D Model. Any changes made by the Department to the model will addressed per ODOT's Construction and Material Specifications (CMS) 104.02 and shall have equivalent standing as a revision of a Plan Sheet.

The Contractor may use the 3D Model to present, visualize, and depict any known or unknown constructability issues on the Project.

The Contractor shall perform Utility Spot Locates by field surveying any exposed active utilities discovered during construction. The field surveys shall be performed on the same standards and datum as the 3D Model. This will be performed on a Unit Cost basis.

The Contractor shall maintain and submit an As-Built 3D Model to the Department. The As-Built 3D Model shall be a transmittal of all Utility Spot Locates, and if applicable, a digital 3D Model.

The Contractor shall maintain a digital 3D Model to depict as-built conditions which vary significantly from the Department's supplied 3D Model. An As-Built 3D Model shall be maintained and submitted by the Contractor when earthwork construction tolerances are found outside of C&MS 203.08B, 203.08C or 203.08D. The Engineer may direct up to 10 verification spot surveys if the tolerances, as judged by the Engineer, appears to exceed the limits as defined in 203.08B, 203.08C or 203.08D. The costs of these verification spot surveys shall be included in the cost of the As-Built 3D Model. If the Engineer directed verification spot surveys demonstrate a digital As-Built 3D Model may be required, the Contractor shall survey the area to determine the limits of the area exceeding the tolerances at no additional cost. This information shall be included within a digital As-Built 3D Model.

As part of the As-Built 3D Model submittal requirements, all Utility Spot Locates shall be organized and submitted, clearly noting all Utility Spot Locates with well-defined Northings, Eastings, Elevations and descriptions in an ASCII file format. The digital As-Built 3D Model shall be in Land xml format.

The As-Built 3D Model information shall be submitted to the Department with a sealed letter from a Professional Surveyor or Professional Engineer certifying the information provided within the As-Built 3D Model is correct and accurate to the best of his/her knowledge. The digital As-Built 3D Model, if applicable, shall be of equal accuracy, quality and value of the original 3D Model. The Professional Surveyor or Engineer must have active participation in the As-Built 3D Model's creation and implementation.

MODEL MANAGEMENT PLAN

The Contractor shall designate a CADD/Model Manager(s) for the Project. (The role may be fulfilled by more than a single individual). The CADD/Model Manager(s) shall manage all modeling associated with the Project, and serve as the point of contact for all modeling activities. The Model Manager(s) shall

have thorough knowledge and understanding of the of required 3D modeling and 4D schedule simulation.

The Contractor shall prepare and maintain a model management plan that contains:

- Resume of the Model Manager
- Strategy for 4D model creation and 3D model maintenance.
- Software, including CADD, 3D modeling, 4D modeling, and CPM scheduling.
- Management plan for keeping models current with milestone submittals.
- 3D Grade Control Software to be used on excavators, dozers, scrapers, etc.
- Quality Control and Quality Assurance process for auditing change management of 3D models.
- Roles and responsibilities of the Contractor's modeling team.

If replacement to the Model Manager is required, the replacement Model Manager must have equal or better experience of the original Model Manager.

The Model Management Plan shall be submitted and accepted within 60 days of Project execution.

The Contractor and Department shall hold a post construction meeting to discuss the functionality, benefits, needed information (provided or not provided), potential improvements, and lessons learned from the 3D/4D Implementation into the project. This meeting may be held and discussed in conjunction with the Post Construction meeting.

The cost of the Model Management Plan and duties of the Model Manager shall be included with the As-Built 3D Model.

DEPARTMENT – SUPPLIED DATA

ODOT operates internally using MicroStation and GEOPAK only. Therefore, all CADD related documentation, supporting files, and customization provided by ODOT shall be MicroStation/GEOPAK based only. Section 504 of the CADD Engineering Standards Manual provides information regarding CADD file requirements.

The Department will make available the data listed in Table 1. The Contractor shall be responsible for verifying any data used for the project.

Table 1 – Department Supplied Data

Information Type
ASCII Files (Horizontal and Vertical Alignments, Survey Control Points (.csv)
Land XML Files (Horizontal and Vertical Alignments, Existing and Proposed 3D Surfaces)
Coordinate Geometry Database (GEOPAK)
Existing and Proposed Triangle Models (GEOPAK)
CADD Basemaps – Existing and Proposed roadway, ROW, Profiles, GEOPAK cross section cells, MOT phasing, etc.

4D MODELING – Baseline Phasing Visualization

The Contractor shall utilize the provided 3D Model and create a 4D Model to reflect the scheduled CPM Baseline construction activities. The 4D Model shall show phased visualization as time-related depictions (estimated dates and estimated durations clearly associated with CPM Schedule's P6 Activity IDs) of earthwork quantities to be placed, anticipated pavement location and quantities to be placed, and MOT phasing showing traffic locations with anticipated lane width and location. The 4D Model will be used by the Department to evaluate the baseline Schedule and to evaluate phasing constructability corresponding to the P6 Schedule.

A 4D Model must contain one or more virtual models and depict the Major CPM Schedule Activities (as defined below) within the CPM baseline schedule. This includes information describing durations, volume, and quantities for the required depicted work. Specific Major CPM Schedule Activities within the CPM schedule shall be relatable to a specific object or grouping of objects within the virtual model(s) provided by the Contractor. The 4D Model shall clearly define and label any deviations from the project plan's Maintenance of Traffic scheme. The 4D model shall show the phasing intent of the project in a tabular and visual format combination (utilizing the modified 3D model).

The 4D Model is a combination of P6 Primavera information, virtual models created by manipulation of the 3D Model, and tabular quantity information. A 4D Model must contain one or more virtual models depicting each of the Major CPM Schedule activities (as defined below).

Specific activities within the CPM schedule will then be related to a specific object or grouping of objects depicting work within the virtual model(s). The 4D model shall show the phasing intent of the project in a graphical, visual, and tabular format combinations (utilizing virtual model(s)).

The Contractor is not required to generate or extract construction documents (plans) from the provided 3D Model to support the 4D Modeling and schedule simulation activities. The 4D Model is not required to be integrated or automated into the 3D Model nor the P6 schedule. The contractor is required to use the 3D Model to create virtual models depicting Major Baseline CPM Schedule activities and must be digitally created within or by usage of the provided 3D Model.

Major Baseline CPM Schedule Activities (in regards to 4D Modeling) to be depicted shall be:

- Each major MOT Traffic Phase with the locations of traffic
- Visual Earthwork locations and tabular quantities of Embankment and Excavation within the MOT Phase(s)
- Visual depiction of Pavement placement phasing (Asphalt: 304 Base, Asphalt Base, Intermediate, and Surface Asphalt. Concrete: 305 Base, and finished Concrete Pavement) and a tabular Pavement placement quantity within the major MOT Traffic Phases

  Each of the MOT Traffic Phases shall be considered a 4D Model Component, and the Earthwork and Pavement placement items shall be considered a Subcomponents. 3D Model visualizations do not need to depict volumetric accuracy and can be provided in simple visual shapes within the 3D Model.

Any Digital 3D Models developed to support the 4D model shall be in Bentley Microstation dgn format, Land xml, or .dwg format.

The 4D Models shall be submitted within 14 days of CPM Baseline schedule acceptance. The progress schedule baseline submission shall follow the requirements of Proposal Note 107 for review and approval. The 4D Model will accurately show and match the CPM baseline schedule for the overall plan to complete the Major CPM Schedule Activities.

The Contractor shall work closely with the Department to refine the requirements of the 4D Model submissions to ensure the end product meets the needs of the Department. The Department expects a minimum of two iterations before the end product satisfies requirements, but reserves the right to request additional iterations if the note's intent is not fulfilled.

The Contractor shall submit one clear, organized hard copy and PDF report to the Department detailing the 4D Model. The report must include the organized baseline CPM schedule's depicted activities along with one or more visualizations depicting each Major CPM Schedule Activities and 4D Components and Subcomponents, as stated above, with overall work location(s). Visualizations for each Major CPM Schedule Activity, at minimum, shall include traffic locations, earthwork locations, and applicable pavement placement phasing. Earthwork and pavement quantities from the 3D Model, estimated dates and durations, and estimated production rates shall be identified in a tabular format for each visualization.

All electronic information files shall be made accessible to the Department by the Contractor to be viewed along with the report. A minimum of one meeting will be held between the Department and the Contractor to discuss the details of the 4D Model submission.

Pay Items:

ITEM	UNIT	DESCRIPTION
690E98400	LS	Special – Misc.: As-Built 3D Model
690E98000	EACH	Special – Misc.: Utility Spot Locates
690E98400	LS	Special – Misc.: 4D Baseline Model