STATE OF OHIO
DEPARTMENT OF TRANSPORTATION

FRA-33-2456
BRIDGE HIT REPAIR

FRANKLIN COUNTY

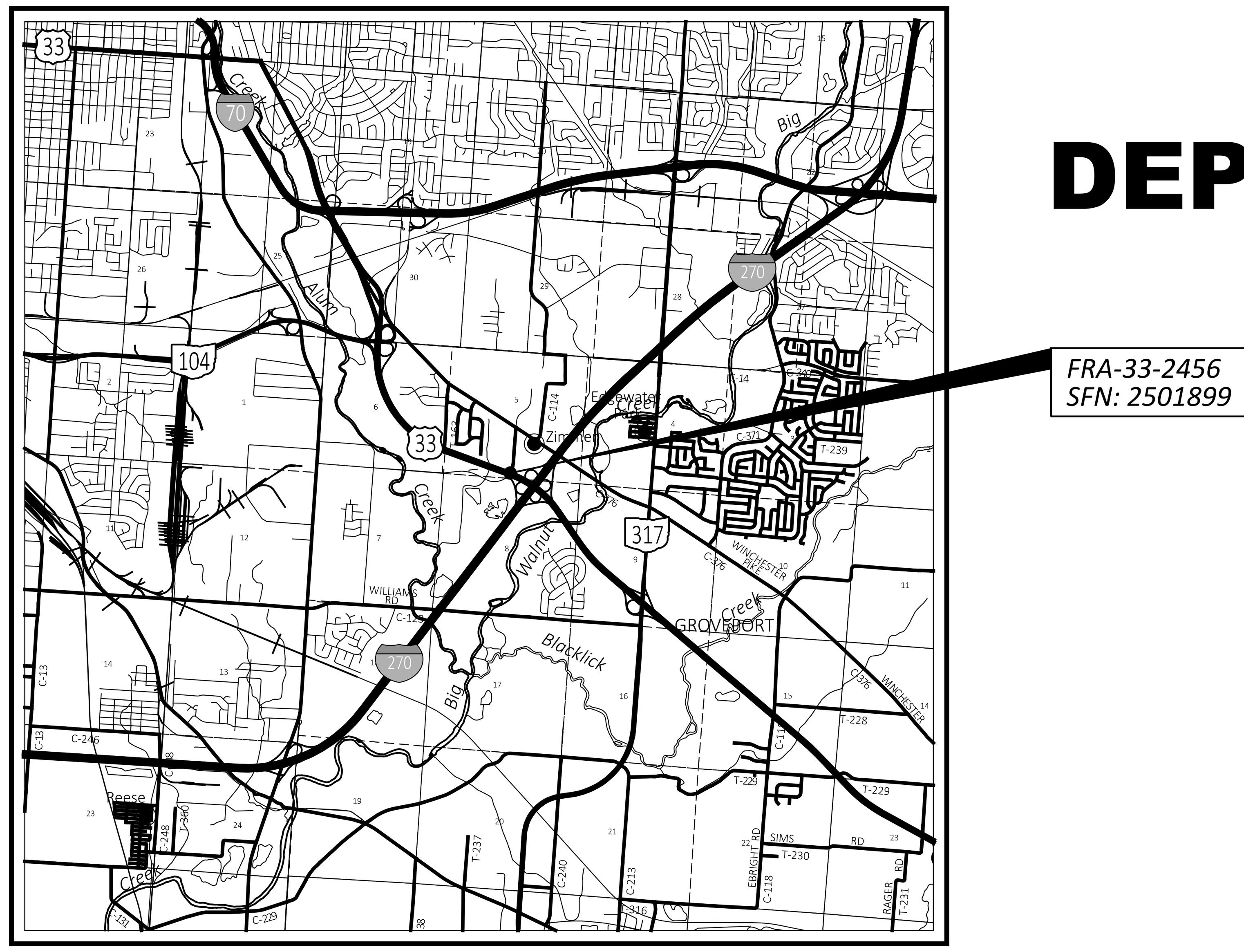

LOCATION MAP

LATITUDE: 39°54'10" N LONGITUDE: 82°54'5" W

N

PORTION TO BE IMPROVED
INTERSTATE HIGHWAY
FEDERAL ROUTES
STATE ROUTES
COUNTY & TOWNSHIP ROADS
OTHER ROADS

DESIGN DESIGNATION

	US 33	WATKINS RD
CURRENT ADT (2026)	51,226	152
DESIGN YEAR ADT (2026)	51,738	155
DESIGN HOURLY VOLUME (2026)	4,588	25
DIRECTIONAL DISTRIBUTION	64%	50%
TRUCKS (24 HOUR B&C)	6%	7%
DESIGN SPEED	65 MPH	40 MPH
LEGAL SPEED	60 MPH	35 MPH
DESIGN FUNCTIONAL CLASSIFICATION:	02 - PRINCIPAL ARTERIAL FREEWAY	06 - MINOR COLLECTOR
NHS PROJECT	YES	NO

DESIGN EXCEPTIONS

NONE

INDEX OF SHEETS:

TITLE SHEET	P.1
SCHEMATIC PLAN	P.2
GENERAL NOTES	P.3
MAINTENANCE OF TRAFFIC	P.4 - P.13
GENERAL SUMMARY	P.23
STRUCTURES (20' AND OVER)	
FRA-33-2456	P.24 - P.42

FEDERAL PROJECT NUMBER

N/A

RAILROAD INVOLVEMENT

NONE

PROJECT DESCRIPTION

BRIDGE REPAIR OF FRA-33-24.56 (WATKINS RD OVER US 33)

EARTH DISTURBED AREAS

PROJECT EARTH DISTURBED AREA:	*N/A ACRES*
ESTIMATED CONTRACTOR EARTH DISTURBED AREA:	*N/A ACRES*
NOTICE OF INTENT EARTH DISTURBED AREA:	*N/A ACRES*

LIMITED ACCESS

THIS IMPROVEMENT IS ESPECIALLY DESIGNED FOR THROUGH TRAFFIC AND HAS BEEN DECLARED A LIMITED ACCESS HIGHWAY OR FREEWAY BY ACTION OF THE DIRECTOR IN ACCORDANCE WITH THE PROVISIONS OF SECTION 5511.02 OF THE OHIO REVISED CODE.

2023 SPECIFICATIONS

THE STANDARD SPECIFICATIONS OF THE STATE OF OHIO, DEPARTMENT OF TRANSPORTATION, INCLUDING SUPPLEMENTAL SPECIFICATIONS LISTED IN THE PLANS AND CHANGES LISTED IN THE PROPOSAL SHALL GOVERN THIS IMPROVEMENT.

I HEREBY APPROVE THESE PLANS AND DECLARE THAT THE MAKING OF THIS IMPROVEMENT WILL NOT REQUIRE THE CLOSING TO TRAFFIC OF THE HIGHWAY EXCEPT FOR THE SIDE ROADS AS DESCRIBED ON SHEETS P.6 AND P.7 , AND THAT PROVISIONS FOR THE MAINTENANCE AND SAFETY OF TRAFFIC WILL BE AS SET FORTH ON THE PLANS AND ESTIMATES.

Anthony C. Turowski, P.E.
District 06 Deputy Director

Pamela Boratyn
Director, Department of Transportation

STANDARD CONSTRUCTION DRAWINGS						SUPPLEMENTAL SPECIFICATIONS		SPECIAL PROVISIONS
MT-95.30	7/18/25					800-2023	7/17/26	ASBESTOS SURVEY REPORT 5/12/26
MT-95.40	7/18/25					849	1/18/13	
MT-98.20	4/19/19							
MT-98.29	1/17/20							ENVIRONMENTAL DOCUMENT 9/11/26
MT-101.70	7/19/24							
MT-101.75	7/21/23							
MT-101.90	7/17/20							
MT-102.10	7/21/23							
MT-105.10	1/17/20							

UNDERGROUND UTILITIES
Contact Two Working Days Before You Dig
OHIO811.org Before You Dig
OHIO811, 8-1-1, or 1-800-362-2764
(Non members must be called directly)

PLAN PREPARED BY:
EMH&T
Evans, Mechwart, Hambleton & Tilton, Inc.
Engineers • Surveyors • Planners • Scientists
5500 New Albany Road, Columbus, OH 43054
Phone: 614.775.4500 Toll Free: 888.775.3648
emht.com

ENGINEER'S SEAL
BRIDGE
STATE OF OHIO
CRAIG A. SCHRADER E-77433
REGISTERED
PROFESSIONAL ENGINEER
Digitally signed by Craig Schrader
Date: 2026.10.30 08:41:02 -04'00'

FRA-33-2456 BRIDGE HIT REPAIR
MODEL: Sheet PAPERSIZE: 34x22 (in.) DATE: 10/30/2026 TIME: 8:34:09 AM USER: cschrader
J:\20250232\ODOT\117444\400-Engineering\Roadway\Sheets\117444_GT001.dgn

TITLE SHEET

DESIGN AGENCY
EMH&T
DESIGNER
BLM
REVIEWER
CAS 08/20/26
PROJECT ID
125600
SHEET P.1 TOTAL 42

FRA-33-2456 BRIDGE HIT REPAIR

MODEL: FRA-33-24.56 Schematic Plan - Sheet 1 PAPERSIZE: 34x22 (in.) DATE: 10/30/2026 TIME: 8:34:13 AM USER: cschrader
J:\20250232\ODOT\117444\400-Engineering\Roadway\Sheets\117444_GB001.dgn

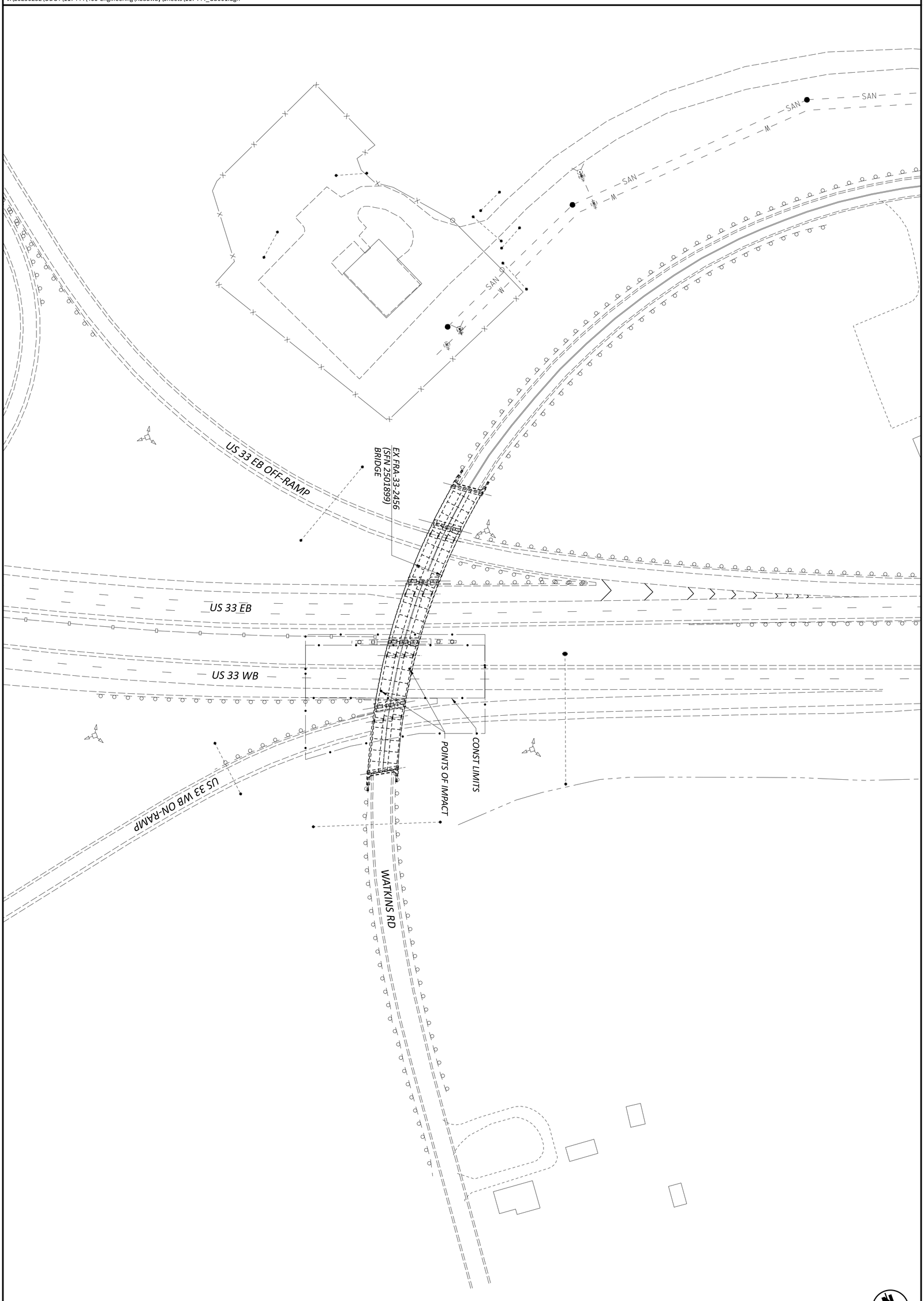

SCHEMATIC PLAN

HORIZONTAL SCALE IN FEET
0 50
25 100

SHEET	TOTAL	PROJECT ID	REVIEWER	DESIGNER	DESIGN AGENCY
P.2	42	125600	CAS 08/20/26	BLM	EMH&T

NOTIFICATION OF CONSTRUCTION INITIATION

AT LEAST FOURTEEN (14) DAYS PRIOR TO ANY CONSTRUCTION ACTIVITIES, THE CONTRACTOR SHALL ADVISE THE DISTRICT OFFICE OF COMMUNICATIONS VIA EMAIL AT D06.PIO@DOT.STATE.OH.US AND THE DISTRICT WORK ZONE TRAFFIC MANAGER VIA EMAIL AT D06@DOT.STATE.OH.US OF THE ANTICIPATED START DATE OF ANY CONSTRUCTION ACTIVITIES, IN CLUDING BUT NOT LIMITED TO THE PLACING OF WORK ZONE SIGNS. THE NOTIFICATION SHALL ALSO INCLUDE THE PROJECT NUMBER, PID, NAME AND PHONE NUMBER OF THE CONTRACTOR, A POINT OF CONTACT AND THE ANTICIPATED IMPACT ON TRAFFIC. THE CONTRACTOR WILL IMMEDIATELY INFORM THE DISTRICT OFFICE OF COMMUNICATIONS AND THE DISTRICT WORK ZONE TRAFFIC MANAGER OF ANY AND ALL DELAYS AND/OR CHANGES REGARDING THE CONSTRUCTION INITIATION DATE.

CONTINGENCY QUANTITIES

THE CONTRACTOR SHALL NOT ORDER MATERIALS OR PERFORM WORK FOR ITEMS DESIGNATED BY PLAN NOTE TO BE USED AS DIRECTED BY THE ENGINEER UNLESS AUTHORIZED BY THE ENGINEER. THE ACTUAL WORK LOCATIONS AND QUANTITIES USED FOR SUCH ITEMS SHALL BE INCORPORATED INTO THE FINAL CHANGE ORDER GOVERNING COMPLETION OF THIS PROJECT.

WORK LIMITS

THE WORK LIMITS SHOWN ON THESE PLANS ARE FOR PHYSICAL CONSTRUCTION ONLY. PROVIDE THE INSTALLATION AND OPERATION OF ALL WORK ZONE TRAFFIC CONTROL AND WORK ZONE TRAFFIC CONTROL DEVICES REQUIRED BY THESE PLANS WHETHER INSIDE OR OUTSIDE THESE WORK LIMITS.

REMOVAL ITEMS

UNLESS OTHERWISE INSTRUCTED, ITEMS DESIGNATED FOR REMOVAL BECOME PROPERTY OF THE CONTRACTOR AND SHALL BE DISPOSED OF. PAYMENT FOR THE ABOVE SHALL BE INCLUDED IN THE UNIT PRICE BID FOR THE REMOVED ITEM.

CONTRACTORS EQUIPMENT - OPERATION AND STORAGE

THE CONTRACTORS EQUIPMENT SHALL BE OPERATED IN THE DIRECTION OF TRAFFIC WHERE PRACTICAL. EQUIPMENT SHALL HAVE AT LEAST ONE AMBER FLASHING LIGHT, WHEN PARKED ALONG THE HIGHWAY, THE EQUIPMENT SHALL BE LOCATED EITHER A MINIMUM OF THIRTY FEET (30') FROM THE EDGE OF PAVEMENT OR SIX FEET (6') BEHIND GUARDRAIL WITH A MINIMUM OF ONE HUNDRED AND TWENTY FIVE FEET (125') OF GUARDRAIL PRECEDING THE EQUIPMENT. ALL OTHER EQUIPMENT, INCLUDING PRIVATE VEHICLES, SHALL BE STORED AT AN APPROVED CONTRACTORS STORAGE AREA.

UTILITIES

THE NATURE OF THE WORK REQUIRED BY THE PROJECT WILL NOT AFFECT ANY KNOWN UTILITIES THAT EXIST UNDER OR ADJACENT TO THE WORK AREA.

LISTED BELOW ARE ALL UTILITIES LOCATED WITHIN THE PROJECT CONSTRUCTION LIMITS, OR ADJACENT TO THE CONSTRUCTION LIMITS, TOGETHER WITH THEIR RESPECTIVE OWNERS:

AEP (FIBER)
JIM RIGDON
301 CLEVELAND AVE SW
CANTON, OH 44702
D: 330-438-7168
C: 330-413-6132
jerigdn@aep.com

AEP (TRANSMISSION)
MICHAEL D. CARR
8600 SMITHS MILL RD
NEW ALBANY, OH 43054
D: 380-205-5072
C: 614-552-1893
mdcarr@aep.com

AEP (DISTRIBUTION)
ROBERT MATTHEWS - PPR COORDINATOR
AMERICAN ELECTRIC POWER
700 MORRISON RD
GAHANNA, OH 43230
740-647-2080
AEP SOLUTION CENTER: 800-277-2177
AEP BUS SOLUTION CENTER 888-710-4237
CentralOHPPR@aep.com

COLUMBIA GAS
ROB CALDWELL
3550 JOHNNY APPLESEED CT
COLUMBUS, OH 43231
614-818-2104
C: 614-370-1906
CUSTOMER SERVICE: 1-800-344-4077
DAMGAGE PREVENTION: 1-866-632-6243
columbiagas_columbuseng@nisource.com
ALSO COPY: rcaldwell@nisource.com

VERIZON BUSINESS (aka MCI, XO)
JOHN DEERE - SR ENGINEER - NETWORK
757 COMMERCE CT
LEWIS CENTER, OH 43035
CELL: 614-809-8866
John.deere@verizon.com
ALSO COPY:
MAURICE JONES - BAU/OSP ENGINEER
CELL: 614-593-6685
maurice.jones@verizon.com

AT&T (FKA SBC)
DONALD G. MARSHALL JR.
MANAGER OSP PLANNING
111 N 4TH ST
COLUMBUS, OH 43215
C: 614-216-2396
DM619W@att.com
AT&T REPAIR SERVICE: 800-288-2020
DAMAGE PREVENTION: 937-296-3929

COLUMBUS FIBERNET
MATT BLACKSTONE
1600 WALCUTT RD
COLUMBUS, OH 43228
614-921-8524
mablackstone@columbusfiber.net
CFNinfo@columbusfiber.net

CROWN CASTLE FIBER
JON TARNOWSKI
2 EASTON OVAL
SUITE 425
COLUMBUS, OH 43219
T: 585-445-5813
C: 614-940-2462
jon.tarnowski@crowncastle.com

LUMEN
(FKA CENTURY LINK/QWEST/
LEVEL 3 COMM/TW TELECOM)
250 W OLD WILSON BRIDGE RD
SUITE 130
WORTHINGTON, OH 43085
relocations@lumen.com
relocations@brightspeed.com

ZAYO GROUP (FKA CITY NET)
COBB FENDLEY
ENGINEERING CONSULTANT
13430 NORTHWEST FREEWAY
SUITE 1100
HOUSTON, TX 77040
CELL: 765-341-1199
waylon.higgins@zayo.com
zayo.relo.ohio@zayo.com
ALSO COPY:
ERIC ALEXANDER
251 NEILSTON ST
COLUMBUS, OH 43215
CELL: 614-989-9655
eric.alexander@zayo.com

ODOT DISTRIC 6 TRAFFIC
TROY BRYANT
UTILITY RELOCATION COORD D6
400 E WILLIAM ST
DELAWARE, OH 43015
O: 740-833-8110
Troy.Bryant@dot.ohio.gov

CITY OF COLUMBUS
DPU
DIVISION OF SEWERAGE DRAINAGE
SEWER MAINTENANCE MANAGER
1250 FAIRWOOD AVE
COLUMBUS, OH 43206
OFFICE: 614-645-7102
DPUDigitalSubmittal@columbus.gov

UTILITIES (CONT.)

CHARTER COMM/SPECTRUM
(AKA TIME WARNER COMM)
JOSEPH VLOCK
3760 INTERCHANGE DR
COLUMBUS, OH 43204
614-402-1979
joseph.vlock@charter.com
DL-MOH-CONSTRUCTION-
FRELO-TEAM@charter.com

NON-OUPS UTILITIES

THE FOLLOWING CITY OF COLUMBUS UTILITIES MAY BE LOCATED WITHIN THE WORK LIMITS OF THIS PROJECT AND DO NOT SUBSCRIBE TO THE REGISTERED UNDERGROUND PROTECTION SERVICE. A FORTY-EIGHT (48) HOUR NOTICE SHALL BE GIVEN TO THE OWNERS OF UNDERGROUND UTILITIES SHOWN ON THE PLANS WHO ARE NOT MEMBERS TO A REGISTERED UNDERGROUND PROTECTION SERVICE.:

CITY OF COLUMBUS
DEPARTMENT OF TECHNOLOGY
1355 MCKINLEY AVE
BUILDING C
COLUMBUS, OH 43222
CONTRACTOR LINE: 614-645-7756

CITY OF COLUMBUS
DEPARTMENT OF PUBLIC SERVICES
TRAFFIC MANAGEMENT
1820 EAST 17TH AVE
COLUMBUS, OH 43219
OFFICE: 614-645-7393

THE LOCATION OF THE UNDERGROUND UTILITIES SHOWN ON THE PLANS ARE AS OBTAINED FROM THE OWNERS AS REQUIRED BY SECTION 153.64 O.R.C.

ITEM 832 - EROSION CONTROL

THE FOLLOWING QUANTITIES HAVE BEEN INCLUDED IN THE GENERAL SUMMARY FOR THE WORK SUPPLEMENTAL SPECIFICATION 832:

ITEM 832 - EROSION CONTROL	1000 EACH

GENERAL NOTES

FRA-33-2456 BRIDGE HIT REPAIR

MODEL: General Notes - Sheet 1 PAPERSIZE: 34x22 (in.) DATE: 10/30/2026 TIME: 8:34:15 AM USER: cschrader
J:\2025\0232\ODOT\117444\400-Engineering\Roadway\Sheets\117444_GN001.dgn

DESIGN AGENCY
EMH&T

DESIGNER
BLM

REVIEWER
CAS 08/20/26

PROJECT ID
125600

CONSTRUCTION OVERVIEW

PRE-PHASE 1

PRIOR TO SHIFTING TRAFFIC ONTO THE EXISTING SHOULDER, EXISTING RUMBLE STRIPS SHALL BE REMOVED IN AREAS IDENTIFIED WITHIN. THIS WORK SHALL BE COMPLETED BY IMPLEMENTING THE PHASE 1B SET-UP (WITHOUT PORTABLE BARRIER) DURING PERMITTED HOURS. SEE "AS PER PLAN" ITEM 615 FOR DETAILS. WATKINS RD SHALL REMAIN CLOSED FOR THE DURATION OF PRE-PHASE 1 PER ODOT SCD MT-101.60. SEE P.8 FOR DETAILS.

PHASE 1A

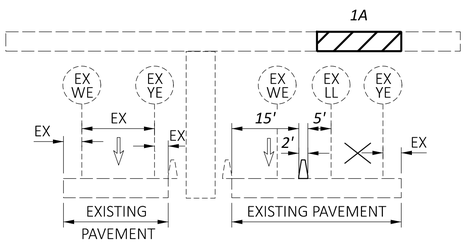

STRUCTURE WORK OVER THE INSIDE LANE OF US-33 WB SHALL BE COMPLETED IN PHASE 1A WITH THE LEFT LANE CLOSED AND TRAFFIC SHIFTED ONTO THE OUTSIDE SHOULDER USING PORTABLE BARRIER (SEE P.8 - P.10). RAMP G SHALL BE CLOSED AND DETOURED PER P.6 AND P.7 . WATKINS RD SHALL REMAIN CLOSED FOR THE DURATION OF PHASE 1A.

POST-PHASE 1A

ONCE ALL PHASE 1A WORK IS COMPLETE, THE REMOVED RUMBLE STRIPS SHALL BE REINSTALLED. THIS WORK SHALL BE COMPLETED BY IMPLEMENTING THE PHASE 1B SET-UP (WITHOUT PORTABLE BARRIER) DURING PERMITTED HOURS. SEE ITEM 618 FOR DETAILS.

PHASE 1B

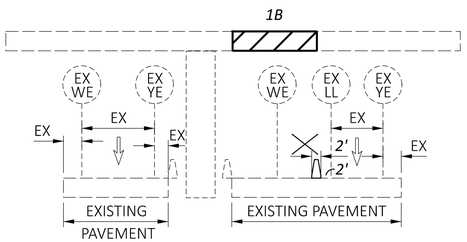

STRUCTURE WORK OVER THE OUTSIDE LANE OF US-33 WB SHALL BE COMPLETED IN PHASE 1B WITH THE RIGHT LANE CLOSED USING PORTABLE BARRIER (SEE P.11- P.13). RAMP G SHALL BE CLOSED AND DETOURED PER P.6 AND P.7. WATKINS RD SHALL REMAIN CLOSED FOR THE DURATION OF PHASE 1B.

PHASE 2

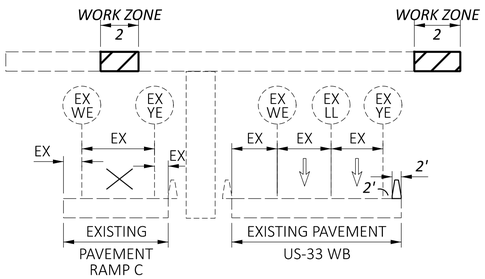

HEAT TREAMENT OF THE EXISTING BEAMS SHALL BE COMPLETED WITH THE LEFT SHOULDER OF US-33 WB AND EB CLOSED USING PORTABLE BARRIER (SEE P.15 AND P.16). RAMP C SHALL BE CLOSED PER ODOT SCD MT-98.29 AND DETOURED PER P.14. WATKINS RD SHALL REMAIN CLOSED FOR THE DURATION OF PHASE 2.

PHASE 3

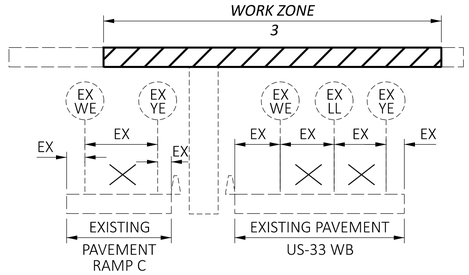

PHASE 3 SHALL COMPLETE THE BEAM REMOVAL AND REPLACEMENT, INCLUDING ALL NECESSARY DECK WORK. AS DETAILED ON SHEETS P.19- P.22. US-33 WB (INCLUDING RAMP G) WILL BE FULLY CLOSED AND DETOURED PER P.17. RAMP C WILL REMAIN CLOSED DURING PHASE 3 AND DETOURED PER P.18. THE PHASE 3 RAMP C DETOUR ROUTE IS NOT THE SAME AS THE PHASE 2 DETOUR ROUTE DUE TO THE PHASE 3 RAMP G CLOSURE. WATKINS RD SHALL REMAIN CLOSED FOR THE DURATION OF PHASE 3.

LANE VALUE CONTRACT TABLE

FRA-33

SECTION (SLM)	EXISTING NUMBER OF LANES PER DIRECTION	LANE CLOSURES ARE NOT PERMITTED				DISINCENTIVE AMOUNTS PER MINUTE PER LANE
		LANE REDUCTION	MON TO FRI	SAT	SUN	
PETZINGER RD (22.23) TO I-270 (24.75) WESTBOUND US-33	2	2 to 1	5AM-7PM	8AM-8PM	9AM-8PM	$205
I-270 (24.75) TO FAIRFIELD COUNTY LINE (31.23) WESTBOUND US-33 WESTBOUND US-34	2	2 to 1	5AM-7PM	8AM-8PM	9AM-8PM	$355

SHORT TERM SHOULDER CLOSURES ARE NOT PERMITTED 5AM-9AM AND 3PM-6PM MONDAY-FRIDAY.

RAMP CLOSURE RESTRICTIONS

FRA-33 AT IR-270

RAMP	MOVEMENT	NO CLOSURES ALLOWED		DETOUR ROUTES	
		MON TO FRI	SAT TO SUN	PRIMARY ROUTE	SECONDARY ROUTE
C	I-270 SB TO US-33 WB	5AM-9AM & 3PM-7PM	NO RESTRICTIONS	270 S TO US-33 E (RAMP E) TO 270 N (RAMP F) TO US-33 W (RAMP G)	270 S TO ALUM CREEK DR TO 270 N TO US-33 W (RAMP G)
G	I-270 NB TO US-33 WB	5AM-7PM	NO RESTRICTIONS	270 N TO 70 W TO 270 S TO US-33 W (RAMP C)	270 N TO US-33 E (RAMP A) TO OH-317 TO US-33 W
H	US-33 WB TO I-270 SB	5AM-7PM	8AM-7PM	US-33 W TO OH-104 TO US-33 E TO 270 S (RAMP D)	US-33 W TO 270 N (RAMP B) TO 70 W TO 270 S

IT HAS BEEN ESTIMATED THAT UP TO TEN TOTAL NIGHTTIME LANE CLOSURES FOR PHASE 1A AND 1B (5 EACH PHASE), 2 NIGHTTIME RAMP/SHOULDER CLOSURES FOR PHASE 2, AND 10 RAMP/ROAD CLOSURES FOR PHASE 3 WILL BE NEEDED TO COMPLETE THE STRUCTURE REPAIR WORK. QUANTITIES HAVE BEEN CALCULATED UNDER THIS ASSUMPTION. PORTABLE BARRIER AND IMPACT ATTENUTATOR QUANTITES HAVE BEEN PROVIDED FOR EACH EXPECTED LANE CLOSURE APPLICATION.

ITEM 614, MAINTAINING TRAFFIC

NO WORK SHALL BE PERFORMED AND ALL EXISTING LANES SHALL BE OPEN TO TRAFFIC DURING THE FOLLOWING DESIGNATED HOLIDAYS OR SPECIAL EVENTS:

NEW YEAR'S (OBSERVED) GENERAL/REGULAR ELECTION DAY (NOV)

MEMORIAL DAY THANKSGIVING

FOURTH OF JULY (OBSERVED) CHRISTMAS (OBSERVED)

LABOR DAY

THE PERIOD OF TIME THAT THE LANES ARE TO BE OPEN DEPENDS ON THE DAY OF THE WEEK ON WHICH THE HOLIDAY OR SPECIAL EVENT FALLS. THE FOLLOWING SCHEDULE SHALL BE USED TO DETERMINE THIS PERIOD:

DAY OF HOLIDAY OR SPECIAL EVENT	TIME ALL LANES MUST BE OPEN TO TRAFFIC
SUNDAY	12:00N FRIDAY THROUGH 6:00 AM MONDAY
MONDAY	12:00N FRIDAY THROUGH 6:00 AM TUESDAY
TUESDAY	12:00N MONDAY THROUGH 6:00 AM WEDNESDAY
TUESDAY (GEN.REG. ELECTION)	5:00 AM TUESDAY THROUGH 12:00 AM WEDNESDAY
WEDNESDAY	12:00N TUESDAY THROUGH 6:00 AM THURSDAY
THURSDAY	12:00N WEDNESDAY THROUGH 6:00 AM FRIDAY
THURSDAY (THANKSGIVING ONLY)	6:00 AM WEDNESDAY THROUGH 6:00 AM MONDAY
FRIDAY	12:00N THURSDAY THROUGH 6:00 AM MONDAY
SATURDAY	12:00N FRIDAY THROUGH 6:00 AM MONDAY

DURING THE SAME PERIODS, MAINTAIN PEDESTRIAN ACCESS IF PEDESTRIAN ACCESS WAS PRESENT PRIOR TO CONSTRUCTION.

SHOULD THE CONTRACTOR FAIL TO MEET ANY OF THESE REQUIREMENTS, THE CONTRACTOR SHALL BE ASSESSED A DISINCENTIVE PER THE LANE VALUE CONTRACT (PN 127).

LENGTH AND DURATION OF LANE CLOSURES AND RESTRICTIONS SHALL BE AT THE APPROVAL OF THE ENGINEER. IT IS THE INTENT TO MINIMIZE THE IMPACT TO THE TRAVELING PUBLIC. LANE CLOSURES OR RESTRICTIONS OVER SEGMENTS OF THE PROJECT IN WHICH NO WORK IS ANTICIPATED WITHIN A REASONABLE TIME FRAME, AS DETERMINED BY THE ENGINEER, SHALL NOT BE PERMITTED. THE LEVEL OF UTILIZATION OF MAINTENANCE OF TRAFFIC DEVICES SHALL BE COMMENSURATE WITH THE WORK IN PROGRESS.

NOTICE OF CLOSURE SIGNS (W20-H13) SHALL BE ERECTED BY THE CONTRACTOR PRIOR TO THE SCHEDULED ROAD OR RAMP CLOSURE IN ACCORDANCE WITH THE NOTICE OF CLOSURE TIME TABLE BELOW. AT THE APPROVAL OF THE ENGINEER, PORTABLE CHANGEABLE MESSAGE SIGNS MAY BE USED IN LIEU OF THE STANDARD FLATSHEET SIGN FOR CLOSURE DURATIONS OF LESS THAN 1 WEEK.

THE SIGNS SHALL BE ERECTED ON THE RIGHT-HAND SIDE OF THE ROAD/RAMP FACING TRAFFIC. THEY SHALL BE PLACED SO AS NOT TO INTERFERE WITH THE VISIBILITY OF ANY OTHER TRAFFIC CONTROL SIGNS. ON ROADWAYS, THEY SHOULD BE ERECTED AT OR NEAR THE POINT OF CLOSURE. THE SIGNS MAY BE ERECTED ANYWHERE ON RAMPS AS LONG AS THEY ARE VISIBLE TO THE MOTORISTS USING THE RAMP. ON ENTRANCE RAMPS, THE SIGN SHALL BE ERECTED WELL IN ADVANCE OF THE MERGE AREA TO AVOID DISTRACTING MOTORISTS.

NOTICE OF CLOSURE SIGN TIME TABLE

ITEM	DURATION OF CLOSURE	SIGN DISPLAYED TO PUBLIC
RAMP & ROAD CLOSURES	>= 2 WEEKS	14 CALENDAR DAYS PRIOR TO CLOSURE
	> 12 HOURS & < 2 WEEKS	7 CALENDAR DAYS PRIOR TO CLOSURE
	<=12 HOURS	2 BUSINESS DAYS PRIOR TO CLOSURE

THE SIGN SHALL DISPLAY THE DATE OF THE CLOSURE IN MMM-DD FORMAT AND THE NUMBER OF DAYS OF THE CLOSURE. THE LAST LINE OF THE W20-H13 SIGN LISTS A PHONE NUMBER WHICH A MOTORIST MAY CALL FOR ADDITIONAL INFORMATION. THIS IS TO BE A SPECIFIC OFFICE WITHIN THE DISTRICT RATHER THAN THE GENERAL SWITCHBOARD NUMBER.

ALL WORK AND TRAFFIC CONTROL DEVICES SHALL BE IN ACCORDANCE WITH C&MS 614 AND OTHER APPLICABLE PORTIONS OF THE SPECIFICATIONS, AS WELL AS THE OHIO MANUAL OF UNIFORM TRAFFIC CONTROL DEVICES. PAYMENT FOR ALL LABOR, EQUIPMENT AND MATERIALS SHALL BE INCLUDED IN THE LUMP SUM CONTRACT PRICE FOR ITEM 614, MAINTAINING TRAFFIC, UNLESS SEPARATELY ITEMIZED IN THE PLAN.

ITEM 614, WORK ZONE IMPACT ATTENUATOR FOR 24" WIDE HAZARDS (UNIDIRECTIONAL OR BIDIRECTIONAL)

THIS ITEM SHALL CONSIST OF FURNISHING AND INSTALLING A NON-GATING IMPACT ATTENUATOR. FURNISH AN IMPACT ATTENUATOR FROM THE OFFICE OF ROADWAY ENGINEERING'S APPROVED LIST FOR WORK ZONE IMPACT ATTENUATORS, FROM THE ROADWAY STANDARDS APPROVED PRODUCTS WEB PAGE.

INSTALLATION SHALL BE AT THE LOCATIONS SPECIFIED IN THE PLANS IN ACCORDANCE WITH THE MANUFACTURER'S SPECIFICATIONS.

THE CONTRACTOR SHALL REPAIR OR REPLACE A DAMAGED UNIT WITHIN 24 HOURS OF A DAMAGING IMPACT.

WHEN BIDIRECTIONAL DESIGNS ARE SPECIFIED, THE CONTRACTOR SHALL SUPPLY APPROPRIATE TRANSITIONS.

WHEN GATING IMPACT ATTENUATORS ARE DESIRED, THE CONTRACTOR SHALL SUBMIT DOCUMENTATION TO THE ENGINEER FOR ACCEPTANCE.

THE COST FOR THE ADDITIONAL BARRIER REQUIRED FOR A GATING IMPACT ATTENUATOR SHALL BE INCLUDED IN THE COST OF THE GATING IMPACT ATTENUATOR.

PAYMENT FOR THE ABOVE WORK SHALL BE MADE AT THE UNIT PRICE BID AND SHALL INCLUDE ALL LABOR, TOOLS, EQUIPMENT AND MATERIALS NECESSARY TO CONSTRUCT AND MAINTAIN A COMPLETE AND FUNCTIONAL IMPACT ATTENUATOR SYSTEM, INCLUDING ALL RELATED BACKUPS, TRANSITIONS, LEVELING PADS, HARDWARE AND GRADING, NOT SEPARATELY SPECIFIED, AS REQUIRED BY THE MANUFACTURER.

MAINTENANCE OF TRAFFIC NOTES

FRA-33-2456 BRIDGE HIT REPAIR

MODEL: Sheet PAPERSIZE: 34x22 (in.) DATE: 10/30/2026 TIME: 8:34:18 AM USER: cschrader
J:\2025\0232\ODOT\1177444\400-Engineering\MOT\Sheets\1177444_MN001.dgn

DESIGN AGENCY EMH&T
DESIGNER MMP
REVIEWER SMM 08/20/26
PROJECT ID 125600

ITEM 614, PORTABLE CHANGEABLE MESSAGE SIGNS, AS PER PLAN

THE CONTRACTOR SHALL FURNISH, INSTALL, MAINTAIN AND REMOVE, WHEN NO LONGER NEEDED, A CHANGEABLE MESSAGE SIGN. THE SIGN SHALL BE OF A TYPE SHOWN ON A LIST OF APPROVED PCMS UNITS AVAILABLE ON THE OFFICE OF MATERIALS MANAGEMENT WEB PAGE. THE LIST CONTAINS CLASS A AND B UNITS WITH MINIMUM LEGIBILITY DISTANCES OF 800 FEET AND 650 FEET, RESPECTIVELY.

EACH SIGN SHALL BE TRAILER-MOUNTED AND EQUIPPED WITH A FUNCTIONAL DIMMING MECHANISM, TO DIM THE SIGN DURING DARKNESS, AND A TAMPER AND VANDAL PROOF ENCLOSURE. EACH SIGN SHALL BE PROVIDED WITH APPROPRIATE TRAINING AND OPERATION INSTRUCTIONS TO ENABLE ON-SITE PERSONNEL TO OPERATE AND TROUBLESHOOT THE UNIT. THE SIGN SHALL ALSO BE CAPABLE OF BEING POWERED BY AN ELECTRICAL SERVICE DROP FROM A LOCAL UTILITY COMPANY. THE PCMS SHALL BE DELINEATED IN ACCORDANCE WITH C&MS 614.03.

THE PROBABLE PCMS LOCATIONS AND WORK LIMITS FOR THOSE LOCATIONS ARE SHOWN ON SHEETS P.6, P.14, P.17 AND P.18 OF THE PLAN. PLACEMENT, OPERATION, MAINTENANCE AND ALL ACTIVATION OF THE SIGNS BY THE CONTRACTOR SHALL BE AS DIRECTED BY THE ENGINEER. THE PCMS SHALL BE LOCATED IN A HIGHLY VISIBLE POSITION YET PROTECTED FROM TRAFFIC. THE CONTRACTOR SHALL, AT THE DIRECTION OF THE ENGINEER, RELOCATE THE PCMS TO IMPROVE VISIBILITY OR ACCOMMODATE CHANGED CONDITIONS. WHEN NOT IN USE, THE PCMS SHALL BE TURNED OFF. ADDITIONALLY, WHEN NOT IN USE FOR EXTENDED PERIODS OF TIME, THE PCMS SHALL BE TURNED AWAY FROM ALL TRAFFIC.

THE ENGINEER SHALL BE PROVIDED ACCESS TO EACH SIGN UNIT AND SHALL BE PROVIDED WITH APPROPRIATE TRAINING AND OPERATION INSTRUCTIONS TO ENABLE ODOT PERSONNEL TO OPERATE AND TROUBLESHOOT THE UNIT, AND TO REVISE SIGN MESSAGES, IF NECESSARY.

ALL MESSAGES TO BE DISPLAYED ON THE SIGN WILL BE PROVIDED BY THE ENGINEER. A LIST OF ALL REQUIRED PRE-PROGRAMMED MESSAGES WILL BE GIVEN TO THE CONTRACTOR AT THE PROJECT PRECONSTRUCTION CONFERENCE. THE SIGN SHALL HAVE THE CAPABILITY TO STORE UP TO 99 MESSAGES. MESSAGE MEMORY OR PRE-PROGRAMMED DISPLAYS SHALL NOT BE LOST AS A RESULT OF POWER FAILURES TO THE ON-BOARD COMPUTER. THE SIGN LEGEND SHALL BE CAPABLE OF BEING CHANGED IN THE FIELD. THREE-LINE PRESENTATION FORMATS WITH UP TO SIX MESSAGE PHASES SHALL BE SUPPORTED. PCMS FORMAT SHALL PERMIT THE COMPLETE MESSAGE FOR EACH PHASE TO BE READ AT LEAST TWICE.

THE PCMS SHALL CONTAIN AN ACCURATE CLOCK AND PROGRAMMING LOGIC WHICH WILL ALLOW THE SIGN TO BE ACTIVATED, DEACTIVATED OR MESSAGES CHANGED AUTOMATICALLY AT DIFFERENT TIMES OF THE DAY FOR DIFFERENT DAYS OF THE WEEK.

THE CONTRACTOR SHALL BE RESPONSIBLE FOR 24-HOUR-PER-DAY OPERATION AND MAINTENANCE OF THESE SIGNS ON THE PROJECT FOR THE DURATION OF THE PHASES WHEN THE PLAN REQUIRES THEIR USE. PAYMENT FOR THE ABOVE DESCRIBED ITEM SHALL BE AT THE CONTRACT UNIT PRICE. PAYMENT SHALL INCLUDE ALL LABOR, MATERIALS, EQUIPMENT, FUELS, LUBRICATING OILS, SOFTWARE, HARDWARE AND INCIDENTALS TO PERFORM THE ABOVE DESCRIBED WORK.

PAYMENT FOR THE ABOVE DESCRIBED ITEM SHALL BE AT THE CONTRACT UNIT PRICE. PAYMENT SHALL INCLUDE ALL LABOR, MATERIAL, EQUIPMENT, FUELS, LUBRICATING OILS, SOFTWARE, HARDWARE AND INCIDENTALS TO PERFORM THE ABOVE DESCRIBED WORK.

ITEM 614, PORTABLE CHANGEABLE MESSAGE SIGN, AS PER PLAN
4 SIGN MONTHS
ASSUMING 4 PCMS SIGN FOR 1 MONTH

DELINEATION OF PORTABLE AND PERMANENT BARRIER

BARRIER REFLECTORS AND OBJECT MARKERS SHALL BE INSTALLED ON ALL PORTABLE BARRIER (PB) USED FOR TRAFFIC CONTROL; AND, ON PERMANENT CONCRETE BARRIER (INCLUDING BRIDGE PARAPETS) LOCATED WITHIN 5 FEET OF THE EDGE OF THE ADJACENT TRAVEL LANE.

BARRIER REFLECTORS SHALL CONFORM TO C&MS 626, EXCEPT THAT THE SPACING SHALL BE AS PER TRAFFIC SCD MT-101.70. OBJECT MARKERS AND THEIR INSTALLATION SHALL CONFORM TO C&MS 614.03 AND SCD MT-101.70. WHEN THE PB OR PERMANENT BARRIER (INCLUDING BRIDGE PARAPETS) CONTAINS GLARE SCREEN, ONE SET OF THREE VERTICAL STRIPES OF SHEETING SHALL BE CONSIDERED EQUIVALENT TO AN OBJECT MARKER, ONE-WAY.

THE FOLLOWING ESTIMATED QUANTITIES HAVE BEEN INCLUDED IN THE PLANS AND CARRIED TO THE GENERAL SUMMARY:

ITEM 614,	*BARRIER REFLECTOR, TYPE 1, ONE-WAY*	*80 EACH*
ITEM 614,	*OBJECT MARKER, ONE-WAY*	*80 EACH*

PAYMENT SHALL BE FULL COMPENSATION FOR ALL MATERIAL, LABOR, INCIDENTALS AND EQUIPMENT NECESSARY FOR FURNISHING, INSTALLING, MAINTAINING AND REMOVING EACH OF THE ABOVE ITEMS.

ITEM 614, LAW ENFORCEMENT OFFICER (WITH PATROL CAR) FOR ASSISTANCE DURING CONSTRUCTION OPERATIONS

USE OF LAW ENFORCEMENT OFFICERS (LEOS) BY CONTRACTORS OTHER THAN THE USES SPECIFIED BELOW SHALL NOT BE PERMITTED AT PROJECT COST NOR PROJECT COMPENSATION. LEOS SHOULD NOT BE USED WHERE THE OMUTCD INTENDS THAT FLAGGERS BE USED.

IN ADDITION TO THE REQUIREMENTS OF C&MS 614 AND THE OMUTCD, A UNIFORMED LEO WITH AN OFFICIAL PATROL CAR (CAR WITH TOP-MOUNTED EMERGENCY FLASHING LIGHTS AND COMPLETE MARKINGS OF THE APPROPRIATE LAW ENFORCEMENT AGENCY) SHALL BE PROVIDED FOR THE FOLLOWING TRAFFIC CONTROL TASKS:

- *DURING THE ENTIRE ADVANCE PREPARATION AND CLOSURE SEQUENCE WHERE COMPLETE BLOCKAGE OF TRAFFIC IS REQUIRED.*
- *DURING A TRAFFIC SIGNAL INSTALLATION WHEN IMPACTING THE NORMAL FUNCTION OF THE SIGNAL OR THE FLOW OF TRAFFIC, OR WHEN TRAFFIC NEEDS TO BE DIRECTED THROUGH AN ENERGIZED TRAFFIC SIGNAL CONTRARY TO THE SIGNAL DISPLAY (E.G., DIRECTING MOTORISTS THROUGH A RED LIGHT).*
- *DURING PERIODS WHERE TRAFFIC NEEDS TO BE DIRECTED CONTRARY TO A TRAFFIC CONTROL DEVICE (FLAGGER, SIGN [E.G. STOP SIGN, STREET OR HIGHWAY SIGNS, ETC], SIGNAL OR OTHER DEVICE USED TO REGULATE, WARN OR GUIDE TRAFFIC). TRAFFIC IN THIS INSTANCE INCLUDES VEHICULAR, PEDESTRIAN AND/OR SHARED USE PATH USERS.*

IN ADDITION TO THE REQUIREMENT OF C&MS 614 AND THE OMUTCD, A UNIFORMED LEO WITH AN OFFICIAL PATROL CAR (CAR WITH TOP-MOUNTED EMERGENCY FLASHING LIGHTS AND COMPLETE MARKINGS OF THE APPROPRIATE LAW ENFORCEMENT AGENCY) SHOULD BE PROVIDED FOR THE FOLLOWING TRAFFIC CONTROL TASKS AS APPROVED BY THE ENGINEER:

- *FOR LANE CLOSURES THAT MEET ALL OF THE CRITERIA LISTED BELOW: DURING INITIAL SET-UP PERIODS, TEAR DOWN PERIODS, SUBSTANTIAL SHIFTS OF A CLOSURE POINT OR WHEN NEW LANE CLOSURE ARRANGEMENTS ARE INITIATED FOR LONG-TERM LANE CLOSURES/SHIFTS (FOR THE FIRST AND LAST DAY OF MAJOR CHANGES IN TRAFFIC CONTROL SETUP).*

CRITERIA

- *ON A MULTI-LANE DIVIDED INTERSTATE, OTHER FREEWAY OR EXPRESSWAY; AND,*
- *AN AUTHORIZED SPEED LIMIT OF 45 MPH OR GREATER THAT IS IN EFFECT AT THE TIME OF THE OPERATION; AND,*
- *AADT OF 50,000 (OR AADT OF 30,000 WITH 25% OR HIGHER PERCENT TRUCKS)*

IN GENERAL, LEOS SHOULD BE POSITIONED IN ADVANCE OF AND ON THE SAME SIDE AS THE LANE RESTRICTION (OR AT THE POINT OF ROAD CLOSURE), AND TO MANUALLY CONTROL TRAFFIC MOVEMENTS THROUGH SIGNALIZED INTERSECTIONS AND/OR IN CONTRARY TO OTHER TRAFFIC CONTROL DEVICES IN WORK ZONES.

LEOS SHOULD NOT FORGO THEIR TRAFFIC CONTROL RESPONSIBILITIES TO APPREHEND MOTORISTS FOR ROUTINE TRAFFIC VIOLATIONS. HOWEVER, IF A MOTORIST'S ACTIONS ARE CONSIDERED TO BE RECKLESS, THEN PURSUIT OF THE MOTORIST IS APPROPRIATE.

THE LEOS WORK AT THE DIRECTION OF THE CONTRACTOR. THE CONTRACTOR IS RESPONSIBLE FOR SECURING THE SERVICES OF THE LEOS WITH THE APPROPRIATE AGENCIES AND COMMUNICATING THE INTENTIONS OF THE PLANS WITH RESPECT TO DUTIES OF THE LEOS. THE ENGINEER SHALL HAVE FINAL CONTROL OVER THE LEOS' DUTIES AND PLACEMENT, AND WILL RESOLVE ANY ISSUES THAT MAY ARISE BETWEEN THE TWO PARTIES.

ENSURE PROVIDED LEOS HAVE BEEN TRAINED APPROPRIATE TO THE JOB DECISIONS THEY ARE REQUIRED TO MAKE WHILE ON THE PROJECT, IN ACCORDANCE WITH C&MS 614.03.

THE LEO SHALL REPORT IN TO THE CONTRACTOR PRIOR TO THE START OF THE SHIFT, IN ORDER TO RECEIVE INSTRUCTIONS REGARDING SPECIFIC WORK ASSIGNMENTS DURING HIS/HER SHIFT. THE SHIFT DURATION SHALL NOT BE LESS THAN THE LEO'S MINIMUM SHOW-UP TIME REQUIRED BY THEIR LAW ENFORCEMENT AGENCY. THE LEO IS EXPECTED TO STAY AT THE PROJECT SITE FOR THE ENTIRE DURATION OF HIS/HER SHIFT. THE LEO SHALL REPORT TO THE CONTRACTOR AT THE END OF HIS/HER SHIFT. SHOULD IT BE NECESSARY TO LEAVE THE PROJECT SITE, THE LEO SHALL NOTIFY THE ENGINEER. THE CONTRACTOR SHALL PROVIDE THE LEO WITH A TWO-WAY COMMUNICATION DEVICE THAT SHALL BE RETURNED TO THE CONTRACTOR AT THE END OF HIS/HER SHIFT.

LEOS (WITH PATROL CAR) REQUIRED BY THE TRAFFIC MAINTENANCE TASKS ABOVE SHALL BE PAID FOR ON A UNIT PRICE (HOURLY) BASIS UNDER ITEM 614, LAW ENFORCEMENT OFFICER (WITH PATROL CAR) FOR ASSISTANCE. THE FOLLOWING ESTIMATED QUANTITIES HAVE BEEN CARRIED TO THE GENERAL SUMMARY.

ITEM 614,	*LAW ENFORCEMENT OFFICER WITH PATROL CAR FOR ASSISTANCE*	*112 HOURS*

THE HOURS PAID SHALL INCLUDE ANY MINIMUM SHOW-UP TIME REQUIRED BY THE LAW ENFORCEMENT AGENCY INVOLVED.

ANY ADDITIONAL COSTS (ADMINISTRATIVE OR OTHERWISE) INCURRED BY THE CONTRACTOR TO OBTAIN THE SERVICES OF AN LEO ARE INCLUDED WITH THE BID UNIT PRICE FOR ITEM 614, LAW ENFORCEMENT OFFICER WITH PATROL CAR FOR ASSISTANCE.

TEMPORARY VANDAL PROTECTION FENCING

IF CONSTRUCTION ACTIVITIES REQUIRE THE REMOVAL OF EXISTING VANDAL PROTECTION FENCING, TEMPORARY VANDAL PROTECTION FENCING SHALL BE INSTALLED PER ODOT SCD TVPF-1-18. ALL COSTS ASSOCIATED WITH THIS ITEM SHALL BE INCIDENTAL TO THE LUMP SUM CONTRACT PRICE FOR ITEM 614, MAINTAINING TRAFFIC.

NOTIFICATION OF TRAFFIC RESTRICTIONS

THROUGHOUT THE DURATION OF THE PROJECT, THE CONTRACTOR SHALL NOTIFY THE PROJECT ENGINEER IN WRITING OF ALL TRAFFIC RESTRICTIONS AND UPCOMING MAINTENANCE OF TRAFFIC CHANGES. THE CONTRACTOR SHALL ENSURE THE WRITTEN NOTIFICATION IS SUBMITTED IN A TIMELY MANNER TO ALLOW THE PROJECT ENGINEER TO MEET THE REQUIRED TIME FRAMES SET FORTH IN THE TABLE BELOW TO INFORM THE SPECIAL HAULING PERMITS SECTION (HAULING.PERMITS@DOT.OHIO.GOV) AND THE DISTRICT PUBLIC INFORMATION OFFICE (PIO). THIS NOTIFICATION SHALL BE RECEIVED BY THE PROJECT ENGINEER PRIOR TO THE PHYSICAL SETUP OF ANY APPLICABLE SIGNS OR MESSAGE BOARDS.

INFORMATION SHOULD INCLUDE, BUT IS NOT LIMITED TO, ALL CONSTRUCTION ACTIVITIES THAT IMPACT OR INTERFERE WITH TRAFFIC AND SHALL LIST THE SPECIFIC LOCATION, TYPE OF WORK, ROAD STATUS, DATE AND TIME OF RESTRICTION, DURATION OF RESTRICTION, NUMBER OF LANES MAINTAINED, NUMBER OF LANES CLOSED, MINIMUM VERTICAL CLEARANCE, MINIMUM WIDTH OF DRIVABLE PAVEMENT, DETOUR ROUTES, IF APPLICABLE, AND ANY OTHER INFORMATION REQUESTED BY THE PROJECT ENGINEER.

NOTIFICATION OF TRAFFIC RESTRICTIONS TIME TABLE

ITEM	*DURATION OF CLOSURE*	*NOTICE DUE TO PERMITS & PIO*
RAMP & ROAD CLOSURES	*> 2 WEEKS*	*21 CALENDAR DAYS PRIOR TO CLOSURE*
	> 12 HOURS & < 2 WEEKS	*14 CALENDAR DAYS PRIOR TO CLOSURE*
	< 12 HOURS	*4 BUSINESS DAYS PRIOR TO CLOSURE*
LANE CLOSURES & RESTRICTIONS	*> 2 WEEKS*	*14 CALENDAR DAYS PRIOR TO CLOSURE*
	< 2 WEEKS	*5 BUSINESS DAYS PRIOR TO CLOSURE*
START OF CONSTRUCTION & TRAFFIC PATTERN CHANGES	*N/A*	*14 CALENDAR DAYS PRIOR TO IMPLEMENTATION*

ANY UNFORESEEN CONDITIONS NOT SPECIFIED IN THE PLANS REQUIRING TRAFFIC RESTRICTIONS SHALL ALSO BE REPORTED TO THE PROJECT ENGINEER USING THE NOTIFICATION TIME TABLE.

ITEM 615, PAVEMENT FOR MAINTAINING TRAFFIC, CLASS A, AS PER PLAN

PAVEMENT FOR MAINTAINING TRAFFIC, CLASS A, AS PER PLAN SHALL BE UTILIZED TO TEMPORARILY REMOVE AND FILL EXISTING SHOULDER RUMBLE STRIPS, IN THE AREAS IDENTIFIED WITHIN. THIS ITEM SHALL INCLUDE MILLING A 2' WIDE BY 1.5" DEEP STRIP OF THE EXISTING OUTSIDE SHOULDER TO REMOVE THE RUMBLE STRIP. THE MILLED AREA SHALL THEN BE RESURFACED WITH 1.5" OF ASPHALT CONCRETE SURFACE COURSE (ITEM 448, TYPE 1). THIS WORK SHALL BE COMPLETE PRIOR TO SHIFTING TRAFFIC ONTO THE SHOULDER. IF EXISTING LANES ARE RESTORED PRIOR TO REINSTALLATION OF RUMBLE STRIPS, DRUMS SHALL BE UTILIZED AS A TEMPORARY SUBSTITUTE, PLACED 1.5' FROM THE EDGELINE.

ITEM 618, RUMBLE STRIPS, SHOULDER (ASHPALT CONCRETE)

THIS ITEM SHALL BE UTILIZED TO REINSTALL RUMBLE STRIPS REMOVED FOR MAINTENANCE OF TRAFFIC. INSTALLATION SHALL CONFORM TO THE REQUIREMENTS OF THE CMS. ALL COSTS ASSOCIATED WITH REINSTALLING RUMBLE STRIPS SHALL BE INCIDENTAL TO THIS ITEM.

DESIGN AGENCY
EMH&T
DESIGNER MMP
REVIEWER SMM 08/20/26
PROJECT ID 125600
SHEET P.5 TOTAL 42

MODEL: Sheet 2 PAPERSIZE: 34x22 (in.) DATE: 10/30/2026 TIME: 8:34:20 AM USER: cschrader
J:\2025023\2\ODOT\117444\400-Engineering\MOT\Sheets\117444_MN001.dgn

SIGNING LEGEND

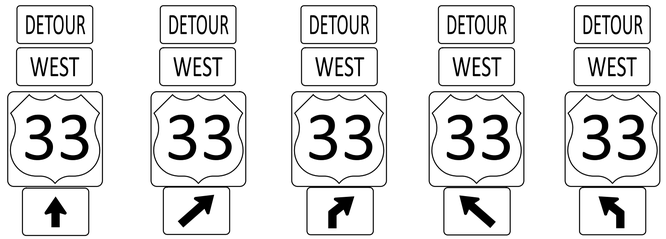

M4-8-30
M3-4-30
M1-4-36-2
M6-3-30
Ⓐ

M4-8-30
M3-4-30
M1-4-36-2
M6-2-30
Ⓑ

M4-8-30
M3-4-30
M1-4-36-2
M5-2-30
Ⓒ

M4-8-30
M3-4-30
M1-4-36-2
M6-2-30
Ⓓ

M4-8-30
M3-4-30
M1-4-36-2
M5-2-30
Ⓔ

RAMP WILL BE CLOSED
FOR DAYS
OHIO DEPT OF TRANSPORTATION

W20-H14-60
PLACE 2 BUSINESS DAYS PRIOR TO CLOSURE
Ⓕ

EXIT TO
US-33 WEST
CLOSED

FOLLOW
DETOUR

PORTABLE CHANGEABLE MESSAGE SIGN
Ⓖ

END
DETOUR

M4-8a-24
Ⓗ

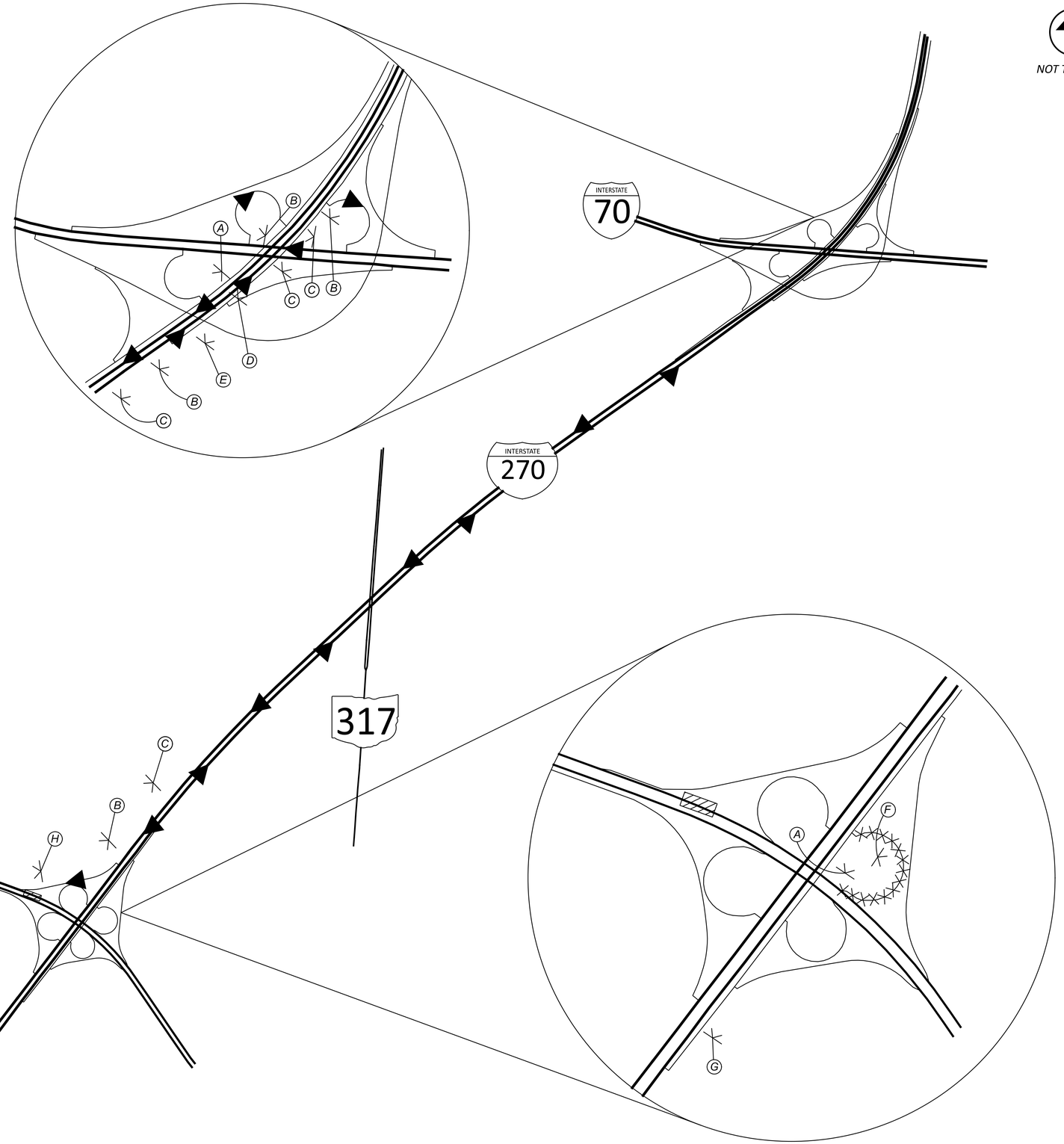

NOTES:
1. PID 98232 (FRA-70-22.85) AND PID 125600 WILL BE UNDER CONSTRUCTION AT THE SAME TIME. THE CONTRACTOR FOR PID 125600 SHALL COORDINATE WITH THE CONTRACTOR OF PID 89232 TO ENSURE THE RAMP G DETOUR IS NOT IN PACE DURING CONFLICTING RAMP CLOSURES AT THE I-270/I-70 INTERCHANGE.

LEGEND

WORK AREA

XXXXX *RAMP CLOSURE*

DETOUR ROUTE

TEMPORARY SIGN SUPPORT

NOT TO SCALE

MAINTENANCE OF TRAFFIC DETOUR
PHASE 1A AND 1B - RAMP G (I-270 NB TO US-33 WB)

FRA-33-2456 BRIDGE HIT REPAIR

MODEL: Sheet PAPERSIZE: 34x22 (in.) DATE: 10/30/2026 TIME: 8:34:23 AM USER: cschrader
J:\20250232\ODOT\117444\400-Engineering\MOT\Sheets\117444_MD001.dgn

DESIGN AGENCY
EMH&T

DESIGNER
MMP

REVIEWER
SMM 08/20/26

PROJECT ID
125600

SHEET P.6 | TOTAL 42

FRA-33-2456 BRIDGE HIT REPAIR

MODEL: Plan 1 [Sheet] PAPERSIZE: 34x22 (in.) DATE: 10/30/2026 TIME: 8:34:25 AM USER: cschrader
J:\20250232\ODOT\117444\400-Engineering\MOT\Sheets\117444_MP003.dgn

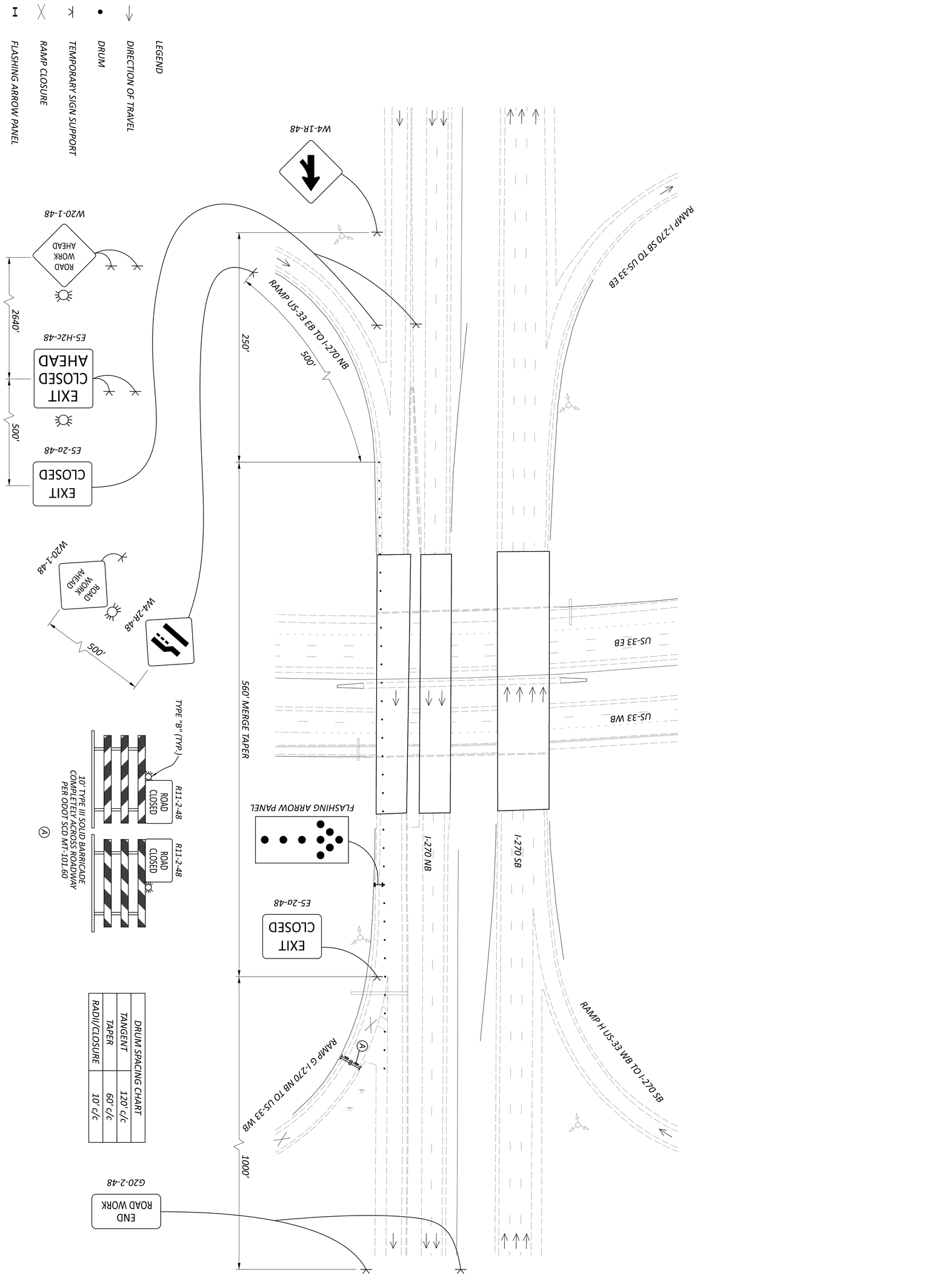

SHEET	TOTAL
P.7	42

PROJECT ID: 125600

REVIEWER: SMM 08/20/26

DESIGNER: MMP

DESIGN AGENCY: EMH&T

MAINTENANCE OF TRAFFIC PLAN
PHASE 1A, 1B AND 3 RAMP G CLOSURE DETAIL

HORIZONTAL SCALE IN FEET
0 50
25 100

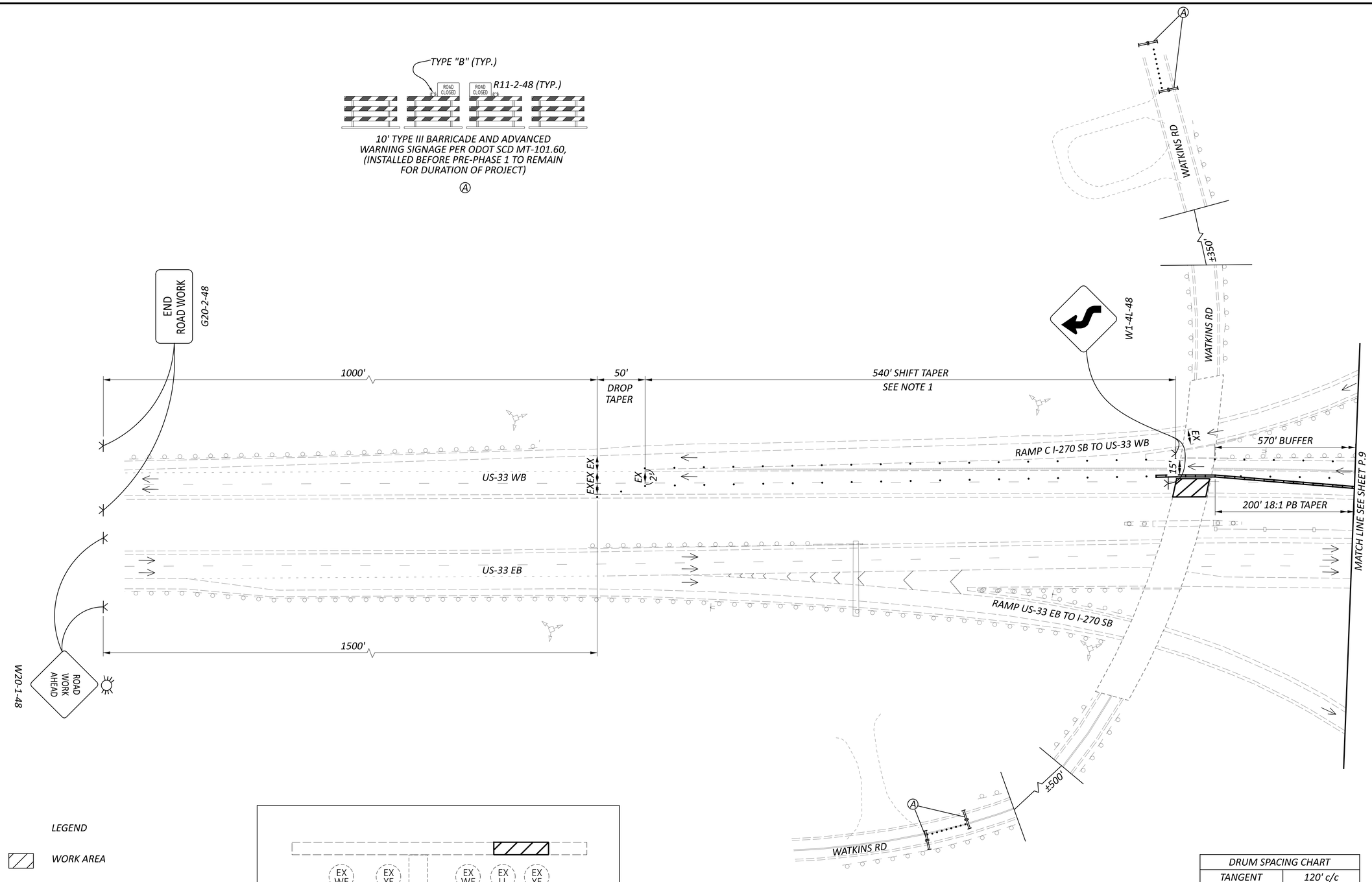

DRUM SPACING CHART	
TANGENT	120' c/c
TAPER	60' c/c
RADII/CLOSURE	10' c/c

NOTES:

1. PRIOR TO PHASE 1A, EXISTING RUMBLE STRIPS WITHIN THE 540' TAPER ON THIS SHEET SHALL BE REMOVED AND RESURFACED PER ITEM 615, PAVEMENT FOR MAINTAINING TRAFFIC, CLASS A, AS PER PLAN.

LEGEND

- WORK AREA
- DIRECTION OF TRAVEL
- DRUM
- PORTABLE BARRIER
- TEMPORARY SIGN SUPPORT
- TYPE III BARRICADE

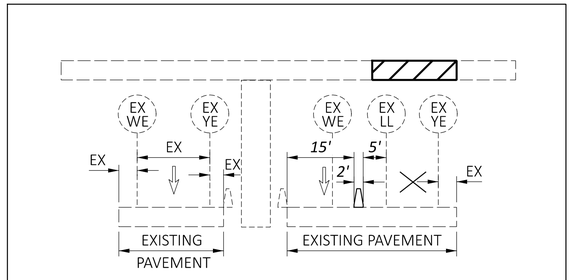

TYPICAL SECTION
US-33 WB UNDER WATKINS RD

HORIZONTAL SCALE IN FEET
0 25 50 100

MAINTENANCE OF TRAFFIC PLAN
PHASE 1A US-33 WB

DESIGN AGENCY
EMH&T

DESIGNER MMP
REVIEWER SMM 08/20/26
PROJECT ID 125600
SHEET P.8 TOTAL 42

FRA-33-2456 BRIDGE HIT REPAIR

MODEL: Plan 1 [Sheet] PAPERSIZE: 34x22 (in.) DATE: 10/30/2026 TIME: 8:34:28 AM USER: cschrader
J:\2025\0232\ODOT\117444\400-Engineering\MOT\Sheets\117444_MP001.dgn

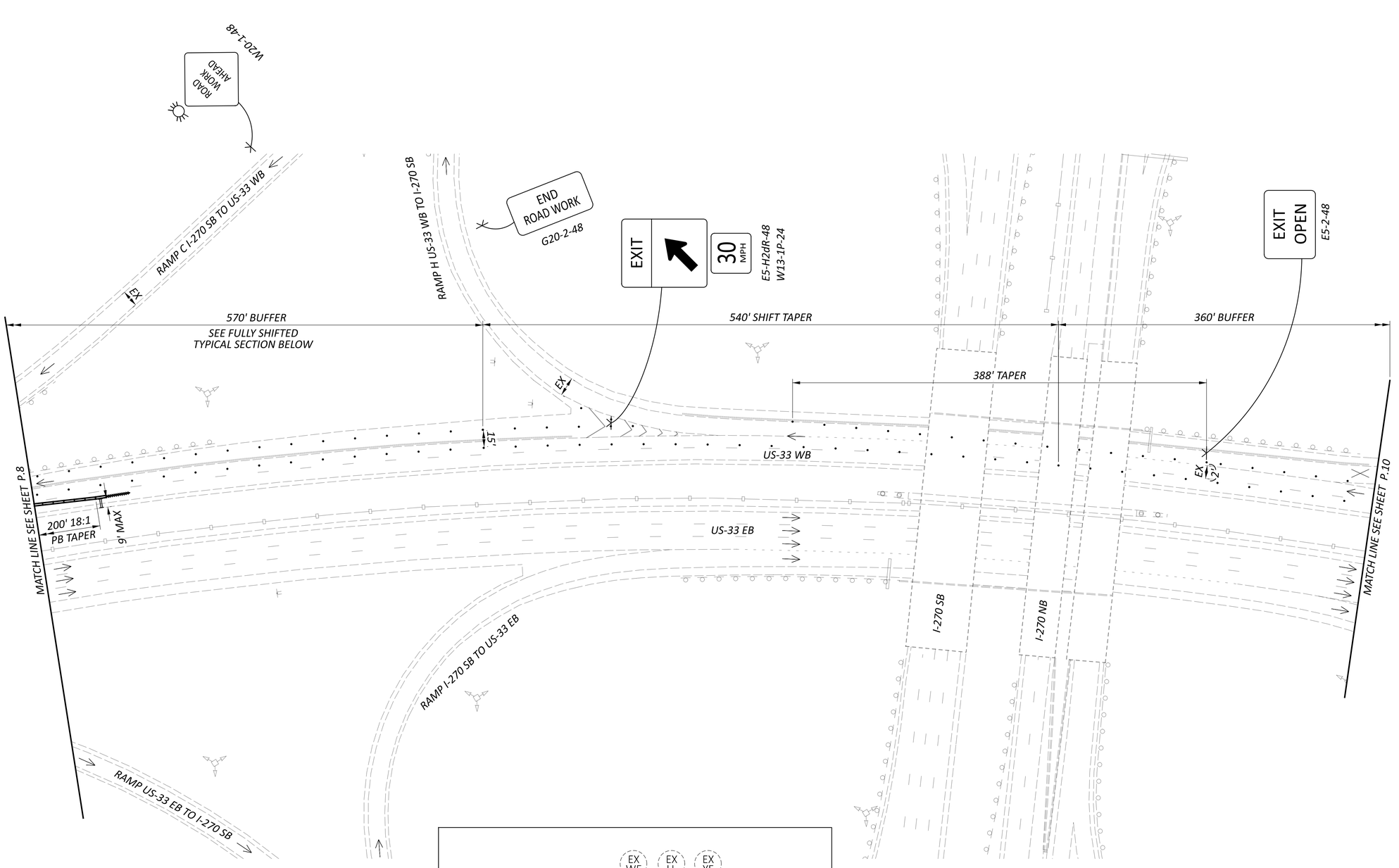

LEGEND

- DIRECTION OF TRAVEL
- DRUM
- PORTABLE BARRIER
- TEMPORARY SIGN SUPPORT
- IMPACT ATTENUATOR
- TYPE III BARRICADE
- RAMP CLOSURE

DRUM SPACING CHART	
TANGENT	120' c/c
TAPER	60' c/c
RADII/CLOSURE	10' c/c

NOTES:

1. EXISTING RUMBLE STRIPS MAY REMAIN IN PLACE WHEN STRADDLED BY SHIFTED TRAFFIC. RUMBLE STRIPS SHOWN ON THIS SHEET ARE NOT EXPECTED TO BE IN CONFLICT, HOWEVER IF RUMBLE STRIPS FALL WITHIN THE SHIFTED TRAFFIC WHEEL PATH, THEY SHALL BE REMOVED PER ITEM 615, PAVEMENT FOR MAINTAINING TRAFFIC, CLASS A, AS PER PLAN.

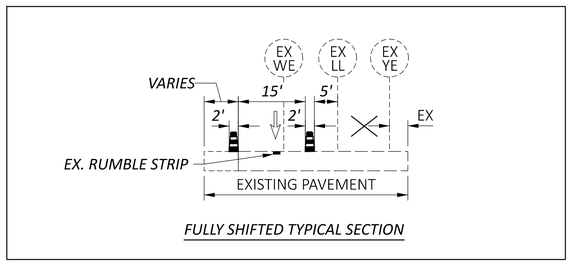

FULLY SHIFTED TYPICAL SECTION

HORIZONTAL SCALE IN FEET
0 25 50 100

MAINTENANCE OF TRAFFIC PLAN PHASE 1A US-33 WB

FRA-33-2456 BRIDGE HIT REPAIR

MODEL: Plan 2 [Sheet] PAPERSIZE: 34x22 (in.) DATE: 10/30/2026 TIME: 8:34:29 AM USER: cschrader
J:\2025023Z\ODOT\117444\400-Engineering\MOT\Sheets\117444_MP001.dgn

DESIGN AGENCY: EMH&T
DESIGNER: MMP
REVIEWER: SMM 08/20/26
PROJECT ID: 125600
SHEET: P.9 TOTAL: 42

FRA-33-2456 BRIDGE HIT REPAIR

MODEL: Plan 3 [Sheet] PAPERSIZE: 34x22 (in.) DATE: 10/30/2026 TIME: 8:34:30 AM USER: cschrader
J:\20250232\ODOT\117444\400-Engineering\MOT\Sheets\117444_MP001.dgn

LEGEND

RAMP CLOSURE

TEMPORARY SIGN SUPPORT

DRUM

DIRECTION OF TRAVEL

NOTES:
1. SEE P.7 FOR RAMP G CLOSURE DETAILS. PHASE 1A RAMP G DETOUR SIGNAGE IS SHOWN ON P.6 .

DRUM SPACING CHART	
TANGENT	120' c/c
TAPER	60' c/c
RADII/CLOSURE	10' c/c

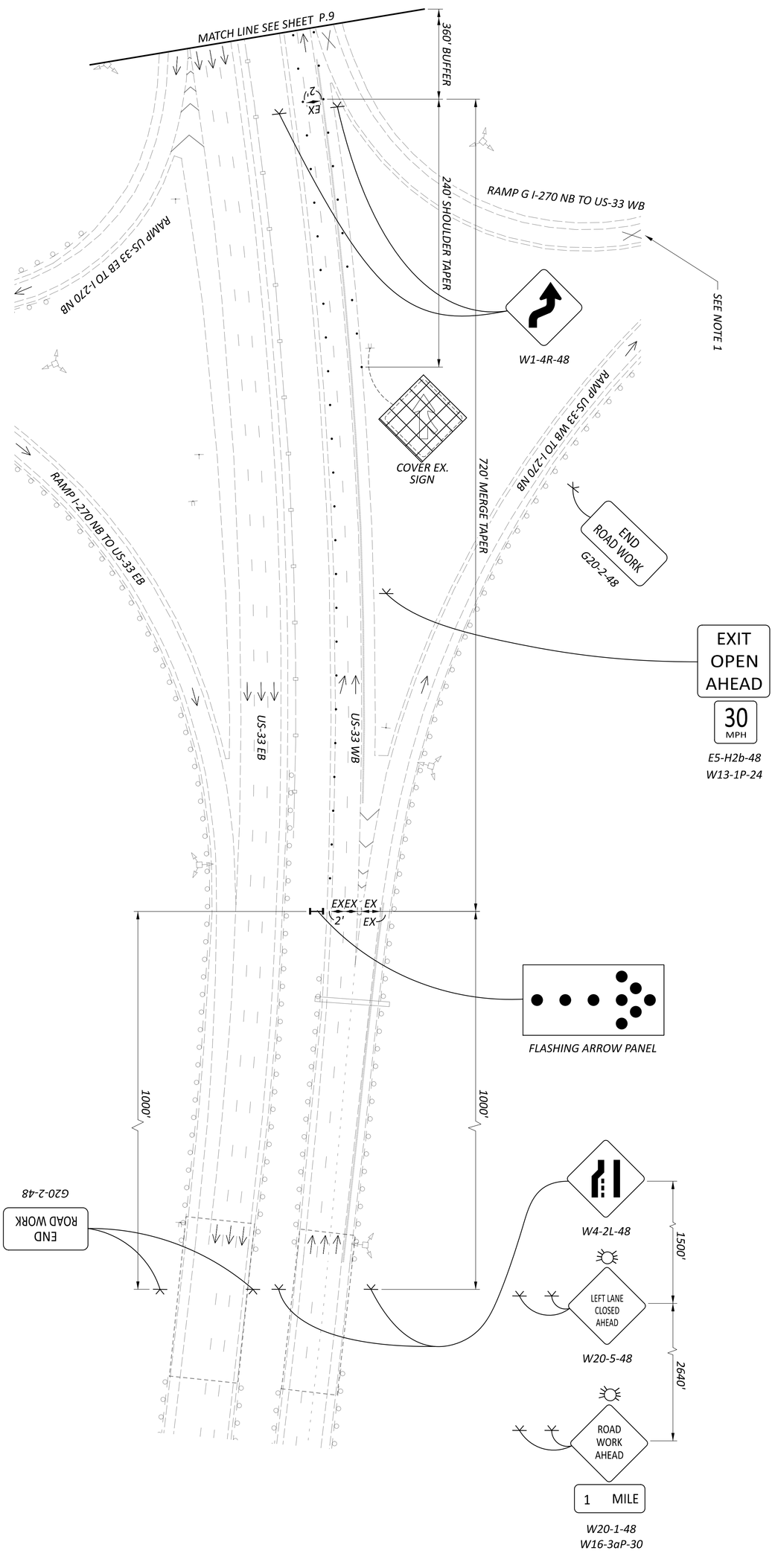

MAINTENANCE OF TRAFFIC PLAN
PHASE 1A US-33 WB

SHEET	TOTAL
P.10	42

PROJECT ID: 125600

REVIEWER: SMM 08/20/26

DESIGNER: MMP

DESIGN AGENCY: EMH&T

HORIZONTAL SCALE IN FEET
0 50
25 100

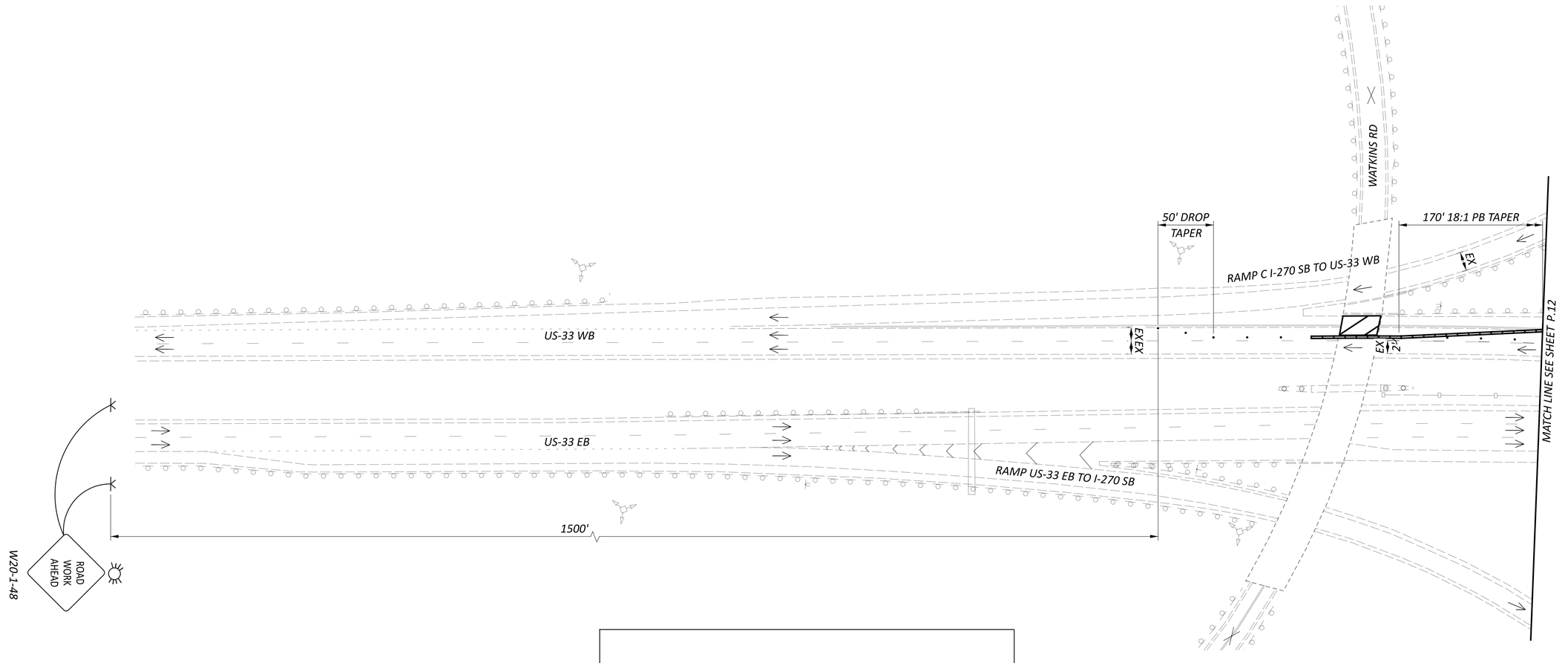

LEGEND

- WORK AREA
- DIRECTION OF TRAVEL
- DRUM
- PORTABLE BARRIER
- TEMPORARY SIGN SUPPORT
- ROAD CLOSURE

DRUM SPACING CHART	
TANGENT	120' c/c
TAPER	60' c/c
RADII/CLOSURE	10' c/c

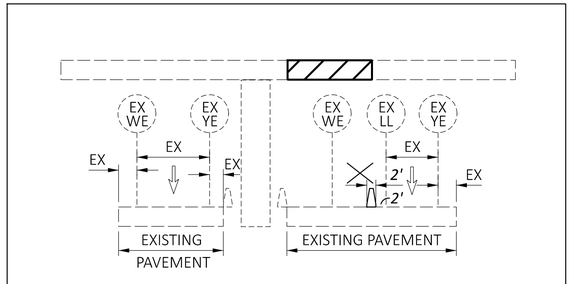

TYPICAL SECTION
US-33 WB UNDER WATKINS RD

HORIZONTAL SCALE IN FEET
0 25 50 100

MAINTENANCE OF TRAFFIC PLAN
PHASE 1B US-33 WB

FRA-33-2456 BRIDGE HIT REPAIR

MODEL: Plan 1 [Sheet] PAPERSIZE: 34x22 (in.) DATE: 10/30/2026 TIME: 8:34:33 AM USER: cschrader
J:\2025\0232\ODOT\117444\400-Engineering\MOT\Sheets\117444_MP002.dgn

DESIGN AGENCY
EMH&T

DESIGNER
MMP

REVIEWER
SMM 08/20/26

PROJECT ID
125600

SHEET P.11 TOTAL 42

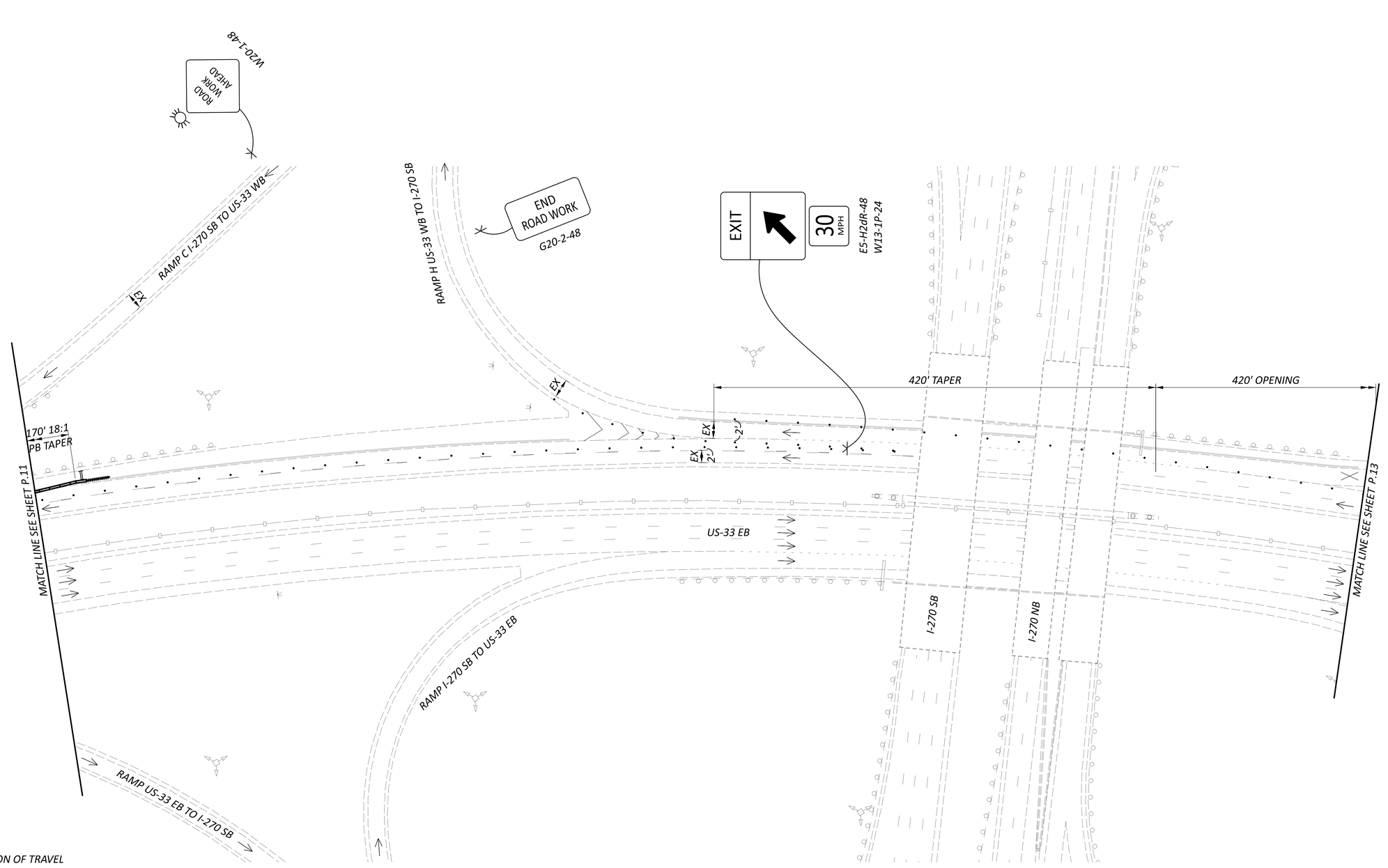

LEGEND

- DIRECTION OF TRAVEL
- DRUM
- PORTABLE BARRIER
- TEMPORARY SIGN SUPPORT
- IMPACT ATTENUATOR
- TYPE III BARRICADE
- RAMP CLOSURE

DRUM SPACING CHART	
TANGENT	120' c/c
TAPER	60' c/c
RADII/CLOSURE	10' c/c

HORIZONTAL SCALE IN FEET
0 25 50 100

MAINTENANCE OF TRAFFIC PLAN PHASE 1B US-33 WB

FRA-33-2456 BRIDGE HIT REPAIR

MODEL: Plan 2 [Sheet] PAPERSIZE: 34x22 (in.) DATE: 10/30/2026 TIME: 8:34:33 AM USER: cschrader
J:\2025032\ODOT\117444\400-Engineering\MOT\Sheets\117444_MP002.dgn

DESIGN AGENCY
EMH&T

DESIGNER
MMP

REVIEWER
SMM 08/20/26

PROJECT ID
125600

SHEET P.12 TOTAL 42

LEGEND

RAMP CLOSURE

TEMPORARY SIGN SUPPORT

DRUM

DIRECTION OF TRAVEL

NOTES:
1. SEE P.7 FOR RAMP G CLOSURE DETAILS. PHASE 1B RAMP G DETOUR SIGNAGE IS SHOWN ON P.6.

DRUM SPACING CHART	
TANGENT	120' c/c
TAPER	60' c/c
RADII/CLOSURE	10' c/c

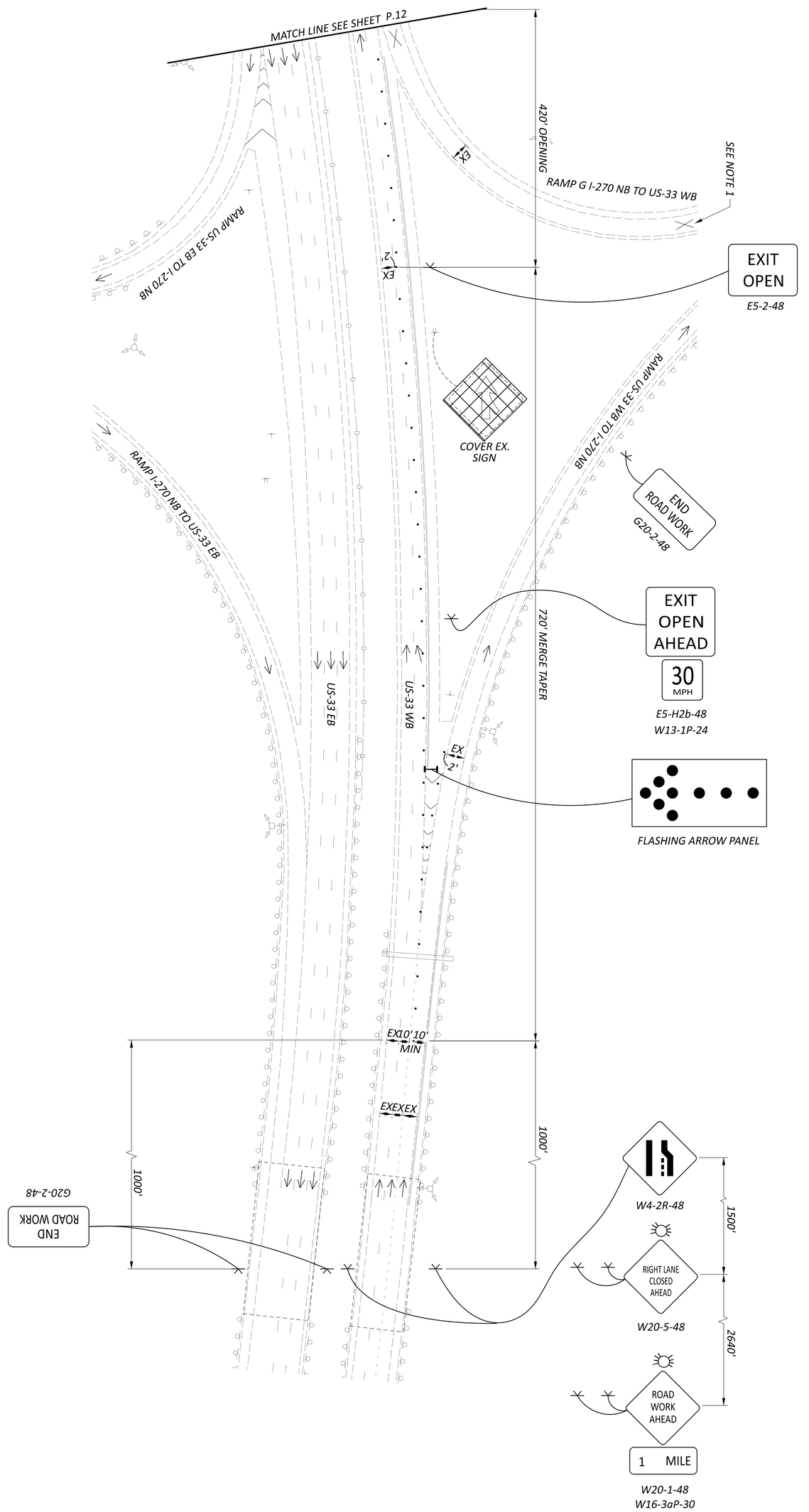

MAINTENANCE OF TRAFFIC PLAN
PHASE 1B US-33 WB

HORIZONTAL SCALE IN FEET
0 50
25 100

SIGNING LEGEND

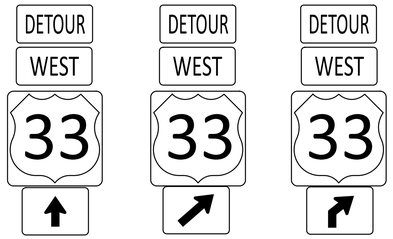

M4-8-30
M3-4-30
M1-4-36-2
M6-3-30
Ⓐ

M4-8-30
M3-4-30
M1-4-36-2
M6-2-30
Ⓑ

M4-8-30
M3-4-30
M1-4-36-2
M5-2-30
Ⓒ

RAMP WILL BE CLOSED
FOR DAYS
OHIO DEPT OF TRANSPORTATION

W20-H14-60
PLACE 2 BUSINESS DAYS PRIOR TO CLOSURE
Ⓓ

EXIT TO
US-33 WEST
CLOSED

FOLLOW
DETOUR

PORTABLE CHANGEABLE MESSAGE SIGN
Ⓔ

END
DETOUR

M4-8a-24
Ⓕ

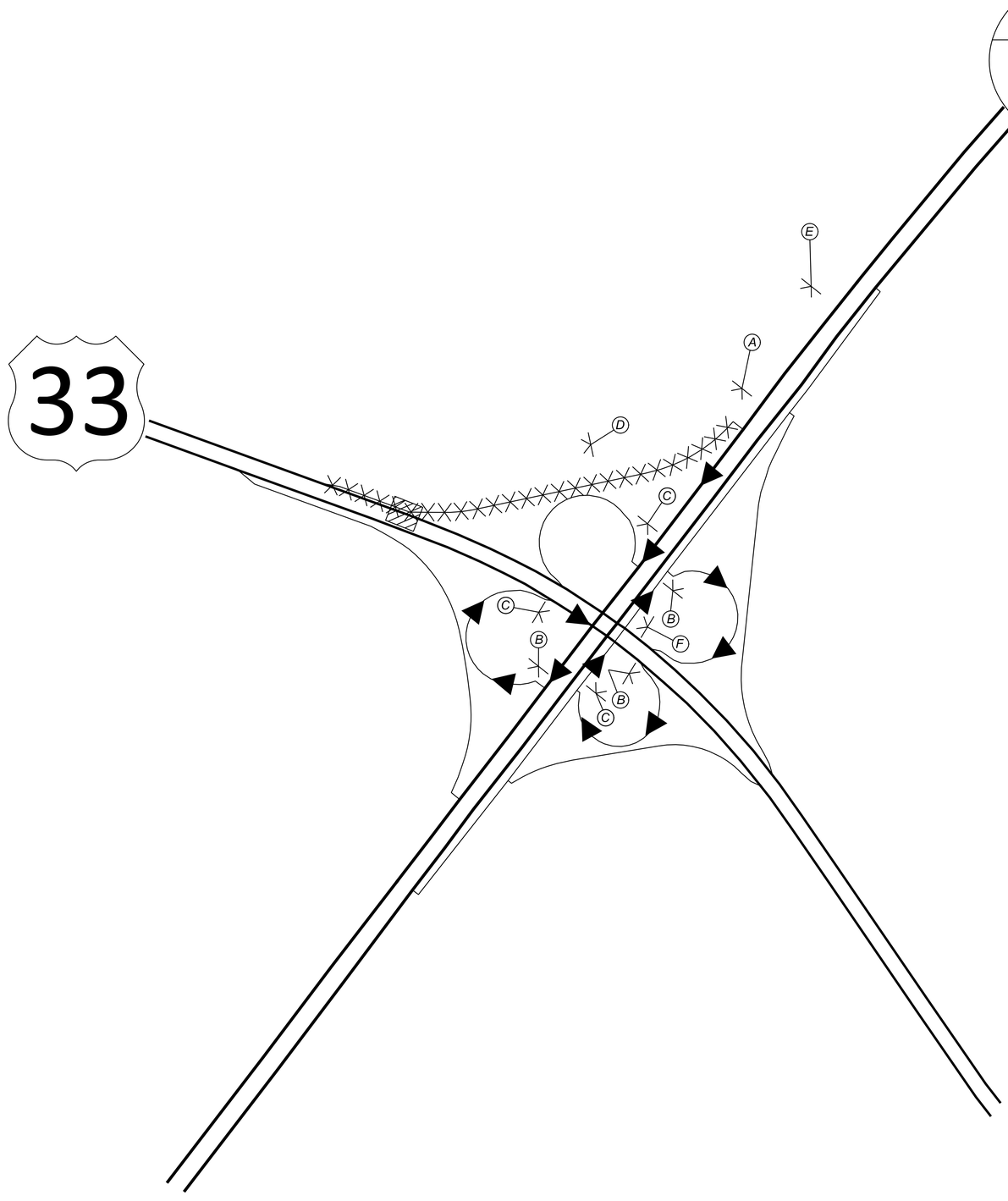

LEGEND

WORK AREA

XXXXX *RAMP CLOSURE*

DETOUR ROUTE

TEMPORARY SIGN SUPPORT

FRA-33-2456 BRIDGE HIT REPAIR

MAINTENANCE OF TRAFFIC DETOUR
PHASE 2 - RAMP C (I-270 SB TO US-33 WB)

DESIGN AGENCY
EMH&T

DESIGNER
MMP

REVIEWER
SMM 08/20/26

PROJECT ID
125600

SHEET P.14 | TOTAL 42

MODEL: Sheet PAPERSIZE: 34x22 (in.) DATE: 10/30/2026 TIME: 8:34:36 AM USER: cschrader
J:\2025\0232\ODOT\117444\400-Engineering\MOT\Sheets\117444_MD002.dgn

FRA-33-2456 BRIDGE HIT REPAIR

MODEL: Unnamed Plan - Plan 1 [Sheet] PAPERSIZE: 34x22 (in.) DATE: 10/30/2026 TIME: 8:34:38 AM USER: cschrader
J:\20250232\ODOT\117444\400-Engineering\MOT\Sheets\117444_MP004.dgn

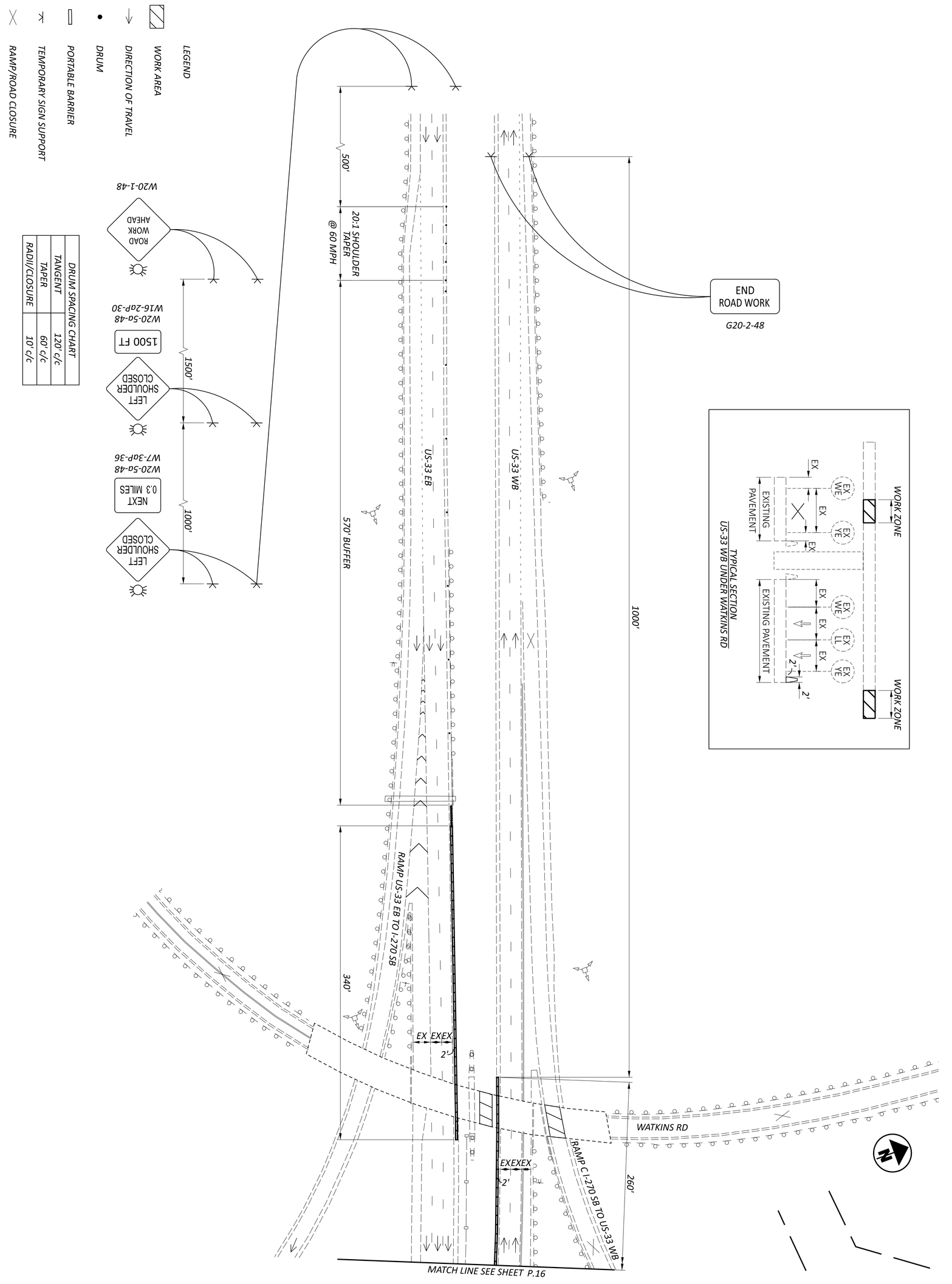

DESIGNER	MMP
REVIEWER	SMM 08/20/26
PROJECT ID	125600
SHEET	P.15
TOTAL	42

DESIGN AGENCY: EMH&T

MAINTENANCE OF TRAFFIC PLAN
PHASE 2 US-33 WB

HORIZONTAL SCALE IN FEET
0 50
25 100

FRA-33-2456 BRIDGE HIT REPAIR

MODEL: Unnamed Plan - Plan 2 [Sheet] PAPERSIZE: 34x22 (in.) DATE: 10/30/2026 TIME: 8:34:39 AM USER: cschrader
J:\20250232\ODOT\117444\400-Engineering\MOT\Sheets\117444_MP004.dgn

LEGEND

- DIRECTION OF TRAVEL
- DRUM
- PORTABLE BARRIER
- TEMPORARY SIGN SUPPORT
- IMPACT ATTENUATOR
- RAMP CLOSURE

DRUM SPACING CHART	
TANGENT	120' c/c
TAPER	60' c/c
RADII/CLOSURE	10' c/c

NOTES:
1. RAMP C (I-270 SB TO US-33 WB) SHALL BE CLOSED PER ODOT SCD MT-98.29. RAMP C TRAFFIC SHALL BE DETOURED PER P.14.

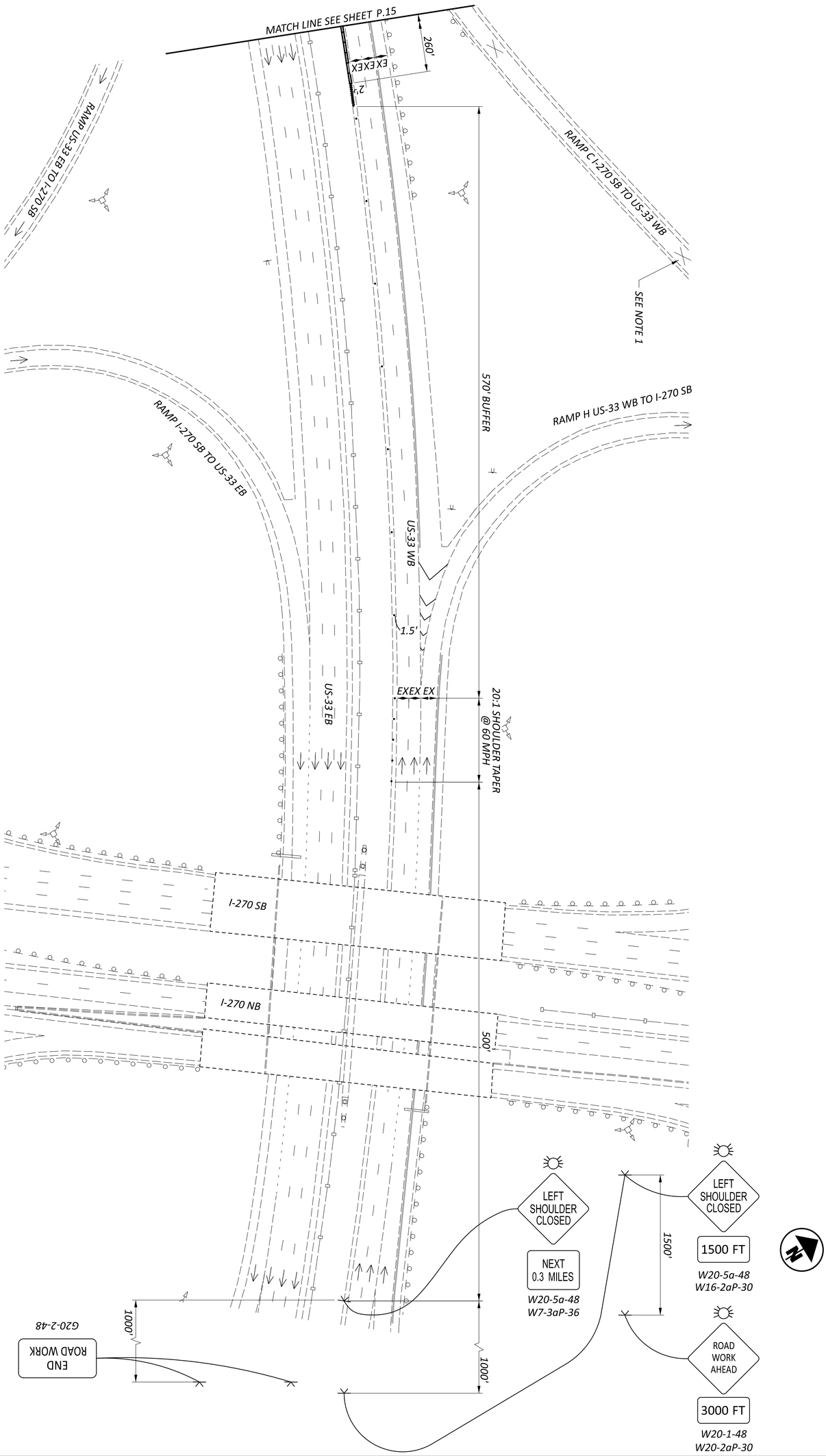

SHEET	TOTAL
P.16	42

PROJECT ID: 125600

REVIEWER: SMM 08/20/26

DESIGNER: MMP

DESIGN AGENCY: EMH&T

MAINTENANCE OF TRAFFIC PLAN
PHASE 2 US-33 WB

HORIZONTAL SCALE IN FEET
0 50
25 100

SIGNING LEGEND

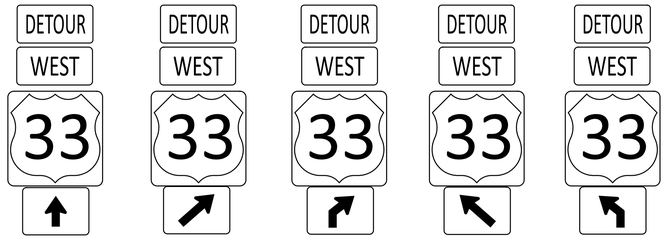

M4-8-30
M3-4-30
M1-4-36-2
M6-3-30
Ⓐ

M4-8-30
M3-4-30
M1-4-36-2
M6-2-30
Ⓑ

M4-8-30
M3-4-30
M1-4-36-2
M5-2-30
Ⓒ

M4-8-30
M3-4-30
M1-4-36-2
M6-2-30
Ⓓ

M4-8-30
M3-4-30
M1-4-36-2
M5-2-30
Ⓔ

US-33 WB WILL BE CLOSED
FOR DAYS
OHIO DEPT OF TRANSPORTATION

W20-H14-60
PLACE 2 BUSINESS DAYS PRIOR TO CLOSURE
Ⓕ

RAMP WILL BE CLOSED
FOR DAYS
OHIO DEPT OF TRANSPORTATION

W20-H14-60
PLACE 2 BUSINESS DAYS PRIOR TO CLOSURE
Ⓖ

US-33 WEST
CLOSED

FOLLOW
DETOUR

PORTABLE CHANGEABLE MESSAGE SIGN
Ⓗ

EXIT TO
US-33 WEST
CLOSED

FOLLOW
DETOUR

PORTABLE CHANGEABLE MESSAGE SIGN
Ⓘ

END
DETOUR

M4-8a-24
Ⓙ

EXIT
131B

①

EXIT 131A

SOUTH
INTERSTATE 270
HM

EXIT ½ MILE

EXIT 131B

NORTH
INTERSTATE 270
HM

¼ MILE

EXIT ONLY

②

33 WEST
CLOSED
Columbus

W20-H15a-72

EXIT 131A

SOUTH
INTERSTATE 270
HM

¼ MILE

EXIT 131B

NORTH
INTERSTATE 270
HM

EXIT ONLY

③

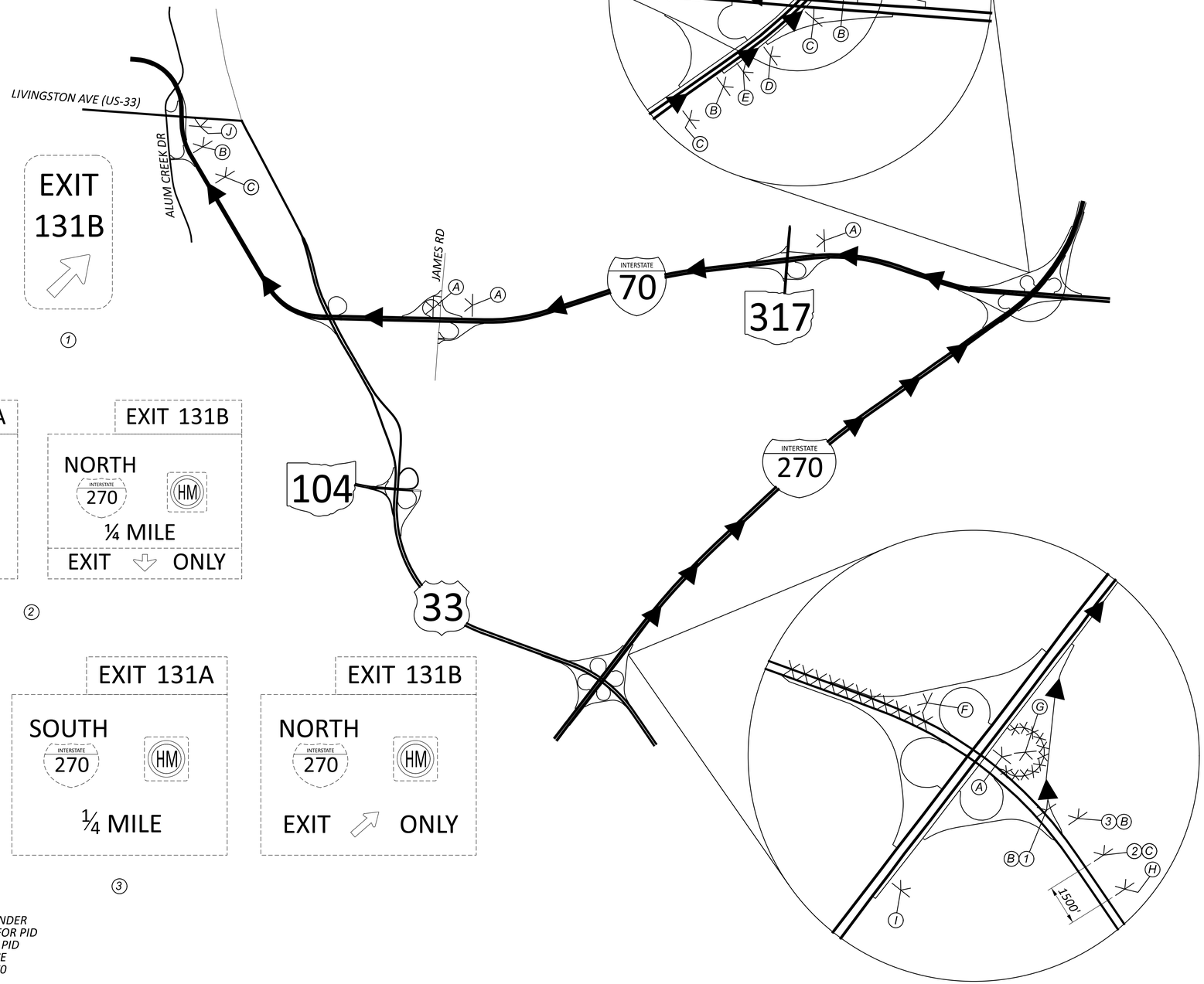

LEGEND

WORK AREA

XXXXX *RAMP/ROAD CLOSURE*

DETOUR ROUTE

TEMPORARY SIGN SUPPORT

NOTES:
1. PID 98232 (FRA-70-22.85) AND PID 125600 WILL BE UNDER CONSTRUCTION AT THE SAME TIME. THE CONTRACTOR FOR PID 125600 SHALL COORDINATE WITH THE CONTRACTOR OF PID 89232. TO ENSURE THE RAMP G DETOUR IS NOT IN PLACE DURING CONFLICTING RAMP CLOSURES AT THE I-270/I-70 INTERCHANGE.

FRA-33-2456 BRIDGE HIT REPAIR

MODEL: Sheet PAPERSIZE: 34x22 (in.) DATE: 10/30/2026 TIME: 8:34:41 AM USER: cschrader
J:\20250232\ODOT\117444\400-Engineering\MOT\Sheets\117444_MD003.dgn

MAINTENANCE OF TRAFFIC DETOUR
PHASE 3 - US 33 WB AND RAMP G (I-270 NB TO US-33 WB)

DESIGN AGENCY
EMH&T

DESIGNER
MMP

REVIEWER
SMM 08/20/26

PROJECT ID
125600

SHEET P.17 | TOTAL 42

SIGNING LEGEND



M4-8-30
M3-4-30
M1-4-36-2
M6-3-30
Ⓐ



M4-8-30
M3-4-30
M1-4-36-2
M6-2-30
Ⓑ



M4-8-30
M3-4-30
M1-4-36-2
M5-2-30
Ⓒ



M4-8-30
M3-4-30
M1-4-36-2
M6-1-30
Ⓓ



M4-8-30
M3-4-30
M1-4-36-2
M5-1-30
Ⓔ



M4-8-30
M3-4-30
M1-4-36-2
M6-1-30
Ⓕ



M4-8-30
M3-4-30
M1-4-36-2
M5-1-30
Ⓖ

RAMP WILL BE CLOSED
FOR DAYS
OHIO DEPT OF TRANSPORTATION

W20-H14-60
PLACE 2 BUSINESS DAYS PRIOR TO CLOSURE
Ⓗ

EXIT TO
US-33 WEST
CLOSED

FOLLOW
DETOUR

PORTABLE CHANGEABLE MESSAGE SIGN
Ⓘ

END
DETOUR

M4-8a-24
Ⓙ

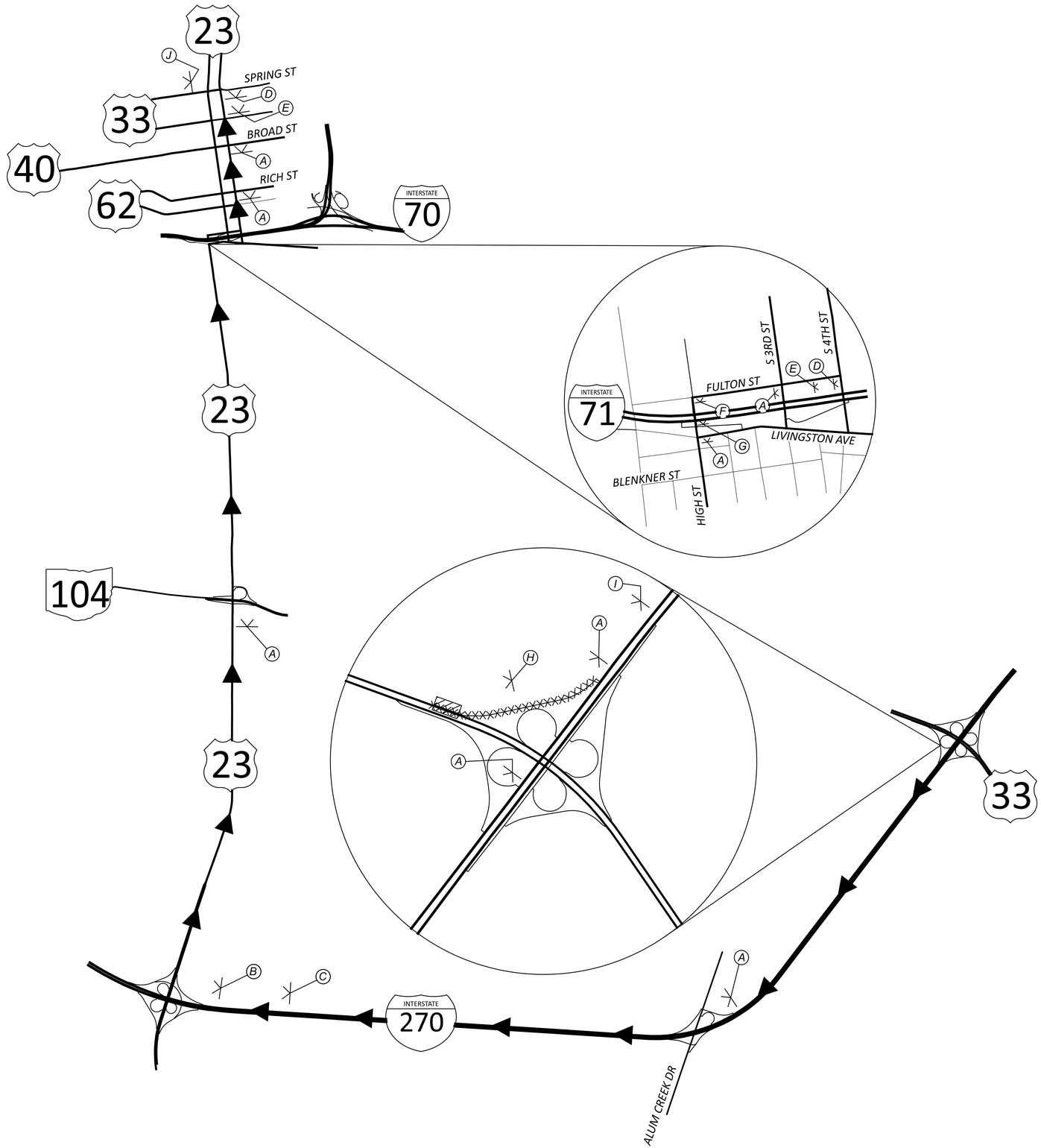

LEGEND

WORK AREA

XXXXX *RAMP CLOSURE*

DETOUR ROUTE

TEMPORARY SIGN SUPPORT

FRA-33-2456 BRIDGE HIT REPAIR

MAINTENANCE OF TRAFFIC DETOUR
PHASE 3 - RAMP C (I-270 SB TO US-33 WB)

DESIGN AGENCY
EMH&T

DESIGNER MMP
REVIEWER SMM 08/20/26
PROJECT ID 125600
SHEET P.18 TOTAL 42

MODEL: Sheet PAPERSIZE: 34x22 (in.) DATE: 10/30/2026 TIME: 8:34:44 AM USER: cschrader
J:\20250232\ODOT\117444\400-Engineering\MOT\Sheets\117444_MD004.dgn

MODEL: Unnamed Plan - Plan 1 [Sheet] PAPERSIZE: 34x22 (in.) DATE: 10/30/2026 TIME: 8:34:46 AM USER: cschrader
J:\20250232\ODOT\117444\400-Engineering\MOT\Sheets\117444_MP005.dgn

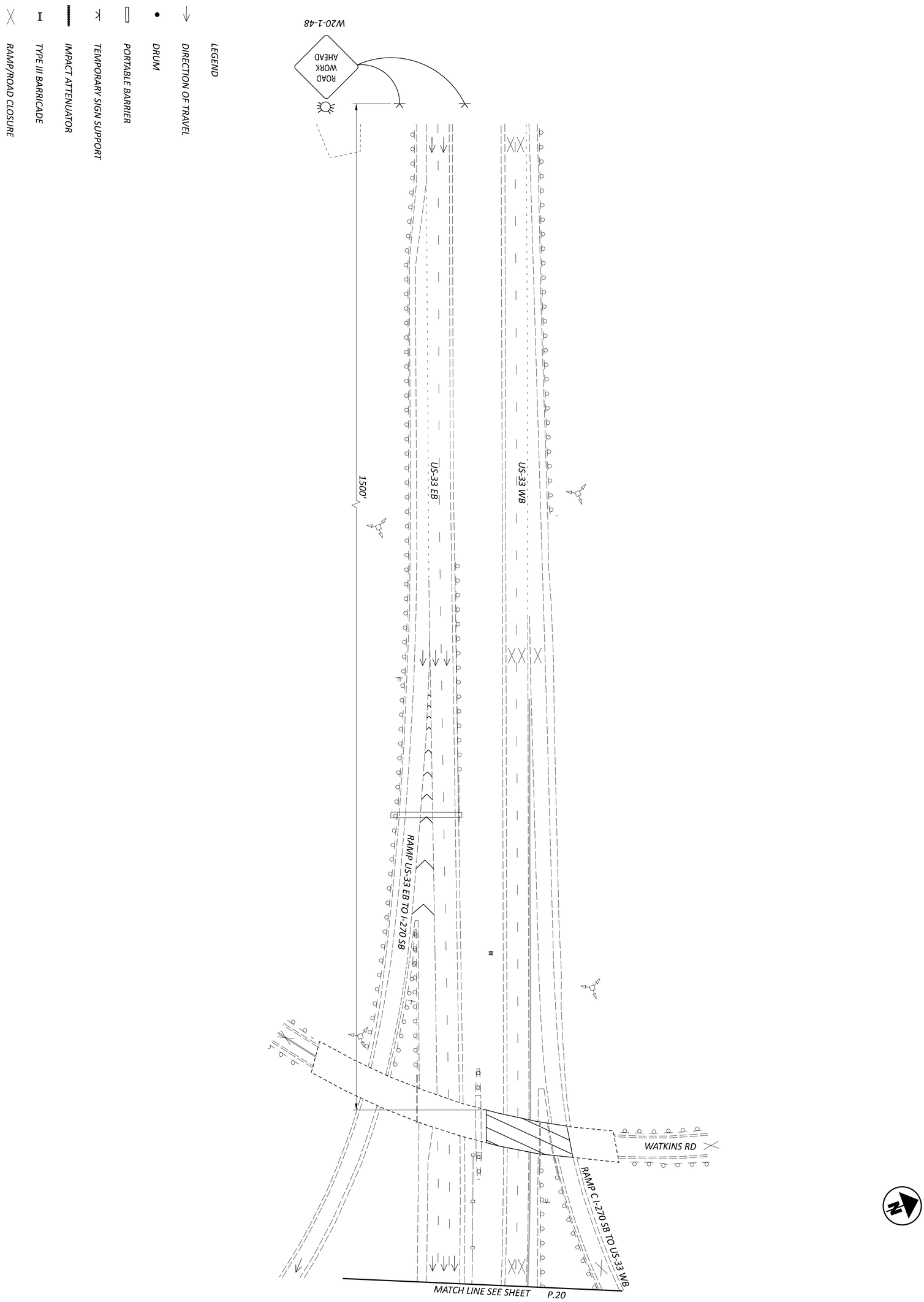

MAINTENANCE OF TRAFFIC PLAN
PHASE 3 - US-33 WB

HORIZONTAL SCALE IN FEET
0 50
25 100

SHEET	TOTAL
P.19	42

PROJECT ID: 125600
REVIEWER: SMM 08/20/26
DESIGNER: MMP
DESIGN AGENCY: EMH&T

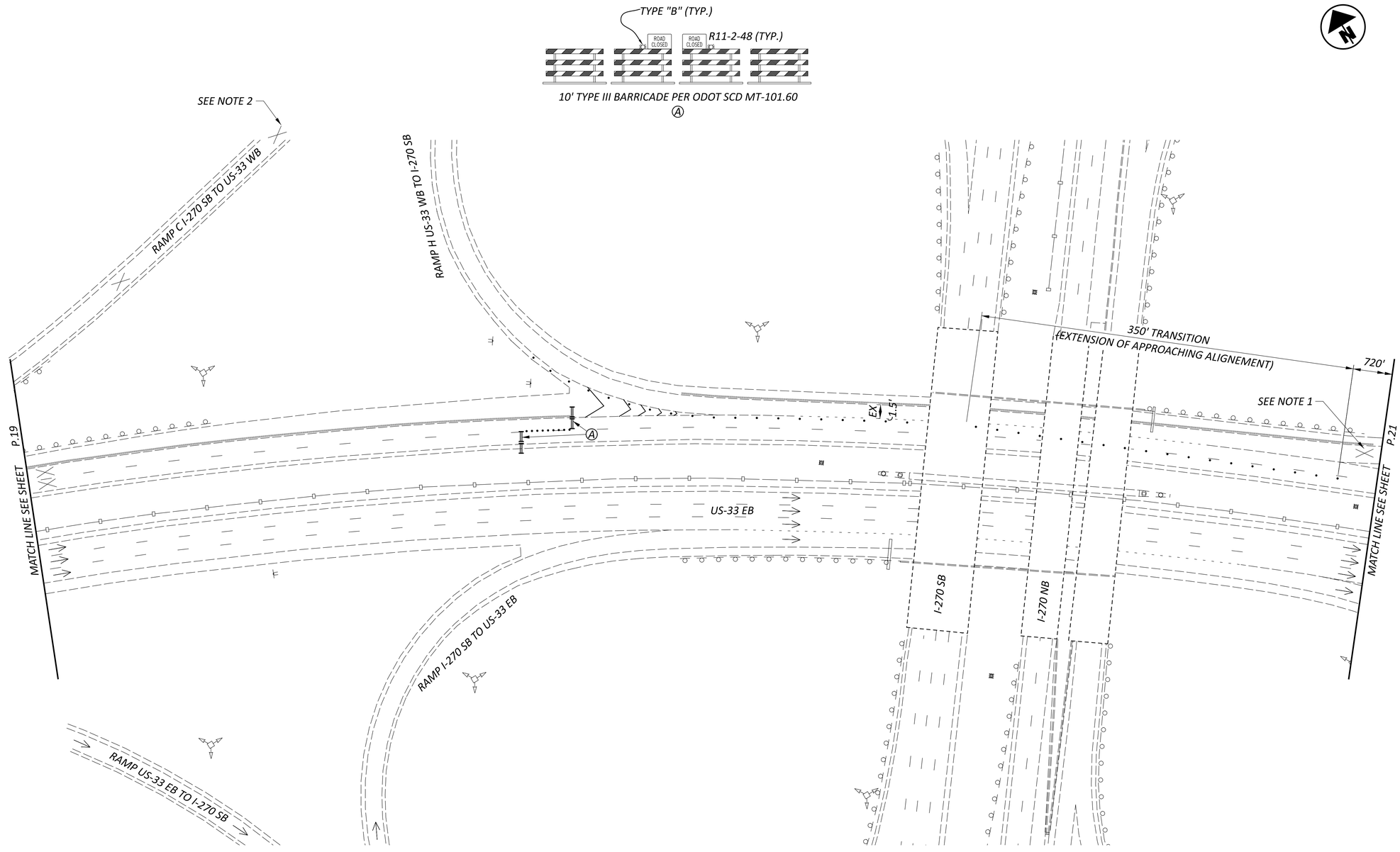

LEGEND

- DIRECTION OF TRAVEL
- DRUM
- PORTABLE BARRIER
- TEMPORARY SIGN SUPPORT
- IMPACT ATTENUATOR
- TYPE III BARRICADE
- RAMP/ROAD CLOSURE

DRUM SPACING CHART	
TANGENT	120' c/c
TAPER	60' c/c
RADII/CLOSURE	10' c/c

NOTES:
1. RAMP G (I-270 NB TO US-33 WB) SHALL BE CLOSED PER P.7. RAMP G TRAFFIC SHALL BE DETOURED PER P.17 .
2. RAMP C (I-270 SB TO US-33 WB) SHALL BE CLOSED PER ODOT SCD MT-98.29. RAMP C TRAFFIC SHALL BE DETOURED PER P.18.

HORIZONTAL SCALE IN FEET
0 25 50 100

MAINTENANCE OF TRAFFIC PLAN
PHASE 3 - US-33 WB

FRA-33-2456 BRIDGE HIT REPAIR

MODEL: Unnamed Plan - Plan 2 [Sheet] PAPERSIZE: 34x22 (in.) DATE: 10/30/2026 TIME: 8:34:47 AM USER: cschrader
J:\2025032\ODOT\117444\400-Engineering\MOT\Sheets\117444_MP005.dgn

DESIGN AGENCY
EMH&T

DESIGNER MMP
REVIEWER SMM 08/20/26
PROJECT ID 125600
SHEET P.20 TOTAL 42

FRA-33-2456 BRIDGE HIT REPAIR

MODEL: Unnamed Plan - Plan 3 [Sheet] PAPERSIZE: 34x22 (in.) DATE: 10/30/2026 TIME: 8:34:48 AM USER: cschrader
J:\20250232\ODOT\117444\400-Engineering\MOT\Sheets\117444_MP005.dgn

LEGEND

RAMP CLOSURE

TEMPORARY SIGN SUPPORT

DRUM

DIRECTION OF TRAVEL

DRUM SPACING CHART	
TANGENT	120' c/c
TAPER	60' c/c
RADII/CLOSURE	10' c/c

NOTES:
1. SEE P.7 FOR RAMP G CLOSURE DETAILS. US-33 WB AND RAMP G DETOUR SIGNAGE IS SHOWN ON P.17.

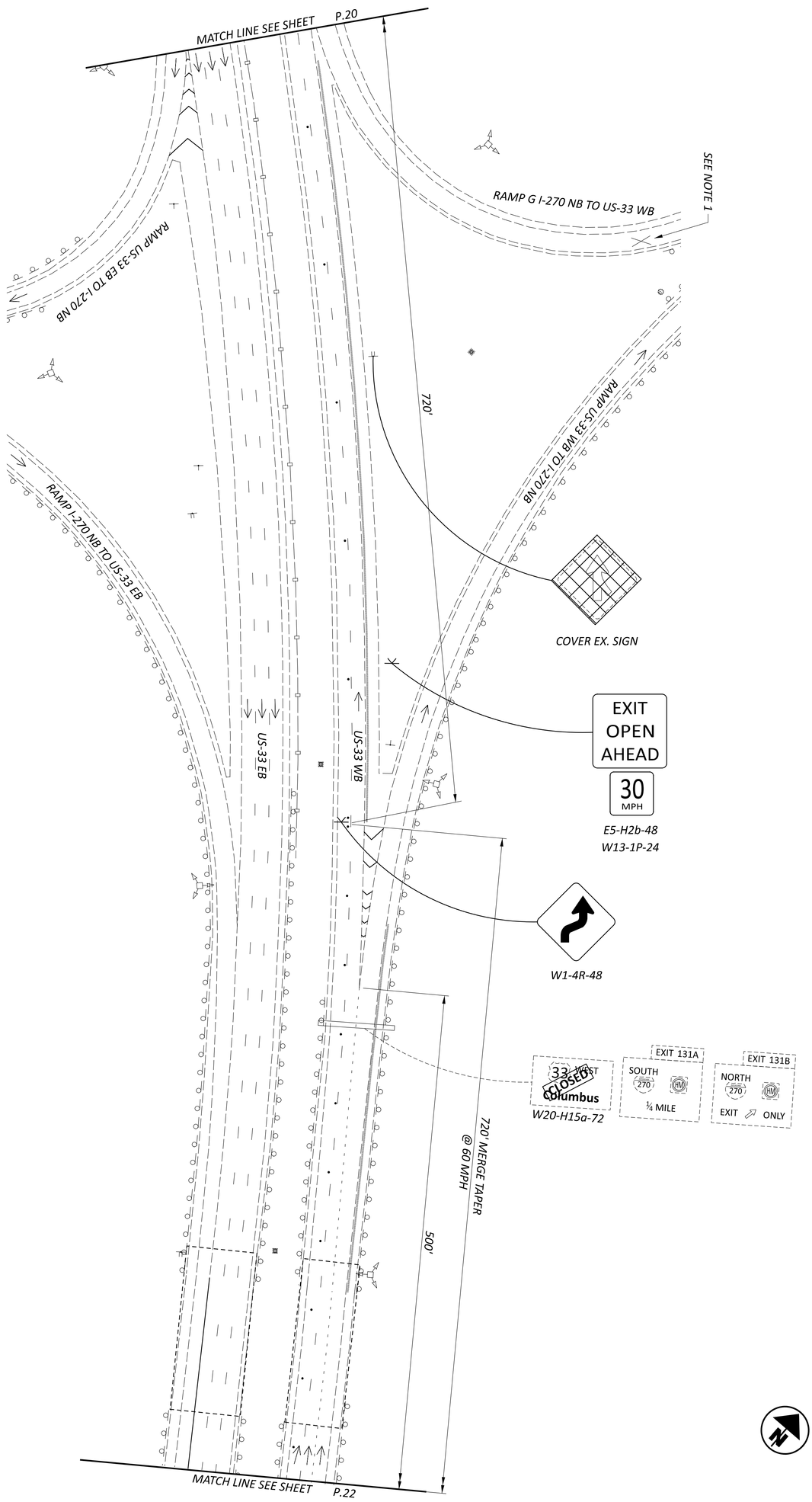

MAINTENANCE OF TRAFFIC PLAN
PHASE 3 - US-33 WB

HORIZONTAL SCALE IN FEET
0 50
25 100

SHEET	TOTAL
P.21	42

PROJECT ID: 125600

REVIEWER: SMM 08/20/26

DESIGNER: MMP

DESIGN AGENCY: EMH&T

FRA-33-2456 BRIDGE HIT REPAIR

MODEL: Unnamed Plan - Plan 4 [Sheet] PAPERSIZE: 34x22 (in.) DATE: 10/30/2026 TIME: 8:34:48 AM USER: cschrader
J:\20250232\ODOT\117444\400-Engineering\MOT\Sheets\117444_MP005.dgn

LEGEND

- DIRECTION OF TRAVEL
- DRUM
- TEMPORARY SIGN SUPPORT
- RAMP CLOSURE
- FLASHING ARROW PANEL

DRUM SPACING CHART	
TANGENT	120' c/c
TAPER	60' c/c
RADII/CLOSURE	10' c/c

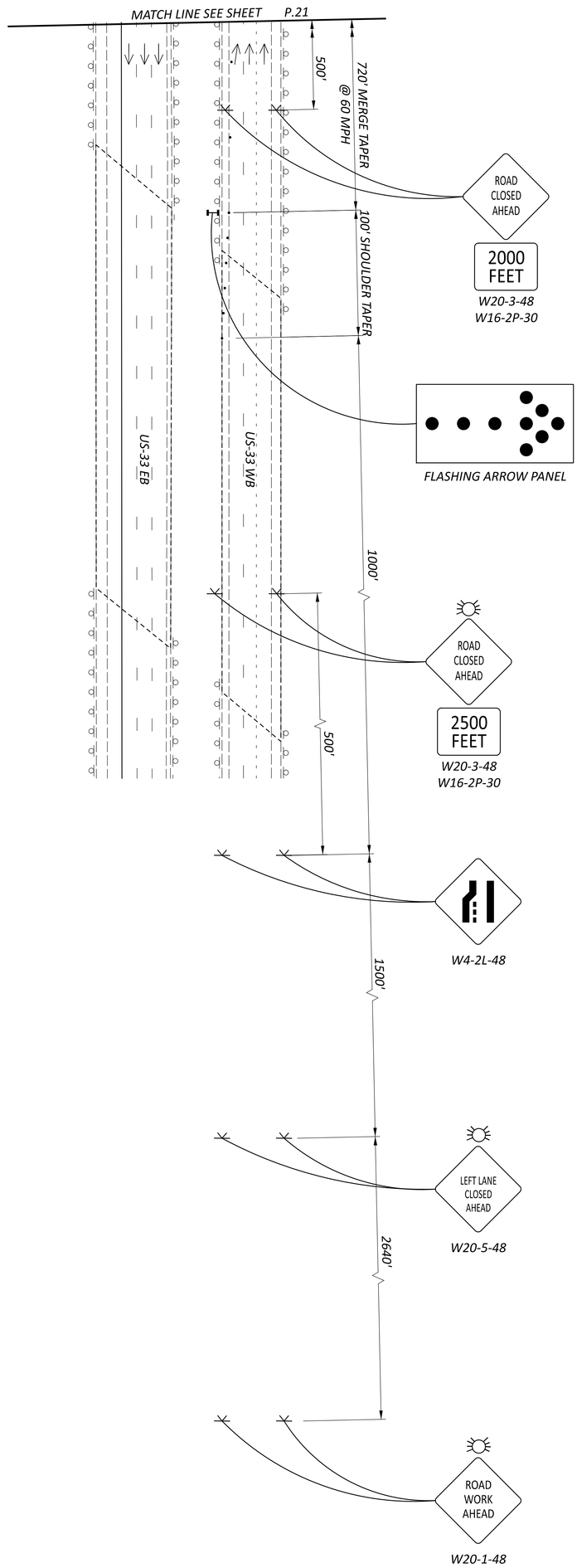

MAINTENANCE OF TRAFFIC PLAN
PHASE 3 - US-33 WB

HORIZONTAL SCALE IN FEET
0 25 50 100

SHEET	TOTAL	PROJECT ID	REVIEWER	DESIGNER	DESIGN AGENCY
P.22	42	125600	SMM 08/20/26	MMP	EMH&T

SHEET NUMBER	PART.	ITEM	ITEM EXT	GRAND TOTAL	UNIT	DESCRIPTION	SEE SHEET NO.
P.3	01/NHS						
						EROSION CONTROL	
1,000	1,000	832	30000	1,000	EACH	EROSION CONTROL	
						MAINTENANCE OF TRAFFIC	
	112	614	11110	112	HOUR	LAW ENFORCEMENT OFFICER WITH PATROL CAR FOR ASSISTANCE	
	14	614	12380	14	EACH	WORK ZONE IMPACT ATTENUATOR, 24" WIDE HAZARDS, (UNIDIRECTIONAL)	
	LS	614	12420	LS		DETOUR SIGNING	
	80	614	13310	80	EACH	BARRIER REFLECTOR, TYPE 1, ONE-WAY	
	80	614	13350	80	EACH	OBJECT MARKER, ONE WAY	
	4	614	18601	4	SNMT	PORTABLE CHANGEABLE MESSAGE SIGN, AS PER PLAN	P.5
	100	615	20001	100	SY	PAVEMENT FOR MAINTAINING TRAFFIC, CLASS A, AS PER PLAN	P.5
	450	618	40100	450	FT	RUMBLE STRIPS, SHOULDER (ASPHALT CONCRETE)	
	3,850	622	41100	3,850	FT	PORTABLE BARRIER, UNANCHORED	
						TRAFFIC CONTROL	
	0.02	646	10010	0.02	MILE	EDGE LINE, 6", WHITE	$1899_SP001-1
						STRUCTURE OVER 20 FOOT SPAN (BRIDGE NO. FRA-33-2456)	
	LS	202	11203	LS		PORTIONS OF STRUCTURE REMOVED, OVER 20 FOOT SPAN, AS PER PLAN	P.25
	108	202	75267	108	FT	VANDAL PROTECTION FENCE REMOVED AND RESET, AS PER PLAN	P.26
	7,037	509	10000	7,037	LB	EPOXY COATED STEEL REINFORCEMENT	
	21	511	34444	21	CY	CLASS QC2 CONCRETE, BRIDGE DECK	
	15	511	34448	15	CY	CLASS QC2 CONCRETE, BRIDGE DECK (PARAPET)	
	105	512	10050	105	SY	SEALING OF CONCRETE SURFACES (NON-EPOXY)	
	13	512	10300	13	SY	SEALING CONCRETE BRIDGE DECKS WITH HMWM RESIN	
	13	512	10600	13	FT	CONCRETE REPAIR BY EPOXY INJECTION	
	2,362	513	10201	2,362	LB	STRUCTURAL STEEL MEMBERS, LEVEL UF, AS PER PLAN (SECONDARY MEMBERS)	P.25
	22,583	513	10201	22,583	LB	STRUCTURAL STEEL MEMBERS, LEVEL UF, AS PER PLAN (MAIN MEMBERS)	P.25
	2	513	95000	2	FT	STRUCTURAL STEEL, MISC.: REPAIR OF DAMAGED MEMBERS, COMPLETE PENETRATION WELDING	P.25
	116	513	95000	116	FT	STRUCTURAL STEEL, MISC.: REPAIR OF DAMAGED MEMBERS, FILLET WELDING	P.25
	162	513	95030	162	EACH	STRUCTURAL STEEL, MISC.: REPAIR OF DAMAGED MEMBERS, DRILLING	P.25
	1	513	95030	1	EACH	STRUCTURAL STEEL, MISC.: REPAIR OF DAMAGED MEMBERS, COPE HOLES	P.25
	1,270	514	20001	1,270	SF	FIELD PAINTING OF DAMAGED STRUCTURAL STEEL, AS PER PLAN (TWO COATS)	P.25
	1	516	45305	1	EACH	REFURBISH BEARING DEVICE, AS PER PLAN	P.26
	LS	516	47001	LS		JACKING AND TEMPORARY SUPPORT OF SUPERSTRUCTURE, AS PER PLAN	P.26
	LS	849	10000	LS		DAMAGE ASSESSMENT	
	LS	849	10500	LS		SURFACE PREPARATION	
	4	849	10600	4	HOUR	REPAIRING DAMAGED MEMBERS BY GRINDING	
	LS	849	10700	LS		STRAIGHTENING DAMAGED MEMBERS	
						INCIDENTALS	
	LS	614	11000	LS		MAINTAINING TRAFFIC	
	LS	624	10000	LS		MOBILIZATION	

GENERAL SUMMARY

FRA-33-2456 BRIDGE HIT REPAIR

MODEL: General Summary - Sheet 1 PAPERSIZE: 34x22 (in.) DATE: 10/30/2026 TIME: 8:34:50 AM USER: cschrader
J:\2025\0232\ODOT\117444\400-Engineering\Roadway\Sheets\117444_GG001.dgn

DESIGN AGENCY
EMH&T

DESIGNER
BLM

REVIEWER
CAS 08/20/26

PROJECT ID
125600

SHEET P.23 TOTAL 42

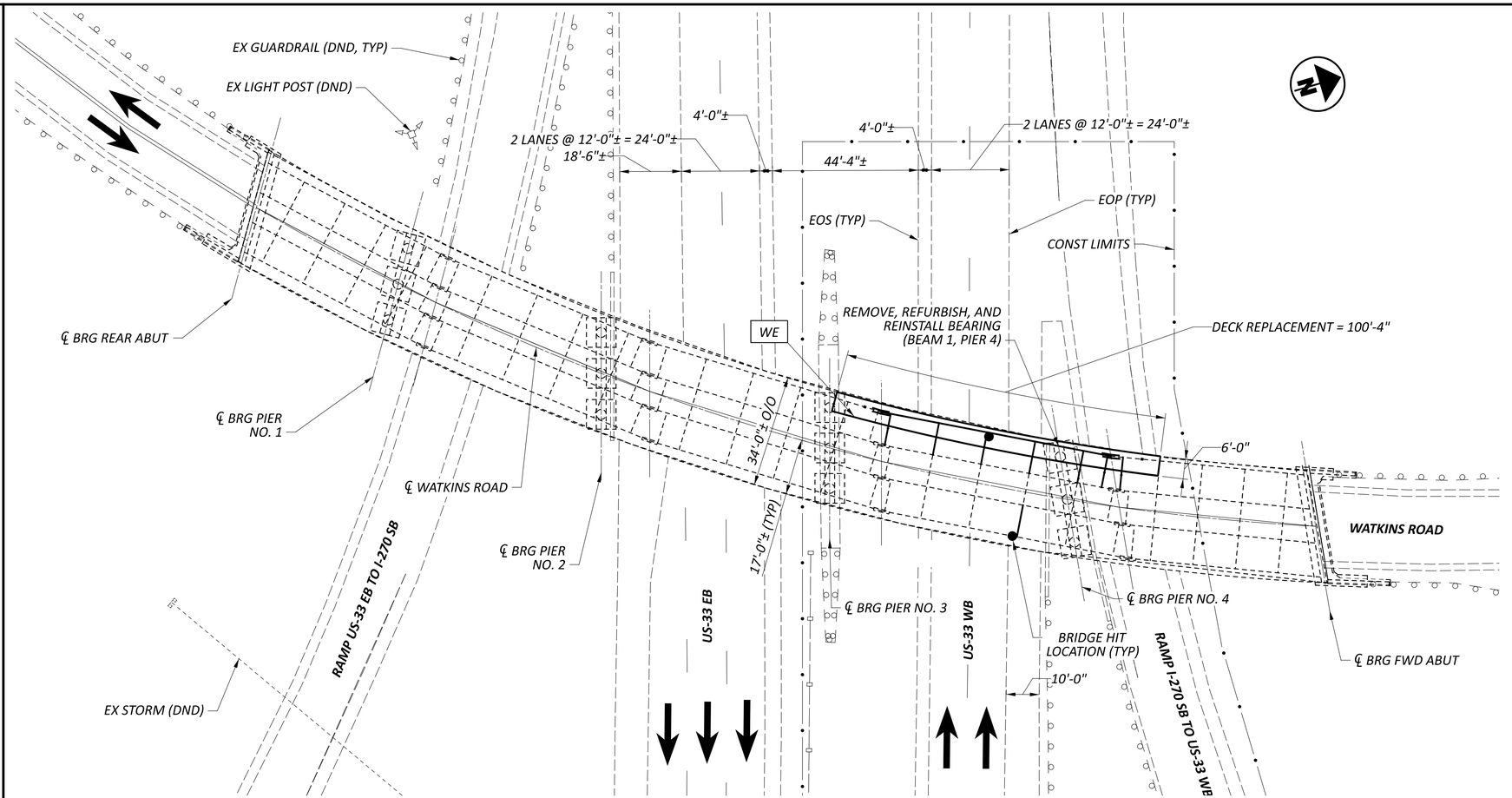

PLAN

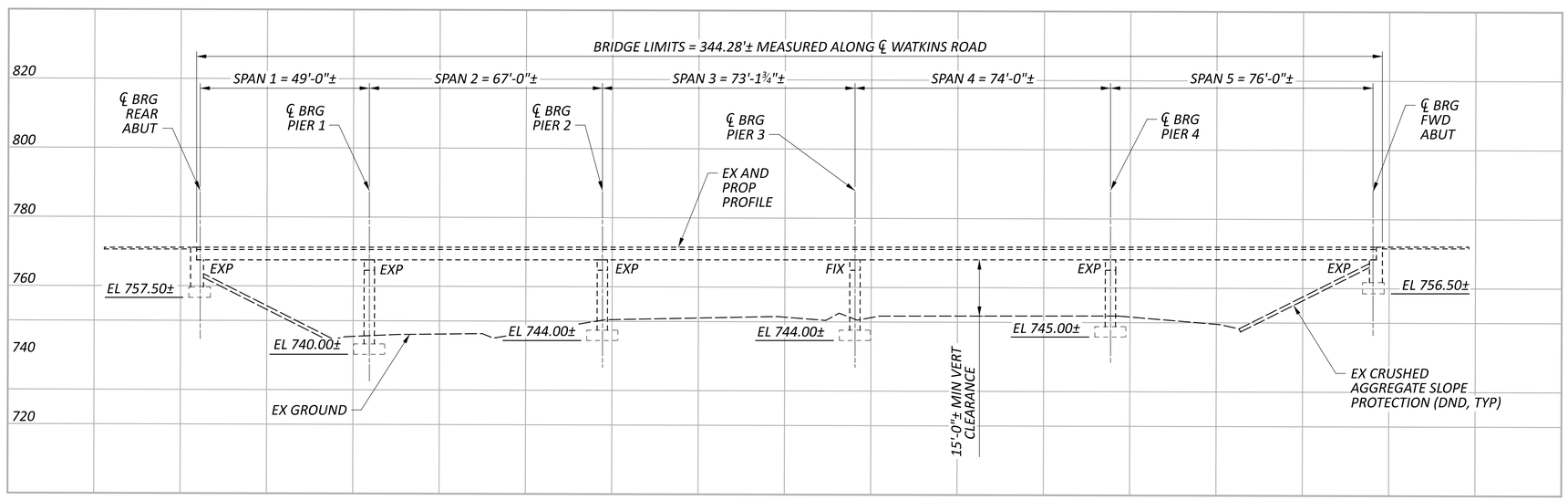

PROFILE ALONG ℄ CONST WATKINS ROAD

NOTES

1. DIMENSIONS AND DATA TAKEN FROM EXISTING PLANS ARE FOR REFERENCE ONLY.

LINE SPECIFICATIONS	
ITEM 646	
WE	EDGE LINE, 6" WHITE

EXISTING STRUCTURE

TYPE: FIVE SPAN CONTINUOUS NON-COMPOSITE STEEL BEAM WITH REINFORCED CONCRETE DECK AND SUBSTRUCTURE

SPANS: 49'-0"±, 67'-6"±, 73'-1¾"±, 74'-0"±, 76'-0"± C/C BRGS ALONG ℄ WATKINS RD

ROADWAY: 30'-0"± F/F CONCRETE PARAPETS

LOADING: H15

SKEW: VARIES

WEARING SURFACE: MONOLITHIC CONCRETE

APPROACH SLABS: 25'-0"± LONG

ALIGNMENT: 8° CURVE LEFT

SUPERELEVATION: 0.083 FT/FT

STRUCTURE FILE NUMBER: 2501899

DATE BUILT: 1969

COORDINATES: LATITUDE N 39°54'10.91"
LONGITUDE W 82°54'08.05"

DISPOSITION: TO BE REHABILITATED

PROPOSED WORK

1. REMOVE PORTIONS OF VANDAL FENCING FOR REINSTALLATION. REMOVE PORTIONS OF DECK AND RAILING.
2. REMOVE AND REPLACE DAMAGED PORTIONS OF GIRDER 1, BETWEEN SPLICES ON SPAN 4 AND 5.
3. HEAT STRAIGHTEN GIRDER 1 IN SPANS 4 AND 5.
4. DRILL HOLES TO ARREST CRACKS AS REQUIRED BY REPAIRS.
5. REPAIR WEB TEAR IN GIRDER 4 PER WC2 DETAILS.
6. REPLACE BROKEN AND MISSING CROSSFRAMES ADJACENT TO HIT LOCATIONS.
7. FORM AND CONSTRUCT PORTIONS OF DECK AND RAILING ALONG LEFT SIDE. REINSTALL VANDAL FENCE.
8. PREPARE AND PAINT MAIN AND SECONDARY MEMBERS.

HORIZONTAL SCALE IN FEET
0 10 20 40

SITE PLAN
BRIDGE NO. FRA-33-2456
WATKINS ROAD OVER US 33

SFN 2501899

DESIGN AGENCY E M H & T

DESIGNER	CHECKER
CAD	TDA

REVIEWER CAS 08/20/26

PROJECT ID 125600

SUBSET	TOTAL
1	19

SHEET	TOTAL
P.24	42

FRA-33-2456 BRIDGE HIT REPAIR

MODEL: Sheet PAPERSIZE: 34x22 (in.) DATE: 10/30/2026 TIME: 8:34:53 AM USER: cschrader
J:\20250232\ODOT\117444\400-Engineering\Structures\SFN_2501899\Sheets\117444_SFN_2501899_SP001.dgn

STANDARD DRAWINGS AND SUPPLEMENTAL SPECIFICATIONS:
REFER TO THE FOLLOWING SUPPLEMENTAL SPECIFICATIONS:
849 DATED 01-18-2013

REFER TO THE FOLLOWING ARCHIVED STANDARD BRIDGE DRAWINGS:
GSD-1-96 DATED 07-19-2002
(SEE SHEET 4/19 TO 5/19).

BR-1 04-03-1990
(SEE SHEET 6/19)

VPF-1-90 07-21-2023
(SEE SHEET 7/19 TO 9/19)

DESIGN DATA:
STRUCTURAL STEEL, ASTM 709 GRADE 50 - MINIMUM YIELD STRENGTH 50 KSI

CONCRETE CLASS QC2, COMPRESSIVE STRENGTH 4.5 KSI

EPOXY COATED STEEL REINFORCEMENT, MINIMUM YIELD STRENGTH 60 KSI

EXISTING STRUCTURE VERIFICATION:
DETAILS AND DIMENSIONS SHOWN ON THESE PLANS PERTAINING TO THE EXISTING STRUCTURE HAVE BEEN OBTAINED FROM PLANS OF THE EXISTING STRUCTURE AND FROM FIELD OBSERVATIONS AND MEASUREMENTS. CONSEQUENTLY, THEY ARE INDICATIVE OF THE EXISTING STRUCTURE AND THE PROPOSED WORK BUT THEY SHALL BE CONSIDERED TENTATIVE AND APPROXIMATE. THE CONTRACTOR IS REFERRED TO C&MS, SECTIONS 102.05, 105.02, AND 513.04. BASE CONTRACT BID PRICES UPON A RECOGNITION OF THE UNCERTAINTIES DESCRIBED ABOVE AND UPON A PREBID EXAMINATION OF THE EXISTING STRUCTURE. HOWEVER, THE DEPARTMENT WILL PAY FOR ALL PROJECT WORK BASED UPON ACTUAL DETAILS AND DIMENSIONS THAT HAVE BEEN VERIFIED IN THE FIELD.

EXISTING PLANS:
EXISTING PLANS CAN BE INSPECTED IN THE LOCAL ODOT DISTRICT OFFICE, AND WILL BE PROVIDED ELECTRONICALLY UPON REQUEST.

STEEL RESTRAINT OR PRELOAD LIMITS:
EXISTING ASTM A709 GRADE 36 - DO NOT SUBJECT ANY PART OF THE STRUCTURE TO A JACKING, PULLING OR RESTRAINING UNIT STRESS EXCEEDING 18,000 PSI.

UTILITIES:
THE NATURE OF THE WORK REQUIRED BY THIS PROJECT WILL NOT AFFECT ANY KNOWN UTILITIES THAT EXIST UNDER OR ADJACENT TO THE WORK AREA.

ITEM 202 - PORTIONS OF STRUCTURE REMOVED, AS PER PLAN
THIS WORK CONSISTS OF THE REMOVAL OF CONCRETE DECKS, PARAPETS, AND STEEL MEMBERS FROM THE EXISTING STRUCTURE. THE PROVISIONS OF ITEM 202 APPLY EXCEPT AS SPECIFIED BY THE FOLLOWING NOTES. PERFORM WORK CAREFULLY DURING DECK REMOVALS TO PROTECT PORTIONS OF SUCH SYSTEMS THAT ARE TO BE SALVAGED AND INCORPORATED INTO THE PROPOSED STRUCTURE. THE USE OF EXPLOSIVES, HEADACHE BALLS, AND/OR HOE RAM TYPE OF EQUIPMENT IS PROHIBITED. SUBMIT CONSTRUCTION PLANS TO INCLUDE PROTECTION OF TRAFFIC ACCORDING TO CMS 501.05.

REMOVAL OF CONCRETE OR STEEL MEMBERS IS NOT PERMITTED WITH LIVE TRAFFIC OF U.S. 33 UNDERNEATH OF WATKINS ROAD BRIDGE.

ALL CONCRETE REMOVED AS DETAILED IN THE PLANS MUST BE REMOVED BY MEANS OF CUTTING AND OF APPROVED PNEUMATIC HAMMERS EMPLOYING POINTED AND BLUNT CHISEL TOOLS. THE WEIGHT OF THE HAMMER MUST NOT BE MORE THAN 35 POUNDS FOR REMOVAL AROUND REBAR TO BE PRESERVED IN THE DECK. DO NOT PLACE PNEUMATIC HAMMERS IN DIRECT CONTACT WITH THE REINFORCING STEEL THAT IS TO BE RETAINED IN THE REBUILT STRUCTURE.

DECK REMOVALS – DECK EDGE REHABILITATION: IF THE CONTRACTOR'S MEANS AND METHODS REQUIRE DRILLING HOLES THROUGH THE BRIDGE DECK, ALL HOLES SHALL BE DRILLED FROM THE BOTTOM OF THE DECK UPWARD. DRILLING HOLES FROM THE TOP OF THE DECK IS NOT PERMITTED. FALSEWORK INTENDED TO FORM THE NEW DECK EDGE MAY BE USED AS A WORK PLATFORM TO AIDE IN THE DECK EDGE REMOVAL. IF FORMS BECOME DAMAGED DURING CONCRETE REMOVAL, THE DAMAGED PORTIONS SHALL BE REPAIRED OR REPLACED PRIOR TO POURING THE CONCRETE. PRIOR TO PLACING CONCRETE, THOROUGHLY CLEAN ALL SURFACES OF THE FORMS THAT CONTACT THE BOTTOM OF THE EXISTING BRIDGE DECK TO ENSURE A SNUG FIT BETWEEN THE FORMS AND EXISTING BRIDGE DECK. THE PORTION OF THE FORM TO BE IN CONTACT WITH THE FRESH CONCRETE SHALL BE FREE OF LAITANCE, SILT, DIRT, SHAVINGS, SAWDUST, LOOSE AND BUILT-UP RUST, AND OTHER DEBRIS. ALL HOLES DRILLED THOUGH THE BRIDGE DECK SHALL BE REPAIRED WITH TROWELABLE MORTAR IN ACCORDANCE WITH SUPPLEMENTAL SPECIFICATION 843.

IF A SPLITTER IS USED TO DEMOLISH THE DECK EDGE, HOLES SHALL BE SPACED NO FURTHER THAN 12-IN APART, MEASURED LONGITUDINALLY ALONG THE BRIDGE DECK. EACH HOLE SHALL BE USED TO SPLIT THE CONCRETE; SKIPPING HOLES WILL NOT BE PERMITTED. ANY DAMAGE TO THE EXISTING STRUCTURE THAT IS TO REMAIN WILL BE REPAIRED AT NO ADDITIONAL COST TO THE DEPARTMENT. IF THE DAMAGE TO THE REMAINING STRUCTURE IS SIGNIFICANT, AT THE DIRECTION OF THE ENGINEER, PROVIDE A REPAIR PLAN IN ACCORDANCE WITH C&MS 501.05.C.

CUT LINE CONSTRUCTION JOINT PREPARATION: PRIOR TO REMOVING THE DECK EDGE, PLACE A 1-IN (+0-IN,-1/4-IN) DEEP SAW CUT AT THE BOUNDARIES OF PROPOSED CONCRETE REMOVALS. IF THERE ARE INTEGRAL CONCRETE PIER CAPS WITHIN THE PROPOSED REMOVAL LIMITS, ALSO SAWCUT THE DECK CONCRETE ALONG THE INTERFACE OF THE DECK AND PIER CAP. REMOVE CONCRETE TO A ROUGH SURFACE. LEAVE THE EXISTING CONCRETE REINFORCEMENT, IF REQUIRED IN THE PLANS, IN PLACE. INSTALL DOWEL BARS IF SPECIFIED. PRIOR TO CONCRETE PLACEMENT ABRASIVELY CLEAN JOINT SURFACES AND EXISTING EXPOSED REINFORCEMENT TO REMOVE LOOSE AND DISINTEGRATED CONCRETE AND LOOSE RUST. THOROUGHLY CLEAN THE JOINT SURFACE AND EXPOSED REINFORCEMENT OF ALL DIRT, DUST, RUST OR OTHER FOREIGN MATERIAL BY THE USE OF WATER, AIR UNDER PRESSURE, OR OTHER METHODS THAT PRODUCE SATISFACTORY RESULTS. EXISTING STEEL REINFORCEMENT DOES NOT HAVE TO HAVE A BRIGHT STEEL FINISH BUT REMOVE ALL PACK AND LOOSE RUST. THOROUGHLY DRENCH EXISTING CONCRETE SURFACES WITH CLEAN WATER AND ALLOW TO DRY TO A DAMP CONDITION BEFORE PLACING CONCRETE.

ITEM 513 - STRUCTURAL STEEL MEMBERS LEVEL UF, AS PER PLAN:
ALL REQUIREMENTS OF 513 APPLY TO SHOP FABRICATED MEMBERS. PERFORM WORK FOR FIELD FABRICATED MEMBERS ACCORDING TO ITEM 513, EXCEPT AS MODIFIED HEREIN. THE DEPARTMENT WILL NOT REQUIRE THE CONTRACTOR PERFORMING FIELD FABRICATION TO BE PRE-QUALIFIED AS SPECIFIED IN SUPPLEMENT 1078. SUBMIT A WRITTEN LETTER OF MATERIAL ACCEPTANCE, 501.06, TO THE ENGINEER. PROVIDE SHOP DRAWINGS ACCORDING TO 513.06 OR SUPPLY THE ENGINEER WITH "AS BUILT" DRAWINGS MEETING 513.06 AFTER COMPLETION OF FIELD FABRICATION. THE ENGINEER WILL REVIEW THE SUBMITTED DRAWINGS FOR CONCURRENCE WITH THE FINAL AS-BUILT CONDITION. THE ENGINEER MAY CONTACT THE OFFICE OF STRUCTURAL ENGINEERING FOR TECHNICAL ASSISTANCE. IF THE ENGINEER IS SATISFIED WITH THE "AS-BUILT" DRAWINGS AND THE DELIVERED MATERIALS. SUPPLY A COPY OF THE DRAWINGS STAMPED, SEALED, AND DATED, ACCORDING TO SUPPLEMENT 1002, TO THE STRUCTURAL WELDING AND METALS SECTION OF THE OFFICE OF MATERIAL MANAGEMENT FOR RECORD PURPOSES. THE MEMBERS INCLUDED IN THIS ITEM ARE PROVIDED IN TABLE 2 AND 3 AND SHEETS 12/19 THROUGH 14/19. THIS WORK INCLUDES FIELD DRILLING OF FLANGE AND WEB SPLICE HOLES OF THE REPLACED MAIN MEMBER TO ENSURE FIT UP TO EXISTING BEAM 1. THE CONTRACTOR MUST VERIFY LENGTH OF NEW BEAM PRIOR TO ORDERING/FABRICATION. THE DEPARTMENT WILL INCLUDE ALL MATERIALS, TOOLS, LABOR, EQUIPMENT AND INCIDENTALS NECESSARY TO COMPLETE THE ABOVE WORK FOR PAYMENT WITH ITEM 513 - STRUCTURAL STEEL MEMBERS LEVEL UF, AS PER PLAN: POUND.

ITEM 513 - STRUCTURAL STEEL MISC.: REPAIR OF DAMAGED MEMBERS, DRILLING:
AN ESTIMATED QUANTITY FOR EACH LOCATION IS PROVIDED IN TABLE 3, FOR DRILLING MAIN OR SECONDARY MEMBERS AS DETERMINED BY FIELD INSPECTION ACCORDING TO ITEM 849, DAMAGE ASSESSMENT OR AS DIRECTED BY THE ENGINEER. DRILL 2 INCH DIAMETER HOLES AT BOTH ENDS OF EACH IDENTIFIED CRACK AS DIRECTED BY THE ENGINEER. GRIND THE HOLES SMOOTH ACCORDING TO C&MS 513.19. THE DEPARTMENT WILL INCLUDE ALL MATERIALS, TOOLS, LABOR, EQUIPMENT AND INCIDENTALS NECESSARY TO COMPLETE THE ABOVE WORK FOR PAYMENT WITH ITEM 513 - STRUCTURAL STEEL MISC.: REPAIR OF DAMAGED MEMBERS, DRILLING: EACH.

ITEM 513 - STRUCTURAL STEEL MISC.: REPAIR OF DAMAGED MEMBERS, COPE HOLES:
AN ESTIMATED QUANTITY FOR EACH LOCATION IS PROVIDED IN TABLE 3, FOR COPING MAIN MEMBERS AS DETERMINED BY FIELD INSPECTION ACCORDING TO ITEM 849, DAMAGE ASSESSMENT OR AS DIRECTED BY THE ENGINEER. PROVIDE A 2 INCH DIAMETER X 4 INCH LONG COPE ACCORDING TO PLAN DETAILS OR AS DIRECTED BY THE ENGINEER. GRIND THE HOLES SMOOTH ACCORDING TO C&MS 513.19. THE DEPARTMENT WILL INCLUDE ALL MATERIALS, TOOLS, LABOR, EQUIPMENT AND INCIDENTALS NECESSARY TO COMPLETE THE ABOVE WORK FOR PAYMENT WITH ITEM 513 -STRUCTURAL STEEL MISC.: REPAIR OF DAMAGED MEMBERS, COPE HOLES: EACH.

ITEM 513 - STRUCTURAL STEEL MISC.: REPAIR OF DAMAGED MAIN MEMBER, COMPLETE PENETRATION WELDING:
AFTER DAMAGED AREAS HAVE BEEN INSPECTED ACCORDING TO ITEM 849 DAMAGE ASSESSMENT. PREPARE THE DAMAGED MATERIAL FOR WELDING, PROVIDE RUNOFF TABS FOR ALL COMPLETE PENETRATION WELDS. PERFORMING COMPLETE PENETRATION WELDS ACCORDING TO C&MS 513 USING APPROVED ELECTRODES, PROCEDURES AND WELDERS. REMOVE RUNOFF TABS AND GRIND THE COMPLETED EDGES SMOOTH. GRIND THE COMPLETED WELDS SMOOTH AND FLUSH WITH THE ADJACENT SURFACES TO PROVIDE A SURFACE FINISH ACCORDING TO ANSI B46.1 OF 250 MIL. DO NOT OVER GRIND AS TO REDUCE THE MATERIAL THICKNESS OR WIDTH OF THE NEW OR EXISTING MATERIALS. PREPARE ALL REENTRANT CORNERS WITH A ONE INCH RADIUS. REMOVE WELDING, START AND STOP DISCONTINUITIES. RADIOGRAPHIC TEST THE FINISHED WELDS ACCORDING TO C&MS 513.25A AND SUBMIT COPIES OF THE REPORTS TO THE ENGINEER. THE ENGINEER MAY OBTAIN TECHNICAL ASSISTANCE FROM THE OFFICE OF MATERIALS MANAGEMENT. THE DEPARTMENT WILL INCLUDE ALL MATERIALS; TOOLS; LABOR; EQUIPMENT; AND INCIDENTALS NECESSARY TO COMPLETE THE ABOVE WORK FOR PAYMENT WITH ITEM 513 - STRUCTURAL STEEL MISC.: REPAIR OF DAMAGED MAIN MEMBERS, COMPLETE PENETRATION WELDING: FOOT.

ITEM 513 - STRUCTURAL STEEL MISC.: REPAIR OF DAMAGED MAIN OR SECONDARY MEMBERS, FILLET WELDING:
AFTER DAMAGED AREAS HAVE BEEN INSPECTED ACCORDING TO ITEM 849 DAMAGE ASSESSMENT. PREPARE THE DAMAGED MATERIAL FOR WELDING, PERFORMING $^{5}/_{16}$ INCH FILLET WELDS ACCORDING TO ITEM 513 USING APPROVED ELECTRODES, PROCEDURES AND WELDERS. WELD EACH SECONDARY MEMBER ACCORDING TO PLAN DETAILS. MAGNETIC PARTICLE INSPECT ALL FILLET WELDS ACCORDING TO C&MS 513.25B. THE ENGINEER MAY OBTAIN TECHNICAL ASSISTANCE FROM THE OFFICE OF MATERIALS MANAGEMENT. THE DEPARTMENT WILL INCLUDE ALL MATERIALS; TOOLS; LABOR; EQUIPMENT; AND INCIDENTALS NECESSARY TO COMPLETE THE ABOVE WORK FOR PAYMENT WITH ITEM 513 - STRUCTURAL STEEL MISC.: REPAIR OF DAMAGED MAIN OR SECONDARY MEMBERS, FILLET WELDING: FOOT.

ITEM 514 - FIELD PAINTING OF DAMAGED STRUCTURAL STEEL, AS PER PLAN (TWO COAT):
1.0 DESCRIPTION
THIS ITEM CONSISTS OF FIELD PAINTING STRUCTURAL STEEL ON FRA-33-2456, PREVIOUSLY COATED WITH AN OLDER EXISTING OZEU OR IZEU PAINT SYSTEM OR UNPAINTED WEATHERING STEEL TO CORRECT DAMAGE BY COLLISION OR CORROSION. THIS WORK CONSISTS OF PERFORMING SURFACE PREPARATION AND APPLYING A TWO-COAT PAINT SYSTEM TO THE PREPARED STEEL AND FEATHERED REMOVAL AREAS OF EXISTING OZEU OR IZEU PAINT SYSTEMS OR UNPAINTED WEATHERING STEEL. REFER TO TABLE 4 FOR QUANTITIES.

2.0 GENERAL
C&MS 514.05 THROUGH 514.10 AND 514.13.D APPLY UNLESS MODIFIED BY THESE NOTES.

3.0 WASHING EXISTING SURFACES
WASHING EXISTING OZEU OR IZEU PAINTED SURFACES OR UNPAINTED WEATHERING STEEL CLEAN SURFACES TO BE COATED WITH LOW PRESSURE WATER CLEANING TO REMOVE ALL DIRT, DEBRIS, ANIMAL EXCREMENT, SALT CONTAMINANTS AND OTHER ACCUMULATED FOREIGN MATERIAL IN ACCORDANCE WITH SSPC-SP12 (LP WC), LOW PRESSURE WATER CLEANING. THE PRESSURE WASHER SHALL BE CAPABLE OF ACHIEVING AT LEAST 2000 POUNDS PER SQUARE INCH AT THE NOZZLE. WHEN USING THE POWER WASHING EQUIPMENT, THE NOZZLE SHALL BE MAINTAINED NO MORE THAN 10 INCHES FROM THE SURFACE. SUPPLY AND USE POTABLE WATER. PROVIDE TO THE ENGINEER A LETTER OF WRITTEN ACCEPTANCE FOR ANY BIODEGRADABLE DETERGENTS OR CLEANERS USED IN CONJUNCTION WITH THIS METHOD. COLLECT AND CONTAIN WATER AND DEBRIS REMOVED DURING WASHING OPERATIONS ABOVE WATER FEATURES IN CONFORMANCE WITH C&MS 514.08 AND C&MS 514.13.D FOR ANY DEBRIS. CREATE SETTLEMENT COLLECTION BASINS AND STRAIN ALL WASH WATER ABOVE LAND FEATURES AS NECESSARY TO PRODUCE VISIBLY CLEAR WATER AND COMPLY WITH C&MS 514.08 AND C&MS 514.13.D FOR ANY DEBRIS.

4.0 SURFACE PREPARATION
AFTER THE PRESSURE WASHED SURFACE HAS DRIED, REMOVE EXISTING PAINT COATING TO CONTRACT LIMITS OR AS DIRECTED BY THE ENGINEER ACCORDING TO: SSPC-SP 11, POWER TOOL CLEANING TO BARE METAL, AS SHOWN ON THE PICTORIAL SURFACE PREPARATION STANDARDS FOR PAINTING STEEL SURFACES SHOWN IN SSPC-VIS 3; SSPC SP6, COMMERCIAL BLAST CLEANING, AS SHOWN ON THE PICTORIAL SURFACE PREPARATION STANDARDS FOR PAINTING STEEL SURFACES SHOWN IN SSPC-VIS 1; OR SSPC SP12 UHP WJ-4, ULTRAHIGH-PRESSURE WATER JETTING, AS SHOWN ON THE PICTORIAL SURFACE PREPARATION STANDARDS FOR PAINTING STEEL SURFACES SHOWN IN SSPC-VIS 4. SUPPLY BLAST WATER CONTAINING A COMMERCIALLY AVAILABLE RUST INHIBITOR AT A DOSAGE THAT PREVENTS FLASH RUSTING FOR 12 HOURS AND DOCUMENTED AS ACCEPTABLE TO THE COATING'S MANUFACTURER. THE ENGINEER WILL USE THE SSPC-VIS 1, SSPC-VIS 3 OR SSPC-VIS 4 TO DETERMINE THE ACCEPTANCE OF THE SURFACE PREPARATION. FEATHER THE EXISTING PAINT TO EXPOSE A MINIMUM OF $^{1}/_{2}$ INCH OF EACH COAT. CONTAIN AND DISPOSE OF WASTE GENERATED BY THE CLEANING ACCORDING TO C&MS 514.13.D.

ROUND ALL EXPOSED CORNERS OF MAIN MATERIAL TO BE PAINTED AS NECESSARY TO ACHIEVE A $^{1}/_{16}$ INCH RADIUS OR EQUIVALENT FLAT SURFACE AT A 45 DEGREE ANGLE.

ITEM 514 - FIELD PAINTING OF DAMAGED STRUCTURAL STEEL, AS PER PLAN (TWO COAT) (CONTINUED...):
5.0 FIELD PAINTING
APPLY THE PRIME AND INTERMEDIATE COATS OF THE THREE-COAT PAINT SYSTEM SPECIFIED IN C&MS 708.02, ACCORDING TO C&MS 514.15, 514.16, 514.17, 514.19 AND 514.20 TO CONTRACT LIMITS OR AS DIRECTED BY THE ENGINEER. TINT THE INTERMEDIATE COAT TO APPROXIMATELY THE SAME COLOR AS THE EXISTING FINISH COLOR, UNPAINTED WEATHERING STEEL OR AS DESIGNATED IN THE CONTRACT. MATCH THE COLOR TO THE ENGINEERS SATISFACTION. THE ENGINEER WILL DETERMINE THE PRIME AND INTERMEDIATE COAT THICKNESS USING A TYPE 2 MAGNETIC GAGE AT SPOT LOCATIONS. DO NOT APPLY THE FINISH COAT. THE PRIME AND INTERMEDIATE COAT OF PAINT SHALL MEET THE MINIMUM DRY FILM THICKNESS REQUIREMENTS OF C&MS 514.20. APPLY PAINT AS FOLLOWS:

A. APPLY THE PRIME COAT ONLY TO THE PREPARED SURFACE OF THE BARE STEEL AND THE EXISTING PRIME COAT EXPOSED BY FEATHERING. DO NOT APPLY THE PRIME COAT TO THE ADJACENT INTERMEDIATE COAT.

B. APPLY CAULK AFTER PRIMING

C. APPLY THE INTERMEDIATE COAT TO THE NEW PRIME COAT AND TO THE EXISTING INTERMEDIATE AND FINISH COAT THAT ARE EXPOSED BY FEATHERING.

AT THE PERIMETER OF THE REPAIR AREA, APPLY THE PRIME AND INTERMEDIATE COATS USING A BRUSH. IN LIEU OF BRUSHING, THE CONTRACTOR MAY DOUBLE MASK THE AREAS NOT TO BE COATED AND SPRAY TO FEATHERED REMOVAL LINES.

BLEND REPAIR AREAS WITH THE ADJACENT COATING TO PROVIDE A FINISHED SURFACE IN THE PATCHED AREAS THAT IS SMOOTH AND HAS AN EVEN PROFILE WITH THE ADJACENT SURFACE.

6.0 MEASUREMENT
THE DEPARTMENT WILL MEASURE FIELD PAINTING OF DAMAGED STRUCTURAL STEEL, AS PER PLAN BY THE NUMBER OF SQUARE FEET OF STRUCTURAL STEEL PAINTED.

THE DEPARTMENT WILL DETERMINE THE SURFACE AREA BY TAKING EXACT FIELD MEASUREMENTS OF ALL PAINTED SURFACES AND CALCULATIONS.

STRUCTURE REPAIR NOTES
BRIDGE NO. FRA-33-2456
WATKINS ROAD OVER US 33

SFN 2501899
DESIGN AGENCY EMH&T
DESIGNER CAD | CHECKER TDA
REVIEWER CAS 08/20/26
PROJECT ID 125600
SUBSET 2 | TOTAL 19
SHEET P.25 | TOTAL 42

FRA-33-2456 BRIDGE HIT REPAIR

MODEL: Structure Notes Sheet 1 PAPERSIZE: 34x22 (in.) DATE: 10/30/2026 TIME: 8:34:56 AM USER: cschrader
J:\20250232\ODOT\117444\400-Engineering\Structures\SFN_2501899\Sheets\117444_SFN_2501899_SN001.dgn

7.0 BASIS OF PAYMENT
THE DEPARTMENT WILL PAY FOR ACCEPTED QUANTITIES AT THE CONTRACT PRICES AS FOLLOWS:

THE DEPARTMENT MAY CONSIDER PAINT AS ELIGIBLE FOR PAYMENT FOR MATERIAL ON-HAND AS SPECIFIED IN 109.10, HOWEVER, ONLY PAINT THAT THE CONTRACTOR CAN PROVE TO THE ENGINEER WILL BE USED DURING THE CONSTRUCTION SEASON IS ELIGIBLE FOR PAYMENT. THE CONTRACTOR SHALL PROVIDE THE ENGINEER CALCULATIONS INDICATING THE TOTAL SQUARE FEET OF STEEL TO BE PAINTED DURING THE CONSTRUCTION SEASON. THE CONTRACTOR SHALL ALSO PROVIDE CALCULATIONS SHOWING THE TOTAL NUMBER OF GALLONS REQUIRED.

IF THE CONTRACTOR CAUSES DAMAGE OR INJURY TO PUBLIC OR PRIVATE PROPERTY, THE DEPARTMENT WILL NOT PAY FOR RESTORING THE PROPERTY TO ITS ORIGINAL CONDITION.

THE DEPARTMENT WILL NOT PAY FOR REPAIRING ADJACENT COATINGS DAMAGED DURING THE WASHING, POWER TOOL CLEANING OR BLAST CLEANING OPERATION.

THE DEPARTMENT WILL NOT PAY FOR REMOVING AND REPLACING AN AREA OF COATING BECAUSE A SPOT OR MAXIMUM AVERAGE THICKNESS EXCEEDS THE MAXIMUM SPOT THICKNESS.

THE DEPARTMENT WILL NOT PAY FOR ADDITIONAL TESTING REQUIRED BY ANY HAULER, TREATMENT FACILITY, DISPOSAL FACILITY, OR LANDFILL.

THE DEPARTMENT WILL NOT PAY FOR ACCESSING, INSPECTING, AND REPAIRING AREAS THAT ARE NOT FOUND TO BE IN CONFORMANCE WITH THE SPECIFICATIONS AND PERTINENT CONTRACT DOCUMENTS.

ALL OTHER REQUIREMENTS OF THIS FIELD PAINTING SPECIFICATION ARE CONSIDERED INCIDENTAL TO THE WORK.

ITEM	***UNIT***	***DESCRIPTION***
514	*SQUARE FEET*	*FIELD PAINTING OF DAMAGED STRUCTURAL STEEL - TWO COAT, AS PER PLAN*

ITEM 516, JACKING AND TEMPORARY SUPPORT OF SUPERSTRUCTURE, AS PER PLAN:
THIS WORK CONSISTS OF RAISING OR RE-POSITIONING EXISTING STRUCTURES TO THE PERFORM REPAIRS DEFINED IN TABLE 3, SHEETS 11/19 AND 12/19, OR THE HEAT STRAIGHTENING PLAN.

SUBMIT CONSTRUCTION PLANS IN ACCORDANCE WITH C&MS 501.05.

IF, DURING THE JACKING OPERATIONS, CRACKING OF THE CONCRETE SUPERSTRUCTURE, SEPARATION OF THE CONCRETE DECK FROM THE STEEL STRINGERS, OR OTHER DAMAGE TO THE STRUCTURE IS VISUALLY OBSERVED, IMMEDIATELY CEASE THE JACKING OPERATION AND INSTALL SUPPORTS TO THE SATISFACTION OF THE ENGINEER. ANALYZE THE DAMAGE AND SUBMIT A METHOD OF CORRECTION TO THE ENGINEER FOR APPROVAL. EPOXY INJECT ALL BEAMS THAT SEPARATE FROM THE DECK FOR THE DISTANCE OF THE SEPARATION IN ACCORDANCE WITH C&MS 512.07. THE DEPARTMENT WILL NOT PAY FOR THE COST OF THIS EPOXY INJECTION OR OTHER REQUIRED REPAIRS NECESSITATED BY THE JACKING OPERATION. THE BRIDGE BEARINGS SHALL BE FULLY SEATED AT ALL CONTACT AREAS. IF FULL SEATING IS NOT ATTAINED, SUBMIT A REPAIR PLAN TO THE ENGINEER. THE DEPARTMENT WILL NOT PAY FOR THE REPAIR COSTS TO ENSURE FULL SEATING ON BEARINGS. THE DEPARTMENT WILL MEASURE THIS WORK ON A LUMP SUM BASIS. THE DEPARTMENT WILL PAY FOR THE ACCEPTED QUANTITIES AT THE CONTRACT PRICE FOR ITEM 516, JACKING AND TEMPORARY SUPPORT OF SUPERSTRUCTURE, AS PER PLAN.

ITEM 516 REFURBISH BEARING DEVICE, AS PER PLAN
REMOVE AND SALVAGE THE EXISTING ROCKER LOAD PLATE FROM THE EXISTING DAMAGED MAIN MEMBER OVER PIER 4 AND WELD NEW PLATE TO PROPOSED BEAM ACCORDING TO DETAILS PROVIDED ON SHEET 14/16. IF DAMAGE IS PRESENT ON END COVER PLATES AFTER INSPECTION, REMOVE AND WELD NEW PLATES TO ENSURE THE ROCKER IS FIXED HORIZONTALLY TO THE TOP ROCKER PLATE. PORTIONS OF THE EXISTING BEARING TO BE REUSED WILL BE PROVIDED TO THE CONTRACTOR BY THE DISTRICT.

ASBESTOS NOTIFICATION
AN ASBESTOS SURVEY WAS CONDUCTED BY A LICENSED ASBESTOS HAZARD EVALUATION SPECIALIST FOR RENOVATION WORK. A COPY OF THE ASBESTOS INSPECTION REPORT FOR EACH STRUCTURE IS INCLUDED IN THE PLAN PACKAGE OF THIS PROJECT. THE ASBESTOS INSPECTION REPORT DID NOT IDENTIFY THE PRESENCE OF ANY ASBESTOS CONTAINING MATERIALS ABOVE REGULATORY LIMITS. SUBMIT A COMPLETED ELECTRONIC NOTIFICATION OF DEMOLITION AND RENOVATION FORM (NDRF), APPLICABLE FEES, AND THE ASBESTOS INSPECTION REPORT TO THE OEPA AT LEAST 10 DAYS PRIOR TO ANY DEMOLITION ACTIVITY, RENOVATION ACTIVITY, OR BOTH. SUBMIT THE NDRF AND PAYMENT ALONG WITH THE ASBESTOS INSPECTION REPORT USING THE OEPA EBUSINESS CENTER. SUBMIT ONE ELECTRONIC PDF COPY AND ONE HARD COPY OF THE NDRF TO THE ENGINEER.

VANDAL PROTECTION FENCE, 6' STRAIGHT, COATED FABRIC, AS PER PLAN
CAREFULLY REMOVE AND SALVAGE POSTS AND FENCING MESH OVER THE LIMITS OF THE DECK REMOVAL. REPLACE THE VANDAL PROTECTION FENCING WITH THE SALVAGED PARTS AND NEW BOLTS ACCORDING TO VPF-1-90.

FRA-33-2456 BRIDGE HIT REPAIR

MODEL: Structure Notes Sheet 2 PAPERSIZE: 34x22 (in.) DATE: 10/30/2026 TIME: 8:34:58 AM USER: cschrader
J:\20250232\ODOT\117444\400-Engineering\Structures\SFN_2501899\Sheets\117444_SFN_2501899_SN001.dgn

STRUCTURE REPAIR NOTES (CONT.)
BRIDGE NO. FRA33-2456
WATKINS ROAD OVER US 33

SFN 2501899
DESIGN AGENCY EMH&T
DESIGNER CAD | CHECKER TDA
REVIEWER CAS 08/20/26
PROJECT ID 125600
SUBSET 3 | TOTAL 19
SHEET P.26 | TOTAL 42

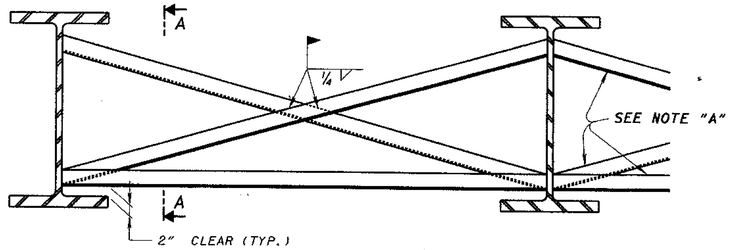

TYPE 1: INTERMEDIATE WELDED CROSSFRAME DETAILS

FOR ROLLED BEAM BRIDGES
AASHTO CASE II

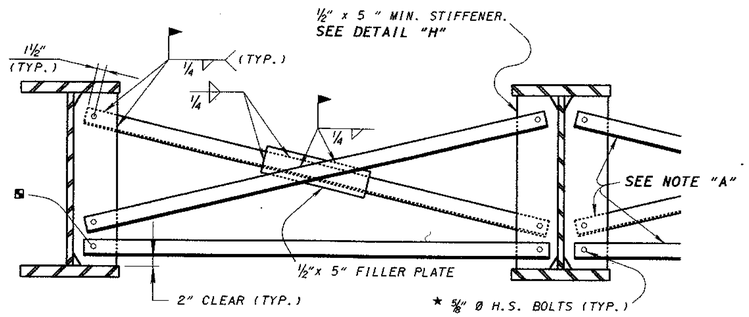

TYPE 3 INTERMEDIATE WELDED CROSSFRAME DETAILS

FOR GIRDER BRIDGES AND AASHTO CASE I ROLLED BEAM BRIDGES

CROSSFRAME ANGLE SIZE	
DEPTH OF BEAM/GIRDER	MINIMUM SIZE ANGLE
D < 48 INCH	3 x 3 x 5/16"
48 INCH < D < 52 INCH	3½ x 3½ x 3/8"
52 INCH < D < 60 INCH	4 x 4 x 3/8"

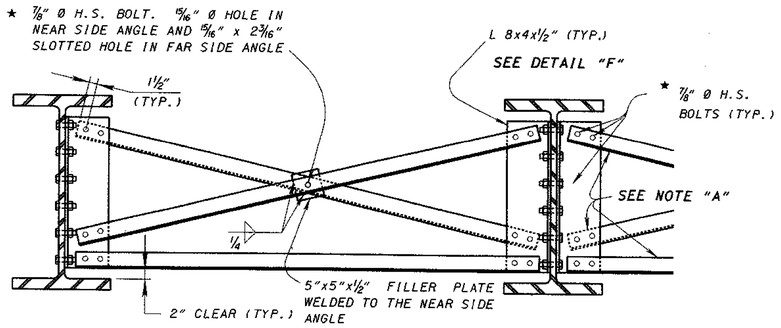

TYPE 2: INTERMEDIATE BOLTED CROSSFRAME DETAILS

FOR ROLLED BEAM BRIDGES
AASHTO CASE I OR CASE II

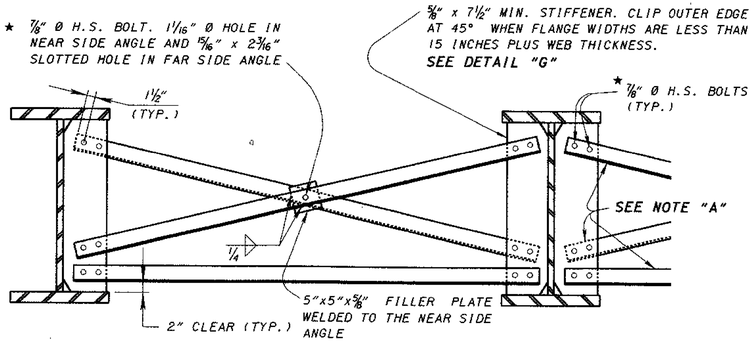

TYPE 4 INTERMEDIATE BOLTED CROSSFRAME DETAILS

FOR GIRDER BRIDGES AND AASHTO CASE I ROLLED BEAM BRIDGES

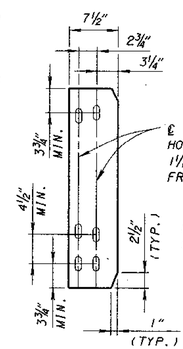

DETAIL "G"

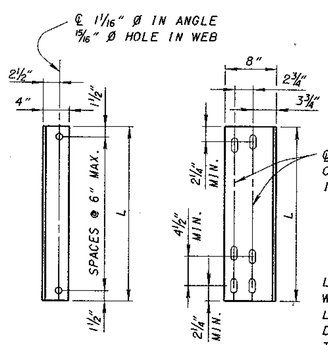

DETAIL "F"

★ ALL BOLTS ARE A325 TYPE 1 GALVANIZED FOR A GALVANIZED OR PAINTED BRIDGE AND A325 TYPE 3 FOR A588 WEATHERING STEEL BRIDGE. EACH ANCHOR ASSEMBLY SHALL INCLUDE A BOLT, NUT AND TWO (2) WASHERS, TIGHTENED PER CMS SECTION 513.15.

THE FABRICATOR SHALL CHECK LONGITUDINAL CROSSFRAME SPACING SO THAT INTERFERENCE WITH BOLTED SPLICES, ANCHOR BOLTS, COMPLETE PENETRATION WEB OR FLANGE WELDED SPLICES AND BEARING STIFFENERS CAN BE AVOIDED. SPACING SHALL BE ADJUSTED TO PROVIDE AT LEAST SIX INCHES OF LONGITUDINAL CLEARANCE. THE FABRICATOR MAY ADJUST CROSS-FRAME SPACES UP TO A MAXIMUM OF 15'-0" CENTER TO CENTER UNLESS THE CONTRACT DRAWINGS PROVIDE A NOTED MAXIMUM.

FOR COMPLETELY SHOP PAINTED OR GALVANIZED SYSTEMS, A TYPE 2 OR TYPE 4 CROSSFRAME SHALL BE USED.

AT THE OPTION OF THE CONTRACTOR, TYPE 2 CROSSFRAME CAN BE USED IN LIEU OF TYPE 1 CROSSFRAME AND TYPE 4 CROSSFRAME CAN BE USED INSTEAD OF TYPE 3 CROSSFRAME.

■ AT SKEWED STRUCTURES THE NEED OF SLOTTED HOLES AT EACH CROSS FRAME LOCATION SHALL BE INVESTIGATED AND SPECIFIED ON THE PLANS AS REQUIRED.

NOTE "A"

MATCH CROSSFRAME LEGS TO EACH SIDE OF THE WEB, SEE CROSSFRAME ANGLE SIZE GUIDE TABLE FOR SIZES

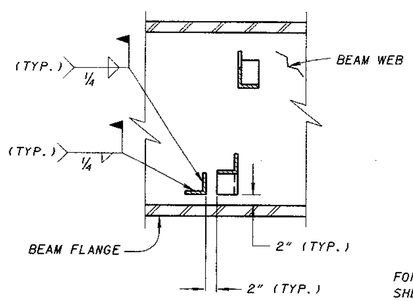

SECTION A-A

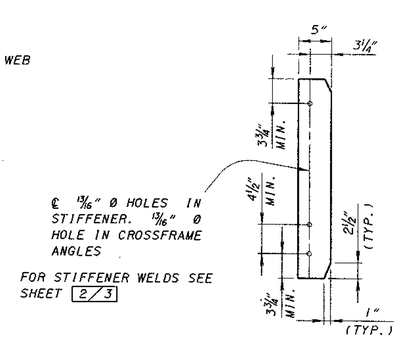

DETAIL "H"

STATE OF OHIO DEPARTMENT OF TRANSPORTATION
Brad Fogwell
ADMINISTRATOR
2-12-97
DATE

DESIGN AGENCY
OFFICE OF STRUCTURAL ENGINEERING

REVISIONS	DESIGNED	DRAWN	CHECKED	REVIEWED
	JCR	BDB/FO	JS	WTL

STANDARD
GENERAL STEEL DETAILS

GSD-1-96

SFN
N/A

DESIGN AGENCY
EMH&T

DESIGNER	CHECKER
CAD	TDA

REVIEWER
CAS 08/20/26

PROJECT ID
125600

SUBSET	TOTAL
4	19

SHEET	TOTAL
P.27	42

1 / 3

ARCHIVED STANDARD DRAWING GSD-1-96

FRA-33-2456 BRIDGE HIT REPAIR

MODEL: Archived Std Dwg Sheet 1 PAPERSIZE: 34x22 (in.) DATE: 10/30/2026 TIME: 8:34:59 AM USER: cschrader
J:\20250232\ODOT\117444\400-Engineering\Structures\SFN_2501899\Sheets\117444_SFN_2501899_SN001.dgn

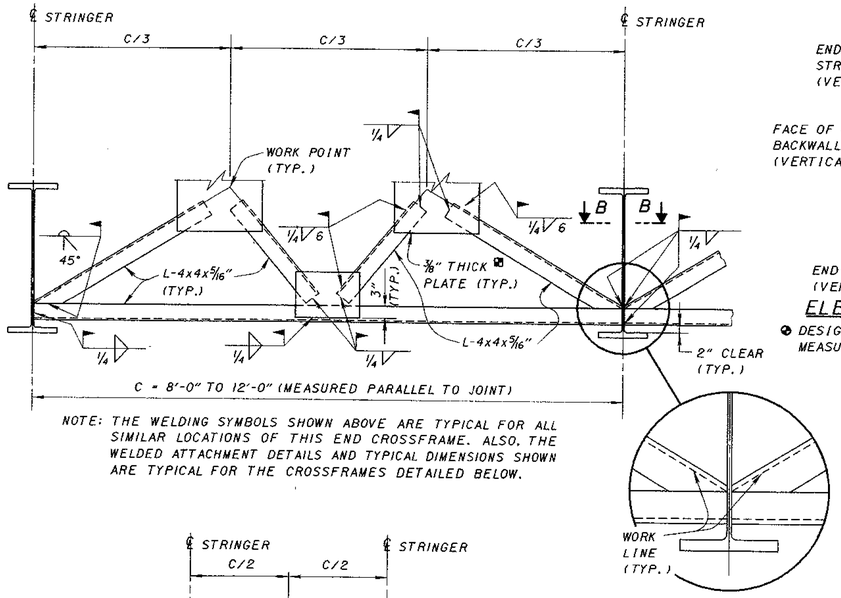

NOTE: THE WELDING SYMBOLS SHOWN ABOVE ARE TYPICAL FOR ALL SIMILAR LOCATIONS OF THIS END CROSSFRAME. ALSO, THE WELDED ATTACHMENT DETAILS AND TYPICAL DIMENSIONS SHOWN ARE TYPICAL FOR THE CROSSFRAMES DETAILED BELOW.

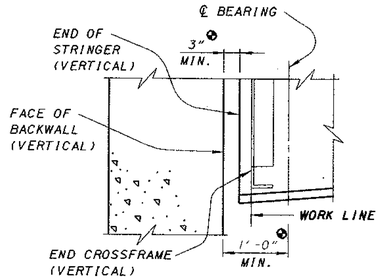

ELEVATION OF BEAM/GIRDER

⊗ DESIGNER TO ESTABLISH DIMENSION REQUIRED, MEASURED NORMAL TO BACKWALL.

▣ 3/8" THICK PLATE IS A PART OF THE EXPANSION JOINT SYSTEM. SEE EXPANSION JOINT STANDARD DRAWINGS FOR DETAILS.

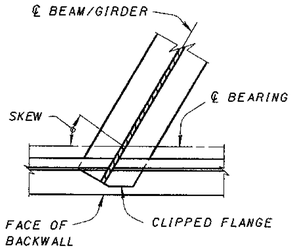

SECTION B-B

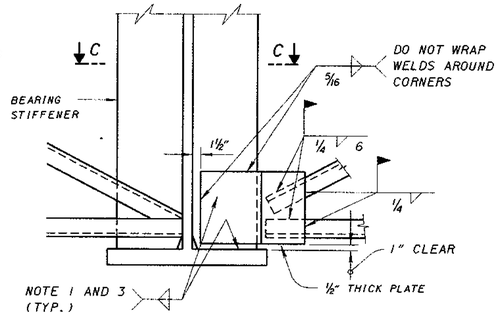

BEAM/GIRDER END

END CROSSFRAME FOR SKEWED BRIDGES WHERE BEARING STIFFENERS INTERFERE WITH END CROSSFRAMES.

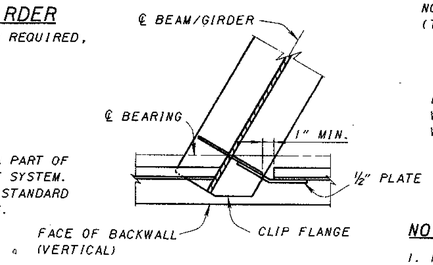

SECTION C-C

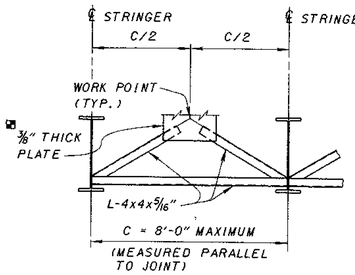

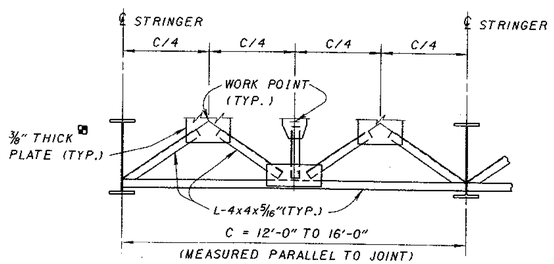

END CROSSFRAME DETAILS

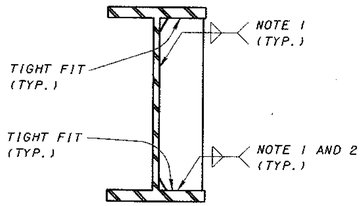

INTERMEDIATE STIFFENER

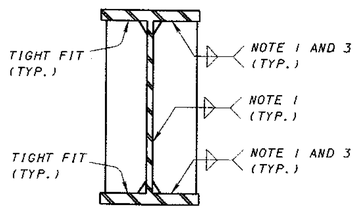

INTERMEDIATE STIFFENER WITH CROSSFRAMES

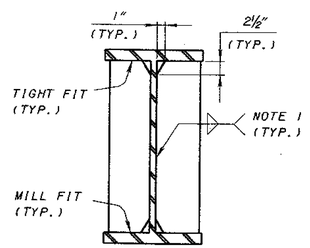

BEARING STIFFENER

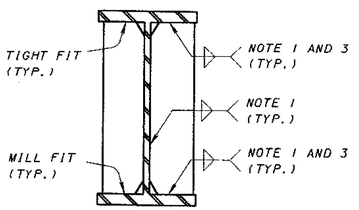

BEARING STIFFENER WITH CROSSFRAMES

NOTES:

1. PROVIDE 1/4" WELD WHEN THE THICKER PLATE IS 3/4" OR LESS OR 5/16" WELD WHEN THE THICKER PLATE IS GREATER THAN 3/4", UNLESS DESIGN REQUIRES LARGER WELDS (SEE CMS 513.17).
2. INTERMEDIATE STIFFENERS REQUIRE FILLET WELDS TO THE COMPRESSION FLANGE ONLY PER CMS 513.08.
3. STIFFENERS TO WHICH CROSS FRAMES CONNECT REQUIRE FILLET WELDS TO BOTH FLANGES PER CMS 513.08

BEARING STIFFENER: BEARING STIFFENER SHALL BE VERTICAL AFTER ERECTION.

WELDS: STIFFENER TO STRINGER WELDS SHALL BE TERMINATED AS GIVEN BELOW:

A. STIFFENER TO STRINGER FLANGE WELDS 1/4" ± 1/8" AT BOTH ENDS OF THE STIFFENER.
B. STIFFENER TO STRINGER WEB WELDS 1/2" ± 1/4" AT BOTH ENDS OF THE STIFFENER.

MILL FIT: THE BEARING ENDS OF THE BEARING STIFFENER SHALL BE FLUSH AND SQUARE WITH THE WEB AND SHALL HAVE AT LEAST 75 PERCENT OF THIS AREA IN CONTACT WITH THE INNER SURFACE OF THE FLANGE.

TIGHT FIT: A TIGHT FIT IS DEFINED AS ONE IN WHICH THE STIFFENER AND FLANGE ARE IN PHYSICAL CONTACT OVER SOME PORTION OF THE END OF THE STIFFENER AND HAVING NO GAP IN EXCESS OF 1/16 INCH.

BEAM OR GIRDER ENDS: FOR STRUCTURES ON GRADE THE BEAM OR GIRDER ENDS SHALL BE CUT IN A MANNER THAT THEY ARE VERTICAL AFTER ERECTION. A THREE (3) INCH MINIMUM CLEARANCE AT 60 F SHALL BE MAINTAINED BETWEEN THE VERTICAL ENDS OF THE BEAMS OR GIRDERS AND THE VERTICAL FACE OF THE BACKWALL.

WORK POINTS: WORK POINTS SHALL BE COORDINATED BETWEEN EXPANSION JOINT AND STRUCTURAL STEEL SUPPLIERS TO ASSURE FIT UP AT ALL DESIGN LOCATIONS.

TRANSITION OF THICKNESS OR WIDTH AT BUTT JOINTS: REFER TO SECTION 9.20 OF THE AMERICAN WELDING SOCIETY (AWS) BRIDGE WELDING CODE AS AMENDED BY SUPPLIMENTAL SPECIFICATION 1011 WHICH PROVIDES TRANSITION DETAILS OF THICKNESSES AND WIDTHS AT COMPLETE PENETRATION BUTT JOINTS.

DESIGN AGENCY
OFFICE OF STRUCTURAL ENGINEERING

STATE OF OHIO DEPARTMENT OF TRANSPORTATION
Brad Fogwell — ADMINISTRATOR
2-12-97 — DATE

REVISIONS	DESIGNED JCR	DRAWN BDB/FO	CHECKED JS	REVIEWED WTL
			GSD-1-96	

STANDARD
GENERAL STEEL DETAILS

2 / 3

ARCHIVED STANDARD DRAWING GSD-1-96

SFN N/A
DESIGN AGENCY EMH&T
DESIGNER CAD | CHECKER TDA
REVIEWER CAS 08/20/26
PROJECT ID 125600
SUBSET 5 | TOTAL 19
SHEET P.28 | TOTAL 42

FRA-33-2456 BRIDGE HIT REPAIR

MODEL: Archived Std Dwg Sheet 2 PAPERSIZE: 34x22 (in.) DATE: 10/30/2026 TIME: 8:35:31 AM USER: cschrader
J:\20250232\ODOT\117444\400-Engineering\Structures\SFN_2501899\Sheets\117444_SFN_2501899_SN001.dgn

FED. RD. DIVISION	STATE	PROJECT	TYPE FUNDS
5	OHIO		

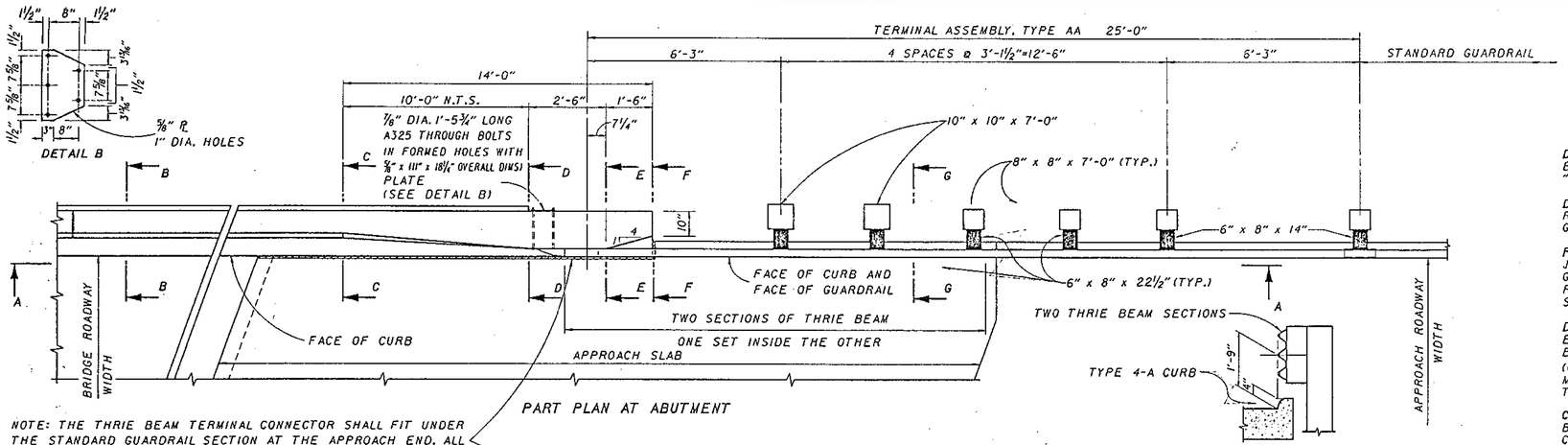

NOTE: THE THRIE BEAM TERMINAL CONNECTOR SHALL FIT UNDER THE STANDARD GUARDRAIL SECTION AT THE APPROACH END. ALL LAPS SHALL BE IN THE DIRECTION OF TRAFFIC.

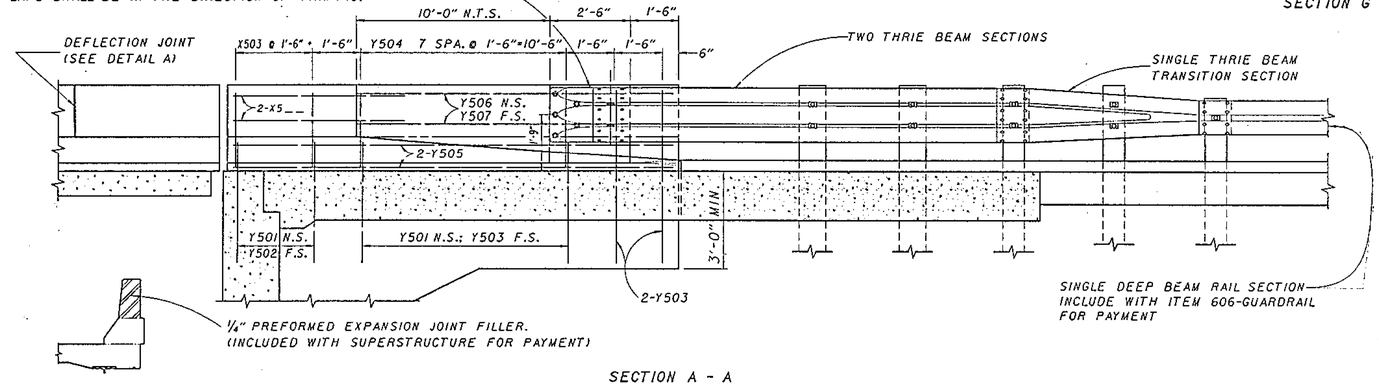

REINFORCING BAR LIST

MARK	LENGTH	SHP.
X501	8'-8½"	BT.
X502	A=2'-3"	BT.
X503	5'-3"	BT.
X5__	⊗	STR.
Y501	3'-7"	BT.
Y502	2'-9"	STR.
Y503	4'-4"	STR.
Y504	3'-0"	BT.
Y505	AS REQ.	STR.
Y506	13'-8"	BT.
Y507	13'-8"	STR.

⊗ SEE PROJECT PLANS
ALL REINFORCING BARS SHALL BE EPOXY COATED

GENERAL NOTES

DESIGN SPECIFICATIONS: "STANDARD SPECIFICATIONS FOR HIGHWAY BRIDGES" ADOPTED BY AASHTO, 1989, INCLUDING THE OHIO "SUPPLEMENT" TO THESE SPECIFICATIONS.

DESIGN DATA: CONCRETE CLASS S f'c=4500 P.S.I., f'c=1500 P.S.I. REINFORCING STEEL ASTM A615, A616 OR A617 GRADE 60 fs=24,000 P.S.I.

PREFORMED EXPANSION JOINT FILLER IN THE PARAPET DEFLECTION JOINTS MAY BE EITHER 1/4 " GRAY SPONGE RUBBER OR 1/4 " GRAY CELLULAR POLYVINYL CHLORIDE (PVC) SPONGE. SPONGE RUBBER FILLER SHALL CONFORM TO AASHTO M-153, TYPE I. DENSITY OF PVC SPONGE NOT BE LESS THAN 20 LBS. PER CU. FT.

DEFLECTION JOINTS SHALL BE SPACED AT 16'-0" CENTERS, MAX., EXCEPT THAT FOR CONTINUOUS STRUCTURES THE PANELS SHALL BE FURTHER SUBDIVIDED IN THE NEGATIVE MOMENT REGION (OVER THE PIERS) INTO LENGTHS OF NOT LESS THAN 5'-0" NOR MORE THAN 7'-6". REINFORCING BARS SHALL NOT EXTEND THROUGH DEFLECTION JOINTS.

CONCRETE PARAPETS ABOVE UPPER CONSTRUCTION JOINT SHALL BE PLACED IN ALTERNATE SECTIONS BY THE USE OF BULKHEADS. CLOSING SECTIONS SHALL BE PLACED AFTER REMOVAL OF BULKHEADS AND AFTER PLACEMENT OF EXPANSION JOINT FILLER. EXPOSED EDGES OF THE FILLER SHALL BE FLUSH WITH THE SURFACE OF CONCRETE AND SHALL BE FREE OF MORTAR.

PAYMENT: ADDITIONAL GUARDRAIL COST IN EXCESS OF NORMAL GUARDRAIL COST, SUCH AS: TERMINAL CONNECTOR, STEEL PLATE, BOLTS, NUTS, PLATE WASHERS AND OTHER HARDWARE SHALL BE INCLUDED WITH BRIDGE TERMINAL ASSEMBLY FOR PAYMENT. QUANTITIES OF CONCRETE AND REINFORCING STEEL FOR PARAPET ARE INCLUDED WITH THEIR APPROPRIATE ITEM UNDER EITHER ABUTMENTS OR SUPERSTRUCTURE FOR PAYMENT.

POSTS SHALL BE SOUARE-SAWED PRESSURE TREATED WOOD AS PER 710.14. POSTS SHALL BE FABRICATED WITH SQUARE ENDS. BOLT HOLES SHALL BE BORED AND TOPS OF POSTS TRIMMED, IF REQUIRED. AFTER POSTS ARE SET, POSTS MAY BE SET IN DRILLED HOLES OR DRIVEN TO GRADE. STEEL POSTS AND BLOCKOUTS MAY BE FURNISHED AS AN ALTERNATE, PROVIDED THAT THE STRENGTH EQUALS OR EXCEEDS THE STRENGTH OF WOOD POSTS AND BLOCKOUTS.

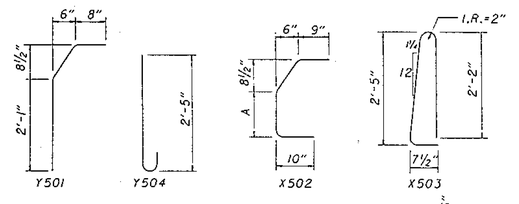

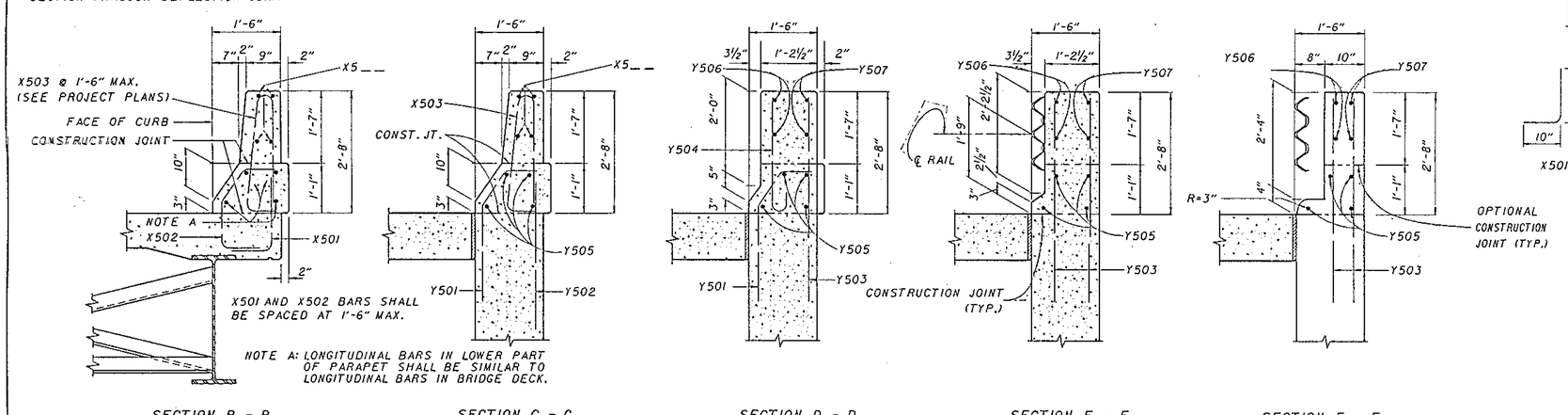

STATE OF OHIO
DEPARTMENT OF TRANSPORTATION
BUREAU OF BRIDGES AND STRUCTURAL DESIGN

BRIDGE RAILING
DEFLECTOR PARAPET TYPE

DESIGNED	DRAWN	TRACED	CHECKED	REVIEWED	DATE	REVISED 1-29-90 4-3-90
FFE	JC			WTF	10-25-89	

SFN	N/A
DESIGN AGENCY	EMH&T
DESIGNER	CAD
CHECKER	TDA
REVIEWER	CAS 08/20/26
PROJECT ID	125600
SUBSET	6
TOTAL	19
SHEET	P.29
TOTAL	42

ARCHIVED STANDARD DRAWING BR-1-90

FRA-33-2456 BRIDGE HIT REPAIR

MODEL: Archived Std Dwg Sheet 3 PAPERSIZE: 34x22 (in.) DATE: 10/30/2026 TIME: 8:36:01 AM USER: cschrader
J:\2025023Z\ODOT\117444\400-Engineering\Structures\SFN_2501899\Sheets\117444_SFN_2501899_SN001.dgn

GENERAL NOTES

DESCRIPTION:

THIS ITEM CONSISTS OF FURNISHING AND INSTALLING VANDAL FENCING ON NEW AND EXISTING CONCRETE BRIDGE RAILINGS. CONSTRUCT IN A MANNER THAT PROVIDES A RIGID, TAUT FENCE CLOSELY CONFORMING TO THE TOP SURFACE OF THE CONCRETE RAILING. UNLESS OTHERWISE SPECIFIED IN THE PLANS, INSTALL POSTS AND POST SLEEVES PLUMB.

(1) FENCE LINE POSTS AND END POSTS

FENCE LINE POSTS AND END POSTS SHALL BE 2.880 INCH OUTSIDE DIAMETER GRADE 2 PIPE, 710.03 (TYPE I), FY = 50,000 PSI, 4.64 LB/FT. THE PROTECTIVE COATING SHALL BE ACCORDING TO AASHTO M181 FOR GRADE 2 POSTS.

(2) FENCE TOP RAILS, BOTTOM RAILS AND LINE RAILS

FENCE TOP RAILS, BOTTOM RAILS AND LINE RAILS SHALL BE 1.660 INCH OUTSIDE DIAMETER GRADE 2 PIPE, 710.03 (TYPE I), FY = 50,000 PSI, 1.84 LB/FT. THE PROTECTIVE COATING SHALL BE ACCORDING TO AASHTO M181 FOR GRADE 2 POSTS.

(3) BASE PLATES

BASE PLATES SHALL BE ASTM A709 GRADE 36 OR 50 STEEL GALVANIZED ACCORDING TO C&MS 711.02.

(4) FASTENERS

THE ¾ INCH DIA. HIGH STRENGTH BOLTS, NUTS AND WASHERS SHALL BE IN ACCORDANCE WITH C&MS 711.09 (ASTM A325) GALVANIZED.

(5) ADHESIVE ANCHORS

THE THREADED ROD FOR ADHESIVE ANCHORS SHALL BE ASTM F1554, GRADE 36, WITH ASTM A563 NUTS AND ASTM F436 WASHERS. MECHANICALLY GALVANIZE ALL ANCHOR HARDWARE ACCODING TO ASTM B695, CLASS 65.

INSTALL ADHESIVE ANCHORS ACCORDING TO THE MANUFACTURER'S INSTALLATION INSTRUCTIONS PUBLISHED IN THE ICC-ES REPORTS LISTED BELOW.

THE HOLES FOR THE ADHESIVE ANCHORS SHALL BE DRILLED WITH A HAMMER DRILL AND CARBIDE BIT. PRIOR TO THE INSTALLATION OF THE ANCHORS, THE HOLES SHALL BE CLEANED AND DRIED IN A MANNER CONSISTENT WITH THE MANUFACTURER'S REQUIREMENTS FOR DRY CONCRETE.

WWW.ICC-ES.ORG/EVALUATION REPORTS/INDEX.SHTML

SELECT FROM ONE OF THE FOLLOWING APPROVED PRODUCTS:

HILTI HIT-HY 200 ADHESIVE ANCHORS
(ICC-ES REPORT ESR-3187)

DEWALT PURE110+ EPOXY ADHESIVE ANCHOR SYSTEM
(ICC-ES REPORT ESR-3298)

SIMPSON STRONG-TIE SET-3G EPOXY ADHESIVE ANCHORS
(ICC-ES REPORT ESR-4057)

ATC ULTRABOND HS-ICC ADHESIVE ANCHOR SYSTEM
(ICC-ES REPORT ESR-4094)

THE CONTRACTOR MAY USE A SUBSTITUTE ADHESIVE ANCHOR EVALUATED BY ICC-ES. THE SUBSTITUTE ANCHORS SHALL MEET OR EXCEED THE CAPACITY OF THE ANCHORS LISTED ABOVE. THE ANCHOR ADHESIVE SHALL BE EVALUATED ACCORDING TO ACI 318 CHAPTER 17, "ANCHORING TO CONCRETE", FOR CRACKED AND UNCRACKED CONCRETE APPLICATIONS.

ADHESIVE ANCHORS SHALL NOT BE SUBSTITUTED WITH MECHANICAL ANCHORS.

(5) ADHESIVE ANCHORS (CONT'D)

THE CONTRACTOR SHALL SUPPLY DOCUMENTATION SEALED BY AN OHIO REGISTERED PROFESSIONAL ENGINEER ENSURING THAT THE SELECTED ADHESIVE ANCHORAGE PROVIDES SUFFICIENT CAPACITY FOR THIS APPLICATION IN ACCORDANCE WITH ACI 318. INSTALL THE SELECTED ANCHORS ACCORDING TO THE MANUFACTURER'S INSTALLATION INSTRUCTION PUBLISHED IN THE ICC-ES REPORT. PUBLISHED ICC-ES REPORTS FOR ACCEPTABLE PRODUCTS ARE AVAILABLE AT:

WWW.ICC-ES.ORG/EVALUATION_REPORTS/

FOR INSTALLATIONS IN NEW CONCRETE RAILINGS, THE ANCHORS MAY BE CAST-IN-PLACE WITH A MINIMUM EMBEDMENT LENGTH EQUIVALENT TO WHAT IS SHOWN IN THE FOLLOWING SHEETS.

(6) TENSION BARS

TENSION BARS SHALL BE 3/16 INCH X ½ INCH STEEL GALVANIZED ACCORDING TO C&MS 711.02.

(7) TENSION BANDS AND BRACE BANDS

TENSION BANDS AND BRACE BANDS SHALL BE ⅛ INCH X 1 INCH GALVANIZED STEEL ASSEMBLED WITH ⅜ INCH DIAMETER X 1¼ INCH GALVANIZED BOLTS. ONE TENSION BAND SHALL BE SUPPLIED FOR EACH FOOT OF FABRIC HEIGHT. BANDS SHALL BE GALVANIZED ACCORDING TO C&MS 711.02.

(8) LINE RAIL CLAMPS OR BOULEVARDS

LINE RAIL CLAMPS OR BOULEVARDS SHALL BE STEEL, GALVANIZED ACCORDING TO C&MS 711.02. THE CLAMPS SHALL BE USED TO CONNECT LINE RAILS OR TOP RAILS OF CURVED FENCES TO INTERIOR POSTS. INSTALL USING ⅜ INCH DIAMETER X 2½ INCH BOLTS, GALVANIZED ACCORDING TO C&MS 711.02.

(9) MALLEABLE OR CAST IRON FITTINGS

MALLEABLE OR CAST IRON FITTINGS SHALL BE USED FOR END POST DOME CAPS, HALF BALL AND LOOP LINE POST CAPS AND LINE OR TOP RAIL ENDS. ALL FITTINGS SHALL BE GALVANIZED ACCORDING TO C&MS 711.02.

(10) TENSION WIRE

TENSION WIRE SHALL BE ALUMINIZED 0.177 INCH DIAMETER STEEL COIL SPRING WIRE CONFORMING TO AASHTO M181. PLACE TENSION WIRE AS CLOSE TO THE CONCRETE RAILING AS PRACTICAL BUT NOT MORE THAN 3 INCHES MAXIMUM. THE MAXIMUM SAG IN THE WIRE SHALL BE ¼" AFTER TENSIONING.

(11) FABRIC TIES AND HOG RINGS

FABRIC TIES AND HOG RINGS SHALL BE 0.148 INCH CORE DIAMETER GALVANIZED PVC COATED STEEL WIRE AND 0.120 INCH ANNEALED STAINLESS STEEL WIRE CONFORMING TO ASTM A478 RESPECTIVELY. TO CONNECT THE FABRIC TO THE LINE POSTS, SUPPLY ONE FABRIC TIE FOR EACH ONE FOOT OF FABRIC HEIGHT. CONNECT THE FABRIC TO THE TENSION WIRE USING HOG RINGS TO EXCEED 12 INCHES BETWEEN POSTS. THE PVC COATING SHALL BE THE SAME AS THAT FOR THE STEEL FABRIC.

(12) ADJUSTABLE TRUSS RODS

ADJUSTABLE TRUSS RODS: IF THE FENCE FABRIC IS CONTINUOUS ACROSS A STRUCTURAL EXPANSION JOINT, INSTALL ADJUSTABLE TRUSS RODS IN THE PANEL SECTION ON EACH IMMEDIATE SIDE OF THE EXPANSION PANEL. OTHERWISE, INSTAL TRUSS RODS ONLY AS NECESSARY TO MEET THE REQUIREMENTS OF THIS DRAWING. ADJUSTABLE TRUSS RODS SHALL BE ⅝ INCH DIAMETER STEEL, GALVANIZED ACCORDING TO C&MS 711.02.

(13) DOUBLE WRAP FABRIC TIES

DOUBLE WRAP FABRIC TIES SHALL BE 0.091 INCH CORE DIAMETER GALVANIZED PVC COATED STEEL WIRE, 15¼ INCHES LONG. TO CONNECT THE FABRIC TO THE LINE AND TOP RAILS, USE DOUBLE WRAP TIES 2-3 INCHES ON EACH SIDE OF THE POSTS AND AT SPACINGS NOT TO EXCEED 12 INCHES BETWEEN POSTS. THE PVC COATING SHALL BE THE SAME AS THAT FOR THE STEEL FABRIC.

(14) POST SLEEVES

POST SLEEVES SHALL BE 3.500 INCH OUTSIDE DIAMETER PIPE, ASTM A53, 25,000 PSI MINIMUM YIELD STRENGTH, 7.58 LB/FT, GALVANIZED ACCORDING TO C&MS 711.02. HEXAGON SOCKET SET SCREWS SHALL BE SAE 4140 ALLOY STEEL, HEAT TREATED, WITH FLAT OR OVAL POINT.

(15) FILLET WELDS

FILLET WELDS SHALL CONFORM TO C&MS 513.

(16) FABRIC

FABRIC SHALL CONSIST OF A 1 INCH DIAMOND MESH USING 0.120 INCH DIA. (11 GAGE) WIRE CONFORMING TO ASTM F668 CLASS 2A OR 2B EXCEPT AS NOTED. THE PVC COATING SHALL BE GRAY IN COLOR CLOSELY APPROACHING FEDERAL STANDARD NO. 595B-16251 UNLESS OTHERWISE SPECIFIED IN THE PLANS. SELVAGES SHALL BE KNUCKLED AT BOTH ENDS. HANDLE ALL PVC COATED FABRIC WITH CARE. IF THE PVC COATING IS DAMAGED, REPLACE THE DAMAGED PORTION OF THE FABRIC AT NO COST TO THE DEPARTMENT.

(17) SHIM PLATES

SHIM PLATES SHALL BE MADE FROM ANY MULTI-POLYMER PLASTIC WITH A MINIMUM COMPRESSIVE STRENGTH OF 5,000 PSI. IN ORDER TO INSTALL POSTS PLUMB, ENDS OF POSTS AND SLEEVES MAY BE CUT ON A BIAS.

(18) TRAFFIC MAINTENANCE

MAINTAIN TRAFFIC ACCORDING TO THE PROJECT PLANS.

(19) CAULKING COMPOUND

CAULKING COMPOUND SHALL CONFORM TO FEDERAL SPECIFICATION TT-S-00230C TYPE II, CLASS A, ALUMINUM GRAY. WHEN APPLYING THE CAULK TO THE BASE PLATE, PROVIDE A 1 INCH OPENING THROUGH THE CAULKING ON LOW SIDE OF BASE PLATE.

(20) EXPANSION SLEEVES

PROVIDE EXPANSION SLEEVES AT LEAST 6 INCHES LONG IN FENCE PANELS SPANNING STRUCTURAL EXPANSION JOINTS. EXPANSION SLEEVES SHALL BE OUTSIDE TYPE WITH INTERNAL HEAVY SPRING AND GALVANIZED ACCORDING TO C&MS 711.02. THE SLEEVES SHOULD BE CAPABLE OF ACCOMMODATING THE MAXIMUM EXPANSION AND CONTRACTION MOVEMENTS OF THE STRUCTURE.

(21) CONSTRUCTION PROCEDURE:

1. FIELD VERIFY THE PLAN LOCATIONS OF ALL BASE PLATES AND MARK RAILINGS ACCORDINGLY.
2. MARK AND DRILL HOLES FOR THE ½ INCH HIGH STRENGTH THREADED ANCHORS OR ½ INCH BOLTS USING A BASE PLATE OR TEMPLATE.
3. INSTALL ½ INCH DIAMETER HIGH STRENGTH THREADED ANCHORS OR ½ INCH BOLTS.
4. INSTALL POSTS AND BASE PLATES AND SHIM WHERE REQUIRED.
5. CAULK EDGES OF BASE PLATES, SHIMS AND SLEEVES.
6. COMPLETE INSTALLATION OF FENCE.

INSTALL FENCING FOR EACH CONSTRUCTION PHASE PRIOR TO OPENING THAT PHASE TO VEHICULAR AND/OR PEDESTRIAN TRAFFIC.

(22) SBR-2 RAILING

WHEN SPECIFING THE USE OF VANDAL PROTECTION FENCE ON A SBR-2 MEDIAN RAILING ON TWIN STRUCTURES, CONFIRM THERE IS ADEQUATE SPACE BETWEEN RAILINGS TO INSTALL THE ADHESIVE ANCHORS ON THE BACK FACE OF THE RAILING. IF THERE IS NOT ADEQUATE CLEARANCE, THE ANCHORS ON THE BACK FACE OF THE RAILING MAY BE CAST-IN-PLACE. IF THERE IS NOT ADEQUATE CLEARANCE TO INSTALL THE BASE PLATES WITH CAST-IN-PLACE ANCHORS, ONLY INSTALL FENCING ON ONE SIDE OF THE MEDIAN RAILING.

(23) SPECIAL DESIGNS

SPECIAL DESIGNS ARE REQUIRED FOR RAILINGS WITH 28 DAY CONCRETE STRENGTHS LESS THAN 4000 PSI. A SPECIAL DESIGN IS ALSO REQUIRED IF THE MIDPOINT OF THE EXPOSED FENCE HEIGHT IS GREATER THAN 50 FEET ABOVE THE NORMAL TERRAIN LEVEL.

(24) PROJECT PLANS

THE DESIGNER SHALL SPECIFY THE TYPE OF BASE PLATE AND POST SECTION TO BE USED AND PROVIDE A SCHEMATIC DECK PLAN SHOWING THE FENCE POST SPACING.

(25) METHOD OF MEASUREMENT

THE DEPARTMENT WILL MEASURE THE QUANTITY BY THE FOOT. THE DEPARTMENT WILL MEASURE ALONG THE BOTTOM OF THE FENCE FROM CENTER TO CENTER OF END POSTS.

(26) BASIS OF PAYMENT

THE DEPARTMENT WILL MAKE PAYMENT FOR THE COMPLETED AND ACCEPTED QUANTITIES OF VANDAL FENCE AS FOLLOWS:

ITEM	UNIT	DESCRIPTION
607	FOOT	SPECIAL - VANDAL PROTECTION FENCE *

*: 6 FT STRAIGHT, COATED FABRIC
8 FT STRAIGHT, COATED FABRIC
10 FT CURVED, COATED FABRIC
12 FT CURVED, COATED FABRIC

OFFICE OF STRUCTURAL ENGINEERING

REVISIONS
07-21-2023
01-20-2023
07-20-2018
01-19-2018
07-17-2015
04-15-2011
07-19-2002
03-24-1993
02-01-1992

STATE OF OHIO OFFICE OF ROADWAY ENGINEERING ADMINISTRATOR
09-26-90

STANDARD BRIDGE DRAWING
VANDAL PROTECTION FENCE

DESIGN AGENCY

SCD NUMBER
VPF-1-90

SHEET 1 TOTAL 8

VPF-1-90

MODEL: Sheet PAPERSIZE: 17x11 (in.) DATE: 7/19/2023 TIME: 3:27:34 PM USER: jhuffma3
I:\Dr\Bridge Standards\Standard Drawings\VPF-1\VPF-1-90_07-21-23.dgn

FRA-33-2456 BRIDGE HIT REPAIR

MODEL: Archived Std Dwg Sheet 4 PAPERSIZE: 34x22 (in.) DATE: 10/30/2026 TIME: 8:36:32 AM USER: cschrader
J:\20250232\ODOT\117444\400-Engineering\Structures\SFN_2501899\Sheets\117444_SFN_2501899_SN001.dgn

ARCHIVED STANDARD DRAWING VPF-1-90

SFN
N/A

DESIGN AGENCY
EM|H&T

DESIGNER CAD | CHECKER TDA

REVIEWER
CAS 08/20/26

PROJECT ID
125600

SUBSET 7 | TOTAL 19

SHEET P.30 | TOTAL 42

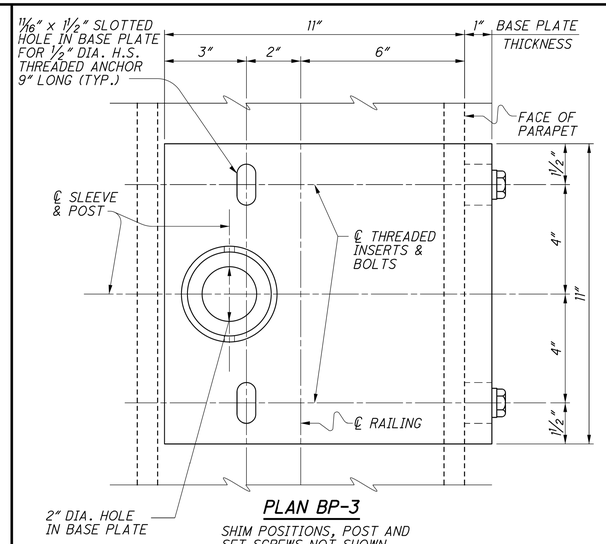

PLAN BP-3

SHIM POSITIONS, POST AND SET SCREWS NOT SHOWN

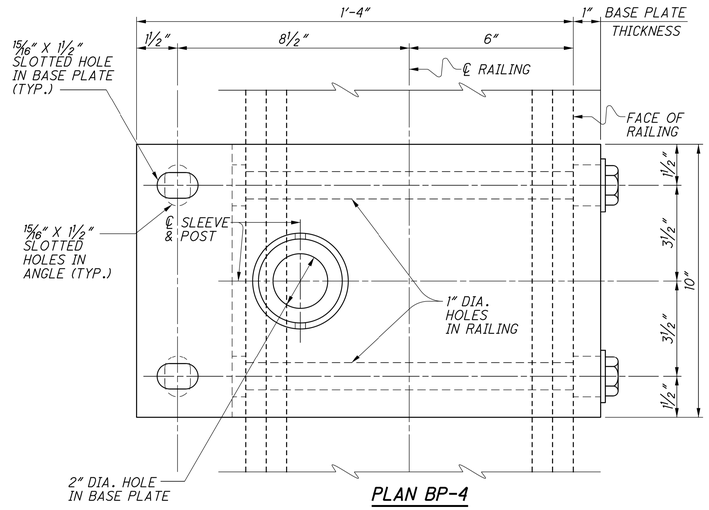

PLAN BP-4

SHIM POSITIONS, POST AND SET SCREWS NOT SHOWN

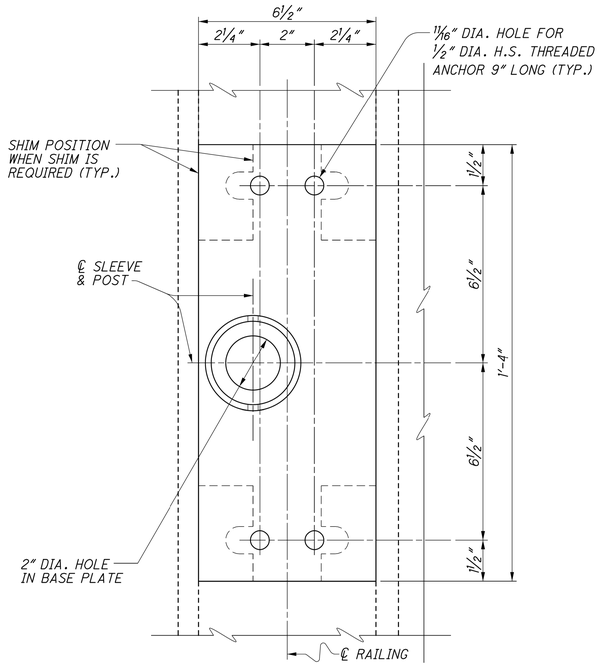

PLAN BP-5

SHIM POSITIONS SHOWN. POST AND SET SCREWS NOT SHOWN

SEE GENERAL NOTES FOR OPTIONAL ANCHORAGE IN NEW CONCRETE

NOTE: TOP RAIL FOR BR-1-65 RAILING WITH 2 POSTS AND BOTH FOR BR-2-98 RAILING NOT SHOWN.

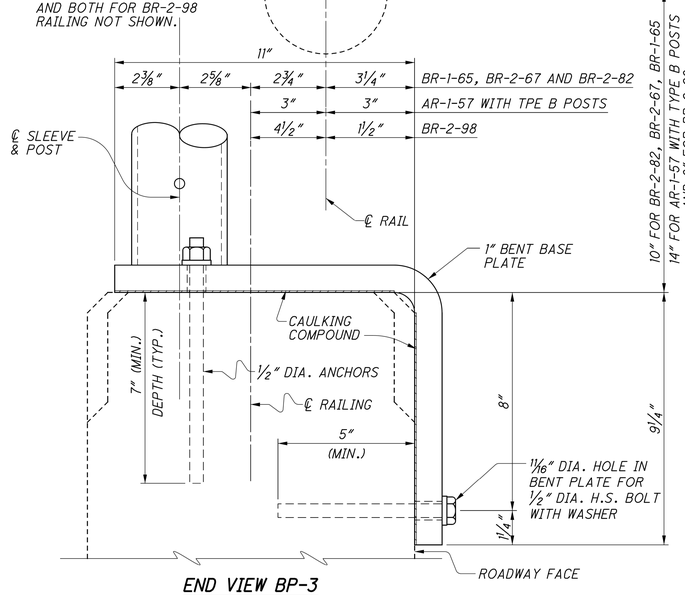

END VIEW BP-3

BP-3 SHALL BE USED WITH PS-1, PS-2, PS-3 OR PS-4 POST SECTIONS ON CONCRETE RAILINGS WITH HORIZONTAL RAIL ELEMENTS AS SHOWN ON STANDARD BRIDGE DRAWING BR-2-98, BR-2-82, BR-2-67, BR-1-65 AND AR-1-57 WITH TYPE B POSTS. DO NOT REMOVE RAIL ELEMENTS. BP-3 REQUIRES A SLEEVE. SEE POST SLEEVE DETAILS ON SHEET 3 OF 8.

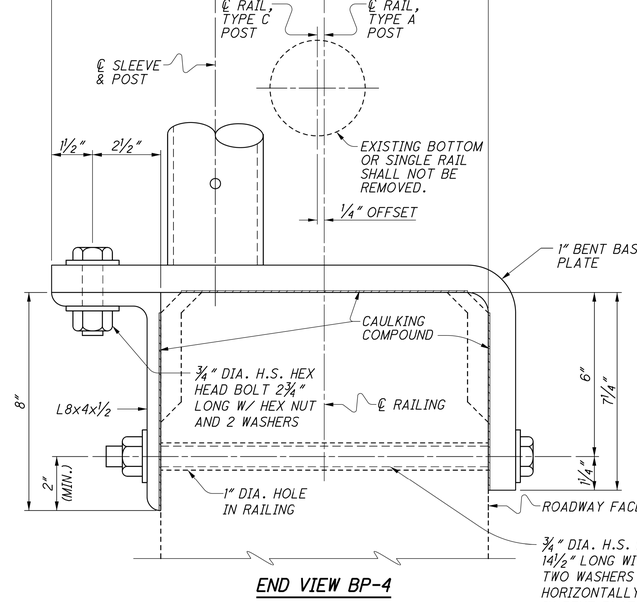

END VIEW BP-4

BP-4 SHALL BE USED WITH PS-1, PS-2, PS-3 OR PS-4 POST SECTIONS ON CONCRETE RAILINGS WITH HORIZONTAL RAIL ELEMENTS AS SHOWN ON STANDARD BRIDGE DRAWING AR-1-57 WITH TYPE A AND C POSTS. DO NOT REMOVE RAIL ELEMENTS. BP-4 REQUIRES A SLEEVE. SEE POST SLEEVE DETAILS ON SHEET 3 OF 8.

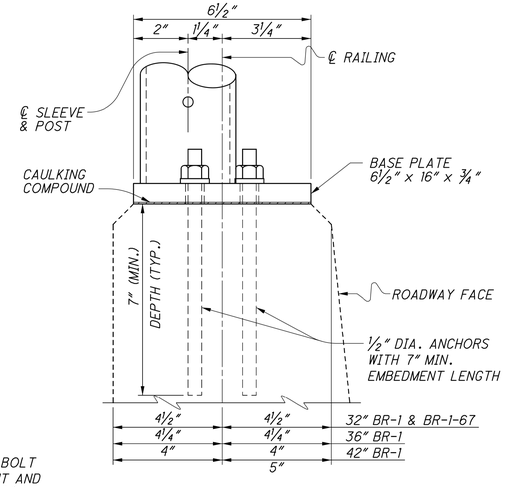

END VIEW BP-5

BP-5 SHALL BE USED TO CONNECT PS-4 POST SECTIONS TO EXISTING BR-1-67 PARAPETS AND EXISTING BR-1 DEFLECTOR RAILINGS. DO NOT USE WITH PS-1, PS-2 AND PS-3 POST SECTIONS. BP-5 REQUIRES A SLEEVE. SEE POST SLEEVE DETAILS ON SHEET 3 OF 8.

VPF-1-90

MODEL: Sheet PAPERSIZE: 17x11 (in.) DATE: 7/19/2023 TIME: 3:29:00 PM USER: jhuffma3
J:\Structural\Bridge Standards\Standard Drawings\VPF-1\VPF-1-90_07-21-23.dgn

OFFICE OF STRUCTURAL ENGINEERING

REVISIONS
07-21-2023
01-20-2023
07-20-2018
01-19-2018
07-17-2015
04-15-2011
07-19-2002
03-24-1993
02-01-1992

STATE OF OHIO OFFICE OF ROADWAY ENGINEERING ADMINISTRATOR
Bob Stanhelmi
09-26-90

STANDARD BRIDGE DRAWING
VANDAL PROTECTION FENCE

DESIGN AGENCY

SCD NUMBER
VPF-1-90

SHEET 4 | TOTAL 8

ARCHIVED STANDARD DRAWING VPF-1-90

SFN
N/A

DESIGN AGENCY
EMH&T

DESIGNER CAD | CHECKER TDA
REVIEWER CAS 08/20/26
PROJECT ID 125600
SUBSET 8 | TOTAL 19
SHEET P.31 | TOTAL 42

FRA-33-2456 BRIDGE HIT REPAIR

MODEL: Archived Std Dwg Sheet 5 PAPERSIZE: 34x22 (in.) DATE: 10/30/2026 TIME: 8:37:24 AM USER: cschrader
J:\20250232\ODOT\117444\400-Engineering\Structures\SFN_2501899\Sheets\117444_SFN_2501899_SN001.dgn

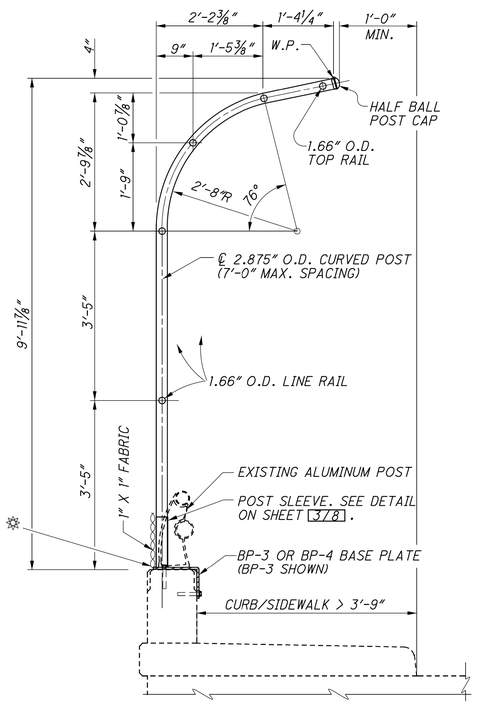

POST SECTION PS-1

(12'-0" CURVED FENCE)

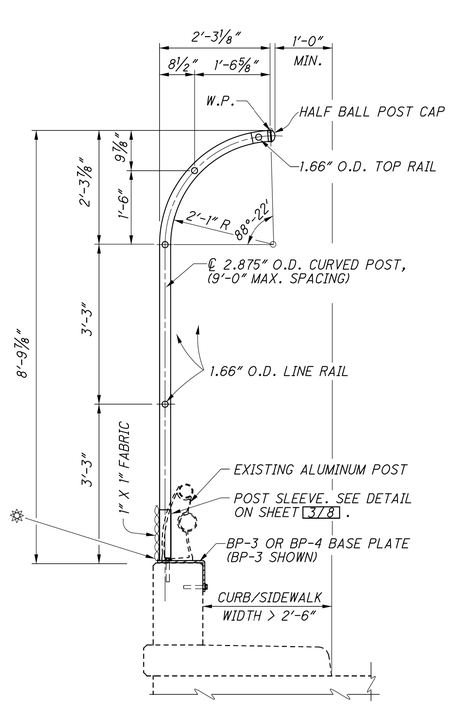

POST SECTION PS-2

(10'-0" CURVED FENCE)

NOTE: BEGIN FABRIC AT BASE PLATE. (MAXIMUM GAP BETWEEN FABRIC AND CONCRETE RAILING = 1")

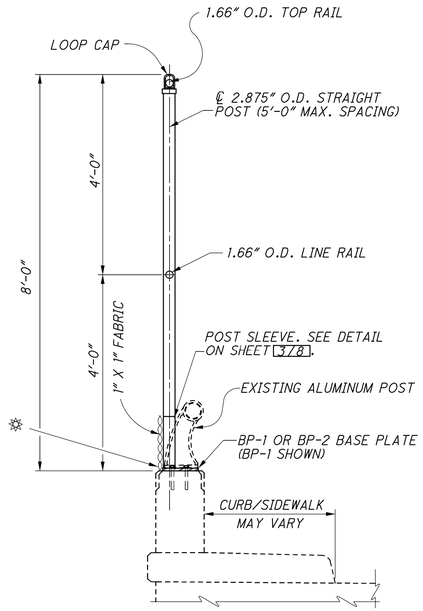

POST SECTION PS-3

(8'-0" STRAIGHT FENCE)

NOTE:
INSTALL 1.66" O.D. BOTTOM RAIL FOR POST SECTIONS PS-1, PS-2 AND PS-3 WHERE INTERFERENCE WITH TRAFFIC RAILING POSTS DOES NOT OCCUR.

NOTE: SEE GENERAL NOTES FOR OPTIONAL ANCHORAGE IN NEW CONCRETE.

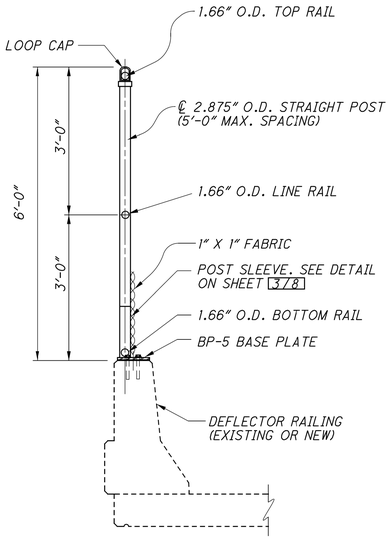

POST SECTION PS-4

(6'-0" STRAIGHT FENCE)

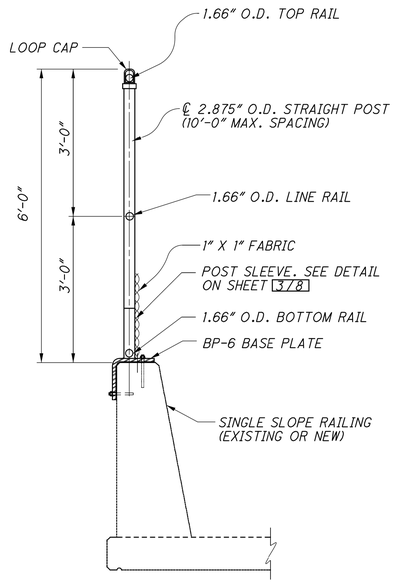

POST SECTION PS-4

(6'-0" STRAIGHT FENCE)

VPF-1-90

MODEL: Sheet PAPERSIZE: 17x11 (in.) DATE: 7/19/2023 TIME: 3:30:29 PM USER: jhuffma3
I:\br\Bridge Standards\Standard Drawings\VPF-1\VPF-1-90_07-21-23.dgn

OFFICE OF STRUCTURAL ENGINEERING

REVISIONS
07-21-2023
01-20-2023
07-20-2018
01-19-2018
07-17-2015
04-15-2011
07-19-2002
03-24-1993
02-01-1992

STATE OF OHIO OFFICE OF ROADWAY ENGINEERING ADMINISTRATOR
09-26-90

STANDARD BRIDGE DRAWING
VANDAL PROTECTION FENCE

DESIGN AGENCY

SCD NUMBER
VPF-1-90

SHEET 6 | TOTAL 8

ARCHIVED STANDARD DRAWING VPF-1-90

FRA-33-2456 BRIDGE HIT REPAIR

MODEL: Archived Std Dwg Sheet 6 PAPERSIZE: 34x22 (in.) DATE: 10/30/2026 TIME: 8:38:01 AM USER: cschrader
J:\20250232\ODOT\117444\400-Engineering\Structures\SFN_2501899\Sheets\117444_SFN_2501899_SN001.dgn

SFN
N/A

DESIGN AGENCY
EMH&T

DESIGNER	CHECKER
CAD	TDA

REVIEWER
CAS 08/20/26

PROJECT ID
125600

SUBSET	TOTAL
9	19

SHEET	TOTAL
P.32	42

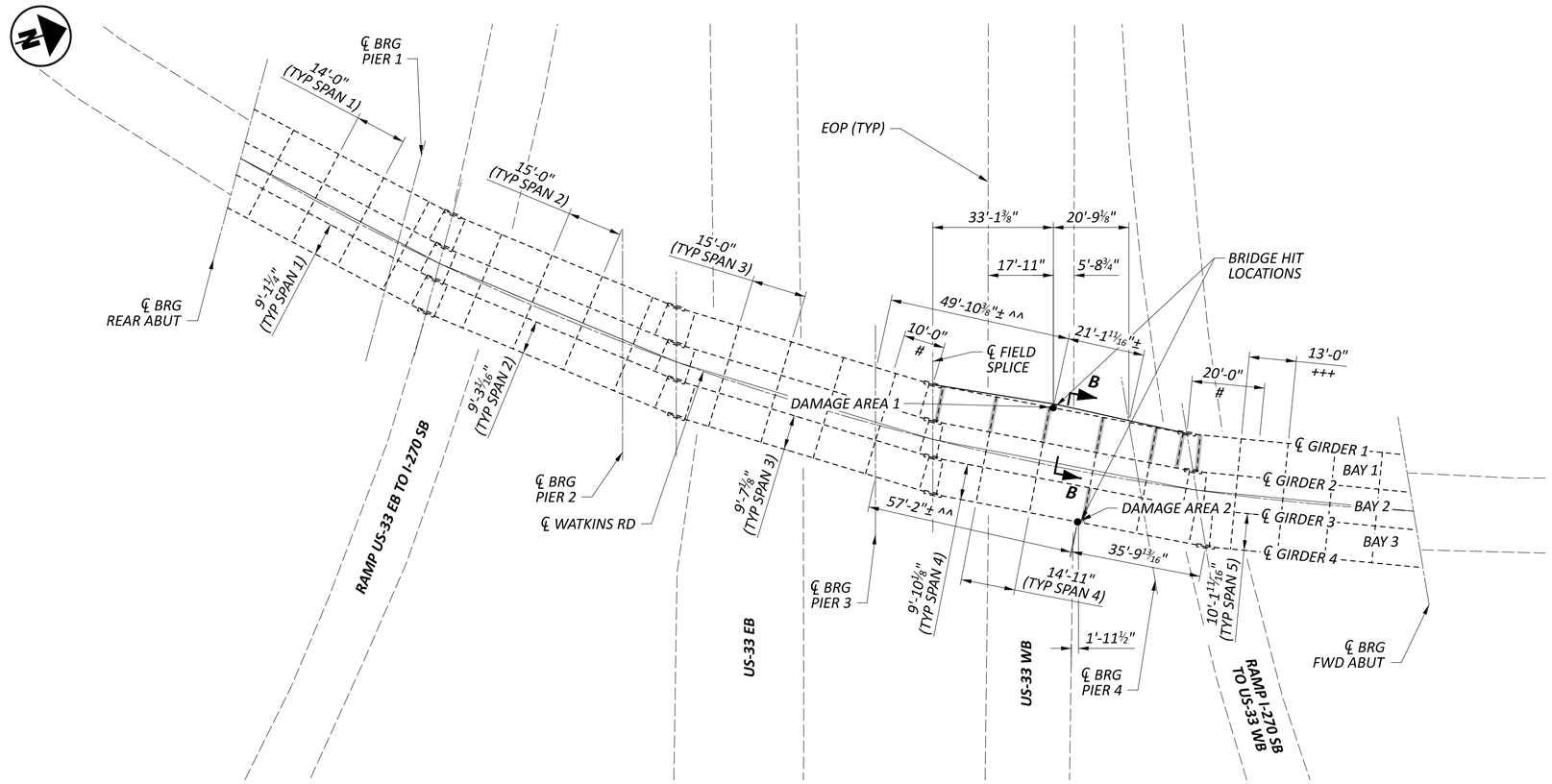

FRAMING PLAN

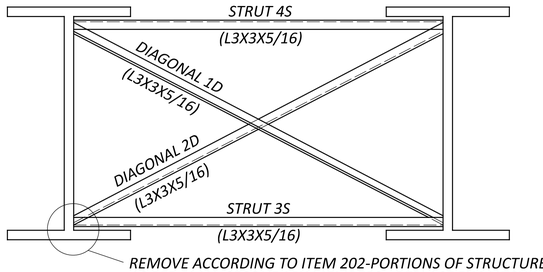

REMOVE ACCORDING TO ITEM 202-PORTIONS OF STRUCTURE REMOVED, AS PER PLAN (SECONDARY MEMBERS). REPLACE BY MATCHING EXISTING DETAIL. SEE GSD-1-96 FOR ADDITIONAL CLARIFICATION.

SECTION B-B

(SECONDARY MEMBER BAY No. 3)

MAIN AND SECONDARY MEMBER DAMAGE IS NOT SHOWN. FOR CLARITY SEE SECTION A-A

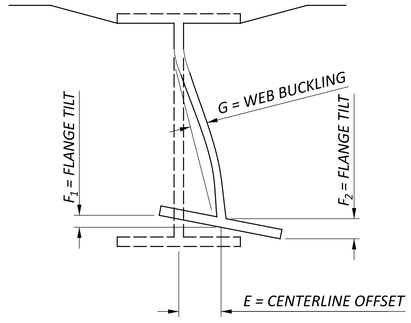

SECTION A-A

NEGATIVE E VALUES ARE BENT LEFT
NEGATIVE F VALUES ARE BENT DOWN
NEGATIVE G VALUES ARE BENT LEFT

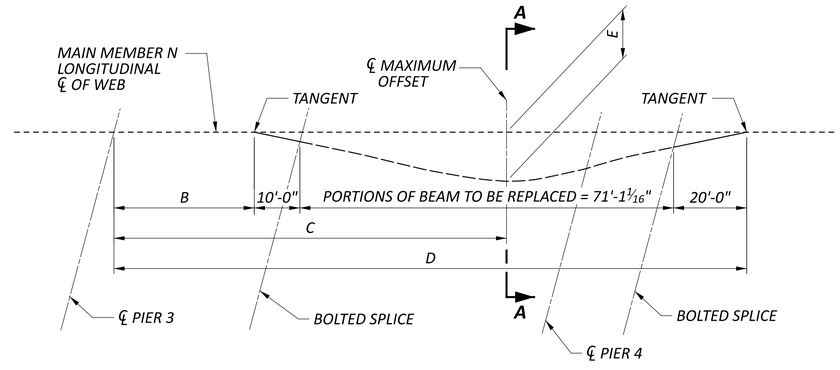

DAMAGED MAIN MEMBER PLAN VIEW

TABLE #2 DAMAGED SECONDARY MEMBER TO BE REPLACED (BAY 3 ONLY)

CROSSFRAME BAY	PIER	N	1D	2D	3S	4S
3	PIER 3	5	1	1	1	N/A

(SEE SHEET 9/16 THROUGH 10/16 FOR BEAM 1 PARTIAL REPLACEMENT AND BAY 1 CROSSFRAME REPLACEMENT DETAILS)

N - NUMBER OF CROSSFRAME BRACES COUNTED FROM THE PIER OR ABUTMENT IDENTIFIED IN TABLE

TABLE # 1 DAMAGED MAIN MEMBERS TO BE HEAT STRAIGHTENED

DAMAGE AREA NO.	MEMBER LINE NO.	PIER OR ABUT.	B	C	D	E	F_1	F_2	G
1	GIRDER 1	PIER 3	6'-5 3/16"	49'-10 3/8"	107'-6 5/16"	1'-3"	-0'-2"	-0'-2"	0"

DIMENSIONS PROVIDED ARE APPROXIMATE. PORTIONS REQUIRING HEAT STRAIGHTENING DO NOT INCLUDE BEAM REPLACEMENT LIMITS. CONTRACTOR SHALL HEAT STRAIGHTEN EXISTING PORTIONS TO REMAIN SO THAT THE BEAM HAS A CONSISTENT ALIGNMENT AND IS PLUMB/SQUARE IN FINAL CONDITION.

LEGEND

- ● - POINT OF IMPACT
- # - LIMITS OF HEAT STRAIGHTENING
- +++ - LIMITS OF EPOXY INJECTION
- ^^ - DIMENSION MEASURED ALONG GIRDER
- ▬ - INDICATES DAMAGED CROSSFRAMES TO BE REPLACED AS SHOWN IN THE PLANS

ORIENTATION NOTE

ABUTMENTS AND PIERS ARE NUMBERED IN THE CARDINAL DIRECTION (FROM SOUTH TO NORTH OR WEST TO EAST).

BEAMS ARE NUMBERED FROM LEFT TO RIGHT WHEN FACING IN THE CARDINAL DIRECTION.

BAYS ARE NUMBERED TO MATCH THE MAIN MEMBERLINE NUMBER TO THE LEFT OF THE CROSSFRAME BAY WHEN FACING IN THE CARDINAL DIRECTION.

TABLE #4 LIMITS OF ITEM 514, FIELD PAINTING OF DAMAGED STEEL (TWO COATS)

DAMAGE AREA NO.	LENGTH (FT)	AVG. PERIMETER (FT)	AREA (SQ FT)
1	103.1	8.4	872
2	5.00	8.7	44
CROSSFRAMES	209.8	1.69	354

PAINTING NOTES

1. LIMITS OF PAINTING OF MAIN MEMBERS ARE BASED ON HEAT STRAIGHTENING LENGTH PLUS AND ADDITIONAL 2'-0" (1'-0" EACH SIDE), MEASURED FROM BOTTOM OF BOTTOM FLANGE TO TOP OF WEB.

2. LIMITS OF PAINTING OF CROSSFRAMES ARE BASED ON THE FULL LENGTH REPLACED.

COLLISION REPAIR AND HEAT STRAIGHTENING PLAN
BRIDGE NO. FRA-33-2456
WATKINS ROAD OVER US 33

SFN 2501899
DESIGN AGENCY EMH&T
DESIGNER CAD | CHECKER TDA
REVIEWER CAS 08/20/26
PROJECT ID 125600
SUBSET 10 | TOTAL 19
SHEET P.33 | TOTAL 42

FRA-33-2456 BRIDGE HIT REPAIR

MODEL: Sheet 1 PAPERSIZE: 34x22 (in.) DATE: 10/30/2026 TIME: 8:38:39 AM USER: cschrader
J:\2025023\ODOT\117444\400-Engineering\Structures\SFN_2501899\Sheets\117444_SFN_2501899_SS001.dgn

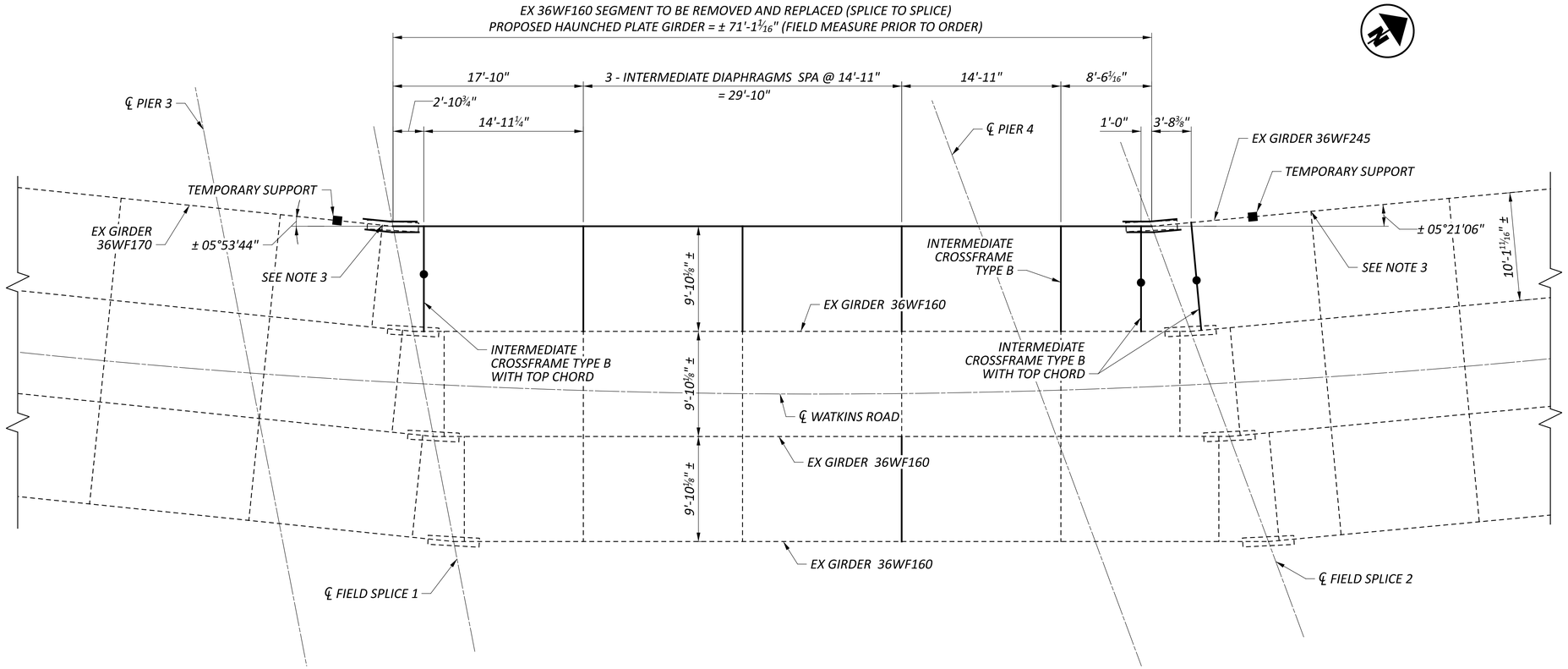

FRAMING PLAN

NOTES:

1. *LOCATIONS OF CROSSFRAMES ARE CONSIDERED APPROXIMATE. MATCH PROPOSED CROSSFRAMES TO THE EXISTING LOCATIONS DETERMINED IN THE FIELD. DIMENSIONS AND ANGLES SHOWN ARE FROM RECORD PLANS AND SHALL BE FIELD VERIFIED BEFORE ORDERING.*
2. *FOR CROSSFRAME DETAILS, SEE SHEET 13/19.*
3. *DISCONNECT EXISTING CROSSFRAMES TO FACILITATE HEAT STRAIGHTENING AS NECESSARY. RECONNECT WITH FILLET WELDS AS REQUIRED AT REMAINING LOCATIONS.*

PARTIAL FRAMING PLAN
BRIDGE NO. FRA-33-2456
WATKINS ROAD OVER US 33

FRA-33-2456 BRIDGE HIT REPAIR

MODEL: Framing Plan Sheet PAPERSIZE: 34x22 (in.) DATE: 10/30/2026 TIME: 8:38:42 AM USER: cschrader
J:\20250232\ODOT\117444\400-Engineering\Structures\SFN_2501899\Sheets\117444_SFN_2501899_SS003.dgn

SFN 2501899
DESIGN AGENCY EM H&T
DESIGNER AI | CHECKER TDA
REVIEWER CAS 08/20/26
PROJECT ID 125600
SUBSET 11 | TOTAL 19
SHEET P.34 | TOTAL 42

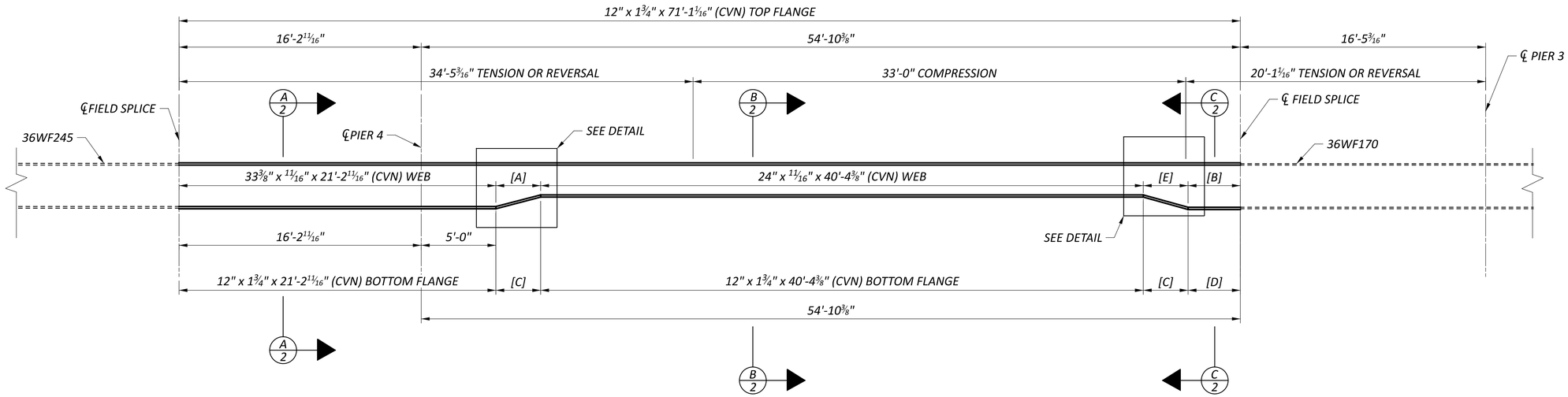

HAUNCHED PLATE GIRDER PARTIAL ELEVATION VIEW

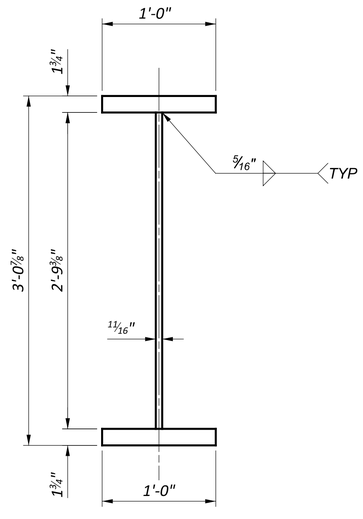

A 2 SECTION

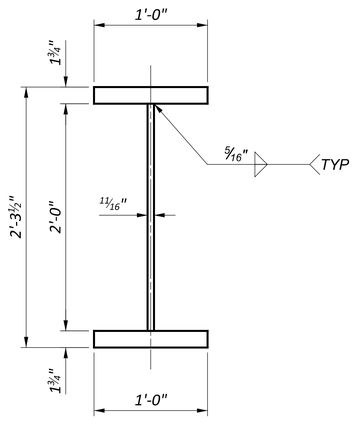

B 2 SECTION

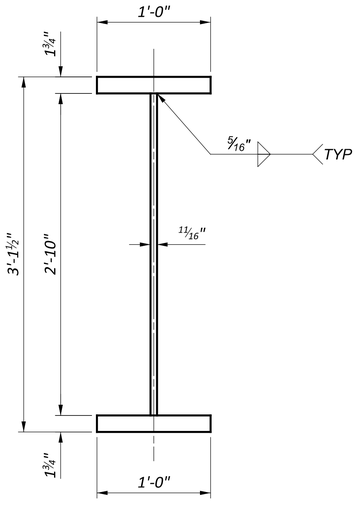

C 2 SECTION

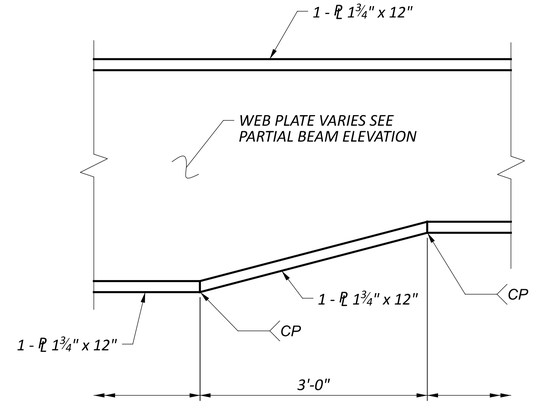

SHOP FLANGE SPLICE (WELD DETAIL)

(BEAM SEGMENT [A] SHOWN, SEGMENT [E] SIMILAR)

WELD CONFIGURATION SHOWN FOR ILLUSTRATION ONLY. ACTUAL CONFIGURATION TO BE DETERMINED BY THE CONTRACTOR. GRIND COMPLETE JOINT PENETRATION WELD SMOOTH IN A LONGITUDINAL DIRECTION TO REMOVE WELD REINFORCEMENT

LEGEND:

[A] - WEB HEIGHT VARIES FROM 24" TO 33⅜" x ¹¹⁄₁₆" x 3'-0" (CVN) WEB

[B] - 34" x ¹¹⁄₁₆" x 3'-6" (CVN) WEB

[C] - 12" x 1¾" x 3'-0" (CVN) BOTTOM FLANGE

[D] - 12" x 1¾" x 3'-6" (CVN) BOTTOM FLANGE

[E] - WEB HEIGHT VARIES FROM 24" TO 34" x ¹¹⁄₁₆" x 3'-0" (CVN) WEB

NOTES:

1. FOR PARTIAL FRAMING PLAN, SEE SHEET 11/19.
2. ALL FLANGE GIRDER PLATES AND FLANGE SPLICE PLATES SHALL BE ASTM A709 GRADE 50. ALL WEB GIRDER PLATES, WEB SPLICE PLATES, AND STIFFENERS SHALL BE ASTM A709 GRADE 50. WHERE A SHAPE OR PLATE IS DESIGNATED (CVN) FURNISH MATERIAL THAT MEETS THE MINIMUM NOTCH TOUGHNESS REQUIREMENTS AS SPECIFIED IN CMS 711.01.
3. FILLET WELD ATTACHMENTS OF SUPPORTS FOR CONCRETE DECK FINISHING MACHINE SHALL BE AT LEAST 1" FROM EDGE OF FLANGES, BE NO MORE THAN 2" LONG, AND AT LEAST ¼" FOR THICKNESSES UP TO ¾" OR ⁵⁄₁₆" FOR GREATER THAN ¾" THICK.
4. ALL STEEL SHALL BE SHOP PRIMED AND FIELD PAINTED PER ITEM 514.
5. BOLT HOLES FOR SPLICE IN PROPOSED GIRDER WEB TO BE FIELD DRILLED.

BEAM DETAILS
BRIDGE NO. FRA-33-2456
WATKINS ROAD OVER US 33

FRA-33-2456 BRIDGE HIT REPAIR

MODEL: Sheet PAPERSIZE: 34x22 (in.) DATE: 10/30/2026 TIME: 8:38:44 AM USER: cschrader
J:\2025023\ODOT\117444\400-Engineering\Structures\SFN_2501899\Sheets\117444_SFN_2501899_SS002.dgn

SFN 2501899
DESIGN AGENCY EMH&T
DESIGNER AI | CHECKER TDA
REVIEWER CAS 08/20/26
PROJECT ID 125600
SUBSET 12 | TOTAL 19
SHEET P.35 | TOTAL 42

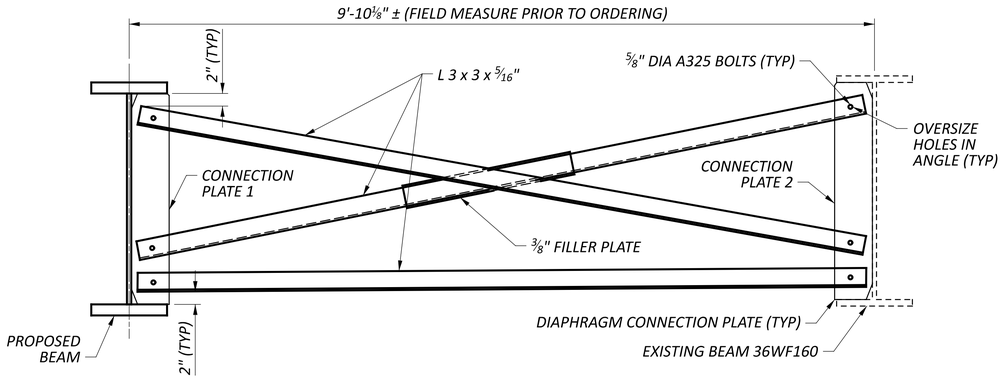

INTERMEDIATE CROSSFRAME TYPE B

(FOR ADDITIONAL DETAILS, SEE STANDARD DRAWING GSD-1-19)

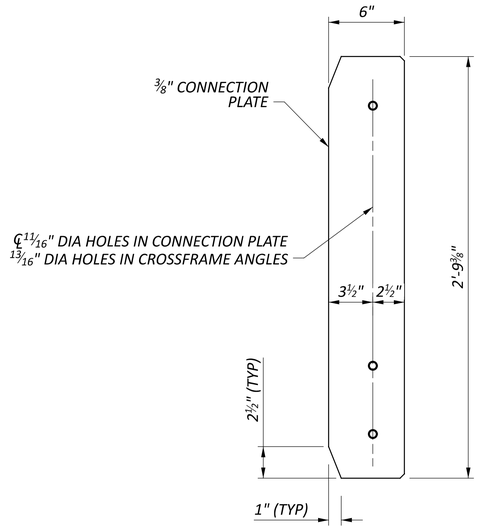

CONNECTION PLATE 1

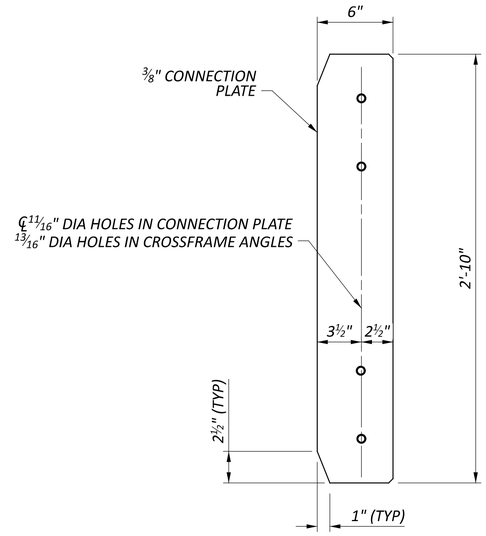

CONNECTION PLATE 2

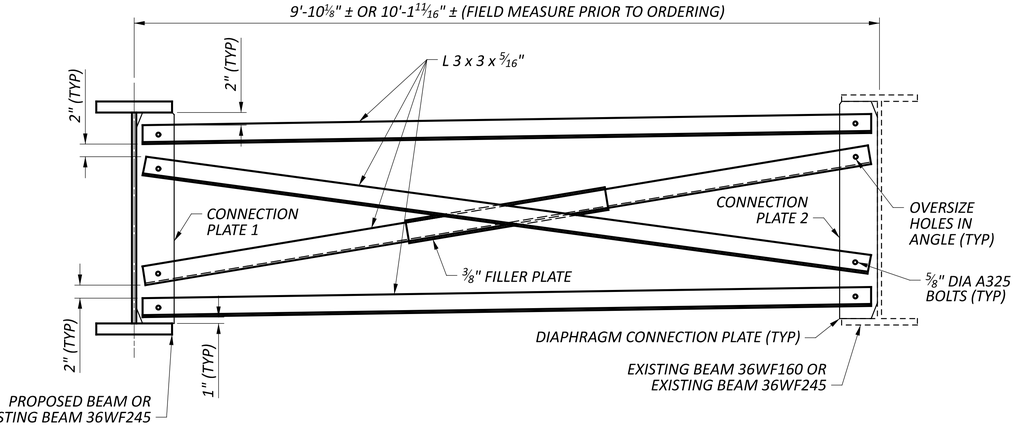

INTERMEDIATE CROSSFRAME TYPE B WITH TOP CHORD

(FOR ADDITIONAL DETAILS, SEE STANDARD DRAWING GSD-1-19)

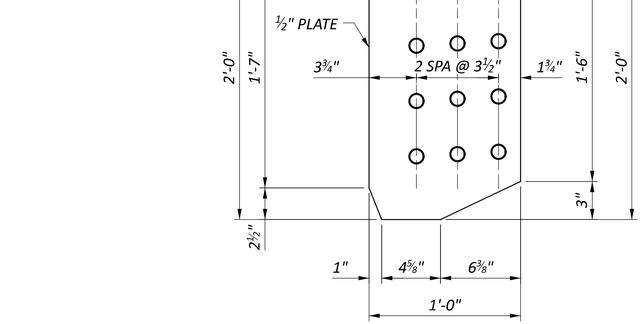

CONNECTION PLATE 3

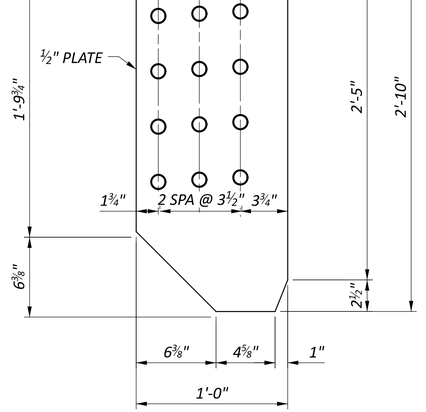

CONNECTION PLATE 4

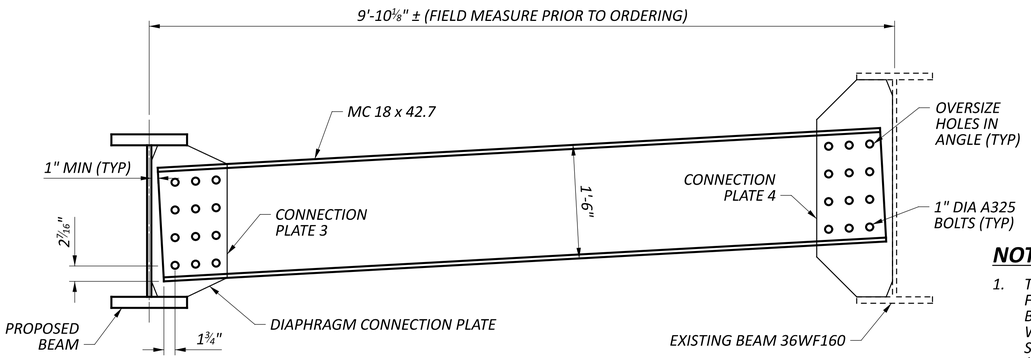

INTERMEDIATE DIAPHRAGM

(FOR ADDITIONAL DETAILS, SEE STANDARD DRAWING GSD-1-19)

NOTES:

1. THE FABRICATOR SHALL CHECK LONGITUDINAL CROSS FRAME SPACING SO THAT INTERFERENCE WITH ANCHOR BOLTS, COMPLETE PENETRATION WEB OR FLANGE WELDED SPLICES AND BEARING STIFFENERS IS AVOIDED. SPACING SHALL BE ADJUSTED TO PROVIDE AT LEAST SIX (6) INCHES OF LONGITUDINAL CLEARANCE.
2. CONNECTION PLATES TO BE NORMAL TO GIRDERS.
3. ALL MATERIAL TO BE ASTM A709, GRADE 50.
4. ALL STEEL SHALL BE SHOP PRIMED AND FIELD PAINTED PER ITEM 514.
5. HIGH STRENGTH BOLTS SHALL BE 1" DIAMETER ASTM F3125, GRADE A325, TYPE I WITH THREADS EXCLUDED FROM SHEAR PLANE UNLESS OTHERWISE NOTED.
6. FOR ADDITIONAL DETAILS SEE STD DWG GSD-1-19
7. STIFFENER MATERIALS AND WELDING INCLUDED WITH ITEM 513 - STRUCTURAL STEEL MEMBERS, LEVEL UF, AS PER PLAN (MAIN MEMBERS) FOR PAYEMENT.
8. CROSSFRAMES AND DIAPHRAGMS INCLUDED WITH ITEM - 513 STRUCTURAL STEEL MEMBERS, LEVEL UF, AS PER PLAN (SECONDARY MEMBERS) FOR PAYMENT.

FRA-33-2456 BRIDGE HIT REPAIR

MODEL: Diaphragm Details Sheet PAPERSIZE: 34x22 (in.) DATE: 10/30/2026 TIME: 8:38:47 AM USER: cschrader
J:\20250232\ODOT\117444\00-Engineering\Structures\SFN_2501899\Sheets\117444_SFN_2501899_SS004.dgn

CROSSFRAME DETAILS
BRIDGE NO. FRA-33-2456
WATKINS ROAD OVER US 33

SFN 2501899
DESIGN AGENCY E M H & T
DESIGNER AI | CHECKER TDA
REVIEWER CAS 08/20/26
PROJECT ID 125600
SUBSET 13 | TOTAL 19
SHEET P.36 | TOTAL 42

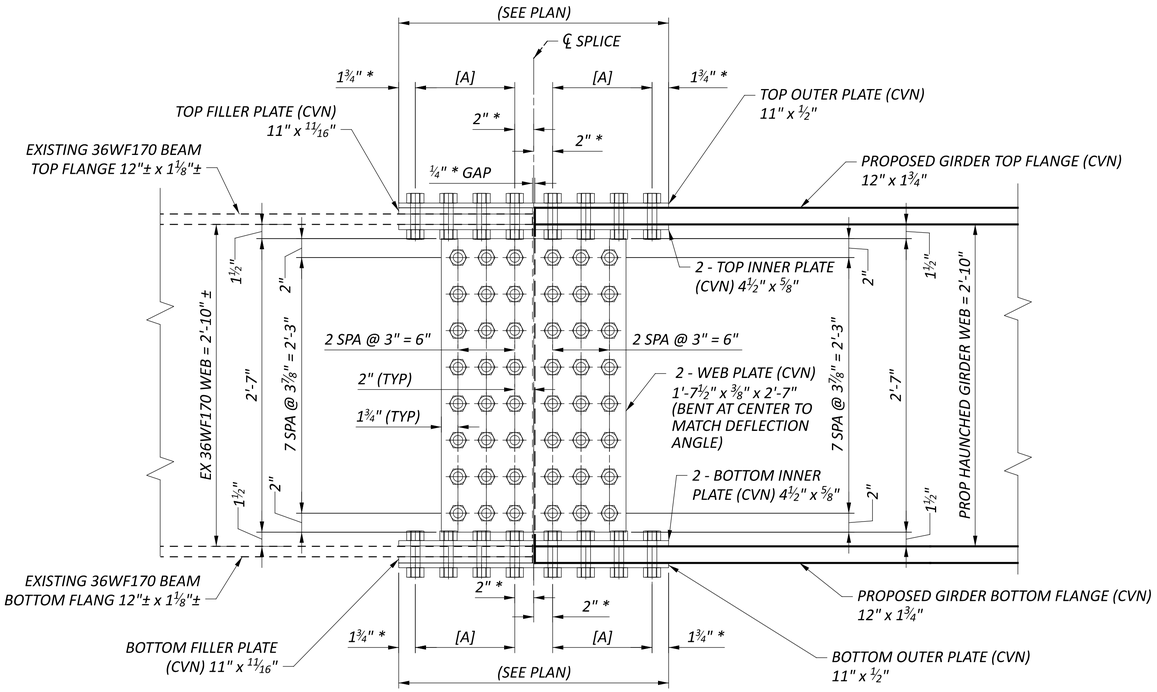

FIELD SPLICE 1 DETAILS

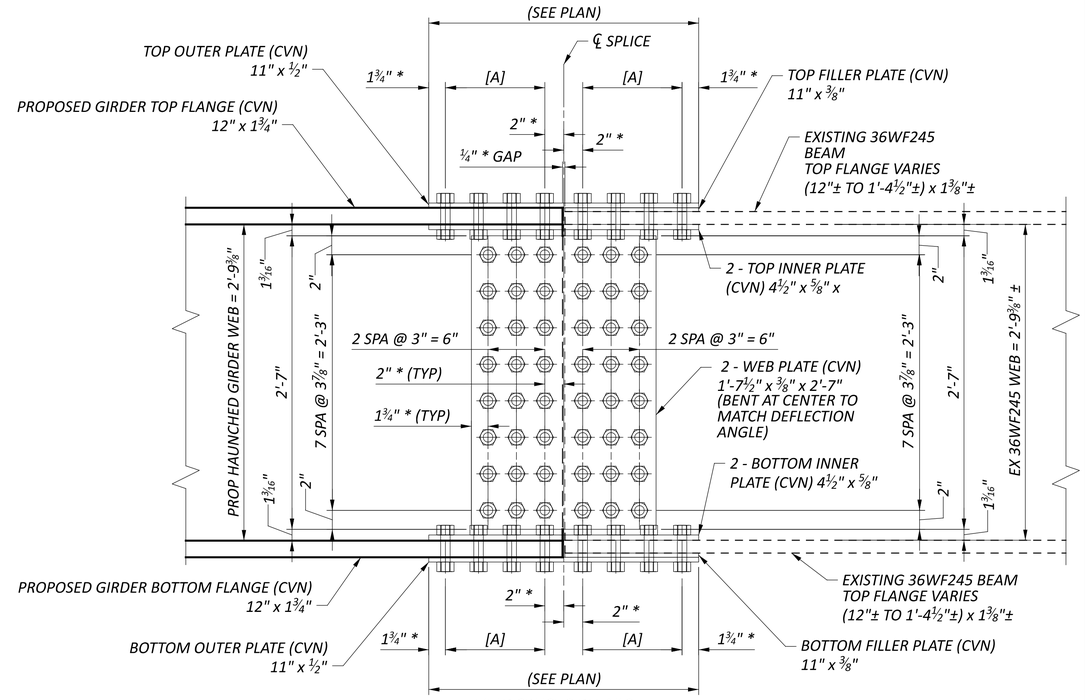

FIELD SPLICE 2 DETAILS

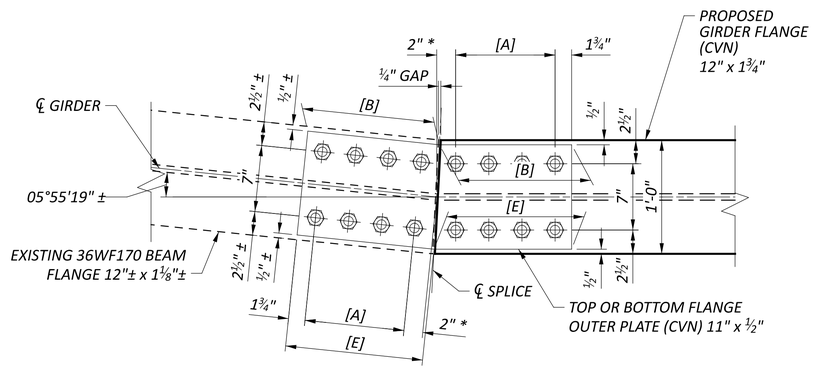

SPLICE 1 FLANGE OUTER PLATE

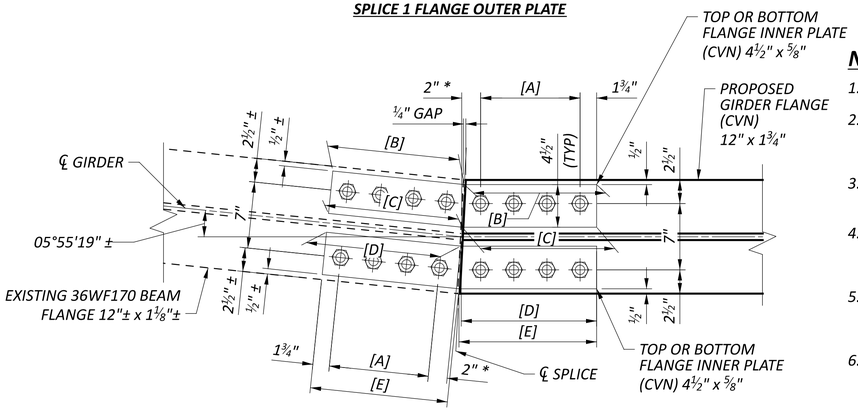

SPLICE 1 FLANGE INNER PLATE

LEGEND:

* - DIMENSIONS ALONG ℄ GIRDER

[A] - 3 SPA @ 3½" = 10½ *

	SPLICE 1	SPLICE 2
[B]	1'- 1 15/16"	1'-2"
[C]	1'-2 3/16"	1'-2 3/16"
[D]	1'-2 5/16"	1'-2 5/16"
[E]	1'-2 9/16"	1'-2½"

NOTES:

1. ALL SPLICE PLATE MATERIAL TO BE ASTM A709, GRADE 50 (CVN).
2. CVN: WHERE A SHAPE OR PLATE IS DESIGNATED (CVN) FURNISH MATERIAL THAT MEETS THE MINIMUM NOTCH TOUGHNESS REQUIREMENTS AS SPECIFIED IN C&MS 711.01.
3. HIGH STRENGTH BOLTS SHALL BE 1" DIAMETER GALVANIZED A325, TYPE 1. BOLT HOLES SHALL BE 1 3/16" DIAMETER.
4. ALL EXISTING DIMENSIONS ARE CONSIDERED APPROXIMATE ±. THE CONTRACTOR MUST VERIFY ALL DIMENSIONS WITH EXISTING CONDITIONS PRIOR TO ORDERING MEMBERS AND MATERIALS.
5. ALL EXISTING BOLT HOLES WILL BE RE-USED IN THE EXISTING MEMBERS TO BE SPLICED. EXISTING BOLT HOLES AND FAYING SURFACES SHALL BE THOROUGHLY CLEANED PRIOR TO RE-USE.
6. THE CONTRACTOR SHALL FIELD DRILL ALL HOLES IN THE PROPOSED PLATE GIRDER FOR THE SPLICE CONNECTIONS TO ENSURE PROPER FIT-UP. THE CONTRACTOR SHALL UTILIZE THE EXISTING SPLICE AS A TEMPLATE TO SET BOLT HOLE LOCATIONS.
7. THE CONTRACTOR SHALL FIELD VERIFY ALL EXISTING DIMENSIONS. THE FLANGES OF THE PROP PLATE GIRDER SHALL BE FIELD CUT IN ORDER TO MATCH THE EXISTING DOG LEG CONDITION.

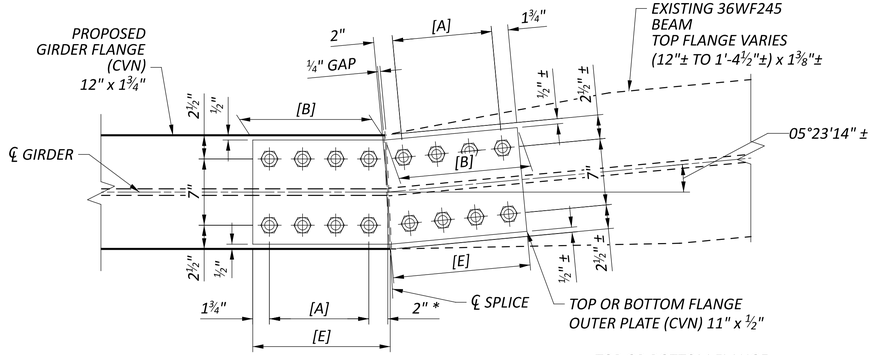

SPLICE 2 FLANGE OUTER PLATE

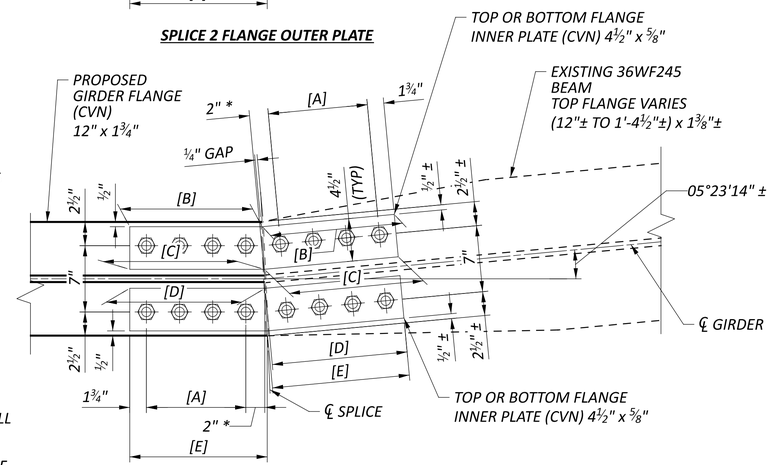

SPLICE 2 FLANGE INNER PLATE

SPLICE DETAILS
BRIDGE NO. FRA-33-2456
WATKINS ROAD OVER US 33

FRA-33-2456 BRIDGE HIT REPAIR

MODEL: Field Splice Details Sheet PAPERSIZE: 34x22 (in.) DATE: 10/30/2026 TIME: 8:38:50 AM USER: cschrader
J:\2025023\2\ODOT\117444\400-Engineering\Structures\SFN_2501899\Sheets\117444_SFN_2501899_SS005.dgn

SFN	2501899
DESIGN AGENCY	EM&T
DESIGNER	AI
CHECKER	TDA
REVIEWER	CAS 08/20/26
PROJECT ID	125600
SUBSET	14
TOTAL	19
SHEET	P.37
TOTAL	42

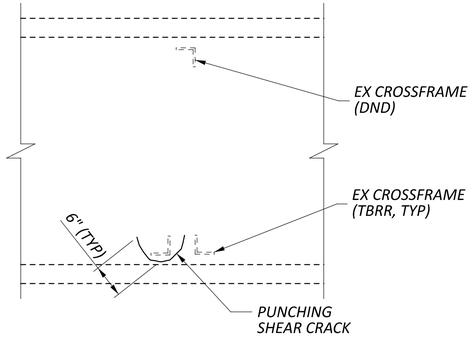

COLLISION REPAIR WC2-1

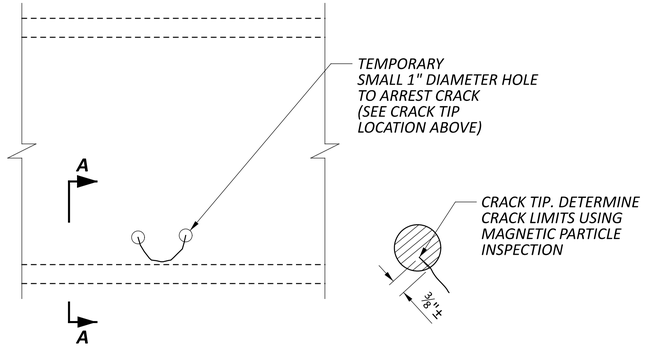

COLLISION REPAIR WC2-2

SEE NOTE 1 & 2

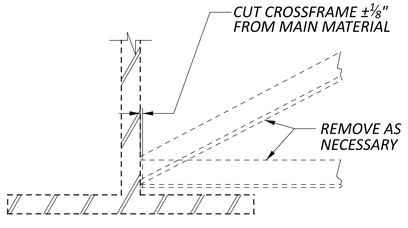

SECTION A-A

SEE NOTE 2 & 3

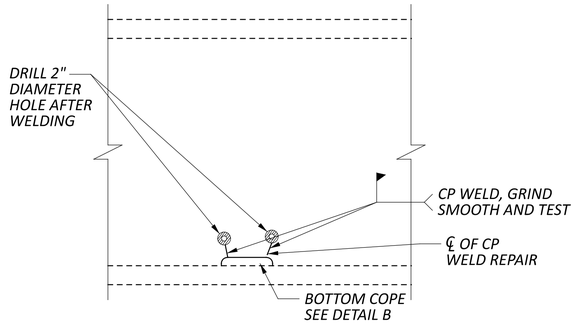

COLLISION REPAIR WC2-3

SEE NOTES 4 THROUGH 8

WC2 REPAIR NOTES

1. ARREST CRACK TEMPORARY
   A. MAGNETIC PARTICLE INSPECTION CRACK TO LOCATE TIP.
   B. TEMPORARY 1" DIAMETER HOLE DRILLED TO STOP CRACK GROWTH.
2. REMOVE SECONDARY MEMBERS AS NECESSARY IF APPLICABLE
3. REMOVE STIFFENER MATERIAL AS NECESSARY
4. PREP EXISTING MATERIALS FOR COMPLETE PENETRATION WELDS
5. PERFORM COMPLETE PENETRATION WELDS ACCORDING TO CMS 513.21
6. GRIND WELDS SMOOTH AND PROVIDE A SURFACE FINISH ACCORDING TO ANSI B46.1 OF 250 mil
7. GRIND THE INSIDE SURFACE OF ALL DRILLED TOP, SIDE OR BOTTOM COPES TO A 1" RADIUS AND PROVIDE A SURFACE FINISH ACCORDING TO ANSI B46.1 OF 250 mil
8. PERFORM NDT TESTS ACCORDING TO C&MS 513.25A
9. REPAIR SECONDARY MEMBERS IF APPLICABLE

TABLE #3 ITEM 513 REPAIRS

DAMAGED AREA No.	MEMBER LINE No. A	PIER OR ABUTMENT	DIM. C	REPAIR DETAIL TYPE	DRILLING HOLES (EACH)	COPE HOLES (EACH)	STEEL MEMBER LEVEL UF (POUNDS)	CP WELD (FEET)	FILLET WELD (FEET)
2	4	3	57'-2"	WC2	2	1	0	2	0

SEE PARTIAL FRAMING PLAN FOR DIMENSION C

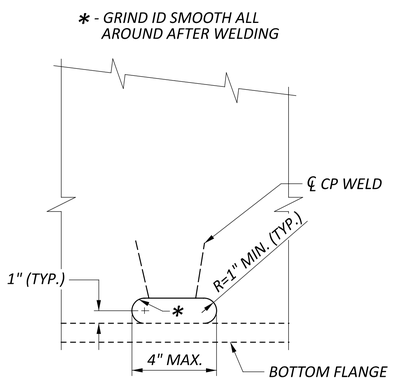

DETAIL B

SEE NOTE 7

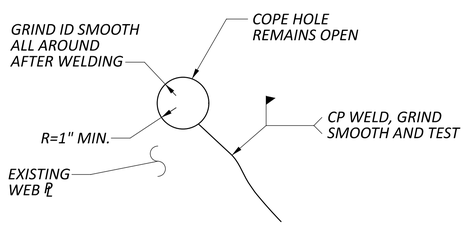

FIELD REPAIR TOP COPES

SEE NOTE 7

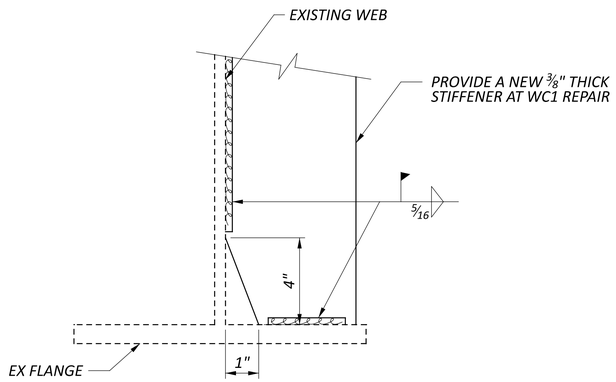

FIELD REPAIR STIFFNER WC2-6

SEE NOTE 4 THROUGH 9
(BOTTOM FLANGE SHOWN, TOP SIMILAR)
(STIFFENER WEIGHT INCLUDED WITH SECONDARY MEMBERS FOR PAYMENT)

GIRDER 4 REPAIR DETAILS
BRIDGE NO. FRA-33-2456
WATKINS ROAD OVER US 33

FRA-33-2456 BRIDGE HIT REPAIR

MODEL: Sheet BC1 PAPERSIZE: 34x22 (in.) DATE: 10/30/2026 TIME: 8:38:56 AM USER: cschrader
J:\20250232\ODOT\117444\400-Engineering\Structures\SFN_2501899\Sheets\117444_SFN_2501899_SS001.dgn

SFN 2501899
DESIGN AGENCY EMH&T
DESIGNER CAD | CHECKER TDA
REVIEWER CAS 08/20/26
PROJECT ID 125600
SUBSET 15 | TOTAL 19
SHEET P.38 | TOTAL 42

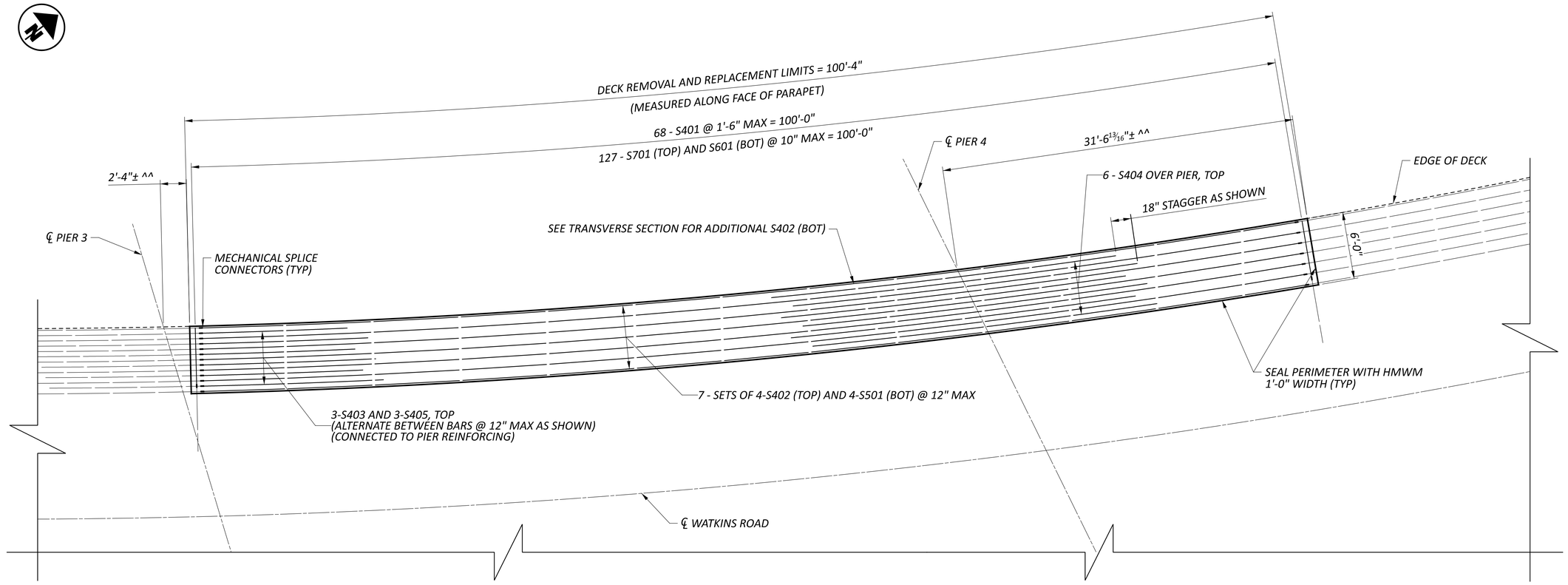

DECK PLAN

LEGEND

^^ *MEASURED ALONG EDGE OF DECK*

NOTES

1. *LAP LENGTHS FOR STEEL REINFORCING BARS SHALL BE:*

   #4 BAR = 1'-11"
   #5 BAR = 2'-5"
   #6 BAR = 3'-7"
   #7 BAR = 4'-2"

DECK PLAN
BRIDGE NO. FRA-33-2456
WATKINS ROAD OVER US 33

SFN 2501899
DESIGN AGENCY E M H T
DESIGNER CAD | CHECKER TDA
REVIEWER CAS 08/20/26
PROJECT ID 125600
SUBSET 16 | TOTAL 19
SHEET P.39 | TOTAL 42

FRA-33-2456 BRIDGE HIT REPAIR

MODEL: Deck Plan [Sheet] PAPERSIZE: 34x22 (in.) DATE: 10/30/2026 TIME: 8:38:58 AM USER: cschrader
J:\20250232\ODOT\117444\400-Engineering\Structures\SFN_2501899\Sheets\117444_SFN_2501899_SD001.dgn

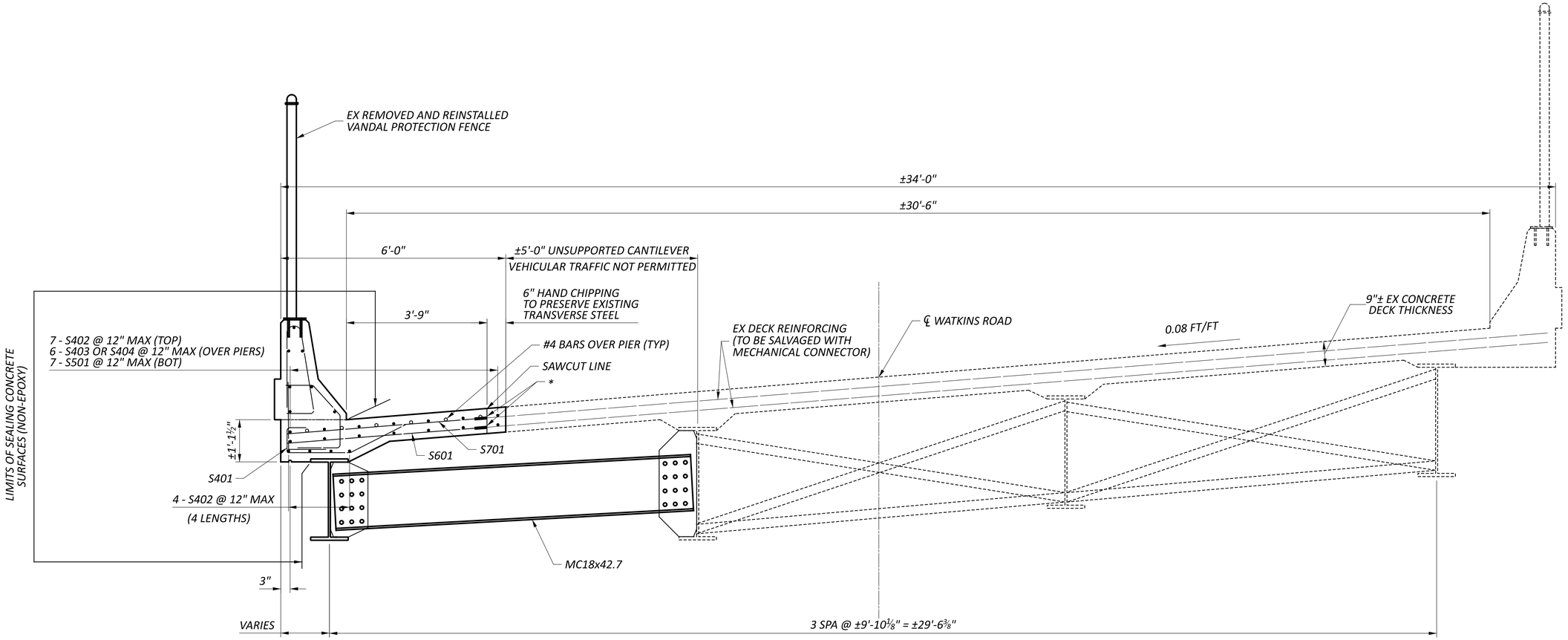

TRANSVERSE VIEW

(SPAN 4)

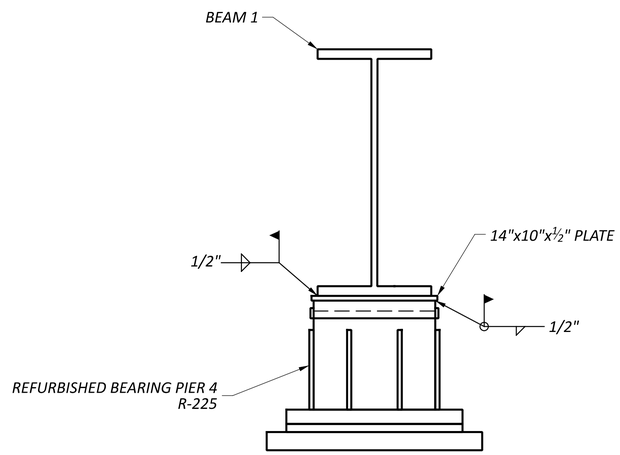

BEARING DETAIL PIER 4

LEGEND

* - MECHANICAL SPLICE CONNECTORS

NOTES

1. FOR PARAPET AND VANDAL PROTECTION FENCE DETAILS, SEE SHEET 15/16.

TRANSVERSE SECTION
BRIDGE NO. FRA-33-2456
WATKINS ROAD OVER US 33

FRA-33-2456 BRIDGE HIT REPAIR

MODEL: Sheet 1 PAPERSIZE: 34x22 (in.) DATE: 10/30/2026 TIME: 8:39:01 AM USER: cschrader
J:\2025023\2\ODOT\117444\400-Engineering\Structures\SFN_2501899\Sheets\117444_SFN_2501899_ST001.dgn

SFN	2501899
DESIGN AGENCY	E M H & T
DESIGNER	CAD
CHECKER	TDA
REVIEWER	CAS 08/20/26
PROJECT ID	125600
SUBSET	17
TOTAL	19
SHEET	P.40
TOTAL	42

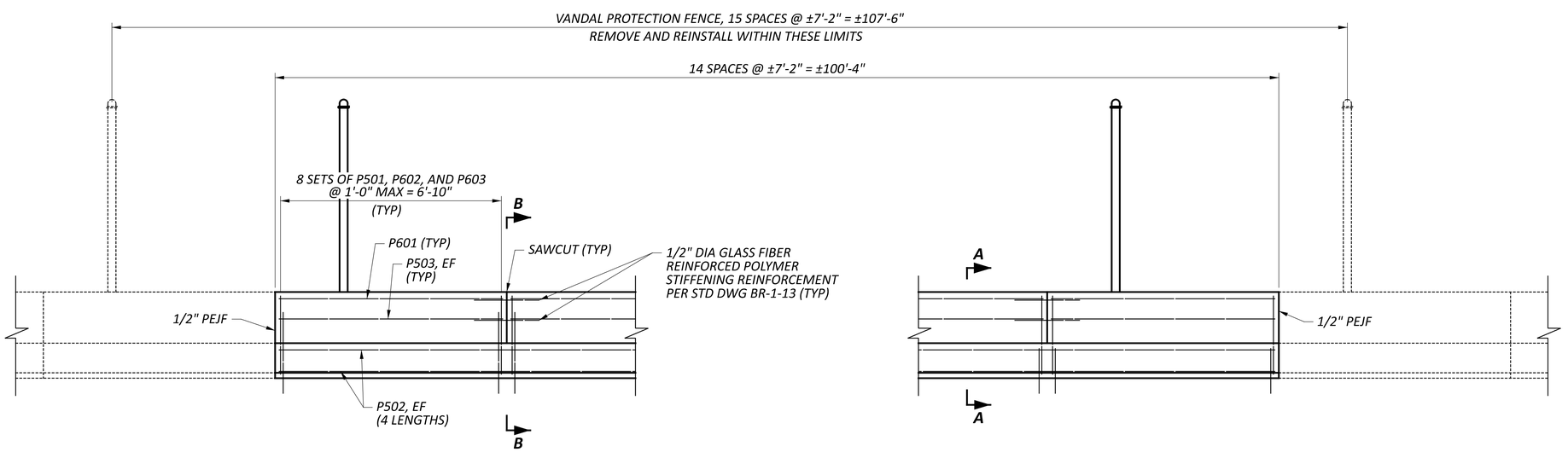

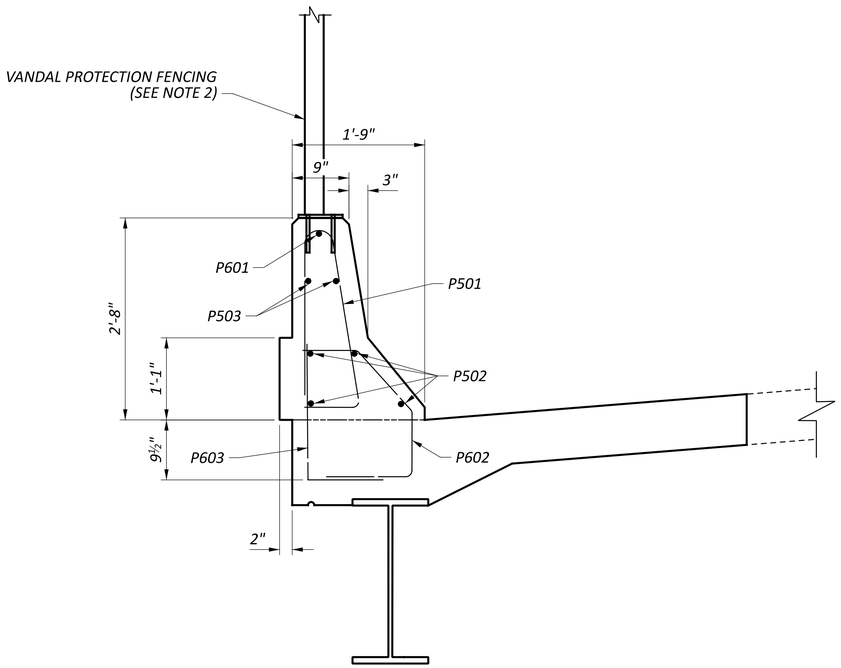

SECTION A-A

(DECK REINFORCING NOT SHOWN)

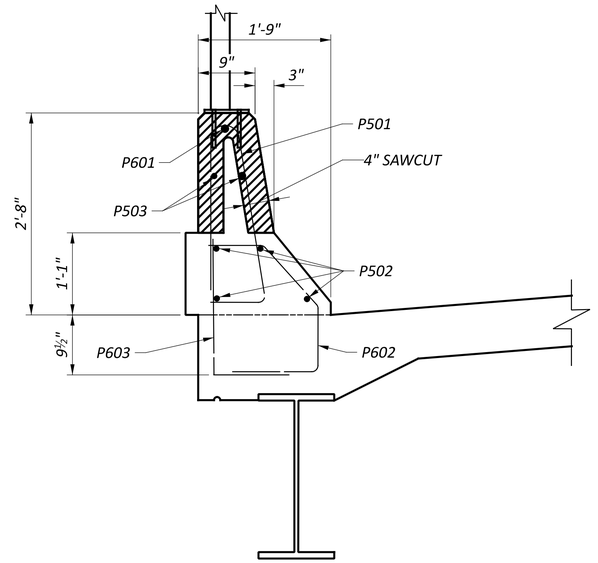

SECTION B-B

(DECK REINFORCING NOT SHOWN)

NOTES

1. LAP LENGTHS FOR STEEL REINFORCING BARS SHALL BE:

   #5 BAR = 2'-5"
   #6 BAR = 3'-7"

2. THE CONTRACTOR MUST CAREFULLY DISMANTLE EXISTING VANDAL FENCE MESH, RAILS, AND POSTS TO BE REUSED AFTER PARAPET HAS BEEN RECONSTRUCTED. SUPPLY NEW BOLTS TO REINSTALL VANDAL FENCING IN ACCORDANCE WITH ODOT STD DWG VPF-1-90.

3. FOR ADDITIONAL DETAILS ON THE PROPOSED BARRIER, REFER TO CURRENT STANDARD DRAWING BR-1-13 AND ARCHIVED STANDARD DRAWING BR-1 (SHEET 6/16)

PARAPET DETAILS
BRIDGE NO. FRA-33-2456
WATKINS ROAD OVER US 33

FRA-33-2456 BRIDGE HIT REPAIR

MODEL: Deck Plan [Sheet] PAPERSIZE: 34x22 (in.) DATE: 10/30/2026 TIME: 8:39:03 AM USER: cschrader
J:\2025023\2\ODOT\117444\400-Engineering\Structures\SFN_2501899\Sheets\117444_SFN_2501899_SD002.dgn

SFN	2501899
DESIGN AGENCY	EMH&T
DESIGNER	CAD
CHECKER	TDA
REVIEWER	CAS 08/20/26
PROJECT ID	125600
SUBSET	18
TOTAL	19
SHEET	P.41
TOTAL	42

	MARK	NUMBER TOTAL	LENGTH	WEIGHT	TYPE	DIMENSIONS A	B	C	D	E	R	INC
	DECK AND RAILNGS (EPOXY COATED REINFORCING STEEL)											
	S401	68	4'-4''	197	12	0'-9''	1'-6''	1'-8''	0'-8''	0'-6''		
**	S402	44	26'-9''	786	STR							
**	S403	3	14'-0''	28	STR							
**	S404	6	31'-0''	124	STR							
**	S405	3	15'-6''	31	STR							
	S501	28	30'-3''	883	STR							
**	S601	127	5'-4''	1017	STR							
**	S701	127	5'-4''	1384	STR							
	P501	112	5'-9''	672	22	0'-9''	2'-5''	2'-2''			0'-3''	
	P502	16	30'-3''	505	STR							
	P503	28	6'-10''	200	STR							
	P601	14	6'-10''	144	STR							
	P602	112	3'-8''	617	14	1'-3''	0'-10''	0'-10''	0'-9''	0'-8''		
	P603	112	2'-8''	449	1	1'-0''	1'-9 1/2''					
			TOTAL	7,037								

** BAR INCLUDES A MECHANICAL CONNECTOR. CONTRACTOR SHALL MODIFY REBAR LENGTHS AS APPROPRIATE.

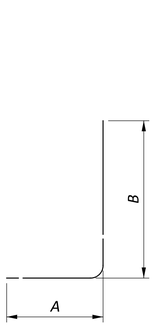

TYPE-1

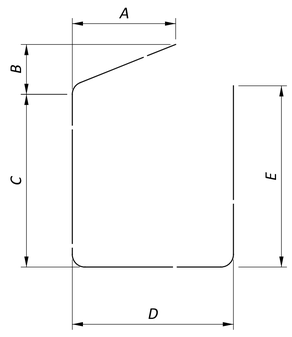

TYPE-12

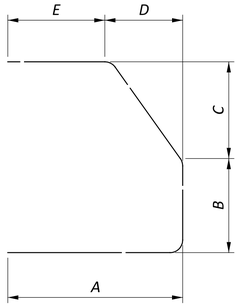

TYPE-14

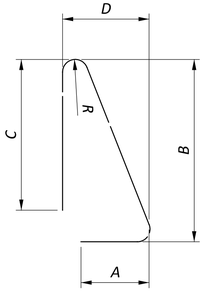

TYPE-22

NOTES

1. THE BAR SIZE NUMBER IS SPECIFIED ON THE PLANS IN THE MARK COLUMN. THE FIRST DIGIT INDICATES THE BAR SIZE NUMBER. FOR EXAMPLE, THE BAR MARK "S601" IS A NO. 6 BAR. BAR DIMENSIONS SHOWN ARE OUT/OUT, UNLESS OTHERWISE INDICATED. R INDICATES INSIDE RADIUS, UNLESS OTHERWISE NOTED. "STD" WRITTEN IN PLACE OF A DIMENSION INDICATES A STANDARD BEND AT THE END OF THE BAR.

2. ALL REINFORCING STEEL TO BE EPOXY COATED.

REINFORCING STEEL SCHEDULE
BRIDGE NO. FRA-33-2456
WATKINS ROAD OVER US 33

SFN 2501899
DESIGN AGENCY EMH&T
DESIGNER CAD | CHECKER TDA
REVIEWER CAS 08/20/26
PROJECT ID 125600
SUBSET 19 | TOTAL 19
SHEET P.42 | TOTAL 42

FRA-33-2456 BRIDGE HIT REPAIR

MODEL: Rebar Table-1 [Sheet] PAPERSIZE: 34x22 (in.) DATE: 10/30/2026 TIME: 8:39:06 AM USER: cschrader
J:\20250232\ODOT\117444\400-Engineering\Structures\SFN_2501899\Sheets\117444_SFN_2501899_SL001.dgn