OHIO DEPARTMENT OF TRANSPORTATION

GEA - 44 - 2.81/VAR

GEA - SR 44-2.81/Various
040453 PID - 77469
Dist 12 7/28/2004

LOCATION MAP

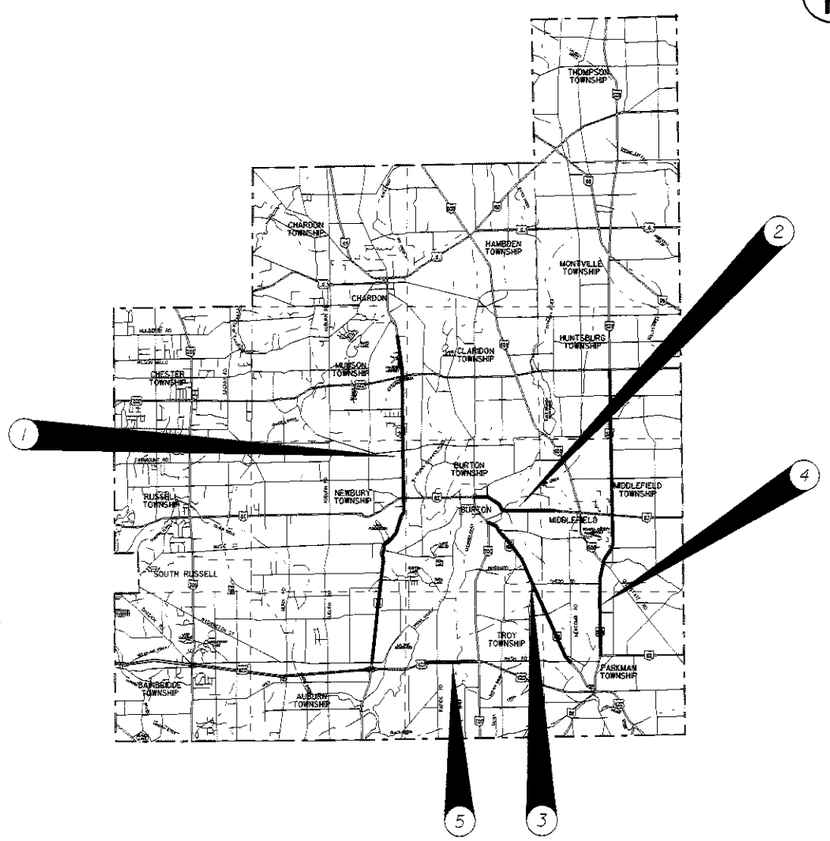

PORTION TO BE IMPROVED

PART	COUNTY	ROUTE	SECTION	PROJECT TERMINII BEGIN	PROJECT TERMINII END	NET LENGTH MILES	VILLAGE	TOWNSHIP
1	GEA	44	2.81	2.81	14.72	11.91		AUBURN
								NEWBURY
								MUNSON
2	GEA	87	13.16	13.16	16.01	2.85	BURTON	BURTON
								MIDDLEFIELD
3	GEA	168	1.63	1.63	7.39	5.76		PARKMAN
								TROY
								BURTON
4	GEA	528	0.67	0.67	11.48	10.81		PARKMAN
								MIDDLEFIELD
								HUNTSBURG
5	GEA	422	11.25	11.25	12.74	1.49		TROY

INDEX OF SHEETS:

TITLE SHEET 1
TYPICAL SECTIONS 2-9
GENERAL NOTES 10-12
GENERAL SUMMARY 13
PAVEMENT SUB-SUMMARIES 14-23

PROJECT DESCRIPTION

This project consists of overlaying SR-44, SR-87, and SR-168 in Geauga County. Also included in the plans are partial depth pavement repairs to SR-528 and pavement repairs to US-422 in Geauga County.

2002 SPECIFICATIONS

The standard specificatons of the State of Ohio, Department of Transportation, including changes and supplemental specifications listed in the proposal shall govern this improvement.

I hereby approve these plans and declare that the making of this improvement will not require the closing to traffic of the highway and that provisions for the maintenance and safety of traffic will be as set forth in the plans and estimates.

NPDES PERMIT REQUIREMENTS:

PROJECT EARTH DISTURBED AREA = N/A (MAINTENANCE PROJECT)
ESTIMATED CONTRACTOR EARTH DISTURBED AREA = N/A (MAINTENANCE PROJECT)
NOTICE OF INTENT DISTURBED AREA = N/A (MAINTENANCE PROJECT)

UNDERGROUND UTILITIES
TWO WORKING DAYS
BEFORE YOU DIG
CALL 1-800-362-2764 (TOLL FREE)
OHIO UTILITIES PROTECTION SERVICE
NON-MEMBERS
MUST BE CALLED DIRECTLY

PLAN PREPARED BY:

OHIO DEPARTMENT OF TRANSPORTATION
DISTRICT 12
PRODUCTION

STATE OF OHIO
LOUIS D. HAZAPIS
E-53285
REGISTERED
PROFESSIONAL ENGINEER

SIGNED: Louis D. Hazapis
DATE: 4/30/04

STANDARD DRAWINGS		STANDARD DRAWINGS		SUPPLEMENTAL SPECIFICATIONS	
BP-3.1	07-28-00	TC-71.10	04-19-02	832	02-12-03
TC-41.10	01-19-01	TC-73.10	01-19-01	833	02-12-03
TC-41.20	01-19-01	TC-82.10	04-19-02	908	04-18-03
TC-52.10	04-20-01			925	04-19-03
TC-52.20	04-20-01	MT-97.11	04-19-02	1055	06-15-99
TC-65.10	10-19-01	MT-99.20M	01-30-95		
TC-65.11	10-19-01	MT-105.10	10-18-02		
TC-65.12	10-19-01	MT-105.11	10-18-02		

Approved [redacted] Deputy Director
Date [redacted]

Approved Gordon Proctor
Date 5-19-04 Director, Department of Transportation

FEDERAL PROJECT NO. NON-FEDERAL
PID NO. 77469
CONSTRUCTION PROJECT NO.
RAILROAD INVOLVEMENT NONE
GEA-44-2.81/VAR

PROPOSED LEGEND

1. Item 448 - ¾" Asphalt Concrete Intermediate Course, Type I, PG64-28
2. Item 446 - 1" Asphalt Concrete Surface Course, Type IH, PG76-22M, APP
3. Item 254 - Pavement Planing, Bituminous, 1½", As Per Plan
4. Item 617 - Compacted Aggregate, Type A, As Per Plan
5. Item 407 - Tack Coat
6. Item 407 - Tack Coat for Intermediate Course
7. Item 448 - 1½" Asphalt Concrete Surface Course, Type I, PG64-22, APP
8. Item 251 - Partial Depth Pavement Repair, 3", As Per Plan
9. Item 448 - 1½" Asphalt Concrete Surface Course, Type I, PG64-22

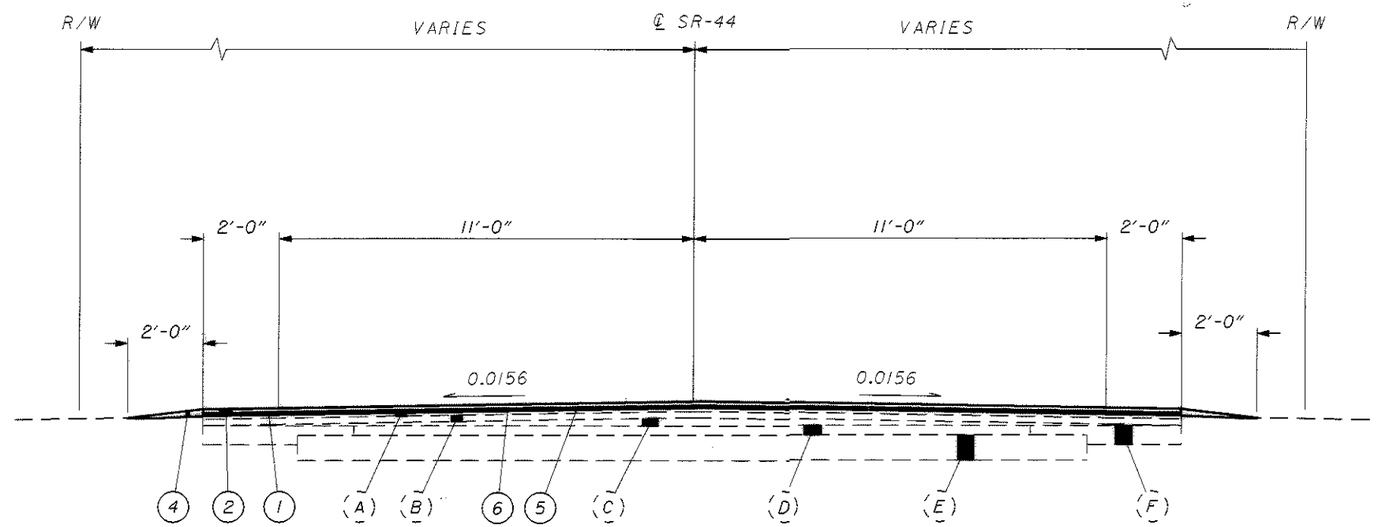

TYPICAL SECTION 1 - SR-44

SLM 2.81 (Washington St.) to SLM 5.87 (Bridge Creek)
SLM 6.73 to SLM 8.80 (SR 87)
SLM 8.99 (SR 87) to SLM 13.16 (US 322)

EXISTING LEGEND

- (A) Asphalt Concrete, 1¼"
- (B) Asphalt Concrete, 2"
- (C) Asphalt Concrete, 2¾" at ℄
- (D) Bituminous Macadam Course, 3"
- (E) Macadam Base, 8"
- (F) Slag Base, 6"
- (G) Asphalt Base, 3"
- (H) Concrete Base, 3"
- (I) Compacted Granular Base, 5"
- (J) Bituminous Aggregate Base, 6"
- (K) Aggregate Base, 8"
- (L) Curb, Type 6
- (M) 6" Shallow Pipe Underdrain
- (N) Guardrail

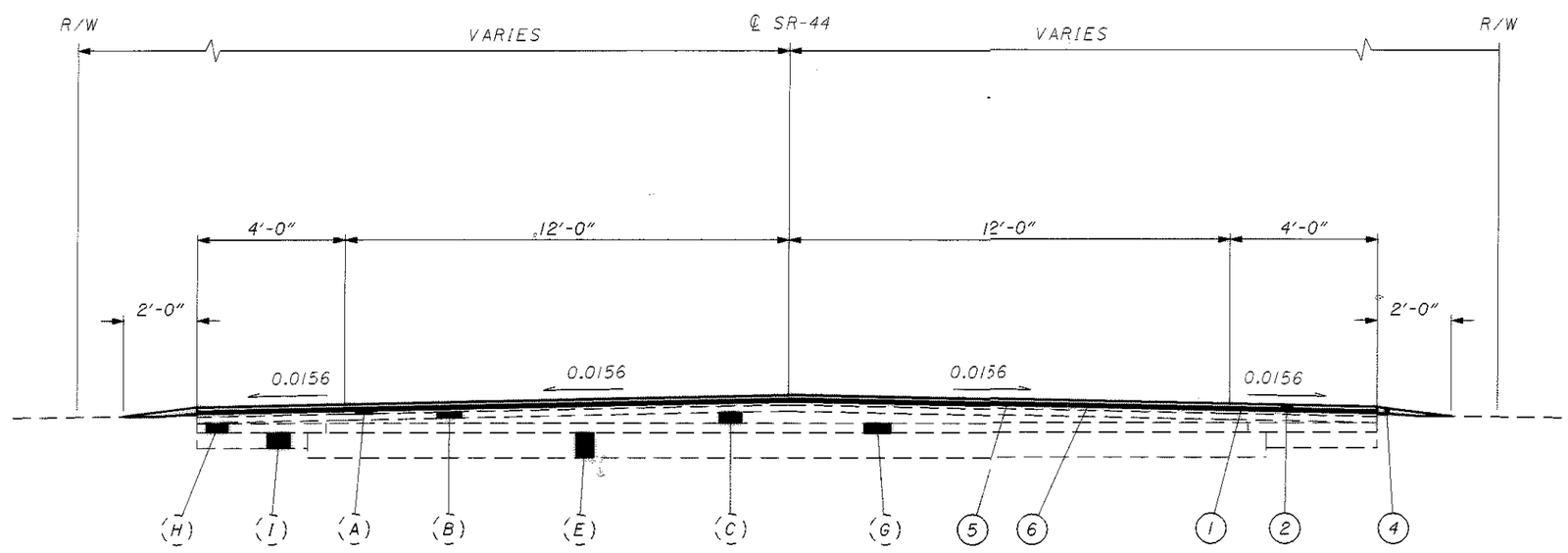

TYPICAL SECTION 2 - SR-44

SLM 13.16 (US 322) to SLM 14.72

REVISED	CHECKED LDH
CALCULATED KDH	DRAWN KDH

TYPICAL SECTIONS - SR-44

GEA-44-2.81/VAR

I:\PROJECTS\Plat77469\dgn\Y77469 gy002.dgn 29-APR-2004 8:52AM khamilt1

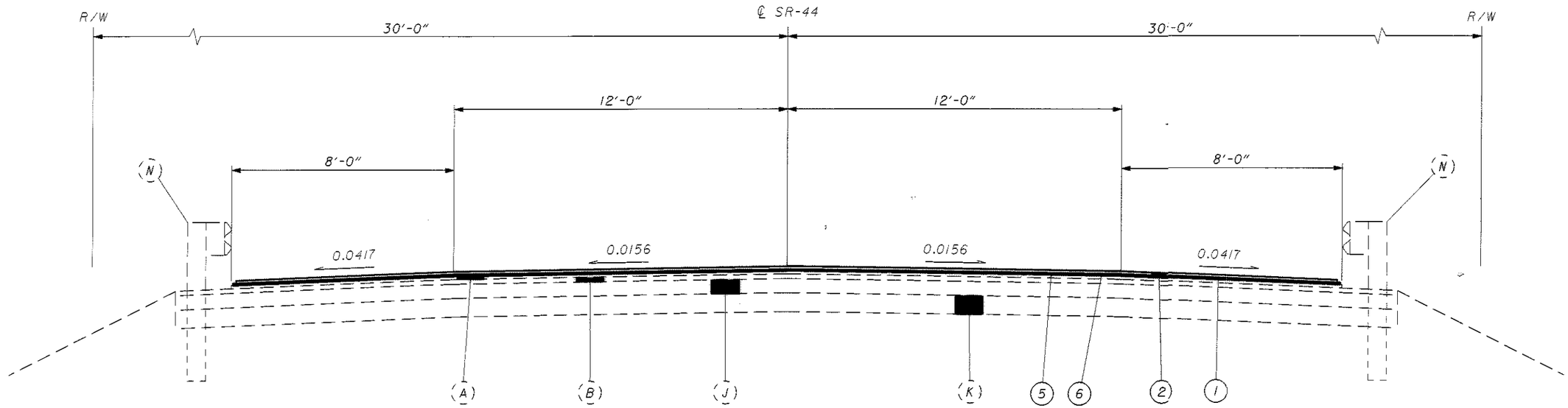

TYPICAL SECTION 3 - SR-44

SLM 5.87 (South of Bridge Creek) to SLM 5.93 (North of Bridge Creek)

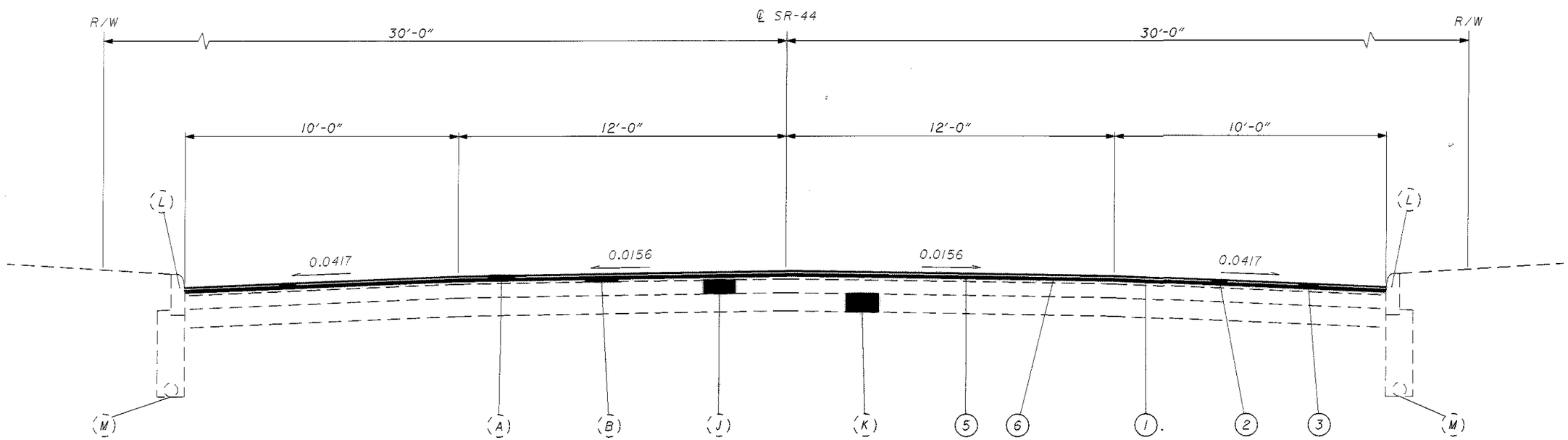

TYPICAL SECTION 4 - SR-44

SLM 5.93 (North of Bridge Creek) to SLM 6.12 (North of Bell St.)

FOR LEGEND, SEE SHEET 2

REVISED
CHECKED LDH
CALCULATED KDH
DRAWN KDH

TYPICAL SECTIONS - SR-44

GEA-44-2.81/VAR

3/23

I:\PROJECTS\Pld77469\dgn\77469 gy003.dgn 29-APR-2004 8:53AM khamlitt

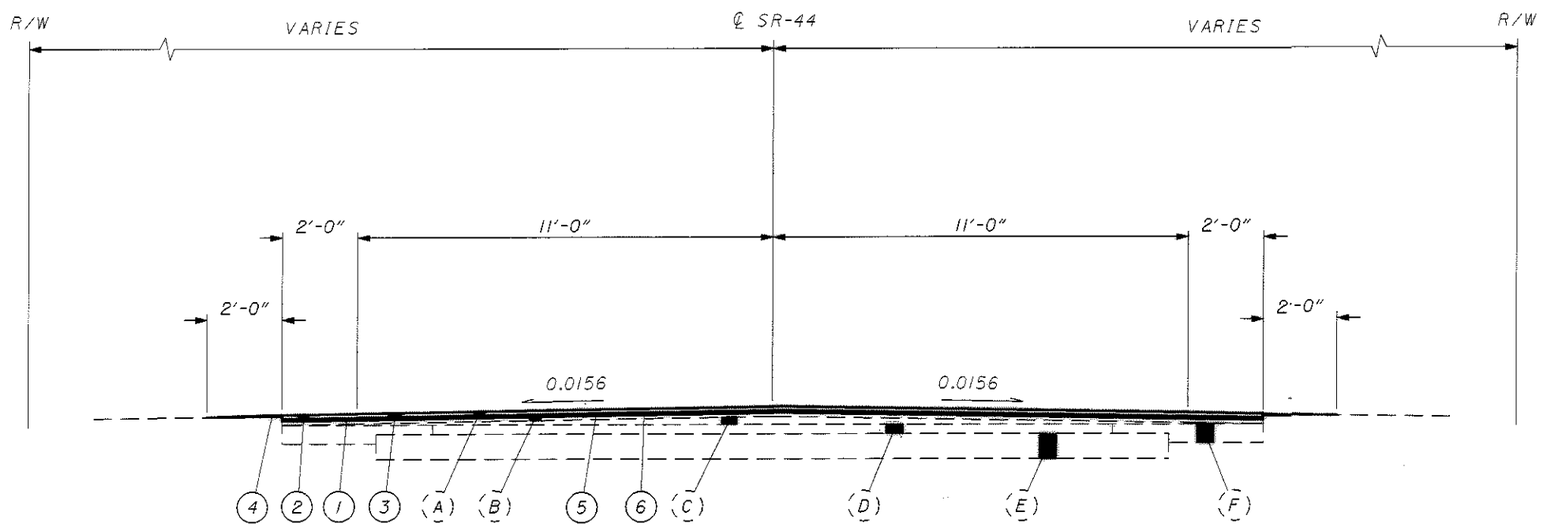

TYPICAL SECTION 5 - SR-44

SLM 6.12 (North of Bell St.) to SLM 6.73

FOR LEGEND, SEE SHEET 2

CALCULATED KDH | DRAWN KDH | REVISED | CHECKED LDH

TYPICAL SECTIONS - SR-44

GEA-44-2.81/VAR

I:\PROJECTS\Pid77469\dgn\77469_gy004.dgn 29-APR-2004 8:53AM khamilt1

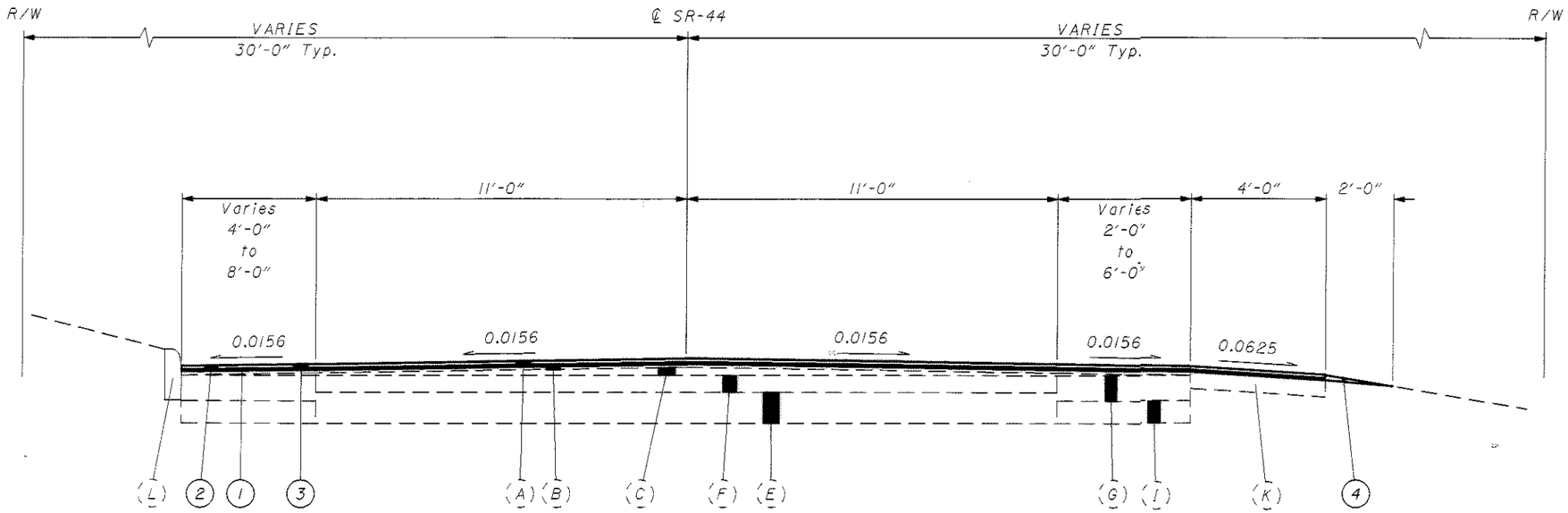

TYPICAL SECTION 6 - SR-44

SLM 8.89 to SLM 8.99
North of SR-87 Intersection

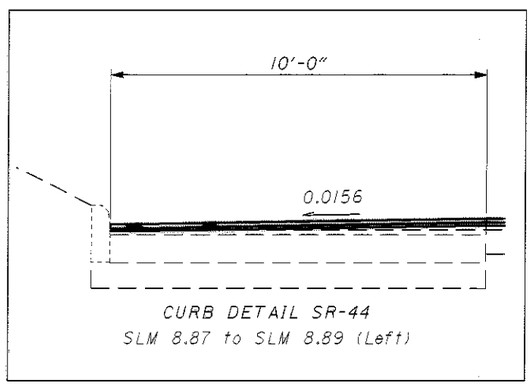

CURB DETAIL SR-44
SLM 8.87 to SLM 8.89 (Left)

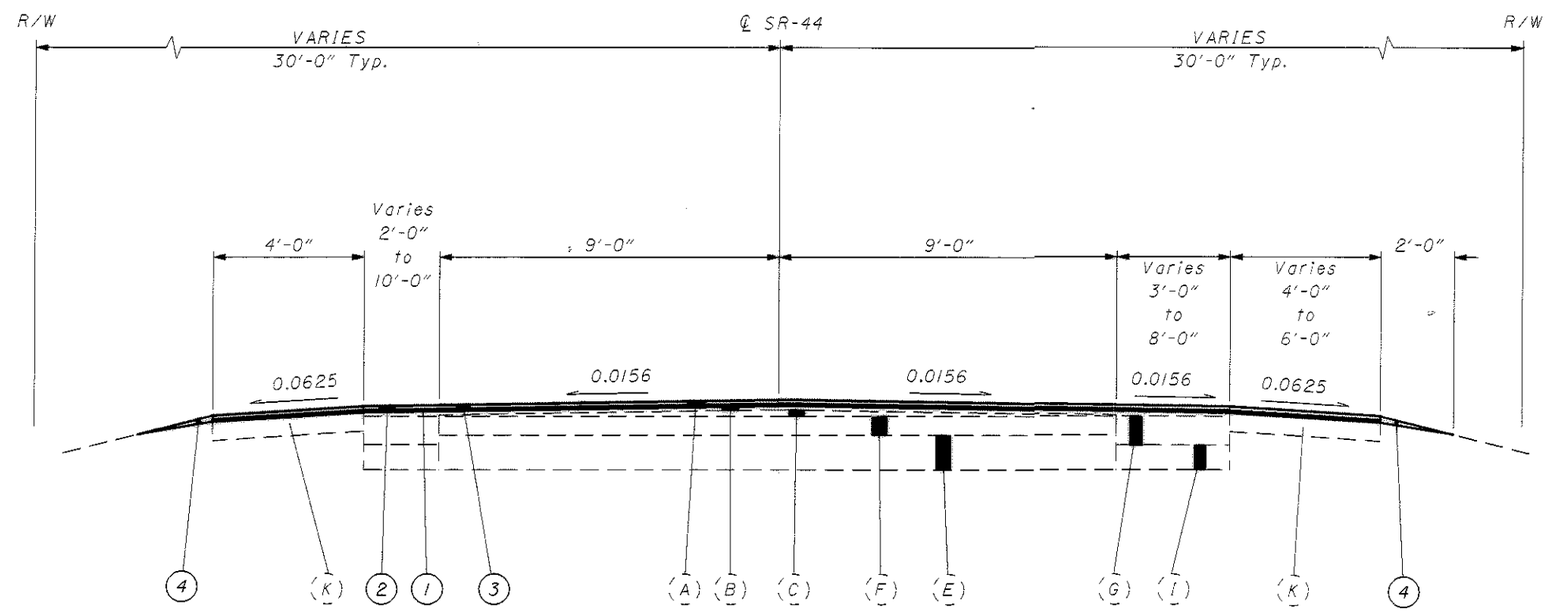

TYPICAL SECTION 7 - SR-44

SLM 8.80 to SLM 8.89
South of SR-87 Intersection

FOR LEGEND, SEE SHEET 2

REVISED | CHECKED LDH
CALCULATED KDH | DRAWN KDH

TYPICAL SECTIONS - SR-44

GEA-44-2.81/VAR

I:\PROJECTS\Pid77469\dgn\77469 gy005.dgn 29-APR-2004 8:54AM khamlin

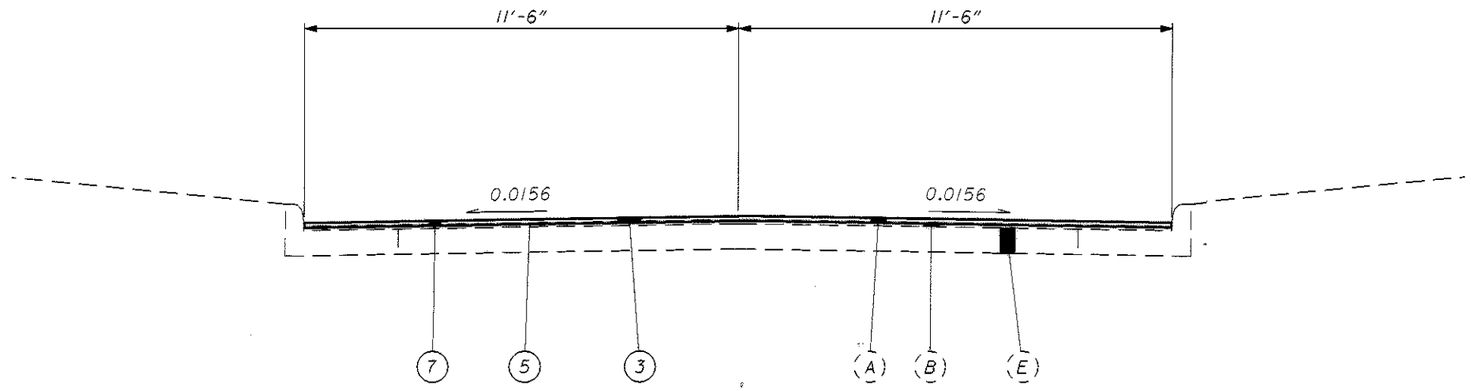

TYPICAL SECTION 8 - SR-87

SLM 13.16 TO SLM 13.64

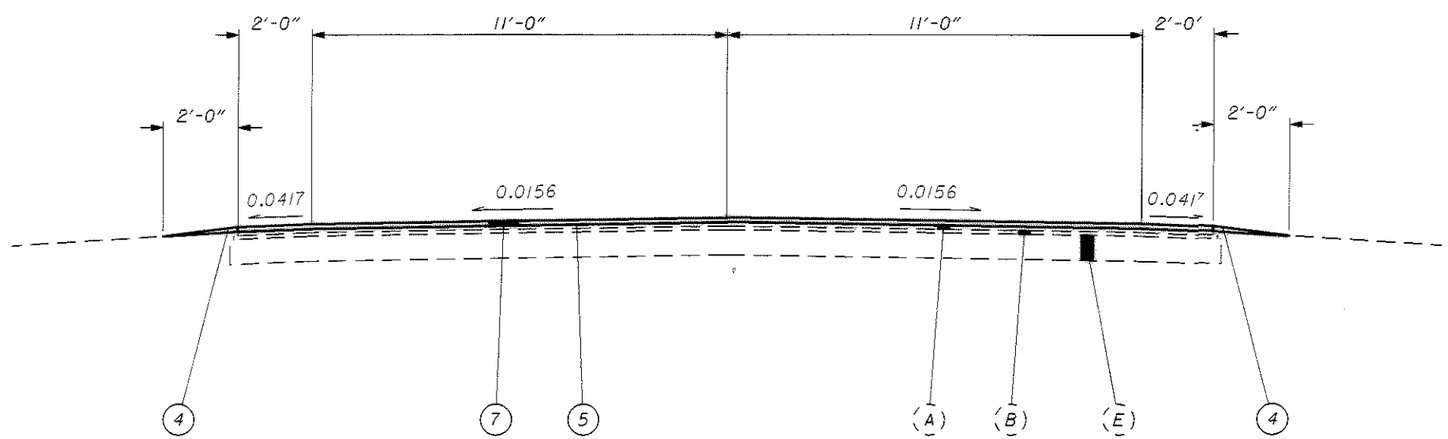

TYPICAL SECTION 9 - SR-87

SLM 13.64 TO SLM 16.01

FOR LEGEND, SEE SHEET 2

CALCULATED	REVISED
KDH	
DRAWN	CHECKED
KDH	LDH

TYPICAL SECTIONS - SR-87

GEA-44-2.81/VAR

I:\PROJECTS\Pid77469\dgn\77469 gx006.dgn 29-APR-2004 8:55AM khamilt1

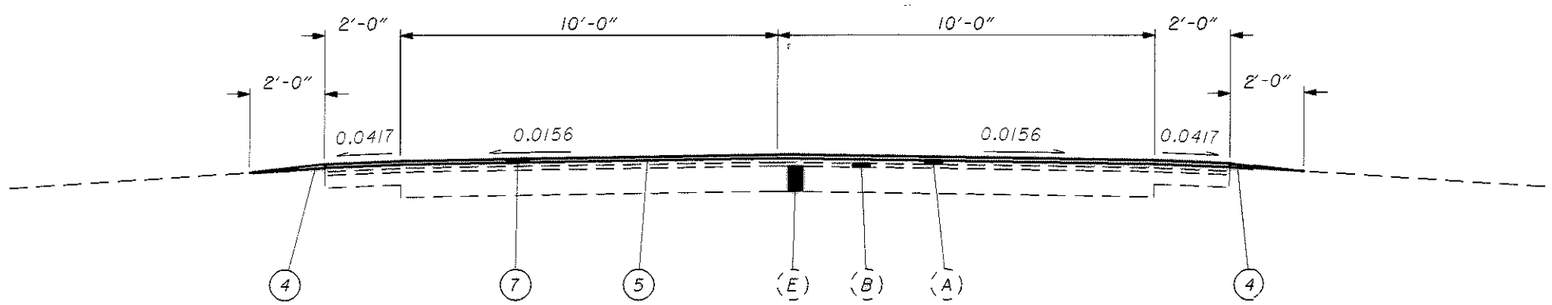

TYPICAL SECTION 10 - SR-168
SLM 1.63 TO SLM 7.39

FOR LEGEND, SEE SHEET 2

CALCULATED	REVISED	CHECKED
KDH		LDH
DRAWN		
KDH		

TYPICAL SECTIONS - SR-168

GEA-44-2.81/VAR

I:\PROJECTS\P1d77469\dgn\77469 gy007.dgn 29-APR-2004 8:55AM khamlin1

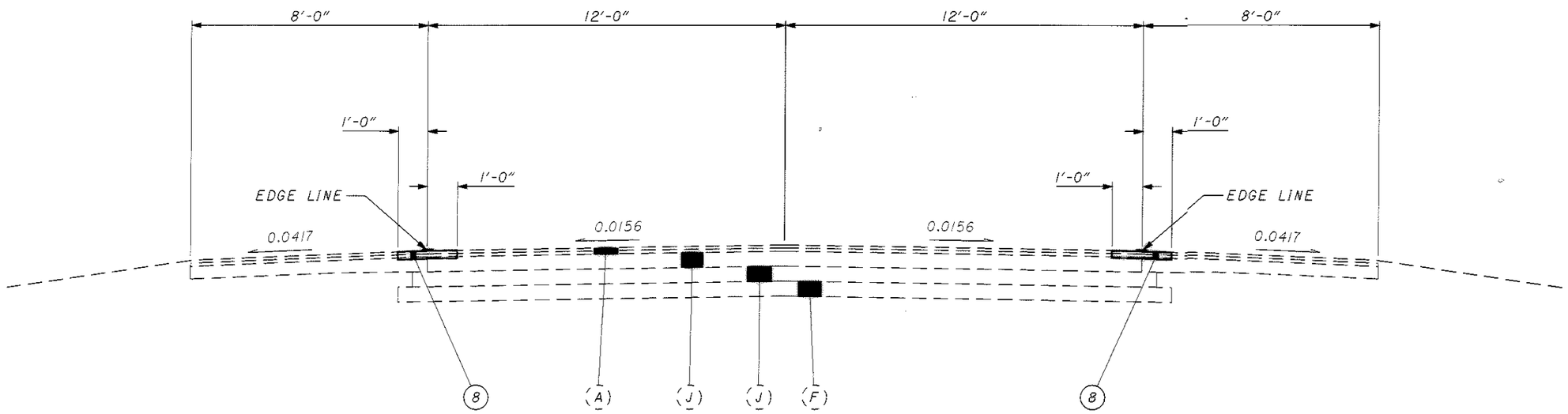

TYPICAL SECTION II - SR-528

SLM 0.67 TO SLM 11.48

FOR LEGEND, SEE SHEET 2

CALCULATED	REVISED	CHECKED
KDH		LDH
DRAWN		
KDH		

TYPICAL SECTIONS - SR-528

GEA-44-2.81/VAR

I:\PROJECTS\Pld77469\dgn\77469_gx008.dgn 29-APR-2004 8:56AM khamlHH

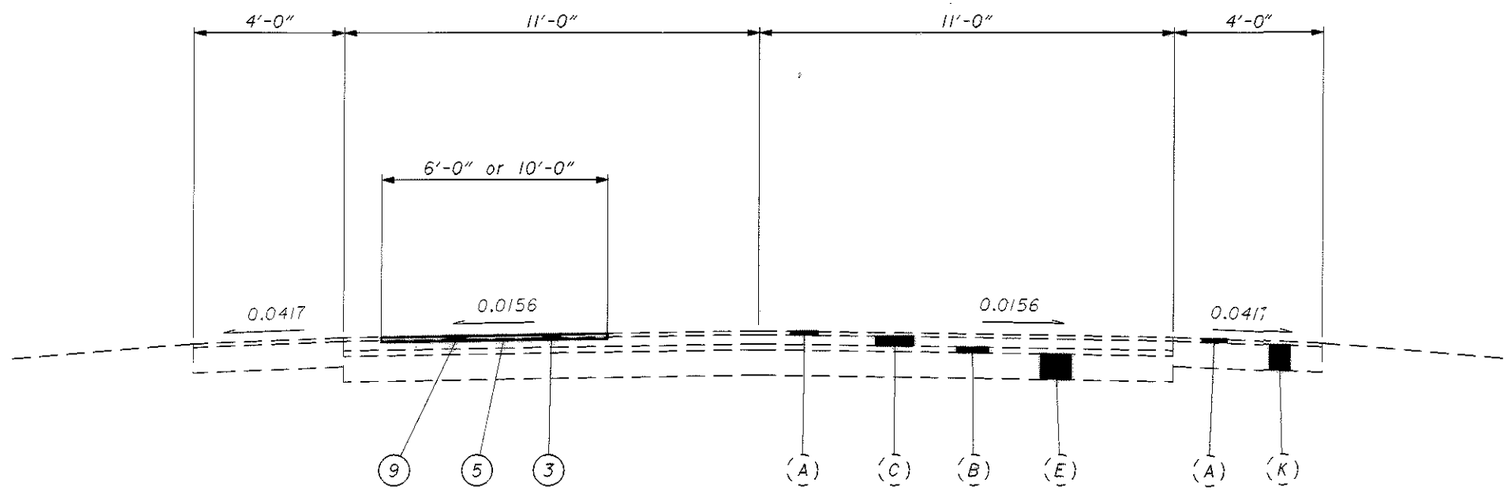

TYPICAL SECTION 12 - US-422

SLM 11.25± TO SLM 11.26± (6'-0" wide)
SLM 11.35± TO SLM 11.46± (10'-0" wide)
SLM 11.95± TO SLM 12.00± (6'-0" wide)

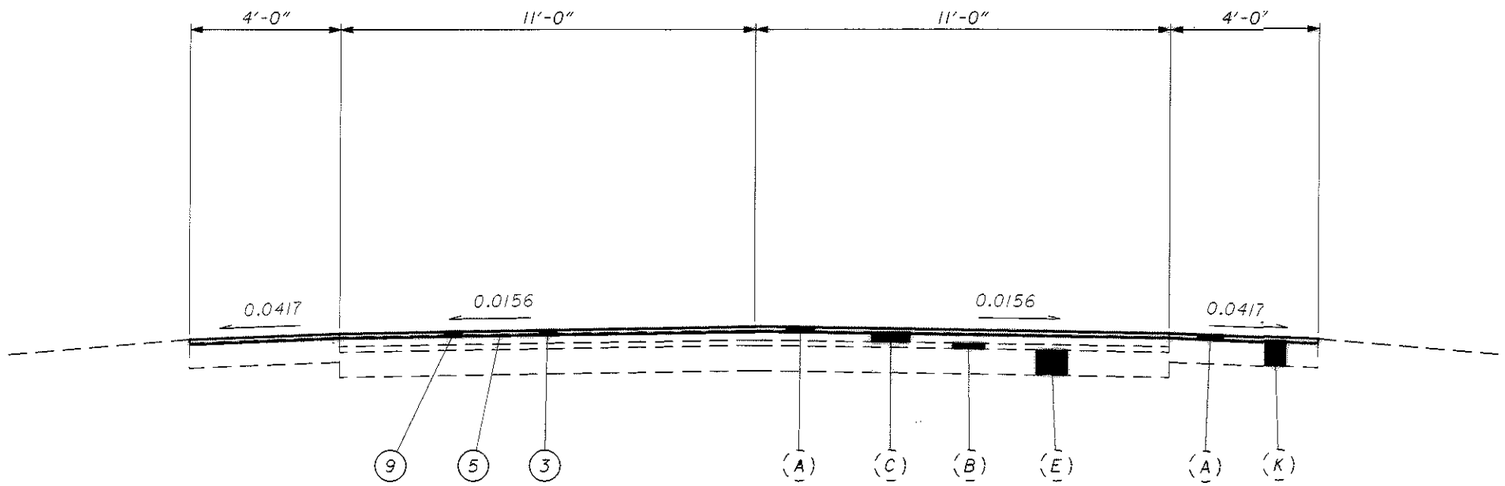

TYPICAL SECTION 13 - US-422

SLM 12.70 TO SLM 12.74

FOR LEGEND, SEE SHEET 2

CALCULATED	REVISED
KDH	
DRAWN	CHECKED
KDH	LDH

TYPICAL SECTIONS - US-422

GEA-44-2.81/VAR

I:\PROJECTS\Pld77469\dgn\77469_gx009.dgn 29-APR-2004 8:56AM khamilt

Project Description

This project consists of:

1. The resurfacing of State Route 44 between Washington Street at SLM 2.81 and the southern Chardon City Corporation Limit at SLM 14.72 in Geauga County.
2. The resurfacing of State Route 87 between East Park Avenue at SLM 13.16 in the Village of Burton and the western Village of Middlefield Corporation Limit at SLM 16.01 in Geauga County.
3. The resurfacing of State Route 168 between Nash Road at SLM 1.63 and State Route 700 at SLM 7.39 in Geauga County.
4. The partial depth pavement repair of State Route 528 between SLM 0.67 and US-322 at SLM 11.48 in Geauga County.
5. The pavement repair of US-422 between SLM 11.25± and SLM 12.74± in Geauga County.

Underground Utilities

There are no underground utilities shown on this plan. The nature of the work required by this project will not affect any known underground utilities that exist under or adjacent to the work area.

Contingency Quantities

The Contractor is not to order materials or perform work for items designated by plan note to be used "as directed by the Engineer" unless authorized by the Engineer.

Work Limits

The work limits shown on these plans are for physical construction only. The installation and operation of all temporary traffic control devices required by these plans is to be provided by the contractor whether inside or outside these work limits.

Right of Way

All work is to be performed within the existing right of way or easements.

Conversion of Standard Construction Drawings

The metric standard drawings referenced in this plan shall be converted to English units using the SI (Metric) to English Conversion Factors provided in section 109.02 of the 2002 Construction and Material Specifications. IEEE/ASTM SI 10 shall be utilized for any additional conversion factors required. Conversions shall be appropriately precise and shall reflect standard industry English values where suitable.

Profile and Alignment

The proposed pavement resurfacing follows the alignment and profile of the existing pavement. The proposed asphalt concrete overlays are to be as shown on the typical sections.

Cooperation Between Contractors

The Contractor must cooperate and coordinate his/her operations with the contractors on other projects that may be in force during the life of the contract. No waiver of any provisions of 105.07 of the 2002 Construction and Material Specifications is intended.

Item 202 - Raised Pavement Markers Removed

The following estimated quantity has been included in the General Summary to be used throughout this project:

Item 202 - Raised Pavement Markers Removed.....**1636 EA.**

Equipment and Material Storage

In order to provide for the safety of the traveling public the Contractor's attention is directed to 614.03. In addition, the following provisions apply:

1. Any removed items are not to be stored on the right of way for more than thirty days.
2. The storage of equipment, materials, and vehicles within the right of way will be permitted. The number of areas and exact locations shall be approved by the Engineer.
3. All disturbed areas must be returned to their original condition at no expense to the State.

Permanent Pavement Markings

Prior to any planing and paving operations, the Contractor is responsible for conducting a field survey of the existing permanent markings. It is the intent of this plan to replace the pavement markings in the same location as the existing pavement markings. Any staking or marking required to establish control points to ensure that existing markings are accurately placed is the responsibility of the Contractor. The Engineer will verify all permanent marking locations prior to the actual installation. The cost for this work shall be included in Item 623 - Construction Layout Stakes.

Castings Adjusted to Grade

All castings are to be adjusted to the finished roadway elevation by the Contractor. The time between adjusting the castings and resurfacing must be kept to an absolute minimum. No adjusting rings will be permitted. The following quantities have been carried to the General Summary.

Item 604 - Monument Box Adjusted to Grade, As Per Plan.....**5 EA.**

Item 604 – Catch Basin Adjusted to Grade, As Per Plan..... **10 EA.**

Item Special - Miscellaneous Metal

Existing castings may prove to be unsuitable for reuse, as determined by the Engineer during the construction of the project. It is the Contractor's responsibility to provide the castings of the required type, size and strength (heavy or light duty) for the particular structure in question. All materials must meet Item 604 of the Specifications and shall have the prior approval of the Engineer. The following estimated quantity has been carried to the General Summary for use as directed by the Engineer.

Item Special, Miscellaneous Metal.....**1000 Lbs.**

The Contractor is cautioned to use extreme care in the removal, storage and replacement of all existing castings. Castings damaged by the negligence of the Contractor, as determined by the Engineer, are to be replaced with the proper new castings at the expense of the Contractor. The Contractor is not to order materials until authorized by the Engineer and if none are needed the item is to be non-performed.

Item 407 - Tack Coat

The rate of application of the Item 407 Tack Coat is subject to adjustment as directed by the Engineer. Plan quantities indicate an average application rate of 0.10 Gallons per Square Yard of Tack Coat for estimating purposes only.

Item 407 - Tack Coat for Intermediate Course

The rate of application of the Item 407 Tack Coat for Intermediate Course is subject to adjustment as directed by the Engineer. Plan quantities indicate an average application rate of 0.05 Gallons per Square Yard of Tack Coat for Intermediate Course for estimating purposes only.

Item 251 - Partial Depth Pavement Repair, As Per Plan B

This work item is for use as directed by the Engineer for the purpose of pavement repair. All labor and material necessary to perform this work and Section 250 of the Construction and Material Specifications is included for payment under Item 251.

The asphalt concrete used in this repair shall be either an Item 301 - Asphalt Concrete Base or Item 448 - Asphalt Concrete, Type 2.

Depth of pavement repair removal shall typically be 3 inches and 4 to 6 feet wide. The majority of these repairs are located in the northbound lane near the right wheel path from Washington Street to SLM 6.73±.

The following quantity has been carried to the General Summary:

Item 251 - Partial Depth Pavement Repair, As Per Plan B.....**2750 SQ.YD.**

Item 251 - Partial Depth Pavement Repair, As Per Plan A

This item of work shall include the removal of asphalt over the existing edge line to a depth of 3 inches and a width of 2 feet. Asphalt concrete shall be placed and compacted as per 251.03 of the CMS. The exact locations of this item of work shall be outlined by the Project Engineer.

Prior to placing the permanent pavement markings, the edges of the repair areas shall be sealed with Item 423 - Crack Sealing Material, Type II or Type III.

At the end of the work day, prior to opening the roadway to traffic, all existing asphalt removed shall be filled and compacted with no drop offs.

All costs associated with the work outlined above including labor, equipment, and materials shall be included in Item 251 - Partial Depth Pavement Repair, As Per Plan A.

Item 423 - Crack Sealing, Misc.: Type II or Type III

The Contractor has the option of using either Type II or Type III Crack Seal. The Contractor shall seal all visible cracks as directed by the Engineer.

Payment will be made at the contract unit bid price per Sq. Yd. instead of the unit bid price per pound as shown in CMS 423.

Item 446 - Asphalt Concrete Surface Course, Type 1H, PG76-22M, APP

The gradation for this item is per Table 441.02-1, Type 1, Surface Medium. All other specifications are as Type 1H, unless given otherwise.

The course aggregate for this item is limited to a blend of air cooled blast furnace slag and limestone. The Contractor shall use a minimum of 50 percent air cooled blast furnace slag with limestone comprising the remaining percentage.

Item 448 - Asphalt Concrete Surface Course, Type 1, PG64-22, As Per Plan

The mix design shall include the addition of 3% SBR (702.14) rubber solids based on the weight of the asphalt cement and 3 pounds polyester fibers per ton of produced mix. The SBR shall be introduced in accordance with SS 1055. The addition of polyester will be by the manufacturer's recommendations. The mixing times and temperatures shall be in accordance with the manufacturer of the rubber compound and polyester fibers recommendations and shall be submitted in writing with the proposed mix design. No reclaimed asphalt concrete pavement, or reclaimed bituminous aggregate base shall be used.

The course aggregate for this item shall be limited to air cooled blast furnace slag or limestone.

CALCULATED KDH CHECKED LDH

GENERAL NOTES

GEA-44-2.81/VAR

I:\PROJECTS\Pid77469\dgn\77469_gn010-011.dgn 29-APR-2004 8:58AM khamilt1

Item 646 - Center Line

The contractor must lay out all center lines using the most recent copy of the center line log. Copies of the center line log may be obtained from the District 12 Roadway Services Department. Center line quantities at the time of construction may vary from plan quantities due to revisions and updates of the center line log.

Item 448 - Asphalt Concrete Surface Course, Type 1, PG64-22 (Driveways)

This item of work consists of paving all existing driveways a distance of 5 feet from the edge of paved shoulder unless otherwise directed by the Engineer. The plan quantities are based on 14 feet wide for residential drives and 40 feet for commercial drives. Asphalt average thickness is 1 inch for all driveways.

All grading, tack, equipment, materials, and incidentals required to layout and construct the driveways is to be included in the unit price bid for Item 448 - Asphalt Concrete Surface Course, Type 1, PG64-22 (Driveways).

Payment for all the above is to be included in the unit bid price for Item 448 - Asphalt Concrete Surface Course, Type 1, PG64-22 (Driveways).

Item 617 - Compacted Aggregate, Type A, As Per Plan

This item shall be used along the shoulders. Materials are limited to 703.18 of the CMS except that gravel is not permitted. All other specifications of 703.18 shall apply.

The actual depth used will vary depending upon existing conditions. For estimating purposes, an average depth of 2 inches will be used. Water, if needed, is to be applied as per 617 and included under Item 617, Compacted Aggregate, Type A, As Per Plan.

The following estimated quantity has been carried to the General Summary:

SR-44 - [62885 LF x 2 FT x 2 Sides x (2"/12)/2] / 27 = 776.36 CU.YD.

SR-87 - [12408 LF x 2 FT x 2 Sides x (2"/12)/2] / 27 = 153.19 CU.YD.

SR-168 - [30413 LF x 2 FT x 2 Sides x (2"/12)/2] / 27 = 375.47 CU.YD.

Item 617 - Compacted Aggregate, Type A, As Per Plan.....**1305 CU.YD.**

Item 254 - Pavement Planing, Asphalt Concrete, As Per Plan

In addition to the requirements of Item 254, the Contractor shall deliver the following amount of asphalt grindings to the following locations:

1000 CU. YD.	Munson Yard 12453 Bass Lake Road Munson Township, OH

24 hours prior to the delivery, the Engineer shall contact the Geauga County Manager or Transportation Manager (440-834-4441) to forward the Contractor's schedule for deliveries.

Item 632 - Detector Loop, As Per Plan

An estimated quantity of Item 632 - Detector Loop, As Per Plan has been provided as a contingency quantity when wire is cut, broken, or destroyed due to pavement planing, pavement repair, or butt joint operations. It is imperative that replacement of loop detectors be installed and fully functional in the shortest possible time. Replacement loop detectors must be installed by the Contractor and fully functional within 7 calendar days of destruction of the original loop.

Failure to comply with the above stated requirements will result in the assessment of liquidated damages according to Section 108.07 of the 2002 Construction and Materials Specifications for each calendar day beyond the specified limit.

Place the new loop detectors after any pavement planing and pavement repairs within the loop detectors are completed, but prior to the placement of asphalt surface course.

New loop detectors shall be placed at the same locations and same size as the existing. Replace the loop detector wire to the pullbox or pole, whichever is applicable, under Item 632 and TC-82.10. The new cable splice kits are to be included in this pay item.

This work includes the poured epoxy insulated splice(s) required to connect the loop detector wire to the existing lead-in cable at the pullbox. The splices must be in accordance with Section 725.15 of the 2002 Construction and Materials Specifications. Payment is to be made per each loop detector connected to the lead-in cable.

The Contractor shall contact Jeff Fox (216-292-5801), District 12 Signal Supervisor, 7 days prior to planing through the intersection to adjust signal operation as needed. The Signal Supervisor shall concur with the location of the replacement loops. Install the detector loops in the surface course within 7 days of the placement of the surface course.

The following estimated quantities have been carried to the General Summary to be used as directed by the Engineer:

Item 632 - Detector Loop, As Per Plan.....**1 EACH**

Location	**Size**
SR-44 South Approach at SR-87 - 300' From Stop Bar	**6' x 8'**

Item 619 - Field Office, Type B

A Type B Field Office is required for this project.

Item 806 - Field Office, Type B.....**6 Months**

I:\PROJECTS\Pid77469\dgn\77469_gn010-011.dgn 29-APR-2004 8:58AM khamilt1

Item 614 - Maintaining Traffic

Generally the Contractor shall conduct his operations as to make the proposed repair with a minimum of hazard, delay and inconvenience to the motorists using the highway affected by the work done under this contract. In addition to the Construction and Material Specifications, the following specific provisions are mandatory.

I. Notification

Since functional traffic control is a major concern on this project, it is essential that the motoring public be adequately forewarned of future lane closures and traffic constrictions. Therefore, the contractor must submit a written schedule to the engineer, responsible law enforcement agencies, and the ODOT Public Information Office (216-584-2007) indicating the locations and dates of the lane closures at least 3 days prior to the implementation of any such closures.

II. Nighttime Work

The Contractor is not permitted to work at night.

III. Lane Closure Restrictions

1. All closures must be in accordance with the applicable Standard Construction Drawings.

2. All lanes are to be open to traffic at the end of each work day, except as noted afterwards. The lanes must be in a safe, passable condition, free from vertical drop offs greater than 1 ½".

3. No lane closures are to occur during the period beginning at 12:00 noon on the day preceding and continuing until noon on the day following legal holidays and holiday weekends such as Memorial Day, Fourth of July, and Labor Day. Furthermore, no lane closures are to be implemented or in place during increased traffic volumes caused by special events or when the Engineer deems the climatological conditions too hazardous.

IV. Maintenance of Traffic Systems

A. When Required

Whenever any part of the traveled surface is being worked upon or is otherwise not suitable for safe and convenient use by vehicles, traffic control devices sufficient to protect such areas to assure the safe and convenient passage of vehicular traffic need to be installed and maintained. Such traffic control devices and the manner in which they are used shall be consistent with these plans and the Ohio Manual of Uniform Traffic Control Devices for Streets and Highways, hereinafter referred to as the "Manual". The traffic control device system constitutes the minimum provisions for traffic control for each particular situation. Whenever the Engineer deems it necessary especially where a grade, curve, or merge conditions exists, he may direct that additional or alternative devices be used.

B. Conditions

During all parts of this project flaggers, signing, barricades, flashing arrows, etc. are to be located as indicated in the "Manual" or as shown in the Standard Drawings. Two-way traffic must be maintained on one lane at least 10' wide at all times.

C. Advance Warning Signs

All advance warning signs for any condition which restricts traffic are to be erected before any such restriction is put into effect. All such signs must be covered or removed from the view of traffic whenever they are not applicable.

D. Flashing Arrow Requirement

Whenever any part of the traveled surface is closed, the motorists must be warned and directed by the Contractor through the use of one flashing arrow for each lane closed. Additionally, the provisions set forth in the "Manual" and the applicable Standard Construction Drawings must be met.

E. Flaggers

At least two flaggers are required for each closure. The Contractor is to furnish additional flaggers as directed by the Engineer.

F. Protection of Public

Personal cars are not to be parked within the Right of Way.

G. Failure to Comply

If there is any failure to comply with provisions for traffic control set out in these plans and notes, or with the provisions of the "Manual", the highway in the vicinity of the work area will not be considered in a condition for the safe and convenient use by the traveling public. Any failure to keep the highway, in the vicinity of the work area, in a condition for the safe and convenient use by the traveling public is considered a breach of this contract. Work shall be suspended until the Contractor complies with the provisions of the aforementioned items.

V. Maintenance of Traffic Materials

A. Signs

Sign dimensions and specifications, including letter sizes are to be as provided in the "Manual", or in design drawings provided by the Department of Transportation. The signs are subject to approval of the Engineer prior to the start of the project.

B. Sign Support

Sign supports are to be of sufficient size and height as to support the signs at the appropriate height. Supports must be adequate in mass and stability to prevent the signs from being blown over by wind or vehicular generated air turbulence.

C. Drums

Drums must be in accordance with pertinent sections of the Ohio Manual of Uniform Traffic Control Devices. All costs for installing, maintaining, and subsequent removal of said drums is to be included in the lump sum bid price for Item 614 - Maintaining Traffic.

D. Cones

Cones are to be located as shown in the "Manual" and the Standard Drawings.

E. Flashers

Flashers shall be 12 Volt battery-operated models with 7 inch diameter yellow lenses illuminated by rapid intermittent flashers of short duration and are to be placed on all signs at all times as required by the "Manual" and the Standard Construction Drawings.

VI. Payment

Payment for providing, erecting, maintaining and removing temporary maintenance of traffic control devices is to be made under the lump sum price bid for Item 614 - Maintaining Traffic.

Placement of Asphalt Concrete

Two-way traffic must be maintained at all times except that one-way traffic will be permitted for minimum periods of time consistent with the requirements of the specifications for protection of completed asphalt concrete courses.

Item 614 - Work Zone Marking Signs

The following estimated quantities have been carried to the General Summary for use at locations identified by the Engineer for Work Zone Marking Signs per the requirements 614.04 and 614.11.

The following quantity has been carried to the General Summary, and consists of 80 - "No Edge Lines" OW-167-36 and 80 - "Unmarked No Passing Zone" OW-168-36 signs:

Item 614 - Work Zone Marking Sign.....**160 Each**

Item 614 - Asphalt Concrete for Maintaining Traffic

A quantity of Item 614 - Asphalt Concrete has been provided to protect the traffic from obstructions including, but not limited to, potholes, driveways, intersections, castings, and inlets and to maintain traffic over ruts and low areas which are left exposed due to pavement planing operations. The casting elevation is not to be greater than 2 inches when exposed to traffic. The following contingency quantity has been carried forward to the General Summary.

Item 614 - Asphalt Concrete for Maintaining Traffic.....**30 CU.YD.**

Item 614 - Work Zone Pavement Markings

The following estimated quantities have been carried to the General Summary, to be used as directed by the Engineer. Place temporary markings at the locations of the permanent markings as shown in the traffic control plans.

After the pavement planing is completed, use the following temporary markings:

Item 614 - Work Zone Center Line, Class I, 642 Paint.....**20.50 Mile**

Item 614 - Work Zone Stop Line, Class I, 642 Paint.....**53 Feet**

After the intermediate course is completed, use the following temporary markings:

Item 614 - Work Zone Center Line, Class I, 642 Paint.....**20.50 Mile**

Item 614 - Work Zone Stop Line, Class I, 642 Paint.....**53 Feet**

After the surface course is placed, use the following temporary markings:

Item 614 - Work Zone Center Line, Class II, 642 Paint.....**20.50 Mile**

Item 614 - Work Zone Stop Line, Class I, 642 Paint.....**53 Feet**

Permanent Pavement Markings

After placing the surface course, the Contractor may place permanent pavement markings at the locations previously field surveyed instead of placing temporary pavement markings, which shall be non-performed at these locations.

CALCULATED KDH CHECKED LDH

MAINTENANCE OF TRAFFIC NOTES

GEA-44-2.81/VAR

I:\PROJECTS\Pid77469\dgn\77469 mn012.dgn 29-APR-2004 8:59AM khamilt1

SHEET NUMBER 10	11	12	14	15	16	17	18	19	20	21	22	23	ITEM	ITEM EXT.	GRAND TOTAL	UNIT	DESCRIPTION	SEE SHEET NO.
1636													202	54000	1636	EACH	RPM REMOVED AND DISPOSED	
5													604	39501	5	EACH	MONUMENT BOX ADJUSTED TO GRADE, AS PER PLAN	10
1000													SPECIAL	60450000	1000	POUND	MISCELLANEOUS METAL	10
10													604	09001	10	EACH	CATCH BASIN ADJUSTED TO GRADE, AS PER PLAN	10
											9000		251	01001	9000	SQ YD	PARTIAL DEPTH PAVEMENT REPAIR, AS PER PLAN A	10
2750													251	01001	2750	SQ YD	PARTIAL DEPTH PAVEMENT REPAIR, AS PER PLAN B	10
			611	4972	9972	4647	1144		7309	680		1471	254	01001	30806	SQ YD	PAVEMENT PLANING, ASPHALT CONCRETE, 1 1/2", AS PER PLAN	11
			4715	638	4155	464	9390		4292	8170		147	407	10000	31971	GALLON	TACK COAT	
			2357	318	2077	233	4694						407	14000	9679	GALLON	TACK COAT FOR INTERMEDIATE COURSE	
											16367		423	98100	16367	SQ YD	CRACK SEALING, MISC.: TYPE II OR TYPE III	10
			1310	177	1154	129	2609						446	50015	5379	CU YD	ASPHALT CONCRETE SURFACE COURSE, TYPE IH, PG76-22M, APP	10
			982	132	866	97	1956						448	46010	4033	CU YD	ASPHALT CONCRETE INTERMEDIATE COURSE, TYPE I, PG64-28	
												61	448	47020	61	CU YD	ASPHALT CONCRETE SURFACE COURSE, TYPE I, PG64-22	
									1781	3396			448	47021	5177	CU YD	ASPHALT CONCRETE SURFACE COURSE, TYPE I, PG64-22, APP	10
			16	1	21	5	53		18	32			448	48020	146	CU YD	ASPHALT CONCRETE SURFACE COURSE, TYPE I, PG64-22 (DRIVEWAYS)	
	1305												617	10101	1305	CU YD	COMPACTED AGGREGATE, TYPE A, AS PER PLAN	11
								1020	216	400			621	00100	1636	EACH	RPM	
								23.82	5.66	11.52	21.62		646	10000	62.62	MILE	EDGE LINE	
								12.07	2.83	5.76			646	10200	20.66	MILE	CENTER LINE	
								125					646	10300	125	FT	CHANNELIZING LINE	
								134					646	10400	134	FT	STOP LINE	
								220					646	10600	220	FT	TRANSVERSE LINE	
								2					646	20300	2	EACH	LANE ARROW	
								2					646	20400	2	EACH	WORD ON PAVEMENT, 72"	
	1												632	26501	1	EACH	DETECTOR LOOP, AS PER PLAN	11
		160											614	12460	160	EACH	WORK ZONE MARKING SIGN	
		30											614	13000	30	CU YD	ASPHALT CONCRETE FOR MAINTAINING TRAFFIC	
		41.00											614	21100	41.00	MILE	WORK ZONE CENTER LINE, CLASS I, 642 PAINT	
		20.50											614	21500	20.50	MILE	WORK ZONE CENTER LINE, CLASS II, 642 PAINT	
		159											614	26200	159	FT	WORK ZONE STOP LINE, CLASS I, 642 PAINT	
													614	11000		LUMP	MAINTAINING TRAFFIC	
	6												619	16010	6	MONTH	FIELD OFFICE, TYPE B	
													623	10000		LUMP	CONSTRUCTION LAYOUT STAKES	
													624	10000		LUMP	MOBILIZATION	

CALCULATED KDH
CHECKED LDH

GENERAL SUMMARY

GEA-44-2.81/VAR

I:\PROJECTS\Pid77469\dgn\77469 gg013.dgn 29-APR-2004 8:59AM khamilt1

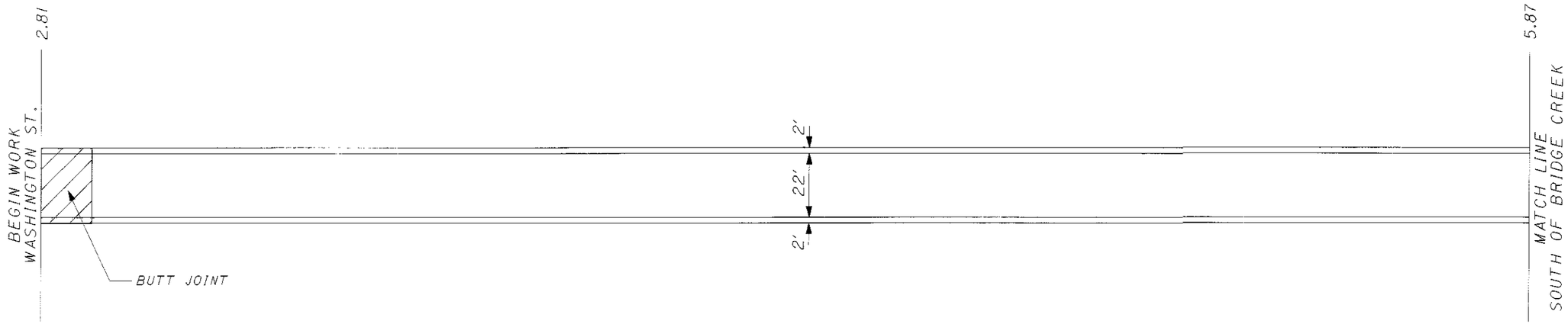

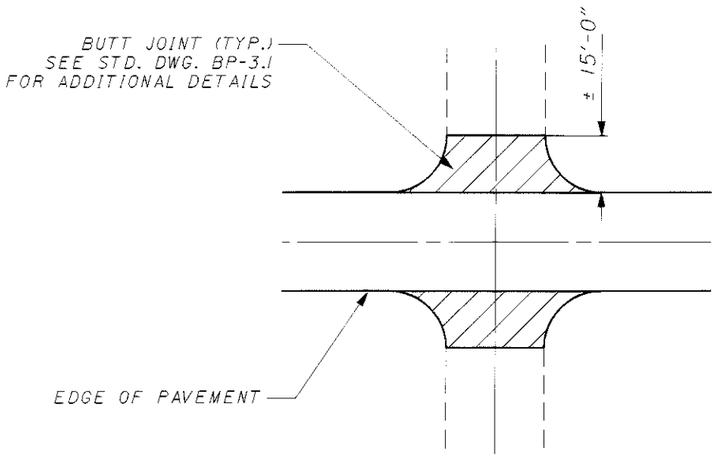

TYPICAL INTERSECTION DETAIL

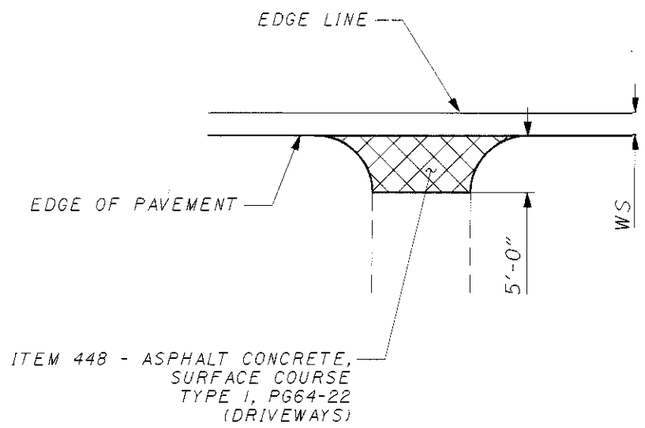

DRIVEWAY APRON DETAIL

LEGEND

PAVEMENT PLANING AREAS, 1½"

LOG POINT TO LOG POINT	TYPICAL	LENGTH		WP	PAVEMENT AREA	254 PAVEMENT PLANING BITUMINOUS, 1½", AS PER PLAN	407 TACK COAT FOR INTERMEDIATE COURSE @ 0.05 GAL/SQ. YD.	448 ASPHALT CONCRETE INTERMEDIATE COURSE, TYPE I PG 64-28 (¾")	407 TACK COAT FOR SURFACE COURSE @ 0.10 GAL/SQ. YD.	446 ASPHALT CONCRETE SURFACE COURSE, TYPE IH, PG 76-22M, AS PER PLAN (1")		448 ASPHALT CONCRETE SURFACE COURSE, TYPE I, PG 64-22 (1") DRIVEWAYS
		MILE	FT.	FT.	SQ. YD.	SQ. YD.	GALLON	CU. YD.	GALLON	CU. YD.		CU. YD.
SR-44:												
SLM 2.81 TO SLM 5.87	1	3.06	1615.7	26	46675	144	2334	972	4668	1297		
EXTRA AREAS:												
INTERSECTIONS					467	467	23	10	47	13		
DRIVEWAYS												16
TOTALS CARRIED TO GENERAL SUMMARY						611	2357	982	4715	1310		16

CALCULATED KDH
CHECKED LDH

PAVEMENT SUB-SUMMARY - SR-44

GEA-44-2.81

I:\PROJECTS\Pid77469\dgn\77469 ga014.dgn 29-APR-2004 9:01AM khamilt1

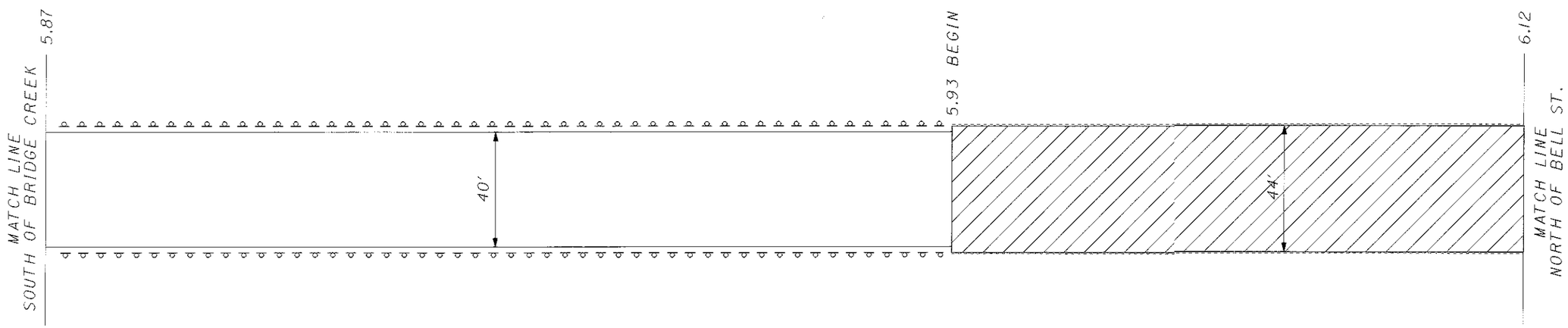

FOR LEGEND, SEE SHEET 14

LOG POINT TO LOG POINT	TYPICAL	LENGTH		WIDTH	PAVEMENT AREA	PAVEMENT PLANING BITUMINOUS, 1½", AS PER PLAN	TACK COAT FOR INTERMEDIATE COURSE @ 0.05 GAL/SQ. YD.	ASPHALT CONCRETE INTERMEDIATE COURSE, TYPE I PG 64-28 (¾")	TACK COAT FOR SURFACE COURSE @ 0.10 GAL/SQ. YD.	ASPHALT CONCRETE SURFACE COURSE, TYPE IH, PG 76-22M, AS PER PLAN (1")		ASPHALT CONCRETE SURFACE COURSE, TYPE I, PG64-22 (1") DRIVEWAYS
		MILE	FT.	FT.	SQ. YD.	SQ. YD.	GALLON	CU. YD.	GALLON	CU. YD.		CU. YD.
						254	407	448	407	446		448
SR-44:												
SLM 5.87 TO SLM 5.93	3	0.06	317	40	1408		70	29	141	39		
SLM 5.93 TO SLM 6.12	4	0.19	1003	44	4905	4905	245	102	490	136		
EXTRA AREAS:												
INTERSECTIONS					67	67	3	1	7	2		
DRIVEWAYS												1
TOTALS CARRIED TO GENERAL SUMMARY						4972	318	132	638	177		1

CALCULATED KDH
CHECKED LDH

PAVEMENT SUB-SUMMARY - SR-44

GEA-44-2.81/VAR

I:\PROJECTS\Pid77469\dgn\77469 ge015.dgn 29-APR-2004 9:01AM khamlin

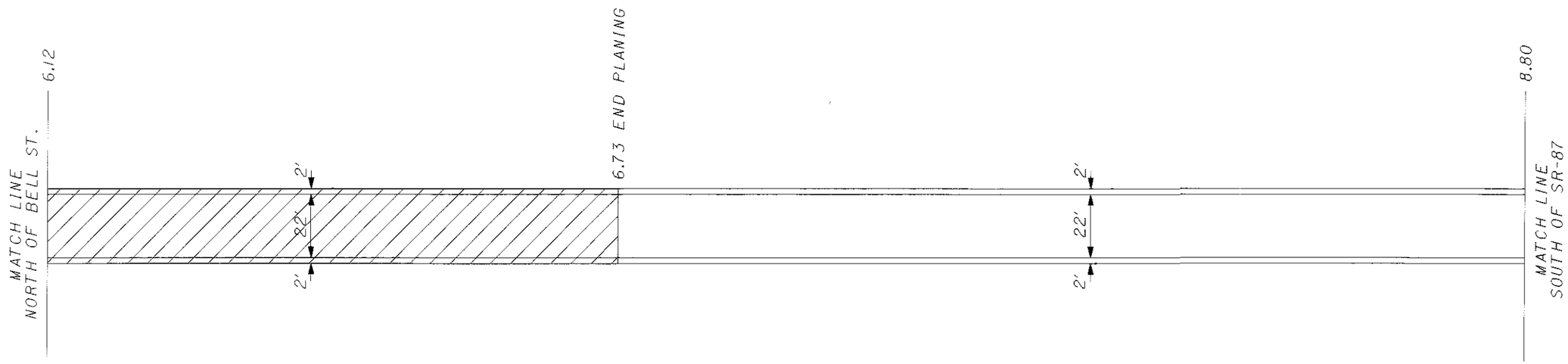

FOR LEGEND, SEE SHEET 14

LOG POINT TO LOG POINT	TYPICAL	LENGTH		WIDTH	PAVEMENT AREA	PAVEMENT PLANING BITUMINOUS, 1½", AS PER PLAN	TACK COAT FOR INTERMEDIATE COURSE @ 0.05 GAL/SQ. YD.	ASPHALT CONCRETE INTERMEDIATE COURSE, TYPE I PG 64-22 (¾")	TACK COAT FOR SURFACE COURSE @ 0.10 GAL/SQ. YD.	ASPHALT CONCRETE SURFACE COURSE, TYPE IH, PG 76-22M, AS PER PLAN (1")		ASPHALT CONCRETE SURFACE COURSE, TYPE I, PG64-22 (1") DRIVEWAYS
		MILE	FT.	FT.	SQ. YD.	SQ. YD.	GALLON	CU. YD.	GALLON	CU. YD.		CU. YD.
SR-44:												
SLM 6.12 TO SLM 6.73	5	0.61	3221	26	9305	9305	465	194	931	258		
SLM 6.73 TO SLM 8.80	1	2.07	10930	26	31574		1579	658	3157	877		
EXTRA AREAS:												
INTERSECTIONS					667	667	33	14	67	19		
DRIVEWAYS												21
TOTALS CARRIED TO GENERAL SUMMARY						9972	2077	866	4155	1154		21

254 407 448 407 446 448

CALCULATED KDH
CHECKED LDH

PAVEMENT SUB-SUMMARY - SR-44

GEA-44-2.81/VAR

I:\PROJECTS\Pid77469\dgn\77469 gs016.dgn 29-APR-2004 9:02AM khamilt1

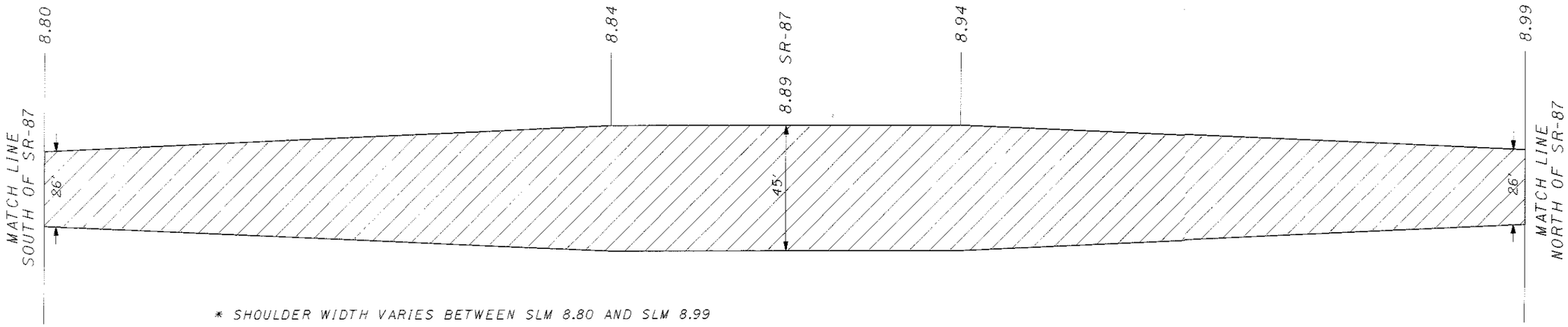

* SHOULDER WIDTH VARIES BETWEEN SLM 8.80 AND SLM 8.99

FOR LEGEND, SEE SHEET 14

LOG POINT TO LOG POINT	TYPICAL	LENGTH		WIDTH	PAVEMENT AREA	PAVEMENT PLANING BITUMINOUS, 1½", AS PER PLAN	TACK COAT FOR INTERMEDIATE COURSE @ 0.05 GAL/SQ. YD.	ASPHALT CONCRETE INTERMEDIATE COURSE, TYPE I PG 64-22 (¾")	TACK COAT FOR SURFACE COURSE @ 0.10 GAL/SQ. YD.	ASPHALT CONCRETE SURFACE COURSE, TYPE IH, PG 76-22M, AS PER PLAN (1")		ASPHALT CONCRETE SURFACE COURSE, TYPE I, PG64-22 (1") DRIVEWAYS						
		MILE	FT.	FT.	SQ. YD.	SQ. YD.	GALLON	CU. YD.	GALLON	CU. YD.		CU. YD.						
SR-44:																		
SLM 8.80 TO SLM 8.84	6	0.04	211	35.5	833	833	42	17	83	23								
SLM 8.84 TO SLM 8.94	6,7	0.10	528	45	2640	2640	132	55	264	73								
SLM 8.94 TO SLM 8.99	7	0.05	264	35.5	1041	1041	52	22	104	29								
EXTRA AREAS:																		
INTERSECTIONS					133	133	7	3	13	4								
DRIVEWAYS												5						
TOTALS CARRIED TO GENERAL SUMMARY						4647	233	97	464	129		5						
						254	407	448	407	446		448						

CALCULATED KDH
CHECKED LDH

PAVEMENT SUB-SUMMARY - SR-44

GEA-44-2.81/VAR

I:\PROJECTS\Pid77469\dgn\77469 gs017.dgn 29-APR-2004 9:02AM khamilth

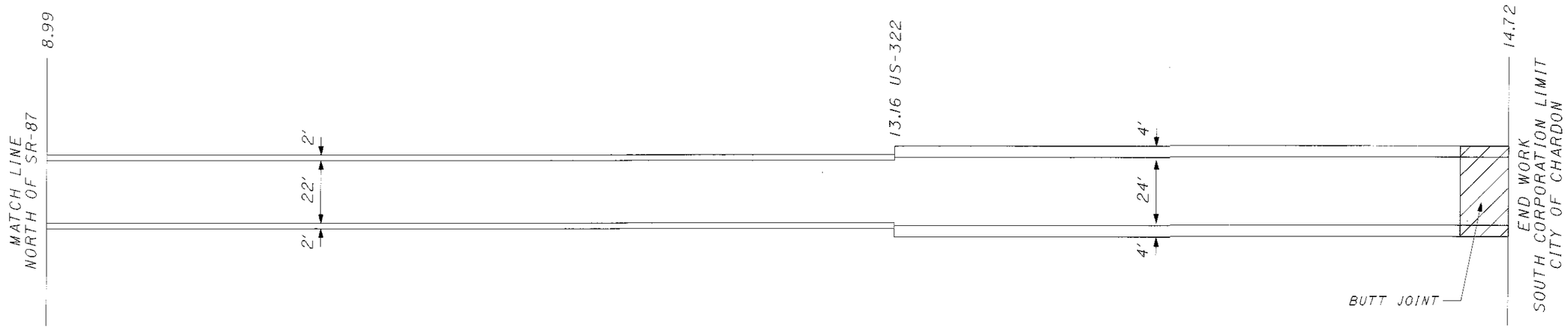

FOR LEGEND, SEE SHEET 14

LOG POINT TO LOG POINT	TYPICAL	LENGTH		WIDTH	PAVEMENT AREA	254 PAVEMENT PLANING BITUMINOUS, 1½", AS PER PLAN	407 TACK COAT FOR INTERMEDIATE COURSE @ 0.05 GAL/SQ. YD.	448 ASPHALT CONCRETE INTERMEDIATE COURSE, TYPE I PG 64-22 (¾")	407 TACK COAT FOR SURFACE COURSE @ 0.10 GAL/SQ. YD.	446 ASPHALT CONCRETE SURFACE COURSE, TYPE 1H, PG 76-22M, AS PER PLAN (1")		448 ASPHALT CONCRETE SURFACE COURSE, TYPE 1, PG64-22 (1") DRIVEWAYS						
		MILE	FT.	FT.	SQ. YD.	SQ. YD.	GALLON	CU. YD.	GALLON	CU. YD.		CU. YD.						
SR-44:																		
SLM 8.99 TO SLM 13.16	1	4.17	22018	26	63606		3180	1325	6361	1767								
SLM 13.16 TO SLM 14.72	2	1.56	8237	32	29286	144	1464	610	2929	814								
EXTRA AREAS:																		
INTERSECTIONS					1000	1000	50	21	100	28								
DRIVEWAYS												53						
TOTALS CARRIED TO GENERAL SUMMARY						1144	4694	1956	9390	2609		53						

CALCULATED KDH
CHECKED LDH

PAVEMENT SUB-SUMMARY - SR-44

GEA-44-2.81/VAR

I:\PROJECTS\Pid77469\dgn\77469 gs01R.dgn 29-APR-2004 9:03AM khamilt1

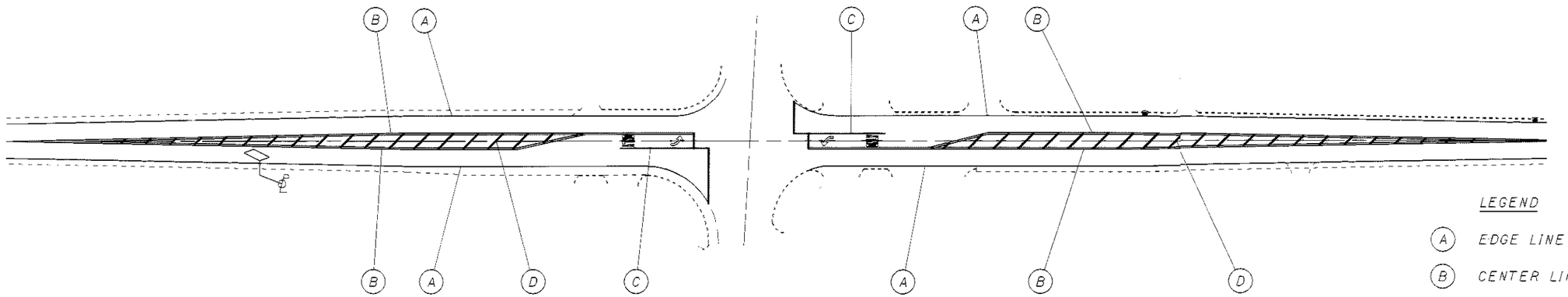

LEGEND

- (A) EDGE LINE (WHITE)
- (B) CENTER LINE
- (C) CHANNELIZING LINE
- (D) TRANSVERSE LINE

LOGPOINT TO LOGPOINT		646									621							
		EDGE LINE, WHITE	CENTER LINE	CHANNELIZING LINE	STOP LINE	TRANSVERSE LINE	LANE ARROW	WORD ON PAVEMENT, 72"			RAISED PAVEMENT MARKERS, TWO-WAY, YELLOW/YELLOW	RAISED PAVEMENT MARKERS, TWO-WAY WHITE/RED	RAISED PAVEMENT MARKERS, ONE-WAY WHITE					
		MILE	MILE	FEET	FEET	FEET	EACH	EACH			EACH	EACH	EACH					
BEGINNING SLM	ENDING SLM																	
2.81	14.72	23.82	11.91								920							
WASHINGTON ST.					14								16					
SR-87 INTERSECTION			0.16	125	90	220	2	2			14	6	32					
US-322 INTERSECTION					30								32					
TOTALS CARRIED TO GENERAL SUMMARY		23.82	12.07	125	134	220	2	2				1020						

CALCULATED KDH
CHECKED LDH

PAVEMENT MARKING QUANTITIES & INTERSECTION DETAIL - SR-44 & SR-87

GEA-44-2.81/VAR

k:\PROJECTS\Pid77469\dgn\77469_gl09.dgn 29-APR-2004 9:04AM khamilt1

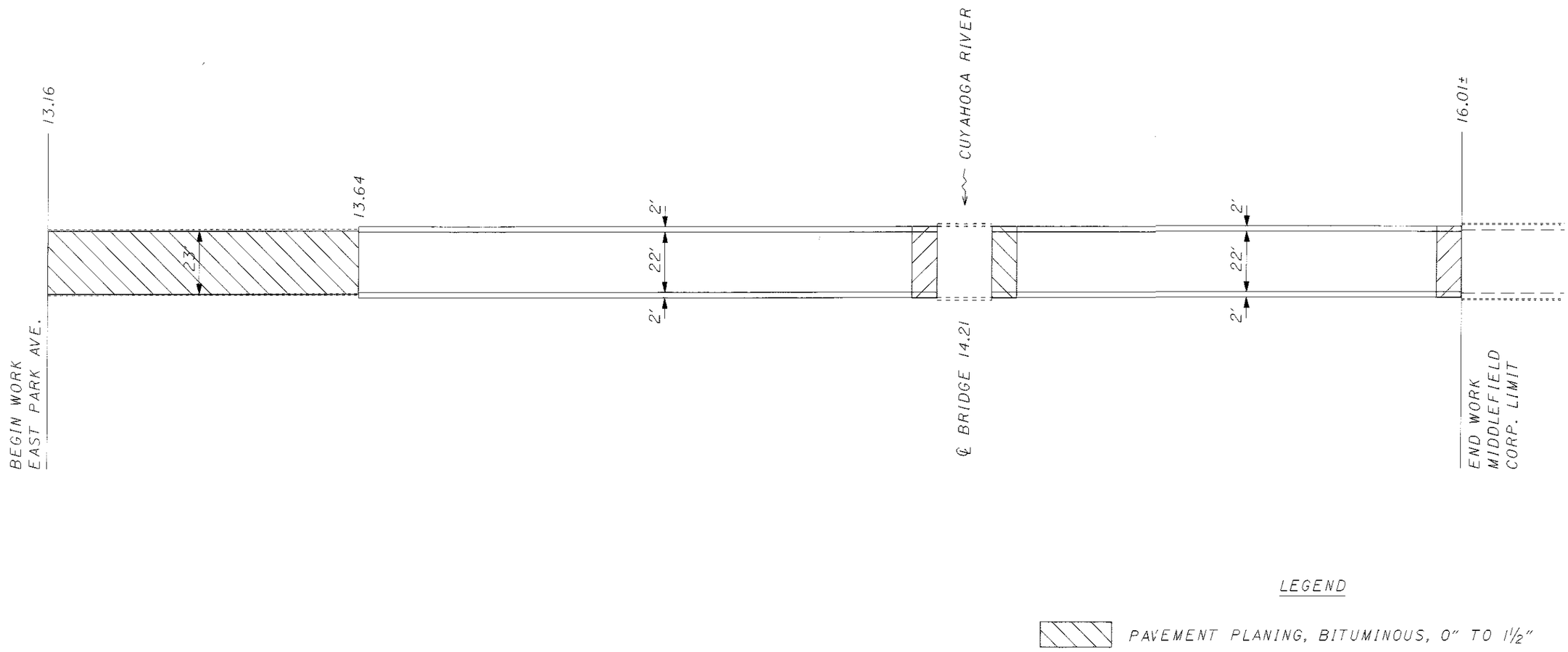

LOG POINT TO LOG POINT	TYPICAL	LENGTH		WIDTH	PAVEMENT AREA	PAVEMENT PLANING BITUMINOUS, 1½", AS PER PLAN	TACK COAT FOR SURFACE COURSE @ 0.10 GAL/SQ. YD.	ASPHALT CONCRETE SURFACE COURSE, TYPE 1, PG64-22, AS PER PLAN (1½")		ASPHALT CONCRETE SURFACE COURSE, TYPE 1, PG64-22 (1") DRIVEWAYS		EDGE LINE, WHITE	CENTER LINE		RAISED PAVEMENT MARKER, TWO-WAY YELLOW/YELLOW			
						254	407	448		448		646			621			
		MILE	FT.	FT.	SQ. YD.	SQ. YD.	GALLON	CU. YD.		CU. YD.		MILE	MILE		EACH			
SR-87:																		
- SLM 13.16 TO SLM 13.64	8	0.48	2534	23	6477	6477	648	270				0.96	0.48		40			
- SLM 13.64 TO SLM 14.20	9	0.56	2957	26	8542	116	854	356				1.12	0.56		41			
- SLM 14.22 TO SLM 16.01	9	1.79	9451	26	27303	116	2730	1138				3.58	1.79		135			
EXTRA AREAS:																		
- INTERSECTIONS					600	600	60	17										
- DRIVEWAYS										18								
TOTALS CARRIED TO GENERAL SUMMARY						7309	4292	1781		18		5.66	2.83		216			

CALCULATED KDH
CHECKED LDH

PAVEMENT SUB-SUMMARY - SR-87

GEA-44-2.81 (VAR

I:\PROJECTS\Pid77469\dgn\77469 gs020.dgn 29-APR-2004 9:05AM khamilt1

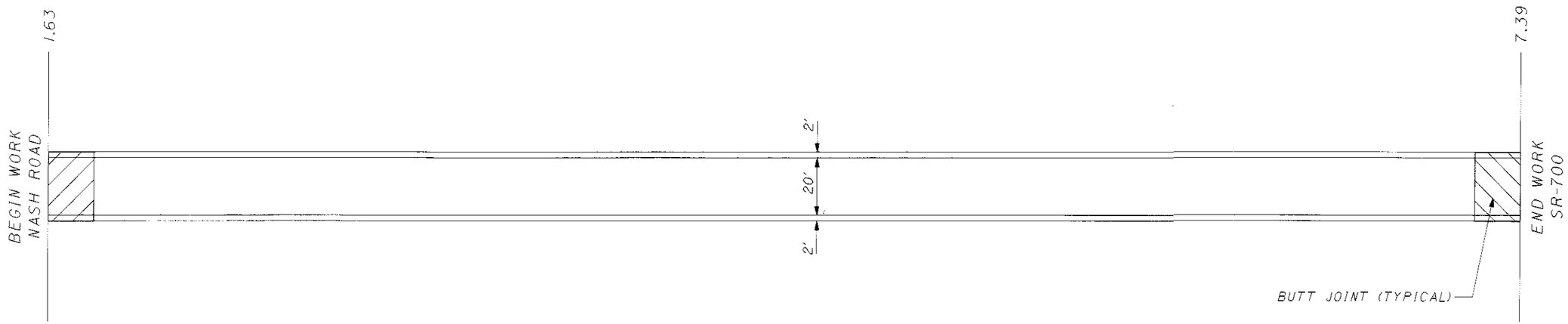

FOR LEGEND, SEE SHEET 20

LOG POINT TO LOG POINT	TYPICAL	LENGTH		WIDTH	PAVEMENT AREA	PAVEMENT PLANING BITUMINOUS, 1½", AS PER PLAN	TACK COAT FOR SURFACE COURSE @ 0.10 GAL/SQ. YD.	ASPHALT CONCRETE SURFACE COURSE, TYPE 1, PG 64-22, AS PER PLAN (1½")		ASPHALT CONCRETE SURFACE COURSE, TYPE 1, PG64-22 (1") DRIVEWAYS		EDGE LINE, WHITE	CENTER LINE		RAISED PAVEMENT MARKER, TWO-WAY YELLOW/YELLOW			
						254	407	448		448		646			621			
		MILE	FT.	FT.	SQ. YD.	SQ. YD.	GALLON	CU. YD.		CU. YD.		MILE	MILE		EACH			
SR-168:																		
SLM 1.63 TO SLM 7.39	10	5.76	30413	24	81101	80	8110	3379				11.52	5.76		400			
EXTRA AREAS:																		
INTERSECTIONS					600	600	60	17										
DRIVEWAYS										32								
TOTALS CARRIED TO GENERAL SUMMARY						680	8170	3396		32		11.52	5.76		400			

CALCULATED KDH
CHECKED LDH

PAVEMENT SUB-SUMMARY - SR-168

GEA-44-2.81/VAR

I:\PROJECTS\Pid77469\dgn\77469 gs021.dgn 29-APR-2004 9:05AM khamlin

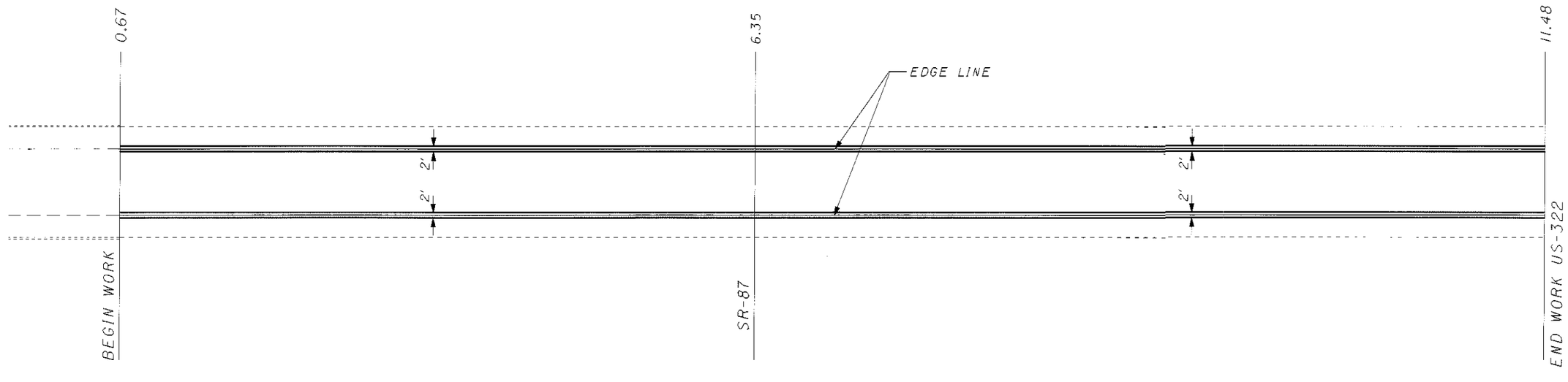

FOR LEGEND, SEE SHEET 20

LOG POINT TO LOG POINT	TYPICAL	LENGTH		WIDTH	PAVEMENT AREA	PARTIAL DEPTH PAVEMENT REPAIR, 3", AS PER PLAN	CRACK SEALING, MISC.: TYPE II OR TYPE III	EDGE LINE, WHITE
						251	423	646
		MILE	FT.	FT.	SQ. YD.	SQ. YD.	SQ. YD.	MILE
SR-528 NORTHBOUND & SOUTHBOUND:								
SLM 0.67 TO SLM 6.35	II	11.36	59981	2	13329	7300	6029	11.36
SLM 6.35 TO SLM 11.48	II	10.26	27086	2	12038	1700	10338	10.26
TOTALS CARRIED TO GENERAL SUMMARY						9000	16367	21.62

CALCULATED KDH
CHECKED LDH

PAVEMENT SUB-SUMMARY - SR-528

GEA-44-2.81/VAR

I:\PROJECTS\Pid77469\dgn\77469 gs022.dgn 29-APR-2004 9:06AM khamilt1

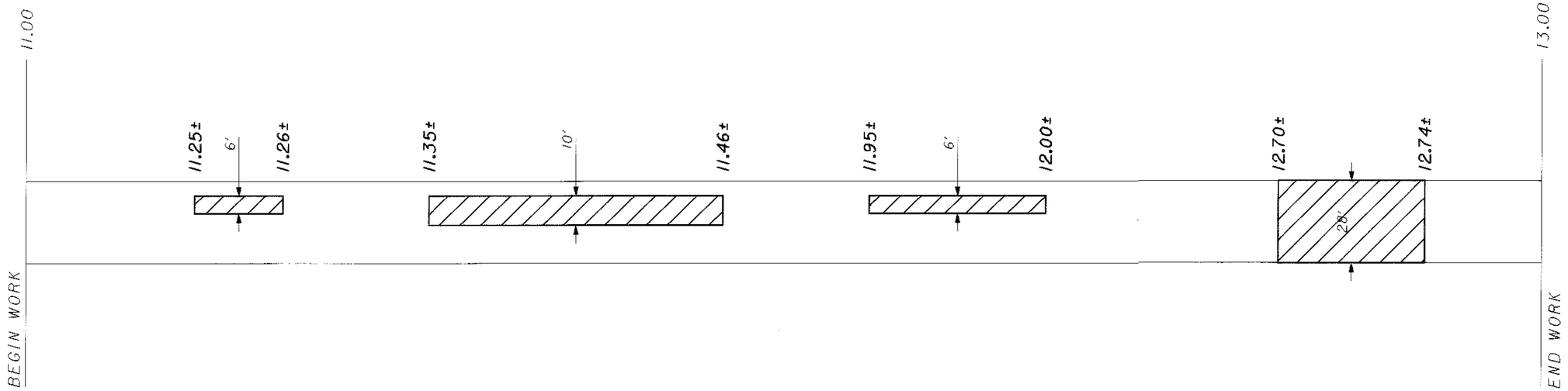

NOTE: EXACT LOCATION OF PAVEMENT REPAIRS TO BE DETERMINED BY THE ENGINEER

FOR LEGEND, SEE SHEET 20

LOG POINT TO LOG POINT	TYPICAL	LENGTH		WIDTH	PAVEMENT AREA	PAVEMENT PLANING, BITUMINOUS, 1½", AS PER PLAN	TACK COAT FOR SURFACE COURSE @ 0.10 GAL/SQ. YD.	ASPHALT CONCRETE SURFACE COURSE, TYPE 1, PG64-22 (1½")
		MILE	FT.	FT.	SQ. YD.	SQ. YD.	GALLON	CU. YD.
US-422:								
SLM 11.25± TO SLM 11.26±	12	0.01	30	6	20	20	2	1
SLM 11.35± TO SLM 11.46±	12	0.11	570	10	633	633	63	26
SLM 11.95± TO SLM 12.00±	12	0.05	294	6	196	196	20	8
SLM 12.70± TO SLM 12.74±	13	0.04	200	28	622	622	62	26
TOTALS CARRIED TO GENERAL SUMMARY						1471	147	61

CALCULATED KDH
CHECKED LDH

PAVEMENT SUB-SUMMARY - US-422

GEA-44-2.81/VAR

I:\PROJECTS\PID77469\dgn\77469 gs023.dgn 29-APR-2004 9:06AM khamlin1