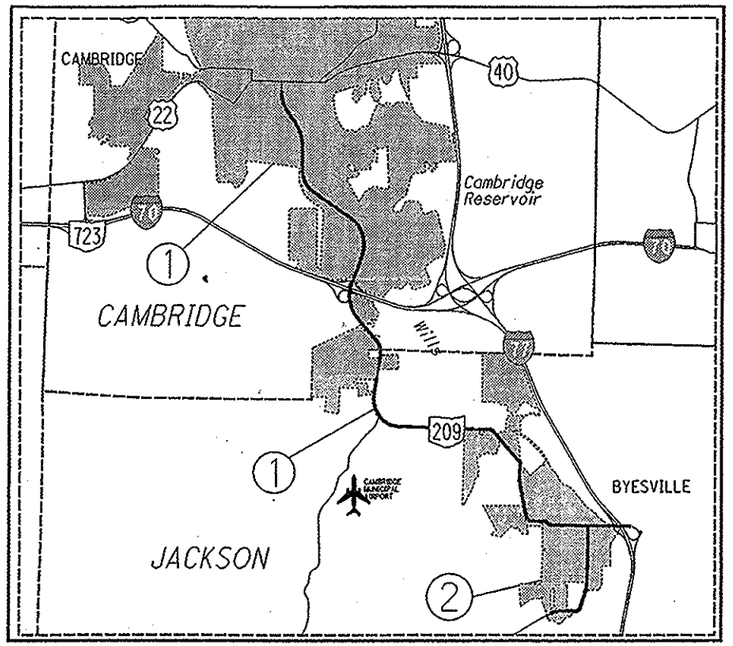

LON/LAT: 81° 34′ 15″ / 39° 58′ 57″

PORTION TO BE IMPROVED

N

STATE OF OHIO
DEPARTMENT OF TRANSPORTATION

GUE-209-8.73
GUE-821-5.45

PART 1.

CITY OF CAMBRIDGE
VILLAGE OF BYESVILLE

CAMBRIDGE AND
JACKSON TOWNSHIPS

GUERNSEY COUNTY

PART 2 SEE GUE-209-8.57/9.85

PROJECT DESCRIPTION:

ASPHALT CONCRETE RESURFACING AND RELATED WORK ON S.R. 209 AND S.R. 821 IN GUERNSEY COUNTY

Project Earth Disturbed Area =
N/A (Maintenance Project)
Estimated Contractor Earth Disturbed Area =
N/A (Maintenance Project)
Notice of Intent Earth Disturbed Area =
N/A (Maintenance Project)

LOCATION	COUNTY	ROUTE	BEGIN SLM	END SLM	LENGTH MILES	VILLAGE/CITY
1	GUE	S.R. 209	8.73	14.57	5.84	CAMBRIDGE/BYESVILLE
2	GUE	S.R. 821	5.45	5.94	0.49	BYESVILLE

DESIGN DESIGNATION	GUE-209 8.73-14.57	GUE-821 5.45-5.94
Functional Classification	PA	MC
Opening Year ADT (2015)	26,000	3,300
Design Year ADT (2027)	30,000	3,300
Design Hourly Volume (2027)	2,700	330
Directional Distribution	60%	56%
Trucks (24 Hour B&C)	3%	3%
Design Speed	35/55mph	35/55mph
Legal Speed	35/55mph	35/55mph

PA - PRINCIPAL ARTERIAL
MC - MAJOR COLLECTOR

INDEX OF SHEETS:

TITLE SHEET 1
GENERAL NOTES 2-4
MAINTENANCE OF TRAFFIC NOTES 5-6
CURB RAMP NOTES AND DETAILS 7-9
PAVEMENT DATA 10-11
SHOULDER DATA 12
EXTRA AREA DATA 13-14
BRIDGE TREATMENT DATA 15-16
CURB RAMP DATA 17
PAVEMENT MARKING DATA 18-21
RAISED PAVEMENT MARKER DATA 22
PLAN SHEETS 23-45
LOCATION SUB-SUMMARIES 46-51
GENERAL SUMMARY 52-53

2013 SPECIFICATIONS

THE STANDARD SPECIFICATIONS OF THE STATE OF OHIO, DEPARTMENT OF TRANSPORTATION, INCLUDING CHANGES AND SUPPLEMENTAL SPECIFICATIONS LISTED IN THE PROPOSAL SHALL GOVERN THIS IMPROVEMENT.

I HEREBY APPROVE THESE PLANS AND DECLARE THAT THE MAKING OF THIS IMPROVEMENT WILL NOT REQUIRE THE CLOSING TO TRAFFIC OF THE HIGHWAY AND PROVISIONS FOR THE MAINTENANCE AND SAFETY OF TRAFFIC WILL BE AS SET FORTH ON THE PLANS AND ESTIMATES.

DESIGN EXCEPTIONS: NONE

UNDERGROUND UTILITIES
CONTACT BOTH SERVICES
CALL TWO WORKING DAYS
BEFORE YOU DIG
CALL
1-800-362-2764
(TOLL FREE)
OHIO UTILITIES PROTECTION SERVICE
NON-MEMBERS
MUST BE CALLED DIRECTLY
OIL & GAS PRODUCERS PROTECTIVE
SERVICE CALL: 1-800-925-0988

PLAN PREPARED BY:
OHIO DEPARTMENT OF TRANSPORTAION
DISTRICT 5 PLANNING & ENGINEERING

ENGINEER'S SEAL

STATE OF OHIO
DOUGLAS N. MORGAN
E-63839
REGISTERED PROFESSIONAL ENGINEER

SIGNED: Douglas N. Morgan
DATE: 1-8-2015

STANDARD CONSTRUCTION DRAWINGS						SUPPLEMENTAL SPECIFICATIONS	
BP-3.1	7-18-14	MT-105.10	7-19-13	A-1-69	7-19-02	800	1-21-15
BP-4.1	7-19-13			AS-1-81	1-18-13	821	4-20-12
BP-5.1	7-19-13	HL-30.11	1-17-14	DBR-2-73	7-19-02	832	1-17-14
				DS-1-92	7-18-03		
MT-95.30	7-18-14	TC-61.30	7-18-14	EXJ-4-87	7-19-02		
MT-95.31	7-18-14	TC-65.10	1-17-14	GSD-1-96	7-19-02		
MT-95.32	7-18-14	TC-65.11	7-18-14	PCB-91	1-18-13	SPECIAL PROVISIONS	
MT-97.10	7-18-14	TC-71.10	1-17-14	TST-1-99	1-17-14		
MT-97.12	7-18-14	TC-82.10	10-18-13				
MT-99.20	7-19-13						
MT-101.90	7-18-14						
MT-102.10	7-18-14						

APPROVED [signature]
DATE 1/8/15 CITY ENGINEER, CAMBRIDGE

APPROVED Dave Ray
DATE 1-9-15 DISTRICT DEPUTY DIRECTOR

APPROVED Jerry Wray Jr.
DATE 1-27-15 DIRECTOR, DEPARTMENT OF TRANSPORTATION

FEDERAL PROJECT NO. E036(440)

PID NO. 76451

CONSTRUCTION PROJECT NO.

RAILROAD INVOLVEMENT
OHIO CENTRAL RAILROAD, INC.
BYESVILLE SCENIC TRAILS, LLC

GUE-209-8.73
GUE-821-5.45

GUE - -SR 209/SR 821-8.73/5.45
150217 PID - 76451 Contract Proposal Available @ www.contracts.dot.state.oh.us/home
Dist 5 4/23/2015
P:\GUE\76451\Design\Roadway\Plan_Sheets\General\76451_mts_001.dgn 08-JAN-2015 10:

UTILITIES

THERE ARE NO UNDERGROUND UTILITIES SHOWN ON THIS PLAN. THE NATURE OF THE WORK REQUIRED BY THIS PROJECT WILL NOT AFFECT ANY KNOWN UNDERGROUND UTILITIES THAT EXIST UNDER OR ADJACENT TO THE WORK AREA.

CONTINGENCY QUANTITIES

THE CONTRACTOR SHALL NOT ORDER MATERIALS OR PERFORM WORK FOR ITEMS DESIGNATED BY PLAN NOTE TO BE USED "AS DIRECTED BY THE ENGINEER" UNLESS AUTHORIZED BY THE ENGINEER. THE ACTUAL WORK LOCATIONS AND QUANTITIES USED FOR SUCH ITEMS SHALL BE INCORPORATED INTO THE FINAL CHANGE ORDER GOVERNING COMPLETION OF THIS PROJECT.

NOTIFICATION OF ROAD CLOSURE OR RESTRICTION

THE CONTRACTOR WILL ADVISE THE PROJECT ENGINEER A MINIMUM OF TWENTY ONE (21) DAYS PRIOR TO THE FOLLOWING: THE START OF CONSTRUCTION ACTIVITIES, LANE RESTRICTIONS, LANE CLOSURES, AND OR ROAD CLOSURES. THE PROJECT ENGINEER WILL FORWARD THIS INFORMATION TO THE FOLLOWING:

DISTRICT PUBLIC INFORMATION OFFICER (PIO) BY FAX AT (614) 887-4510 OR EMAIL AT D05.PIO@DOT.STATE.OH.US

DISTRICT PERMIT SECTION BY FAX AT (614) 887-4525 OR EMAIL AT BRIAN.BOSCH@DOT.STATE.OH.US

CENTRAL OFFICE SPECIAL HAUL PERMITS SECTION BY FAX AT (614) 728-4099 OR EMAIL AT HAULING.PERMITS@DOT.STATE.OH.US

THE PIO WILL, IN TURN, NOTIFY THE PUBLIC, THE LOCAL EMERGENCY SERVICES, AFFECTED SCHOOLS AND BUSINESSES, AND ANY OTHER IMPACTED LOCAL PUBLIC AGENCY OF ANY OF THE ABOVE MENTIONED ITEMS, VIA MEDIA SOURCES.

PAVEMENT MARKING

STOP LINES, CROSSWALK LINES, CHANNELIZING LINES, ETC., SHOWN IN THE PLANS ARE TAKEN FROM EXISTING MARKINGS. THE CONTRACTOR SHALL DOCUMENT ALL OF THE EXISTING PAVEMENT MARKING LOCATIONS THAT WILL BE REMOVED/OBLITERATED DURING THIS PROJECT. THE CONTRACTOR SHALL PLACE NEW PAVEMENT MARKINGS AT THE LOCATION OF THE EXISTING MARKINGS UNLESS OTHERWISE DIRECTED BY THE ENGINEER. DOCUMENTATION OF PAVEMENT MARKING SHALL BE SUPPLIED TO THE ENGINEER BEFORE COMMENCEMENT OF ANY OPERATION WHICH WILL REMOVE/OBLITERATE MARKINGS. THE METHOD OF DOCUMENTATION SHALL BE APPROVED BY THE ENGINEER IN ORDER TO PROVIDE AN ACCEPTABLE TOLERANCE BETWEEN THE EXISTING AND PROPOSED PAVMENT MARKINGS.

PART-WIDTH CONSTRUCTION

BECAUSE OF THE NECESSITY TO BUILD THIS PROJECT UNDER TRAFFIC AND TO CONSTRUCT THE FULL PAVEMENT WIDTH IN STAGES, EXERCISE CARE TO PREVENT THE CONSTRUCTION OF A BUTT JOINT IN THE BASE COURSES. LAP LONGITUDINAL JOINTS AS SHOWN ON STANDARD CONSTRUCTION DRAWING BP-3.1.

PAVING AT RAILROAD CROSSING

WORK THE CROWN OUT OF THE PROPOSED PAVEMENT ON EACH SIDE OF THE RAILROAD CROSSING, BEGINNING 50 FEET FROM THE NEAREST RAIL, BY RAISING THE EDGES OF THE NEW PAVEMENT TO MEET THE PLATFORM ELEVATION.

ITEM 209 LINEAR GRADING

IN ORDER TO PROVIDE POSITIVE DRAINAGE FROM THE ROADWAY SURFACE TO THE SHOULDER BREAK, THE EXISTING ROADWAY SHOULDERS SHALL BE GRADED AND SHAPED USING A GRADER OF ADEQUATE SIZE TO PERFORM THE WORK TO THE SATISFACTION OF THE ENGINEER.

ALL EXCESS MATERIAL REMAINING AROUND GUARDRAIL AND OTHER AREAS AFTER THE GRADER WORK IS COMPLETED AND NOT DISPOSED OF ON THE SITE, SHALL BE REMOVED AND DISPOSED OF BY THE CONTRACTOR. ALL EQUIPMENT, LABOR, OR INCIDENTALS REQUIRED TO COMPLETE THIS ITEM SHALL BE INCLUDED FOR PAYMENT IN THE UNIT PRICE BID FOR ITEM 209 LINEAR GRADING.

THIS WORK MAY BE INTERMITTENT AND SPREAD THROUGHOUT THE PROJECT LIMITS, AS DIRECTED BY THE ENGINEER. THE CONTRACTOR WILL ONLY BE PAID FOR INTERSECTIONS AND GAPS IF THEY ARE WITHIN THE LIMITS OF A SECTION MARKED BY THE ENGINEER FOR GRADING.

ALL LINEAR GRADING WORK SHALL BE DONE BEFORE PLACING THE ASPHALT SURFACE COURSE

THE FOLLOWING QUANTITY HAS BEEN CARRIED TO THE SUB-SUMMARIES FOR THE ABOVE PURPOSES.

ITEM 209 LINEAR GRADING
LOCATION 1A – 2.54 MILE
LOCATION 1B – 2.80 MILE
LOCATION 1C – 2.90 MILE

ITEM 253, PAVEMENT REPAIR

AN ESTIMATED QUANTITY FOR PAVEMENT REPAIR HAS BEEN INCLUDED IN THE PLAN TO BE USED AS DIRECTED BY THE ENGINEER. REPAIRS SHALL TAKE PLACE PRIOR TO THE PAVEMENT PLANING OPERATION.

THE INTENT OF THIS OPERATION IS TO REPAIR THOSE AREAS OF PAVEMENT WHICH HAVE COMPLETELY FAILED. DEPTH OF EXCAVATION SHALL BE APPROXIMATELY 7". THE MINIMUM WIDTH OF THE REPAIRS SHALL BE 4'.

AFTER EXCAVATION HAS BEEN COMPLETED, THE FACE OF THE REPAIR SHALL BE COATED WITH 407 TACK COAT. REPLACEMENT MATERIAL WILL BE 7" OF ITEM 301 ASPHALT CONCRETE BASE, PG64-22.

REPAIR QUANTITIES MAY BE USED ON MAINLINE PAVEMENT OR ON PAVED SHOULDERS. ALL EXCAVATION, MATERIALS, LABOR, EQUIPMENT, TOOLS, TRAFFIC CONTROL AND INCIDENTALS NEEDED TO COMPLETE THE WORK
DESCRIBED ABOVE SHALL BE PAID FOR UNDER ITEM 253 PAVEMENT REPAIR.

THE FOLLOWING QUANTITY HAS BEEN CARRIED TO THE SUB-SUMMARIES FOR THE ABOVE DESCRIBED PURPOSE.

ITEM 253, PAVEMENT REPAIR
LOCATION 1A - 35 CU.YD.
LOCATION 1B – 20 CU.YD.
LOCATION 2 – 20 CU.YD.

ITEM 254, PAVEMENT PLANING, ASPHALT CONCRETE

DEPTH OF PLANING SHALL BE BETWEEN 1.25" AND 3.0" AS SHOWN ON PAVEMENT DATA TABLE.

THE ROADWAY SHALL BE PLANED SUCH THAT POSITIVE DRAINAGE IS CREATED FROM THE CENTER LINE TO THE EDGE OF PAVEMENT IN TANGENT SECTIONS AND SHALL FOLLOW EXISTING SUPERELEVATIONS WHERE APPLICABLE. ALL REQUIREMENTS OF ITEM 254 SHALL APPLY.

ITEM 407, TACK COAT, TRACKLESS TACK

THE RATE OF APPLICATION OF THE 407 TACK COAT SHALL BE SUBJECT TO ADJUSTMENT AS DIRECTED BY THE ENGINEER. PLAN QUANTITIES INDICATE AN AVERAGE APPLICATION RATE OF 0.075 GALLONS PER SQUARE YARD FOR ESTIMATING PURPOSES ONLY.

ITEM 407, TACK COAT, TRACKLESS TACK FOR INTERMEDIATE COURSE

THE RATE OF APPLICATION OF THE 407 TACK COAT FOR INTERMEDIATE COURSE SHALL BE SUBJECT TO ADJUSTMENT AS DIRECTED BY THE ENGINEER. PLAN QUANTITIES INDICATE AN AVERAGE APPLICATION RATE OF 0.05 GALLONS PER SQUARE YARD FOR ESTIMATING PURPOSES ONLY.

ITEM 408, PRIME COAT, AS PER PLAN

THE CONTRACTOR SHALL APPLY ONE COAT OF MC-70 (AS PER SECTION 702) AT A RATE OF 0.40 GALLON PER SQUARE YARD TO THE COMPLETED AGGREGATE SHOULDER (ITEM 617) AS DIRECTED BY THE ENGINEER. THE CONTRACTOR SHALL PROVIDE A SHIELD TO PREVENT THE SPRAYING OR DRIFTING OF LIQUID BITUMINOUS MATERIAL ONTO THE EDGE OF PAVEMENT OR EDGE LINE. THE ATTENTION OF THE CONTRACTOR IS DIRECTED TO 107.10 OF THE SPECIFICATIONS.

THE FOLLOWING QUANTITIES OF PRIME COAT, AS PER PLAN HAVE BEEN CARRIED TO THE SUB-SUMMARIES AND SHALL INCLUDE ALL LABOR, MATERIAL AND EQUIPMENT TO PERFORM THE ABOVE MENTIONED WORK.

ITEM 408, PRIME COAT, AS PER PLAN
LOCATION 1A: 2,979 SQ.YD. X 0.40 GAL./SQ YD = 1,192 GAL
LOCATION 1B: 3,051 SQ.YD. X 0.40 GAL./SQ YD = 1,221 GAL
LOCATION 1C: 3,404 SQ.YD. X 0.40 GAL./SQ YD = 1,362 GAL

ITEM 516, 2" DEEP JOINT SEALER, AS PER PLAN

THE CONTRACTOR SHALL PLACE A 1" X 2.0" DEEP BEAD OF JOINT SEALER (AS PER 705.04) AT THE LOCATIONS SHOWN IN PLANS. THE CONTRACTOR SHALL SAW CUT A CHANNEL FOR THE JOINT SEALER. THE COST FOR SAW CUTTING THE CHANNEL FOR THE JOINT SEALER SHALL BE INCLUDED FOR PAYMENT WITH ITEM 516, 2" DEEP JOINT SEALER, AS PER PLAN.

ITEM 617, COMPACTED AGGREGATE, AS PER PLAN

ALL AGGREGATE SHALL BE 100% CRUSHED LIMESTONE. ALL QUALITY REQUIREMENTS EXCEPT SHALE SHALL BE WAIVED. OTHER GRADATION REQUIREMENTS SHALL BE AS SPECIFIED EXCEPT THE INDEX SHALL BE WAIVED. IF SO PERMITTED, THE CONTRACTOR MAY USE ASPHALT CONCRETE PAVEMENT (RACP MEETING REQUIREMENTS OF 617.02) IN LIEU OF CRUSHED LIMESTONE.

BEFORE PLACING COMPACTED AGGREGATE, THE CONTRACTOR SHALL PERFORM SHOULDER PREPARATION AS PER 617.04. THIS WORK SHALL BE INCLUDED IN THE UNIT PRICE BID FOR ITEM 617 COMPACTED AGGREGATE, AS PER PLAN.

P:\GUE\76451\Design\Roadway\Plan_Sheets\General\76451_mgn_001.dgn 08-JAN-2015 11:01AM dmorgan

ITEM SPECIAL, TACK COAT, TRACKLESS TACK
ITEM SPECIAL, TACK COAT, TRACKLESS TACK FOR INTERMEDIATE COURSE

DESCRIPTION: *THIS WORK CONSISTS OF PREPARING AND TREATING A PAVED SURFACE WITH A TRACKLESS TACK ASPHALT EMULSION. FURNISH MATERIALS ACCORDING TO THE DEPARTMENT'S APPROVED LIST. MEET ALL REQUIREMENTS OF ITEM 407 TACK COAT IN THE CONSTRUCTION AND MATERIALS SPECIFICATIONS REQUIRED BY THE CONTRACT, EXCEPT AS NOTED BELOW.*

MATERIAL: *MEET ALL PROPERTIES OF THE APPROVED MANUFACTURER'S TRACKLESS TACK SPECIFICATION REQUIREMENTS ON FILE WITH THE LABORATORY AT TIME OF PLACEMENT.*

ACCEPTANCE AND SAMPLING OF MATERIALS:
SUPPLY CERTIFIED TEST DATA TO THE ENGINEER AND TO THE DISTRICT LABORATORY DEMONSTRATING THE TRACKLESS TACK SUPPLIED WAS TESTED FOR AND MEETS ALL MATERIAL PROPERTIES SHOWN ON THE DEPARTMENT'S APPROVED LIST. DURING CONSTRUCTION, ODOT PERSONNEL WILL SAMPLE FROM THE DISTRIBUTOR AND SUPPLY TO THE DISTRICT TEST LAB A MINIMUM OF ONE QUART OF TRACKLESS TACK FOR EVERY 25,000 GALLONS USED ON THE PROJECT. THE CONTRACTOR IS RESPONSIBLE FOR SUPPLYING THE PROPER PLASTIC QUART SAMPLING CONTAINER. CLEARLY MARK ON THE SAMPLE WITH THE MANUFACTURER'S NAME, PROJECT NUMBER, AND THE WORDS "TRACKLESS TACK".

EQUIPMENT: *FOLLOW MANUFACTURER'S RECOMMENDATIONS FOR CORRECT DISTRIBUTOR SETTINGS. THOROUGHLY CLEAN ALL EQUIPMENT IF PREVIOUSLY USED MATERIAL CHARGE IS DIFFERENT THAN THE PROPOSED MATERIAL.*

APPLICATION OF ASPHALT MATERIAL: *UNIFORMLY APPLY THE TRACKLESS TACK WITH A DISTRIBUTOR ACCORDING TO THE MANUFACTURER'S INSTRUCTIONS. IF TRACKLESS TACK IS STORED FOR AN EXTENDED PERIOD OF TIME, PRIOR TO APPLICATION, AGITATE OR GENTLY CIRCULATE THE MATERIAL. ENSURE ALL NOZZLES AND SPRAY PATTERNS ARE IDENTICAL TO ONE ANOTHER ALONG THE DISTRIBUTOR SPRAY BAR. PLACE THE ANGLE OF THE NOZZLE AT A 15 TO 30 DEGREE ANGLE TO THE SPRAY BAR AXIS TO MAXIMIZE OVERLAP OR AS RECOMMENDED BY THE NOZZLE MANUFACTURER. CONTACT THE MANUFACTURER'S REPRESENTATIVE FOR REQUIRED SPRAY NOZZLE SIZE AND DISTRIBUTOR AND NOZZLE SETTINGS. APPLY AT A RATE OF 0.04 TO 0.1 GALLONS PER SQUARE YARD. DO NOT DILUTE TRACKLESS TACK. RECOMMENDED APPLICATION TEMPERATURE IS 160 °F TO 180 °F. DO NOT EXCEED 180 °F. THE ENGINEER WILL APPROVE THE QUANTITY, RATE OF APPLICATION, TEMPERATURE, DISTRIBUTOR SETTINGS, AND AREAS TO BE TREATED BEFORE APPLICATION OF THE TRACKLESS TACK COAT. THE ENGINEER WILL DETERMINE THE ACTUAL APPLICATION IN GALLONS PER SQUARE YARD BY A CHECK ON THE PROJECT.*

PERFORMANCE OF TRACKLESS TACK: *DETERMINE THE TIME TO SET FOR THE MATERIAL TO BECOME TRACKLESS. THE ENGINEER WILL REPORT ANY ISSUES WITH EXCESSIVE TIME TO SET, OR AFTER SET ISSUES WITH STICKINESS, OR PICKUP OF THE TACK TO THE DISTRICT TESTING ENGINEER AND NEW PRODUCT ENGINEER, BRAD YOUNG 614-351-2882. IF THE CERTIFIED TEST DATA FAILS TO MEET THE LAB TESTING CRITERIA, OR FIELD SAMPLES FAIL TO MEET THE LAB TEST CRITERIA, OR THE TRACKLESS TACK FAILS TO PERFORM SATISFACTORILY IN THE FIELD, AS NOTED ABOVE, THE CONTRACTOR WILL BE REQUIRED TO REPLACE AND SUPPLY ANOTHER APPROVED TRACKLESS TACK PRODUCT FOR THE REMAINDER OF THE PROJECT AT NO ADDITIONAL COST TO THE DEPARTMENT. ANY FAILING TRACKLESS TACK PRODUCT WILL BE REMOVED FROM THE DEPARTMENT'S APPROVED LIST.*

THE DEPARTMENT WILL PAY FOR ACCEPTED QUANTITIES AT THE CONTRACT PRICES AS FOLLOWS:

ITEM	UNIT	DESCRIPTION
SPECIAL	GALLON (LITER)	TACK COAT, TRACKLESS TACK
SPECIAL	GALLON (LITER)	TACK COAT, TRACKLESS TACK FOR INTERMEDIATE COURSE

RESIDENTIAL AND COMMERCIAL DRIVES

AN ESTIMATED QUANTITY OF ITEM 448 ASPHALT CONCRETE, HAS BEEN INCLUDED IN THE PLAN TO BE USED AS DIRECTED BY THE ENGINEER TO PAVE APPROACH AREAS TO EXISTING DRIVEWAYS. PAVING SHALL EXTEND AN AVERAGE OF 4' INTO THE DRIVEWAY (MEASURED FROM THE EDGE OF PAVEMENT OR PAVED SHOULDER IF PRESENT), WITH THE MAXIMUM DISTANCE TO BE DIRECTED BY THE ENGINEER, IN ORDER TO PROVIDE A SMOOTH TRANSITION AND/OR ELIMINATE SHORT DISTANCES OF UNDESIRABLE PROFILE. ABRUPT CHANGES IN DRIVEWAY PROFILE ARE NOT PERMITTED.

FIELD DRIVES AND OIL WELL DRIVES SHALL NOT BE PAVED. GRAVEL DRIVES SHALL BE PAVED BACK AN AVERAGE OF 4' INTO THE DRIVE-WAY UNLESS OTHERWISE DIRECTED BY THE ENGINEER. CONCRETE AND ASPHALT DRIVES SHALL HAVE BUTT JOINTS OR AS SHORT AN ASPHALT TAPER AS POSSIBLE (AVERAGE OF 4') AS DIRECTED BY THE ENGINEER SO AS TO PROVIDE A SMOOTH TRANSITION. GRAVEL DRIVES WITH ASPHALT APRONS SHALL ALSO HAVE BUTT JOINTS OR AS SHORT AN ASPHALT TAPER AS POSSIBLE (AVERAGE OF 4') BUT ONLY IF THE EXISTING ASPHALT APRON IS IN AN ACCEPTABLE CONDITION TO BE PAVED OVER AS DIRECTED BY THE ENGINEER. IF THE ASPHALT APRON CANNOT BE PAVED OVER (FOR EXAMPLE, BROKEN INTO SMALL PIECES) AS DETERMINED BY THE ENGINEER, IT SHALL BE REMOVED BEFORE BEING PAVED BACK 4' INTO THE DRIVEWAY. ALL GRADING, PRIME OR TACK COAT, MATERIALS, LABOR, EQUIPMENT TOOLS AND INCIDENTALS NECESSARY TO COMPLETE THE DRIVES SHALL BE INCLUDED IN THE UNIT PRICE BID FOR THE ITEMS LISTED BELOW.

THE FOLLOWING QUANTITIES HAVE BEEN CARRIED TO THE SUB-SUMMARIES FOR THE ABOVE DESCRIBED PURPOSE.

ITEM 202, WEARING COURSE REMOVED
LOCATION 1A - 160 SQ.YD.
LOCATION 1B – 300 SQ.YD.
LOCATION 1C – 200 SQ.YD.
LOCATION 2 – 20 SQ.YD.

ITEM 441, ASPHALT CONCRETE SURFACE COURSE, TYPE 1, (448), PG 70-22M
LOCATION 1A - 6 CU.YD.
LOCATION 1B – 11 CU.YD.
LOCATION 1C – 7 CU.YD.
LOCATION 2 – 1 CU.YD.

MAIL BOX TURN OUTS

A QUANTITY OF ASPHALT CONCRETE HAS BEEN PROVIDED IN THE PLAN TO COVER MAIL BOX TURN-OUTS. TURN-OUTS SHALL BE PAVED AS SHOWN IN THE DETAIL IN DRAWING BP-4.1. ANY EXTRA GRADING OF THE SHOULDERS, PRIME OR TACK COAT, MATERIALS, LABOR, EQUIPMENT, TOOLS AND INCIDENTALS NECESSARY TO COMPLETE MAIL BOX TURN OUTS SHALL BE INCLUDED IN THE UNIT PRICE BID FOR THE ITEMS LISTED BELOW.

THE FOLLOWING QUANTITIES HAVE BEEN CARRIED TO THE SUB-SUMMARIES FOR THE ABOVE PURPOSES.

ITEM 202, WEARING COURSE REMOVED
LOCATION 1A - 20 SQ.YD.
LOCATION 1B – 40 SQ.YD.
LOCATION 1C – 20 SQ.YD.

ITEM 441 ASPHALT CONCRETE INTERMEDIATE COURSE, TYPE 2 (448)
LOCATION 1A: 1 CU. YD.
LOCATION 1B: 2 CU. YD.
LOCATION 1C – 1 CU.YD.

ITEM 441 ASPHALT CONCRETE SURFACE COURSE, TYPE 1, (448), PG 70-22M
LOCATION 1A: 1 CU.YD.
LOCATION 1B: 2 CU. YD.
LOCATION 1C – 1 CU.YD.

ITEM 604, CATCH BASIN ADJUSTED TO GRADE
ITEM 604, MANHOLE ADJUSTED TO GRADE
ITEM 638, VALVE BOX ADJUSTED TO GRADE

THESE ITEMS SHALL BE USED TO ADJUST/RECONSTRUCT CATCH BASINS, MANHOLES, AND WATER VALVE BOXES LOCATED THROUGH OUT THE PROJECT LIMITS AS DIRECTED BY THE ENGINEER.

ALL MATERIALS, LABOR, EQUIPMENT, TOOLS AND INCIDENTALS NECESSARY TO COMPLETE THE WORK DECRIBED SHALL BE INCLUDED FOR PAYMENT WITH THE ITEMS LISTED BELOW:

ITEM 604, CATCH BASIN ADJUSTED TO GRADE
LOC. 1A – 3 EACH, LOC. 1B – 7 EACH, LOC. 2 – 5 EACH

ITEM 604, MANHOLE ADJUSTED TO GRADE
LOC. 1A – 3 EACH, LOC. 1B – 15 EACH, LOC. 1C – 1 EACH,
LOC. 2 – 16 EACH

ITEM 638, VALVE BOX ADJUSTED TO GRADE
LOC. 1A – 2 EACH, LOC. 1B – 8 EACH, LOC. 2 – 4 EACH

ITEM 621, RAISED PAVEMENT MARKER REMOVED

THE FOLLOWING ESTIMATED QUANTITY HAS BEEN INCLUDED IN THE PLANS TO REMOVE RAISED PAVEMENT MARKERS FOR DISPOSAL BY THE CONTRACTOR. RPM REMOVAL SHALL NOT OCCUR SOONER THAN 10 DAYS PRIOR TO RESURFACING OF THE ROADWAY. ALL RPM'S REMOVED SHALL BECOME THE PROPERTY OF THE CONTRACTOR.

ITEM 644 PARKING LOT STALL MARKING

THE FOLLOWING ESTIMATED QUANTITY SHALL BE USED AS DIRECTED TO REPLACE PARKING LOT STALL MARKINGS WITHIN THE VILLAGE OF BYESVILLE. IT IS THE CONTRACTOR'S RESPONSIBILITY TO RECORD THE EXISTING MARKING LOCATIONS BEFORE PLANING OPERATIONS.

THE CONTRACTOR SHALL CONTACT VILLAGE OF BYESVILLE, STREET DEPARTMENT, BEFORE PLACING FINAL MARKINGS SO AS TO CONFIRM FINAL LOCATIONS.

ITEM 644 PARKING LOT STALL MARKING

LOCATION 2 – 250 FEET

CALCULATED LME
CHECKED DNM

GENERAL NOTES

GUE-209-8.73
GUE-821-5.45

P:\GUE\76451\Design\Roadway\Plan_Sheets\General\76451_mgn_002.dgn 08-JAN-2015 2:41PM leby

ITEM 632 DETECTOR LOOP, AS PER PLAN

ALL STOP LINE INDUCTANCE DETECTOR LOOPS SHALL BE THE POWER HEAD CONFIGURATION SHOWN ON TC-82.10. THE WIDTH SHALL BE AS SPECIFIED ON TC-82.10 AND THE LENGTH SHALL BE 20' OR AS DIRECTED. THE STOP LINE DETECTOR LOOPS SHALL NOT BE WIRED TO ANY OTHER LOOPS AND SHALL HAVE ITS OWN DETECTOR CHANNEL. ALL STOP LINE DETECTION SHALL BE TESTED FOR A BICYCLE TARGETAND ALL DILEMMA DETECTION ZONES SHALL BE TESTED FOR A MOTORCYCLE TARGET.

ALL DILEMMA ZONE INDUCTANCE DETECTOR LOOPS CALLED FOR IN THE PLANS SHALL BE THE ANGULAR DESIGN DETECTION (ADD) LOOP AS SHOWN ON TC-82.10. DIMENSIONS SHALL BE AS SPECIFIED ON TC-82.10.

ALL DETECTOR LOOPS SHALL BE CUT INTO THE PLANED SURFACE OR THE PROPOSED INTERMEDIATE COURSE AT A DEPTH OF 4" FROM THE PROPOSED SURFACE ELEVATION. THE CONTRACTOR SHALL TEST ALL LEAD-IN CABLES PRIOR TO MAKING THE FINAL SPLICE. PLACEMENT SHALL BE AS PER SPECIFICATION 632.10. FINAL LOCATIONS, SIZE AND ORIENTATION SHALL BE PROVIDED TO THE CONTRACTOR AT THE PRE-CONSTRUCTION MEETING.

FINAL LOCATIONS AND ORIENTATION SHALL BE PROVIDED TO THE CONTRACTOR AT THE PRE-CONSTRUCTION MEETING.

ALL MATERIALS, LABOR, TOOLS, EQUIPMENT, TRAFFIC CONTROL AND INCIDENTALS NECESSARY TO PERFORM THE WORK DESCRIBED ABOVE SHALL BE INCLUDED IN THE UNIT PRICE BID FOR ITEM 632, DETECTOR LOOP, AS PER PLAN.

THE FOLLOWING QUANTITIES HAVE BEEN CARRIED TO THE SUB-SUMMARIES FOR THE ABOVE PURPOSES.

ITEM 632 DETECTOR LOOP, AS PER PLAN

LOCATION 1A –12 EACH

SIGNAL AT GEORGETOWN RD. – 3 POWERHEAD, 4 DILEMMA

ON W.B. I.R. 70 OFF RAMP – 2 POWERHEAD, 1 DILEMMA

SIGNAL AT I.R. 70 W.B. RAMPS – 1 POWERHEAD

SIGNAL AT I.R. 70 E.B. RAMPS – 1 POWERHEAD

LOCATION 1B –17 EACH

SIGNAL AT KMART DR. – 2 POWERHEAD, 8 DILEMMA

SIGNAL AT WALMART – 2 POWERHEAD, 1 PRESENCE, 4 DILEMMA

LOCATION 1C – 17 EACH

SIGNAL AT S.R. 660 – 4 POWERHEAD, 1 PRESENCE, 4 DILEMMA

SIGNAL AT COUNTRY CLUB – 5 POWERHEAD, 3 DILEMMA

ITEM 653, TOPSOIL FURNISHED AND PLACED, AS PER PLAN

THIS ITEM SHALL CONSIST OF FURNISHING AND PLACING TOPSOIL ADJACENT TO CURB RAMPS, SIDEWALKS, AND CURBS THROUGHOUT THE PROJECT LIMITS AS DIRECTED BY THE ENGINEER. THE CONTRACTOR SHALL BE REQUIRED TO SEED AND MULCH THE TOPSOIL AS PER 659 OF THE 2013 CMS.

PAYMENT FOR ITEM 653, TOPSOIL FURNISHED AND PLACED, AS PER PLAN, SHALL BE AT THE CONTRACT UNIT PRICE PER CUBIC YARD OF TOPSOIL FURNISHED AND PLACED, INCLUDING ALL OF THE LABOR, MATERIALS AND EQUIPMENT NEEDED TO COMPLETE THE WORK.

ITEM 653, TOPSOIL FURNISHED AND PLACED, AS PER PLAN
LOCATION 1B – 3 CU. YD.
LOCATION 2 – 3 CU. YD.

SEEDING AND MULCHING

THE FOLLOWING QUANTITIES ARE PROVIDED TO PROMOTE GROWTH AND CARE OF PERMANENT SEEDED AREAS AT CURB RAMPS, SIDEWALKS AND CURB OR AS DIRECTED BY THE ENGINEER:

ITEM 659, SEEDING AND MULCHING

LOCATION 1B - 100 SQ.YD.
LOCATION 2 – 100 SQ.YD.

ITEM 659, REPAIR SEEDING AND MULCHING
(5% OF THE PERMANENT SEEDING AREA)

LOCATION 1B - 5 SQ.YD.
0.05 x 100 = 5
LOCATION 2 - 5 SQ.YD.
0.05 x 100 = 5

ITEM 659, INTER-SEEDING
(5% OF THE PERMANENT SEEDING AREA)

LOCATION 1B - 5 SQ.YD.
0.05 x 100 = 5
LOCATION 2 - 5 SQ.YD.
0.05 x 100 = 5

ITEM 659, COMMERCIAL FERTILIZER
(ONE TON PER 7,410 SQ. YD. OF THE PERMANENT SEEDED AREA)

LOCATION 1B – 0.03 TON
2 x (100 ÷ 7,410) = 0.027
LOCATION 2 – 0.03 TON
2 x (100 ÷ 7,410) = 0.027

ITEM 659, LIME
(PERMANENT SEEDED AREA)

LOCATION 1B – 0.02 ACRE
100 SQ. YD. x 9 SQ. FT./SQ.YD. ÷ 43,560 SQ. FT./ACRE = 0.02 ACRE
LOCATION 2 – 0.02 ACRE
100 SQ. YD. x 9 SQ. FT./SQ.YD. ÷ 43,560 SQ. FT./ACRE = 0.02 ACRE

ITEM 659, WATER
(0.0027 M. GAL. PER SQ. YD. OF THE PERMANENT SEEDED AREA)

LOCATION 1B – 1 M. GAL.
3 x (100 x 0.0027) = 0.81
LOCATION 2 – 1 M. GAL.
3 x (100 x 0.0027) = 0.81

SEEDING AND MULCHING SHALL BE APPLIED TO ALL AREAS OF EXPOSED SOIL BETWEEN THE RIGHT-OF-WAY LINES, AND WITHIN THE CONSTRUCTION LIMITS. QUANTITY CALCULATIONS FOR SEEDING AND MULCHING ARE BASED ON THESE LIMITS.

AIRWAY/HIGHWAY CLEARANCE FOR AIRPORTS AND HELIPORTS

THIS PROJECT HAS BEEN IDENTIFIED AS BEING WITHIN THE INFLUENCE AREA OF A PUBLIC USE AIRPORT OR HELIPORT. NO TEMPORARY STRUCTURES OR CONSTRUCTION EQUIPMENT AT MAXIMUM OPERATING HEIGHT, SHALL EXCEED A HEIGHT OF 35 FT. IF ANY TEMPORARY STRUCTURES OR CONSTRUCTION EQUIPMENT WILL EXCEED THIS HEIGHT, FURTHER COORDINATION WITH THE FEDERAL AVIATION ADMINISTRATION (FAA), AND ODOT OFFICE OF AVIATION, WILL BE NECESSARY PRIOR TO ERECTING SUCH TEMPORARY STRUCTURES OR OPERATING SUCH EQUIPMENT ON THE PROJECT. THE CONTRACTOR WILL BE REQUIRED TO SUBMIT FORM 7460-1 TO THE FAA. A COPY OF THE SUBMISSION AND TWO COPIES OF FORM 7460-1 SHALL BE FORWARDED TO THE ODOT OFFICE OF AVIATION. NO TEMPORARY STRUCTURES OR CONSTRUCTION EQUIPMENT SHALL EXCEED THE PERMISSIBLE HEIGHT, UNTIL A COPY OF THE FAA APPROVAL AND ODOT OFFICE OF AVIATION PERMIT HAS BEEN FURNISHED TO THE PROJECT ENGINEER.

EXPRESS PROCESSING CENTER
THE FEDERAL AVIATION ADMINISTRATION
SOUTHWEST REGIONAL OFFICE
AIR TRAFFIC AIRSPACE BRANCH ASW-520
2601 MEACHAN BLVD.
FORT WORTH, TX 76137-4298

OHIO DEPARTMENT OF TRANSPORTATION
OFFICE OF AVIATION
2829 WEST DUBLIN-GRANVILLE ROAD
COLUMBUS, OHIO 43235
614-387-2346

CALCULATED LME
CHECKED DNM

GENERAL NOTES

GUE-209-8.73
GUE-821-5.45

P:\GUE\76451\Design\Roadway\Plan_Sheets\General\76451_mgn_003.dgn 08-JAN-2015 3:14PM leby

ITEM 614, MAINTAINING TRAFFIC

A MINIMUM OF 1 LANE OF TRAFFIC IN EACH DIRECTION SHALL BE MAINTAINED AT ALL TIMES BY USE OF THE EXISTING PAVEMENT AND STANDARD DRAWINGS MT-95.30, MT-95.31, MT-95.32, MT-97.10 AND MT-97.12.

AT NO TIME SHALL TRAFFIC BE MAINTAINED ON THE PLANED SURFACE, AT LEAST ONE COURSE OF ASPHALT CONCRETE SHALL BE IN PLACE BEFORE OPENING TO TRAFFIC.

ITEM 614 WORK ZONE CENTER LINE, CLASS II HAS BEEN ITEMIZED IN THE PLAN FOR USE ON THE MILLED SURFACE AND ON THE INTERMEDIATE COURSE. SURFACE COURSE TEMPORARY MARKINGS SHALL BE PLACED AS PER CMS 614.11, AS STATED, FULL RATE WORK ZONE MARKINGS CANNOT BE PLACED ON THE SURFACE COURSE, SINCE WE ARE USING SPRAY THERMOPLACTIC FINAL PAVEMENT MARKINGS. ALL OTHER WORK ZONE PAVEMENT MARKINGS NECESSARY SHALL BE INCLUDED IN THE LUMP SUM BID FOR MAINTAINING TRAFFIC.

NO WORK SHALL BE PERFORMED AND ALL EXISTING LANES SHALL BE OPENED TO TRAFFIC DURING THE FOLLOWING DESIGNATED HOLIDAYS OR EVENTS:

MEMORIAL DAY (MAY 30, 2015)
NATIONAL ROAD BIKE SHOW (JUNE 20, 2015)
INDEPENDENCE DAY (JULY 4, 2015)
CRUISE-IN CAR SHOW (AUGUST 15, 2015)
LABOR DAY (SEPTEMBER 7, 2015)
OCTOBER FALL FESTIVAL (OCTOBER 2-3, 2015)

THE PERIOD OF TIME THAT THE LANES ARE TO BE OPEN DEPENDS ON THE DAY OF THE WEEK ON WHICH THE HOLIDAY OR EVENT FALLS. THE FOLLOWING SCHEDULE SHALL BE USED TO DETERMINE THIS PERIOD:

DAY OF THE WEEK	TIME ALL LANES MUST BE OPEN TO TRAFFIC
SUNDAY	12:00N FRIDAY THROUGH 6:00AM MONDAY
MONDAY	12:00N FRIDAY THROUGH 6:00AM TUESDAY
TUESDAY	12:00N MONDAY THROUGH 6:00AM WEDNESDAY
WEDNESDAY	12:00N TUESDAY THROUGH 6:00AM THURSDAY
THURSDAY	12:00N WEDNESDAY THROUGH 6:00AM MONDAY
FRIDAY	12:00N THURSDAY THROUGH 6:00AM MONDAY
SATURDAY	12:00N FRIDAY THROUGH 6:00 AM MONDAY

NO EXTENSIONS OF TIME SHALL BE GRANTED FOR DELAYS IN MATERIAL DELIVERIES, UNLESS SUCH DELAYS ARE INDUSTRY-WIDE, OR FOR LABOR STRIKES, UNLESS SUCH STRIKES ARE AREA-WIDE.

SHOULD THE CONTRACTOR FAIL TO MEET ANY OF THESE REQUIREMENTS, THE CONTRACTOR SHALL BE ASSESSED A DISINCENTIVE OF **$100.00** FOR EACH MINUTE THE ABOVE DESCRIBED LANE CLOSURE RESTRICTIONS ARE VIOLATED.

LENGTH AND DURATION OF LANE CLOSURES AND RESTRICTIONS SHALL BE AT THE APPROVAL OF THE ENGINEER. IT IS THE INTENT TO MINIMIZE THE IMPACT TO THE TRAVELING PUBLIC. LANE CLOSURES OR RESTRICTIONS OVER SEGMENTS OF THE PROJECT, IN WHICH NO WORK IS ANTICIPATED WITHIN A REASONABLE TIME FRAME, AS DETERMINED BY THE ENGINEER, SHALL NOT BE PERMITTED. THE LEVEL OF UTILIZATION OF MAINTENANCE OF TRAFFIC DEVICES SHALL BE COMMENSURATE WITH THE WORK IN PROGRESS.

ALL WORK AND TRAFFIC CONTROL DEVICES SHALL BE IN ACCORDANCE WITH CMS 614 AND OTHER APPLICABLE PORTIONS OF THE SPECIFICATIONS, AS WELL AS THE OHIO MANUAL OF UNIFORM TRAFFIC CONTROL DEVICES. PAYMENT FOR ALL LABOR, EQUIPMENT AND MATERIALS SHALL BE INCLUDED IN THE LUMP SUM CONTRACT PRICE FOR ITEM 614, MAINTAINING TRAFFIC, UNLESS SEPARATELY ITEMIZED IN THE PLAN.

DROPOFFS IN WORK ZONES

DROPOFFS THAT DEVELOP DURING CONSTRUCTION OPERATIONS AND THAT ARE NOT OTHERWISE PROVIDED FOR IN THE PLANS SHALL BE TREATED AS SHOWN ON STANDARD DRAWING MT-101.90. WHERE THE PLANS DO NOT PROVIDE SPECIFIC ITEMS FOR LABOR, EQUIPMENT, OR MATERIALS TO IMPLEMENT THE DROP-OFF TREATMENTS SPECIFIED, THEY SHALL BE INCLUDED FOR PAYMENT IN THE LUMP SUM BID FOR ITEM 614, MAINTAINING TRAFFIC.

ITEM 614, WORK ZONE MARKING SIGN

IN ACCORDANCE WITH CMS SECTION 614.04, THE QUANTITIES OF WORK ZONE MARKING SIGN HAVE BEEN CARRIED TO THE SUB-SUMMARIES TO BE USED AS DIRECTED BY THE ENGINEER.

W8-H12a (NO EDGE LINES):
LOCATION 1A: 19 EACH
LOCATION 1B: 22 EACH
LOCATION 1C: 16 EACH
LOCATION 2: 6 EACH

R4-1 (DO NOT PASS):
LOCATION 1A: 9 EACH
LOCATION 1B: 37 EACH
LOCATION 1C: 9 EACH
LOCATION 2: 16 EACH

R4-2 (PASS WITH CARE):
LOCATION 1B: 1 EACH
LOCATION 1C: 3 EACH

ITEM 614, WORK ZONE MARKING SIGN
LOCATION 1A - 28 EACH
LOCATION 1B - 60 EACH
LOCATION 1C – 28 EACH
LOCATION 2 – 22 EACH

IN ADDITION, THE CONTRACTOR SHALL ERECT A "GROOVED PAVEMENT" SIGN 250 FEET IN ADVANCE OF ANY SECTION OF ROADWAY WHERE TRAFFIC MUST TRAVEL ON A PLANED SURFACE. ENSURE THESE SIGNS ARE IN PLACE BEFORE OPENING THE ROADWAY TO TRAFFIC. ERECT THESE SIGNS AT INTERSECTIONS OF THROUGH ROUTES TO WARN TRAFFIC OF THIS SURFACE CONDITION. "GROOVED PAVEMENT" SIGNS SHALL BE INCLUDED FOR PAYMENT WITH THE LUMP SUM BID FOR ITEM 614 MAINTAINING TRAFFIC AS PER CMS SECTION 614.055.

MAINTAINING EXISTING DRIVES

THE CONTRACTOR SHALL MAINTAIN ACCESS TO BUSINESSES TO THE FUKKEST EXTENT POSSIBLE. IT IS UNDERSTOOD THAT FOR SHORT PERIODS OF TIME, FULL ACCESS TO DRIVEWAYS MAY NOT BE POSSIBLE. THE CONTRACTOR SHALL MAKE ACCOMODATIONS TO THE BUSINESSES DURING THESE SHORT INTERVALS.

PROPERTIES WITH MULTIPLE ACCESS POINTS: WORK AT ONE DRIVE AT A TIME. DRIVE CLOSURE SHALL BE LIMITED TO 14 CALENDAR DAYS.

PROPERTIES WITH A SINGLE ACCESS POINT: MAINTAIN ACCESS TO PROPERTY AT ALL TIMES USING ONE OF THE FOLLOWING METHODS: REPLACE DRIVEWAY USING PART WIDTH CONSTRUCTION, BACKFILL OPEN EXCAVATION WITH 304.02 AGGREGATE FOR TEMPORARY ACCESS, OR USE STEEL PLATES TO SPAN OPEN EXCAVATION AND CONCRETE NOT OUT OF CURE. BEFORE ACCESS TO A DRIVEWAY IS INTERRUPTED, THE CONTRACTOR SHALL GIVE PRIOR NOTICE TO THE OCCUPANT.

THE CONTRACTOR SHALL BE RESPONSIBLE TO ENSURE THAT US MAIL OR ANY OTHER DELIVERY WITHIN THE PROJECT LIMITS IS NOT DISRUPTED BY CONSTRUCTION OPERATION.

BUTT JOINT

A BUTT JOINT WILL BE REQUIRED AT LOCATIONS SPECIFIED BELOW AND AT THE EXTRA AREAS WITH WEARING COURSE REMOVED.

BUTT JOINTS SHALL BE AS PER STANDARD CONSTRUCTION DRAWING BP-3.1 UNLESS OTHERWISE SHOWN IN THE PLANS.

MINIMUM LENGTH FOR ASPHALT WEDGE AT BUTT JOINTS SHALL BE 10'.

LOCATION	ROUTE	DESCRIPTION	S.L.M.	ITEM 614 ASPHALT CONCRETE FOR MAINTAINING TRAFFIC CU. YD.
1A	S.R. 209	BEGIN WORK	8.73	2.0
1A	S.R. 209	BRIDGE: GUE-209-0895	8.95	3.0
1A	S.R. 209	BRIDGE: GUE-209-0985	9.85	3.0
1A	S.R. 209	BRIDGE: GUE-209-1054	10.54	7.0
1A	**S.R. 209**	**TOTAL**		**15.0**
1B	**S.R. 209**	**RAILROAD**	**14.16**	**2.0**
1C	S.R. 209	BRIDGE: GUE-209-1188	11.88	3.5
1C	S.R. 209	RAILROAD	11.96	6.0
1C	S.R. 209	BRIDGE: GUE-209-1448	14.48	4.0
1C	S.R. 209	END WORK	14.57	1.5
1C	**S.R. 209**	**TOTAL**		**15.0**
2	S.R. 821	BEGIN WORK	5.45	1.3
2	S.R. 821	RAILROAD	5.82	3.0
2	S.R. 821	END WORK	5.94	1.7
2	**S.R. 821**	**TOTAL**		**6.0**

THE GRINDING FOR BUTT JOINTS SHALL BE INCLUDED WITH ITEM 254 PAVEMENT PLANING, ASPHALT CONCRETE

CALCULATED LME CHECKED DNM

MAINTENANCE OF TRAFFIC NOTES

GUE-209-8.73
GUE-821-5.45

P:\GUE\76451\Design\Roadway\Plan_Sheets\General\76451_mgn_004.dgn 12-JAN-2015 7:24AM dmorgan

ITEM 614, LAW ENFORCEMENT OFFICER (WITH PATROL CAR) FOR ASSISTANCE

USE OF LAW ENFORCEMENT OFFICERS (LEOS) BY CONTRACTORS OTHER THAN THE USES SPECIFIED BELOWWILL NOT BE PERMITTED AT PROJECT COST. LEOS SHOULD NOT BE USED WHERE THE OMUTCD INTENDS THAT FLAGGERS BE USED.

IN ADDITION TO THE REQUIREMENTS OF CMS 614 AND THE OMUTCD, A UNIFORMED LEO WITH ANOFFICIAL PATROL CAR (CAR WITH TOP-MOUNTED EMERGENCY FLASHING LIGHTS AND COMPLETE MARKINGS OF THE APPROPRIATE LAW ENFORCEMENT AGENCY) SHALL BE PROVIDED FOR THE FOLLOWING TRAFFIC CONTROL TASKS:

- DURING THE ENTIRE ADVANCE PREPARATION AND CLOSURE SEQUENCE WHERE COMPLETE BLOCKAGE OF TRAFFIC IS REQUIRED.

- FOR LANE CLOSURES: DURING INITIAL SET-UP PERIODS, TEAR DOWN PERIODS, SUBSTANTIAL SHIFTS OF A CLOSURE POINT OR WHEN NEW LANE CLOSURE ARRANGEMENTS ARE INITIATED FOR LONG-TERM LANE CLOSURES/SHIFTS (FOR THE FIRST AND LAST DAY OF MAJOR CHANGES IN TRAFFIC CONTROL SETUP). IN GENERAL, LEOS SHOULD BE POSITIONED AT THE POINT OF LANE RESTRICTION OR ROAD CLOSURE AND TO MANUALLY CONTROL TRAFFIC MOVEMENTS THROUGH INTERSECTIONS IN WORK ZONES.

LEOS SHOULD NOT FORGO THEIR TRAFFIC CONTROL RESPONSIBILITIES TO APPREHEND MOTORISTS FOR ROUTINE TRAFFIC VIOLATIONS. HOWEVER, IF A MOTORIST'S ACTIONS ARE CONSIDERED TO BE RECKLESS, THEN PURSUIT OF THE MOTORIST IS APPROPRIATE.

THE LEOS WORK AT THE DIRECTION OF THE CONTRACTOR. THE CONTRACTOR IS RESPONSIBLE FOR SECURING THE SERVICES OF THE LEOS WITH THE APPROPRIATE AGENCIES AND COMMUNICATING THE INTENTIONS OF THE PLANS WITH RESPECT TO DUTIES OF THE LEOS. THE ENGINEER SHALL HAVE FINAL CONTROL OVER THE LEOS' DUTIES AND PLACEMENT, AND WILL RESOLVE ANY ISSUES THAT MAY ARISE BETWEEN THE TWO PARTIES.

THE LEO SHALL REPORT IN TO THE CONTRACTOR PRIOR TO THE START OF THE SHIFT, IN ORDER TO RECEIVE INSTRUCTIONS REGARDING SPECIFIC WORK ASSIGNMENTS DURING HIS/HER SHIFT. THE LEO IS EXPECTED TO STAY AT THE PROJECT SITE FOR THE ENTIRE DURATION OF HIS/HER SHIFT. THE LEO SHALL REPORT TO THE CONTRACTOR AT THE END OF HIS/HER SHIFT. ONCE THE LEO HAS COMPLETED THE DUTIES DESCRIBED ABOVE AND STILL HAS TIME REMAINING ON HIS/HER SHIFT,

THE LEO MAY BE ASKED TO PATROL THROUGH THE WORK ZONE (WITH FLASHING LIGHTS OFF) OR BE PLACED AT A LOCATION TO DETER MOTORISTS FROM SPEEDING. SHOULD IT BE NECESSARY TO LEAVE THE PROJECT SITE, THE LEO SHALL NOTIFY THE ENGINEER. THE CONTRACTOR SHALL PROVIDE THE LEO WITH A TWO-WAY COMMUNICATION DEVICE WHICH SHALL BE RETURNED TO THE CONTRACTOR AT THE END OF HIS/HER SHIFT.

THE HOURS PAID SHALL INCLUDE ANY MINIMUM SHOW-UP TIME REQUIRED BY THE LAW ENFORCEMENT AGENCY INVOLVED.

ANY ADDITIONAL COSTS (ADMINISTRATIVE OR OTHERWISE) INCURRED BY THE CONTRACTOR TO OBTAIN THE SERVICES OF AN LEO ARE INCLUDED WITH THE BID UNIT PRICE FOR ITEM 614, LAW ENFORCEMENT OFFICER WITH PATROL CAR FOR ASSISTANCE.

LEOS (WITH PATROL CAR) REQUIRED BY THE TRAFFIC MAINTENANCE TASKS ABOVE SHALL BE PAID FOR ON A UNIT PRICE (HOURLY) BASIS UNDER ITEM 614, LAW ENFORCEMENT OFFICER (WITH PATROL CAR) FOR ASSISTANCE.

THE FOLLOWING ESTIMATED QUANTITIES HAVE BEEN CARRIED TO THE SUB-SUMMARIES.

ITEM 614, LAW ENFORCEMENT OFFICER WITH PATROL CAR FOR ASSISTANCE
LOC. 1A - 80 HRS, LOC. 1B – 80 HOURS, LOC. 1C – 80 HOURS

ITEM 614, PORTABLE CHANGEABLE MESSAGE SIGNS, AS PER PLAN

THE CONTRACTOR SHALL FURNISH, INSTALL, MAINTAIN AND REMOVE, WHEN NO LONGER NEEDED, TWO CHANGEABLE MESSAGE SIGNS, ON SITE FOR THE DURATION OF THE PROJECT. THE SIGN SHALL BE OF A TYPE SHOWN ON A LIST OF APPROVED PCMS UNITS MAINTAINED BY THE DIRECTOR (OFFICE OF MATERIALS MANAGEMENT). THE APPROVED LIST OF PORTABLE CHANGEABLE MESSAGE SIGNS CAN BE FOUND ON THE ODOT WEBSITE BY CLICKING ON THE SERVICES MENU, THEN CLICKING ON MATERIALS MANAGEMENT. THE LIST CONTAINS CLASS A AND B UNITS WITH MINIMUM LEGIBILITY DISTANCES OF 475 FT. AND 650 FT. RESPECTIVELY.

EACH SIGN SHALL BE TRAILER-MOUNTED AND EQUIPPED WITH A FUNCTIONAL DIMMING MECHANISM, TO DIM THE SIGN DURING DARKNESS, AND A TAMPER AND VANDAL PROOF ENCLOSURE. EACH SIGN SHALL BE PROVIDED WITH APPROPRIATE TRAINING AND OPERATION INSTRUCTIONS TO ENABLE ON-SITE PERSONNEL TO OPERATE AND TROUBLESHOOT THE UNIT. THE SIGN SHALL ALSO BE CAPABLE OF BEING POWERED BY AN ELECTRICAL SERVICE DROP FROM A LOCAL UTILITY COMPANY. PCMS TRAILERS SHALL BE DELINEATED ON A PERMANENT BASIS BY AFFIXING CONSPICUITY TAPE CONFORMING TO CMS 614.03, IN A CONTINUOUS LINE ON THE FACE OF THE TRAILER AS SEEN BY ONCOMING ROAD USERS.

PLACEMENT, OPERATION, MAINTENANCE AND ALL ACTIVATION OF THE SIGNS BY THE CONTRACTOR SHALL BE AS DIRECTED BY THE ENGINEER. THE PCMS SHALL BE LOCATED IN A HIGHLY VISIBLE POSITION YET PROTECTED FROM TRAFFIC. THE CONTRACTOR SHALL, AT THE DIRECTION OF THE ENGINEER, RELOCATE THE PCMS TO IMPROVE VISIBILITY OR ACCOMMODATE CHANGED CONDITIONS. WHEN NOT IN USE, THE PCMS SHALL BE TURNED OFF. ADDITIONALLY, WHEN NOT IN USE FOR EXTENDED PERIODS OF TIME, THE PCMS SHALL BE TURNED, FACING AWAY FROM ALL TRAFFIC, AND SHALL DISPLAY ONE OR MORE TYPE G YELLOW RETROREFLECTIVE SHEETING SURFACES OF 9-INCH BY 15-INCH MINIMUM SIZE FACING TRAFFIC.

THE ENGINEER SHALL BE PROVIDED ACCESS TO EACH SIGN UNIT AND SHALL BE PROVIDED WITH APPROPRIATE TRAINING AND OPERATION INSTRUCTIONS TO ENABLE ODOT PERSONNEL TO OPERATE AND TROUBLESHOOT THE UNIT, AND TO REVISE SIGN MESSAGES, IF NECESSARY.

ALL MESSAGES TO BE DISPLAYED ON THE SIGN WILL BE PROVIDED BY THE ENGINEER. A LIST OF ALL REQUIRED PRE-PROGRAMMED MESSAGES WILL BE GIVEN TO THE CONTRACTOR AT THE PROJECT PRECONSTRUCTION CONFERENCE. THE SIGN SHALL HAVE THE CAPABILITY TO STORE UP TO 99 MESSAGES. MESSAGE MEMORY OR PRE-PROGRAMMED DISPLAYS SHALL NOT BE LOST AS A RESULT OF POWER FAILURES TO THE ON-BOARD COMPUTER. THE SIGN LEGEND SHALL BE CAPABLE OF BEING CHANGED IN THE FIELD. THREE-LINE PRESENTATION FORMATS WITH UP TO SIX MESSAGE PHASES SHALL BE SUPPORTED. PCMS FORMAT SHALL PERMIT THE COMPLETE MESSAGE FOR EACH PHASE TO BE READ AT LEAST TWICE.

THE PCMS SHALL CONTAIN AN ACCURATE CLOCK AND PROGRAMMING LOGIC WHICH WILL ALLOW THE SIGN TO BE ACTIVATED, DEACTIVATED OR MESSAGES CHANGED AUTOMATICALLY AT DIFFERENT TIMES OF THE DAY FOR DIFFERENT DAYS OF THE WEEK.

THE PCMS UNIT SHALL BE MAINTAINED IN GOOD WORKING ORDER BY THE CONTRACTOR IN ACCORDANCE WITH THE PROVISIONS OF CMS 614.07. THE CONTRACTOR SHALL, PRIOR TO ACTIVATING THE UNIT, MAKE ARRANGEMENTS, WITH AN AUTHORIZED SERVICE AGENT FOR THE PCMS, TO ASSURE PROMPT SERVICE IN THE EVENT OF FAILURE. ANY FAILURE SHALL NOT RESULT IN THE SIGN BEING OUT OF SERVICE FOR MORE THAN 12 HOURS, INCLUDING WEEKENDS. FAILURE TO COMPLY MAY RESULT IN AN ORDER TO STOP WORK AND OPEN ALL TRAFFIC LANES AND/OR IN THE DEPARTMENT TAKING APPROPRIATE ACTION TO SAFELY CONTROL TRAFFIC. THE ENTIRE COST TO CONTROL TRAFFIC, ACCRUED BY THE DEPARTMENT DUE TO THE CONTRACTORS NONCOMPLIANCE, WILL BE DEDUCTED FROM MONEYS DUE, OR TO BECOME DUE THE CONTRACTOR ON HIS CONTRACT.

ITEM 614, PORTABLE CHANGEABLE MESSAGE SIGNS, AS PER PLAN (cont'd)

THE CONTRACTOR SHALL BE RESPONSIBLE FOR 24-HOUR-PER-DAY OPERATION AND MAINTENANCE OF THESE SIGNS ON THE PROJECT FOR THE DURATION OF THE PHASES WHEN THE PLAN REQUIRES THEIR USE.

PAYMENT FOR THE ABOVE DESCRIBED ITEM SHALL BE AT THE CONTRACT UNIT PRICE. PAYMENT SHALL INCLUDE ALL LABOR, MATERIALS, EQUIPMENT, FUELS, LUBRICATING OILS, SOFTWARE, HARDWARE AND INCIDENTALS TO PERFORM THE ABOVE DESCRIBED WORK. THE CONTRACTOR SHALL ONLY BE PAID FOR PCMS UNITS WHEN THEY ARE IN OPERATION ON THE PROJECT AS SPECIFIED IN THE PLANS OR BY THE ENGINEER.

2 PCMS FOR 60 DAYS (2 X120 = 120)

ITEM 614, PORTABLE CHANGEABLE MESSAGE SIGN, AS PER PLAN
LOCATION 1A - 40 DAY
LOCATION 1B - 40 DAY
LOCATION 2 – 40 DAY

CALCULATED LME
CHECKED DNM

MAINTENANCE OF TRAFFIC NOTES

GUE-209-8.73
GUE-821-5.45

P:\GUE\76451\Design\Roadway\Plan_Sheets\General\76451_mgn_005.dgn 08-JAN-2015 2:43PM leby

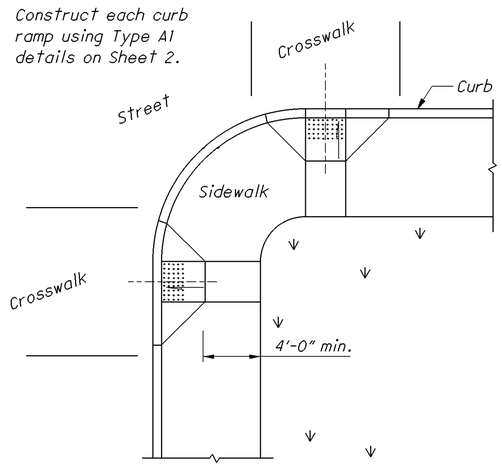

Use curb ramps with flared sides at locations with wide sidewalks.

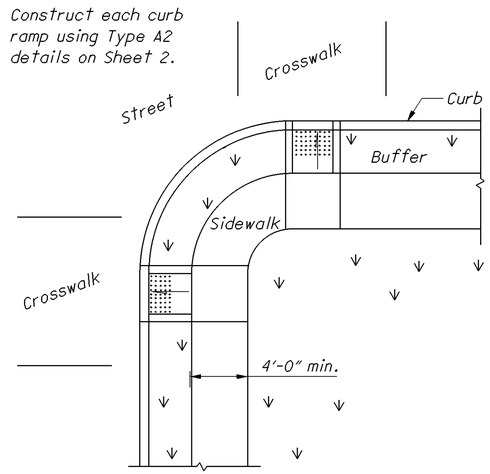

Use curb ramps with returned curbs where buffer is wide enough to accommodate ramp slope.

PERPENDICULAR CURB RAMPS

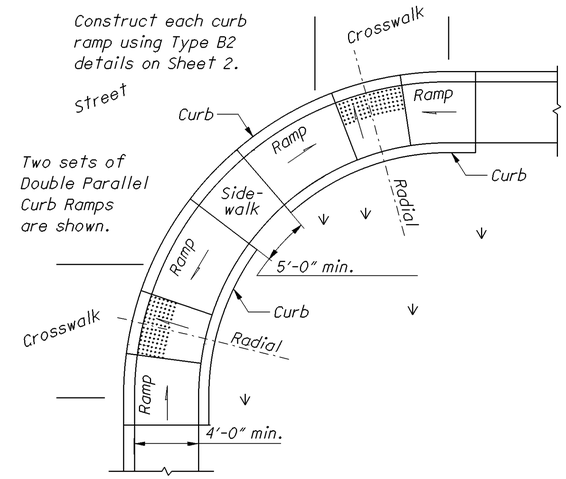

Place on streets having wide turning radius and where sidewalks are narrow.

PARALLEL CURB RAMPS

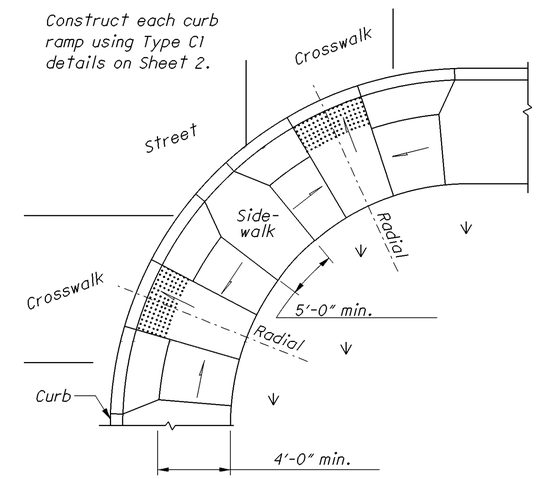

Curb ramp placement where streets have wide turning radius, and sufficient sidewalks width.

COMBINATION CURB RAMPS

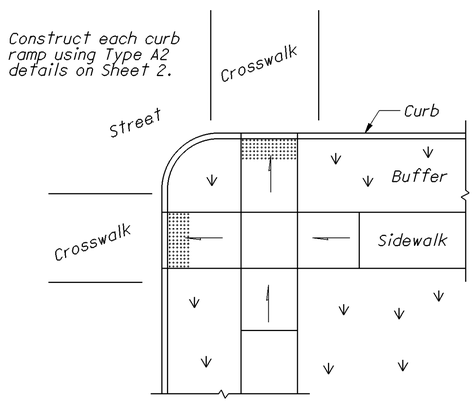

LEGEND

[1] May be reduced to 3'-4" in existing sidewalks to better fit the walk configuration or where site conditions are restricted by narrow walks, pole foundations, drainage inlets, etc. The width may be tapered.

NOTES

GENERAL: This drawing shows curb ramp types details and placement examples for curb ramp construction, including the installation of detectable warnings.

Curb ramp types are shown on Sheet 2 and include Perpendicular, Parallel, and Combined types as specified to be constructed in the locations shown on the project plans.

Curb ramps added to an existing intersection or walk should be individually detailed on the project plans to assure that the design is appropriate for site constraints and all items can be constructed to ADA standards. The contractor may adjust the placement of curb ramps if existing field conditions warrant with the approval of the Engineer.

METHOD OF MEASUREMENT: The Department will measure Curb Ramps by the number of each completed curb ramp. The Department will measure Detectable Warnings in existing curb ramps and at grade crossings by the number of square feet completed.

Concrete Walk and Curb, Item 608 and 609, will be measured through out the curb ramp area and paid for under their respective Items.

METHOD OF PAYMENT: New Curb Ramps constructed in new or existing Walk are paid for under Item 690 Special Misc.: Curb Ramp, Type __ (A1, A2, B1, B2, B3, C1, C2, or D) each, and includes the cost of any additional materials and installation (including detectable warnings), grading, forming and finishing.

Detectable Warnings constructed in existing curb ramps or for at-grade crossing locations are paid for under Item 690-Special Misc.: Detectable Warning (Sq. Ft.) and is full compensation for excavation, backfill, base course material, reinforcing steel, expansion joint materials, and any incidentals required to complete the installation as specified. The work to cost the tiles in place will also require removal of existing pavement or sidewalk (Item 202) to the nearest joint, or if no joint exists, a minimum of 4 feet.

Removal of existing curb, pavement, walk (or existing curb ramps) are paid under Item 202.

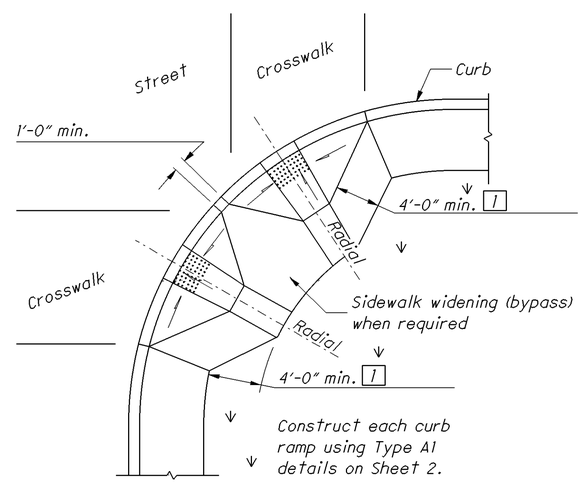

Acceptable design on corners with wide turning radius where user is able to maneuver within crosswalk limits so as not to encroach into adjacent traveled lanes.

PERPENDICULAR RAMPS

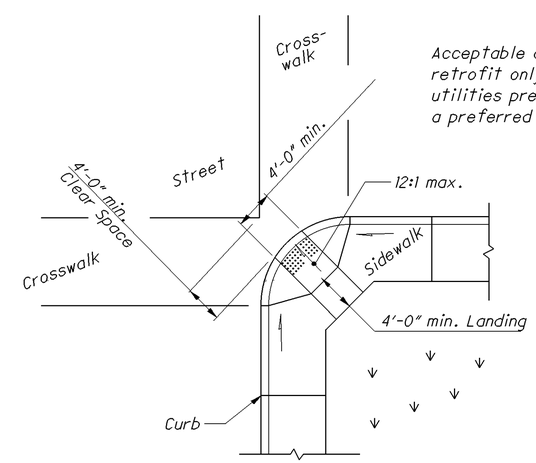

Use this design only for existing walks, and when site constraints prohibit other designs. The diagonal Type D ramp may be constructed as either a Perpendicular, Parallel or Combination curb ramp type. Avoid using where curb radii are less than 20'-0".

DIAGONAL RAMP (Type D)

ACCEPTABLE CONSTRUCTION PLACEMENT

CALCULATED ---
CHECKED ---

CURB RAMP AND DETECTABLE WARNING DETAILS

GUE-209-8.73
GUE-821-5.45

P:\GUE\76451\Design\Roadway\Plan_Sheets\General\76451_crd_001.dgn 08-JAN-2015 12:44PM dmorgan

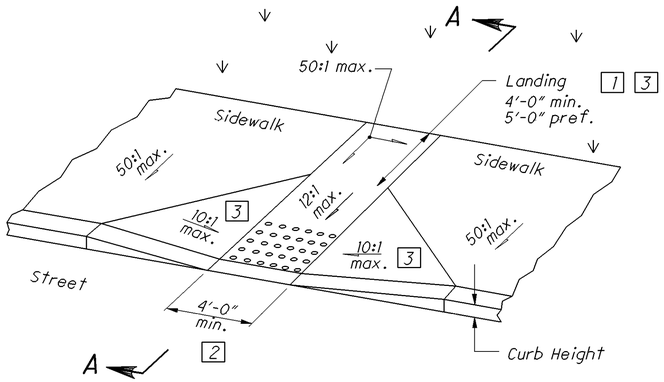

Type A1 (Perpendicular with flared sides)

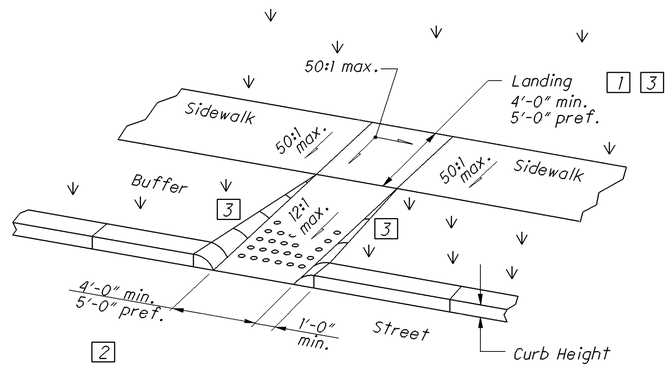

Type A2 (Perpendicular with returned curb)

PERPENDICULAR CURB RAMP DETAILS

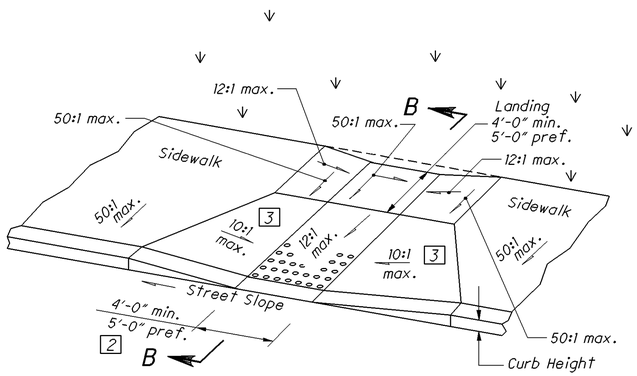

Type C1 (Combined with flared sides)

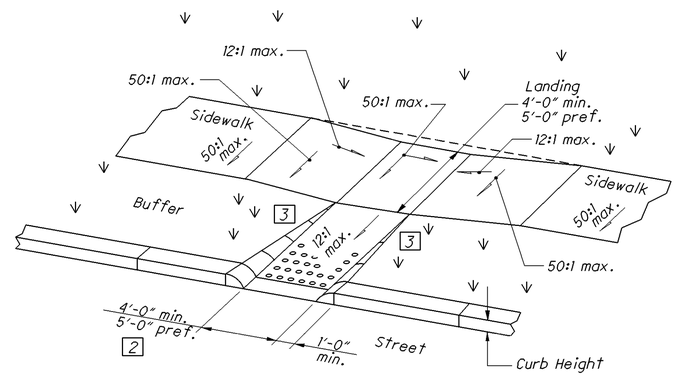

Type C2 (Combined with returned curb)

COMBINED CURB RAMP DETAILS

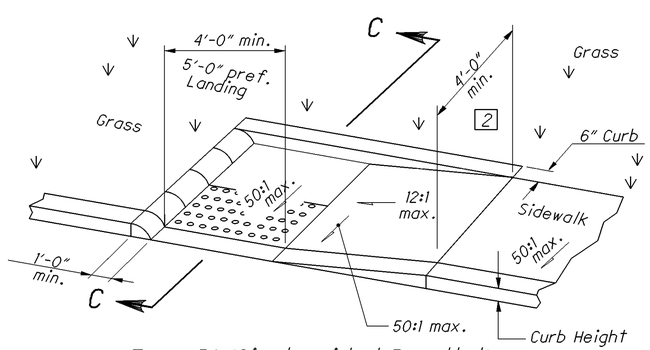

Type B1 (Single sided Parallel)

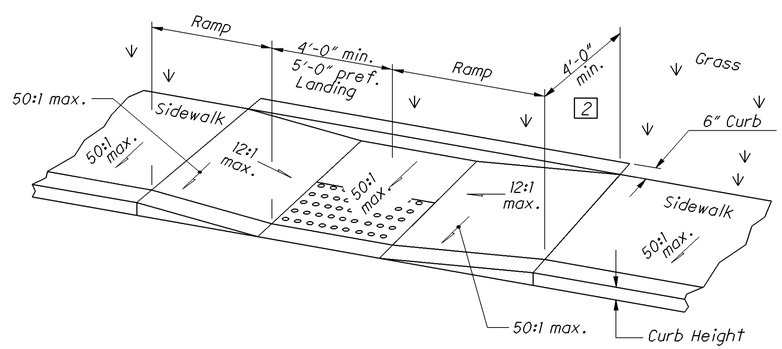

Type B2 (Double sided Parallel)

PARALLEL CURB RAMP DETAILS

NOTES CONTINUED

The running slope of the ramp is preferred to be 12:1 or flatter. In existing sidewalks, where the maximum ramp slope is not feasible due to site constraints (e.g. utility poles or vaults, right-of-way limits) it may be reduced as follows:

A) 10:1 for a max. rise of 6",
B) 8:1 for a max. rise of 3",
C) 6:1 over a max. run of 2'-0" for historic areas where a flatter slope is not feasible.

To prevent chasing the grade indefinitely, the transition from exisiting sidewalk to the curb ramp area is not required to exceed 15 feet in length.

While ramps may be skewed to the crosswalk, the entire lower landing area must fall within the cross walk that the ramp serves and cannot be located in the traveled lane of opposing traffic.

The counter slope of the gutter or street at the foot of a curb ramp, landing, or blended transitions shall be 20:1 ot flatter.

The bottom edge of the ramp shall change planes perpendicular to the landing.

The edge of the curb shall be flush with the edge of the adjacent pavement and gutter and surface slopes that meet grade breaks shall also be flush.

Ramp landings shall be 4' min. x 4' min. with a 50:1 or flatter cross slope and running slope, unless otherwise shown.

DETECTABLE WARNINGS: Install Detectable warnings on each curb reamp with approved materials as shown on Sheet 3. Install these proprietary products as per manufacturer's written instructions.

DRAINAGE: Contractor is to ensure the base of each constructed ramp allows for proper drainage, without exceeding allowable cross slope or ramp slope. Vertical change in level exceeding 1/8" between the 1) pavement and gutter, and 2) gutter and ramp, are not allowed.

JOINTS: Provide expansion joints in the curb ramp as extensions of walk joints and consistent with Item 608.03 requirements for a new concrete walk. Provide a 1/2" Item 705.03 expansion joint filler around the edge of ramps built in existing concrete walks. Lines shown on this drawing indicate the ramp edges and slope changes and do not necessarily indicate joint lines.

SURFACE TEXTURE: Texture concrete surfaces by coarse brooming transverse to the ramp slopes to be rougher than the adjacent walk.

LEGEND

1 Dimension may be reduced to 3'-0" in existing sidewalks if the landing is unconstrained along the back edge.

2 May be reduced to 3'-4" in existing sidewalks to better fit the walk configuration or where site conditions are restricted by narrow walks, pole foundations, drainage inlets, etc. The width may be tapered.

3 Where landing width (D) has been reduced to 3'-0" the flared sides shall have a maximum slope of 12:1. Flared sides are not required where the edges of a curb ramp are protected by landscaping or other barriers to travel by wheelchair users or pedestrians across the edge of the curb ramp. However, if the flared sides are used in these areas, they may be of any slope.

See Sheet 3 for Sections.

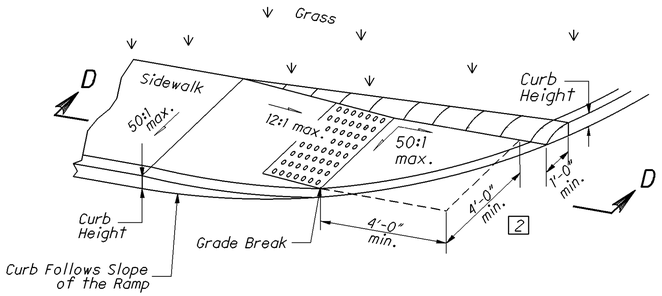

Type B3 (Single sided Parallel)

CALCULATED --- CHECKED ---

CURB RAMP AND DETECTABLE WARNING DETAILS

GUE-209-8.73
GUE-821-5.45

2 / 3

8 / 53

P:\GUE\76451\Design\Roadway\Plan_Sheets\General\76451_crd_002.dgn 08-JAN-2015 12:44PM dmorgan

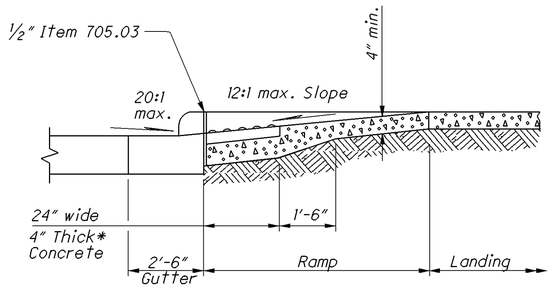

New gutter shown.

SECTION A-A
NORMAL DETAIL
See Sheet 2.

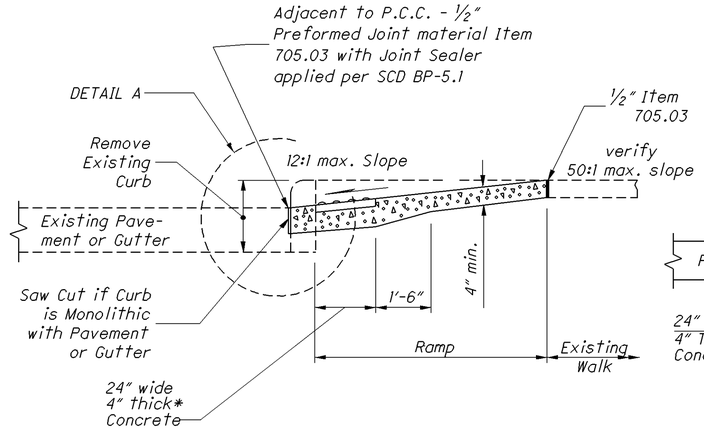

SECTION A-A
EXISTING WALK DETAIL
See Sheet 2.

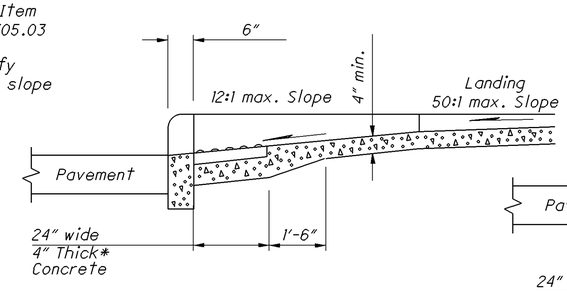

SECTION B-B
See Sheet 2.

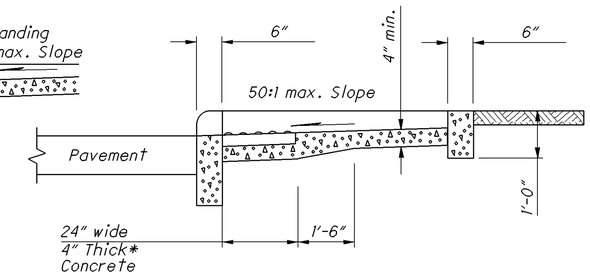

SECTION C-C
See Sheet 2.

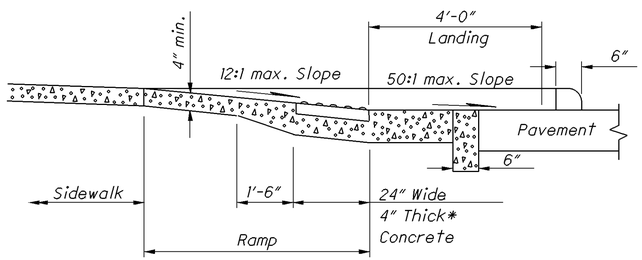

SECTION D-D
See Sheet 2.

*Where possible, pour ramp area integral with the curb, otherwise use 6" thick walk.

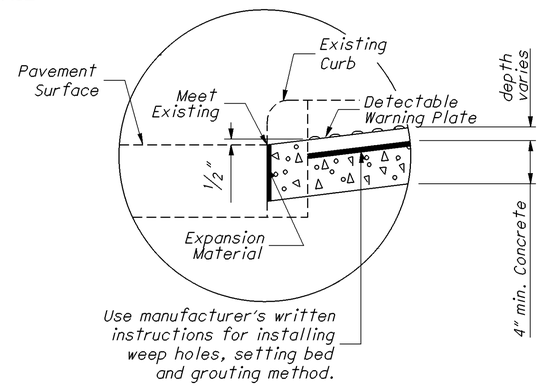

DETAIL A

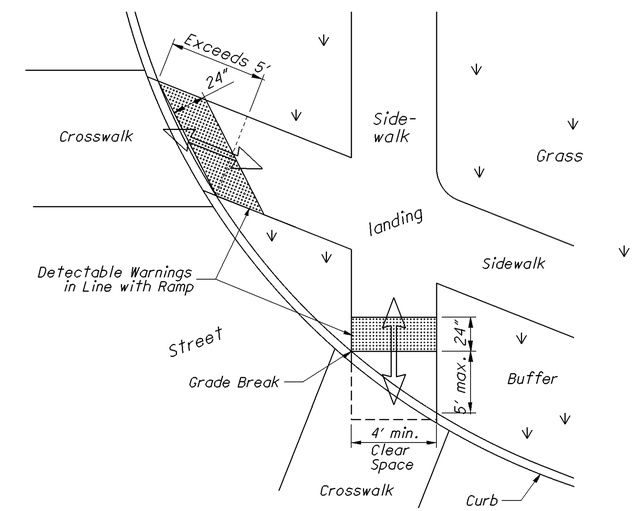

DETECTABLE WARNING ALIGNMENT

DETECTABLE WARNINGS NOTES

GENERAL: Detectable Warnings are a distinctive surface pattern of truncated domes which are detectable by cane or underfoot to alert people with vision impairments of their approach to streets and hazardous drop-offs.

PLACEMENT: Detectable warnings are to be installed at any location where pedestrians might cross paths with vehicular traffic lanes, such as the base of curb ramps or at blended curbs. A 24" strip of domes is to be installed for the full width of the ramp or walk. Typical street corner placement locations are shown on Sheet 2.

The depth of concrete underneath detectable warning products shall be a minimum of 4". See DETAIL A.

ALIGNMENT: Truncated domes should be aligned with the primary direction of the ramp as shown on the DETECTABLE WARNING ALIGNMENT Detail. Normally the detectable warnings should be flush with the back of the curb, but in skewed conditions see DETECTABLE WARNING ALIGNMENT DETAIL. For non-standard layouts, detectable warning materials may have to be mitered and placed segmentally.

PRODUCTS & COLORS: Color of the detectable warnings should contrast with surrounding concrete walk and ramp. Black is not an acceptable color. Approved products and guidance on color may be found on the Office of Roadway Engineering Service's Detectable Warnings Approved List. Install products as per manufacturer's printed instructions.

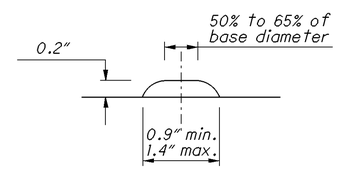

HEIGHT AND DIAMETER

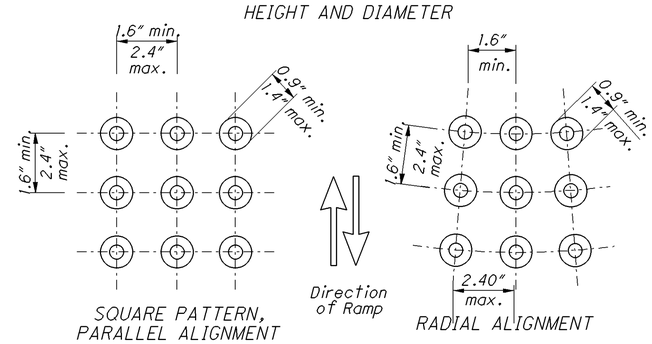

SQUARE PATTERN, PARALLEL ALIGNMENT

RADIAL ALIGNMENT

TRUNCATED DOMES DETAILS

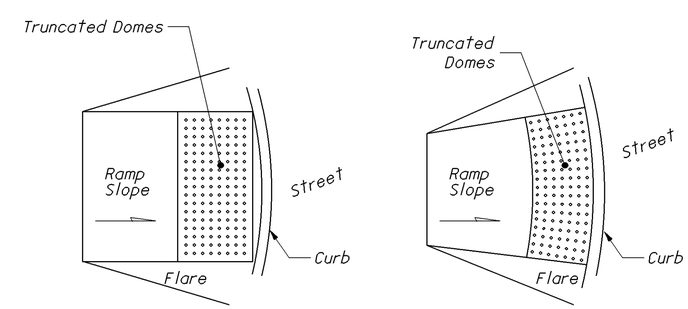

DOME ALIGNMENT ON RADIUSED CURB

CALCULATED ---
CHECKED ---

CURB RAMP AND DETECTABLE WARNING DETAILS

GUE-209-8.73
GUE-821-5.45

3 / 3

9 / 53

P:\GUE\76451\Design\Roadway\Plan_Sheets\General\76451_crd_003.dgn 08-JAN-2015 12:45PM dmorgan

NOTE:

THE PAVEMENT WIDTHS SHOWN IN THE "PAVEMENT DATA" TABLE ON SHEET 11 ARE THE WIDTHS WHICH HAVE BEEN DETERMINED TO HAVE SUFFICIENT ROADWAY BASE FOR PAVING. IF ACTUAL ROADWAY WIDTHS DIFFER, THE ROADWAY SHALL BE PAVED ONLY THE WIDTH SHOWN IN THE AFOREMENTIONED TABLE. IF THE EXISTING ROADWAY IS WIDER THAN THAT WHICH IS SHOWN IN THE TABLE, PAVING SHALL BE CENTERED ABOUT THE FULL WIDTH OF THE ROADWAY AND ANY EXCESS EXISTING PAVEMENT ON THE EDGES SHALL BE COVERED WITH ITEM 617 COMPACTED AGGREGATE. PAVING IN CURBED ROADWAY SECTIONS SHALL BE FROM CURB TO CURB.

PW = PAVEMENT WIDTH
PS = PAVED SHOULDER
AS = AGGREGATE SHOULDER

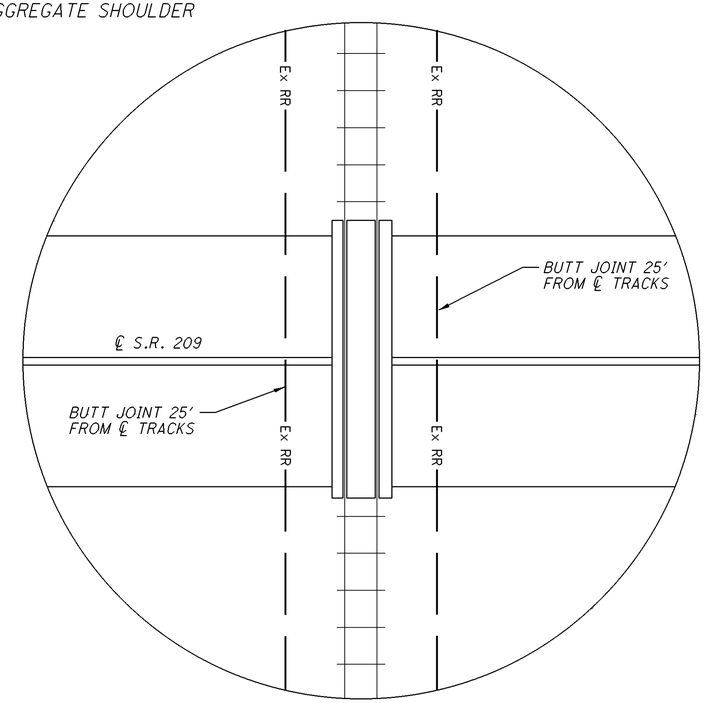

OHIO CENTRAL RAILROAD, INC.
RAILROAD CROSSING
AARDOT - 599280L

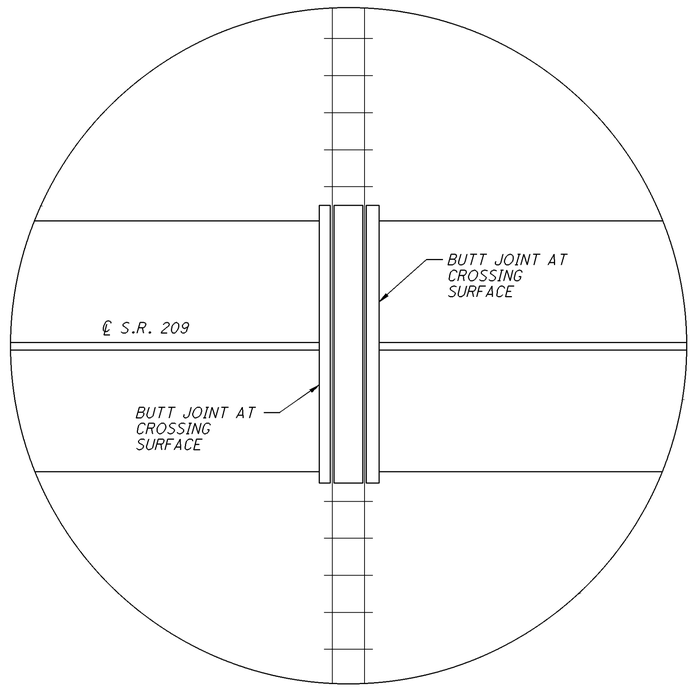

BYESVILLE SCENIC TRAILS, LLC
RAILROAD CROSSING
AARDOT - 503669N

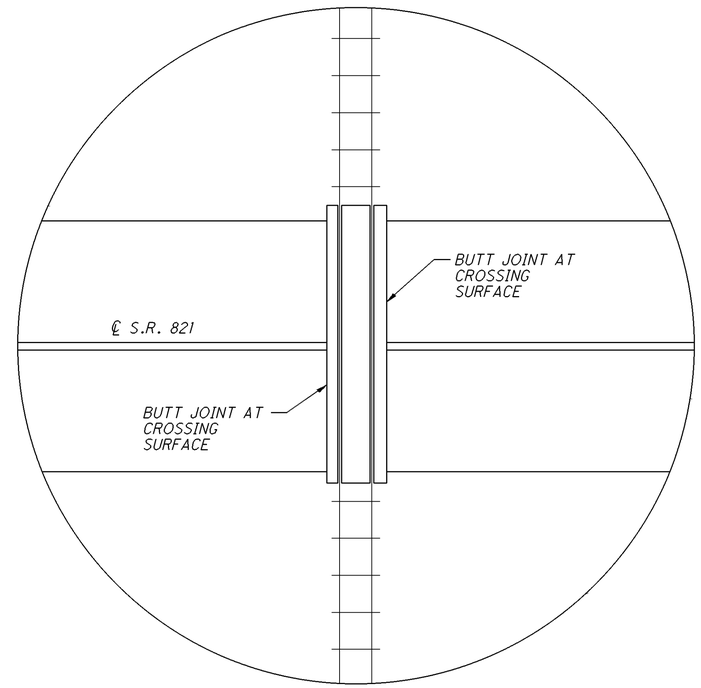

BYESVILLE SCENIC TRAILS, LLC
RAILROAD CROSSING
AARDOT - 503704A

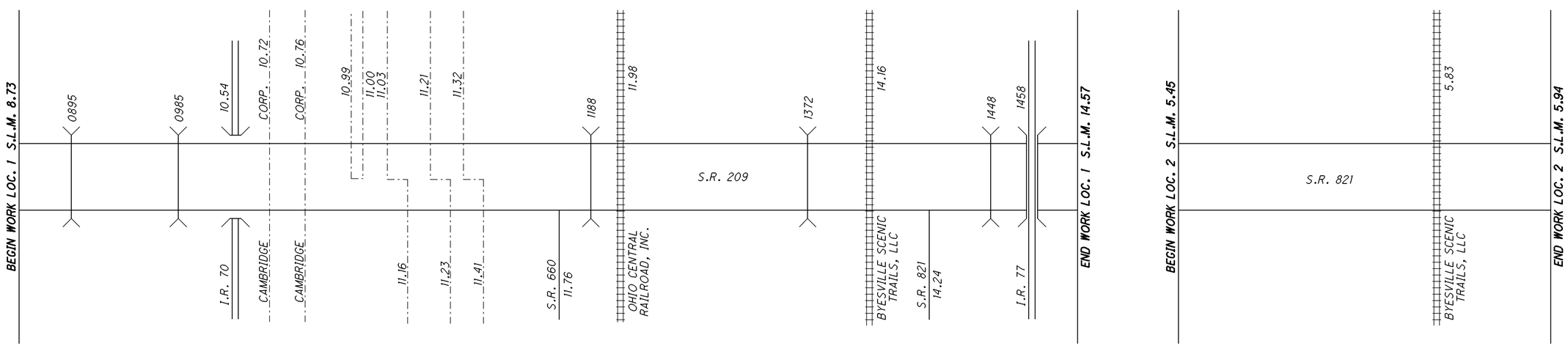

CALCULATED LME
CHECKED DNM

PAVEMENT DATA

GUE-209-8.73
GUE-821-5.45

P:\GUE\76451\Design\Roadway\Plan_Sheets\General\76451_mac_002.dgn 08-JAN-2015 12:50PM dmorgan

PAVEMENT DATA

LOCATION	COUNTY	ROUTE	BEGIN LOG POINT SLM	END LOG POINT SLM	LENGTH MILES	LENGTH LIN. FT.	PAVEMENT WIDTH (FEET)	TYPICAL	PAVEMENT AREA SQ. YD.	254 THICKNESS INCHES	254 PAVEMENT PLANING, ASPHALT CONCRETE SQ. YD.	407 TACK COAT, TRACKLESS TACK @ 0.075 GAL./S.Y. GAL.	407 TACK COAT, TRACKLESS TACK FOR INTERMEDIATE COURSE @ 0.05 GAL./S.Y. GAL.	441 ASPHALT CONCRETE THICKNESS INCHES	441 ASPHALT CONCRETE INTERMEDIATE COURSE, TYPE 2, (448) CU. YD.	441 ASPHALT CONCRETE THICKNESS INCHES	441 ASPHALT CONCRETE SURFACE COURSE, TYPE 1, (448), PG 70-22M CU. YD.	614 WORK ZONE CENTER LINE, CLASS II MILE
1A	GUE	S.R. 209	8.73	9.91	1.18	6,230.4	24.0	1	16,614.4	3.00	16,614.4	1,246.1	830.7	1.75	807.7	1.25	576.9	2.36
1A	GUE	S.R. 209	9.91	10.41	0.50	2,640.0	48.0	3	14,080.0	3.00	14,080.0	1,056.0	704.0	1.75	684.5	1.25	488.9	1.00
1A	GUE	S.R. 209	10.41	10.60	0.19	1,003.2	54.0	3	6,019.2	3.00	6,019.2	451.4	301.0	1.75	292.6	1.25	209.0	0.38
1A	GUE	S.R. 209	10.60	10.66	0.06	316.8	61.0 (Avg.)	1	2,147.2	3.00	2,147.2	161.0	107.4	1.75	104.4	1.25	74.6	0.12
1A	GUE	S.R. 209	10.66	10.71	0.05	264.0	72.0	1	2,112.0	3.00	2,112.0	158.4	105.6	1.75	102.7	1.25	73.4	0.10
1A	GUE	S.R. 209	10.76	10.80	0.04	211.2	72.0	1	1,689.6	3.00	1,689.6	126.7	84.5	1.75	82.2	1.25	58.7	0.08
1A	GUE	S.R. 209	10.80	10.99	0.19	1,003.2	60.0	1	6,688.0	3.00	6,688.0	501.6	334.4	1.75	325.2	1.25	232.3	0.38
1A	GUE	S.R. 209	11.00	11.03	0.03	158.4	60.0	1	1,056.0	3.00	1,056.0	79.2	52.8	1.75	51.4	1.25	36.7	0.06
1A	GUE	S.R. 209	11.23	11.32	0.09	475.2	60.0	1	3,168.0	1.50	3,168.0	237.6				1.50	132.0	0.18
BRIDGE DEDUCTIONS									3,511.1		(3,511.1)	(263.3)	(175.6)	1.75	(170.7)	1.25	(121.9)	(0.35)
LOCATION 1A TOTALS (CARRIED TO SUB-SUMMARY)											**50,063.3**	**3,754.7**	**2,344.8**		**2,280.0**		**1,760.6**	**4.31**
1B	GUE	S.R. 209	10.71	10.76	0.05	264.0	72.0	1	2,112.0	3.00	2,112.0	158.4	105.6	1.75	102.7	1.25	73.4	0.10
1B	GUE	S.R. 209	10.99	11.00	0.01	52.8	60.0	1	352.0	3.00	352.0	26.4	17.6	1.75	17.2	1.25	12.3	0.02
1B	GUE	S.R. 209	11.03	11.23	0.20	1,056.0	60.0	1	7,040.0	1.50	7,040.0	528.0				1.50	293.4	0.40
1B	GUE	S.R. 209	11.32	11.53	0.21	1,108.8	60.0	1	7,392.0	1.50	7,392.0	554.4				1.50	308.0	0.42
1B	GUE	S.R. 209	12.85	13.84	0.99	5,227.2	24.0	1	13,939.2	1.25	13,939.2	1,045.4	697.0	1.75	677.6	1.25	484.0	1.98
1B	GUE	S.R. 209	13.84	14.27	0.43	2,270.4	24.0	2	6,054.4	3.00	6,054.4	454.1	302.7	1.75	294.4	1.25	210.3	0.86
1B	GUE	S.R. 209	14.27	14.44	0.17	897.6	26.0	2	2,593.1	3.00	2,593.1	194.5	129.7	1.75	126.1	1.25	90.1	0.34
BRIDGE DEDUCTIONS									40.5		(40.5)	(3.0)	(2.0)	1.75	(2.0)	1.25	(1.4)	
LOCATION 1B TOTALS (CARRIED TO SUB-SUMMARY)											**39,442.2**	**2,958.2**	**1,250.6**		**1,216.0**		**1,470.1**	**4.12**
1C	GUE	S.R. 209	11.53	11.96	0.43	2,270.4	60.0	1	15,136.0	1.50	15,136.0	1,135.2				1.50	630.7	0.86
1C	GUE	S.R. 209	11.96	12.18	0.22	1,161.6	60.0	1	7,744.0	1.25	7,744.0	580.8	387.2	1.75	376.5	1.25	268.9	0.44
1C	GUE	S.R. 209	12.18	12.25	0.07	369.6	48.0	1	1,971.2	1.25	1,971.2	147.8	98.6	1.75	95.9	1.25	68.5	0.14
1C	GUE	S.R. 209	12.25	12.43	0.18	950.4	36.0 (Avg.)	1	3,801.6	1.25	3,801.6	285.1	190.1	1.75	184.8	1.25	132.0	0.36
1C	GUE	S.R. 209	12.43	12.85	0.42	2,217.6	24.0	1	5,913.6	1.25	5,913.6	443.5	295.7	1.75	287.5	1.25	205.4	0.84
1C	GUE	S.R. 209	14.44	14.57	0.13	686.4	31.0	1	2,364.3	3.00	2,364.3	177.3	118.2	1.75	115.0	1.25	82.1	0.26
BRIDGE DEDUCTIONS									2,011.7		(2,011.7)	(150.9)	(100.6)	1.75	(97.8)	1.25	(69.9)	(0.18)
LOCATION 1C TOTALS (CARRIED TO SUB-SUMMARY)											**34,919.0**	**2,618.8**	**989.2**		**961.9**		**1,317.7**	**2.72**
2	GUE	S.R. 821	5.45	5.82	0.37	1,953.6	24.0	2	5,209.6	3.00	5,209.6	390.7	260.5	1.75	253.3	1.25	180.9	0.74
2	GUE	S.R. 821	5.82	5.94	0.12	633.6	38.0	2	2,675.2	3.00	2,675.2	200.6	133.8	1.75	130.1	1.25	92.9	0.24
LOCATION 2 TOTALS (CARRIED TO SUB-SUMMARY)											**7,884.8**	**591.3**	**394.3**		**383.4**		**273.8**	**0.98**

PW = PAVEMENT WIDTH
PS = PAVED SHOULDER
AS = AGGREGATE SHOULDER

SEE SHEET 10 FOR STRAIGHT LINE DIAGRAM

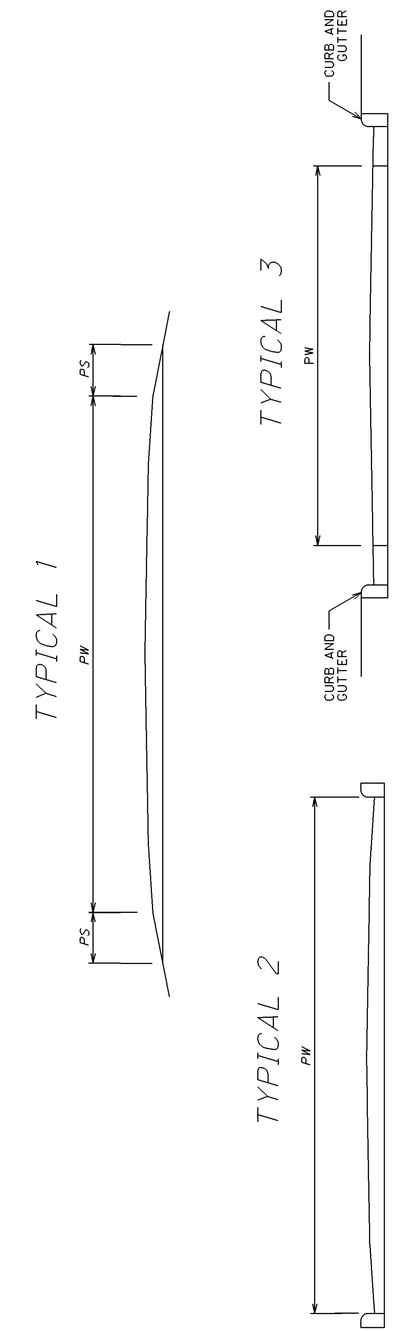

CALCULATED LME
CHECKED DNM

PAVEMENT DATA

GUE-209-8.73
GUE-821-5.45

P:\GUE\76451\Design\Roadway\Plan_Sheets\General\76451_mac_001.dgn 08-JAN-2015 12:47PM dmorgan

PW = PAVEMENT WIDTH
PS = PAVED SHOULDER
AS = AGGREGATE SHOULDER

TYPICAL 1

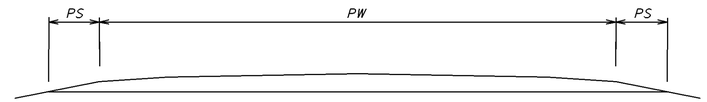

SHOULDER DATA

LOCATION	COUNTY	ROUTE	BEGIN LOG POINT SLM	END LOG POINT SLM	LENGTH MILES	LENGTH LIN. FT.	TYPICAL	PROPOSED WIDTH (FT.) (WIDTHS ARE AVERAGE THROUGHOUT SECTION) A	B	C	D	SHOULDER AREA SQ. YD.	254 DEPTH OF PAVEMENT PLANING INCHES	254 PAVEMENT PLANING, ASPHALT CONCRETE SQ. YD.	407 TACK COAT, TRACKLESS TACK @ 0.075 GAL./S.Y. GAL.	407 TACK COAT, TRACKLESS TACK FOR INTERMEDIATE COURSE @ 0.05 GAL./S.Y. GAL.	441 ASPHALT CONCRETE THICKNESS INCHES	441 INTERMEDIATE COURSE, TYPE 2, (448) CU. YD.	441 THICKNESS INCHES	441 SURFACE COURSE, TYPE 1, (448), PG 70-22M CU. YD.	617 THICKNESS INCHES	617 COMPACTED AGGREGATE, AS PER PLAN (2' WIDTH) CU. YD.
1A	GUE	S.R. 209	8.73	9.91	1.18	6230.4	1	3	3			4,153.6	3.00	4153.6	311.5	207.7	1.75	201.9	1.25	144.2	2.00	153.8
1A	GUE	S.R. 209	11.23	11.32	0.09	475.2	1	8	8			844.8	1.50	844.8	63.4				1.50	35.2	2.00	11.7
	BRIDGE DEDUCTIONS											356.7		(356.7)	(26.8)	(17.8)	1.75	(17.3)	1.25	(12.4)		
LOCATION 1A TOTALS (CARRIED TO SUB-SUMMARY)														**4,641.7**	**348.1**	**189.9**		**184.6**		**167.0**		**165.5**
1B	GUE	S.R. 209	11.03	11.23	0.20	1056.0	1	8	8			1,877.3	1.50	1877.3	140.8				1.50	78.2	2.00	13.0
1B	GUE	S.R. 209	11.32	11.53	0.21	1108.8	1	8	8			1,971.2	1.50	1971.2	147.8				1.50	82.1	2.00	27.4
1B	GUE	S.R. 209	12.85	13.84	0.99	5227.2	1	2	2			2,323.2	1.25	2323.2	174.2	116.2	1.75	112.9	1.25	80.7	2.00	129.1
	BRIDGE DEDUCTIONS											6.8		(6.8)	(0.5)	(0.3)	1.75	(0.3)	1.25	(0.2)		
LOCATION 1B TOTALS (CARRIED TO SUB-SUMMARY)														**6164.90**	**462.30**	**115.90**	**3.50**	**112.60**		**240.80**		**169.5**
1C	GUE	S.R. 209	11.53	11.96	0.43	2270.4	1	8	8			4,036.3	1.50	4036.3	302.7				1.50	168.2	2.00	56.1
1C	GUE	S.R. 209	11.96	12.43	0.47	2481.6	1	8	8			4,411.7	1.25	4411.7	330.9	220.6	1.75	214.5	1.25	153.2	2.00	61.3
1C	GUE	S.R. 209	12.43	12.85	0.42	2217.6	1	2	2			985.6	1.25	985.6	73.9	49.3	1.75	47.9	1.25	34.2	2.00	54.8
1C	GUE	S.R. 209	14.44	14.57	0.13	686.4	1	2	2			305.1	3.00	305.1	22.9	15.3	1.75	14.8	1.25	10.6	2.00	16.9
	BRIDGE DEDUCTIONS											460.6		(460.6)	(34.5)	(23.0)	1.75	(22.4)	1.25	(16.0)		
LOCATION 1C TOTALS (CARRIED TO SUB-SUMMARY)														**9278.10**	**695.90**	**262.20**		**254.80**		**350.20**		**189.1**

CALCULATED LME
CHECKED DNM

SHOULDER DATA

GUE-209-8.73
GUE-821-5.45

P:\GUE\76451\Design\Roadway\Plan_Sheets\General\76451_mps_001.dgn 08-JAN-2015 12:49PM dmorgan

EXTRA AREAS

LOCATION	COUNTY	ROUTE	SIDE	DESCRIPTION	INTERSECTIONS DETAIL DIMENSION A	B	C	AREA	202 WEARING COURSE REMOVED	407 TACK COAT, TRACKLESS TACK FOR INTERMEDIATE COURSE @ 0.05 GAL./S.Y.	TACK COAT, TRACKLESS TACK @ 0.075 GAL./S.Y.	441 ASPHALT CONCRETE THICKNESS	INTERMEDIATE COURSE, TYPE 2, (448)	THICKNESS	SURFACE COURSE, TYPE 1, (448), PG 70-22M	THICKNESS	SURFACE COURSE, TYPE 1, (448), PG 64-22
					FT.	FT.	FT.	SQ. YD.	SQ. YD.	GAL.	GAL.	IN.	CU. YD.	IN.	CU. YD.	IN.	CU. YD.
1A	GUE	S.R. 209		JEFFERSON AVE. TURN LANES	AREA COMPUTER GENERATED			1485.1	1,485.1	74.3	111.4	1.75	72.2	1.25	51.6		
1A	GUE	S.R. 209		CAMPBELL AVE. TURN LANES	AREA COMPUTER GENERATED			1217.0	1,217.0	60.9	91.3	1.75	59.2	1.25	42.3		
1A	GUE	S.R. 209		WOODLAWN AVE. TURN LANES	AREA COMPUTER GENERATED			632.0	632.0	31.6	47.4	1.75	30.8	1.25	22.0		
1A	GUE	S.R. 209	LT.	WOODLAWN AVE.	252	22		308.0	308.0	15.4	23.1	1.75	15.0	1.25	10.7		
1A	GUE	S.R. 209	RT.	GEORGETOWN RD.	30	34	96	216.7	216.7	10.9	16.3	1.75	10.6	1.25	7.6		
1A	GUE	S.R. 209		RIGHT TURN LANE AT WALMART	AREA COMPUTER GENERATED			407.6	407.6	20.4	30.6	1.75	19.9	1.25	14.2		
LOCATION 1A TOTALS (CARRIED TO SUB-SUMMARY)									**4,266.4**	**213.5**	**320.1**		**207.7**		**148.4**		
1B	GUE	S.R. 209	RT.	DOZER RD.	45	33	140	432.5	432.5		32.5					1.25	15.1
1B	GUE	S.R. 209	LT.	JONES RD.	20	10	35	50.0	50.0		3.8					1.25	1.8
LOCATION 1B TOTALS (CARRIED BELOW)									**482.5**		**36.3**						**16.9**
1C	GUE	S.R. 209	RT.	WHITAKER RD.	20	23	46	76.7	76.7		5.8					1.25	2.7
1C	GUE	S.R. 209		RIGHT TURN LANE AT S.R. 660	AREA COMPUTER GENERATED			561.9	561.9	28.1	42.2	1.75	27.4	1.25	19.6		
1C	GUE	S.R. 209	RT.	S.R. 660	50	40	135	486.2	486.2		36.5						
1C	GUE	S.R. 209	RT.	DESMOND DR.	30	30	60	150.0	150.0		11.3					1.25	5.3
1C	GUE	S.R. 209	RT.	HULSE DR.	30	27	57	140.0	140.0		10.5					1.25	4.9
1C	GUE	S.R. 209	RT.	COUNTRY CLUB RD.	30	26	63	148.4	148.4		11.2					1.25	5.2
1C	GUE	S.R. 209	LT.	ROAD TO FACTORY	50	43	135	494.5	494.5		37.1					1.25	17.2
1C	GUE	S.R. 209	LT.	VANADIUM RD.	15	14	27	34.2	34.2		2.6					1.25	1.2
1C	GUE	S.R. 209	LT.	HOPE AVE.	25	55	130	257.0	257.0		19.3					1.25	9.0
LOCATION 1C TOTALS (CARRIED TO SUB-SUMMARY)									**2,348.9**	**28.1**	**176.5**		**27.4**		**19.6**		**45.5**
1B	GUE	S.R. 209	RT.	STEEL ST.	20	18	43	67.8	67.8		5.1					1.25	2.4
1B	GUE	S.R. 209	RT.	14TH ST.	30	22	75	161.7	161.7		12.2					1.25	5.7
1B	GUE	S.R. 209	RT.	MORTON ST.	40	19	60	175.6	175.6		13.2					1.25	6.1
1B	GUE	S.R. 209	RT.	CAMPBELL ST.	30	18	45	105.0	105.0		7.9					1.25	3.7
1B	GUE	S.R. 209	LT.	JUNCTION ST.	25	38	100	191.7	191.7		14.4					1.25	6.7
1B	GUE	S.R. 209	RT.	ALLEY	9	12	25	18.5	18.5		1.4					1.25	0.7
1B	GUE	S.R. 209	RT.	JACKSON ST.	20	18	50	75.6	75.6		5.7					1.25	2.7
1B	GUE	S.R. 209	LT.	PIONEER ST.	20	19	48	74.5	74.5		5.6					1.25	2.6
1B	GUE	S.R. 209	RT.	PIONEER ST.	20	19	62	90.0	90.0		6.8					1.25	3.2
1B	GUE	S.R. 209	RT.	ORR ST.	20	17	50	74.5	74.5		5.6					1.25	2.6
1B	GUE	S.R. 209	LT.	ORR ST.	20	20	47	127.0	127.0		9.6					1.25	4.5
1B	GUE	S.R. 209	RT.	QUARTER ST.	13	14	41	39.8	39.8		3.0					1.25	1.4
1B	GUE	S.R. 209	RT.	BURT ST.	20	17	45	224.0	224.0		16.8					1.25	7.8
1B	GUE	S.R. 209	LT.	BURT ST.	40	22	80	226.7	226.7		17.1					1.25	7.9
1B	GUE	S.R. 209	RT.	WASHINGTON ST.	20	19	45	71.2	71.2		5.4					1.25	2.5
1B	GUE	S.R. 209	LT.	WASHINGTON ST.	25	18	45	219.0	219.0		16.5					1.25	7.7
1B	GUE	S.R. 209	RT.	PIONEER RD.	112	90		560.0	560.0		42.0					1.25	19.5
1B	GUE	S.R. 209	RT.	OLIVE ST.	25	23	45	94.5	94.5		7.1					1.25	3.3
LOCATION 1B TOTALS (CARRIED FROM ABOVE)									482.5		36.3						16.9
LOCATION 1B TOTALS (CARRIED TO NEXT SHEET)									**3,079.6**		**231.7**						**107.9**

CALCULATED LME
CHECKED DNM

EXTRA AREA DATA

GUE-209-8.73
GUE-821-5.45

P:\GUE\76451\Design\Roadway\Plan_Sheets\General\76451_mea_001.dgn 08-JAN-2015 12:50PM dmorgan

EXTRA AREAS

LOCATION	COUNTY	ROUTE	SIDE	DESCRIPTION	INTERSECTIONS DETAIL DIMENSION A	B	C	AREA	202 WEARING COURSE REMOVED	407 TACK COAT, TRACKLESS TACK FOR INTERMEDIATE COURSE @ 0.05 GAL./S.Y.	TACK COAT, TRACKLESS TACK @ 0.075 GAL./S.Y.	441 ASPHALT CONCRETE THICKNESS	INTERMEDIATE COURSE, TYPE 2, (448)	THICKNESS	SURFACE COURSE, TYPE 1, (448), PG 70-22M	THICKNESS	SURFACE COURSE, TYPE 1, (448), PG 64-22
					FT.	FT.	FT.	SQ. YD.	SQ. YD.	GAL.	GAL.	IN.	CU. YD.	IN.	CU. YD.	IN.	CU. YD.
LOCATION 1B TOTALS (CARRIED FROM PREVIOUS SHEET)									3079.6		231.7						107.9
1B	GUE	S.R. 209	RT.	SOUTH 9TH ST.	9	22	39	30.5	30.5		2.3					1.25	1.1
1B	GUE	S.R. 209	LT.	8TH ST.	30	25	55	133.4	133.4		10.1					1.25	4.7
1B	GUE	S.R. 209	LT.	7TH ST.	55	21	90	339.2	339.2		25.5					1.25	11.8
1B	GUE	S.R. 209	RT.	7TH ST.	35	22	60	159.5	159.5		12.0					1.25	5.6
1B	GUE	S.R. 209	RT.	6TH ST.	20	23	55	86.7	86.7		6.6					1.25	3.1
1B	GUE	S.R. 209	LT.	6TH ST.	15	24	52	63.4	63.4		4.8					1.25	2.3
1B	GUE	S.R. 209	RT.	5TH ST.	20	21	48	76.7	76.7		5.8					1.25	2.7
1B	GUE	S.R. 209	RT.	4TH ST.	20	22	56	86.7	86.7		6.6					1.25	3.1
1B	GUE	S.R. 209	LT.	GLASS AVE.				325.0	325.0		24.4					1.25	11.3
1B	GUE	S.R. 209	LT.	3RD ST.	20	19	41	66.7	66.7		5.1					1.25	2.4
1B	GUE	S.R. 209	LT.	ALLEY	15	10	20	25.0	25.0		1.9					1.25	0.9
1B	GUE	S.R. 209	RT.	ALLEY	15	10	20	25.0	25.0		1.9					1.25	0.9
1B	GUE	S.R. 209	LT.	2ND. ST.	15	30	38	56.7	56.7		4.3					1.25	2.0
1B	GUE	S.R. 209	RT.	2ND. ST. (S.R. 821)	SEE LOCATION 2												
1B	GUE	S.R. 209	LT.	WILLS ST.	22	19	45	78.3	78.3		5.9					1.25	2.8
1B	GUE	S.R. 209	RT.	WILLS ST.	18	16	34	50.0	50.0		3.8					1.25	1.8
1B	GUE	S.R. 209	RT.	REID DR.	20	14	32	51.2	51.2		3.9					1.25	1.8
1B	GUE	S.R. 209	RT.	FIRST ST.	32	28	74	181.4	181.4		13.7					1.25	6.3
LOCATION 1B TOTALS (CARRIED TO SUB-SUMMARY)									4,915.0		370.3					21.3	172.5
2	GUE	S.R. 821	LT	MCGLAUGHLIN AVE.	20	19	31	55.6	55.6		4.2					1.25	2.0
2	GUE	S.R. 821	RT	SUNRISE DR.	27	30	52	123.0	123.0		9.3					1.25	4.3
2	GUE	S.R. 821	LT	EUCLID AVE.	22	23	45	83.2	83.2		6.3					1.25	2.9
2	GUE	S.R. 821	RT	PRIMROSE AVE.	20	20	40	66.7	66.7		5.1					1.25	2.4
2	GUE	S.R. 821	LT	RACE AVE.	22	22	39	74.6	74.6		5.6					1.25	2.6
2	GUE	S.R. 821	LT	ALLEY	15	15	25	33.4	33.4		2.6					1.25	1.2
2	GUE	S.R. 821	RT	ALLEY	15	15	25	33.4	33.4		2.6					1.25	1.2
2	GUE	S.R. 821	RT	GREENDALE AVE.	22	21	39	73.4	73.4		5.6					1.25	2.6
2	GUE	S.R. 821	RT	ALLEY	25	22	22	61.2	61.2		4.6					1.25	2.2
2	GUE	S.R. 821	LT	SPRUCE AVE.	30	23	42	108.4	108.4		8.2					1.25	3.8
2	GUE	S.R. 821	RT	SPRUCE AVE.	21	20	40	127.0	127.0		9.6					1.25	4.5
2	GUE	S.R. 821	LT	ALLEY	23	14	23	47.3	47.3		3.6					1.25	1.7
2	GUE	S.R. 821	LT	WATSON AVE.	24	25	48	224.0	224.0		16.8					1.25	7.8
2	GUE	S.R. 821	LT	TOLIVERS TRAIL	32	13	25	67.6	67.6		5.1					1.25	2.4
2	GUE	S.R. 821	RT	EIBEL ALLEY	19	18	20	40.2	40.2		3.1					1.25	1.4
2	GUE	S.R. 821	RT	SENECA ST.	21	28	47	219.0	219.0		16.5					1.25	7.7
2	GUE	S.R. 821	RT	ALLEY	15	15	25	33.4	33.4		2.6					1.25	1.2
2	GUE	S.R. 821	LT	ALLEY	13	12	23	25.3	25.3		1.9					1.25	0.9
2	GUE	S.R. 821		S.R. 821 AT S.R. 209	22	36	65	123.5	123.5	6.2	9.3	1.75	6.1	1.25	4.3		
LOCATION 2 TOTALS (CARRIED TO SUB-SUMMARY)									1,620.2	6.2	122.6		6.1		4.3		52.8

CALCULATED LME
CHECKED DNM

EXTRA AREA DATA

GUE-209-8.73
GUE-821-5.45

P:\GUE\76451\Design\Roadway\Plan_Sheets\General\76451_mea_002.dgn 08-JAN-2015 12:51PM dmorgan

BRIDGE DECK TREATMENT DATA

CALCULATED LME
CHECKED DNM

BRIDGE DATA																		
LOCATION	COUNTY, ROUTE, BRIDGE NO.	LENGTH (BRIDGE LIMITS)	WIDTH	AREA	APPROACH SLAB LENGTH	APPROACH SLAB WIDTH	APPROACH SLAB AREA (INCLUDES BOTH APPROACH SLABS)	DETAIL (SEE SHEET 16)	MAINLINE DEDUCTIONS (CARRIED TO SHEET 11)	SHOULDER DEDUCTIONS (CARRIED TO SHEET 12)	202	407		441				516
											WEARING COURSE REMOVED	TACK COAT, TRACKLESS TACK @ 0.075 GAL./S.Y.	TACK COAT, TRACKLESS TACK FOR INTERMEDIATE COURSE @ 0.05 GAL./S.Y.	THICKNESS	ASPHALT CONCRETE INTERMEDIATE COURSE, TYPE 2, (448)	THICKNESS	ASPHALT CONCRETE SURFACE COURSE, TYPE 1, (448), PG 70-22M	2" DEEP JOINT SEALER, AS PER PLAN
		LIN. FT.	LIN. FT.	SQ. YD.	LIN. FT.	LIN. FT.	SQ. YD.		SQ.YD.	SQ.YD.	SQ.YD.	GALLON	GALLON	INCHES	CU.YD.	INCHES	CU.YD.	FEET
1A	GUE-209-0895	303.4	36.3	1,223.8	30.0	36.0	240.0	1	969.1	242.3								72.0
1A	GUE-209-0985	171.6	44.0	839.0	25.0	44.0	244.4	2	457.6	114.4								88.0
1A	GUE-209-1054	297.4	74.5	2,461.9	25.0	75.0	416.7	1	2,084.4									150.0
	BRIDGE DEDUCTIONS								3,511.1	356.7								
	LOCATION 1A TOTALS (CARRIED TO SUB-SUMMARY)																	**310.0**
1B	GUE-209-1372	15.2	33.5	56.6				4	40.5	6.8	56.6	4.2	2.8	1.75	2.8	1.25	2.0	
	BRIDGE DEDUCTIONS								40.5	6.8								
	LOCATION 1B TOTALS (CARRIED TO SUB-SUMMARY)										**56.6**	**4.2**	**2.8**		**2.8**		**2.0**	
1C	GUE-209-1188	138.0	76.0	1,165.4	25.0	76.0	422.2	3	1,253.3	334.2								152.0
1C	GUE-209-1448	234.4	44.0	1,146.0	25.0	44.0	244.4	1	758.4	126.4								88.0
	BRIDGE DEDUCTIONS								2,011.7	460.6								
	LOCATION 1C TOTALS (CARRIED TO SUB-SUMMARY)																	**240.0**

GUE-209-8.73
GUE-821-5.45

P:\GUE\76451\Design\Roadway\Plan_Sheets\General\76451_mbt_001.dgn 08-JAN-2015 2:32PM leby

DETAIL 1

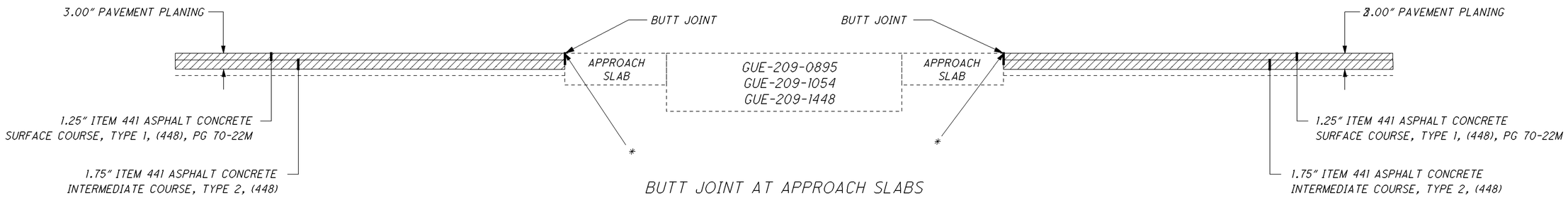

BUTT JOINT AT APPROACH SLABS

DETAIL 2

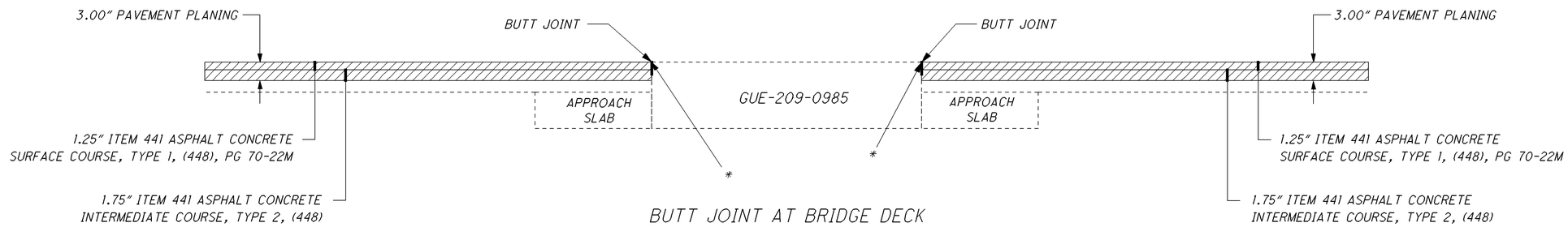

BUTT JOINT AT BRIDGE DECK

DETAIL 3

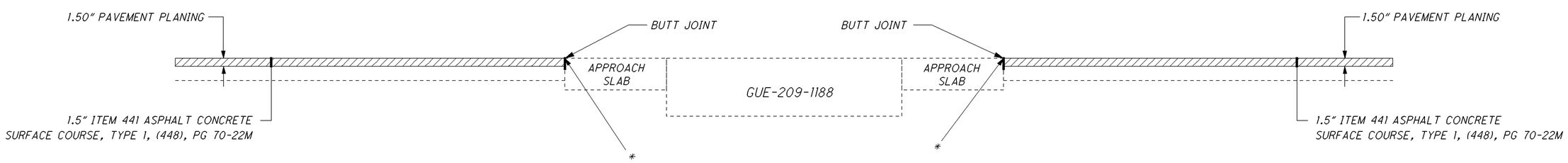

BUTT JOINT AT APPROACH SLABS

DETAIL 4

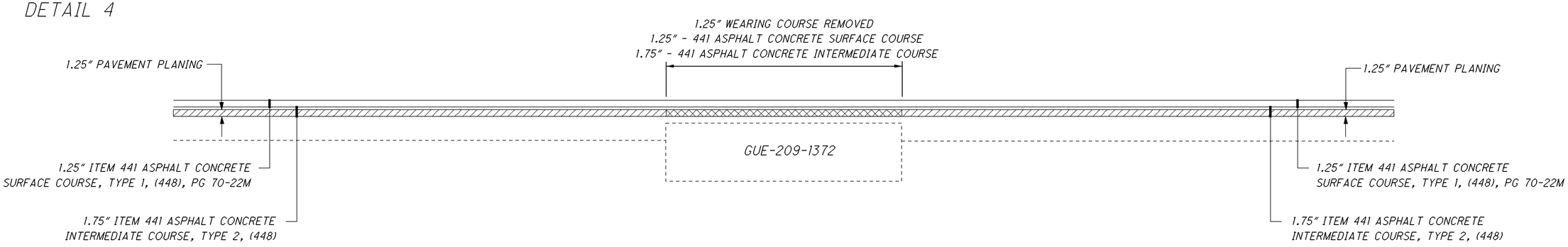

1.25" WEARING COURSE REMOVED
PLACE 3.0" ASPHALT CONCRETE

ITEM 254 PAVEMENT PLANING, ASPHALT CONCRETE

ITEM 202 WEARING COURSE REMOVED

* 2" DEEP JOINT SEALER, AS PER PLAN

CALCULATED LME
CHECKED DNM

BRIDGE DECK DETAILS

GUE-209-8.73
GUE-821-5.45

P:\GUE\76451\Design\Roadway\Plan_Sheets\General\76451_mbt_002.dgn 08-JAN-2015 12:57PM dmorgan

CURB RAMP CALCULATIONS

REFERENCE NO.	SHEET NO.	LOCATION	SIDE	202 CURB AND GUTTER REMOVED	202 WALK REMOVED	202 CURB REMOVED	608 4" CONCRETE WALK, (CURB RAMP AREA)	608 4" CONCRETE WALK, (EXTRA WALK AREA)	690 SPECIAL-MISC.: DETECTABLE WARNING	690 CURB RAMPS, TYPE A1	690 CURB RAMPS, TYPE A2	690 CURB RAMPS, TYPE D	609 CURB, TYPE 6	COMMENTS
			CL./LT./RT.	SQ. YD.	SQ. FT.	FT.	SQ. FT.	SQ. FT.	SQ. FT.	EACH	EACH	EACH	FT.	
		S.R. 209 - BYESVILLE												
1-CR	40	N. 8TH ST.	LT		40.0			32.0	8					ADD 10' WALK, DETECTABLE WARNING
2-CR	40	N. 6TH ST.	LT		50.0	5	42.0		8				5	PLACE DETECTABLE WARNING
3-CR	40	S. 6TH ST.	RT		35.0	5	27.0		8				5	PLACE DETECTABLE WARNING
4-CR	40	S. 6TH ST.	RT		25.0	5	17.0		8				5	PLACE DETECTABLE WARNING
5-CR	41	S. 5TH ST.	RT		35.0	8	27.0			1			8	PLACE RAMP
6-CR	41	N. 4TH ST.	LT		30.0		22.0		8					PLACE DETECTABLE WARNING
7-CR	41	N. 4TH ST.	LT		20.0		12.0		8					PLACE DETECTABLE WARNING
8-CR	41	S. 4TH ST.	RT		20.0		12.0		8					PLACE DETECTABLE WARNING
9-CR	41	BEFORE RAILROAD TRACKS	LT		20.0		12.0		8					PLACE DETECTABLE WARNING
10-CR	41	BEFORE RAILROAD TRACKS	RT		20.0		12.0		8					PLACE DETECTABLE WARNING
11-CR	41	AFTER RAILROAD TRACKS	RT				12.0		8					AD 4' X 5' WALK, DETECTABLE WARNING
12-CR	41	GLASS AVE.	LT		49.0	12	49.0			1			12	PLACE RAMP
13-CR	41	N. 3RD ST.	LT		30.0	8	30.0			1			8	PLACE RAMP
14-CR	41	N. 3RD ST.	LT		42.0	10	42.0			1			10	PLACE RAMP
15-CR	42	N. 2ND ST.	LT		56.0	11	56.0					1	11	PLACE RAMP
16-CR	42	S. 2ND ST.	RT		56.0	12	56.0					1	12	PLACE RAMP
17-CR	42	N. 2ND ST.	LT		121.0	20	121.0					1	20	PLACE RAMP
18-CR	42	S. 2ND ST.	RT		72.0	12	72.0					1	12	PLACE RAMP
19-CR	42	HIGH ST.	LT		20.0	5	12.0		8				8	PLACE DETECTABLE WARNING
20-CR	42	WILLS ST.	RT		12		4		8					PLACE DETECTABLE WARNING
21-CR	42	WILLS ST.	RT		20		12		8					PLACE DETECTABLE WARNING
22-CR	42	HIGH ST.	LT		177.0	25	177.0			2			25	PLACE RAMPS
23-CR	42	ON S.R. 209	RT		24.0	6	24.0			1			6	PLACE RAMP
24-CR	42	REID DR.	RT		20.0		12.0		8					PLACE DETECTABLE WARNING
25-CR	42	REID DR.	RT		20.0		12.0		8					PLACE DETECTABLE WARNING
26-CR	43	1ST ST.	RT		20.0	10	12.0		8				10	PLACE DETECTABLE WARNING
27-CR	43	1ST ST.	RT		64.0	8	8.0	48.0	8				8	PLACE 16' WALK, DETECTABLE WARNING
		SUB-TOTALS					894.0	80.0						
		TOTALS LOCATION 1B CARRIED TO SUB-SUMMARY			1,098	162	974		136	7		4	165	
		S.R. 821 - BYESVILLE												
28-CR	44	SENECA ST.	RT		77.0	15	77.0					1	15	PLACE RAMP
29-CR	44	SENECA ST.	RT		49.0	11	49.0			1			11	PLACE RAMP
30-CR	44	ACROSS FROM SENECA ST.	LT		49.0	11	49.0			1			11	PLACE RAMP
31-CR	44	EIBEL ALLEY	RT		8.0				8					PLACE DETECTABLE WARNING
32-CR	44	BEFORE RAILROAD TRACKS	RT		20.0		12.0		8					PLACE DETECTABLE WARNING
33-CR	44	AFTER RAILROAD TRACKS	LT		42.0		34.0		8					PLACE DETECTABLE WARNING
34-CR	44	TOLLIVER TRAIL	LT		35.0		27.0		8					PLACE DETECTABLE WARNING
35-CR	44	WATSON AVE.	LT		32.0	8	32.0			1			8	PLACE RAMP
36-CR	44	WATSON AVE.	LT		35.0	10	35.0			1			10	PLACE RAMP
37-CR	44	E. SPRUCE AVE.	RT		25.0	5	17.0		8				5	PLACE DETECTABLE WARNING
38-CR	44	E. SPRUCE AVE.	RT		25.0	5	17.0		8				5	PLACE DETECTABLE WARNING
39-CR	44	W. SPRUCE AVE.	LT		15.0	5	7.0		8				5	PLACE DETECTABLE WARNING
40-CR	44	W. SPRUCE AVE.	LT		164.0	14	35.0	75.0			1		14	PLACE RAMP
41-CR	45	GREENDALE AVE.	RT		20.0	5	12.0		8				5	PLACE DETECTABLE WARNING
42-CR	45	GREENDALE AVE.	RT		40.0	5	32.0		8				5	PLACE DETECTABLE WARNING
43-CR	45	RACE AVE.	LT		40.0	5	40.0			1			5	PLACE RAMP
44-CR	45	RACE AVE.	LT		25.0	5	25.0			1			5	PLACE RAMP
45-CR	45	PRIMROSE DR.	RT		20.0		12.0		8					PLACE DETECTABLE WARNING
46-CR	45	PRIMROSE DR.	RT		10.0		2.0		8					PLACE DETECTABLE WARNING
47-CR	45	EUCLID AVE.	LT		30.0		22.0		8					PLACE DETECTABLE WARNING
		SUB-TOTALS					536.0	75.0						
		TOTALS LOCATION 2 CARRIED TO SUB-SUMMARY			761	104	611		96	6	1	1	104	

CALCULATED LME
CHECKED DNM

CURB RAMP DATA

GUE-209-8.73
GUE-821-5.45

P:\GUE\76451\Design\Roadway\Plan_Sheets\General\76451_crs_001.dgn 09-JAN-2015 9:05AM leby

ITEM 648 EDGE LINE, 4"

LOCATION	COUNTY	ROUTE	S.L.M. FROM	S.L.M. TO	TOTAL LENGTH (MILES)	INFORMATION ONLY: WHITE EDGE LINE QUANTITIES TOTAL MILES	WHITE EDGE LINE QUANTITIES HIGHWAY MILES	WHITE EDGE LINE QUANTITIES RAMP MILES	YELLOW EDGE LINE QUANTITIES TOTAL MILES	YELLOW EDGE LINE QUANTITIES HIGHWAY MILES	YELLOW EDGE LINE QUANTITIES RAMP MILES	TOTAL EDGE LINE (4") MILES	REMARKS
1A	GUE	S.R. 209	8.73	9.91	1.18	2.36	2.36					2.36	
1A	GUE	S.R. 209	10.42	10.71	0.29	0.58	0.58					0.58	
1A	GUE	S.R. 209	10.76	10.92	0.16	0.32	0.32					0.32	
1A	GUE	S.R. 209	11.00	11.03	0.03	0.06	0.06					0.06	
1A	GUE	S.R. 209	11.23	11.32	0.09	0.18	0.18					0.18	
LOCATION 1A TOTALS (CARRIED TO SUB-SUMMARY)												**3.50**	
1B	GUE	S.R. 209	10.71	10.76	0.05	0.10	0.10					0.10	
1B	GUE	S.R. 209	10.92	11.00	0.08	0.16	0.16					0.16	
1B	GUE	S.R. 209	11.03	11.23	0.20	0.40	0.40					0.40	
1B	GUE	S.R. 209	11.32	11.53	0.21	0.42	0.42					0.42	
1B	GUE	S.R. 209	12.85	13.84	0.99	1.98	1.98					1.98	
1B	GUE	S.R. 209	14.40	14.44	0.04	0.08	0.08					0.08	
LOCATION 1B TOTALS (CARRIED TO SUB-SUMMARY)												**3.14**	
1C	GUE	S.R. 209	11.53	12.85	1.32	2.64	2.64					2.64	
1C	GUE	S.R. 209	14.44	14.57	0.13	0.26	0.26					0.26	
LOCATION 1C TOTALS (CARRIED TO SUB-SUMMARY)												**2.90**	
2	GUE	S.R. 821	5.45	5.61	0.16	0.32	0.32					0.32	
LOCATION 2 TOTALS (CARRIED TO SUB-SUMMARY)												**0.32**	

CALCULATED LME
CHECKED DNM

PAVEMENT MARKING DATA - LONG LINE

GUE-209-8.73
GUE-821-5.45

P:\GUE\76451\Design\Roadway\Plan_Sheets\General\76451_tel_001.dgn 08-JAN-2015 1:01PM dmorgan

ITEM 648 CENTER LINE AND LANE LINE

LOCATION	COUNTY	ROUTE	S.L.M. FROM	S.L.M. TO	TOTAL LENGTH (MILES)	INFORMATION ONLY: CENTER LINE QUANTITIES TOTAL MILES	INFORMATION ONLY: CENTER LINE QUANTITIES EQUIVALENT SOLID LINE	TOTAL CENTER LINE MILES	TOTAL LANE LINE MILES	REMARKS
1A	GUE	S.R. 209	8.73	9.91	1.18	1.18	0.664	1.18		
1A	GUE	S.R. 209	9.91	10.71	0.80	0.80	2.000	1.60	1.60	2 WAY LEFT TURN LANE
1A	GUE	S.R. 209	10.76	10.92	0.16	0.16	0.400	0.32	0.32	2 WAY LEFT TURN LANE
1A	GUE	S.R. 209	11.00	11.03	0.03	0.03	0.075	0.06	0.06	2 WAY LEFT TURN LANE
1A	GUE	S.R. 209	11.23	11.32	0.09	0.09	0.225	0.18	0.18	2 WAY LEFT TURN LANE
LOCATION 1A TOTALS (CARRIED TO SUB-SUMMARY)								**3.34**	**2.16**	
1B	GUE	S.R. 209	10.71	10.76	0.05	0.05	0.125	0.10	0.10	2 WAY LEFT TURN LANE
1B	GUE	S.R. 209	10.92	11.00	0.08	0.08	0.200	0.16	0.16	2 WAY LEFT TURN LANE
1B	GUE	S.R. 209	11.03	11.23	0.20	0.20	0.500	0.40	0.40	2 WAY LEFT TURN LANE
1B	GUE	S.R. 209	11.32	11.53	0.21	0.21	0.525	0.42	0.42	2 WAY LEFT TURN LANE
1B	GUE	S.R. 209	12.85	13.84	0.99	0.99	1.980	0.99		
1B	GUE	S.R. 209	13.84	14.27	0.43	0.43	0.860	0.43		
1B	GUE	S.R. 209	14.27	14.44	0.17	0.17	0.340	0.17		
LOCATION 1B TOTALS (CARRIED TO SUB-SUMMARY)								**2.67**	**1.08**	
1C	GUE	S.R. 209	11.53	12.18	0.65	0.65	1.625	1.30	1.30	2 WAY LEFT TURN LANE
1C	GUE	S.R. 209	12.18	12.43	0.25	0.25	0.500	0.25		
1C	GUE	S.R. 209	12.43	12.85	0.42	0.42	0.840	0.42		
1C	GUE	S.R. 209	14.44	14.57	0.13	0.13	0.260	0.13		
LOCATION 1C TOTALS (CARRIED TO SUB-SUMMARY)								**2.10**	**1.30**	
2	GUE	S.R. 821	5.45	5.94	0.49	0.49	0.980	0.49		
LOCATION 2 TOTALS (CARRIED TO SUB-SUMMARY)								**0.49**		

CALCULATED LME
CHECKED DNM

PAVEMENT MARKING DATA - LONG LINE

GUE-209-8.73
GUE-821-5.45

P:\GUE\76451\Design\Roadway\Plan_Sheets\General\76451_tcl_001.dgn 08-JAN-2015 1:01PM dmorgan

ITEM 644 AUXILARY MARKING

LOCATION	COUNTY	ROUTE	SIDE	DESCRIPTION	SLM	TRANSEVERSE/ DIANGONAL LINES (24") WHITE FT.	TRANSEVERSE/ DIANGONAL LINES (24") YELLOW FT.	STOP LINE (24") FT.	12" CROSSWALK LINE FT.	WORD ON PAVEMENT ONLY 72" EACH	WORD ON PAVEMENT ONLY 96" EACH	LANE ARROWS COMBINATION LT./TH. EACH	LANE ARROWS COMBINATION RT./TH. EACH	LANE ARROWS TURN THRU EACH	LANE ARROWS TURN LT. EACH	LANE ARROWS TURN RT. EACH	8" CHANNELIZING LINE FEET	ISLAND MARKING (YELLOW) SQ.FT.	RAILROAD SYMBOL MARKING EACH	REMARKS
1A	GUE	S.R. 209		JEFFERSON AVE. TURN LANES			119				2				2	2	520			SEE SHEET 23
1A	GUE	S.R. 209		CAMPBELL AVE. TURN LANES			256	66	118		1				2	2	270			SEE SHEET 24
1A	GUE	S.R. 209		WOODLAWN AVE. TURN LANES			89	48			2			1	3		285			SEE SHEET 25
1A	GUE	S.R. 209		TURN LANES AT TRACTOR SUPPLY				58			2				2		200			SEE SHEET 27,28
1A	GUE	S.R. 209		ON S.R. 209 BEFORE GEORGETOWN RD.				19												SEE SHEET 28
1A	GUE	S.R. 209	RT.	GEORGETOWN RD.				18												PLACE AT EXISTING LOCATION
1A	GUE	S.R. 209		ON S.R. 209 AFTER GEORGETOWN RD.			200	31			1				1		75			SEE SHEET 29
1A	GUE	S.R. 209		ON S.R. 209 AT I.R. 70 RAMPS				53			1				2		135	57		SEE SHEET 29
1A	GUE	S.R. 209		ON S.R. 209 AT I.R. 70 RAMPS & PILOT			256	75			9			2	9		1170	57		SEE SHEET 30
1A	GUE	S.R. 209		LEFT TURN LANE AT KMART/HOTEL				72			2				4		350			SEE SHEET 30
1A	GUE	S.R. 209		2 WAY LEFT TURN ARROWS											6					PLACE AT EXISTING LOCATION
1A	GUE	S.R. 209		RIGHT/LEFT TURN LANE AT WALMART				48			2				2	2	340			SEE SHEET 31
1A	GUE	S.R. 209		LEFT TURN LANE AT WALMART				36			1				2		235			SEE SHEET 33
1A	GUE	S.R. 209		2 WAY LEFT TURN ARROWS											2					PLACE AT EXISTING LOCATION
LOCATION 1A TOTALS (CARRIED TO SUB-SUMMARY)							**920**	**524**	**118**		**23**			**3**	**37**	**6**	**3,580**	**114**		
1B	GUE	S.R. 209	RT.	DOZER RD.				18												PLACE AT EXISTING LOCATION
1B	GUE	S.R. 209	LT.	JONES RD.				10												PLACE AT EXISTING LOCATION
LOCATION 1B TOTALS (CARRIED TO TOTAL BELOW)								**28**												
1C	GUE	S.R. 209	RT.	WHITAKER RD./LEFT TURN LANE				20							1		50	57		SEE SHEET 35
1C	GUE	S.R. 209		RIGHT TURN LANE AT S.R. 660				36			1				2		240	57		SEE SHEET 35,36
1C	GUE	S.R. 209	RT.	S.R. 660				48												SEE SHEET 36
1C	GUE	S.R. 209		LEFT TURN LANE AT S.R. 660				36			1				2		180			SEE SHEET 36
1C	GUE	S.R. 209		ON S.R. 209											2				1	SEE SHEET 36
1C	GUE	S.R. 209	RT.	DESMOND DR./LEFT TURN LANE			68	18							1		60	57		SEE SHEET 37
1C	GUE	S.R. 209	RT.	HULSE DR./LEFT TURN LANE			136	20			1				1		140	57	1	SEE SHEET 37
1C	GUE	S.R. 209		ON S.R. 209											2					SEE SHEET 38
1C	GUE	S.R. 209		RIGHT & LEFT TURN LANES							1				1	2	250			SEE SHEET 38
1C	GUE	S.R. 209	RT.	COUNTRY CLUB RD./LEFT TURN LANE			113	16			1				2		150	57		SEE SHEET 38
1C	GUE	S.R. 209	LT.	ROAD TO FACTORY/LEFT TURN LANE			71	22			1				2		150	57		SEE SHEET 38
1C	GUE	S.R. 209	LT.	LEFT TURN LANE/SEPERATION			565				1				2		180	318		SEE SHEET 38,39
1C	GUE	S.R. 209	LT.	VANADIUM RD.				7												PLACE AT EXISTING LOCATION
1C	GUE	S.R. 209	LT.	HOPE AVE.				28												PLACE AT EXISTING LOCATION
LOCATION 1C TOTALS (CARRIED TO SUB-SUMMARY)							**953**	**251**			**7**				**18**	**2**	**1400**	**660**	**2**	
1B	GUE	S.R. 209	RT.	STEEL ST.				9												PLACE AT EXISTING LOCATION
1B	GUE	S.R. 209	RT.	14TH ST.				11												PLACE AT EXISTING LOCATION
1B	GUE	S.R. 209	RT.	MORTON ST.				10												PLACE AT EXISTING LOCATION
1B	GUE	S.R. 209	RT.	CAMPBELL ST.				9												PLACE AT EXISTING LOCATION
1B	GUE	S.R. 209	LT.	JUNCTION ST.				19												PLACE AT EXISTING LOCATION
1B	GUE	S.R. 209	RT.	ALLEY				8												PLACE AT EXISTING LOCATION
1B	GUE	S.R. 209	RT.	JACKSON ST.				9												PLACE AT EXISTING LOCATION
1B	GUE	S.R. 209	LT.	PIONEER ST.				10												PLACE AT EXISTING LOCATION
1B	GUE	S.R. 209	RT.	PIONEER ST.				10												PLACE AT EXISTING LOCATION
1B	GUE	S.R. 209	RT.	ORR ST.				9												PLACE AT EXISTING LOCATION
1B	GUE	S.R. 209	LT.	ORR ST.				10												PLACE AT EXISTING LOCATION
1B	GUE	S.R. 209	RT.	QUARTER ST.				10												PLACE AT EXISTING LOCATION
1B	GUE	S.R. 209	RT.	BURT ST.				9												PLACE AT EXISTING LOCATION
1B	GUE	S.R. 209	LT.	BURT ST.				11												PLACE AT EXISTING LOCATION
1B	GUE	S.R. 209	RT.	WASHINGTON ST.				10												PLACE AT EXISTING LOCATION
1B	GUE	S.R. 209	LT.	WASHINGTON ST.				9												PLACE AT EXISTING LOCATION
1B	GUE	S.R. 209	RT.	PIONEER RD.				20												PLACE AT EXISTING LOCATION
1B	GUE	S.R. 209	RT.	OLIVE ST.				12												PLACE AT EXISTING LOCATION
1B	GUE	S.R. 209	RT.	SOUTH 9TH ST.				11												PLACE AT EXISTING LOCATION
TOTAL FROM 1B ABOVE								**28**												
LOCATION 1B TOTALS (CARRIED TO NEXT SHEET)								**234**												

CALCULATED LME
CHECKED DNM

PAVEMENT MARKING DATA - AUXILARY MARKING

GUE-209-8.73
GUE-821-5.45

P:\GUE\76451\Design\Roadway\Plan_Sheets\General\76451_tas_001.dgn 09-JAN-2015 9:02AM dmorgan

ITEM 644 AUXILARY MARKING

LOCATION	COUNTY	ROUTE	SIDE	DESCRIPTION	SLM	TRANSEVERSE/ DIANGONAL LINES (24") WHITE FT.	TRANSEVERSE/ DIANGONAL LINES (24") YELLOW FT.	STOP LINE (24") FT.	12" CROSSWALK LINE FT.	WORD ON PAVEMENT ONLY 72" EACH	WORD ON PAVEMENT ONLY 96" EACH	LANE ARROWS COMBINATION LT./TH. EACH	LANE ARROWS COMBINATION RT./TH. EACH	LANE ARROWS TURN THRU EACH	LANE ARROWS TURN LT. EACH	LANE ARROWS TURN RT. EACH	8" CHANNELIZING LINE FEET	SCHOOL SYMBOL MARKING EACH	RAILROAD SYMBOL MARKING EACH	REMARKS
LOCATION 1B TOTALS (CARRIED FROM PREVIOUS SHEET)								234												
1B	GUE	S.R. 209	LT.	8TH ST.				13												PLACE AT EXISTING LOCATION
1B	GUE	S.R. 209	LT.	7TH ST.				11												PLACE AT EXISTING LOCATION
1B	GUE	S.R. 209	RT.	7TH ST.				11												PLACE AT EXISTING LOCATION
1B	GUE	S.R. 209	RT.	6TH ST.				12	50											PLACE AT EXISTING LOCATION
1B	GUE	S.R. 209	LT.	6TH ST.				12	54											PLACE AT EXISTING LOCATION
1B	GUE	S.R. 209	RT.	5TH ST.				11	48											PLACE AT EXISTING LOCATION
1B	GUE	S.R. 209	RT.	4TH ST.				11	50											PLACE AT EXISTING LOCATION
1B	GUE	S.R. 209	LT.	GLASS AVE.				27												PLACE AT EXISTING LOCATION
1B	GUE	S.R. 209	LT.	3RD ST.				10	52											PLACE AT EXISTING LOCATION
1B	GUE	S.R. 209	LT.	ALLEY				5	20											PLACE AT EXISTING LOCATION
1B	GUE	S.R. 209	RT.	ALLEY				5	20											PLACE AT EXISTING LOCATION
1B	GUE	S.R. 209		ON S.R. 209 BEFORE 2ND ST.				14	70											PLACE AT EXISTING LOCATION
1B	GUE	S.R. 209	LT.	2ND. ST.				15	64											PLACE AT EXISTING LOCATION
1B	GUE	S.R. 209	RT.	2ND. ST. (S.R. 821)				19	84											PLACE AT EXISTING LOCATION
1B	GUE	S.R. 209		ON S.R. 209 AFTER 2ND ST.				24	72		1				2		100			PLACE AT EXISTING LOCATION
1B	GUE	S.R. 209	LT.	HIGH ST.				10	40											PLACE AT EXISTING LOCATION
1B	GUE	S.R. 209	RT.	WILLS ST.				8	34											PLACE AT EXISTING LOCATION
1B	GUE	S.R. 209	RT.	REID DR.				7	30											PLACE AT EXISTING LOCATION
1B	GUE	S.R. 209		ON S.R. 209														2		PLACE AT EXISTING LOCATION
1B	GUE	S.R. 209	RT.	FIRST ST.				14	59											PLACE AT EXISTING LOCATION
LOCATION 1B TOTALS (CARRIED TO SUB-SUMMARY)								473	747		1				2		100	2		
2	GUE	S.R. 821	LT	MCGLAUGHLIN AVE.				9	42											PLACE AT EXISTING LOCATION
2	GUE	S.R. 821	RT	SUNRISE DR.				17	64											PLACE AT EXISTING LOCATION
2	GUE	S.R. 821	LT	EUCLID AVE.				12	24											PLACE AT EXISTING LOCATION
2	GUE	S.R. 821	RT	PRIMROSE AVE.				10	40											PLACE AT EXISTING LOCATION
2	GUE	S.R. 821	LT	RACE AVE.				13	52											PLACE AT EXISTING LOCATION
2	GUE	S.R. 821	LT	ALLEY				6	28											PLACE AT EXISTING LOCATION
2	GUE	S.R. 821	RT	ALLEY				6	28											PLACE AT EXISTING LOCATION
2	GUE	S.R. 821	RT	GREENDALE AVE.				12	48											PLACE AT EXISTING LOCATION
2	GUE	S.R. 821	RT	ALLEY				7	26											PLACE AT EXISTING LOCATION
2	GUE	S.R. 821	LT	SPRUCE AVE.				13	54											PLACE AT EXISTING LOCATION
2	GUE	S.R. 821	RT	SPRUCE AVE.				10	42											PLACE AT EXISTING LOCATION
2	GUE	S.R. 821	LT	ALLEY				7	28											PLACE AT EXISTING LOCATION
2	GUE	S.R. 821	LT	WATSON AVE.				15	58											PLACE AT EXISTING LOCATION
2	GUE	S.R. 821		ON S.R. 821	5.82														2	PLACE AT EXISTING LOCATION
2	GUE	S.R. 821	LT	ALLEY				10	40											PLACE AT EXISTING LOCATION
2	GUE	S.R. 821	RT	ALLEY				10	42											PLACE AT EXISTING LOCATION
2	GUE	S.R. 821	RT	SENECA ST.				12	52											PLACE AT EXISTING LOCATION
2	GUE	S.R. 821		ON S.R. 821					76											PLACE AT EXISTING LOCATION
2	GUE	S.R. 821	RT	ALLEY				8	32											PLACE AT EXISTING LOCATION
2	GUE	S.R. 821	LT	ALLEY				8	24											PLACE AT EXISTING LOCATION
LOCATION 2 TOTALS (CARRIED TO SUB-SUMMARY)								185	800										2	

CALCULATED LME
CHECKED DNM

PAVEMENT MARKING DATA - AUXILARY MARKING

GUE-209-8.73
GUE-821-5.45

P:\GUE\76451\Design\Roadway\Plan_Sheets\General\76451_tas_002.dgn 08-JAN-2015 2:33PM leby

DETAIL	SEE STD. DWG. TC-65.11
1	TAPERED ACCELERATION LANE
2	DECELERATION LANE
3	MULTILANE DIVIDED/ CONTROLLED ACCESS

DETAIL	SEE STD. DWG. TC-65.11
4	4 LANE DIVIDED TO 2 LANE TRANSITION
5	4 LANE UNDIVIDED TO 2 LANE TRANSITION
6	ONE LANE BRIDGE
7	STOP APPROACH
8	THRU APPROACH
9	TWO WAY LEFT TURN LANE

DETAIL	SEE STD. DWG. TC-65.11
10	APPROACH W/LT. TURN LANE
11	HORIZONTAL CURVE 40'
12	HORIZONTAL CURVE ALT.
GAP	CENTERLINE AT 80' TYP.

REM = REMARKS

ITEM 621 RPM SUB-SUMMARY

LOCATION	COUNTY	ROUTE	BEGIN LOG POINT SLM	END LOG POINT SLM	LENGTH		DETAIL	621		PRISMATIC RETRO-REFLECTOR COLORS					REMARKS
								RAISED PAVEMENT MARKER REMOVED	RPM	INFORMATION ONLY					
										ONE-WAY		TWO-WAY			
					MILES	LIN.FT.		EACH	EACH	WHITE	YELLOW	YELLOW / YELLOW	WHITE / RED	YELLOW / RED	
1A	GUE	S.R. 209	10.76	10.80	0.04	211	9	10	10			5	5		
1A	GUE	S.R. 209	10.80	10.92	0.12	634	7,9	53	53	16		16	21		INCLUDES W/R FOR CHANNELIZING LINES
1A	GUE	S.R. 209	11.00	11.03	0.03	158	9	8	8			4	4		
1A	GUE	S.R. 209	11.23	11.32	0.09	475	7,9	73	73	32		12	29		INCLUDES W/R FOR CHANNELIZING LINES
		SUB-TOTALS								48		37	59		
LOCATION 1A TOTALS (CARRIED TO SUB-SUMMARY)								**144**	**144**						
1B	GUE	S.R. 209	10.71	10.76	0.05	264	9	24	24			3	21		INCLUDES W/R FOR CHANNELIZING LINES
1B	GUE	S.R. 209	10.92	11.00	0.08	422	7,9	43	43	16		11	16		INCLUDES W/R FOR CHANNELIZING LINES
1B	GUE	S.R. 209	11.03	11.23	0.20	1,056	9	52	52			26	26		
1B	GUE	S.R. 209	11.03	11.06	0.03	158	9	8	8			4	4		
1B	GUE	S.R. 209	11.06	11.18	0.12	634	11	48	48			32	16		PC 11.06 PT 11.18 L=634' DEG=6
1B	GUE	S.R. 209	11.18	11.23	0.05	264	9	14	14			7	7		
1B	GUE	S.R. 209	11.32	11.53	0.21	1,109	9	56	56			28	28		
1B	GUE	S.R. 209	12.85	13.07	0.22	1,162	GAP	15	15			15			
1B	GUE	S.R. 209	13.07	13.29	0.22	1,162	12	35	35			35			PC 13.16 PT 13.20 L=211' DEG=21
1B	GUE	S.R. 209	13.29	13.55	0.26	1,373	GAP	17	17			17			
		SUB-TOTALS								16		178	118		
LOCATION 1B TOTALS (CARRIED TO SUB-SUMMARY)								**312**	**312**						
1C	GUE	S.R. 209	11.53	11.91	0.38	2,006	7,11	201	201	32		100	69		PC 11.91 PT 11.96 L=2007' DEG=5
1C	GUE	S.R. 209	11.91	11.96	0.05	264	9	14	14			7	7		
1C	GUE	S.R. 209	11.96	12.18	0.22	1,162	REM	43	43			29	14		INCLUDES W/R FOR CHANNELIZING LINES
1C	GUE	S.R. 209	12.18	12.25	0.07	370	REM	19	19			9	10		INCLUDES W/R FOR CHANNELIZING LINES
1C	GUE	S.R. 209	12.25	12.43	0.18	950	REM	30	30			24	6		INCLUDES W/R FOR CHANNELIZING LINES
1C	GUE	S.R. 209	12.43	12.70	0.27	1,426	GAP	18	18			18			
1C	GUE	S.R. 209	12.70	12.85	0.15	792	12	26	26			26			PC 12.79 PT 12.83 L=211' DEG=21
		SUB-TOTALS								32		213	106		
LOCATION 1C TOTALS (CARRIED TO SUB-SUMMARY)								**351**	**351**						

CALCULATED LME
CHECKED DNM

RAISED PAVEMENT MARKER DATA

GUE-209-8.73
GUE-821-5.45

P:\GUE\76451\Design\Roadway\Plan_Sheets\General\76451_trm_001.dgn 08-JAN-2015 1:05PM dmorgan

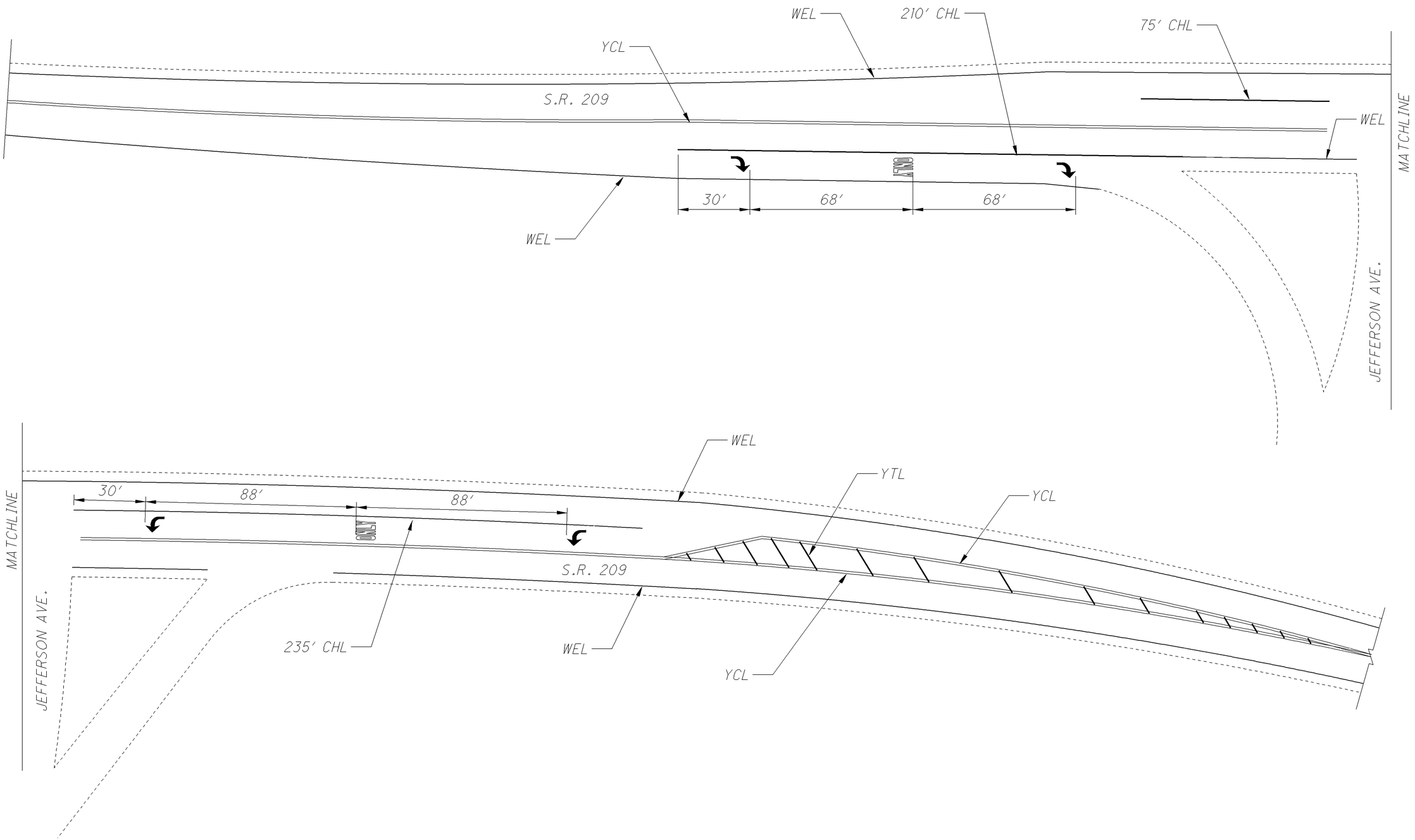

CHL = CHANNELIZING LINE
WEL = WHITE EDGE LINE
YCL = YELLOW CENTER LINE
YTL = YELLOW TRANSVERSE/DIAGONAL LINE

FOR AUXILIARY PAVEMENT MARKING QUANTITIES SEE SHEET 20.

CALCULATED LME
CHECKED DNM

S.R. 209 PLAN SHEET

GUE-209-8.73
GUE-821-5.45

P:\GUE\76451\Design\Roadway\Plan_Sheets\General\MAP.dgn 08-JAN-2015 4:33PM dmorgan

CHL = CHANNELIZING LINE
CWL = CROSS WALK LINE
WEL = WHITE EDGE LINE
SL = STOP LINE
YCL = YELLOW CENTER LINE
YTL = YELLOW TRANSVERSE/DIAGONAL LINE

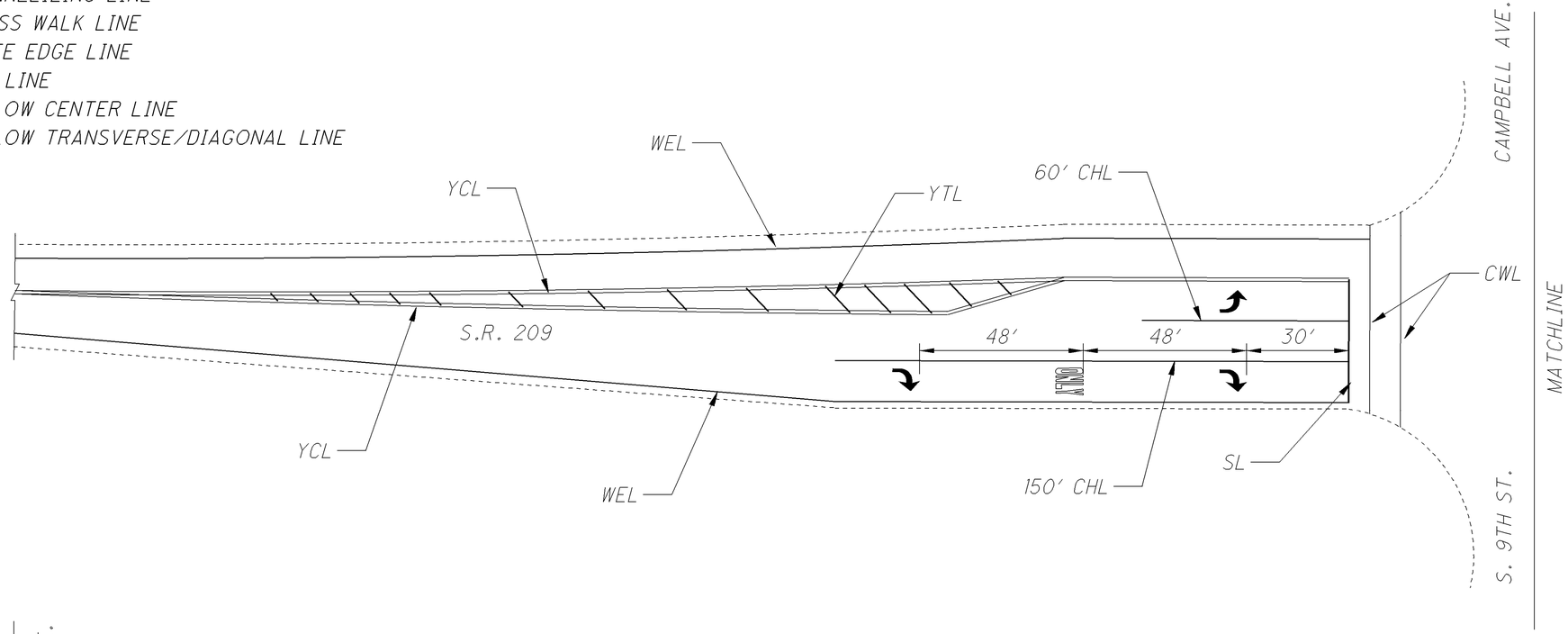

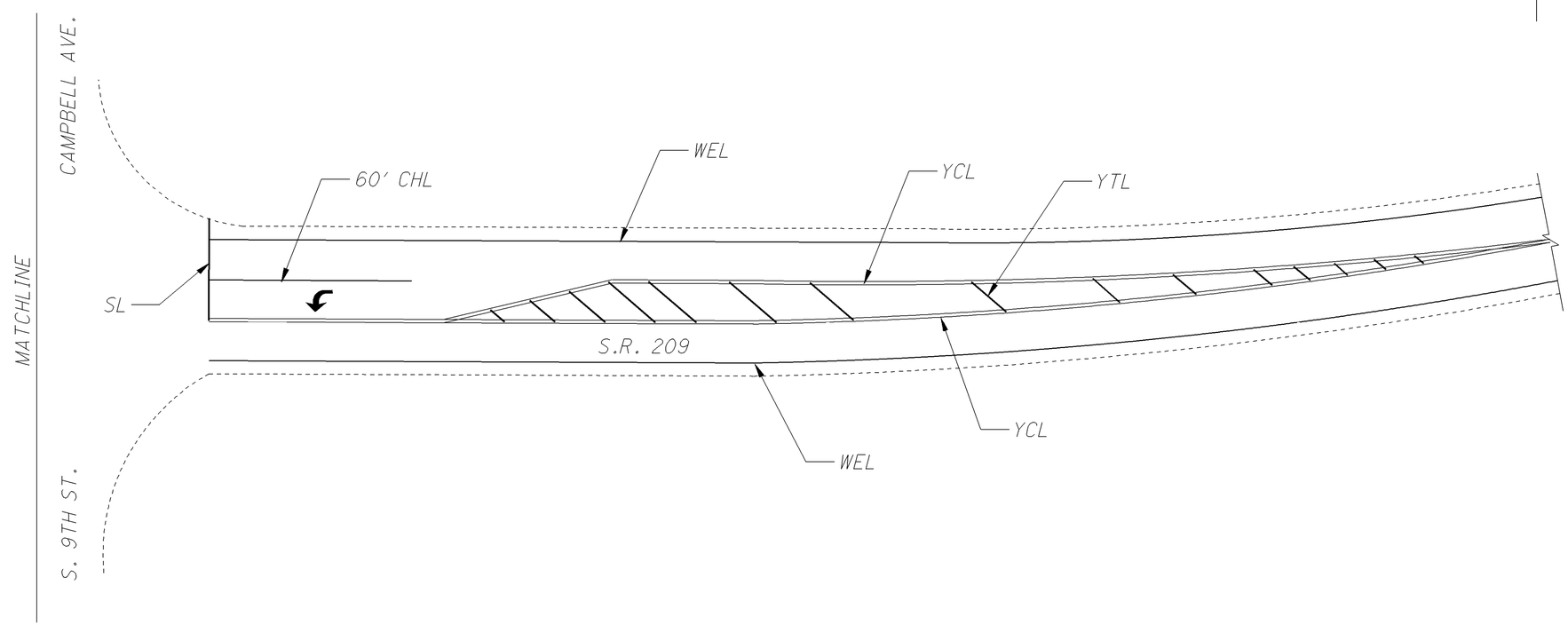

FOR AUXILIARY PAVEMENT MARKING QUANTITIES SEE SHEET 20.

CALCULATED LME
CHECKED DNM

S.R. 209 PLAN SHEET

GUE-209-8.73
GUE-821-5.45

P:\GUE\76451\Design\Roadway\Plan_Sheets\General\MAP.dgn 08-JAN-2015 4:33PM dmorgan

CHL = CHANNELIZING LINE
CWL = CROSS WALK LINE
WEL = WHITE EDGE LINE
SL = STOP LINE
YCL = YELLOW CENTER LINE
YTL = YELLOW TRANSVERSE/DIAGONAL LINE

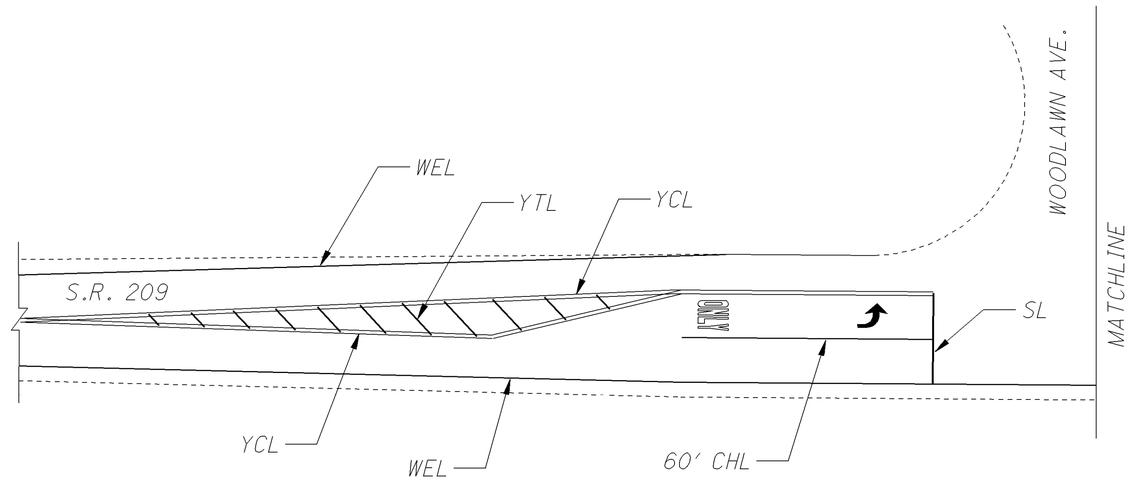

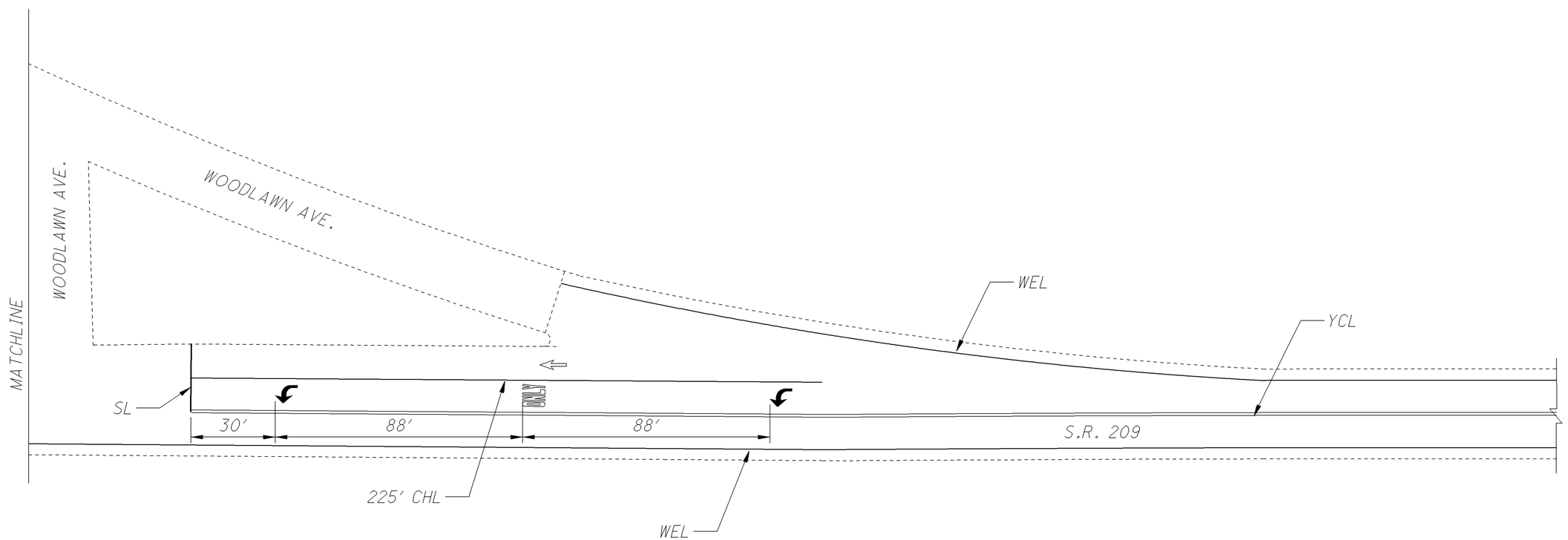

FOR AUXILIARY PAVEMENT MARKING QUANTITIES SEE SHEET 20.

CALCULATED LME
CHECKED DNM

S.R. 209 PLAN SHEET

GUE-209-8.73
GUE-821-5.45

P:\GUE\76451\Design\Roadway\Plan_Sheets\General\MAP.dgn 08-JAN-2015 4:34PM dmorgan

CHL = CHANNELIZING LINE
CWL = CROSS WALK LINE
DLL = DASHED LANE LINE
WEL = WHITE EDGE LINE
SL = STOP LINE
YCL = YELLOW CENTER LINE
WTL = WHITE TRANSVERSE/DIAGONAL LINE
YIM = YELLOW ISLAND MARKING
YTL = YELLOW TRANSVERSE/DIAGONAL LINE

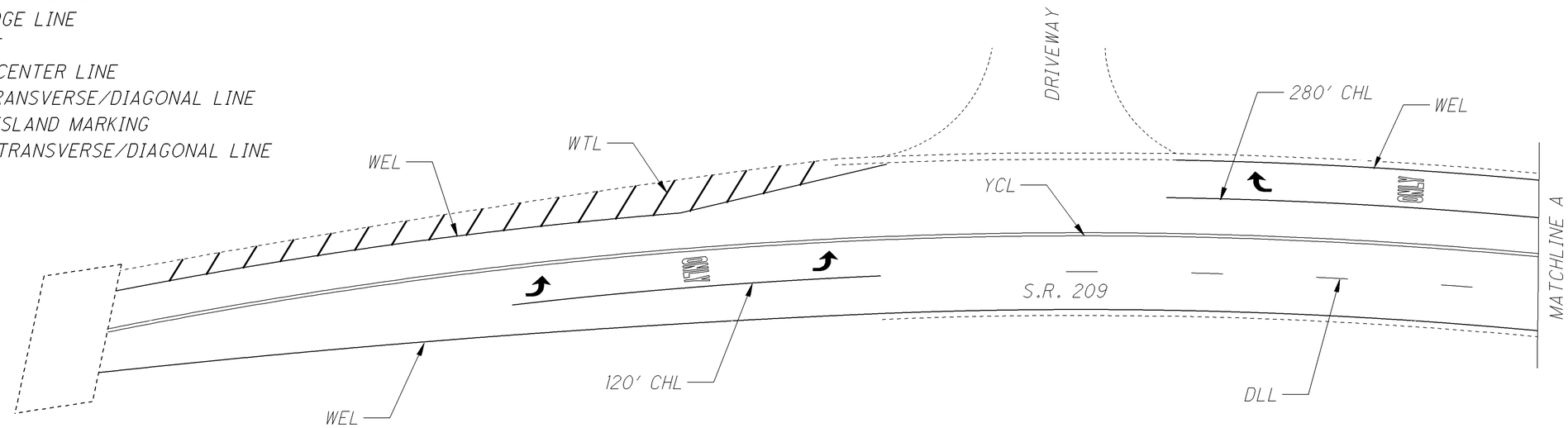

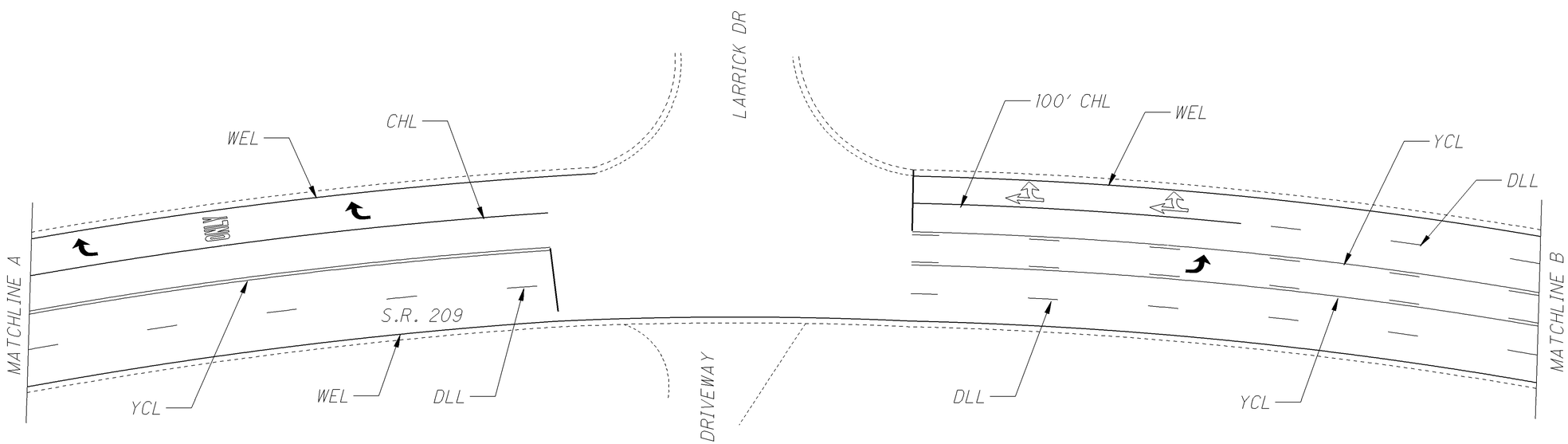

FOR AUXILIARY PAVEMENT MARKING QUANTITIES SEE SHEET 20.

CALCULATED LME
CHECKED DNM

S.R. 209 PLAN SHEET

GUE-209-8.73
GUE-821-5.45

P:\GUE\76451\Design\Roadway\Plan_Sheets\General\MAP.dgn 09-JAN-2015 7:14AM dmorgan

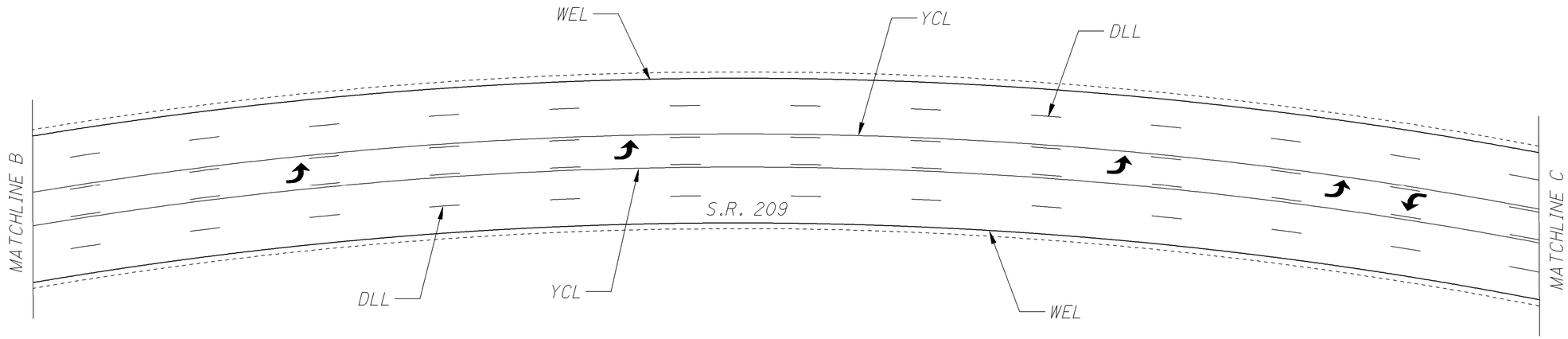

CHL = CHANNELIZING LINE
CWL = CROSS WALK LINE
DLL = DASHED LANE LINE
WEL = WHITE EDGE LINE
SL = STOP LINE
YCL = YELLOW CENTER LINE
WTL = WHITE TRANSVERSE/DIAGONAL LINE
YIM = YELLOW ISLAND MARKING
YTL = YELLOW TRANSVERSE/DIAGONAL LINE

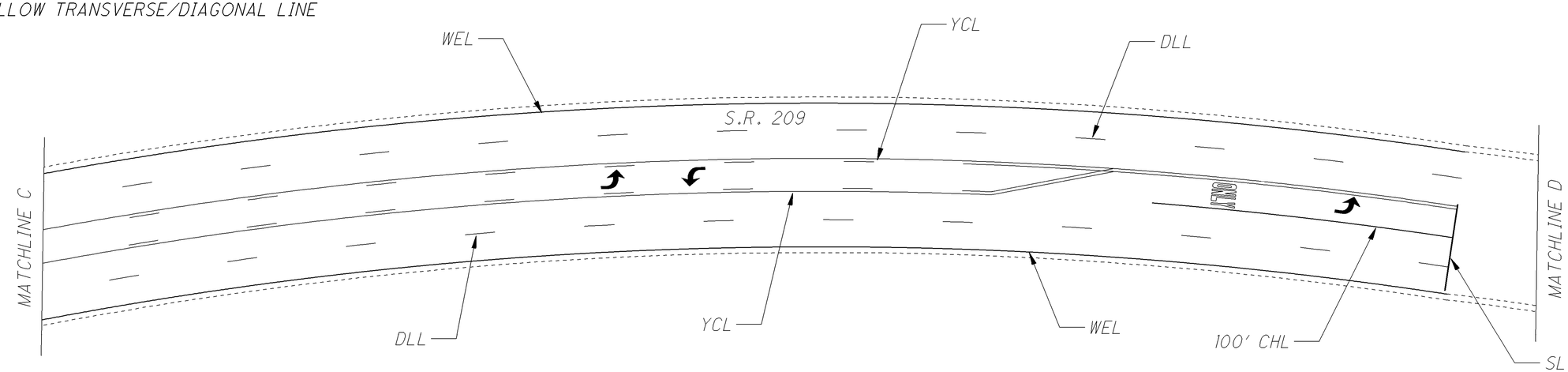

FOR AUXILIARY PAVEMENT MARKING QUANTITIES SEE SHEET 20.

CALCULATED LME
CHECKED DNM

S.R. 209 PLAN SHEET

GUE-209-8.73
GUE-821-5.45

P:\GUE\76451\Design\Roadway\Plan_Sheets\General\MAP.dgn 08-JAN-2015 4:35PM dmorgan

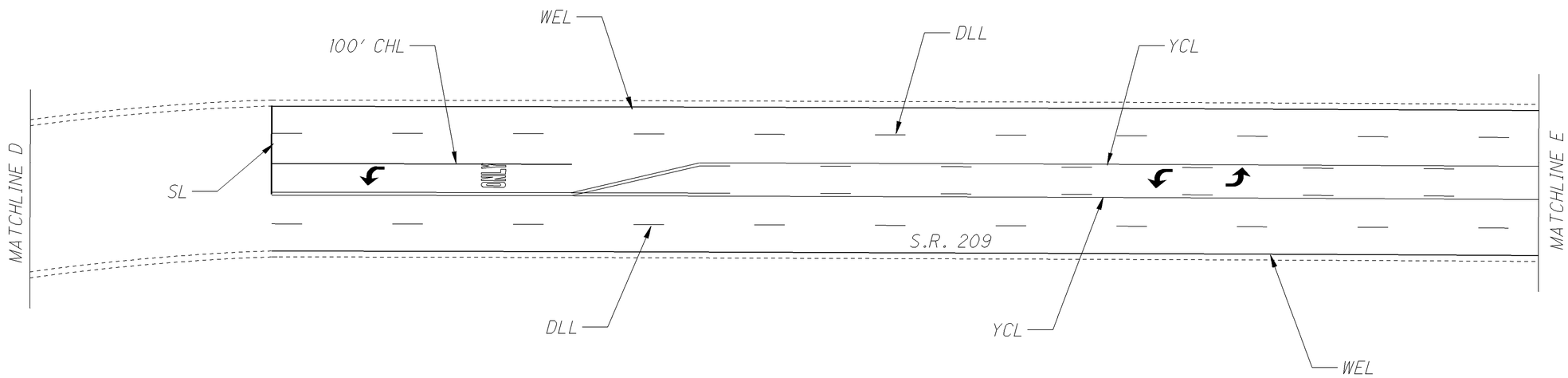

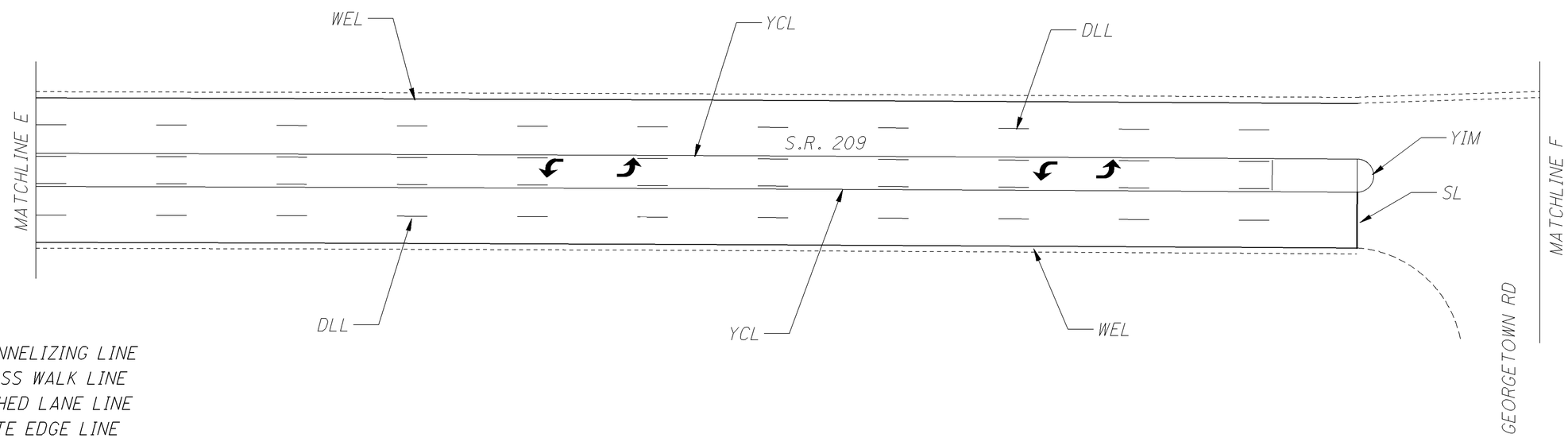

CHL = CHANNELIZING LINE
CWL = CROSS WALK LINE
DLL = DASHED LANE LINE
WEL = WHITE EDGE LINE
SL = STOP LINE
YCL = YELLOW CENTER LINE
WTL = WHITE TRANSVERSE/DIAGONAL LINE
YIM = YELLOW ISLAND MARKING
YTL = YELLOW TRANSVERSE/DIAGONAL LINE

FOR AUXILIARY PAVEMENT MARKING QUANTITIES SEE SHEET 20.

CALCULATED LME
CHECKED DNM

S.R. 209 PLAN SHEET

GUE-209-8.73
GUE-821-5.45

P:\GUE\76451\Design\Roadway\Plan_Sheets\General\MAP.dgn 09-JAN-2015 7:15AM dmorgan

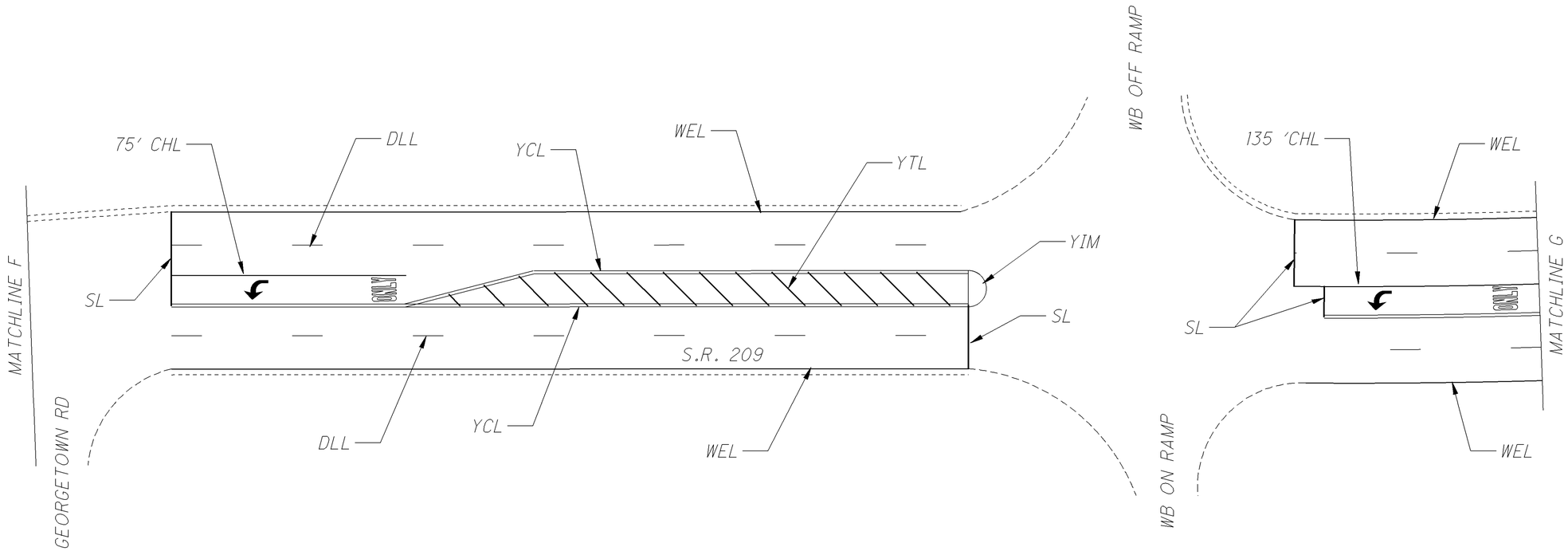

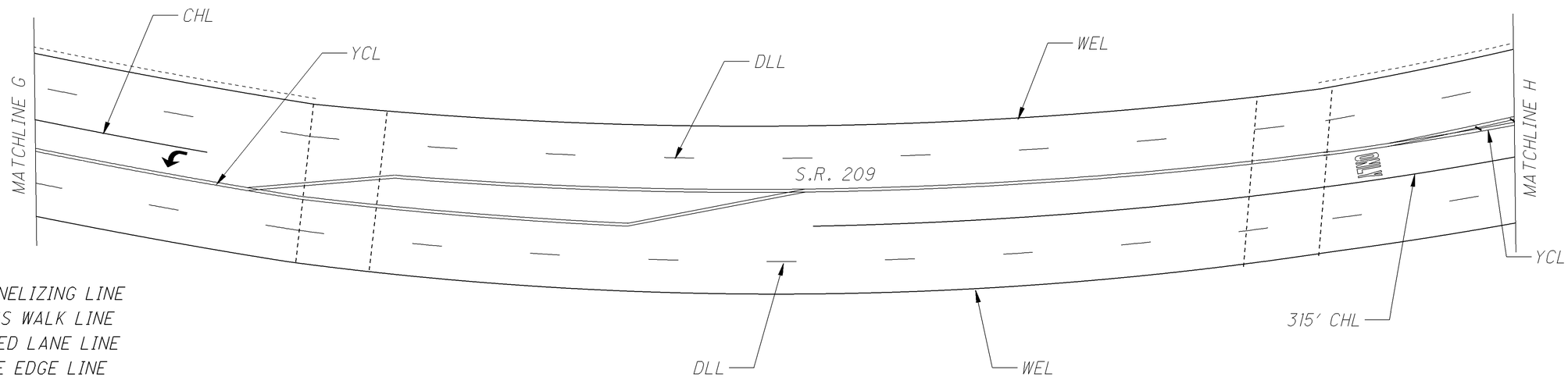

CHL = CHANNELIZING LINE
CWL = CROSS WALK LINE
DLL = DASHED LANE LINE
WEL = WHITE EDGE LINE
SL = STOP LINE
YCL = YELLOW CENTER LINE
WTL = WHITE TRANSVERSE/DIAGONAL LINE
YIM = YELLOW ISLAND MARKING
YTL = YELLOW TRANSVERSE/DIAGONAL LINE

FOR AUXILIARY PAVEMENT MARKING QUANTITIES SEE SHEET 20.

CALCULATED LME
CHECKED DNM

S.R. 209 PLAN SHEET

GUE-209-8.73
GUE-821-5.45

P:\GUE\76451\Design\Roadway\Plan_Sheets\General\MAP.dgn 09-JAN-2015 7:16AM dmorgan

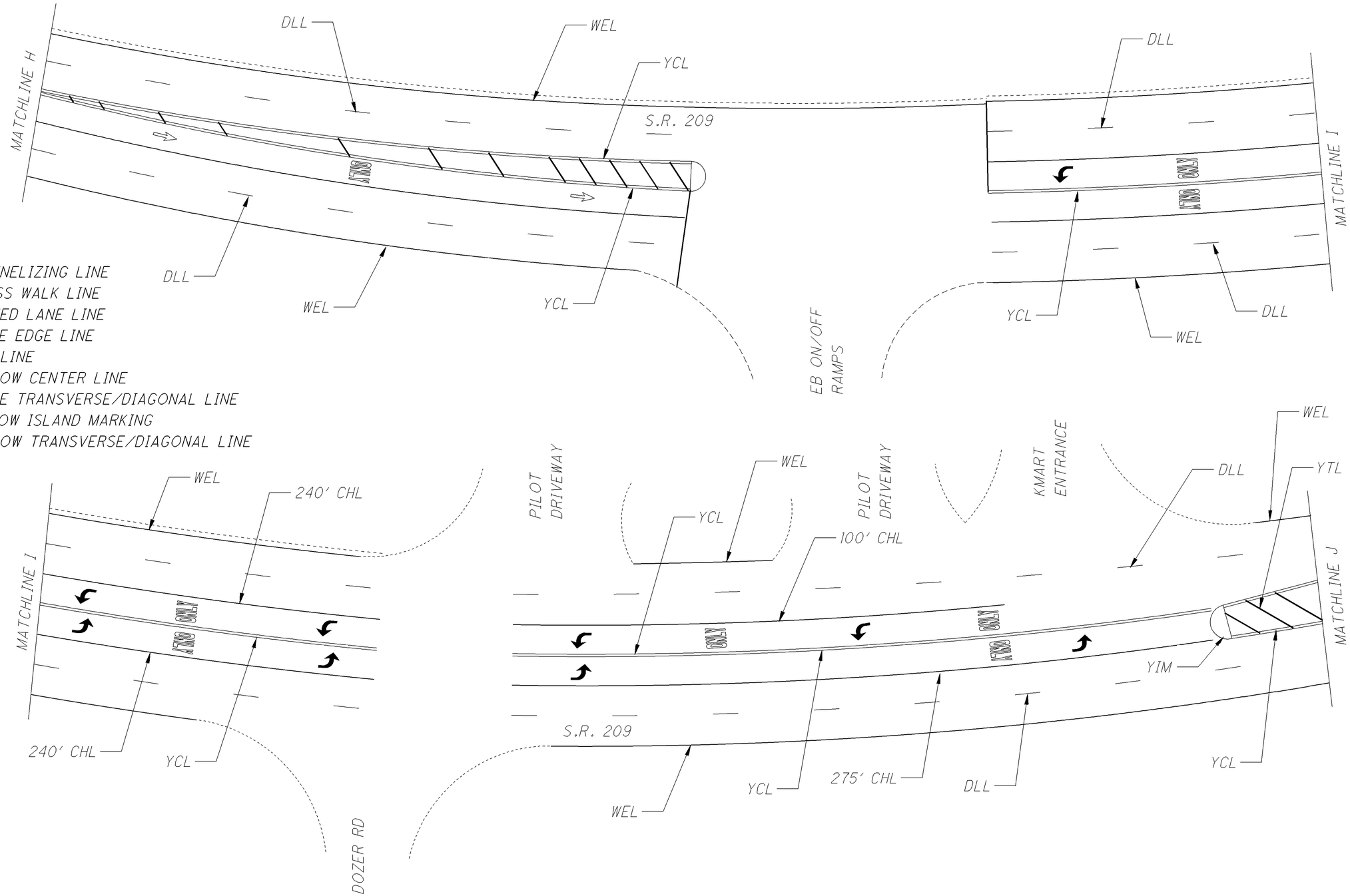

CHL = CHANNELIZING LINE
CWL = CROSS WALK LINE
DLL = DASHED LANE LINE
WEL = WHITE EDGE LINE
SL = STOP LINE
YCL = YELLOW CENTER LINE
WTL = WHITE TRANSVERSE/DIAGONAL LINE
YIM = YELLOW ISLAND MARKING
YTL = YELLOW TRANSVERSE/DIAGONAL LINE

FOR AUXILIARY PAVEMENT MARKING QUANTITIES SEE SHEET 20.

CALCULATED LME
CHECKED DNM

S.R. 209 PLAN SHEET

GUE-209-8.73
GUE-821-5.45

P:\GUE\76451\Design\Roadway\Plan_Sheets\General\MAP.dgn 09-JAN-2015 7:49AM dmorgan

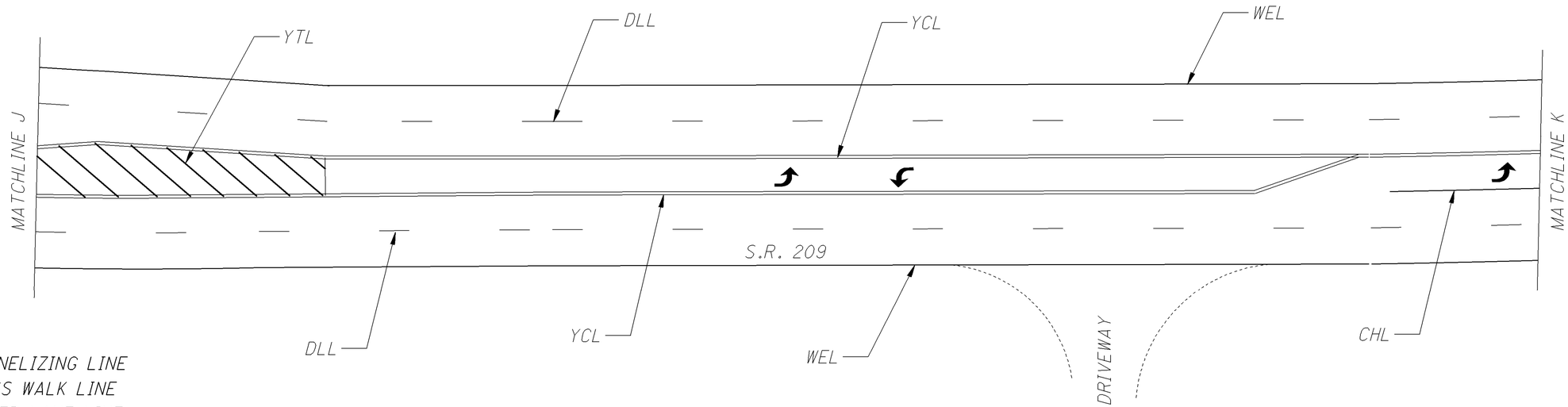

CHL = CHANNELIZING LINE
CWL = CROSS WALK LINE
DLL = DASHED LANE LINE
WEL = WHITE EDGE LINE
SL = STOP LINE
YCL = YELLOW CENTER LINE
WTL = WHITE TRANSVERSE/DIAGONAL LINE
YIM = YELLOW ISLAND MARKING
YTL = YELLOW TRANSVERSE/DIAGONAL LINE

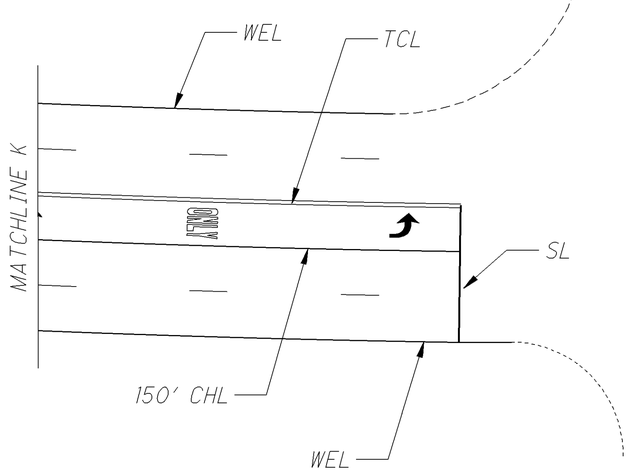

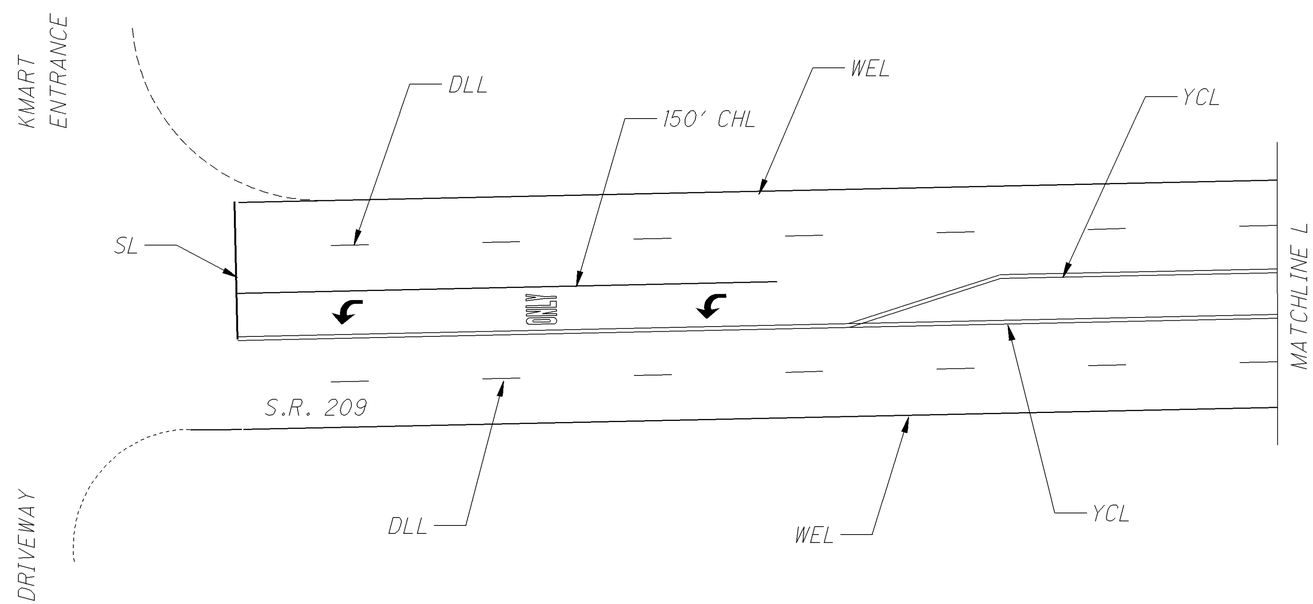

FOR AUXILIARY PAVEMENT MARKING QUANTITIES SEE SHEET 20.

CALCULATED LME
CHECKED DNM

S.R. 209 PLAN SHEET

GUE-209-8.73
GUE-821-5.45

P:\GUE\76451\Design\Roadway\Plan_Sheets\General\MAP.dgn 09-JAN-2015 7:49AM dmorgan

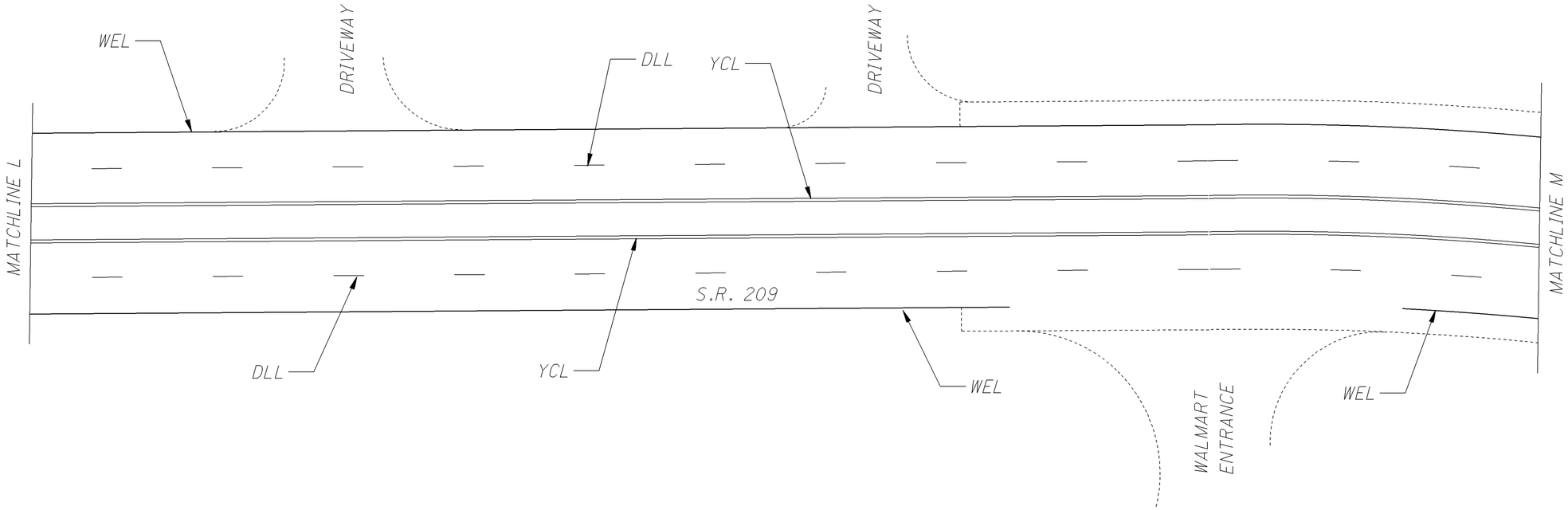

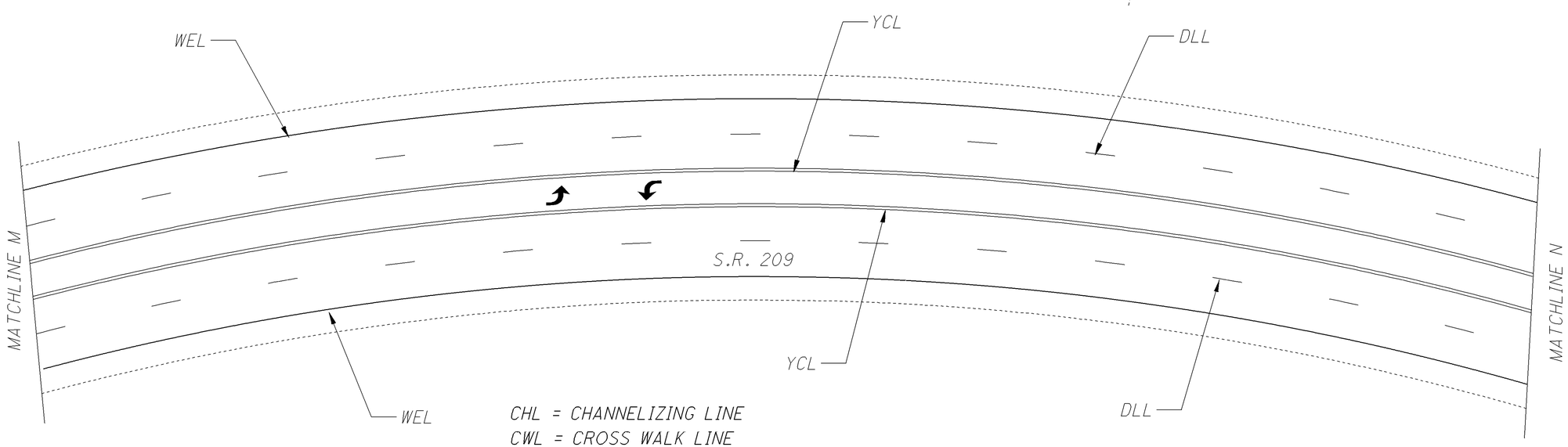

CHL = CHANNELIZING LINE
CWL = CROSS WALK LINE
DLL = DASHED LANE LINE
WEL = WHITE EDGE LINE
SL = STOP LINE
YCL = YELLOW CENTER LINE
WTL = WHITE TRANSVERSE/DIAGONAL LINE
YIM = YELLOW ISLAND MARKING
YTL = YELLOW TRANSVERSE/DIAGONAL LINE

FOR AUXILIARY PAVEMENT MARKING QUANTITIES SEE SHEET 20.

CALCULATED LME
CHECKED DNM

S.R. 209 PLAN SHEET

GUE-209-8.73
GUE-821-5.45

P:\GUE\76451\Design\Roadway\Plan_Sheets\General\MAP.dgn 09-JAN-2015 7:50AM dmorgan

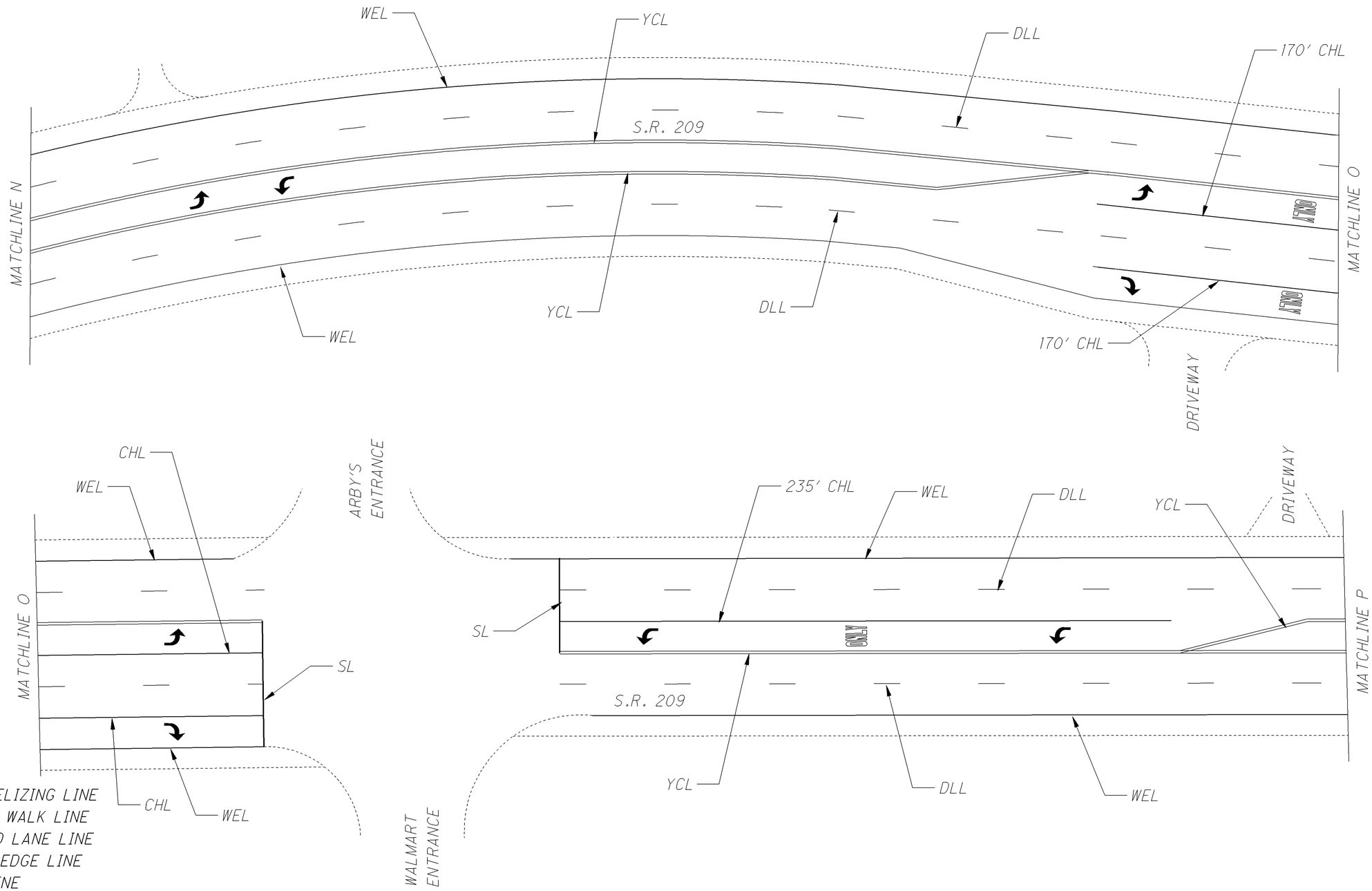

CHL = CHANNELIZING LINE
CWL = CROSS WALK LINE
DLL = DASHED LANE LINE
WEL = WHITE EDGE LINE
SL = STOP LINE
YCL = YELLOW CENTER LINE
WTL = WHITE TRANSVERSE/DIAGONAL LINE
YIM = YELLOW ISLAND MARKING
YTL = YELLOW TRANSVERSE/DIAGONAL LINE

FOR AUXILIARY PAVEMENT MARKING QUANTITIES SEE SHEET 20.

CALCULATED LME
CHECKED DNM

S.R. 209 PLAN SHEET

GUE-209-8.73
GUE-821-5.45

P:\GUE\76451\Design\Roadway\Plan_Sheets\General\MAP.dgn 09-JAN-2015 7:56AM dmorgan

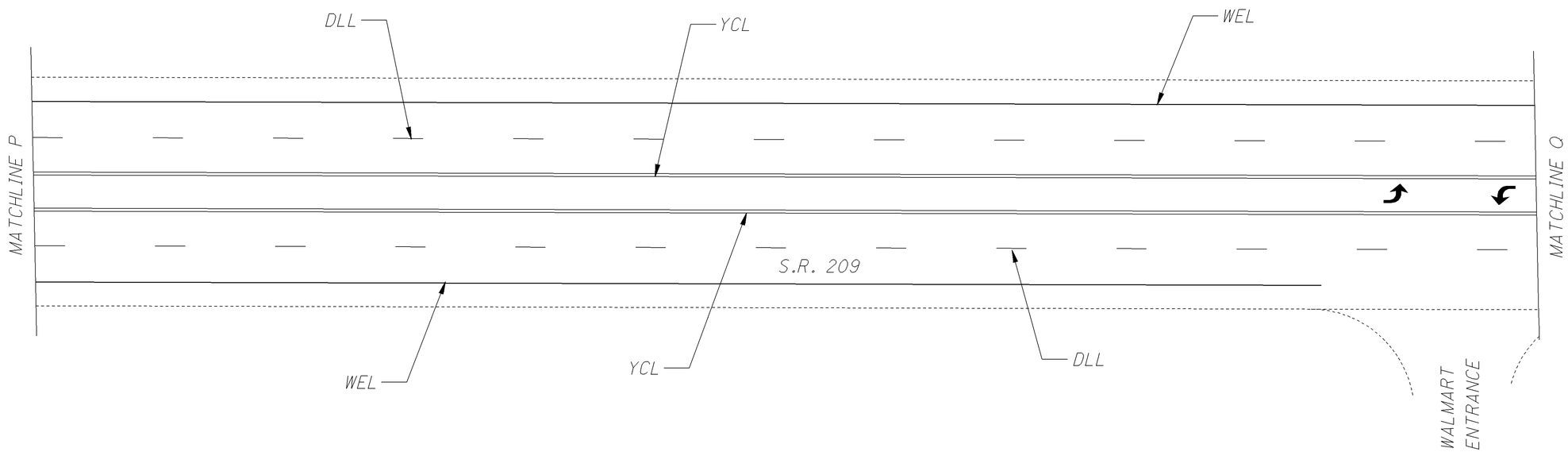

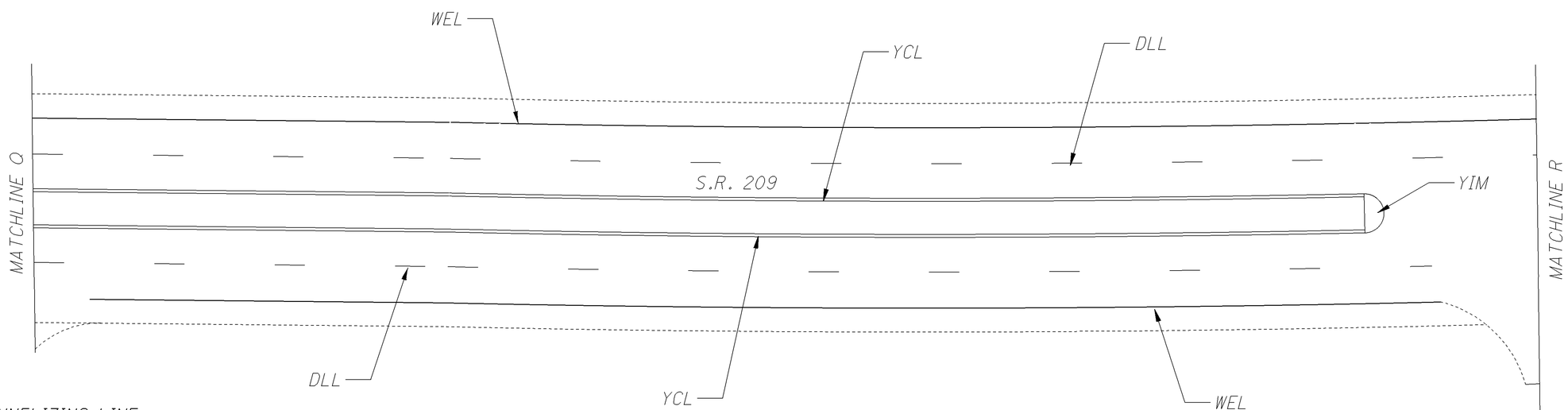

CHL = CHANNELIZING LINE
CWL = CROSS WALK LINE
DLL = DASHED LANE LINE
WEL = WHITE EDGE LINE
SL = STOP LINE
YCL = YELLOW CENTER LINE
WTL = WHITE TRANSVERSE/DIAGONAL LINE
YIM = YELLOW ISLAND MARKING
YTL = YELLOW TRANSVERSE/DIAGONAL LINE

FOR AUXILIARY PAVEMENT MARKING QUANTITIES SEE SHEET 20.

CALCULATED LME
CHECKED DNM

S.R. 209 PLAN SHEET

GUE-209-8.73
GUE-821-5.45

P:\GUE\76451\Design\Roadway\Plan_Sheets\General\MAP.dgn 09-JAN-2015 8:04AM dmorgan

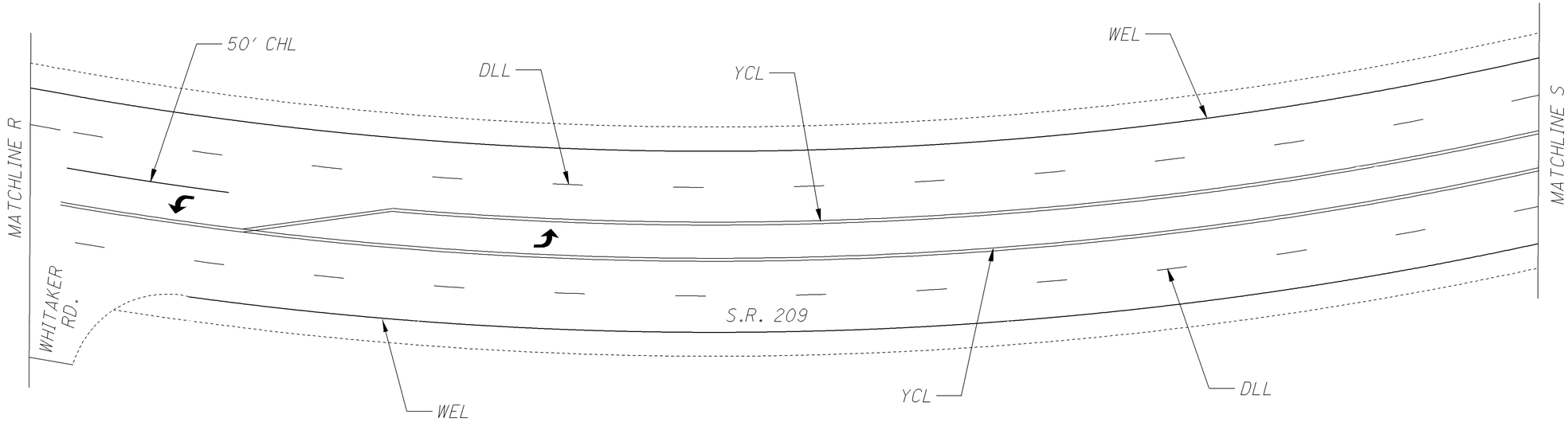

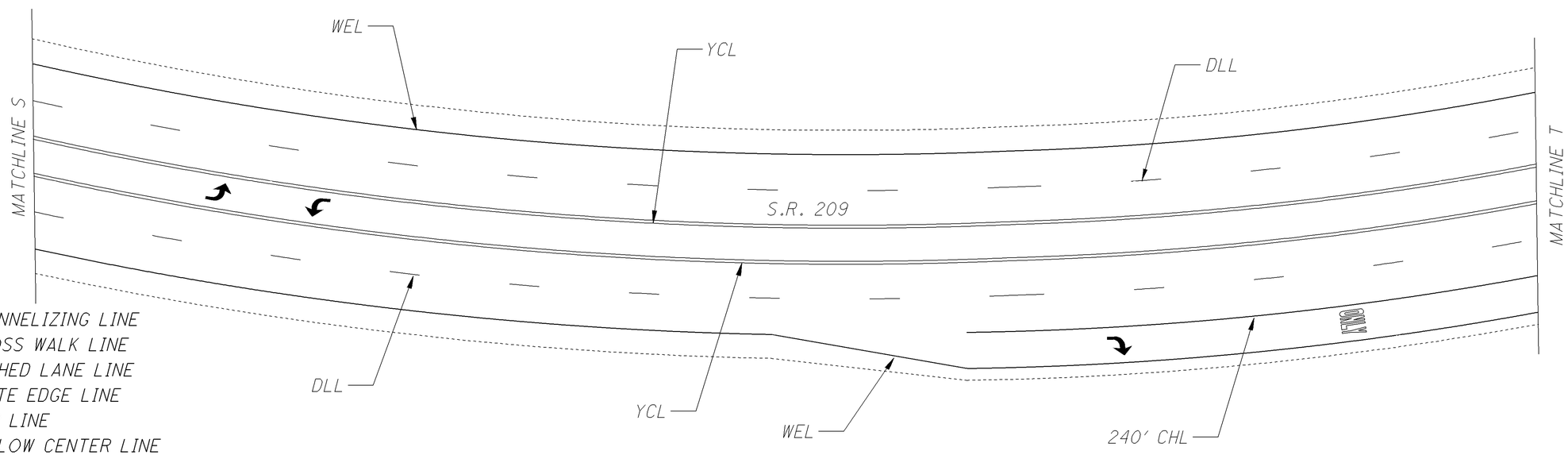

CHL = CHANNELIZING LINE
CWL = CROSS WALK LINE
DLL = DASHED LANE LINE
WEL = WHITE EDGE LINE
SL = STOP LINE
YCL = YELLOW CENTER LINE
WTL = WHITE TRANSVERSE/DIAGONAL LINE
YIM = YELLOW ISLAND MARKING
YTL = YELLOW TRANSVERSE/DIAGONAL LINE

FOR AUXILIARY PAVEMENT MARKING QUANTITIES SEE SHEET 20.

CALCULATED LME
CHECKED DNM

S.R. 209 PLAN SHEET

GUE-209-8.73
GUE-821-5.45

P:\GUE\76451\Design\Roadway\Plan_Sheets\General\MAP.dgn 09-JAN-2015 8:04 AM dmorgan

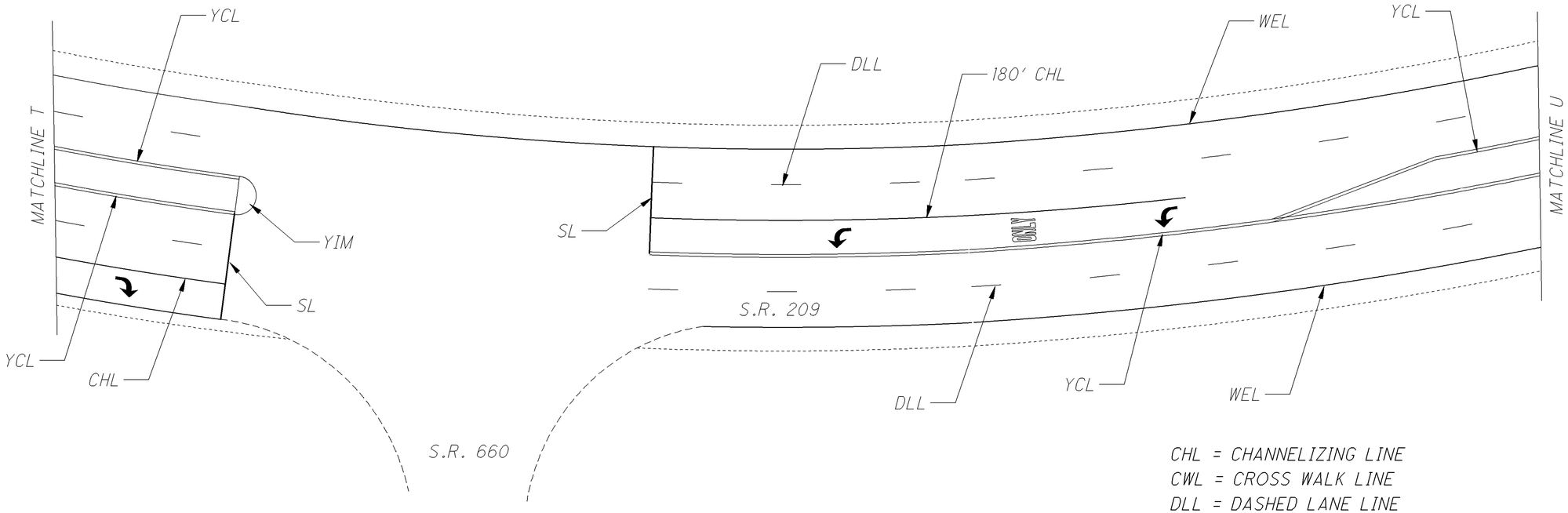

CHL = CHANNELIZING LINE
CWL = CROSS WALK LINE
DLL = DASHED LANE LINE
WEL = WHITE EDGE LINE
SL = STOP LINE
YCL = YELLOW CENTER LINE
WTL = WHITE TRANSVERSE/DIAGONAL LINE
YIM = YELLOW ISLAND MARKING
YTL = YELLOW TRANSVERSE/DIAGONAL LINE

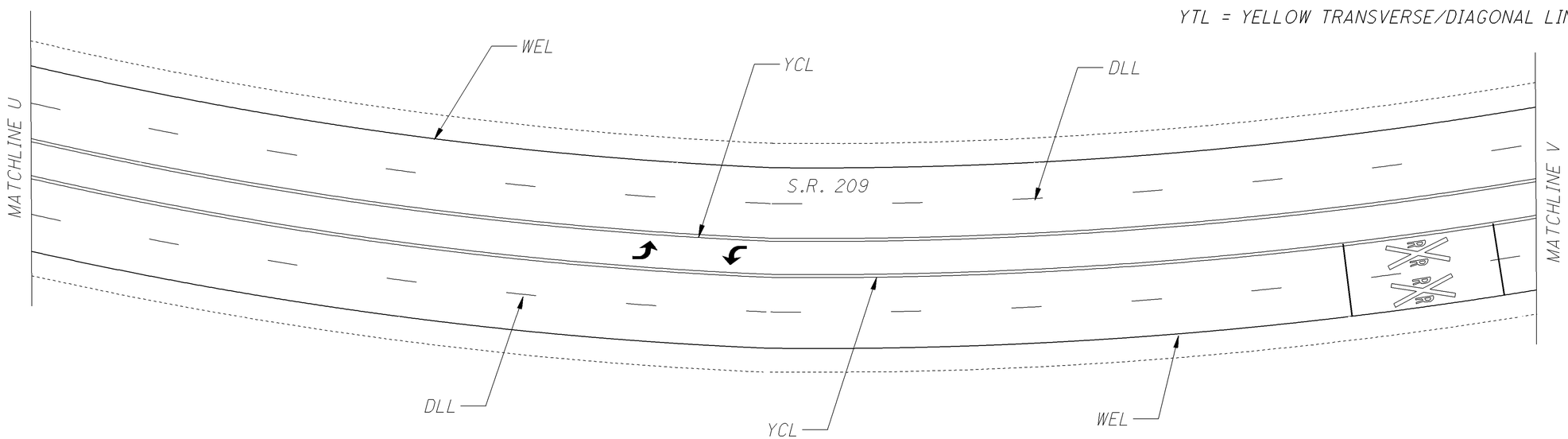

FOR AUXILIARY PAVEMENT MARKING QUANTITIES SEE SHEET 20.

CALCULATED LME
CHECKED DNM

S.R. 209 PLAN SHEET

GUE-209-8.73
GUE-821-5.45

P:\GUE\76451\Design\Roadway\Plan_Sheets\General\MAP.dgn 09-JAN-2015 8:05AM dmorgan

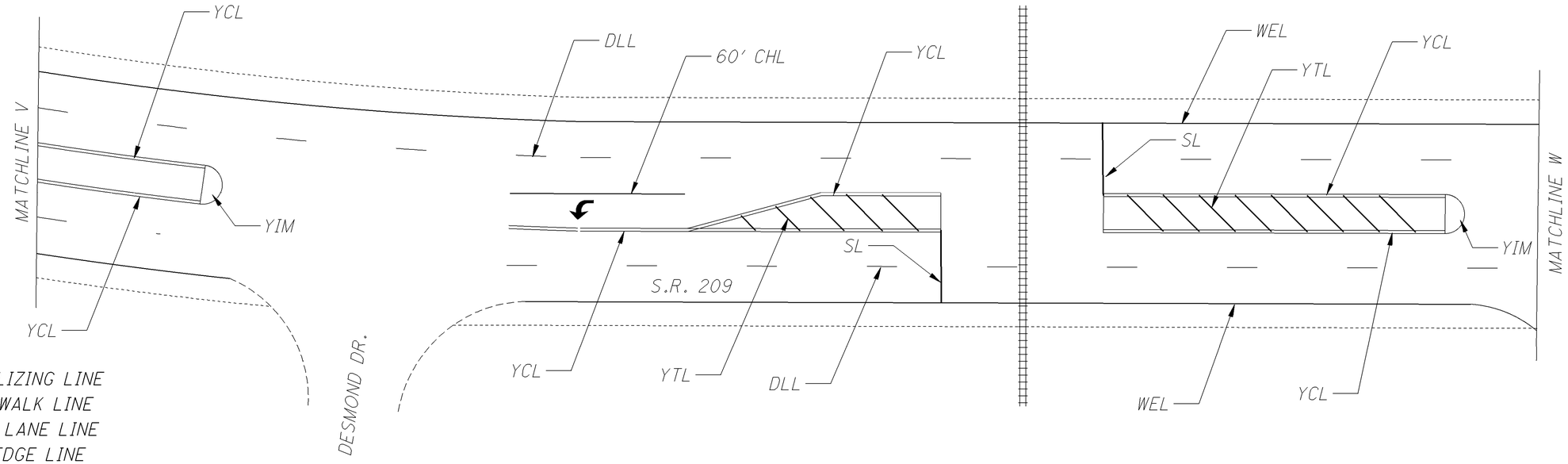

CHL = CHANNELIZING LINE
CWL = CROSS WALK LINE
DLL = DASHED LANE LINE
WEL = WHITE EDGE LINE
SL = STOP LINE
YCL = YELLOW CENTER LINE
WTL = WHITE TRANSVERSE/DIAGONAL LINE
YIM = YELLOW ISLAND MARKING
YTL = YELLOW TRANSVERSE/DIAGONAL LINE

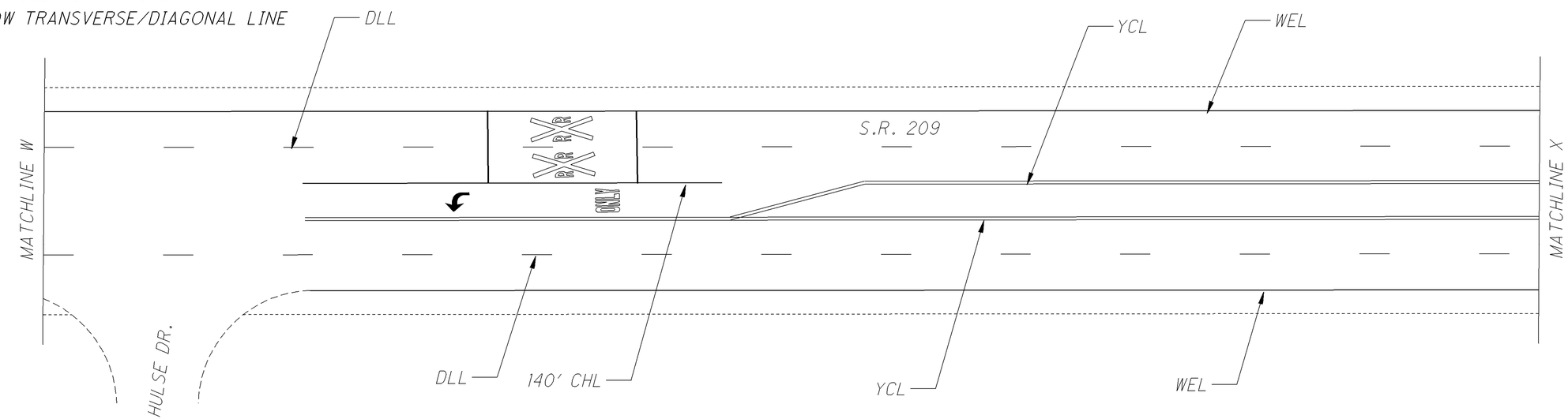

FOR AUXILIARY PAVEMENT MARKING QUANTITIES SEE SHEET 20.

CALCULATED LME
CHECKED DNM

S.R. 209 PLAN SHEET

GUE-209-8.73
GUE-821-5.45

P:\GUE\76451\Design\Roadway\Plan_Sheets\General\MAP.dgn 09-JAN-2015 8:05AM dmorgan

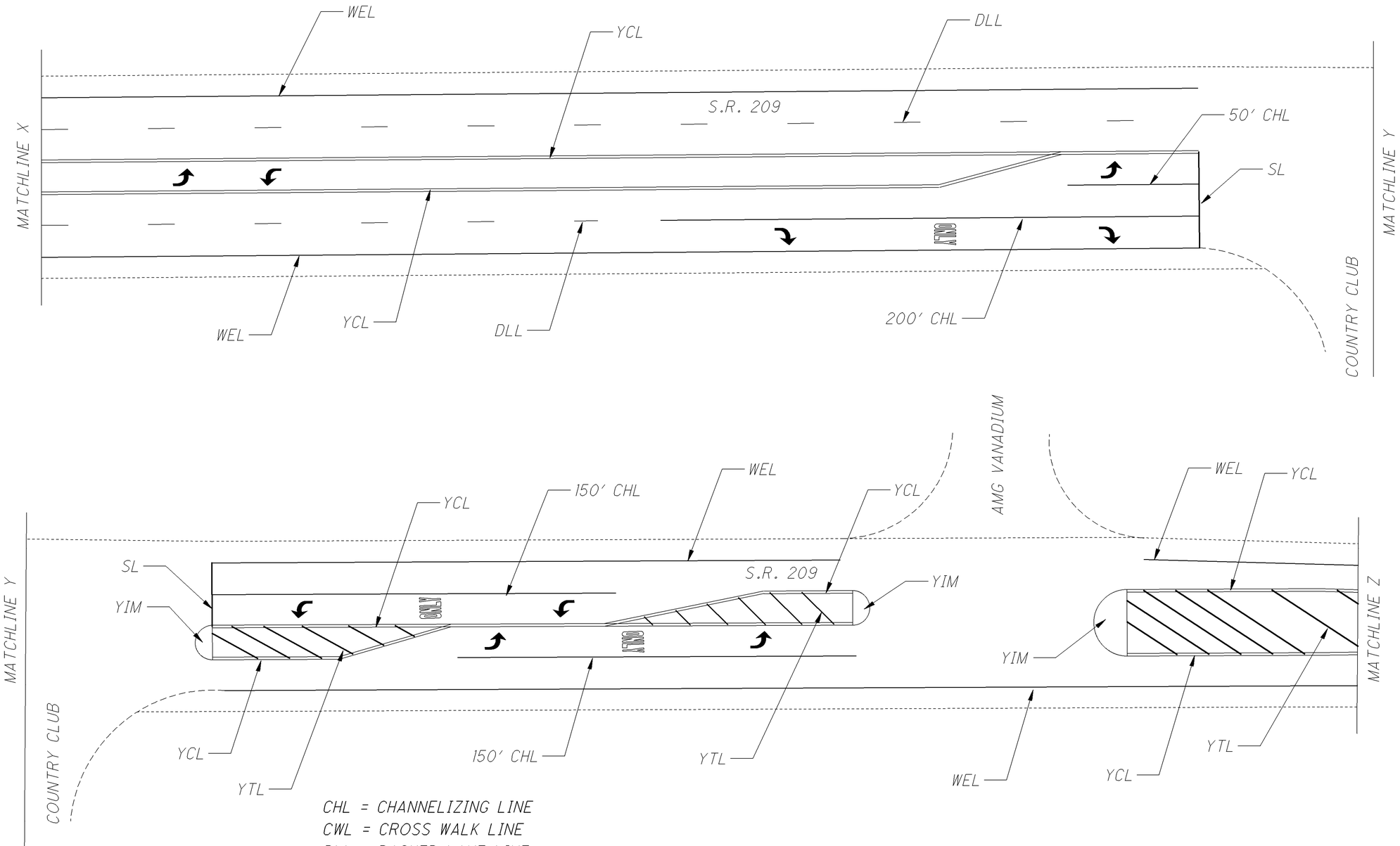

CHL = CHANNELIZING LINE
CWL = CROSS WALK LINE
DLL = DASHED LANE LINE
WEL = WHITE EDGE LINE
SL = STOP LINE
YCL = YELLOW CENTER LINE
WTL = WHITE TRANSVERSE/DIAGONAL LINE
YIM = YELLOW ISLAND MARKING
YTL = YELLOW TRANSVERSE/DIAGONAL LINE

FOR AUXILIARY PAVEMENT MARKING QUANTITIES SEE SHEET 20.

CALCULATED LME
CHECKED DNM

S.R. 209 PLAN SHEET

GUE-209-8.73
GUE-821-5.45

P:\GUE\76451\Design\Roadway\Plan_Sheets\General\MAP.dgn 09-JAN-2015 8:10AM dmorgan

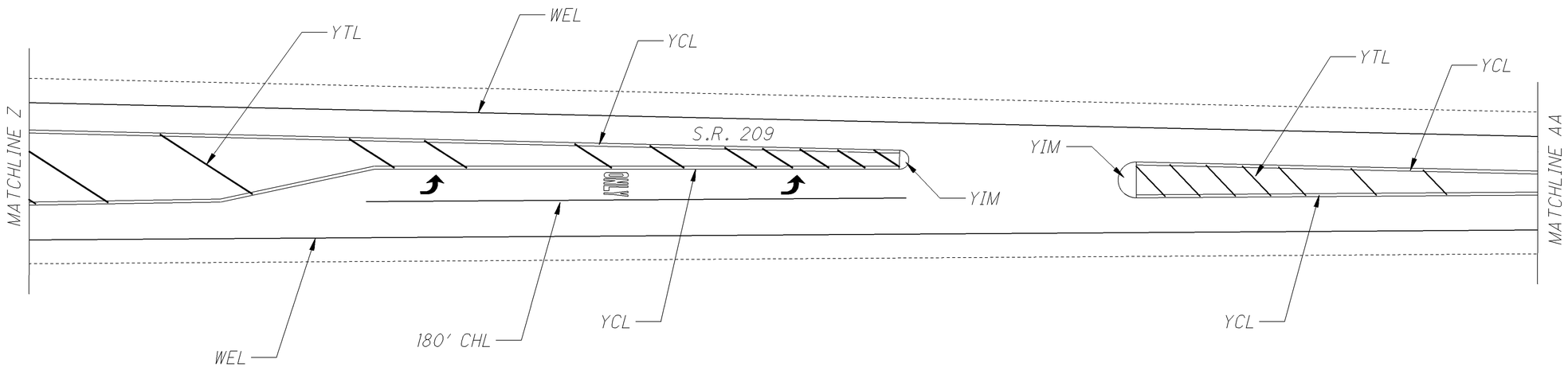

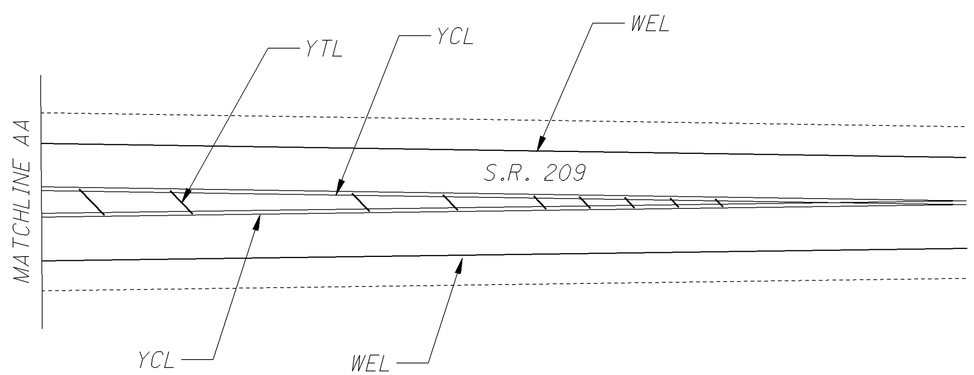

CHL = CHANNELIZING LINE
CWL = CROSS WALK LINE
DLL = DASHED LANE LINE
WEL = WHITE EDGE LINE
SL = STOP LINE
YCL = YELLOW CENTER LINE
WTL = WHITE TRANSVERSE/DIAGONAL LINE
YIM = YELLOW ISLAND MARKING
YTL = YELLOW TRANSVERSE/DIAGONAL LINE

FOR AUXILIARY PAVEMENT MARKING QUANTITIES SEE SHEET 20.

CALCULATED LME
CHECKED DNM

S.R. 209 PLAN SHEET

GUE-209-8.73
GUE-821-5.45

P:\GUE\76451\Design\Roadway\Plan_Sheets\General\MAP.dgn 09-JAN-2015 8:10AM dmorgan

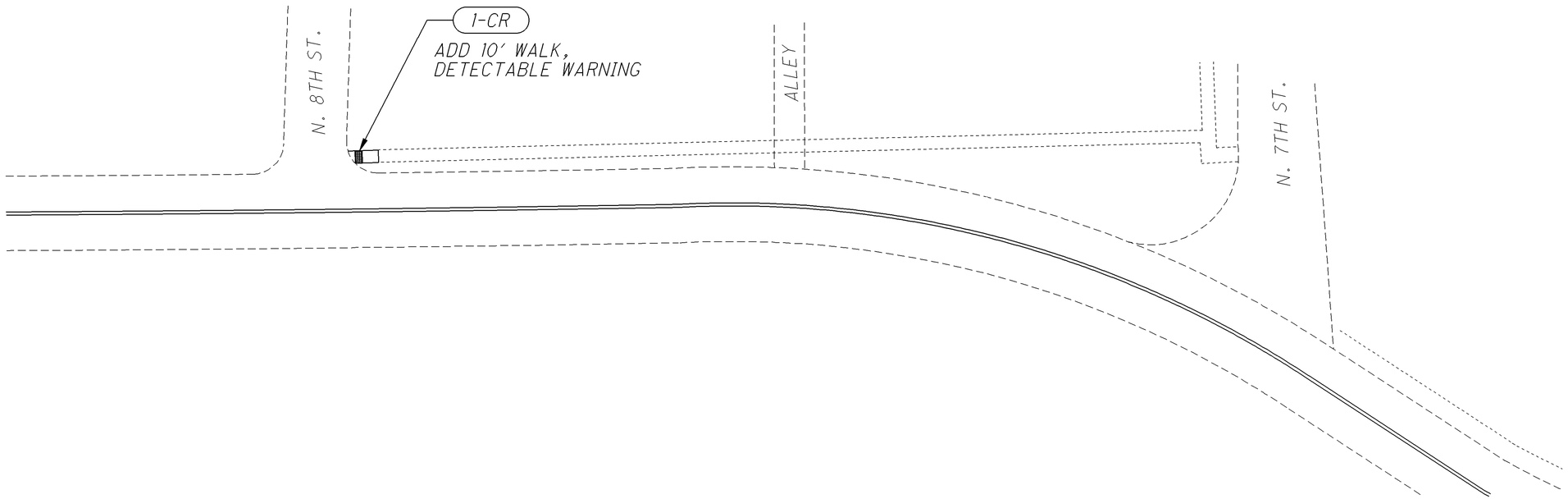

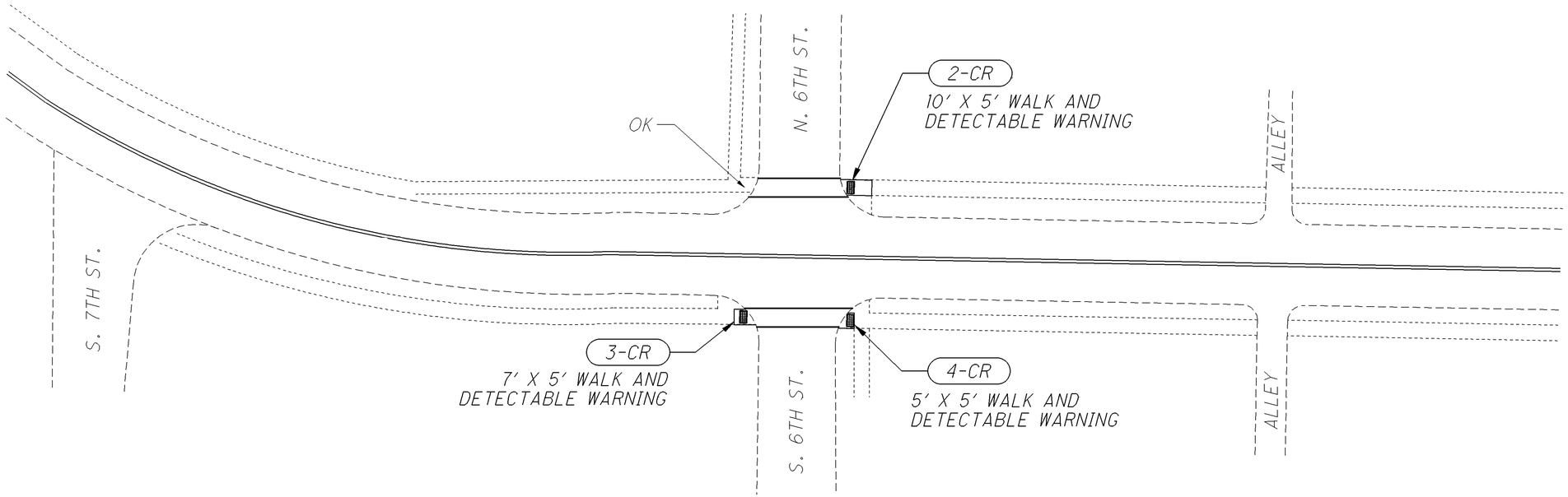

FOR CURB RAMP QUANTITIES SEE SHEET 17.
FOR AUXILIARY MARKING QUANTITIES SEE SHEET 21.

CALCULATED LME
CHECKED DNM

S.R. 209 PLAN SHEET

GUE-209-8.73
GUE-821-5.45

P:\GUE\76451\Design\Roadway\Plan_Sheets\General\MAP.dgn 09-JAN-2015 8:11AM dmorgan

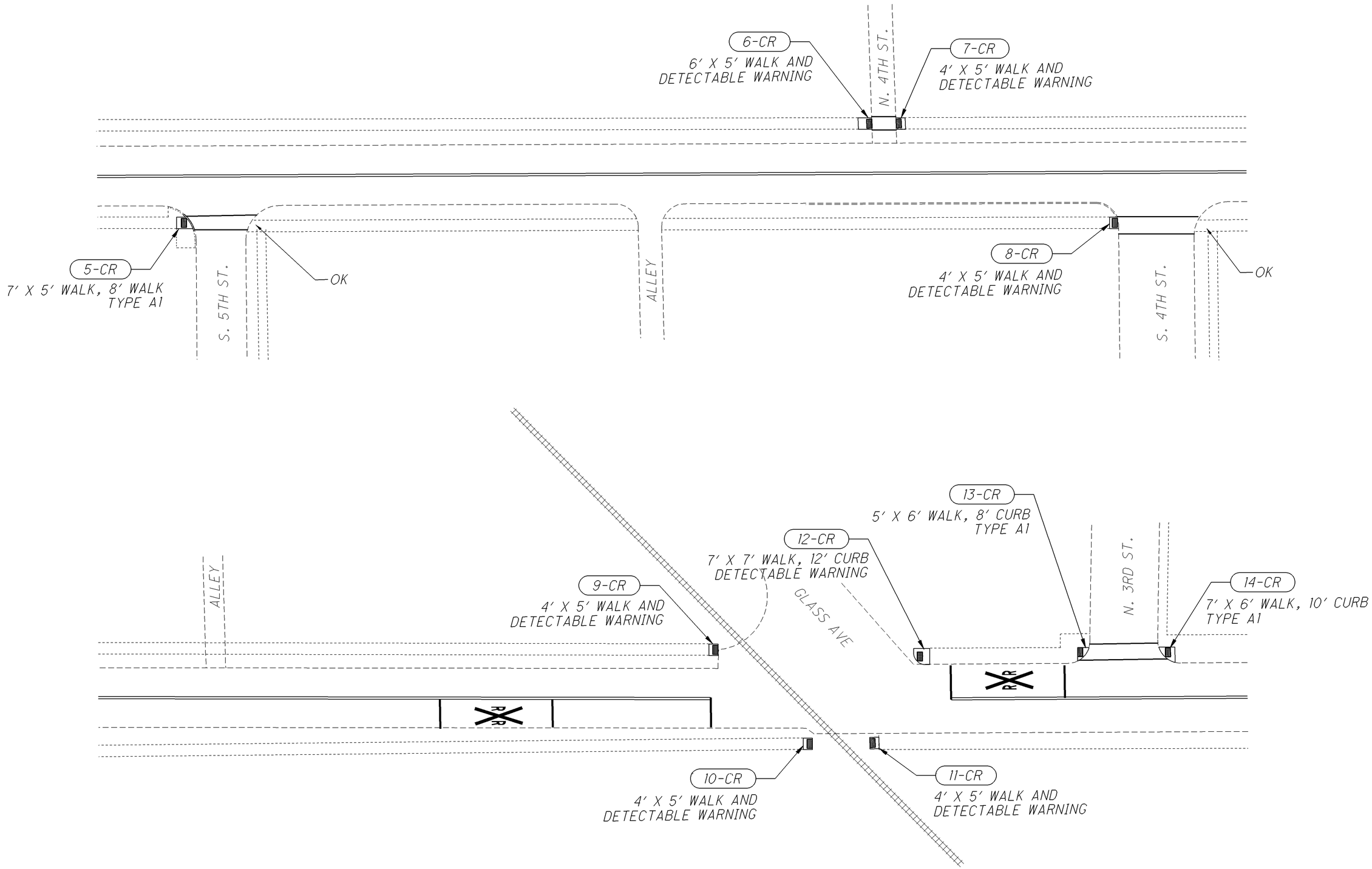

FOR CURB RAMP QUANTITIES SEE SHEET 17.
FOR AUXILIARY MARKING QUANTITIES SEE SHEET 21.

CALCULATED LME
CHECKED DNM

S.R. 209 PLAN SHEET

GUE-209-8.73
GUE-821-5.45

P:\GUE\76451\Design\Roadway\Plan_Sheets\General\MAP.dgn 09-JAN-2015 8:12AM dmorgan

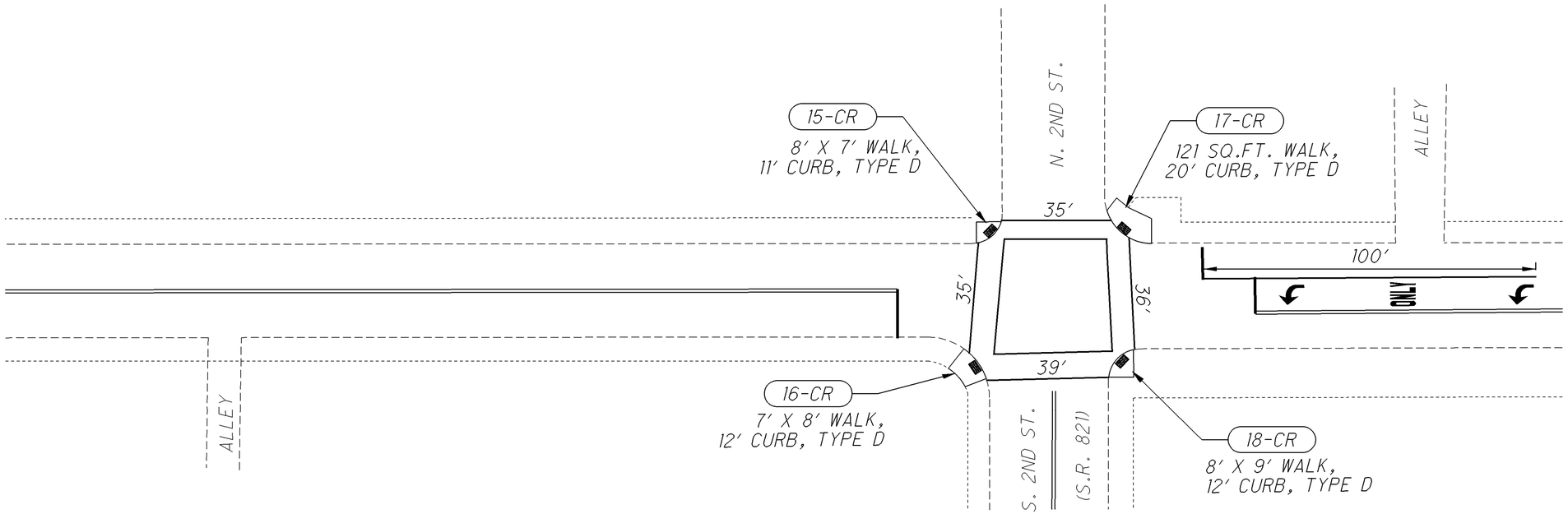

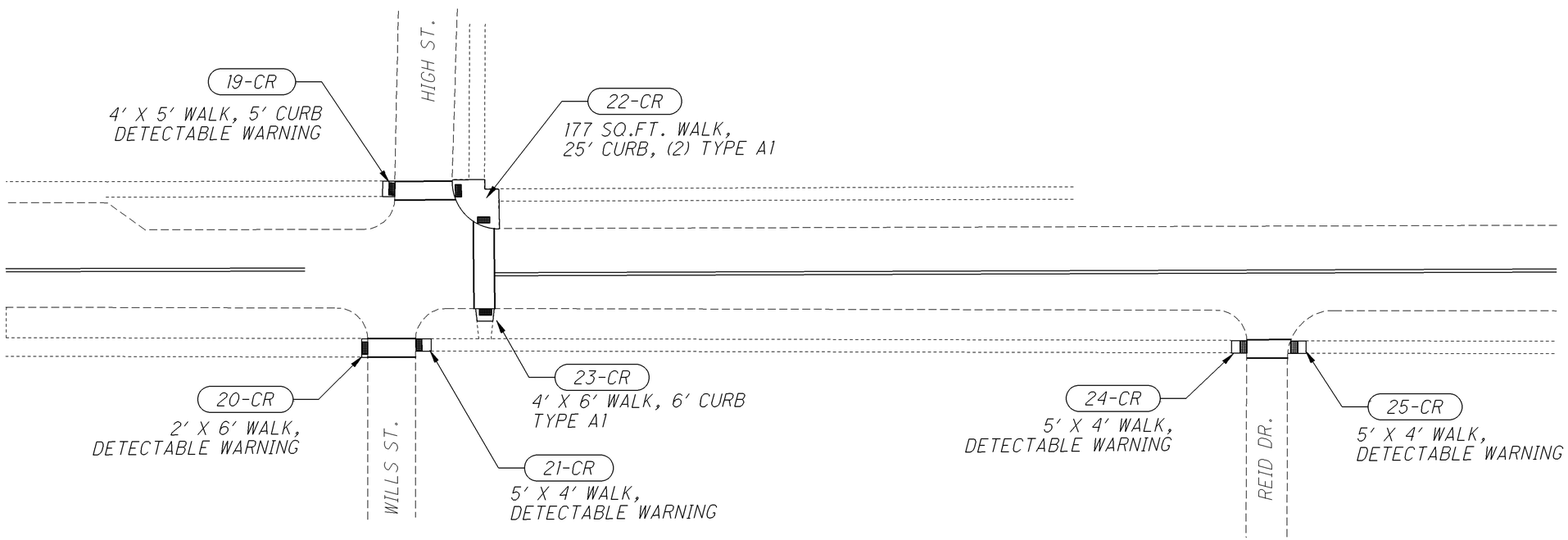

FOR CURB RAMP QUANTITIES SEE SHEET 17.
FOR AUXILIARY MARKING QUANTITIES SEE SHEET 21.

CALCULATED LME
CHECKED DNM

S.R. 209 PLAN SHEET

GUE-209-8.73
GUE-821-5.45

P:\GUE\76451\Design\Roadway\Plan_Sheets\General\MAP.dgn 09-JAN-2015 8:12AM dmorgan

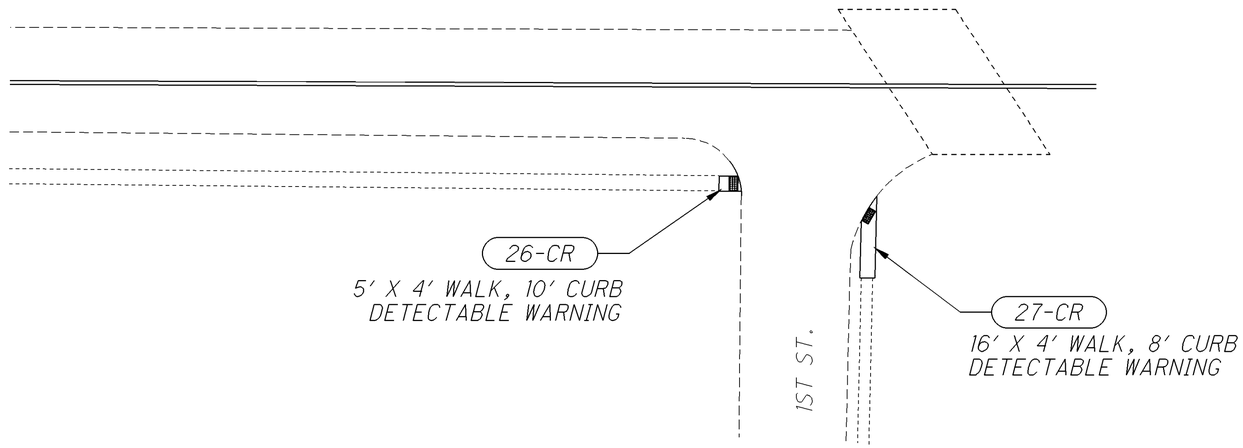

FOR CURB RAMP QUANTITIES SEE SHEET 17.
FOR AUXILIARY MARKING QUANTITIES SEE SHEET 21.

CALCULATED LME
CHECKED DNM

S.R. 209 PLAN SHEET

GUE-209-8.73
GUE-821-5.45

P:\GUE\76451\Design\Roadway\Plan_Sheets\General\MAP.dgn 09-JAN-2015 8:13AM dmorgan

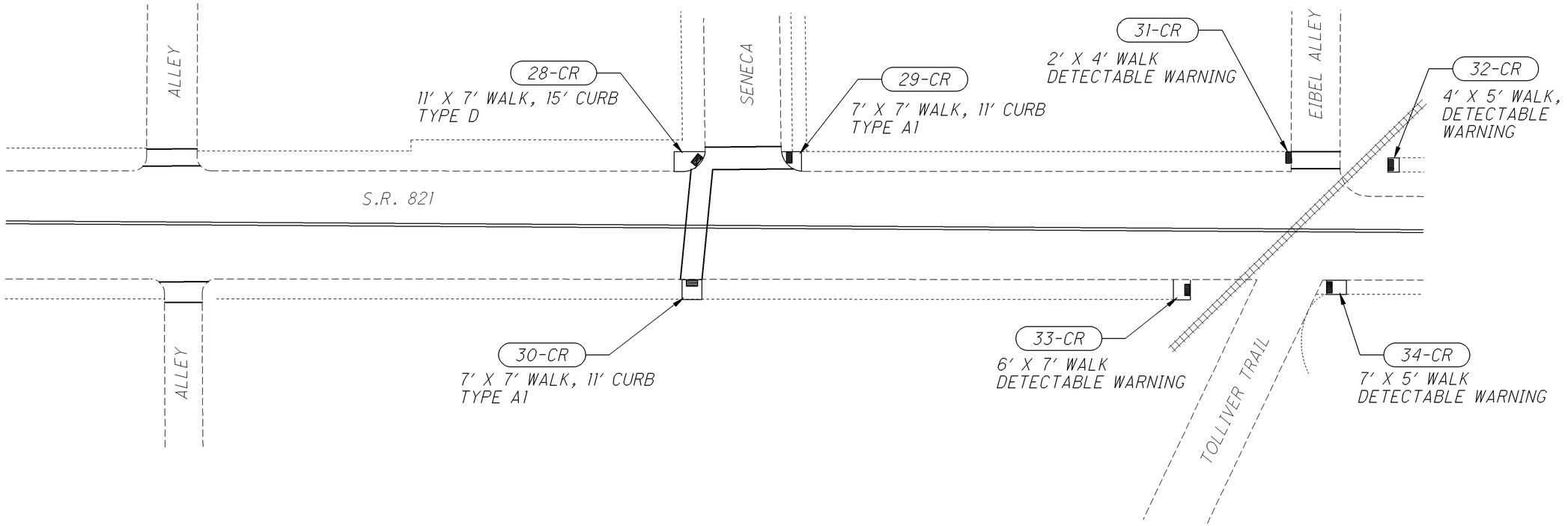

FOR CURB RAMP QUANTITIES SEE SHEET 17.
FOR AUXILIARY MARKING QUANTITIES SEE SHEET 21.

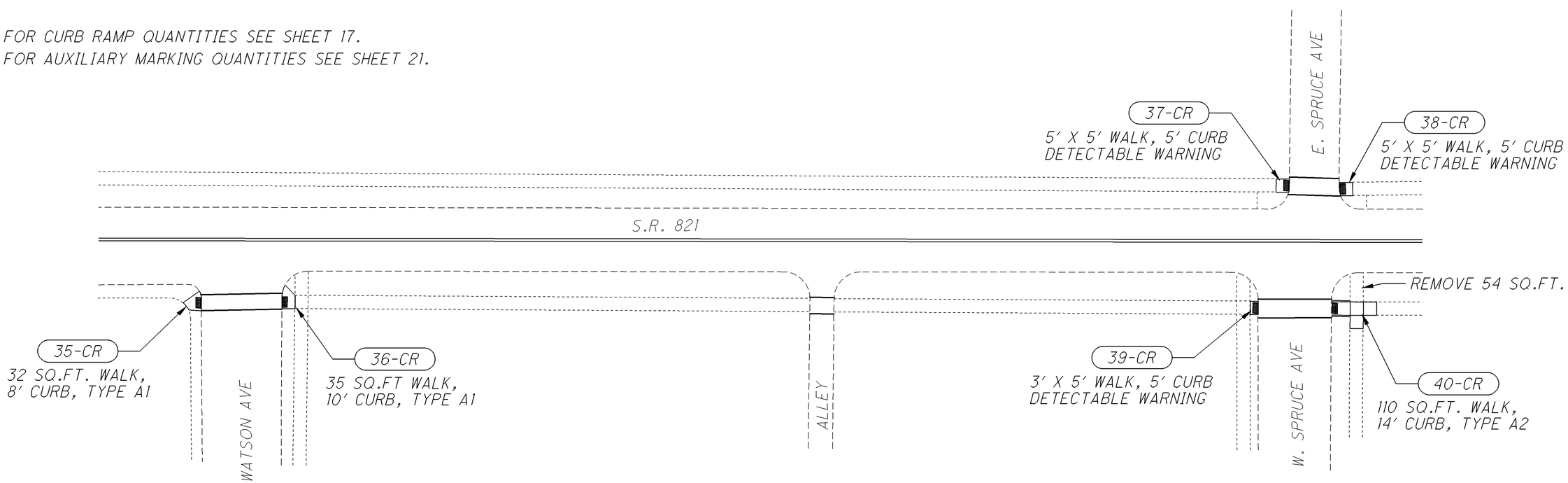

CALCULATED LME
CHECKED DNM

S.R. 821 PLAN SHEET

GUE-209-8.73
GUE-821-5.45

P:\GUE\76451\Design\Roadway\Plan_Sheets\General\MAP.dgn 09-JAN-2015 8:33AM dmorgan

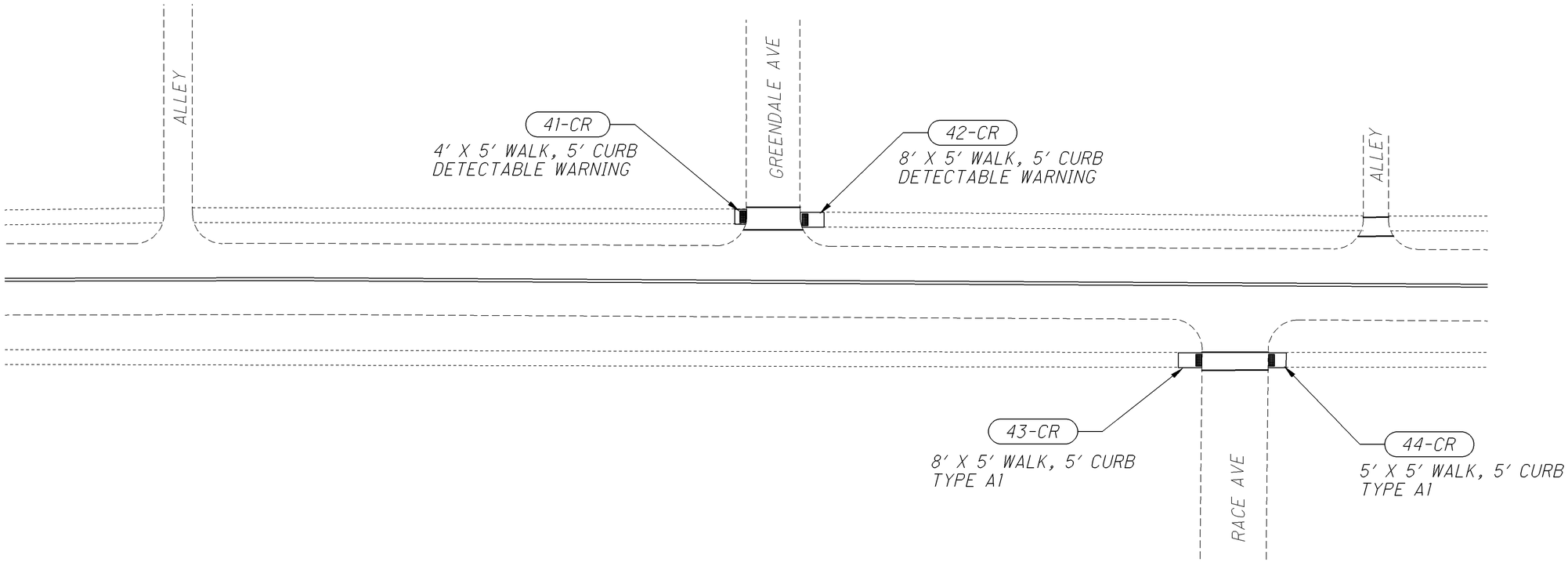

FOR CURB RAMP QUANTITIES SEE SHEET 17.
FOR AUXILIARY MARKING QUANTITIES SEE SHEET 21.

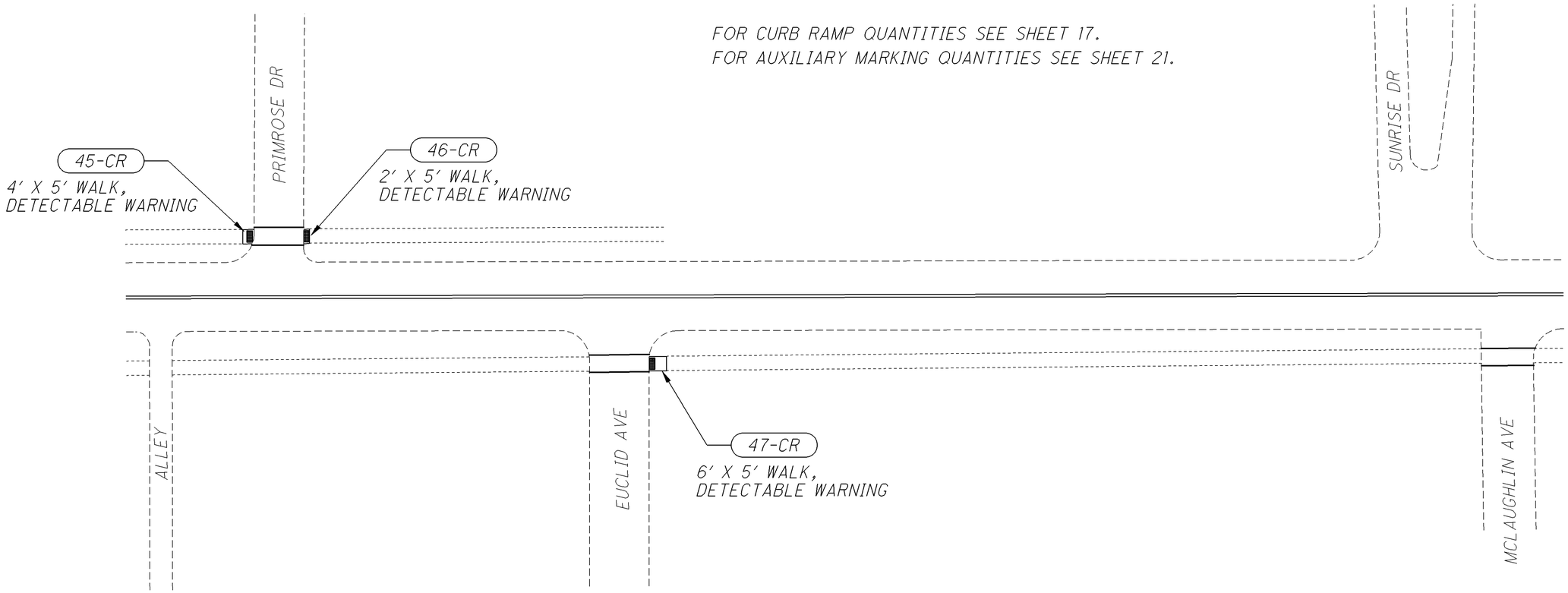

CALCULATED LME
CHECKED DNM

S.R. 821 PLAN SHEET

GUE-209-8.73
GUE-821-5.45

P:\GUE\76451\Design\Roadway\Plan_Sheets\General\MAP.dgn 09-JAN-2015 8:33AM dmorgan

LOCATION 1A SHEET TOTALS													ITEM	ITEM EXT.	GRAND TOTALS	UNIT	DESCRIPTION
2	3	4	5	6	11	12	13	15	18	19	20	22					
	180						4,267						202	23500	4,447	SY	WEARING COURSE REMOVED
2.54													209	60500	2.54	MILE	LINEAR GRADING
35													253	01000	35	CY	PAVEMENT REPAIR
					50,064	4,642							254	01000	54,706	SY	PAVEMENT PLANING, ASPHALT CONCRETE
					3,755	349	321						407	20500	4,425	GAL	SPECIAL - TACK COAT, TRACKLESS TACK
					2,345	190	214						407	20510	2,749	GAL	SPECIAL - TACK COAT, TRACKLESS TACK FOR INTERMEDIATE COURSE
1,192													408	10001	1,192	GAL	PRIME COAT, AS PER PLAN
	7				1,761	167	149						441	50100	2,084	CY	ASPHALT CONCRETE SURFACE COURSE, TYPE 1, (448), PG70-22M
	1				2,280	185	208						441	50300	2,674	CY	ASPHALT CONCRETE INTERMEDIATE COURSE, TYPE 2, (448)
								310					516	31011	310	FT	2" DEEP JOINT SEALER, AS PER PLAN
	3												611	98630	3	EACH	CATCH BASIN ADJUSTED TO GRADE
	3												611	99654	3	EACH	MANHOLE ADJUSTED TO GRADE
				80									614	11110	80	HOUR	LAW ENFORCEMENT OFFICER WITH PATROL CAR FOR ASSISTANCE
			28										614	12460	28	EACH	WORK ZONE MARKING SIGN
			15.0										614	13000	15.0	CY	ASPHALT CONCRETE FOR MAINTAINING TRAFFIC
				40									614	18401	40	DAY	PORTABLE CHANGEABLE MESSAGE SIGN, AS PER PLAN
					4.31								614	21400	4.31	MILE	WORK ZONE CENTER LINE, CLASS II
						166							617	10101	166	CY	COMPACTED AGGREGATE, AS PER PLAN
												144	621	00100	144	EACH	RPM
												144	621	54000	144	EACH	RAISED PAVEMENT MARKER REMOVED
		12											632	26501	12	EACH	DETECTOR LOOP, AS PER PLAN
	2												638	10800	2	EACH	VALVE BOX ADJUSTED TO GRADE
											3.580		644	00400	3.580	FT	CHANNELIZING LINE, 8"
											524		644	00500	524	FT	STOP LINE
											118		644	00600	118	FT	CROSSWALK LINE
											920		644	00700	920	FT	TRANSVERSE/DIAGONAL LINE
											114		644	00900	114	SF	ISLAND MARKING
											46		644	01300	46	EACH	LANE ARROW
											23		644	01410	23	EACH	WORD ON PAVEMENT, 96"
									3.50				648	00100	3.50	MILE	EDGE LINE, 4"
										2.16			648	00200	2.16	MILE	LANE LINE, 4"
										3.34			648	00300	3.34	MILE	CENTER LINE

CALCULATED LME
CHECKED DNM

LOCATION 1A SUB-SUMMARY

GUE-209-8.73
GUE-821-5.45

P:\GUE\76451\Design\Roadway\Plan_Sheets\General\76451_lss_001.dgn 12-JAN-2015 7:29AM dmorgan

LOCATION 1B SHEET TOTALS										ITEM	ITEM EXT.	GRAND TOTALS	UNIT	DESCRIPTION
2	3	5	6	11	12	14	15	17						
	340					4,915	57			202	23500	5,312	SY	WEARING COURSE REMOVED
								1,098		202	30000	1,098	SF	WALK REMOVED
								162		202	32000	162	FT	CURB REMOVED
2.80										209	60500	2.80	MILE	LINEAR GRADING
20										253	01000	20	CY	PAVEMENT REPAIR
				39,443	6,165					254	01000	45,608	SY	PAVEMENT PLANING, ASPHALT CONCRETE
				2,958	463	371	5			407	20500	3,797	GAL	SPECIAL - TACK COAT, TRACKLESS TACK
				1,251	116		3			407	20510	1,370	GAL	SPECIAL - TACK COAT, TRACKLESS TACK FOR INTERMEDIATE COURSE
1,221										408	10001	1,221	GAL	PRIME COAT, AS PER PLAN
						173				441	50000	173	CY	ASPHALT CONCRETE SURFACE COURSE, TYPE 1, (448), PG64-22
	13			1,471	241		2			441	50100	1,727	CY	ASPHALT CONCRETE SURFACE COURSE, TYPE 1, (448), PG70-22M
	2			1,216	113		3			441	50300	1,334	CY	ASPHALT CONCRETE INTERMEDIATE COURSE, TYPE 2, (448)
								974		608	10000	974	SF	4" CONCRETE WALK
								165		609	26000	165	FT	CURB, TYPE 6
	7									611	98630	7	EACH	CATCH BASIN ADJUSTED TO GRADE
	15									611	99654	15	EACH	MANHOLE ADJUSTED TO GRADE
			80							614	11110	80	HOUR	LAW ENFORCEMENT OFFICER WITH PATROL CAR FOR ASSISTANCE
		60								614	12460	60	EACH	WORK ZONE MARKING SIGN
		2.0								614	13000	2.0	CY	ASPHALT CONCRETE FOR MAINTAINING TRAFFIC
			40							614	18401	40	DAY	PORTABLE CHANGEABLE MESSAGE SIGN, AS PER PLAN
				4.12						614	21400	4.12	MILE	WORK ZONE CENTER LINE, CLASS II
					170					617	10101	170	CY	COMPACTED AGGREGATE, AS PER PLAN

CALCULATED LME
CHECKED DNM

LOCATION 1B SUB-SUMMARY

GUE-209-8.73
GUE-821-5.45

P:\GUE\76451\Design\Roadway\Plan_Sheets\General\76451_lss_002.dgn 12-JAN-2015 7:29AM dmorgan

LOCATION 1B SHEET TOTALS							ITEM	ITEM EXT.	GRAND TOTALS	UNIT	DESCRIPTION
3	4	17	18	19	21	22					
						312	621	00100	312	EACH	RPM
						312	621	54000	312	EACH	RAISED PAVEMENT MARKER REMOVED
	17						632	26501	17	EACH	DETECTOR LOOP, AS PER PLAN
8							638	10800	8	EACH	VALVE BOX ADJUSTED TO GRADE
					100		644	00400	100	FT	CHANNELIZING LINE, 8"
					473		644	00500	473	FT	STOP LINE
					747		644	00600	747	FT	CROSSWALK LINE
					2		644	01110	2	EACH	SCHOOL SYMBOL MARKING, 96"
					2		644	01300	2	EACH	LANE ARROW
					1		644	01410	1	EACH	WORD ON PAVEMENT, 96"
			3.14				648	00100	3.14	MILE	EDGE LINE, 4"
				1.08			648	00200	1.08	MILE	LANE LINE, 4"
				2.67			648	00300	2.67	MILE	CENTER LINE
	3						653	10001	3	CY	TOPSOIL FURNISHED AND PLACED, AS PER PLAN
	100						659	00500	100	SY	SEEDING AND MULCHING, CLASS 1
	5						659	14000	5	SY	REPAIR SEEDING AND MULCHING
	5						659	15000	5	SY	INTER-SEEDING
	0.03						659	20000	0.03	TON	COMMERCIAL FERTILIZER
	0.02						659	31000	0.02	ACRE	LIME
	1						659	35000	1	MGAL	WATER
		7					690	98000	7	EACH	SPECIAL - MISC.: CURB RAMP, TYPE A1
		4					690	98000	4	EACH	SPECIAL - MISC.: CURB RAMP, TYPE D
		136					690	98200	136	SF	SPECIAL - MISC.: DETECTABLE WARNING

CALCULATED LME
CHECKED DNM

LOCATION 1B SUB-SUMMARY

GUE-209-8.73
GUE-821-5.45

P:\GUE\76451\Design\Roadway\Plan_Sheets\General\76451_lss_003.dgn 12-JAN-2015 7:30AM dmorgan

LOCATION 1C SHEET TOTALS													ITEM	ITEM EXT.	GRAND TOTALS	UNIT	DESCRIPTION
2	3	4	5	6	11	12	13	15	18	19	20	22					
	220						2,349						202	23500	2,569	SY	WEARING COURSE REMOVED
2.90													209	60500	2.90	MILE	LINEAR GRADING
					34,919	9,279							254	01000	44,198	SY	PAVEMENT PLANING, ASPHALT CONCRETE
					2,619	696	177						407	20500	3,492	GAL	SPECIAL - TACK COAT, TRACKLESS TACK
					990	263	29						407	20510	1,282	GAL	SPECIAL - TACK COAT, TRACKLESS TACK FOR INTERMEDIATE COURSE
1,362													408	10001	1,362	GAL	PRIME COAT, AS PER PLAN
							46						441	50000	46	CY	ASPHALT CONCRETE SURFACE COURSE, TYPE 1, (448), PG64-22
	8				1,318	351	20						441	50100	1,697	CY	ASPHALT CONCRETE SURFACE COURSE, TYPE 1, (448), PG70-22M
	1				962	255	28						441	50300	1,246	CY	ASPHALT CONCRETE INTERMEDIATE COURSE, TYPE 2, (448)
								240					516	31011	240	FT	2" DEEP JOINT SEALER, AS PER PLAN
	1												611	99654	1	EACH	MANHOLE ADJUSTED TO GRADE
				80									614	11110	80	HOUR	LAW ENFORCEMENT OFFICER WITH PATROL CAR FOR ASSISTANCE
			28										614	12460	28	EACH	WORK ZONE MARKING SIGN
			15.0										614	13000	15.00	CY	ASPHALT CONCRETE FOR MAINTAINING TRAFFIC
					2.72								614	21400	2.72	MILE	WORK ZONE CENTER LINE, CLASS II
						190							617	10101	190	CY	COMPACTED AGGREGATE, AS PER PLAN
												351	621	00100	351	EACH	RPM
												351	621	54000	351	EACH	RAISED PAVEMENT MARKER REMOVED
		17											632	26501	17	EACH	DETECTOR LOOP, AS PER PLAN
											1,400		644	00400	1,400	FT	CHANNELIZING LINE, 8"
											251		644	00500	251	FT	STOP LINE
											953		644	00700	953	FT	TRANSVERSE/DIAGONAL LINE
											660		644	00900	660	SF	ISLAND MARKING
											2		644	01000	2	EACH	RAILROAD SYMBOL MARKING
											20		644	01300	20	EACH	LANE ARROW
											7		644	01410	7	EACH	WORD ON PAVEMENT, 96"
									2.90				648	00100	2.90	MILE	EDGE LINE, 4"
										1.30			648	00200	1.30	MILE	LANE LINE, 4"
										2.10			648	00300	2.10	MILE	CENTER LINE

CALCULATED LME
CHECKED DNM

LOCATION 1C SUB-SUMMARY

GUE-209-8.73
GUE-821-5.45

P:\GUE\76451\Design\Roadway\Plan_Sheets\General\76451_lss_004.dgn 12-JAN-2015 7:31AM dmorgan

LOCATION 2 SHEET TOTALS							ITEM	ITEM EXT.	GRAND TOTALS	UNIT	DESCRIPTION
2	3	5	6	11	14	17					
	20				1,621		202	23500	1,641	SY	WEARING COURSE REMOVED
						761	202	30000	761	SF	WALK REMOVED
						104	202	32000	104	FT	CURB REMOVED
20							253	01000	20	CY	PAVEMENT REPAIR
				7,885			254	01000	7,885	SY	PAVEMENT PLANING, ASPHALT CONCRETE
				592	123		407	20500	715	GAL	SPECIAL - TACK COAT, TRACKLESS TACK
				395	7		407	20510	402	GAL	SPECIAL - TACK COAT, TRACKLESS TACK FOR INTERMEDIATE COURSE
					53		441	50000	53	CY	ASPHALT CONCRETE SURFACE COURSE, TYPE 1, (448), PG64-22
	1			274	5		441	50100	280	CY	ASPHALT CONCRETE SURFACE COURSE, TYPE 1, (448), PG70-22M
				384	7		441	50300	391	CY	ASPHALT CONCRETE INTERMEDIATE COURSE, TYPE 2, (448)
						611	608	10000	611	SF	4" CONCRETE WALK
						104	609	26000	104	FT	CURB, TYPE 6
	5						611	98630	5	EACH	CATCH BASIN ADJUSTED TO GRADE
	16						611	99654	16	EACH	MANHOLE ADJUSTED TO GRADE
		22					614	12460	22	EACH	WORK ZONE MARKING SIGN
		6.0					614	13000	6.0	CY	ASPHALT CONCRETE FOR MAINTAINING TRAFFIC
			40				614	18401	40	DAY	PORTABLE CHANGEABLE MESSAGE SIGN, AS PER PLAN
				0.98			614	21400	0.98	MILE	WORK ZONE CENTER LINE, CLASS II

CALCULATED LME
CHECKED DNM

LOCATION 2 SUB-SUMMARY

GUE-209-8.73
GUE-821-5.45

P:\GUE\76451\Design\Roadway\Plan_Sheets\General\76451_lss_005.dgn 12-JAN-2015 7:32AM dmorgan

LOCATION 2 SHEET TOTALS						ITEM	ITEM EXT.	GRAND TOTALS	UNIT	DESCRIPTION
3	4	17	18	19	21					
4						638	10800	4	EACH	VALVE BOX ADJUSTED TO GRADE
					185	644	00500	185	FT	STOP LINE
					800	644	00600	800	FT	CROSSWALK LINE
					2	644	01000	2	EACH	RAILROAD SYMBOL MARKING
250						644	01200	250	EACH	PARKING LOT STALL MARKING
			0.32			648	00100	0.32	MILE	EDGE LINE, 4"
				0.49		648	00300	0.49	MILE	CENTER LINE
	3					653	10001	3	CY	TOPSOIL FURNISHED AND PLACED, AS PER PLAN
	100					659	00500	100	SY	SEEDING AND MULCHING, CLASS 1
	5					659	14000	5	SY	REPAIR SEEDING AND MULCHING
	5					659	15000	5	SY	INTER-SEEDING
	0.03					659	20000	0.03	TON	COMMERCIAL FERTILIZER
	0.02					659	31000	0.02	ACRE	LIME
	1					659	35000	1	MGAL	WATER
		6				690	98000	6	EACH	SPECIAL - MISC.: CURB RAMP, TYPE A1
		1				690	98000	1	EACH	SPECIAL - MISC.: CURB RAMP, TYPE A2
		1				690	98000	1	EACH	SPECIAL - MISC.: CURB RAMP, TYPE D
		96				690	98200	96	SF	SPECIAL - MISC.: DETECTABLE WARNING

CALCULATED LME
CHECKED DNM

LOCATION 2 SUB-SUMMARY

GUE-209-8.73
GUE-821-5.45

P:\GUE\76451\Design\Roadway\Plan_Sheets\General\76451_lss_006.dgn 12-JAN-2015 7:32AM dmorgan

LOCATION TOTALS				PARTICIPATION				ITEM	ITEM EXT.	GRAND TOTALS	UNIT	DESCRIPTION	SEE SHEET
1A	1B	1C	2	01/NHS/PV/ CAMB	02/NHS/PV	03/NHS/PV	04/S<2/PV						
4,447	5,312	2,569	1,641	4,447	2,569	5,312	1,641	202	23500	13,969	SY	WEARING COURSE REMOVED	
	1,098		761			1,098	761	202	30000	1,859	SF	WALK REMOVED	
	162		104			162	104	202	32000	266	FT	CURB REMOVED	
2.54	2.80	2.90		2.54	2.90	2.80		209	60500	8.24	MILE	LINEAR GRADING	
35	20		20	35		20	20	253	02000	75	CY	PAVEMENT REPAIR	
54,706	45,608	44,198	7,885	54,706	44,198	45,608	7,885	254	01000	152,397	SY	PAVEMENT PLANING, ASPHALT CONCRETE	
4,425	3,797	3,492	715	4,425	3,492	3,797	715	407	20500	12,429	GAL	SPECIAL - TACK COAT, TRACKLESS TACK	
2,749	1,370	1,282	402	2,749	1,282	1,370	402	407	20510	5,803	GAL	SPECIAL - TACK COAT, TRACKLESS TACK FOR INTERMEDIATE COURSE	
1,192	1,221	1,362		1,192	1,362	1,221		408	10001	3,775	GAL	PRIME COAT, AS PER PLAN	2
	173	46	53		46	173	53	441	50000	272	CY	ASPHALT CONCRETE SURFACE COURSE, TYPE 1, (448), PG64-22	
2,084	1,727	1,697	280	2,084	1,697	1,727	280	441	50100	5,788	CY	ASPHALT CONCRETE SURFACE COURSE, TYPE 1, (448), PG70-22M	
2,674	1,334	1,246	391	2,674	1,246	1,334	391	441	50300	5,645	CY	ASPHALT CONCRETE INTERMEDIATE COURSE, TYPE 2, (448)	
310		240		310	240			516	31011	550	FT	2" DEEP JOINT SEALER, AS PER PLAN	2
	974		611			974	611	608	10000	1,585	SF	4" CONCRETE WALK	
	165		104			165	104	609	26000	269	FT	CURB, TYPE 6	
3	7		5	3		7	5	611	98630	15	EACH	CATCH BASIN ADJUSTED TO GRADE	
3	15	1	16	3	1	15	16	611	99654	35	EACH	MANHOLE ADJUSTED TO GRADE	
80	80	80		80	80	80		614	11110	240	HOUR	LAW ENFORCEMENT OFFICER WITH PATROL CAR FOR ASSISTANCE	
28	60	28	22	28	28	60	22	614	12460	138	EACH	WORK ZONE MARKING SIGN	
15.0	2.0	15.0	6.0	15.0	15.0	2.0	6.0	614	13000	38	CY	ASPHALT CONCRETE FOR MAINTAINING TRAFFIC	
40.0	40		40	40		40	40	614	18401	120	DAY	PORTABLE CHANGEABLE MESSAGE SIGN, AS PER PLAN	6
4.31	4.12	2.72	0.98	4.31	2.72	4.12	0.98	614	21400	12.13	MILE	WORK ZONE CENTER LINE, CLASS II	
166	170	190		166	190	170		617	10101	526	CY	COMPACTED AGGREGATE, AS PER PLAN	2
144	312	351		144	351	312		621	00100	807	EACH	RPM	
144	312	351		144	351	312		621	54000	807	EACH	RAISED PAVEMENT MARKER REMOVED	
12	17	17		12	17	17		632	26501	46	EACH	DETECTOR LOOP, AS PER PLAN	4
2	8		4	2		8	4	638	10800	14	EACH	VALVE BOX ADJUSTED TO GRADE	

CALCULATED LME
CHECKED DNM

GENERAL SUMMARY

GUE-209-8.73
GUE-821-5.45

P:\GUE\76451\Design\Roadway\Plan_Sheets\General\76451_mgs_001.dgn 12-JAN-2015 7:42AM dmorgan

LOCATION TOTALS				PARTICIPATION				ITEM	ITEM EXT.	GRAND TOTALS	UNIT	DESCRIPTION	SEE SHEET
1A	1B	1C	2	01/NHS/PV/ CAMB	02/NHS/PV	03/NHS/PV	04/S<2/PV						
3,580.0	100	1,400		3,580	1,400	100		644	00400	5,080	FT	CHANNELIZING LINE, 8"	
524	473	251	185	524	251	473	185	644	00500	1,433	FT	STOP LINE	
118	747		800	118		747	800	644	00600	1,665	FT	CROSSWALK LINE	
920		953		920	953			644	00700	1,873	FT	TRANSVERSE/DIAGONAL LINE	
114		660		114	660			644	00900	774	SF	ISLAND MARKING	
		2	2		2		2	644	01000	4	EACH	RAILROAD SYMBOL MARKING	
	2					2		644	01110	2	EACH	SCHOOL SYMBOL MARKING, 96"	
			250				250	644	01200	250	EACH	PARKING LOT STALL MARKING	
46	2	20		46	20	2		644	01300	68	EACH	LANE ARROW	
23	1	7		23	7	1		644	01410	31	EACH	WORD ON PAVEMENT, 96"	
3.50	3.14	2.90	0.32	3.50	2.90	3.14	0.32	648	00100	9.86	MILE	EDGE LINE, 4"	
2.16	1.08	1.30		2.16	1.30	1.08		648	00200	4.54	MILE	LANE LINE, 4"	
3.34	2.67	2.10	0.49	3.34	2.10	2.67	0.49	648	00300	8.60	MILE	CENTER LINE	
	3		3			3	3	653	10001	6	CY	TOPSOIL FURNISHED AND PLACED, AS PER PLAN	4
	100		100			100	100	659	00500	200	SY	SEEDING AND MULCHING, CLASS 1	
	5		5			5	5	659	14000	10	SY	REPAIR SEEDING AND MULCHING	
	5		5			5	5	659	15000	10	SY	INTER-SEEDING	
	0.03		0.03			0.03	0.03	659	20000	0.06	TON	COMMERCIAL FERTILIZER	
	0.02		0.02			0.02	0.02	659	31000	0.04	ACRE	LIME	
	1		1			1	1	659	35000	2	MGAL	WATER	
	7		6			7	6	690	98000	13	EACH	SPECIAL - MISC.: CURB RAMP, TYPE A1	
			1				1	690	98000	1	EACH	SPECIAL - MISC.: CURB RAMP, TYPE A2	
	4		1			4	1	690	98000	5	EACH	SPECIAL - MISC.: CURB RAMP, TYPE D	
	136		96			136	96	690	98200	232	SF	SPECIAL - MISC.: DETECTABLE WARNING	
				LUMP	LUMP	LUMP	LUMP	103	05000	LUMP		PREMIUM FOR CONTRACT PERFORMANCE BOND AND FOR PAYMENT BOND	
				LUMP	LUMP	LUMP	LUMP	614	11000	LUMP		MAINTAINING TRAFFIC	
				LUMP	LUMP	LUMP	LUMP	623	10000	LUMP		CONSTRUCTION LAYOUT STAKES AND SURVEYING	
				LUMP	LUMP	LUMP	LUMP	624	10000	LUMP		MOBILIZATION	

CALCULATED LME
CHECKED DNM

GENERAL SUMMARY

GUE-209-8.73
GUE-821-5.45

P:\GUE\76451\Design\Roadway\Plan_Sheets\General\76451_mgs_002.dgn 12-JAN-2015 11:10AM dmorgan

STATE OF OHIO

DEPARTMENT OF TRANSPORTATION

GUE-209-8.57/9.85 PART 2

CAMBRIDGE TOWNSHIP

GUERNSEY COUNTY

(FOR PART 1, SEE GUE-209/821-8.73/5.45)

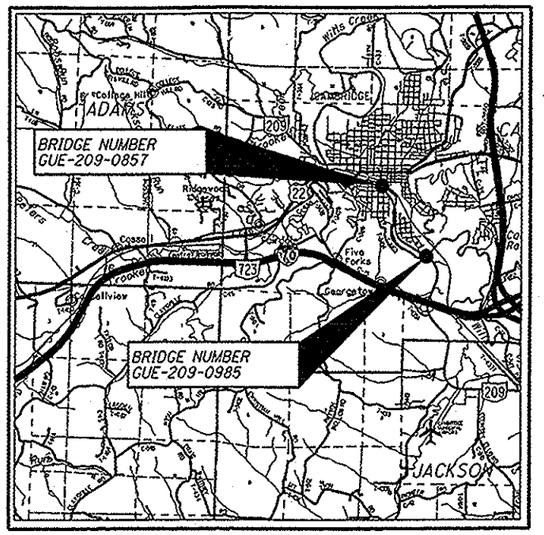

LOCATION MAP

GUE-209-9.85
LATITUDE: N 40° 0' 30" LONGITUDE: W 81° 34' 44"
GUE-209-8.57
LATITUDE: N 40° 01' 25" LONGITUDE: W 81° 35' 24"

SCALE IN MILES
0 1 2 3 4

N

PORTION TO BE IMPROVED
INTERSTATE HIGHWAY
STATE & FEDERAL ROUTES
COUNTY & TOWNSHIP ROADS
OTHER ROADS

DESIGN DESIGNATION

CURRENT ADT (2015)	17,500
DESIGN YEAR ADT (2035)	20,800
DESIGN HOURLY VOLUME (2035)	1,872
DIRECTIONAL DISTRIBUTION	55%
TRUCKS (24 HOUR B&C)	520
DESIGN SPEED	35 MPH
LEGAL SPEED	35 MPH
DESIGN FUNCTIONAL CLASSIFICATION: RURAL PRINCIPAL ARTERIAL	
NHS PROJECT	NO

DESIGN EXCEPTIONS

NONE

UNDERGROUND UTILITIES

CONTACT BOTH SERVICES
CALL TWO WORKING DAYS
BEFORE YOU DIG

CALL
1-800-362-2764
(TOLL FREE)
OHIO UTILITIES PROTECTION SERVICE
NON-MEMBERS
MUST BE CALLED DIRECTLY

OIL & GAS PRODUCERS PROTECTIVE
SERVICE CALL: 1-800-925-0988

PLAN PREPARED BY:
OHIO DEPARTMENT OF
TRANSPARTATION, DISTRICT 5

INDEX OF SHEETS:

TITLE SHEET 1
TYPICAL SECTIONS 2-5
GENERAL NOTES 6-8
MAINTENANCE OF TRAFFIC 9-19
GENERAL SUMMARY 20
PLAN AND PROFILE 21,22
SUB-SUMMARY 23
CALCULATIONS 23
STRUCTURES OVER 20 FT. (SFN 3004112)
BRIDGE NOTES 24,25
BRIDGE SUMMARY 26
ABUTMENT DETAILS 27-34
SUPERSTRUCTURE DETAILS 35-47
RESTEEL SCHEDULE 48,49
APPROACH SLABS 50-52
STRUCTURES OVER 20 FT. (SFN 3004058)
BRIDGE NOTES 53
BRIDGE SUMMARY 54
ABUTMENT DETAILS 55,56
SUPERSTRUCTURE DETAILS 57-60

PROJECT DESCRIPTION

BRIDGE GUE-209-0982

REPLACEMENT OF EXISTING REINFORCED CONCRETE DECK, BACKWALL AND APPROACH SLABS WITH NEW REINFORCED CONCRETE DECK, BACKWALL AND BURIED APPROACH SLABS. EXISTING STEEL BEAM PAINTING TO BE REMOVED AND STEEL BEAMS TO BE REPAINTED. EXITING SLIDING PLATES AT ABUTMENTS TO BE REPLACED, WHILE EXISTING BEARINGS AT THE PIERS ARE TO REMAIN. MINOR VERTICAL REALIGNMENT, FULL DEPTH PAVEMENT REPLACEMENT, AND RESURFACING OF THE FACILITY AND ASSOCIATED ROADWAY WORK.

BRIDGE GUE-209-0857

REHABILITATE DETERIORATED BACKWALL, APPROACH SLABS AND INTERMEDIATE JOINTS. SPOT PATCHING OF DETERIORATED CONCRETE OVERLAY AND CONCRETE SAFETY CURB.

PROJECT EARTH DISTURBED AREA:	N/A
ESTIMATED CONTRACTOR EARTH DISTRUBED AREA:	N/A
NOTICE OF INTENT EARTH DISTURBED AREA:	N/A

2013 SPECIFICATIONS

THE STANDARD SPECIFICATIONS OF THE STATE OF OHIO, DEPARTMENT OF TRANSPORTATION, INCLUDING CHANGES AND SUPPLEMENTAL SPECIFICATIONS LISTED IN THE PROPOSAL SHALL GOVERN THIS IMPROVEMENT.

I HEREBY APPROVE THESE PLANS AND DECLARE THAT THE MAKING OF THIS IMPROVEMENT WILL NOT REQUIRE CLOSING OF THE HIGHWAY. PROVISIONS FOR THE MAINTENANCE, SAFETY, AND CLOSURE WILL BE AS SET FORTH IN THE PLANS.

ENGINEER'S SEAL:

STATE OF OHIO
JUSTIN DEAN REED
71763
REGISTERED
PROFESSIONAL ENGINEER

SIGNED: Justin D. Reed
DATE: 1-7-2015

STANDARD CONSTRUCTION DRAWINGS	SUPPLEMENTAL SPECIFICATIONS
	SEE PART 1
SEE PART 1	SPECIAL PROVISIONS
	SEE PART 1

APPROVED [signature]
DATE 1/8/15 CAMBRIDGE CITY ENGINEER

APPROVED Dave Rory
DATE 1-9-15 DISTRICT DEPUTY DIRECTOR

APPROVED Jerry Wray Jr.
DATE 1-27-15 DIRECTOR, DEPARTMENT OF TRANSPORTATION

FEDERAL PROJECT NO. E036 (440)

PID NO. 76451

CONSTRUCTION PROJECT NO.

RAILROAD INVOLVEMENT NONE

GUE-209-8.57/9.85

P:\MUS\91824\Design\MUS-208-10.41\Bridge\6005578 - MUS-208-1041\Plan_Sheets\91824_GTS_001.DGN SCALE-1.000 (1/1/13)

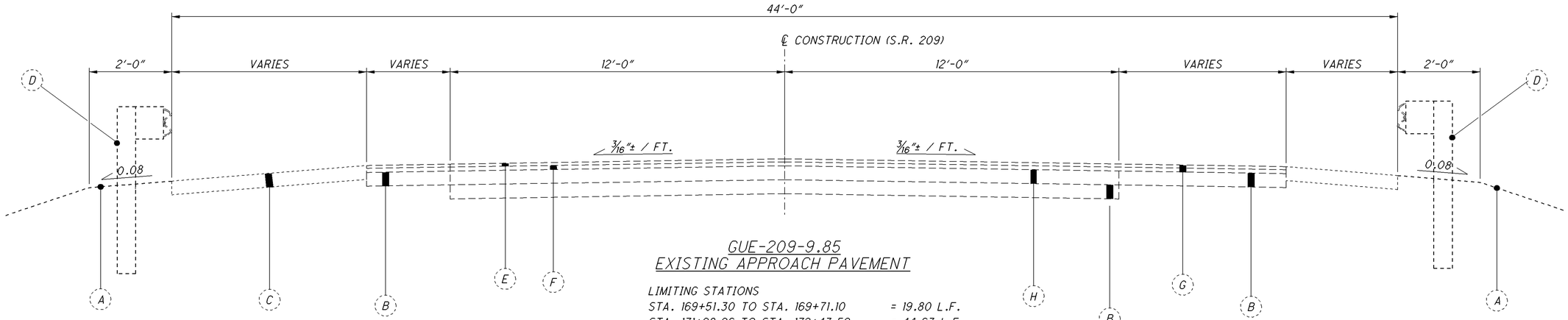

GUE-209-9.85
EXISTING APPROACH PAVEMENT

LIMITING STATIONS

STA. 169+51.30 TO STA. 169+71.10	= 19.80 L.F.
STA. 171+98.96 TO STA. 172+43.59	= 44.63 L.F.
TOTAL LENGTH	= 64.43 L.F.

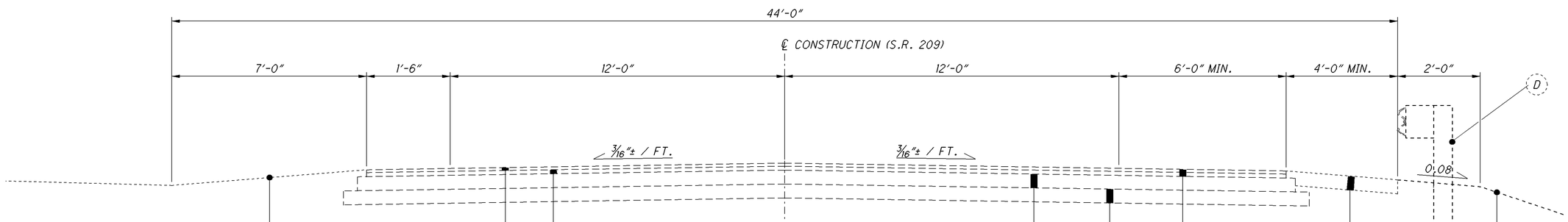

GUE-209-9.85
EXISTING APPROACH PAVEMENT

LIMITING STATIONS

STA. 167+13.04 TO STA. 169+51.30	= 238.26 L.F.
STA. 172+43.59 TO STA. 173+08.57	= 64.88
TOTAL LENGTH	= 303.14 L.F.

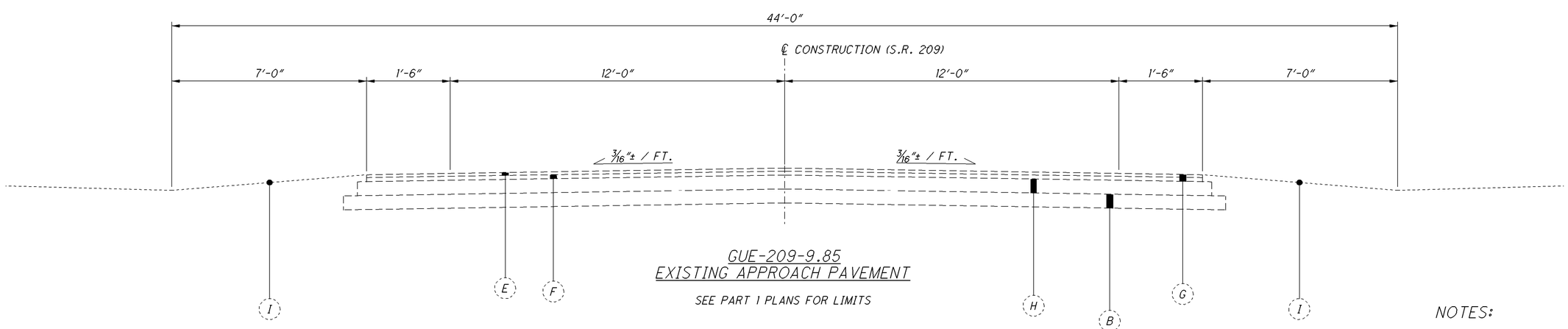

GUE-209-9.85
EXISTING APPROACH PAVEMENT

SEE PART 1 PLANS FOR LIMITS

NOTES:

1. SEE SHEET 3 & 4 OF 60 FOR LEGEND AND NOTES

APPROACH PAVEMENT TYPICAL SECTIONS

GUE-209-8.57/9.85

P:\GUE\93133\Design\Bridge\SFN - Route Name\Plan_Sheets\93133_PTS_003.dgn 08-JAN-2015 1:33PM nmccoy

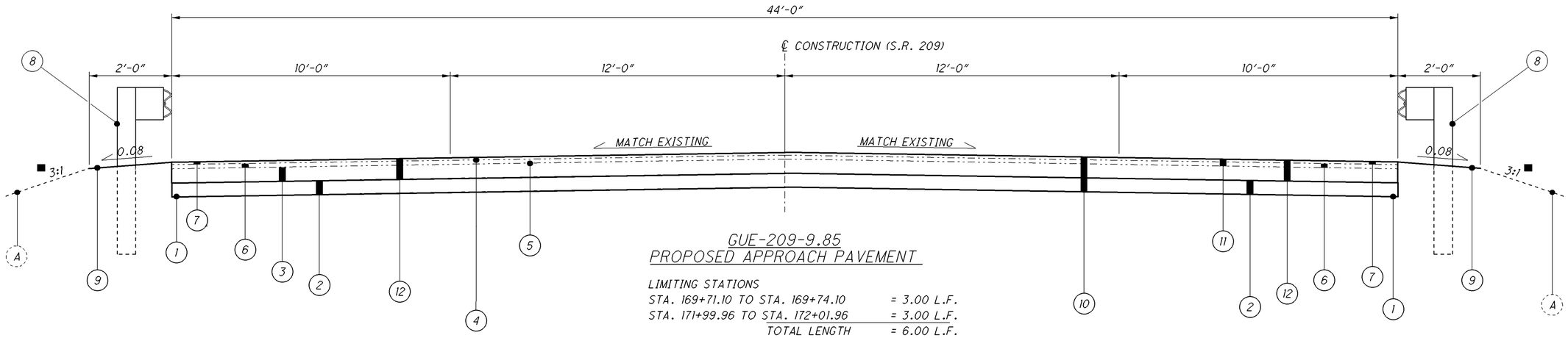

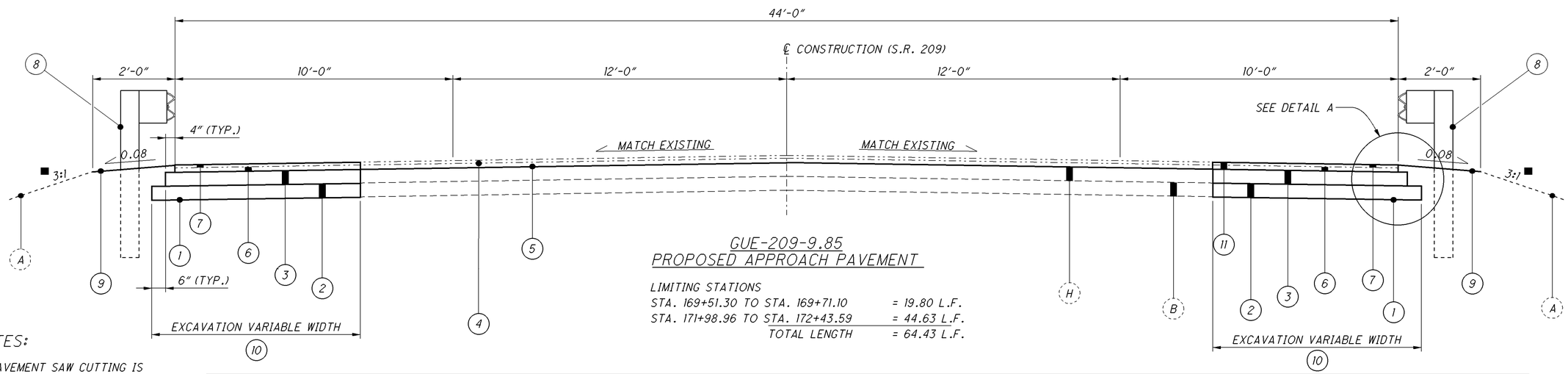

NOTES:

1. PAVEMENT SAW CUTTING IS INCLUDED WITH ITEM 202 - EXCAVATION
2. TAPER THICKNESS OF ASPHALT INTERMEDIATE COURSE TO ACHIEVE PROPOSED ROADWAY PROFILE.

* SEE PART 1 ROADWAY PLANS FOR PAYMENT AND QUANTITIES

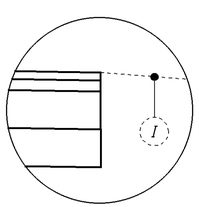

DETAIL A
PROPOSED APPROACH PAVEMENT AT DRIVES

LEGEND

■ - UNLESS OTHERWISE NOTED ON THE PLANS OR CROSS SECTIONS.

MARK	ITEM	DESCRIPTION	MARK	ITEM	DESCRIPTION
1	204	SUBGRADE COMPACTION	12	301	9" ASPHALT CONCRETE BASE
2	304	6" AGGREGATE BASE			
3	301	6" ASPHLAT CONCRETE BASE	A	-	EXISTING SEEING AND MULCHING
4	407	TACK COAT (0.075 GAL./SQ. YD.)*	B	-	EXISTING 6" AGGREGATE BASE
5	407	TACK COAT FOR INTERMEDIATE COURSE (0.04 GAL./SQ. YD.)*	C	-	EXISTING 6" SHOULDER
6	441	ASPHALT CONCRETE INTERMEDIATE COURSE, TYPE 2, (448) (VARIABLE THICKNESS, 1¾" MIN.)*	D	-	EXISTING GUARDRAIL
7	441	1 ¼ " ASPHALT CONCRETE SURFACE COURSE, TYPE 1, (448), PG70-22M (VARIABLE THICKNESS, 1¼" MIN.)*	E	-	EXISTING 1¼" ± ASPHALT CONCRETE SURFACE COURSE
8	606	GUARDRAIL, TYPE MGS	F	-	EXISTING 1¾" ± INTERMEDIATE COURSE
9	659	SEEDING AND MULCHING	G	-	EXISTING PAVEMENT REMOVED, ASPHALT
10	202	EXCAVATION	H	-	EXISTING 9" ASPHALT CONCRETE BASE
11	301	3" ASPHALT CONCRETE BASE	I	-	EXISTING CONC., ASPHALT OR CONC. WITH ASPHALT OVERLAY DRIVEWAY (DEPTH UNKNOWN)

APPROACH PAVEMENT TYPICAL SECTIONS

GUE-209-8.57/ 9.85

P:\GUE\93133\Design\Bridge\SFN - Route Name\Plan_Sheets\93133_PTS_002.dgn 08-JAN-2015 3:02PM nmccoy

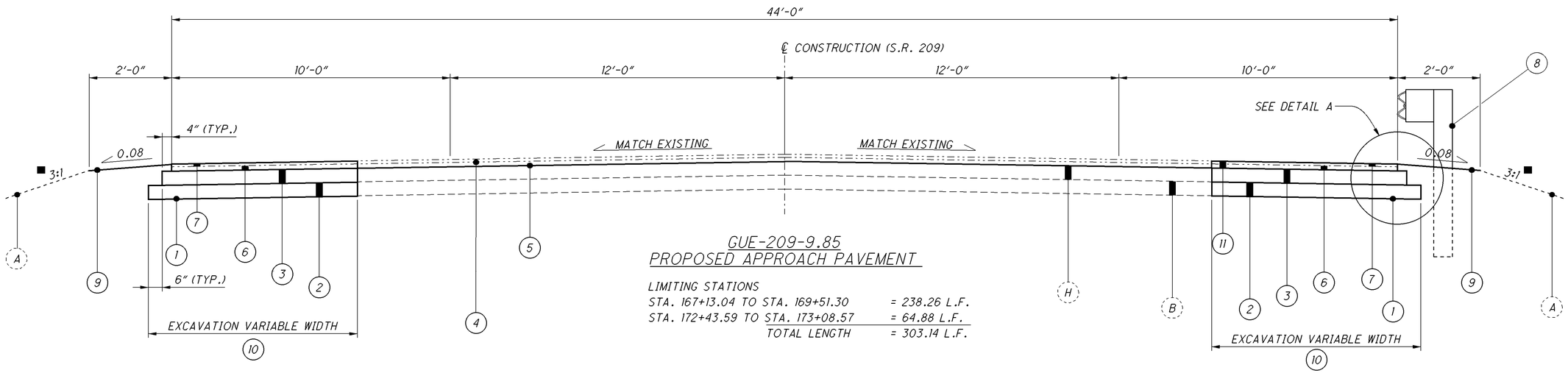

NOTES:

1. PAVEMENT SAW CUTTING IS INCLUDED WITH ITEM 202 - EXCAVATION
2. TAPER THICKNESS OF ASPHALT INTERMEDIATE COURSE TO ACHIEVE PROPOSED ROADWAY PROFILE.

* SEE PART 1 ROADWAY PLANS FOR PAYMENT AND QUANTITIES

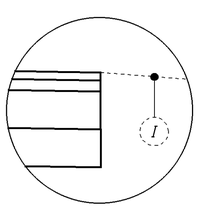

DETAIL A
PROPOSED APPROACH PAVEMENT AT DRIVES

LEGEND

■ - UNLESS OTHERWISE NOTED ON THE PLANS OR CROSS SECTIONS.

MARK	ITEM	DESCRIPTION	MARK	ITEM	DESCRIPTION
1	204	SUBGRADE COMPACTION	12	301	9" ASPHALT CONCRETE BASE
2	304	6" AGGREGATE BASE			
3	301	6" ASPHLAT CONCRETE BASE	A	-	EXISTING SEEING AND MULCHING
4	407	TACK COAT (0.075 GAL./SQ. YD.)*	B	-	EXISTING 6" AGGREGATE BASE
5	407	TACK COAT FOR INTERMEDIATE COURSE (0.04 GAL./SQ. YD.)*	C	-	EXISTING 6" SHOULDER
6	441	ASPHALT CONCRETE INTERMEDIATE COURSE, TYPE 2, (448) (VARIABLE THICKNESS, 1¾" MIN.)*	D	-	EXISTING GUARDRAIL
7	441	1 ¼ " ASPHALT CONCRETE SURFACE COURSE, TYPE 1, (448), PG70-22M (VARIABLE THICKNESS, 1¼" MIN.)*	E	-	EXISTING 1¼" ± ASPHALT CONCRETE SURFACE COURSE
8	606	GUARDRAIL, TYPE MGS	F	-	EXISTING 1¾" ± INTERMEDIATE COURSE
9	659	SEEDING AND MULCHING	G	-	EXISTING PAVEMENT REMOVED, ASPHALT
10	202	EXCAVATION	H	-	EXISTING 9" ASPHALT CONCRETE BASE
11	301	3" ASPHALT CONCRETE BASE	I	-	EXISTING CONC., ASPHALT OR CONC. WITH ASPHALT OVERLAY DRIVEWAY (DEPTH UNKNOWN)

APPROACH PAVEMENT TYPICAL SECTIONS

GUE-209-8.57/9.85

P:\GUE\93133\Design\Bridge\SFN - Route Name\Plan_Sheets\93133_PTS_004.dgn 08-JAN-2015 3:01PM nmccoy

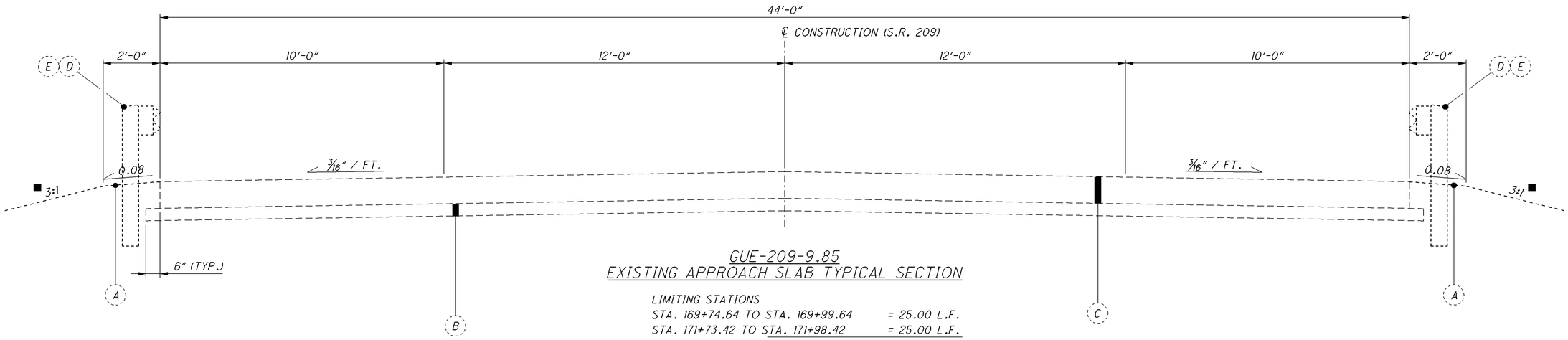

GUE-209-9.85
EXISTING APPROACH SLAB TYPICAL SECTION

LIMITING STATIONS
STA. 169+74.64 TO STA. 169+99.64 = 25.00 L.F.
STA. 171+73.42 TO STA. 171+98.42 = 25.00 L.F.
TOTAL LENGTH = 50.00 L.F.

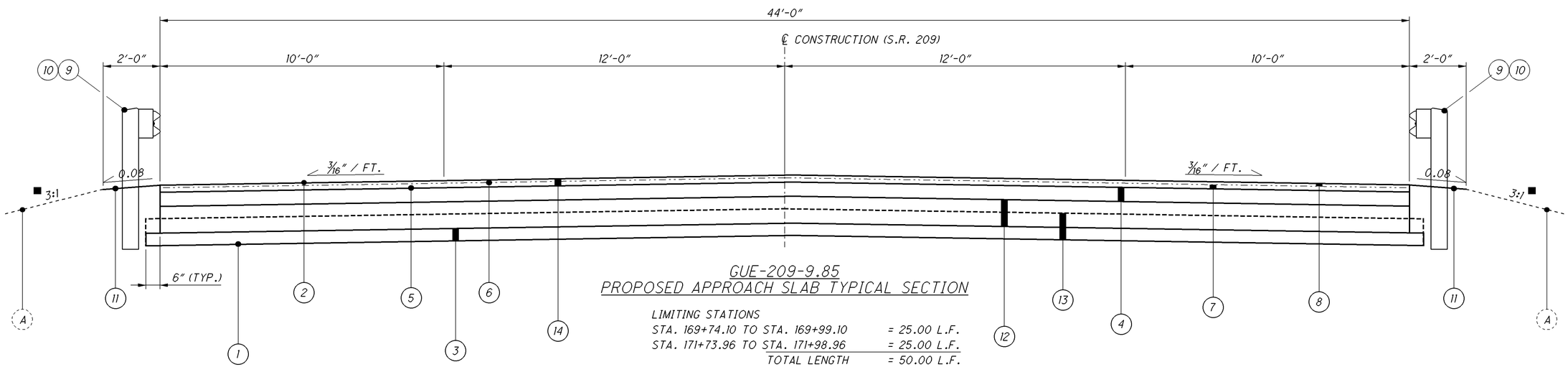

GUE-209-9.85
PROPOSED APPROACH SLAB TYPICAL SECTION

LIMITING STATIONS
STA. 169+74.10 TO STA. 169+99.10 = 25.00 L.F.
STA. 171+73.96 TO STA. 171+98.96 = 25.00 L.F.
TOTAL LENGTH = 50.00 L.F.

LEGEND

■ - UNLESS OTHERWISE NOTED ON THE PLANS OR CROSS SECTIONS.

MARK	ITEM	DESCRIPTION	MARK	ITEM	DESCRIPTION
1	204	SUBGRADE COMPACTION	11	659	SEEDING AND MULCHING
2	516	2" DEEP JOINT SEALER, AS PER PLAN*	12	526	REINFORCED CONCRETE APPROACH SLABS (T=15"), AS PER PLAN
3	304	6" AGGREGATE BASE	13	526	EXCAVATION
4	301	6" ASPHLAT CONCRETE BASE	14	301	3" ASHPALT CONCRETE BASE
5	407	TACK COAT (0.075 GAL./SQ. YD.)*	A	-	EXISTING SEEING AND MULCHING
6	407	TACK COAT FOR INTERMEDIATE COURSE (0.04 GAL./SQ. YD.)*	B	-	EXISTING 6" AGGREGATE BASE
7	441	ASPHALT CONCRETE INTERMEDIATE COURSE, TYPE 2, (448) (VARIABLE THICKNESS, 1¾" MIN.)*	C	-	EXISTING REINFORCED CONCRETE APPROACH SLAB (T=15")
8	441	1 ¼ " ASPHALT CONCRETE SURFACE COURSE, TYPE 1, (448), PG70-22M (VARIABLE THICKNESS, 1¼" MIN.)*	D	-	EXISTING GUARDRAIL
9	606	GUARDRAIL, TYPE MGS	E	-	EXISTING BRIDGE TERMINAL ASSEMBLY
10	606	BRIDGE TERMINAL ASSEMBLY, MGS, TYPE 1			

NOTES:

1. PAVEMENT SAWCUTTING IS INCLUDED WITH ITEM 202 - EXCAVATION
2. TAPER THICKNESS OF ASPHALT INTERMEDIATE COURSE TO ACHIEVE PROPOSED ROADWAY PROFILE.

* SEE PART 1 ROADWAY PLANS FOR PAYMENT AND QUANTITES

APPROACH SLAB TYPICAL SECTIONS

GUE-209-8.57/ 9.85

P:\GUE\93133\Design\Bridge\SFN - Route Name\Plan_Sheets\93133_PTS_001.dgn 08-JAN-2015 3:05PM nmccoy

EXISITNG PLANS

EXISTING PLANS ENTITLED GUE-209-(9.92-9.93) AND BR-36-89 MAY BE INSPECTED IN THE BIDDING DOCUMENTS FOR THIS PROJECT.

MOBILIZATION

THE CONTRACTOR SHALL ON ANY CONTRACT FOR WHICH HIS BID EXCEEDS $50,000.00 INCLUDE AN AMOUNT TO COVER ANY APPLICABLE EXPENDITURES REFERRED TO UNDER ITEM 624 OF THE 2012 CONSTRUCTION AND MATERIAL SPECIFICATION. PAYMENT SHALL BE THE LUMP SUM BID PRICE FOR ITEM 624, MOBILIZATION.

UTILITY OWNERSHIP

LISTED BELOW ARE ALL UTILITIES LOCATED WITHIN THE PROJECT CONSTRUCTION LIMITS TOGETHER WITH THEIR RESPECTIVE OWNERS:

AMERICAN ELECTRIC POWER CO.
850 TECH CENTER DRIVE
GAHANNA, OHIO 43230
ATTN: PAUL PAXTON
PH: (614)-883-6831

CITY OF CAMBRIDGE WATER/WASTE WATER
CITY ADMINISTRATION BUILDING
1131 STEUBENVILLE AVENUE
CAMBRIDGE, OHIO 43725
ATTN: ANNE BURNS
PH: (740)-432-5453

COLUMBIA GAS OF OHIO
98 STEUBENVILLE AVENUE
CAMBRIDGE, OHIO 43725
ATTN: WILLIAM RICH
PH: (740)-648-0079

FRONTIER TELEPHONE COMPANY
9444 CAMPBELL STREET
CAMBRIDGE, OHIO 43725
ATTN: ASHLEY MORAN
PH: (740)-432-6961

GATHERCO, INC.
6273 FRANK AVE, NW
NORTH CANTON, OHIO 44720
ATTN: TONY KOVACEVICH
PH: (330)-498-9553

TIME WARNER CABLE
3760 INTERCHANGE DRIVE
COLUMBUS, OHIO 43204
ATTN: RAY MAURER
PH: (614)-481-5262

THE LOCATION OF THE UNDERGROUND UTILITIES SHOWN ON THE PLANS ARE AS OBTAINED FROM THE OWNERS AS REQUIRED BY SECTION 153.64 O.R.C.

SEEDING AND MULCHING

THE FOLLOWING QUANTITIES ARE PROVIDED TO PROMOTE GROWTH AND CARE OF THE PERMANENT SEEDED AREAS:

ITEM 659 - SEEDING AND MULCHING, CLASS 3B	318 SQ. YDS.
ITEM 659 - COMMERICAL FERTILIZER	0.03 TON
ITEM 659 - LIME	0.07 ACRES
ITEM 659 - WATER	1.7 M GAL

THE QUANTITES ABOVE HAVE BEEN CARRIED TO THE GENERAL SUMMARY.

GENERAL PROVISIONS

THE CONTRACTOR'S ATTENTION IS CALLED TO ALL OF SECTION 100 OF THE CONSTRUCTION AND MATERIAL SPECIFICATIONS OF THE OHIO DEPARTMENT OF TRANSPORTATION.

CONSTRUCTION NOTIFICATION

IN ORDER FOR ODOT TO PREPARE SIGNING WHEN REQUIRED AND TO NOTIFY THE GENERAL MOTORING PUBLIC, THE CONTRACTOR SHALL NOTIFY (IN WRITING) THE DISTRICT 5 CONSTRUCTION ENGINEER WITH COPIES FOR THE DISTRICT 5 ROADWAY SERVICES MANAGER, AREA ENGINEER AND PERMIT TECHNICIAN NOT LESS THAN 21 DAYS BEFORE ACTIVATING SUCH CLOSURE OR LANE RESTRICTION.
SEND NOTIFICATION TO:

TOM BRADFORD
DISTRICT 5 CONSTRUCTION ENGINEER
P.O. BOX 306
JACKSONTOWN, OHIO 43030
(740) 323-5240

ELEVATION DATUM

ALL ELEVATIONS ARE ORTHOMETRIC HEIGHTS USING THE NORTH AMERICAN VERTICAL DATUM OF 1988 (NAVD 88) AND THE GEOID03 GEOID. THE HORIZONTAL POSITIONS ARE BASED ON THE OHIO STATE PLANE NORTH ZONE. A LAMBERT CONFORMAL CONIC MAP PROJECTION, THE NORTH AMERICAN DATUM OF 1983 ADJUSTED TO THE NATIONAL SPATIAL REFERENCE SYSTEM OF 2007 (NAD 83(NSRS 2007)), AND THE GRS80 ELLIPSOID.

ITEM 614 ASPHALT CONCRETE FOR MAINTAINING TRAFFIC

AN ADDITIONAL QUANTITY OF 7 CU. YDS. HAS BEEN INCLUDED IN THE PLANS TO STABILIZE BERMS AND/OR REPAIR PAVEMENT OR BERMS DAMAGED WHEN MAINTAINING TRAFFIC, AND FOR TRANSITIONING FROM BACKWALLS TO ITEM 301 - BASE COURSE, AND FOR BUILDING UP EXISTING BRIDGE DECK PRIOR TO PLACEMENT OF PCBBM SHOWN IN MOT.

CONTINGENCY QUANTITIES

THE CONTRACTOR SHALL NOT ORDER MATERIALS OR PERFORM WORK FOR ITEMS DESIGNATED BY PLAN NOTE TO BE USED "AS DIRECTED BY THE ENGINEER" UNLESS AUTHORIZED BY THE ENGINEER. THE ACTUAL WORK LOCATIONS AND QUANTITIES USED FOR SUCH ITEMS SHALL BE INCORPORATED INTO THE FINAL CHANGE ORDER GOVERNING COMPLETION OF THIS PROJECT.

CLEARING AND GRUBBING

ALTHOUGH THERE ARE NO TREES OR STUMPS SPECIFICALLY MARKED FOR REMOVAL WITHIN THE LIMITS OF THE PROJECT, A LUMP SUM QUANTITY IS INCLUDED IN THE GENERAL SUMMARY FOR ITEM 201, CLEARING AND GRUBBING. ALL PROVISIONS AS SET FORTH IN THE SPECIFICATION UNDER THIS ITEM ARE INCLUDED IN THE LUMP SUM PRICE BID FOR ITEM 201, CLEARING AND GRUBBING.

REMOVED MATERIALS

ALL REMOVED MATERIALS EXCEPT AS NOTED ELSEWHERE IN THE PLANS SHALL BECOME THE PROPERY OF THE CONTRACTOR AND SHALL BE REMOVED BY HIM FROM THE JOB SITE.

WORK LIMITS

THE WORK LIMITS SHOWN ON THESE PLANS ARE FOR PHYSICAL CONSTRUCTION ONLY. PROVIDE THE INSTALLATION AND OPERATION OF ALL WORK ZONE TRAFFIC CONTROL AND WORK ZONE TRAFFIC CONTROL DEVICES REQUIRED BY THESE PLANS WHETHER INSIDE OR OUTSIDE THESE WORK LIMITS.

ITEM 622 PORTABLE CONCRETE BARRIER, 32", BRIDGE MOUNTED

THE CONTRACTOR SHALL INSTALL A PORTABLE CONCRETE BARRIER, 32" BRIDGE MOUNTED AS PER STANDARD DRAWING PCB-91. CONNECTION OF THE SEGMENTS SHALL BE ACCOMPLISHED BY USING 1¼" DIA. HIGH STRENGTH BOLTS. DOWEL HOLES PROVIDED TO ANCHOR THE CONCRETE BARRIER TO THE BRIDGE SHALL NOT BE FILLED UNLESS OTHERWISE DIRECTED BY THE ENGINEER. ITEM 622 PORTABLE CONCRETE BARRIER, 32", BRIDGE MOUNTED HAS BEEN PROVIDED FOR MAINTAINING TRAFFIC AS SHOW IN SHEET XX. FLAGGERS SHALL BE UTILIZED FOR PROTECTION OF VEHICULAR TRAFFIC UNTIL THE MOVEMENT OF THE BARRIERS IS COMPLETE AND TRAFFIC IS MAINTAINED. AFTER THE PROJECT HAS BEEN COMPLETED THE PORTABLE CONCRETE BARRIER SHALL BECOME THE PROPERTY OF THE CONTRACTOR AND SHALL BE REMOVED BY HIM FROM THE PROJECT SITE.

ITEM 614, WORK ZONE IMPACT ATTENUATOR FOR 24" HAZARDS (BIDIRECTIONAL)

THIS ITEM SHALL CONSIST OF FURNISHING AND INSTALLING A NON-GATING IMPACT ATTENUATOR. FURNISH AN IMPACT ATTENUATOR FROM THE OFFICE OF ROADWAY ENGINEERING APPROVED LIST FOR WORK ZONE IMPACT ATTENUATORS. THE APPROVED LIST IS AVAILABLE AT THE "ROADWAY STANDARDS: PROPRIETARY ROADSIDE SAFETY DEVICES" WEB PAGE ON THE OFFICE OF ROADWAY ENGINEERING WEBSITE. INSTALLATION SHALL BE AT THE LOCATIONS SPECIFIED IN THE PLANS IN ACCORDANCE WITH THE MANUFACTURER'S SPECIFICATIONS. THE CONTRACTOR SHALL REPAIR OR REPLACE A DAMAGES UNIT WITHIN 24 HOURS OF A DAMAGING IMPACT. WHEN BIDIRECTIONAL DESIGNS ARE SPECIFIED THE CONTRACTORS SHALL SUPPLY APPROPRIATE TRANSITIONS. PAVEMENT FOR ABOVE WORK SHALL BE MADE AT THE UNIT PRICE BID AND SHALL INCLUDE ALL LABOR, TOOLS, EQUIPMENT AND MATERIALS NECESSARY TO CONSTRUCT AND MAINTAIN A COMPLETE AND FUNCTIONAL IMPACT ATTENUATOR SYSTEM, INCLUDING ALL RELATED BACKUPS, TRANSITIONS, LEVELING PADS, HARDWARE AND GRADING, NOT SEPARATELY SPECIFIED, AS REQUIRED BY THE MANUFACTURER.

SEQUENCE OF OPERATIONS

PHASE 1:

1. ERECT BARRIER CLOSING THE EXISITNG NORTHBOUND LANE, INSTALL TRAFFIC CONTROL DEVICES, AND MAINTAIN TRAFFIC (TWO WAY ONLY) AS SHOWN ON SHEETS 13 OF 60 AND 14 OF 60
2. ERECT TEMPORARY DECK SUPPORTS BETWEEN BEAMS 3 AND 4. SUBMIT CONSTRUCTION PLANS IN ACCORDANCE WITH C&MS 501.05.
3. REMOVE PHASE 1 PORTION OF THE STRUCTURE AS DETAILED ON SHEETS 9 OF 60.
4. JACK AND SUPPORT BEAMS 1-3 AT EACH ABUTMENT AS DETAILED IN THE PLANS.
5. CONSTRUCT THE PHASE 1 PORTION OF THE PROPOSED BRIDGE ABUTMENTS AND BEARINGS
6. SET BEAM END 1-3 DOWN AT EACH ABUTMENT TO ACHIEVE FULL BEARING.
7. CONSTRUCT THE PHASE 1 PORTION OF THE PROPOSED BRIDGE DECK, CROSS FRAMES AND REMAINING ITEMS

SEQUENCE OF OPERATIONS (CONTINUED)

PHASE 2:

1. AFTER PHASE 1 CONCRETE HAS BEEN CURED, MOVE BARRIER TO PHASE 2 LOCATION CLOSING THE EXISTING SOUTHBOUND LANE. INSTALL TRAFFIC CONTROL DEVICES, AND MAINTAIN TRAFFIC (TWO WAY ONLY) AS SHOWN ON SHEETS 15-17 OF 60.
2. REMOVE PHASE 2 PORTION OF THE STRUCTURE AS DETAILED ON SHEETS 10 OF 60.
3. JACK AND SUPPORT BEAMS 3-6 AT EACH ABUTMENT AS DETAILED IN THE PLANS.
4. CONSTRUCT THE PHASE 2 PORTION OF THE PROPOSED BRIDGE ABUTMENTS AND BEARINGS.
5. SET BEAM ENDS 3-6 DOWN AT EACH ABUTMENT TO ACHIEVE FULL BEARING.
6. CONSTRUCT THE PHASE 2 PORTION OF THE PROPOSED BRIDGE DECK, CROSS FRAMES AND REMAINING ITEMS.

PHASE 3:

1. AFTER PHASE 2 CONCRETE HAS BEEN CURED, MOVE BARRIER TO PHASE 3 LOCATION CLOSING PORTIONS OF THE PROPOSED NORTHBOUND AND SOUTHBOUND LANES. INSTALL TRAFFIC CONTROL DEVICES, AND MAINTAIN TRAFFIC (TWO WAY ONLY) AS SHOWN ON SHEETS 18 OF 60 AND 19 OF 60
2. REMOVE PHASE 3 PORTION OF THE STRUCTURE AS DETAILED ON SHEETS 11 OF 60.
3. CONSTRUCT THE PHASE 3 PORTION OF THE PROPOSED BRIDGE ABUTMENTS AND BEARINGS.
4. CONSTRUCT THE PHASE 3 PORTION OF THE PROPOSED BRIDGE DECK, CROSS FRAMES AND REMAINING ITEMS.

PHASE 3A:

1. AFTER PHASE 3 CONCRETE HAS BEEN CURED, REMOVE THE TRAFFIC CONTROL DEVICES AND OPEN BOTH NORTHBOUND AND SOUTHBOUND LANES TO TRAFFIC. EITHER TEMPORARY OR PERMANENT PAVEMENT MARKINGS SHALL BE IN PLACE PRIOR TO OPENING THE ROADWAY TO TRAFFIC
2. CONSTRUCT INTERMEDIATE AND SURFACE COURSE PAVEMENTS AS DESCIRBED IN PART 1 ROADWAY PLANS
3. WITH THE USE OF FLAGGERS PREFORM PN 555. SEE SCD MT-97.10
4. WITH THE USE OF FLAGGERS PERFORM BRIDGE DECK GROOVING AS PER C&MS 511.17
5. PLACE PERMANENT PAVEMENT MARKING AS DESCRIBED IN PART 1 ROADWAY PLANS.
6. PAINT STRUCTURE USING A SHOULDER CLOSURE UTLIZING TRAFFIC CONTROL METHODS OF STD. DWG. MT-97.10, EXCEPT THE USE OF FLAGGERS WILL NOT BE REQUIRED.

CALCULATED NEM
CHECKED JDR

GENERAL NOTES

GUE-209-8.57/9.85

P:\GUE\93133\Design\Bridge\SFN - Route Name\Plan_Sheets\93133_GN_001.dgn 08-JAN-2015 1:36PM nmccoy

ITEM 614 - PORTABLE CHANGEABLE MESSAGE SIGNS, AS PER PLAN

THE CONTRACTOR SHALL FURNISH, INSTALL, MAINTAIN AND REMOVE, WHEN NO LONGER NEEDED, A CHANGEABLE MESSAGE SIGN, ON SITE, FOR THE DURATION OF THE PROJECT. THE SIGN SHALL BE OF A TYPE SHOWN ON A LIST OF APPROVED PCMS UNITS MAINTAINED BY THE DIRECTOR (OFFICE OF MATERIALS MANAGEMENT). THE APPROVED LIST OF PORTABLE CHANGEABLE MESSAGE SIGNS CHAN BE FOUND ON THE ODOT WEBSITE BY CLICKING ON THE SERVICES MENU, THEN CLICKING ON MATERIALS MANAGEMENT. THE LIST CONTAINS CLASS A AND B UNITS WITH MINIMUM LEGIBILITY DISTANCES OF 650 FT. AND 475 FT., RESPECTIVELY.

EACH SIGN SHALL BE TRAILER-MOUNTED AND EQUIPPED WITH A FUNCTIONAL DIMMING MECHANISM, TO DIM THE SIGN DURING DARKNESS, AND A TAMPER AND VANDAL PROOF ENCLOSURE. EACH SIGN SHALL BE PROVIDED WITH APPROPRIATE TRAINING AND OPERATION INSTRUCTIONS TO ENABLE ON-SITE PERSONNEL TO OPERATE AND TROUBLESHOOT THE UNIT. THE SIGN SHALL ALSO BE CAPABLE OF BEING POWERED BY AN ELECTRICAL SERVICE DROP FROM A LOCAL UTILITY COMPANY. PCMS TRAILER SHOULD BE DELINEATED ON A PERMANENT BASIS BY AFFIXING RETROREFLECTIVE MATERIAL, IN A CONTINUOUS LINE ON THE FACE OF THE TRAILER AS SEEN BY ONCOMING ROAD USERS.

THE PORTABLE PCMS LOCATIONS AND WORK LIMITS FOR THOSE LOCATIONS ARE SHOWN ON SHEET 8 OF 60 OF THE PLAN. PLACEMENT, OPERATION, MAINTENANCE AND ALL ACTIVATION OF THE SIGNS BY THE CONTRACTOR SHALL BE AS DIRECTED BY THE ENGINEER. THE PCMS SHALL BE LOCATED IN A HIGHLY VISIBLE POSITION YET PROTECTED FROM TRAFFIC. THE CONTRACTOR SHALL, AT THE DIRECTION OF THE ENGINEER, RELOCATE THE PCMS TO MPROVE VISIBILITY OR ACCOMMODATE CHANGED CONDITIONS. WHEN NOT IN USE, THE PCMS SHALL BE TURNED OFF. ADDITIONALLY, WHEN NOT IN SUE FOR EXTENDED PERIODS OF TIMES, THE PCMS SHALL BE TURNED, FACING AWAY FROM ALL TRAFFIC, AND SHALL DISPLAY ON EOR MORE YELLOW RETROREFLECTIVE SHEETING SURFACES OF 9-INCH BY 15-INCH MINIMIM SIZE FACING TRAFFIC.

THE ENGINEER SHALL BE PROVIDED ACCESS TO EACH SIGN UNIT AND SHALL BE PROVIDED WITH APPROPRIATE TRAINING AND OPERATION INSTRUCTIONS TO ENABLE ODOT PERSONNEL TO OPERATE AND TROUBLESHOOT THE UNIT, AND TO REVISE SIGN MESSAGES, IF NECESSARY.

(THE CONTRACTOR SHALL IMPLEMENT A SYSTEM WHEREBY CHANGEABLE MESSAGES WILL BE IMPLEMENTED WITHIN 2 HOURS FOLLOWING TELEPHONE NOTIFICATION FROM THE PROJECT ENGINEER TO A DESIGNATED PHONE.)

ALL MESSAGES TO BE DISPLAYED ON THE SIGN WILL BE PROVIDED BY THE ENGINEER. A LIST OF ALL REQUIRED PREPROGRAMMED MESSAGES WILL BE GIVEN TO THE CONTRACTOR AT THE PROJECT PRECONSTRUCTION CONFERENCE. THE SIGN SHALL HAVE THE CAPABILITY TO STORE UP TO 99 MESSAGES. MESSAGE MEMORY OR PRE-PROGRAMMED DISPLAYS SHALL NOT BE LOST AS A RESULT OF POWER FAILURES TO THE ON-BOARD COMPUTER. THE SIGN LEGEND SHALL BE CAPABLE OF BEING CHANGED IN THE FIELD. THREE-LINE PRESENTATION FORMATS WITH UP TO SIX MESSAGE PHASES SHALL BE SUPPORTED. PCMS FORMAT SHALL PERMIT THE COMPLETE MESSAGE FOR EACH PHASE TO BE READ AT LEAST TWICE.

THE PCMS SHALL CONTAIN AN ACCURATE CLOCK AND PROGRAMMING LOGIC WHICH WILL ALLOW THE SIGN TO BE ACTIVATED, DEACTIVATED OR MESSAGES CHANGED AUTOMATICLLY AT DIFFERENT TIMES OF THE DAY FOR DIFFERENT DAY OF THE WEEK.

ITEM 614 - PORTABLE CHANGEABLE MESSAGE SIGNS, AS PER PLAN (CONT'D)

THE PCMS SHALL CONTAIN A CELLULAR TELEPHONE DATA LINK WHICH WILL (IN ACTIVE CELLULAR PHONE AREAS) ALLOW REMOTE SIGN ACTIVATION, MESSAGE CHANGES, MESSAGE ADDITIONS AND REVISIONS TO TIME OF DAY PROGRAMS. THE SYSTEM SHALL ALSO PERMIT VERIFICATION OF CURRENT AND PROGRAMMED MESSAGES. ONE REMOTE DATA INPUT DEVICE (LAPTOP COMPUTER PLUS MODEM OR EQUIVALENT) SHALL BE FURNISHED FOR USE BY THE DISTRICT TRAFFIC ENGINEER, OR EQUIVALENT, AND HSALL BE INSURED AGAINST THEFT.)

THE PCMS SHALL BE MAINTAINED IN GOOD WORKING ORDER BY THE CONTRACTOR IN ACCORDIANCE WITH THE PROVISIONS OF C&MS 614.07. THE CONTRACTOR SHALL, PRIOR TO ACTIVATING THE UNIT, MAKE ARRANGEMENTS, WITH AN AUTHORIZED SERVICE AGENT FOR THE PCMS, TO ASSURE PROMPT SERVICE IN THE EVENT OF FAILURE. ANY FAILURE SHALL NOT RESULT IN THE SIGN BEING OUT OF SERVICE FOR MORE THAN 12 HOURS, INCLUDING WEEKEND. FAILURE TO COMPLY MAY RESULT IN A ORDER TO STOP WORK AND OPEN ALL TRAFFIC LANES AND/OR IN THE DEPARMENT TAKING APPROPRIATE ACTION TO SAFELY CONTROL TRAFFIC. THE ENTIRE COST TO CONTROL TRAFFIC, ACCRUED BY THE DEPARMENT DUE TO THE CONTRACOTR'S NONCOMPLIANCE, WILL BE DEDUCTED FROM MONEY DUE, OR TO BECOME DUE TO THE CONTRACTOR ON HIS CONTRACT.

THE CONTRACTOR SHALL BE RESPONSIBLE FOR 24-HOUR-PER DAY OPERATION AND MAINTENANCE OF THESE SIGNS ON THE PROJECT FOR THE DURATION OF THE PHASES WHEN THE PLAN REQUIRES THEIR USE. THE PORTABLE CHANGEABLE MESSAGE SIGN IS TO BE USED TO INFORM TRAVELING PUBLIC OF THE STATE ROUTE DETOUR.

PAYMENT FOR THE ABOVE DESCRIBED ITEM SHALL BE AT THE CONTRACT UNIT PRICE. PAYMENT SHALL INCLUDE ALL LABOR, MATERIALS, EQUIPMENT, FUELS, LUBRICATING OILS, SOFTWARE, HARDWARE AND INCIDENTALS TO PREFORM THE ABOVE DESCRIBED WORK.

ITEM 614 - PORTABLE CHANGEABLE MESSAGE SIGN, AS PER PLAN.....28 DAYS

ITEM 622 PORTABLE CONCRETE BARRIER, 32"

THE CONTRACTOR SHALL INSTALL A PORTABLE CONCRETE BARRIER, 32" AS PER STANDARD DRAWING RM-4.2. ITEM 622 PORTABLE CONCRETE BARRIER, 32" HAS BEEN PROVIDED FOR MAINTAINING TRAFFIC AS SHOW IN SHEET 14,15 & 17 OF 60. FLAGGERS SHALL BE UTILIZED FOR PROTECTION OF VEHICULAR TRAFFIC UNTIL THE MOVEMENT OF THE BARRIERS IS COMPLETE AND TRAFFIC IS MAINTAINED. AFTER THE PROJECT HAS BEEN COMPLETED THE PORTABLE CONCRETE BARRIER SHALL BECOME THE PROPERTY OF THE CONTRACTOR AND SHALL BE REMOVED BY HIM FROM THE PROJECT SITE.

ITEM 614, BARRIER REFLECTOR AND/OR OBJECT MARKERS

BARRIER REFLECTORS AND/OR OBJECT MARKERS SHALL BE INSTALLED ON ALL PORTABLE CONCRETE BARRIER USED FOR TRAFFIC CONTROL. BARRIER REFLECTORS, OBJECT MARKERS AND THEIR INSTALLATION SHALL CONFORM TO C&MS 626, EXCEPT THAT THE SPACING SHALL BE 50 FEET. ESTIMATED QUANTITIES OF ITEM 614 BARRIER REFLECTOR AND OF ITEM 614 OBJECT MARKER, TWO WAY HAVE BEEN SHOWN ON SHEET 14,15 & 18 OF 60 AND CARRIED TO THE GENERAL SUMMARY.

CONNECTION BETWEEN EXISTING AND PROPOSED GUARDRAIL

WHEN IT IS NECESSARY TO SPLICE PROPOSED GUARDRAIL TO EXISTING GUARDRAIL ONLY THE EXISTING SHALL BE CUT, DRILLED OR PUNCHED. THE CONNECTION SHALL BE MADE USING A "W BEAM RAIL SPLICE" AS SHOWN IN AASHTO M 180. PAYMENT SHALL BE INCLUDED IN THE CONTRACT PRICE FOR THE RESPECTIVE GUARDRAIL ITEMS.

LOCATION OF GUARDRAIL

THE LOCATIONS OF THE GUARDRAIL RUNS, AS SHOWN IN THESE PLANS ARE SUBJECT TO ADJUSTMENTS PRIOR TO FINAL ACCEPTANCE. THE ENGINEER SHALL BE SATISFIED THAT ALL INSTALLATION WILL AFFORD MAXIMUM PROTECTION FOR TRAFFIC

STRUCTURE GUE-209-0985 OBJECT MARKERS

THE CONTRACTOR SHALL INSTALL OM-3L & OM-3R (36"x12") SIGNS AT ALL FOUR (4) WINGWALLS OF THE BRIDGE. SIGNS SHALL BE INSTALLED 1'-0" BEHIND THE GUARDRAIL POST AND BRIDGE WINGWALL. THE BOTTOM OF GROUND MOUNTED SIGN SHALL BE 5'-0" ABOVE PAVEMENT.

THE FOLLOWING ITEMS HAVE BEEN CARRIED TO THE GENERAL SUMMARY TO INSTALL THE SIGNS:

ITEM 630 - GROUND MOUNTED SUPPORT, NO. 3 POST.....46.0 FT

ITEM 630 - SIGN, FLAT SHEET.....12.0 SF

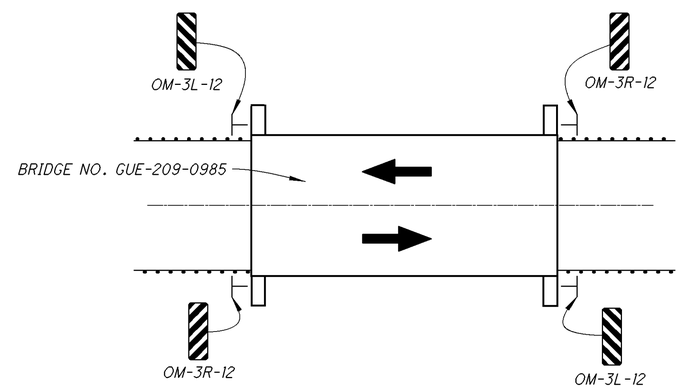

CALCULATED NEM
CHECKED JDR

GENERAL NOTES

GUE-209-8.57/9.85

P:\GUE\93133\Design\Bridge\SFN - Route Name\Plan_Sheets\93133_GN_002.dgn 08-JAN-2015 1:37PM nmccoy

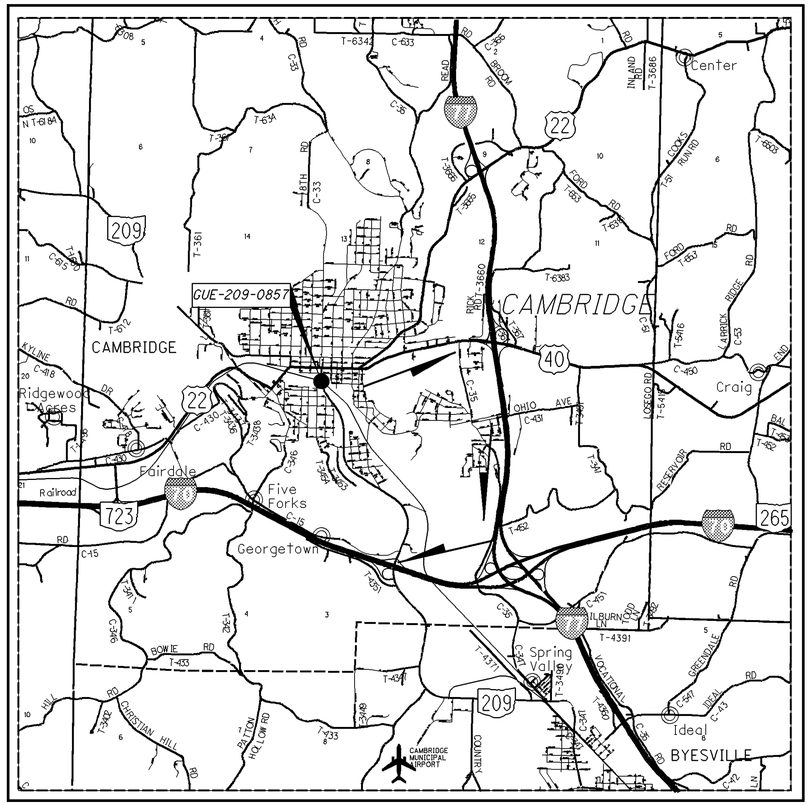

STATE DETOUR FOR GUE-209-0857

SCALE IN MILES

0 0.67 1.33 2 2.67

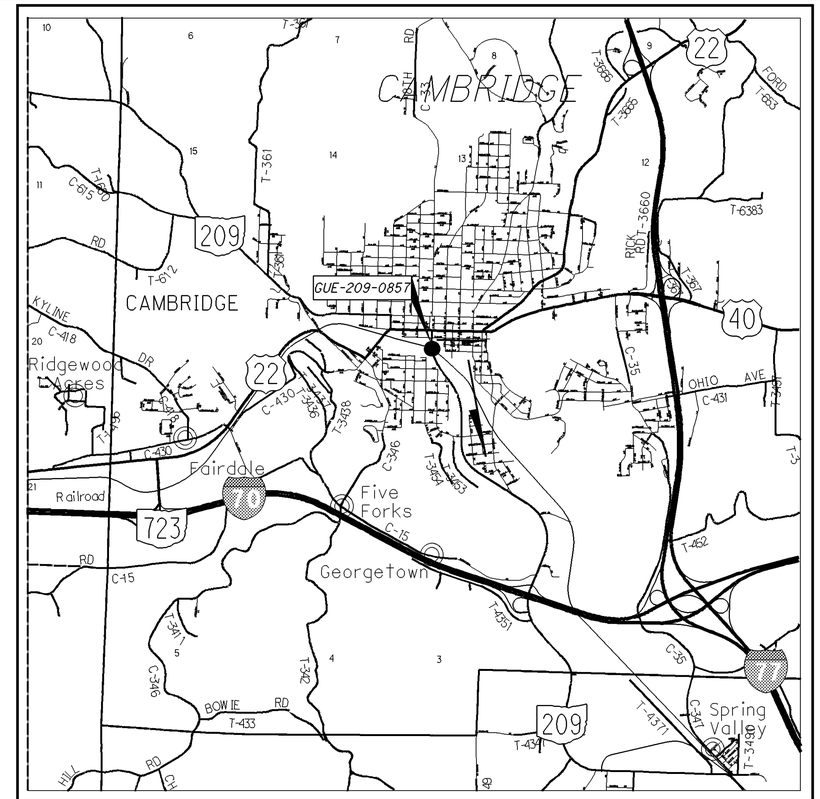

LOCAL DETOUR FOR GUE-209-0857

SCALE IN MILES

0 0.5 1 1.5 2

ITEM 614 MAINTAINING TRAFFIC

A MINIMUM OF ONE LANE OF TRAFFIC IN EACH DIRECTION ON S.R. 209 SHALL BE MAINTAINED AT ALL TIMES, EXCEPT FOR WHEN SOUTHBOUND TRAFFIC MAY BE DETOURED AS PER PROPOSAL NOTE 124. DAMAGES SHALL BE AS PER PROPOSAL NOTE 124 FOR EACH CALENDAR DAY THE ROADWAY REMAINS CLOSED TO TRAFFIC BEYOND THE SPECIFIED TIME. THE CONTRACTOR SHALL PROVIDE, ERECT AND MAINTAIN STANDARD 48x30 INCHES ROAD CLOSED SIGNS, SIGN SUPPORTS, TYPE III BARRICADES, GATES AND LIGHTS, AS DETAILED IN SCD MT-101.60 AT THE FOLLOWING LOCATIONS DURING PERIODS IN WHICH THE AFFECTED ROADS ARE CLOSED TO TRAFFIC.

BOTH PHASES:
S.R. 209: JUST SOUTH OF THE COURTHOUSE BLOCKING SOUTHBOUND TRAFFIC
S.R. 209: JUST OFF SOUTH END OF BRIDGE NO. GUE-209-0857

TO PARTION AND DEFLECT THE THE NORTHBOUND TRAFFIC, AS NECESSARY TO CONSTRUCT THE PLAN IN PHASES, DRUM PLACEMENT SHALL BE UTILIZED IN ACCORDANCE WITH STD. DWG. MT-97.10.

ALL WORK AND TRAFFIC CONTROL DEVICES SHALL BE IN ACCORDANCE WITH CMS 614 AND OTHER APPLICABLE PORTIONS OF THE SPECIFICATIONS, AS WELL AS THE OHIO MANUAL OF UNIFORM TRAFFIC CONTROL DEVICES. PAYMENT FOR ALL LABOR, EQUIPMENT AND MATERIALS SHALL BE INCLUDED IN THE LUMP SUM CONTRACT PRICE FOR ITEM 614, MAINTAINING TRAFFIC, UNLESS SEPARATELY ITEMIZED IN THE PLAN.

DETOUR SIGNING

THE CONTRACTOR SHALL UTILIZE THE PORTABLE CHANGEABLE MESSAGE SIGNS ITEMIZED IN THIS PLAN FOR DETOUR SIGNING. 4 ASSUMED INTERSECTIONS TIMES 7 DAYS OF SOUTHBOUND CLOSURE DURATION = 28 DAYS OF PCMS USAGE. THIS QUANTITY IS REFLECTED IN THE PCMS NOTE IN THIS PLAN.

NOTICE OF CLOSURE SIGNS

NOTICE OF CLOSURE SIGNS, AS DETAILED BELOW, SHALL BE ERECTED BY THE CONTRACTOR AT LEAST ONE WEEK IN ADVANCE OF THE SCHEDULED ROAD CLOSURE. THE SIGNS SHALL BE ERECTED ON THE RIGHTHAND SIDE OF THE ROAD FACING TRAFFIC. THEY SHALL BE PLACED SO AS NOT TO INTERFERE WITH THE VISIBILITY OF ANY OTHER TRAFFIC CONTROL SIGNS. THEY SHOULD BE ERECTED AT THE POINT OF CLOSURE.

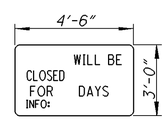

OC-60A-60

DESIGNATED LOCAL DETOUR ROUTE

IN ADDITION TO THE OFFICIAL, SIGNED DETOUR ROUTE, A LOCAL ROUTE HAS BEEN DETERMINED TO BE THE SECONDARY, UNSIGNED DETOUR ROUTE OR "DESIGNATED LOCAL DETOUR ROUTE." THIS ROUTE IS SHOWN ON THIS SHEET. DURING THE TIME THAT TRAFFIC IS DETOURED, THE CONTRACTOR SHALL MAINTAIN THIS ROUTE IN A CONDITION WHICH IS REASONABLY SMOOTH AND FREE FROM HOLES, RUTS, RIDGES, BUMPS, DUST AND STANDING WATER. ONCE THE DETOUR IS REMOVED AND TRAFFIC RETURNED TO ITS NORMAL PATTERN, THE DESIGNATED LOCAL DETOUR ROUTE SHALL BE RESTORED TO A CONDITION THAT IS EQUIVALENT TO THAT WHICH EXISTED PRIOR TO ITS USE FOR THIS PURPOSE. ALL SUCH WORK SHALL BE PERFORMED WHEN AND AS DIRECTED BY THE ENGINEER.
THE FOLLOWING ESTIMATED QUANTITIES ARE PROVIDED FOR USE AS DIRECTED BY THE ENGINEER TO MAINTAIN AND SUBSEQUENTLY RESTORE THE DESIGNATED LOCAL DETOUR ROUTE.
ITEM 410 - TRAFFIC COMPACTED SURFACE, TYPE C.....5 C.Y.
ITEM 614 - ASPHALT CONCRETE FOR MAINTAINING TRAFFIC .....5 C.Y.

A+B CONTRACT TABLE

USE THE FOLLOWING INFORMATION IN COMBINATION WITH PROPOSAL NOTE 124 AS LISTED IN THE PROPOSAL. THIS PROJECT PART SHALL AFFECT TRAFFIC ON SOUTBOUND S.R. 209 ONLY

CONTRACT SEGMENT - LOCATION OF CRITICAL WORK	MIN. DAYS	MAX. DAYS	INCENTIVE / DISINCENTIVE $ PER DAY	MAXIMUM INCENTIVE $
PHASE 1 AND 2 BRIDGE REHABILITATION @ BRIDGE NO. GUE-209-0857 - SOUTHBOUND S.R. 209 CLOSED WITHIN SHOWN WORK LIMITS	5	7	$5,000	$10,000

SPECIAL EVENTS HOLIDAY

ALL LANES AT GUE-209-0857 SHALL BE OPEN TO TRAFFIC DURING THE FOLLOWING DESIGNATED HOLIDAYS OR EVENTS:

MERMORIAL DAY.....(MAY 30, 2015)
NAT'L RD. BIKE SHOW.....(JUNE 20, 2015)
INDEPENDENCE DAY.....(JULY 4, 2015)
CRUISE IN CAR SHOW.....(AUGUST 15, 2015)
LABOR DAY.....(SEPT. 7, 2015)
OCT. FALL FESTIVAL.....(OCT. 2 & 3, 2015)
THANKSGIVING.....(NOV. 26, 2015)

THE PERIOD OF TIME THAT THE LANES ARE TO BE OPEN DEPENDS ON THE DAY OF THE WEEK ON WHICH THE HOLIDAY OR EVENT FALLS. THE FOLLOWING SCHEDULE SHALL BE USED TO DETERMINE THIS PERIOD:

DAY OF THE WEEK	TIMES LANES MUST BE OPEN THROUGH	
SUNDAY	12:00PM FRIDAY	6:00AM MONDAY
MONDAY	12:00PM FRIDAY	6:00AM TUESDAY
TUESDAY	12:00PM MONDAY	6:00AM WEDNESDAY
WEDNESDAY	12:00PM TUESDAY	6:00AM THURSDAY
THURSDAY	12:00PM WEDNESDAY	6:00AM THURSDAY
THURSDAY (THANKS)	12:00PM WEDNESDAY	6:00AM MONDAY
FRIDAY	12:00PM THURSDAY	6:00AM MONDAY
SATURDAY	12:00PM FRIDAY	6:00AM MONDAY

CALCULATED NEM
CHECKED JDR

GENERAL NOTES - M.O.T.

GUE-209-8.57/9.85

P:\GUE\93133\Design\Bridge\SFN - Route Name\Plan_Sheets\93133_GGN_001.DGN (SCALE = 1.000)

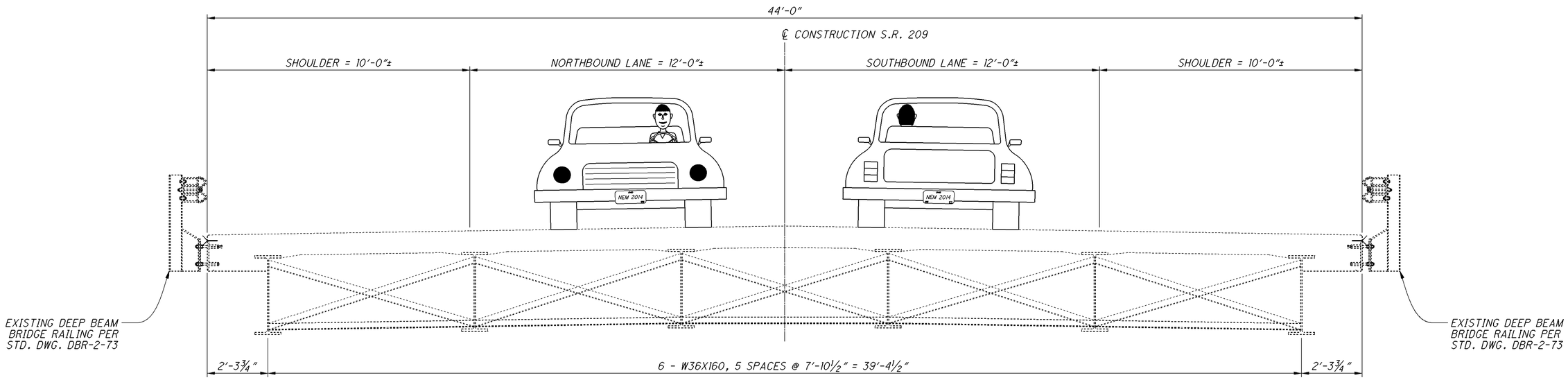

EXISTING BRIDGE

LEGEND:

PORTIONS OF STRUCTURE TO BE REMOVED

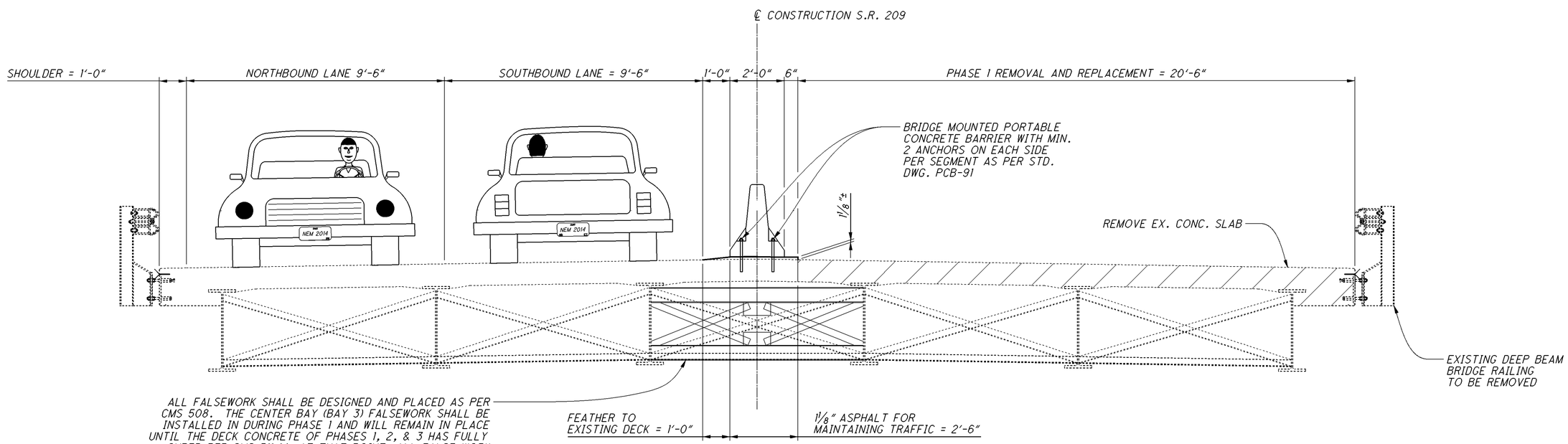

PHASE ONE DEMOLITION

DESIGNED	DRAWN	REVIEWED	DATE
NEM	NEM	JDR	01/05/15
CHECKED	REVISED	STRUCTURE FILE NUMBER	
TAG	NEM	3004112	

DESIGN AGENCY
OHIO DEPARTMENT OF TRANSPORTATION, DISTRICT 5

MAINTENACNE OF TRAFFIC
BRIDGE NO. GUE-209-9.85
OVER WILLS CREEK

GUE-209-8.57/9.85

P:\GUE\93133\Design\Bridge\SFN - Route Name\Plan_Sheets\93133_NEM_MOT_001.dgn 08-JAN-2015 1:39PM nmccoy

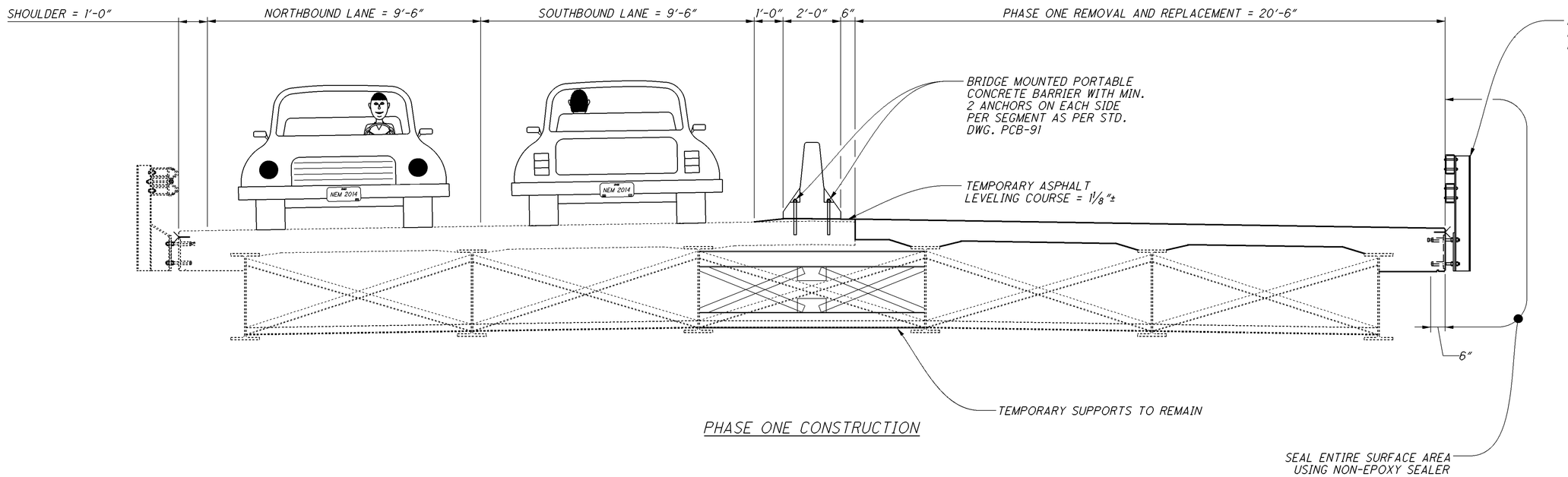

PHASE ONE CONSTRUCTION

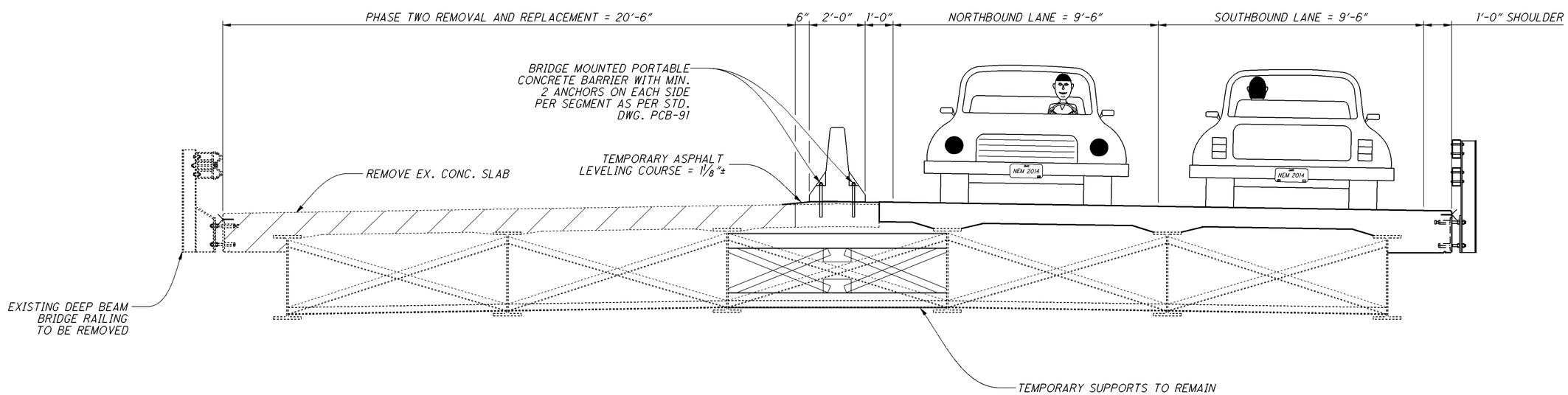

PHASE TWO DEMOLITION

LEGEND:

PORTIONS OF STRUCTURE TO BE REMOVED

DESIGN AGENCY
OHIO DEPARTMENT OF TRANSPORTATION, DISTRICT 5

DESIGNED	DRAWN	REVIEWED	DATE
NEM	NEM	JDR	01/05/15
CHECKED	REVISED	STRUCTURE FILE NUMBER	
TAG	NEM	3004112	

MAINTENACNE OF TRAFFIC
BRIDGE NO. GUE-209-9.85
OVER WILLS CREEK

GUE-209-8.57/9.85

P:\GUE\93133\Design\Bridge\SFN - Route Name\Plan_Sheets\93133_NEM_MOT_001.dgn 08-JAN-2015 1:39PM nmccoy

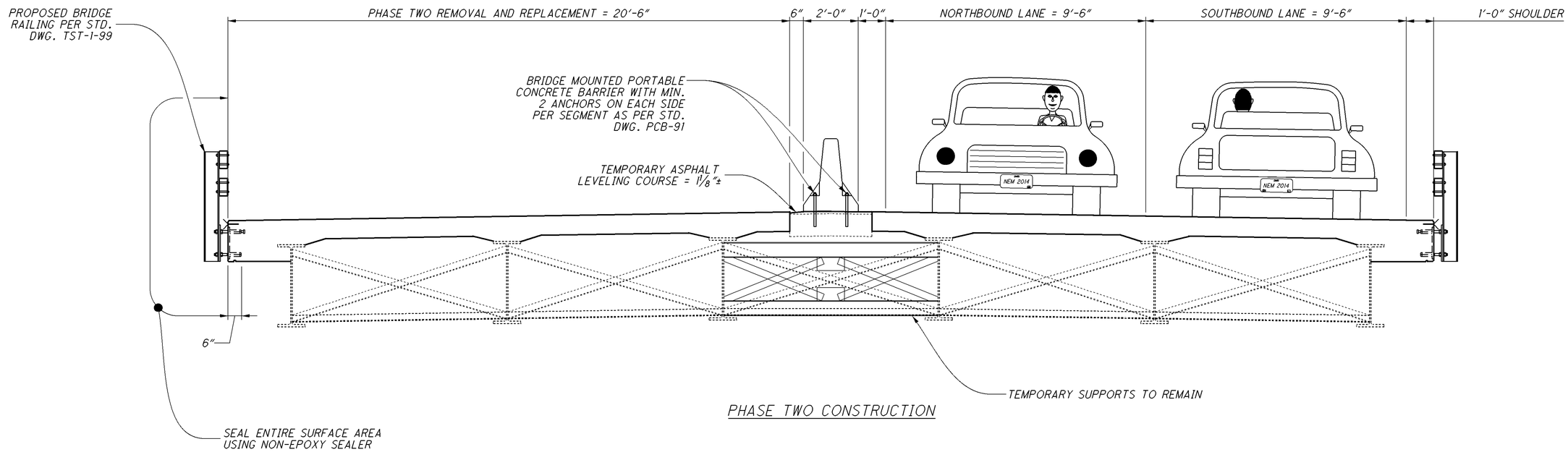

PHASE TWO CONSTRUCTION

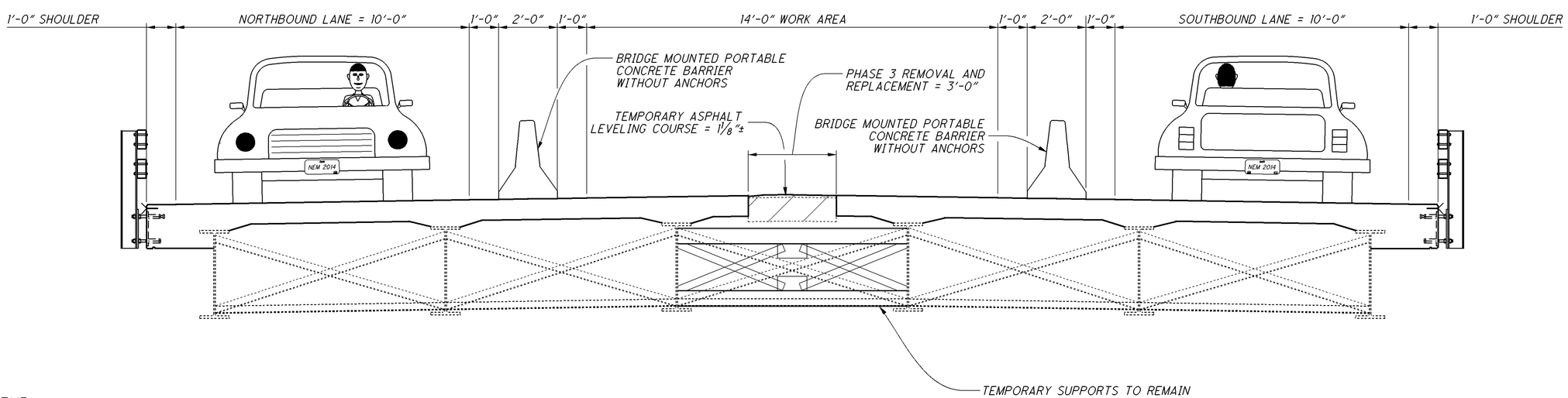

PHASE THREE DEMOLITION

LEGEND:

PORTIONS OF STRUCTURE TO BE REMOVED

DESIGN AGENCY
OHIO DEPARTMENT OF TRANSPORTATION, DISTRICT 5

DESIGNED	DRAWN	REVIEWED	DATE
NEM	NEM	JDR	01/05/15
CHECKED	REVISED	STRUCTURE FILE NUMBER	
TAG	NEM	3004112	

MAINTENACNE OF TRAFFIC
BRIDGE NO. GUE-209-9.85
OVER WILLS CREEK

GUE-209-8.57/9.85

P:\GUE\93133\Design\Bridge\SFN - Route Name\Plan_Sheets\93133_NEM_MOT_001.dgn 08-JAN-2015 1:40PM nmccoy

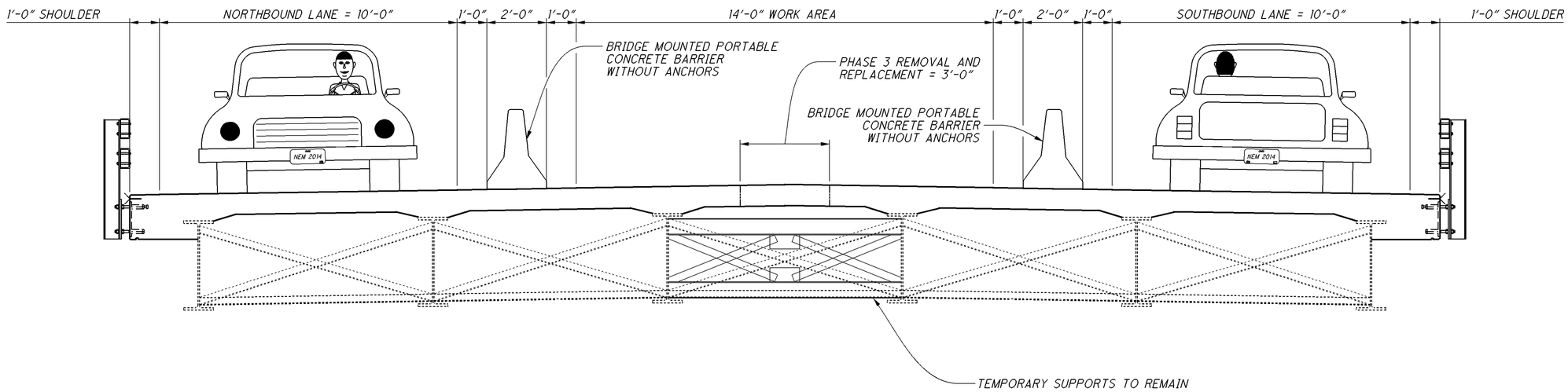

PHASE THREE CONSTRUCTION

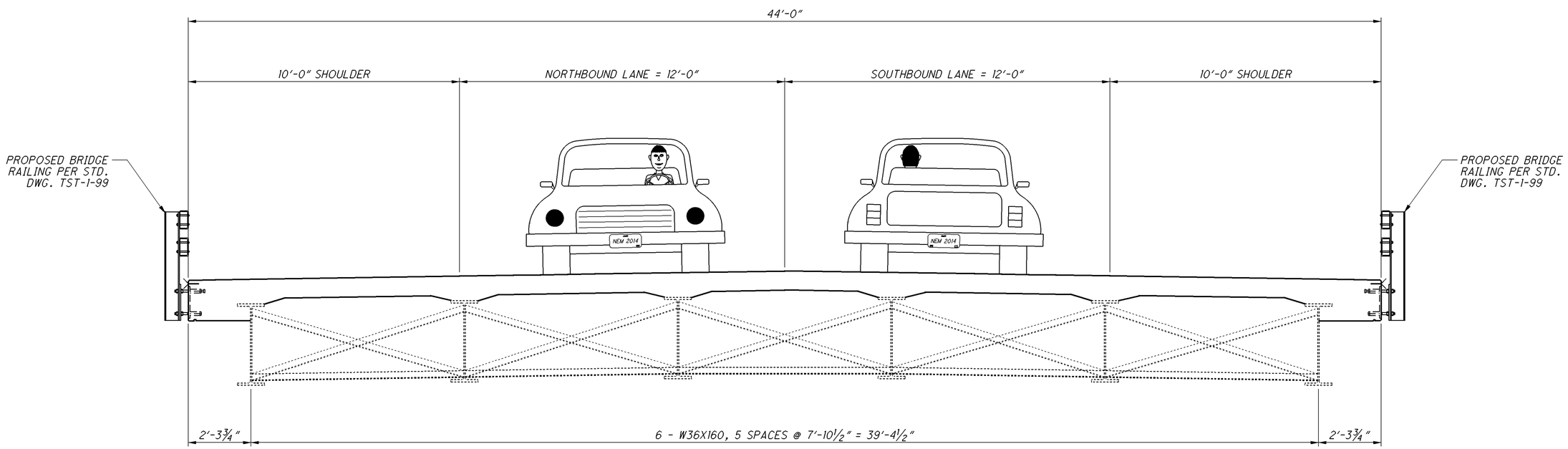

PROPOSED STRUCTURE

DESIGN AGENCY
OHIO DEPARTMENT OF TRANSPORTATION, DISTRICT 5

DESIGNED	DRAWN	REVIEWED	DATE
NEM	NEM	JDR	01/05/15
CHECKED	REVISED	STRUCTURE FILE NUMBER	
TAG	NEM	3004112	

MAINTENACNE OF TRAFFIC
BRIDGE NO. GUE-209-9.85
OVER WILLS CREEK

GUE-209-8.57/9.85

P:\GUE\93133\Design\Bridge\SFN - Route Name\Plan_Sheets\93133_NEM_MOT_001.dgn 08-JAN-2015 1:40PM nmccoy

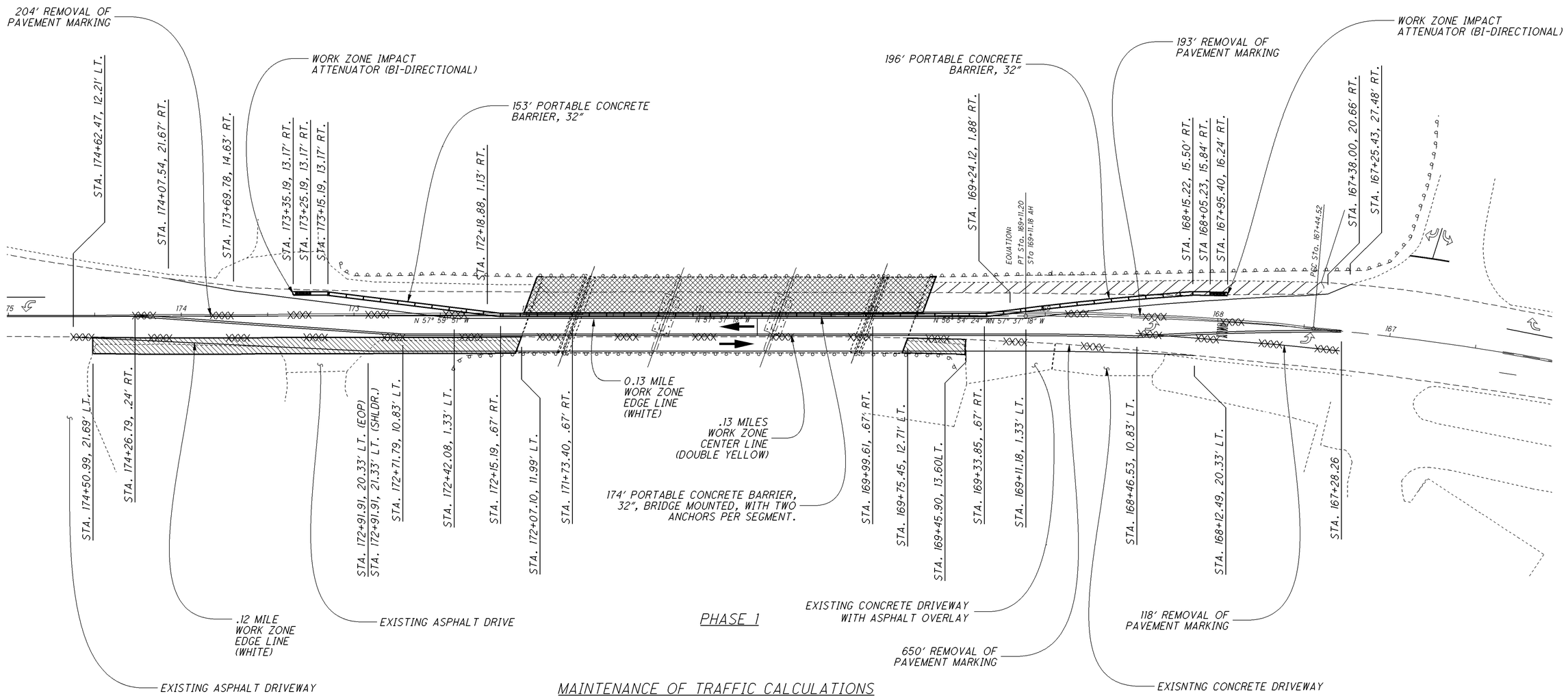

PHASE 1

MAINTENANCE OF TRAFFIC CALCULATIONS

ITEM 622 PORTABLE CONCRETE BARRIER, 32"

STA. 171+73.40 TO STA. 173+25.19	= 153 FT.
STA. 168+05.23 TO STA. 169+99.61	= 196 FT.
	349 FT.

ITEM 622 PORTABLE CONCRETE BARRIER, 32", BRIDGE MOUNTED

STA. 169+99.61 TO STA. 171+73.40	= 174 FT.
	174 FT.

ITEM 614 WORK ZONE IMPACT ATTENUATOR (BI-DIRECTIONAL), 24" WIDTH

STA. 173+35.19	1 EACH
STA. 167+95.40	1 EACH
	2 EACH

ITEM 642 REMOVAL OF PAVEMENT MARKINGS

STA. 168+12.49 TO STA. 174+62.47	= 650 FT.
STA. 172+18.88 TO STA. 174+26.79	= 208 FT.
STA. 167+28.26 TO STA. 169+24.12	= 196 FT.
STA. 167+28.26 TO STA. 168+46.53	= 118 FT.
	1172 FT.

ITEM 614 WORK ZONE EDGE LINE (WHITE)

STA. 167+25.43 TO STA. 174+07.54	= 687.81 FT.	(0.13 MILE)
STA. 168+12.49 TO STA. 174+62.47	= 649.14 FT.	(0.12 MILE)
	1366.95 FT.	(0.25 MILE)

ITEM 614 WORK ZONE CENTER LINE, CLASS I (DOUBLE YELLOW)

STA. 167+28.26 TO STA. 174+26.79	= 698.73 FT.	(0.13 MILE)
	698.73 FT.	(0.13 MILE)

PROPOSED PHASE 1 PAVEMENT (SEE TYPICAL SECTIONS FOR BUILDUP)

STA. 169+45.90 TO STA. 169+75.45	= 28.00 SQ. YDS.
STA. 172+07.10 TO STA. 174+50.99	= 240.48 SQ. YDS.
	268.48 SQ. YDS.

ITEM 614 BARRIER REFLECTOR AND/ OR OBJECT MARKER (TWO-WAY)

STA. 168+05.23 TO STA. 173+25.19 (ON PORTABLE CONCRETE BARRIER)	= 11 EACH
STA. 169+51.30 TO STA. 172+43.59 (ON GUARDRAIL)	= 6 EACH
	17 EACH

LEGEND

- PHASE 1 REMOVAL AND REPLACEMENT
- PHASE 1 PAVEMENT
- DRUMS
- PORTABLE BARRIER (PB)
- REMOVE EXISTING MARKINGS
- ATTENUATOR
- DIRECTION OF TRAVEL

NOTES:

1. ONCE STRUCTURE REHABILITATION IS COMPLETE, PAVEMENT SHALL BE RESURFACED. SEE ROADWAY PLANS.
2. FULL DEPTH SAW CUTTING OF EXISTING ASPHALT CONCRETE, CONCRETE DRIVEWAYS AND CONCRETE DRIVEWAYS WITH ASPHALT OVERLAY SHALL BE INCLUDED WITH ITEM 202 PAVEMENT REMOVED, ASPHALT AND ITEM 202 EXCAVATION
3. SEE SHEET 9 OF 60 FOR PORTABLE CONCRETE BARRIER ANCHORING REQUIREMENTS.
4. REMOVE EXISTING SHOULDER AND REPLACE WITH PAVEMENT FOR MAINTAINING TRAFFIC PRIOR TO ESTABLISHING PHASE ONE MOT.
5. SEE SHEET 14 OF 60 FOR PHASE 1 SIGNING PLAN

DESIGN AGENCY
OHIO DEPARTMENT OF TRANSPORTATION, DISTRICT 5

DESIGNED	DRAWN	REVIEWED	DATE
NEM	NEM	JDR	01/05/15
CHECKED	REVISED	STRUCTURE FILE NUMBER	
TAG	NEM	3004112	

PHASE 1 MAINTENANCE OF TRAFFIC
BRIDGE NO. GUE-209-9.85
OVER WILLS CREEK

GUE-209-8.57/9.85

P:\GUE\93133\Design\Bridge\SFN - Route Name\Plan_Sheets\93133_NEM_MOT_005.dgn 08-JAN-2015 1:41PM nmccoy

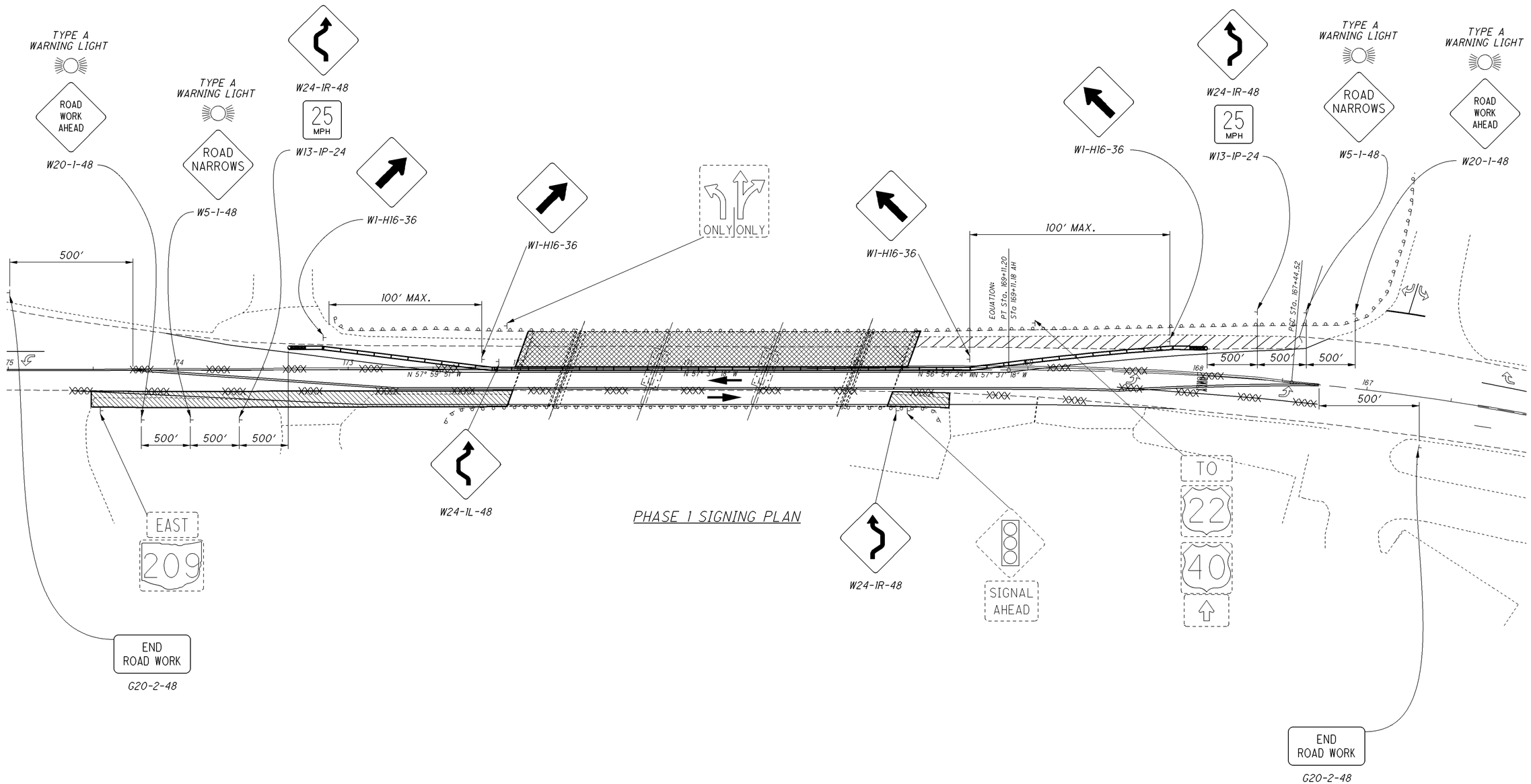

PHASE 1 SIGNING PLAN

LEGEND

PHASE 1 REMOVAL AND REPLACEMENT	
PHASE 1 PAVEMENT	
DRUMS	● ● ●
PORTABLE BARRIER (PB)	
REMOVE EXISTING MARKINGS	
ATTENUATOR	
DIRECTION OF TRAVEL	→

NOTES:

1. FOR ADDITIONAL INFORMATION SEE STD. DWG. MT-102.10
2. FOR PHASE 1 MAINTENCE OF TRAFFIC SEE SHEET 13 OF 60

DESIGN AGENCY
OHIO DEPARTMENT OF TRANSPORTATION, DISTRICT 5

DESIGNED	DRAWN	REVIEWED	DATE
NEM	NEM	JDR	01/05/15
CHECKED	REVISED	STRUCTURE FILE NUMBER	
TAG	NEM	3004112	

PHASE 1 SIGNING PLAN
BRIDGE NO. GUE-209-9.85
OVER WILLS CREEK

GUE-209-8.57/9.85

P:\GUE\93133\Design\Bridge\SFN - Route Name\Plan_Sheets\93133_NEM_MOT_005_SIGN.dgn 08-JAN-2015 1:42PM nmccoy

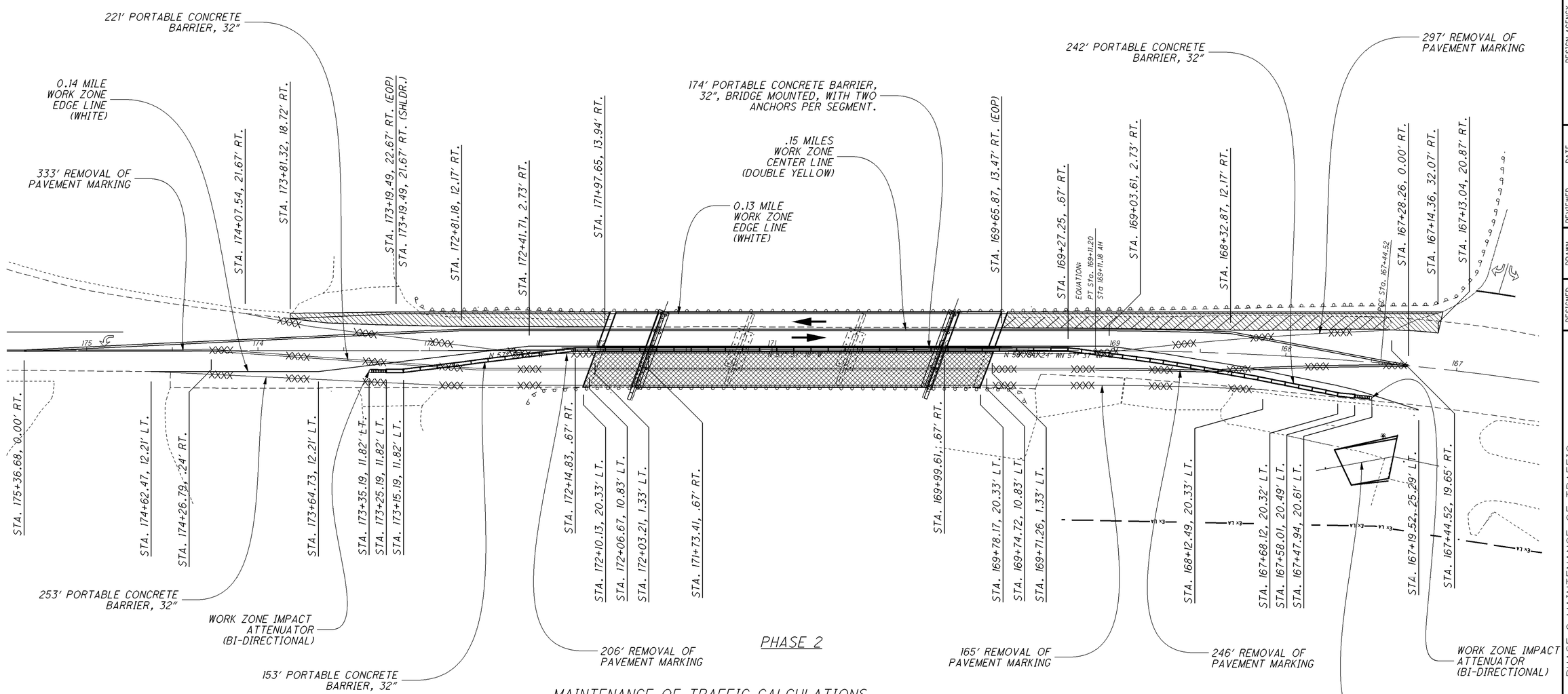

PHASE 2

MAINTENANCE OF TRAFFIC CALCULATIONS

ITEM 622 PORTABLE CONCRETE BARRIER, 32"

STA. 171+73.41 TO STA. 173+25.19	= 153 FT.
STA. 167+58.01 TO STA. 169+99.61	= 242 FT.
	395 FT.

ITEM 614 WORK ZONE IMPACT ATTENUATOR (BI-DIRECTIONAL), 24" WIDTH

STA. 173+35.19	1 EACH
STA. 167+47.94	1 EACH
	2 EACH

ITEM 642 REMOVAL OF PAVEMENT MARKINGS

STA. 167+28.26	TO STA. 169+74.72	= 246 FT.
STA. 167+44.52	TO STA. 169+71.26	= 297 FT.
STA. 168+12.49	TO STA. 169+78.17	= 165 FT.
STA. 172+03.21	TO STA. 174+07.54	= 206 FT.
STA. 172+06.67	TO STA. 174+26.79	= 221 FT.
STA. 172+10.13	TO STA. 174+62.47	= 253 FT.
		1,388 FT.

ITEM 614 WORK ZONE EDGE LINE (WHITE)

STA. 167+19.52 TO STA. 174+62.47	= 745.31 FT.	(0.14 MILE)
STA. 167+14.36 TO STA. 173+81.32	= 670.17 FT.	(0.13 MILE)
	1,415.48 FT.	(0.27 MILE)

ITEM 614 WORK ZONE CENTER LINE, CLASS I (DOUBLE YELLOW)

STA. 167+28.26 TO STA. 175+36.68	= 810.18 FT.	(0.15 MILE)
	810.18 FT.	(0.15 MILE)

ITEM 614 BARRIER REFLECTOR AND/OR OBJECT MARKERS (TWO-WAY)

STA. 167+18.09 TO 173+08.57 (ON GUARDRAIL)	= 12 EACH
STA. 167+58.01 TO 173+25.19 (ON PORTABLE CONCRETE BARRIER)	= 11 EACH
	23 EACH

LEGEND

- PHASE 2 REMOVAL AND REPLACEMENT
- PHASE 2 TEMP. PAVEMENT
- DRUMS
- PORTABLE BARRIER (PB)
- REMOVE EXISTING MARKINGS
- ATTENUATOR
- DIRECTION OF TRAVEL

NOTES:

1. ONCE STRUCTURE REHABILITATION IS COMPLETE, PAVEMENT SHALL BE RESURFACED. SEE ROADWAY PLANS.
2. FULL DEPTH SAW CUTTING OF EXISTING ASPHALT CONCRETE, CONCRETE DRIVEWAYS AND CONCRETE DRIVEWAYS WITH ASPHALT OVERLAY SHALL BE INCLUDED WITH ITEM 202 PAVEMENT REMOVED, ASPHALT AND ITEM 202 EXCAVATION
3. SEE SHEET 10 OF 60 FOR PORTABLE CONCRETE BARRIER ANCHORING REQUIREMENTS.
4. REMOVE EXISTING SHOULDER AND REPLACE WITH PAVEMENT FOR MAINTAINING TRAFFIC PRIOR TO ESTABLISHING PHASE ONE MOT.
5. SEE SHEET 16 OF 60 FOR PHASE 2 SIGNING PLAN.

DESIGN AGENCY
OHIO DEPARTMENT OF TRANSPORTATION, DISTRICT 5

DESIGNED	DRAWN	REVIEWED	DATE
NEM	NEM	JDR	01/05/15
CHECKED	REVISED	STRUCTURE FILE NUMBER	
TAG	NEM	3004112	

PHASE 2 MAINTENANCE OF TRAFFIC
BRIDGE NO. GUE-209-9.85
OVER WILLS CREEK

GUE-209-8.57/9.85

P:\GUE\93133\Design\Bridge\SFN - Route Name\Plan_Sheets\93133_NEM_MOT_006.dgn 08-JAN-2015 1:42PM nmccoy

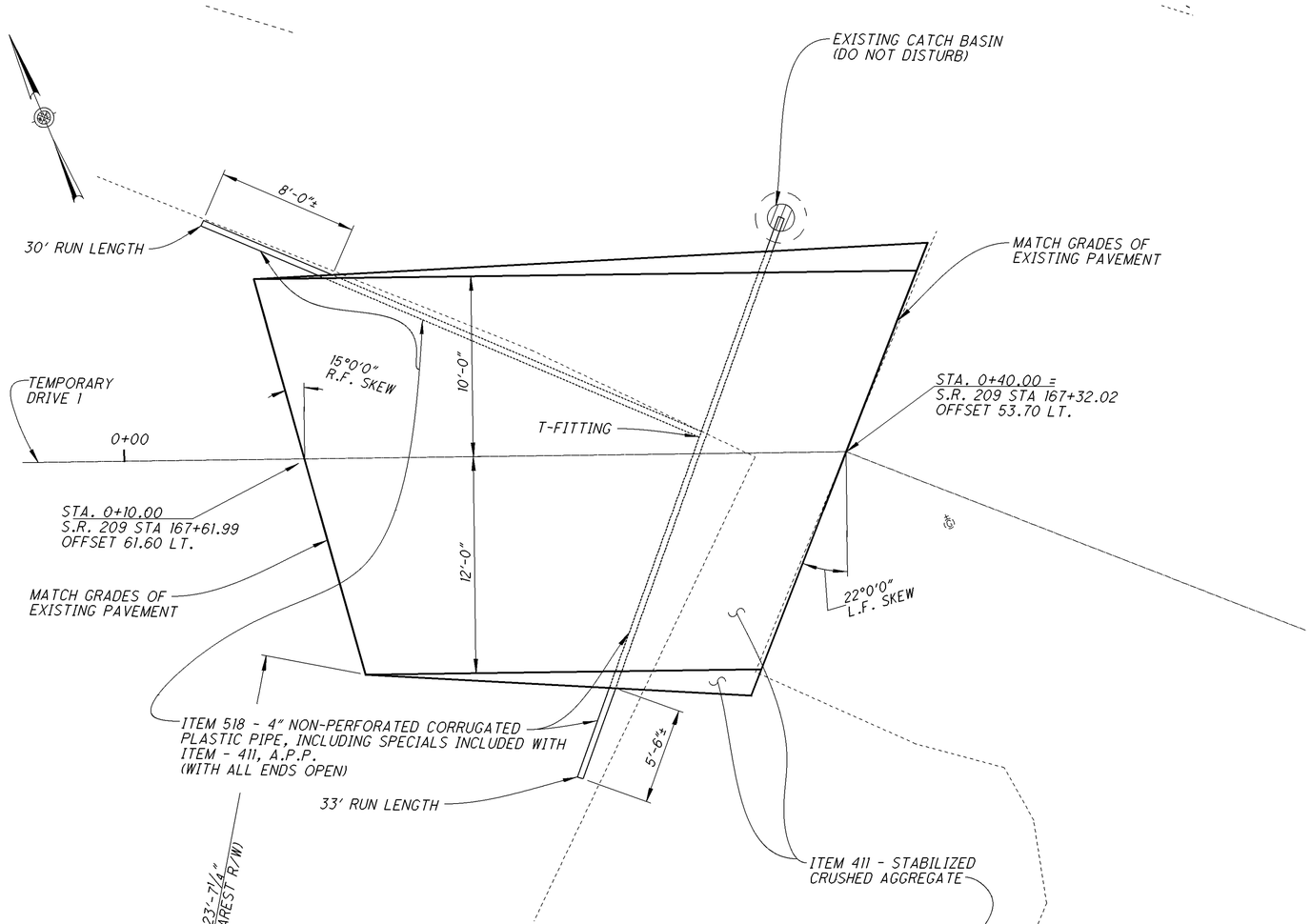

TEMPORARY DRIVE 1 - PLAN

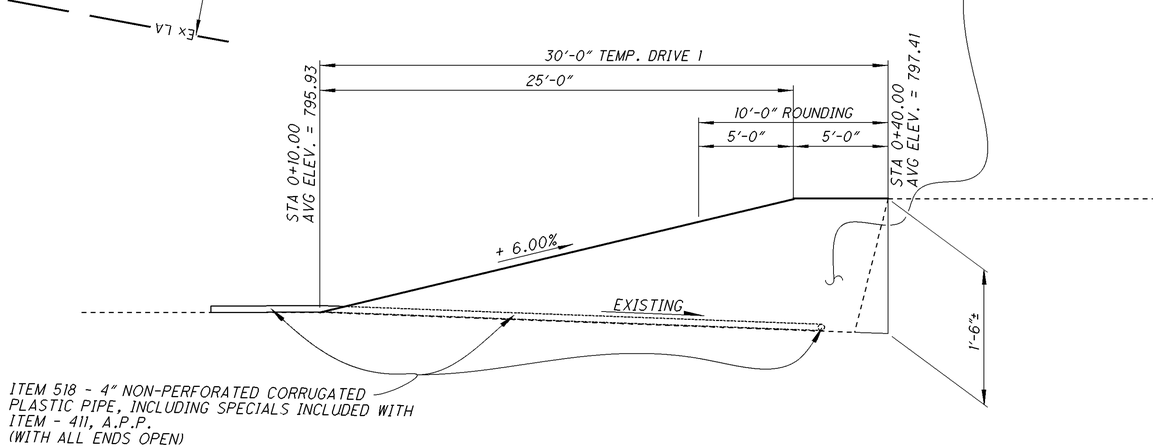

TEMPORARY DRIVE 1 - PROFILE

(1) - ITEM 411 - STABILIZED CRUSHED AGGREGATE
(VARIABLE THICKNESS AS SHOWN)

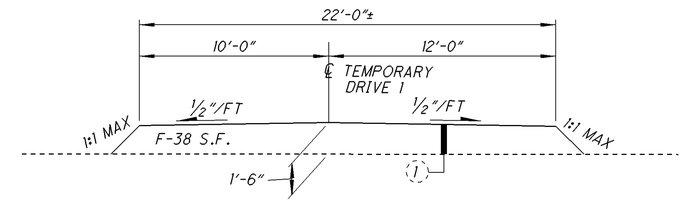

PROPOSED TYPCIAL SECTION TEMP. DRIVE 1

STA. 0+35.00 TO STA. 0+40.00 = 5.00'

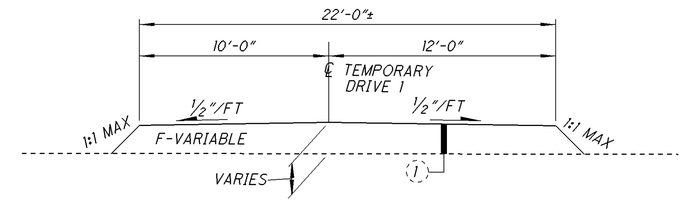

PROPOSED TYPCIAL SECTION TEMP. DRIVE 1

STA. 0+10.00 TO STA. 0+35.00 = 25.00'

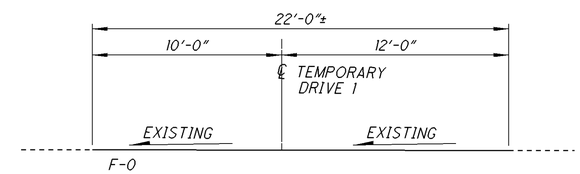

PROPOSED TYPCIAL SECTION TEMP. DRIVE 1

STA. 0+10.00 = 0.00'

ITEM 411 - STABILIZED CRUSHED AGGREGATE, AS PER PLAN

THIS ITEM INCLUDES THE TEMPORARY 4" P.C.P.P AND STABILIZED CRUSHED AGGREGATE SHOWN ON THIS SHEET. PROVIDE THE 4" P.C.P.P. ACCORDING TO C.M.S. SECTION 518 AND THE STABILIZED CRUSHED AGGREGATE AS PER C.M.S. 411. REMOVE THE 4" P.C.P.P. AND THE STABILIZED CRUSHED AGGREGATE WHEN THE PHASE OF CONSTRUCTION REQUIRING ITS PLACEMENT IS CONSTRUCTED AND TRAFFIC IS SWITCHED TO THE NEXT PHASE. CARE SHALL BE TAKEN WHEN REMOVING THESE TEMPORARY ITEMS SO THAT ALL EXISITNG FEATURES OF THE AREA REMAIN UNHARMED UPON COMPLETION OF THIS PROJECT. SWEEP AND/OR AIR BLAST CLEAN THE EXISTING PARKING LOT PAVEMENT ONCE MATERIAL IS REMOVED. ANY DAMAGE TO EXISTING ITEMS IN THIS VICINITY SHALL BE REAPIRED BY THE CONTRACTOR. ALL WORK IS TO BE COMPLETED AS PER THE ODOT FIELD INSPECTOR. ALL TIME, MATERIAL, AND LABOR ASSCIATED WITH PLACEMENT AND REMOVAL OF ITEMS DESCRIBED ON THIS SHEET SHALL BE PAID PER THE CONTRACT UNIT PRICE FOR: ITEM 411 - STABILIZED CRUSHED AGGREGATE, AS PER PLAN (CU. YD.)

THE FOLLOWING QUANTITY IS INCLUDED WITH THIS ITEM AND IS FOR ESTIMATING PURPOSES ONLY:
4" PERF. CORR. PLASTIC PIPE = 33 FT + 30 FT = 66 FEET

THE FOLLOWING QUANTITY HAS BEEN CARRIED TO THE GENERAL SUMMARY FOR PAYMENT:
STABILIZED CRUSHED AGGREGATE VOLUME:
(38 S.F. +0 S.F.)/2 X 25 FT / 27 = 16 C.Y.
(38 S.F.) X 5 FT / 27 = 7 C.Y.

TOTAL = 23 C.Y.

CALCULATED NEM
CHECKED JDR

TEMPORARY DRIVE 1 - TYPICAL SECTIONS

GUE-209-8.57/9.85

P:\GUE\93133\Design\Bridge\SFN - Route Name\Plan_Sheets\931330_TDD_001.dgn (SCALE = 4.000)

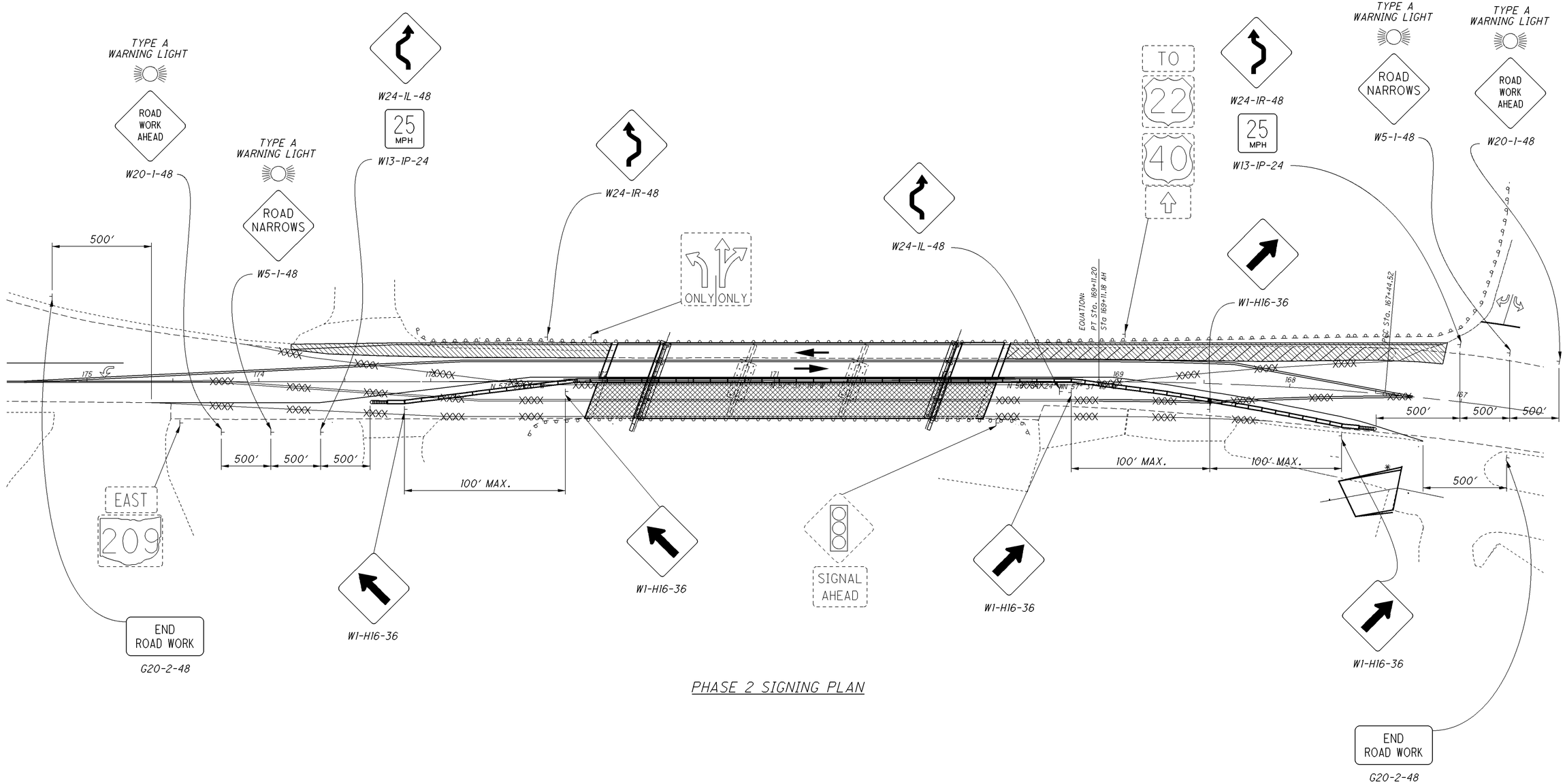

PHASE 2 SIGNING PLAN

LEGEND

PHASE 2 REMOVAL AND REPLACEMENT	
PHASE 2 TEMP. PAVEMENT	
DRUMS	● ● ●
PORTABLE BARRIER (PB)	
REMOVE EXISTING MARKINGS	
ATTENUATOR	
DIRECTION OF TRAVEL	→

NOTES:

1. FOR ADDITIONAL INFORMATION SEE STD. DWG. MT-102.10
2. FOR PHASE 2 MATINTENCE OF SEE SHEET 15 OF 60

DESIGN AGENCY
OHIO DEPARTMENT OF TRANSPORTATION, DISTRICT 5

DESIGNED	DRAWN	REVIEWED	DATE
NEM	NEM	JDR	01/05/15
CHECKED	REVISED	STRUCTURE FILE NUMBER	
TAG	NEM	3004112	

PHASE 2 SIGNING PLAN
BRIDGE NO. GUE-209-9.85
OVER WILLS CREEK

GUE-209-8.57/9.85

P:\GUE\93133\Design\Bridge\SFN - Route Name\Plan_Sheets\93133_NEM_MOT_006_SIGNS.dgn 08-JAN-2015 1:44PM nmccoy

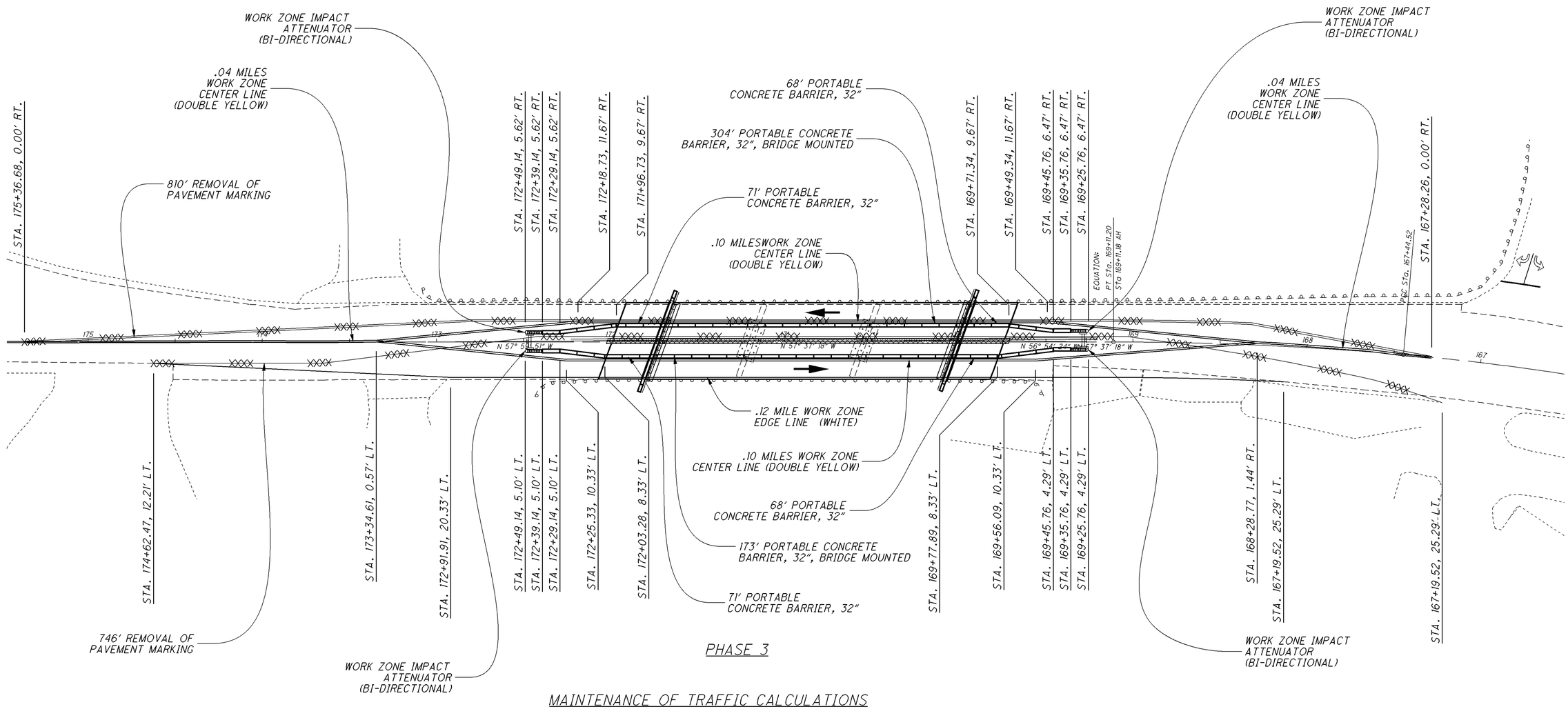

PHASE 3

MAINTENANCE OF TRAFFIC CALCULATIONS

ITEM 622 PORTABLE CONCRETE BARRIER, 32"

STA. 169+35.76 TO STA. 170+04.22	= 68 FT.	(LEFT)
STA. 171+77.20 TO STA. 172+39.14	= 71 FT.	(LEFT)
STA. 169+35.76 TO STA. 169+97.67	= 68 FT.	(RIGHT)
STA. 171+70.70 TO STA. 172+39.14	= 71 FT.	(RIGHT)
	278 FT.	

ITEM 622 PORTABLE CONCRETE BARRIER, 32"

STA. 170+04.22 TO STA. 171+77.20	= 173 FT.	(LEFT)
STA. 169+97.67 TO STA. 171+70.70	= 173 FT.	(RIGHT)
	346 FT.	

ITEM 614 WORK ZONE IMPACT ATTENUATOR (BI-DIRECTIONAL), 24" WIDTH

STA. 172+49.14 (LEFT)	1 EACH
STA. 172+49.14 (RIGHT)	1 EACH
STA. 169+25.76 (LEFT)	1 EACH
STA. 169+25.76 (RIGHT)	1 EACH
	4 EACH

ITEM 642 REMOVAL OF PAVEMENT MARKINGS

STA. 175+36.68TO STA. 167+28.26	= 810 FT.
STA. 174+62.47TO STA. 167+19.52	= 746 FT.
	1658 FT.

ITEM 614 WORK ZONE EDGE LINE (WHITE)

STA. 174+62.47 TO STA. 168+12.49	= 649.14 FT.	(0.12 MILE)
	649.14 FT.	(0.12 MILE)

ITEM 614 WORK ZONE CENTER LINE, CLASS I (DOUBLE YELLOW)

STA. 175+36.68 TO STA. 173+34.61	= 202.07 FT.	(0.04 MILE)
STA. 173+34.61 TO STA. 168+28.77	= 506.83 FT.	(0.10 MILE LEFT)
STA. 173+34.61 TO STA. 168+28.77	= 507.02 FT.	(0.10 MILE RIGHT)
STA. 168+28.77 TO STA. 167+19.52	= 100.57 FT.	(0.02 MILE)
	1316.49 FT.	(0.26 MILE)

ITEM 614 BARRIER REFLECTOR AND/OR OBJECT MARKERS (TWO-WAY)

STA. 169+35.76 TO STA. 172+39.14 (LEFT PORTABLE CONCRETE BARRIER)	= 6 EACH
STA. 169+35.76 TO STA. 172+39.14 (RIGHT PORTABLE CONCRETE BARRIER)	= 6 EACH
	12 EACH

LEGEND

- PHASE 2 REMOVAL AND REPLACEMENT
- PHASE 2 TEMP. PAVEMENT
- DRUMS
- PORTABLE BARRIER (PB)
- REMOVE EXISTING MARKINGS
- ATTENUATOR
- DIRECTION OF TRAVEL

NOTES:

1. ONCE STRUCTURE REHABILITATION IS COMPLETE, PAVEMENT SHALL BE RESURFACED. SEE ROADWAY PLANS.
2. FULL DEPTH SAW CUTTING OF EXISTING ASPHALT CONCRETE, CONCRETE DRIVEWAYS AND CONCRETE DRIVEWAYS WITH ASPHALT OVERLAY SHALL BE INCLUDED WITH ITEM 202 PAVEMENT REMOVED, ASPHALT AND ITEM 202 EXCAVATION
3. SEE SHEET 11 OF 60 FOR PORTABLE CONCRETE BARRIER ANCHORING REQUIREMENTS.
4. REMOVE EXISTING SHOULDER AND REPLACE WITH PAVEMENT FOR MAINTAINING TRAFFIC PRIOR TO ESTABLISHING PHASE ONE MOT.
5. SEE SHEET 19 OF 60 FOR PHASE 3 SIGNING PLAN.

DESIGN AGENCY
OHIO DEPARTMENT OF TRANSPORTATION, DISTRICT 5

DESIGNED	DRAWN	REVIEWED	DATE
NEM	NEM	JDR	01/05/15
CHECKED	REVISED	STRUCTURE FILE NUMBER	
TAG	NEM	3004112	

PHASE 3 MAINTENANCE OF TRAFFIC
BRIDGE NO. GUE-209-9.85
OVER WILLS CREEK

GUE-209-8.57/9.85

P:\GUE\93133\Design\Bridge\SFN - Route Name\Plan_Sheets\93133_NEM_MOT_007.dgn 08-JAN-2015 1:45PM nmccoy

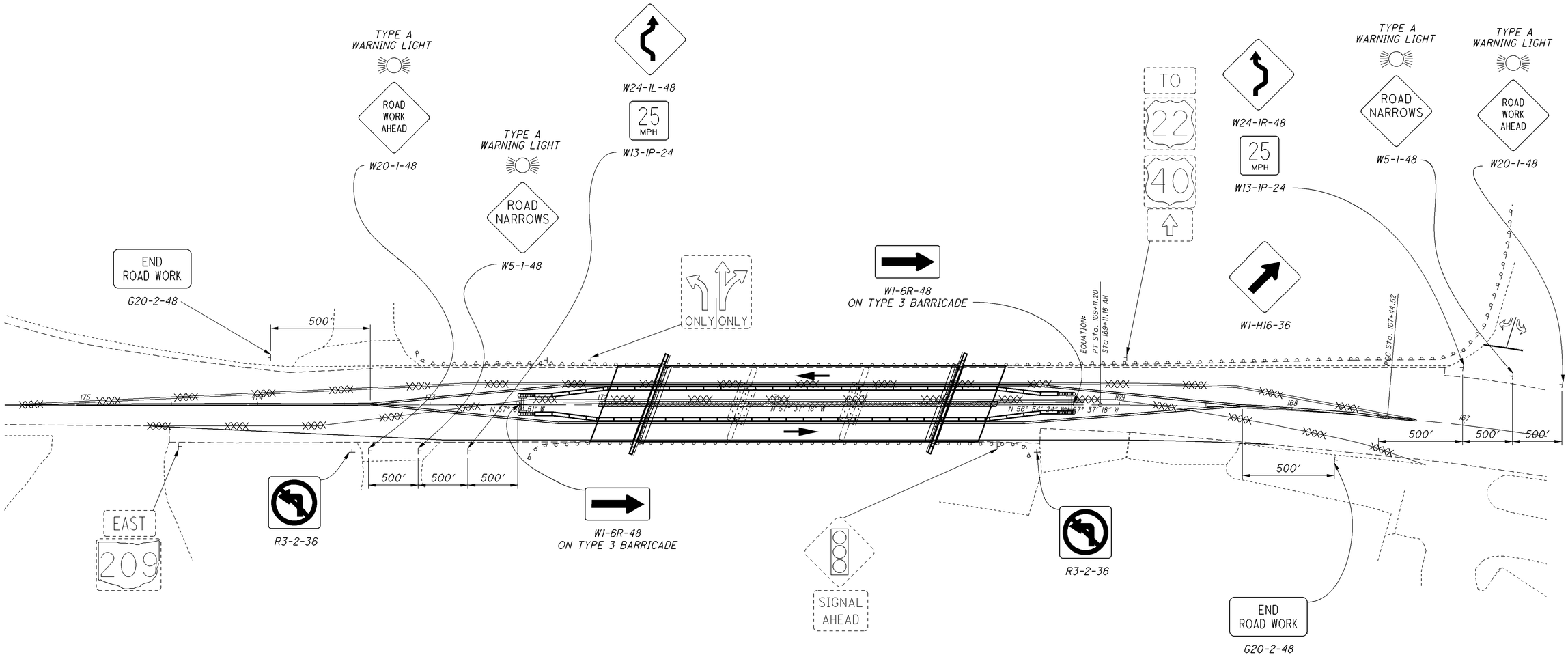

PHASE 3 SIGNING PLAN

LEGEND

PHASE 2 REMOVAL AND REPLACEMENT	
PHASE 2 TEMP. PAVEMENT	
DRUMS	● ● ●
PORTABLE BARRIER (PB)	
REMOVE EXISTING MARKINGS	
ATTENUATOR	
DIRECTION OF TRAVEL	→

NOTES:

1. FOR ADDITIONAL INFORMATION SEE STD. DWG. MT-102.10
2. FOR PHASE 3 MAINTENCE OF TRAFFIC SEE SHEET 18 OF 60

DESIGN AGENCY
OHIO DEPARTMENT OF TRANSPORTATION, DISTRICT 5

DESIGNED	DRAWN	REVIEWED	DATE
NEM	NEM	JDR	01/05/15
CHECKED	REVISED	STRUCTURE FILE NUMBER	
TAG	NEM	3004112	

PHASE 3 SIGNING PLAN
BRIDGE NO. GUE-209-9.85
OVER WILLS CREEK

GUE-209-8.57/9.85

P:\GUE\93133\Design\Bridge\SFN - Route Name\Plan_Sheets\93133_NEM_MOT_007_SIGN.dgn 08-JAN-2015 1:46PM nmccoy

SHEET NUMBER												PART.		ITEM	ITEM EXT	GRAND TOTAL	UNIT	DESCRIPTION	SEE SHEET NO.
		6	7	8	13	15	16	18	23	52		05/BRO/BR	06/NHS/BR						
																		ROADWAY - PART 2	
												LUMP		201	11000	LUMP		CLEARING AND GRUBBING	
									556			556		202	38000	556	FT	GUARDRAIL REMOVED	
									310			310		203	10000	310	CY	EXCAVATION	
									744			744		204	10000	744	SY	SUBGRADE COMPACTION	
									526			526		606	15050	526	FT	GUARDRAIL, TYPE MGS	
									4			4		606	26500	4	EACH	ANCHOR ASSEMBLY, TYPE T	
									4			4		606	35002	4	EACH	MGS BRIDGE TERMINAL ASSEMBLY, TYPE 1	
									4			4		SPECIAL	69050350	4	EACH	MAILBOX REMOVED AND RESET	
																		EROSION CONTROL - PART 2	
		318										318		659	00530	318	SY	SEEDING AND MULCHING, CLASS 3B	
		0.03										0.03		659	20000	0.03	TON	COMMERCIAL FERTILIZER	
		0.07										0.07		659	31000	0.07	ACRE	LIME	
		1.7										1.7		659	35000	1.7	MGAL	WATER	
												2000		832	30000	2000	EACH	EROSION CONTROL	
																		DRAINAGE - PART 2	
												4		611	99710	4	EACH	PRECAST REINFORCED CONCRETE OUTLET	
																		PAVEMENT - PART 2	
									252			252		301	46000	252	CY	ASPHALT CONCRETE BASE, PG64-22	
									119			119		304	20000	119	CY	AGGREGATE BASE	
										52		52		SPECIAL	69012050	52	SY	REINFORCED MESH FOR TRANSVERSE AND/OR LONGITUDINAL JOINTS AND CRACKS	29
																		TRAFFIC CONTROL - PART 2	
									20			20		626	00100	20	EACH	BARRIER REFLECTOR	
			46									46		630	03100	46	FT	GROUND MOUNTED SUPPORT, NO. 3 POST	
			12									12		630	80100	12	SF	SIGN, FLAT SHEET	
																		STRUCTURES - PART 2	
																		(SEE SUB-SUMMARY ON SHEET 26 OF 60 FOR STRUCTURE GUE-209-0985) - PART 2	
																		(SEE SUB-SUMMARY ON SHEET 54 OF 60 FOR STRUCTURE GUE-209-0857) - PART 2	
																		MAINTENANCE OF TRAFFIC - PART 2	
				5									5	410	13000	5	CY	TRAFFIC COMPACTED SURFACE, TYPE C	
							23					23		411	10001	23	CY	STABILIZED CRUSHED AGGREGATE, AS PER PLAN	16
					2	2		4				8		614	12348	8	EACH	WORK ZONE IMPACT ATTENUATOR (BIDIRECTIONAL), 24" WIDTH	
		7		5								7	5	614	13000	12	CY	ASPHALT CONCRETE FOR MAINTAINING TRAFFIC	
					17	23		12				52		614	13100	52	EACH	BARRIER REFLECTOR	
					17	23		12				52		614	13360	52	EACH	OBJECT MARKER, TWO WAY	
			28										28	614	18401	28	DAY	PORTABLE CHANGEABLE MESSAGE SIGN, AS PER PLAN	7
					0.13	0.15		0.26				0.54		614	21200	0.54	MILE	WORK ZONE CENTER LINE, CLASS I, 740.06, TYPE I	
					0.25	0.27		0.12				0.64		614	22200	0.64	MILE	WORK ZONE EDGE LINE, CLASS I, 740.06, TYPE I	
					349	395		278				1022		622	41000	1022	FT	PORTABLE BARRIER, 32"	
					174			346				520		622	41020	520	FT	PORTABLE BARRIER, 32", BRIDGE MOUNTED	
					1172	1388		1658				4218		642	30000	4218	FT	REMOVAL OF PAVEMENT MARKING	
																		INCIDENTALS - PART 2	
												LUMP		614	11000	LS		MAINTAINING TRAFFIC	
												LUMP		623	10000	LS		CONSTRUCTION LAYOUT STAKES AND SURVEYING	
												LUMP		624	10000	LS		MOBILIZATION	

DESIGN AGENCY
OHIO DEPARTMENT OF TRANSPORTATION, DISTRICT 5

DATE 01/05/15 | STRUCTURE FILE NUMBER 3004112
REVIEWED JDR | DRAWN NEM | REVISED NEM
DESIGNED NEM | CHECKED TAG

GENERAL SUMMARY
BRIDGE NO. GUE-209-9.85
OVER WILLS CREEK

GUE-209-8.57/9.85

P:\GUE\93133\Design\Bridge\SFN - Route Name\Plan_Sheets\93133_GS_001.dgn 08-JAN-2015 3:18PM nmccoy

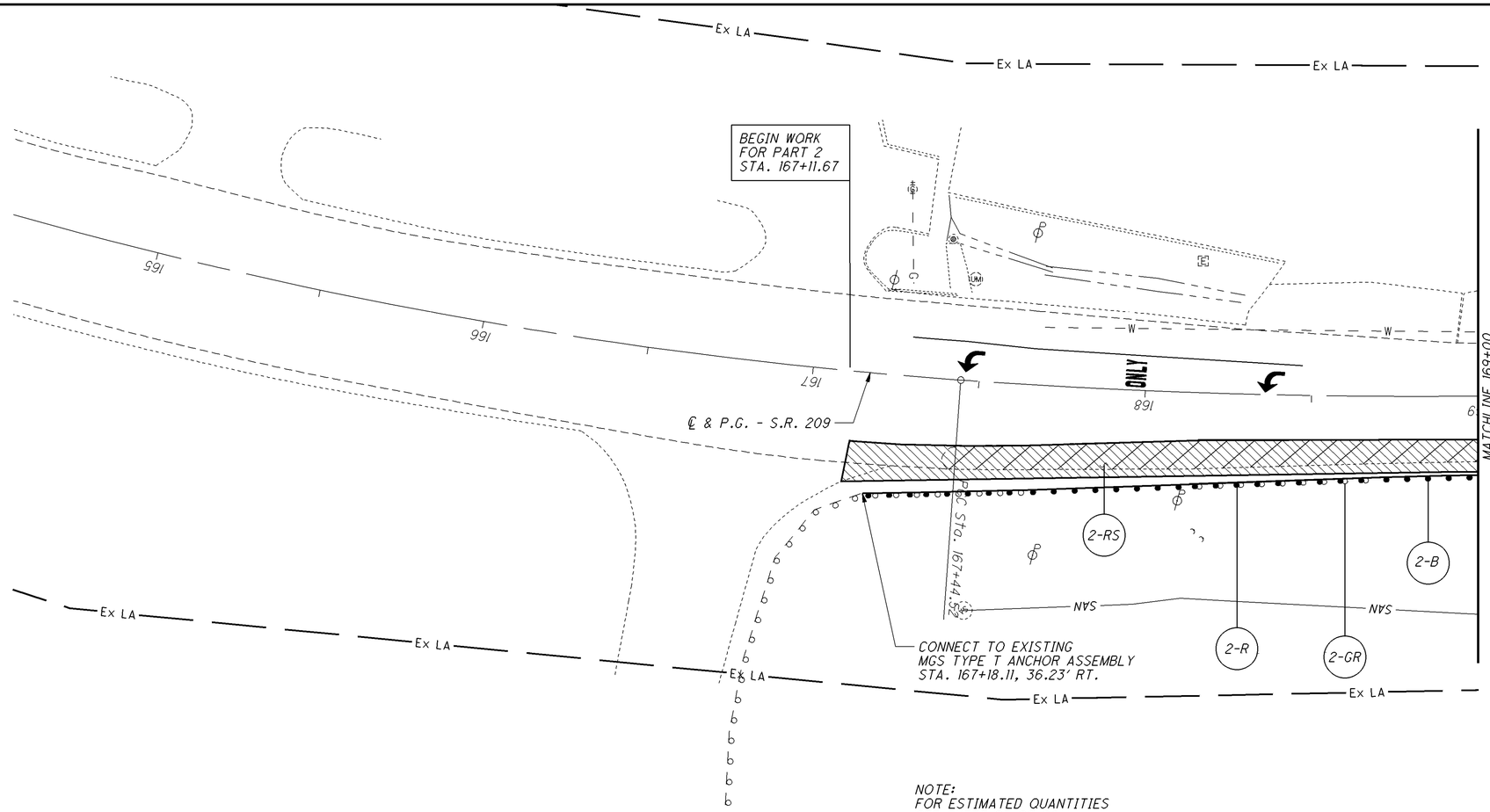

NOTE:
FOR ESTIMATED QUANTITIES
SEE SHEET 23 OF 60

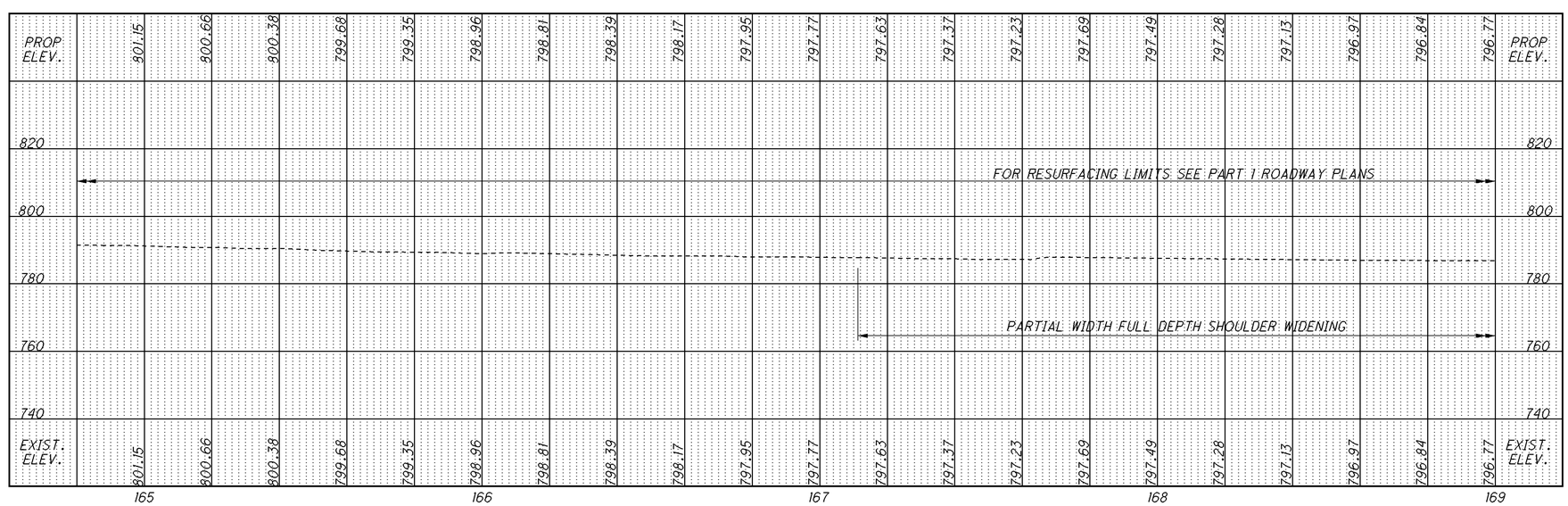

DESIGN AGENCY
OHIO DEPARTMENT OF TRANSPORTATION, DISTRICT 5

DESIGNED	DRAWN	REVIEWED	DATE
NEM	NEM	JDR	01/05/14
CHECKED	REVISED	STRUCTURE FILE NUMBER	
TAG	NEM	3004112	

GUERNSEY
STA. 164+80.00
STA. 169+00.00

PLAN & PROFILE
BRIDGE NO. GUE-209-0985
OVER WILLS CREEK

GUE-209-8.57/9.85

P:\GUE\93133\Design\Bridge\SFN - Route Name\Plan_Sheets\933133_BSP_001.dgn 08-JAN-2015 1:48PM nmccoy

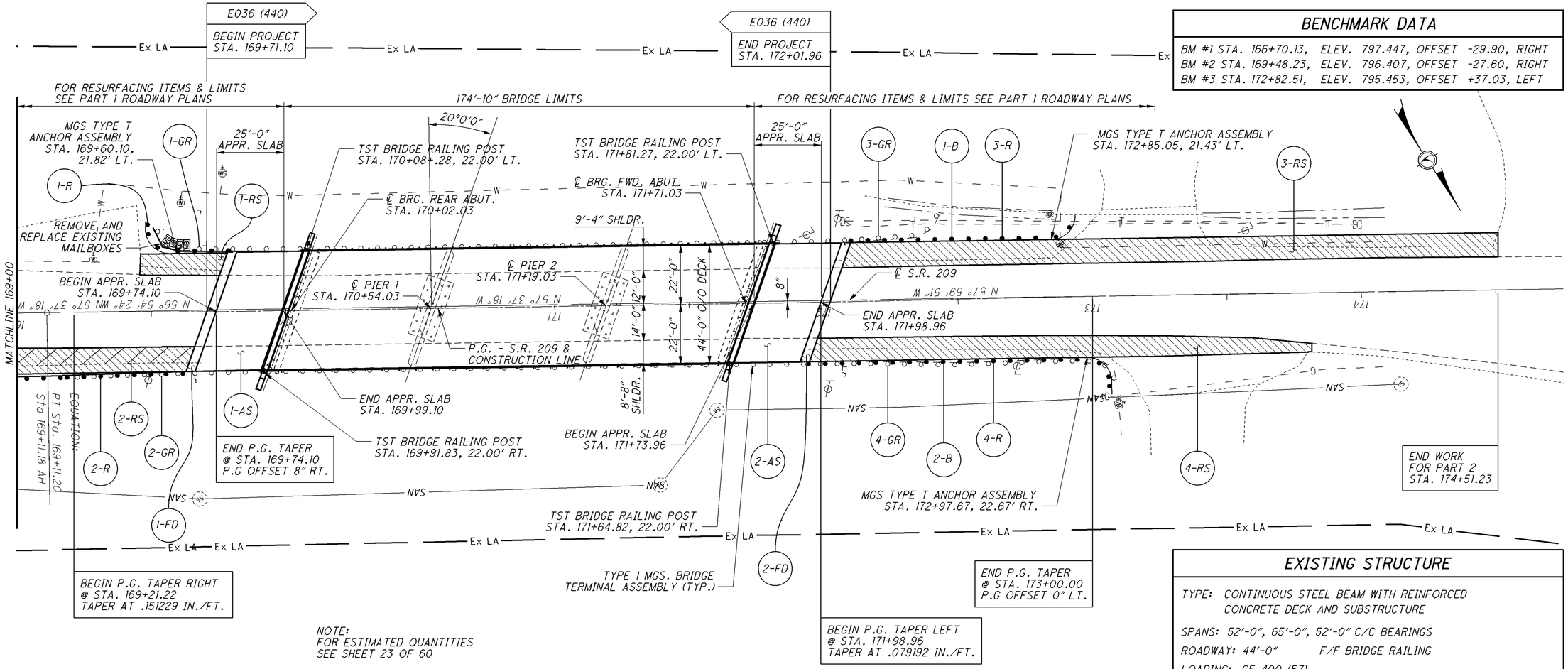

NOTE:
FOR ESTIMATED QUANTITIES
SEE SHEET 23 OF 60

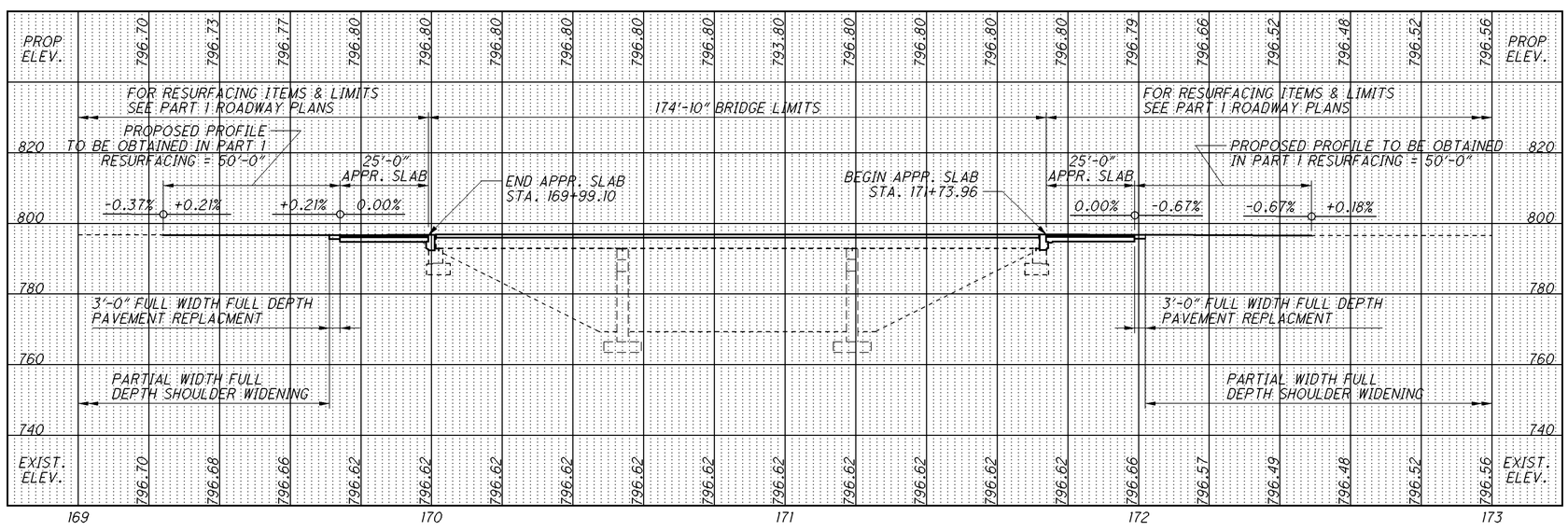

BENCHMARK DATA

BM #1 STA. 166+70.13, ELEV. 797.447, OFFSET -29.90, RIGHT
BM #2 STA. 169+48.23, ELEV. 796.407, OFFSET -27.60, RIGHT
BM #3 STA. 172+82.51, ELEV. 795.453, OFFSET +37.03, LEFT

EXISTING STRUCTURE

TYPE: CONTINUOUS STEEL BEAM WITH REINFORCED CONCRETE DECK AND SUBSTRUCTURE
SPANS: 52'-0", 65'-0", 52'-0" C/C BEARINGS
ROADWAY: 44'-0" F/F BRIDGE RAILING
LOADING: CF-400 (57)
SKEW: 20° LEFT FORWARD
APPROACH SLABS: 25'-0" LONG (AS-1-81)
ALIGNMENT: TANGENT
CROWN: 0.0156 FT/FT (NORMAL)
STRUCTURAL FILE NUMBER: 3004112
DATE BUILT: 1963
WEARING SURFACE: 1¾" SUPERPLASRICIZED DENSE CONCRETE OVERLAY

PROPOSED STRUCTURE

TYPE: CONTINUOUS STEEL BEAM WITH REINFORCED CONCRETE DECK AND SUBSTRUCTURE
SPANS: 52'-0", 65'-0", 52'-0" C/C BEARINGS
ROADWAY: 44'-0" F/F BRIDGE RAILING
LOADING: HS20 CASE II AND ALTERNATE MILITARY
SKEW: 20° LEFT FORWARD
APPROACH SLABS: 25'-0" LONG (AS-1-81)
ALIGNMENT: TANGENT
CROWN: 0.0156 FT/FT (NORMAL)
SFN: 3004112
COORDINATES: LATITUDE N 40° 0' 30.30"
LONGITUDE W 81° 34' 44.22"

DESIGN AGENCY
OHIO DEPARTMENT OF TRANSPORTATION, DISTRICT 5

DESIGNED	DRAWN	REVIEWED	DATE
NEM	NEM	JDR	01/05/14
CHECKED	REVISED	STRUCTURE FILE NUMBER	
TAG	NEM	3004112	

GUERNSEY
STA. 169+00.00
STA. 174+51.23

PLAN & PROFILE
BRIDGE NO. GUE-209-9.85
OVER WILLS CREEK

GUE-209-8.57/9.85

P:\GUE\93133\Design\Bridge\SFN - Route Name\Plan_Sheets\933133_BSP_001.dgn 08-JAN-2015 1:49PM nmccoy

ROADWAY CALCULATIONS

ITEM 202 - EXCAVATION

1-RS — STA. 169+45.90 TO STA. 169+75.45
[(8.40′ W x 30′ L x 1.25′ D)] / 27 = 11.67 CU. YD.

2-RS — STA. 167+13.04 TO STA. 169+65.87
[(10.18′ W x 255′ L x 1.25′ D)] / 27 = 120.18 CU. YD.

3-RS — STA. 172+07.10 TO STA. 174+50.99
[(8.87′ W x 244′ L x 1.25′ D)] / 27 = 100.20 CU. YD.

4-RS — STA. 171+97.65 TO STA. 173+81.32
[(7.72′ W x 184′ L x 1.25′ D)] / 27 = 65.76 CU. YD.

1-FD — STA. 169+71.10 TO STA. 169+74.10
[(44′ W x 3′ L x 1.25′ D)] / 27 = 6.11 CU. YD.

2-FD — STA. 171+98.96 TO STA. 172+01.96
[(44′ W x 3′ L x 1.25′ D)] / 27 = 6.11 CU. YD.

ITEM 204 SUBGRADE COMPACTION

1-RS — STA. 169+45.90 TO STA. 169+75.45
[(8.40′ W x 30′ L)] / 9 = 28.00 SQ. YD.

2-RS — STA. 167+13.04 TO STA. 169+65.87
[(10.18′ W x 255′ L)] / 9 = 288.43 SQ. YD.

3-RS — STA. 172+07.10 TO STA. 174+50.99
[(8.87′ W x 244′ L)] / 9 = 240.48 SQ. YD.

4-RS — STA. 171+97.65 TO STA. 173+81.32
[(7.72′ W x 184′ L)] / 9 = 157.83 SQ. YD.

1-FD — STA. 169+71.10 TO STA. 169+74.10
[(44′ W x 3′ L)] / 9 = 14.67 SQ. YD.

2-FD — STA. 171+98.96 TO STA. 172+01.96
[(44′ W x 3′ L)] / 9 = 14.67 SQ. YD.

ITEM 301 ASPHALT CONCRETE BASE, PG64-22

1-RS — STA. 169+45.90 TO STA. 169+75.45
[(8.40′ W x 30′ L x .75′ D)] / 27 = 7.00 CU. YD.

2-RS — STA. 167+13.04 TO STA. 169+65.87
[(10.18′ W x 255′ L x .75′ D)] / 27 = 72.11 CU. YD.

3-RS — STA. 172+07.10 TO STA. 174+50.99
[(8.87′ W x 244′ L x .75′ D)] / 27 = 60.12 CU. YD.

4-RS — STA. 171+97.65 TO STA. 173+81.32
[(7.72′ W x 184′ L x .75′ D)] / 27 = 39.46 CU. YD.

1-FD — STA. 169+71.10 TO STA. 169+74.10
[(44′ W x 3′ L x 1.25′ D)] / 27 = 6.11 CU. YD.

2-FD — STA. 171+98.96 TO STA. 172+01.96
[(44′ W x 3′ L x 1.25′ D)] / 27 = 6.11 CU. YD.

1-AS — STA. 169+74.10 TO STA. 169+99.10
[(44′ W x 25′ L x .75′ D)] / 27 = 30.55 CU. YD.

2-AS — STA. 171+73.96 TO STA. 171+98.96
[(44′ W x 25′ L x .75′ D)] / 27 = 30.55 CU. YD.

ITEM 304 - 6" AGGREGATE BASE

1-RS — STA. 169+45.90 TO STA. 169+75.45
[(8.40′ W x 30′ L x .5′ D)] / 27 = 4.67 CU. YD.

2-RS — STA. 167+13.04 TO STA. 169+65.87
[(10.18′ W x 255′ L x .5′ D)] / 27 = 48.07 CU. YD.

3-RS — STA. 172+07.10 TO STA. 174+50.99
[(8.87′ W x 244′ L x .5′ D)] / 27 = 40.08 CU. YD.

4-RS — STA. 171+97.65 TO STA. 173+81.32
[(7.72′ W x 184′ L x .5′ D)] / 27 = 26.30 CU. YD.

ITEM 626 - BARRIER REFLECTOR TYPE A2

1-B — STA. 169+48.26 TO STA. 172+94.01
327.5′ L / 50 = 6.55 + 1 = 7.55 EACH

2-B — STA. 167+18.09 TO STA. 173+06.63
553.5′ L / 50 = 11.07 + 1 = 12.07 EACH

REF NO.	STATION FROM	STATION TO	SIDE	202 EXCAVATION	202 GUARDRAIL REMOVED	204 SUBGRADE COMPACTION	301 ASPHALT CONCRETE BASE, PG64-22	304 6" AGGREGATE BASE	606 GUARDRAIL, TYPE MGS	606 MGS BRIDGE TERMINAL ASSEMBLY, TYPE 1	606 ANCHOR ASSEMBLY, MGS, TYPE T	626 BARRIER REFLECTOR TYPE A2	690 MAILBOX REMOVED AND RESET
				CU. YD.	FT.	SQ. YD.	CU. YD.	CU. YD.	FT.	EACH	EACH	EACH	EACH
1-RS	169+45.90	169+75.45	LT.	11.67		28.00	7.00	4.67					
2-RS	167+13.04	169+65.87	RT.	120.18		288.43	72.11	48.07					
3-RS	172+07.10	174+50.99	LT.	100.20		240.48	60.12	40.08					
4-RS	171+97.65	173+81.32	RT.	65.76		157.83	39.46	26.30					
1-R	169+48.26	170+08.24	LT.						50	1	1		
2-R	167+18.09	169+91.79	RT.						251	1	1		
3-R	171+81.23	172+94.01	LT.						100	1	1		
4-R	171+64.78	173+06.63	RT.						125	1	1		
1-GR	169+51.30	170+08.24	LT.		62								4
2-GR	167+18.09	169+91.79	RT.		278								
3-GR	171+81.23	172+43.59	LT.		67								
4-GR	171+64.78	173+08.57	RT.		149								
1-AS	169+74.10	169+99.10	℄				30.55						
2-AS	171+73.96	171+98.96	℄				30.55						
1-FD	169+71.10	169+74.10	℄	6.11		14.67	6.11						
2-FD	171+98.96	172+01.96	℄	6.11		14.67	6.11						
1-B	169+48.26	172+94.01	LT.									8	
2-B	167+18.09	173+06.63	RT.									12	
TOTALS CARRIED TO GENERAL SUMMARY				310	556	744	252	119	526	4	4	20	4

CALCULATED NEM
CHECKED JDR

GENERAL SUB-SUMMARY

COS-209-8.57/9.85

P:\MUS\91824\Design\MUS-208-10.41\Bridge\6005578 - MUS-208-1041\Plan_Sheets\91824_GSS_001.DGN (SCALE = 1.000)

STANDARD DRAWINGS AND SUPPLEMENTAL SPECIFICATIONS:

REFER TO THE FOLLOWING STANDARD BRIDGE DRAWINGS:

A-1-69	DATED: 07-19-02
AS-1-81	DATED: 01-18-13
DS-1-92	DATED: 07-18-03
EXJ-4-87	DATED: 07-19-02
GSD-1-96	DATED: 07-19-02
PCB-91	DATED: 01-18-13
TST-1-99	DATED: 01-17-14

AND THE FOLLOWING SUPPLEMENTAL SPECIFICATIONS:

800	DATED: 07-18-14
832	DATED: 01-17-14

REFERENCE

DETAILED DRAWINGS OF THE EXISTING STRUCTURE MAY BE INSPECTED IN THE DISTRICT 5 OFFICE OF THE OHIO DEPARTMENT OF TRANSPORTATION, JACKSONTOWN OHIO.

DESIGN SPECIFICATIONS

THIS STRUCTURE CONFORMS TO THE "STANDARD SPECIFICATIONS FOR HIGHWAY BRIDGES" ADOPTED BY THE AMERICAN ASSOCIATED OF STATE HIGHWAY AND TRANSPORTATION OFFICIALS, 17TH EDITION (2002), AND THE ODOT BRIDGE DESIGN MANUAL, 2004.

DESIGN LOADING

HS-20 CASE II AND THE ALTERNATE MILITARY LOADING, WITH FUTURE WEARING SURFACE (FWS) OF 60 LBS/SQ. FT.

DESIGN DATA

CONCRETE CLASS QSC2 - COMPRESSIVE STRENGTH 4.5 KSI (SUPERSTRUCTURE)

CONCRETE CLASS QSC1 - COMPRESSIVE STRENGTH 4.0 KSI (SUBSTRUCTURE)

STRUCTURAL STEEL - ASTM A709 GRADE 50
- YIELD STRENGTH 50 KSI

REINFORCING STEEL - ASTM A614 OR A996 GRADE 60
- MINIMUM YIELD STRENGTH 60 KSI.

EXISTING STRUCTURE VERIFICATION

DETAILS AND DIMENSIONS SHOWN ON THESE PLANS PERTAINING TO THE EXISTING STRUCTURE HAVE BEEN OBTAINED FROM PLANS OF THE EXISTING STRUCTURE AND FROM FIELD OBSERVATIONS AND MEASUREMENTS. CONSEQUENTLY, THEY ARE INDICATIVE OF THE EXISTING STRUCTURE AND THE PROPOSED WORK BUT THEY SHALL BE CONSIDERED TENTATIVE AND APPROXIMATE. THE CONTRACTOR IS REFERRED TO CMS SECTIONS 102.05, 105.02, AND 513.04.

BASE CONTRACT BID PRICES UPON A RECOGNITION OF THE UNCERTAINTIES DESCRIBED ABOVE AND UPON A PREBID EXAMINATION OF THE EXISTING STRUCTURE. HOWEVER, THE DEPARTMENT WILL PAY FOR ALL PROJECT WORK BASED UPON ACTUAL DETAILS AND DIMENSIONS THAT HAVE BEEN VERIFIED IN THE FIELD.

MONOLITHIC WEARING SURFACE

MONOLITHIC WEARING SURFACE IS ASSUMED, FOR DESIGN PURPOSES, TO BE 1 INCH THICK.

DECK PROTECTION METHOD:

EPOXY COATED REINFORCING STEEL
2½" CONCRETE COVER
STEEL DRIP STRIP
SEALING OF CONCRETE SURFACES

PORTIONS OF STRUCTURE REMOVED, AS PER PLAN, SUPERSTURCTURE (CONCRETE)

DESCRIPTION: THIS WORK CONSISTS OF THE REMOVAL OF THE CONCRETE DECK FROM STEEL SUPPORTING SYSTEMS (GIRDERS, CROSSFRAMES, ETC,). THE PROVISIONS OF ITEM 202 APPLY EXCEPT AS SPECIFIED BY THE FOLLOWING NOTES. PERFORM WORK CAREFULLY DURING REMOVALS TO PROTECT PORTIONS OF SUCH SYSTEMS THAT ARE TO BE SALVAGED AND INCORPORATED INTO THE PROPOSED STRUCTURE. THE USE OF EXPLOSIVES, HEADACHE BALLS AND/OR HOE RAM TYPE EQUIPMENT IS PROHIBITED. SUBMIT CONSTRUCTION PLANS ACCORDING TO C&MS 501.05.

PROTECTION OF TRAFFIC: PRIOR TO DEMOLITION OF ANY PORTIONS OF THE EXISTING SUPERSTRUCTURE, THE CONTRACTOR SHALL SUBMIT PLANS FOR THE PROTECTIONS OF TRAFFIC (VEHICULAR, PEDESTRIAN, BOAT, ETC.) AS PER C&MS 2013 501.05.B.2.

PROTECTION OF STEEL SUPPORT SYSTEMS: BEFORE DECK AND SLAB CUTTING IS PERMITTED, DRAW THE OUTLINE OF PRIMARY STEEL MEMBERS IN CONTACT WITH THE BOTTOM OF THE DECK ON THE SURFACE OF DECK. DRILL SMALL DIAMETER PILOT HOLES 2 INCHES OUTSIDE THESE LINES TO CONFIRM THE LOCATION OF THE FLANGE EDGES. DECK CUTS OVER OR WITHIN 2 INCHES OF FLANGE EDGES SHALL NOT EXTEND LOWER THAN THE BOTTOM LAYER OF DECK SLAB REINFORCING STEEL. CUTS MADE OUTSIDE 2 INCHES OF FLANGE EDGES MAY EXTEND THE FULL DEPTH OF THE DECK. PERFORM WORK CAREFULLY DURING CUTTING OF THE DECK SLAB TO AVOID DAMAGING STEEL MEMBERS THAT ARE TO BE INCORPORATED INTO THE PROPOSED STRUCTURE. REPLACE OR REPAIR STEEL MEMBERS DAMAGED BY THE DECK SLAB CUTTING OPERATIONS AT NO COST TO THE PROJECT. AT LEAST 7 DAYS BEFORE PERFORMING REPAIR WORK , SUBMIT A PROPOSED REPAIR PLAN, DEVELOPED BY AN OHIO REGISTERED PROFESSIONAL ENGINEER TO THE DIRECTOR. OBTAIN THE DIRECTOR'S APPROVAL BEFORE PERFORMING REPAIR.

REMOVAL METHODS: THE CONTRACTOR MAY REMOVE CONCRETE BY CUTTING AND BY MEANS OF HAND OPERATED PNEUMATIC HAMMERS EMPLOYING POINTED OR BLUNTED CHISEL TYPE TOOLS. FOR REMOVALS OVER STRUCTURAL MEMBERS (STEEL GIRDERS), THE CONTRACTOR MAY USE A HAMMER HEAVIER THAN 35 POUNDS, BUT NOT EXCEED 90 POUNDS UNLESS APPROVED BY THE ENGINEER. REMOVAL METHODS OVER STRUCTURAL MEMBERS SHALL ENSURE ADEQUATE DEPTH CONTROL AND PREVENT NICKING OR GOUGING THE PRIMARY STRUCTURAL MEMBERS.

DUE TO THE POSSIBLE PRESENCE OF ATTACHMENTS (E.G., FINISHING MACHINE AND FORM SUPPORTS, ETC.) TO EXISTING STRUCTURAL MEMBERS, PREFORM WORK CAREFULLY DURING DECK REMOVAL TO AVOID DAMAGING STRUCTURAL MEMBERS THAT ARE TO REMAIN. REPLACE OR REPAIR STRUCTURAL MEMBERS DAMAGED BY THE REMOVAL OPERATIONS AT NO COST TO THE PROJECT. AT LEAST 7 DAYS BEFORE PERFORMING REPAIR WORK, SUBMIT A PROPOSED REPAIR PLAN, DEVELOPED BY AN OHIO REGISTERED PROFESSIONAL ENGINEER TO THE DIRECTOR. OBTAIN THE DIRECTOR'S APPROVAL BEFORE PERFORMING REPAIR.

EXISITNG WELDED ATTACHMENTS: REMOVE EXISTING WELDED ATTACHMENTS (E.G., FINISHING MACHINE, UTILITY ATTACHMENTS, AND FORM SUPPORTS) LOCATED IN THE WEB AND/OR FLANGES OF EXISTING STEEL MEMBERS. ANY GRINDING SHALL BE DONE PARALLEL TO THE SURFACE THAT THE ATTACHEMEN IT LOCATED ON. CARE SHALL BE TAKEN WHEN GRINDING AS NOT TO DAMAGE THE STEEL MEMBER AND ATTACHMENTS SHALL BE GROUND DOWN UNTIL THE STEEL MEMBER IS SMOOTH.

PORTIONS OF STRUCTURE REMOVED, AS PER PLAN, SUPERSTURCTURE (CONCRETE) (CONTINUED)

MEASUREMENT & PAYMENT: THE DEPARTMENT WILL MEASURE THE QUANTITY OF CONCRETE REMOVALS ON A CUBIC YARD BASIS. THE DEPARTMENT WILL PAY FOR THE ACCEPTED QUANTITIES OF REMOVALS AT THE CONTRACT PRICE FROM ITEM 202, PORTIONS OF STRUCTURE REMOVED, AS PER PLAN, SUPERSTRUCTURE (CONCRETE).

PORTIONS OF STRUCTURE REMOVED, AS PER PLAN, SUBSTRUCTURE

THERE SHALL BE NO SAWCUTS BELOW THE BEAM SEAT ELEVATIONS AT ANY LOCATION EXCEPT AS DETAILED IN THE PLAN. ALL CONCRETE REMOVED FROM THE SAWCUT DOWN TO THE BEAM SEAT SHALL BE REMOVED BY MEANS OF APPROVED PNEUMATIC HAMMERS EMPLOYING POINTED AND BLUNT CHISEL TOOLS. HYDRAULIC HOE-RAM TYPE HAMMERS WILL NOT BE PERMITTED. THE WEIGHT OF THE HAMMER SHALL NOT BE MORE THAN 35 POUNDS FOR REMOVAL WITHIN 18 INCHES OF PORTIONS TO BE PRESERVED. OUTSIDE THE 18 INCH LIMIT, THE CONTRACTOR MAY USE HAMMERS NOT EXCEEDING 90 POUNDS UPON THE APPROVAL OF THE ENGINEER. DO NOT PLACE PNEUMATIC HAMMERS IN DIRECT CONTACT WITH REINFORCING STEEL THAT IS TO BE RETAINED IN THE REBUILT STRUCTURE. THIS ITEM SHALL INCLUDE THE REMOVAL OF ANY FOREIGN MATERIALS FROM THE EXISTING WEEPHOLES.

CUT LINE CONSTRUCTION JOINT PREPARATION

FOR ABUTMENT BACKWALL REMOVALS SAW CUT BOUNDARIES OF PROPOSED CONCRETE REMOVALS 1 INCH DEEP. REMOVE CONCRETE TO A ROUGH SURFACE. LEAVE THE EXISTING REINFORCING STEEL, IF REQUIRED IN THE PLANS, IN PLACE. INSTALL DOWEL BARS IF SPECIFIED. PRIOR TO CONCRETE PLACEMENT ABRASIVELY CLEAN JOINT SURFACES AND EXISTING EXPOSED REINFORCEMENT TO REMOVE LOOSE AND DISINTEGRATED CONCRETE AND LOOSE RUST. THOROUGHLY CLEAN THE JOINT SURFACE AND EXPOSED REINFORCEMENT OF ALL DIRT, DUST, RUST OR OTHER FOREIGN MATERIAL BY THE USE OF WATER, AIR UNDER PRESSURE, OR OTHER METHODS THAT PRODUCE SATISFACTORY RESULTS. EXISTING REINFORCING STEEL DOES NOT HAVE TO HAVE A BRIGHT STEEL FINISH, BUT REMOVE PACK AND LOOSE RUST. THOROUGHLY DRENCH EXISTING CONCRETE SURFACES WITH CLEAN WATER AND ALLOW TO DRY TO A DAMP CONDITION BEFORE PLACING CONCRETE.

ITEM 526 - QC/QA CONCRETE, CLASS QC2, SUPERSTRUCTURE (APPROACH SLAB). (T=15"), AS PER PLAN

FURNISH APPROACH SLABS CONFORMING TO C&MS 526. THE ACCEPTED QUANTITIES SHALL INCLUDE: CONCRETE, REINFORCING STEEL, JOINT FILLERS, JOINT SEALS, AND WATERPROOFING. THE DEPARTMETN WILL INITIALLY PAY THE FULL BID PRICE TO THE CONTRACTOR UPON COMPLETING THE WORK. THE DEPARTMENT WILL CALCULATE THE FINAL ADJUSTED PAYMENT ACCORDING TO C&MS 455 AND INCLUDE APPROACH SLAB CONCRETE AND DECK CONCRETE IN THE SAME LOT TO DETERMINE FINAL PAY FACTORS.

ITEM 511 - CLASS QC2, CONCRETE WITH QC/QA, BRIDGE DECK, AS PER PLAN

THE DEPARTMENT WILL CALCULATE THE FINAL ADJUSTED PAYMENT ACCORDING TO C&MS 455 AND INCLUDE APPROACH SLAB CONCRETE AND DECK CONCRETE IN THE SAME LOT TO DETERMINE FINAL PAY FACTORS.

ITEM 516 - 2" DEEP JOINT SEALER, AS PER PLAN

A 2" DEEP x 1" WIDE STRIP SHALL BE SAWCUT OUT OF ALL ROADWAY SURFACE ASPHALT ABUTTING ENDS OF BACKWALL AFTER THE FINAL SURFACE COURSE HAD BEEN CONSTRUCTED. JOINT SEALER AS PER 705.04 SHALL BE USED TO SEAL THE JOINT CREATED.

INSPECTION OF EXISTING STRUCTURAL STEEL

THE ENGINEER WILL VISUALLY INSPECT ALL EXISTING BUTT-WELDED SPLICES AND/OR TOP FLANGE COVER PLATE FILLET WELDS TO ENSURE THE WELDS, PLATES AND GIRDERS ARE FREE OF DEFECTS AND CRACKS. IF NECESSARY, REMOVE ALL DECK SLAB HAUNCH FORMS IMMEDIATELY ADJACENT TO SUCH WELDS THAT MAY INTERFERE WITH THE ENGINEERS'S INSPECTION. THE INSPECTIONS WILL NOT TAKE PLACE UNTIL THE TOP FLANGES ARE CLEANED ACCORDING TO 511.07, BUT WILL BE DONE BEFORE THE DECK SLAB REINFORCEMENT IS INSTALLED. THE DEPARTMENT WILL PAY FOR THE COST ASSOCIATED WITH THIS INSPECTION WITH ITEM 511 QC/QA CONCRETE, CLASS QC2, SUPERSTRUCTURE (DECK), AS PER PLAN. THE ENGINEER WILL REPORT ALL CRACKS FOUND TO THE OFFICE OF CONSTRUCTION ADMINISTRATION, BRIDGE CONSTRUCTION SPECIALIST, ALONG WITH SPECIFIC INFORMATION ON LOCATION OF THE CRACKS, LENGTH AND DEPTH SO AN EVALUATION AND REPAIR OR REPLACEMENT RECOMMENDATION CAN BE MADE.

BACKWALL CONCRETE

IN ADDITION TO 511.07. DO NOT PLACE BACKWALL CONCRETE ABOVE THE OPTIONAL CONSTRUCTION JOINT AT THE APPROACH SLAB SEAT UNTIL AFTER THE DECK CONCRETE IN THE SPAN ADJACENT TO THE ABUTMENT HAS BEEN PLACED.

INSTALLATION OF SEAL

DURING INSTALLATION OF THE SUPPORT/ARMOR FOR THE SUPERSTRUCTURE SIDE OF THE EXPANSION JOINT SEAL, OBSERVE THE SEATING OF BEAMS ON BEARINGS TO ASSURE THAT POSITIVE BEARING IS MAINTAINED.

DECK SLAB CONCRETE QUANTITY

THE ESTIMATED QUANTITY OF DECK SLAB CONCRETE IS BASED ON THE CONSTANT DECK SLAB THICKNESS, AS SHOWN, PLUS THE QUANTITY OF CONCRETE THAT FROM EACH BEAM HAUNCH. THE ESTIMATE ASSUMES A CONSTANT HAUNCH THICKNESS OF 2 7/16 INCHES AND A CONSTANT HAUNCH WIDTH OUTSIDE THE EDGE OF EACH BEAM FLANGE OF 9 INCHES. DEVIATE FROM THIS HAUNCH THICKNESS AS NECESSARY TO PLACE THE DECK SURFACE AT THE FINISHED GRADE. THE ALLOWABLE TOLERANCE FOR THE HAUNCH WIDTH OUTSIDE OF THE EDGE OF EACH BEAM FLANGE IS = 3 INCHES.

THE HAUNCH THICKNESS WAS MEASURED AT THE CENTERLINE OF THE BEAM, FROM THE SURFACE OF THE DECK TO THE BOTTOM OF THE TIP FLANGE MINUS THE DECK SLAB THICKNESS, THE AREA OF ALL EMBEDDED STEEL PLATES HAS BEEN DEDUCTED FROM THE HAUNCH QUANTITY IN ACCORDANCE WITH 511.23.

WELDED ATTACHMENTS

WELD ATTACHMENTS OF SUPPORTS FOR CONCRETE DECK FINISHING MACHINE TO AREAS OF THE FASCIA STRINGER FLANGES DESIGNATED "COMPRESSION". DO NOT WELD ATTACHMENTS TO AREAS DESIGNATED "TENSION". FILLET WELDS TO COMPRESSION FLANGES SHALL BE AT LEAST 1" FROM EDGE OF FLANGE, BE NO MORE THAN 2" LONG, AND BE AT LEAST 1/4" FOR THICKNESSES UP TO 3/4" OR 5/16" FOR GREATER THAN 3/4" THICK.

PAINTING OF STRUCTURAL STEEL

ALL STRUCTURAL STEEL SHALL BE PAINTED IN ACCORDANCE WITH SECTION 514 OF THE CONSTRUCTION AND MATERIAL SPECIFICATIONS. THE FINISH COAT COLOR SHALL BE GREEN FS-595B-14260. COLORS BROWN OR BLUE SHALL NOT BE USED IN THE FINAL FINISH COAT. FIELD INSPECTOR MAY NON -PREFORM QUANTITY PORTIONS WHERE EXISTING UTILITIES SHALL REMAIN IN PLACE AND IN SERVICE.

END DAMS - BRIDGE PAINTING

THE END DAMS SHALL NOT RECEIVE ABRASIVE BLASTING OR PAINTING.

ITEM 516, JACKING AND TEMPORARY SUPPORT OF SUPERSTRUCTURE, AS PER PLAN

THIS WORK CONSISTS OF RAISING OR RE-POSITIONING EXISTING STRUCTURES TO THE DIMENSIONS AND REQUIREMENTS DEFINED IN THE PROJECT PLANS.

SUBMIT CONSTRUCTION PLANS IN ACCORDANCE WITH C&MS 501.05.

AFTER THE PROPOSED REHABILITATION OF EACH ABUTMENT FOLLOWING EACH PHASE, THE BRIDGE BEARINGS SHALL BE FULLY SEATED AT ALL CONTACT AREAS. IF FULL SEATING IS NOT ATTAINED, SUBMIT A REPAIR PLAN TO THE ENGINEER. THE DEPARTMENT WILL NOT PAY FOR THE REPAIR COSTS TO ENSURE FULL SEATING ON BEARINGS.

THE DEPARTMENT WILL MEASURE THIS WORK ON A LUMP SUM BASIS.

THE DEPARTMENT WILL PAY FOR THE ACCEPTED QUANTITIES AT THE CONTRACT PRICE FOR ITEM 516. JACKING AND TEMPORARY SUPPORT OF SUPERSTRUCTURE, AS PER PLAN.

WELDED ATTACHMENT REMOVALS

WHEN REMOVING THE EXPANSION JOINTS, END CROSSFRAMES, AND OTHER APPURTENANCES FROM STEEL SUPPORTING SYSTEMS (BEAMS, CROSSFRAMES, ETC.) THE ITEM ALONG WITH ITS SUPPORTS SHALL BE COMPLETELY REMOVED. THE PROVISIONS OF ITEM 202 APPLY EXCEPT AS SPECIFIED BY THE FOLLOWING NOTES. PREFORM WORK CAREFULLY DURING REMOVALS TO PROTECT PORTIONS OF SUCH SYSTEMS THAT ARE TO BE SALVAGED AND INCORPORATED INTO THE PROPOSED STRUCTURE. THE USE OF EXPLOSIVES, HEADACHE BALLS AND/OR HOE RAM TYPE EQUIPMENT IS PROHIBITED. SUBMIT CONSTRUCTION PLANS ACCORDING TO C&MS 501.05.

PERFORM WORK CAREFULLY DURING CUTTING OF THE WELDED ATTACHMENTS TO AVOID DAMAGING STEEL MEMBERS THAT ARE TO BE INCORPORATED INTO THE PROPOSED STRUCTURES. REPLACE OR REPAIR STEEL MEMBERS DAMAGE BY THE CUTTING OPERATIONS AT NO COST TO THE PROJECT. AT LEAST 7 DAYS BEFORE PERFORMING REPAIR WORK, SUBMIT A PROPOSED REPAIR PLAN, DEVELOPED BY AN OHIO REGISTERED PROFESSIONAL ENGINEER TO THE DIRECTOR. OBTAIN THE DIRECTORS'S APPROVAL BEFORE PERFORMING REPAIR.

EXISTING WELDED ATTACHMENTS: REMOVE EXISTING WELDED ATTACHMENTS (E.G., FINISHING MACHINE, UTILITY ATTACHMENTS, AND FORM SUPPORTS) LOCATED IN THE WEB AND/OR FLANGES OF EXISTING STEEL MEMBERS. ANY GRINDING SHALL BE DONE PARALLEL TO THE SURFACE THAT THE ATTACHMENT IS LOCATED ON. CARE SHALL BE TAKEN WHEN GRINDING AS NOT TO DAMAGE THE STEEL MEMBER AND ATTACHMENTS SHALL BE GROUND DOWN UNTIL THE STEEL MEMBER IS SMOOTH.

PAYMENT FOR THE ABOVE WORK TO BE INCLUDED WITH THEIR RESPECTIVE PAY ITEMS ITEM 202 REMOVAL MISC.: DETERIORATED END CROSSFRAMES, PORTIONS OF STRUCTURE REMOVED, AS PER PLAN, SUPERSTRUCTURE (CONCRETE)

FILL UNDER APPROACH SLABS

ITEM 304, AGGREGATE BASE SHALL BE USED TO BRING THE SUBBASE TO GRADE FOR THE NEW APPROACH SLAB AS DETAILED ON THE APPROACH SLAB DETAIL SHEETS AND SHALL EXTEND 1'-6" ON BOTH SIDES OF EACH APPROACH SLAB.

DECK PLACEMENT DESIGN ASSUMPTIONS

THE FOLLOWING ASSUMPTIONS OF CONSTRUCTION MENAS AND METHODS WERE MADE FOR THE ANALYSIS AND DESIGN OF THE SUPERSTRUCTURE. THE CONTRACTOR IS RESPONSIBLE FOR THE DESIGN OF THE FALSEWORK SUPPORTS SYSTEM WITHIN THESE PARAMETERS AND WILL ASSUME RESPONSIBILITY FOR SUPERSTRUCTURE ANALYSIS FOR DEVIATION FROM THESE DESIGN ASSUMPTIONS.

AN EIGHT WHEEL FINISHING MACHINE WITH A MAXIMUM WHEEL LOAD OF 1.1 KIPS FOR A TOTAL MACHINE LOAD OF 8.9 KIPS.

A MINIMUM OUT-TO-OUT WHEEL SPACING AT EACH END OF THE MACHINE OF 103".

A MAXIMUM SPACING OF OVERHANG FALSEWORK BRACKETS OF 48".

A MAXIMUM DISTANCE FROM THE CENTERLINE OF THE FASCIA GIRDER TO THE FACE OF THE SAFETY HANDRAIL OF 65".

POROUS BACKFILL WITH FILTER FABRIC

POROUS BACKFILL WITH FILTER FABRIC, 2 FEET THICK SHALL EXTEND UP TO THE PLANS OF THE SUBGRADE TO 1 FOOT BELOW THE EMBANKMENT SURFACE, AND LATERALLY TO THE ENDS OF THE WINGWALLS.

ITEM 513 - STRUCTURAL STEEL MEMBERS, LEVEL UF, AS PER PLAN

ITEM 513 - STRUCTURAL STEEL MEMBERS, LEVEL UF, AS PER PLAN: ALL REQUIREMENTS OF 513 APPLY TO SHOP FABRICATED MEMBERS. PREFORM WORK FOR FIELD FABRICATED MEMBERS ACCORDING TO ITEM 513, EXCEPT AS MODIFIED HEREIN. THE DEPARTMENT WILL NOT REQUIRE THE CONTRACTOR PERFORMING FIELD FABRICATION TO BE PREQUALIFIED AS SPECIFIED IN SUPPLEMENT 1078. SUBMIT A WRITTEN LETTER OF MATERIAL ACCEPTANCE, 501.06, TO THE ENGINEER. PROVIDE SHOP DRAWINGS ACCORDING TO 513.06 OR SUPPLY THE ENGINEER WITH "AS-BUILT" DRAWINGS MEETING 513.06 AFTER COMPLETION OF FIELD FABRICATION. THE ENGINEER WILL REVIEW THE SUBMITTED DRAWINGS FOR CONCURRENCE WITH THE FINAL AS-BUILT CONDITION. IF NECESSARY, THE ENGINEER MAY COTACT THE OFFICE OF STRUCTURAL ENGINEERING FOR TECHNICAL ASSISTANCE. IF THE ENGINEER IS SATISFIED WITH THE "AS-BUILT" DRAWINGS AND THE DELIVERED MATERIALS, SUPPLY A COPY OF THE DRAWINGS, STAMPED AND DATED, ALONG WITH MICROFILM, TO THE OFFICE OF STRUCTURAL ENGINEERING FOR RECORD PURPOSES. THE FOLLOWING MEMBERS ARE INCLUDED IN THIS ITEM: PROPOSED MIDDLE INTERMEDIATE CROSSFRAMES.

REMOVAL MISC.: BEARINGS

THIS ITEM SHALL INCLUDE THE REMOVAL OF ALL BEARING COMPONENTS AT THE ABUTMENTS AS WELL AS REMOVING RUST AND ANY OTHER DEBRIS FROM THE BEAMS TO PREPARE THEM FOR THE ATTACHMENT OF THE NEW BEARINGS. THE CONTRACTOR SHALL BE CAREFUL WHEN REMOVING THE BEARINGS AND WELDS FORM THE BEAMS SO NO DAMAGE IS DONE TO STEEL MEMBERS THAT ARE TO BE INCORPORATED INTO THE PROPOSED STRUCTURE. ANY DAMAGE DONE TO THE BEAMS SHALL BE REPAIRED BY THE CONTRACTOR AT HIS OWN EXPENSE.

REMOVAL MISC.: DETERIOATED END CROSSFRAMES

THIS ITEM SHALL INCLUDE THE REMOVAL OF THE END CROSS FRAMES AND WELDS FROM THE BEAMS. THE CONTRACTOR SHALL BE CAREFUL WHEN REMOVING THE END CROSSFRAMES AND WELDS FROM THE BEAMS SO NO DAMAGE IS DONE TO STEEL MEMBERS THAT ARE TO BE INCORPORATED INTO THE PROPOSED STRUCTURE. ANY DAMAGE DONE TO THE BEAMS SHALL BE REPAIRED BY THE CONTRACTOR AT HIS OWN EXPENSE.

REMOVAL MISC.: EXPANSION JOINT

THIS ITEM SHALL INCLUDE THE REMOVAL OF THE EXPANSION JOINTS. THE CONTRACTOR SHALL BE CAREFUL WHEN REMOVING THE EXPANSION JOINTS FROM THE BEAMS SO NO DAMAGE IS DONE TO STEEL MEMBERS THAT ARE TO BE INCORPORATED INTO THE PROPOSED STRUCTURE. ANY DAMAGE DONE TO THE BEAMS SHALL BE REPAIRED BY THE CONTRACTOR AT HIS OWN EXPENSE.

NON-USE OF ASBESTOS-CONTAINING MATERIALS

THE CONTRACTOR SHALL AT NO TIME INCORPORATE ANY MATERIALS WHICH ARE COMPOSED OF OR CONTAIN ANY AMOUNTS OF ASBESTOS. THE SUBSTITUTION OF MATERIALS WHICH CONTAIN ANY AMOUNTS OF ASBESTOS WILL IN NO CIRCUMSTANCES BE ACCEPTABLE. UPON COMPLETIONS OF THE PROJECT, THE CONTRACTOR SHALL SUBMIT A WRITTEN STATEMENT OF CERTIFICATION ASSERTING THAT NO ASBESTOS CONTAINING MATERIALS WERE USED IN ANY PORTION OF THE CONSTRUCTION.

ENVIROMENTAL NOTES

NO TOXIC OR HAZARDOUS MATERIAL SUCH AS SEALANTS, PAINT, SOLVENTS, CLEANING AGENTS, EARTHEN MATERIALS, WASTE-WATER, FUELS OR DEBRIS OF ANY KIND SHALL BE DISCHARGED INTO THE STREAM CHANNEL OR ANY TRIBUTARY WATER COURSES. ALL ASPHALT OR CONCRETE GRINDINGS, EXCESS ASPHALTIC OR CONCRETE MATERIALS OR ANY OTHER DEBRIS GENERATED DURING RESURFACING OR OTHER SIMILAR ACTIVITIES SHALL BE REMOVED IMMEDIATELY FROM WITHIN 1000 FEET OF THE STREAM AND DISPOSED OF AT AN APPROPRIATE FACILITY ABOVE THE FEMA 100 YEAR FLOOD ELEVATION AND NOT WITHIN 1000 FEET OF THE STREAM

IF PAINTING, WELDING, SAND AND/OR WATER BLASTING (CLEANING) IN INCORPORATED AS PART OF THE PROJECT AT OR OVER A ROAD OR WATERWAY, THEN APPROPRIATE APRONS SHALL BE UTILIZED TO PROVIDE FOR COMPLETE CONTAINMENT OF ALL PAINT, WELDING SLAG AND/OR SEALANT OVER SPRAY AND OTHER DEBRIS. APRONS SHALL BE UTILIZED ON ALL DECK REPLACEMENT, OR SEALING PROJECT WHEN USING HYDRO DEMOLITION TECHNIQUES. ALL PROJECT WHEN USING HYDRO DEMOLITION TECHNIQUES. ALL DEBRIS COLLECTED SHALL BE DISPOSED OF AT AN APPROPRIATE FACILITY ABOVE THE FEMA 100 YEAR FLOOD PLAIN AND NOT WITHIN 1000 FEET OF THE STREAM

THE FOLLOWING BRIDGES SPAN JURISDICTION WATERS:

GUE-209-9.85 (SFN 3004112) OVER WILLS CREEK

WATERWAY PERMITS

THE PROJECT DOES NOT REQUIRE ANY WORK IN WILLS CREEK OR THE PLACEMENT OF ANY TEMPORARY OR PERMANENT FILLS BELOW THE ORDINARY HIGH WATER ELEVATION OF WILL CREEK. THEREFORE, A SECTION 404 PERMIT FROM THE U.S. ARMY CORPS OF ENGINEERS HAS NOT BEEN OBTAINED. THE CONTRACTOR SHALL NOT PLACE TEMPORARY OR PERMANENT FILL, OR ALLOW ANY DEMOLITION MATERIALS OR THE STORAGE OF MATERIALS BELOW THE ORDINARY HIGH WATER ELEVATION OF 781.38.

FALSEWORK AND FORMS

ALL FALSEWORK SHALL BE DESIGNED AND PLACED AS PER CMS 508. THE CENTER BAY (BAY 3) FALSEWORK SHALL BE INSTALLED IN DURING PHASE 1 AND WILL REMAIN IN PLACE UNTIL THE DECK CONCRETE OF PHASES 1, 2, & 3 HAVE FULLY CURED PER CMS 511.14. AT THAT POINT, ALL FALSE-WORK SHALL BE REMOVED. IT IS THE RESPONISBILITY OF THE CONTRACTOR TO PROVIDE FALSEWORK THAT WILL SUPPORT THE DEAD LOADS AND LIVE LOADS THAT WILL BE APPILIED TO THE SUPERSTRUCTRURE, THROUGH ALL PHASES OF CONSTRUCTION, AS SHOWN IN THESE PLANS. PAYMENT FOR THESE FALSEWORK RESTRICTIONS SHALL BE INCLUDED WITH ITEM 511 - CLASS QC2 CONCRETE WITH QC/QA SUPERSTRUCTURE, AS PER PLAN.

ITEM	ITEM EXT	GRAND TOTAL	UNIT	DESCRIPTION	PART. 05/BRO/BR	PART.	SUPER.	ABUT.	PIERS	GENERAL	SEE SHEET NUMBER
				STRUCTURE 20 FOOT SPAN AND OVER (GUE-209-0985) - PART 2							
202	11301	241	CY	PORTIONS OF STRUCTURE REMOVED, AS PER PLAN, SUPERSTRUCTURE (CONCRETE)	241		241				1/29
202	11301	31	CY	PORTIONS OF STRUCTURE REMOVED, AS PER PLAN, SUBSTRUCTURE	31			31			1/29
202	22900	245	SY	APPROACH SLAB REMOVED	245					245	
202	98100	12	EACH	REMOVAL MISC.:ABUTMENT BEARINGS	12			12			2/29 & 13/29
202	98000	LS		REMOVAL MISC.:DETERIORATED END CROSSFRAMES	LUMP						2/29
202	98200	94	FT	REMOVAL MISC.:EXPANSION JOINT	94		94				2/29
503	11100	LS		COFFERDAMS AND EXCAVATION BRACING	LUMP						
503	21300	LS		UNCLASSIFIED EXCAVATION	LUMP						
509	10000	69148	LB	EPOXY COATED REINFORCING STEEL	69148		63988	5160			
510	10000	260	EACH	DOWEL HOLES WITH NONSHRINK, NONMETALLIC GROUT	260			260			
511	34447	234	CY	CLASS QC2 CONCRETE WITH QC/QA, BRIDGE DECK, AS PER PLAN	234		234				1/29 & 2/29
511	45710	36	CY	CLASS QC1 CONCRETE, ABUTMENT	36			36			
512	10050	76	SY	SEALING OF CONCRETE SURFACES (NON-EPOXY)	76					76	
512	33000	41	SY	TYPE 2 WATERPROOFING	41			41			
513	10201	4496	LB	STRUCTURAL STEEL MEMBERS, LEVEL UF, AS PER PLAN	4496		4496				2/29
513	20000	2400	EACH	WELDED STUD SHEAR CONNECTORS	2400		2400				
514	00050	10899	SF	SURFACE PREPARATION OF EXISTING STRUCTURAL STEEL	10899		10899				
514	00056	10899	SF	FIELD PAINTING OF EXISTING STRUCTURAL STEEL, PRIME COAT	10899		10899				
514	00060	10899	SF	FIELD PAINTING STRUCTURAL STEEL, INTERMEDIATE COAT	10899		10899				
514	00066	10899	SF	FIELD PAINTING STRUCTURAL STEEL, FINISH COAT	10899		10899				
514	00504	17	MNHR	GRINDING FINS, TEARS, SLIVERS ON EXISTING STRUCTURAL STEEL	17		17				
514	10000	15	EACH	FINAL INSPECTION REPAIR	15		15				
516	11210	94	FT	STRUCTURAL EXPANSION JOINT INCLUDING ELASTOMERIC STRIP SEAL	94					94	
516	46900	12	EACH	BEARING DEVICE, MISC.:SLIDING PLATE	12			12			13/29
516	47001	LS		JACKING AND TEMPORARY SUPPORT OF SUPERSTRUCTURE, AS PER PLAN	LUMP						2/29
517	70000	355	FT	RAILING (TWIN STEEL TUBE)	355		355				
518	21200	39	CY	POROUS BACKFILL WITH FILTER FABRIC	39			39			
SPECIAL	51822300	422	FT	STEEL DRIP STRIP	422		422				
518	40000	123	FT	6" PERFORATED CORRUGATED PLASTIC PIPE	123			123			
518	40010	60	FT	6" NON-PERFORATED CORRUGATED PLASTIC PIPE, INCLUDING SPECIALS	60			60			
526	25011	245	SY	REINFORCED CONCRETE APPROACH SLABS WITH QC/QA (T=15"), AS PER PLAN	245					245	1/29

DESIGN AGENCY
OHIO DEPARTMENT OF TRANSPORTATION, DISTRICT 5

DESIGNED NEM | CHECKED TAG | DRAWN NEM | REVISED NEM | REVIEWED JDR | DATE 01/05/15 | STRUCTURE FILE NUMBER 3004112

BRIDGE SUMMARY
BRIDGE NO. GUE-209-9.85
OVER WILLS CREEK

GUE-209-8.57/9.85

P:\GUE\93133\Design\Bridge\SFN - Route Name\Plan_Sheets\93133_BGS_001.dgn 09-JAN-2015 10:06AM nmccoy

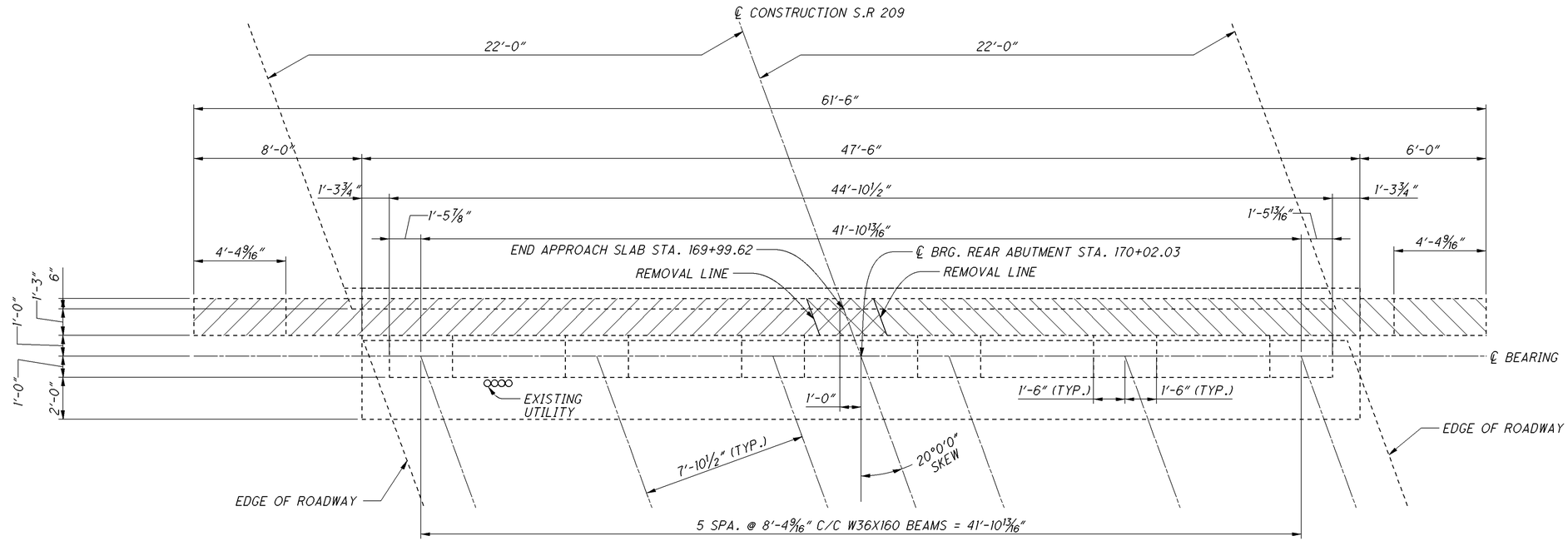

PLAN

PHASE 1 REMOVALS

PHASE 2 REMOVALS

PHASE 3 REMOVALS

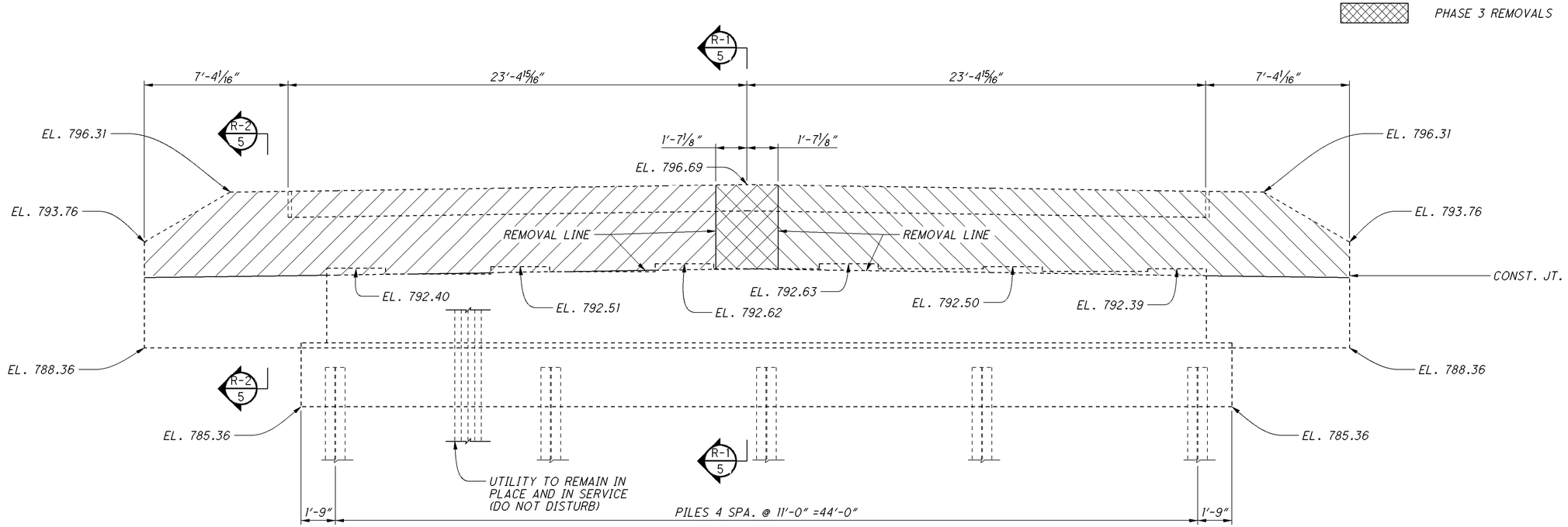

ELEVATION

DESIGN AGENCY
OHIO DEPARTMENT OF TRANSPORTATION, DISTRICT 5

DESIGNED	DRAWN	REVIEWED	DATE
NEM	NEM	JDR	01/05/15
CHECKED	REVISED	STRUCTURE FILE NUMBER	
TAG	NEM	3004112	

EXISTING REAR ABUTMENT REMOVALS
BRIDGE NO. GUE-209-9.85
OVER WILLS CREEK

GUE-209-8.57/9.85

P:\GUE\93133\Design\Bridge\SFN - Route Name\Plan_Sheets\93133_NEM_REAR_DEMO_002.dgn 08-JAN-2015 1:56PM nmccoy

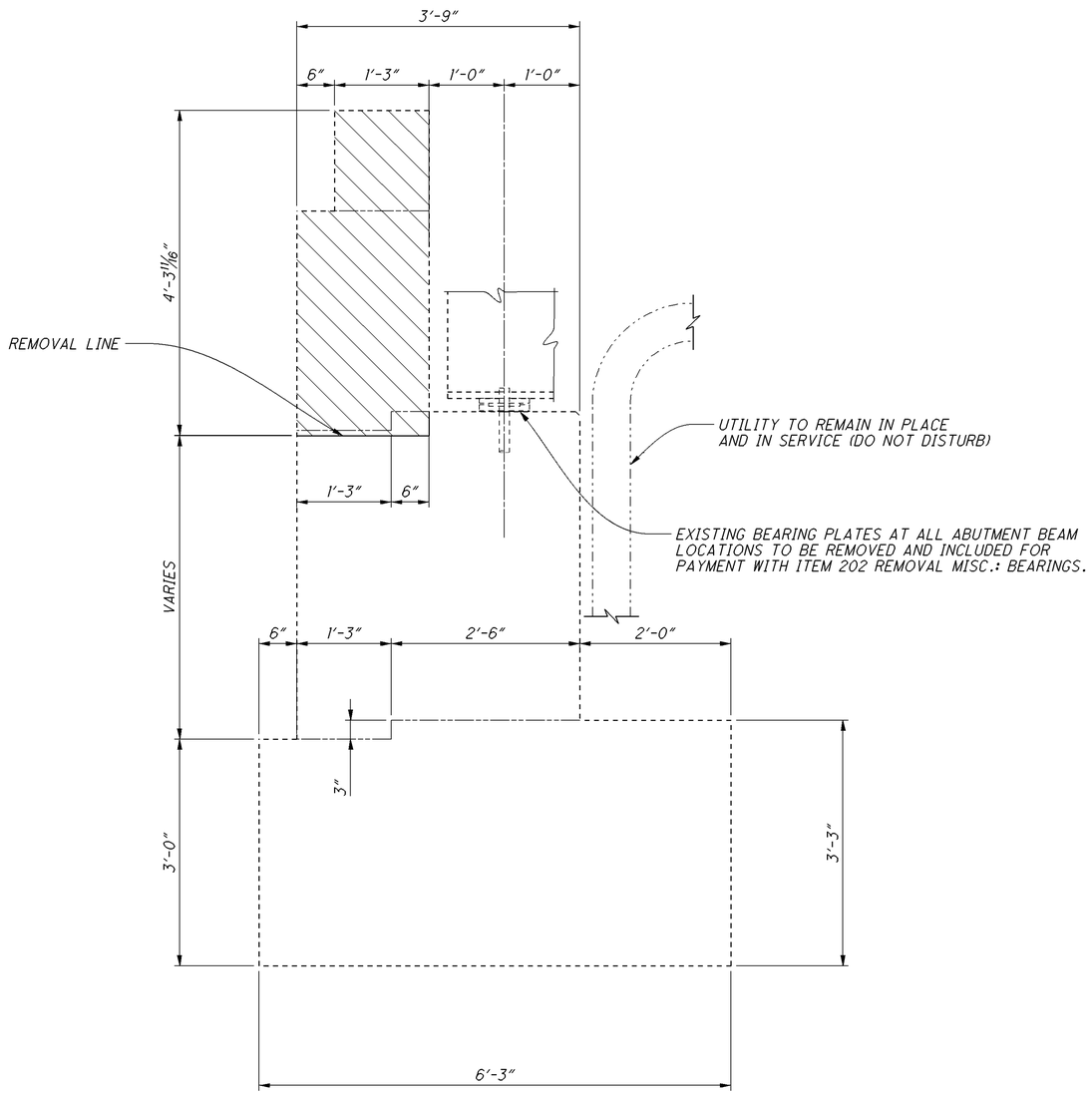

SECTION R-1 / 4

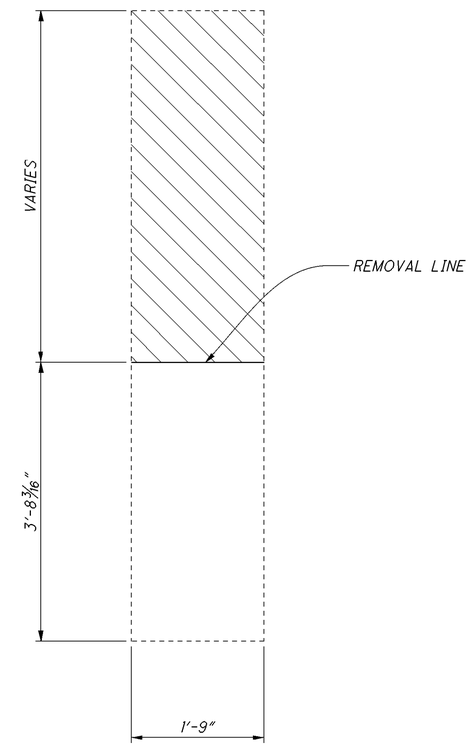

SECTION R-2 / 4

LEGEND:

REMOVALS

DESIGN AGENCY
OHIO DEPARTMENT OF
TRANSPORTATION, DISTRICT 5

DESIGNED	DRAWN	REVIEWED	DATE
NEM	NEM	JDR	01/05/15
CHECKED	REVISED	STRUCTURE FILE NUMBER	
TAG	NEM	3004112	

EXISTING REAR ABUTMENT REMOVALS
BRIDGE NO. GUE-209-9.85
OVER WILLS CREEK

GUE-209-8.57/9.85

P:\GUE\93133\Design\Bridge\SFN - Route Name\Plan_Sheets\93133_NEM_REAR_DEMO_003.dgn 08-JAN-2015 1:57PM nmccoy

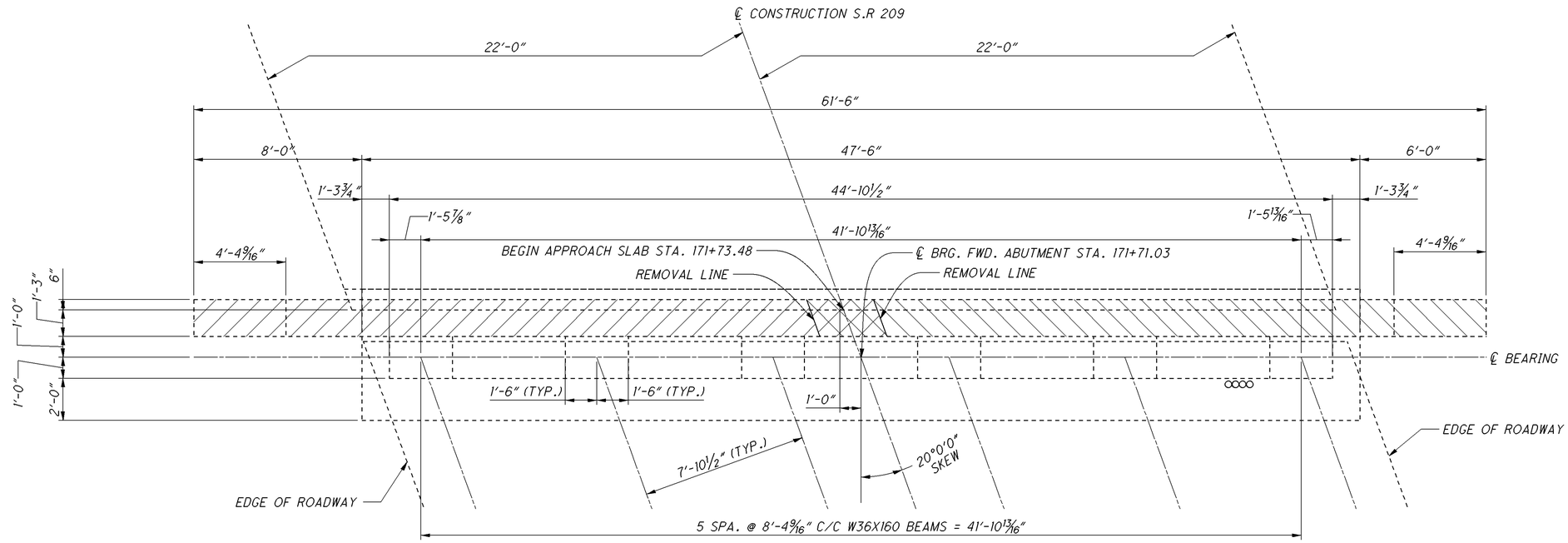

PLAN

PHASE 1 REMOVALS

PHASE 2 REMOVALS

PHASE 3 REMOVALS

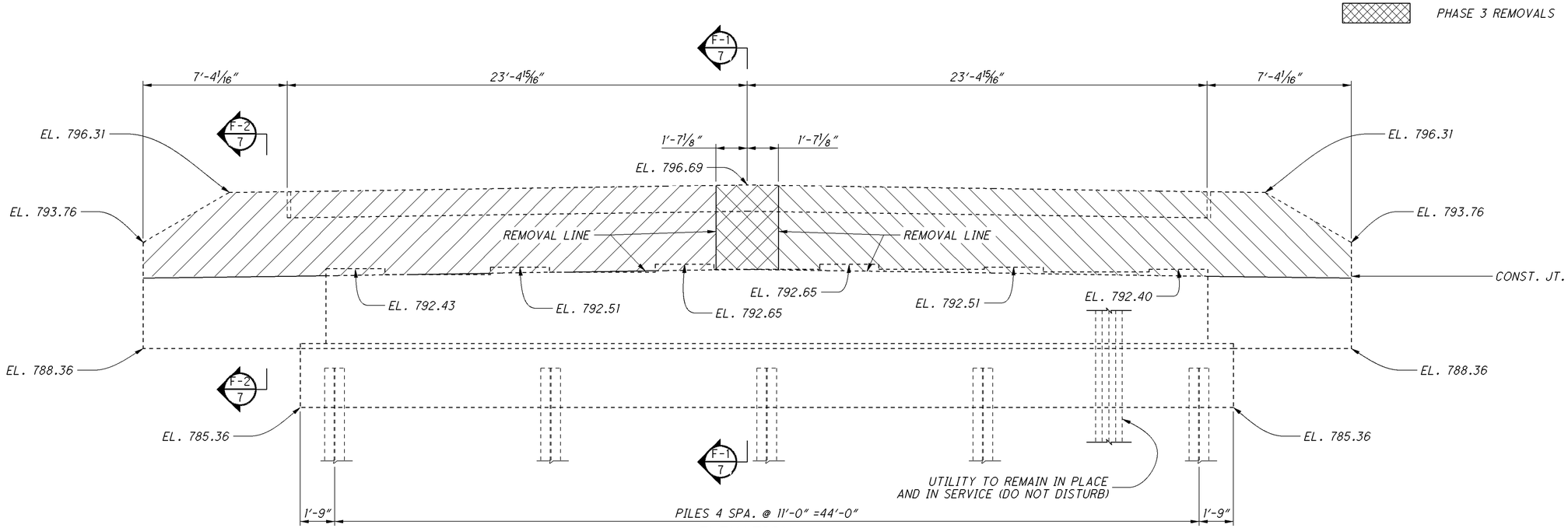

ELEVATION

DESIGN AGENCY
OHIO DEPARTMENT OF TRANSPORTATION, DISTRICT 5

DESIGNED	DRAWN	REVIEWED	DATE
NEM	NEM	JDR	01/05/15
CHECKED	REVISED	STRUCTURE FILE NUMBER	
TAG	NEM	3004112	

EXISTING FORWARD ABUTMENT REMOVALS
BRIDGE NO. GUE-209-9.85
OVER WILLS CREEK

GUE-209-8.57/9.85

P:\GUE\93133\Design\Bridge\SFN - Route Name\Plan_Sheets\93133_NEM_FORWARD_DEMO_001.dgn 08-JAN-2015 2:00PM mmccoy

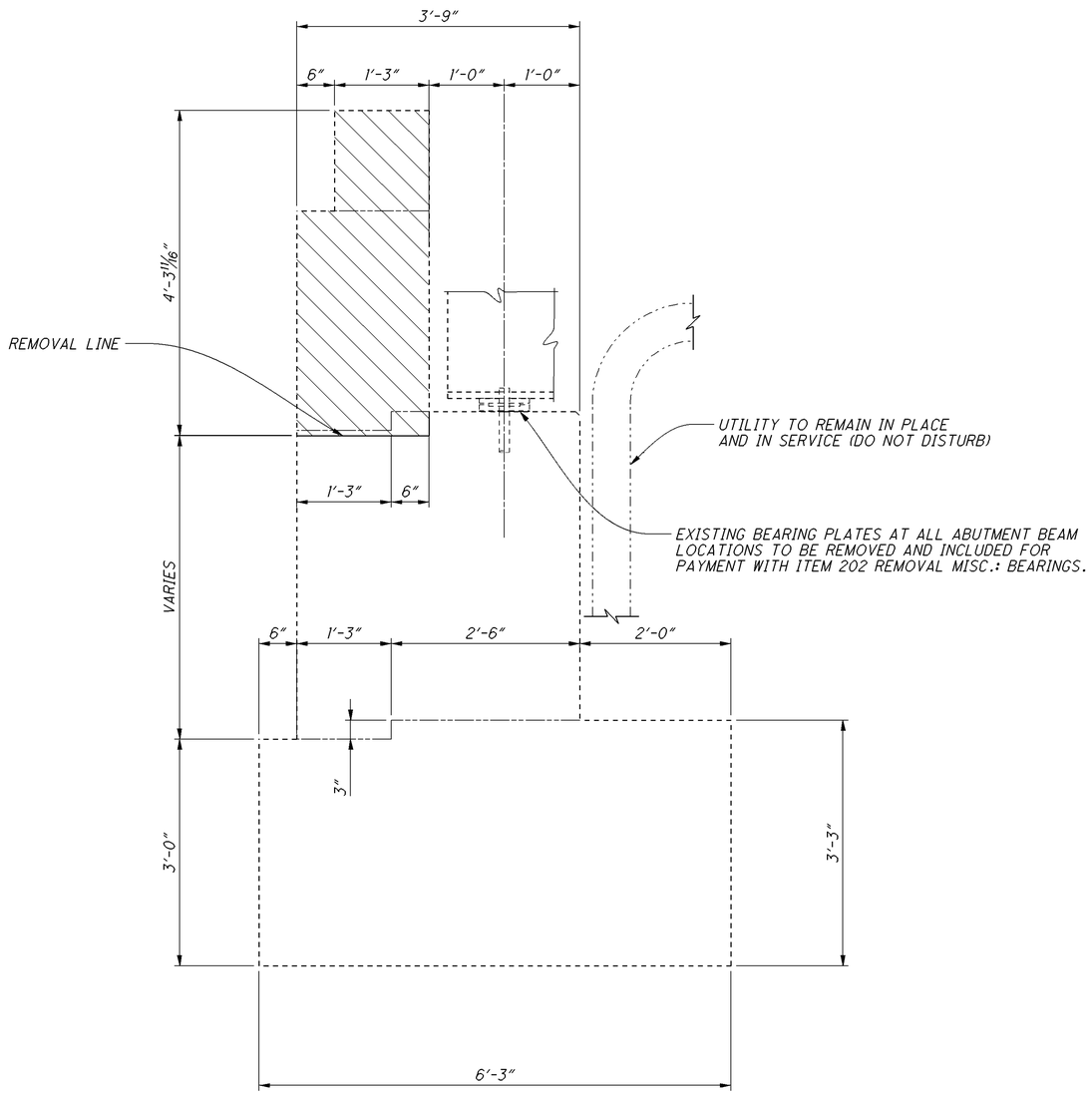

SECTION F-1 / 6

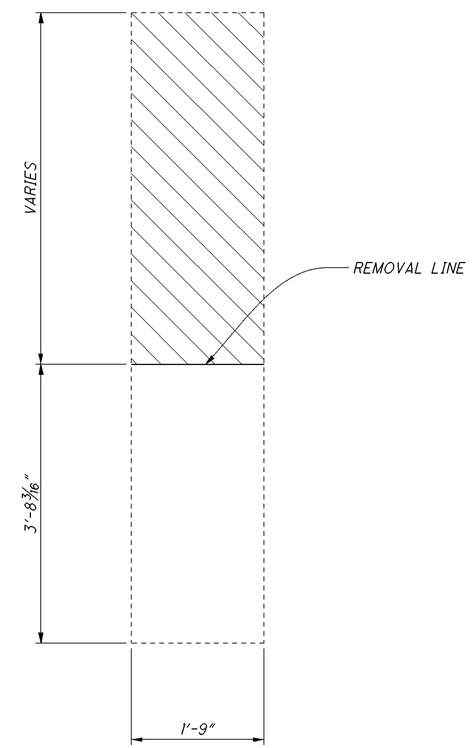

SECTION F-2 / 6

LEGEND:

REMOVALS

DESIGN AGENCY
OHIO DEPARTMENT OF
TRANSPORTATION, DISTRICT 5

DESIGNED	DRAWN	REVIEWED	DATE
NEM	NEM	JDR	01/05/15
CHECKED	REVISED	STRUCTURE FILE NUMBER	
TAG	NEM	3004112	

EXISTING FORWARD ABUTMENT REMOVALS
BRIDGE NO. GUE-209-9.85
OVER WILLS CREEK

GUE-209-8.57/9.85

P:\GUE\93133\Design\Bridge\SFN - Route Name\Plan_Sheets\93133_NEM_FORWARD_DEMO_002.dgn 08-JAN-2015 2:02PM nmccoy

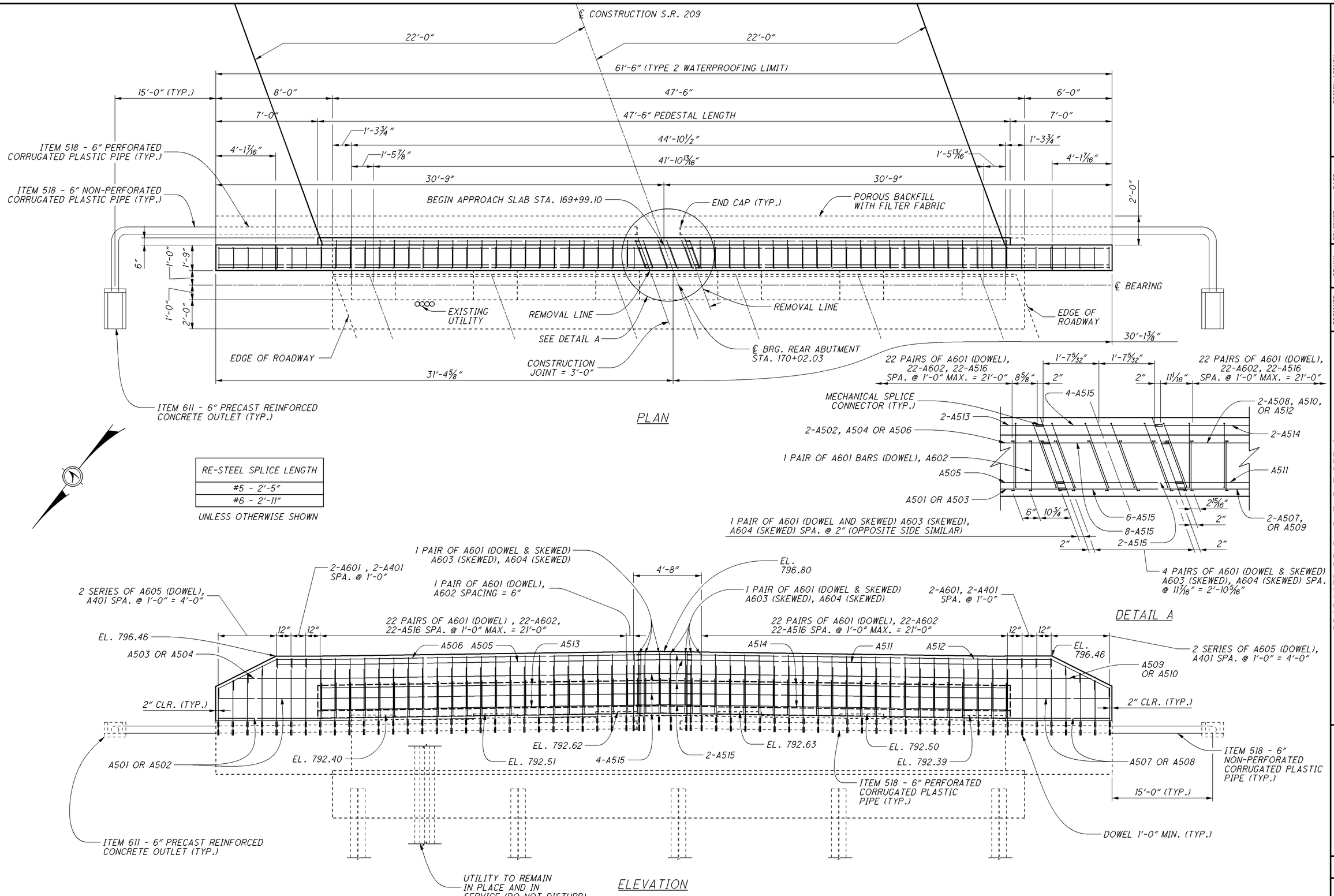

DESIGN AGENCY
OHIO DEPARTMENT OF TRANSPORTATION, DISTRICT 5

DESIGNED	DRAWN	REVIEWED	DATE
NEM	NEM	JDR	01/05/15
CHECKED	REVISED	STRUCTURE FILE NUMBER	
TAG	NEM	3004112	

PROPOSED REAR ABUTMENT DETAIL
BRIDGE NO. GUE-209-9.85
OVER WILLS CREEK

GUE-209-8.57/9.85

P:\GUE\93133\Design\Bridge\SFN - Route Name\Plan_Sheets\93133_BPA_004REAR.dgn 08-JAN-2015 2:03PM nmccoy

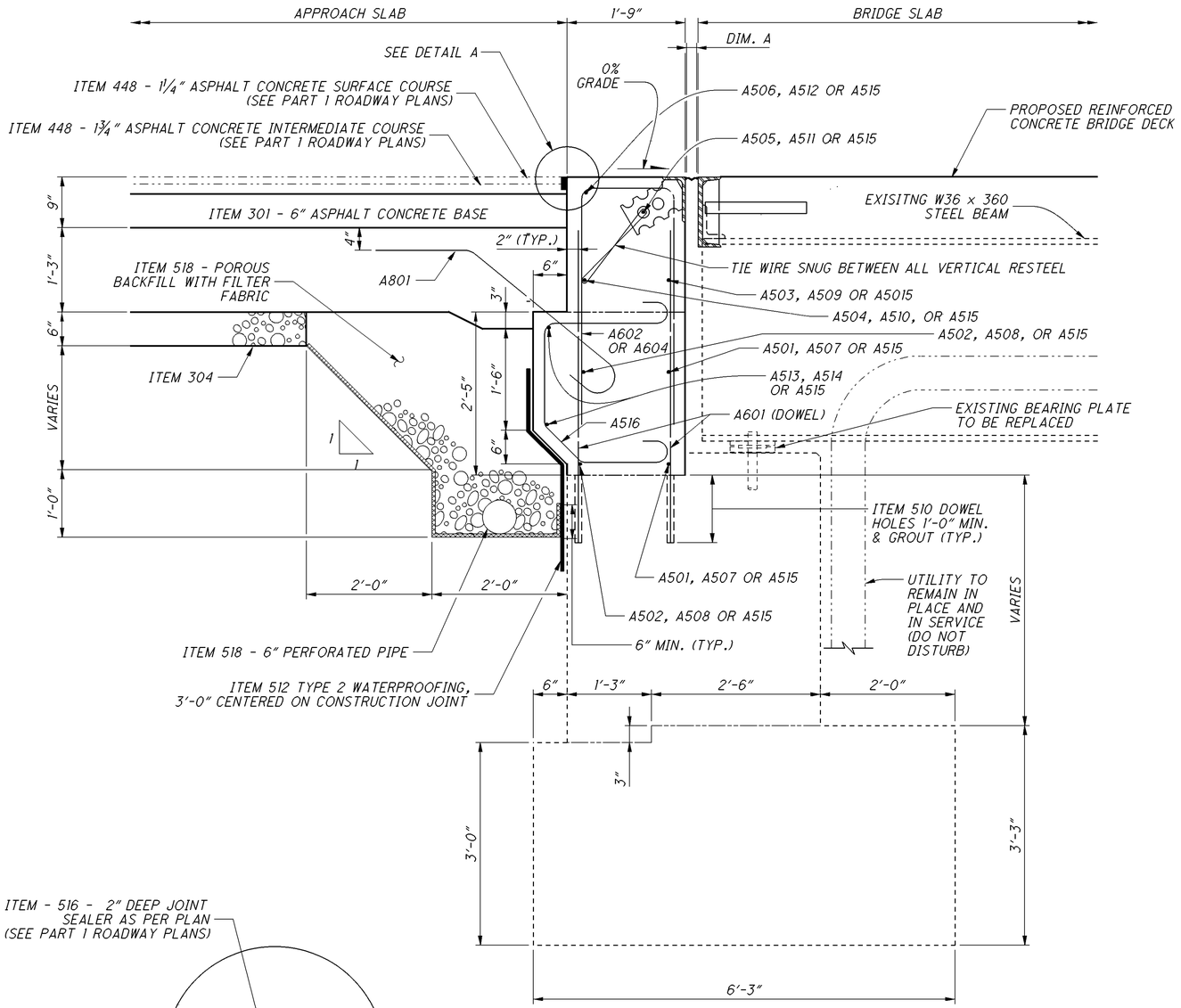

ABUTMENT SECTION - BEAM SEAT

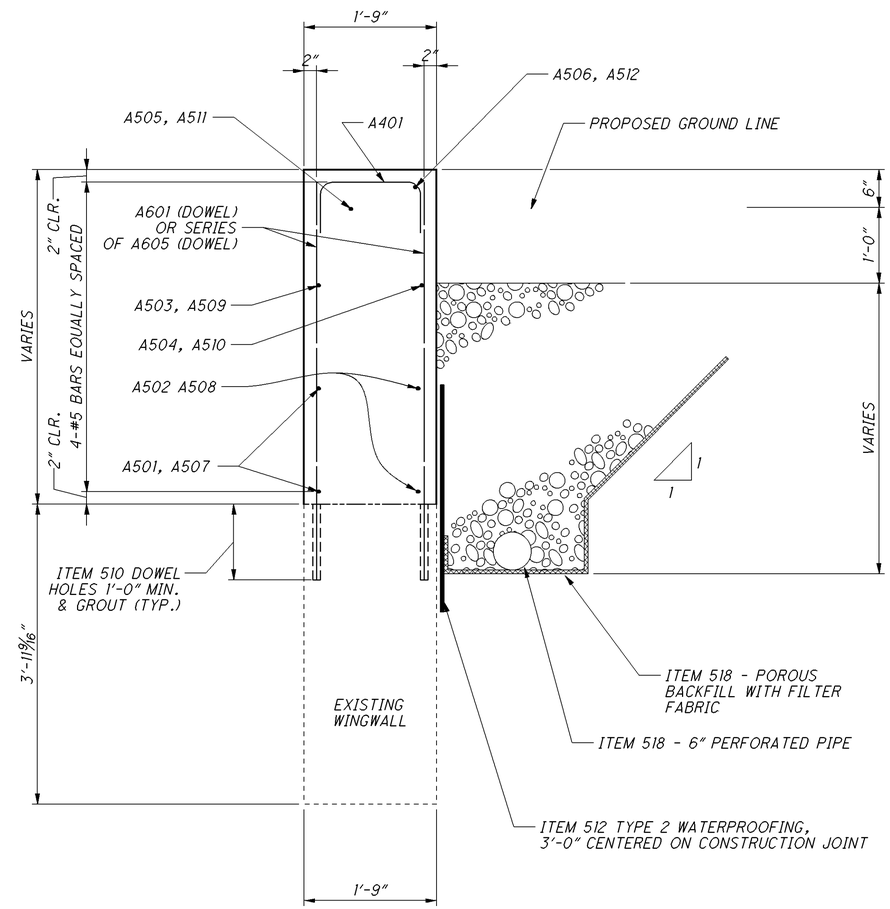

ABUTMENT SECTION - WINGWALL

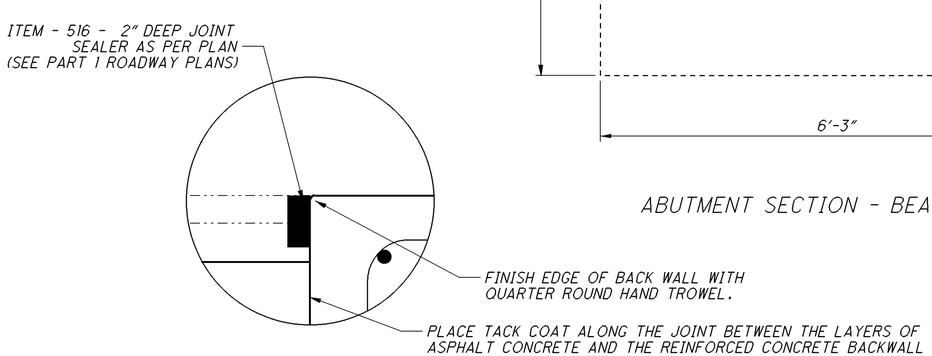

DETAIL A

DESIGN AGENCY
OHIO DEPARTMENT OF TRANSPORTATION, DISTRICT 5

REVIEWED	DATE
JDR	01/05/15

STRUCTURE FILE NUMBER
3004112

DRAWN	REVISED
NEM	NEM

DESIGNED	CHECKED
NEM	TAG

REAR ABUTMENT TYPICAL SECTIONS
BRIDGE NO. GUE-209-9.85
OVER WILLS CREEK

GUE-209-8.57/9.85

P:\GUE\93133\Design\Bridge\SFN - Route Name\Plan_Sheets\93133_BPA_001REAR.dgn 08-JAN-2015 2:04PM nmccoy

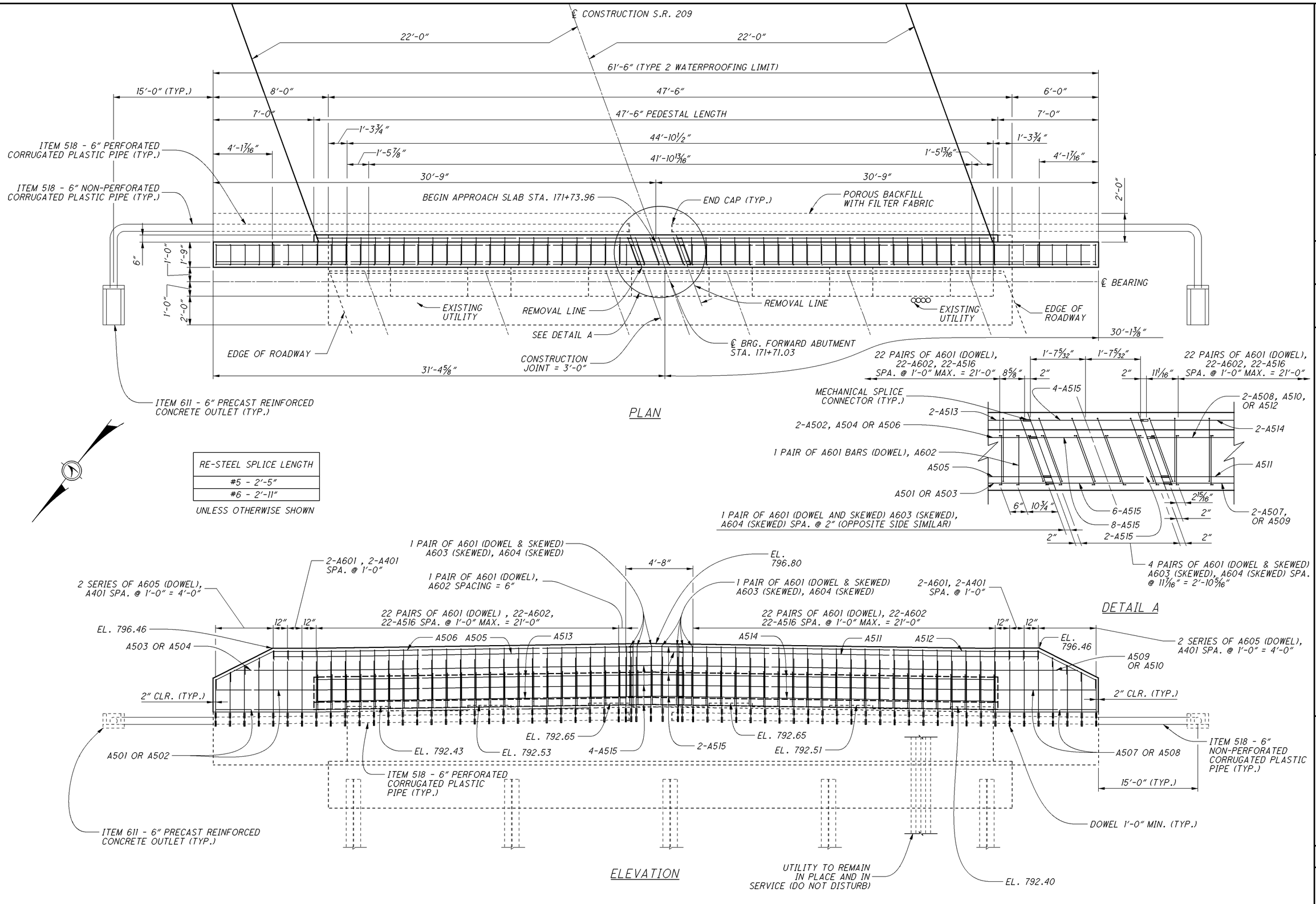

DESIGN AGENCY
OHIO DEPARTMENT OF TRANSPORTATION, DISTRICT 5

DESIGNED	DRAWN	REVIEWED	DATE
NEM	NEM	JDR	01/05/15
CHECKED	REVISED	STRUCTURE FILE NUMBER	
TAG	NEM	3004112	

PROPOSED FORWARD ABUTMENT DETAIL
BRIDGE NO. GUE-209-9.85
OVER WILLS CREEK

GUE-209-8.57/9.85

P:\GUE\93133\Design\Bridge\SFN - Route Name\Plan_Sheets\93133_NEM_FORWARD_DEMO_003.dgn 08-JAN-2015 2:04PM nmccoy

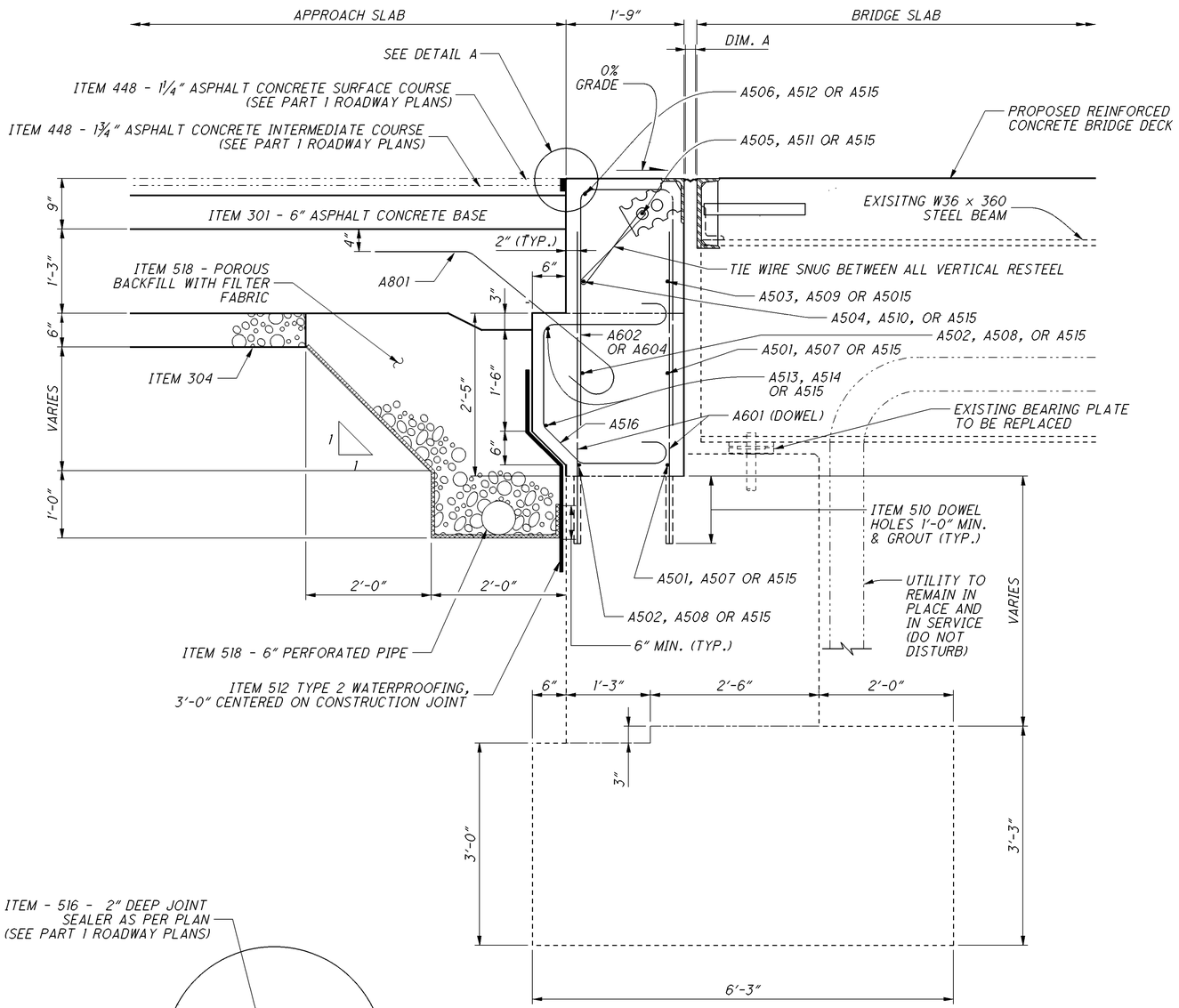

ABUTMENT SECTION - BEAM SEAT

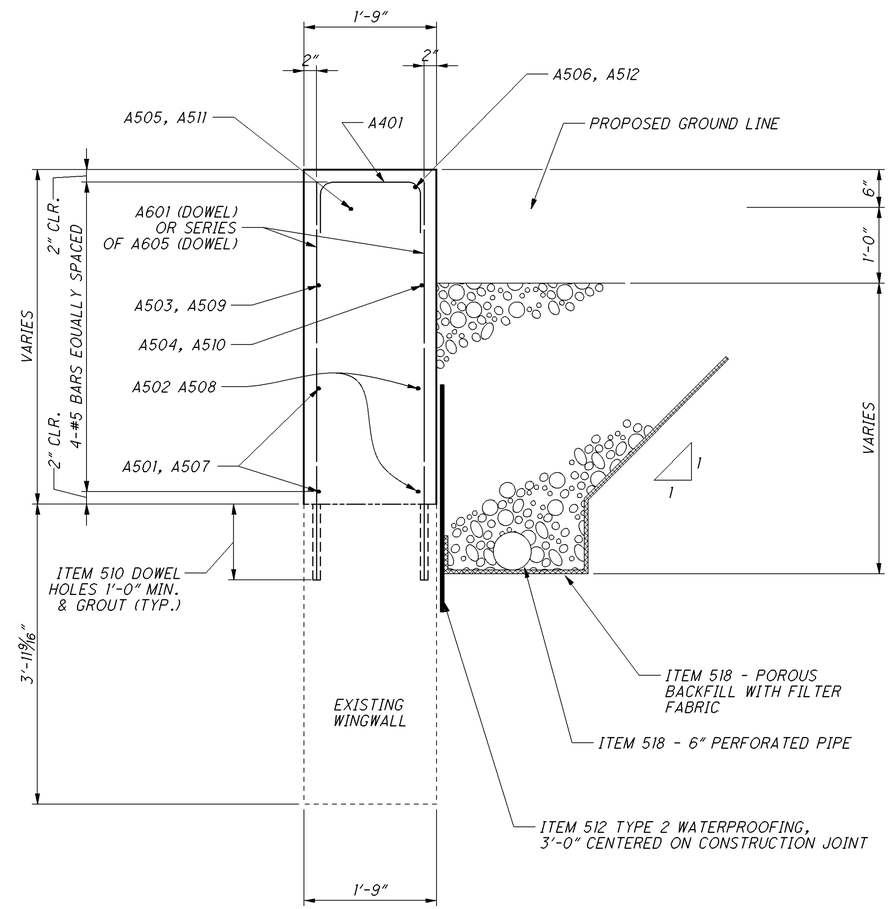

ABUTMENT SECTION - WINGWALL

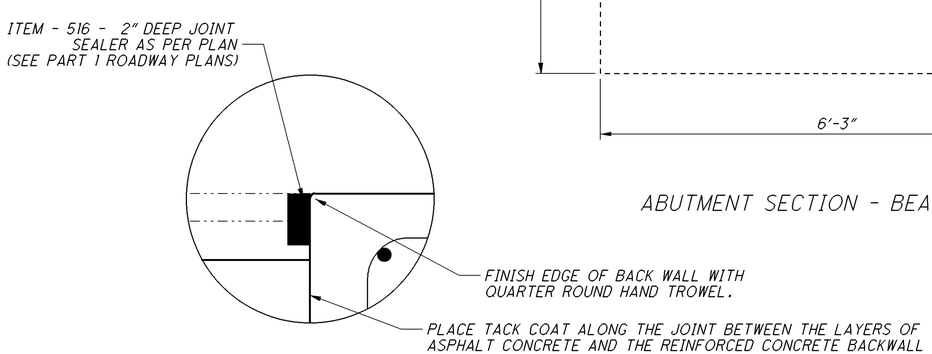

DETAIL A

DESIGN AGENCY
OHIO DEPARTMENT OF TRANSPORTATION, DISTRICT 5

REVIEWED	DATE
JDR	01/05/15

STRUCTURE FILE NUMBER
3004112

DRAWN	REVISED
NEM	NEM

DESIGNED	CHECKED
NEM	TAG

FORWARD ABUTMENT TYPICAL SECTIONS
BRIDGE NO. GUE-209-9.85
OVER WILLS CREEK

GUE-209-8.57/9.85

P:\GUE\93133\Design\Bridge\SFN - Route Name\Plan_Sheets\93133_BPA_002FORWARD.dgn 08-JAN-2015 2:06PM nmccoy

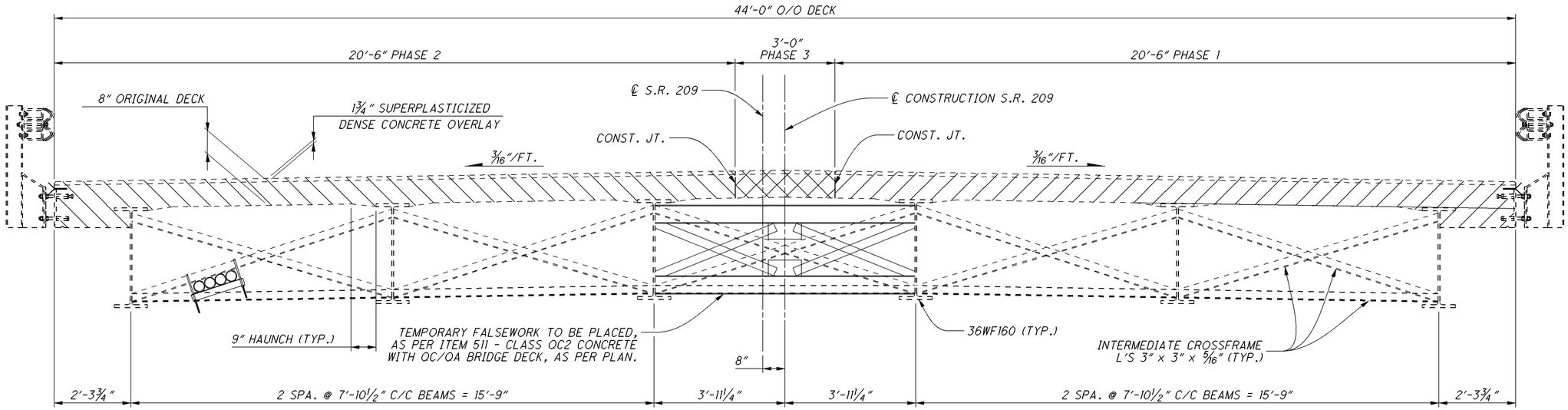

EXISTING TRANSVERSE SECTION

PHASE 1 REMOVALS

PHASE 2 REMOVALS

PHASE 3 REMOVALS

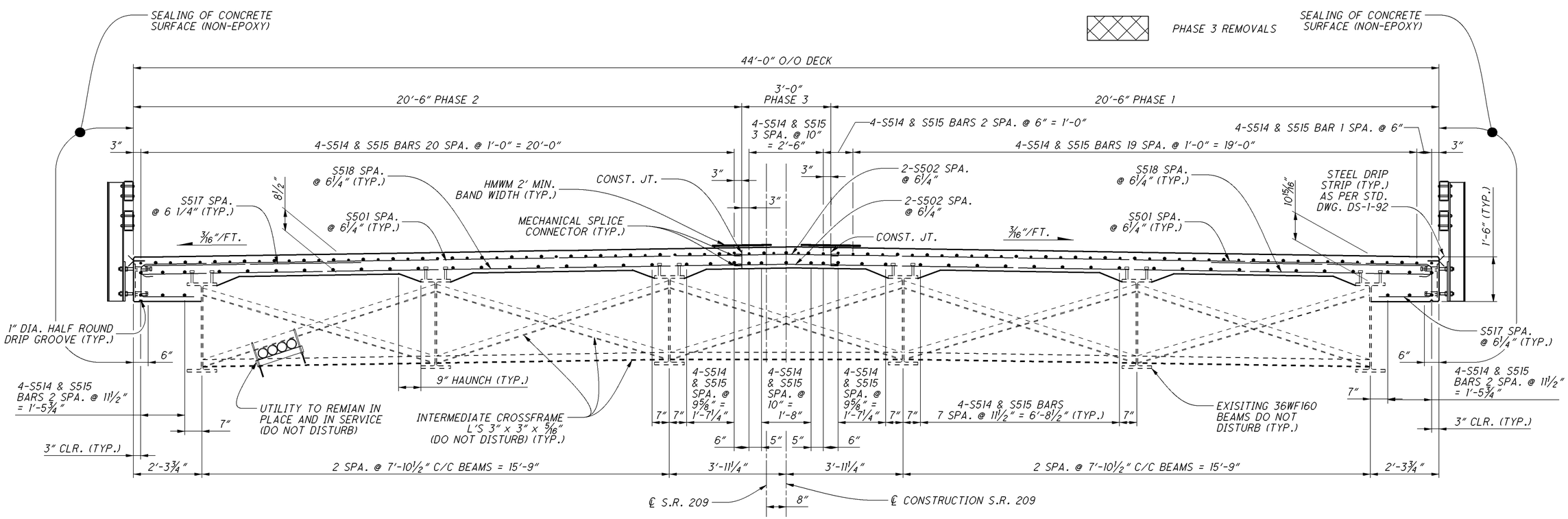

PROPOSED TRANSVERSE SECTION

DESIGN AGENCY
OHIO DEPARTMENT OF TRANSPORTATION, DISTRICT 5

DESIGNED	DRAWN	REVIEWED	DATE
NEM	NEM	JDR	01/05/15
CHECKED	REVISED	STRUCTURE FILE NUMBER	
TAG	NEM	3004112	

TRANSVERSE SECTIONS
BRIDGE NO. GUE-209-9.85
OVER WILLS CREEK

GUE-209-8.57/9.85

P:\GUE\93133\Design\Bridge\SFN - Route Name\Plan_Sheets\93133_BTS_001.dgn 08-JAN-2015 2:08PM nmccoy

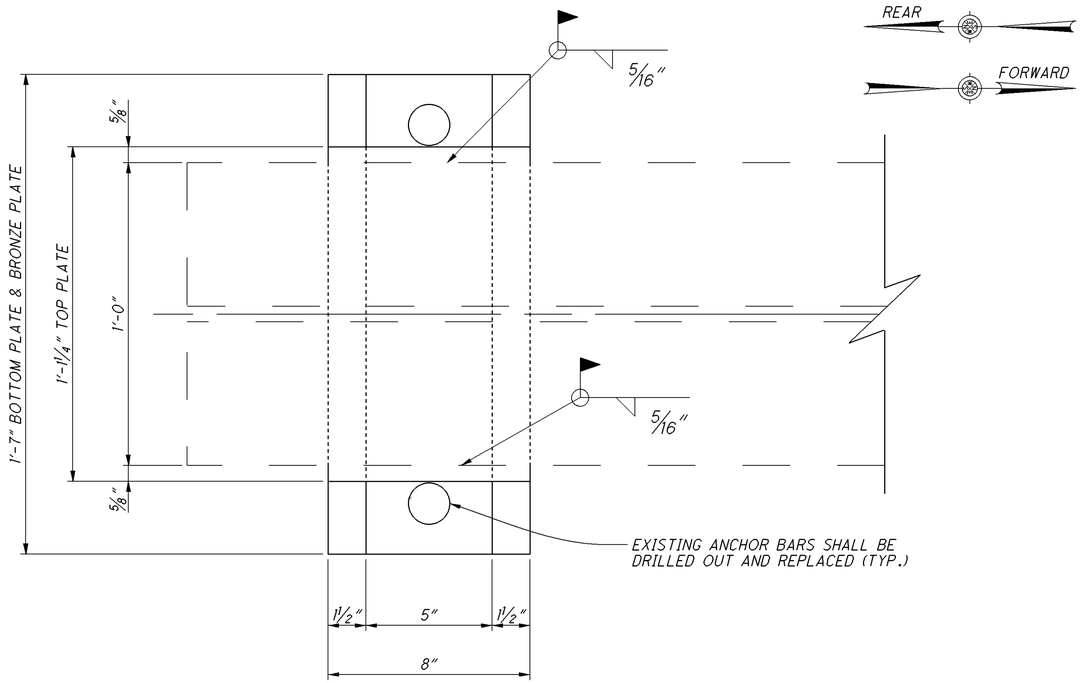

ABUTMENT BEARING PLATES PLAN

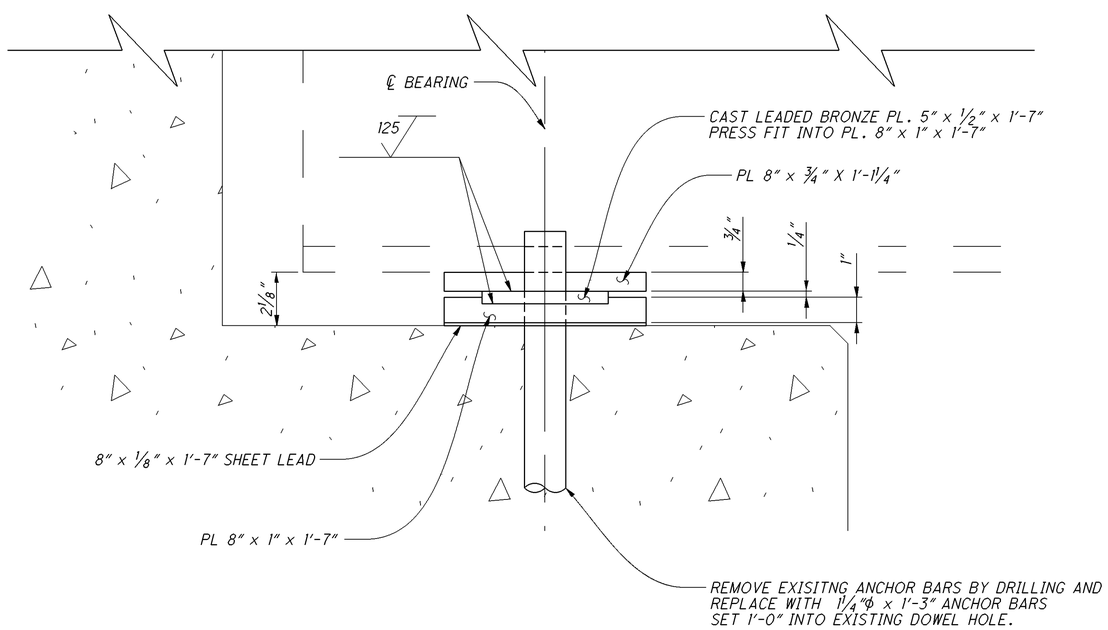

ABUTMENT BEARING PLATES ELEVATION

ITEM 202 REMOVAL MISC: ABUTMENT BEARINGS

THIS ITEM SHALL INCLUDE THE REMOVAL OF ALL REAR AND FORWARD ABUTMENT BEARING COMPONENTS AS WELL AS REMOVING RUST, WELDS AND ANY OTHER DEBRIS FROM THE BEAMS TO PREPARE THEM FOR THE ATTACHMENT OF THE NEW BEARINGS. DRILL OUT EXISTING ANCHOR BARS AND ENSURE THAT THE NEW BEARINGS HAVE A LEVEL SURFACE TO REST ON. THE CONTRACTOR SHALL BE CAREFUL WHEN REMOVING THE BEARINGS AND WELDS FROM THE BEAMS SO NO DAMAGE IS DONE TO THE BEAMS. ANY DAMAGE TO THE BEAMS SHALL BE REPAIRED BY THE CONTRACTOR AT HIS OWN EXPENSE.

ALL WORK REQUIRED TO PERFORM THE ABOVE WORK SHALL BE PAID AT THE UNIT PRICE FOR ITEM 202 REMOVAL MISC: ABUTMENT BEARINGS.

ITEM 516 BEARING DEVICE, MISC: SLIDING PLATE

THIS WORK CONSISTS OF THE INSTALLATION OF NEW SLIDING PLATES AT THE REAR AND FORWARD ABUTMENT. THE PROVISIONS OF ITEM 516 APPLY EXCEPT AS SPECIFIED BY THE FOLLOWING NOTES AND DETAILS.

THE CONTRACTOR MUST INSTALL ALL SLIDING PLATES AT THE ABUTMENT BEFORE ATTACHING THE END CROSS FRAMES

DOWEL HOLES FOR THE NEW ANCHOR BARS SHALL INCLUDE NONSHRINK NONMETALLIC GROUT AND FOLLOW THE PROVISIONS FOR 510 IN THE C&MS.

PHOSPHOR BRONZE PLATE
CAST PHOSPHOR BRONZE PLATE SHALL CONFORM TO 711.16 OF C&MS

STEEL
PLATES AND ANCHOR BARS SHALL CONFORM TO ASTM DESIGNATION A709 GR. 50

SHEET LEAD
A MAXIMUM OF TWO (2) SHEETS OF LEAD MAY BE USED AS DIRECTED BY THE ENGINEER FOR SHIMMING PURPOSES. ANY ADDITIONAL 8" x ⅛" x 1'-7" SHEET LEAD USED FOR SHIMMING PURPOSES ARE CONSIDERED INCIDENTAL TO THE INSTALLATION OF ITEM 516 BEARING DEVICE, MISC: SLIDING PLATE

ALL WORK REQUIRED TO PREFORM THE ABOVE WORK AND DETAILS SHALL BE PAID AT THE UNIT PRICE FOR ITEM 516 BEARING PAD, MISC: SLIDING PLATE

DESIGN AGENCY
OHIO DEPARTMENT OF TRANSPORTATION, DISTRICT 5

DESIGNED NEM | DRAWN NEM | REVIEWED JDR | DATE 01/05/15
CHECKED TAG | REVISED NEM | STRUCTURE FILE NUMBER 3004112

BEARING DETAILS
BRIDGE NO. GUE-209-9.85
OVER WILLS CREEK

GUE-209-8.57/9.85

P:\GUE\93133\Design\Bridge\SFN - Route Name\Plan_Sheets\93133_BBP_001.dgn 08-JAN-2015 2:08PM nmccoy

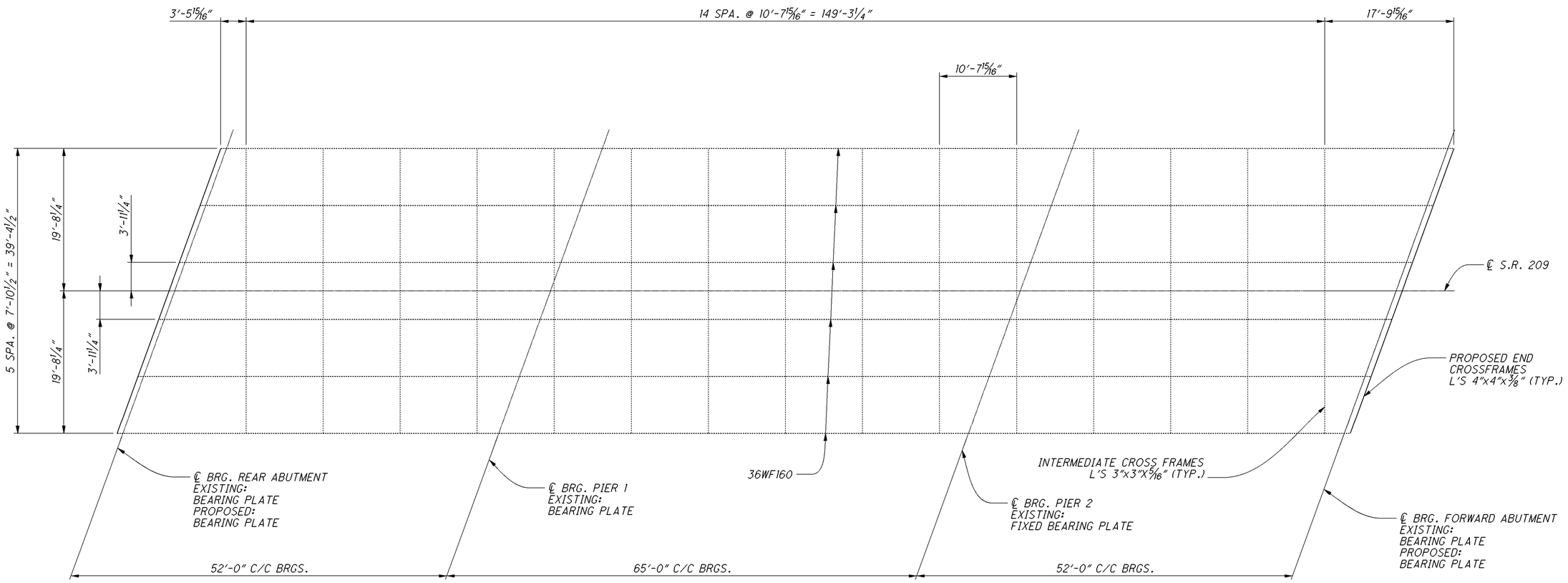

DESIGN AGENCY
OHIO DEPARTMENT OF TRANSPORTATION, DISTRICT 5

DESIGNED	DRAWN	REVIEWED	DATE
NEM	NEM	JDR	01/05/15
CHECKED	REVISED	STRUCTURE FILE NUMBER	
TAG	NEM	3004112	

FRAMING PLAN
BRIDGE NO. GUE-209-9.85
OVER WILLS CREEK

GUE-209-8.57/ 9.85

P:\GUE\93133\Design\Bridge\SFN - Route Name\Plan_Sheets\93133_BFP_001.dgn 08-JAN-2015 2:09PM nmccoy

ITEM 513 - STRUCTURAL STEEL MEMBERS LEVEL UF, AS PER PLAN		
PLATE/ANGLE	NUMBER	POUNDS
L 4"x4"x3/8"x8'-4"	5	408
L 4"x4"x3/8"x3'-0"	10	294
L 4"x4"x3/8"x2'-3 1/2"	10	225
PL 1'-9"x1'-2"x1/2"	5	208
TOTAL		1,135

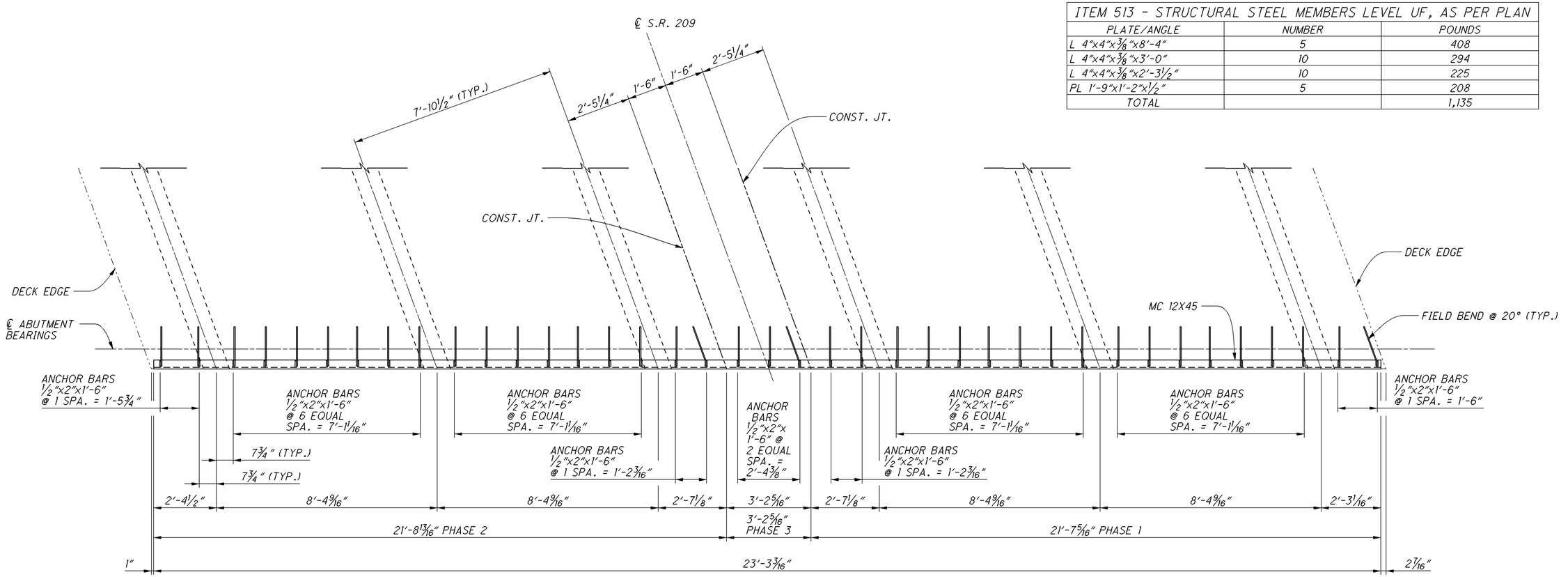

PLAN

NOTE:
FOR ADDITIONAL STRUCTUREAL STEEL DETAILS AND MATERIAL SPECS., SEE STD DWGS. EXJ-4-87 AND GSD-1-96.

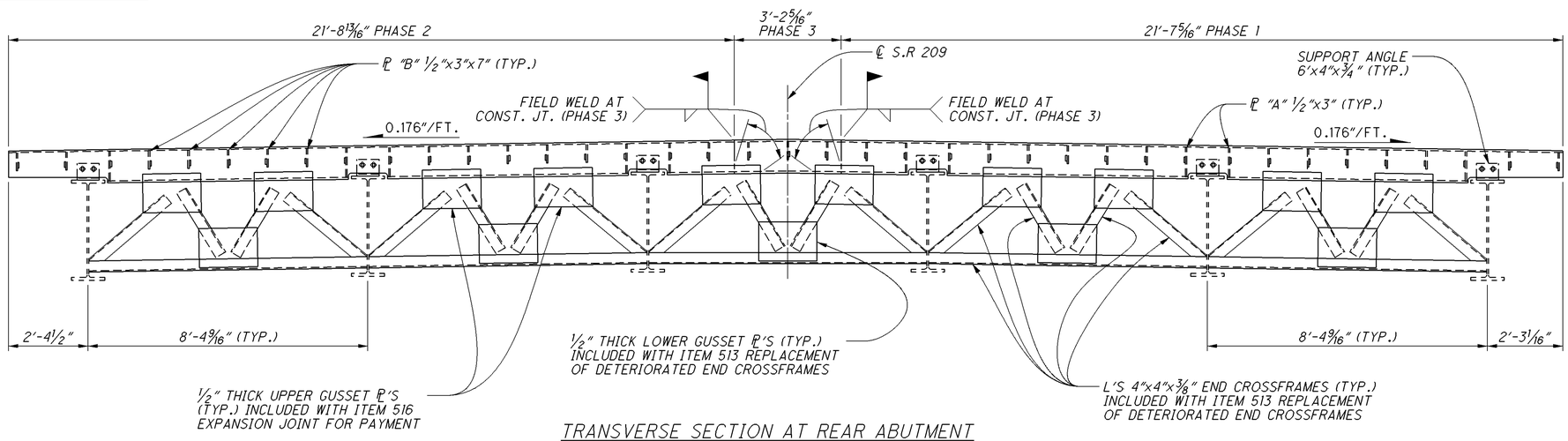

TRANSVERSE SECTION AT REAR ABUTMENT

DESIGN AGENCY
OHIO DEPARTMENT OF TRANSPORTATION, DISTRICT 5

DESIGNED	DRAWN	REVIEWED	DATE
NEM	NEM	JDR	01/05/15
CHECKED	REVISED	STRUCTURE FILE NUMBER	
TAG	NEM	3004112	

REAR EXPANSION JOINT DETAILS
BRIDGE NO. GUE-209-9.85
OVER WILLS CREEK

GUE-209-8.57/9.85

P:\GUE\93133\Design\Bridge\SFN - Route Name\Plan_Sheets\93133_BEJ_003.dgn 08-JAN-2015 2:10PM nmccoy

ITEM 513 - STRUCTURAL STEEL MEMBERS LEVEL UF, AS PER PLAN		
PLATE/ANGLE	NUMBER	POUNDS
L 4"x4"x3/8"x8'-4"	5	408
L 4"x4"x3/8"x3'-0"	10	294
L 4"x4"x3/8"x2'-3 1/2"	10	225
PL 1'-9"x1'-2"x1/2"	5	208
TOTAL		1,135

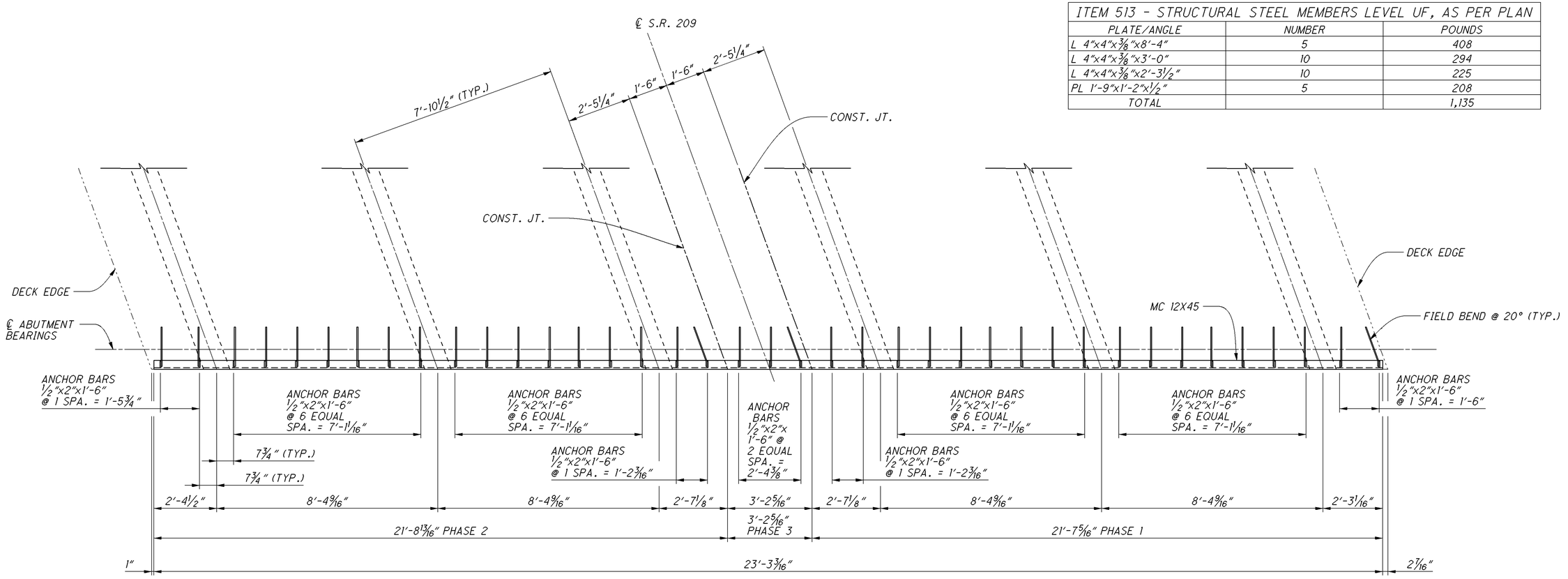

PLAN

NOTE:
FOR ADDITIONAL STRUCTUREAL STEEL DETAILS AND MATERIAL SPECS., SEE STD DWGS. EXJ-4-87 AND GSD-1-96.

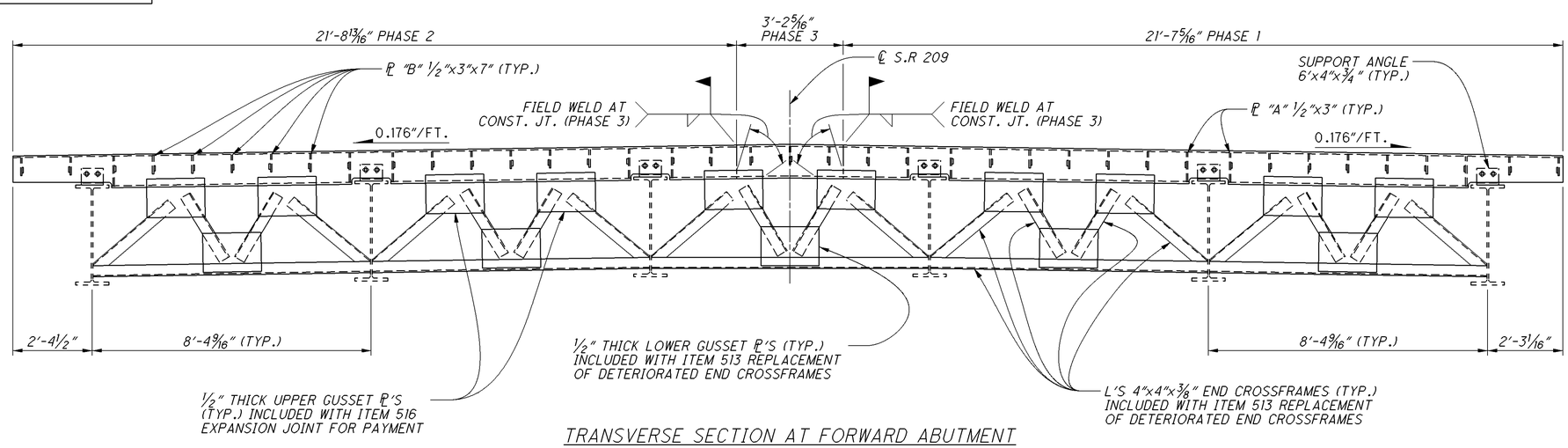

TRANSVERSE SECTION AT FORWARD ABUTMENT

DESIGN AGENCY
OHIO DEPARTMENT OF TRANSPORTATION, DISTRICT 5

DESIGNED	DRAWN	REVIEWED	DATE
NEM	NEM	JDR	01/05/15
CHECKED	REVISED	STRUCTURE FILE NUMBER	
TAG	NEM	3004112	

FORWARD EXPANSION JOINT DETAILS
BRIDGE NO. GUE-209-9.85
OVER WILLS CREEK

GUE-209-8.57/9.85

P:\GUE\93133\Design\Bridge\SFN - Route Name\Plan_Sheets\93133_BEJ_002.dgn 08-JAN-2015 2:12PM nmccoy

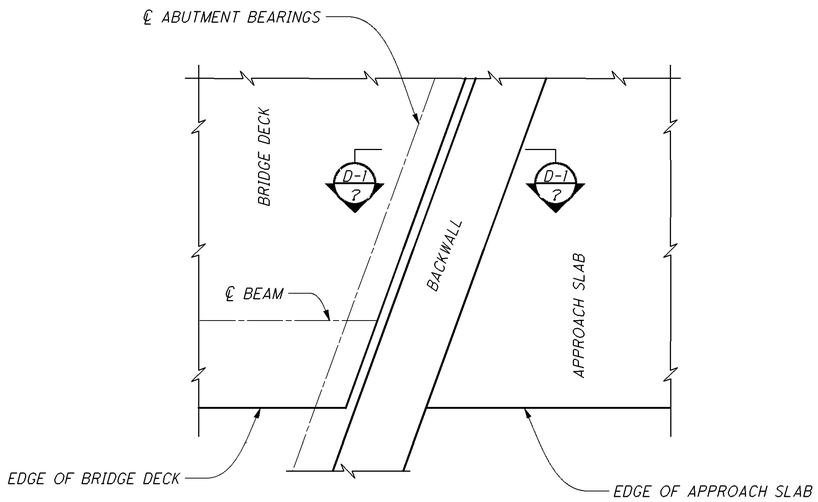

PART PLAN AT ABUTMENT

AMBIENT TEMP. F°	DIMENSION A	
	3" SEAL	
	REAR ABUT.	FORWARD ABUT.
90°	1 3/8"	1 5/8"
80°	1 1/2"	1 5/8"
70°	1 9/16"	1 11/16"
60°	1 5/8"	1 3/4"
50°	1 3/4"	1 3/4"
45°	1 3/4"	1 3/4"
40°	1 13/16"	1 13/16"
30°	1 15/16"	1 13/16"

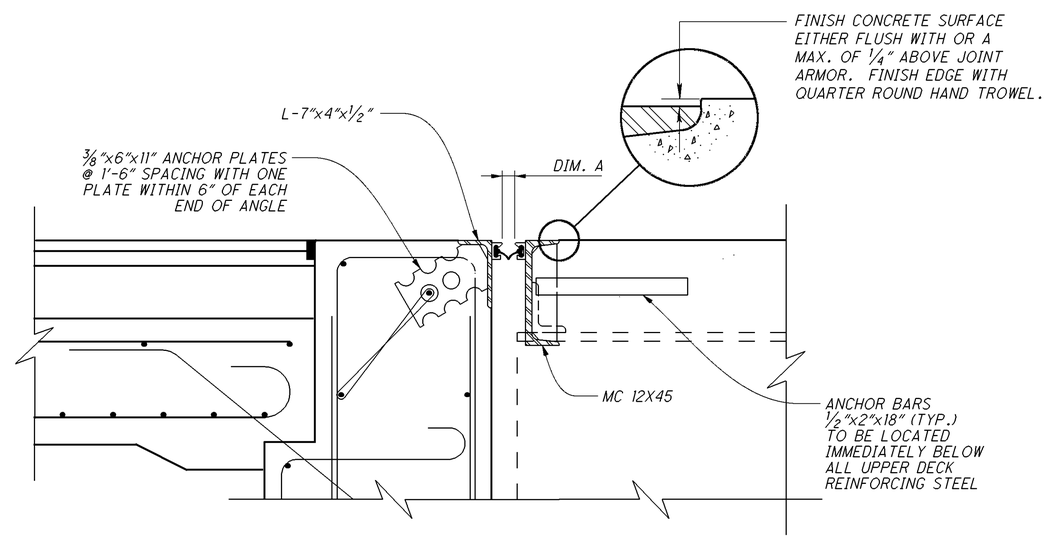

SECTION D-1 / ?

DESIGN AGENCY
OHIO DEPARTMENT OF TRANSPORTATION, DISTRICT 5

DATE 01/05/15
REVIEWED JDR
STRUCTURE FILE NUMBER 3004112

DRAWN NEM
REVISED NEM

DESIGNED NEM
CHECKED TAG

EXPANSION JOINT DETAILS
BRIDGE NO. GUE-209-9.85
OVER WILLS CREEK

GUE-209-8.57/9.85

P:\GUE\93133\Design\Bridge\SFN - Route Name\Plan_Sheets\93133_BEJ_001.dgn 08-JAN-2015 2:12PM nmccoy

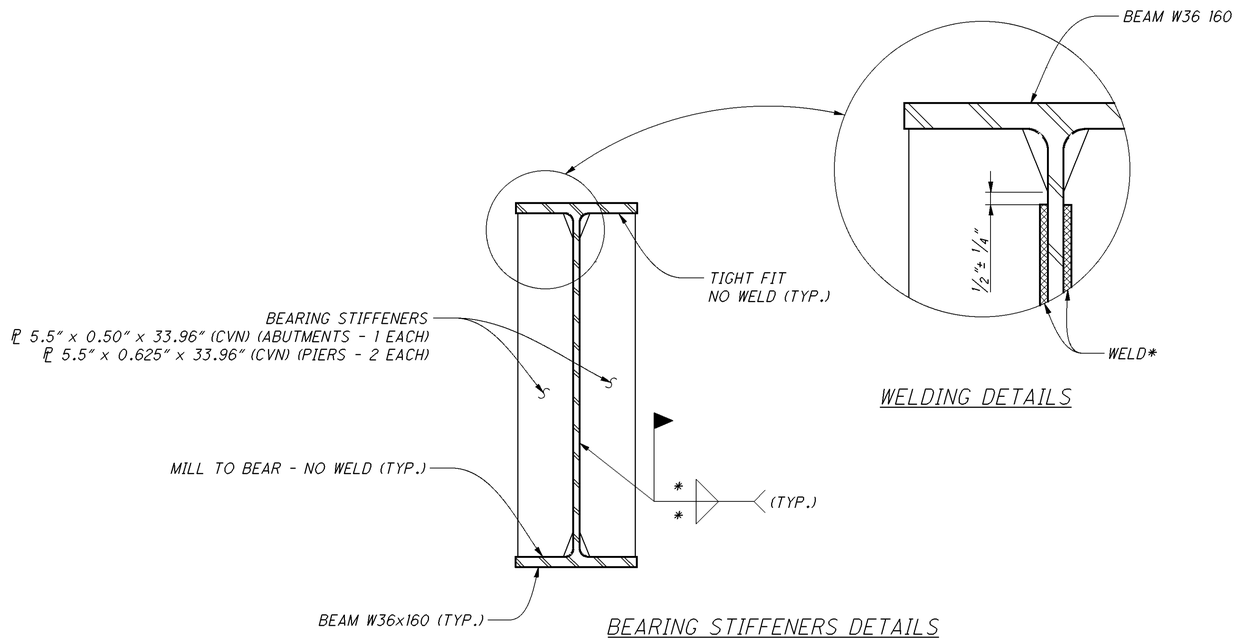

WELDING DETAILS

BEARING STIFFENERS DETAILS

(REAR & FWD. ABUTMENTS AND PIER)

* - FOR WELD SIZES, SEE STD. DWG. GSD-1-96

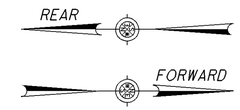

ITEM 513 STRUCTURAL STEEL MEMBERS, LEVEL UF, AS PER PLAN		
STIFFENER	NUMBER	POUNDS
5.5" x 0.625" x 33.96"	24	795
5.5" x 0.4375" x 33.96"	48	1,112
TOTAL		1,907

FINAL QUANTITIES FOR ITEM 513 STRUCTURAL STEEL MEMBERS, LEVEL UF, AS PER PLAN SHALL BE DETERMINED IN THE FIELD

NOTE

FOR NOTES AND ADDITIONAL DETAILS INCLUDING WELDING DETAILS SEE STD. DWG. GSD-1-96.

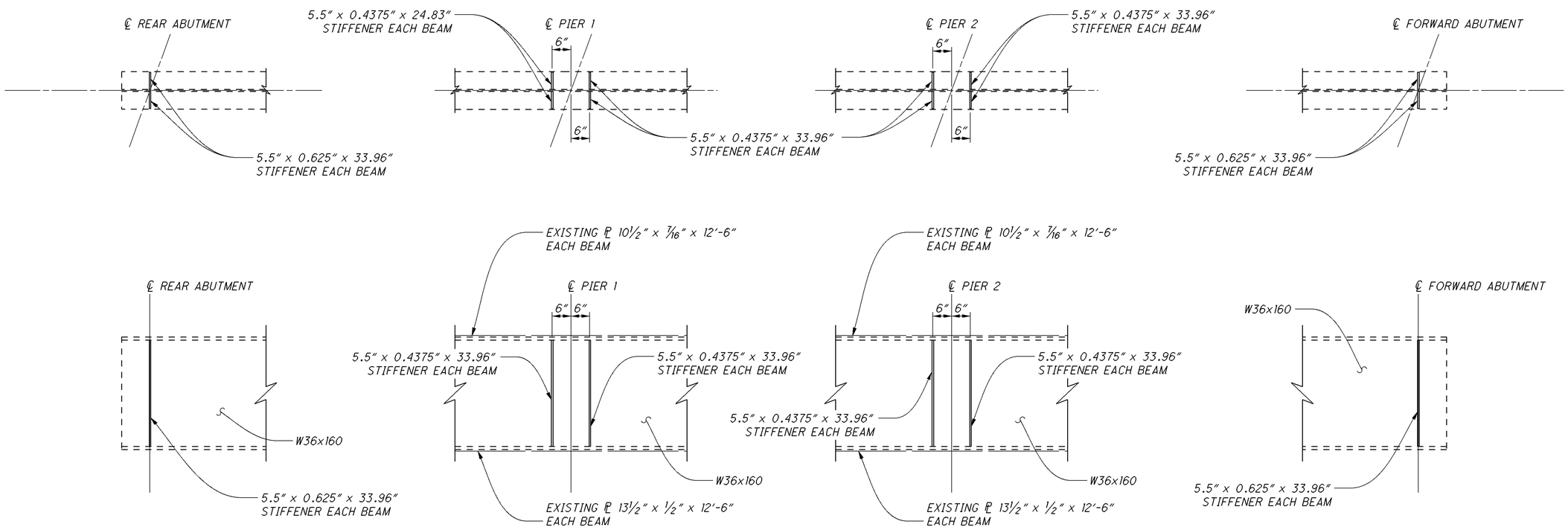

PROPOSED BEARING STIFFENERS LOCATIONS

DESIGN AGENCY
OHIO DEPARTMENT OF TRANSPORTATION, DISTRICT 5

DESIGNED	DRAWN	REVIEWED	DATE
NEM	NEM	JDR	01/05/15
CHECKED	REVISED	STRUCTURE FILE NUMBER	
TAG	NEM	3004112	

PROPOSED BEARING STIFFENER DETAILS
BRIDGE NO. GUE-209-9.85
OVER WILLS CREEK

GUE-209-8.57/9.85

P:\GUE\93133\Design\Bridge\SFN - Route Name\Plan_Sheets\93133_BSD_009.dgn 08-JAN-2015 2:13PM nmccoy

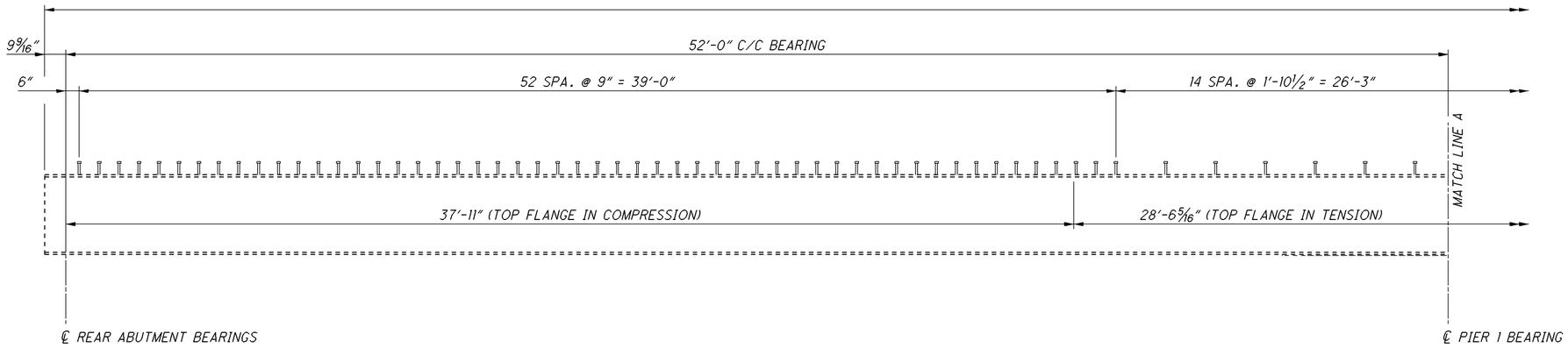

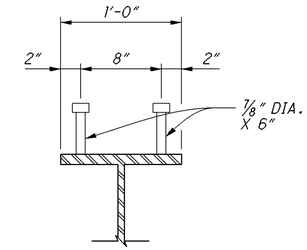

36WF160
TRANSVERSE SHEAR
CONNECTOR SPACING

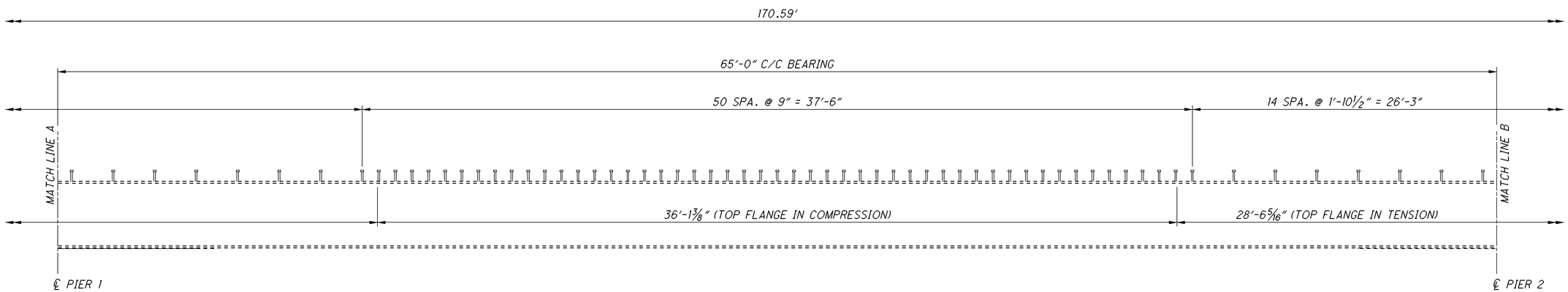

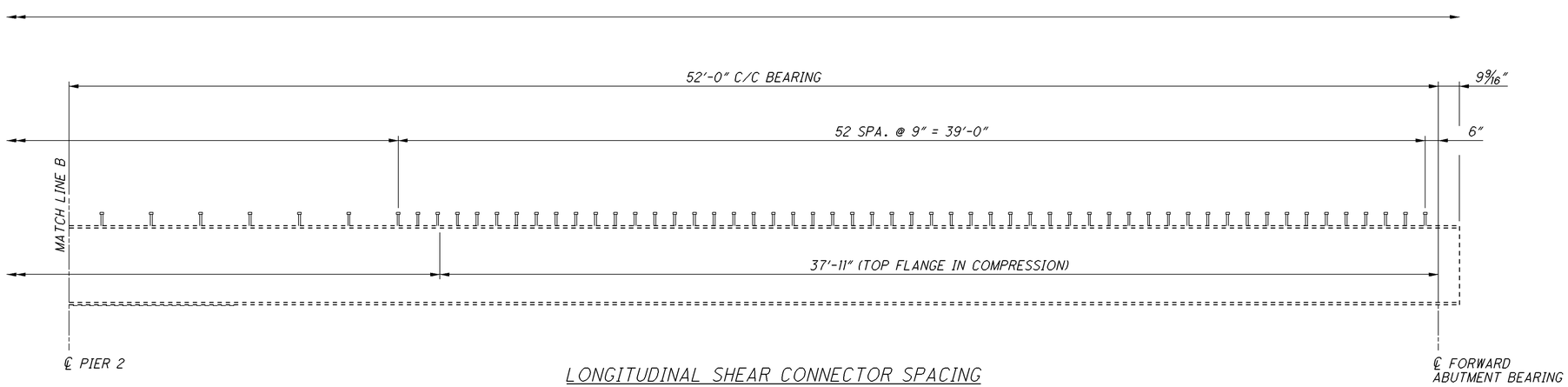

LONGITUDINAL SHEAR CONNECTOR SPACING

NOTES:
WELDED ATTACHMENT OF SUPPORTS FOR CONCRETE DECK FINISHING MACHINE TO AREAS OF THE FASCIA STRINGER FLANGES DESIGNATED "COMPRESSION". DO NOT WELD ATTACHMENTS TO AREAS DESIGNATED "TENSION". FILLET WELDS TO COMPRESSION FLANGES SHALL BE AT LEAST 1" FROM EDGE OF FLANGE, BE NO MORE THAN 2" LONG, AND BE AT LEAST 1/4" FOR THICKNESS UP TO 3/4" OR 5/16" FOR GREATER THAN 3/4" THICK.

DESIGN AGENCY
OHIO DEPARTMENT OF TRANSPORTATION, DISTRICT 5

DESIGNED	DRAWN	REVIEWED	DATE
NEM	NEM	JDR	01/05/15
CHECKED	REVISED	STRUCTURE FILE NUMBER	
TAG	NEM	3004112	

SUPERSTRUCTURE REINFORCING STEEL LAYOUT (BOTTOM MAT)
BRIDGE NO. GUE-209-9.85
OVER WILLS CREEK

GUE-209-8.57/9.85

P:\GUE\93133\Design\Bridge\SFN - Route Name\Plan_Sheets\93133_BSD_008.dgn 08-JAN-2015 2:13PM nmccoy

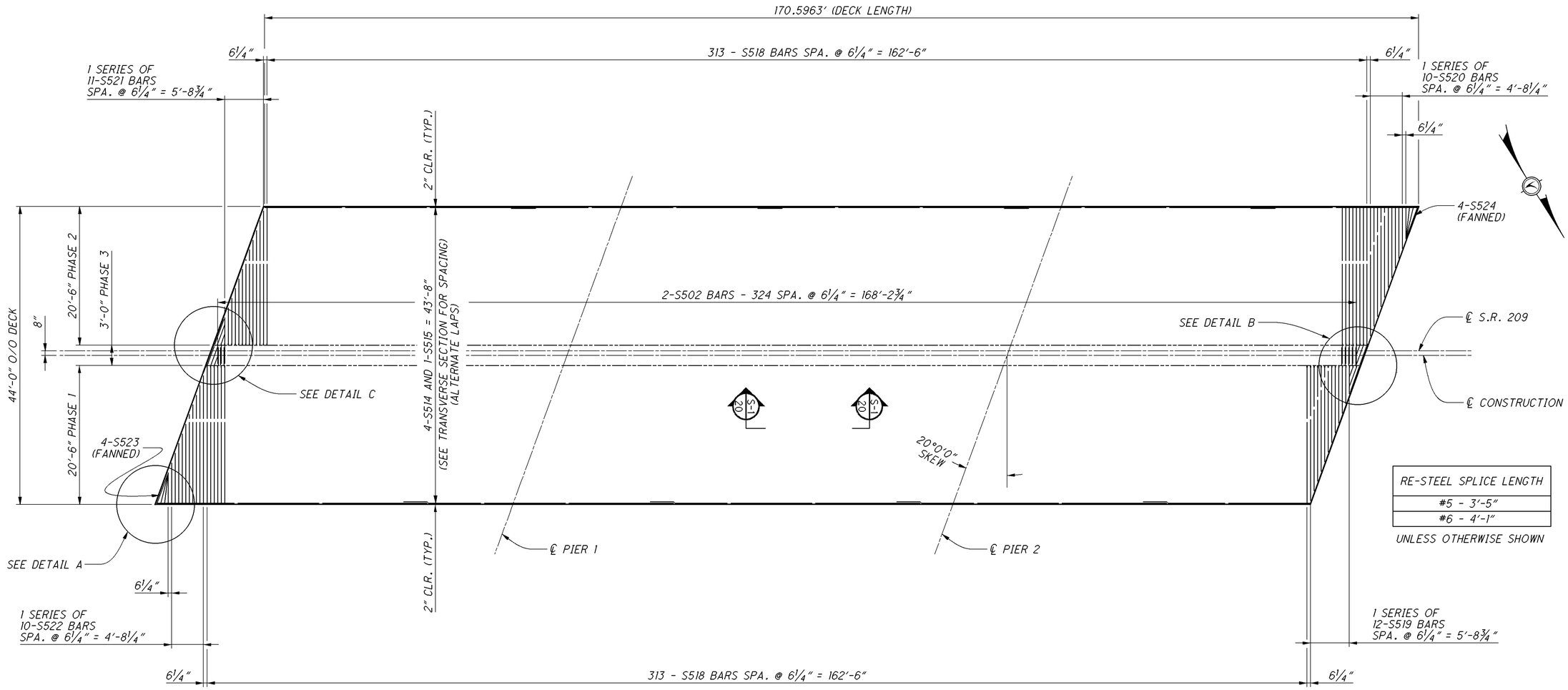

BOTTOM MAT REINFORCEMENT

RE-STEEL SPLICE LENGTH
#5 - 3'-5"
#6 - 4'-1"

UNLESS OTHERWISE SHOWN

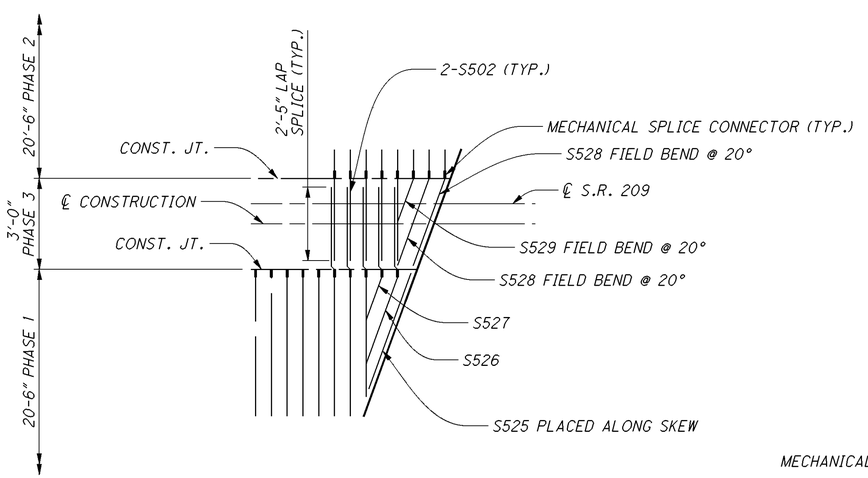

DETAIL B

DETAIL C

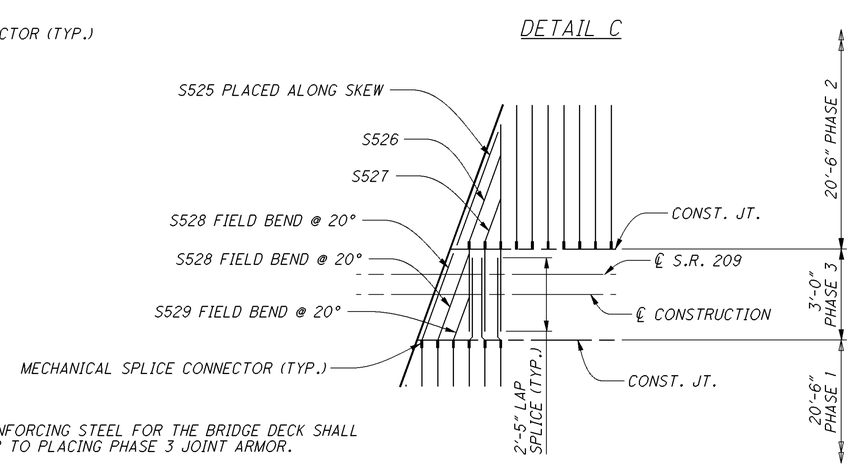

NOTE:

ALL PHASE 3 REINFORCING STEEL FOR THE BRIDGE DECK SHALL BE PLACED PRIOR TO PLACING PHASE 3 JOINT ARMOR.

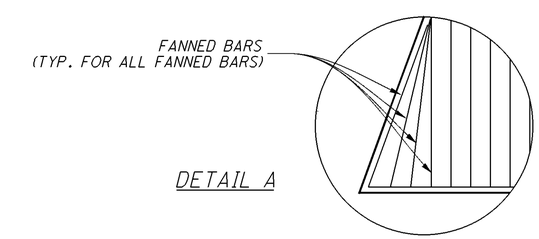

DETAIL A

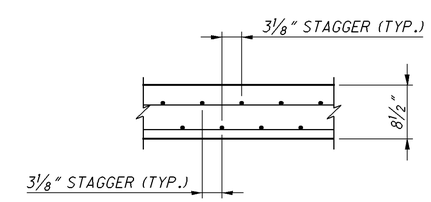

SECTION S-1 20 & 21

DESIGN AGENCY: OHIO DEPARTMENT OF TRANSPORTATION, DISTRICT 5

DESIGNED	DRAWN	REVIEWED	DATE
NEM	NEM	JDR	01/05/15
CHECKED	REVISED	STRUCTURE FILE NUMBER	
TAG	NEM	3004112	

SUPERSTRUCTURE REINFORCING STEEL LAYOUT (BOTTOM MAT)
BRIDGE NO. GUE-209-9.85
OVER WILLS CREEK

GUE-209-8.57/9.85

20/29

43/60

P:\GUE\93133\Design\Bridge\SFN - Route Name\Plan_Sheets\93133_BSD_006.dgn 08-JAN-2015 2:14PM nmccoy

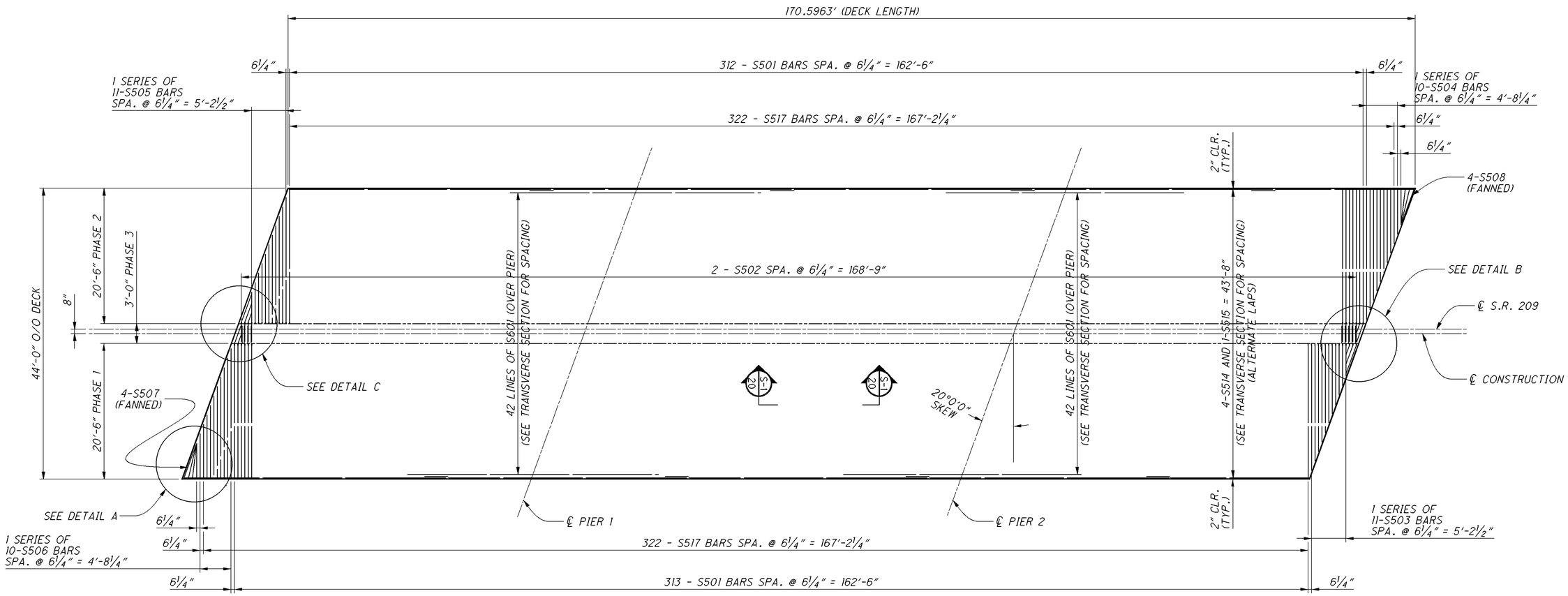

TOP MAT REINFORCEMENT

RE-STEEL SPLICE LENGTH
#5 - 3'-5"
#6 - 4'-1"

UNLESS OTHERWISE SHOWN

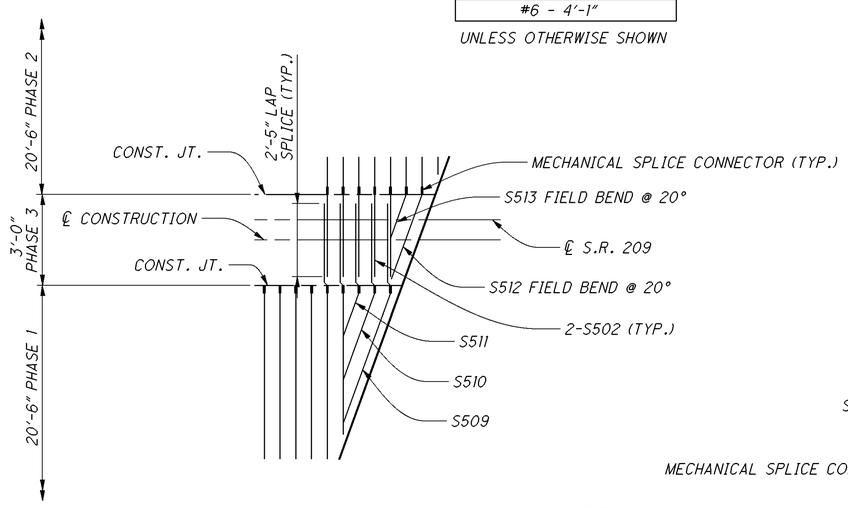

DETAIL B

DETAIL C

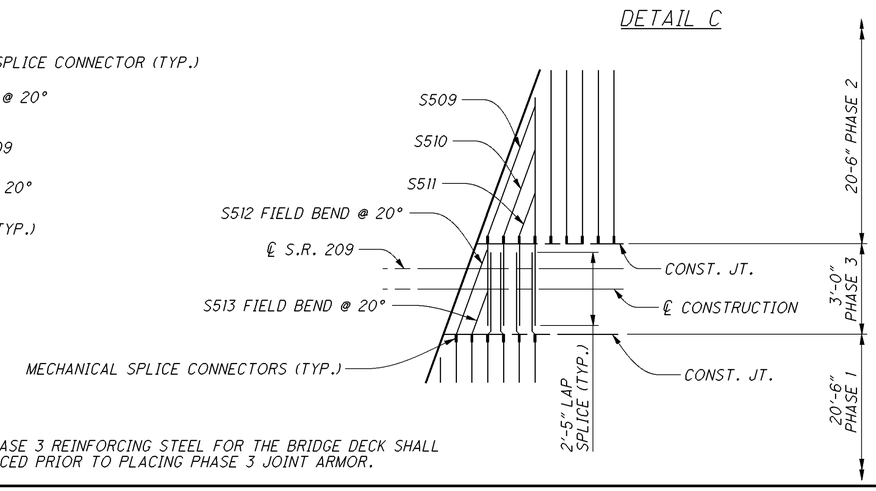

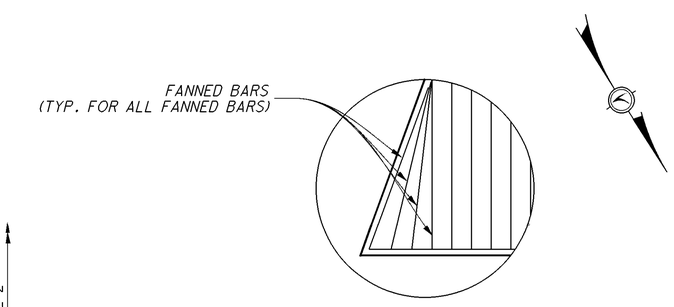

DETAIL A

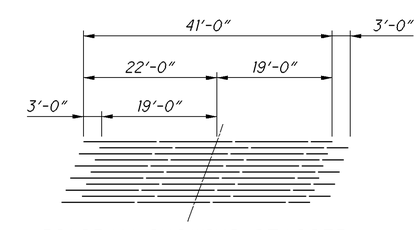

DIAGRAM SHOWING STAGGER OF S601 BARS OVER PIER 1 & 2

NOTE:

ALL PHASE 3 REINFORCING STEEL FOR THE BRIDGE DECK SHALL BE PLACED PRIOR TO PLACING PHASE 3 JOINT ARMOR.

DESIGN AGENCY
OHIO DEPARTMENT OF TRANSPORTATION, DISTRICT 5

DESIGNED	DRAWN	REVIEWED	DATE
NEM	NEM	JDR	01/05/15
CHECKED	REVISED	STRUCTURE FILE NUMBER	
TAG	NEM	3004112	

SUPERSTRUCTURE REINFORCING STEEL LAYOUT (TOP MAT)
BRIDGE NO. GUE-209-9.85
OVER WILLS CREEK

GUE-209-8.57/9.85

P:\GUE\93133\Design\Bridge\SFN - Route Name\Plan_Sheets\93133_BSD_007.dgn 08-JAN-2015 2:15PM nmccoy

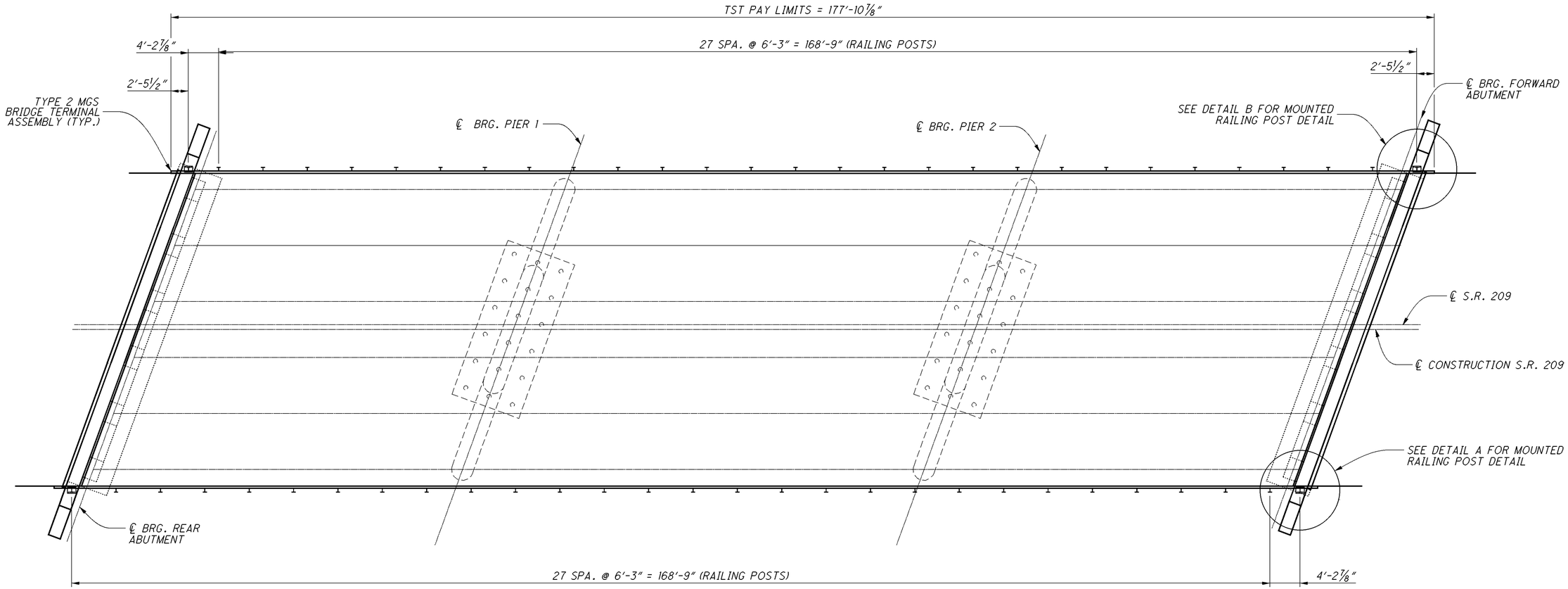

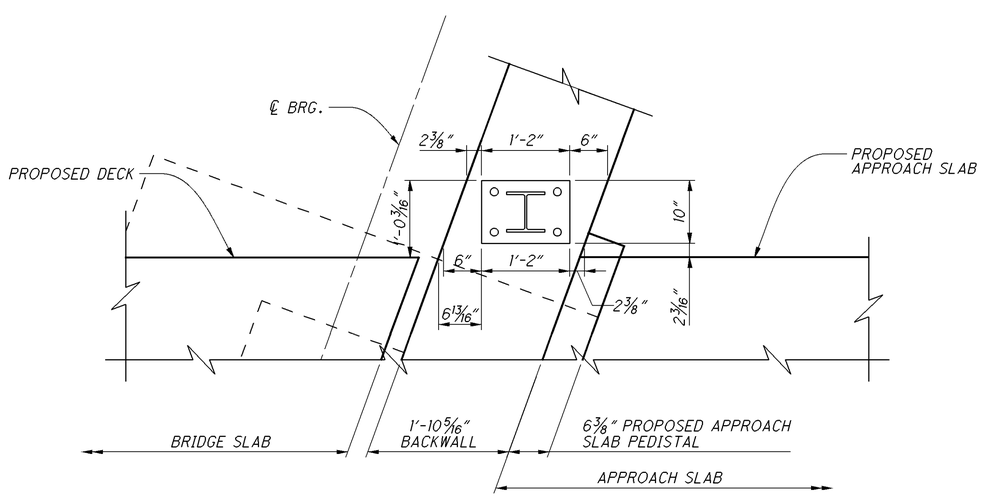

DETAIL B

RIGHT FORWARD & LEFT REAR

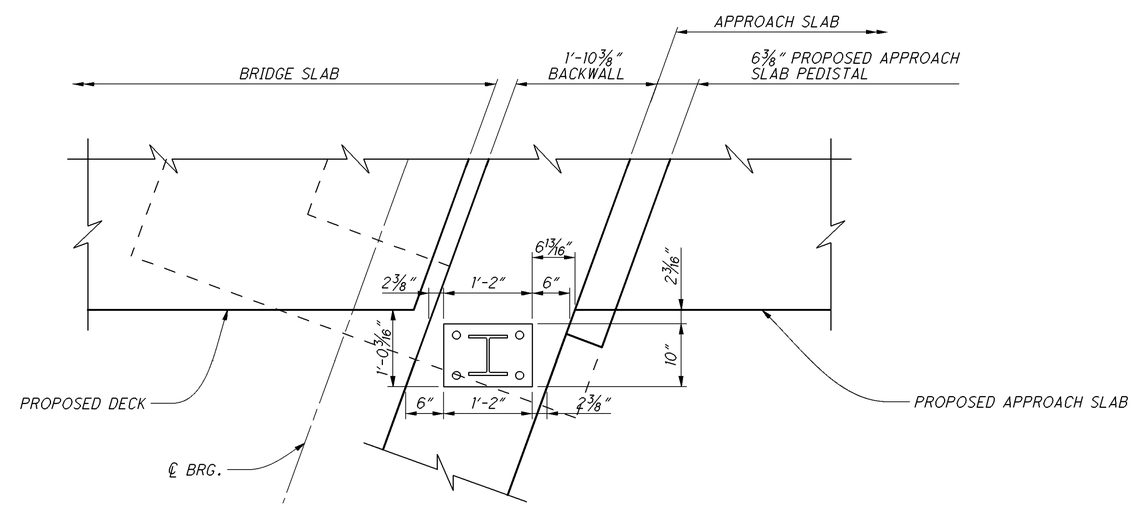

DETAIL A

LEFT FORWARD & RIGHT REAR

DESIGN AGENCY
OHIO DEPARTMENT OF TRANSPORTATION, DISTRICT 5

DESIGNED	DRAWN	REVIEWED	DATE
NEM	NEM	JDR	01/05/15
CHECKED	REVISED	STRUCTURE FILE NUMBER	
TAG	NEM	3004112	

MOUNTED RAILING POST DETAILS

BRIDGE NO. GUE-209-9.85
OVER WILLS CREEK

GUE-209-8.57/9.85

P:\GUE\93133\Design\Bridge\SFN - Route Name\Plan_Sheets\93133_BGR_001.dgn 08-JAN-2015 2:15PM nmccoy

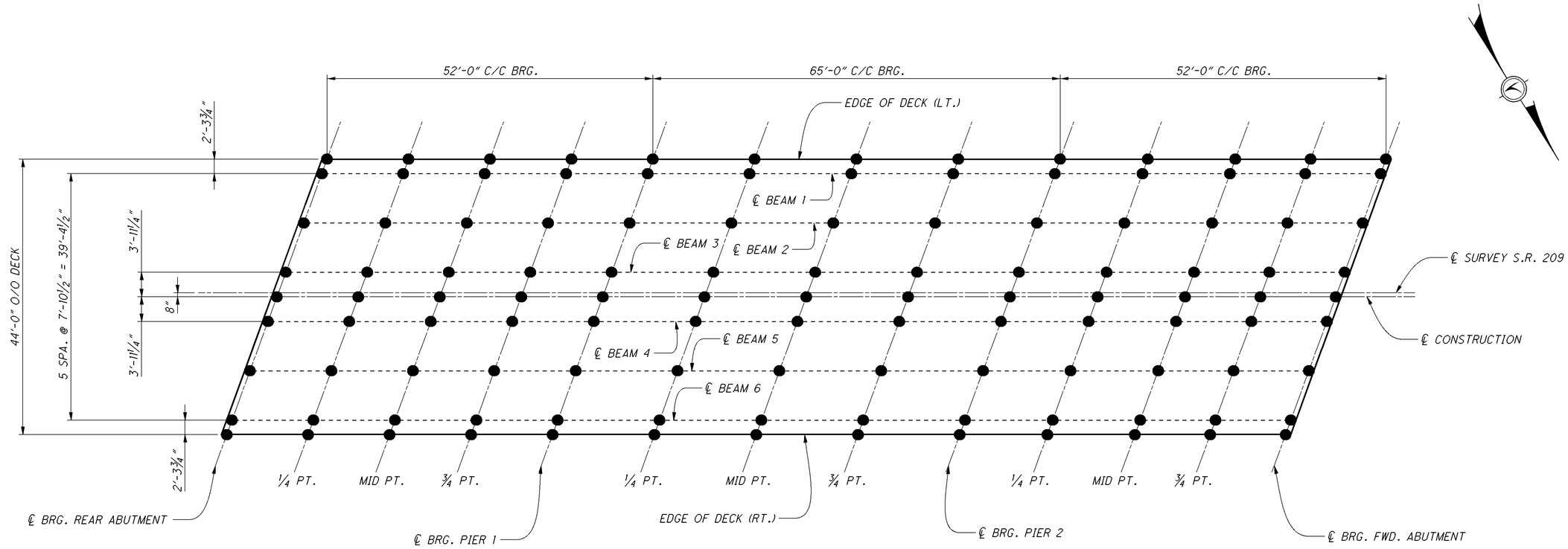

LOCATIONS OF SCREED ELEVATIONS

FOR DECK SCREED ELEVATIONS SEE SHEET 24 OF 29

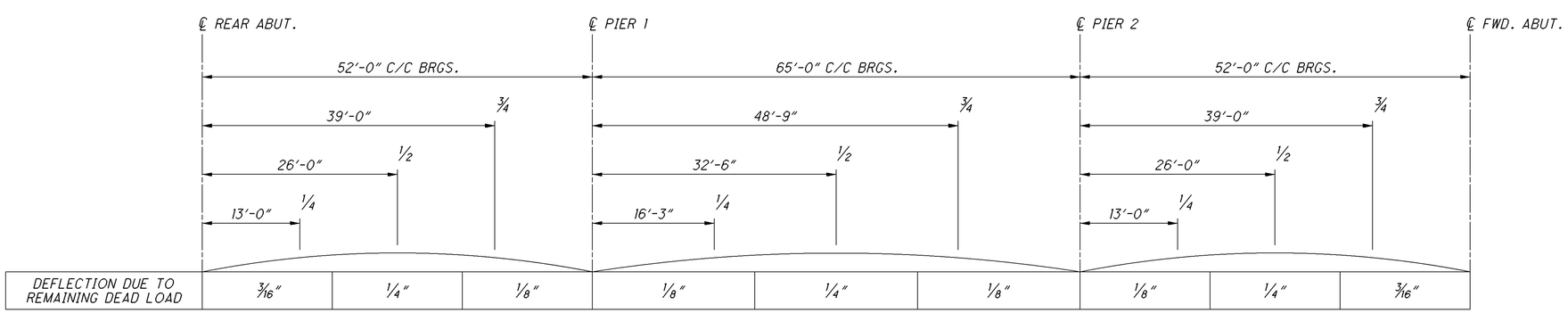

DEFLECTION DIAGRAM

DESIGN AGENCY
OHIO DEPARTMENT OF TRANSPORTATION, DISTRICT 5

DESIGNED	DRAWN	REVIEWED	DATE
NEM	NEM	JDR	01/05/15
CHECKED	REVISED	STRUCTURE FILE NUMBER	
TAG	NEM	3004112	

DEFLECTION DIAGRAM AND SCREED ELEVATION LOCATIONS
BRIDGE NO. GUE-209-9.85
OVER WILLS CREEK

GUE-209-8.57/9.85

P:\GUE\93133\Design\Bridge\SFN - Route Name\Plan_Sheets\93133_BSD_001.dgn 08-JAN-2015 2:16PM nmccoy

DECK ELEVATION

LOCATION	CL BRG. REAR ABUTMENT				1/4 PT.				1/2 PT.				3/4 PT.				CL BRG. PIER 1				1/4 PT.			
	STATION	FINISHED DECK ELEV.	TOP OF DECK SCREED ELEV.	TOP OF HAUNCH SCREED ELEV.	STATION	FINISHED DECK ELEV.	TOP OF DECK SCREED ELEV.	TOP OF HAUNCH SCREED ELEV.	STATION	FINISHED DECK ELEV.	TOP OF DECK SCREED ELEV.	TOP OF HAUNCH SCREED ELEV.	STATION	FINISHED DECK ELEV.	TOP OF DECK SCREED ELEV.	TOP OF HAUNCH SCREED ELEV.	STATION	FINISHED DECK ELEV.	TOP OF DECK SCREED ELEV.	TOP OF HAUNCH SCREED ELEV.	STATION	FINISHED DECK ELEV.	TOP OF DECK SCREED ELEV.	TOP OF HAUNCH SCREED ELEV.
EDGE OF DECK (LT.)	170+10.04	796.46	796.46	795.75	170+23.04	796.46	796.47	795.76	170+36.04	796.46	796.48	795.77	170+49.04	796.46	796.46	795.80	170+62.04	796.46	796.46	795.75	170+78.29	796.46	796.47	795.76
BEAM 1	170+09.20	796.49	796.49	795.78	170+22.20	796.49	796.51	795.80	170+35.20	796.49	796.51	795.80	170+48.20	796.49	796.50	795.83	170+61.20	796.49	796.49	795.78	170+77.45	796.49	796.51	795.80
BEAM 2	170+06.33	796.62	796.62	795.91	170+19.33	796.62	796.63	795.92	170+32.33	796.62	796.63	795.93	170+45.33	796.62	796.62	795.96	170+58.33	796.62	796.62	795.91	170+74.58	796.62	796.63	795.92
BEAM 3	170+03.46	796.74	796.74	796.03	170+16.46	796.74	796.75	796.05	170+29.46	796.74	796.76	796.05	170+42.46	796.74	796.75	796.08	170+55.46	796.74	796.74	796.03	170+71.71	796.74	796.75	796.04
CORWN	170+02.03	796.80	796.80	796.09	170+15.03	796.80	796.82	796.11	170+28.03	796.80	796.82	796.11	170+41.03	796.80	796.81	796.14	170+54.03	796.80	796.80	796.09	170+70.28	796.80	796.81	796.10
BEAM 4	170+00.60	796.74	796.74	796.03	170+13.60	796.74	796.75	796.05	170+26.60	796.74	796.76	796.05	170+39.60	796.74	796.75	796.08	170+52.60	796.74	796.74	796.03	170+68.85	796.74	796.75	796.04
BEAM 5	169+97.73	796.62	796.62	795.91	170+10.73	796.62	796.63	795.92	170+23.73	796.62	796.63	795.93	170+36.73	796.62	796.62	795.96	170+49.73	796.62	796.62	795.91	170+65.98	796.62	796.63	795.92
BEAM 6	169+94.86	796.49	796.49	795.78	170+07.86	796.49	796.51	795.80	170+20.86	796.49	796.51	795.80	170+33.86	796.49	796.50	795.83	170+46.86	796.49	796.49	795.78	170+63.11	796.49	796.51	795.80
EDGE OF DECK (RT.)	169+94.02	796.46	796.46	795.75	170+07.02	796.46	796.47	795.76	170+20.02	796.46	796.48	795.77	170+33.02	796.46	796.46	795.80	170+46.02	796.46	796.46	795.75	170+62.27	796.46	796.47	795.76

DECK ELEVATIONS

LOCATION	1/2 PT.				3/4 PT.				CL BRG. PIER 2				1/4 PT.				1/2 PT.				3/4 PT.			
	STATION	FINISHED DECK ELEV.	TOP OF DECK SCREED ELEV.	TOP OF HAUNCH SCREED ELEV.	STATION	FINISHED DECK ELEV.	TOP OF DECK SCREED ELEV.	TOP OF HAUNCH SCREED ELEV.	STATION	FINISHED DECK ELEV.	TOP OF DECK SCREED ELEV.	TOP OF HAUNCH SCREED ELEV.	STATION	FINISHED DECK ELEV.	TOP OF DECK SCREED ELEV.	TOP OF HAUNCH SCREED ELEV.	STATION	FINISHED DECK ELEV.	TOP OF DECK SCREED ELEV.	TOP OF HAUNCH SCREED ELEV.	STATION	FINISHED DECK ELEV.	TOP OF DECK SCREED ELEV.	TOP OF HAUNCH SCREED ELEV.
EDGE OF DECK (LT.)	170+94.54	796.46	796.48	795.77	171+10.79	796.46	796.46	795.75	171+27.04	796.46	796.46	795.76	171+40.04	796.46	796.46	795.76	171+53.04	796.46	796.48	795.77	171+66.04	796.46	796.47	795.76
BEAM 1	170+93.70	796.49	796.52	795.81	171+09.95	796.49	796.49	795.78	171+26.20	796.49	796.50	795.79	171+39.20	796.49	796.50	795.79	171+52.20	796.49	796.51	795.80	171+65.20	796.49	796.51	795.80
BEAM 2	170+90.83	796.62	796.64	795.93	171+07.08	796.62	796.62	795.91	171+23.33	796.62	796.62	795.92	171+36.33	796.62	796.62	795.92	171+49.33	796.62	796.63	795.93	171+62.33	796.62	796.63	795.92
BEAM 3	170+87.96	796.74	796.76	796.05	171+04.21	796.74	796.74	796.03	171+20.46	796.74	796.75	796.04	171+33.46	796.74	796.75	796.04	171+46.46	796.74	796.76	796.05	171+59.46	796.74	796.75	796.05
CORWN	170+86.53	796.80	796.82	796.11	171+02.78	796.80	796.80	796.09	171+19.03	796.80	796.81	796.10	171+32.03	796.80	796.81	796.10	171+45.03	796.80	796.82	796.11	171+58.03	796.80	796.82	796.11
BEAM 4	170+85.10	796.74	796.76	796.05	171+01.35	796.74	796.74	796.03	171+17.60	796.74	796.75	796.04	171+30.60	796.74	796.75	796.04	171+43.60	796.74	796.76	796.05	171+56.60	796.74	796.75	796.05
BEAM 5	170+82.23	796.62	796.64	795.93	170+98.48	796.62	796.62	795.91	171+14.73	796.62	796.62	795.92	171+27.73	796.62	796.62	795.92	171+40.73	796.62	796.63	795.93	171+53.73	796.62	796.63	795.92
BEAM 6	170+79.36	796.49	796.52	795.81	170+95.61	796.49	796.49	795.78	171+11.86	796.49	796.50	795.79	171+24.86	796.49	796.50	795.79	171+37.86	796.49	796.51	795.80	171+50.86	796.49	796.51	795.80
EDGE OF DECK (RT.)	170+78.52	796.46	796.48	795.77	170+94.77	796.46	796.46	795.75	171+11.02	796.46	796.46	795.76	171+24.02	796.46	796.46	795.76	171+37.02	796.46	796.48	795.77	171+50.02	796.46	796.47	795.76

DECK ELEVATIONS

LOCATION	CL BRG. FORWARD ABUTMENT			
	STATION	FINISHED DECK ELEV.	TOP OF DECK SCREED ELEV.	TOP OF HAUNCH SCREED ELEV.
EDGE OF DECK (LT.)	171+79.04	796.46	796.46	795.75
BEAM 1	171+78.20	796.49	796.49	795.78
BEAM 2	171+75.33	796.62	796.62	795.91
BEAM 3	171+72.46	796.74	796.74	796.03
CORWN	171+71.03	796.80	796.80	796.09
BEAM 4	171+69.60	796.74	796.74	796.03
BEAM 5	171+66.73	796.62	796.62	795.91
BEAM 6	171+63.86	796.49	796.49	795.78
EDGE OF DECK (RT.)	171+63.02	796.46	796.46	795.75

TOP OF DECK SCREED ELEVATIONS

SCREED ELEVATIONS SHOWN REPRESENT THE THEORETICAL DECK SURFACE LOCATION PRIOR TO DEFLECTION CAUSED BY DECK PLACEMENT AND OTHER ANTICIPATED DEAD LOADS.

TOP OF DECK SCREED ELEVATIONS

TOP OF HAUNCH ELEVATIONS SHOWN REPRESENT THE THEORETICAL LOCATION OF THE BOTTOM OF THE DECK ABOVE THE GIRDER HAUNCH PRIOR TO DEFLECTIONS CAUSED BY DECK PLACEMENT AND OTHER ANTICIPATED DEAD LOADS.

TOP OF DECK SCREED ELEVATIONS

FINAL DECK SURFACE ELEVATIONS SHOW REPRESENT THE DECK SURFACE LOCATION AFTER ALL ANTICIPATED DEAD LOAD DEFLECTIONS HAVE OCCURRED.

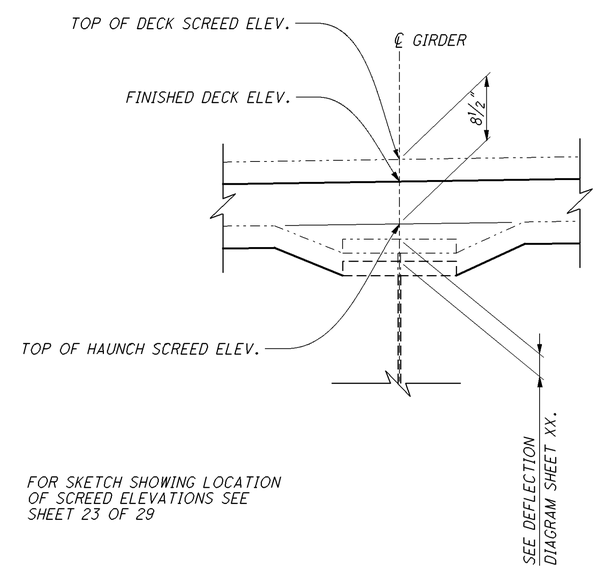

FOR SKETCH SHOWING LOCATION OF SCREED ELEVATIONS SEE SHEET 23 OF 29

DESIGN AGENCY
OHIO DEPARTMENT OF TRANSPORTATION, DISTRICT 5

REVIEWED JDR DATE 01/05/15
STRUCTURE FILE NUMBER 3004112

DRAWN NEM REVISED NEM

DESIGNED NEM CHECKED TAG

REAR APPROACH SLAB DETAILS
BRIDGE NO. GUE-209-9.85
OVER WILLS CREEK

GUE-209-8.57/9.85

P:\GUE\93133\Design\Bridge\SFN - Route Name\Plan_Sheets\93133_BSD_002.dgn 08-JAN-2015 2:16PM nmccoy

MARK	NUMBER TOTAL	LENGTH	WEIGHT	TYPE	DIMENSIONS A	B	C	D	E	R	INC
REAR ABUTMENT											
A401	14	2'-7"	24	2	0'-8"	1'-5"	0'-8"				
A501	2	29'-7"	62	STR	62						
A502	2	28'-11"	60	STR	60						
A503	1	28'-3"	29	STR	29						
A504	1	27'-8"	29	STR	29						
A505	1	25'-7"	27	STR	27						
A506	1	25'-1"	26	STR	26						
A507	2	28'-3"	59	STR	59						
A508	2	28'-11"	60	STR	60						
A509	1	26'-10"	28	STR	28						
A510	1	27'-8"	29	STR	29						
A511	1	23'-11"	25	STR	25						
A512	1	24'-11"	26	STR	26						
A513	2	21'-11"	46	STR	46						
A514	2	22'-1"	46	STR	46						
A515	20	2'-10"	59	STR	59						
A516	50	6'-4"	330	99	1'-11"	1'-3 1/2"	0'-7"	0'-7"	1'-4"		
A601	110	5'-3"	867	STR	5'-3"						
A602	45	8'-1"	546	2	3'-6"	1'-5"	3'-6"				
A603	BAR NOT USED										
A604	6	8'-2"	74	2	3'-6"	1'-6"	3'-6"				
	4 SR	3'-3"			3'-3"						
A605	OF	TO	128	STR	TO						0'-6"
	5	5'-3"			5'-3"						
SUBTOTAL REAR ABUTMENT			2,580								

MARK	NUMBER TOTAL	LENGTH	WEIGHT	TYPE	DIMENSIONS A	B	C	D	E	R	INC
FORWARD ABUTMENT											
A401	14	2'-7"	24	2	0'-8"	1'-5"	0'-8"				
A501	2	29'-7"	62	STR	62						
A502	2	28'-11"	60	STR	60						
A503	1	28'-3"	29	STR	29						
A504	1	27'-8"	29	STR	29						
A505	1	25'-7"	27	STR	27						
A506	1	25'-1"	26	STR	26						
A507	2	28'-3"	59	STR	59						
A508	2	28'-11"	60	STR	60						
A509	1	26'-10"	28	STR	28						
A510	1	27'-8"	29	STR	29						
A511	1	23'-11"	25	STR	25						
A512	1	24'-11"	26	STR	26						
A513	2	21'-11"	46	STR	46						
A514	2	22'-1"	46	STR	46						
A515	20	2'-10"	59	STR	59						
A516	50	6'-4"	330	99	1'-11"	1'-3 1/2"	0'-7"	0'-7"	1'-4"		
A601	110	5'-3"	867	STR	5'-3"						
A602	45	8'-1"	546	2	3'-6"	1'-5"	3'-6"				
A603	BAR NOT USED										
A604	6	8'-2"	74	2	3'-6"	1'-6"	3'-6"				
	4 SR	3'-3"			3'-3"						
A605	OF	TO	128	STR	TO						0'-6"
	5	5'-3"			5'-3"						
SUBTOTAL FORWARD ABUTMENT			2,580								
SUBTOTAL REAR ABUTMENT			2,580								
SUBTOTAL FORWARD ABUTMENT											
SUBTOTAL ABUTMENTS			5,160								

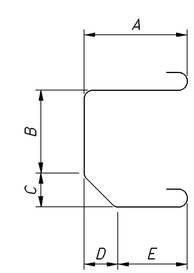

TYPE-99

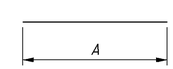

TYPE-STR.

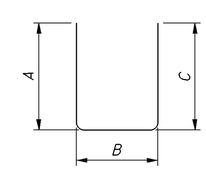

TYPE-2

DESIGN AGENCY
OHIO DEPARTMENT OF TRANSPORTATION, DISTRICT 5

REVIEWED JDR DATE 01/05/15
STRUCTURE FILE NUMBER 3004112

DRAWN NEM REVISED NEM

DESIGNED NEM CHECKED TAG

REINFORCING STEEL SCHEDULE
BRIDGE NO. GUE-209-9.85
OVER WILLS CREEK

GUE-209-8.57/9.85

P:\GUE\93133\Design\Bridge\SFN - Route Name\Plan_Sheets\93133_BRL_001.dgn 08-JAN-2015 2:17PM nmccoy

MARK	NUMBER TOTAL	LENGTH	WEIGHT	TYPE	DIMENSIONS A	B	C	D	E	R	INC
DECK											
S501	626	20'-11"	13,657	16	20'-4"						
S502	1298	2'-9"	3,723	STR	2'-9"						
	1 SR	4'-11"			4'-11"						
S503	OF	TO	139	STR	TO						1'-5 1/4"
	11	19'-3"			19'-3"						
	1 SR	6'-9"			6'-9"						
S504	OF	TO	138	STR	TO						1'-5 1/4"
	10	19'-8"			19'-8"						
	1 SR	4'-10"			4'-10"						
S505	OF	TO	138	STR	TO						1'-5 1/4"
	11	19'-2"			19'-2"						
	1 SR	6'-8"			6'-8"						
S506	OF	TO	139	STR	TO						1'-5 3/4"
	10	20'-0"			20'-0"						
S507	4	5'-3"	22	STR	5'-3"						
S508	4	5'-4"	22	STR	5'-4"						
S509	2	4'-10"	10	STR	4'-10"						
S510	2	3'-4"	7	STR	3'-4"						
S511	2	1'-9"	4	STR	1'-9"						
S512	2	3'-0"	6	STR	3'-0"						
S513	2	1'-6"	3	STR	1'-6"						
S514	408	40'-0"	17,022	STR	40'-0"						
S515	102	24'-0"	2,553	STR	24'-0"						
S516	BAR NOT USED										
S517	644	10'-11"	7,333	2	1'-9"	1'-0"	8'-4"				
S518	626	20'-4"	13,276	STR	20'-4"						
	1 SR	4'-8"			4'-8"						
S519	OF	TO	154	STR	TO						1'-4 3/4"
	12	19'-11"			19'-11"						
	1 SR	6'-1"			6'-1"						
S520	OF	TO	136	STR	TO						1'-6 1/2"
	10	19'-11"			19'-11"						
	1 SR	4'-1"			4'-1"						
S521	OF	TO	137	STR	TO						1'-7"
	11	19'-10"			19'-10"						
	1 SR	6'-0"			6'-0"						
S522	OF	TO	130	STR	TO						1'-5 1/4"
	10	18'-10"			18'-10"						
S523	4	4'-7"	19	STR	4'-7"						
S524	4	4'-8"	19	STR	4'-8"						
S525	2	4'-0"	8	STR	4'-0"						
S526	2	3'-4"	7	STR	3'-4"						
S527	2	1'-9"	4	STR	1'-9"						
S528	2	3'-1"	6	STR	3'-1"						
S529	2	1'-6"	3	STR	1'-6"						
S601	84	41'-0"	5,173	STR	41'-0"						
SUBTOTAL DECK			63,988								
SUBTOTAL ABUTMENTS			5,160								
SUBTOTAL DECK			63,988								
GRAND TOTAL			69,148								

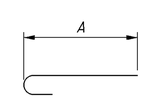

TYPE-16

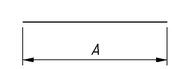

TYPE-STR.

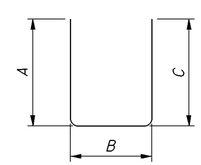

TYPE-2

DESIGN AGENCY
OHIO DEPARTMENT OF TRANSPORTATION, DISTRICT 5

DESIGNED	DRAWN	REVIEWED	DATE
NEM	NEM	JDR	01/05/15
CHECKED	REVISED	STRUCTURE FILE NUMBER	
TAG	NEM	3004112	

REINFORCING STEEL SCHEDULE
BRIDGE NO. GUE-209-9.85
OVER WILLS CREEK

GUE-209-8.57/9.85

P:\GUE\93133\Design\Bridge\SFN - Route Name\Plan_Sheets\93133_BRL_002.dgn 08-JAN-2015 2:18PM nmccoy

NOTE:

1. FOR ADDITIONAL DETAILS SEE STANDARD DRAWING AS-1-81.
2. MINIMUM LAP SPLICE SHALL BE 2'-5" MIN.

● LOCATIONS OF FINISHED TOP OF APPROACH SLAB ELEVATIONS

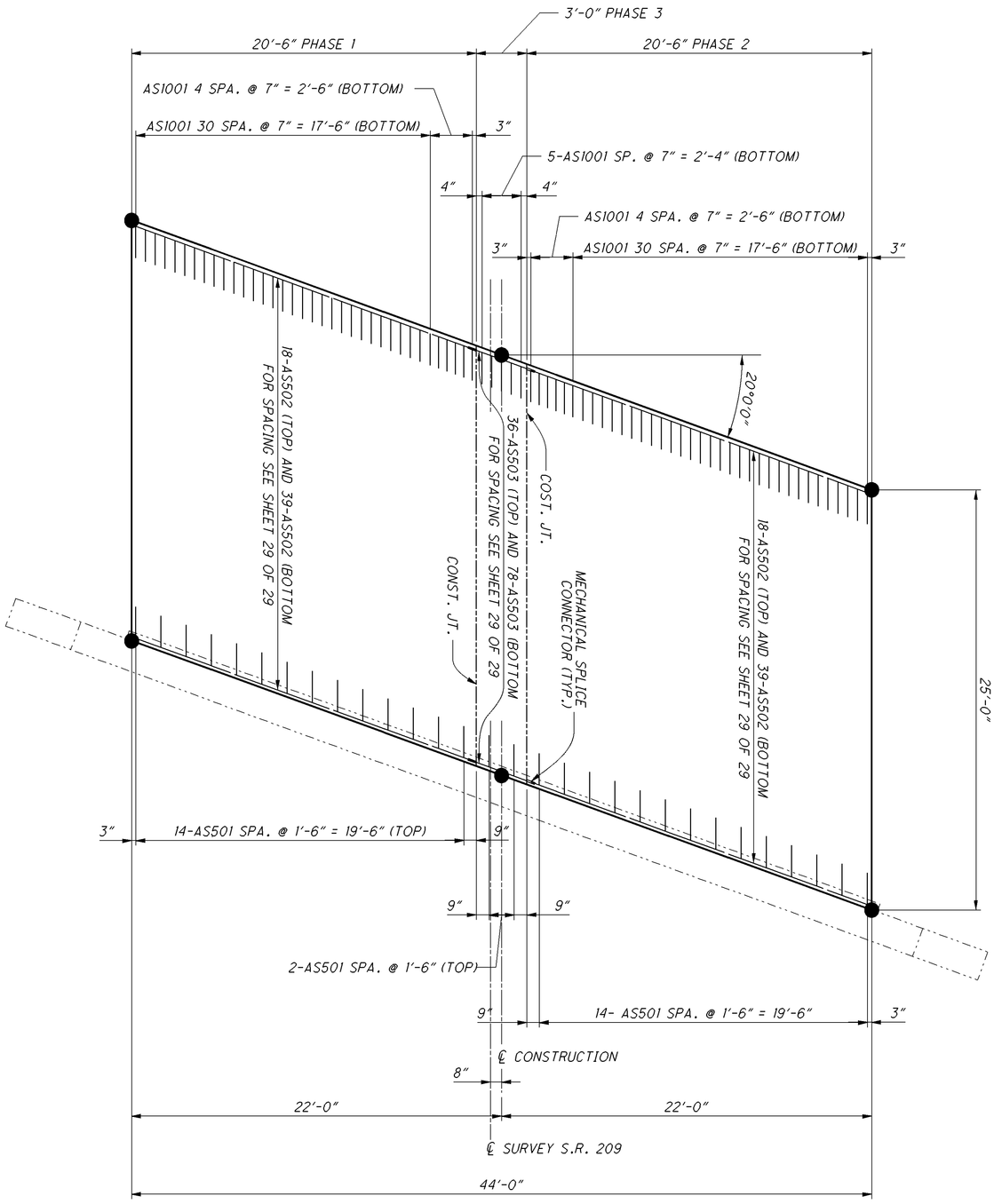

PLAN

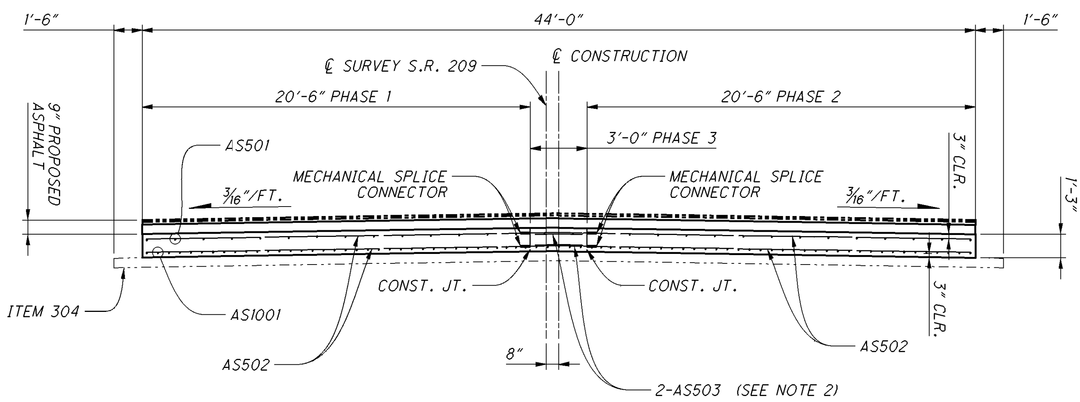

ELEVATION

50/60	27/29	GUE-209-8.57/9.85	REAR APPROACH SLAB DETAILS BRIDGE NO. GUE-209-9.85 OVER WILLS CREEK	DESIGNED NEM CHECKED TAG	DRAWN NEM REVISED NEM	REVIEWED JDR DATE 01/05/15 STRUCTURE FILE NUMBER 3004112	DESIGN AGENCY OHIO DEPARTMENT OF TRANSPORTATION, DISTRICT 5

NOTE:

1. FOR ADDITIONAL DETAILS SEE STANDARD DRAWING AS-1-81.
2. MINIMUM LAP SPLICE SHALL BE 2'-5" MIN.

● LOCATIONS OF FINISHED TOP OF APPROACH SLAB ELEVATIONS

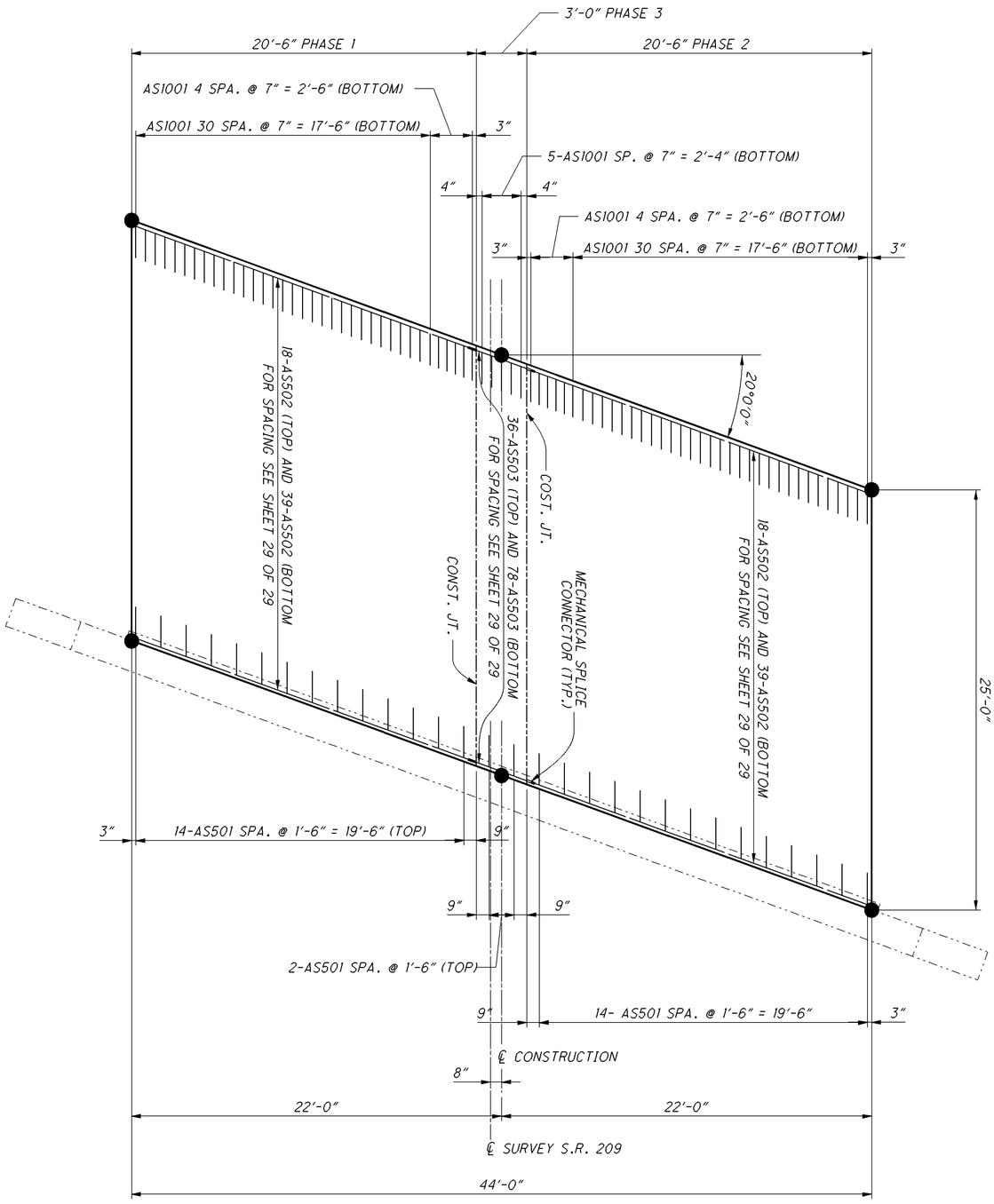

PLAN

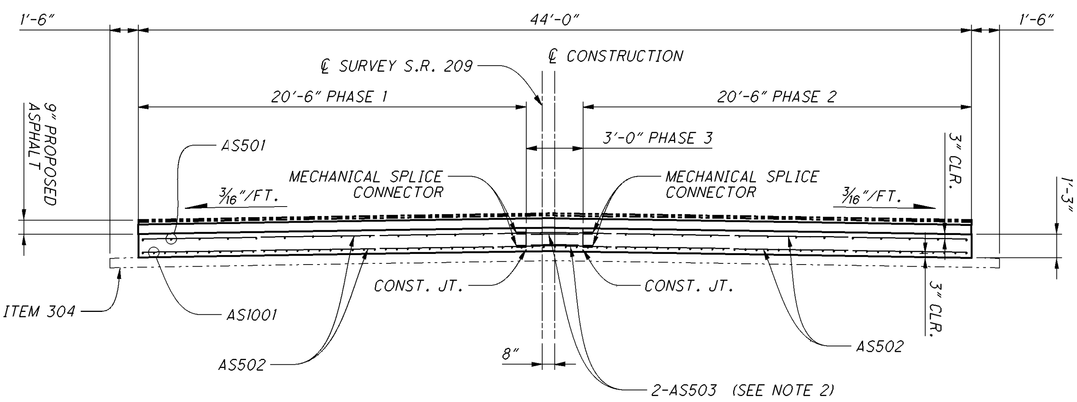

ELEVATION

51/60	28/29	GUE-209-8.57/9.85	FORWARD APPROACH SLAB DETAILS BRIDGE NO. GUE-209-9.85 OVER WILLS CREEK	DESIGNED NEM CHECKED TAG	DRAWN NEM REVISED NEM	REVIEWED JDR DATE 01/05/15 STRUCTURE FILE NUMBER 3004112	DESIGN AGENCY OHIO DEPARTMENT OF TRANSPORTATION, DISTRICT 5

FORWARD APPROACH SLAB FINISH ELEVATIONS						
LOCATION	BEGIN APPR. SLAB		1/2 PT.		END APPR. SLAB	
	STATION	ELEV.	STATION	ELEV.	STATION	ELEV.
EDGE OF SLAB (22.00' LT)	171+81.99	796.46	171+94.49	796.46	172+06.99	796.46
CROWN	171+73.98	796.80	171+86.48	796.80	171+98.98	796.80
EDGE OF SLAB (22.00' RT)	171+65.97	796.46	171+78.47	796.46	171+90.97	796.46

REAR APPROACH SLAB FINISH ELEVATIONS						
LOCATION	BEGIN APPR. SLAB		1/2 PT.		END APPR. SLAB	
	STATION	ELEV.	STATION	ELEV.	STATION	ELEV.
EDGE OF SLAB (22.00' LT)	169+82.13	796.46	169+94.63	796.46	170+07.13	796.46
CROWN	169+74.12	796.80	169+86.62	796.80	169+99.12	796.80
EDGE OF SLAB (22.00' RT)	169+66.11	796.46	169+78.61	796.46	169+91.11	796.46

NOTES:

1. ALL LONGITUDINAL CONSTRUCTION JOINTS SHALL BE SEALED 2'-0" IN WIDTH WITH HMWM RESIN (SEE PROPOSED NOTE) APPROACH SLAB SEALING TO BE INCLUDED IN ITEM 526 OC/OA CONCRETE, CLASS QSC2, SUPERSTRUCTURE (APPROACH SLAB), (T=15"), AS PER PLAN
2. FOR ADDITIONAL DETAILS SEE STANDARD DRAWING AS-1-81

APPROACH SLAB ELEVATIONS

FOR SKECTCH SHOW LOCATIONS OF APPROACH SLAB ELEVATIONS SEE SHEET 27 & 28 OF 29.

DETAIL B

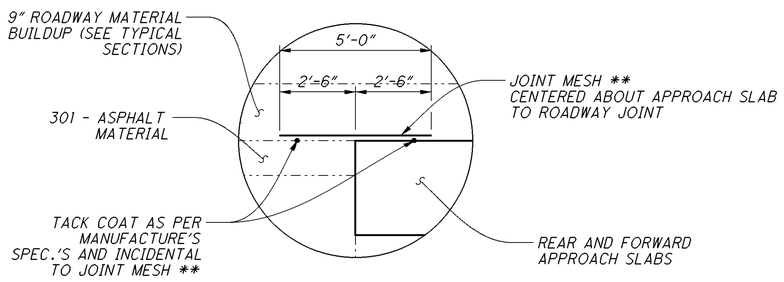

** - ITEM 690 - SPECIAL - REINFORCED MESH FOR TRANSVERSE AND/OR LONGITUDINAL JOINTS AND CRACKS

THIS ITEM SHALL BE USED TO REINFORCE TRANSVERSE JOINTS. PLACE REINFORCING MESH ON PROPOSED SURFACE (AS SHOWN IN DETAIL B), 5'-0" WIDE, ALONG LENGTHS SHOWN IN THE PLAN, CENTERED OVER JOINT CREATED. THE ENTIRE APPROACH SLAB AT THESE LOCATIONS SHALL BE OVERLAYED WITH 9" ASPHALT CONCRETE OR COMPACTED AGGREGATE AFTER PLACEMENT OF THE REINFORCING MESH, THIS WORK SHALL BE PREFORMED ONLY AT THE LOCATIONS SHOWN IN DETAIL B. REINFORCING MATERIALS SHALL BE GLASGRID CG200 OR EQUIVALENT AND SHALL BE PLACED ACCORDING TO MANUFACTURES'S SPECIFICATIONS AND THIS NOTE.

ALL MATERIALS, LABOR, EQUIPMENT, TOOLS, TRAFFIC CONTROL AND INCIDENTALS NEEDED TO COMPLETE THE WORK DESCRIBED ABOVE SHALL BE INCLUDED FOR PAYMENT IN THE UNIT PRICE BID FOR ITEM SPECIAL - REINFORCED MESH FOR TRANSVERSE AND/OR LONGITUDINAL JOINTS AND CRACKS.

ITEM 690 SPECIAL - REINFORCED MESH FOR TRANSVERSE AND/OR LONGITUDINAL JOINTS AND CRACKS

QUANTITY CARRIED TO BRIDGE SUMMARY
REAR APPROACH SLAB:
(44'-0" ÷ cos(20°)) x 5'-0" wide ÷ 9 = 26.01 SQ. YDS.
FORWARD APPROACH SLAB:
(44'-0" ÷ cos(20°)) x 5'-0" wide ÷ 9 = 26.01 SQ. YDS.

TOTAL = 52 SQ.YDS.

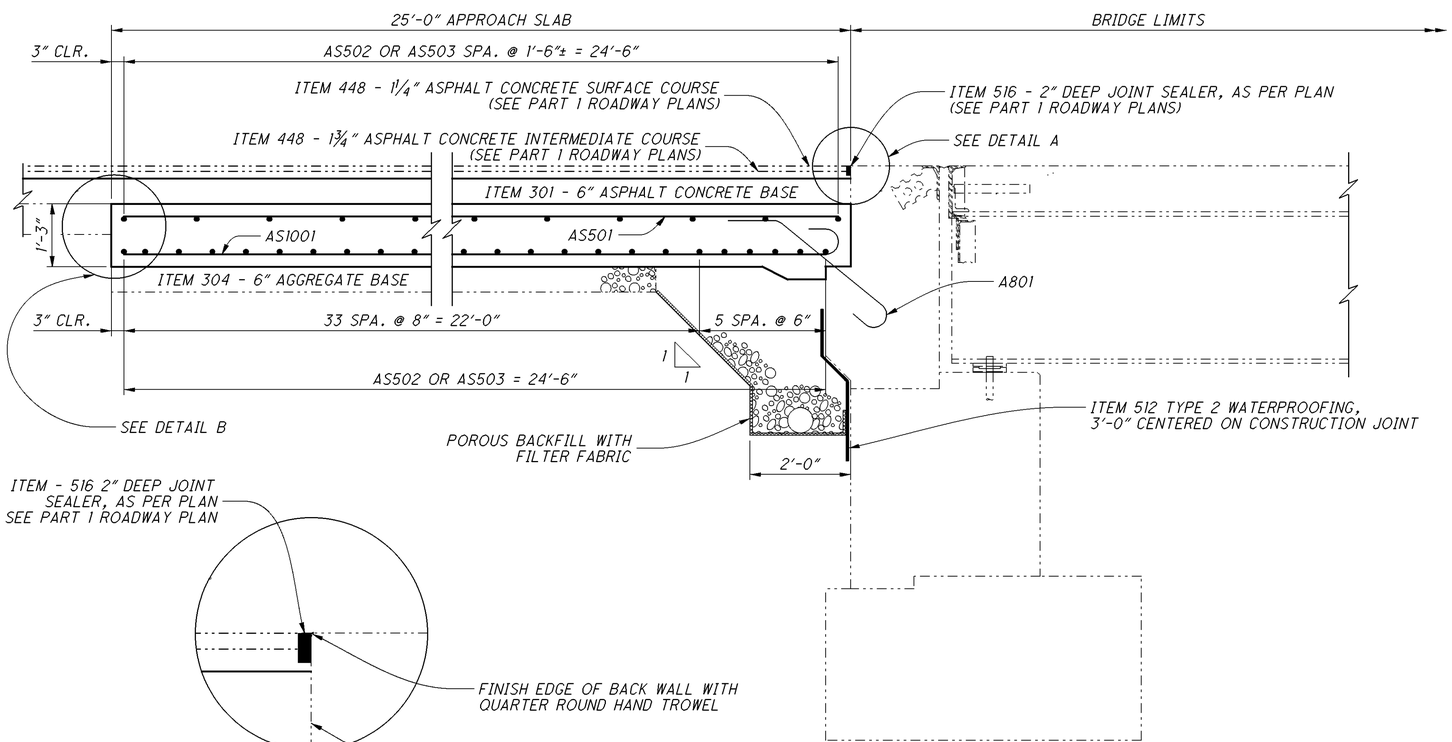

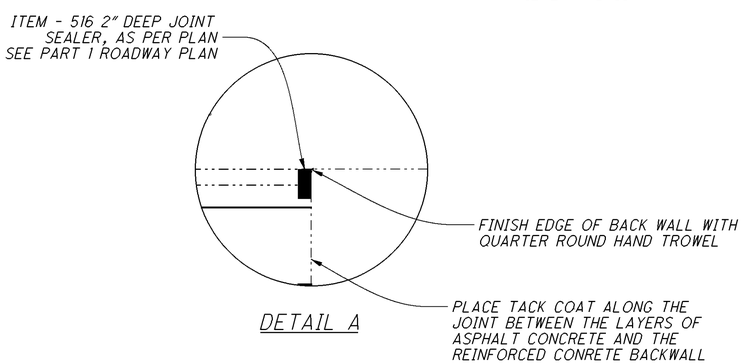

DETAIL A

ABUTMENT AND APPROACH SLAB SECTION @ ℄ ROADWAY S.R. 209

BENDING DIAGRAMS

STR. TYPE-16

MARK	NUMBER TOTAL	LENGTH	WEIGHT	TYPE	DIMENSIONS A	B	C	R	INC
REAR AND FORWARD APPROACH SLABS									
AS501	60	24'-6"	1,533	STR	24'-6"				
AS502	228	21'-6"	5,113	STR	21'-6"				
AS503	228	2'-10"	674	STR	2'-10"				
AS1001	150	25'-11"	16,728	16	24'-6"				
SUB-TOTAL			24,048						

RE-STEEL TO BE INCLUDED FOR PAYMENT IN ITEM 526 OC/OA CONCRETE, CLASS QSC2, SUPERSTRUCTURE (APPROACH SLAB), (T=15"), AS PER PLAN

DESIGN AGENCY
OHIO DEPARTMENT OF TRANSPORTATION, DISTRICT 5

REVIEWED JDR | DATE 01/05/15 | STRUCTURE FILE NUMBER 3004112
DRAWN NEM | REVISED NEM
DESIGNED NEM | CHECKED TAG

APPROACH SLAB DETAILS
BRIDGE NO. GUE-209-9.85
OVER WILLS CREEK

GUE-209-8.57/9.85

P:\GUE\93133\Design\Bridge\SFN - Route Name\Plan_Sheets\93133_BSD_005.dgn 08-JAN-2015 2:20PM nmccoy

UTILITIES

THERE ARE NO UNDERGROUND UTILITIES SHOWN ON THIS PLAN. THE NATURE OF THE WORK REQUIRED BY THE PROJECT WILL NOT AFFECT ANY KNOWN UNDERGROUND UTILITIES THAT EXIST UNDER OR ADJACENT TO THE WORK AREA.

ITEM 202 - PORTIONS OF STRUCTURE REMOVED, AS PER PLAN

UPON REMOVAL OF THE EXISTING CONCRETE, THE FIELD ENGINEER WILL SOUND THE ENTIRE ABUTMENT BACKWALL, CURBS WHERE SHOWN, AND APPROACH SLAB SURFACE TO DETERMINE, AND INDICATE TO THE CONTRACTOR, THE PORTIONS OF STRUCTURE TO BE REMOVED.

ALL UNSOUND CONCRETE SHALL BE REMOVED BY MEANS OF APPROVED PNEUMATIC HAMMERS EMPLOYING POINTED AND BLUNT CHISEL TOOLS. HYDRAULIC HOE-RAM TYPE HAMMERS WILL NOT BE PERMITTED. THE WEIGHT OF THE HAMMERS SHALL NOT BE MORE THAN 35 POUNDS FOR REMOVAL WITHIN 18" OF PORTIONS TO BE PRESERVED. DO NOT PLACE PNEUMATIC HAMMERS IN DIRECT CONTACT WITH REINFORCING STEEL THAT IS TO BE RETAINED IN THE REBUILT STRUCTURE. FOLLOW C&MS SECTION 519 TO PROPERLY EXTEND THE LIMITS OF REMOVAL DIRECTED BY THE ENGINEER OR SHOWN IN THIS PLAN AND FOR PREPARING THE REMOVED AREAS FOR PLACEMENT OF ITEM 511 - CLASS QC2 CONCRETE, MISC.: ACCELERATING ADMIXTURE.

ITEM 511 - CLASS QC2 CONCRETE, MISC.: ACCELERATING ADMIXTURE

TO EXPEDITE WORK, CLASS QC2 CONCRETE WITH AN ACCELERATING ADMIXTURE SIKA RAPID-1 OR ANY APPROVED EQUIVALENT ADMIXTURE SHALL BE USED TO ACHIEVE 3,000 PSI COMPRESSIVE STRENGTH IN 12 HRS. USE A NON-CHLORIDE ACCELERATING ADMIXTURE AND PROVIDE DOCUMENTATION THAT THE MIX WILL PROVIDE THE STRENGTH IN THE SPECIFIED TIME.

THIS ITEM SHALL CONFORM TO C&MS 511 WITH THE FOLLOWING CONDITIONS AND REVISIONS:

AT LEAST 5 DAYS PRIOR TO CONSTRUCTION, THE CONTRACTOR SHALL SUBMIT TO THE ENGINEER FOR APPROVAL A SCHEDULE OF REPAIR WORK ITEM TO BE COMPLETED. THE SCHEDULE SHALL INCLUDE A BREAKDOWN OF ALL MAJOR WORK ACTIVITIES ON AN HOURLY BASIS. REPAIR WORK SHALL NOT BEGIN UNTIL THE SCHEDULE IS APPROVED BY THE ENGINEER.

THE CONTRACTOR SHALL CONTINUE THE WE CURE FOR THE MAXIMUM NUMBER OF HOURS POSSIBLE DURING THE PERMITTED LANE CLOSURE. THE CLOCK STARTS FOR THE WET CURE WHEN THE CONCRETE PLACEMENT IS COMPLETE.

TRAFFIC WILL NOT BE PERMITTED ON THE FINISHED CONCRETE SURFACE UNTIL AFTER COMPLETION OF A 12 HOUR MINIMUM WE CURE AND AFTER TWO TEST BEAMS HAVE ATTAINED AN AVERAGE MODULUS OF RUPTURE OF 400 PSI.

PAYMENT FOR ALL THE ABOVE WORK DESCRIBED LABOR, EQUIPMENT, AND MATERIALS WILL BE MADE AT THE CONTRACT PRICE BID ITEM 511 - CLASS QC2 CONCRETE, MISC.: ACCELERATING ADMIXTURE.

ITEM 516- 2" DEEP JOINT SEALER, AS PER PLAN

SAWCUT FINAL PROPOSED MATERIAL ½" WIDE x 2" DEEP AND SEAL WITH HOT APPLIED JOINT SEALER AS PER C&MS 705.04 AS DIRECTED BY THE ENGINEER.

ITEM 519 SPECIAL - PATCHING CONCRETE STRUCTURE, MISC.: ELASTOMERIC CONCRETE

THIS ITEM CONSISTS OF CLEANING, PREPARING, AND PLACING OF ELASTOMERIC CONCRETE AT LOCATIONS SPECIFIED IN THE PLANS OR AS DIRECTED BY THE ENGINEER.

FOR REPAIR LOCATIONS FIRST CUT AND REMOVE UNSOUND CONCRETE AROUND THE ENTIRE AREA OF REPAIR. THEN CLEAN THE HOLE, FORM, PREPARE THE HOLE AND PALCE ELASTOMERIC CONCRETE AS PER THE APPROVED PRODUCT MANUFACTURE'S INSTALLATION GUIDELINES.

PROVIDE A FIELD MIXED ELASTOMERIC CONCRETE HEADER MATERIAL. THE ELASTOMERIC CONCRETE MATERIAL SHALL BE FIELD MIXED AND CONSIST OF A TWO COMPONENT ELASTOMERIC AND PRE-GRADED AGGREGATE MIX.

THE ELASTOMERIC CONCRETE SHALL BE:

WABO CRETE II
WATSON AND BOWMAN ACME CORP.
95 PINVIEW DRIVE
AMHERST, NY 14228
1-800-667-4992

OR AN APPROVD EQUAL

THE CONTRACTOR SHALL SUBMIT THE SELECTED PRODUCT INFORMATION, AFTER THE AWARD OF THE CONTRACT TO THE RESPECTIVE ODOT AREA ENGINEER FOR APPROVAL. THE MANUFACTURE WILL BE REQUIRED TO FURNISH A REPRESENTATIVE SAMPLE OF THE MATERIAL TO BE SUPPLIED IN ACCORDANCE WITH THE PROJECT SPECIFICATIONS.

THE CONTRACTOR SHALL PROVIDE APPROVED MANFACTURER INSTRUCTONS FOR THE PROPOER INSTALLATION OF THE ELASTOMERIC CONCRETE. ELASTOMERIC CONCRETE SHALL BE INSTALLED AT THE LOCATIONS SHOWN ON THE PLAN OR AS DIRETED BY THE ENGINEER.

PAYMENT FOR ALL LABOR, EQUIPMENT, MATERIALS AND INCIDENTALS SHALL BE INCLUDED IN THE CONTRACT PER SQUARE FOOT UNIT PRICE FOR ITEM 519 SPECIAL - PATCHING CONCRETE STRUCTURE, MISC.: ELASTOMERIC CONCRETE.

ITEM 519 PATCHING CONCRETE STRUCTURE, AS PER PLAN

TO EXPEDITE WORK, CLASS QC2 CONCRETE WITH AN ACCELERATING ADMIXTURE SIKA RAPID-1 OR ANY APPROVED EQUIVALENT ADMIXTURE SHALL BE USED TO ACHIEVE 3,000 PSI COMPRESSIVE STRENGTH IN 12 HRS. USE A NON-CHLORIDE ACCELERATING ADMIXTURE AND PROVIDE DOCUMENTATION THAT THE MIX WILL PROVIDE THE STRENGTH IN THE SPECIFIED TIME.

THIS ITEM SHALL CONFORM TO C&MS 519 WITH THE FOLLOWING CONDITIONS AND REVISIONS:

AT LEAST 5 DAYS PRIOR TO CONSTRUCTION, THE CONTRACTOR SHALL SUBMIT TO THE ENGINEER FOR APPROVAL A SCHEDULE OF REPAIR WORK ITEM TO BE COMPLETED. THE SCHEDULE SHALL INCLUDE A BREAKDOWN OF ALL MAJOR WORK ACTIVITIES ON AN HOURLY BASIS. REPAIR WORK SHALL NOT BEGIN UNTIL THE SCHEDULE IS APPROVED BY THE ENGINEER.

THE CONTRACTOR SHALL CONTINUE THE WE CURE FOR THE MAXIMUM NUMBER OF HOURS POSSIBLE DURING THE PERMITTED LANE CLOSURE. THE CLOCK STARTS FOR THE WET CURE WHEN THE CONCRETE PLACEMENT IS COMPLETE.

TRAFFIC SHALL BE MAINTAINED UNTIL AFTER COMPLETION OF A 12 HOUR MINIMUM WET CURE AND AFTER TWO TEST BEAMS HAVE ATTAINED AN AVERAGE MODULUS OF RUPTURE OF 400 PSI.

PAYMENT FOR ALL THE ABOVE WORK DESCRIBED LABOR, EQUIPMENT, AND MATERIALS WILL BE MADE AT THE CONTRACT PRICE BID ITEM 511 - CLASS QC2 CONCRETE, MISC.: ACCELERATING ADMIXTURE.

ITEM	ITEM EXT	GRAND TOTAL	UNIT	DESCRIPTION	PART. 06/NHS/BR	PART.	SUPER.	ABUT.	PIERS	GENERAL	SEE SHEET NUMBER
				STRUCTURE 20 FOOT SPAN AND OVER (GUE-209-0857) - PART 2							
202	11301	3	CY	PORTIONS OF STRUCTURE REMOVED, AS PER PLAN	3					3	1/8
202	30000	50	SF	WALK REMOVED	50					50	1
202	32000	10.5	FT	CURB REMOVED	10.5					10.5	
202	98000	LS		REMOVAL MISC.:STRUCTURAL STEEL	LUMP						
511	53012	3	CY	CLASS QC2 CONCRETE, MISC.:ACCELERATING ADMIXTURE	3					3	1/8
513	10200	59	LB	STRUCTURAL STEEL MEMBERS, LEVEL UF	59					59	1
516	31011	30	FT	2" DEEP JOINT SEALER, AS PER PLAN	30					30	1/8
519	11101	294	SF	PATCHING CONCRETE STRUCTURE, AS PER PLAN	294		294				1/8
SPECIAL	51911600	94	SF	PATCHING CONCRETE STRUCTURE, MISC.:ELASTOMERIC CONCRETE	94		17	77			1/8
											1
608	10000	50	SF	4" CONCRETE WALK	50					50	
609	24510	10.5	FT	CURB, TYPE 4-C	10.5					10.5	

DESIGN AGENCY
OHIO DEPARTMENT OF TRANSPORTATION, DISTRICT 5

REVIEWED JDR DATE 01/05/15
STRUCTURE FILE NUMBER 3004058

DRAWN NEM REVISED NEM

DESIGNED NEM CHECKED TAG

BRIDGE SUMMARY
BRIDGE NO. GUE-209-0857
OVER WILLS CREEK, B&O RAILROAD AND CONRAIL RAILROAD

GUE-209-8.57/9.85

P:\GUE\93133\Design\Bridge\SFN - Route Name\Plan_Sheets\93133_BGS_002.dgn 08-JAN-2015 2:21PM nmccoy

LEGEND

- ITEM 202 - WEARING COURSE REMOVED (SEE PART 1 ROADWAY PLANS)
- PROPOSED ASPHALT CONCRETE (SEE PART 1 ROADWAY PLANS)
- ITEM 511 CLASS QC2 CONCRETE, MISC.: ACCELERATING ADMIXTURE
- ITEM 202 - PORTIONS OF STRUCRURE REMOVED, AS PER PLAN
- EXISTING APPROACH SLAB TO BE REMOVED (SEE PART 1 ROADWAY PLANS)

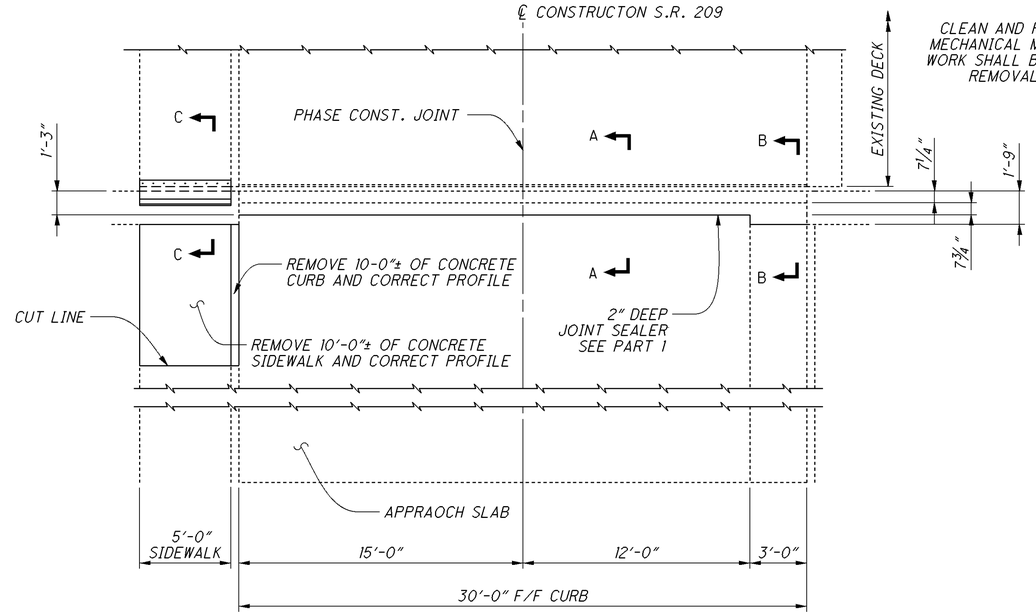

PLAN

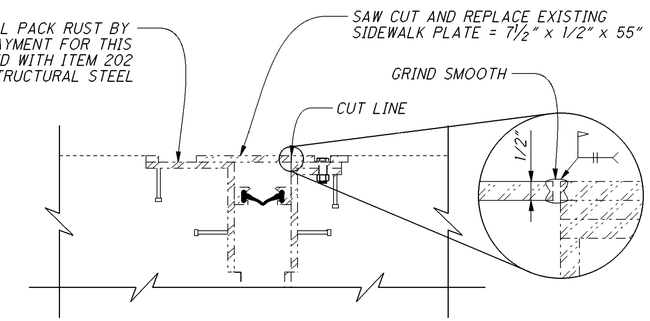

SECTION C-C (EXISTING SIDEWALK AREA)

NOTES:

1. ALL EXISTING REINFORCING STEEL SHALL BE SALVAGED UNLESS OTHERWISE DIRECTED BY THE ENGINEER.
2. CONTRACTOR SHALL SUPPORT JOINT ARMOR AS NESSESSARY.

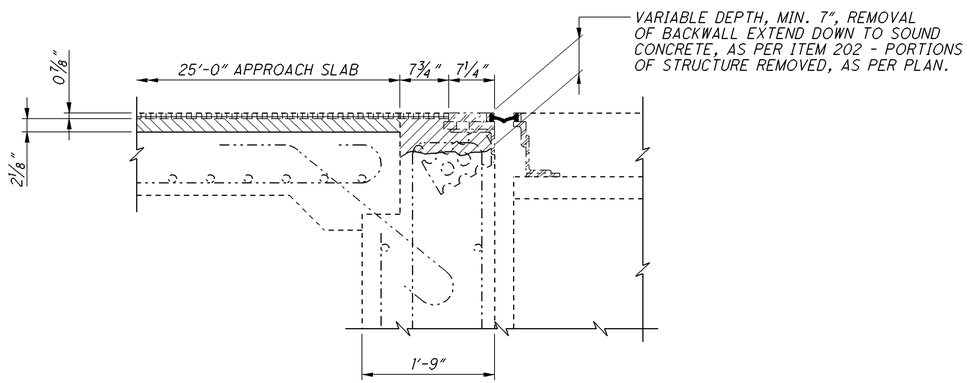

SECTION A-A (EXISTING APPROACH SLAB AREA)

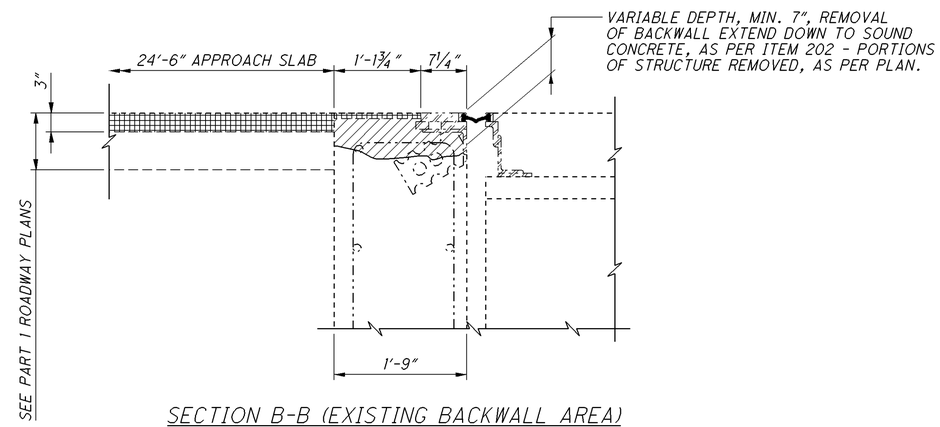

SECTION B-B (EXISTING BACKWALL AREA)

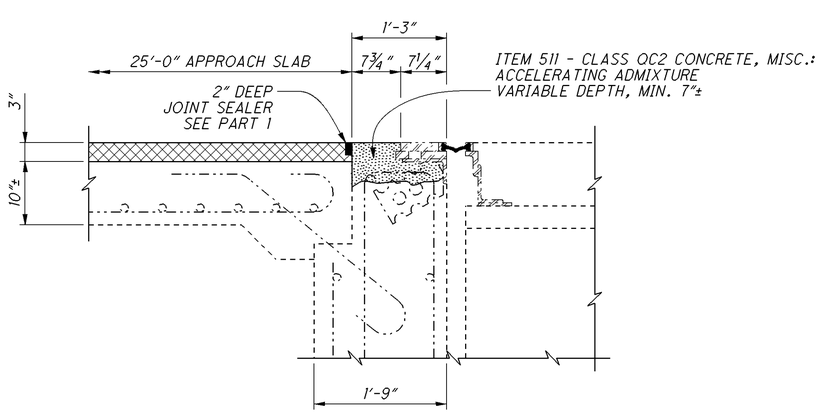

SECTION A-A (PROPOSED APPROACH SLAB AREA)

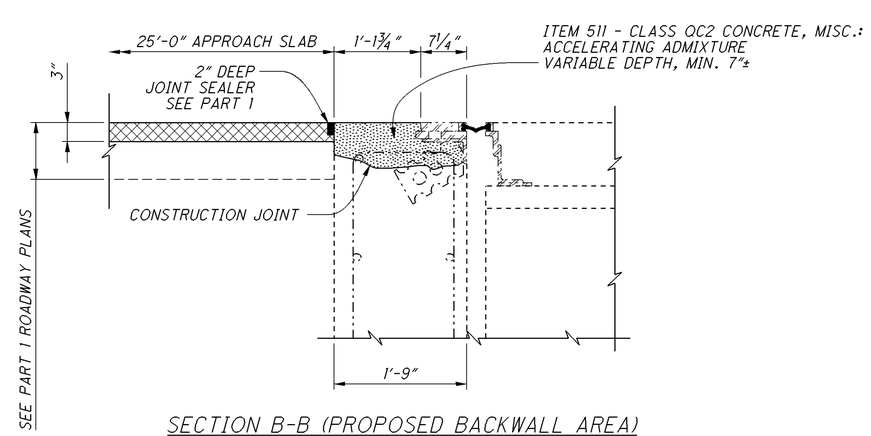

SECTION B-B (PROPOSED BACKWALL AREA)

DESIGN AGENCY
OHIO DEPARTMENT OF TRANSPORTATION, DISTRICT 5

DESIGNED	DRAWN	REVIEWED	DATE
NEM	NEM	JDR	01/05/15
CHECKED	REVISED	STRUCTURE FILE NUMBER	
TAG	NEM	3004058	

REAR APPROACH SLAB TREATMENT DETAILS
BRIDGE NO. GUE-209-0857
OVER WILLS CREEK, B&O RAILROAD AND CONRAIL RAILROAD

GUE-209-8.57/9.85

P:\GUE\93133\Design\Bridge\SFN - Route Name\Plan_Sheets\93133-2_REHAB_001.dgn 08-JAN-2015 2:21PM mmccoy

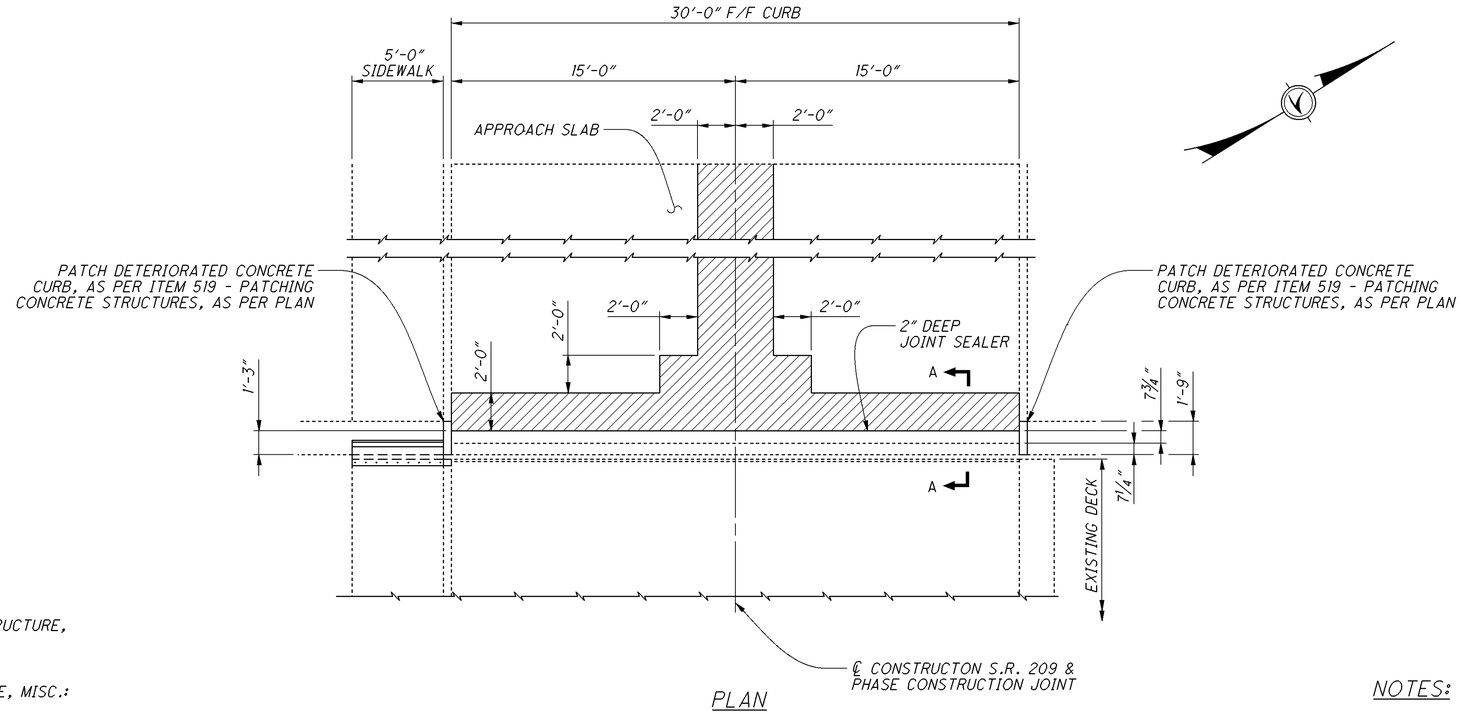

PLAN

LEGEND

ITEM 202 - PORTIONS OF STRUCTURE, REMOVED, AS PER PLAN.

ITEM 511 CLASS QC2 CONCRETE, MISC.: ACCELERATING ADMIXTURE

NOTES:

1. ALL EXISTING REINFORCING STEEL SHALL BE SALVAGED UNLESS OTHERWISE DIRECTED BY THE ENGINEER
2. CONTRACTOR SHALL SUPPORT JOINT ARMOR AS NESESSARY

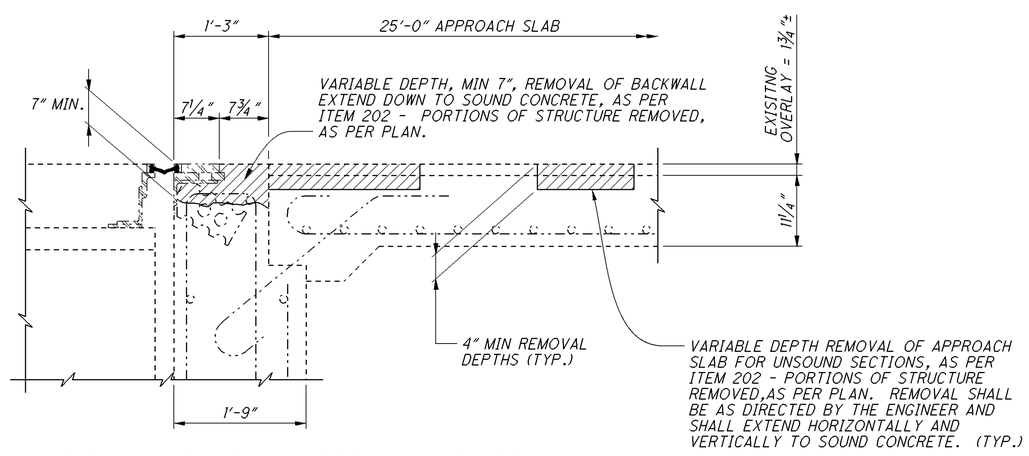

SECTION A-A (EXISTING APPROACH SLAB AREA)

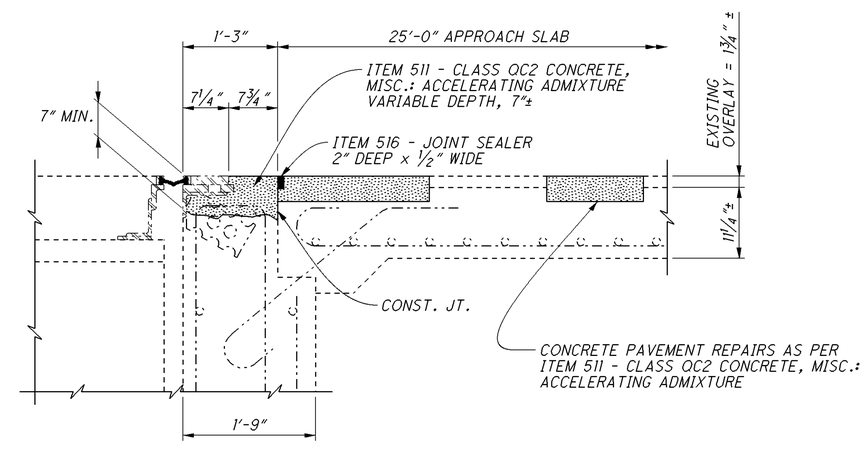

SECTION A-A (PROPOSED APPROACH SLAB AREA)

DESIGN AGENCY
OHIO DEPARTMENT OF TRANSPORTATION, DISTRICT 5

DESIGNED	DRAWN	REVIEWED	DATE
NEM	NEM	JDR	01/05/15
CHECKED	REVISED	STRUCTURE FILE NUMBER	
TAG	NEM	3004058	

FORWARD APPROACH SLAB TREATMENT DETAILS
BRIDGE NO. GUE-209-0857
OVER WILLS CREEK, B&O RAILROAD AND CONRAIL RAILROAD

GUE-209-8.57/9.85

P:\GUE\93133\Design\Bridge\SFN - Route Name\Plan_Sheets\93133-2_REHAB_002.dgn 08-JAN-2015 2:22PM nmccoy

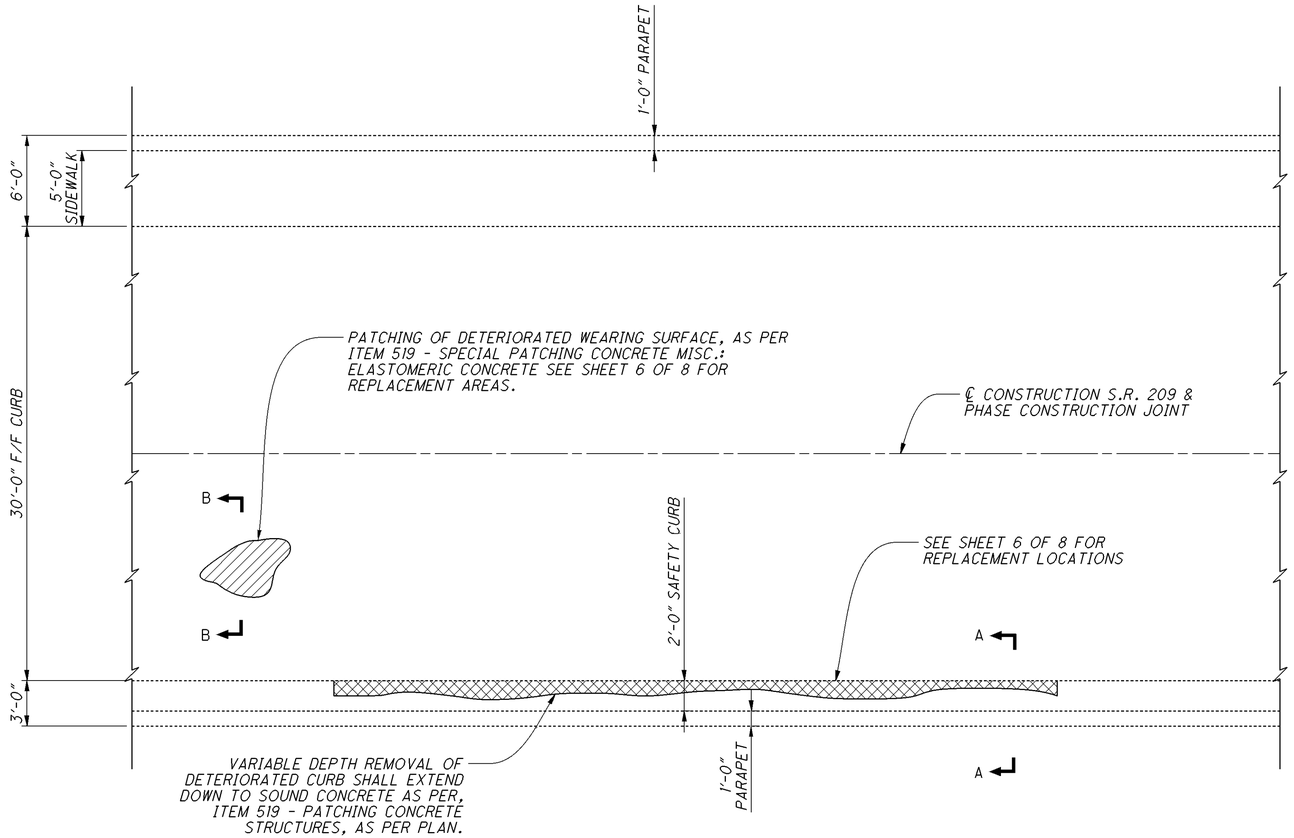

PLAN

NOTES:

1. ALL EXISTING REINFORCING STEEL SHALL BE SALVAGED UNLESS OTHERWISE DIRECTED BY THE ENGINEER

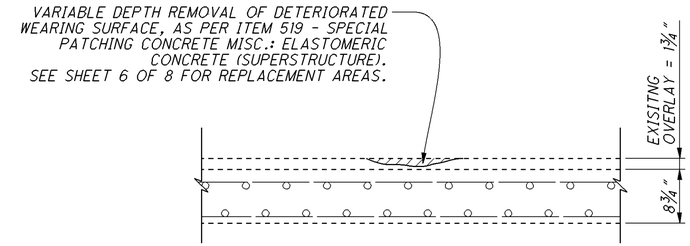

SECTION B-B (EXISTING SLAB AREA)

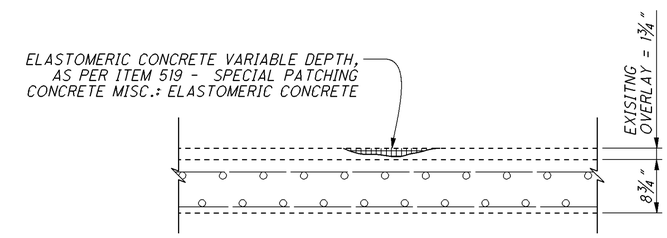

SECTION B-B (PROPOSED SLAB AREA)

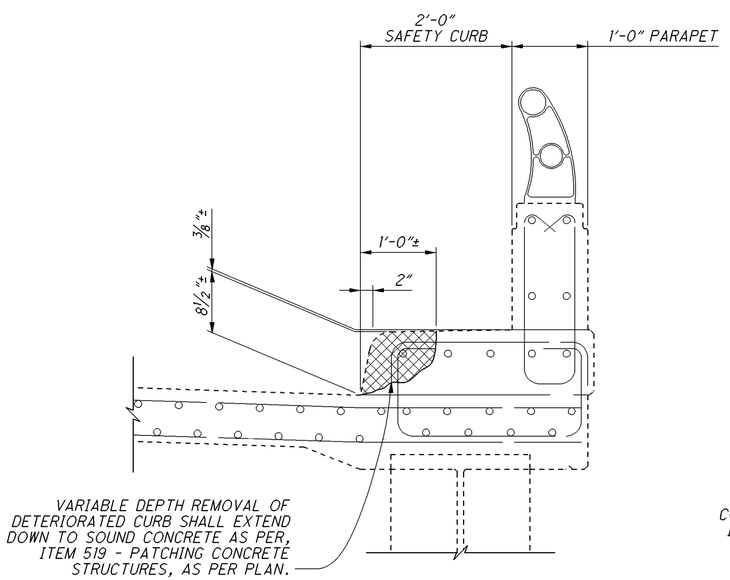

SECTION A-A (EXISTING CURB AND PARAPET AREA)

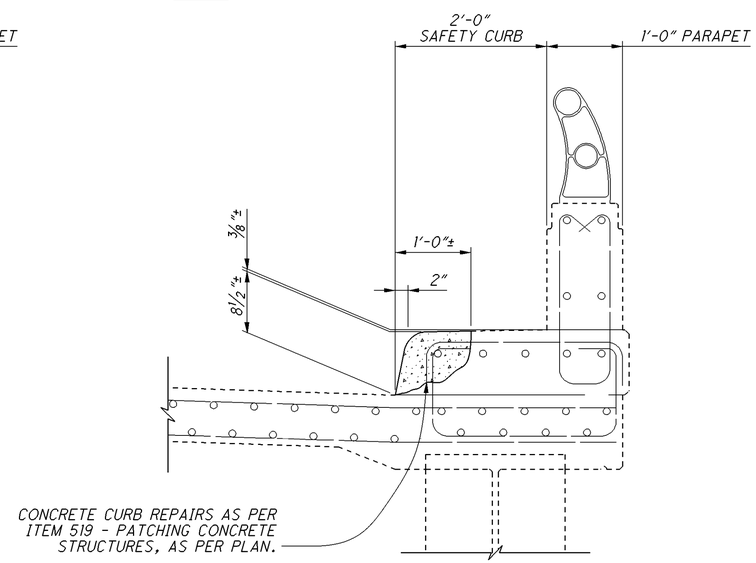

SECTION A-A (PROPOSED CURB AND PARAPET AREA)

LEGEND

- ITEM 519 - PATCHING CONCRETE STRUCTURES, AS PER PLAN
- REMOVAL OF DISINTEGRATED CONCRETE SAFETY CURB AS PER C&MS 519.03
- REMOVAL OF DISINTEGRATED CONCRETE SUPERSTRUCTURE, AS PER C&MS 519.03
- ITEM 519 - SPECIAL PATCHING CONCRETE MISC.: ELASTOMERIC CONCRETE

DESIGN AGENCY
OHIO DEPARTMENT OF TRANSPORTATION, DISTRICT 5

DESIGNED	DRAWN	REVIEWED	DATE
NEM	NEM	JDR	01/05/15
CHECKED	REVISED	STRUCTURE FILE NUMBER	
TAG	NEM	3004058	

SAFETY CURB & DECK TREATMENT DETAILS
BRIDGE NO. GUE-209-0857
OVER WILLS CREEK, B&O RAILROAD AND CONRAIL RAILROAD

GUE-209-8.57/9.85

P:\GUE\93133\Design\Bridge\SFN - Route Name\Plan_Sheets\93133-2_REHAB_003.dgn 08-JAN-2015 2:22PM nmccoy

LEGEND

ITEM 519 - PATCHING CONCRETE STRUCTURES, AS PER PLAN

ITEM 519 - SPECIAL PATCHING CONCRETE MISC.: ELASCTOMETIC CONCRETE

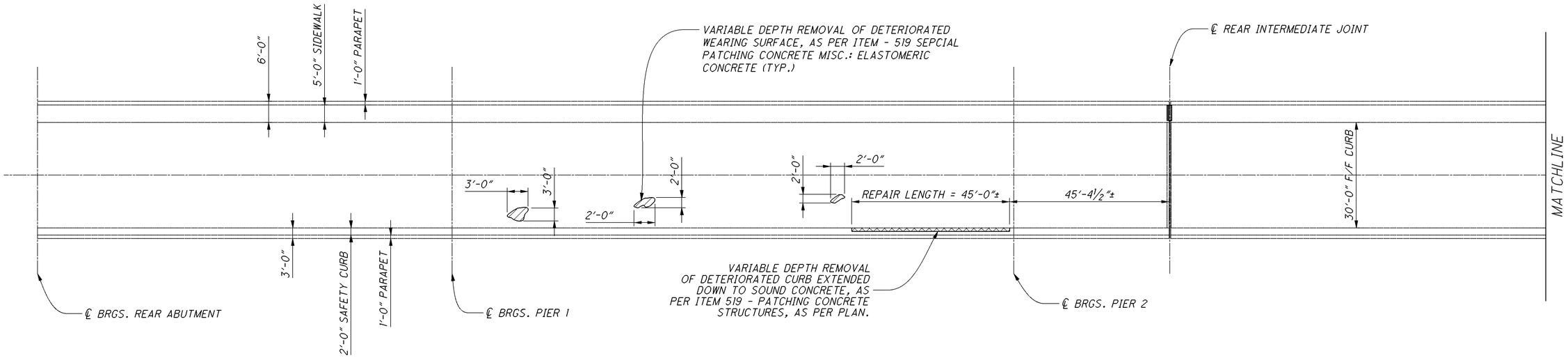

PLAN

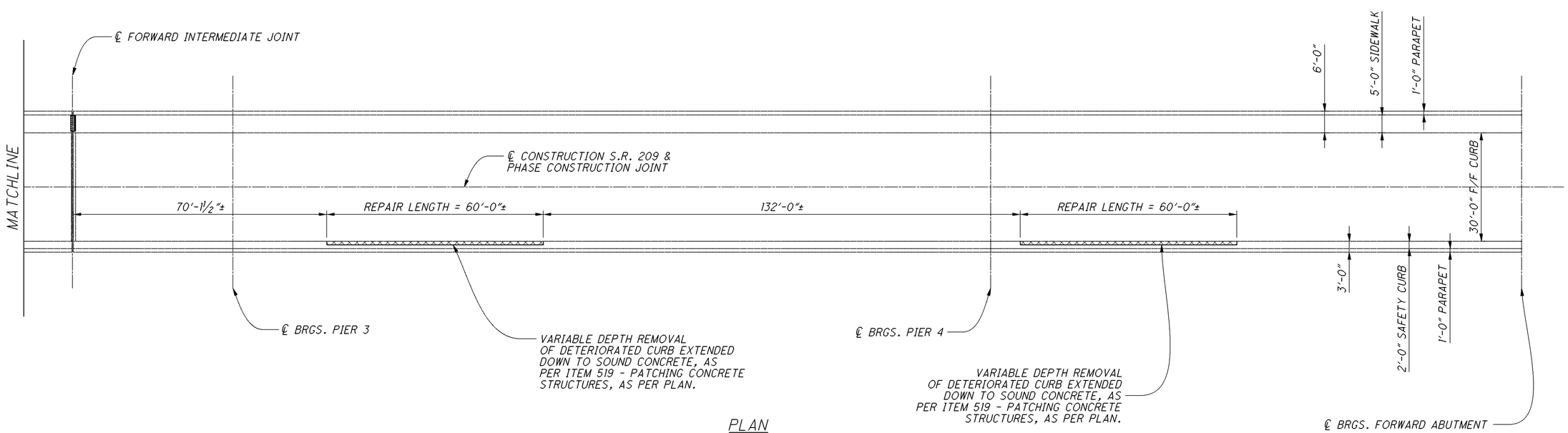

PLAN

DESIGN AGENCY
OHIO DEPARTMENT OF TRANSPORTATION, DISTRICT 5

DESIGNED	DRAWN	REVIEWED	DATE
NEM	NEM	JDR	01/05/15
CHECKED	REVISED	STRUCTURE FILE NUMBER	
TAG	NEM	3004058	

SAFETY CURB & DECK TREATMENT DETAILS
BRIDGE NO. GUE-209-0857
OVER WILLS CREEK, B&O RAILROAD AND CONRAIL RAILROAD

GUE-209-8.57/9.85

P:\GUE\93133\Design\Bridge\SFN - Route Name\Plan_Sheets\93133-2_REHAB_004.dgn 08-JAN-2015 2:23PM nmccoy

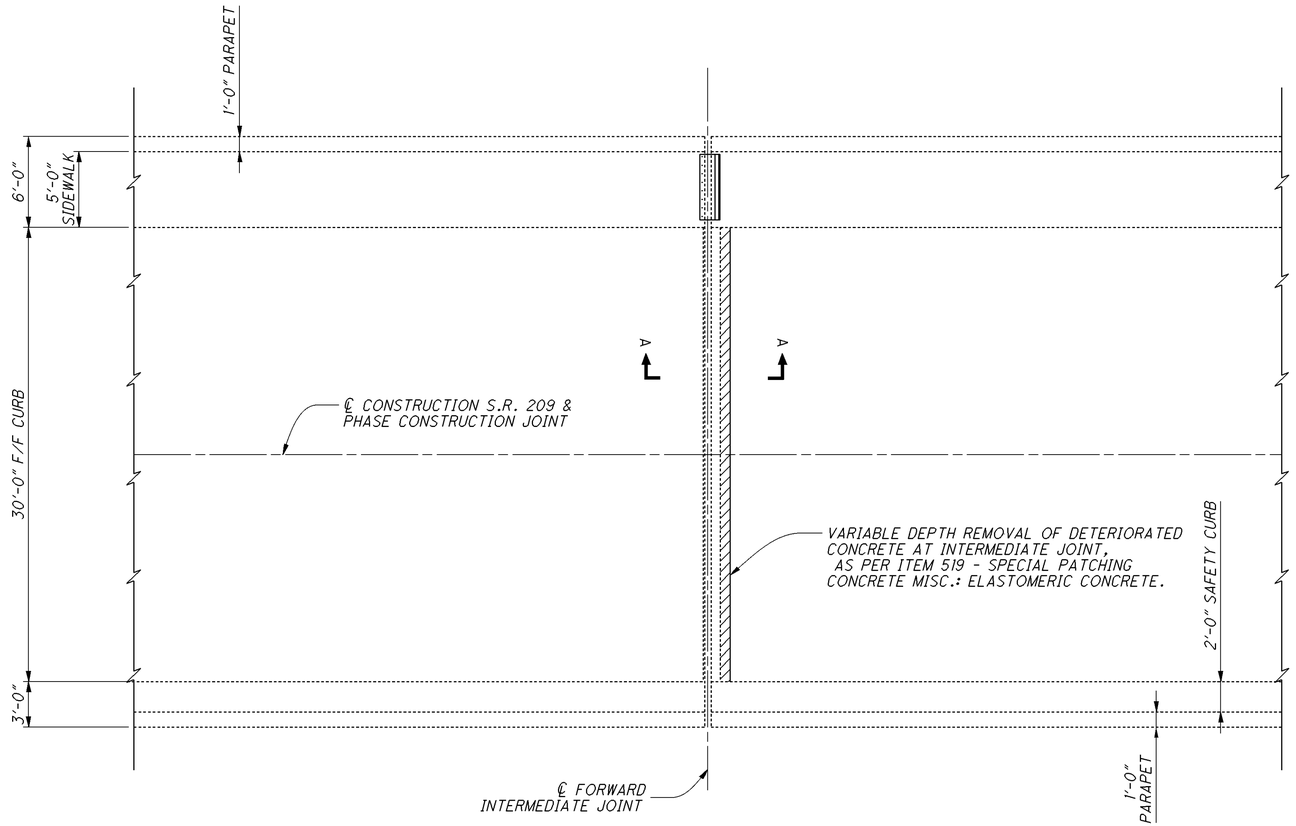

PLAN

LEGEND

REMOVAL OF DISINTEGRATED CONCRETE SUPERSTRUCTURE, AS PER C&MS 519.03

ITEM 519 - SPECIAL PATCHING CONCRETE MISC.: ELASTOMERIC CONCRETE

NOTES:

1. ALL EXISTING REINFORCING STEEL SHALL BE SALVAGED UNLESS OTHERWISE DIRECTED BY THE ENGINEER

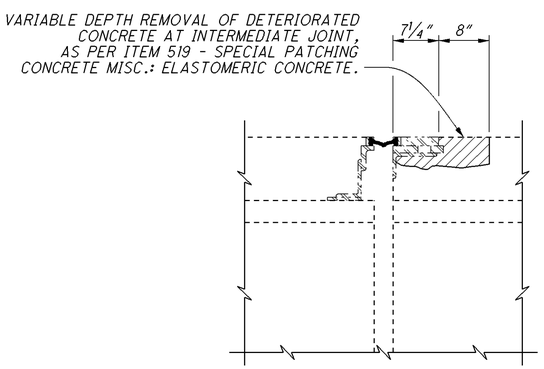

SECTION A-A (EXISTING INTERMEDIATE JOINT)

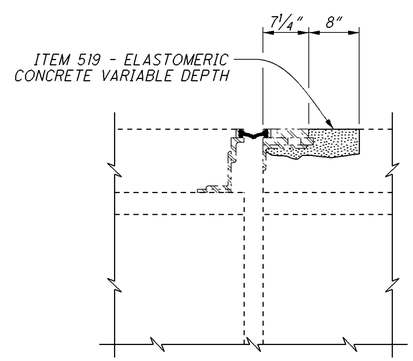

SECTION A-A (PROPOSED INTERMEDIATE JOINT)

DESIGN AGENCY
OHIO DEPARTMENT OF TRANSPORTATION, DISTRICT 5

DESIGNED	DRAWN	REVIEWED	DATE
NEM	NEM	JDR	01/05/15
CHECKED	REVISED	STRUCTURE FILE NUMBER	
TAG	NEM	3004058	

FORWARD INTERMEDIATE JOINT TREATMENT DETAILS
BRIDGE NO. GUE-209-0857
OVER WILLS CREEK, B&O RAILROAD AND CONRAIL RAILROAD

GUE-209-8.57/9.85

P:\GUE\93133\Design\Bridge\SFN - Route Name\Plan_Sheets\93133-2_REHAB_005.dgn 08-JAN-2015 2:24PM nmccoy

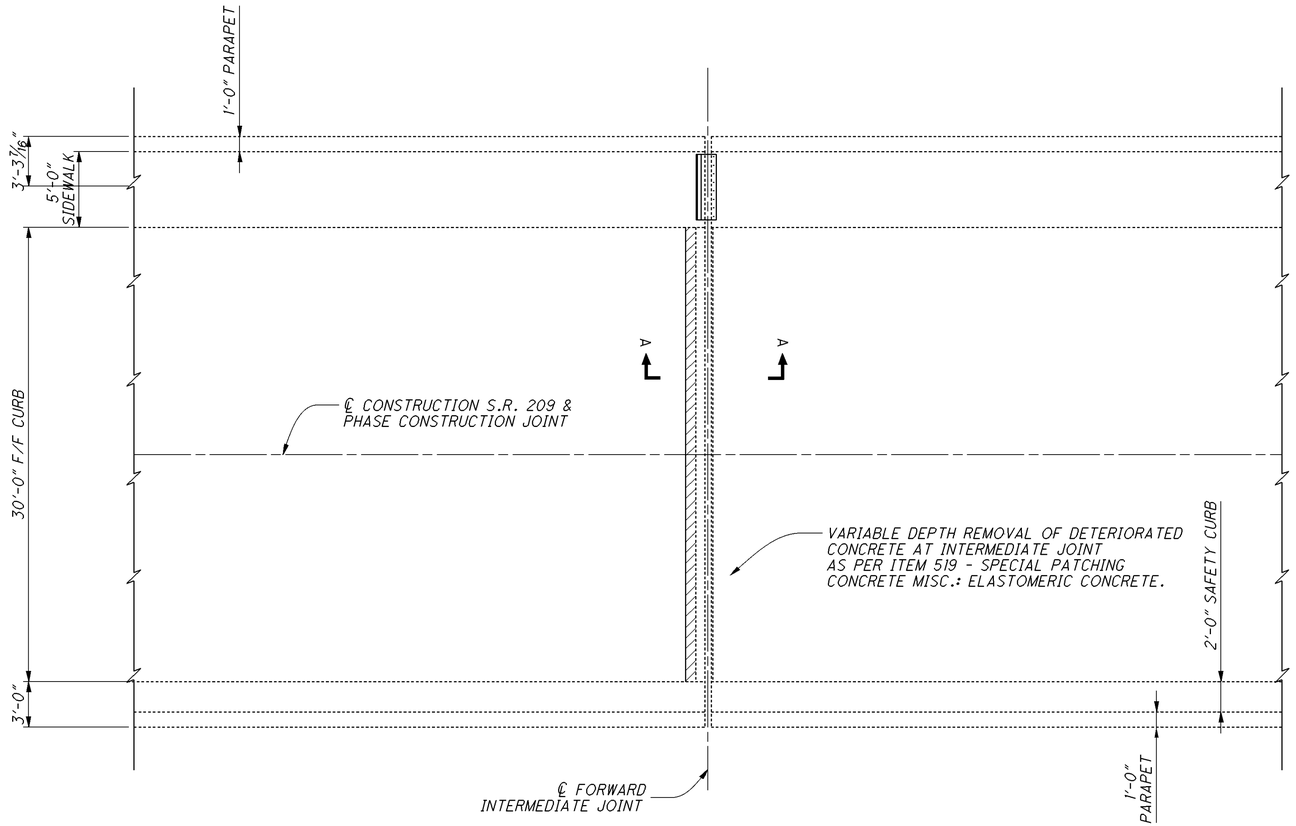

PLAN

LEGEND

REMOVAL OF DISINTEGRATED CONCRETE SUPERSTRUCTURE, AS PER C&MS 519.03

ITEM 519 - SPECIAL PATCHING CONCRETE MISC.: ELASTOMERIC CONCRETE

NOTES:

1. ALL EXISTING REINFORCING STEEL SHALL BE SALVAGED UNLESS OTHERWISE DIRECTED BY THE ENGINEER

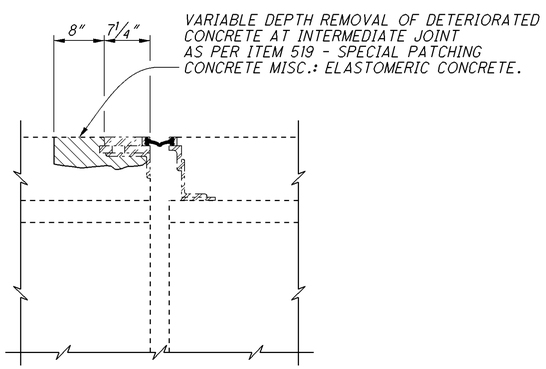

SECTION A-A (EXISTING INTERMEDIATE JOINT)

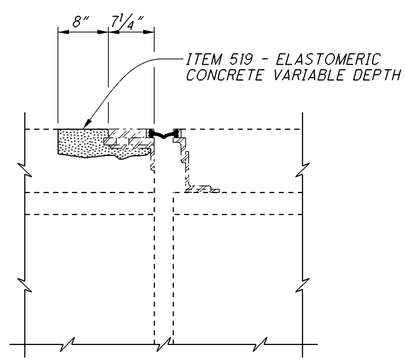

SECTION A-A (PROPOSED INTERMEDIATE JOINT)

DESIGN AGENCY
OHIO DEPARTMENT OF TRANSPORTATION, DISTRICT 5

DESIGNED	DRAWN	REVIEWED	DATE
NEM	NEM	JDR	01/05/15
CHECKED	REVISED	STRUCTURE FILE NUMBER	
TAG	NEM	3004058	

REAR INTERMEDIATE JOINT TREATMENT DETAILS
BRIDGE NO. GUE-209-0857
OVER WILLS CREEK, B&O RAILROAD AND CONRAIL RAILROAD

GUE-209-8.57/9.85

P:\GUE\93133\Design\Bridge\SFN - Route Name\Plan_Sheets\93133-2_REHAB_006.dgn 08-JAN-2015 2:24PM nmccoy