FED. RD. DIV.	STATE	PROJECT	FISCAL YEAR
2	OHIO	I-71-1(28)03	

1 / 492

HAMILTON COUNTY
HAM-71-(1.56)(2.51)

I-71-1(28)03 B-200

Black 200 1-100

LIMITED ACCESS

THIS IMPROVEMENT HAS BEEN DECLARED A LIMITED ACCESS HIGHWAY OR FREEWAY BY ACTION OF THE DIRECTOR OF HIGHWAYS IN ACCORDANCE WITH THE PROVISIONS OF SECTION 5511.02 REVISED CODE OF OHIO AND IS ESPECIALLY DESIGNED FOR THROUGH TRAFFIC.

STATE OF OHIO
DEPARTMENT OF HIGHWAYS

NORTHEAST EXPRESSWAY HAM-71-(1.56)(2.51)

GRADE SEPARATION WITH THE PENNSYLVANIA RAILROAD CO.

HAMILTON COUNTY
CITY OF CINCINNATI

1963 SPECIFICATIONS

Sheet 204 Revised 4-4-66 C.E.H.
Revise participation on sheet No. 204 & 317 10-25-65 C.E.H.
Sheet Nos. 419 & 427 revised 11-23-65.
Sheets 250, 251, 257 & 258 revised 12-21-65.
Sheet Nos. 333 & 335 revised 1-4-66
Sheet No. 397 revised 2-7-66
Sheet Nos. 404, 412, 417 & 418 revised 3-3-66

Sheet No. 332 revised 9-27-66 Sheet No. 341 revised 9-27-66 Sheet No. 341A Supersedes Sheet No. 341 - 9-27-66
Sheet Nos. 332, 333, 340A, & 341A revised 9-27-66
Sheet No. 337A supersedes sheet No. 337 - 9-27-66

CONVENTIONAL SIGNS

CENTER LINE		
PROPERTY LINE		
FENCE	EXISTING	PROPOSED
RAILROAD	OR	
POLES	TELEPHONE ⌀ POWER ⌀ LIGHT ⌀	
GUARD RAIL	EXISTING	PROPOSED
DRAIN OR SEWER PIPE	EXISTING	PROPOSED
CATCH BASIN	EXISTING	PROPOSED
MANHOLES	EXISTING ○ ADJUSTED TO GRADE ◑	PROPOSED ●
VALVE CHAMBERS	EXISTING ⊗ ADJUSTED TO GRADE ⊗	PROPOSED ⊗
TELEPHONE CHAMBERS	EXISTING Ⓣ	OR Ⓣ
ELECTRIC CHAMBERS	EXISTING Ⓔ	OR Ⓔ
GAS MAIN		
WATER MAIN	EXISTING	
TELEPHONE CONDUIT	EXISTING	
ELECTRIC CONDUIT	EXISTING	
EXISTING RIGHT OF WAY	Exist R/W	
LIMITED ACCESS	L/A	
PROPOSED RIGHT OF WAY	R/W	
PROPOSED LIMITED ACCESS RIGHT OF WAY	L/A R/W	
TREES OR STUMPS	EXIST ⊙	TO BE REMOVED ⊠

INDEX OF SHEETS

TITLE SHEET	1	WATER WORKS PLANS
GENERAL PLAN	2&3	CROSS SECTIONS
TYPICAL SECTIONS	4-11	SEWER DETAILS
GENERAL NOTES	12-18	GRADE DETAILS
SUMMARY OF QUANTITIES & COMPUTATIONS	19-29	LIGHTING, SIGNING & TRAFFIC CONTROL
GENERAL SUMMARY	30-35	APPROACH SLABS
ALIGNMENT & WITNESS	36-39	RETAINING WALLS
PLAN OF EXP. RAMPS GA & GD, GILBERT AVE., ELSINORE AVE. & PENN. R.R.	40-54	STRUCTURE PLANS
PROFILES OF EXP. RAMPS GA & GD, GILBERT AVE., ELSINORE AVE. & PENN. RR.	55-74	RIGHT OF WAY PLANS
PLAN & PROFILE OF VAN METER ST. & McGREGOR AVE.	75-79	
TEMPORARY RUN-AROUNDS AT ELSINORE PL. & GILBERT AVE.	80&81	
SEWER PROFILES	82-94	
SEWER TABULATION	95-97	

98-111
112-178
179-186
181-199
200-235*
236-243
244-331
332-446
447-492

* Includes 216A, 235A, 235B, 235C, 235D
Sheet 224 not included

LINE DATA

HAM-71-1.56		HAM-71-2.51	
BEGIN PROJECT	STA. 149+96.75	RESUME PROJECT	STA. 201+00.00 N.B
SUSPEND PROJECT	STA. 178+16.49 NB	END PROJECT	STA. 213+00.00
LENGTH OF PROJECT = 2819.74 LIN.FT. or 0.534 MILE		LENGTH OF PROJECT = 1200.00 LIN.FT. or 0.227 MILE	
SOUTH APPROACH	STA. 149+85 to STA. 149+96.75 = 11.75 LIN.FT.	SOUTH APPROACH	STA. 199+84 N.B. to STA. 201+00 N.B = 116.00 LIN.FT.
NORTH APPROACH	STA. 178+16.49 NB to STA. 184+80 NB = 663.51 LIN.FT.	NORTH APPROACH	STA. 213+00 to STA. 213+80 = 80.00 LIN.FT.
LENGTH OF APPROACHES	= 675.26 LIN.FT.	McGREGOR AVE.	STA. 9+25 to STA. 20+61 = 1136.00 LIN.FT.
LENGTH OF WORK = 2819.74 + 675.26 = 3495.00 LIN.FT. or 0.662 MILE		LENGTH OF APPROACHES	= 1332.00 LIN.FT.
		LENGTH OF WORK = 1200.00 + 1332.00 = 2532.00 LIN.FT. or 0.480 MILE	

TOTAL LENGTH OF PROJECT = 2819.74 + 1200.00 = 4019.74 LIN. FT. or 0.761 MILE
TOTAL LENGTH OF WORK = 3495.00 + 2532.00 = 6027.00 LIN.FT. or 1.141 MILE

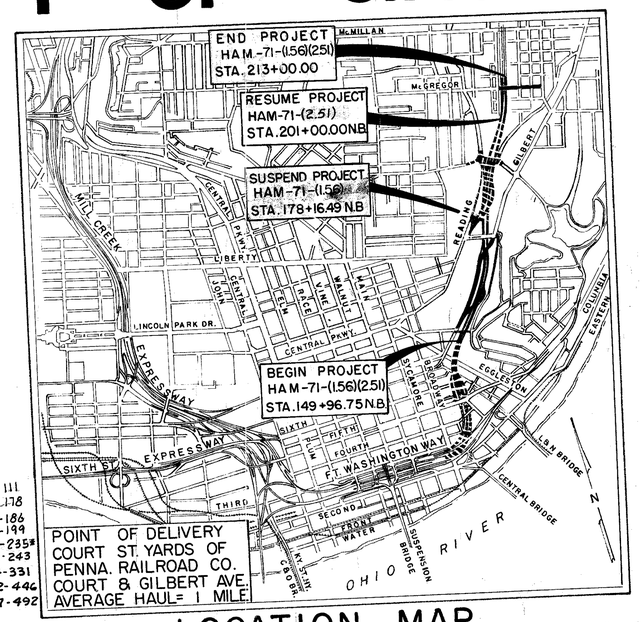

LOCATION MAP

0 1/4 1/2 3/4 1 2
SCALE OF MILES

PORTION TO BE IMPROVED
PORTION TO BE IMPROVED UNDER SEPERATE CONTRACT

SCALES

PLAN
PROFILE HORIZONTAL 0 8 16 24 32 40
PROFILE VERTICAL 0 2 4 6 8 10
CROSS SECTIONS 0 4 8 12 16 20

THE STANDARD SPECIFICATIONS OF THE STATE OF OHIO, DEPARTMENT OF HIGHWAYS, INCLUDING CHANGES AND SUPPLEMENTAL SPECIFICATIONS LISTED IN THE PROPOSAL SHALL GOVERN THIS IMPROVEMENT.

I HEREBY APPROVE THESE PLANS AND DECLARE THAT THE MAKING OF THIS IMPROVEMENT WILL NOT REQUIRE THE CLOSING TO TRAFFIC OF THE HIGHWAY AND THAT PROVISIONS FOR MAINTENANCE AND SAFETY OF TRAFFIC WILL BE AS SET FORTH IN THESE PLANS AND ESTIMATES.

THE RIGHT OF WAY FOR THIS IMPROVEMENT WILL BE PROVIDED BY THE STATE OF OHIO.

APPROVED: J. R. Cooke
DATE: 6-3-65 DIVISION DEPUTY DIRECTOR

APPROVED: C. N. Abbottas
DATE: 7-29-65 ENGINEER OF BRIDGES

APPROVED: R. M. Rickett
DATE: 7-30-65 ENGINEER OF LOCATION & DESIGN

APPROVED: R. E. Shultz
DATE: 7-30-65 DEPUTY DIRECTOR OF DESIGN & CONSTRUCTION

APPROVED: T. H. Arnold
DATE: 7-30-65 DEPUTY DIRECTOR OF RIGHT OF WAY

APPROVED: J. W. Wilson
DATE: 7-30-65 DEPUTY DIRECTOR OF PLANNING & PROGRAMMING

APPROVED:
DATE: FIRST ASSISTANT DIRECTOR

APPROVED: P. E. Moehrle
DATE: 7/30/65 DIRECTOR OF HIGHWAYS

APPROVED: A. O. Bird ACTING
DATE: 5-21-65 CITY MANAGER, CITY OF CINCINNATI

PLANS PREPARED BY
HAZELET & ERDAL - CONSULTING ENGINEERS
CINCINNATI, OHIO

FILE Nº	HAMILTON COUNTY HAM-71-(1.56)(2.51) DATE OF LETTING 196 CONTRACT Nº

STANDARD DRAWING

FACI-1	2-25-64	I-1	11-15-60	L.J. No. 1	7-1-55
FACI-2	2-25-64	I-12	2-1-63	RI-1	9-1-64
B-1-70-71	11-15-60	I-15 No. 1	11-15-60	T-35	1-2-56
B-1-71 R	3-2-53	I-15 No. 2-A	8-17-60	TJ.	9-12-60
F-1	2-1-63	I-21-23	3-10-64	AR-1-57	R-4-2-62
F-3	2-1-63	L-3	4-1-50	FSB-1-62	R-1-15-63
G-7.07	4-1-64	L-3-A	4-1-50	SD-1-63 No. 2 & 4	11-12-63
I-8 C.B. No. 5	2-1-63	RI-2	9-1-64	I-21-23	8-1-56
		I-146	1-22-52	L-1	4-1-50
		I-15 No. 6	2-1-63	AS-1-54	7-5-62
				30-2-64	11-25-64

SUPPLEMENTAL SPECIFICATIONS	
CE-101.04	5-22-56
S-307	10-1-64
I-212	R-6-23-61
I-125	6-26-61
I-129	R-4-5-61
L-120	R-1-2-62
M-106.11	1-26-61
M-109.28	R-8-12-59
S-101	7-12-62
T-335	10-28-63

DEPARTMENT OF COMMERCE
BUREAU OF PUBLIC ROADS

MICROFILMED
FEB 19 1985

APPROVED:

DIVISION ENGINEER DATE

FED. RD. DIV.	STATE	PROJECT	FISCAL YEAR
2	OHIO		

2
492

HAMILTON COUNTY
HAM-71-(1.56) (2.51)

MICROFILMED
FEB 19 1985

GENERAL PLAN

FED. RD. DIV.	STATE	PROJECT	FISCAL YEAR
2	OHIO		

3
492

HAMILTON COUNTY
HAM-71-(1.56)(2.51)

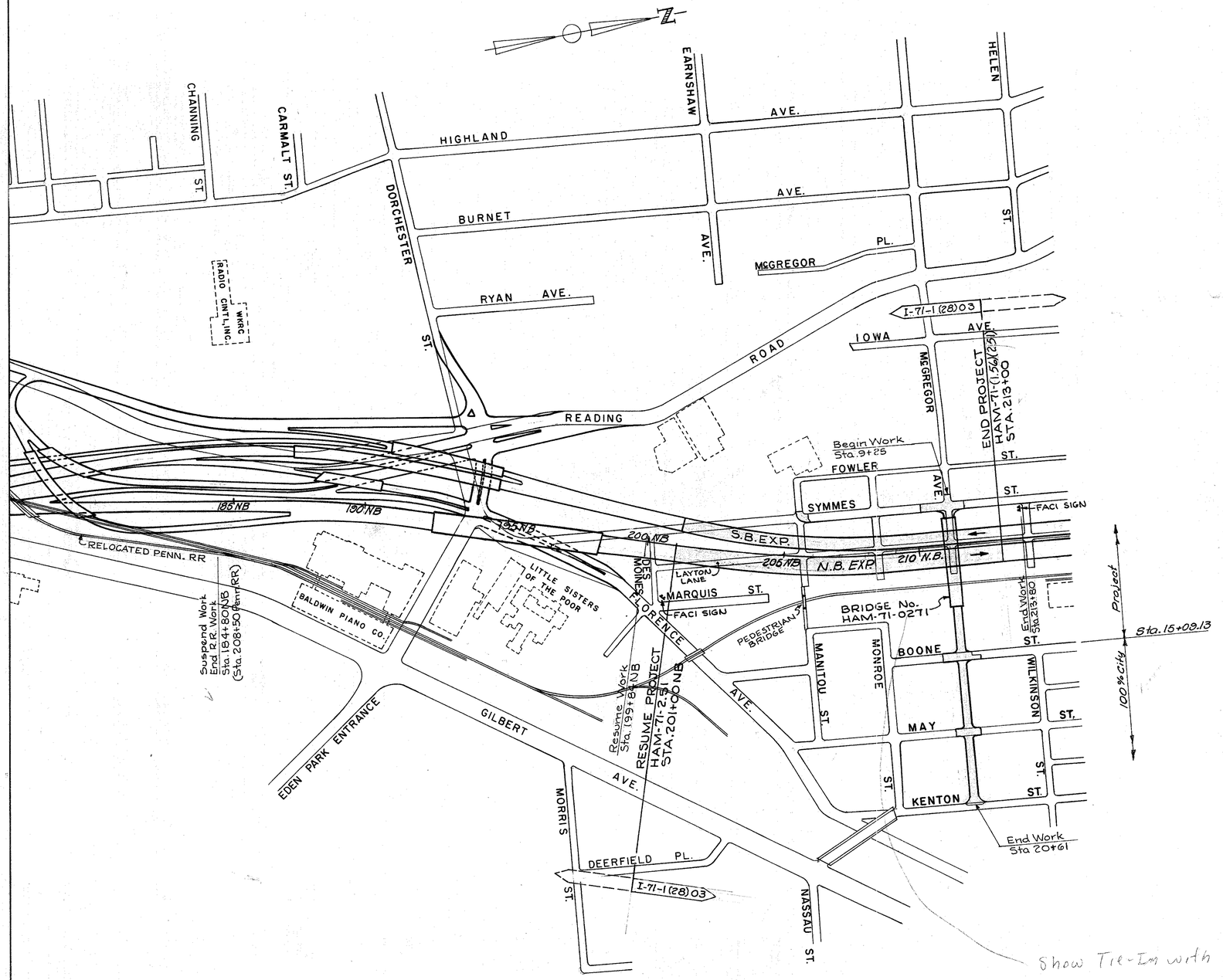

Show Tie-In with N.B. Main Line

MICROFILMED
FEB 19 1985

GENERAL PLAN

TYPICAL SECTIONS

TYPE T-71

FED. RD. DIV.	STATE	PROJECT	FISCAL YEAR
2	OHIO		

4 / 492

HAMILTON COUNTY
HAM-71-(1.56) (2.51)

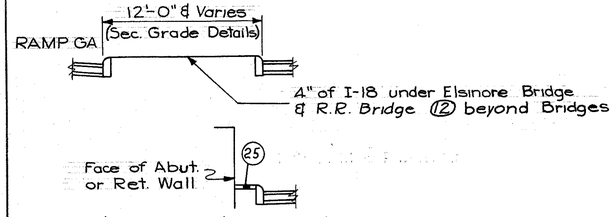

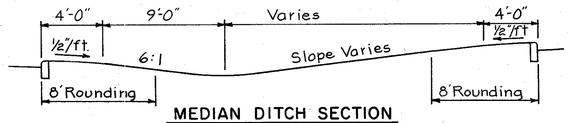

MEDIAN DITCH SECTION

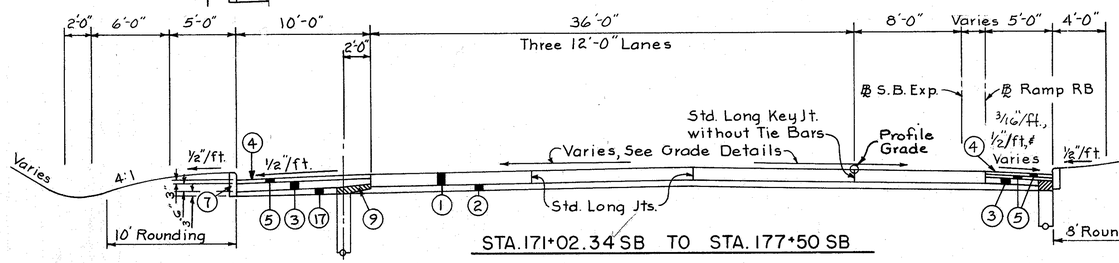

STA. 171+02.34 SB TO STA. 177+50 SB

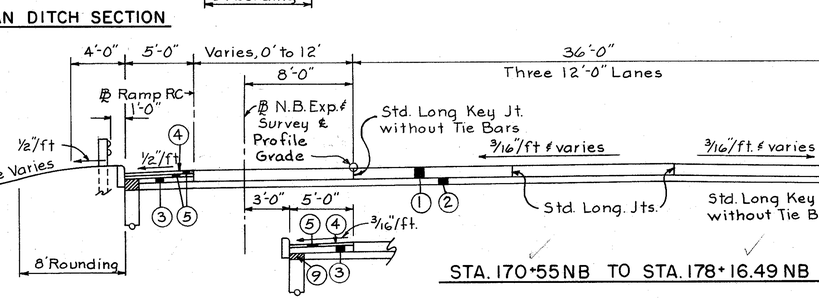

Face of Ret. Wall or Abutment

Shoulder Const. Sta. 170+55 to 174+00

STA. 170+55 NB TO STA. 178+16.49 NB

Shoulder Const. shown applies to Sta. 174+72.60. From Sta. 174+72.60 to 178+16.49 shoulder const. same as 10' shoulder on S.B. Exp. (See left) (See Legend on Plan Sheets)

SEQUENCE OF CONSTRUCTION OPERATIONS

1. Install pipe underdrain on outside shoulder Installation of shallow underdrain in median may be deferred until T-71 is placed.
2. Place subbase out to outside edge of underdrain or to one foot beyond edge of pavement where no underdrain is present.
3. Construction T-71
4. Remove subbase and any contaminated backfill over drain and replace with No. 6 aggregate as shown.
5. Complete shoulder construction.

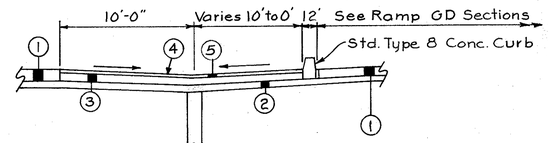

SHOULDER CONSTRUCTION
STA. 168+60 NB to STA. 170+55 NB

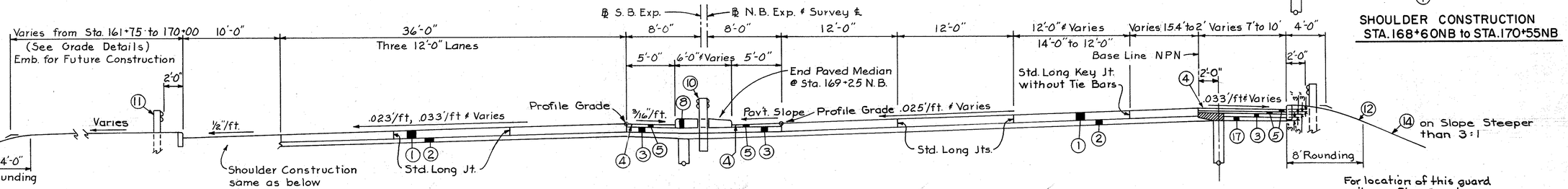

STA. 162+71.24 TO STA. 171+02.34 SB

STA. 162+71.24 TO STA. 170+55 NB

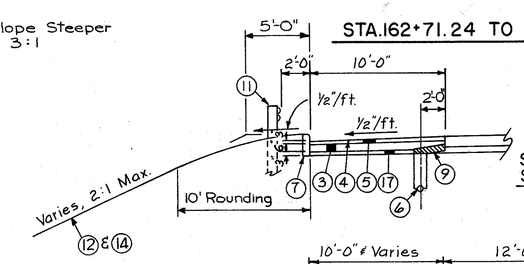

SHOULDER CONSTRUCTION
STA. 154+25.13 TO STA. 158+65

STA. 159+40.79 TO STA. 162+71.24
BRIDGE No. HAM-71-0173 & APPROACH SLABS

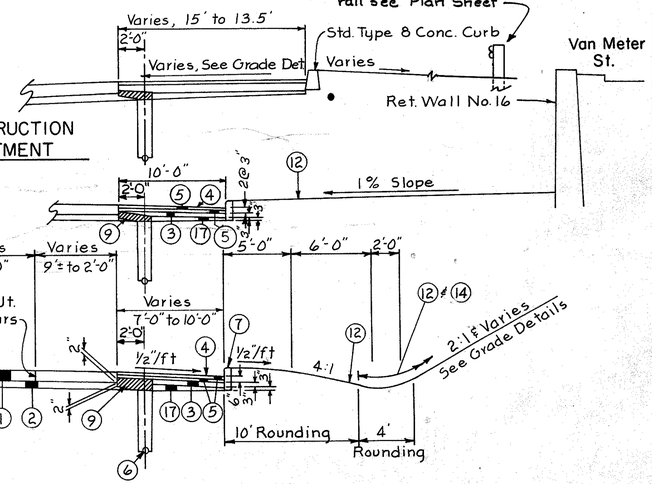

STA. 150+21.75 TO STA. 159+40.79

STA. 149+96.75 TO STA. 150+21.75
APPROACH SLABS

Details typical except as shown or noted.
For Legend See Sheet No. 5
See Plan & Profile sheet for limit & depth of underdrains.

Note: Pavement Slope Varies, See Grade Detail Sheets No. 187 Thru 199

EXPRESSWAY TYPICAL SECTIONS

TYPICAL SECTIONS

TYPE T-71

FED. RD. DIV.	STATE	PROJECT	FISCAL YEAR
2	OHIO		

5 / 492

HAMILTON COUNTY
HAM-71-(1.56) (2.51)

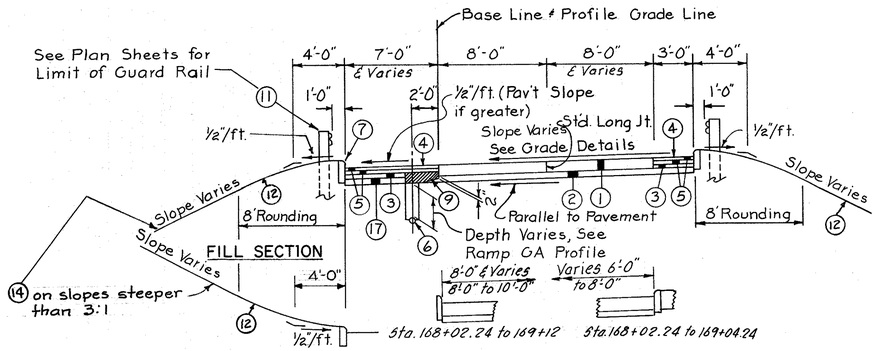

CUT SECTION

STA. 168+02.24 TO STA. 177+25

RAMP GA

Section Drawn
Looking North

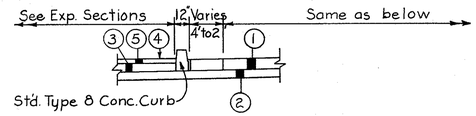

STA. 169+53 TO STA. 170+50.07

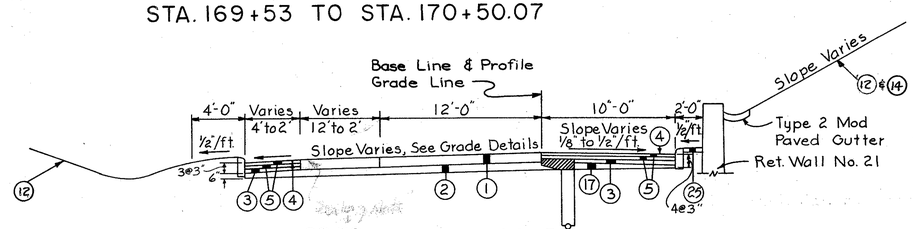

STA. 164+92.58 TO STA. 169+53

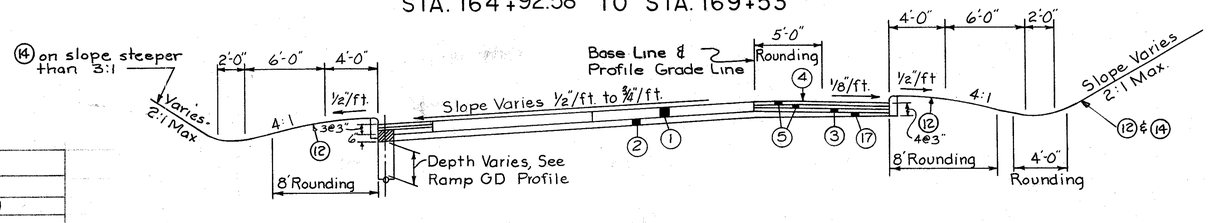

STA. 161+60.56 TO STA. 164+92.58

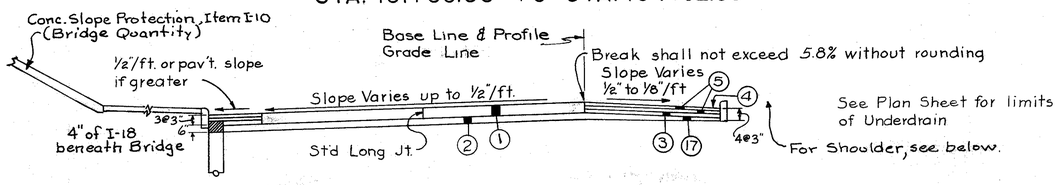

STA. 159+60.56 TO STA. 161+60.56

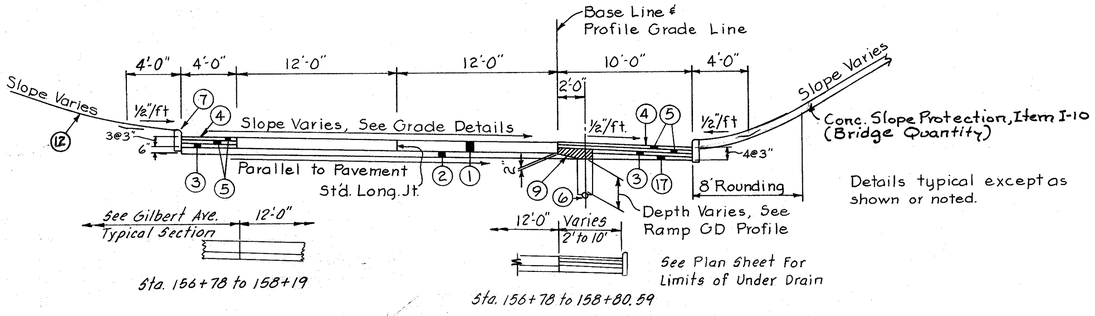

STA. 158+80.59 TO STA. 159+60.56

RAMP GD

Section Drawn
Looking North

Note: Pavement Slope Varies, See Grade Detail Sheets No. 187 Thru. 199

		LEGEND	
1.	Item T-71	9" Reinforced Portland Cement Concrete Pavement	
2.	Item I-22	6" (except as noted) Subbase, Grading "A" or "B", As Per Plan (See General Notes)	
3.	Item B-19	Aggregate Base Course, 6" Except as Noted	
4.	Item T-31	Bituminous Surface Treatment using 0.008 cu. yd. No. 6 aggregate per sq. yd. and 0.25 gal. Bituminous Material per sq. yd. (See note in Proposal)	
* 5.	Item B-21	Waterproofed Aggregate Base Course, 3" Except as Noted (Type "A" T-35 or T-335 material may be used in construction of this course - See note in Proposal)	
6.	Item I-1	6" Pipe, Class I-3	
7.	Item I-12	Standard Type 6 Concrete Curb	
8.	Item I-21	Standard Portland Cement Concrete Median Pavement Type 2 Modified, as per plan	
9.	Item Special	Drainage Connection using No. 6 aggregate (See Note in Proposal)	
10.	Item I-15	Guard Rail, Steel Beam Barrier Type (Deep) Galvanized, using Galvanized Steel Posts.	
11.	Item I-15	Guard Rail, Steel Beam Standard Type (Deep) Galvanized, using Galvanized Steel Posts.	
12.	Item L-9	Seeding and Protecting (See Grading Details for Location & Type)	
13.	Item I-22	6" Subbase, Grading "C" or "D"	
14.	Item L-120	Jute Matting	
15.	Item I-12	Type 7A Concrete Curb, As Per Plan	
16.	Item I-13	4" Portland Cement Concrete Sidewalk	
17.	Item I-22	Subbase	
* 18.	Item T-35	1¼" Asphaltic Concrete Surface Course Type "C" (70-85)	
* 19.	Item B-35	1¾" Asphaltic Concrete Leveling Course (70-85)	
20.	Item B-70	8" Plain Portland Cement Concrete Base Course	
21.	Item T-30	Bituminous Tack Coat @ 0.10 gal. per sq. yd. Sec. M-5.5, MS-2 or RS-1 or Sec. M-5.2, RC-1 or RC-2 as per Sec. T-30.02	
* 22.	Item T-35	1" Asphaltic Concrete Surface Course Type "C" (70-85)	
* 23.	Item B-35	0" Min. Thickness Asphaltic Concrete Leveling Course (70-85)	
24.	Item I-12	Type 7B Concrete Curb, As Per Plan	
25.	Item I-21	Portland Cement Concrete Median Pavement, Standard Type 1 Modified, as per plan	

* Thicknesses shown are "designed" thickness as described in Sections T-35.01, B-35.01 & B-21.01

RAMP TYPICAL SECTIONS

TYPICAL SECTIONS

TYPE T-71

FED. RD. DIV.	STATE	PROJECT	FISCAL YEAR
2	OHIO		

6
492

HAMILTON COUNTY
HAM-71-(1.56)(2.51)

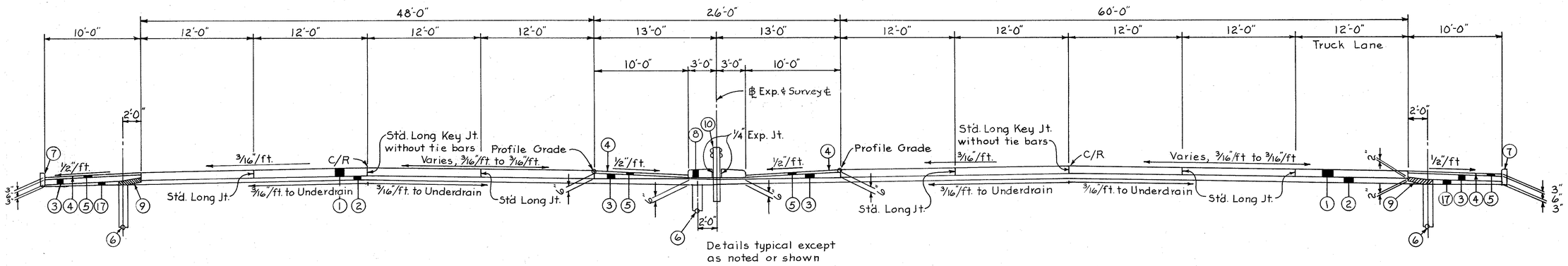

STA. 211+56.91 SB TO STA. 213+00

STA. 210+15.76 NB TO STA. 213+00

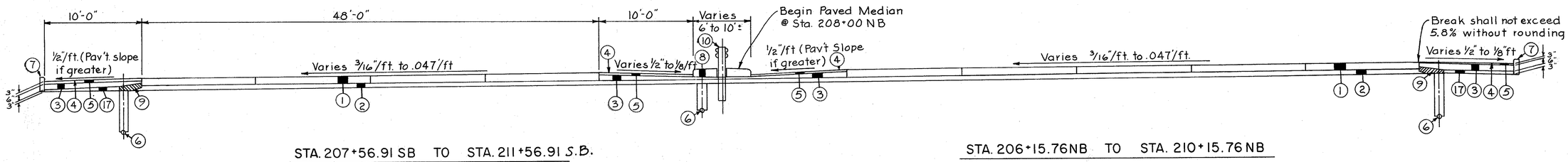

STA. 207+56.91 SB TO STA. 211+56.91 S.B.

STA. 206+15.76 NB TO STA. 210+15.76 NB

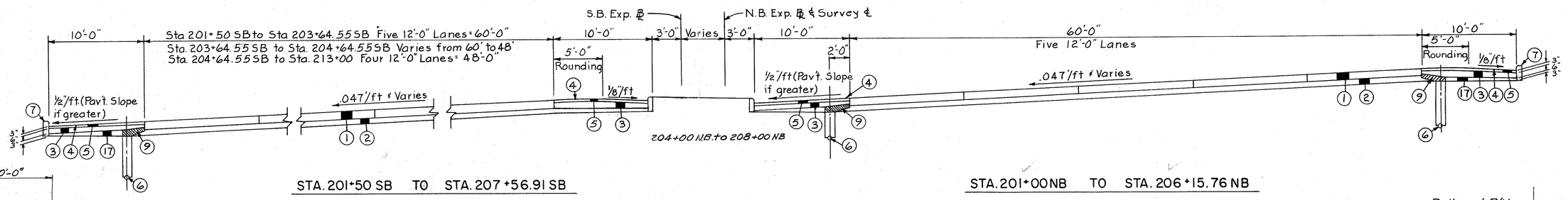

STA. 201+50 SB TO STA. 207+56.91 SB

STA. 201+00 NB TO STA. 206+15.76 NB

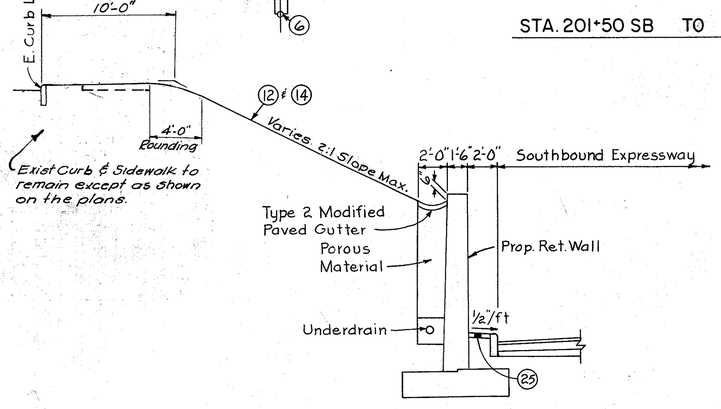

RETAINING WALL SECTION ALONG SYMMES ST.

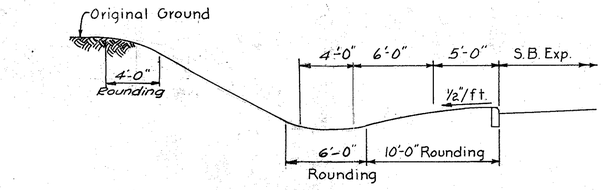

CUT DITCH SECTION

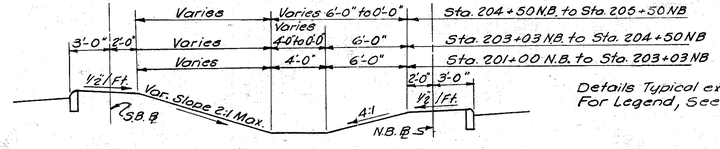

MEDIAN DITCH SECTION
Sta. 201+00 NB. to Sta. 203+50 NB

Details Typical except as shown or noted.
For Legend, See Sheet No. 5

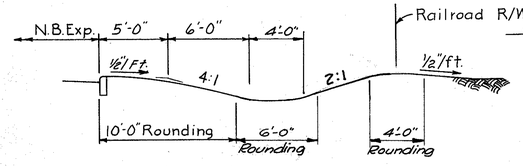

SECTION ALONG R.R. TRACKS
Sta. 204+50 N.B. to Sta. 207+00 NB.

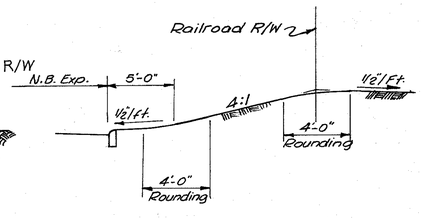

SECTION ALONG R.R. TRACK
Sta. 208+00 NB to Sta. 213+00 NB

Note: Pavement Slope Varies
See Grade Detail Sheets
No. 187 Thru. 199

EXPRESSWAY TYPICAL SECTIONS

FED. RD. DIV.	STATE	PROJECT	FISCAL YEAR
2	OHIO		

7
492

HAMILTON COUNTY
HAM-71-(1.56) (2.51)

TYPICAL SECTIONS
TYPE T-71

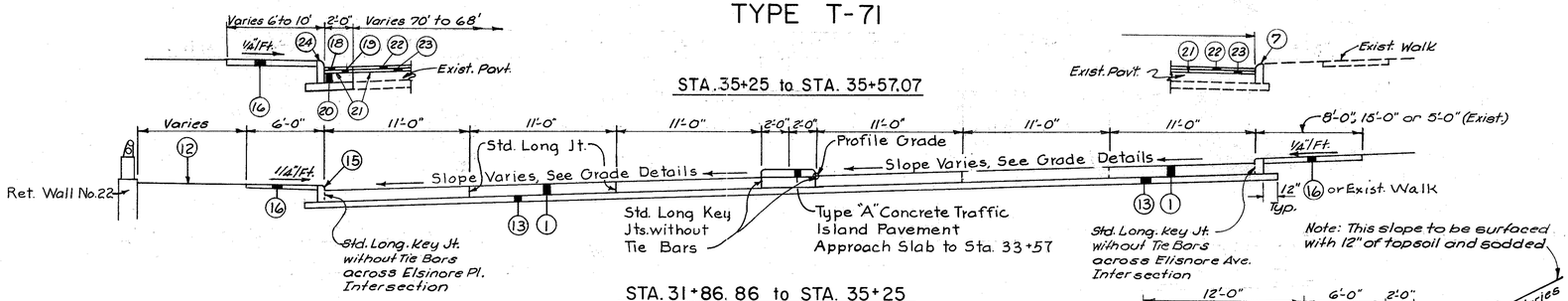

STA. 35+25 to STA. 35+57.07

STA. 31+86.86 to STA. 35+25

STA. 28+51.76 to STA. 31+86.86
APPROACH SLABS AND BRIDGE

STA. 31+50 to STA. 33+05

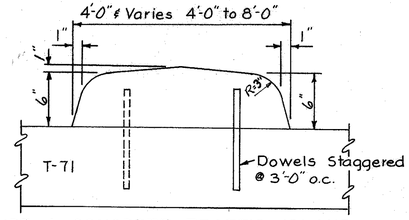

TYPE A CONCRETE TRAFFIC ISLAND
As Per Plan

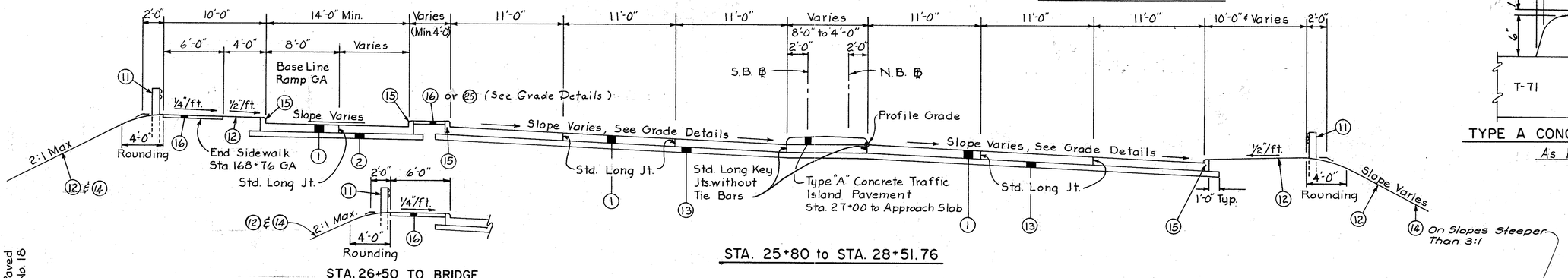

STA. 26+50 TO BRIDGE

STA. 25+80 to STA. 28+51.76

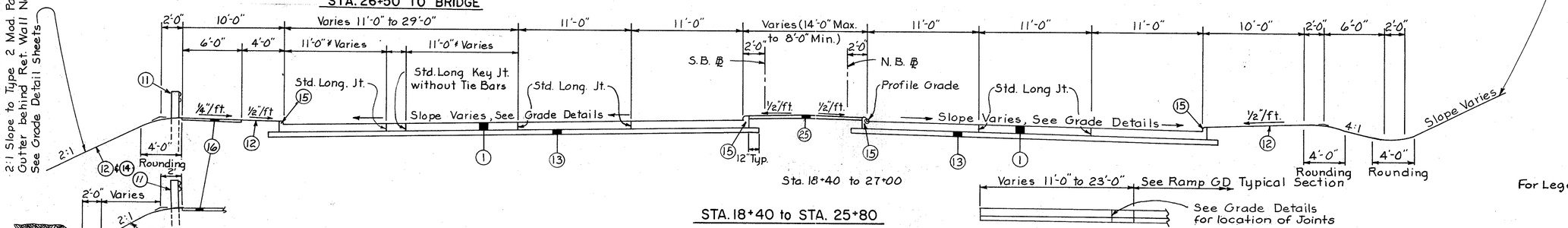

STA. 18+40 to STA. 25+80

STA. 14+00 to 17+51

For Legend, see Sh. No. 5

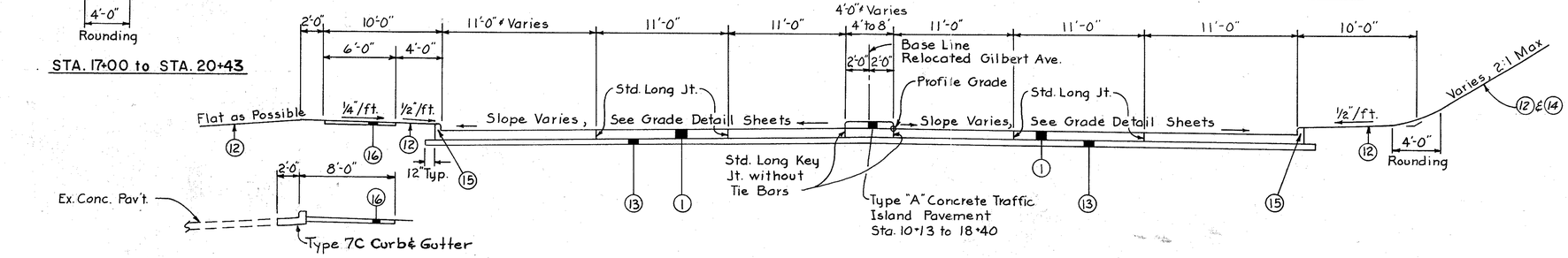

STA. 11+00 TO STA. 15+00

STA. 10+00 to STA. 18+40

Note: Pavement Slope Varies, See Grade Detail Sheets No. 187 Thru. 199

GILBERT AVENUE TYPICAL SECTIONS

FED. RD. DIV.	STATE	PROJECT	FISCAL YEAR
2	OHIO		

8
492

HAMILTON COUNTY
HAM-71-(1.56) (2.31)

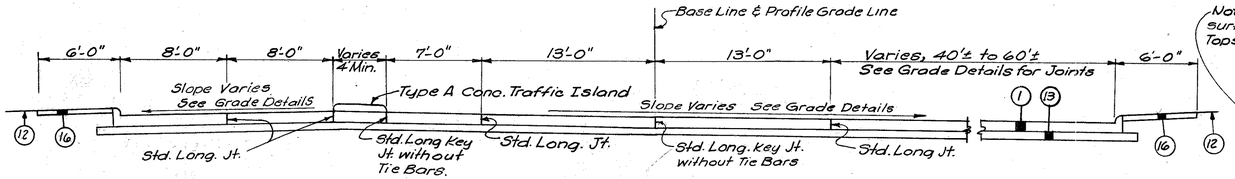

Sta. 15+87.75 to Sta. 16+16.7

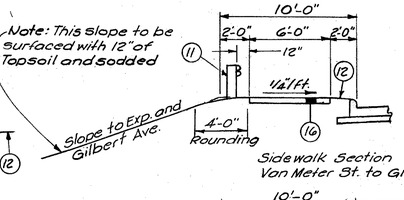

Sidewalk Section
Van Meter St. to Gilbert Ave.

Same as below

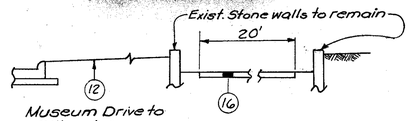

Museum Drive to Gilbert Ave.

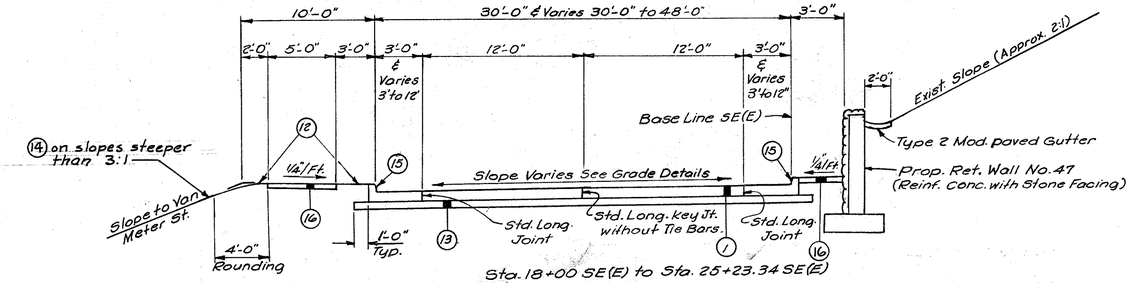

Sta. 18+00 SE(E) to Sta. 25+23.34 SE(E)

Sidewalk Section
Sta. 18+00 to Van Meter St.

Sta. 13+20.65 to Sta. 15+87.75
APPROACH SLABS & BRIDGE

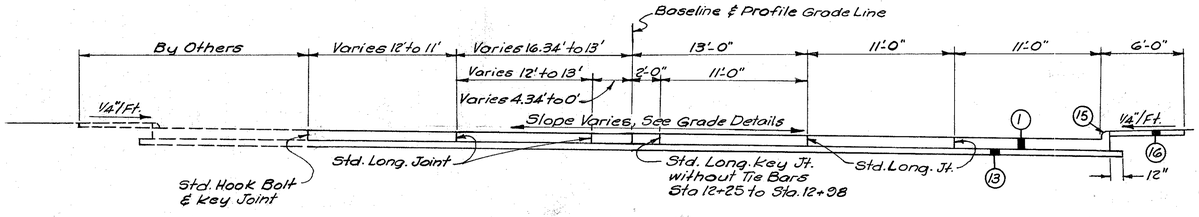

Sta. 12+25 to Sta. 12+98 See Above
Sta. 12+98 to Sta. 13+09 RR Const. (By Others)
Sta. 13+09 to Sta. 13+20.65 See Above

ELSINORE PLACE

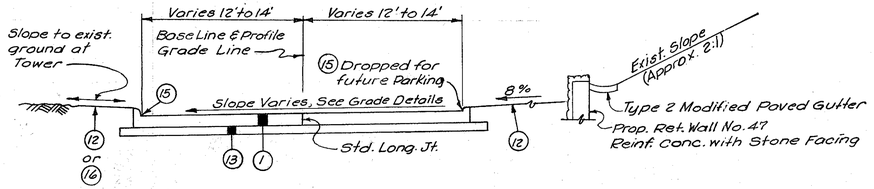

MUSEUM DRIVE

ELSINORE AVE.

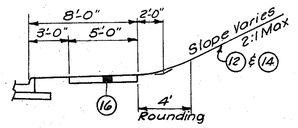

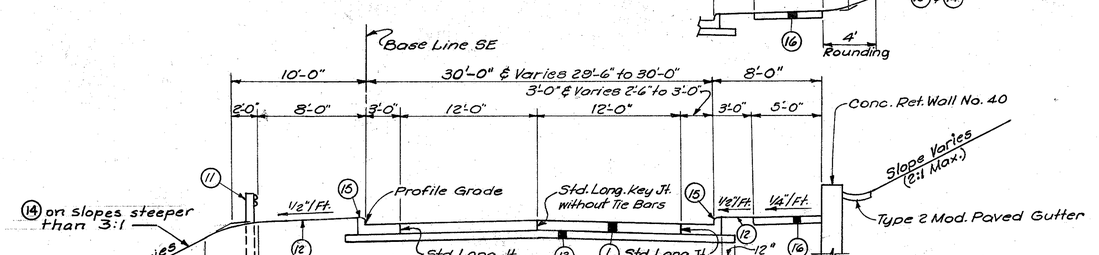

Sta. 10+00 SE to Sta. 20+80 SE

Note: Van Meter St. (exist Sixth St.) between Sta. 24+86 S and Sta. 10+00 SE is to remain except for removal of existing west sidewalk.

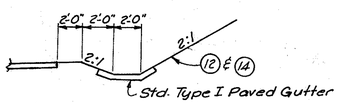

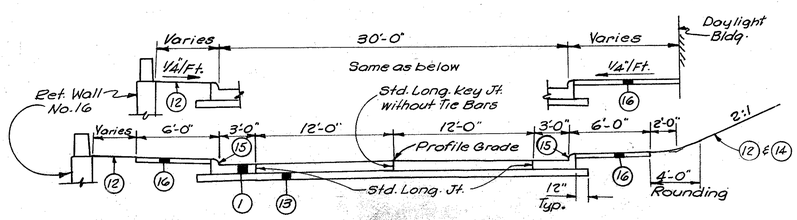

Sta. 20+57 S to Sta. 24+86 S

VAN METER ST.

For Legend see Sh. No. 5

Note: Pavement Slope Varies, See Grade Detail Sheets No. 187 Thru. 199

MUSEUM DRIVE, ELSINORE AVE. ELSINORE PLACE & VANMETER ST. TYPICAL SECTION

TYPICAL SECTIONS
TYPE T-71

FED. RD. DIV.	STATE	PROJECT	FISCAL YEAR
2	OHIO		

9 / 492

HAMILTON COUNTY
HAM-71-(1.66)(2.61)

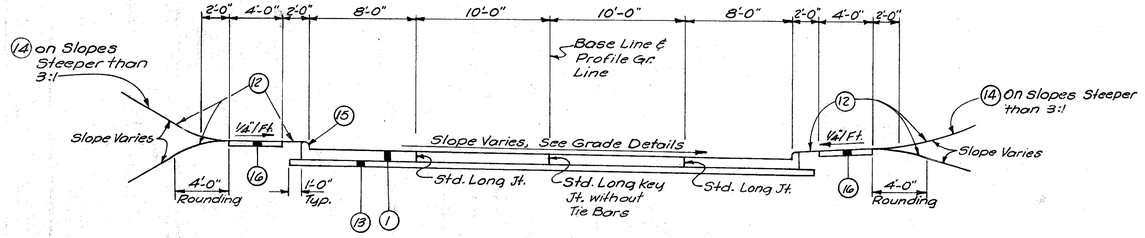

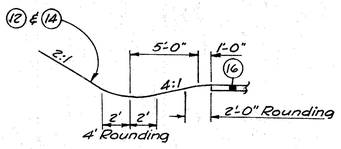

Ditch Section
Sta. 18+15 to 19+15
Sta. 19+35 to 20+35

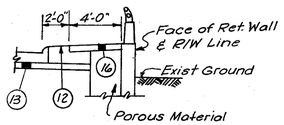

Ret. Wall Sections
Sta. 15+54.13 to 16+14.80
Sta. 18+12.61 to 18+39.49

Sta. 13+62.79 to Sta. 20+48.74 See Above
Sta. 10+00 to Sta. 13+62.79 Approach Slabs & Bridge
Sta. 9+70 to Sta. 10+00 See Symmes St. Section
Sta. 9+45 to Sta. 9+70 See Above
Sta. 9+25 to Sta. 9+45 Resurface Exist. (See Grade Details)

McGREGOR AVE.

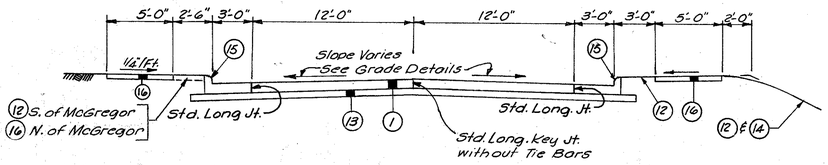

100' S of ℄ McGregor to 57' N of ℄ McGregor

SYMMES ST.

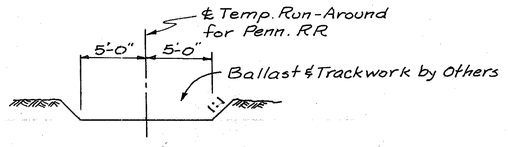

STA. 199+15 T to STA. 205+00 T

TEMP. RUN-AROUND FOR PENN. R.R.

Note: Pavement Slope Varies, See Grade Detail Sheets No. 187 Thru 199

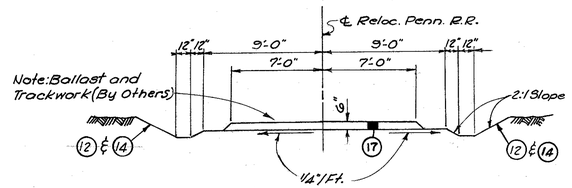

STA. 201+95 TO STA. 208+25

STA. 198+46 TO STA. 201+95
BRIDGE NO. HAM-71-0207

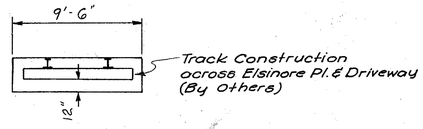

STA. 197+30 TO STA. 198+26
STA. 194+90 TO STA. 195+29

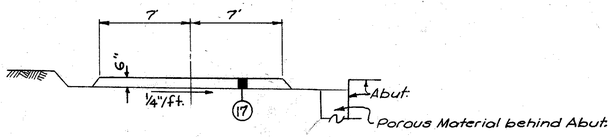

STA. 198+26 TO STA. 198+46

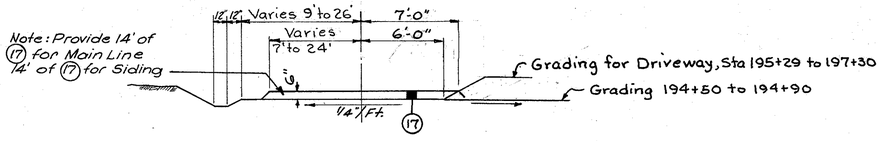

STA. 195+29 TO STA. 197+30
STA. 194+50 TO STA. 194+90

PENNSYLVANIA R.R.

For Legend see Sh. No. 5

McGREGOR AVE. SYMMES ST. & PENNSYLVANIA R.R. TYPICAL SECTIONS

FED. RD. DIV.	STATE	PROJECT	FISCAL YEAR
2	OHIO		

10
492

HAMILTON COUNTY
HAM-71-(1.56) (2.51)

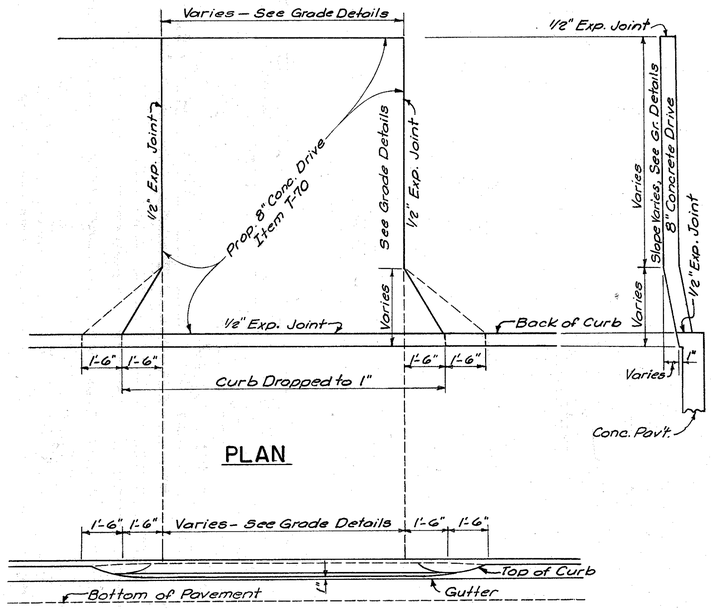

TYPICAL DRIVE DETAIL

TYPICAL SECTION

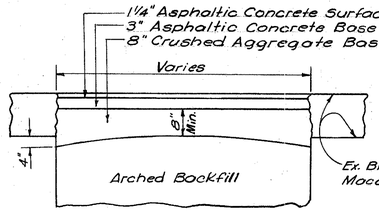

BITUMINOUS PAVEMENT

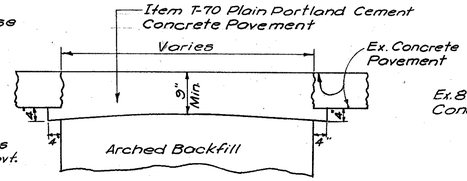

CONCRETE PAVEMENT

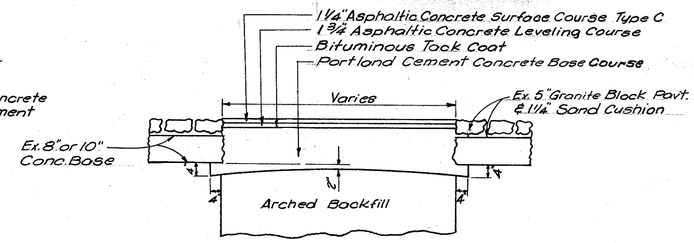

GRANITE BLOCK PAVEMENT

PAVEMENT RESTORATION

(Cost of Pavement Restoration included in Item I-1 for payment)

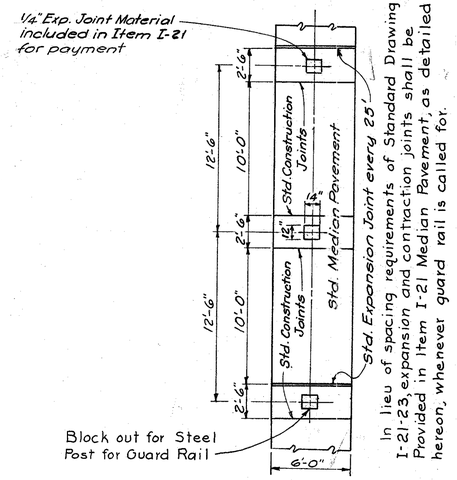

JOINT DETAIL AT GUARD RAIL POSTS

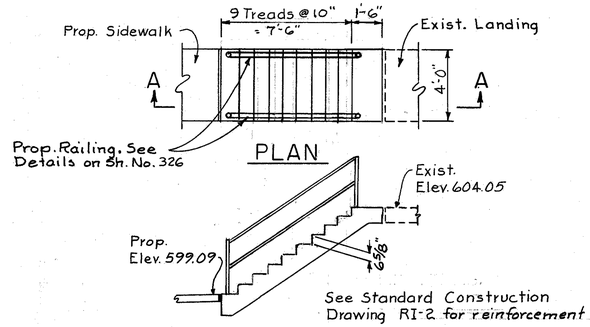

DETAIL OF STEPS @ STA. 10+25 SE, 45' RT.

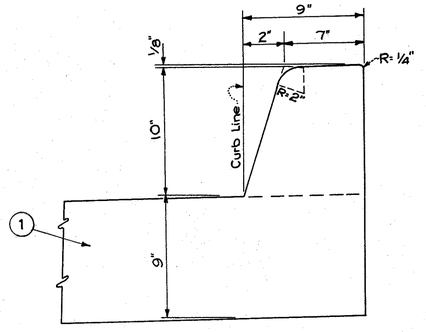

TYPE 10 A CONCRETE CURB

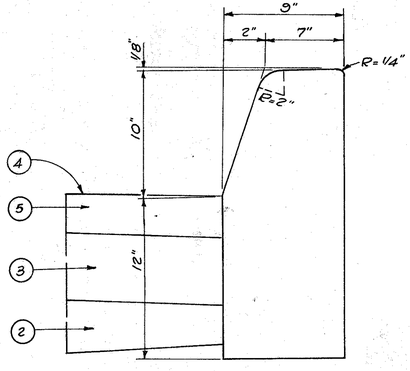

TYPE 10 CONCRETE CURB
City of Cincinnati Acc. No. 3890

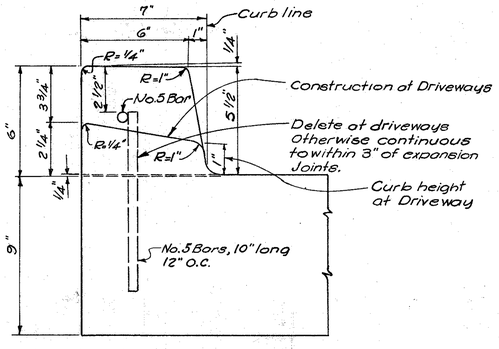

TYPE 7A CONCRETE CURB
City of Cincinnati Acc. No. 5562

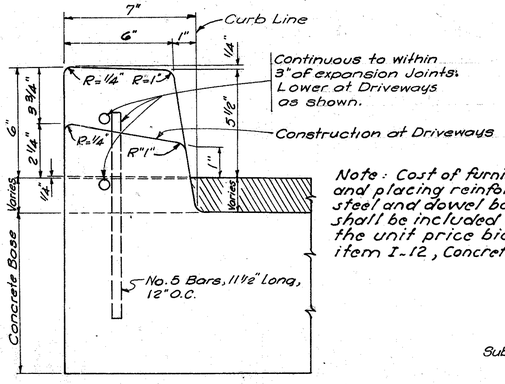

TYPE 7B CONCRETE CURB
City of Cincinnati Acc. No 5536

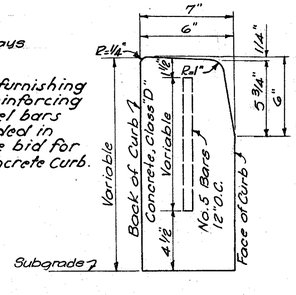

TYPE 6A CONCRETE CURB
City of Cincinnati Acc. No. 3890

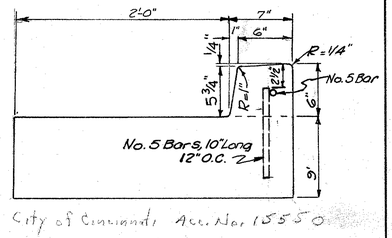

City of Cincinnati Acc. No. 1555

TYPE 7C CONCRETE CURB & GUTTER

MISCELLANEOUS DETAILS

FED. RD. DIV.	STATE	PROJECT	FISCAL YEAR
2	OHIO		

11
492

HAMILTON COUNTY
HAM-71-(1.58)(2.51)

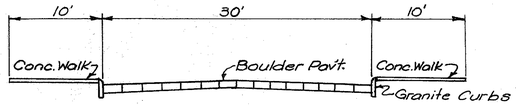

SIXTH ST.

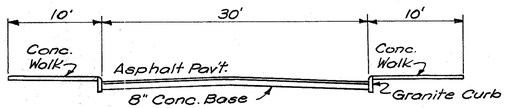

SYMMES ST.

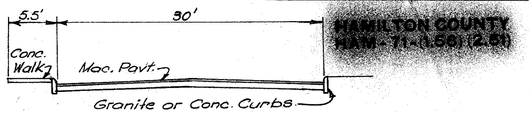

ELSINORE AVE.

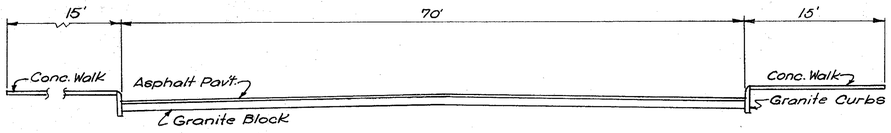

ELSINORE PL.

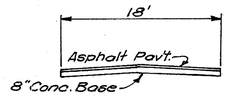

DES MOINES ST.

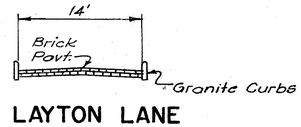

LAYTON LANE

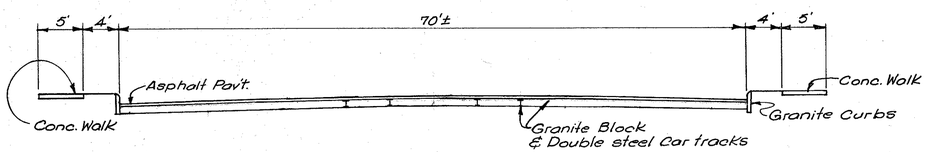

GILBERT AVE.

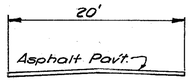

ARDEN ST.

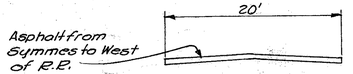

McGREGOR ST.

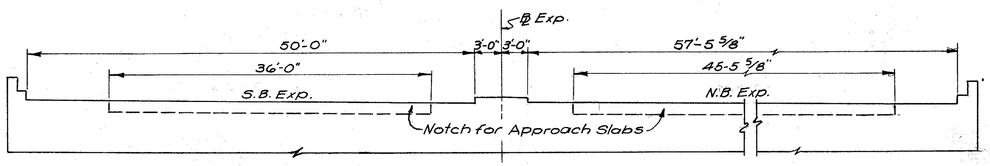

SECTION AT NORTH ABUTMENT
BRIDGE NO. HAM-71-0135
(Looking North)

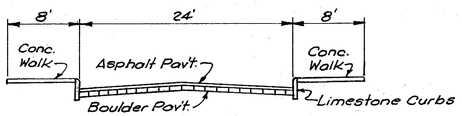

EIGHTH ST.

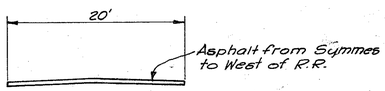

MANITOU ST.

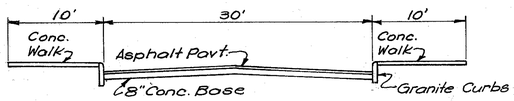

COURT ST.

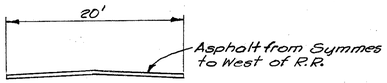

MONROE AVE.

EXISTING ROADWAY SECTIONS

FED. RD. DIVISION	STATE	PROJECT	
2	OHIO		

12
492

HAMILTON COUNTY
HAM-71-(1.56) (2.51)

GENERAL NOTES

GENERAL

DESIGN SPEED

The geometrics of this project have been planned for a design speed of 50 miles per hour.

ELEVATION DATUM

All elevations are based on U.S.C. & G.S. datum.

FIELD OFFICE

The Contractor shall, in accordance with Section S-0.01(b), provide, for the exclusive use of the State's and City's employees, a suitable field office having a minimum of 500 sq. ft. of floor space. The Contractor shall have a telephone installed and maintained in this field office during the construction of this project.

The Contractor shall also provide and install wiring and outlets suitable for connecting lights and office equipment in the field office and provide 110-volt alternating current to the office during the entire period of construction of this project.

All the above is included in the lump sum price bid for Field Office.

WORK TO BE DONE BY THE CITY

The City will wreck and remove all the existing buildings, sheds, garages and other similar structures (unless otherwise shown on plans) within the limits of construction. In general, buildings will be wrecked to the top of the foundation walls and all the resulting debris removed, unless otherwise noted on plans. The Contractor will be expected to field check the site to view existing conditions as most of the wrecking will have been completed before construction begins.

The City will claim and haul from the project, parking meters, street signs, and street lighting standards, which are to be removed from their location and stored by the Contractor.

The City utility forces in connection with the lighting will remove existing lamps, traffic lights and poles.

UTILITIES

The Contractor shall notify at least two working days before breaking ground all public service corporations having wire, poles, pipe conduits, manholes or other structures that may be affected. Any and all work required for public or private utilities will be done by and at the expense of their respective owners, unless otherwise noted on these plans.

WATER AND GAS SHUT-OFF BOXES

The water and gas shut-off boxes generally located behind the existing curb are shown on the plan sheets and designated by the following symbols:

oG . . . . . Gas Box
oW. . . . . Water Box

REPLACEMENT

The Contractor shall replace at his own expense any item not specifically listed for removal that is damaged or destroyed by his operation.

COOPERATION BETWEEN CONTRACTORS

The Contractor's attention is called to the existance of a project abuting this project to the north, south and west. The Contractor shall coordinate his operations to the fullest extent with the adjoining Contractors in a manner that will result in a minimum of interference.

All underground work shall be scheduled and completed at some planned time, agreeable to all parties concerned, that will cause the least amount of interference with the movement of traffic.

ESTIMATED QUANTITIES

Specific locations and usage of estimated quantities set up on this plan to be used "as directed by the Engineer" shall be made a matter of record by incorporation into the final change order governing completion of this project. Materials to be used as directed by the Engineer shall not be delivered until requested by the Engineer.

CONSTRUCTION LAYOUT STAKES

See note in proposal describing the work included in this lump sum pay item.

FEDERAL AID CONSTRUCTION IDENTIFICATION SIGNS

The Contractor shall furnish, erect, maintain and subsequently remove Federal Aid Construction Identification Signs at each of the following locations:

Sta. 10 + 50 Gilbert Ave., 40 ft. Rt. The sign is to be so positioned as to be readable from the southwest.

Sta. 35 + 50 Gilbert Ave., 50 ft. Lt. The sign is to be so positioned as to be readable from the north.

Sta. 201 N.B. Expressway, 200 ft. Rt. The sign is to be so positioned as to be readable from the south.

Sta. 213 + 50 N.B. Expressway, 120 ft. Lt. The sign is to be so positioned as to be readable from the north.

Sign detail shall be as specified on Standard Drawing FACI-1, "Code N-55(1)-132(3) and the signs shall be erected in accordance with Standard Drawing FACI-2. Additional requirements shall be in accordance with notes in the Proposal.

PARKING

The Contractor shall not permit revenue producing parking of motor vehicles within the right-of-way of this project.

CONTRACTOR'S MAINTENANCE RESPONSIBILITY

On this project, the Contractor's responsibility for maintenance of the existing pavement per Item I-3 shall be limited to those portions of the existing pavement lying within the proposed work limits.

HAUL ROADS

The Contractor shall notify the Division Engineer, in writing, at least ten days before using any street for the purpose of hauling material or equipment to or from the project, of his intent to use the streets. The Contractor shall include in his report the limits of the streets within which he intends to operate. The Contractor may not use a street for hauling purposes without approval of the Director Highways.

FED. RD. DIVISION	STATE	PROJECT	
2	OHIO		

13
492

HAMILTON COUNTY
HAM-71-(1.56)(2.51)

GENERAL NOTES

TRAFFIC

MAINTAINING TRAFFIC

The construction schedule and requirements for maintaining traffic shown in these general notes are intended to provide minimum inconvenience to traffic at all times, and to impose any interference to traffic on individual portions of the project for minimum periods of time. The order of construction where shown, indicates the order in which the various phases of work shall be undertaken and completed. The Contractor will be expected to complete each operation as quickly as good construction practices permit. Some of the operations can be carried on simultaneously and every effort shall be made to complete the project at the earliest possible date. The construction schedule and the requirements for maintaining traffic are predicated upon handling the traffic in a concentrated area in the basin of the City and any modification of the aforementioned construction schedule and requirements for maintaining traffic must be approved by the City Manager of the City of Cincinnati and the Director in writing.

The Contractor shall maintain the existing pavement within the limits of the work by making necessary repairs with bituminous material when requested by the Engineer. An estimated amount of asphaltic concrete surface course Item T-35 has been provided for this purpose. The Contractor shall construct temporary pavement where required and as directed by the Engineer for the purpose of maintaining traffic. An estimated amount of asphaltic concrete surface course Item T-35 and an estimated amount of aggregate base course Item B-19 has been provided for this purpose. The asphaltic concrete used for these purposes shall be paid for at the unit price bid for Item T-35, Asphaltic Concrete Surface Course, For Maintaining Traffic. The aggregate base course used for these purposes shall be paid for at the unit price bid for Item B-19, Aggregate Base Course, For Maintaining Traffic. In lieu of T-35, an approved Bituminous Pre-Mixed Surface Course For Maintaining Traffic may be used and plant inspection is waived for either of these items.

Local traffic on all streets within the limits of work and on all adjacent and intersecting streets shall be maintained in a manner causing the least amount of inconvenience to the abutting property owners. Temporary driveways shall be constructed, maintained and removed by the Contractor as directed by the Engineer. Aggregate and chloride used for maintaining local traffic shall be applied on temporary roadways as directed and in the amount requested by the Engineer and shall be paid for at the unit prices bid for respective T-10 and I-4 Items. The hardness and soundness requirements of the Construction and Material Specifications shall be waived for the traffic compacted surface course.

Temporary walks shall be constructed along Van Meter Street south of Court Street, along Elsinore Avenue between Van Meter Street and Gilbert Avenue and at other locations as required where construction work interferes with existing walks. Temporary walks shall be at least five feet wide and may be constructed of wood, asphaltic concrete or concrete. They shall be properly lighted and barricaded to assure a safe walk for the pedestrian. Special care shall be taken for the protection of school-age pedestrians. Walks shall be kept clean during the entire period of use. Payment for this work shall be included in the lump sum price bid for Item I-3, Maintaining Traffic.

The Contractor shall safeguard the traveling public on existing city streets during the construction of overhead bridges, by providing platforms, nets, or other suitable protection above the streets and sidewalks. Payment for this protection shall be included in the lump sum price bid for Item I-3, Maintaining Traffic.

Through traffic shall be maintained on full width of streets at all times during the construction period except as provided in these general notes.

ESTIMATED QUANTITIES CARRIED TO GENERAL SUMMARY

Item B-19	Aggregate Base Course for Maintaining Traffic	300 Cu. Yds.
Item T-10	Traffic Compacted Surface Course for Maintaining Traffic	130 Cu. Yds.
Item T-10	Traffic Compacted Surface Course, Using Size No. 34 Material for Maintaining Traffic, As Per Plan	70 Cu. Yds.
Item T-35	Asphaltic Concrete Surface Course or an Approved Bituminous Premixed Surface Course for Maintaining Traffic	100 Cu. Yds.
Item I-4	Water for Dust Control	300 M. Gal.
Item I-4	Calcium Chloride for Dust Control	50 Ton

E. EIGHTH STREET

Court Street between Gilbert Avenue and E. Sixth Street may be closed permanently when required for construction purposes.

Traffic shall be maintained at all times on Court Street west of Gilbert and east of E. Sixth Street.

During construction work at the intersection of Court Street and E. Sixth Street at least one 12-foot lane of usable roadway width shall be kept open to traffic at all times.

During construction work at the intersection of Court Street and Gilbert Avenue at least two 12-foot lanes of usable roadway width shall be kept open to traffic at all times.

Access to the Pennsylvania Railroad Co. drive off of Court Street immediately west of Gilbert Avenue shall be maintained at all times.

Temporary material shall be installed where required, as directed by the Engineer.

E. SIXTH STREET

Traffic shall be maintained at all times on E. Sixth Street between Baum Street and a point 800 feet north of Court Street.

E. Sixth Street between Gilbert Avenue and proposed Van Meter Street shall remain open until the new gas line in E. Sixth Street near the Daylight Building is installed and placed in operation. At this time this portion of E. Sixth Street may be closed permanently.

During construction work on E. Sixth Street at least one 12-foot lane of usable roadway width shall be kept open to traffic at all times.

Vehicular access to the Daylight Building at the northeast corner of E. Sixth Street and Court Street shall be maintained at all times.

Temporary material shall be installed as directed by the Engineer.

ELSINORE AVENUE (EAST OF GILBERT AVENUE)

During construction work on Elsinore Avenue the street may be closed to thru traffic except as noted below.

Vehicular access to the parking lot of the Museum of Natural History at the northeast corner of Gilbert Avenue and Elsinore Avenue shall be maintained at all times by use of either the existing drive or new drive.

Temporary material shall be installed where required, as directed by the Engineer.

GILBERT AVENUE

Traffic shall be maintained at all times.

During construction work in Gilbert Avenue at least four 11-foot lanes of usable roadway width shall be kept open to traffic at all times by use of either existing pavement, proposed pavement and bridge or the Temporary Run-Around at Bridge No. HAM-71-0196.

ELSINORE PLACE

Traffic shall be maintained at all times.

During construction work at least four 11-foot lanes of usable roadway width shall be kept open to traffic by use of either existing pavement, proposed pavement and bridge or the Temporary Run-Around at Bridge No. HAM-71-0203.

Adequate access to the loading facilities in the rear of Leblond Realty Co. property and to the Pennsylvania Railroad Co. warehouse, now served by the existing drive south of Stat. 14+20, shall be maintained at all times.

Temporary material shall be installed where required, as directed by the Engineer.

SYMMES STREET

Symmes Street south of Manitou Street may be closed permanently when required for construction purposes.

Traffic shall be maintained at all times on Symmes Street north of Manitou Street. During construction work on Symmes Street north of Manitou Street at least one 12-foot lane of usable roadway width shall be kept open to traffic at all times at the intersections of McGregor Avenue and Manitou Street.

Temporary material shall be installed where required, as directed by the Engineer.

DES MOINES STREET

Des Moines Street may be closed permanently when required for construction purposes.

MANITOU STREET

Manitou Street east of Symmes Street may be closed permanently when required for construction purposes. However, the existing pedestrian bridge over the railroad tracks and a suitable pedestrian walk and steps between the bridge and Symmes Street must be maintained until the proposed bridge at McGregor is built and open to traffic.

Traffic shall be maintained at all times on Manitou Street west of Symmes Street. During construction work at the intersection of Symmes Street and Manitou Street at least one 12-foot lane of usable roadway width shall be kept open to traffic at all times.

MONROE STREET

Monroe Street between Symmes Street and the Pennsylvania Railroad may be closed permanently when required for construction purposes.

BOONE STREET & MAY STREET

During construction work at the intersection with McGregor the street may be closed. However, one intersection shall be completed before work in the other intersection is started so that only one street at a time is closed to traffic.

Temporary material shall be installed where required, as directed by the Engineer.

KENTON STREET

Traffic shall be maintained at all times.

During construction work at the intersection with McGregor at least two 11-foot lanes of usable roadway width shall be kept open to traffic at all times.

Temporary material shall be installed where required, as directed by the Engineer.

LAYTON LANE

Layton Lane between Des Moines Street and Wilkinson Street may be closed permanently when required for construction purposes.

FED. RD. DIVISION	STATE	PROJECT	
2	OHIO		

14
492

HAMILTON COUNTY
HAM-71-(1.56) (2.51)

TRAFFIC

CONSTRUCTION SCHEDULE

The construction of this project requires that certain work schedules be followed in order that the public utilities and the Pennsylvania Railroad Co. maintain service in this area.

Existing Gilbert Avenue between Court Street and Elsinore Place shall not be disturbed, except for the Temporary Run-Around at Gilbert Avenue, until such time that relocated Gilbert Avenue and Bridge No. HAM-71-0196 are completed and all utilities are installed and placed in operation. The new 48 inch watermain crossing the Expressway north of Elsinore Place must also be installed and placed in operation before the existing 36 inch watermain in Gilbert Avenue is disturbed.

The existing 6 inch gas main in E. Sixth Street between Gilbert Avenue and proposed Van Meter Street must be maintained until the new gas line in relocated E. Sixth Street at Court Street is installed and placed in operation.

The construction work for Wall No. 18 (Tail Track Slot) must be done in stages to maintain switching operations in the Pennsylvania Railroad Co. Court Street Yards. The construction procedure notes for this wall are shown on the retaining wall plans and the Contractor shall coordinate his work with work done by the Railroad.

LEBLOND REALTY COMPANY (Rear of No. 1630 Reading Road)

The Temporary Easement 5397 T-1 shall extend for a period of time not to exceed three (3) months from the starting date of the demolition of the building and loading dock. The Temporary Easement 5397 T-2 shall extend for the period of time while the Temporary Run-Around at Elsinore Place is in use.

CONSTRUCTION PROCEDURE

The procedure outlined below covers work required to relocate the railroad track crossing the expressway north of Elsinore Place. The notes for watermain work should be coordinated with these construction notes for a complete construction procedure..

The work responsibility in this procedure is indicated by (C) for Contractor and (R) for Railroad on a Force Account Basis. The numbers following the letter indicate order of work, and items of the same number may be performed concurrently.

C1 Grade for new track northward from Sta. 205 to Sta. 210 and for temporary track southward from Sta. 205 to existing track at north side of Elsinore Place.

R2 Lay temporary and new track from Elsinore Place northward to existing track and reroute railroad.

C2 Construct Temporary Run-Around at Elsinore Place.

R3 Construct crossing for existing track in Temporary Run-Around south of Elsinore Place.

C4 Construct RR Bridge, West Abutment and Pier No. 1 of the Elsinore Place Bridge. Grade from east abutment of RR Bridge to Sta. 205 and from west abutment to Sta. 194 + 50.

R5 Lay new track from Sta. 191/80 to Sta. 205 with turnouts to existing sidings at the Hershey Warehouse and track crossings at Elsinore Place and the Temporary Run-Around.

C6 Complete the Elsinore Place Bridge and paving at east and west end of bridge. Reroute traffic over bridge and remove Temporary Run-Around.

The cost of maintaining traffic as outlined above, including all the provisions of Section G-4.05 and Section G-7.07 of the Construction and Material Specifications, except the cost of temporary run-arounds and temporary pavement, which are being paid for under separate items, is all included in the lump sum price bid for Maintaining Traffic, Item I-3.

FED. RD. DIV.	STATE	PROJECT	FISCAL YEAR
2	OHIO		

15
492

HAMILTON COUNTY
HAM-71-(1.56) (2.51)

GENERAL NOTES

ROADWAY

GUARD RAIL FLARES

Where proposed guard rail flares are constructed of rail elements which have not been fabricated exactly to fit the curvature shown on the plans, the two end posts of each flared section shall be encased in a minimum 4 inch thickness of Class "E" concrete for the full depth of the post below the ground line. Payment for the encasement, if required, shall be included in the unit price bid for the guard rail.

GUARD RAIL ADJACENT TO BRIDGE

One (1) additional guard rail post shall be provided in the center of each panel of guard rail adjacent to the bridge, payment for which shall be included in the unit price bid for Item I-15 Guard Rail.

Guard rail shall be flared to meet bridge railing in such a manner that the change in alignment of the guard rail will not exceed one foot in 20 feet.

DRIVEWAY EXPANSION JOINTS

One-half inch (1/2") premolded expansion joints Section M-10.02 shall be provided where the drive abuts a walk, longitudinal curb, wall or building.

Payment for the 1/2" premolded expansion joint material is included in the unit price bid per square yard for Item T-70, 8" Portland cement concrete pavement.

ITEM T-10, AS PER PLAN (USING NO. 34 AGGREGATE)

The weights to be used in calculating the yardage to be paid for under this item, if a standard size coarse aggregate is specified, shall be the same as those indicated in the Construction and Material Specifications for crusher run or bank run materials.

SEEDING QUANTITIES

The entire work area on the project that is not paved, sodded or surfaced with I-18 shall be seeded.

SEEDING AND PROTECTING

Quantities for Seeding, Item L-9, are calculated for the soil areas between the right-of-way lines and for the soil areas of any work limits that are beyond the right-of-way lines covered by work agreement or slope easement. Seed shall be sown at the rate of three (3) pounds per 1,000 sq. ft. Seeding formula for all seeded areas shall be in accordance with the following:

20% Kentucky Bluegrass (Poa pratensis)
65% Kentucky 31 Fescue (Festuca elatior Var. Ky. 31)
15% Red Clover (Trifolium pratense)

ITEM L-2, TOPSOIL FOR GRANULAR SLOPES, FURNISHED AND PLACED, AS PER PLAN

Slopes composed of granular material shall be stabilized by the addition of L-2 topsoil as described below and as shown on the plans. If other than granular material is furnished or encountered in these areas, the placement of topsoil shall be non-preformed as directed by the Engineer.

The second paragraph of Sec. L-2.02 and the entire Sec. L-2.03 shall be waived for this project. The Contractor shall, in addition to and in conjunction with the remaining requirements of this item, perform the following:

1. Furnish and place topsoil to a loose depth of either 4" or 12" on all areas specified in the plans.
2. Prior to rolling as per Sec. L-2.07, the topsoil shall be incorporated into the upper 3" of the granular material on the specified areas by disking, pulvi-mixing, or other suitable means to assure a thorough mixing.

The cost of all the above shall be included in the unit price bid per square yard for Item L-2, Topsoil Furnished and Placed, As Per Plan.

L-9 COMMERCIAL FERTILIZER

All areas to be seeded under Item L-9, shall have commercial fertilizer (12-12-12) applied at the rate of twenty (20) pounds per 1,000 sq. ft.

EROSION CONTROL

Items I-14, L-10 and L-120 are provided in these plans for erosion control. Rock of a stable nature will not be removed in order to place any of these items. The Engineer shall check and non-perform quantities or adjust locations and quantities for these items where indicated by field conditions during construction. Wherever paved gutter is indicated on the plans the upper edge of the paving shall be placed 3" to 6" below the elevation of the proposed ground.

AGRICULTURAL LIMING MATERIALS

The location and need for agricultural liming materials will be determined by laboratory tests after rough grading operations have been performed. Quantities of agricultural liming materials as shown on the plans are sufficient for the entire project, but will be non-performed for the areas where tests show that the liming material is not needed. Where used, this material shall be applied at the rate of one hundred (100) pounds per 1,000 sq. ft.

REMOVING EXISTING STREET SIGNS

Existing street signs, traffic markers, and other similar objects within the limits of construction shall be removed and stored on the right-of-way for the City of Cincinnati. Payment for removal and storing of these items shall be included in the contract price bid per cubic yard for Item E-1, Roadway Excavation.

ROUNDING OF CORNERS ON CROSS SECTIONS

The rounded corners, shown on Standard Drawing RI-1, apply to all cross sections even though otherwise shown in these plans.

PAVEMENT REMOVAL, RIGID TYPE

Existing rigid type pavements shall be removed when they are located less than 3 feet below the proposed pavement subgrade in proposed pavement areas or less than 3 feet below the proposed finished surface in areas outside the proposed pavement. These removals shall include concrete pavement and integral curb, granite block pavement and base, and brick pavement and base, either with or without bituminous surface. Payment for this operation shall be made at the unit price bid per square yard for Item E-8, Removal and Disposal of Existing Pavement.

When existing rigid type pavements lie below the above limits, they shall not be removed. In lieu thereof, they shall be broken up in place into portions not to exceed one square foot in area prior to placement of proposed embankment. Payment for this operation shall be included in the unit price bid for Item E-1, Roadway Excavation.

REMOVAL OF EXISTING CURB

Removal of curb not integral with the pavement, including granite, stone, concrete, and steel plate curb shall be paid for at the unit price bid per lineal foot for Item E-8, Removal and Disposal of Existing Curb.

NON-RIGID PAVEMENT REMOVAL

Removal and disposal of existing non-rigid pavement, unless otherwise indicated on these plans, shall be measured and paid for as Item E-1, Roadway Excavation.

INSTALLATION OF TWIN 4" CONDUIT

Payment will be made at the contract unit price bid per linear foot, Item Special, "Installation of Twin 4" Conduit" and shall constitute full payment for all necessary materials, tools and labor necessary to install the conduit at the desired depth and location as shown on sheet No. 78 including plugging and other incidentals necessary to complete this item. The Conduit will be furnished by Others

CONCRETE SIDEWALK

Wherever the proposed concrete sidewalk adjoins or abuts an existing sidewalk the existing walk shall be cut and trimmed to a neat line as shown on the plans. Payment for cutting and trimming shall be included in the contract unit price bid per square foot for Item I-13, Concrete Sidewalks.

UNDERGROUND UTILITIES

The locations of the underground utilities shown on the plans have been obtained by diligent field checks and searches of available records. It is believed they are essentially correct, but the State of Ohio makes no guarantee as to their accuracy or completeness.

BENCHING OF FOUNDATION SLOPES

Although cross sections on this plan indicate specific widths and depths of proposed benching of the embankment foundation in certain areas, no waiver of the specifications is intended and all other sloped foundation areas shall be benched as set forth in Sec. E-1.04. No additional payment will be made for benching required by the provisions of Sec. E-1.04.

MOWING OF VEGETATIVE GROWTH THROUGHOUT CONTRACT

Throughout the entire life of the contract all seeded and sodded areas which have a planted vegetative growth that exceeds twelve (12) inches in height shall be mowed to a height not less than four (4) inches nor more than five (5) inches.

This shall include ditches, guard rail areas and areas around structures that have cuts or embankments that are 3:1 and flatter.

Not included shall be all cuts and embankments that are steeper than 3:1.

At the time of final acceptance all vegetative areas (other than those excepted from mowing) shall be less than twelve (12) inches in height.

The Engineer shall decide when the general vegetative growth exceeds the twelve (12) inch height.

No mowing shall be permitted when the vegetative areas are too soft due to moisture content. The Engineer shall decide when the areas may be mowed.

Rubber tired power mowers have rotary type cutting blades shall be used.

Mowing operations shall extend over the edge of all berms, curbs, paved gutters, etc. so that no vegetation exceeds the minimum height of cut at the edges of these areas.

Payment for all mowing throughout the life of the contract shall be included in the unit bid price per Acre, Item Special, Mowing Seeded and Sodded Areas, as per Plan.

ITEM E-4, BORROW AS PER PLAN

An estimated amount of bank run gravel has been included in the general summary to be used at the direction of the Engineer in filling old cisterns and tunnels encountered under pavement and any other place where its use is practical.

Bank run gravel shall consist of sound durable material containing not more than 5 percent clay or silt by weight and free from an excessive amount of deleterious material. It shall be well graded from coarse to fine; 100 percent shall pass a 3 inch sieve, not more than 50 percent shall pass a 1/4 inch sieve and not more than 10 percent shall pass a No. 50 sieve. Measurement of the quantity of Item E-4, Borrow As Per Plan to be paid for shall be made in accordance with Section E-4.04 of the Construction and Material Specifications. Basis of payment shall be in accordance with Section E-4.05 of the Construction and Material Specifications.

Estimated Quantity to General Summary = 600 Cu. Yd.

FED. RD. DIV.	STATE	PROJECT	FISCAL YEAR
2	OHIO		

16/492

HAMILTON COUNTY
HAM-71-(1.56) (2.51)

GENERAL NOTES

ROADWAY

REMOVAL OF TREES AND STUMPS

All trees and stumps lying within the construction limits of this project shall be removed under the lump sum price bid for Item E-9, Removal of Trees and Stumps, except that those trees and stumps for which protection and preservation work is indicated elsewhere in these plans shall not be removed.

The following is an approximate estimate of the number of trees and stumps to be removed.

SIZES	NO. TREES		NO. STUMPS	
	7221	100% City	7221	100% City
12" - 18"	141	0		
18" - 24"	53	3	1	0
24" - 30"	21	0		
30" - 36"	2	0		
36" - 42"	1	0		
42" - 48"	1	0		
Over 48"				

The above estimate is approximate and the State of Ohio reserves the right to order the removal of additional trees or stumps outside of the limits of construction but within the right-of-way and/or easement lines. Payment for the removal of these additional trees or stumps shall be included in the lump sum price bid for Item E-9, Removal of Trees and Stumps.

ITEM S. S. CE-101.04 COMPACTION USING HEAVY PNEUMATIC TIRED ROLLER

An estimated quantity for this item has been provided in the General Summary for use in proof rolling of subgrade on the mainline and ramp pavements as directed by the Engineer. Proof rolling will not be required where rock or shale occurs in subgrade and in areas where subbase has been thickened to replace frost susceptible silts. In lieu of the requirements of CE-101.04, a minimum of one coverage will be required to check the subgrade. Moisture content of the top 12" of subgrade shall not exceed optimum at the time of proof rolling. Tire pressure and total load shall be varied as directed by the Engineer within the limits provided in CE-101.04.

ITEM L-10 SODDING

The outer edges of all sodded ditches shall have the finished grade of the tamped sod surface, one half inch below the finish grade of the adjoining seeded area.

The length of the grass on the sod shall be approximately six (6) inches.

The subgrade of all areas to be sodded shall be thoroughly watered just prior to placing the sod.

All sod shall be thoroughly watered within two hours after it has been laid. After watering but prior to being tamped, the grass surface of the sod shall be raked down grade in all ditches.

All sodded areas shall be thoroughly tamped by hand with a metal sod tamper having a 64 to 100 square inch tamping surface.

Within twenty four (24) hours after being tamped the sod shall again be thoroughly watered.

No mulch material shall be permitted to lie on the surface of any sodded ditch except during the period of June 1st to October 15th when the mulch layer shall be only one inch thick, loose measurement.

Sod shall be staked only after the sod has been tamped and re-watered.

TEMPORARY RUN-AROUND AT ELSINORE PLACE USING CLASS A PAVEMENT, AS PER PLAN

Payment for this item shall be as shown and noted on Sheet No. 80.

TEMPORARY RUN-AROUND AT GILBERT AVE. USING CLASS A PAVEMENT, AS PER PLAN

Payment for this item shall be as shown and noted on Sheet No 81.

PAVEMENT

I-22 SUBBASE, GRADING "A" OR "B", AS PER PLAN

The material furnished for this item shall meet the requirements of Grading "A" or "B" of Section I-22.02 except that, for either grading, no more than 10 percent of the material shall pass a No. 200 sieve after all operations of placing and compacting have been completed.

EXPANSION AND CONTRACTION JOINTS

Where transverse joints are located closer than 10 feet to the regular blockout joints around catch basins, manholes and water valves, the blockout joints shall be continued to the transverse joint. Similarly, where longitudinal joints are located closer than 2 feet to the regular blockout joints around catch basins, manholes and water valves, the blockout joints shall be continued to the longitudinal joints.

In addition to contraction joints specifically located on pavement details, contraction joints in all T-71 pavement shall be provided in all cases in accordance with Standard Construction Drawing T.J.

Expansion joints not otherwise detailed shall be provided at all major structures as required by Standard Construction Drawing T.J.

PLACING AND FINISHING ASPHALTIC CONCRETE

The requirements under Section T-35.18 for mechanical equipment for placing and finishing asphaltic concrete are hereby waived for areas less than 5 feet in width or where surface is deformed, and the asphaltic concrete may be spread and finished by acceptable hand methods. Dump boards will be required if spread and finished by hand method.

RESTORATION OF PAVEMENT

For sewers that are to be constructed in existing streets or paved areas where no repaving is called for on the plans, the cost of the removal and replacement of this pavement shall be included in the contract unit price bid for Item I-1, Pipes.

Where pier footings are to be constructed in existing paved areas, the cost of the removal of the pavement will be included in the contract unit price bid for Item E-2, Excavation for Structures, if flexible pavement or Item E-8, Removal and Disposal of Existing Pavement, if rigid pavement. The cost of replacement of this pavement shall be at the contract unit price bid for various items and material required to replace the pavement.

For details of pavement restoration see Sheet No. 10

ITEM I-21, TYPE "A" CONCRETE TRAFFIC ISLAND PAVEMENT, AS PER PLAN

Payment will be made at the contract unit price bid per square yard, Item I-21 Type "A" Concrete Traffic Island Pavement and shall constitute full payment for all necessary materials, tools and labor necessary to complete this item.

APPROACH SLAB LONGITUDINAL JOINTS

Longitudinal impressed or sawed joints shall be provided between lane elements on all approach slabs, in accordance with "Standard Construction Drawing L.J. No. 1, revised 7-1-55.

CONCRETE CURBS AND COMBINED CURB AND GUTTER AS PER PLAN

Payment will be made at the contract unit price bid per lineal foot, Item I-12 Curb Type 6A, 6B, 7A, 7B, 7C, 10 or 10A and shall constitute full payment for all necessary materials, tools and labor, including furnishing and placing reinforcing steel necessary to complete this item.

WATER WORKS

For Water Works Notes see Sheet No. 110

GENERAL NOTES

DRAINAGE

CONDITION OF SEWERS

Before any work is started on the project, representatives from the State, Contractor, and City shall make an inspection of the existing sewers, within the limits of the work area, that are to remain in operation after the completion of the project, and a record of such inspection reduced to writing by the State. All new sewers, inlets and manholes constructed as part of the project shall be free of all foreign matter and in a clean condition before the project will be acceptable to the State. All existing sewers inspected initially by the above-mentioned parties shall be maintained and left in the same condition as determined by the original inspection. Any change in the condition resulting from the Contractor's operations shall be corrected to the satisfaction of the Engineer by the Contractor at no additional cost to the State.

SEWAGE

The Contractor shall conduct his operations so as to maintain any sewage flow uninterrupted throughout the construction period.

Any additional costs involved in maintaining this flow, by pumping or by any other approved method which is necessary for construction of the project, shall be included in the contract unit price bid per linear foot for pertinent pipe item.

LOCATION AND SIZE OF EXISTING PIPE

The location, type, depth and size of all existing pipe and house connections affected by this project are shown as nearly exact as available information will permit. The State of Ohio will not be responsible for any variations found during construction.

INLETS, MANHOLES AND PIPES

The proposed elevations and locations of inlets, manholes and pipes and the estimated lengths of pipe may be adjusted by the Engineer during construction.

TILE FOR SUBGRADE DRAINAGE

6-Inch drain tile, Section M-6.1 or M-6.2, shall be furnished and placed by the Contractor, in manholes, catch basins and inlets for subgrade drainage, where and as directed by the Engineer. Payment for same shall be included in price bid per "Each" for Item I-8 Manholes, Catch Basins and Inlets.

SANITARY CONNECTIONS PASSING OVER WATER MAINS

Any proposed house connection or lateral sewer, excluding inlet connections, which must of necessity pass over a proposed water main, shall be encased in a minimum of six (6) inches of Class "E" concrete for a distance of ten (10) feet on each side of the centerline of the water main. Payment for this work shall be of the contract unit price bid for Item I-2, Masonry and measurement shall be based upon the specified minimum dimensions of the encasement.

CONNECTIONS TO EXISTING SEWERS

At places where the plans provide for proposed drainage pipe to be connected to existing pipes, it shall be the responsibility of the Contractor to locate the existing pipe, both as to line and grade, before he starts to lay the proposed sewer. The cost of this operation shall be included in the unit price bid for pertinent pipe item.

CONNECTION TO EXISTING MANHOLES OR SEWERS

Payment for connecting proposed sewers to existing manholes or sewers shall be included in the contract unit price bid per linear foot for pertinent pipe item.

SEWER HOUSE DRAINS

EXISTING HOUSE DRAINS. All existing house drains, which include sanitary, yard, roof, basement or other similar pipe drains, now in use which are disturbed because of the highway improvement, shall be replaced by the Contractor. If the existing sewer is to be abandoned, then a satisfactory house connection shall be provided. Payment for this work shall be at the contract unit price bid per linear foot of pertinent pipe item. Unrecorded house drains that are encountered during construction and required to be replaced under the direction of the Engineer shall be paid for as specified.

Where an existing house is to be removed, the upgrade end of existing house connections shall be plugged in accordance with the requirements outlined under "Plugging or Sealing Sewers". Payment for this work shall be included in the contract unit price bid for Item E-1, Roadway Excavation.

SEWER HOUSE DRAINS (Continued)

PROPOSED HOUSE CONNECTIONS. The City of Cincinnati will notify property owners in advance of construction that, if they contemplate new house connections to the proposed sewer, the property owner must furnish, at his sole cost, tees of the proper size and material to the Contractor. The Contractor will then install the tees as he proceeds with laying the sewer and payment for the work involved will be at the same rate as though he were furnishing and laying straight pipe.

To obtain a house connection to either an existing sewer that is to remain or to a proposed sewer, the property owner or his agent, at his sole cost, shall furnish all material and labor required to install the house connection from the carrier sewer to a point beyond the limits of roadway construction.

SEALING OF PIPE JOINTS

Where connections are made between rigid and flexible pipe sections or between pipe sections of different kind or type of end fabrication, whether required by the plans, arising from permissible use of optional materials, or encountered in connection to existing facilities, the joint shall be sealed, if sealing is required by the specifications, by means of a reinforced concrete collar as shown on the plans. Payment for sealing as described above shall be included in the unit price bid for the pertinent pipe item.

UNRECORDED CONNECTIONS

Any unrecorded active connections to the sewers, encountered in construction, shall be reconnected to the existing sewers as directed by the Engineer. Payment for this work, except for work covered in Item I-16, shall be at the contract price bid for the following items.

The following estimated quantities of the various items have been included for use under the direction of the Engineer to replace unrecorded house connections and drains encountered in the work and required to be replaced. None of this material shall be ordered unless directed by the Engineer.

Item I-1	20 L. F.	6" Pipe Class B-1
Item I-1	20 L. F.	8" Pipe Class B-1
Item I-1	50 L. F.	12" Pipe Class B-1
Item I-2	1 C. Y.	Masonry
Item I-5	4 Each	Pipe Special 6" X 45° Bend Class B-1
Item I-5	4 Each	Pipe Special 8" X 45° Bend Class B-1
Item I-5	2 Each	Pipe Special 12" X 6" Tee Class B-1
Item I-5	2 Each	Pipe Special 12" X 8" Tee Class B-1

COOPERATION BETWEEN CONTRACTOR AND PROPERTY OWNER

The Contractor must cooperate with the property owner or his agent to give said property owner or his agent ample opportunity for extending said sewer connection from the tee branch or existing sewer to a point beyond roadway construction limits. The necessary house connections shall be installed by the property owner or his agent at no cost to the Contractor, other than the cost of cooperation in scheduling his work which said cost shall be assumed by the Contractor and shall be included in the unit prices bid for the various pipe items.

REMOVAL OF EXISTING HOUSE DRAINS

The removal, where required, of all existing house connections, which include sanitary, yard, roof, basement or other similar pipe drains within the construction limits shall be included in the price bid for Item E-1, Roadway Excavation, unless otherwise itemized for payment in the plans.

PIPE CUT-OFFS

When bell and spigot pipe is used, any necessary pipe cut-offs will be made at the spigot end of the length of pipe adjacent to the end length. When tongue and groove pipe is used, the length of pipe next to the end length shall be cut and butt joint formed with a collar as detailed in Standard Drawing No. I-1. The cost of the joint and collar shall be included in the contract unit price bid for the pertinent pipe item.

SEALING OF NEW PIPES

Plugging or sealing of new pipes where required, shall be in accordance with the requirements outlined under "Plugging or Sealing Sewers". Payment for this work shall be included in the contract unit price bid per linear foot of the pertinent pipe item.

SEWERS TO BE ABANDONED OR REMOVED

All existing sewers, manholes and catch basins that are to be abandoned or removed as part of this project are noted on the plans. Existing catch basins are generally 3 to 4 feet deep with connecting pipe from 3 to 7 feet deep. Approximate manhole depths are shown on the Sub-Summary Sheet. No extra payment will be made in the event that additional depth is encountered.

Sewers that are to be abandoned shall be sealed in accordance with the requirements outlined under "Plugging or Sealing Sewers".

Existing sewers over 15 inches in diameter and having a cover of more than three feet, which due to their size or condition have been indicated to be removed, shall be removed or, at the Contractor's option, shall be filled hydraulically with sand or sand and gravel similar to strippings from a gravel pit and left in place. Any exposed ends of the sewer shall be sealed in accordance with the requirements outlined under "Plugging or Sealing Sewers".

If the sewer is filled rather than removed, the fill material shall, after solidification, occupy at least 90% of the cross sectional area of the sewer for the entire length indicated to be removed. In order to meet this requirement, the Contractor will dig pit holes as approved by the Engineer to implement the filling of the sewer and/or to check the cross sectional area of the sewer when filled.

Payment for sealing and abandoning existing sewers shall be included in the contract unit price bid for Item E-1, Roadway Excavation. Payment for removal of existing sewers, where indicated on the plans or directed by the Engineer, shall be at the contract unit prices bid for Item E-12, "Removal of Pipe 15-Inch Diameter and Under" or "Removal of Pipe Over 15-Inch Diameter", which price shall also include plugging or sealing when required. Payment for abandoning all manholes, catch basins and inlets that are not specifically paid for under Item I-16, shall be included in the contract unit price bid for Item E-1, E-2, I-1 or I-8 whichever is applicable.

PLUGGING OR SEALING SEWERS

Sewers which are to be abandoned shall be plugged or sealed where they join manholes or catch basins. All existing sewers encountered in construction operations, that are inactive or are to be abandoned as determined by the Engineer, shall be plugged or sealed at both ends where broken into before proceeding with backfilling.

Where plugging or sealing is required, pipe sewers 12 inches or less in diameter shall be plugged by the installation of a suitable precast concrete or vitrified clay stopper. Masonry and pipe sewers larger than 12 inches in diameter shall be sealed at the required locations by the construction of masonry bulkheads of brick, stone or concrete having a thickness of one-half of the sewer diameter, except that the minimum thickness shall be 12 inches and the maximum thickness shall be 2 feet.

Payment for plugging or sealing sewers shall be included in the contract unit price bid for Item E-1, Roadway Excavation, unless otherwise specified for payment in the plans.

ITEM I-1, CAST IRON PIPE, CLASS B-1

The thickness classification of Cast Iron Pipe shall be in accordance with the American Water Works Association Specification C-106.

Where called for on the plans, this item shall be constructed of the thickness class shown and in accordance with Item S-5, Cast Iron Storm Sewers, of the City of Cincinnati, Department of Public Works General Construction and Materials Specifications for Highways and Sewers, on file with the Administrator of Contract Sales, Department of Highways, 25 S. Front St., Columbus, Ohio.

ITEM I-5 PIPE SPECIALS

Pipe without perforations will be permitted for use on this project for all Item I-5 Pipe Specials.

ITEM I-8, MANHOLE RECONSTRUCTED TO GRADE

This item shall consist of the careful removal of the existing manhole in accordance with the detail shown in the plans and reconstruction of the manhole to the new grade, conforming as nearly as practicable to the existing dimensions and type of construction and using the salvaged frame and cover. This item applies when the change in grade exceeds a raise of 12 inches or a lowering of 6 inches. When the change in grade amounts to a raise of 12 inches or less or a lowering of 6 inches or less, the work is paid for under Item I-8, Manhole Adjusted to Grade.

GENERAL NOTES

DRAINAGE (CONTINUED)

ITEM I-8 SPECIAL DROP MANHOLE, AS PER PLAN

This item shall consist of furnishing, constructing and maintaining a vertical access shaft of 16-ft. minimum diameter at the proposed location of the special drop manhole, complete with tunnel liner plates and concrete subpour, and the subsequent construction of the proposed special drop manhole as shown on Sheet No. 184 of the plans, complete.

The work included in this item shall be paid for in accordance with the provisions of Section I-8 of the Specifications at the contract unit price bid each for "Item I-8, Special Drop Manhole, As Per Plan", which shall also include full payment for the vertical access shaft including all incidentals, and the 60-inch pipe tap to the existing 8 ft. sewer.

ITEM S-6, PNEUMATICALLY PLACED MORTAR LINING, AS PER PLAN

This item shall consist of constructing a pneumatically placed mortar lining in the existing 8-ft. brick sewer to the lines and grade as shown in the plans and in accordance with the provisions of Item S-6 of the Specifications.

The method of measurement shall be the actual linear feet of lining installed, measured along the centerline of sewer and including a six-inch tapered transition between the mortar lining and the existing surface of the sewer at each end of the work.

The number of linear feet determined as above shall be paid for at the contract unit price per linear foot bid for "Item S-6, Pneumatically Placed Mortar Lining, As Per Plan" which price and payment shall constitute full compensation for furnishing, preparing and placing all materials and for all labor, equipment, tools and incidentals including maintaining the sewage flow. For details and additional information refer to Sheets No. 186

ITEM S-6, PNEUMATICALLY PLACED MORTAR PATCH, AS PER PLAN

This item shall consist of cleaning and patching cracks, crevices, missing brick courses, etc. that are located above the springline of the existing 8-foot brick sewer using un-reinforced pneumatically placed mortar in accordance with the provisions of Item S-6 of the Specifications. Patches shall be finished flush with the inside surface of the existing sewer and then given a flash coat about 1/8 inch thick. The areas to be patched shall be determined and marked by the Engineer at such time that this work may be performed in connection with constructing the pneumatically placed mortar lining in the existing sewer. The work area will be limited to the section of sewer between the proposed special drop manhole and the northerly end of the proposed pneumatically placed mortar lining.

The method of measurement shall be the actual number of square feet marked for patching and measured by the Engineer except that no single isolated patch shall be measured as less than one square foot of area and no strip shall be measured as less than six inches wide. The number of square feet, measured as provided above, completed and accepted shall be paid for at the contract unit price per square foot bid for "Item S-6, Pneumatically placed Mortar Patch, As Per Plan" which price and payment shall consititute full payment in accordance with paragraph S-6.09 of the Specifications. The quantity of patching required under this contract is estimated as 65 square feet.

JUNCTION CHAMBER No. 1 AS PER PLAN

This item shall consist of constructing the Junction Chamber complete as shown on Sheet No. 185.

Payment will be made at the contract unit price bid for Item I-8, Junction Chamber No. 1 As Per Plan, and shall constitute full payment for all necessary materials, tools and labor necessary to complete this item.

VITRIFIED BRICK

Where called for on the plans, vitrified brick for sewers shall be in accordance with Sec. M-4.3 of the City of Cincinnati Department of Public Works General Construction and materials Specifications for Highways and sewers, a copy of which is on file with the Administrator of contract sales, Department of Highway Room 507 S. Front St., Columbus, Ohio.

ITEM S-29

Where item S-29 bituminous coated helical perforated corrugated metal pipe [Sec. M-6.4(h)(c)] (Including specials) is called for in these plans, the requirements for bituminous coating shall be disregarded and the item shall be considered to read "Item S-29, Helical Perforated Corrugated Metal Pipe [Sec. M-6.4 (h)] (Including Specials)."

HAMILTON COUNTY
HAM-71-(1.56)(2.51)

FED. RD. DIV.	STATE	PROJECT	FISCAL YEAR
2	OHIO		

19
492

EXCAVATION & EMBANKMENT

Location	Station to Station	See Sheet No.	Item E-1 Roadway Excavation & Embankment: Roadway Excavation Cu. Yds. Method B	Embankment Cu. Yds.	Embankment +15%	CELLAR VOLUMES: Deduct from Cut Cu. Yds.	Add to Fill Cu. Yds.	
PROJECT								
Expressway	Sta. 149+97.25 to Sta. 175+50	115-131	117,830	190,262				
S.B. Exp.	Sta. 175+50 to Sta. 179+32	132-136	31,235	0				
N.B. Exp.	Sta. 175+50 to Sta. 179+68	132-136	33,789	0				
S.B. Exp.	Sta. 200+83 to Sta. 204+00	139-140	33,487	2,217				
N.B. Exp.	Sta. 200+40 to Sta. 204+00	137-138	5,831	6,082				
Expressway	Sta. 204+00 to Sta. 213+77	141-146	183,497	339				
Gilbert Ave.	Sta. 3+50 to Sta. 35+25		4,048	122,942				
Ramp GD	Sta. 158+00 to Sta. 165+88	155-158	26,120	24,848				
Van Meter	Sta. 20+57.5 to Sta. 24+86.5	159	1,011	72				
Elsinore-Van Meter	Sta. 10+00 SE to Sta. 24+55 SE	160-169	28,260	17,158				
Penn. R.R.	Sta. 201+31.80 to Sta. 208+50		1,976	0				
Temp. Penn. R.R.	Sta. 199+15 T to 205+00 T		1,031	0				
Museum Drive		171	642	13				
Elsinore Place			694	126				
McGregor	Sta. 9+25 to Sta. 15+09.10		681	52				
Unsuitable Material, Abutments & Ramp GD			12,400	12,400				
Unsuitable Material, Prop. Ret. Wall Gilbert			15,800	15,800				
Unsuitable Material Abuts. Elsinore & Penn RR			11,800	11,800				
Benching Van Meter	Sta. 15+75 to Sta. 21+25	169-167	15,383	15,383				
			525,515	419,494				
Cellar Volumes			+ 2,939	- 4,035		4035	2939	
Item E-8 Removal & Disposal			- 5,794	+ 859				
			522,660	416,318	478,766			522,660
								-478,766
					Estimated Quantity of Material Unsuitable for Embankment -			40,000
								Surplus — 3,894
Total to General Summary			522,660					
100% CITY								
McGregor	Sta. 15+09.10 to Sta. 20+48.74		17,463	190	219			17338
Item E-8 Removal & Disposal			-125					- 219
Total to General Summary			17,338					Surplus — 17,119

REMOVAL & DISPOSAL ITEM E-8

STREET NAME	SHEET NO.	LOCATION	Removal and Disposal of Exist. Pavement Sq. yds. Project	100% City	Removal & Disposal of Ex. Curb, Curb & Gutter or Header Curb Lin. Ft. Project	100% City	Removal & Disposal of Exist. Sidewalk Sq. Ft. Project	100% City	Removal & Disposal of Exist. Wearing Course Sq. Yds. Project	100% City
E. Sixth St.		Sta. 20+57.5 to Sta. 24+86.5	1460		348		3515			
E. Eighth St.		Sta. 150+30 N.B. Expwy. to 90' N.	240		180					
E. Eighth St.		75' S. of Court (0' wide) to Gilbert (full width)	180		120					
Gilbert Ave.		Sta. 10+00 GB(N) to Sta. 12+30 GB(N)	1025		210		940		200	
Gilbert Ave.		Sta. 12+30 GB(N) (full width) to Sta. 14+12 GB(N) (50' wide)	1210		181					
Gilbert Ave.		Sta. 14+12 GB(N) (60' wide) to 197' N. (0' wide)	545		197					
Penn. R.R. Driveway		Sta. 11+15 GB(N) (0' wide) to Sta. 15+00 GB(N) (54' wide)	845							
Court St.		Sta. 154+50 (35' Rt.) N.B. Expwy. to E. Sixth St.	1340		800					
Court St.		E. Sixth to 36' E.	10		80		150		70	
Gilbert Ave.		Sta. 158+00 GD to Sta. 159+50 GD (under rt pav. shld.)	160		50					
Penn. R.R. Driveway		Sta. 15+00 GB(N) to Sta. 19+00 GB(N)	2490							
E. Sixth St.		Sta. 10+00 SE to Gilbert	2650		1620		160			
Gilbert Ave.		Sta. 167+50 N.B. to Sta. 35+25 GB(N)	7350		1680		2810			
Parking Lot		Sta. 171+85 N.B.	230							
Penn. R.R. Driveway		Relocated track to Elsinore Place	530							
Parking Lot		Sta. 174+80 N.B.	200							
Elsinore Place		Sta 12+25 to Gilbert Ave.	3020		690		2630			
Elsinore Ave.		Gilbert to 45' E.	130		47					
Gilbert Ave.		Sta. 35+25 GB(N) to Sta. 35+57.07 GB(N)	7		32		160		170	
Elsinore Ave.		Sta. 18+00 SE(E) N. to Elsinore Tower			995		1325			
Symmes St.		215' N. of Des Moines to Maintou	1060		560		30			
Arden St.		Symmes to 10' East	38		31					
Maintou St.		Symmes to 12' East	47		38					
Symmes St.		Maintou to 100' S. of & McGregor			370		1980			
Layton Lane		Maintou to Monroe	380		485					
Monroe St.		Symmes to 10' East	38		31					
Layton Lane		Monroe to McGregor	390		500					
Symmes St.		100' S of & McGregor to 57' N of & McGregor	523		186					
Symmes St.		57' N of & McGregor to 183' N. of & McGregor			126		630		150	
McGregor Ave.		Symmes to 45' W.	67		56		180		45	
McGregor Ave.		Symmes to 15' E.	67		47		50			
Layton Lane		McGregor to Wilkenson	380		488					
Boone St.		70' S. of & McGregor to 73' N. of & McGregor				200		750		
May St.		50' S. of & McGregor to 50' N. of & McGregor		300		150		480		
Cranston Alley		43' S. of & McGregor to 43' N. of & McGregor				112				
Kenton St.		63' S of & McGregor to 63' N. of & McGregor				90		950		
McGregor		Kenyton to 12' W.		41		30				20
Totals to General Summary			26,612	491	10,148	432	14,360	2180	635	20

STEPS ITEM I-13

LOCATION	Sht. No.	Concrete, Type "A", As Per Plan, Lin. Ft.	Concrete, Type "B", As Per Plan, Lin. Ft.	Concrete & Stone, Type "C", As Per Plan, Lin. Ft.
Project				
Van Meter St. Sta. 10+25 SE, 45' Rt.		40		
Elsinore Ave. Sta. 20+85 SE (E) 10' Rt.		116		
Museum Drive Sta. 0+85, 40' Rt.				40
Totals to General Summary		156		40
100% City				
McGregor Ave. Sta. 15+50, 30' Rt.			20	
McGregor Ave. Sta. 16+10, 30' Rt.			36	
Totals to General Summary			56	

Notes: All locations are from the nearest curb line and all removals are full width unless otherwise indicated.

SUMMARY OF QUANTITIES

FED. RD. DIV.	STATE	PROJECT	FISCAL YEAR
2	OHIO		

20
492

HAMILTON COUNTY
HAM-71-(1.56) (2.51)

EROSION CONTROL

Location Station to Station PROJECT	Side	Item L-10 Sodding Sq.Yds.	Item L-2 4" Topsoil Furnished & Placed Sq.Yd.	Item L-2 12" Topsoil Furnished & Placed Sq.Yd.	Item L-9 Seeding & Protecting Sq. Yds.	Item L-120 Jute Matting Sq. Yds.	Item L-9 Commercial Fertilizer Tons 12-12-12	Item L-9 Agricultural Liming Material Tons
Expwy. 149+86 NB to 153+65 NB	Lt.				6,770	4,110		
Expwy. 149+93.5 NB to 161+80 NB	Rt.				13,390	5,660		
Gilbert Ave. 10+11.5 GB(N) to 17+00 GB(N)	Lt.				400			
Van Meter St. 21+00 S to 22+56 S	Rt.				690			
Expwy. 159+30 NB to 170+07 NB	Lt.				10,620	1,690		
Expwy. 162+50 NB to 168+60 NB	Rt.				2,360	460		
Gilbert Ave 17+00 GB(N) to 168+04.24 GA	Lt.				3,365	2,980		
Ramp GD 161+35 GD to 171+25 GD	Rt.				15,240	12,580		
VanMeter St. 10+00 SE to 20+80 SE	Rt.				4,230	470		
Ramp GA 168+04.24 GA to 174+83 GA	Lt.				3,940	1,320		
SB Expwy. 26+50 GB(S) to 175+03 SB	Lt.				2,450	1,370		
NB Expwy. 169+25 NB to 175+06 NB	Lt.				960			
Gilbert Ave. 171+25 GD to 33+62 GB(N)	Rt.	4751		4751	680			
Gilbert Ave. 32+45 GB(N) to 33+50 GB(N)	Lt.				180			
Elsinore Ave. 24+37.5 E(E) to 25+20 SE(E)	Rt.				280			
Ramp GA 175+67 GA to 177+25 GA	Lt.				543	516		
SB Expwy. 175+33 SB to 177+50 SB	Lt.				201			
NB Expwy. 176+00 NB to 177+42 NB	Lt.				544			
NB Expwy. 176+06 NB to 208+50 RP	Rt.				3,440			
SB Expwy 201+50 SB to 205+59 SB	Lt.				3,930	3,570		
NB Expwy 201+00 NB to 208+00 NB	Lt.				1,930	300		
NB Expwy 201+00 NB to 213+00 NB	Rt.				6,380	1,970		
SB Expwy 205+59 SB to 211+22 SB	Lt.				2,310	2,050		
SB Expwy 211+75 SB to 213+00 NB	Lt.				860	790		
Mc Gregor Ave. 12+87 to 15+09.	Lt & Rt.				274			
S.B. Expwy 152+00 to 159+00	Lt.		3678					
S.B. Gilbert Ave. 16+00 GB(S) to 25+58 GB(S)	Lt.		1772					
S.B. Expwy 159+29 to 170+07	Lt.		10495					
Ramp GD 160+28 GD to 162+38 GD	Rt.		1739					
Ramp GD 165+00 GD to 171+25 GD	Rt.		8346					
Ramp GA 168+07 GA to 171+50 GA	Lt.		1514					
Ramp GA 168+76 GA to 171+50 GA	Rt.		861					
N.B. Exp. 201+00 to 204+08	Rt.		1478					
Totals to General Summary		4751	29883	4751	85,697	39,826	8.14	40.70
100% CITY								
Mc Gregor Ave 15+39 to 20+48	Lt & Rt				2,800	1760		
Totals to General Summary					2,800	1,760	0.25	1.25

ITEM E-1 COMPACTED SUBGRADE SQ.YDS.

PROJECT	See Sh. No.	Project	100% City
9" Reinforced Portland Cement Conc. Pavement	24&29	70,853	2814
8" Portland Cement Concrete Base Course	27	39	
Paved Shoulder 3956 Gal. x 4	24	15,824	
Reinforced Concrete Approach Slab	26	1,752	
Standard Portland Cement Conc. Median Pavement	25	1,551	
Type 6 Curb 13,502 Lin. Ft. x 0.5 ÷ 9	26	750	
Type 8 Curb 445 Lin. Ft. x 1.0 ÷ 9	27	50	
Type 10 Curb 80 Lin Ft. x 0.75 ÷ 9	27	7	
Totals to General Summary		90,826	2814

ITEM S.S.CE-101.04 COMPACTION USING HEAVY PNEUMATIC TIRED ROLLER

PROJECT		Sh. No.	Hours
T-71 Exp. & Ramps	41,952.86 Sq. Yds.	27	
Paved Shoulders, Exp. & Ramps	15,822.45 " "	27	
I-7 Approach Slabs, Exp.	701.83 " "	29	
I-21 Median Pavement, Exp.	1,550.56 " "	28	
	60,027.70 Sq. Yds.		
60,027.70 Sq. Yds. ÷ 2000 Sq. Yds. / hr.			
Total to General Summary =			30

ITEM I-15 GUARD RAIL

Location Station to Station PROJECT	Side	See Sheet No.	Steel Beam Std. Type (Deep) Lin. Ft.	Steel Beam Barrier Std. Type (Deep) Lin. Ft.
Expwy. 149+36.75 N.B. to 153+65.75 NB	Rt.	41-44		969
Expwy. 159+30 N.B. to 160+80	Rt.	43&44	150	
Van Meter St. 12+00 S.E to 23+56 SE	Lt.	75-77	1150	
Expwy. 154+23.5 N.B. to 158+70.5 NB	Lt.	42&43	441	
Ramp GD 158+06 GD to 161+20 GD	Rt.	43&44	312.5	
Gilbert Ave. 17+13 GB(S) to 168+76 GA	Lt.	43-46	950	
Expwy. 161+80 NB to 164+85 NB	Lt.	44&45	300	
Expwy. 162+46.24 NB to 165+12.24 NB.	Rt.	44&45		266
Expwy. 165+12.24 NB to 165+62.24 NB	Rt.	45	100	
Expwy. 165+62.24 NB to 169+24.74 NB	Rt.	45&46		362.5
Expwy. 163+59 NB to 167+03 NB	Rt.	45&46	350	
SB Expwy. 169+25 SB to 172+75 SB	Rt.	46&47	350	
NB Expwy. 169+24.74 NB to 178+12 NB	Lt.	46-49	887.5	
Gilbert Ave. 25+10 GB(N) to 27+03.8 GB(N)	Rt.	46	187.5	
Gilbert Ave. 26+59.5 GB(S) to 29+38.5 GB(N)	Lt.	46&47	287.5	
Gilbert Ave. 31+01.5 GB(N) to 31+74 GB(N)	Rt.	47	75	
Ramp GA 171+50 GA to 177+17 GA	Rt.	47&48	575	
S.B. Expwy. 175+06.5 SB to 177+44 SB	Lt.	48	237.5	
Elsinore Place 0+66 Drive to 13+40.5 Elsinore	Rt.	48	325	
NB Expwy. 201+00 NB to 204+20 NB	Rt.	51&52	325	
SB Expwy. 201+50 SB to 208+12.5 SB	Rt.	51-53	662.5	
Expwy. 207+80. N.B. to 210+80 NB	Rt.	53&54		300
Expwy. 210+80 NB to 211+55 NB	Rt.	54	150	
Expwy. 211+55 NB to 212+32.5	Rt.	54		137.5
Expwy. 210+45 NB to 211+32.5 NB	Rt.	54	87.5	
McGregor Ave. 13+54.5 to 14+04.5	Lt.	78	50	
Deduct (Traffic Control Item) 112.5 feet each @ Signs at Sta. 152+40 NB, 155+80 NB, 163+00 NB & 212+50 SB				-450.0
Totals to General Summary			7,666.0	1585.0

MOWING SEEDED & SODDED AREAS, ITEM SPECIAL

PROJECT		100% CITY
Seeded Areas	= 85697 sq. Yds.	Seeded Area = 2800 sq. Yds.
Sodded Areas	= 4751	2800 ÷ 4840 = 0.58 acres
Total Area	= 90,448 sq. Yds.	
90,448 ÷ 4840 = 18.69 acres		
Total to General Summary	18.69 Acres	Total to General Summary 0.58 Acres

FENCING

Station to Station PROJECT	Side	See Sheet No.	Chain Link Fence 5' High	Chain Link Fence Gate, 14' Double Opening
149+94.50 (64' Rt.) to 151+28.97 (131.45' Rt.)	Rt.	459	212	
154+28 (57.2 Lt) to 157+20.5 GD (11' Rt)	Lt.	461	435	
154+80.84 (103.52' Rt) to 165+70.50 GD (16' Rt.)	Rt.	462 MA 461	1265	1
17+60 GB NB (55.95' Rt) to 27+04.37 GB NB (37.17 Rt)	Lt.	423 425	940	
29+39.78 (43.42' Lt.) to 174+81 GA (16' Lt.)	Lt.	469	410	
170+76.5 GD (13' Rt.) to 172+20 GD (13' Rt.)	Rt.	467 476	144	
201+00 NB (116.53 Rt.) to 213+00 (100.49 Rt.)	Rt.	471 478 475	1265	1
201+50 SB (105' Lt.) to 213+00 (117.50 Lt.)	Lt.	476 478 475	1125	1
Totals to General Summary			5796	3

ITEM S-24 REMOVAL OF EXISTING STRUCTURE

Location PROJECT		Sheet No.	Type of Construction	Approx. Length	Approx. Height
150+40 NB	121' Lt.	41	1.5' Concrete Wall	140'	13'
11+00 GB(N) 50' Lt. to 18+65 GB(N) 115' Rt.		42-44	1.5 Concrete & Brick Wall	780'	6'
153+10 NB	15' Rt.	42	2.2' & 4.4' Conc. Walls and Conc. Steps	75'	10' to 30'
154+30 NB	56' Rt.	42	3.8' Concrete Wall	225'	3' to 40'
154+80 NB	111' Rt.	42	3' to 6' Concrete Wall	270'	1' to 22'
171+26 NB 115' Rt. to 30.5' Rt.		47	2.0' Stone Wall	220'	3'
171+25 NB 115' Rt. to 175+30 NB 205' Rt.		47&48	1.5 Stone Wall and Concrete Steps	420'	3'
34+00 GB(N)	90' Rt.	48	1.5 Stone Wall	70'	1.5'
34+26 GB(N)	51' Rt.	48	1.2' Stone Wall	50'	3'
10+35 SE	35' Rt.	75	2.0' Stone Wall	12'	3.5'
11+05 SE	10' Lt.	75	1.2' Stone Wall	60'	3'
12+10 SE	17' Lt.	75	1.5' Stone Wall	10'	4'
12+40 SE	34' Rt.	75	1.5' Stone Wall	125'	4'
12+55 SE	14' Rt.	75	1.8 & 1.0' Stone Walls	60'	5'
12+90 SE to 13+70 SE	Lt & Rt.	75	2.0' Stone Walls	100'	5'
12+96 SE to 14+45 SE	Lt & Rt.	75	1.5' Stone Walls	300'	4'
19+75 SE	75' Rt.	77	2.0' Stone Walls	60'	1.5'
24+25 SE(E)	80' Rt.	77	2.0' Stone Wall	35'	2'
24+45 SE(E)	87' Rt.	77	2.0' Stone Wall	25'	2'
205+65 NB	170' Rt.	52	Wood & Steel Pedestrian Bridge	100'	—
211+00 NB	80' Rt & 95' Rt	54	2.0' Stone Walls	125'	5'
212+00 NB	81' Rt.	54	2.0' Stone Wall	92'	7'
Walls @ "1233 Elsinore Ave.		75	1.5' (Avg.) Stone Walls and Steps	177'	8'
20+32 SE(E)	20' Rt.	77	2.0' Stone Wall	22'	2'
100% CITY					
16+05 Mc Gregor	20' Rt.	79	1.5' Stone Wall and Steps	15'	3'
17+55 Mc Gregor	17' Rt.	79	1.5' Stone Wall	90'	4'
17+60 Mc Gregor	40' Lt.	79	1.0' Stone Wall & Conc. Blk. Wall	200'	5'
17+73 Mc Gregor	25' Rt.	79	1.0' Stone Wall	50'	4'
18+15 Mc Gregor	Rt.	79	1.5' Stone Wall	35'	3.5'
18+15 Rt to 19+18 Rt. Mc Gregor		79	1.5' Stone Wall & Conc. Blk. Walls	160'	3' & 7'
20+00 Mc Gregor	25' Lt.	79	1.0' Stone Wall	75	2.5'

ITEM S-22 REMOVAL OF PORTIONS OF EXISTING STRUCTURE

Location PROJECT		Sheet No.	Type of Construction	Approx. Length	Approx. Height
21+00 SE(E)	10' Rt.	77	5' Wide Conc. Steps	40'	—
24+38 SE(E)	90' Rt.	77	Stone Steps	22'	—
10+25 SE	42' Rt.	75	4' Wide Conc. Steps	12'	—
100% CITY					
14+50 Mc Gregor	20' Lt.	78	1.0' Stone Wall	22'	
15+00 Mc Gregor	25' Lt.	79	0.5' Conc. Wall	8'	
18+15 Mc Gregor	33' Lt.	79	1.5' Stone Wall	33'	4'
19+40 Mc Gregor	40' Lt.	79	2.0' Stone Wall	42'	6'
20+37 Mc Gregor	40' Lt.	79	1.0' Conc. Wall	17'	3'

ITEM E-11 WATER

PROJECT	1000 Gal.
478,766 Cu. Yd. Emb. @ 0.005 M.Gal./Cu.Yd.	2393.8
14,818 Cu. Yd. I-22 "	74.1
225 Cu. Yd. I-18 "	1.1
2260 Cu. Yd. B-19 "	11.3
Total to General Summary	2480.3
100% CITY	
508 Cu. Yd. I-22 @ 0.005 M.Gal./Cu.Yd.	2.5
Total to General Summary	2.5

SUMMARY OF QUANTITIES

DRAINAGE

HAMILTON COUNTY
HAM-71-(1.58) (2.81)

FED. RD. DIV.	STATE	PROJECT	FISCAL YEAR
2	OHIO		

21
492

Location
Manhole or Catch Basin
Number Designation as Shown
on Plan and Profile

ITEM I-1 PIPES (LIN. FT)

PROJECT	See Sheet Number	CLASS B-1 6"	CLASS B-1 8"	CLASS B-1 12"	CLASS B-1 Sec. M-6.6(b) or Sec. M-6.8(b) 12"	CLASS B-1 Sec. M-6.6(c) 12"	CLASS B-1 Sec. M-6.6(d) Under Railroad 12"	CLASS B-1 Cast Iron Thickness Class 23 12"	CLASS B-1 Sec. M-6.6(b) or Sec. M-6.8(b) 15"	CLASS B-1 Sec. M-6.6(b) or Sec. M-6.8(b) 15"	CLASS B-1 Sec. M-6.6(d) 15"	CLASS B-1 Sec. M-6.6(b) or Sec. M-6.8(b) 18"	CLASS B-1 Sec. M-6.6(c) 18"	CLASS B-1 Sec. M-6.6(d) 18"	CLASS B-1 Cast Iron Thickness Class 27 18"	CLASS B-1 Sec. M-6.6(b) or Sec. M-6.8(b) 21"	CLASS B-1 Sec. M-6.6(c) 21"	CLASS B-1 Sec. M-6.6(d) 24"	CLASS B-1 Sec. M-6.6(b) or Sec. M-6.8(b) 24"	CLASS B-1 Sec. M-6.6(c) 24"	CLASS B-1 Sec. M-6.6(d) 24"	CLASS B-1 Cast Iron Thickness Class 27 24"	CLASS B-1 Sec. M-6.6(b) or Sec. M-6.8(b) 27"	CLASS B-1 Sec. M-6.6(c) 27"	CLASS B-1 Sec. M-6.6(b) or Sec. M-6.8(b) 30"	CLASS B-1 Sec. M-6.6(c) Radius Pipe 30"	CLASS B-1 Sec. M-6.6(c) Radius Pipe Sec. M-6.6 (d) 30"	CLASS B-1 Cast Iron Thickness Class 26 30"	CLASS B-1 Sec. M-6.6(b) or Sec. M-6.8(b) 36"	CLASS B-1 Sec. M-6.6(c) 36"	CLASS B-1 Sec. M-6.6(d) 36"	CLASS B-1 Cast Iron Thickness Class 26 36"	CLASS B-1 Class F-4 12"
1A,1B to 1, 1B to 1C, 1 to 2, 2 to 2B to 2C	41			81					100				101																				
2 to 2A, 2 to 3, 3B to 3A to 3C, 3A to 3 to 3D	41			86					12			70																					
3 to 4, 12 to 12C to 12D, 13 to 13A, 12A, 11A to 11 to 11B	41			71					80			260																					
4A to 4 to 4B to 4C, 4 to 5 to 5B to 5C to 5D, 5 to 5A	42			210					79																								
4 to 6, 14 to 15 to 16 to 16A, 16 to 16B, 15A to 15 to 15B	42,43			108								266		179	91				118														
15 to 17, 10B to 10A to 10 to 16, 8 to 8B, 17 to 18	42,43			42					28	165		321																					
6A to 6 to 6B to 6C, 6 to 7 to 7A, 7B to 7 to 8 to 8A	43			104	53				13	58																							
17A to 17 to 17B, 18B to 18A to 18 to 19 to 19A to 19B	43			108					144	67																							
19E to 19D to 19 to 19C, 19 to 20 to 21, 20B to 20 to 20A	43,44			103	157																												
21B to 21 to 21A, 32A to 32 to 32B, 32 to 33 to 33A	44			180																										97			
33 to 34 to 34A, 34 to 35, 34 to 39 to 40 to 40A	44,45,75			62															119		187								108			33	
39A to 39 to 39B, 22C to 22B to 22 to 22A, 22 to 23 to 24	44			209					40		97																						
24 to 57 to 57B, 57 to 57A, 23 to 25 to 25A	44			207						90																							58
25B to 25 to 25C, 30 to 31 to 31B, 31 to 31A, 57 to 57C	44			48			43		72	18																							
N.B. Exp. 160+50 to 161+41 (Rt.)	189																																
171+75GD to 172+87GD (Rt.)	195																																
40B to 40 to 40A, 40 to 41 to 42 to 42A, 42B to 42 to 43	45			110																	81												
43A to 43 to 43B, 41A to 41 to 44 to 44B to 44C	45			21					37												226											63	
44A to 44 to 45 to 45A, 45 to 46 to 46A to 46B	45			88	65																												
46 to 46C to 46D, 25 to 26 to 26A	44,45			88	308																												
26B to 26 to 26C to 26D	45			40																													
44 to 47 to 47C, 47A to 47 to 47B, 47 to 48 to 48A to 48B	45,46			115					13								54				281												
48E to 48 to 48C to 48D, 48 to 49 to 49A to 49B	46			107					77							133																	
26 to 27 to 27B, 27A to 27 to 28 to 28B, 28 to 28A	45,46			132		250																											
28 to 29 to 29A	46			25	124																												
49 to 50 to 52 to 52A to 52B to 52C, 52 to 52D	46,47			50					74	79						89																	
50A to 50 to 50B, 50 to 51 to 51A to 51B, 51A to 51C	47			34					49	29																							
51 to 53 to 53A, 53 to 101 to 101A to 101B	47			22					171																								
101C to 101 to 101D, 58 to 103 to 103A	47,48			88	99																												
58 to 59 to 99 to 100, 59 to 60 to 68 to 68A	48			41																	70							5	18	54		32	126	30
71A to 71 to 70 to 70C, 70B to 70A to 70, 70 to 68 to 69 to 69A	48			269			23																										
69 to 69B, 60 to 61 to 61A to 61B, 61C to 61 to 62 to 97	48,77			174					49										136					88		99			34				
97 to 97A, 62A to 62 to 62B to 62C, 98A to 98 to 98B	48			122					110																								
98 to 96 to 96A to 96B, 96 to 73 to 72 to 72B	48			138						55																							
73A to 73 to 73B, 72C to 72 to 72A, 96 to 96C	48			103																													
68 to 72 to 74 to 74A to 74B to 74D, 74C to 74A	48			100					52															100		124							
74 to 75 to 75B, 75A to 75 to 75C, 75 to 76 to 76B	48,49			8					80										6					156									
76 to 76C to 76D to 76E, 76A to 76 to 76F, 76D to 76G	49			44					100																								
77 to 78 to 78E to 78F, 78 to 78A to 78B, 78C to 78 to 78D	51			122					134																131								
78 to 79 to 79C to 79D, 79A to 79 to 79B	51,52			199					10															203									
83A to 83 to 84 to 85 to 86, 85 to 85A, 86 to 86A	52			100								24								298		23											
79 to 80 to 80C to 80D, 80A to 80 to 80B	52			176					8															227									
80 to 81 to 81D to 81C, 81B to 81A to 81 to 81E	52,53			93					97										244														
81 to 82 to 82E to 82C, 82E to 82D	53,54,78			24					15										275														
82I to 82B to 82A to 82 to 82G to 82F, 82 to 82H	54,78			23					154										233													30	
38A to 38, 37 to 37A, 36 to 35 to 35A to 35B, 35 to 37 38B	44,75			52					26				37					58															
35 to 54 to 55 to 56, 54A to 54 to 54B to 54C	46,75,76			41	692																												
55A to 55 to 55B, 56A to 56 to 56B	76			56																													
67A to 67 to 67B, 67 to 65 to 65A, 88 to 67 to 67C	77			83			24					125																						
65 to 64 to 63 to 62, 64B to 64 to 64A	77			62								262							77														
64 to 64C, 63 to 63A, 63 to 9 to 9A, 9 to 66 to 102	77			216																													
87 to 87B, 87A, 89A to 89 to 90	54,78			67	136																												
20+47GB(S) to 25+79GB(S) Lt, 22+42GB(S) to 25+65GB(S) Lt.	191																																
131+25E to 151+65E (Rt.), 101+85E to 131+45E (Rt.)	191																																
205+63SB to 213+00(Rt) 180+05E(E) to Museum Dr. (Rt)	195,197																																
165+78GD to 170+71GD (Rt.)	191																																
From General Notes	17	20	20	50																												1	
Total To General Summary		20	20	4902	1634	250	43	47	1824	561	97	1328	138	179	91	222	54	58	1208	886	257	23	686	219	124	104	18	54	34	108	32	223	63	151
100% CITY																																		
89 to 90 to 90A to 90B, 91 to 91A, 92A to 92 to 92B	78,79			118	14				41																								
93 to 93A	79			53																													
94A to 94 to 94B, 94C to 94 to 94D	79			120																													
95E to 95D to 95 to 95B to 95C, 95A, 95 to 94	79			29	138				70																								
Total To General Summary				320	152				111																								

ITEM I-2 | ITEM I-5 (EACH) | ITEM I-6 | ITEM I-8 (EACH)

PROJECT	Class F-4 12"	Masonry C.Y.	Pipe Special 36"&18" Sec. M-6.6(d)	CLASS B-1 Pipe Special 6"	CLASS B-1 Pipe Special 8"	CLASS B-1 Pipe Special 12"	Pneu Placed Mortar Lining (As Per Plan) Lin. Ft.	Pneu Placed Mortar Patch (As Per Plan) Sq. Ft.	Manholes (Types) A or P As Per Plan	Manholes (Types) A 5' Dia. As Per Plan	Manholes (Types) Drop Type A or P As Per Plan	Manholes (Types) Special Drop As Per Plan	Manholes (Types) Type D As Per Plan	Manholes (Types) Type B As Per Plan	Manhole Adjusted To Grade As Per Plan	Junction Chamber No. 1 As Per Plan	Catch Basins (Types) A	Catch Basins (Types) A-2	Catch Basins (Types) K	Catch Basins (Types) C	Catch Basins (Types) D	Catch Basins (Types) V	Catch Basins (Types) Standard No. 5	Catch Basins Adjust To Grade	ITEM I-14 Paved Gutter Type 1 Lin. Ft.	ITEM I-14 Paved Gutter Type 2 Modified As Per Plan Lin. Ft.
1A,1B to 1, 1B to 1C, 1 to 2, 2 to 2B to 2C									1									2	1		1					
2 to 2A, 2 to 3, 3B to 3A to 3C, 3A to 3 to 3D									1								1	2	1							
3 to 4, 12 to 12C to 12D, 13 to 13A, 12A, 11A to 11 to 11B									4								2	2		1						
4A to 4 to 4B to 4C, 4 to 5 to 5B to 5C to 5D, 5 to 5A									1								1	2	2				1			
4 to 6, 14 to 15 to 16 to 16A, 16 to 16B, 15A to 15 to 15B									3						1			2		2						
15 to 17, 10B to 10A to 10 to 16, 8 to 8B, 17 to 18									4									1	1							
6A to 6 to 6B to 6C, 6 to 7 to 7A, 7B to 7 to 8 to 8A									1								1	2	1							
17A to 17 to 17B, 18B to 18A to 18 to 19 to 19A to 19B									1									2	2		1					
19E to 19D to 19 to 19C, 19 to 20 to 21, 20B to 20 to 20A									2										1							
21B to 21 to 21A, 32A to 32 to 32B, 32 to 33 to 33A									1				1													
33 to 34 to 34A, 34 to 35, 34 to 39 to 40 to 40A									2	1	1										1					
39A to 39 to 39B, 22C to 22B to 22 to 22A, 22 to 23 to 24									2				1				1	2	1		1					
24 to 57 to 57B, 57 to 57A, 23 to 25 to 25A	58								1								1	1	1							
25B to 25 to 25C, 30 to 31 to 31B, 31 to 31A, 57 to 57C									1									1			1					
N.B. Exp. 160+50 to 161+41 (Rt.)																									98	
171+75GD to 172+87GD (Rt.)																									115	
40B to 40 to 40A, 40 to 41 to 42 to 42A, 42B to 42 to 43									3									1			1					
43A to 43 to 43B, 41A to 41 to 44 to 44B to 44C	63								1								1		1							
44A to 44 to 45 to 45A, 45 to 46 to 46A to 46B									2								2	1	1							
46 to 46C to 46D, 25 to 26 to 26A									1									1	1							
26B to 26 to 26C to 26D																			1							
44 to 47 to 47C, 47A to 47 to 47B, 47 to 48 to 48A to 48B									2								3			2						
48E to 48 to 48C to 48D, 48 to 49 to 49A to 49B									1								1	1	2							
26 to 27 to 27B, 27A to 27 to 28 to 28B, 28 to 28A									1		1							3			1					
28 to 29 to 29A									1								1									
49 to 50 to 52 to 52A to 52B to 52C, 52 to 52D									2										1				1			
50A to 50 to 50B, 50 to 51 to 51A to 51B, 51A to 51C									1											3						
51 to 53 to 53A, 53 to 101 to 101A to 101B									2										1				1			
101C to 101 to 101D, 58 to 103 to 103A		1							1		1							1			1					
58 to 59 to 99 to 100, 59 to 60 to 68 to 68A		0.94					325	65	4							1										
71A to 71 to 70 to 70C, 70B to 70A to 70, 70 to 68 to 69 to 69A									3									2		1						
69 to 69B, 60 to 61 to 61A to 61B, 61C to 61 to 62 to 97		4.9							1	2							1	1	1							
97 to 97A, 62A to 62 to 62B to 62C, 98A to 98 to 98B									1									2	1				1			
98 to 96 to 96A to 96B, 96 to 73 to 72 to 72B									3									1					1			
73A to 73 to 73B, 72C to 72 to 72A, 96 to 96C																		2								
68 to 72 to 74 to 74A to 74B to 74D, 74C to 74A									1									1	1							
74 to 75 to 75B, 75A to 75 to 75C, 75 to 76 to 76B									2																	
76 to 76C to 76D to 76E, 76A to 76 to 76F, 76D to 76G																		1			2					
77 to 78 to 78E to 78F, 78 to 78A to 78B, 78C to 78 to 78D									2								1	1	2				2			
78 to 79 to 79C to 79D, 79A to 79 to 79B									1								1	2	1							
83A to 83 to 84 to 85 to 86, 85 to 85A, 86 to 86A							2		2	1										1	1					
79 to 80 to 80C to 80D, 80A to 80 to 80B									1								1	2	1							
80 to 81 to 81D to 81C, 81B to 81A to 81 to 81E									1								1	1	2							
81 to 82 to 82E to 82C, 82E to 82D									1								1		1							
82I to 82B to 82A to 82 to 82G to 82F, 82 to 82H	30																	1	1							
38A to 38, 37 to 37A, 36 to 35 to 35A to 35B, 35 to 37 38B										2							1		1	2	1					
35 to 54 to 55 to 56, 54A to 54 to 54B to 54C									3									1	1		1					
55A to 55 to 55B, 56A to 56 to 56B																	2	2								
67A to 67 to 67B, 67 to 65 to 65A, 88 to 67 to 67C						1			2	1								3								
65 to 64 to 63 to 62, 64B to 64 to 64A						1			2									1								
64 to 64C, 63 to 63A, 63 to 9 to 9A, 9 to 66 to 102									1				2					2								
87 to 87B, 87A, 89A to 89 to 90									1						1			2						1		
20+47GB(S) to 25+79GB(S) Lt, 22+42GB(S) to 25+65GB(S) Lt.																										883
131+25E to 151+65E (Rt.), 101+85E to 131+45E (Rt.)																									287	232
205+63SB to 213+00(Rt) 180+05E(E) to Museum Dr. (Rt)																										1,444
165+78GD to 170+71GD (Rt.)																										493
From General Notes		1		4	4	4																				
Total To General Summary	151	6.84	1	4	4	6			75	1	8	1	2	2	4	1	24	55	32	12	13	1	6	1	500	3,052
100% CITY																										
89 to 90 to 90A to 90B, 91 to 91A, 92A to 92 to 92B															3		1	2	1			1				
93 to 93A																		1								
94A to 94 to 94B, 94C to 94 to 94D																		3			1					
95E to 95D to 95 to 95B to 95C, 95A, 95 to 94																		1	2		1	1				
Total To General Summary															3		1	7	3		2	2				

SUMMARY OF QUANTITIES

HAMILTON COUNTY
HAM-71-(1.56)(2.51)

FED. RD. DIV.	STATE	PROJECT	FISCAL YEAR
2	OHIO		

22
492

UNDERDRAINS

Symbol Designation Shown on Plan Sheet	Location Station to Station	Side	See Sheet No.	Shallow				Deep					
				6" Pipe Class I-3 Item I-1, Lin Ft.	6" Pipe Class F-4 Item I-1, Lin Ft.	Pipe Specials Class F-4 Item 15 6"		6" Pipe Class I-3 Item I-1, Lin Ft.	6" Pipe Class F-4 Item I-1, Lin Ft.	Pipe Specials Class F-4 Item 15 6"		8"x6"x6" Wye Each	8" Pipe, Class F-4 Item I-1, Lin. Ft.
						6"X6"X60° Bends Each	6"X6"X30° Bends Each			6"X6"X60° Bend Each	6"X6"X30° Bends Each		
U-1	Ramp GA 169+55 to 170+50	Rt.	46	93	2	1							
U-2	Ramp GA 170+50 to 174+75	Rt.	47					414	10				
U-3	Ramp GA 174+75 to 177+25	Rt.	48					239	10				
U-4	Ramp GD 157+59 to 159+60	Rt.	43,44	201									
U-5	Ramp GD 17+64 GB(N) to 161+94	Lt.	43,44	362	20								
U-6	Ramp GD 161+98 to 163+43	Lt.	44,45					135	10				
U-7	Ramp GD 163+62 to 165+72	Lt.	45					181	20				
U-8	Ramp GD 165+77 to 168+50	Lt.	45,46					267	6	1			
U-9	Ramp GD 168+60 to 170+54	Lt.	46,47					186	6	1			
U-10	Ramp GD 171+00 to 174+18	Rt.	47,48					312	6	1			
U-11	S.B. Exp. 150+27 to 151+64	Rt.	41	134	2	1							
U-12	N.B. Exp. 150+27 to 151+35	Rt.	41					106	4	1			
U-13	S.B. Exp. 151+66 to 154+44	Rt.	41,42	252	26	1							
U-14	N.B. Exp. 151+43 to 154+38	Rt.	41,42					293	4	1			
U-15	S.B. Exp. 154+35 to 156+98	Lt.	42,43	260	6	1							
U-16	S.B. Exp. 154+46 to 156+96	Rt.	42,43	247	6	1							
U-17	N.B. Exp. 154+43 to 157+31	Rt.	42,43					282	6		1		
U-18	S.B. Exp. 157+04 to 158+83	Lt.	43	176	6	1							
U-19	S.B. Exp. 157+16 to 159+60	Rt.	43,44	241	6	1							
U-20	N.B. Exp. 157+40 to 160+35	Rt.	43,44	289	6		1						
U-21	S.B. Exp. 161+91 to 164+00	Lt.	44,45	196	16	1							
U-22	S.B. Exp. 162+74 to 164+00	Rt.	44,45	123	6	1							
U-23	Ramp GA 174+75	Rt.	48									1	18
U-24	S.B. Exp. 164+02 to 166+38	Lt.	45	233	6	1							
U-25	S.B. Exp. 164+02 to 166+29	Rt.	45	220	6	1	4						
U-26	S.B. Exp. 166+40 to 168+62	Lt.	45,46					219	6	1			
U-27	S.B. Exp. 166+45 to 168+62	Rt.	45,46	201	17	1							
U-28	S.B. Exp. 170+83	Lt.	47									1	49
U-29	S.B. Exp. 168+68 to 169+95	Lt.	46					123	7	1			
U-30	S.B. Exp. 168+67 to 170+83	Rt.	46,47	202	18	1							
U-31	N.B. Exp. 169+10 to 170+80	Rt.	46,47	160	10								
U-32	S.B. Exp. 170+83 to 176+11	Lt.	47,48					508	20				
U-33	S.B. Exp. 171+10 to 172+51	Rt.	47	128	12	1							
U-34	S.B. Exp. 172+62 to 174+47	Rt.	47,48	175	10								
U-35	N.B. Exp. 170+93 to 174+03	Rt.	47,48	300	10								
U-36	S.B. Exp. 174+76 to 175+92	Rt.	48	113	4	1							
U-37	S.B. Exp. 176+12 to 176+95	Rt.	48	72	10								
U-38	N.B. Exp. 174+20 to 177+00	Rt.	48	274	3		1						
U-39	N.B. Exp. 174+20 to 177+16.49	Rt.	48,49					391	6	1			
U-40	S.B. Exp. 176+16 to 177+50	Lt.	48					129	5		1		
U-41	S.B. Exp. 176+98 to 177+50	Rt.	48	50	2	1							
U-42	N.B. Exp. 177+04 to 178+16	Lt.	48,49	102	10								
U-43	S.B. Exp. 170+00 to 170+83	Lt.	46,47					83					
U-44	N.B. Exp. 201+00 to 201+19	Lt.	51	19									
U-45	S.B. Exp. 201+56 to 203+50	Lt.	51,52					184	6	1			
U-46	S.B. Exp. 201+66 to 203+53	Rt.	51,52	185	6	1							
U-47	N.B. Exp. 201+21 to 203+20	Lt.	51,52	197	6	1							
U-48	S.B. Exp. 203+55 to 208+30	Lt.	52					453	16	1			
U-49	S.B. Exp. 203+67 to 205+80	Rt.	52	196	16	1							
U-50	N.B. Exp. 203+25 to 205+47	Lt.	52	208	16	1							
U-51	S.B. Exp. 205+95 to 208+26	Rt.	52,53	229	6	1							
U-52	N.B. Exp. 205+52 to 207+91	Lt.	52,53	237	6	1							
U-53	N.B. Exp. 204+11 to 208+00	Rt.	52,53					378	33	1			
U-54	S.B. Exp. 208+29 S.B to 213+00	Lt.	53,54					484	78				
U-55	S.B. Exp. 208+38 to 210+99	Rt.	53,54	259	6	1							
U-56	N.B. Exp. 208+06 to 210+76	Rt.	53,54					268	6	1			
U-57	S.B. Exp. 211+04 S.B. to 213+00	Rt.	54	214	20	2	1						
U-58	N.B. Exp. 210+81 to 213+00	Rt.	54					212	6	1			
	Totals to General Summary			6,548	299	25	7	5,857	261	13	2	2	67

ABANDON I-16 (M.H.)

Manhole Designation Shown on Plan Sheet	Location	See Sheet No.	Item I-16, Manhole Abandoned Each	Depth of M.H. (Ft)
M-1	Under S.B. Exp. 151+21 31'L	41	1	13
M-2	Under N.B. Exp. 153+42 25'R	42	1	8
M-3	Gilbert Ave. 11+18 50'R	42	1	9
M-4	Under N.B. Exp. 154+89 15'R	42	1	4
M-5	Gilbert Ave. 12+98 50'R	42	1	8
M-6	Gilbert Ave. 12+72 43'R	42	1	11
M-7	Under N.B. Gilbert Ave. 12+66 14'R	42	1	13
M-8	Under S.B. Gilbert Ave. 12+97 11'R	42	1	11
M-9	Under N.B Gilbert Ave. 14+08 3'R	42	1	11
M-10	Gilbert Ave. Viaduct 8+13 50'R	41	1	10
M-11	Under N.B. Exp. 154+75 40'R	42	1	11
M-12	Under McGregor Ave. 9+98 12'L	54,78	1	7
M-13	S.B. Exp. 156+93 64'R	43	1	10
M-14	Under S.B. Exp. 158+12 42'R	43	1	10
M-15	Under Symmes St. 206+00 S.B. 100'L	52	1	5
M-16	Under S.B. Exp. 202+00 27'L	51	1	12
M-17	Under Ramp GD 160+93 19'L	44	1	10
M-18	Under Ramp GD 158+91 9'L	44	1	11
M-19	Ramp GD 160+21 51'L	44	1	11
M-20	Under S.B. Exp. 162+79 29'L	44	1	12
M-21	Under N.B. Exp. 163+04 22'R	45	1	12
M-22	Under N.B. Exp. 164+79 22'R	45	1	12
M-23	Under N.B. Exp. 166+25 28'R	45	1	12
M-24	Under S.B. Exp. 164+54 32'R	45	1	12
M-25	Under S.B. Exp. 165+91 26'L	45	1	13
M-26	Gilbert Ave. 24+04 53'L	45	1	
M-27	N.B. Exp. 167+67 63'R	46	1	9
M-28	Under N.B. Exp. 167+73 40'R	46	1	9
M-29	Under N.B. Exp. 168+86 51'R	46	1	9
M-30	Under S.B. Exp. 167+25 18'L	46	1	13
M-31	Under S.B. Gilbert Ave. 31+92 5'L	47	1	12
M-32	N.B. Gilbert Ave. 32+61 37'R	48	1	7
M-33	Under N.B. Gilbert Ave. 33+31 28'R	48	1	6
M-34	Under S.B. Gilbert Ave. 33+09 21'R	48	1	11
M-35	Under S.B. Gilbert Ave. 34+40 29'L	48	1	5
M-36	N.B. Exp. 200+11 21'L	51	1	11
M-37	N.B. Exp. 200+24 11'L	51	1	7
	Total to General Summary		37	

ABANDON I-16 (C.B.)

Catch Basin Designation Shown on Plan Sheet	Location PROJECT	See Sheet No.	Item I-16 Manholes Abandoned Each
C-1	Gilbert Ave. 10+87 55'R	42	1
C-2	S.B. Exp. 152+80 80'L	42	1
C-3	S.B. Exp. 153+15 94'L	42	1
C-4	S.B. Exp. 153+55 105'L	42	1
C-5	S.B. Exp. 154+72 89'L	42	1
C-6	S.B. Gilbert Ave. 14+17 3'L	42	1
C-7	Van Meter St. 10+77 5'L	44	1
C-8	Van Meter St. 24+40 18'R	42	1
C-10	Under McGregor 9+98 32'L	54	1
C-11	N.B. Gilbert Ave 18+54 68'R	44	1
C-12	Under Symmes St. 206+15 S.B. 100'L	52	1
C-13	Under N.B. Exp. 164+81 34'R	45	1
C-14	Under S.B. Exp. 164+55 40'L	45	1
C-15	Under N.B. Exp. 168+10 54'R	46	1
C-16	Under S.B. Exp. 167+37 25'L	46	1
C-17	N.B. Gilbert Ave. 33+46 39'R	48	1
C-18	Under S.B. Gilbert Ave. 34+66 36'R	48	1
C-19	N.B. Exp. 203+17 122'R	52	1
	Total to General Summary		18
	100% CITY		
C-9	Under McGregor 20+49 34'L	79	1
	Total to General Summary		1

REMOVAL E-12

Pipe Removal Designation Shown on Plan Sheet	Location PROJECT	See Sheet No	Item E-12 Removal of Pipe Lin. Ft. 15" Diam. and Under	Item E-12 Removal of Pipe Lin. Ft. Over 15" Diam.
P-1	Van Meter St. 23+04 S	42	28	
P-2	Van Meter St. 23+17 S	42	27	
P-3	Gilbert Ave. 11+00 52'R	42	29'	
P-4	Gilbert Ave. 11+13 62'R	42	24'	
P-5	N.B. Exp. 154+82 26'R	42	17	
P-6	Under S.B. Gilbert Ave. 14+70 19'L	43	154	
P-7	Under S.B. Gilbert Ave. 14+74 19'L	43	130	
P-8	Under N.B. Gilbert Ave. 17+33 40'R	43	140	
P-9	Under N.B. Gilbert Ave. 17+35 38'R	43	13	
P-10	Under N.B. Gilbert Ave. 17+37 40'R	43	125	
P-11	Under Ramp GD 166+00 9'L	45	115	
P-12	Ramp GD 169+90 7'L	46		95
P-13	Ramp GD 172+11 45'R	47		52
P-14	Under N.B. Exp. 170+64 26'R	47	75	
P-15	Under Reloc. Penn. RR 195+50	47	69	
P-16	Under S.B. Exp. 203+30 60'L	52		65
P-17	Gilbert Ave. 11+50 50'R	42	12'	
P-18	Gilbert Ave. 12+97 53'R	42	4'	
P-19	Under Gilbert Ave. 13+12 42'L	42	15'	
P-20	Under N.B. Exp. 155+00 42'R	42	46'	
P-21	Under Gilbert Ave. 14+14 0	42	8'	
P-22	Under Van Meter St. 23+00 S. 13'L	42	32'	
P-23	Under Gilbert Ave 15+95 4'R	43	10'	
P-24	Under Exp. 162+68 0	44		182
P-25	Van Meter St. 10+80 10'L	44		74
P-26	Under S.B. Exp. 164+53 35'L	45	6'	
P-27	Under N.B. Exp. 164+80 25'R	45	10'	
P-28	Under N.B. Exp. 168+00 46'R	46	19'	
P-29	Under S.B. Exp. 167+25 20'L	46	11'	
P-30	Under N.B. Gilbert 33+38 31'R	48	17'	
P-31	Under Elsinore Ave. 24+43 50'	48	54'	
P-32	Under N.B. Gilbert 33+95 50R	48	41'	
P-33	Under Elsinore Ave. 24+60 0	48	40'	
P-34	Under S.B. Gilbert 34+50 32'L	48	23'	
P-35	Under N.B. Gilbert 35+18 13'R	48	12'	
P-36	N.B. Exp. 200+14 19'L	51	6'	
P-37	N.B. Exp. 200+28 12'L	51	5'	
P-38	Under McGregor Ave. 9+98 20'L	54,78	18'	
P-39	Under McGregor Ave. 9+95 8'L	54,78	15'	
P-40	Under Symmes St. 206+07 S.B. 100'L	52	11'	
P-41	Under Symmes St. 205+94 S.B. 105'L	52	15'	
P-42	Under N.B. Exp. 154+75 40'R	42		18
P-44	Gilbert Ave. 11+80 43'R	42	17'	
	Total to General Summary		1393	486
	100% CITY			
P-43	Under McGregor 20+54 17'L	79	17	
	Total to General Summary		17	

SUMMARY OF QUANTITIES

FED. RD. DIV.	STATE	PROJECT	FISCAL YEAR
2	OHIO		

23
492

HAMILTON COUNTY
HAM-71-(1.56) (2.51)

RETAINING WALLS

Item	Unit	Description	Retaining Wall No. 15	16	18	19	20	21	22	23	24	26	27	28	29	40	41	45	46	47	Total Project	Total 100% City
E-2	Sum	Cofferdams, Cribs and Sheeting		Lump	Lump		Lump		Lump	Lump	Lump		Lump		Lump	Lump	Lump			Lump	Lump	
E-2	Sq. Ft.	Steel Sheet Piling Left in Place (Minimum Section Modulus of 7in³/ft. of wall				385											227				612	
E-2	Cu. Yds.	Unclassified Excavation	855	7,140	4,430	80	680	754	1195	3660	1075	202	430	103	70	260	9890	75	92	990	31814	167
E-2	Cu. Yds.	Rock (Shale) Excavation		3,460				1,032	75						260	460				2000	7287*	
S-1	Cu. Yds.	Class "E" Concrete, Footings	299	930	1,102	149	98	331	191	427	149	58	46	44	66	212	966	23	31	552	5620	54
S-1	Cu. Yds.	Class "C" Concrete, Footings			410																410	
S-1	Cu. Yds.	Class "E" Concrete, Wall Shafts	311	1,353	791	137	64	434				46	46	33	64	253	1,034	17	19	422	4988	36
S-1	Cu. Yds.	Class "C" Concrete, Wall Shafts			509				269	508	159										1445	
S-3	Lin. Ft.	Waterproofing, Premolded Sealing Strip	121	349	438	49	46	183	112	224	79	36	47	15	45	98	361	9	7	260	2463	16
S-3	Sq. Yds.	Type "A" Waterproofing			1,123															6	1123	
S-3	Sq. Yds.	Type "B" Waterproofing																			6	
S-4	Lbs.	Reinforcing Steel	25930	321,391	293,807	18,810	8,452	30,950	40,351	81,613	25,064	7,785	4987	2,794	7,328	26,325	131,861	2,784	3,107	83,795	1111243	5891
S-9	Sq. ft.	1" Preformed Expansion Joint Filler	154	203	306	54	67	121	115	258	175	48	53	17	66	62	267			210	2176	
S-14	Lin. Ft.	Railing, Type "C" (Aluminum Rail and Supports, Concrete Parapet)		310		100			90	226								51	59		726	110
S-14	Lin. Ft.	Railing, Type "A" (Aluminum Rail and Supports, Concrete Parapet)	398																		398	
S-18	Lin. Ft.	Steel Piles, 10 BP 42			3,700	1459	624			5475	2190		988				1,665				16101	
S-18	Lin. Ft.	Steel Piles, 12 BP 53										684									684	
S-21	Cu. ft.	Stone Facing																		9164	9164	
S-29	Cu. Yds.	Porous Backfill	226	671	945	55	45	200	145	350	110	35	30	23	40	177	705	14	16	380	4137	30
S-29	Lin. Ft.	6" Helical Perforated Corrugated Metal Pipe [Sec. M-6.4 (h)] (including specials)			25																25	
S-29	Lin. Ft.	6" Bituminous Coated Helical Corrugated Metal Pipe [Sec. M 64 (1)] (including specials)			690																690	
S-29	Lin. Ft.	8" Helical Perforated Corrugated Metal Pipe [Sec. M-64 (h)] (including specials and sand)	314	353	926	101	52	493	92	224	58	44	41		52	239	822	51	95	739	4550	146
S-29	Lin. Ft.	8" Helical Perforated Corrugated Metal Pipe [Sec. M-6.4 (h)] (including specials)		6																	6	
S-29	Lin. Ft.	12" Reinforced Concrete Sewer Pipe [Sec. M-6.6(a)]		8	8			8		5	12		4				12			6	63	
S-29	Lin. Ft.	15" Reinforced Concrete Sewer Pipe [Sec. M-6.6(a)]									4										4	
I-8	Each	Frame and Cover, As Per Plan			1						1										2	
I-8	Each	Type "V" Grating and Frame, As Per Plan			2			2									3			2	9	
I-26	Lin. Ft.	Aluminum Coated Steel Chain Link Fence, As Per ASTM A-491, Coating Class II, As Per Plan			377			504													881	
SSCE-1014	Hours	Compaction Using Heavy Pneumatic Tired Roller			8																8	
Special	Lin. Ft.	Prebored Holes											266★								266	

Note: Quantities carried to sheet 39.

★ See note on sheet 293.

SUMMARY OF QUANTITIES

COMPUTATIONS

HAMILTON COUNTY
HAM-71-(1.56)(2.51)

ITEM T-71 9" REINFORCED PORTLAND CEMENT CONCRETE PAVEMENT

HAM-71-1. 56

EXPRESSWAY
Sta. 150+21. 75 NB&SB to Sta. 159+40. 79 NB&SB = 919. 04 Lin. Ft
Sta. 162+71. 24 NB&SB to Sta. 166+12. 27 NB&SB = 341. 03
1, 260. 07
1260. 07×72÷9 = 10, 080. 56 Sq. Yds.
Sta. 166+12. 27 SB to Sta. 177+50 SB &
Sta. 166+12. 27 NB to Sta. 178+16. 49 NB = 2, 338. 73
2338. 73×36÷9 = 9, 354. 92
Added for Widening at Ramp Tapers
Sta. 150+21. 75 NB to Sta. 154+69. 93 NB = 448. 18
448. 18×4. 4 (Avg.)÷9 = 219. 11
Sta. 163+44. 00 NB to Sta. 169+00 NB = 556. 00
556. 00×6. 9 (Avg.)÷9 = 426. 23
Sta. 170+55. 00 NB to Sta. 178+16. 49 NB = 761. 49
761. 49×14. 9 (Avg.)÷9 = 1, 260. 69
Sta. 174+00 NB to Sta. 178+16. 49 NB = 416. 49
416. 49×10. 55(Avg.)÷9 = 488. 22
Sta. 171+02. 34 SB to Sta. 177+50 SB = 647. 66
647. 66×4. 85(Avg.)÷9 = 349. 01
Total T-71 for Expressway 22, 178. 74 Sq. Yds.

RAMP GD
Sta. 156+40. 79GD to Sta. 158+80. 59GD
Irregular Area = 750. 46
Sta. 158+80. 56GD to Sta. 165+03. 69GD = 612. 73
612. 73×24÷9 = 1, 633. 54
Sta. 165+03. 69GD to Sta. 170+52. 07GD = 548. 38
548. 38×18. 25(Avg.)÷9 = 1, 111. 95
Deduct for Catch Basin Slab: 1×4×15÷9 = - 6. 67
Total T-71 for Ramp GD 3, 489. 28

RAMP GA
Sta. 168+04. 24GA to Sta. 170+04. 24GA = 200. 00
200. 00×15. 2(Avg.)÷9 = 337. 76
Sta. 170+04. 24GA to Sta. 177+25GA = 723. 93
723. 93×16÷9 = 1, 286. 42
Deduct for Catch Basin Slab: 1×4×15÷9 = - 6. 67
Total T-71 for Ramp GA 1, 617. 51

GILBERT AVENUE
Sta. 10+00GB (N&S) to Sta. 16+54. 07GB (N&S) = 654. 07
654. 07×66÷9 = 4, 796. 30
Sta. 16+54. 07GB (N) to Sta. 28+20BGB (N) = 1, 160. 52
1160. 52×33÷9 = 4, 254. 47
Sta. 16+54. 07GB (S) to Sta. 28+81GB (S) = 1, 233. 62
1233. 62×33÷9 = 4, 522. 45
Sta. 31+86. 86GB (N&S) to Sta. 35+25GB (N&S) = 338. 14
338. 14×66÷9 = 2, 479. 58
Added for Widening
Sta. 10+00GB (N) to 11+00GB (N) = 100. 00
100. 00×1. 6(Avg.)÷9 = 17. 78
4×14÷9 = 6. 22
Sta. 16+54. 07GB (S) to Sta. 20+55. 16GB (S) = 401. 09
401. 09×6. 0(Avg.)÷9 = 267. 37
Sta. 20+55. 16GB (S) to Sta. 24+19. 75GB (S) = 364. 59
364. 59×11÷9 = 445. 53
Sta. 24+19. 75GB (S) to Sta. 25+82. 27GB (S) = 167. 54
167. 54×14. 5(Avg.)÷9 = 269. 92
Sta. 33+57GB (N) to Sta. 35+25GB (N&S) = 168. 00
168. 00×4÷9 = 74. 59
Deduct for Catch Basin Slabs: 17×4×15÷9 = - 113. 33
Add for Type 7A Curb: 5776 Lin. Ft. ×0. 58÷9 = + 372. 23
Add for Type 10A Curb: 80 Lin. Ft. ×0. 75÷9 = + 6. 67
Add for Type A Traffic Island: = + 622. 44
Total T-71 for Gilbert Avenue 18, 022. 22

VAN METER STREET
Sta. 20+57 S to Sta. 24+86 S = 429. 00
429. 0×30÷9 = 1, 430. 00
Deduct for Catch Basin Slabs: 4×4×15÷9 = - 26. 67
Sta. 10+00 SE to Sta. 20+68 SE = 1, 074. 93
1074. 93×30÷9 = 3, 582. 74
Deduct for Catch Basin Slabs: 8×4×15÷9 = - 53. 33
Add for Type 7A Curb: 2934 Lin. Ft. ×0. 58÷9 = + 189. 08
Total T-71 for Van Meter Street 5, 121. 82

ITEM T-71 9" REINFORCED PORTLAND CEMENT CONCRETE PAVEMENT, HAM-71-1. 56 (Continued)

ELSINORE AVENUE
Sta. 18+00 SE(E) to Sta. 20+28. 28 SE(E) = 228. 28 Lin. Ft.
228. 28×30÷9 = 760. 86 Sq. Yds.
Sta. 20+28. 28 SE(E) to Sta. 22+05. 49 SE(E) =
Irregular Area = 444. 04
Sta. 20+68 SE to Sta. 21+79. 45 SE &
Sta. 21+52. 35 ℄ to Sta. 23+59. 55 ℄ = 290. 01
290. 01×30÷9 = 966. 60
Sta. 23+59. 55 ℄ to Sta. 24+90. 83 ℄ = 131. 28
131. 28×48÷9 = 700. 12
Added for Widening
Sta. 21+52. 35 ℄ to Sta. 23+59. 55 ℄ = 207. 20
207. 20×3. 4(Avg.)÷9 = 78. 26
Sta. 22+07 ℄ to Sta. 23+59. 55 ℄ = 152. 55
152. 55×6. 3(Avg.)÷9 = 106. 79
Sta. 23+59. 55 ℄ to Sta. 24+90. 83 ℄
Irregular Area = 74. 22
Deduct for Catch Basin Slabs: 5×4×15÷9 = - 33. 33
Add for Type 7A Curb: 1390 Lin. Ft. ×0. 58÷9 = + 89. 58
Total T-71 for Elsinore Avenue 3, 187. 14 Sq. Yds.

MUSEUM DRIVE
Sta. 0+00 to Sta. 1+16. 5 Drive = 116. 50
116. 5×27. 25(Avg.)÷9 = 352. 73
Deduct for Catch Basin Slab: 1×4×15÷9 = - 6. 67
Add for Type 7A Curb: 257 Lin. Ft. ×0. 58÷9 = + 16. 56
Total T-71 for Museum Drive 362. 62

ELSINORE PLACE
Sta. 12+25 to Sta. 13+20. 65
Irregular Area = 572. 88
Sta. 15+87. 75 to Gilbert Avenue
Irregular Area = 423. 11
Deduct for Traffic Island = - 44. 44
Deduct for Catch Basin Slab: 1×4×15÷9 = - 6. 67
Add for Type 7A Curb: 84 Lin. Ft. ×0. 58÷9 = + 5. 41
Add for Type 10A Curb: 40 Lin. Ft. ×0. 75÷9 = + 3. 33
Total T-71 for Elsinore Place 953. 62

TOTAL T-71 for HAM-71-1. 56 54, 932. 95 Sq. Yds.

HAM-71-2. 51

EXPRESSWAY
Sta. 201+50 SB to Sta. 203+64. 55 SB = 212. 00
212×60÷9 = 1, 413. 33
Sta. 203+64. 55 SB to Sta. 204+64. 55 SB = 99. 00
99. 0×54(Avg.)÷9 = 594. 00
Sta. 204+64. 55 SB to Sta. 213+00 SB = 860. 00
860. 0×48÷9 = 4, 586. 67
Sta. 201+00 NB to Sta. 213+00 NB = 1, 211. 00
1211. 0×60÷9 = 8, 073. 33
Total T-71 for Expressway 14, 667. 33

McGREGOR AVENUE
Sta. 9+45 to Sta. 9+70 = 25. 00
Sta. 13+62. 79 to Sta. 15+09. 13 = 146. 34
Net Length = 171. 34
Area: 171. 34×36÷9 = 685. 36
Deduct for Catch Basin Slabs: 1×4×15÷9 = - 6. 67
Turnouts at Sta. 9+70: Area = 10. 75
Symmes St. Approach: Net Length = 157. 00
157. 00×30÷9 = 523. 33
Deduct for Catch Basin Slabs: 2×4×15÷9 = - 13. 33
Turnouts at W. side of Boone St. : Area = + 10. 74
Add for Type 7A Curb: 613 Lin. Ft. ×0. 58÷9 = + 39. 50
Add for Type 10A Curb: 40 Lin. Ft. ×0. 75÷9 = + 3. 33
Total T-71 for McGregor Avenue 1, 253. 01

TOTAL T-71 for HAM-71-2. 51 15, 920. 34 Sq. Yds.

TOTAL T-71 for HAM-71-(1. 56)(2. 51) 70, 853. 29 Sq. Yds.

TO SUMMARY, USE 70, 853 SQ. YDS.

ITEM T-31 BITUMINOUS SURFACT TREATMENT - BITUMINOUS MATERIAL

RATE OF APPLICATION 0. 25 GALLONS PER SQ. YD.

HAM-71-1. 56

EXPRESSWAY PAVED BERMS
Sta. 150+21. 75 NB to Sta. 153+19. 94 NB = 298. 19 Lin. Ft.
298. 19×7÷9 = 231. 90 Sq. Yds.
Sta. 153+19. 94 NB to Sta. 154+69. 94 NB = 150. 00
150. 00×8. 5(Avg.)÷9 = 141. 66
Sta. 154+69. 94 NB to Sta. 158+35 NB = 365. 06
365. 06×10÷9 = 405. 58
Sta. 158+35 NB to Sta. 160+47 NB = 212. 00
212. 00×14. 12(Avg.)÷9 = 332. 59
Sta. 163+36 NB to Sta. 166+75 NB = 339. 00
339. 00×7÷9 = 263. 64
Sta. 166+75 NB to Sta. 168+60 NB = 185. 00
185. 00×8. 5(Avg.)÷9 = 174. 71
Sta. 168+60 NB to Sta. 170+55 NB = 195. 00
195. 00×14. 25(Avg.)÷9 = 308. 75
Sta. 170+55 NB to Sta. 178+16. 49 NB = 761. 49
761. 49×10÷9 = 846. 02
Sta. 150+21. 75 NB&SB to Sta. 159+65. 79 NB&SB = 944. 04
944. 04×10÷9 = 1, 048. 83
Sta. 162+46. 24 NB&SB to Sta. 166+12. 27 NB&SB = 366. 03
366. 03×10÷9 = 406. 66
Sta. 166+12. 27 NB to Sta. 178+16. 49 NB = 1, 204. 22
1204. 22×5÷9 = 668. 94
Sta. 166+12. 27 SB to Sta. 177+50 SB = 1, 137. 73
1137. 73×5÷9 = 632. 01
Sta. 150+21. 75 SB to Sta. 158+80 SB = 858. 25
858. 25×10÷9 = 953. 52
Sta. 161+72 SB to Sta. 177+50 SB = 1, 578. 00
1578. 00×10÷9 = 1, 753. 16
Add for Approach Slabs at Sta. 150+21. 75
25×7÷9 = 19. 44
25×9÷9 = 25. 00
Deduct for Catch Basin Slabs
38×4×15÷9 = - 253. 31
Net Area = 7, 959. 10
Total T-31 Bituminous Material Expressway = 7, 959. 10×0. 25 = 1, 989. 78 Gallons

RAMP GD PAVED BERM
Sta. 156+75GD to Sta. 158+80. 59GD = 205. 59
205. 59×6. 0(Avg.)÷9 = 137. 05
Sta. 158+80. 59GD to Sta. 170+52. 07GD = 1, 171. 48
1171. 48×10÷9 = 1, 301. 51
Sta. 158+40GD to Sta. 168+50GD = 1, 010. 00
1010. 00×4÷9 = 448. 89
Sta. 168+50GD to Sta. 169+52GD = 102. 00
102. 00×3÷9 = 34. 00
Deduct for Catch Basin Slabs
9×4×15÷9 = - 60. 00
Net Area = 1, 861. 45
Total T-31 Bituminous Material Ramp GD = 1, 861. 45×0. 25 = 465. 36

RAMP GA PAVED BERM
Sta. 169+04. 24GA to Sta. 170+04. 24GA = 100. 00
100. 00×2. 5(Avg.)÷9 = 27. 77
Sta. 169+11GA to Sta. 170+04. 24GA = 93. 24
93. 24×4. 5(Avg.)÷9 = 46. 62
Sta. 170+04. 24GA to Sta. 177+25GA = 720. 76
720. 76×10÷9 = 800. 84
Deduct for Catch Basin Slabs
5×4×15÷9 = - 33. 33
Net Area = 841. 90
Total T-31 Bituminous Material Ramp GA = 841. 90×0. 25 = 210. 48

TOTAL T-31 Bituminous Material for HAM-71-1. 56 = 2, 665. 62 Gallons

HAM-71-2. 51

EXPRESSWAY PAVED BERMS
Lengths from T-71 Computations
212+99+860+1211 = 2, 382. 00
2382. 00×20÷9 = 5, 293. 33
Deduct for Catch Basin Slabs
20×4×15÷9 = - 133. 33
Net Area = 5, 160. 00
Total T-31 Bituminous Material Expressway = 5, 160. 00×0. 25 = 1, 290. 00

TOTAL T-31 Bituminous Material for HAM-71-2. 51 = 1, 290. 00 Gallons

TOTAL T-31 Bituminous Material for HAM-71-(1. 56)(2. 51) = 3, 955. 62 Gallons

TO SUMMARY, USE 3, 956 GALLONS

COMPUTATIONS

ITEM T-31 BITUMINOUS SURFACE TREATMENT - NO. 6 AGGREGATE

RATE OF APPLICATION 0.008 CU. YD. PER SQ. YD.
AREAS ARE FROM BITUMINOUS MATERIAL COMPUTATIONS

HAM-71-1.56

Volume for Expressway = 7959.10×0.008 = 63.67 Cu. Yds.
Volume for Ramp GD = 1861.45×0.008 = 14.89
Volume for Ramp GA = 841.90×0.008 = 6.74

TOTAL T-31 No. 6 Aggregate for HAM-71-1.56 = 85.30 Cu. Yds.

HAM-71-2.51

Volume for Expressway = 5160.00×0.008 = 41.28

TOTAL T-31 No. 6 Aggregate for HAM-71-2.51 = 41.28 Cu. Yds.

TOTAL T-31 No. 6 Aggregate for HAM-71-(1.56)(2.51) = 126.58 Cu. Yds.

TO SUMMARY, USE 127 CU. YDS.

ITEM B-21 3" WATERPROOFED AGGREGATE BASE COURSE

HAM-71-1.56

EXPRESSWAY
Sta. 154+69.94 NB to Sta. 158+35 NB = 365.06 Lin. Ft.
365.06×10÷9 = 405.62 Sq. Yds.
Sta. 158+35 NB to Sta. 160+47 NB = 212.00
212.00×14.12(Avg.)÷9 = 332.60
Sta. 168+60 NB to Sta. 170+55 NB = 195.00
195.00×14.25(Avg.)÷9 = 308.75
Sta. 174+72.60 NB to Sta. 178+16.49 NB = 343.89
343.89×10÷9 = 382.10
Sta. 149+96.75 SB to Sta. 154+25.13 SB = 428.38
428.38×10÷9 = 475.98
Sta. 154+25.13 SB to Sta. 158+80 SB = 454.87
454.85×10÷9 = 505.41
Sta. 161+72 SB to Sta. 177+50 SB = 1,578.00
1578.00×10÷9 = 1,753.33
Sta. 150+21.75 NB&SB to Sta. 159+65.79 NB&SB = 944.04
944.04×10÷9 = 1,048.93
Sta. 162+46.24 NB&SB to Sta. 166+12.27 NB&SB = 366.03
366.03×10÷9 = 406.70
Sta. 166+12.27 NB to Sta. 174+00 NB = 787.73
787.73×5÷9 = 437.63
Sta. 166+12.27 SB to Sta. 171+02.34 SB = 490.07
490.07×5÷9 = 272.26
Deduct for Catch Basin Slabs = - 180.00
Net Area = 6,149.31
Volume = 6149.31×3÷36 = 512.44
Total B-21 3" Waterproofed Aggregate Base Course for HAM-71-1.56 = 512.44 Cu. Yds.

HAM-71-2.51

EXPRESSWAY
Total Area from T-31 Computations = 5,160.00
Deduct: Sta. 201+50 SB to Sta. 204+64.55 SB
314.55×10÷9 = - 349.50
Net Area = 4,810.50
Volume = 4810.50×3÷36 = 400.88
Total B-21 3" Waterproofed Aggregate Base Course for HAM-71-2.51 = 400.88 Cu. Yds.

ITEM B-21 6" WATERPROOFED AGGREGATE BASE COURSE

HAM-71-1.56

EXPRESSWAY
From T-31 Computations: Net Area = 7,959.10
From B-21 3" Computations: Net Area = - 6,149.31
Net Area = 1,809.79
Volume for Expressway: 1,809.79×6÷36 = 301.63

Areas from T-31 Bituminous Material Computations
RAMP GD: Volume= 1861.45×6÷36 = 310.24
RAMP GA: Volume= 841.90×6÷36 = 140.32
Total B-21 6" Waterproofed Aggregate Base Course for HAM-71-1.56 = 752.19 Cu. Yds.

ITEM B-21 6" WATERPROOFED AGGREGATE BASE COURSE (Continued)

HAM-71-2.51

EXPRESSWAY
Sta. 201+55 SB to Sta. 204+64.55 SB = 314.55 Lin. Ft.
314.55×10÷9 = 349.50 Sq. Yds.
Volume = 349.50×6÷36 = 58.25 Cu. Yds.
Total B-21 6" Waterproofed Aggregate Base Course for HAM-71-2.51 = 58.25 Cu. Yds.

TOTAL Waterproofed Aggregate Base Course for HAM-71-(1.56)(2.51) = 1,723.76 Cu. Yds.

TO SUMMARY, USE 1,724 CU. YDS.

ITEM B-19 AGGREGATE BASE COURSE

HAM-71-1.56

EXPRESSWAY
3" Aggregate Base Course
Area from B-21 6" Computations
Volume = 1809.79×3÷36 = 150.82 Cu. Yds.
Deduct for Drainage Connection (Berm):
Net Length = 1414.79 Lin. Ft., End Area = 0.625 Sq. Ft.
Volume = 1414.79×0.625÷27 = - 32.75
Deduct for Drainage Connection (Median):
Net Length = 1048.15 Lin. Ft., End Area = 0.25 Sq. Ft.
Volume = 1048.15×0.25÷27 = - 9.71
Total 3" Agg. Base Course = 108.36
6" Aggregate Base Course
Area from B-21 3" Computations
Volume = 6149.31×6÷36 = 1,024.89
Deduct for Drainage Connection:
Net Length = 5901.69 Lin. Ft., End Area = 0.25 Sq. Ft.
Volume = 5901.69×0.25÷27 = - 54.65
Additional under Median
1310.07×6.0×0.5÷27 = + 145.56
312.73×7.5(Avg.)×0.5÷27 = + 43.43
Total 6" Agg. Base Course = 1,159.23
Total B-19 Aggregate Base Course for Expressway = 1,267.59

Areas from T-31 Bituminous Material Computations
RAMP GD: Volume = 1861.46×3÷36 = 155.12
Deduct for Drainage Connections:
Net Length = 841.00 Lin. Ft., End Area = 0.625 Sq. Ft.
Volume = 841.00×0.625÷27 = - 19.47
Net Length = 570.00 Lin. Ft., End Area = 0.25 Sq. Ft.
Volume = 570.00×0.25÷27 = - 5.28
Total B-19 Aggregate Base Course for Ramp GD = 130.37

RAMP GA: Volume = 841.90×3÷36 = 70.16
Deduct for Drainage Connection
Net Length=824.00 Lin. Ft., End Area = 0.625
Volume = 824.00×0.625÷27 = - 19.07
Total B-19 Aggregate Base Course for Ramp GA = 51.09

TOTAL B-19 Aggregate Base Course for HAM-71-1.56 = 1,449.05 Cu. Yds.

HAM-71-2.51

EXPRESSWAY
Sta. 201+50 SB to Sta. 207+56.91 SB
600×20×0.5 = 6,000.00 Cu. Ft.
Sta. 201+00 NB to Sta. 206+15.76 NB
522×20×0.5 = 5,220.00
Sta. 207+56.91 SB to Sta. 211+56.91 SB
394×10×0.5 = 1,970.00
400×10×0.435(Avg.) = 1,740.00
Sta. 206+15.76 NB to Sta. 210+15.76
407×10×0.5 = 2,035.00
400×10×0.435(Avg.) = 1,740.00
Sta. 211+56.91 SB to Sta. 213+00 SB
174×10×0.5 = 870.00
175×10×0.37(Avg.) = 647.50
Sta. 210+15.76 NB to Sta. 213+00 NB
284×10×0.5 = 1,420.00
284×10×0.37(Avg.) = 1,050.80
22,693.30
Volume = 22,693.30÷27 = 840.49
Add for Median
Sta. 208+00 NB to Sta. 211+00 NB
300×8×0.37(Avg.) = 888.00
Sta. 211+00 NB to Sta. 213+00 NB
200×6×0.24 = 288.00
1,176.00

ITEM B-19 AGGREGATE BASE COURSE, HAM-71-2.51 (Continued)

Volume = 1176.00÷27 = + 43.56 Cu. Yds.
Deduct for 6" B-21
Sta. 201+50 SB to Sta. 204+64.55 SB
314.55×10×0.25 = 786.38 Cu. Ft.
Deduct for Drainage Connection
Sta. 201+50 SB to Sta. 213+00 SB
1159×0.21(End Area) = 243.39
Sta. 201+00 NB to Sta. 213+00 NB
1217×0.21 = 255.57
Sta. 201+00 NB to Sta. 208+00 NB (Median)
700×0.21 = 147.00
1,432.34
Volume = 1432.34 = - 53.05
Deduct for Catch Basin Slabs:
4×15×0.5×16 = 480.00
4×15×0.24×4 = 57.60
537.60
Volume = 537.60÷27 = - 19.91

TOTAL B-19 Aggregate Base Course for HAM-71-2.51 = 811.09 Cu. Yds.

TOTAL B-19 Aggregate Base Course for HAM-71-(1.56)(2.51) = 2,260.14 Cu. Yds.

TO SUMMARY, USE 2,260 CU. YDS.

ITEM I-21 STANDARD PORTLAND CEMENT CONCRETE MEDIAN PAVEMENT TYPE 2 MOD.

HAM-71-1.56

EXPRESSWAY
Sta. 149+96.75 to Sta. 166+12.27 = 1,335.07 Lin. Ft.
1335.07×6÷9 = 889.96 Sq. Yds.
Sta. 166+12.27 to Sta. 169+25 = 312.73
312.73×7.5(Avg.)÷9 = 260.60

TOTAL I-21 Median Pavement for HAM-71-1.56 = 1,150.56 Sq. Yds.

HAM-71-2.51

EXPRESSWAY
Lengths from B-19 Aggregate Base Course Computations
300×8 = 2,400.00 Sq. Ft.
200×6 = 1,200.00
Area = 3,600.00
Net Area = 3600.00÷9 = 400.00

TOTAL I-21 Median Pavement for HAM-71-2.51 = 400.00 Sq. Yds.

TOTAL I-21 Standard Portland Cement Concrete Median Pavement for HAM-71-(1.56)(2.51) = 1,550.56 Sq. Yds.

TO SUMMARY, USE 1,551 SQ. YDS.

ITEM I-21 TYPE 1 PORTLAND CEMENT CONCRETE MEDIAN PAVEMENT

HAM-71-1.56

EXPRESSWAY
Sta. 172+33 GD to Sta. 178+16 NB = 583.00 Lin. Ft.
583.00×1.5÷9 = 97.17

RAMP GD
Sta. 165+72 GD to Sta. 170+75 GD Rt. = 503.00
503.00×1.5÷9 = 83.83

RAMP GA
Sta. 174+47 GA to Sta. 176+47 GA Lt. = 109.00
109.00×1.5÷9 = 18.17

GILBERT AVENUE
Sta. 18+40 to Sta. 20+85 = 245.00
245.00×9.83(Avg.)÷9 = 267.59
Sta. 20+85 to Sta. 24+20 = 335.00
335.00×12.83÷9 = 477.56
Sta. 24+20 to Sta. 27+00 = 280.00
280.00×9.83(Avg.)÷9 = 305.82
Sta. 25+81 GB (S) to Sta. 26+44 GB (S) Lt. = 62.00
62×5.32(Avg.)÷9 = 36.67
Total I-21 for Gilbert Avenue = 1,087.64

TOTAL I-21 Standard 4" Median Pavement for HAM-71-1.56 = 1,286.81 Sq. Yds.

COMPUTATIONS

ITEM I-21 *TYPE 1* PORTLAND CEMENT CONCRETE MEDIAN PAVEMENT (Continued)

HAM-71-2.51

EXPRESSWAY
Sta. 205+59 SB to Sta. 213 SB = 760.00 Lin. Ft.
760.00×1.5÷9 = 126.67 Sq. Yds.

TOTAL I-21 Standard 4" Median Pavement for HAM-71-2.51 = 126.67 Sq. Yds.

TOTAL I-21 Standard 4" Portland Cement Concrete Median Pavement for HAM-71-(1.56)(2.51) = 1,413.48 Sq. Yds.

TO SUMMARY, USE 1,413 SQ. YDS.

ITEM I-7 REINFORCED CONCRETE APPROACH SLABS

HAM-71-1.56

EXPRESSWAY
Sta. 149+96.75 NB to Sta. 150+21.75 NB
Expressway Area = 25×72÷9 = 200.00 Sq. Yds.
Ramp B Area = 25×10.30(Avg.)÷9 = 28.61
Sta. 159+40.79 NB to Sta. 159+65.79 NB
Expressway Area = 25×72÷9 = 200.00
Sta. 162+46.24 NB to Sta. 162+71.24 NB
Expressway Area = 228.78
Ramp NPN Area = 22×16(Avg.)÷9 = 44.44
Total I-7 for Expressway = 701.83

GILBERT AVENUE
Sta. 28+51.76 GB to Sta. 28+76.76 GB
Area = 199.93
Sta. 31+61.86 GB to Sta. 31+86.86 GB
Area = 200.71
Total I-7 for Gilbert Avenue = 400.64

ELSINORE PLACE
Sta. 13+20.65 to Sta. 13+45.65
Irregular Area = 189.01
Sta. 15+62.75 to Sta. 15+87.75
Irregular Area = 223.57
Total I-7 for Elsinore Place = 412.58

TOTAL I-7 Reinforced Concrete Approach Slabs for HAM-71-1.56 = 1,515.05 Sq. Yds.

HAM-71-2.51

McGREGOR AVENUE
Sta. 10+00 to Sta. 10+25
Irregular Area = 133.00
Sta. 13+37.79 to Sta. 13+62.79
Area = 37.5×25÷9 = 104.17
Total I-7 for McGregor Avenue = 237.17

TOTAL I-7 Reinforced Concrete Approach Slabs for HAM-71-2.51 = 237.17 Sq. Yds.

TOTAL I-7 Reinforced Concrete Approach Slabs for HAM-71-(1.56)(2.51) = 1,752.22 Sq. Yds.

TO SUMMARY, USE 1,752 SQ. YDS.

ITEM I-22 SUBBASE, GRADING "A" OR "B"

HAM-71-1.56

EXPRESSWAY
Area under Approach Slabs from I-7 Computations = 701.83
Area of Pavement from T-71 Computations = 22,178.74
Area of Median from I-21 Computations = 1,150.56
Area under Berm along Retaining Wall No. 15
428.38×8.5÷9 = 404.58
Area under Berm along Median
1622.80×10÷9 = 1,803.11
Sta. 169+25 NB to Sta. 178+16.49 NB
Area under Berm: 891.49×4÷9 = 396.22
Sta. 169+25 SB to Sta. 177+50 SB
Area under Berm: 825.00×4÷9 = 366.67
Total Area for I-22 = 27,001.71
Volume I-22 6" thick = 27,061.71×6÷36 = 4,500.29 Cu. Yds.
Add for Area under Drainage Connection
Net Length from B-21 Computations = 5776.76 Lin. Ft.
End Area = 0.25 Sq. Ft.
Volume = 5776.76×0.25÷27 = 53.49
Total I-22 for Expressway = 4,553.78 Cu. Yds.

ITEM I-22 SUBBASE, GRADING "A" OR "B", HAM-71-1.56 (Continued)

RAMP GD
Area of Pavement from T-71 Computations = 3,489.28 Sq. Yds.
Area of Berm from T-31 Computations = 482.89
Total Area for I-22 = 3,972.17
Volume I-22 6" Thick = 3972.17×6÷36 = 662.03 Cu. Yds.
Additional Areas:
Sta. 157+00 GD to Sta. 160+00 GD
Sta. 165+70 GD to Sta. 170+52.07 GD
Volume = 782.07×0.25(End Area)÷27 = + 7.24
Sta. 160+00 GD to Sta. 165+70 GD
Volume = 570×3.75(End Area)÷27 = + 79.17
Deduct for Drainage Connection:
Sta. 158+40 GD to Sta. 165+70 GD
Volume = 730×0.5(End Area)÷27 = - 13.52
Total I-22 for Ramp GD = 734.92 Cu. Yds.

RAMP GA
Area of Pavement from T-71 Computations = 1,617.51
Sta. 169+04.24 GA to Sta. 170+04.24 GA
100×2.5(Avg.)÷9 = 27.77
Sta. 170+04.24 GA to Sta. 177+25 GA
720.76×3÷9 = 240.25
Total Area for I-22 = 1,885.53
Volume I-22 6" thick = 1885.53×6÷36 = 314.26
Add for Area under Drainage Connection:
Volume = 814.0×0.25(End Area)÷27 = + 7.54
Total I-22 for Ramp GA = 321.80

TOTAL I-22 for HAM-71-1.56 = 5,610.50 Cu. Yds.

HAM-71-2.51

EXPRESSWAY
Area of Pavement from T-71 Computations = 14,667.33
Area of Paved Berm from T-31 Computations = 5,160.00
Area of Median from I-21 Computations = 400.00
Total Area for I-22 = 20,227.33
Volume I-22 6" thick = 20,227.33×6÷36 = 3,371.22
Deduct for Paved Berms with Drainage Connection:
Net Length = 700 Lin. Ft. End Area = 1.00 Sq. Ft.
Volume = 700×1.00÷27 = - 25.93
Net Length = 2376 Lin. Ft. End Area = 3.50 Sq. Ft.
Volume = 2376×3.50÷27 = - 308.00
Total I-22 for Expressway = 3,037.29

TOTAL I-22 for HAM-71-2.51 = 3,037.29 Cu. Yds.

TOTAL I-22 Subbase, Grading "A" or "B" for HAM-71-(1.56)(2.51) = 8,647.79 Cu. Yds.

TO SUMMARY, USE 8,648 CU. YDS.

ITEM I-12 STANDARD TYPE 6 CONCRETE CURB

HAM-71-1.56

EXPRESSWAY
Sta. 150+36 to Sta. 154+45 Rt. = 410 Lin. Ft.
Sta. 154+45 to Sta. 158+35 Lt. &Rt. = 780
Sta. 158+35 to Sta. 158+45 Lt. = 10
Sta. 161+97 to Sta. 165+50 Lt. = 349
Sta. 163+75 to Sta. 165+50 Rt. = 177
Sta. 165+50 to Sta. 169+25 Lt. = 368
Sta. 165+50 to Sta. 168+60 Rt. = 322
Sta. 169+25 to Sta. 173+25 Lt. = 393
Sta. 169+25 to Sta. 173+25 Median Lt. &Rt. = 800
Sta. 173+25 SB to Sta. 176+75 SB Lt. = 350
Sta. 173+25 SB to Sta. 176+75 SB Median = 350
Sta. 173+25 NB to Sta. 176+50 NB Median = 327
Sta. 174+73 NB to Sta. 176+50 NB Rt. = 177
Sta. 176+75 SB to Sta. 177+50 SB Rt. &Lt. = 150
Sta. 176+50 NB to Sta. 178+16 NB Rt. &Lt. = 332
Total I-12 Type 6 Expressway = 5,295 Lin. Ft.

RAMP GD
Sta. 156+75 to Sta. 161+00 Rt. = 423
Sta. 158+40 to Sta. 161+00 Lt. = 263
Sta. 161+00 to Sta. 165+00 Rt. = 410
Sta. 161+00 to Sta. 165+00 Lt. = 378
Sta. 165+00 to Sta. 169+00 Rt. = 400
Sta. 165+00 to Sta. 168+35 Lt. = 335
Sta. 169+00 to Sta. 173+00 Rt. = 400
Sta. 173+00 to Sta. 174+73 Rt. = 173
Total I-12 Type 6 Ramp GD = 2,782

ITEM I-12 STANDARD TYPE 6 CONCRETE CURB, HAM-71-1.56 (Continued)

RAMP GA
Sta. 169+11 to Sta. 169+75 Lt. = 64 Lin. Ft.
Sta. 169+04 to Sta. 169+75 Rt. = 71
Sta. 169+75 to Sta. 173+50 Lt. &Rt. = 750
Sta. 173+50 to Sta. 176+50 Lt. &Rt. = 600
Sta. 176+50 to Sta. 177+25 Lt. &Rt. = 150
Total I-12 Type 6 Ramp GA = 1,635 Lin. Ft.

GILBERT AVENUE
Sta. 35+25 to Sta. 35+57 Rt. = 32
Total I-12 Type 6 Gilbert Avenue = 32

TOTAL I-12 Standard Type 6 Concrete Curb for HAM-71-1.56 = 9,744 Lin. Ft.

HAM-71-2.51

EXPRESSWAY
Lengths from B-19 Computations
SB = 1,159
NB = 1,217
Median: Sta. 201+00 NB to Sta. 208+00 NB = 700
Sta. 201+50 SB to Sta. 208+32 SB = 682
Total I-12 Type 6 Expressway = 3,758

TOTAL I-12 Standard Type 6 Concrete Curb for HAM-71-2.51 = 3,758 Lin. Ft.

TOTAL I-12 Standard Type 6 Concrete Curb for HAM-71-(1.56)(2.51) = 13,502 Lin. Ft.

TO SUMMARY, USE 13,502 LIN. FT.

ITEM I-12 TYPE 6A CONCRETE CURB

HAM-71-1.56

GILBERT AVENUE
Sta. 9+27 to Sta. 10+00 Rt. = 73
Sta. 9+75 to Sta. 10+00 Lt. = 24
Total I-12 Type 6A Gilbert Avenue = 97

VAN METER STREET: Sta. 9+75 to Sta. 10+00 Lt. &Rt. = 50
DRIVEWAYS, VAN METER STREET (13+13+13+15+35) = 89
ELSINORE PLACE: Sta. 11+81 to Sta. 12+25 Rt. = 44

TOTAL I-12 Type 6A Concrete Curb for HAM-71-1.56 = 280 Lin. Ft.

HAM-71-2.51

SYMMES STREET = 146

TOTAL I-12 Type 6A Concrete Curb for HAM-71-2.51 = 146 Lin. Ft.

TOTAL I-12 Type 6A Concrete Curb for HAM-71-(1.56)(2.51) = 426 Lin. Ft.

TO SUMMARY, USE 426 LIN. FT.

ITEM I-12 TYPE 7A CONCRETE CURB

HAM-71-1.56

GILBERT AVENUE
Sta. 10+00 to Sta. 14+00 Lt. &Rt. = 800
Sta. 14+00 to Sta. 16+00 Lt. = 199
Sta. 154+75.97 GD to Sta. 156+75.79 GD = 200
Sta. 16+00 to Sta. 20+00 Lt. = 401
Sta. 18+40 to Sta. 20+00 Median Lt. &Rt. = 320
Sta. 17+60 to Sta. 20+00 Rt. = 278
Sta. 20+00 to Sta. 23+75 SB & NB = 1,500
Sta. 23+75 to Sta. 169+11 GA = 318
Sta. 25+80 to Sta. 27+25 Lt. at nose = 255
Sta. 23+75 to Sta. 27+00 Median Lt. &Rt. = 650
Sta. 23+75 to Sta. 26+87 Rt. = 305
Sta. 27+25 to Sta. 28+85 Lt. = 165
Sta. 32+81 to Sta. 33+33 Lt. = 53
Sta. 31+45 to Sta. 33+46 Rt. = 208
Sta. 34+60 to Sta. 35+25 Lt. = 69
Sta. 34+70 to Sta. 35+25 Rt. = 55
Total I-12 Type 7A Gilbert Avenue = 5,776

COMPUTATIONS

ITEM I-12 TYPE 7A CONCRETE CURB, HAM-71-1.56 (Continued)

VAN METER STREET
- Sta. 20+57 to Sta. 22+61 Lt. &Rt. = 408 Lin. Ft.
- Sta. 22+61 to Sta. 23+37 Lt. = 78
- Sta. 23+37 to Sta. 24+86 Lt. &Rt. = 298
- Sta. 10+00 SE to Sta. 13+22SE Lt. &Rt. = 660
- Sta. 13+22 SE to Sta. 15+88 SE Lt. &Rt. = 532
- Sta. 15+88 SE to Sta. 17+87 SE Lt. &Rt. = 393
- Sta. 17+87 SE to Sta. 19+51 SE Lt. &Rt. = 328
- Sta. 19+51 SE to Sta. 20+68 SE Lt. &Rt. = 237

Total I-12 Type 7A Van Meter Street = 2,934 Lin. Ft.

ELSINORE AVENUE
- Sta. 20+68 SE to Sta. 24+65 SE Lt. = 397
- Sta. 22+05 SE (E) to Sta. 23+97 SE (E) = 192
- Sta. 24+54 SE (E) to Sta. 25+48 SE (E) = 94
- Sta. 18+00 SE (E) to Sta. 22+05 SE (E) Rt. = 405
- Sta. 18+00 SE (E) to Nose Lt. = 302

Total I-12 Type 7A Elsinore Avenue = 1,390

MUSEUM DRIVE: Sta. 0+00 to Sta. 1+16.5 L. T. &Rt. = 257

ELSINORE PLACE
- Sta. 12+25 to Sta. 13+21 Rt. = 84

Total I-12 Type 7A Elsinore Place = 84

TOTAL I-12 Type 7A Concrete Curb for HAM-71-1.56 = 10,441 Lin. Ft.

HAM-71-2.51

McGREGOR AVENUE
- Symmes St. at McGregor Ave. = 304
- Sta. 13+37.97 to Boone St. Lt. &Rt. = 309

Total I-12 Type 7A McGregor Avenue = 613

TOTAL I-12 Type 7A Concrete Curb for HAM-71-2.51 = 613 Lin. Ft.

TOTAL I-12 Type 7A Concrete Curb for HAM-71-(1.56)(2.51) = 11,054 Lin. Ft.

TO SUMMARY, USE 11,054 LIN. FT.

ITEM I-12 TYPE 7B CONCRETE CURB

HAM-71-1.56

- COURT STREET = 68
- GILBERT AVENUE: Sta. 35+25 to Sta. 35+57 Lt. = 35

TOTAL I-12 Type 7B Concrete Curb for HAM-71-1.56 = 103 Lin. Ft.

TOTAL I-12 Type 7B Concrete Curb for HAM-71-(1.56)(2.51) = 103 Lin. Ft.

TO SUMMARY, USE 103 LIN. FT.

ITEM I-12 STANDARD TYPE 8 CONCRETE CURB

HAM-71-1.56

- EXPRESSWAY: Sta. 158+35 to Sta. 160+57 Rt. = 228
- RAMP GD: Sta. 168+35 GD to Sta. 170+52 GD = 217

TOTAL I-12 Standard Type 8 Concrete Curb for HAM-71-1.56 = 445 Lin. Ft.

TOTAL I-12 Standard Type 8 Concrete Curb for HAM-71-(1.56)(2.51) = 445 Lin. Ft.

TO SUMMARY, USE 445 LIN. FT.

ITEM I-12 TYPE 10 CONCRETE CURB

HAM-71-1.56

- EXPRESSWAY = 80

TOTAL I-12 Type 10 Concrete Curb for HAM-71-1.56 = 80 Lin. Ft.

TOTAL I-12 Type 10 Concrete Curb for HAM-71-(1.56)(2.51) = 80 Lin. Ft.

TO SUMMARY, USE 80 LIN. FT.

ITEM I-12 TYPE 10A CONCRETE CURB

HAM-71-1.56

- GILBERT AVENUE = 80 Lin. Ft.
- ELSINORE PLACE = 40

TOTAL I-12 Type 10A Concrete Curb for HAM-71-1.56 = 120 Lin. Ft.

HAM-71-2.51

- McGREGOR AVENUE = 40

TOTAL I-12 Type 10A Concrete Curb for HAM-71-2.51 = 40 Lin. Ft.

TOTAL I-12 Type 10A Concrete Curb for HAM-71-(1.56)(2.51) = 160 Lin. Ft.

TO SUMMARY, USE 160 LIN. FT.

ITEM I-12 TYPE 7C CONCRETE CURB AND GUTTER

HAM-71-1.56

GILBERT AVENUE
- Sta. 11+00 to Sta. 15+00 Lt. = 398 Lin. Ft.

TOTAL I-12 Type 7C Concrete Curb and Gutter for HAM-71-1.56 = 398 Lin. Ft.

TOTAL I-12 Type 7C Concrete Curb and Gutter for HAM-71-(1.56)(2.51) = 398 Lin. Ft.

TO SUMMARY, USE 398 LIN. FT.

ITEM I-21 PORTLAND CEMENT CONCRETE TRAFFIC ISLAND, TYPE "A"

HAM-71-1.56

GILBERT AVENUE
- Sta. 10+13 to Sta. 16+54: 641 Lin. Ft. ×4 = 2,564 Sq. Ft.
- Sta. 16+54 to Sta. 18+40: 186 Lin. Ft. ×6 = 1,116
- Sta. 27+00 to Sta. 28+45: 145 Lin. Ft. ×6 = 870
- Sta. 31+94 to Sta. 33+57: 163 Lin. Ft. ×4 = 652
- Sta. 34+50 Lt.: Irregular Area = 400
- Total Area = 5,602
- Net Area = 5602÷9 = 622.44 Sq. Yds.

TOTAL I-21 Type "A" for HAM-71-1.56 = 622.44 Sq. Yds.

TOTAL I-21 Portland Cement Concrete Traffic Island, Type "A" for HAM-71-(1.56)(2.51) = 622.44 Sq. Yds.

TO SUMMARY, USE 622 SQ. YDS.

ITEM I-13 4" PORTLAND CEMENT CONCRETE SIDEWALK

HAM-71-1.56

GILBERT AVENUE
- 7.5 Ft. wide × 73 Lin. Ft. = 547.50 Sq. Ft.
- 7.42 Ft. wide × 441 Lin. Ft. = 3,272.22
- 5.42 Ft. wide × 535 Lin. Ft. = 2,899.70
- 6 Ft. wide × 1243 Lin. Ft. = 7,458.00
- Width Varies: Area = 3,046.50

Total I-13 Gilbert Avenue = 17,223.92 Sq. Ft.

VAN METER STREET
- 5.42 Ft. wide × 337 Lin. Ft. = 1,826.54
- 5 Ft. wide × 1088 Lin. Ft. = 5,440.00
- Width Varies: S. of Drive 23+92 S Area = 796.00
- Width Varies: N. of Drive 23+92 S Area = 870.00

Total I-13 Van Meter Street = 8,932.54

ELSINORE AVENUE
- 7.42 Ft. wide × 90 Lin. Ft. = 667.80
- 6 Ft. wide × 298 Lin. Ft. = 1,788.00
- 5 Ft. wide × 285 Lin. Ft. = 1,425.00
- 2.42 Ft. wide × 582 Lin. Ft. = 1,408.44
- Width Varies: Area = 14.00

Total I-13 Elsinore Avenue = 5,303.24

ELSINORE PLACE
- 5.42 Ft. wide × 112 Lin. Ft. = 607.04
- Width Varies: Area = 239.00

Total I-13 Elsinore Place = 846.04

TOTAL I-13 for HAM-71-1.56 = 32,305.74 Sq. Ft.

ITEM I-13 4" PORTLAND CEMENT CONCRETE SIDEWALK (Continued)

HAM-71-2.51

SYMMES STREET
- 5 Ft. wide × 273 Lin. Ft. = 1,365.00 Sq. Ft.
- Width Varies: Area = 946.50

Total I-13 Symmes Street = 2,311.50 Sq. Ft.

McGREGOR AVENUE
- 4 Ft. wide × 309 Lin. Ft. = 1,236.00
- Width Varies: Area = 316.00

Total I-13 McGregor Avenue = 1,552.00

TOTAL I-13 for HAM-71-2.51 = 3,863.50 Sq. Ft.

TOTAL I-13 4" Portland Cement Concrete Sidewalk for HAM-71-(1.56)(2.51) = 36,169.24 Sq. Ft.

TO SUMMARY, USE 36,169 SQ. FT.

ITEM T-70 8" PLAIN PORTLAND CEMENT CONCRETE PAVEMENT

HAM-71-1.56

- VAN METER STREET: Sta. 23+92: Area = 25.89 Sq. Yds.
- ELSINORE PLACE: Sta. 13+20 Rt.: Area = 605.28
- ELSINORE PLACE: Sta. 12+04 Rt.: Area = 39.67

TOTAL T-70 8" for HAM-71-1.56 = 670.84 Sq. Yds.

TOTAL T-70 8" Plain Portland Cement Concrete Pavement for HAM-71-(1.56)(2.51) = 670.84 Sq. Yds.

TO SUMMARY, USE 671 SQ. YDS.

ITEM B-70 8" PLAIN PORTLAND CEMENT CONCRETE BASE COURSE

HAM-71-1.56

- GILBERT AVENUE: Sta. 35+25 to Sta. 35+57 Lt.: Area = 9.34
- COURT STREET: Sta. 23+00 S Rt.: Area = 29.21

TOTAL B-70 8" for HAM-71-1.56 = 38.55 Sq. Yds.

TOTAL B-70 8" Plain Portland Cement Concrete Base Course for HAM-71-(1.56)(2.51) = 38.55 Sq. Yds.

TO SUMMARY, USE 39 SQ. YDS.

ITEM T-35 1-1/4" ASPHALTIC CONCRETE SURFACE COURSE TYPE "C"

HAM-71-1.56

GILBERT AVENUE
- Area from B-70 Computations = 7.11 Sq. Yds.
- Volume = 7.11×1.25÷46 = 0.25 Cu. Yds.

COURT STREET
- Area from B-70 Computations = 24.83
- Volume = 24.83×1.25÷36 = 0.86

TOTAL T-35 1-1/4" for HAM-71-1.56 = 1.11 Cu. Yds.

TOTAL T-35 1-1/4" Asphaltic Concrete Surface Course Type "C" = 1.11 Cu. Yds.

ITEM T-35 1" ASPHALTIC CONCRETE SURFACE COURSE TYPE "C"

HAM-71-1.56

GILBERT AVENUE
- Sta. 9+50 to Sta. 10+00: Area = 313.89
- Sta. 35+25 to Sta. 35+57: Area = 245.33
- Net Area = 559.22
- Volume = 559.22×1.00÷36 = 15.53

COURT STREET
- Sta. 23+00 S Rt.: Area = 85.56
- Volume = 85.56×1.00÷36 = 2.38

COMPUTATIONS

ITEM T-35 1" ASPHALTIC CONCRETE SURFACE COURSE TYPE "C", HAM-71-1.56 (Continued)

VAN METER STREET
Sta. 9+25SE to Sta. 10+00SE: Area = 146.11 Sq. Yds.
Sta. 24+86S: Area = 12.50
Net Area = 158.61
Volume = 158.61×1.00÷36 = 4.41 Cu. Yds.

TOTAL T-35 1" for HAM-71-1.56 = 22.32 Cu. Yds.

HAM-71-2.51

SYMMES STREET AT MANITOU STREET
Net Area = 130.99
Volume = 130.99×1.00÷36 = 3.64

SYMMES STREET AT McGREGOR AVENUE
Net Area = 20.83
Volume = 20.83×1.00÷36 = 0.58

McGREGOR AVENUE
Sta. 9+25 to Sta. 9+45: Area = 71.11
Volume = 71.11×.100÷36 = 1.98

TOTAL T-35 1" for HAM-71-2.51 = 6.20 Cu. Yds.

TOTAL T-35 1" Asphaltic Concrete Surface Course Type "C" for HAM-71-(1.56)(2.51) = 28.52 Cu. Yds.

TOTAL T-35 Asphaltic Concrete Surface Course Type "C" for HAM-71-(1.56)(2.51) = 29.63 Cu. Yds.

TO SUMMARY, USE 30 CU. YDS.

ITEM B-35 1-3/4" ASPHALTIC CONCRETE LEVELING COURSE

HAM-71-1.56

GILBERT AVENUE
Area = 7.11 Sq. Yds. (From T-35 Computations)
Volume = 7.11×1.75÷36 = 0.35

COURT STREET
Area = 24.83 Sq. Yds. (From T-35 Computations)
Volume = 24.83×1.75÷36 = 1.21

TOTAL B-35 1-3/4" for HAM-71-1.56 = 1.56

TOTAL B-35 1-3/4" Asphaltic Concrete Leveling Course = 1.56 Cu. Yds.

ITEM B-35 0" MIN. THICKNESS ASPHALTIC CONCRETE LEVELING COURSE

HAM-71-1.56

GILBERT AVENUE: Volume = 7.77 Cu. Yds.
COURT STREET: Volume = 1.19
VAN METER STREET: Volume = 2.20

TOTAL B-35 0" Min. Thickness for HAM-71-1.56 = 11.16

HAM-71-2.51

SYMMES STREET AT MANITOU STREET: Volume = 1.82
SYMMES STREET AT McGREGOR AVENUE: Volume = 0.29
McGREGOR AVENUE Sta. 9+25 to Sta. 9+45: Volume = 0.99

TOTAL B-35 0" Min. Thickness for HAM-71-2.51 = 3.10

TOTAL B-35 0" Min. Thickness Asphaltic Concrete Leveling Course for HAM-71-(1.56)(2.51) = 14.26 Cu. Yds.

TOTAL B-35 Asphaltic Concrete Leveling Course for HAM-71-(1.56)(2.51) = 15.82 Cu. Yds.

TO SUMMARY, USE 16 CU. YDS.

ITEM T-30 BITUMINOUS TACK COAT

RATE OF APPLICATION 0.10 GAL. PER SQ. YD.
AREAS FROM T-35 COMPUTATIONS

HAM-71-1.56

GILBERT AVENUE
Volume = (7.11+559.22)×0.10 = 56.63 Gallons

COURT STREET
Volume = (24.83+85.56)×0.10 = 11.04

VAN METER STREET
Volume = 158.61×0.10 = 15.86

TOTAL T-30 for HAM-71-1.56 = 83.53 Gallons

HAM-71-2.51

SYMMES STREET AT MANITOU STREET
Volume = 130.99×0.10 = 13.10

SYMMES STREET AT McGREGOR AVENUE
Volume = 20.83×0.10 = 2.08

McGREGOR AVENUE Sta. 9+25 to Sta. 9+45
Volume = 71.11×0.10 = 7.11

TOTAL T-30 for HAM-71-2.51 = 22.29 Gallons

TOTAL T-30 Bituminous Tack Coat for HAM-71-(1.56)(2.51) = 105.82 Gallons

TO SUMMARY, USE 106 GALLONS

ITEM I-22 SUBBASE, GRADING "C" OR "D"

HAM-71-1.56

GILBERT AVENUE
Area under Approach Slabs from I-7 Computations = 400.64 Sq. Yds.
Volume 6" Thick = 400.64×6÷36 = 66.77 Cu. Yds.
Area of Pavement from T-71 Computations = 18,022.22
Volume 6" Thick = 18022.22×6÷36 = 3,003.70
Add for Type 7A, 7B&10A Curb: Width = 1.0' Thickness = 6"
Volume = 5891×1.0×0.5÷27 = + 109.09
Area of Pavement from B-70 Computations = 9.34
Volume = 9.34×6÷36 = 1.56
Add for Catch Basin Slabs = 17×1.27 Cu. Yd. ea. = 21.59
Total I-22 for Gilbert Avenue = 3,202.71 Cu. Yds.

VAN METER STREET
Area of Pavement from T-71 Computations = 5,121.82
Volume 6" Thick = 5121.82×6÷36 = 853.64
Add for Type 7A & 7B Curb: Width = 1.0' Thickness = 6"
Volume = 3002×1.0×0.5÷27 = + 55.59
Area of Pavement from B-70 Computations = 29.21
Volume = 29.21×6÷36 = 4.87
Add for Catch Basin Slabs = 8×1.27 Cu. Yd. = 10.16
Total I-22 Van Meter Street = 924.26

ELSINORE AVENUE
Area of Pavement from T-71 Computations = 3,187.14
Volume 6" Thick = 3187.14×6÷36 = 531.19
Add for Type 7A Curb: Width = 1.0' Thickness = 6"
Volume = 1390×1.0×0.5÷27 = + 25.74
Add for Catch Basin Slabs = 5×1.27 Cu. Yd. = 6.35
Total I-22 Elsinore Avenue = 563.28

MUSEUM DRIVE
Area of Pavement from T-71 Computations = 362.62
Volume 6" Thick = 362.62×6÷36 = 60.44
Add for Type 7A Curb: Width = 1.0' Thickness = 6"
Volume = 257×10×0.5÷27 = + 4.76
Add for Catch Basin Slabs = 1×1.27 Cu. Yd. = 1.27
Total I-22 Museum Drive = 66.47

ITEM I-22 SUBBASE, GRADING "C" OR "D" (Continued)

ELSINORE PLACE
Area of Pavement from T-71 Computations = 953.62 Sq. Yds.
Volume 6" Thick = 953.62×6÷36 = 158.94 Cu. Yds.
Area under Approach Slabs from I-7 Computations = 412.58
Volume 6" Thick = 412.58×6÷36 = 68.76
Add for Type 7A & 10A: Width = 1.0' Thickness = 6"
Volume = 124×1.0×0.5÷27 = + 2.30
Add for Catch Basin Slabs = 1×1.27 Cu. Yd. = 1.27
Total I-22 Elsinore Place = 231.27 Cu. Yds.

TOTAL I-22 for HAM-71-1.56 = 4,987.99 Cu. Yds.

HAM-71-2.51

McGREGOR AVENUE
Area of Pavement from T-71 Computations = 1,253.01
Volume 6" Thick = 1253.01×6÷36 = 208.84
Add for Type 7A Curb: Width = 1.0' Thickness = 6"
Volume = 653×1.0×0.5÷27 = + 12.09
Area under Approach Slabs from I-7 Computations = 237.17
Volume 6" Thick = 237.17×6÷36 = 39.53
Add for Catch Basin Slabs = 3 @ 1.27 Cu. Yd. = 3.81
Total I-22 McGregor Avenue = 264.27

TOTAL I-22 for HAM-71-2.51 = 264.27 Cu. Yds.

TOTAL I-22 Subbase, Grading "C" or "D" for HAM-71-(1.56)(2.51) = 5,252.26 Cu. Yds.

TO SUMMARY, USE 5,252.CU. YDS.

ITEM I-22 SUBBASE

HAM-71-1.56

EXPRESSWAY
Total Area from T-31 Computations = 7,959.10
Less Areas from B-21 3" Computations
Sta. 149+96.75 SB to Sta. 154+25.13 SB = - 475.98
Sta. 150+21.75 NB&SB to Sta. 159+65.79 NB&SB (Median) = -1,048.93
Sta. 162+46.24 NB&SB to Sta. 166+12.27 NB&SB (Median) = - 406.70
Sta. 166+12.27 NB to Sta. 174+00 NB (Median) = - 437.63
Sta. 166+12.27 SB to Sta. 171+02.34 SB (Median) = - 272.26
Less Areas to Project Limits
Sta. 174+00 NB to Sta. 178+16.49 NB 416.49×5÷9 = - 231.38
Sta. 171+02.34 SB to Sta. 177+50 SB 647.66×5÷9 = - 359.81
Total Area of Paved Berm = 4,726.41

Net Length of Drainage Connection from B-19 Computations = 4368.61 Lin. Ft.
Net Area = 4368.61×2.5÷9 = -1,213.50

Total Area for I-22 = 3,512.91
Volume I-22(4-1/8" Avg.) = 3512.91×4-1/8÷36 = 402.58

RAMP GD
Sta. 157+00 GD to Sta. 158+80.59 GD
Net Length = 180.59 Lin. Ft. Avg. End Area = 1.25 Sq. Ft.
Volume = 180.59×1.25÷27 = 8.36 Cu. Yds.
Sta. 158+80.59 GD to Sta. 160+00 GD
Sta. 165+70 GD to Sta. 170+52.07 GD
Net Length = 601.48 Lin. Ft. End Area = 2.50 Sq. Ft.
Volume = 601.48×2.50÷27 = 55.69
Total I-22 Ramp GD = 64.05

RAMP GA
Sta. 169+11 GA to Sta. 170+04.24 GA
Net Length = 93.24 Lin. Ft. Avg. End Area = 1.13 Sq. Ft.
Volume = 93.24×1.13÷27 = 3.90
Sta. 170+04.24 GA to Sta. 177+25 GA
Net Length = 720.76 Lin. Ft. End Area = 2.25 Sq. Ft.
Volume = 720.76×2.25÷27 = 60.06
Total I-22 Ramp GA = 63.96

COMPUTATIONS

ITEM I-22 SUBBASE, HAM-71-1.56 (Continued)

PENNSYLVANIA RAILROAD
Sta. 194+50 to Sta. 194+90 = 40 Lin. Ft.
Sta. 195+29 to Sta. 197+30 = 201
Sta. 198+26 to Sta. 198+46 = 20
Sta. 201+95 to Sta. 208+25 = 630
Net Length = 891
Volume = 891×14×0.5÷27 = 231.00 Cu. Yds.

TOTAL I-22 for HAM-71-1.56 = 761.59 Cu. Yds.

HAM-71-2.51

EXPRESSWAY
Net Length = 2376 Lin. Ft. End Area = 2.50 Sq. Ft.
Volume = 2376×2.50÷27 = 220.00

TOTAL I-22 for HAM-71-2.51 = 220.00 Cu. Yds.

TOTAL I-22 Subbase for HAM-71-(1.56)(2.51) = 981.59 Cu. Yds.

TO SUMMARY, USE 982 CU. YDS.

ITEM I-18 STABILIZED CRUSHED AGGREGATE SHOULDERS & APPROACHES

HAM-71-1.56

BRIDGE No. HAM 71-0173
$\frac{238+252}{2} \times 35$ = 8,575 Sq. Ft.
52 × 14 × 1/2 = 364
-33 × 4 × 2/3 = - 88

BRIDGE No. HAM 71-0196
$\frac{133 \times 22+15}{2}$ = 2,461
1/2 × 15 × 22 = 165
1/2 × 22 × 33 = 363

BRIDGE No. HAM-71-0203
$\frac{12+11}{2} \times 90$ = 1,035
-Pier Cols. $\pi(1.75)^2 \times 6$ = - 58
$\frac{38+30}{2} \times 90$ = 3,060
-Pier Cols. $\pi(1.75)^2 \times 6$ = - 58

BRIDGE No. HAM-71-0207
38 × 11 = 418
-Pier 35 × 4.5 = - 158
$\frac{78+71}{2} \times 31$ = 2,310
-Pier 35 × 4.5 = - 158
18,413 Sq. Ft.

Volume = 18,413 × 0.33 × 1/27 = 225 Cu. Yds.

TOTAL I-18 for HAM-71-(1.56)(2.51) = 225 Cu. Yds.

TO SUMMARY, USE 225 CU. YDS.

ITEM SPECIAL-DRAINAGE CONNECTOR USING No. G AGGREGATE

Area along Curb: 0.75 × 1.0 = 0.75 Sq. Ft.
Length from Underdrain Table, Sh. No. 22 = 2666 Lin. Ft.
Volume = 0.75 × 2666 ÷ 27 = 74 Cu. Yds.
Area along Edge of Pavement:
0.42 × 1.5 = 0.63
0.50 × 1.0 = 0.50
1.13 Sq. Ft.
Length from Underdrain Table, Sh. No. 22 = 10299 Lin. Ft.
Volume = 1.13 × 10299 ÷ 27 = 431
Total Volume = 505 Cu. Yds.

TO SUMMARY, USE 505 Cu. Yds.

100% CITY

ITEM T-71 9" REINFORCED PORTLAND CEMENT CONCRETE PAVEMENT

HAM-71-2.51

McGREGOR AVENUE & APPROACHES
Sta. 15+09.13 to Sta. 20+48.74 = 539.61 Lin. Ft.
Area: 539.61×36÷9 = 2,158.44 Sq. Yds.
Deduct for Catch Basin Slabs: 4×4×15÷9 = - 26.66
Boone Street Approaches
Area Lt. Approach = 115.38
Area Rt. Approach = 178.71
May Street Approaches
Area Lt. Approach = 82.75
Area Rt. Approach = 96.08
Cranston Alley Approaches
Area Lt. Approach = 33.48
Area Rt. Approach = 46.78
Turnouts at Kenton Street: Area = 47.33
Add for Type 7A Curb: Area = 1272×0.58×1/9 = 81.97
Total T-71 for McGregor Avenue = 2,814.26 Sq. Yds.

TOTAL T-71 for HAM-71-2.51 100% City = 2,814.26 Sq. Yds.

TO SUMMARY, USE 2,814 SQ. YDS.

ITEM I-12 TYPE 7A CONCRETE CURB

HAM-71-2.51

McGREGOR AVENUE & APPROACHES
Boone St. to May St. Lt. & Rt. = 632 Lin. Ft.
May St. to Cranston Alley Lt. & Rt. = 323
Cranston Alley to Kenton St. Lt. & Rt. = 317
Total I-12 Type 7A for McGregor Avenue & Approaches = 1,272 Lin. Ft.

TOTAL I-12 Type 7A Concrete Curb for HAM-71-2.51 100% City = 1,272 Lin. Ft.

TO SUMMARY, USE 1,272 LIN. FT.

ITEM I-12 TYPE 6A CONCRETE CURB

HAM-71-2.51

KENTON STREET = 15

TOTAL I-12 Type 6A Concrete Curb for HAM-71-2.51 100% City = 15 Lin. Ft.

TO SUMMARY, USE 15 LIN. FT.

ITEM I-13 PORTLAND CEMENT CONCRETE SIDEWALK

HAM-71-2.51

McGREGOR AVENUE
4 Ft. wide×837 Lin. Ft. = 3,348.00 Sq. Ft.
Width Varies: Area = 1,800.00
Total I-13 McGregor Avenue = 5,148.00 Sq. Ft.

TOTAL I-13 Portland Cement Concrete Sidewalk for HAM-71-2.51 100% City = 5,148.00 Sq. Ft.

TO SUMMARY, USE 5,148 SQ. FT.

ITEM T-35 1" ASPHALTIC CONCRETE SURFACE COURSE TYPE "C"

HAM-71-2.51

KENTON STREET
Net Area = 38.67 Sq. Yds.
Volume = 38.67×1.00÷36 = 1.07 Cu. Yds.

TOTAL T-35 1" Asphaltic Concrete Surface Course for HAM-71-2.51 100% City = 1.07 Cu. Yds.

TO SUMMARY, USE 1 CU. YD.

100% CITY

ITEM B-35 0" MIN. THICKNESS ASPHALTIC CONCRETE LEVELING COURSE

HAM-71-2.51

KENTON STREET
Volume = 38.67×0.5÷36 = 0.54 Cu. Yd.

TOTAL B-35 0" Min. Thickness Leveling Course for HAM-71-2.51 100% City = 0.54 Cu. Yd.

TO SUMMARY, USE 1 CU. YD.

ITEM T-30 BITUMINOUS TACK COAT
RATE OF APPLICATION 0.01 GAL. PER SQ. YD.

HAM-71-2.51

KENTON STREET Volume = 38.67 (T-35 above) × 0.10 = 3.87 Gallons

TOTAL T-30 Bituminous Tack Coat for HAM-71-2.51 100% City = 3.87 Gallons

TO SUMMARY, USE 4 GALLONS

ITEM I-22 SUBBASE, GRADING "C" OR "D"

HAM-71-2.51

McGREGOR AVENUE & APPROACHES
Area of Pavement from T-71 Computations = 2,814.26 Sq. Yds.
Volume 6" Thick = 2814.26×6÷36 = 469.04 Cu. Yds.
Add for Type 7A Curb: Width = 1.0' Thickness = 6"
Volume = 1272×1.0×0.5÷27 = 23.55
Add for Additional Width at Retaining Walls No. 45 & 46
Volume = 116×2×0.5÷27 = 4.30
Add for Catch Basin Slabs @ 1.27 Cu. Yd. each
Volume = 9 × 1.27 = 11.43
Total I-22 McGregor Avenue & Approaches = 508.32 Cu. Yds.

TOTAL I-22 Subbase, Grading "C" or "D" for HAM-71-2.51 100% City = 508.32 Cu. Yds.

TO SUMMARY, USE 508 CU. YDS.

FED. RD. DIV.	STATE	PROJECT	FISCAL YEAR
2	OHIO		

30
492

HAMILTON COUNTY
HAM-71-(1.56) (2.51)

GENERAL SUMMARY

ROADWAY

~~TYPE CODE 7221~~

ITEM	TOTAL QUANTITY	UNIT	DESCRIPTION	TYPE CODES	PROJECT Y005	Y009	Y060	7221	100% CITY
								522,660	17,338
E-1	539,998	Cu. Yd.	Roadway Excavation, Method "B", As Per Plan					30,826	2814
E-1	93,640	Sq. Yd.	Compacted Subgrade						
								600	
E-4	600	Cu. Yd.	Borrow, As Per Plan						
								14,360	2180
E-8	16,540	Sq. Ft.	Removal & Disposal of Existing Sidewalk					26,612	491
E-8	27,103	Sq. Yd.	Removal & Disposal of Existing Pavement					10,148	432
E-8	10,580	Lin. Ft.	Removal & Disposal of Existing Curb					635	20
E-8	655	Sq. Yd.	Removal & Disposal of Existing Wearing Course					Lump	Lump
E-9	Lump Sum	Lump Sum	Removal of Trees & Stumps					2480.5	2.5
E-11	2483	M. Gal.	Water						
								300	
B-19	300	Cu. Yd.	Aggregate Base Course For Maintaining Traffic						
								130	
T-10	130	Cu. Yd.	Traffic Compacted Surface Course, For Maintaining Traffic.					70	
T-10	70	Cu. Yd.	Traffic Compacted Surface Course, Using Size No.34 Material, For Maintaining Traffic, As Per Plan					100	
T-35	100	Cu. Yd.	Asphaltic Concrete Surface Course or an Approved Bituminous Premixed Surface Course For Maintaining Traffic						
								Lump	
S-15	Lump Sum	Lump Sum	Temporary Run-Around Road @ Elsinore Place Using Class "A" Pavement, As Per Plan					Lump	
S-15	Lump Sum	Lump Sum	Temporary Run-Around Road @ Gilbert Ave. Using Class "A" Pavement, As Per Plan					Lump	Lump
S-22	Lump Sum	Lump Sum	Removal of Portions of Existing Structures					Lump	Lump
S-24	Lump Sum	Lump Sum	Removal of Existing Structures					300	
I-4	300	M. Gal.	Water For Dust Control					50	
I-4	50	Ton	Calcium Chloride For Dust Control					156	
I-13	156	Lin. Ft.	Type A Concrete Steps, As Per Plan						56
I-13	56	Lin. Ft.	Type B Concrete Steps, As Per Plan					40	
I-13	40	Lin. Ft.	Type C Concrete & Stone Steps, As Per Plan					36,169	5,148
I-13	41,317	Sq. Ft.	4" Concrete Sidewalk					7660	
I-15	7660	Lin. Ft.	Guard Rail, Steel Beam Standard Type (Deep) Galvanized, using Galvanized Steel Post					1585	
I-15	1585	Lin. Ft.	Guard Rail, Steel Beam Barrier Type (Deep) Galvanized, using Galvanized Steel Post, As Per Plan					225	
I-18	225	Cu. Yd.	Stabilized Crushed Aggregate Shoulders and Approaches						
								5796	
I-26	5796	Lin. Ft.	Aluminum Coated Steel Chain Link Fence, As per ASTM A-491, Coating Class II					3	
I-26	3	Each	Aluminum Coated Steel Chain Link Fence Gates as per ASTM A-491, Coating Class II, 14' Double Opening.						
					29883				
L-2	29,883	Sq. Yd.	Topsoil Furnished and Placed, As Per Plan (4" Thick)		4751				
L-2	4,751	Sq. Yd.	Topsoil Furnished and Placed, As Per Plan (12" Thick)		85,687				2800
L-9	88,437	Sq. Yd.	Seeding and Protecting, As per Plan		8.14				0.25
L-9	8.39	Tons	Commercial Fertilizer (12-12-12)		40.70				1.25
L-9	41.95	Tons	Agricultural Liming Material, As Per Plan		4751				
L-10	4751	Sq. Yd.	Sodding, As Per Plan						
					39,826				1760
L-120	41,586	Sq. Yd.	Jute Matting		18.69				0.58
Special	19.27	Acre	Mowing Seeded and Sodded Areas, As Per Plan						
								30	
S.S.C.E-101.04	30	Hour	Compaction Using Heavy Pneumatic Tired Roller						
								25	
Special	25	Lin. Ft.	Installation of Twin 4" Conduit, As Per Plan						

Rev. 8-2-05

FED. RD. DIV.	STATE	PROJECT	FISCAL YEAR
2	OHIO		

31
492

HAMILTON COUNTY
HAM-71-(1.56)(2.51)

GENERAL SUMMARY

DRAINAGE

~~TYPE CODE 7221~~

ITEM	TOTAL QUANTITY	UNIT	DESCRIPTION	TYPE CODES	PROJECT Y005	PROJECT Y009	PROJECT Y060	PROJECT 7221	100% CITY
I-1	20	Lin. Ft.	6" Pipe, Class B-1,				20		
I-1	560	Lin. Ft.	6" Pipe, Class F-4					560	
I-1	12,405	Lin. Ft.	6" Pipe, Class I-3					12,405	
I-1	20	Lin. Ft.	8" Pipe Class B-1,				20		
I-1	67	Lin. Ft.	8" Pipe, Class F-4					67	
I-1	1,786	Lin. Ft.	12" Pipe, Class B-1, Sec. M-6.6(b) or Sec. M-6.8(b)				150	1,498	138
I-1	250	Lin. Ft.	12" Pipe, Class B-1, Sec. M-6.6(c)					250	
I-1	43	Lin. Ft.	12" Pipe, Class B-1, Sec. M-6.6(d) Under Railroad, as per plan					43	
I-1	47	Lin. Ft.	12" Pipe, Class B-1, Cast Iron, Class 23					47	
I-1	5,222	Lin. Ft.	12" Pipe, Class B-1				50	4,852	320
I-1	151	Lin. Ft.	12" Pipe, Class F-4					151	
I-1	561	Lin. Ft.	15" Pipe, Class B-1, Sec. M-6.6(b) or Sec. M-6.8(b)					561	
I-1	97	Lin. Ft.	15" Pipe, Class B-1, Sec. M-6.6(d)					97	
I-1	1,935	Lin. Ft.	15" Pipe, Class B-1,					1,824	111
I-1	1,328	Lin. Ft.	18" Pipe, Class B-1, Sec. M-6.6(b) or Sec. M-6.8(b)				150	1,178	
I-1	138	Lin. Ft.	18" Pipe, Class B-1, Sec. M-6.6(c)				37	101	
I-1	179	Lin. Ft.	18" Pipe, Class B-1, Sec. M-6.6(d)					179	
I-1	91	Lin. Ft.	18" Pipe, Class B-1, Cast Iron, Class 27					91	
I-1	222	Lin. Ft.	21" Pipe, Class B-1, Sec. M-6.6(b) or Sec. M-6.8(b)					222	
I-1	54	Lin. Ft.	21" Pipe, Class B-1, Sec. M-6.6(c)					54	
I-1	1,208	Lin. Ft.	24" Pipe, Class B-1, Sec. M-6.6(b) or Sec. M-6.8(b)				254	954	
I-1	886	Lin. Ft.	24" Pipe, Class B-1, Sec. M-6.6(c)				298	588	
I-1	257	Lin. Ft.	24" Pipe, Class B-1, Sec. M-6.6(d)				257		
I-1	23	Lin. Ft.	24" Pipe, Class B-1, Cast Iron, Class 27				23		
I-1	58	Lin. Ft.	24" Pipe, Class B-1,				58		
I-1	686	Lin. Ft.	27" Pipe, Class B-1, Sec. M-6.6(b) or Sec. M-6.8(b)					686	
I-1	219	Lin. Ft.	27" Pipe, Class B-1, Sec. M-6.6(c)					219	
I-1									
I-1	124	Lin. Ft.	30" Pipe, Class B-1, Sec. M-6.6(b) or Sec. M-6.8(b)					124	
I-1	104	Lin. Ft.	30" Pipe, Class B-1, Sec. M-6.6(c)				99	05	
I-1	18	Lin. Ft.	30" Radius Pipe, Class B-1, Sec. M-6.6(c)					18	
I-1	34	Lin. Ft.	30" Pipe Class B-1, Cast Iron, Class 26				34		
I-1	108	Lin. Ft.	36" Pipe, Class B-1, Sec. M-6.6(b) or Sec. M-6.8(b)				108		
I-1	32	Lin. Ft.	36" Pipe, Class B-1, Sec. M-6.6(c)				32		
I-1	63	Lin. Ft.	36" Pipe, Class B-1, Cast Iron, Class 26				63		
I-1	223	Lin. Ft.	36" Pipe, Class B-1, Sec. M-6.6(d)				223		
I-1	54	Lin. Ft.	36" Radius Pipe, Class B-1, Sec. M-6.6(d)				54		
I-2	6.9	Cu. Yd.	Masonry				5.9	1.0	
I-5	47	Each	6" Pipe Special, Class F-4					47	
I-5	4	Each	6" Pipe Special, Class B-1				4		
I-5	4	Each	8" Pipe Special Class B-1				4		
I-5	2	Each	8" Pipe Special, Class F-4					2	
I-5	6	Each	12" Pipe Special, Class B-1				4	2	
I-5	1	Each	36" Pipe Special, Class B-1 Sec. M-6.6(d)				1		

GENERAL SUMMARY

FED. RD. DIV.	STATE	PROJECT	FISCAL YEAR
2	OHIO		

32
492

HAMILTON COUNTY
HAM-71-(1.56) (2.51)

GENERAL SUMMARY

DRAINAGE (CONTINUED)

~~TYPE CODE 7221~~

ITEM	TOTAL QUANTITY	UNIT	DESCRIPTION	TYPE CODES	PROJECT Y005	PROJECT Y009	PROJECT Y060	PROJECT 7221	100% CITY
I-8	2	Each	Manhole Type B, As Per Plan					2	
I-8	75	Each	Manhole A or P, As Per Plan				12	63	
I-8	1	Each	Manhole A, 5-Ft. Diameter, As Per Plan				1		
I-8	8	Each	Manhole Drop, Type A or P, As Per Plan				6	2	
I-8	1	Each	Manhole Special Drop, As Per Plan				1		
I-8	2	Each	Manhole Type D, As Per Plan				1	1	
I-8	7	Each	Manhole Adjusted to Grade, As Per Plan				1	3	3
I-8	1	Each	Junction Chamber No. 1, As Per Plan				1		
I-8	25	Each	Type A Catch Basin					24	1
I-8	62	Each	Type A-2 Catch Basin					55	7
I-8	35	Each	Type K Catch Basin					32	3
I-8	12	Each	Type C Catch Basin					12	
I-8	15	Each	Type D Catch Basin					13	2
I-8	3	Each	Type V Catch Basin					1	2
I-8	6	Each	Standard No. 5 Catch Basin					6	
I-8	1	Each	Catch Basin Adjusted to Grade					1	
I-14	500	Lin. Ft.	Paved Gutter Standard Type 1		500				
I-14	3052	Lin. Ft.	Paved Gutter Standard Type 2 Modified, as per plan		3052				
I-16	19	Each	Catch Basins Abandoned					18	1
I-16	37	Each	Manholes Abandoned					37	
E-12	1,410	Lin. Ft.	Removal of Pipe, 15" Diameter and Under					1,393	17
E-12	486	Lin. Ft.	Removal of Pipe, Over 15" Diameter					486	
S-6	325	Lin. Ft.	Pneumatically Placed Mortar Lining, As Per Plan				325		
S-6	65	Sq. Ft.	Pneumatically Placed Mortar Patch, As Per Plan				65		
Special	505	Cu. Yds.	Drainage Connector Using No. 6 Aggregate					505	

FED. RD. DIV.	STATE	PROJECT	FISCAL YEAR
2	OHIO		

33
492

HAMILTON COUNTY
HAM-71-(1.66)(2.51)

GENERAL SUMMARY

PAVEMENT

~~TYPE CODE 7221~~

ITEM	TOTAL QUANTITY	UNIT	DESCRIPTION	TYPE CODES	PROJECT Y005	PROJECT Y009	PROJECT Y060	PROJECT 7221	100% CITY
B-19	2260	Cu. Yd.	Aggregate Base Course					2260	
B-21	1724	Cu. Yd.	Waterproofed Aggregate Base Course					1724	
B-35	17	Cu. Yd.	Asphaltic Concrete Leveling Course (70-85)					16	1
B-70	39	Sq. Yd.	8" Portland Cement Concrete Base Course					39	
T-30	110	Gal.	Bituminous Tack Coat: Sec. M-5.5, MS-2 or RS-1 or Sec. M-5.2, RC-1 or RC-2 as per Sec. T-30.02					106	4
T-31	3956	Gal.	Bituminous Surface Treatment - Bituminous Material, As Per Plan					3956	
T-31	127	Cu. Yd.	Bituminous Surface Treatment - No. 6 Aggregate					127	
T-35	31	Cu. Yd.	Asphaltic Concrete Surface Course, Type C (70-85)					30	1
T-70	671	Sq. Yd.	8" Portland Cement Concrete Pavement					671	
T-71	73,667	Sq. Yd.	9" Reinforced Portland Cement Concrete Pavement					70,853	2814
I-7	1752	Sq. Yd.	Reinforced Concrete Approach Slabs (T=13") As Per Plan					1752	
I-12	445	Lin. Ft.	Standard Type B Concrete Curb					445	
I-12	13502	Lin. Ft.	Standard Type G Concrete Curb					13502	
I-12	441	Lin. Ft.	Type GA Concrete Curb					426	15
I-12	12,326	Lin. Ft.	Type 7A Concrete Curb, As Per Plan					11,054	1272
I-12	103	Lin. Ft.	Type 7B Concrete Curb, As Per Plan					103	
I-12	398	Lin. Ft.	Type 7C Concrete Curb & Gutter, As Per Plan					398	
I-12	80	Lin. Ft.	Type 10 Concrete Curb, As Per Plan					80	
I-12	160	Lin. Ft.	Type 10A Concrete Curb, As Per Plan					160	
I-21	1551	Sq. Yd.	Standard Portland Cement Concrete Median Pavement Type 2 Modified, as per plan					1551	
I-21	622	Sq. Yd.	Type A Portland Cement Concrete Traffic Island Pavement, as per plan					622	
I-21	1413	Sq. Yd.	Portland Cement Concrete Median Pavement, Standard Type 1 Modified, as per plan					1413	
I-22	8,648	Cu. Yd.	Subbase - Grading A or B As Per Plan					8648	
I-22	5,760	Cu. Yd.	Subbase - Grading C or D					5252	508
I-22	982	Cu. Yd.	Subbase					982	

FED. RD. DIV.	STATE	PROJECT	FISCAL YEAR
2	OHIO		

34
492

HAMILTON COUNTY
HAM-71-(1.66) (2.81)

GENERAL SUMMARY

RETAINING WALLS

~~TYPE CODE 7221~~

ITEM	TOTAL QUANTITY	UNIT	DESCRIPTION	TYPE CODES	PROJECT Y005	PROJECT Y009	PROJECT Y060	PROJECT 7221	100% CITY
E-2	Lump	Sum	Cofferdams, Cribs and Sheeting					Lump	
E-2	612	Sq. Ft.	Steel Sheet Piling Left in Place (Minimun Section Modulus of 7in³/ft of Wall)					612	
E-2	31981	Cu. Yds	Unclassified Excavation					31814	167
E-2	7287	Cu. Yds	Rock (Shale) Excavation					7287	
S-1	5674	Cu. Yds.	Class "E" Concrete, Footings					5620	54
S-1	410	Cu. Yds.	Class "C" Concrete, Footings					410	
S-1	5024	Cu. Yds.	Class "E" Concrete, Wall Shafts					4988	36
S-1	1445	Cu. Yds	Class "C" Concrete, Wall Shafts					1445	
S-3	2479	Lin. Ft.	Waterproofing, Premolded Sealing Strip					2463	16
S-3	1123	Sq. Yds.	Type "A" Waterproofing					1123	
S-3	6	Sq. Yds.	Type "B" Waterproofing					6	
S-4	111734	Lbs.	Reinforcing Steel					1111243	5891
S-9	2176	Sq. Ft.	1" Preformed Expansion Joint Filler					2176	
S-14	836	Lin. Ft.	Railing, Type "C" (Aluminum Rail and Supports, Concrete Parapet)					726	110
S-14	398	Lin. Ft.	Railing, Type "A" (Aluminum Rail and Supports, Concrete Parapet)					398	
S-18	16101	Lin. Ft.	Steel Piles, 10BP42					16101	
S-18	684	Lin. Ft.	Steel Piles 12BP53					684	
S-21	9164	Cu. Ft.	Stone Facing					9164	
S-29	4167	Cu. Yds.	Porous Backfill					4137	30
S-29	25	Lin. Ft.	6" Helical Perforated Corrugated Metal Pipe [Sec. M-6.4(h)] (including specials)					25	
S-29	690	Lin. Ft.	6" Bituminous Coated Helical Corrugated Metal Pipe [Sec. M-6.4 (i)] (including specials)					690	
S-29	4696	Lin. Ft.	8" Helical Perforated Corrugated Metal Pipe [Sec. M-6.4(h)] (including specials and sand)					4550	146
S-29	6	Lin. Ft.	8" Helical Perforated Corrugated Metal Pipe [Sec. M-6.4(h)] (including specials)					6	
S-29	63	Lin. Ft.	12" Reinforced Concrete Sewer Pipe [Sec. M-6.6(a)]					63	
S-29	4	Lin. Ft.	15" Reinforced Concrete Sewer Pipe [Sec. M-6.6(a)]					4	
I-8	2	Each	Frame and Cover, As Per Plan					2	
I-8	9	Each	Type "V" Grating and Frame, As Per Plan					9	
I-26	881	Lin. Ft.	Aluminum Coated Steel Chain Link Fence, as per ASTM A-491, Coating Class II, As Per Plan					881	
SSCE-101.04	8	Hours	Compaction Using Heavy Pneumatic Tired Roller					8	
Special	266	Lin. Ft.	Prebored Holes					266	

FED. RD. DIV.	STATE	PROJECT	FISCAL YEAR
2	OHIO		

35
492

HAMILTON COUNTY
HAM-71-(1.56)(2.51)

GENERAL SUMMARY

REMOVAL OF BUILDINGS

~~TYPE CODE 7221~~

ITEM	TOTAL QUANTITY	UNIT	DESCRIPTION	TYPE CODES	PROJECT Y005	PROJECT Y009	PROJECT Y060	PROJECT 7221	100% CITY
			One - 1 story frame building, partially covered with composition siding with a detached frame shed, covered with composition siding (Parcel No. 5115-WL)					Lump	
E-10	Lump Sum	Lump Sum	One - 2 story brick building and a 1 story metal clad building (Parcel No. 5306-WD)					Lump	
E-10	Lump Sum	Lump Sum	One - 3 story brick and reinforced concrete building (Parcel No. 5321-WL)					Lump	
E-10	Lump Sum	Lump Sum	One - 3 story brick and reinforced concrete building (Parcel No. 5322-WL)					Lump	
E-10	Lump Sum	Lump Sum	One - 1 story concrete block building, faced with brick (Parcel No. 5328-WL)					Lump	
E-10	Lump Sum	Lump Sum	One - 3 story brick building with a 2 story frame addition and a 1 story concrete block addition, faced with brick (Parcel No. 5333-WL)					Lump	
E-10	Lump Sum	Lump Sum	One - 1 story frame building (Parcel No. 5334 - WL)					Lump	
E-10	Lump Sum	Lump Sum	One - 2 story frame building with an attached concrete block garage (Parcel No. 5384-WD)					Lump	
E-10	Lump Sum	Lump Sum	One - 1 story brick building (Parcel No. 5397-WL)					Lump	
E-10	Lump Sum	Lump Sum	One - 3 story brick building (Parcel No. 5400-WL)					Lump	
E-10	Lump Sum	Lump Sum	One - 1 story frame building with a detached frame shed (Parcel No. 5409-WL)					Lump	
E-10	Lump Sum	Lump Sum	One - 1 story frame building, covered with composition siding (Parcel No. 5410-WL)					Lump	
E-10	Lump Sum	Lump Sum	One - Frame garage (Parcel No. 5798-T)					Lump	
E-10	Lump Sum	Lump Sum	One - Frame garage (Parcel No. 5803-WD)					Lump	
E-10	Lump Sum	Lump Sum	One - 2 Story Shingle with a detached frame garage, metal clad. (Parcel No. 5375-WD)					Lump	
E-10	Lump Sum	Lump Sum	One - 2 Story frame (Parcel No. 5722-EL)					Lump	
E-10	Lump Sum	Lump Sum	Two - Billboards (Parcel No. 5330-WL)					Lump	
E-10	Lump Sum	Lump Sum	Four - Billboards (Parcel No. 5373-WL)						

LIGHTING

For Estimated Quantities, See Sheet No. 204

TRAFFIC CONTROLS

For Estimated Quantities, See Sheet No. 220

WATER WORKS

For Estimated Quantities, See Sheet No. 111

STRUCTURE OVER 20Ft. SPAN

Bridge No. HAM-71-0157 For Estimated Quantities, See Sheet No. 341
Bridge No. HAM-71-0173 For Estimated Quantities, See Sheet No. 343
Bridge No. HAM-71-0184 For Estimated Quantities, See Sheet No. 380
Bridge No. HAM-71-0196 For Estimated Quantities, See Sheet No. 387
Bridge No. HAM-71-0203 For Estimated Quantities, See Sheet No. 404
Bridge No. HAM-71-0207 For Estimated Quantities, See Sheet No. 418
Bridge No. HAM-71-0271 For Estimated Quantities, See Sheet No. 431

Bridge No. HAM-471-0072 For Estimated Quantities, See Sheet No. 375

ALTERNATE BID ITEMS

I-26	881	Lin. Ft.	Chain Link Fence, As Per Plan
I-15	1585	Lin. Ft.	Guard Rail, Steel Beam Barrier Type (Deep) Using Steel Post, As Per Plan
I-15	7660	Lin. Ft.	Guard Rail, Steel Beam Standard Type (Deep) Using Steel Post
I-26	5796	Lin. Ft.	Chain Link Fence
I-26	3	Each	Chain Link Fence Gates 14' Double Opening
S-14	398	Lin. Ft.	Railing Type A (Galvanized Steel Rail and Supports and Concrete Parapets - As Per Proposal Note)
S-14	836	Lin Ft.	Railing Type C (Galvanized Steel Rail and Supports and Concrete Parapets - As Per Proposal Note)
I-3	Lump Sum	Lump Sum	Maintaining Traffic, As Per Plan
	Lump Sum	Lump Sum	Construction Layout Stakes
	Lump Sum	Lump Sum	Field Office

FED. RD. DIV.	STATE	PROJECT	FISCAL YEAR
2	OHIO		

36
492

HAMILTON COUNTY
HAM-71-(1.56)(2.51)

NOTE: All traverse points shown are cut notches unless otherwise noted.

1GB(N)
P.I. Sta. 13+27.84 GB(N)
P.C. Sta. 10+00.00 GB(N)
P.T. Sta. 16+54.07 GB(N)
Δ = 9° 48' 40"
D = 1° 30' 00"
R = 3,819.72'
L = 654.07'
T = 327.84'

1GB(S)
P.I. Sta. 17+16.58 GB(S)
P.C. Sta. 16+54.07 GB(S)
P.T. Sta. 17+79.07 GB(S)
Δ = 1° 52' 30"
D = 1° 30' 00"
R = 3,819.72'
L = 125.00'
T = 62.51'

2GB(S)
P.I. 20+22.20 GB(S)
P.C. 19+59.70 GB(S)
P.T. 20+84.70 GB(S)
Δ = 1° 52' 30"
D = 1° 30' 00"
R = 3,819.72'
L = 125.00'
T = 62.51'

4GB(S)
Δ = 5° 42' 00"
D = 3° 00' 00"
R = 1,909.86'
L = 190.00'
T = 95.08'

5GB(S)
Δ = 5° 42' 00"
D = 3° 00' 00"
R = 1,909.86'
L = 190.00'
T = 95.08'

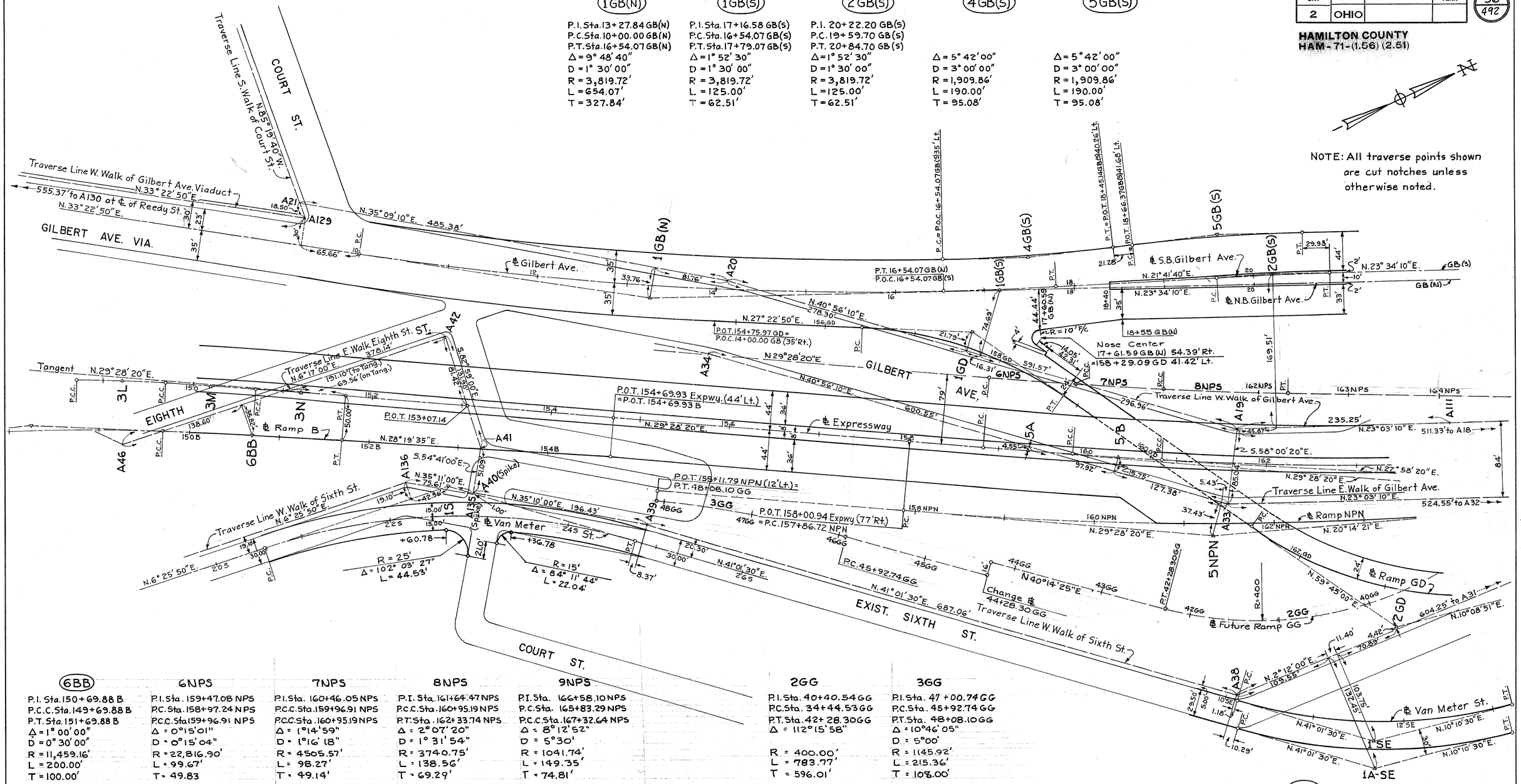

6BB
P.I. Sta. 150+69.88 B
P.C.C. Sta. 149+69.88 B
P.T. Sta. 151+69.88 B
Δ = 1° 00' 00"
D = 0° 30' 00"
R = 11,459.16'
L = 200.00'
T = 100.00'

6NPS
P.I. Sta. 159+47.08 NPS
P.C. Sta. 158+97.24 NPS
P.C.C. Sta. 159+96.91 NPS
Δ = 0° 15' 01"
D = 0° 15' 04"
R = 22,816.90'
L = 99.67'
T = 49.83

7NPS
P.I. Sta. 160+46.05 NPS
P.C.C. Sta. 159+96.91 NPS
P.C.C. Sta. 160+95.19 NPS
Δ = 1° 14' 59"
D = 1° 16' 18"
R = 4505.57'
L = 98.27'
T = 49.14'

8NPS
P.I. Sta. 161+64.47 NPS
P.C.C. Sta. 160+95.19 NPS
P.T. Sta. 162+33.74 NPS
Δ = 2° 07' 20"
D = 1° 31' 54"
R = 3740.75'
L = 138.56'
T = 69.29'

9NPS
P.I. Sta. 166+58.10 NPS
P.C. Sta. 165+83.29 NPS
P.C.C. Sta. 167+32.64 NPS
Δ = 8° 12' 52"
D = 5° 30'
R = 1041.74'
L = 149.35'
T = 74.81'

2GG
P.I. Sta. 40+40.54 GG
P.C. Sta. 34+44.53 GG
P.T. Sta. 42+28.30 GG
Δ = 112° 15' 58"
R = 400.00'
L = 783.77'
T = 596.01'

3GG
P.I. Sta. 47+00.74 GG
P.C. Sta. 45+92.74 GG
P.T. Sta. 48+08.10 GG
Δ = 10° 46' 05"
D = 5° 00'
R = 1145.92'
L = 215.36'
T = 108.00'

1S
P.I. Sta. 22+73.27 S
P.C. Sta. 20+57.00 S
P.T. Sta. 24+76.32 S
Δ = 34° 35' 40"
D = 8° 15' 00"
R = 694.49'
L = 419.32'
T = 216.27'

3L
P.I. Sta. 149+19.94
P.C.C. Sta. 148+69.94
P.C.C. Sta. 149+69.94
Δ = 1° 54' 41"
D = 1° 54' 41"
R = 2,997.60'
L = 100.00'
T = 50.00'

3M
P.I. Sta. 150+19.94
P.C.C. Sta. 149+69.94
P.C.C. Sta. 150+69.94
Δ = 1° 21' 45"
D = 1° 21' 45"
R = 4,205.20'
L = 100.00'
T = 50.00'

3N
P.I. Sta. 151+19.94
P.C.C. Sta. 150+69.94
P.T. Sta. 151+69.94
Δ = 0° 16' 23"
D = 0° 16' 23"
R = 20,983.20'
L = 100.00'
T = 50.00'

5A
P.I. Sta. 159+33.66
P.C. Sta. 158+83.66
P.C.C. Sta. 159+83.66
Δ = 0° 15' 01"
D = 0° 15' 01"
R = 22,892.88'
L = 100.00'
T = 50.00'

5B
P.I. Sta. 160+33.66
P.C.C. Sta. 159+83.66
P.C.C. Sta. 160+83.66
Δ = 1° 14' 59"
D = 1° 14' 59"
R = 4,584.68'
L = 100.00'
T = 50.00'

1GD
P.I. Sta. 157+63.97 GD
P.C. Sta. 156+40.79 GD
P.T. Sta. 158+80.56 GD
Δ = 32° 22' 10"
D = 13° 30' 00"
R = 424.41'
L = 239.77'
T = 123.18'

2GD
P.I. Sta. 163+32.39 GD
P.C. Sta. 161+36.27 GD
P.T. Sta. 165+03.69 GD
Δ = 49° 36' 09"
D = 13° 30' 00"
R = 424.41'
L = 367.42'
T = 196.12'

5NPN
P.I. Sta. 161+33.71 NPN
P.C. Sta. 157+86.72 NPN
P.C.C. Sta. 164+79.20 NPN
Δ = 9° 13' 59"
D = 1° 20' 00"
R = 4,297.19'
L = 692.48'
T = 346.99'

1SE
P.I. Sta. 11+71.64 SE
P.C. Sta. 10+13.55 SE
P.T. Sta. 13+22.05 SE
Δ = 30° 51' 00"
D = 10° 00' 00"
R = 572.96'
L = 308.50'
T = 158.09'

1A-SE
Δ = 30° 51' 00"
D = 10° 00' 00"
R = 572.96'
L = 308.50'
T = 158.09'

ALIGNMENT & WITNESS PLAN

NOTE: All traverse points shown are cut notches unless otherwise noted.

FED. RD. DIV.	STATE	PROJECT	FISCAL YEAR
2	OHIO		

37
492

HAMILTON COUNTY
HAM-71-(1.56) (2.51)

1GA
P.I. Sta. 167+20.48 GA
P.C. Sta. 166+36.70 GA
P.T. Sta. 168+04.24 GA
Δ = 2° 30' 47"
D = 1° 30' 00"
R = 3,819.72'
L = 167.54'
T = 83.78'

2GA
P.I. Sta. 173+57.40 GA
P.C. Sta. 171+63.85 GA
P.T. Sta. 175+45.78 GA
Δ = 22° 54' 57"
D = 6° 00' 00"
R = 954.93'
L = 381.93'
T = 193.55'

3GB(S)
P.I. Sta. 26+40.39 GB(S)
P.C. Sta. 24+19.76 GB(S)
P.T. Sta. 28+56.69 GB(S)
Δ = 19° 39' 42"
D = 4° 30' 00"
R = 1,273.24'
L = 436.93'
T = 220.63'

2GB(N)
P.I. Sta. 26+68.23 GB(N)
P.C. Sta. 24+47.60 GB(N)
P.T. Sta. 28+84.53 GB(N)
Δ = 19° 39' 42"
D = 4° 30' 00"
R = 1,273.24'
L = 436.93'
T = 220.63'

3GB(N)
P.I. Sta. 32+32.38 GB(N)
P.C. Sta. 30+45.40 GB(N)
P.T. Sta. 34+15.41 GB(N)
Δ = 20° 21' 02"
D = 5° 30' 00"
R = 1,041.74'
L = 370.01'
T = 186.98'

1RB
P.I. Sta. 172+88.94 RB
P.C.C. Sta. 171+02.34 RB
P.T. Sta. 174+75.25 RB
Δ = 5° 35' 37"
D = 1° 30' 00"
R = 3,819.72'
L = 372.91'
T = 186.60'

1NBR
P.I. Sta. 13+68.92 NBR
P.C. Sta. 13+06.63 NBR
P.T. Sta. 14+31.04 NBR
Δ = 7° 27' 53"
D = 6° 00' 00"
R = 954.93'
L = 124.41'
T = 62.29'

6NPN
P.I. Sta. 166+29.68 NPN
P.C.C. Sta. 164+79.20 NPN
P.T. Sta. 167+80.00 NPN
Δ = 4° 30' 43"
D = 1° 30' 00"
R = 3,819.72'
L = 300.80'
T = 150.48'

5C
P.I. Sta. 166+27.38 NB
P.C.C. Sta. 160+83.66 NB
P.C.C. Sta. 171+63.85 NB
Δ = 16° 12' 10"
D = 1° 30' 00"
R = 3,819.72'
L = 1,080.19'
T = 543.72'

5D
P.I. Sta. 172+13.85 NB
P.C.C. Sta. 171+63.85 NB
P.C.C. Sta. 172+63.85 NB
Δ = 1° 14' 59"
D = 1° 14' 59"
R = 4,584.68'
L = 100.00'
T = 50.00'

5E
P.I. Sta. 173+13.85 NB
P.C.C. Sta. 172+63.85 NB
P.T. Sta. 173+63.85 NB
Δ = 0° 15' 01"
D = 0° 15' 01"
R = 22,892.88'
L = 100.00'
T = 50.00'

6A
P.I. Sta. 169+73.58 SB
P.C.C. Sta. 166+12.27 SB
P.C.C. Sta. 173+31.09 SB
Δ = 14° 22' 35"
D = 2° 00' 00"
R = 2,864.79'
L = 718.82'
T = 361.31'

6B
P.I. Sta. 173+56.09 SB
P.C.C. Sta. 173+31.09 SB
P.C.C. Sta. 173+81.09 SB
Δ = 0° 54' 00"
D = 1° 48' 00"
R = 3,183.10'
L = 50.00'
T = 25.00'

6C
P.I. Sta. 174+31.09 SB
P.C.C. Sta. 173+81.09 SB
P.C.C. Sta. 174+81.09 SB
Δ = 1° 19' 59"
D = 1° 19' 59"
R = 4,298.08'
L = 100.00'
T = 50.00'

6D
P.I. Sta. 175+31.09 SB
P.C.C. Sta. 174+81.09 SB
P.T. Sta. 175+81.09 SB
Δ = 0° 16' 01"
D = 0° 16' 01"
R = 21,463.56'
L = 100.00'
T = 50.00'

2GD
P.I. Sta. 163+32.38 GD
P.C. Sta. 161+36.27 GD
P.T. Sta. 165+03.69 GD
Δ = 49° 36' 09"
D = 13° 30' 00"
R = 424.41'
L = 367.42'
T = 196.11'

3GD
P.I. Sta. 171+54.94 GD
P.C. Sta. 171+12.91 GD
P.T. Sta. 171+96.96 GD
Δ = 1° 15' 51"
D = 1° 30' 00"
R = 3,819.72'
L = 84.05'
T = 42.03'

4GD
P.I. Sta. 174+26.51 GD
P.C. Sta. 173+80.42 GD
P.T. Sta. 174+72.60 GD
Δ = 1° 22' 58"
D = 1° 30' 00"
R = 3,819.72'
L = 92.19'
T = 46.09'

2SE
P.I. Sta. 16+87.96 SE
P.C. Sta. 15+88.12 SE
P.T. Sta. 17+87.29 SE
Δ = 9° 57' 30"
D = 5° 00' 00"
R = 1,145.92'
L = 199.17'
T = 99.84'

3SE
P.I. Sta. 20+79.53 SE
P.C. Sta. 19+51.35 SE
P.T. Sta. 22+06.65 SE
Δ = 12° 45' 54"
D = 5° 00' 00"
R = 1,145.92'
L = 255.30'
T = 128.18'

4SE
P.I. Sta. 20+59.15 SE(E)
P.C. Sta. 20+28.28 SE(E)
P.T. Sta. 20+88.48 SE(E)
Δ = 31° 21' 21"
D = 52.09°
R = 110.00'
L = 60.20'
T = 30.87'

5SE
P.I. Sta. 23+84.71 SE
P.C. Sta. 23+61.88 SE
P.C.C. Sta. 24+06.69 SE
Δ = 27° 01' 28"
D = 60.31°
R = 95.00'
L = 44.81'
T = 22.83'

6SE
P.I. Sta. 24+65.05 SE
P.C.C. Sta. 24+06.69 SE
P.R.C. Sta. 24+64.99 SE
Δ = 133° 37' 24"
D = 229.18°
R = 25.00'
L = 58.30'
T = 58.36'

7SE
P.I. Sta. 25+23.34 SE(E)
P.R.C. Sta. 24+90.98 SE(E)
P.T. Sta. 25+48.42 SE(E)
Δ = 65° 49' 16"
R = 50.00'
L = 57.44'
T = 32.36'

8SE
P.I. Sta. 24+32.77 ℄
P.C. Sta. 23+59.55 ℄
P.T. Sta. 24+90.83 ℄
Δ = 63° 12' 37"
R = 119.00'
L = 131.28'
T = 73.22'

9SE
P.I. Sta. 24+27.78 SE(E)
P.C. Sta. 23+52.67 SE(E)
P.R.C. Sta. 24+90.98 SE(E)
Δ = 55° 25' 05"
R = 143.00'
L = 138.31'
T = 75.11'

11SE
P.I. Sta. 21+64.77 SE(E)
P.C. Sta. 21+20.94 SE(E)
P.T. Sta. 22+05.49 SE(E)
Δ = 37° 15' 50"
R = 130.00'
L = 84.55'
T = 43.83'

ALIGNMENT & WITNESS PLAN

FED. RD. DIV.	STATE	PROJECT	FISCAL YEAR
2	OHIO		

38
492

HAMILTON COUNTY
HAM-71-(1.56)(2.51)

8F
P.I. Sta. 191+52.67 SB
P.C.C. Sta. 191+02.67 SB
P.C.C. Sta. 192+02.67 SB
Δ = 1° 50' 06"
D = 1° 50' 06"
R = 3,122.39'
L = 100.00'
T = 50.00'

8G
P.I. Sta. 192+52.67 SB
P.C.C. Sta. 192+02.67 SB
P.C.C. Sta. 193+02.67 SB
Δ = 1° 09' 48"
D = 1° 09' 48"
R = 4,925.14'
L = 100.00'
T = 50.00'

8H
P.I. Sta. 193+52.67 SB
P.C.C. Sta. 193+02.67 SB
P.C.C. Sta. 194+02.67 SB
Δ = 0° 50' 08"
D = 0° 50' 08"
R = 6,857.21'
L = 100.00'
T = 50.00'

8J
P.I. Sta. 194+52.67 SB
P.C.C. Sta. 194+02.67 SB
P.T. Sta. 195+02.67 SB
Δ = 0° 09' 58"
D = 0° 09' 58"
R = 34,492.45'
L = 100.00'
T = 50.00'

10A
P.I. Sta. 198+14.55 SB
P.C. Sta. 197+64.55 SB
P.C.C. Sta. 198+64.55 SB
Δ = 0° 07' 59"
D = 0° 07' 59"
R = 43,061.42'
L = 100.00'
T = 50.00'

10B
P.I. Sta. 199+14.55 SB
P.C.C. Sta. 198+64.55 SB
P.C.C. Sta. 199+64.55 SB
Δ = 0° 40' 00"
D = 0° 40' 00"
R = 8,594.37'
L = 100.00'
T = 50.00'

10C
P.I. Sta. 200+14.55 SB
P.C.C. Sta. 199+64.55 SB
P.C.C. Sta. 200+64.55 SB
Δ = 0° 56' 04"
D = 0° 56' 04"
R = 6,131.54'
L = 100.00'
T = 50.00'

10D
P.I. Sta. 201+14.55 SB
P.C.C. Sta. 200+64.55 SB
P.C.C. Sta. 201+64.55 SB
Δ = 1° 27' 51"
D = 1° 27' 51"
R = 3,913.20'
L = 100.00'
T = 50.00'

10E
P.I. Sta. 201+89.55 SB
P.C.C. Sta. 201+64.55 SB
P.C.C. Sta. 202+14.55 SB
Δ = 0° 50' 14"
D = 1° 40' 28"
R = 3,421.78'
L = 50.00'
T = 25.00'

10F
P.I. Sta. 202+39.55 SB
P.C.C. Sta. 202+14.55 SB
P.C.C. Sta. 202+64.55 SB
Δ = 0° 57' 52"
D = 1° 55' 44"
R = 2,970.40'
L = 50.00'
T = 25.00'

10G
P.I. Sta. 205+11.34 SB
P.C.C. Sta. 202+64.55 SB
P.C.C. Sta. 207+56.91 SB
Δ = 9° 50' 50"
D = 2° 00' 00"
R = 2,864.79'
L = 492.36'
T = 246.79'

5EP(S)
P.I. Sta. 11+29.39 EP(S)
P.C. Sta. 10+91.15 EP(S)
P.T. Sta. 11+67.33 EP(S)
Δ = 12° 11' 20"
D = 16° 00' 00"
R = 358.10'
L = 76.18'
T = 38.24'

1EP(N)
P.I. Sta. 10+81.23 EP(N)
P.C. Sta. 10+05.32 EP(N)
P.T. Sta. 11+55.59 EP(N)
Δ = 20° 01' 20"
D = 13° 19' 29"
R = 430.00'
L = 150.27'
T = 75.91'

1EP
P.I. Sta. 10+94.64 EP
P.C. Sta. 10+22.57 EP
P.T. Sta. 11+65.38 EP
Δ = 19° 01' 42"
D = 13° 19' 29"
R = 430.00'
L = 142.81'
T = 72.07'

2EP
P.I. Sta. 15+41.95 EP
P.C. Sta. 12+88.02 EP
P.T. Sta. 17+44.65 EP
Δ = 62° 24' 22"
D = 13° 40' 00"
R = 419.24'
L = 456.63'
T = 253.93'

4EP
P.I. Sta. 13+32.12 EP(S)
P.C. Sta. = P.O.T. 12+54.21 EP(S)
P.T. Sta. = P.O.C. 29+36.55 SBR
Δ = 114° 37' 00"
R = 50.00'
L = 100.02'
T = 77.91'

6EP
P.I. Sta. 13+97.32 EP(S)
P.C. Sta. 13+08.27 EP(S)
P.T. Sta. = P.O.T. 192+91.48 RF (16' Lt.)
Δ = 99° 47' 30"
R = 75.00'
L = 130.63'
T = 89.05'

3SBR
P.I. Sta. 28+72.60 SBR
P.C. Sta. 28+04.31 SBR
P.T. Sta. 29+40.82 SBR
Δ = 4° 46' 40"
D = 3° 30' 00"
R = 1,637.02'
L = 136.51'
T = 68.29'

3RF
P.I. Sta. 195+29.71 RF
P.C. Sta. 193+08.53 RF
P.T. Sta. 197+49.24 RF
Δ = 12° 07' 11"
D = 2° 45' 00"
R = 2,083.48'
L = 440.71'
T = 221.18'

4NBR
P.I. Sta. 34+16.69 NBR
P.C. Sta. 32+42.90 NBR
P.T. Sta. 35+89.18 NBR
Δ = 12° 07' 11"
D = 3° 30' 00"
R = 1,637.02'
L = 346.28'
T = 173.79'

3G-GA
P.I. Sta. 193+57.95 GA
P.C.C. Sta. 190+50.37 GA
P.T. Sta. 196+64.06 GA
Δ = 9° 41' 47"
D = 1° 34' 48"
R = 3,626.32
L = 613.69'
T = 307.58

2RA
P.I. Sta. 192+54.02 RA
P.C.C. Sta. 190+87.20 RA
P.T. Sta. 194+20.25 RA
Δ = 8° 19' 34"
D = 2° 30' 00"
R = 2,291.83'
L = 333.05'
T = 166.82

3RA
P.I. Sta. 199+47.65 RA
P.C. Sta. 198+30.55 RA
P.C.C. Sta. 200+64.55 RA
Δ = 5° 51' 00"
D = 2° 30' 00"
R = 2,291.83'
L = 234.00'
T = 117.10'

2RE
P.I. Sta. 192+88.79 RE
P.C. Sta. 191+86.89 RE
P.T. Sta. 193+88.58 RE
Δ = 20° 10' 07"
D = 10° 00' 00"
R = 572.96'
L = 201.69'
T = 101.90'

3RE
P.I. Sta. 199+40.20 RE
P.C. Sta. 198+92.79 RE
P.T. Sta. 199+86.88 RE
Δ = 17° 24' 26"
D = 18° 30' 00"
R = 309.71'
L = 94.09'
T = 47.41'

4RB
P.I. Sta. 193+36.59 RB
P.C. Sta. 192+45.82 RB
P.T. Sta. 194+26.51 RB
Δ = 13° 33' 07"
D = 7° 30' 00"
R = 763.94'
L = 180.69'
T = 90.77'

5RB
P.I. Sta. 197+75.42 RB
P.C. Sta. 196+00.56 RB
P.C.C. Sta. 199+50.04 RB
Δ = 5° 14' 32"
D = 1° 30' 00"
R = 3,819.72'
L = 349.48'
T = 174.86'

6RB
P.I. Sta. 199+83.04 RB
P.C.C. Sta. 199+50.04 RB
P.T. Sta. 200+15.79 RB
Δ = 12° 09' 54"
D = 18° 30' 00"
R = 309.71'
L = 65.76'
T = 33.00'

9A
P.I. Sta. 199+87.43 NB
P.C. Sta. 199+37.43 NB
P.C.C. Sta. 200+37.43 NB
Δ = 0° 07' 59"
D = 0° 07' 59"
R = 43,061.42'
L = 100.00'
T = 50.00'

9B
P.I. Sta. 200+87.43 NB
P.C.C. Sta. 200+37.43 NB
P.C.C. Sta. 201+37.43 NB
Δ = 0° 40' 00"
D = 0° 40' 00"
R = 8,594.37'
L = 100.00'
T = 50.00'

9C
P.I. Sta. 201+87.43 NB
P.C.C. Sta. 201+37.43 NB
P.C.C. Sta. 202+37.43 NB
Δ = 0° 56' 04"
D = 0° 56' 04"
R = 6,131.54'
L = 100.00'
T = 50.00'

9D
P.I. Sta. 202+87.43 NB
P.C.C. Sta. 202+37.43 NB
P.C.C. Sta. 203+37.43 NB
Δ = 1° 27' 51"
D = 1° 27' 51"
R = 3,913.20'
L = 100.00'
T = 50.00'

9E
P.I. Sta. 203+62.43 NB
P.C.C. Sta. 203+37.43 NB
P.C.C. Sta. 203+87.43 NB
Δ = 0° 50' 14"
D = 1° 40' 28"
R = 3,421.78'
L = 50.00'
T = 25.00'

9F
P.I. Sta. 204+12.43 NB
P.C.C. Sta. 203+87.43 NB
P.C.C. Sta. 204+37.43 NB
Δ = 0° 57' 52"
D = 1° 55' 44"
R = 2,970.40'
L = 50.00'
T = 25.00'

9G
P.I. Sta. 205+26.63 NB
P.C.C. Sta. 204+37.43 NB
P.C.C. Sta. 206+15.76 NB
Δ = 3° 34' 00"
D = 2° 00' 00"
R = 2,864.79'
L = 178.33'
T = 89.20'

NOTE: All traverse points shown are cut notches unless otherwise noted.

ALIGNMENT & WITNESS PLAN

FED. RD. DIV.	STATE	PROJECT	FISCAL YEAR
2	OHIO		

39
492

HAMILTON COUNTY
HAM-71-(1.56) (2.51)

10G
P.I. Sta. 205+11.34 SB
P.C.C. Sta. 202+64.55 SB
P.C.C. Sta. 207+56.91 SB
Δ = 9° 50' 50"
D = 2° 00' 00"
R = 2,864.79'
L = 492.36'
T = 246.79'

10H
P.I. Sta. 207+81.91 SB
P.C.C. Sta. 207+56.91 SB
P.C.C. Sta. 208+06.91 SB
Δ = 0° 57' 52"
D = 1° 55' 44"
R = 2,970.40'
L = 50.00'
T = 25.00'

10J
P.I. Sta. 208+31.91 SB
P.C.C. Sta. 208+06.91 SB
P.C.C. Sta. 208+56.91 SB
Δ = 0° 50' 14"
D = 1° 40' 28"
R = 3,421.78'
L = 50.00'
T = 25.00'

10K
P.I. Sta. 209+06.91 SB
P.C.C. Sta. 208+56.91 SB
P.C.C. Sta. 209+56.91 SB
Δ = 1° 27' 51"
D = 1° 27' 51"
R = 3,913.20'
L = 100.00'
T = 50.00'

10L
P.I. Sta. 210+06.91 SB
P.C.C. Sta. 209+56.91 SB
P.C.C. Sta. 210+56.91 SB
Δ = 0° 56' 04"
D = 0° 56' 04"
R = 6,131.54'
L = 100.00'
T = 50.00'

10M
P.I. Sta. 211+06.91 SB
P.C.C. Sta. 210+56.91 SB
P.C.C. Sta. 211+56.91 SB
Δ = 0° 40' 00"
D = 0° 40' 00"
R = 8,594.37'
L = 100.00'
T = 50.00'

10N
P.I. Sta. 212+06.91 SB
P.C.C. Sta. 211+56.91 SB
P.T. Sta. 212+56.91 SB
Δ = 0° 07' 59"
D = 0° 07' 59"
R = 43,061.42'
L = 100.00'
T = 50.00'

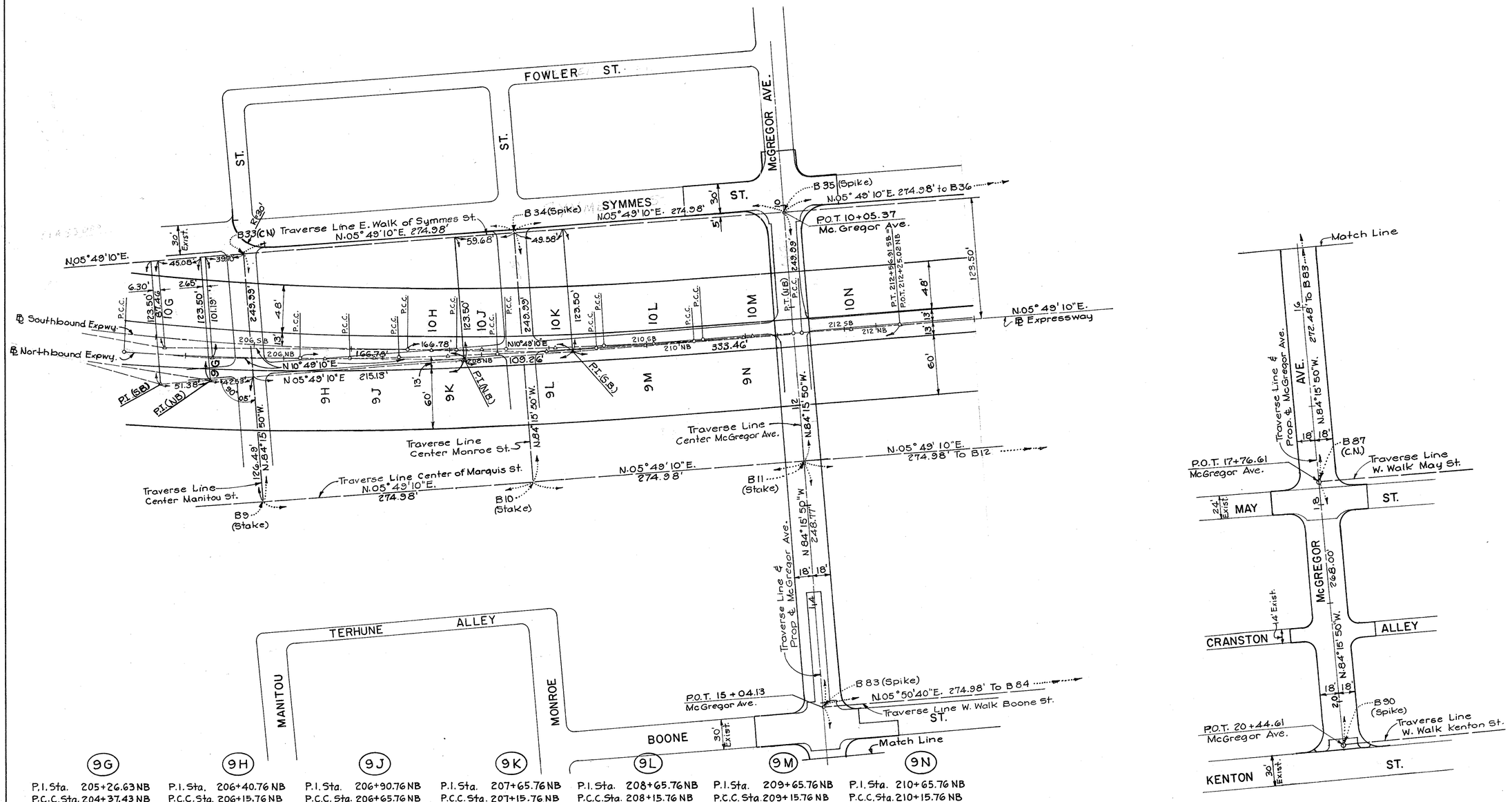

9G
P.I. Sta. 205+26.63 NB
P.C.C. Sta. 204+37.43 NB
P.C.C. Sta. 206+15.76 NB
Δ = 3° 34' 00"
D = 2° 00' 00"
R = 2,864.79'
L = 178.33'
T = 89.20'

9H
P.I. Sta. 206+40.76 NB
P.C.C. Sta. 206+15.76 NB
P.C.C. Sta. 206+65.76 NB
Δ = 0° 57' 52"
D = 1° 55' 44"
R = 2,970.40'
L = 50.00'
T = 25.00'

9J
P.I. Sta. 206+90.76 NB
P.C.C. Sta. 206+65.76 NB
P.C.C. Sta. 207+15.76 NB
Δ = 0° 50' 14"
D = 1° 40' 28"
R = 3,421.78'
L = 50.00'
T = 25.00'

9K
P.I. Sta. 207+65.76 NB
P.C.C. Sta. 207+15.76 NB
P.C.C. Sta. 208+15.76 NB
Δ = 1° 27' 51"
D = 1° 27' 51"
R = 3,913.20'
L = 100.00'
T = 50.00'

9L
P.I. Sta. 208+65.76 NB
P.C.C. Sta. 208+15.76 NB
P.C.C. Sta. 209+15.76 NB
Δ = 0° 56' 04"
D = 0° 56' 04"
R = 6,131.54'
L = 100.00'
T = 50.00'

9M
P.I. Sta. 209+65.76 NB
P.C.C. Sta. 209+15.76 NB
P.C.C. Sta. 210+15.76 NB
Δ = 0° 40' 00"
D = 0° 40' 00"
R = 8,594.37'
L = 100.00'
T = 50.00'

9N
P.I. Sta. 210+65.76 NB
P.C.C. Sta. 210+15.76 NB
P.T. Sta. 211+15.76 NB
Δ = 0° 07' 59"
D = 0° 07' 59"
R = 43,061.42'
L = 100.00'
T = 50.00'

ALIGNMENT & WITNESS PLAN

FED. RD. DIV.	STATE	PROJECT	FISCAL YEAR
2	OHIO		

40
492

HAMILTON COUNTY
HAM-71-(1.56)(2.51)

LEGEND

Item T-71 Reinforced Portland Cement Concrete Pavement, T=9"

Item I-18 Stabilized Crushed Aggregate, 4" Thick

Item T-70 8" Plain Portland Cement Concrete Pavement

Item I-21 Standard Portland Cement Concrete Median Pavement

Item I-13 4" Portland Cement Concrete Sidewalk

Item B-19 6" Aggregate Base Course
Item B-21 3" Waterproofed Aggregate Base Course
Item T-31 Bituminous Surface Treatment

Item T-35 1¼" Asphaltic Concrete Surface Course Type "C" (70-85)
Item B-35 (¾" Asphaltic Concrete Leveling Course (70-85)
Item B-70 8" Plain Portland Cement Concrete Base Course
Item T-30 Bituminous Tack Coat @ 0.10 Gal. Per Sq. Yd.

Item T-35 1" Asphaltic Concrete Surface Course Type "C" (70-85)
Item B-35 0" Min. Thickness Asphaltic Concrete Leveling Course (70-85)
Item T-30 Bituminous Tack Coat @ 0.10 Gal. Per Sq. Yd.

Item L-120 Jute Matting

Item B-19 3" Aggregate Base Course
Item B-21 6" Waterproofed Aggregate Base Course
Item T-31 Bituminous Surface Treatment

UTILITY OWNERS

UTILITY	OWNER	ADDRESS
Gas, Light & Power	Cinti. Gas & Electric Co.	4th St. & Main St., Cinti. 2, Ohio
Water	Cinti. Water Works	4747 Spring Grove Ave.
Sewer	Cinti. Sewer Dept.	City Hall, Cinti. 2, Ohio
Telephone	Cinti. & Suburban Bell Telephone Co.	225 E. 4th St. Cinti. 2, Ohio
Telegraph	Western Union Telegraph Co.	4th St. & Walnut St. Cinti. 2, Ohio
Transportation	The Pennsylvania Railroad Co.	Swift Bldg. 230E. 9th St. Cinti. 2, Ohio

BENCH MARK DATUM

B.M. Elev. 543.85 S.W. Cor. of Conc. D.S. Court St. Ent. 2 Sty. Br. Pennsylvania R.R. Freight House No. 444 E. Court St.

P.B.M.# 2260 Elev. 533.45 N.E. Corner 6th St. & Gilbert Ave. Brass Disc. is 22'± N. of N. Curb of 6th St. & 5'± E. of E. Curb of Gilbert Ave.

P.B.M.# 2261 Elev. 621.50 N.E. Corner Gilbert Ave. & Elsinore. Brass Disc. is 18'± N. of N. Curb of Elsinore & 11'± E. of E. Curb of Gilbert Ave.

B.M. Elev. 681.95 Fire Hydrant 19.5' N of & Des Moines on east side of Symmes St.

B.M. Elev. 772.75 Fire Hydrant 150' N. of & McGregor on east side of Symmes St.

B.M. Elev. 817.28 S. End Bottom sand Stone Step # 2303 Kenton St.

Note:
B.M. on Fire Hydrant is Elev. on Top of Bolt at Point of Arrow Cast in Flange.

UTILITIES, BENCH MARKS & LEGEND

FED. RD. DIV.	STATE	PROJECT	FISCAL YEAR
2	OHIO		

41
492

HAMILTON COUNTY
HAM-71-(1.56) (2.51)

Note
R/W Fence is shown on the R/W Plans
Curb Types, Erosion Protection, etc. are
Shown on Grade Detail Sheets.

C-3 Indicates Catch Basin or Inlet to be Abandoned.
M-2 Indicates Manhole to be Abandoned.
ADG Indicates Manhole or Catch Basin to be Adjusted to Grade.
P-1 Indicates Pipe to be Removed.
U-5 Indicates Underdrain

For Grade Detail See Sh. 187
For Pedestrian Bridge, See Sheet No. 332

COURT ST.
Ex. 8" P.S.
Ex. Conc. Pavt.
Ex. Wall to Remain
Ex. 6.6 KV Elec. Cond.
Prop. Conc. Walk
Ex. Tel. Cond.
Ex. 2' Br. S. Curve 168 N
Type 'A' Concrete Traffic Island
Ex. Tel. Cond.
Prop 12" P.S.
Main Line Ex. 12"
Ex. 8" G.M.
Police Call Box
Tel. Booth
Tel. MH
Ex. 2' Br. S. (Comb.)
Ex. Elec. Cond.
Ex. 6.6 KV Elec. Cond.
CG&E MH
CG&E Box
Prop. 15" P.S.
Ex. 12" P.S.
Prop. 12" P.S.
Pedestrian Br. No. HAM-71-0157
Prop. Stairway See Details Sh. 337
Sta. 0+13 Gilbert Ave.
Begin Work Sta 8+63 GB (N)
Ex. W.U. Conduit
Ex. Walk
GILBERT AVE. VIADUCT
868 (N)
Remove Ex. Conc. Walk
Berm Line
Ex. 12" C.I.P.
Ex. 8" G.M.
Retaining Wall No. 15 (See Sh. 244)
Remove Ex. Conc. Walk
Ex. Elec. Cond.
Prop. Conc. Walk
Prop. 18" P.S.
Prop. 12" P.S.
Begin Conc. Pavt.
Manson Ex. 2' Br. Sewer
Prop. 15" P.S.
Prop. 12" P.S.
Prop. 12" P.S.
Sta 151+49 Ex.
Prop. 12" P.S.
Prop. 15" P.S.
PT (ST.) 151+69.94
PT 151+69.88
Prop. 15" P.S.
Prop. 12" P.S.
Prop. 12" P.S.
Prop. 12

FED. RD. DIV.	STATE	PROJECT	FISCAL YEAR
2	OHIO		

HAMILTON COUNTY
HAM-71-(1.56) (2.61)

EXP. STA. 152+50 TO STA. 156+00

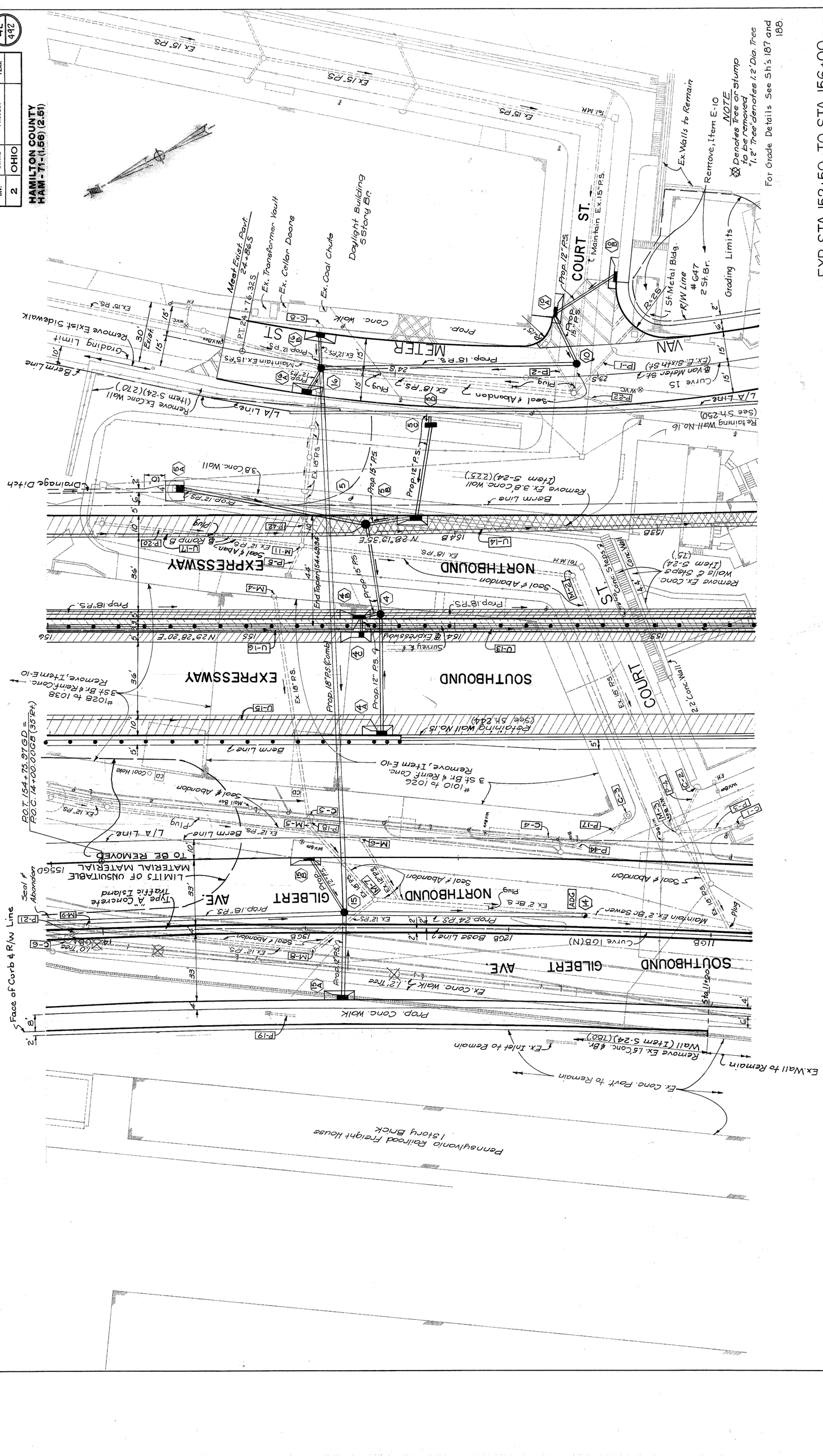

FED. RD. DIV.	STATE	PROJECT	FISCAL YEAR
2	OHIO		

43
492

HAMILTON COUNTY
HAM-71-(1.56)(2.51)

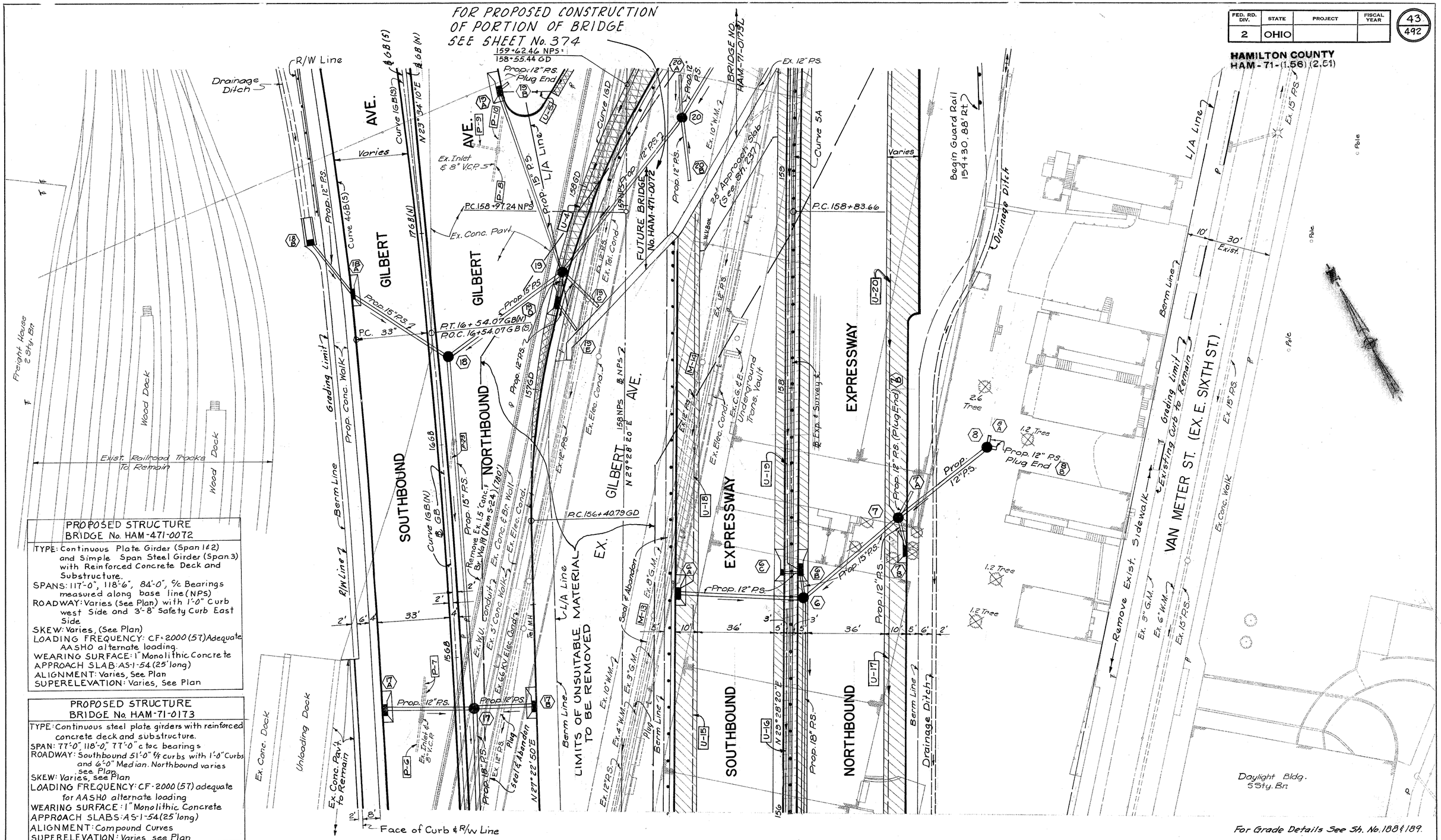

PROPOSED STRUCTURE
BRIDGE No. HAM-471-0072

TYPE: Continuous Plate Girder (Span 1 & 2) and Simple Span Steel Girder (Span 3) with Reinforced Concrete Deck and Substructure.
SPANS: 117'-0", 118'-6", 84'-0", c/c Bearings measured along base line (NPS)
ROADWAY: Varies (See Plan) with 1'-0" Curb west Side and 3'-8" Safety Curb East Side
SKEW: Varies, (See Plan)
LOADING FREQUENCY: CF=2000 (57) Adequate AASHO alternate loading.
WEARING SURFACE: 1" Monolithic Concrete
APPROACH SLAB: AS-1-54 (25' long)
ALIGNMENT: Varies, See Plan
SUPERELEVATION: Varies, See Plan

PROPOSED STRUCTURE
BRIDGE No. HAM-71-0173

TYPE: Continuous steel plate girders with reinforced concrete deck and substructure.
SPAN: 77'-0", 118'-0", 77'-0" c to c bearings
ROADWAY: Southbound 51'-0" f/f curbs with 1'-0" Curbs and 6'-0" Median. Northbound varies see Plan.
SKEW: Varies, see Plan
LOADING FREQUENCY: CF-2000 (57) adequate for AASHO alternate loading
WEARING SURFACE: 1" Monolithic Concrete
APPROACH SLABS: AS-1-54 (25' long)
ALIGNMENT: Compound Curves
SUPERELEVATION: Varies, see Plan

For Grade Details See Sh. No. 188 & 189.

EXP. STA. 156+00 TO STA. 159+50

FED. RD. DIV.	STATE	PROJECT	FISCAL YEAR
2	OHIO		

44
492

HAMILTON COUNTY
HAM-71-(1.56) (2.51)

NOTE: For the construction sequence for the proposed 12" P.S. between M.H. 31 & 31B, refer to the plans for Retaining Wall No. 18

Note: Ex. B.B. Tracks within the Proposed Right of Way are to be removed by others.

NOTE: FOR PLAN & PROFILE OF VANMETER ST. SEE SHEET NO. 75

Begin Approach Slab 162+46.24
End Approach Slab 162+71.24

Begin Approach Slab 159+40.79 NB
End Approach Slab 159+65.79 NB

For Grade Details, See Sh. No. 189 & 190
For Proposed Structure, See Sh. No. 342 & 374

EXP. STA. 159+50 TO STA. 163+00

FED. RD. DIV.	STATE	PROJECT	FISCAL YEAR
2	OHIO		

45
492

HAMILTON COUNTY
HAM-71-(1.56)(2.51)

Note: Existing R.R. Tracks within the Proposed Right of Way are to be removed by others

FOR PROPOSED CONSTRUCTION OF PORTION OF BRIDGE No. 0184, SEE SHEET No. 379

Note: For Plan & Profile of Van Meter St., See Sheet No. 75 & 76

SOUTHBOUND GILBERT AVE.

NORTHBOUND GILBERT AVE.

SOUTHBOUND EXPRESSWAY

NORTHBOUND EXPRESSWAY

RAMP GD

EX. E. SIXTH ST.

FUTURE BRIDGE NO. HAM-71-0164

BRIDGE NO. HAM-71-0792

LIMITS OF UNSUITABLE MATERIAL TO BE REMOVED

Remove Ex. Billboard Structures, Item E-10

Remove, Item E-10

Type 2 Mod. Paved Gutter

Type 1 Paved Gutter

Std. Type 1 Paved Gutter

Ret. Wall No. 18 (See Sh. No. 259)

Ret. Wall No. 21 (See Sh. No. 282)

Ex. 24" P.S.

Ex. 15" P.S.

Top of Bank

Bottom of Bank

Grading Limits

Ex. 8' Br. Sewer

Drainage Ditch

Berm Line

R/W Line

Relocate Rail Track

Prop. Conc. Walk

Ex. Conc. Walk

Ex. Conc. Islands

Ex. Conc. Pavt.

Ex. Conc. Wall

Future Pier

Curve 1GA

Curve 3GB(S)

P.C. 166+36.70 GA

P.C. 24+19.75 GB(S)

Future Ramp 35GG

Seal and Abandon

Prop. 12" P.S. Plug Ends

Prop. 12" P.S.

Prop. 12" P.S. Z

Prop. 24" P.S.

Prop. 15" P.S.

Ex. 12" P.S.

Ex. 18" P.S. Seal & Abandon

Prop. 12" P.S. Plug End

Ex. 2-GB(S) 2-GB(N)

Prop. 2-GB(S) 2-GB(N)

4'-9" Sub Sewer

10" Sewer

2.7'x7.4' Conc. Dividers

Ex. Elec. Cond.

Ex. 66 KV Elec. Cond.

Ex. Tel. Cond.

Ex. Elec. Cond.

Ex. 10" W.M.

Ex. 36" W.M.

Ex. 8" C.M.P.

Ex. Elec. Cond.

Ex. Conc. Walk

Ex. Tel. Pole

Ex. Bit. Mac. Drive

Ex. W.U. Cond.

Ex. 4" W.M.

Ex. 6" W.M.

Ex. 6" C.M.

Ex. 12" P.S.

Ex. Exp. & Survey E

Standard Flare

Curve 3GG

Curve 6NPN

Curve 5NPN

Curve 2GD

Curve 4GD

Berm Line 1 St. Conc. Bl.

Drainage Ditch

Seal & Abandon

Seal & Abandon Z

Ex. 12" P.S. Z

Ex. 18" P.S.

Ex. 36" W.M. Z

Ex. 10" W.M. Z

Ex. 8" C.M.P.

Ex. 66 KV Elec. Cond. Z

Ex. Elec. Cond. Z

Ex. Tel. Cond. Z

Ex. Conc. Wall Z

Ex. Conc. Islands Z

Ex. Conc. Pavt. Z

Ex. Bit. Mac. Drive Z

Ex. Tel. Pole Z

Ex. W.U. Cond. Z

Ex. 4" W.M. Z

Ex. 6" W.M. Z

Ex. 6" C.M. Z

Ex. 12" P.S. Z

Ex. Exp. & Survey E Z

Standard Flare Z

Curve 3GG Z

Curve 6NPN Z

Curve 5NPN Z

Curve 2GD Z

Curve 4GD Z

Berm Line 1 St. Conc. Bl. Z

Drainage Ditch Z

Seal & Abandon Z

Type 2 Mod. Paved Gutter Z

Ex. 24" P.S. Z

Prop. 12" P.S. Z

Prop. 24" P.S. Z

Prop. 15" P.S. Z

Ex. 18" P.S. Seal & Abandon Z

Prop. 12" P.S. Plug End Z

Ex. 2-GB(S) 2-GB(N) Z

Prop. 2-GB(S) 2-GB(N) Z

4'-9" Sub Sewer Z

10" Sewer Z

2.7'x7.4' Conc. Dividers Z

Ex. Elec. Cond. Z

Ex. 66 KV Elec. Cond. Z

Ex. Tel. Cond. Z

Ex. Elec. Cond. Z

Ex. Conc. Walk Z

Ex. Tel. Pole Z

Ex. Bit. Mac. Drive

FED. RD. DIV.	STATE	PROJECT	FISCAL YEAR
2	OHIO		

46
492

HAMILTON COUNTY
HAM-71-(1.66) (2.81)

NOTE: Ex. R.R. Tracks within the Proposed Right of Way are to be removed by others.

1½ Sty. Conc. Block Warehouse
Ex. R.R. Siding
Top of Bank
Bottom of Bank
℄ Reloc. Penn. R.R. (By Others)
Drainage Ditch
Grading Limit
L/A/RW Line
RW Line
L/A Line
Berm Line
SUSPEND RAILROAD WORK Sta. 168+00 NB
P.T. ℄ Node Sta. 168+04.21 GA
N 23° 34' 10" E
Ret. Wall No. 18 See Sh. No. 239
Type 2 Mod. Paved Gutter
Type 2 Modified Paved Gutter
Ex. 8" Brick Sewer
℄ Main Line Track
℄ Reloc. Tell Track
Prop. Conc. Walk
Curve 1 GA
Curve 2 GA
Curve 3 GB(S)
Curve 2 GB(N)
Prop. 12" P.S.
Prop. 15" P.S.
Prop. 21" P.S.
Ex. C.B.
Abond. 4" W.M.
Ex. 12" P.S.
Ex. 12" Elec. Cond.
Ex. 12" Tel. Cond.
Ex. W.U. Cond.
Ex. Elec. Cond.
Ex. Cons. Telenals
Ex. 10" W.M.
Ex. 36" W.M.
Ex. 8" G.M.
Ex. 6" W.M.
Ex. 6" G.M.
Ex. 24" P.S.
Ex. 12" P.S.
Prop. 24" P.S.
Prop. 12" P.S.
Retaining Wall No. 2 See Sh. No. 278
Remove, Item E-10
Remove Ex. Billboard Structures, Item E-10
Seal and Abandon
Seal & Abandon
Ex. Conc. Walk
Type 2 Modified Paved Gutter
Retaining Wall No. 21 See Sh. No. 282
Ret. Wall No. 40 See Sh. No. 297
Type 2 Modified Paved Gutter
Drainage Ditch
Berm Line
L/A Line
Curve 2 SE
Curve 6A
Curve 5C
Curve 6 GD
GILBERT AVE.
SOUTHBOUND RAMP
NORTHBOUND RAMP
EXPRESSWAY
E. SIXTH ST.
VAN METER ST.
P.C. 24+47.60 GB(N)
P.C. 16+39.00 NPN = P.O.C. 16+20.00 N.B. (44' Rt.)
P.T. 167+80.00 NPN
P.T. 17+57.29 SE
P.C. 15+88.12 SE
N 20° 08' 00" E
N 10° 08' 51" E
N 16° 45' 38" E
Varies
Tree
Twin Trees

For Grade Details See Sh. No. 191 & 192

EXP. STA. 166+50 TO STA. 170+00

FED. RD. DIV.	STATE	PROJECT	FISCAL YEAR
2	OHIO		

47
492

HAMILTON COUNTY
HAM-71-(4.56)2.51

NOTE: Ex. R.R. Tracks within the Proposed Right of Way are to be removed by others.

3 St. Br. & Conc.

1 St. Br. Remove, Item E-10

Conc. Loading Dock

Ex. RR Tracks

Iron Door - Coal Drop

Top of Bank

Ex. Drains

Ex. MH

Drainage Ditch

Prop. 12" P.S.

S 18° 40' 00" W

10' 10' 5'

4' 7' 16' 3' 4'

For Grade Detail (See Sh. 192)

Plug & Seal & Abandon

Berm Line

(Bit. Mac.) Conc. Pavement

℄ Reloc. Penn. R.R. (By Others)

Grading Limit

Prop. 12" P.S. (Sec. M6.6(d))

Prop. Siding Connection (By Others)

Ex. Drain

Meet Proposed Conc. Pavt.

Conc. Pavt. & Trackwork by Others

Meet Ex. Conc. Pavt.

Ex. Conc. Pavt.

194+83

Remove Ex. Mac. Pavt. Item E-11

RESUME RAILROAD WORK
172+05 N.B.

Ex. Mac. Pavt.

Ex. 8' Br. Sewer

Ex. Block Warehouse

Ex. 12" St. Conc.

Prop. Siding Connection (By Others)

Ex. RR Sidings

N 30° 26' 10" E

194

Berm Line

℄ R/W Line

P.C. 171+63.85 GA

Ret. Wall No. 20 S (See Sh. 281)

Curve 1 RR

Top of Bank

(Bottom of Bank)

P.C. 192+63.92

P.T. 193+82.61

CURVE DATA

CURVE 1 RR

P.I. Sta. 193+23.64
P.C. Sta. 192+63.91
P.T. Sta. 193+82.61
Δ = 13° 39' 00"
D = 11° 30' 00"
R = 499.06'
L = 118.70'
T = 59.73'

PROPOSED STRUCTURE HAM-71-0196

TYPE: Continuous steel plate girders with reinforced concrete deck and substructure

SPAN: Varies (124.60, 150.48' ℄ brgs.' measured along ℄ Gilbert Ave. (Relocated)

ROADWAY: 70'-0" f/f curbs including 4'-0" raised median with 2'-0" safety curb Northbound Rdwy & 6'-0" sidewalk Southbound Rdwy.

SKEW: Varies, see Plan

LOADING FREQUENCY: CF = 2.000 (57)

WEARING SURFACE: 1" Monolithic Concrete

APPROACH SLABS: AS-1-54 (25'-0" long)

ALIGNMENT: Varies, see Plan

SUPERELEVATION: Varies, see Plan

Ramp RB

Curve 6B

PCC. 173+31.09 SB

Survey ℄ of NB Exp. 2

Curve 5E

EXPRESSWAY

Sta. 3+61.36

HAM-71-0196

P.T. 173+63.85 NB

Begin Approach Slab 31+61.86 GB(N)
End Approach Slab 31+86.86 GB(N)

N 8° 53' 12" E

N 10° 16' 10" E

173 GA

Curve 2 GA

172 GA

173 RB

173 SB

173 SB Exp.

173 NB

173 GD

U-34

U-35

U-32

U-33

U-31

U-2

U-1

Prop. 15" P.S.

Prop. 12" P.S.

Prop. 18" P.S.

Ex. 12" P.S.

Ex. 15" P.S.

Ex. 18" P.S.

P.C.C. 172+63.85 NB

Curve 5D

P.C. 30+45.40 GB(N)

Curve 3 GB(N)

Th 94.13 NB
30 | 13.22 GB(N)

P.T. 171+96.96 GD

Curve 3 GD

N 12° 30' 00" W

Ret. Wall No. 20 S (See Sh. 281)

BRIDGE NO. 53

Curve 1 RB

Conc. Parking Lot Pav't.

PCC. 171+63.85 NB

Curve 4 A

N 43° 13' 52" E

P.T.C. & M.H.

Begin Approach Slab 28+54.46 GB(N)
End Approach Slab 28+76.16 BB(N)

Begin Ramp RB
PCC. 171+02.34 RB

P.O.C. 171+02.34 SB (8' Lt.)

Prop. 12" P.S.

P.T. 28+84.53 GB(N)
28+86.41 GB(S)

P.T. 28+56.69 GB(S)

Curve 3 GB(S)

Curve 2 GB(N)

Curve 2 GB(S)

25' Approach Slab (See Sh. 239)

Sta. 2+84

Begin Approach Slab (See Sh. 239)

End Approach Slab (See Sh. 239)

Prop. Conc. Walk

SOUTHBOUND GILBERT AVE.

SOUTHBOUND ℄ Ramp RB

Curve 5C

U-43

U-30

U-28

U-29

NORTHBOUND GILBERT AVE.

Ex. 12" P.S.

Prop. 15" P.S.

Prop. 12" P.S.

Prop. 21 P.S.

Prop. 15" P.S.

Prop. 15" P.S.

P.C. 171+12.91 GD

Prop. 15" P.S.

Prop. 15" P.S.

Prop. 15" P.S.

FED. RD. DIV.	STATE	PROJECT	FISCAL YEAR
2	OHIO		

48
492

HAMILTON COUNTY
HAM-71-(1.56) (2.51)

CURVE DATA

CURVE 1TRR
P.I. Sta. = 199+69.71T
P.C. Sta. = 199+19.20T
P.T. Sta. = 200+19.35T
Δ = 15°-01'-23"
D = 15°-00'-00"
R = 383.065'
L = 100.15'
T = 50.51'

CURVE 2RR
P.I. Sta. = 197+95.94
P.C. Sta. = 196+69.94
P.T. Sta. = 199+13.27
Δ = 35°-17'-00"
D = 14°-30'-00"
R = 396.20'
L = 243.33'
T = 126.00'

PROPOSED STRUCTURE
BRIDGE NO. HAM-71-0203

TYPE: Simple Span Steel Beam (Span 1) and Continuous Plate Girder (Spans 2 & 3) with Reinforced Concrete Deck & Substructure.
SPANS: 36'-4", 88'-9", 87'-6¼" ℄ Bearings
ROADWAY: 33'-0" f/f curbs with 4'-0" median and two 6'-0" sidewalks.
SKEW: Varies, see Plan.
LOAD FREQUENCY: C.F. = 2000 (57)
WEARING SURFACE: 1" Monolithic Concrete
APPROACH SLAB: AS-1-54 (25'-0" Long)
ALIGNMENT: Tangent
SUPERELEVATION: Varies, see Plan.

EXP. STA. 173+73 TO STA. 177+60

FED. RD. DIV.	STATE	PROJECT	FISCAL YEAR
2	OHIO		

HAMILTON COUNTY
HAM-71-(1.56) (2.51)

Note: Contractor will backfill to limit shown behind wall No. 24 to allow the installation of R.R. Track by Others.
Exist R.R. Tracks within the proposed Right of Way are to be removed by others. When the Temporary Run-Around is no longer required; The track will be removed by others and the contractor will grade to the limits shown.
For profile & cross section of Temporary Run-Around see sheets 74 & 173.
For profile & cross section of Reloc. Penn. R.R. see sheets 72, 73, & 172.

For Grade Details
See Sh. 194

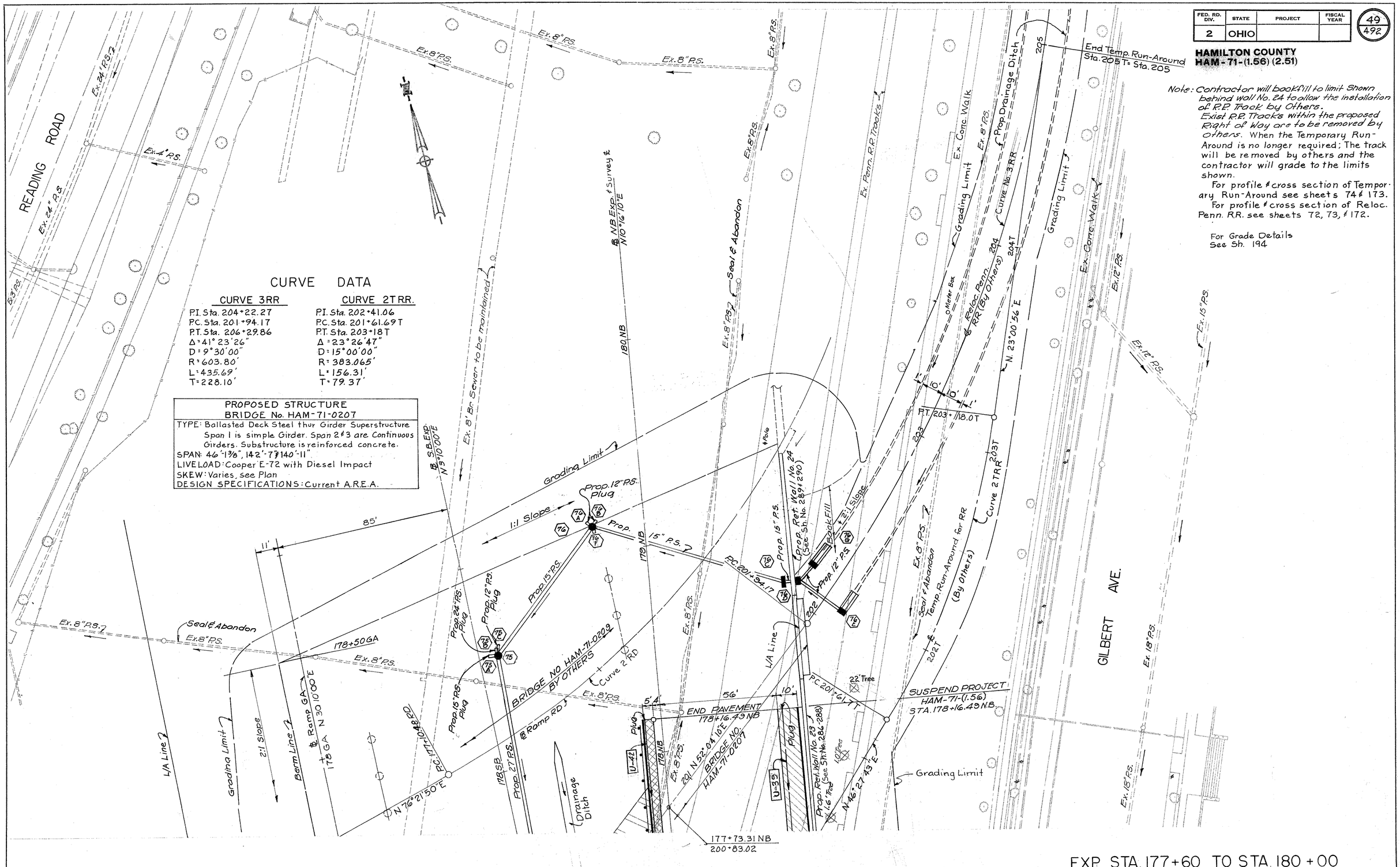

CURVE DATA

CURVE 3RR	CURVE 2TRR.
P.I. Sta. 204+22.27	P.I. Sta. 202+41.06
P.C. Sta. 201+94.17	P.C. Sta. 201+61.69 T
P.T. Sta. 206+29.86	P.T. Sta. 203+18 T
Δ = 41° 23' 26"	Δ = 23° 26' 47"
D = 9° 30' 00"	D = 15° 00' 00"
R = 603.80'	R = 383.065'
L = 435.69'	L = 156.31'
T = 228.10'	T = 79.37'

PROPOSED STRUCTURE
BRIDGE No. HAM-71-0207

TYPE: Ballasted Deck Steel thur Girder Superstructure Span 1 is simple Girder. Span 2 & 3 are Continuous Girders. Substructure is reinforced concrete.
SPAN: 46'-1 3/8", 142'-7" & 140'-11"
LIVELOAD: Cooper E-72 with Diesel Impact
SKEW: Varies, see Plan
DESIGN SPECIFICATIONS: Current A.R.E.A.

EXP. STA. 177+60 TO STA. 180+00

FED. RD. DIV.	STATE	PROJECT	FISCAL YEAR
2	OHIO		

50
492

HAMILTON COUNTY
HAM-71-(1.56)(2.51)

Note: Base Line of N.B. Exp. Offset 100' east.

N 10° 16' 10" E

182 NB · 183 NB · 184 NB · 185 NB · 186 NB · 187 NB

Survey ℄

Ex. 8" P.S. · 3' Inlet · Ex. 8" Br. Sewer · 3' M.H. · Inlet M.H. · Inlet · Ex. 8" P.S. · Ex. 8" P.S. · Ex. 8" P.S. · Ex. 8" P.S. · Ex. 8" P.S.

SUSPEND WORK STA. 184+80 NB

Deer Creek Common Field House 2 St. Br. & Stucco

Grating · Step · Sod Area · 3' Conc. Walk · Sod Area · Conc. Area · Fence · Stone Walk · 1 St Insul Br. · 1 St Insul Br. Garage · Conc. Area · 2 Stone Wall · 24" Stone Wall & Cyclone Fence · 12" Conc. Wall · Conc. Dock · Sod Area · Mac. Pav't. · 1 St Br. Garage · 2 St. Br.

Bott of Bank · Top of Bank · Wire Mesh Fence · 1.9' x 2.6' Box (Standing Upright)

R.R. Track · 5' Conc. Walk · Grading Limits · Wire Mesh Fence · Drainage Ditch N 10° 40' 44" E · Grading Limits · Conc. · Conc. Walk · Conc. Walk · Conc. · Conc. · Conc.

FED. RD. DIV.	STATE	PROJECT	FISCAL YEAR
2	OHIO		

51
492

HAMILTON COUNTY
HAM-71-(1.56) (2.51)

Notes:
① Spirals are replaced by compound curves (See Sht. 38)
② For Grade Details, see sheet 196

EXP. STA. 201+00 TO STA. 202+00

FED. RD. DIV.	STATE	PROJECT	FISCAL YEAR
2	OHIO		

52
492

HAMILTON COUNTY
HAM-71-(1.56) (2.51)

MANITOU ST.
SYMMES ST.
SOUTHBOUND EXPRESSWAY
NORTHBOUND LAYTON EXPRESSWAY
HARDEN ST.
MARQUIS ST.
Ex. penn. R.R. Tracks
Type 2 Mod. Paved Gutter
Prop. Ret. Wall No. 41 (See Sht. 301)
Ex. 8" P.S.
Ex. 12" P.S.
Prop. 12" P.S.
Seal & Abandon Ex. Inlet
Prop. Conc. Walk
Prop 18" P.S. (Comb) Prop. 12" P.S.
Plug
Ex. 18" P.S.
Prop. 24" P.S.
Prop. 15" P.S.
Berm Line
Drainage Ditch
Ex. Walk & Steps
Ex. 12" P.S.
Ex. 21" C.I.P.
Exist. Pedestrian Bridge to be Removed Item S-24 (100)
Ex. 18" P.S.
Ex. Conc. Hdwl.
Ex. M.H.
Ex. 24" P.S. to be Maintained
Prop. 24" P.S. (comb)
Ex. 24" P.S.
Ex. 4" G.M.
Ex. 3' Storm Sewer
Prop. 12" P.S.
End Taper 204+64.55 (61' Lt.)
S.C. 204+37.43 N.B.
Curve 10 L
Curve 9 L
Prop. 27" P.S.
Begin Taper 205+64.55 SB (73' Lt.)
S.C. 202+64.55 SB
Prop. 24" P.S.
Prop. 73" P.S.
Drainage Ditch
Survey ℄ N.B. Exp.
Seal & Abandon Ex. 21" P.S.
Ex. 12" Corr. P.S.
Ex. Inlet
Ex. 12" Corr. P.S.
Limit of Grading
2:1 Fill Slope
2:1 Cut Slope
Grading Limit
Drainage Ditch
L/A
L/A RW
Ex. 3' Storm Sewer
Drainage Ditch
13" Tree
12" Tree
18" Tree
16" Tree
30" Tree
14" Tree
17" Tree
22" Tree
20" Tree
26" Tree
20" stump
60'
48'
10'
5'
4'
3'
6'
1'
Ls = 600'
Ls = 500'
205 NB
204 NB
203 NB
202 NB
U-51
U-52
U-53
U-59
U-49
U-48
U-47
U-46
U-45
U-41
C-19
C-72
M-18
Z-41
R=30'
Δ=90°

Notes:
① Spirals are replaced by compound curves. See Sht. 38
② For Grade Details See Sht. 197 .

EXP. STA. 202+00 TO STA. 206+00

FED. RD. DIV.	STATE	PROJECT	FISCAL YEAR
2	OHIO		

53
492

HAMILTON COUNTY
HAM-71-(1.56) (2.51)

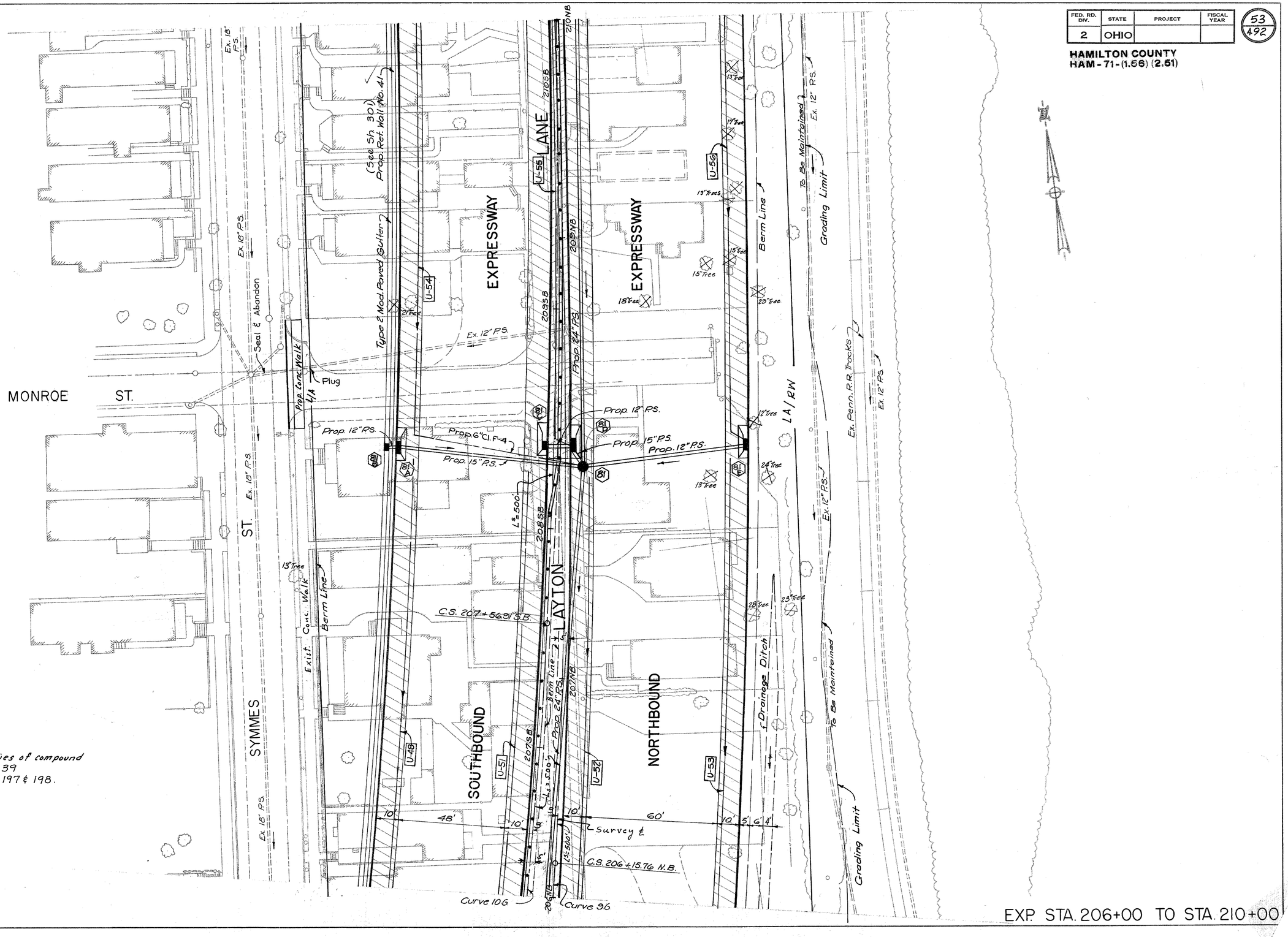

Notes:
Spirals are replaced by a series of compound curves, See alignment shts. 39
For Grade Details See shts. 197 & 198.

EXP. STA. 206+00 TO STA. 210+00

FED. RD. DIV.	STATE	PROJECT	FISCAL YEAR
2	OHIO		

54
492

HAMILTON COUNTY
HAM-71-(1.56) (2.51)

WILKINSON ST.

Ex. 12" P.S. To Be Maintained

℄ Survey ℄

END WORK STA. 213+80

END PROJECT HAM-71-(1.56)(2.51) STA. 213+00

I-71 I (28) 03

Grading Limit

1:1 Cut Slope

Berm Line

SYMMES ST.

Ex. 15" P.S. To Be Maintained

Ex. 15" P.S. To Be Maintained

Ex. 15" P.S. To Be Maintained

Ex. 12" P.S.

Ex. 12" P.S.

Ex. 18" P.S. To be maintained

Ex. 24" P.S.

Prop. 24" P.S.

Prop. 12" P.S.

Prop. 15" P.S.

Prop. 15" P.S.

Prop. 15" P.S.

Prop. 12" P.S.

Prop. 12" Class A.C.P.

Prop. Ret. Wall No. 41 (See Sh. 301)

Type 2 Mod. Paved Gutter

Slope Varies

Slope Varies

Slope Varies

Prop. Conc. Walk

Prop. Conc. Walk

Prop. Approach Slab 10+00

End Approach Slab 10+24.96

Seal & Abandon

Seal & Abandon

Plug End

Plug End of P.S.

END PAVEMENT

END PAVEMENT

Plug End

EXP. N 5°49'10"E

213+15 Face

213+58

212+NB

210+NB

S.T. 212+56.21 S.S.=
P.O.T. 212+25.02 NB

Ls = 5°00'39" 215.5

Ls = 5°00' NB

211+17.14 NB
11+28.87
ST. 211+15.76 N.B.

NO. HAM-71-0271

BRIDGE

EXPRESSWAY

SOUTHBOUND

NORTHBOUND

EXPRESSWAY

Remove Ex. 20' St. Wall, Item S-24 (92')

Remove Ex. 20' St. Wall, Item S-24 (125')

U-54

U-55

U-56

U-57

U-58

McGREGOR AVE.

Ex. Blacktop Pavement

9+00

10+00

11+00

12+00

13+00

LIMIT OF WORK Sta. 9+25

End Conc. Pav't.

End Conc. Pav't.

End Conc. Pav't.

1 Sty. Conc. Blk. #2301

2½ Sty. Brick #2236

2½ Sty. Brick #2233

2½ Sty. Brick #2231

2 Sty. Fr. #2223

To be Maintained

To be Maintained

To be Maintained

To Be Maintained

To Be Maintained

Grading Limit

Grading Limit

Grading Limit

Grading Limit

Grading Limit

Ex. Pennsylvania R.R. Tracks

LA/EW

Begin Approach Slab 13+37.79
End Approach Slab 13+62.79

25' Approach Slab (See Sheet 243)

See Sheets 78 & 79 For Continuation of McGregor Ave.

For Proposed Structure See Sh. No. 430

Notes:
1- Spirals are replaced by compound curves, See Sh. 39.
2- For Grade Details, See Sh. 198.
3- Twenty-five feet of twin 4" Conduit will be furnished and paid for by the "Cincinnati Gas and Electric Company" and shall be placed by the contractor.

EXP. STA. 210+00 TO STA. 214+00

FED. HIGHWAY DIVISION	STATE	PROJECT		SHEET NO.	TOTAL SHEETS
2	OHIO			55	492

HAMILTON COUNTY
HAM-71-(1.56) (2.51)

562.63 563.63 564.63 565.63 566.63 567.63 567.88 568.03 568.13 568.40 568.69 569.00

590 580 570 560 550 540 530 520 510

BRIDGE No. HAM-71-0135
(BY OTHERS)

Begin Approach Slab
149 + 96.75

End Approach Slab
150 + 21.75

Existing Ground Line

Profile Grade applied 8' Lt & Rt. of Base Line

153 + 40

300' V.C.

+1.0%

Outlet U-11
@C.B. No. 1C
Inv. 560.6

Prop. 12" P.S.

End U-11
Sta. 151+64
Inv. 561.8

Outlet U-13
@C.B. No. 3A
Inv. 561.8

10 LF 6" Cl. F-4

End U-13
Sta. 154+44
Inv. 564.8

End U-14
Sta. 154+38
Inv. 562.6

Prop. 12" P.S.

Outlet U-12
@C.B. No. 1B
Inv. 557.7

Ex. 12" P.S.

End U-12
Sta. 151+35
Inv. 560.1

Outlet U-14
@C.B. No. 2A
Inv. 560.3

10 LF 6" Cl. F-4

Prop. 12" P.S.

Prop. 18" P.S.

Ex. 18" P.S.

644.0 658.0 594.6 563.6 567.3 567.7 544.2

148 149 150 151 152 153 154

N.B. & S.B. EXP. STA. 148 TO 154

FED. RD.	STATE	SHEET	56
2	OHIO		492

HAMILTON COUNTY
HAM-71-(1.56) (2.51)

568.69 569.00 569.33 569.68 570.06 570.45 570.87 570.30 571.76 572.23 572.45 573.73 574.23 575.73 577.73 579.73

590 580 570 560 550

300' V.C.

154+40

+25

Profile Grade applied 8' Rt. & Lt. of Base Line

Profile Grade Applied 8' Lt. of Base Line

Future Profile of Base Line NPS

+2.0 %

+1.8 %

Begin Approach Slab 159+40.79

End Approach Slab 159+65.79

BRIDGE No. HAM-71-0173

End U-20 Sta. 160+35 Inv. 577.0

End U-18 Sta. 158+83 Inv. 572.4

End U-19 Sta. 159+60 Inv. 574.7

End U-13 Sta. 154+44 Inv. 564.8

10 LF 6" Cl. F-4

+1.0 %

Outlet U-16 @ C.B. No. 4B Inv. 564.9

P.V.I. 154+90

Elev. 569.45

Ex. 18" P.S.

End U-14 Sta. 154+38 Inv. 562.6

Outlet U-17 @ M.H. No. 5 Inv. 562.9

Prop. 12" P.S.

Outlet U-15 @ C.B. No. 4A Inv. 564.2

End U-16 Sta. 156+96 Inv. 569.5

Outlet U-19 @ C.B. No. 6B Inv. 569.5

Outlet U-20 @ M.H. No. 7 Inv. 569.9

End U-15 Sta. 156+98 Inv. 569.0

End U-17 Sta. 157+31 Inv. 567.9

Outlet U-18 @ C.B. No. 6A Inv. 569.2

Future Ramp GG

544.3 545.1 545.0 546.1 547.8 547.8 546.8

154 155 156 157 158 159 160

Existing Ground Line

Prop. 18" P.S.

Prop. 18" P.S.

Prop. 18" P.S.

579.73 581.73 583.23 583.70 584.13 584.50 584.81 585.08 585.29 585.45 585.56 585.62 585.63 585.78 585.48 585.36 584.86

590 580 570 560 550

BRIDGE No. HAM-71-0173

Begin Approach Slab 162+46.24

P.V.I. 163+25

Elev. 586.23

Profile Grade applied 8' Lt. of Base Line

-0.5 %

+2.0 %

46.24

Outlet U-21 @ C.B. 57A Inv. 578.7

10 LF 6" Cl. F-4

End Approach Slab 162+71.24

300' V.C.

End U-22 Sta. 164+00 Inv. 581.2

Begin U-25 Sta. 164+02 Inv. 581.2

Outlet U-25 @ C.B. No. 4GA Inv. 580.3

Outlet U-22 @ C.B. No. 57B Inv. 580.4

End U-21 Sta. 164+00 Inv. 580.3

Begin U-24 Sta. 164+02 Inv. 580.3

Outlet U-24 @ C.B. No. 4GD Inv. 579.0

161+75

164+76

Prop. 12" P.S.

℄ Ramp GD

15.0' Min. Vertical Clear.

15.3' Act. Vertical Clear.

Existing Ground Line

547.0 549.5 552.0 558.4 561.5 566.5 571.7

160 161 162 163 164 165 166

N.T.S. Ex. 12" P.S. Inv. 537.70

N.T.S. Ex 4' Br. S. Inv. 534.10

N.B. & S.B. EXP. STA. 154 TO STA. 166

Bear Ck. Bg. ALT 11-Ire. 64

HAMILTON COUNTY
HAM-71-(1.56) (2.51)

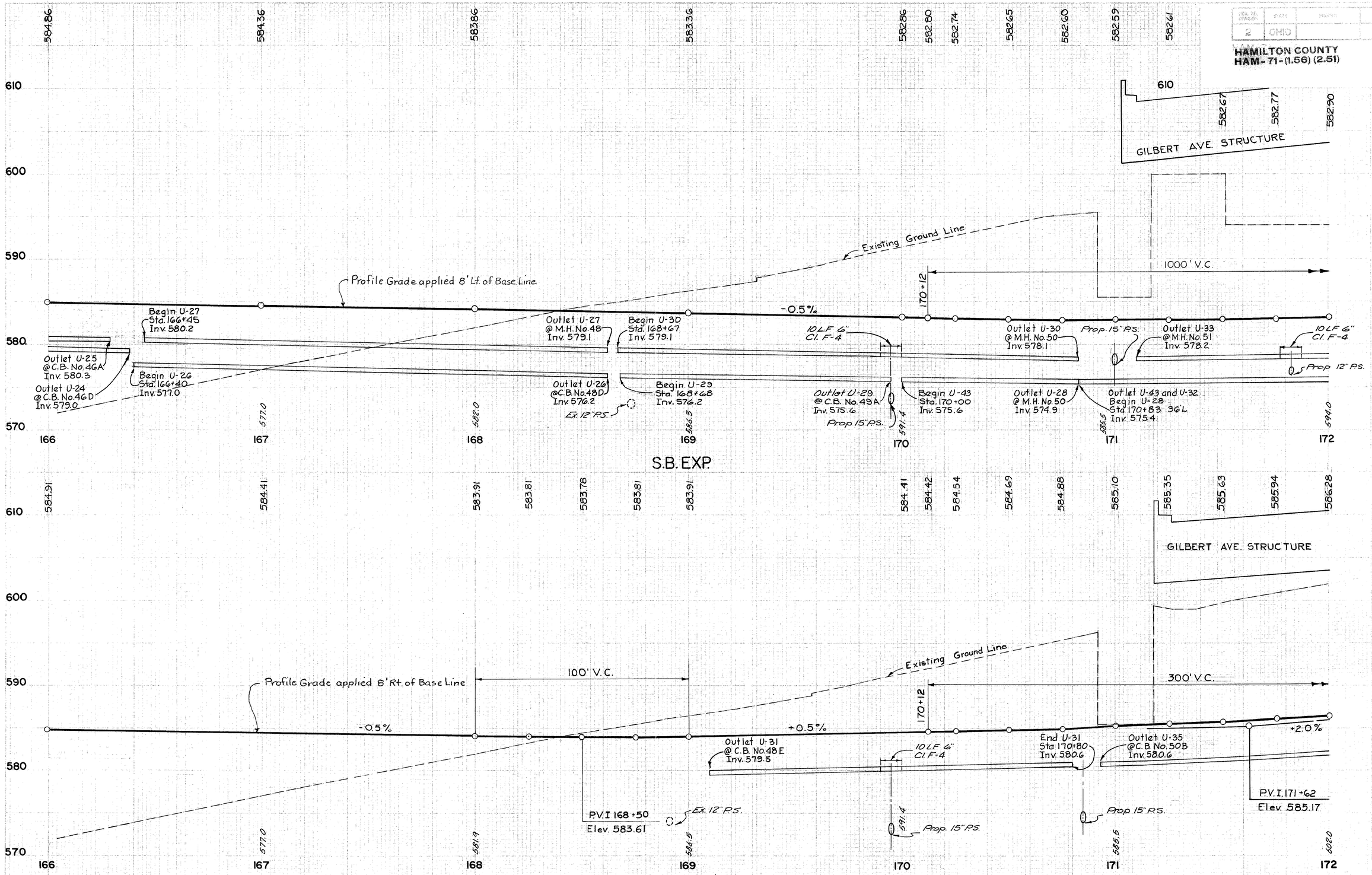

N.B. & S.B. STA. 166 TO STA. 172

SHEET NO.	STATE	PROJECT
2	OHIO	

HAMILTON COUNTY
HAM-71-(1.56) (2.51)

582.90 583.07 583.28 583.52 583.81 584.12 584.48 584.87 585.30 585.77 586.27 586.81 587.38 588.00 588.65 589.34 590.06 590.82 591.62 592.45 593.32 594.23 595.18 596.16 597.18

620 610 600 590 580

PENN. R.R STRUCTURE

ELSINORE PL. STRUCTURE

GILBERT AVE. STRUCTURE

1000' V.C.

END PAV'T. 177+50

Prop. Pav't. (By Others)

Grading Limit

Profile Grade applied 8' Lt. of Base Line

594.0 606.4 609.2 606.8 612.0

End U-33 Sta. 172+51 Inv. 579.0

Outlet U-34 @ C.B. No. 101C Inv. 579.0

End U-34 Sta. 174+47 Inv. 581.9

Outlet U-36 @ M.H. No. 68 Inv. 582.5

End U-36 Sta. 175+92 Inv. 585.4

Outlet U-37 @ C.B. No. 72A Inv. 586.0

End U-37 Sta. 176+95 Inv. 588.4

Outlet U-41 @ M.H. No. 74 Inv. 588.5

End U-41 Sta. 177+50 Inv. 590.4

Plug

End U-40 Sta. 177+50 Inv. 588.9

End U-32 Sta. 176+11 Inv. 583.9

Outlet U-40 @ M.H. No. 73 Inv. 584.0

-0.5% +5.4%

10 L.F. 6" C.I. F-4

Prop. 15" P.S. Prop. 15" P.S. Prop. 12" P.S.

P.V.I. 175+12 Elev. 580.30

172 173 174 175 176 177 178

612.9 613.2

Prop. 30" P.S.

Prop. 36" P.S.

S.B. EXP.

586.28 586.64 587.04 587.46 587.93 588.17 589.93 591.93 593.93 595.93

PENN R.R STRUCTURE

Ex. 8" P.S. (Approx. Elev.)

597.65 597.94

GILBERT AVE STRUCTURE

ELSINORE PL. STRUCTURE

200 V.C.

177+86

300' V.C.

173+12

Profile Grade applied 8' Rt of Base Line

+2.0%

End U-42 Sta. 178+16.49 Inv. 593.5

Plug

End U-39 Sta. 178+16.49 Inv. 592.0

End U-38 Sta. 177+00 Inv. 591.2

Outlet U-42 @ C.B. No. 74A Inv. 591.2

End U-35 Sta. 174+03 Inv. 585.6

Outlet U-38 @ M.H. No. 69 Inv. 585.8

Outlet U-39 @ C.B. No. 69B Inv. 584.4

606.1 609.6 613.3 614.0 615.6 615.0

N.B. EXP.

N.B. & S.B. EXP. STA. 172 TO STA. 178

HAMILTON COUNTY
HAM-71-(1.56) (2.51)

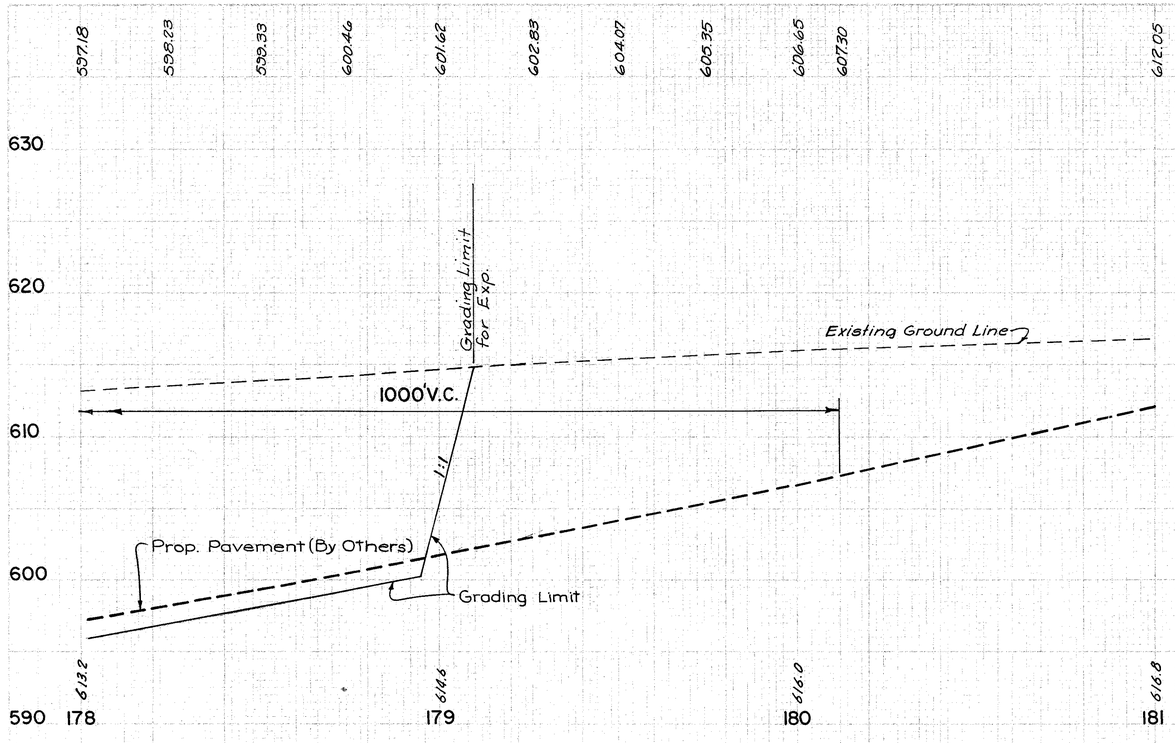

S.B.EXP.

NOTE: For Grading beyond limits shown on this sheet (for Reloc. RR) see Plan Sheet No. 49650 and RR Cross Sections

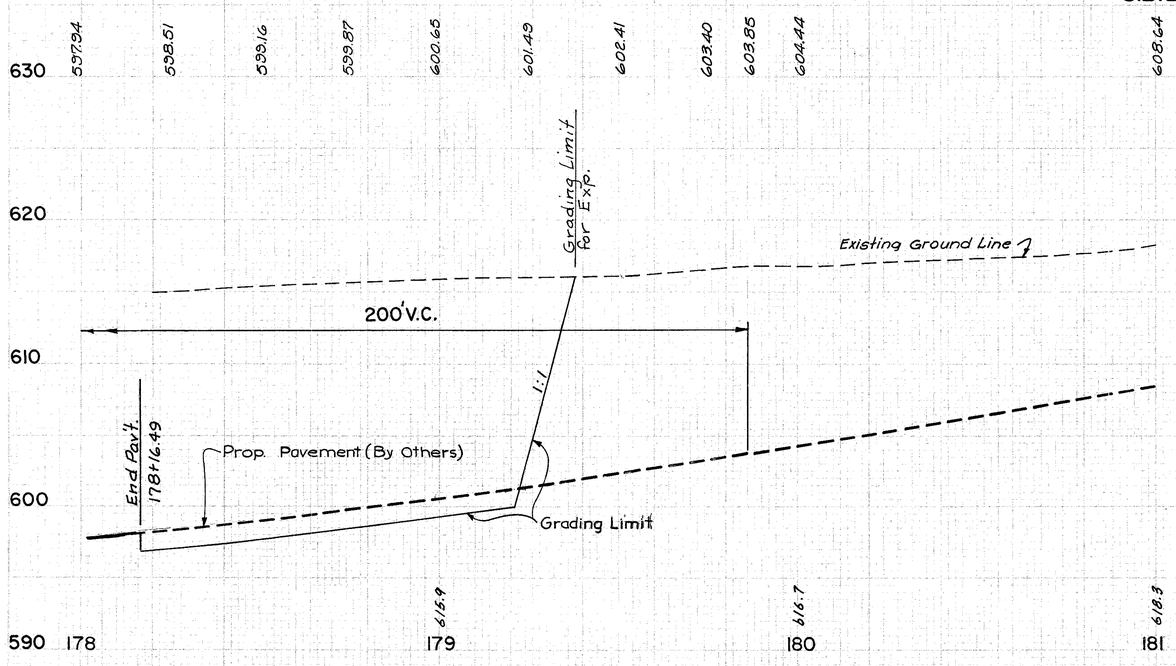

N.B.EXP.

N.B. & S.B. EXP. STA. 178 TO STA. 181

FED. RD. DIVISION	STATE	PROJECT	
2	OHIO		

60
492

HAMILTON COUNTY
HAM-71-(1.56) (2.51)

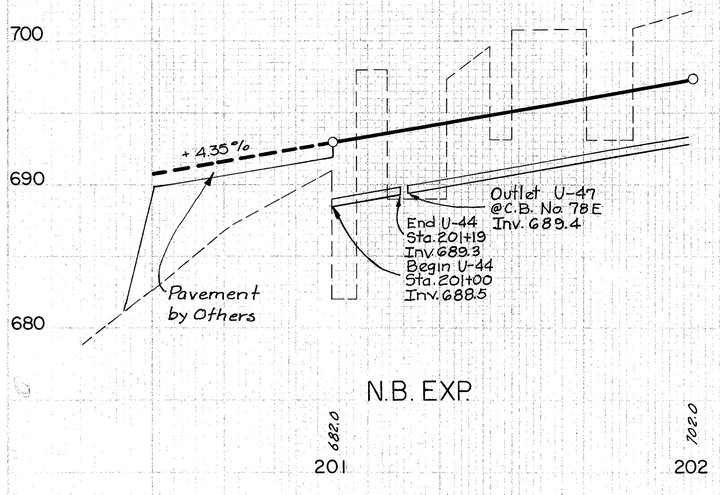

N.B. EXP.

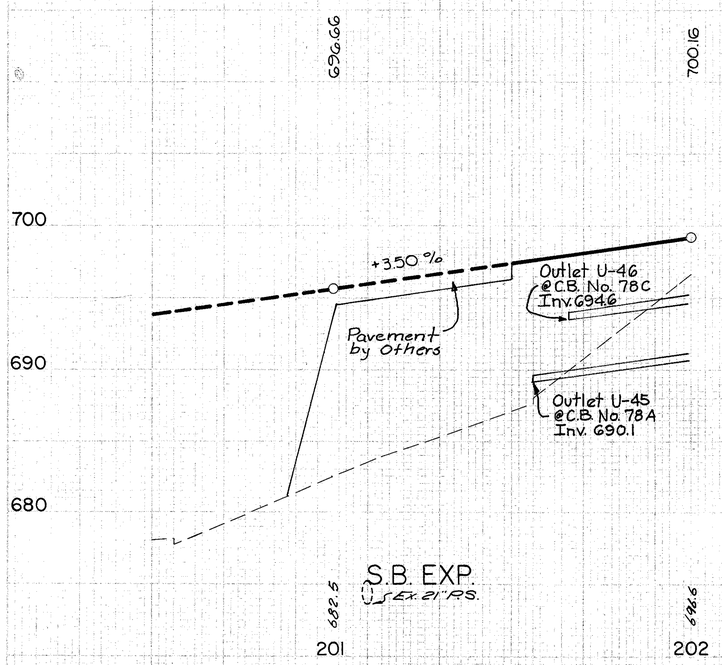

S.B. EXP.
EX. 21" R.S.

N.B. & S.B. EXP. STA. 200+50 TO STA. 202

FED. RD. DIVISION	STATE	PROJECT	
2	OHIO		

61
492

HAMILTON COUNTY
HAM-71-(1.56) (2.51)

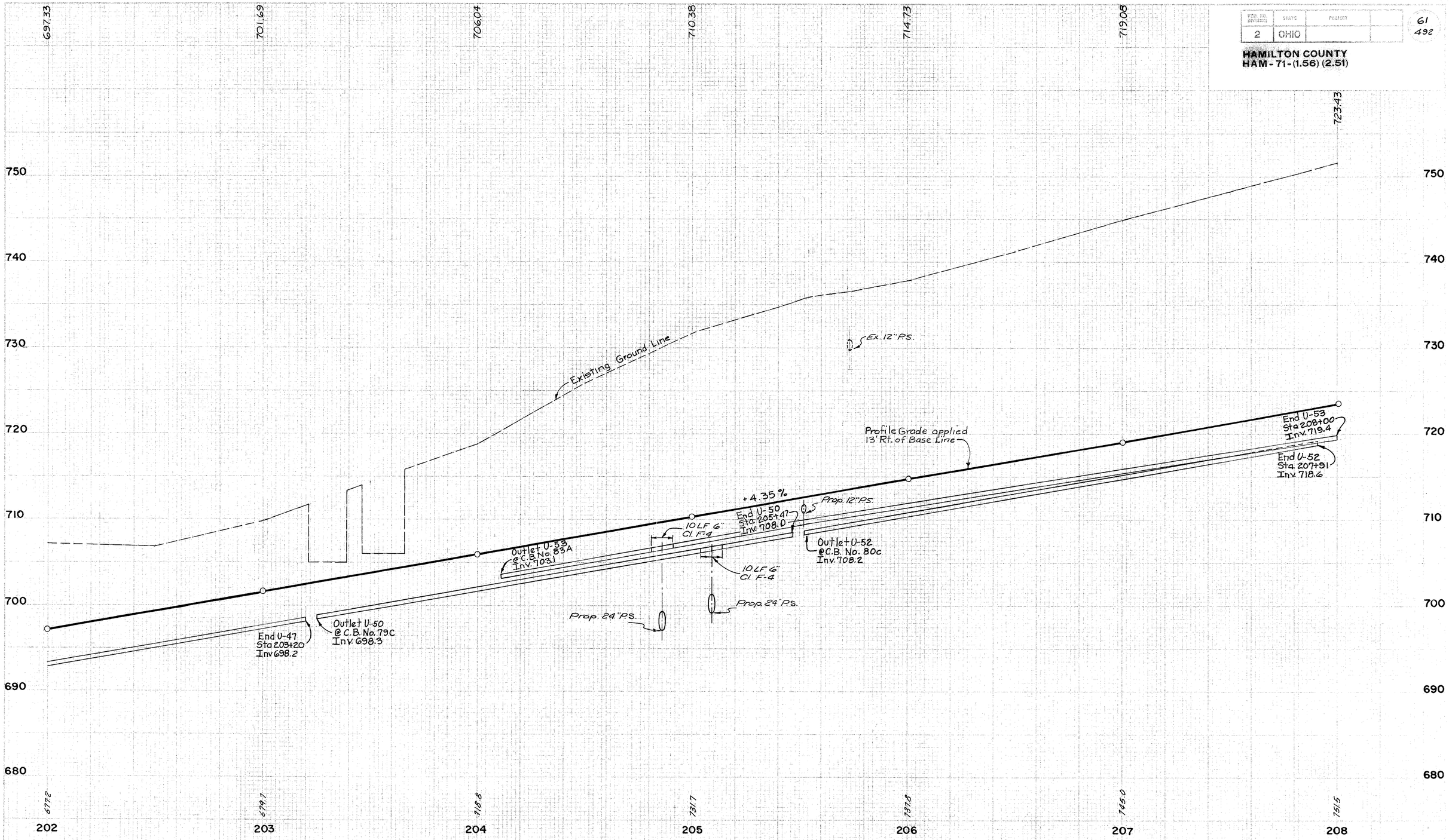

N.B. EXP. STA. 202 TO STA. 208

FED. AID DIVISION	STATE	PROJECT	
2	OHIO		

62
492

HAMILTON COUNTY
HAM-71-(1.56) (2.51)

723.43 | 727.78 | 732.13 | 734.48 | 740.83 | 745.18

790
780
770
760
750
740
730
720

Monroe St.

Mc GREGOR AVE. STRUCTURE

Existing Ground Line

End Pavement

1:1 Slope

213+50

End U-58
Sta. 213+00
Inv. 738.9

Plug End

Profile Grade applied
13' Rt. of Base Line

+4.35%

End U-56
Sta. 210+76
Inv. 729.9

Outlet U-58
@ C.B. No. 82G
Inv. 730.1

Outlet U-56
@ C.B. No. 81E
Inv. 719.6

751.5 | 756.7 | 761.8 | 765.6 | 768.6 | 771.8 | 775.0

208 | 209 | 210 | 211 | 212 | 213 | 214

N.B. EXP. STA. 208 TO STA. 214

STATE NO.	STATE	PROJECT
2	OHIO	

63
492

HAMILTON COUNTY
HAM - 71 - (1.56) (2.51)

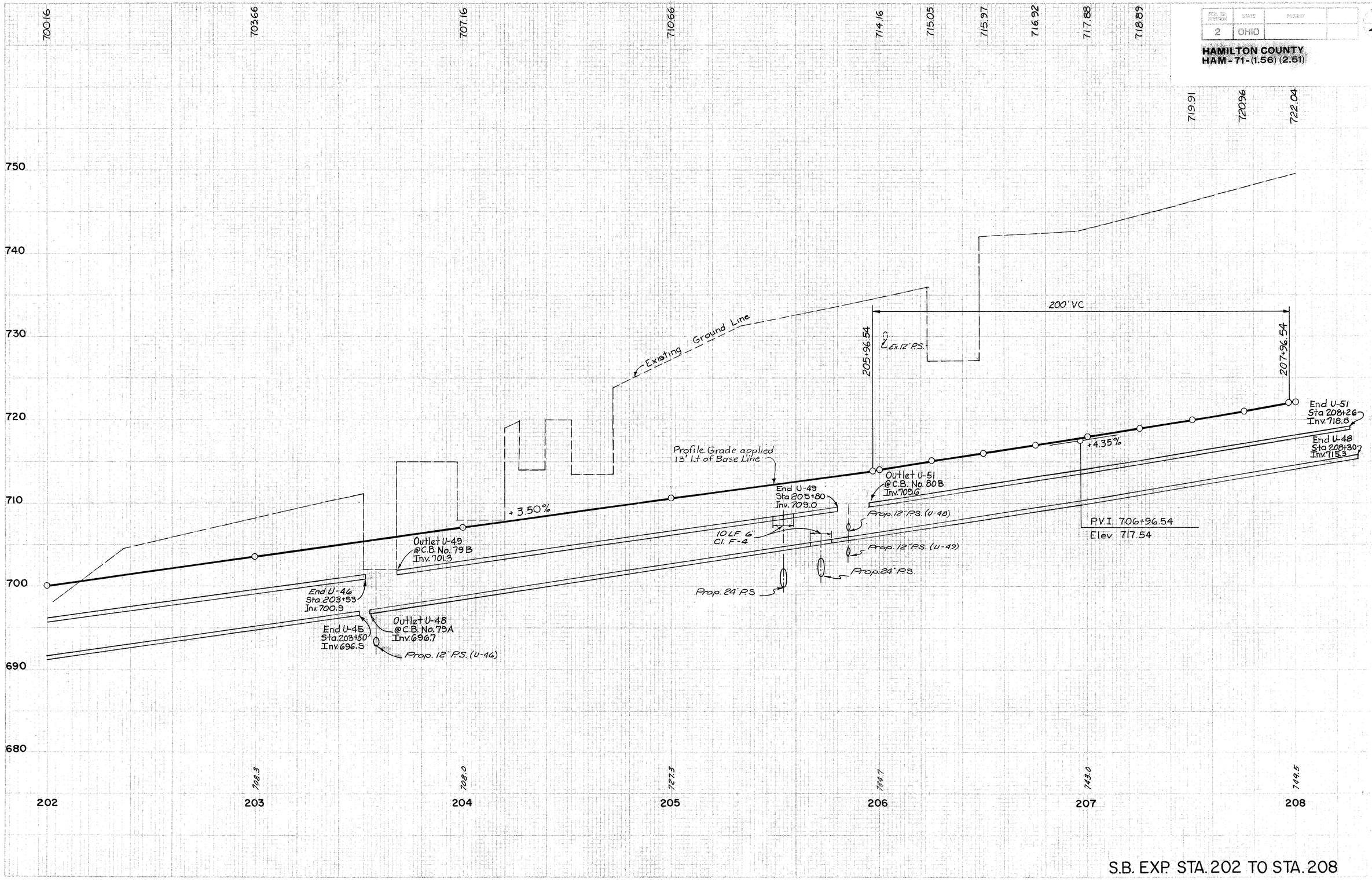

S.B. EXP. STA. 202 TO STA. 208

FED. RD. DIVISION	STATE	PROJECT	
2	OHIO		

64
492

HAMILTON COUNTY
HAM-71-(1.56) (2.51)

722.04 726.39 730.74 735.09 739.44 741.92 745.18

790 780 770 760 750 740 730 720

Existing Ground Line

McGREGOR AVE. STRUCTURE

1:1 Slope

212 + 56.91 S.B.
212 + 25.03 N.B.

End Pavement

213+50

End U-57
Sta 213+00 NB
Inv 740.7

Plug End

End U-54
Sta 213+00 NB
Inv. 738.9

Profile Grade applied
13' Lt. of Base Line

10 LF 6" Cl. F-4

End U-55
Sta 210+99
Inv. 730.4

Prop. 15" RS.

Prop 24" RS.

Outlet U-57
@M.H. No. 82
Inv. 730.7

+ 4.35 %

End U-51
Sta. 208+26
Inv. 716.8

Outlet U-55
@C.B. No. 81D
Inv. 715.3

End U-48
Sta. 208+30
Inv. 715.3

Outlet U-54
@MH. No. 81
Inv. 715.0

749.5 754.6 759.5 764.1 767.7 771.8 775.0

208 209 210 211 212 213NB 214NB

S.B. EXP. STA. 208 TO STA. 214

FED. RD. DIVISION	STATE	PROJECT
2	OHIO	

65
492

HAMILTON COUNTY
HAM-71-(1.56) (2.51)

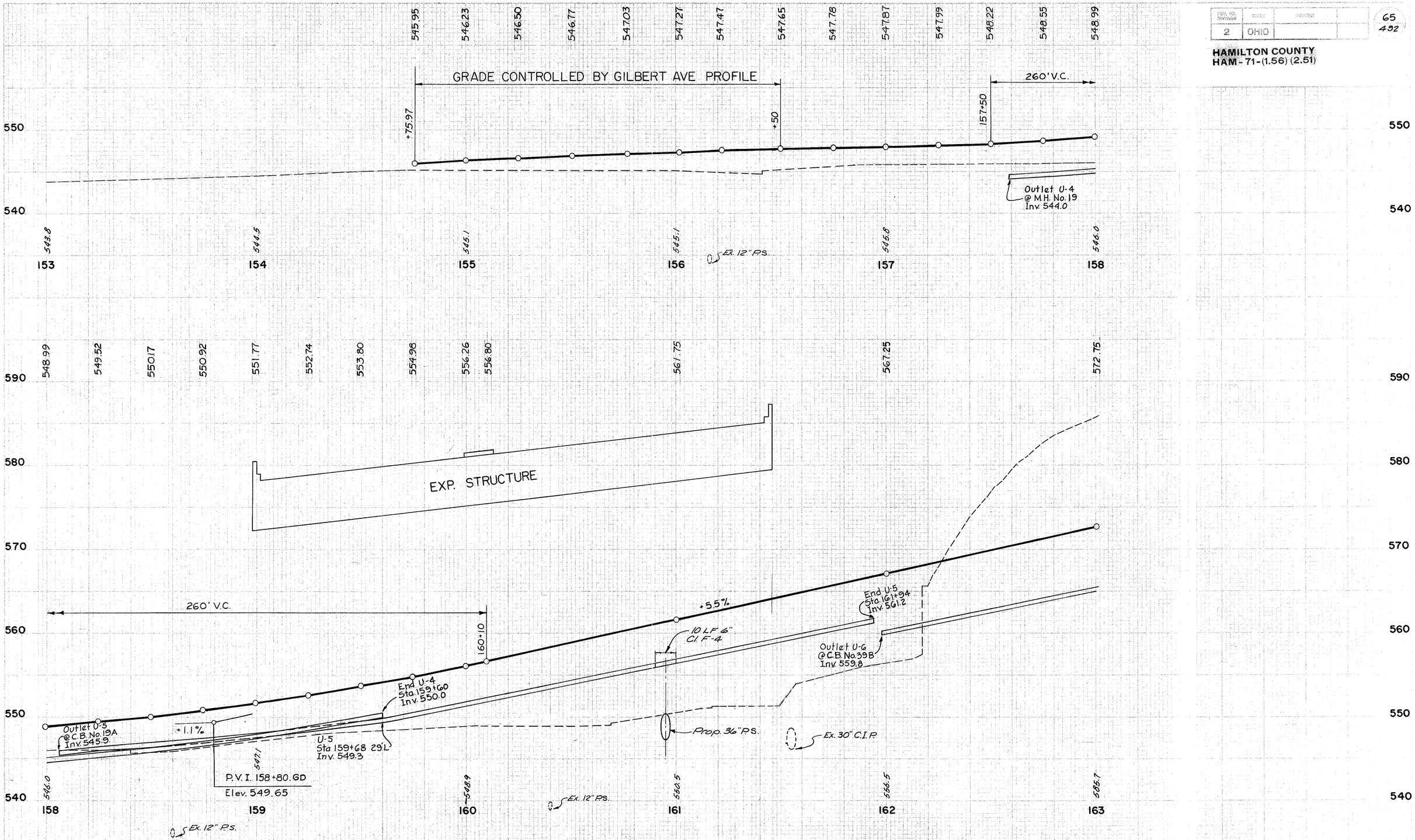

RAMP G D STA. 153 TO STA. 163

SHEET NO.	STATE	PROJECT
2	OHIO	

66
492

HAMILTON COUNTY
HAM-71-(1.56) (2.61)

572.75 | 574.90 | 575.49 | 576.77 | 577.95 | 579.02 | 579.99 | 580.86 | 581.62 | 582.27 | 582.83 | 583.27 | 583.62 | 583.86 | 583.95 | 584.25 | 584.75 | 585.25

600
590
580
570

Existing Ground Line

300' V.C.

P.V.I. 164+90
Elev. 583.20

166+40

+0.5%

163+40

+5.5%

Ex. 12" P.S.

10 LF 6" C.I.F-4

Prop. 12" P.S.

U-7
Sta. 164+00
Inv. 570.3

591.2

End U-7
Sta. 165+72
Inv. 576.4

Outlet U-8
@ M.H. No. 44
Inv. 576.7

End U-8
Sta. 168+50
Inv. 578.6

Outlet U-9
@ M.H. Nº 47
Inv. 578.7

593.4 | 592.3 | 597.5 | 600.5 | 591.5

163 | 164 | 165 | 166 | 167 | 168 | 169

End U-6
Sta. 163+43
Inv. 567.5

Outlet U-7
@ CB No. 42B
Inv. 568.3

Prop. 24" P.S.

585.25 | 585.75 | 586.01 | 586.18 | 586.38 | 586.62 | 586.87 | 587.12 | 587.36 | 587.64 | 587.94 | 588.29 | 588.62 | 588.99 | 589.37 | 589.77 | 590.21

600
590
580

Grade Controlled by N.B. Exp. Profile

Existing Ground Line

+50

Ex. 12" P.S.

Ex. 18" P.S.

End U-10
Sta. 174+18
Inv. 584.5

Outlet U-10
@ M.H. No. 52
Inv. 580.3

End U-9
Sta. 170+54
Inv. 580.1

591.5 | 592.2 | 597.9 | 603.0 | 606.8 | 611.5

169 | 170 | 171 | 172 | 173 | 174

RAMP GD STA. 163 TO STA. 174

2	OHIO		

67
492

HAMILTON COUNTY
HAM-71-(1.56) (2.51)

592.41 592.61 593.80 594.86 595.78 596.58 597.24 597.77 598.17 598.44 598.58 598.59 598.47 598.21 597.82 597.31 596.66 596.01 595.58

610
600
590
580
570

Grade Controlled by Gilbert Ave. Profile

P.V.I. 169+96
Elev. 602.61

+5.10%

Outlet U-1 @ C.B. No. 29A Inv. 593.6

End U-1 Sta. 170+50 Inv. 594.3

Begin U-2 Sta. 170+50 Inv. 592.6

592.58

-3.30%

167+96

400' V.C.

171+96

595.0 600.2 602.6

167 168 169 170 171 172 173

552.0 553.4 572.6

Existing Ground Line

560
550

PENN. R.R. STRUCTURE

ELSINORE PL. STRUCTURE

589.74 Ex. 8" P.S. 590.23 590.83 591.55 592.38 593.32 594.37 595.54 596.82 597.92

Existing Ground Line

Grading

602.48

620
610
600
590
580

Ex. 12" P.S.

Ex. 15" P.S.

500' V.C.

592.58 591.92 591.77 591.01 590.38 589.86 589.45 589.15 588.97 588.90 588.94 589.09 589.36

Pavement by Others

178+20

+5.70%

-3.30%

173+20

End U-3 Sta. 177+25 Inv. 578.4

Plug

Prop. 12" P.S.

Outlet U-2 and U-3 Begin U-23 Sta. 174+75 Inv. 582.8

Prop. 12" P.S.

Sta. 175+25 Inv. 583.0

Prop. 12" P.S.

N.T.S. Ex. 18" P.S. Inv. 553.20

N.T.S. Ex. 3' Br. S. Inv. 549.85

602.6 602.0 602.0 610.3 611.4 612.3 613.5

173 174 175 176 177 178 179

10 L.F. 6" Cl. F-4

Outlet U-23 @ M.H. No. 70 Inv. 582.7

Prop. 36" P.S. El. 568.11 (N.T.S.)

P.V.I. 175+70 Elev. 583.67

N.T.S. Ex. 18" P.S. Inv. 548.50

N.T.S. Ex. 8' Br. S. Inv. 545.75

RAMP GA STA. 167 TO STA. 179

SHEET NO.	STATE	PROJECT	
2	OHIO		

68
492

HAMILTON COUNTY
HAM-71-(1.56) (2.51)

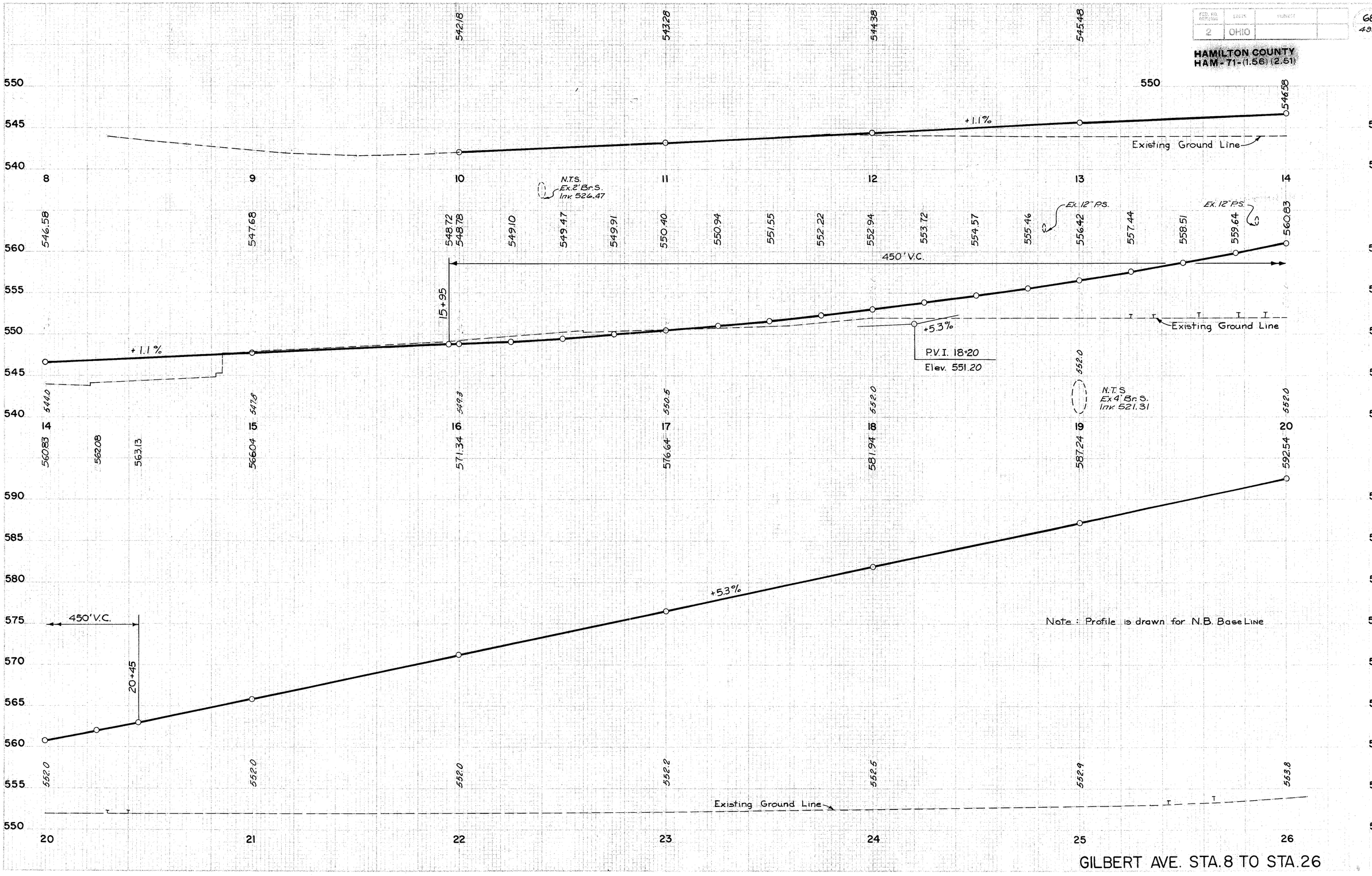

GILBERT AVE. STA. 8 TO STA. 26

FED. AID PROJECT	STATE	PROJECT	
2	OHIO		

69
492

HAMILTON COUNTY
HAM-71-(1.50)(2.51)

BRIDGE NO. HAM-71-0196

Begin Approach Slab 31+61.86

End Approach Slab 31+86.86

End Approach Slab 28+76.76

Begin Approach Slab 28+51.76

P.V.I. 29+50
Elev. 611.09

+5.3%

+1.96%

+5.3%

15.0' Min. Vert. Clearance
15.3' Act. Vert. Clearance

15.0' Min. Vert. Clearance
15.3' Act. Vert. Clearance

S.B. EXP.

N.B. EXP.

500' V.C.

Existing Ground Line

Existing Ground Line

+1.96%

Note: Profile is drawn for N.B. Base Line

GILBERT AVE. STA. 26 TO STA. 38

FED. RD. DIVISION	STATE	PROJECT	
2	OHIO		

70
492

HAMILTON COUNTY
HAM-71-(1.56[illegible].51)

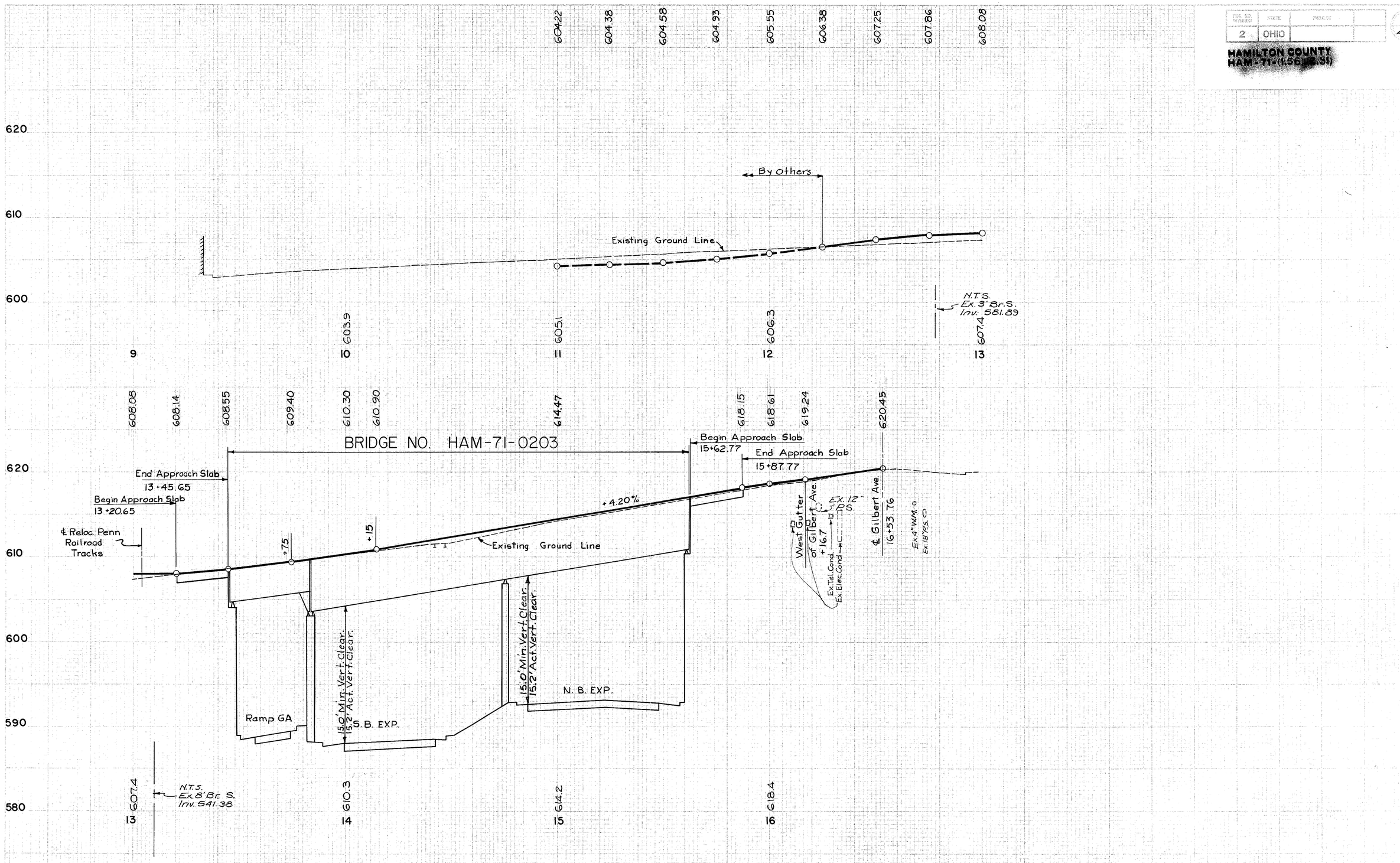

ELSINORE PLACE STA. 9 TO STA. 16+53.76

Ex. ✓ WMC 7-22-64

STATE	COUNTY
2	OHIO

71
492

HAMILTON COUNTY
HAM-71-(1.56) (2.51)

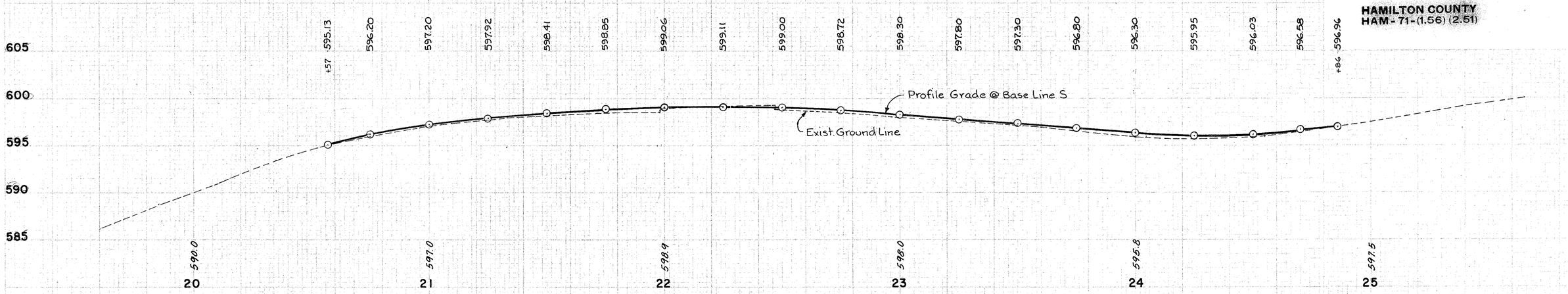

VAN METER STREET

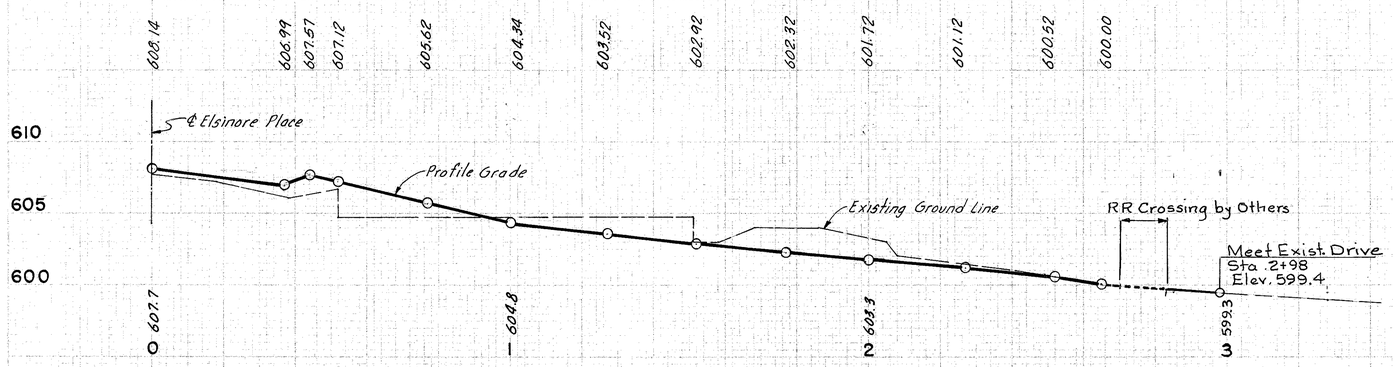

DRIVEWAY SOUTH OFF ELSINORE PLACE

VAN METER STREET &
DRIVEWAY SOUTH OFF
ELSINORE PLACE

FED. AID PROJECT	STATE	PROJECT	
2	OHIO		

72
492

HAMILTON COUNTY
HAM-71-(1.56) (2.51)

584.50 588.50 592.50 595.54 599.04 599.76 602.76

610
605
600
595
590
585
580

Meet Exist Track @ Sta. 191+80 El. 587.70

Prop. T/R Profile

P.V.I 194+26
Elev. 597.54

+3.0%

+4.0%

100' V.C.

Exist. T/R Profile

Exist. Ground Line

580.1 584.2 588.0 591.5 597.6 600.8 603.0

190 191 192 193 194 195 196

BRIDGE NO. HAM-71-0207

602.76 605.76 608.76 611.76 614.76 617.76 620.76

625
620
615
610
605
600
595
590
585

Prop. T/R Profile

+3.0%

Exist Ground Line

Min. Vert. Clearance = 15.0'
Clearance Prov'd. = 15.2'

Min. Vert. Clearance = 15.0'
Clearance Prov'd. = 15.7'

Min. Vert. Clearance = 15.0'
Clearance Prov'd. = 16.6'

N.B. EXP.

S.B. EXP.

RAMP GA

602.8 604.7 607.6 611.1 613.3 618.6 620.8

196 197 198 199 200 201 202

Exist. 8' Brick Sewer

Aprox. Inv. El. 534.00

PENNSYLVANIA RAILROAD STA. 190 TO STA. 202

FED. ROAD NUMBER	STATE	PROJECT	
2	OHIO		

73
492

HAMILTON COUNTY
HAM-71-(1.56) (2.51)

620.76 623.76 625.02 628.02 630.30 633.80 637.80 640.80

645
640
635
630
625
620
615
610

P.V.I 203+92
Elev. 626.52

Exist. Ground Line

+3.0%

100' V.C.

+3.5%

Prop. T/R Profile

620.8 626.3 628.5 630.9 633.4 637.0 640.4

202 203 204 205 206 207 208

640.80 644.30 647.80 651.30 654.80

660
655
650
645
640
635

Meet Exist. Track @ Sta. 212+00, El. 654.80

Exist. T/R Profile

+3.5%

Exist. Ground Line

640.4 643.4 646.5 650.6 654.5 658.0 661.4

208 209 210 211 212 213 214

PENNSYLVANIA RAILROAD STA. 202 TO STA. 214

FED. RD. DIVISION	STATE	PROJECT	
2	OHIO		

74
492

HAMILTON COUNTY
HAM-71-(1.56) (2.51)

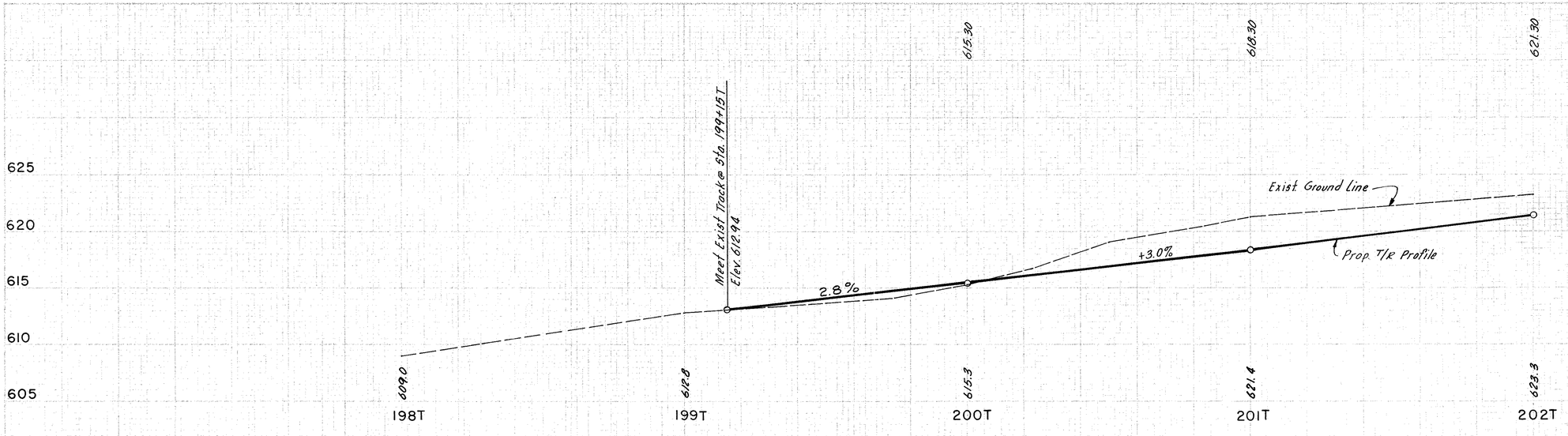

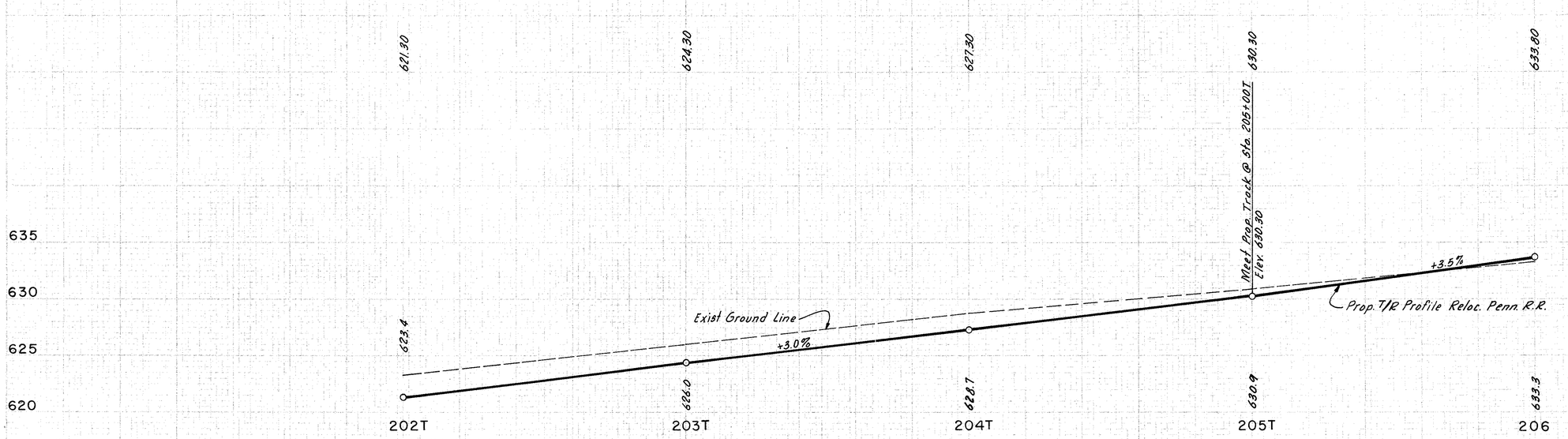

TEMPORARY RUN-AROUND
FOR PENNSYLVANIA RAILROAD

FED. RD. DIV.	STATE	PROJECT	FISCAL YEAR
2	OHIO		

75
492

HAMILTON COUNTY
HAM-71-(1.56)(2.51)

For Grading Detail See Sh. No. 187, 190 & 191.

Remove Exist Sidewalk
Begin Work Sta. 9+25 SE
Ex. 15" P.S. (Comb.)
Prop. 12" P.S.
To Be Maintained
Ex. 18" P.S.
Meet Exist. Sidewalk
#741
#743 2 Sty. Fr.
#745
#747
Stone Wall
N 41° 01' 30" E 10 SE
P.C. 10+13.55 SE
29.5'
Prop. 12" P.S.
Prop. 18" P.S.
Prop. 15" P.S.
Seal & Aban.
Ex. 15" P.S.
Prop. 24" P.S. (Comb.)
Ex. 4' S.S.
Remove 4' S.S.
Item S-25
Seal & Abandon
Ex. 12" P.S.
Remove Ex. 1.2' Stone Wall (60') Item S-24
Remove Ex. 1.5' Stone Wall (70') Item S-24
Berm Line
11 SE
Curve No. 1 SE
12 SE
Prop. 12" P.S. (Comb.)
Remove Ex. 1.8' to 1.0' Stone Walls (60') Item S-24
Prop. 12" P.S.
Curve No. 1A-SE
Berm Line
Prop. Conc. Walk
Prop. Std. Type I Paved Gutter
Prop. Type A Conc. Steps (For Detail See Sh. No. 10)
Remove Ex. 2' Stone Wall Item S-24 (12')
Seal & Abandon Prop. 24" P.S. (Comb.)
R/W Line
Remove Ex. 1.5' Stone Wall (12.5') Item S-24
Remove Portion of Conc. Steps (12') Item S-22
Ex. Inlet to Remain
Ex. 4' Conc. Steps & Bit. Mac. Landings.
Prop. Grading Limit
Remove Ex. 2' Stone Walls (100) Item S-24
Remove Ex. 1.5' Stone Walls Item S-24 (90')
14 SE
℄ Van Meter St.
Prop. 12" P.S. (Comb.)
N 10° 10' 30" E
13 SE
3" Tree
17 Tree
90'
N 10° 10' 30" E
7.30'
(See Sh. No. 297-300)
Ret. Wall No. 40
℄ Prop. Type 2 Mod. Paved Gutter
R/W Line
P.T. 13+22.05 SE
MATCH LINE 14+50 SE
1 Sty. Metal Garage
Mac. Area Item E-10
3 Sty. Br. #1237-1245
1.7' St. Wall
Ex. Conc. Walk
2.2' St. Wall
Remove
1.6' St. Wall
Remove Ex. Stone Walls & Steps Item S-24 (177')
1.3' St. Wall
2 Sty. Shingle #1233
Fr. Garage Metal Clad
1.1' St. Wall
Conc. Pav't.
1.5' St. Wall
Wood Porch
1.5' St. Wall
Wire Fence
Ex. 12" P.S.
ELSINORE AVE.

630
625
620
615
610
605
600
595

597.14 +26.5 | 596.96 +50 | 596.98 +75 | 597.22 | 597.68 +25 | 598.37 +50 | 599.28 +75 | 600.41 | 601.76 +25 | 603.34 +50 | 605.25 +76.5 | 607.04 | 614.73 | 622.41 | 626.26

250' V.C.
P.V.C. Sta. 9+26.5
P.V.T. 11+76.5
-1.2%
+7.69%
Profile Grade @ ℄ SE
Existing Ground Line
P.V.I. Sta. 10+51.50
Elev. 595.64
601.9
596.1
597.6
610.0
618.6
619.4
Ex. 15" P.S.
Ex. 24" P.S.

9 | 10 | 11 | 12 | 13 | 14

VAN METER ST.
STA. 9+00 TO STA. 14+50

FED. RD. DIV.	STATE	PROJECT	FISCAL YEAR
2	OHIO		

76
492

HAMILTON COUNTY
HAM-71-(1.56)(2.51)

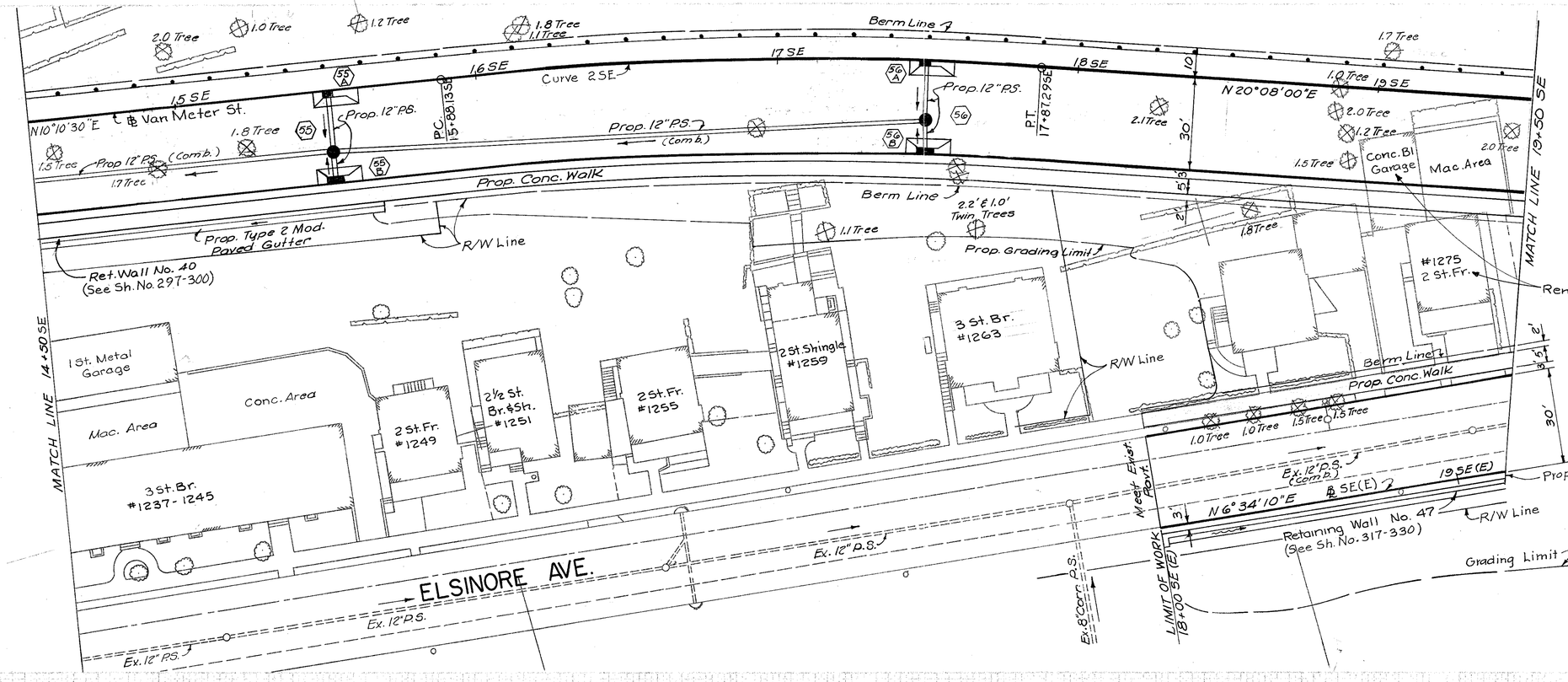

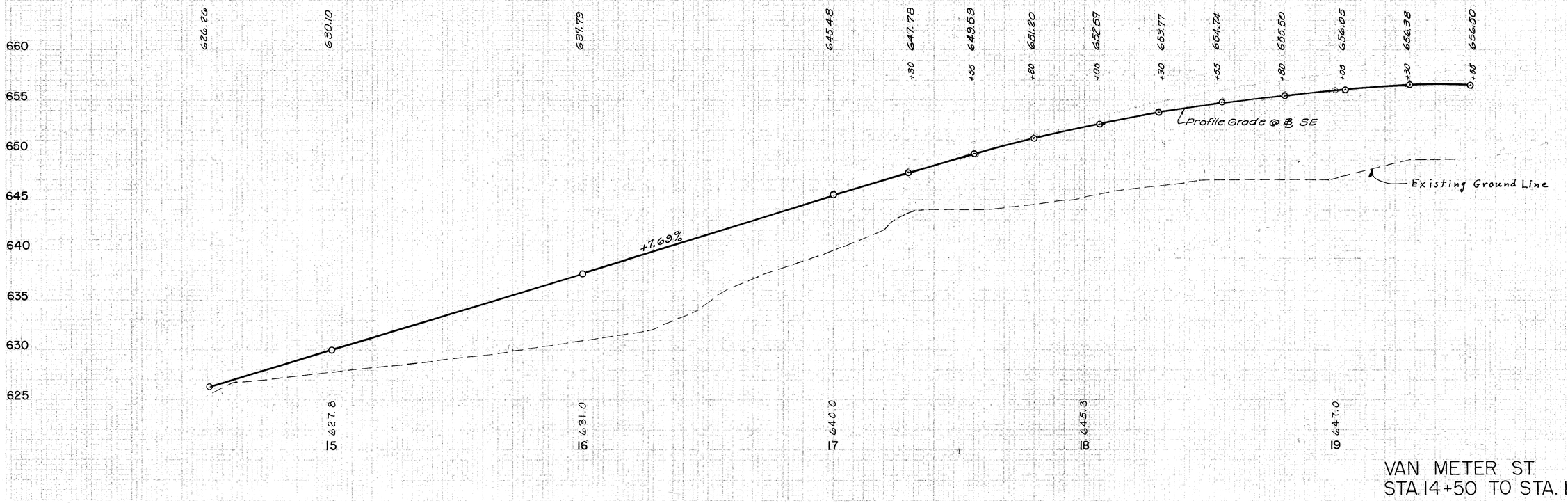

VAN METER ST.
STA. 14+50 TO STA. 19+50

P.C. 19+51.35 SE
Remove Ex. 2' St. Wall (Item S-24) (220')
Berm Line
1.6 Tree
L/A Line
1.8 Tree
20' SE
30'
Ex. 12" P.S.
2'
R/W Line
21 SE
Curve 3 SE
1.7 Tree
1.5 Tree
2.1 Tree
Seal and Abandon
P.O.C. 21+49.75 SE (15.24')
P.T. 21+52.35 ℄
1.1 Tree
P.T. 22+06.65 SE
22 SE
Prop. Concrete Walk 23 SE
Curve 5 SE
P.C. 23+59.55
N7°22'06"E
Prop. 12" P.S.
MATCH LINE 19+50 SE
Prop. Concrete Walk
Berm Line
2.3 Tree
1.5 Tree
Remove Ex. 2' Stone wall Item (60') S-24
15'
3.5'
2.2
Prop. 18" P.S.
N10°12'47"E
2.3
N24°47'11"W
Curve 11 SE
℄ SE(E)
22 SE(E)
N12°28'39"E
Prop. Conc. Walk 23 SE(E)
Prop. 12" P.S.
Prop. 18" P.S.
Plug
45° Bend
Curve 4 SE
21 SE(E)
Seal & Abandon
Ex. 12" P.S.
30'
N6°34'10"E
20 SE(E)
3'
P.C. 20+28.18 SE(E)
Ex. 12" P.S.
Ex. & Prop 12" P.S.
Ex. Stone Wall
Remove 2.0' Stone Wall, Item S-24 For Details of Steps See Sh. No. 317-330
P.C. 21+20.94 SE(E)
P.T. 20+88.48 SE(E)
Remove Portion Conc. Steps (40') Item S-22
Prop. Type 2 Mod. Paved Gutter Retaining Wall No. "47 (See Sh. No. 317-330)
R/W Line
P.T. 22+05.49 SE (E)
Limit of Grading
Ex. Elec. Cond.
P.O.C. 33+45.60 GB(N) 35° Rt.
P.R.C. 24+64.39 SE
Ex. 18" P.S.
Prop. 27" P.S.
Prop. 18" P.S.
1.5 Tree
Curve 6 SE
R=90'
P.C. 23+41.88 SE
Prop. 12" P.S.
Curve 8 SE
Prop. 18" P.S.
1.4 Tree
P.C. 23+52.67 SE(E)
Prop. 12" P.S.
24 SE(E)
45° Bend
Curve 9 SE
Seal & Aban.
20' R.
12'
12'
R=20'
Ex. 18" P.S.
Prop. 24" P.S.
P.O.C. 34+90.89 GB(N) 35° Rt.
P.T. 34+70.37 GB(N) 35° Rt.
P.C. 25+48.46 SE(E)
Remove Ex. 1.5' Stone Walls Item S-24 (70')
Remove Ex. 1.2' Stone Wall Item S-24 (50')
Ex. 18" P.S. To Be Maint'd
Prop. 12" P.S.
Ex. Stone Walls to Remain
Prop. 24" P.S.
Prop. 12" P.S.
Prop. 12" P.S.
Plug
P.O.C. 24+25.57 SE(E)
P.R.C. 24+30.98 SE(E)
See Work in Tunnel
Ex. Elsinore Tower (Above)
Ex. Stone Tower
20'
Prop. 12" P.S.
Prop. 12" P.S.
Prop. 12" P.S.
Ex. 10" P.S. To Be Maintained
Ex. Curb
Ex. 10" W.M.
Meet Exist. Pvmt.
Exist. Bit. Mac. Parking Area.
Remove Ex. 2' Stone Wall, Item S-24 (25')
Remove Portion of Ex. Stone Steps, Item S-22 (22')
Remove Ex. 2' Stone Wall, Item S-24 (35')
Prop. 12" P.S.
Meet Exist. at Landing
For Detail of Steps (See Sh. No. 317-330) To be maintained
Ex. Water Main Tunnel
Prop. 12" P.S.
Prop. 24" P.S.
Prop. 12" P.S.
Prop. 12" P.S.
Ex. Stone Tower
Prop. Drive 1:00
Ex. Curb
Meet Exist. Pvmt.
Ex. 10" P.S.
Prop. 12" P.S.
Ex. Curb
Ex. 10" W.M.
Exist. Bit. Mac. Parking Area.
Remove Ex. 2' Stone Wall, Item S-24 (25')
Remove Portion of Ex. Stone Steps, Item S-22 (22')

The Contractor's attention is called to the shallow cover of the proposed driveway over the existing brick arch tunnel for water mains. The proposed grading and paving shall be performed by such equipment that no truck or equipment wheel loads will be within 15 feet of the center of the tunnel, and grading over the tunnel shall be done in a manner to minimize any unbalance in load on the arch.

For Grade Details See Sh. No. 195

656.50 656.42 655.93 655.23 654.32 653.19 651.86 650.37 648.55 646.53 644.33 642.00 628.81 624.33 623.35 622.25 621.17 620.50 620.13 618.32

+35 +80 +05 +30 +55 +80 +05 +30 +55 +80 +05 +30

+61.88 +06.69 +16.40 +26.11 +35.83 +45.55 +55.27 +64.99

655 650 645 640 635 630 625 620

Profile Grade @ ℄ SE

-10.0%

-10.0%

Existing Ground Line

Ex. 12" P.S.

658.5 651.3 649.5 640.0 627.2

20 21 22 23 24 25

VAN METER ST.
STA. 19+50 TO GILBERT AVE.

FED. RD. DIV. 2 | STATE OHIO | PROJECT | FISCAL YEAR
78
492

HAMILTON COUNTY
HAM-71-(1.56) (2.51)

Notes:
① Twenty five foot of twin 4" conduit will be furnished and paid for by Cincinnati Gas and Electric Company, and placed by the contractor.
② For Grade Details see sht. 198

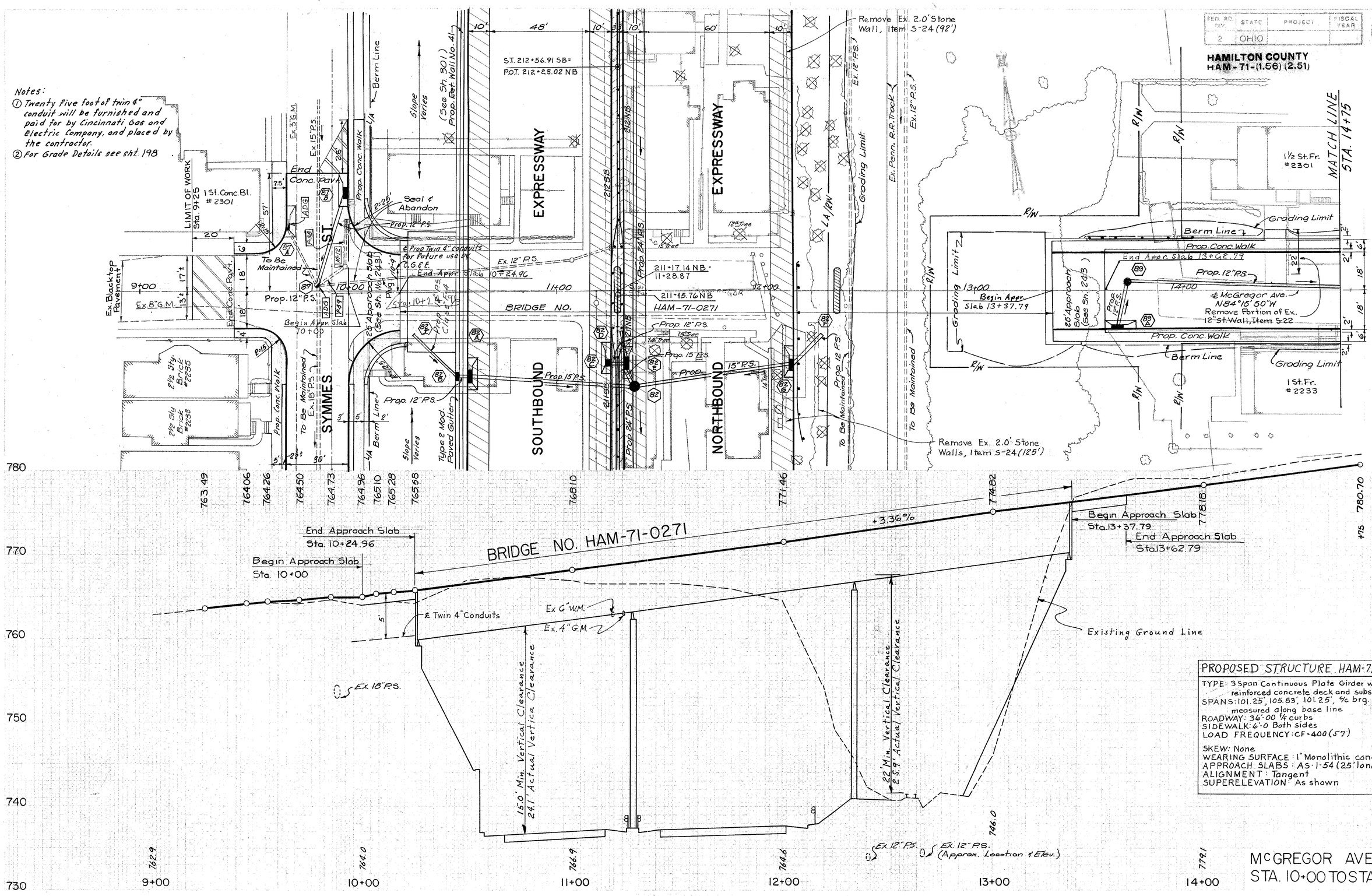

PROPOSED STRUCTURE HAM-71-0271

TYPE: 3 Span Continuous Plate Girder with reinforced concrete deck and substructure
SPANS: 101.25', 105.83', 101.25', c/c brg. measured along base line
ROADWAY: 36'-00 f/f curbs
SIDEWALK: 6'-0 Both sides
LOAD FREQUENCY: CF=400 (57)

SKEW: None
WEARING SURFACE: 1" Monolithic concrete
APPROACH SLABS: AS-1-54 (25' long)
ALIGNMENT: Tangent
SUPERELEVATION: As shown

McGREGOR AVE.
STA. 10+00 TO STA. 14+75

FED. RD. DIV.	STATE	PROJECT	FISCAL YEAR
2	OHIO		

79
492

HAMILTON COUNTY
HAM-71-(1.56) (2.51)

MATCH LINE

BOONE ST.

MAY ST.

CRANSTON ALLEY

KENTON ST.

Remove Portion of Ex. 6' Conc. Wall, Item S-22

Prop. 12" P.S.

Ex. 15" P.S. (Comb.)

Bit. Mac. Pav't @ Limestone Curbs

To be maintained

Ex. 18" P.S. (To be maintained)

Prop. 12" P.S.

Grading Limits

Remove Ex. 15" St. & Conc. Block Walls Item S-24 (200')

4-0.3 Trees

Berm Line

Prop. Conc. Walk

℄ McGregor Ave. N 84°15' 50" W

Fr. Gar. — Remove, Item E-10

Remove Ex. 1.2' St. Wall & Steps, Item S-24 (15')

Ex. Conc. Wk.

Prop. Ret. Wall No. 45 see sht. 313. 2 St. Fr. #2238

Prop. Conc. Steps, Type B (For Details see Ret. Wall No. 45 Plans)

Ex. 8" Conc. Bl. Wall

Prop. Conc. Steps, Type B (For Details see Sh. No. 199)

Remove Ex. 1.5' St. Wall, Item S-24 (90')

Remove Ex. 10' St. Wall, Item S-24 (60')

Ex. 18" P.S. (To be maintained)

Prop. 15" P.S.

Remove Portion of Ex. 1.5' St. Wall Item S-22

Prop. Drainage Ditch

Remove Ex. 1.5' St. Wall, Item S-24 (35')

20" Tree (Comb.)

Remove Ex. 1.5' St. & Conc Block Wall Item S-24 (160')

Prop. Ret. Wall No. 46 see sht. 315.

2½ St. Fr. #2230

Ex. Conc. Area

Fr. Gar.

Remove, Item E-10

Prop. Conc. Steps (For Details see Ret. Wall No. 46 Plans)

Note: For Limit of Work on Boone St., May St., Cranston Alley and Kenton St. see Grade Details.

Br. Pav't @ Limestone Curbs

Remove Portion of Ex. 2.0' St. Wall, Item S-22

Remove Portion of Ex. 1.0' St. Wall, Item S-22

Remove Ex. 1.0' St. Wall, Item S-24 (75')

24" Tree

22" Tree

2½ St. Fr. #2231

Bik't over Br. Pav't @ Granite Curbs

Ex. Conc Walk

Ex. 12" P.S.

Limit of Work Sta. 20+61

Notes:
For Grade Details see sht's 199.

Project

100% City

Ex. Ground Line

Existing Ground Line

℄ Boone St.

℄ May St.

℄ Cranston Alley

℄ Kenton St.

Prop. & Profile Grade

+3.36%

+12.0%

+0.94%

N.T.S.
Ex. 18" P.S. - El. 770.24

Ex. 18" P.S.

Ex. 12" P.S.

780.70 781.54 782.84 783.15 783.53 784.62 786.13 787.93 799.93 804.12 805.85 805.70 806.25 806.48 806.61 806.76 806.92 807.80 808.13 808.41 808.94 810.09 811.37 812.43 812.87 813.22

+75 +39.13 +46.13 +54.13 +70 +85 +35 +45 +55 +67.61 +75.61 +82.61 +94.61 +06.61 +35 +46.3 +60 +80 +19.24 +31.24 +48.74

830 820 810 800 790 780

782.1 785.7 833.0 806.7 813.0 814.6

15+00 16+00 17+00 18+00 19+00 20+00

McGREGOR AVE.
STA. 14+75 TO STA. 20+75

FED. RD. DIV.	STATE	PROJECT	FISCAL YEAR
2	OHIO		

80
492

HAMILTON COUNTY
HAM-71-(1.56) (2.51)

Approximate Excavation Limit for removal of Unsuitable Material

Temp. Run-Around for Railroad

Conc. Encased Track Const. (By Others)

75' Prop. Steel Beam Guard Rail Std. Type Deep (Include with Temp. Run-Around for Payment)

Sta. 12+18 Elsinore Place = Sta. 0+00 Temp. Run-Around

ELSINORE PLACE

62°

Prop. 36" P.S.

WEST ABUTMENT

Footing Outline

PIER No. 1

BRIDGE No. HAM-71-0203

PIER No. 2

Ex. Penn. R.R. Mainline Track

EAST ABUTMENT

Footing Outline

Temp. Sheet Piling

ELSINORE AVE.

Remove Exist Curb

P.C.

NOTE
The Temporary Easement 5397T-1 shall extend for a period of time not to exceed three (3) months from the starting date of the demolition of the building & dock.
The Temporary Easement 5397T-2 shall extend for the period of time while the Temporary Run-Around is in use.

Ex. 3 St. Br. & Conc.

R=50'

5397 T2

5397 T1

R=125'

Prop. 24" P.S.

Temp. Sheet Piling

Exist Switch to be removed by others

Ex. Conc. Drive

Ex. 12" P.S.

Exist. R.R. Tracks to be removed by others

Ex. Conc. Pav't.

Ex. Conc. Island

110'

Ex. Asphalt Pav't.

R=35'

Prop. Conc. Walk

Std. Type 1 Asphaltic Conc. Curb

p.c. 196+89.93

T/G=602.79

Prop. 36" P.S. (Comb)

Temp. Plug

Omit curb across R.R. Construction

TEMPORARY RUN-AROUND AT ELSINORE PLACE

44'

Meet Exist. Gilbert Ave. Gutter Line Sta 4+10

Remove Exist. Curb

Ex. Inlet

Ex. Relocated Pennsylvania R.R. (By Others)

Remove Ex. 1st. Br. Bldg. and Conc. Loading Dock (Item E-10)

Ex. Conc. Dock

Ex. Drain

Ex. R.R. Siding to be removed by Others

Ex. 8' Br. Sewer

Ex. Sidings to remain

Ex. Underground Telegraph Cable

Prop. Type A-2 Catch Basin T/C Elev. = 607.5 (12" P.S. & C.B. included with Temp. Run-Around for Payment)

Prop. 12" P.S.

Ex. 4'x6' Drain T/G 608.28

Ex. Conc. Island

Std. Type 1 Asphaltic Conc. Curb

R=35'

TEMPORARY RUN-AROUND AT GILBERT AVENUE

PLAN

CONSTRUCTION SCHEDULE

1. Construct Manholes 58, 59, 99 and 100 and sewers as shown. This work is required in order to place protection for the existing 8' brick sewer which must be completed before starting work on the Railroad Bridge. These items are paid for seporately and are not included in the cost of the Temporary Run-Around.
2. Construct Temporary Run-Around and sidewalk as shown above and reroute traffic. (Track crossing for railroad tracks, shown hatched, Sta. 2+01 to Sta. 2+25, will be constructed by Others)
3. Construct Railroad Bridge over Expressway and West Abutment at Elsinore Place Bridge. Railroad will use existing mainline track south of Elsinore and Temp. Run-Around Track and new track north of Elsinore during this operation.
4. When Railroad Bridge is completed new track will be installed by others from Sta. 191+80 to Sta. 205 (Penn. R.R. Stationing) and railroad relocated to new track. (Contractor will remove pavement at Elsinore Place, Temp. Run-Around and driveway south of Run-Around and grade for new track.)
5. Complete Bridge @ Elsinore Place, reroute traffic and remove Temp. Run Around. Existing track to be removed by Others.

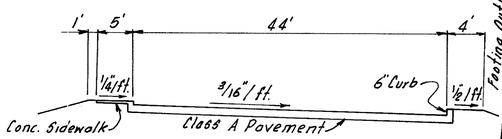

TYPICAL SECTION

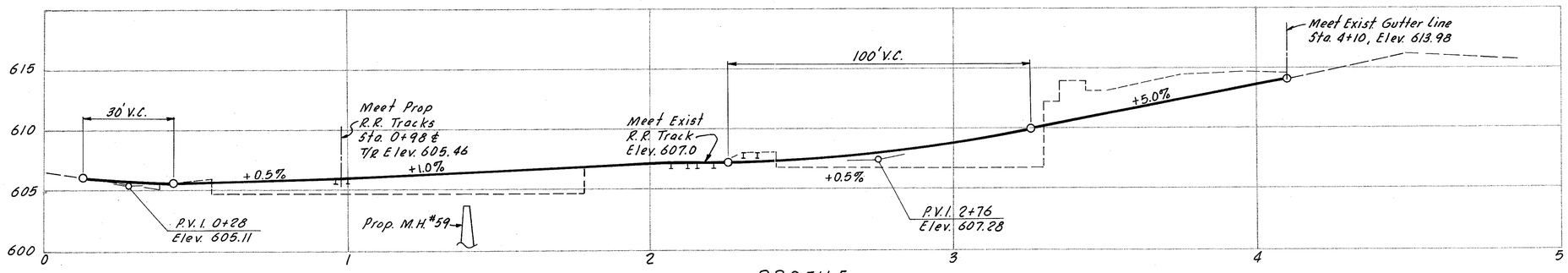

PROFILE

BASIS OF PAYMENT

Price and payment for the contract lump sum Item 5-15 "Temporary Run-Around at Elsinore Place using Class A Pavement" shall constitute full compensation for the construction, maintaining and subsequent removal of the Run-Around as shown on this sheet including the furnishing, installing and removal of the traffic control system as shown on sheet No. 232. The traffic controller will be furnished by the City of Cincinnati, installed by the contractor, and returned to the city when no longer required for this Run-Around. All other materials, labor and incidentals required for the complete traffic control system are included in the lump sum price bid for the Temporary Run-Around.

The furnishing, driving and removing of the Temporary Sheet Piling and the furnishing installing and removal for reuse of the 75 feet of Steel Beam Guard Rail (Subject to approval of the Engineer) are included in the lump sum price bid for the Temporary Run-Around.

TEMPORARY RUN-AROUND AT ELSINORE PLACE

FED. RD. DIV.	STATE	PROJECT	FISCAL YEAR
2	OHIO		

81
492

HAMILTON COUNTY
HAM-71-(1.66) (2.61)

BRIDGE REF. LINE
BRIDGE No. HAM-71-0196

30° ℄ Pier

Ex. W.U. Tel. Cond.
Ex. Elec. Cond.
Ex. 66 KV Elec. Cond.
Ex. Elec. Cond.
Ex. Tel. Cond.
Ex. 12" P.S.

15° Curve

70' Exist.

GILBERT AVE.

Ex. 10" W.M.
Ex. 36" W.M.
Ex. 18" P.S.
Ex. 8" G.M.

Ex. 5' Conc. Walk

10° Curve

Prop. 12" P.S.

Prop. Type A-2 Catch Basin
T/C Elev. 599.15 Inv. 12" P.S.=
(Pipe & Catch Basin included with Temp. Run-Around for payment.)

A

Footing Outline
℄ Brg.
ABUTMENT
EAST
Temp. Sheet Piling

Ex. Conc. Island

ELSINORE PLACE
TEMPORARY RUN-AROUND

R=35'

Std. Type I Asphaltic Conc. Curb

Prop. Asphaltic Conc. Curb

TEMPORARY RUN-AROUND AT GILBERT AVENUE

45'

5'

Maintain Ex. 18" P.S.

10° Curve

15° Curve

Prop. Temp. Walk

Ex. 1.5' Stone Wall

Meet Exist. Gilbert Ave. Gutter Sta. 4+10

Ex. Asphalt Pavt.

Ex. Conc Island

R=35'

Std. Type I Asphaltic Conc. Curb

ELSINORE PLACE

EAST ABUTMENT

Temp. Sheet Piling

Ex. Inlet

ELSINORE AVE.

Prop. Run-Around 45' Min
5'
Exist. Gilbert Ave. to Remain
Prop. Temp. Walk
3"
Asp. Con. Curb
Ex. Wall
Class A Pavement
6" Curb
Temp. Sheet Piling
Footing

SECTION A-A

BASIS OF PAYMENT

Price and payment for the contract lump sum Item S-15 Temporary Run-Around at Gilbert Ave. using Class A Pavement shall constitute full compensation for the construction, maintaining and subsequent removal of the Run-Around as shown on this sheet.

The furnishing, driving and removing of the Temporary Sheet Piling is included in the lump sum price bid for the Temporary Run-Around.

CONSTRUCTION PROCEDURE

1. Construct Temporary Run-Around and Sidewalk as shown above & reroute traffic.
2. Drive Temporary Sheet Piling at Abutment as required to maintain Run-Around.
3. Construct East Abutment and complete bridge and roadway south of bridge.
4. Construct Gilbert Ave. from bridge to existing Gilbert north of Elsinore.

During all phases of construction four lanes of traffic (two northbound and two southbound) must be maintained on Gilbert Ave. between Court St. and Elsinore by use of new construction, Temporary Run-Around or old Gilbert Ave. Four lanes of traffic must be maintained on Elsinore Place between Gilbert Ave. and Reading Road at all times by use of new construction, Temporary Run-Around (as shown on Sh. No. 80) or old Elsinore Place.

TEMPORARY RUN-AROUND AT GILBERT AVE.

DRAWING	STATE	COUNTY	
2	OHIO		

HAMILTON COUNTY
HAM-71-(1.55)(2.31)

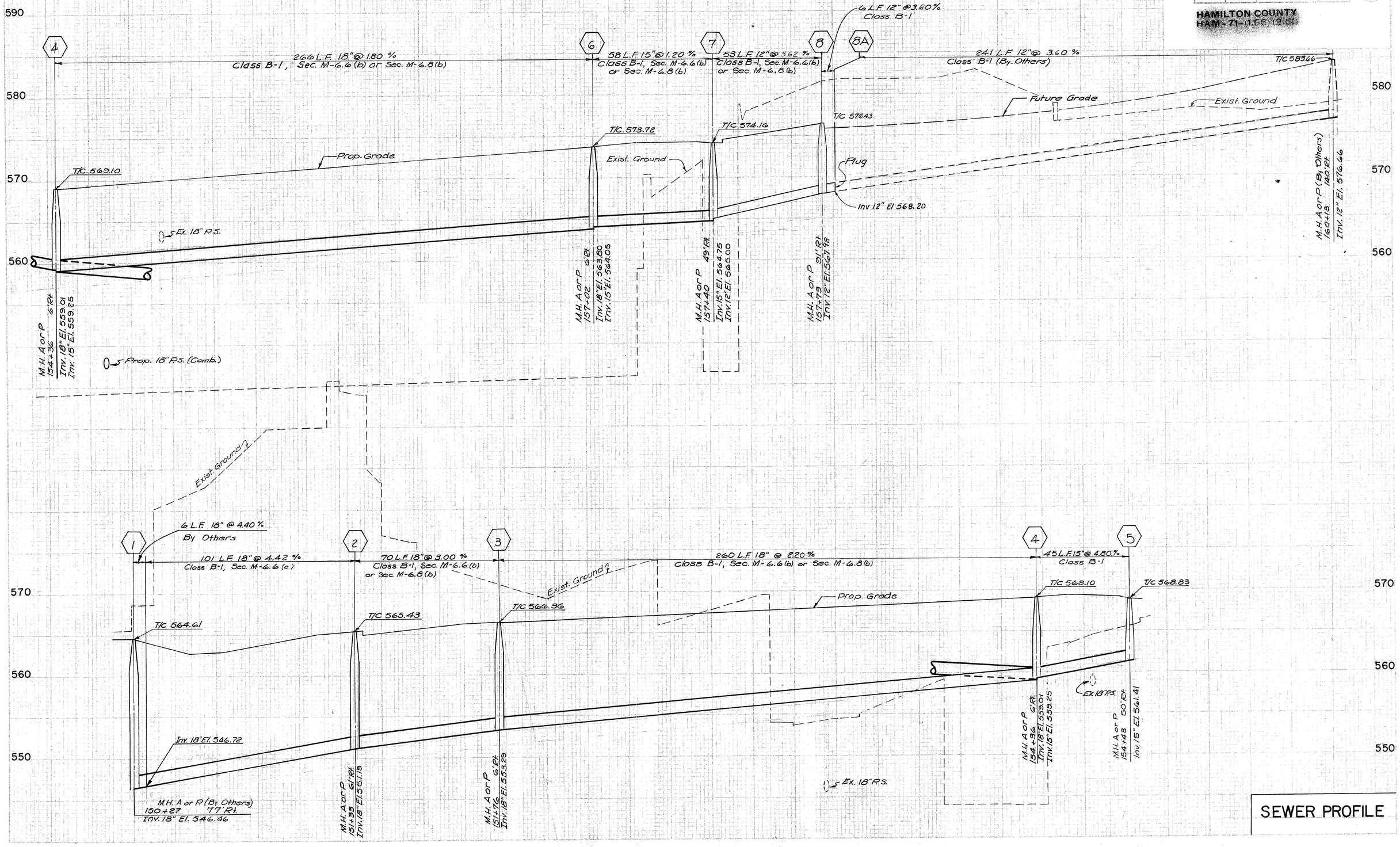

SEWER PROFILE

FED. AID PROJECT	STATE	PROJECT		SHEET NO.	TOTAL SHEETS
2	OHIO			83	492

HAMILTON COUNTY
HAM-71-11.50; 2.81

15 — 53 L.F. 18" Cast Iron Pipe @ 10.50%. Thickness Class 2.7

179 L.F. 18" @ 10.50 %. Class B-1, Sec. M-6.6(d)

18" Cast Iron Pipe @ 10.50% — 38 L.F. — 16 — T/c 595.91. Thickness Class 2.7

Ret. Wall No. 16

Proposed Grade

Future Grade

Prop. 18" P.S.

Prop 12" P.S.

Ex. 18" P.S.

Footing El. 562.25

Reinf. Conc. Collar

M.H. A or P 12+81 GB 7' Rt. Inv. 18" El. 531.74 Inv. 24" El. 531.24

T/c 545.19

Future Retaining Wall

Existing Grade

Future Footing El. 539.5 ±

Reinf. Conc. Collar

Ex. 12" P.S.

Ex. 18" P.S.

MH A or P 24+35.5 21' Rt. Inv. 18" El. 560.09 Inv. Ex. 18" El. 587.66 Inv. Ex. 15" El. 584.42 Inv. Ex. 18" El. 584.17

18 — 67 L.F. 15" @ 1.30 %. Class B-1, Sec. M-6.6(b) or Sec. M-6.8(b) — 19 — 92 L.F. 12" @ 9.70 %. Class B-1 Sec. M-6.6(b) or Sec. M-6.8(b) — 20 — 65 L.F. 12" @ 5.70%. Class B-1 Sec. M-6.6(b) or Sec. M-6.8(b) — 21

T/c 560.30

T/c 558.54

T/c 549.27

T/c 548.22

Prop. Ground

Exist. Ground

Ex. 12" P.S.

MH A or P 16+42 GD 7' Rt. Inv. 15" El. 537.92

M.H. A or P 67+35 GD 25' Rt. Inv. 15" El. 538.79 Inv. 12" El. 539.04

M.H. A or P 158+51 GD 30' Rt. Inv. 12" El. 547.96

MH A or P 153+18 GD 31' Rt. Inv. 12" El. 551.67

13 — 113 L.F. Ex. 2' Br. S. @ 1.63 % — 14 — 118 L.F. 24" @ 2.20 %. Class B-1, Sec. M-6.6(b) or Sec. M-6.8(b) — 15 — 195 L.F. 18" @ 1.35 %. Class B-1, Sec. M-6.6(b) or Sec. M-6.8(b) — 17 — 165 L.F. 15" @ 2.00 %. Class B-1, Sec. M-6.6(b) or Sec. M-6.8(b) — 18

12 — 101 L.F. Ex. 2' Br. S @ 3.64 %

T/c 541.1 ±

T/c 543.23

T/c 543.88

T/c 545.19

T/c 547.34

T/c 549.27

Prop. Grade

Exist. Ground

Install Pipe Special for 4" Drain from Elect. M.H. Mat'l furnished by C.G.&E. Co.

Ex. 12" P.S.

Ex. 12" P.S.

M.H. A or P 9+65 GB 40' Lt. Inv. Ex. 24" El. 523.08

M.H. A or P 10+50 GB 0.5' Rt. Inv. Ex. 24 El. 526.80

Ex. M.H. 11+61 GB 7' Rt. Inv. 24 El. 523.64

M.H. A or P 12+81 GB 7' Rt. Inv. 24" El. 531.24 Inv. 18" El. 531.74

M.H. A or P 14+76 GB 7' Rt. Inv. 18" El. 534.37 Inv. 15" El. 534.62

MH A or P 16+14 GB 7' Rt. Inv. 15" El. 551.92

SEWER PROFILES

REG. NO. DIVISION	STATE	PROJECT	
2	OHIO		

84
492

HAMILTON COUNTY
HAM-71-11.60 (12.14)

22 — 97 L.F. 15" @ 18.00% Class B-1 Sec. M-6.6(d) — 23 — 30 L.F. 15" @ 5.30% Class B-1 Sec. M-6.6(b) or Sec. M-6.8(b) — 25 — 308 L.F. 12" @ 5.30% Class B-1 Sec. M-6.6(b) or Sec. M-6.8(b) — 26

57 — 57 L.F. 12" @ 33.40% Class F-1 — 24 — 56 L.F. 12" @ 4.00% Class B-1

T/C 581.75

T/C 562.11

T/C 560.51

T/C 565.16

T/C 581.43

Install 4" P.S. Stub for Elect. M.H. Drain. Mat'l. furnished by C.G.&E.G.

2.0% ±

Prop. Ground Line

Install Pipe Special for 6" Elect. M.H. Drain. Mat'l. furnished by C.G.&E. Co.

T/C 556.88

M.H. A or P
16+91 81.5' Lt.
Inv 12" El. 574.75

M.H. A
23+92 GB(N) 7.5' Rt.
Inv. 12" El.: 563.53
Inv. 4" El.: 570.50

Existing Ground Line

28 — 124 LF 12" @ 4.00% Class B-1 Sec. M-6.6(b) or Sec M-6.8(b) — 29

M.H. A
20+00 GB(N) 62' Rt.
Inv. 12" El. 555.71

M.H. A or P
19+35 GB(N) 7.5' Rt.
Inv. 15" El. 548.19
Inv. 12" El. 553.47

M.H. A
20+89 GB(N) 7.5' Rt.
Inv. 15" El.: 552.96
Inv. 12" El.: 553.21

26 — 208 L.F. 12" @ 2.90% Class B-1 Sec. M-6.6(c) — 27 — 42 LF 12" @ 1.00% Class B-1 Sec. M-6.6(c)

T/C 598.88

T/C 594.06

T/C 593.04

T/C 581.43

Prop. Ground Line

M.H. A or P
26+01 GB(N) 3' Lt.
Inv. 12" El. 575.36

M.H. Drop (Non-P)
26+23 GA 17.12' Rt.
Inv. 12" El. 575.98
Inv. 12" El. 584.66

M.H. A or P
23.92 GB(N) 10' Rt.
Inv. 12" El. 569.53

M.H. A or P
68+49 GA 21.12' Rt.
Inv. 12" El. 589.62

Existing Ground Line

M.H. D
18+99 GB(N) 3' Lt.
Ex. 4' Br. Sewer El. 521.12
Inv. 15" El. 530.73

Install Pipe Special for 4" Drain from Elect. M.H. Mat'l furnished by C.G.&E. Co.

SEWER PROFILES

FED. RD. DIVISION	STATE	PROJECT		85
2	OHIO			492

HAMILTON COUNTY
HAM-71-0.58 (2.81)

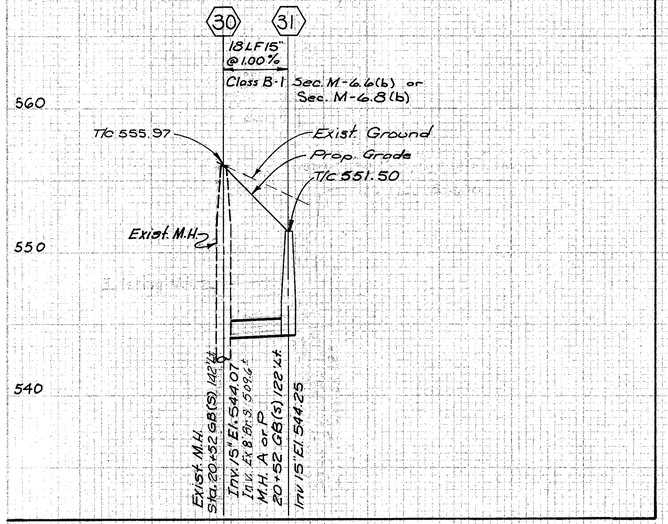

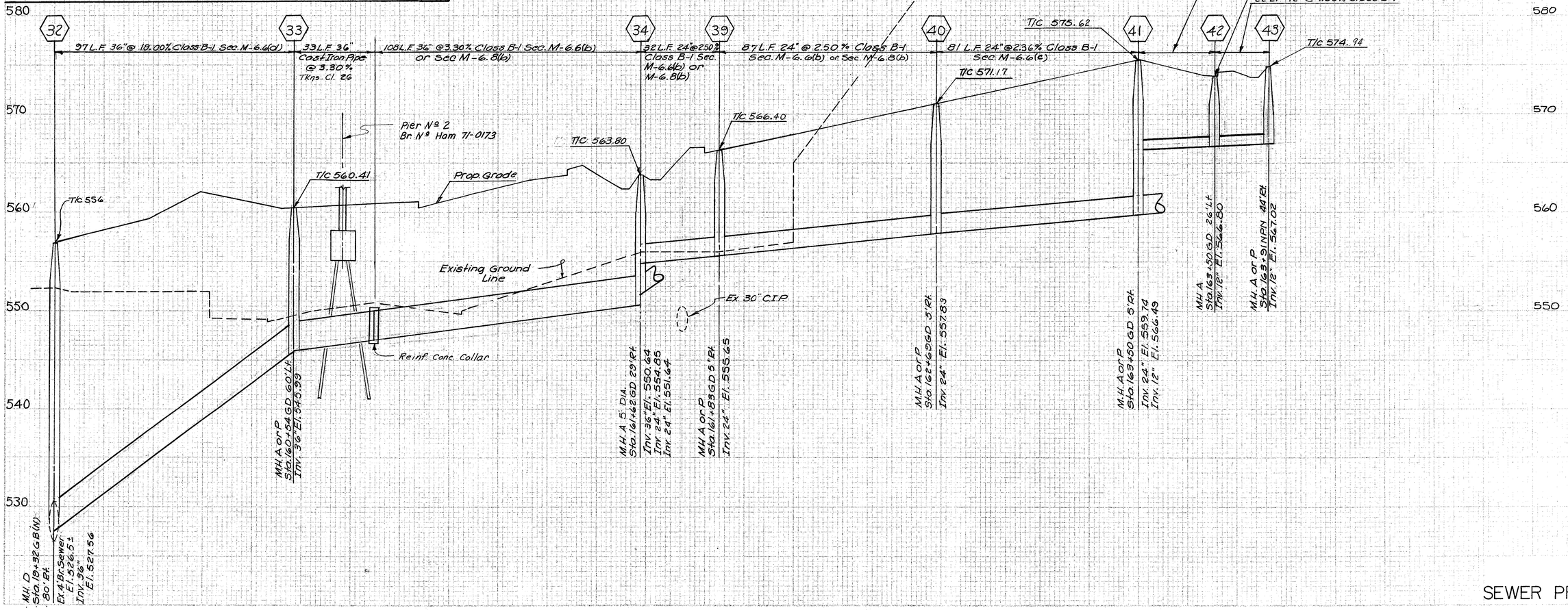

SEWER PROFILE

FED. NO. DIVISION	STATE	PROJECT		
2	OHIO			

86
402

HAMILTON COUNTY
HAM-71-10.56(12.56)

34 — 35 — 54

187 L.F. 24" P.S. @ 17.20%
Class B-1 Sec. M-6.6 (d)

268 L.F. 12" P.S. @ 6.50%
Class B-1, Sec. M-6.6(b) or Sec. M-6.8(b)

T/c 616.69

Exist. Ground

Prop. Grade

T/c 599.31

Ex. 24" P.S.

12" Stack

Ex. 15" P.S.

M.H. A or P (Drop)
Sta. 10+58 SE 17' Rt.
Inv. 24" El. 583.80
Inv. 24" El. 589.00
Inv. 15" El. 584.63
Inv. 12" El. 590.00

M.H. A or P
Sta. 13+22 SE 20' Rt.
Inv. 12" El. 594.12

620 610 600 590 580 570 560 550 540

37 — 35 — 36

37 L.F. 18" P.S. @ 1.50%
Class B-1
Sec. M-6.6(C)

58 L.F. 24" P.S. @ 17.00%
Class B-1

T/c 598.39

T/c 599.31

T/c 608.5
Ex. 24" P.S.

12" Stack

Prop. Gr.

Exist. Gr.

17' Rt.

M.H. A or P
Sta. 10+23 SE
Inv. 15" (Ex.)
El. 585.10
Inv. 18"
El. 584.85

M.H. A or P (Drop)
Sta. 10+58 SE 17' Rt.
Inv. 24" El. 583.80
Inv. 24" El. 589.00
Inv. 18" El. 584.30
Inv. 12" El. 590.00

M.H. A or P (Drop)
Sta. 10+94 SE 61' Rt.
Inv. Ex. 24" El. 601.5±
Inv. 24" El. 598.86

610 600 590 580

55 — 56

196 L.F. 12" P.S. @ 7.70%
Class B-1 Sec. M-6.6(b) or Sec. M-6.8(b)

T/c 649.86

T/c 634.21

650 640 630 620 610 600

54

228 L.F. 12" P.S. @ 7.70%
Class B-1 Sec M-6.6(b) or Sec. M-6.8(b)

Existing Ground

Proposed Grade

T/c 616.69

M.H. A or P
Sta. 15+50 SE 20 Rt.
Inv. 12" El. 624.98

M.H. A or P
Sta. 17+50 SE 20' Rt.
Inv. 12" El. 640.07

M.H. A or P.
Sta. 13+22 SE 20 Rt.
Inv. 12" El. 607.42

M.H. "A" (5' Dia)
Sta. 161+62 GD 29 Rt.
Inv. 36" El. 550.64
Inv. 24" El. 551.64
Inv. 24" El. 554.85

SEWER PROFILES

FED. AID DIVISION	STATE	PROJECT
2	OHIO	

87
492

HAMILTON COUNTY
HAM-71-(1.56)(2.51)

48 — 133 LF 21" @ 1.60%
Class B-1 Sec M-6.6(b) or Sec M-6.8(b)
T/C 583.73
M.H. A or P
168+62 N.B. 5.5' Rt.
Inv 21" El. 569.81

49 — 89 LF 21" @ 1.00%
Class B-1 Sec M-6.6(b) or Sec M-6.8(b)
Exist. Ground
T/C 584.32
M.H. A or P
169+95 NB 5.5' Rt.
Inv. 21" El. 571.94

50 — 29 LF 15" @ 2.80%
Class B-1 Sec M-6.6(b) or Sec M-6.8(b)
T/C 584.17
M.H. A or P
170+83 N.B. 4' Lt.
Inv 15" El. 573.33
Inv 21" El. 572.83

51 — 72 LF 15" @ 0.90%
Class B-1
Exist. Ground
T/C 582.56
Prop. Grade
M.H. A or P
171+10 SB 4' Lt.
Inv 15" El. 574.14

53 — 51 LF 15" @ 0.90%
Class B-1
T/C 582.78
M.H. A or P
171+82 SB 5.5' Lt.
Inv. 15" El. 574.79

101
T/C 583.12
M.H. A or P
172+32 RB 2.5' Rt.
Inv. 15" El. 575.25

Ex. 12" P.S.

590 / 580 / 570

50 — 79 LF 15" @ 7.30%
Class B-1 Sec M-6.6(b) or Sec M-6.8(b)
Exist. Ground
T/C 584.17
Prop. Grade
Ex. 12" P.S.

52
T/C 586.15
M.H. A or P
170+83 N.B. 4' Lt.
Inv. 15" El. 573.33
Inv. 21" El. 572.83

M.H. A or P
170+98 GO 5' Rt.
Inv. 15" El. 579.10

590 / 580 / 570

41 — 226 LF 24" @ 2.00%
Class B-1 Sec M-6.6 (c)
Exist. Ground
T/C 575.62
Prop. Grade
M.H. A or P
163+50 GO 5' Rt.
Inv 12" El. 566.49
Inv 24" El. 559.74

44 — 281 LF 24" @ 1.50%
Class B-1 Sec M-6.6 (c)
T/C 583.08
M.H. A or P
165+77 GO 30' Lt.
Inv 12" El. 572.04
Inv 24" El. 564.26

45 — 65 LF 12" @ 5.90%
Class B-1 Sec M-6.6(b) or Sec. M-6.8(b)
T/C 585.66
M.H. A or P
166+38 NPN 35' Rt.
Inv. 12" El. 576.68

46 — 49 LF 12" @ 2.00%
Class B-1
T/C 584.64
Prop. Grade
Exist. Ground
Ex. 18" P.S.
M.H. A or P
166+40 NB 5.5' Rt.
Inv 12" El. 577.66

47 — 54 LF 21" @ 2.00%
Class B-1 Sec M-6.6(c)
T/C 584.53
Exist. Ground
M.H. A or P
168+60 GO 24' Lt.
Inv. 21" El. 568.73
Inv 24" El. 568.48

48
T/C 583.73
Ex. 12" P.S.
M.H. A or P
168+62 NB 5.5' Rt.
Inv 21" El. 569.81

590 / 580 / 570 / 560

SEWER PROFILE

DIST. RTE DIVISION	STATE	PROJECT	
2	OHIO		

88
492

HAMILTON COUNTY
HAM-71-(1.56) (2.51)

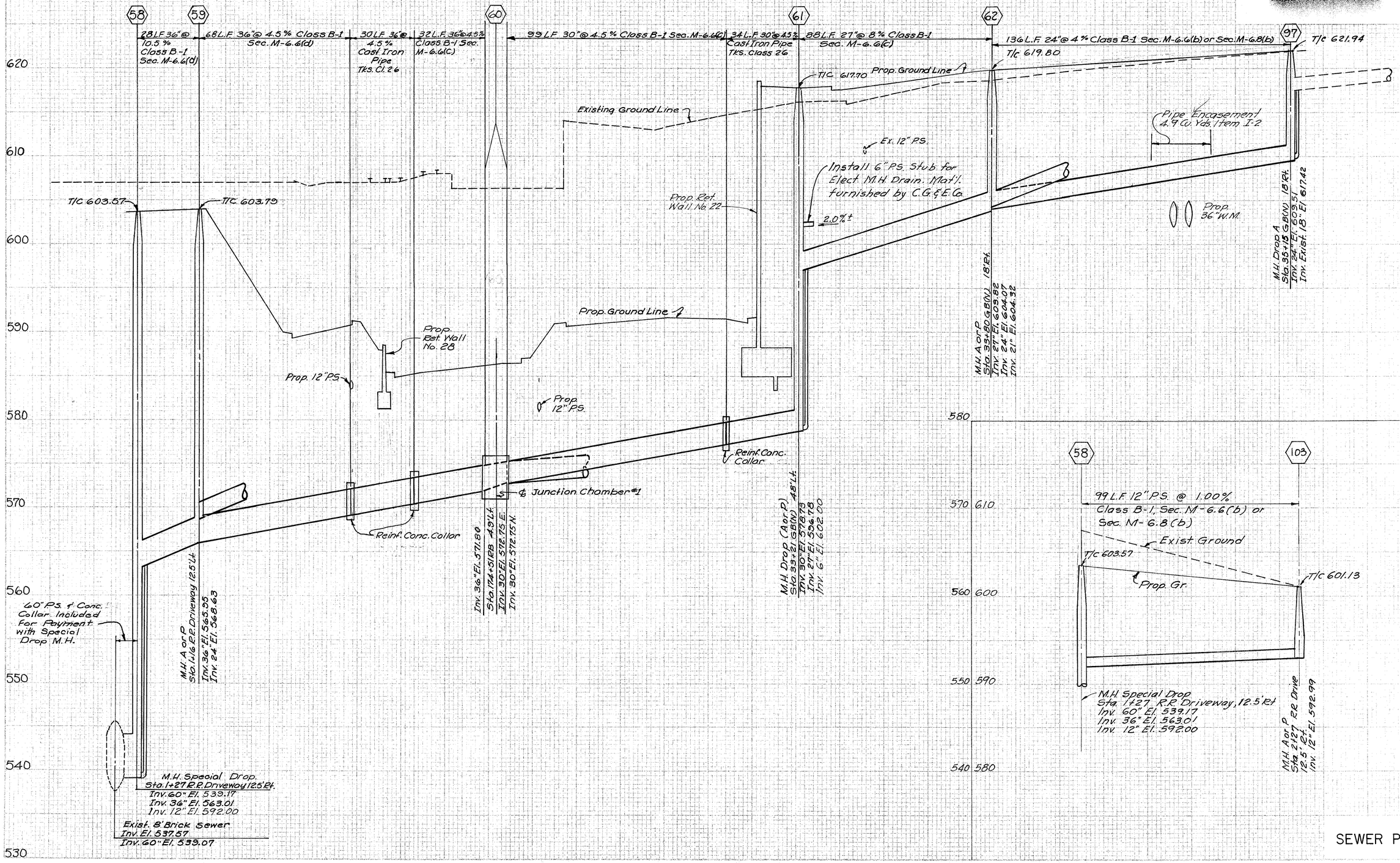

SEWER PROFILE

DES. CH. DIVISION	STATE	PROJECT	
2	OHIO		

89
492

HAMILTON COUNTY
HAM-71-(1.56)(2.51)

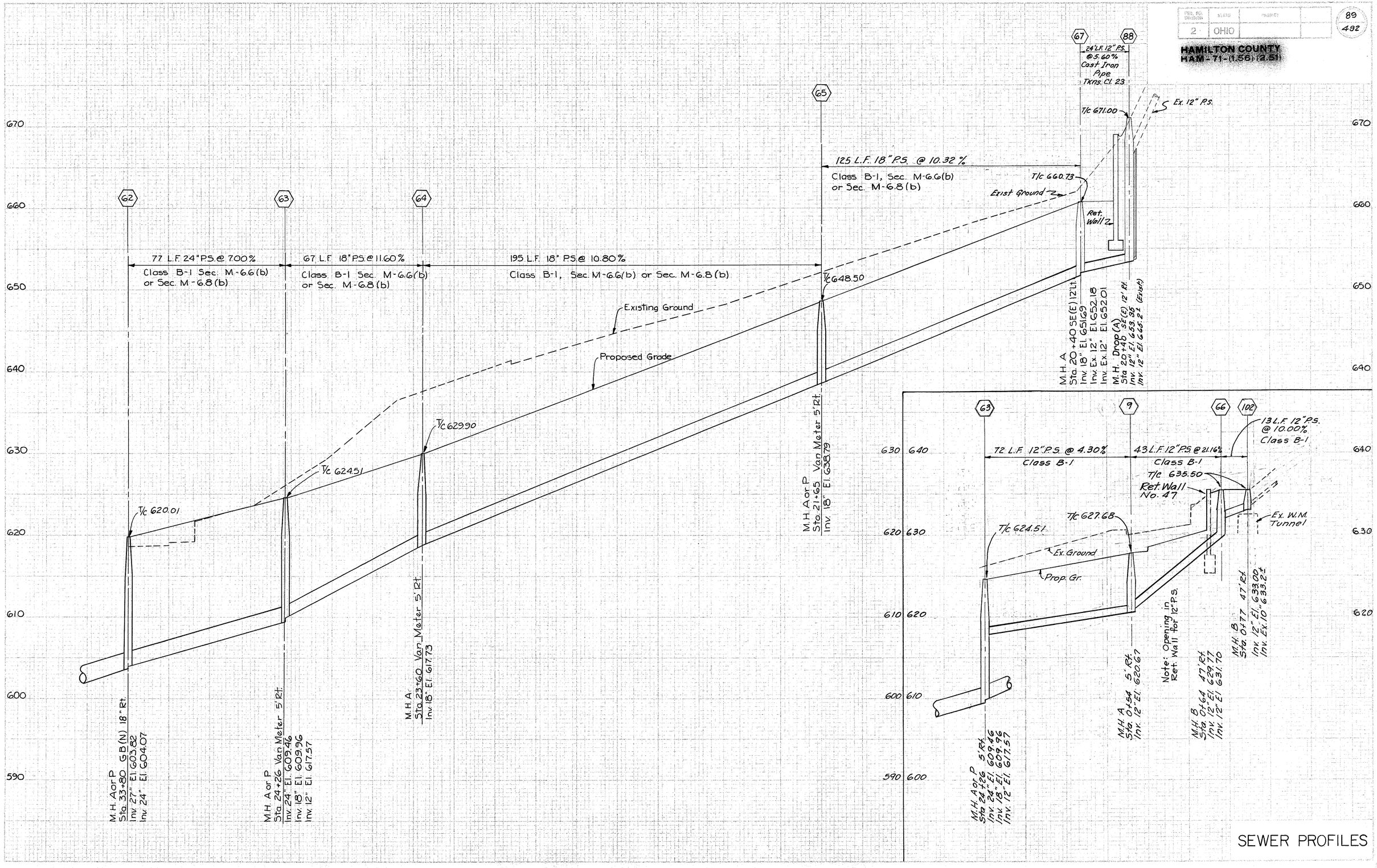

SEWER PROFILES

FED. AID DIVISION	STATE	PROJECT	
2	OHIO		

90
492

HAMILTON COUNTY
HAM-71-(1.56) (2.51)

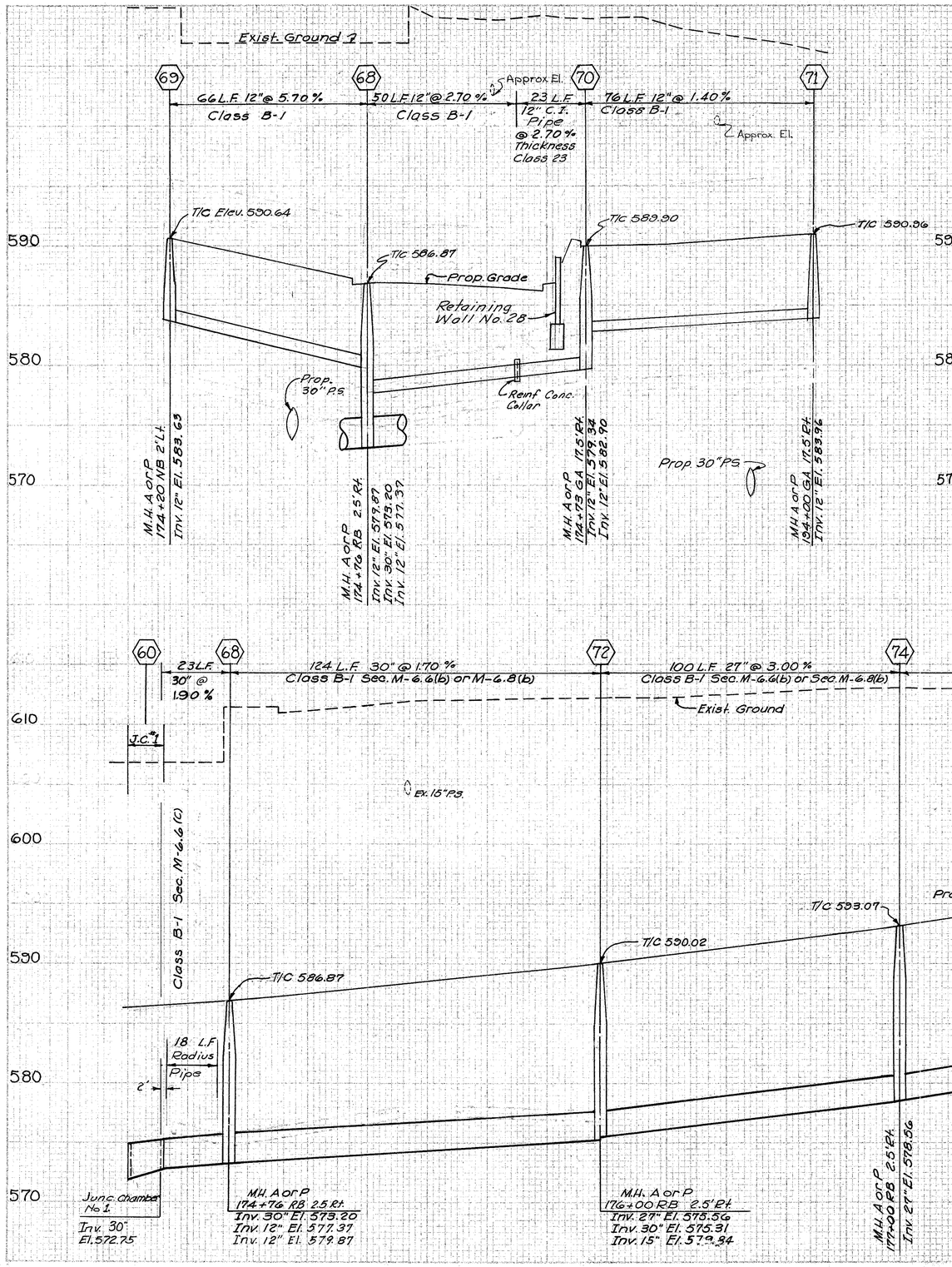

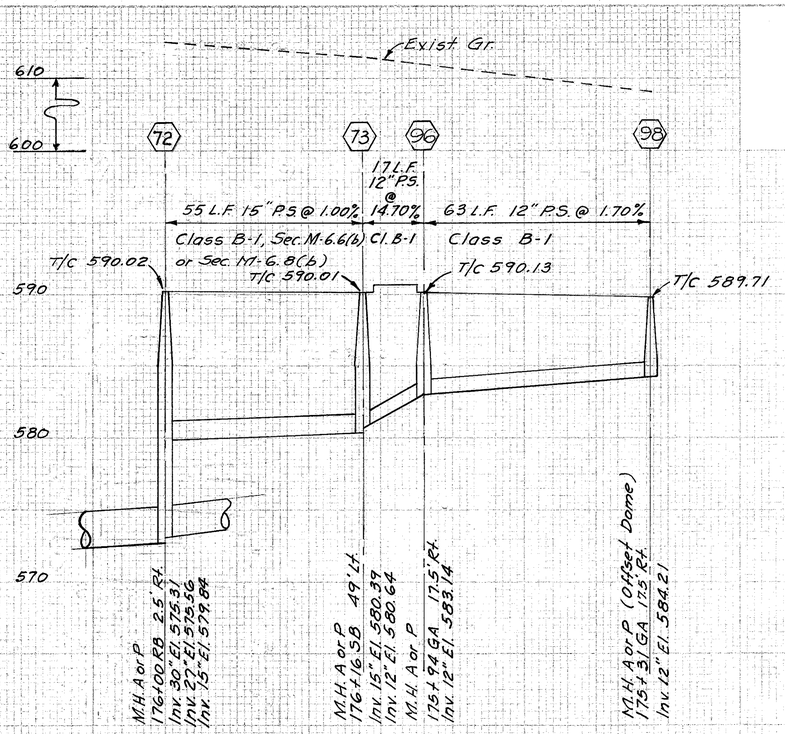

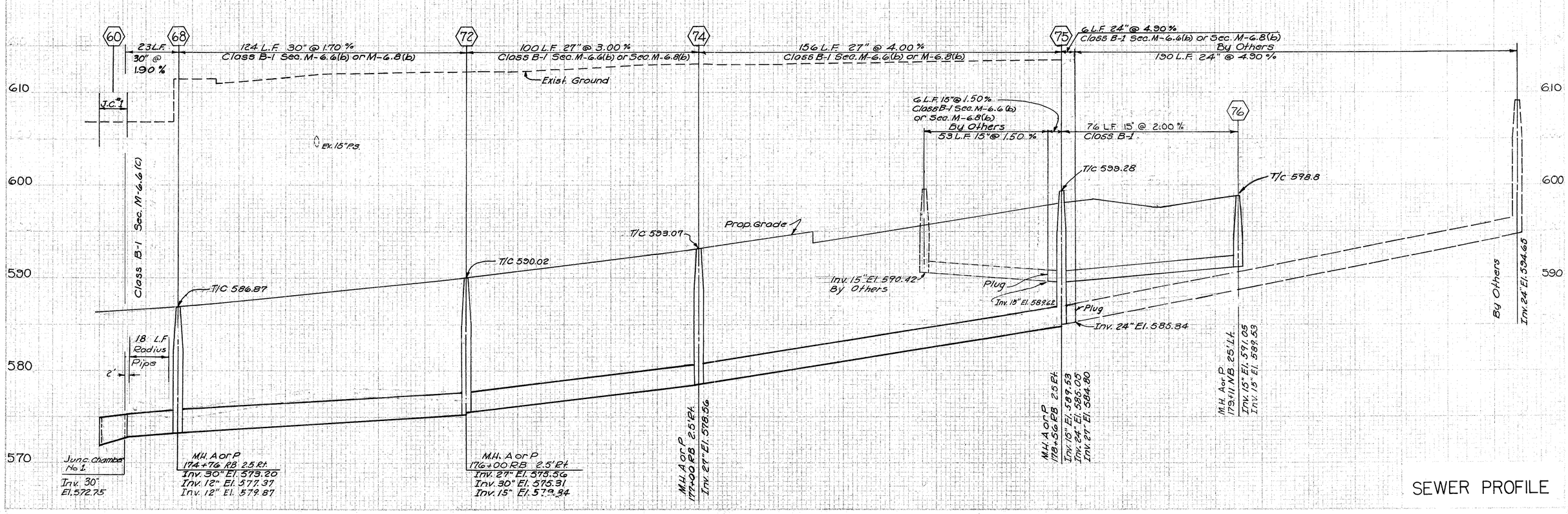

SEWER PROFILE

FED. AID DIVISION	STATE	PROJECT	
2	OHIO		

91
492

HAMILTON COUNTY
HAM-71-(1.55) (2.51)

80 — 81 — 82

244 L.F. 24" @ 5.70 % Class B-1, Sec. M-6.6(b) or Sec. M-6.8(b)

275 L.F. 24" @ 4.40 % Class B-1, Sec. M-6.6(b) or Sec. M-6.8(b)

Exist 12" P.S. El. 729.8

M.H. A or P Sta. 205+52 NB 4' Lt. Inv. 27" El. 698.48 Inv. 24" El. 698.73

Existing Ground

Proposed Grade

T/C El. 723.09

T/C El. 735.02

M.H. A or P Sta. 210+71 NB 8' Rt. Inv. 24" El. 724.74

S.B. N.B.

T/C El. 712.13

M.H. A or P Sta. 207+58 NB 8' Rt. Inv. 24" El. 712.64

79 — 80

227 L.F. 27" @ 4.40 % Class B-1, Sec. M-6.6(b) or Sec. M-6.8(b)

T/G El. 712.13

77 — 78

131 L.F. 27" @ 10.00 % Class B-1, Sec. M-6.6(c)

203 L.F. 27" @ 5.00 % Class B-1, Sec. M-6.6(b) or Sec. M-6.8(b)

M.H. A or P (Channel & Benches Witrified Brick) Sta. 193+90 NB 16 Lt. Inv. 27" El. 665.25 Inv. 15.21" El. 665 ±

T/C 693.55

Future Grade

Temporary T/C El. 675.5

Temporary Outlet Existing 21" P.S.

M.H. A or P Sta. 201+21 NB 9 Lt. Inv. 27" El. 678.35

T/C El. 701.65

Prop. 24" P.S. (Comb.)

M.H. A or P Sta. 203+25 NB 6' Lt. Inv. 27" El. 688.50

M.H. A or P Sta. 206+82 NB 4' Lt. Inv. 27" El. 698.48 Inv. 24" El. 698.73

740 730 720 710 700 690 680 670

760 750 745 725 720 715 710 700 690

730 720 710 700 690

SEWER PROFILES

FED. AID REVISION	STATE	PROJECT	
2	OHIO		

92
492

HAMILTON COUNTY
HAM-71-(1.66)(2.51)

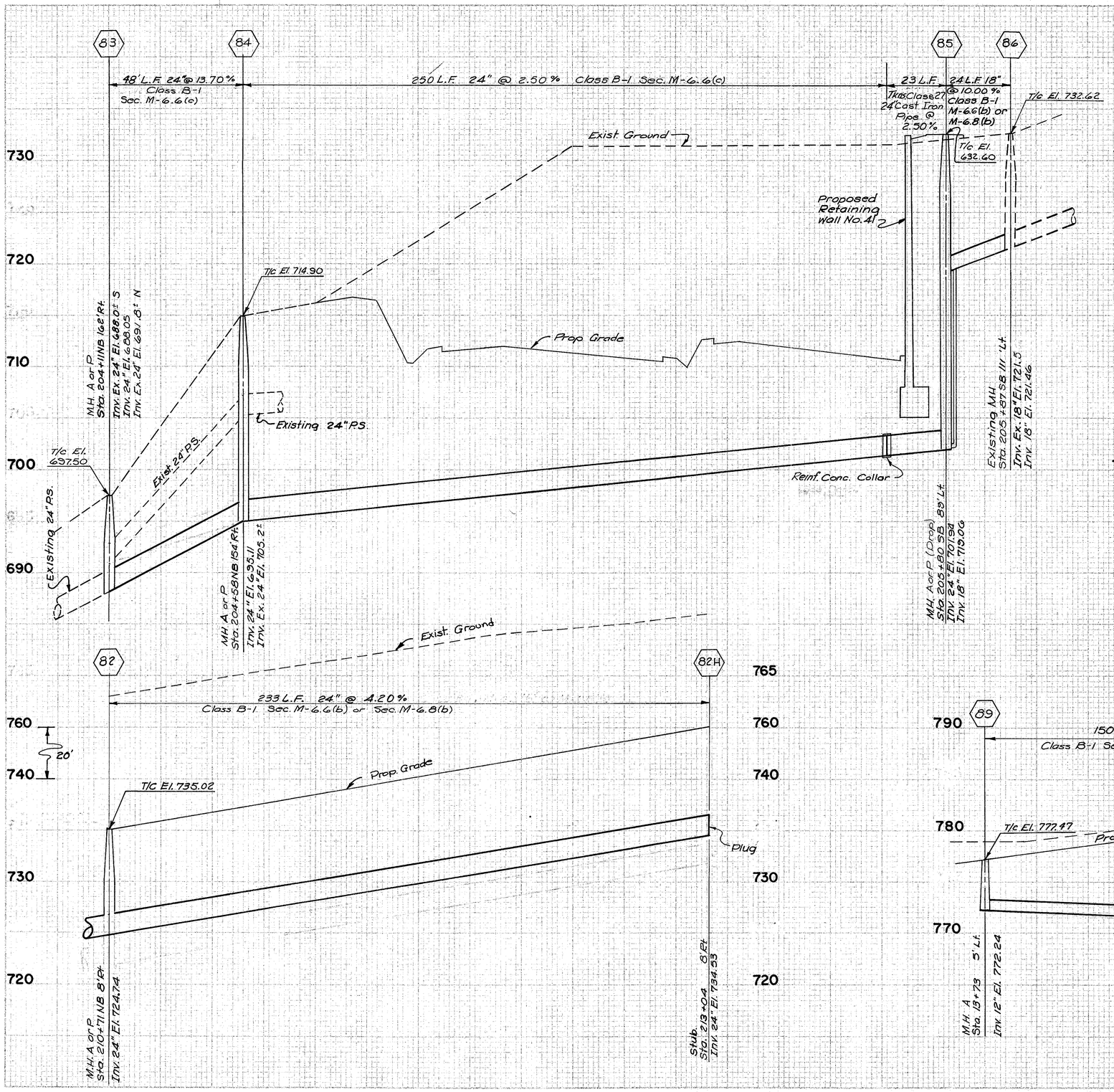

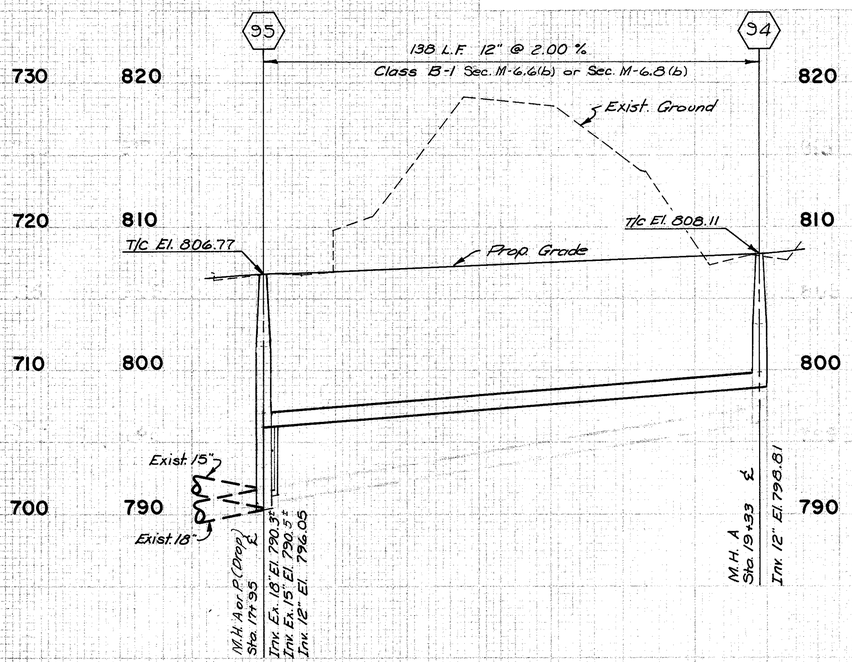

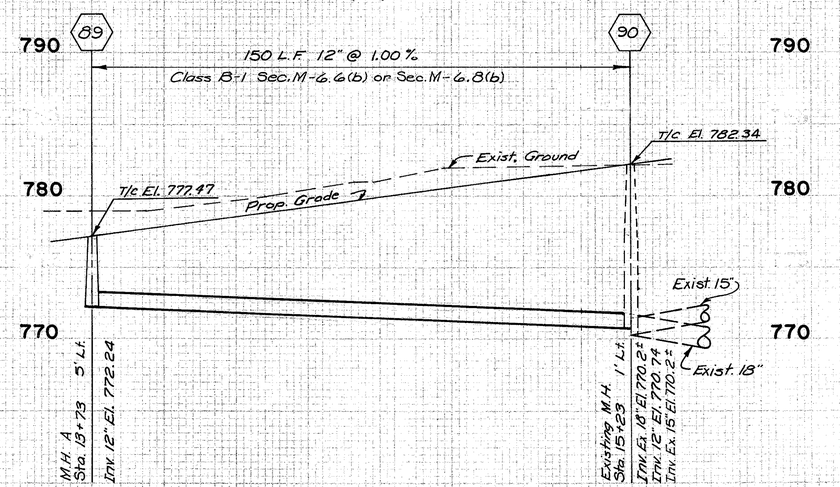

SEWER PROFILES

FED. RD. DIVISION	STATE	PROJECT		
2	OHIO			

93
482

HAMILTON COUNTY
HAM-71-(1.56) (2.61)

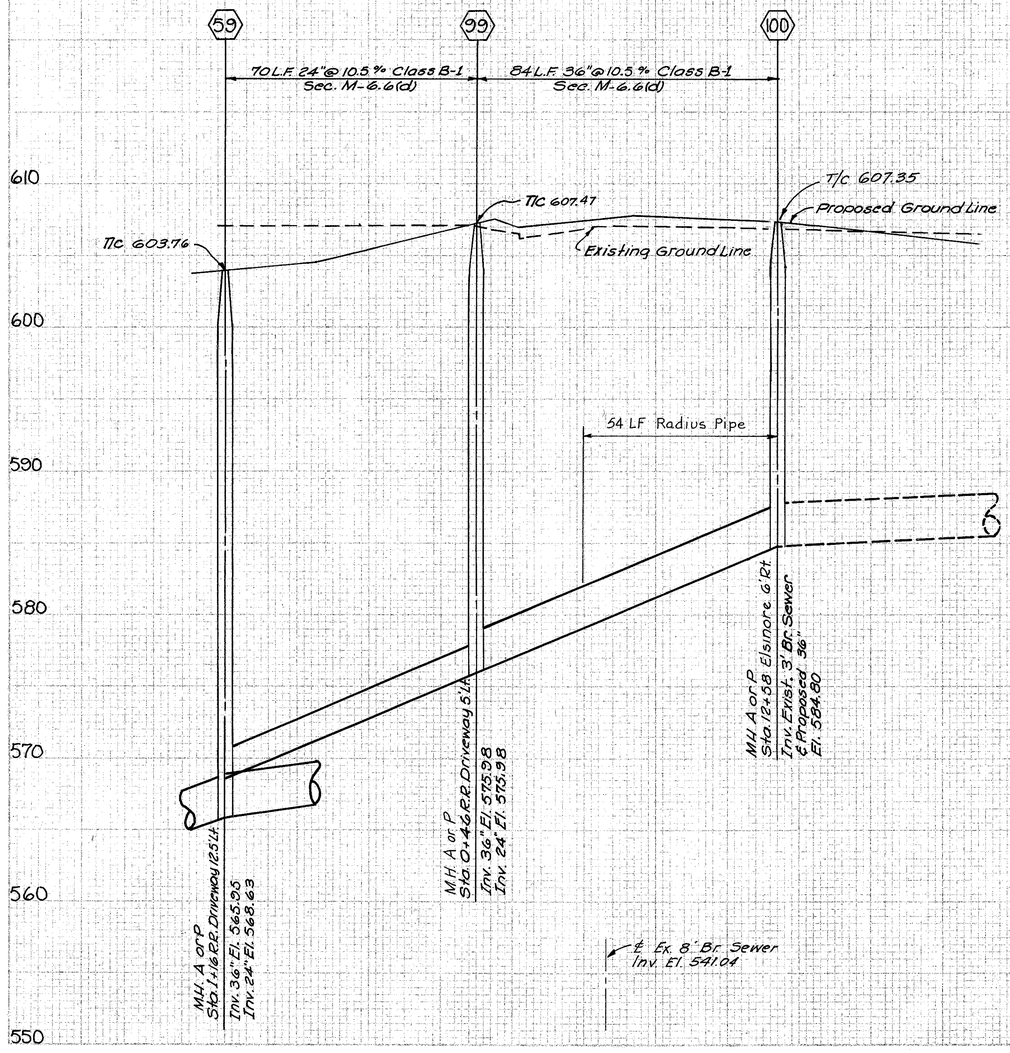

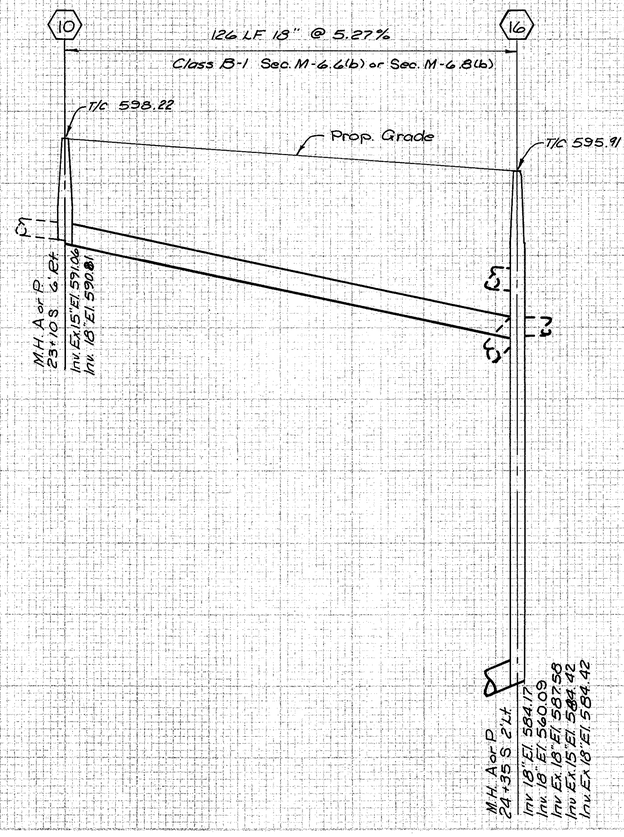

SEWER PROFILE

FED. RD. DIVISION	STATE	PROJECT	
2	OHIO		

94
492

HAMILTON COUNTY
HAM-71-(1.56) (2.51)

620
610
600
590
580
570
560
550
540

Ex. R.R. Track

℄ Prop. R.R. Track

℄ Elsinore Ave.

℄ Prop. R.R. Track

Existing Ground

Ret. Wall # 27

℄ Sta. 176+64 GA

Proposed Grade

Approx. Top of M.H (Covered)

Sta. 1+14 as shown on Sheet No. 6 of City of Cinti. Sewer Inspection Report 4-1240

Prop. 36" P.S.

20 L.F.

Proposed 325 L.F. of Pneumatically Placed Mortar Lining

350 ± L.F.
Lining By Others

Existing 8'-0" ± Cir. Brick Sewer

Existing 7'-7" ± Cir. Brick Sewer

Existing 8'-0" Cir. Brick Sewer

Ex. 4' Brick Sewer to West
(To Be Sealed by 2 Ft. Thick Bulkhead With 12" Relief Outlet)
0.94 C.Y. Conc. Item 1-2

Ex. M.H. (Covered)
Sta. 6+50 ±
Inv. El. 557.15
(63' ± Lt. of Sta. 180+45 ± N.B.

Prop. 60" P.S. to East
22' Rt. Sta. 1+25, Prop. Driveway ±
84 Lt. Sta. 173+96 GA

0+00 1+00 2+00 3+00 4+00 5+00

SEWER PROFILES

MANHOLE No.	TYPE	PLAN SH. No.	PROFILE SH. No.	EXPRESSWAY OR RAMP	STATION	FLOW LINE ELEVATION	RIM ELEV.	CATCH BASIN	TYPE	GRATING ELEVATION	FLOW LINE ELEVATION	STATION	EXPRESSWAY OR RAMP	FLOW LINE ELEVATION AT M.H. C.B. OR SEWER
1	A or P (By Others)	41	82	N.B. EXPRESSWAY	150+27 77'R	546.46 18"	564.61	1A	D	562.10	559.85 12"	150+16 72'R	N.B. EXPRESSWAY	557.48 (Stub)
								1B	K	563.46	557.20 15"	150+27 60'R	N.B. EXPRESSWAY	554.48 (Stub)
2	A or P	41	82	N.B. EXPRESSWAY	151+33 61'R	551.19 18"	565.43	1C	A-2	560.10	560.10 12"	150+27 31L	N.B. EXPRESSWAY	557.20
								2A	A-2	564.84	559.80 12"	151+43 58'R	N.B. EXPRESSWAY	557.20
3	A or P	41	82	N.B. EXPRESSWAY	151+76 61'R	553.29 18"	566.36	2B	A-2	565.03	561.13 12"	152+00 111'R	N.B. EXPRESSWAY	564.84
								2C	Struct.	564.20	— 12"	152+00 114'R	N.B. EXPRESSWAY	558.43
4	A or P	42	82	N.B. EXPRESSWAY	154+36 61'R	559.01 18"	569.10	3A	K	566.04	559.30 15"	151+66 31'R	N.B. EXPRESSWAY	562.24 (Stub)
						559.25 15"		3B	Struct.	—	561.96 12"	151+55 21'R	N.B. EXPRESSWAY	559.36
5	A or P	42	82	N.B. EXPRESSWAY	154+43 50'R	561.41 15"	568.83	3C	A	566.00	563.00 12"	151+62 31'L	N.B. EXPRESSWAY	561.30
								3D	A-2	565.98	562.98 12"	151+76 54'L	N.B. EXPRESSWAY	561.30
6	A or P	43	82	N.B. EXPRESSWAY	157+02 61'R	563.80 18"	573.72	4A	A-2	568.36	563.70 12"	154+35 54'L	N.B. EXPRESSWAY	559.36
						564.05 15"		4B	K	569.03	564.40 15"	154+46 31'R	N.B. EXPRESSWAY	562.10
7	A or P	43	82	N.B. EXPRESSWAY	157+40 49'R	564.75 15"	574.16	4C	A	564.02	566.02 12"	154+45 31'L	N.B. EXPRESSWAY	564.40
8	A or P	43	82	N.B. EXPRESSWAY	157+73 91'R	565.00 12"	576.43	5A	CB No.5	567.75	566.75 12"	155+35 67'R	N.B. EXPRESSWAY	561.64
9	A	48,77	89	MUSEUM DRIVEWAY	0+54 5'R	567.98 12"	627.68	5B	K	568.16	563.17 15"	154+19 54'R	N.B. EXPRESSWAY	561.41
						620.67 12"		5C	A-2	567.09	564.09 12"	154+12 99'R	N.B. EXPRESSWAY	563.17
10	A or P	42	93	VAN METER ST.	23+10 S 6'R	591.06 15"	598.22	5D	Struct.	—	564.35 12"	154+12 103'R	N.B. EXPRESSWAY	564.27 (Stub)
10B	A-2					584.8 ± Ex. 12"		6A	A-2	573.04	568.70 12"	157+04 54'L	N.B. EXPRESSWAY	566.72
11	A or P	41		VAN METER ST.	20+61S 6'L		595.20	6B	K	573.80	569.00 15"	157+16 31'R	N.B. EXPRESSWAY	566.72
11B	A					591.66 12"		6C	A	573.76	570.76 12"	157+14 31'L	N.B. EXPRESSWAY	569.00
12	A or P	41	83	N.B. GILBERT AVE.	9+68 40'L	523.08 Ex.24"	541.1±	7A	Stub	—	570.00 12"	157+52 57'R	N.B. EXPRESSWAY	567.16
12A	A-2					594.38 12"	598.88	7B	A-2	573.44	570.44 12"	157+24 54'R	N.B. EXPRESSWAY	567.16
12B	Extap					598.16 12"	601.16	8A	Stub	—	568.20 12"	157+78 93'R	N.B. EXPRESSWAY	567.98
12C	C					591.66 12"	594.66	8B	Stub	—	568.10 12"	157+73 97'R	N.B. EXPRESSWAY	567.98
12D	Struct.					591.92 12"	594.92	9A	A-2	623.40	623.71 12"	0+53 12'L	MUSEUM DRIVEWAY	623.40
13	A or P	41	83	N.B. GILBERT AVE.	10+50 0.5'R	526.80 Ex.24"	543.23	10A	K	598.88	594.38 12"	23+22 S 26'R	VAN METER ST.	591.31
14	Exist.	42	83	N.B. GILBERT AVE.	11+61 7'R	528.64 24"	543.88	10B	A-2	601.16	598.16 12"	22+87S 46'R	VAN METER ST.	594.38
15	A or P	42	83	N.B. GILBERT AVE.	12+81 7'R	531.24 24"	545.19	11A	A	594.66	591.66 12"	20+61S 15'L	VAN METER ST.	588.20
						531.74 18"		11B	A	595.92	591.92 12"	20+61S 15'R	VAN METER ST.	588.20
16	A or P	42	83	VAN METER ST.	24+35 S 2'L	584.17 18"	595.91	12A	A-2	Exist.	541.18	10+31 36'L	N.B. GILBERT AVE.	Exist.
						584.42 Ex.15"		12B	Extap				N.B. GILBERT AVE.	
17	A or P	43	83	N.B. GILBERT AVE.	14+76 7'R	560.09 18"	547.34	12C	C	540.83	533.51 15"	9+42 35'R	N.B. GILBERT AVE.	533.51
						534.37 15"		12D	Struct.	—	537.83 12"	9+46 40'R	N.B. GILBERT AVE.	537.83
18	A or P	43	83	N.B. GILBERT AVE.	16+42 7'R	537.92 15"	549.27	13A	A-2	541.94	536.23 12"	10+51 35'R	N.B. GILBERT AVE.	536.23
19	A or P	43	83	RAMP GD	157+59 GD 25'R	538.79 15"	548.22	15A	A-2	544.49	537.19 12"	12+82 35'L	N.B. GILBERT AVE.	537.19
						539.04 12"		15B	A-2	544.67	538.19 12"	12+98 35'R	N.B. GILBERT AVE.	538.19
20	A or P	43	83	RAMP GD	158+51 GD 30'R	547.96 12"	558.54	16A	C	595.36	588.91 12"	24+42 S 15'L	VAN METER ST.	588.91
21	A or P	44	83	RAMP GD	159+18 GD 31'R	551.67 12"	560.30	16B	C	595.37	592.37 12"	24+39 S 15'R	VAN METER ST.	588.91
22	D	44	84	N.B. GILBERT AVE.	18+99 GB(N) 3'L	530.73 15"	556.88	17A	A-2	546.61	539.34 12"	14+78 35'L	N.B. GILBERT AVE.	539.34
						521.11 ± Ex.48"CP		17B	A-2	546.60	540.60 12"	14+75 36'R	N.B. GILBERT AVE.	540.34
23	A or P	44	84	N.B. GILBERT AVE.	19+95 GB(N) 7.5'R	553.47 12"	560.51	18A	K	549.10	543.10 15"	16+75 GB(N) 35'L	N.B. GILBERT AVE.	541.27
						548.19 15"		18B	D	546.50	546.50 12"	17+00 GB(N) 54'L	N.B. GILBERT AVE.	545.85
24	A	44	84	N.B. GILBERT AVE.	20+00 GB(N) 62'R	555.71 12"	562.11	19A	K	545.40	540.01 15"	17+64 GB(N) 44'R	N.B. GILBERT AVE.	538.79
25	A	44	84	N.B. GILBERT AVE.	20+85 GB(N) 7.5'R	553.21 12"	565.16	19B	Stub	—	546.01 12"	17+66 GB(N) 47'R	N.B. GILBERT AVE.	545.65
						552.96 15"		19C	Struct.	—	547.00 12"	17+44 GD 23'R	RAMP GD	541.22
26	A	45	84	N.B. GILBERT AVE.	23+92 GB(N) 7.5'R	569.53 12"	581.43	19D	K	547.81	543.31 12"	157+43 GD 4'R	RAMP GD	541.22
27	A or P	46	84	N.B. GILBERT AVE.	26+01 GB(N) 3'L	575.56 12"	593.04	19E	Struct.	—	547.00 12"	157+31 GD 15'R	RAMP GD	546.77
28	Drop (A or P)	46	84	RAMP GA	168+25 GA 17'R	575.98 12"	594.06	20A	Struct.	558.54	547.96 12"	158+51 GD 30'R	RAMP GD	547.96
						584.66 12"		20B	Struct.	—	548.69 12"	159+46 54'L	N.B. EXPRESSWAY	551.54
29	A or P	46	84	RAMP GA	169+49 GA 21'R	589.62 12"	598.88	21A	Struct.	—	553.00 12"	159+96 49'L	RAMP GD	551.67
30	Exist.	44	85	S.B. GILBERT AVE.	20+53 GB(S) 42'L	544.07 Ex 65.5	555.97	21B	Struct.	—	553.00 12"	159+81 GD 19'R	RAMP GD	551.67
31	A or P	44	85	S.B. GILBERT AVE.	20+52.66(S) 122'L	544.50 12"	551.50	22A	K	549.37	544.00 12"	159+33 GD 50'R	RAMP GD	548.87
						544.25 15"		22B	K	555.37	549.37 15"	18+83 GB(N) 35'R	N.B. GILBERT AVE.	546.59
32	D	44	85	N.B. GILBERT AVE.	19+32 GB(N) 80'R	526.5 ± Ex.48"S.	556.85	22C	D	550.55	547.39 12"	18+75 GB(N) 68'R	N.B. GILBERT AVE.	548.30
						527.56 36"								
33	A or P	44	85	RAMP GD	160+54 GD 60'L	545.99 36"	560.41			—				
34	A (5'Dia)	44	85,86	RAMP GD	161+62 GD 29'R	550.64 24"	563.80			—				
						554.85 24"								
35	Drop (A or P)	75	86	VAN METER ST.	10+58 SE 17'R	589.00 24"	599.31	23A	A-2	581.24	578.24 12"	23+91 GB(S) 2'L	S.B. GILBERT AVE.	574.43
						584.63 18"		23B	Stub	—	579.80 12"	23+99 GB(N) 1'L	N.B. GILBERT AVE.	577.43
						590.00 12"		24C	K	580.71	574.21 12"	23+92 GB(N) 39'R	N.B. GILBERT AVE.	574.43
						583.80 24"		24D	Stub	—	577.70 12"	23+92 GB(N) 39'R	N.B. GILBERT AVE.	576.21
36	Drop (A or P)	75	86	VAN METER ST.	10+34 SE 61'R	598.86 24"	608.5	27A	A-2	592.70	589.70 12"	24+08 GB(S) 2'L	S.B. GILBERT AVE.	586.04
						601.51 Ex.24"		27B	A-2	591.66	588.66 12"	24+04 GB(S) 39'R	N.B. GILBERT AVE.	586.04
37	A or P	44,75	86	VAN METER ST.	10+23 SE 17'R	585.10 Ex.15"	598.39	28A	A-2	592.75	589.75 12"	16+11 GA 14'R	RAMP GA	587.06
						584.85 18"		28B	D	580.25	578.00 12"	16+13 GA 58'	RAMP GA	576.56
38	Exist	44,75		VAN METER ST.	9+58 SE 21'R	585.99 Ex. 15"	597.99	29A	A	597.60	593.10 12"	16+55 GA 41'	RAMP GA	591.88
39	A or P	44	85	RAMP GD	161+83 GD 5'R	555.65 24"	566.40	31A	D	—	— 12"	21+21 GB(S) 105'L	S.B. GILBERT AVE.	546.70
40	A or P	44	85	RAMP GD	162+69 GD 5'R	557.83 24"	571.17	31B	Struct	—	— 12"	20+47 GB(S) 80'L	S.B. GILBERT AVE.	550.30
41	A or P	45	85,87	RAMP GD	163+50 GD 5'R	559.74 24"	575.62	32A	Struct	—	553.62 12"	19+32 GB(N) 80'R	N.B. GILBERT AVE.	549.50
						566.49 12"		32B	Stub	—	549.62 12"	19+24 GB(N) 79'R	N.B. GILBERT AVE.	544.50
42	A	45	85	RAMP GD	163+35 GD 39'L	568.95 12"	571.45	33A	Struct	—	544.62 12"	16+54 GD 60'L	RAMP GD	542.31
						563.47 12"		34A	D	592.40	554.00 12"	16+20 GD 42'R	RAMP GD	543.91
					163+62 GD 28'L	567.80 12"	574.18							

SEWER TABULATIONS

SEWER TABULATIONS

MANHOLE No.	TYPE	PLAN SH. No.	PROFILE SH. No.	EXPRESSWAY OR RAMP	STATION	FLOW LINE ELEVATION	RIM ELEV.	CATCH BASIN	TYPE	EXPRESSWAY OR RAMP	STATION	FLOW LINE ELEVATION	GRATING ELEVATION	FLOW LINE ELEVATION AT M.H. C.B. OR SEWER
43	A	45	85	NEWPORT CONNECTOR	163+91 NPN 44'R	567.02 12"	574.94	43A*	Struct	NEWPORT CONNECTOR	164+46 NPN 17'R	581.00 12"	—	567.88
								43B*	Struct	NEWPORT CONNECTOR	163+98 NPN 45'R	573.00 12"	—	568.88
44	AorP	45	87	RAMP GD	165+77 GD 30'L	564.26 24"	583.08	44A	A-2	RAMP GD	165+88 GD 26'L	579.69 12"	582.69	576.08
						572.84 12"		44B	K	RAMP GD	165+75 GD 10'R	578.24 15"	582.74	575.83
								44C	Struct.	RAMP GD	165+75 GD 11'R	580.75 12"	—	578.24
45	AorP	45	87	NEWPORT CONNECTOR	166+38 NPN 35'R	576.68 12"	585.66	45A	A	NEWPORT CONNECTOR	166+29 NPN 7'R	582.43 12"	585.43	578.66
46	AorP	45	87	N.B. EXPRESSWAY	166+40 55'R	577.66 12"	584.64	46A	K	N.B. EXPRESSWAY	166+30 3'R	579.80 12"	584.47	577.66
								46B	A	S.B. EXPRESSWAY	166+30 3'L	581.47 12"	584.47	579.80
								46C	K	S.B. EXPRESSWAY	166+40 54'L	578.38 12"	582.88	577.66
								46D	Stub	S.B. EXPRESSWAY	166+32. 56L	578.93 12"	—	578.38
47	AorP	46	87	RAMP GD	168+60 GD 24'L	568.48 24"	584.53	47A	C	NEWPORT CONNECTOR	168+50 NPN 10'R	581.20 12"	584.20	577.53
						568.73 21"		47B	A	RAMP GD	168+69 GD 19'L	581.52 12"	584.52	577.53
								47C	A	RAMP GD	168+62 GD 10'R	581.47 12"	584.47	574.53
48	AorP	46	87	N.B. EXPRESSWAY	168+62 NB 5.5'R	569.81 21"	583.73	48A	C	N.B. EXPRESSWAY	168+50 NB 3'R	578.49 15"	583.49	576.73
								48B	A	N.B. EXPRESSWAY	167+89 NB 3'R	580.67 12"	583.67	578.49
								48C	K	S. B. EXPRESSWAY	168+62 SB 3'L	574.68 16"	583.30	573.73
								48D	A-2	S.B. EXPRESSWAY	168+62 SB 55'L	575.70 12"	581.77	574.68
								48E	A	N.B. EXPRESSWAY	169+10 NB 3'R	579.00 12"	583.66	576.73
49	AorP	46	87	N.B. EXPRESSWAY	169+95 NB 5.5'R	571.94 21"	584.32	49A	K	S.B. EXPRESSWAY	169+95 S.B. 54'L	575.10 15"	581.11	572.44
								49B	Struct	S.B. EXPRESSWAY	170+04 S. B. 58'L	579.30 12"	—	575.10
50	AorP	47	87	N.B. EXPRESSWAY	170+83 NB 4'L	572.83 21"	584.17	50A	C	S.B. EXPRESSWAY	170+97 SB. 3'L	579.34 12"	582.34	577.17
						573.33 15"		50B	C	N.B. EXPRESSWAY	170+93 N.B. 3'R	580.10 12"	584.75	577.17
51	AorP	47	87	S.B. EXPRESSWAY	171+105 B. 5.5L	574.14 15"	582.56	51A	C	S.B. EXPRESSWAY	170+97 SB. 54'L	577.81 15"	580.81	576.81
								51B*	Struct.	S.B. EXPRESSWAY	170+96 S.B. 56'L	579.50 12"	—	577.81
								51C*	Struct.	S.B. EXPRESSWAY	170+98 SB. 56'L	579.50 12"	—	577.81
52	AorP	47	87	RAMP GD	170+98 GD 5'R	579.10 15"	586.15	52A	K	RAMP GD	171+43 GD 10'R	581.71 15"	586.21	579.10
								52B	CB No.5	RAMP GD	171+68 GD 25'R	582.15 15"	584.16	581.71
								52C	Struct.	RAMP GD	171+89 GD 28'R	584.50 12"	—	582.15
								52D	Struct	RAMP GD	170+77.5 GD 13'R	583.25 12"	—	579.35
53	AorP	47	87	S.B. EXPRESSWAY	171+82 SB. 5.5'L	574.79 15"	582.78	53A*	Struct.	S.B. EXPRESSWAY	171+82 SB 3'R	578.50 12"	—	575.04
54	AorP	75	86	VAN METER ST.	13+22 SE 20'R	607.42 12"	616.69	54A	A-2	VAN METER ST.	13+22 SE (E)	613.25 12"	616.25	609.69
								54B	K	VAN METER ST	13+22 SE 30'R	611.75 12"	616.25	609.69
								54C	D	VAN METER ST.	13+22 SE 43'R	613.38 12	615.88	611.75
55	AorP	46,76	86	VAN METER ST.	15+50 SE 20'R	624.98 12"	634.21	55A	A	VAN METER ST.	15+50 SE (E)	630.77 12"	633.77	627.21
								55B	A-2	VAN METER ST.	15+50 SE 30'R	630.77 12"	633.77	627.21
56	AorP	46,76	86	VAN METER ST.	17+50 SE 20'R	640.07 12"	649.86	56A	A	VAN METER ST.	17+50 SE (E)	640.42 12"	649.42	642.50
								56B	A-2	VAN METER ST.	17+50 SE 30'R	640.42 12"	649.42	642.50
57	AorP	44	84	N.B. EXPRESSWAY	161+91 81.5L	574.75. 12"	581.75	57A	K	N.B. EXPRESSWAY	162+03 54'L	577.93 12"	582.43	574.75
								57B	A	N.B. EXPRESSWAY	162+75 3'R	579.80 12"	584.77	577.93
								57C	Stub	N.B. EXPRESSWAY	161+84 82.5'L	576.20 12"	—	574.75
						592.00 12"								
58	Special Drop.	48	88	R.R. DRIVEWAY	1+27 12.5'R	539.17 60"	603.57							
						563.01 36"								
59	AorP	48	88,93	R.R. DRIVEWAY	1+16 12.5L	563.95 36"	603.76							
						568.63 24"								
60	Junction Chamber No. 1	48	88,90	RAMP RB	174+51 RB 4.9'L	571.80 36"								
						572.75 (E) 30"								
						572.75 (N) 30"								
61	DROP (AorP)	48	88	N.B. GILBERT AVE.	33+21 48'L	578.73 30"	617.70	61A	K	N.B. GILBERT AVE.	32+72 35'L	610.55 15"	616.20	609.50
						596.78 27"		61B	A	N.B. GILBERT AVE.	31+91 2'R	612.31 12"	615.64	610.80
						602.00 6"		61C	Struct.	N.B. EXPRESSWAY	174+85 NB 72'R	588.50 12"	—	588.00
62	AorP	48,77	88,89	N.B. GILBERT AVE.	33+80 18'R	603.82 27"	619.89	62A	A-2	N.B. GILBERT AVE.	33+60 40'R	617.14 12"	620.14	612.80
						604.07 24"		62B	K	ELSINORE PLACE	15+97 44'L	614.24 15"	618.74	612.55
						604.32 21"		62C	V	N.B. GILBERT AVE.	34+65 98L	615.03 12"	618.03	614.24
63	AorP	48,77	89	VAN METER ST.	24+26 5'R	609.46 24"	624.51	63A	Struct.	VAN METER ST.	24+67 SE(E) 13'R	611.30 12"	—	610.40
						609.96 18"								
						617.57 12"								
64	A	48,77	89	VAN METER ST.	23+60 5'R	617.73 18"	629.90	64A	Struct.	VAN METER ST.	23+77 SE(E) 5'R	627.08 12"	—	622.94
								64B	A-2	VAN METER ST.	23+30 23'R	629.09 12"	632.09	622.94
								64C	A-2	VAN METER ST.	23+60 23'L	626.14 12"	629.14	622.94
65	AorP	47,77	89	VAN METER ST.	21+65 5'R	638.79 18"	648.50	65A	A-2	VAN METER ST.	21+65 15'L	644.73 12"	647.73	641.55
66	B	77	89	MUSEUM DR.	0+64 47'R	629.77 12"	635.50							
67	A	77	89	VAN METER ST.	20+40 SE(E) 12'L	631.70 12"	660.73	67A	A-2	VAN METER ST.	20+27.5 SE(E)	657.58 12"	660.58	653.73
						652.18 Ex. 12" S		67B	A-2	VAN METER ST.	20+27.5 SE(E) 30'L	657.39 12"	660.39	653.73
						652.01 Ex. 12" E		67C	Struct.	VAN METER ST.	20+63 SE(E) 2'R	655.50 12"	—	653.73
						651.69 18"								
68	AorP	48	90	RAMP RB	174+76 RB 2.5'R	573.20 30"	586.87	68A*	Struct.	S.B. EXPRESSWAY	175+03 S.B. 22'R	585.50 12"	—	579.87
						579.87 12"								
						577.37 12"								
69	AorP	48	90	N.B. EXPRESSWAY	174+20 NB. 2'L	583.63 12"	590.64	69A	A-2	N.B. EXPRESSWAY	174+08 NB. 2'R	586.81 12"	589.81	583.63
								69B	A-2	RAMP GD	174+20 GD 10'R	584.4 12"	589.97	583.63
70	AorP	48	90	RAMP GA	174+73 GA 17.5R	579.34 12"	589.90	70A	C	RAMP GA	174+90 GA 7'L	585.36 12"	588.36	580.70
						582.90		70B*	Struct.	RAMP GA	174+90 GA 7'L	586.30 12"	—	585.36
								70C*	Struct.	RAMP GA	174+81 GA 22'R	587.60 12"	—	582.90
71	AorP		90	RAMP GA	174+00 GA 17.5R	583.96 12"	590.96	71A	A-2	RAMP GA	173+98 GA 7'L	586.29 12"	589.29	583.96
72	AorP	48	90	RAMP RB	176+00 RB 25'R	579.84 15"	590.02	72A	A-2	RAMP RB	176+12 S.B. 5'R	585.50 12"	589.83	583.02
						575.56 27"		72B	CB No.5	S.B. EXPRESSWAY	176+00 SB 20'R	585.50 12"	588.66	583.02
						575.31 30"		72C*	Struct.	S.B. EXPRESSWAY	175+60 S.B. 23'R	585.69 12"	—	580.09
73	AorP	48	90	S.B. EXPRESSWAY	176+16 S.B. 49'L	580.39 15"	590.01	73A	A-2	S.B. EXPRESSWAY	176+04 S.B. 54'L	586.25 12"	589.25	583.01
						580.64 12"		73B*	Struct.	S.B. EXPRESSWAY	176+21 SB. 54'L	589.00 12"	—	583.01
74	AorP	48	90	RAMP RB	177+00 RB 25'R	578.56 27"	593.07	74A	K	N.B. EXPRESSWAY	177+04 N.B. 9'L	590.70 12"	595.46	586.07
								74B	A-2	N.B. EXPRESSWAY	177+12 N.B. 66'R	592.27 12"	595.60	590.70
								74C*	Struct.	N.B. EXPRESSWAY	177+23 N.B. 18'L	593.50 12"	—	590.70
								74D	Struct.	N.B. EXPRESSWAY	177+12 N.B. 66'R	593.94 12"	—	593.60
75	AorP	49	90	RAMP RB	178+56 RB 25'R	589.53 15"	599.28	75A	STUB	S.B. EXPRESSWAY	178+56 S.B. 3.5'L	589.62 15"	—	589.53
						585.05 24"		75B	STUB	S.B. EXPRESSWAY	178+62 SB. 25'R	585.34 24"	—	585.05
						584.80 27"		75C	STUB	RAMP RB	178+62 RB. 35'R	593.14 12"	—	592.28
						589.53 15"								
76	AorP	49	90	N.B. EXPRESSWAY	179+11 NB. 25'L	591.05 15"	598.8	76A	STUB	N.B. EXPRESSWAY	179+15 N.B. 28'L	593.43 12"	—	591.8
								76B	STUB	N.B. EXPRESSWAY	179+15 N.B. 23'L	592.94 12"	—	591.8
								76C	A-2	N.B. EXPRESSWAY	178+77 N.B. 65'R	596.34 15"	599.34	591.05
								76D	Struct.	N.B. EXPRESSWAY	178+77 NB. 67'R	597.34 15"	—	596.34
								76E	D	PENN. R.R.	202+08 105'R	615.58 12"	618.08	613.58
								76F	STUB	N.B. EXPRESSWAY	179+08 N.B. 24'L	12"	—	
77	AorP**	51	91	N.B. EXPRESSWAY	199+90 NB 16L	665.25 27"	675.50	76G	D	PENN R.R	202+19 105'L	615.91 12"	618.41	615.08
78	AorP	51	91	N.B. EXPRESSWAY	201+21 N.B. 9'L	678.35 27"	693.55	78A	K	S.B. EXPRESSWAY	201+54 S.B. 83'L	689.60 15"	695.73	686.55
								78B	CB No.5	S.B. EXPRESSWAY	201+56 S.B. 96'L	691.98 15"	694.45	689.60
								78C	A	S.B. EXPRESSWAY	201+66 S.B. 3'L	694.10 12"	698.61	693.55
								78D	CB No.5	N.B. EXPRESSWAY	201+33 N.B. 10'L	689.55 12"	692.55	686.55
								78E	K	N.B. EXPRESSWAY	201+21 N.B. 3'R	688.82 15"	693.32	683.55
								78F	A-2	N.B. EXPRESSWAY	201+20 N.B. 83'R	691.65 12"	694.65	688.82

** CHANNEL & BENCHES VITRIFIED BRICK

HAMILTON COUNTY
HAM-71-(15.25)25R

FED. RD. DIV.	STATE	PROJECT	FISCAL YEAR
2	OHIO		

96
492

MANHOLE No.	TYPE	PLAN SH. No.	PROFILE SH. No.	EXPRESSWAY OR RAMP	STATION	FLOW LINE ELEVATION	RIM ELEV.	CATCH BASIN	TYPE	EXPRESSWAY OR RAMP	STATION	FLOW LINE ELEVATION	GRATING ELEVATION	FLOW LINE ELEVATION AT M.H. C.B OR SEWER
79	AorP	52	91	N.B. EXPRESSWAY	203+25 N.B. 6'L	688.50 27"	701.65	79A	A-2	S.B. EXPRESSWAY	203+55 S.B. 83'L	696.10 12"	702.13	691.65
								79B	A	S.B. EXPRESSWAY	203+67 S.B. 3'L	700.80 12"	705.73	694.65
								79C	K	N.B. EXPRESSWAY	203+25 N.B. 3'R	697.73 15"	702.18	694.40
								79D	A-2	N.B. EXPRESSWAY	203+25 N.B. 83'R	702.56 12"	705.56	697.73
80	AorP	52	91	N.B. EXPRESSWAY	205+52 N.B. 4'L	698.48 27"	712.13	80A	A-2	S.B. EXPRESSWAY	205+84 S.B. 71'L	707.14 12"	710.69	702.38
						698.73 24"		80B	A	S.B. EXPRESSWAY	205+95 S.B. 3'L	709.10 12"	713.71	705.13
								80C	K	N.B. EXPRESSWAY	205+52 N.B. 3'R	707.50 15"	712.00	705.13
								80D	A-2	N.B. EXPRESSWAY	205+52 N.B. 83'R	712.20 12"	715.20	707.50
81	AorP	53	91	N.B. EXPRESSWAY	207+96 N.B. 8'R	712.64 24"	723.09	81A	A-2	S.B. EXPRESSWAY	208+35 S.B. 71'L	717.97 15"	720.97	713.09
								81B	Struct.	S.B. EXPRESSWAY	208+35 S.B. 75'L	718.25 12"	—	717.97
								81C	A	S.B. EXPRESSWAY	208+38 S.B. 3'L	720.35 12"	723.35	718.61
								81D	K	N.B. EXPRESSWAY	208+06 N.B. 3'R	718.61 15"	723.11	716.04
								81E	A-2	N.B. EXPRESSWAY	208+06 N.B. 83'R	719.1 12"	723.19	716.04
82	AorP	54,78	91,92	N.B. EXPRESSWAY	210+71 N.B. 8'R	724.74 24"	735.02	82A	A-2	S.B. EXPRESSWAY	211+08 S.B. 71'L	730.87 15"	733.87	725.49
								82B	Struct.	S.B. EXPRESSWAY	211+08 S.B. 72'L	731.07 12"	—	730.87
								82C	A	S.B. EXPRESSWAY	211+14 S.B. 3'L	732.11 12"	735.11	730.57
								82D*	Struct.	N.B. EXPRESSWAY	210+98 N.B. 2'R	734.00 12"	—	730.57
								82E	K	N.B. EXPRESSWAY	210+81 N.B. 3'R	730.57 15"	735.07	728.02
								82F*	Struct.	N.B. EXPRESSWAY	210+97 N.B. 97'R	732.61 12"	—	729.60
								82G	K	N.B. EXPRESSWAY	210+81 N.B. 83'R	729.60 15"	735.80	725.49
								82H	Stub	N.B. EXPRESSWAY	213+04 N.B. 8'R	734.53 24"	—	724.74
								82I*	Struct	S.B. EXPRESSWAY	211+28 S.B. 97'L	751.40 12"		739.35
83	AorP	52	92	MARQUIS ST.	204+11 N.B. 162'R	688.0± Ex. 24"(S)	697.50	83A	D	N.B. EXPRESSWAY	204+11 N.B. 95'R	702.60 12"	707.57	690.50
						688.05 24"								
						690.8± Ex. 24"N.								
84	AorP	52	92	MARQUIS ST.	204+58 N.B. 154'R	695.11 24"	714.90							
						705.2± 24" Ex.								
85	DROP (A or P)	52	92	SYMMES ST.	205+80 S.B. 89'L	701.94 24"	732.60	85A	Struct.	SYMMES ST.	205+63 76'L	728.20 12"	—	725.60
						719.06 18"								
86	Exist.	52	92	SYMMES ST.	205+87 S.B. 111'L	721.5± 18"	732.62	86A	C	SYMMES ST.	205+76 S.B. 118'L	729.03 12"	732.03	725.62
						721.46 18" Ex.								
87	Exist.	54,78		McGREGOR AVE.	9+85 3'L	753.1± 18" Ex.	764.65	87A	Exist.	McGREGOR AVE.	9+71 32'L	Exist 12"	765.29	Exist.
								87B	A-2	McGREGOR AVE.	10+00 47'L	762.96 12"	765.96	757.65
88	DROP(A)		89	VAN METER ST.	20+40 SE(E) 12'R	653.35 12"	671.00							
89	A	78	92	McGREGOR AVE.	13+73 5'L	772.24 12"	777.47	89A	A-2	McGREGOR AVE.	13+69 18'R	773.31 12"	776.31	772.24
90	Exist.	79	92	McGREGOR AVE.	15+23 1'L	770.2± 18" Ex.	782.34	90A	K	McGREGOR AVE.	15+60 18'R	779.97 15"	782.97	775.34
						770.2± 15" Ex.		90B	V	McGREGOR AVE.	15+60 27'R	780.50 12"	782.40	779.97
						770.74 12"								
91	Exist.	79		McGREGOR AVE	15+10 17'L	12" Ex.	782.57	91A	A-2	McGREGOR AVE.	15+09 37'L	780.18 12"	783.18	EXIST. 12"
92	Exist.	79		McGREGOR AVE	15+38 15'L	12" Ex.	783.37	92A	A-2	McGREGOR AVE.	15+39 63'L	781.42 12"	784.42	EXIST 12"
								92B	A	McGREGOR AVE.	15+80 18'L	782.54 12"	785.54	EXIST 12"
93	Exist	79		McGREGOR AVE.	20+59 1'L	803.1± 12" Ex.	813.1±	93A	A-2	McGREGOR AVE	20+48 53'L	812.52 12"	815.80	806.15
94	A	79	92	McGREGOR AVE.	19+33 ℄	798.81 12"	808.11	94A	A-2	McGREGOR AVE.	19+21 33'L	806.00 12"	809.00	801.11
								94B	A-2	McGREGOR AVE.	19+35 33'L	806.06 12"	809.01	798.81
								94C	D	McGREGOR AVE	19+48 30'L	803.91 12"	808.14	801.11
								94D	A-2	McGREGOR AVE	19+48 18'R	804.68 12"	807.68	798.81
								95E	V	McGREGOR AVE	18+28 27'R	802.00 12"	803.84	801.84
95	Exist.	79	92	McGREGOR AVE.	17+95 ℄	790.3± 18" Ex.	806.77	95A	A-2	McGREGOR AVE.	17+82 33'L	805.55 12"	808.55	Exist. 12"
						796.05 12"		95B	K	McGREGOR AVE.	18+06 32'L	804.12 15"	808.62	799.77
						790.5± 15" Ex.		95C	D	McGREGOR AVE.	18+25 30'R	804.91 12"	807.10	804.50
								95D	K	McGREGOR AVE.	18+28 18'R	801.84 15"	805.94	799.77
96	AorP	48	90	RAMP GA	175+94 GA 175'R	583.14 12"	590.13	96A	A-2	RAMP GA	176+28 GA 7'L	586.75 12"	589.83	583.13
								96B	Struct.	RAMP GA	176+28 GA 87'L	587.50 12"	—	586.75
97	DROP (A)	48,77	88	N.B. GILBERT AVE.	35+15 18'R	609.51 24"	621.94	96C*	Struct.	RAMP GA	175+96 GA 9'L	587.50 12"	—	583.13
98	A	48	90	RAMP GA	175+31 GA 16.5'R	584.21 12"	589.66	97A	A-2	N.B. GILBERT AVE.	34+90 35'R	618.19 12"	621.19	614.94
								98A*	Struct.	RAMP GA	175+28 GA 65'L	586.80 12"	—	584.21
99	AorP	48	93	R.R. DRIVEWAY	0+46 5'L	575.98 36"	607.47	98B*	Struct.	RAMP GA	175+31 GA 20'R	587.00 12"	—	586.90
						575.98 24"								
100	AorP	48	93	ELSINORE PLACE	12+58 6'R	584.80 Ex. & Prop 36	607.35							
101	AorP	47	87	RAMP RB	172+32 RB 25'R	575.25 15"	583.12	101A	K	RAMP RB	172+32 RB 46'L	576.87 15"	581.35	575.25
								101B	CB No.5	S.B. EXPRESSWAY	172+33 S.B. 68'L	577.75 12"	579.75	576.87
								101C	A-2	RAMP RB	172+62 RB 5'R	578.00 12"	583.18	575.25
								101D	Struct.	S.B. EXPRESSWAY	172+39 S.B. 15'R	578.75 12"	—	576.12
102	B	77	89	MUSEUM DR.	0+77 47'R	633.00 12"	635.50							
						633.2± Ex. 12"								
103	AorP	47	88	RAILROAD DR.	2+27 12.5'R	592.99	601.13	103A	D	RAILROAD DR.	2+80 41'R	594.00 12"	596.50	592.99

* Stationing as shown is approximate only for the exact location of the junction point between the pipe sewer and the lower limit of the downspout (Item S-29) refer to the drainage details of the pertinent bridge plans.

SEWER TABULATIONS

HAMILTON COUNTY
HAM-71-18.60 (2.50)

FED. RD. DIV.	STATE	PROJECT	FISCAL YEAR
2	OHIO		

97
432

FED. RD. DIV.	STATE	PROJECT	FISCAL YEAR
2	OHIO		

98
492

HAMILTON COUNTY
FAM-TI-(L56)(2.51)

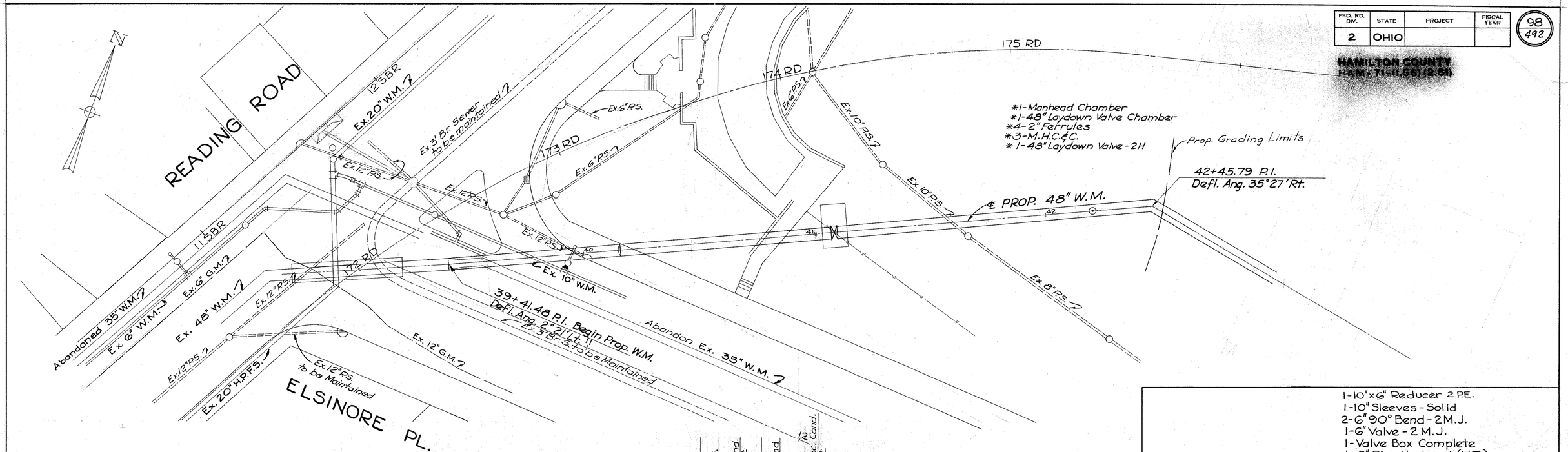

1-Plug Ex. 6" Tee-Cl. 3
1-6" Plug
1-6" Plug Clamp
1-Remove Ex. M.H.C.&C.-Cl. 3
1-Remove Ex. F.H.-Cl. 6

NOTE: Contact Project Engineer Before Rebuilding Inlet Connection At Sta. 40+00±. Do Not Rebuild If No Longer Required.

Contractor Must Contact Mr. Holtmeier Cincinnati Transit Co. for Information Regarding Removal of Pole At Sta. 40+00±.

* CITY COST

1-10"x6" Reducer 2 P.E.
1-10" Sleeves-Solid
2-6" 90° Bend-2 M.J.
1-6" Valve-2 M.J.
1-Valve Box Complete
1-6" Fire Hydrant (Y.T.)

PROP. 36" W.M. (NORTH)

(For Plan See Sheet No. 2 of 14)

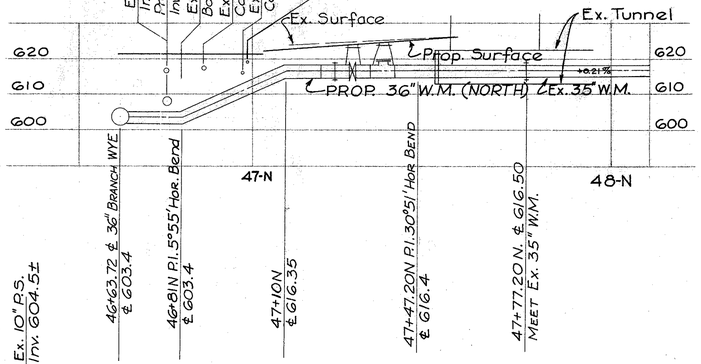

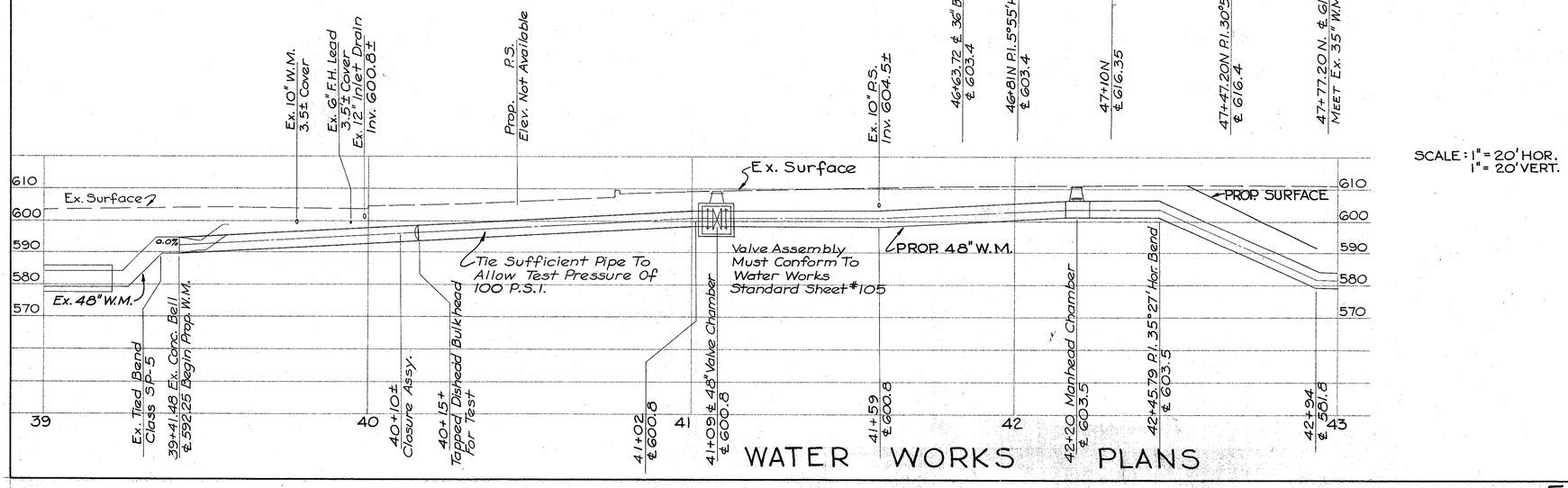

SCALE: 1" = 20' HOR.
1" = 20' VERT.

WATER WORKS PLANS

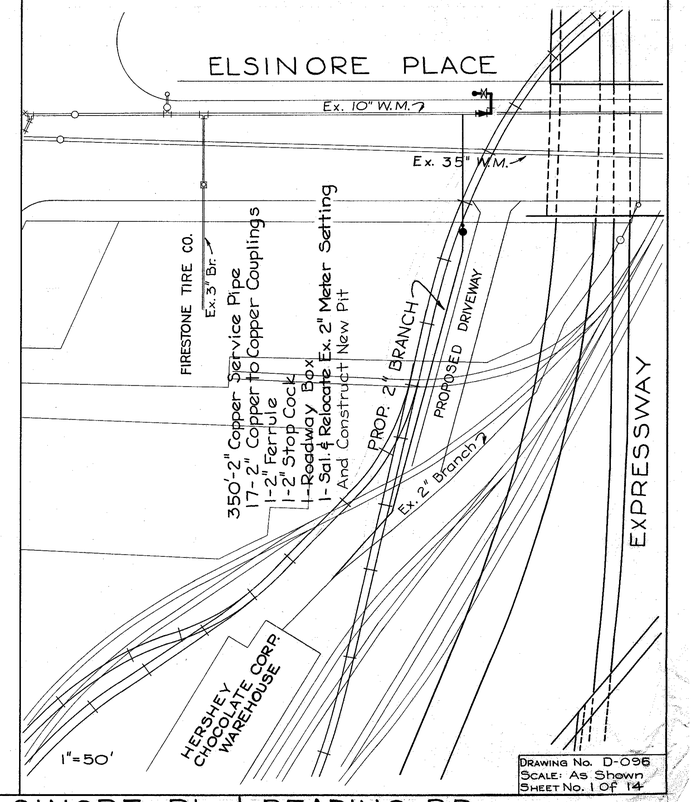

DRAWING No. D-096
SCALE: As Shown
SHEET No. 1 OF 14

ELSINORE PL. & READING RD.

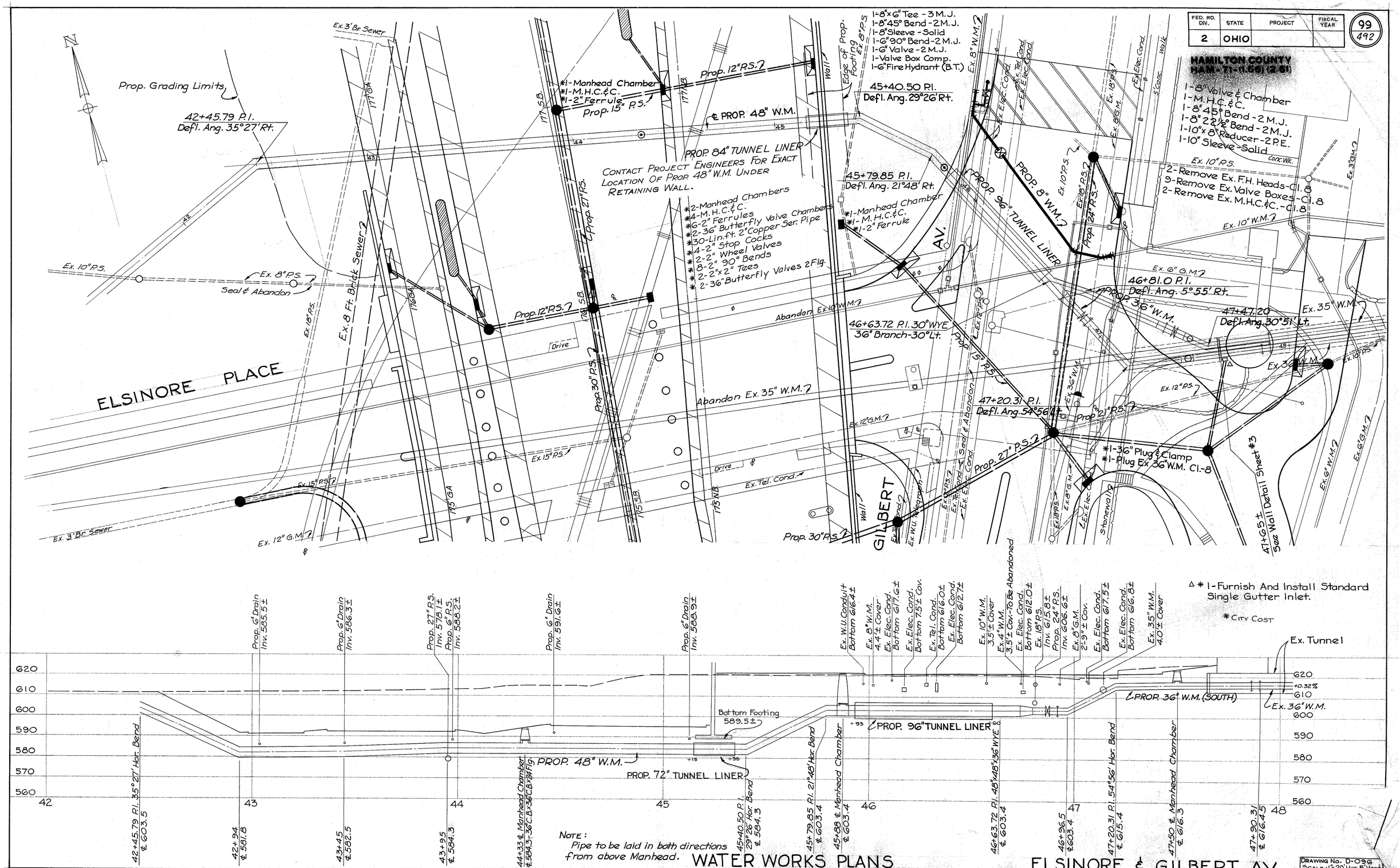

FED. RD. DIV. 2
STATE OHIO
PROJECT
FISCAL YEAR
99
492
HAMILTON COUNTY
HAM-71-(1.56)(2.51)
1-8"x6" Tee - 3 M.J.
1-8"45° Bend - 2 M.J.
1-8" Sleeve - Solid
1-6"90° Bend - 2 M.J.
1-6" Valve - 2 M.J.
1-Valve Box Comp.
1-6" Fire Hydrant (B.T.)
1-8" Valve & Chamber
1-M.H.C.&C.
1-8"45° Bend - 2 M.J.
1-8"22½° Bend - 2 M.J.
1-10"x8" Reducer - 2 P.E.
1-10" Sleeve - Solid
2-Remove Ex. F.H. Heads - Cl. 8
9-Remove Ex. Valve Boxes - Cl. 8
2-Remove Ex. M.H.C.&C. - Cl. 8
Prop. Grading Limits
42+45.79 P.I.
Defl. Ang. 35°27' Rt.
*1-Manhead Chamber
*1-M.H.C.&C.
*1-2" Ferrule
Prop. 15" P.S.
Prop. 12" P.S.
℄ PROP. 48" W.M.
PROP. 84" TUNNEL LINER
CONTACT PROJECT ENGINEERS FOR EXACT LOCATION OF PROP. 48" W.M. UNDER RETAINING WALL.
45+40.50 P.I.
Defl. Ang. 29°26' Rt.
45+79.85 P.I.
Defl. Ang. 21°48' Rt.
*2-Manhead Chambers
*4-M.H.C.&C.
*6-2" Ferrules
*2-36" Butterfly Valve Chambers
*30-Lin.ft. 2" Copper Ser. Pipe
*4-2" Stop Cocks
*2-2" Wheel Valves
*8-2" 90° Bends
*2-2"x2" Tees
*2-36" Butterfly Valves 2 Flg.
*1-Manhead Chamber
*1-M.H.C.&C.
*1-2" Ferrule
PROP. 96" TUNNEL LINER
PROP. 8" W.M.
Prop. 24" P.S.
Prop. 27" P.S.
Prop. 30" P.S.
Prop. 12" P.S.
Ex. 8 Ft. Brick Sewer
Ex. 10" P.S.
Ex. 8" P.S.
Seal & Abandon
Ex. 3' Br. Sewer
Ex. 12" G.M.
Ex. 15" P.S.
Ex. 18" P.S.
Ex. 6" G.M.
46+81.0 P.I.
Defl. Ang. 5°55' Rt.
PROP. 36" W.M.
47+47.20
Defl. Ang. 30°51' Lt.
Ex. 35" W.M.
Ex. 36" W.M.
46+63.72 P.I. 30° WYE
36" Branch - 30° Lt.
Abandon Ex. 10" W.M.
Abandon Ex. 35" W.M.
47+20.31 P.I.
Defl. Ang. 54°56' Lt.
Prop. 21" P.S.
Prop. 27" P.S.
*1-36" Plug & Clamp
*1-Plug Ex. 36" W.M. Cl.-8
47+65± See Wall Detail Sheet #3
ELSINORE PLACE
GILBERT AV.
Drive
Ex. Tel. Cond.
Ex. W.U. Telegraph
Ex. Elec. Cond.
Ex. 8" W.M.
Ex. 10" W.M.
Ex. 12" P.S.
Ex. 6" W.M.
Ex. 3" G.M.
Ex. 8" G.M.
Ex. 18" P.S.
Ex. 10" P.S.
Ex. 12" G.M.
Ex. 15" P.S.
Ex. 3' Br. Sewer
Ex. 12" G.M.
Prop. 30" P.S.
Wall
Edge of Prop. Footing
Ex. 8" P.S.
Conc. Wk.
Stonewall
Δ * 1-Furnish And Install Standard Single Gutter Inlet.
* City Cost
Prop. 6" Drain Inv. 585.5±
Prop. 6" Drain Inv. 586.3±
Prop. 27" P.S. Inv. 578.1±
Prop. 6" P.S. Inv. 588.2±
Prop. 6" Drain Inv. 591.6±
Prop. 6" Drain Inv. 588.9±
Ex. W.U. Conduit Bottom 616.4±
Ex. 8" W.M. 4.4'± Cover
Ex. Elec. Cond. Bottom 617.6±
Ex. Elec. Cond. Bottom 7.5'± Cov.
Ex. Tel. Cond. Bottom 616.0±
Ex. Elec. Cond. Bottom 612.7±
Ex. 10" W.M. 3.5'± Cover
Ex. 4" W.M. 3.5'± Cov.-To Be Abandoned
Ex. Elec. Cond. Bottom 612.0±
Ex. 18" P.S. Inv. 615.8±
Prop. 24" P.S. Inv. 606.6±
Ex. 8" G.M. 2'-9"± Cov.
Ex. Elec. Cond. Bottom 617.5±
Ex. Elec. Cond. Bottom 616.8±
Ex. 35" W.M. 4.0'± Cover
Ex. Tunnel
620
610
600
590
580
570
560
+0.32%
Bottom Footing 589.5±
PROP. 96" TUNNEL LINER
PROP. 36" W.M. (SOUTH)
Ex. 36" W.M.
PROP. 48" W.M.
PROP. 72" TUNNEL LINER
42
43
44
45
46
47
48
42+45.79 P.I. 35°27' Hor. Bend ℄ 603.5
42+94 ℄ 581.8
43+45 ℄ 582.5
43+95 ℄ 584.3
44+33 ℄ Manhead Chamber ℄ 584.3-36" C.B.x36" C.B.x24" Flg.
45+40.50 P.I. 29°26' Hor. Bend ℄ 584.3
45+79.85 P.I. 21°48' Hor. Bend ℄ 603.4
45+88 ℄ Manhead Chamber ℄ 603.4
46+63.72 P.I. 48"x48"x36" WYE ℄ 603.4
46+96.5 ℄ 603.4
47+20.31 P.I. 54°56' Hor. Bend ℄ 615.4
47+50 ℄ Manhead Chamber ℄ 616.3
47+90.31 ℄ 616.45
NOTE: Pipe to be laid in both directions from above Manhead.
WATER WORKS PLANS
ELSINORE & GILBERT AV.
DRAWING No. D-096
SCALE: 1"=20' Hor. 5' Vert.
SHEET No. 2 of 14

FED. RD. DIV.	STATE	PROJECT	FISCAL YEAR
2	OHIO		

100
492

HAMILTON COUNTY
HAM-71-(1.55) (2.51)

NORTH PROFILE

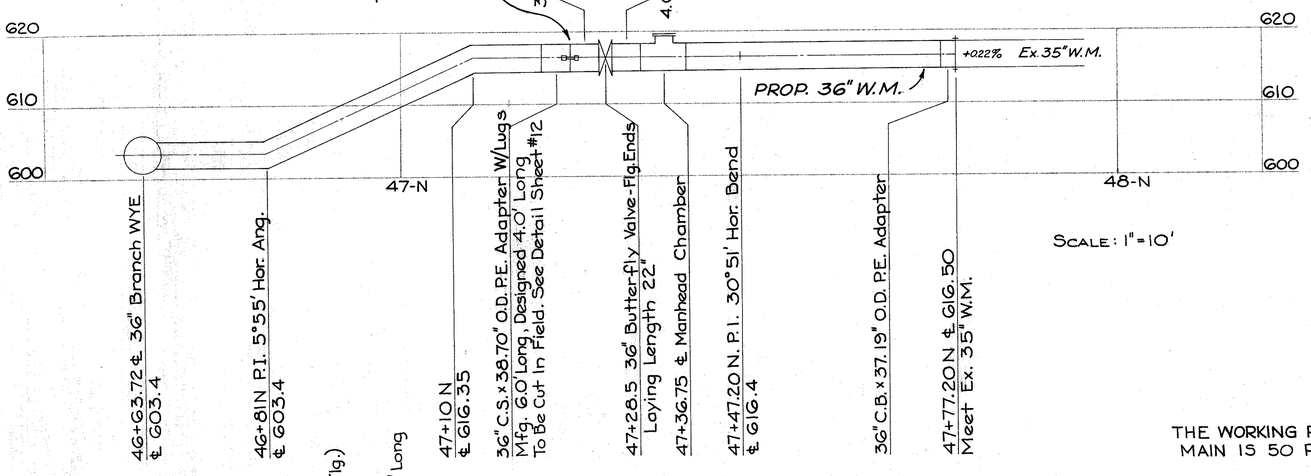

SCALE: 1" = 10'

TIE (WELD) ALL JOINTS, EXCEPT COUPLING JOINTS BETWEEN STA. 46+63.72 ℄ 47+76

TUNNEL WALL DETAIL
47+65 (SOUTH)

NOTES:
1. Forms Shall Not Be Removed For 4 Days.
2. Remove At Least One Course Of Brick To Allow Keying Of New Wall Into Ex. Tunnel Surfaces.
3. Class 'C' Concrete To Be Used.
4. In The Event That The Existing Tunnel Floor Is Not A Suitable Support For The Proposed Wall, The Contractor Will Install A Footing As Per Water Works Design.

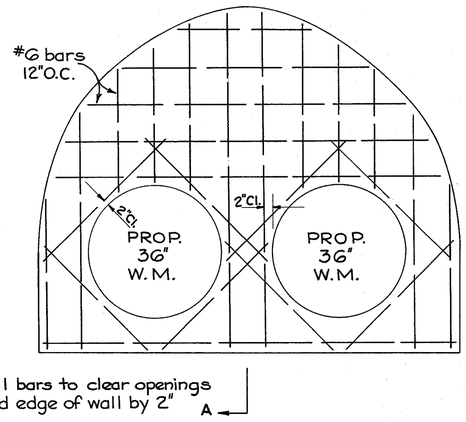

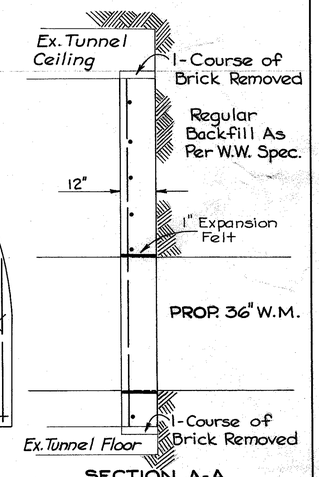

SECTION A-A

SCALE: 1" = 2'

THE WORKING PRESSURE OF THIS 48" ℄ 36" MAIN IS 50 P.S.I.

THE FIELD HYDROSTATIC TEST PRESSURE OF THE 48" ℄ 36" MAIN IS TO BE 100 P.S.I.

SOUTH PROFILE

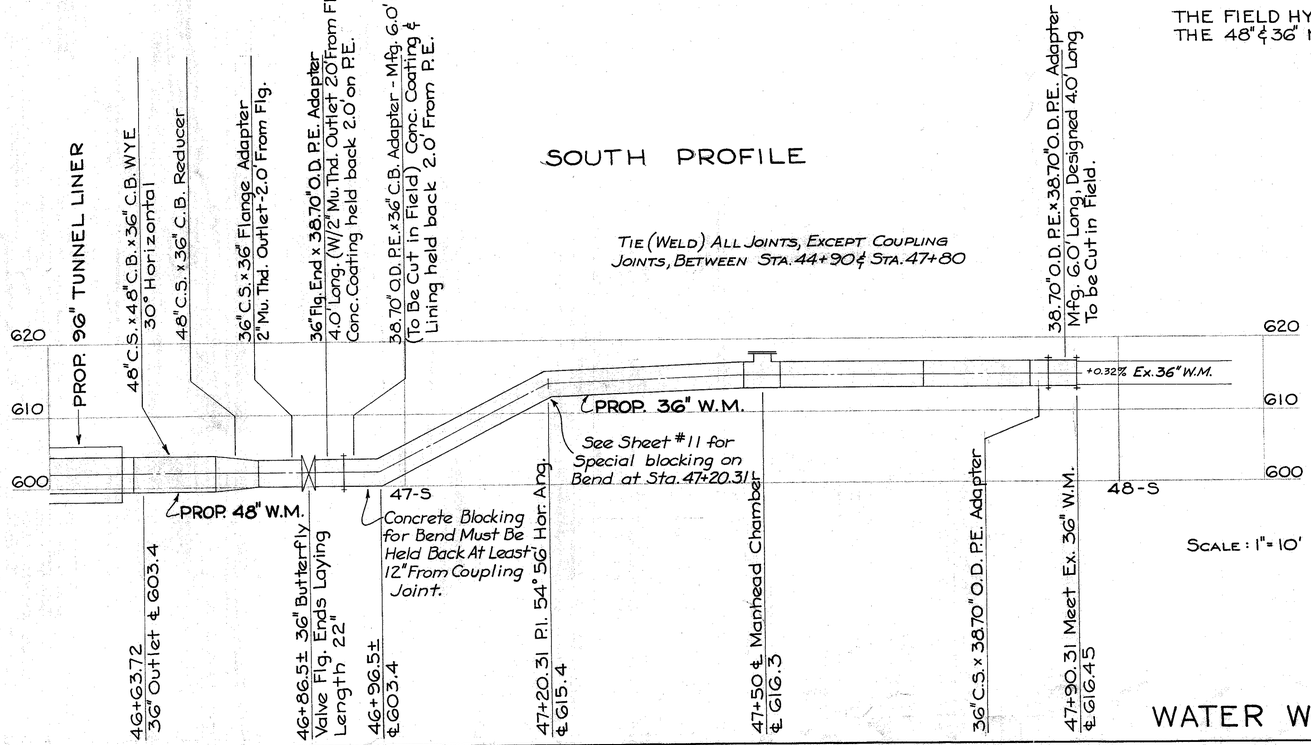

SCALE: 1" = 10'

TIE (WELD) ALL JOINTS, EXCEPT COUPLING JOINTS, BETWEEN STA. 44+90 ℄ STA. 47+80

WATER WORKS PLANS

36" & 48" W.M. PROFILE & CONSTRUCTION NOTES

DRAWING NO. D-096
SCALE: AS SHOWN
SHEET NO. 3 OF 14

FED. RD. DIV.	STATE	PROJECT	FISCAL YEAR
2	OHIO		

101
492

HAMILTON COUNTY
HAM-71-(1.56)(2.61)

Block 201

101-200

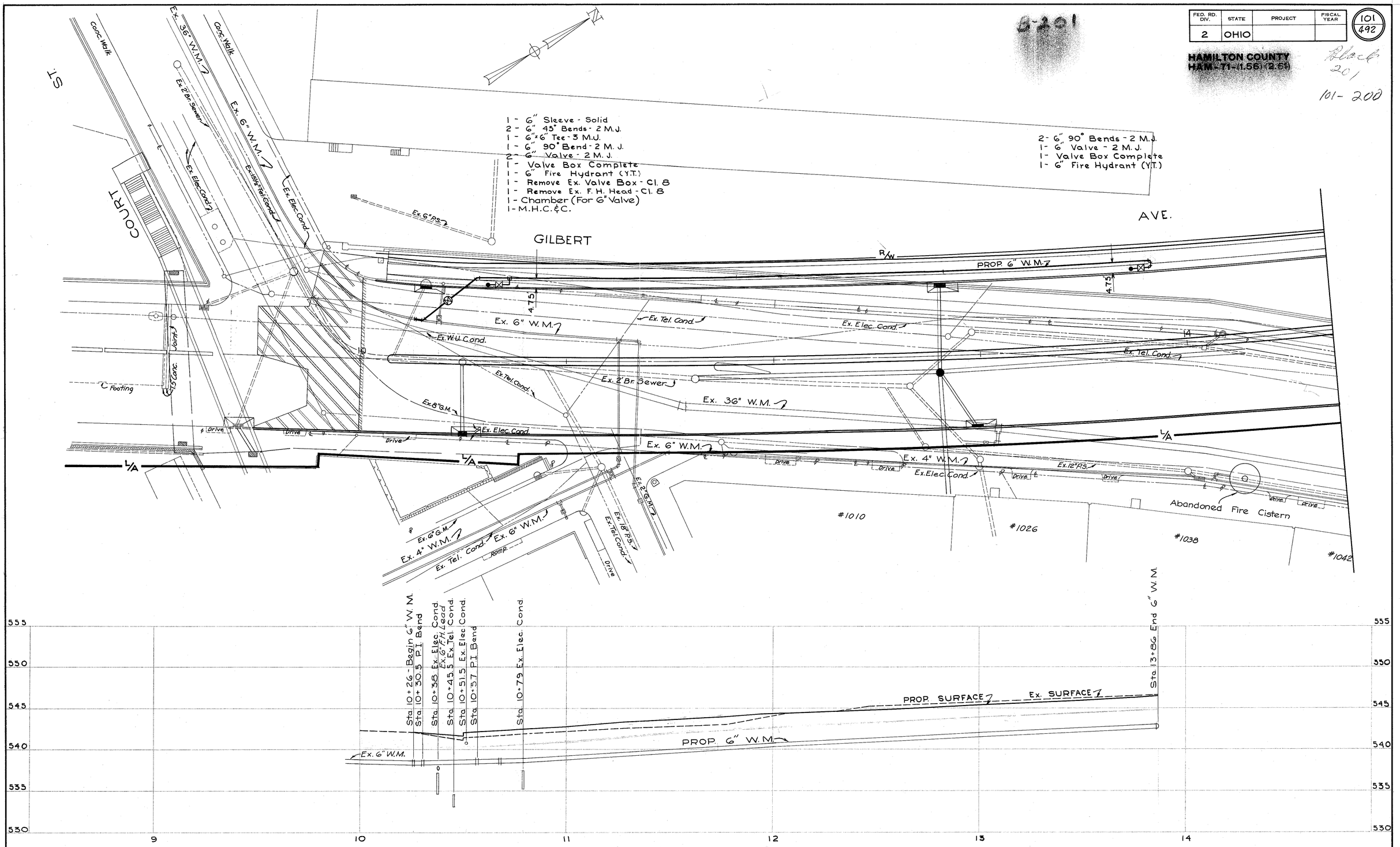

WATER WORKS PLANS

GILBERT AVE & COURT ST.

DRAWING No. D-096
SCALE: 1"=20' Hor. 5' Vert.
SHEET No. 4 of 14

FED. RD. DIV.	STATE	PROJECT	FISCAL YEAR
2	OHIO		

102
492

HAMILTON COUNTY
HAM-71-(1.56) (2.51)

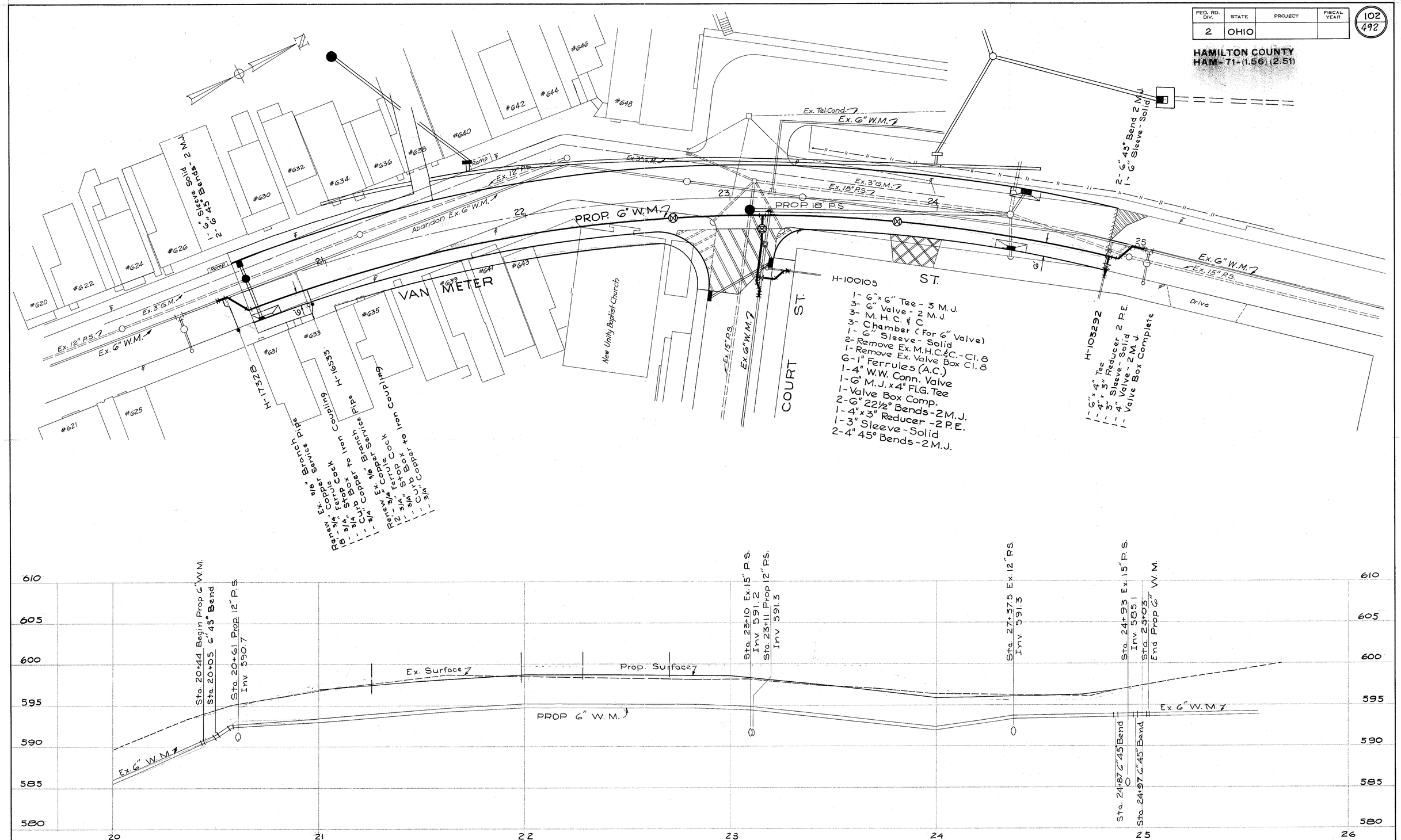

WATER WORKS PLANS

VAN METER ST. 20+00 TO 26+00

DRAWING No. D-096
SCALE: 1"=20' Hor. 5' Vert.
SHEET No. 5 of 14

C

FED. RD. DIV.	STATE	PROJECT	FISCAL YEAR
2	OHIO		

103
492

HAMILTON COUNTY
HAM-71-(1.56)(2.54)

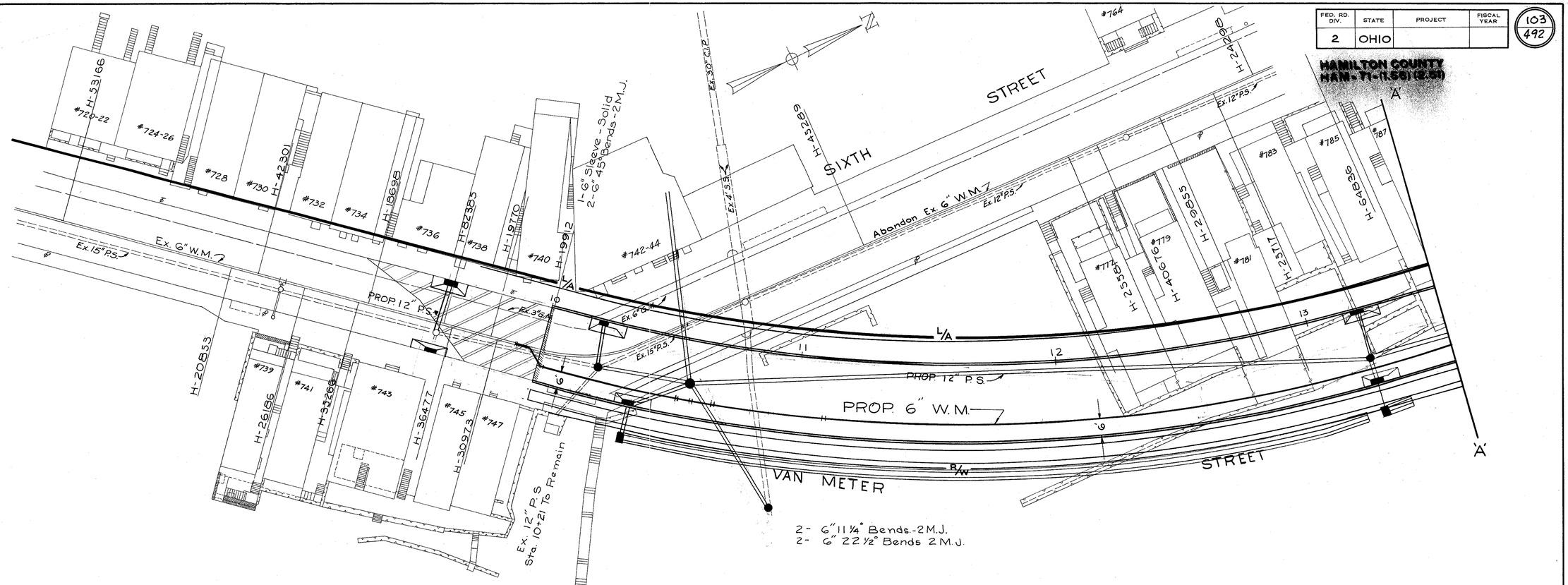

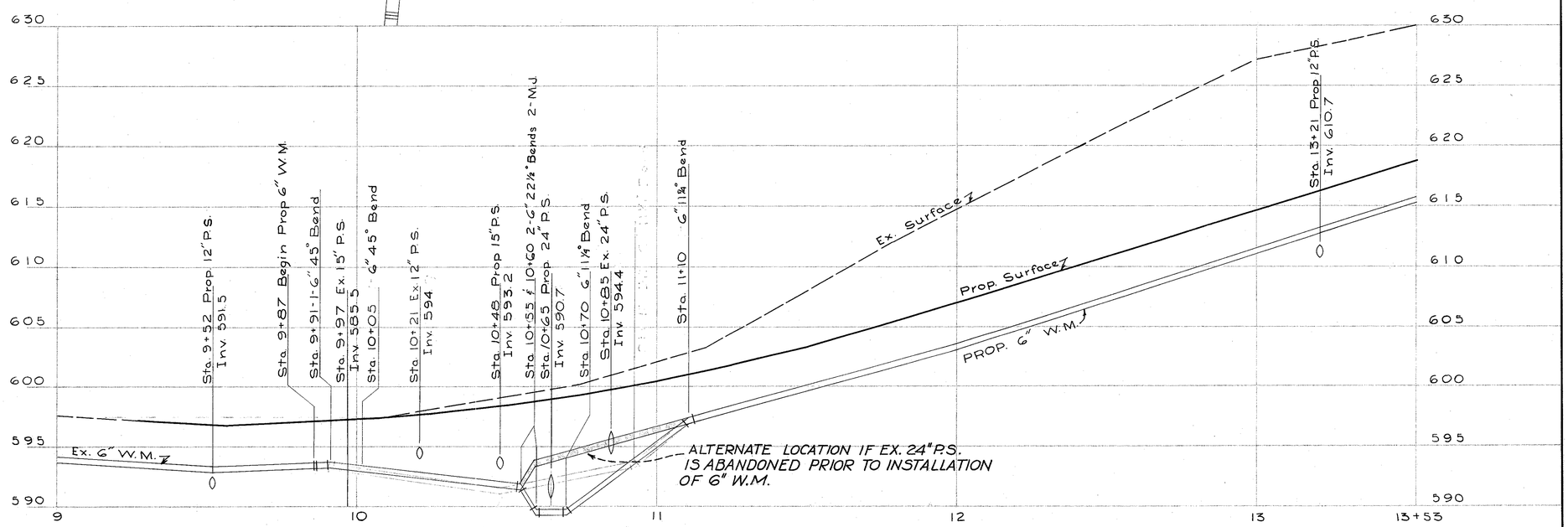

WATER WORKS PLANS

SIXTH ST.- ELSINORE AVE STA. 9+00 TO 13+50

DRAWING NO. D-096
SCALE: 1"=20' HOR. 5' VERT.
SHEET NO. 6 OF 14

FED. RD. DIV.	STATE	PROJECT	FISCAL YEAR
2	OHIO		

104
492

HAMILTON COUNTY
HAM-71-(1.56) (2.51)

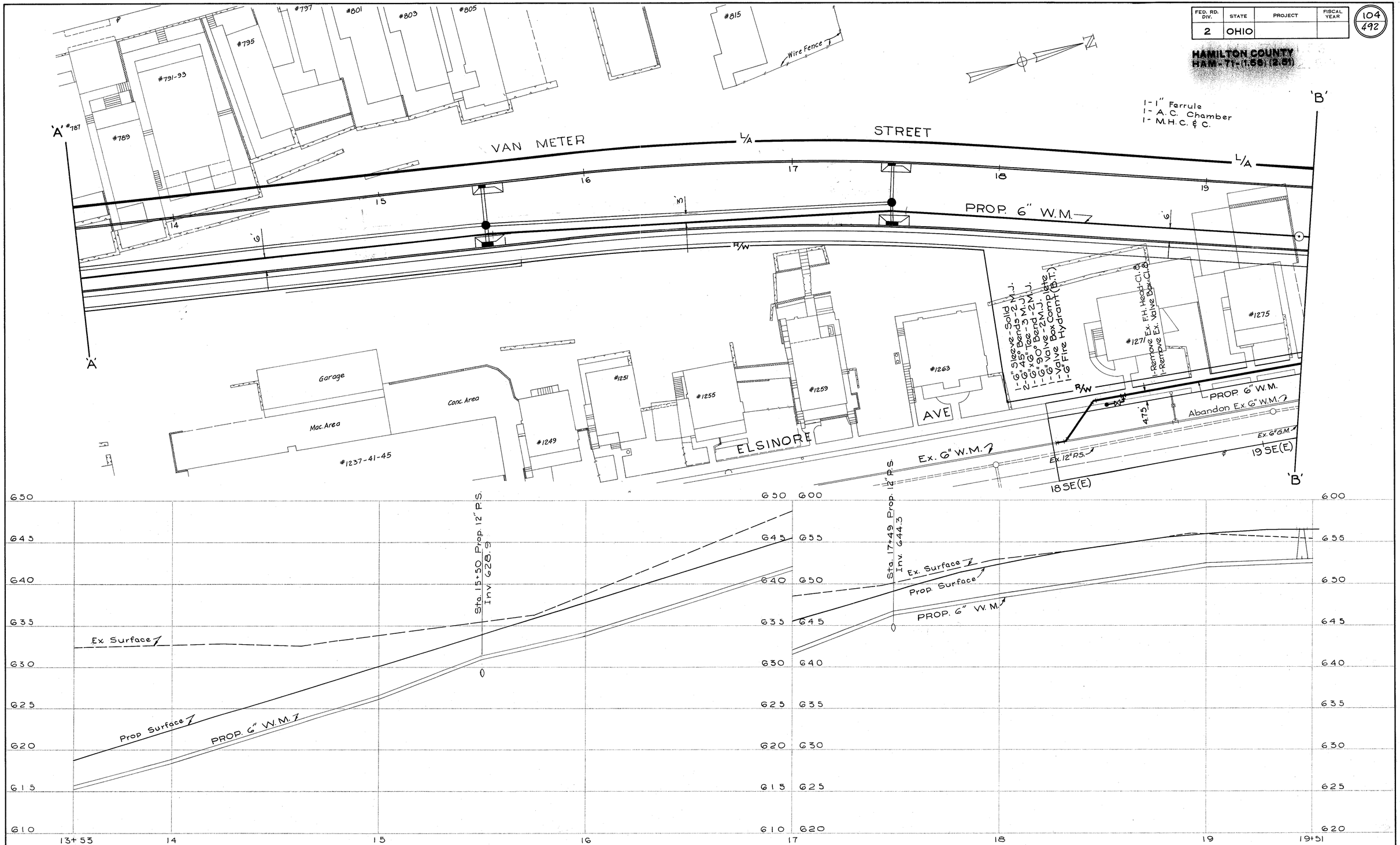

WATER WORKS PLANS VAN METER ST STA. 13+50 TO 19+50

DRAWING No. D-096
SCALE:
SHEET No. 7 of 14

C

FED. RD. DIV.	STATE	PROJECT	FISCAL YEAR
2	OHIO		

105/492

HAMILTON COUNTY
HAM-71-(1.56)(2.51)

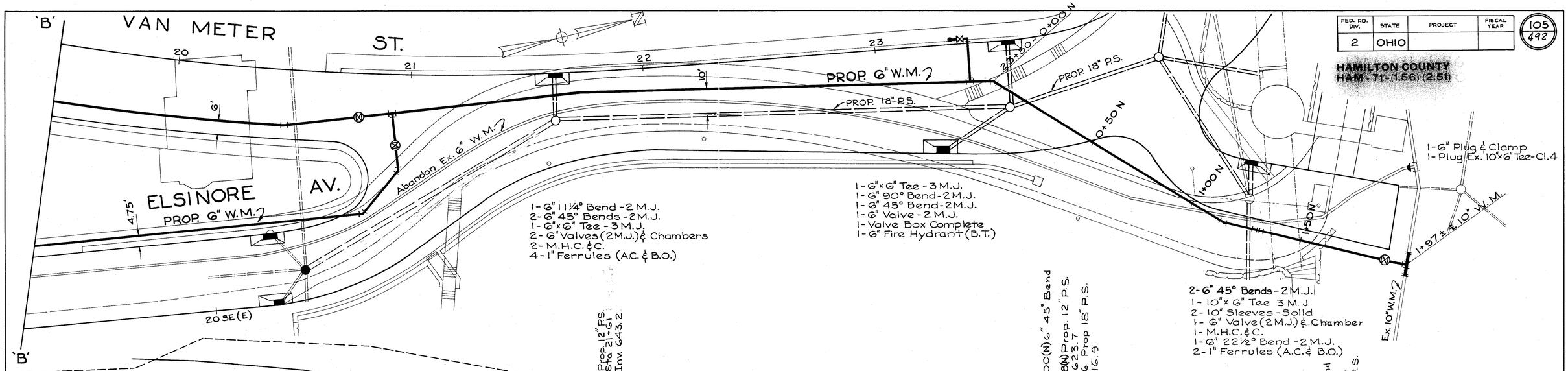

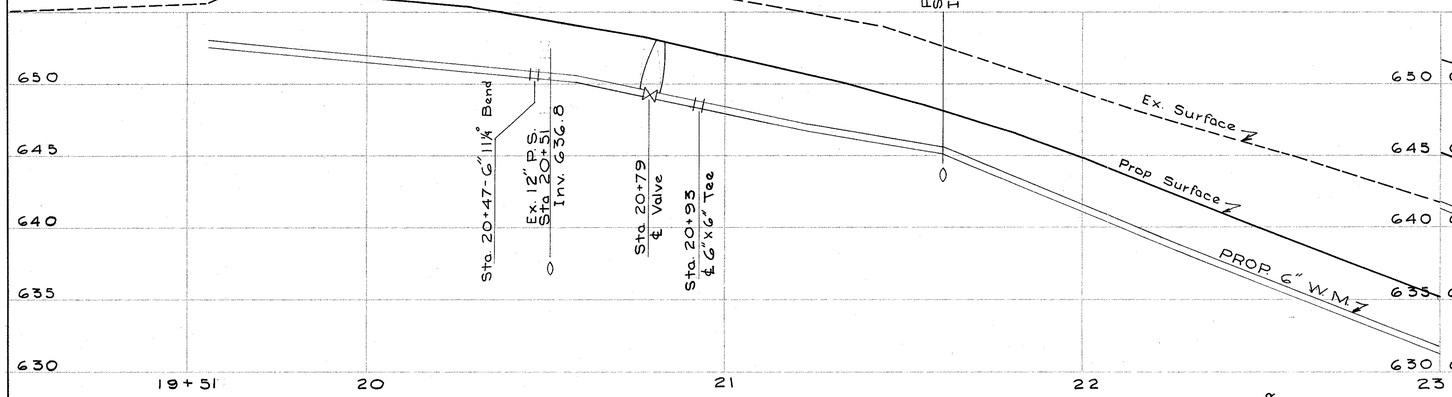

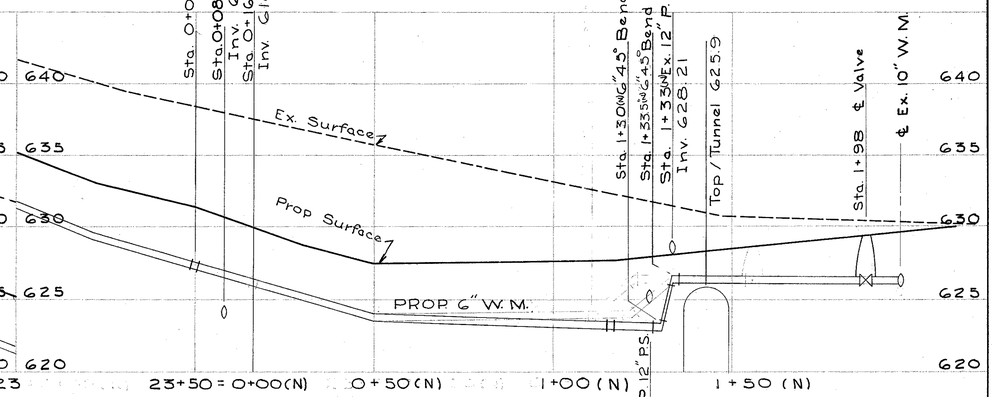

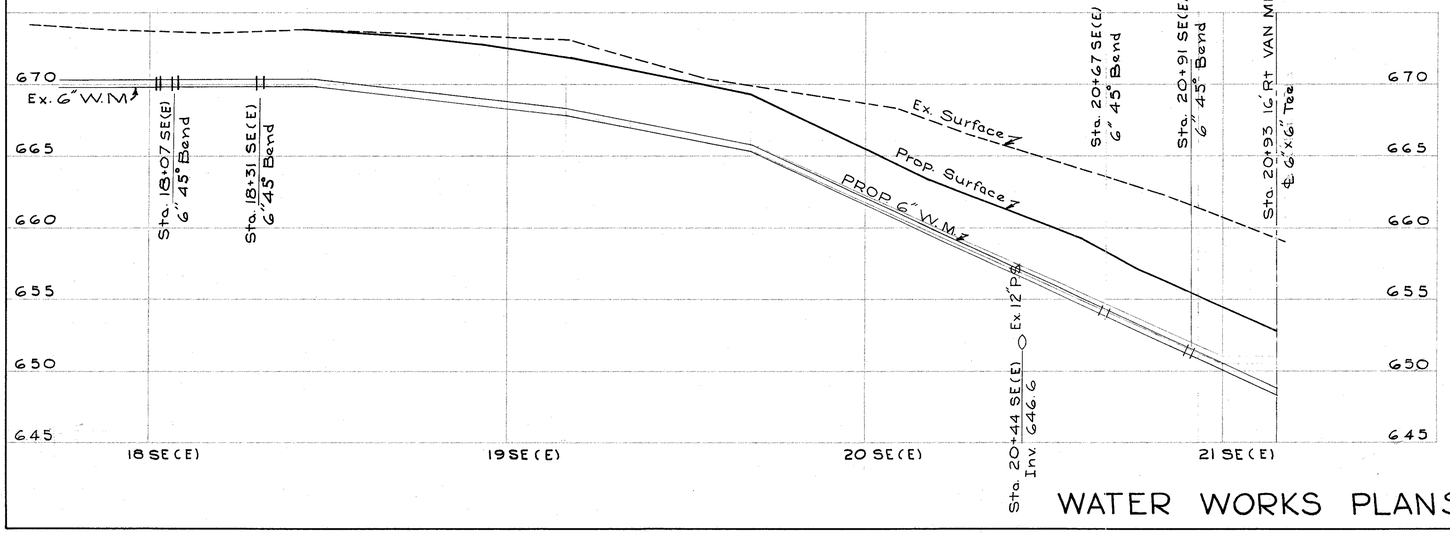

WATER WORKS PLANS VAN METER ST. STA. 19+50 TO GILBERT AV.

DRAWING No. D-096
SCALE: 1"=20 Hor. 5' Vert.
SHEET No. 8 of 14

FED. RD. DIV.	STATE	PROJECT	FISCAL YEAR
2	OHIO		

106
492

HAMILTON COUNTY
HAM-71-(1.66) (2.51)

REEDY ST.

COURT ST.

*1-36" Plug & Clamp
*1- Plug Ex. 36" Tee-Cl. 3
*1- Remove Ex. M.H.C.&C.-Cl. 3
*1- Remove Ex. Valve Box-Cl. 3

* City Cost

20"
30"
36"
6"
36" Abandon
6"
Ex. 36" W.M.
Abandon Ex. 6" W.M.

EIGHTH ST.

Abandon Ex. 4" W.M.
Abandon Ex. 6" W.M.

GILBERT AVENUE

8-Remove Ex Valve Boxes-Cl. 8
2-Remove Ex. F.H. Head-Cl. 8
1- Remove Ex. M.H.C.&C.-Cl. 8

6"
Ex. 4" W.M.
Abandon Ex. 36" W.M.
20" F.C.
Abandon Ex. 10" W.M.
Abandon Ex. 4" W.M.
Ex. 6" W.M.
Abandon
Abandon Ex. 6" W.M.
Ex. 6" W.M.
Ex. 6" W.M.

DAYLIGHT

BLDG.

SIXTH ST.

'A'

GILBERT AVENUE

Abandon Ex. 10" W.M.
Abandon Ex. 36" W.M.
Abandon Ex. 6" W.M.

SIXTH ST.

2-Remove Ex. Valve Boxes-Cl. 8
1-Remove Ex. F.H Head-Cl. 8

'A'

3-Remove Ex. Valve Boxes-Cl. 8
1-Remove Ex. F.H. Head-Cl. 8

Abandon Ex. 10" W.M.
Abandon Ex. 36" W.M.

2- Remove Ex. M.H.C.&C Cl. 8
1- Remove Ex. F.H. Head Cl. 8

Abandon Ex. 6" W.M.

'A'

WATER WORKS PLANS

MISC. PLUGGING

DRAWING No. D-096
SCALE: 1"=50'
SHEET No. 9 of 14

FED. RD. DIV.	STATE	PROJECT	FISCAL YEAR
2	OHIO		

107
492

HAMILTON COUNTY
HAM-T1-(1.55) (2.51)

ST.

201+50 S.B.

1-6" Plug & Clamp
1-Plug Ex. 6"x6" Tee-Cl.3

Abandon Ex. 6" W.M.

200SB

200NB

NORTHBOUND

NORTHEAST EXPRESSWAY

2055B 205NB

1-Remove Ex. F.H. Head-Cl.8
2-Remove Ex. Valve Box-Cl.8

ST.

Ex. 6" W.M.

SYMMES

ST.

Ex. 6" W.M.

ST.

Ex. 6" W.M.

3-Remove Ex. M.H.C.&C.-Cl.8
1-6" Plug & Clamp
1 Plug Ex. 6"x6" Tee-Cl.3

Abandon Ex. 6" W.M.

SOUTH BOUND

Ex. 6" W.M.

Abandon Ex. 6" W.M.

2-Remove Ex. M.H.C.&C.-Cl.8
1-6" Plug & Clamp
1-Plug Ex. 6"x6" Tee-Cl.8

NORTH EAST EXPRESSWAY

3-Remove Ex. M.H.C.&C.-Cl.8
2-6" Plug & Clamp
2-Plug Ex. 6"x6" Tees-Cl.3

Abandon Ex. 6" W.M.

210SB

210NB

1-Remove Ex. F.H. Head-Cl.8
1-Remove Ex. Valve Box-Cl.8

1-Remove Ex. F.H. Head-Cl.8
1-Remove Ex. Valve Box-Cl.8

Ex. 6" W.M. Abandon

Abandon Ex. 6" W.M.

1-Remove Ex. F.H. Head-Cl.8
1-Remove Ex. Valve Box-Cl.8

DES MOINES

201+00 N.B.

MARQUIS

ARDEN ST.

ST.

Ex. 4" W.M.

EXIST. PEDESTRIAN BRIDGE

PENNSYLVANIA R.R.

213+00

Ex. 20" W.M.

FLORENCE AVE.

MANITOU

TERHUNE

MONROE

ALLEY

Mc GREGOR

Ex. 6" W.M.

BOONE

ST.

Ex. 6" W.M.

MAY

ST.

Ex. 6" W.M.

KENTON

ST.

Ex. 6" W.M.

*1-Remove Ex. F.H. Head-Cl. 8
*2-Remove Ex. Valve Box-Cl. 3
*1-4" Plug & Clamp
*1-6" Plug & Clamp
*1-Plug Ex. 6"x4" Tee-Cl. 3
*1-Plug Ex. 6"x6" Tee-Cl. 3
*1-6"x6"Tee-3M.J.
*2-6" Sleeves-Solid
*1-6" 90° Bend-2M.J.
*1-6" Valve-2M.J.
*1-6" Fire Hydrant (Y.T.)
*1-Valve Box Complete

* City Cost

WATER WORKS PLANS

MISC. PLUGGING

Drawing No. D-096
Scale: 1"=50'
Sheet No. 10 of 14

C

FED. RD. DIV.	STATE	PROJECT	FISCAL YEAR
2	OHIO		

108
492

HAMILTON COUNTY
HAM-71-(1.56)(2.51)

TYPICAL SERVICE BRANCH INSTALLATION

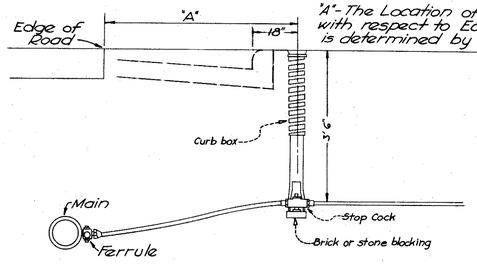

"A"- The Location of Curb Boxes with respect to Edge of Road is determined by field conditions.

STANDARD MEASUREMENTS FOR SETTING FIRE HYDRANTS

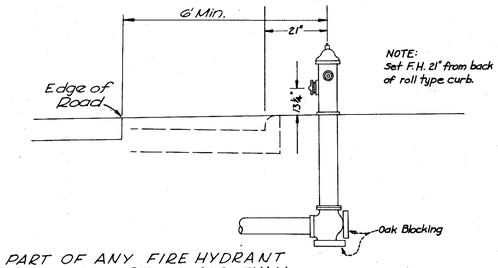

NO PART OF ANY FIRE HYDRANT SETTING SHALL BE CLOSER THAN FIVE (5) FEET TO ANY DRIVEWAY SEWER INLET UTILITY POLE OR GUY WIRE ANCHOR

FIRE HYDRANT REMOVAL

NOTE: Fire Hydrant and shoe to be carefully removed. Fire Hydrant to be picked up by Cincinnati Fire Department.

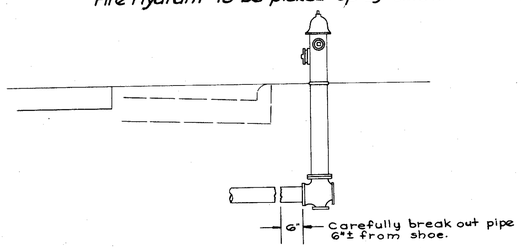

STANDARD CHAMBER FOR AIR COCKS

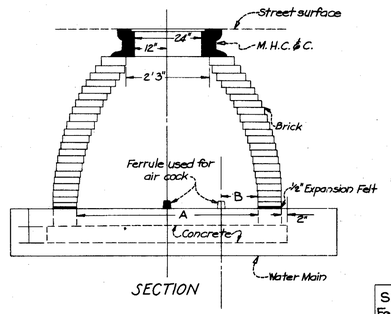

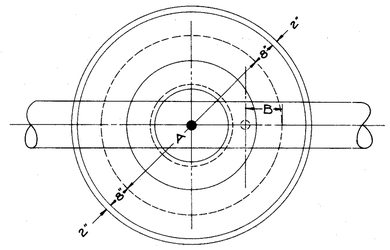

For Estimate Only

Size of Ferrule	A	B	Cu. Yds Conc.	Cu. Yds Brick
1"	3'0"	1'0"	0.3	1.0
1½" & 2"	5'0"	2'6"	0.6	1.4

STANDARD CHAMBER FOR VERTICAL VALVES

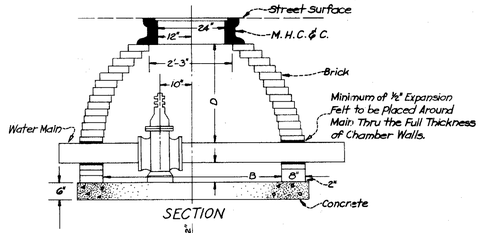

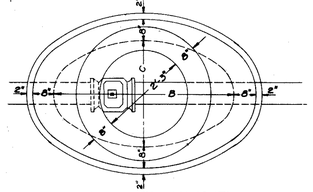

FOR ESTIMATE ONLY

SIZE OF VALVE	A	B	C	D	CONC. CU. YDS.	BRICK CU. YDS.
4"-6"-8"	6"	5'-0"	3'-0"	2'-11"	0.5	1.3
10"-12"	6"	5'-0"	4'-0"	2'-11"	0.6	1.6

STANDARD MANHEAD CHAMBER

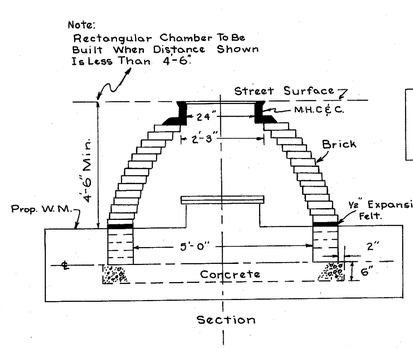

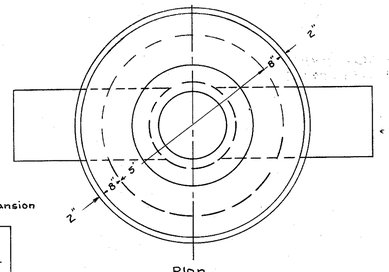

WYE BLOCKING DETAIL

46+64±

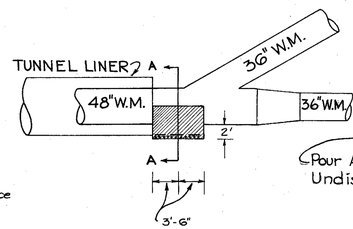

CONCRETE BLOCKING ON CONCRETE BENDS

Note:
All Reinforcing Bars Shall Be ¾" Round Bars Spaced 12" O.C. Except On long Side Of Bend Where They Shall Be 6" O.C.

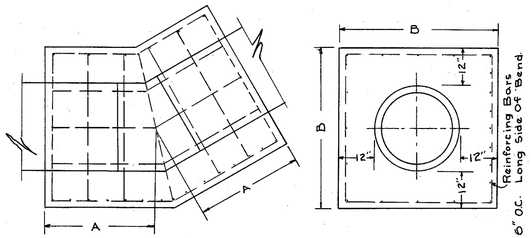

Size Pipe	Pressure Under 100 lbs. P.S.I					
	Degree Bend	A	B	Cu Yds Conc	Lbs. Steel	Ft. Tied Ea. Side
48"	0°-15°	4.0'	6'.5	7.6	835	32
	15°-30°	4.0'	6'.5	7.6	835	48
	30°-45°	4.0'	6'.5	7.6	835	64

SPECIAL BLOCKING 36" BENDS	46+81N	4.0'	5.5'	6.1'	705	As PER LAYING SCHEDULE
	46+96.5S	4.0'	5.5'	6.1'	705	
	47+09N	4.0'	5.5'	6.1'	705	
	47+20S	7.5'	5.5'	12.3'	1350	
	47+47N	5.0'	5.0*	7.1	705	
	*Only 6" Outside Pipe On Thrust Side					

FED. RD. DIV.	STATE	PROJECT	FISCAL YEAR
2	OHIO		

109
492

HAMILTON COUNTY
HAM-71-(1.56)(2.51)

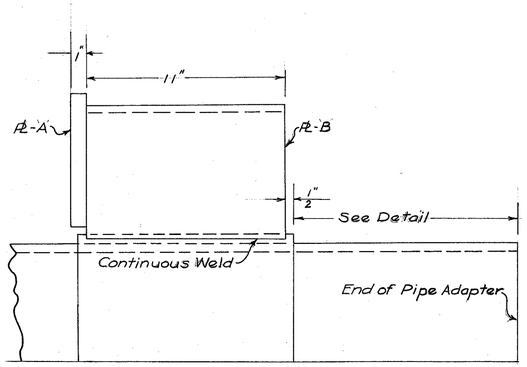

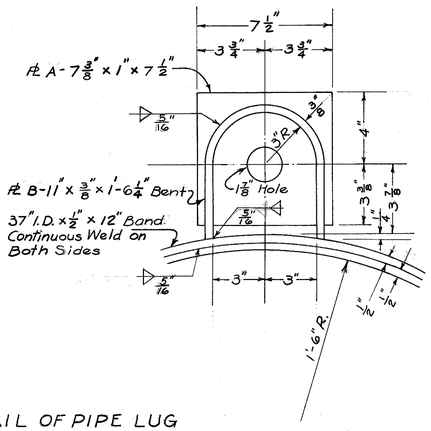

DETAIL OF PIPE LUG

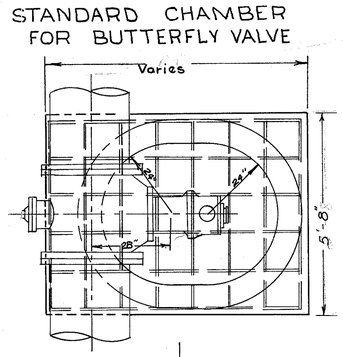

STANDARD CHAMBER FOR BUTTERFLY VALVE

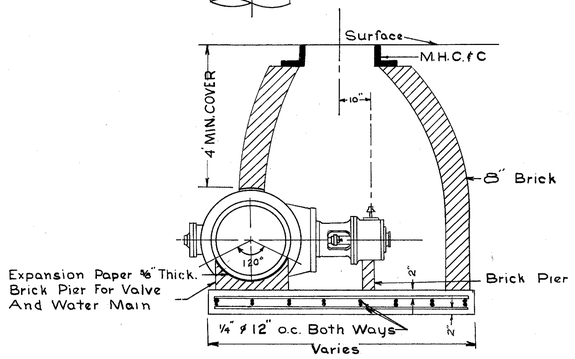

STANDARD CHAMBER FOR LAY DOWN VALVES

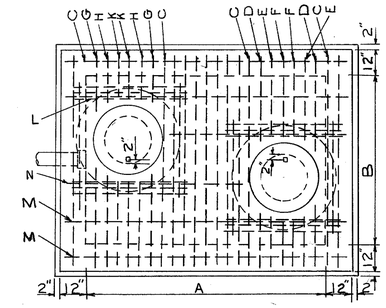

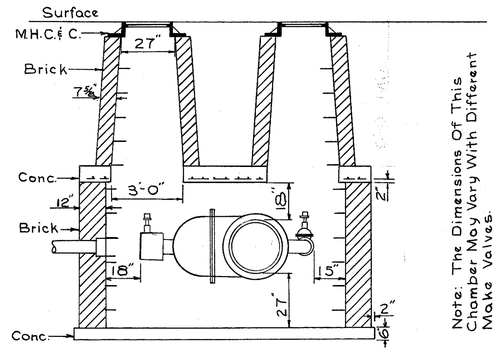

Note: The Dimensions Of This Chamber May Vary With Different Make Valves.

Note: 1" Expansion Felt To Be Around Main And To Extend The Full Thickness Of The Chamber Wall. Provide Ladders With Standard Steps 12" O.C. Additional Concrete And Steel To Be Used In Chamber Bottom When Ordered By The Superintendent.

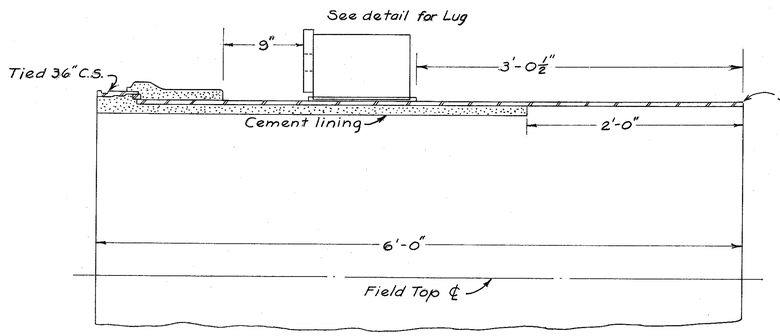

36" C.S. x 36" P.E. ADAPTER

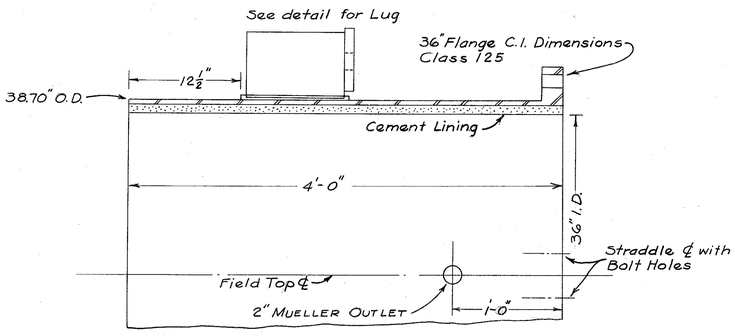

36" P.E. x 36" FLG. ADAPTER

NOTES:
1. All exposed steel to be coated with Davies Shop Coat Black.
2. Provide 2 Lugs at 90° each side of Field Top ℄.
3. Include 2-1 3/8" Dia. Steel Studs - 7'-0" Long (threaded 8" on one end and 32" on the other), Hex Nuts, Washers with 1 3/4" Dia. Hole.

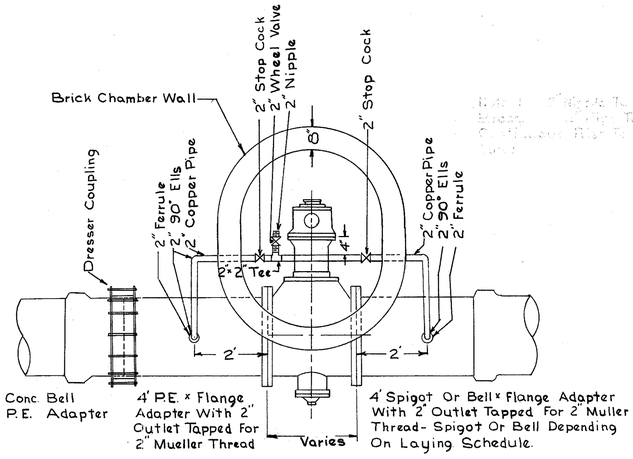

Note: 2" Nipple To Be Red Brass.
2" Pipe To Have Continuous Rise To Wheel Valve.

Reinforcing Bars - 3/4" ø

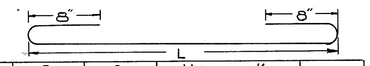

Size Of Valve	C		D		E		F		G		H		K		Bar Spacing
	L	No. Req'd	L	No. Req'd	L	No. Req'd	L	No. Req'd	L	No. Req'd	L	No. Req'd	L	No. Req'd	
48"	10'-4	32	4'-8	4	4'-5	4	4'-3	4	3'-3	4	2'-11	4	2'-9	4	4"

Size Of Valve	Str. Bars - 3/4" ø	Long Steel - 1/2" ø			
	L	M		N	
	4'-9" Long No. Required	Lgth.	No. Req'd	Lgth.	No. Req'd
48"	16	17'-8"	10	12'-4	5

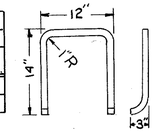

Standard Steps 1" Sq. Stock Wrought Iron

Size Of Valve	A	B	Concrete Cu. Yds.	Brick Cu. Yds.	Lbs. Of Steel	Depth Of Slab	Length 6" Pipe
48"	16'-6"	8'-6"	9.01	17.56	934	12"	9'-0"

WATER WORKS PLANS

STANDARDS & DETAILS

DRAWING NO. D-096
SHEET NO. 12 of 14

FED. RD. DIV.	STATE	PROJECT	FISCAL YEAR
2	OHIO		

110
492

HAMILTON COUNTY
HAM-71-(1.56)(2.51)

SUPPLEMENTAL SPECIFICATIONS

W-8 FURNISHING AND INSTALLING TUNNEL LINER WITH GROUT HOLES
W-8.01 DESCRIPTION. "THIS ITEM SHALL COVER THE FURNISHING AND INSTALLING OF TUNNEL LINER. THE LINER PLATES SHALL CONFORM TO CITY SPECIFICATIONS NO.10-112-60, OR LATEST REVISION THEREOF. THE CONTRACTOR SHALL MAKE ANY NECESSARY EXCAVATION AND/OR BORING, FURNISH AND INSTALL THE TUNNEL LINER PLATES, INSTALL GROUT IN ALL VOIDS BETWEEN THE LINER PLATES AND THE EXCAVATION, BULKHEAD BOTH ENDS OF THE TUNNEL WITH A BRICK WALL OF 4" MINIMUM THICKNESS, PROVIDE A 4" DRAIN WHERE REQUIRED THROUGH EACH BULKHEAD, AND PROPERLY BACKFILL ALL OPENINGS. THE PROVISIONS OF ITEM SG-3, " TUNNELING", SHALL ALSO APPLY TO THIS ITEM.
W-8.02 PAYMENT. PAYMENT FOR THE ITEM OF "FURNISHING AND INSTALLING TUNNEL LINER" WILL BE MADE AT THE UNIT PRICE BID WHICH SHALL COVER ALL LABOR, MATERIAL, AND EQUIPMENT REQUIRED TO FURNISH AND INSTALL THE LINER PLATES COMPLETE. INCLUDING EXCAVATING, BORING, HAULING, GROUTING ALL VOIDS. AND BACKFILLING ALL OPENINGS. THE BRICK BULKHEADS AND THE DRAINS WILL BE PAID FOR UNDER ITEM W-47, "BRICK MASONRY". PAYMENT FOR INSTALLING WATER MAIN IN THE TUNNEL WILL BE MADE UNDER ITEM W-7. THE VOID BETWEEN OUTSIDE OF WATER MAIN AND INSIDE OF TUNNEL LINER MUST BE COMPLETELY FILLED WITH PEA GRAVEL.

W-63 WELDING TIED JOINTS - REINFORCED CONCRETE PIPE.
W-63.01 DESCRIPTION. WELDING OF TIED JOINTS OF REINFORCED CONCRETE PRESSURE PIPE SHALL BE DONE IN ACCORDANCE WITH SECTION C-4.23 OF THE CITY OF CINCINNATI GENERAL CONSTRUCTION AND MATERIAL SPECIFICATIONS.
W-63.02 PAYMENT. PAYMENT FOR THE ITEM "WELDING TIED JOINTS-REINFORCED CONCRETE PIPE"WILL BE MADE AT THE PRICE BID PER JOINT PER SIZE AS DESIGNATED. PAYMENT FOR THIS ITEM SHALL COVER ALL LABOR, EQUIPMENT AND MATERIAL NECESSARY TO PERFORM THE OPERATION.

W-65 SALVAGE AND RELOCATE EXISTING METER SETTING AND CONSTRUCT NEW PIT.
W-65.01 DESCRIPTION. THIS ITEM SHALL COVER THE SALVAGING AND RELOCATING EXISTING METER SETTINGS, PRESSURE REGULATORS, VALVES AND THE CONSTRUCTION OF NEW METER PITS, WHERE SHOWN ON PLANS OR AS DIRECTED BY THE ENGINEER. THE CONTRACTOR SHALL MAKE ANY NECESSARY EXCAVATIONS, CAREFULLY REMOVE THE CASTINGS, METER, PRESSURE REGULATOR AND APPURTENANCES AND INSTALL THEM IN A NEW LOCATION AS SHOWN ON THE PLANS OR AS DIRECTED BY THE ENGINEER. THE CONTRACTOR SHALL CONSTRUCT A NEW BRICK AND CONCRETE METER PIT AND INSTALL THE SALVAGE CASTINGS TO THE PROPER GRADE.
W-65.02 PAYMENT. PAYMENT FOR THE ITEM "SALVAGE AND RELOCATE EXISTING METER SETTING AND CONSTRUCT NEW PIT" WILL BE MADE AT THE UNIT PRICE BID WHICH SHALL COVER ALL LABOR, MATERIAL AND EQUIPMENT REQUIRED TO SALVAGE AND RELOCATE EXISTING METER SETTING, PRESSURE REGULATOR, VALVES AND CONSTRUCT NEW CONCRETE AND BRICK METER PIT COMPLETE INCLUDING EXCAVATION, BACKFILLING, RESTORATION OF THE SUROUNDING AREAS AND ANY OTHER OPERATION NECESSARY FOR THE SATISFACTORY COMPLETION OF THE WORK.

W-85 FURNISH AND INSTALL SINGLE GUTTER INLET IN TUNNEL.
W-85.01 THIS ITEM SHALL COVER THE FURNISHING AND INSTALLING OF ALL LABOR AND MATERIAL NECESSARY TO PROVIDE AN INLET IN THE TUNNEL AT STATION 47 + 66 ±. INSTALLATION SHALL INCLUDE ALL CONCRETE, MORTAR, BRICKS, EXCAVATION INCLUDING REMOVAL OF EXISTING FLOOR AND WALL WHERE NECESSARY, 12" PIPE SEWER, STANDARD SINGLE GUTTER INLET CASTING, BACKFILL, AND ALL OTHER LABOR, EQUIPMENT, OR MATERIAL NECESSARY TO CONNECT INLET INTO 12" SEWER PIPE PROVIDED BY OTHERS AS SHOWN ON PLAN, OR TO EXTEND 12" SEWER PIPE TO A POINT OUTSIDE THE TUNNEL, AT PROPER LINE AND GRADE, TO ALLOW THE 12" SEWER PIPE TO BE CONNECTED BY OTHERS.
W-85.02 PAYMENT. PAYMENT FOR THIS ITEM, "FURNISH AND INSTALL SINGLE GUTTER INLET IN TUNNEL" WILL BE MADE AT THE LUMP PRICE BID FOR THIS ITEM, WHICH SHALL INCLUDE PAYMENT FOR ALL LABOR, FURNISHING OF ALL MATERIAL AND EQUIPMENT NECESSARY TO INSTALL INLET COMPLETE, INCLUDING EXCAVATION AND BACKFILL.

THE 36" WATER MAIN AND THE 35" WATER MAIN INVOLVED IN THIS PROJECT,ARE IMPORTANT IN PROVIDING ADEQUATE WATER SERVICE FOR THE CENTRAL & WESTERN PORTIONS OF CINCINNATI & HAMILTON COUNTY. THEREFORE INTERUPTION TO SERVICE IN BOTH OF THESE MAINS MUST BE KEPT TO A MINIMUM AND IN NO EVENT MAY BOTH OF THESE MAINS BE OUT OF SERVICE AT THE SAME TIME.
THE 36" MAIN IN GILBERT AVE, WHICH IS TO BE ABANDONED,MUST BE KEPT IN SERVICE UNTIL THE NEW 48" MAIN ACROSS THE EXPRESSWAY HAS BEEN PLACED IN SERVICE. (STEP 9 OF THE CONSTRUCTION SEQUENCE) ONCE THE GILBERT AVE MAIN IS ABANDONED THE CONTRACTOR MUST PROCEDE WITHOUT DELAY TO CONNECT THE SOUTH 36" MAIN FROM THE ELSINORETOWER TO THE NEW 48" WATER MAIN.
THE FOLLOWING CONSTRUCTION SEQUENCE IS INTENDED TO PROVIDE A LOGICAL CONSTRUCTION PROCEDURE.

1. THE CONTRACTOR MUST BEGIN INSTALLATION OF THE 48" WATER MAIN AT STATION 44 + 33 ± AND PROCEED IN EITHER DIRECTION.
2. PROCEEDING WESTWARDLY, THE CONTRACTOR CAN CONTINUE INSTALLATION TO STATION 40 + 15 ± WHERE A BULKHEAD MUST BE INSTALLED FOR TEST PURPOSES.
3. PROCEEDING EASTWARDLY, THE CONTRACTOR CAN CONTINUE INSTALLATION UNTIL STATION 46 + 86.5± (BUTTERFLY VALVE ON SOUTH MAIN) ,WHERE WORK MUST STOP.
4. STARTING AT THE 36" BRANCH OF WYE, THE PROP 36" W.M. (NORTH) CAN BE INSTALLED UP TO STATION 47 + 20 ± (NORTH) WHERE WORK MUST STOP.
5. ADAPTER AT STATION 47 + 77.20 (NORTH) MUST BE INSTALLED AND PROCEED WITH WORK WESTWARDLY FROM THE ADAPTER. INSTALLATION CAN CONTINUE TO STATION 47 + 27 ± WHERE CLOSURE ASSEMBLY CAN BE CUT TO PROPER SIZE AND INSTALLED.
6. TEST PRESSURE OF AT LEAST 100 PSI MUST BE APPLIED TO THE PIPE BETWEEN BULKHEAD AT STATION 40 + 15 ± AND BOTH 36" BUTTERFLY VALVES.
7. AFTER COMPLETING TEST AND CHLORINATION,THE CONTRACTOR SHOULD BEGIN INSTALLATION AT STATION 39 + 42 ± AND PROCEED TO STATION 40 + 15±AND REMOVE BULKHEAD AND INSERT CLOSURE.
8. THE 36" VALVE AT STATION 47 + 28 ± (NORTH) CAN BE OPENED AND REGULAR SERVICE WILL BE MAINTAINED THROUGH THE 48" WATER MAIN.
9. AFTER THE 35" W.M. IS FEEDING THE 48" W.M. , AND ONLY AT THIS TIME , THE 36" W.M. IN GILBERT AVE CAN BE SHUT-DOWN AND CONSTRUCTION WORK MUST IMMEDIATELY RESUME AT STATION 46 + 86.5 AND CONTINUE TO STATION 47 + 90 ± WHERE CLOSURE CAN BE CUT TO PROPER SIZE AND INSTALLED.

NOTES

WATER MAINS ARE TO BE CONSTRUCTED IN ACCORDANCE WITH THE PROVISIONS OF GENERAL CONSTRUCTION AND MATERIAL SPECIFICATIONS FOR HIGHWAYS AND SEWERS, DATED JANUARY 1, 1956, AND THE SPECIFICATIONS OF THE CINCINNATI WATER WORKS GOVERNING THE INSTALLATION OF WATER MAINS AND APPURTENANCES IN FORCE AT THE TIME OF THE OPENING OF THE BIDS. COPIES OF THESE SPECIFICATIONS ARE ON FILE AT THE OFFICE OF THE ENGINEER OF CONTRACT SALES FOR THE STATE HIGHWAY DEPARTMENT AND AT THE OFFICES OF THE CITY ENGINEER OF CINCINNATI, OHIO.

THIS PLAT WAS PREPARED FOR THE CONVENIENCE OF THE CONTRACTOR FROM AVAILABLE RECORDS.
THE CINCINNATI WATER WORKS CAN NOT GUARANTEE THE ACCURACY OF THESE RECORDS NOR CAN IT BE HELD LIABLE FOR ANY INACCURACIES IN THIS PLAT. TEST HOLES MUST BE DUG, OR DITCHED OPENED, BY THE CONTRACTOR, FAR ENOUGH IN ADVANCE OF CROSSING ANY UTILITY OR OTHER UNDERGROUND STRUCTURE TO AVOID ANY DIFFICULTY THAT MAY ARISE IN THE EXECUTION OF THIS CONTRACT.

LINE AND GRADE FOR THE PROPOSED WATER MAIN SHOWN ON THESE DRAWINGS ARE SUBJECT TO CHANGE WHEN NECESSARY IN THE LAYING OF THESE MAINS. IF THE CONTRACTOR RUNS INTO ANY DIFFICULTY WITH ANY UTILITY OR UNDERGROUND STRUCTURE THAT WAS NOT UNCOVERED FAR ENOUGH IN ADVANCE TO BE AVOIDED, THE CONTRACTOR SHALL ASSUME THE COST OF ALL ENGINEERING, LABOR, AND MATERIAL NECESSARY TO BY-PASS OR CHANGE THE UTILITY OR STRUCTURE IN THE PATH OF THE PROPOSED WATER MAINS.

A CUSHION OF 12" SHALL BE MAINTAINED BETWEEN THE PROPOSED WATER MAINS AND THE EXISTING SEWERS, INLET CONNECTION AND DRAINS. IF A GREATER CLEARANCE IS DESIRED IT WILL BE SO DESIGNATED. BUILDING SEWER LATERALS ARE NOT TO BE DISTURBED OR TRAPPED. EXISTING DRAINS, SEWERS, AND CULVERTS ARE NOT TO BE DISTURBED. IF WATER MAIN IS TO BE LAID UNDER CULVERTS AND/OR PIPE SEWERS THEY SHALL BE TUNNELED AND BACKFILLED WITH CLASS "T" CONCRETE.

PAYMENT WILL BE MADE ONLY FOR WORK PERFORMED AND NO PAYMENT WILL BE MADE FOR NON-PERFORMANCE OF ANY ITEM OR FOR NON-PERFORMANCE OF ANY PORTION OF THE ESTIMATED QUANTITY GIVEN FOR ANY ITEM.

ADDITIONAL CONCRETE AND STEEL FOR BACKING OR REINFORCING BENDS MAY BE ADDED AT THE DISCRETION OF THE WATER WORKS ENGINEER OR INSPECTOR. PAYMENT FOR THIS WORK WILL BE MADE AT THE UNIT PRICE BID FOR CONCRETE MASONRY ITEM W-48 AND REINFORCING STEEL ITEM C-3.

ANY MANHOLES CURBS AND COVERS OR VALVE BOXES TO BE ADJUSTED OR RESET, THAT ARE FOUND TO BE DEFECTIVE, SHALL BE REPLACED WITH NEW CASTINGS. PAYMENT FOR THIS WORK WILL BE MADE AT THE UNIT PRICE BID FOR HAULING WATER WORKS MATERIAL W-52.

ALL SPECIALS AND APPURTENANCES USED ON THIS PROJECT SHALL BE THAT WHICH HAS BEEN INSPECTED AT SITE OF MANUFACTURER BY THE CINCINNATI WATER WORKS. ALL CAST IRON PIPE AND SPECIALS SHALL BE CEMENT LINED.

ALL PIPE AND SPECIALS TO BE CAST IRON, CEMENT LINED, EITHER LEAD, MECHANICAL OR COMPRESSION TYPE JOINTS.

CONTRACTOR IS TO NOTIFY CINCINNATI WATER WORKS INSPECTION OFFICE PRIOR TO WATER MAIN RELOCATION.

PIPE REMOVED FOR CONSTRUCTION PURPOSES IS NO LONGER THE PROPERTY OF THE CITY OF CINCINNATI AND SHALL BE DISPOSED OF BY THE CONTRACTOR. NO PAYMENT WILL BE MADE FOR HAULING THIS MATERIAL.

ALL WATER CONSUMERS MUST BE PROVIDED WITH ADEQUATE WATER SERVICE FOR REQUIRED USAGE AND FIRE PROTECTION AT ALL TIMES AT THE CONTRACTOR'S EXPENSE. IN THE EVENT THAT DURING CONSTRUCTION TEMPORARY WATER LINES ARE NECESSARY TO PROVIDE SUCH SERVICE, THE CONTRACTOR MUST PROVIDE, AT HIS COST, PIPE OF SUFFICIENT SIZE.

NO PAYMENT WILL BE MADE FOR FURNISHING AND INSTALLING TEMPORARY PLUGS.

PAYMENT FOR REBUILDING EXISTING INLETS WILL BE MADE AT THE UNIT PRICE BID FOR CONCRETE AND BRICK. THIS IS TO INCLUDE THE RESETTING OF THE CASTINGS. INLETS ARE TO BE CONSTRUCTED IN ACCORDANCE WITH CITY OF CINCINNATI SPECIFICATIONS AND DEPARTMENT OF PUBLIC WORKS DRAWINGS THAT APPLY.

THE PRIME CONTRACTOR SHALL OBTAIN ALL NECESSARY STREET OPENING PERMITS FOR WORK OUTSIDE THE PROJECT LIMITS.

FED. RD. DIV.	STATE	PROJECT	FISCAL YEAR
2	OHIO		

111
492

HAMILTON COUNTY
HAM-71-(1.56) (2.51)

LABOR SUMMARY

TYPE CODE Y-060

ITEM	100% CITY COST	100% PROJECT COST	TOTAL	UNIT	DESCRIPTION	CITY OF CINCINNATI SPECIFICATION ITEM NUMBER
SPECIAL	56		56	LIN.FT.	LAYING 48" REINF. CONC. PIPE,WITH RESTORATION CLASS 3	W-7
"	568		568	"	LAYING 48" REINF. CONC. PIPE, CLASS 8	W-7
"	25		25	"	LAYING 48" REINF. CONC. PIPE,WITH RESTORATION CLASS 6	W-7
"	20		20	"	LAYING 48" REINF. CONC. PIPE IN 84" TUNNEL LINER	W-7
"	67		67	"	LAYING 48" REINF. CONC. PIPE IN 96" TUNNEL LINER	W-7
"	178		178	"	LAYING 36" REINF. CONC. PIPE, CLASS 8	W-7
"	50		50	"	LAYING 36" REINF. CONC. PIPE IN STONE TUNNEL	W-7
"	20		20	"	FURNISHING AND INSTALLING 72" TUNNEL LINER WITH GROUT HOLES	W-8
"	67		67	"	FURNISHING AND INSTALLING 96" TUNNEL LINER WITH GROUT HOLES	W-8
"		10	10	"	LAYING 10" CAST IRON PIPE, WITH RESTORATION CLASS 3	W-1
"		10	10	"	LAYING 10" CAST IRON PIPE, WITH RESTORATION CLASS 4	W-1
"		115	115	"	LAYING 8" CAST IRON PIPE, CLASS 8	W-1
"		2790	2790	"	LAYING 6" CAST IRON PIPE, CLASS 8	W-1
"		85	85	"	LAYING 6" CAST IRON PIPE, WITH RESTORATION CLASS 3	W-1
"	10	15	25	"	LAYING 6" CAST IRON PIPE, WITH RESTORATION CLASS 6	W-1
"	10	10	20	"	LAYING 6" CAST IRON PIPE, WITH RESTORATION CLASS 4	W-1
"		10	10	"	LAYING 4" CAST IRON PIPE, CLASS 8	W-1
"	1	6	7	EACH	HAULING & SETTING 6" FIRE HYDRANTS	W-11
"		1	1	"	RESETTING EXISTING FIRE HYDRANTS	W-12
"	1	13	14	"	REMOVING EXISTING FIRE HYDRANTS -CLASS 8	W-13
"		1	1	"	REMOVING EXISTING FIRE HYDRANTS -CLASS 6 RESTORATION	W-13
"	6	102	108	LIN.FT	REMOVING EXISTING WATER MAINS - 12" AND UNDER	W-15
"	125		125	"	REMOVING EXISTING 36" WATER MAINS	W-16
"		1	1	EACH	PLUGGING EXISTING TEES & MAINS 12" AND UNDER CLASS 8	W-21
"		8	8	"	PLUGGING EXISTING TEES & MAINS 12" AND UNDER CLASS 3 REST'N	W-21
"	2	1	3	"	PLUGGING EXISTING TEES & MAINS 12" AND UNDER CLASS 4 REST'N	W-21
"	1		1	"	PLUGGING EXISTING 36" TEES & MAINS CLASS 3 RESTORATION	W-21
"	1		1	"	PLUGGING EXISTING 36" TEES & MAINS CLASS 8	W-21
"		50	50	LIN.FT.	LOWERING EXISTING WATER MAINS 12" AND UNDER CLASS 8	W-23
"		50	50	"	LOWERING EXISTING WATER MAINS 12" AND UNDER CLASS 3 RESTORATION	W-23
"		50	50	"	LOWERING EXISTING WATER MAINS OVER 12" CLASS 8	W-23
"		50	50	"	LOWERING EXISTING WATER MAINS OVER 12" CLASS 3 RESTORATION	W-23
"		150	150	"	LOWERING EXISTING 5/8" THRU 2" SERVICE BRANCHES	W-25
"		1	1	EACH	RECONNECTING EXISTING 5/8" THRU 2" SERVICE BRANCHES	W-27
"		50	50	LIN.FT.	HAULING & INSTALLING 3/4" SERVICE PIPE & FITTINGS	W-28
"		50	50	"	HAULING & INSTALLING 1" SERVICE PIPE & FITTINGS	W-28
"		50	50	"	HAULING & INSTALLING 11/2" SERVICE PIPE & FITTINGS	W-28
"	30	350	380	"	HAULING & INSTALLING 2" SERVICE PIPE & FITTINGS	W-28
"		1	1	EACH	CUTTING & REVERSING EX. STOP COCK -5/8" THRU 2"	W-36
"		2	2	"	HAULING & INSTALLING CURB BOXES	W-39
"		1	1	"	HAULING AND INSTALLING ROADWAY BOXES	W-40
"	1	8	9	"	INSTALLING VALVE BOXES	W-41
"		1	1	"	RESETTING EXISTING CURB & ROADWAY BOXES	W-42
"		1	1	"	RESETTING EXISTING VALVE BOXES	W-44
"		180	180	CU.YDS.	ROCK EXCAVATION	W-45
"		10	10	"	ADDITIONAL EXCAVATION	W-46
"	30	13	43	"	BRICK MASONRY	W-47
"	95	55	150	"	CONCRETE MASONRY 1.5 MIX -CLASS "C"	W-48
"	10	10	20	"	CONCRETE MASONRY 1.5 MIX -CLASS "C" HIGH EARLY	W-48
"	10	10	20	"	CONCRETE MASONRY 1.12 MIX -CLASS "T"	W-48
"	52	18	70	TONS	HAULING WATER WORKS MATERIAL	W-52
"		43	43	EACH	REMOVING EXISTING M.H.C.&C. AND VALVE BOXES - CLASS 8	W-54
"	2	7	9	"	REMOVING EXISTING M.H.C.&C. AND VALVE BOXES - CLASS 3 REST'N	W-54
"		1	1	"	REMOVING EXISTING M.H.C.&C. AND VALVE BOXES - CLASS 6 REST'N	W-54
"	2	1	3	"	REMOVING EXISTING M.H.C.&C. AND VALVE BOXES - CLASS 4 REST'N	W-54
"		1	1	"	SALVAGE & RELOCATE EX. 2" METER SETTING & CONSTRUCT NEW PIT	W-65
"	28		28	"	WELDING TIED PIPE - 48" REINFORCED CONCRETE PIPE	W-63
"	20		20	"	WELDING TIED PIPE - 36" REINFORCED CONCRETE PIPE	W-63
"	1		1	"	FURNISH AND INSTALL SINGLE GUTTER INLET IN TUNNEL	W-85
"	10,000	1500	11500	LBS	REINFORCING STEEL	C-3
"		60	60	LIN.FT.	CHANGING 6" & 8" SEWERS	S-20
"		60	60	"	CHANGING 12" THRU 15" PIPE SEWERS	S-3
"		60	60	"	CHANGING 24" AND LARGER PIPE SEWERS	S-3
"		1	1	EACH	ADJUSTING EXISTING VALVE CHAMBERS	S-11
"	10	2	12	M.BD.FT.	SHEETING AND BRACING ORDERED LEFT IN PLACE	S-25
		10	10	LIN. FT.	LAYING 4" CAST IRON PIPE,WITH RESTORATION CLASS 3	W-1
		15	15	"	LAYING 4" CAST IRON PIPE,WITH RESTORATION CLASS 6	W-1

CAST IRON MATERIAL

TYPE CODE Y-060

100% CITY COST	100% PROJECT COST	TOTAL	UNIT	DESCRIPTION
	1	1	EACH	18' LENGTH 10" CAST IRON PIPE H & S
	7	7	"	18' LENGTHS 8" CAST IRON PIPE M.J.
1	161	162	"	18' LENGTHS 6" CAST IRON PIPE M.J.
	2	2	"	8" 45° BENDS 2M.J.
	1	1	"	8" 221/2° BEND 2 M.J.
1	8	9	"	6" 90° BENDS 2 M.J.
	13	13	"	6" 45° BENDS 2 M.J.
	5	5	"	6" 221/2° BENDS 2 M.J.
	3	3	"	6" 111/4° BENDS 2 M.J.
2		2	"	36" PLUGS & PLUG CLAMPS
1	7	8	"	6" PLUGS & PLUG CLAMPS
1		1	"	4" PLUG & CLAMP
	1	1	"	10" X 8" REDUCER 2 P.E.
	1	1	"	10" X 6" REDUCER 2 P.E.
	2	2	"	4" X 3" REDUCER 2 P.E.
	4	4	"	10" SLEEVES -SOLID
	1	1	"	8" SLEEVE -SOLID
2	6	8	"	6" SLEEVES -SOLID
	2	2	"	3" SLEEVES -SOLID
	1	1	"	8" X 6" TEE 3 M.J.
1	5	6	"	6" X 6" TEES 3 M.J.
	1	1	"	6" X 4" TEE 3 M.J.
	1	1	"	10" X 6" TEE 3 M.J.
1		1	"	48" LAYDOWN VALVE 2 HUB
2		2	"	36" BUTTERFLY VALVES 2 FLANGE
	1	1	"	8" VALVE 2 M.J.
1	13	14	"	6" VALVES 2 M.J.
	1	1	"	4" VALVE 2 M.J.
9	9	18	"	M.H.C. & C.
1	8	9	"	VALVE BOX HOODS, LIDS & TELESCOPES
7		7	"	6" FIRE HYDRANTS (FURNISHED BY C.F.D.)
	1	1	"	4" W.W. CONN. VALVE
	1	1	"	6" M.J. x 4" FLG. TEE
	2	2	"	4" 45° BENDS-2M.J.
30	350	380	LIN.FT.	2" COPPER SERVICE PIPE
	30	30	"	3/4"" COPPER SERVICE PIPE
12	1	13	EACH	2" FERRULES
	13	13	"	1" FERRULES
	2	2	"	3/4" FERRULES
4	1	5	"	2" STOP COCKS
	2	2	"	3/4" STOP COCKS
2		2	"	2" WHEEL VALVES
8		8	"	2" 90° BENDS
2		2	"	2" X 2" TEES
	17	17	"	2" COPPER TO COPPER COUPLINGS
	2	2	"	3/4" COPPER TO IRON COUPLINGS
	2	2	"	CURB BOXES
	1	1	"	ROADWAY BOX

CONCRETE PIPE MATERIAL

TYPE CODE Y-060

QUANTITY	UNIT	100% CITY COST DESCRIPTION
225	LIN.FT.	36" REINFORCED CONCRETE PIPE - CLASS "B"
736	LIN.FT.	48" REINFORCED CONCRETE PIPE - CLASS "B"

NOTE.

ALL OF THE MATERIAL, EXCEPT FIRE HYDRANTS, LISTED ON THIS SUMMARY SHALL BE FURNISHED TO THE CONTRACTOR BY THE CINCINNATI WATER WORKS. THE CONTRACTOR SHALL PROCURE THE FIRE HYDRANTS FROM THE CINCINNATI FIRE DEPARTMENT. THE CAST IRON AND SERVICE BRANCH MATERIALS SHALL BE OBTAINED AT THE WATER WORKS YARDS AT 4747 SPRING GROVE AVENUE. IF GIVEN A MINIMUM NOTICE OF 24 HOURS, THE WATER WORKS WILL LOAD THIS MATERIAL ON THE CONTRACTORS TRUCKS.

THE CONCRETE PIPE AND SPECIALS WILL BE DELIVERED, BY THE PIPE FABRICATOR, TO ANY SPOT DESIGNATED BY THE CONTRACTOR WHICH IS ACCESSIBLE BY "OVER THE ROAD" TRACTOR TRAILER.

FED. RD. DIV.	STATE	PROJECT	FISCAL YEAR
2	OHIO		

112
492

HAMILTON COUNTY
HAM-71-(1.56) (2.51)

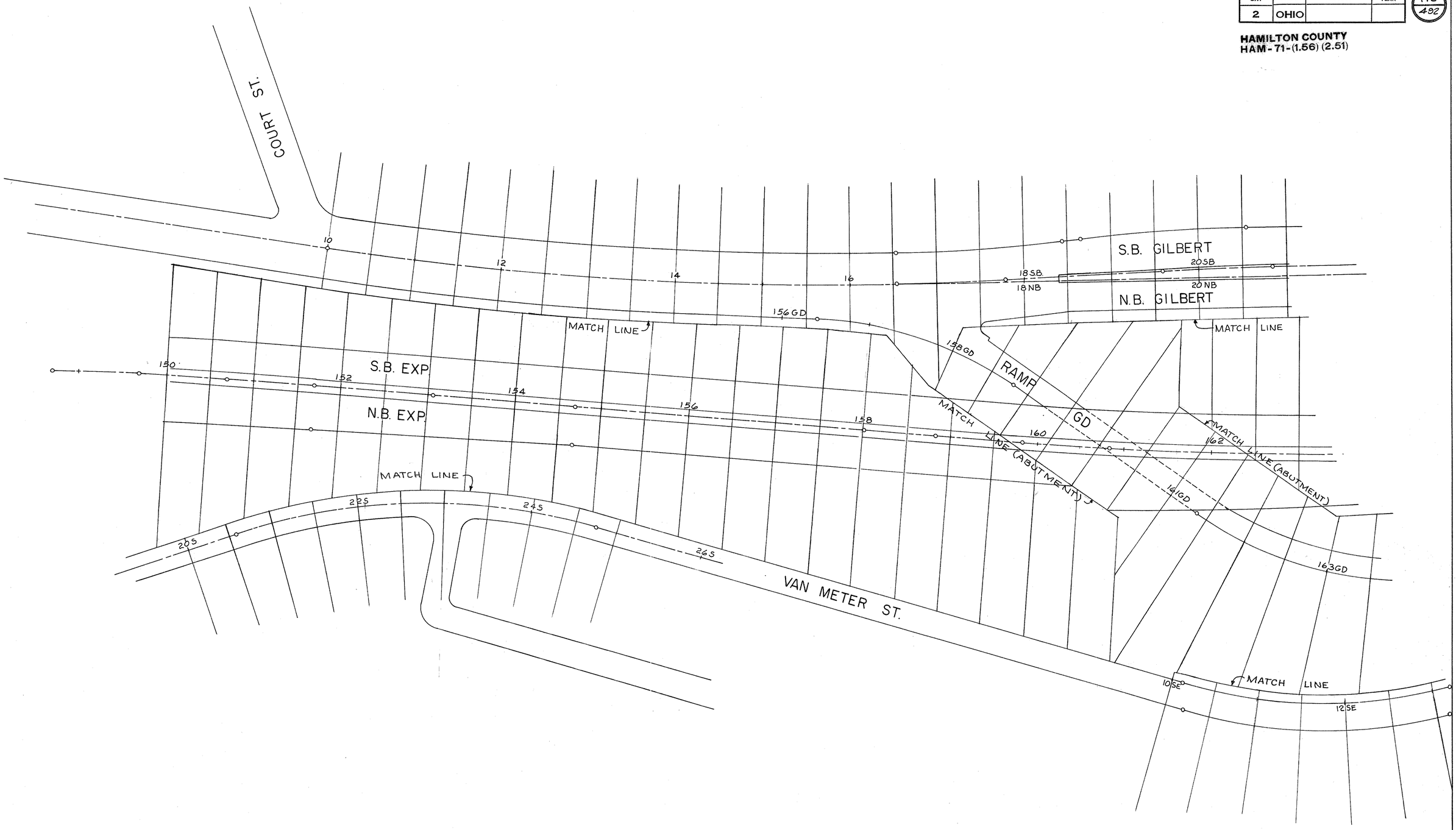

CROSS SECTION LOCATION DIAGRAM

FED. RD. DIV.	STATE	PROJECT	FISCAL YEAR
2	OHIO		

113
492

HAMILTON COUNTY
HAM-71-(1.56) (2.51)

CROSS SECTION LOCATION DIAGRAM

READING RD.
10 SBR
12 SBR
14 SBR
ELSINORE PLACE
N
+25
+50
℄ Reloc. Penn. R.R.
S
MATCH LINE (ABUT.)
177GA
175GA
173GA
171GA
169GA
167GA
22 SB
22 NB
24 SB
24 NB
MATCH LINE
S.B. GILBERT
RAMP GA
26 SB
26 NB
N.B. GILBERT
28 SB
28 NB
MATCH LINE (ABUT.)
179SB
177SB
175SB
173SB
179 NB
177 NB
175 NB
173 NB
170 SB.
170 NB.
S.B. EXP.
N.B. EXP.
164
166
168
163 NPN
165 NPN
167 NPN
MATCH LINE
163 GD
165 GD RAMP GD
167 GD
169 GD
171 GD
MATCH LINE (RET. WALL & ABUT.)
31
33
35
MATCH LINE
MATCH LINE (ABUT. & RET. WALL)
202+00
202+50
Sections for Penn. RR plotted to Sta 209+00
12 SE
14 SE
MATCH LINE
16 SE
18 SE
20 SE
22 SE
VAN METER ST.
ELSINORE AVE.
10+00
+25
+50
+75
1+00
1+16.5
MUSEUM PARKING LOT

FED. RD. DIV.	STATE	PROJECT	FISCAL YEAR
2	OHIO		

114
492

HAMILTON COUNTY
HAM-71-(1.56) (2.51)

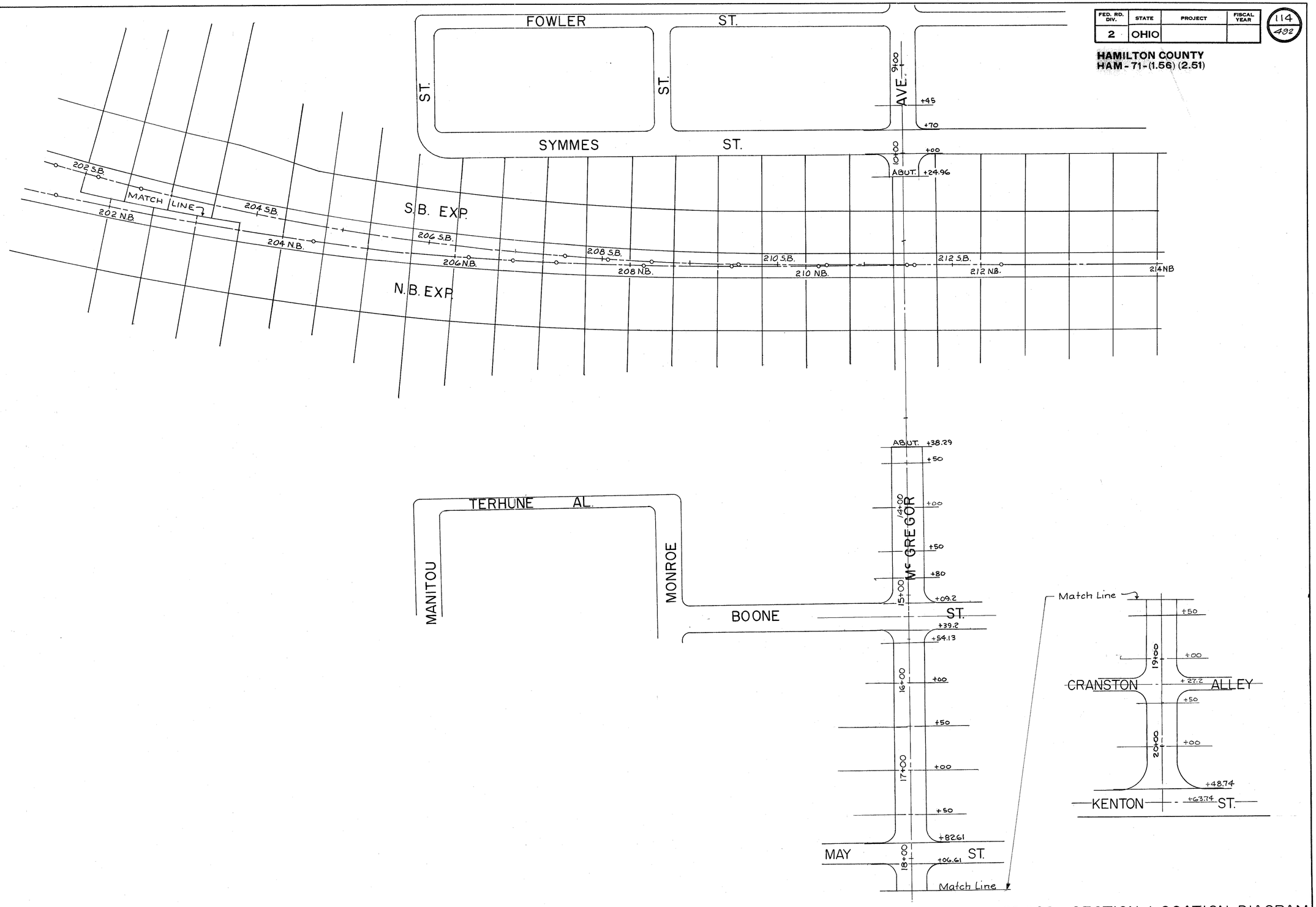

CROSS SECTION LOCATION DIAGRAM

SHEET NO.	STATE	STATE NO.
2	OHIO	

HAMILTON COUNTY
HAM-71-(1.56) (2.51)

150 100 50 ℄ 50 100

590 580 570 560 550

Proposed Ret. Wall No. 15

GILBERT AVE.

E. EIGHTH ST.

Ex. 12" P.S.

565.13
150+50
565.00

Match Line Sta. 150+50

Cellar Volume

600
590

2354 O

415 O

Match Line Sta. 149+97.25

1897 O

590 580 570 560 550

E. EIGHTH ST.

Bridge Abutment by Others

564.6
149+97.25
564.8

Ex. 12" P.S.

590 580 570 560 550 540

EXP. STA. 149+97.25 TO STA. 150+50

150 100 50 ℄ 50 100 150

2 OHIO
HAMILTON COUNTY
HAM-71-(8.56) (2.51)

100 50 ℄ 50 100

590
580
570
560
550

Proposed Ret. Wall No. 15
East Eight St.
566.63
152+00
567.70

East Sixth St.
Proposed Ret. Wall No. 16
Ex. 12" P.S.

2292 663

590
580
570
560
550

Match Line with
Gilbert Ave. Sect.

Proposed Ret. Wall No. 15
East Eight St.
566.13
151+50
567.50

Proposed Ret. Wall No. 16
East Sixth St.
Cellar Volume
Ex. 12" P.S.

4040 815

590
580
570
560

2071 217

590
580
570
560
550

Proposed Ret. Wall No. 15
East Eight St.
Cellar Volume
Ex. 12" P.S.
565.63
151+00
563.50

Cellar Volume

3814 342

590
580
570
560
550
540

2048 152

4076 141

100 50 ℄ 50 100 150

EXP. STA. 151+00 TO STA. 152+00

HAMILTON COUNTY
HAM-71-(1.56) (2.51)

150 100 50 ℄ 50 100

590
580
570
560
550

Gilbert Ave.

Proposed Ret. Wall No. 15

East Court St.

Ex. 18" P.S.

568.13
153+50
554.80

Proposed Ret. Wall No. 16

East Court St.

Ex. 18" P.S.

1372 2215

590
580
570
560
550

3210 3106

590
580
570
560
550

Match Line with
Gilbert Ave. Sect.

Gilbert Ave.

East Eigth St.

East Court St.

Proposed Ret. Wall No. 15

Ex. 18" P.S.

567.63
153+00
567.50

Proposed Ret. Wall No. 16

East Sixth St.

2095 1140

590
580
570
560
550

Match Line With
Van Meter Sect.

3856 1930

590
580
570
560
550
540

Proposed Ret. Wall No. 15

East Eigth St.

567.13
152+50
571.80

East Sixth St.

Proposed Ret. Wall No. 16

2070 944

4039 1488

150 100 50 ℄ 50 100 150

EXP. STA. 152+50 TO STA. 153+50

HAMILTON COUNTY
MARK TWAIN (LESS) (2.61)

150 100 50 ℄ 50 100

590 580 570 560 550

Gilbert Ave.

570.06
155+00
544.50

Ex. 12" P.S.

East Court St.

Ex. 12" P.S.

East Court St.

East Sixth St.

590 580 570 560 550

173 2647

Match Line with Van Meter Sect.

665 4682

590 580 570 560 550 540

Match Line with Gilbert Ave. Sect.

Gilbert Ave.

569.33
154+50
544.40

Ex. 12" P.S.

East Court St.

Ex. 18" P.S.

Proposed Ret. Wall No. 16

East Court St.

Ex. 18" P.S.

East Sixth St.

590 580 570 560 550

545 2910

1403 4419

590 580 570 560 550 540

Proposed Ret. Wall No. 15

Gilbert Ave.

568.69
154+00
544.40

East Court St.

Ex. 18" P.S.

Proposed Ret. Wall No. 16

East Court St.

970

Ex. 18" P.S.

East Sixth St.

590 580 570 560 550 540

970 2363

2169 4239

150 100 50 ℄ 50 100 150

EXP. STA. 154+00 TO STA. 155+00

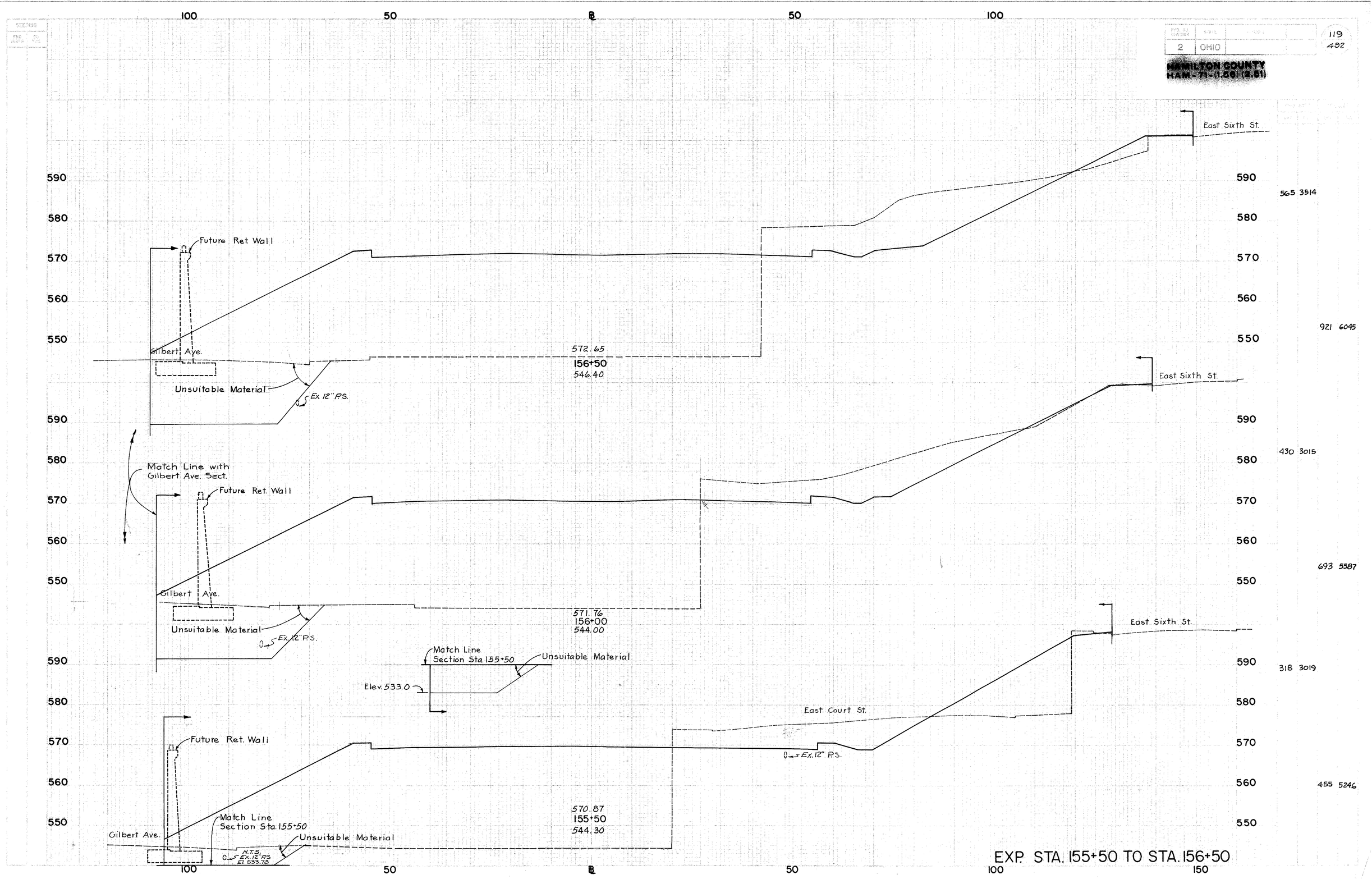

2
OHIO
HAMILTON COUNTY
HAM-71-(1.56)(2.51)
119
492
East Sixth St.
Future Ret. Wall
Gilbert Ave.
Unsuitable Material
Ex. 12" P.S.
572.65
156+50
546.40
Match Line with Gilbert Ave. Sect.
571.76
156+00
544.00
Match Line Section Sta. 155+50
Elev. 533.0
East Court St.
570.87
155+50
544.30
N.T.S.
Ex. 12" P.S.
El. 533.78
565 3514
921 6045
430 3015
693 5587
318 3019
455 5246
EXP. STA. 155+50 TO STA. 156+50

HAMILTON COUNTY
HAM-71-(1.56) (2.51)

100 50 ℄ 50 100

590 580 570 560 550

Future Ret. Wall

Gilbert Ave.

575.73
158+00
547.60

Unsuitable Material

℄ Ex. 12" P.S.

Match line with Gilbert Ave. Sect

590 580 570 560 550

Future Ret. Wall

Gilbert Ave.

574.73
157+50
546.50

Unsuitable Material

℄ Ex. 12" P.S.

Match Line Section Sta. 157+00

Unsuitable Material

Elev. 528.0±

590 580 570 560 550

Future Ret. Wall

Match Line Section Sta. 157+00

Gilbert Ave.

Unsuitable Material

573.73
157+00
546.30

℄ N.T.S. Ex. 12" P.S. Inv. 534.91

100 50 ℄ 50 100 150

590 580 570 560 550

547 4390

590 580 570 560 550

560 4074

590 580 570 560 550

1194 7265

E. Sixth St.

Cellar Volume

590 580 570 560 550

730 3762

1199 6737

1025 7837

EXP. STA. 157+00 TO STA. 158+00

2	OHIO		

HAMILTON COUNTY
HAM-71-(1.56) (2.51)

℄ 50 100 150 200

590
580
570
560
550
540

Unsuitable Material
Ex. 12" P.S.
578.73
159+50
547.30

℄ 50 50 ℄ 159+00 100 50 150 100 200 150

Cellar Volume

Match Line with Ramp GD Sect.
South Abut. Struct. No. HAM-71-0173

Gilbert Ave.
Unsuitable Material
Ex. 12" P.S.
577.73
159+00
547.8

Match Line Section Sta. 158+50
524.57
Unsuitable Material

South Abut. Struct. No. HAM-71-0072

Gilbert Ave.
Unsuitable Material
Ex. 12" P.S.
576.73
158+50
547.70
Match Line Section Sta. 158+50

E. Sixth Sixth

153 3586
711 6919
615 3887
1418 7588
917 4308
1356 8054

50 ℄ 50 100 150 200

EXP. STA. 158+50 TO STA. 159+50

STATE	PROJECT
OHIO	

HAMILTON COUNTY
HAM-71-(1.56)(2.51)

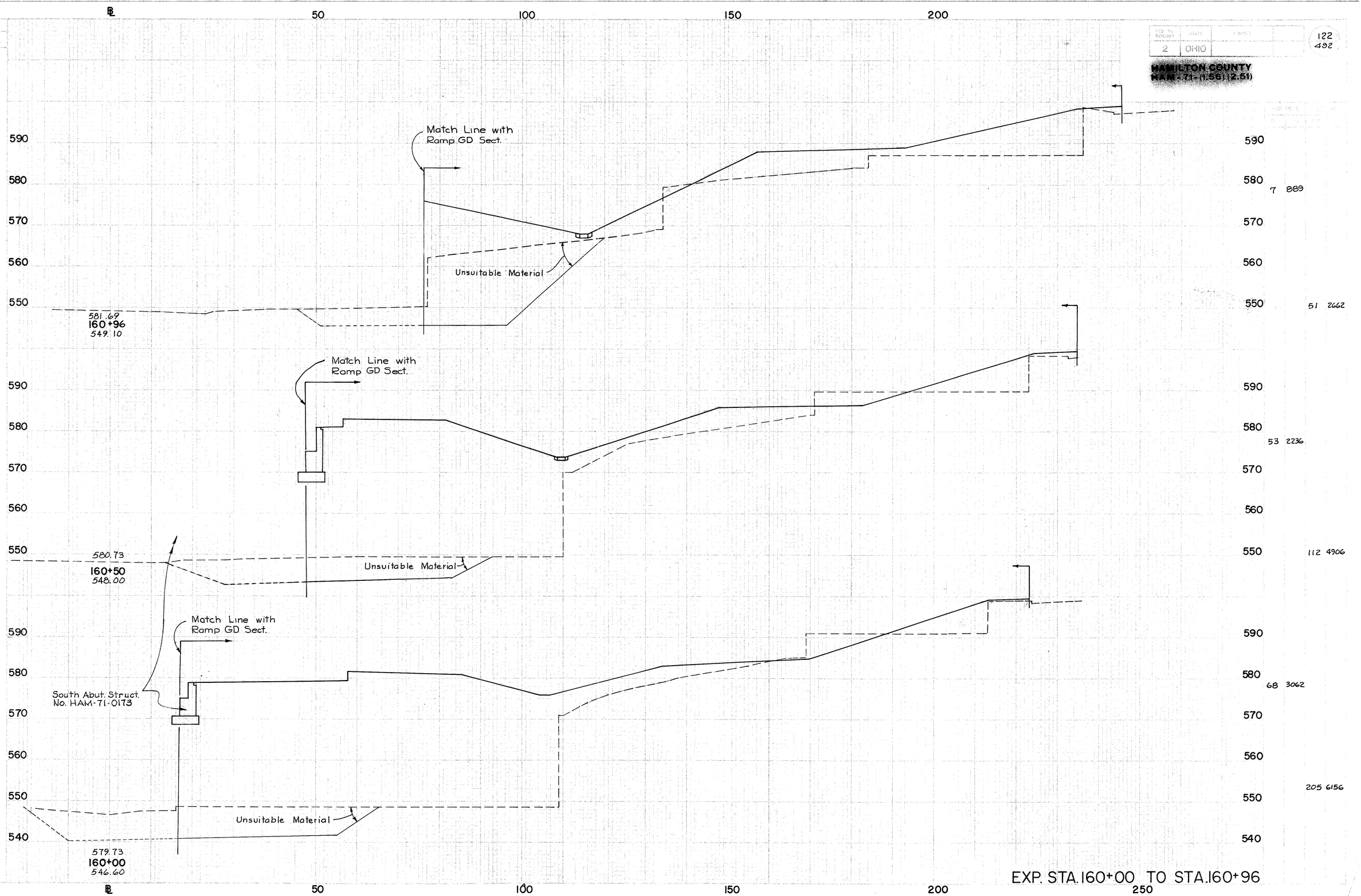

EXP. STA. 160+00 TO STA. 160+96

HAMILTON COUNTY
HAM-71-(1.56) (2.51)

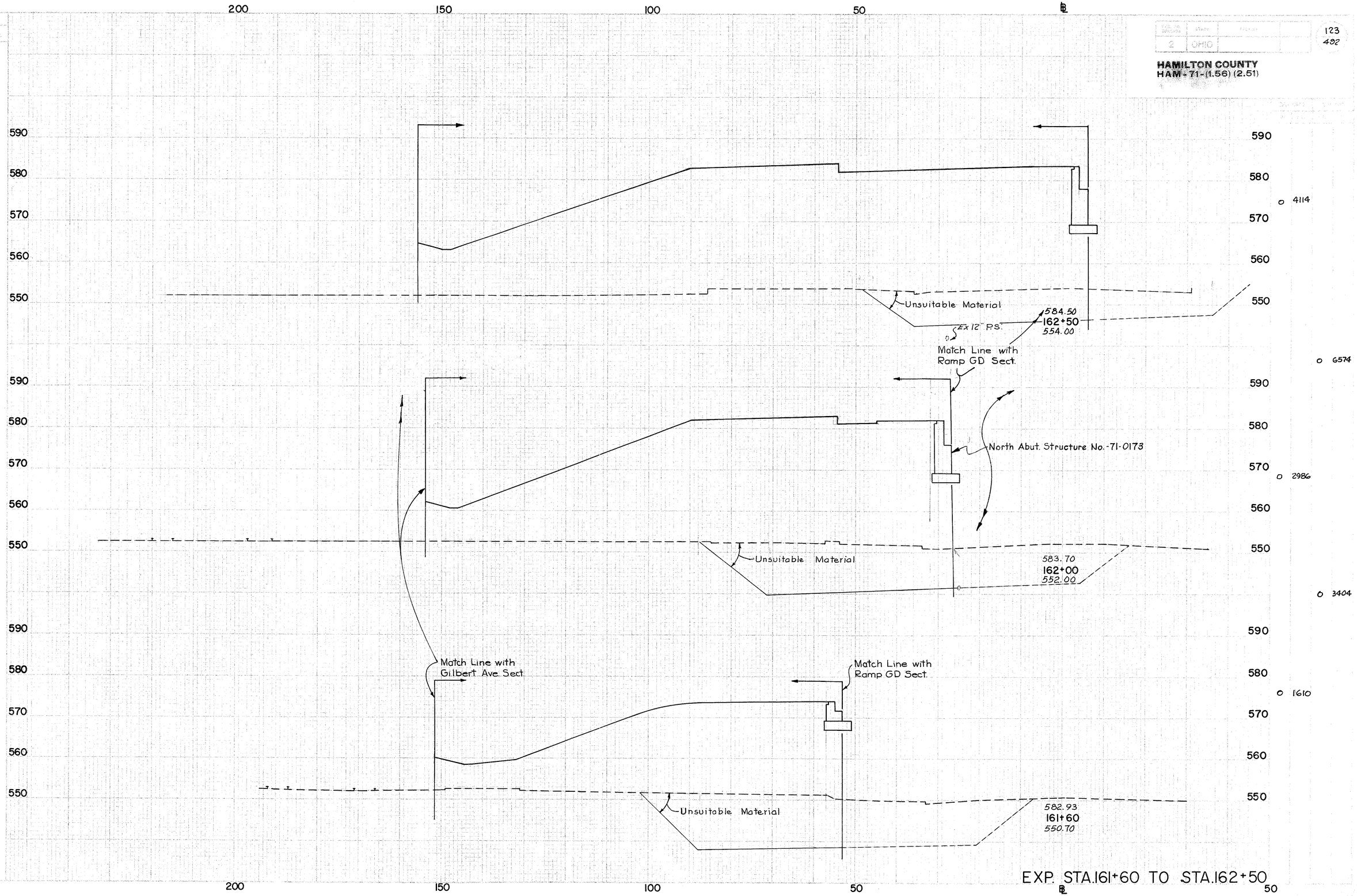

EXP. STA.161+60 TO STA.162+50

HAMILTON COUNTY
HAM-71-(1.56) (2.51)

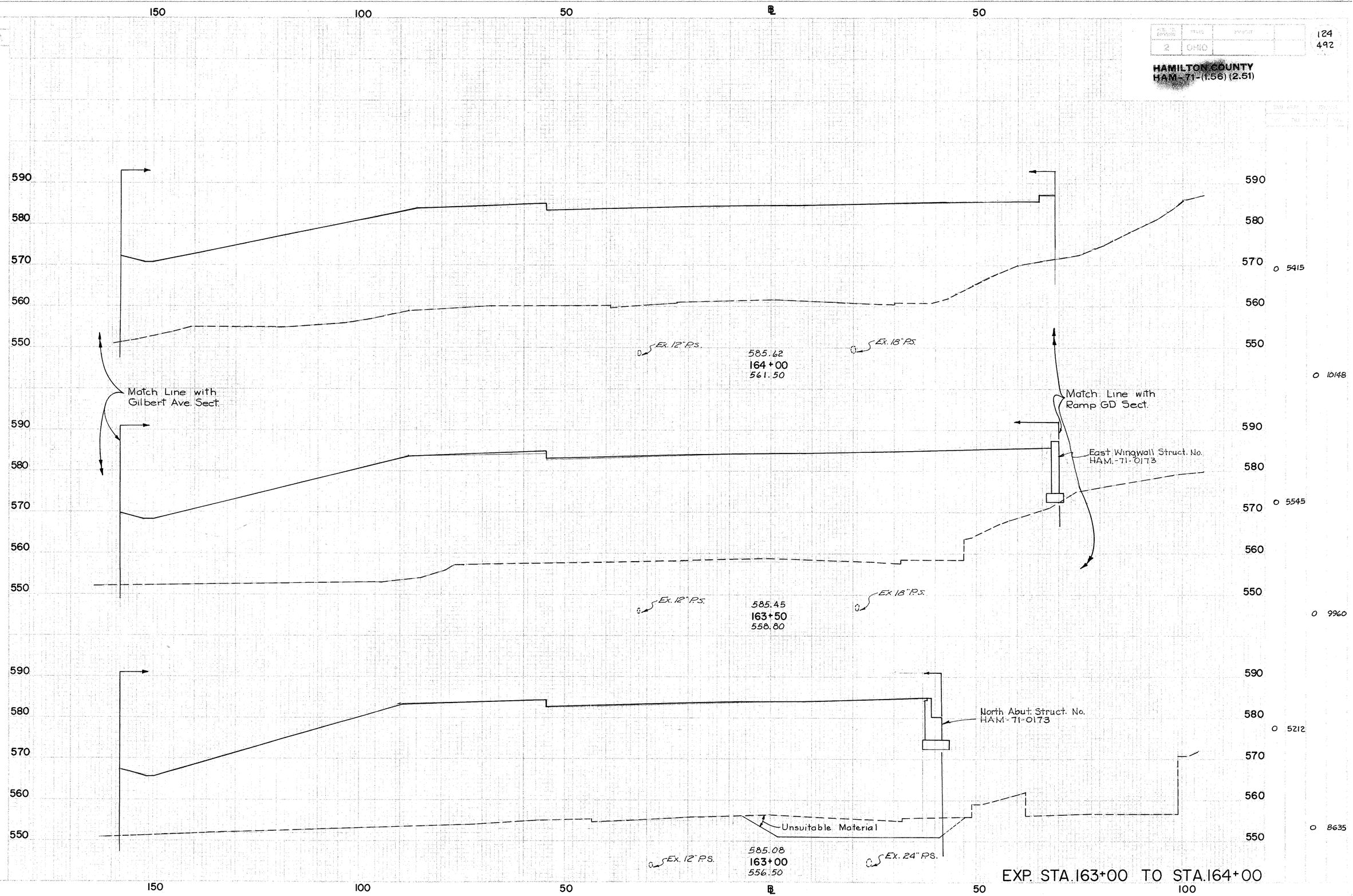

EXP. STA. 163+00 TO STA. 164+00

Exist Ground ck'd 7-27-64

SHEET NO.	STATE	PROJECT	125
2	OHIO		492

HAMILTON COUNTY
HAM - 71 - (1.56) (2.51)

150 100 50 ℄ 50

590
580
570
560
550

Ex. 12" P.S.
Ex. 18" P.S.

585.11
165+50
569.00

Match Line with
Gilbert Ave. Sect.

Match Line with
Ramp GD Sect.

590
580
570
560
550

Ex. 12" P.S.
Ex. 18" P.S.

585.36
165+00
566.70

590
580
570
560
550

Ex. 12" P.S.
Ex. 18" P.S.

585.78
164+50
563.80

0 3905
0 7491
0 4185
0 8288
0 4766
0 9436

EXP. STA. 164+50 TO STA. 165+50

150 100 50 ℄ 50 100

Exist Ground Cld 7-27-64

HAMILTON COUNTY
HAM - 71 - (1.56) (2.51)

150 100 50 ℄ 50

600 590 580 570 560 550

Proposed Ret. Wall No. 21
Match Line Sta. 167+00
590
580

Match Line Sta. 167+00
590
580
191 2934

Ex. 12" P.S.
584.41
167+00
577.0

Ex. 18" P.S.

Proposed Ret. Wall No. 21
Match Line Sta. 166+50
590
580

Match Line with Gilbert Ave. Sect.

Match Line with Van Meter St. Sect
600
590
580
570
543 5767

Match Line Sta. 166+50
590
580
395 3294

Ex. 12" P.S.
584.66
166+50
574.7

Ex. 18" P.S.

Match Line Sta. 166+00
Area = 264
Prop. Ret. Wall No 21
580
Area Ahead
570

STA 166+50 TO STA 175+00
PROFILE GRADE & CROSS-SECTIONS
CARRIED ON N.B. ROADWAY

Note: Area between Match Lines to be added to area shown on Sh. No. 163 to give total area back for Sta. 165+88 Ramp GD

865 6369

600 590 580 570 560 550

Match Line Sta. 166+00
590
Area = 285
580
Area = 223
Cellar Vol.
570
Ahead 539 3584
Back 0 3361

Ex. 12" P.S.
584.86
166+00
571.40

Ex. 18" P.S.

Area Back
560
550

0 6728

EXP. STA. 166+00 TO STA. 167+00

150 100 50 ℄ 50 100

Exist. Ground Ckd 7-27-64

150 100 50 N.B. ℄ 50 100

FED. AID DIVISION	STATE	PROJECT	127
2	OHIO		492

HAMILTON COUNTY
HAM-71-(1.56) (2.51)

610 600 590 580 570

℄ S.B.
Ex 12" P.S.
583.78
168+50
584.2
Ex 18" P.S.
Proposed Ret. Wall No. 21
615 328

610 600 590 580 570 560

Match Line with Gilbert Ave. Sect.
℄ S.B.
Ex. 12" P.S.
583.91
168+00
581.9
Ex 18" P.S.
Match Line with Van Meter St. Sect
Proposed Ret. Wall No. 21
1040 1098
508 858
761 2954

600 590 580 570 560 550

℄ S.B.
Ex 12" P.S.
584.16
167+50
579.5
Ex 18" P.S.
Ex. 12" P.S.
Proposed Ret. Wall No. 21
314 2332
468 4876

EXP. STA. 167+50 TO STA. 168+50

150 100 50 N.B. ℄ 50 100 150

Exist. Ground Ckd 7-27-64

HAMILTON COUNTY
HAM-71-(1.56) (2.51)

150 100 50 N.B. ℄ 50 100

620 610 600 590 580 570

Proposed Ret Wall No. 19

Ex. 18" P.S.

Ex. 12" P.S.

Proposed Ret. Wall No. 21

584.41
170+00
591.4

1135 0

610 600 590 580 570

Match Line with Gilbert Ave. Sect.

Proposed Ret. Wall No. 19

℄ S.B.

Ex. 12" P.S.

Ex. 18" P.S.

Match Line with Gilbert Ave. Sect.

Proposed Ret. Wall No. 21

584.16
169+50
588.5

1741 315

610 600 590 580 570

745 340

1222 1023

610 600 590 580 570 560

Proposed Ret. Wall No. 21

℄ S.B.

Ex. 12" P.S.

Ex. 18" P.S.

℄ Ramp GD

583.91
169+00
586.5

575 765

1102 1012

EXP. STA. 169+00 TO STA. 170+00

150 100 50 N.B. ℄ 50 100 150

Ex. & Ground Ck'd G.J.T. 7-27-64

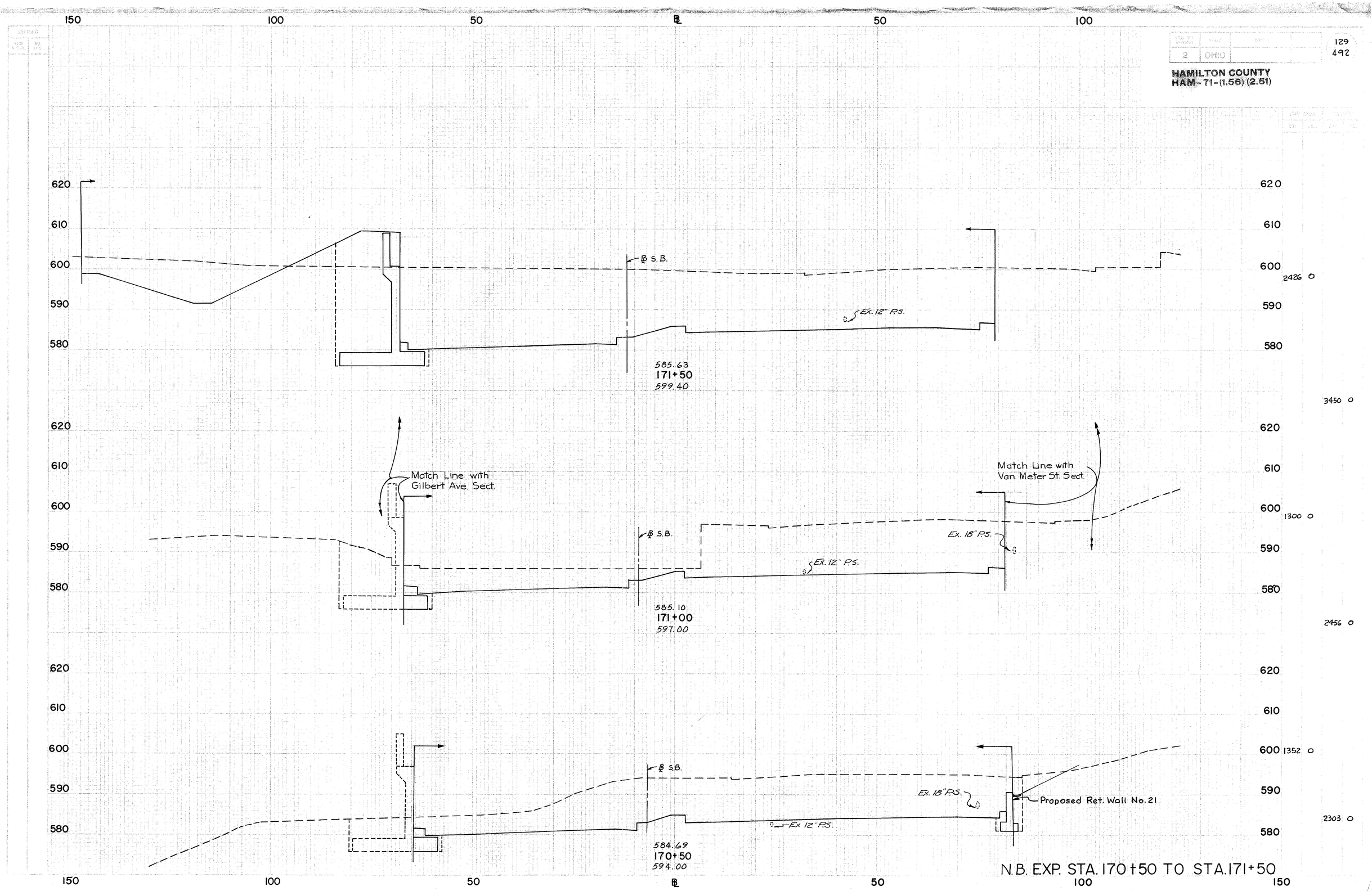

2 OHIO
129
492
HAMILTON COUNTY
HAM-71-(1.56) (2.51)
150
100
50
℄
50
100
620
610
600
590
580
℄ S.B.
Ex. 12" P.S.
585.63
171+50
599.40
2426 0
3450 0
Match Line with
Gilbert Ave. Sect.
Match Line with
Van Meter St. Sect.
Ex. 18" P.S.
Ex. 12" P.S.
585.10
171+00
597.00
1300 0
2456 0
Ex. 18" P.S.
Proposed Ret. Wall No. 21
Ex 12" P.S.
584.69
170+50
594.00
1352 0
2303 0
N.B. EXP. STA. 170+50 TO STA. 171+50
Exist Ground Ch'd G.J.T. 7-27-64

HAMILTON COUNTY
HAM-71-(1.56)(2.51)

200 150 100 50 ℄

℄ Proposed Railroad Track
℄ Prop. R.R Siding Conn.
Match Line Sta. 173+00
Tracks & Ballast by Others

℄ Proposed Driveway
Match Line Sta. 173+00
℄ GA
℄ S.B.
587.93
173+00
606.20
4525 0

Match Line with Van Meter St. Sect.
7971 0

Concrete Encased Track across Driveway by Others
℄ Proposed Railroad Track
Grading by Contractor
Match Line Sta. 172+50
250
200
℄ GA
Match Line Sta. 172+50
Ex. 12" P.S.
℄ S.B.
4084 0

Track, Ballast & Grading by Others
Match Line Sta. 172+00
587.04
172+50
603.80
7207 0

℄ GA
Match Line Sta. 172+00
RAMP GA
Proposed Ret. Wall No. 20
℄ S.B.
Match Line
Ex 12" P.S.
3700 0

586.28
172+00
602.00
5672 0

N.B. EXP. STA. 172+00 TO STA. 173+00

200 150 100 50 ℄ 50

Exist Ground Ckd T-27-64

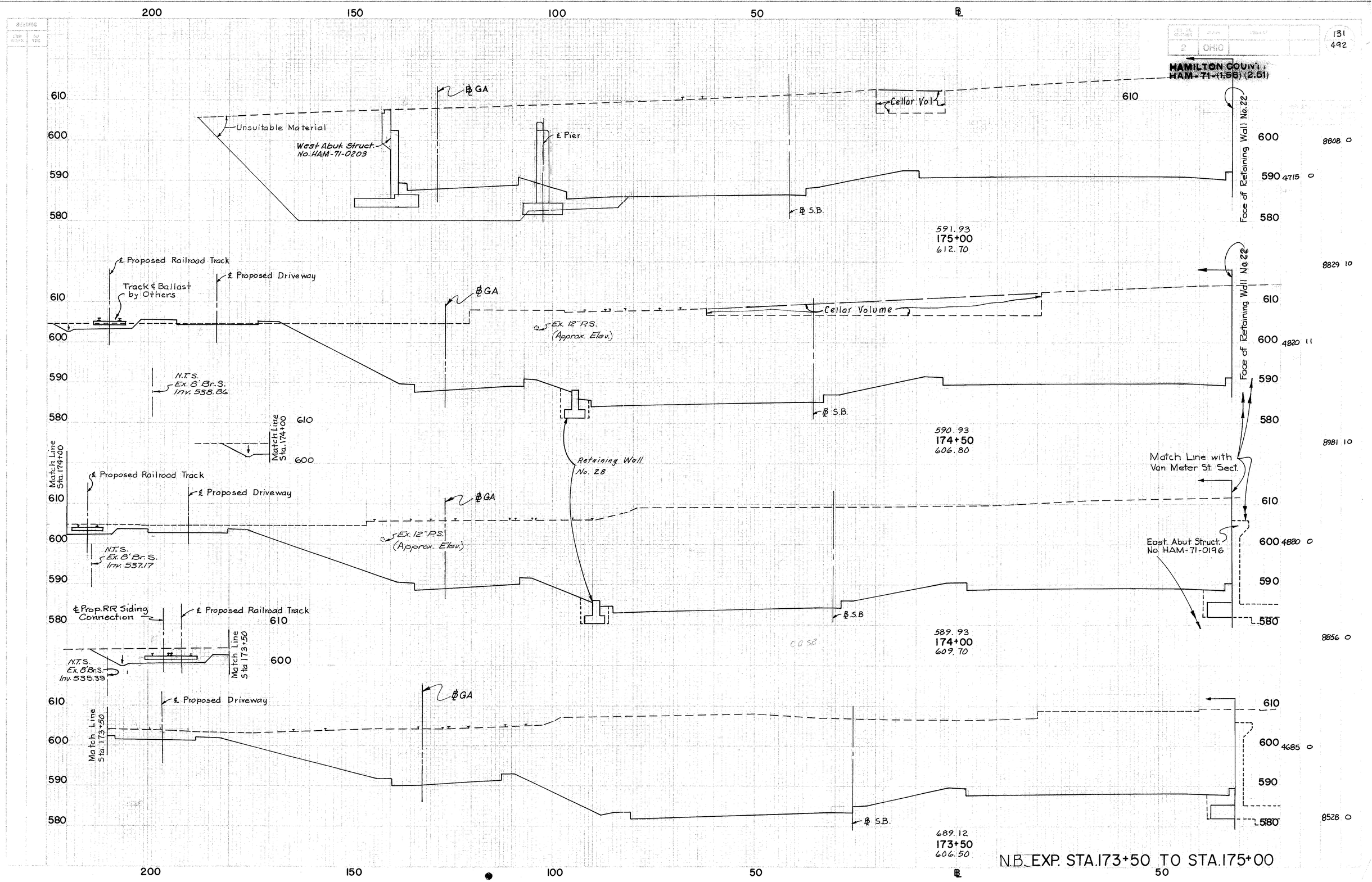

2 OHIO
131
492
HAMILTON COUNTY
HAM-71-(1.56) (2.51)
Unsuitable Material
West Abut. Struct. No. HAM-71-0203
℄ GA
℄ Pier
Cellar Vol.
℄ S.B.
Face of Retaining Wall No. 22
591.93
175+00
612.70
℄ Proposed Railroad Track
Track & Ballast by Others
℄ Proposed Driveway
Ex. 12" P.S. (Approx. Elev.)
Cellar Volume
N.T.S. Ex. 8' Br.S. Inv. 538.86
Match Line Sta. 174+00
590.93
174+50
606.80
Retaining Wall No. 28
Match Line with Van Meter St. Sect.
N.T.S. Ex. 8' Br.S. Inv. 537.17
East. Abut. Struct. No. HAM-71-0196
℄ Prop. RR Siding Connection
N.T.S. Ex. 8' Br.S. Inv. 535.39
Match Line Sta. 173+50
589.93
174+00
609.70
689.12
173+50
606.50
8808 0
4715 0
8829 10
4820 11
8981 10
4880 0
8856 0
4685 0
8528 0
N.B. EXP. STA. 173+50 TO STA. 175+00

2 OHIO
HAMILTON COUNTY
HAM-71-(1.56) (2.51)

50 ℄ 50 100 150 200

620
610
600
590

595.93
177+00
615.50

Ex. 8" P.S. (Approx. Elev.)
Proposed Ret. Wall No. 23
Ex. 18" P.S.

2501 O
4643 O

620
610
600
590

594.93
176+50
614.90

Ex 8" P.S. (Approx. Elev.)
Proposed Ret. Wall No. 23
Ex. 18" P.S.

2513 O
4460 O

Match Line with S.B. Exp. Sect.

620
610
600
590

593.93
176+00
614.40

Face of Abut. Bridge No. HAM-71-0203
Match Line with Gilbert Ave. Sections
Ex. 18" P.S.

2304 O
4207 O

620
610
600
590

592.93
175+50
614.2

Face of Abut. Bridge No. HAM-71-0203
Match Line with Gilbert Ave. Sections
Ex. 12" P.S.
Ex. 18" P.S.

2240 O

50 ℄ 50 100 150 200

N.B. EXP. STA. 175+50 TO STA. 177+00

Exist. Ground Ck'd 7-27-64

HAMILTON COUNTY
HAM-71-(1.56) (2.51)

200 150 100 50 ℄

610
600
590
580

℄ GA
N.T.S.
Ex. 18" P.S.
Inv. 557.42
N.T.S.
Ex. 8' Br. S.
Inv. 546.27
593.32
177+00
612.70
2840 ○
4986

610
600
590
580

Unsuitable Material
Face of Ret Wall No. 27
℄ GA
N.T.S.
Ex 18" P.S.
Inv. 565.43
N.T.S.
Ex. 8' Br. S.
Inv. 544.66
591.62
176+50
612.10
2545 ○
4634
Match Line with N.B. Exp. Sect

610
600
590
580

Unsuitable Material
West Abut. Struct.
No. HAM.-71-0207
℄ GA
590.06
176+00
612.00
2460 ○
4646 ○

610
600
590
580

Unsuitable Material
West Abut. Struct.
No. HAM.-71-0203
℄ GA
588.65
175+50
611.50
2558 ○

200 150 100 50 ℄ 50

S.B. EXP. STA. 175+50 TO STA. 177+00

Exist Ground Ckd 7-27-64

50 ℄ 50 100 150

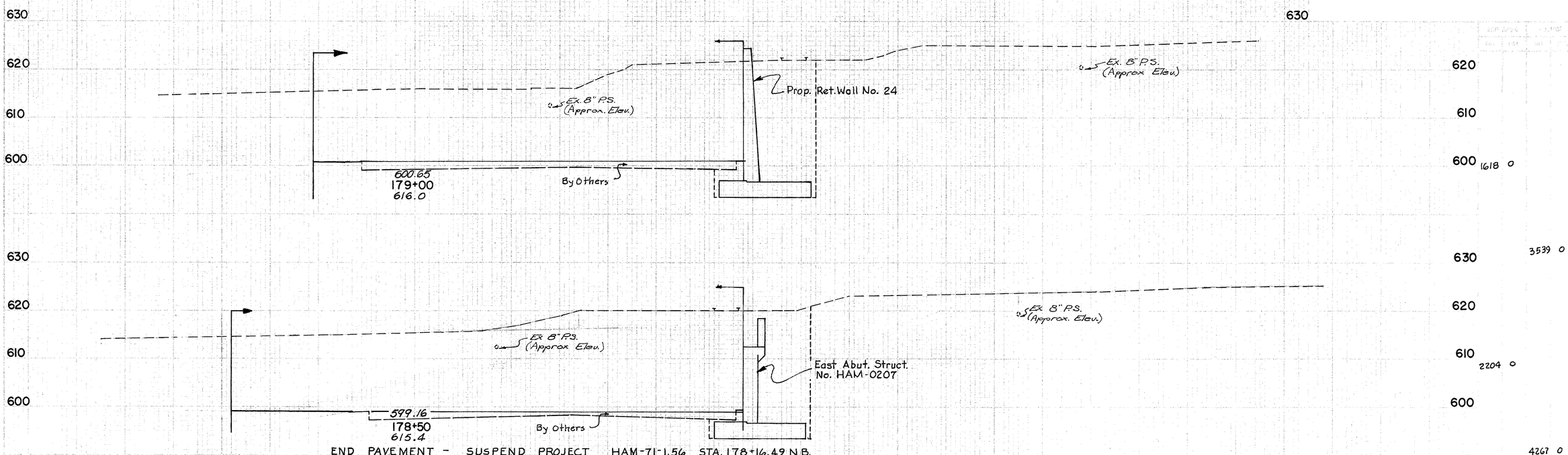

END PAVEMENT - SUSPEND PROJECT HAM-71-1.56 STA. 178+16.49 N.B.

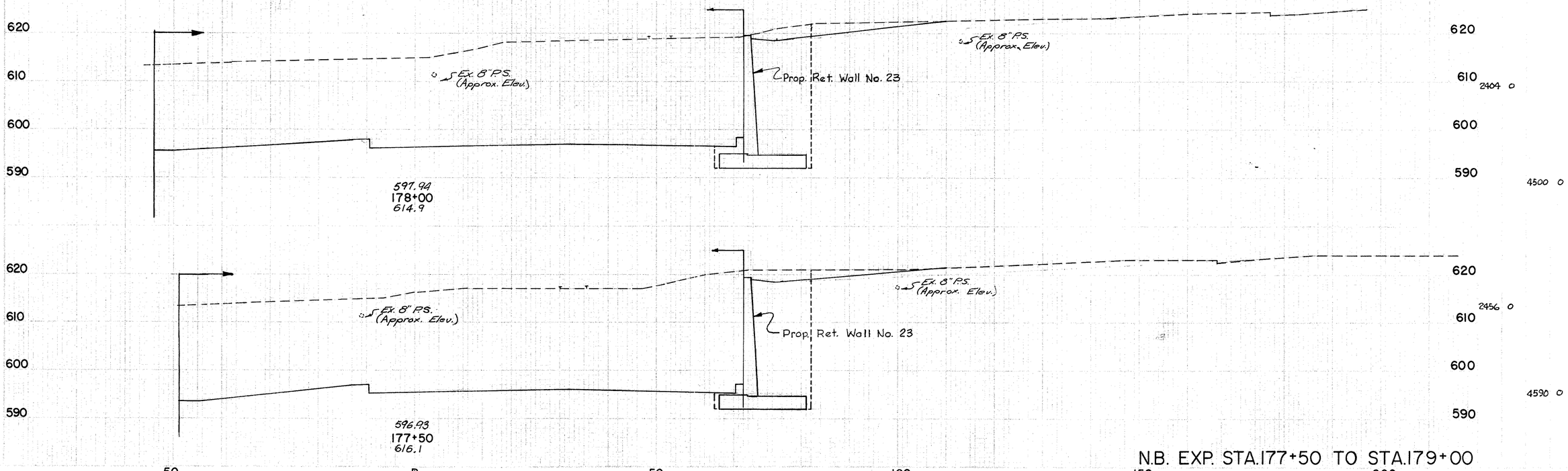

N.B. EXP. STA.177+50 TO STA.179+00

50 ℄ 50 100 150 200

Exist Ground Cld G.J.T. 7-21-64

50 ℄ 50 100 150

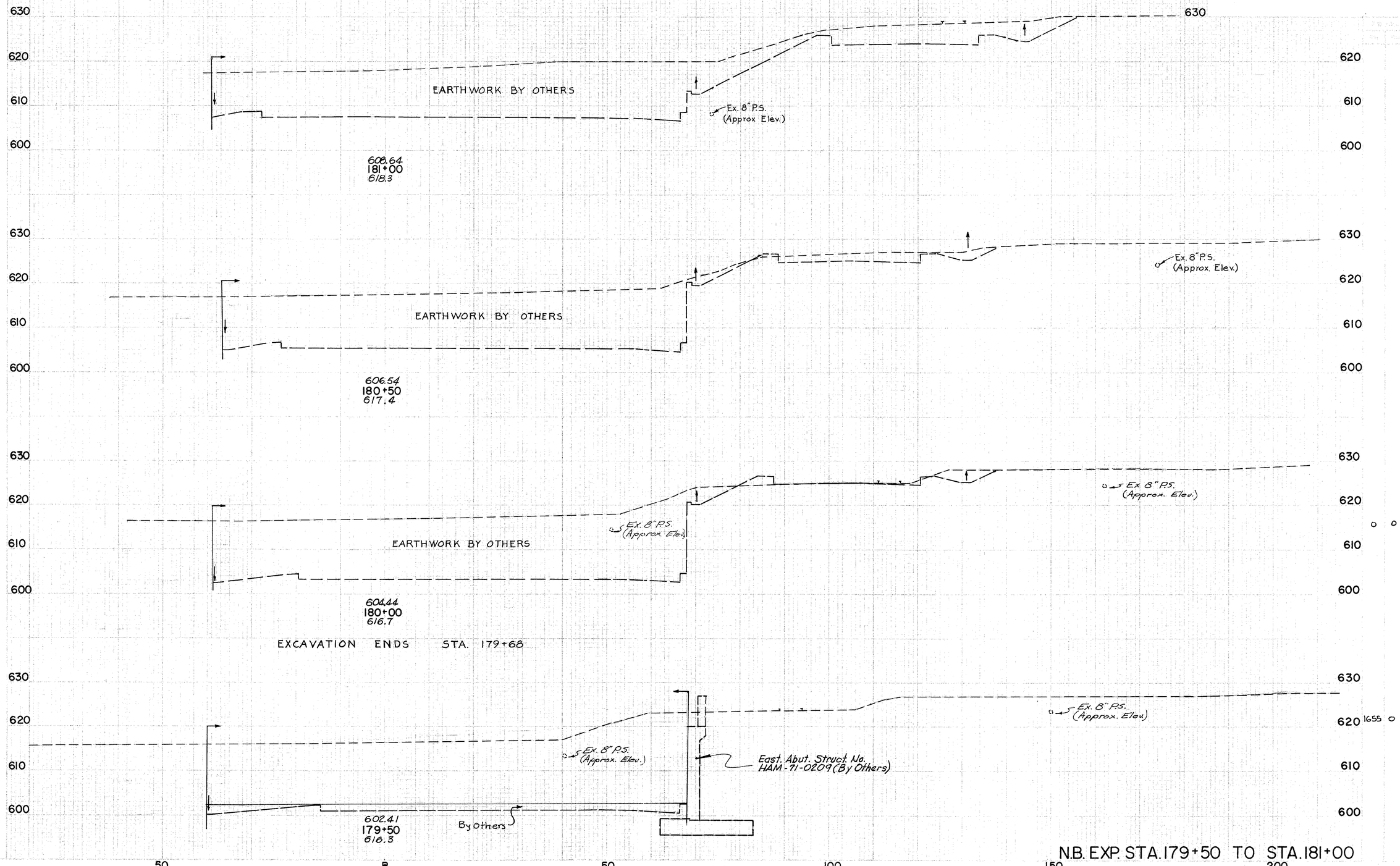

N.B. EXP. STA. 179+50 TO STA. 181+00

50 ℄ 50 100 150 200

Exist Ground Ch'd G.J.T. 7-21-64

END EXCAVATION STA 179+68 NB
END EXCAVATION STA 179+32 SB

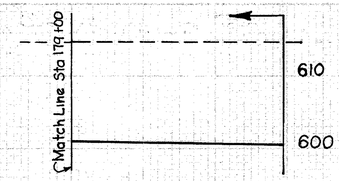

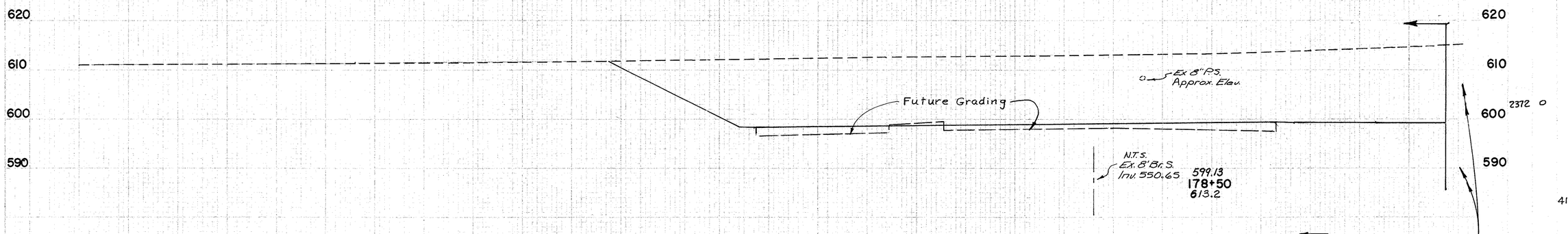

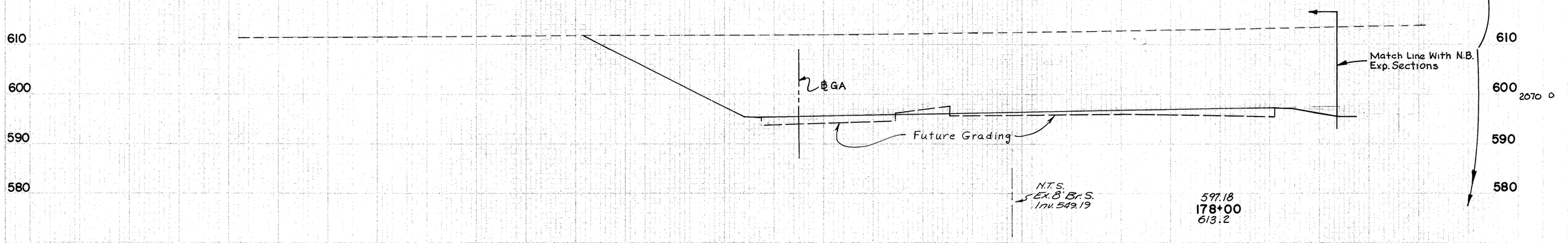

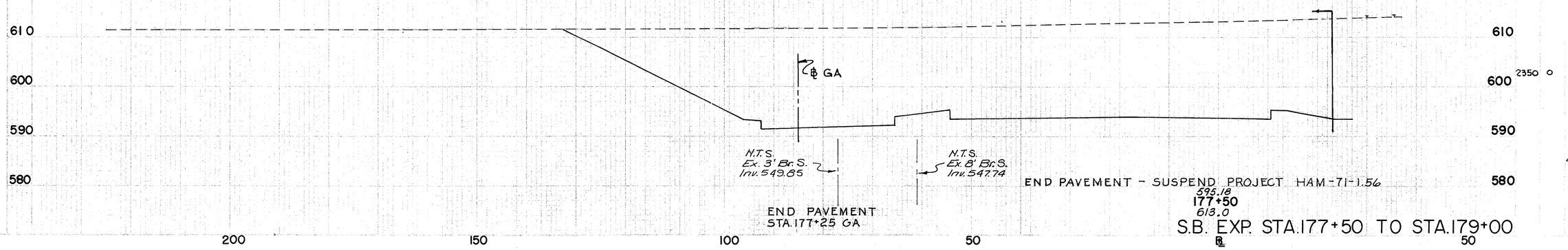

S.B. EXP. STA. 177+50 TO STA. 179+00

Exist. Ground dist. G.J.T. 7-27-64

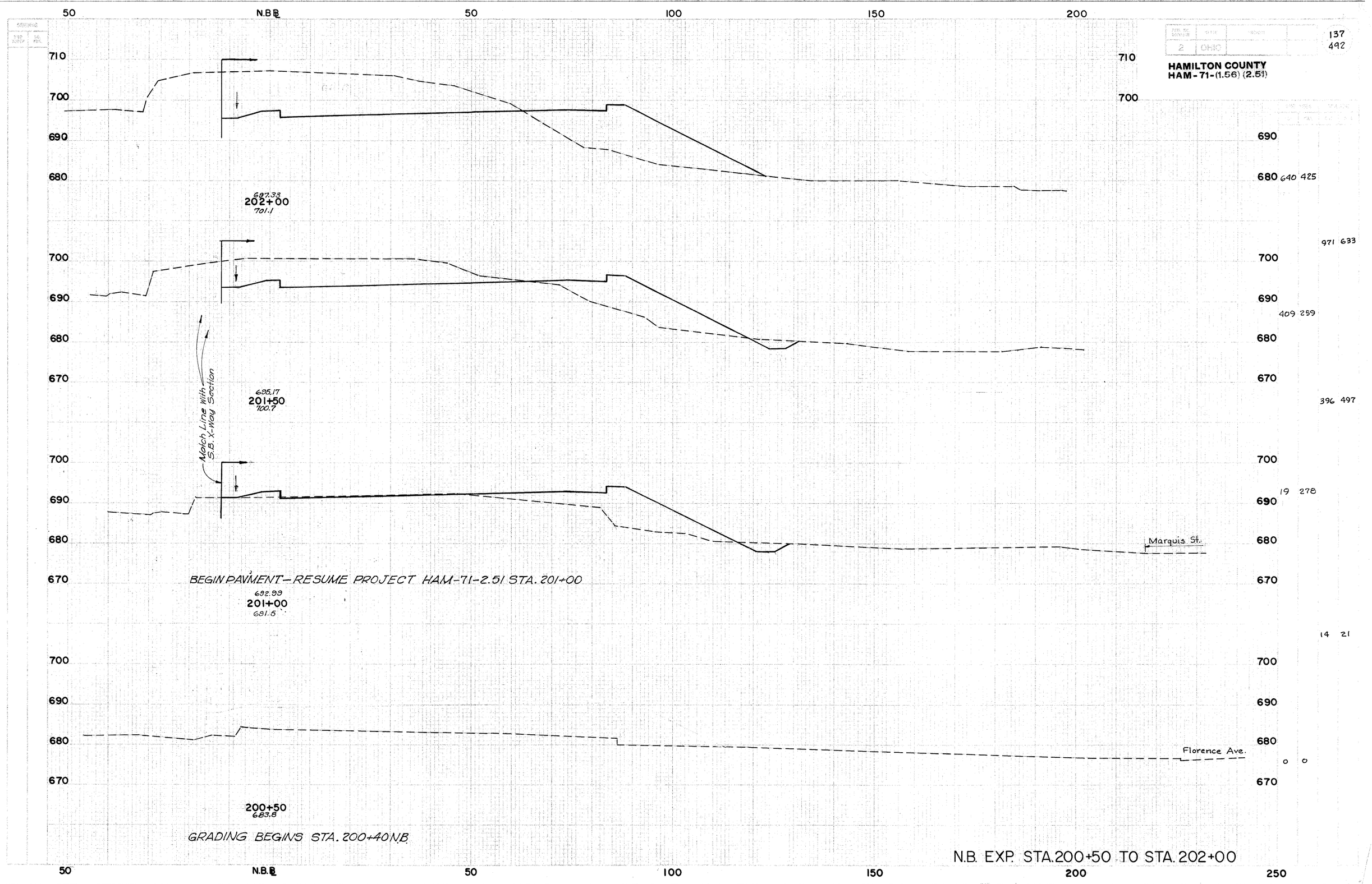

50
N.B.℄
50
100
150
200
2
OHIO
137
492
HAMILTON COUNTY
HAM-71-(1.56) (2.51)
710
700
690
680
697.33
202+00
701.1
640 425
971 633
700
690
680
670
409 259
695.17
201+50
700.7
396 497
Match Line With S.B. X-Way Section
700
690
680
670
19 278
Marquis St.
BEGIN PAVMENT-RESUME PROJECT HAM-71-2.51 STA. 201+00
692.99
201+00
691.5
14 21
700
690
680
670
Florence Ave.
0 0
200+50
683.8
GRADING BEGINS STA. 200+40 N.B.
N.B. EXP. STA. 200+50 TO STA. 202+00
50
N.B.℄
50
100
150
200
250

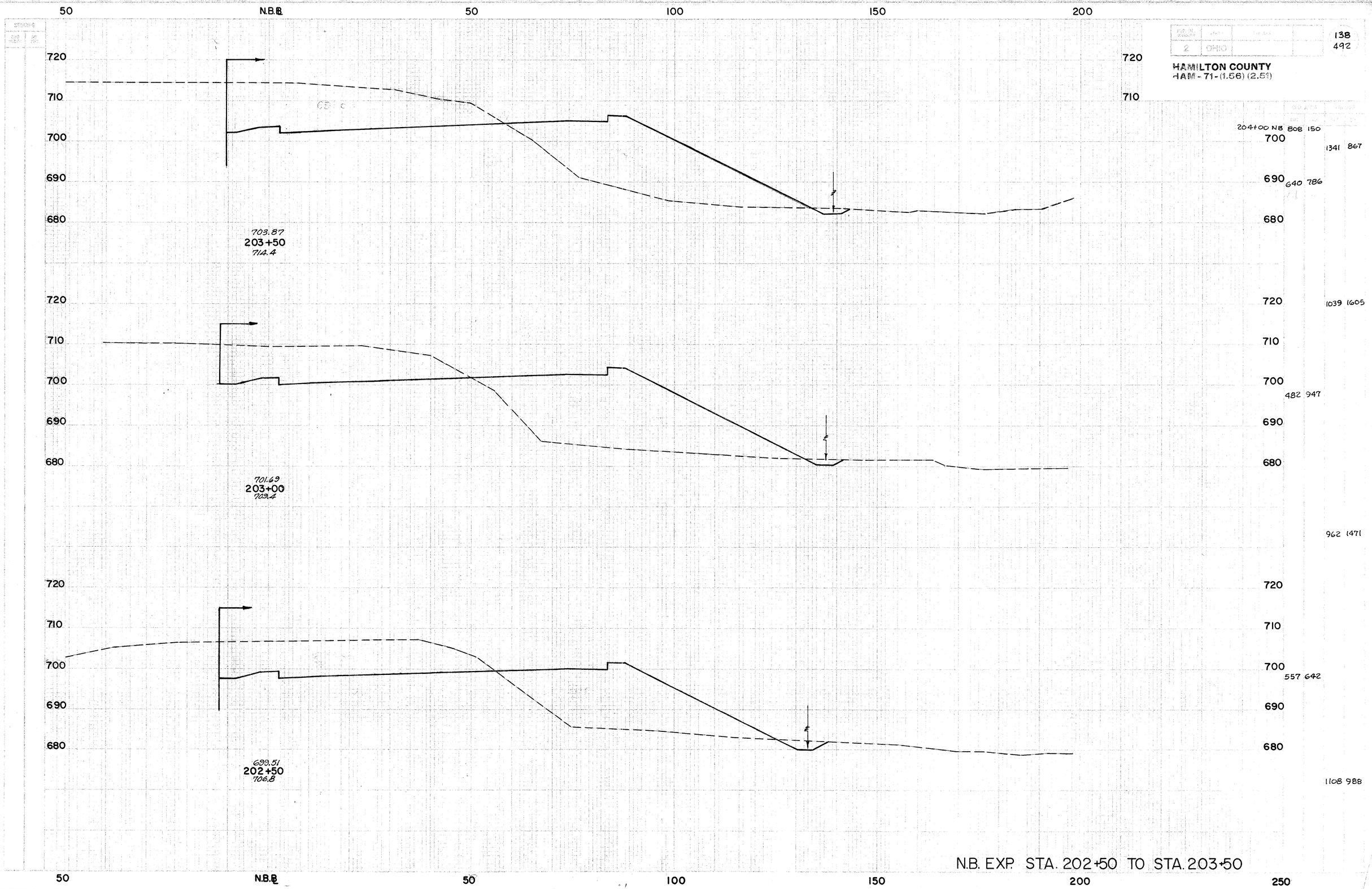

N.B. EXP. STA. 202+50 TO STA. 203+50

SHEET NO.	TOTAL SHEETS
2	OHIO

139
492

HAMILTON COUNTY
HAM - 71 - (1.56) (2.51)

250 200 150 100 50 S.B. ℄

740 730 720 710 700 690

3000 930

700.16
Ex 21" P.S.
202+00
692.8

740 730 720 710 700 690

5636 727

3087 455

688.41
201+50
688.5

Ex 21" P.S.

5153 988

BEGIN PAVEMENT STA. 201+50 S.B. RESUME PROJECT
HAM-71-2.51 STA. 201+00 N.B.

730 720 710 700 690 680

2478 612

780 193

N.T.S.
Ex 21" P.S.
Inv. 672.42
696.66
201+00
684.0

GRADING BEGINS STA. 200+83 S.B.

S.B. EXP. STA. 201+00 TO STA. 202+00

250 200 150 100 50 S.B. ℄

250 200 150 100 50 S.B.℄

140
492

HAMILTON COUNTY
HAM-71-(1.58) (2.51)

204+00 SB 1650 0

750
740
730
720
710
700

Ex. 18" P.S.

705.41
203+50
704.0

4565 0

3280 0

3220

750
740
730
720
710
700

Match Line with
N.B. Expressway Sect.

703.66
203+00
705.0

Ex. 21" P.S.

3271 0

6066 0

5769 2

750
740
730
720
710
700

701.91
202+50
703.0

N.T.S.
Ex. 21" P.S.
Inv. 687.48

2960 2

5518 307

S.B. EXP. STA. 202+50 TO STA. 203+50

250 200 150 100 50 S.B.℄

PRO. NO.	STATE	FEDERAL
2	OHIO	

HAMILTON COUNTY
HAM-71-(1.56)(2.51)

150 100 50 N.B. ℄ 50 100

740 730 720 710 700

Ex. 18" P.S.

S.B. ℄

710.38
205+00
731.6

R/W

Match Line

5066 0

720 710 700

205+00 Match Line

R/W

Ex 12" P.S.

Ex 18" P.S (Approx. Location & Elevation)

7584 0

730 720 710 700

Ex. 18" P.S.

S.B. ℄

708.22
204+50
725.5

3125 0

730 720 710 700 690

5169 139

730 720 710 700 690

Ex. 18" P.S.

S.B. Back Area = 1650

N.B. Back Area = 808

Area = 150

S.B. ℄

706.04
204+00
718.9

2458 150

150 100 50 N.B. ℄ 50 100 150

EXP. STA. 204+00 TO STA. 205+00

Exist. Grd. Line Ckd.: H.L.L. 7-24-69

SEC. NO. | STATE | PROJECT
2 | OHIO |
HAMILTON COUNTY
HAM-71-(1.56) (2.51)

150 100 50 N.B. ℄ 50 100

Symmes St.

Ex. 18" P.S.

Layton Lane

Ex. 12" P.S.

R/W

S.B. ℄

719.08
207+00
744.7

740 730 720 710

5114 0

Symmes St.

Layton Lane

Ex 18" P.S.

Prop. Ret. Wall No. 41

R/W

Ex. 12" P.S.

S.B. ℄

716.91
206+50
741.0

9474 0

9269 0

Symmes St.

Layton Lane

R/W

Ex. 18" P.S.

Ex. 12" P.S.

S.B. ℄

714.73
206+00
737.8

4893 0

9129 74

Match Exist. Manitou

Curb Line Symmes & Manitou

Manitou ST

Layton Lane

R/W

Match Line

Ex. 18" P.S.

S.B. ℄

712.56
205+50
735.3

Match Line

160

Ex. 12" P.S.

Ex. 21" C.I.P.

Ex. 18" P.S.
(Approx. Location & Elev.)

4966 80

9289 74

700

EXP. STA. 205+50 TO STA. 207+00

150 100 50 N.B. ℄ 50 100 150

			143
2	OHIO		492

HAMILTON COUNTY
HAM - 71 - (1.56) (2.51)

150 100 50 N.B.℄ 50 100

750 740 730 720

Ex. 18" P.S.

S.B.℄

Ex. 12" P.S.

R/W

727.28
209+00
756.5

5751 0

750 740 730 720

Ex. 18" P.S.

S.B.℄

R/W

Ex. 12" P.S.

725.61
208+50
754.6

10426 0

5509 0

750 740 730 720

Ex. 18" P.S.

Prop. Ret. Wall No. 41

S.B.℄

Ex. 12" P.S.

R/W

723.43
208+00
751.2

5243 0

9585 0

750 740 730 720 710

Ex. 18" P.S.

S.B.℄

R/W

Ex. 12" P.S.

721.26
207+50
747.0

5109 0

9466 0

9956 0

150 100 50 N.B.℄ 50 100 150

EXP. STA. 207+50 TO STA. 209+00

Exp. Grade Chg.: H.L.L. 7-24-64

ROUTE SECTION 2 | STATE OHIO | PROJECT

144
492

HAMILTON COUNTY
HAM-71-(1.59) (2.51)

150 100 50 N.B. ℄ 50 100

760 750 740 730

Match Line
Ex. 18" P.S.
West Abut. Struct. No. HAM-71-0271
Match Line
S.B. ℄
Ex. 12" P.S.
℄ R/W

736.48
211+00
765.6

5444 19

Match Line
Ex. 18" P.S.
Match Line
S.B. ℄
Ex. 12" P.S.
R/W

734.31
210+50
763.5

10409 26

5798 9

10743 8

Ex. 18" P.S.
Prop. Ret. Wall No. 41
S.B. ℄
R/W
Ex. 12" P.S.

732.13
210+00
762.0

5805 0

10749 0

Ex. 18" P.S.
S.B. ℄
R/W
Ex. 12" P.S.

729.96
209+50
760.7

5804 0

10699 0

EXP. STA. 209+50 TO STA. 211+00

150 100 50 N.B. ℄ 50 100 150

Ex. Grading Crit. Hill 7-24-64

HAMILTON COUNTY
HAM-71-(1.56) (2.51)

150 100 50 N.B.℄ 50 100

770 760 750 740

Ex. 15" P.S.

℄R/W

Ex. 12" P.S.

5159 0

746.18
213+00
712.4

END PAVEMENT STA. 213+00 N.B. END PROJECT HAM-71-2.51 STA. 213+00 N.B.

9698 0

Ex. 15" P.S.

Prop. Ret. Wall No. 41

743.01
212+50
710.3

5315 0

10081 0

Ex. 15" P.S.

Ex. 12" P.S.

℄S.B.

5573 0

740.83
212+00
768.8

10388 0

Match Line

Ex. 15" P.S.

N.W. Wingwall
Struct. No HAM-71-0271

Match Line ℄

℄R/W

Ex. 12" P.S.

5646 0

738.66
211+50
767.1

10269 18

EXP. STA. 211+50 TO STA. 213+00

150 100 50 N.B.℄ 50 100 150

Exist. Grid Line Ckd: H.L. 7-24-64

FED. AID DIVISION | STATE | PROJECT
2 | OHIO |

HAMILTON COUNTY
HAM-71-(1.56) (2.51)

100 50 ℄ 50 100

780 770 760 750

Layton Lane

215+00
778.2

℄ R/W

780 770 760 750

Layton Lane

℄ R/W

214+50
770.0

Wilkinson ST.

℄ R/W

℄ Ex. 15" P.S.

℄ Ex. 12" P.S.

℄ Ex. 12" P.S.

770 760 750 740

214+00
773.6

END GRADING STA. 213+77 N.B.

780 770 760 750 740

℄ R/W

℄ Ex. 15" P.S.

℄ Ex. 12" P.S.

2257 ○

4515 ○

8957 ○

213+50
773.1

150 100 50 ℄ 50 100 150

EXP. STA. 213+50 TO STA. 215+00

FED. AID PROJECT	STATE	PROJECT
2	OHIO	

HAMILTON COUNTY
HAM-71-(156)(2.61)

50 ℄ 50

550
540

544.33
12+50
543.8
Ex. 2' Br. S.

550
540

544.38
12+00
543.7
Ex. 2' Br. S.
Match Line with Expressway Sect.

550
540

543.83
11+50
543.5
Ex. 2' Br. S.

550
540

543.28
11+00
543.0
Ex. 2' Br. S.
Ex. 18" P.S.

550
540

542.73
10+50
542.3 N.T.S.
Ex. 2' Br. S.
El. 526.80

550
540

542.18
10+00
542.0 N.T.S.
Ex. 2' Br. S.
El. 524.94

550
540

9+50
541.9

50 ℄ 50

548.23
15+50
548.5
Unsuitable Material
Ex. 12" P.S.

550
540

547.68
15+00
548.0
Unsuitable Material
Ex. 12" P.S.
Match Line with Expressway Sect.

550
540

547.13
14+50
544.3
Unsuitable Material
Ex. 12" P.S.

550
540

546.58
14+00
543.8
Ex. 12" P.S.
Match Line with Expressway Sect.

550
540

546.03
13+50
544.0
Ex. 12" P.S.
Unsuitable Material
Ex. 12" P.S.

550
540

545.48
13+00
543.9
Ex. 12" P.S.
Ex. 12" P.S.

15+50	80	70		
			129	128
15+00	60	68		
			94	109
14+50	41	50		
			63	94
14+00	27	51		
			42	64
13+50	18	18		
			21	35
13+00	5	20		
			31	30
12+50	28	12		
			44	29
12+00	20	19		
			83	35
11+50	70	19		
			122	27
11+00	62	10		
			131	9
10+50	80	0		
			157	0
10+00	90	0		
			83	0
9+50	0	0		

GILBERT AVE. STA. 9+50 TO STA. 15+50

50 ℄ 50

FED. RD. DIVISION	STATE	PROJECT
2	OHIO	

HAMILTON COUNTY
HAM-71-(1.56) (2.51)

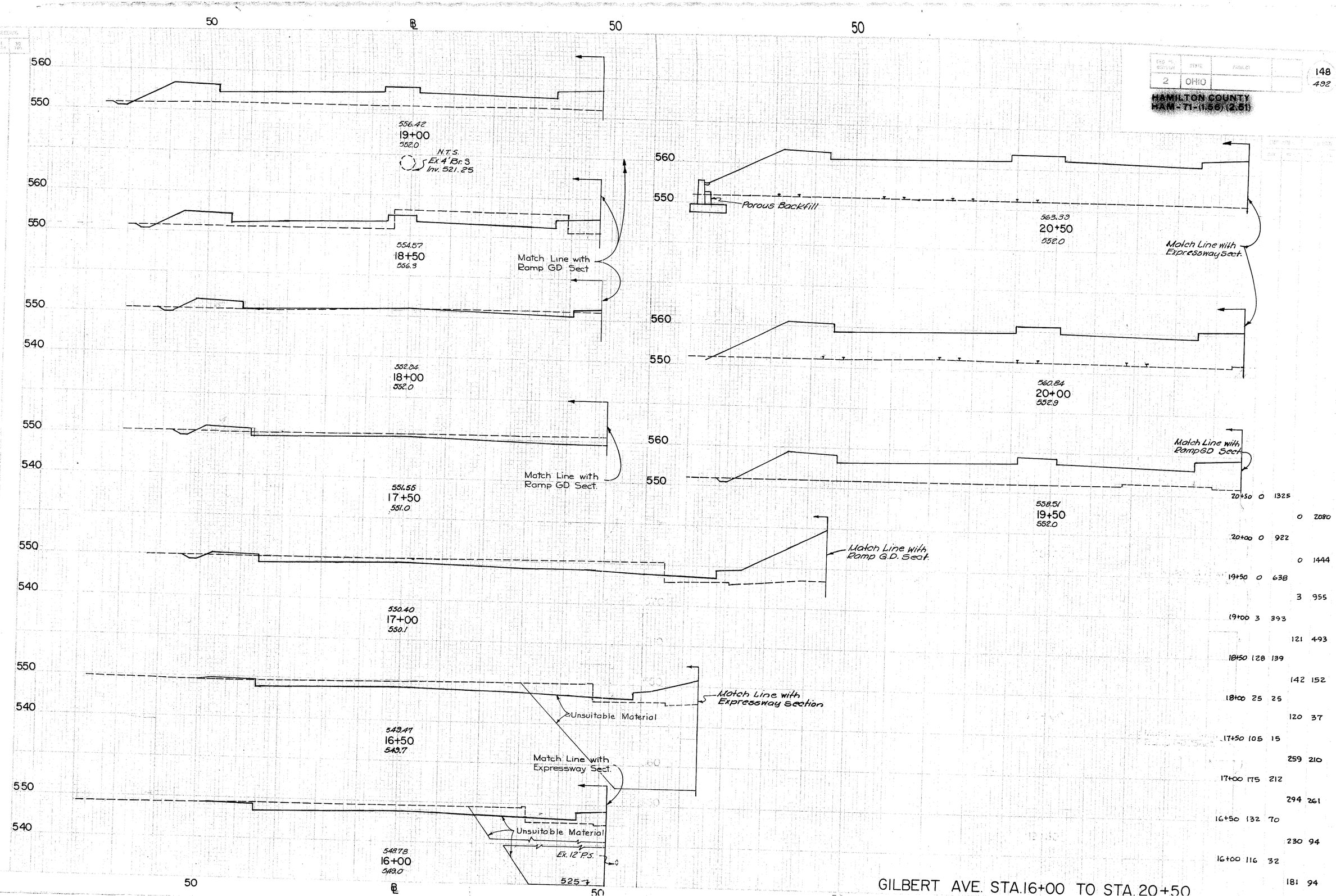

20+50	0	1325		
			0	2080
20+00	0	922		
			0	1444
19+50	0	638		
			3	955
19+00	3	393		
			121	493
18+50	128	139		
			142	152
18+00	25	25		
			120	37
17+50	105	15		
			259	210
17+00	175	212		
			294	261
16+50	132	70		
			230	94
16+00	116	32		
			181	94

GILBERT AVE. STA.16+00 TO STA.20+50

200 150 100 50 NB℄ 50

580 570 560 550

℄ Prop. Penn. R.R. Track

N.T.S.
Ex. 8' Br. S.
Inv. 514.54

Porous Backfill

Track and Ballast By Others

Prop. Ret. Wall No 18

576.74
23+00
552.1

N.T.S.
Ex. 8' Br. S.
Inv. 513.54

Porous Backfill

Track and Ballast By Others

573.99
22+50
551.8

Track and Ballast By Others

Prop Ret. Wall No 18

571.34
22+00
551.5

Match Line with Expressway Sect.

Track and Ballast By Others

568.69
21+50
551.5

℄ Prop. Penn. R.R. Tail Track

Track and Ballast By Others

566.04
21+00
551.2

560 o 3163
550
o 5580
570
o 2863
560
550
57 4933
570
62 2465
560
550
101 4208
570
47 2080
560
550
90 3523
570
560
50 1725
550
46 2824

GILBERT AVE. STA. 21+00 TO STA. 23+00

200 150 100 50 NB℄ 50 100

STATE	PROJECT
OHIO	

150
492

HAMILTON COUNTY
HAM-71-(1.56) (2.51)

200 150 100 50 N.B.℄ 50

590
580
570
560
550

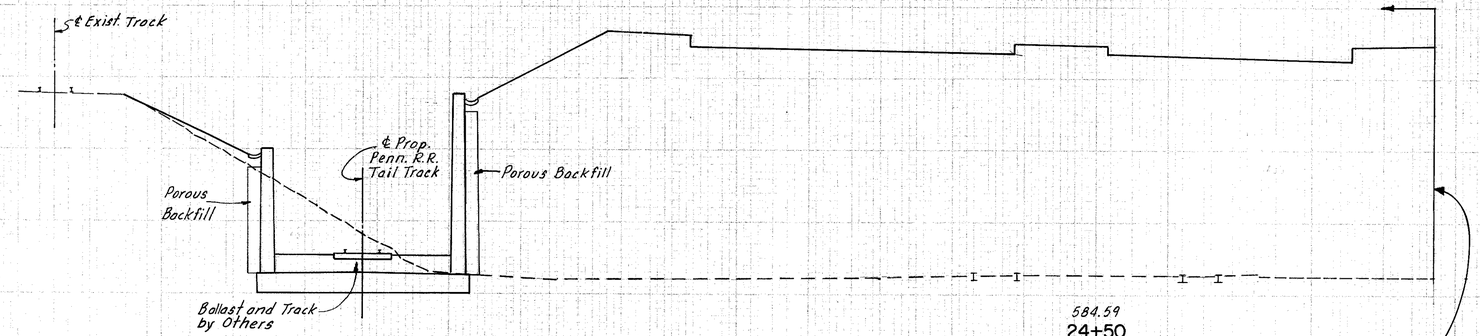

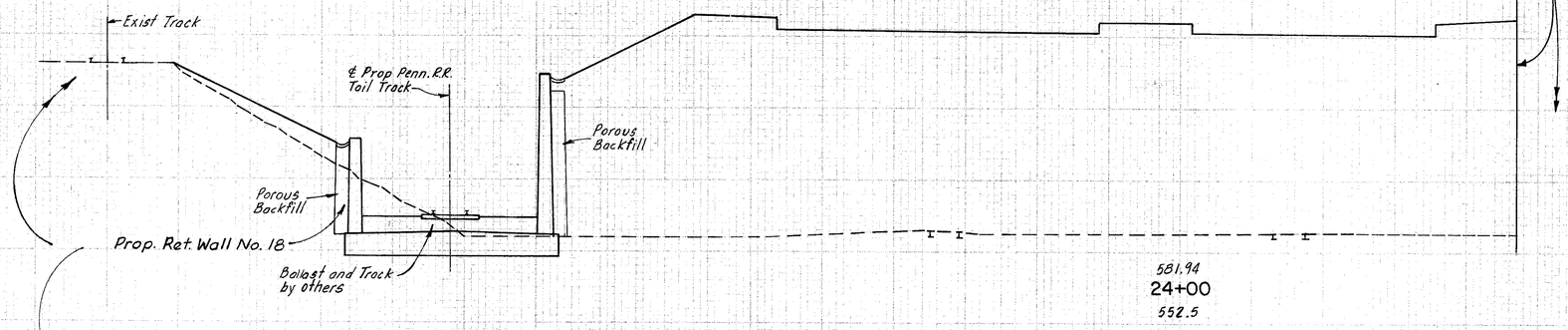

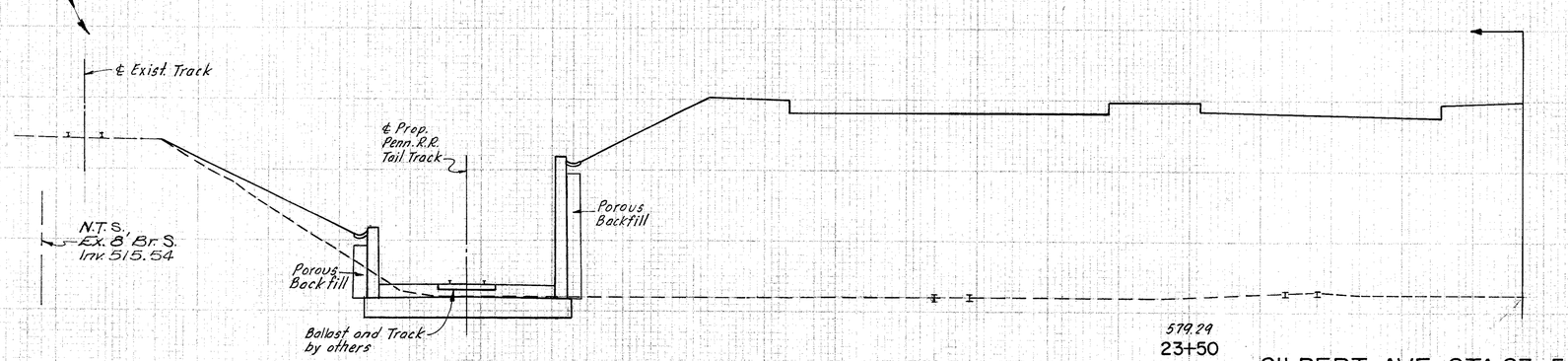

GILBERT AVE. STA.23+50 TO STA.24+50

590
580
570
560
550

0 4235
0 7545
0 3914
0 6920
0 3560
0 6225

200 150 100 50 N.B.℄ 50 100

FED. AID PROJECT NO.	STATE	PROJECT		SHEET NO.
2	OHIO			151

HAMILTON COUNTY
HAM-71-(1.56) (2.51)

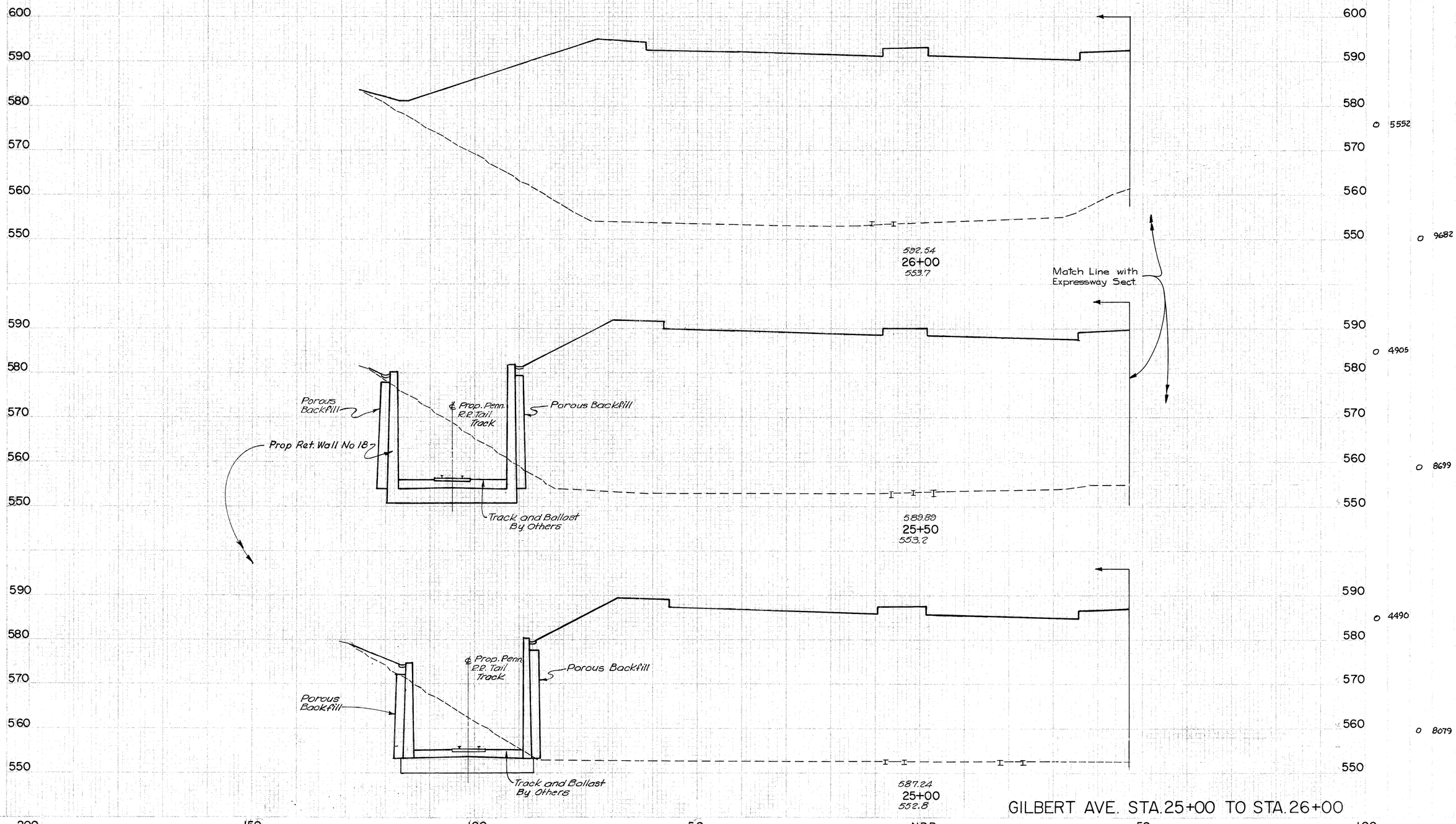

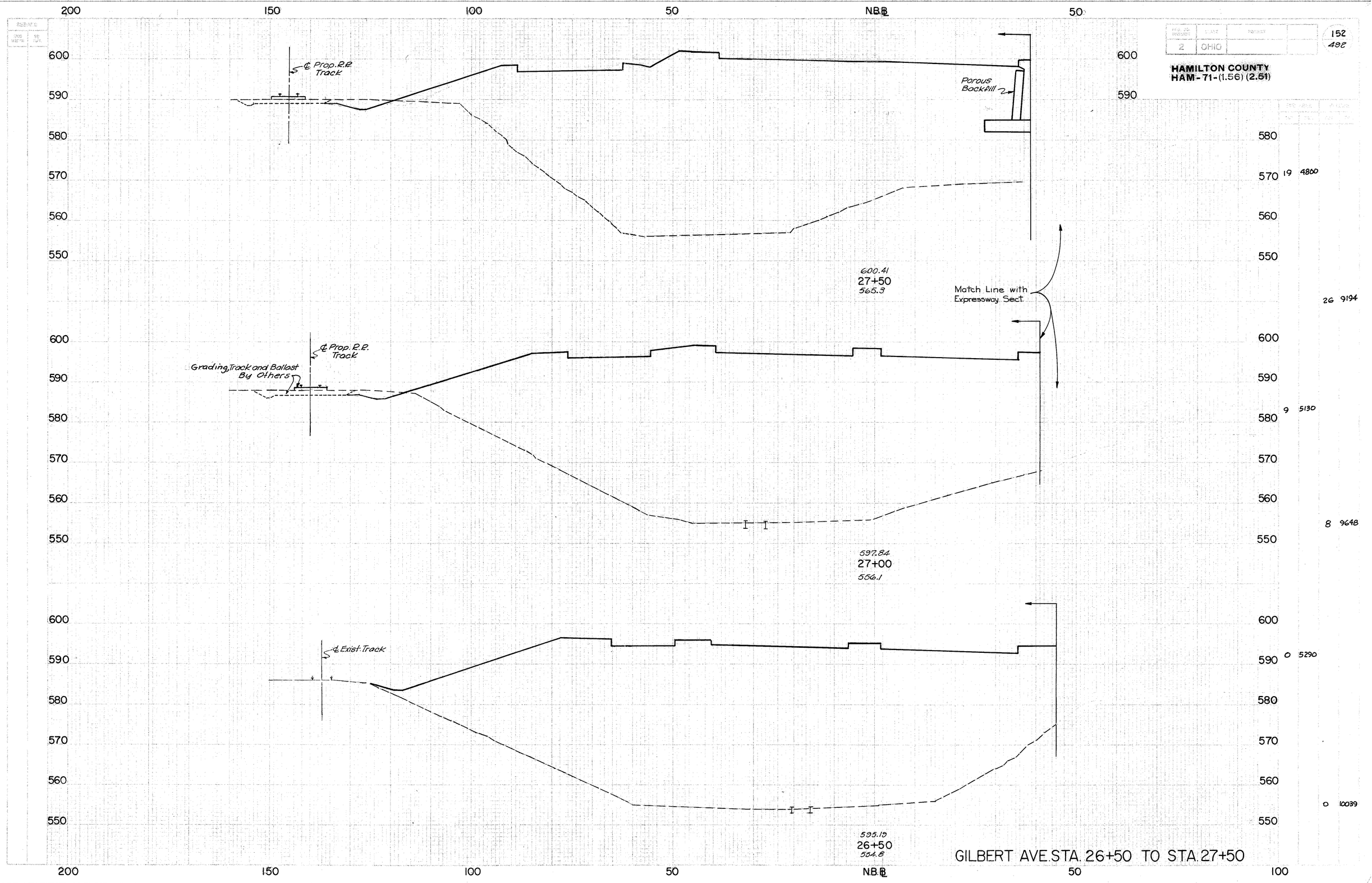

2
OHIO
152
492
HAMILTON COUNTY
HAM-71-(1.56) (2.51)
200
150
100
50
N.B.℄
50
600
590
580
570
560
550
℄ Prop. R.R. Track
Porous Backfill
600.41
27+50
565.3
Match Line with Expressway Sect.
℄ Prop. R.R. Track
Grading, Track and Ballast By Others
597.84
27+00
556.1
℄ Exist. Track
595.19
26+50
554.8
19 4800
26 9194
9 5130
8 9648
0 5290
0 10039
GILBERT AVE. STA. 26+50 TO STA. 27+50

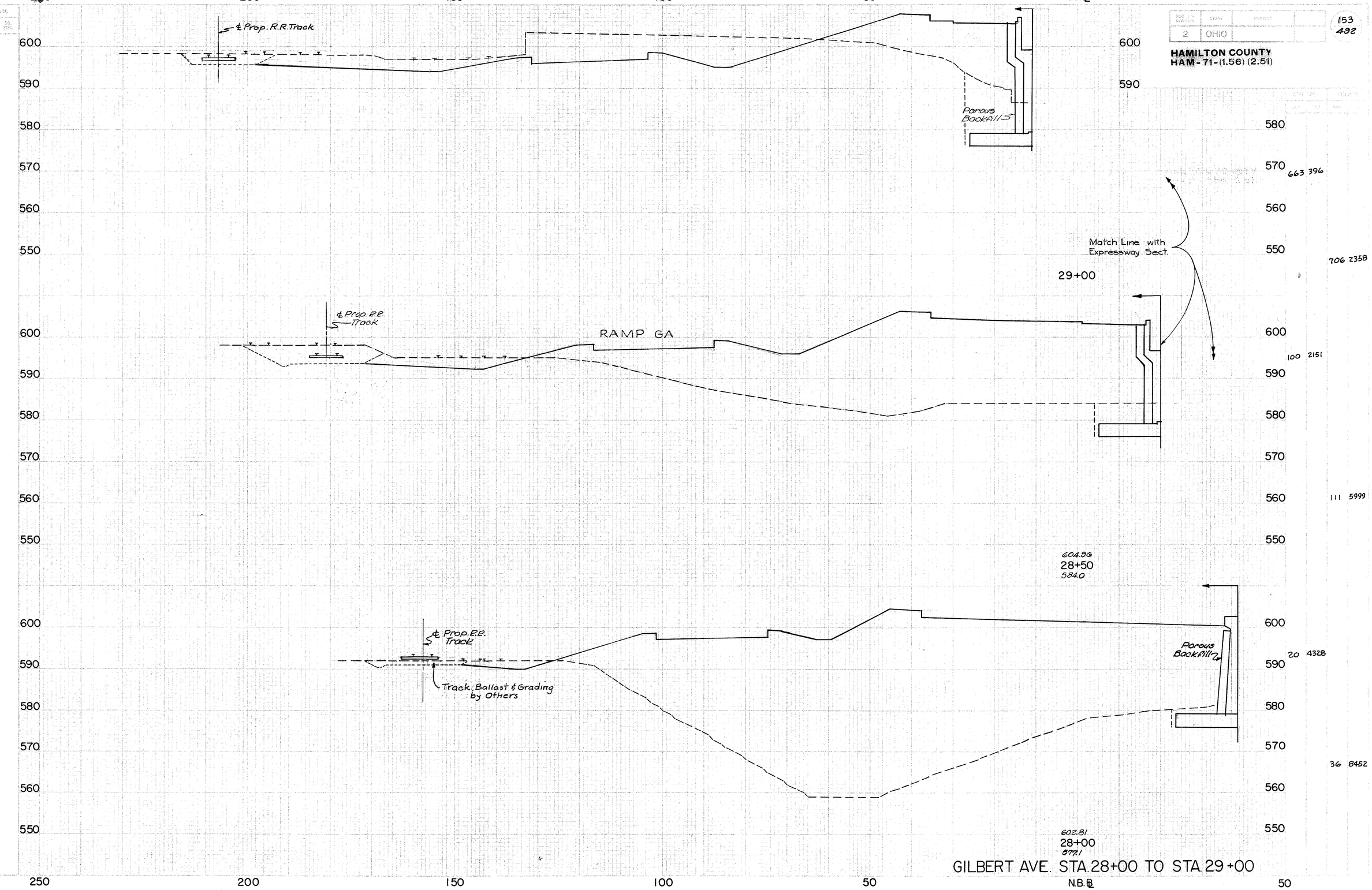

2
OHIO
HAMILTON COUNTY
HAM-71-(1.56) (2.51)
153
492
℄ Prop. R.R. Track
Porous Backfill
Match Line with Expressway Sect.
29+00
℄ Prop. R.R. Track
RAMP GA
663 396
706 2358
100 2151
111 5999
604.96
28+50
584.0
℄ Prop. R.R. Track
Track, Ballast & Grading by Others
Porous Backfill
20 4328
36 8452
602.81
28+00
577.1
GILBERT AVE. STA. 28+00 TO STA. 29+00
N.B.℄

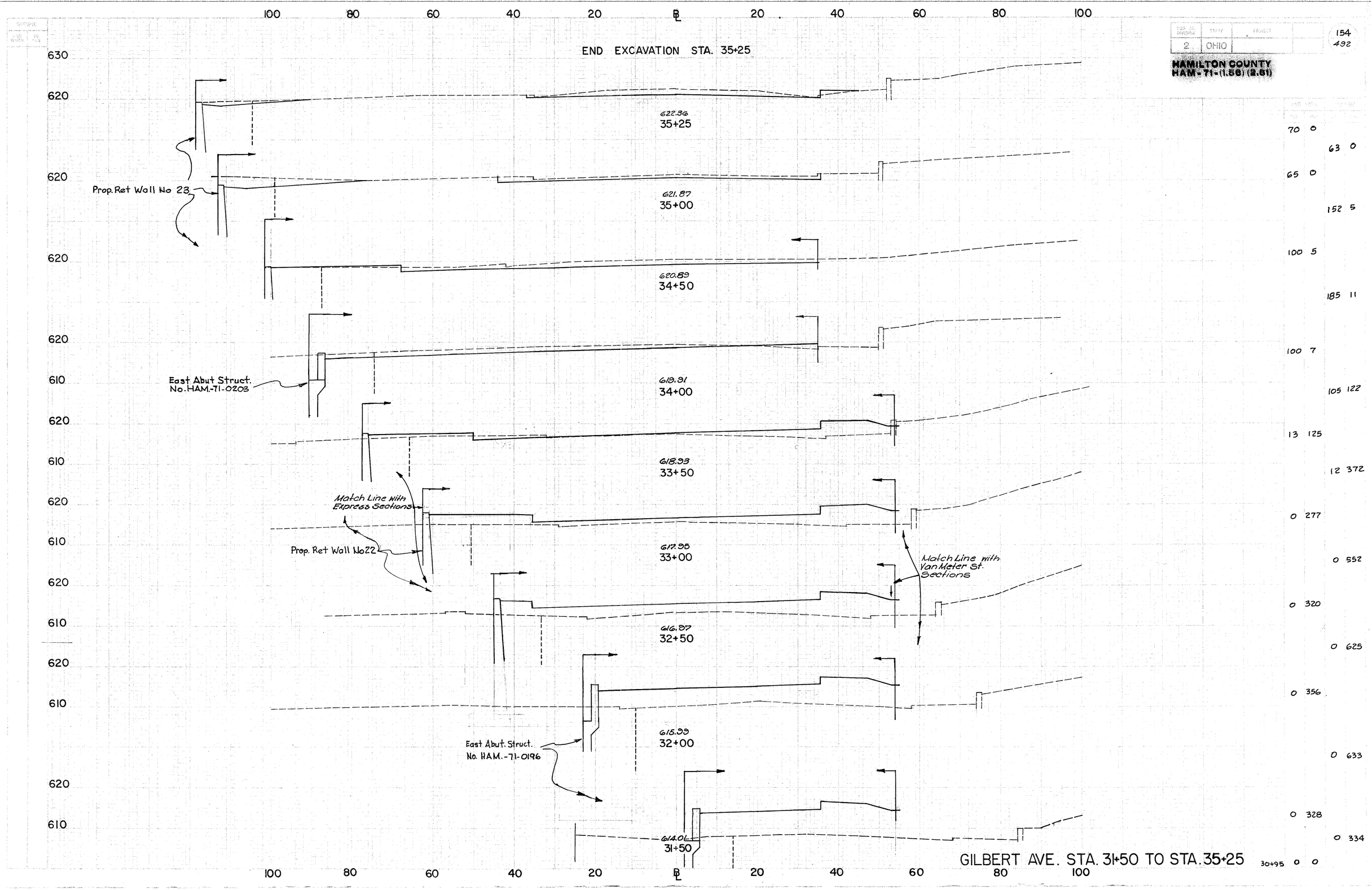

GILBERT AVE. STA. 31+50 TO STA. 35+25

FED. RD. DIVISION	STATE	PROJECT
2	OHIO	

154
492

HAMILTON COUNTY
HAM-71-(1.56) (2.61)

70	0	
		63 0
65	0	
		152 5
100	5	
		185 11
100	7	
		105 122
13	125	
		12 372
0	277	
		0 552
0	320	
		0 625
0	356	
		0 633
0	328	
		0 334
30+95	0	0

FED. ROAD DIVISION	STATE	PROJECT	
2	OHIO		

155
492

HAMILTON COUNTY
HAM-71-(1.56) (2.51)

150 100 50 ℄ 50 100

570 560 550 540

N.T.S.
Ex 4' Br. S.
Inv. 524.43

Match Line with
Gilbert Ave. Sect.

Ex. 12" P.S.

553.80
159+50
548.2

Unsuitable Matl.

Ex. 12" P.S.

Match Line with
Expressway Sect. &
Face of Abut. Struct.
No. HAM-71-0173

570 560 550 540

Ex. 12" P.S.

551.77
159+00
547.4

Unsuitable Matl.

Ex. 12" P.S.

570 560 550 540

550.17
158+50
546.2

Ex. 12" P.S.

Unsuitable Matl.

Match Line with
Gilbert Ave. Sect.

Match Line with
Expressway Sect. &
Face of Abut. Struct.
No. HAM-71-0173

570 560 550 540

548.39
158+00
546.0

Unsuitable Matl.

Ex. 12" P.S.

RAMP GD STA. 158+00 TO STA. 159+50

150 100 50 ℄ 50 100 150

570 560 550 540

o 1207

570 560 550 540

o 1911

o 857

33 1335

570 560 550 540

36 585

570 560 550 540

86 977

57 470

50 ℄ 50 100 150

FED. HIS. DIVISION	STATE	SHEET
2	OHIO	

156
492

HAMILTON COUNTY
HAM-71-(1.56) (2.51)

580 570 560 550 540

Unsuitable Matl.

Ex 24" P.S.

Match Line with Expressway Sect.

Ex. 30" C.I.P.S.

564.50
161+50
551.50

Match Line

600 590 580

Match Line

E. Sixth St.

150 200

570 560 550

188 2800

Ex. 12" P.S.

192 4044

570 560 550 540

Unsuitable Matl.

Ex. 12" P.S.

Ex. 4' Br. S.

561.75
161+00
550.0

19 1568

Match Line with Expressway Sect

570 560 550 540

Face of North Abut. Struct. No. HAM-71-0173

Match Line with Expressway Sect.

Unsuitable Matl.

Ex. 4' Br. S.

Unsuitable Matl.

Ex. 12" P.S.

559.00
160+50
549.0

Face of South Abutment Structure No HAM-71-0173

Match Line with Expressway Sect.

18 3185

570 560 550 540

18 1872

18 3585

570 560 550 540

N.T.S.
Ex. 4' Br. S.
Inv. 527.92

Ex 12" P.S.

Ex. 12" P.S.

556.26
160+00
548.8

Unsuitable Matl.

18 2000

18 2969

RAMP GD STA. 160+00 TO STA. 161+50

150 100 50 ℄ 50 100

FED. RD. DIVISION	STATE	PROJECT	
2	OHIO		

157
492

HAMILTON COUNTY
HAM-71-11.56 (2.51)

100 50 ℄ 50 100 150

610 600 590 580 570

575.49
163+50
588.9

Ex. 12" P.S.

590 580 570

Ex. 12" P.S.

Match Line with
Van Meter St. Sect.

560 550

Match Line with
Expressway Sect.

572.75
163+00
585.6

Face of North Abutment
Struct. No. HAM-71-0173

Ex 12" P.S. Ex. 4' S.S.

580 570 560 550

570.00
162+50
577.1

580 570 560 550

Unsuitable Matl.

Ex. 24" P.S.

Ex. 30" P.S.

567.25
162+00
556.3

RAMP GD STA. 162+00 TO STA. 163+50

100 50 ℄ 50 100 150 200

2140 135
3740 204
1900 85
2773 471
1095 424
2773 518
1900 135
1933 2718

166+00 NB	539	Exc.	223 Emb.
15+00 SE	361		332
TOTAL	900		555

165+88 (See Sh. No. 126 & 163

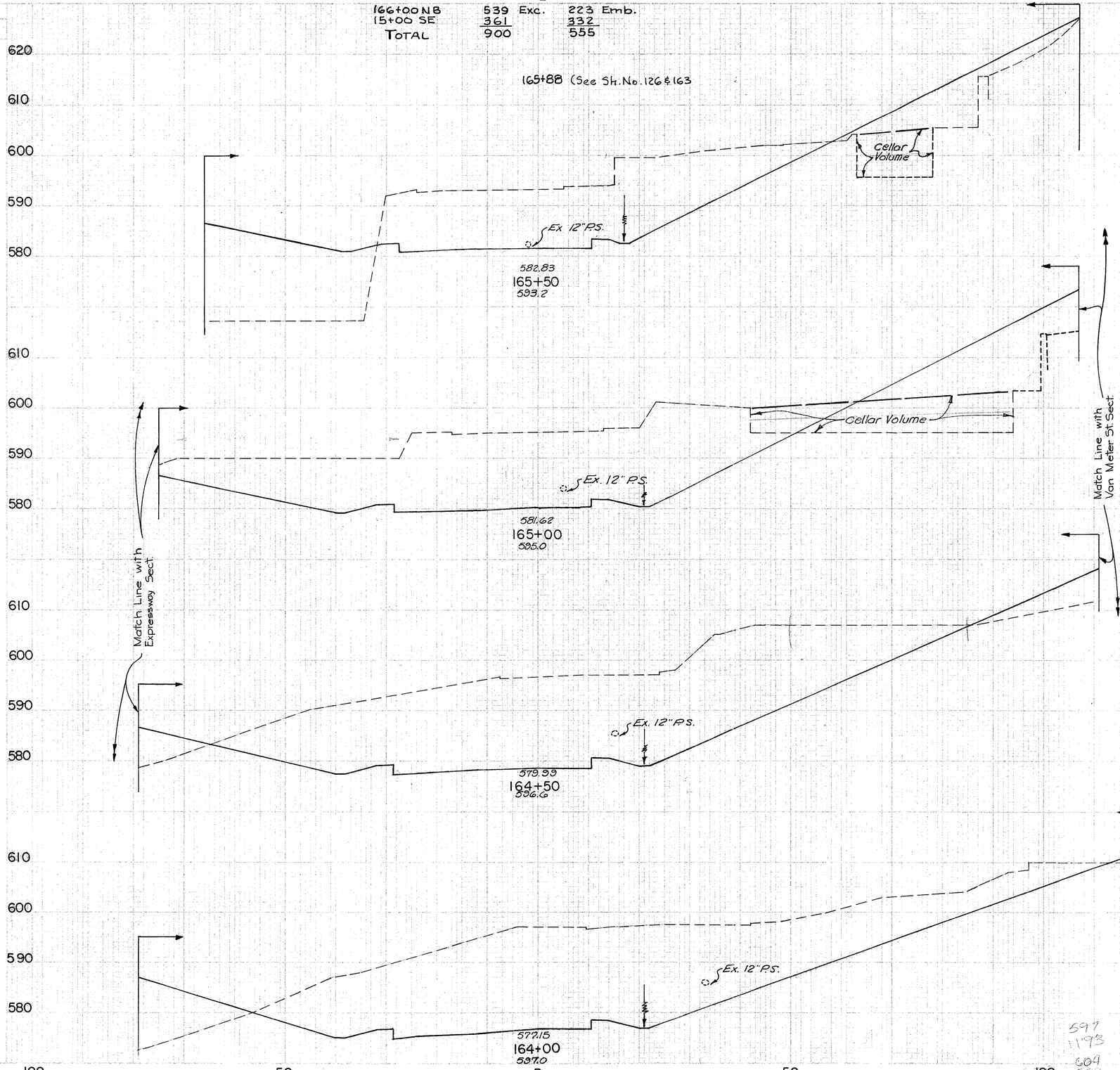

900 555
1288 907
930 734
2281 1006
1533 353
3304 445
2035 128
3801 283
2070 178
3898 290

597
1193
604
589

RAMP GD STA. 164+00 TO STA. 165+50

STATE	PROJECT
OHIO	

HAMILTON COUNTY
HAM-71-(1.56) (2.5)

159
492

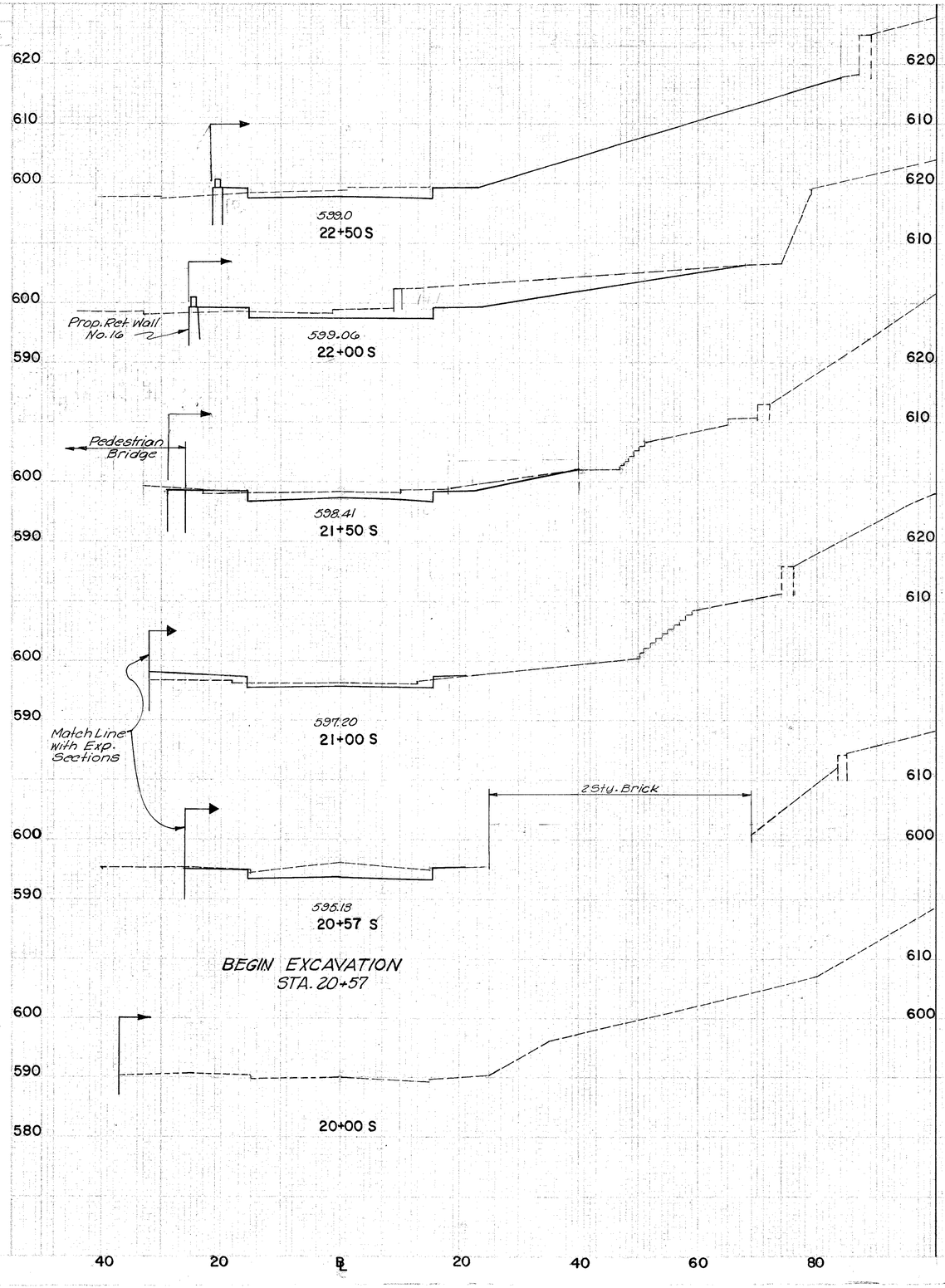

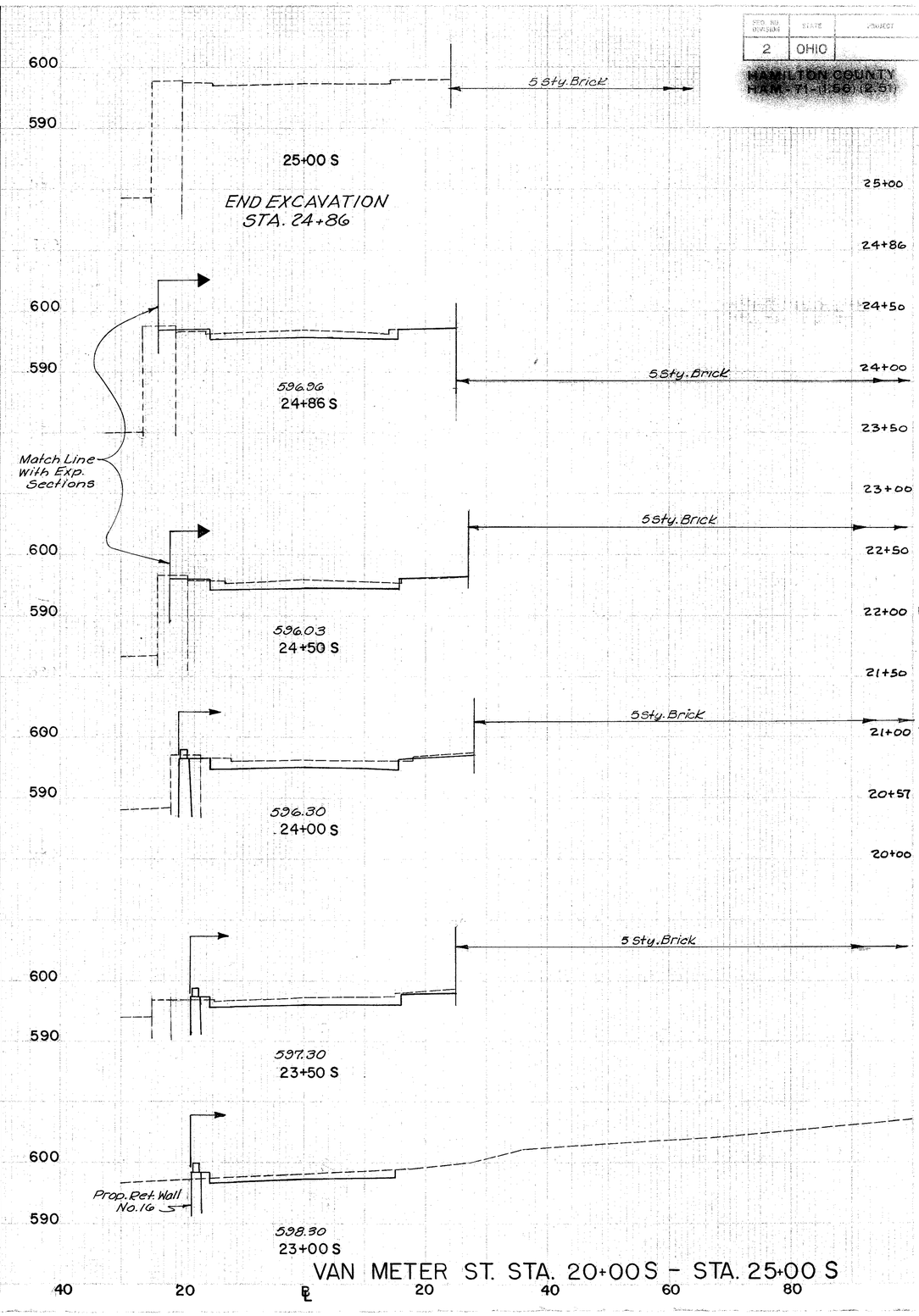

STA.		
25+00	0	0
		12 1
24+86	45	2
		63 2
24+50	50	1
		93 3
24+00	50	2
		88 3
23+50	45	1
		69 2
23+00	30	1
		65 6
22+50	40	5
		208 11
22+00	185	7
		215 9
21+50	47	3
		65 19
21+00	23	18
		68 15
20+57	62	1
		65 1
20+00	0	0

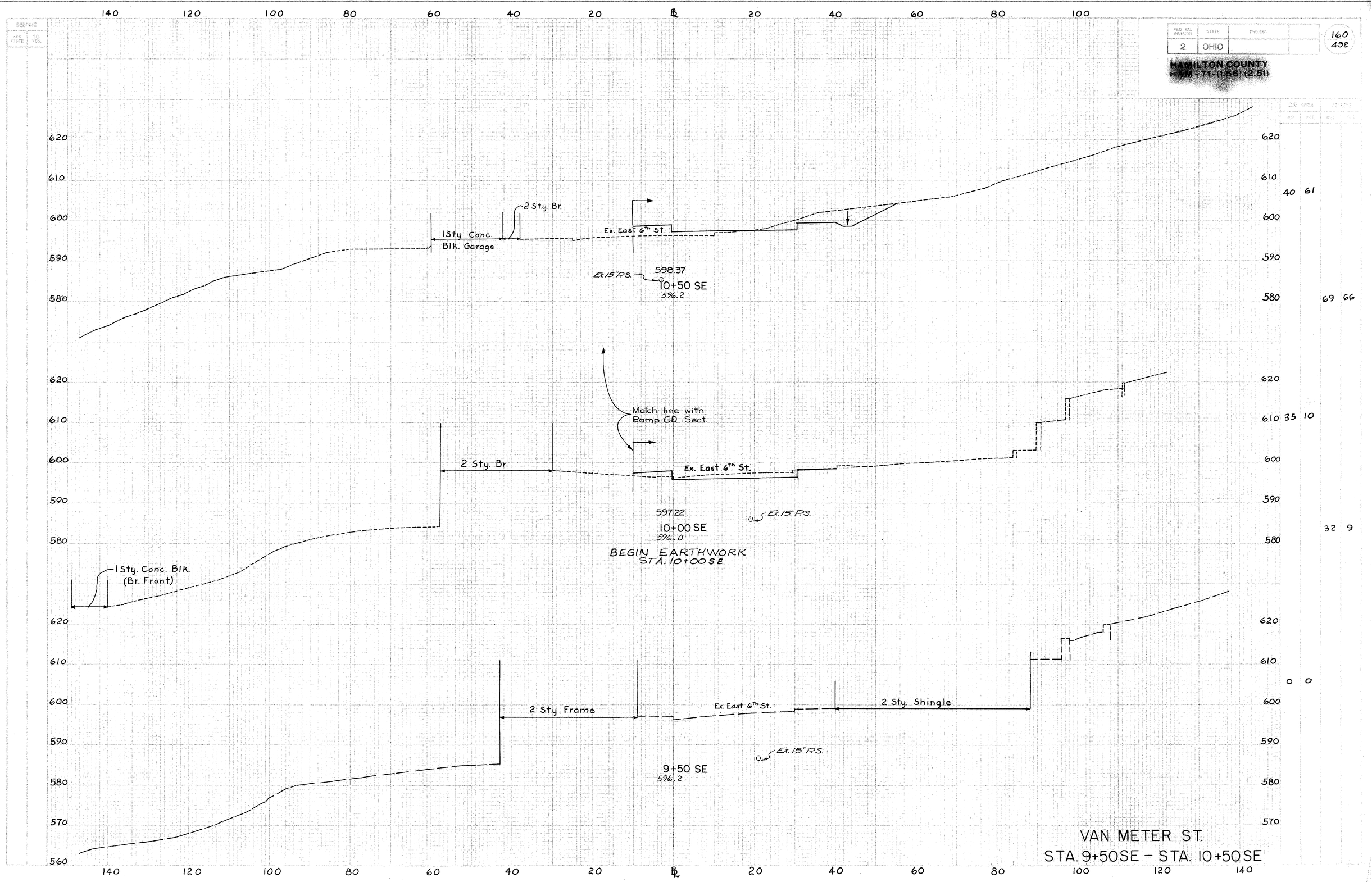

2
OHIO
HAMILTON COUNTY
HAM-71-(1.56) (2.51)
160
492
2 Sty. Br.
1 Sty Conc.
Blk. Garage
Ex. East 6th St.
Ex. 15" P.S.
598.37
10+50 SE
596.2
Match line with
Ramp GD Sect
2 Sty. Br.
Ex. East 6th St.
597.22
10+00 SE
596.0
Ex. 15" P.S.
BEGIN EARTHWORK
STA. 10+00 SE
1 Sty. Conc. Blk.
(Br. Front)
2 Sty Frame
Ex. East 6th St.
2 Sty. Shingle
Ex. 15" P.S.
9+50 SE
596.2
VAN METER ST.
STA. 9+50SE - STA. 10+50SE

SHEETS		
ENG.	CO.	

FED. HWY. DIVISION	STATE	PROJECT
2	OHIO	

161
492

HAMILTON COUNTY
HAM-71-(1.56) (2.51)

140 120 100 80 60 40 20 ℄ 20 40 60 80 100

640 630 620 610 600 590 580 570 560

West Corner of
1.5' St. Wall

Steps

Ex. East 6th St.

607.04
12+00 SE
608.8

Match Line with
Ramp GD Sect.

Ex. East 6th St.

603.34
11+50 SE
603.6

Ex. East 6th St.

600.41
11+00 SE
601.0

Ex. 24" R.C.P.

1133 2

1681 10

683 9

911 9

300 1

315 58

VAN METER ST.
STA. 11+00 SE – STA. 12+00 SE

SHEET NO.	STATE	PROJECT	
2	OHIO		

162
492

HAMILTON COUNTY
I-AM-71-(1.56) (2.51)

SEEDING
EXIST WIDTH
PROP WIDTH

140 120 100 80 60 40 20 ℄ 20 40 60 80 100

660
650
640
630
650
640
630
620
610
600
590
580
570

Prop. Ret. Wall No. 40

2 Sty Shingle

2½ Sty Shingle

Ex. East 6th St.

618.57
13+50 SE
609.1

Match Line with Ramp GD Sect.

614.73
13+00 SE
618.9

Ex. East 6th St.

2 Sty Shingle

2 Sty Frame

610.88
12+50 SE
611.7

1 Sty. Insul. Br.

Ex. East 6th St.

660
650
640
630
650
640
630
620
610
600
590
580

663 38

2484 35

2020 0

3275 0

1517 0

2453 2

VAN METER ST.
STA. 12+50 SE - STA. 13+50 SE

140 120 100 80 60 40 20 ℄ 20 40 60 80 100 120 140

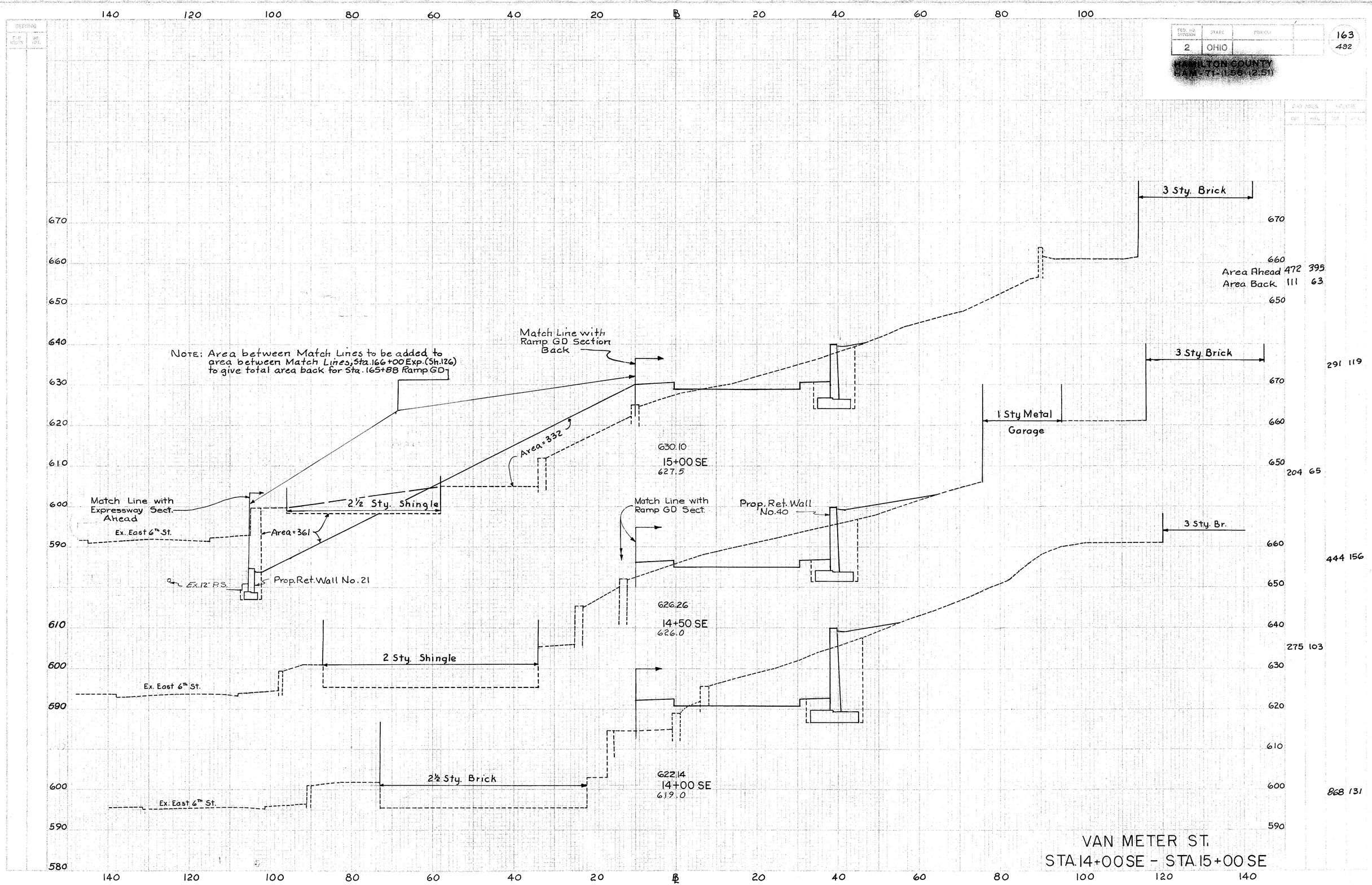

FED. RD. DIVISION 2
STATE OHIO
163
492
HAMILTON COUNTY
HAM-71-(1.56)(2.51)
3 Sty. Brick
Area Ahead 472 395
Area Back 111 63
Match Line with Ramp GD Section Back
NOTE: Area between Match Lines to be added to area between Match Lines, Sta. 166+00 Exp. (Sh. 126) to give total area back for Sta. 165+88 Ramp GD
3 Sty. Brick
291 119
1 Sty Metal Garage
Area=332
630.10
15+00 SE
627.5
204 65
Match Line with Expressway Sect. Ahead
2½ Sty. Shingle
Ex. East 6th St.
Area=361
Match Line with Ramp GD Sect.
Prop. Ret. Wall No. 40
3 Sty. Br.
444 156
Ex. 12" P.S.
Prop. Ret. Wall No. 21
626.26
14+50 SE
626.0
275 103
2 Sty. Shingle
Ex. East 6th St.
2½ Sty. Brick
622.14
14+00 SE
619.0
868 131
Ex. East 6th St.
VAN METER ST.
STA. 14+00 SE - STA. 15+00 SE

PRO. NO. DIVISION	STATE	PROJECT	
2	OHIO		

164
492

HAMILTON COUNTY
HAM-71-(1.56) (2.51)

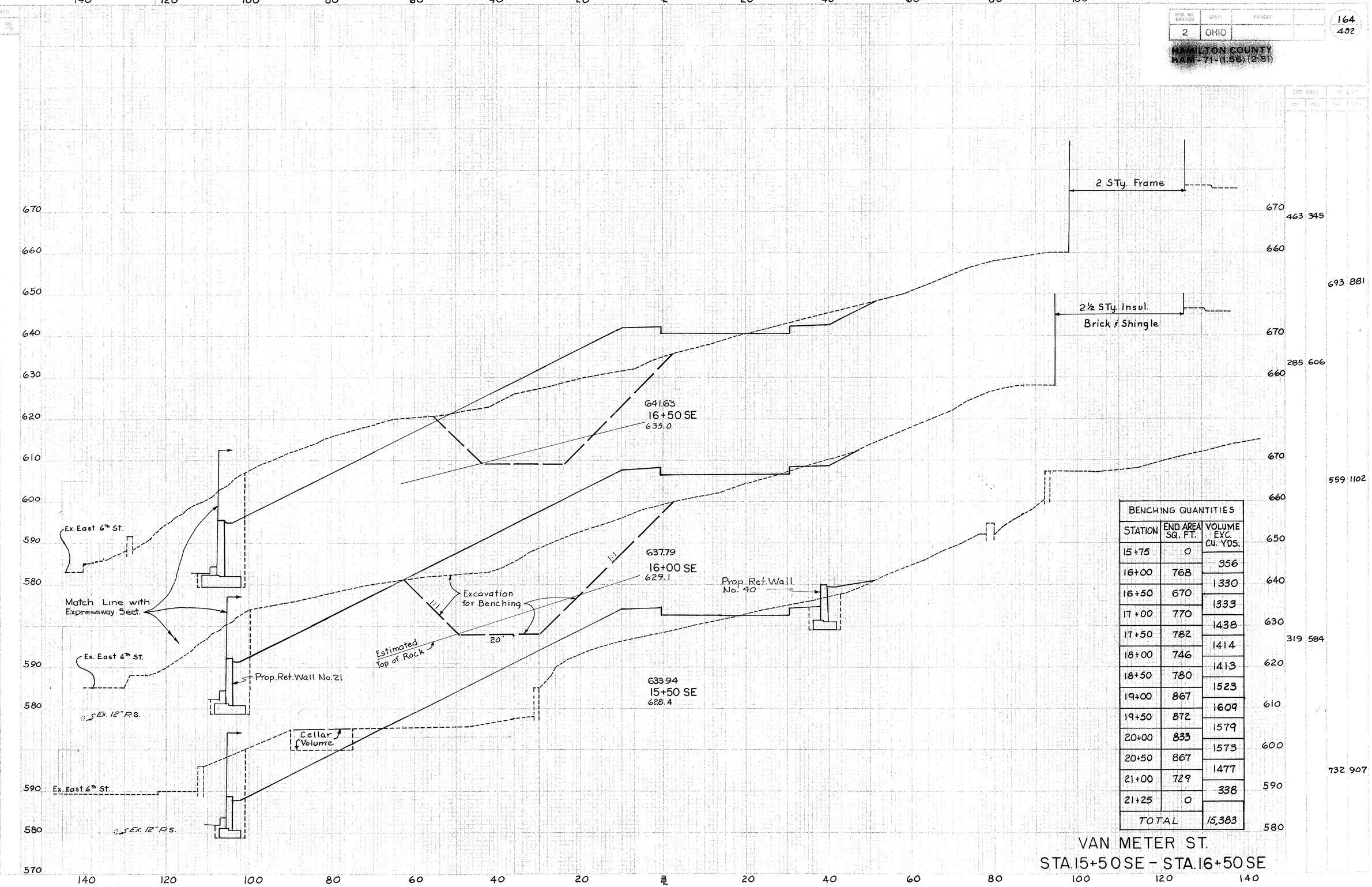

BENCHING QUANTITIES		
STATION	END AREA SQ. FT.	VOLUME EXC. CU. YDS.
15+75	0	356
16+00	768	1330
16+50	670	1333
17+00	770	1438
17+50	782	1414
18+00	746	1413
18+50	780	1523
19+00	867	1609
19+50	872	1579
20+00	833	1573
20+50	867	1477
21+00	729	338
21+25	0	
TOTAL		15,383

VAN METER ST.
STA. 15+50 SE – STA. 16+50 SE

FED. RD. DIVISION	STATE	PROJECT
2	OHIO	

165
492

HAMILTON COUNTY
HAM-71-(1.56) (2.51)

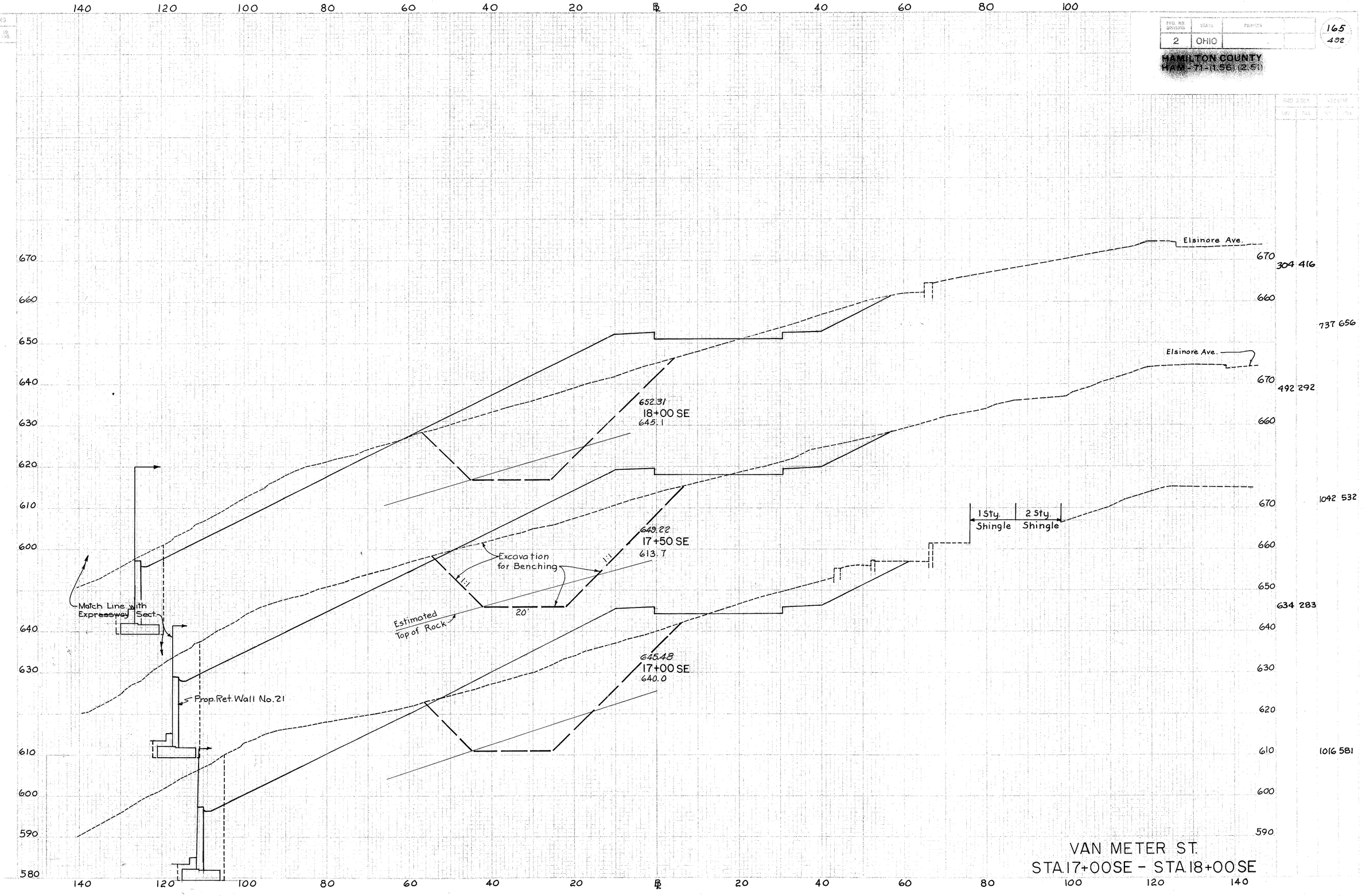

VAN METER ST.
STA. 17+00 SE - STA. 18+00 SE

FED. RD. DIVISION	STATE	PROJECT	
2	OHIO		

166
492

HAMILTON COUNTY
1-[illegible]-71-1.55 (2.81)

140 120 100 80 60 40 20 ℄ 20 40 60 80 100

670 660 650 640 630 620 610 600 630 620 610 600 620 610 600 590 580

Prop. Ret Wall No. 47

Ex. 12" P.S.

533 880

656.48
19+50 SE
649.0

Elsinore Ave.
ELSINORE AVE.

Ex. 12" P.S.

1044 1648

594 900

Match Line with Expressway Sect.

655.94
19+00 SE
647.0

1:1

Excavation for Benching

1:1

20'

Estimated Top of Rock

Elsinore Ave.

1077 1299

Ex. 12" P.S.

654.54
18+50 SE
647.0

569 503

Prop. Ret. Wall No. 21

808 851

670 660 650 640 630 620 610 600 650 640 630 620 610 600 590

VAN METER ST.
STA. 18+50 SE - STA. 19+50 SE

140 120 100 80 60 40 20 ℄ 20 40 60 80 100 120 140

FED. RD. DIVISION	STATE	PROJECT	
2	OHIO		

167
432

HAMILTON COUNTY
HAM-71-11.56 (2.54)

140 120 100 80 60 40 20 ℄ 20 40 60 80 100

670 660 650 640 630 620 610 600 590

Elsinore Ave.

652.12
21+00 SE
652.0

Ex. Gilbert Ave.

Ex. 18" P.S.

Prop. Ret. Wall No. 47

Elsinore Ave.

ELSINORE AVE.

Ex. 12" P.S.

654.50
20+50 SE
649.5

Ex. 12" P.S.

Excavation for Benching

1:1

1:1

20'

Estimated Top of Rock

Match Line with Expressway Sect.

Ex. Gilbert Ave.

Ex. 18" P.S.

600

590

150

140

Match Line

Elsinore Ave.

Ex. 12" P.S.

656.05
20+00 SE
650.0

888 107

1399 502

623 435

1118 967

584 609

1034 1379

VAN METER ST.
STA. 20+00 SE - STA. 21+00 SE

FED. HIGHWAY DIVISION	STATE	PROJECT	
2	OHIO		

168
432

HAMILTON COUNTY
HAM-71-(1.56)(2.51)

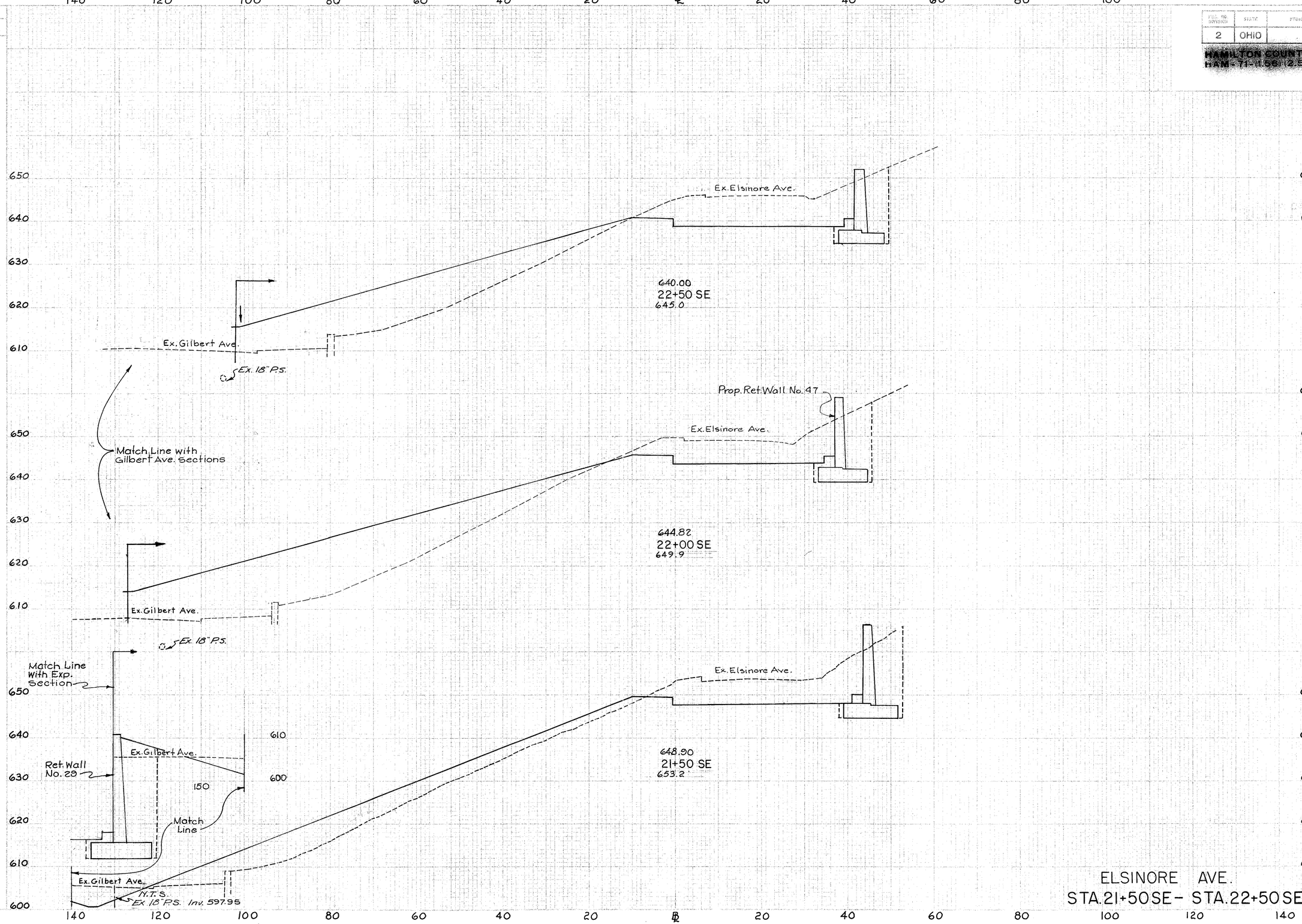

ELSINORE AVE.
STA. 21+50 SE - STA. 22+50 SE

FED. RD. DIVISION	STATE	PROJECT
2	OHIO	

HAMILTON COUNTY
HAM-71-(1.56)(2.51)

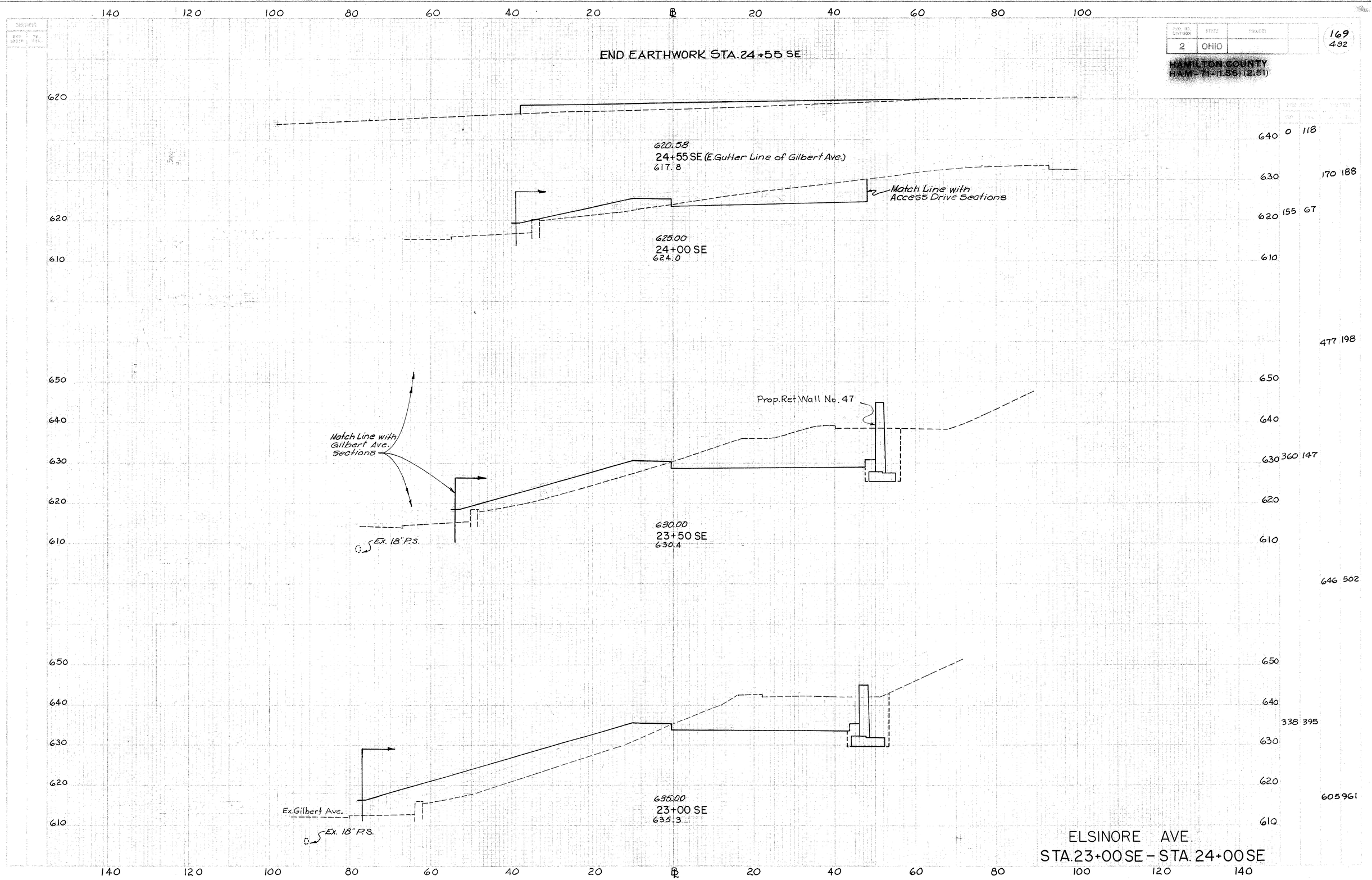

ELSINORE AVE.
STA. 23+00 SE – STA. 24+00 SE

FED. RD. DIVISION	STATE	PROJECT
2	OHIO	

170
492

HAMILTON COUNTY
HAM-71-(1.56) (2.51)

END EARTHWORK
STA. 13+45.15

610
600

608.55
13+45.15
608.0

25 15

46 29

610
600

608.08
13+00
607.0

30 20

147 71

610
600

607.25
12+50
606.0

129 57

181 26

610
600

606.38
12+25
606.0

261 1

220 0

BEGIN EARTHWORK
STA. 12+25

610
600

12+00
606.0

215

100 0

610
600

11+50
605.0

0

50 ℄ 50 100 150

ELSINORE PLACE STA. 11+50 TO STA. 13+45.15

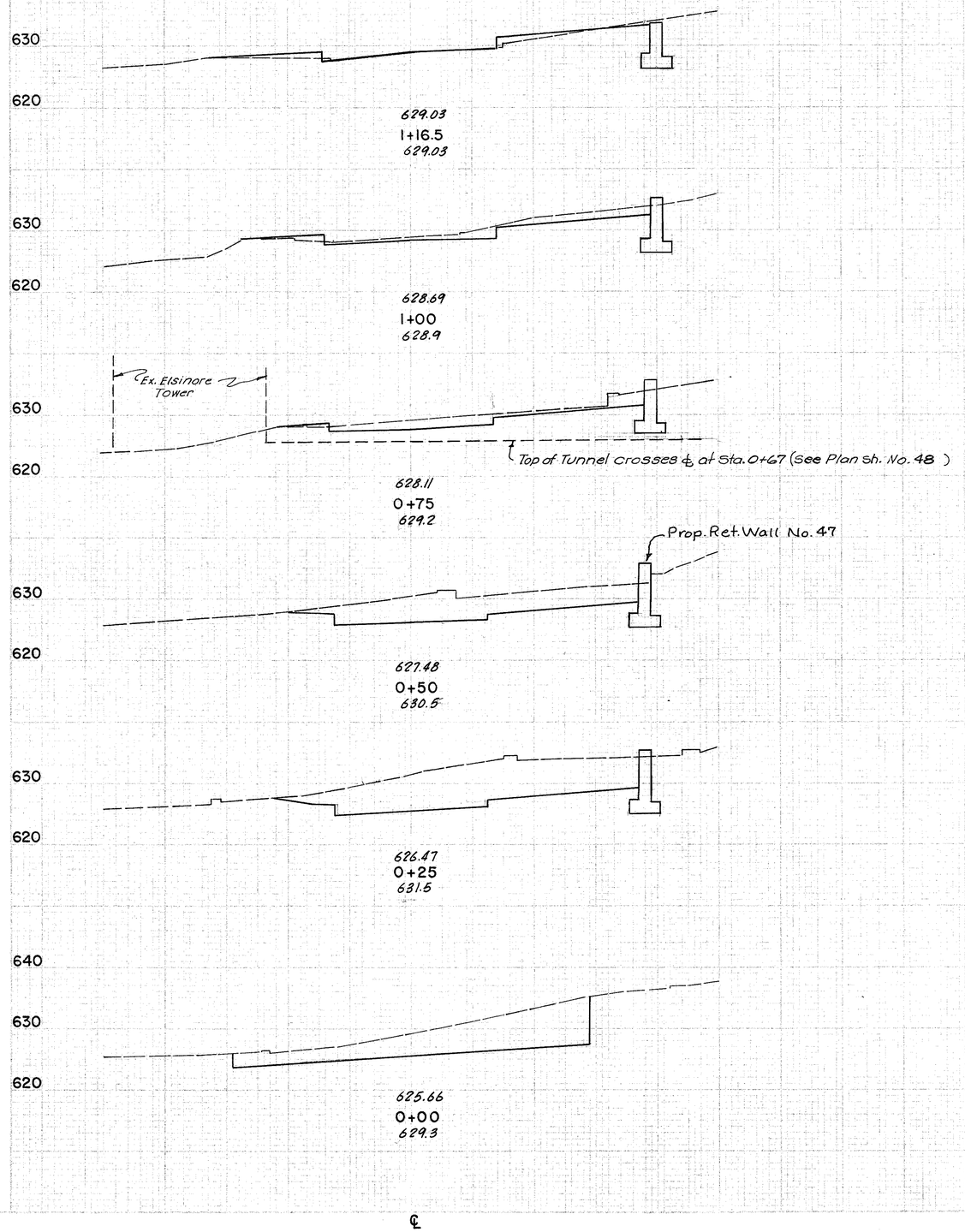

2	19		
		14	8
45	6		
		41	4
44	2		
		105	1
183			
		227	0
307			
		255	0
244			

DRIVE TO MUSEUM PARKING LOT

FED. HI. DIVISION	STATE	PROJECT
2	OHIO	

172
492

HAMILTON COUNTY
HAM-71-(1.56) (2.51)

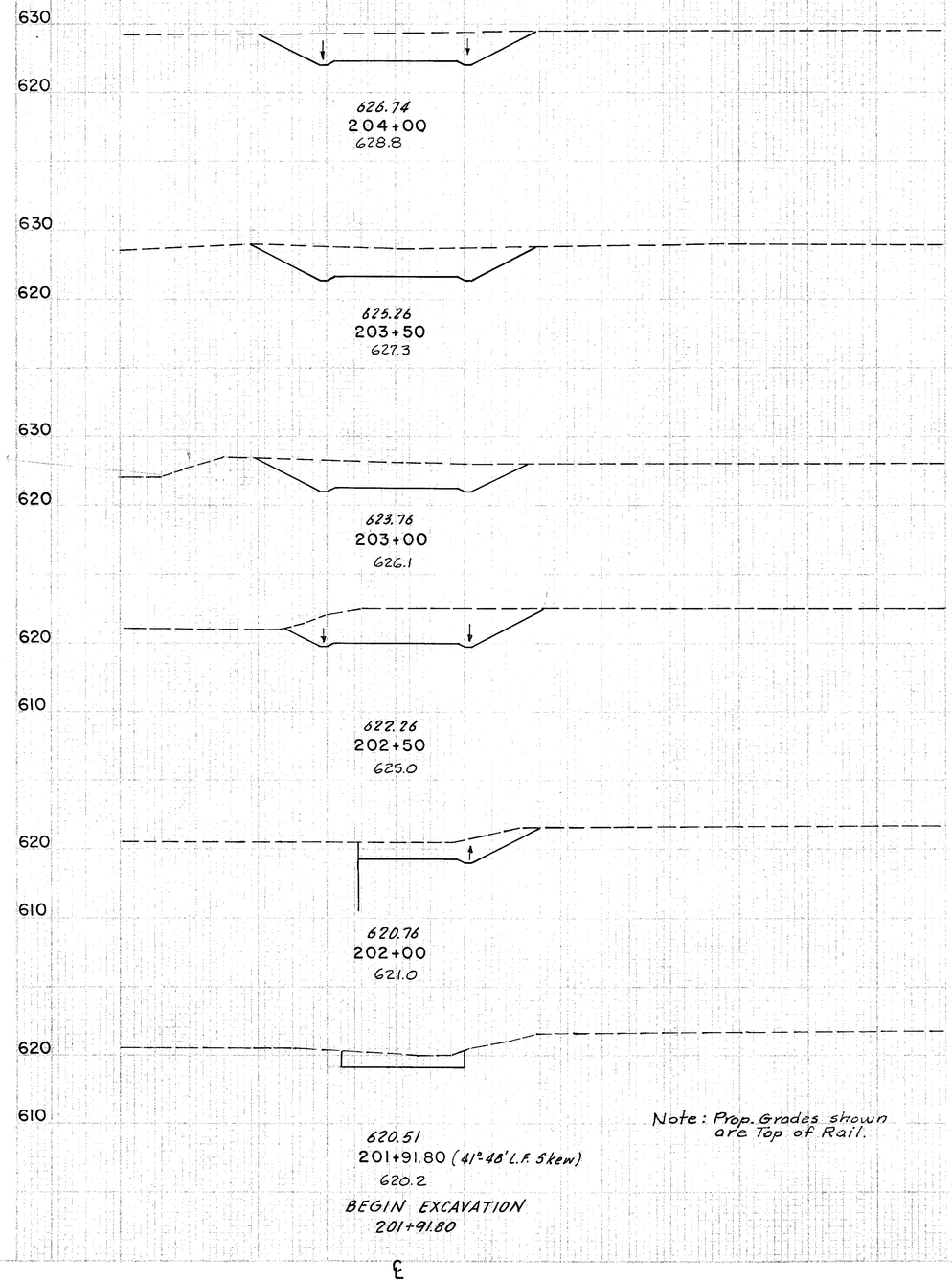

208+50	0	33
208+00	36	79
207+50	49	93
207+00	51	96
206+50	43	70
206+00	33	94
205+50	69	146
205+00	89	186
204+50	111	229
204+00	137	254
203+50	137	238
203+00	120	247
202+50	147	195
202+00	64	16
201+91.80	39	

PENNSYLVANIA RAILROAD

HAMILTON COUNTY
HAM-71-(1.56) (2.51)

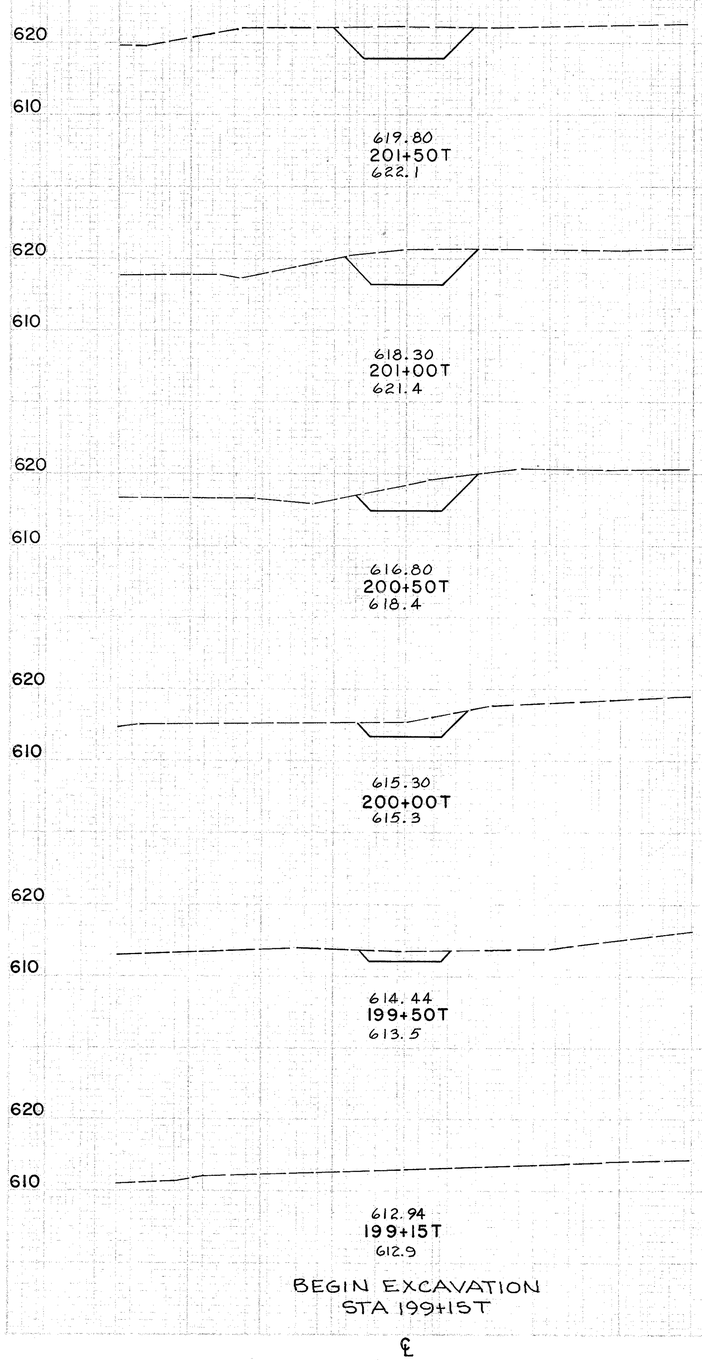

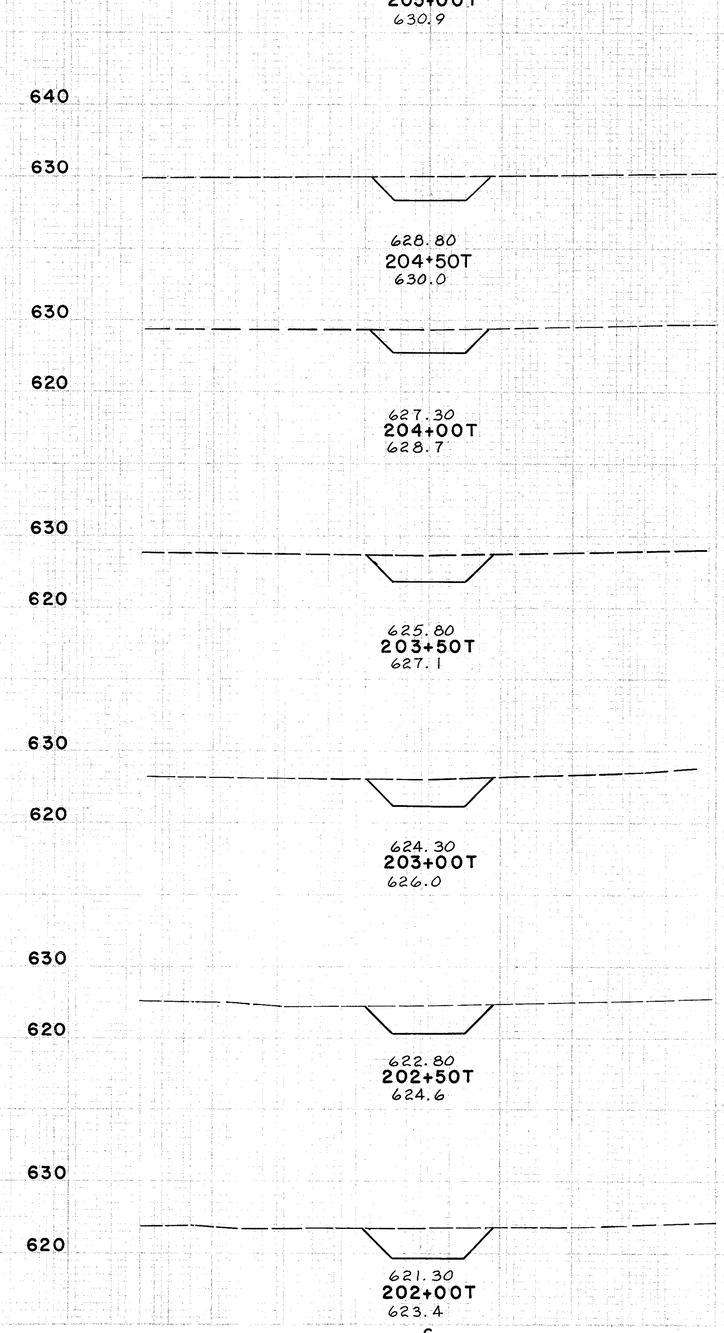

205+00	35	74
204+50	45	79
204+00	40	81
203+50	48	94
203+00	53	101
202+50	56	106
202+00	58	122
201+50	74	132
201+00	69	110
200+50	50	76
200+00	32	45
199+50	17	11
199+15	0	

TEMPORARY RUN-AROUND
FOR PENNSYLVANIA RAILROAD

FED. AID DIVISION	STATE	PROJECT
2	OHIO	

174
492

HAMILTON COUNTY
HAM-71-(1.56)(2.51)

SUSPEND EARTHWORK
STA. 10+24.46

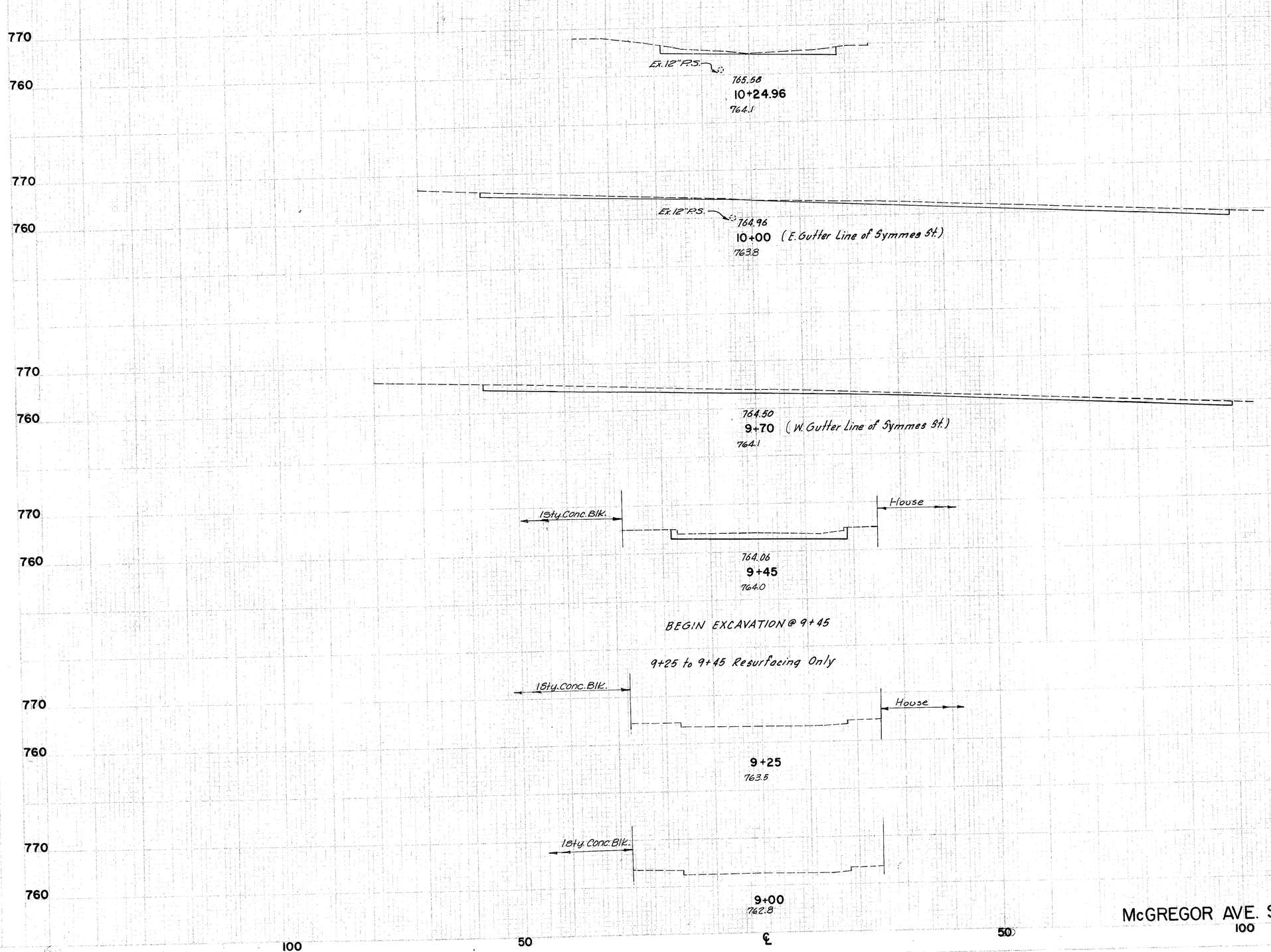

STA.	AREA CUT	AREA FILL
10+24.96	32	0
		61 0
10+00	100	0
		14 0
9+70	155	0
		13 0
9+45	52	0
		19 0
9+25	0	0
9+00		

McGREGOR AVE. STA. 9+00 TO STA. 10+24.96

FED. AID DIVISION	STATE	PROJECT
2	OHIO	

175
492

HAM-71-(1.56)(2.51)

150 100 50 ℄ 50 100

790
780
770
750
740

781.83
15+09.1 (W. Gutter Line Boone St.)
782.1

House Porch
780.87
14+80
782.0

House House
779.86
14+50
781.0

778.18
14+00
779.3

776.50
13+50
778.0

776.11
13+38.29
776.2

RESUME EARTHWORK
STA. 13+38.29

13+00

156	0	
141	0	
105	0	
112	1	
97	1	
150	25	
66	26	
135	24	
80	0	
26	1	
40	3	
10	1	
0	0	

McGREGOR AVE. STA. 13+00 TO STA. 15+09.2

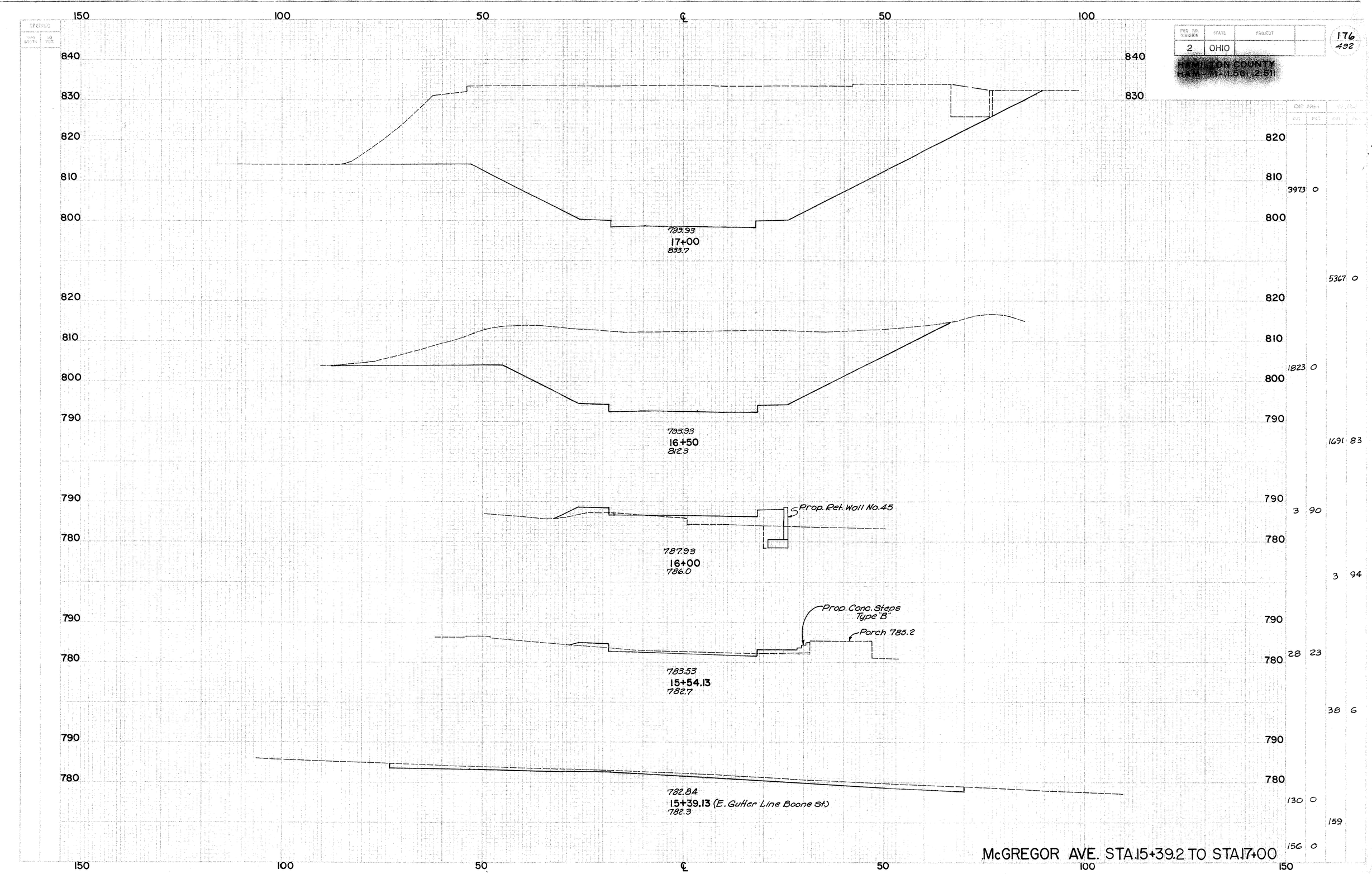

FED. RD. DIVISION 2
STATE OHIO
PROJECT
HAMILTON COUNTY
HAM-71-(1.56)(2.51)
176
492
150
100
50
℄
50
100
840
830
820
810
800
790
780
799.93
17+00
833.7
793.93
16+50
812.3
Prop. Ret. Wall No.45
787.93
16+00
786.0
Prop. Conc. Steps Type "B"
Porch 785.2
783.53
15+54.13
782.7
782.84
15+39.13 (E. Gutter Line Boone St.)
782.3
3973 0
5367 0
1823 0
1691 83
3 90
3 94
28 23
38 6
130 0
159
156 0
McGREGOR AVE. STA.15+39.2 TO STA.17+00

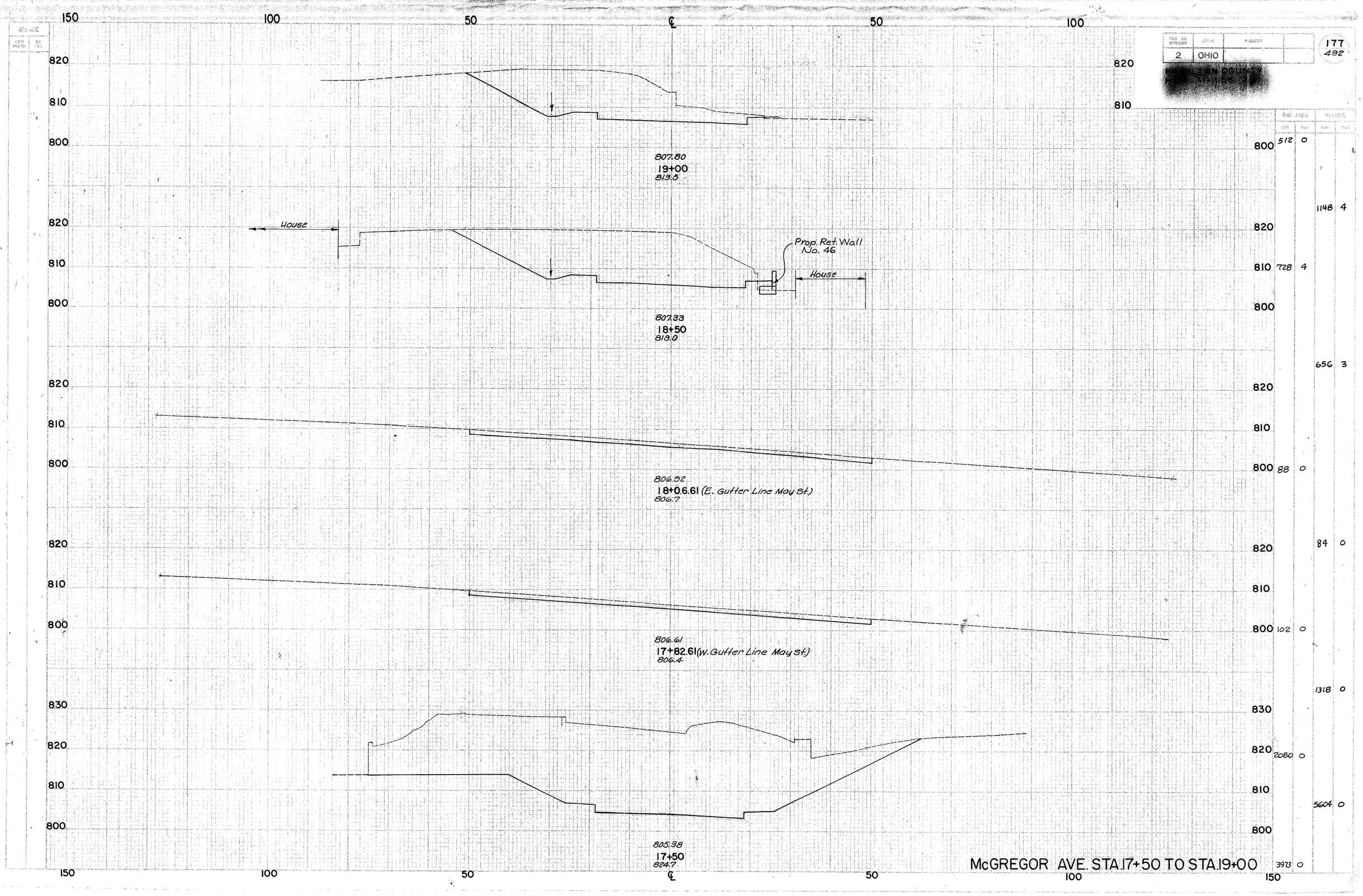

FED. RD. DIVISION	STATE	PROJECT	
2	OHIO		

177
492

[redacted]

END AREA CUT	END AREA FILL	VOLUME CUT	VOLUME FILL
512	0		
		1148	4
728	4		
		656	3
88	0		
		84	0
102	0		
		1318	0
2080	0		
		5604	0
3973	0		

McGREGOR AVE. STA.17+50 TO STA.19+00

FED. RD. DIVISION	STATE	PROJECT	
2	OHIO		

HAMILTON COUNTY
HAM-71-(1.56) (2.51)

178
492

SEEDING

END WIDTH	SQ. YDS.

150 100 50 ℄ 50 100

820 810 800

20+63.74 (℄ Kenton St.)
813.3

END EXCAVATION @ 20+48.74

813.22
20+48.74 (West Gutter of Kenton St.)
813.2

2½ Sty. Fr.

811.37
20+00
814.6

808.58
19+50
811.3

808.08
19+29.3 (℄ Cranston Alley)
808.0

END AREA		VOLUME	
CUT	FILL	CUT	FILL
118	0		
		372	0
295	0		
		528	0
275	0		
		152	0
121	0		
		343	0
512	0		

McGREGOR AVE. STA. 19+28 TO STA. 20+64.24

150 100 50 ℄ 50 100 150

FED. RD. DIV.	STATE	PROJECT	FISCAL YEAR
2	OHIO		

179
492

HAMILTON COUNTY
HAM-71-(1.56) (2.51)

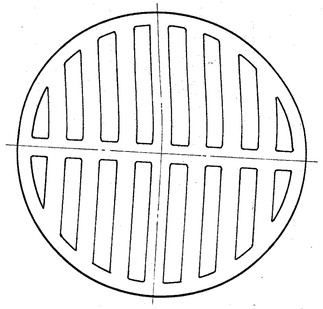

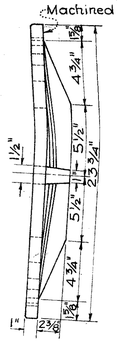

City of Cincinnati Acc. No. 49007

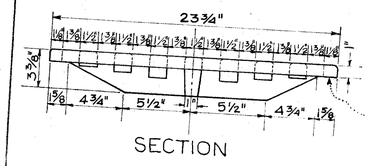

Note: For use with standard manhole frame, Acc. No. 49005 Approx. Wt. 105 lbs.

Machined Surface

Note:
All Castings to receive 2 Coats of Bituminous Paint.

STANDARD GRATING MANHOLE COVER

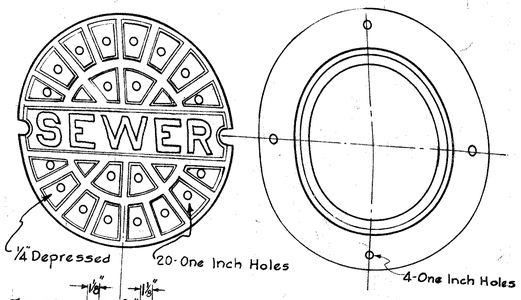

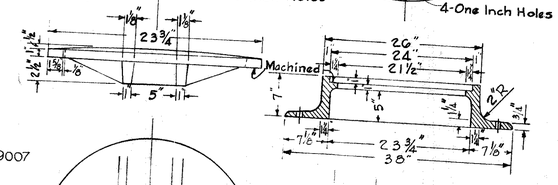

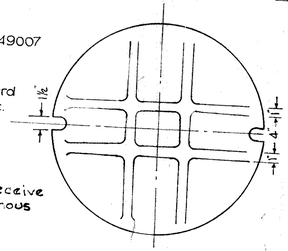

COMPUTED WEIGHTS

Frame	332 lbs.
Cover	155 lbs.
Total	487 lbs.

City of Cincinnati Acc. No. 49005

STANDARD MANHOLE FRAME AND COVER

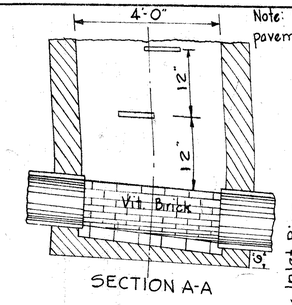

SECTION A-A

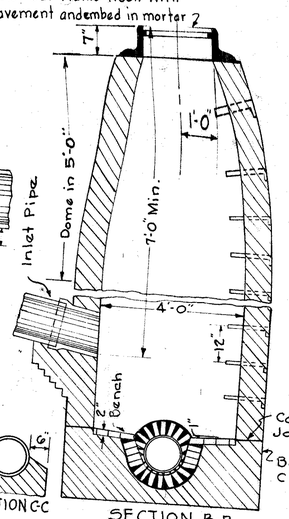

SECTION B-B

MANHOLE DEPTH	WALL THICKNESS
Less than 20'	9"
20' to 40'	13"
greater than 40'	18"

SECTION C-C

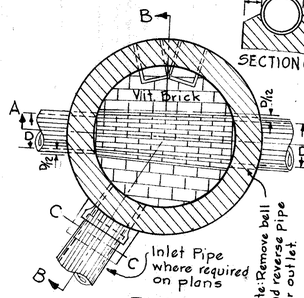

PLAN

Channels and benches shall be of vitrified brick or formed concrete.

City of Cincinnati Acc. No. 49000

Manhole shall be built in accordance with Item S-7 City of Cincinnati Construction & Material Specifications.

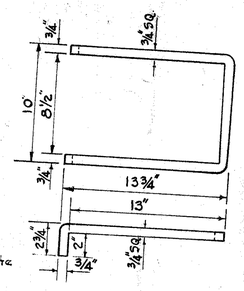

STEP FOR BRICK MANHOLE

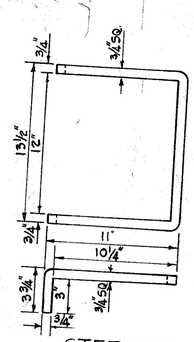

STEP FOR PRECAST MANHOLE

Bends shall be made hot.
Steps shall be made of Wrought Iron, which meets the requirements and tests of the A.S.T.M. Specifications for single refined Wrought Iron.
Steps shall bear the stamp of the manufacturer and be thoroughly coated with red lead.
Computed Weight - 6 lbs.
City of Cincinnati Acc. No. 49008

STANDARD MANHOLE STEPS

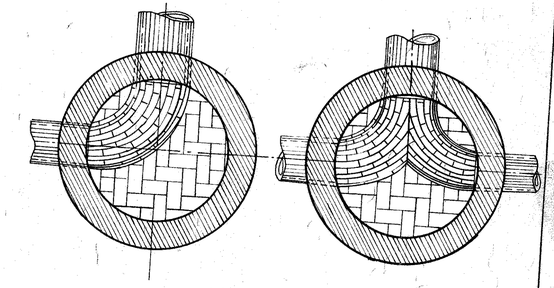

City of Cincinnati Acc. No. 49004

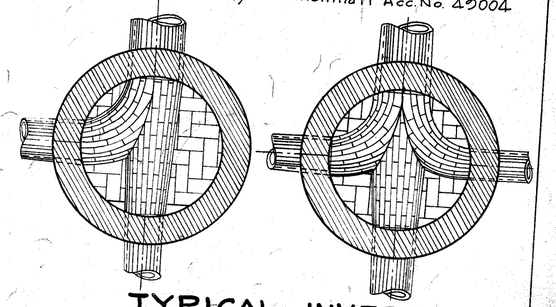

TYPICAL INVERTS

Note:
All Acc. No's shown are City of Cincinnati Acc. No's.

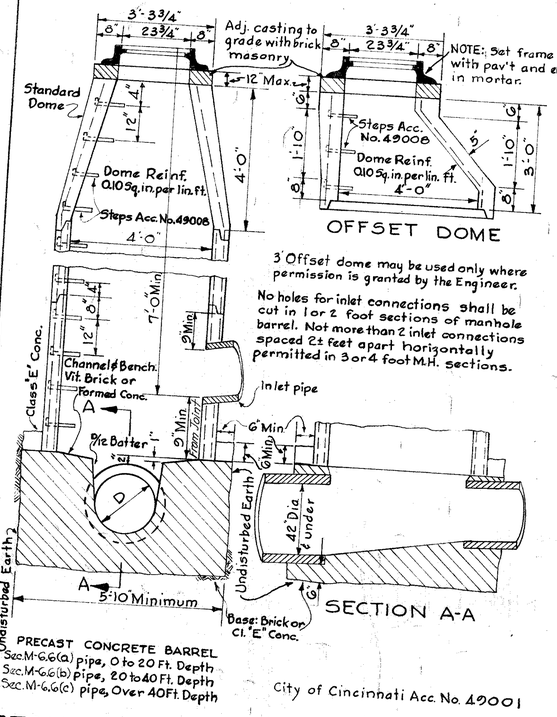

3' Offset dome may be used only where permission is granted by the Engineer.

No holes for inlet connections shall be cut in 1 or 2 foot sections of manhole barrel. Not more than 2 inlet connections spaced 2± feet apart horizontally permitted in 3 or 4 foot M.H. sections.

PRECAST CONCRETE BARREL
Sec. M-6.6(a) pipe, 0 to 20 Ft. Depth
Sec. M-6.6(b) pipe, 20 to 40 Ft. Depth
Sec. M-6.6(c) pipe, Over 40 Ft. Depth

City of Cincinnati Acc. No. 49001

STANDARD MANHOLE TYPE P

Use same barrel and dome as shown for standard manholes on sewers 42" and under Acc. Nos. 49000 or 49001

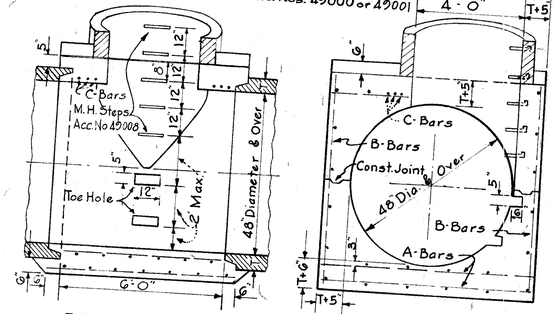

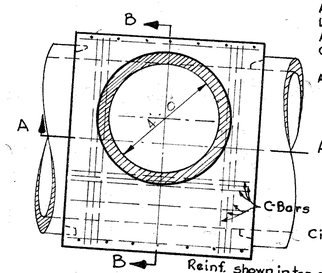

All concrete to be Class "E"
All steel to have 2" cover except where noted.
Longitudinal steel - No. 5 Bars @ 18" o.c.
A and B bars - 12" o.c. as shown.
C-Bars - 3' o.c. as shown.
A, B, and C bars { No. 5 bars on 48" to 60" Srs. / No. 6 bars on 66" to 78" Srs. / No. 7 bars on 84" to 108" Srs.

City of Cincinnati Acc. No. 49002

STANDARD MANHOLE TYPE D

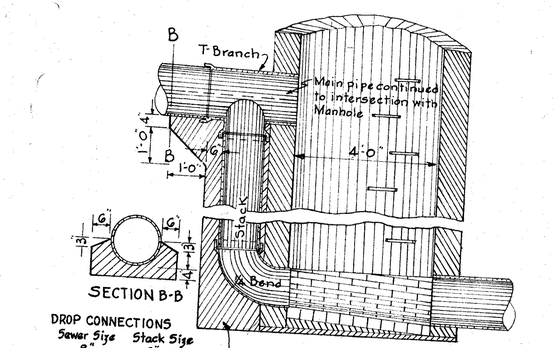

DROP CONNECTIONS

Sewer Size	Stack Size
8"	8"
10"	10"
12"	12"
15"	12" Unless
18"	12" Otherwise
20"	12" Noted
22"	12" On
24"	12" Plans

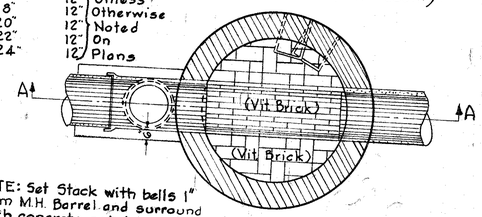

NOTE: Set Stack with bells 1" from M.H. Barrel and surround with concrete or brick masonry. Other characteristics similar to Standard Manhole.

City of Cincinnati Acc. No. 49003

STANDARD DROP MANHOLE

FED. RD. DIV.	STATE	PROJECT	FISCAL YEAR
2	OHIO		

180
492

HAMILTON COUNTY
HAM-71-(1.56) (2.51)

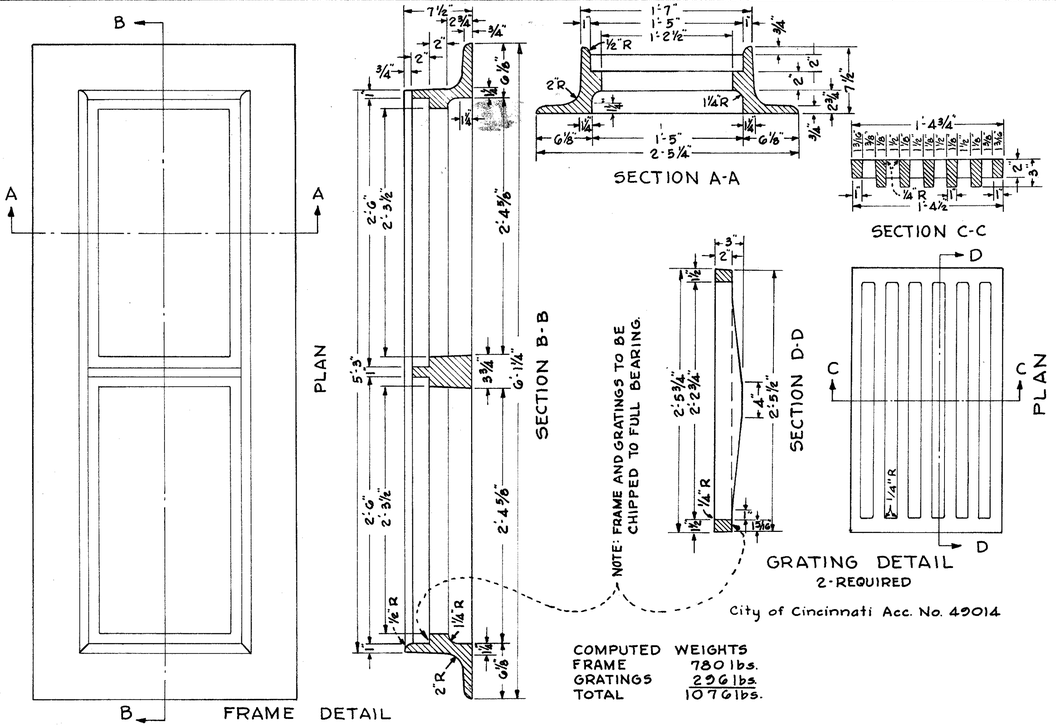

STANDARD CASTINGS FOR TYPE A-2 OR K CATCH BASIN

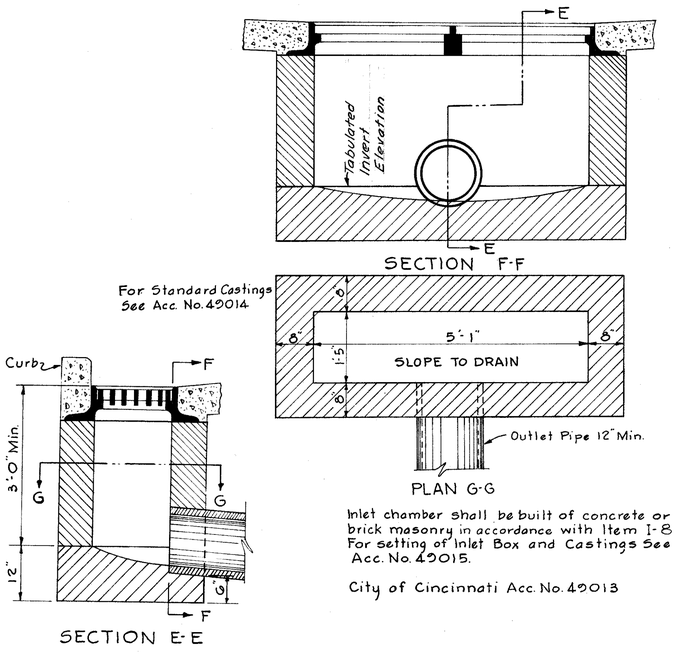

Inlet chamber shall be built of concrete or brick masonry in accordance with Item I-8
For setting of Inlet Box and Castings See Acc. No. 49015.

City of Cincinnati Acc. No. 49013

TYPE A-2 CATCH BASIN

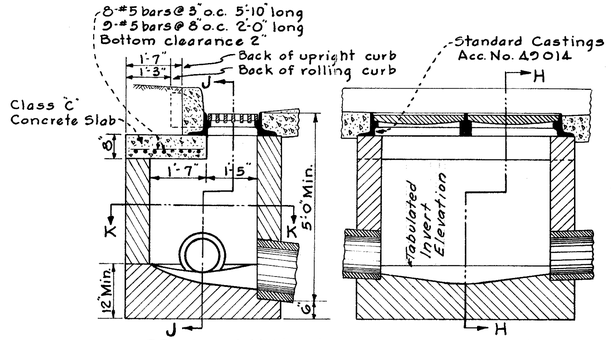

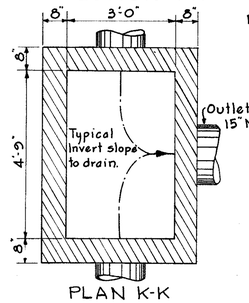

Note: Concrete slab may be precast with lift holes 12" from each end. Mark top of slab.
Inlet Chamber shall be built of concrete or brick masonry in accordance with Item I-8

For Pavement Detail See Acc. No. 49015

City of Cincinnati Acc. No. 49010

TYPE K CATCH BASIN

Note:
All castings to receive 2 Coats of bituminous Paint.

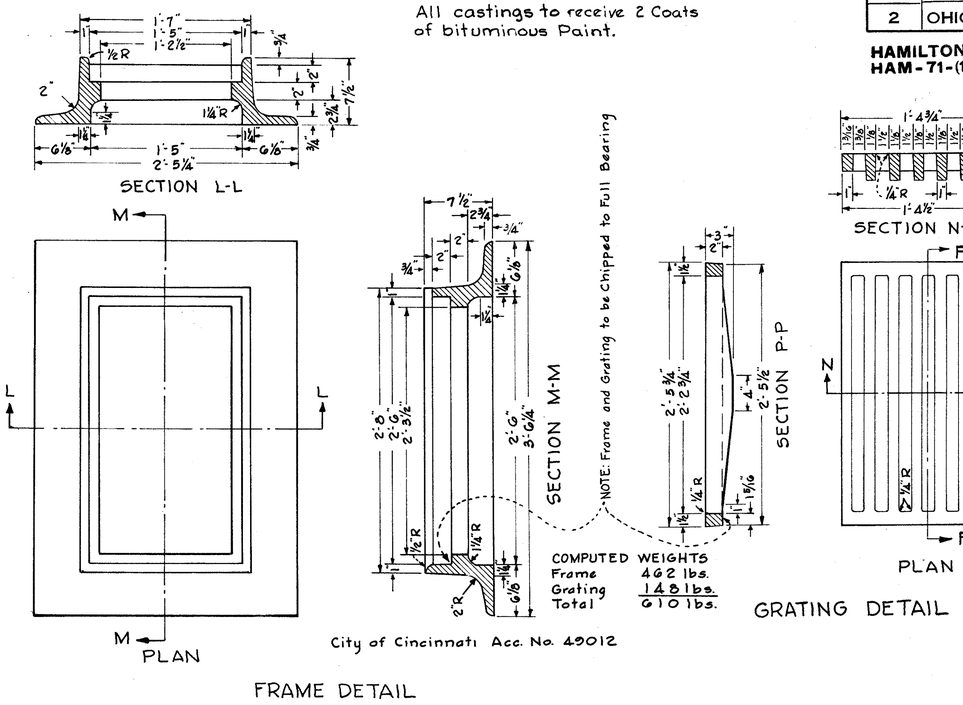

STANDARD CASTINGS FOR TYPE A CATCH BASIN

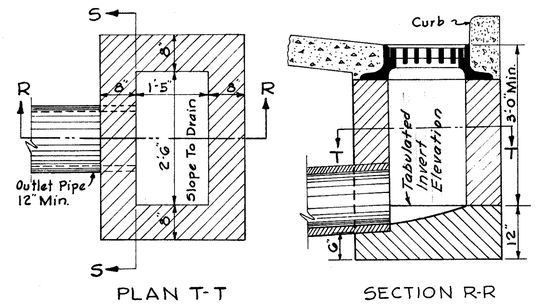

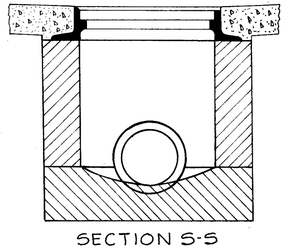

Inlet chamber shall be built of concrete or brick masonry in accordance with Item I-8

For setting of Inlet Box and Castings See Acc. No. 49015.

For Std. castings see Acc. No. 49012

City of Cincinnati Acc. No. 49011

SECTION S-S

TYPE A CATCH BASIN

Note:
All Acc. No's shown are City of Cincinnati Acc. No's.

SEWER DETAILS

FED. RD. DIV.	STATE	PROJECT	FISCAL YEAR
2	OHIO		

181
492

HAMILTON COUNTY
HAM-71-(1.56) (2.51)

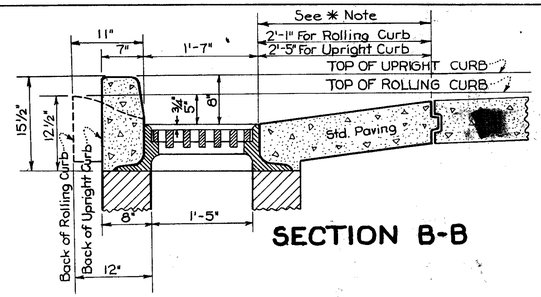

SECTION B-B

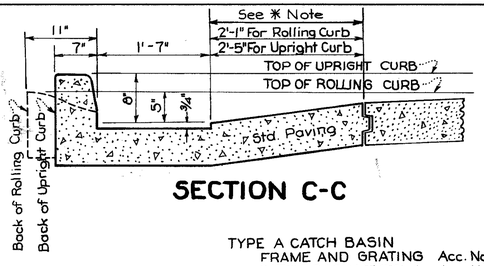

SECTION C-C

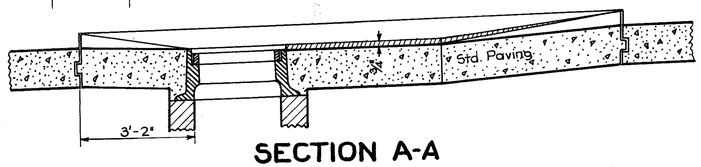

SECTION A-A

TYPE A CATCH BASIN
FRAME AND GRATING Acc. No. 49012
CATCH BASIN TYPE A Acc. No. 49011

TYPE A-2 CATCH BASIN
FRAME AND GRATING Acc. No. 49014
CATCH BASIN TYPE A-2 Acc. No. 49013

TYPE K CATCH BASIN
FRAME AND GRATING Acc. No. 49014
CATCH BASIN TYPE K Acc. No. 49010

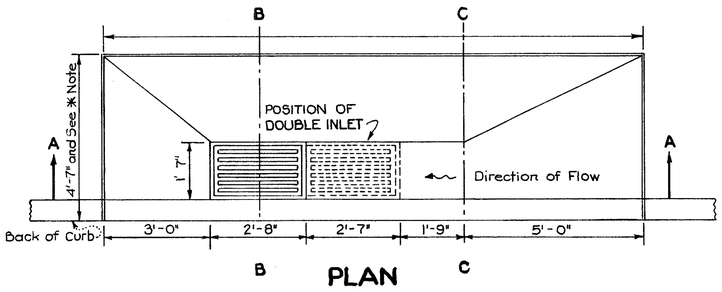

PLAN

* NOTE: Alter this dimension to meet Edge of Concrete Paving for Bituminous paved shoulder of 5' width & under. Otherwise construct as shown.

* NOTE: Payment for all labor and material required to construct the standard pavement shall be included in the unit price bid for Item I-8, Type A, A-2, K or C Catch Basins

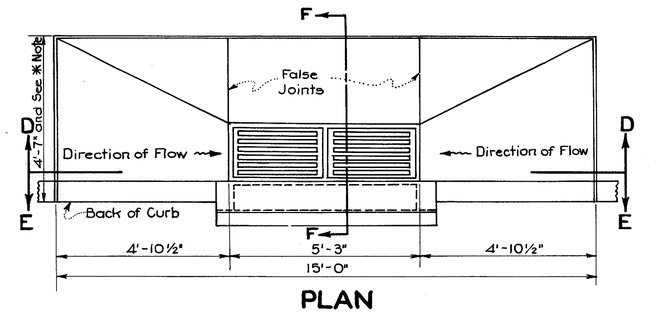

PLAN

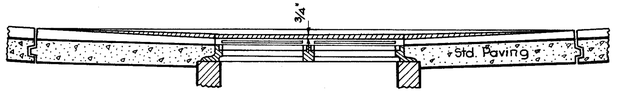

SECTION D-D

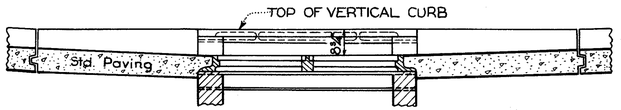

SECTION E-E

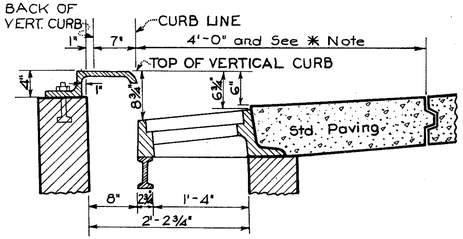

SECTION F-F

TYPE C CATCH BASIN
FRAME AND GRATING Acc. No. 49017
CATCH BASIN TYPE C Acc. No. 49016

City of Cincinnati Acc. No. 49015

City of Cincinnati Acc. No. 49018

STANDARD PAVEMENT DETAIL FOR TYPE A, A-2 & K CATCH BASINS

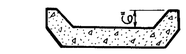

SECTION L-L

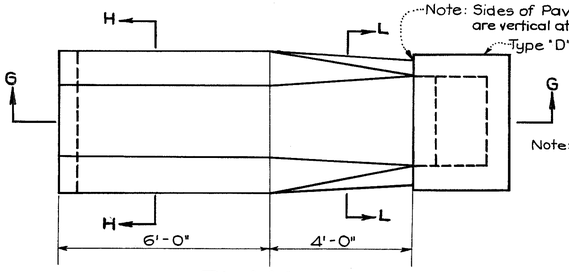

PLAN

Note: Cost of Paved Gutter as shown for one or more sides of Type D Catch Basin shall be included in UNIT Price bid for Item I-8 Type D Catch Basin.

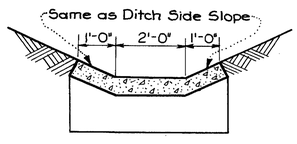

SECTION H-H

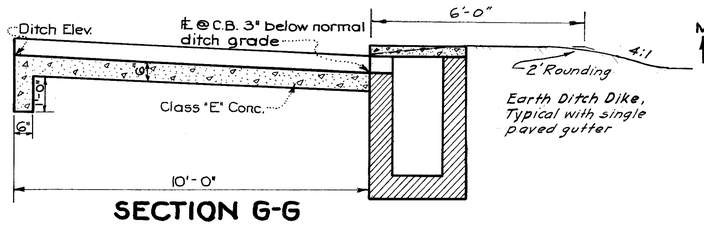

SECTION G-G

PAVED GUTTER DETAIL FOR TYPE D CATCH BASIN

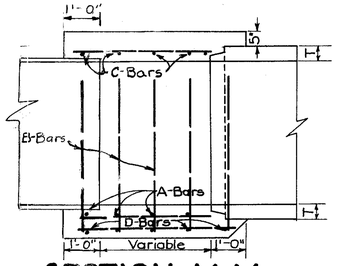

SECTION M-M

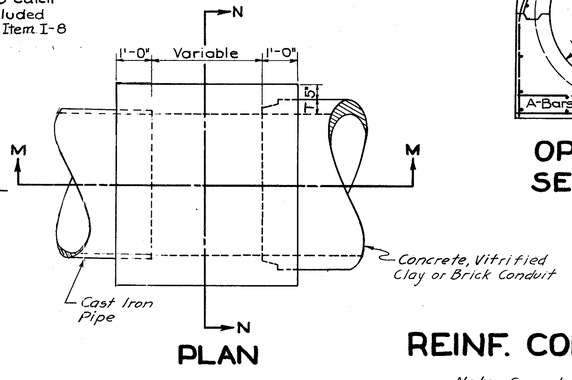

PLAN

Note:
All Acc. No's. shown are City of Cincinnati Acc. No's.

STANDARD PAVEMENT DETAIL FOR TYPE C CATCH BASIN

Invert Steel - 3" cl.
All other Steel - 2" cl.
Bar Lap - 30 times the bar diameter

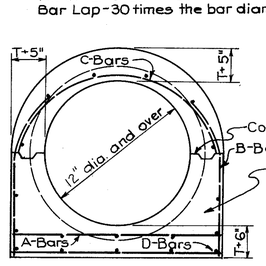

OPTIONAL SECTION N-N

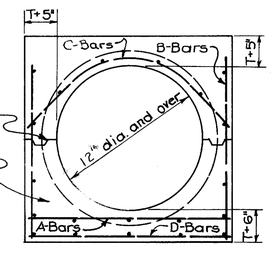

SECTION N-N

A-B-C and D Bars @ 12" o.c.
A-B-C { #5 Bars for 12" to 60" Sewer
A-B-C { #6 Bars for 36" to 78" Sewer
A-B-C { #7 Bars for 84" to 108" Sewer
D-Bar #5 Bars for 12" to 108" Sewer
Not less than 3 transverse bars in any gap.
All longitudinal steel - #5 Bars @ 18" o.c.

REINF. CONCRETE COLLAR

Note: Symetrical about center of collar when joining same types of conduit

City of Cincinnati Acc. No. 49031

SEWER DETAILS

FED. RD. DIV.	STATE	PROJECT	FISCAL YEAR
2	OHIO		

182
492

HAMILTON COUNTY
HAM-71-(1.56) (2.51)

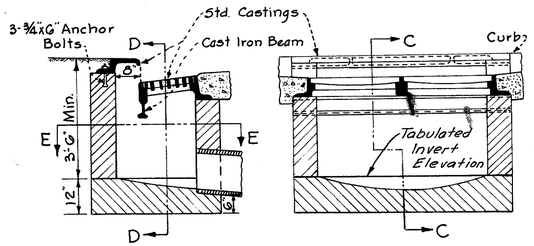

SECTION C-C SECTION D-D

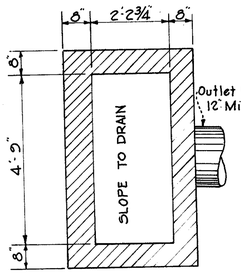

PLAN E-E

Inlet Chamber shall be built of concrete or brick masonry in accordance with Item I-8

For Standard Castings See Acc. No. 49017.

For setting of Inlet Box and Casting See Acc. No. 49018

City of Cincinnati Acc. No. 49016

TYPE C CATCH BASIN

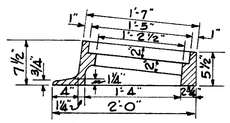

SECTION G-G

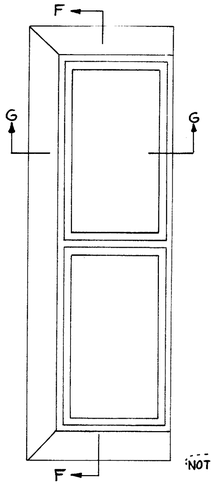

FRAME PLAN

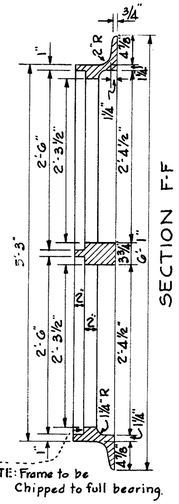

NOTE: Frame to be Chipped to full bearing.

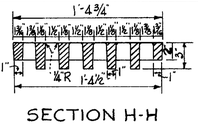

SECTION H-H

Note: All castings to receive 2 coats of bituminous paint.

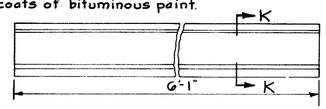

GRAY CAST IRON BEAM

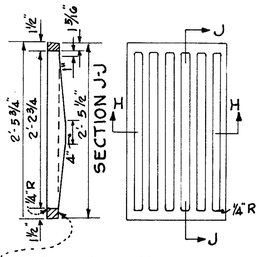

SECTION J-J

NOTE: Grating to be chipped to full bearing.

GRATING PLAN
2 GRATINGS REQUIRED

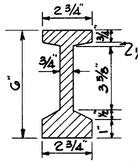

SECTION K-K

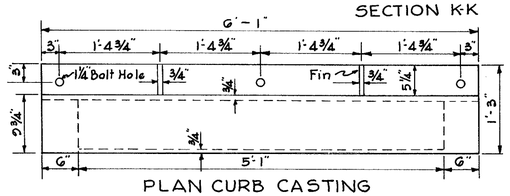

PLAN CURB CASTING

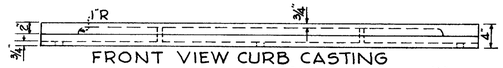

FRONT VIEW CURB CASTING

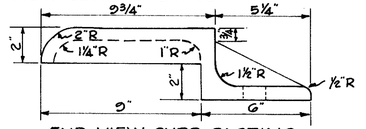

END VIEW CURB CASTING

COMPUTED WEIGHTS

Frame	680 lbs.
Gratings	296 lbs.
Curb Casting	305 lbs.
Cast Iron Beam	162 lbs.
Total	1443 lbs.

City of Cincinnati Acc. No. 49017

STANDARD CASTING FOR TYPE C CATCH BASIN

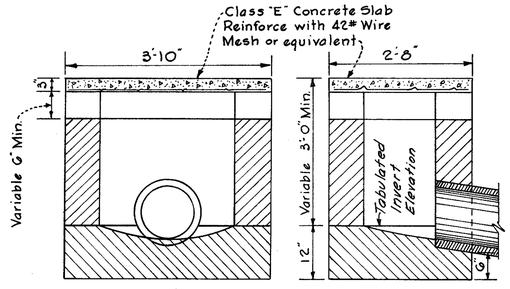

SECTION A-A SECTION B-B

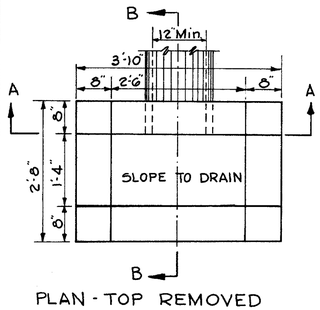

PLAN - TOP REMOVED

NOTE:
The Inlet is shown open on four sides. Any of these openings may be closed as directed by the engineer.

Inlet shall be built of brick or concrete in accordance with Item I-8

City of Cincinnati Acc. No. 49023

TYPE D CATCH BASIN

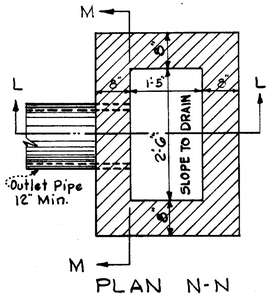

PLAN N-N

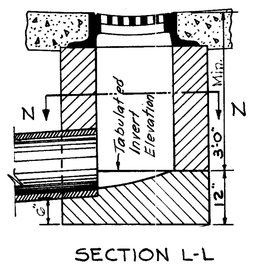

SECTION L-L

Inlet chamber shall be built of concrete or brick masonry in accordance with Item I-8

For Std. castings see Acc. No. 49020.

City of Cincinnati Acc. No. 49019

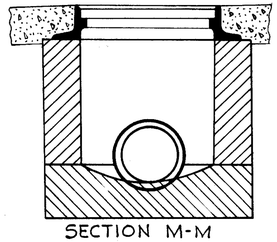

SECTION M-M

TYPE V CATCH BASIN

Note:
All castings to receive 2 coats of Bituminous Paint.

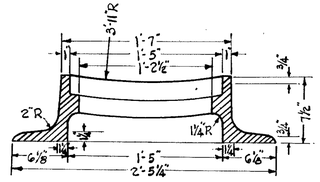

SECTION P-P

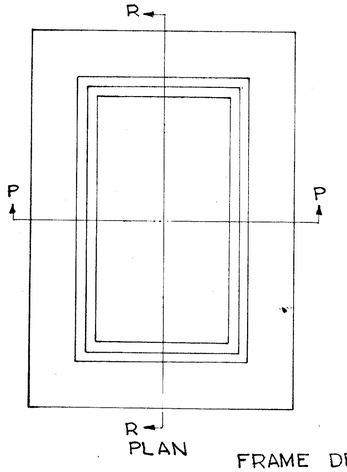

PLAN

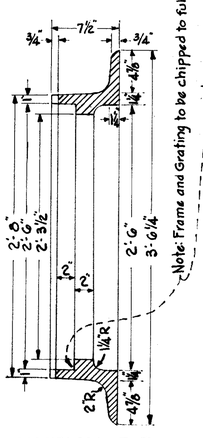

SECTION R-R

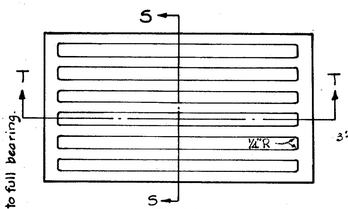

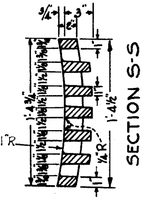

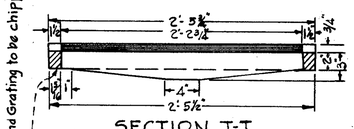

GRATING DETAIL

Note: Frame and Grating to be chipped to full bearing.

FRAME DETAIL

COMPUTED WEIGHTS

Frame	464 lbs.
Grating	148 lbs.
Total	612 lbs.

City of Cincinnati Acc. No. 49020

Note:
All Acc. No's shown are.
City of Cincinnati Acc. No's.

STANDARD CASTINGS FOR TYPE V CATCH BASIN

SEWER DETAILS

FED. RD. DIV.	STATE	PROJECT	FISCAL YEAR
2	OHIO		

183
432

HAMILTON COUNTY
HAM-71-(1.56) (2.51)

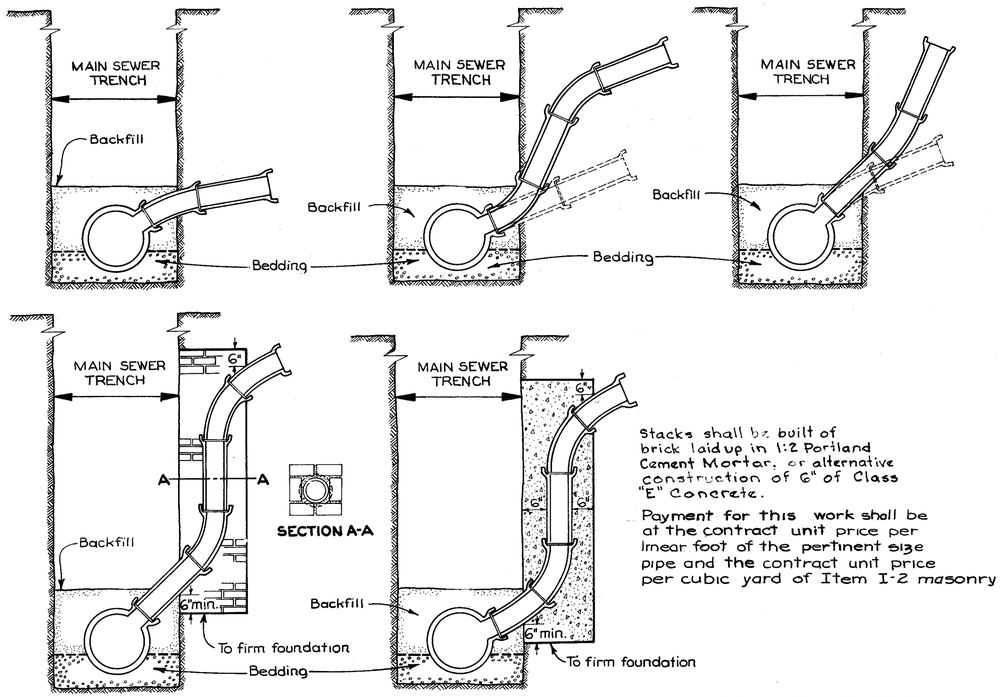

Stacks shall be built of brick laid up in 1:2 Portland Cement Mortar, or alternative construction of 6" of Class "E" Concrete.

Payment for this work shall be at the contract unit price per lineal foot of the pertinent size pipe and the contract unit price per cubic yard of Item I-2 masonry

City of Cincinnati Acc. No. 49033

TYPICAL HOUSE DRAINS AND STACKS

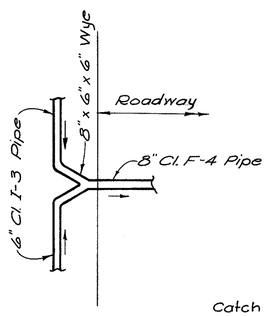

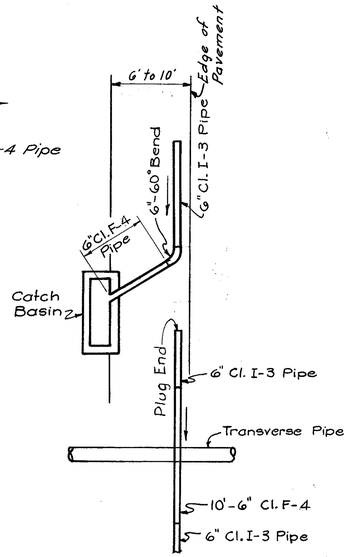

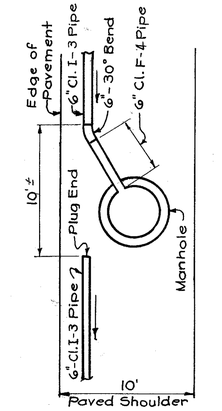

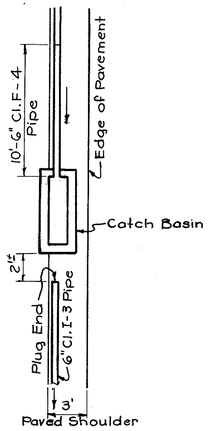

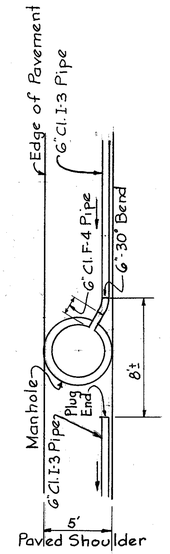

UNDERDRAIN DETAILS

Note:
Channel and Bench may be made of Vitrified Brick or formed of Concrete Class "E"
Where sewer does not change size or direction at M.H., Channel Pipe may be used.

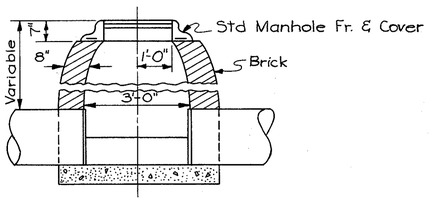

TYPE "B" MANHOLE

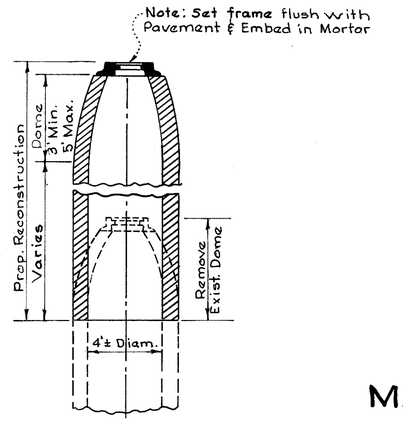

TYPICAL SECTION

MANHOLE RECONSTRUCTED TO GRADE

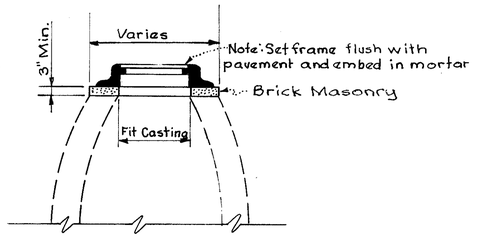

TYPICAL SECTION

MANHOLE ADJUSTED TO GRADE

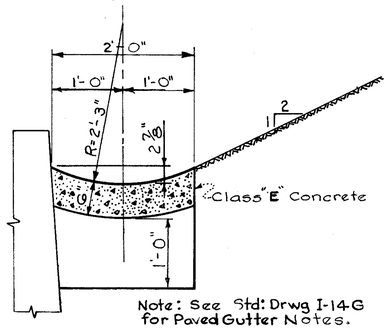

SECTION A-A

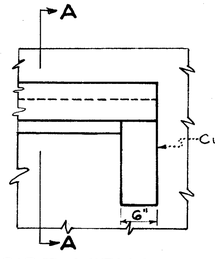

SIDE VIEW

TYPE 2 MODIFIED PAVED GUTTER

Note:
All Acc. No's shown are City of Cincinnati Acc. No's.

SEWER DETAILS

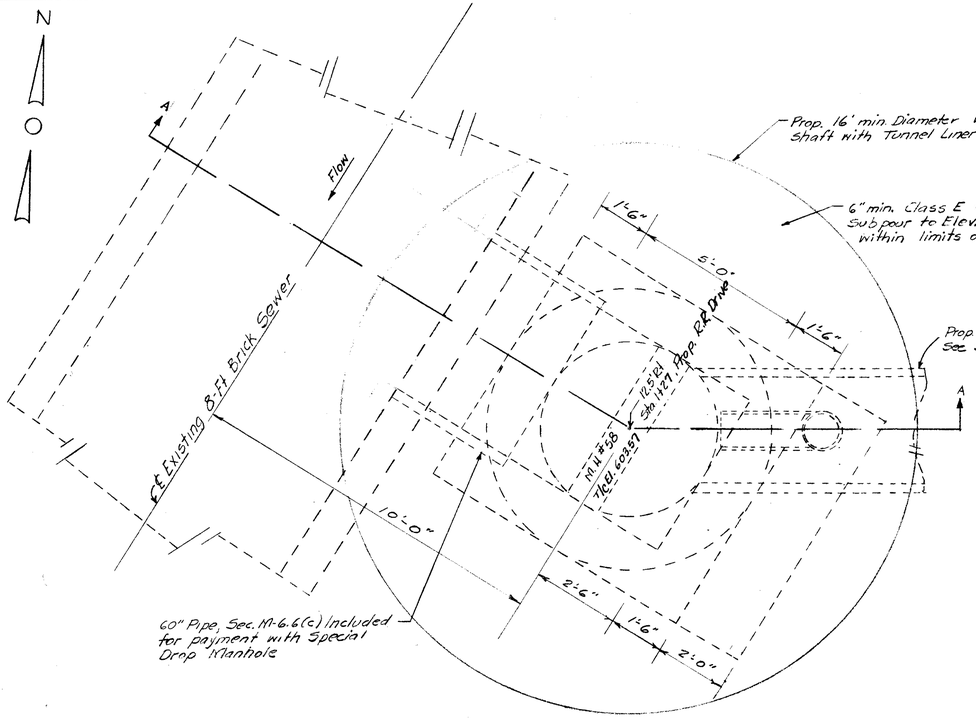
N
A
Flow
Prop. 16' min. Diameter Vertical Shaft with Tunnel Liner Plates
6" min. Class E Concrete Sub pour to Elev. 538 within limits of shaft
1'-6"
5'-0"
1'-6"
Prop. 36" Pipe See Sewer Profile
A
12.5 Ø Sh 1121 Prop. RR Drive
10 #8 Tied Sp 2.51
Ø
Ø
Ø

FED. RD. DIV.	STATE	PROJECT	FISCAL YEAR
2	OHIO		

185
492

HAMILTON COUNTY
HAM-71-(1.56) (2.51)

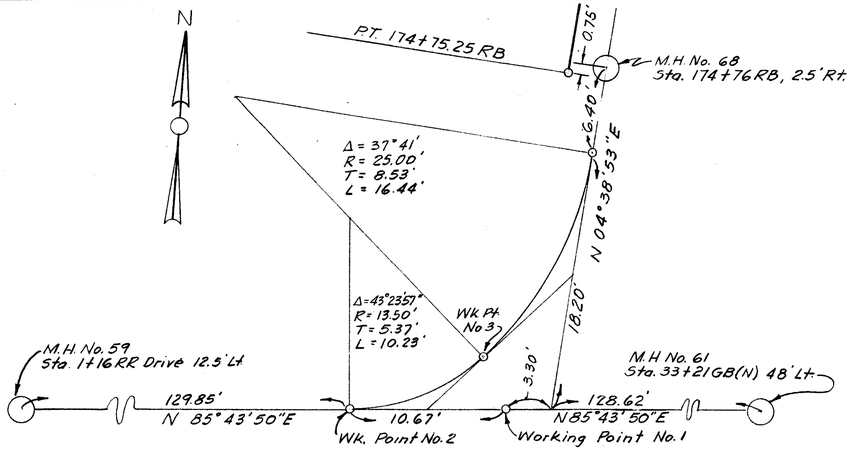

STAKEOUT DIAGRAM

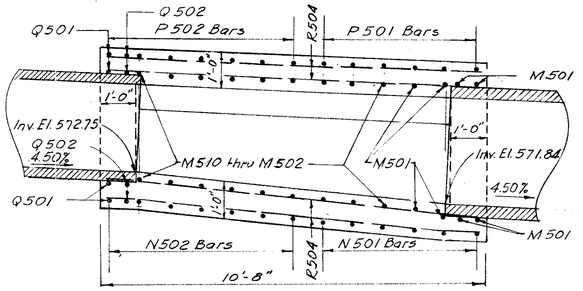

SECTION AA

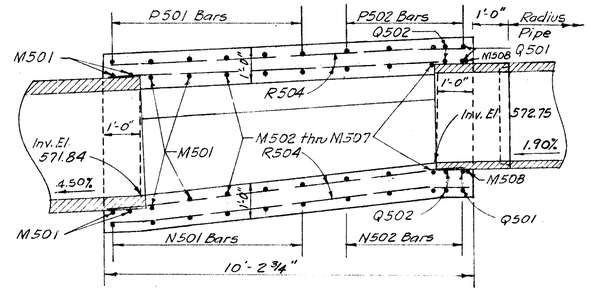

SECTION BB

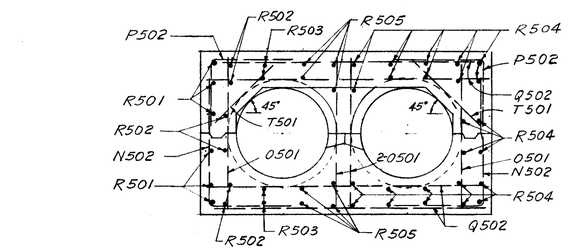

SECTION DD

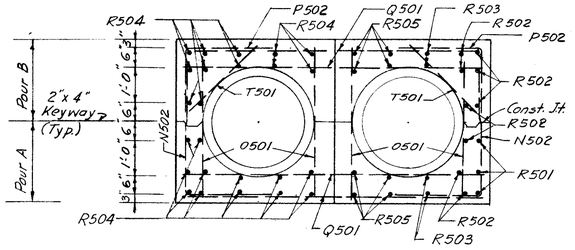

SECTION EE

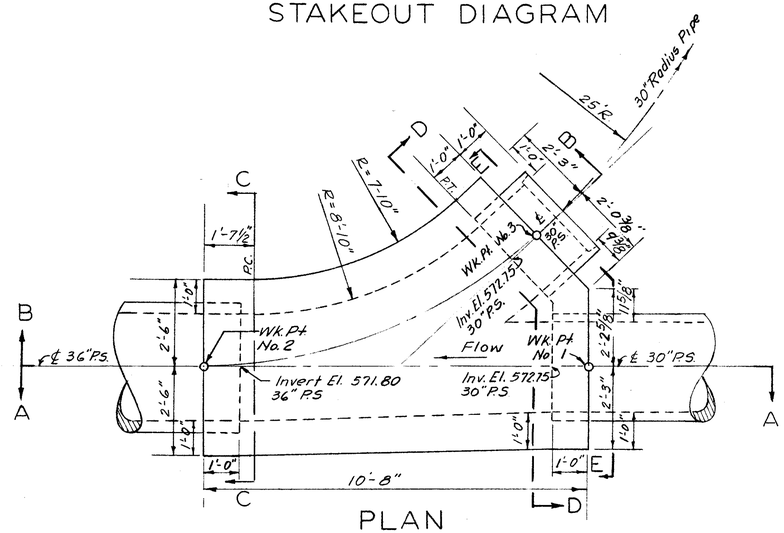

PLAN
JUNCTION CHAMBER NO. 1

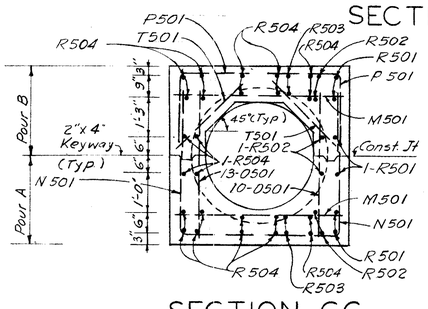

SECTION CC

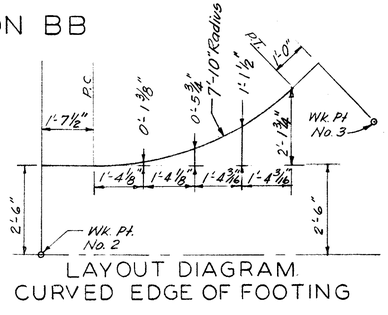

LAYOUT DIAGRAM
CURVED EDGE OF FOOTING

CONCRETE	
Pour A	3.7 C.Y.
Pour B	3.6 C.Y.
Total	7.3 C.Y.

REINFORCING STEEL						
Mark	Shape	Number	a	b	Length	Weight
M501	Str.	8			4'-8"	39
M502	Str.	2			4'-9"	10
M503	Str.	2			4'-10"	10
M504	Str.	2			5'-1"	11
M505	Str.	2			5'-6"	11
M506	Str.	2			6'-0"	13
M507	Str.	2			6'-8"	14
M508	Str.	2			7'-0"	15
M509	Str.	2			6'-2"	13
M510	Str.	2			5'-3"	11
N501	Bent	12	2'-0"	4'-0"	5'-11"	74
N502	Bent	11	2'-6"	4'-0"	6'-5"	74
0501	Str.	27			4'-1"	115
P501	Bent	12	2'-0"	2'-0"	3'-11"	49
P502	Bent	11	2'-6"	2'-0"	4'-5"	51
Q501	Bent	4	4'-3"	4'-0"	8'-2"	34
Q502	Bent	4	4'-1"	3'-10"	7'-10"	33
R501	Bent	6	5'-11"	—	8'-3"	52
R502	Bent	6	6'-3"	—	8'-8"	54
R503	Bent	4	7'-2"	—	9'-8"	40
R504	Str.	24			10'-4"	259
R505	Str.	8			4'-2"	35
T501	Str.	23			2'-9"	66
					Total	1083 Lbs.

NOTES
1. All concrete shall be Class "E".
2. All reinforcing bars are No.5.
3. Provide 3" clearance for reinforcement in footing and 2" clearance for walls and top slab (minimum).
4. The embedded concrete pipe shall be Class B-1, Sec. M-G.G (c) and paid for as Item I-1 for the pertinent size pipe as shown on the Sewer Profile Sheets.

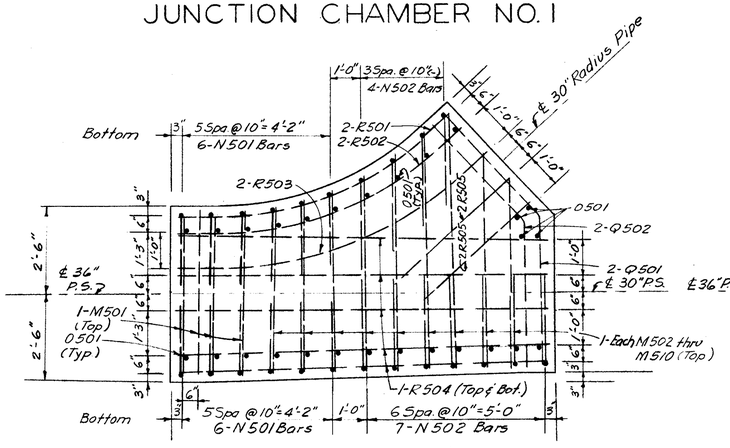

FOOTING PLAN

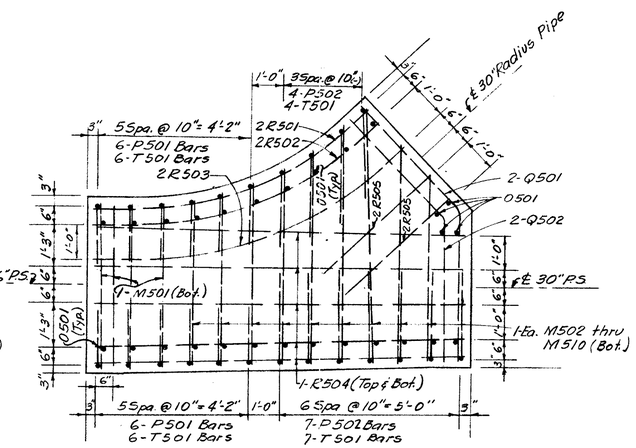

TOP SLAB PLAN

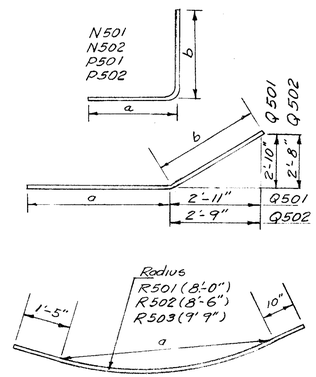

BAR BENDING DIAGRAMS

SEWER DETAILS

3-15-65 CRW
4-14-65 SPC

FED. RD. DIVISION	STATE	PROJECT	
2	OHIO		

186
492

HAMILTON COUNTY
HAM-71-(1.56)(2.51)

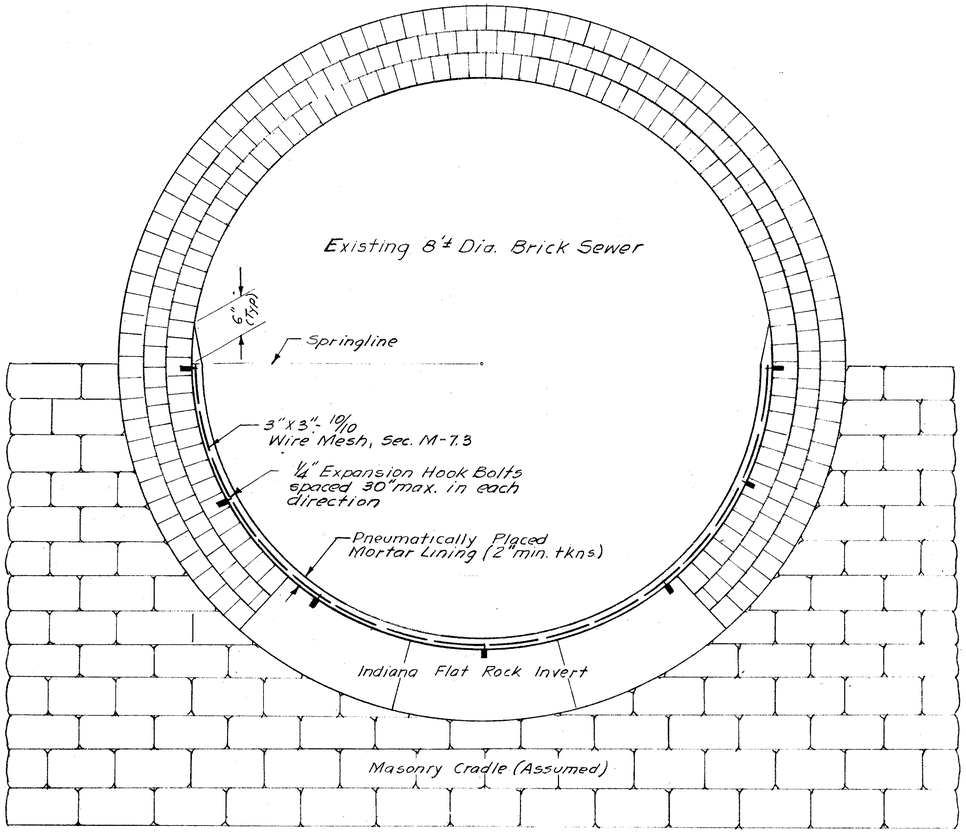

TYPICAL SECTION SHOWING
PNEUMATICALLY PLACED MORTAR LINING
FOR EXISTING 8-FT. BRICK SEWER

NOTES

The City of Cincinnati, Division of Engineering, shall be notified at least two working days before any work is started in the existing 8-ft. sewer.

The pneumatically placed mortar lining in the existing 8-ft. brick sewer shall be completed and all grout and mortar shall have attained 7-day strength before any excavation or pile driving operations will be permitted in the immediate vicinity of the sewer.

An inspection of the condition of the existing 8-ft. circular brick sewer was made by the City of Cincinnati Sewer Department on December 2, 1962 and is on file with the Administrator of Contract Sales, Department of Highways, Ohio Departments Building, Columbus, Ohio. The section of this report applicable to this project begins at Report Station 11 + 50 on page 6.

The Contractor's attention is called to the necessity of performing this work without interrupting sewage flow. Access to the sewer is contemplated by means of a shaft sunk for the construction of a manhole and 60-inch connection to the existing 8-ft. sewer in the vicinity of 86 feet left of Station 173 + 96 GA. The construction of this shaft and the 60-inch pipe connection shall be so scheduled that access will be available for the construction of the pneumatically placed mortar lining in the 8-ft. brick sewer. Payment for the access shaft shall be incidental to the construction of Special Drop Manhole No. 58. Any additional access required shall be at the Contractor's sole expense.

The 3" × 3"-10/10 wire mesh reinforcement shall be accurately held in place by 1/4" expansion hook bolts, spaced 30" maximum in each direction. The reinforcement shall be securely fastened and supported to prevent displacement and shall have a minimum coverage of 3/4".

Cracks, crevices, missing masonry, eroded inverts, etc. located beneath the area of the proposed mortar lining may at the Contractor's option be built up to the subgrade for the mortar lining using methods and materials conforming with the provisions of Item I-2 of the Specifications or filled with pneumatically placed mortar. Payment for filling these areas shall be included in the contract unit price per linear foot bid for "Item S-6, Pneumatically Placed Mortar Lining, As Per Plan".

The pneumatically placed mortar lining shall be cured a minimum of 48 hours before being subjected to any sewage flow.

SEWER DETAILS

Notes:

Transitions from Type 10 Curb to Std. Type 6 Curb are paid for as Type 10 Curb.

Jute Matting, when shown at ditches, shall extend up the side slopes for a distance equivalent to six inches of depth unless otherwise shown on the plans.

Transitions from Type 10A Curb to Type 7A Curb are paid for as Type 10A Curb.

Elevations on all Grade Details are given for Twenty-five foot-intervals unless other wise noted.

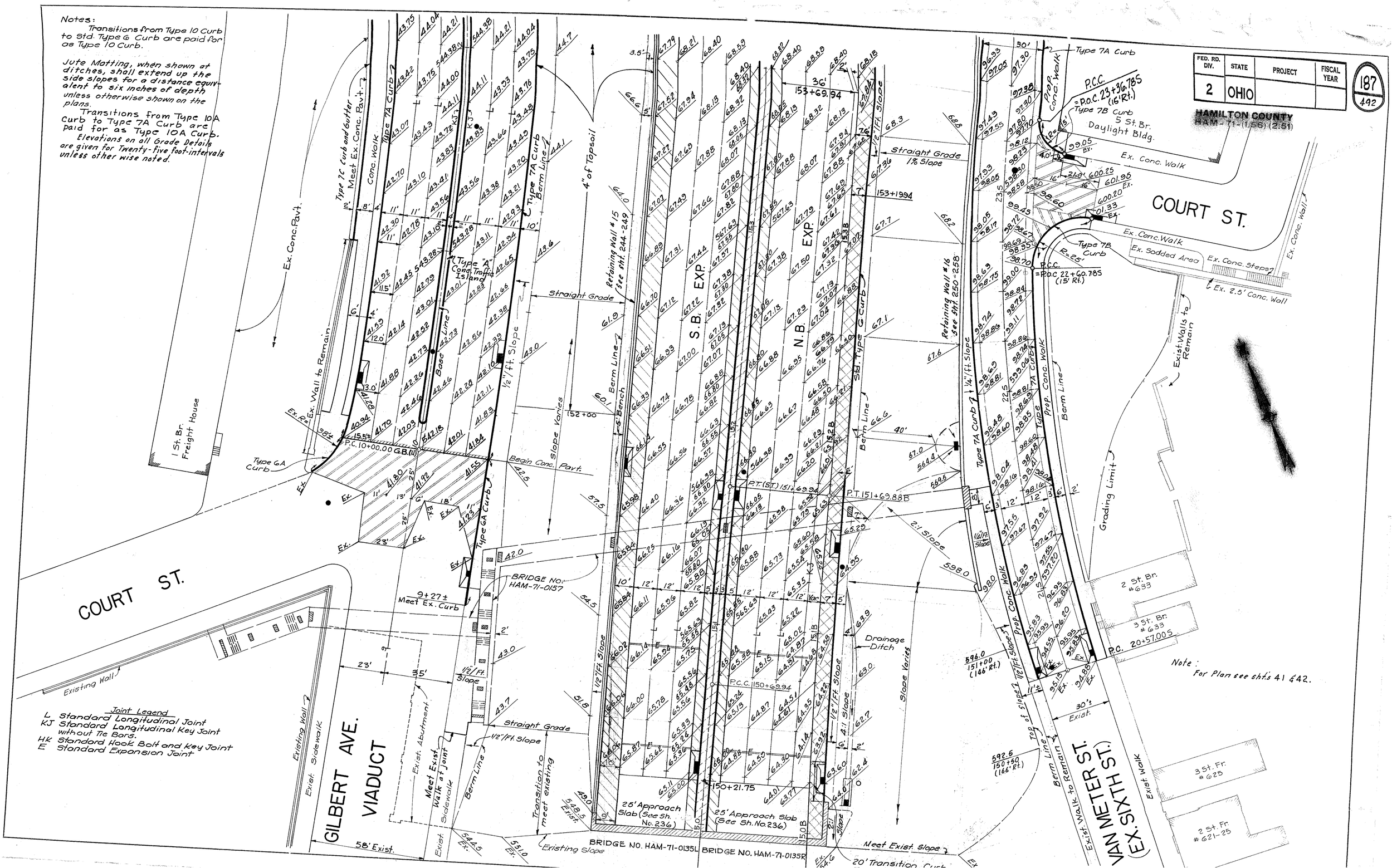

FED. RD. DIV.	STATE	PROJECT	FISCAL YEAR
2	OHIO		

188
492

HAMILTON COUNTY
HAM-71-(1.56)(2.54)

NOTE
Transition from Type 10 Curb to Std. Type 6 Curb is paid for as Type 10 Curb.
For Joint Legend See Sh. No. 187
For Plan See Sh. No 42&43

Berm Line
Type 7C Curb & Gutter
Prop. Conc. Walk
Type 7A Curb
Conc. Dock
Unloading Dock
I St. Br.
Freight House
Ex. Conc. Pav't.
Meet Ex. Conc. Pav't.
GILBERT AVE.
S. B.
N. B.
Base Line
P.C. 156+40.79 GD
P.O.C. 14+00.00 GB 35' Rt.
P.T. 154+75.97 GD
4" of Topsoil
1/2"/Ft. Slope
2:1 Slope
Type "A" Cond. Traffic Island
Type 7A Curb
Berm Line
20' Transition Curb Type 10 to Std. Type 6
End Wall 154+27.93
Retaining Wall No. 15 (See Sh. No. 244-249)
S.B. EXPRESSWAY
N.B. EXPRESSWAY
Std. Type 6 Curb
End Taper 154+69.94
4:1 Slope
Straight Grade
VAN METER ST. (EX. SIXTH ST.)
Type 6A Curb @ Driveway
Exist. Curb to Remain
Ex. Conc. Walk
5 St. Br. Daylight Bldg.
Meet Exist Pav't. 24+86.5
Existing Transformer Vault
Existing Cellar Doors
Existing Coal Chute
Retaining Wall No. 16 (See Sh. No. 250-258)
Drive 23+82
Prop. Conc.

GRADE DETAILS
STA. 153+75 TO STA. 157+75

FED. RD. DIV.	STATE	PROJECT	FISCAL YEAR
2	OHIO		

189
492

HAMILTON COUNTY
HAM-71-(1.56) (2.51)

Match Line 9+90 SE

Begin Work 9+25 SE

Type GA Curb

Type GA Curb @ Driveways

Ex. Conc. Walk

Ex. Curb to remain

Slope 1/2"/Ft.

VAN METER ST.

Prop. Drainage Ditch

4" of Topsoil

GILBERT AVE.

Type 7A Curb

Berm Line

Concrete Walk

Grading Limits

R.C.W. Curb Line = (P.O.T. 18+66.37 GB(S) 41.68 Lt.)

P.T.W. Curb Line = (P.O.T. 18+45.14 GB(S) 40.26 Lt.)

P.C.C.W. Curb Line = P.O.C. 16+54.07 GB(S) 35° Lt.

P.T. 16+54.07 GB(W)

P.O.C. 16+54.07 GB(S)

P.T. 17+79.07 GB(S)

Type A Cond. Traffic Island

4" Conc. Median Pavt.

Drainage Ditch

Slope Varies

20' Transition Curb Type 10 to Std. Type 6

2:1 Slope

4:1 Slope

Concrete Slope Protection Item 1-10 (Included with Bridge Quantities)

Grade to Drain (18' Lt.)

RAMP GD

Straight Grade

Std. Type 6 Curb

Berm Line Slope Varies

BRIDGE NO. HAM-71-0173

Approach Sheet No. 23T.)

Slab

Approach 2.5' Slab (See Sheet No. 23T.)

FUTURE BRIDGE No. HAM-471-0072

20' Transition Curb Std. Type 6 to Type 10

Std. Type 6 Curb

4" of Topsoil

2:1 Slope

Grading Limits

FUTURE RAMP GG

S.B. EXP.

N.B. EXP.

Break Line

98 L.F. Prop. Paved Gutter Std. Type 8

Std. Type 8 Curb

Berm Line 4:1 Slope

Straight Grade

Std. Type 6 Curb

Type GA Curb @ Driveways

Slope 1/2"/Ft.

Exist. Curb to remain

VAN METER ST.

Note
Transition from Std. Type 6 Curb to Type 10 Curb is paid for as Type 10 Curb.
For Joint Legend See Sh. No. 187
For Plan See Sht. No's. 43 & 44

GRADE DETAILS
STA. 157+75 TO STA. 161+75

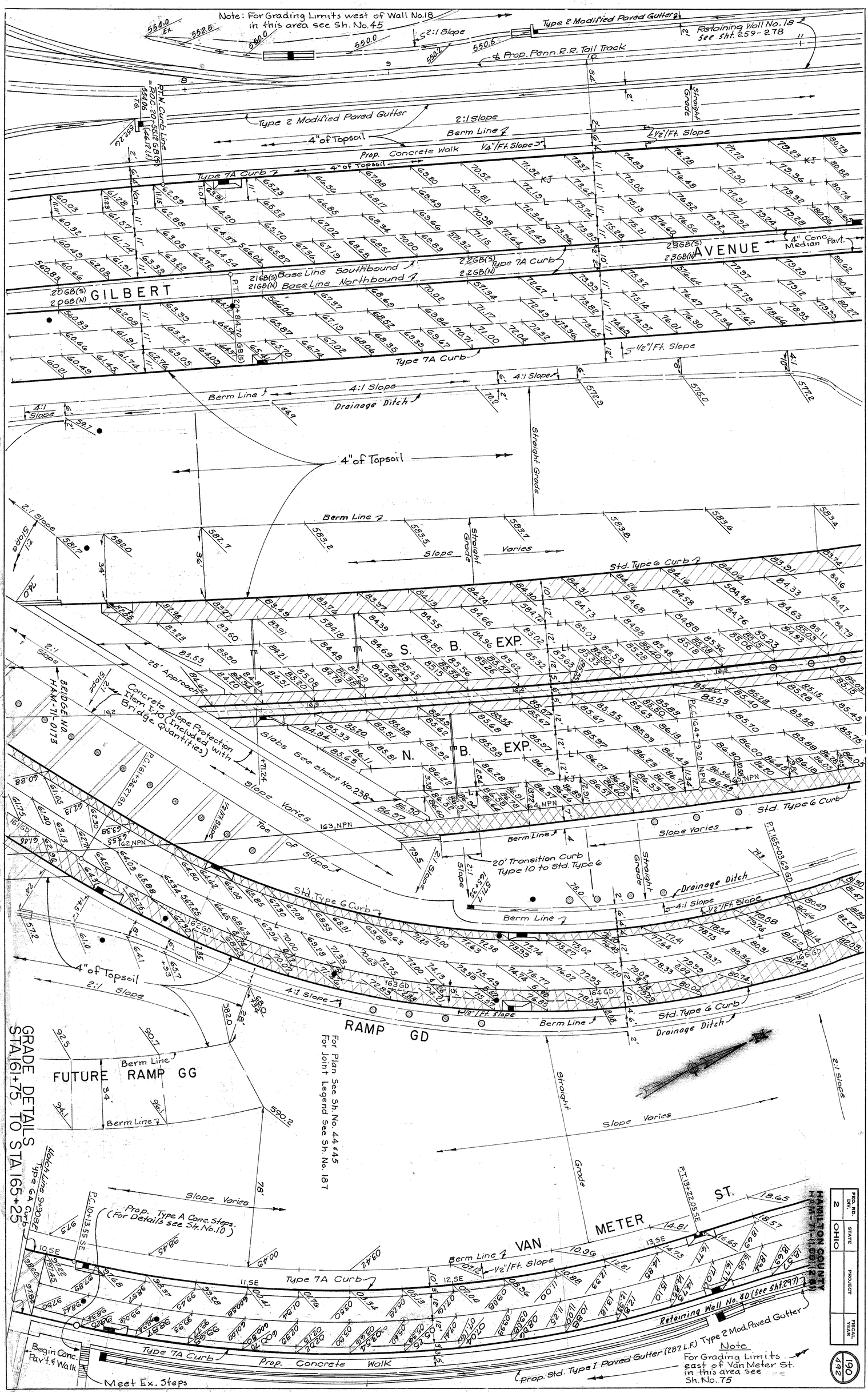

Note: For Grading Limits west of Wall No.18 in this area see Sh. No.45
Type 2 Modified Paved Gutter
Retaining Wall No.18 see Sht. 259-278
℄ Prop. Penn. R.R. Tail Track
Type 2 Modified Paved Gutter
2:1 Slope
4" of Topsoil
Berm Line
Prop. Concrete Walk
1/4"/Ft. Slope
1/2"/Ft. Slope
Type 7A Curb
Straight Grade
GILBERT AVENUE
4" Conc. Median Pavt.
Base Line Southbound
Base Line Northbound
Type 7A Curb
4:1 Slope
Drainage Ditch
Slope Varies
Std. Type 6 Curb
S. B. EXP.
N. B. EXP.
25' Approach
Concrete Slope Protection Item I-10 (Included with Bridge Quantities)
BRIDGE NO. HAM-71-0173
Slabs See sheet No.238
Toe of Slope
20' Transition Curb Type 10 to Std. Type 6
Std. Type 6 Curb
Drainage Ditch
RAMP GD
FUTURE RAMP GG
For Plan See Sh. No. 44 & 45
For Joint Legend See Sh. No. 187
Prop. Type A Conc. Steps. (For Details see Sh. No.10)
VAN METER ST.
Type 7A Curb
Retaining Wall No. 40 (See Sht. 297)
Type 2 Mod. Paved Gutter
Prop. Std. Type I Paved Gutter (287 L.F.)
Note
For Grading Limits east of Van Meter St. in this area see Sh. No. 75
Begin Conc. Pav't. & Walk
Meet Ex. Steps
Match Line 9+90 SE
Type 6A Curb
GRADE DETAILS
STA. 161+75 TO STA. 165+25
HAMILTON COUNTY
HAM-71-(1,50),2.51
FED. RD. DIV. 2
STATE OHIO
PROJECT
FISCAL YEAR
190
492

FED. RD. DIV.	STATE	PROJECT	FISCAL YEAR
2	OHIO		

191
492

HAMILTON COUNTY
HAM-71-1.56 (2.61)

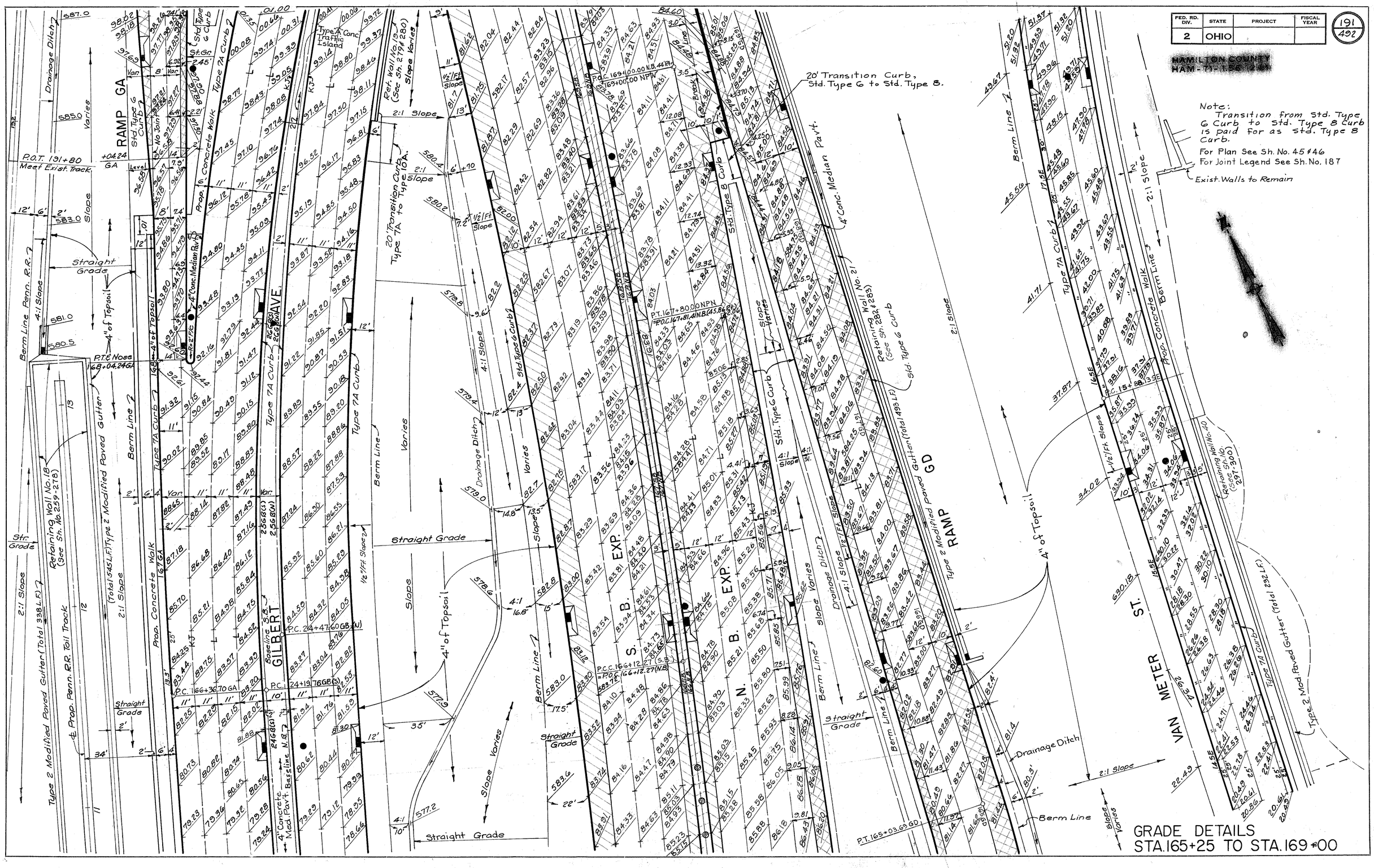

GRADE DETAILS
STA. 165+25 TO STA. 169+00

FED. RD. DIV.	STATE	PROJECT	FISCAL YEAR
2	OHIO		

192
492

HAMILTON COUNTY
HAM-71-(1.56)(2.54)

Note: Payment for 20' of Transition curb from 7A to 10A will be paid for as Type 10A curb.

For Plan See Sh. No. 46 & 47
For Joint Legend See Sh. No. 187

GRADE DETAILS
STA. 169+00 TO STA. 173+00

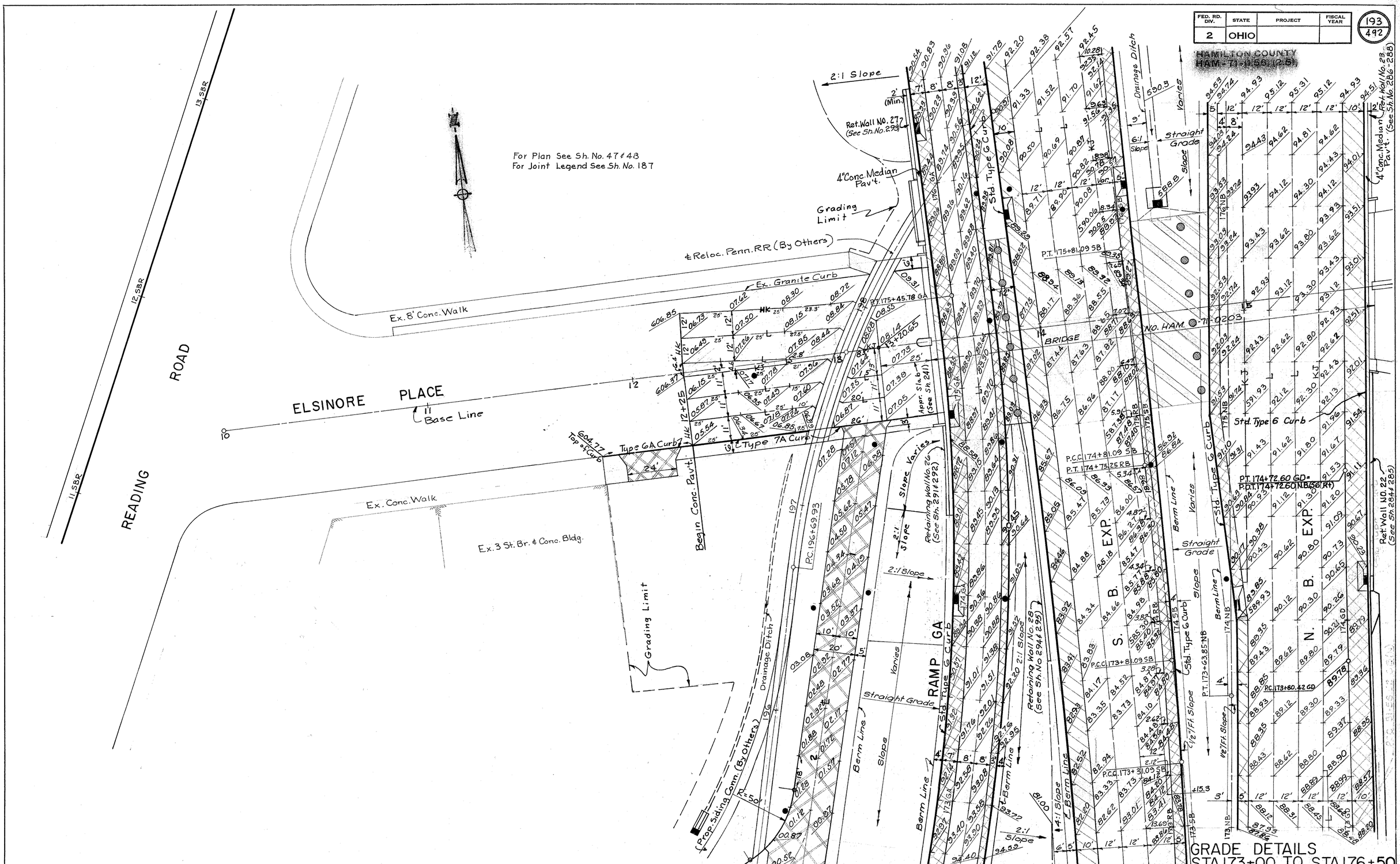

FED. RD. DIV. 2
STATE OHIO
PROJECT
FISCAL YEAR
193
492
HAMILTON COUNTY
HAM-71-(1.56)(2.5)
For Plan See Sh. No. 47 & 48
For Joint Legend See Sh. No. 187
READING ROAD
ELSINORE PLACE
Base Line
Ex. 8' Conc. Walk
Ex. Conc. Walk
Ex. 3 St. Br. & Conc. Bldg.
Ex. Granite Curb
℄ Reloc. Penn. RR (By Others)
Grading Limit
4" Conc. Median Pav't.
Ret. Wall No. 27 (See Sh. No. 293)
2:1 Slope
Std. Type 6 Curb
Drainage Ditch
Straight Grade
Slope
Varies
Berm Line
Begin Conc. Pav't.
Type 6A Curb
Type 7A Curb
Top of Curb
Appr. Slab (See Sh. 241)
Retaining Wall No. 26 (See Sh. 291 & 292)
Retaining Wall No. 28 (See Sh. No 294 & 295)
Prop. Siding Conn. (By Others)
RAMP GA
S. B. EXP.
N. B. EXP.
BRIDGE NO. HAM-71-0203
Ret. Wall No. 23 (See Sh. No. 286-288)
Ret. Wall No. 22 (See Sh. 284 & 285)
P.T. 175+81.09 SB
P.T. 175+45.78 GA
P.C.C. 174+81.09 SB
P.T. 174+75.25 RB
P.T. 174+72.60 GD = P.O.T. 174+72.60 NB (56' Rt)
P.C.C. 173+81.09 SB
P.C.C. 173+31.09 SB
P.T. 173+63.85 NB
P.C. 173+80.42 GD
P.C. 196+69.93
GRADE DETAILS
STA. 173+00 TO STA. 176+50

FED. RD. DIV.	STATE	PROJECT	FISCAL YEAR
2	OHIO		

194
492

HAMILTON COUNTY
HAM-71-(1.56)(2.31)

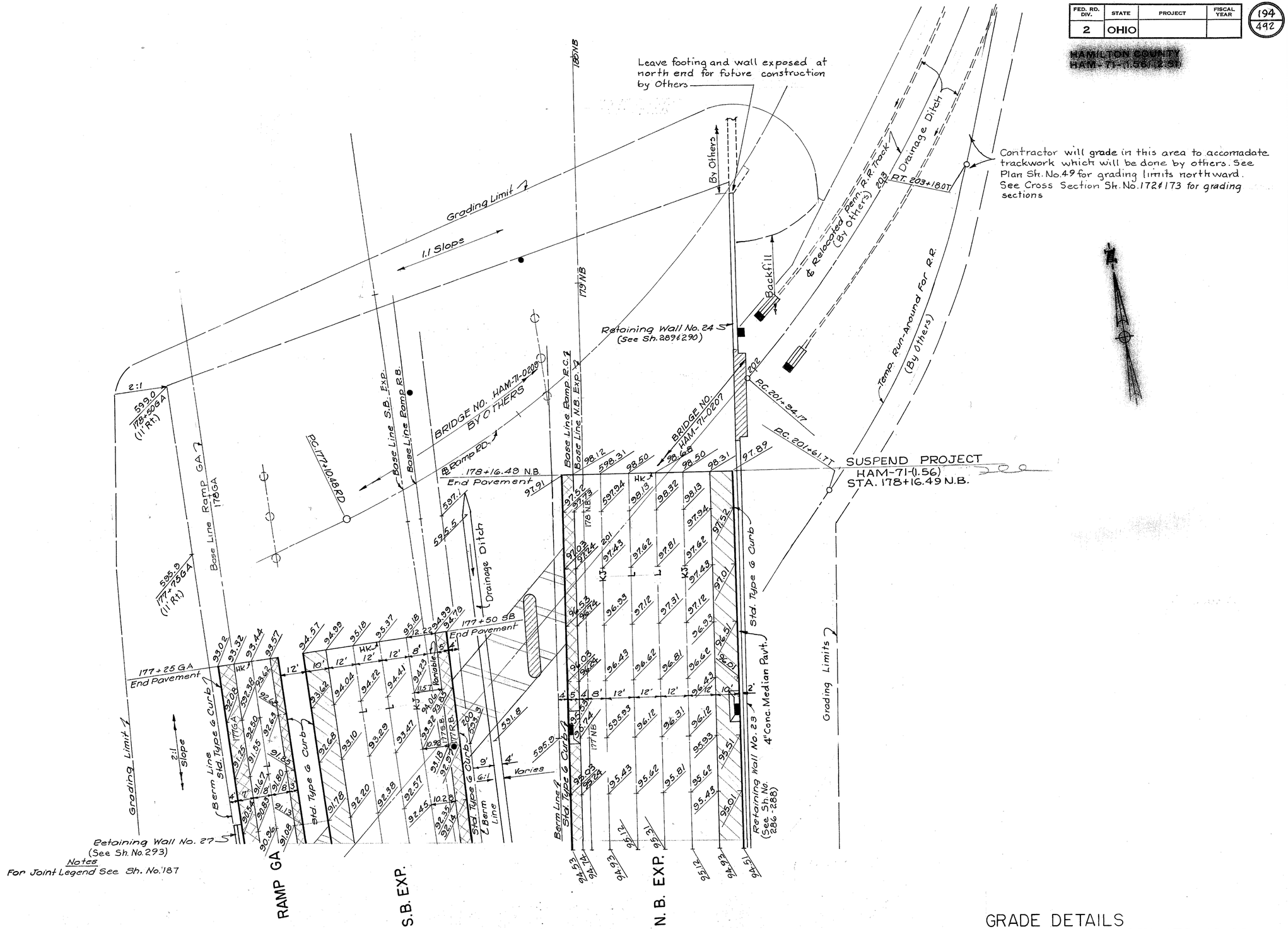

GRADE DETAILS
STA. 176+50 TO STA. 178+16.49

FED. RD. DIV.	STATE	PROJECT	FISCAL YEAR
2	OHIO		

195
492

HAMILTON COUNTY
HAM-71-11.56 (2.61)

NORTHBOUND

BRIDGE NO. HAM-71-0196

EXPRESSWAY

Retaining Wall No. 22 (See Sh. No. 284 & 285)

P.C. 173+80.42 GD

P.T. 174+72.60 GD = P.O.T. 174+72.60 N.B. (56' Rt)

P.C. = 15+50.64 Elsinore (35' Lt.)

BRIDGE NO. HAM-71-0203

Base Line Elsinore Place

4" Conc. Median Pav't.

Base Line Ramp GD

Std. Type G Curb

Retaining Wall No. 29 (See Sh. No. 296)

4:1 Slope

Drainage Ditch

25' Appr. Slab (See Sheet No. 240)

Straight Grade

600.0

115' L.F. Prop. Std. Type 1 Paved Gutter

(Include with Std. Type 1 paved gutter for payment)

Transition Curb Type 10A to Type 7A

Type 7A Curb

Type "A" Conc. Traffic Island

20' Transition Curb Type 10A to Type 7A

25' Appr. Slab

(See Sheet No. 242)

Retaining Wall No. 23 P.C. 15+66.03 Elsinore (See Sh. No. 286-288) (35' Lt.)

Limit of Grading

Type 7A Curb

Type 7B Curb

Note: This area shall have 12 inches of top soil and shall be sodded.

2:1 Slope

Slope Varies

GILBERT AVE.

Berm Line

Drainage Ditch

P.O.C. 33+45.60 GB(N) 35' Rt. = P.R.C. 24+64.99 SE

Base Line GB(N)

1.96 % ~ 109.59'

1.58 % ~ 109.59'

1.16 % ~ 109.58'

End Conc. Pav't.

Type 7A Curb

Std. Type G Curb

P.O.T. 34+70.37 GB(N) 35' Rt. = P.R.T. 25+48.42 SE(E)

Exist. Stone Walls to remain

VAN METER ST.

P.O.C. 21+49.75 SE (15' Rt.) = P.T. 21+52.35 ℄

P.T. 22+06.65 SE

P.C. 23+61.88 SE

P.R.C. 24+06.68 SE

4.01' Prop. ℄ Concrete Walk

Type 7A Curb

10.0 % ~ 131.81' 23 SE

10.0 % ~ 75'

Base Line SE

10.0 % ~ 94.51'

Type 7A Curb

Type 2 Mod. Paved Gutter (Total 703 L.F.)

Retaining Wall No. 47 (See Sh. No. 317-330)

ELSINORE AVE.

Limit of Grading

P.T. 22+05.49 SE(E)

P.C. 23+52.67 SE(E)

0+00 Drive = P.O.C. 24+25.57 SE(E)

4 spaces @ 6.87

Dropped Curb

2.6 % ~ 73'

Elsinore Tower

Arch Way

Stone Tower

Exist. Parking Area

MUSEUM OF NATURAL HISTORY

Ex. Tunnel

Meet Exist at Landing 34.46

Type 7A Curb

Prop. Conc. Walk

4 spaces @ 9.64'

Straight Grade

R=15'

Berm Line

Prop. Conc. Walk

8.80 % ~ 60.20'

MATCH LINE 19+75 SE(E)

Ex. Stone Wall

P.C. 20+28.28 SE(E)

For Detail of Steps See Sh. No. 317-330

P.T. 20+88.48 SE(E)

Meet Exist at Landing 75.91

20.70 SE(E)

68.30

Berm Line

Prop. Concrete Walk

Ex. C.W.

Type 7A Curb

Type 2 Mod. Paved Gutter

Retaining Wall No. 47 (See Sh No. 317-330)

ELSINORE AVE.

MATCH LINE 19+75 SE(E)

Limit of Grading

For Plan See Sh. No. 48 & 77

For Joint Legend See Sh. No. 187

GRADE DETAILS GILBERT AVE., VAN METER ST. & ELSINORE AVE. INTERSECTION

FED. RD. DIV.	STATE	PROJECT	FISCAL YEAR
2	OHIO		

196
492

HAMILTON COUNTY
HAM-71-(1.68) (2.51)

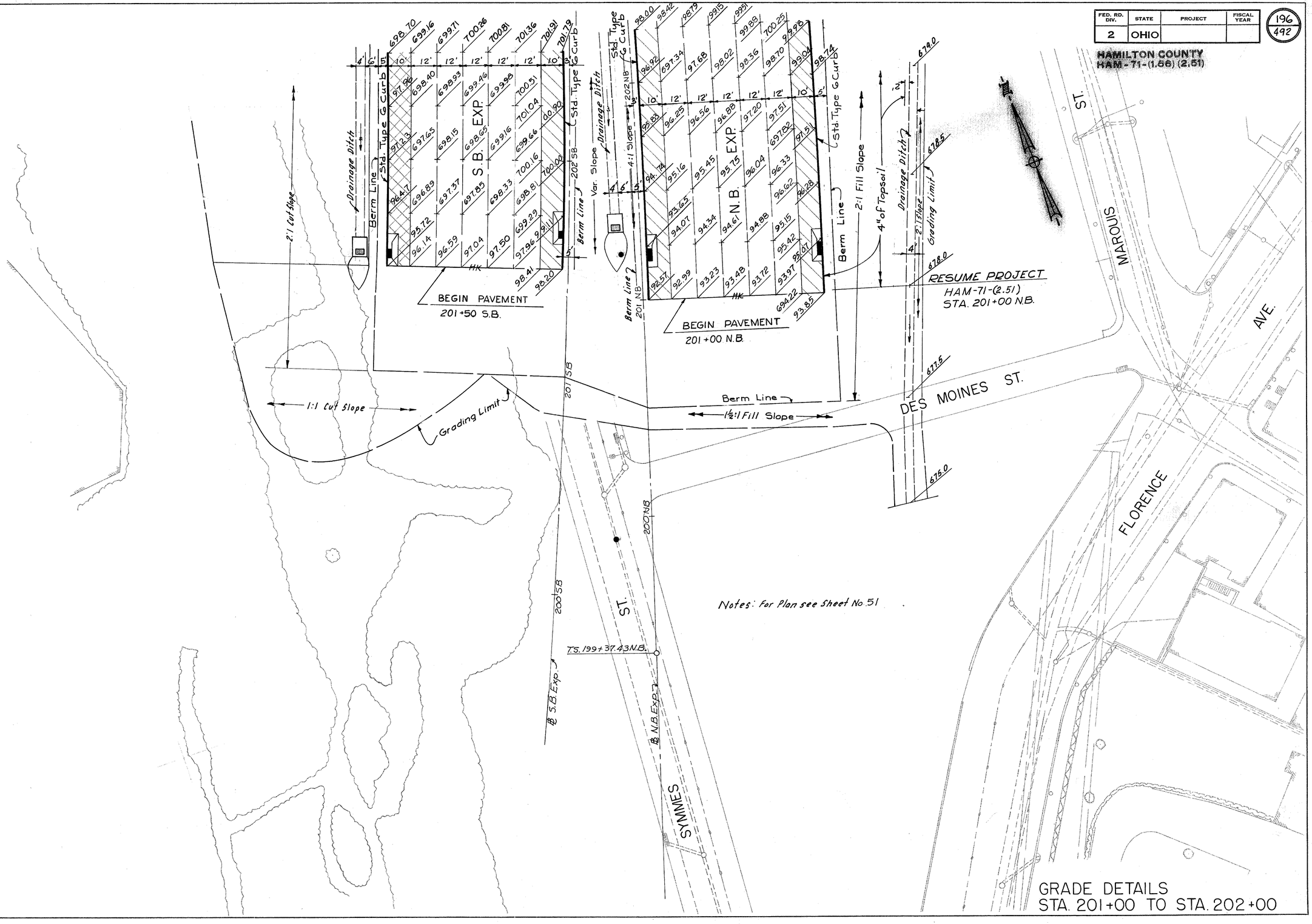

GRADE DETAILS
STA. 201+00 TO STA. 202+00

FED. RD. DIV.	STATE	PROJECT	FISCAL YEAR
2	OHIO		

197
492

HAMILTON COUNTY
HAM-71-(1.56) (2.51)

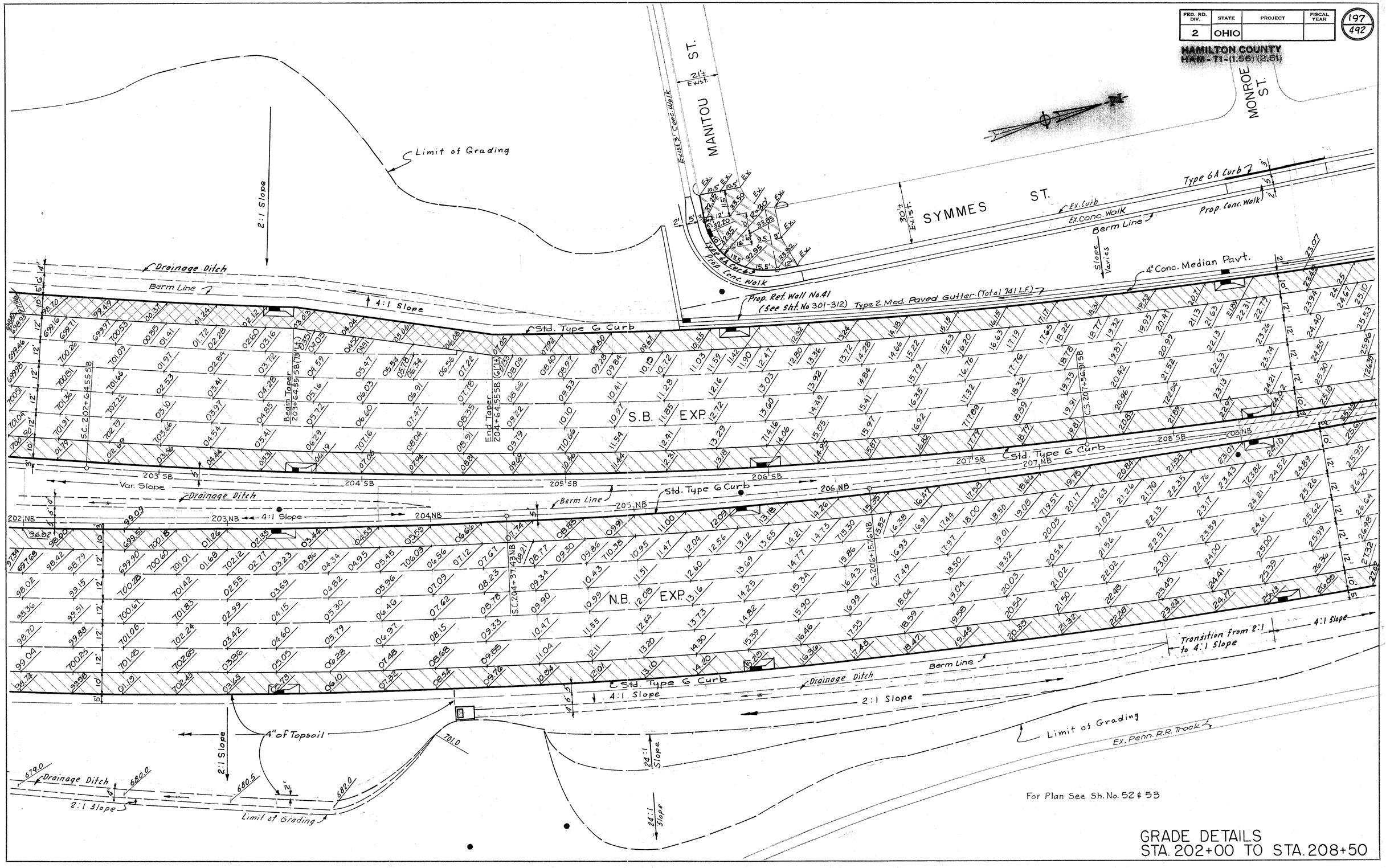

GRADE DETAILS
STA. 202+00 TO STA. 208+50

FED. RD. DIV.	STATE	PROJECT	FISCAL YEAR
2	OHIO		

198
492

HAMILTON COUNTY
HAM-71-(1.56) (2.51)

MONROE ST.

SYMMES ST.

Meet Existing Steps
Type 7A Curb
Match Line
Meet Ex. Walk at joint
Type 7A Curb
Ex. Conc. Walk
Ex. Conc. Walk
30'± Exist.
30'± Exist.
Type 6A Curb
Prop. Conc. Walk
Ex. Conc. Walk
Berm Line
Type 7A Curb
Type 6A Curb
Ex. Curb
Prop. Conc. Walk
Ex. Conc. Walk
Berm Line
Type 7A Curb
25' Approach Slab (See Sh. 243)
Slope Varies Maximum of 2:1
Slope Varies Maximum 2:1
Concrete Slope Protection Item 1-10 (Included with Bridge Quantities)
Type 2 Mod. Paved Gutter
Prop. Ret. Wall No. 4.1 (See Sh. No. 301-312)
Std. Type G Curb
4" Conc. Median Pav't.
S.B. EXP.
N.B. EXP.
HAM-71-0271
209 SB
210 SB
211 SB
212 SB
209 NB
210 NB
211 NB
212 NB
Std. Type G Curb
Std. Type G Curb
ST. 211+15.76 N.B.
ST. 212+56.91 SB
P.O.T. 212+25.02 NB
END PAVEMENT 213+00
Berm Line
Straight Grade
Grade to Drain
Grading Limit
Slope Varies
Slope Varies
1:1 cut Slope
Grading Limit
NO BRIDGE
Ex. Penn. R.R. Track
Grading Limits
Crushed Aggregate Slope Protection Item 1-10 (Included with Bridge Quantities)
25' Approach Slab (See Sheet No. 243)
13+00
12+00
END PROJECT
HAM-71-(1.56)(2.51)
STA. 213+00

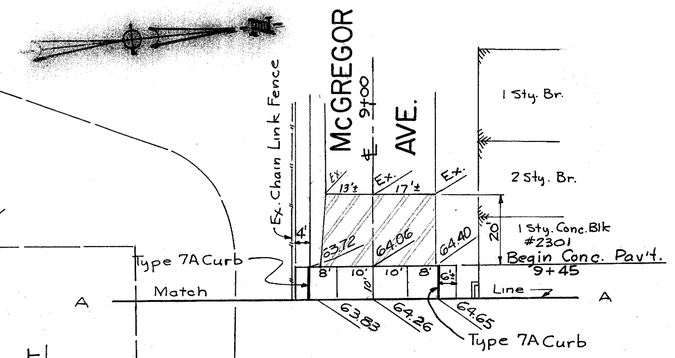

Notes: For Plan see Sheets 53 & 54

GRADE DETAILS
STA. 208+50 TO STA. 213+00

FED. RD. DIV.	STATE	PROJECT	FISCAL YEAR
2	OHIO		

199
492

HAMILTON COUNTY
HAM-71-(1.56)(2.51)

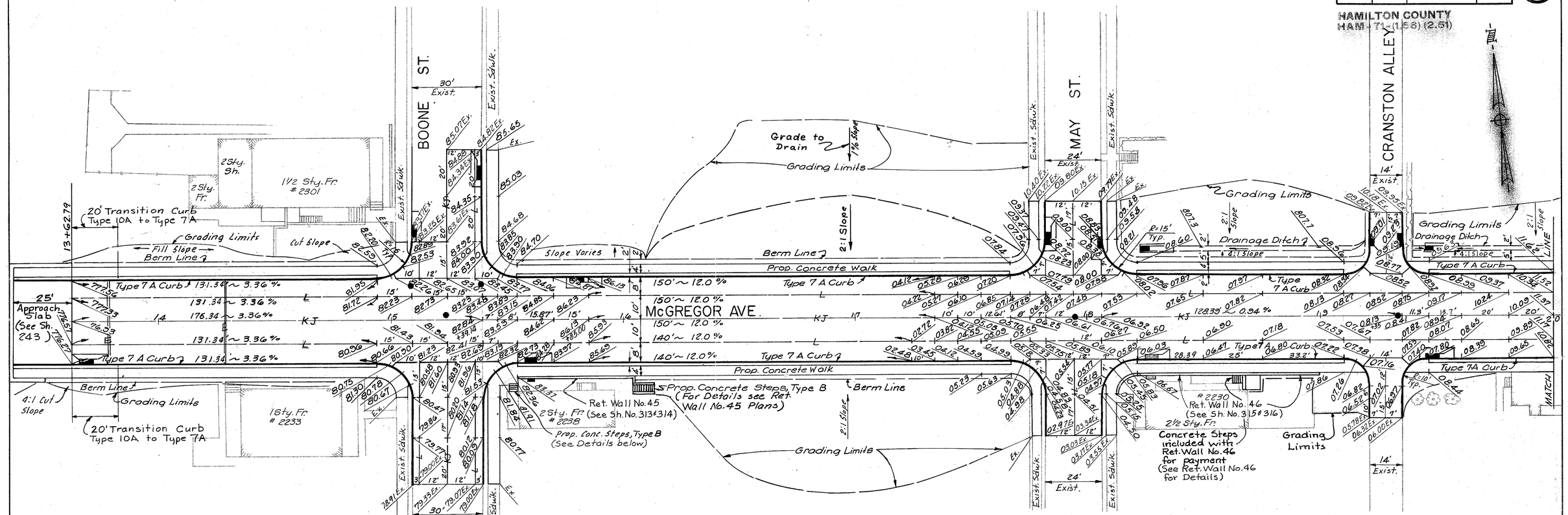

Notes: For Plan & Profile see Sheets 78 & 79.
For Joint Legend See Sh. No. 187

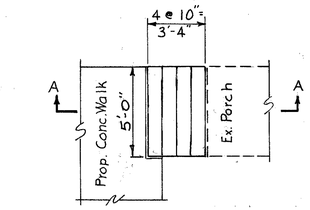

PLAN

See Standard Construction Drawing RI-2 for reinforcement

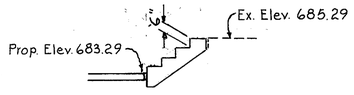

SECTION A-A

DETAIL OF STEPS STA. 15+50, 30' RT.

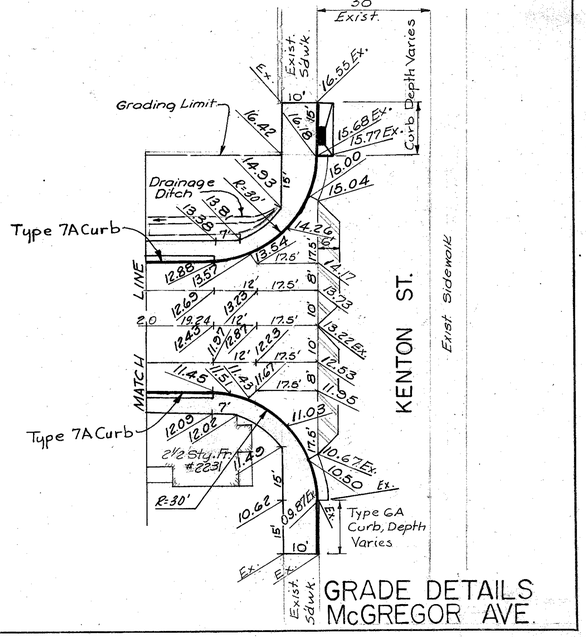

GRADE DETAILS McGREGOR AVE.

FED. RD. DIVISION	STATE	PROJECT	
2	OHIO		

200
492

HAMILTON COUNTY
HAM-71-(1.56) (2.51)

GENERAL NOTES
LIGHTING

DESCRIPTION

This item shall consist of furnishing all materials and labor required for the complete installation of highway lighting and associated electrical facilities in accordance with the dimensions and details shown on the Plans and as described in the Specifications.

All construction methods, materials and workmanship, except as modified herein or on the drawings shall conform to the general requirements of Item S-25, Electrical Equipment, and other applicable sections of the State of Ohio, Department of Highways Construction and Material Specifications, January 1, 1963.

GENERAL

Certified statements regarding compliance of materials with specifications shall be furnished upon request. Materials other than those listed herein shall be of the size and quality indicated on the Plans and in the Specifications.

The Engineer shall approve the final location of all lighting standards, pull boxes, steel conduit and cable-duct.

The prime Contractor shall coordinate construction of the highway lighting facilities with the roadway construction, sign construction and with service to be provided by the Cincinnati Gas & Electric Company.

Upon completion of the work the Contractor shall leave all luminaires, poles, and other equipment in first class condition, free from dirt, dust and foreign materials. Glassware shall be cleaned with soap and water.

ELECTRICAL ENERGY

The lighting circuits will be supplied with single phase current at 240 volts from Cincinnati Gas & Electric Company power poles at the locations shown on the plans. All lighting circuits shall be multiple three-wire circuits, with the neutral pole grounded. Street lighting circuits shall be 240 volts, with the neutral cable grounded at each lamp standard.

TEMPORARY LIGHTING

Lighting shall be maintained on all existing roadways through the construction area remaining open to traffic. Should the Contractor require the removal of lighting from an existing roadway, the Contractor shall then be responsible for adequate temporary lighting of that portion of the existing roadway affected by the removal of existing lighting.

On temporary roadways, temporary lighting providing an average level of 0.7 foot candles shall be installed before opening. On permanent new roadways open to traffic either permanent street lighting shall be installed before opening, or temporary lighting providing an average level of illumination of 0.7 foot candles shall be installed before opening.

The Contractor shall be responsible for lighting of new roadways opened to public use prior to acceptance of the project. However, he will not be responsible for damage done to lighting equipment because of traffic accidents by the public.

The City will pay for electrical energy and maintenance for lighting on existing streets, and for permanent lighting placed in operation. The Contractor will pay for electrical energy, installation, removal, and maintenance of any temporary lighting required. Payment for all work in connection with temporary lighting shall be made at the contract lump sum price bid for "Temporary Lighting".

ELECTRICAL CABLE

Cable of size No. 4 AWG and smaller shall conform to the Federal Aviation Agency, Advisory Circular Number AC 150/5345-7 dated November 4, 1963, Specification for L-824 Underground Electrical cables for Airport Lighting Circuits, *Type A*

Cable larger than No. 4 AWG shall conform to Underwriters Laboratory RHW 75C-USE.

Cables shall be in continuous lengths without splices except in pull boxes and lighting units. Liberal slack shall be provided in pull boxes and bases of standards for splicing operations.

All cables shall be marked or tagged at all pull boxes, handholes, light standards, sign standards and control contactors with an approved tag, so as to be individually identifiable.

Payment shall be made at the contract unit price per linear foot for each type of cable installed in conduit, structure conduit and lighting standards. This price will be full compensation for furnishing, installing, splicing and testing of all materials and for all labor, equipment, tools and incidentals necessary to complete the item.

CONDUIT

Exposed conduit and conduit buried in earth shall be rigid metal conduit hot-dipped galvanized inside and outside, after threading, with an enameled or plastic inside coating. Conduit shall conform to A. S. A. Specification Designation C-80.1 and further comply with Supplemental Specification M-106.11 or Federal General Service Specification No. WWP-441B for wrought iron.

Conduit encased in concrete in structures shall be rigid galvanized steel conduit (Federal Spec. WW-C-581d and AM-3.)

Exposed conduit running along structures shall be supported at least 3/4" from the structure and supported every six feet of its length. Conduit runs exposed to the weather elements shall be constructed with waterproof integrity and gasketed fittings. No running threads or threadless fittings shall be used as part of metallic conduit installation. Conduit stubs shall be sealed with a duct sealing compound which is non-setting and will not damage cable insulation or conduit. All spare (empty) ducts shall be plugged and sealed with the duct seal.

Conduits shall have positive drainage to pull boxes or drainage points. Underground conduits shall follow roadway contours at uniform depth and alignment, except slope of conduit to drain shall be 5 inches per 100 feet minimum.

Conduit ends shall be equipped with end bells or bushings.

Where crossover conduits are located in areas where guard rail is used, the location of crossovers may be shifted in maximum of 5'-0" if necessary to avoid severance of cable.

Wherever conduit is installed for future use, one No. 10 AWG galvanized steel drag wire shall be left in each conduit and the ends of the conduit shall be closed with capped busings.

Conduits shall be plugged or capped to prevent seepage of ground water or dirt into them. Cap with tapered plug until cables are installed.

Foundation conduit shall project 2 inches above top of foundation. Both ends of conduit shall be capped or plugged until light standard and electrical conductors are installed. Steel conduit ends shall be equipped with bushings.

Payment for conduit except light standard foundation conduit which is included in the cost of each foundation, shall be made at the contract unit price per linear foot for each type and size of conduit installed and accepted, which price shall be full compensation for furnishing and installing all materials, including conduit, excavation, backfill and all preparation, assembly, restoration, surplus material disposal and for all labor, equipment, tools and incidentals required to complete the work.

FIBER OR ASBESTOS CONDUIT, CONCRETE ENCASED

Encased conduit shall be provided where shown on the Plans, and shall be 1 way or 2 way of size shown on the plans, with 3-inch concrete encasement.

Payment shall be made at the contract unit price per linear foot for each size and type of fiber or asbestos conduit, concrete encased installed. This price will be full compensation for furnishing all materials, labor and equipment necessary to install the conduit, including excavation, backfilling, concrete for encasement, fittings, drains, and all incidentals necessary to complete the item.

DUCT-CABLE

Duct-cables shall consist of insulated conductor cables and insulated neutral cables, of the number and size specified, factory assembled inside a polyethylene duct. The duct size shall conform to the requirements of the National Electric Code insofar as "conduit fill" is concerned, but in no case shall the diameter of the duct be less than 1-1/2 inches.

Conductors and Neutrals. The cables used as conductors and neutrals shall conform to the requirements for Electrical Cable.

Polyethylene Duct shall conform to ASTM D 2104, Schedule 40, Type II Grade 3 or Type III.

Duct-cable shall be unreeled in place alongside or in trench, rather than pulled from one end, with care being taken to eliminate kinks. Laterial spacing of calbes in trenches shall be as indicated on the plans.

Terminal points of all cable duct shall be completely sealed in an approved manner with a removable sealing compound which is compatible with the cable jacket, the insulation, and the duct material.

DUCT-CABLE (Continued)

Where more than one cable-duct passes through a pull box, sufficient clearance shall be maintained between ducts to allow any duct to be cut for future splicing.

Payment shall be made at the contract unit price per linear foot for each type and size of duct-cable installed. This price will be full compensation for furnishing and installing the duct-cable and for all labor, equipment, tools and incidentals necessary to complete the item.

LIGHT STANDARDS AND BRACKETS

A. SHAFTS

Shafts shall be tapered steel tubes fabricated from not less than 7 gauge hot rolled, basic open hearth, carbon steel. A shaft shall have only one longitudinal, automatically electrically welded joint and shall have no intermediate transverse joints or welds. Only one length of steel sheet shall be used, which shall be formed into a shaft, having a continuous taper of approximately .14" per foot.

1. MANUFACTURE

Shafts, *after all manufacturing processes are complete,* shall develop a minimum yield strength of 48,000 p. s. i., and *shall be a* true tapered tube of uniform thickness throughout (including the weld area), without flat spots.

2. DEFLECTION

Shafts, regardless of method of manufacture, shall be capable of withstanding loadings applied 18" from top of shafts without exceeding the permanent set and deflection measured in inches 18" from top of shaft as tabulated for the respective pole sizes on plans.

3. SHAFT FITTINGS

Each shaft shall be fitted with a "J" hook and a pole top interchangeable with those used by the City.

The shafts of anchor base standards shall be fitted with a 4" × 6-1/2" minimum sized reinforced hand hole, locking steel cover with captive bronze or stainless steel chain and 1/2"-13 grounding nut welded to inside of shaft opposite hand hole. Hand holes on ground mounted standards shall be on the side opposite traffic at 90 degrees to the luminaire support arm. For bridge mounted standards hand hole shall be 17" above base on same side of shaft as luminaire support arm. A grounding nut shall be located 18" above base opposite hand hole.

B. ANCHOR TYPE BASES

Anchor bases shall be one-piece cast steel conforming to Section M-7.7, or steel plate, secured to the lower end of the shaft by two continuous electric arc welds. The base shall telescope the shaft with one weld at the lower end of shaft and the other weld at the top of the base. The two welds shall be not less than 1-1/2" apart. The welded connection shall develop the full strength of the adjacent shaft section.

The base shall be provided with four holes to receive the anchor bolts, four holes for ventilation located in the body of the base directly behind each anchor bolt hole, and four tapped holes for attaching the covers. Four removable cast iron covers shall be provided with each base, and each cover shall attach to the base by means of a hex head cap screw.

C. ANCHOR BOLTS

Four high grade steel anchor bolts fitted with hex nuts shall be furnished for each standard. Anchor bolts shall conform to ASTM A-107, Grade 1035, 1040 or 1045 Special Quality having a minimum yield strength of 46,000 p. s. i. and a minimum tensile strength of 67,000 p. s. i. Each anchor bolt shall have an "L" bend at the bottom and be threaded at the top end. Threaded ends and nuts shall be galvanized in accordance with ASTM A-153 with galvanizing extending *1" to 4" beyond threads.*

B202

FED. RD. DIVISION	STATE	PROJECT	
2	OHIO		

201
492

HAMILTON COUNTY
HAM-71-(1.56) (2.51)

Block 202
201-300

GENERAL NOTES
LIGHTING

LIGHT STANDARDS AND BRACKETS (Continued)

D. BRACKET ARMS

1. The bracket arm assembly shall consist of an upper and lower member securely joined by means of vertical strut or struts. The upper and lower members shall be standard steel pipe of 2" N. P. S., ASTM A 53 Schedule 40. The shaft end of member shall have a welded steel fitting, which will permit positioning the arm on the shaft plate and will support the arm while securing to the shaft. Two cap screws shall be provided per fitting. All arms shall accommodate a 2" slip fitter luminaire. Fitting and shaft plate shall be similar to those now in use by the City to provide interchangeability of arms.

2. Bracket arms and their shaft attachments shall sustain a vertical load of 250 lbs. applied within 3" of the luminaire end of the arm without collapse or rupture of any portion of the standard assembly.

3. The bracket arms and their shaft attachments shall sustain a vertical load of 100 lbs. applied within 3" of the luminaire end of the arm and with the arm attached to a rigid structure. The vertical deflection shall not exceed 5-1/2% of the arm length. This includes a maximum allowance of 1/2 of 1% of the arm length for testing methods and permanent set.

4. The bracket arms and their shaft attachments shall sustain a transverse horizontal load of 50 lbs. applied within 3" of the luminaire end of the arm with the arm attached to a rigid structure. The horizontal deflection shall not exceed 5% of the arm length and the shaft attachments shall not develop any looseness within the specified loading range. This test shall be conducted with a vertical load of 30 lbs. on the support.

5. Deflection is defined as the total transverse displacement of the longitudinal centerline of the shaft or luminaire bracket arm at the point of test load application between its initially unloaded and fully loaded positions.

6. Permanent set is defined as the total transverse displacement of the longitudinal centerline of the shaft at the point of test load application between its initially unloaded position and the final unloaded position after application of test loads.

E. WELDING

Welders and welding operators shall be prequalified for class A welding according to the instructions given in "Instructions from the Laboratory, Pre-Qualification of Electric Arc Welders and Welding Operators." Welding equipment shall be of sufficient capacity of such design and in such condition as to make possible the production of first class welds. All surfaces to be welded shall be smooth, uniform and free from fins, tears, and other defects which might adversely affect the quality of the welds. Surfaces to be welded shall be free from loose scale, slag, rust, moisture, grease, paint and other foreign material. Mill scale shall be removed by power brushing, blasting or grinding.

F. GALVANIZING AND PAINTING

All steel standards shall be hot dipped galvanized after fabrication in accordance with the requirements of Section M-7.4(d). (After erection, standard shall be inspected for scratches in the galvanized surfaces. Such scratches shall be given two coats of a zinc rich base paint. Second coat shall be applied after first coat has completely dried.) Major damage to galvanized finish shall result in rejection of standard.

Galvanized standards shall be given one coat of wash primer conforming to federal (Military) Specification MIL-P-15328B and shall be given one shop coat of paint immediately when the wash primer is dry.

After erection the light standards shall be painted with two coats of pole gray Federal Color No. 16251 exterior metal protection paint conforming to applicable provisions of Sections M-9.13 and M-9.14 of the Construction and Material Specifications.

G. INSTALLATION

Each lighting standard shall be arranged in the distribution system as detailed and designated by a letter number sequence which indicates its energizing circuit and position of the unit in the circuit.

H. SHAFT TRANSVERSE SECTION CONFIGURATION

1. Bid items, as shown and detailed, are for standards with shafts of circular transverse section.
2. Alternate bid items are for standards with shafts of transverse section other than circular. Specify configuration bid.
3. All shafts throughout the the project shall have the same transverse sectional configuration.

LIGHT STANDARDS AND BRACKETS (Continued)

I. PAYMENT

Payment shall be made at the contract unit price bid for each size of pole and bracket installed in place, which price shall be full compensation for furnishing all materials, labor, equipment, tools and incidentals necessary to complete the item.

PEDESTRIAN BRIDGE LIGHT STANDARDS

Pedestrian Bridge Light Standards shall be as shown on the Plans, and shall conform to the applicable requirements of Lighting Standards and Brackets.

Payment shall be made at the contract unit price per each, which price shall be full compensation for furnishing all materials, labor, equipment, tools and incidentals to complete the item.

PLATES FOR FUTURE BRACKETS (SETS OF TWO)

This item consists of furnishing and installing plates in Retaining Wall No. 16 for support of luminaire support arms which will be placed by others at a future date.

The plates shall be fabricated and installed in accordance with details shown on the Plans.

Payment shall be made at the contract unit price per each, which price shall be full compensation for furnishing all materials, labor, equipment, tools and incidentals necessary to complete the item.

LUMINAIRES

Luminaires shall be mercury vapor of type and size shown on the Plans.

Each bidder shall submit with his bid, descriptive literature which adequately describes and identifies the exact type of luminaires being bid under this specification.

Pole Bracket Arm Mounted Luminaires

The luminaire housing shall be an aluminum unit having a two-piece design. A single piece forms the upper half of the luminaire assembly. The lower half, or refractory holding ring, shall be hinged on the house side and detachable from the upper housing from the street side. The refractor ring latching mechanism shall be on the street side. The housing shall present a pleasant streamlined appearance.

Luminaires shall have internal ballasts.

The ballast shall be 240 volt, reactor type without capacitors, and the reactor ballast losses shall not exceed 25 watts.

Luminaires for Underpasses

This specification covers luminaires for mounting in underpasses. The luminaire shall be a complete lighting device, less lamp, consisting of a housing, reflector, shrouded porcelain socket, refractor, door and integral ballast.

Detail Requirements

(a) Under pass luminaires shall be complete, shall be weather and insect proof and shall be constructed to withstand water pressure up to 100 p. s. i. from cleaning nozzles.

(b) The assembly shall consist of an optical system which includes a one piece molded prismatic refractor of thermal shock resisting borosilicate crystal glass, an asymmetric polished aluminum reflector, an integral cast guard and door frame, an integral regulator output ballast, an adjustable mogul socket and a cast aluminum housing.

(c) The housing shall have neoprene and felt gasketing, and shall have rear access holes in gasketed cover plates and shall have three tapped and plugged 3/4 inch conduit entries, one on each side and one on top.

(d) The device shall have adjustable sockets for 60° or 70° beam positions to set beam pattern to conform effectively to roadway width.

LUMINAIRES (Continued)

(e) The regulator output ballast shall be high power factor type, designed for 240/480 volt circuit. Lamp regulation shall not exceed ± 1-1/2% with ± 13% voltage variation. The ballast shall start the lamp at -20° F. (Ballasts shall be available to operate either 175 or 250 watt mercury vapor lamps).

(f) The integral cast guard and door frame shall be gasketed and retain the refractor by spring loaded rotatable retainer clips for easy removal of the refractor without tools. The door frame shall be hinged to the housing at the bottom with stainless steel hinge and stainless steel latches at the top. Safety chains shall support the door when open.

(g) The asymmetric reflector and socket shall be mounted to the housing to complete the optical system.

(h) The refractor shall produce an asymmetric distribution.

(i) The assembly with a 250 watt ASA Designation H37-5KB clear mercury lamp rated at 12000 lumens, shall provide candle power within 10% of the values shown in the following table with the socket set at 70° beam.

Vertical Distribution Through 0° Lateral		Lateral Distribution In 70° Cone			Vertical Distribution Through 85° Lateral Toward Approaching Traffic	
Angle	Candle Power	Angle	Candle Power Traffic Receding	Candle Power Traffic Approaching	Angle	Candle Power
0	1925	0	8200	8200	85	175
15	1875	5	8150	8200	75	250
35	1275	15	8225	8275	65	400
55	2350	25	7825	7150	55	700
60	2825	35	5600	4250	50	825
65	4800	45	3075	1725		
70	8200	55	1250	875		
75	4150	65	1200	700		
80	2000	75	1350	500		
85	1725	85	750	300		
95	1975					
105	1400					

(j) The assembly shall be approximately 16-1/2" wide, 17" high and 8" deep.

(k) The assembly shall be suitable for mounting in a vertical position for underpass or tunnel lighting and for horizontal mounting for illumination of signs.

Pedestrian Bridge Luminaires

Pole top luminaires shall be provided at the Pedestrian Bridge, HAM-71-0157, as shown on the Plans.

Payment

Payment for luminaires shall be made at the contract bid price for each type and size of luminaire which price shall constitute full compensation for furnishing all materials, labor and equipment required to complete the item.

GLARE SHIELDS

Aluminum glare shields shall be furnished and installed where designated. The shields shall be obtained from the manufacturer of the luminaires with which they are to be used. They shall cut off the upward component of light but shall not reduce the total output of the luminaire by more than 3 percent.

Payment shall be made at the contract unit price for each glare shield installed in place and accepted.

FED. RD. DIVISION	STATE	PROJECT	
2	OHIO		

202
492

HAMILTON COUNTY
HAM-71-(1.56)(2.51)

GENERAL NOTES

LIGHTING

LIGHT STANDARD FOUNDATIONS

Lighting Standard Foundations shall conform to the dimensions and details indicated on the Plans.

Where light standards and crossover conduit fall within locations where guard rail is used, the guard rail posts shall be staked out prior to the construction of the foundations for standards or pull boxes for crossovers to determine that they will not coincide with cable trenches servicing the lights and pull boxes.

If necessary, the project Engineer is authorized to shift the light standard or crossover a maximum of 5'-0" longitudinally to avoid severance of cable.

Where special guard rail for sign protection is used with 6'-3" post spacing the light standard or pull box is to be centered between the guard rail posts.

Foundations for light standards shall be poured-in-place class "C" concrete. The lower portion may be poured in a two foot diameter or a two foot square hole with forms, unless, at the discretion of the Engineer soil stability precludes the need for forms.

The top portion shall be formed two foot square for at least one foot deep or a minimum six inches below the finished grade line. Foundation must be to a minimum depth of six feet below lowest point of finished grade, additional depth required depending upon soil conditions.

Payment shall be made at the contract unit price for each foundation, completed and accepted in accordance with the plans or as ordered by the Engineer, which price shall include furnishing and placing of concrete, reinforcing steel, all necessary formwork, anchor bolts and conduit and the cost of excavation, backfill and disposal of surplus material. The anchor bolts shall conform to the requirements for anchor bolts under "Light Standards and Brackets".

PULL BOXES

Pull boxes shall be constructed in accordance with details shown on the Plans.

Payment shall be made at the contract unit price per each which price shall be full compensation for furnishing all materials, labor, equipment, tools and incidentals necessary to complete the item.

REINFORCING STEEL

Reinforcing steel shall be plain intermediate grade as required by Item M-7, Section M-7.1 of the Construction and Material Specifications.

No separate payment shall be made for this item.

LIGHT STANDARD ANCHOR BOLTS FOR BRIDGES AND RETAINING WALLS (FOUR BOLTS PER SET)

Anchor bolts for mounting light standards on bridges and retaining walls shall conform to the requirements for anchor bolts under "Light Standards and Brackets", and shall be paid for at the contract unit price bid for "Item S-25, Light Standard Anchor Bolts for Bridges and Retaining Walls (Four Bolts per Set)" which price shall constitute full compensation for furnishing and placing the anchor bolts.

TRENCH

Trenches shall be excavated manually or with mechanical trenching equipment and shall have essentially vertical walls.

Trenches shall be backfilled in accordance with Section I-1.07 Type 4 of the Construction and Material Specifications except that the material in the first four inches above the Duct-Cable shall contain no pieces larger than one inch.

Payment shall be made at the contract unit price per linear foot of "Item S-25, Trench", which price shall include all excavation regardless of material encountered, backfill, tamping, restoration and all labor, equipment, tools and incidentals necessary to complete the work. No separate payments shall be made for trenches of different widths.

MARKERS

When a cable run is neither parallel with nor concentric with the roadway, concrete route markers shall be installed at points of departure and not over one hundred feet apart along the run. Markers shall be constructed as shown on the Plans.

No separate payment shall be made for markers. The cost of markers shall be included in the unit prices bid for conduit and duct-cable.

GROUND ROD UNITS

A complete grounding system shall be provided at all lighting control structures, lighting standards, metal conduit on retaining walls, pull boxes and handholes, by placing ground rods as shown on the Plans.

Payment for ground rods, including wire and connections for units being grounded shall be made at the contract unit price bid per each for Item S-25 Ground Rod Units, which price shall constitute full compensation for furnishing all materials, labor, equipment, tools and incidentals necessary to complete this item.

BRIDGE STRUCTURE GROUNDING SYSTEM

A complete grounding system shall be provided at all bridges as shown on the Plans.

Payment for the bridge structure grounding systems shall be made at the contract unit prices bid for Item S-25, Bridge Structure Grounding System" which price shall constitute full compensation for furnishing all materials, labor, equipment, tools and incidentals required to complete the item.

CONNECTORS

Cable connections in lighting standards and pull boxes shall be made with connector kits as shown on the Plans.

Payment shall be made at the contract unit price bid for each type of connector which price shall be full compensation for furnishing all materials, labor, equipment, tools and incidentals necessary to complete the item.

LAMPS

Mercury lamps for use in the luminaire specified shall be first line, high quality lamps having heat resistant clear glass envelopes, with a quartz arc tube interior. The horizontal initial lumens and approximate hours of life shall not be less than for the following American Standards Association Designations.

ASA Designation	Watts	Bulb	Horizontal Initial Lumens	Approximate Hours Life
H39-22KB	175	BT-28	6950	16000
H33- 1CD	400	BT-37	19500	16000

The lumen output of the mercury lamp after 16000 hours use shall produce 80% of its initial lumen rating.

Payment shall be made at the contract unit price bid for each size of lamp for each lamp installed and accepted, which price shall constitute full payment for materials, labor, equipment and tools necessary to complete the item.

PHOTO ELECTRIC CELL AND SOCKET

The photo-electric cell element shall be of the cadmium sulphide type and shall operate without the use of vacuum tubes. The sensing element shall be hermetically sealed and have three locking type blades that will fit a socket which meets E. E. I. - N. E. M. A. standards. The unit shall be designed for operation on 120 volt A. C., 60 cycle.

The relay shall have a contact rating of 500 watts with an inrush capacity of 900 volt-amperes and be capable of operation within a temperature range of minus 30 degrees F to 130 degrees F. The relay contacts shall be snap acting to minimize arcing. Switch leaves on which the contacts are mounted shall be independent of thermal elements.

The sensing element shall have an operating range of 0.3 to 6.0 foot candles.

There shall be incorporated into the switching operation a time delay of at least 20 seconds to prevent switching due to lightning.

The complete device shall consist of a socket mounted in a pole top adapter with wiring terminals and the above mentioned photo-cell.

Payment shall be made at the contract unit price bid, which price shall constitute full payment for materials, labor, equipment and tools necessary to complete the item.

STREET LIGHTING CONTROLLERS

The street lighting controller combinations shall consist of a switch and a contactor of the capacity shown on the Plans in a stainless steel enclosure.

The enclosure shall contain the following units mounted on a removable panel and factory wired:

(a) One three pole heavy duty fused switch rated of the size indicated on the drawings and designed for the 600 volt level. The fuse clips shall be adjustable and for 250 volt fuse size.

(b) One 480 volt three pole tungsten rated magnetic contactor of the size indicated on the drawings with the operating cell designed for operation on 120 volt A. C. service.

(c) One neutral bar with provisions for one A. W. G. #2 and six A. W. G. #6 conductor attachments.

(d) One cabinet grounding lug.

The enclosure shall be NEMA 4 water tight .063 gage stainless steel ASTA 302-303. A disconnect handle shall be flange mounted and capable of being locked in either position. The enclosure shall be equipped with a door locking mechanism with a defecter that necessitates two hands to operate mechanism with the switch in off position.

A wiring space of 2" shall be provided between the case and all internal units.

The "line" and "lead" leads shall be marked and easily accessible with provisions for connecting the external wiring into the controller.

Two mounting flanges shall be provided on the outside of the case. The flanges shall be drilled or slotted for mounting bolts.

The controller shall be: Combination Switch and Contactor Square "D" Class 8903, Type W939FA Series or equivalent by Twyco Engineering Co. or Furnas Electric Co. or approved equal.

The enclosure shall be mounted on brackets with 5/16" - 18 × 3/4 hex head cadmium plated machine bolts.

Payment shall be made at the contract unit price for each size of controller, which price shall constitute full payment for materials, labor, equipment and tools necessary to complete the item.

FED. RD. DIVISION	STATE	PROJECT	
2	OHIO		

203
492

HAMILTON COUNTY
HAM-71-(1.56)(2.51)

GENERAL NOTES

LIGHTING

STREET LIGHTING CONTROL STRUCTURES

Street Lighting Control Structures shall be provided as shown on the Plans.

Payment shall be made at the contract unit price bid per each, which price shall constitute full payment for materials, labor, equipment and tools necessary to complete the item.

FLUSH MOUNT ISLAND LIGHT WITH 100 WATT LAMP

Flush mount island lights shall be installed on medians, islands and gores where and as shown on the Plans.

Payment shall be made at the contract unit price bid per each for "Item S-25 Flush Mount Island Light With 100 Watt Lamp" which price shall constitute full compensation for furnishing all materials, labor, equipment, tools and incidentals required to complete the item.

PEDESTAL LIGHT WITH 150 WATT LAMP

Pedestal lights shall be installed on street medians where and as shown on the Plans.

Payment shall be made at the contract unit price bid per each for "Item S-25 Pedestal Light With 150 Watt Lamp" which price shall constitute full compensation for furnishing all materials, labor, equipment, tools and incidentals required to complete the pedestal light, including pole, anchor bolts and foundation.

ELECTRICAL SERVICES FOR SIGNS

The roadway lighting items include all electrical services for external illumination of all overhead signs, to and including the pull box adjacent to each lighted sign, and to and including the wiring connector kits in the pull box. The sign items shall include all wiring, conduit and related incidentals from this point that are necessary to energize the sign lighting.

METHOD OF MEASUREMENT OF CABLE, CONDUIT AND DUCT-CABLE

Where cable, conduit and duct-cable items are indicated to be paid for on a linear foot basis, measurement will be made as follows:

Conduit: The number of linear feet of conduit installed will be measured from center to center of pull boxes, foundations, etc., and shall include all fittings and appurtenances, joints, bends, grounds, and concrete encasement where specified.

Cable: The number of linear feet of cable installed will be measured from center to center of foundation, pull boxes, etc., plus 10 feet per each spacing to allow for slack and splicing leads. The number of linear feet of pole and bracket cable acceptably furnished and installed will be measured, for each cable, as the lighting standard mounting height plus the designated arm length, or lengths.

Duct-Cable: The number of linear feet of duct-cable installed will be measured, for each duct, from center to center of pull boxes, foundations, etc., plus 10 feet per each spacing to allow for slack and splicing leads.

JUNCTION BOXES

Galvanized cast iron junction boxes shall be installed where and of the type shown on the Plans.

Payment shall be made at the contract unit price bid per each for each type of junction box which price shall constitute full compensation for furnishing all materials, labor, equipment, tools and incidentals necessary to complete the item.

30 AMPERE FUSIBLE DISCONNECT SWITCH
60 AMPERE FUSIBLE DISCONNECT SWITCH

Fusible disconnect switches shall be installed at the lighting control centers and at a C. G. & E. Company pole on Court Street for the sign lighting circuits.

The switches shall conform to the requirements for switches on Sheet 231, and shall be mounted in a NEMA 4 stainless steel enclosure and attached to the supporting structures.

Payment shall be made at the contract unit price bid per each for "Item S-25, Fusible Disconnect Switch" of size specified, which price shall constitute full compensation for materials, labor, equipment and tools necessary to complete the item.

TEST AND FINAL ACCEPTANCE

The Contractor shall be responsible for furnishing qualified personnel and the equipment required to successfully perform the following tests, and shall furnish six certified copies of complete test records to the Engineer:

(a) Ground Test: The resistance to ground for each ground rod installation shall not exceed 25 ohms. Where resistance exceeds 25 ohms, additional lengths and/or numbers of rods shall be installed as per Plan. The tests for each ground rod installation shall be performed before circuit and ground cables are connected.

(b) Circuit Test: The resistance to ground for each insulated multiple circuit conductor, including insulated ground, shall be not less than 10 megohms. The test shall be performed for each circuit with all ballasts disconnected from the circuit. In the case of a grounded circuit, the insulated ground return shall be tested before the ground rods are connected.

(c) DC High Potential Test: Conduct the following test on each conductor, including the insulated ground. Before performing this test be sure all ballasts ground rods, fuses, etc. are disconnected from the circuit. Conduct this test as per cable manufacturer's recommendations and per applicable sections of the following specifications: ASTM Designation D-470-59T and ASTM Designation D-1350-58T. All defective conductors shall be repaired and replaced by the Contractor and the test resumed until all conductors meet the requirements of this test.

(d) Performance Test: Prior to acceptance, the Contractor shall operate the complete lighting system from sunset to sunrise for seven (7) consecutive days with no failure or breakdown. If any failure occurs the Contractor shall record this failure, date of failure and method of repair. After all failures have been corrected (if any) the Contractor shall begin again the Performance Test. All costs of electrical power shall be borne by the Contractor. No portable power (generators, etc.) shall be used for this test. All costs for the above tests shall be included in the unit prices for the respective items tested.

☐ Quantities included within the squares represent items withdrawn from Federal participation to adjust intensities. Change will be 95% State & 5% City.

GENERAL LIGHTING SUMMARY

◯ Quantities contained within the circle represents items to be considered as special participation subject to negotiation when value for restoration of existing lights are determined.

FED. RD. DIV.	STATE	PROJECT	FISCAL YEAR
2	OHIO		

204/492

HAMILTON COUNTY
HAM-71-(1.56) (2.51)

STRUCTURE

BRIDGE NO.	BRIDGE NO.	BRIDGE NO.	BRIDGE NO.	BRIDGE NO.
HAM-71-0157	HAM-71-0173	HAM-71-0196	HAM-71-0203	HAM-71-0271
	4	③	③	③
7	7	14	10	
	4	③	③	
7	7	14	10	③
		1	1	
	4	③	③	③
7				
14	8	⑥	⑥	⑥
~~7~~	~~4~~	~~3~~	~~3~~	~~3~~
1900	1905 1545	1995 2076	1440 1194	1185
70	160	120	120	120
35				
178	445	511	233	6
225	595	565	440	355
7				
	10	15	11	
	2	3	4	4
	2			
~~Each~~	~~Each~~	~~Each~~	~~Each~~	~~Each~~
~~Lump~~	~~Lump~~	~~Lump~~	~~Lump~~	~~Lump~~
7				

ROADWAY CODE 7221

PROJECT N.B. EXP.	S.B. EXP.	RAMP GA	RAMP GD	GILBERT AVE.	VAN METER STREET	ELSINORE AVE.	McGREGOR AVE.	WALL No.15	WALL No.16	WALL NO.21	WALL NO.22	WALL NO.23	WALL NO.24	WALL NO.28	WALL NO.41	TOTAL	100% City McGREGOR AVE.	ROADWAY GRAND TOTAL	UNIT	ITEM	DESCRIPTION
22 17 8 15 12		5	2	21 22 1	1 7		1	3		3	1	2	1	1	4	82		82	Each	S-25	400 Watt Luminaire Type III with Integral 400 Watt Mercury Ballast
																8	4	12	Each	S-25	250 Watt Luminaire Type III with Integral 175 Watt Mercury Ballast
																			Each	S-25	175 Watt Luminaire Type I with Integral 175 Watt Mercury Ballast
																			Each	S-25	250 Watt Underpass Luminaire with Integral 175 Watt Mercury Ballast
22 17 8 15 12		5	2	21 22 1	1 7		1	3		3	1	2	1	1	4	82		82	Each	S-25	Mercury Vapor Lamp - 400 Watt (ASA-H33-1CD)
																8	4	12	Each	S-25	Mercury Vapor Lamp - 175 Watt (ASA-H39-22KB)
1		1			1		1									4		4	Each	S-25	Street Lighting Control Structure
				2 3 1												3		3	Each	S-25	Flush Mount Island Light with 100 Watt Lamp
				2												2		2	Each	S-25	Pedestal Light with 150 Watt Lamp
		2		1	1		1									5		5	Each	S-25	Photo-electric Cell and Socket
															1	1		1	Each	S-25	Anchor Base 22'-0" Standard, Circular Shaft, with 15' Bracket Arm
								1				1				2		2	Each	S-25	Anchor Base 27'-0" Standard, Circular Shaft, with 15' Bracket Arm
																			Each	S-25	Anchor Base 27'-0" Standard, Circular Shaft, with 10' Bracket Arm
26 15 8 N 8		5	2	21 22 1	8		1									31		31	Each	S-25	Anchor Base 29'-6" Standard, Circular Shaft, with 15' Bracket Arm
	2															38	4	42	Each	S-25	Anchor Base 29'-6" Standard, Circular Shaft, with 10' Bracket Arm
								2								2		2	Each	S-25	Anchor Base 29'-6" Std. Circular Shaft with 15' Bracket Arm & Spare Pole Plates, As Per Plan
2																2		2	Each	S-25	Anchor Base 27'-0" Std. Circular Shaft with 15' Bracket Arm & Spare Pole Plates, As Per Plan
										3	1	2	1		3	2		2	Each	S-25	Anchor Base 29'-6" Standard Circular Shaft, with Twin 15' Bracket Arms
																10		10	Each	S-25	Anchor Base Variable Height Standard Circular Shaft with 15' Bracket Arm, As Per Plan
																			Each	S-25	Anchor Base 10'-0" Standard, Circular Staft, As Per Plan
		1		1												2		2	Each	S-25	60 Ampere Fusible Disconnect Switch
22 17 8 15 10		5	2	21 22 1	8		1									73	4	77	Each	S-25	Light Standard Foundation
					1											2		2	Each	S-25	30 Ampere Fusible Disconnect Switch
36 31 8 27 24		10	4	30 24 23 2	10 8	2	2 35 1	3		3	1	2	1	1	4	150	9	159	Each	S-25	Ground Rod Unit
2		1														3		3	Each	S-25	Street Lighting Controller 60 Ampere
27	19	5	2	5 10 5	2		4									69		69	Each	S-25	Type I Unfused Connector Kit
~~44 34 16 26 20~~		10	4	42 44 2	16		2	6		6	2	4	2	2	8	176	8	184	Each	S-25	Type II Fused "Y" Connector Kit
~~22~~	~~13~~	~~5~~	~~2~~	~~22~~	~~8~~		~~1~~	~~3~~		~~3~~	~~1~~	~~2~~	~~1~~	~~1~~	~~4~~	~~88~~	~~4~~	~~92~~	~~Each~~	~~S-25~~	~~Type III Unfused "Y" Connector Kit~~
54	38	10	4	14 20 6	4		8									138		138	Each	S-25	Type IV Unfused "Y" Connector Kit
		1		1	1		1									4		4	Each	S-25	Street Lighting Controller 100 Ampere
27	19	5	2	10 20 10	2		2 1 2									79	5	84	Each	S-25	Pull Box Type A
								3		3	1	2	1	1	4	15		15	Set	S-25	Light Standard Anchor Bolts for Bridges and Retaining Walls (Four per Set)
6975	3419	1535	1060	1250	1470		180								705	16594	425	17019	Lin.Ft.	S-25	1¼" Duct-Cable with 3 - No. 6 AWG Cables
				1070 2180 1110												2180		2180	Lin.Ft.	S-25	1¼" Duct-Cable with 3 - No 4 AWG Cables
135		90			135		150									510		510	Lin.Ft.	S-25	No. 0 AWG Cable
4905	2080	465	390	1222			60	1680	885							11687	525	12212	Lin.Ft.	S-25	No. 6 AWG Cable
																			Lin.Ft.	S-25	No. 12 AWG Cable
				4140 5635	1495											5635		5635	Lin.Ft.	S-25	No. 4 AWG Cable
						415										415		415	Lin.Ft.	S-25	No. 8 AWG Cable, FAA L-824 Type B (5,000 Volt Insulation)
~~795 1045~~ 400 ~~578~~ 428		213	83	895 935 40	340		43	120		116	22	46	26	45	135	3747	170	3917	Lin.Ft.	S-25	Pole and Bracket Cable, No. 12 AWG, Two Conductor
	1		1													2		2	Each	S-25	Glare Shields
																			Lin.Ft.	S-25	1¼" Metal Conduit
		10		22				15	12	18	6	12	3	6	32	136		136	Lin.Ft.	S-25	2" Metal Conduit
760	457	315	110	225 615 390	35		46 56 40	430	265							3043	145	3188	Lin.Ft.	S-25	3" Metal Conduit
				1528												1528		1528	Lin.Ft.	S-25	2 Way 3" Fiber or Asbestos Cement Conduit, Type I, with 3" Concrete Encasement
					395											395		395	Lin.Ft.	S-25	1 Way 2" Fiber or Asbestos Cement Conduit, Type I with 3" Concrete Encasement
																			Each	S-25	Junction Box, Type A, 12"×8"×6"
																			Each	S-25	Junction Box, Type B, 6"×6"×6"
								5	3							8		8	Each	S-25	Junction Box, Type C, 18"×12"×8"
																			Each	S-25	Junction Box, Type D, 18"×6"×6"
					1											1		1	Each	S-25	Junction Box, Type E, 24"×12"×6"
4888	2078	725	990	1430 2030 600	1400		162									12273	363	12636	Lin.Ft.	S-25	Trench
									2							2		2	Set	S-25	Plates for Future Brackets (Sets of Two)
																			Each	S-25	Bridge Structure Grounding System
																					Alternate Bid Items (For Poles other than round)
															1	1		1	Ea.	S-25	Anchor Base 22'-0" Pole, Other than round, with 15' Bracket Arm
								1						1		2		2	Ea.	S-25	Anchor Base 27'-0" Pole, Other than round, with 15' Bracket Arm
	4	3	3	3															Ea.	S-25	Anchor Base 27'-0" Pole, Other than round, with 10' Bracket Arm
20	11															31		31	Ea.	S-25	Anchor Base 29'-6" Pole, Other than round, with 15' Bracket Arm
	2	5	2	22	8		1									38	4	42	Ea.	S-25	Anchor Base 29'-6" Pole, Other than round, with 10' Bracket Arm
																2		2	Ea.	S-25	Anchor Base 29'-6" Pole, Other than round, with 15' Bracket Arm & Spare Pole Plates, As per plan
								2								2		2	Ea.	S-25	Anchor Base 27'-0" Pole, Other than round, with 15' Bracket Arm & Spare Pole Plates, As Per Plan
2																2		2	Ea.	S-25	Anchor Base 29'-6" Pole, Other than round, with twin 15' Bracket Arms
										3	1	2	1		3	10		10	Ea.	S-25	Anchor Base Variable Height Pole, other than round, with 15 Bracket Arm, As Per Plans (2nd)
																			Ea.	S-25	Anchor Base 10'-0" Pole, Other than round, As Per Plan. Rev. 4-4-66 C.E.H.

Rev. 10-25-65 C.E.H.

FED. RD. DIV.	STATE	PROJECT	FISCAL YEAR
2	OHIO		

205
492

HAMILTON COUNTY
HAM-71-(1.65)(2.51)

L5-6-15-JC5 — No. of Circuit - Light No. - Lgth. of Bracket arm in feet. Type & No. of Junction Box.
151+09 — Sta. Where Located
L4-21P — No. of Circuit - Light No. Post Type Light
JA-5 — Junction Box No.
L4-8F — No. of Circuit - No. of Flush Mounted Island Light
10+16 — Sta. Where Located
L7-2H — No. of Circuit - No. of Underpass Luminaire
JB-2 — Junction Box No.

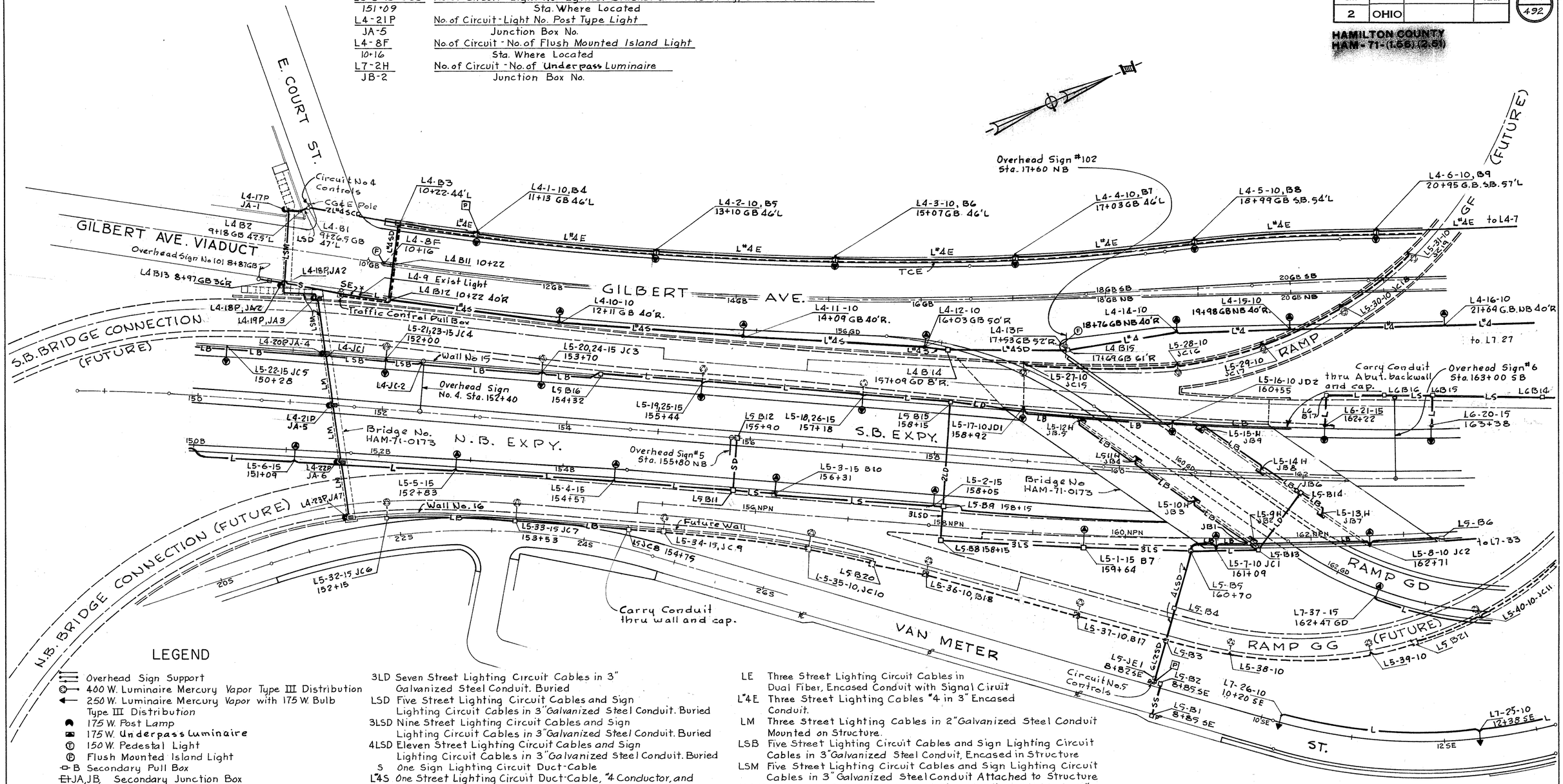

LEGEND

- Overhead Sign Support
- 400 W. Luminaire Mercury Vapor Type III Distribution
- 250 W. Luminaire Mercury Vapor with 175 W. Bulb Type III Distribution
- 175 W. Post Lamp
- 175 W. Underpass Luminaire
- (T) 150 W. Pedestal Light
- (F) Flush Mounted Island Light
- B Secondary Pull Box
- JA, JB, JC, JD or JE Secondary Junction Box
- Photo Electric Cell

- L One Street Lighting Circuit Doct-Cable
- L"4 One Street Lighting Circuit Duct-Cable, "4 Conductors
- 2L Two Street Lighting Circuit Duct-Cables
- 3L Three Street Lighting Circuit Duct-Cables
- LS One Street Lighting Circuit Duct-Cable and One Sign Lighting Circuit Duct-Cable
- 3LS Three Street Lighting Circuit Duct-Cables and Three Sign Lighting Circuit Duct-Cables
- LD Three Street Lighting Circuit Duct-Cables in 3" Galvanized Steel Conduit. Buried
- 2LD Five Street Lighting Circuit Duct-Cables in 3" Galvanized Steel Conduit. Buried
- 3LD Seven Street Lighting Circuit Cables in 3" Galvanized Steel Conduit. Buried
- LSD Five Street Lighting Circuit Cables and Sign Lighting Circuit Cables in 3" Galvanized Steel Conduit. Buried
- 3LSD Nine Street Lighting Circuit Cables and Sign Lighting Circuit Cables in 3" Galvanized Steel Conduit. Buried
- 4LSD Eleven Street Lighting Circuit Cables and Sign Lighting Circuit Cables in 3" Galvanized Steel Conduit. Buried
- S One Sign Lighting Circuit Duct-Cable
- L"4S One Street Lighting Circuit Duct-Cable, "4 Conductor, and One Sign Lighting Circuit Duct-Cable
- SD Three Sign Lighting Circuit Cables in 3" Galvanized Steel Conduit. Buried
- 3SD Nine Sign Lighting Circuit Cables in 3" Galvanized Steel Conduit. Buried
- SE Three Sign Lighting Circuit Cables in Dual Fiber Encased Conduit with Signal Conduit.
- L4SD Three Street Lighting Circuit Cables "4 and Three Sign Lighting Circuit Cables in 3" Galv. Steel Conduit Buried
- LB Three Street Lighting Ciruit Cables in 3" Galvanized Steel Conduit Encased in Structure
- 2L"4 SCD Five Street Lighting Circuit Cables "4 and Five Sign Lighting and Control Cables in 3" Galvanized Steel Conduit Buried
- LE Three Street Lighting Circuit Cables in Dual Fiber, Encased Conduit with Signal Ciruit
- L"4E Three Street Lighting Cables "4 in 3" Encased Conduit.
- LM Three Street Lighting Cables in 2" Galvanized Steel Conduit Mounted on Structure.
- LSB Five Street Lighting Circuit Cables and Sign Lighting Circuit Cables in 3" Galvanized Steel Conduit, Encased in Structure
- LSM Five Street Lighting Circuit Cables and Sign Lighting Circuit Cables in 3" Galvanized Steel Conduit Attached to Structure
- 6L2SD Seventeen Street Lighting and Sign Lighting Cables in 3" Galvanized Steel Conduit Buried
- LX 1-3C "12 Lighting Cable in Traffic Control Duct.
- LY 1-2C "12 Lighting Cable in Traffic Control Duct.

FOR TRAFFIC SIGNALS

- TE 3" Encased conduit with 1-12C "12 Cable
- TD 3" Galvanized Metal Conduit with 1-12C "12 Cable
- TCE 1-12C "12 Cable in East Duct
- TB 3" Galvanized Metal Conduit in Bridge with 1-12C "12 Cable
- LT-JC Junction Box
- LT-B Pull Box

NOTE
All luminaires and conduit lines shown dashed, with the exception of Traffic Control lines, denote future installation.

LIGHTING PLAN

FED. RD. DIV.	STATE	PROJECT	FISCAL YEAR
2	OHIO		

206
492

HAMILTON COUNTY
HAM-71-(1.56) (2.51)

ELSINORE PLACE

* 2" Galv. Metal Conduit from pull box to C.G.&E.Co. pole. Top of conduit stopped and capped 7' above side walk. For future signal cable. which will be installed By Others, under the next contract.

* 2" Galv. Metal Conduit for Signal cable which will be installed By Others, under the next contract.

L4-6-10, B9 20+95 G.B. SB
L4-7-10, B10 22+78 G.B. SB
L6-5-10-B19 24+56 G.B. SB
L6-4-10-B18 168+17 GA
L6-3-10 170+17 GA
L6-2-10 172+17 GA
L6-1-10-B2 174+17 GA
L4-16-10 21+64 G.B. NB
L1-34-10 23+30 GB NB
L7-33-10 24+96 G.B. NB
L7-32-10 26+66 G.B. NB
L6-6-10.B21 21+50 G.B. SB
L7-18-10 29+33 GB
L6-13H JB5
L6-14H JB6
L6-15H JB7
L7-31-10-JC7 28+35 GB. NB
L6-16-15 B11 169+82 SB
L6-17-15 B12 168+00
L6-18-15 B13 166+20
L6-19-15 164+59
L6-20-15 163+38
L6 B14 164+59
L6 B15 163+38
L6 B16 162+90
Overhead Sign #6 Sta 163+00 S.B
L7-42-15 163+96
L5-8-10 162+71
L5 B6
L7-38-15 162+47 GD
L7-41-15 165+60
L7-40-15 167+06
L7-39-15 168+52 NB
L7-B11
L7-B10
L7-B9
L7-37-15 164+26 GD
L7-36-15 166+06 GD
L7-35-15 167+86 GD
L7-29-15 169+66 GD
L7-28-15 171+00
L7-B8
L7-B7
L7-27-10 32+21 GB
L7-26-10 32+98 GB
L7-15-10 33+19 GB
L7-43T 33+91 G.B.
L7-B5 32+58 GB
L7-B4
L7-7-15 176+30.44
L7-8-15 177+62.94 NB
L9-1-15 178+82 NB
L9-B1 179+39
L9-B2 177+49 SB
L9-2-15 176+52 GA
L7-6-10 35+21
L7-10F
L7-10H JB3
L6-24 H
L6-26-15 176+33 SB
L6-25H JB11
L6-22H
L7-JC3
L6-8H JB1
JB8-JB9
L6-9H JB2
L6-11H JB4
L7-10-JC2 13+56
L6-B1
L6-B6
L6-B5
L6-7-15 174+20 SB
L6-27-15 B18 173+66 NB
L7-1-10 JC1 14+62
L6-B19
L6-B20
JB12-JB13
L7-17-10 JC5 31+28 GB
L7-2-15 174+78.17 NB
Wall No. 22
L7-2H JB2
L7-3H JB3
L7-B2
L7-B3
L7-9T
L7-10-JC4 15+60
Wall No. 23
L7-B1
L7-B2
L7-1H JB8
L7-12H JB9
L7-13H JB10
L7-14H
L7-JC1
L7-B9
L6-B10
L7-30-10 JC6 30+32 GB
L6-B8
L6-B9
L6-12-15 L6 B17 172+78 SB
Overhead Sign #8 Sta. 172+20 SB
L6-B3
L6-B4
L6-B2
L6-B1
L6-B6
L6-B5
L6-B19
L6-B20
L6-B8
L6-B9
L6-B10
L7-B8
L7-B7
L7-B6
L7-B5
L7-B4
L7-B3
L7-B2
L7-B1
L7-B9
L7-B10
L7-B11
L7-B12
L7-B13
L7-B14
L7-B15
L7-B16
L7-B17
L7-B18
L7-B19
L7-B20
L7-B21
L7-B22
L7-B23
L7-B24
L7-B25
L7-B26
L7-B27
L7-B28
L7-B29
L7-B30
L7-B31
L7-B32
L7-B33
L7-B34
L7-B35
L7-B36
L7-B37
L7-B38
L7-B39
L7-B40
L7-B41
L7-B42
L7-B43
L7-B44
L7-B45
L7-B46
L7-B47
L7-B48

FED. RD. DIV.	STATE	PROJECT	FISCAL YEAR
2	OHIO		

207
492

HAMILTON COUNTY
HAM-71-(1.56) (2.51)

L8-B18-201+69 SB
L8-20-15 203+64 SB
L8-19-15 205+10 SB
L8-B17-204+85 SB
L8-18-15 202+58 SB
L8-B16-204+48 NB
L8-17-15 202+08 NB
L8-16-15 204+48 NB
L8-B19 201+09 NB
L8-27-15 203+28 NB
L8-26-15 205+68 NB
L8-B14 206+92 NB
L8-25-15 208+08 NB
L8-24-15 210+48 NB
L8-B13 209+25 NB
L8-B15-206+92 NB
L8-15-15 206+88 NB
L8-13,14-15-B20 209+28 NB
L8-12-15 206+56 SB
L8-11-15 208+20 SB
L8-10-15 210+80 SB
Wall No. 41
205 SB
205 NB
210 SB
210 NB
S. B. EXPY.
N. B. EXPY.
SYMMES AVE.
L8-J-10-JC2 10+39
B1-211+76 NB
C.G.&E. Co. Power Supply Pole
P ST
Circuit No. 8 Control
L8-B2
3 LSD
L8-B9
L8-9-15 212+88 NB
2LD
L8-B10
Sign S8-13 Sta. 212+50 S.B.
L8-B11
L8-21,22-15 211+68 NB
L8-B12 211+76 NB
L8-23-15 212+88 N.B.
L8-2-10-JC3 211+78
L8-3-10-JC4 211+78
L8-B21
L8-4-10 14+57
L8-B3 14+93
Project
Sta. 15+09.13
100% City
BOONE ST.
McGREGOR
L8-B4 15+59
L8-5-10 15+97
L8-6-10 17+37
L8-B5 17+65
MAY ST.
L8-B6 16+20
L8-7-10 17+37
L8-B7 19+12
L8-8-10 20+17
L8-B8 19+52
KENTON ST.

LIGHTING PLAN

FED. RD. DIV.	STATE	PROJECT	FISCAL YEAR
2	OHIO		

208
497

HAMILTON COUNTY
HAM-71-(1.56)(2.51)

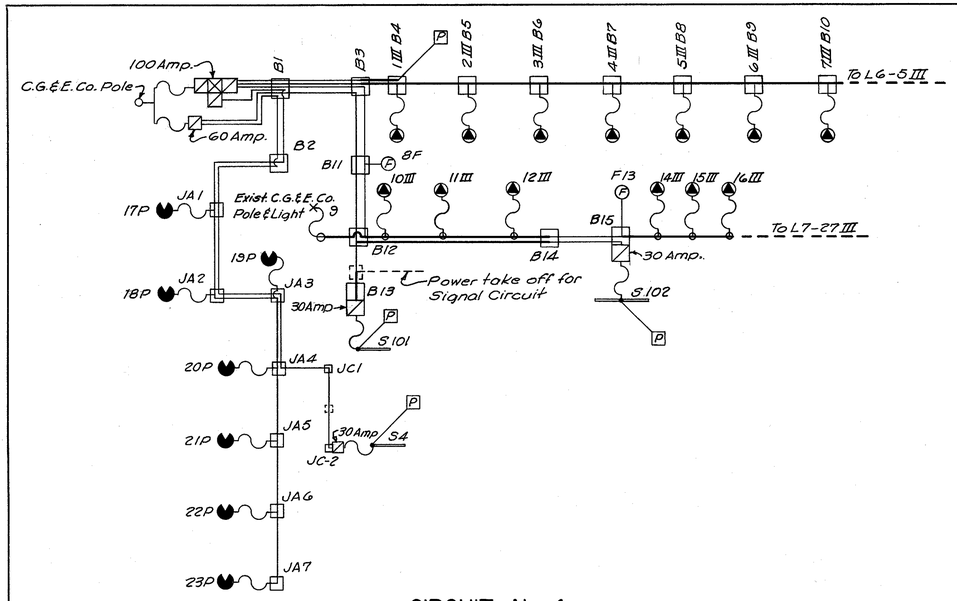

CIRCUIT No. 4

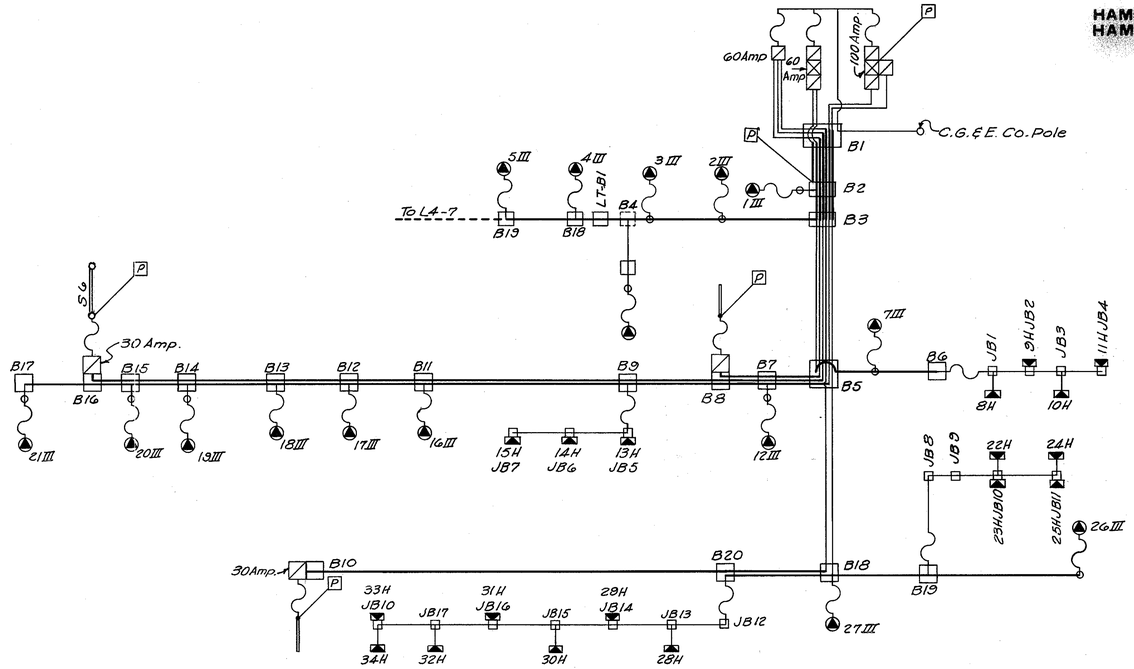

CIRCUIT No. 6

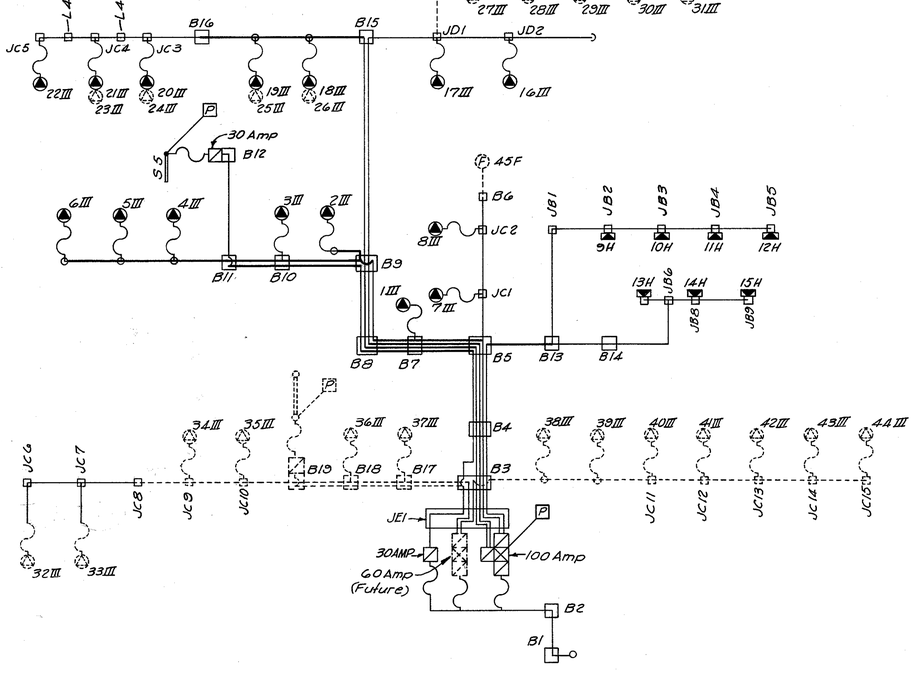

CIRCUIT No. 5

- Secondary Fuse
- Secondary Switch
- Contactor
- P Photoelectric Control
- J Secondary Junction Box
- B Secondary Pull Box Type A
- Overhead Sign Supports
- ▲III 250 Watt Mercury Vapor Luminaire with 175 Watt Lamp, Type III Light Distribution.
- ◮III 400 Watt Mercury Vapor Luminaire Type III Light Distribution.
- ● 175 Watt Post Type Luminaire
- ◥ 250 Watt Underpass Luminaire 175 Watt Lamp
- (F) Flush Mount Island Light
- (7) Pedestal Light

- One 1c 600V Cable, Plain and Two 1c 600V Cable, Identifiable.
- One Duct Cable containing One 1c 600V Cable, Plain and Two 1c 600V Cable, Identifiable.
- One 1c 600V Cable, Plain and Four 1c 600V Cables, Identifiable.
- Two Duct Cables each containing One 1c 600V Cable, Plain and Two 1c 600V Cables, Identifiable.
- One 1c 600V Cable, Plain and Six 1c 600V Cables, Identifiable.
- Three Duct Cables each containing One 1c 600V Cable, Plain and Two 1c 600V Cables, Identifiable.
- One 1c 600V Cable, Plain and Eight 1c 600V Cables, Identifiable.
- Four Duct Cables each containing One 1c 600V Cable, Plain and Two 1c 600V Cables, Identifiable.
- One 1c 600V Cable, Plain and Ten 1c 600V Cables, Identifiable.
- Five Duct Cables each containing One 1c 600V Cable, Plain and Two 1c 600V Cables, Identifiable.
- One 1c 600V Cable, Plain and Twelve 1c 600V Cables, Identifiable.
- Six Duct Cables each containing One 1c 600V Cable, Plain and Two 1c 600V Cables, Identifiable.
- One 1c 600V Cable, Plain and Fourteen 1c 600V Cables, Identifiable.
- Seven Duct Cables each containing One 1c 600V Cable, Plain and Two 600V Cables, Identifiable.

Note:
Dashed Lines Indicates Future Installations.

CIRCUIT DIAGRAMS

FED. RD. DIV.	STATE	PROJECT	FISCAL YEAR
2	OHIO		

209
497

HAMILTON COUNTY
HAM-71-(1.56)(2.51)

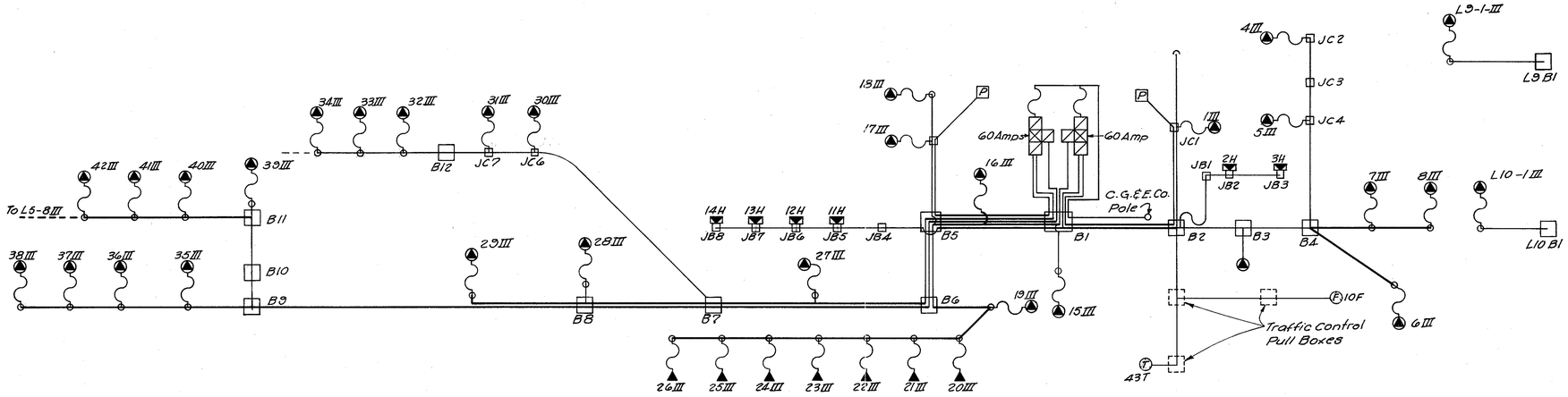

CIRCUIT No. 7

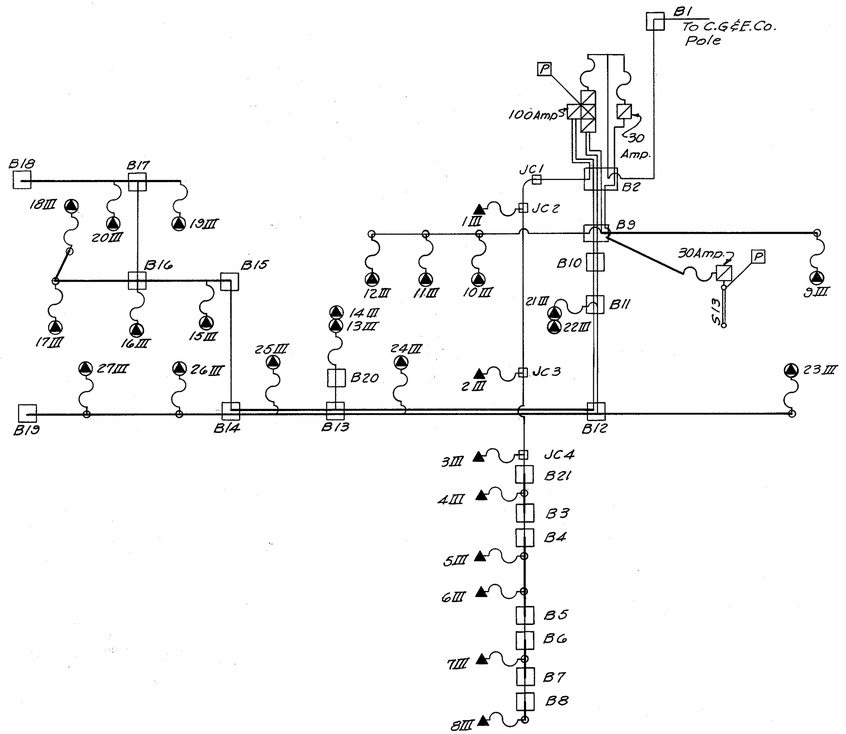

CIRCUIT No. 8

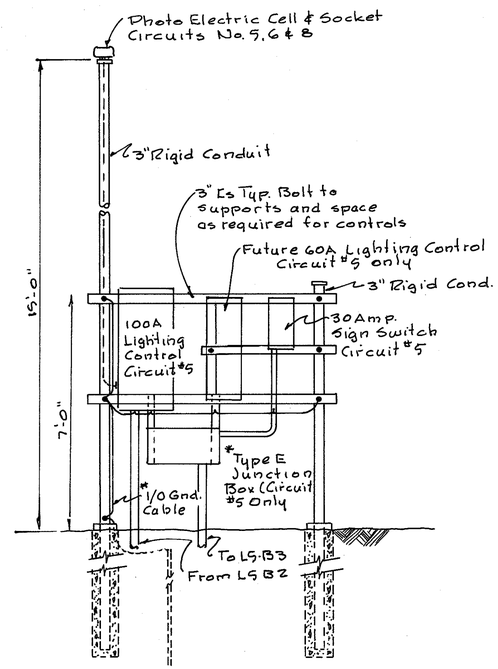

CONTROL STRUCTURE
Typ. for Circuits 5, 6, 7 & 8
(Drawn for Circuit #5)

*NOTE Junction Box Type E shall be 24"x12"x6" galvanized cast iron with plain cover, Neoprene gasket, flush stainless steel cover screws, pry bar slots, drilled holes to accommodate 2" or 3" conduit. Boxes shall be "O-Z" Catalog No. YS 241206A, Hope City Catalog No. HZ305 or approved equal.

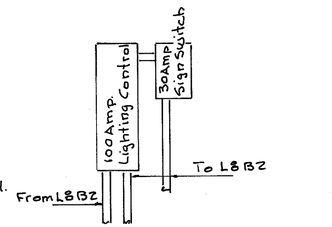

CIRCUIT No. 8

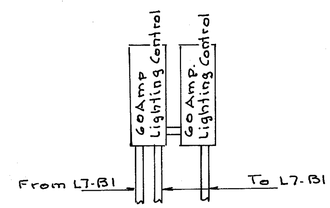

CIRCUIT No 7

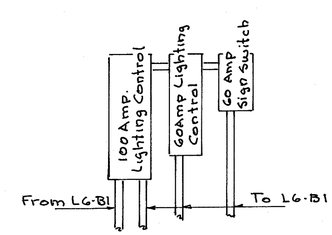

CIRCUIT No 6

CIRCUIT DIAGRAMS

FED. RD. DIV.	STATE	PROJECT	FISCAL YEAR
2	OHIO		

210
492

HAMILTON COUNTY
HAM-71-(1.56) (2.51)

EXP. & RAMP LIGHT STD. DESIGN NOS.

Exp. Single Bracket : No. 7A15B 32.5
Exp. Double Bracket : No. 7A15BB 32.5
Ramp GA : No. 7A10B 32.5
Ramp GD : No. 7A15B 32.5

EXP. & RAMP LUMINAIRES

Luminaires shall be 400 Watt Mercury Vapor with Ballast enclosed in Luminaire. IES Type III Distribution. General Electric Type M-400, Westinghouse Type OV-25, or equal.

EXP. & RAMP LAMPS

Lamps shall be 400 Watt Mercury Vapor ASA Code No. H33-1CD. General Electric "Bonus Line" Westinghouse "Lifeguard", Sylvania "Banner", or equal.

FOUNDATION CONDUIT

Foundation Conduit shall be Standard weight galvanized Steel conduit. Conduit shall project 2" above top and as detailed beyond face of foundation. Both ends of conduit shall be capped or plugged until light Standard and electrical conductors are installed. Steel conduit ends shall be equipped with bushings.

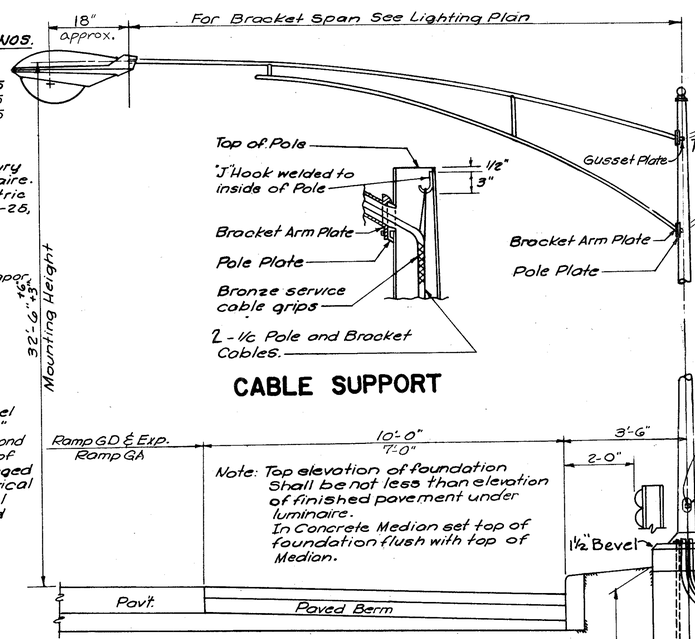

CABLE SUPPORT

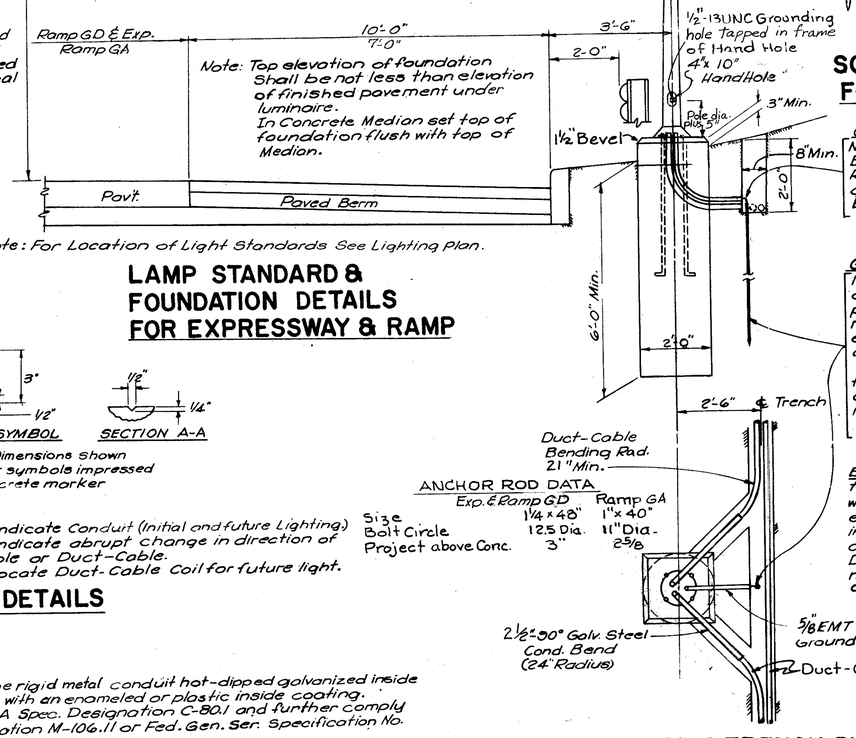

Note: For Location of Light Standards See Lighting Plan.

LAMP STANDARD & FOUNDATION DETAILS FOR EXPRESSWAY & RAMP

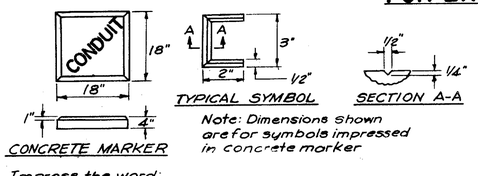

Note: Dimensions shown are for symbols impressed in concrete marker

Impress the word:

"CONDUIT" To indicate Conduit (Initial and future Lighting)
"CABLE" To indicate abrupt change in direction of Cable or Duct-Cable.
"LIGHT" To locate Duct-Cable Coil for future light.

MARKER DETAILS

ANCHOR ROD DATA

	Exp. & Ramp GD	Ramp GA
Size	1¼ x 48"	1" x 40"
Bolt Circle	12.5 Dia.	11" Dia.
Project above Conc.	3"	2⅝"

FOUNDATION & TRENCH PLAN

SCHMETIC WIRING DIAGRAM FOR LAMP STANDARD

GROUND WIRE
No. 4 AWG 7 strand copper ground cable. Exothermic weld cable to ground rod. Run thru 3/4" EMT Conduit and connect to ground hole in pole using a galvanized bolt and washer.

GROUND ROD
1"x10'-0" Solid wrought iron ground rod (with driving point) in cable trench outside light pole foundation, install vertically. If a ground resistance of 25 Ohms maximum is not obtained, either additional rods shall be driven 10'-0" apart (maximum of 5 additional rods) or sectional rods may be employed to obtain the specified low resistance ground at greater depth. Rods shall be connected in parallel to grounding nut. Top of ground rod to be within 4" of trench bottom.

BACKFILLING Backfill trench in accordance with Sec. I-1.07 Type 4 except that the material in first four(4) inches above the Duct-Cable shall contain no pieces larger than one inch.

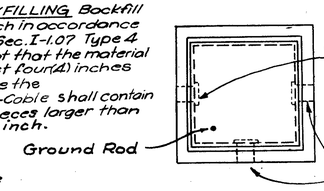

CROSSOVER CONDUIT Shall be rigid metal conduit hot-dipped galvanized inside and outside, after threading, with an enameled or plastic inside coating. Conduit shall conform to ASA Spec. Designation C-80.1 and further comply with Supplemental Specification M-106.11 or Fed. Gen. Ser. Specification No. WWP-441B for Wrought Iron.

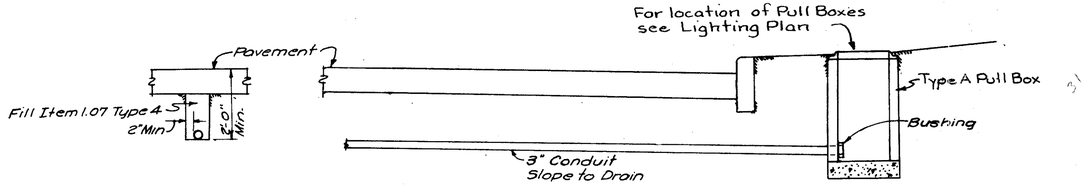

TYPICAL CONDUIT CROSSOVER DETAIL

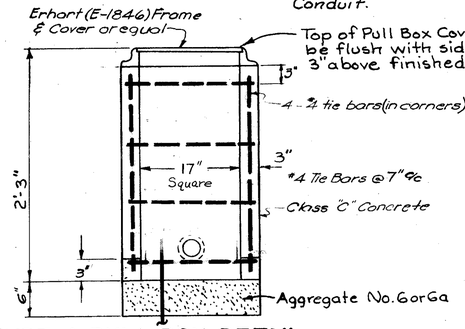

TYPE A PULL BOX DETAIL

Decals shall be adhesive type with silver white reflective characters on a reflective green background, with circuit and pole numbers as scheduled on Lighting Plan Sheets.

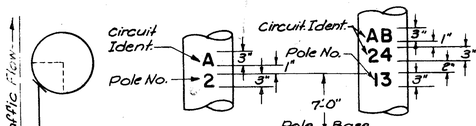

Locate identification decals (Circuit and Pole No's) in this area, and approximately seven feet (7'-0") above pole base.

Reflective letters and numbers Specification MIL-R-13688 A): Series "B" Type letters and numbers with spacing per A.A.S.H.O. specifications.

Note: Circuit Identification Letters shall be as follows:

Circuit No.	Circuit Identification
4	D
5	E
6	F
7	G
8	H

Pole numbers shall be as shown on the Plans.

Cost of Pole Identification shall be included with cost of the pole.

LIGHT POLE CIRCUIT IDENTIFICATION

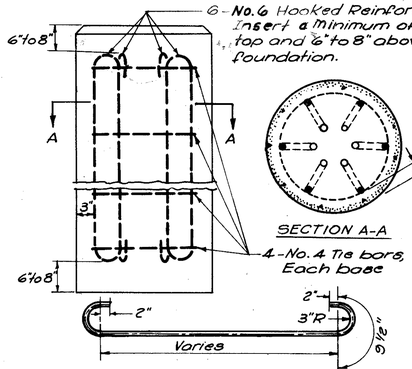

FOUNDATION

Light standard foundation shall be poured-in-place Class "C" Concrete. The lower portion may be poured in a 2'-0" diameter or 2'-0" square hole with forms, unless, at the discretion of the Engineer, soil stability precludes the need for forms. The top portion shall be formed 2'-0" square for at least 1'-0" deep or a minimum of 6 inches below the finished grade line.

REINFORCING BARS (FOUNDATION)

CITY STREET LUMINAIRES

Luminaires shall be Mercury with Ballast enclosed in Luminaire, IES Type III Distribution.

	250 Watt	400 Watt
General Electric Type	M-250B	M-400
Westinghouse Type Line Material, or equal		OV-25

CITY STREET LAMPS

Lamps shall be mercury vapor as follows:

	175 Watt	400 Watt
ASA Code No.	H38-2KB	H33-1CD
General Electric	"Bonus Line"	"Bonus Line"
Westinghouse Sylvania, or equal	"Lifeguard" "Banner"	"Lifeguard" "Banner"

4" x 10" Hand Hole located on opposite side of pole from Direction of Traffic with ½" 13UNC tapped grounding hole in handhole frame.

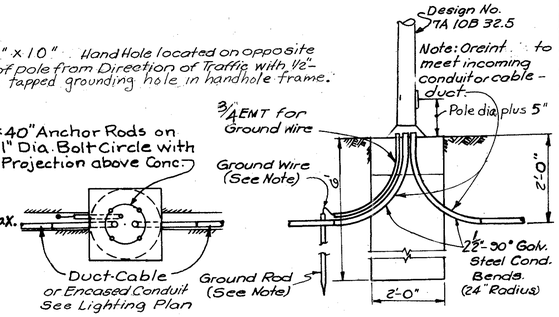

PLAN ELEVATION

Note: For Location of Light Standard & type of Luminaires and Lamps see Lighting Plans

LAMP STANDARD & FOUNDATION DETAILS FOR CITY STREETS

FED. RD. DIV.	STATE	PROJECT	FISCAL YEAR
2	OHIO		

211
492

HAMILTON COUNTY
HAM-71-(1.56) (2.51)

MECHANICAL PROPERTIES FOR ROUND, TAPERED, ANCHOR BASE POLES

DESIGN No.	POLE SIZE Ⓐ	ANCHOR BOLT Dia. Bolt Circle	ANCHOR BOLT Proj'n above Found.	Max. Arm Length (Single or Double)*	Mount. Height	Elastic Deflect. Rate inches per 100 lbs.	At 2/3 of Yield Strength: Load in lbs.	At 2/3 of Yield Strength: Total Deflect. in inches	At 2/3 of Yield Strength: Perm. Set in inches	At Yield Stress: Load in lbs.	At Yield Stress: Total Deflect. in inches	At Yield Stress: Perm. Set in inches
7A 10B 30	8.0"x4.22"x 27'-0" 7Ga.	11.0"	2 5/8"	12'-0"	30'-0"	1.68	845	14.02	.50	1267	22.80	2.53
7A 10B 32.5	8.0"x3.87"x 29'-6" 7Ga.	11.0"	2 5/8"	10'-0"	32'-6"	2.24	770	17.75	.50	1154	28.94	3.09
7A 15B 25	8.0"x4.92"x 22'-0" 7Ga.	11.0"	2 5/8"	15'-0"	25'-0"	0.75	1051	8.38	.50	1577	13.51	1.68
7A 15B 32	9.0"x4.87"x 29'-6" 7Ga.	12.5"	3"	15'-0"	32'-6"	1.45	983	14.75	.50	1474	24.01	2.64
7A 15B 30	8.5"x4.72" x 27'-0" 7Ga.	11.5"	2 3/4"	15'-0"	30'-0"	1.28	958	12.76	.50	1437	20.73	2.34

Ⓐ Diameters are minimum outside diameters.

* Based on a 75lb. luminaire with a maximum projected area of 3.3 Sq. Ft.

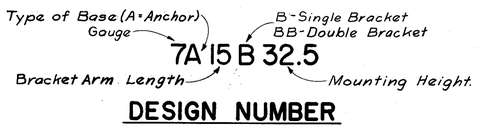

DESIGN NUMBER

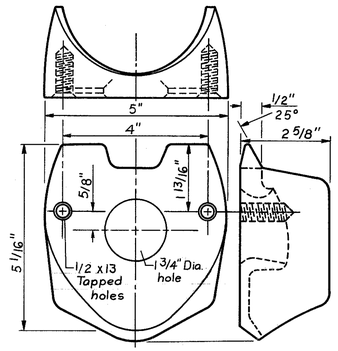

POLE PLATE

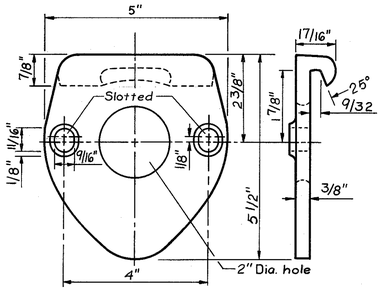

BRACKET ARM PLATE

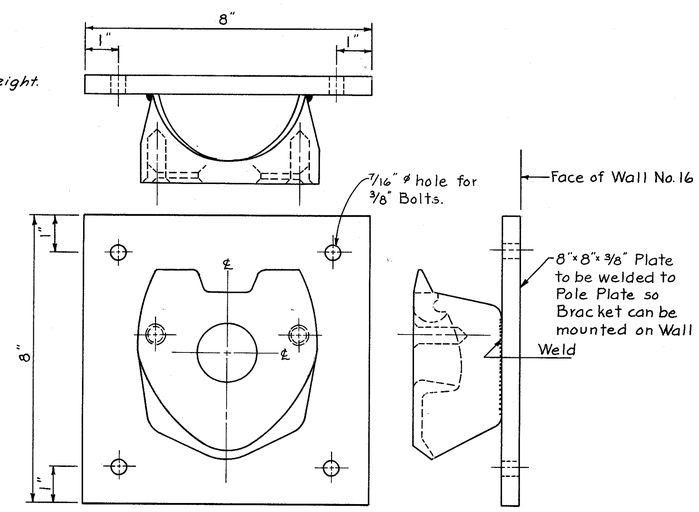

MODIFIED POLE PLATE

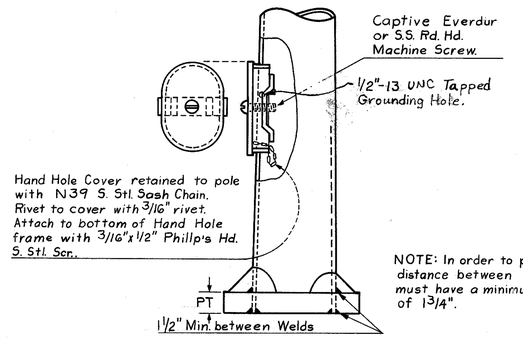

HAND HOLE with COVER
also: ALTERNATE STEEL PLATE BASE DATA

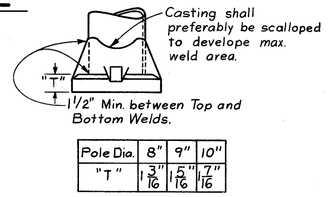

Pole Dia.	8"	9"	10"
"T"	3/16"	5/16"	7/16"

CAST STEEL ANCHOR BASE DETAILS

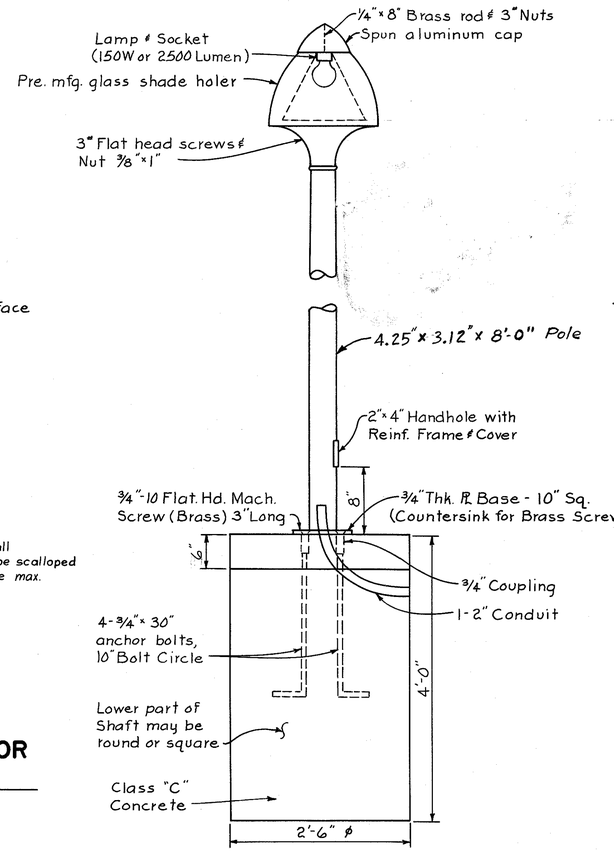

CONCRETE ENCASED CONDUIT

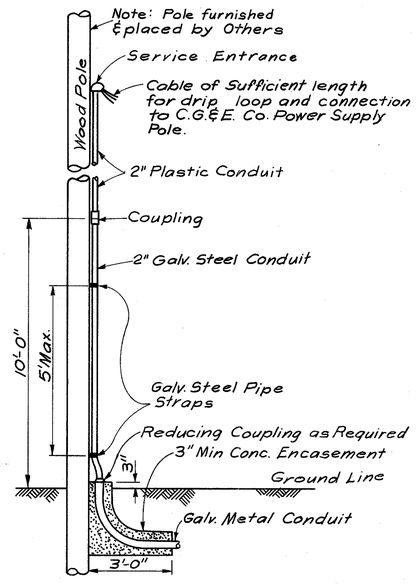

DETAIL OF POWER SUPPLY CONNECTION

PEDESTAL LIGHT DETAIL

FED. RD. DIV.	STATE	PROJECT	FISCAL YEAR
2	OHIO		

212
492

HAMILTON COUNTY
HAM-71-(1.56)(2.51)

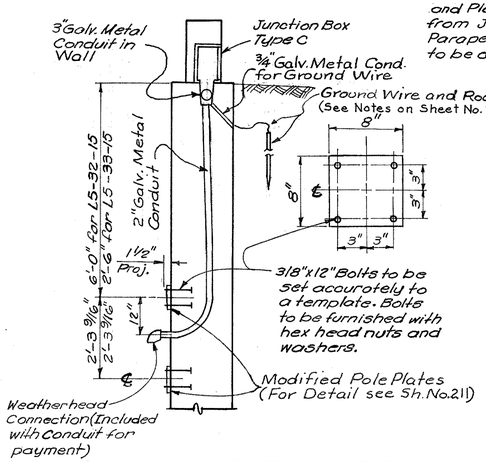

Note: Luminaires, Bracket Arms and Plates and wiring from Junction Box in Parapet to Luminaire to be done by others.

WALL NO. 16 DETAILS FOR FUTURE LIGHTING

See Lighting Plan for Location

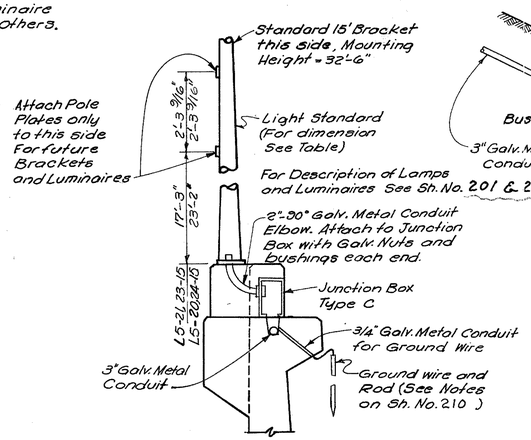

SECTION THRU WALL NO. 15

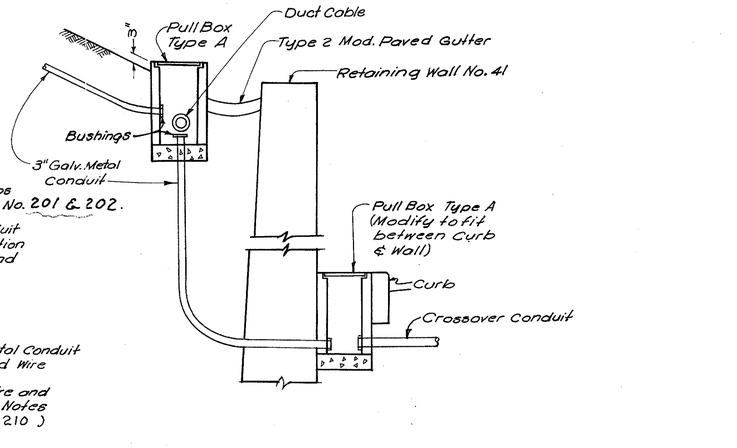

DETAILS OF WALL NO. 41 AT STA. 211+68 N.B.

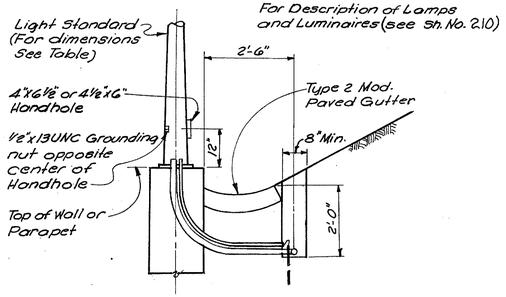

SECTION

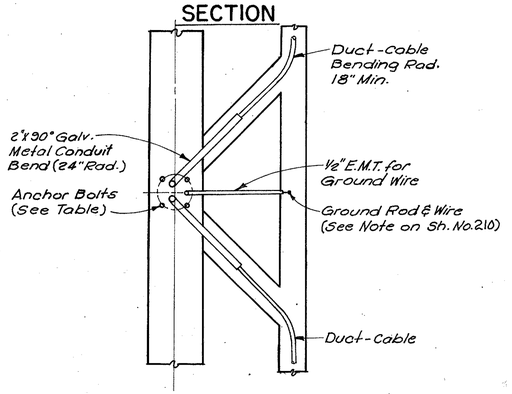

TYPICAL INSTALLATION AT RETAINING WALLS

Drawn for Ditch Section behind Wall Details is same when Ditch is omitted.

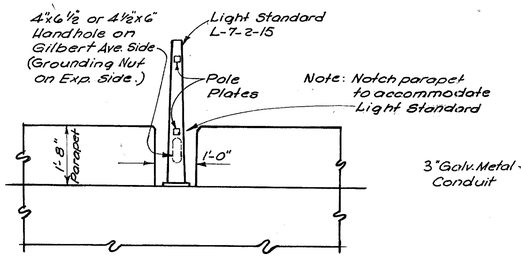

ELEVATION OF LIGHT STANDARD L7-2-15 AT WALL NO. 22

(Looking East)

RETAINING WALL LIGHT STANDARDS						
WALL NO.	STANDARD NO.	POLE DIMENSIONS	ANCHOR BOLTS DIA. BOLT CIR.	PROJECTION	SIZE	DESIGN NO.
15	L5-22-15	8.5"x4.78"x27'-0"	11.5"	2 3/4"	1 1/4"x48"	TA15B30
15	L5-21,23-15	8.5"x4.78"x27'-0"	11.5"	2 3/4"	1 1/4"x48"	TA15B30
15	L5-20,24-15	8.5"x4.78"x27'-0"	11.5"	2 3/4"	1 1/4"x48"	TA15B30
* 21	L7-35-15	8.27"x4.72"x25'-4"	11.0"	2 5/8"	1"x40"	
* 21	L7-34-15	7.25"x4.32"x16'-8"	10.5"	2 5/8"	1"x40"	
* 21	L7-23-15	7.70"x4.32"x19'-10"	11.0"	2 5/8"	1"x40"	
* 22	L7-2-15	4'-0"	8"	2"	3/4"x30"	
* 23	L7-7-15	3'-8"	8"	2"	3/4"x30"	
* 23	L7-8-15	5'-7"	8"	2"	3/4"x30"	
* 24	L9-1-15	6.0"x4.32"x 7'-9"	8"	2"	3/4"x30"	
28	L6-7-15	8.5"x4.78"x27'-0"	11.5"	2 3/4"	1 1/4"x48"	TA15B30
* 41	L8-12-15	6.26"x4.32"x3'-1"	8"	2"	3/4"x30"	
* 41	L8-11-15	6.91"x4.32"x14'-3"	10"	2 1/2"	1"x40"	
* 41	L8-10-15	7.84"x4.32"x28'-5"	11.0"	2 5/8"	1"x40"	
41	L8-9-15	8.01"x4.32"x22'-0"	11.0"	2 5/8"	1"x40"	TA15B25

* These Light Standards are carried to the General Summary as Variable Heights Standards.

Flush Mount Island Light - Crouse Hinds, Type TSIL-1, or Equal with yellow color Screen with mounting brackets TL 614. Cast Bronze Head with 100 W. Lamp.

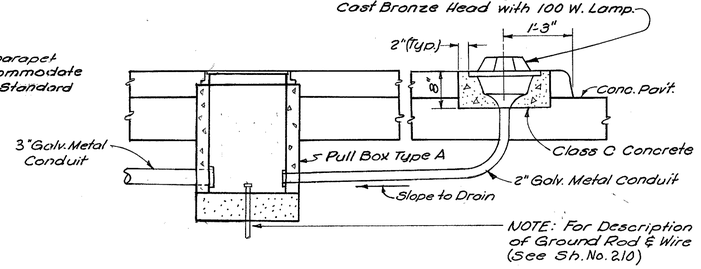

DETAIL OF FLUSH MOUNT ISLAND LIGHT

FED. RD. DIV.	STATE	PROJECT	FISCAL YEAR
2	OHIO		

213
492

HAMILTON COUNTY
HAM-71-(1.5G)(2.51)

Notes:
The Specifications for the lamp Standard shall conform to the specifications of the Monotube Floodlighting Poles, Design 562G - CAT. 100 page C16 - of the Union Metal Manufacturing Company, Valley MFG. Co., Universal Pole Bracket Co. or approved equal.

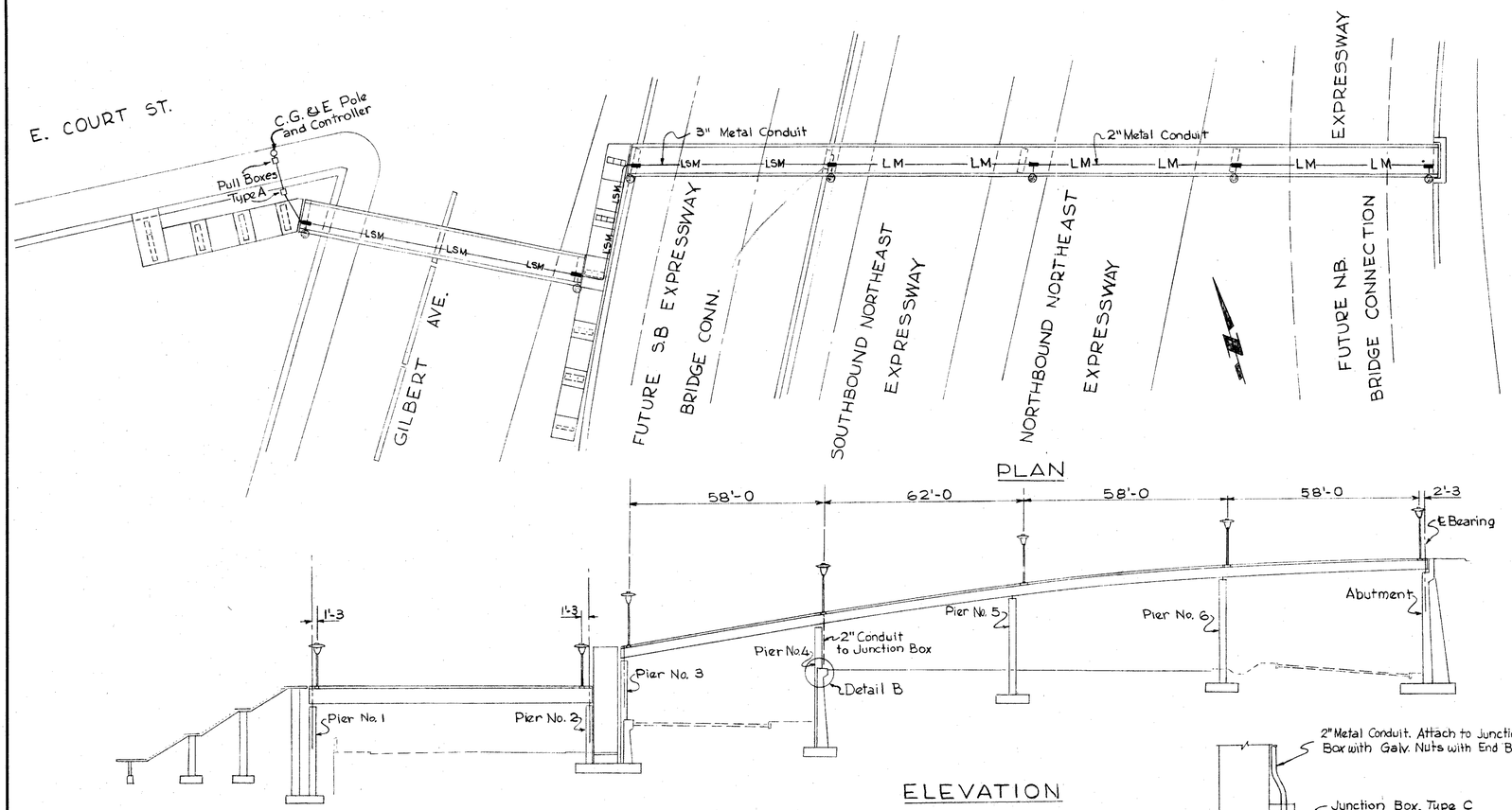

PLAN

ELEVATION

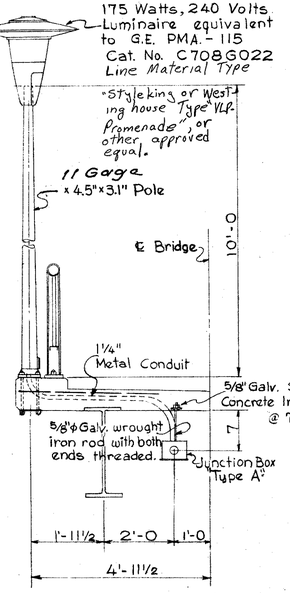

TYPICAL SECTION

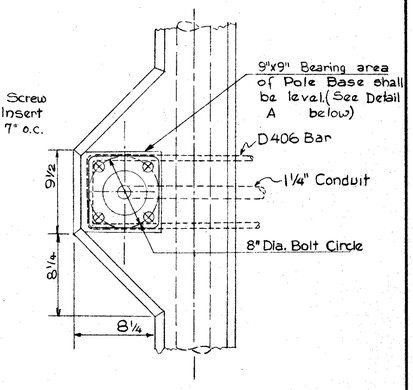

SUPER-STRUCTURE GROUND

A No. 1/0 AWG 7 Strand, soft annealed bare copper cable shall be encased in column at fixed piers No. 2 & 5 The lower end shall be connected to an additional 25 ft. length of cable looped under the pier footing and separated from the concrete with two (2) layers of tar paper. The upper end shall extend sufficiently above the top of the pier cap to exothermically weld to the girder of the super-structure.

LIGHT POLE GROUND. - A No. 1/0 AWG 7 Strand, soft annealed bare copper cable shall connect a light pole anchor bolt to the top flange of the girder of the super-structure. These connections shall be exothermically welded.

JUNCTION BOX & METALLIC CONDUIT

A No. 1/0 AWG 7 Strand soft annealed bare copper cable shall connect the Junction Box to the girder of super-structure. These connections shall be exothermically welded.

Junction Box. Type A shall be 12"x8"x6" galvanized cast iron with plain cover, Neoprene gasket, flush stainless steel cover screws, pry bar slots, with drilled holes as noted in table. Boxes shall be as "O-Z" Catalog No. YS 120806, Hope Catalog No. H2241, or Spring City MFG. Co. CAT. No. S 120806.

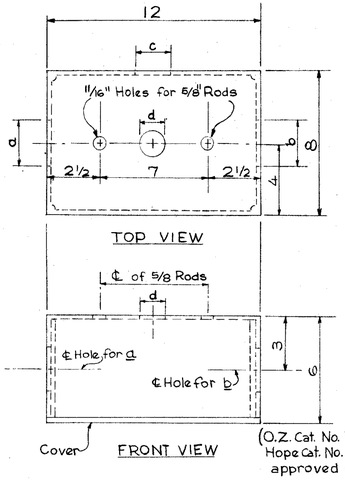

TABLE OF CONDUITS AT EACH JUNCTION BOX				
Location	a	b	c	d
Pier No. 1	3	3	-	1¼
Pier No. 2	3	3	-	1¼
Pier No. 3	3	3	-	1¼
Pier No. 4	3	2	2	1¼
Pier No. 5	2	2	-	1¼
Pier No. 6	2	2	-	1¼
Abutment	2	-	-	1¼

Provide holes in junction boxes for conduit sizes shown in table above.

(O.Z. Cat. No. YS 120806, Hope Cat. No. H2241 or approved equal.)

DETAILS OF JUNCTION BOX, TYPE A

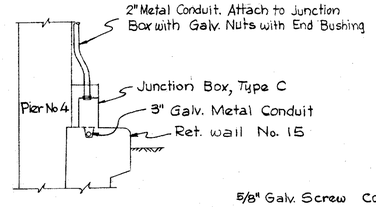

DETAIL B

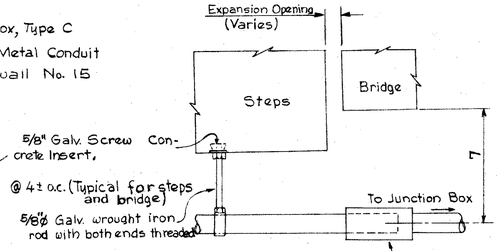

DETAIL OF CONDUIT AT EXPANSION JOINTS

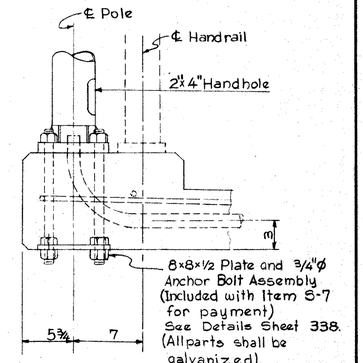

POLE BASE DETAILS

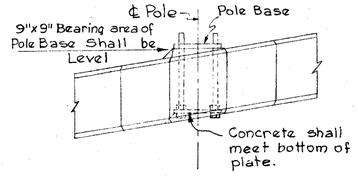

DETAIL A
(Front view pole base on grade)

CITY OF CINCINNATI
DEPARTMENT OF PUBLIC WORKS
DIVISION OF ENGINEERING

LIGHTING DETAILS

BRIDGE NO. HAM-71-0157

I-71 UNDER PEDESTRIAN CROSSING AT COURT ST.

CINCY BRIDGE NO.7

DESIGNED	DRAWN	TRACED	CHECKED	REVIEWED	DATE	REVISED
LEN	LEN		RMB	W.W.	5-26-65	

FED. RD. DIV.	STATE	PROJECT	FISCAL YEAR
2	OHIO		

214
492

HAMILTON COUNTY
HAM-71-(1.56) (2.51)

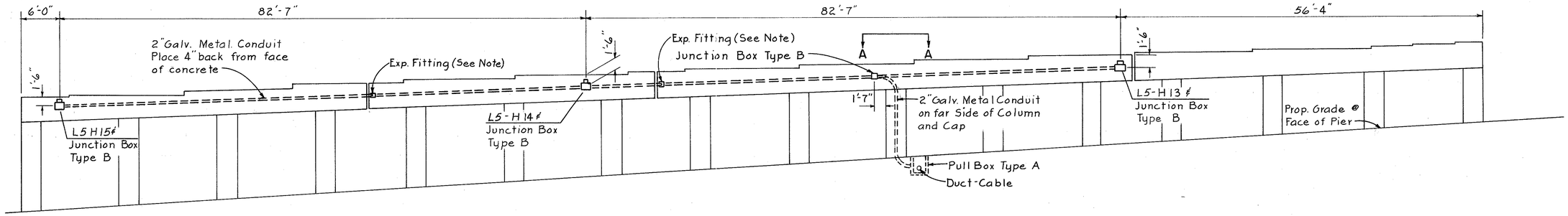

ELEVATION PIER No. 2

(Looking North)

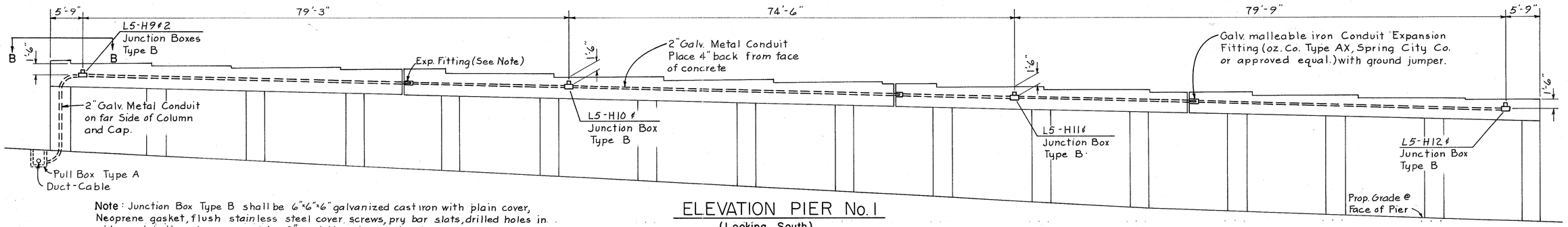

ELEVATION PIER No. 1

(Looking South)

Note: Junction Box Type B shall be 6"×6"×6" galvanized cast iron with plain cover, Neoprene gasket, flush stainless steel cover screws, pry bar slots, drilled holes in sides and bottom to accommodate 2" conduit and mounting lugs. Boxes shall be as "O-Z" Catalog No. YS 060606, Hope City Catalog No. H7007 or approved equal.

Junction boxes and conduit shall be adjusted as required to clear the plan location of reinforcing steel and to maintain at least 2" clearance between conduit and face of concrete.

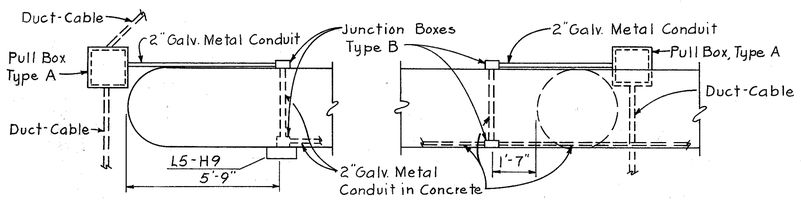

PLAN B-B

PLAN A-A

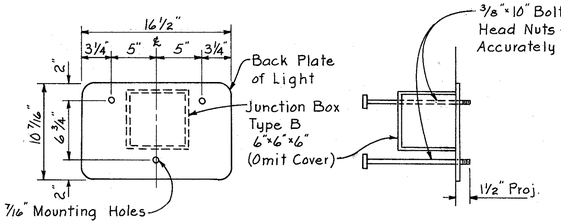

ELEVATION

SECTION

UNDERPASS LIGHT MOUNTING DETAILS

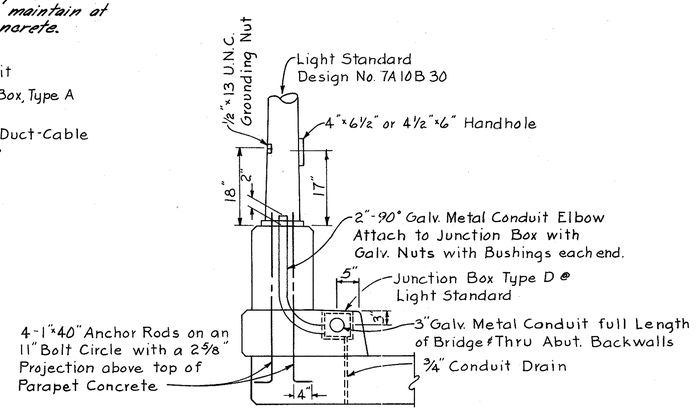

SECTION THRU WEST PARAPET

(Section thru East Parapet is same as shown for Detail on Sheet No. 216)

Note: Junction Box, Type D shall be 18"×6"×6" galvanized cast iron with cross ribbed checkered sidewalk cover, Neoprene gasket, flush stainless steel cover screws, pry bar slots, drilled holes in sides to accommodate 3" conduit and drilled holes in bottom to accomadate ¾" conduit drain. Boxes shall be as "O-Z" Catalog No. YS 180606, "Hope" Catalog No. H1236 or approved equal.

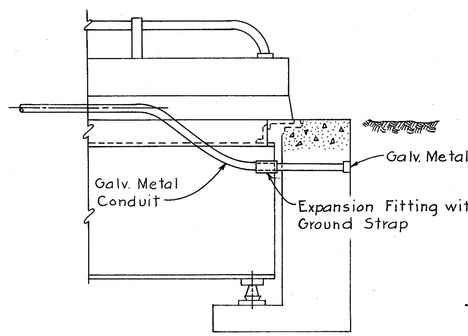

ELEVATION WITHOUT WING WALL

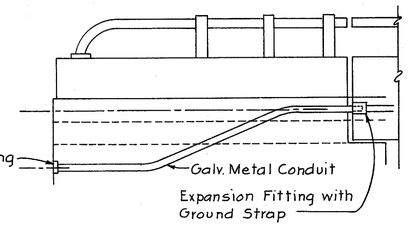

ELEVATION WITH WING WALL

DETAILS ABUTMENT TO SUPERSTRUCTURE CONDUIT

Note: Underpass Lighting Units shall be Holophane Company Inc. Wallpack Mercury Luminaires designed for 250-Watt Lamps, Line Material, Westinghouse, or approved equal, with Inbuilt Ballast and hood with beam angle set at 70°, Catalog No. U-588-240-70° or approved equal.

LIGHTING DETAILS
BRIDGE No. HAM-71-017

FED. RD. DIV.	STATE	PROJECT	FISCAL YEAR
2	OHIO		

215
492

HAMILTON COUNTY
HAM-71-(1.56)(2.51)

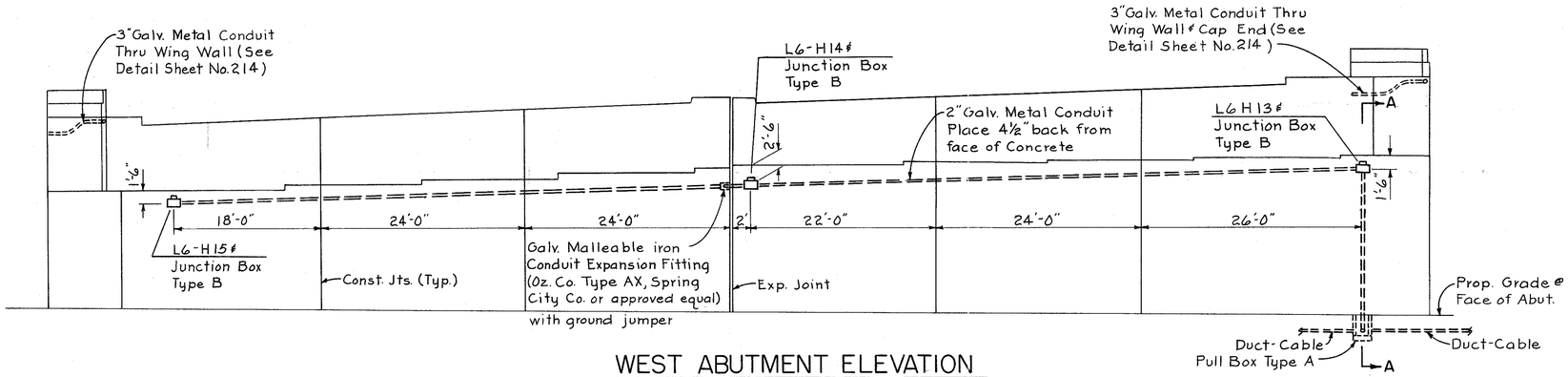

WEST ABUTMENT ELEVATION

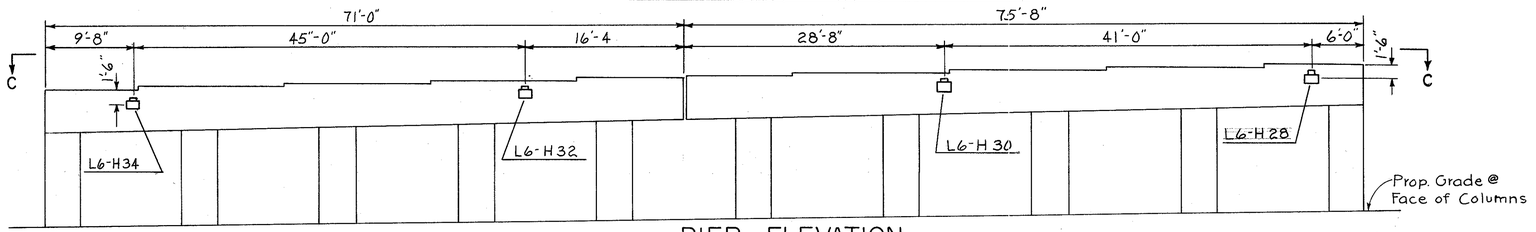

PIER ELEVATION
(Looking West)

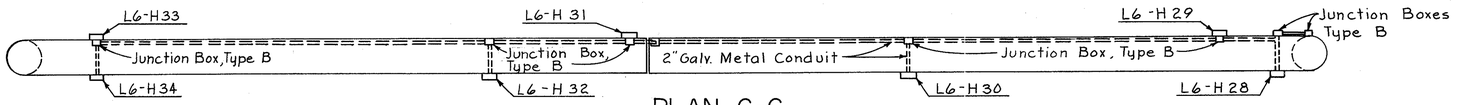

PLAN C-C

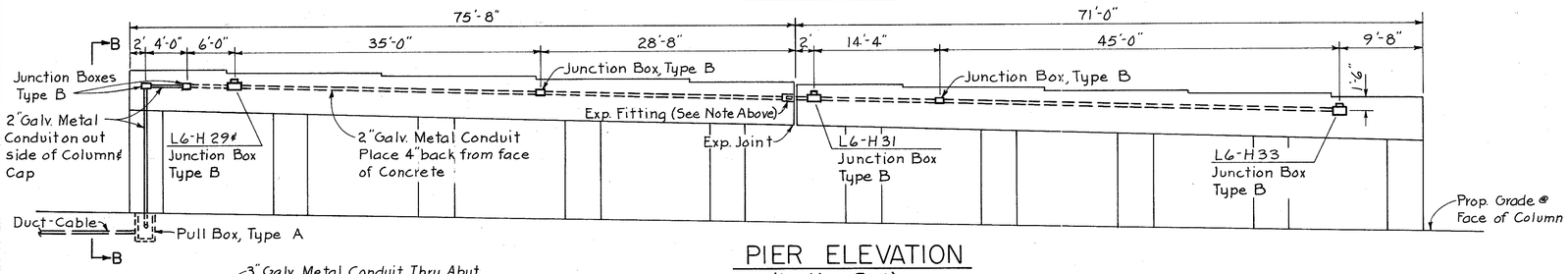

PIER ELEVATION
(Looking East)

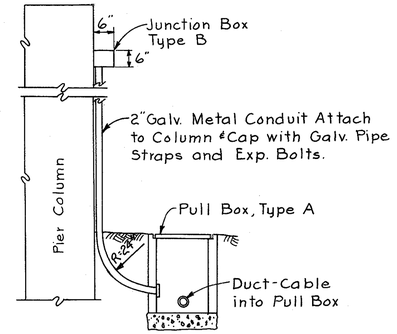

ELEVATION B-B

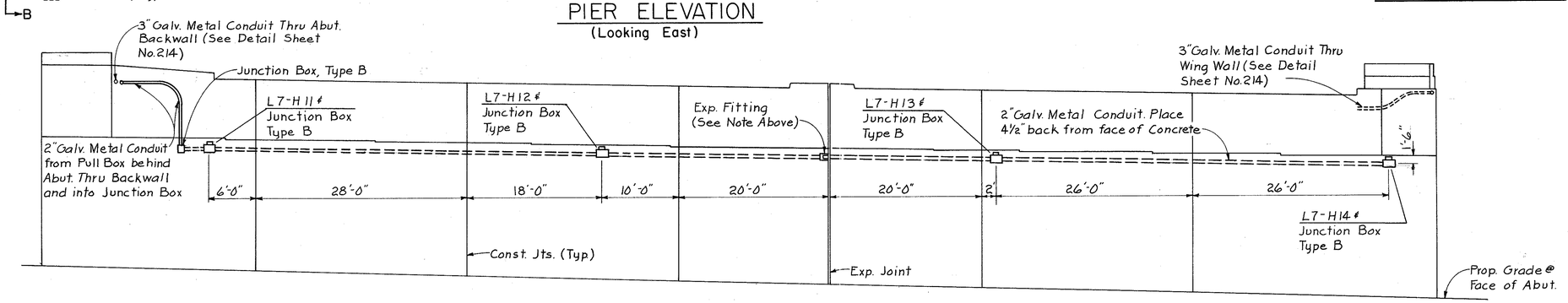

EAST ABUTMENT ELEVATION

Note: For details of Bridge Parapet showing Junction Boxes, Conduit, Light Standards, etc., (See Sheet No.216)
For description of underpass Lighting Units (See Sheet No.214)

LIGHTING DETAILS
BRIDGE No. HAM-71-0196

FED. RD. DIV.	STATE	PROJECT	FISCAL YEAR
2	OHIO		

216
492

HAMILTON COUNTY
HAM-71-(1.56) (2.51)

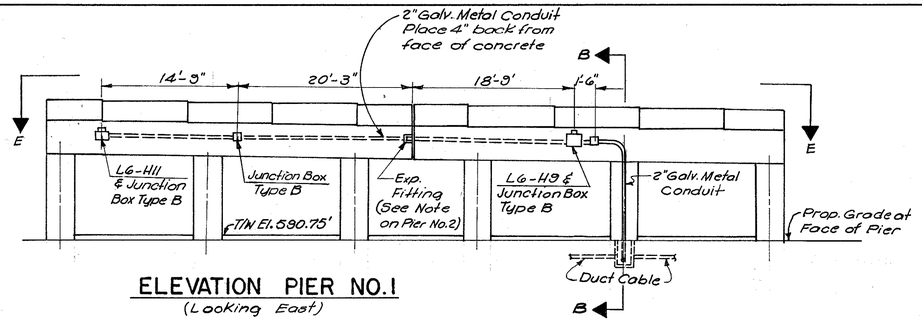

ELEVATION PIER NO.1
(Looking East)

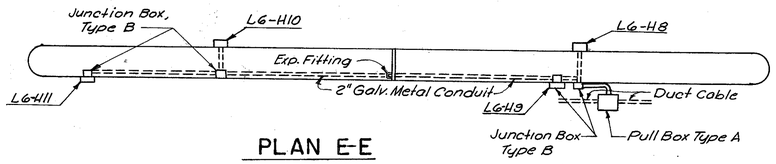

PLAN E-E

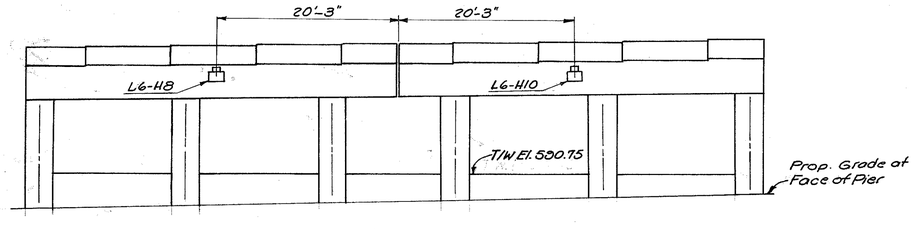

ELEVATION PIER NO.1
(Looking West)

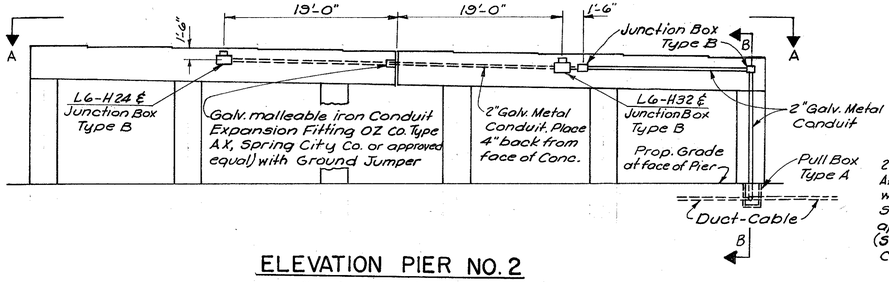

ELEVATION PIER NO. 2
(Looking East)

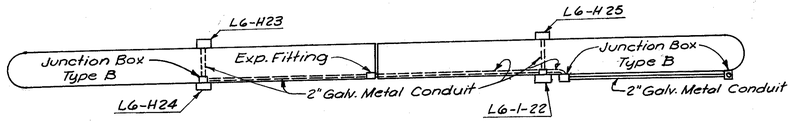

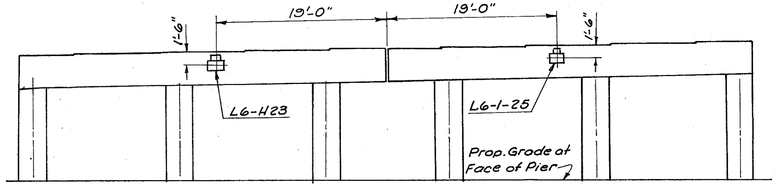

ELEVATION PIER NO. 2
(Looking West)

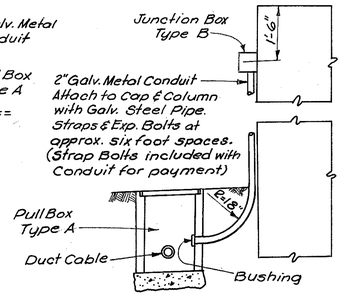

SECTION B-B

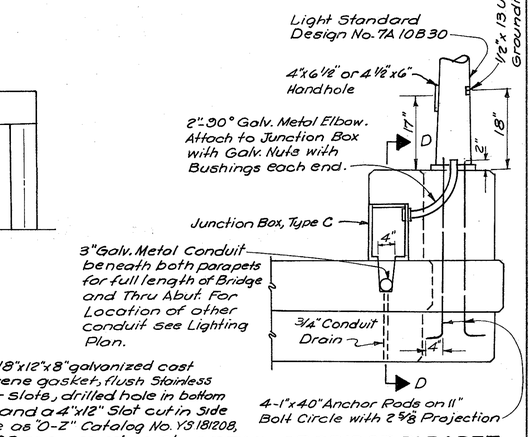

DETAIL OF BRIDGE PARAPET AT LIGHT STANDARD

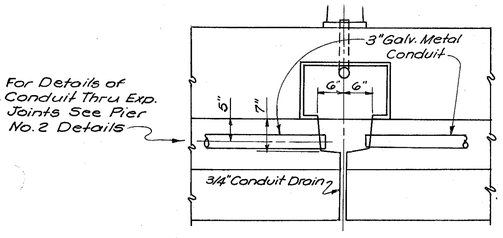

SECTION D-D

Note: For description of Underpass Lighting Units (See Sheet No. 214)

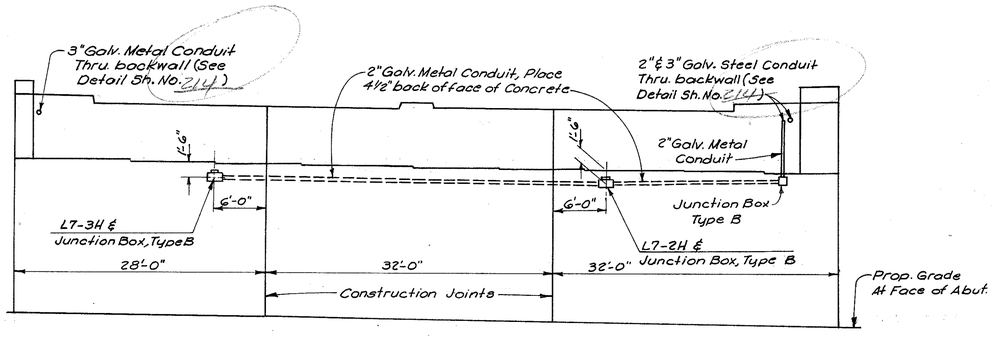

EAST ABUTMENT ELEVATION
(West Abut. is similar except There are underpass Lights.)

SUPERSTRUCTURE GROUND
A No. 1/0 AWG 7 Strand, soft annealed bare copper cable shall be encased in the outside columns of Pier No.1 of Bridge No. HAM-71-0173 and Pier No. 2 of Bridge No. HAM-71-0203 & 0271. The lower end of the cable shall be exothermic welded to a steel pile and the upper end shall extend sufficiently above the top of the pier cap to be exothermic welded to the outside girder of the super structure.
For grounds at Bridge No. HAM-71-0196 see note on Sh. No. 213 but place looped cable under Pier No.1

LIGHT POLE GROUND
See Note on Sh. No. 213

JUNCTION BOX & METALLIC CONDUIT GROUND
See Note on Sh. No. 213

Note:
Junction Box, Type C shall be 18"x12"x8" galvanized cast iron with plain cover, Neoprene gasket, flush Stainless Steel cover screws, pry bar slots, drilled hole in bottom to accommodate 2" conduit and a 4"x12" Slot cut in side as Shown. Boxes Shall be as "O-2" Catalog No. YS 18/208, Hope City Catalog No. H 1298 or approved equal.

LIGHTING DETAILS
BRIDGE-NO. HAM-71 02

FED. RD. DIVISION	STATE	PROJECT	
2	OHIO		

216A
492

HAMILTON COUNTY
HAM-71-(1.56)(2.51)

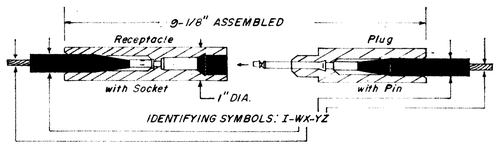

TO IDENTIFY THE PROPER KIT FOR AN INSTALLATION, SELECT FROM THE TABLES BELOW THE SYMBOLS WHICH COINCIDE WITH THE REQUIREMENTS and SUBSTITUTE FOR (W,X) and (Y,Z) RESPECTIVELY.

EXAMPLE

IF THE INSTALLATION REQUIRES A RECEPTACLE FOR NO.6 STRANDED CONDUCTOR and A CABLE DIA. OF .660" and A PLUG FOR NO.8 SOLID CONDUCTOR and A CABLE DIA. OF .460", THE KIT NO. IS I-F3-E6.

CONDUCTOR SIZE AWG NO.		SYMBOL FOR X and Z
Concentric Stranded	Solid	
10, 12	8, 10	6
8	6	4
6	4	3
4	–	2

CABLE DIA.		SYMBOL FOR W and Y
MIN.	MAX.	
.195"	.260"	B*
.250"	.330"	C*
.320"	.430"	D*
.420"	.585"	E
.575"	.785"	F
.775"	.985"	G
.975"	1.125"	H

DIAMETERS VARY ALONG CABLE LENGTHS. TAKE SEVERAL MEASUREMENTS. SELECT A TIGHT FIT RATHER THAN A LOOSE ONE.

** MOLDED RUBBER ADAPTERS ARE A PART OF THESE KITS FOR SMALL DIA. CABLE.*

TYPE I
INLINE SELF LOCKING CONNECTOR KIT FOR PULL BOX INSTALLATION.

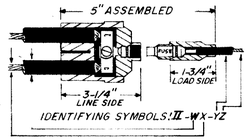

FOR LIGHT AT END OF A CIRCUIT, PLUG ONE OPENING WITH INSULATED PLUG HAVING SAME DIAMETER AS CABLE. ANY STANDARD MIDGET, FERRULE TYPE, FUSE MAY BE USED IN THIS CONNECTOR. A FUSE CAPABLE OF INTERUPTING THE SHORT CIRCUIT CAPACITY OF THE SUPPLY CIRCUIT MUST BE USED.

(X) CONDUCTOR SIZE(X) AWG NO.		SYMBOL FOR X	(Z) CONDUCTOR SIZE(Z) AWG NO.		SYMBOL FOR X
Concentric Stranded	Solid		Concentric Stranded	Solid	
–	8	6	14, 16	12, 14	8
8	6	4	10, 12	8, 10	6
6	4	3	8	6	4
4	–	2	6	4	3
2	–	1			
1	–	0			
1/0	–	10			
2/0	–	20			

(W) CABLE DIA.		SYMBOL FOR W	(Y) CABLE DIA.		SYMBOL FOR Y
MIN.	MAX.		MIN.	MAX.	
.250"	.330"	C	.120"	.160"	S
.320"	.380"	DA	.155"	.205"	A
.370"	.430"	DB	.195"	.260"	B
.420"	.505"	EA	.250"	.330"	C
.495"	.585"	EB	.320"	.430"	D
.575"	.685"	FA			
.675"	.785"	FB			

DIAMETERS VARY ALONG CABLE LENGTHS. TAKE SEVERAL MEASUREMENTS. SELECT A TIGHT FIT RATHER THAN A LOOSE ONE.

TYPE II
FUSED "Y" CONNECTOR KIT FOR POLE BASE INSTALLATION.

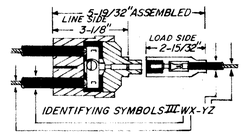

FOR LIGHT AT END OF A CIRCUIT, PLUG ONE OPENING WITH INSULATED PLUG HAVING SAME DIAMETER. TO IDENTIFY THE PROPER KIT FOR AN INSTALLATION, SELECT FROM THE TABLES BELOW THE SYMBOLS WHICH COINCIDE WITH THE REQUIREMENTS and SUBSTITUTE FOR (W,X) and (Y,Z) RESPECTIVELY.

EXAMPLE

IF THE LINE SIDE CABLES ARE NO. 2 STRANDED CONDUCTOR WITH AN OUTSIDE DIAMETER OF .54", and THE LOAD SIDE CABLE IS NO. 12 STRANDED CONDUCTOR WITH AN OUTSIDE DIAMETER OF .29", THE KIT NO. IS 3-EB1-C6.

(X) CONDUCTOR SIZE(X) AWG NO.		SYMBOL FOR X	(Z) CONDUCTOR SIZE(Z) AWG NO.		SYMBOL FOR X
Concentric Stranded	Solid		Concentric Stranded	Solid	
–	8	6	14, 16	12, 14	8
8	6	4	10, 12	8, 10	6
6	4	3	8	6	4
4	–	2	6	4	3
2	–	1			
1	–	0			
1/0	–	10			
	–				

(W) CABLE DIA.		SYMBOL FOR W	(Y) CABLE DIA.		SYMBOL FOR Y
MIN.	MAX.		MIN.	MAX.	
.250"	.330"	C	.120"	.160"	S
.320"	.380"	DA	.155"	.205"	A
.370"	.430"	DB	.195"	.260"	B
.420"	.505"	EA	.250"	.330"	C
.495"	.585"	EB	.320"	.430"	D
.575"	.685"	FA			
.675"	.785"	FB			

DIAMETERS VARY ALONG CABLE LENGTHS. TAKE SEVERAL MEASUREMENTS. SELECT A TIGHT FIT RATHER THAN A LOOSE ONE.

TYPE III
UNFUSED "Y" CONNECTOR KIT FOR POLE BASE INSTALLATION.

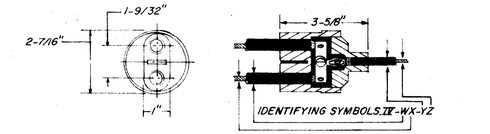

TO IDENTIFY THE PROPER KIT FOR AN INSTALLATION, SELECT FROM THE TABLES BELOW THE SYMBOLS WHICH COINCIDE WITH THE REQUIREMENTS and SUBSTITUTE FOR (W,X) and (Y,Z) RESPECT.VELY.

EXAMPLE

IF THE TWIN CABLES ARE NO.2 STRANDED CONDUCTOR WITH AN OUTSIDE DIA. OF .54" and THE SINGLE CABLE IS NO. STRANDED CONDUCTOR WITH AN OUTSIDE DIA. OF .29", THE KIT NO. IS 4-EB1-C6.

(X) CONDUCTOR SIZE(X) AWG NO.		SYMBOL FOR X	(Z) CONDUCTOR SIZE(Z) AWG NO.		SYMBOL FOR Z
Concentric Stranded	Solid		Concentric Stranded	Solid	
–	8	6	14, 16	12, 16	8
8	6	4	10, 12	8, 10	6
6	4	3	8	6	4
4	–	2	6	4	3
2	–	1	4	–	2
1	–	0	2	–	1
1/0	–	10	1	–	0
2/0	–	20			

(W) CABLE DIA.		SYMBOL FOR W	(Y) CABLE DIA.		SYMBOL FOR Y
MIN.	MAX.		MIN.	MAX.	
.250"	.330"	C	.155"	.205"	A
.320"	.380"	DA	.195"	.260"	B
.370"	.430"	DB	.250"	.330"	C
.420"	.505"	EA	.320"	.430"	D
.495"	.585"	EB	.420"	.585"	E
.575"	.685"	FA	.575"	.785"	F
.675"	.785"	FB			

DIAMETERS VARY ALONG CABLE LENGTHS. TAKE SEVERAL MEASUREMENTS. SELECT A TIGHT FIT RATHER THAN A LOOSE ONE.

TYPE IV
UNFUSED "Y" CONNECTOR KIT FOR PULL BOX INSTALLATION

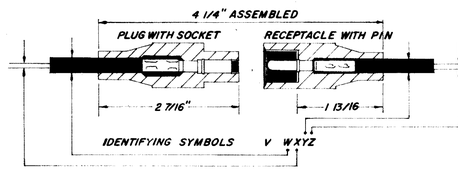

TO IDENTIFY THE PROPER KIT FOR AN INSTALLATION, SELECT FROM THE TABLES BELOW THE SYMBOLS WHICH COINCIDE WITH THE REQUIREMENTS AND SUBSTITUTE FOR (W,X) AND (Y,Z) RESPECTIVELY.

EXAMPLE: IF THE INSTALLATION REQUIRES A PLUG FOR NO. 8 STRANDED CONDUCTOR AND A CABLE DIAMETER OF .38" AND A RECEPTACLE FOR NO. 14 STRAND CONDUCTOR AND A CABLE DIAMETER OF .27", THE KIT NO. IS V-D4-C8.

Conductor Size AWG		Symbol for X and Z
Concentric Strd.	Solid	
14, 16	12, 14	8
10, 12	8, 10	6
8	6	4
6	4	3

Cable Diameter		Symbol for W and Y
MIN.	MAX.	
.155"	.205	A
.195	.260	B
.250	.330	C
.320	.430	D

DIAMETERS VARY ALONG CABLE LENGTHS. TAKE SEVERAL MEASUREMENTS. SELECT A TIGHT FIT RATHER THAN A LOOSE ONE.

TYPE V
UNFUSED INLINE CONNECTOR KIT FOR JUNCTION BOX INSTALLATION.

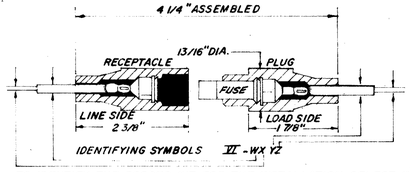

TO IDENTIFY THE PROPER KIT FOR THE INSTALLATION, SELECT FROM THE THE SYMBOLS WHICH COINCIDE WITH THE REQUIREMENTS AND SUBSTITUTE FOR (W,X) and (Y,Z) RESPECTIVELY.

EXAMPLE: IF THE INSTALLATION REQUIRES A RECEPTACLE FOR THE LINE SIDE FOR NO.6 STRANDED CONDUCTOR AND A CABLE DIAMETER OF .42" AND A PLUG FOR THE FUSE FOR THE LOAD SIDE FOR NO.12 STRANDED CONDUCTOR AND A CABLE DIAMETER OF .29", THE KIT NO. IS VI-D3-C6.

Conductor Size AWG		Symbol for X and Z
Concentric Strd.	Solid	
14, 16	12, 14	8
10, 12	8, 10	6
8	6	4
6	4	3

Cable Diameter		Symbol for Y and W
MIN.	MAX.	
.120"	.160"	S
.155	.205	A
.195	.260	B
.250	.330	C
.320	.430	D

DIAMETERS VARY ALONG CABLE LENGTHS. TAKE SEVERAL MEASUREMENTS. SELECT A TIGHT FIT RATHER THAN A LOOSE ONE.

TYPE VI
FUSED INLINE CONNECTOR KIT FOR JUNCTION BOX INSTALLATION.

MIDGET SIZE FUSE

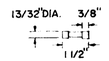

MIDGET FUSES ARE AVAILABLE IN THE FOLLOWING CAPACITIES:
600 VOLTS OR LESS, 1/10 TO 30 AMPS.
ANY STANDARD MIDGET, FERRULE TYPE FUSE, (EXCEPT GLASS TUBE) MAY BE USED IN THIS CONNECTOR.
A FUSE CAPABLE OF INTERRUPTING THE SHORT CIRCUIT CAPACITY OF THE SUPPLY CIRCUIT MUST BE USED.

FED. RD. DIVISION	STATE	PROJECT	
2	OHIO		

217
492

HAMILTON COUNTY
HAM-71-(1.56)(2.51)

GENERAL NOTES

TRAFFIC CONTROLS

SIGNING

CONTINUED IN SHEET 219

MATERIALS-GENERAL

Materials to be furnished may be specified in the Plans by a given manufacturer's catalog number or type. This is for descriptive purposes only and the Contractor may assume that approved equal materials may be furnished.

SIGN ERECTION, BY TYPE, AS PER PLAN

The Contractor shall erect sign panels furnished by others as noted on the Schematic Signing Plan sheet 221. The panels shall be mounted on the brackets or beam supports provided in the Plans.

A schedule for sign erection shall be submitted to the Engineer, Bureau of Traffic, 450 East Town Street, Columbus, Ohio, 60 calendar days prior to the start of any scheduled erection work. The schedule shall include proposed dates, time, sign numbers and delivery point.

The price bid per square foot for, "Item I-129, Sign Erection By Type, As Per Plan", shall include all necessary labor, tools and equipment necessary to erect the signs noted. All sign material and accessories will be furnished and transported to a designated delivery point, on or near the subject project, by others.

The Contractor shall be responsible for the handling and storage of the sign panels and accessories from the time of arrival at the delivery point.

I-129 CONCRETE FOR SIGN SUPPORT FOUNDATIONS, BY TYPE, AS PER PLAN

Payment for this Item shall be per Cubic Yard based on approved plan dimensions or dimensions as modified by the Engineer in lieu of plan quantities as specified in Supplemental Specification I-129.

Payment for furnishing and installing Reinforcing Steel shall be included in the Unit Price Bid per Cubic Yard of Concrete for overhead sign support foundations in lieu of being a separate pay item as called for in Supplemental Specification No. I-129.

Payment for installation only of the 2 Inch Galvanized Steel Conduit Ells and the 1/2 Inch EMT Ground Wire Conduit will be included in this item. Payment for furnishing this Conduit is included under "Sign Service, As Per Plan" and "Ground Rod and Wire Connection, As Per Plan".

Foundations shall be constructed in the manner called for under Supplemental Specification I-129. Concrete shall be Class "C".

CERTIFICATION AND APPROVAL OF SIGN SUPPORTS AND LIGHTING ITEMS

The Contractor shall submit through proper channels the drawings, information or samples as required below:

(A) Six (6) copies of the following:

Shop Drawings and Material Lists for Approval

1. Overhead Sign Supports
2. Sign Lighting Details
3. Catalog cuts, descriptions or samples of fabricator's standard items as shown in the Plans or their equal for approval.

(B) Certifications or samples for all materials which have been approved above under item (A) shall be in possession of the Contractor prior to any purchase or installation.

S-25 ELECTRICAL - GENERAL

This item shall consist of furnishing all necessary material, labor and facilitites required to complete the electrical installation in accordance with the designs, dimensions and details shown in the Plans and described in the specifications.

All material, workmanship and construction methods, except as modified herein, shall conform to the general requirements of the State of Ohio, Department of Highways, Construction and Materials Specifications, January 1, 1963.

S-25 GROUND ROD AND WIRE CONNECTION

This item of work shall consist of furnishing and installing ground rod and wire with conduit as detailed and specified on the Plans. Also included will be the cost of furnishing the 1/2 EMT ground wire conduit for installation under Item I-129, Concrete for Sign Support Foundations.

Basis of payment for this item shall be at contract unit price per each, which shall include all labor, tools, materials and equipment required for the complete item of work.

S-25 DISCONNECT SWITCH

The basis for payment for this item shall be on a unit bid basis, complete and accepted.

The item shall include furnishing of a 30 amp. 600 volt fused disconnect switch of type and make as indicated on the Plans, mounted in a NEMA 4 stainless steel enclosure and attached to each sign support by means of a mounting bracket as described on the Plans.

S-25 BALLAST BY TYPE, AS PER PLAN

This item of work shall consist of furnishing all ballast types A through D as shown on the Plans.

Basis of payment for this item shall be at the contract unit price per each furnished to the job for installation under Item S-25, "Signs Wired Complete, As Per Plan".

S-25 FIXTURES WITH LAMP, BY TYPE AND SIZE, AS PER PLAN

This item of work shall consist of furnishing all light fixtures and lamps, types and sizes as shown on the Plans.

Basis of payment for this item shall be at the contract unit price per each furnished to the job for installation under Item S-25 "Signs Wired Complete, As Per Plan".

WIRE AND CABLE

Wire and cable installation shall conform to the above specifications and shall be of the sizes and types shown on the Plans.

Wire or cable installed in conduit on sign structures shall be #12 RHW, (3/64" insulation and 3/64" jacket), 600 volt, standard copper wire.

Wire in conduit from pull boxes to disconnect switches shall be No. 12, Single Conductor, Seven Strand FAA Specification, L-824 Type A, 600 Volt Direct Burial Cable.

PHOTO ELECTRIC CELL

The photoelectric controller shall be tubeless type with Cadmium Sulfide Photocell and shall include pole-top mounting adapter, sponge rubber gasket, weatherproof Acrylic housing, time delay, fail safe lightening arrester and shall be equal to Fisher-Pierce series 6600 A or equivalent by G.E., Ripley or Tork. The Contractor may mount photocells on finials provided with sign support poles by adapting with Base Housing assemblies in 1 1/4" ϕ holes.

SIGNALS

SIGNAL SUPPORT POLES (STRAIN) BY TYPE DETECTOR SUPPORT POLES

Signal support poles (strain) and the detector support poles shall be installed where shown and as detailed on the Plans.

Materials, fabrication, galvanizing and painting shall be as specified for Lighting Standards and Brackets.

Basis of payment shall be at the contract unit price bid per each for the type specified.

FOUNDATIONS FOR SUPPORT POLES

The foundations for the signal and detector support poles shall be Class "C" Concrete. The lower portion shall be poured in either a round hole or a square hole with forms, unless, at the discretion of the Engineer soil stability precludes the need for forms. The top portion shall be formed square for at least one foot deep or a minimum of six inches below the finished grade line.

Basis of payment shall be at the contract unit price bid for "Item S-25, Foundation for Support Poles by Type", which price shall constitute full compensation for the foundation including concrete and reinforcing steel.

ANCHOR RODS FOR DETECTOR SUPPORT POLE ON BRIDGE (FOUR BOLTS PER SET)

Anchor bolts for mounting the detector support pole on Bridge No. HAM-71-0203 shall conform to the requirements for anchor bolts under "Light Standards and Brackets", and shall be paid for at the contract unit price bid for "Item S-25, Anchor Rods for Detector Support Pole on Bridge (Four Bolts per Set)" which price shall constitute full compensation for furnishing and placing the anchor rods.

INSTALL AND CONNECT SIGNAL CONTROLLER

The traffic signal controller at the intersection of Gilbert Avenue and Elsinore Place will be furnished by the City of Cincinnati and shall be installed, connected with the power source and signal equipment, and placed in operating condition by the Contractor.

The signal controller is a two phase controller, semi-actuated by vehicles and pedestrians.

Basis of payment shall be at the contract lump sum price bid for "Item S-25, Install and Connect Signal Controller".

FOUNDATION FOR SIGNAL CONTROLLER

The foundation for the traffic signal controller shall be constructed of Class "C" Concrete and shall conform to the details shown on the Plans.

Basis of payment shall be at the contract lump sum price bid for "Item S-25, Foundation for Signal Controller".

INSTALL AND CONNECT DETECTORS, TRANSCEIVERS AND EQUIPMENT CASES

The ultra-sonic detectors for the traffic signal installation at the intersection of Gilbert Avenue and Elsinore Place, with transceiver units and equipment cases, will be furnished by the City of Cincinnati and shall be installed, connected and placed in operating condition by the Contractor.

Basis of payment shall be at the contract lump sum price bid for "Item S-25, Install and Connect Detectors, Transceivers and Equipment Cases".

DETECTOR CABLE

The shielded cable connecting the ultra-sonic detectors to their transceiver units shall be furnished and installed as shown on the Plans, and shall be Beldon No. 8412 or Alpha No. 1250 or approved equal.

Basis of payment shall be at the contract unit price bid per linear foot for "Item S-25, Detector Cable".

CONNECT CABLES TO EXISTING SIGNAL CONTROLLER AT COURT STREET

The traffic signal installation at the intersection of Gilbert Avenue and Court Street will remain in use, but will require new power service and new connection to the signal interconnecting cable.

Basis of payment shall be at the contract lump sum price bid for "Item S-25, Connect Cables to Existing Signal Controller at Court Street" which price shall constitute full compensation for removing existing connections and making the new connections.

FED. RD. DIV.	STATE	PROJECT	FISCAL YEAR
2	OHIO		

218
492

HAMILTON COUNTY
HAM-71-(1.56) (2.51)

GENERAL NOTES
TRAFFIC CONTROLS

PEDESTRIAN SIGNALS

Scope

This specification covers neon tube grid illuminated pedestrian Walk - Don't Walk Signals.

Guarantee

The units furnished shall be new, of the latest model, fabricated in a first-class workmanlike manner from good quality material.

See general note on Sheet for testing requirements.

General

The unit shall consist of a single housing containing optical parts, illuminants, visors, and accessories for displaying by artifical illumination the letters "WALK" and "DON'T WALK". The unit shall be completely assembled and ready to operate when connected to a 110 volt, 60 cycle power supply.

Dimensions

Face Size

	Width - Inches		Height - Inches	
	Minimum	Maximum	Minimum	Maximum
24 inch size	22	26	16	20
16 inch size	14	18	12	16

Legend Letter Size

	Height - Inches		Stroke - Inches	
	Nominal	Tolerance	Nominal	Tolerance
24 inch size	5-1/2	±1/8	13-16"	± 1/32
16 inch size	4-1/2	±1/8	5/8"	± 1/32

Arrangement of Letters and Colors

The letters "DON'T WALK" shall appear on the upper and lower halves of the signal unit in brilliant red color by illumination of orange gas tubing formed in a grid pattern behind cut-out letters in the upper and lower halves of the glass face of the signal unit. Background shall be black.

The letters "WALK" shall appear on the lower half of the signal unit in brilliant green color by illumination of green gas tubing formed in a grid pattern behind out-out letters in the lower half of the glass face of the signal unit. Background shall be black, and there shall be no illumination in the upper half of unit when "WALK" legend is displayed in green color.

Housing

The housing shall be sheet aluminum or stainless steel of sufficient strength to offer long life.

All joints shall be continuously welded to prevent the entrance of moisture.

All screws, nuts, bolts and fastening devices used in the signal housing shall be stainless steel.

Visors

The visors shall be of heavy gauge aluminum or stainless steel; securely attached to the housing. The length of the visors (from face of lens to tip of visor) shall be 11-1/2 inches for the 24 inch unit, and 9-3/8 inches for the 16 inch unit.

Mounting

The unit shall be arranged for bracket arm mounting.

Two gasketed hubs for 1-1/2 inch standard pipe shall be bolted, one each to the top and bottom of the housing, and cable entrance shall be provided through the hubs.

Gasketed cover plates shall be furnished for holes not used for mounting.

PEDESTRIAN SIGNALS (Continued)

Painting

The unit shall be properly cleaned and the exterior of the housing and the entire visor shall be given one coat of chromate primer and two coats of black automotive baking enamel. Each coat shall be baked individually to a hard finish.

The interior of the housing or housings containing the tubing and transformer shall be given one coat of chromate primer, and two coats of non-yellowing white automotive baking enamel. Each coat shall be baked individually to a hard finish.

Optical

The optical part shall be made dust and moisture tight by the use of neoprene gaskets.

The lens on the face of the unit shall be impact resistant light diffusing plastic, not less than 7/32" thick.

The lettering shall be on the inside of the face and the black opaque background shall not peel or scratch under continuous exposure to sun, temperature and humidity changes.

Transformers

Transformers for grid tubing:

	24 inch unit		16 inch unit	
	Walk	Don't Walk	Walk	Don't Walk
Rated voltage	6000 volts	10,500 volts	5000 volts	9000 volts
Amperage	60 m. a.	60 m. a.	30 m. a.	30 m. a.
Power Factor	High	High	High	High
Input Voltage	115-120 volts	115-120 volts	115-120 volts	115-120 volts
Input	60 cycle A. C.	60 cycle A. C.	60 cycle A. C.	60 cycle A. C.

Mountings for Tubing

At least twelve glass mounting posts shall be installed within the signal unit for the mounting of the gas tube grids.

Grid Posts

Six electrode housings glass, with metal lock rings, approximately 1-5/16 inches outside diameter, with procelain insulating cap and collar, shall be mounted on the back of the front plate of the rear compartment.

Electrode housings shall be furnished with helical springs to make contact with the end caps of the tubing electrodes, and it shall be possible to install or replace the tubing without opening the rear compartment. One type of housing believed to meet these requirements is type T1-2 as manufactured by the Tubelite Company.

Illuminant Neon Tubing

Neon tubing for the 24 inch unit shall be twelve M. M. diameter and for the 16 inch unit, ten M. M. diameter, the tubing, electrodes, etc., shall match the City Standard in design, construction, quality bending, etc. They shall be interchangeable with those now in use in the City's pedestrian signals.

A sample tube is available for inspection at the Department of Public Utilities, 323 Plum Street, Cincinnati, Ohio.

Electrode ends of tubing shall have brass ferrules to which leads of electrodes are soldered.

Red grid 12 M. M. tubing shall be clear, pumped with neon gas to 10 M. M. pressure. Red grid 10 M. M. tubing shall be clear, pumped with neon gas to 12 M. M. pressure.

Green grid 12 M. M. tubing shall be coated on inside with fluorescent green powder, matching Voltaro #V-10 in color and pumped with argon #B-10 gas to 11 M. M. pressure.

Load Relays

Two load relays shall be provided and mounted securely in the rear compartment of the signal, one for the "WALK" indication and one for the "DON'T WALK" indication. The relays shall be Adams and Westlake Company, Catalog No. 1140-45-7A, or approved equal, metal contacts normally open, quick release type, or approved equal.

Relays shall be installed in both large and small signals, as specified.

Terminal Block

A terminal block having a minimum of six terminals shall be located so as to be easily accessible when the rear compartment of the unit is opened. Wires for interior connections to the external wiring shall terminate on this terminal block. Entry for external wiring shall be provided through both the top and bottom mounting hubs to the terminal block.

Payment

Basis of payment shall be at the contract unit price bid per each for "Item S-25, Pedestrian Signal Heads", of size called for on the Plans.

VEHICLE SIGNAL HEADS

Vehicle signal heads shall meet the Institute of Traffic Engineers Standards and Specifications and shall be equipped with Alzac reflectors.

Each signal head shall have one coat of a zinc chromate primer and at least one coat of the following colors, baked on:

Housing	-	Black or Dark Green Enamel
Inside of Hood	-	Black Flat
Door and Outside of Hood	-	Federal Yellow Gloss Enamel

Basis of payment shall be at the contract unit price bid for "Item S-25, Vehicle Signal Heads" by type and size.

FED. RD. DIVISION	STATE	PROJECT	
2	OHIO		

219
492

HAMILTON COUNTY
HAM-71-(1.56) (2.51)

GENERAL NOTES

TRAFFIC CONTROLS

LANE-USE CONTROL SIGNS, OVERHEAD, 30" × 36"

Overhead lane-use control signs shall be furnished and installed as shown on the Plans.

Sign face shall be aluminum not less than 8 ga. B.&S. and shall be painted black on a reflective white background.

Sign legend shall conform to the Department's Manual of Uniform Traffic Control Devices for Streets and Highways, 1963.

Basis of payment shall be at the contract unit price bid for "Item S-25, Lane-Use Control Signs", which price will constitute full compensation for furnishing and installing the signs including all materials necessary to hang the signs from the messengers.

PUSH BUTTON AND PUSH BUTTON SIGN 18" × 24"

Push buttons and push button signs shall be installed where and as shown on the Plans.

Push buttons shall be of weatherproof construction and shall be Eagle Signal Corporation Type EJS5 or Automatic Signal Division Type A111049, or approved equal.

Push button signs shall be of aluminum not less than 10 ga. B.&S., with enameled face reading PUSH BUTTON FOR WALK SIGNAL.

Basis of payment shall be the contract unit price bid for "Item S-25, Push Button and Push Button Sign 18" × 24"" which price shall constitute full payment for furnishing and installing the push buttons, push button signs and mounting devices.

SECTIONALIZER AND CABINET

The existing 12 conductor No. 12 interconnecting cable on overhead installation on the east side of Gilbert Avenue shall be connected to the new interconnecting cable by furnishing and installing a Sectionalizer in Cabinet on the existing C. G. & E. Co. pole just north of Elsinore Avenue.

The sectionalizer shall consist of a terminal strip providing for 12 pairs of wires with slide links and terminals for No. 12 B.&S. ga. conductors.

The cabinet shall have hinged covers and be of weatherproof construction not less than 12" × 10-1/2" × 3-1/2" in size. Openings in the box shall be drilled on the bottom.

Basis of payment shall be at the contract lump sum price bid for "Item S-25, Sectionalizer and Cabinet, which shall constitute full compensation for furnishing and installing the sectionalizer and cabinet and connecting to the existing overhead cable.

CABLE, MESSENGER, SEVEN STRAND COPPERWELD

Messenger cables for support of signals and signs shall be furnished and installed as shown on the Plans.

Basis of payment shall be at the contract unit price bid per linear foot for each size of "Item S-25, Cable, Messenger, Seven Strand Copperweld" which price shall constitute full compensation for furnishing and installing the messenger cables including accessories for attachment to the supporting poles.

PULL BOX
JUNCTION BOX
METAL CONDUIT
FIBER OR ASBESTOS CONDUIT, CONCRETE ENCASED
CABLE
CONNECTORS
GROUND ROD UNITS

Reference is made to General Notes, Lighting for above items.

INSPECTION AND TESTING OF TRAFFIC CONTROL SYSTEM

The Contractor shall furnish all equipment necessary to demonstrate to the Engineer that all circuits are free from short circuits and unspecified grounds, and are properly connected and operable before acceptance. This demonstration shall include a meggaring test to show that all conductors are clear of grounds and that the resistance at the ground is not more than 25 ohms. Voltage and amperage tests shall be made at the sign support switch.

Payment for these tests shall be considered a subsidiary work item, included in the unit price bid for the respective items tested.

After the Traffic Control System is completed, the entire system shall be operated continuously each night until seven (7) consecutive days elapse without failure or defect. The Contractor shall correct any defects which may develop at no extra cost to the State.

INSPECTION AND TESTING OF SIGN LIGHTING

Inspection and testing requirements shall conform to those for Traffic Control described on this sheet.

In addition, during the test period, adjustments to fixture aiming angles shall be made as directed by the Engineer to obtain maximum uniformity in sign illumination on the sign face.

S-25 SIGN SERVICE, AS PER PLAN

This Item will consist of the completion of the Electrical System and components connecting from the ESNA Connectors in the pull box (included within the Roadway Lighting Quantities) to the primary side of the disconnect switch.

Work will include the furnishing of the 2 Inch Galvanized Steel Conduit Ells (to be installed) under Item "I-129 Concrete For Sign Support Foundations, By Type, As Per Plan" and the furnishing and installing (including trenching and backfilling) of the 2 Inch Galvanized Steel Conduit and Couplings from the pull box to the sign support foundation.

This Item will also include the furnishing and installing of the 1/c 600 Volt Service Wire from the ESNA Connectors to the disconnect switch.

Basis of payment shall be at the Contract Unit Price Per Each Installation, which price shall include all material, labor, equipment and incidentals necessary to finish the complete item of work.

S-25 SIGNS WIRED, COMPLETE, AS PER PLAN

This Item shall consist of furnishing and/or installation of the electrical sign lighting system components for each illuminated sign.

Work shall include installation of light fixtures and ballasts and furnishing and installation of all rigid and flexible conduit, condulets, junction boxes, wire, fasteners hardware and all other items required to energize the sign lighting system. See details on Sheets (EI-1 & 2, ES-3A).

Basis of payment shall be at the Contract Unit Price Per Each Sign Wired, which price shall include all labor, materials, tools, equipment and other incidentals to provide a complete and accepted item of work.

The cost of furnishing and installing wire and necessary fasteners from the disconnect switch to the signs (or between signs) within sign support members shall be incidental to the cost of various items included in this item of work.

Illuminated signs requiring two (2) ballasts shall be considered as an equivalent of two (2) separate signs for determination of payment quantities.

I-129 OVERHEAD SIGN SUPPORT, BY TYPE, AS PER PLAN

All component parts of the Overhead Sign Supports shall be steel, except for the truss and components for the Number 7 Series which shall be aluminum. For specific details and materials see Sheet Numbers _____ through _____.

Cost of furnishing and installing the fixture support arm, length "C," with mounting holes and hardware (See Sheets ____ and ____) shall be included in the Contract Unit Price Bid for Overhead Sign Supports.

Modifying Supplemental Specification I-129 Switch Enclosure Mounting Brackets including mounting bolts and drilled holes shall be furnished and installed under payment for Item I-129 Overhead Sign Support Structures at the contract price per "Overhead Sign Support, By Type, As Per Plan".

Payment for this item shall be made at the contract unit price bid for each Overhead Sign Support, By Type, As Per Plan" installed in place and accepted, which price shall be full compensation for furnishing all anchor bolts (For installation under Item I-129 "Concrete For Overhead Sign Support Foundations") and for furnishing and installing each overhead sign support structure shown on Sheet Numbers _____ including fixture support arms, switch enclosure mounting bracket, sign brackets and all component parts necessary to make a complete workable installation ready for sign erection, installation of disconnect switch and enclosure, ground rod and wire connections and sign wiring.

Erection of these supports shall be accomplished in a manner meeting the requirements of Supplemental Specification Number I-129.

GENERAL SUMMARY

TRAFFIC CONTROL

FED. RD. DIV.	STATE	PROJECT	FISCAL YEAR
2	OHIO		

220
492

HAMILTON COUNTY
HAM-71-(1.56)(2.51)

TYPE CODE 7221

OVERHEAD SIGNS							PAVEMENT MARKING			TOTAL	UNIT	ITEM	DESCRIPTION
No.4	No.5	No.6	No.7 & No.8	No.13	No.101	No.102	GILBERT AVE.	VAN METER ST.	ELSINORE AVE				
							0.069	0.209	0.179	0.457	Miles	I-125	4" Barrier Lines
							0.029			0.029	Miles	I-125	4" Edge Lines
							0.670			0.670	Miles	I-125	4" Lane Lines
								0.283	0.020	0.303	Miles	I-125	6" Center Lines
							0.196			0.196	Miles	I-125	8" Channelizing Lines
							148		40	188	Lin.Ft.	I-125	24" Stop Bar
							Lump			Lump	Lump	I-125	Curb, Island and Pavement Arrow Marking
							Lump			Lump	Lump	I-125	Diagonal Stripes
		1								1	Each	I-129	Overhead Sign Support No. 7.5 Design No.4 Modified, 98'-6" Span
1										1	Each	I-129	Overhead Sign Support No. 7.5 Design No.1 Modified, 56'-5 3/4" Span
				1						1	Each	I-129	Overhead Sign Support No. 7.5 Design No.2 Modified, 73'-9" Span
						1				1	Each	I-129	Overhead Sign Support No. 9.24 Design No.1 Modified, 14' Arm
					1					1	Each	I-129	Overhead Sign Support No. 12.24 Design No.1 Modified, 12' Arm
	1		1							2	Each	I-129	Overhead Sign Support No. 12.24 Design No.7 Modified 18' Arm
446	204	84.5	204	400	88	91				1517	Sq.Ft.	I-129	Sign Erection, As Per Plan
225	225	225	50	225		50				1000	Lin.Ft.	I-15	Guard Rail Steel Beam Standard Type (Deep)
4.7	3.4	9.6	7.0	4.7	2.6	2.6				34.4	Cu.Yds	I-129	Concrete Foundations for Overhead Sign Supports, As Per Plan
1	1	1	2	1	1	1				8	Each	S-25	Sign Support Ground Rod and Wire Connection, As Per Plan
		1				1				2	Each	S-25	Sign Ballast Type B As Per Plan
				1	1					2	Each	S-25	Sign Ballast Type C As Per Plan
3	1	1	1	2						8	Each	S-25	Sign Ballast Type D As Per Plan
		2				2				4	Each	S-25	72" Light Fixture with H.O. Lamps, As Per Plan
4		2	1	3						10	Each	S-25	72" Light Fixture with S.H.O. Lamps, As Per Plan
2	1		1	2	1					7	Each	S-25	96" Light Fixture with S.H.O. Lamps, As Per Plan
3	1	2	1	3	1	1				12	Each	S-25	Signs Wired Complete, As Per Plan
	1	1	1	1	1	1				6	Each	S-25	Photo Electric Cell and Socket, 1800 Watts Rating
1										1	Each	S-25	Photo Electric Cell and Socket, 3000 Watts Rating
2	15	15	25	6	15	15				93	Lin.Ft.	S-25	2" Metal Conduit
0	60	60	60	0	60	60				300	Lin.Ft.	S-25	No.6 AWG Cable
1	1	1	1	1	1	1				7	Each	S-25	30 Ampere Fusible Disconnect Switch
1	1	1	1	1	1	1				7	Each	S-25	Sign Service, As Per Plan

TYPE CODE 7221

SIGNALIZATION						TOTAL	UNIT	ITEM	DESCRIPTION
GILBERT AVE. AT COURT ST.	GILBERT AVE. COURT ST. TO ELSINORE	GILBERT AVE. AT ELSINORE	ELSINORE PLACE	ELSINORE AVE.					
		1		1		2	Each	I-129	Foundation for Detector Support Pole, 1'x3'
		2				2	Each	I-129	Foundation for Signal Support Pole (Strain)
			1			1	Set	I-129	Anchor Rods for Detector Support Pole on Bridge (Four Bolts per Set)
			1			1	Each	I-129	Detector support, Cantilever Type, 15' Pole with 30' Arm
		1				1	Each	I-129	Signal Support Pole (Strain), 28' Pole with 8'-6" Mast Arm
		1				1	Each	I-129	Signal Support Pole (Strain) 28' pole without Mast Arm
				1		1	Each	I-129	Detector support, 9'-3" Pole, 5" Pipe
1	9	5	1			16	Each	S-25	Pull Box, Type A
	1		2			3	Each	S-25	Junction Box, Type C
		Lump				Lump	Lump	S-25	Foundation for Signal Controller
		73				73	Lin.Ft.	S-25	1½" Metal Conduit
10		38	285			333	Lin.Ft.	S-25	2" Metal Conduit
84	344	111				539	Lin.Ft.	S-25	3" Metal Conduit
		196				196	Lin.Ft.	S-25	4" Metal Conduit
		24		45		69	Lin.Ft.	S-25	2" Fiber or Asbestos Cement Conduit, Type I, with 3" Encasement
	384					384	Lin.Ft.	S-25	3" Fiber or Asbestos Cement Conduit, Type I, with 3" Encasement
45						45	Lin.Ft.	S-25	2 way - 3" Fiber or Asbestos Cement Conduit Type I, with 3" Encasement
		Lump				Lump	Lump	S-25	Install and Connect Signal Controller
				Lump		Lump	Lump	S-25	Install and Connect Detectors, Transceivers and Equipment Cases
Lump						Lump	Lump	S-25	Connect Cables to Existing Signal Controller at Court St.
		3				3	Each	S-25	Lane-Use Control Signs, Overhead, 30"x36"
		3				3	Each	S-25	Push Button and Push Button Sign, 18"x24"
		9				9	Each	S-25	Vehicle Signal Head, Vertical, 3-8" Sections
		6				6	Each	S-25	Pedestrian Signal Head, 24" Neon Grid
		275				275	Lin.Ft.	S-25	Cable 5/16" Messenger, Seven Strand Copperweld
		220				220	Lin.Ft.	S-25	Cable 3/8" Messenger, Seven Strand Copperweld
		Lump				Lump	Lump	S-25	Sectionalizer and Cabinet
54		155				209	Lin.Ft.	S-25	No. 6 AWG Cable
150	2380	280				2810	Lin.Ft.	S-25	No.12 AWG, 12 Conductor Cable
		2890	100	60		3150	Lin.Ft.	S-25	No.14 AWG, 5 Conductor Cable
			165	40		205	Lin.Ft.	S-25	Detector Cable, Beldon No. 8412 or Apha No. 1250 or Equal
2						2	Each	S-25	Type II Fused "Y" Connector kit
1						1	Each	S-25	Type III Unfused "Y" Connector kit
1	4	9		1		15	Each	S-25	Ground Rod Unit

FED. RD. CIV.	STATE	PROJECT	FISCAL YEAR
2	OHIO		

HAMILTON COUNTY
HAM-71-(1.56) (2.51)

SCHEMATIC SIGNING PLAN

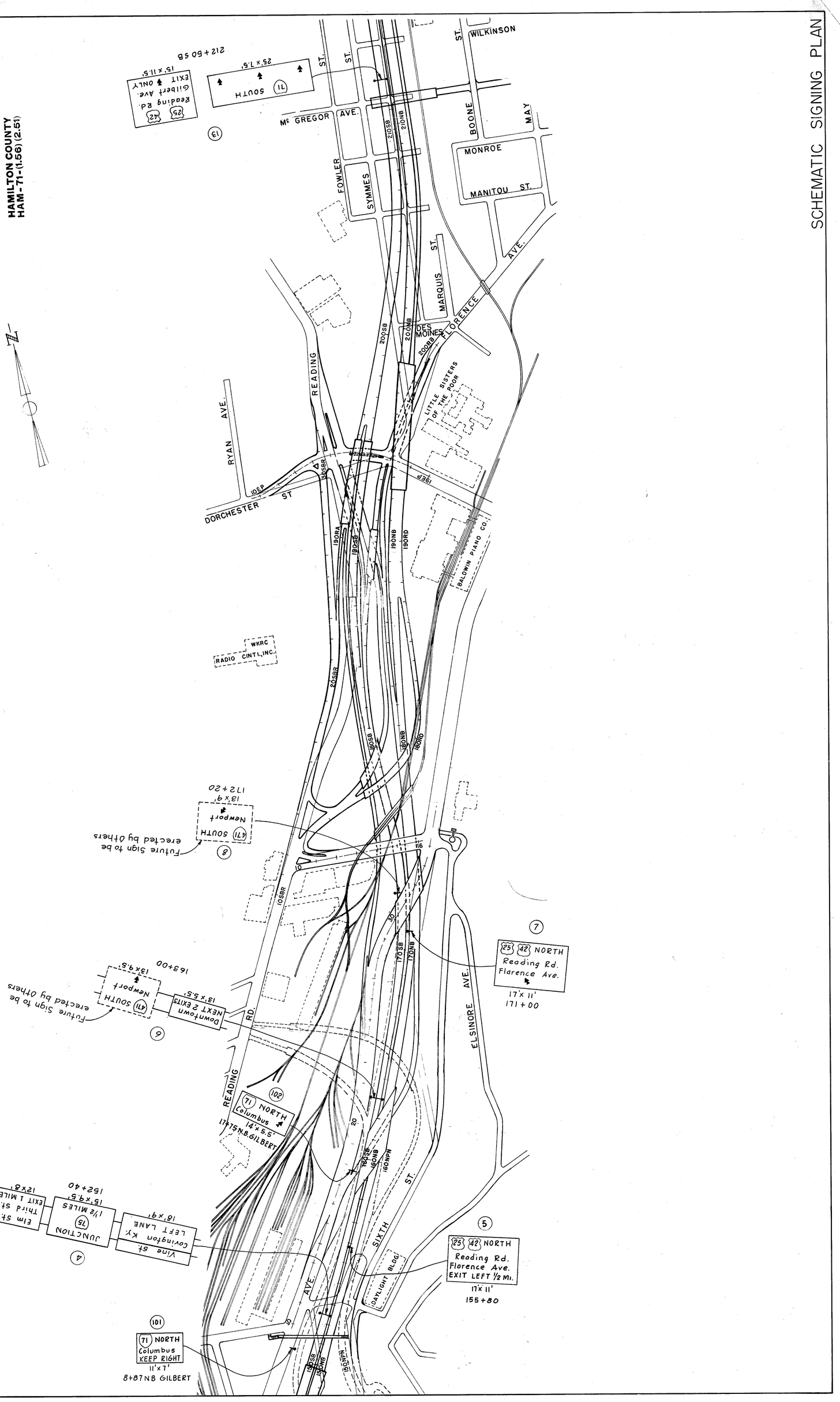

FED. RD. DIV.	STATE	PROJECT	FISCAL YEAR
2	OHIO		

222
492

HAMILTON COUNTY
HAM-71-(1.56) (2.51)

④

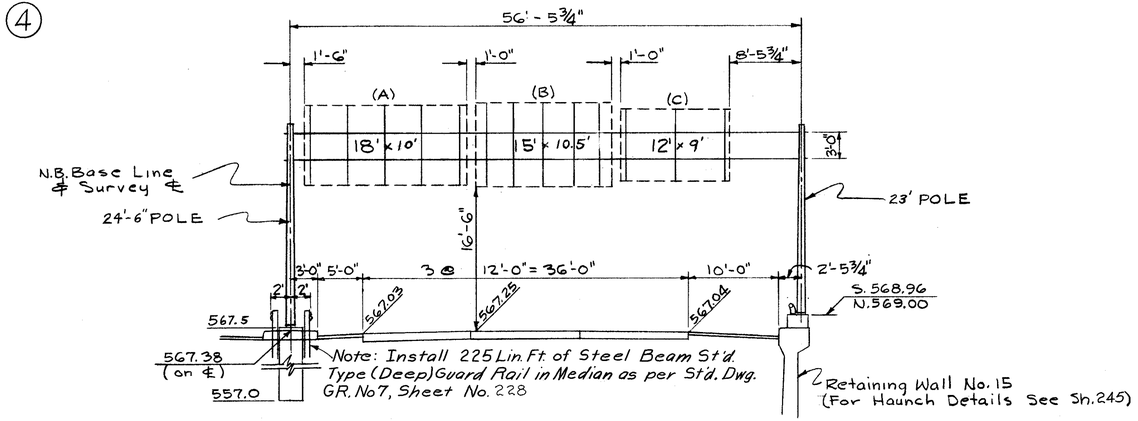

STA. 152 + 40 N.B.
SOUTH BOUND ROADWAY
I-129 Nº 7.5 DESIGN 1 MODIFIED, 56'-5 3/4" SPAN

(A)
AREA (ACTUAL) = 18' x 10' = 180 SQ. FT.
BR. SPACING = 8 5/8", 4 @ 4'-1 11/16", 8 5/8"
NO. OF BR. = 5 HEIGHT = 10' TYPE Ya

(B)
AREA (ACTUAL) = 15' x 10.5' = 157.5 SQ. FT.
BR. SPACING = 1'-2 5/8", 4 @ 3'-1 11/16", 1'-2 5/8"
NO. OF BR. = 5 HEIGHT = 10.5' TYPE Ya

(C)
AREA (ACTUAL) = 12' x 9' = 108 SQ. FT.
BR. SPACING = 6", 2 @ 5'-6", 6"
NO. OF BR. = 3 HEIGHT = 9' TYPE Ya

⑤

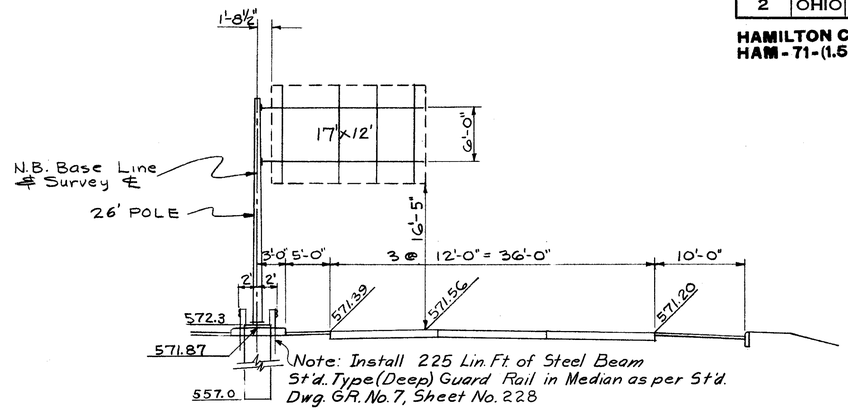

STA. 155 + 80 N.B.
NORTH BOUND ROADWAY
I-129 Nº 12.24 DESIGN 7 MODIFIED, 18' ARM

AREA (ACTUAL) = 17' x 12' = 204 SQ. FT.
BR. SPACING = 1'-2 5/8", 6'-3 3/8", 2 @ 4'-1 11/16", 1'-2 5/8"
NO. OF BR. = 4 HEIGHT = 12' TYPE Ys

⑥

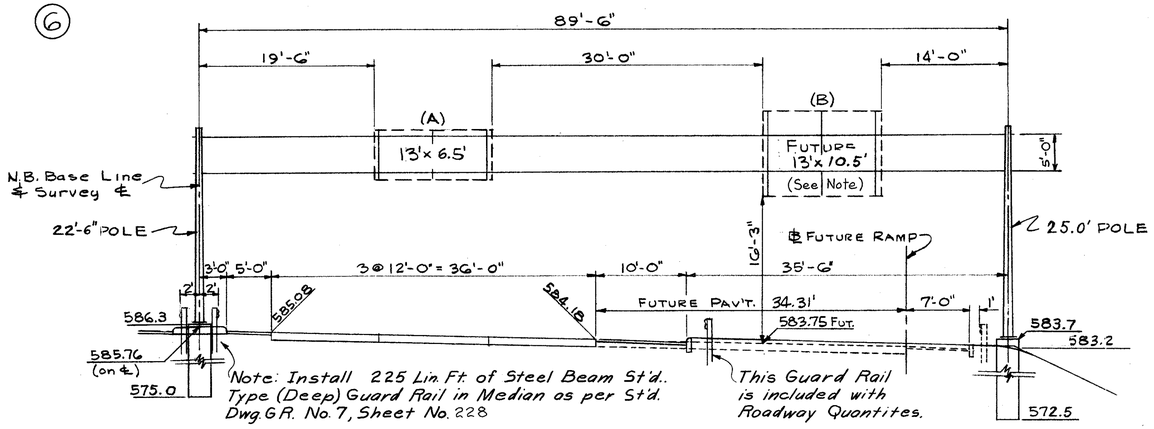

STA. 163 + 00 N.B.
SOUTH BOUND ROADWAY
I-129 Nº 7.5 DESIGN 4 MODIFIED, 89'-6" SPAN

(A)
AREA (ACTUAL) = 13' x 6.5' = 84.5 SQ. FT.
BR. SPACING = 6", 2 @ 6'-0", 6"
NO. OF BR. = 3 HEIGHT = 6.5' TYPE Xa

AREA (ACTUAL) = 13' x 10.5 = 136.5 SQ. FT.
BR. SPACING = 6", 2 @ 6'-0", 6"
NO. OF BR. = 3 HEIGHT = 10.5 TYPE Ya

Note: Fixture Support Arms for Sign No. 6(B) are to be furnished by others at a future date.

⑦

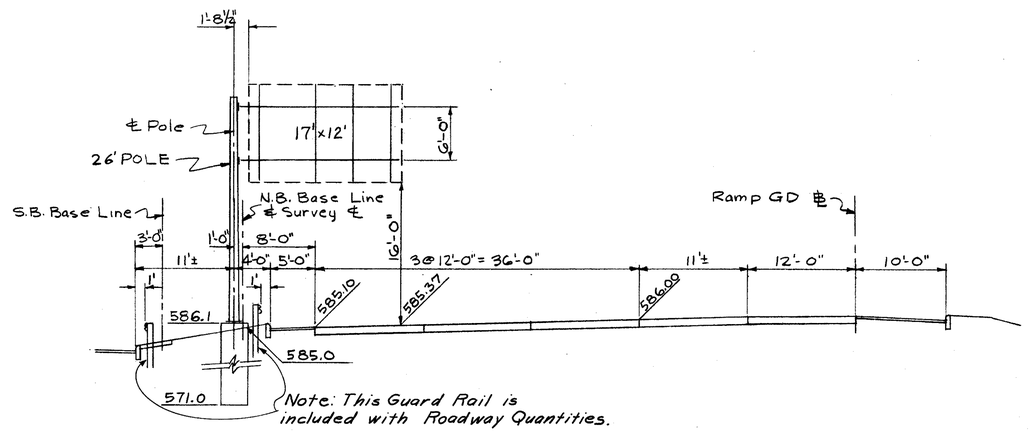

STA. 171 + 00 N.B.
NORTH BOUND ROADWAY
I-129 Nº 12.24 DESIGN 7 MODIFIED, 18' ARM

AREA (ACTUAL) = 17' x 12' = 204 SQ. FT.
BR. SPACING = 1'-2 5/8", 6'-3 3/8", 2 @ 4'-1 11/16", 1'-2 5/8"
NO. OF BR. = 4 HEIGHT = 12' TYPE Ys

SIGN PLACEMENT DETAILS

FED. RD. DIV.	STATE	PROJECT	FISCAL YEAR
2	OHIO		

223
492

HAMILTON COUNTY
HAM-71-(1.56) (2.51)

(8)

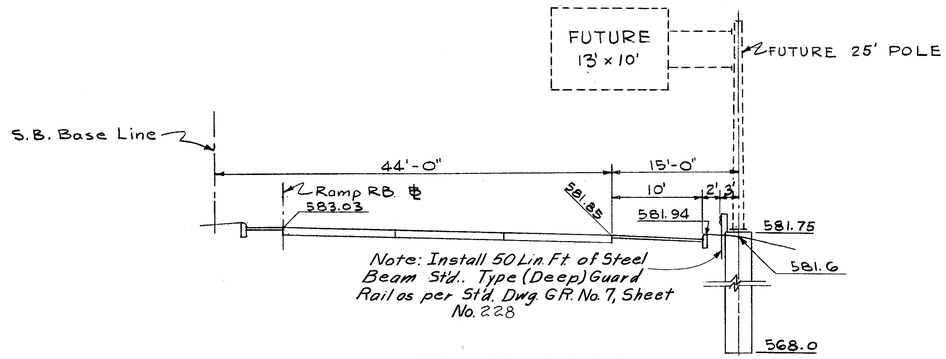

STA. 172 + 20 S.B.
SOUTH BOUND ROADWAY
I-129 Nº 12.24 DESIGN 5 MODIFIED, 20' ARM
(FOUNDATION ONLY)

(13)

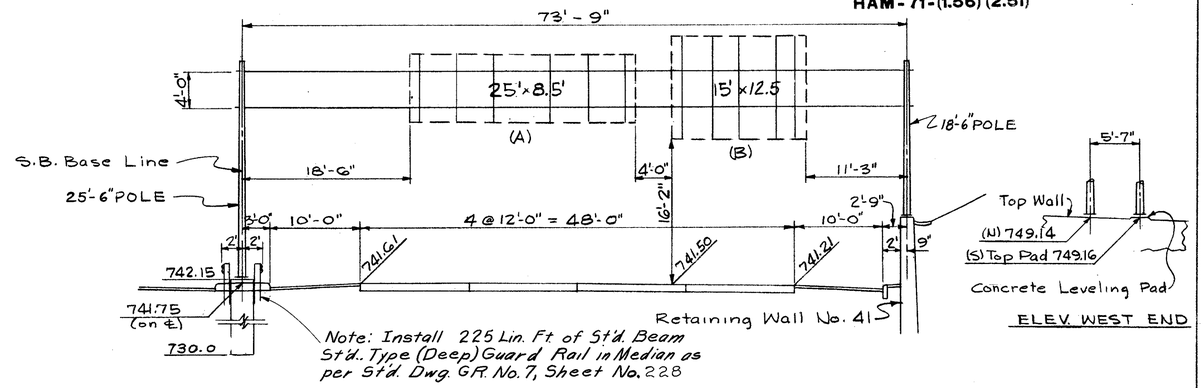

STA. 212 + 50 S.B.
SOUTH BOUND ROADWAY
I-129 Nº 7.5 DESIGN 2 MODIFIED, 73'-9" SPAN

(A)
AREA (ACTUAL) = 25' x 8.5' = 212.5 SQ. FT.
BR. SPACING = 1'-1", 2@4'-1 1/16", 6'-3 3/8", 2@4'-1 1/16", 1'-0 7/8"
NO. OF BR. = 6 HEIGHT = 8.5' TYPE Ya

(B)
AREA (ACTUAL) = 15' x 12.5' = 187.5 SQ. FT.
BR. SPACING = 1'-2 5/8", 4@3'-1 11/16", 1'-2 5/8"
NO. OF BR. = 5 HEIGHT = 12.5' TYPE = Ya

(101)

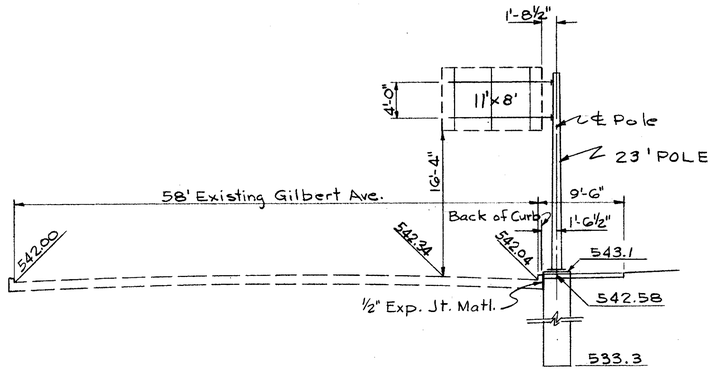

STA. 8 + 87 GB(N)
NORTH BOUND GILBERT AVE.
I-129 Nº 12.24 DESIGN 1 MODIFIED, 12' ARM

AREA (ACTUAL) = 11' x 8' = 88 SQ. FT.
BR. SPACING = 1'-4 3/8", 2@4'-1 11/16", 1'-4 1/4"
NO. OF BR. = 3 HEIGHT = 8' TYPE Xs

(102)

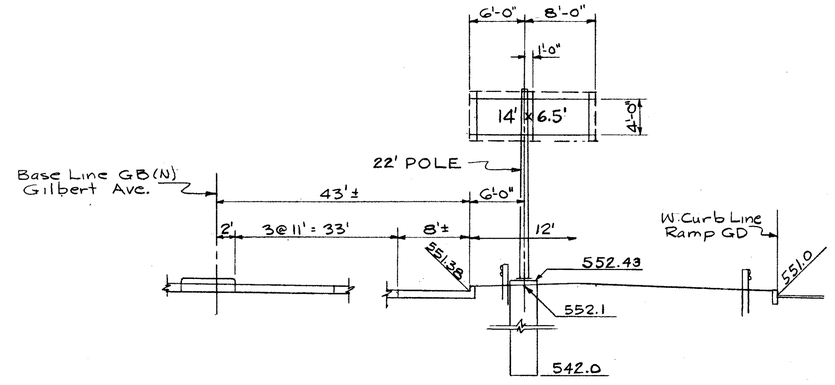

Note: Install 50 Lin. Ft of Steel Beam Std. Type (Deep) Guard Rail as shown and as per Std Dwg GR. No. 7, Sheet No. 228

GUARD RAIL DETAILS

STA. 17 + 75 GB(N)
NORTH BOUND GILBERT AVE.
I-129 Nº 9.24 DESIGN 1 MODIFIED, 14' ARM

AREA (ACTUAL) = 14' x 6.5' = 91 SQ. FT.
BR. SPACING = 8 5/8", 2@6'-3 3/8", 8 5/8"
NO. OF BR. = 3 HEIGHT = 6.5' TYPE Xs

SIGN PLACEMENT DETAILS

FED. RD. DIVISION	STATE	PROJECT	
2	OHIO		

228
492

HAMILTON COUNTY
HAM-71-(1.56)(2.51)

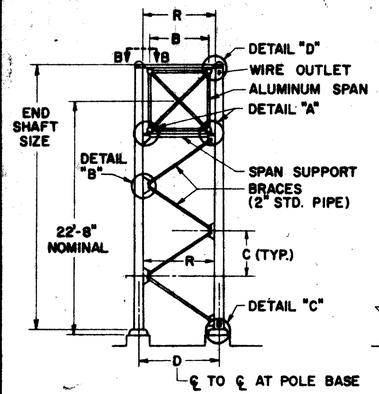

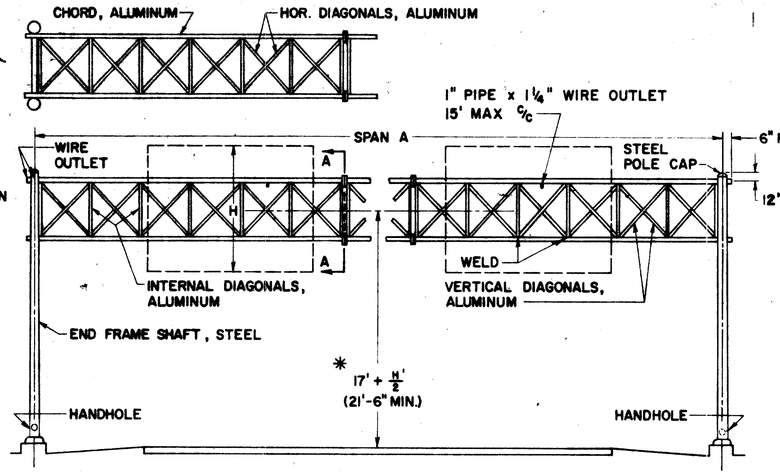

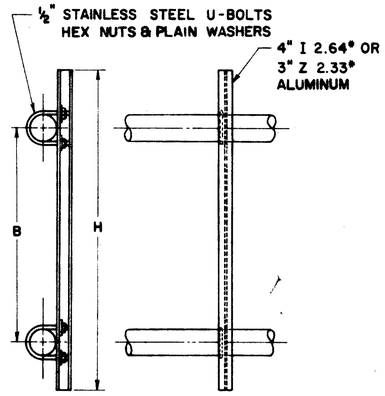

SIGN BRACKET

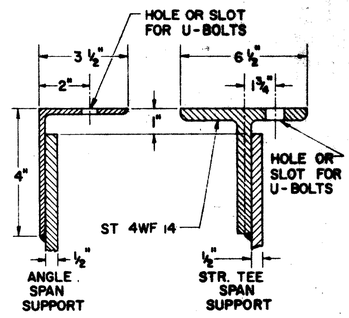

SECTION D-D

NOTES

MATERIALS

THE OVERHEAD SPAN TRUSS SHALL BE ALUMINUM AND THE END FRAMES SHALL BE STEEL.

SPAN TRUSS AND END FRAMES, INCLUDING HARDWARE, SHALL BE IN ACCORDANCE WITH SUPPLEMENTAL SPECIFICATION I-129 UNLESS OTHERWISE NOTED.

STEEL POLE BASES AND GUSSETS SHALL CONFORM TO THE REQUIREMENTS OF ASTM SPECIFICATION A-373.

AFTER FABRICATION THE TAPERED POLES SHALL HAVE A MINIMUM YIELD STRENGTH OF 48,000 PSI.

FABRICATION

THE ENTIRE STEEL END FRAME SHALL BE HOT DIP GALVANIZED IN ACCORDANCE WITH SEC. M-7.410.

MAXIMUM LENGTH OF SPAN SECTIONS IS 30 FT.

ERECTION

USE A MINIMUM OF 1" CAMBER IN SPAN TRUSS MEMBER FOR A 50' SPAN; ADD ⅛" OF CAMBER FOR EACH 5' OF INCREASE IN SPAN OVER 50'.

SOILS

THE FOUNDATION DETAILS SHOWN ARE FOR AVERAGE SOIL CONDITIONS (MEDIUM CLAY, CEMENTED SAND AND GRAVEL, SANDY CLAY, OR STIFF CLAY).

FOR POOR SOIL CONDITIONS, INCREASE "D" MIN. BY: 50% IN DRY OR WET SAND, 60% IN SILTY CLAY, 100% IN SOFT CLAY, AND FROM 75% TO 150% IN WET SILT, DEPENDING ON QUICKSAND ACTION.

REINFORCING STEEL

COST OF REINFORCING STEEL SHALL BE INCLUDED IN THE UNIT PRICE FOR ITEM I-129 CONCRETE FOR SIGN SUPPORT FOUNDATIONS.

~~BAR SIZE~~ IS INDICATED IN THE BAR MARK. THE FIRST DIGIT WHERE THREE DIGITS ARE USED AND THE FIRST TWO DIGITS WHERE FOUR ARE USED, INDICATE THE BAR SIZE NUMBER.

***FOUNDATION ELEVATION**

ELEVATION OF TOPS OF FOUNDATIONS SHALL BE BUILT UP SO THAT 17' CLEARANCE IS MAINTAINED OVER THE ENTIRE WIDTH OF PAVEMENT AND SHOULDERS.

DESIGN

THE DESIGN OF OVERHEAD SUPPORTS IS IN ACCORDANCE WITH A.A.S.H.O. SPECIFICATION FOR THE DESIGN AND CONSTRUCTION OF STRUCTURAL SUPPORTS FOR HIGHWAY SIGNS, ADOPTED JUNE 12, 1961.

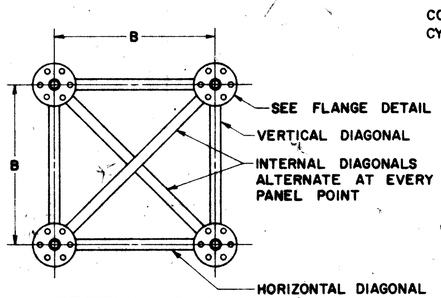

SECTION A-A

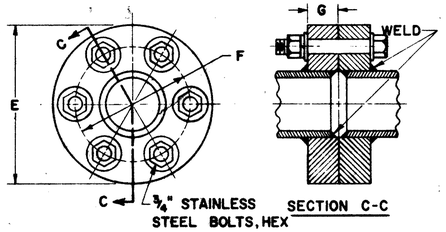

CAST FLANGE, B-26 ALLOY SG 70A-T7 (356-T7)

FLANGE DETAIL

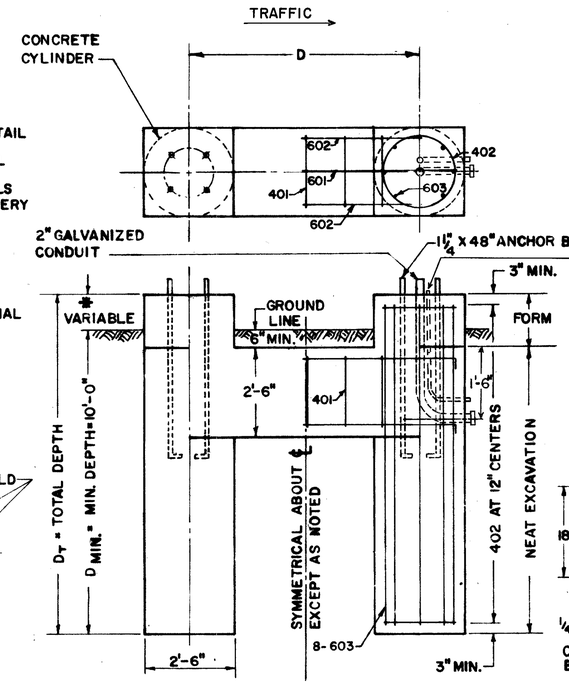

FOUNDATION DETAIL
(RIGHT HAND SHOWN — LEFT HAND OPPOSITE)

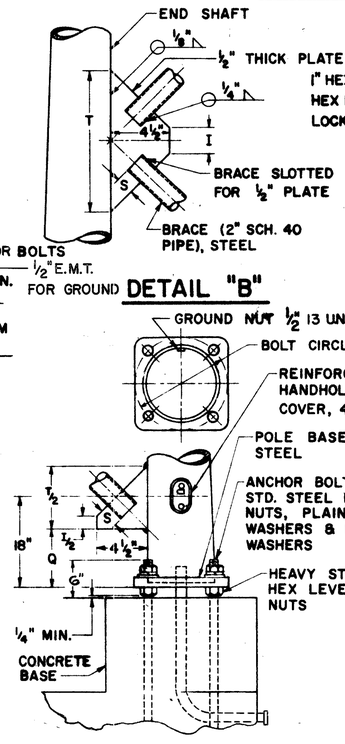

DETAIL "B"

DETAIL "C"

POLE BASE DETAIL

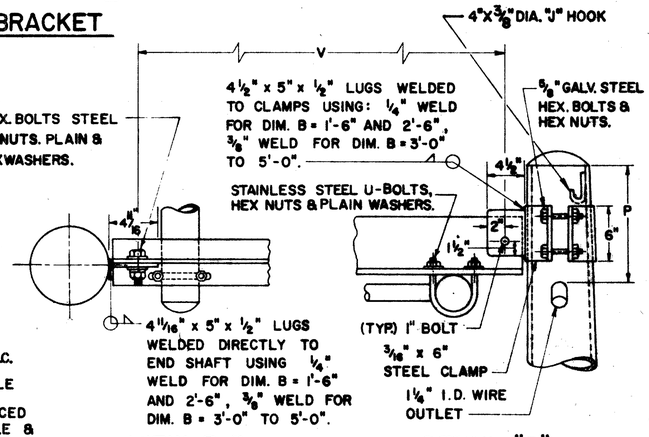

VIEW B-B

DETAIL "D"

UPPER SPAN SUPPORT (ALTERNATE METHODS)

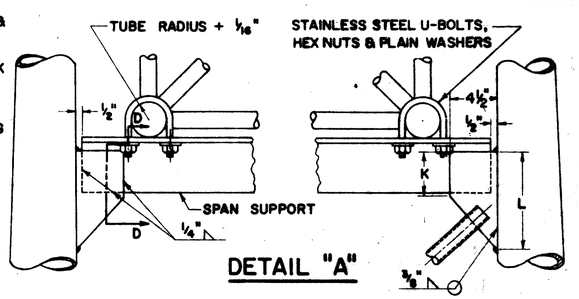

DETAIL "A"

LOWER SPAN SUPPORT

DESIGN NO.	SPAN A	B	C	D	E	END SHAFT	BRACE LENGTH	F	G	I	K	L	P	Q	R	S	T	U BOLTS	V	BOLT CIRCLE	SPAN SUPPORT SECTION D-D	CHORDS	HORIZONTAL AND INTERNAL DIAGONAL	VERTICAL DIAGONAL
1	50' THRU 70'	3'-0"	4'-11¾"	4'-5"	9¼"	8"X4.5"X 25'-0", 3GA	5'-10 3/16"	7 7/16"	1⅜"	3½"	4¾"	8"	12"	6⅝"	3'-9"	1½"	10"	⅝"	3'-3⅝"	11"	SPLIT TEE 3'-8"	4¾"X.188"	1.900"X.145"	1.660"X.140"
2	71' THRU 80'	4'-0"	4'-10¼"	5'-7"	9¼"	8"X6.22"X25'-6", 3GA	6'-7⅛"	7 7/16"	1⅜"	⅝"	4⅜"	7¾"	12"	6¼"	4'-11"	1½"	9½"	⅝"	4'-5⅝"	11"	SPLIT TEE 4'-10"	4¾"X.188"	2" X .188"	1.900"X.145"
3	81' THRU 86'	4'-0"	4'-10¼"	5'-7"	11"	8"X6.22"X25'-6", 3GA	6'-7⅛"	8½"	1½"	⅝"	4⅜"	7¾"	12"	6¼"	4'-11"	1½"	9½"	⅝"	4'-5⅞"	11"	SPLIT TEE 4'-10"	5½"X.250"	2" X .188"	1.900"X.145"
4	86' THRU 110'	5'-0"	4'-8½"	6'-7"	11"	8"X6.18"X26'-0", 3GA	7'-3¼"	8½"	1½"	—	3½"	7¾"	12"	7¼"	5'-11"	1¾"	11¼"	¾"	5'-5⅝"	11"	SPLIT TEE 5'-10"	5½"X.250"	2½"X.188"	2½"X.188"

REINFORCEMENT SCHEDULE			
MARK	NO.	LENGTH	TYPE
401	12"C/C	8'-6"	102
402	12"C/C	7'-6"	103
601	4	D+4'-0"	101
602	8	D+2'-0"	101
603	32	D+ — 6"	STR.

BUREAU OF TRAFFIC
OHIO DEPARTMENT OF HIGHWAYS

OVERHEAD SIGN SUPPORTS

I-129 No. 7.5

DATE 8-2-62 7-25-63 4-20-65

APPROVED Robert E. Comer
ENGINEER OF TRAFFIC

500 SQ. FT. SIGN AREA — OVERHEAD SIGN SUPPORT, I-129 NO. 7.5

FED. RD. DIVISION	STATE	PROJECT	
2	OHIO		

(226 492)

HAMILTON COUNTY
HAM-71-(1.56) (2.51)

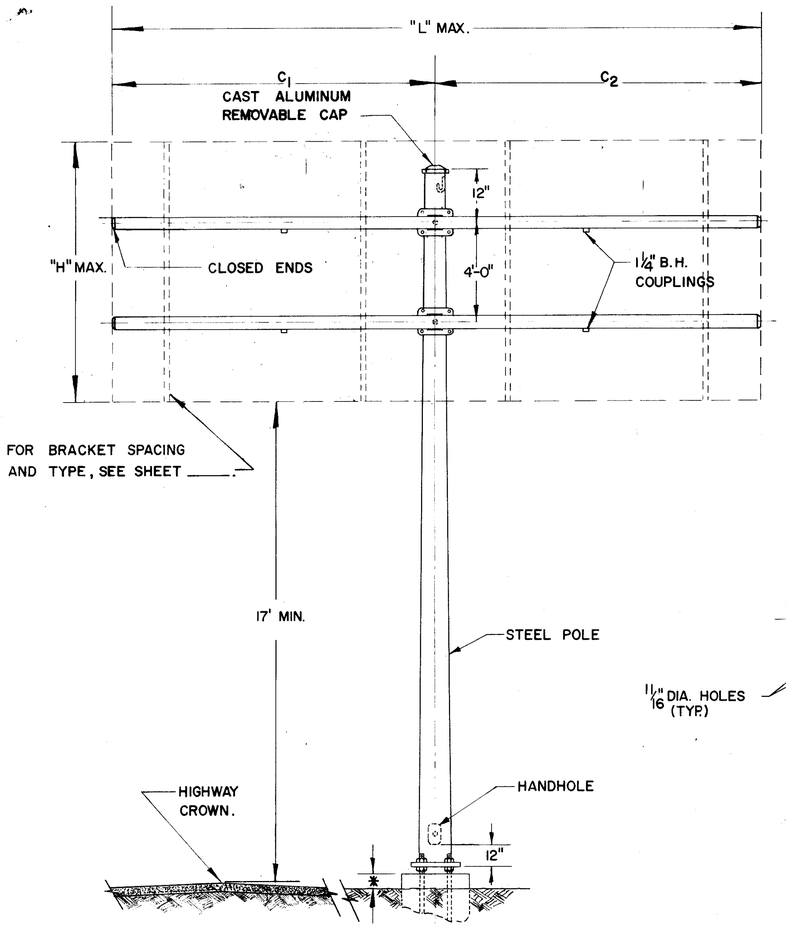

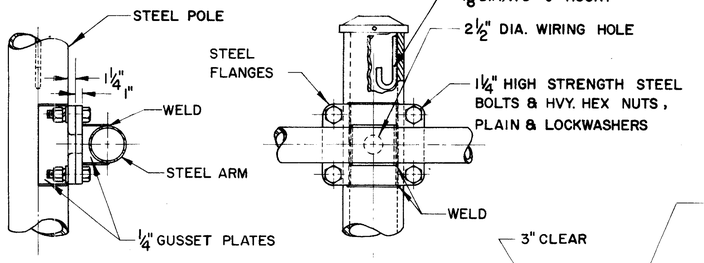

ARM ATTACHMENT DETAIL

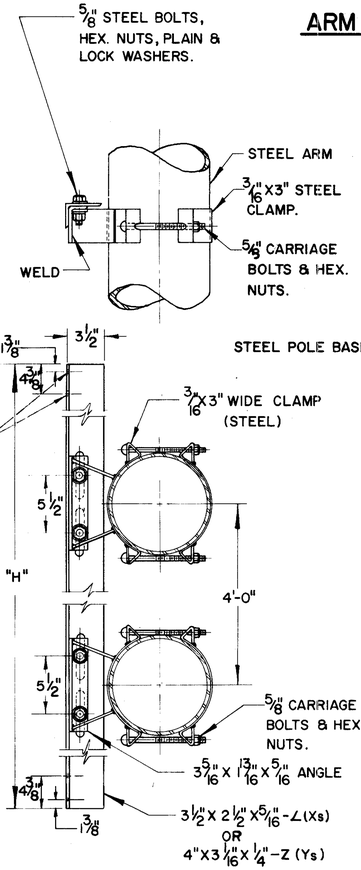

SIGN ATTACHMENT DETAIL

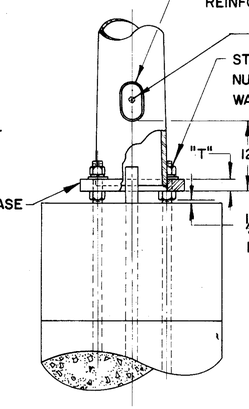

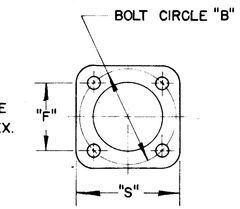

POLE DETAIL

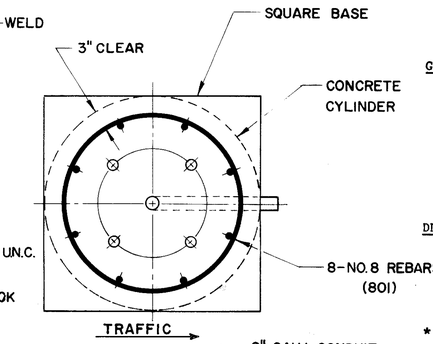

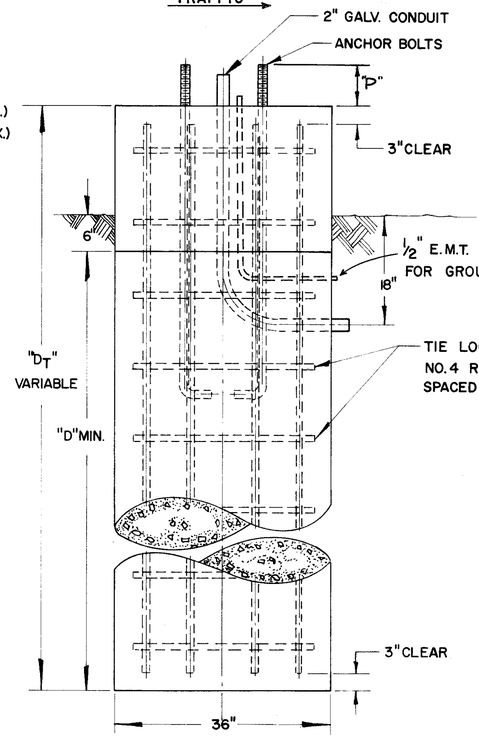

FOUNDATION DETAIL

DESIGN	POLE SIZE (STD.)	MAX. ARM SIZE	MAX. SIGN LENGTH "L"	MAX. SIGN AREA	B	F	P	S	T	ANCHOR BOLTS	"D" MIN.
1.	3GA. 14"X10.78"X23'	4" SCH. 40 12'-0"	24'-0"	120 SQ FT	20"	14 1/8"	7"	20½"	2"	1¾" X 90"	9'
2.	3GA. 16.5"X13" X 25'	4"SCH. 40 9'-0"	18'-0"	180 SQ FT	23½"	16 5/8"	8"	24½"	2"	2"X 96"	11'
3.	3GA. 16.5"X13.28"X25'	6"SCH. 40 12'-0"	24'-0"	180 SQ FT	23½"	16 5/8"	8"	24½"	2"	2"X 96"	11'
4.	0GA. 18"X 14.5"X25'	6"SCH. 40 12'-0"	24'-0"	240 SQ FT	25½"	18"	9"	26½"	2½"	2¼"X96"	13'

REINFORCEMENT SCHEDULE				
MARK	NO.	LEN.	TYPE	2'-6"
402	12"c/c	8'-6"	103	
801	8	D_T-6"	STR.	103

NOTES

GENERAL

MAXIMUM SIGN AREAS AND ARM LENGTHS SHOWN IN TABLE, ARE FOR BALANCED DESIGN ($C_1 = C_2$).

FOR UNBALANCED DESIGN ($C_1 \gtrless C_2$), THE PRODUCT OF THE ACTUAL SIGN AREA (C_1 H or C_2 H) TIMES 1/2 OF ACTUAL ARM (1/2 C_1 or 1/2 C_2) SHALL BE LESS THAN THE PRODUCT OF 45% OF MAXIMUM SIGN AREA TIMES 1/2 MAX ARM FOR BALANCED DESIGN. (0.45 H $2C_1$ $1/2C_1$ or 0.45 H $2C_2$ $1/2C_2$)

DESIGN

THE DESIGN OF OVERHEAD SUPPORTS SHALL BE IN ACCORDANCE WITH A.A.S.H.O. SPECIFICATION FOR THE DESIGN AND CONSTRUCTION OF STRUCTURAL SUPPORTS FOR HIGHWAY SIGNS, ADOPTED JUNE 13, 1961.

*** FOUNDATION**

THE TOP ELEVATION OF FOUNDATIONS SHALL BE VARIED SO AS TO MAINTAIN A MINIMUM CLEARANCE OF 17' BETWEEN THE BOTTOM OF THE SIGN AND THE HIGHWAY CROWN.

SOILS

THE FOUNDATION DETAILS SHOWN ARE FOR AVERAGE SOIL CONDITIONS (MEDIUM CLAY, CEMENTED SAND AND GRAVEL, SANDY CLAY, OR STIFF CLAY). FOR POOR SOIL CONDITIONS, INCREASE "D" MIN. BY: 50% IN DRY OR WET SAND, 60% IN SILTY CLAY, 100% IN SOFT CLAY, AND FROM 75% TO 150% IN WET SILT, DEPENDING ON QUICKSAND ACTION.

FINISH

ALL STRUCTURAL PORTIONS OF THE SIGN SUPPORTS, SIGN BRACKETS, HARDWARE AND CONDUIT SHALL BE HOT DIPPED GALVANIZED IN ACCORDANCE WITH S.S. I-129.02 (EXCEPT AS OTHER WISE SHOWN).

MATERIALS

ALL MATERIALS TO BE FURNISHED SHALL BE IN ACCORDANCE WITH S.S. I-129.02 WITH THE FOLLOWING ADDITIONS:

TAPERED TUBES SHALL BE STEEL, SAE 1015 AND COLD ROLLED TO OBTAIN A MINIMUM YIELD STRENGTH OF 48,000PSI.
STEEL PIPE: 4" DIAMETER AND UNDER SHALL BE STEEL-ASTM-A120
OVER 4" DIAMETER SHALL BE ASTM-A53, GRADE B
ANCHOR BOLTS SHALL BE HIGH STRENGTH STEEL ASTM-A107, GRADE C-1035
HIGH STRENGTH CLAMPS SHALL BE STEEL-ASTM-A242

REINFORCING STEEL

COST OF REINFORCING STEEL SHALL BE INCLUDED IN THE UNIT PRICE FOR ITEM I-129 CONCRETE FOR SIGN SUPPORT FOUNDATIONS.

BAR SIZE IS INDICATED IN THE BAR MARK. THE FIRST DIGIT WHERE THREE DIGITS ARE USED AND THE FIRST TWO DIGITS WHERE FOUR ARE USED, INCIDATE THE BAR SIZE NUMBER.

BUREAU OF TRAFFIC
OHIO DEPARTMENT OF HIGHWAYS

OVERHEAD SIGN SUPPORT | **I-129 No.9.24** | DATE 6-17-64

APPROVED _____
ENGINEER OF TRAFFIC

FED. RD. DIVISION	STATE	PROJECT	
2	OHIO		

227
492

HAMILTON COUNTY
HAM-71-(1.56) (2.51)

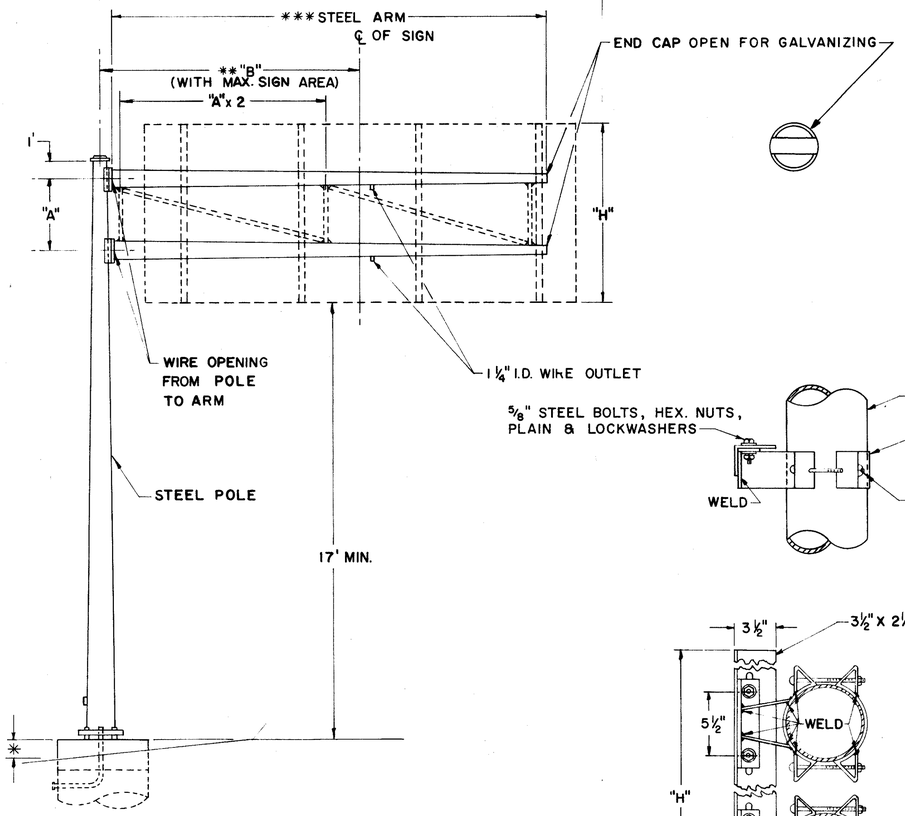

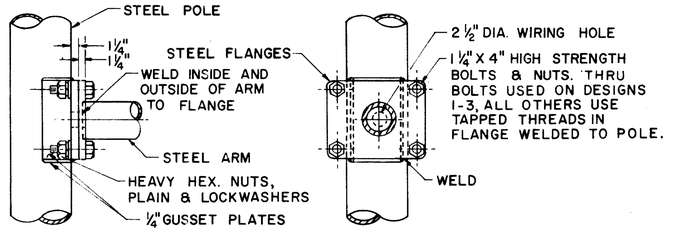

ARM ATTACHMENT

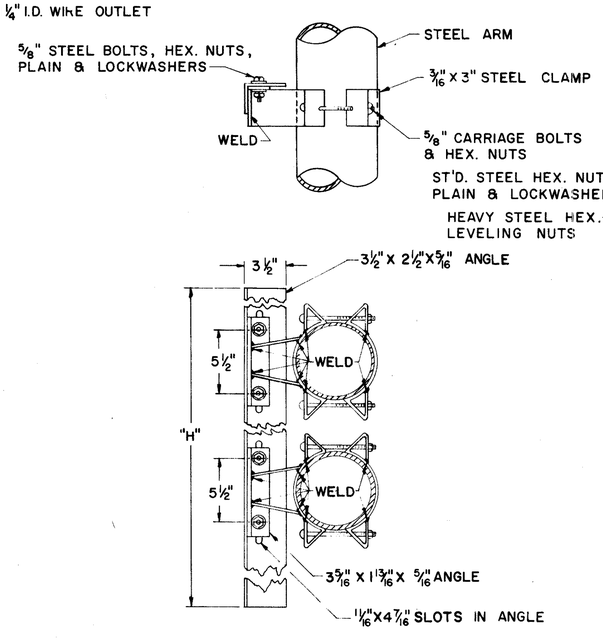

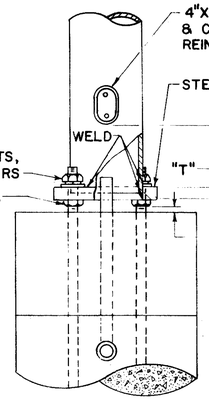

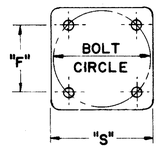

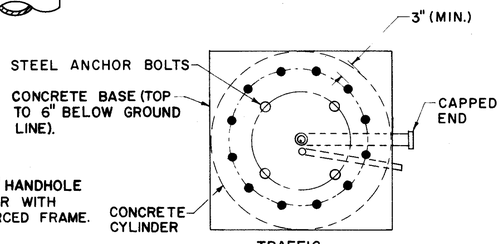

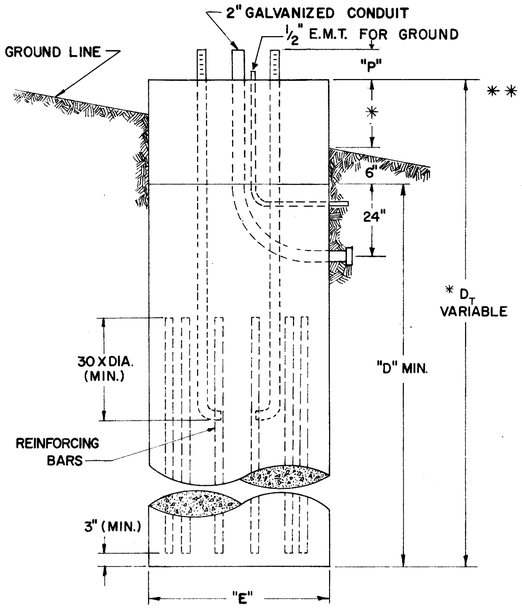

FOUNDATION DETAIL

NOTES

FABRICATION - ALL PORTIONS OF THE SIGN SUPPORT, INCLUDING SIGN ATTACHMENTS, SHALL BE HOT DIP GALVANIZED IN ACCORDANCE WITH THE REQUIREMENTS OF A.S.T.M. DESIGNATIONS A-123 AND A-153. THE CONDUIT SHALL BE GALVANIZED IN ACCORDANCE WITH SEC. S-25.08.

* FOUNDATION - THE TOP ELEVATION OF FOUNDATIONS SHALL BE VARIED SO AS TO MAINTAIN A MINIMUM CLEARANCE OF 17' BETWEEN THE BOTTOM OF THE SIGN AND THE HIGHWAY CROWN.

** ERECTION - VALUES OF "B" MAY BE EXCEEDED PROVIDED THE PRODUCT OF ACTUAL SIGN AREA TIMES THE DISTANCE FROM ℄ OF POLE TO ℄ OF SIGN DOES NOT EXCEED THE MAX. SIGN AREA TIMES "B".

*** ARMS 20' LONG OR LONGER ARE TO BE TRUSS TYPE WITH 3" X 3" X 3/8" ANGLES WELDED TO GUSSET PLATES.

MATERIAL - STEEL POLE BASES, FLANGES, AND END CAPS SHALL CONFORM TO THE REQUIREMENTS OF ASTM SPECIFICATION A 30 GRADE B. HIGH STRENGTH STEEL BOLTS SHALL CONFORM TO ASTM SPECIFICATION A 193 GRADE B7 AFTER FABRICATION TAPERED POLES AND ARMS SHALL HAVE A MINIMUM YIELD STRENGTH OF 48,000 PSI.

SOILS - THE FOUNDATION DETAILS SHOWN ARE FOR AVERAGE SOIL CONDITIONS (MEDIUM CLAY, CEMENTED SAND AND GRAVEL, SANDY CLAY, OR STIFF CLAY). FOR POOR SOIL CONDITIONS, INCREASE "D" MIN. BY: 50% IN DRY OR WET SAND, 60% IN SILTY CLAY, 100% IN SOFT CLAY, AND FROM 75% TO 150% IN WET SILT, DEPENDING ON QUICKSAND ACTION.

REINFORCING STEEL - REINFORCING STEEL AS SHOWN IN TABLE SHALL BE INSTALLED WHEN "D_T" EXCEEDS THE ANCHOR BOLT LENGTH BY MORE THAN 3 FT. THE COST AND PLACEMENT OF REINFORCING STEEL SHALL BE INCLUDED IN THE UNIT PRICE FOR ITEM I-129 CONCRETE FOR SIGN SUPPORT FOUNDATIONS.

DESIGN

THE DESIGN OF OVERHEAD SUPPORTS IS IN ACCORDANCE WITH A.A.S.H.O. SPECIFICATIONS FOR THE DESIGN AND CONSTRUCTION OF STRUCTURAL SUPPORTS FOR HIGHWAY SIGNS, ADOPTED JUNE 12, 1961.

SIGN ATTACHMENT DETAIL — POLE DETAIL

DESIGN NO.	POLE SIZE	*** ARM SIZE	DIM A	DIM ** B	DIM "D" MIN.	DIM F	DIM F	DIM P	DIM S	DIM T	BOLT CIRCLE	ANCHOR BOLT SIZE	MAX SIGN AREA	REINF. BARS SIZE	REINF. BARS NO.
1	3 Ga, 12" X 8.78" X 23'-0"	7Ga, 6.9" X 4.66" X 16'-0"	4'	12'	9'	3'-0"	11 5/16"	7¾"	17"	2"	16"	1¾" X 90"	80	¾"	12
2	3 Ga, 12" X 8.78" X 23'-0"	7 Ga, 8" X 5.2" X 20'-0"	4'	16'	9'	3'-0"	11 5/16"	7¾"	17"	2"	16"	1¾" X 90"	80	¾"	12
3	3 Ga, 15" X 11.5" X 25'-0"	7 Ga, 8.3" X 6.06" X 16'-0"	4'	12'	11'	3'-0"	15½"	8⅜"	23"	2"	22"	2" X 96"	120	1"	12
4	3 Ga, 16" X 12.5" X 25'-0"	3 Ga, 9.2" X 6.40" X 20'-0"	4'	16'	11'	3'-0"	16⅝"	8⅜"	24½"	2"	23½"	2" X 96"	120	1"	12
5	0 Ga, 18" X 14.36" X 26'-0"	7 Ga, 11" X 7.92" X 22'-0"	6'	14'	13'	3'-0"	18"	9⅜"	26½"	2½"	25½"	2¼" X 120"	180	1⅛"	12
6	0 Ga, 18" X 14.36" X 26'-0"	7 Ga, 12.5" X 8.86" X 26'-0"	6'	18'	13'	3'-0"	18"	9⅜"	26½"	2½"	25½"	2¼" X 120"	180	1⅛"	12
7	2 PLY 7 Ga, 18" X 14.36" X 26'-0"	7 Ga, 12.5" X 9.14" X 24'-0"	6'	14'	15'	3'-0"	18"	9¾"	26½"	2½"	25½"	2½" X 144"	240	1¼"	12
8	2 PLY ¼", 18" X 14.36" X 26'-0"	3 Ga, 12.5" X 8.58" X 28'-0"	6'	18'	15'	3'-0"	18"	11¼"	26½"	3"	25½"	3" X 144"	240	1¼"	12

BUREAU OF TRAFFIC
OHIO DEPARTMENT OF HIGHWAYS

OVERHEAD SIGN SUPPORT — I-129 No. 12.24

DATE 8-18-61 4-11-62

APPROVED Robert E. Lamon
ENGINEER OF TRAFFIC

OVERHEAD SIGN SUPPORT I-129 No. 12.24

FED. RD. DIVISION	STATE	PROJECT	
2	OHIO		

228
492

HAMILTON COUNTY
HAM-71-(1.56) (2.51)

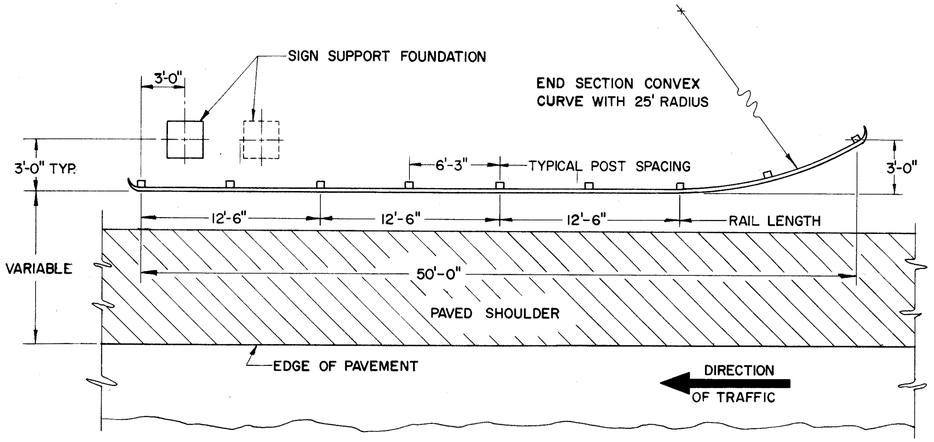

GUARD RAIL DETAILS

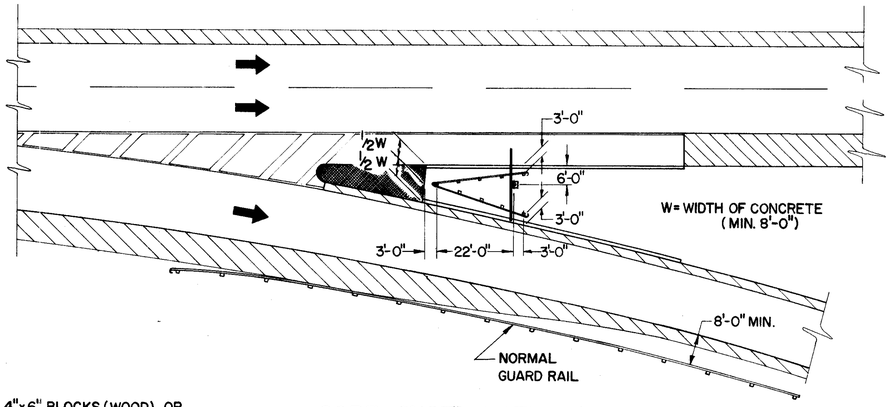

GORE INSTALLATION (TYPICAL)

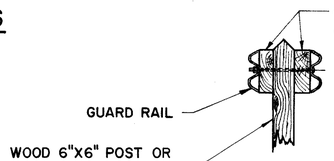

NOTE:
TYPICAL TREATMENT OF FIRST POST IN MEDIAN FLARED SECTION.

SECTION B-B

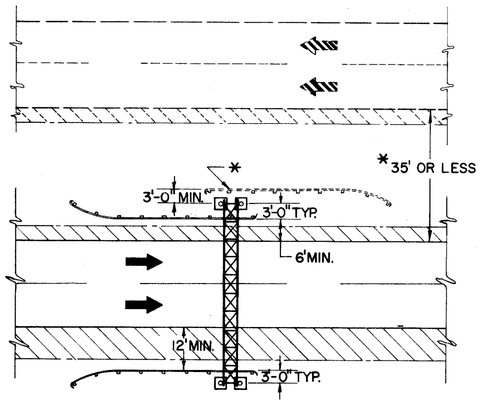

GUARD RAIL DETAILS
(SPAN TYPE)

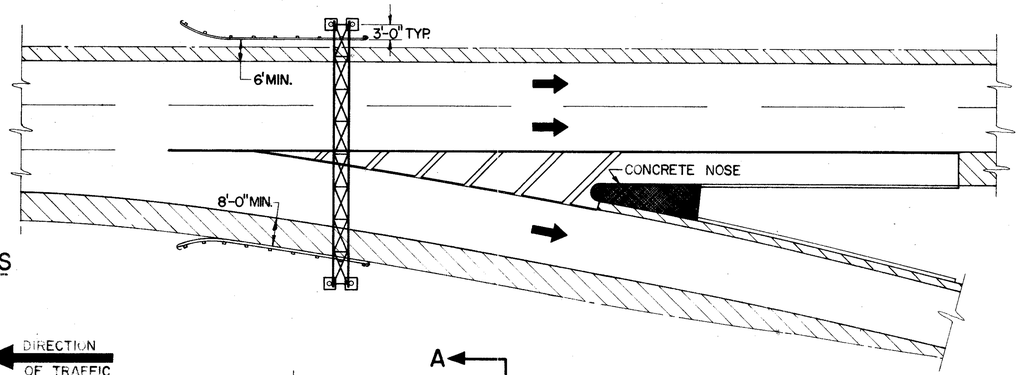

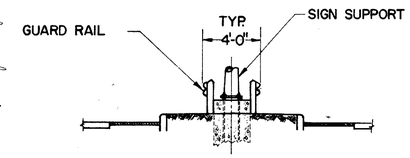

SECTION A-A

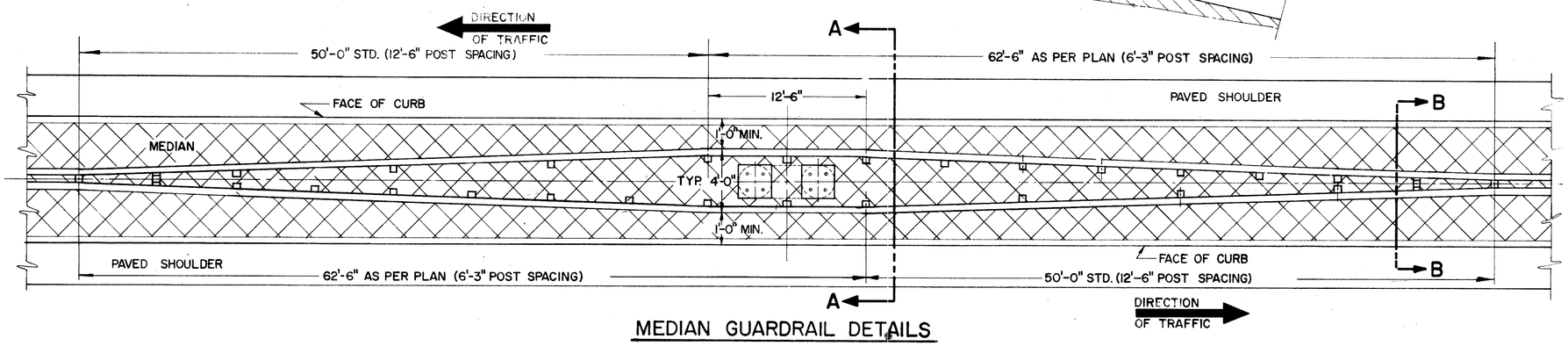

MEDIAN GUARDRAIL DETAILS

NOTES

GENERAL

PROTECTIVE GUARD RAIL FOR OVERHEAD SIGN STRUCTURES SHALL CONFORM TO ITEM 606 AND STANDARD CONSTRUCTION DRAWING GR. NO. 1 & 2A.

A MIN. OF 50' OF GUARDRAIL IS REQUIRED USING 6'-3" POST SPACING. WHEN 12'-6" POST SPACING IS SPECIFIED, THE MINIMUM GUARD RAIL LENGTH SHALL BE 75'.

WHERE THE PROPOSED GUARD RAIL FLARES, IT SHALL BE CONSTRUCTED OF GUARD RAIL ELEMENTS WHICH HAVE BEEN FABRICATED TO FIT.

IN CASES WHERE NO RADII HAS BEEN SPECIFIED OR THE FABRICATED ELEMENTS DO NOT FIT THE CONDITIONS, THE TWO END POSTS OF THE FLARED SECTION SHALL BE ENCASED IN A MINIMUM THICKNESS OF 4" OF CLASS "E" CONCRETE FOR THE FULL DEPTH OF OF THE POST BELOW THE GROUND LINE. PAYMENT FOR ENCASEMENT, IF REQUIRED, SHALL BE INCLUDED IN THE UNIT PRICE BID FOR THE GUARD RAIL.

ALL GUARD RAIL SHALL HAVE APPROPRIATE TERMINAL SECTIONS. FOR DETAILS SEE GR. NO. 2A. THE GORE INSTALLATIONS NOSE SECTION SHALL BE A BARRIER TERMINAL TYPE MOUNTED ON A SINGLE POST.

DESIGN

THE DESIGN OF GUARD RAIL PROTECTION FOR OVERHEAD SUPPORTS IS IN ACCORDANCE WITH A.A.S.H.O. SPECIFICATIONS FOR THE DESIGN AND CONSTRUCTION OF STRUCTURAL SUPPORTS FOR HIGHWAY SIGNS, ADOPTED JUNE 12, 1961.

BUREAU OF TRAFFIC
OHIO DEPARTMENT OF HIGHWAYS

GUARD RAIL DETAILS FOR OVERHEAD SIGN SUPPORTS	GR. NO. 7	DATE 3-10-65 5-5-65

APPROVED Fred C. Taylor
ENGINEER OF TRAFFIC

GUARD RAIL DETAILS FOR OVERHEAD SIGN SUPPORTS, G R. NO. 7

FED. RD. DIVISION	STATE	PROJECT	
2	OHIO		

229
492

HAMILTON COUNTY
HAM-71-(1.56) (2.51)

ALTERNATE FIXTURE LOCATION (ABOVE)

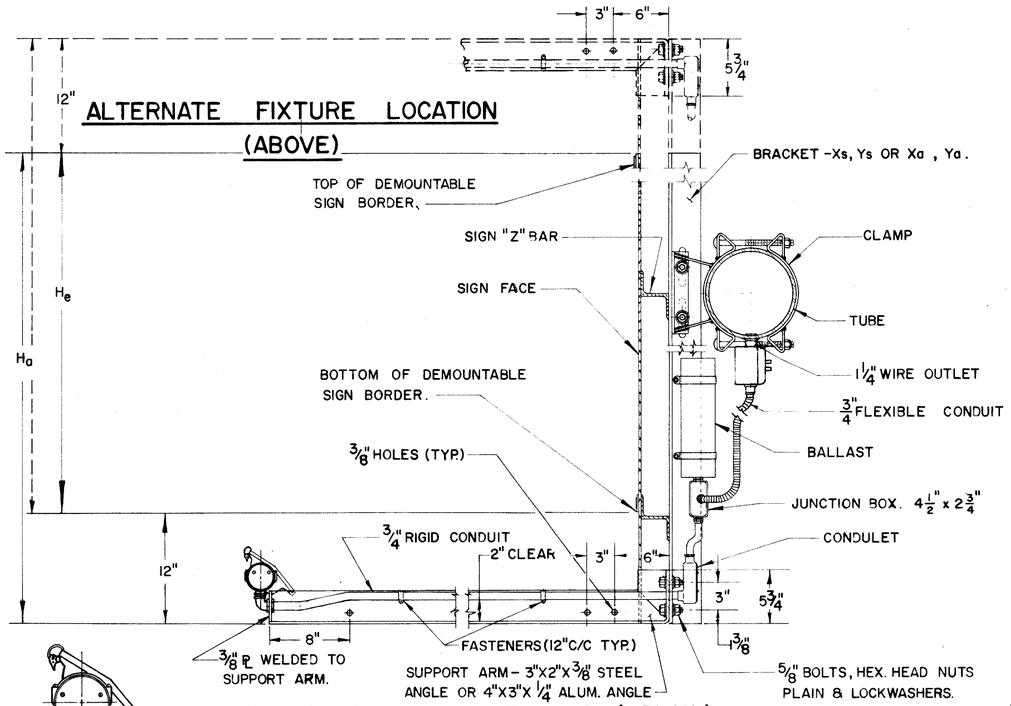

STANDARD FIXTURE LOCATION (BELOW)

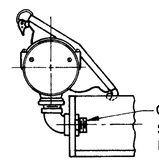

FIXTURE CONNECTION WHERE WIRING CONDUIT IS NOT NEEDED.

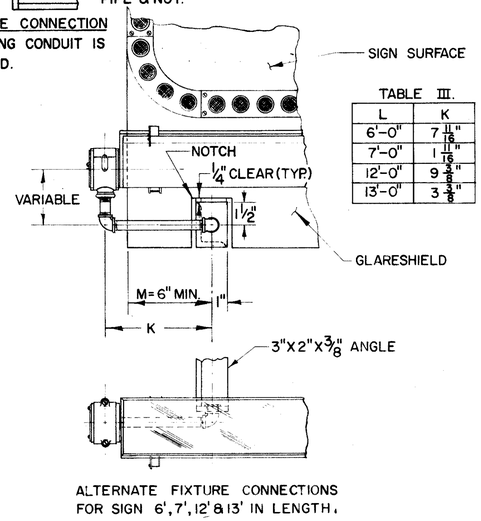

TABLE III.	
L	K
6'-0"	7 11/16"
7'-0"	1 11/16"
12'-0"	9 5/8"
13'-0"	3 5/8"

ALTERNATE FIXTURE CONNECTIONS FOR SIGN 6', 7', 12' & 13' IN LENGTH.

DETAIL A.

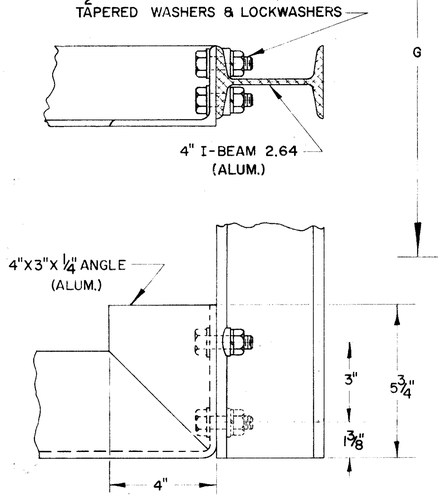

FOR SUPPORTS 7.2-7.6

DETAIL B.

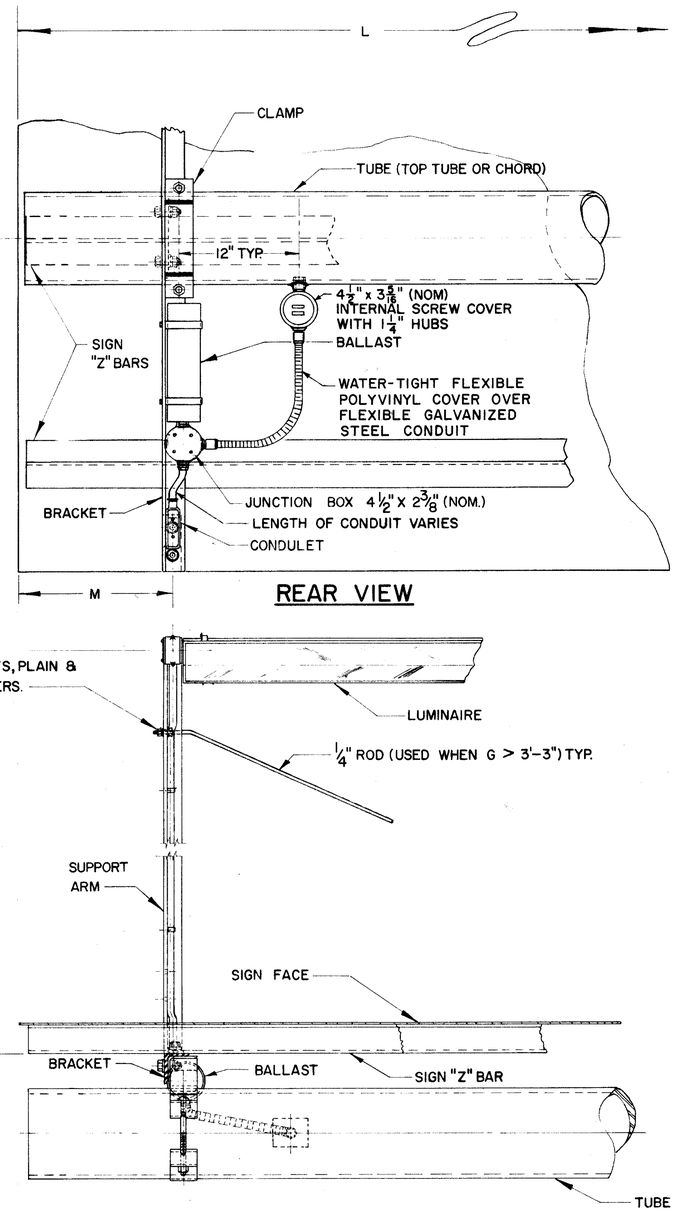

REAR VIEW

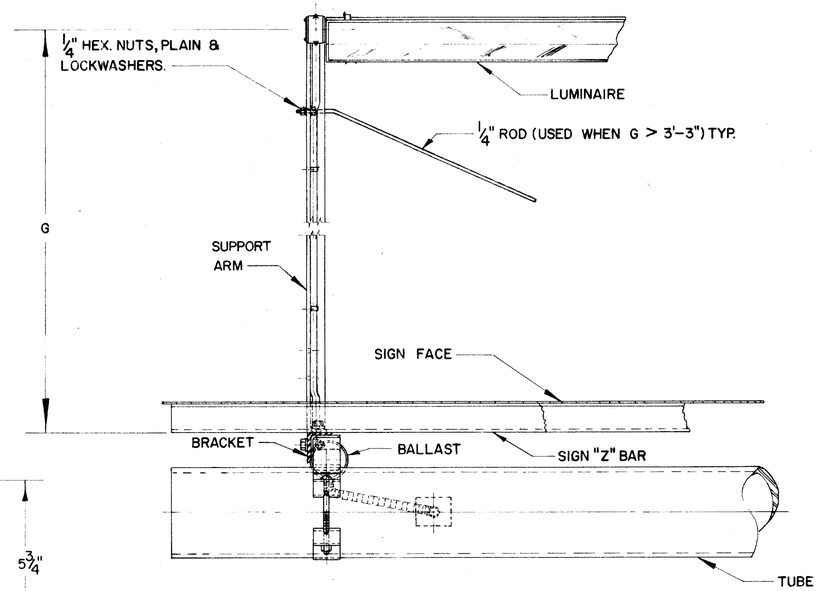

TOP VIEW

FABRICATION — ALL STRUCTURAL COMPONENTS SHOWN ON THIS SHEET SHALL CONFORM TO SUPPLEMENT SPECIFICATIONS I-129.

MATERIALS — THE MATERIALS USED IN THE COMPONENTS SHOWN ON THIS SHEET SHALL BE IN CONFORMANCE WITH THE MATERIALS USED IN THE SIGN SUPPORT.

TABLE I.

"L" SIGN LENGTH		NUMBER OF FIXTURES		"M" EDGE DISTANCE				NO. BALLAST
				A		B		
A	B	75⅜"	99⅜"	LT.	RT.	LT.	RT.	
6'-0"	7'-0"	1		6"	6"	6"	6"	1
8'-0"	9'-0"	1		10 3/8"	10 1/4"	16 3/8"	16 1/4"	1
10'-0"	11'-0"		1	10 3/8"	10 1/4"	16 3/8"	16 1/4"	1
12'-0"	13'-0"	2		6"	6	6	6	1
14'-0"	15'-0"	2		8 5/8"	8 5/8"	14 5/8"	14 5/8"	1
16'-0"	17'-0"	1	1	8 5/8"	8 5/8"	14 5/8"	14 5/8"	1
18'-0"	19'-0"		2	8 5/8"	8 5/8"	14 5/8"	14 5/8"	1
20'-0"	21'-0"	3		7"	6 7/8"	13	12 7/8"	2
22'-0"	23'-0"	2	1	7"	6 7/8"	13	12 7/8"	2
24'-0"	25'-0"	1	2	7"	6 7/8"	13	12 7/8"	2
26'-0"	27'-0"		3	7"	6 7/8"	13	12 7/8"	2

Sn= Nominal Fixture Length, 72" & 96" respectively.
Sa= Actual Fixture Length, for mounting purposes, 75⅜" and 99⅜" respectively. (Slight variation for different manufacturers.)
M= Distance from edge of sign to ℄ of notch, min. 6". When the length of the sign minus 1'-0" is less than the sum of the actual fixture lengths, an offset "K" is used. For additional details see detail A and table III.

TABLE II

MAX. BRACKET SPACING FOR EXTERNALLY ILLUMINATED SIGNS

ACTUAL SIGN HEIGHT "Ha"	SUPPORT TYPES			
	9.12, 11.08, 13.2, 7.2	9.24, 10.48, 12.24, 14.5, 15.8, 7.2 to 7.6		
	SINGLE TUBE DOUBLE TUBE LESS 36" C/C	DOUBLE TUBE		
		C/C 36"-42"	C/C 48"-54"	C/C 60"-72"
	MAXIMUM BRACKET SPACING			
to 5'-0"	6'-4" with X 8'-4" with Y	8'-4" with X	8'-4" with X	8'-4" with X
5'-6" to 8'-0"	6'-4" with Y	4'-2" with X 6'-4" with Y	6'-4" with X 8'-4" with Y	8'-4" with X
8'-6" to 10'-0"	3'-2" with X 4'-2" with Y	6'-4" with Y	6'-4" with Y	8'-4" with Y
10'-6" to 12'-0"	———	4'-2" with Y	6'-4" with Y	6'-4" with Y
12'-6" to 14'-0"	———	3'-2" with Y	3'-2" with Y	4'-2" with Y

Ha= ACTUAL SIGN HEIGHT
He= EFFECTIVE SIGN HEIGHT
BRACKET SIZE: Xs = 3½" X 2½" X 5/16" — L @ 6.1 LB. STEEL } 9.12, 10.48, 11.08,
Ys = 4" X 3 1/16" X ¼" — Z @ 8.2 LB. STEEL } 12.24, 14.5 & 15.8
Xa = 3" X 2 1/16" X ¼" — Z @ 2.33 LB. ALUM. } 7.2 Thru 7.6
Ya = 4" X 2 3/32" X 3/16" — I @ 2.64 LB. ALUM. }

WHEN MAX. ALLOWABLE SPACING IS LESS THAN ACTUAL FIXTURE LENGTHS, Sa, ADDITIONAL STANDARD BRACKETS MUST BE FURNISHED, EQUAL IN HEIGHT TO "Ha".

SUPPORTS 7.2 THROUGH 7.6 SHALL HAVE AN ALUMINUM FIXTURE ARM, 4"X3"X¼" ANGLE. SEE DETAIL B. BOLTS AND ACCESSORIES SHALL BE STAINLESS STEEL.

BUREAU OF TRAFFIC
OHIO DEPARTMENT OF HIGHWAYS

STRUCTURAL DETAILS FOR EXTERNALLY ILLUMINATED SIGNS	EI-1	DATE 10-16-63 5-6-64 10-28-64

APPROVED Fred C Tarbox
ENGINEER OF TRAFFIC

STRUCTURAL DETAILS FOR EXTERNALLY ILLUMINATED SIGNS

FED. RD. DIVISION	STATE	PROJECT	
2	OHIO		

230
492

HAMILTON COUNTY
HAM-71-(1.56) (2.51)

SIGN LIGHTING NOTES

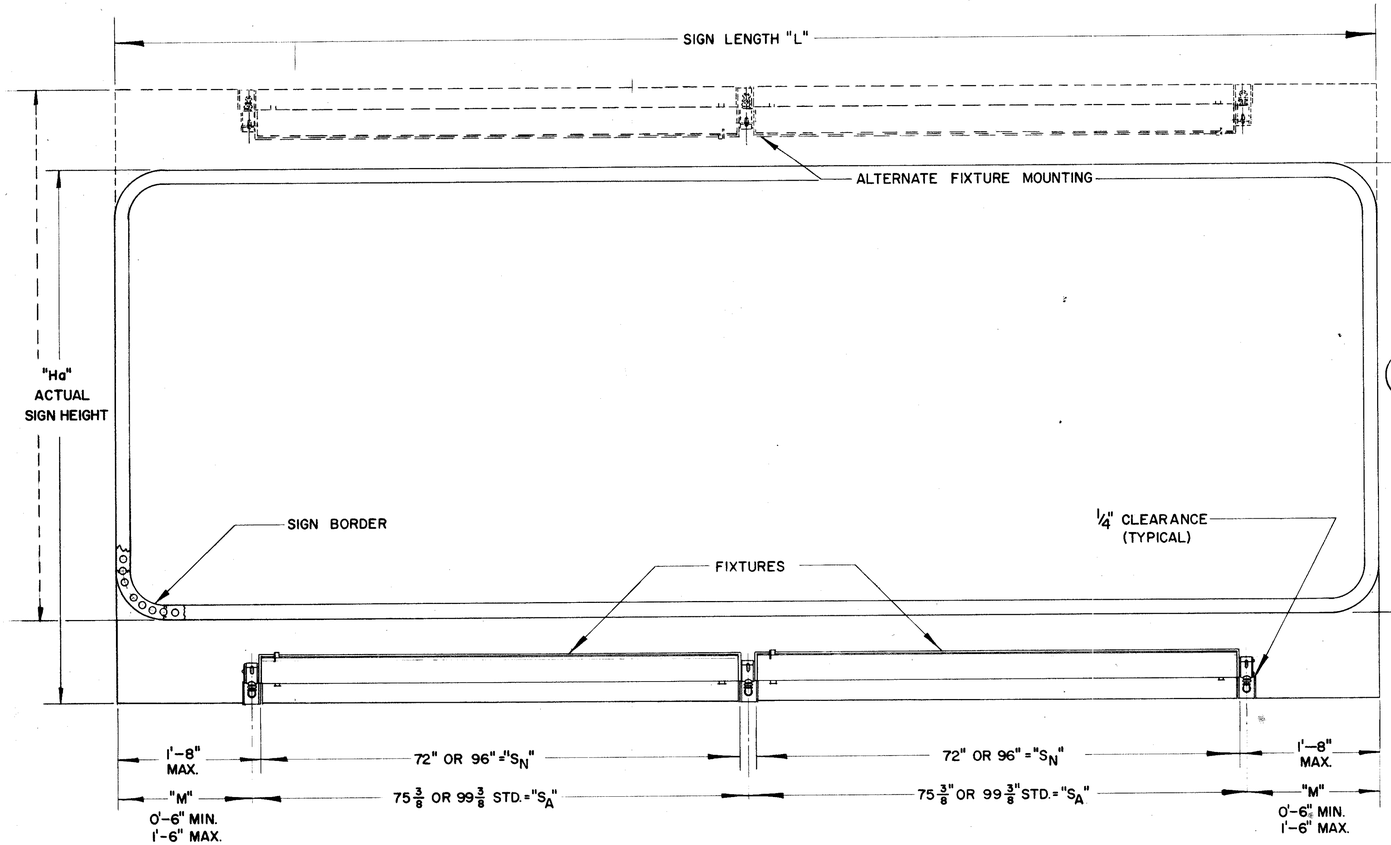

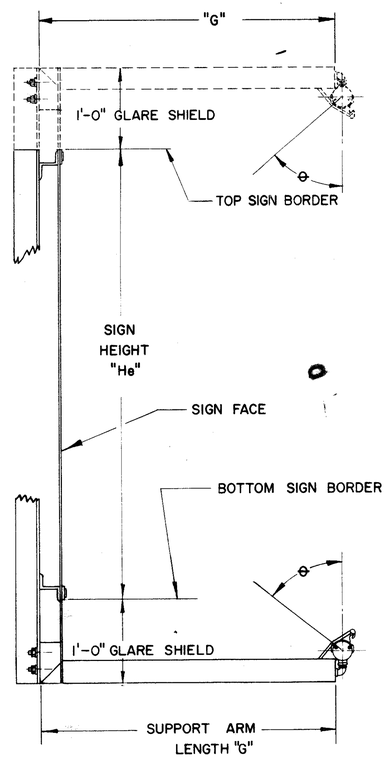

SIGN ILLUMINATION

SIGN ILLUMINATION SHALL BE BY ATTACHED FLUORESCENT FIXTURES AS SHOWN ON ILLUMINATED SIGN DETAIL SHEETS.

LAMPS

LAMPS SHALL BE TYPE F72 OR F96-T12/CW/HO AS MANUFACTURED BY WESTINGHOUSE, GENERAL ELECTRIC OR APPROVED EQUAL FOR SIGNS TO A MAXIMUM HEIGHT OF 6'-6". LAMP TYPE SHALL BE F72 OR F96-T12/CW/SHO AS MANUFACTURED BY WESTINGHOUSE, F72 OR F96-PG17/CW AS MANUFACTURED BY GENERAL ELECTRIC OR APPROVED EQUAL FOR SIGNS THAT ARE 7'-0" OR GREATER IN HEIGHT.

LAMP FIXTURES

LIGHTING FIXTURES SHALL BE CONSTRUCTED OF CORROSION RESISTANT MATERIALS OR WITH HIGH QUALITY CORROSION RESISTANT FINISH. ALL FIXTURES SHALL BE SPECIFICALLY DESIGNED FOR OUTDOOR SIGN LIGHTING SERVICE. MAJOR COMPONENTS SHALL INCLUDE WEATHERPROOF CAST ALUMINUM MOUNTING HUBS DESIGNED TO SECURELY LOCK THE FIXTURES AT ANY ANGLE THROUGH 360 DEGREES. INDICATORS IN 10 DEGREE INCREMENTS SHALL BE STAMPED OR CAST INTO THE HUB TO FACILITATE PROPER AIMING OF THE FIXTURE. FINAL ADJUSTMENT OF FIXTURE SHALL BE DONE AT NIGHT UNDER THE PROJECT ENGINEER'S DIRECTION.

THE BODY DESIGN OF THE FIXTURE SHALL PROVIDE AN ASYMMETRIC SPECULAR ALZAK REFLECTOR TO GIVE A HIGH LEVEL OF UNIFORM ILLUMINATION AND SHALL PROVIDE A WIREWAY FROM END TO END. WHEN ADJACENT FIXTURES ARE WIRED TOGETHER THROUGH THE WIREWAY, WIRE BETWEEN FIXTURES SHALL BE ENTIRELY ENCLOSED.

EXTERIOR FINISH OF THE FIXTURE BODY SHALL BE INTERSTATE GREEN COLOR, HEAT RESISTANT BAKED ENAMEL SUCH AS UNIVERSAL PAINT AND VARNISH INC. 8950 OR EQUIVALENT BY MIDWESTERN COLOR WORKS, OR APPROVED EQUAL. REFLECTOR, LAMP AND SOCKETS SHALL BE PROTECTED BY A HINGED DOOR OF CLEAR ACRYLIC PLASTIC WITH ALUMINUM OR STAINLESS STEEL FRAME AND NEOPRENE GASKETING.

BALLASTS

BALLASTS FOR FIXTURES SHALL BE WEATHER-PROOF OUTDOOR TYPE FOR A 120 VOLT 60 CYCLE SYSTEM AND SHALL PROVIDE LAMP STARTING AT AN AMBIENT TEMPERATURE OF -20°F. BALLASTS SHALL BE MOUNTED ON SIGN BRACKET ONLY. WIRING SHALL BE ACCOMPLISHED IN SUCH A MANNER THAT THE SIGN MAY BE REMOVED WITHOUT DISTURBING THE ELECTRICAL WIRING.

EFFECTIVE SIGN HEIGHT "H"	SUPPORT ARM LENGTH "G"	APPROX. AIMING ANGLE -θ-
3'-0" to 5'-0"	2'-9"	25°
5'-0" to 6'-6"	3'-3"	25°
7'-0" to 10'-0"	4'-3"	17°
10'-6" to 13'-0"	5'-9"	23°

"L" SIGN LENGTH	NO. OF FIXTURES			He=3'-0" to 6'-6" LAMP=T12/cw/ho			He=7'-0" to 13'-0" LAMP=T12/cw/sho		
	72	96		BALLAST NO.	BALLAST TYPE	WATTAGE PER SIGN	BALLAST NO.	BALLAST TYPE	WATTAGE PER SIGN
6'-0" to 7'-0"	1			1	A	190	1	C	250
8'-0" to 9'-0"	1			1	A	190	1	C	250
10'-0" to 11'-0"			1	1	A	190	1	C	250
12'-0" to 13'-0"	2			1	B	250	1	D	425
14'-0" to 15'-0"	2			1	B	250	1	D	425
16'-0" to 17'-0"	1	1		1	B	250	1	D	425
18'-0" to 19'-0"			2	1	B	250	1	D	425
20'-0" to 21'-0"	3			2	A&B	440	2	C&D	675
22'-0" to 23'-0"	2	1		2	A&B	440	2	C&D	675
24'-0" to 25'-0"	1	2		2	A&B	440	2	C&D	675
26'-0" to 27'-0"		3		2	A&B	440	2	C&D	675

BALLASTS

TYPE	MANUFACTURERS		WATTAGE
	G.E.	JEFFERSON	
A	GG 3583	257-151	190
B	GG 3535	257-171	250
C	GG 3585	257-231	250
D	GG 3588	257-181	425

BALLASTS SHALL BE GENERAL ELECTRIC, JEFFERSON AS SPECIFIED ABOVE OR EQUAL.

BUREAU OF TRAFFIC
OHIO DEPARTMENT OF HIGHWAYS

ELECTRICAL DETAILS FOR EXTERNALLY ILLUMINATED SIGNS

EI-2

DATE 10-31-63 5-6-64 10-29-64

APPROVED Jack O Traffic
ENGINEER OF TRAFFIC

FED. RD. DIVISION	STATE	PROJECT	
2	OHIO		

231
492

HAM-71-(1.56)(2.51)

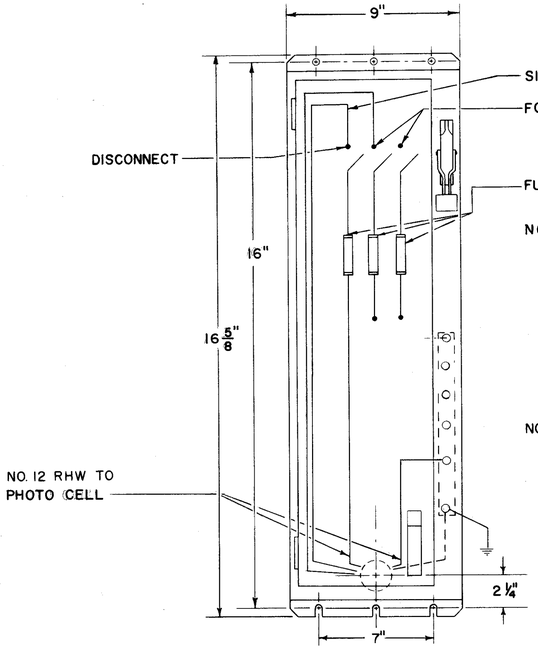

TYPICAL ENCLOSURE DETAIL

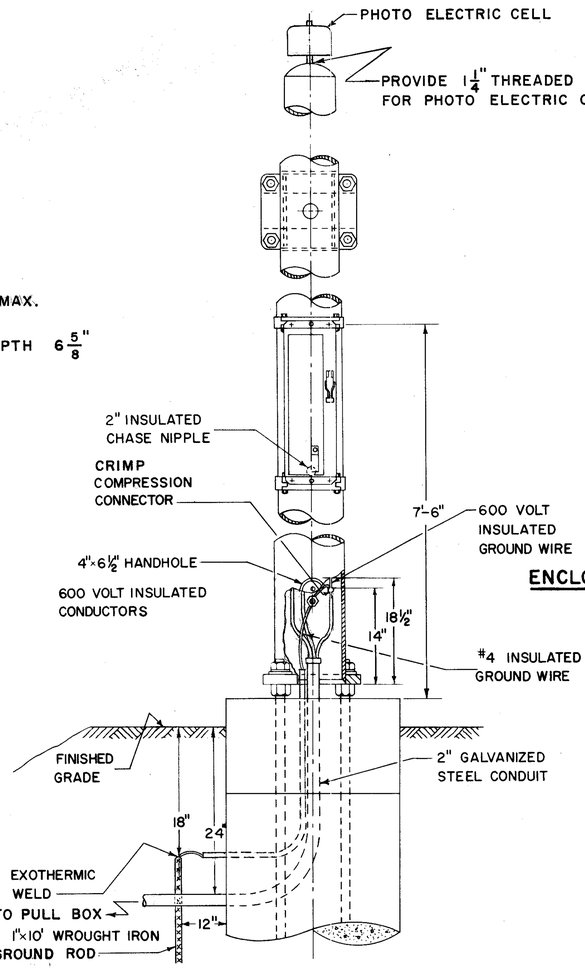

SIGN SUPPORT DETAIL FOR ILLUMINATED SIGNS

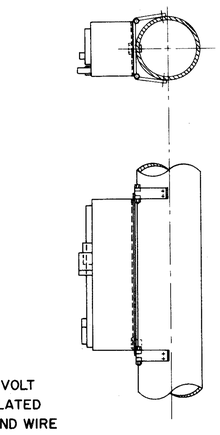

ENCLOSURE MOUNTING DETAIL

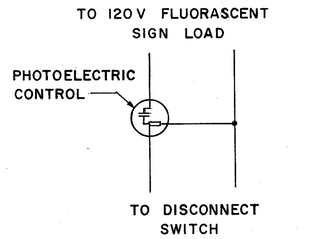

PHOTO CELL DETAIL

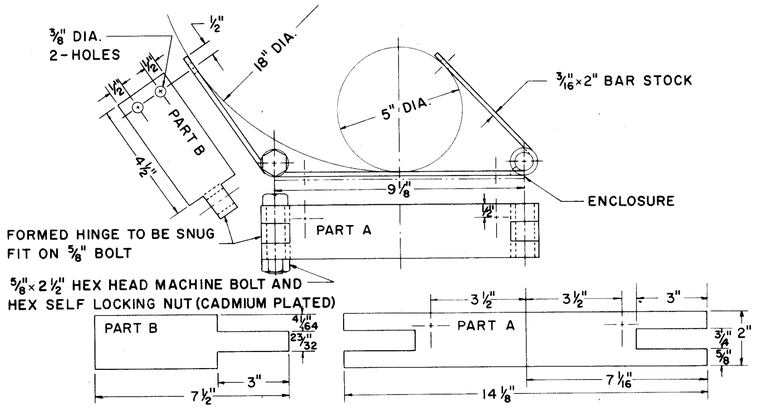

ENCLOSURE MOUNTING BRACKET

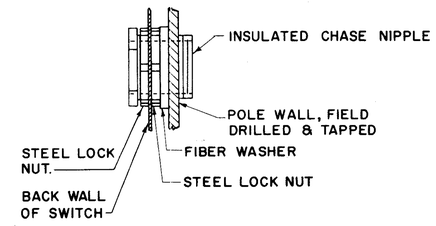

CHASE NIPPLE ASSEMBLY DETAIL

INSULATED CHASE NIPPLE AS MANUFACTURED BY APPLETON, THOMAS BETTS, OR STEEL CITY OR EQUAL.

NOTES

GENERAL

DETAILS OF THIS SHEET SHALL APPLY TO EACH OVERHEAD SIGN STRUCTURE TO SUPPORT EXTERNALLY ILLUMINATED SIGNS.

SERVICE

ELECTRIC SERVICE SHALL ENTER THROUGH A 2" GALVANIZED RIGID STEEL CONDUIT INSTALLED IN STRUCTURE FOUNDATION AS PER DETAIL. SIGN SERVICE OR CIRCUITRY SHALL BE CONTROLLED AS REQUIRED BY THE SYSTEM DESIGN AT THE PRIMARY SOURCE.

SERVICE CONDUCTORS SHALL BE THE SIZE AND TYPE AS SPECIFIED.

DISCONNECT SWITCH

(TYPE "X" ENCLOSURE REQUIRED AS PER SCHEDULE ON THIS SHEET)

THE DISCONNECT SHALL BE A 30 AMPERE 600 VOLT SWITCH. THE SWITCH AND ENCLOSURE SHALL BE AS SQUARE D CLASS 9421, COLUMBUS ELECTRIC WORKS CLASS 101, PANELS INCORPORATED – CLASS 9400, OR APPROVED EQUAL.

TRANSFORMER

THE TRANSFORMER SHALL BE DRY TYPE SINGLE FACE 240/480 VOLT PRIMARY 120/240 VOLT SECONDARY, THE TYPE AND CAPACITY AS SPECIFIED IN DETAILED SCHEDULE ON THIS SHEET.

ENCLOSURE

THE ENCLOSURE SHALL BE NEMA #4 WATER TIGHT .063 GAGE STAINLESS STEEL ASTA 302-303. A DISCONNECT HANDLE SHALL BE FLANGE MOUNTED AND CAPABLE OF BEING LOCKED IN EITHER POSITION. THE ENCLOSURE SHALL BE EQUIPPED WITH A DOOR LOCKING MECHANISM WITH A DEFEATER THAT NECESSITATES TWO HANDS TO OPERATE MECHANISM WITH THE SWITCH IN OFF POSITION. SPACE FOR A 2" INSULATED CHASE NIPPLE SHALL BE PROVIDED APPROXIMATELY 2 1/4" ABOVE THE CENTER LINE OF THE LOWER MOUNTING SLOT. THIS ENCLOSURE AND STRUCTURE SHALL BE FIELD DRILLED AND TAPPED FOR THE REQUIRED NIPPLE AS SHOWN ON THE DETAIL ON THIS SHEET.

THIS ENCLOSURE SHALL BE FLANGE MOUNTED ON BRACKETS WITH 5/16-18×3/4" HEX HEAD CADMIUM PLATED MACHINE BOLTS. ENCLOSURES SHALL BE TYPE "X" AS SPECIFIED AND DIMENSIONED ON THIS SHEET.

ENCLOSURE MOUNTING BRACKET

THE ENCLOSURE MOUNTING BRACKET SHALL BE FABRICATED THEN GALVANIZED BEFORE ASSEMBLY. THE BRACKET SHALL BE FIELD MOUNTED WITH 5/16 HEX HEAD SELF TAPPING CADMIUM PLATED SCREWS. THE SIGN SUPPORT SHALL BE FIELD DRILLED, AS PER DETAIL.

WIRE AND CABLE

ALL WIRE AND CABLE UP TO AND INCLUDING #4 SHALL COMPLY WITH FAA TYPE A SPECIFICATIONS. #2 OR LARGER WIRE OR CABLE SHALL BE G.E. 58006 OR ANACONDA AP-10711, OR EQUAL. ALL WIRE AND CABLE SHALL BE 600 VOLT.

GROUNDING

EACH SIGN SUPPORT OR STRUCTURE SHALL BE GROUNDED WITH A #4 RUBBER INSULATION AND NEOPRENE JACKETED CONDUCTOR. THE GROUNDING CONDUCTOR SHALL BE CONNECTED TO THE SWITCH THEN TO THE COMPRESSION CONNECTOR IN THE SIGN SUPPORT THEN TO A 1"×10' GALVANIZED WROUGHT IRON GROUND ROD. GROUND CONDUCTOR SHALL BE EXOTHERMICALLY WELDED TO GROUND ROD AND THEN TAPED WITH PLASTIC ELECTRICAL TAPE AT EACH EXPOSED PORTION OF CONDUCTOR. THE WELDED CONNECTION AND TAPED PORTION SHALL BE PAINTED 2 COATS OF INSULATING ENAMEL.

BUREAU OF TRAFFIC
OHIO DEPARTMENT OF HIGHWAYS

ELECTRICAL SIGN SERVICE DETAILS

ES-3A

DATE 6-18-64 7-20-65

APPROVED _____
ENGINEER OF TRAFFIC

FED. RD. DIV.	STATE	PROJECT	FISCAL YEAR
2	OHIO		

232
492

HAMILTON COUNTY
HAM - 71 - (1.56) (2.51)

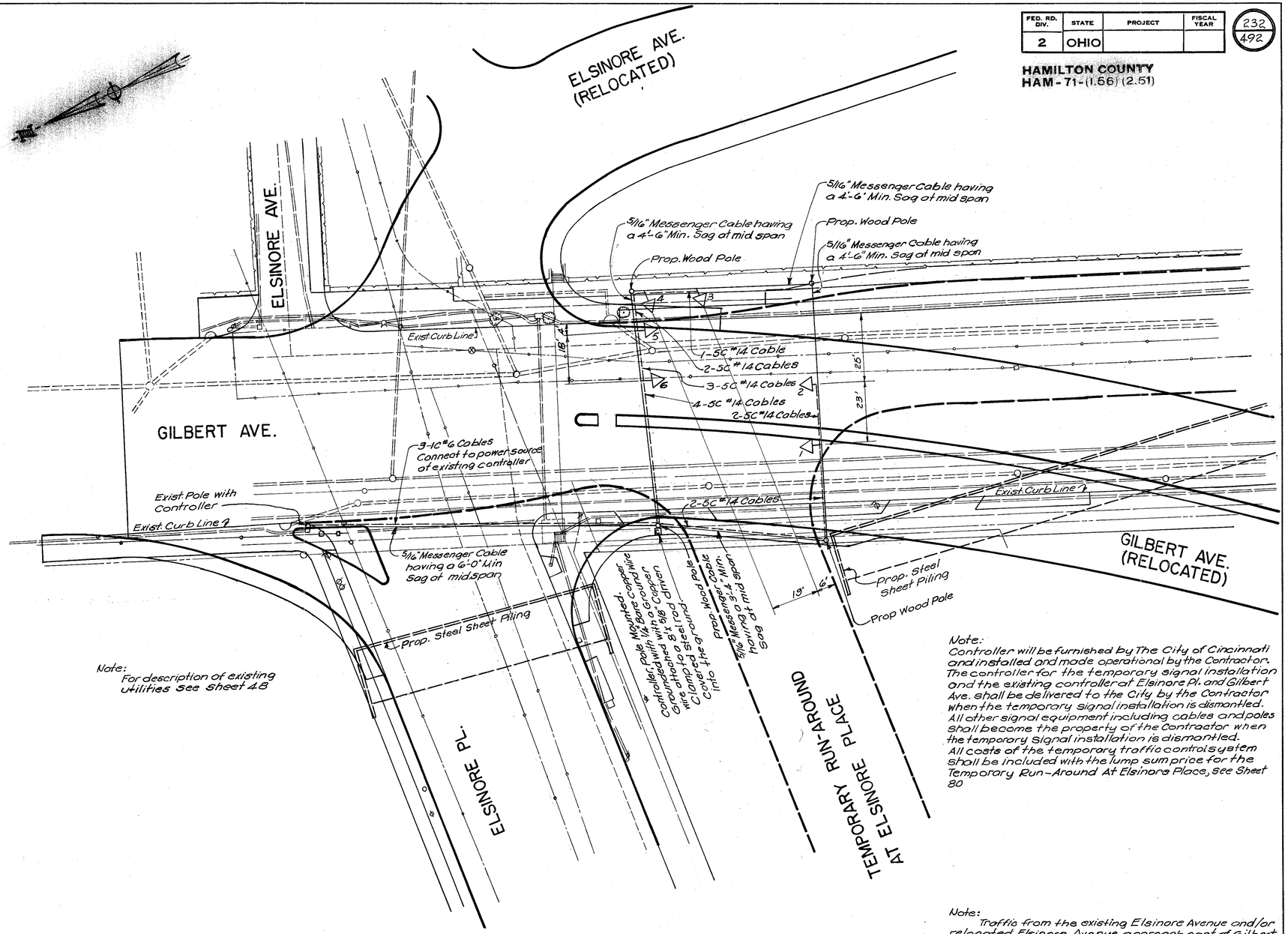

Note:
For description of existing utilities see Sheet 18

Note:
Traffic Signals "1 thru. "6 shall be vertical, 3 head, 8" face. Messenger Cables shall be installed to provide a 16'-0" minimum vertical clearance between the roadway surface and the bottom of the signals or the bottom of cables crossing Elsinore Place, its temporary run-around and Gilbert Ave.

Note:
Controller will be furnished by The City of Cincinnati and installed and made operational by the Contractor. The controller for the temporary signal installation and the existing controller at Elsinore Pl. and Gilbert Ave. shall be delivered to the City by the Contractor when the temporary signal installation is dismantled. All other signal equipment including cables and poles shall become the property of the Contractor when the temporary signal installation is dismantled. All costs of the temporary traffic control system shall be included with the lump sum price for the Temporary Run-Around At Elsinore Place, see Sheet 80

Note:
Traffic from the existing Elsinore Avenue and/or relocated Elsinore Avenue approach east of Gilbert Avenue shall be controlled by Stop signs during use of the Temporary Run-Around at Elsinore Place.

TEMPORARY TRAFFIC CONTROL DETAILS

FED. RD. DIV.	STATE	PROJECT	FISCAL YEAR
2	OHIO		

233
492

HAMILTON COUNTY
HAM-71-(1.56) (2.51)

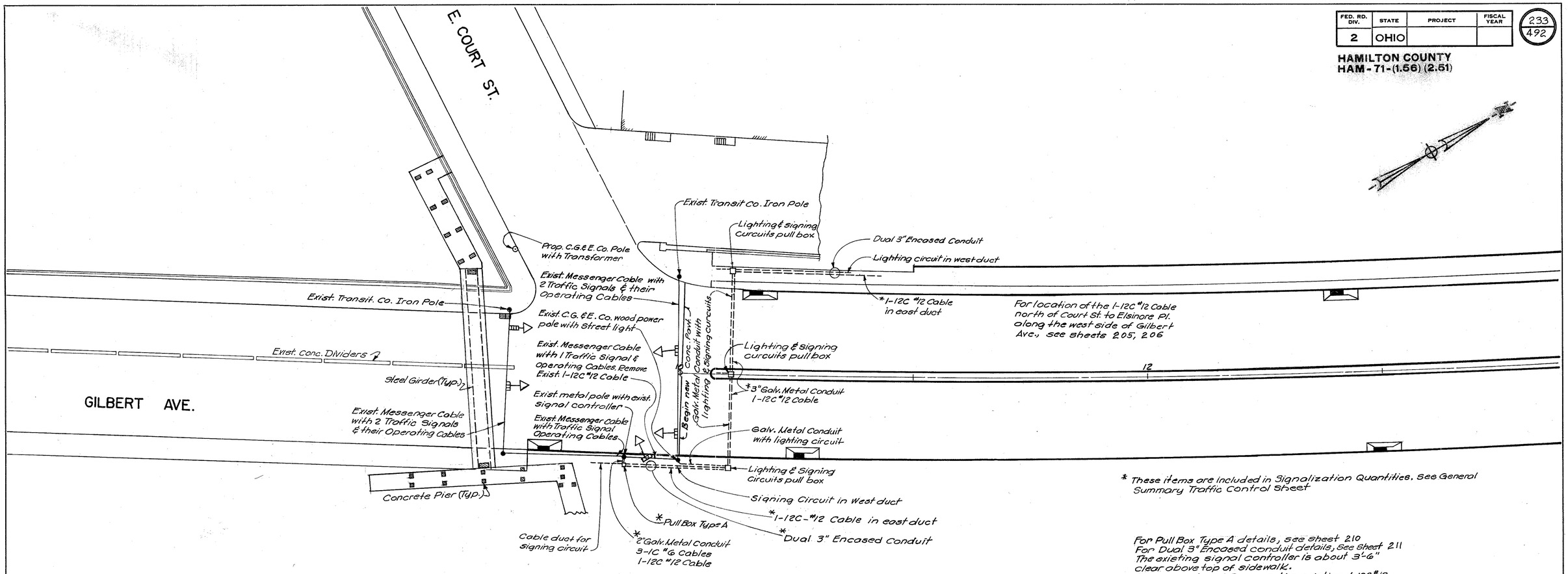

For location of the 1-12C #12 Cable north of Court St. to Elsinore Pl. along the west side of Gilbert Ave., see sheets 205, 206

* These items are included in Signalization Quantities. See General Summary Traffic Control Sheet

For Pull Box Type A details, see sheet 210
For Dual 3" Encased conduit details, see sheet 211
The existing signal controller is about 3'-6" clear above top of sidewalk.
Disconnect and Remove the existing 1-12C #12 Cable at the existing Traffic Controller. Connect the new 1-12C #12 Cable
Disconnect and remove the existing power cables at the existing Traffic controller. Connect the new 3-1C #6 Cables to the controller and their other ends to the signing circuit with 2-fused "Y" Connector kits, Type II (Type KTK 600 V. fuse with a rating equal to 200 % controller load) and 1-unfused "Y" Connector kit, Type III.
Ground the existing controller with a ground wire to the ground rod in the pull box. For description of the ground wire and rod see sheet 210

TRAFFIC CONTROL DETAILS

FED. RD. DIV.	STATE	PROJECT	FISCAL YEAR
2	OHIO		

234
492

HAMILTON COUNTY
HAM-71-(1.56) (2.51)

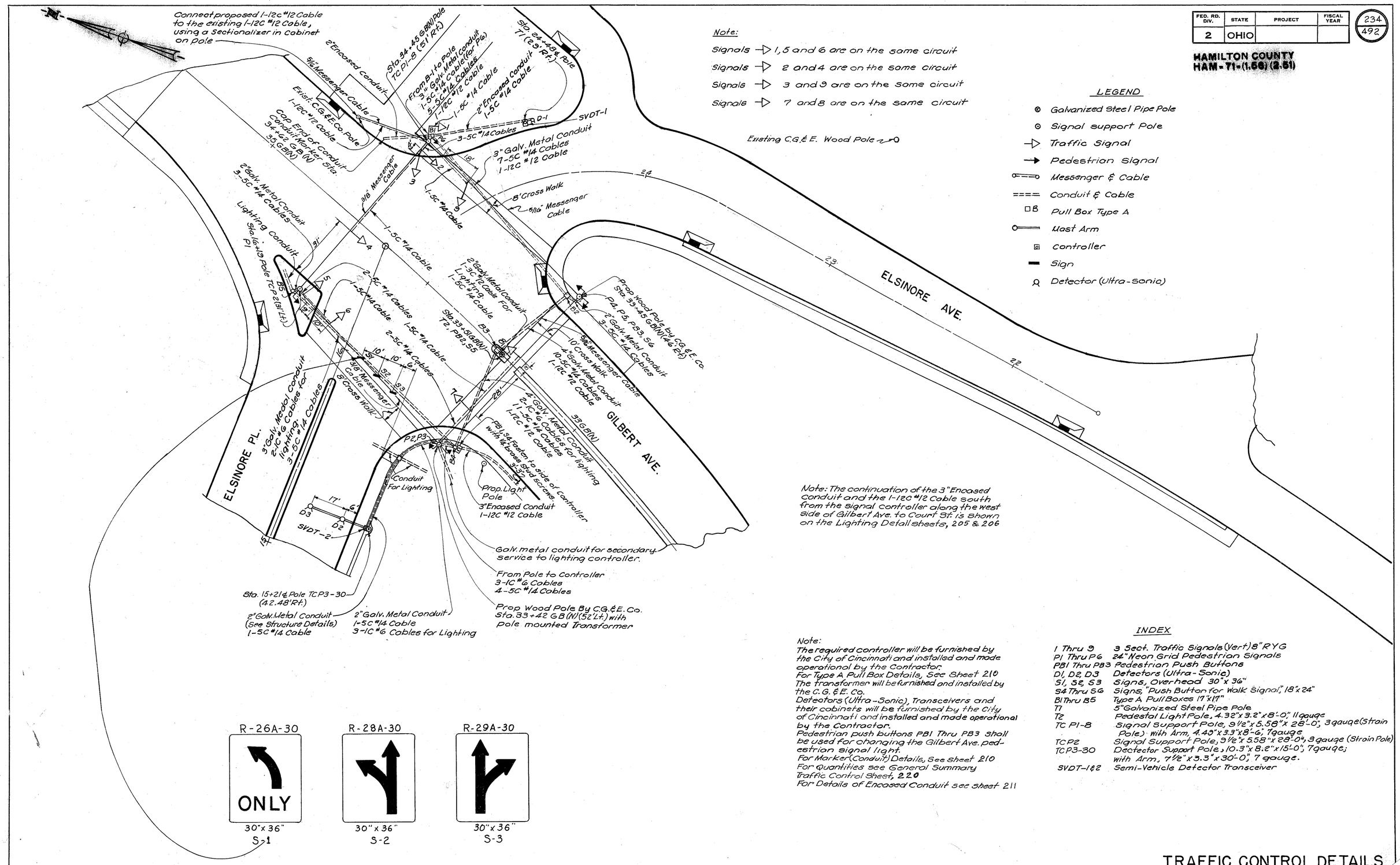

Note: The continuation of the 3" Encased conduit and the 1-12C #12 Cable south from the signal controller along the west side of Gilbert Ave. to Court St. is shown on the Lighting Detail sheets, 205 & 206

Note:
The required controller will be furnished by the City of Cincinnati and installed and made operational by the Contractor.
For Type A Pull Box Details, See Sheet 210
The transformer will be furnished and installed by the C.G.&E. Co.
Detectors (Ultra-Sonic), Transceivers and their cabinets will be furnished by the City of Cincinnati and installed and made operational by the Contractor.
Pedestrian push buttons PB1 Thru PB3 shall be used for changing the Gilbert Ave. pedestrian signal light.
For Marker (Conduit) Details, See Sheet 210
For Quantities see General Summary Traffic Control Sheet, 220
For Details of Encased Conduit see sheet 211

INDEX

1 Thru 9	3 Sect. Traffic Signals (Vert) 8" RYG
P1 Thru P6	24" Neon Grid Pedestrian Signals
PB1 Thru PB3	Pedestrian Push Buttons
D1, D2, D3	Detectors (Ultra-Sonic)
S1, S2, S3	Signs, Overhead 30"x36"
S4 Thru S6	Signs, "Push Button for Walk Signal," 18"x24"
B1 Thru B5	Type A Pull Boxes 17"x17"
T1	5" Galvanized Steel Pipe Pole
T2	Pedestal Light Pole, 4.32"x3.2"x8'-0", 11 gauge
TC P1-8	Signal Support Pole, 9 1/2"x5.58"x28'-0", 3 gauge (Strain Pole) with Arm, 4.49"x3.3"x8'-6", 7 gauge
TC P2	Signal Support Pole, 9 1/2"x5.58"x28'-0", 3 gauge (Strain Pole)
TC P3-30	Dectector Support Pole, 10.3"x8.2"x15'-0", 7 gauge; with Arm, 7 1/2"x3.3"x30'-0", 7 gauge.
SVDT-1&2	Semi-Vehicle Detector Transceiver

TRAFFIC CONTROL DETAILS

FED. RD. DIV.	STATE	PROJECT	FISCAL YEAR
2	OHIO		

235
492

HAMILTON COUNTY
HAM-71-(1.56) (2.51)

STEEL POLE CAP
CONNECT MASTER GROUND & BINDING WIRES TO SPAN WIRE WITH SPLIT BOLT (TYP.)
L - SPAN LENGTH - VARIES
SPAN WIRE CLAMP
.05 L MIN. SAG
LACE CABLE WITH PLASTIC TAPE
#14 BARE COPPER BINDING WIRE (TYP.)
SIGNAL HANGER & WIRE ENTRY
3" GALVANIZED ENTRANCE FITTING
3" HALF-COUPLING
RED
YELLOW
GREEN
TYP. FOR ALL SIGNALS
NO. 9
THROUGH BOLTS
WOOD POLE BY C.G. & E. Co.
¼" BRASS GROUND WIRE CONNECT TO GROUND ROD AT BASE OF POLE (NOT SHOWN).
¼" CONDUIT CLAMPS 12" APART
WOOD POLE PLATE FOR 1½" HORIZ. & DOWN HUBS
18
PUSH BUTTON FOR WALK SIGNAL
24"
A
A
THROUGH BOLTS
LAG SCREWS
1½" GALV. METAL CONDUIT AND 150 LB. TEST FITTING
1½" THREADED GALV. CONDUIT FITTING WITH REMOVABLE COVER
2'-6"
DONT WALK
DRAIN HOLES - 2 IN BOTTOM OF SIGNAL. 1 IN BOTTOM OF CONDUIT FITTINGS
THROUGH BOLTS
1½" GALV. METAL CONDUIT
2'-0"
LAG SCREWS
4'-0"
PEDESTRIAN PUSH BUTTON
2" GALV. METAL CONDUIT
4'
NOTE: CONNECT GROUND WIRE (NOT SHOWN) TO WALK LIGHT, PUSH BUTTON AND TO GROUND ROD IN PULL BOX
ARRANGE SO THAT NEITHER SIGNAL INTERFERES WITH OPENING THE DOOR OR BACK OF OTHER SIGNAL
PUSH BUTTON
45°
GILBERT AVE.
CURB
SECTION A-A
23'-0"
16'
POLE TCP1-8
4" x 6½" HANDHOLE WITH REINFORCED FRAME & COVER
12"
ELSINORE AVE.
NOTE: FOR DESCRIPTION OF GROUND WIRE & ROD SEE SHEET 210
FOR DESCRIPTION OF HAND HOLE SEE SHEET 211
2" x 4" HANDHOLE WITH REINFORCED FRAME & COVER

ELEVATION LOOKING EAST

1½" HALF-COUPLING
GALVANIZED STEEL CAP
1½" GALV. ENTRANCE FITTING
5" STEEL PIPE POLE 9'-3" LONG. GALVANIZE AFTER FABRICATION
1'-0"
GALVANIZED POLE CLAMP W/BOLTS
GALVANIZED STEEL STRAP
EQUIPMENT CASE WITH TRANSCEIVER
GROMMETED WIRE ENTRY 2" GALVANIZED PIPE 6" LONG FOR SLIP FIT.
2-CABLES, BELDEN No. 8412 OR APHA No. 1250 OR EQUAL
8'-0" DETECTOR (ULTRA-SONIC)
1½" GALV. PIPE NIPPLE 2" LONG
GALV. CONDUIT FITTING WITH REMOVABLE COVER
1½" GALV. PIPE NIPPLE 2" LONG
4-¾" x 14" ANCHOR BOLT WITH WASHERS. PROJECT 2" ABOVE TOP OF CONCRETE BASE
3'-1"
½"-13UNC GROUNDING NUT OPPOSITE HANDHOLE
CONDUIT TOP PROJECT 2" ABOVE CONCRETE SEE BASE PLATE DETAILS
10"
3"
GROUND LINE
TOP 12" TO BE SQUARE REMAINDER OF DEPTH MAY BE SQUARE OR ROUND
½" EMT FOR GROUND WIRE
GROUND WIRE
3'-0"
2" CONDUIT
GROUND ROD
CLASS C CONCRETE
12"

ELEVATION

4" GALV. METAL CONDUIT 2-1C #6 CABLE FOR LIGHTING 11-5C #14 CABLES 1-12C #12 CABLE
LIGHTING CONNECTION: 1-UNFUSED "Y" CONNECTOR KIT, TYPE III AND 2 FUSED "Y" CONNECTOR KITS, TYPE II (TYPE KTK 600 V. FUSE). FUSE RATING = 200% LAMP LOAD
PULL BOX
4" GALV. METAL CONDUIT
1½" GALV. METAL CONDUIT
3" GALV. METAL CONDUIT
2-¾" x 12" ANCHOR BOLTS WITH WASHERS & NUTS
3" GALV. METAL CONDUIT 2-1C #6 CABLES FOR LIGHTING 3-5C #14 CABLES
3"ENCASED CONDUIT 1-12C #12 CABLE
BACK OF SIDEWALK
2" GALV. METAL CONDUIT 1-5C #14 CABLE 3-1C #6 CABLES FOR LIGHTING
NOTE: CONNECT CONTROLLER TO GROUND ROD WITH GROUND CABLE THRU ½" E.M.T. CONDUIT. FOR DESCRIPTION SEE SHT. 210
BUSHING (TYP.)
2" GALV. METAL CONDUIT 4-5C #14 CABLES
½" EMT CONDUIT
GROUND ROD
PROP. WOOD POLE BY C.G. & E. CO.
GALV. METAL CONDUIT FOR SECONDARY SERVICE TO LIGHTING CONTROLLER
1½" GALV. METAL CONDUIT 3-1C #6 CABLES (FROM TRANSFORMER)
8'-0"
PLAN

BUSH TOP OF ALL GALV. METAL CONDUITS
3½"
1" (TYP.)
2" x 2" CHAMFER
GRADE LINES
6"
CONTROLLER FOUNDATION
2'-0"
PULL BOX
GROUND ROD
NOTE: SLOPE ALL CONDUITS TOWARDS A PULL BOX FOR DRAINAGE.
ELEVATION B-B

CONTROLLER FOUNDATION

8"
1½" RAD. (TYP.)
1" HOLE FOR ¾" BOLT
1" THICK STEEL PLATE
8"
4" HOLE
℄ 1½" HALF-COUPLING & HANDHOLE, ABOVE IN POLE
5" STEEL PIPE
3/16"

BASE PLATE DETAILS

TI POLE DETAILS

TRAFFIC CONTROL DETAILS

FED. RD. DIV.	STATE	PROJECT	FISCAL YEAR
2	OHIO		

235A 492

HAMILTON COUNTY
HAM-T1-(1.56)12.49

CONNECT MASTER GROUND & BINDING WIRES TO SPAN WIRE WITH SPLIT BOLT (TYP.)

L - SPAN LENGTH - VARIES

SPAN WIRE CLAMP (TYP.)

.05 L MIN. SAG.

2" GALV. ENTRANCE FITTING

2" HALF - COUPLING

#14 BARE COPPER BINDING WIRE (TYP.)

SIGNAL HANGER & WIRE ENTRY

LACE CABLE WITH PLASTIC TAPE (TYP.)

3" HALF - COUPLING & GALV. ENTRANCE FITTING

7 GAUGE, 4.49" x 3.3" x 8'-6", 12°

12'-0"

4"

12"

1-5C #14 CABLE

1" I.D. RUBBER GROMMETED WIRE ENTRY

DOUBLE CLEVIS SIGNAL HANGER & WIRE ENTRY. 1¼" PIPE AS NEEDED

1½" GALV. ENT. FITTING

1½" HALF - COUPLING

POLE TCP2

12'-6"

SIGNAL No. 4

No. 3

No. 2

No. 1

A

A

8'-0"

6"

7'-6"

POLE TCP1-8

GROMMETED WIRE ENTRY (TYP.)

1½" GALV. ENTRANCE FITTING (TYP.)

1½" GALV. METAL CONDUIT & 150 LB. TEST FITTING (TYP.)

DONT WALK

2'-6"

6"

2'

15'

16' (TYP.)

8'

PROJECT CONDUIT 2½" (TYP.)

HANDHOLE 4" x 6½" (TYP.)

DRAIN HOLES, 2 IN BOTTOM OF SIGNAL. 1 IN BOTTOM OF CONDUIT FITTING (TYP.)

½"-13 UNC GROUNDING NUT (TYP.)

½" EMT FOR GROUND WIRE (TYP.)

4 - 1½" x 60" ANCHOR RODS 13" BOLT CIRCLE, 3⅛" BOLT PROJECTION (TYP.)

2½" GALV. METAL CONDUIT, BUSH ENDS

10'-0"

2'-0"

DONT WALK

2'-6"

8'-0"

GILBERT AVE.

P.T. 25+48.42 SE (E)

90°

CURB LINE

℄ OF HANDHOLE & GROUNDING NUT

℄ 8'-6" SIGNAL ARM & HOLE FOR 1½" HALF - COUPLING

℄ PEDESTRIAN SIGNAL ARM & HOLE FOR 1½" ENTRANCE FITTING

90°

54°

47°

45°

℄ OF HOLE FOR 3" HALF - COUPLING

SECTION A - A

NOTE: FOR POLE FOUNDATION NOTE & REINFORCEMENT SEE SHEET 210

CLASS C CONCRETE (TYP.)

2" GALV. METAL CONDUIT, BUSH ENDS

TOP 12" TO BE SQUARE REMAINDER OF DEPTH MAY BE SQUARE OR ROUND (TYP.)

10'-0"

2'-0"

GILBERT AVE.

ELEVATION LOOKING NORTH

NOTE: CONNECT GROUND WIRE (NOT SHOWN) TO WALK LIGHT AND GROUND ROD IN PULL BOX (TYP.)

NOTE: FOR DESCRIPTION OF GROUND WIRE & ROD SEE SHEET 210
FOR DESCRIPTION OF HANDHOLE SEE SHEET 211

¼" x 8" BRASS ROD & 3 NUTS

SPUN ALUMINUM CAP

SOCKET & LAMP (150 W OR 2500 LUMEN)

PRE - M.F.G. GLASS SHADE HOLDER

#3 FLAT HEAD SCREWS & NUT ⅜" x 1"

POLE T2

PUSH BUTTON FOR WALK SIGNAL

PEDESTRIAN PUSH BUTTON

2" x 4" HANDHOLE WITH REINFORCED FRAME & COVER

CONDUIT & BUSHING TO PROJECT 2"

4 - ¾" - 10 FLAT HD. MACH. SCREW (BRASS) 3" LONG.

TOP OF MEDIAN

8'-0"

4'-0"

8"

C

C

¾" COUPLING

TOP 12" TO BE SQUARE, REMAINDER OF DEPTH MAY BE SQUARE OR ROUND

CLASS C CONCRETE

4 - ¾" x 21" ANCHOR BOLTS

90° ELBOW

3'-0"

18"

ELEVATION
(LOOKING NORTH)

NOTE: THE PEDESTRIAN PUSH BUTTON, WITH SIGN, CONDUIT, PUSH BUTTON CABLE AND PULL BOX, IS INCLUDED WITH TRAFFIC CONTROL QUANTITIES. THE POLE WITH FOUNDATION, HOOD, LAMP AND LAMP WIRING IS INCLUDED WITH LIGHTING QUANTITIES.

MEDIUM CURB LINE

BUSHING (TYP.)

4" GALV. METAL CONDUIT (TYP.)

2-1C #6 CABLES FOR LIGHTING
1-5C #14 CABLE TO PUSH BUTTON

CONNECT GROUND WIRE TO GROUNDING NUT

2" GALV. METAL CONDUIT

GROUND ROD & WIRE FOR DESCRIPTION SEE SHT. 210

LIGHTING CONNECTION:
1 - UNFUSED "Y" CONNECTOR KIT, TYPE III AND 1 FUSED "Y" CONNECTOR KIT TYPE II (TYPE KTK 600 V. FUSE). FUSE RATING = 200 % LAMP LOAD.

1-3C #12 CABLE FOR LIGHTING

2'-0"

2'-0"

2'-0"

½"-13 UNC GROUNDING NUT, PLACE OPPOSITE CENTER OF HANDHOLE

¾" THICK BASE PL - 10" SQ. COUTERSINK FOR BRASS SCREWS

STA. 33+51 GB (N)

5" RAD.

2" RAD (TYP.)

NOTE: SLOPE CONDUITS TOWARD PULL BOX FOR DRAINAGE.

SECTION C-C

T2 POLE DETAILS

TRAFFIC CONTROL DETAILS

FED. RD. DIV.	STATE	PROJECT	FISCAL YEAR
2	OHIO		

235B
492

HAMILTON COUNTY
HAM-71-(1.56) (2.61)

Steel Pole Cap

Connect Master Ground & Binding Wires To Span Wire With Split Bolt (Typ.)

L- Span Length - Varies

Through Bolts

Span wire clamp (Typ.)

.05 L Min. Sag

2-5C #14 CABLES

¼" Conduit Clamps 12" Apart

Fitting to permit angular adjustment of hanger

Hinge w/½" Bolt

¾" ø Rod, threaded, Length as required

Clevis for ¾" rod (Typ.)

Assembly same as shown for sign S3

Signal Hanger & Wire Entry (Typ.)

#14 Bare Copper Binding Wire (Typ.)

Lace Cable with Plastic Tape (Typ.)

½" Galvanized Ent. Fitting

Pipe Fitting

Hinge w/washers as needed (Free turning) (Typ.)

1½" Galv. Metal Conduit

¼" Brass Ground Wire, Connect to Ground Rod at base of pole (Not shown)

Wood Pole by C.G. & E. Co.

Sign S3

1½" Metal Pipe

Sign S2

Sign S1

⅜" Bolt (Typ.)

Pole TCP 2

B

B

A

A

Through Bolts

DONT WALK

Signal No. 6

No. 5

All items except Sign shall be galvanized after manufacture

Typical for Signs S1, S2 & S3

NOTE: Overhead Lane-Use Control Signs shall conform to: Part-1 Standard Signs of the Ohio Manual Of Uniform Traffic Control Devices for Streets & Highways by The Ohio Department of Highways, 1963
Sign S1 shall be type R-26A
Sign S2 shall be type R-28A
Sign S3 shall be type R-29A

19'

2" Galv. Metal Conduit

NOTE: Pedestrian Signal Data not Shown same as on sheet 235

1½" Galv. Metal Conduit to Transformer

1½" Galv. Metal Conduit For 2-5C #14 Cables

2" Threaded Galv. Conduit Fitting with Removable Cover

2" Galv. Metal Conduit

ELEVATION A-A

ELSINORE PL.

ELEVATION LOOKING WEST

℄ 1½" Entrance Fitting for Pedestrian Signal

45°

℄ Handhole

135°

45°

℄ Hole for 2" Half-Coupling

90°

Island Curb Line

Gilbert Ave.

SECTION B-B

TRAFFIC CONTROL DETAILS

FED. RD. DIV.	STATE	PROJECT	FISCAL YEAR
2	OHIO		

235C
492

HAMILTON COUNTY
HAM-71-(1.66)(2.91)

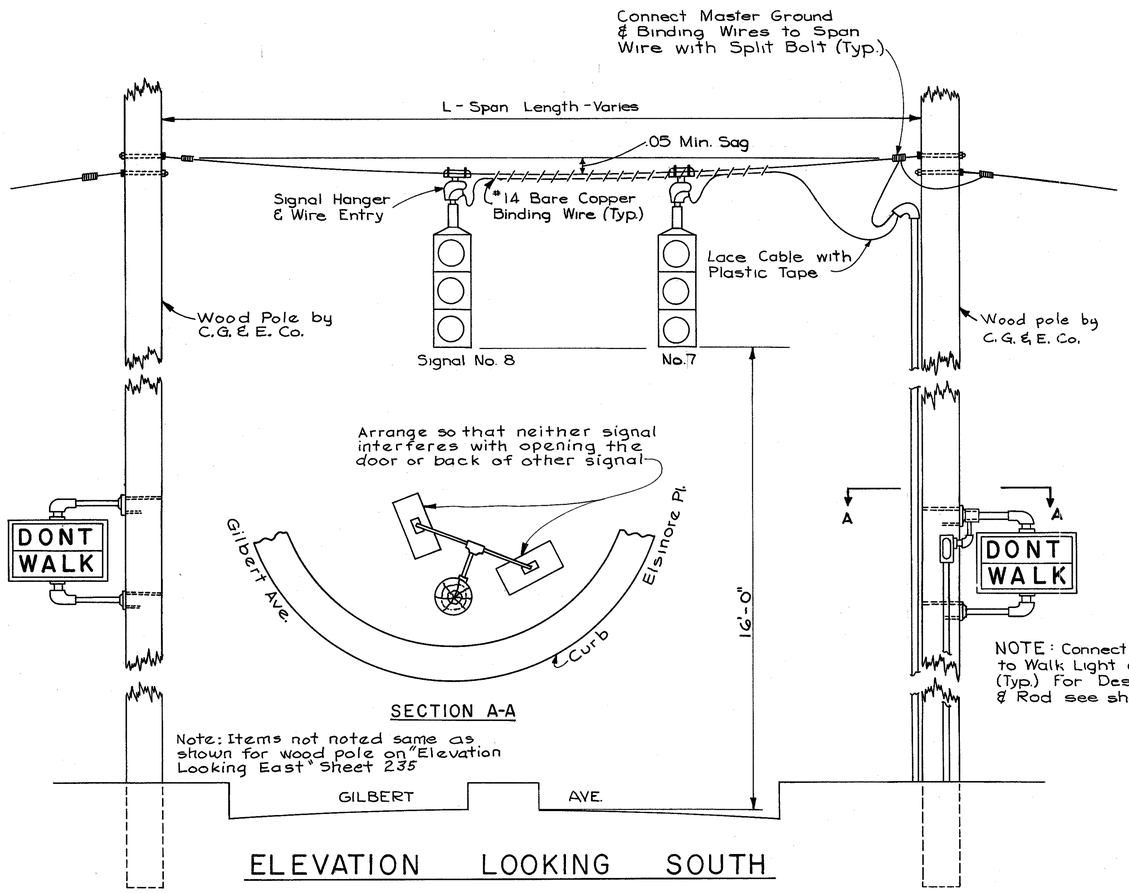

ELEVATION LOOKING SOUTH

NOTE: Connect Ground Wire (Not Shown) to Walk Light and Ground Rod in Pull Box (Typ.) For Description of Ground Wire & Rod see sheet, 210

Note: A No. 1/0 AWG 7 strand, soft annealed bare copper ground cable shall be exothermically welded to the pole anchor bolt and to the top flange of the girder.

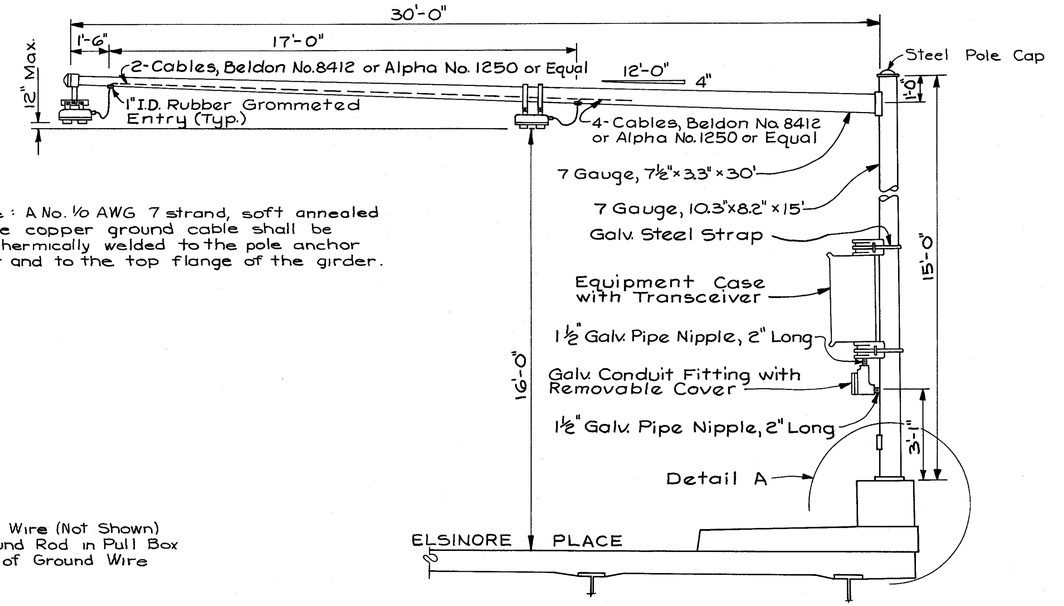

ELEVATION LOOKING EAST

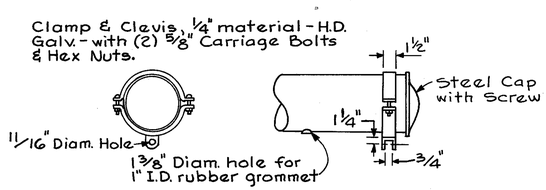

HANGER DETAIL

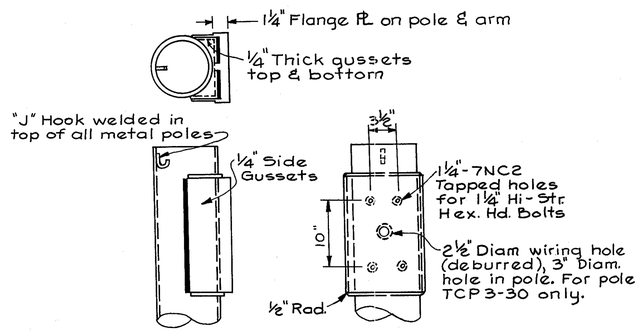

ARM ATTACHMENT DETAIL

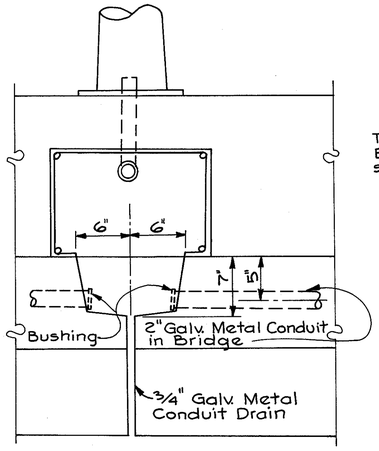

SECTION B-B

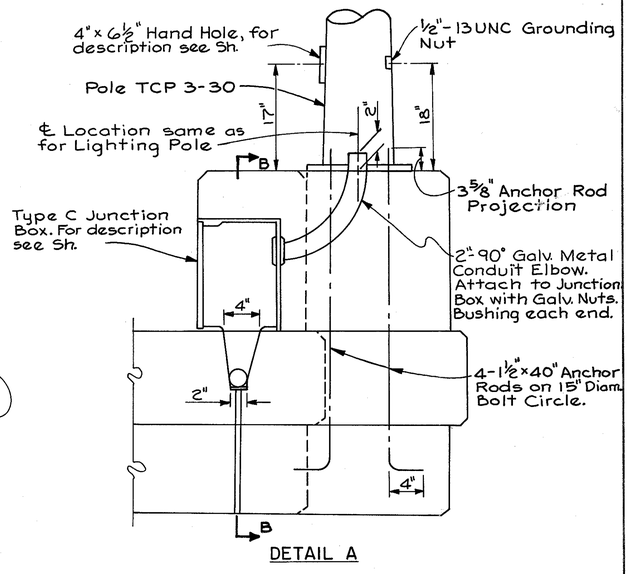

DETAIL A

TCP 3-30 POLE DETAILS

TRAFFIC CONTROL DETAILS

FED. RD. DIV.	STATE	PROJECT	FISCAL YEAR
2	OHIO		

235D
492

HAMILTON COUNTY
HAM-71-(1.56) (2.51)

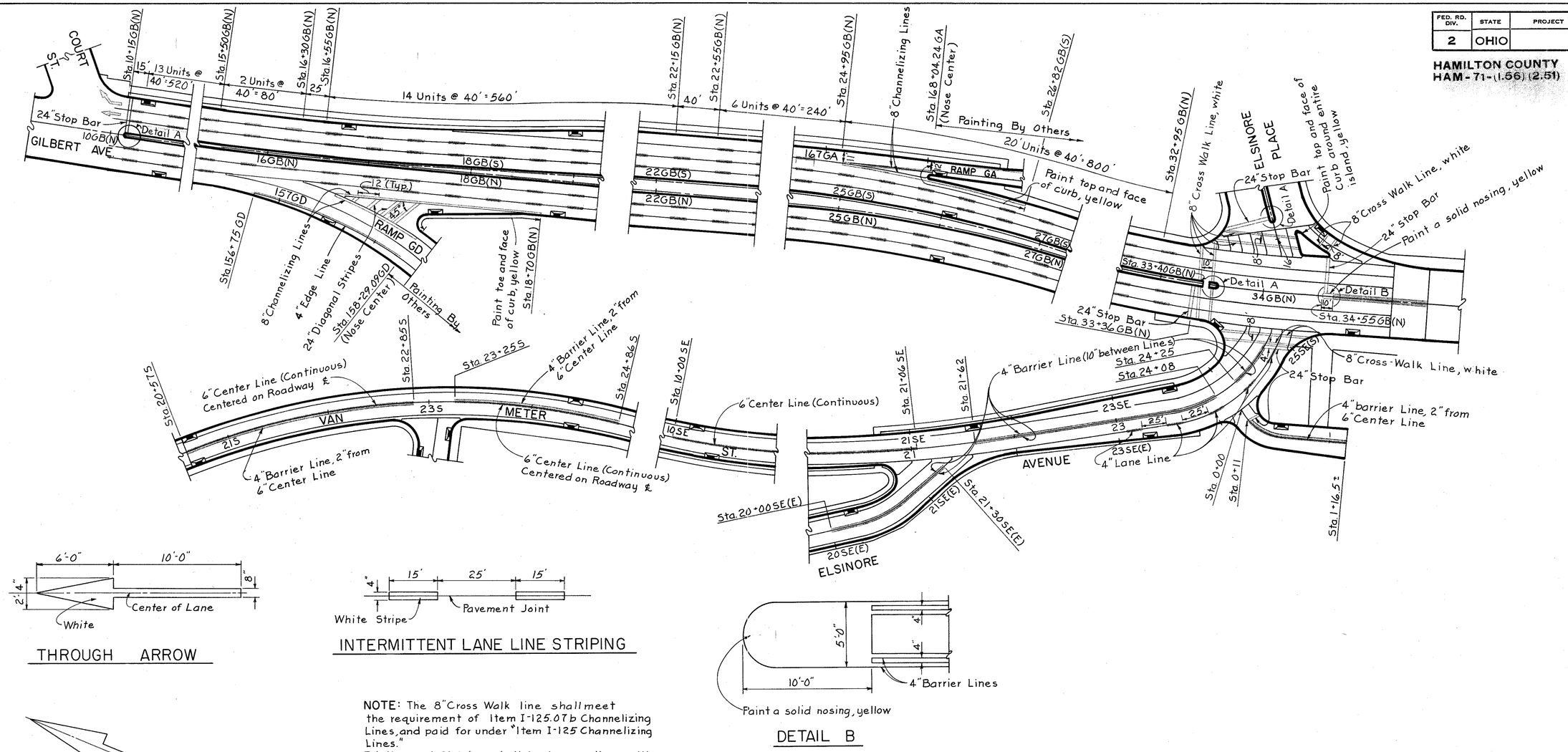

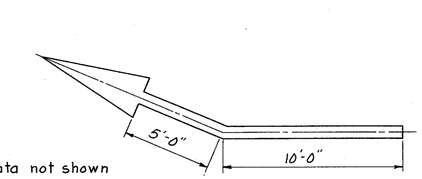

THROUGH ARROW

Data not shown same as for Through Arrow

TURN ARROW

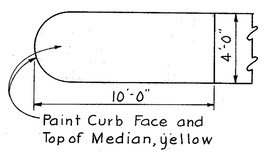

DETAIL A

INTERMITTENT LANE LINE STRIPING

NOTE: The 8" Cross Walk line shall meet the requirement of Item I-125.07b Channelizing Lines, and paid for under "Item I-125 Channelizing Lines."
Painting and Striping shall be in compliance with Supplemental Specifications No. I-125 Revised June 26, 1961.
The 24" Stop Bar shall be a white beaded stripe 24" inches in width and shall be paid for under Item I-125 on a linear foot basis.
The Pavement Arrows shall be white beaded markers of size and shape as shown, and shall be included for payment in "Item I-125 Curb, Island and Pavement Arrow Marking."
For Quantities See General Summary Traffic Control Sheet No. 220

DETAIL B

TRAFFIC CONTROL DETAILS

FED. RD. DIV.	STATE	PROJECT	FISCAL YEAR
2	OHIO		

236
492

HAMILTON COUNTY
HAM-71-(1.56) (2.51)

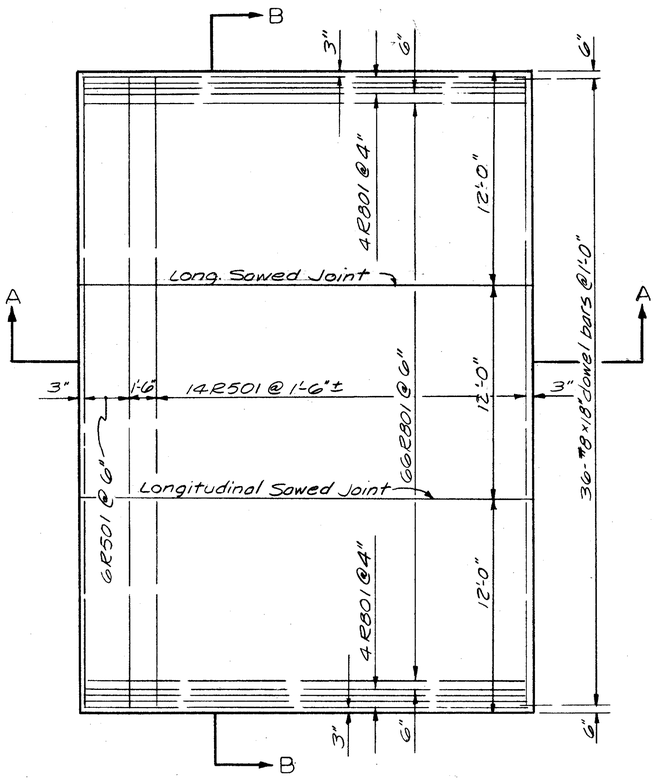

PLAN
NORTH APPROACH SLAB
SOUTHBOUND

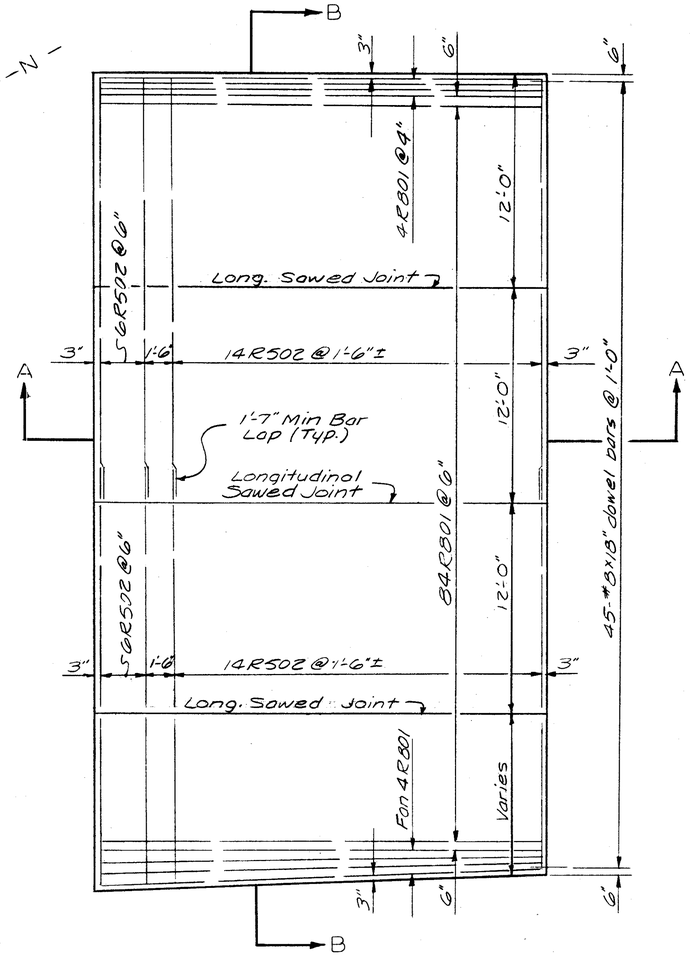

PLAN
NORTH APPROACH SLAB
NORTHBOUND

REINFORCING STEEL LIST			
Mark	No.	Length	Shape
R501	20	35'-6"	Str.
R502	40	23'-6"	Str.
R801	166	25'-7"	Bent
81 - #8x18" dowel bars			

BENDING

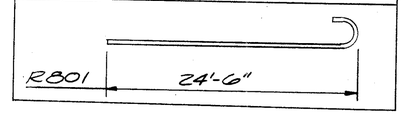

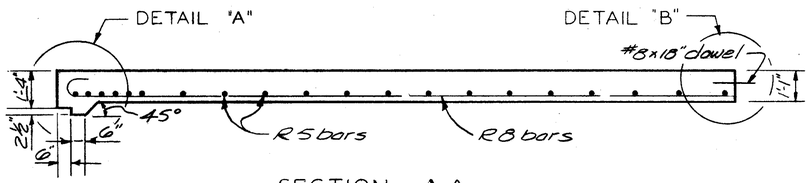

SECTION A-A

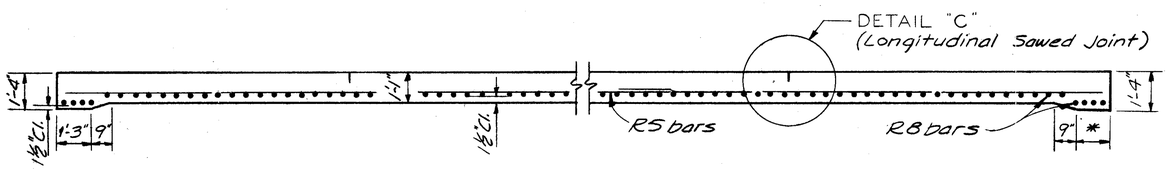

SECTION B-B

* Northbound Slab distance varies
Southbound Slab distance = 1'-3"

For Detail "A" and "B" see "Standard Bridge Drawing AS-1-54"

For Detail "C" see "Standard Construction Drawing L.J. No.1"

HAZELET & ERDAL
CONSULTING ENGINEERS
CINCINNATI, OHIO

NORTH APPROACH SLABS
BRIDGE NO. HAM-71-0135
OVER EGGLESTON AVE.

DESIGNED	DRAWN	TRACED	CHECKED	REVIEWED DATE	REVISED
TLZ	TLZ		A.N.	JHO 5/20/65	

FED. RD. DIV.	STATE	PROJECT	FISCAL YEAR
2	OHIO		

237
492

HAMILTON COUNTY
HAM-71-(1.56) (2.51)

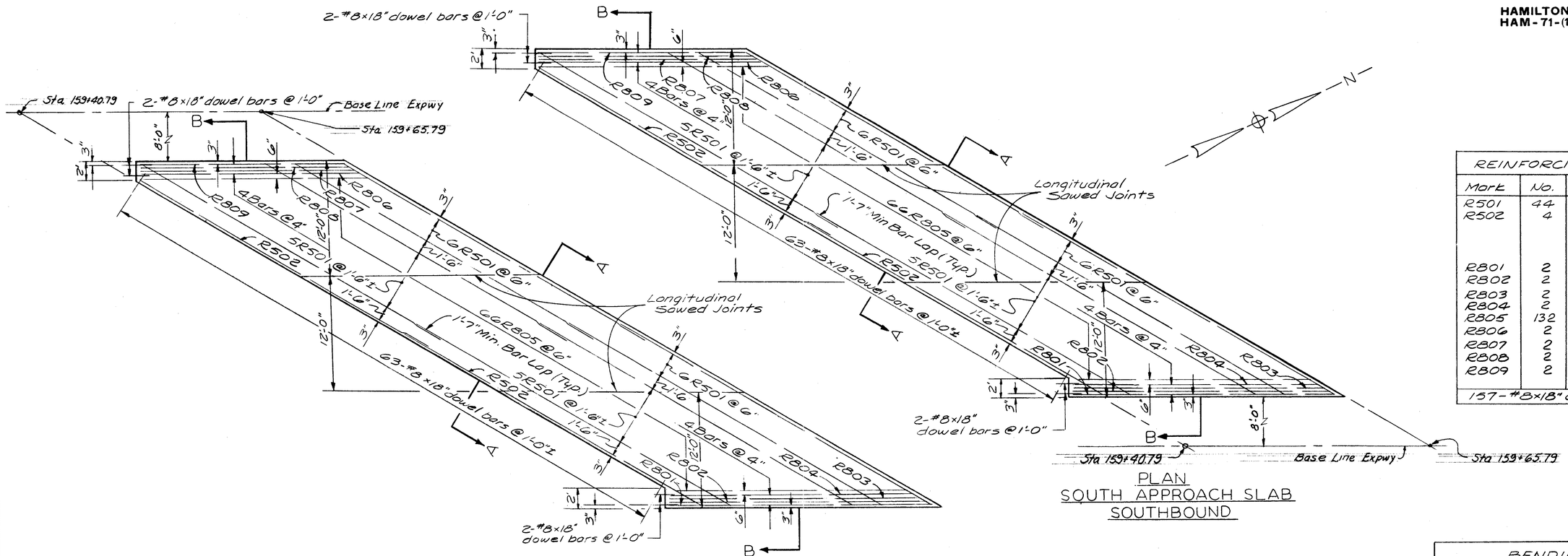

PLAN
SOUTH APPROACH SLAB
SOUTHBOUND

PLAN
SOUTH APPROACH SLAB
NORTHBOUND

REINFORCING STEEL LIST			
Mark	No.	Length	Shape
R501	44	36'-6"	Str.
R502	4	34'-6"	Str.
R801	2	28'-4"	Bent
R802	2	27'-10"	Bent
R803	2	27'-4"	Bent
R804	2	26'-7"	Bent
R805	132	25'-7"	Bent
R806	2	24'-1"	Bent
R807	2	23'-7"	Bent
R808	2	23'-1"	Bent
R809	2	22'-7"	Bent
157-#8×18" dowel bars			

BENDING	
R801	27'-3"
R802	26'-9"
R803	26'-3"
R804	25'-6"
R805	24'-6"
R806	23'-0"
R807	22'-6"
R808	22'-0"
R809	21'-6"

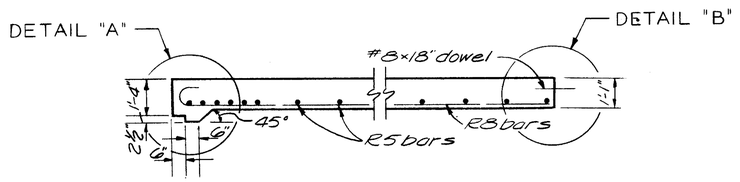

SECTION A-A

For Detail "A" and "B" see "Standard Bridge Drawing AS-1-54"

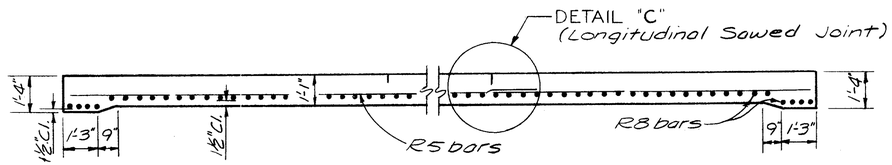

SECTION B-B

For Detail "C" see "Standard Construction Drawing L.V. No. 1"

HAZELET & ERDAL
CONSULTING ENGINEERS
CINCINNATI, OHIO

SOUTH APPROACH SLABS
BRIDGE NO. HAM-71-0173
OVER RAMP GD

DESIGNED	DRAWN	TRACED	CHECKED	REVIEWED DATE	REVISED
TLZ	TLZ		AN	JHO 5/20/65	

FED. RD. DIV.	STATE	PROJECT	FISCAL YEAR
2	OHIO		

238
492

HAMILTON COUNTY
HAM.-71-(1.56)(2.51)

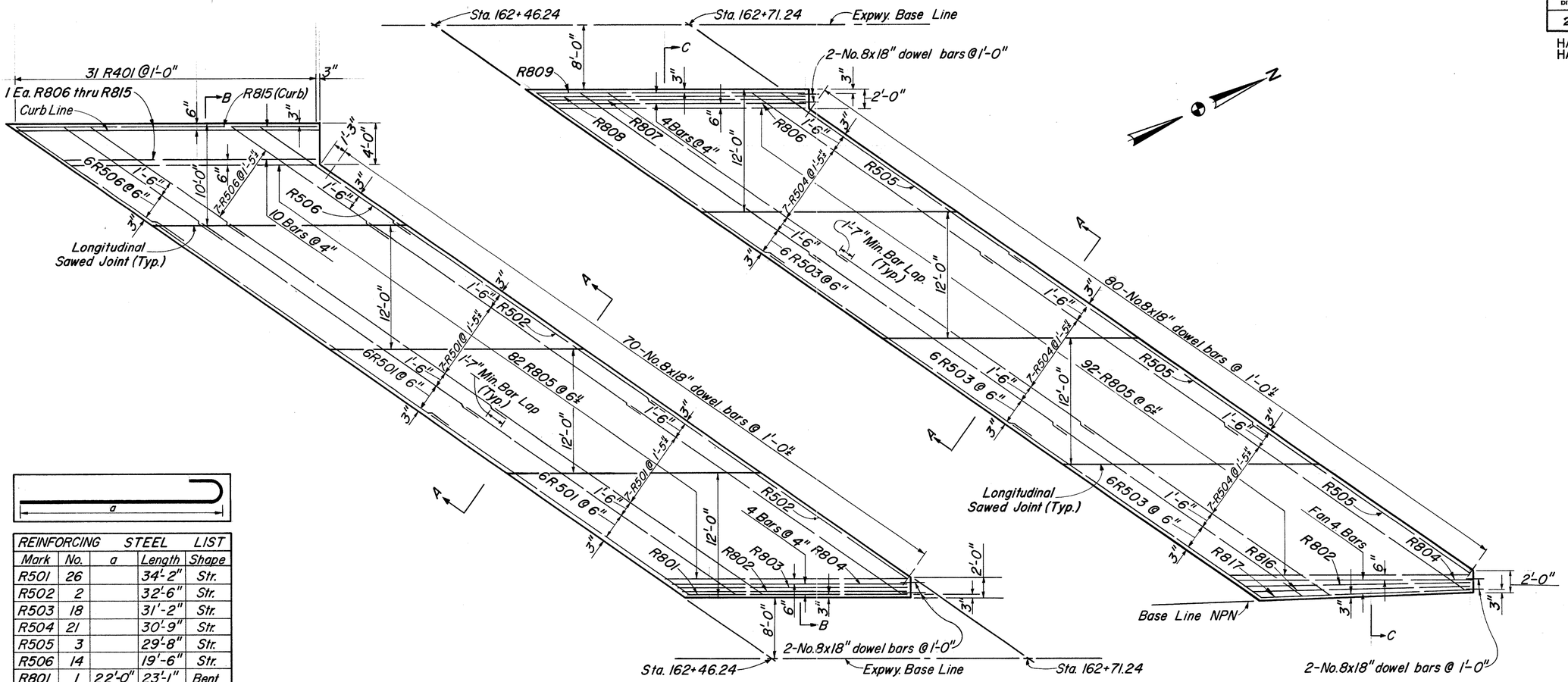

PLAN
NORTH APPROACH SLAB
SOUTHBOUND

PLAN
NORTH APPROACH SLAB
NORTHBOUND

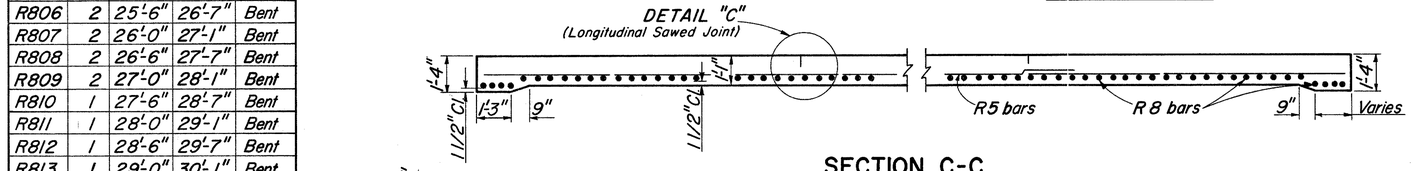

SECTION C-C

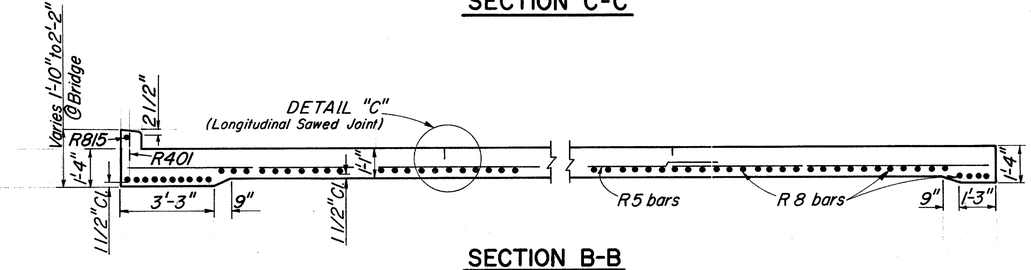

SECTION B-B

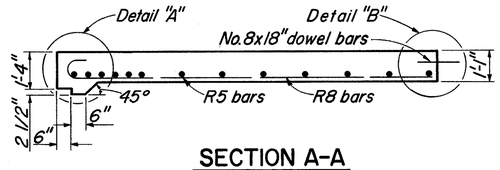

SECTION A-A

For detail "A" & "B" see "Standard Bridge Drawing AS-1-54."
For detail "C" see "Standard Construction Drawing L.J. No.1."

REINFORCING STEEL LIST				
Mark	No.	a	Length	Shape
R501	26		34'-2"	Str.
R502	2		32'-6"	Str.
R503	18		31'-2"	Str.
R504	21		30'-9"	Str.
R505	3		29'-8"	Str.
R506	14		19'-6"	Str.
R801	1	22'-0"	23'-1"	Bent
R802	2	22'-6"	23'-7"	Bent
R803	1	22'-9"	23'-10"	Bent
R804	2	23'-3"	24'-4"	Bent
R805	174	24'-6"	25'-7"	Bent
R806	2	25'-6"	26'-7"	Bent
R807	2	26'-0"	27'-1"	Bent
R808	2	26'-6"	27'-7"	Bent
R809	2	27'-0"	28'-1"	Bent
R810	1	27'-6"	28'-7"	Bent
R811	1	28'-0"	29'-1"	Bent
R812	1	28'-6"	29'-7"	Bent
R813	1	29'-0"	30'-1"	Bent
R814	1	29'-6"	30'-7"	Bent
R815	2	30'-0"	31'-1"	Bent
R816	1	21'-6"	22'-7"	Bent
R817	1	20'-9"	21'-10"	Bent
R401	31		1'-1"	Str.
156 No. 8x18" dowel bars				

HAZELET & ERDAL
CONSULTING ENGINEERS
CINCINNATI, OHIO

NORTH APPROACH SLABS
BRIDGE No. HAM-71-0173
OVER RAMP GD

DESIGNED	DRAWN	TRACED	CHECKED	REVIEWED DATE	REVISED
TLZ	TLZ	MJE	AN	JLH 5/20/65	

FED. RD. DIV.	STATE	PROJECT	FISCAL YEAR
2	OHIO		

239
492

HAMILTON COUNTY
HAM-71-(1.56) (2.51)

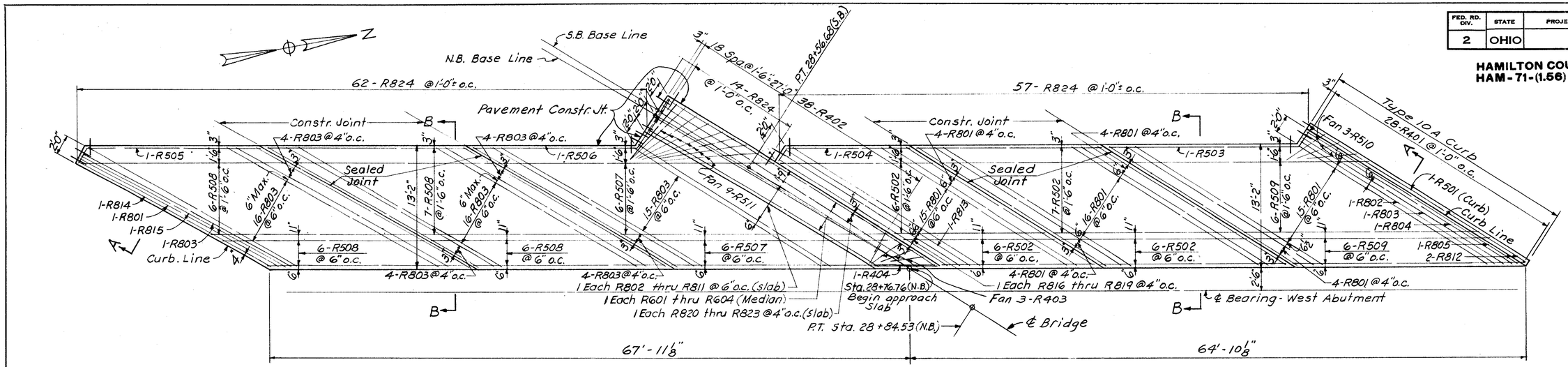

PLAN OF WEST APPROACH SLAB

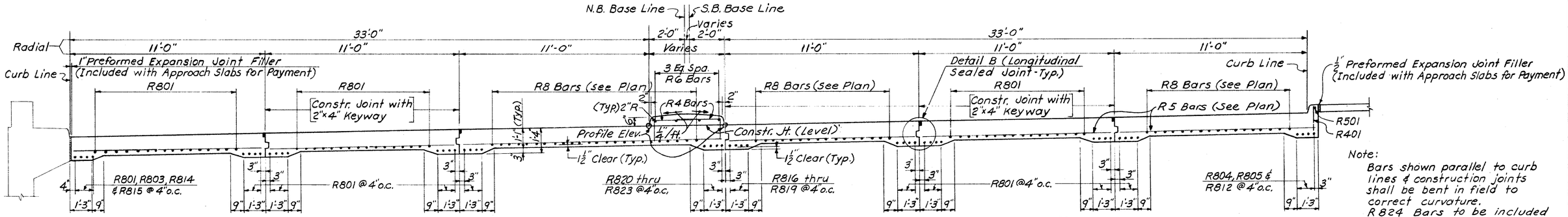

SECTION A-A

Note: For Detail "B" see Standard Construction Drawing L.D. No. 1

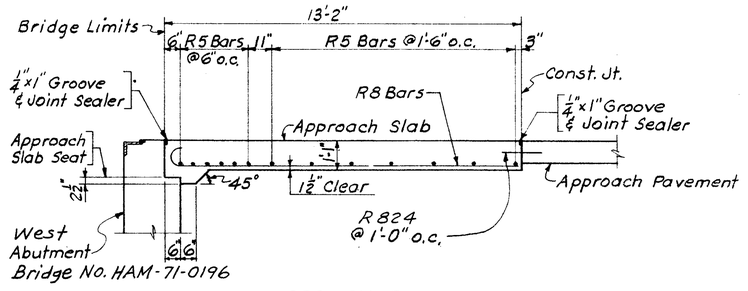

SECTION B-B

WEST APPROACH SLAB

Mark	Type	No. Reqd	Length
R401	Str.	28	1'-1"
R402	18	38	3'-5"
R403	18	3	4'-4"
R404	1	1	8'-9"
R501	Str.	1	27'-0"
R502	Str.	25	20'-0"
R503	20	1	18'-2"
R504	20	1	17'-11"
R505	20	1	19'-10"
R506	20	1	23'-6"
R507	Str.	12	27'-5"
R508	↑	25	20'-3"
R509	↓	12	21'-0"
R510		3	5'-0"
R511	Str.	9	8'-0"

Mark	Type	No. Reqd	Length
R601	Str.	1	33'-6"
R602	↓	1	31'-6"
R603		1	29'-6"
R604	Str.	1	27'-6"
R801	44	63	25'-2"
R802	↑	2	25'-5"
R803		66	26'-3"
R804		2	27'-1"
R805		2	27'-7"
R806		1	28'-5"
R807		1	29'-2"
R808		1	29'-11"
R809		1	30'-9"
R810		1	31'-6"
R811	44	1	32'-4"

Mark	Type	No. Reqd	Length
R812	44	2	28'-1"
R813	↑	1	24'-10"
R814		1	24'-5"
R815		1	25'-7"
R816		1	23'-7"
R817		1	23'-1"
R818		1	22'-7"
R819		1	22'-1"
R820		1	34'-10"
R821		1	34'-4"
R822	↓	1	33'-10"
R823	44	1	33'-4"
R824	Str.	133	1'-6"

Mark	a	b
R402	0'-11"	2'-7"
R403	0'-11"	3'-6"

Type 18

Mark	a	b
R404	7'-1"	0'-11

Type 1

Mark	a	Mark	a
R801	24'-1"	R813	23'-9"
R802	24'-4"	R814	23'-4"
R803	25'-2"	R815	24'-6"
R804	26'-0"	R816	22'-6"
R805	26'-6"	R817	22'-0"
R806	27'-4"	R818	21'-6"
R807	28'-1"	R819	21'-0"
R808	28'-10"	R820	33'-9"
R809	29'-8"	R821	33'-3"
R810	30'-5"	R822	32'-9"
R811	31'-3"	R823	32'-3"
R812	27'-0"		

Type 44

Mark	a	b	c	d
R503	1'-6½"	16'-4"	1'-10"	1'-0"
R504	1'-4"	16'-4"	1'-7"	0'-10½"
R505	1'-4"	18'-3"	1'-7"	0'-10½"
R506	5'-3"	17'-3"	6'-3"	3'-4½"

Type 20

HAZELET & ERDAL
CONSULTING ENGINEERS
CINCINNATI, OHIO

WEST APPROACH SLAB

BRIDGE NO. HAM-71-0196

Designed	Drawn	Traced	Checked	Reviewed Date	Revised
	C.G.H.		J.K.H. 3-17-65	LHO 5/20/65	

FED. RD. DIV.	STATE	PROJECT	FISCAL YEAR
2	OHIO		

240
492

HAMILTON COUNTY
HAM-71-(1.56) (2.61)

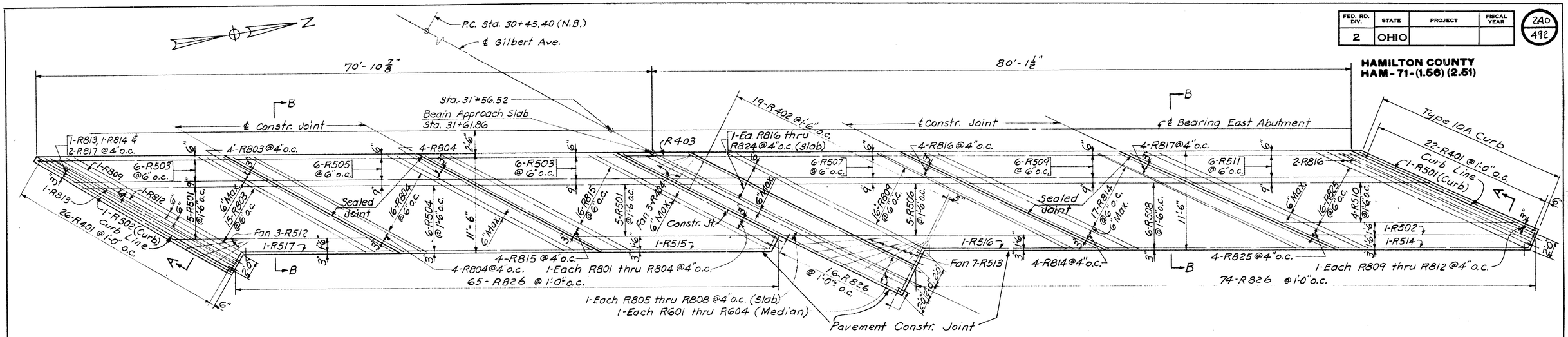

PLAN OF EAST APPROACH SLAB

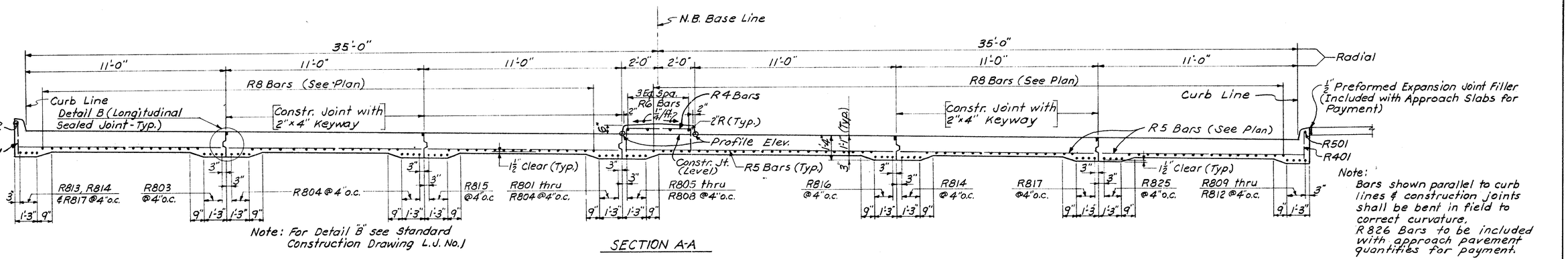

SECTION A-A

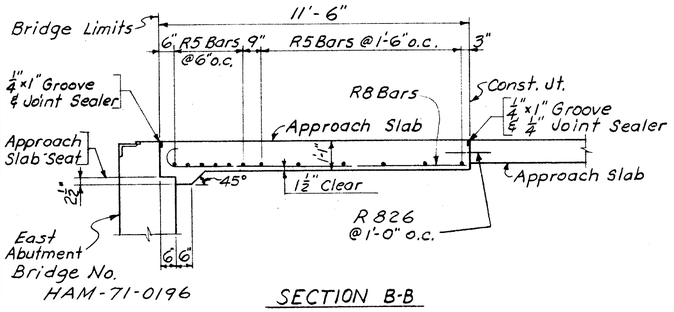

SECTION B-B

EAST APPROACH SLAB

Mark	Type	No. Reqd.	Length
R401	str.	48	1'-1"
R402	1	19	5'-3"
R403	1	1	9'-9"
R404	18	3	4'-6"
R501	str.	11	22'-0"
R502	↓	2	25'-6"
R503		12	21'-9"
R504		6	21'-3"
R505		6	21'-0"
R506		5	32'-0"
R507		6	31'-6"
R508		6	24'-6"
R509		6	23'-9"
R510		4	26'-9"
R511		6	26'-6"
R512	↓	3	5'-0"
R513	str.	7	8'-0"
R514	20	1	24'-5"

Mark	Type	No. Reqd.	Length
R515	20	1	21'-0"
R516	20	1	25'-5"
R517	20	1	19'-5"
R601	str.	1	28'-6"
R602	↓	1	30'-8"
R603		1	32'-10"
R604	str.	1	35'-0"
R801	44	1	21'-9"
R802	↓	1	22'-4"
R803		20	23'-11"
R804		26	23'-6"
R805		1	34'-7"
R806		1	35'-2"
R807		1	35'-9"
R808		1	36'-4"
R809	↓	18	24'-10"
R810	44	1	24'-1"

Mark	Type	No. Reqd.	Length
R811	44	1	24'-5"
R812	↓	2	24'-10"
R813		2	25'-5"
R814		22	25'-11"
R815		20	24'-1"
R816		7	25'-7"
R817		7	26'-7"
R818		1	27'-7"
R819		1	28'-7"
R820		1	29'-7"
R821		1	30'-7"
R822		1	31'-7"
R823		1	32'-7"
R824	↓	1	33'-7"
R825	44	20	27'-1"
R826	str.	155	1'-6"

Mark	a	b
R402	3'-6 1/2"	0'-11"
R403	8'-1"	0'-11"

Type 1

Mark	a	b
R404	0'-11"	3'-8"

Type 18

Mark	a	Mark	a
R801	20'-8	R814	24'-10
R802	21'-3"	R815	23'-0
R803	21'-10	R816	24'-6
R804	22'-5"	R817	25'-6
R805	33'-6	R818	26'-6
R806	34'-1"	R819	27'-6
R807	34'-8	R820	28'-6
R808	35'-3	R821	29'-6
R809	23'-9	R822	30'-6
R810	23'-0	R823	31'-6
R811	23'-4	R824	32'-6
R812	23'-9	R825	26'-0
R813	24'-4		

Type 44

Mark	a	b	c	d
R514	2'-1 1/2"	22'-0	2'-5	1'-1 1/2"
R515	1'-6 1/2"	19'-3"	1'-9"	0'-9 1/2"
R516	5'-0 1/2"	19'-9"	5'-8	2'-7 1/2"
R517	2'-1 1/2"	17'-0"	2'-5	1'-1 1/2"

Type 20

HAZELET & ERDAL
CONSULTING ENGINEERS
CINCINNATI, OHIO

EAST APPROACH SLAB

BRIDGE NO. HAM-71-0196

Designed	Drawn	Traced	Checked	Reviewed Date	Revised
	C.G.H.		J.V.H. 9-17-65	J.H.O. 5/20/65	

HAMILTON COUNTY
HAM - 71 - (1.56) (2.51)

FED. RD. DIV.	STATE	PROJECT	FISCAL YEAR
2	OHIO		

241
492

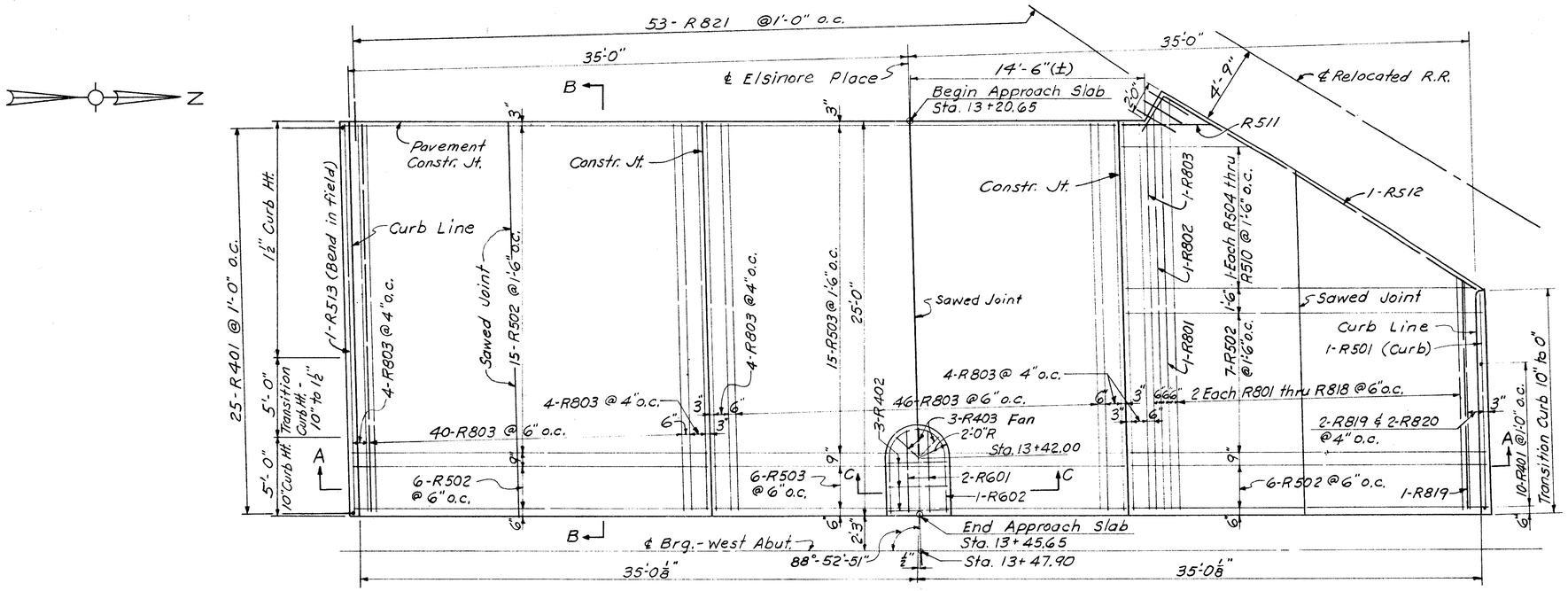

PLAN - WEST APPROACH SLAB

Mark	a	b
R402	3'-6½"	0'-11

Type 1

Mark	a	b
R403	0'-11"	1'-9"
R512	2'-6"	23'-0

Type 18

Mark	a	b	Rad.
R602	5'-4"	3'-6"	1'-8"

Type 6

Mark	a	Mark	a
R801	25'-11"	R811	19'-7"
R802	25'-3"	R812	19'-0"
R803	24'-8"	R813	18'-5"
R804	24'-1"	R814	17'-8"
R805	23'-5"	R815	17'-0"
R806	22'-10"	R816	16'-4"
R807	22'-2"	R817	15'-8"
R808	21'-7"	R818	15'-0"
R809	20'-11"	R819	14'-3"
R810	20'-3"	R820	13'-9"

Type 44

WEST APPROACH SLAB			
Mark	Type	No. Reqd.	Length
R401	Str.	35	1'-1"
R402	1	3	5'-3"
R403	18	3	2'-7"
R501	Str.	1	13'-9"
R502	↑	34	22'-0"
R503		21	25'-6"
R504		1	7'-9"
R505		1	10'-0"
R506		1	12'-9"
R507		1	14'-9"
R508		1	17'-0"
R509		1	19'-3"
R510	↓	1	21'-6"
R511	Str.	1	5'-6"
R512	18	1	25'-4"
R513	Str.	1	24'-6"
R601	Str.	2	5'-0"
R602	6	1	12'-4"
R801	44	3	27'-0"
R802	↑	3	26'-4"
R803		109	25'-9"
R804		2	25'-2"
R805		2	24'-6"
R806		2	23'-11"
R807		2	23'-3"
R808		2	22'-8"
R809		2	22'-0"
R810		2	21'-4"
R811		2	20'-8"
R812		2	20'-1"
R813		2	19'-6"
R814		2	18'-9"
R815		2	18'-1"
R816		2	17'-5"
R817		2	16'-9"
R818		2	16'-1"
R819	↓	3	15'-4"
R820	44	2	14'-10"
R821	Str.	53	1'-6"

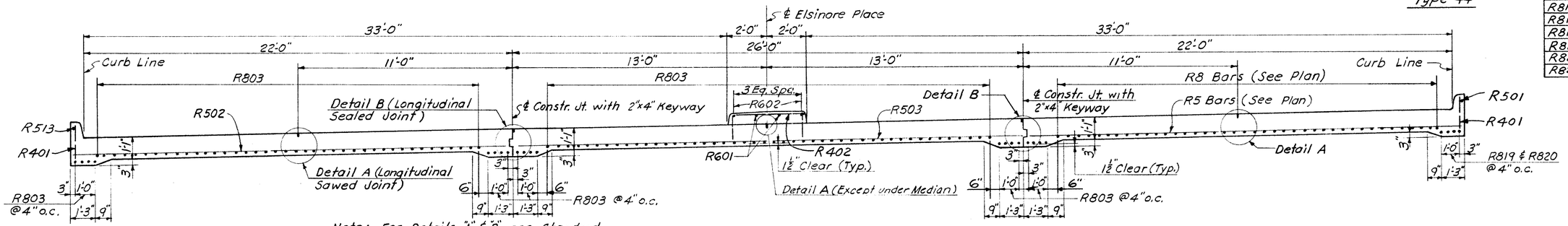

SECTION A-A

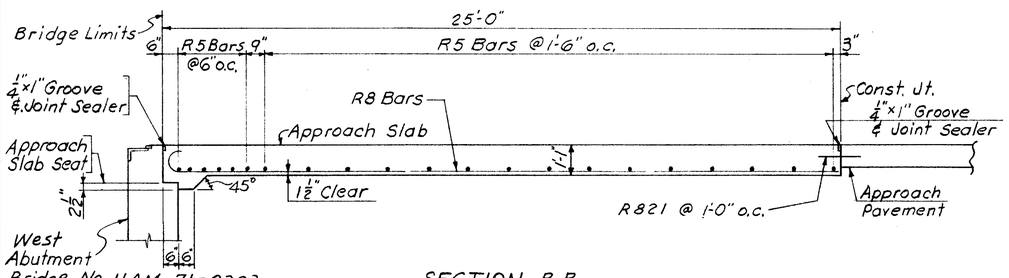

SECTION B-B

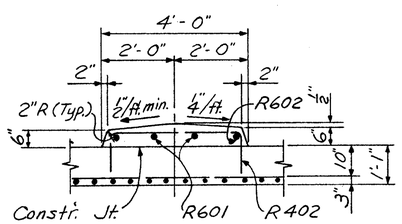

SECTION C-C

Note

R821 bars to be included with the approach pavement quantities for payment.

HAZELET & ERDAL
CONSULTING ENGINEERS
CINCINNATI, OHIO

WEST APPROACH SLAB

BRIDGE NO. HAM - 71 - 0203

DESIGNED	DRAWN	TRACED	CHECKED	REVIEWED DATE	REVISED
	C.G.H.		J.Y.H. 3-19-65	JHO 5/20/65	

HAMILTON COUNTY HAM-71-(1.56)(2.51)	FED. RD. DIV.	STATE	PROJECT	FISCAL YEAR
	2	OHIO		

242
492

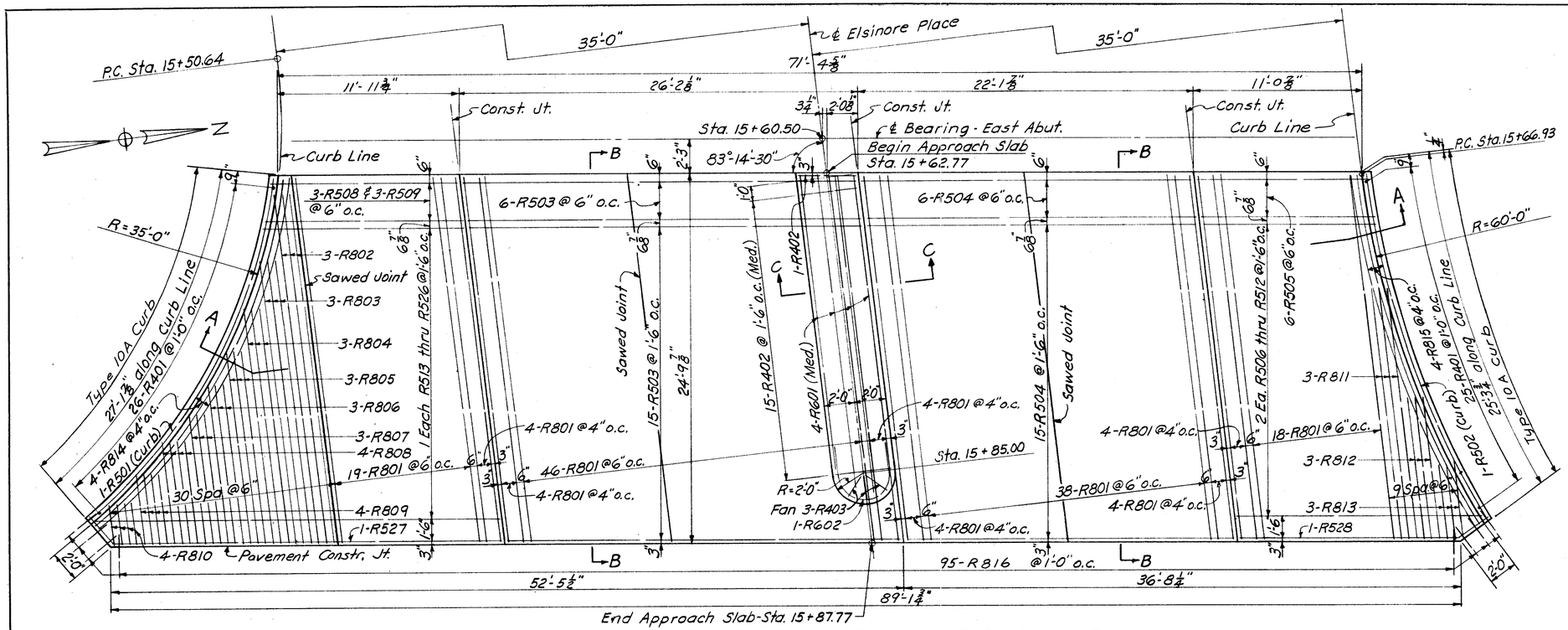

PLAN OF EAST APPROACH SLAB

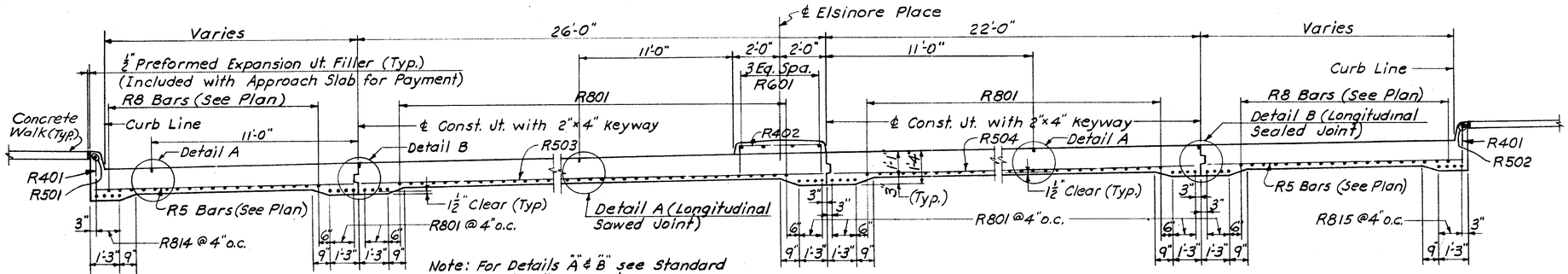

SECTION A-A

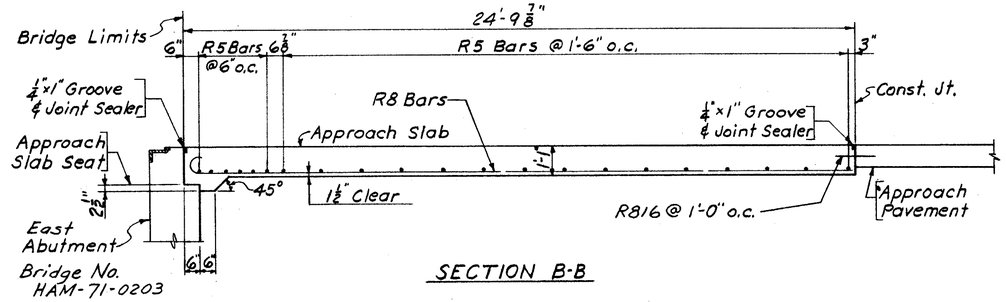

SECTION B-B

Note

R 816 bars to be included with the approach pavement quantities for payment.
For Section C-C, see west approach slab details.

Mark	a	b
R402	3'-6½"	0'-11"

Type 1

Mark	a	b
R403	0'-11"	1'-9"

Type 18

Mark	a	b	Radius
R501	26'-0⅜"	2'-5⅞"	35'-0"
R502	25'-7⅜"	1'-4⅝"	60'-0"
R814	26'-0⅜"	2'-5⅜"	35'-0"
R815	25'-7⅝"	1'-4⅝"	60'-0"

Type 46

Mark	a	b	c	d	e
R527	1'-8⅝"	26'-11⅝"	2'-3"	1'-5⅝"	25'-6"
R528	1'-1¾"	16'-2⅝"	2'-3"	1'-11⅝"	14'-3"

Type 20

Mark	a	b	Rad.
R602	5'-4"	2'-4"	1'-8"

Type 6

Mark	a
R801	25'-4"

Type 44

EAST APPROACH SLAB			
Mark	Type	No. Reqd	Length
R401	Str.	51	1'-1"
R402	1	16	5'-3"
R403	18	3	2'-7"
R501	46	1	26'-8"
R502	46	1	25'-10"
R503	Str.	21	25'-9"
R504	↑	21	21'-6"
R505		6	11'-4"
R506		2	11'-6"
R507		2	11'-10"
R508		5	12'-3"
R509		5	12'-10"
R510		2	13'-8"
R511		2	14'-8"
R512		2	15'-10"
R513		1	13'-0"
R514		1	13'-6"
R515		1	14'-1"
R516		1	14'-10"
R517		1	15'-7"
R518		1	16'-5"
R519		1	17'-4"
R520		1	18'-4"
R521		1	19'-5"
R522		1	20'-8"
R523		1	22'-1"
R524		1	23'-9"
R525	↓	1	25'-3"
R526	Str.	1	26'-8"
R527	20	1	27'-9"
R528	20	1	16'-6"
R601	Str.	4	20'-9"
R602	6	1	10'-0"
R801	44	145	26'-5"
R802	Str.	3	23'-6"
R803	↑	3	19'-0"
R804		3	15'-9"
R805		3	13'-0"
R806		3	10'-6"
R807		3	8'-9"
R808		4	6'-9"
R809		4	4'-9"
R810		4	2'-9"
R811		3	16'-9"
R812		3	9'-6"
R813	Str.	3	5'-0"
R814	46	4	26'-8"
R815	46	4	25'-10"
R816	Str.	95	1'-6"

HAZELET & ERDAL
CONSULTING ENGINEERS
CINCINNATI, OHIO

EAST APPROACH SLAB

BRIDGE NO. HAM-71-0203

Designed	Drawn	Traced	Checked	Reviewed Date	Revised
	C.G.H.		J.Y.H. 3-19-65	JHO 5/20/65	

FED. RD. DIV.	STATE	PROJECT	FISCAL YEAR
2	OHIO		

243
492

HAMILTON COUNTY
HAM-71-(1.56) (2.51)

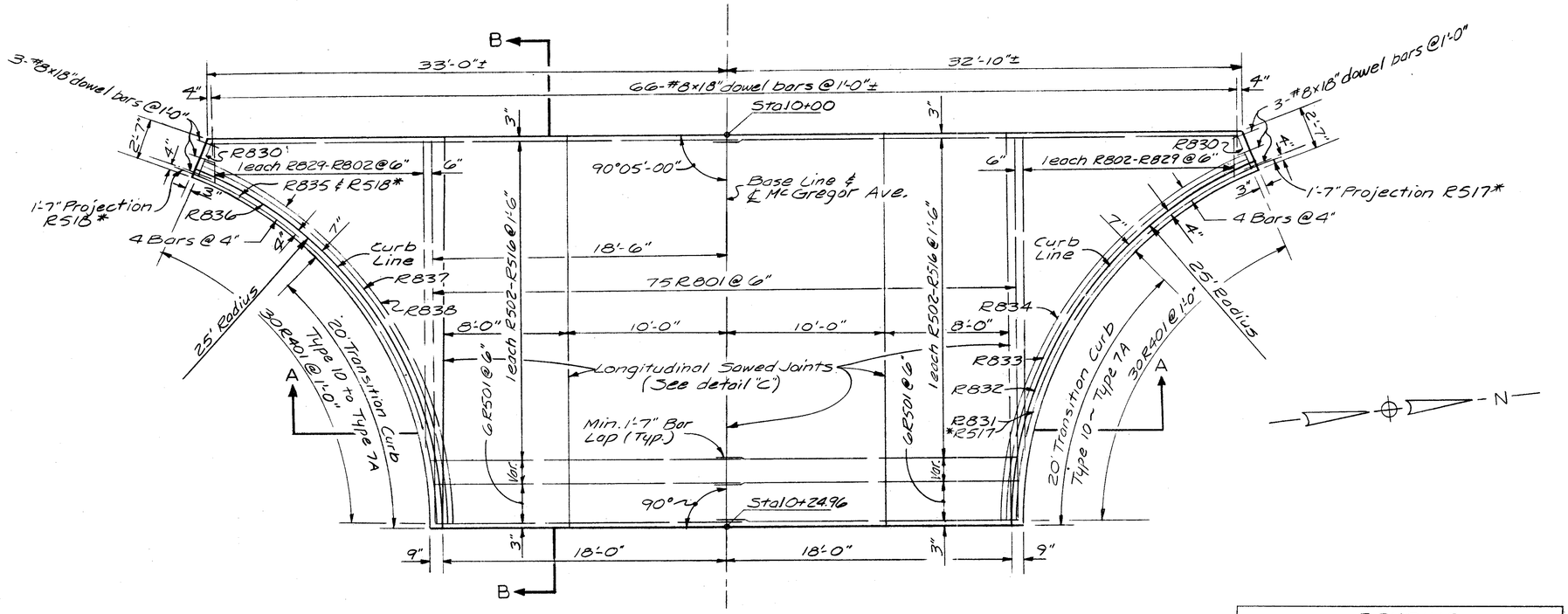

PLAN

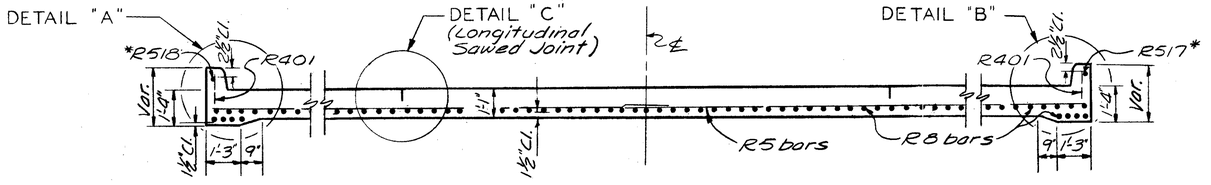

SECTION A-A

For Detail "A" see sheet No. 10 Type 7A Curb
For Detail "B" see sheet No. 10 Type 10 Curb
For Detail "C" see "Standard Construction Drawing L.J. No. 1"

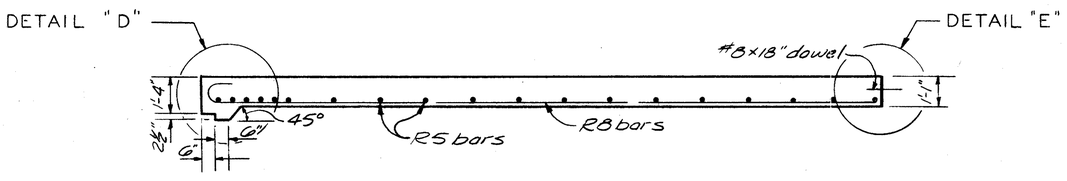

SECTION B-B

For Detail "D" and "E" see "Standard Bridge Drawing AS-1-54"

BENDING

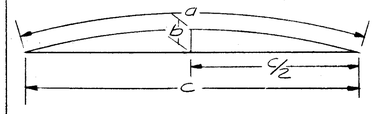

Mark	a	b	c
R831	28'-7"	4'-0½"	27'-1½"
R832	29'-0"	4'-1"	27'-6"
R833	29'-5"	4'-2"	27'-10½"
R834	29'-10"	4'-3"	28'-3"
R835	28'-10"	4'-1¼"	27'-3¾"
R836	29'-3"	4'-2"	27'-7½"
R837	29'-8"	4'-3"	28'-0"
R838	30'-1"	4'-3½"	28'-5"

REINFORCING STEEL LIST

MARK	NO.	LENGTH	SHAPE	BENDING
R801	75	25'-6"	Bent	24'-5"
R802	2	20'-6"	Bent	19'-5"
R803	2	18'-8"	Bent	17'-7"
R804	2	17'-1"	Bent	16'-0"
R805	2	16'-2"	Bent	15'-1"
R806	2	15'-1"	Bent	14'-0"
R807	2	13'-9"	Bent	12'-8"
R808	2	12'-11"	Bent	11'-10"
R809	2	12'-2"	Bent	11'-1"
R810	2	11'-5"	Bent	10'-4"
R811	2	10'-9"	Bent	9'-8"
R812	2	10'-1"	Bent	9'-0"
R813	2	9'-6"	Bent	8'-5"
R814	2	9'-0"	Bent	7'-11"
R815	2	8'-6"	Bent	7'-5"
R816	2	8'-0"	Bent	6'-11"
R817	2	7'-6"	Bent	6'-5"
R818	2	7'-1"	Bent	6'-0"
R819	2	6'-8"	Bent	5'-7"
R820	2	6'-3"	Bent	5'-2"
R821	2	5'-11"	Bent	4'-10"
R822	2	5'-7"	Bent	4'-6"
R823	2	5'-3"	Bent	4'-2"
R824	2	4'-11"	Bent	3'-10"
R825	2	4'-7"	Bent	3'-6"
R826	2	4'-4"	Bent	3'-3"
R827	2	4'-0"	Bent	2'-11"
R828	2	3'-9"	Bent	2'-8"
R829	2	3'-7"	Bent	2'-6"
R830	2	3'-3"	Bent	2'-2"
R831	1	29'-8"	Bent	28'-7"
R832	1	30'-1"	Bent	29'-0"
R833	1	30'-6"	Bent	29'-5"
R834	1	30'-11"	Bent	29'-10"
R835	1	29'-11"	Bent	28'-10"
R836	1	30'-4"	Bent	29'-3"
R837	1	30'-9"	Bent	29'-8"
R838	1	31'-2"	Bent	30'-1"
R501	12	19'-4"	Str.	
R502	2	19'-7"	Str.	
R503	2	19'-10"	Str.	
R504	2	20'-3"	Str.	
R505	2	20'-9"	Str.	
R506	2	21'-4"	Str.	
R507	2	22'-0"	Str.	
R508	2	22'-9"	Str.	
R509	2	23'-9"	Str.	
R510	2	24'-11"	Str.	
R511	2	26'-4"	Str.	
R512	2	27'-11"	Str.	
R513	2	29'-10"	Str.	
R514	2	32'-3"	Str.	
R515	2	34'-5"	Str.	
R516	2	33'-10"	Str.	
*R517	1	30'-11"	*Bent	
*R518	1	31'-2"	*Bent	
R401	60	1'-1"	Str.	
72-#8x18" dowel bars				

* These bars to be bent in the field

NOTE:
For Approach Slab Detail for East End of bridge see Standard Drawing AS-1-54

HAZELET & ERDAL
CONSULTING ENGINEERS
CINCINNATI, OHIO

WEST APPROACH SLAB
BRIDGE NO. HAM-71-0271
McGREGOR AVE.

DESIGNED	DRAWN	TRACED	CHECKED	REVIEWED DATE	REVISED
TLZ	TLZ		A.N.		

FED. RD. DIV.	STATE	PROJECT	FISCAL YEAR
2	OHIO		

244
492

HAMILTON COUNTY
HAM-71-(1.56) (2.51)

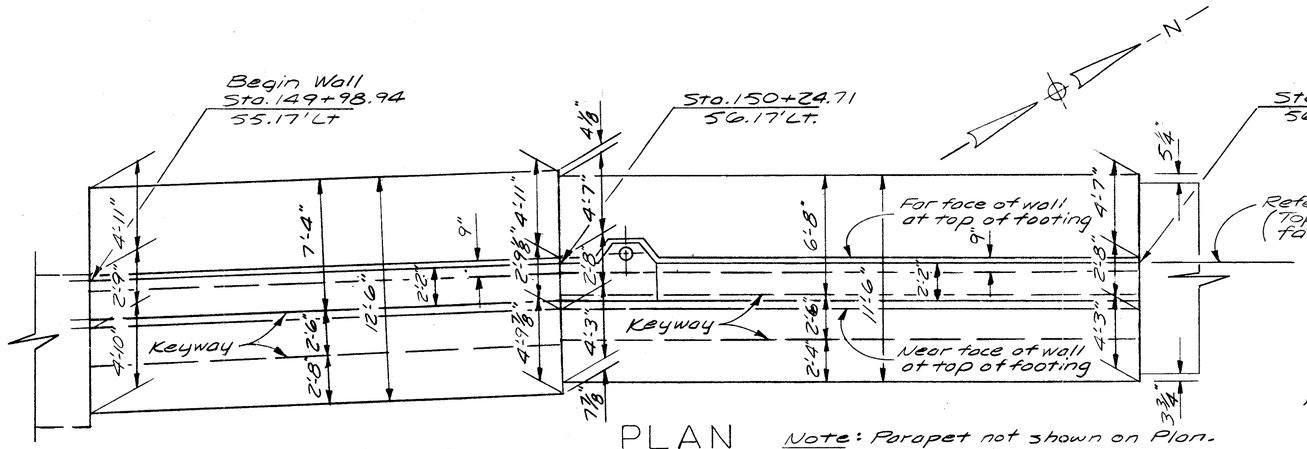

PLAN

Note: Parapet not shown on Plan.

Note: Reference Line of Unit 2 only is concentric to base line of Expressway.

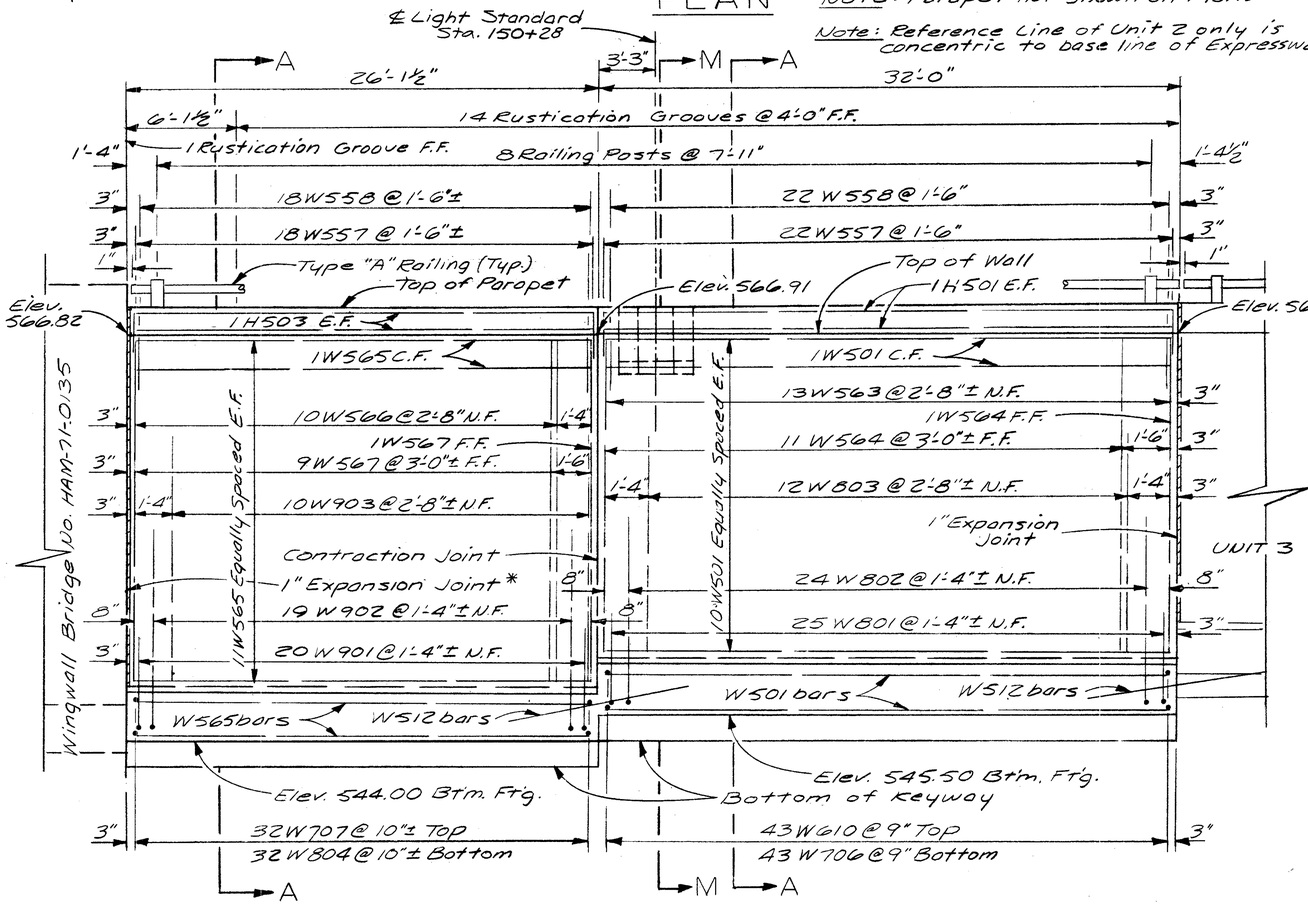

ELEVATION

Note: N.F. denotes near face
F.F. denotes far face
E.F. denotes each face
C.F. denotes curb face

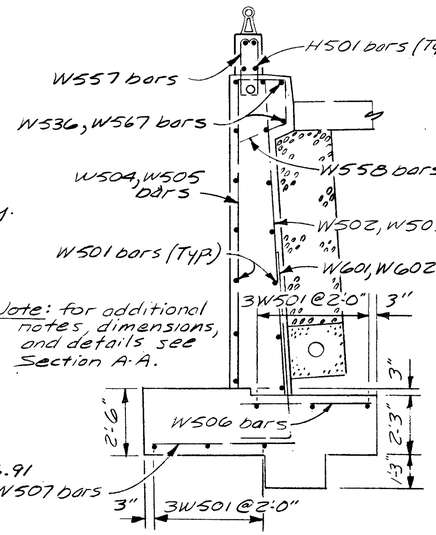

Note: for additional notes, dimensions, and details see Section A-A.

SECTION C-C
(See sheet No. 246.)

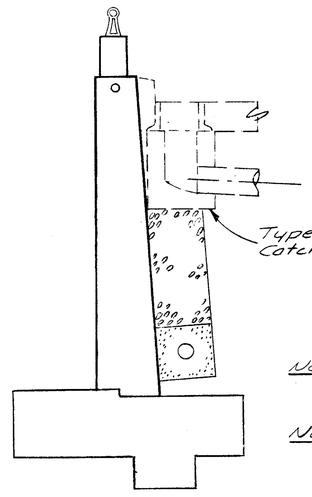

SECTION D-D
(See sheet No. 246.)

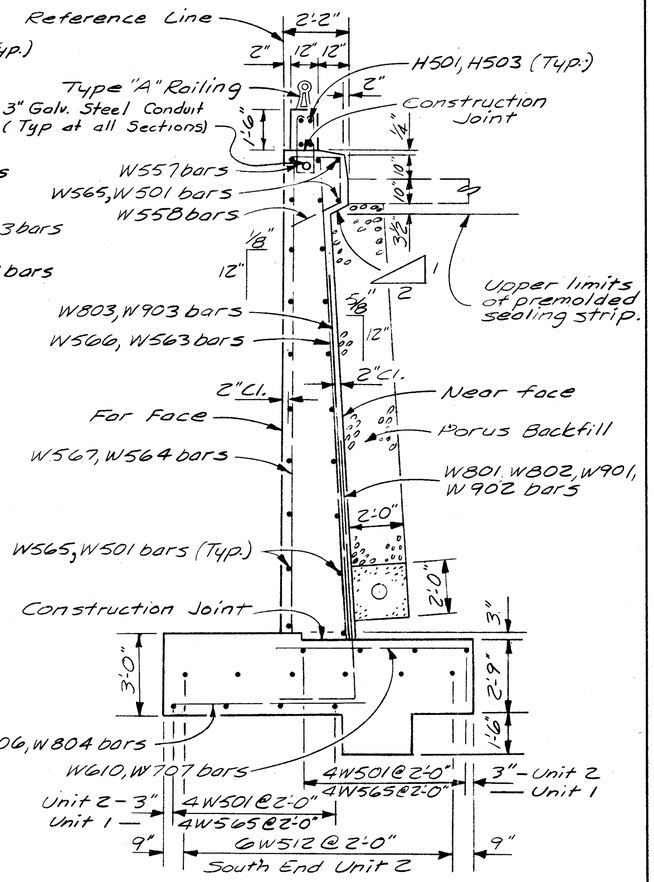

SECTION A-A

Note: For Notes and Design Assumptions see Sheet No. 245.

Note: For Section "M-M" see Sheet No. 245

HAZELET & ERDAL
CONSULTING ENGINEERS
CINCINNATI, OHIO

PLAN & ELEVATION
RETAINING WALL NO. 15

SHEET NO. 1 OF 6

DESIGNED	DRAWN	TRACED	CHECKED	REVIEWED DATE	REVISED
	TLZ		Y.L. 2-26-65	JHO 5/20/65	

FED. RD. DIV.	STATE	PROJECT	FISCAL YEAR
2	OHIO		

245
492

HAMILTON COUNTY
HAM-71-(1.56) (2.51)

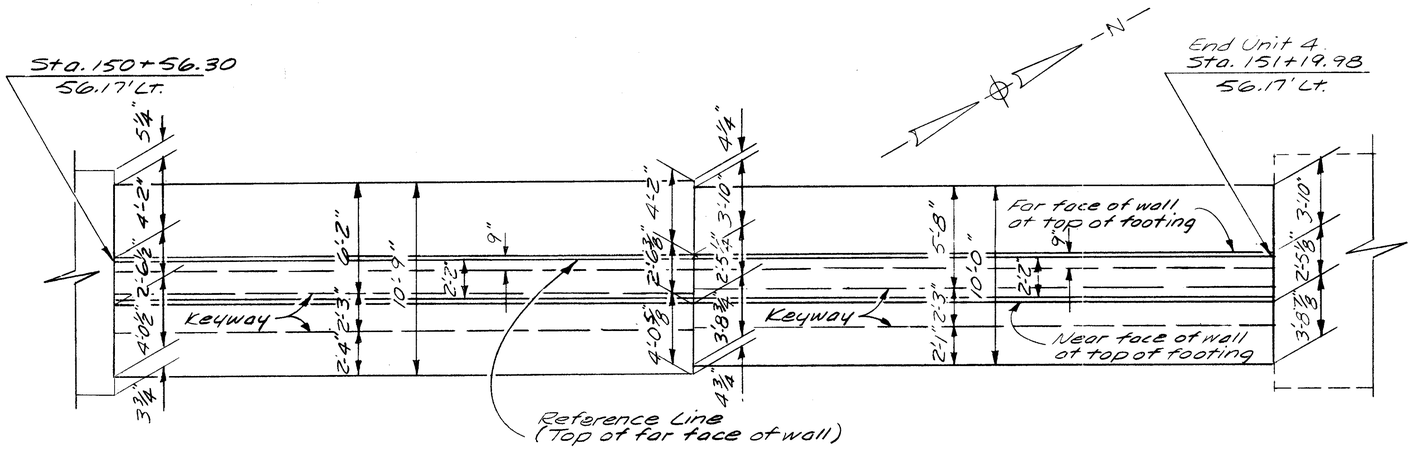

PLAN

Note: Parapet not shown on Plan.

Note: Reference Line of Wall is concentric to base line of Expressway.

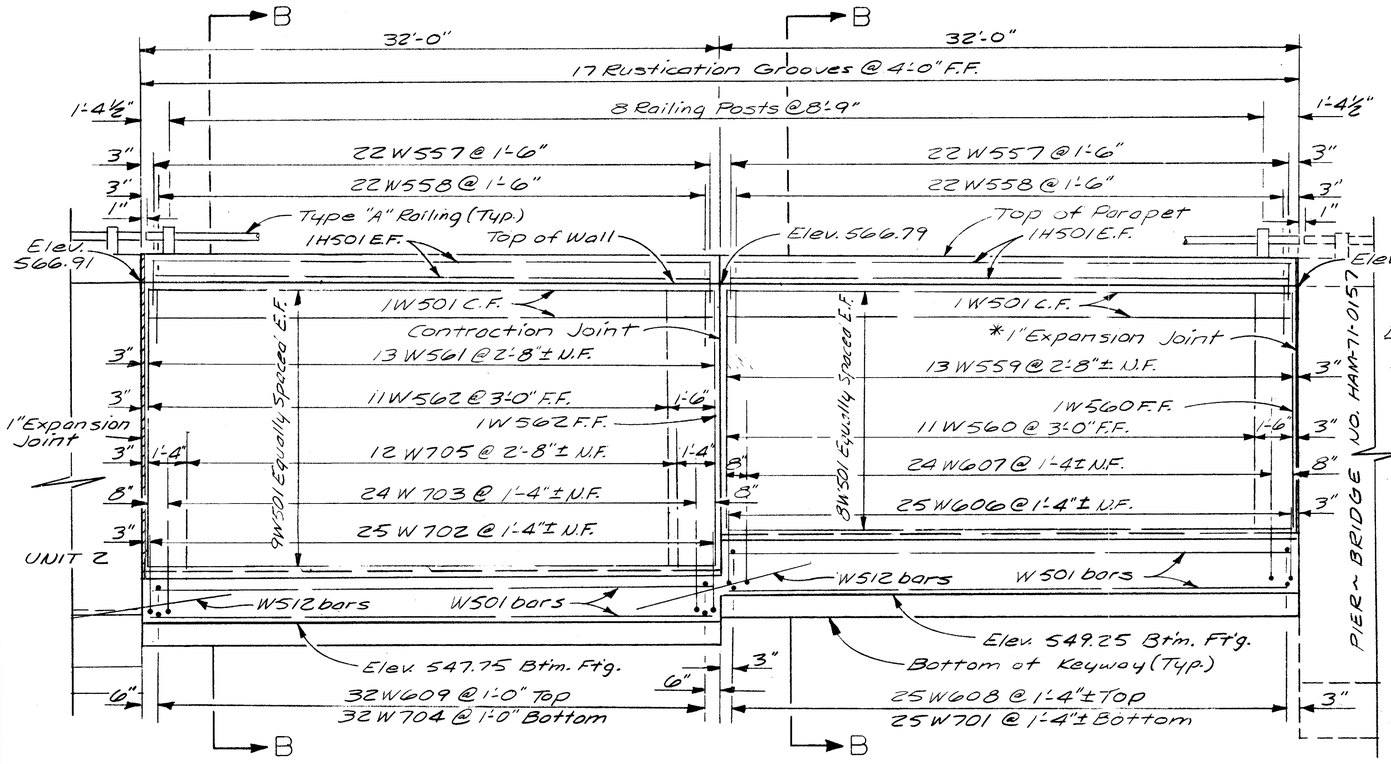

UNIT NO. 3 — UNIT NO. 4

ELEVATION

Note: N.F. denotes near face
F.F. denotes for face
E.F. denotes each face
C.F. denotes curb face

*Note: 1" Joint filler and premolded sealing strip are included with wall No. 15 quantities for payment.

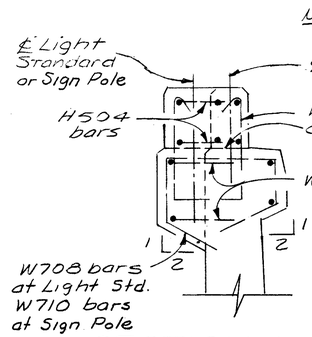

SECTION M-M

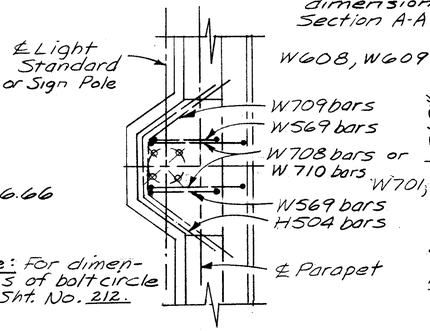

PLAN M-M

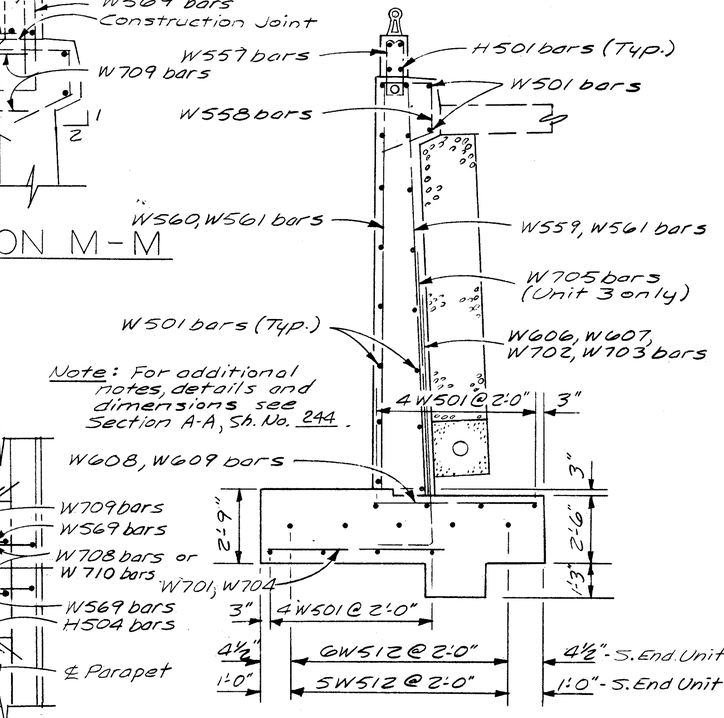

SECTION B-B

NOTES

The footing keys shall be placed in a carefully made trench against undisturbed earth.
Wall units are measured along top of for face of wall.
Railing is measured along center line of parapet.
W512 bars are to be centered between Units in the footing.
For Miscellaneous Details and General Notes see Sheet No. 331.
For Reinforcing Steel List see Sheet No. 249.
For Estimated Quantities see Sheet No. 249.
For Wall Drainage see Sheet No. 249.
All Concrete shall be Class "E" Concrete
For Light Standard Details see Sh. No 212.
For Sign Support Details see Sh. No. 225.
For Lighting Plan see Sh No. 205.

DESIGN ASSUMPTIONS

Maxium foundation pressure	2.5 Tons per Sq. Ft.
Equivalent fluid weight (passive)	390 Lbs per Cu. Ft.
Coefficient of friction "f" of masonry on subfoundation	0.45

HAZELET & ERDAL
CONSULTING ENGINEERS
CINCINNATI, OHIO

PLAN & ELEVATION
RETAINING WALL NO. 15

SHEET NO. 2 OF 6

DESIGNED	DRAWN	TRACED	CHECKED	REVIEWED DATE	REVISED
	TLZ		W.L. 2-26-65	JJH0 5/20/65	

FED. RD. DIV.	STATE	PROJECT	FISCAL YEAR
2	OHIO		

246
492

HAMILTON COUNTY
HAM-71-(1.56) (2.51)

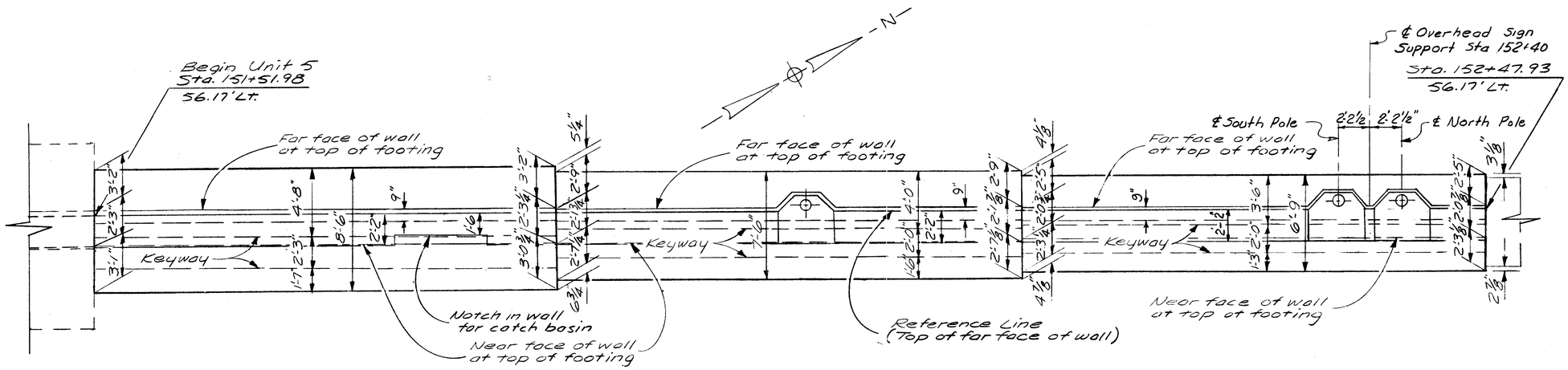

PLAN

Note: Parapet is not shown on Plan.

Note: Reference Line of Unit 5 is concentric to base line of Expressway. Reference Line of Units 6 and 7 is parallel to base line of Expressway.

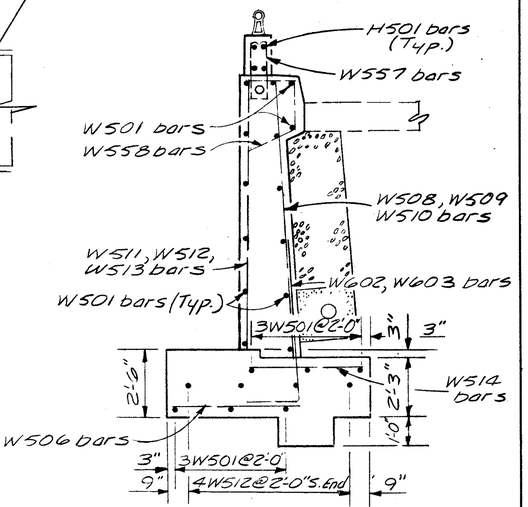

SECTION E-E

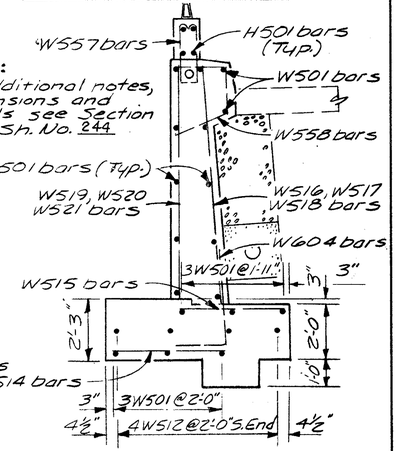

Note: For additional notes, dimensions and details see Section "A-A" Sh. No. 244

SECTION F-F

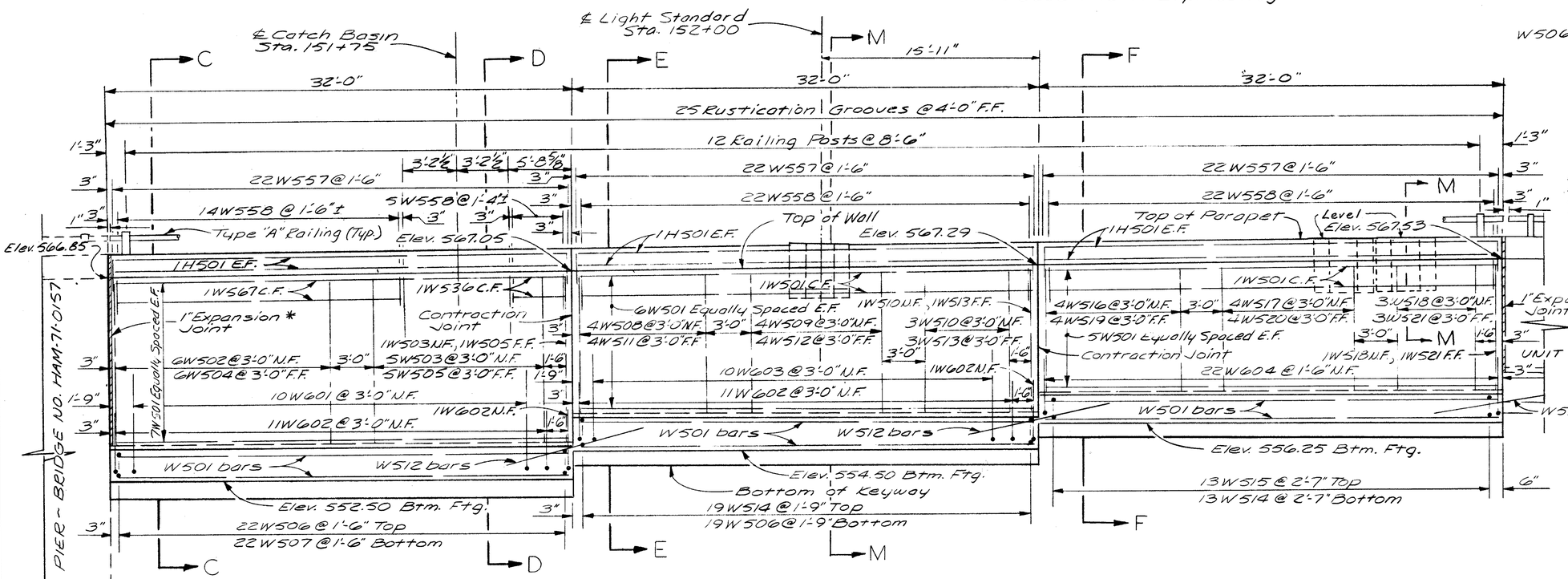

UNIT NO. 5 | UNIT NO. 6 | UNIT NO. 7

ELEVATION

Note: N.F. denotes near face
F.F. denotes far face
E.F. denotes each face
C.F. denotes curb face

*Note: 1" Joint filler and premolded sealing strip are included with Wall No. 15 quantities for payment.

Note: For Notes and Design Assumptions see Sheet No. 249.

Note: For Sections "C-C" and "D-D" see Sheet No. 244

Note: For Section "M-M" see Sheet No. 245.

HAZELET & ERDAL
CONSULTING ENGINEERS
CINCINNATI, OHIO

PLAN & ELEVATION
RETAINING WALL NO. 15

SHEET NO. 3 OF 6

DESIGNED	DRAWN	TRACED	CHECKED	REVIEWED DATE	REVISED
	TLZ		W.L. 2-26-65	JHO 5/20/65	

FED. RD. DIV.	STATE	PROJECT	FISCAL YEAR
2	OHIO		

247
492

HAMILTON COUNTY
HAM-71-(1.56) (2.51)

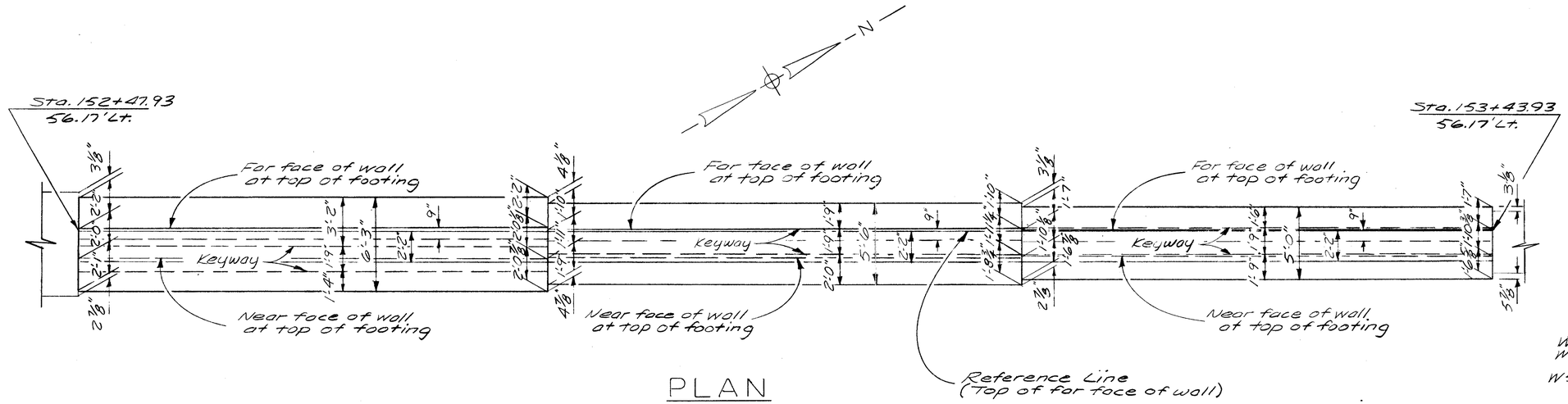

PLAN

Note: Reference Line of wall is parallel to base line of Expressway.

Note: Parapet not shown on Plan.

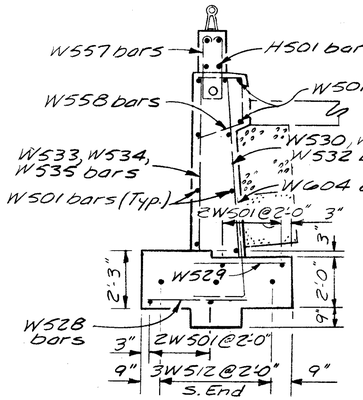

SECTION H-H

Note: For additional notes, dimensions and details see Section A-A Sheet No. 244

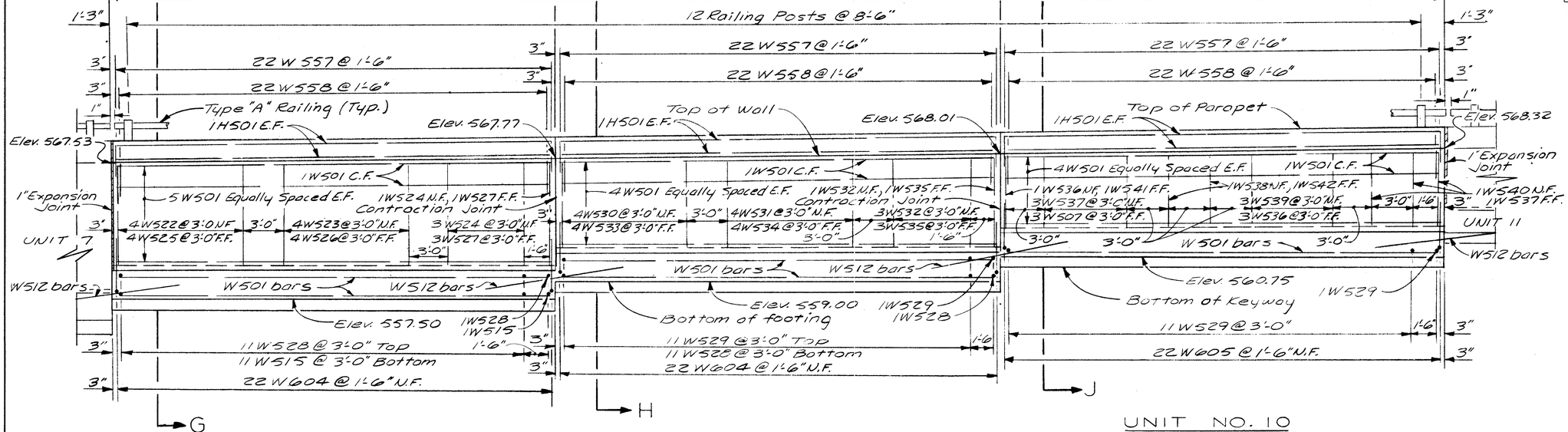

UNIT NO. 8

UNIT NO. 9

ELEVATION

UNIT NO. 10

Note: N.F. denotes near face
F.F. denotes far face
E.F. denotes each face
C.F. denotes curb face

Note: For Section "GG" see Sheet No. 248.

Note: For Notes and Design Assumptions see Sheet No. 249.

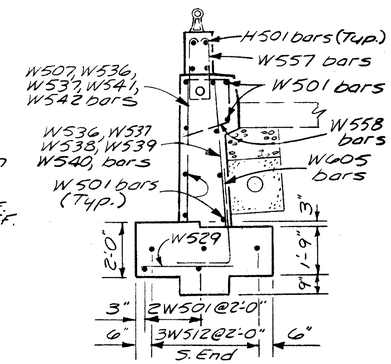

SECTION J-J

HAZELET & ERDAL
CONSULTING ENGINEERS
CINCINNATI, OHIO

PLAN & ELEVATION
RETAINING WALL NO. 15

SHEET NO. 4 OF 6

DESIGNED	DRAWN	TRACED	CHECKED	REVIEWED DATE	REVISED
	TLZ		W.L. 2-26-65	JHO 5/10/65	

FED. RD. DIV.	STATE	PROJECT	FISCAL YEAR
2	OHIO		

248
492

HAMILTON COUNTY
HAM-71-(1.56) (2.51)

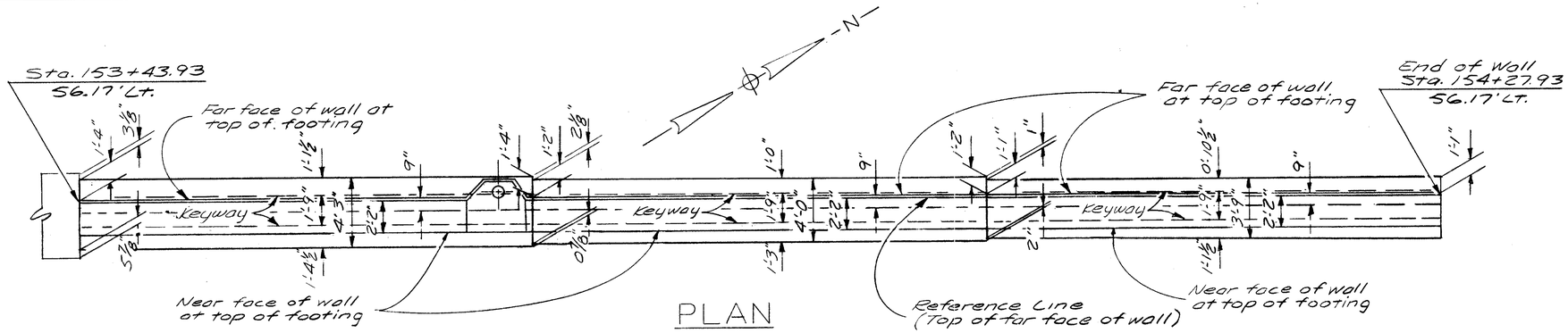

PLAN

Note: Parapet not shown on Plan.

Note: Reference Line of wall is parallel to Base Line of Expressway.

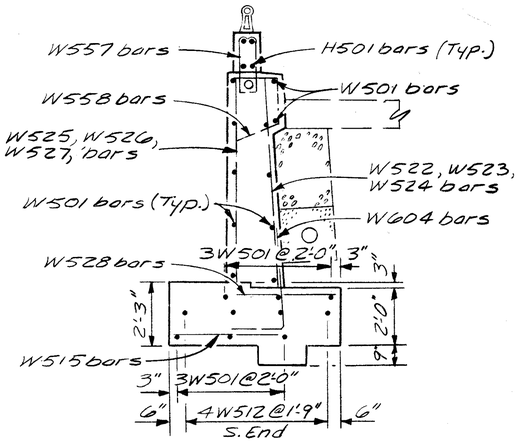

SECTION G-G

(See Sheet No. 247)

Note: For additional notes, dimensions and details see Section A-A Sh. No. 244

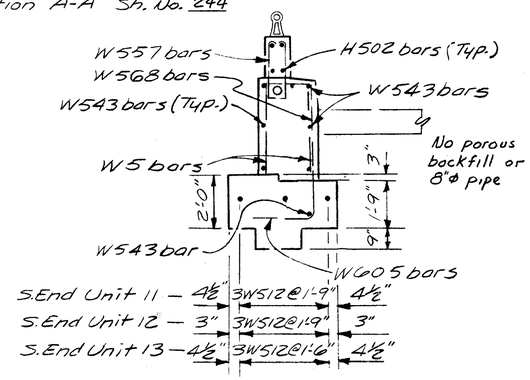

SECTION K-K

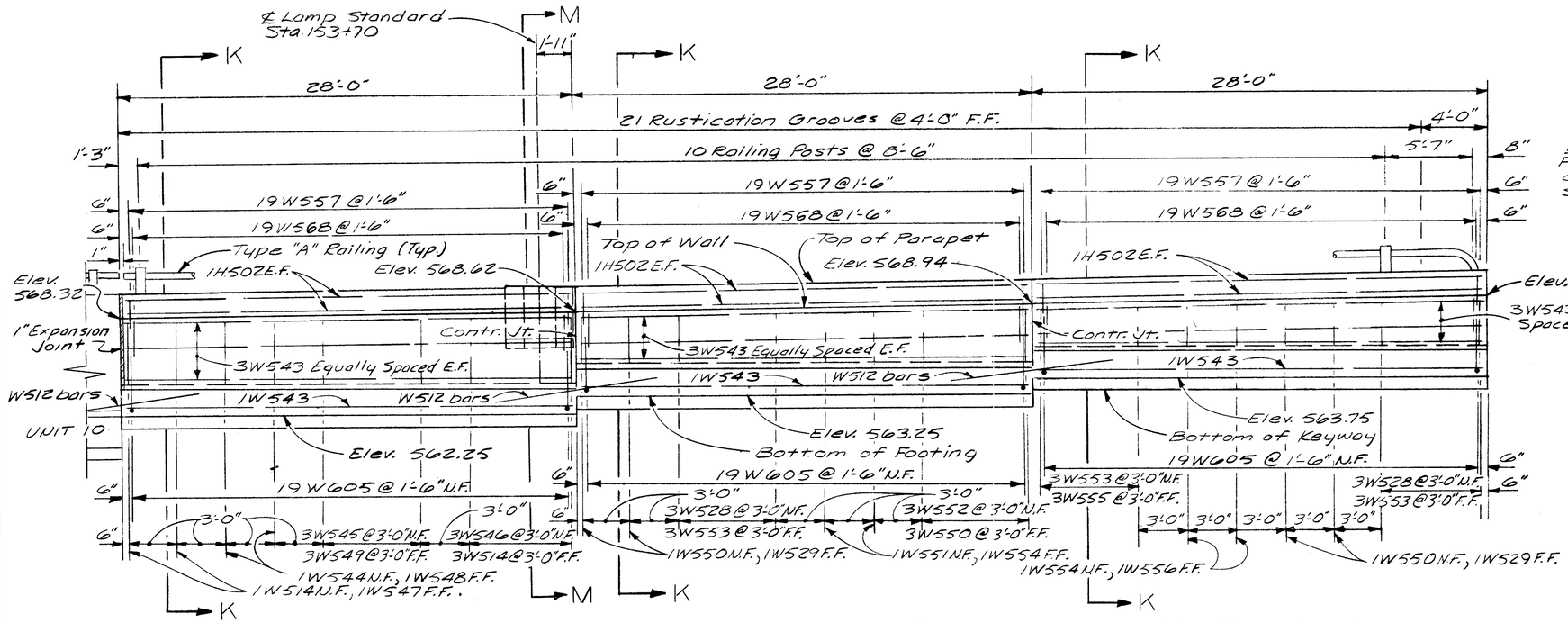

UNIT NO. 11 UNIT NO. 12 UNIT NO. 13

ELEVATION

Note: N.F. denotes near face
F.F. denotes far face
E.F. denotes each face
C.F. denotes curb face

Note: For Notes and Design Assumptions see sheet No. 249.

Note: For Section "M-M" see Sht. No. 245.

HAZELET & ERDAL
CONSULTING ENGINEERS
CINCINNATI, OHIO

PLAN & ELEVATION
RETAINING WALL NO. 15

SHEET NO. 5 OF 6

DESIGNED	DRAWN	TRACED	CHECKED	REVIEWED DATE	REVISED
	TLZ		W.L. 2-26-65	JHO 5/20/65	

FED. RD. DIV.	STATE	PROJECT	FISCAL YEAR
2	OHIO		

HAMILTON COUNTY
HAM-71-(1.56)(2.61)

REINFORCING STEEL LIST

Mark	Type	No.	Length	Weight
W501	Str.	186	31'-9"	6158
W502	Str.	6	12'-0"	75
W503	Str.	6	12'-1"	76
W504	Str.	6	11'-9"	74
W505	Str.	6	11'-10"	74
W506	Str.	41	4'-8"	200
W507	Str.	25	5'-2"	135
W508	Str.	4	10'-2"	42
W509	Str.	4	10'-3"	43
W510	Str.	4	10'-4"	43
W511	Str.	4	9'-11"	41
W512	Str.	48	10'-0"	501
W513	Str.	4	10'-1"	42
W514	Str.	37	4'-2"	161
W515	Str.	25	3'-10"	100
W516	Str.	4	8'-11"	37
W517	Str.	4	9'-0"	38
W518	Str.	4	9'-1"	38
W519	Str.	4	8'-8"	36
W520	Str.	4	8'-9"	37
W521	Str.	4	8'-10"	37
W522	Str.	4	7'-11"	33
W523	Str.	4	8'-0"	33
W524	Str.	4	8'-1"	34
W525	Str.	4	7'-8"	32
W526	Str.	4	7'-9"	32
W527	Str.	4	7'-10"	33
W528	Str.	30	3'-7"	112
W529	Str.	28	3'-3"	95
W530	Str.	4	6'-8"	28
W531	Str.	4	6'-9"	28
W532	Str.	4	6'-10"	29
W533	Str.	4	6'-5"	27
W534	Str.	4	6'-6"	27
W535	Str.	4	6'-7"	27
W536	Str.	6	5'-4"	33
W537	Str.	6	5'-5"	34
W538	Str.	2	5'-6"	11
W539	Str.	3	5'-7"	17
W540	Str.	3	5'-8"	18
W541	Str.	1	5'-1"	5
W542	Str.	2	5'-3"	11
W543	Str.	24	27'-9"	695
W544	Str.	2	4'-3"	9
W545	Str.	3	4'-4"	14
W546	Str.	3	4'-5"	14
W547	Str.	2	3'-11"	8
W548	Str.	2	4'-0"	8
W549	Str.	3	4'-1"	9
W550	Str.	7	3'-6"	26
W551	Str.	2	3'-8"	8
W552	Str.	3	3'-9"	12
W553	Str.	9	3'-4"	31
W554	Str.	4	3'-5"	14
W555	Str.	3	3'-1"	10
W556	Str.	2	3'-2"	7
W557	3	273	5'-7"	1590
W558	2	213	4'-11"	1092
W559	Str.	13	14'-9"	200
W560	Str.	12	14'-6"	181
W561	Str.	13	16'-4"	221
W562	Str.	12	16'-1"	201
W563	Str.	13	18'-6"	251
W564	Str.	12	18'-3"	228
W565	Str.	32	25'-9"	859
W566	Str.	10	19'-10"	207
W567	Str.	12	19'-7"	245
W568	1	57	7'-1"	421
W569	3	10	6'-11"	72
W601	6	10	8'-9"	131
W602	6	24	5'-8"	204
W603	6	10	7'-9"	116
W604	6	66	5'-5"	537
W605	6	79	5'-2"	613
W606	6	25	5'-11"	222
W607	6	24	12'-0"	433
W608	Str.	25	5'-9"	216
W609	Str.	32	6'-0"	288

REINFORCING STEEL LIST

Mark	Type	No.	Length	Weight
W610	Str.	43	6'-5"	414
W701	Str.	25	6'-0"	307
W702	6	25	6'-7"	336
W703	6	24	11'-1"	544
W704	Str.	32	6'-4"	414
W705	Str.	12	10'-0"	245
W706	Str.	43	6'-10"	601
W707	Str.	32	7'-0"	458
W708	16	6	8'-9"	107
W709	15	10	7'-4"	150
W710	16	4	10'-3"	84
W801	6	25	7'-4"	489
W802	6	24	12'-7"	806
W803	Str.	12	12'-0"	384
W804	Str.	32	7'-4"	627
W901	6	20	7'-11"	538
W902	6	19	13'-7"	878
W903	Str.	10	13'-9"	468
H501	Str.	36	31'-9"	*
H502	Str.	12	27'-9"	*
H503	Str.	4	25'-9"	*
H504	15	10	6'-8"	*

Total Weight = 25,930 Lbs.

BENDING

Mark	a	b	c	d	e	f	rad.
W557	0'-8"	2'-2"					
W558	1'-6"	1'-8"	1'-11"	1'-8½"	0'-10¼"		
W569	2'-0"	2'-2"					
W708	3'-0"	1'-6"	1'-6"	0'-5½"	0'-10½"	4¼"	2¼"
W710	3'-0"	3'-0"	1'-6"	0'-5½"	0'-10½"	4¼"	2¼"
W601	1'-7⅞"	3"	4¼"	6'-11⅞"	6'-8⅜"	4¼"	2¼"
W602	1'-7⅞"	3"	4¼"	3'-10⅞"	3'-7⅜"	2¼"	2¼"
W603	1'-7⅞"	3"	4¼"	5'-11⅞"	5'-8⅜"	3⅛"	2¼"
W604	1'-7⅞"	3"	4¼"	3'-7⅞"	3'-4⅜"	2⅛"	2¼"
W605	1'-7⅞"	3"	4¼"	3'-4⅞"	3'-1⅜"	2"	2¼"
W606	1'-7⅞"	3"	4¼"	4'-1⅞"	3'-10⅜"	2⅜"	2¼"
W607	1'-7⅞"	3"	4¼"	10'-2⅞"	9'-11⅜"	6¼"	2¼"
W702	1'-11½"	3⅜"	4¾"	4'-6⅛"	4'-2¾"	2⅝"	2½"
W703	1'-11½"	3⅜"	4¾"	9'-0⅛"	8'-8¾"	5½"	2½"
W709	1'-7½"	2'-3"	1'-10"	2'-9"			
W801	2'-1⅜"	4½"	6½"	5'-0½"	4'-8⅛"	2⅞"	3½"
W802	2'-1⅜"	4½"	6½"	10'-3½"	9'-11⅛"	6¼"	3½"
W901	2'-4⅛"	5⅝"	8¼"	5'-4⅜"	4'-10⅝"	3"	4½"
W902	2'-4⅛"	5⅝"	8¼"	11'-0⅜"	10'-6⅝"	6⅛"	4½"
H504	2'-0¾"	1'-5¼"	1'-8"	2'-6"			

Note: For Bar Bending Schedule see Sheet No. 331.
For Replacement Bars see Sheet No. 331.

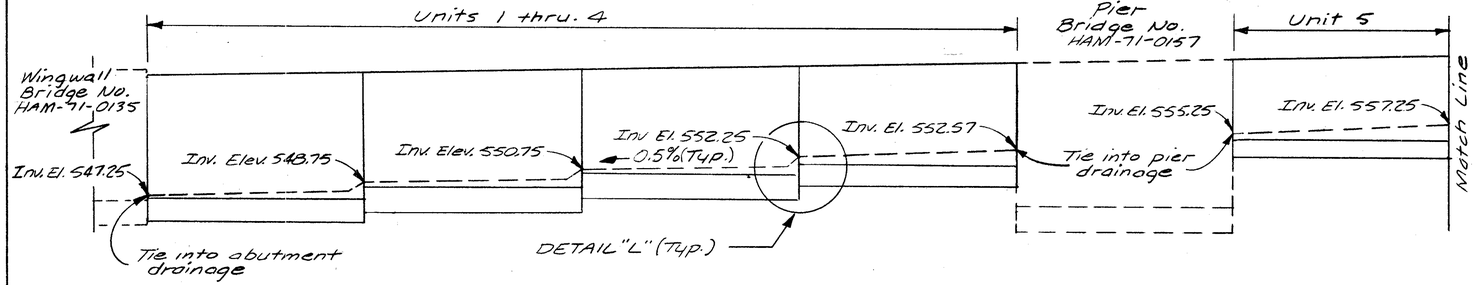

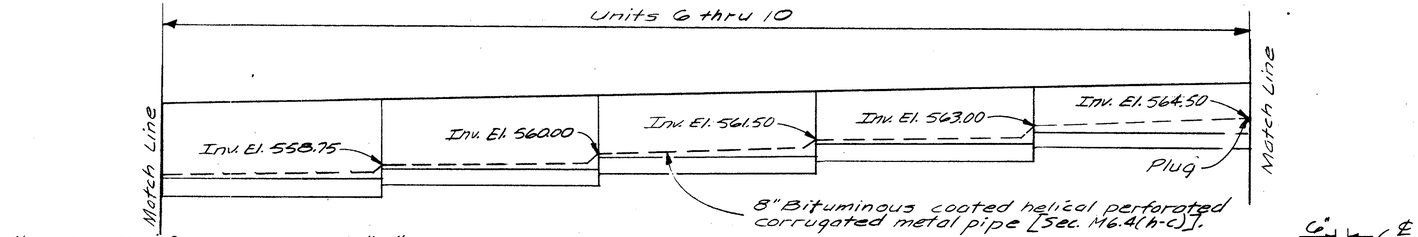

*Note: Reinforcing bar mark "H" are included in Item S-14 (Railing) for payment

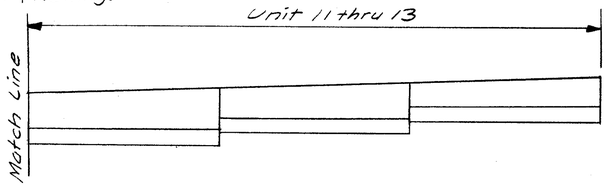

WALL DRAINAGE

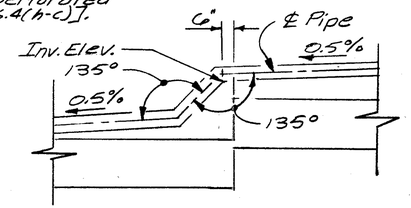

DETAIL "L"

ESTIMATED QUANTITIES

ITEM	TOTAL	UNIT	DESCRIPTION
E-2	855	Cu.Yds.	Unclassified Excavation.
S-1	299	Cu.Yds.	Class "E" Concrete, Footing
S-1	311	Cu.Yds.	Class "E" Concrete, Wall Shafts
S-3	121	Lin.Ft.	Waterproofing, premolded sealing strip.
S-4	25,930	Lbs.	Reinforcing Steel
S-9	154	Sq.Ft.	1" Preformed expansion joint filler
S-14	398	Lin Ft.	Railing Type "A" (aluminum rail and supports, concrete parapet)
S-29	226	Cu.Yds.	Porous Backfill
S-29	314	Lin Ft.	8" Bituminous coated helical perforated corrugated metal pipe [Sec. M6.4(h-c)] (including specials and sand)

Note: The above quantities are carried to the "Summary of Quantities" Sheet No. 23.

Note: For Lighting Quantities see Sheet No. 204

HAZELET & ERDAL
CONSULTING ENGINEERS
CINCINNATI, OHIO

RETAINING WALL NO. 15

SHEET NO. 6 OF 6

Designed	Drawn	Traced	Checked	Reviewed Date	Revised
	TLZ		W.L. 2-26-65	JHO 5/10/65	

FED. RD. DIV.	STATE	PROJECT	FISCAL YEAR
2	OHIO		

250
492

HAMILTON COUNTY
HAM-71-(1.56) (2.51)

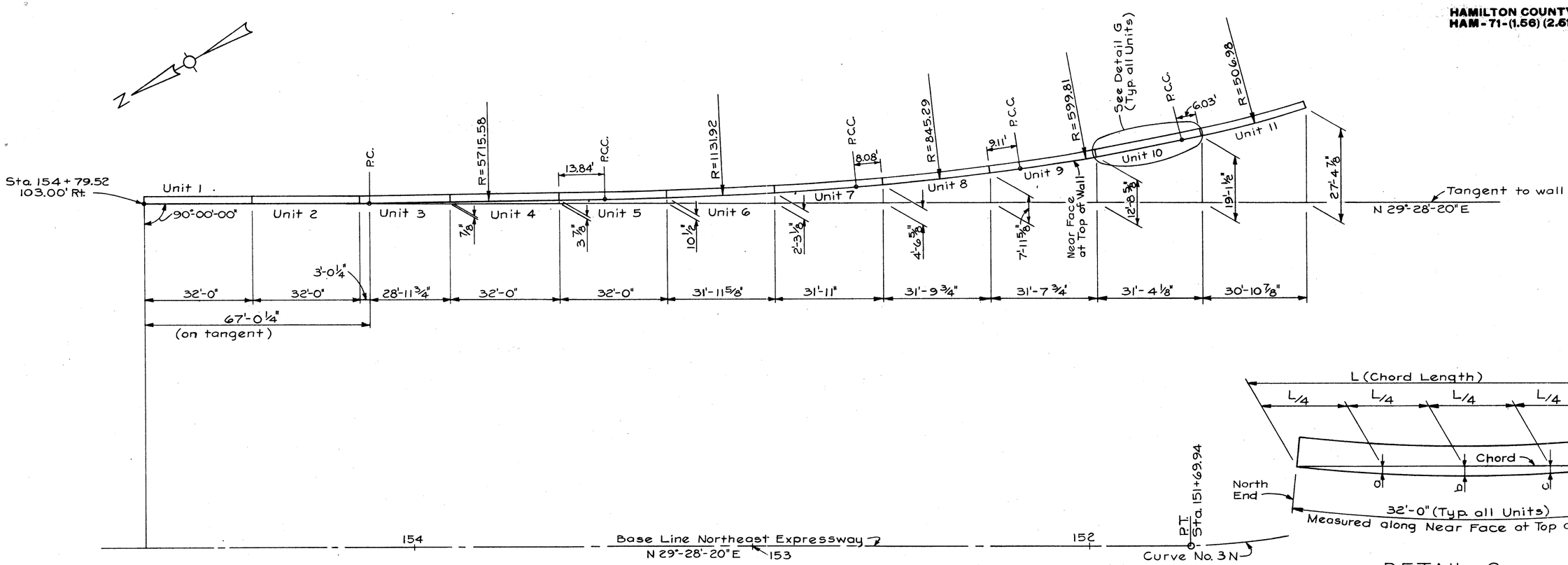

WALL LAYOUT

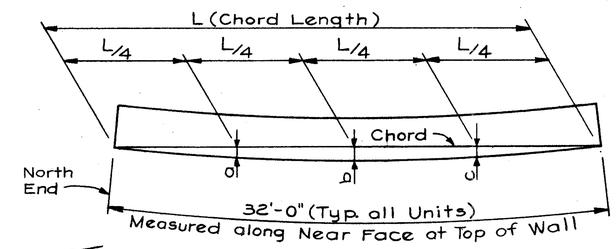

DETAIL G
(For chord offsets a, b & c see Table below)

Offset	Unit 1	Unit 2	Unit 3	Unit 4	Unit 5	Unit 6	Unit 7	Unit 8	Unit 9	Unit 10	Unit 11
a	0	0	0	1/8"	1/2"	1"	1"	1 3/8"	1 3/4"	1 7/8"	2 1/4"
b	0	0	0	1/4"	1"	1 3/8"	1 3/8"	1 7/8"	2 1/2"	2 5/8"	3"
c	0	0	0	1/8	7/8"	1"	1 1/8"	1 3/8"	1 7/8"	2"	2 1/4"

ESTIMATED QUANTITIES

Item	Total	Unit	Description
E2	Lump	Sum	Cofferdams, Cribs and Sheeting
E2	7,140	Cu. Yds.	Unclassified Excavation
E2	3,460	Cu. Yds.	Rock (Shale) Excavation
S1	930	Cu. Yds.	Class E Concrete, Footings
S1	1,353	Cu. Yds.	Class E Concrete, Wall Shafts
S3	349	Lin. Ft.	Waterproofing, Premolded Sealing Strip
S4	321,~~391~~ 526	Lbs.	Reinforcing Steel
S9	203	Sq. Ft.	1" Preformed Expansion Joint Filler
S14	~~310~~ 342	Lin. Ft.	Railing, Type C (Aluminum Rail and Supports, Concrete Parapet)
S29	671	Cu. Yds.	Porous Backfill
S29	6	Lin. Ft.	8" Bituminous Coated, Helical, Perforated, Corrugated Metal Pipe [Sec. M-6.4 (h-c)] (Including Specials)
S29	353	Lin. Ft.	8" Bituminous Coated, Helical, Perforated, Corrugated Metal Pipe [Sec. M-6.4 (h-c)] (Including Specials and Sand)
S29	8	Lin. Ft.	12" Reinforced Concrete Sewer Pipe [Sec. M-6.6 (a)]

The above quantities are carried to the Summary of Quantities Sh. No. 23

GENERAL NOTES

FOUNDATION BEARING PRESSURE: Footings are designed for a maximum bearing pressure of 5.0 tons per sq. ft.

The contractors attention is especially directed to the necessity of performing his work in such manner as to avoid any damage to the Daylight Building or any other adjacent buildings.

All excavation for this wall shall be done in Cofferdams. Not more than 65'-0" of trench shall be open for construction at any one time.

For additional notes see "Miscellaneous Details for Retaining Walls" Sh. No. 331.

HAZELET & ERDAL
CONSULTING ENGINEERS
CINCINNATI, OHIO

RETAINING WALL NO. 16

SHEET NO. 1 of 9

DESIGNED	DRAWN	TRACED	CHECKED	REVIEWED DATE	REVISED
	J.D.C. 4.30.65		H.A.Z.	JHO 5/20/65	12-21-65

FED. RD. DIV.	STATE	PROJECT	FISCAL YEAR
2	OHIO		

251
492

HAM-71-(1.56)(2.51)

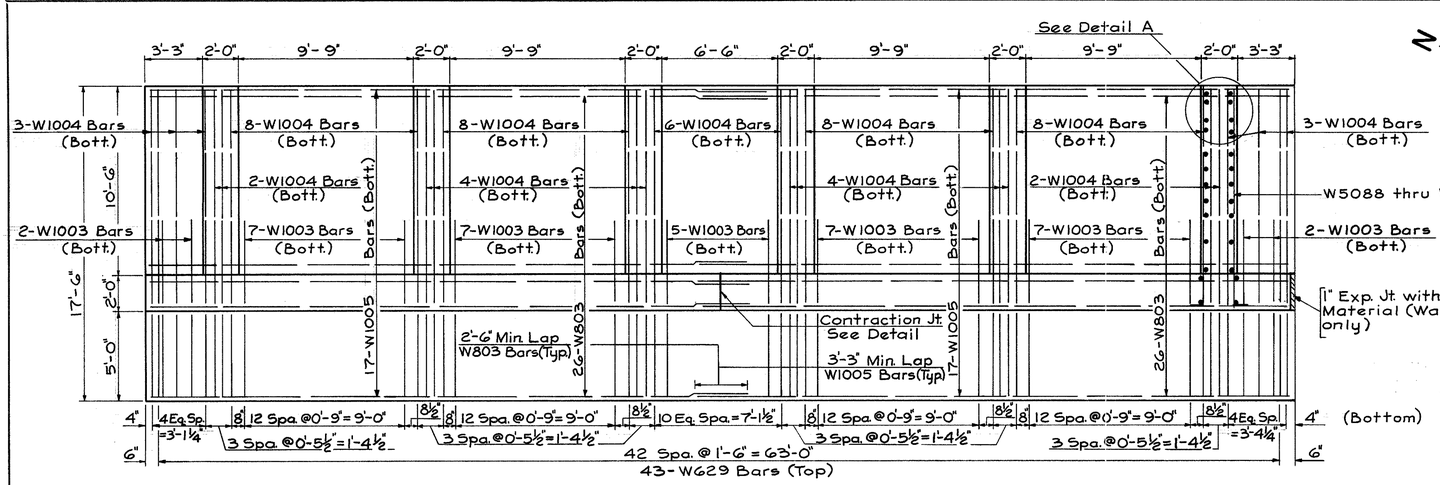

FOOTING PLAN

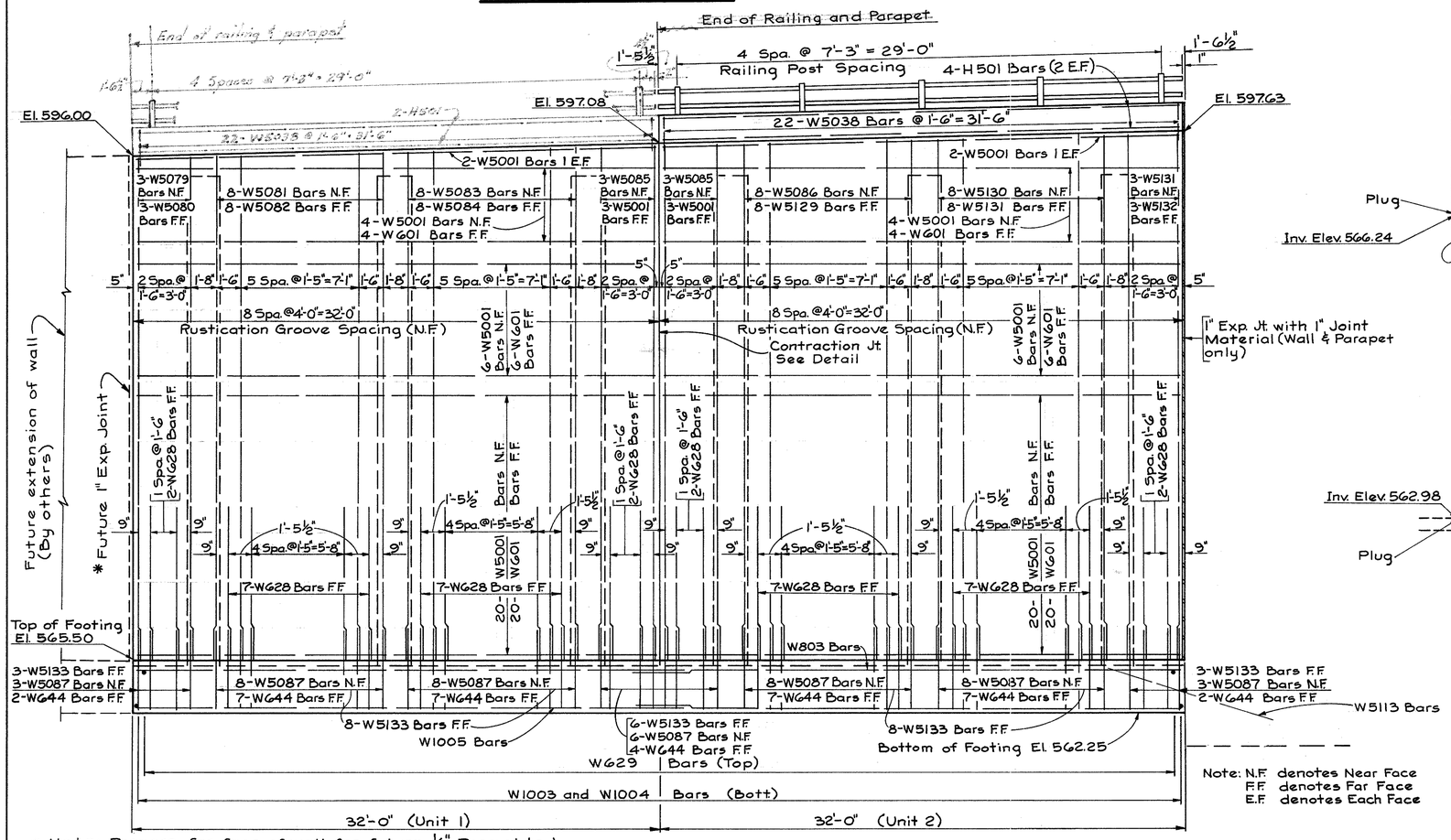

* Note: Prepare far face of wall for future ½" Premolded Sealing Strip (to be included with future extension of wall for payment). 1" Joint Filler to be included with future extension of wall for payment.

ELEVATION

Note: N.F. denotes Near Face
F.F. denotes Far Face
E.F. denotes Each Face

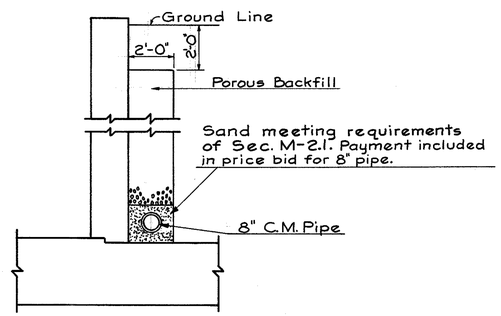

SECTION
SHOWING DRAINAGE

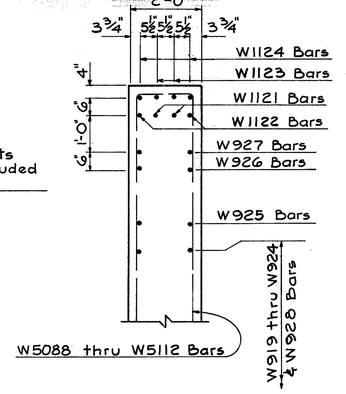

DETAIL A

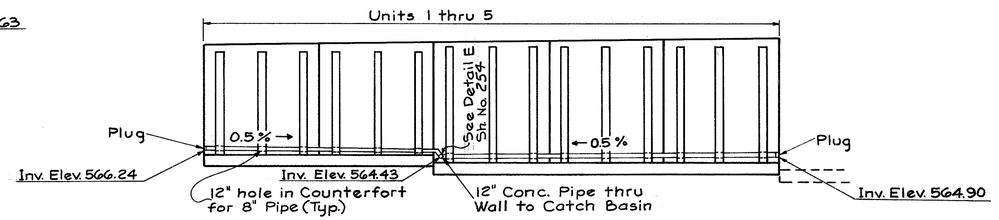

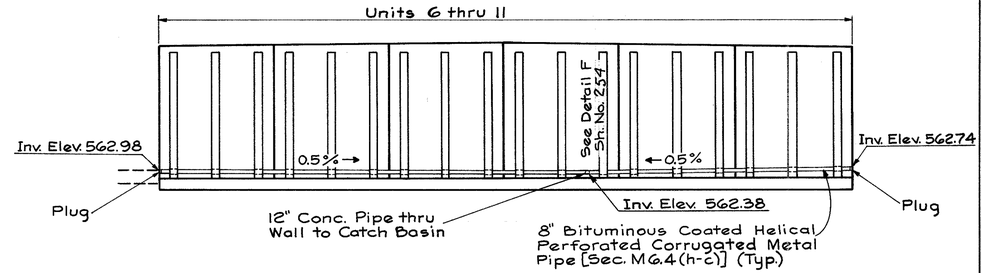

WALL DRAINAGE

DESIGN NOTE:
Design Assumption based on wall being founded on rock.
All concrete shall be class "E".

For rustication groove, contraction joint, & expansion joint details see "Miscellaneous Details for Retaining Walls," Sh. No. 331.

Work this Sheet with Sh. No. 255.

HAZELET & ERDAL
CONSULTING ENGINEERS
CINCINNATI, OHIO

RETAINING WALL No. 16

SHEET No. 2 of 9

DESIGNED	DRAWN	TRACED	CHECKED	REVIEWED DATE	REVISED
GLW	GLW	JDC MJE	W.A.Z.	JHO 5/20/65	12-21-65

FED. RD. DIV.	STATE	PROJECT	FISCAL YEAR
2	OHIO		

252
492

HAMILTON COUNTY
HAM-TI-(8.56)(2.51)

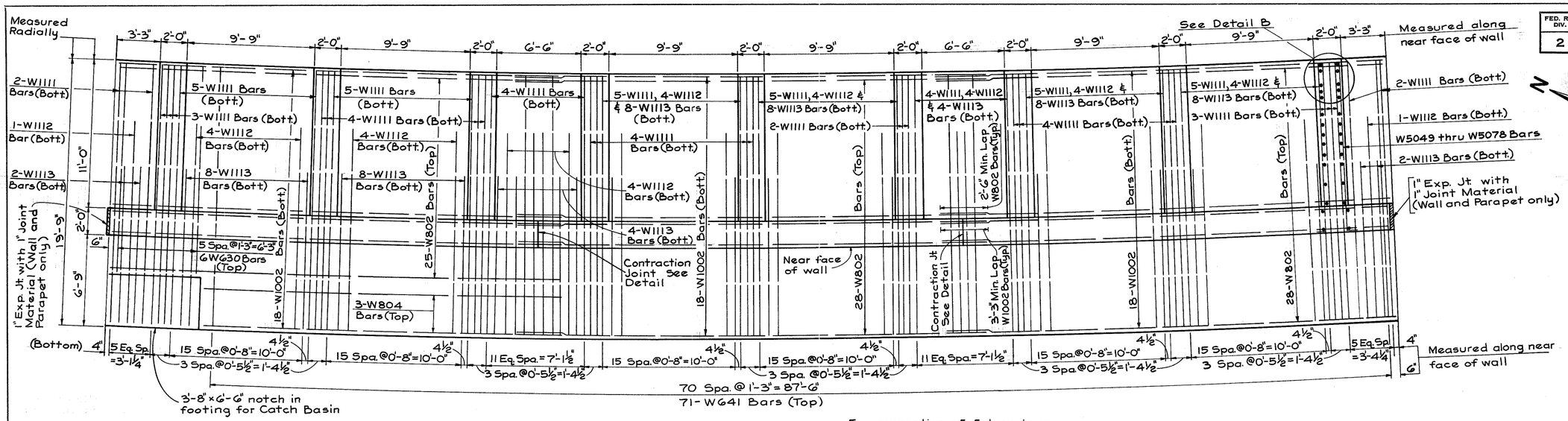

FOOTING PLAN

For connection of future lamp standard bracket to wall see Sh. No. 212.

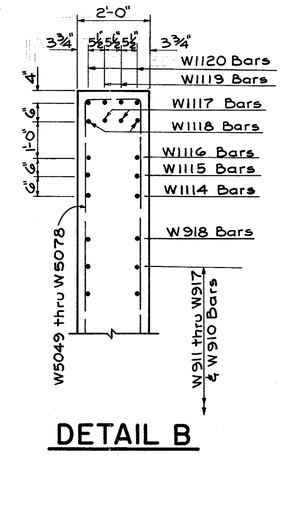

DETAIL B

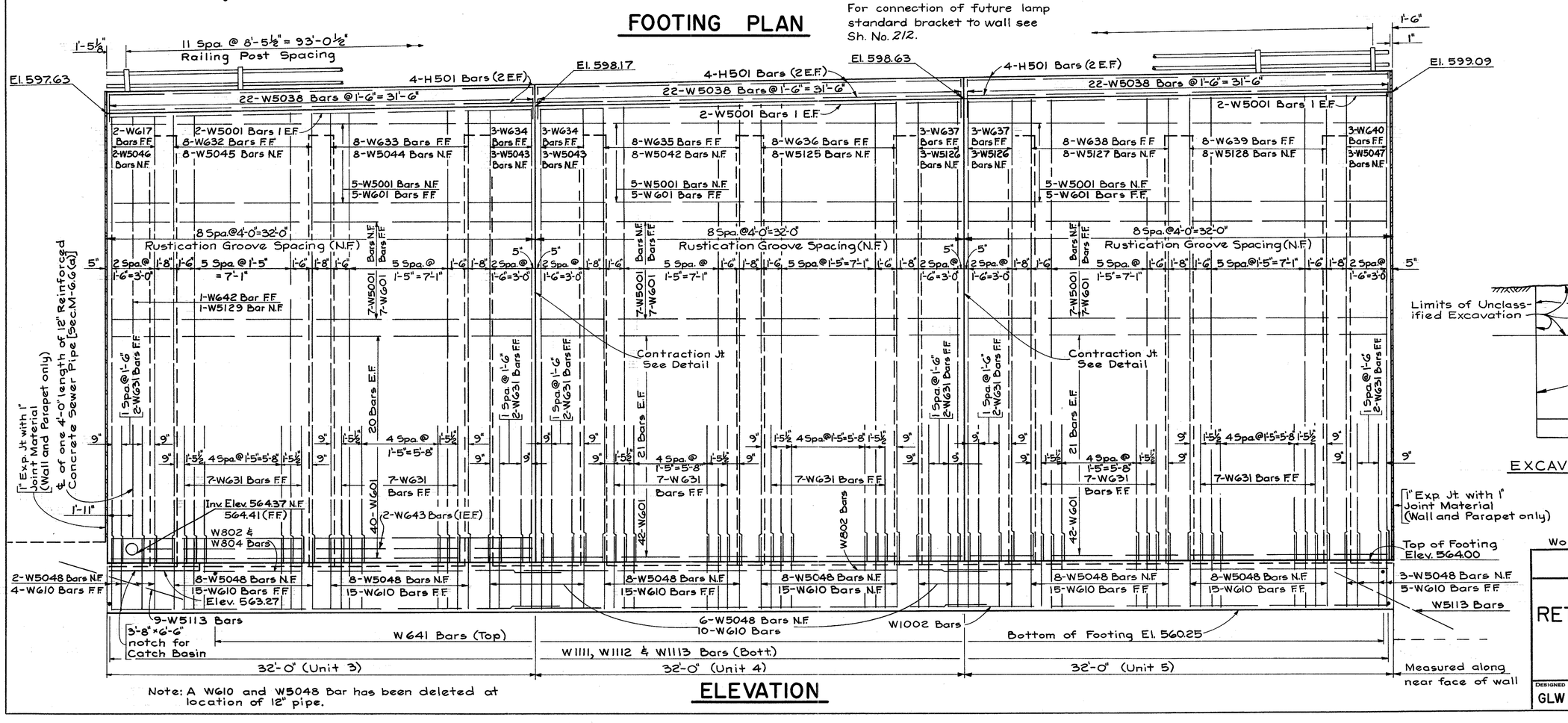

ELEVATION

Note: A W610 and W5048 Bar has been deleted at location of 12" pipe.

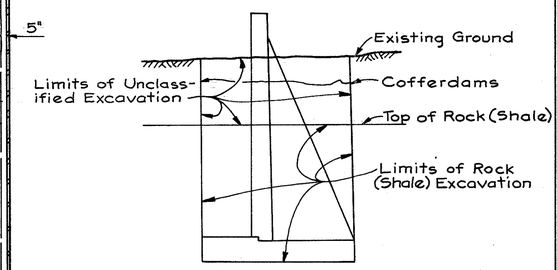

EXCAVATION LIMITS

Work this Sheet with Sh. No. 255.

HAZELET & ERDAL
CONSULTING ENGINEERS
CINCINNATI, OHIO

RETAINING WALL No. 16

SHEET No. 3 of 9

DESIGNED	DRAWN	TRACED	CHECKED	REVIEWED DATE	REVISED
GLW	GLW	JDC MJE	W.A.G.	JJH 5/20/65	

FED. RD. DIV.	STATE	PROJECT	FISCAL YEAR
2	OHIO		

253
492

HAMILTON COUNTY
HAM-71-(1.56)(2.51)

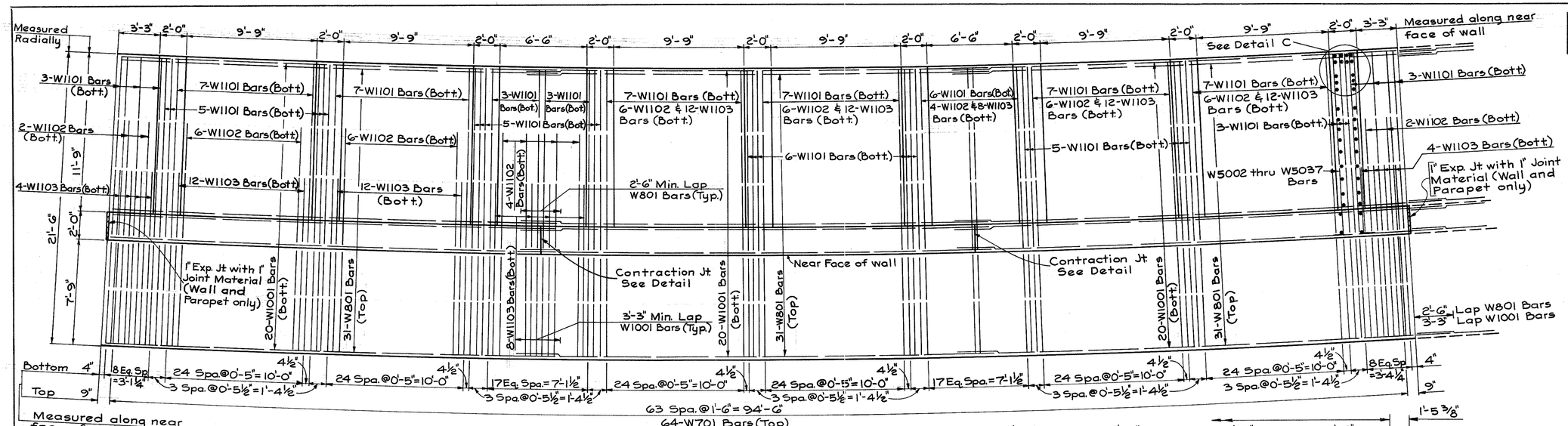

FOOTING PLAN

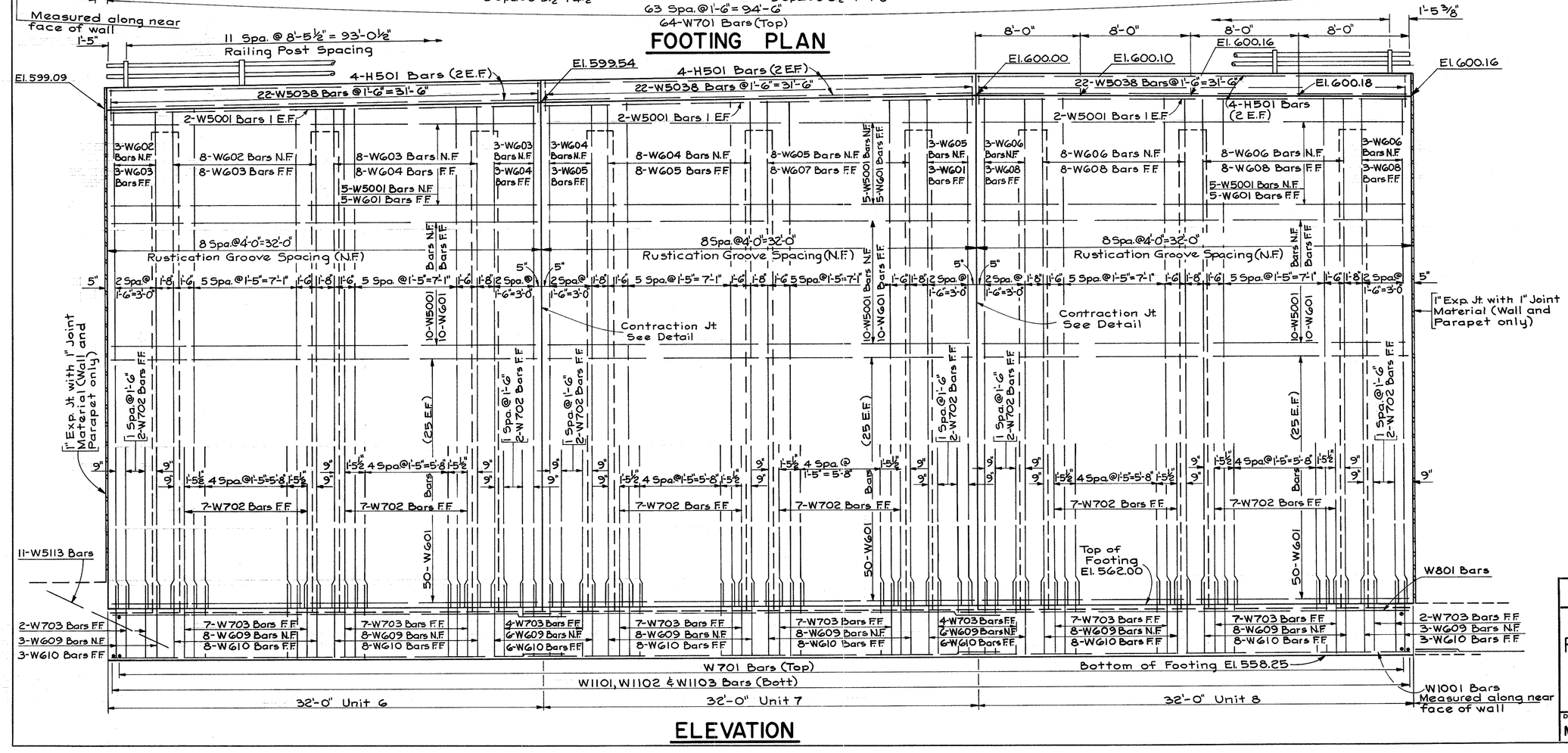

ELEVATION

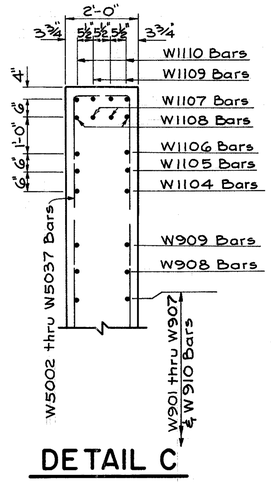

DETAIL C

Work this sheet with Sh. No. 255.

HAZELET & ERDAL
CONSULTING ENGINEERS
CINCINNATI, OHIO

RETAINING WALL No. 16

SHEET No. 4 of 9

DESIGNED	DRAWN	TRACED	CHECKED	REVIEWED DATE	REVISED
MKK	GLW	JDC MJE	M.A.Z.	JHo 5/20/65	

FED. RD. DIV.	STATE	PROJECT	FISCAL YEAR
2	OHIO		

254
492

HAMILTON COUNTY
[redacted]-71-(1.56)(2.51)

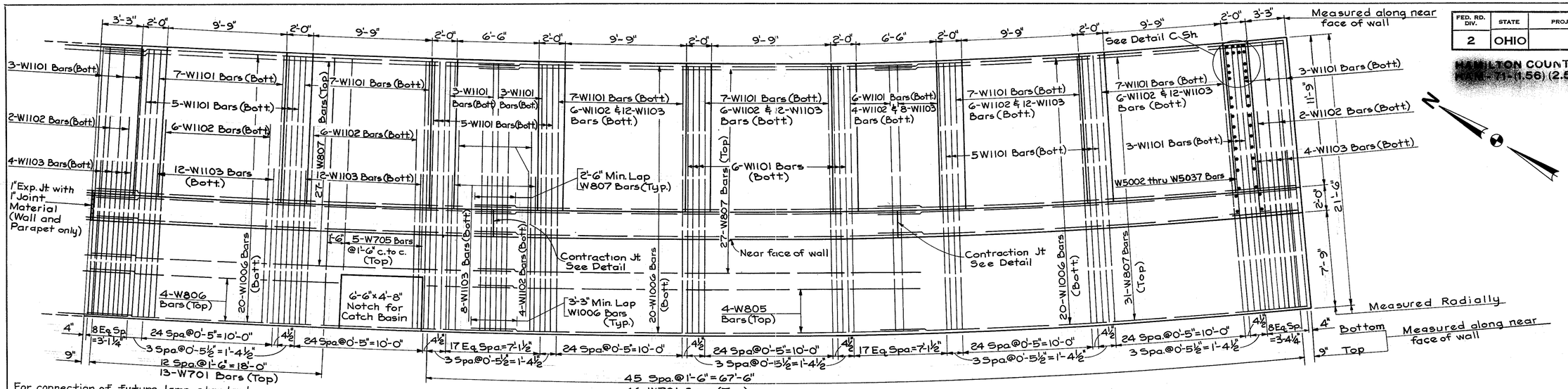

For connection of future lamp standard bracket to wall see Sh. No. 212.

FOOTING PLAN

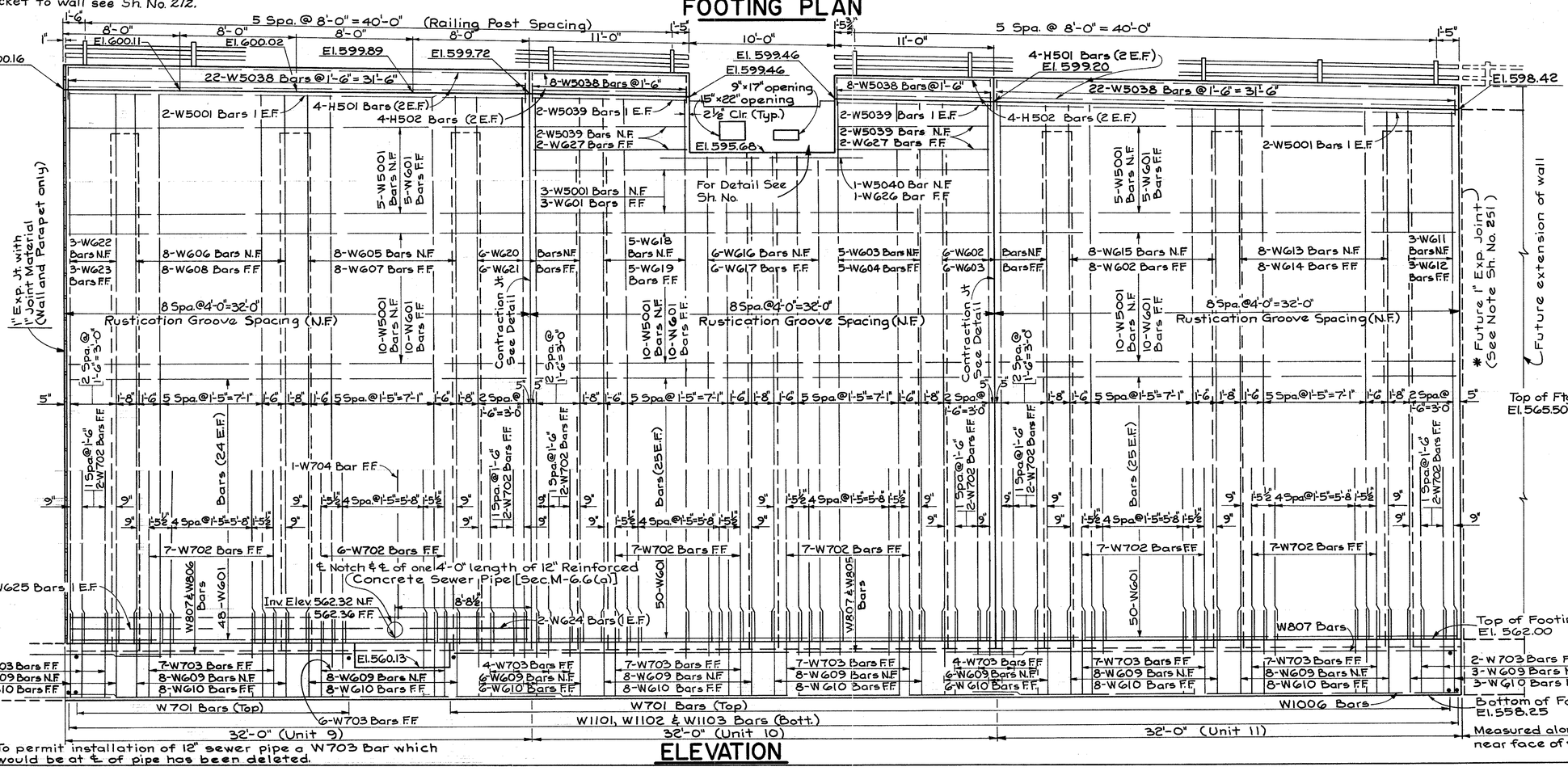

To permit installation of 12" sewer pipe a W703 Bar which would be at ℄ of pipe has been deleted.

ELEVATION

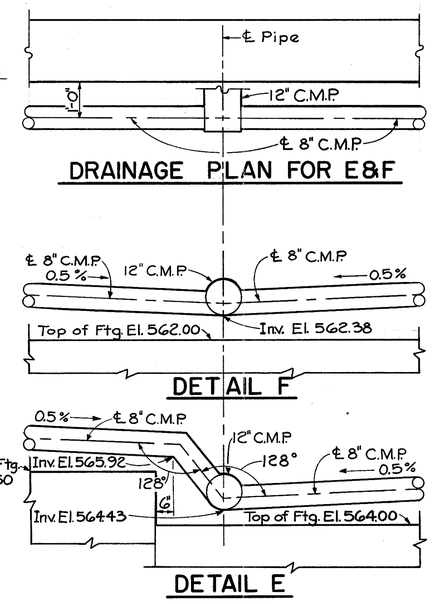

Work this Sheet with Sh. No. 255.

HAZELET & ERDAL
CONSULTING ENGINEERS
CINCINNATI, OHIO

RETAINING WALL No. 16

SHEET No. 5 of 9

DESIGNED	DRAWN	TRACED	CHECKED	REVIEWED DATE	REVISED
MKK	GLW	JDC MJE	H.A.Z.	JHO 5/20/65	

FED. RD. DIV.	STATE	PROJECT	FISCAL YEAR
2	OHIO		

255
492

HAMILTON COUNTY
HAM-71-(1.56) (2.61)

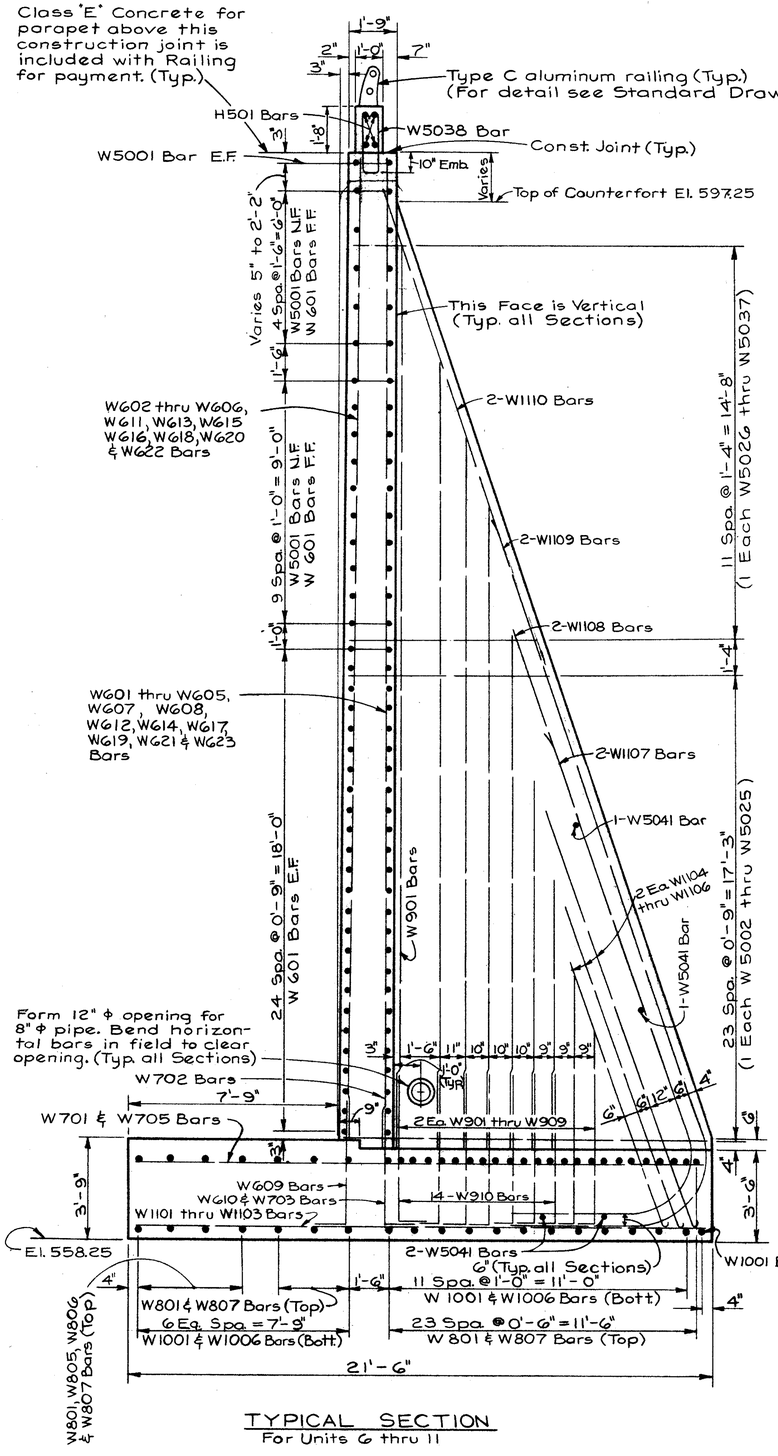

TYPICAL SECTION
For Units 6 thru 11

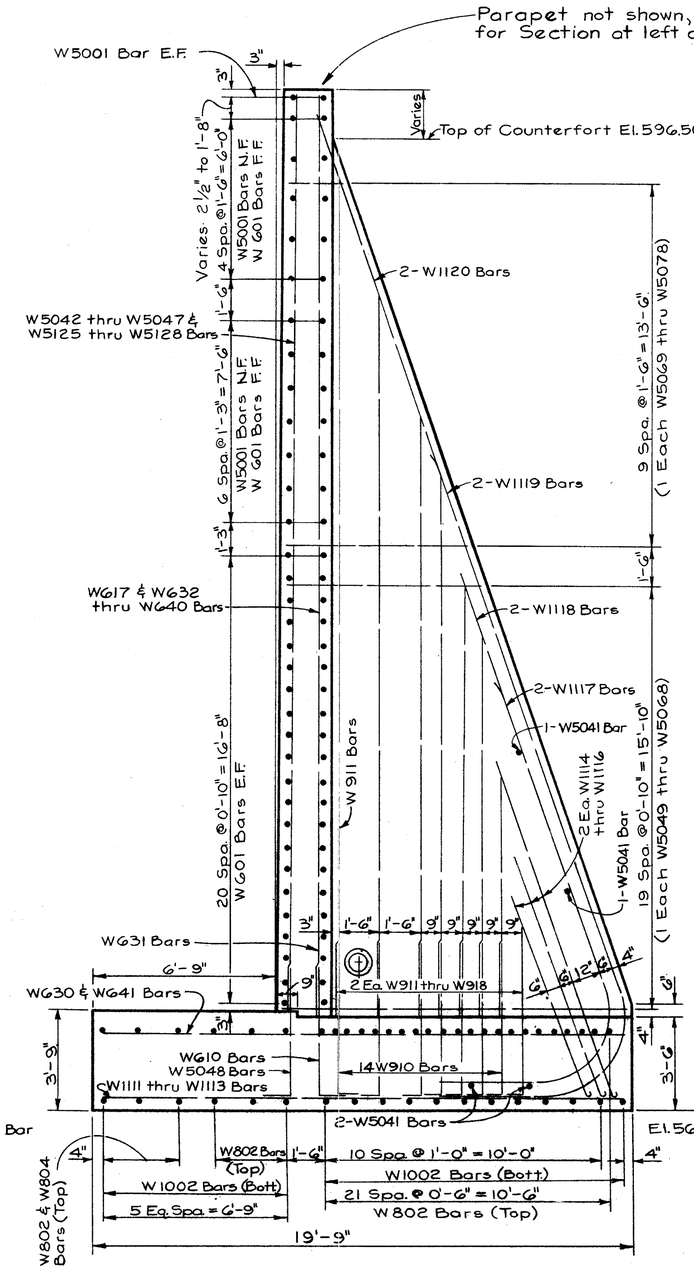

TYPICAL SECTION
For Units 3, 4, & 5

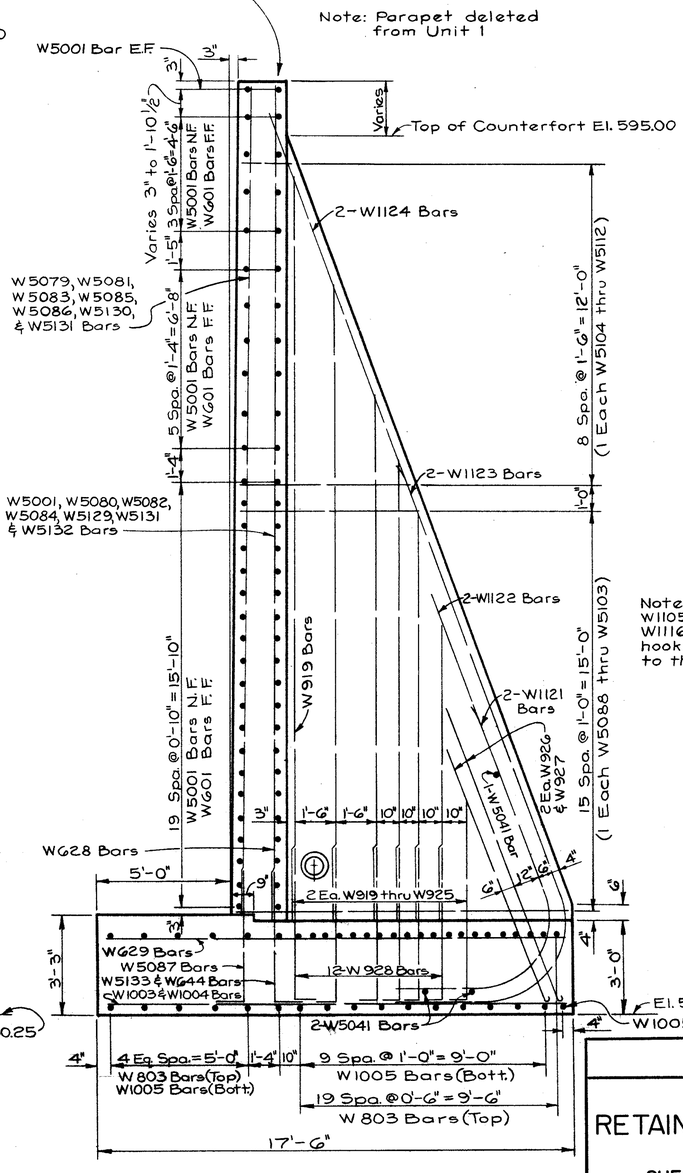

TYPICAL SECTION
For Units 1 & 2

Note: Bars W926, W927, W1104, W1105, W1106, W1114, W1115 and W1116 are placed so their hooks are at right angles to the counterfort face.

HAZELET & ERDAL
CONSULTING ENGINEERS
CINCINNATI, OHIO

RETAINING WALL No. 16

SHEET No. 6 of 9

DESIGNED	DRAWN	TRACED	CHECKED	REVIEWED DATE	REVISED
	JDC 3-29-65		9/1/3.	JHO 5/20/65	

FED. RD. DIV.	STATE	PROJECT	FISCAL YEAR
2	OHIO		

256
492

HAMILTON COUNTY
HAM-71-(1.66) (2.61)

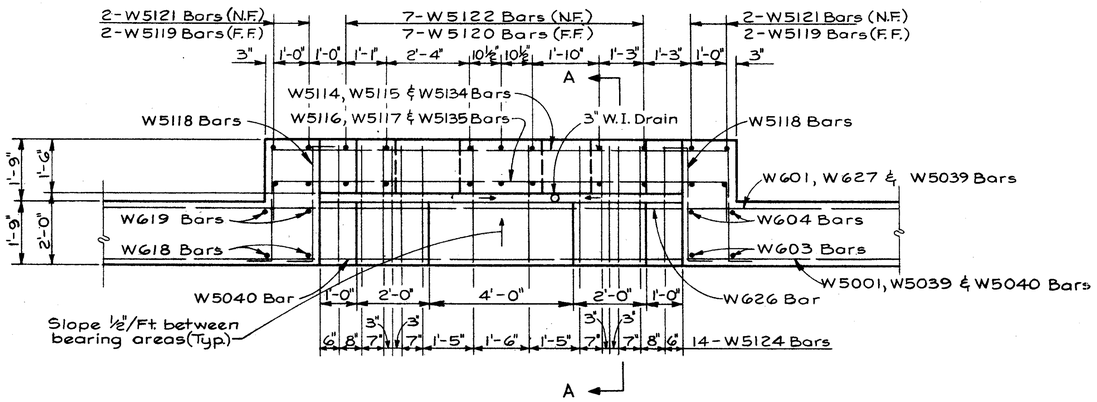

PLAN

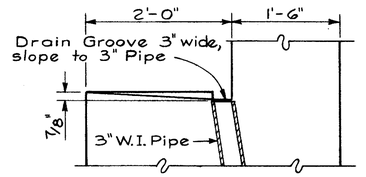

GUTTER DETAIL

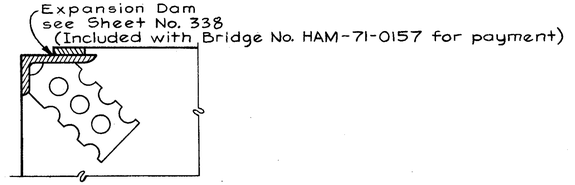

DETAIL D

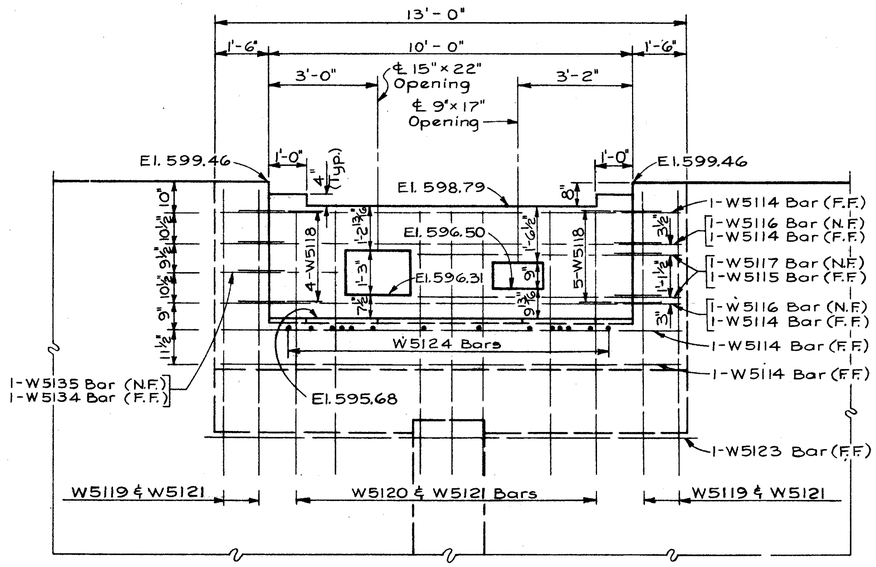

ELEVATION

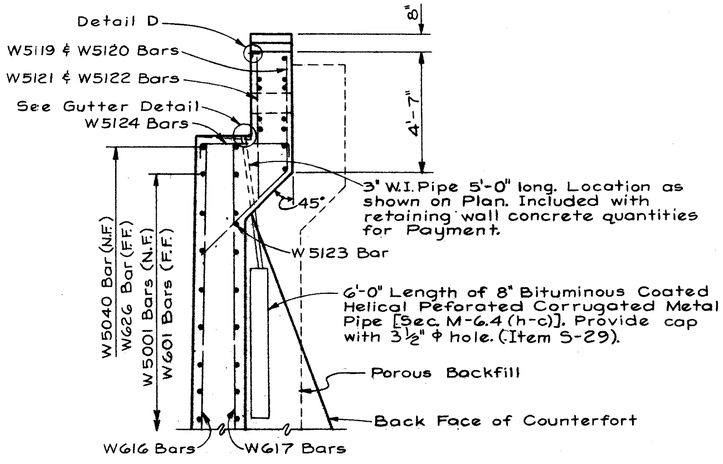

SECTION A-A

HAZELET & ERDAL
CONSULTING ENGINEERS
CINCINNATI, OHIO

RETAINING WALL No. 16

SHEET No. 7 of 9

DESIGNED	DRAWN	TRACED	CHECKED	REVIEWED DATE	REVISED
	J.D.C. 4.10.65			JHO 5/20/65	

FED. RD. DIV.	STATE	PROJECT	FISCAL YEAR
2	OHIO		

257
492

HAMILTON COUNTY
HAM-71-(1.56)(2.51)

REINFORCING STEEL LIST

MARK	LENGTH	TYPE	DIMENSIONS A	B	C	D	UNITS 1	2	3	4	5	6	7	8	9	10	11	TOTAL	WEIGHT
W5001	31'-7"	Str.					35	35	14	14	14	17	17	17	17	13	17	210	6,918
W5002	29'-6"	14	13'-4"	1'-8"	10"	10"						3	3	3	3	3	3	18	554
W5003	29'-2"	↕	13'-2"	↕	↕	↕						↕	↕	↕	↕	↕	↕	↕	548
W5004	28'-7"		12'-10½"																537
W5005	28'-1"		12'-7½"																527
W5006	27'-7"		12'-4½"																518
W5007	27'-1"		12'-1½"																508
W5008	26'-7"		11'-10½"																499
W5009	26'-1"		11'-7½"																490
W5010	25'-6"		11'-4"																479
W5011	25'-0"		11'-1"																469
W5012	24'-6"		10'-10"																460
W5013	24'-0"		10'-7"																451
W5014	23'-6"		10'-4"																441
W5015	23'-0"		10'-1"																432
W5016	22'-5"		9'-9½"																421
W5017	21'-11"		9'-6½"																411
W5018	21'-5"		9'-3½"																402
W5019	20'-11"		9'-0½"																393
W5020	20'-5"		8'-9½"																383
W5021	19'-11"		8'-6½"																374
W5022	19'-4"		8'-3"																363
W5023	18'-10"		8'-0"																354
W5024	18'-4"		7'-9"																344
W5025	17'-10"		7'-6"																335
W5026	16'-11"		7'-0½"																318
W5027	16'-0"		6'-7"																300
W5028	15'-1"		6'-1½"																283
W5029	14'-2"		5'-8"																266
W5030	13'-3"		5'-2½"																249
W5031	12'-4"		4'-9"																232
W5032	11'-5"		4'-3½"																214
W5033	10'-6"		3'-10"																197
W5034	9'-7"		3'-4½"																180
W5035	8'-8"		2'-11"																163
W5036	7'-9"	↕	2'-5½"	↕	↕	↕						↕	↕	↕	↕	↕	↕	↕	145
W5037	6'-10"	14	2'-0"	1'-8"	10"	10"						3	3	3	3	3	3	18	128
W5038	5'-11"	3	8"	2'-4"			22	22	22	22	22	22	22	22	22	16	22	214	1,321 - 1,456
W5039	10'-8"	Str.														8	234	8	89
W5040	14'-0"	↕														1		1	15
W5041	1'-8"						9	9	12	12	12	12	12	12	12	12	12	126	219
W5042	34'-1"									8								8	284
W5043	34'-0"								3	3								6	213
W5044	33'-9"								8									8	282
W5045	33'-7"								8									8	280
W5046	33'-6"								2									2	70
W5047	34'-11"	Str.									3							3	109
W5048	5'-6"	11	7"	5'-0"					21	22	22							65	373
W5049	28'-0"	14	12'-7"	1'-8"	10"	10"			3	3	3							9	263
W5050	27'-7"	↕	12'-4½"	↕	↕	↕			↕	↕	↕							↕	259
W5051	27'-0"		12'-1"																253
W5052	26'-5"		11'-9½"																248
W5053	25'-10"		11'-6"																242
W5054	25'-3"		11'-2½"																237
W5055	24'-8"		10'-11"																232
W5056	24'-1"		10'-7½"																226
W5057	23'-6"		10'-4"																221
W5058	22'-11"		10'-0½"																215
W5059	22'-4"		9'-9"																210
W5060	21'-9"		9'-5½"																204
W5061	21'-2"		9'-2"																199
W5062	20'-7"		8'-10½"																193
W5063	20'-0"		8'-7"																188
W5064	19'-5"		8'-3½"																182
W5065	18'-10"		8'-0"																177
W5066	18'-3"		7'-8½"																171
W5067	17'-8"		7'-5"																166
W5068	17'-1"		7'-1½"																160
W5069	16'-1"		6'-7½"																151
W5070	15'-0"	14	6'-1"	1'-8"	10"	10"			3	3	3							9	141

REINFORCING STEEL LIST

MARK	LENGTH	TYPE	DIMENSIONS A	B	C	D	UNITS 1	2	3	4	5	6	7	8	9	10	11	TOTAL	WEIGHT
W5071	14'-0"	14	5'-7"	1'-8"	10"	10"			3	3	3							9	131
W5072	12'-11"	↕	5'-0½"	↕	↕	↕			↕	↕	↕							↕	121
W5073	11'-11"		4'-6½"																112
W5074	10'-10"		4'-0"																102
W5075	9'-10"		3'-6"																92
W5076	8'-9"		2'-11½"																82
W5077	7'-8"		2'-5"																72
W5078	6'-8"	14	1'-11"	1'-8"	10"	10"			3	3	3							9	63
W5079	30'-4"	Str.					3											3	95
W5080	30'-7"	↕					3											3	96
W5081	30'-6"						8											8	254
W5082	30'-9"						8											8	257
W5083	30'-11"						8											8	258
W5084	31'-2"						8											8	260
W5085	31'-4"						3	3										6	196
W5086	31'-6"	Str.						8										8	263
W5087	5'-0"	11	7"	4'-6"			22	22										44	229
W5088	27'-1"	14	12'-1½"	1'-8"	10"	10"	3	3										6	169
W5089	26'-5"	↕	11'-9½"	↕	↕	↕	↕	↕										↕	165
W5090	25'-8"		11'-5"																161
W5091	24'-11"		11'-0½"																156
W5092	24'-3"		10'-8½"																152
W5093	23'-6"		10'-4"																147
W5094	22'-9"		9'-11½"																142
W5095	22'-0"		9'-7"																138
W5096	21'-3"		9'-2½"																133
W5097	20'-7"		8'-10½"																129
W5098	19'-10"		8'-6"																124
W5099	19'-1"		8'-1½"																119
W5100	18'-4"		7'-9"																115
W5101	17'-8"		7'-5"																111
W5102	16'-11"		7'-0½"																106
W5103	16'-2"		6'-8"																101
W5104	15'-5"		6'-3½"																96
W5105	14'-4"		5'-9"																90
W5106	13'-3"		5'-2½"																83
W5107	12'-1"		4'-7½"																76
W5108	11'-0"		4'-1"																69
W5109	9'-11"		3'-6½"																62
W5110	8'-10"		3'-0"																55
W5111	7'-9"	↕	2'-5½"	↕	↕	↕	↕	↕	↕									↕	48
W5112	6'-7"	14	1'-10½"	1'-8"	10"	10"	3	3										6	41
W5113	10'-0"	Str.							9			11						20	209
W5114	19'-8"	14	3'-1½"	12'-8"	7"	7"										5		5	103
W5115	10'-9"	8	7'-3"	3'-1½"	7"											2		2	22
W5116	13'-7"	1	12'-8"	7"												2		2	28
W5117	7'-9"	11	7'-3"	8"												2		2	16
W5118	4'-1"	8	7½"	3'-1½"	7½"											9		9	38
W5119	9'-4"	12	3'-1"	5'-0"	4'-4"	3'-1"										4		4	39
W5120	8'-8"	12	3'-1"	4'-4"	4'-4"	3'-1"										7		7	63
W5121	6'-2"	Str.														4		4	26
W5122	5'-5"	Str.														7		7	40
W5123	13'-6"	Str.														1		1	14
W5124	4'-3"	1	3'-2"	8"												14		14	62
W5125	34'-3"	Str.								8								8	286
W5126	34'-5"	↕								3	3							6	215
W5127	34'-6"										8							8	288
W5128	34'-9"										8							8	290
W5129	31'-9"							8	1									9	298
W5130	31'-8"							8										8	264
W5131	31'-11"	↕						11										11	366
W5132	32'-2"	Str.						3										3	101
W5133	4'-9"	11	7"	4'-3"			22	22										44	218
W5134	6'-8"	8	3'-3"	3'-1½"	7"											1		1	7
W5135	3'-8"	11	3'-3"	7"												1		1	4

Notes: For Replacement Bars see Sh. No. 331.
For Bar Bending Schedule see Sh. No. 331.

HAZELET & ERDAL
CONSULTING ENGINEERS
CINCINNATI, OHIO

RETAINING WALL No. 16

SHEET No. 8 of 9

DESIGNED	DRAWN	TRACED	CHECKED	REVIEWED DATE	REVISED
		MP	J.D.C.	JHO 5/20/65	

FED. RD. DIV.	STATE	PROJECT	FISCAL YEAR
2	OHIO		

258
492

HAMILTON COUNTY
HAM-71-(1.56)(2.51)

REINFORCING STEEL LIST

MARK	LENGTH	TYPE	DIMENSIONS A	B	C	D	UNITS 1	2	3	4	5	6	7	8	9	10	11	TOTAL	WEIGHT
WG01	31'-7"	Str.					30	30	52	54	54	65	65	65	63	63	65	606	28,747
WG02	36'-11"	↑										11				3	11	25	1,386
WG03	37'-2"											22				8	3	33	1,842
WG04	37'-5"											11	11			5		27	1,517
WG05	37'-8"												22		8			30	1,697
WG06	37'-10"													22	8			30	1,705
WG07	37'-11"	↓											11		8			19	1,082
WG08	38'-1"	Str.												22	8			30	1,716
WG09	5'-11"	11	9"	5'-4"								22	22	22	22	22	22	132	1,173
WG10	5'-8"	11	9"	5'-1"					39	40	40	22	22	22	22	22	22	251	2,136
WG11	36'-3"	Str.															3	3	163
WG12	36'-6"	↑															3	3	164
WG13	36'-4"																8	8	437
WG14	36'-7"																8	8	440
WG15	36'-8"																8	8	441
WG16	33'-6"															6		6	302
WG17	33'-9"								2							6		8	406
WG18	37'-4"															5		5	280
WG19	37'-7"															5		5	282
WG20	37'-6"														3	3		6	338
WG21	37'-9"														3	3		6	340
WG22	38'-0"														3			3	171
WG23	38'-3"														3			3	172
WG24	7'-9"														2			2	23
WG25	22'-4"														2			2	67
WG26	14'-0"															1		1	21
WG27	10'-8"															4		4	64
WG28	10'-0"						18	18										36	541
WG29	17'-0"						←43→											43	1,098
WG30	15'-7"								6									6	140
WG31	10'-9"								18	18	18							54	872
WG32	33'-10"								8									8	407
WG33	34'-0"								8									8	409
WG34	34'-3"								3	3								6	309
WG35	34'-4"									8								8	413
WG36	34'-6"									8								8	415
WG37	34'-8"										3	3						6	312
WG38	34'-9"											8						8	418
WG39	35'-0"											8						8	421
WG40	35'-2"											3						3	158
WG41	19'-3"								←71→									71	2,053
WG42	31'-9"	↓							1									1	48
WG43	29'-0"	Str.							2									2	87
WG44	5'-2"	11	9"	4'-7"			18	18										36	279
W701	21'-0"	Str.										←64→			←59→			123	5,280
W702	11'-9"	Str.										18	18	18	17	18	18	107	2,570
W703	5'-10"	11	11"	5'-1"								18	18	18	17	18	18	107	1.276
W704	9'-10"	Str.													1			1	20
W705	16'-4"	Str.													5			5	167
W801	34'-8"	Str.										31	31	31				93	8,608
W802	33'-7"	↑							25	28	28							81	7,263
W803	33'-1"						26	26										52	4,593
W804	27'-1"								3									3	217
W805	38'-5"															4		4	410
W806	20'-0"	↓													4			4	214
W807	34'-0"	Str.													27	27	31	85	7,716
W901	33'-4"	Str.										6	6	6	6	6	6	36	4,080
W902	28'-10"	↑																	3,529
W903	26'-2"																		3,203
W904	23'-9"	↓																	2,907
W905	21'-3"	Str.										6	6	6	6	6	6	36	2,601

REINFORCING STEEL LIST

MARK	LENGTH	TYPE	DIMENSIONS A	B	C	D	E	F	Rad.	UNITS 1	2	3	4	5	6	7	8	9	10	11	TOTAL	WEIGHT
W906	17'-2"	Str.													6	6	6	6	6	6	36	2,101
W907	11'-9"	Str.																				1,438
W908	10'-4"	11	1'-1"	9'-6"											6	6	6	6	6	6	36	1,265
W909	8'-1"	11	1'-1"	7'-3"																		989
W910	6'-10"	11	1'-1"	6'-0"								42	42	42	42	42	42	42	42	42	378	8,782
W911	30'-3"	Str.										6	6	6							18	1,851
W912	26'-3"	↑																				1,607
W913	21'-11"																					1,341
W914	19'-8"																					1,204
W915	15'-10"																					969
W916	13'-8"	↓																				836
W917	8'-4"	Str.																				510
W918	7'-1"	11	1'-1"	6'-3"								6	6	6							18	434
W919	27'-9"	Str.								6	6										12	1,132
W920	23'-6"	↑																				959
W921	19'-6"																					796
W922	17'-2"																					700
W923	14'-10"	↓																				605
W924	11'-0"	Str.																				449
W925	7'-9"	11	1'-1"	6'-11"																		316
W926	9'-2"	13	2'-10"	5'-1"	5'-0½"	9½"																374
W927	10'-3"	13	2'-10"	6'-2"	6'-1"	11½"				6	6										12	418
W928	6'-4"	11	1'-1"	5'-6"						36	36										72	1,550
W1001	35'-5"	Str.													20	20	20				60	9,144
W1002	34'-1"	↑										18	18	18							54	7,920
W1003	10'-0"									18	19										37	1,592
W1004	17'-0"									28	28										56	4,096
W1005	33'-6"	↓								17	17								20	20	34	4,901
W1006	34'-6"	Str.																			60	8,907
W1101	21'-0"	Str.													28	28	28	28	28	28	168	18,744
W1102	16'-0"	Str.													16	16	16	16	16	16	96	8,161
W1103	12'-9"	Str.													32	32	32	32	32	32	192	13,006
W1104	12'-0"	13	3'-3"	7'-2"	7'-11½"	7"									6	6	6	6	6	6	36	2,295
W1105	14'-2"	13	3'-3"	9'-4"	9'-3½"	9"																2,710
W1106	17'-10"	13	3'-3"	13'-0"	12'-11½"	1'-0½"																3,411
W1107	23'-11"	6	3'-7"	2'-7"	4'-10"	18'-1"	15'-6"	5'-0½"	2'-6"													4,574
W1108	28'-2"	6	3'-7"	2'-7"	4'-10"	22'-1½"	19'-9"	6'-5"	2'-6"													5,387
W1109	33'-2"	6	3'-7"	3'-1"	5'-9½"	26'-7"	23'-9"	7'-9"	3'-0"													6,344
W1110	46'-11"	6	3'-7"	3'-1"	5'-9½"	39'-7½"	37'-6"	12'-1"	3'-0"													8,974
W1111	19'-3"	Str.								21	20	21									62	6,341
W1112	15'-0"	Str.								11	12	11									34	2,710
W1113	11'-9"	Str.								20	20	20									60	3,746
W1114	9'-5"	13	3'-3"	4'-7"	4'-7"	4½"				6	6	6									18	901
W1115	11'-0"	13	3'-3"	6'-2"	6'-2"	6"																1,052
W1116	14'-8"	13	3'-3"	9'-10"	9'-9½"	9½"																1,403
W1117	20'-9"	6	3'-7"	2'-7"	4'-10"	15'-1"	12'-4"	4'-0½"	2'-6"													1,984
W1118	25'-0"	↑		2'-7"	4'-10"	19'-1½"	16'-7"	5'-4½"	2'-6"													2,391
W1119	30'-7"			3'-1"	5'-9½"	24'-1½"	21'-2"	6'-11"	3'-0"													2,925
W1120	42'-11"			3'-1"	5'-9½"	35'-10"	33'-6"	10'-10"	3'-0"													4,104
W1121	15'-3"			2'-11½"	3'-11"	10'-1"	7'-9"	2'-9"	2'-0"	6	6										12	972
W1122	19'-7"			2'-11½"	3'-11"	14'-2"	12'-1"	4'-2½"	2'-0"													1,249
W1123	25'-8"	↓		2'-7½"	4'-10½"	19'-7½"	17'-2"	5'-11½"	2'-6"													1,636
W1124	39'-1"	6	3'-7"	2'-7½"	4'-10½"	32'-3"	30'-7"	10'-6"	2'-6"	6	6										12	2,492
H501	31'-7"	Str.								4	4	4	4	4	4	4	4	4	8	4	40 (36)	*
H502	10'-8"	Str.																			8	*

* NOTE: Reinforcing bar Mark "H" are included in Item S-14 (Railing) for payment.

Total weight of Reinforcing Steel for Retaining Wall No. 16 = 321,391 lbs.

HAZELET & ERDAL
CONSULTING ENGINEERS
CINCINNATI, OHIO

RETAINING WALL No. 16

SHEET No. 9 of 9

DESIGNED	DRAWN	TRACED	CHECKED	REVIEWED DATE	REVISED
		MJE	J.D.C.	JLH 5/20/65	12-21-65

FED. RD. DIV.	STATE	PROJECT	FISCAL YEAR
2	OHIO		

259
492

HAMILTON COUNTY
HAM-71-(1.56) (2.51)

NOTE

CONCRETE for Footing and Stems North of Sta 12+26.23 (16E&W, 17E&W, 18E&W&N) shall be CLASS "C" CONCRETE

CONCRETE for Footing and Stems South of Sta 12+26.23 (1E thru 15E&W) Shall be CLASS "E" CONCRETE

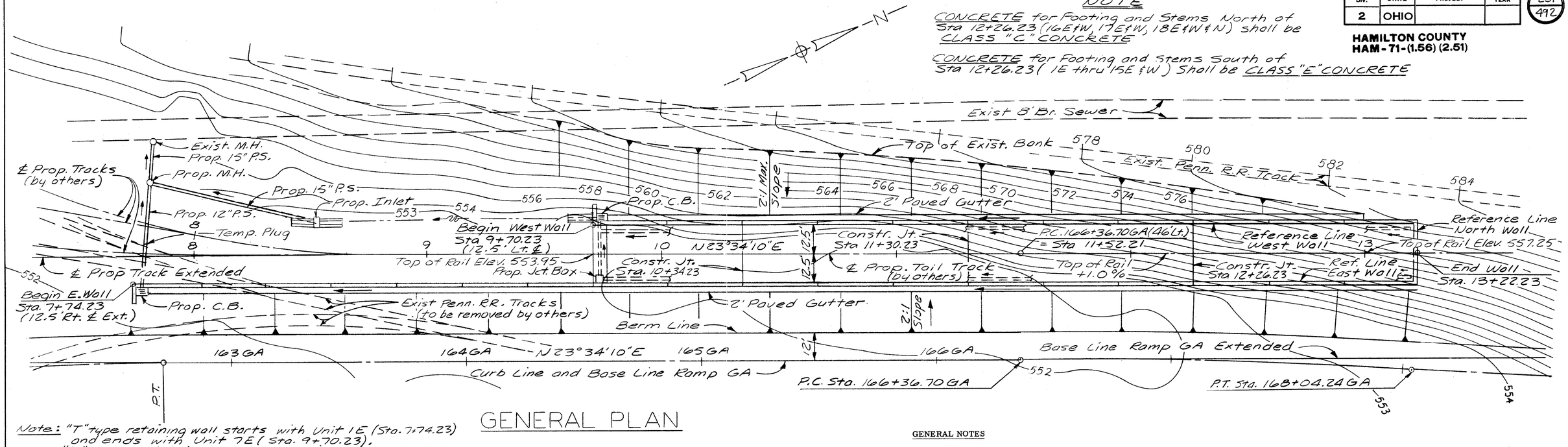

GENERAL PLAN

Note: "T" type retaining wall starts with Unit 1E (Sta. 7+74.23) and ends with Unit 7E (Sta. 9+70.23).
"U" type retaining wall starts with Units 8E&8W (Sta. 9+70.23) and ends with Unit 18N (Sta 13+22.23).

Note: Chain Link Fence 5ft. high to be built on West & North Wall.

Note: PILES: All piles shall be 10BP42 "H" Piles with an est. length of 50 Ft. All battered piles shall be at 1:3.

ESTIMATED QUANTITIES

ITEM	TOTAL	UNIT	DISCRIPTION
E-2	Lump	Sum	Cofferdams, Cribs, and Sheeting
E-2	4430	Cu. Yds.	Unclassified Excavation
S-1	509	Cu. Yds.	Class "C" Concrete, Wall Shafts
S-1	410	Cu. Yds.	Class "C" Concrete, Footings
S-1	791	Cu. Yds.	Class "E" Concrete, Wall Shafts
S-1	1,102	Cu. Yds.	Class "E" Concrete, Footings
S-3	438	Lin. Ft.	Waterproofing, Premolded Sealing Strip
S-3	1123	Sq. Yds	Type "A" Waterproofing
S-4	293,807	Lbs.	Reinforcing Steel
S-9	306	Sq. Ft.	1" Preformed Expansion Joint Filler
S-18	3700	Lin. Ft.	Steel Piles, 10BP42
S-29	25	Lin Ft.	6" Bituminous Coated Helical Perforated Corrugated Metal Pipe [Sec M6.4 (h-c)] (including special)
S-29	690	Lin. Ft.	6" Bituminous Coated Helical Corrugated Metal Pipe [Sec M6.4 (1)] (including Special)
S-29	926	Lin. Ft.	8" Bituminous Coated Helical Perforated Corrugated Metal Pipe [Sec M6.4 (h-c)] (including Specials and Sand)
S-29	945	Cu. Yds.	Porous Backfill
S-29	8	Lin. Ft.	12" Reinforced Concrete Sewer Pipe [Sec M6.6 (a)]
I-8	2	Each	Type "V" Grating and Frame, as per plan
I-8	1	Each	Frame and Cover, as per plan
I-26	377	Lin. Ft.	Aluminum Coated Steel Chain Link Fence as per ASTM A-491, Coating Class II,
SSCE-101.4	8	Hours	Compaction Using Heavy Pneumatic Tired Roller [as per plan

Note: The above quantities are to be carried to the Summary of Quantities Sheet No. 23.

GENERAL NOTES

DESIGN SPECIFICATIONS: The design of this structure conforms to the requirements of the specifications for Retaining Walls of the American Railway Engineering Association, 1964 Edition.

Live Load - Cooper's E72
Impact - None
Concrete Class C - basic unit stress 1,333 psi
Concrete Class E - basic unit stress 1,133 psi
Reinforcing Steel - ASTM A15, A16, A160. Deformed Intermediate or Hard Grade. Basic unit stress 20,000 psi

CONSTRUCTION SPECIFICATIONS: State of Ohio, Department of Highways, Construction and Material Specifications, 1963.

PILES shall be driven to firm contact with rock. If the length of penetration is approximately equal to the depth to rock according to the wall foundation investigation report, the firm contact shall be considered as attained when the capacity, according to the formula in Sec. S-18.05, is not less than 50 tons per pile using an 11,000 ft. lb. hammer or 45 tons per pile using a 15,000 ft. lb. hammer.

The wall design is based on 35 tons per pile.

The subgrade for Units 8 thru 18 shall be rolled as described in CE-101.04, to provide a soil bearing capacity of 1.3 tons per sq. ft. as directed by the Engineer. Moisture content of top 12" of subgrade shall not exceed optimum at the time of rolling. Tire pressure and total load shall be varied as directed by the Engineer, within the limits provided in CE-101.04.

The top of footings for Units 8 thru 18 shall be built to a 1% grade.

SHEETING & BRACING: Before construction is started, eight sets of prints showing details of the sheeting and bracing to be used for excavation adjacent to the tracks shall be submitted to the Director for approval by the Department of Highways and by the Railroad Company.

WATERPROOFING: The Type "A" waterproofing shall be placed in accordance with Item S-3 prior to backfilling.

BACKFILL: Backfill against the stems of Units 8 thru 18 shall be placed in a manner so the backfill against the east stem is never lower nor more than 2 ft. higher than the backfill against the west stem, until the top of the west stem is reached. The longitudinal slope of the backfill shall never be steeper than the slope of top of wall against which it is being placed.

BALLAST, TIES, RAILS, FASTENSINGS and other railroad equipment will be furnished and installed by the Railroad Company.

CONSTRUCTION PROCEDURE

NOTE: The work responsibility in Construction Procedure is indicated by (C) for Contractor, (R) for Railroad on a Force Account Basis. The numbers following the letter indicate order of work, and items of the same number may be performed concurrently.

C1 Excavate, construct, install drainage and backfill for Units 6 thru 18.
C2 Complete all drainage from temporary plug west of existing tracks to existing manhole at the 8 ft. brick sewer.
R3 Grade and construct new tracks near Unit 1 and Tail Track.
R4 Remove existing tracks as noted on General Plan.
C5 Excavate and construct Units 1 thru 5.
C6 Remove temporary plug and construct drainage to Unit 1.

DESIGN ASSUMPTIONS

Maximum Foundation Pressure (Unit 8 thru 18) = 1.3 tons/sq. ft.
Equivalent Fluid Weight (passive) (Unit 1E thru 7E) = 100 lbs/cu. ft.

HAZELET & ERDAL
CONSULTING ENGINEERS
CINCINNATI, OHIO

RETAINING WALL NO. 18

SHEET NO. 1 OF 20

DESIGNED	DRAWN	TRACED	CHECKED	REVIEWED DATE	REVISED
	TLZ		MMZ	JHO 6/11/65	

FED. RD. DIV.	STATE	PROJECT	FISCAL YEAR
2	OHIO		

260
492

HAMILTON COUNTY
HAM-71-(1.56) (2.51)

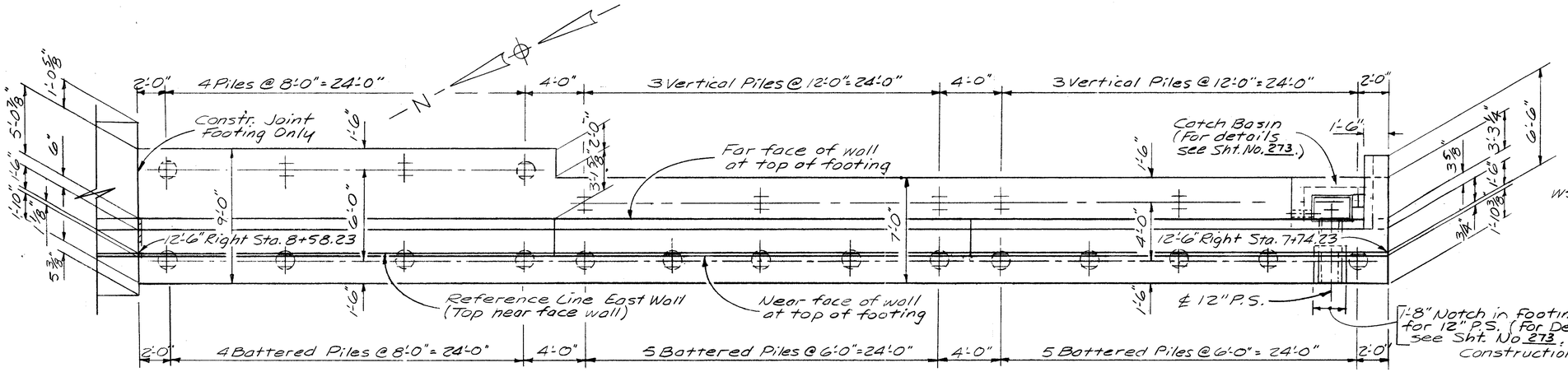

Note: I denotes vertical pile
Ⓘ denotes battered pile

PLAN

Note: Reference Line of Wall is parallel to ℄ Prop. Tail Track Extended

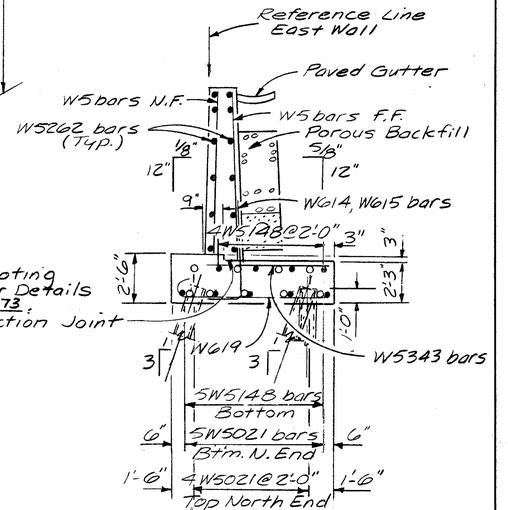

SECTION N-N

Note: ○ denotes W5021 bars

Note: For Elevation "Q-Q" see Sht. No. 273.

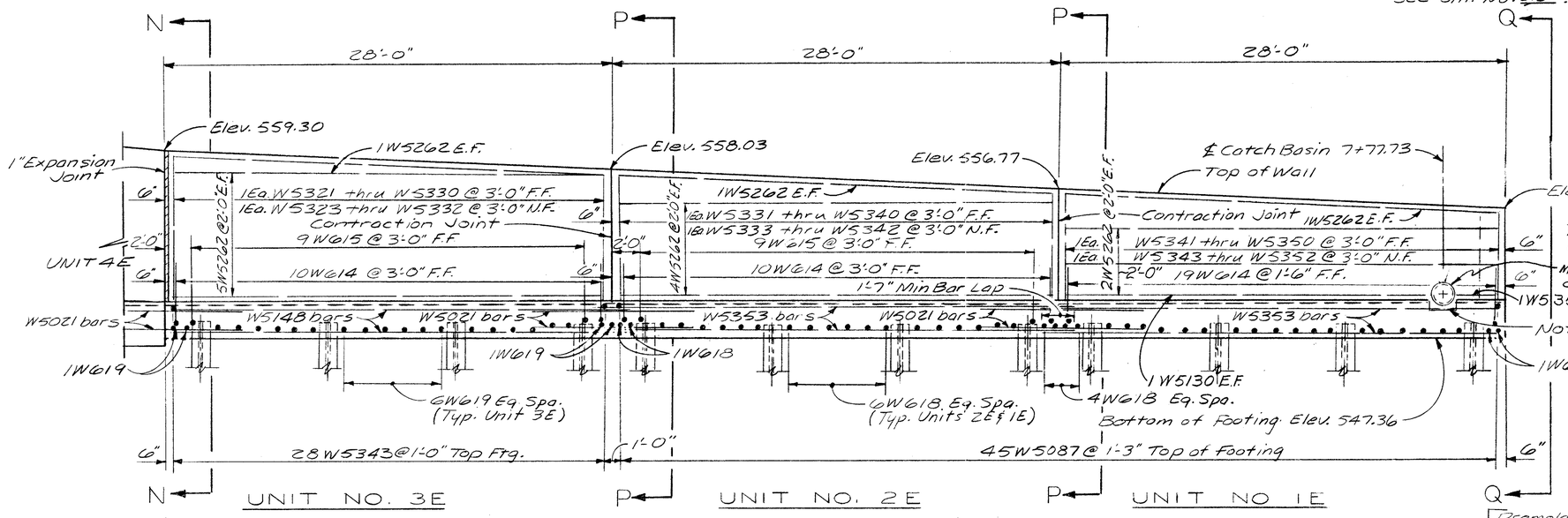

ELEVATION EAST WALL

(Looking East)

Note: W5021 bars in footing are to be centered under stem expansion & contraction joints

Note: N.F. denotes near face
F.F. denotes far face
E.F. denotes each face

Note: For Additional Notes & General Notes see Sht. No. 259.
For Wall Drainage see Sht. No. 275.
For Estimated Quantities see Sht. No. 259
For Reinforcing Steel List see Sht. No. 276, 277 & 278

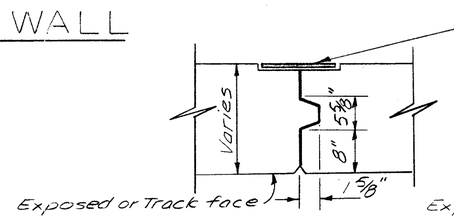

CONTRACTION JOINT DETAIL

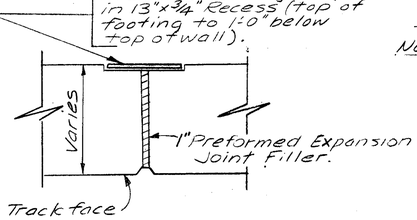

EXPANSION JOINT DETAIL

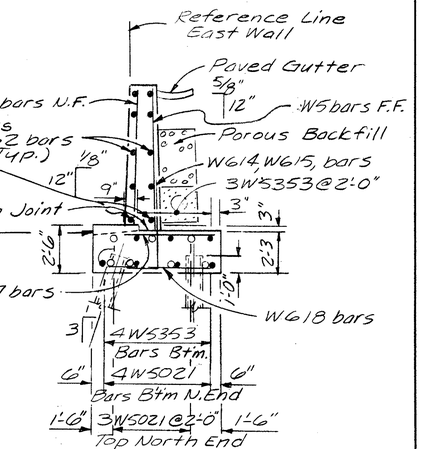

SECTION P-P

Note: ○ denotes W5021 bars

HAZELET & ERDAL
CONSULTING ENGINEERS
CINCINNATI, OHIO

RETAINING WALL NO. 18

SHEET NO. 2 OF 20

DESIGNED	DRAWN	TRACED	CHECKED	REVIEWED DATE	REVISED
	TLZ		M.A.Z.	JHO 6/1/65	

FED. RD. DIV.	STATE	PROJECT	FISCAL YEAR
2	OHIO		

261
492

HAMILTON COUNTY
HAM-71-(1.56) (2.51)

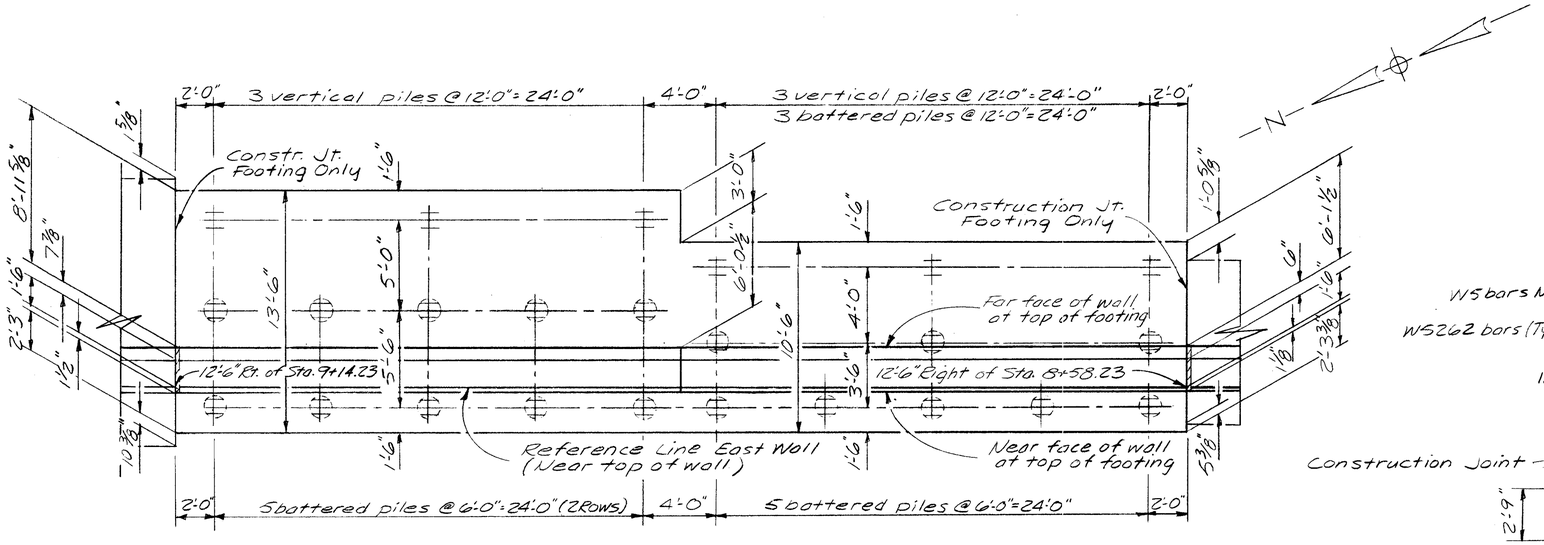

Note: I denotes vertical pile
⏀ denotes battered pile

PLAN

Note: Reference Line of wall is parallel to & Prop. Tail Track & Tail Track Extended.

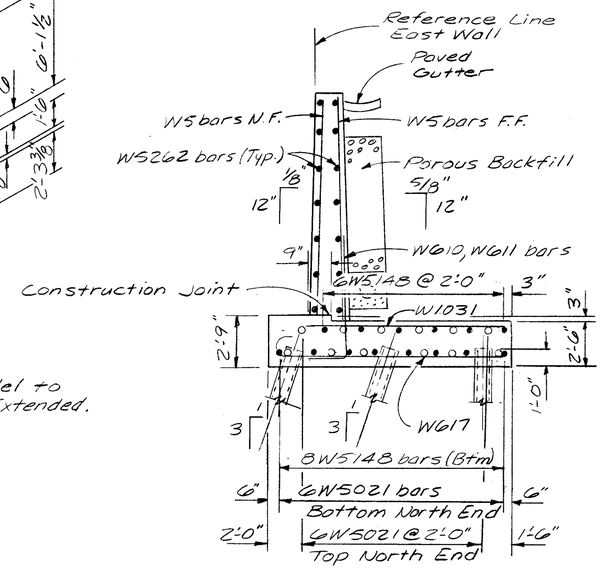

SECTION L-L

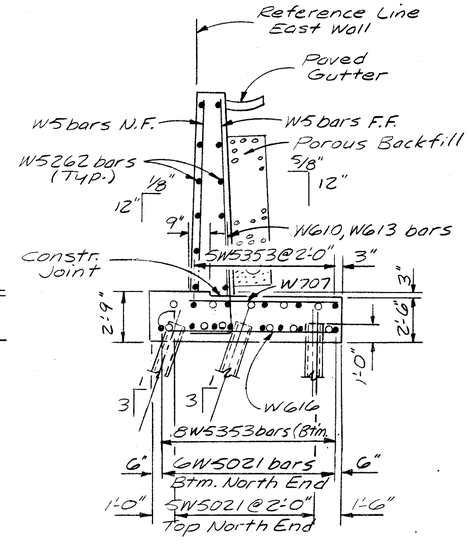

SECTION M-M

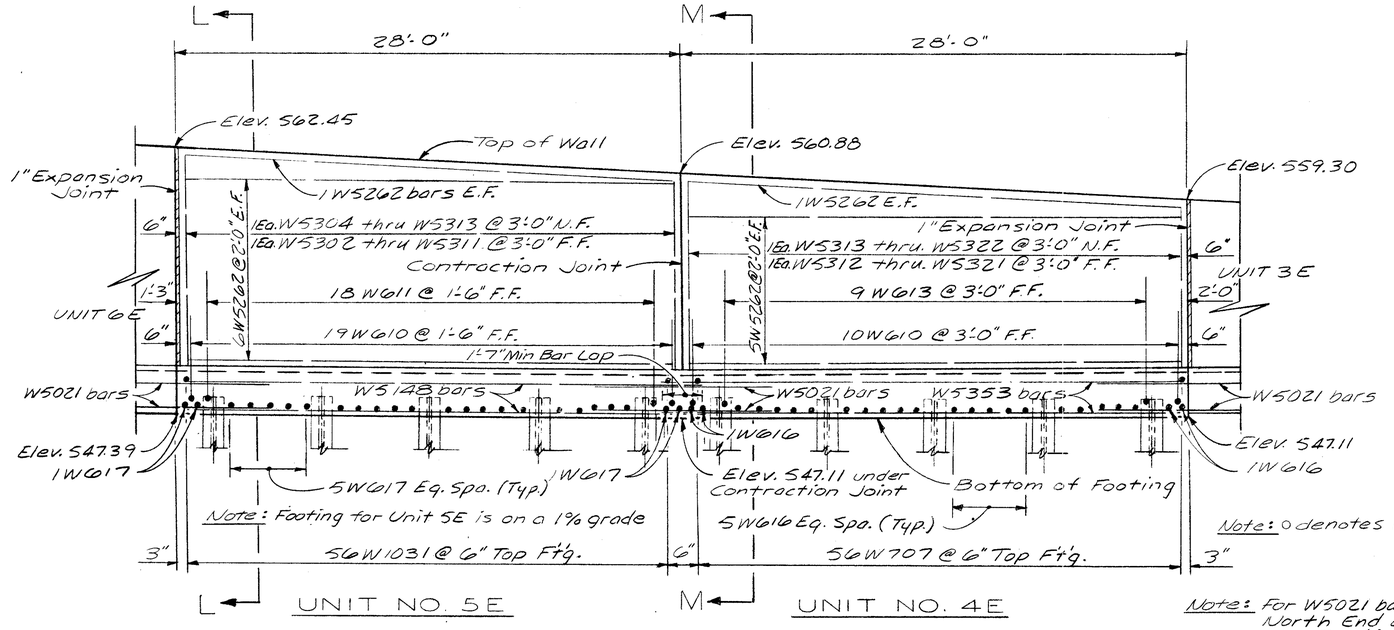

ELEVATION EAST WALL
(Looking East)

Note: W5021 bars in footing to be centered under stem expansion and contraction joints

Note: N.F. denotes near face
F.F. denotes for face
E.F. denotes each face

Note: For W5021 bars in North End of Unit 7E see Section "A-A" Sheet No. 263.

Note: ○ denotes W5021 bars

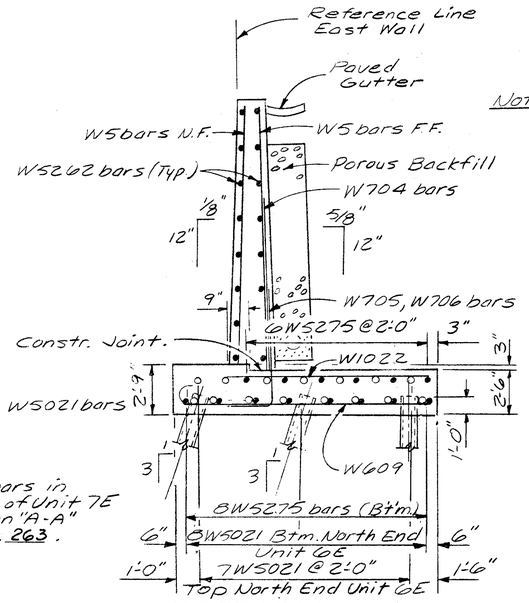

SECTION K-K
(Work with Sheet No. 262.)

Note: ○ denotes W5021 bars

Note: For Additional Notes and General Notes see Sht. No. 259.
For Wall Drainage see Sht. No. 275.
For Reinforcing Steel List see Sht. No. 276 277 & 278
For Estimated Quantities see Sht. No. 259.
For Expansion & Contraction Joint Details see Sht. No. 260.

HAZELET & ERDAL
CONSULTING ENGINEERS
CINCINNATI, OHIO

RETAINING WALL NO. 18

SHEET NO. 3 OF 20

DESIGNED	DRAWN	TRACED	CHECKED	REVIEWED DATE	REVISED
	TLZ		W.A.S.	JHD 6/1/65	

FED. RD. DIV.	STATE	PROJECT	FISCAL YEAR
2	OHIO		

262
492

HAMILTON COUNTY
HAM-71-(1.56) (2.51)

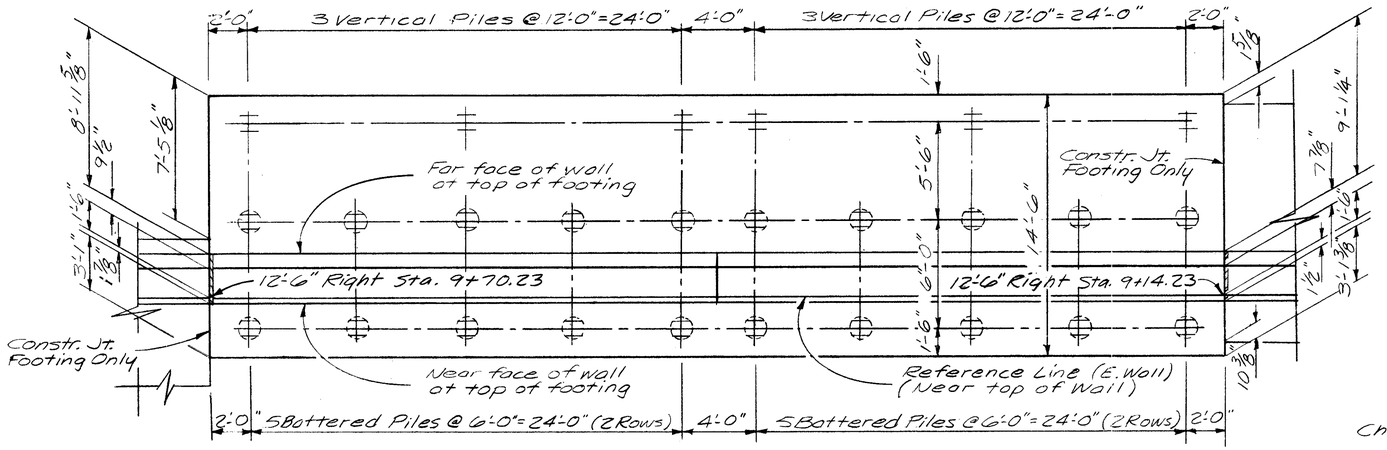

PLAN

Note: I denotes vertical Pile
⊕ denotes battered Pile.

Note: Reference Line of Wall is parallel to ℄ Prop. Tail Track

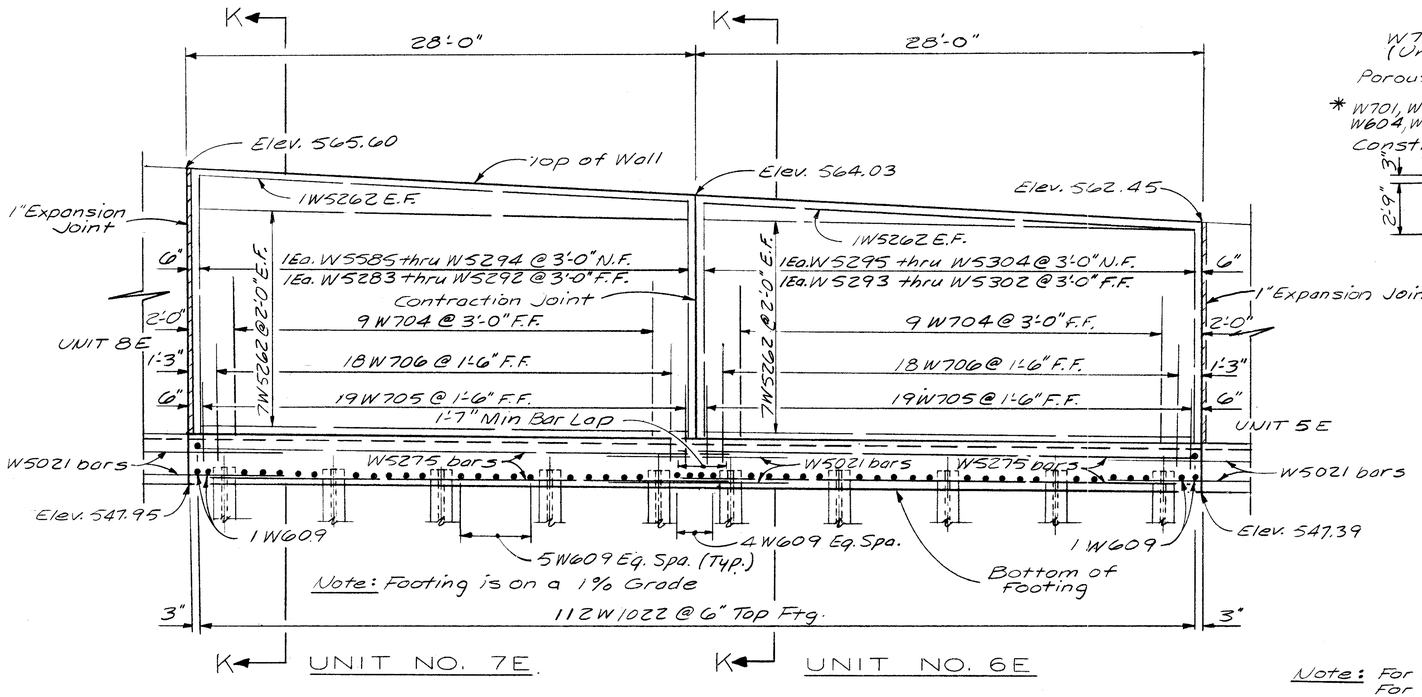

ELEVATION EAST WALL
(Looking East)

Note: W5021 bars in footing are to be centered under stem expansion and contraction. Joints

Note: N.F. denotes near face
F.F. denotes far face
E.F. denotes each face

Note: For Section "K-K" see Sheet No. 261.

** Note: The long leg of the W805 bars shall be placed horizontal in the footing

* Note: The 7 ft. leg of the W603, W604, W605, W701, W702, W901, W902, W1001, W1002, W1004, and W1005 bars shall be placed in the footing.

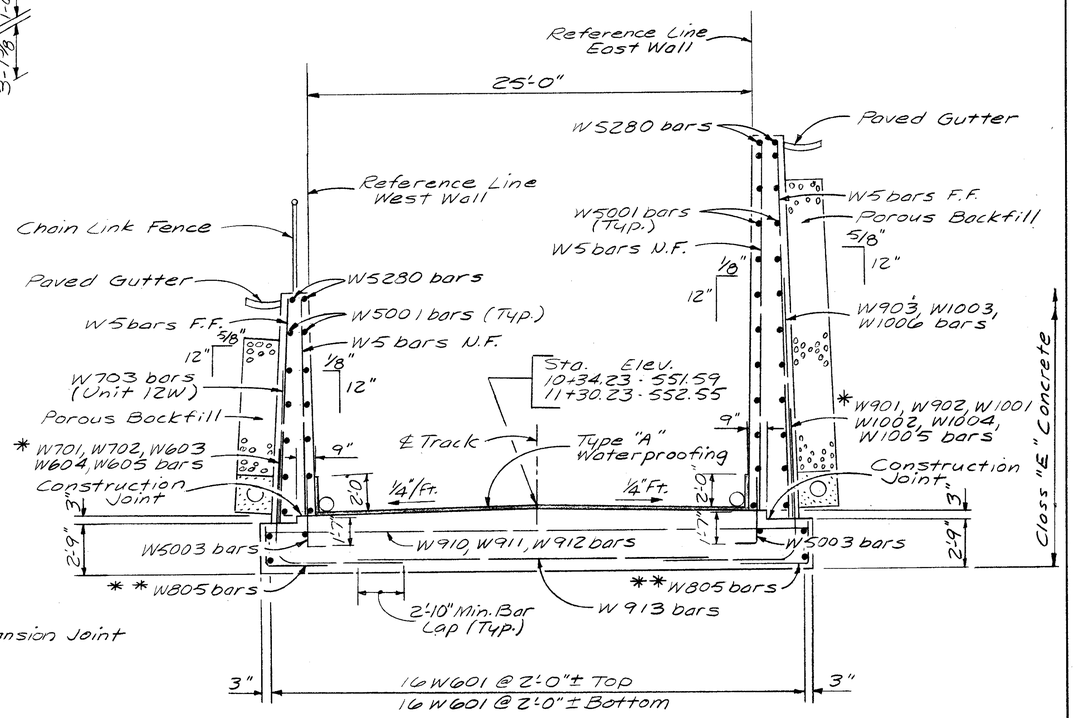

SECTION B-B
(Work with Sheet No. 264 & 265)

Note: Trackwork and Ballast (by others) not shown on Section.

Note: For Additional Notes & General Notes see Sht. No. 259.
For Wall Drainage see Sht. No. 275.
For Reinforcing Steel List see Sht. No. 276 277 & 278
For Estimated Quantities see Sht. No. 259.
For Expansion & Contraction Joint Details see Sht. No. 260.

HAZELET & ERDAL
CONSULTING ENGINEERS
CINCINNATI, OHIO

RETAINING WALL NO. 18

SHEET NO. 4 OF 20

DESIGNED	DRAWN	TRACED	CHECKED	REVIEWED DATE	REVISED
	TLZ		JHO	JHO 6.1.65	

FED. RD. DIV.	STATE	PROJECT	FISCAL YEAR
2	OHIO		

263
492

HAMILTON COUNTY
HAM-71-(1.56)(2.51)

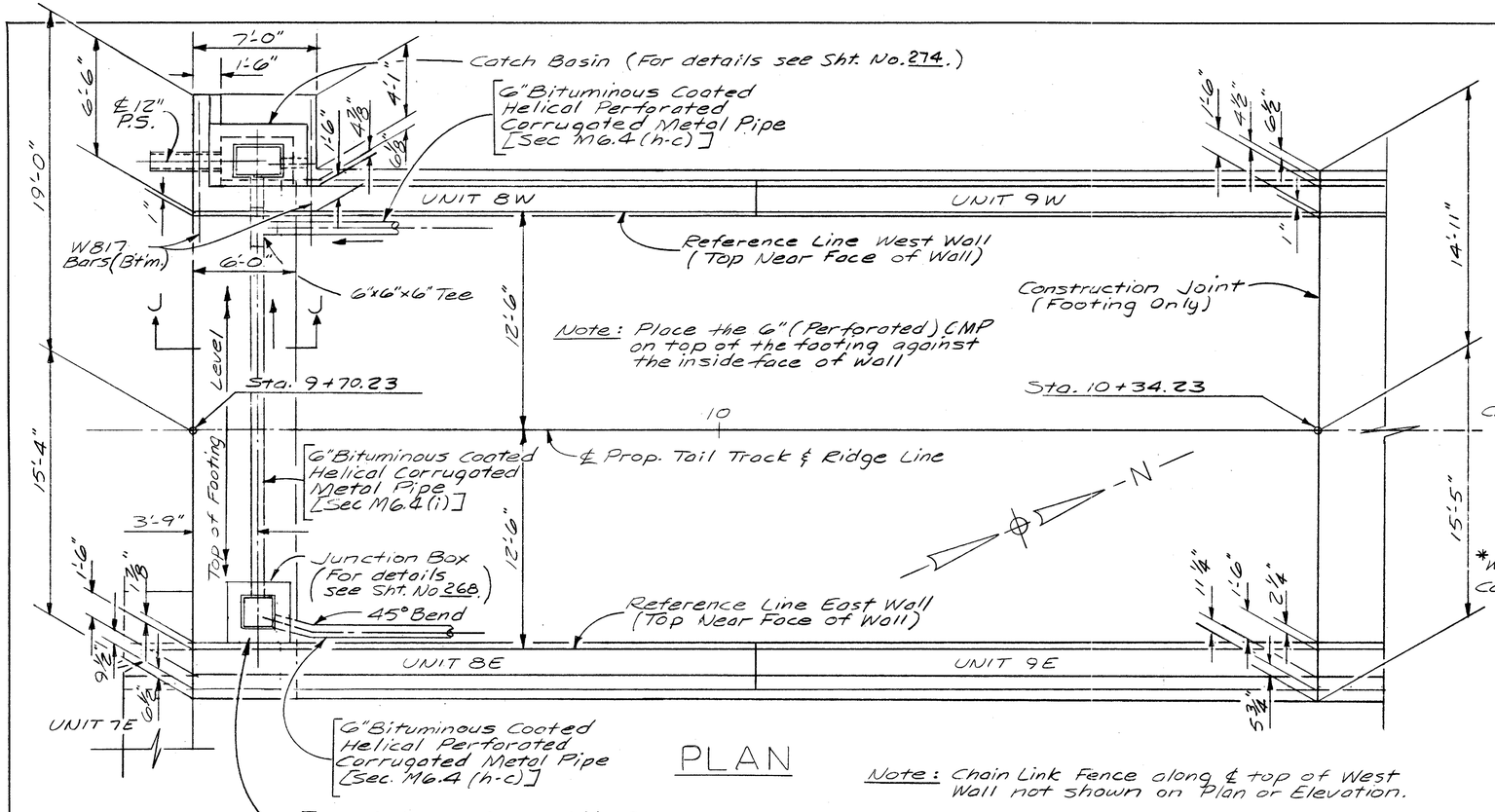

PLAN

Note: Chain Link Fence along ℄ top of West Wall not shown on Plan or Elevation.

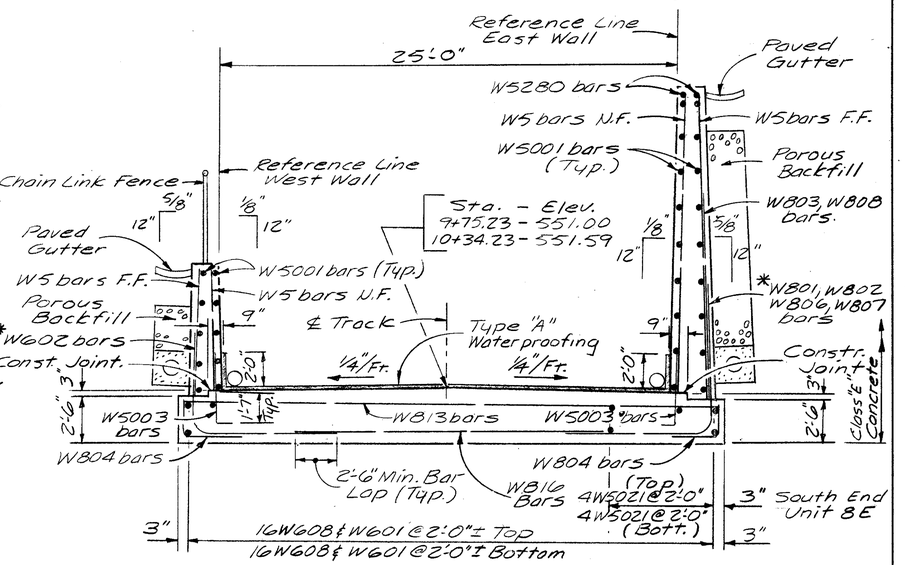

SECTION A-A

Note: Trackwork and Ballast (by others) not shown on Section.

Note: For Footing and Wall Shafts use Class "E" Concrete

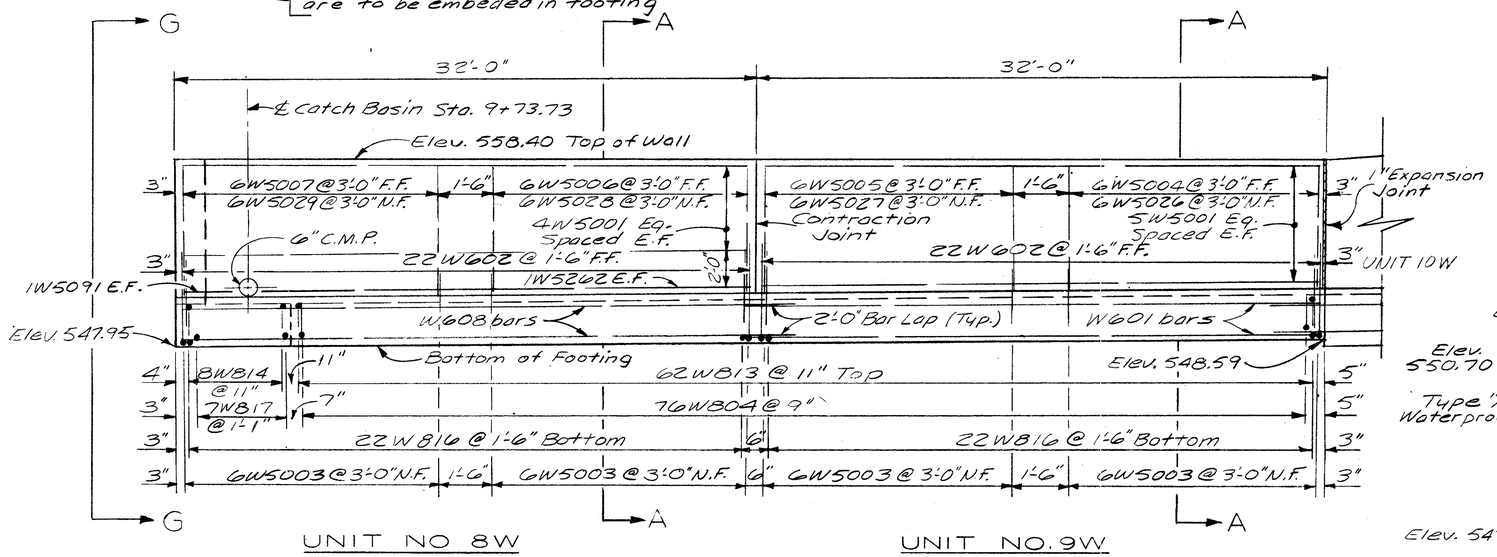

UNIT NO 8W

UNIT NO. 9W

ELEVATION WEST WALL
(Looking West)

Note: For Elevation "G-G" see Sheet No. 274.

Note: N.F. denotes near face
F.F. denotes for face
E.F. denotes each face

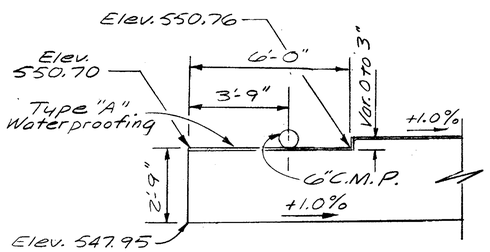

SECTION J-J

Note: For Additional and General Notes see Sht. No. 259.
For Wall Drainage Details see Sht. No. 275.
For Fence Details see Sht. No. 275.
For Estimated Quantities see Sht. No. 259.
For Reinforcing Steel List see Sht No. 276 277 & 278
For Expansion and Contraction Joint Details see Sht. No. 260.

HAZELET & ERDAL
CONSULTING ENGINEERS
CINCINNATI, OHIO

RETAINING WALL NO. 18

SHEET NO. 5 OF 20

DESIGNED	DRAWN	TRACED	CHECKED	REVIEWED DATE	REVISED
	TLZ		M.A.Z.	JHO 6/1/65	

FED. RD. DIV.	STATE	PROJECT	FISCAL YEAR
2	OHIO		

264
492

HAMILTON COUNTY
HAM-71-(1.56) (2.51)

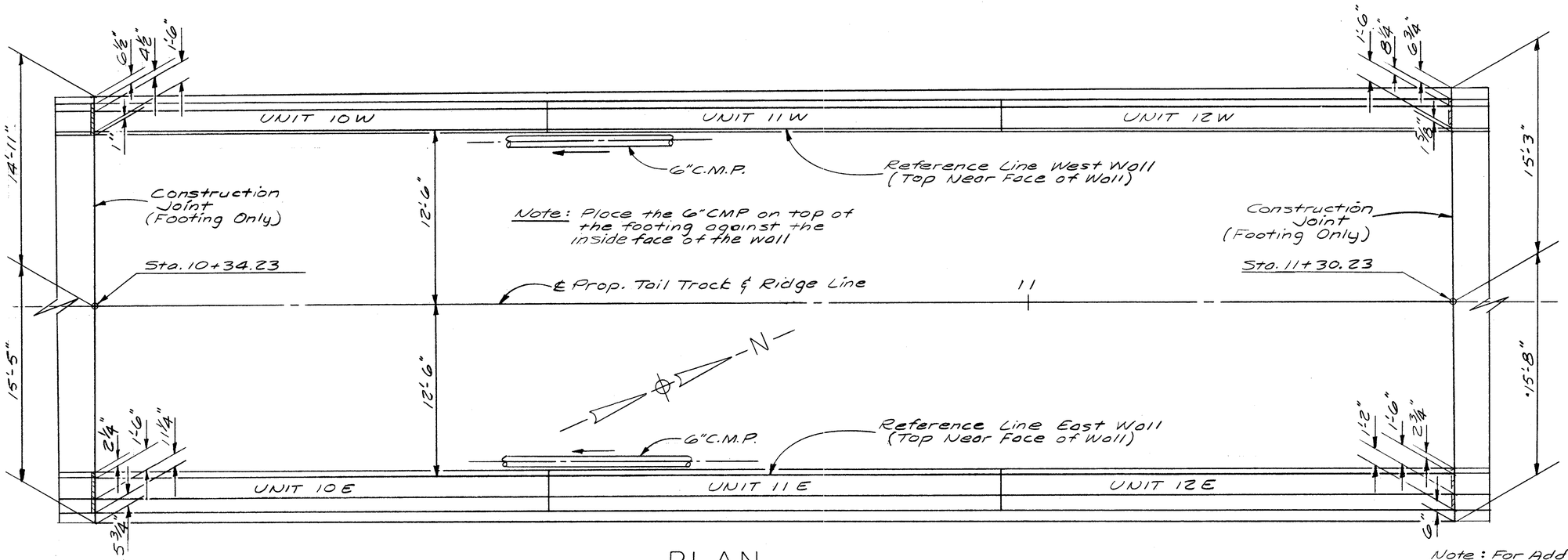

PLAN

Note: N.F. denotes near face
F.F. denotes far face
E.F. denotes each face

Note: Chain Link Fence along ℄ Top West Wall not shown on Plan or Elevation.

Note: For Section "B-B" see Sht. No. 262.

Note: For Additional Notes and General Notes see Sht No. 259.
For Reinforcing Steel List see Sht. No. 276 277 & 278
For Estimated Quantities see Sht No. 259.
For Wall Drainage See Sht. No. 275.
For Fence Details See Sht. No. 275.
For Expansion & Contraction Joint Details see Sht. No. 260.

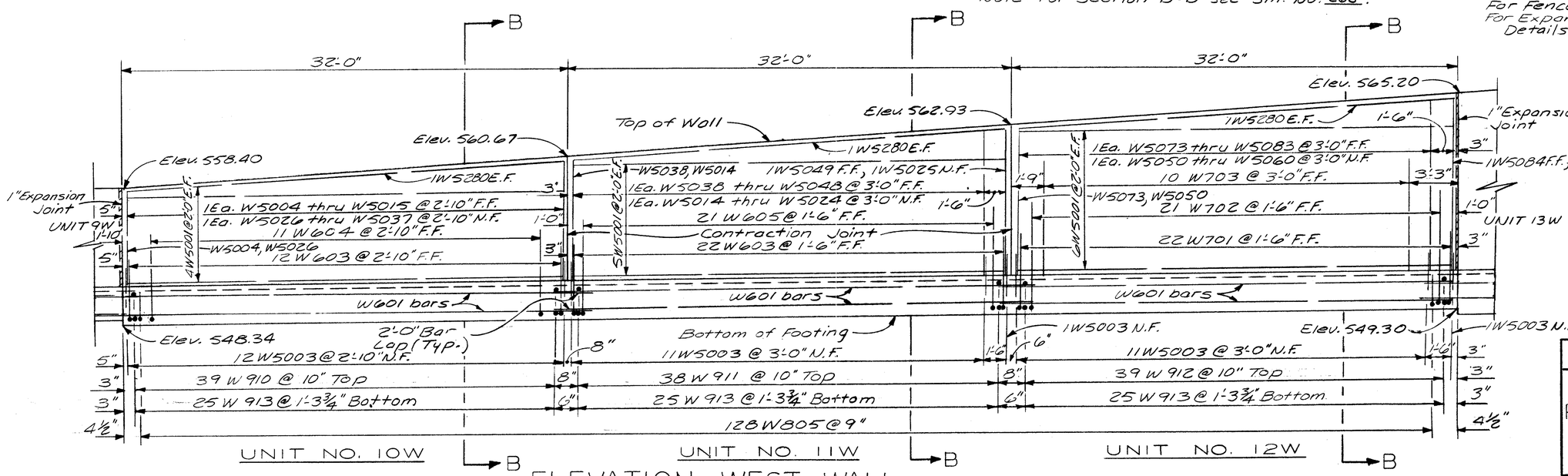

ELEVATION WEST WALL
(Looking West)

HAZELET & ERDAL
CONSULTING ENGINEERS
CINCINNATI, OHIO

RETAINING WALL NO. 18

SHEET NO. 6 OF 20

DESIGNED	DRAWN	TRACED	CHECKED	REVIEWED DATE	REVISED
	TLZ		M.M.Z.	JHD 6/1/65	

FED. RD. DIV.	STATE	PROJECT	FISCAL YEAR
2	OHIO		

265
492

HAMILTON COUNTY
HAM - 71 - (1.56) (2.51)

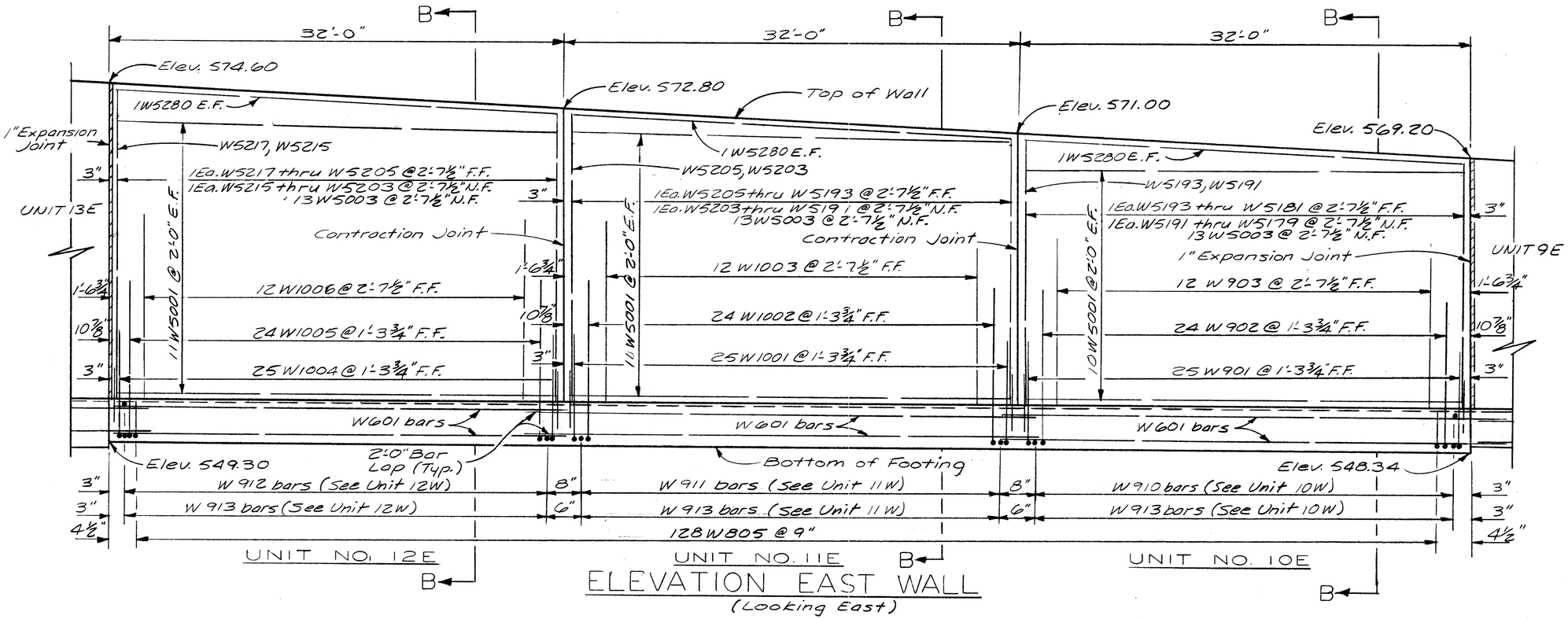

ELEVATION EAST WALL
(Looking East)

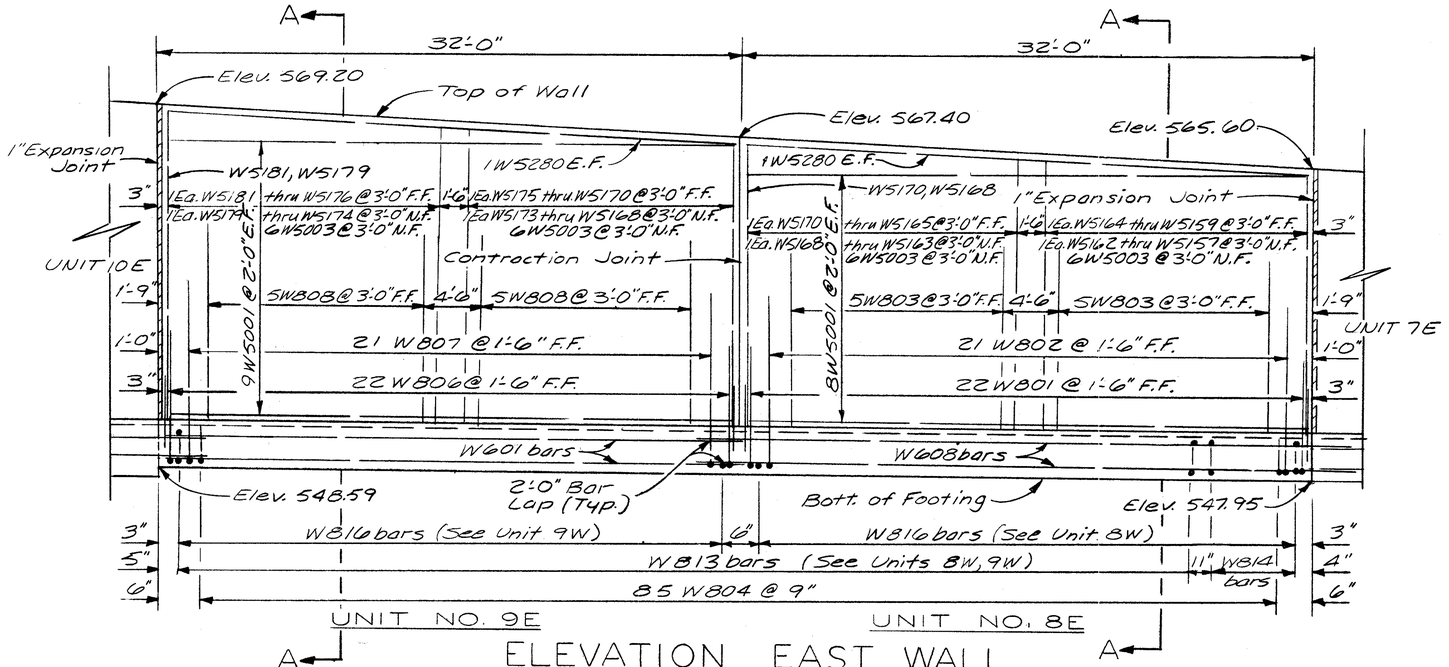

ELEVATION EAST WALL
(Looking East)

Note: For Additional Notes & General Notes see Sht. No. 259.
For Wall Drainage see Sht. No. 275.

For Reinforcing Steel List see Sht. No. 276 277 & 278
For Estimated Quantities see Sht. No. 259.
For Expansion & Contraction Joint Details see Sht. No. 260.

Note: For Section "A-A" see Sht. No. 263.
For Section "B-B" see Sht. No. 262.

Note: N.F. denotes near face
F.F. denotes for face
E.F. denotes each face

Note: For Plan (Units 12E thru 10E) see Sht. No. 264
For Plan (Units 9E & 8E) see Sht. No. 263.

HAZELET & ERDAL
CONSULTING ENGINEERS
CINCINNATI, OHIO

RETAINING WALL NO. 18

SHEET NO. 7 OF 20

DESIGNED	DRAWN	TRACED	CHECKED	REVIEWED DATE	REVISED
	TLZ			JHO 6/1/65	

FED. RD. DIV.	STATE	PROJECT	FISCAL YEAR
2	OHIO		

266/492

HAMILTON COUNTY
HAM-71-(1.56) (2.51)

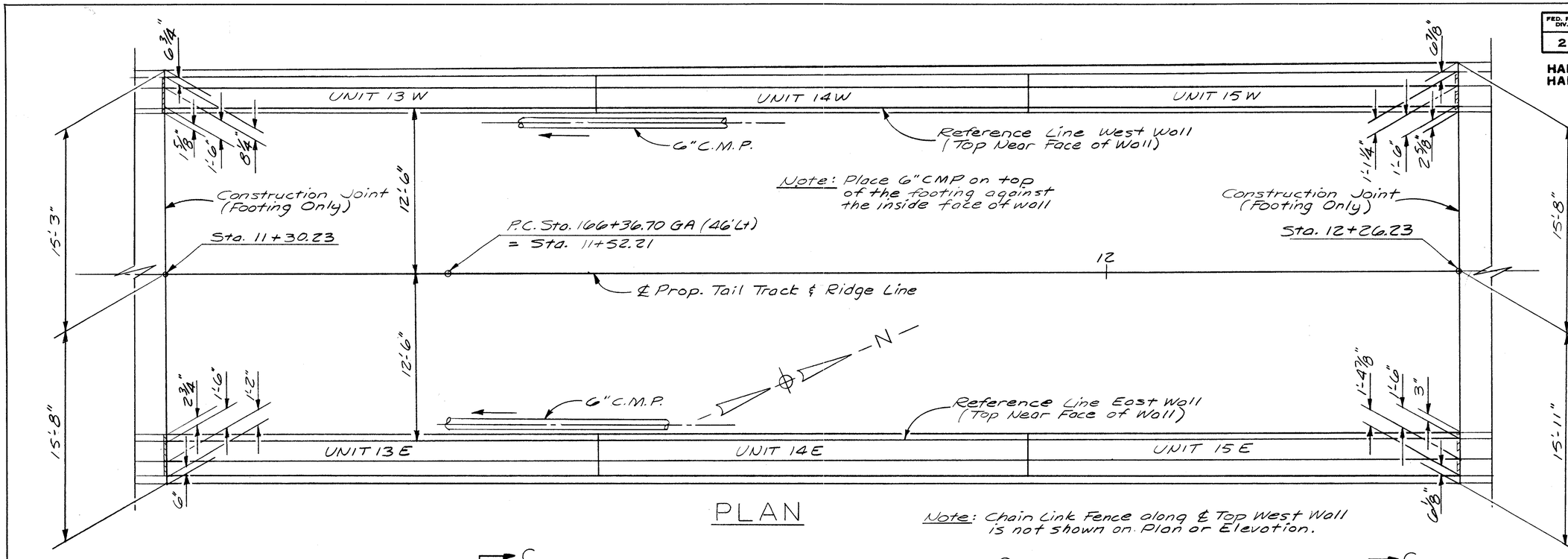

PLAN

Note: Chain Link Fence along ℄ Top West Wall is not shown on Plan or Elevation.

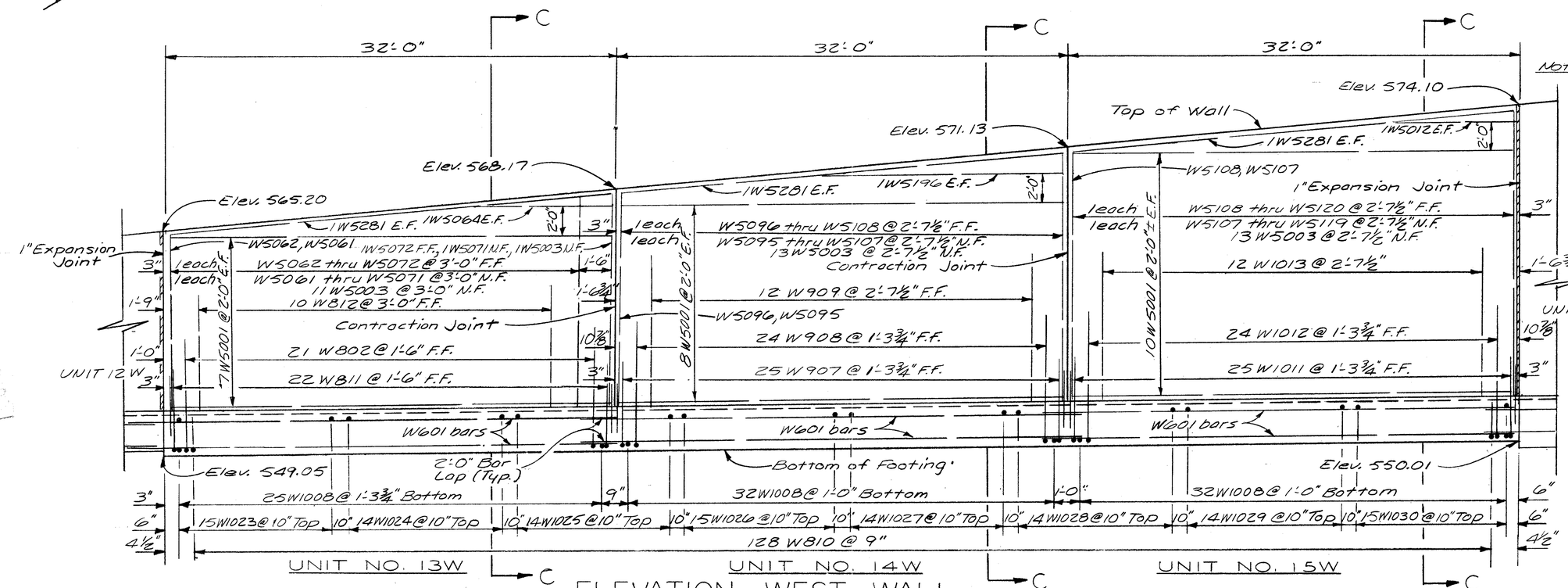

ELEVATION WEST WALL (Looking West)

Note: For Additional Notes and General Notes see Sht. No. 259.
For Estimated Quantities see Sht. No. 259.
For Reinforcing Bar List see Sht. No. 276, 277 & 278
For Wall Drainage see Sht. No. 275.
For Fence Details see Sht. No. 275.
For Expansion & Contraction Joint Details see Sht. No. 260.

Note: For Section "C-C" See Sht. No. 271.

Note: N.F. denotes near face
F.F. denotes far face
E.F. denotes each face

HAZELET & ERDAL
CONSULTING ENGINEERS
CINCINNATI, OHIO

RETAINING WALL NO. 18

SHEET NO. 8 OF 20

DESIGNED	DRAWN	TRACED	CHECKED	REVIEWED DATE	REVISED
	TLZ		N.A.Z.	JHO 6/1/65	

FED. RD. DIV.	STATE	PROJECT	FISCAL YEAR
2	OHIO		

267
492

HAMILTON COUNTY
HAM-71-(1.56) (2.51)

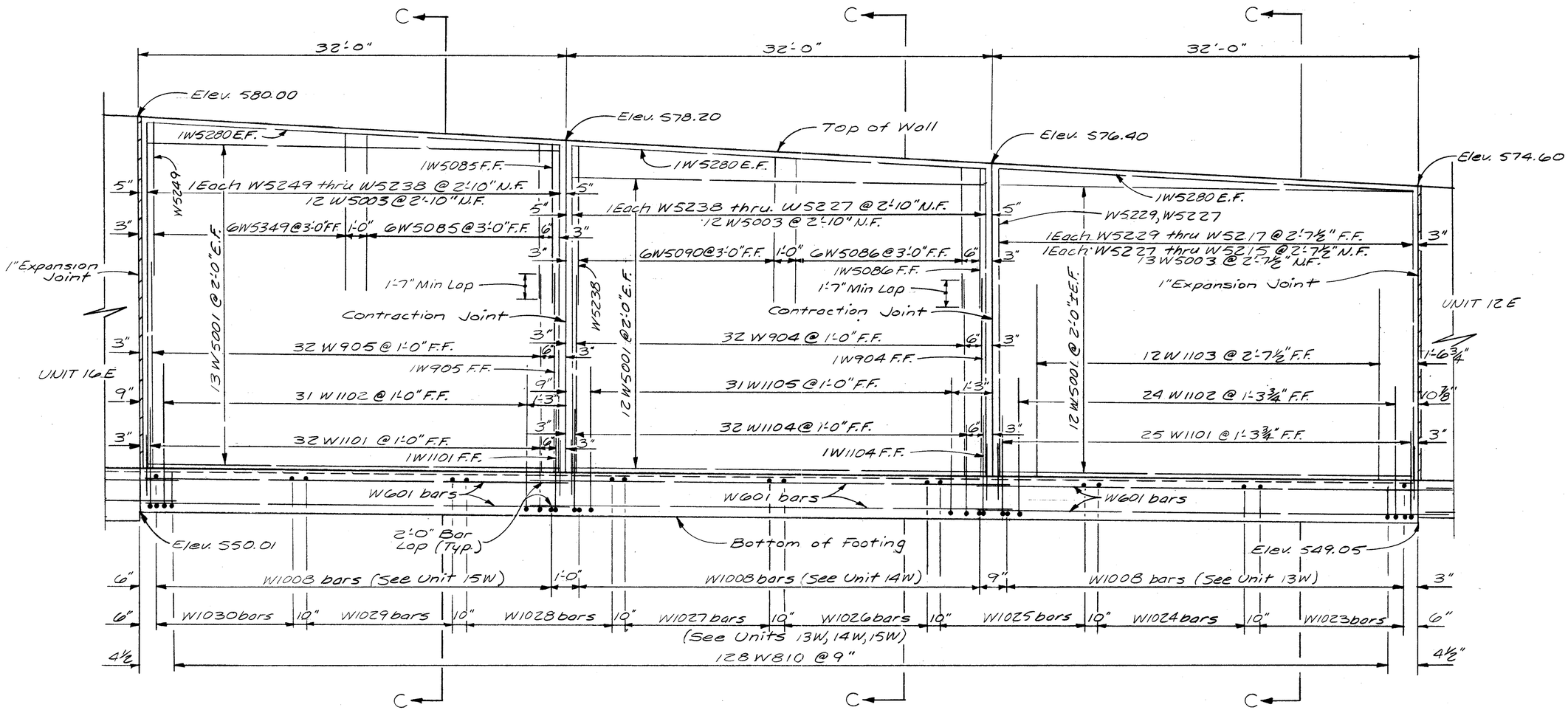

UNIT NO. 15E — UNIT NO. 14E — UNIT NO. 13E

ELEVATION EAST WALL

(Looking East)

Note: N.F. denotes near face
F.F. denotes far face
E.F. denotes each face

Note: For Section "C-C" see Sht. No. 271.
For Plan see Sht. No. 266.

Note: For Additional Notes and General Notes see Sht. No. 259.
For Expansion & Contraction Joint Details see Sht. No. 260.
For Reinforcing Bar List see Sht. No. 276 277 & 278
For Estimated Quantities see Sht. No. 259.
For Wall Drainage See Sht. No. 275.

HAZELET & ERDAL
CONSULTING ENGINEERS
CINCINNATI, OHIO

RETAINING WALL NO. 18

SHEET NO. 9 OF 20

DESIGNED	DRAWN	TRACED	CHECKED	REVIEWED DATE	REVISED
.	TLZ		H.A.Z.	JHO 6.1.65	

FED. RD. DIV.	STATE	PROJECT	FISCAL YEAR
2	OHIO		

268
492

HAMILTON COUNTY
HAM-71-(1.56) (2.51)

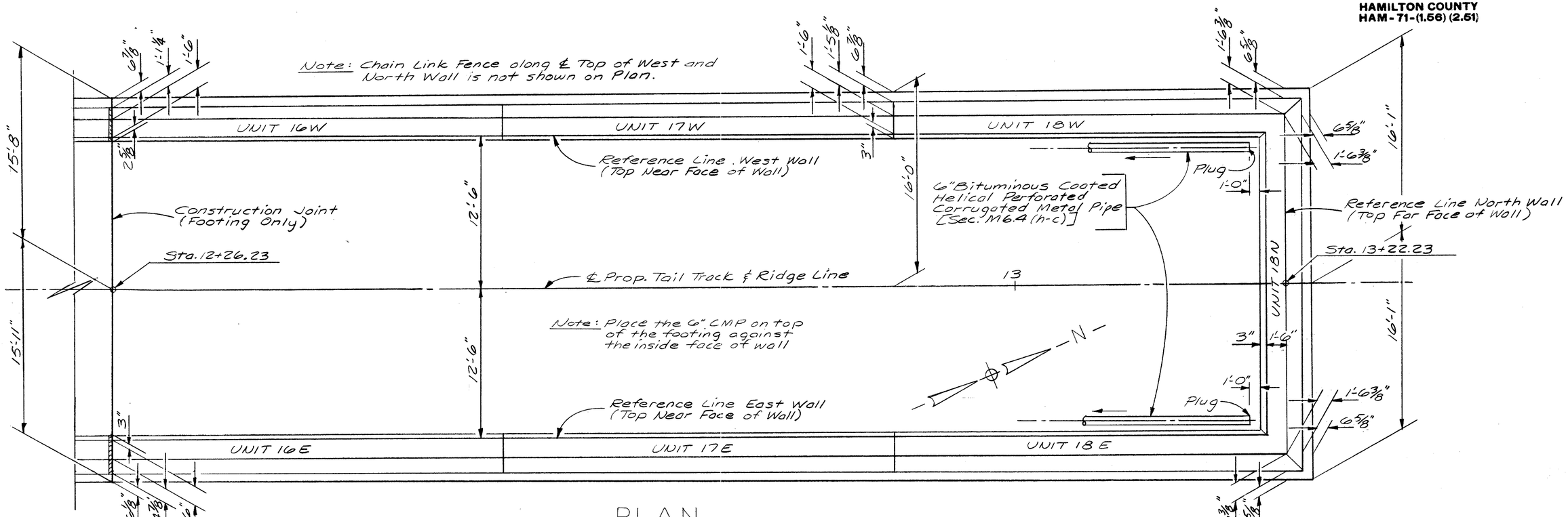

PLAN

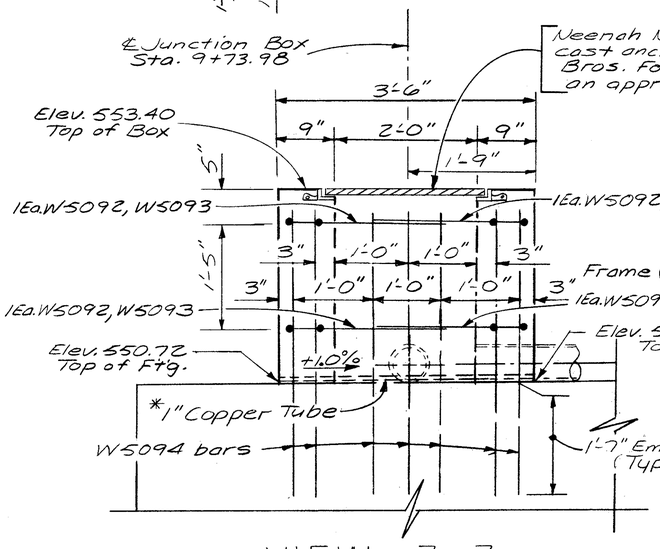

VIEW Z-Z

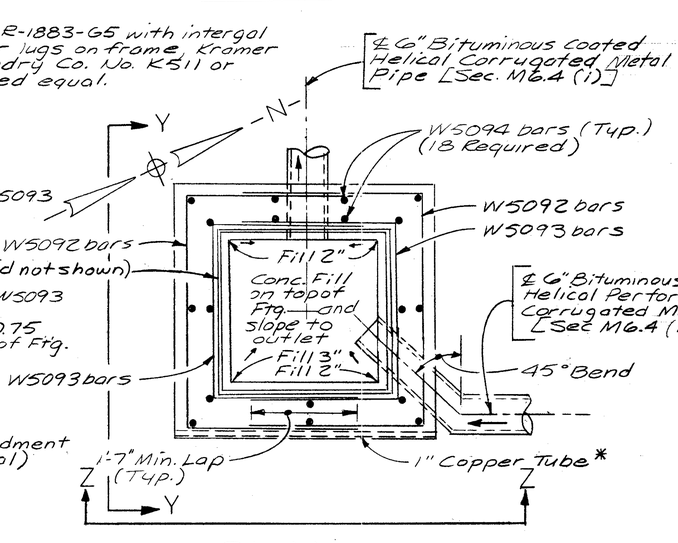

PLAN

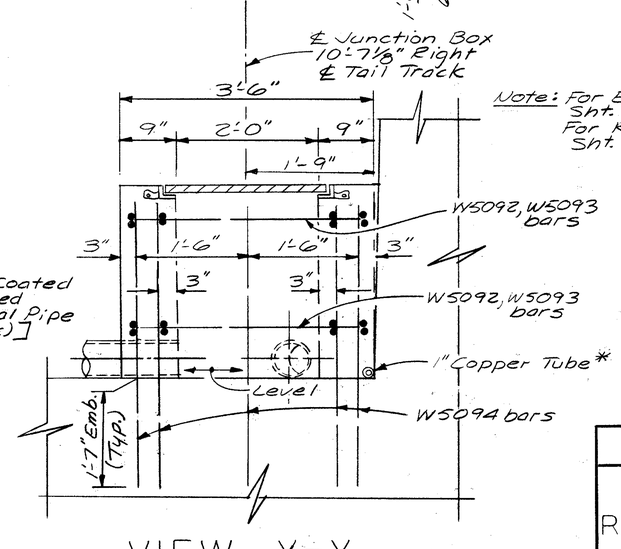

VIEW Y-Y

Note: For Estimated Quantities see Sht. No. 259.
For Reinforcing Steel List see Sht. No. 276 277 & 278

JUNCTION BOX DETAILS

(Work with Sht. No. 263.)

*Note: 1" ϕ Copper Tube to be included with Item 511 Class "E" Concrete Wall Shafts for payment.

HAZELET & ERDAL
CONSULTING ENGINEERS
CINCINNATI, OHIO

RETAINING WALL NO. 18

SHEET NO. 10 OF 20

DESIGNED	DRAWN	TRACED	CHECKED	REVIEWED DATE	REVISED
	TLZ		11-12-64	JHO 6/1/65	

FED. RD. DIV.	STATE	PROJECT	FISCAL YEAR
2	OHIO		

269
492

HAMILTON COUNTY
HAM-71-(1.56) (2.51)

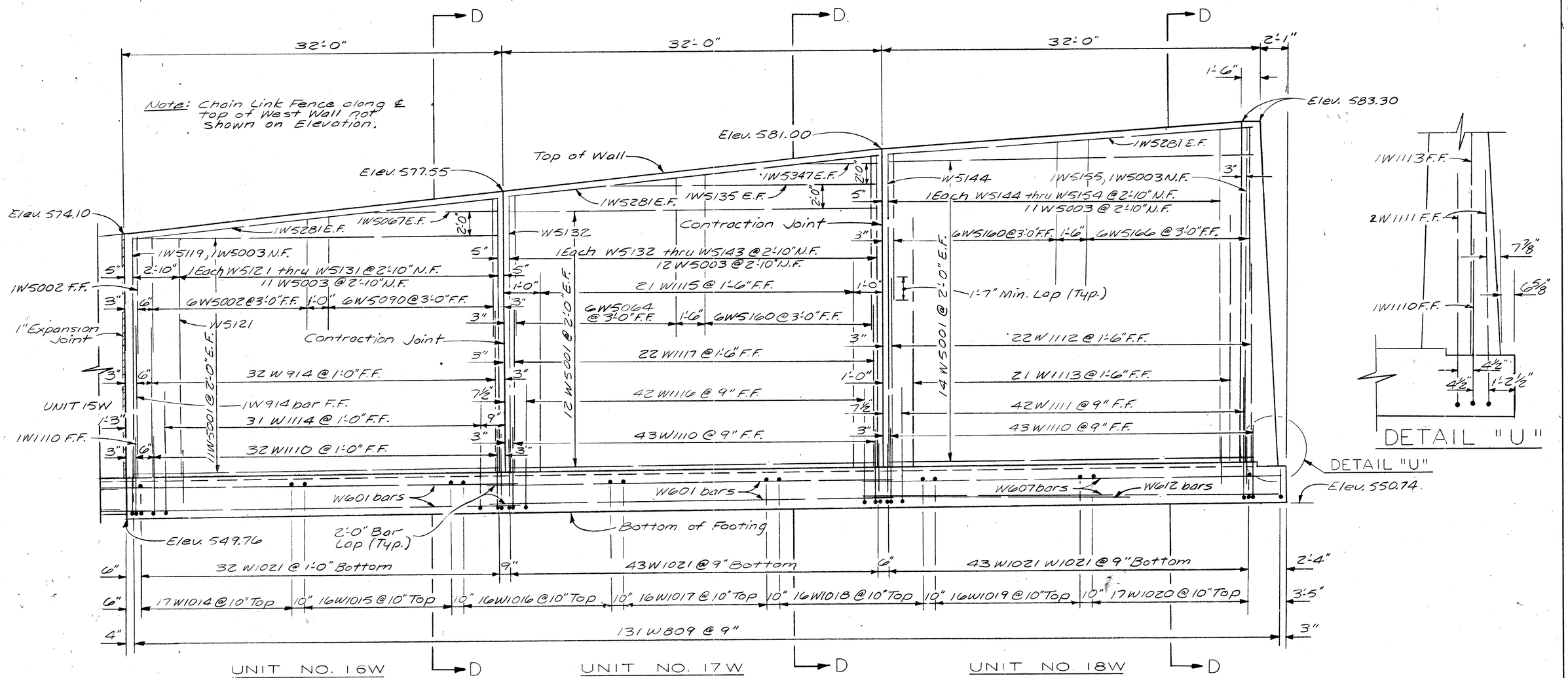

ELEVATION WEST WALL

(Looking West)

Note: N.F. denotes near face
F.F. denotes far face
E.F. denotes each face

Note: For Section "D-D" see Sht. No. 271.
For Plan see Sht. No. 268.

Note: For Additional Notes & General Notes see Sht. No. 259.
For Wall Drainage see Sht. No. 275.
For Expansion & Contraction Joint Details see Sht. No. 260.
For Reinforcing Steel List see Sht. No. 276 277 & 278
For Fence Details see Sht. No. 275.
For Estimated Quantities see Sht. No. 259.

HAZELET & ERDAL
CONSULTING ENGINEERS
CINCINNATI, OHIO

RETAINING WALL NO. 18

SHEET NO. 11 OF 20

DESIGNED	DRAWN	TRACED	CHECKED	REVIEWED DATE	REVISED
	TLZ			JHO 6.1.65	

FED. RD. DIV.	STATE	PROJECT	FISCAL YEAR
2	OHIO		

270
492

HAMILTON COUNTY
HAM-71-(1.56)(2.51)

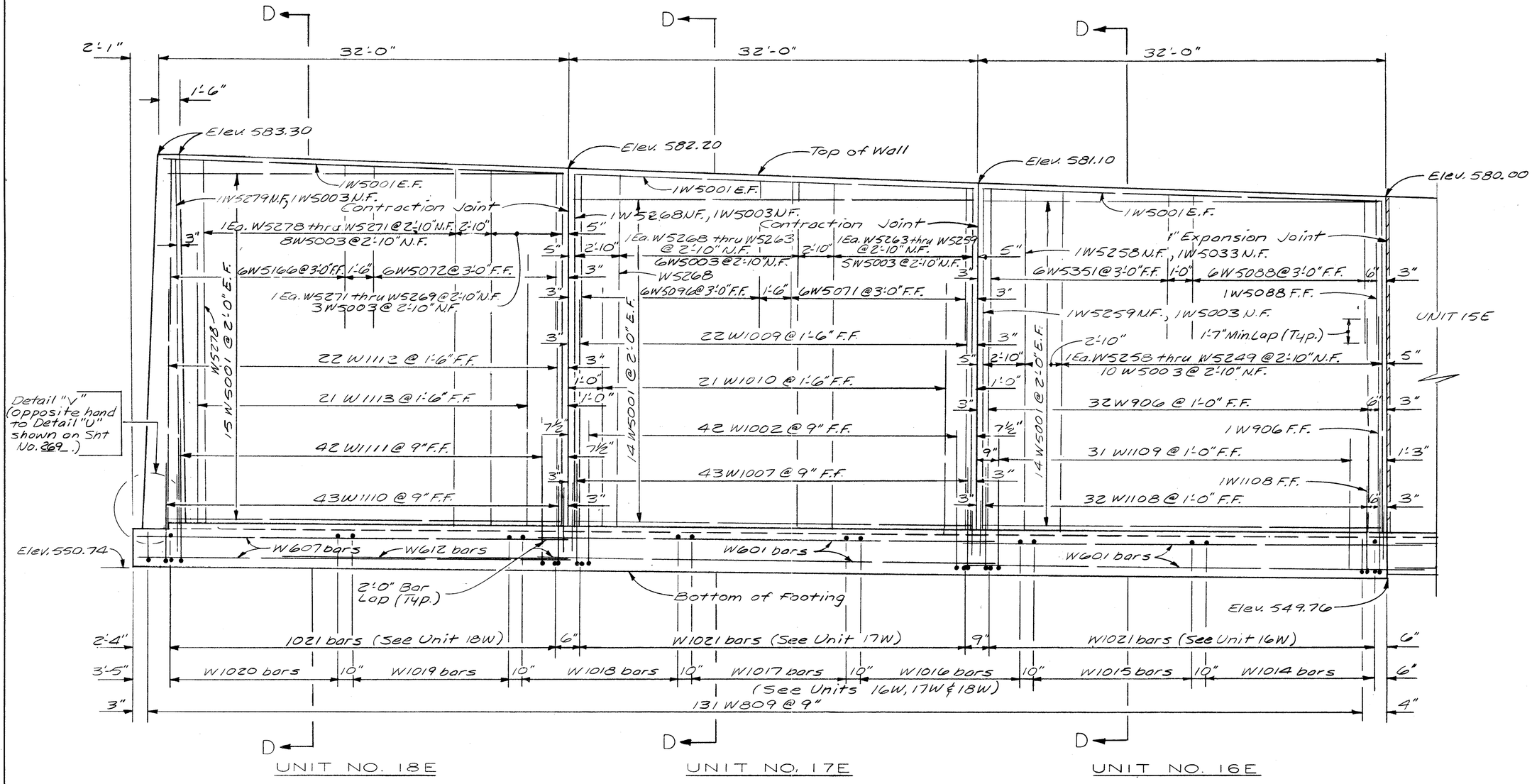

ELEVATION EAST WALL

(Looking East)

Note: N.F. denotes near face
F.F. denotes far face
E.F. denotes each face

Note: For Section "D-D" see Sht. No. 271.
For Plan see Sht. No. 268.

Note: For Additional Details and General Notes see Sht. No. 259.
For Expansion & Contraction Joint Details see Sht. No. 260.
For Reinforcing Steel List see Sht. No. 276, 277 & 278
For Estimated Quantities see Sht. No. 259.
For Wall Drainage see Sht. No. 275.

HAZELET & ERDAL
CONSULTING ENGINEERS
CINCINNATI, OHIO

RETAINING WALL NO. 18

SHEET NO. 12 OF 20

DESIGNED	DRAWN	TRACED	CHECKED	REVIEWED DATE	REVISED
	TLZ		N.A.Z.	JHD 6.1.65	

FED. RD. DIV.	STATE	PROJECT	FISCAL YEAR
2	OHIO		

271
492

HAMILTON COUNTY
HAM-71-(1.56) (2.51)

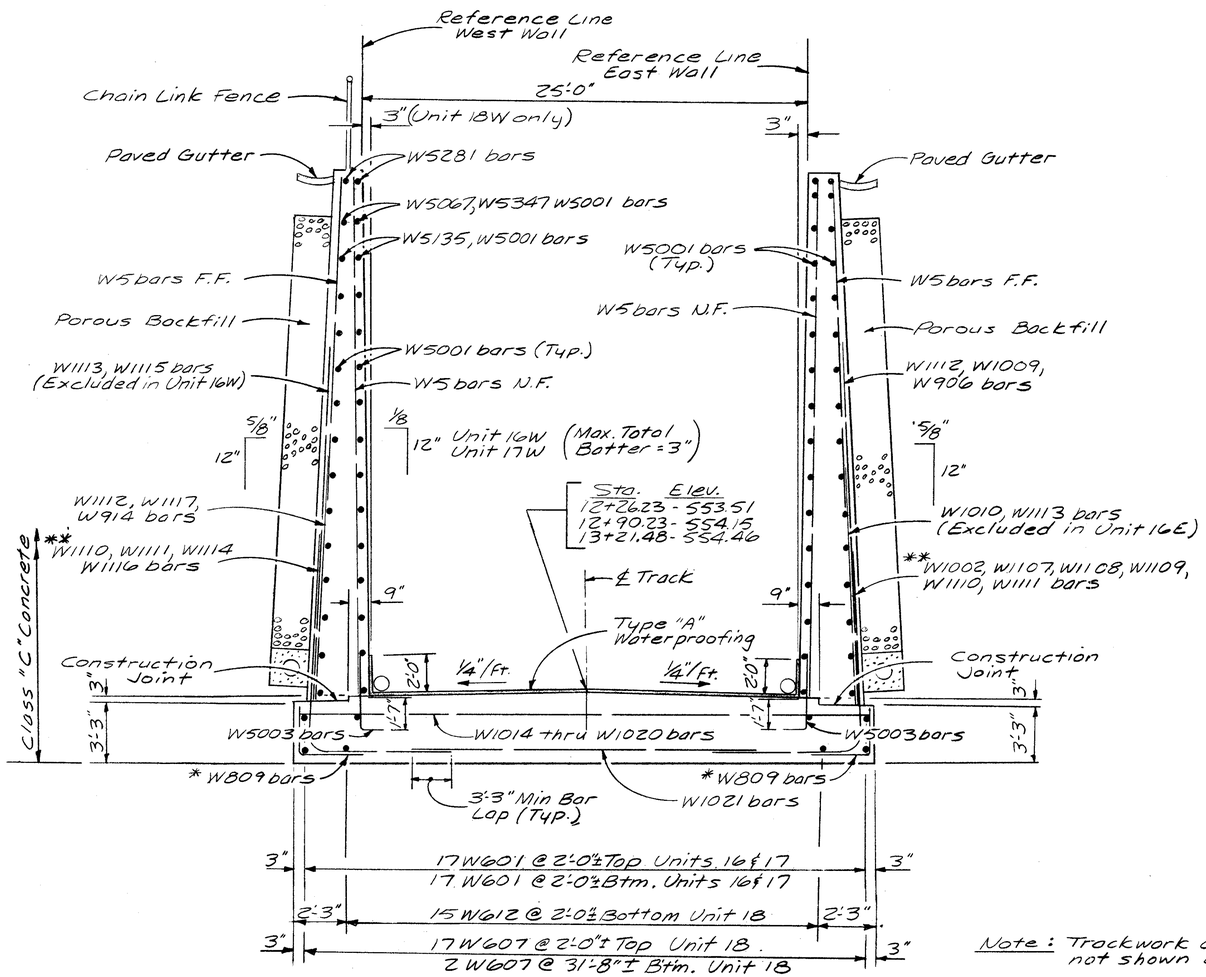

SECTION D-D

(Work with Sheet No. 269 & 270),

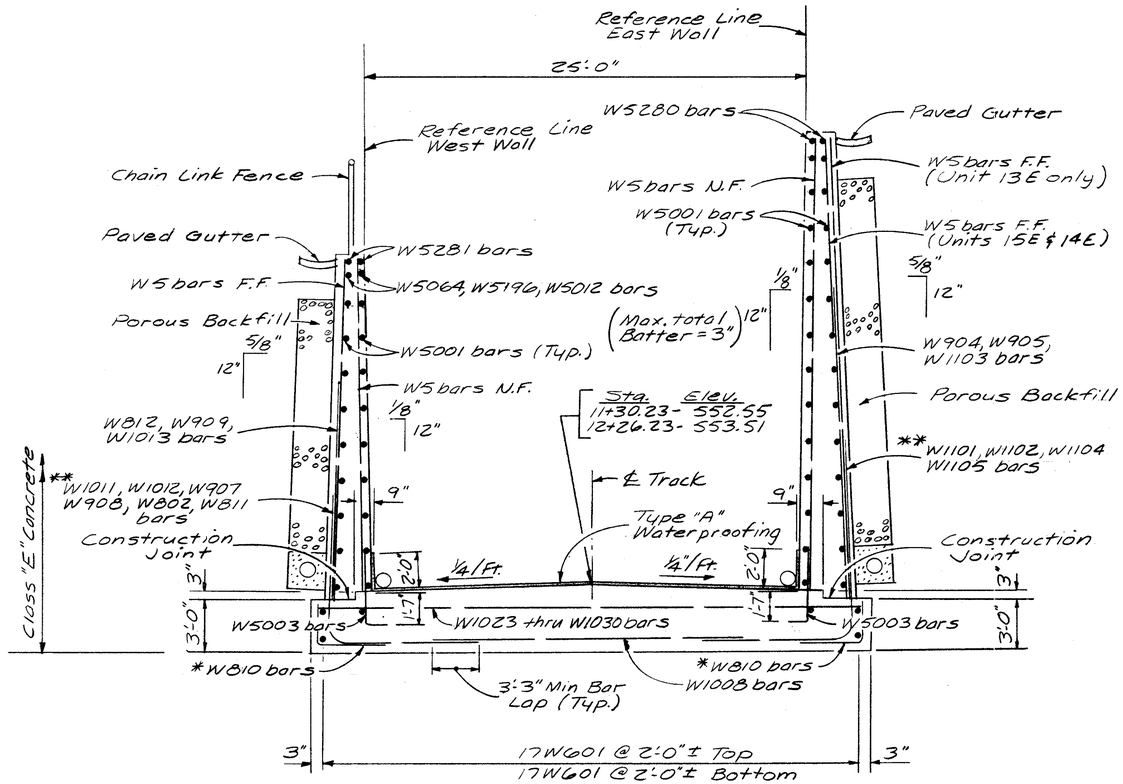

SECTION C-C

(Work with Sheet No. 266 & 267)

Note: Trackwork and Ballast (by others) not shown on Sections.

Note: N.F. denotes near face
F.F. denotes for face

* Note: The long leg of the W809 & W810 bars shall be placed horizontal in the footing.

** Note: The 7 ft. leg of the W802, W811, W907, W908, W1002, W1007, W1011, W1012, W1101, W1102, W1104, W1105, W1108, W1109, W1110, W1111, W1114, and W1116 bars shall be placed in the footing.

HAZELET & ERDAL
CONSULTING ENGINEERS
CINCINNATI, OHIO

RETAINING WALL NO. 18

SHEET NO. 13 OF 20

DESIGNED	DRAWN	TRACED	CHECKED	REVIEWED DATE	REVISED
	TLZ		[illegible]	JHO 6.1.165	

FED. RD. DIV.	STATE	PROJECT	FISCAL YEAR
2	OHIO		

272
492

HAMILTON COUNTY
HAM-71-(1.56) (2.51)

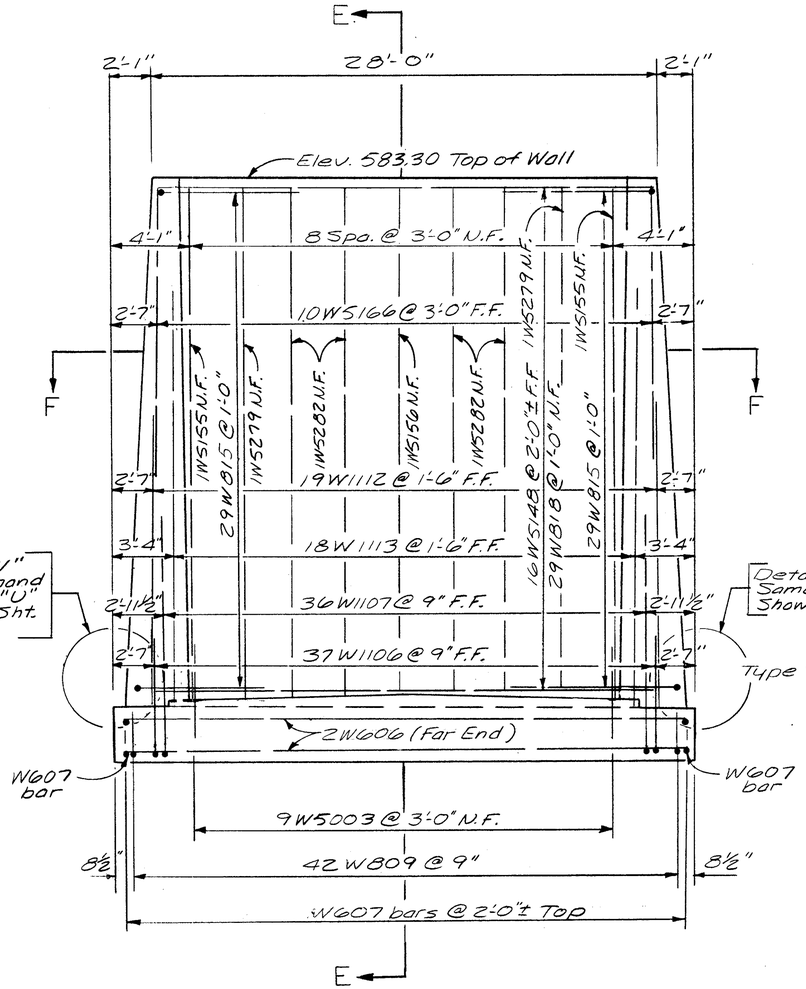

UNIT NO. 18N

ELEVATION NORTH WALL

(Looking North)

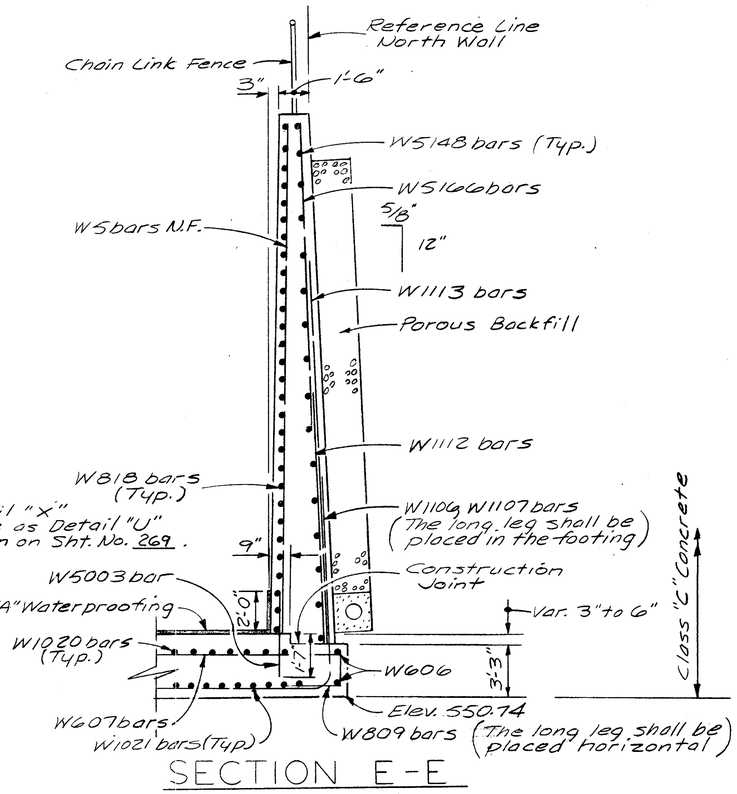

SECTION E-E

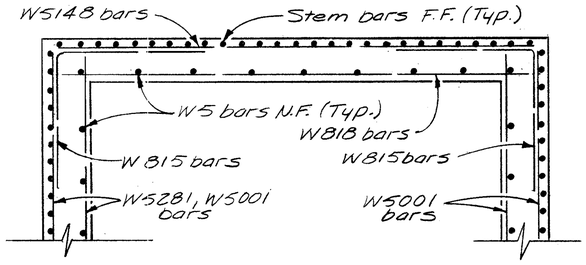

SECTION F-F

Note: Chain Link Fence along & top of Wall not shown on Elevation

Note: N.F. denotes near face
F.F. denotes far face
E.F. denotes each face

Note: For Plan see Sht. No. 268.

Note: For Additional Notes and General Notes see Sht. No. 239.
For Fence Details see Sht. No. 275.
For Wall Drainage see Sht. No. 275.
For Estimated Quantities see Sht. No. 259.
For Reinforcing Steel List see Sht. No. 276, 277 & 278

HAZELET & ERDAL
CONSULTING ENGINEERS
CINCINNATI, OHIO

RETAINING WALL NO. 18

SHEET NO. 14 OF 20

DESIGNED	DRAWN	TRACED	CHECKED	REVIEWED DATE	REVISED
	TLZ			JHO 6.1.65	

FED. RD. DIV.	STATE	PROJECT	FISCAL YEAR
2	OHIO		

273
492

HAMILTON COUNTY
HAM-71-(1.66) (2.61)

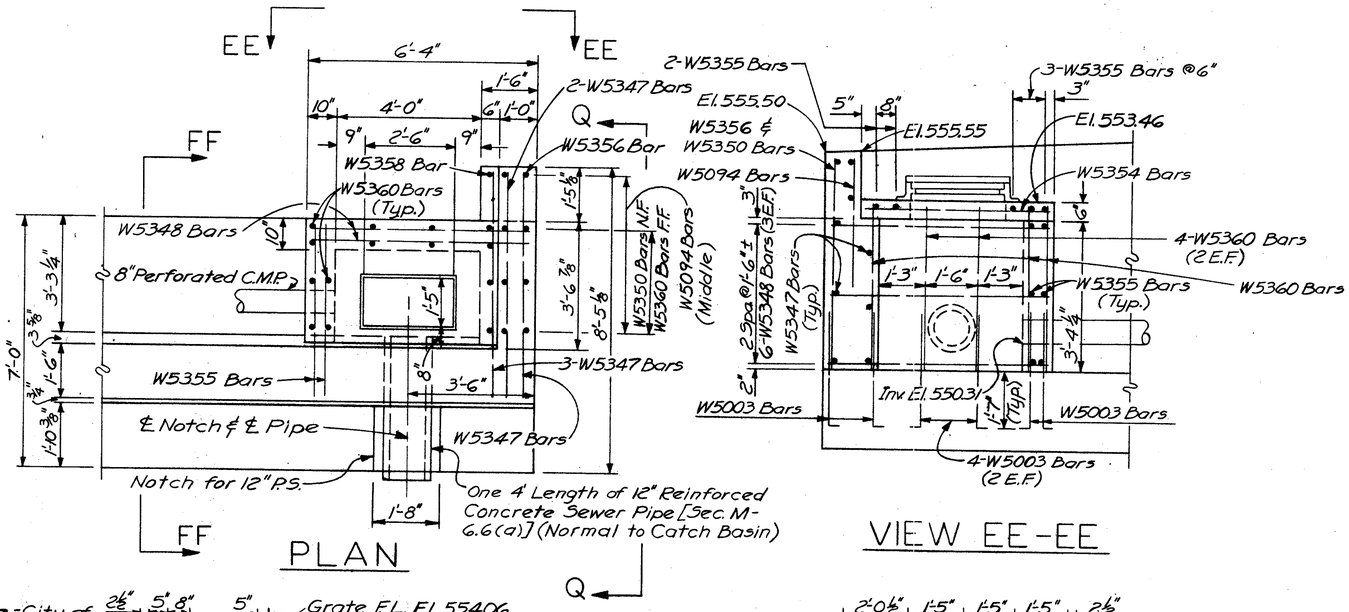

PLAN

VIEW EE-EE

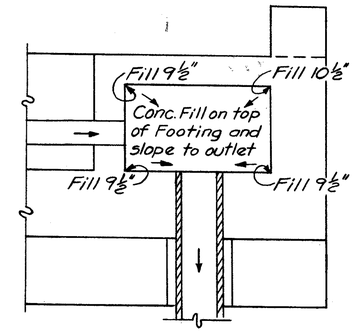

HORIZONTAL SECTION
(At ℄ of 12" P.S.)

VIEW FF-FF

END ELEVATION Q-Q

Note: For Additional and General Notes see Sh. No. 259
For Wall Drainage Details see Sh. No. 275
For Estimated Quantities see Sh. No. 259
For Reinforcing Steel List see Sh. No. 276 277 & 278
For Plan see Sh. No. 260

HAZELET & ERDAL
CONSULTING ENGINEERS
CINCINNATI, OHIO

RETAINING WALL NO. 18

SHEET NO. 15 OF 20

DESIGNED	DRAWN	TRACED	CHECKED	REVIEWED DATE	REVISED
	JDC 5-3-65		W.A.Z.	JHD 6.1.65	

FED. RD. DIV.	STATE	PROJECT	FISCAL YEAR
2	OHIO		

274
492

HAMILTON COUNTY
HAM-71-(1.56) (2.51)

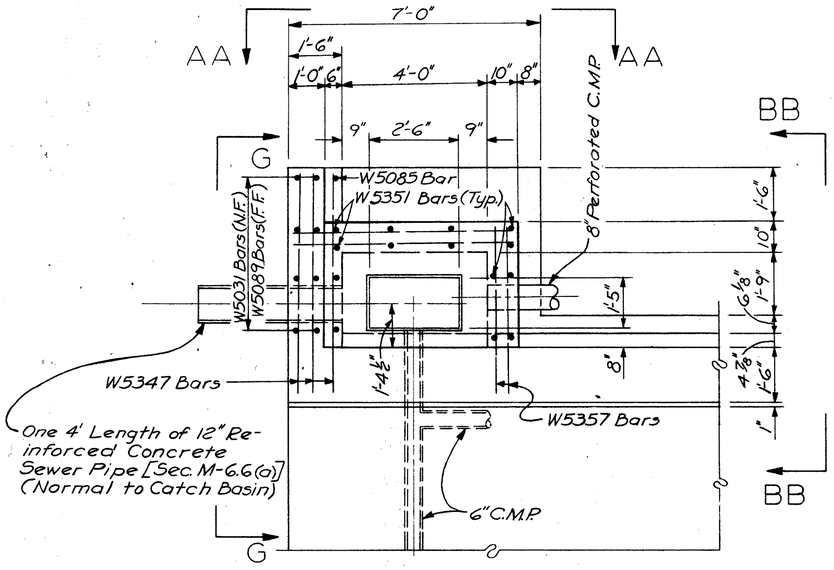

PLAN

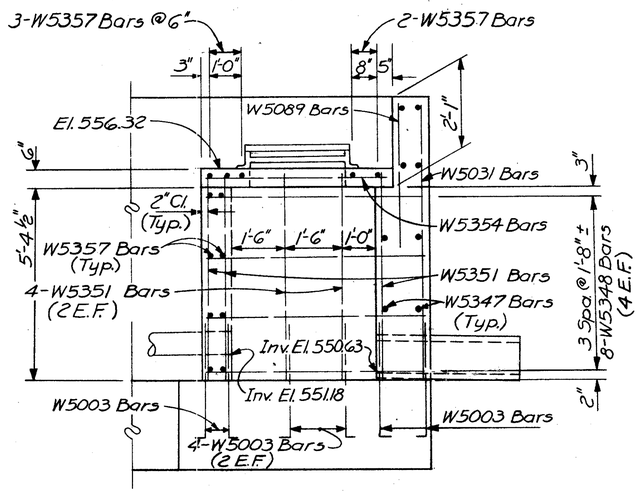

VIEW AA-AA

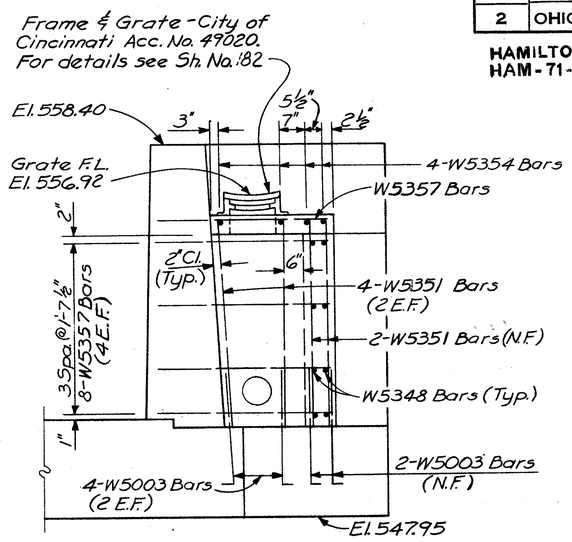

VIEW BB-BB

Note: For Addititional and General Notes see Sh. No. 259
For Wall Drainage Details see Sh. No. 275
For Estimated Quantities see Sh. No. 259
For Reinforcing Steel List see Sh. No. 276 277 & 278
For Plan see Sh. No. 263

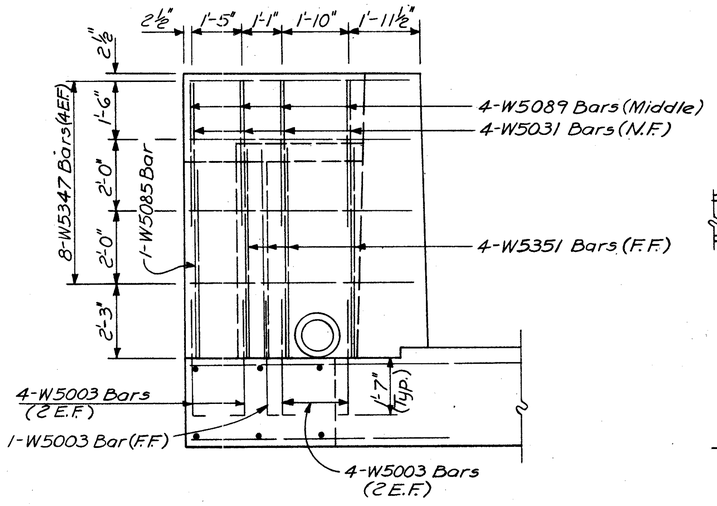

END ELEVATION G-G

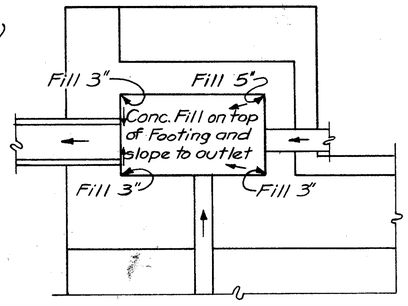

HORIZONTAL SECTION
(At ℄ of 12" P.S.)

HAZELET & ERDAL
CONSULTING ENGINEERS
CINCINNATI, OHIO

RETAINING WALL NO. 18

SHEET NO. 16 OF 20

DESIGNED	DRAWN	TRACED	CHECKED	REVIEWED DATE	REVISED
	JDC 5-3-65			JHO 6-1-65	

FED. RD. DIV.	STATE	PROJECT	FISCAL YEAR
2	OHIO		

275
492

HAMILTON COUNTY
HAM-71-(1.56)(2.51)

Note: No Chain Link Fence along East Wall

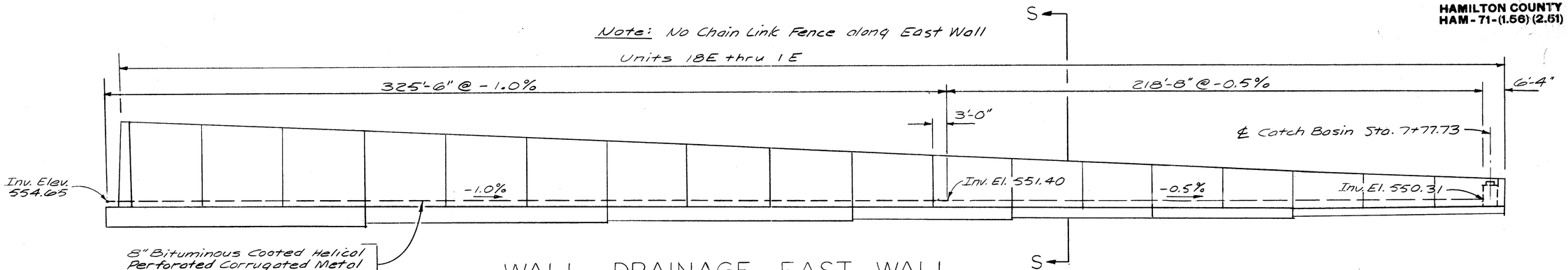

WALL DRAINAGE EAST WALL
(Looking East)

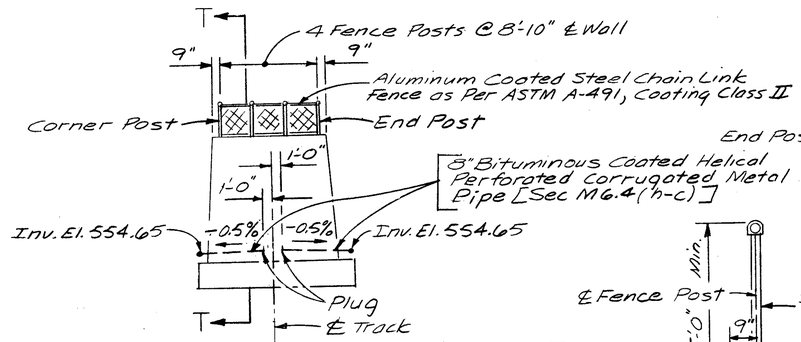

FENCING & WALL DRAINAGE NORTH WALL
(Unit 18N)
(Looking North)

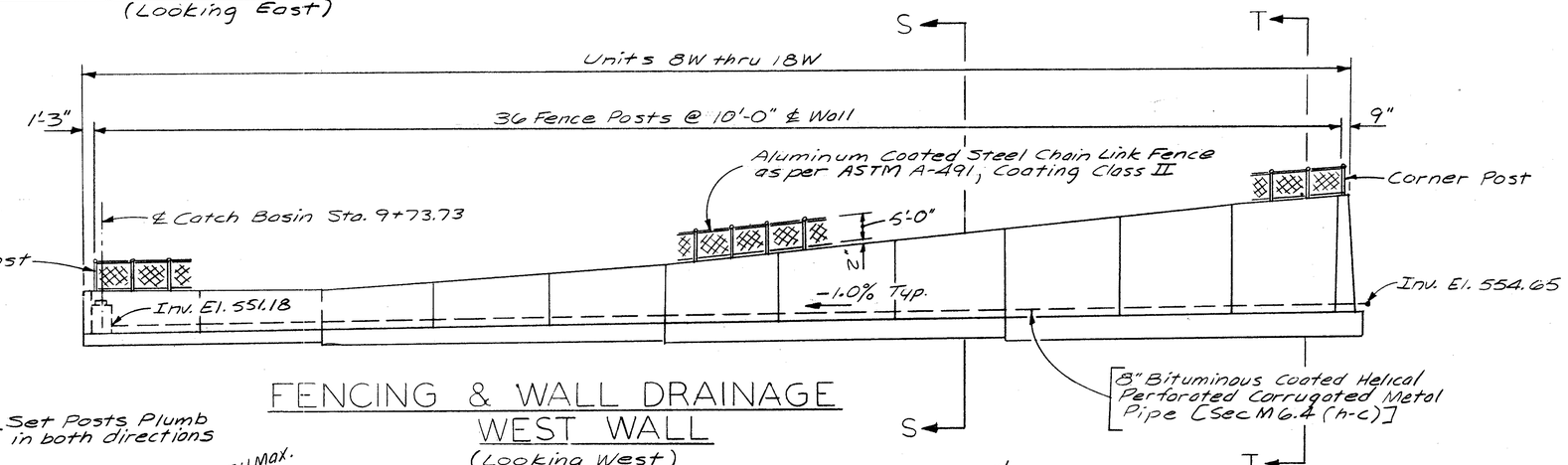

FENCING & WALL DRAINAGE WEST WALL
(Looking West)

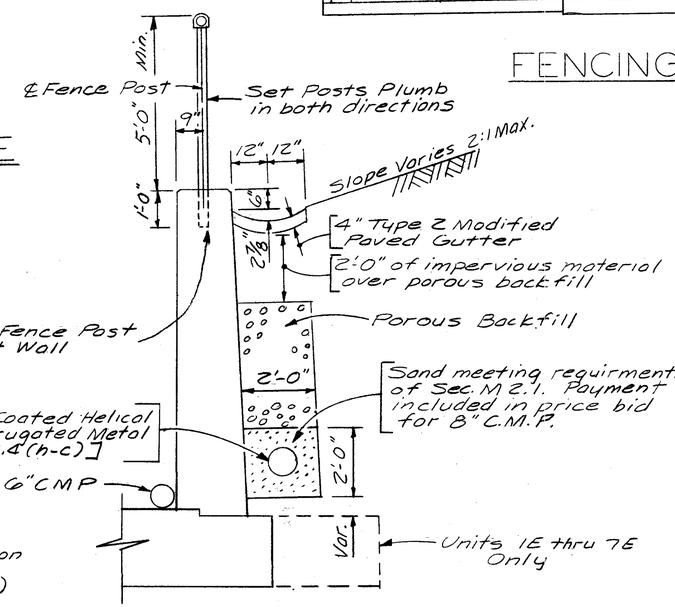

** Note: 6" CMP is not shown on Wall Drainage Elevations. For location and description see Wall Plans. (Excluded-Units 1E thru 7E)

SECTION S-S
(Typical East & West Wall excluding Unit 18W)

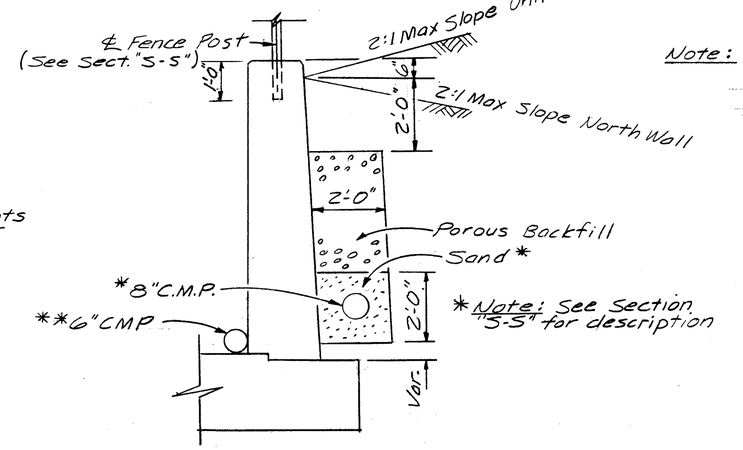

* Note: See Section "S-S" for description

SECTION T-T
(North Wall & Unit 18W)

Note: For 8" CMP tie in at Catch Basins see Sheet No. 273 & 274.

For additional details of fence See Sh. No. 283.

For Estimated Quantities see Sheet No. 259.

HAZELET & ERDAL
CONSULTING ENGINEERS
CINCINNATI, OHIO

RETAINING WALL NO. 18

SHEET NO. 17 OF 20

DESIGNED	DRAWN	TRACED	CHECKED	REVIEWED DATE	REVISED
	TLZ		M.A.Z	JWO 6/11/65	

FED. RD. DIV.	STATE	PROJECT	FISCAL YEAR
2	OHIO		

276
492

HAMILTON COUNTY
HAM-71-(1.66) (E.61)

REINFORCING STEEL LIST

Mark	Type	No.	Length	Weight
W5001	Str.	436	31'-7"	14,362
W5002	Str.	7	4'-3"	31
W5003	11	315	3'-8"	1205
W5004	Str.	7	7'-2"	52
W5005	Str.	7	7'-4"	54
W5006	Str.	7	7'-6"	55
W5007	Str.	7	7'-8"	56
W5008	Str.	1	7'-10"	8
W5009	Str.	1	8'-0"	8
W5010	Str.	1	8'-2"	9
W5011	Str.	1	8'-4"	9
W5012	Str.	3	8'-6"	27
W5013	Str.	1	8'-8"	9
W5014	Str.	2	8'-10"	18
W5015	Str.	2	9'-0"	19
W5016	Str.	1	9'-2"	10
W5017	Str.	1	9'-5"	10
W5018	Str.	1	9'-7"	10
W5019	Str.	1	9'-9"	10
W5020	Str.	1	9'-11"	10
W5021	Str.	70	10'-1"	736
W5022	Str.	1	10'-3"	11
W5023	Str.	1	10'-6"	11
W5024	Str.	1	10'-8"	11
W5025	Str.	1	10'-9"	11
W5026	Str.	7	6-11"	50
W5027	Str.	7	7'-1"	52
W5028	Str.	7	7'-3"	53
W5029	Str.	7	7'-5"	55
W5030	Str.	1	7'-7"	8
W5031	Str.	5	7'-9"	40
W5032	Str.	1	7'-11"	8
W5033	Str.	1	8'-1"	8
W5034	Str.	1	8'-3"	9
W5035	Str.	1	8'-5"	9
W5036	Str.	1	8'-7"	9
W5037	Str.	1	8'-9"	9
W5038	Str.	1	9'-1"	9
W5039	Str.	1	9'-3"	10
W5040	Str.	1	9'-5"	10
W5041	Str.	1	9'-8"	10
W5042	Str.	1	9'-10"	10
W5043	Str.	1	10'-0"	10
W5044	Str.	1	10'-2"	11
W5045	Str.	1	10'-4"	11
W5046	Str.	1	10'-6"	11
W5047	Str.	1	10'-9"	11
W5048	Str.	1	10'-11"	11
W5049	Str.	1	11'-0"	11
W5050	Str.	1	10'-9"	11
W5051	Str.	1	10'-11"	11
W5052	Str.	1	11'-2"	12
W5053	Str.	1	11'-4"	12
W5054	Str.	1	11'-6"	12
W5055	Str.	1	11'-8"	12
W5056	Str.	1	11'-10"	12
W5057	Str.	1	12'-1"	13
W5058	Str.	1	12'-3"	13
W5059	Str.	1	12'-5"	13
W5060	Str.	1	12'-7"	13
W5061	Str.	2	12'-9"	27
W5062	Str.	2	13'-0"	27
W5063	Str.	2	13'-3"	28
W5064	Str.	10	13'-6"	141
W5065	Str.	2	13'-9"	29
W5066	Str.	2	14'-0"	29
W5067	Str.	4	14'-3"	59
W5068	Str.	2	14'-6"	30
W5069	Str.	2	14'-9"	31
W5070	Str.	2	15'-0"	31
W5071	Str.	9	15'-3"	143

REINFORCING STEEL LIST

Mark	Type	No.	Length	Weight
W5072	Str.	8	15'-6"	129
W5073	Str.	1	11'-0"	11
W5074	Str.	1	11'-2"	12
W5075	Str.	1	11'-5"	12
W5076	Str.	1	11'-7"	12
W5077	Str.	1	11'-9"	12
W5078	Str.	1	11'-11"	12
W5079	Str.	1	12'-1"	13
W5080	Str.	1	12'-4"	13
W5081	Str.	1	12'-6"	13
W5082	Str.	1	12'-8"	13
W5083	Str.	1	12'-10"	13
W5084	Str.	1	12'-11"	13
W5085	Str.	8	5'-2"	43
W5086	Str.	7	5'-1"	37
W5087	Str.	45	4'-10"	227
W5088	Str.	7	5'-4"	39
W5089	Str.	4	3'-6"	15
W5090	Str.	12	5'-10"	73
W5091	Str.	2	3'-1"	6
W5092	1	4	7'-8"	32
W5093	1	4	6'-3"	26
W5094	Str.	22	4'-0"	92
W5095	Str.	1	15'-5"	16
W5096	Str.	8	15'-8"	131
W5097	Str.	2	15'-10"	33
W5098	Str.	2	16'-1"	34
W5099	Str.	2	16'-3"	34
W5100	Str.	2	16'-6"	34
W5101	Str.	2	16'-9"	35
W5102	Str.	2	16'-11"	35
W5103	Str.	2	17'-2"	36
W5104	Str.	2	17'-4"	36
W5105	Str.	2	17'-7"	37
W5106	Str.	2	17'-9"	37
W5107	Str.	3	18'-0"	56
W5108	Str.	3	18'-3"	57
W5109	Str.	2	18'-6"	39
W5110	Str.	2	18'-8"	39
W5111	Str.	2	18'-11"	39
W5112	Str.	2	19'-1"	40
W5113	Str.	2	19'-4"	40
W5114	Str.	2	19'-7"	41
W5115	Str.	2	19'-9"	41
W5116	Str.	2	20'-0"	42
W5117	Str.	2	20'-3"	42
W5118	Str.	2	20'-5"	43
W5119	Str.	3	20'-8"	65
W5120	Str.	1	20'-11"	22
W5121	Str.	1	21'-0"	22
W5122	Str.	1	21'-3"	22
W5123	Str.	1	21'-6"	22
W5124	Str.	1	21'-10"	23
W5125	Str.	1	22'-1"	23
W5126	Str.	1	22'-5"	23
W5127	Str.	1	22'-8"	24
W5128	Str.	1	22'-11"	24
W5129	Str.	1	23'-2"	24
W5130	Str.	3	23'-6"	74
W5131	Str.	1	23'-9"	25
W5132	Str.	1	23'-10"	25
W5133	Str.	1	24'-1"	25
W5134	Str.	1	24'-5"	25
W5135	Str.	3	24'-8"	77
W5136	Str.	1	24'-11"	26
W5137	Str.	1	25'-3"	26
W5138	Str.	1	25'-6"	27
W5139	Str.	1	25'-9"	27
W5140	Str.	1	26'-1"	27
W5141	Str.	1	26'-4"	27
W5142	Str.	1	26'-7"	28

REINFORCING STEEL LIST

Mark	Type	No.	Length	Weight
W5143	Str.	1	26'-11"	28
W5144	Str.	1	27'-0"	28
W5145	Str.	1	27'-2"	28
W5146	Str.	1	27'-4"	29
W5147	Str.	1	27'-6"	29
W5148	Str.	40	27'-8"	1154
W5149	Str.	1	27'-11"	29
W5150	Str.	1	28'-1"	29
W5151	Str.	1	28'-3"	29
W5152	Str.	1	28'-5"	30
W5153	Str.	1	28'-8"	30
W5154	Str.	1	28'-10"	30
W5155	Str.	3	28'-11"	90
W5156	Str.	1	29'-2"	30
W5157	Str.	1	14'-9"	15
W5158	Str.	1	14'-10"	15
W5159	Str.	2	15'-0"	31
W5160	Str.	14	15'-2"	221
W5161	Str.	2	15'-3"	32
W5162	Str.	2	15'-5"	32
W5163	Str.	2	15'-6"	32
W5164	Str.	2	15'-8"	33
W5165	Str.	2	15'-9"	33
W5166	Str.	24	15'-11"	398
W5167	Str.	2	16'-1"	34
W5168	Str.	3	16'-2"	51
W5169	Str.	2	16'-4"	34
W5170	Str.	3	16'-5"	51
W5171	Str.	2	16'-7"	35
W5172	Str.	2	16'-9"	35
W5173	Str.	2	16'-11"	35
W5174	Str.	2	17'-0"	35
W5175	Str.	2	17'-2"	36
W5176	Str.	2	17'-3"	36
W5177	Str.	2	17'-5"	36
W5178	Str.	2	17'-6"	37
W5179	Str.	3	17'-8"	55
W5180	Str.	2	17'-9"	37
W5181	Str.	3	17'-11"	56
W5182	Str.	2	18'-1"	38
W5183	Str.	2	18'-2"	39
W5184	Str.	2	18'-3"	39
W5185	Str.	2	18'-5"	39
W5186	Str.	2	18'-6"	39
W5187	Str.	2	18'-8"	39
W5188	Str.	2	18'-9"	39
W5189	Str.	2	18'-11"	39
W5190	Str.	2	19'-0"	40
W5191	Str.	3	19'-2"	60
W5192	Str.	2	19'-3"	40
W5193	Str.	3	19'-5"	61
W5194	Str.	2	19'-6"	41
W5195	Str.	2	19'-8"	41
W5196	Str.	4	19'-9"	82
W5197	Str.	2	19'-11"	42
W5198	Str.	2	20'-0"	42
W5199	Str.	2	20'-2"	42
W5200	Str.	2	20'-3"	42
W5201	Str.	2	20'-5"	43
W5202	Str.	2	20'-6"	43
W5203	Str.	3	20'-8"	65
W5204	Str.	2	20'-9"	43
W5205	Str.	3	20'-11"	65
W5206	Str.	2	21'-0"	44
W5207	Str.	2	21'-2"	44
W5208	Str.	2	21'-3"	44
W5209	Str.	2	21'-5"	45
W5210	Str.	2	21'-6"	45
W5211	Str.	2	21'-7"	45
W5212	Str.	2	21'-9"	45
W5213	Str.	2	21'-10"	46

REINFORCING STEEL LIST

Mark	Type	No.	Length	Weight
W5214	Str.	2	22'-0"	46
W5215	Str.	3	22'-1"	69
W5216	Str.	2	22'-3"	46
W5217	Str.	3	22'-4"	70
W5218	Str.	2	22'-6"	47
W5219	Str.	2	22'-7"	47
W5220	Str.	2	22'-9"	47
W5221	Str.	2	22'-11"	48
W5222	Str.	2	23'-0"	48
W5223	Str.	2	23'-2"	48
W5224	Str.	2	23'-3"	48
W5225	Str.	2	23'-4"	49
W5226	Str.	2	23'-6"	49
W5227	Str.	3	23'-7"	74
W5228	Str.	2	23'-9"	50
W5229	Str.	2	23'-10"	50
W5230	Str.	1	24'-0"	25
W5231	Str.	1	24'-2"	25
W5232	Str.	1	24'-3"	25
W5233	Str.	1	24'-5"	25
W5234	Str.	1	24'-6"	26
W5235	Str.	1	24'-8"	26
W5236	Str.	1	24'-10"	26
W5237	Str.	1	24'-11"	26
W5238	Str.	2	25'-1"	52
W5239	Str.	1	25'-3"	26
W5240	Str.	1	25'-4"	26
W5241	Str.	1	25'-6"	27
W5242	Str.	1	25'-7"	27
W5243	Str.	1	25'-9"	27
W5244	Str.	1	25'-11"	27
W5245	Str.	1	26'-0"	27
W5246	Str.	1	26'-2"	27
W5247	Str.	1	26'-3"	27
W5248	Str.	1	26'-5"	28
W5249	Str.	2	26'-6"	55
W5250	Str.	1	26'-7"	28
W5251	Str.	1	26'-8"	28
W5252	Str.	1	26'-9"	28
W5253	Str.	1	26'-10"	28
W5254	Str.	1	26'-11"	28
W5255	Str.	1	27'-0"	28
W5256	Str.	1	27'-1"	28
W5257	Str.	1	27'-2"	28
W5258	Str.	2	27'-3"	57
W5259	Str.	2	27'-4"	57
W5260	Str.	1	27'-5"	29
W5261	Str.	1	27'-6"	29
W5262	Str.	89	27'-7"	2560
W5263	Str.	2	27'-8"	58
W5264	Str.	1	27'-9"	29
W5265	Str.	1	27'-10"	29
W5266	Str.	1	27'-11"	29
W5267	Str.	1	28'-0"	29
W5268	Str.	2	28'-1"	59
W5269	Str.	1	28'-2"	29
W5270	Str.	1	28'-3"	29
W5271	Str.	2	28'-4"	59
W5272	Str.	1	28'-5"	30
W5273	Str.	1	28'-6"	30
W5274	Str.	1	28'-7"	30
W5275	Str.	29	28'-8"	867
W5276	Str.	1	28'-9"	30
W5277	Str.	1	28'-10"	30
W5278	Str.	2	28'-11"	60
W5279	Str.	3	29'-0"	91
W5280	Str.	22	31'-8"	726
W5281	Str.	12	31'-9"	397
W5282	Str.	4	29'-1"	121
W5283	Str.	1	14'-11"	16
W5284	Str.	1	14'-10"	15

REINFORCING STEEL LIST

Mark	Type	No.	Length	Weight
W5285	Str.	2	14'-8"	31
W5286	Str.	2	14'-7"	30
W5287	Str.	2	14'-5"	30
W5288	Str.	2	14'-3"	30
W5289	Str.	2	14'-2"	30
W5290	Str.	2	14'-0"	29
W5291	Str.	2	13'-10"	29
W5292	Str.	2	13'-8"	29
W5293	Str.	2	13'-7"	28
W5294	Str.	2	13'-5"	28
W5295	Str.	2	13'-4"	28
W5296	Str.	2	13'-3"	28
W5297	Str.	2	13'-1"	27
W5298	Str.	2	13'-0"	27
W5299	Str.	2	12'-10"	27
W5300	Str.	2	12'-8"	26
W5301	Str.	2	12'-7"	26
W5302	Str.	3	12'-4"	39
W5303	Str.	2	12'-3"	26
W5304	Str.	3	12'-1"	38
W5305	Str.	2	11'-11"	25
W5306	Str.	2	11'-10"	25
W5307	Str.	2	11'-8"	24
W5308	Str.	2	11'-6"	24
W5309	Str.	2	11'-5"	24
W5310	Str.	2	11'-3"	23
W5311	Str.	2	11'-1"	23
W5312	Str.	2	11'-0"	23
W5313	Str.	3	10'-10"	34
W5314	Str.	2	10'-8"	22
W5315	Str.	2	10'-6"	22
W5316	Str.	2	10'-4"	22
W5317	Str.	2	10'-2"	21
W5318	Str.	2	10'-0"	21
W5319	Str.	2	9'-10"	21
W5320	Str.	2	9'-8"	20
W5321	Str.	3	9'-6"	30
W5322	Str.	2	9'-4"	19
W5323	Str.	2	9'-3"	19
W5324	Str.	2	9'-1"	19
W5325	Str.	2	9'-0"	19
W5326	Str.	2	8'-10"	18
W5327	Str.	2	8'-8"	18
W5328	Str.	2	8'-7"	18
W5329	Str.	2	8'-5"	18
W5330	Str.	2	8'-3"	17
W5331	Str.	2	8'-2"	17
W5332	Str.	2	8'-0"	17
W5333	Str.	2	7'-11"	17
W5334	Str.	2	7'-10"	16
W5335	Str.	2	7'-8"	16
W5336	Str.	2	7'-7"	16
W5337	Str.	2	7'-5"	15
W5338	Str.	2	7'-3"	15
W5339	Str.	2	7'-2"	15

Note: Work this sheet with Sheet No. 277.

HAZELET & ERDAL
CONSULTING ENGINEERS
CINCINNATI, OHIO

RETAINING WALL NO. 18

SHEET NO. 18 OF 20

DESIGNED	DRAWN	TRACED	CHECKED	REVIEWED DATE	REVISED
	TLZ		C.K.B.	JHO 6/1/65	

FED. RD. DIV.	STATE	PROJECT	FISCAL YEAR
2	OHIO		

277
492

HAMILTON COUNTY
[illegible]

REINFORCING STEEL LIST

Mark	Type	No.	Length	Weight
W5340	Str.	2	7'-0"	15
W5341	Str.	2	6'-11"	14
W5342	Str.	2	6'-9"	14
W5343	Str.	30	6'-8"	209
W5344	Str.	2	6'-7"	14
W5345	Str.	2	6'-5"	13
W5346	Str.	2	6'-4"	13
W5347	Str.	21	6'-2"	135
W5348	Str.	16	6'-0"	100
W5349	Str.	8	5'-11"	49
W5350	Str.	5	5'-9"	30
W5351	Str.	22	5'-8"	130
W5352	Str.	1	5'-6"	6
W5353	Str.	27	29'-7"	833
W5354	Str.	8	5'-0"	42
W5355	Str.	11	4'-9"	54
W5356	Str.	1	5'-7"	6
W5357	Str.	13	4'-8"	63
W5358	Str.	1	3'-0"	3
W5359	Str.	2	2'-1"	4
W5360	Str.	14	3'-8"	53
W601	Str.	298	34'-0"	15218
W602	6	44	12'-0"	803
W603	6	34	12'-3"	626
W604	6	11	14'-3"	235
W605	6	21	16'-3"	513
W606	Str.	2	31'-8"	95
W607	Str.	19	35'-8"	1018
W608	Str.	32	31'-10"	1530
W609	5	48	14'-8"	1058
W610	6	29	5'-11"	258
W611	6	18	10'-8"	288
W612	Str.	15	21'-10"	492
W613	6	9	8'-9"	118
W614	6	39	5'-8"	332
W615	6	18	7'-8"	207
W616	5	24	10'-8"	385
W617	5	24	13'-8"	493
W618	5	44	7'-2"	474
W619	5	22	9'-2"	303
W701	6	22	12'-7"	566
W702	6	21	14'-7"	626
W703	Str.	10	7'-3"	148
W704	Str.	18	8'-4"	307
W705	6	38	6'-7"	512
W706	6	36	9'-7"	705
W707	Str.	56	8'-0"	916

REINFORCING STEEL LIST

Mark	Type	No.	Length	Weight
W801	6	22	12'-7"	739
W802	6	42	17'-1"	1915
W803	Str.	10	11'-6"	307
W804	11	161	4'-11"	2115
W805	11	256	5'-2"	3532
W806	6	22	13'-7"	798
W807	6	21	18'-7"	1042
W808	Str.	10	13'-0"	347
W809	11	304	5'-8"	4602
W810	11	256	5'-5"	3705
W811	6	22	13'-1"	768
W812	Str.	10	10'-6"	280
W813	Str.	62	29'-11"	4953
W814	Str.	8	34'-0"	726
W815	11	58	15'-10"	2451
W816	Str.	44	17'-0"	1997
W817	Str.	7	7'-1"	133
W818	Str.	29	27'-8"	2142
W901	6	25	13'-2"	1119
W902	6	24	19'-8"	1605
W903	Str.	12	14'-10"	605
W904	Str.	33	21'-1"	2365
W905	Str.	33	22'-6"	2525
W906	Str.	33	23'-6"	2637
W907	6	25	13'-5"	1141
W908	6	24	18'-11"	1544
W909	Str.	12	13'-10"	564
W910	Str.	39	30'-0"	3978
W911	Str.	38	30'-2"	3898
W912	Str.	39	30'-4"	4022
W913	Str.	75	18'-7"	4738
W914	Str.	33	19'-10"	2225
W1001	6	25	13'-7"	1461
W1002	6	66	20'-1"	5703
W1003	Str.	12	16'-3"	839
W1004	6	25	14'-4"	1542
W1005	6	24	21'-4"	2203
W1006	Str.	12	18'-0"	929
W1007	6	43	14'-1"	2605
W1008	Str.	89	19'-10"	7594
W1009	Str.	22	14'-3"	1349
W1010	Str.	21	24'-3"	2191
W1011	6	25	14'-7"	1568
W1012	6	24	21'-1"	2197
W1013	Str.	12	17'-0"	878
W1014	Str.	17	31'-3"	2286
W1015	Str.	16	31'-4"	2157
W1016	Str.	16	31'-5"	2163
W1017	Str.	16	31'-6"	2169
W1018	Str.	16	31'-7"	2174
W1019	Str.	16	31'-8"	2180
W1020	Str.	17	31'-9"	2323
W1021	Str.	118	20'-2"	10240
W1022	Str.	112	12'-4"	5944
W1023	Str.	15	30'-7"	1974

REINFORCING STEEL LIST

Mark	Type	No.	Length	Weight
W1024	Str.	14	30'-8"	1848
W1025	Str.	14	30'-9"	1852
W1026	Str.	15	30'-10"	2002
W1027	Str.	14	30'-11"	1863
W1028	Str.	14	31'-0"	1868
W1029	Str.	14	31'-1"	1872
W1030	Str.	15	31'-2"	2024
W1031	Str.	56	12'-1"	2911
W1101	6	58	15'-2"	4674
W1102	6	55	23'-1"	6744
W1103	Str.	12	20'-0"	1275
W1104	6	33	14'-3"	2498
W1105	6	31	21'-8"	3569
W1106	6	37	21'-6"	4226
W1107	6	36	27'-9"	5308
W1108	6	33	15'-11"	2791
W1109	6	31	24'-1"	3966
W1110	6	166	14'-6"	12,788
W1111	6	92	20'-9"	10,142
W1112	Str.	63	14'-10"	4964
W1113	Str.	64	24'-10"	8493
W1114	6	31	23'-11"	3940
W1115	Str.	21	23'-7"	2631
W1116	6	42	19'-6"	4351
W1117	Str.	22	13'-7"	1587

Total Weight = 293,807 Lbs.

REPLACEMENT BARS

Mark	Type	No.	Length
RE501	Str.	2	5'-7"
RE601	Str.	2	5'-11"
RE701	Str.	1	6'-3"
RE801	Str.	2	6'-6"
RE901	Str.	2	6'-10"
RE1001	Str.	5	7'-3"
RE1101	Str.	5	7'-7"

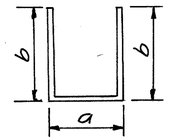

TYPE 1

MARK	a	b
W5092	3'-2"	2'-4½"
W5093	2'-5½"	2'-0½"

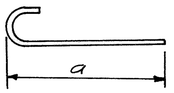

TYPE 5

MARK	a
W609	14'-0"
W616	10'-0"
W617	13'-0"
W618	6'-6"
W619	8'-6"

TYPE II

MARK	a	b
W804	3'-0"	2'-1"
W805	3'-0"	2'-4"
W809	3'-0"	2'-10"
W810	3'-0"	2'-7"
W815	8'-0"	8'-0"
W5003	3'-2"	0'-7½"

Note: For "Type 6" Bending Diagram and dimensions see Sheet No. 278 .

Note: Bars shall be carefully shaped to the pertinent dimensions shown in table I Standard Bends Sheet 212 of the State of Ohio Construction and Material Specifications, unless otherwise indicated above.

Note: Bar size is indicated in the bar mark. The first digit in bar mark beginning with numbers 5 thur 9 indicate the bar size. The first two digits in bar marks beginning with numbers 10 or 11 indicate the bar size.

HAZELET & ERDAL
CONSULTING ENGINEERS
CINCINNATI, OHIO

RETAINING WALL NO. 18

SHEET NO. 19 OF 20

DESIGNED	DRAWN	TRACED	CHECKED	REVIEWED DATE	REVISED
	TLZ		C.K.B.	JHO 6/1/65	

FED. RD. DIV.	STATE	PROJECT	FISCAL YEAR
2	OHIO		

278
492

HAMILTON COUNTY
HAM-71-(1.55) (2.05)

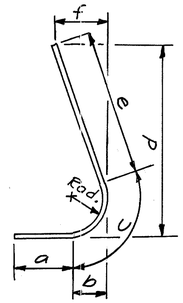

TYPE 6

MARK	a	b	c	d	e	f	rad.
W602	7'-0"	1'-6 3/4"	2'-6"	4'-2"	2'-6"	0'-1 1/2"	1'-6"
W603	7'-0"	1'-6 3/4"	2'-6"	4'-5"	2'-9"	0'-1 3/4"	1'-6"
W604	7'-0"	1'-6 3/4"	2'-6"	6'-5"	4'-9"	0'-3"	1'-6"
W605	7'-0"	1'-6 3/4"	2'-6"	8'-5"	6'-9"	0'-4 1/2"	1'-6"
W610	1'-7 7/8"	0'-3"	0'-4 1/4"	4'-1 7/8"	3'-10 7/8"	0'-2 3/8"	0'-2 1/4"
W611	1'-7 7/8"	0'-3"	0'-4 1/4"	8'-10 7/8"	8'-7 7/8"	0'-5 3/8"	0'-2 1/4"
W613	1'-7 7/8"	0'-3"	0'-4 1/4"	6'-11 7/8"	6'-8 7/8"	0'-4 1/4"	0'-2 1/4"
W614	1'-7 7/8"	0'-3"	0'-4 1/4"	3'-11	3'-7 7/8"	0'-2 1/4"	0'-2 1/4"
W615	1'-7 7/8"	0'-3"	0'-4 1/4"	5'-10 7/8"	5'-7 7/8"	0'-3 3/8"	0'-2 1/4"
W701	7'-0"	1'-7"	2'-6"	4'-9"	3'-1"	0'-2"	1'-6"
W702	7'-0"	1'-7"	2'-6"	6'-9"	5'-1"	0'-3"	1'-6"
W705	1'-11 1/2"	0'-3 3/8"	0'-4 3/4"	4'-5 7/8"	4'-2 1/2"	0'-2 5/8"	0'-2 1/2"
W706	1'-11 1/2"	0'-3 3/8"	0'-4 3/4"	7'-5 7/8"	7'-2 1/2"	0'-4 1/2"	0'-2 1/2"
W801	7'-0"	1'-7"	2'-6"	4'-9"	3'-1"	0'-2"	1'-6"
W802	7'-0"	1'-7"	2'-6"	9'-3"	7'-7"	0'-4 1/2"	1'-6"
W806	7'-0"	1'-7"	2'-6"	5'-9"	4'-1"	0'-2 1/2"	1'-6"
W807	7'-0"	1'-7"	2'-6"	10'-9"	9'-1"	0'-5 1/2"	1'-6"
W811	7'-0"	1'-7"	2'-6"	5'-3"	3'-7"	0'-2 1/4	1'-6"

MARK	a	b	c	d	e	f	rad.
W901	7'-0"	1'-7"	2'-6"	5'-4"	3'-8"	0'-2 1/2"	1'-6"
W902	7'-0"	1'-7"	2'-6"	11'-10"	10'-2"	0'-6 1/2"	1'-6"
W907	7'-0"	1'-7"	2'-6"	5'-7"	3'-11"	0'-2 1/2"	1'-6"
W908	7'-0"	1'-7"	2'-6"	11'-1"	9'-5"	0'-6"	1'-6"
W1001	7'-0"	1'-7 1/4"	2'-6"	5'-9"	4'-1"	0'-2 1/2"	1'-6"
W1002	7'-0"	1'-7 1/4"	2'-6"	12'-3"	10'-7"	0'-6 1/2"	1'-6"
W1004	7'-0"	1'-7 1/4"	2'-6"	6'-6"	4'-10"	0'-3"	1'-6"
W1005	7'-0"	1'-7 1/4"	2'-6"	13'-6"	11'-10"	0'-7 1/2"	1'-6"
W1007	7'-0"	1'-7 1/4"	2'-6"	6'-3"	4'-7"	0'-3"	1'-6"
W1011	7'-0"	1'-7 1/4"	2'-6"	6'-9"	5'-1"	0'-3"	1'-6"
W1012	7'-0"	1'-7 1/4"	2'-6"	13'-3"	11'-7"	0'-7"	1'-6"
W1101	7'-0"	1'-7 1/2"	2'-6 1/2"	7'-3 1/2"	5'-7"	0'-3 1/2"	1'-6"
W1102	7'-0"	1'-7 1/2"	2'-6 1/2"	15'-3"	13'-7"	0'-8 1/2"	1'-6"
W1104	7'-0"	1'-7 1/2"	2'-6 1/2"	7'-4 1/2"	4'-8"	0'-3"	1'-6"
W1105	7'-0"	1'-7 1/2"	2'-6 1/2"	13'-10"	12'-2"	0'-7 1/2"	1'-6"
W1106	14'-0"	1'-7 1/2"	2'-6 1/2"	6'-7 1/2"	4'-11"	0'-3"	1'-6"
W1107	14'-0"	1'-7 1/2"	2'-6 1/2"	12'-10 1/2"	11'-2"	0'-7"	1'-6"
W1108	7'-0"	1'-7 1/2"	2'-6 1/2"	8'-0 1/2"	6'-4"	0'-4"	1'-6"
W1109	7'-0"	1'-7 1/2"	2'-6 1/2"	16'-3 1/2"	14'-7"	0'-9"	1'-6"
W1110	7'-0"	1'-7 1/2"	2'-6 1/2"	6'-7 1/2"	4'-11"	0'-3"	1'-6"
W1111	7'-0"	1'-7 1/2"	2'-6 1/2"	12'-10 1/2"	11'-2"	0'-7"	1'-6"
W1114	7'-0"	1'-7 1/2"	2'-6 1/2"	14'-1 1/2"	12'-5"	0'-7 3/4"	1'-6"
W1116	7'-0"	1'-7 1/2"	2'-6 1/2"	11'-7 1/2"	9'-11"	0'-6"	1'-6"

Note: Work this sheet with Sheet No. 277 .

HAZELET & ERDAL
CONSULTING ENGINEERS
CINCINNATI, OHIO

RETAINING WALL NO. 18

SHEET NO. 20 OF 20

DESIGNED	DRAWN	TRACED	CHECKED	REVIEWED DATE	REVISED
	TLZ		C.K.B.	JHO 6/1/65	

FED. RD. DIV.	STATE	PROJECT	FISCAL YEAR
2	OHIO		

279
492

HAMILTON COUNTY
HAM-71-(1.56) (2.56)

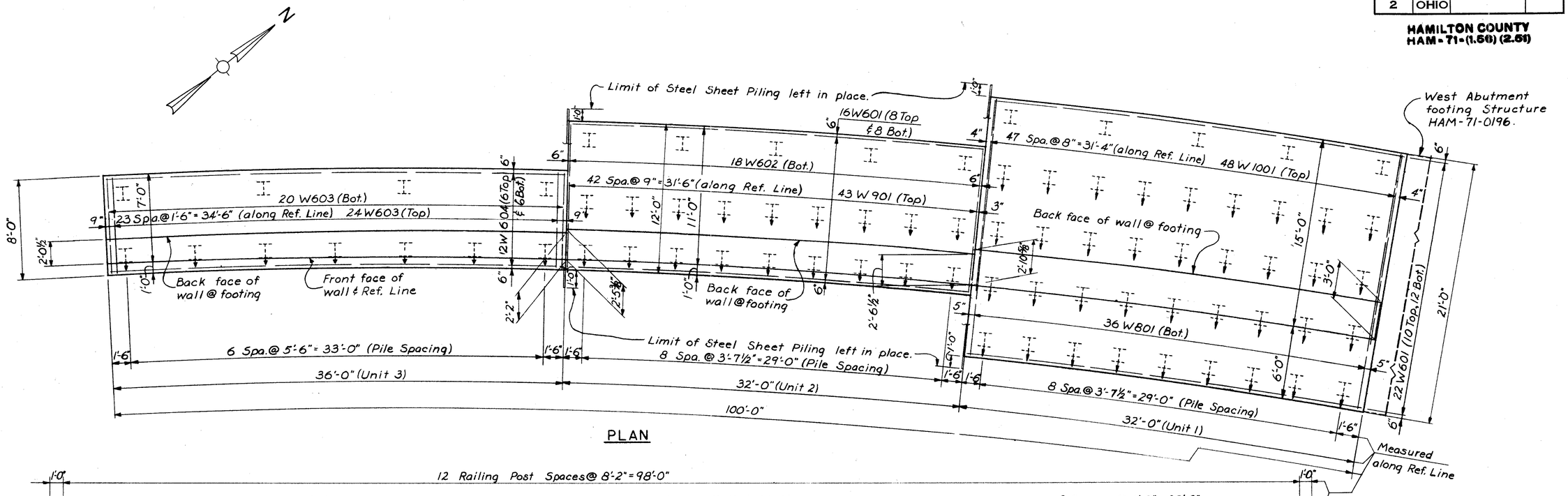

PLAN

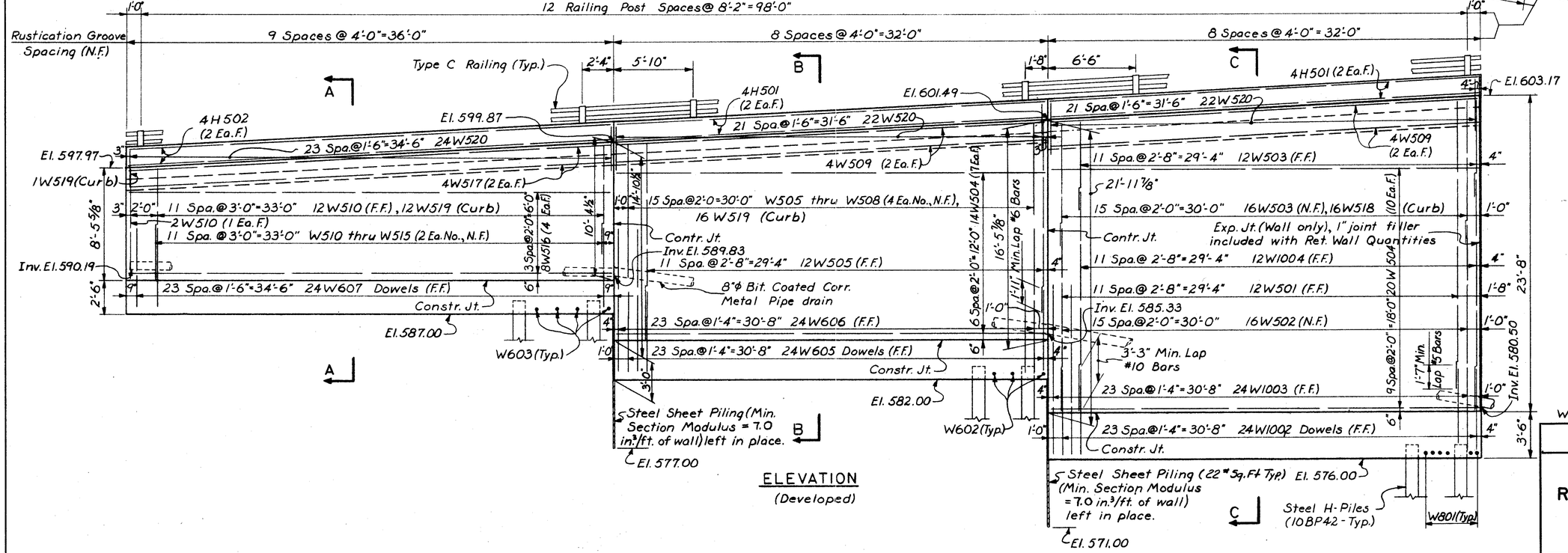

ELEVATION
(Developed)

Notes:
(N.F.) denotes Near Face.
(F.F.) denotes Far Face.
(Ea.F.) denotes Each Face.
Concrete in Retaining Wall and Footing shall be Class "E".
Provide 3" clearance to reinf. steel in footing and 2" clearance in wall (Min.).
All piles shall be 10BP42 Steel H-Piles.
All piles shall be driven along radial lines.
denotes vertical pile
denotes batter pile (batter 1 on 3).
For details not shown, see "Misc. Details for Retaining Walls." Sh No 331

Design Assumption: Equivalent fluid weight (passive) = 100 lbs. per cu. ft.

For piling note, see Sh. 331

Work this sheet with Sheet 280

HAZELET & ERDAL
CONSULTING ENGINEERS
CINCINNATI, OHIO

RETAINING WALL NO. 19
SHEET 1 OF 2

DESIGNED	DRAWN	TRACED	CHECKED	REVIEWED DATE	REVISED
SU	AFS		W.J.E. 5-11-65	JHO 5/20/65	

FED. RD. DIV.	STATE	PROJECT	FISCAL YEAR
2	OHIO		

280
492

HAMILTON COUNTY
HAM-71-(1.56) (2.51)

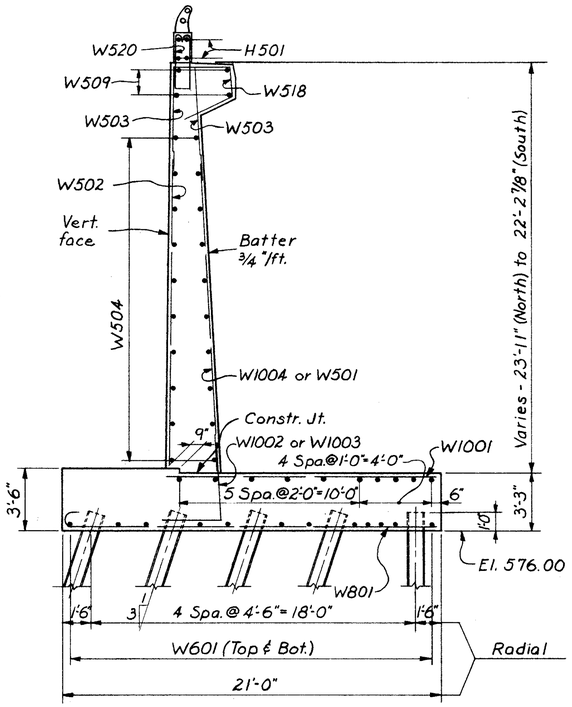

SECTION C-C
(Unit 1)

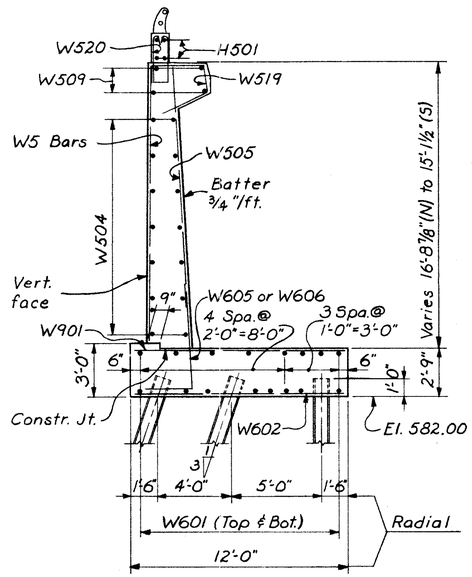

SECTION B-B
(Unit 2)

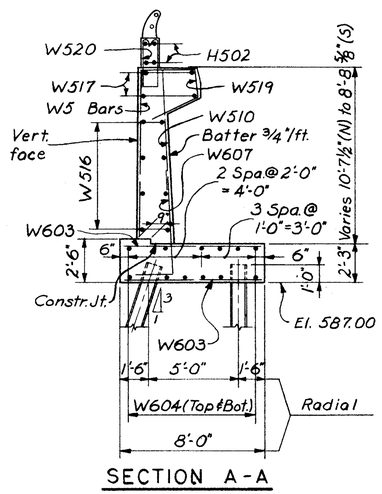

SECTION A-A
(Unit 3)

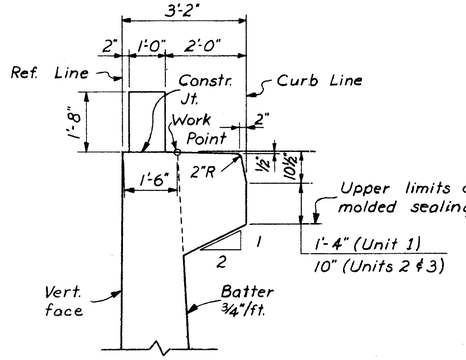

CURB DETAIL

ESTIMATED QUANTITIES

E-2	80	Cu.Yds.	Unclassified excavation
E-2	385	Sq.Ft.	Steel sheet piling left in place (Min. Sect. Modulus of 7 in³ per foot of wall)
S-1	149	Cu.Yds.	Class "E" concrete, footings
S-1	137	Cu.Yds.	Class "E" concrete, wall shafts
S-3	49	Lin.Ft.	Waterproofing sealing strip
S-4	18810	Lbs.	Reinforcing steel
S-9	54	Sq.Ft.	1" preformed expansion joint filler
S-14	100	Lin.Ft.	Railing type "C" (aluminium rail & supports, concrete parapet)
S-18	1459	Lin.Ft.	Steel piles 10 BP 42
S-29	55	Cu.Yds.	Porous backfill
S-29	101	Lin.Ft.	8" bituminous coated helical perforated corrugated metal pipe [Sec. M-6.4 (h.c)] (including specials & sand)

Note: The above quantities are carried to the Summary of Quantities, Sh. 23

BENT BAR DIMENSIONS

TYPE 3

Mark	a	b
W520	0'-8"	3'-0"

TYPE 5

Mark	a
W801	20'-6"

TYPE 4

Mark	a	b	c	d
W605	1'-11"	1'-11"	0'-1½"	6'-3"
W606	1'-11"	1'-11"	0'-1½"	11'-0"
W607	1'-11"	1'-11"	0'-1½"	5'-10"
W1002	3'-3"	3'-3"	0'-2½"	6'-5"
W1003	3'-3"	3'-3"	0'-2½"	13'-0"

TYPE 10

Mark	a	b	c	d	e	f	g	h
W518	3'-1"	3'-5"	1'-6"	1'-8"	1'-8⅛"	0'-2"	2'-8"	2'-0"
W519	3'-1"	3'-5"	1'-6"	1'-2"	1'-2⅛"	0'-2"	2'-8"	2'-0"

REINFORCING STEEL LIST

Mark	Type	No.Req.	Length	Wgt.
W501	Str.	12	21'-6"	269
W502	↑	16	16'-7"	277
W503		28	8'-5"	246
W504		34	31'-6"	1117
W505		16	14'-8"	245
W506		4	15'-0"	63
W507		4	15'-6"	65
W508		4	15'-10"	66
W509		8	31'-7"	264
W510		16	8'-2"	136
W511		2	8'-6"	18
W512		2	8'-11"	19
W513		2	9'-3"	19
W514		2	9'-6"	20
W515		2	9'-10"	21
W516	↓	8	35'-6"	296
W517	Str.	4	35'-7"	148
W518	10	16	9'-4"	156
W519	10	29	8'-10"	267
W520	3	68	7'-3"	514

Mark	Type	No.Req.	Length	Wgt.
W601	Str.	38	31'-6"	1798
W602	↑	18	11'-6"	311
W603	↓	44	7'-6"	496
W604	Str.	12	35'-6"	640
W605	4	24	8'-0"	288
W606	4	24	12'-9"	460
W607	4	24	7'-7"	273
W801	5	36	21'-7"	2075
W901	Str.	43	11'-6"	1681
W1001	Str.	48	15'-0"	3098
W1002	4	24	9'-4"	964
W1003	4	24	15'-11"	1644
W1004	Str.	12	16'-7"	856
H501	Str.	8	31'-6"	*
H502	Str.	4	35'-6"	*

For Replacement Bars, see Sh. 331
For bar bending schedule, see Sh. 331
*Reinforcing bars marked "H" are included in Item S-14 (Railing) for payment.

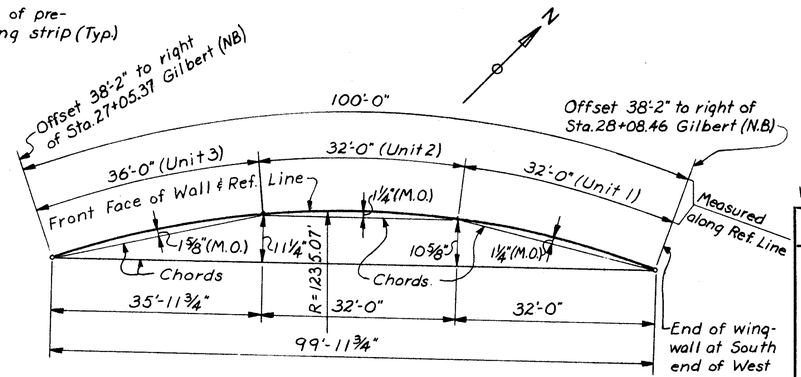

RETAINING WALL GEOMETRICS

Work this Sheet with Sheet 279

HAZELET & ERDAL
CONSULTING ENGINEERS
CINCINNATI, OHIO

RETAINING WALL NO. 19
SHEET 2 OF 2

DESIGNED	DRAWN	TRACED	CHECKED	REVIEWED DATE	REVISED
SU	AFS		W.J.E. 5-11-65	JHO 5/20/65	

FED. RD. DIV.	STATE	PROJECT	FISCAL YEAR
2	OHIO		

281
492

HAMILTON COUNTY
HAM-71-(1.56) (2.51)

BENT BAR DIMENSIONS

Mark	a
W701	16'-0"
W801	20'-6"

TYPE 5

Mark	a	b	c	d
W601	1'-11"	1'-11"	0'-1¼"	4'-0"
W602	1'-11"	1'-11"	0'-1¼"	8'-5"
W603	1'-11"	1'-11"	0'-1¼"	8'-1"
W604	1'-11"	1'-11"	0'-1¼"	7'-4"
W605	1'-11"	1'-11"	0'-1¼"	6'-7"
W606	1'-11"	1'-11"	0'-1¼"	6'-2"
W1001	3'-3"	3'-3"	0'-2"	6'-6"
W1002	3'-3"	3'-3"	0'-2"	14'-0"

TYPE 4

ESTIMATED QUANTITIES

Item	Total	Unit	Description
E-2	Lump	Sum	Cofferdams, cribs & sheeting
E-2	680	Cu.Yds.	Unclassified excavation
S-1	98	Cu.Yds.	Class "E" concrete, footings
S-1	64.	Cu.Yds.	Class "E" concrete, wall shafts
S-3	46	Lin.Ft.	Waterproofing, premolded sealing strip.
S-4	8452	Lbs.	Reinforcing steel
S-9	67	Sq.Ft.	1" preformed expansion joint filler
S-18	624	Lin.Ft.	Steel piles, 10 BP 42
S-29	45	Cu.Yds.	Porous backfill
S-29	52	Lin.Ft.	8" bituminous coated helical perforated corrugated metal pipe [Sec M-6.4(h-c)],(including specials & sand)

Note: The above quantities are carried to the Summary of Quantities, Sh. 23

REINFORCING STEEL LIST

Mark	Type	No.Req.	Length	Weight	Mark	Type	No.Req.	Length	Weight
W501	Str.	18	23'-7"	443	W536	Str.	2	11'-6"	24
W502	▲	2	20'-11"	44	W537	Str.	2	7'-6"	16
W503		2	16'-11"	35	W538	Str.	2	3'-6"	7
W504		2	12'-11"	27	W539	Str.	2	30'-9"	64
W505		2	8'-11"	19	W601	4	18	5'-9"	155
W506		2	4'-11"	10	W602	▲	15	10'-2"	229
W512		1	28'-6"	30	W603		1	9'-10"	15
W513		1	27'-9"	29	W604		1	9'-1"	14
W514		3	26'-3"	82	W605	▼	1	8'-4"	13
W515		1	24'-9"	26	W606	4	1	7'-11"	12
W516		1	23'-3"	24	W607	Str.	1	24'-7"	37
W517		1	21'-9"	23	W608	▲	2	23'-6"	71
W518		1	20'-3"	21	W609		4	22'-5"	135
W519		1	18'-9"	20	W610		4	21'-4"	128
W520		3	17'-3"	54	W611		22	14'-0"	463
W521		2	15'-9"	33	W612		2	19'-7"	59
W522		2	14'-3"	30	W613	▼	3	31'-8"	143
W523		3	12'-9"	40	W614	4	4	29'-10"	179
W524		3	11'-3"	35	W615	Str.	6	27'-11"	252
W525		3	9'-9"	31	W616	Str.	19	10'-0"	285
W526		3	8'-3"	26					
W527		3	6'-9"	21	W701	5	17	16'-10"	585
W528		2	5'-3"	11					
W529		2	3'-9"	8	W801	5	20	21'-7"	1153
W530		1	13'-6"	14					
W531		4	27'-8"	115					
W532		2	27'-6"	57	W1001	4	16	9'-5"	648
W533		2	23'-6"	49	W1002	4	16	16'-11"	1165
W534	▼	2	19'-6"	41	W1003	Str.	16	17'-0"	1170
W535	Str.	2	15'-6"	32					

Note:
For Replacement Bars, see Sh. 331
For bar bending schedule, see Sh. 331

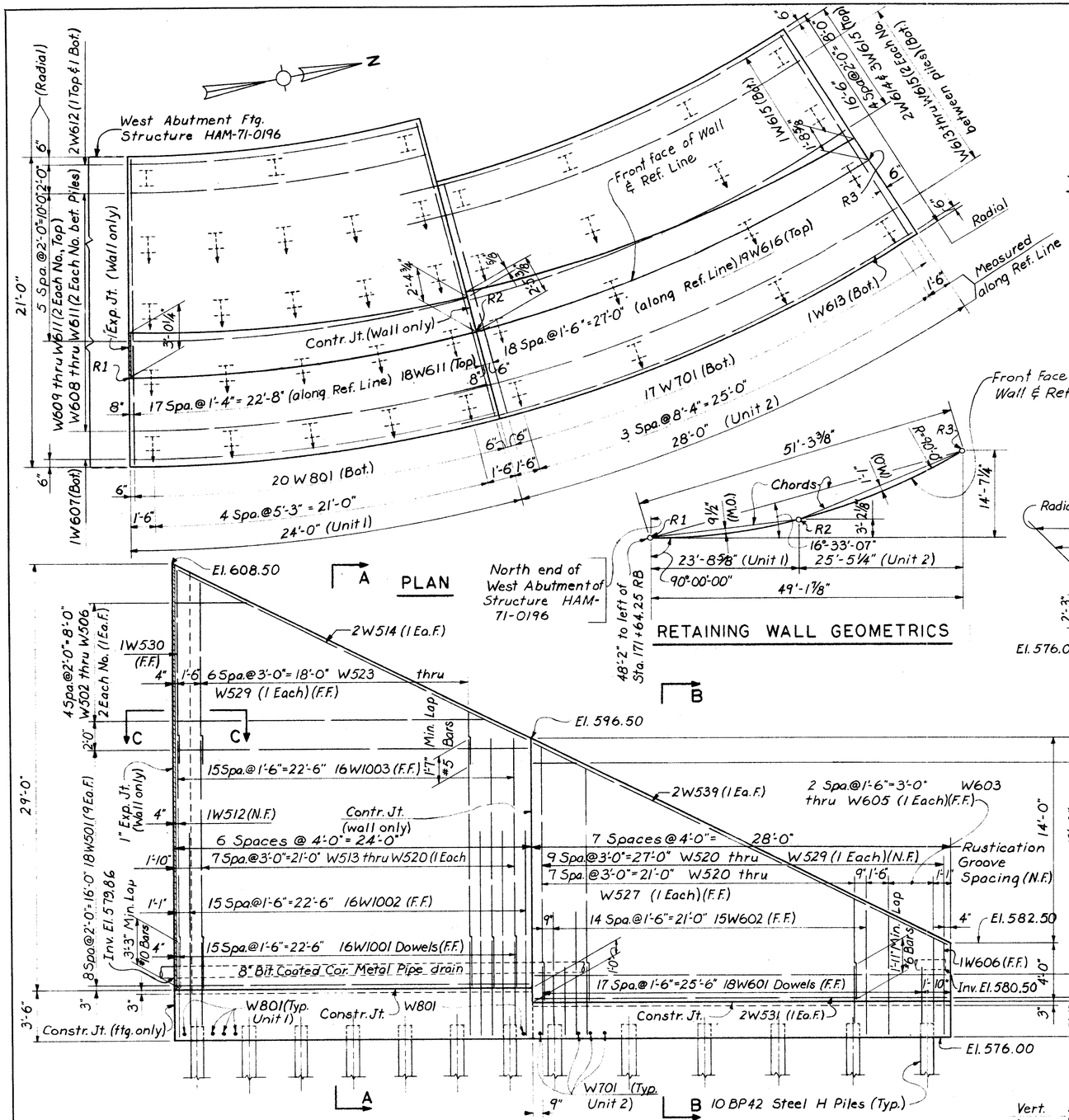

Notes:
(N.F.) denotes Near Face.
(F.F.) denotes Far Face.
(Ea.F.) denotes Each Face.
For details not shown, see "Misc. Retaining Wall Details".
denotes batter pile (batter 1 on 3).
denotes vertical pile.

Concrete in Retaining Wall and Footing shall be Class "E".

Design Assumption: Equivalent fluid weight (passive) = 100 lbs. per cu. ft.

For piling note, see Sh. 331

HAZELET & ERDAL
CONSULTING ENGINEERS
CINCINNATI, OHIO

RETAINING WALL NO. 20
SHEET 1 OF 1

Designed	Drawn	Traced	Checked	Reviewed Date	Revised
TFL	AFS		W.J.Z. 5-11-65	JHO 5/20/65	

FED. RD. DIV.	STATE	PROJECT	FISCAL YEAR
2	OHIO		

282
492

HAMILTON COUNTY
HAM-71-(1.66) (2.61)

WALL DRAINAGE

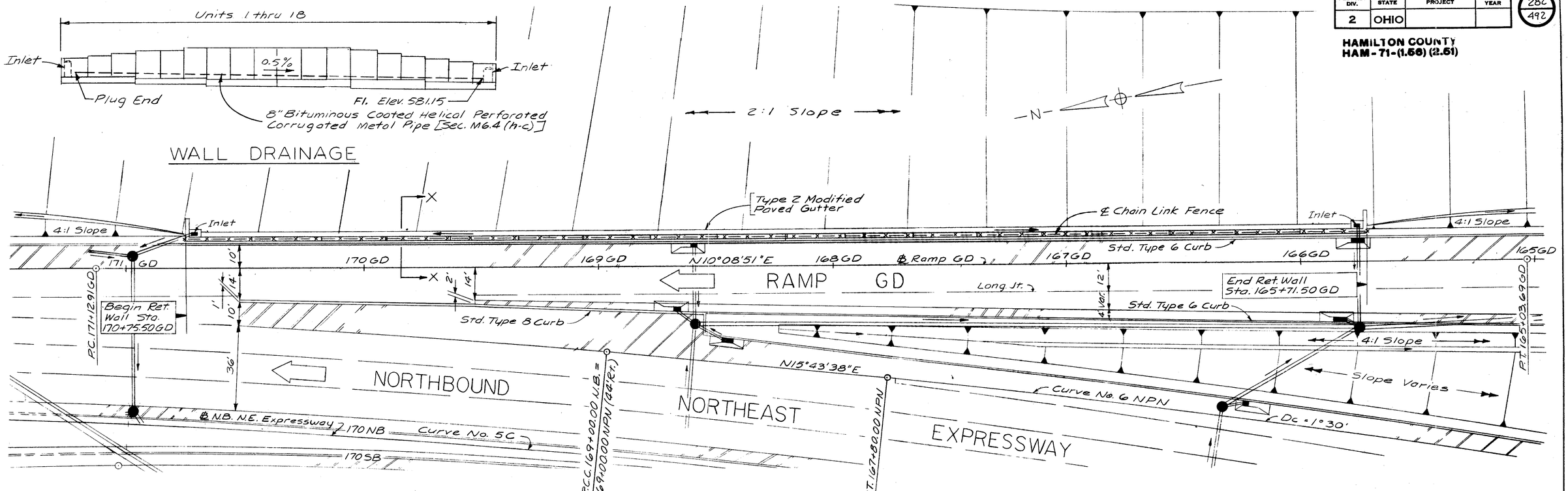

PLAN

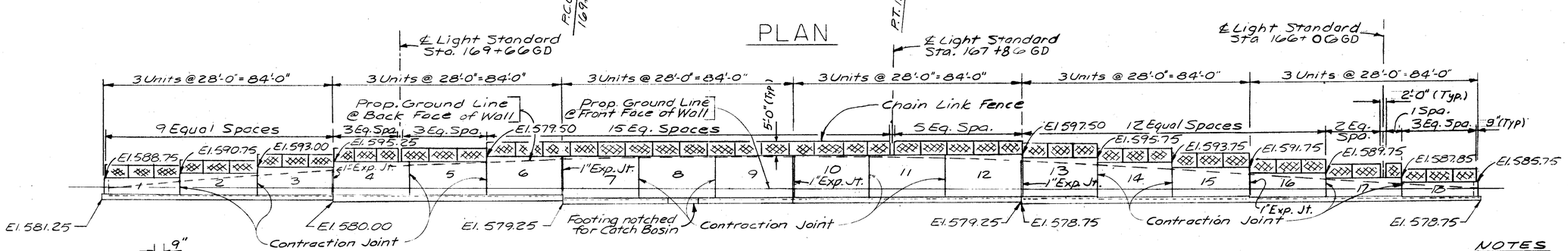

ELEVATION

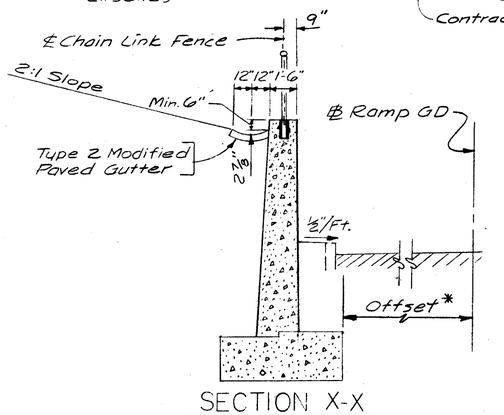

SECTION X-X

ESTIMATED QUANTITIES

Item	Total	Unit	Description
E-2	754	Cu. Yds.	Unclassified excavation
E-2	1032	Cu. Yds.	Rock (or Shale) excavation
I-8	2	Each	Type "V" Grating and Frame, as per Plan
S-1	331	Cu. Yds.	Class "E" Concrete, footing
S-1	434	Cu. Yds.	Class "E" Concrete, wall shafts
S-3	183	Lin. Ft.	Waterproofing, premolded sealing strip
S-4	30950	Lbs.	Reinforcing steel
S-9	121	Sq. Ft.	1" preformed expansion joint filler
S-29	200	Cu. Yds.	Porous Backfill
S-29	493	Lin. Ft.	8" Bituminous coated helical perforated corrugated metal pipe [Sec. M-6.4 (h-c)] (including specials and sand)
S-29	8	Lin. Ft.	12" Reinforced Concrete Sewer Pipe [Sec. M-6.6 (a)]
I-26	504	Lin. Ft.	Aluminum Coated Steel Chain Link Fence, As per ASTM A-491, Coating Class II As Per Plan

Note: The above quantities are carried to the Summary of Quantities Sheet No. 23

* WALL LOCATION		
UNIT	OFFSET	STATION (RAMP GD)
1	11.06	170+75.50 to 170+47.50
2	10.55	170+47.50 to 170+19.50
3	10.05	170+19.50 to 169+91.50
4,5	9.23	169+91.50 to 169+35.50
6	8.65	169+35.50 to 169+07.50
7-12	8.57	169+07.50 to 167+39.50
13	8.83	167+39.50 to 167+11.50
14	9.33	167+11.50 to 166+83.50
15	9.83	166+83.50 to 166+55.50
16	10.25	166+55.50 to 166+27.50
17	10.75	166+27.50 to 165+99.50
18	11.17	165+99.50 to 165+71.50

FOUNDATION BEARING PRESSURE
Wall footings are designed for a maximum bearing pressure of 5 tons per sq. ft.

NOTES

Retaining Wall to be built parallel to the base line of Ramp GD

For lighting plan see Sh. No. 202
Work this sheet with Sht. No. 283.

For Light Standard Details see Sheet No. 331.

HAZELET & ERDAL
CONSULTING ENGINEERS
CINCINNATI, OHIO

GENERAL PLAN & ELEVATION ✓

RETAINING WALL NO. 21

DESIGNED	DRAWN	TRACED	CHECKED	REVIEWED DATE	REVISED
	TLZ		W.L. 5-6-65	JHD 5/20/65	

FED. RD. DIV.	STATE	PROJECT	FISCAL YEAR
2	OHIO		

HAMILTON COUNTY
HAM-71-(1.56)(2.51)

283
492

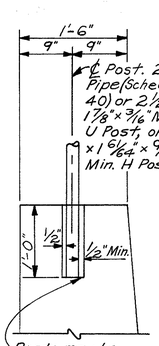

DETAIL B

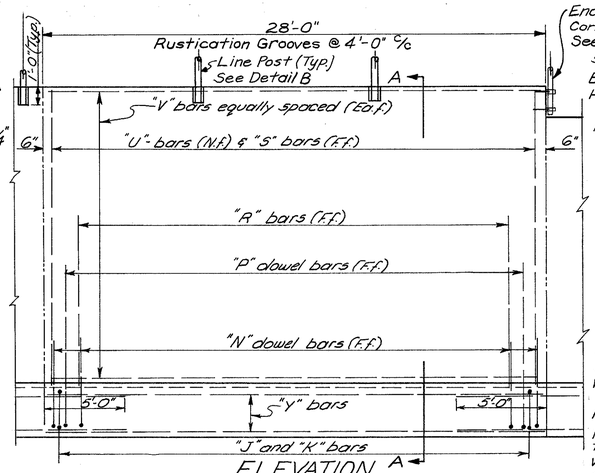

ELEVATION
(Typical Units 6-13)(Unit 8 Footing Modified)

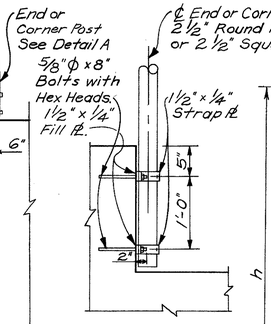

DETAIL A

Strap Pl., Fill Pl. & Bolts shall be galvanized. Include with Item I-26 for payment

Note: Recesses for fence posts shall be satisfactorily protected to prevent water accumulation during freezing weather prior to erection of fence. Payment for this work shall be included in Unit Price bid for Item I-26.

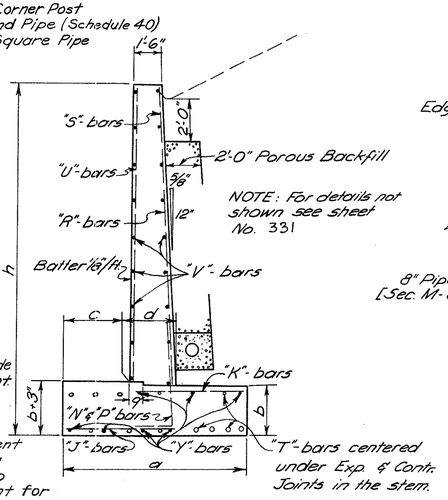

NOTE: For details not shown see sheet No. 331

SECTION A-A
(Fence not shown)

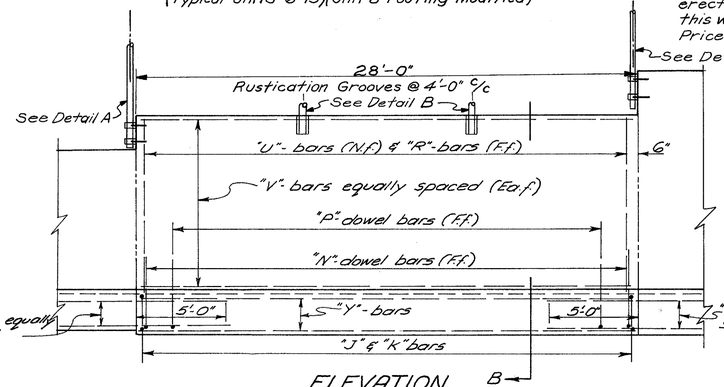

ELEVATION
(Typical Units 1-5 & 14-18)

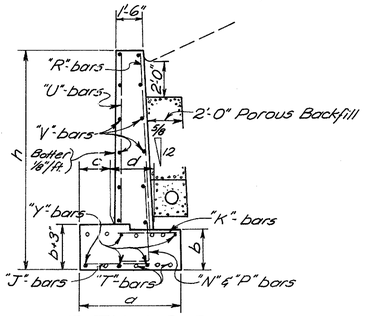

SECTION B-B
(Fence not shown.)

NOTE: Outlet pipes are 4'-0" long of 12" Reinf. conc. sewer pipe [Sec. M-6.6(a)]

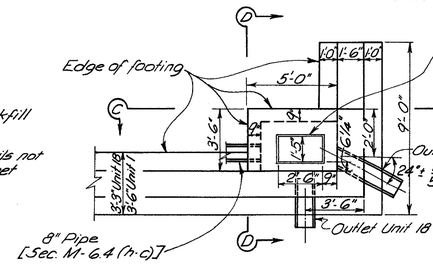

END PLAN UNIT 1 & 18

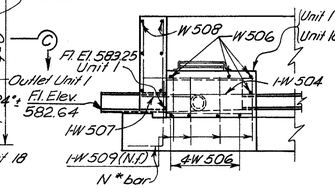

SECTION C-C

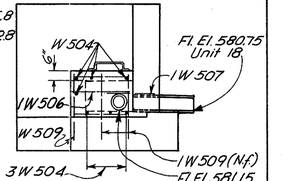

SECTION D-D

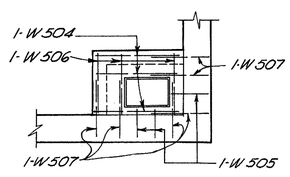

TOP SLAB REINFORCING PLAN

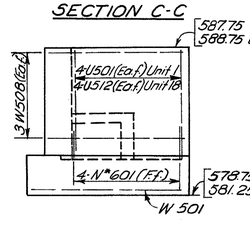

END WALL ELEVATION

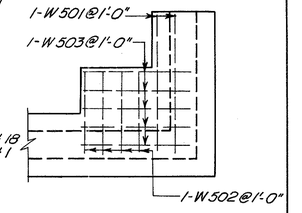

EXTRA FOOTING REINF.

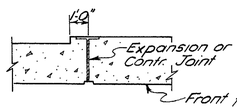

WALL JOINT DETAIL
(Typical except between Units 4-5 and 6-12)

For details not shown see sheet No. 331

NOTES:
All Concrete shall be class "E" Concrete
Provide 3" clearance to reinforcing steel in the footing and 2" clearance to reinforcing steel in the wall (Min)
Frame and grate details for Standard Castings for Type V Catch Basins are shown on sheet No. 182
F.f. denotes far face, N.f. denotes near face, and Ea.f. denotes each face.
Concrete for the inlet walls and top shall be included in Item S-1, class "E" concrete, wall shafts.
Concrete for bottom of inlet shall be included in Item S-1, Class E concrete, Footings.
For other General Notes and details see sheet No. 331

Unit No.	Dimension					Reinforcement in footing																												End Wall Reinforcement					
						"N"- Bars					"P"- Bars					"K"- Bars					"J"- Bars					"Y"- Bars					"T"-Bars (between units)					
	h	a	b	c	d	Mark	Lgth.	Spa.	No.	Wt.	Mark	Lgth.	Spa.	No.	Wt.	Mark	Lgth.	Spa.	No.	Wt.	Mark	Lgth.	Spa.	No.	Wt.	Mark	Lgth.	Spa.	No.	Wt.	Mark	Lgth.	No.	Wt.	Unit	Mark	Lgth.	No.	Wt.
1	7'-6"	3'-6"	1'-9"	11"	1'-10⅛"	W601	5'-3"	1'-6"	19	150															Y501	27'-10"	1	29										
2	9'-6"	4'-6"	2'-0"	1'-5"	1'-11⅞"	W602	5'-5"	1'-6"	19	155															Y501	27'-10"	1	29	T501	10'-0"	5	52						
3	11'-9"	5'-9"	2'-0"	1'-11"	2'-1¾"	W602	5'-5"	3'-0"	10	81	P601	7'-6"	3'-0"	9	101	K501	3'-4"	2'-0"	14	49	J501	3'-9"	2'-0"	14	55	Y501	27'-10"	5	145	T501	10'-0"	9	94						
4,5	15'-3"	7'-9"	2'-3"	2'-9"	2'-3⅝"	W603	5'-8"	1'-6"	38	323	P602	9'-6"	1'-6"	36	514	K602	4'-8"	1'-0"	56	392	J602	4'-7"	1'-0"	56	386	Y501	27'-10"	10	290	T501	10'-0"	7	73						
6	17'-6"	9'-0"	2'-6"	3'-4"	2'-5¼"	W 701	6'-7"	1'-6"	19	256	P701	9'-7"	1'-6"	18	353	K601	5'-2"	9"	37	287	J601	5'-6"	9"	37	306	Y501	27'-10"	7	203	T501	10'-0"	22	229						
7, 8, 9	18'-3"	9'-3"	2'-6"	3'-5"	2'-5⅞"	W 701	6'-7"	1'-6"	57	767	P701	9'-7"	1'-6"	54	1058	K601	5'-2"	9"	106	823	J601	5'-6"	9"	106	876	Y501	27'-10"	20	581	T501	10'-0"	11	115						
10, 11, 12	18'-3"	9'-3"	2'-6"	3'-5"	2'-5⅞"	W 701	6'-7"	1'-6"	57	767	P701	9'-7"	1'-6"	54	1058	K601	5'-2"	9"	111	861	J601	5'-6"	9"	111	917	Y501	27'-10"	21	610	T501	10'-0"	60	626						
13	17'-0"	8'-6"	2'-6"	3'-2"	2'-4⅛"	W604	5'-11"	1'-6"	19	169	P603	9'-9"	1'-6"	18	264	K602	4'-8"	1'-0"	28	196	J603	5'-2"	1'-0"	28	217	Y501	27'-10"	6	174	T501	10'-0"	12	125						
14	15'-0"	7'-6"	2'-3"	2'-8"	2'-3½"	W603	5'-8"	1'-6"	19	162	P602	9'-6"	1'-6"	18	257	K603	4'-3"	1'-0"	28	179	J602	4'-7"	1'-0"	28	193	Y501	27'-10"	5	145	T501	10'-0"	11	115						
15	13'-0"	6'-6"	2'-3"	2'-2"	2'-2"	W603	5'-8"	3'-0"	10	85	P604	8'-0"	3'-0"	9	108	K502	3'-9"	1'-6"	19	74	J502	4'-0"	1'-6"	19	79	Y501	27'-10"	5	145	T501	10'-0"	9	94						
16	11'-0"	5'-3"	2'-0"	1'-9"	2'-0⅞"	W602	5'-5"	3'-0"	10	81	P601	7'-6"	3'-0"	9	101	K502	3'-9"	2'-0"	14	55	J501	3'-9"	2'-0"	14	55	Y501	27'-10"	1	29	T501	10'-0"	9	94						
17	9'-0"	4'-3"	2'-0"	1'-3"	1'-11⅛"	W602	5'-5"	1'-6"	19	155															Y501	27'-10"	1	29	T501	10'-0"	9	94						
18	7'-0"	3'-3"	1'-9"	10"	1'-9⅞"	W601	5'-3"	1'-6"	19	150															Y501	27'-10"	1	29	T501	10'-0"	5	52						
8																K701	7'-8"	6"	8	125	J604	8'-9"	9"	5	66	Y502	15'-2"	1	16									
																										Y503	8'-2"	1	9									
UNIT 8																										Y504	3'-8"	4	15									

Unit No.	Reinforcement in stem																																							
	"R"- Bars					"S"- Bars					"U"- Bars					"V"- Bars																							
	Mark	Lgth.	Spa.	No.	Wt.	Mark	Lgth.	Spa.	No.	Wt.	Mark	Lgth.	Spa.	No.	Wt.	Mark	Lgth.	Spa.	No.	Wt.																			
1	R501	5'-7"	3'-0"	10	58						U501	5'-4"	3'-0"	10	56	V501	27'-9"	1'-9"	8	232																			
2	R502	7'-4"	3'-0"	10	76						U502	7'-1"	3'-0"	10	74	V501	27'-9"	1'-9"	10	289																			
3	R503	9'-7"	3'-0"	10	100						U503	9'-4"	3'-0"	10	97	V501	27'-9"	1'-10"	12	347																			
4,5	R504	12'-10"	3'-0"	20	268						U504	12'-7"	3'-0"	20	262	V501	27'-9"	2'-0"	28	810																			
6	R701	8'-4"	3'-0"	9	153	S501	14'-10"	3'-0"	10	155	U505	14'-7"	3'-0"	10	152	V501	27'-9"	2'-0"	16	463																			
7, 8, 9	R701	8'-4"	3'-0"	27	460	S502	15'-7"	3'-0"	30	488	U506	15'-4"	3'-0"	30	480	V501	27'-9"	1'-11"	54	1563																			
10, 11, 12	R701	8'-4"	3'-0"	27	460	S502	15'-7"	3'-0"	30	488	U506	15'-4"	3'-0"	30	480	V501	27'-9"	1'-11"	54	1563																			
13	R601	8'-0"	3'-0"	9	108	S503	14'-4"	3'-0"	10	149	U507	14'-1"	3'-0"	10	147	V501	27'-9"	1'-11"	16	463																			
14	R505	12'-7"	3'-0"	10	131						U508	12'-4"	3'-0"	10	129	V501	27'-9"	2'-0"	14	405																			
15	R506	10'-7"	3'-0"	10	110						U509	10'-4"	3'-0"	10	108	V501	27'-9"	2'-0"	12	347																			
16	R507	8'-10"	3'-0"	10	92						U510	8'-7"	3'-0"	10	90	V501	27'-9"	2'-0"	10	289																			
17	R508	6'-10"	3'-0"	10	71						U511	6'-7"	3'-0"	10	69	V501	27'-9"	2'-0"	8	232																			
18	R509	5'-1"	3'-0"	10	53						U512	4'-10"	3'-0"	10	50	V501	27'-9"	2'-0"	6	174																			

End Wall Reinforcement					
Unit	Mark	Lgth.	No.	Wt.	
1,18	W501	8'-0"	4	33	
1,18	W502	4'-6"	8	38	
1,18	W503	6'-0"	6	22	
1,18	W504	4'-9"	14	69	
1,18	W505	2'-0"	6	13	
1,18	W506	3'-4"	16	56	
1,18	W507	3'-0"	16	50	
1,18	W508	7'-8"	12	96	
1,18	W509	3'-6"	6	22	
1	W501	5'-4"	8	44	
18	U512	4'-10"	8	40	
1	W509	4'-0"	6	25	

Mark	R	a	b
N601	2¼"	1'-11"	3'-5"
N602	2¼"	1'-11"	3'-8"
N603	2¼"	1'-11"	3'-11"
N604	2¼"	1'-11"	4'-2"
N701	2½"	2'-3"	4'-6"
P601	2¼"	1'-11"	5'-9"
P602	2¼"	1'-11"	7'-9"
P603	2¼"	1'-11"	8'-0"
P701	2½"	2'-3"	7'-6"

Total weight of reinforcement = 30,950 lbs.

* These bars are bent 90°

Work this sheet with sheet No. 282

⊕ 5-J601, 5-K601 Bars and 1-Y501 Bar eliminated from Typical Unit. See Unit 8 footing plan for modified steel reinforcing.

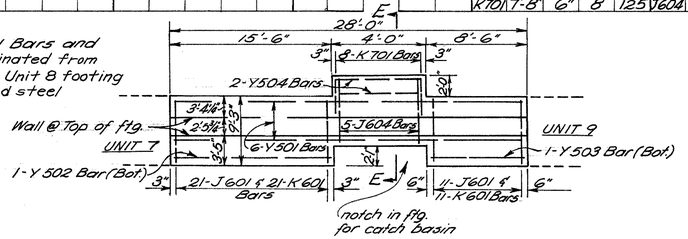

UNIT 8 FOOTING PLAN

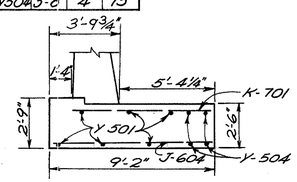

SECTION E-E

NOTE: Bar size is included in the bar mark. The first digit indicates the bar size number. For example N 601 is a No. 6 bar.

For replacement bars see Sh. No. 331

HAZELET & ERDAL
CONSULTING ENGINEERS
CINCINNATI, OHIO

RETAINING WALL NO. 21

Designed	Drawn	Traced	Checked	Reviewed Date	Revised
	A.N.	B.Sch.	W.L.	JHO 5/20/65	

FED. RD. DIV.	STATE	PROJECT	FISCAL YEAR
2	OHIO		

284
492

HAMILTON COUNTY
HAM-71-(1.56) (2.51)

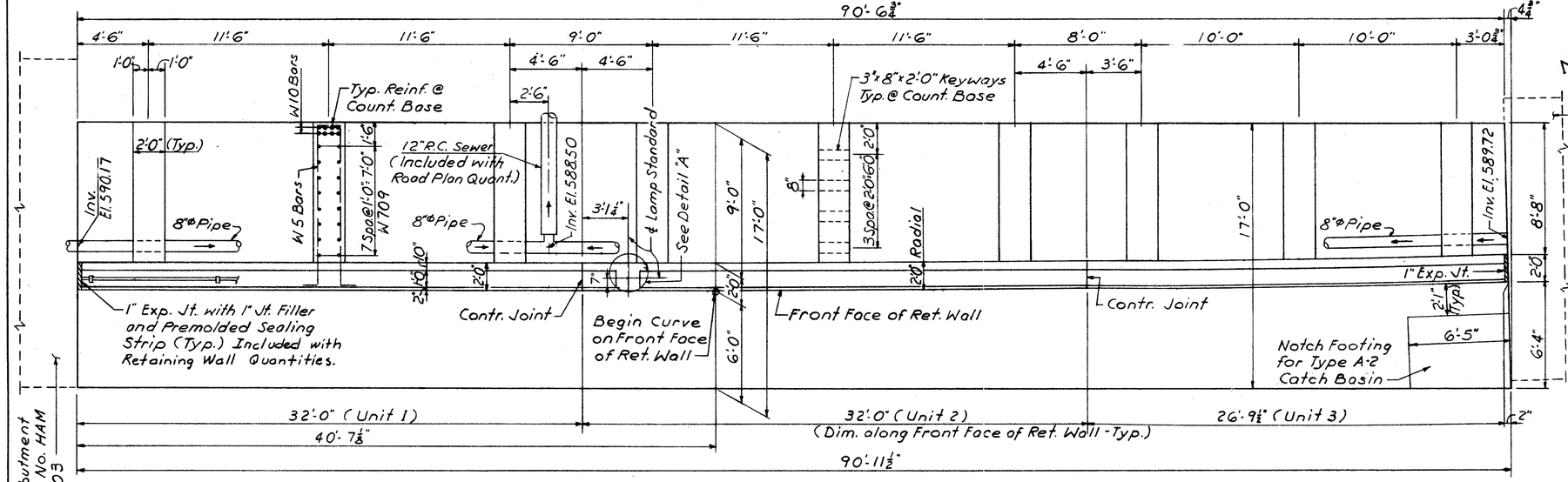

PLAN

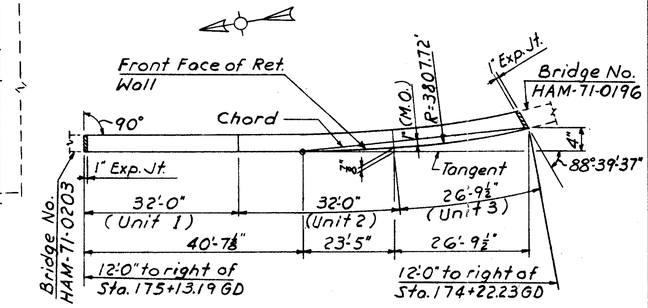

RETAINING WALL GEOMETRICS

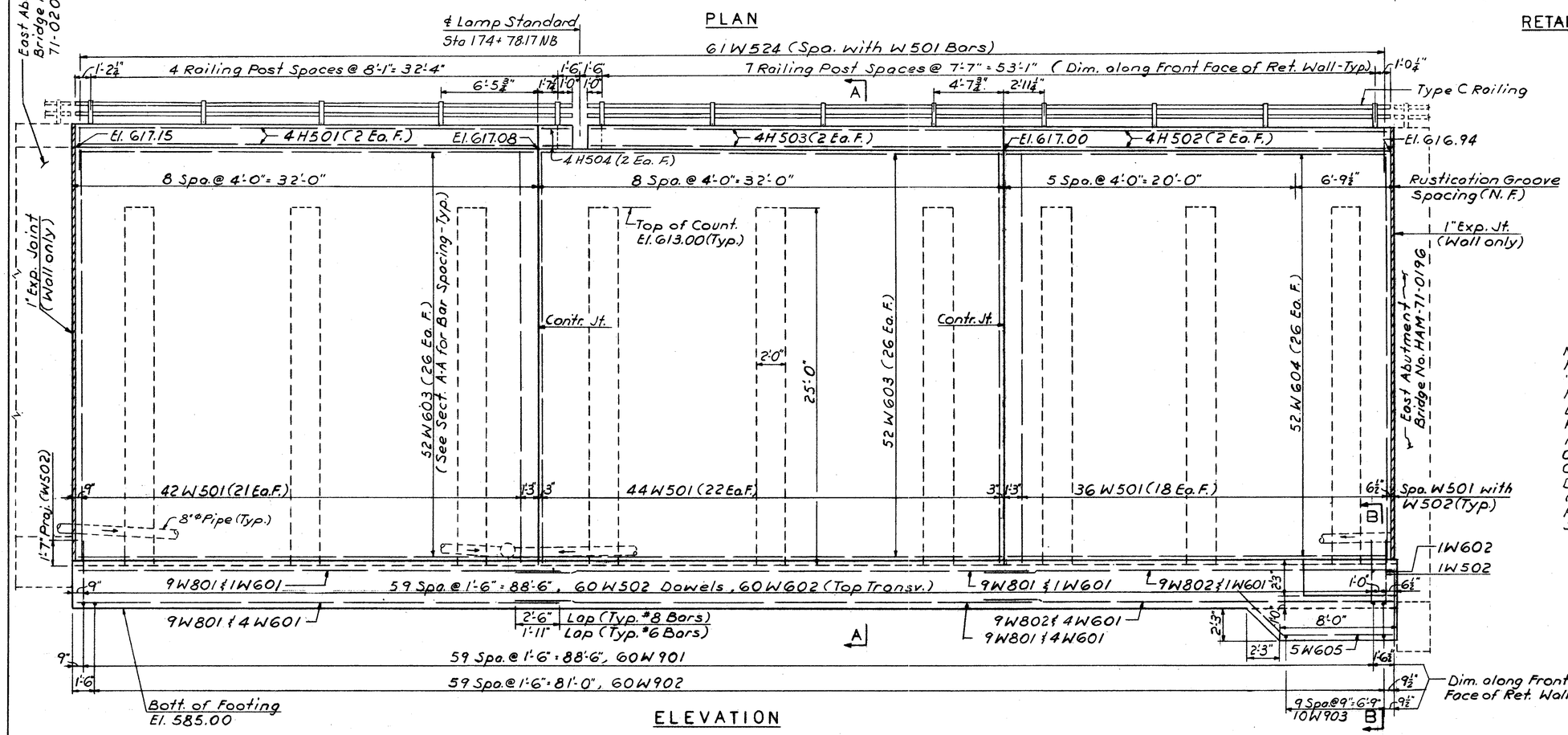

ELEVATION

Notes:
For General Notes and details not shown see "Miscellaneous Details for Retaining Walls."
N.F. denotes Near Face; F.F. denotes Far Face; Ea.F. denotes Each Face.
Retaining Wall Footing is designed for a maximum bearing pressure of 3 Tons/Sq.Ft.
Concrete in Wall shall be Class "C".
Concrete in Footing shall be Class "E".
Design Assumption: Equivalent fluid weight (passive) = 390 lbs. per cu ft.
For lighting details not shown see Sheets 212.
See lighting plan sh. no. 206

Work this sheet with Sheet 285

HAZELET & ERDAL
CONSULTING ENGINEERS
CINCINNATI, OHIO

RETAINING WALL NO. 22
SHEET 1 OF 2

DESIGNED	DRAWN	TRACED	CHECKED	REVIEWED DATE	REVISED
S.U.	S.U.		W.J.Z. 5-11-65	JHO 5/20/65	

HAMILTON COUNTY
HAM-71-(1.56)(2.51)

FED. RD. DIV.	STATE	PROJECT	FISCAL YEAR
2	OHIO		

285
492

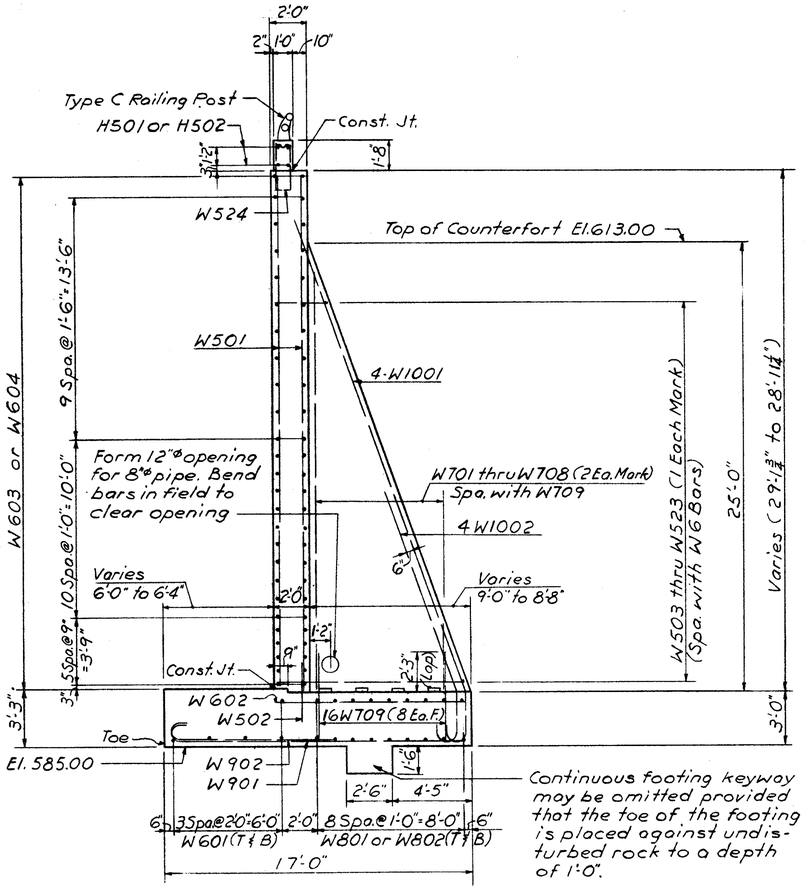

SECTION A-A

Continuous footing keyway may be omitted provided that the toe of the footing is placed against undisturbed rock to a depth of 1'-0".

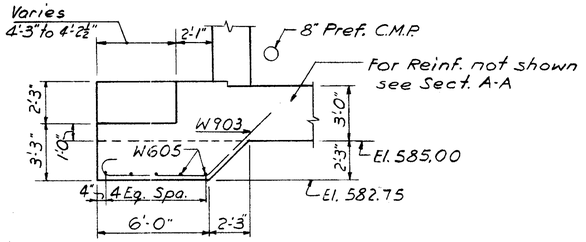

SECTION B-B

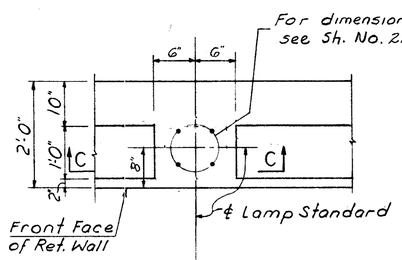

DETAIL A

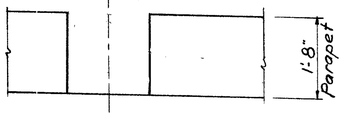

SECTION C-C

TYPE 14			
Mark	a	b	c&d
W503	10'-2"	1'-8"	1'-4"
W504	9'-10"	↓	↓
W505	9'-7"		
W506	9'-4"		
W507	9'-1"		
W508	8'-9"		
W509	8'-5"		
W510	8'-1"		
W511	7'-9"		
W512	7'-4"		
W513	7'-0"		
W514	6'-8"		
W515	6'-3"		
W516	5'-11"		
W517	5'-7"		
W518	5'-2"		
W519	4'-8"		
W520	4'-1"		
W521	3'-7"		
W522	3'-0"	↓	↓
W523	2'-6"	1'-8"	1'-4"

TYPES 13 & 12					
Type	Mark	a	b	c	d
13	W903	5'-9"	5'-0"	3'-6"	3'-6"
	W1001	2'-8"	29'-0"	27'-4"	9'-10"
	W1002	2'-8"	12'-0"	11'-4"	4'-1"
12	W605	3'-6"	7'-9"	5'-0"	3'-6"

TYPE 5		
Mark	a	
W709	4'-6"	
W901	16'-6"	
W902	8'-10"	

TYPE 1		
Mark	a	b
H503	1'-2"	0'-9"

TYPE 3		
Mark	a	b
W524	0'-8"	3'-1"

* Reinforcing Bars marked "H" are included in Item S-14 (Railing) for payment.

REINF. STEEL LIST				
Mark	Type	No. Rqd	Length	Weight
W501	Str.	122	28'-6"	3627
W502	Str.	61	3'-3"	201
W503	14	9	24'-3"	228
W504	↓	9	23'-7"	221
W505		9	23'-1"	217
W506		9	22'-7"	212
W507		9	22'-1"	207
W508		9	21'-5"	201
W509		9	20'-9"	195
W510		9	20'-1"	189
W511		9	19'-5"	182
W512		9	18'-7"	174
W513		9	17'-11"	168
W514		9	17'-3"	162
W515		9	16'-5"	154
W516		9	15'-9"	148
W517		9	15'-1"	142
W518		9	14'-3"	134
W519		9	13'-3"	124
W520		9	12'-1"	113
W521		9	11'-1"	104
W522	↓	9	9'-11"	93
W523	14	9	8'-11"	84
W524	3	61	7'-6"	477
W601	Str.	15	31'-5"	708
W602	Str.	61	11'-0"	1008
W603	Str.	104	31'-6"	4921
W604	Str.	52	26'-3"	2050
W605	12	5	12'-9"	96
W701	Str.	18	23'-4"	858
W702	↓	18	20'-7"	757
W703		18	17'-9"	653
W704		18	15'-0"	552
W705		18	12'-3"	451
W706		18	9'-5"	346
W707		18	6'-8"	245
W708	Str.	18	3'-11"	144
W709	5	144	5'-4"	1570
W801	Str.	36	33'-6"	3220
W802	Str.	18	28'-6"	1370
W901	5	60	17'-9"	3621
W902	5	60	10'-1"	2057
W903	13	60	11'-10"	402
W1001	13	36	32'-11"	5099
W1002	13	36	15'-11"	2466
H504	Str.	4	2'-4"	*
H501	Str.	4	31'-6"	*
H502	Str.	4	26'-3"	*
H503	1	4	28'-1"	*

For Replacement Bars see Sh. No. 331
For bar bending schedule see Sh. No. 331

ESTIMATED QUANTITIES			
ITEM	TOTAL	UNIT	DESCRIPTION
E-2	Lump	Sum	Cofferdams, Cribs & Sheeting
E-2	1195	Cu. Yds.	Unclassified Excavation
E-2	75	Cu. Yds.	Rock (or Shale) Excavation
S-1	191	Cu. Yds.	Class "E" Concrete (Footing)
S-1	269	Cu. Yds.	Class "C" Concrete (Wall Shafts)
S-3	112	Lin. Ft.	Waterproofing, Premolded Sealing Strip
S-4	40,351	Lbs.	Reinforcing Steel
S-9	115	Sq. Ft.	1" Preformed Expansion Joint Filler
S-14	90	Lin. Ft.	Railing, Type "C" (Aluminum Rail & Supports, Conc. Parapet)
S-29	145	Cu. Yds.	Porous Backfill
S-29	92	Lin. Ft.	8" Bituminous Coated Helical Perforated Corrugated Metal Pipe [Sec. M-6.4 (h-c)] (Including Specials & Sand)

Note: The above quantities are carried to the Summary of Quantities Sh. No. 23

HAZELET & ERDAL
CONSULTING ENGINEERS
CINCINNATI, OHIO

RETAINING WALL NO. 22
SHEET 2 OF 2

DESIGNED	DRAWN	TRACED	CHECKED	REVIEWED DATE	REVISED
S.U.	S.U.		W.J.Z. 5-11-65	JHO 5/20/65	

FED. RD. DIV.	STATE	PROJECT	FISCAL YEAR
2	OHIO		

286 / 492

HAMILTON COUNTY
HAM-71-(1.56) (2.51)

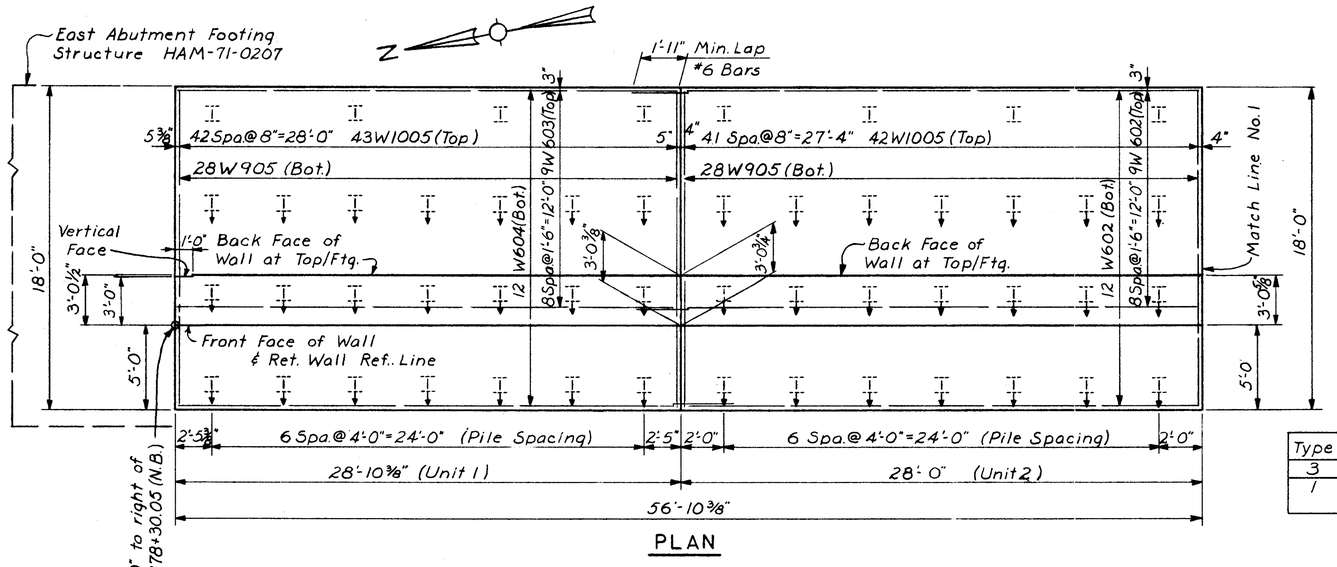

PLAN

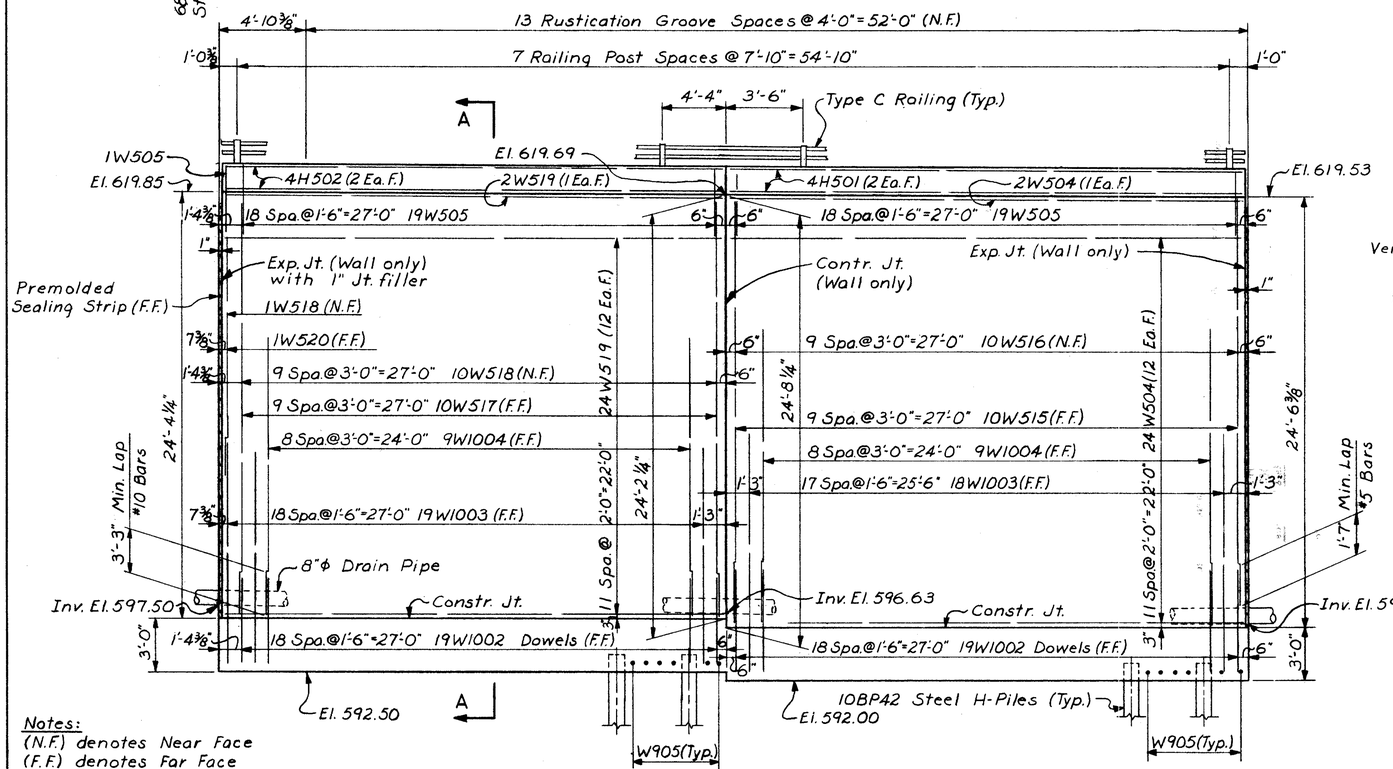

ELEVATION

Notes:
(N.F.) denotes Near Face
(F.F.) denotes Far Face
(Ea.F.) denotes Each Face
Concrete in Retaining Wall shall be Class "C."
Concrete in Footing shall be Class "E."
Provide 3" clearance to reinf. steel in footing and 2" clearance in wall. (Min.)
For details not shown, see "Misc. Details for Ret. Walls."
I denotes vertical pile, I denotes batter pile.

Design Assumptions: Equivalent fluid weight (passive) 100 lbs. per cu. ft.
For piling note, see Sh. No. 331

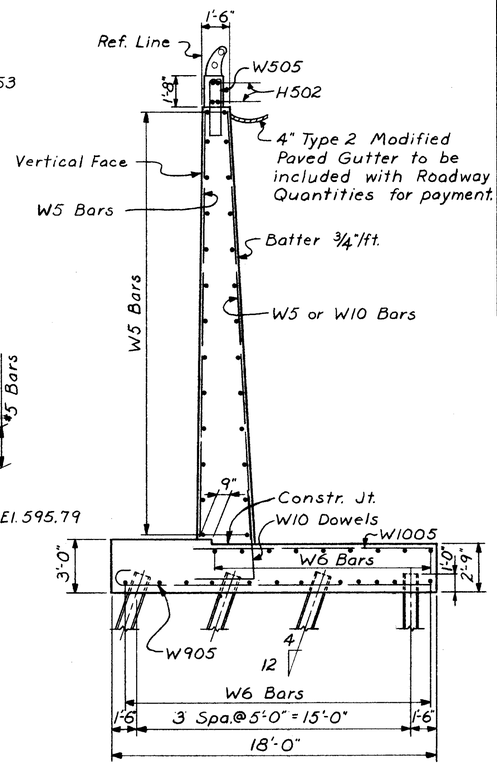

SECTION A-A

BENT BAR DIMENSIONS

Mark	a	b	c	d
W605	2'-1½"	10'-8"	3'-0"	2'-1½"
W606	2'-1½"	4'-0"	3'-0"	2'-1½"

TYPE 12

Mark	a	b	c	d
W901	2'-10"	2'-10"	0'-2"	5'-7"
W902	2'-10"	2'-10"	0'-2"	10'-7"
W1002	3'-3"	3'-3"	0'-2½"	5'-9"
W1003	3'-3"	3'-3"	0'-2½"	13'-5"
W1101	3'-7"	3'-7"	0'-2¾"	6'-4"
W1102	3'-7"	3'-7"	0'-2¾"	14'-5"

TYPE 4

Type	Mark	a	b
3	W505	0'-8"	3'-0"
1	H503	1'-2"	0'-9"

TYPE 3, 1

Mark	a
W905	17'-6"
W1001	17'-6"

TYPE 5

ESTIMATED QUANTITIES

Item	Total	Unit	Description
E-2	Lump	Sum	Cofferdams, Cribs & Sheeting
E-2	3660	Cu.Yds.	Unclassified Excavation
S-1	427	Cu.Yds.	Class E Concrete, Footings
S-1	508	Cu.Yds.	Class C Concrete, Wall Shafts
S-3	224	Lin.Ft.	Waterproofing, Premolded Sealing Strip
S-4	81613	Lbs.	Reinforcing Steel
S-9	258	Sq.Ft.	1" Preformed Expansion Joint Filler
S-14	226	Lin.Ft.	Railing Type C (Aluminum Rail & Supports, Concrete Parapet
S-18	5475	Lin.Ft.	Steel Piles, 10BP42
S-29	350	Cu.Yds.	Porous Backfill
S-29	224	Lin.Ft.	8" Bituminous Coated Helical Perforated Corrugated Metal Pipe (Sec. M6.4(h))(Including Specials & Sand)
S-29	5	Lin.Ft.	12" Reinforced Concrete Sewer Pipe (Sec. M-6.6(a))

Note: The above quantities are carried to the Summary of Quantities, Sh. 23

REINFORCING STEEL LIST

Mark	Type	No. Req.	Length	Wgt.	Mark	Type	No. Req.	Length	Wgt.
W501	Str.	10	17'-7"	183	W605	12	3	13'-8"	62
W502		10	26'-6"	276	W606	12	11	7'-0"	116
W503		10	28'-0"	292					
W504	Str.	196	27'-6"	5622	W701	Str.	12	13'-0"	319
W505	3	152	7'-3"	1149					
W506	Str.	10	24'-8"	257	W901	4	37	8'-5"	1059
W507		10	24'-1"	251	W902	4	36	13'-5"	1642
W508		10	23'-9"	248	W903	Str.	19	12'-6"	808
W509		10	23'-0"	240	W904	Str.	18	20'-1"	1229
W510		10	27'-1"	282	W905	5	140	18'-9"	8925
W511		10	26'-3"	274					
W512		10	25'-5"	265	W1001	5	86	18'-11"	7000
W513		10	25'-1"	262	W1002	4	95	9'-0"	3679
W514		10	24'-3"	253	W1003	4	91	16'-8"	6526
W515		10	23'-4"	243	W1004	Str.	45	17'-1"	3308
W516		10	24'-4"	254	W1005	Str.	211	13'-2"	11954
W517		10	22'-9"	237					
W518		11	24'-0"	275	W1101	4	38	9'-11"	2002
W519		26	28'-4"	768	W1102	4	36	18'-0"	3443
W520	Str.	1	15'-4"	16	W1103	Str.	18	18'-8"	1785
					W1104	Str.	126	13'-6"	9037
W601	Str.	11	27'-6"	454					
W602		127	29'-9"	5675	H501	Str.	28	27'-6"	*
W603		9	28'-4"	383	H502	Str.	4	28'-4"	*
W604	Str.	12	31'-1"	560	H503	1	4	2'-5"	*

Note:
For Replacement Bars, see Sh. No. 331
* Reinforcing Bars marked "H" are included in Item S-14 (Railing) for payment.
For bar bending schedule, see Sh. No. 331
See lighting plan sh. no. 206.

See sheet 290 for notes regarding "SHEETING & BRACING" and "ALIGNING RAILROAD TRACKS."

Work this sheet with Sheets 287 & 288

HAZELET & ERDAL
CONSULTING ENGINEERS
CINCINNATI, OHIO

RETAINING WALL NO. 23
SHEET 1 OF 3

DESIGNED	DRAWN	TRACED	CHECKED	REVIEWED DATE	REVISED
AFS	AFS		WFB 5-10-65	JHO 5/20/65	

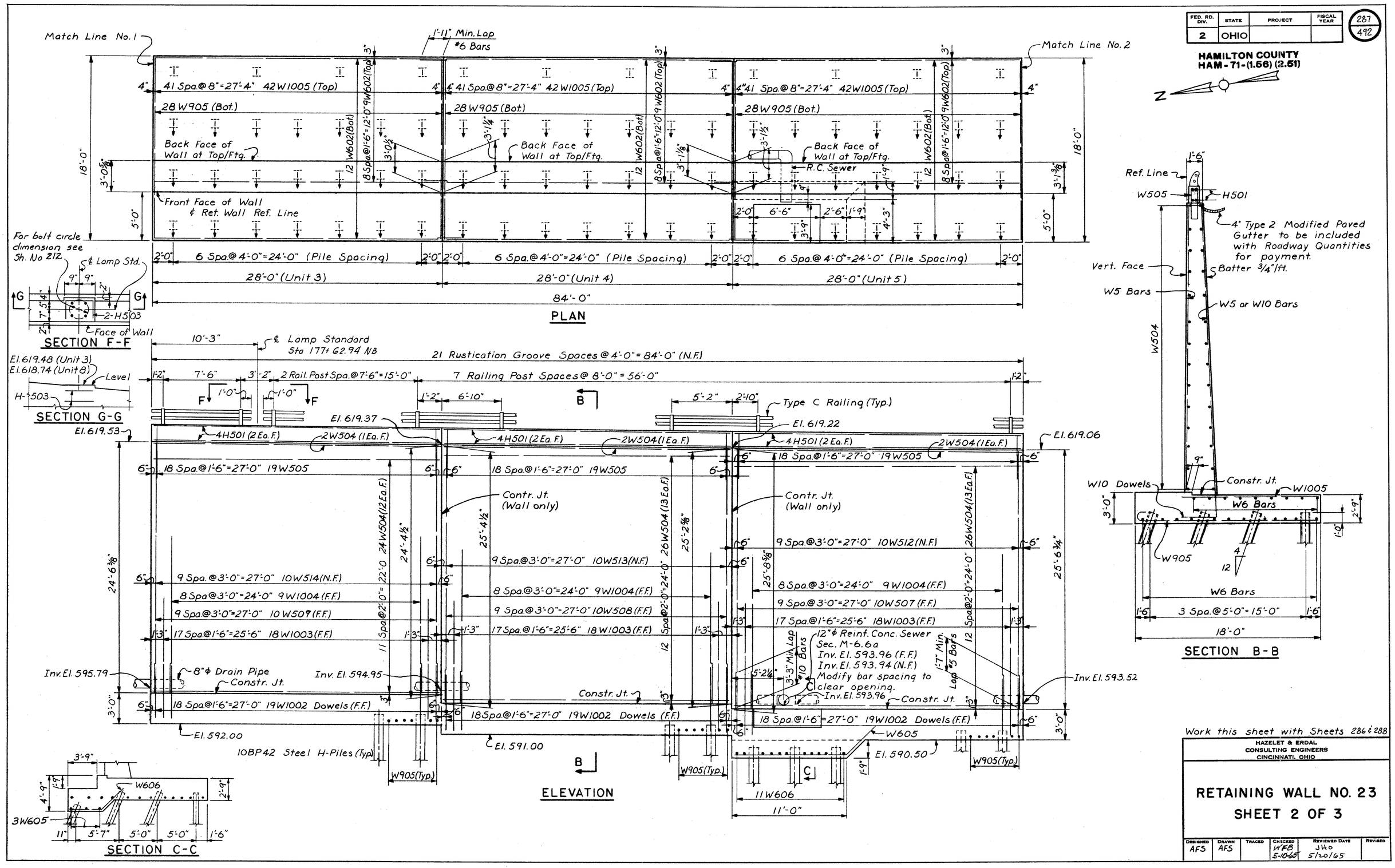

FED. RD. DIV. 2
STATE OHIO
PROJECT
FISCAL YEAR
287
492
HAMILTON COUNTY
HAM-71-(1.56) (2.51)
Match Line No. 1
Match Line No. 2
1'-11" Min. Lap #6 Bars
41 Spa.@ 8"=27'-4" 42W1005 (Top)
28 W905 (Bot.)
Back Face of Wall at Top/Ftg.
Front Face of Wall & Ret. Wall Ref. Line
R.C. Sewer
12 W602 (Bot.)
8 Spa.@1'-6"=12'-0" 9W602 (Top)
6 Spa.@ 4'-0"=24'-0" (Pile Spacing)
28'-0" (Unit 3)
28'-0" (Unit 4)
28'-0" (Unit 5)
84'-0"
PLAN
For bolt circle dimension see Sh. No 212
℄ Lamp Std.
2-H503
Face of Wall
SECTION F-F
El. 619.48 (Unit 3)
El. 618.74 (Unit 8)
Level
H-503
SECTION G-G
10'-3"
℄ Lamp Standard Sta 177+62.94 NB
21 Rustication Groove Spaces @ 4'-0" = 84'-0" (N.F.)
2 Rail. Post Spa.@ 7'-6" = 15'-0"
7 Railing Post Spaces @ 8'-0" = 56'-0"
Type C Railing (Typ.)
El. 619.37
El. 619.22
El. 619.53
El. 619.06
4H501 (2 Ea. F.)
2W504 (1 Ea. F.)
18 Spa.@1'-6"=27'-0" 19W505
Contr. Jt. (Wall only)
9 Spa.@3'-0"=27'-0" 10W512 (N.F.)
9 Spa.@3'-0"=27'-0" 10W513 (N.F.)
9 Spa.@3'-0"=27'-0" 10W514 (N.F.)
8 Spa.@3'-0"=24'-0" 9W1004 (F.F.)
9 Spa.@3'-0"=27'-0" 10W507 (F.F.)
9 Spa.@3'-0"=27'-0" 10W508 (F.F.)
9 Spa.@3'-0"=27'-0" 10W509 (F.F.)
17 Spa.@1'-6"=25'-6" 18W1003 (F.F.)
12" ϕ Reinf. Conc. Sewer Sec. M-6.6a Inv. El. 593.96 (F.F.) Inv. El. 593.94 (N.F.) Modify bar spacing to clear opening.
Inv. El. 593.96
Inv. El. 595.79
8" ϕ Drain Pipe
Constr. Jt.
Inv. El. 594.95
Inv. El. 593.52
18 Spa.@1'-6"=27'-0" 19W1002 Dowels (F.F.)
El. 592.00
El. 591.00
El. 590.50
10BP42 Steel H-Piles (Typ.)
W905 (Typ.)
W605
11W606
11'-0"
ELEVATION
W606
3W605
SECTION C-C
Ref. Line
W505
H501
4" Type 2 Modified Paved Gutter to be included with Roadway Quantities for payment.
Vert. Face
Batter 3/4"/ft.
W5 Bars
W5 or W10 Bars
W504
W10 Dowels
Constr. Jt.
W1005
W6 Bars
W905
3 Spa.@5'-0"=15'-0"
18'-0"
SECTION B-B
Work this sheet with Sheets 286 & 288
HAZELET & ERDAL
CONSULTING ENGINEERS
CINCINNATI, OHIO
RETAINING WALL NO. 23
SHEET 2 OF 3
DESIGNED AFS
DRAWN AFS
TRACED
CHECKED WFB 5-10-65
REVIEWED DATE JHO 5/20/65
REVISED

FED. RD. DIV.	STATE	PROJECT	FISCAL YEAR
2	OHIO		

288
492

HAMILTON COUNTY
HAM-71-(1.56) (2.51)

N

Match Line No. 2

℄ Prop. 48"ϕ Water Line with 72"ϕ Casing

East Abutment Footing, Structure HAM-71-0203

Front Face of Wall and Wall Ref. Line

41 Spa.@8"=27'-4" 42W1104 (Top)

30 W1001 (Bot.)

28 W1001 (Bot.)

28 W1001 (Bot.)

12 W701 (6 Top & 6 Bot.)

11 W602 (Bot.)

6 Spa.@2'0"=12'-0" 7W602 (Top)

11 W602 (Bot.)

11 W601 (Bot.)

6 Spa.@2'0"=12'-0" 7W602 (Top)

Back Face of Wall at Top/Ftg.

1'-11" Min. Lap #6 Bars

18'-0"

5'-0"

3'-2⅛"

3'-2"

3'-2¾"

3'-3⅜"

1'-6" 3'-0" 8'-0" 5 Spa.@2'-10"=14'-2 (Pile Spa.) 1'-4" 2'-0" 8 Spa.@3'-0"=24'-0" (Pile Spacing) 2'-0" 2'-0" 8 Spa.@3'-0"=24'-0" (Pile Spacing) 2'-0"

28'-0" (Unit 6) 28'-0" (Unit 7) 28'-0" (Unit 8)

84'-0"

68'-0" to right of Sta. 176+05.19 (N.B.)

PLAN

2'-9" ℄ Lamp Standard Sta 176+30.44 NB

21 Rustication Groove Spaces @ 4'-0" = 84'-0" (N.F.)

7 Railing Post Spaces @ 8'-0" = 56'-0"

3 Railing Post Spaces @ 7'-6" = 22'-6"

1'-2" 3'-2" 1'-2"

Type C Railing (Typ.)

See Corner Detail, East Abut. Structure No. HAM-71-0203 for railing extension.

El. 619.06 El. 618.90 El. 618.75 El. 618.59

4H501 (2 Ea.F.) 2W504 (1 Ea.F.)

18 Spa.@1'-6"=27'-0" 19W505

Exp. Jt. (Wall only)

Contr. Jt. (Wall only)

Exp. Jt. (Wall only) with 1" Jt. filler

Premolded Sealing Strip (F.F.)

9 Spa.@3'-0"=27'-0" 10W511 (N.F.)

9 Spa.@3'-0"=27'-0" 10W506 (F.F.)

9 Spa.@3'-0"=27'-0" 10W510 (N.F.)

9 Spa.@3'-0"=27'-0" 10W502 (F.F.)

8 Spa.@3'-0"=24'-0" 9W1103 (F.F.)

17 Spa.@1'-6"=25'-6" 18W1102 (F.F.)

9 Spa.@3'-0"=27'-0" 10W501 (F.F.)

17 Spa.@1'-6"=25'-6" 18W904 (F.F.)

9 Spa.@3'-0"=27'-0" 10W503 (N.F.)

18 Spa@1'-6"=27'-0" 19W903 (F.F.)

35 Spa.@ 9"=26'-3" 36W902 (F.F.)

8" ϕ Bit. Coated Perforated C.M.P. drain

Constr. Jt.

18 Spa.@1'-6"=27'-0" 19W1101 Dowels (F.F.)

36 Spa@9"=27'-0" 37W901 Dowels (F.F.)

Inv. El. 593.52 Inv. El. 592.96 Inv. El. 592.40 Inv. El. 592.01

El. 589.50 El. 588.50 El. 587.50

W1001 (Typ.)

10BP42 Steel H-Piles (Typ.)

Prop. water main to be uncovered before driving piling

12 Spa.@ 2'0"=24'-0" 26W504 (13 Ea.F.)

13 Spa.@ 2'0"=26'-0" 28W504 (14 Ea.F.)

13 Spa.@ 2'0"=26'-0" 28W504 (14 Ea.F.)

26'-6¾"

26'-4¾"

27'-4¾"

27'-3"

28'-3"

28'-1⅛"

1'-7" Min. Lap #5 Bars

2'-10" Min. Lap #9 Bars

10½"

ELEVATION

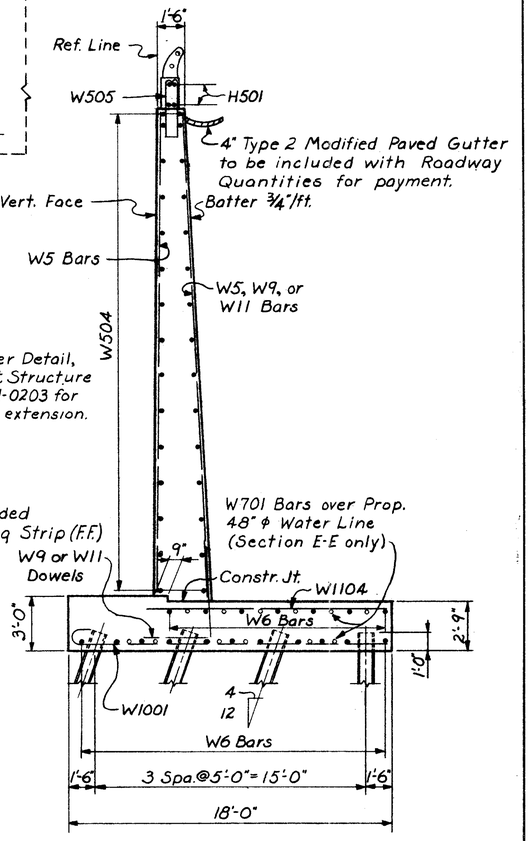

SECTION D-D
SECTION E-E

Work this sheet with Sheets 286 & 287

HAZELET & ERDAL
CONSULTING ENGINEERS
CINCINNATI, OHIO

RETAINING WALL NO. 23
SHEET 3 OF 3

DESIGNED	DRAWN	TRACED	CHECKED	REVIEWED DATE	REVISED
AFS	AFS		WFB 5-10-65	JHO 5/20/65	

FED. RD. DIV.	STATE	PROJECT	FISCAL YEAR
2	OHIO		

289
492

HAMILTON COUNTY
HAM-71-(1.56) (2.61)

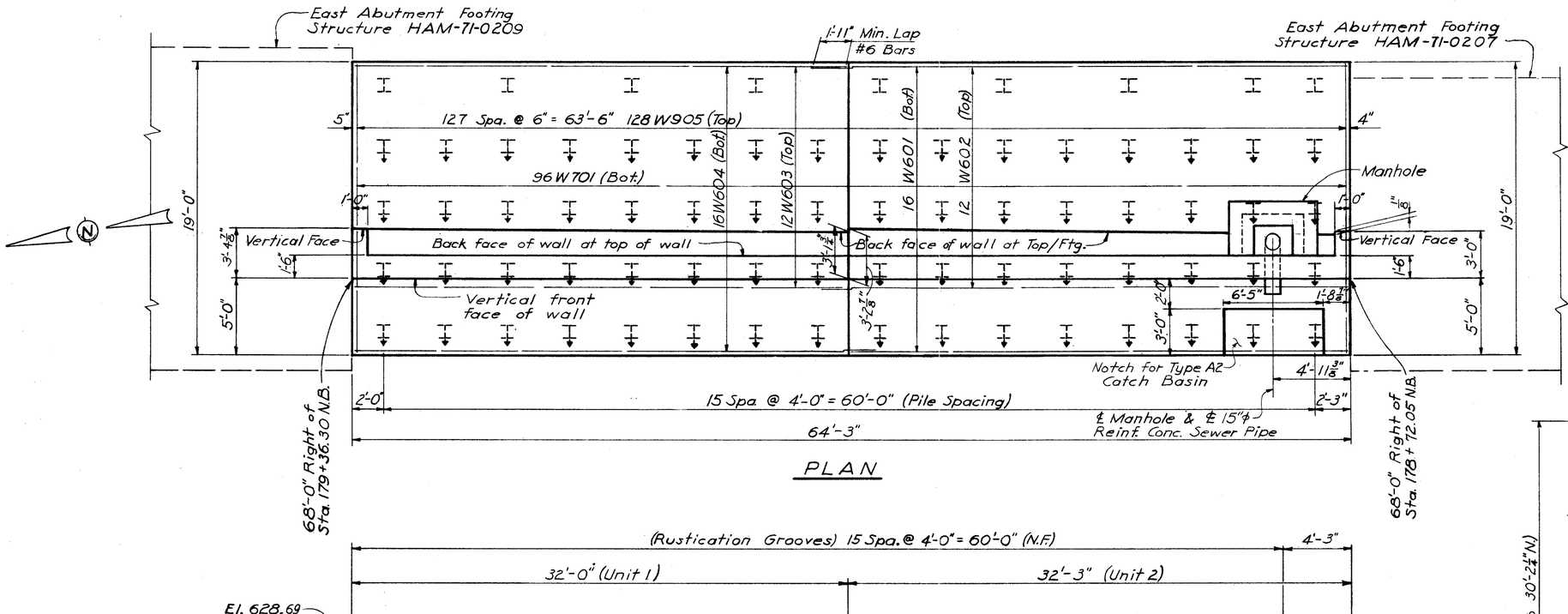

PLAN

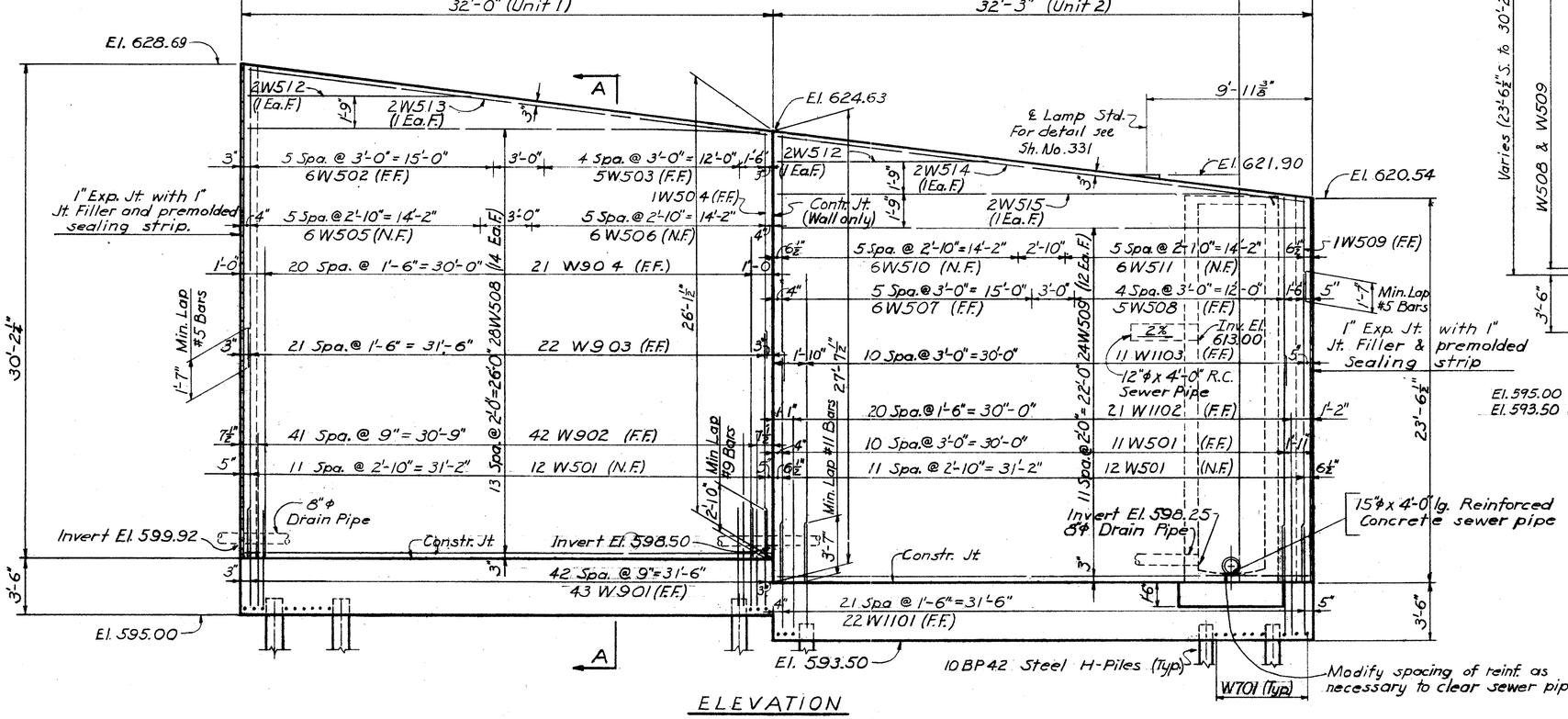

ELEVATION

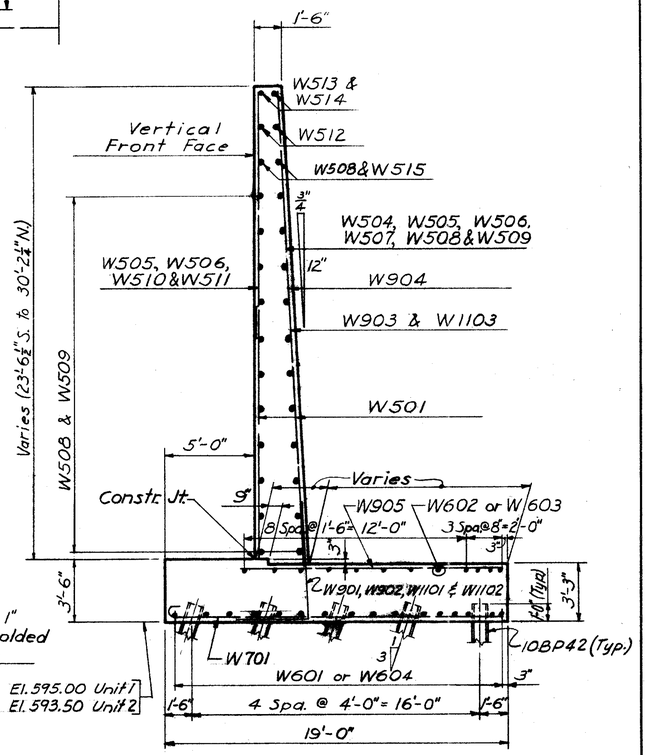

SECTION A-A

HAZELET & ERDAL
CONSULTING ENGINEERS
CINCINNATI, OHIO

RETAINING WALL NO. 24
SHEET 1 OF 2

DESIGNED	DRAWN	TRACED	CHECKED	REVIEWED DATE	REVISED
	DLO		WLZ 3-5-65	JHO 5/20/65	

FED. RD. DIV.	STATE	PROJECT	FISCAL YEAR
2	OHIO		

270
492

HAMILTON COUNTY
HAM-71-(1.56) (2.51)

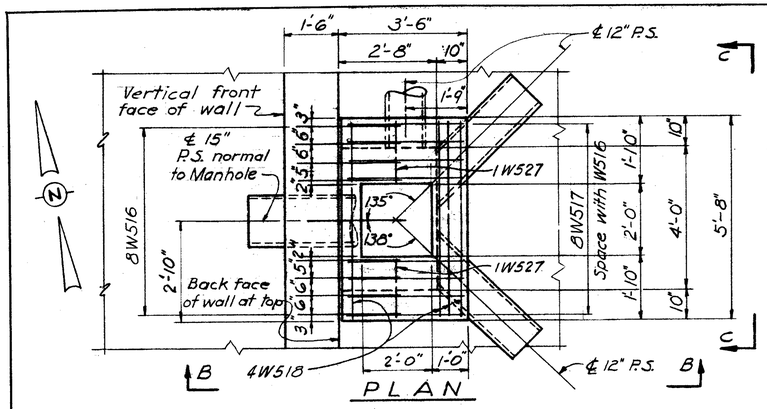

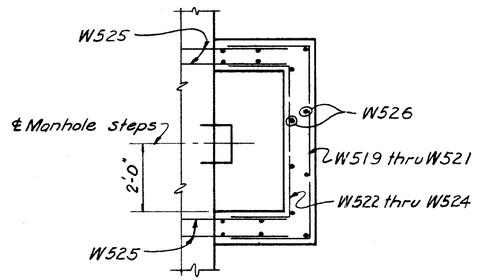

SECTION D-D

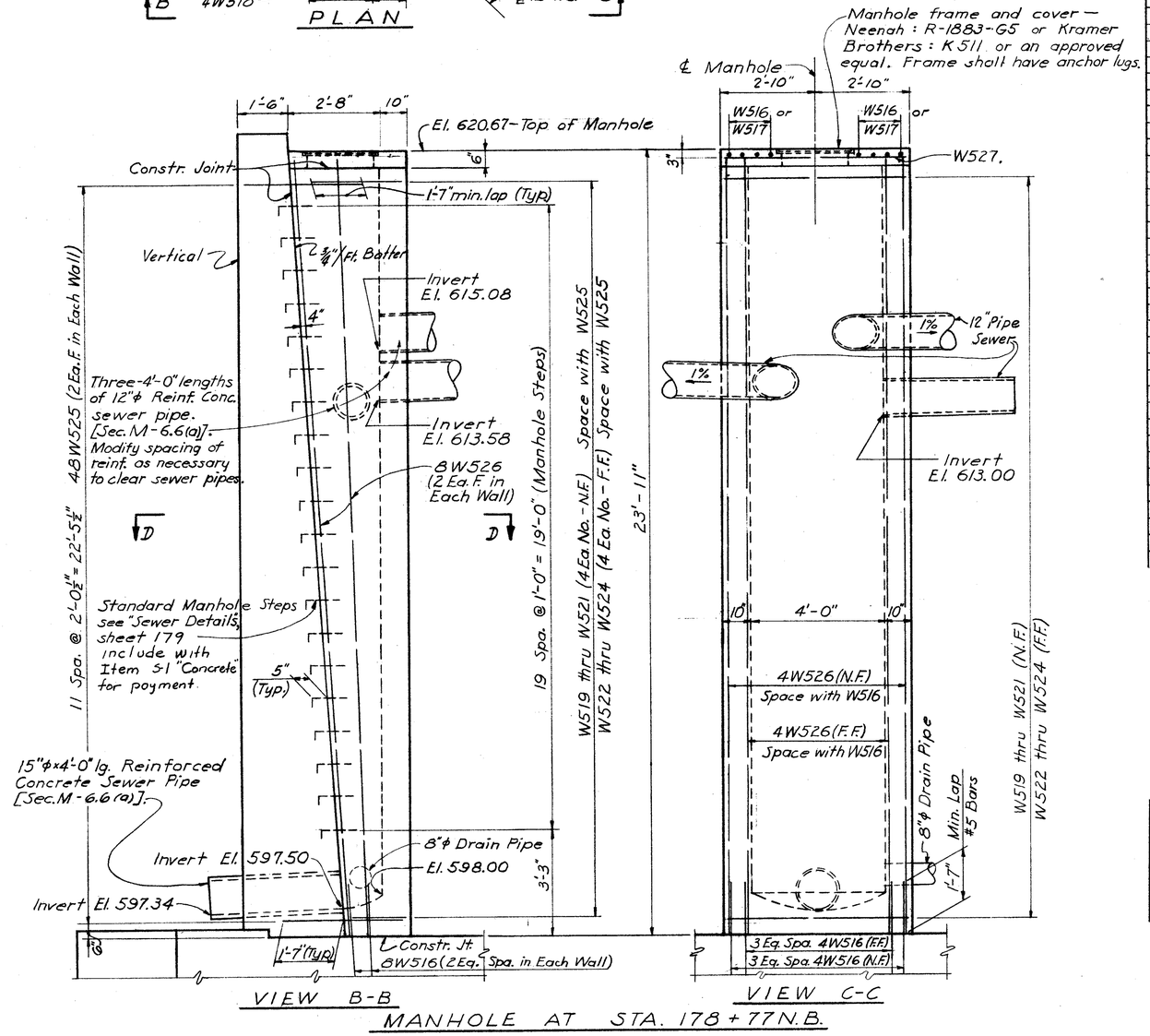

MANHOLE AT STA. 178+77 N.B.

REINFORCING STEEL LIST

Mark	Type	No. Req.	Length	Wgt.
W501	Str.	36	14'-0"	526
W502	↑	6	18'-11"	118
W503		5	16'-8"	87
W504		1	14'-11"	16
W505		6	17'-6"	110
W506		6	15'-6"	97
W507		6	15'-3"	95
W508		5	13'-0"	68
W509		1	5'-5"	6
W510		6	15'-0"	94
W511		6	12'-9"	80
W512		4	13'-0"	54
W513		2	31'-8	66
W514		2	32'-0"	67
W515		2	28'-0"	58
W516		24	3'-2"	79
W517	↓	8	3'-3"	27
W518	Str.	4	5'-4"	22
W519	1	4	8'-3"	34
W520	1	4	9'-5"	39
W521	1	4	10'-5"	43
W522	1	4	6'-9"	28
W523	1	4	7'-8"	32
W524	1	4	8'-8"	36
W525	Str.	48	3'-9"	188
W526	Str.	16	23'-8"	395
W527	Str.	2	1'-6"	3
W901	4	43	8'-5"	1231
W902	4	42	13'-5"	1916
W903	Str.	22	12'-10"	960
W904	Str.	21	20'-4"	1452
W905	Str.	128	14'-4"	6237
W1101	4	22	9'-10"	1150
W1102	4	21	17'-11"	1999
W1103	Str.	11	18'-10"	1101
W601	Str.	16	31'-9"	763
W602	↕	12	34'-2"	616
W603		12	31'-6"	568
W604	Str.	16	33'-8"	809
W701	5	96	19'-4"	3794

BEND BAR DIMENSIONS

TYPE 1		
Mark	a	b
W519	5'-4"	1'-7"
W520	5'-4"	2'-2"
W521	5'-4"	2'-8"
W522	4'-5¼"	1'-5"
W523	4'-5¼"	1'-10"
W524	4'-5¼"	2'-3"

TYPE 4				
Mark	a	b	c	d
W901	2'-10"	2'-10"	2⅛"	5'-10"
W902	2'-10"	2'-10"	2⅛"	10'-10"
W1101	3'-7"	3'-7"	2⅝"	6'-7"
W1102	3'-7"	3'-7"	2⅝"	14'-8"

TYPE 5	
Mark	a
W701	18'-6"

ESTIMATED QUANTITIES

Item	Total	Unit	Description
E-2	1075	cu. Yds.	Unclassified Excavation
S-1	149	Cu. Yds.	Class "E" Concrete (Footing)
S-1	159	Cu. Yds.	Class "C" Concrete (Wall Shafts)
S-3	79	Lin. Ft.	Waterproofing, Premolded Sealing Strip
S-4	25064	Lbs.	Reinforcing Steel
S-9	175	Sq. Ft.	1" Preformed Expansion Joint Filler
S-18	2190	Lin. Ft.	Steel Piles, 10BP42
S-29	110	Cu. Yds.	Porous Backfill
S-29	58	Lin. Ft.	8" Bituminous Coated Helical Perforated Corrugated Metal Pipe [Sec. M-6.4 (h-c)] (including specials and sand)
S-29	12	Lin. Ft.	12" Reinforced Concrete Sewer Pipe [Sec. M-6.6 (a)]
S-29	4	Lin. Ft.	15" Reinforced Concrete Sewer Pipe [Sec. M-6.6 (a)]
I-8	1	Each	Frame and Cover, As Per Plan
E-2	Lump	Sum	Cofferdams, Cribs & sheeting

Note: The above quantities are carried to the Summary of Quantities Sh. no. 23

NOTES

(N.F.) denotes Near Face.
(F.F.) denotes Far Face.
(Ea.F.) denotes Each Face.
Concrete in Ret. Wall & Manhole shall be Class "C".
Concrete in Footing shall be Class "E".
Provide 3" clearance to reinforcing steel in footing and 2" clearance in wall shafts, (Min.).
All piles shall be 10BP42 Steel H-Piles.
For Replacement Bars, Bar Bending Schedule, Pile Notes and Misc. Details not shown see Sh. no. 331
┌ denotes a vertical pile.
┼ denotes a batter pile (batter 1 on 3).
For lighting details not shown, see Sh. no. 212.
For lighting plan see Sh No 202

Design assumption: Equivalent fluid weight (passive) = 100 lbs. per cu. ft.

SHEETING AND BRACING: Befor construction is started, eight sets of prints showing details of the sheeting and bracing to be used for excavation adjacent to the railroad tracks shall be submitted to the Director for approval by the Department of Highways and by the Railroad Company.

ALIGNING RAILROAD TRACKS: After the Contractor has completed all excavation and backfill adjacent to the railroad tracks in compliance with Sec. E-2.04 and E-2.08 of the Construction and Material Specifications, subject to the Supervision of the Railroad Company, nothing in Sec. E-2.04, E-2.08 or G-8.07 of the Specifications shall be construed to hold the Contractor liable for aligning and resurfacing the railroad tracts.

HAZELET & ERDAL
CONSULTING ENGINEERS
CINCINNATI, OHIO

RETAINING WALL NO. 24
SHEET 2 OF 2

Designed	Drawn	Traced	Checked	Reviewed Date	Revised
	DLO		W.J.E. 5-5-65	JHO 5/20/65	

FED. RD. DIV.	STATE	PROJECT	FISCAL YEAR
2	OHIO		

291
492

HAMILTON COUNTY
HAM-71-(1.56)(2.51)

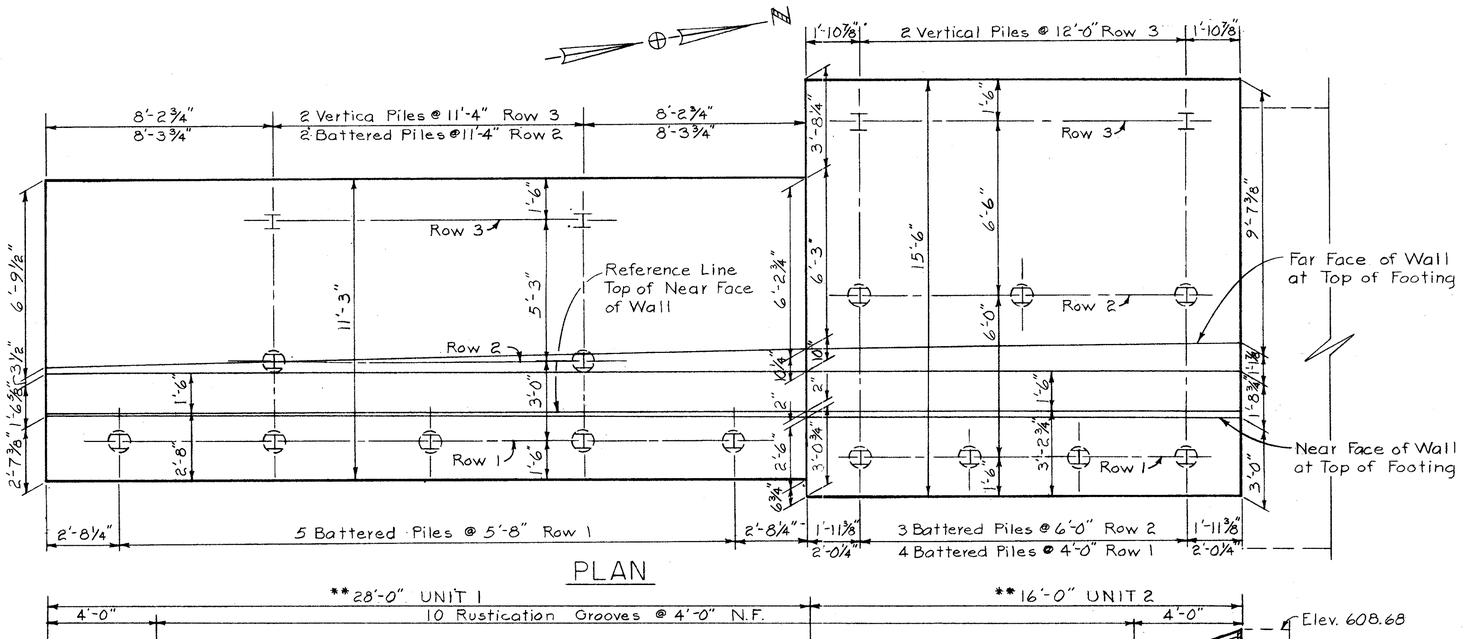

PLAN

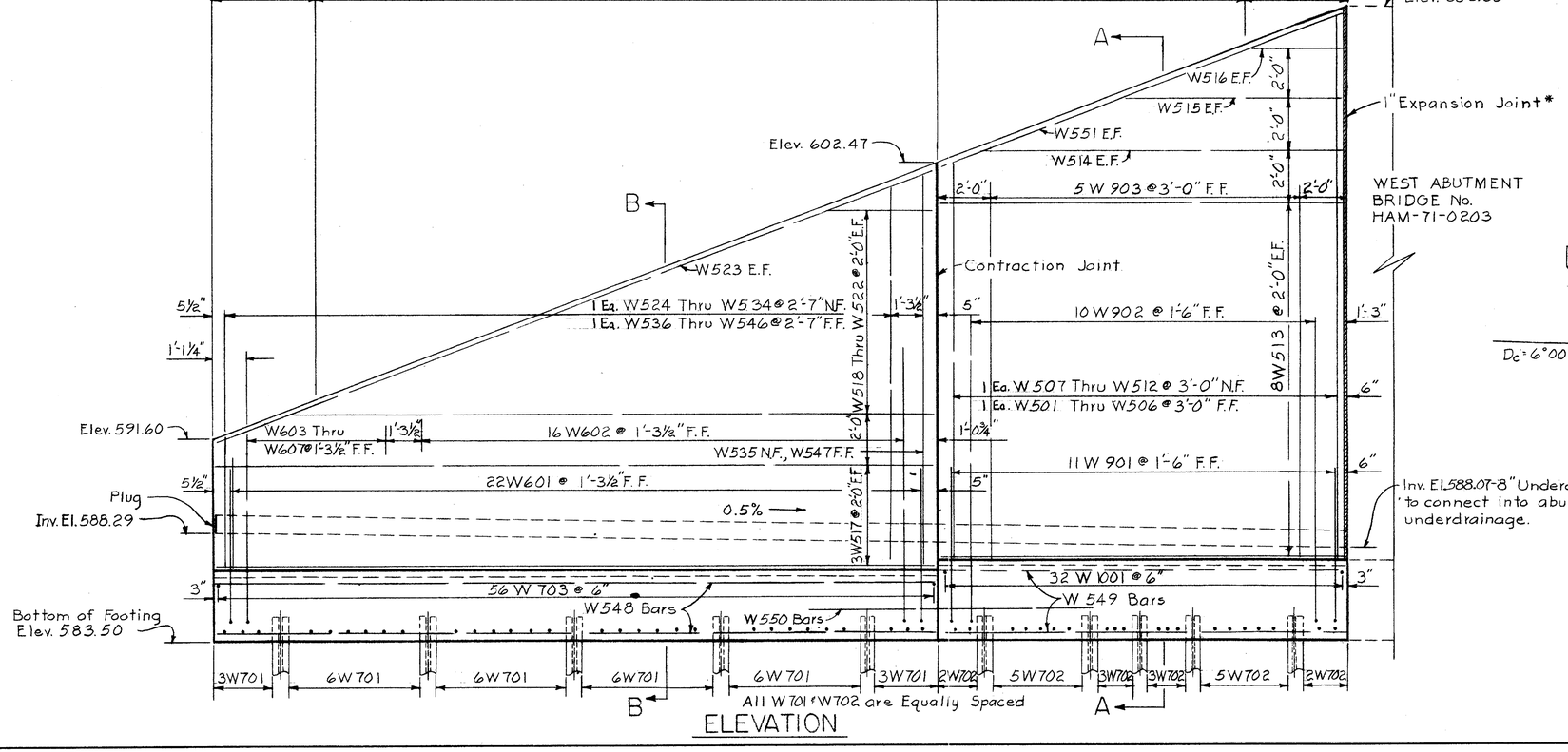

ELEVATION

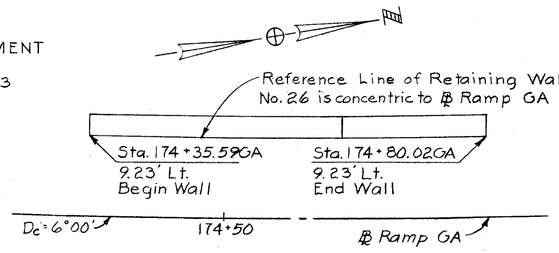

LOCATION OF WALL

NOTES

** Measured along Reference Line of Wall.

* 1" Joint Filler and pre molded sealing strip included with Retaining Wall quantities for payment.

W549 bars are to be centered under contr. joint in the stem.
All concrete shall be Class 'E'
Work this sheet with sheet No. 292

N.F. denotes Near Face
F.F. denotes Far Face
E.F. denotes Each Face
⊞ denotes Vertical Piles
⊕ denotes Battered Piles
Ea. denotes Each

HAZELET & ERDAL
CONSULTING ENGINEERS
CINCINNATI, OHIO

RETAINING WALL No. 26

SHEET 1 of 2

DESIGNED	DRAWN	TRACED	CHECKED	REVIEWED DATE	REVISED
	ALT.		H.L.L. 4-22-65	JHO 5/20/65	

FED. RD. DIV.	STATE	PROJECT	FISCAL YEAR
2	OHIO		

292
492

HAMILTON COUNTY
HAM-71-(1.56)(2.51)

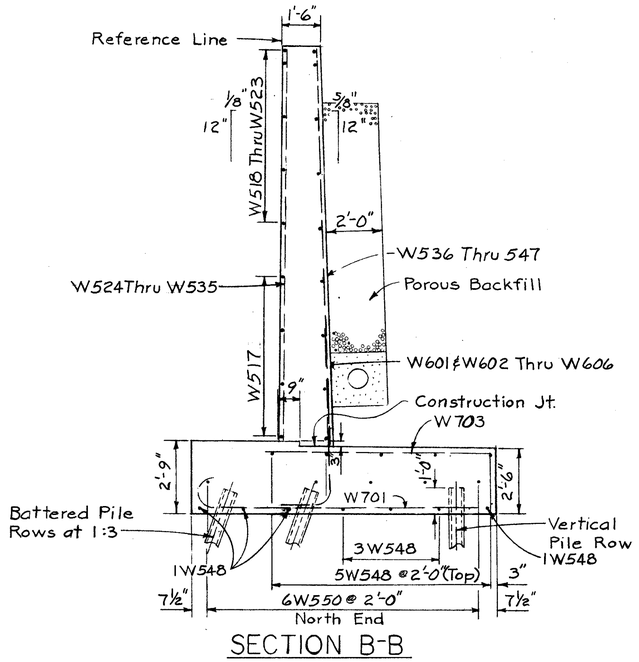

SECTION B-B

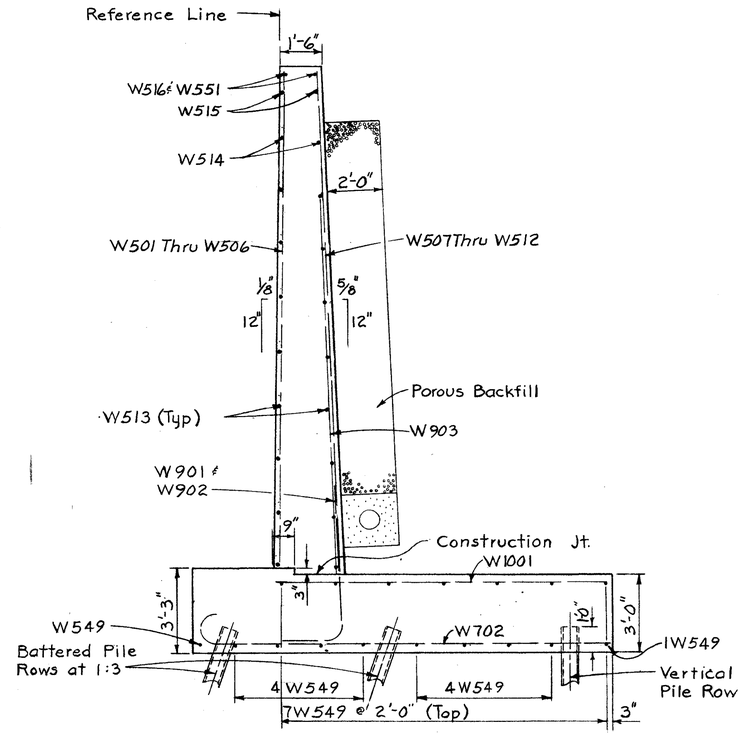

SECTION A-A

REINFORCING STEEL LIST

Mark	Type	No.	Length	Weight
W501	Str.	1	16'-0"	17
W502	Str.	1	17'-2"	18
W503	Str.	1	18'-4"	19
W504	Str.	1	19'-6"	20
W505	Str.	1	20'-8"	22
W506	Str.	1	21'-10"	23
W507	Str.	1	15'-9"	16
W508	Str.	1	16'-11"	18
W509	Str.	1	18'-1"	19
W510	Str.	1	19'-3"	20
W511	Str.	1	20'-5"	21
W512	Str.	1	21'-7"	22
W513	Str.	16	15'-8"	262
W514	Str.	2	14'-0"	29
W515	Str.	2	9'-0"	19
W516	Str.	2	4'-0"	8
W517	Str.	6	27'-8"	173
W518	Str.	2	24'-9"	52
W519	Str.	2	19'-7"	41
W520	Str.	2	14'-6"	30
W521	Str.	2	9'-4"	19
W522	Str.	2	4'-3"	9
W523	Str.	2	29'-2"	61
W524	Str.	1	5'-4"	6
W525	Str.	1	6'-4"	7
W526	Str.	1	7'-4"	8
W527	Str.	1	8'-4"	9
W528	Str.	1	9'-4"	10
W529	Str.	1	10'-4"	11
W530	Str.	1	11'-4"	12
W531	Str.	1	12'-4"	13
W532	Str.	1	13'-4"	14
W533	Str.	1	14'-4"	15
W534	Str.	1	15'-4"	16
W535	Str.	1	15'-11"	17
W536	Str.	1	5'-7"	6
W537	Str.	1	6'-7	7
W538	Str.	1	7'-7"	8
W539	Str.	1	8'-7"	9
W540	Str.	1	9'-7"	10
W541	Str.	1	10'-7"	11
W542	Str.	1	11'-7"	12
W543	Str.	1	12'-7"	13
W544	Str.	1	13'-7"	14
W545	Str.	1	14'-7"	15
W546	Str.	1	15'-7"	16
W547	Str.	1	16'-1"	17
W548	Str.	12	27'-6"	344
W549	Str.	17	15'-6"	274
W550	Str.	6	10'-0"	63
W551	Str.	2	16'-6"	35
W601	6	22	7'-11"	262
W602	6	16	12'-7"	302
W603	6	1	9'-11"	15
W604	6	1	10'-5"	16
W605	6	1	10'-11"	16
W606	6	1	11'-5"	17
W607	6	1	11'-11"	18
W701	5	30	11'-7"	710
W702	5	20	15'-10"	647
W703	Str.	56	8'-9"	1002
W901	6	11	8'-4"	312
W902	6	10	14'-8"	499
W903	Str.	5	14'-8	249
W1001	Str.	32	13'-0"	1790
			Total Weight lbs.	7785

For Replacement Bars See Sheet No. 331

BENDING

Mark	a	b	c	d	e	f	rad
W601	1'-7 7/8"	3"	4 1/4"	6'-1 7/8"	5'-10 7/8"	3 5/8"	2 1/4"
W602	1'-7 7/8"	3"	4 1/4"	10'-9 7/8"	10'-6 7/8"	6 5/8"	2 1/4"
W603	1'-7 7/8"	3"	4 1/4"	8'-1 7/8"	7'-10 7/8"	5"	2 1/4"
W604	1'-7 7/8"	3"	4 1/4"	8'-7 7/8"	8'-4 7/8"	5 1/4"	2 1/4"
W605	1'-7 7/8"	3"	4 1/4"	9'-1 7/8"	8'-10 7/8"	5 1/2"	2 1/4"
W606	1'-7 7/8"	3"	4 1/4"	9'-7 7/8"	9'-4 7/8"	5 7/8"	2 1/4"
W607	1'-7 7/8"	3"	4 1/4"	10'-1 7/8"	9'-10 7/8"	6 1/8"	2 1/4"
W701	10'-9"						
W702	15'-0"						
W901	2'-4 1/8"	5 7/8"	8 1/4"	5'-9 3/8"	5'-3 3/8"	3 1/4"	4 1/2"
W902	2'-4 1/8"	5 7/8"	8 1/4"	12'-1 3/8"	11'-7 3/8"	7 1/4"	4 1/2"

ESTIMATED QUANTITIES

Item	Total	Unit	Description
E-2	202	Cu. Yd.	Unclassified Excavation
S-1	58	Cu. Yd.	Class "E" Concrete, Footings
S-1	46	Cu. Yd.	Class "E" Concrete, Wall Shafts
S-3	36	Lin. Ft.	Waterproofing, premolded Sealing Strip
S-4	7785	Lbs.	Reinforcing Steel
S-9	48	Sq. Ft.	1" Preformed Expansion Joint Filler
S-18	684	Lin. Ft.	Steel Piles, 12BP53
S-29	35	Cu. Yd.	Porous Backfill
S-29	44	Lin. Ft.	8" Bituminous Coated Helical Perforated Corrugated Metal Pipe [See M 6.4 (h-c)] (Including Special and Sand)

Note: The above quantities are to be carried to the Summary of Quantities Sheet No. 23

Notes:
Work Reinforcing Steel List with Sheet No. 331
For Miscellaneous Details and General Notes see Sheet No. 331
Work this sheet with Sheet No. 291
For piling note see Sheet No. 331
For replacement bars see Sheet No. 331

DESIGN ASSUMPTIONS

Equivalent Fluid Weight (Passive) = 100 lbs per cu. ft.

HAZELET & ERDAL
CONSULTING ENGINEERS
CINCINNATI, OHIO

RETAINING WALL No. 26

SHEET 2 of 2

DESIGNED	DRAWN	TRACED	CHECKED	REVIEWED DATE	REVISED
	ALT.		H.L.L. 4-22-65	JHO 5/20/65	

FED. RD. DIV.	STATE	PROJECT	FISCAL YEAR
2	OHIO		

293
492

HAMILTON COUNTY
HAM-71-(1.56)(2.51)

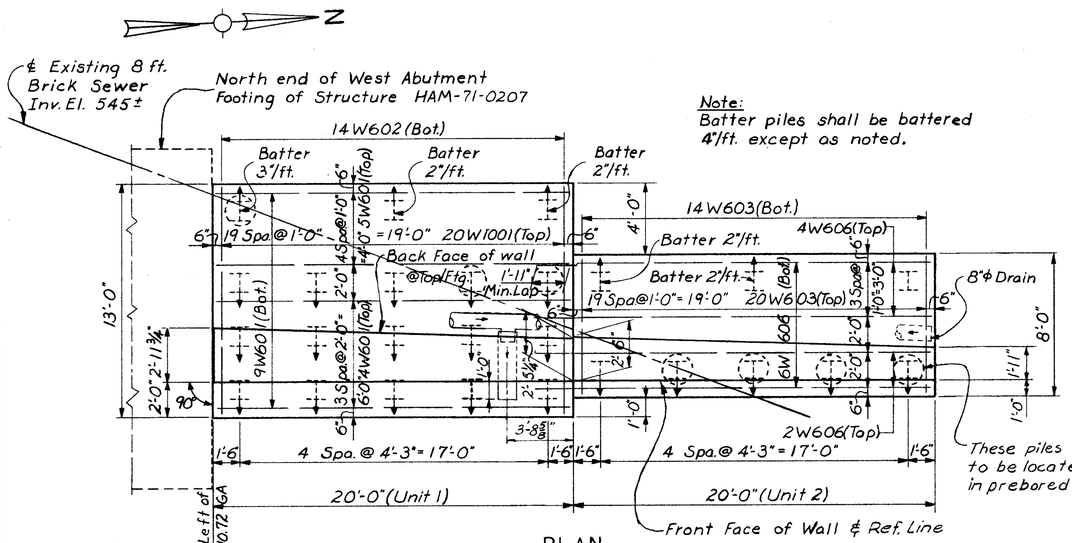

Note:
Batter piles shall be battered 4"/ft. except as noted.

Notes:
(N.F.) denotes Near Face
(F.F.) denotes For Face
(Ea.F.) denotes Each Face
Concrete in Retaining Wall and Footing shall be Class "E".
Provide 3" clearance to reinf. steel in footing and 2" clearance in wall. (Min.)
⫶ denotes vertical pile, ⫶ denotes batter pile.

For details not shown, see "Misc. Details for Retaining Walls."
All piles shall be 10BP42 Steel H-piles.
Care shall be taken in driving piles in the vicinity of the existing brick sewer to avoid any damage to it.

Prebored Holes: Where directed by the Engineer, piles as indicated on the Footing Plan adjacent to the existing 8' Brick Sewer, shall be started in prebored holes of a minimum depth of 1'-0" below bottom of sewer and the diameter of pile or mandrel. Payment shall be included in the contract unit price per lineal foot bid for "Item Special, Prebored Holes" which price and payment shall constitute full compensation for all labor, tools, equipment and incidentals necessary to complete this item.

Design Assumption: Equivalent fluid weight (passive) = 100 lbs. per cu. ft.

For piling note, see Sh. 331

ESTIMATED QUANTITIES

Item	Total	Unit	Description
E-2	Lump	Sum	Cofferdams, cribs & sheeting
E-2	430	Cu.Yds.	Unclassified excavation
S-1	46	Cu.Yds.	Class "E" concrete, footings
S-1	46	Cu.Yds.	Class "E" concrete, wall shafts
S-3	47	Lin.Ft.	Waterproofing, premolded sealing strip
S-4	4987	Lbs.	Reinforcing steel
S-9	53	Sq.Ft.	1" preformed expansion joint filler
S-18	988	Lin.Ft.	Steel piles, 10 BP 42
S-29	30	Cu.Yds.	Porous backfill
S-29	41	Lin.Ft.	8" Bituminous coated helical perforated corrugated metal pipe [Sec. M-6.4 (h.c)], (including specials & sand)
S-29	4	Lin.Ft.	12" reinforced concrete sewer pipe [Sec. M-6.6 (a)]
Special	266	Lin.Ft.	Prebored Holes

Note: The above quantities are carried to the Summary of Quantities, Sh. 23

BENT BAR DIMENSIONS

Mark	a	b	c	d
W604	1'-11"	1'-11"	0'-1½"	4'-0"
W605	1'-11"	1'-11"	0'-1½"	5'-10"
W801	2'-6"	2'-6"	0'-2"	5'-9"
W802	2'-6"	2'-6"	0'-2"	11'-4"

TYPE 4

REINF. STEEL LIST

Mark	Type	No. Req.	Length	Wgt.
W501	Str.	2	22'-9"	47
W502		2	21'-6"	45
W503		2	20'-3"	42
W504		2	18'-9"	39
W505		2	17'-5"	36
W506		2	16'-0"	33
W507		2	14'-7"	30
W508		2	15'-4"	32
W509		2	14'-0"	29
W510		2	12'-7"	26
W511		2	11'-3"	23
W512		2	9'-9"	20
W513		2	8'-6"	18
W514		2	7'-1"	15
W515		2	23'-3"	49
W516		24	19'-6"	488
W517		4	15'-2"	63
W518		4	10'-10"	45
W519	↓	4	6'-6"	27
W520	Str.	4	21'-6"	90
W601	Str.	18	19'-6"	527
W602	Str.	14	12'-6"	263
W603	Str.	34	7'-6"	383
W604	4	7	5'-9"	60
W605	4	7	7'-7"	80
W606	Str.	12	22'-0"	397
W801	4	14	8'-0"	299
W802	4	13	13'-7"	471
W803	Str.	7	12'-6"	234
W1001	Str.	20	12'-6"	1076

Note: For Replacement Bars, see Sh. 331
For bar bending schedule, see Sh. 331

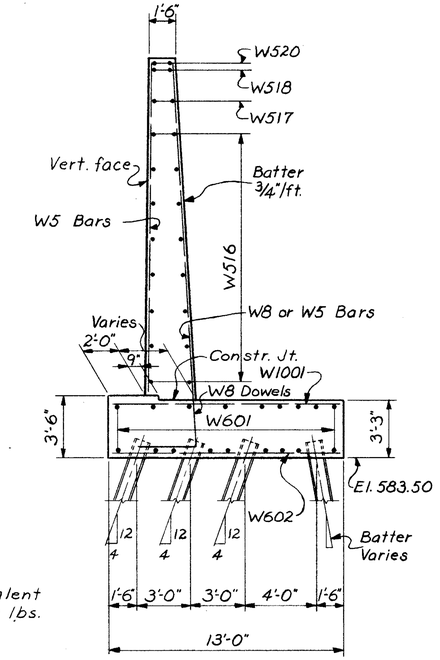

SECTION A-A
(Unit 1)

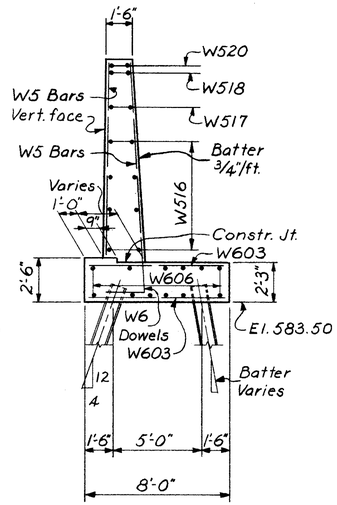

SECTION B-B
(Unit 2)

HAZELET & ERDAL
CONSULTING ENGINEERS
CINCINNATI, OHIO

RETAINING WALL NO. 27
SHEET 1 OF 1

DESIGNED	DRAWN	TRACED	CHECKED	REVIEWED DATE	REVISED
SU	AFS		W.J.E. 5-11-65	JHO 5/20/65	

FED. RD. DIV.	STATE	PROJECT	FISCAL YEAR
2	OHIO		

294
492

HAMILTON COUNTY
HAM-71-(1.56)(2.61)

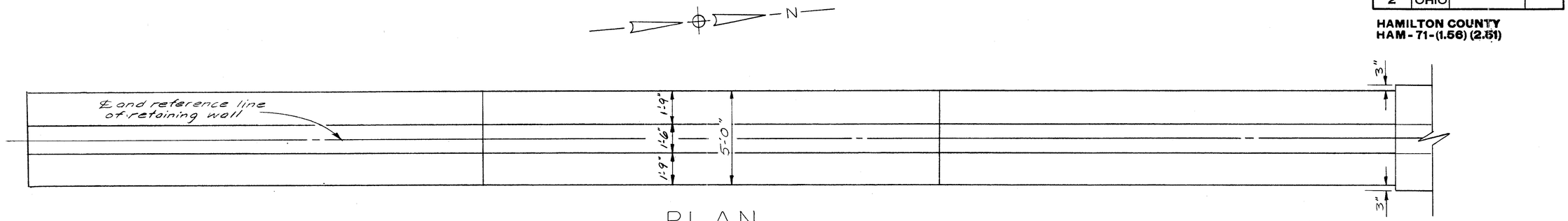

PLAN

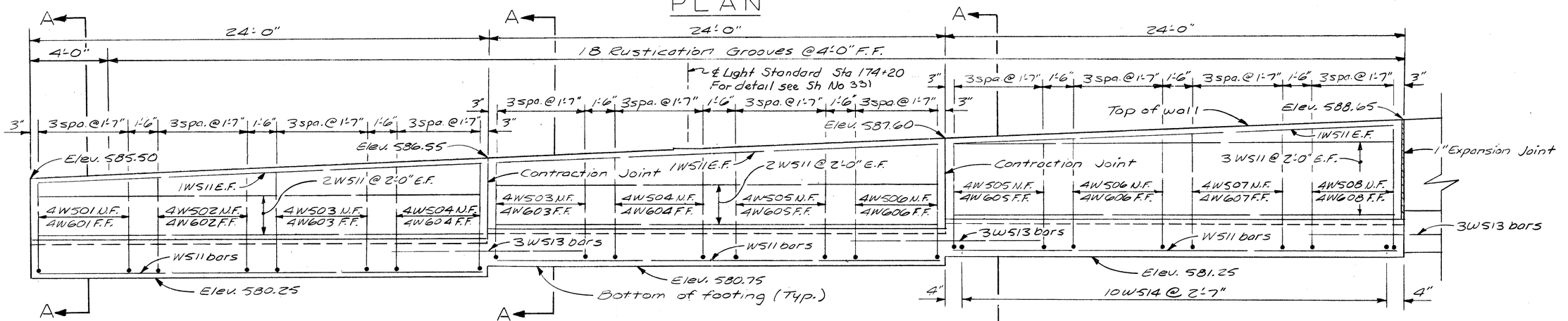

ELEVATION

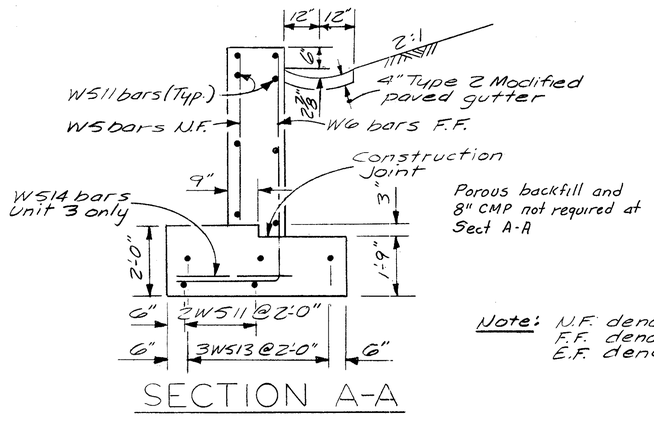

SECTION A-A

Note: N.F. denotes near face
F.F. denotes far face
E.F. denotes each face

Note: Work Reinforcing Bar List with Sh. No. 331
For Replacement Bar List see Sheet No. 331

REINFORCING STEEL LIST

Mark	Type	a	b	No.	Length	Weight
W501	Str.	–	–	4	3'-1"	13
W502	Str.	–	–	4	3'-4"	14
W503	Str.	–	–	8	3'-8"	31
W504	Str.	–	–	8	3'-11"	33
W505	Str.	–	–	8	4'-2"	35
W506	Str.	–	–	8	4'-6"	38
W507	Str.	–	–	8	4'-9"	40
W508	Str.	–	–	12	5'-0"	63
W509	Str.	–	–	8	5'-4"	45
W510	Str.	–	–	8	5'-7"	47
W511	Str.	–	–	42	23'-8"	1035
W512	Str.	–	–	4	19'-11"	83
W513	Str.	–	–	12	10'-0"	125
W514	Str.	–	–	10	3'-2"	33
W515	Str.	–	–	19	3'-5"	66
W516	Str.	–	–	6	4'-7"	29
W517	Str.	–	–	2	5'-11"	12
W601	11	2'-9"	4'-9"	4	7'-4"	44
W602	11	2'-9"	5'-0"	4	7'-7"	46
W603	11	2'-9"	5'-4"	8	7'-11"	95
W604	11	2'-9"	5'-7"	8	8'-2"	98
W605	11	2'-9"	5'-10"	8	8'-5"	101
W606	11	2'-9"	6'-2"	8	8'-9"	105
W607	11	2'-9"	6'-5"	4	9'-0"	54
W608	11	2'-9"	6'-8"	4	9'-3"	56
W609	11	3'-0"	6'-8"	4	9'-6"	57
W610	11	3'-0"	6'-11"	8	9'-9"	117
W611	11	3'-0"	7'-3"	8	10'-1"	121
W612	11	3'-0"	7'-6"	8	10'-4"	124
W613	11	3'-0"	7'-10"	2	10'-8"	32
Total Weight = 2794						Lbs.

ESTIMATED QUANTITIES

Item	Total	Unit	Description
E-2	103	Cu. Yds	Unclassified Excavation
S-1	44	Cu. Yds.	Class "E" Concrete Footing
S-1	33	Cu. Yds.	Class "E" Concrete Wall shafts
S-3	15	Lin. Ft.	Waterproofing, Premolded sealing strip
S-4	2794	Lbs.	Reinforcing Steel
S-9	19	Sq. Ft.	1" Premolded Expansion Joint Filler
S-29	23	Cu. Yds	Porous Backfill

Note: The above quantities are carried to the "Summary of Quantities Sheet No. 23

NOTE: Work this sheet with Sheet No. 295

Design Assumptions

Maximum foundation pressure = 3000 lb/sq. ft.
Equivalent fluid weight (passive) = 300 lb/cu. ft.

HAZELET & ERDAL
CONSULTING ENGINEERS
CINCINNATI, OHIO

RETAINING WALL NO. 28

(SHEET NO. 1 OF 2)

DESIGNED	DRAWN	TRACED	CHECKED	REVIEWED DATE	REVISED
	TLZ		HLL	JHO 5/20/65	

FED. RD. DIV.	STATE	PROJECT	FISCAL YEAR
2	OHIO		

295
492

HAMILTON COUNTY
HAM-71-(1.56)(2.61)

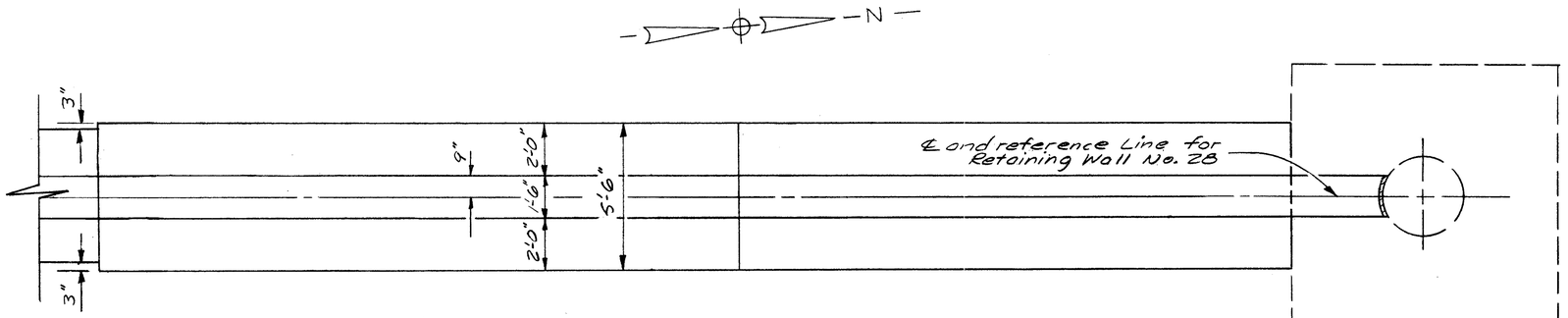

PLAN

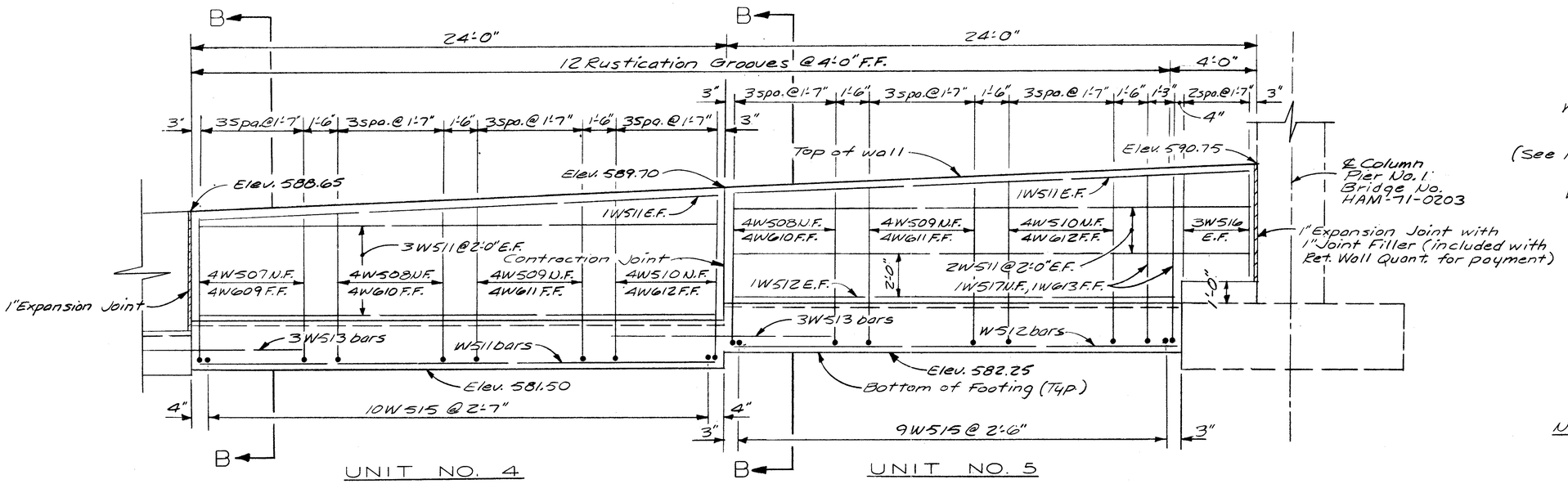

UNIT NO. 4 UNIT NO. 5

ELEVATION

Note: Weepholes not shown in elevation or plan.

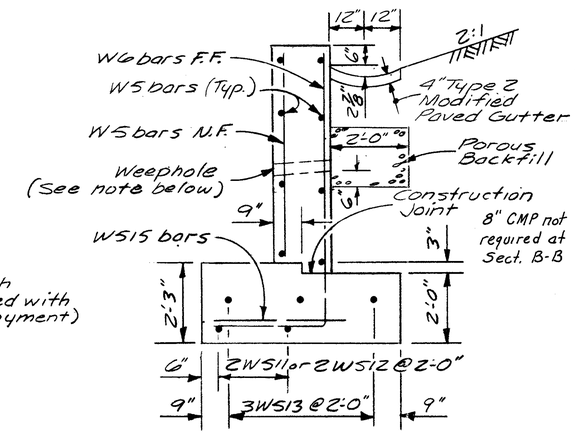

SECTION B-B

Note: Units 4 and 5 only, there shall be placed 4" ϕ weepholes 10'-0" ℄, 6" ± above ground line, and clear reinforcing steel by 3".

Note: N.F. denotes near face
F.F. denotes far face
E.F. denotes each face

Note: For Miscellaneous Wall details and General Notes see Sht. No. 331.

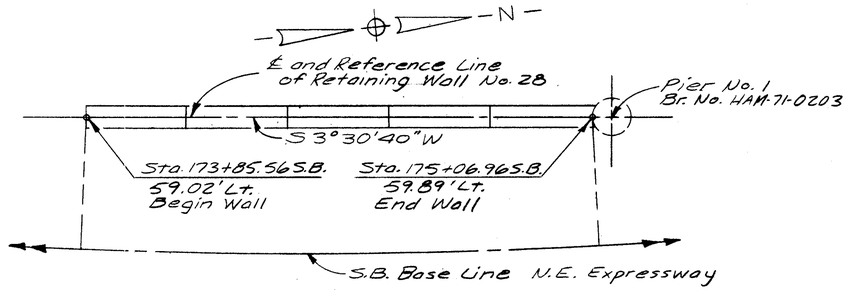

LOCATION OF WALL

Note: Work this sheet with Sheet No. 294.
All concrete to be Class E

HAZELET & ERDAL
CONSULTING ENGINEERS
CINCINNATI, OHIO

RETAINING WALL NO 28

(SHEET NO. 2 OF 2)

DESIGNED	DRAWN	TRACED	CHECKED	REVIEWED DATE	REVISED
	TLZ		HLL	JHO 5/20/65	

FED. RD. DIV.	STATE	PROJECT	FISCAL YEAR
2	OHIO		

296
492

HAMILTON COUNTY
HAM-71-(1.56) (2.51)

BENT BAR DIMENSIONS

Mark	a	b	c	d
W601	1'-11"	1'-11"	0'-1¼"	4'-0"
W602	1'-11"	1'-11"	0'-1¼"	8'-5"
W603	1'-11"	1'-11"	0'-1¼"	8'-1"
W604	1'-11"	1'-11"	0'-1¼"	7'-4"
W605	1'-11"	1'-11"	0'-1¼"	6'-7"
W606	1'-11"	1'-11"	0'-1¼"	6'-2"
W1001	3'-3"	3'-3"	0'-2"	6'-6"
W1002	3'-3"	3'-3"	0'-2"	14'-0"

TYPE 4

ESTIMATED QUANTITIES

Item	Total	Unit	Description
E-2	Lump	Sum	Cofferdams, cribs & sheeting
E-2	70	Cu.Yds.	Unclassified excavation
E-2	260	Cu.Yds.	Rock (or shale) excavation
S-1	66	Cu.Yds.	Class "E" concrete, footings
S-1	64	Cu.Yds.	Class "E" concrete, wall shafts
S-3	45	Lin.Ft.	Waterproofing, premolded sealing strip
S-4	7328	Lbs.	Reinforcing steel
S-9	66	Sq.Ft.	1" preformed expansion joint filler
S-29	40	Cu.Yds.	Porous backfill
S-29	52	Lin.Ft.	8" bituminous coated helical perforated corrugated metal pipe [Sec. M-6.4(h-c)], (including specials & sand)

Note: The above quantities are carried to the Summary of Quantities, Sh. 23

REINFORCING STEEL LIST

Mark	Type	No. Req.	Length	Weight	Mark	Type	No. Req.	Length	Weight
W501	Str.	18	23'-7"	443	W537	Str.	2	7'-6"	16
W502	↓	2	20'-11"	44	W538	Str.	2	3'-6"	7
W503		2	16'-11"	35	W539	Str.	2	30'-9"	64
W504		2	12'-11"	27					
W505		2	8'-11"	19					
W506		2	4'-11"	10	W601	4	18	5'-9"	155
W512		1	28'-6"	30	W602	↓	15	10'-2"	229
W513		1	27'-9"	29	W603		1	9'-10"	15
W514		3	26'-3"	82	W604		1	9'-1"	14
W515		1	24'-9"	26	W605	↓	1	8'-4"	13
W516		1	23'-3"	24	W606	4	1	7'-11"	12
W517		1	21'-9"	23	W616	Str.	4	24'-8"	148
W518		1	20'-3"	21	W617	↓	4	23'-7"	142
W519		1	18'-9"	20	W618		4	22'-5"	135
W520		3	17'-3"	54	W619		4	21'-6"	129
W521		2	15'-9"	33	W620		4	31'-0"	186
W522		2	14'-3"	30	W621		4	29'-6"	177
W523		3	12'-9"	40					
W524		3	11'-3"	35	W623	↓	19	4'-3"	121
W525		3	9'-9"	31	W624	Str.	19	4'-9"	136
W526		3	8'-3"	26					
W527		3	6'-9"	21					
W528		2	5'-3"	11	W703	Str.	32	7'-8"	501
W529		2	3'-9"	8					
W530		1	13'-6"	14	W803	Str.	32	8'-1"	691
W531		4	27'-8"	115					
W532		2	27'-6"	57	W1001	4	16	9'-5"	648
W533		2	23'-6"	49	W1002	4	16	16'-11"	1165
W534		2	19'-6"	41	W1003	Str.	16	17'-0"	1170
W535	↓	2	15'-6"	32					
W536	Str.	2	11'-6"	24					

Note:
For Replacement Bars, see Sh. 331
For bar bending schedule, see Sh. 331

Notes:
(N.F.) denotes Near Face.
(F.F.) denotes For Face.
(Ea.F.) denotes Each Face.
For details not shown, see "Misc. Details for Retaining Walls."
For details of stem wall reinforcement, Units 1 & 2, see Elevation, Ret. Wall No. 20, Sheet 281
Footing is designed for a maximum bearing pressure of 2.5 Tons/Sq.Ft..

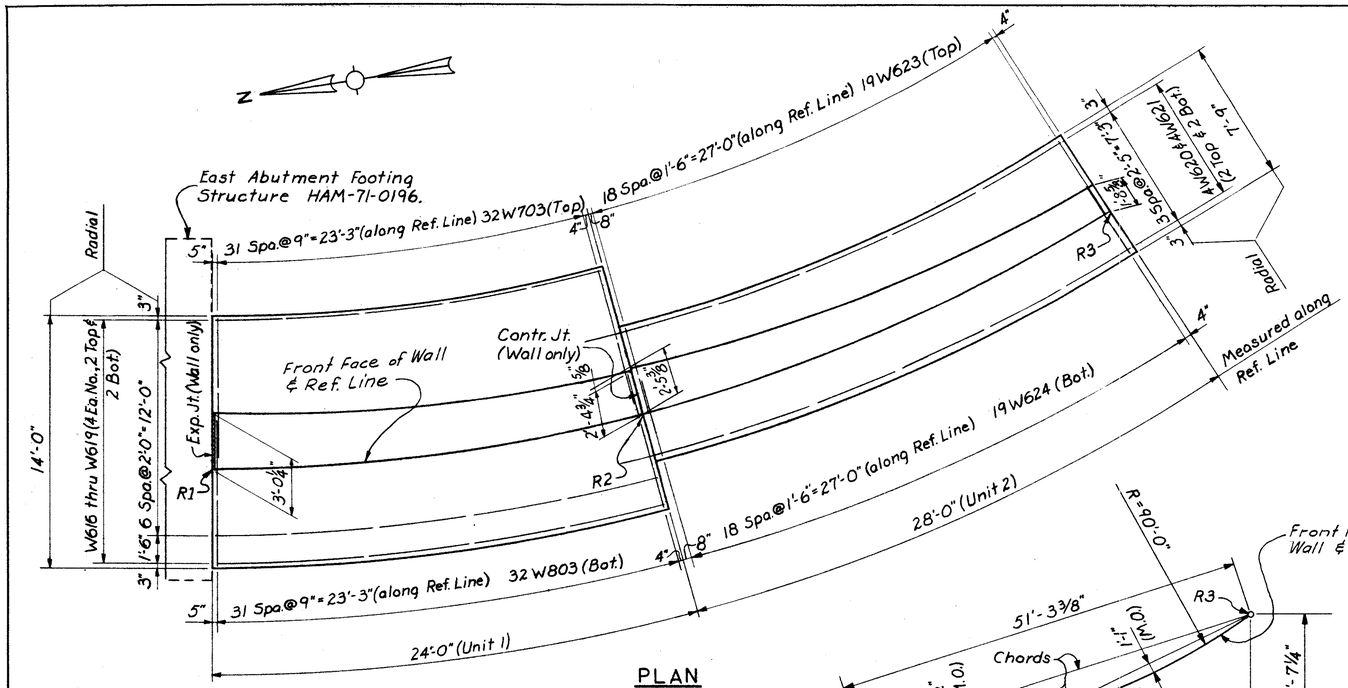

RETAINING WALL GEOMETRICS

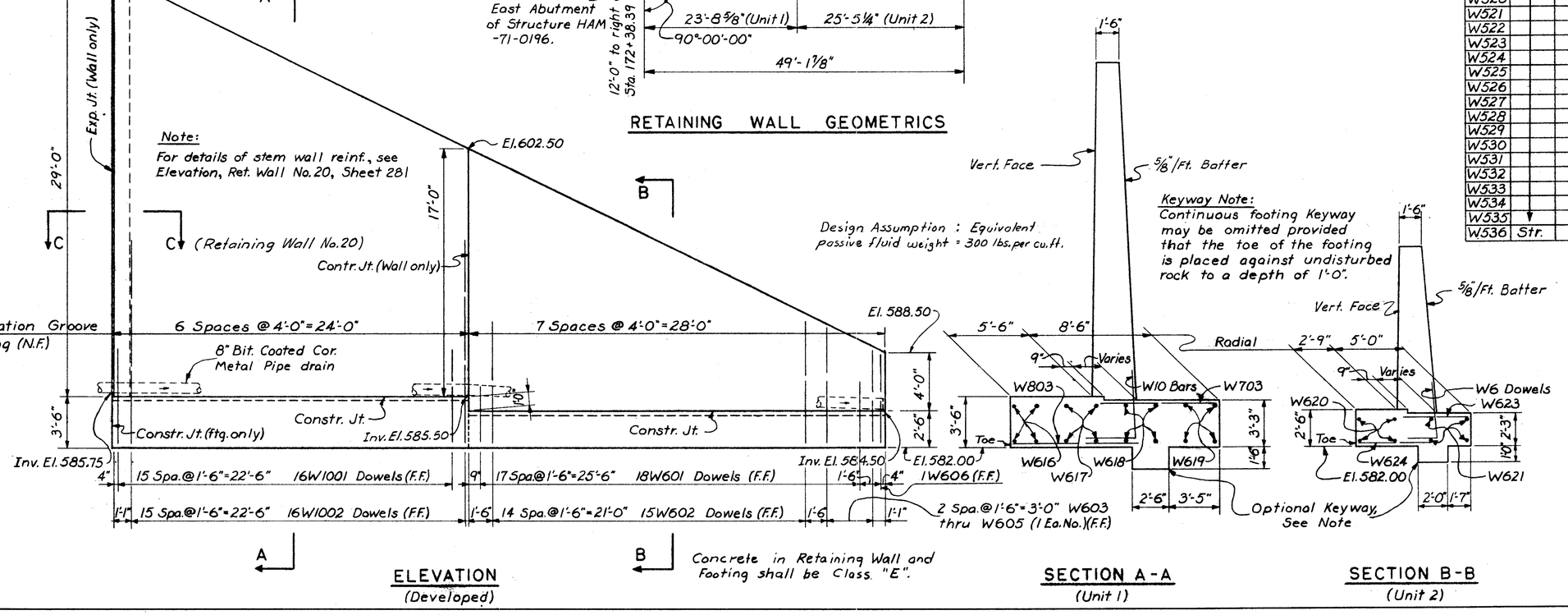

ELEVATION (Developed)

SECTION A-A (Unit 1)

SECTION B-B (Unit 2)

Concrete in Retaining Wall and Footing shall be Class "E".

HAZELET & ERDAL
CONSULTING ENGINEERS
CINCINNATI, OHIO

RETAINING WALL NO. 29
SHEET 1 OF 1

DESIGNED	DRAWN	TRACED	CHECKED	REVIEWED DATE	REVISED
SU	AFS		W.J.Z. 5-11-65	SHO 5/20/65	

FED. RD. DIV.	STATE	PROJECT	FISCAL YEAR
2	OHIO		

297
492

HAMILTON COUNTY
HAM-71-(1.56)(2.51)

REINFORCING STEEL LIST

Mark	Type	No.	Length	Weight
W501	Str.	16	3'-0"	50
W502	Str.	42	3'-7"	157
W503	Str.	108	31'-6"	3548
W504	Str.	24	8'-7"	215
W505	Str.	26	4'-4"	118
W506	Str.	24	10'-10"	271
W507	Str.	24	13'-4"	334
W508	Str.	24	15'-10"	396
W509	Str.	26	18'-4"	497
W510	Str.	68	23'-6"	1667
W511	Str.	20	20'-4"	424
W512	Str.	2	20'-0"	42
W513	Str.	2	16'-0"	33
W514	Str.	2	12'-0"	25
W515	Str.	2	8'-0"	17
W516	Str.	8	22'-0"	184
W517	Str.	2	20'-8"	43
W518	Str.	2	19'-5"	40
W519	Str.	2	18'-1"	38
W520	Str.	2	16'-10"	35
W521	Str.	2	15'-6"	32
W522	Str.	2	14'-3"	30
W523	Str.	2	17'-11"	37
W524	Str.	8	5'-10"	49
W525	Str.	8	5'-7"	47
W526	Str.	2	15'-11"	33
W527	Str.	2	14'-5"	30
W528	Str.	2	12'-11"	27
W529	Str.	2	11'-5"	24
W530	Str.	2	9'-11"	21
W531	Str.	2	8'-8"	18
W532	Str.	2	7'-2"	15
W533	Str.	2	5'-8"	12
W534	Str.	2	4'-2"	9
W535	Str.	2	19'-6"	41
W536	Str.	2	15'-6"	32
W537	Str.	2	11'-6"	24
W538	Str.	2	7'-6"	16
W539	Str.	2	3'-6"	7
W540	Str.	2	26'-5"	55
W541	Str.	10	10'-0"	104
W601	19	12	5'-6"	99
W602	19	11	7'-6"	124
W603	19	12	5'-8"	102
W604	19	11	8'-6"	140
W605	Str.	32	4'-6"	216
W606	Str.	32	4'-11"	236
W607	19	22	5'-9"	190
W608	19	21	10'-6"	331
W609	Str.	16	5'-10"	140
W610	Str.	16	5'-7"	134
W611	19	4	6'-0"	36
W612	19	4	8'-0"	48
W701	Str.	43	5'-6"	483
W702	Str.	43	5'-10"	513
W801	19	22	7'-1"	416
W802	19	21	10'-7"	593
W803	Str.	10	9'-3"	247
W804	Str.	43	6'-5"	737
W805	Str.	43	6'-7"	756
W806	19	9	7'-5"	178
W807	19	8	11'-4"	242
W808	Str.	4	10'-5"	111

REINFORCING STEEL LIST

Mark	Type	No.	Length	Weight
W901	19	25	7'-10"	666
W902	19	24	12'-7"	1027
W903	Str.	12	12'-0"	490
W904	Str.	32	7'-2"	780
W905	Str.	32	7'-3"	789
W1001	19	19	8'-9"	715
W1002	19	18	13'-11"	1078
W1003	Str.	9	14'-0"	542
W1004	Str.	32	8'-3"	1136
W1005	Str.	32	7'-10"	1079
W1101	19	19	9'-6"	959
W1102	19	18	15'-9"	1506
W1103	Str.	5	16'-9"	445
W1104	Str.	2	12'-7"	133
W1105	Str.	2	10'-5"	111

ESTIMATED QUANTITIES

ITEM	TOTAL	UNIT	DESCRIPTION
E-2	Lump	Sum	Cofferdams, Cribs, and Sheeting
E-2	260	Cu. Yds.	Unclassified Excavation
E-2	460	Cu. Yds.	Rock or Shale Excavation
S-1	212	Cu. Yds.	Class "E" Concrete, Footing
S-1	253	Cu. Yds.	Class "E" Concrete, Wall Shafts
S-3	98	Lin. Ft.	Waterproofing, premolded sealing strip
S-4	26,325	Lbs.	Reinforcing Steel
S-9	62	Sq. Ft.	1" Preformed expansion joint filler
S-29	177	Cu. Yds.	Porous Backfill
S-29	239	Lin. Ft.	8" Bituminous Coated helical perforated corrugated metal pipe [See M6.4 (h-c)] (including specials and sand)

NOTES: The above quantities are carried to the "Summary of Quantities" Sheet No. 23
For Miscellaneous Wall Details and General Notes See Sheet No. 331

BENDING

Mark	a	b	c	d
W601	1'-11"	1'-11"	1¼"	3"-9"
W602	1'-11"	1'-11"	1¼"	5'-9"
W603	1'-11"	1'-11"	1¼"	3'-11"
W604	1'-11"	1'-11"	1¼"	6'-9"
W607	1'-11"	1'-11"	1¼"	4'-0"
W608	1'-11"	1'-11"	1¼"	8'-9"
W611	1'-11"	1'-11"	1¼"	4'-3"
W612	1'-11"	1'-11"	1¼"	6'-3"
W801	2'-6"	2'-6"	1½"	4'-10"
W802	2'-6"	2'-6"	1½"	8'-4"
W806	2'-6"	2'-6"	1½"	5'-2"
W807	2'-6"	2'-6"	1½"	9'-1"
W901	2'-10"	2'-10"	1⅞"	5'-3"
W902	2'-10"	2'-10"	1⅞"	10'-0"
W1001	3'-3"	3'-3"	2"	5'-10"
W1002	3'-3"	3'-3"	2"	11'-0"
W1101	3'-7"	3'-7"	2¼"	6'-3"
W1102	3'-7"	3'-7"	2¼"	12'-6"

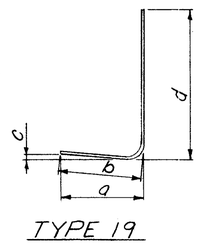

TYPE 19

For replacement bars see Sh. No. 331

DESIGN NOTE:
Design Assumption Based on Wall being Founded on Rock

Work this sheet with sheet No. 298, 299 & 300

HAZELET & ERDAL
CONSULTING ENGINEERS
CINCINNATI, OHIO

RETAINING WALL NO. 40

DESIGNED	DRAWN	TRACED	CHECKED	REVIEWED DATE	REVISED
	W.R.T. 4-1965		J.C. E.E.K. 4-8-65	JHO 5/20/65	

FED. RD. DIV.	STATE	PROJECT	FISCAL YEAR
2	OHIO		

298
492

HAMILTON COUNTY
HAM-71-(1.56) (2.61)

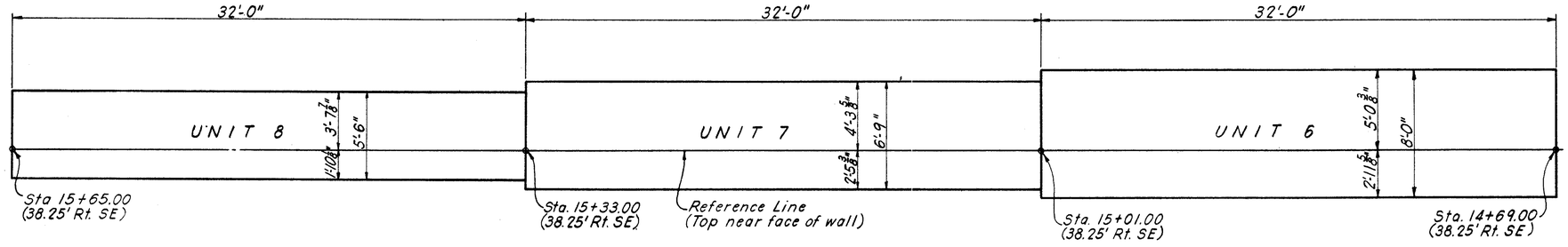

PLAN

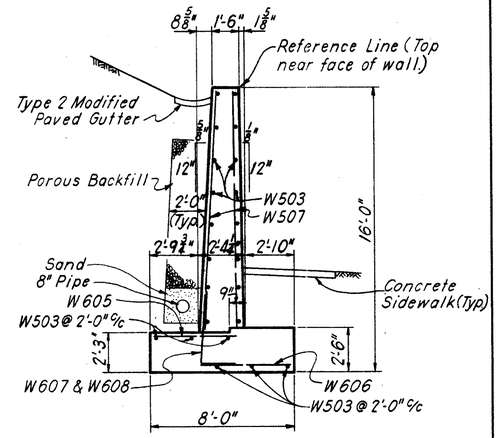

TYPICAL SECTION-UNIT 6

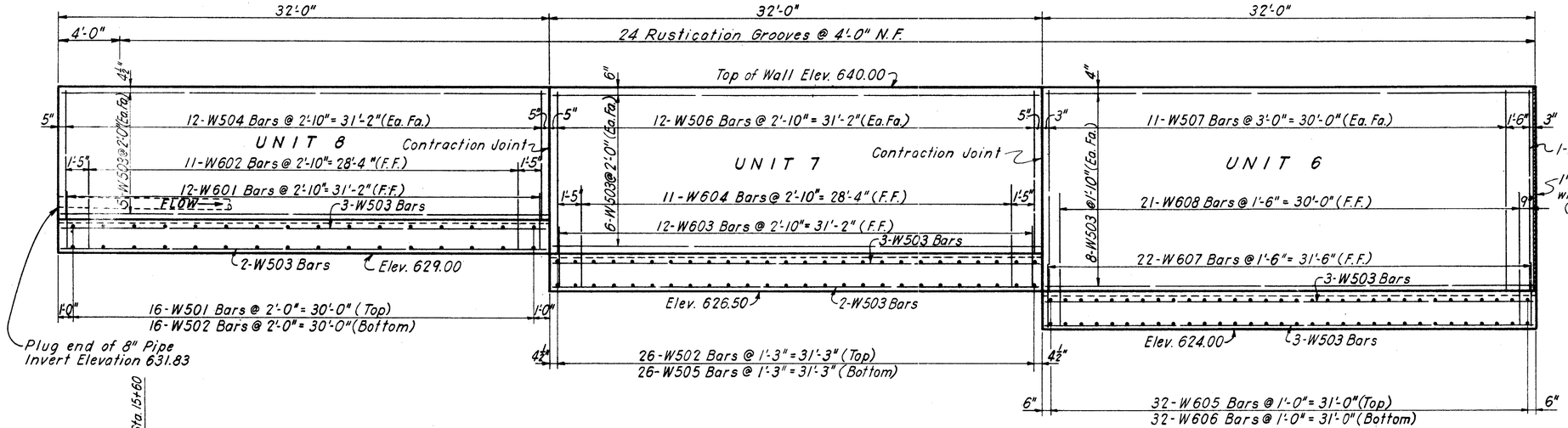

ELEVATION

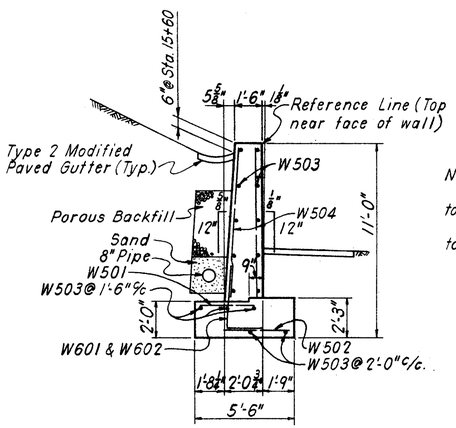

TYPICAL SECTION-UNIT 8

NOTE:
Construct Paved Gutter from Station 15+60 to 15+65 to match finished ground.
Construct Paved Gutter from Station 15+60 to 13+73 on 0.2% slope.

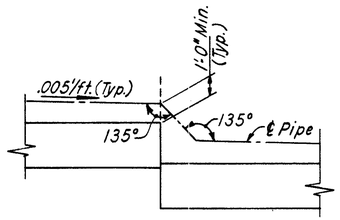

DRAINAGE PIPE DETAIL
(Typical between each Unit)

NOTES:
For General Notes and Miscellaneous Details see Sheet Nº 331
For Reinforcing Steel List, Quantities and Notes see Sheet Nº 297
N.F. denotes Near Face
F.F. denotes For Face
Ea. Fa. denotes Each Face
For detail of Type 2 Modified Paved Gutter see Sh. Nº 183

All concrete shall be Class "E"

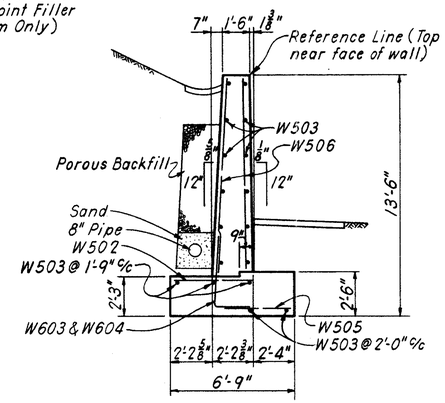

TYPICAL SECTION UNIT 7

HAZELET & ERDAL
CONSULTING ENGINEERS
CINCINNATI, OHIO

RETAINING WALL NO. 40

DESIGNED	DRAWN	TRACED	CHECKED	REVIEWED DATE	REVISED
	RLR 4-7-65		R.M.K. 4-14-65	JHO 5/20/65	

FED. RD. DIV.	STATE	PROJECT	FISCAL YEAR
2	OHIO		

297
492

HAMILTON COUNTY
HAM-71-(1.56) (2.51)

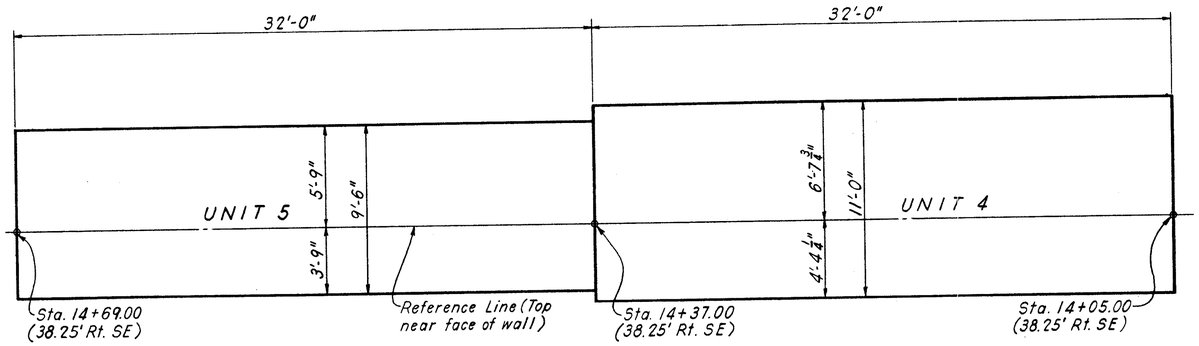

PLAN

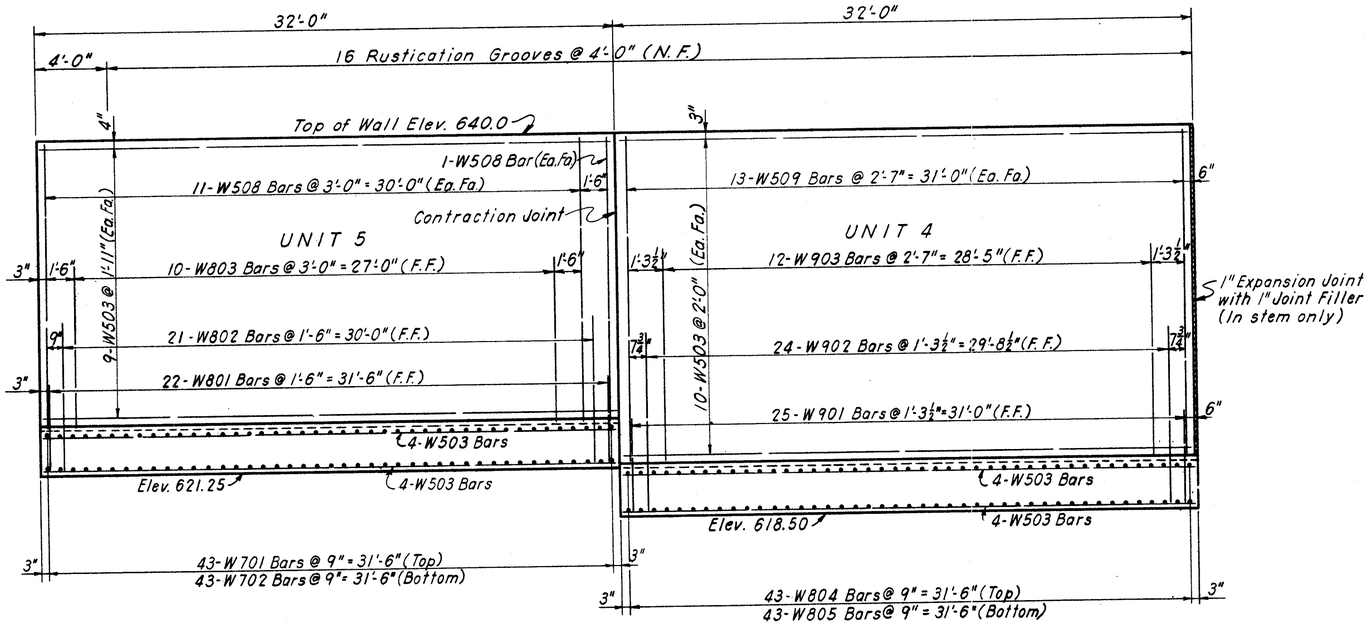

ELEVATION

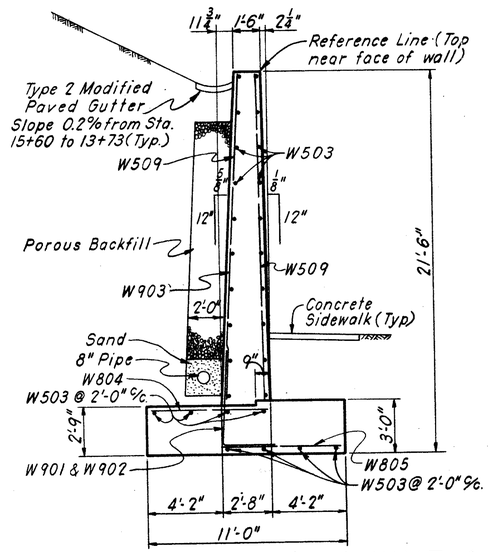

TYPICAL SECTION - UNIT 4

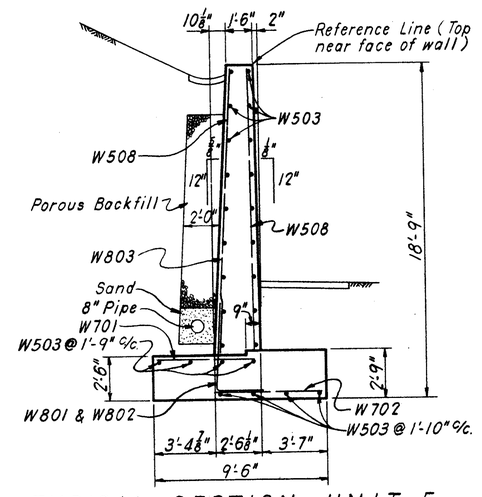

TYPICAL SECTION - UNIT 5

NOTE:
For Notes see Sheet No 297

HAZELET & ERDAL
CONSULTING ENGINEERS
CINCINNATI, OHIO

RETAINING WALL NO. 40

DESIGNED	DRAWN	TRACED	CHECKED	REVISED DATE	REVISED
	RLR 4-9-65		EAE 4-14-65	1HO 5/20/65	

FED. RD. DIV.	STATE	PROJECT	FISCAL YEAR
2	OHIO		

300
492

HAMILTON COUNTY
HAM-71-(1.56)(2.51)

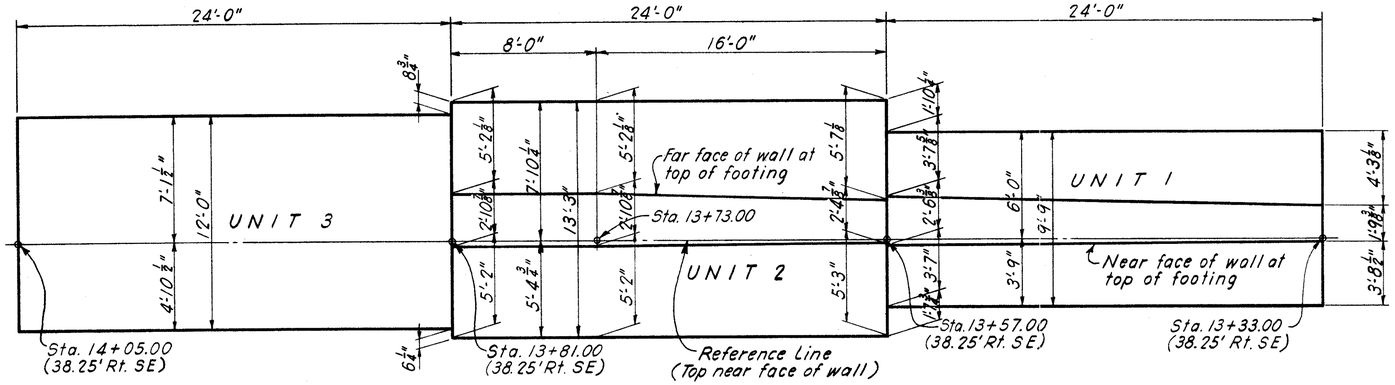

PLAN

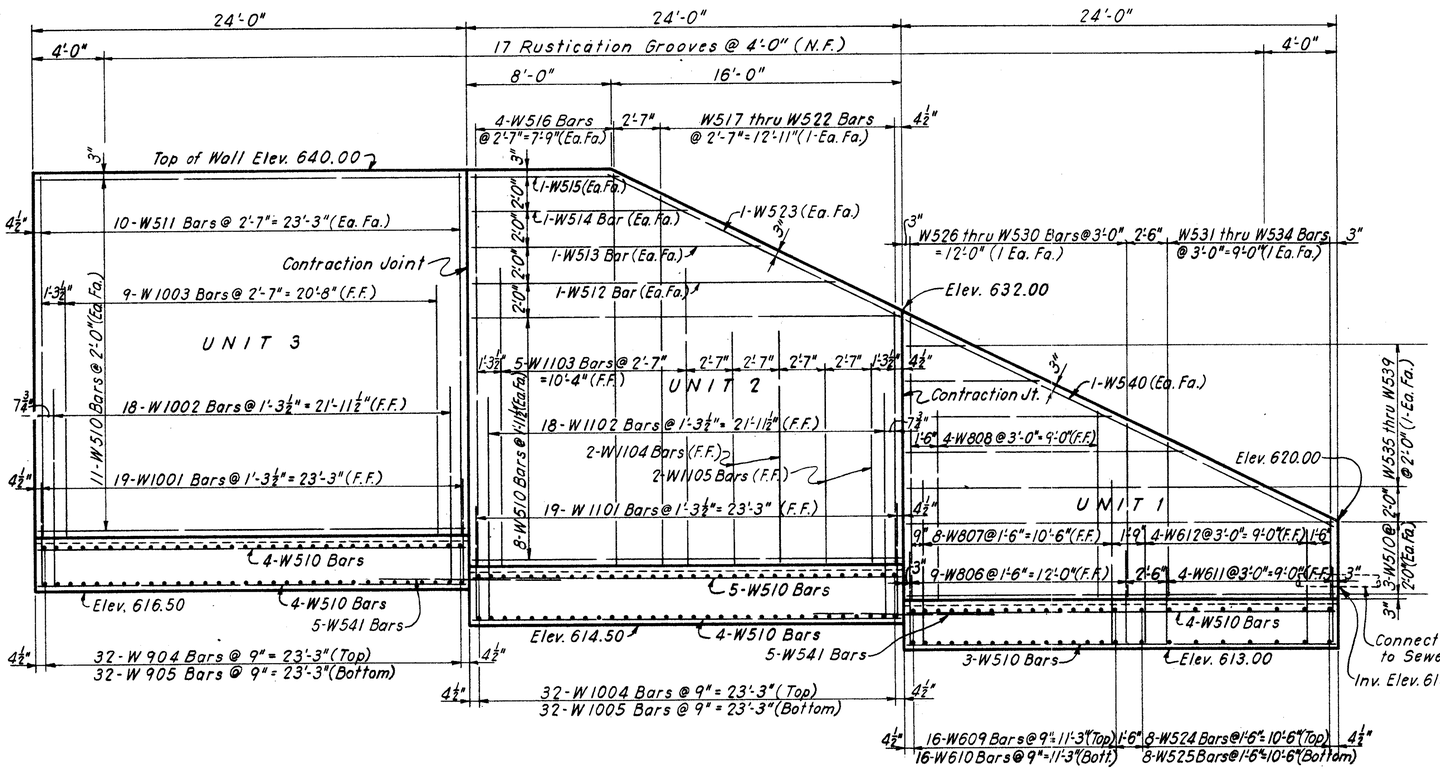

ELEVATION

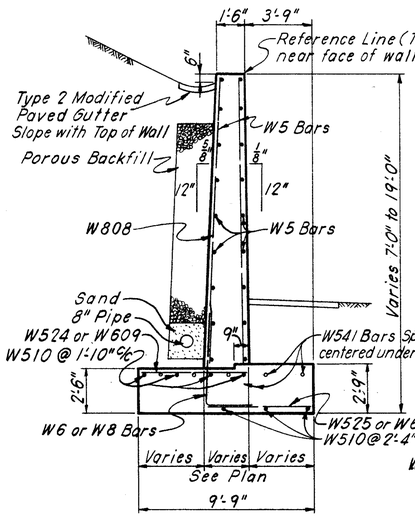

TYPICAL SECTION-UNIT 1

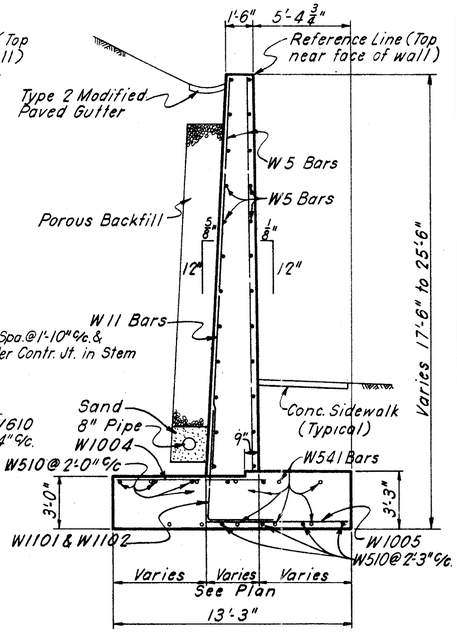

TYPICAL SECTION-UNIT 2

NOTE:
For Notes see Sheet No 297

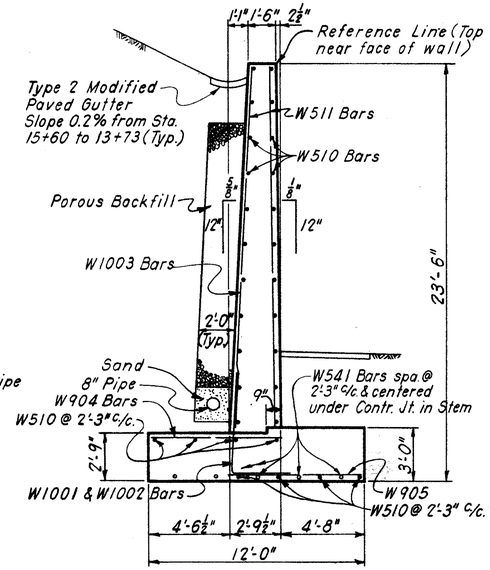

TYPICAL SECTION-UNIT 3

HAZELET & ERDAL
CONSULTING ENGINEERS
CINCINNATI, OHIO

RETAINING WALL NO. 40

DESIGNED	DRAWN	TRACED	CHECKED	REVIEWED DATE	REVISED
	RLR 4-16-65		C.E.E. 4-17-65	JHO 5/20/65	

B-203

FED. RD. DIV.	STATE	PROJECT	FISCAL YEAR
2	OHIO		

301
492

HAMILTON COUNTY
HAM-71-(1.56) (2.51)

Black 203
301 - 400

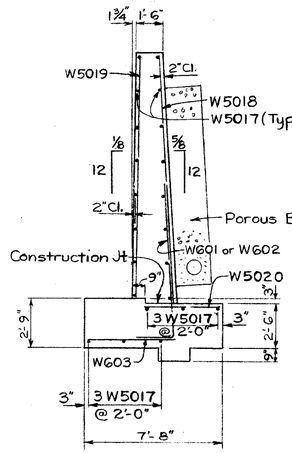

SECTION A-A

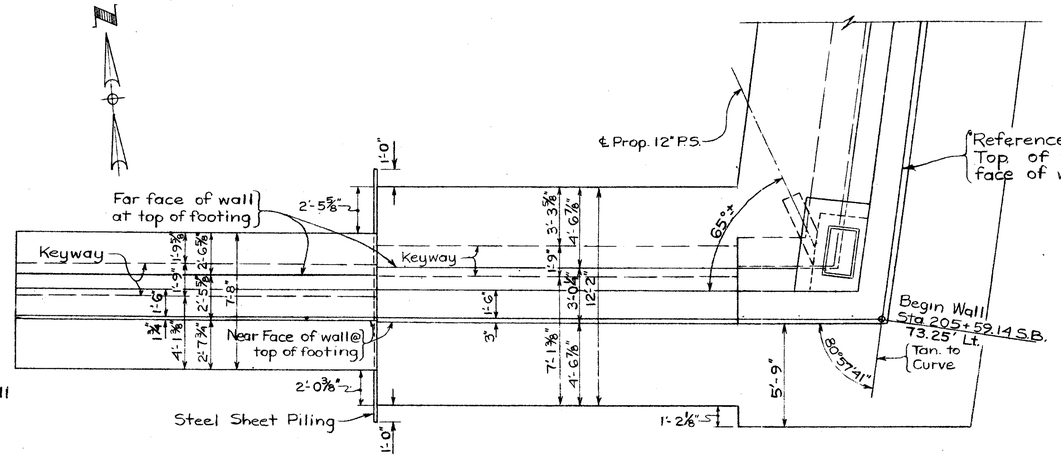

PLAN

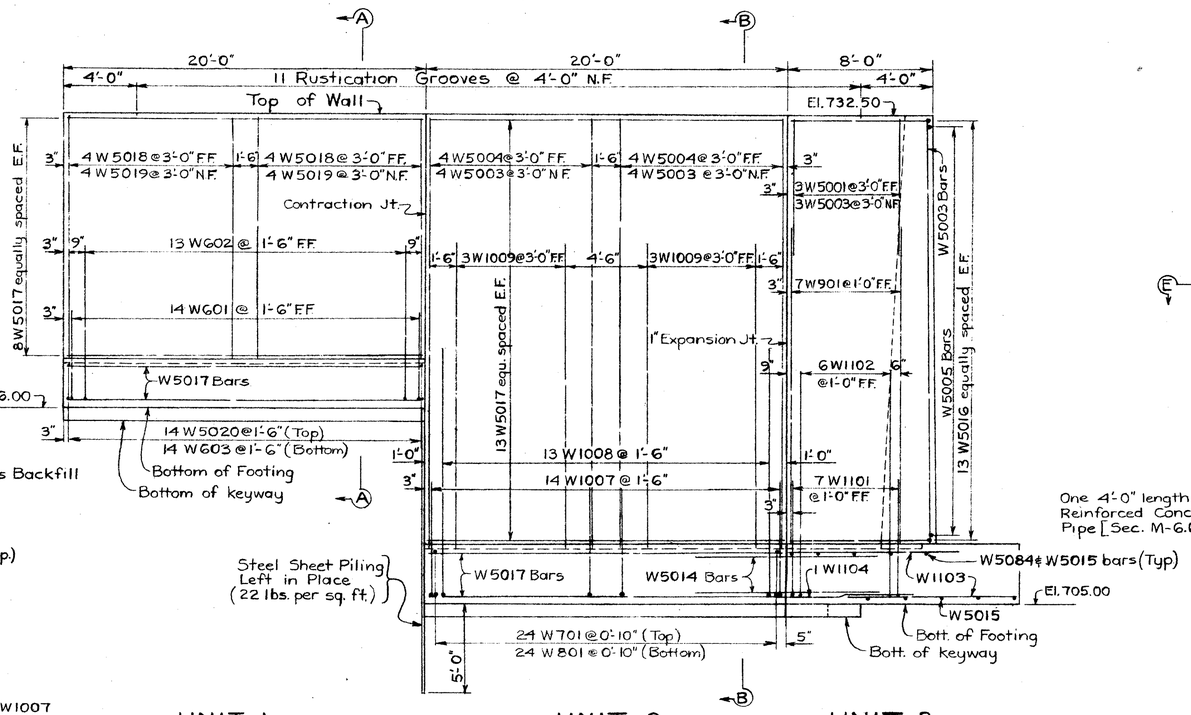

UNIT 1 UNIT 2 UNIT 3

ELEVATION

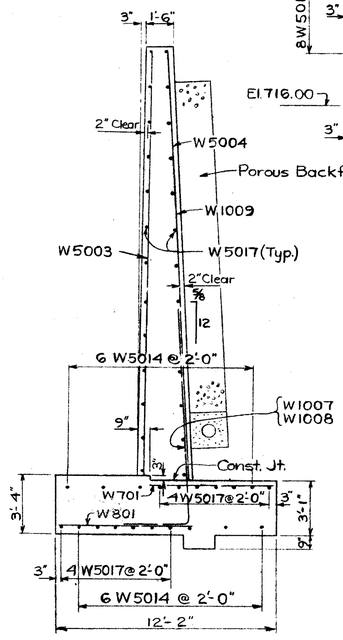

SECTION B-B

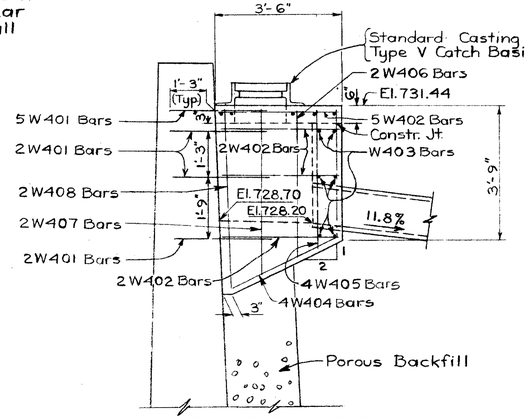

SECTION E-E

Note:
For Wall Location, see Sheet No. 311
For Wall Drainage, see Sheet No. 311
For Reinforcing Steel List, see Sheet No. 312
For Estimated Quantities, see Sheet No. 312
For Wall Notes, see Sheet No. 312
For Catch Basin Notes, see Sheet No. 310

Frame and grate details for Standard Castings for Type V Catch Basins are shown on Sheet No 182

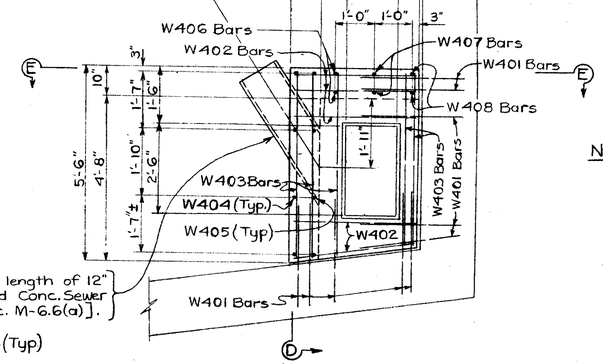

CATCH BASIN PLAN

Note: N.F. denotes near face
F.F. denotes far face
E.F. denotes each face

DESIGN ASSUMPTIONS (UNITS 1-5)
Maximum Foundation Pressure = 8000 lbs. per sq. ft.

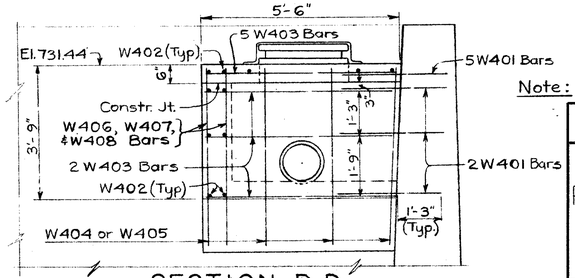

SECTION D-D

Note: Work this Sheet with Sheet No 302

HAZELET & ERDAL
CONSULTING ENGINEERS
CINCINNATI, OHIO

RETAINING WALL NO. 41

SHEET NO. 1 OF 12

DESIGNED	DRAWN	TRACED	CHECKED	REVIEWED DATE	REVISED
	H.L.L. 10-30-64		T.L.Z. 4-4-65	JHO 5/20/65	

FED. RD. DIV.	STATE	PROJECT	FISCAL YEAR
2	OHIO		

302
492

HAMILTON COUNTY
HAM-71-(1.66) (2.51)

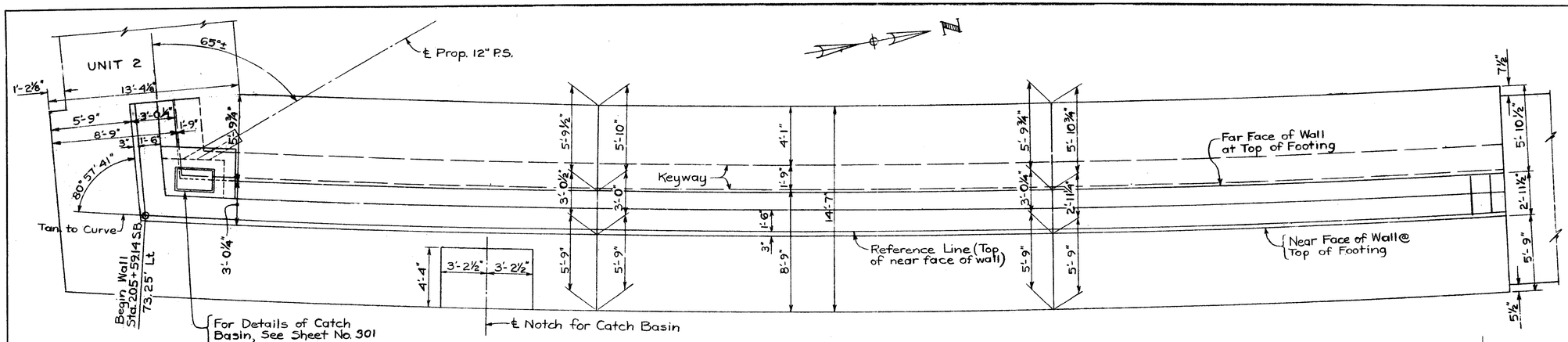

PLAN

Note: Reference Line of wall is concentric to Base Line of S.B. Expressway.

℄ Light Standard Sta 206+56 SB For details see Sh. No. 331

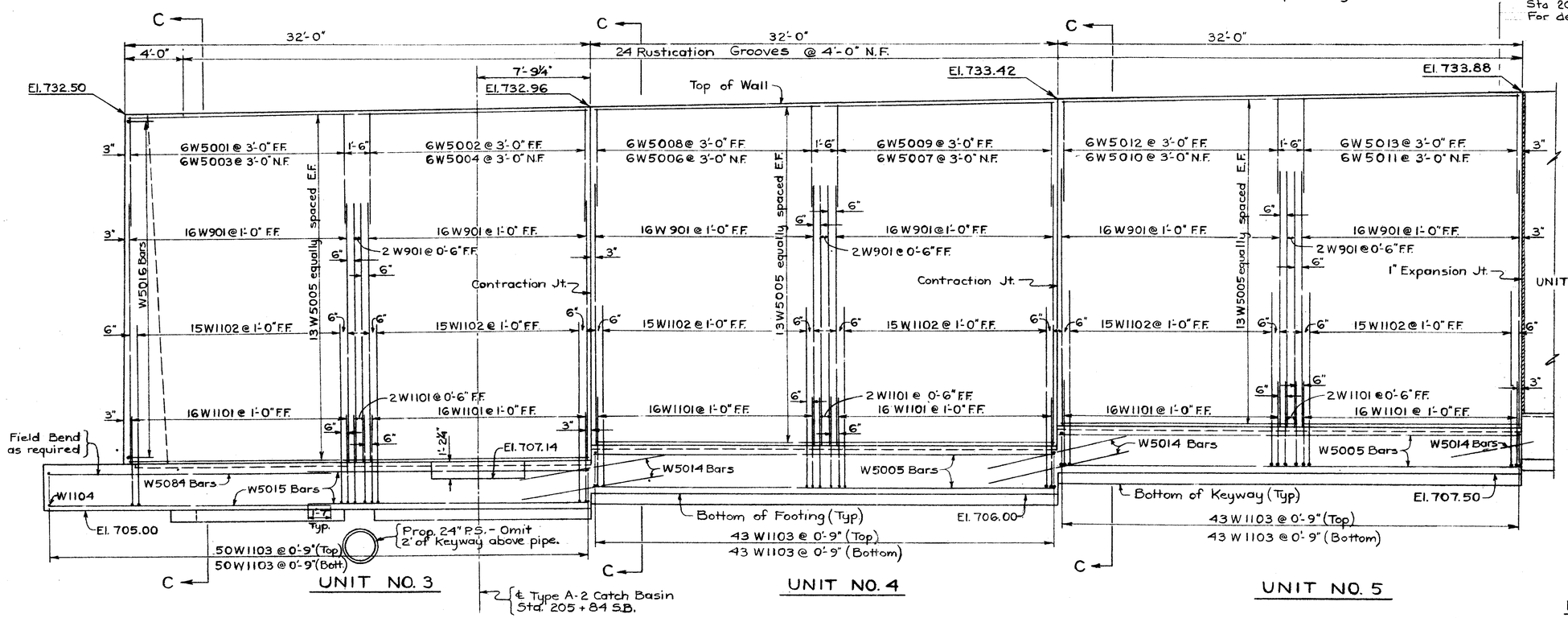

ELEVATION

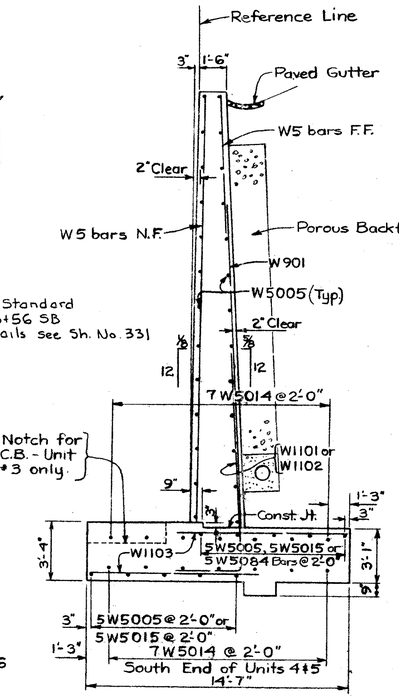

SECTION C-C

Note: N.F. denotes near face
F.F. denotes far face
E.F. denotes each face

Note: Work this sheet with Sheet No. 301

HAZELET & ERDAL
CONSULTING ENGINEERS
CINCINNATI, OHIO

RETAINING WALL NO. 41

SHEET NO. 2 OF 12

DESIGNED	DRAWN	TRACED	CHECKED	REVIEWED DATE	REVISED
	H.L.L. 10-28-64		T.L.Z. 4-4-65	JHO 5/10/65	

FED. RD. DIV.	STATE	PROJECT	FISCAL YEAR
2	OHIO		

303
492

HAMILTON COUNTY
HAM-71-(1.56) (2.51)

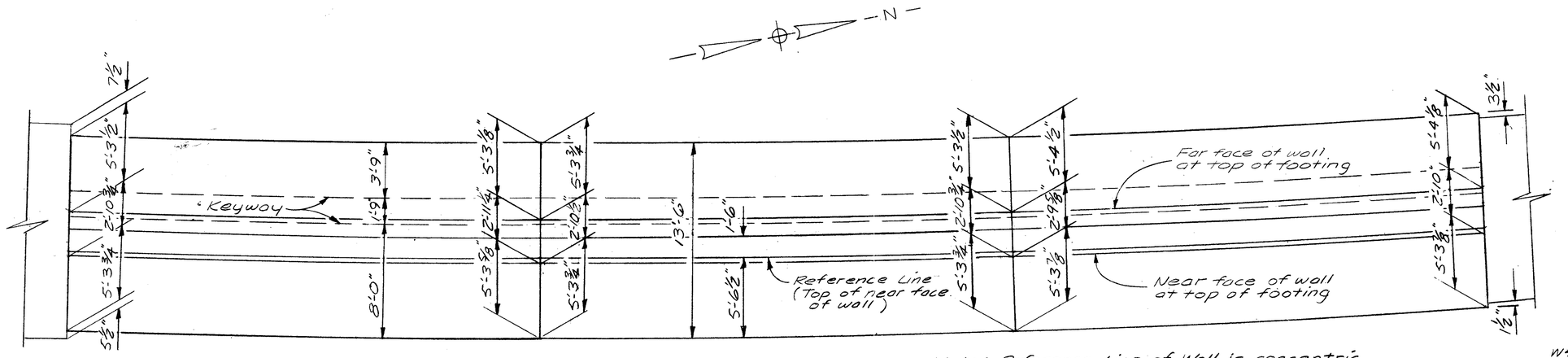

Note: Reference Line of Wall is concentric to base Line of S.B. Expressway.

PLAN

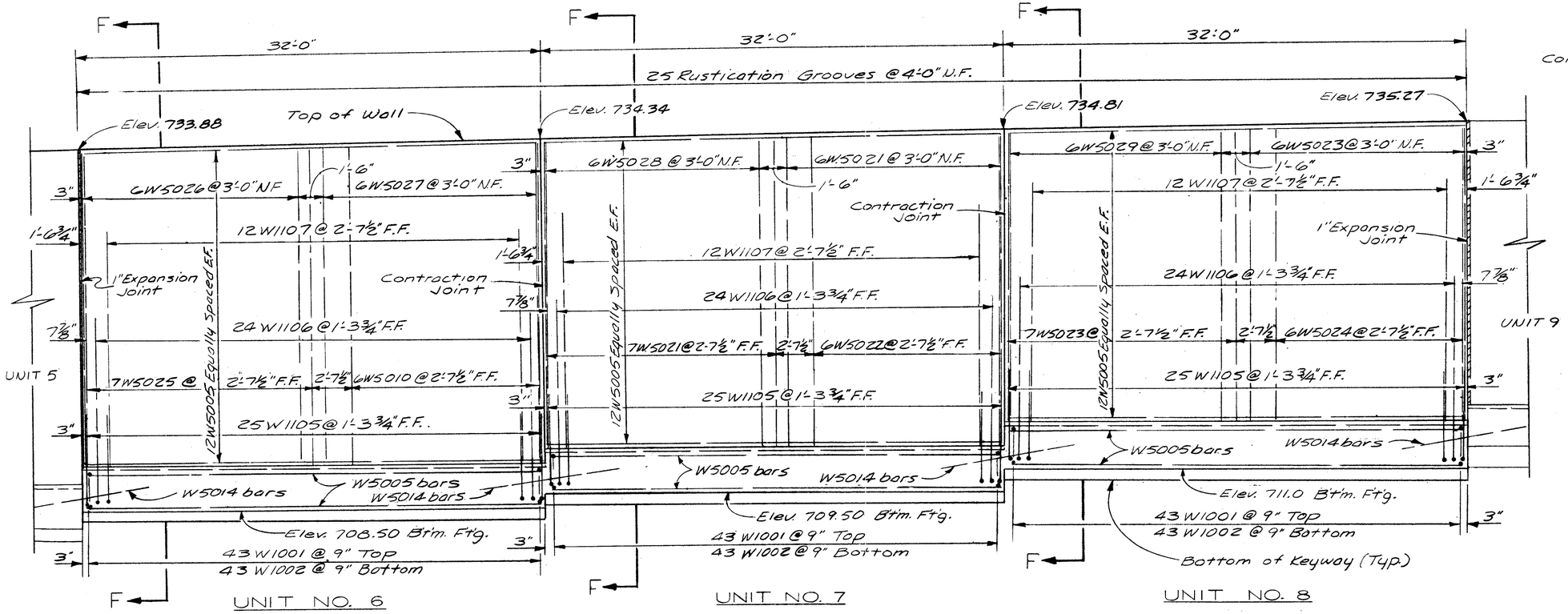

ELEVATION

Note: For Location of Wall see Sht. No. 311.
For Estimated Quantities see Sht. No. 312.
For Wall Drainage see Sht. No. 311.
For Wall Notes see Sht. No. 312.
For Reinforcing Steel List see Sht. No. 312.
For lighting plan see Sh No 203

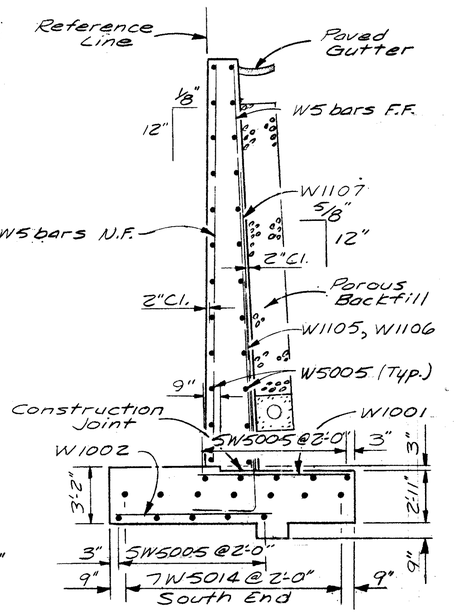

SECTION F-F

DESIGN ASSUMPTIONS
Maxium foundation Pressure = 8000 lbs/sq. ft.

Note: N.F. denotes near face
F.F. denotes far face
E.F. denotes each face

HAZELET & ERDAL
CONSULTING ENGINEERS
CINCINNATI, OHIO

RETAINING WALL NO. 41

SHEET NO. 3 OF 12

DESIGNED	DRAWN	TRACED	CHECKED	REVIEWED DATE	REVISED
	TLZ		H.L.L. 3-10-65	JHO 5/20/65	

FED. RD. DIV.	STATE	PROJECT	FISCAL YEAR
2	OHIO		

304
492

HAMILTON COUNTY
HAM-71-(1.56)(2.51)

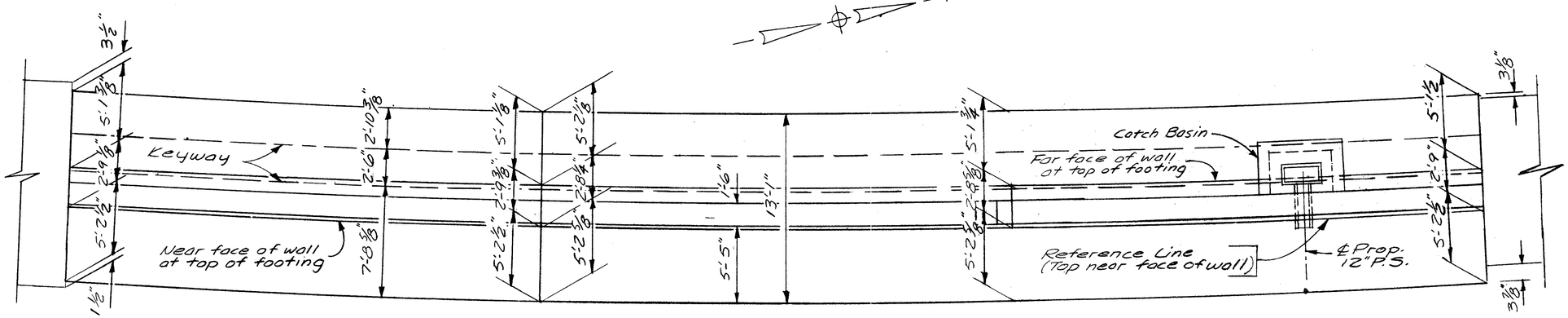

PLAN

Note: Reference Line of Wall is concentric to base Line of S.B. Expressway.

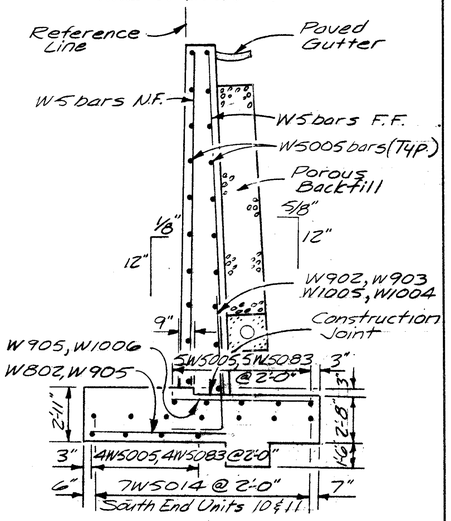

SECTION G-G

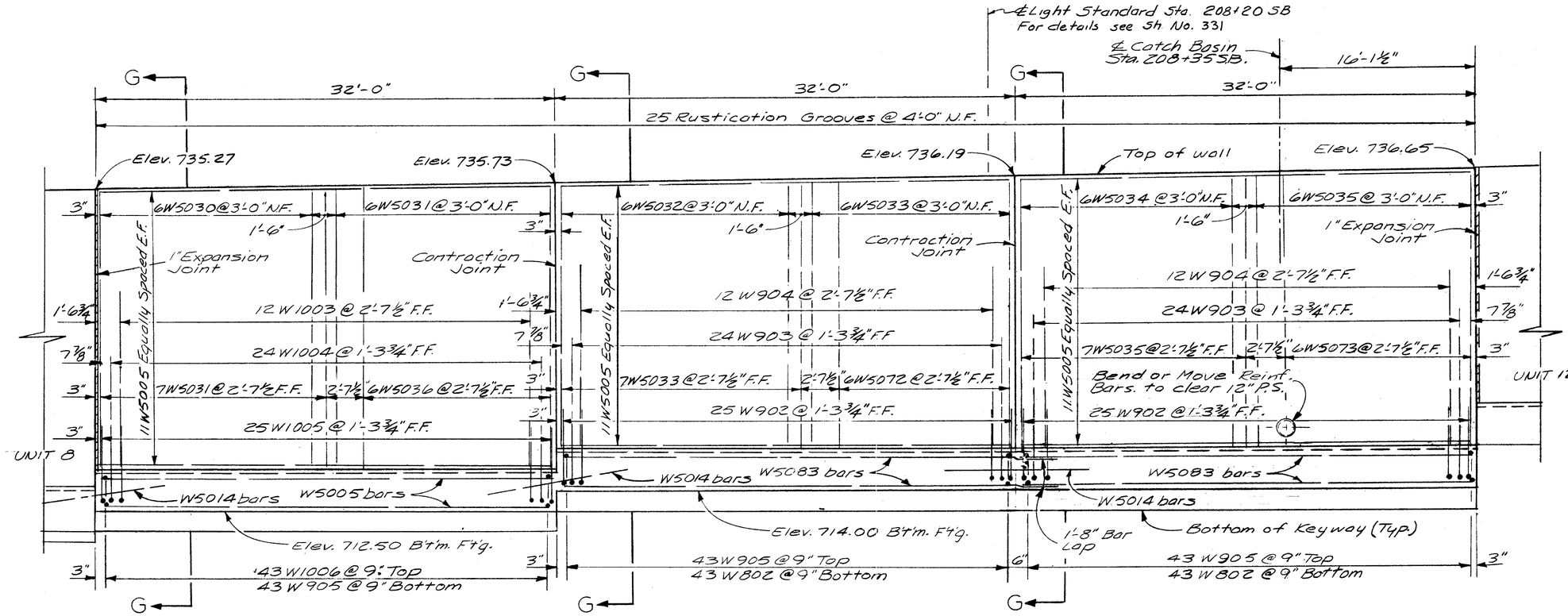

UNIT NO. 9 — UNIT NO. 10 — UNIT NO. 11

ELEVATION

DESIGN ASSUMPTIONS
Maxium Foundation Pressure = 5000 Lbs./Sq.Ft.

Note: N.F. denotes near face
F.F. denotes far face
E.F. denotes each face

Note: For Wall Location see Sht. No. 311.
For Wall Drainage see Sht. No. 311.
For Wall Notes see Sht. No. 312.
For Reinforcing Steel List see Sht. No. 312.
For Estimated Quantities see Sht. No. 312.
For Catch Basin Details see Sht. No. 310.

HAZELET & ERDAL
CONSULTING ENGINEERS
CINCINNATI, OHIO

RETAINING WALL NO. 41

SHEET NO. 4 OF 12

DESIGNED	DRAWN	TRACED	CHECKED	REVIEWED DATE	REVISED
	TLZ		H.L.L. 3-15-65	JHO 5/20/65	

FED. RD. DIV.	STATE	PROJECT	FISCAL YEAR
2	OHIO		

305
492

HAMILTON COUNTY
HAM-71-(1.56) (2.51)

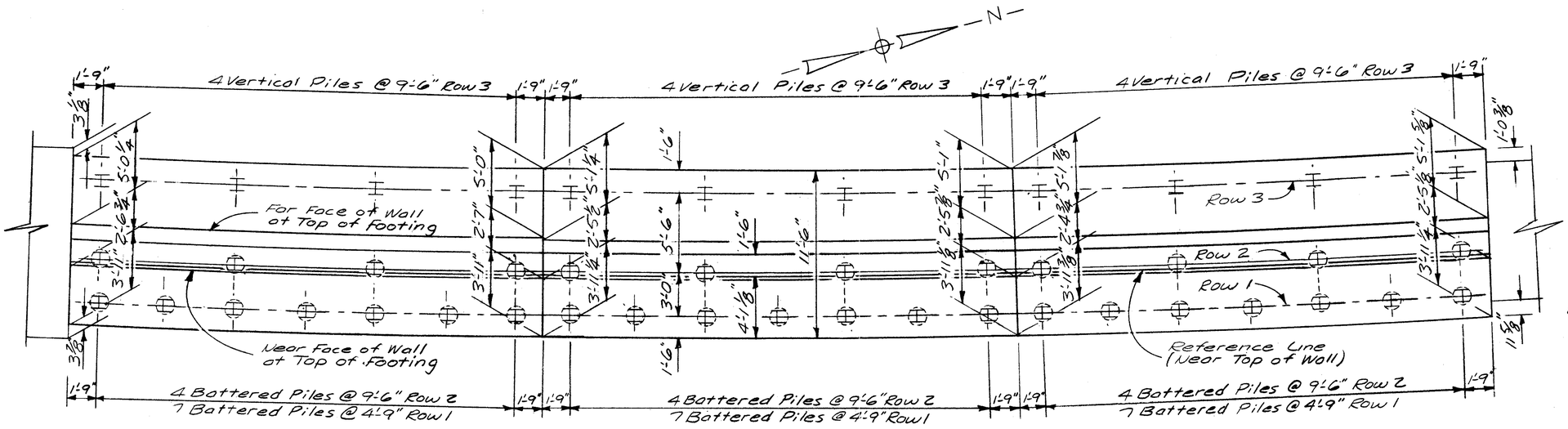

PLAN

Note: Reference Line of Wall is concentric to Base Line of S.B. Expressway.

Note: I denotes vertical pile
Ⓘ denotes battered pile

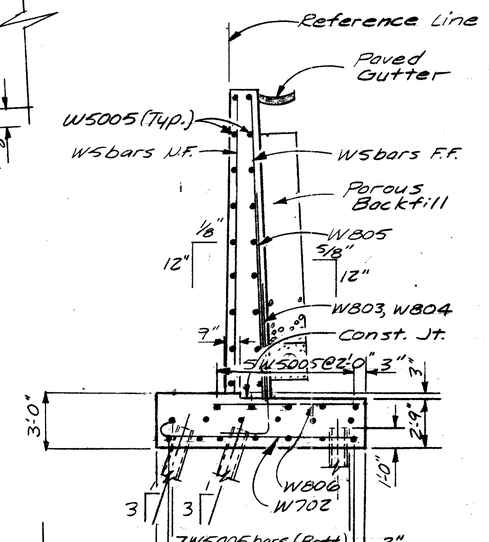

SECTION H-H

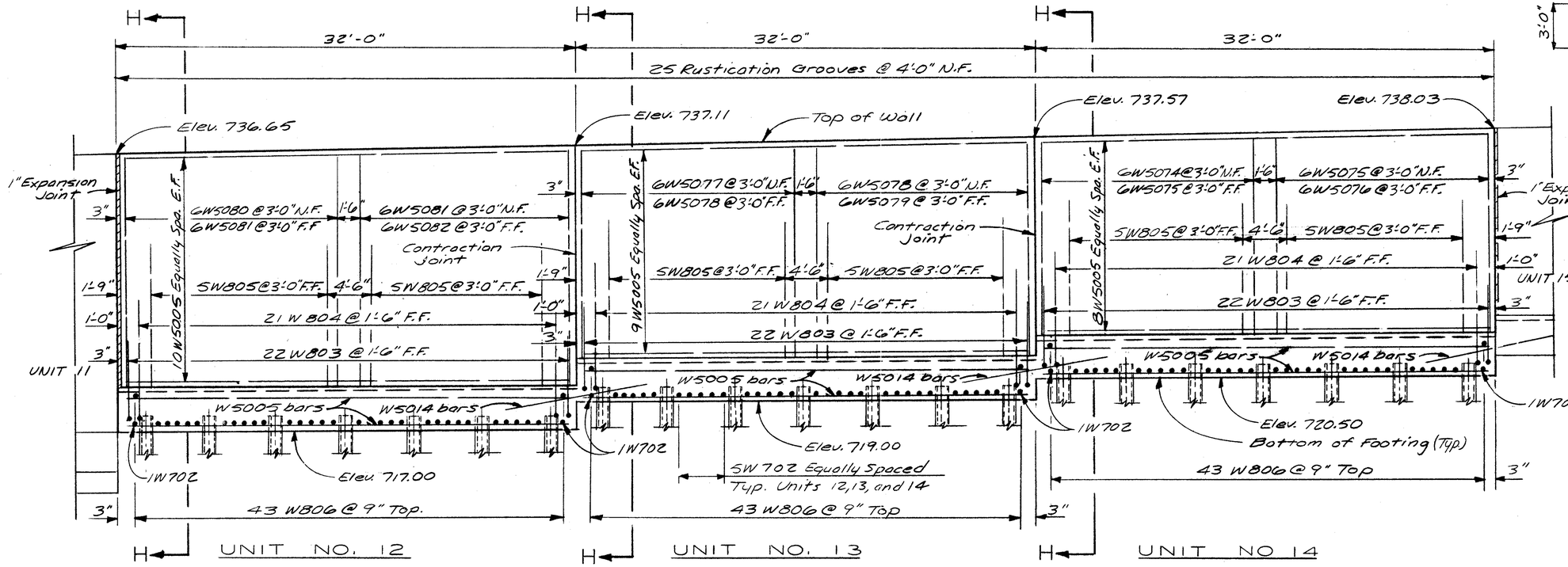

UNIT NO. 12 — UNIT NO. 13 — UNIT NO 14

ELEVATION

Note: For Wall Location see Sht. No. 311
For Wall Drainage see Sht. No. 311.
For Wall Notes see Sht. No. 312
For Estimated Quantities see Sht. No. 312.
For Reinforcing Steel List see Sht. No. 312.

DESIGN ASSUMPTIONS
Equivalent Fluid Weight
(Possive) = 300 Lbs/Cu. Ft.

Note: N.F. denotes near face
F.F. denotes for face
E.F. denotes each face

HAZELET & ERDAL
CONSULTING ENGINEERS
CINCINNATI, OHIO

RETAINING WALL NO. 41

SHEET NO. 5 OF 12

DESIGNED	DRAWN	TRACED	CHECKED	REVIEWED DATE	REVISED
	TLZ		H.L.L. 3-15-65	JHO 5/10/65	

FED. RD. DIV.	STATE	PROJECT	FISCAL YEAR
2	OHIO		

306
492

HAMILTON COUNTY
HAM-71-(1.56) (2.51)

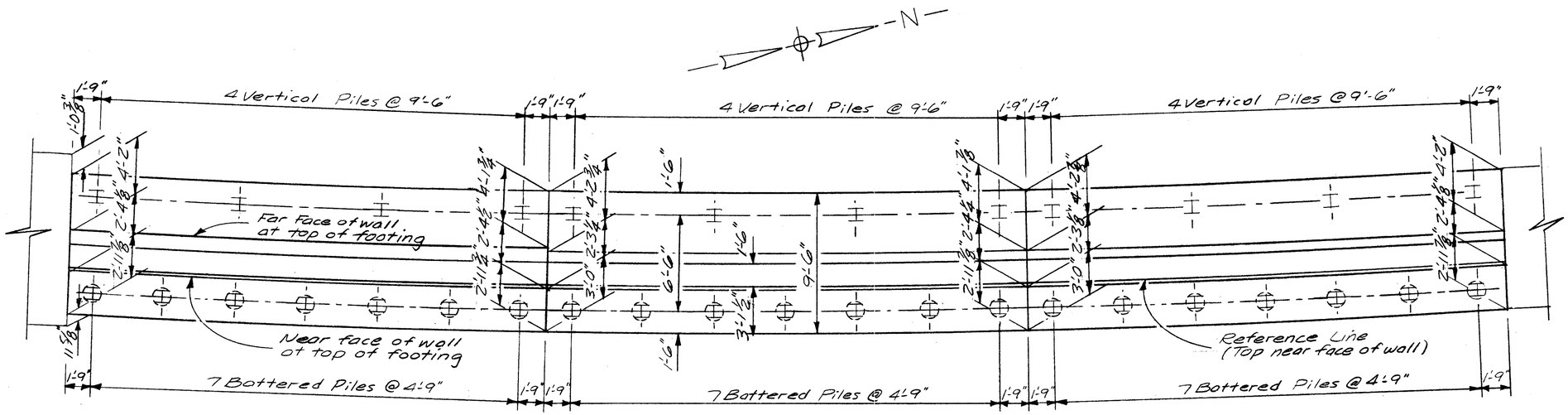

PLAN

Note: I denotes verticol Pile
(T) denotes battered Pile

Note: Reference Line of Wall is concentric to Base Line of S.B. Expressway.

Note: For Wall Locotion see Sht. No. 311 .
For Wall Drainage see Sht. No. 311 .
For Wall Notes see Sht No. 312 .
For Estimate of Quantities see Sht. No. 312 .
For Reinforcing Steel List see Sht No. 312 .
For Section "J-J" see Sht. No. 307 .

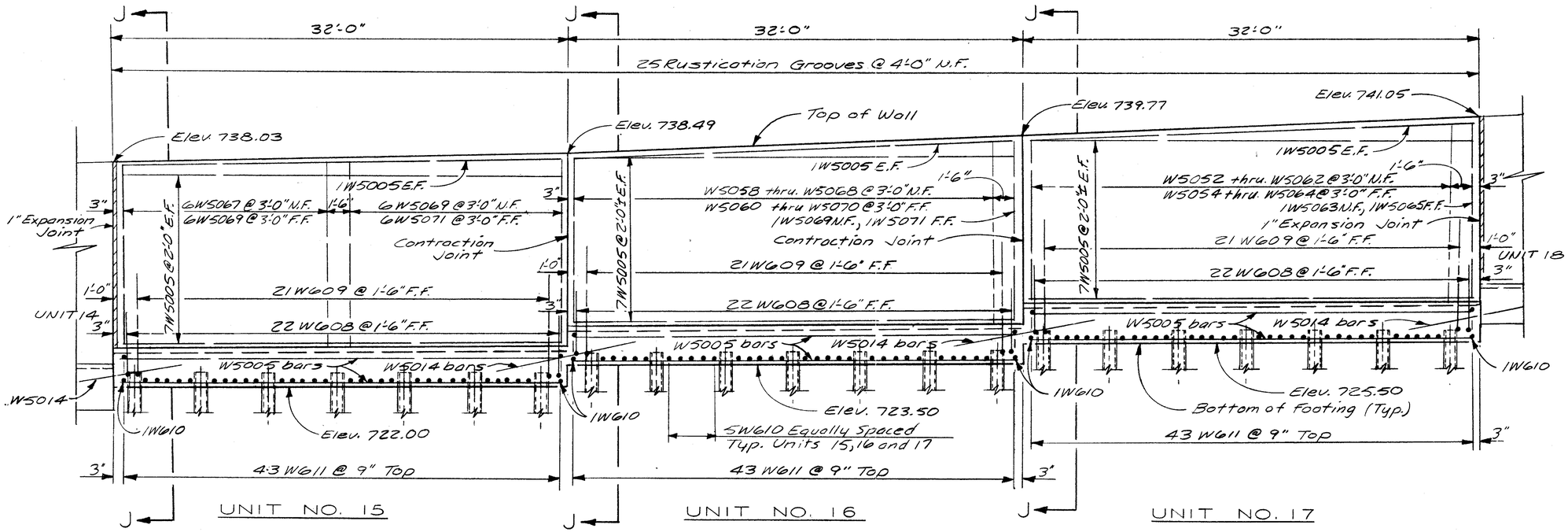

ELEVATION

Note: N.F. denotes near face
F.F. denotes far face
E.F. denotes each face

DESIGN ASSUMPTIONS
Equivolent Fluid Weight (Possive) = 300 Lbs/Cu. Ft.

HAZELET & ERDAL
CONSULTING ENGINEERS
CINCINNATI, OHIO

RETAINING WALL NO. 41

SHEET NO. 6 OF 12

DESIGNED	DRAWN	TRACED	CHECKED	REVIEWED DATE	REVISED
	TLZ		H.L.L. 3-17-65	JHO 5/20/65	

FED. RD. DIV.	STATE	PROJECT	FISCAL YEAR
2	OHIO		

307
492

HAMILTON COUNTY
HAM-71-(1.56) (2.51)

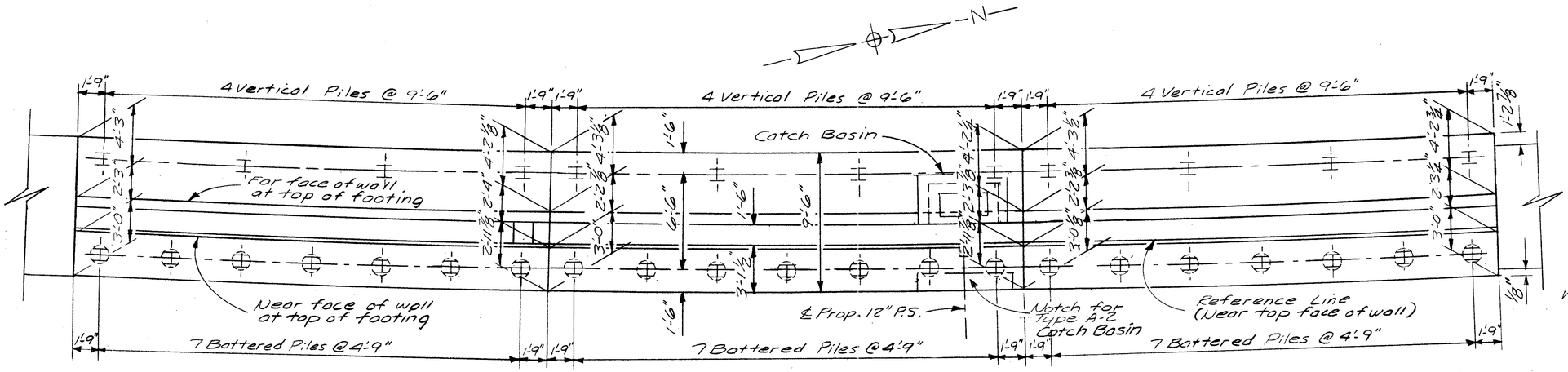

PLAN

Note: Reference Line of Wall is concentric to Base Line of S.B. Expressway.

Note: ⊥ denotes vertical pile
⊕ denotes battered pile

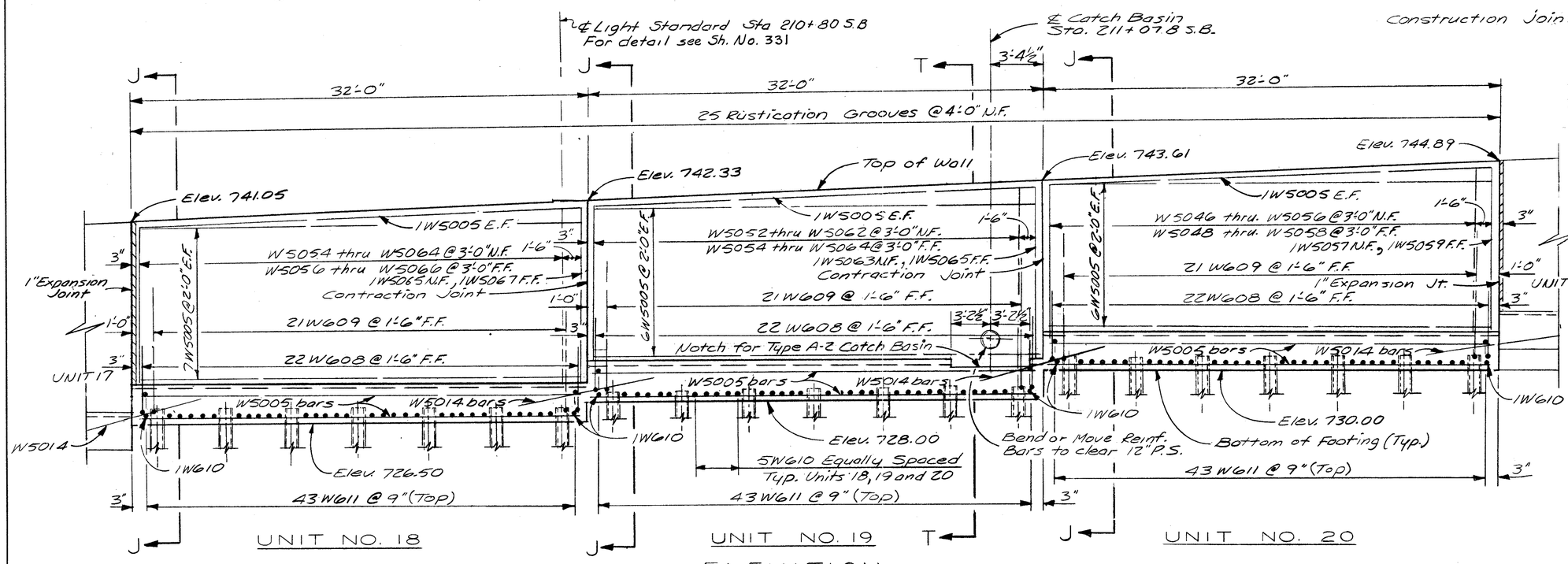

ELEVATION

Note: N.F. denotes near face
F.F. denotes for face
E.F. denotes each face

DESIGN ASSUMPTIONS
Equivalent fluid weight
(Passive) = 300 Lbs/cu. Ft.

Note: For Wall Location see Sht. No. 311.
For Wall Drainage see Sht. No. 311.
For Wall Notes see Sht. No. 312.
For Estimated Quantities see Sht. No. 312.
For Reinforcing Steel List see Sht. No. 312.
For Catch Basin Details see Sht. No. 310.

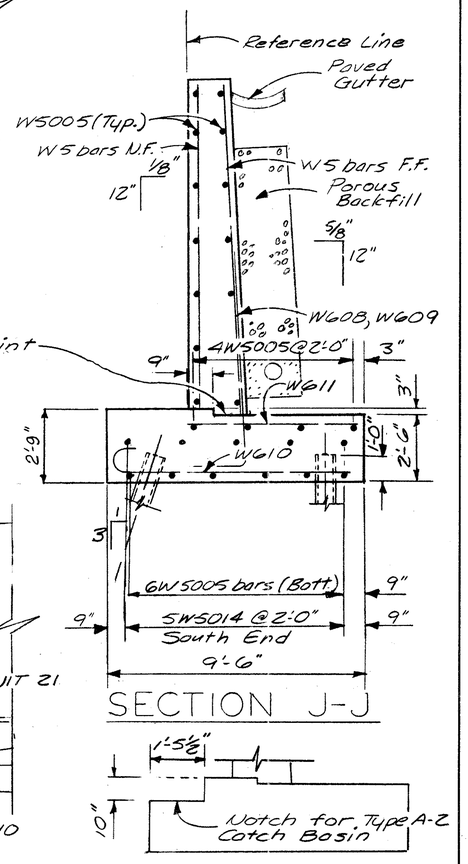

HAZELET & ERDAL
CONSULTING ENGINEERS
CINCINNATI, OHIO

RETAINING WALL NO. 41

SHEET NO. 7 OF 12

DESIGNED	DRAWN	TRACED	CHECKED	REVIEWED DATE	REVISED
	TLZ		H.L.L. 3-17-65	J.H.O. 5/20/65	

FED. RD. DIV.	STATE	PROJECT	FISCAL YEAR
2	OHIO		

308
492

HAMILTON COUNTY
HAM-71-(1.56) (2.61)

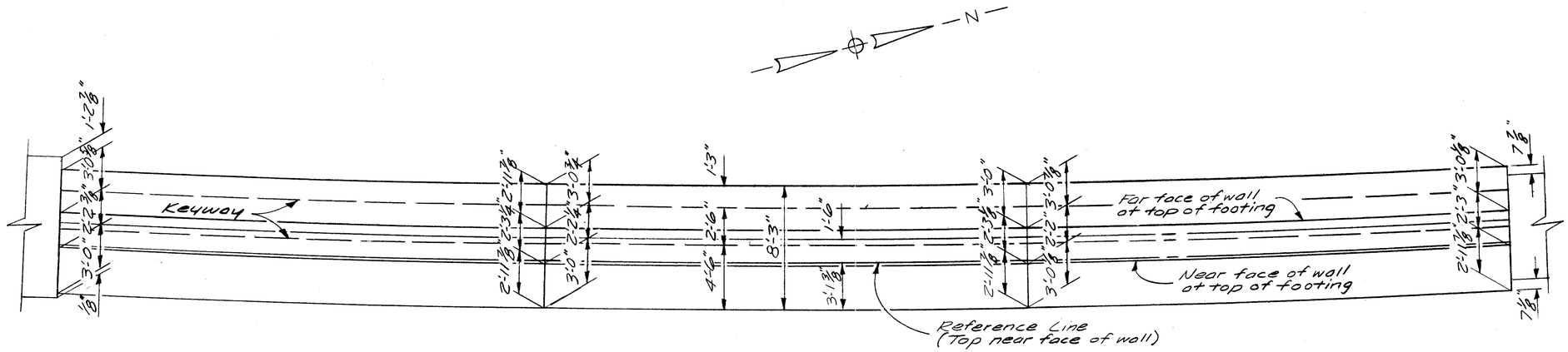

PLAN

Note: Reference Line of wall is concentric to Base Line of S.B. Expressway.

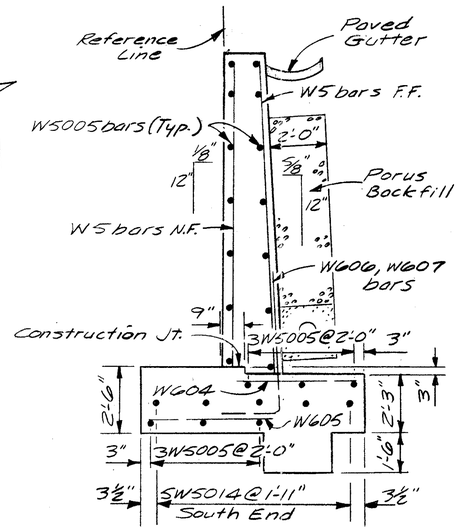

SECTION K-K

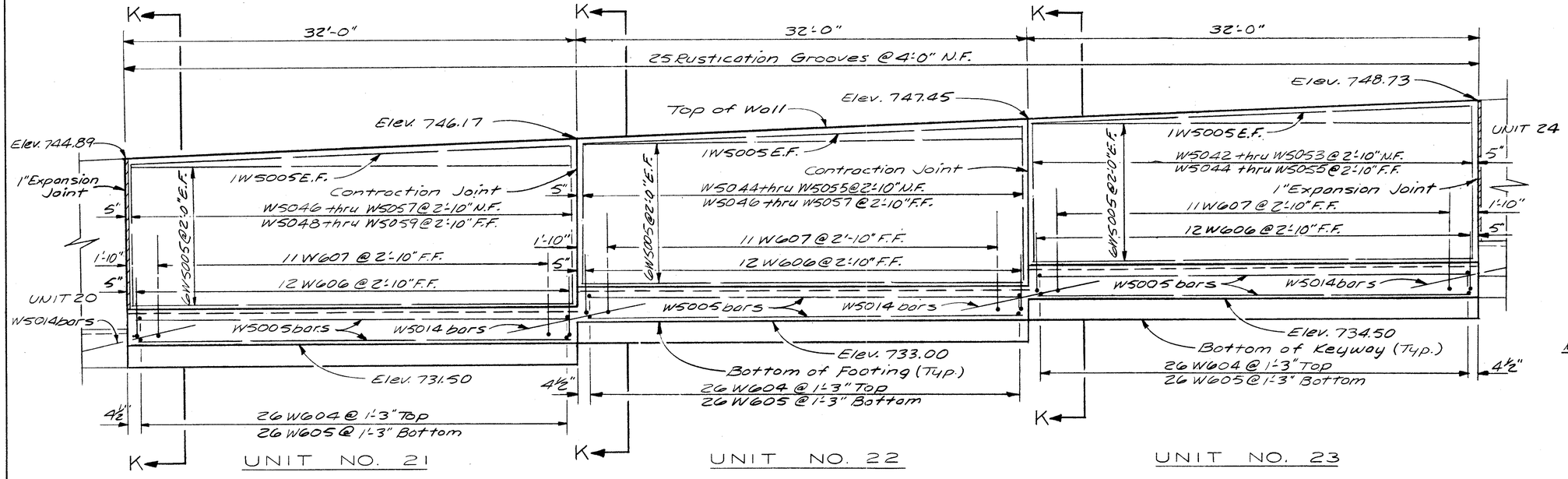

ELEVATION

DESIGN ASSUMPTIONS
Maxium Foundation Pressure = 5000 Lbs./Sq.Ft.

Note: N.F. denotes near face
F.F. denotes far face
E.F. denotes each face

Note: For Wall Location see Sht. No. 311.
For Wall Drainage see Sht. No. 311.
For Wall Notes see Sht. No. 312.
For Reinforcing Steel List see Sht. No. 312
For Estimated Quantities see Sht. No. 312.

HAZELET & ERDAL
CONSULTING ENGINEERS
CINCINNATI, OHIO

RETAINING WALL NO. 41

SHEET NO. 8 OF 12

DESIGNED	DRAWN	TRACED	CHECKED	REVIEWED DATE	REVISED
	TLZ		H.L.L. 3-18-65	JHO 5/20/65	

FED. RD. DIV.	STATE	PROJECT	FISCAL YEAR
2	OHIO		

309
492

HAMILTON COUNTY
HAM-71-(1.56) (2.51)

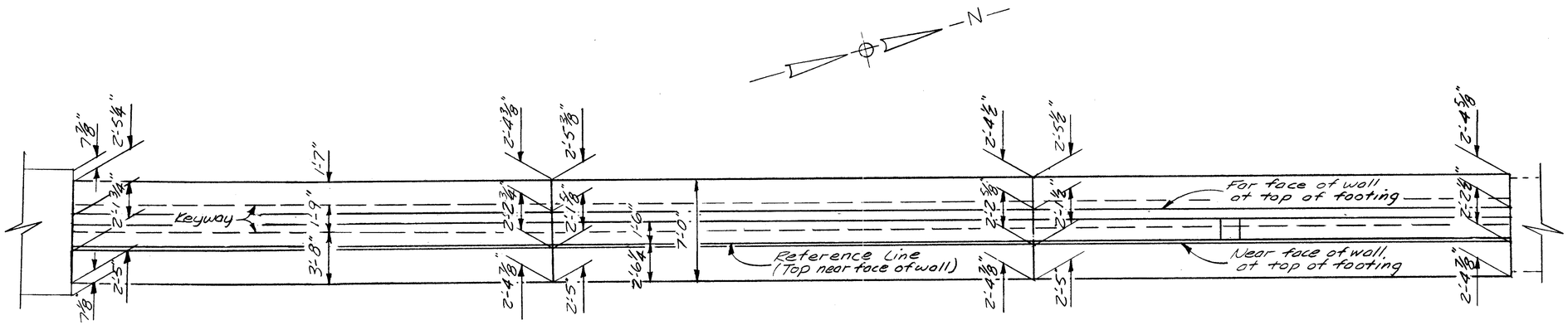

PLAN

Note: Reference Line of Units 25 and 26 is parallel to base line of Northbound Expressway. Reference Line of Unit 24 is concentric to base line of Southbound Expressway.

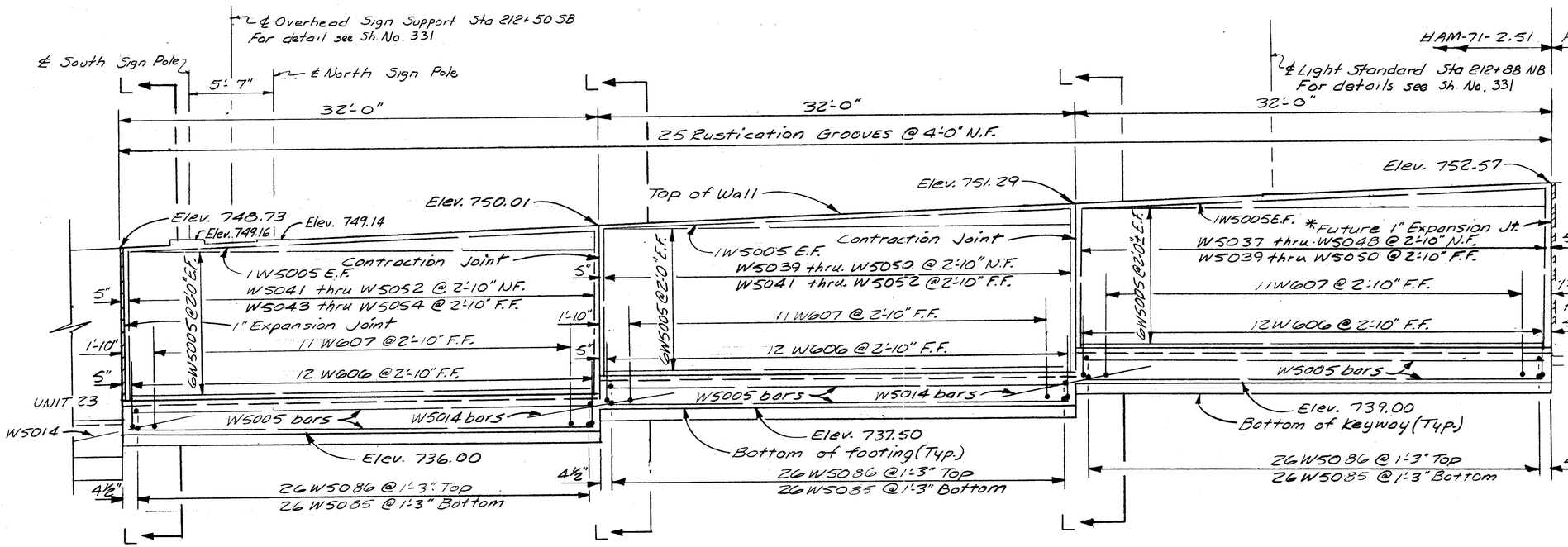

UNIT NO. 24 — UNIT NO. 25 — UNIT NO. 26

ELEVATION

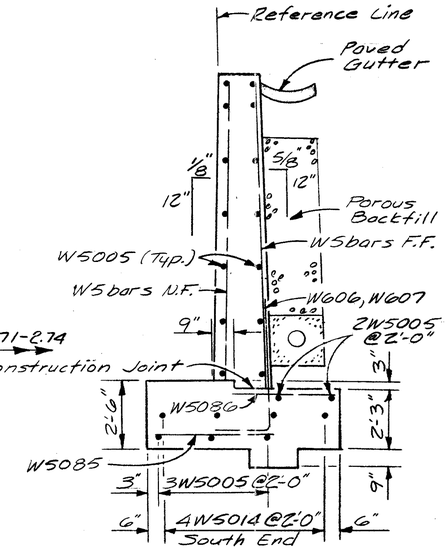

SECTION L-L

*Note: Prepare for face of wall for future 1/2" premolded sealing strip (to be included with future Unit No. 27 for payment). 1" Joint Filler to be included with future Unit No. 27 for payment.

DESIGN ASSUMPTIONS
Maxium Foundation Pressure = 8000 Lbs/Sq. Ft.

Note: N.F. denotes near face
F.F. denotes far face
E.F. denotes each face

Note: For Location of Wall see Sht. No. 311.
For Wall Drainage see Sht. No. 311.
For Wall Notes see Sht. No. 312.
For Estimated Quantities see Sht. No. 312
For Reinforcing Steel List see Sht. No. 312.

HAZELET & ERDAL
CONSULTING ENGINEERS
CINCINNATI, OHIO

RETAINING WALL NO. 41

SHEET NO. 9 OF 12

DESIGNED	DRAWN	TRACED	CHECKED	REVIEWED DATE	REVISED
	TLZ		H.L.L. 3-19-65	JHO 5/20/65	

FED. RD. DIV.	STATE	PROJECT	FISCAL YEAR
2	OHIO		

310
492

HAMILTON COUNTY
HAM-71-(1.56)(2.61)

CATCH BASIN NOTES

Concrete for Catch Basins and Tops shall be included in Item 511 Class "E" Concrete, Wall Shafts.

For Reinforcing Steel List see Sht. No. 312

For Estimate of Quantities see Sht No. 312

Provide 2" clearance to reinforcing steel in Catch Basins.

For Details of Type "V" Standard Catch Basin Casting see Sht. No. 182.

Work Catch Basin @ Sta. 208+35 S.B. with Sht. No. 304.

Work Catch Basin @ Sta. 211+07.8 S.B. with Sht. No. 307.

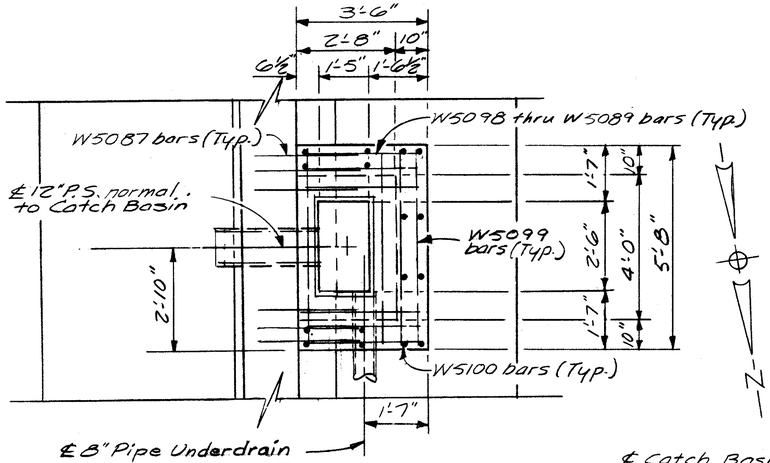

PLAN

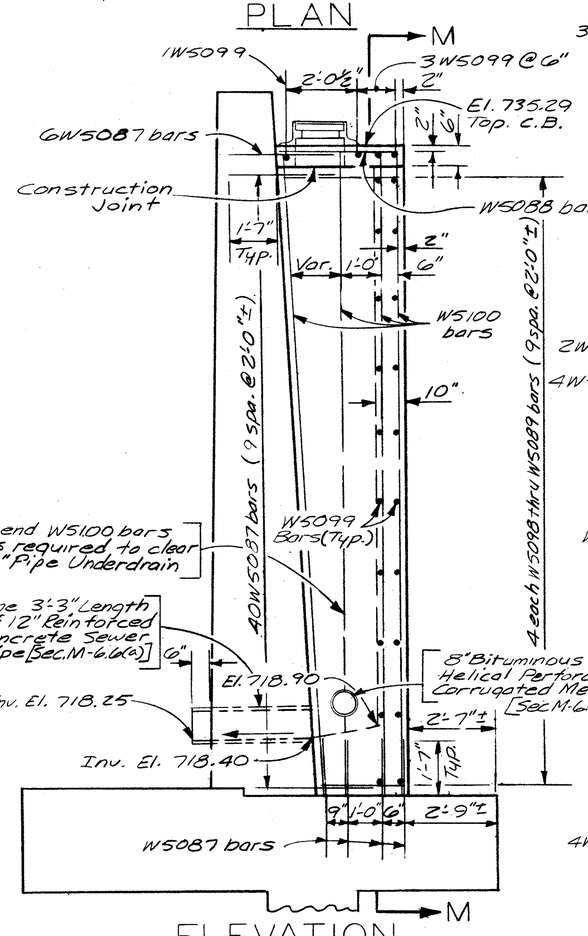

ELEVATION

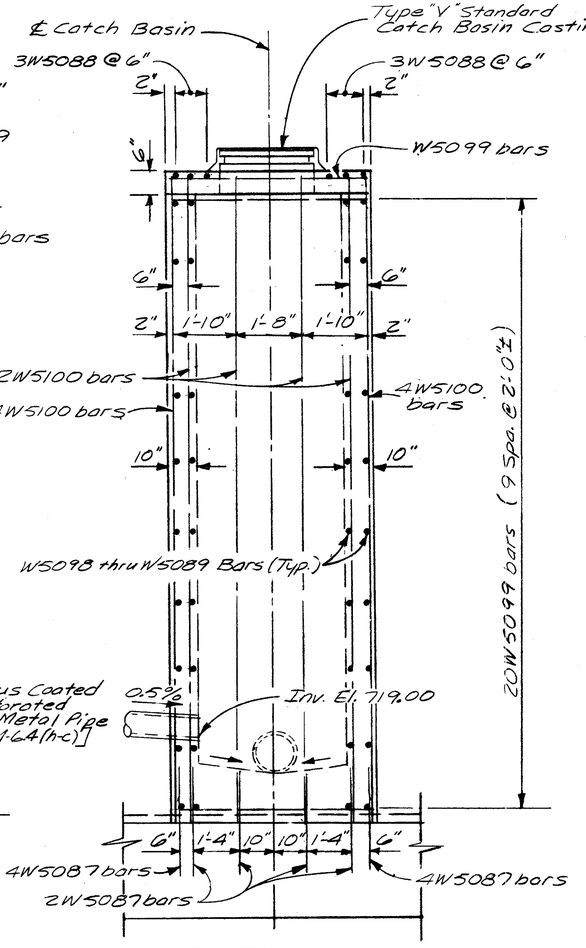

SECTION M-M

CATCH BASIN AT STA. 208+35 S.B.

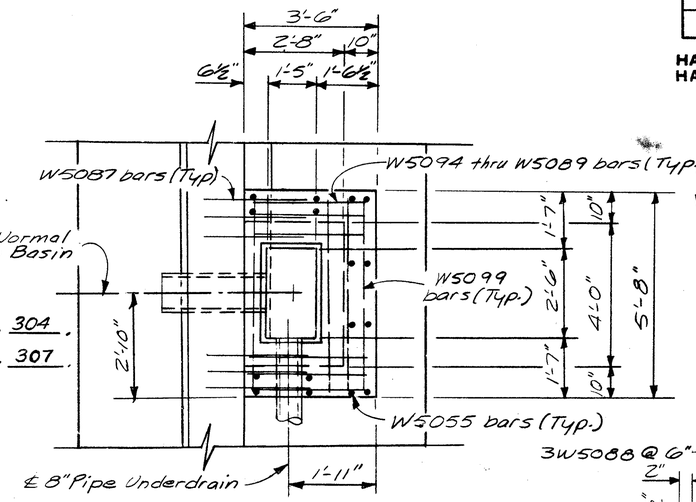

PLAN

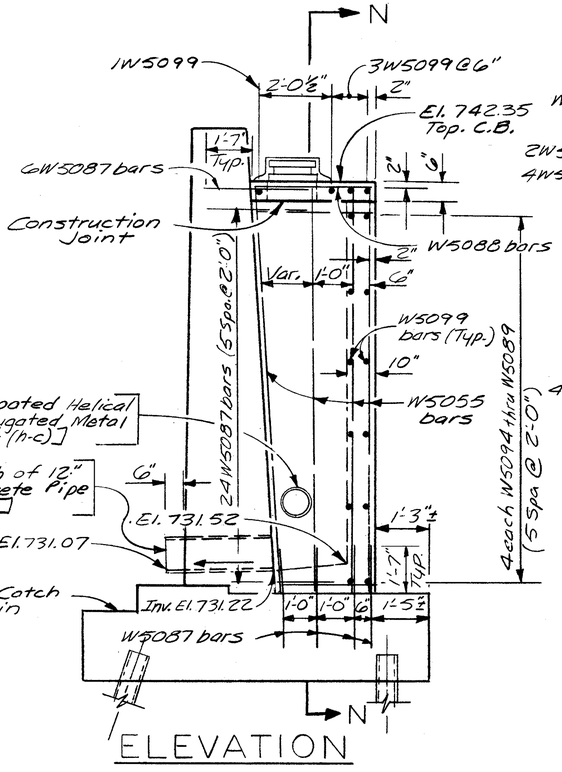

ELEVATION

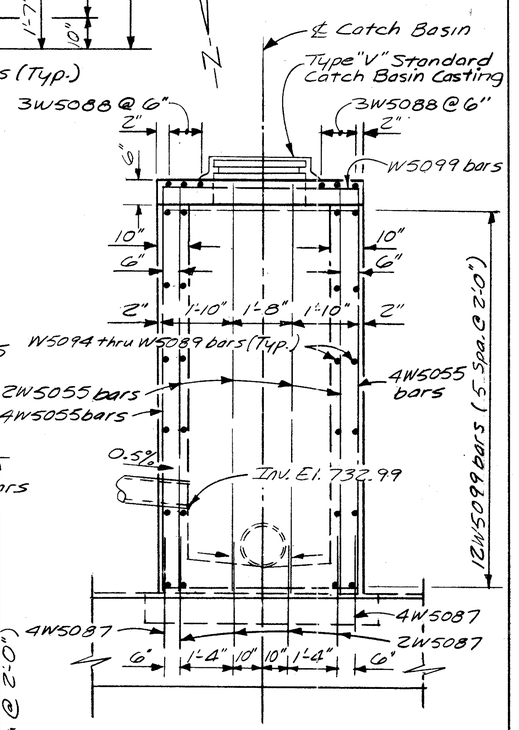

SECTION N-N

CATCH BASIN AT STA. 211+07.8 S.B.

HAZELET & ERDAL
CONSULTING ENGINEERS
CINCINNATI, OHIO

RETAINING WALL NO. 41

SHEET NO. 10 OF 12

DESIGNED	DRAWN	TRACED	CHECKED	REVIEWED DATE	REVISED
TLZ	TLZ		H.L.L. 3-8-65	JHO 5/10/65	

FED. RD. DIV.	STATE	PROJECT	FISCAL YEAR
2	OHIO		

311
492

HAMILTON COUNTY
HAM-71-(1.56) (2.51)

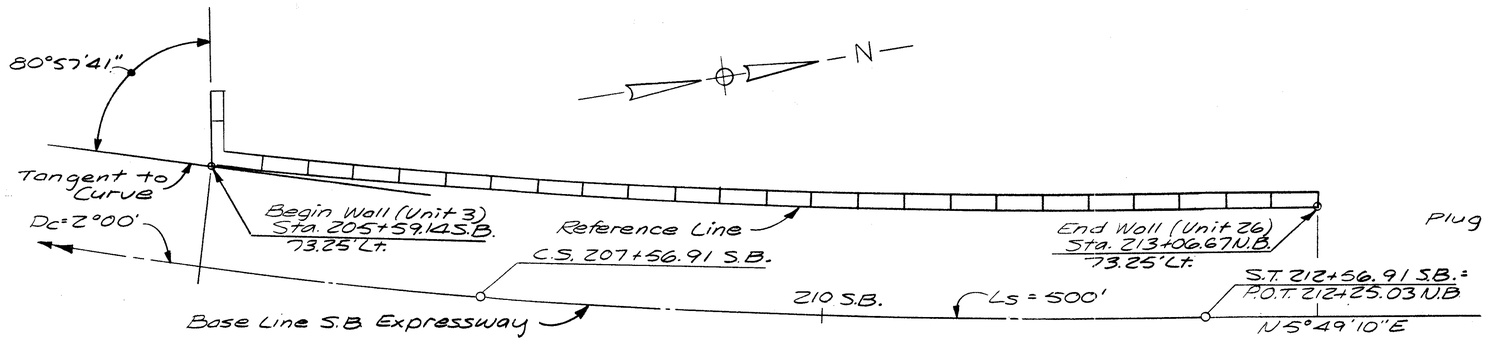

WALL LOCATION

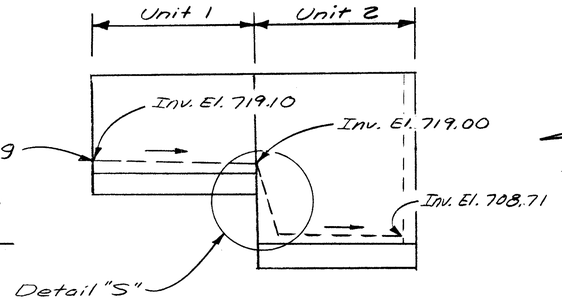

VIEW P-P

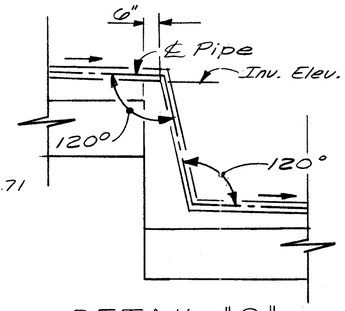

DETAIL "S"

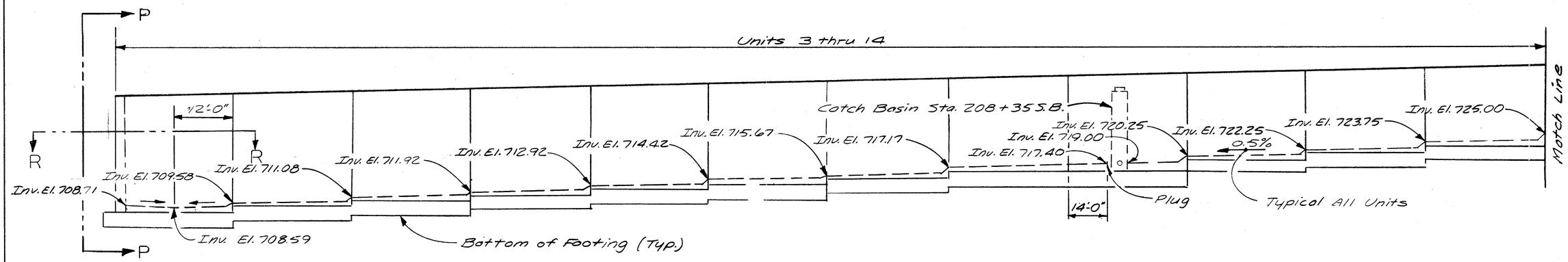

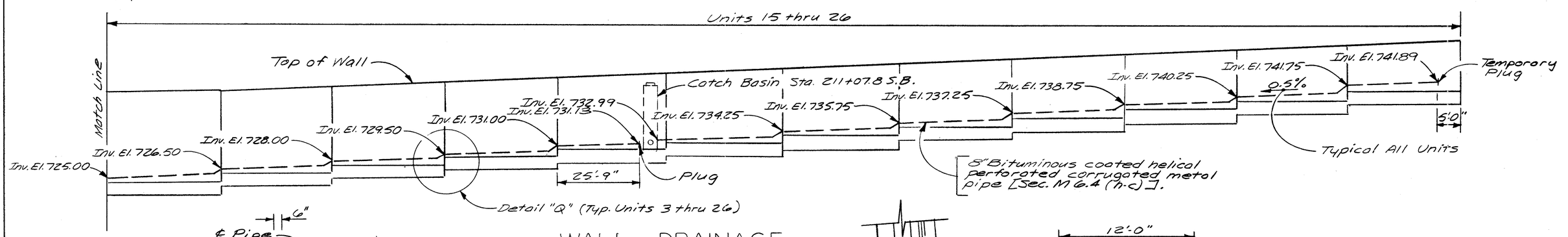

WALL DRAINAGE

Note: For 8" pipe underdrain tie in at Catch Basins see Sheet No. 310 .

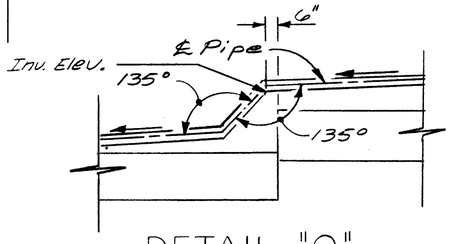

DETAIL "Q"

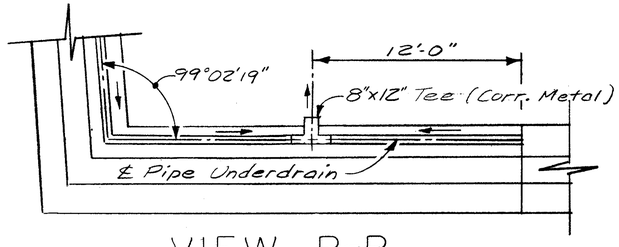

VIEW R-R

HAZELET & ERDAL
CONSULTING ENGINEERS
CINCINNATI, OHIO

RETAINING WALL NO. 41

SHEET NO. 11 OF 12

DESIGNED	DRAWN	TRACED	CHECKED	REVIEWED DATE	REVISED
	TLZ		H.L.L. 3-5-65	JHO 5/20/65	

FED. RD. DIV.	STATE	PROJECT	FISCAL YEAR
2	OHIO		

312
492

HAMILTON COUNTY
HAM-71-(1.56)(2.61)

REINFORCING STEEL LIST

MARK	TYPE	NO.	LENGTH	WEIGHT
W5001	Str.	9	7'-8"	72
W5002	Str.	6	7'-11"	50
W5003	Str.	17	24'-0"	426
W5004	Str.	14	24'-3"	354
W5005	Str.	634	31'-8"	20940
W5006	Str.	6	23'-5"	147
W5007	Str.	6	23'-8"	148
W5008	Str.	6	7'-1"	44
W5009	Str.	6	7'-4"	46
W5010	Str.	12	22'-5"	281
W5011	Str.	6	22'-8"	142
W5012	Str.	6	6'-1"	38
W5013	Str.	6	6'-4"	40
W5014	Str.	151	10'-0"	1575
W5015	Str.	15	19'-4"	303
W5016	12	26	9'-3"	251
W5017	Str.	56	19'-8"	1149
W5018	Str.	8	13'-10"	115
W5019	Str.	8	13'-7"	113
W5020	Str.	14	4'-2"	61
W5021	Str.	13	21'-8"	294
W5022	Str.	6	21'-11"	137
W5023	Str.	13	20'-8"	280
W5024	Str.	6	20'-11"	131
W5025	Str.	7	22'-3"	162
W5026	Str.	6	22'-0"	138
W5027	Str.	6	22'-2"	139
W5028	Str.	6	21'-5"	134
W5029	Str.	6	20'-5"	128
W5030	Str.	6	19'-7"	123
W5031	Str.	13	19'-10"	269
W5032	Str.	6	18'-7"	116
W5033	Str.	13	18'-10"	255
W5034	Str.	6	19'-0"	119
W5035	Str.	13	19'-3"	261
W5036	Str.	6	20'-1"	126
W5037	Str.	1	9'-7"	10
W5038	Str.	1	9'-8"	10
W5039	Str.	3	9'-9"	31
W5040	Str.	3	9'-10"	31
W5041	Str.	5	10'-0"	52
W5042	Str.	6	10'-1"	63
W5043	Str.	7	10'-3"	75
W5044	Str.	9	10'-4"	97
W5045	Str.	9	10'-6"	99
W5046	Str.	12	10'-8"	134
W5047	Str.	12	10'-9"	135
W5048	Str.	14	10'-11"	159
W5049	Str.	13	11'-0"	149
W5050	Str.	13	11'-1"	150
W5051	Str.	11	11'-3"	129
W5052	Str.	13	11'-4"	154
W5053	Str.	11	11'-6"	132
W5054	Str.	13	11'-7"	157
W5055	Str.	28	11'-8"	341
W5056	Str.	11	11'-10"	136
W5057	Str.	11	11'-11"	137
W5058	Str.	9	12'-0"	113
W5059	Str.	10	12'-2"	127
W5060	Str.	8	12'-4"	103
W5061	Str.	8	12'-5"	104
W5062	Str.	8	12'-6"	104
W5063	Str.	8	12'-8"	106
W5064	Str.	6	12'-9"	80
W5065	Str.	6	12'-10"	80
W5066	Str.	3	13'-0"	41
W5067	Str.	9	13'-1"	123
W5068	Str.	2	13'-3"	28
W5069	Str.	14	13'-4"	195
W5070	Str.	1	13'-6"	14
W5071	Str.	7	13'-7"	99

REINFORCING STEEL LIST

MARK	TYPE	NO.	LENGTH	WEIGHT
W5072	Str.	6	19'-1"	119
W5073	Str.	6	19'-6"	122
W5074	Str.	6	13'-11"	87
W5075	Str.	12	14'-2"	177
W5076	Str.	6	14'-5"	90
W5077	Str.	6	14'-11"	93
W5078	Str.	12	15'-2"	190
W5079	Str.	6	15'-5"	97
W5080	Str.	6	16'-6"	103
W5081	Str.	12	16'-9"	210
W5082	Str.	6	17'-0"	106
W5083	Str.	18	32'-7"	612
W5084	Str.	5	20'-4"	106
W5085	Str.	78	4'-6"	366
W5086	Str.	78	4'-0"	325
W5087	Str.	108	3'-4"	376
W5088	Str.	12	3'-2"	40
W5089	Str.	8	3'-1"	26
W5090	Str.	8	2'-11"	24
W5091	Str.	8	2'-10"	24
W5092	Str.	8	2'-9"	23
W5093	Str.	8	2'-8"	22
W5094	Str.	8	2'-7"	22
W5095	Str.	4	2'-6"	10
W5096	Str.	4	2'-5"	10
W5097	Str.	4	2'-4"	10
W5098	Str.	4	2'-3"	9
W5099	Str.	40	5'-4"	223
W5100	Str.	16	18'-2"	303
W601	6	14	6'-11"	145
W602	6	13	10'-7"	207
W603	Str.	14	4'-10"	102
W604	Str.	78	4'-11"	576
W605	Str.	78	5'-1"	596
W606	6	72	5'-10"	631
W607	6	66	8'-8"	859
W608	6	132	5'-11"	1173
W609	6	126	10'-8"	2019
W610	5	192	9'-8"	2788
W611	Str.	258	6'-1"	2357
W701	Str.	24	6'-10"	335
W702	5	96	11'-10"	2322
W801	Str.	24	7'-4"	470
W802	Str.	86	7'-8"	1760
W803	6	66	7'-4"	1292
W804	6	63	11'-7"	1948
W805	Str.	30	10'-5"	834
W806	Str.	129	7'-6"	2583
W901	Str.	109	18'-2"	6733
W902	6	50	8'-1"	1374
W903	6	48	12'-10"	2094
W904	Str.	24	12'-7"	1024
W905	Str.	129	8'-0"	3509

REINFORCING STEEL LIST

MARK	TYPE	NO.	LENGTH	WEIGHT
W1001	Str.	129	8'-6"	4718
W1002	Str.	129	8'-5"	4672
W1003	Str.	12	14'-7"	753
W1004	6	24	14'-9"	1523
W1005	6	25	8'-11"	959
W1006	Str.	43	8'-4"	1542
W1007	6	14	10'-2"	612
W1008	6	13	17'-0"	951
W1009	Str.	6	17'-1"	441
W1101	6	109	10'-0"	5791
W1102	6	96	16'-4"	8331
W1103	Str.	272	9'-4"	13488
W1104	Str.	1	6'-9"	36
W1105	6	75	9'-10"	3918
W1106	6	72	16'-6"	6312
W1107	Str.	36	16'-9"	3204
W401	Str.	22	2'-10"	42
W402	Str.	11	3'-1"	23
W403	Str.	11	5'-1"	37
W404	12	4	6'-8"	18
W405	Str.	4	3'-10"	10
W406	Str.	2	4'-1"	6
W407	Str.	2	4'-7"	6
W408	Str.	2	5'-0"	7

TOTAL WEIGHT = 131,861 LBS.

BENDING

MARK	a	b	c	d	e	f	rad.
W404	2'-11"	3'-5"	3'-3"	1'-5½"			
W5016	1'-6¾"	7'-8"	1'-7"	0'-3"			
W601	1'-7⅞"	3"	4¼"	5'-1½"	4'-10⅞"	3"	2¼"
W602	1'-7⅞"	3"	4¼"	8'-9½"	8'-6⅞"	5⅜"	2¼"
W606	1'-7⅞"	3"	4¼"	4'-0½"	3'-9⅞"	2⅜"	2¼"
W607	1'-7⅞"	3"	4¼"	6'-10½"	6'-7⅞"	4⅛"	2¼"
W608	1'-7⅞"	3"	4¼"	4'-1½"	3'-10⅞"	2⅜"	2¼"
W609	1'-7⅞"	3"	4¼"	8'-10½"	8'-7⅞"	5⅜"	2¼"
W610	9'-0"						
W702	11'-8"						
W803	2'-1⅜"	4½"	6½"	5'-0⅝"	4'-8⅛"	2⅜"	3½"
W804	2'-1⅜"	4½"	6½"	9'-3⅜"	8'-11⅛"	5⅜"	3½"
W902	2'-4⅛"	5⅜"	8¼"	5'-6⅜"	5'-0⅞"	3⅜"	4½"
W903	2'-4⅛"	5⅜"	8¼"	10'-3⅜"	9'-9⅞"	6⅛"	4½"
W1004	2'-8½"	6¼"	9⅛"	11'-9⅞"	11'-3⅜"	7"	5"
W1005	2'-8½"	6¼"	9⅛"	5'-11¾"	5'-5⅜"	3⅜"	5"
W1007	2'-8½"	6¼"	9⅛"	7'-2¾"	6'-8⅜"	4⅛"	5"
W1008	2'-8½"	6¼"	9⅛"	14'-0⅜"	13'-6⅞"	8½"	5"
W1101	2'-11⅞"	6⅞"	10⅛"	6'-9"	6'-2"	3⅞"	5½"
W1102	2'-11⅞"	6⅞"	10⅛"	13'-0⅜"	12'-6"	7¾"	5½"
W1105	2'-11⅞"	6⅞"	10⅛"	6'-6⅜"	6'-0"	3¾"	5½"
W1106	2'-11⅞"	6⅞"	10⅛"	13'-2⅜"	12'-8"	7⅞"	5½"

ESTIMATED QUANTITIES

ITEM	TOTAL	UNIT	DESCRIPTION
E-2	9890	Cu.Yd.	Unclassified Excavation
E-2	Lump	Sum	Cofferdams, Cribs and Sheeting
E-2	227	Sq.Ft.	Steel Sheet Piling Left in Place. (Minimun Section Modulus of 7 cu.in. per foot of Wall)
S-1	966	Cu.Yd.	Class "E" Concrete, Footings
S-1	1034	Cu.Yd.	Class "E" Concrete, Wall Shafts
S-3	361	Lin.Ft.	Waterproofing, Premolded Sealing Strip
S-4	131,861	Lbs.	Reinforcing Steel
S-9	267	Sq.Ft.	1" Preformed Expansion Joint Filler
S-18	1665	Lin.Ft.	Steel Piles, 10BP42
S-29	705	Cu.Yd.	Porous Backfill
S-29	12	Lin.Ft.	12" Reinforced Concrete Sewer Pipe [Sec. M-6.6(a)]
S-29	822	Lin.Ft.	8" Bituminous Coated Helical Perforated Corrugated Metal Pipe [Sec M-6.4 (h-c)] (including Specials and Sand)
I-8	3	Each	Type "V" Grating and Frame; as per Plan

Note: The quantities are carried to the Summary of Quantities Sheet No. 23.

WALL NOTES

For Miscelloneous Wall Details and General Notes see Sheet No. 331.

W5014 bars are to be centered between units in the footing.

The footing keys shall be placed in a carefully made trench against undistrubed earth.

For Replacement Bar List see Sheet No. 331.

Work Reinforcing Steel List with Sheet No. 331.

Steel sheet piling (22 lbs/Sq.Ft.) left in place shall have a mininum section modulus of 7 cu.in. per foot of wall. Used piling in good condition may be used.

All piles used shall be 10BP42 "H" Piles, with an estimated length of 15 feet.

All Concrete shall be Class "E".

For piling note see Sh No. 331

HAZELET & ERDAL
CONSULTING ENGINEERS
CINCINNATI, OHIO

RETAINING WALL NO 41

SHEET NO. 12 OF 12

DESIGNED	DRAWN	TRACED	CHECKED	REVIEWED DATE	REVISED
	TLZ		H.L.L. 3-25-65	JHO 5/20/65	

FED. RD. DIV.	STATE	PROJECT	FISCAL YEAR
2	OHIO		

313/492

HAMILTON COUNTY
HAM-71-(1.56)(2.51)

S 84°-15'-50" E — ℄ Mc Gregor Avenue

24'-0" | 26'-8"

Recess in footing for 12" Sewer Pipe

Start Retaining Wall Sta.15+54.13 Mc Gregor

5'-0" | 4'-0" | 1'-0" | 24'-0" | 6'-0" | 7'-0" | 1'-0"

S 84°-15'-50" E — Reference Line of Retaining Wall

℄ Railing & Parapet

Type-V Inlet (Include with Roadway Quantities for Payment)

NOTE: For flow line elevations of 12" sewer see Drainage Sheet No. 97

PLAN

90°-00'-00"

Contraction Jt. (Wall only)

1'-0" | 4'-0" | 5'-0"

North Wall

½" Jt. Filler

3'-0" | 1'-0" | 3'-0" | 1'-0"

½" Jt. Filler

10'-0" ℄ South Wall

F — See Sheet No. 314 for Section F-F (Concrete Steps Details)

W540 | W528 | W539 | WG44 | WG bars | W536 | W5 bars

SECTION E-E

7 Railing Posts @ 8'-1" = 48'-6"

1'-1" | 18-W538 @ 1'-6" = 25'-6" | 1'-1"

6'-0" | 6'-0" | 6'-0" | 6'-0" | 10'-0"

16-W538 @ 1'-5" 22'-8"

Top of Parapet | Top of Wall

Elev. 788.60

Elev. 792.50 | Elev. 791.80±

1 W535 E.F (N. & S. Walls)

1 W513 E.F (N. & S. Walls)

1 W537 E.F (N. & S. Walls)

Concrete Steps For Details see Sheet No. 314

2-H501 | 2-H502

Elev. 785.52 | Elev. 785.00 | Elev. 784.36 | Elev. 783.87 | Elev. 783.36

1-W535 E.F | 1-W525 E.F | 1-W526 E.F | 1-W509 N.F | 1-W617 F.F | 1-W512 E.F

Fl. El. 781.42 | Fl. El. 780.77 | Fl. El. 781.55

Contraction Jt. | 8" Pipe | 0.5%

3 Spaces @ 2'-0" = 6'-0"

S 401

1-W522 N.F | W511

W542

W536 or W510 | W536 or W511

Elev. 780.75 (Plug end ℄ North Wall)

Fl. El. 782.90 ℄ Bend Point | Fl. El. 782.92 ℄ North Wall

W527 bars (Top & Bott.) | 1'-0" | 4-W511 @ 1'-4" | 4'-0" (Top)

Ea. W528 thru W535 N.F @ 1'-4" (North Wall)

Ea. W528 thru W535 F.F @ 1'-4" (South Wall)

Ea. WG36 thru WG43 F.F @ 1'-4" (North Wall)

Ea. WG36 thru WG43 N.F @ 1'-4" (South Wall)

5'-10½" | Fl. El. 780.68 ℄ Wall | Fl. El. 780.65 ℄ C.B.

8" Dia. hole for 12" Reinf. Concrete Sewer Pipe

8" Pipe 2 | 0.5% | 1 W510 (Top)

W512 bars

3" | Elev. 778.50 | 1-Each W501 Thru W508 N.F @ 3'-0" = 21'-0" | 2'-4"

1-Each W601 Thru W616 F.F @ 1'-6" = 22'-6" | 10"

8 W510 (Top) @ 3'-0" = 21'-0"

8 W511 (Bottom) @ 3'-0" = 21'-0"

Modify spacings of bars to clear opening.

1-W511 (Bott.) | Elev. 779.00

1-Each W513 Thru W521 N.F @ 3'-0" = 24'-0" | 1'-6"

1-Each W618 Thru W635 F.F @ 1'-6" = 25'-6" | 4"

18 W523 (Top) @ 1'-6" = 25'-6"

9 W524 (Bottom) @ 3'-0" = 24'-0"

W525 bars | 3-W541 | 1-W524 (Bott.)

Bott. of Footing (Typ)

ELEVATION

UNIT-1

Construction Jt. | Type-C Railing | W538 | H501 | Top of South Sidewalk | W512 | W526 | W601 Thru W617 | Porous Backfill For details see Sh. No. 331 | W501 thru W509 | W512 | Construction Joint | W510 | W541 | W511½

1'-8" | 1'-9" | 1'-9"

9" | 3 W512 @ 2'-0" (Top & Bottom) | 3"

SECTION A-A

Railing not shown in Section B-B

W538 | H502 | Top of South Sidewalk | Construction Jt. | W525 | W513 Thru W522 | W535 | Porous Backfill | W618 Thru W635 | W525 | Construction Joint | W523 | W524

1'-8" | 2'-0"

6" (Typ) | 4-W525 @ 2'-0" (Top & Bott.)

SECTION B-B

UNIT-2

4" | 2 Spa @ 1'-2"-2'-4" | 4"

5'-0" | 1'-0" | 3'-0" | 1'-0"

3-W528 F.F | 3-WG44 N.F

W535 | WG36 thru WG43 | W528 thru W535 | W536 bars | Drop ½" in Elev. thru Wall | 3" Pipe | Constr. Jt. | W511 | 2.5% | 4-W539 @ 1'-10" N.F. | 4-W540 @ 1'-10" F.F. | W527

1'-9" | 1'-6" | 3" | 4-W542 @ 10" | 3'-0"

3" | 4 W536 @ 1'-6" (Top & Bott.) | 1'-0" | 2 Spa @ 1'-0" | 3"

3-W510 (Top) | 3-W511 (Bott.)

SECTION C-C

W539 | W540 | Porous Backfill | W528 bars | WG44 bars | W539 | W540 | Construction Joint | W510 | W511

1'-9" | 1'-6"

6" | 4-W527 @ 1'-4"-4'-0" (Top & Bottom)

SECTION D-D

NOTES:
N. denotes North
S. denotes South
N.F. denotes near face
F.F. denotes far face
E.F. denotes each face
For contraction joint detail Sheet No. 331
For General Notes see Sheet No. 331
No Rustication Grooves required
For Reinforcing Steel List & Quantities see Sheet No. 314
Class E concrete shall be used for ret. wall.

Design Assumptions:
Maximum foundation pressure = 3000 lb/sq.ft
Equivalent fluid weight (passive) = 300 lb/sq.ft

Work this sheet with Sheet No. 314

HAZELET & ERDAL
CONSULTING ENGINEERS
CINCINNATI, OHIO

RETAINING WALL NO. 45

SHEET 1 of 2

DESIGNED	DRAWN	TRACED	CHECKED	REVIEWED DATE	REVISED
	A.L.T.		W. L. 5-7-65	JHO 5/20/65	

FED. RD. DIV.	STATE	PROJECT	FISCAL YEAR
2	OHIO		

314
492

HAMILTON COUNTY
HAM-71-(1.56)(2.51)

REINFORCING STEEL LIST					BAR BENDING		
Mark	Type	No	Length	Weight	a	b	
W501	Str.	1	2'-11"	3			
W502	Str.	1	3'-2"	3			
W503	Str.	1	3'-6"	4			
W504	Str.	1	3'-8"	4			
W505	Str.	1	3'-11"	4			
W506	Str.	1	4'-3"	4			
W507	Str.	1	4'-7"	5			
W508	Str.	1	4'-10"	5			
W509	Str.	1	5'-1"	5			
W510	5	12	5'-3"	66	4'-8"		
W511	Str.	18	4'-8"	88			
W512	Str.	12	23'-8"	296			
W513	Str.	5	4'-5"	23			
W514	Str.	1	4'-9"	5			
W515	Str	1	5'-1"	5			
W516	Str.	1	5'-5"	6			
W517	Str.	1	5'-10"	6			
W518	Str.	1	6'-2"	6			
W519	Str.	1	6'-6"	7			
W520	Str.	1	6'-10"	7			
W521	Str.	1	7'-2"	7			
W522	Str.	1	7'-4"	8			
W523	5	18	7'-3"	136	6'-8"		
W524	Str.	10	6'-8"	70			
W525	Str.	16	26'-4"	438			
W526	Str.	2	8'-6"	18			
W527	Str.	8	7'-8"	64			
W528	Str.	5	6'-0"	31			
W529	Str.	2	6'-7"	14			
W530	Str.	2	7'-2"	15			
W531	Str.	2	7'-9"	16			
W532	Str.	2	8'-4"	17			
W533	Str.	2	8'-11"	19			
W534	Str.	2	9'-6"	20			
W535	Str.	8	9'-10"	82			
W536	Str.	20	9'-8"	202			
W537	Str.	4	9'-0"	38			
W538	3	34	5'-10"	206	0'-7"	2'-4"	
W539	11	4	4'-5"	18	1'-7"	3'-0"	
W540	11	4	5'-1"	21	1'-7"	3'-8"	
W541	Str.	3	10'-0"	31			
W542	3	4	7'-9"	32	0'-8"	3'-3"	
W601	11	1	5'-2"	8	1'-0"	4'-4"	
W602	11	1	5'-4"	8	1'-0"	4'-6"	
W603	11	1	5'-5"	8	1'-0"	4'-7"	
W604	11	1	5'-7"	8	1'-0"	4'-9"	
W605	11	1	5'-9"	9	1'-0"	4'-11"	
W606	11	1	5'-10"	9	1'-0"	5'-0"	
W607	11	1	5'-11"	9	1'-0"	5'-1"	
W608	11	1	6'-1"	9	1'-0"	5'-3"	
W609	11	1	6'-2"	9	1'-0"	5'-4"	
W610	11	1	6'-4"	10	1'-0"	5'-6"	
W611	11	1	6'-6"	10	1'-0"	5'-8"	
W612	11	1	6'-8"	10	1'-0"	5'-10"	
W613	11	1	6'-10"	10	1'-0"	6'-0"	
W614	11	1	7'-0"	11	1'-0"	6'-2"	
W615	11	1	7'-1"	11	1'-0"	6'-3"	
W616	11	1	7'-3"	11	1'-0"	6'-5"	

REINFORCING STEEL LIST					BAR BENDING	
Mark	Type	No	Length	Weight	a	b
W617	11	1	7'-4"	11	1'-0"	6'-6"
W618	11	1	6'-11"	10	1'-0"	6'-1"
W619	11	1	7'-1"	11	1'-0"	6'-3"
W620	11	1	7'-3"	11	1'-0"	6'-5"
W621	11	1	7'-5"	11	1'-0"	6'-7"
W622	11	1	7'-7"	11	1'-0"	6'-9"
W623	11	1	7'-9"	12	1'-0"	6'-11"
W624	11	1	7'-11"	12	1'-0"	7'-1"
W625	11	1	8'-2"	12	1'-0"	7'-4"
W626	11	1	8'-4"	13	1'-0"	7'-6"
W627	11	1	8'-6"	13	1'-0"	7'-8"
W628	11	1	8'-8"	13	1'-0"	7'-10"
W629	11	1	8'-10"	13	1'-0"	8'-0"
W630	11	1	9'-0"	14	1'-0"	8'-2"
W631	11	1	9'-2"	14	1'-0"	8'-4"
W632	11	1	9'-4"	14	1'-0"	8'-6"
W633	11	1	9'-6"	14	1'-0"	8'-8"
W634	11	1	9'-8"	15	1'-0"	8'-10"
W635	11	1	9'-10"	15	1'-0"	9'-0"
W636	11	2	10'-7"	32	3'-4"	7'-5"
W637	11	2	11'-2"	34	3'-4"	8'-0"
W638	11	2	11'-9"	35	3'-4"	8'-7"
W639	11	2	12'-4"	37	3'-4"	9'-2"
W640	11	2	12'-11"	39	3'-4"	9'-9"
W641	11	2	13'-6"	41	3'-4"	10'-4"
W642	11	2	14'-1"	42	3'-4"	10'-11"
W643	11	2	14'-5"	43	3'-4"	11'-3"
W644	11	3	8'-3"	37	1'-0"	7'-5"
H501	Str.	4	23'-8"	*		
H502	Str.	4	26'-4"	*		
Total Weight = 2784 lbs						

* Reinforcing bars marked "H" are included in Item S-14 (Railing) for payment

For Bar Bending Schedule See Sheet No. 331
For replacement bars See Sh. No. 331

STEPS			
Mark	Type	No	Length
S401	Str.	14	2'-7"
S402	Str.	3	14'-0"

ESTIMATED QUANTITIES (ROADWAY)

Item	Total	Unit	Description
I-13	35	Lin.Ft.	Concrete Steps, As Per Plan

Note: The above quantities are carried to the Summary of Quantities Sheet No. 19

ESTIMATED QUANTITIES (WALLS)

Item	Total	Unit	Description
E-2	75	Cu.Yds	Unclassified Excavation
S-1	23	Cu.Yds	Class "E" Concrete, Footing
S-1	17	Cu.Yds	Class "E" Concrete, Wall Shafts
S-3	9	Lin.Ft.	Waterproofing, Premolded Sealing Strip
S-4	2,784	Lbs.	Reinforcing Steel
S-14	51	Lin.Ft.	Railing Type "C" (Aluminum Rail & Supports, Concrete Parapet)
S-29	14	Cu.Yd	Porous Backfill
S-29	51	Lin.Ft.	8" Bituminous coated helical perforated corrugated metal pipe [Sec. M-6.4 (h-9)] (including specials and sand)

Note: The above quantities are carried to the Summary of Quantities Sheet No. 23

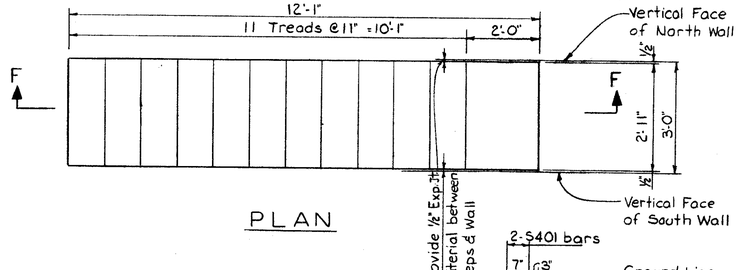

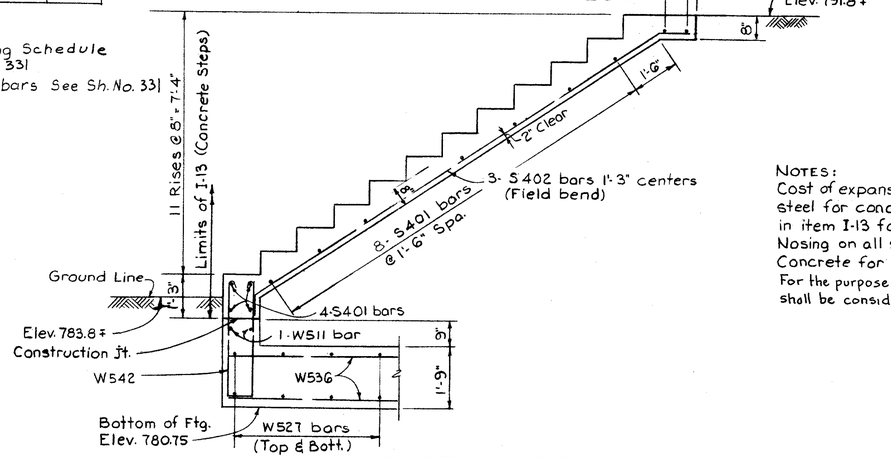

SECTION F-F

NOTES:
Cost of expansion joint material and reinforcing steel for concrete steps shall be included in item I-13 for payment.
Nosing on all steps shall have ½" radius.
Concrete for steps shall be Class-C.
For the purpose of estimating, the 2'-0" landing shall be considered as a tread.

CONCRETE STEPS DETAILS

Work this Sheet with Sheet No. 313

HAZELET & ERDAL
CONSULTING ENGINEERS
CINCINNATI, OHIO

RETAINING WALL NO 45

SHEET 2 of 2

DESIGNED	DRAWN	TRACED	CHECKED	REVIEWED DATE	REVISED
	ALT		WW 5-7-65	JRO 5/20/65	

FED. RD. DIV.	STATE	PROJECT	FISCAL YEAR
2	OHIO		

315
492

HAMILTON COUNTY
HAM-71-(1.56) (2.51)

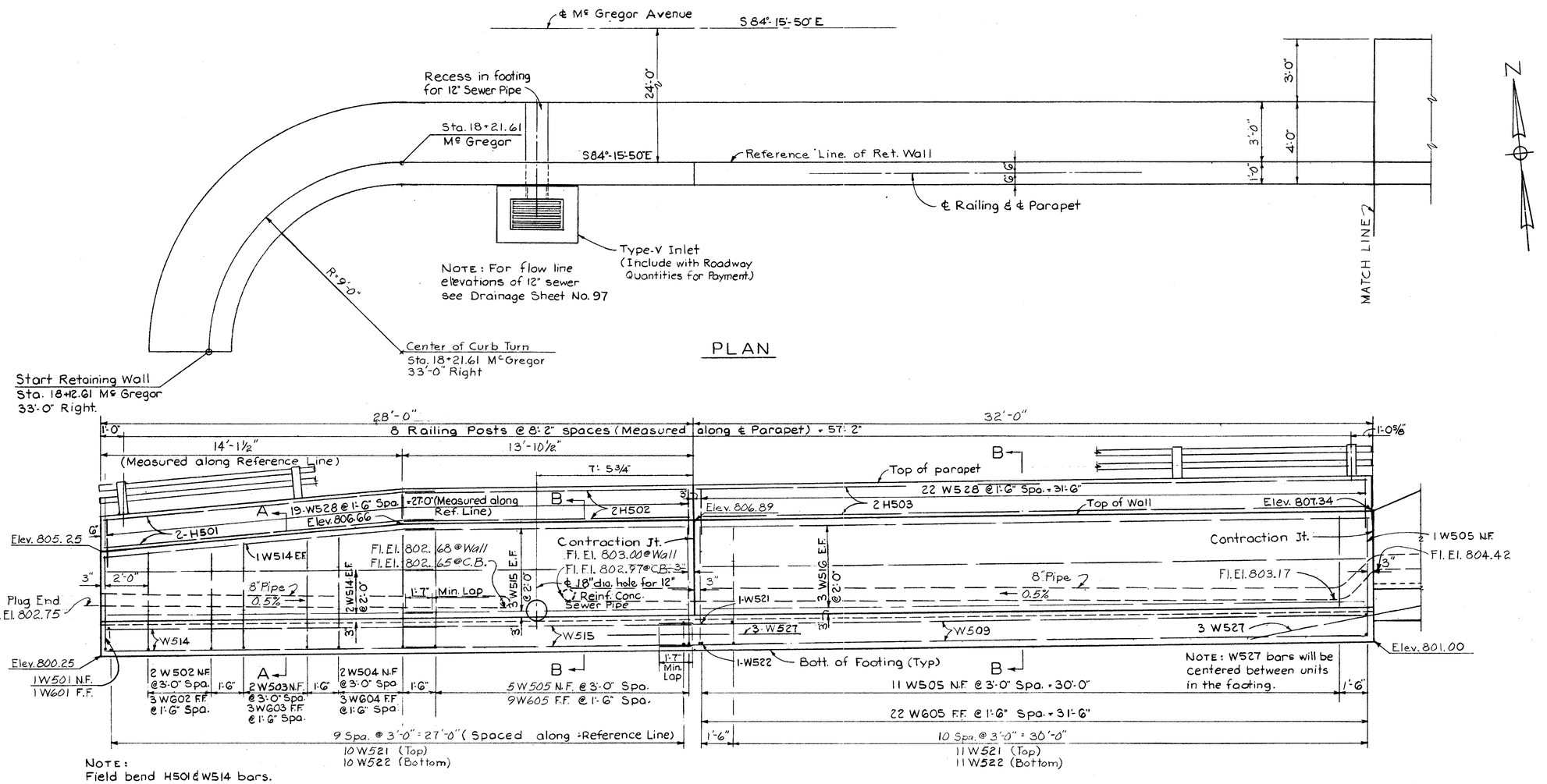

NOTE:
Field bend H501 & W514 bars.
Modify spacings of bars to clear opening.

UNIT 1

UNIT 2

ELEVATION

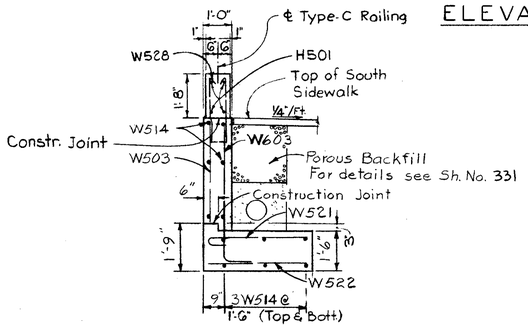

SECTION A-A

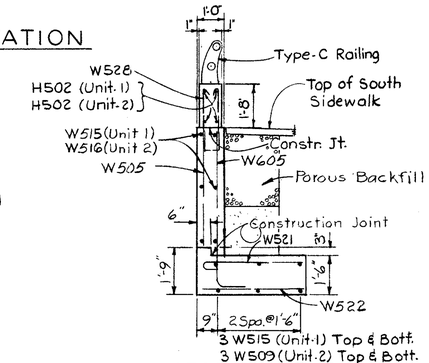

SECTION B-B

NOTES
N.F. denotes near face
F.F. denotes far face
E.F. denotes each face
For contraction joint detail Sheet No. 331
For General Notes see Sheet No. 331
No Rustication Grooves required.
For Reinforcing Steel List & Quantities see Sh. No. 316
Class-E concrete shall be used.

Design Assumptions
Maximum foundation pressure = 3000 lb./sq. ft.
Equivalent fluid weight (passive) = 300 lb./sq. ft.

Work this sheet with Sheet No. 316

HAZELET & ERDAL
CONSULTING ENGINEERS
CINCINNATI, OHIO

RETAINING WALL NO. 46

SHEET 1 of 2

DESIGNED	DRAWN	TRACED	CHECKED	REVIEWED DATE	REVISED
	M.K.K.	A.L.T.	5-7-65	JHO 5/20/65	

FED. RD. DIV.	STATE	PROJECT	FISCAL YEAR
2	OHIO		

316
492

HAMILTON COUNTY
HAM-71-(1.56) (2.51)

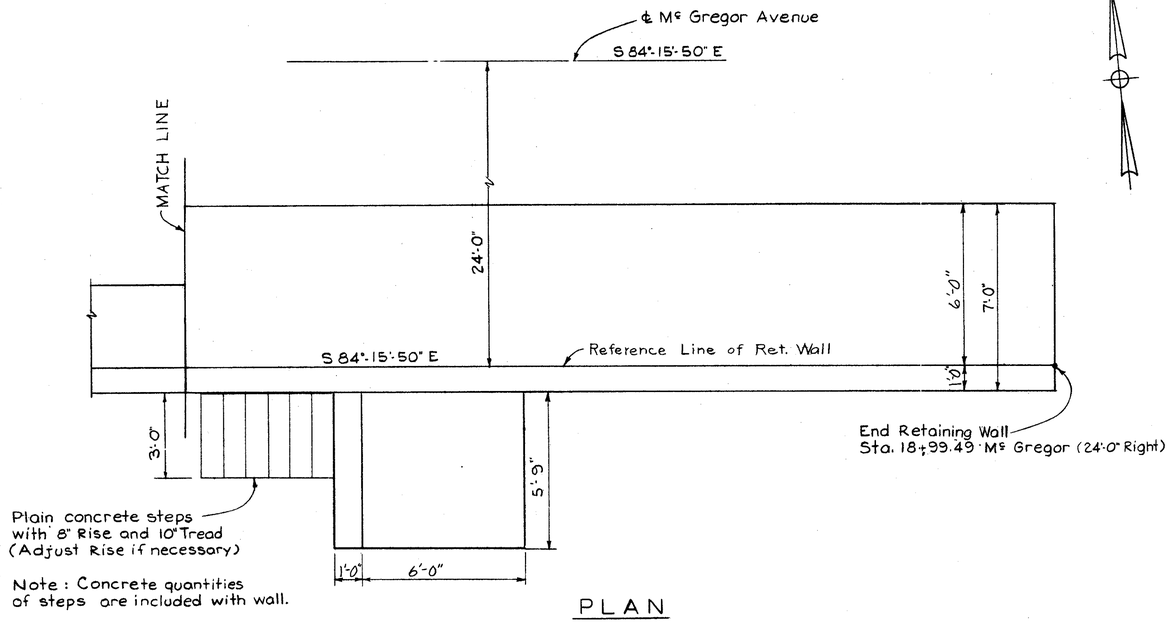

PLAN

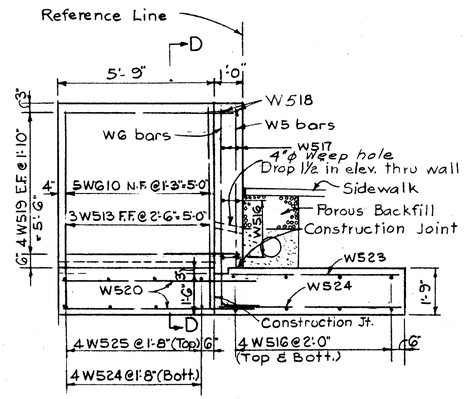

SECTION C-C

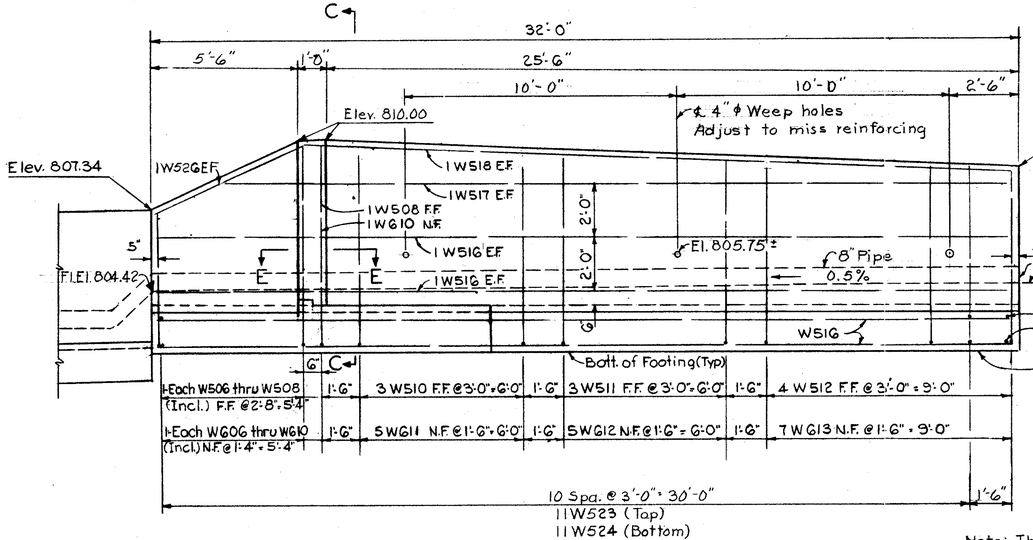

UNIT 3

ELEVATION

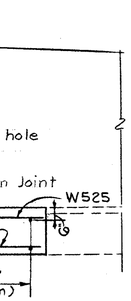

SECTION D-D

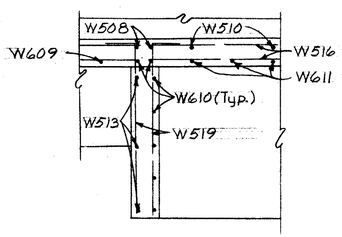

SECTION E-E

REINFORCING STEEL LIST				
Mark	Type	No	Length	Weight
W501	Str.	1	3'-1"	3
W502	Str.	2	3'-3"	7
W503	Str.	2	3'-7"	7
W504	Str.	2	4'-1"	9
W505	Str.	17	4'-4"	77
W506	Str.	1	3'-6"	4
W507	Str.	1	4'-10"	5
W508	Str.	2	6'-1"	13
W509	Str.	6	33'-7"	210
W510	Str.	3	5'-10"	18
W511	Str.	3	5'-5"	17
W512	Str.	4	5'-1"	21
W513	Str.	3	5'-9"	18
W514	Str.	12	19'-8"	246
W515	Str.	12	14'-0"	175
W516	Str.	18	31'-8"	595
W517	Str.	2	29'-6"	62
W518	Str.	2	26'-2"	55
W519	11	8	7'-3"	60
W520	Str.	8	7'-4"	61
W521	5	22	4'-3"	98
W522	Str.	22	3'-8"	84
W523	Str.	12	6'-2"	77
W524	Str.	16	6'-8"	111
W525	5	4	7'-3"	30
W526	Str.	2	6'-0"	12
W527	Str.	6	10'-0"	63
W528	3	41	5'-10"	250
W601	11	1	5'-4"	8
W602	11	3	5'-6	25
W603	11	3	5'-10"	26
W604	11	3	6'-4"	29
W605	11	31	6'-7"	306
W606	11	1	5'-9"	9
W607	11	1	6'-5"	10
W608	11	1	7'-1"	11
W609	11	1	7'-9"	12
W610	11	7	8'-4"	88
W611	11	5	8'-1"	60
W612	11	5	7'-8"	58
W613	11	7	7'-4"	77
H501	Str.	4	15'-6"	*
H502	Str.	4	13'-9"	*
H503	Str.	4	31'-8"	*
Total Weight = 3107 lbs				

BENDING		
Mark	a	b
W519	1'-0"	6'-5"
W521	3'-8"	
W525	6'-8"	"
W528	0'-7"	2'-4"
W601	1'-0"	4'-6"
W602	1'-0"	4'-8"
W603	1'-0"	5'-0"
W604	1'-0"	5'-6"
W605	1'-0"	5'-9"
W606	1'-0"	4'-11"
W607	1'-0"	5'-7"
W608	1'-0"	6'-3"
W609	1'-0"	6'-11"
W610	1'-0"	7'-6
W611	1'-0"	7'-3"
W612	1'-0"	6'-10"
W613	1'-0"	6'-6"

For Bar Bending Schedule see Sheet No. 331
For replacement bars see Sh No. 331

* Reinforcing bars marked 'H' are included in Item 5-14 (Railing) for payment.

Note: The below quantities are carried to the Summary of Quantities Sh. No. 23

ESTIMATED QUANTITIES			
ITEM	TOTAL	UNIT	DESCRIPTION
E-2	92	Cu. Yds.	Unclassified Excavation
S-1	31	Cu. Yds.	Class "E" Concrete, Footing
S-1	19	Cu. Yds.	Class "E" Concrete, Wall shafts
S-3	7	Lin. Ft.	Waterproofing, Premolded Sealing Strip
S-4	3,107	Lbs.	Reinforcing Steel
S-14	59	Lin. Ft.	Railing Type "C" (Aluminum Rail & Supports, Concrete Parapet)
S-29	16	Cu. Yds.	Porous Backfill
S-29	95	Lin. Ft.	8" Bituminous coated helical perforated corrugated metal pipe [Sec. M-6.4(h-c)] (including specials and sand)

Work this Sheet with Sheet No. 315

HAZELET & ERDAL
CONSULTING ENGINEERS
CINCINNATI, OHIO

RETAINING WALL NO. 46

SHEET 2 of 2

DESIGNED	DRAWN	TRACED	CHECKED	REVIEWED DATE	REVISED
	M.K.K.	A.L.T.	Y.K. 5-7-65	JHO 5/20/65	

FED. RD. DIV.	STATE	PROJECT	FISCAL YEAR
2	OHIO		

317
492

HAMILTON COUNTY
HAM-71-(1.66)(2.51)

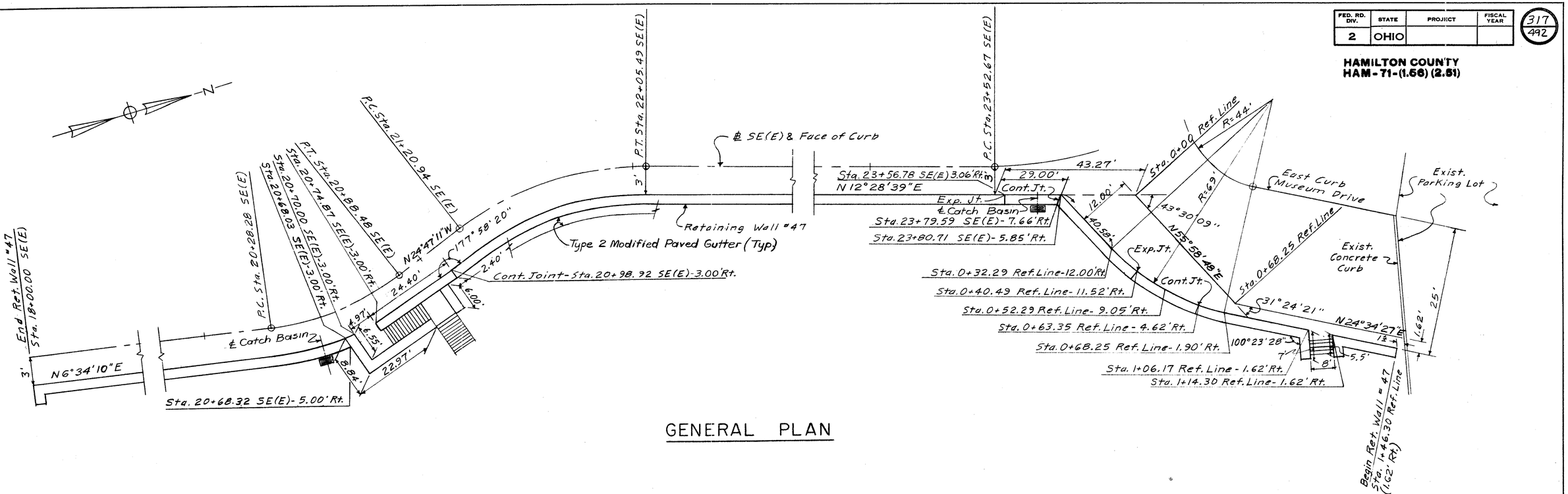

GENERAL PLAN

STONE MASONRY FACING

The stone masonry shall be clean, sound limestone laid ~~in horizontal courses~~ random ashlar with 1/2" thick raked joints.

Stones shall be laid on their natural beds, ~~and shall be selected for thickness to maintain uniform courses.~~ They shall be laid with best faces exposed. Spalls and irregular pieces shall be used to back up face stones so as to avoid large mortar joints. Vertical joints shall be staggered. All stones shall be laid in full mortar beds, with vertical joints slushed full. The stone masonry shall be anchored to the reinforced concrete wall with galvanized metal slots and ties as shown on the plans and described elsewhere herein. The stone coping shall follow the grade of the top of the wall and shall be laid in full mortar beds with vertical joints slushed full, using full width stones selected for uniform thickness and trimmed to size as necessary. Except as modified herein the masonry shall conform to Item S-21 of the General Specifications.

STONE ANCHORS AND ANCHOR SLOTS

The anchors shall be manufactured from No. 14 gauge galvanized corrugated steel and shall have a length of 6 inches from face of concrete.

The anchors shall be inserted in anchor slots and bedded in horizontal mortar joints of the stone facing. They are to be spaced vertically at 18 inch centers in the slots.

The anchor slots shall be manufactured from No. 24 gauge galvanized steel and are to be set in all units having stone facing at a maximum spacing of 4'-0".

The anchor slots furnished shall fit the stone anchors furnished and shall be so installed in the forms as to prevent their distortion under pressure of fresh concrete or their filling by intrusion of mortar. The anchor slots shall be slushed full of mortar as the stone facing is laid.

Anchors and Anchor Slots shall be Gateway Engineering Co. "Bee-Hive" Anchoring System, Code No. CBA-G14 and DAS-G24, Meadow Steel Products, Inc. No. 102 and No. 100, or an approved equal.

Payment for furnishing, preparing and placing the anchor slots and stone anchors is to be included in the unit price bid for Item S-21, Stone Facing.

ESTIMATED QUANTITIES (RET WALLS)

ITEM	TOTAL	UNIT	DESCRIPTION
E-2	Lump	Sum	Cofferdams, Cribs, and Sheeting
E-2	990	Cu Yd.	Unclassified Excavation
E-2	2000	Cu Yd.	Rock (or Shale) Excavation
S-1	552	Cu Yd.	Class "E" Concrete, Footings
S-1	422	Cu Yd.	Class "E" Concrete, Wall Shafts
S-3	260	Lin. Ft.	Waterproofing, Premolded Sealing Strip
S-3	6	Sq. Yd.	Type "B" Waterproofing
S-4	83,795	Lbs.	Reinforcing Steel
S-9	210	Sq. Ft.	1" Preformed Expansion Joint Filler
S-21	9164	Cu Ft.	Stone Facing
S-29	380	Cu Yd.	Porous Backfill
S-29	739	Lin. Ft.	8" Bituminous Coated, Helical, Perforated, Corrugated Metal Pipe [Sec. M-6.4(h-c)] (Including Specials and Sand)
S-29	6	Lin. Ft.	12" Reinforced Concrete Sewer Pipe. [Sec. M-6.6(a)]
I-8	2	Each	Type "V" Grating and Frame, as per plan

The above quantities are carried to the Summary of Quantities, Sh No. 23

ESTIMATED QUANTITIES (ROADWAY)

ITEM	TOTAL	UNIT	DESCRIPTION
I-13	116	Lin Ft.	Conc. Steps, Type A, As Per Plan
I-13	40	Lin Ft.	Conc. and Stone Steps, Type C, As Per Plan

The above quantities are carried to the Summary of Quantities, Sh. No. 19

DESIGN ASSUMPTIONS :

Design Assumptions based on wall being founded on rock

For General Notes, see Miscellaneous Details for Ret. Walls, Sh. No. 331
For Expansion Joint Details, see Sh 319
For Contraction Joint Details, see Sh 319
No Rustication Grooves required.
All concrete shall be Class "E" conc.
For Paved Gutter Profile, see Sh. 328
Footings shall extend a minimum of 3" into undisturbed rock or to the elevation shown, whichever is lower.

HAZELET & ERDAL
CONSULTING ENGINEERS
CINCINNATI, OHIO

ok Br. Bu. 5-27-65 WSH

RETAINING WALL NO 47
SHEET 1 OF 14

DESIGNED	DRAWN	TRACED	CHECKED	REVIEWED DATE	REVISED
	H.L.L. 5-11-65		W.L. 5-14-65	JHO 5/26/65	

Rev. 10-25-65 C.E.H.

HAMILTON COUNTY
HAM-71-(1.56) (2.51)

FED. RD. DIV.	STATE	PROJECT	FISCAL YEAR
2	OHIO		

318
492

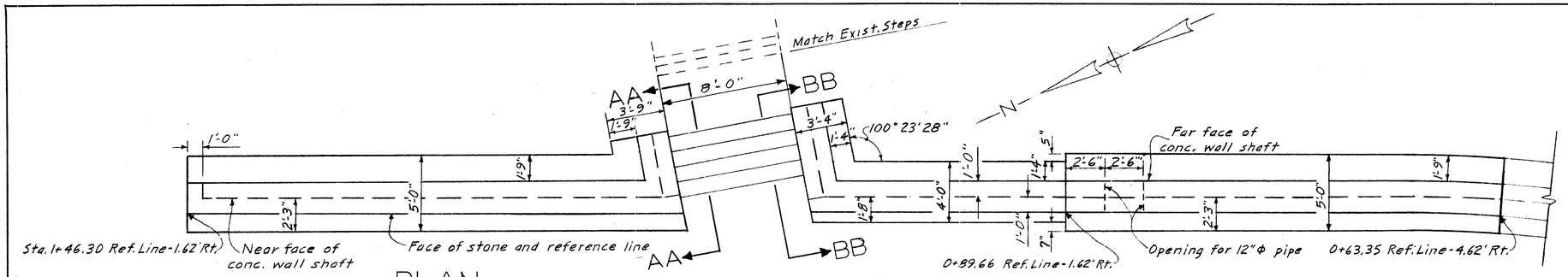

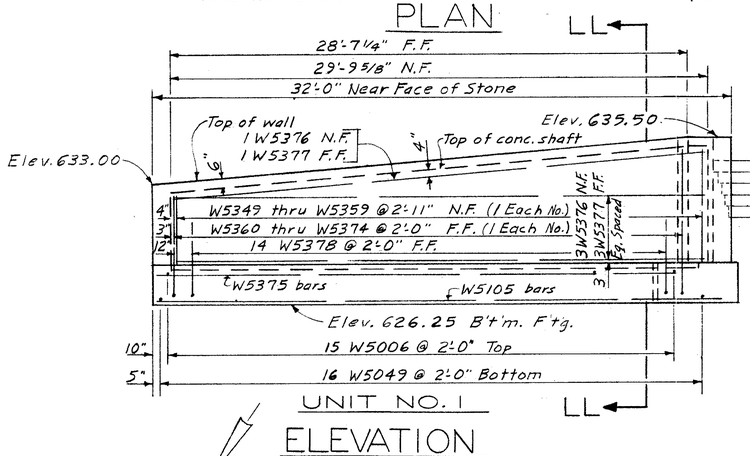

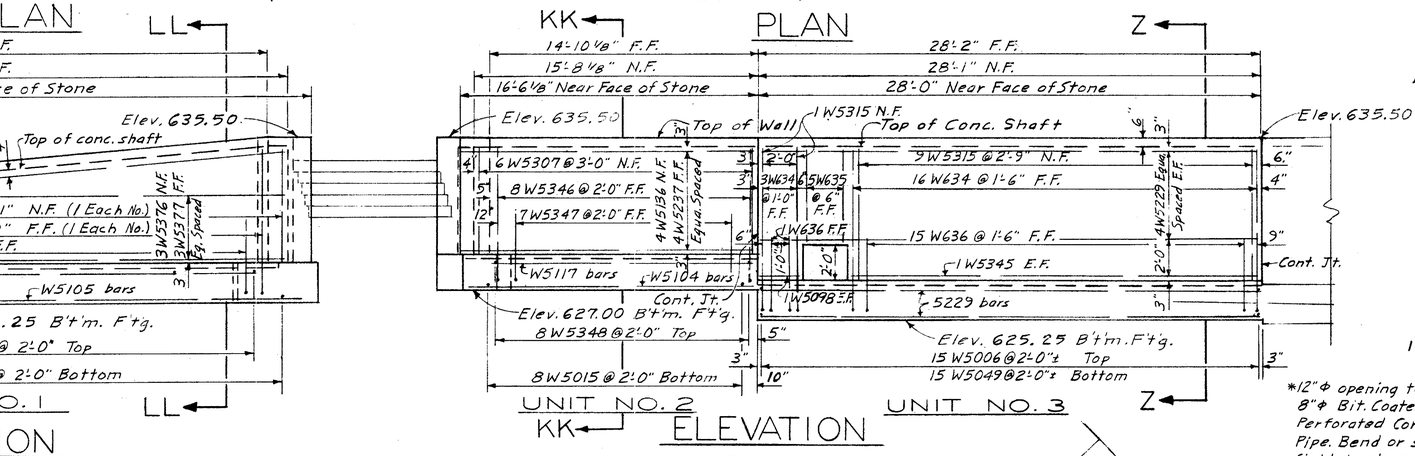

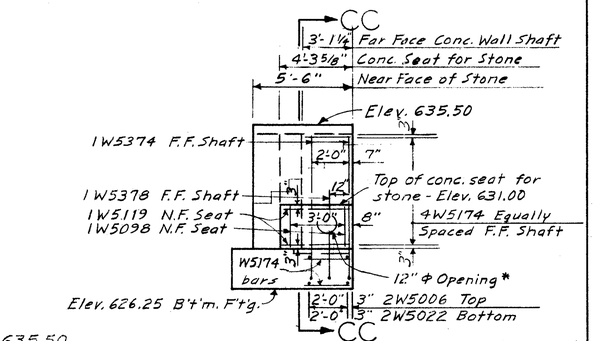

*12"Φ opening to be formed for 8"Φ Bit. Coated Helical Perforated Corrugated Metal Pipe. Bend or shift bars in field to clear opening.

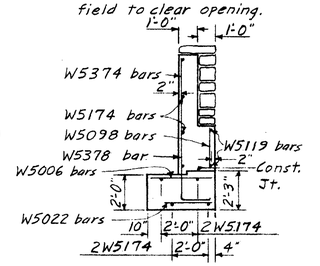

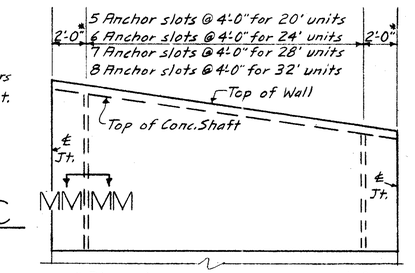

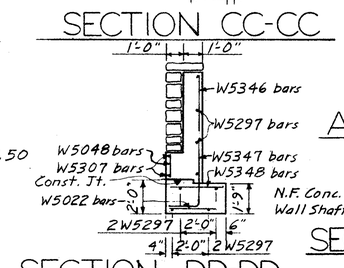

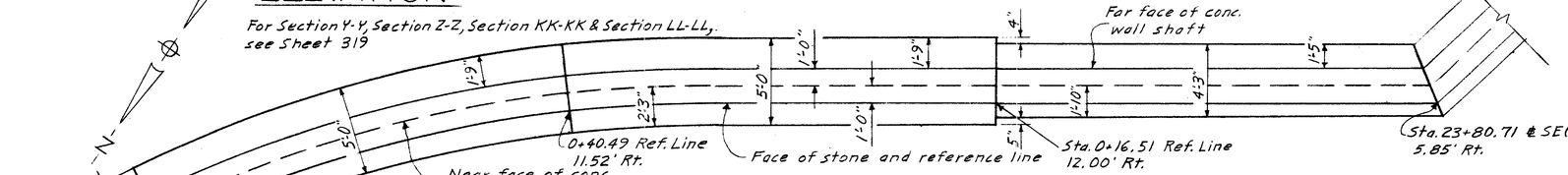

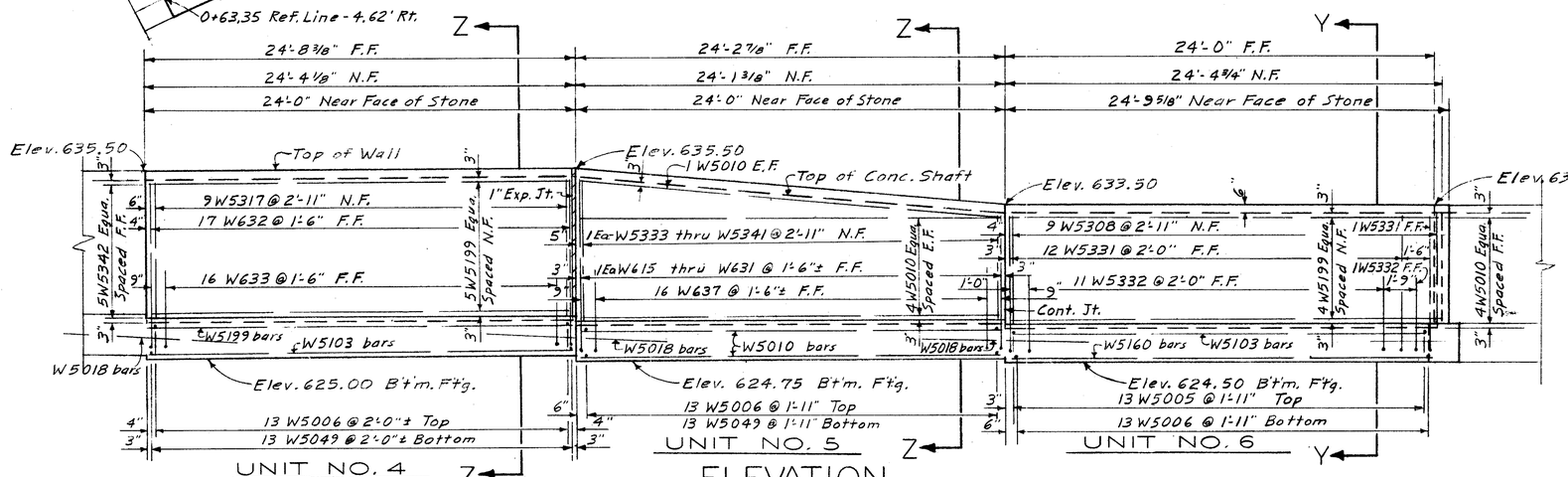

Notes:
N.F. denotes near face of conc.
F.F. denotes far face of conc.
E.F. denotes each face of conc.
W5018 bars are centered under expansion and contraction joints in the stem
For reinf. steel list, see Sh. 329, 330
For step details, see Sh. 326
For drainage details, see Sh. 328
For General Plan and other notes, see Sh. 317

HAZELET & ERDAL
CONSULTING ENGINEERS
CINCINNATI, OHIO

RETAINING WALL NO. 47

SHEET 2 OF 14

DESIGNED	DRAWN	TRACED	CHECKED	REVIEWED DATE	REVISED
	R.G.P.		W.L.	JHD 5/26/65	

FED. RD. DIV.	STATE	PROJECT	FISCAL YEAR
2	OHIO		

319
492

HAMILTON COUNTY
HAM-71-(1.56) (2.5%)

Note:
Units 7&8 to be built parallel to extended tangent ℄ SE(E)

N

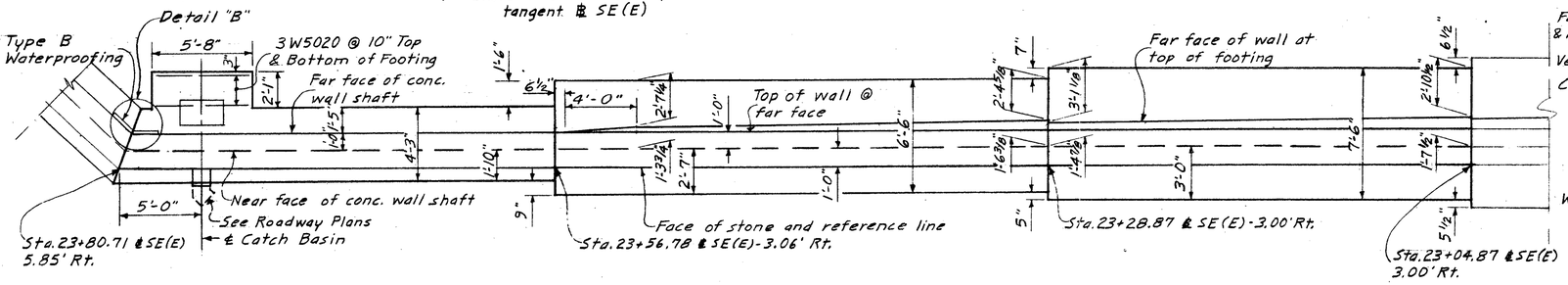

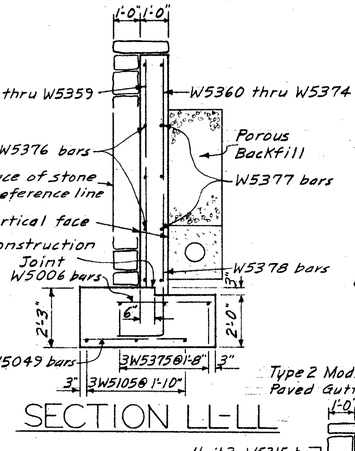

SECTION LL-LL

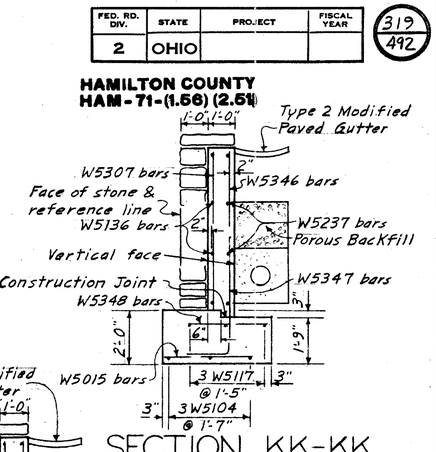

SECTION KK-KK

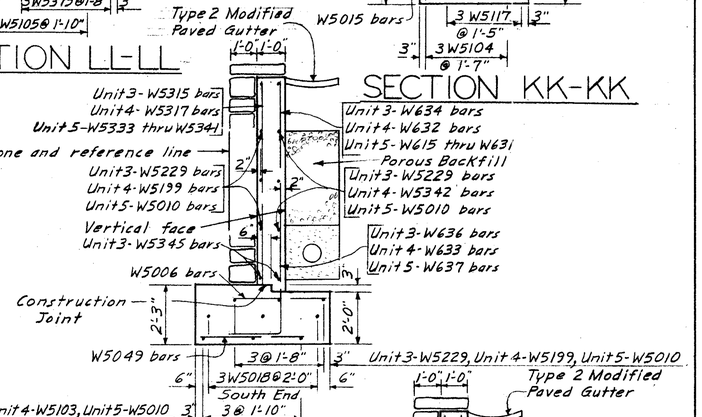

SECTION Z-Z

PLAN

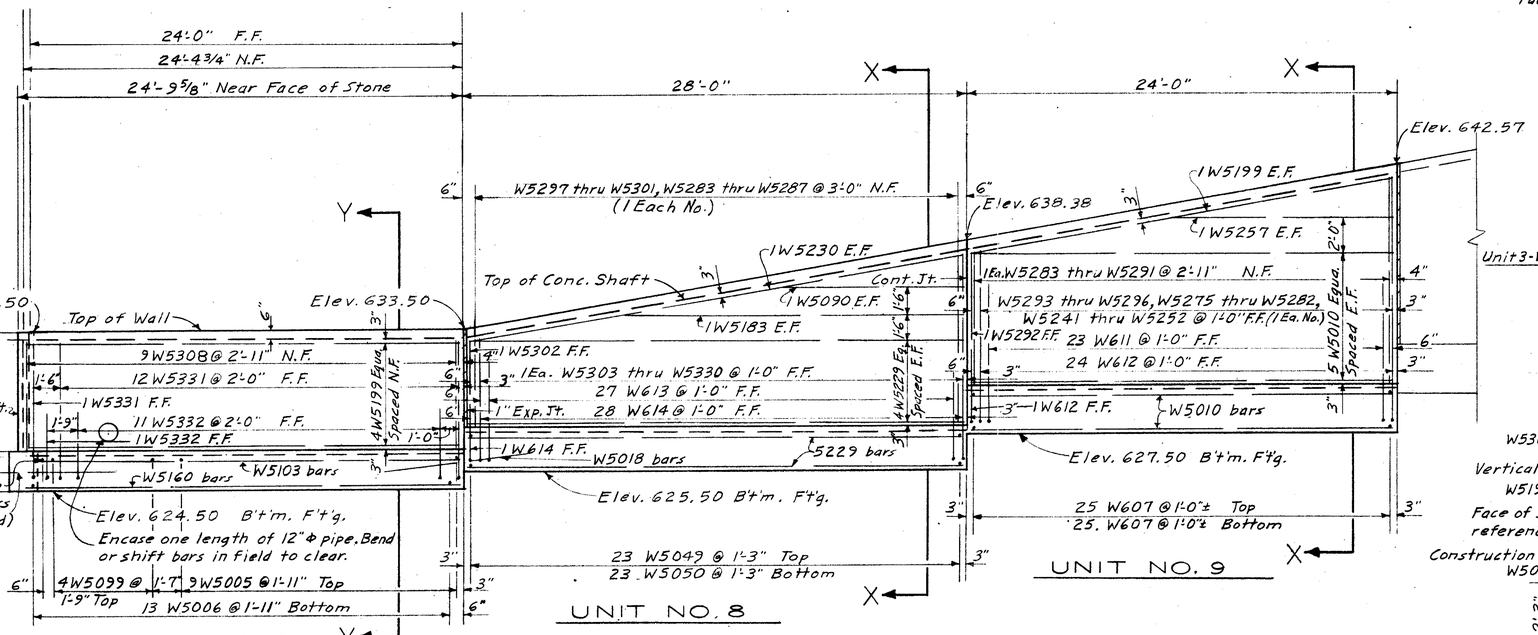

ELEVATION

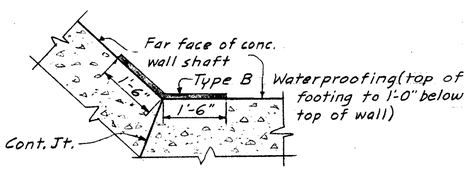

DETAIL B

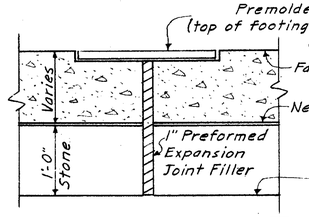

EXPANSION JOINT DETAIL

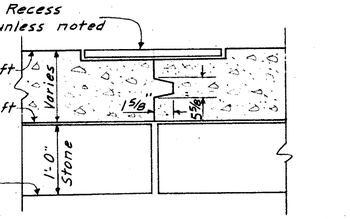

CONTRACTION JOINT DETAIL

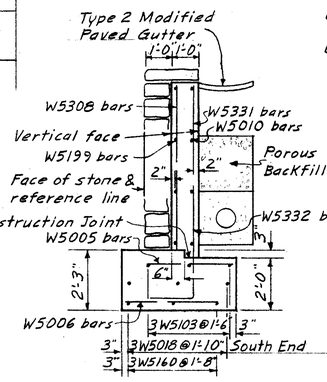

SECTION Y-Y

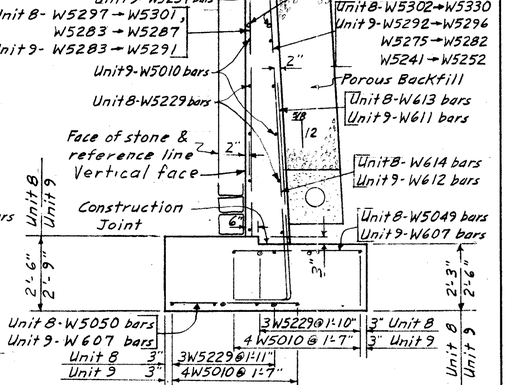

SECTION X-X

Notes:
N.F. denotes near face of conc.
F.F. denotes far face of conc.
E.F. denotes each face of conc.
W5018 bars are centered under expansion and contraction joints in the stem.
For reinf. steel list, see Sh. 329, 330
Work Sect. Z-Z, Sect. KK-KK & Sect. LL-LL with Sh. 318
For drainage details, see Sh. 328
For catch basin details, see Sh. 327
For General Plan and other notes, see Sh. 317

HAZELET & ERDAL
CONSULTING ENGINEERS
CINCINNATI, OHIO

RETAINING WALL NO. 47

SHEET 3 OF 14

DESIGNED	DRAWN	TRACED	CHECKED	REVIEWED DATE	REVISED
	R.G.P.		W.L.	JHO 5/24/65	

FED. RD. DIV.	STATE	PROJECT	FISCAL YEAR
2	OHIO		

320
492

HAMILTON COUNTY
HAM-71-(1.56)(2.61)

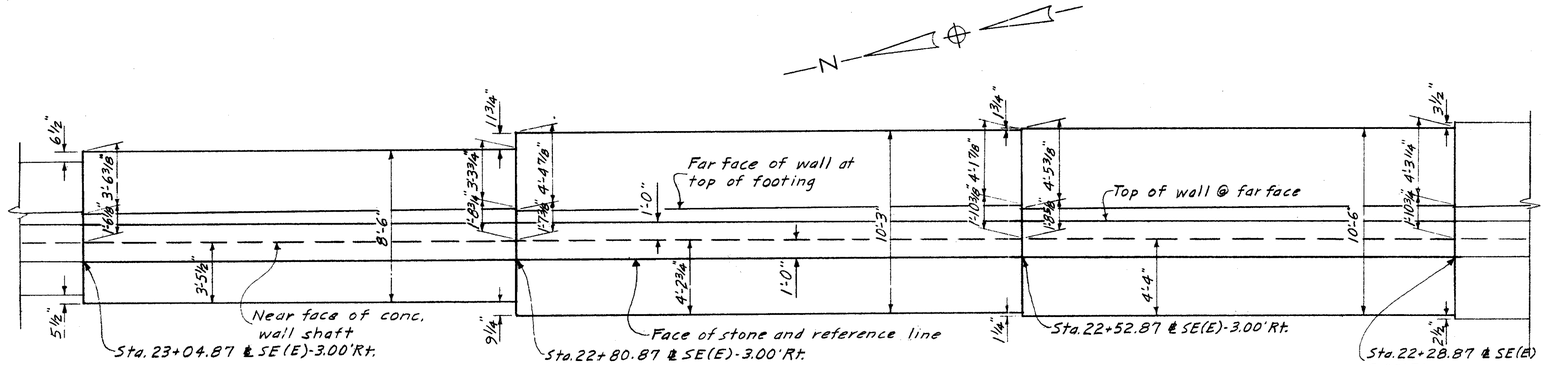

PLAN

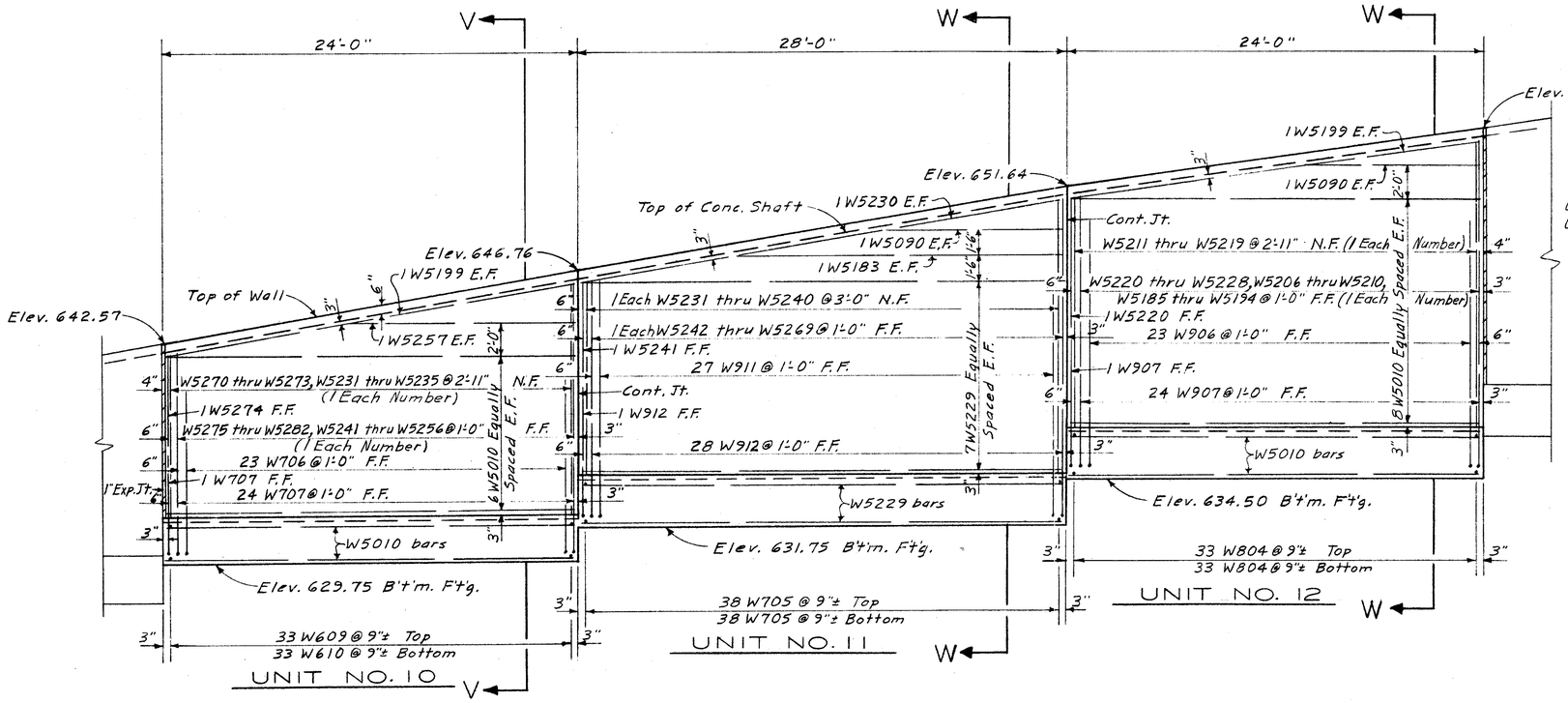

ELEVATION

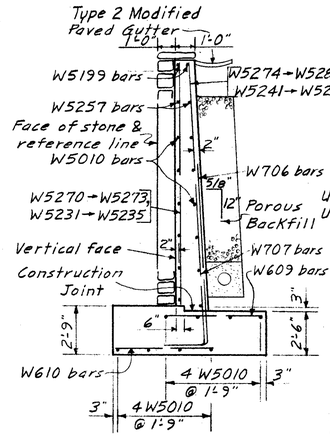

SECTION V-V

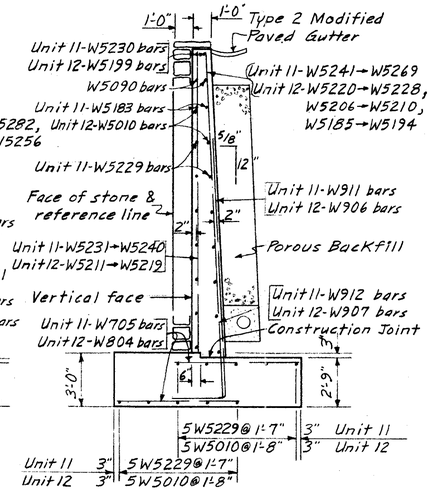

SECTION W-W

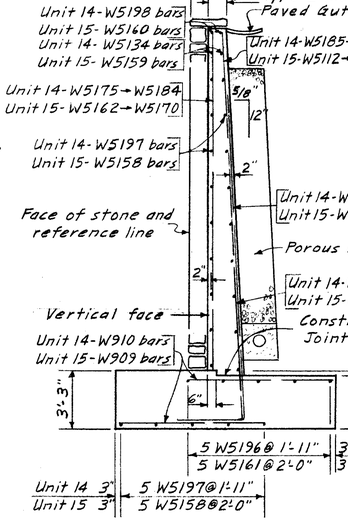

SECTION U-U

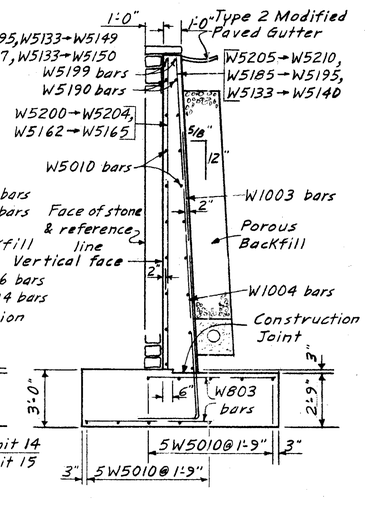

SECTION T-T

Notes:
N.F. denotes near face of conc.
F.F. denotes far face of conc.
E.F. denotes each face of conc.
For reinf. steel list, see Sh. 329, 330
Work Section U-U & Section T-T with Sh. 321
For drainage details, see Sh. 328
For General Plan and other notes, see Sh. 317

HAZELET & ERDAL
CONSULTING ENGINEERS
CINCINNATI, OHIO

RETAINING WALL NO. 47

SHEET 4 OF 14

DESIGNED	DRAWN	TRACED	CHECKED	REVIEWED DATE	REVISED
	R.G.P.		W.L.	JHO 5/26/65	

FED. RD. DIV.	STATE	PROJECT	FISCAL YEAR
2	OHIO		

321
492

HAMILTON COUNTY
HAM-71-(1.58)(2.61)

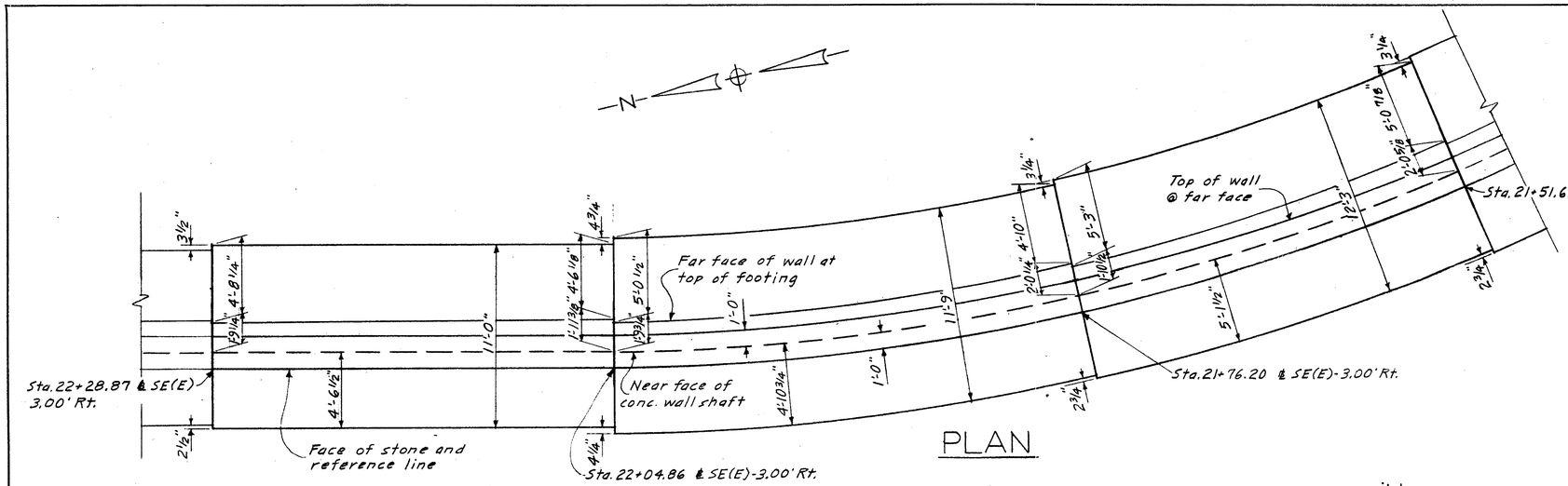

PLAN

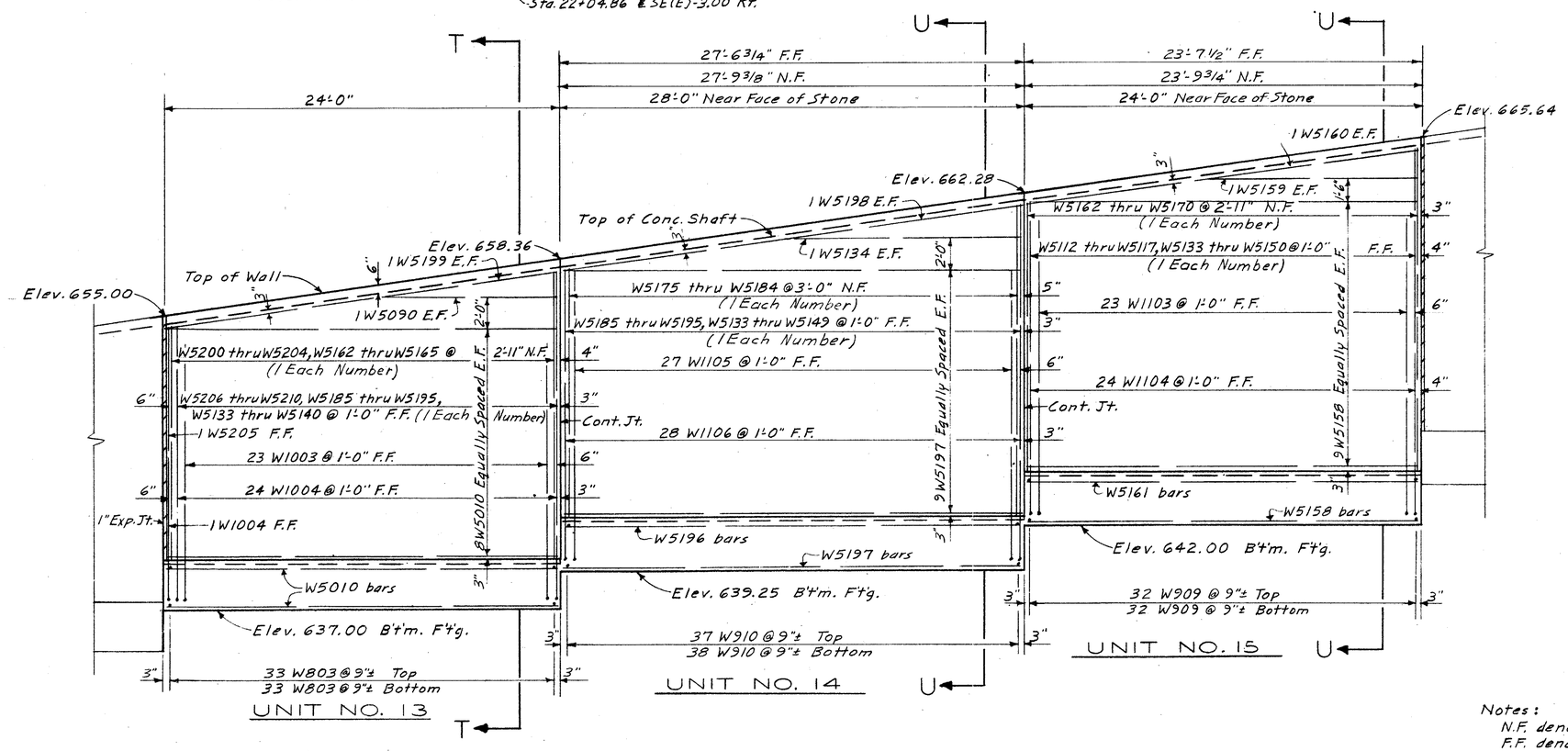

ELEVATION

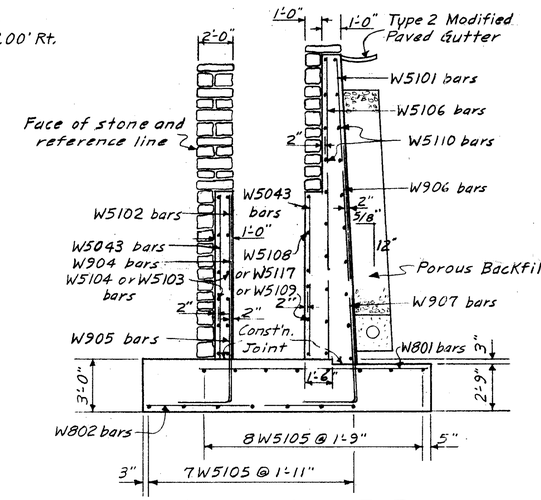

SECTION P-P
(Steps not shown)

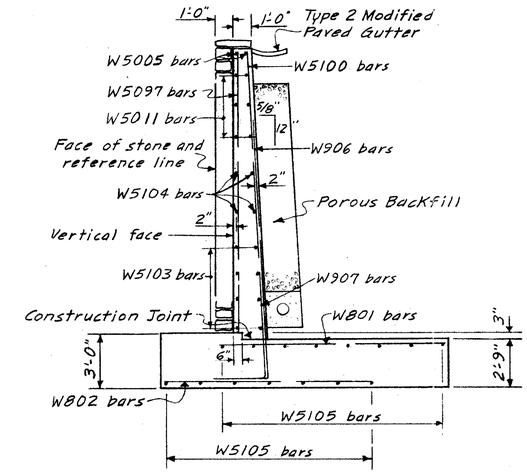

SECTION Q-Q

Notes:
- N.F. denotes near face of conc.
- F.F. denotes far face of conc.
- E.F. denotes each face of conc.
- For reinf. steel list, see Sh. 329, 330
- Work Section P-P & Section Q-Q with Sh. 322
- For drainage details, see Sh. 328
- For General Plan & other notes, see Sh 317
- For Section T-T and Section U-U, see Sh. 320

HAZELET & ERDAL
CONSULTING ENGINEERS
CINCINNATI, OHIO

RETAINING WALL NO 47

SHEET 5 OF 14

DESIGNED	DRAWN	TRACED	CHECKED	REVIEWED DATE	REVISED
	R.G.P.		W.L.	5/26/65	

HAMILTON COUNTY
HAM-71-(1.66)(2.51)

FED. RD. DIV.	STATE	PROJECT	FISCAL YEAR
2	OHIO		

322
492

Note:
Units 16 & 17 to be built concentric to ℄ SE(E).
Unit 18 to be built with straight walls & footing.

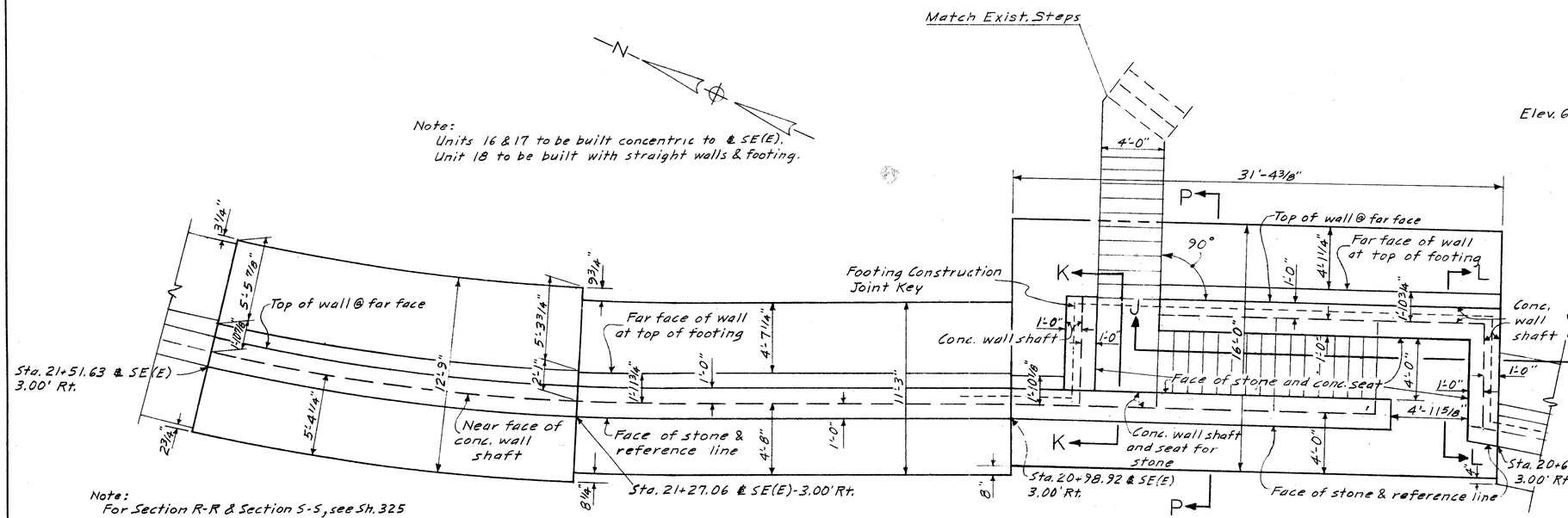

Note:
For Section R-R & Section S-S, see Sh. 325

PLAN

Note:
For Section P-P & Section Q-Q, see Sh. 321

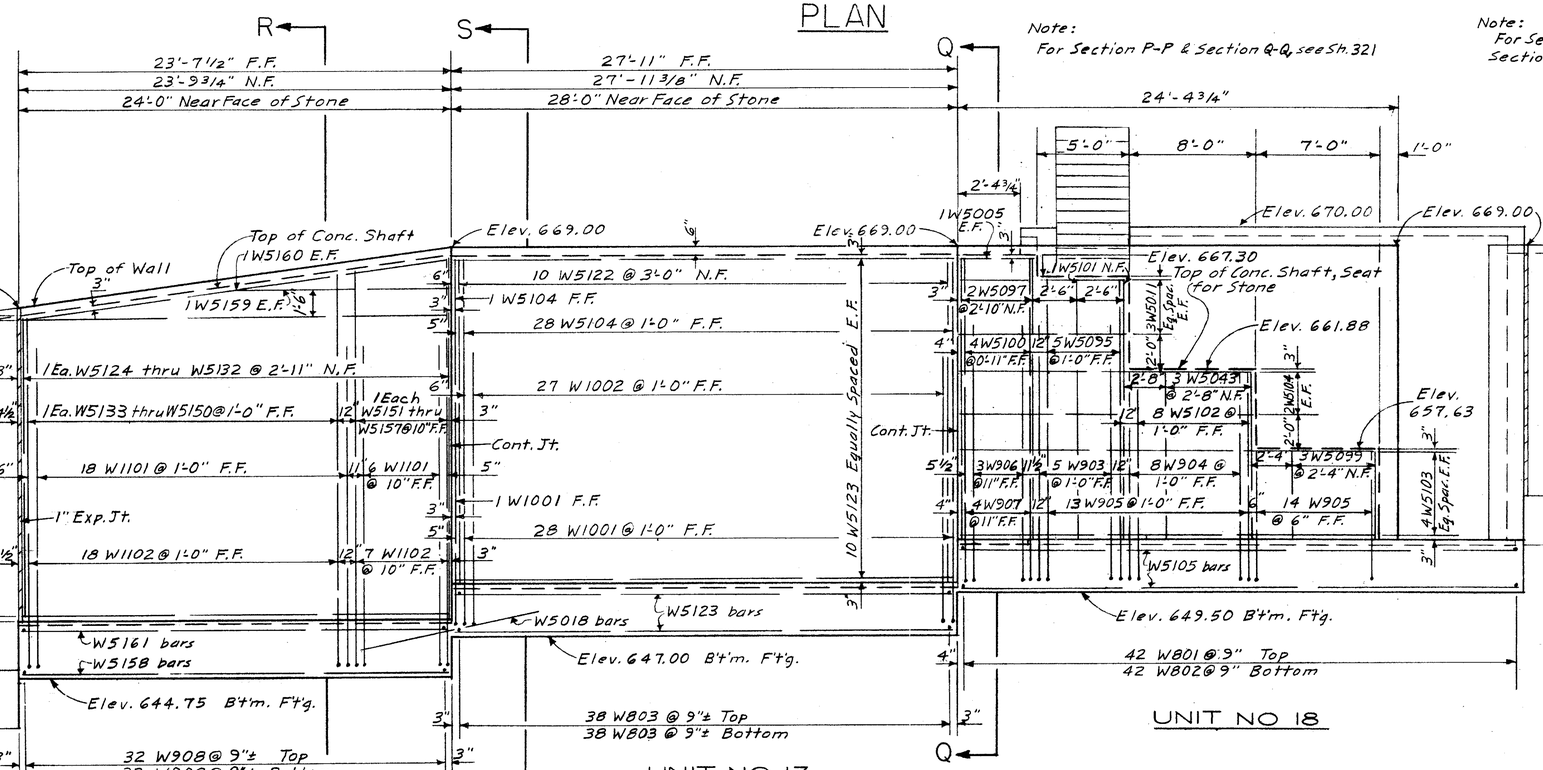

UNIT NO 16

UNIT NO 17

UNIT NO 18

ELEVATION

Note:
For Section M-M & Section N-N see Sh. 324

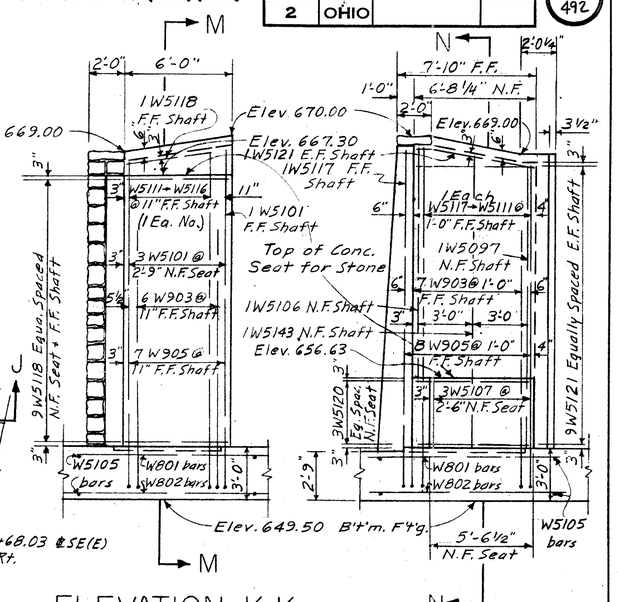

ELEVATION K-K

ELEVATION L-L

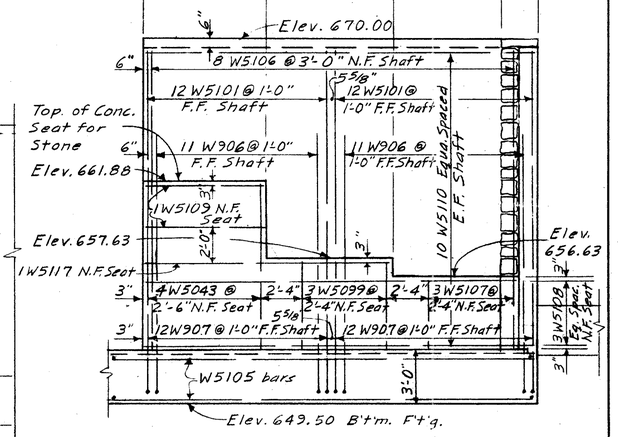

ELEVATION J-J (Steps not shown)

Notes:
N.F. denotes near face of conc.
F.F. denotes far face of conc.
E.F. denotes each face of conc.
W5018 bars are centered under expansion and contraction joints in the stem
For reinf. steel list, see Sh. 329
For step details, see Sh. 326
For drainage details, see Sh. 328
For General Plan & other notes, see Sh. 317

HAZELET & ERDAL
CONSULTING ENGINEERS
CINCINNATI, OHIO

RETAINING WALL NO. 47
SHEET 6 OF 14

DESIGNED	DRAWN	TRACED	CHECKED	REVIEWED DATE	REVISED
	R.G.P.		W.L.	JHO 5/26/65	

FED. RD. DIV.	STATE	PROJECT	FISCAL YEAR
2	OHIO		

323
492

HAMILTON COUNTY
HAM-71-(1.58) (2.51)

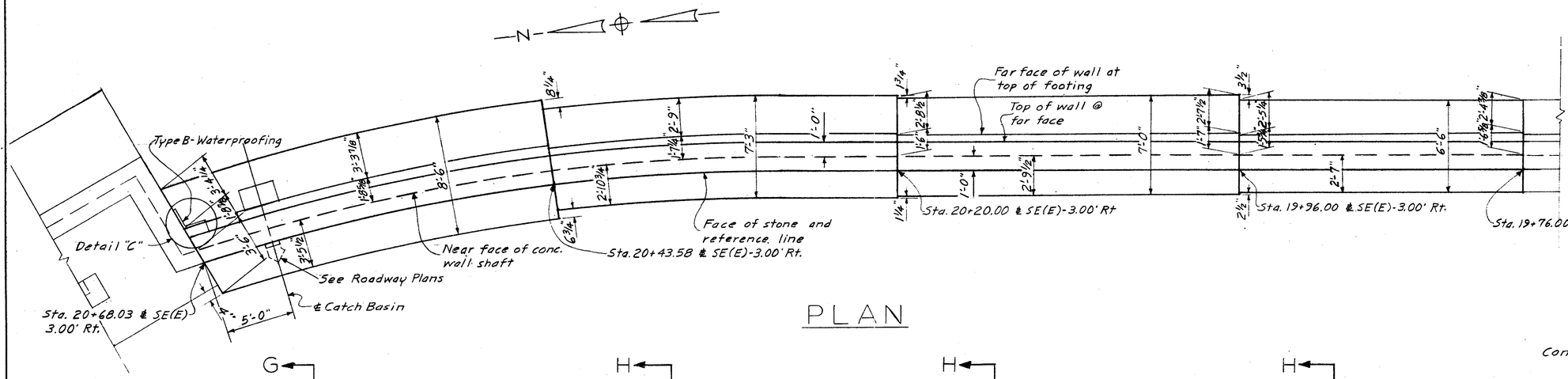

PLAN

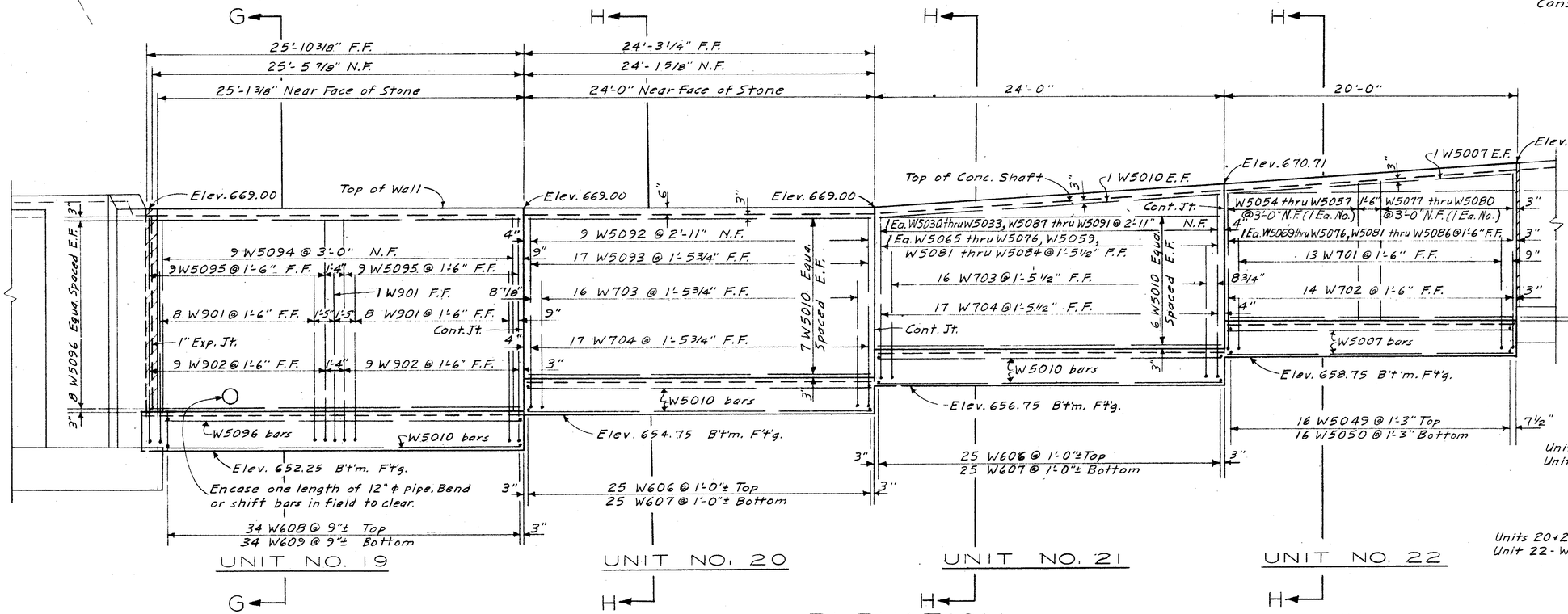

UNIT NO. 19 | UNIT NO. 20 | UNIT NO. 21 | UNIT NO. 22

ELEVATION

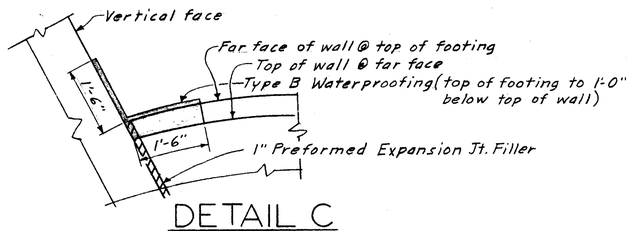

DETAIL C

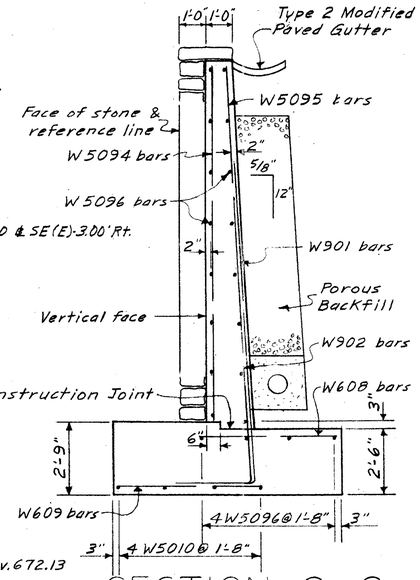

SECTION G-G

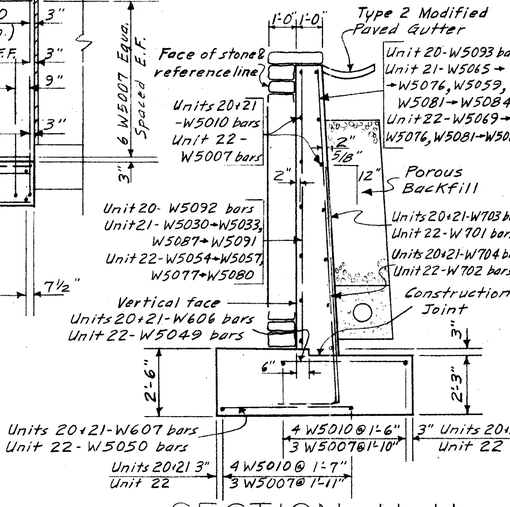

SECTION H-H

Notes:
N.F. denotes near face of conc.
F.F. denotes far face of conc.
E.F. denotes each face of conc.
For reinf. steel list, see Sh. 329, 330
For Catch Basin details, see Sh. 327
For drainage details, see Sh. 328
For General Plan & other notes, see Sh 317

HAZELET & ERDAL
CONSULTING ENGINEERS
CINCINNATI, OHIO

RETAINING WALL NO. 47

SHEET 7 OF 14

DESIGNED	DRAWN	TRACED	CHECKED	REVIEWED DATE	REVISED
	R.G.P.		W.L.	JHO 5/26/65	

FED. RD. DIV.	STATE	PROJECT	FISCAL YEAR
2	OHIO		

324/492

HAMILTON COUNTY
HAM-71-(1.56) (2.61)

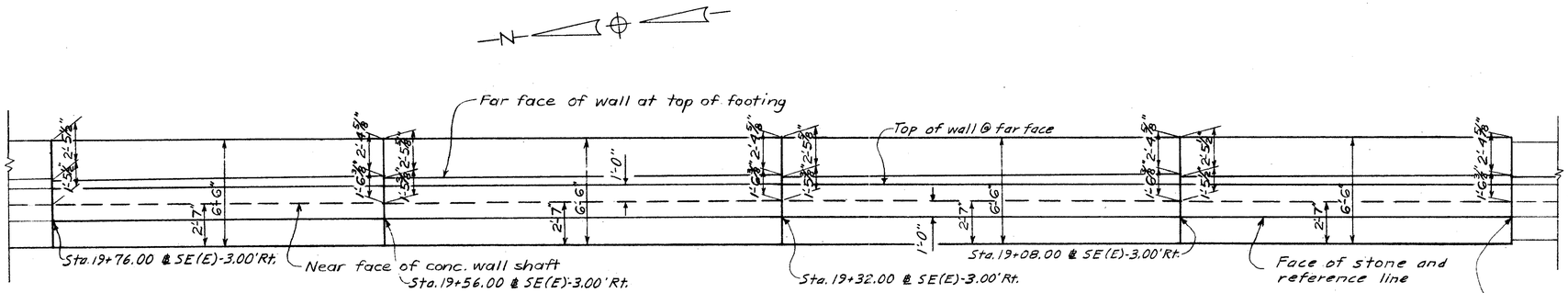

PLAN

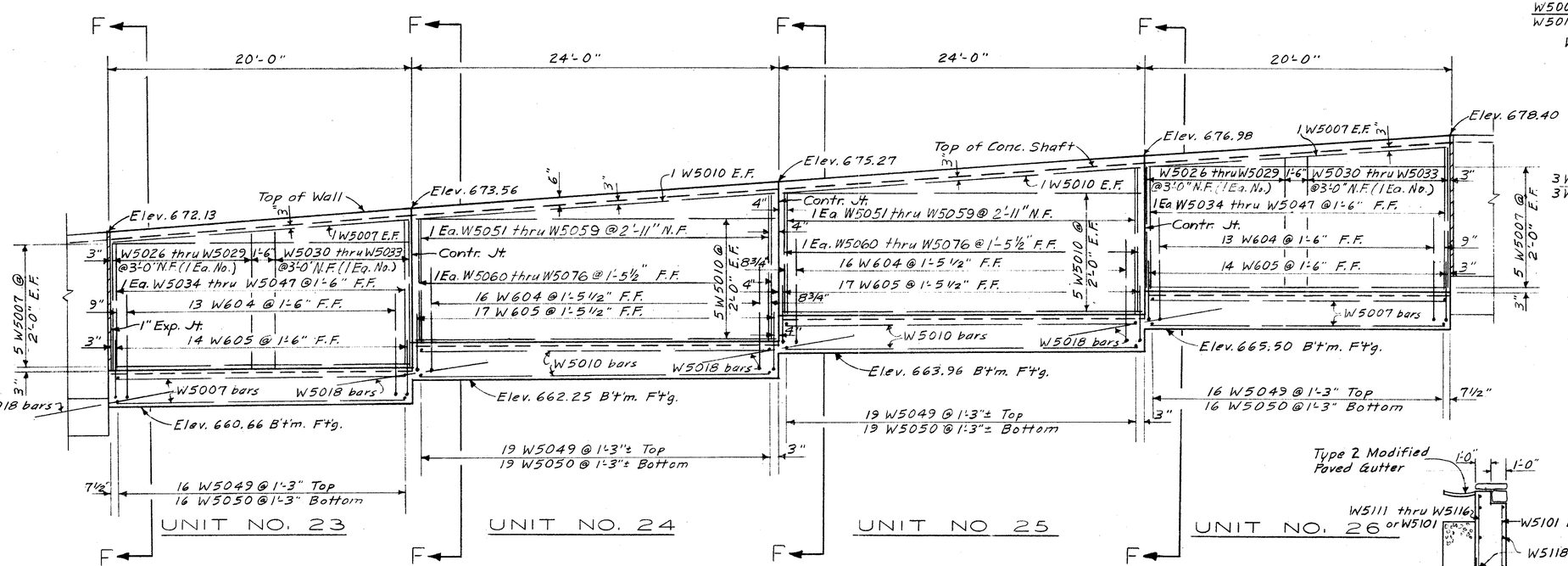

ELEVATION

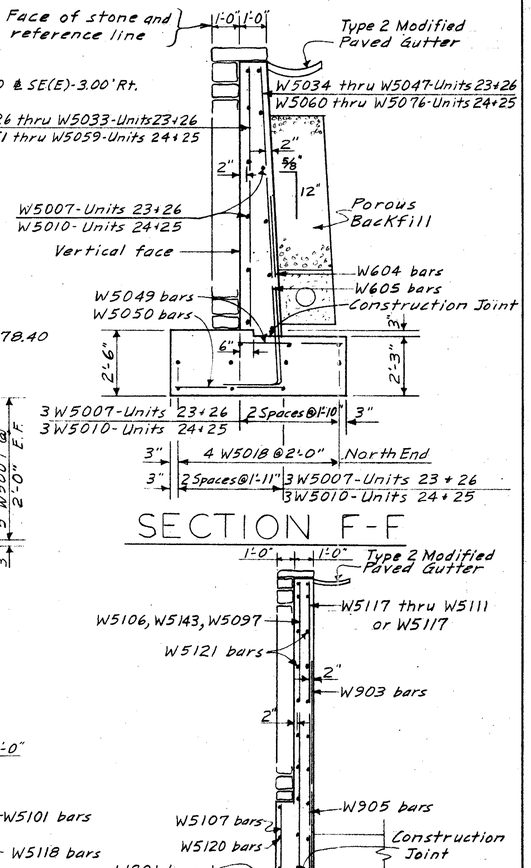

SECTION F-F

SECTION N-N

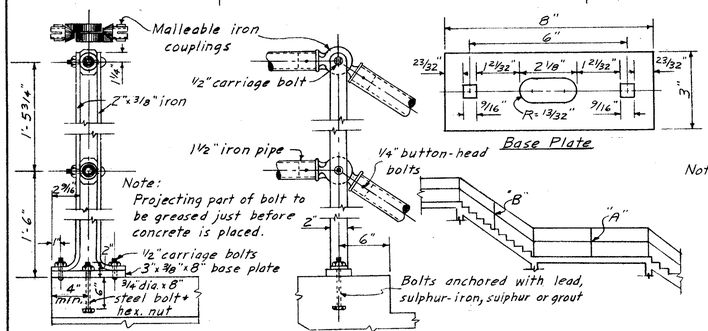

IRON HAND RAILING DETAIL (Work with Sh. 326)

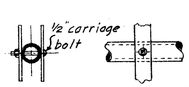

Special Construction at "A" & "B"

Notes:
All bolts to project beyond nut ½ dia., but not over ¼". Bolts to be burred to lock nuts. Threads of nuts to be cut deeply so nuts are free-working after being galvanized.
All parts galvanized after fabrication per A.S.T.M. DES. A-123.
Stamping shall be hot-dipped galvanized after fabrication in accordance with A.S.T.M. DES. A-123.

Notes:
N.F. denotes near face of conc.
F.F. denotes far face of conc.
E.F. denotes each face of conc.
W5018 bars are centered under expansion and contr. joints in the stem.
For reinf. steel list see Sh. 329, 330
For drainage details, see Sh. 328
For General Plan and other notes, see Sh. 317
Work Section M-M and Section N-N with Sh. 322

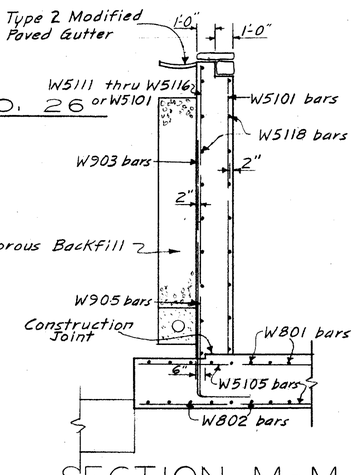

SECTION M-M

HAZELET & ERDAL
CONSULTING ENGINEERS
CINCINNATI, OHIO

RETAINING WALL NO. 47

SHEET 8 OF 14

DESIGNED	DRAWN	TRACED	CHECKED	REVIEWED DATE	REVISED
	R.G.P.		W.L.	JHO 5/26/65	

FED. RD. DIV.	STATE	PROJECT	FISCAL YEAR
2	OHIO		

325/492

HAMILTON COUNTY
HAM-71-(1.56)(2.51)

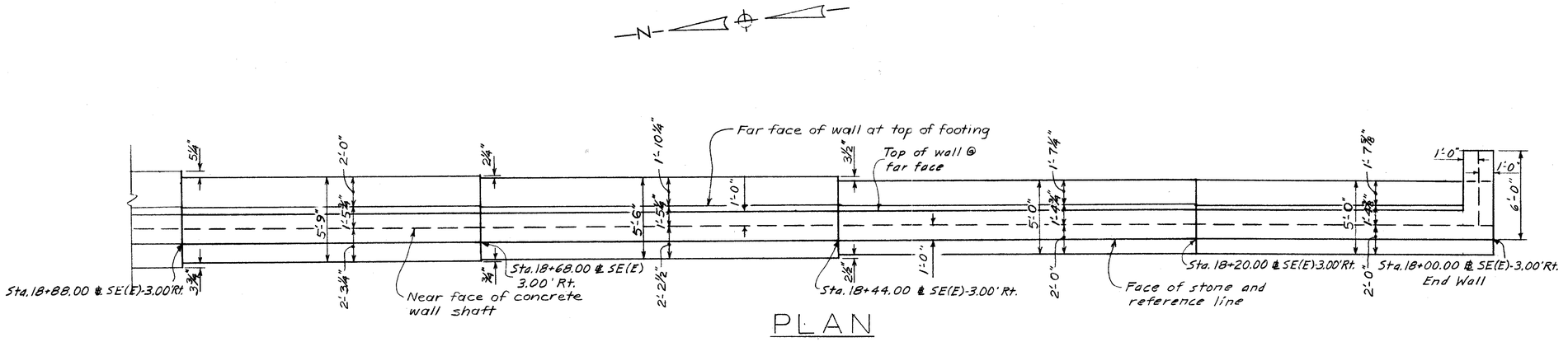

PLAN

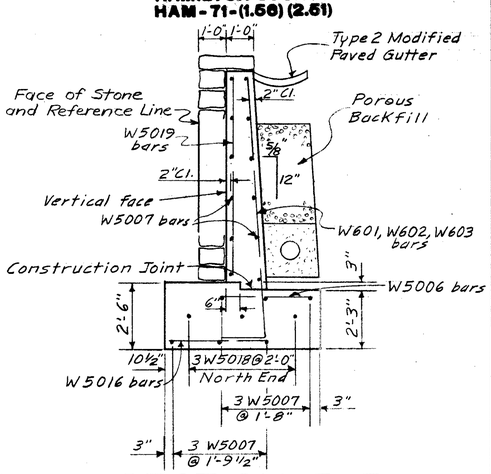

SECTION B-B

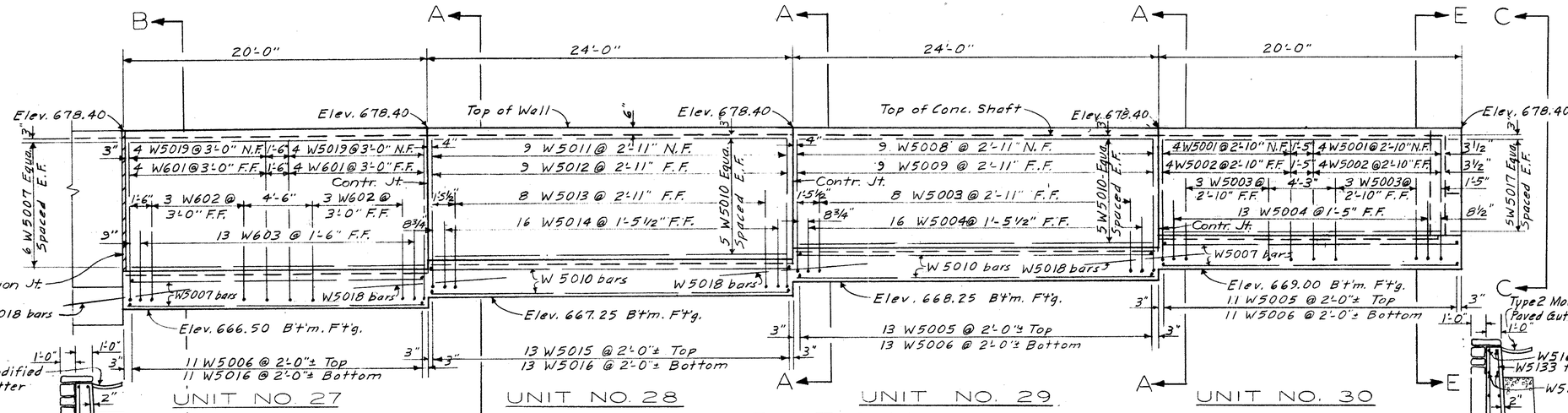

ELEVATION

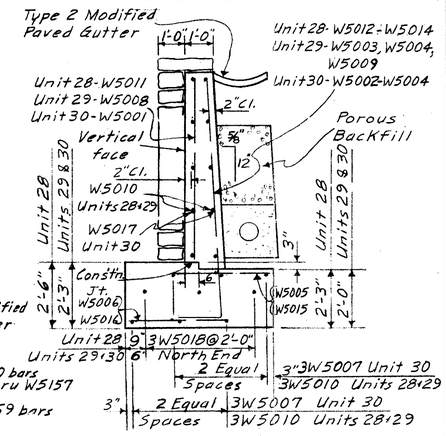

SECTION A-A

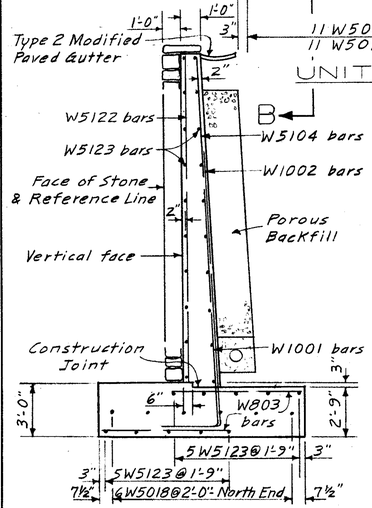

SECTION S-S

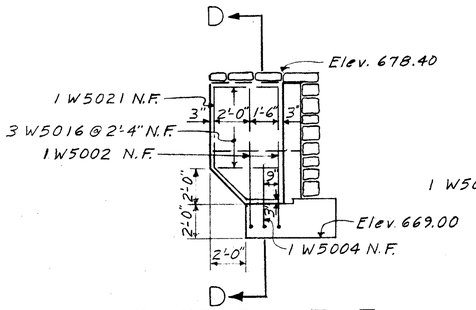

SECTION E-E

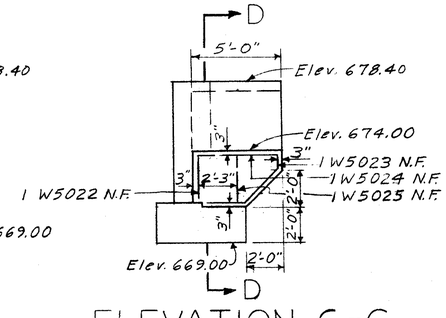

ELEVATION C-C

Note: W5018 bars are centered under expansion and contraction joints in the stem.

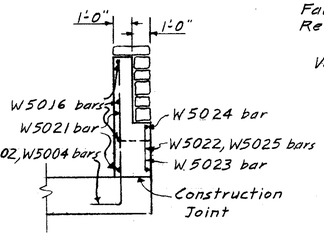

SECTION D-D

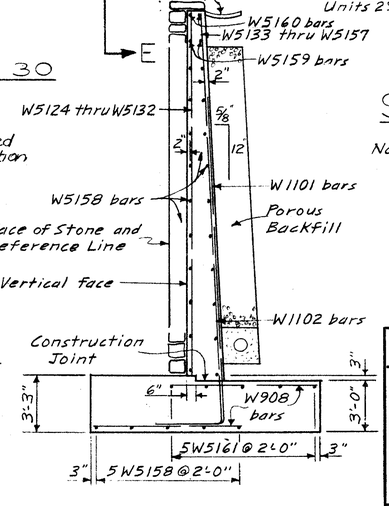

SECTION R-R

Notes:
N.F. denotes near face of conc.
F.F. denotes far face of conc.
E.F. denotes each face of conc.
For reinf. steel list see Sh. 329, 330
Work Section R-R & Section S-S with Sh. 322
For drainage details, see Sh. 328
For General Plan & other notes, see Sh. 317

HAZELET & ERDAL
CONSULTING ENGINEERS
CINCINNATI, OHIO

RETAINING WALL NO. 47

SHEET 9 OF 14

DESIGNED	DRAWN	TRACED	CHECKED	REVIEWED DATE	REVISED
	R.G.P.		W.L.	JHO 5/26/65	

FED. RD. DIV.	STATE	PROJECT	FISCAL YEAR
2	OHIO		

326
492

HAMILTON COUNTY
HAM-71-(1.56) (2.51)

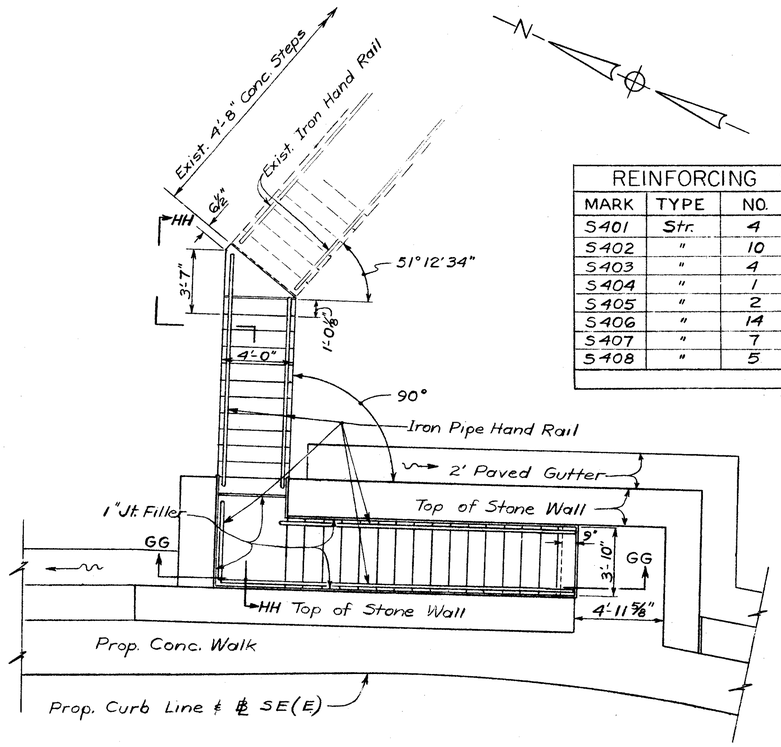

STEP PLAN - UNIT 18

REINFORCING STEEL LIST				
MARK	TYPE	NO.	LENGTH	
S401	Str.	4	13'-0"	
S402	"	10	3'-8"	
S403	"	4	23'-0"	
S404	"	1	3'-7"	
S405	"	2	4'-6"	
S406	"	14	3'-6"	
S407	"	7	5'-3"	
S408	"	5	7'-6"	

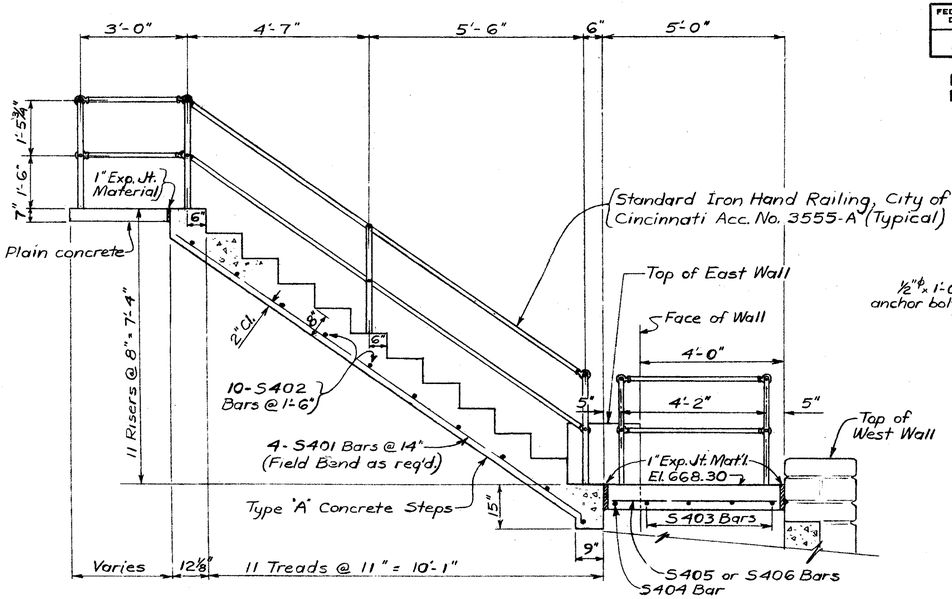

SECTION HH-HH

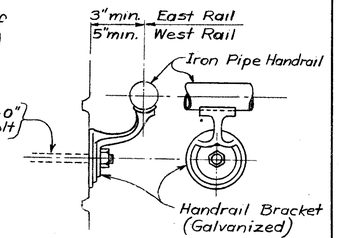

Hand Rail Bracket shall be galvanized malleable iron and shall be Julius Blum & Co. Inc. Stock No. 1306, J.G. Braun Co. Stock No. 4549-3", or approved equal. Include with Item I-13 for paym't. (8 Req'd).

DETAIL "D"

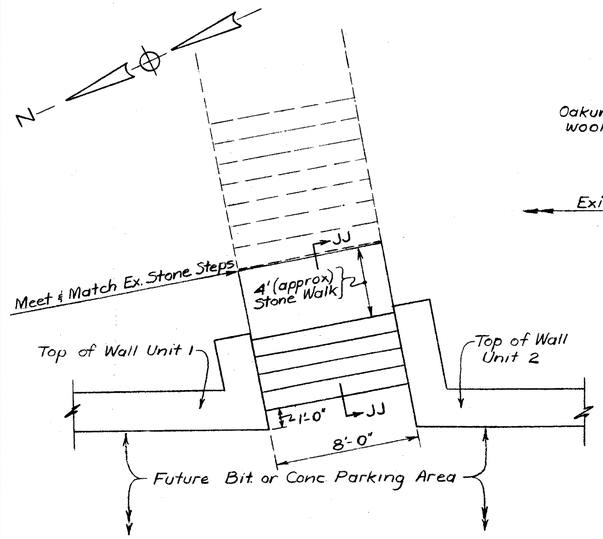

STONE STEP PLAN - UNITS 1&2

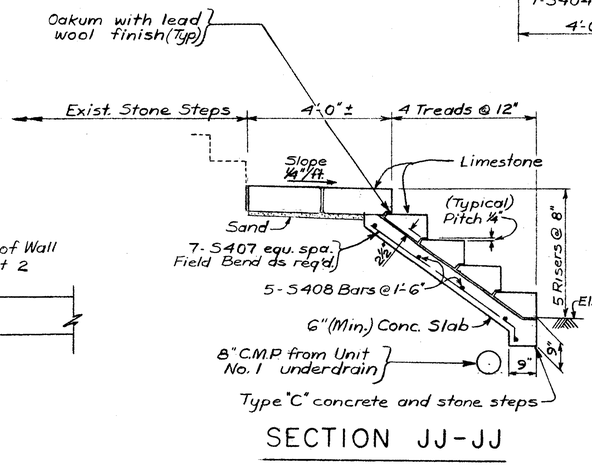

SECTION JJ-JJ

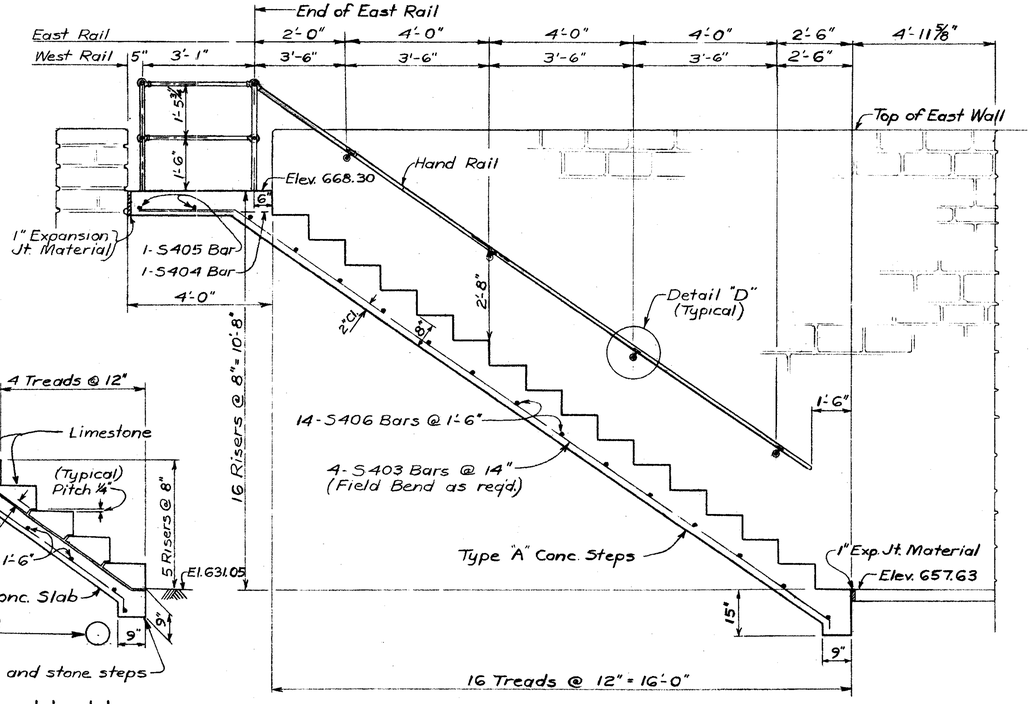

SECTION GG-GG

NOTES

Cost of expansion joint material, railing, and reinforcing steel for concrete steps shall be included in Item I-13 for payment.
Concrete for steps shall be Class "C".
For the purpose of estimating, the 5'-0" landing shall be considered as a tread.
Area between East and West Walls under steps shall be backfilled with bank run gravel to bottom of proposed conc. steps.
For additional details and notes not shown of Iron Pipe Hand Railing, see details on Sheet No. 324.
For Retaining Wall Details of Units 1 & 2 See Sh. No. 318.
For Wall General Plan, See Sh. No. 317.
For Retaining Wall Details of Unit 18, See Sh. No. 322

HAZELET & ERDAL
CONSULTING ENGINEERS
CINCINNATI, OHIO

RETAINING WALL NO. 47

SHEET 10 OF 14

DESIGNED	DRAWN	TRACED	CHECKED	REVIEWED DATE	REVISED
	H.L.L. 5-13-65		W.L.	JWH 5/16/65	

FED. RD. DIV.	STATE	PROJECT	FISCAL YEAR
2	OHIO		

327
492

HAMILTON COUNTY
HAM-71-(1.56)(2.51)

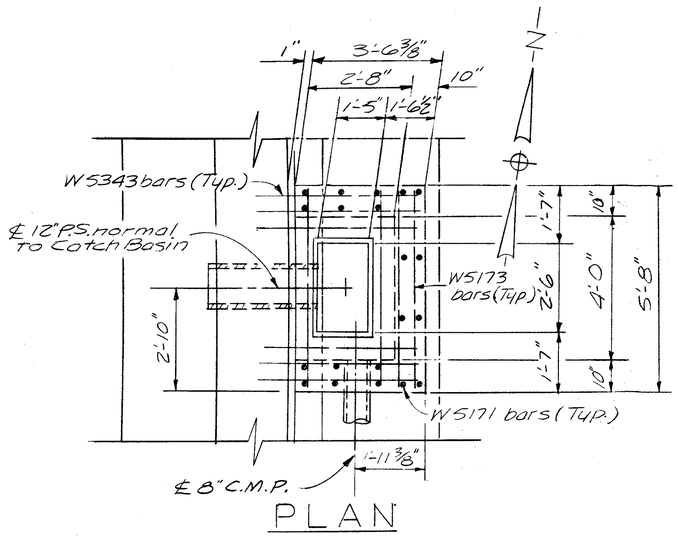

PLAN

NOTES:

Concrete for Catch Basins and Tops shall be included in Item S-1 Class "E" Concrete, Wall Shafts.

For Reinforcing Steel List see Sht. No. 329.

For Estimate of Quantities see Sht. No. 317.

Provide 2" Clearance to reinforcing steel in Catch Basins.

For Details of Type "V" Standard Catch Basin Casting see Sht. No. 182.

Work Catch Basin at Sta. 20+63 SE(E) with Sht. No. 323.

Work Catch Basin at Sta. 23+75± SE(E) with Sht. No. 319.

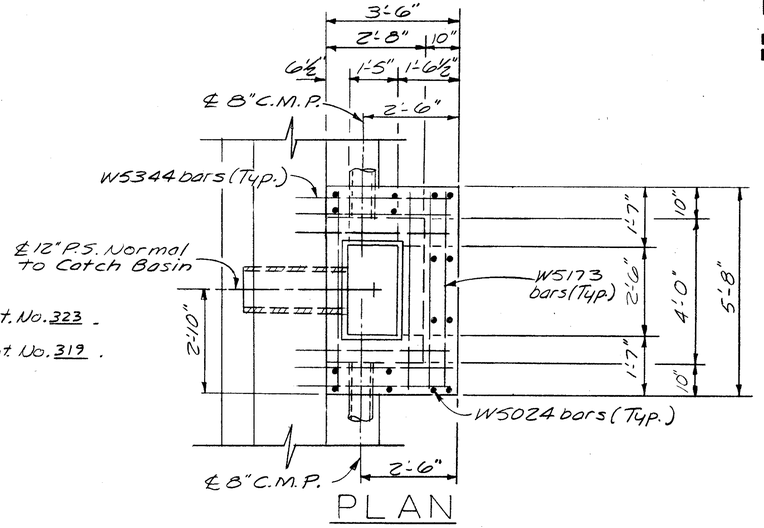

PLAN

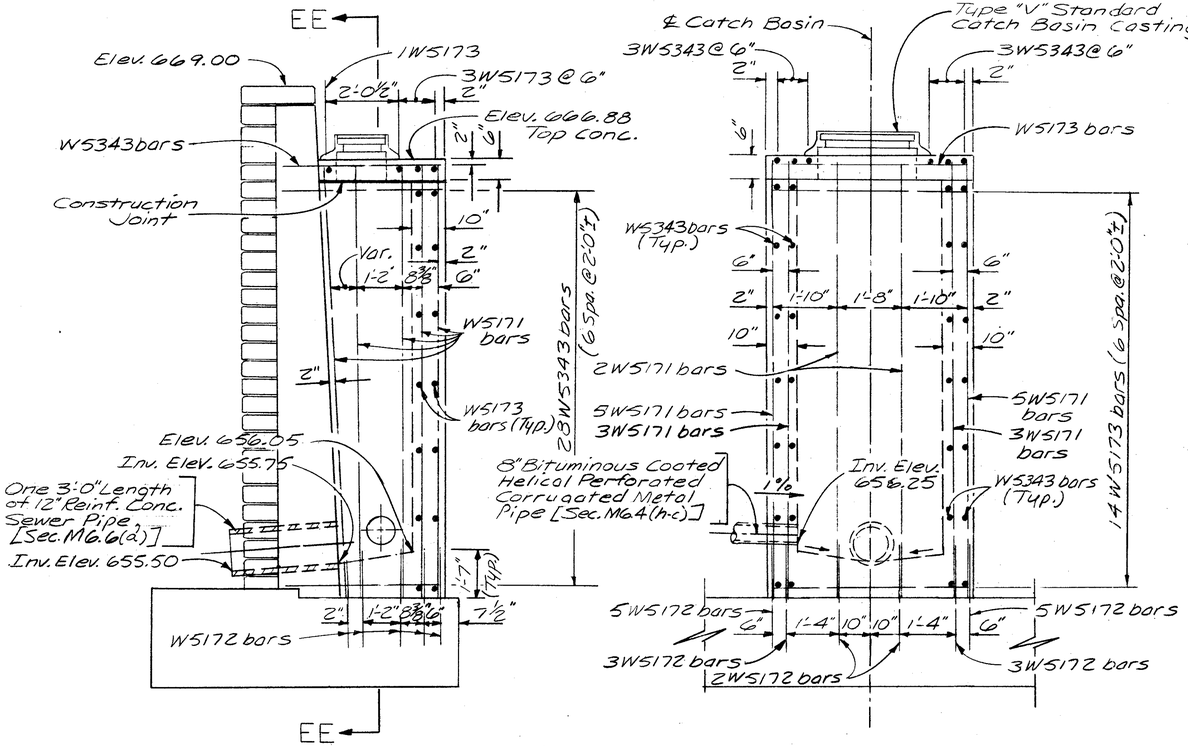

ELEVATION

SECTION EE-EE

CATCH BASIN AT STA. 20+63SE(E)

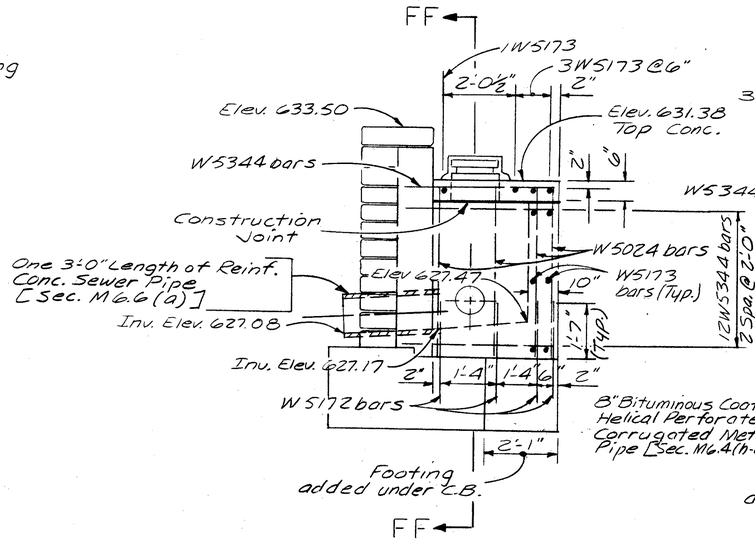

ELEVATION

SECTION FF-FF

CATCH BASIN AT STA. 23+75±SE(E)

HAZELET & ERDAL
CONSULTING ENGINEERS
CINCINNATI, OHIO

RETAINING WALL NO. 47
SHEET 11 OF 14

DESIGNED	DRAWN	TRACED	CHECKED	REVIEWED DATE	REVISED
TLZ	TLZ		H.L.I. 5-15-65	JWO 5/16/65	

FED. RD. DIV.	STATE	PROJECT	FISCAL YEAR
2	OHIO		

328
492

HAMILTON COUNTY
HAM-71-(1.56) (2.51)

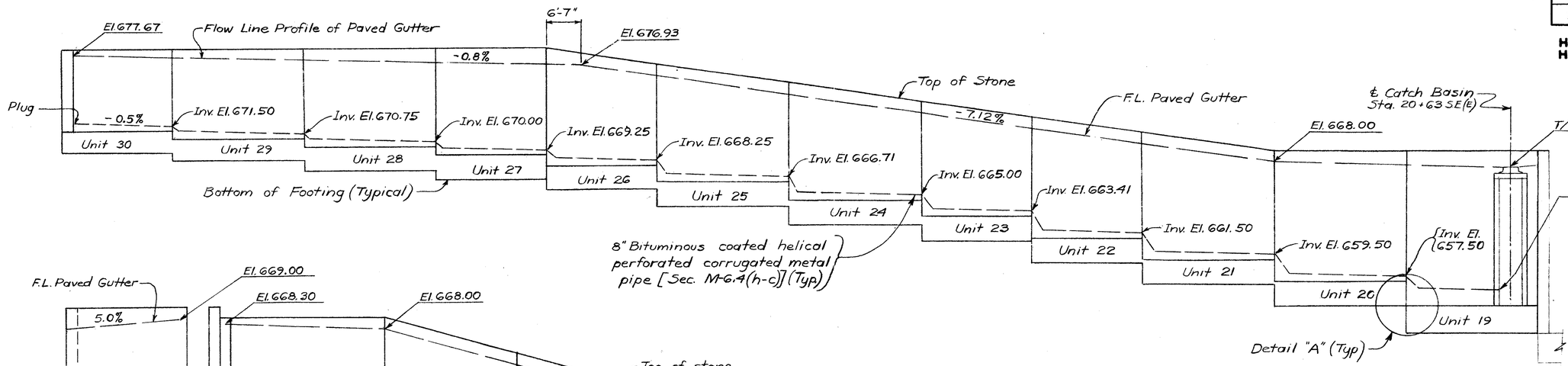

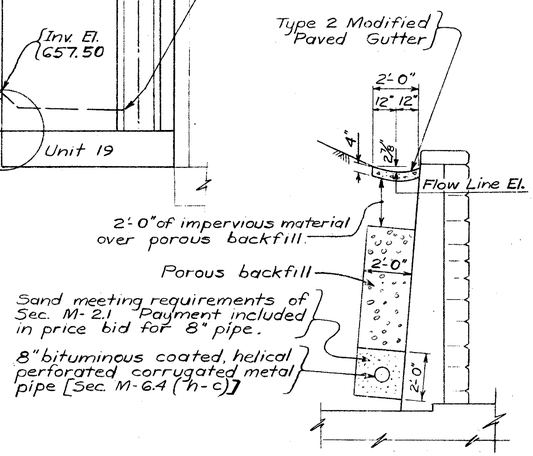

TYPICAL SECTION

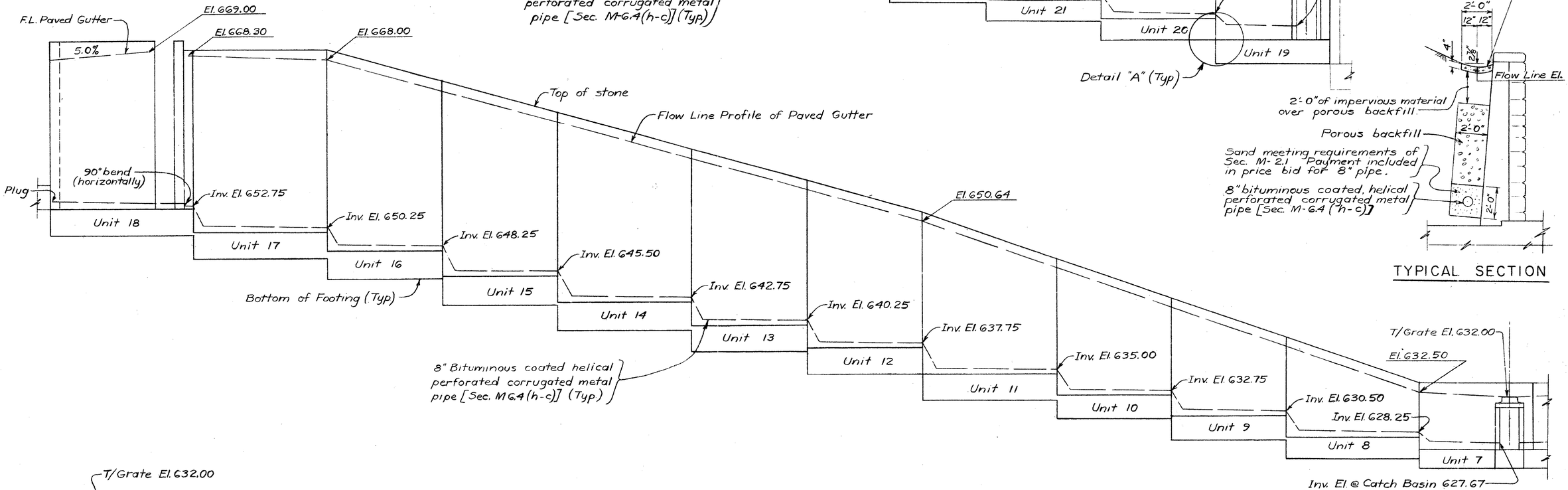

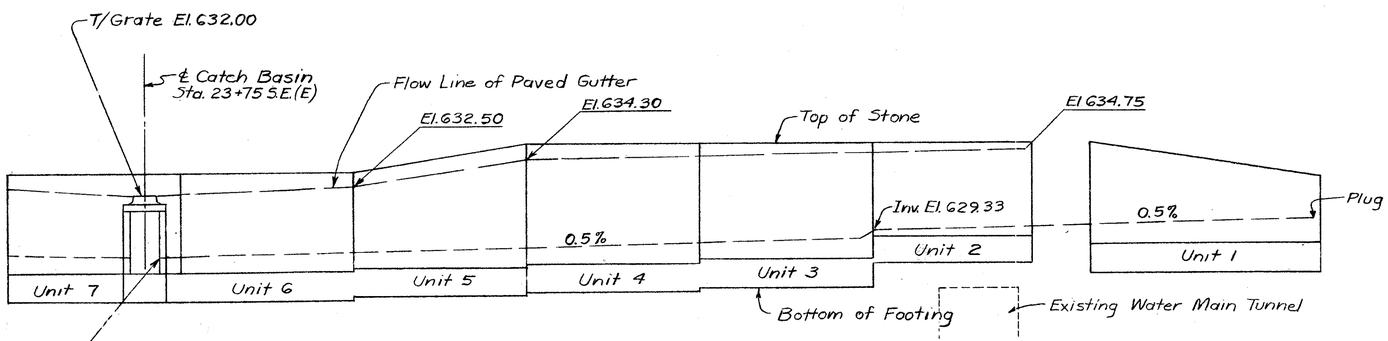

RETAINING WALL DRAINAGE DETAILS

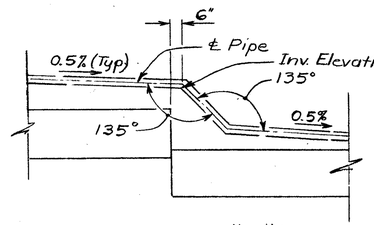

DETAIL "A"

For Catch Basin Details, See Sh. 327
For Wall General Plan, See Sh. 317

HAZELET & ERDAL
CONSULTING ENGINEERS
CINCINNATI, OHIO

RETAINING WALL NO. 47
SHEET 12 OF 14

DESIGNED	DRAWN	TRACED	CHECKED	REVIEWED DATE	REVISED
	H.L.L. 5-11-65		W.L. 5-20-65	JHO 5/26/65	

FED. RD. DIV.	STATE	PROJECT	FISCAL YEAR
2	OHIO		

329
492

HAMILTON COUNTY
HAM.-71-(1.56) (2.51)

REINFORCING STEEL LIST

MARK	TYPE	No.	LENGTH	WEIGHT
W5001	Str.	8	6'-6"	54
W5002	6	10	9'-10"	103
W5003	6	14	7'-1"	103
W5004	6	30	5'-4"	167
W5005	Str	49	3'-1"	158
W5006	↑	119	3'-5"	424
W5007	↓	80	19'-8"	1641
W5008	Str.	9	7'-3"	68
W5009	6	9	10'-7"	99
W5010	Str.	230	23'-8"	5677
W5011	Str.	15	8'-0"	125
W5012	6	9	11'-7"	109
W5013	6	8	8'-1"	67
W5014	6	16	6'-4"	106
W5015	Str.	21	3'-3"	71
W5016	↑	27	3'-8"	103
W5017		10	18'-8"	195
W5018		49	10'-0"	511
W5019	↓	8	8'-9"	73
W5020	Str.	6	5'-4"	33
W5021	9	1	8'-11"	9
W5022	Str.	6	2'-7"	16
W5023	9	1	5'-7"	6
W5024	Str.	17	4'-8"	83
W5025	↑	1	2'-10"	3
W5026		2	8'-4"	17
W5027		2	8'-6"	18
W5028		2	8'-9"	18
W5029		2	8'-11"	19
W5030		3	9'-1"	28
W5031		3	9'-3"	29
W5032		3	9'-6"	30
W5033		3	9'-8"	30
W5034		2	8'-3"	17
W5035		2	8'-4"	17
W5036		2	8'-5"	18
W5037		2	8'-7"	18
W5038		2	8'-8"	18
W5039		2	8'-9"	18
W5040		2	8'-10"	18
W5041		2	9'-0"	19
W5042		2	9'-1"	19
W5043		9	9'-2"	86
W5044		2	9'-4"	19
W5045		2	9'-5"	20
W5046		2	9'-6"	20
W5047		2	9'-7"	20
W5048		3	1'-4"	4
W5049		166	3'-10"	664
W5050		109	4'-0"	455
W5051		2	8'-2"	17
W5052		2	8'-4"	17
W5053		2	8'-7"	18
W5054		3	8'-9"	27
W5055		3	9'-0"	28
W5056		3	9'-2"	29
W5057		3	9'-5"	29
W5058		2	9'-7"	20
W5059		3	9'-10"	31
W5060		2	8'-1"	17
W5061		2	8'-2"	17
W5062		2	8'-3"	17
W5063		2	8'-4"	17
W5064		2	8'-6"	18
W5065		3	8'-7"	27
W5066		3	8'-8"	27
W5067		3	8'-9"	27
W5068		3	8'-11"	28
W5069		4	9'-0"	38
W5070		4	9'-1"	38
W5071		4	9'-2"	38
W5072		4	9'-4"	39
W5073		4	9'-5"	39
W5074		4	9'-6"	40
W5075		4	9'-7"	40
W5076	↓	4	9'-9"	41
W5077	Str.	1	9'-6"	10

REINFORCING STEEL LIST

MARK	TYPE	No.	LENGTH	WEIGHT
W5078	Str.	1	9'-9"	10
W5079	↑	1	10'-0"	10
W5080		1	10'-2"	11
W5081		2	9'-11"	21
W5082		2	10'-0"	21
W5083		2	10'-1"	21
W5084		2	10'-2"	21
W5085		1	10'-4"	11
W5086		1	10'-5"	11
W5087		1	9'-11"	10
W5088		1	10'-1"	11
W5089		1	10'-4"	11
W5090		9	10'-6"	99
W5091		1	10'-9"	11
W5092		9	11'-1"	104
W5093		17	10'-7"	188
W5094		9	13'-6"	127
W5095		23	12'-5"	298
W5096		20	25'-0"	522
W5097		3	15'-10"	50
W5098		4	2'-2"	9
W5099		10	4'-11"	51
W5100		4	13'-8"	57
W5101		30	14'-7"	456
W5102		8	7'-0"	58
W5103		17	23'-0"	408
W5104		36	16'-0"	601
W5105		18	31'-0"	582
W5106		9	16'-10"	158
W5107		6	3'-11"	25
W5108		3	21'-7"	68
W5109		2	7'-8"	16
W5110		20	22'-7"	471
W5111		2	13'-8"	29
W5112		3	13'-10"	43
W5113		3	14'-0"	44
W5114		3	14'-2"	44
W5115		3	14'-3"	45
W5116		3	14'-5"	45
W5117		7	14'-8"	107
W5118		19	5'-8"	112
W5119		2	3'-5"	7
W5120		3	5'-2"	16
W5121		20	6'-4"	132
W5122		10	18'-4"	191
W5123		30	27'-3"	853
W5124		1	17'-0"	18
W5125		1	17'-5"	18
W5126		1	17'-10"	19
W5127		1	18'-3"	19
W5128		1	18'-7"	19
W5129		1	19'-0"	20
W5130		1	19'-5"	20
W5131		1	19'-10"	21
W5132		1	20'-3"	21
W5133		4	14'-10"	62
W5134		6	15'-0"	94
W5135		4	15'-1"	63
W5136		8	15'-3"	127
W5137		4	15'-5"	64
W5138		4	15'-6"	65
W5139		4	15'-8"	65
W5140		4	15'-10"	66
W5141		3	16'-0"	50
W5142		3	16'-1"	50
W5143		4	16'-3"	68
W5144		3	16'-5"	51
W5145		3	16'-6"	52
W5146		3	16'-8"	52
W5147		3	16'-10"	53
W5148		3	17'-0"	53
W5149		3	17'-1"	53
W5150		2	17'-3"	36
W5151		1	17'-5"	18
W5152		1	17'-6"	18
W5153	↓	1	17'-7"	18
W5154	Str.	1	17'-9"	19

REINFORCING STEEL LIST

MARK	TYPE	No.	LENGTH	WEIGHT
W5155	Str.	1	17'-10"	19
W5156	↑	1	18'-0"	19
W5157		1	18'-1"	19
W5158		48	23'-3"	1164
W5159		4	11'-6"	48
W5160		10	23'-6"	245
W5161		10	21'-9"	227
W5162		2	16'-4"	34
W5163		2	16'-9"	35
W5164		2	17'-2"	36
W5165		2	17'-7"	37
W5166		1	18'-0"	19
W5167		1	18'-5"	19
W5168		1	18'-10"	20
W5169		1	19'-3"	20
W5170		1	19'-8"	21
W5171		20	11'-11"	249
W5172		36	3'-2"	119
W5173		28	5'-4"	156
W5174		8	2'-9"	23
W5175		1	15'-3"	16
W5176		1	15'-8"	16
W5177		1	16'-1"	17
W5178		1	16'-6"	17
W5179		1	16'-11"	18
W5180		1	17'-4"	18
W5181		1	17'-9"	19
W5182		1	18'-2"	19
W5183		5	18'-7"	97
W5184		1	19'-0"	20
W5185		3	13'-3"	41
W5186		3	13'-5"	42
W5187		3	13'-7"	43
W5188		3	13'-9"	43
W5189		3	13'-10"	43
W5190		3	14'-0"	44
W5191		3	14'-2"	44
W5192		3	14'-3"	45
W5193		3	14'-5"	45
W5194		3	14'-7"	46
W5195		2	14'-8"	31
W5196		5	25'-9"	134
W5197		23	27'-0"	648
W5198		2	27'-5"	57
W5199		24	23'-11"	599
W5200		1	14'-4"	15
W5201		1	14'-9"	15
W5202		1	15'-2"	16
W5203		1	15'-7"	16
W5204		1	16'-0"	17
W5205		1	12'-7"	13
W5206		2	12'-8"	26
W5207		2	12'-9"	27
W5208		2	12'-11"	27
W5209		2	13'-1"	27
W5210		2	13'-2"	27
W5211		1	13'-6"	14
W5212		1	13'-11"	15
W5213		1	14'-4"	15
W5214		1	14'-8"	15
W5215		1	15'-1"	16
W5216		1	15'-6"	16
W5217		1	15'-11"	17
W5218		1	16'-4"	17
W5219		1	16'-9"	17
W5220		2	11'-4"	24
W5221		1	11'-6"	12
W5222		1	11'-8"	12
W5223		1	11'-9"	12
W5224		1	11'-11"	12
W5225		1	12'-1"	13
W5226		1	12'-3"	13
W5227		1	12'-4"	13
W5228		1	12'-6"	13
W5229		52	27'-8"	1501
W5230	↓	4	28'-1"	117
W5231	Str.	2	11'-5"	24

REINFORCING STEEL LIST

MARK	TYPE	No.	LENGTH	WEIGHT
W5232	Str.	2	11'-11"	25
W5233	↑	2	12'-5"	26
W5234		2	13'-0"	27
W5235		2	13'-6"	28
W5236		1	14'-0"	15
W5237		5	14'-6"	15
W5238		1	15'-1"	16
W5239		1	15'-7"	16
W5240		1	16'-1"	17
W5241		3	9'-11"	31
W5242		3	10'-0"	31
W5243		3	10'-2"	32
W5244		3	10'-4"	32
W5245		3	10'-6"	33
W5246		3	10'-9"	34
W5247		3	10'-11"	34
W5248		3	11'-1"	35
W5249		3	11'-3"	35
W5250		3	11'-5"	36
W5251		3	11'-7"	37
W5252		3	11'-9"	37
W5253		2	11'-11"	25
W5254		2	12'-1"	25
W5255		2	12'-3"	26
W5256		2	12'-5"	26
W5257		5	12'-8"	66
W5258		1	12'-10"	13
W5259		1	13'-0"	14
W5260		1	13'-2"	14
W5261		1	13'-4"	14
W5262		1	13'-6"	14
W5263		1	13'-8"	14
W5264		1	13'-10"	14
W5265		1	14'-0"	15
W5266		1	14'-2"	15
W5267		1	14'-5"	15
W5268		1	14'-7"	15
W5269		1	14'-9"	15
W5270		1	9'-5"	10
W5271		1	9'-11"	10
W5272		1	10'-5"	11
W5273		1	10'-11"	11
W5274		1	8'-5"	9
W5275		2	8'-6"	18
W5276		2	8'-8"	18
W5277		2	8'-10"	18
W5278		2	9'-0"	19
W5279		2	9'-2"	19
W5280		2	9'-4"	19
W5281		2	9'-7"	20
W5282		2	9'-9"	20
W5283		2	7'-6"	16
W5284		2	8'-0"	17
W5285		2	8'-6"	18
W5286		2	9'-0"	19
W5287		2	9'-6"	20
W5288		1	10'-0"	10
W5289		1	10'-6"	11
W5290		1	11'-1"	12
W5291		1	11'-7"	12
W5292		1	7'-9"	8
W5293		1	7'-10"	8
W5294		1	8'-0"	8
W5295		1	8'-2"	9
W5296		1	8'-4"	9
W5297		9	4'-11"	46
W5298		1	5'-5"	6
W5299		1	5'-11"	6
W5300		1	6'-5"	7
W5301		1	7'-0"	7
W5302		1	5'-1"	5
W5303		1	5'-2"	5
W5304		1	5'-4"	6
W5305		1	5'-6"	6
W5306		1	5'-8"	6
W5307	↓	9	5'-10"	55
W5308	Str.	19	6'-1"	121

REINFORCING STEEL LIST

MARK	TYPE	No.	LENGTH	WEIGHT
W5309	Str.	1	6'-3"	7
W5310	↑	1	6'-5"	7
W5311		1	6'-7"	7
W5312		1	6'-9"	7
W5313		1	6'-11"	7
W5314		1	7'-1"	7
W5315		12	7'-3"	91
W5316		1	7'-5"	8
W5317		10	7'-7"	79
W5318		1	7'-9"	8
W5319		1	8'-0"	8
W5320		1	8'-2"	9
W5321		1	8'-4"	9
W5322		1	8'-6"	9
W5323		1	8'-8"	9
W5324		1	8'-10"	9
W5325		1	9'-0"	9
W5326		1	9'-2"	10
W5327		1	9'-4"	10
W5328		1	9'-6"	10
W5329	↓	1	9'-8"	10
W5330	Str.	1	9'-11"	10
W5331	11	26	9'-5"	255
W5332	11	24	5'-7"	140
W5333	Str.	1	7'-9"	8
W5334	↑	1	7'-6"	8
W5335		1	7'-3"	8
W5336		1	7'-0"	7
W5337		1	6'-9"	7
W5338		1	6'-7"	7
W5339		1	6'-4"	7
W5340		1	6'-1"	6
W5341		1	5'-10"	6
W5342		5	24'-4"	127
W5343		34	4'-3"	151
W5344	↓	18	4'-2"	78
W5345	Str.	2	22'-8"	47
W5346	11	12	8'-11"	112
W5347	11	10	5'-4"	56
W5348	Str.	11	2'-11"	33
W5349	↑	1	3'-11"	4
W5350		1	4'-2"	4
W5351		1	4'-5"	5
W5352		1	4'-8"	5
W5353		1	4'-11"	5
W5354		1	5'-2"	5
W5355		1	5'-5"	6
W5356		1	5'-8"	6
W5357		1	5'-11"	6
W5358	↓	1	6'-1"	6
W5359	Str.	1	6'-4"	7
W5360	11	1	7'-3"	8
W5361	↑	1	7'-5"	8
W5362		1	7'-7"	8
W5363		1	7'-9"	8
W5364		1	7'-11"	8
W5365		1	8'-1"	8
W5366		1	8'-3"	9
W5367		1	8'-5"	9
W5368		1	8'-7"	9
W5369		1	8'-9"	9
W5370		1	8'-11"	9
W5371		1	9'-1"	9
W5372		1	9'-3"	10
W5373	↓	1	9'-5"	10
W5374	11	3	9'-7"	30
W5375	Str.	3	28'-8"	90
W5376	Str.	4	29'-5"	123
W5377	Str.	4	28'-3"	118
W5378	11	15	5'-10"	91

REINFORCING STEEL LIST

MARK	TYPE	No.	LENGTH	WEIGHT
W601	6	8	12'-8"	152
W602	↑	6	8'-8"	78
W603		13	6'-8"	130
W604	↓	58	8'-11"	777
W605	6	62	5'-11"	551
W606	Str.	50	4'-8"	350
W607	↑	100	4'-10"	726
W608		34	5'-1"	260
W609	↓	67	5'-3"	528
W610	Str.	33	5'-5"	268
W611	6	23	9'-11"	343
W612	↑	25	6'-2"	232
W613	↓	27	7'-8"	311
W614	6	29	5'-7"	243
W615	11	1	11'-5"	17
W616	↑	1	11'-4"	17
W617		1	11'-2"	17
W618		1	11'-1"	17
W619		1	10'-11"	16
W620		1	10'-10"	16
W621		1	10'-8"	16
W622		1	10'-7"	16
W623		1	10'-5"	16
W624		1	10'-4	16
W625		1	10'-2"	15
W626		1	10'-1"	15
W627		1	9'-11"	15
W628		1	9'-10"	15
W629		1	9'-8"	15
W630		1	9'-7"	14
W631		1	9'-5"	14
W632		17	11'-3"	287
W633	↓	16	6'-5"	154
W634	11	19	11'-0"	314
W635	Str.	5	5'-2"	39
W636	11	17	6'-2"	157
W637	11	16	6'-8"	160
W701	6	13	10'-0"	266
W702	↑	14	6'-3"	179
W703	↓	32	11'-0"	720
W704	6	34	7'-0"	487
W705	Str.	76	6'-6"	1010
W706	6	23	12'-6"	588
W707	6	25	7'-9"	396
W801	Str.	42	12'-8"	1421
W802	↑	42	11'-6"	1290
W803	↓	142	7'-2"	2717
W804	Str.	66	6'-10"	1204

Work this sheet with sheet No. 330

HAZELET & ERDAL
CONSULTING ENGINEERS
CINCINNATI, OHIO

RETAINING WALL No. 47

SHEET 13 OF 14

DESIGNED	DRAWN	TRACED	CHECKED	REVIEWED DATE	REVISED
	MJE		WL	JHO 5/26/65	

FED. RD. DIV.	STATE	PROJECT	FISCAL YEAR
2	OHIO		

330
492

HAMILTON COUNTY
HAM.-71-(1.56) (2.51)

REINFORCING STEEL LIST

MARK	TYPE	No.	LENGTH	WEIGHT
W901	6	17	14'-9"	853
W902	6	18	8'-9"	536
W903	11	18	17'-3"	1056
W904	11	8	14'-5"	392
W905	11	42	10'-3"	1464
W906	6	48	17'-3"	2815
W907	6	53	10'-3"	1847
W908	Str.	64	8'-2"	1777
W909	Str.	64	8'-0"	1741
W910	Str.	75	7'-9"	1976
W911	6	27	16'-6"	1515
W912	6	29	9'-6"	937
W1001	6	29	11'-1"	1383
W1002	↕	27	19'-1"	2217
W1003	↕	23	18'-10"	1864
W1004	6	25	10-7"	1138
W1101	6	24	21'-5"	2731
W1102	↕	25	11'-11"	1583
W1103	↕	23	21'-8"	2648
W1104	↕	24	12'-2"	1551
W1105	↕	27	21'-2"	3037
W1106	6	28	11'-8"	1736

Total Reinforcement Weight 83,795 lbs.

REPLACEMENT BARS

MARK	TYPE	No.	LENGTH
RE501	Str.	2	5'-7"
RE601	↕	1	5'-11"
RE701	↕	1	6'-3"
RE801	↕	1	6'-6"
RE901	↕	1	6'-10"
RE1001	↕	1	7'-3"
RE1101	Str.	1	7'-7"

REINFORCING STEEL LIST

MARK	DIMENSIONS a	b	c	d	e	f	r	g	TYPE
W5002	1'-4 1/4"	2 5/8"	3 3/4"	8'-5"	8'-2 3/8"	5 1/8"	2"		6
W5003	1'-4 1/4"	2 5/8"	3 3/4"	5'-8"	5'-5 3/8"	3 3/8"	2"		6
W5004	1'-4 1/4"	2 5/8"	3 3/4"	3'-11"	3'-8 1/4"	2 1/4"	2"		6
W5009	1'-4 1/4"	2 5/8"	3 3/4"	9'-2"	8'-11 3/8"	5 5/8"	2"		6
W5012	1'-4 1/4"	2 5/8"	3 3/4"	10'-2"	9'-11 3/8"	6 1/4"	2"		6
W5013	1'-4 1/4"	2 5/8"	3 3/4"	6'-8"	6'-5 3/8"	4"	2"		6
W5014	1'-4 1/4"	2 5/8"	3 3/4"	4'-11	4'-8 3/8"	2 7/8"	2"		6
W5021	2'- 8"	1'-2 1/2"	1'-8 1/2"	1'-2 1/2"	3'-3"	4'- 7"		3'-3"	9
W5023	2'- 8"	6"	8 1/2"	6"	1'-7"	2'- 3"		1'-7"	9
W5331	1'- 7"	8'-0"							11
W5332	1'- 7"	4'-2"							11
W5346	1'- 7"	7'-6"							11
W5347	1'- 7"	3'-11"							11
W5360	1'- 7"	5'-10"							11
W5361	1'- 7"	6'-0"							11
W5362	1'- 7"	6'-2"							11
W5363	1'- 7"	6'-4"							11
W5364	1'- 7"	6'-6"							11
W5365	1'- 7"	6'-8"							11
W5366	1'- 7"	6'-10"							11
W5367	1'- 7"	7'-0"							11
W5368	1'- 7"	7'-2"							11
W5369	1'- 7"	7'-4"							11
W5370	1'- 7"	7'-6"							11
W5371	1'- 7"	7'-8"							11
W5372	1'- 7"	7'-10"							11
W5373	1'- 7"	8'-0"							11
W5374	1'- 7"	8'-2"							11
W5378	1'- 7"	4'-5"							11
W601	1'-7 7/8"	3"	4 1/4"	10'-11"	10'-8"	6 5/8"	2 1/4"		6
W602	1'-7 7/8"	3"	4 1/4"	6'-11"	6'-8"	4 1/8"	2 1/4"		6
W603	1'-7 7/8"	3"	4 1/4"	4'-11"	4'-8"	2 7/8"	2 1/4"		6
W604	1'-7 7/8"	3"	4 1/4"	7'-2"	6'-11"	4 3/8"	2 1/4"		6
W605	1'-7 7/8"	3"	4 1/4"	4'-2"	3'-11"	2 1/2"	2 1/4"		6
W611	1'- 7 7/8"	3"	4 1/4"	8'-2"	7'-11"	5"	2 1/4"		6
W612	1'- 7 7/8"	3"	4 1/4"	4'-5"	4'-2"	2 5/8"	2 1/4"		6
W613	1'- 7 7/8"	3"	4 1/4"	5'-11"	5'-8"	3 1/2"	2 1/4"		6
W614	1'-7 7/8"	3"	4 1/4"	3'-10"	3'-6 7/8"	2 1/4"	2 1/4"		6
W615	1'-11"	9'- 8"							11
W616	1'-11"	9'- 7"							11
W617	1'-11"	9'- 5"							11
W618	1'-11"	9'- 4"							11
W619	1'-11"	9'- 2"							11
W620	1'-11"	9'- 1"							11
W621	1'-11"	8'- 11"							11
W622	1'-11"	8'- 10"							11
W623	1'-11"	8'- 8"							11
W624	1'-11"	8'- 7"							11
W625	1'-11"	8'- 5"							11
W626	1'-11"	8'- 4"							11
W627	1'-11"	8'- 2"							11
W628	1'-11"	8'- 1"							11
W629	1'-11"	7'- 11"							11
W630	1'-11"	7'-10"							11
W631	1'-11"	7'-8"							11
W632	1'-11"	9'-6"							11
W633	1'-11"	4'-8"							11
W634	1'-11"	9'-3"							11
W636	1'-11"	4'-5"							11
W637	1'-11"	4'-11"							11
W701	1'-11 1/2"	3 3/8"	4 3/4"	7'-11"	7'-7 5/8"	4 3/4"	2 1/2"		6
W702	1'-11 1/2"	3 3/8"	4 3/4"	4'-2"	3'-10 5/8"	2 3/8"	2 1/2"		6
W703	1' 11 1/2"	3 3/8"	4 3/4"	8'-11"	8'-7 5/8"	5 3/8"	2 1/2"		6
W704	1'-11 1/2"	3 3/8"	4 3/4"	4'-11"	4'-7 5/8"	2 7/8"	2 1/2"		6
W706	1'-11 1/2"	3 3/8"	4 3/4"	10'-5"	10'-1 5/8"	6 3/8"	2 1/2"		6
W707	1'-11 1/2"	3 3/8"	4 3/4"	5'-8"	5'-4 5/8"	3 3/8"	2 1/2"		6

REINFORCING STEEL LIST

MARK	DIMENSIONS a	b	c	d	e	f	r	g	TYPE
W901	2'- 4 1/8"	5 5/8"	8 1/4"	12'-2"	11'-8 1/4"	7 1/4"	4 1/2"		6
W902	2'- 4 1/8"	5 5/8"	8 1/4"	6'-2"	5'-8 1/4"	3 1/2"	4 1/2"		6
W903	2'-10"	14'-8"							11
W904	2'-10"	11'-10"							11
W905	2'-10"	7'-8"							11
W906	2'- 4 1/8"	5 5/8"	8 1/4"	14'-8"	14'-2 3/8"	8 7/8"	4 1/2"		6
W907	2'- 4 1/8"	5 5/8"	8 1/4"	7'-8"	7'-2 1/4"	4 1/2"	4 1/2"		6
W911	2'- 4 1/8"	5 5/8"	8 1/4"	13'-11"	13'-5 3/8"	8 3/8"	4 1/2"		6
W912	2'- 4 1/8"	5 5/8"	8 1/4"	6'-11"	6'-5 1/4"	4"	4 1/2"		6
W1001	2'- 8 1/2"	6 1/4"	9 1/8"	8'-2"	7'-7 5/8"	4 3/4"	5"		6
W1002	2'- 8 1/2"	6 1/4"	9 1/8"	16'-2"	15'-7 3/4"	9 3/4"	5"		6
W1003	2'- 8 1/2"	6 1/4"	9 1/8"	15'-11"	15'-4 3/4"	9 5/8"	5"		6
W1004	2'- 8 1/2"	6 1/4"	9 1/8"	7'-8"	7'-1 5/8"	4 1/2"	5"		6
W1101	2'- 11 7/8"	6 7/8"	10 1/8"	18'-2"	17'-7 1/8"	11"	5 1/2"		6
W1102	2'- 11 7/8"	6 7/8"	10 1/8"	8'-8"	8'-1"	5"	5 1/2"		6
W1103	2'- 11 7/8"	6 7/8"	10 1/8"	18'-5"	17'-10 1/8"	11 1/8"	5 1/2"		6
W1104	2'- 11 7/8"	6 7/8"	10 1/8"	8'-11"	8'-4"	5 1/4"	5 1/2"		6
W1105	2'- 11 7/8"	6 7/8"	10 1/8"	17'-11"	17'-4 1/8"	10 7/8"	5 1/2"		6
W1106	2'- 11 7/8"	6 7/8"	10 1/8"	8'-5"	7'-10"	4 7/8"	5 1/2"		6

Notes:
For Bar Bending Schedule and Notes see sheet No. 331

Work this sheet with sheet No. 329

HAZELET & ERDAL
CONSULTING ENGINEERS
CINCINNATI, OHIO

RETAINING WALL No. 47

SHEET 14 OF 14

DESIGNED	DRAWN	TRACED	CHECKED	REVIEWED DATE	REVISED
	MJE		WL	JHO 5/26/65	

FED. RD. DIV.	STATE	PROJECT	FISCAL YEAR
2	OHIO		

331
492

HAMILTON COUNTY
HAM-71-(1.56)(2.61)

Replacement Bars			
Mark	Type	No.	Length
RE501	Str.	8	5'-7"
RE601	Str.	6	5'-11"
RE701	Str.	2	6'-3"
RE801	Str.	3	6'-6"
RE901	Str.	6	6'-10"
RE1001	Str.	6	7'-3"
RE1101	Str.	9	7'-7"

Note: Replacement Bar list is based upon total combined weights of all retaining wall reinforcing bars except for those in Wall No. 18 & 47.

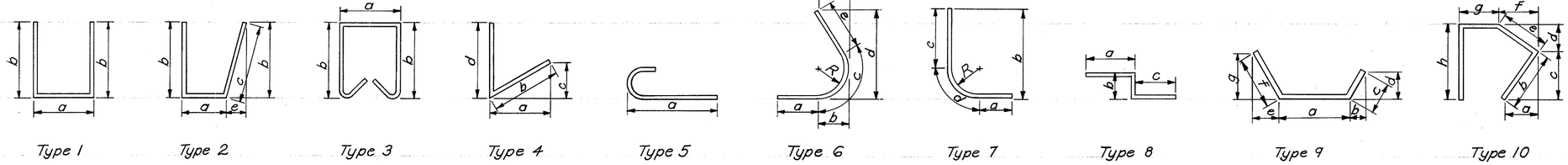

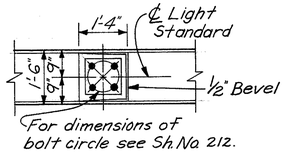

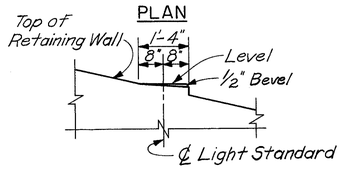

DETAIL AT LIGHT STANDARDS

BAR BENDING SCHEDULE

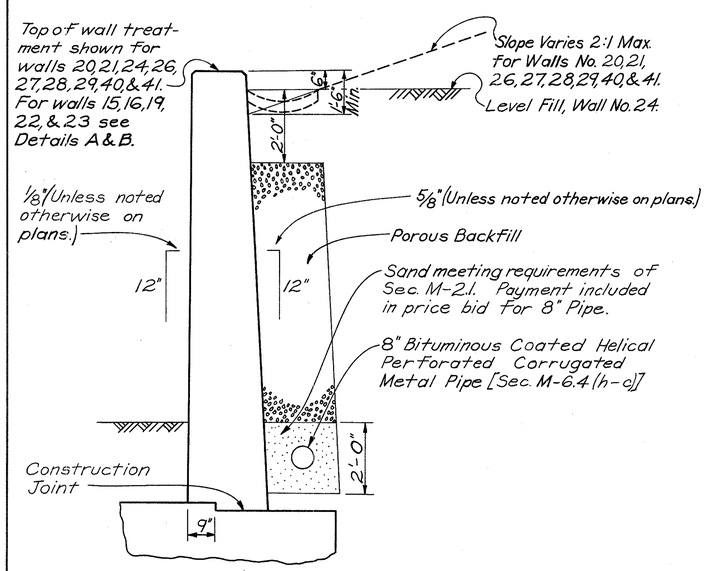

TYPICAL WALL SECTION

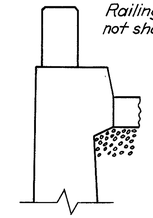

DETAIL A
(For Walls 15 & 19)

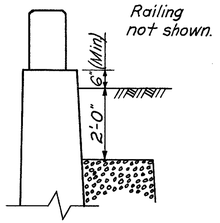

DETAIL B
(For Walls 16, 22, & 23)

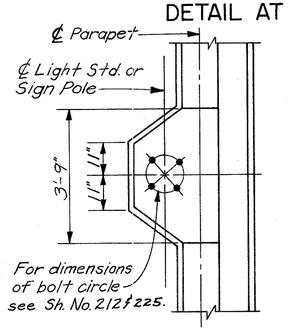

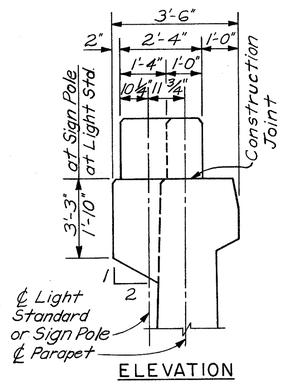

PARAPET DETAIL AT LIGHT STANDARDS OR SIGN POSTS

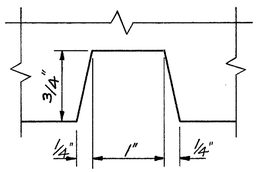

RUSTICATION GROOVE DETAIL

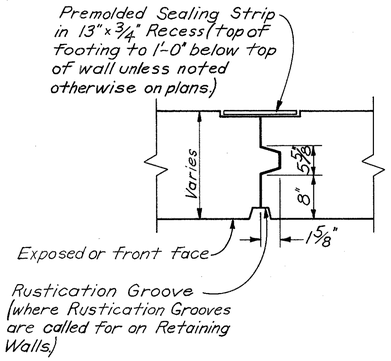

CONTRACTION JOINT DETAIL

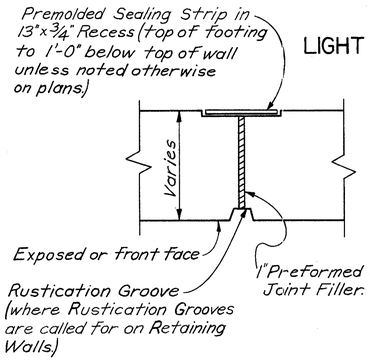

EXPANSION JOINT DETAIL

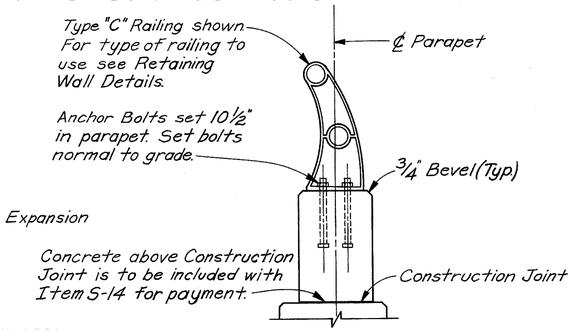

RAILING AND PARAPET DETAIL

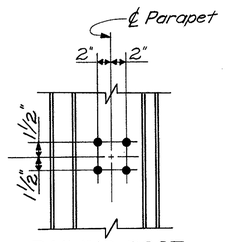

RAILING POST ANCHOR BOLT PLAN

NOTES

Bars shall be carefully shaped to the pertinent dimensions shown in Table I Standard Bends Sheet 212 of the State of Ohio Construction and Material Specifications, unless otherwise indicated above.

Bar size is indicated in the bar mark. The first digit in bar mark beginning with numbers 4 thru 9 indicate the bar size. The first two digits in bar marks beginning with numbers 10 or 11 indicate the bar size.

GENERAL NOTES

DESIGN UNIT STRESSES: Concrete Class "C" fc = 1333 psi., Class "E" fc = 1133 psi. Reinforcing Steel ASTM A15, A16, A160 Deformed, Intermediate or Hard Grade fs = 20,000 psi.

CONCRETE PARAPET: Concrete for parapet to be placed after embankment has been placed and compacted. Height of parapet to be adjusted to compensate for settlement of wall. All material for railing and parapet (except stirrup reinforcing steel) included in Item S-14 for payment.

EXPANSION JOINT FILLER: The 1" preformed expansion joint filler shall be carried up through the concrete parapet. The joint filler within the cross section of the parapet shall be included in Item S-14 for payment.

RAILING: Rail details for all retaining walls are shown on Standard Drawing AR-1-57.

REINFORCING BARS: Provide 3" clearance to reinforcing steel in footing, and 2" Clearance in wall (min).
For typical bar bending details and reinforcing bar notes see Bar Bending Schedule.

PILES: Piles shall be driven with a hammer of not less than 11,000 ft. lbs. per blow to firm contact with rock or shale. If the length of penetration is approximately equal to the depth of rock and shale according to the bridge foundation investigation report, the firm contact shall be considered as attained when the capacity according to the formula in Section S-18.05 is not less than the following values for a pile hammer of the indicated energy rating.

60 Tons per pile for retaining walls #19, 20, & 26 using an 11,000 ft. lb. hammer.
55 Tons per pile for retaining walls #19, 20, & 26 using a 15,000 ft. lb. hammer.
50 Tons per pile for retaining walls #23, 24, 27, & 41 using an 11,000 ft. lb. hammer.
45 Tons per pile for retaining walls #23, 24, 27, & 41 using a 15,000 ft. lb. hammer.

If the energy rating of the hammer is between the ratings as shown above, the required formula capacity shall be determined by interpolation.

The design load for retaining walls #19, 20, 23, 24, 27, & 41 is 35 Tons per pile, and 45 Tons per pile for retaining wall #26.

HAZELET & ERDAL
CONSULTING ENGINEERS
CINCINNATI, OHIO

MISCELLANEOUS DETAILS FOR RETAINING WALLS

DESIGNED	DRAWN	TRACED	CHECKED	REVIEWED DATE	REVISED
	⊕		HLL	JHO 5/20/65	

FED. RD. DIV.	STATE	PROJECT	FISCAL YEAR
2	OHIO		

332
492

HAMILTON COUNTY
HAM-71-(1.56)(2.51)

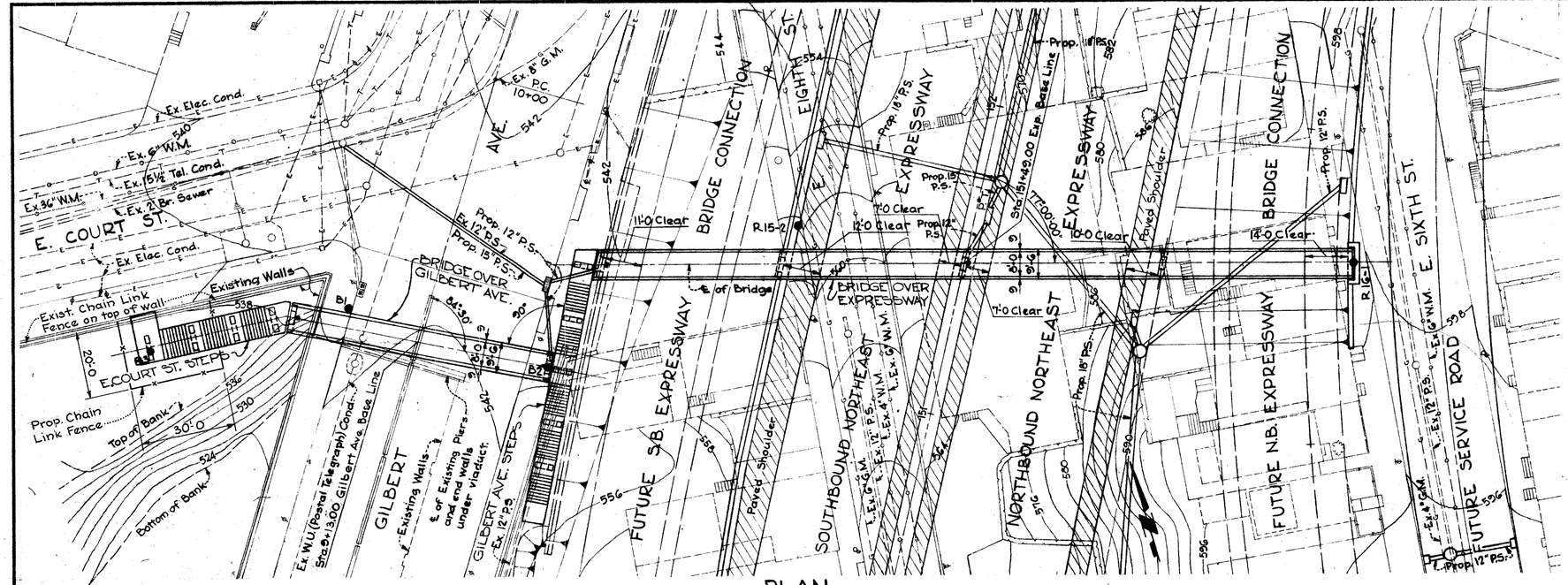

PLAN

● Symbol denotes Test Boring.
For logs of borings see Sheet No. 7A.

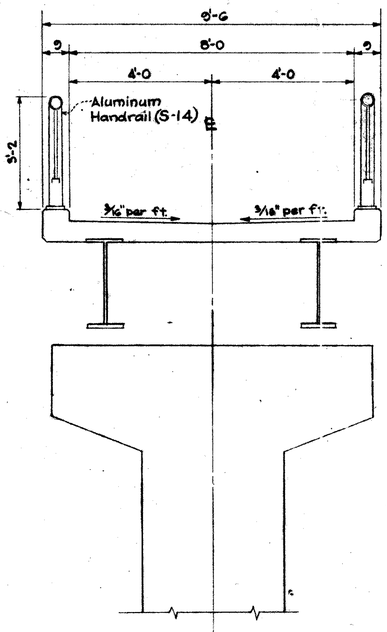

SECTION THRU BRIDGE

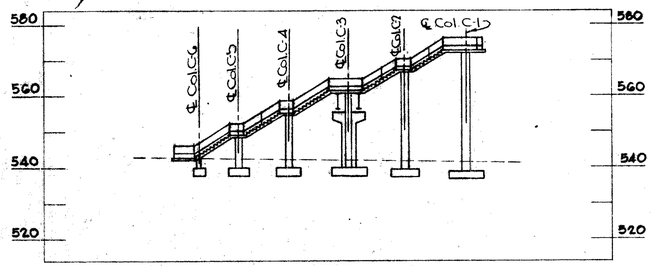

ELEVATION A-A

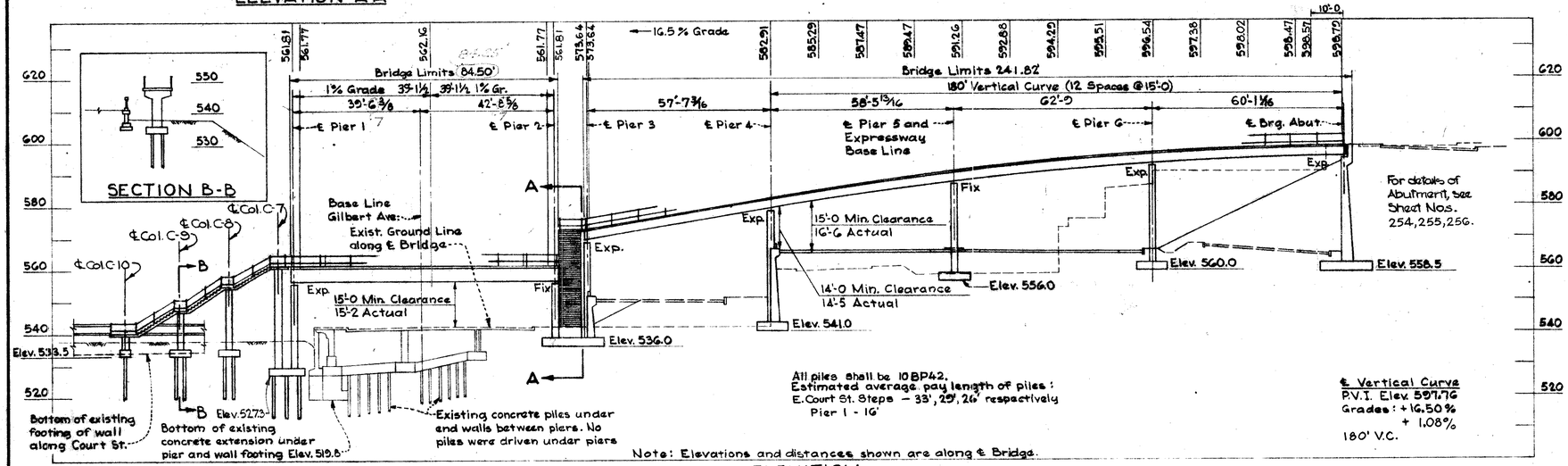

All piles shall be 10 BP 42.
Estimated average pay length of piles:
E. Court St. Steps — 33', 29', 26' respectively
Pier 1 - 16'

℄ Vertical Curve
P.V.I. Elev. 597.76
Grades: + 16.50%
+ 1.08%
180' V.C.

Note: Elevations and distances shown are along ℄ Bridge.

ELEVATION

MICROFILMED
FEB 20 1985

PROPOSED STRUCTURE

TYPE: 4 Span Continuous Rolled Beam with reinforced concrete deck and substructure. Single Span Plate Girder with reinforced concrete deck and substructure.
SPANS: 56.73', 58.46', 62.75', 61.11' (Rolled Beam Structure). 82.25' (Plate Girder Structure).
WIDTH: 8'-0 Clear between curbs.
LOADING: 85 lb./sq. ft. (uniform)
SKEW: As shown on Plan.

CITY OF CINCINNATI
DEPARTMENT OF PUBLIC WORKS
DIVISION OF ENGINEERING

SITE PLAN

BRIDGE NO. HAM-71-0157
I-71 UNDER PEDESTRIAN CROSSING AT COURT ST.
Sta. 151+49 N.B. Main Line

CINCY BRIDGE NO. 7

DESIGNED	DRAWN	TRACED	CHECKED	REVIEWED	DATE	REVISED
L.E.N.	J.D.A		W.W.	W.W	3-8-65	9-27-66

HAMILTON COUNTY
HAM-71-(15G)(2.51)

FED. RD. DIV.	STATE	PROJECT	FISCAL YEAR
2	OHIO		

333
402

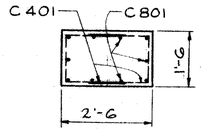

SECTION D-D

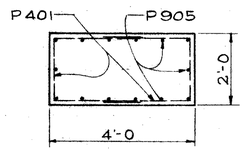

SECTION C-C

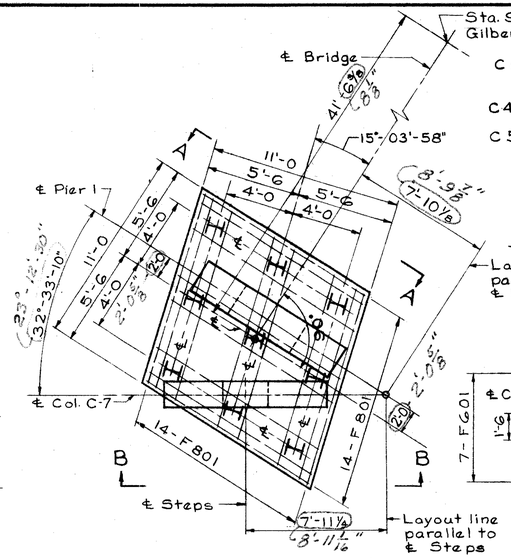

PLAN
(Pier 1 & Column C-7)

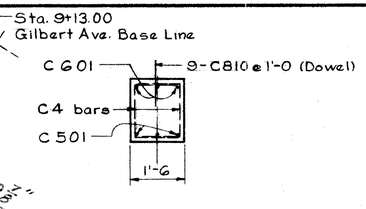

SECTION A-A

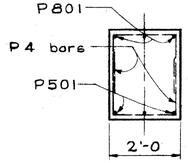

SECTION B-B

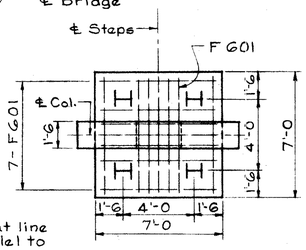

PLAN
(Column C-8)

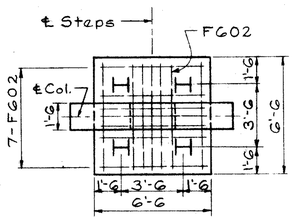

PLAN
(Column C-9)

Typical for all plans this sheet.

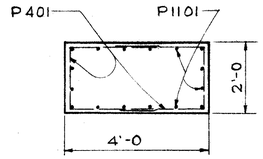

SECTION G-G

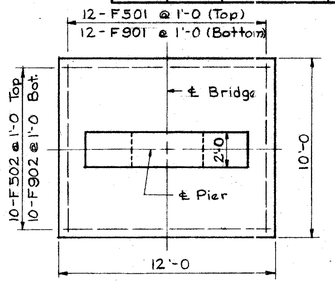

PLAN
(Pier G)

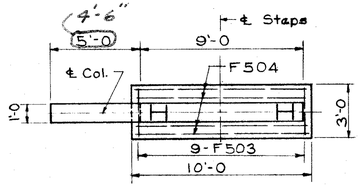

PLAN
(Column C-10)

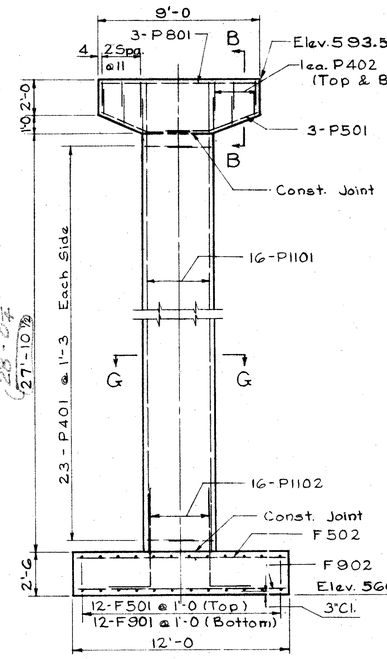

ELEVATION
(Pier G)

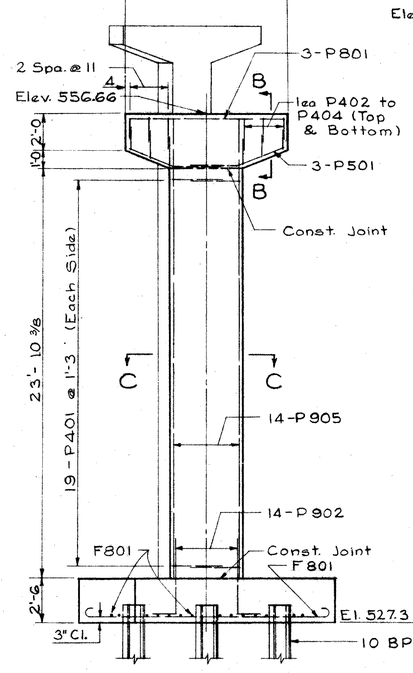

ELEVATION A-A
(Pier 1)

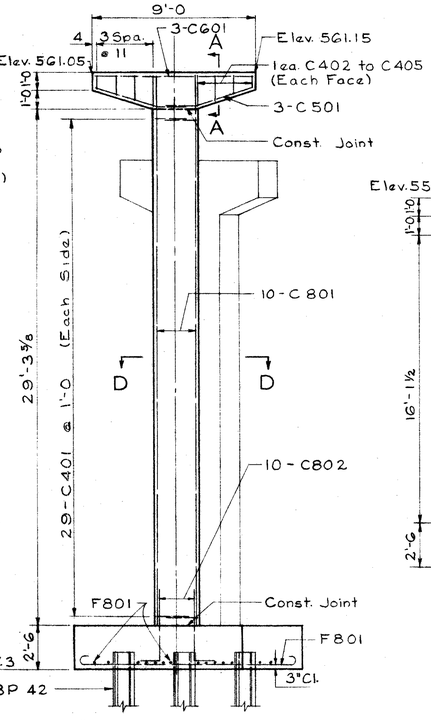

ELEVATION B-B
(Column C-7)

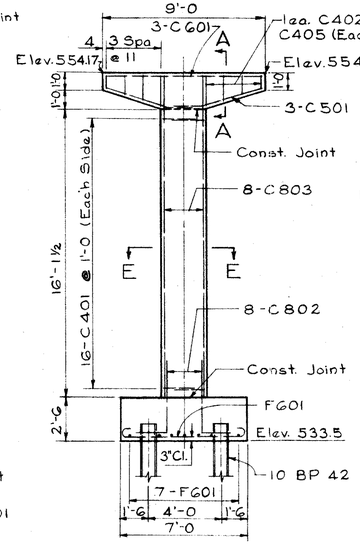

ELEVATION
(Column C-8)

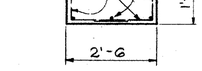

SECTION E-E

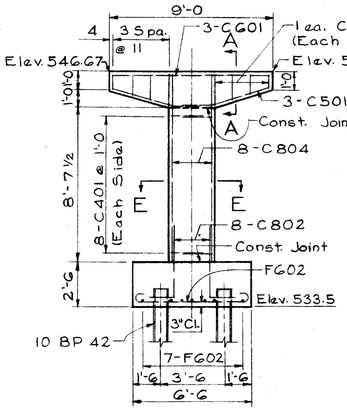

ELEVATION
(Column C-9)

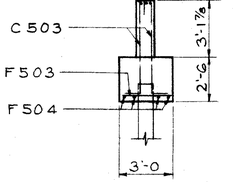

SECTION F-F

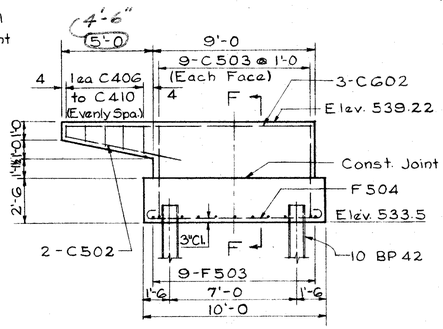

ELEVATION
(Column C-10)

MICROFILMED
FEB 20 1985

CITY OF CINCINNATI
DEPARTMENT OF PUBLIC WORKS
DIVISION OF ENGINEERING

PIER AND COLUMN DETAILS
BRIDGE NO. HAM-71-0157
I-71 UNDER PEDESTRIAN CROSSING AT COURT ST.

CINCY BRIDGE NO. 7

DESIGNED	DRAWN	TRACED	CHECKED	REVIEWED	DATE	REVISED
J.G.T.	J.G.T.		L.E.N.	W.W.	3-8-65	6-27-66

Bridge Seat Reinforcing: Special care shall be taken in placing reinforcing steel in the vicinity of the bridge seat so as to avoid interference with the drilling of anchor rod holes.
Footing for Pier G shall extend a minimum of 3" into undisturbed rock or to the elevation shown, whichever is lower.
Foundation Bearing Pressure: Footing for Pier G is designed for a maximum bearing pressure of 3 tons per sq. ft.

FED. RD. DIV.	STATE	PROJECT	FISCAL YEAR
2	OHIO		

334/492

HAMILTON COUNTY
HAM-71-(1.56)(2.51)

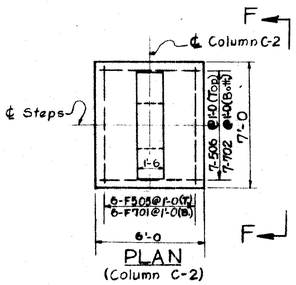

PLAN
(Column C-2)

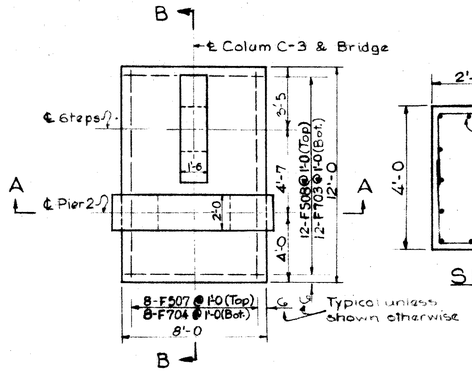

PLAN
(Pier 2 & Column C-3)

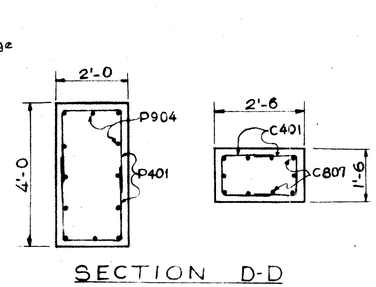

SECTION D-D

Typical for all plans this sheet

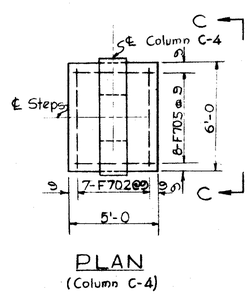

PLAN
(Column C-4)

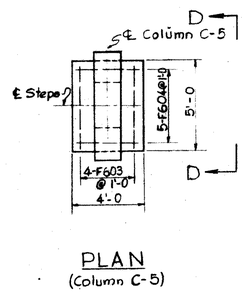

PLAN
(Column C-5)

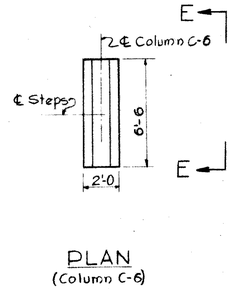

PLAN
(Column C-6)

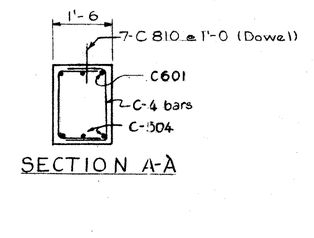

SECTION A-A

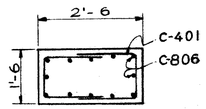

SECTION B-B

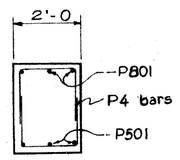

SECTION C-C

SECTION F-F

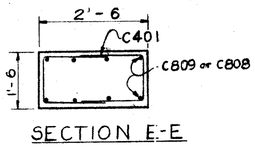

SECTION E-E

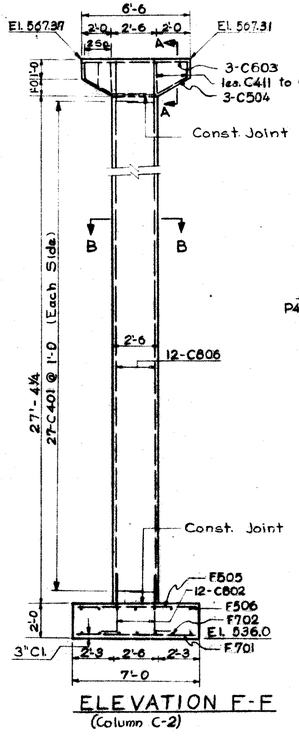

ELEVATION F-F
(Column C-2)

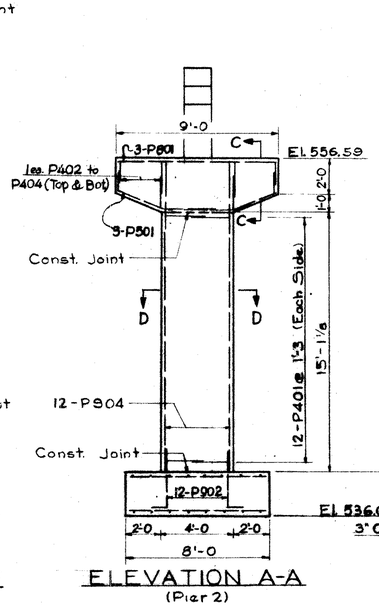

ELEVATION A-A
(Pier 2)

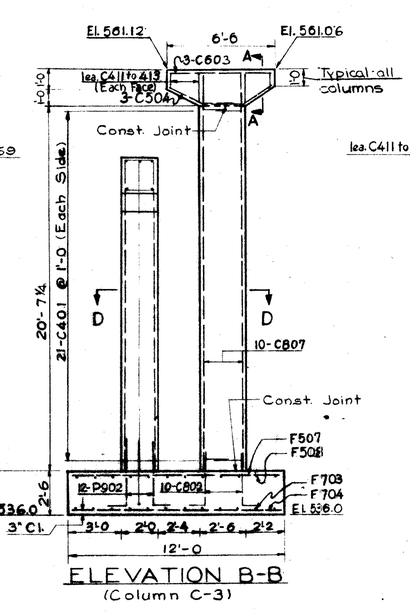

ELEVATION B-B
(Column C-3)

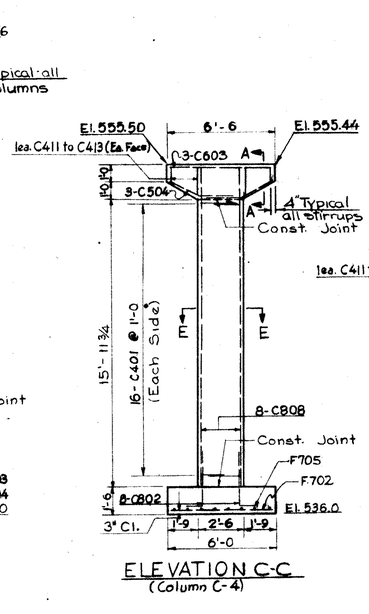

ELEVATION C-C
(Column C-4)

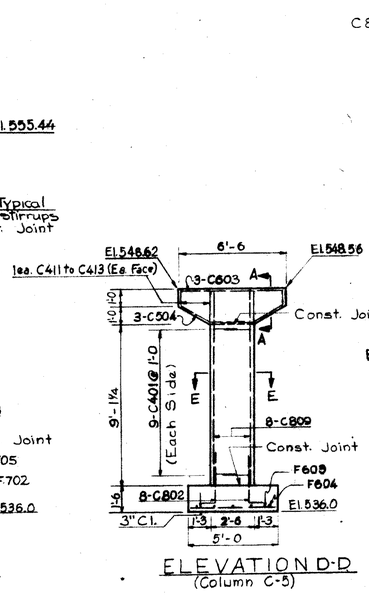

ELEVATION D-D
(Column C-5)

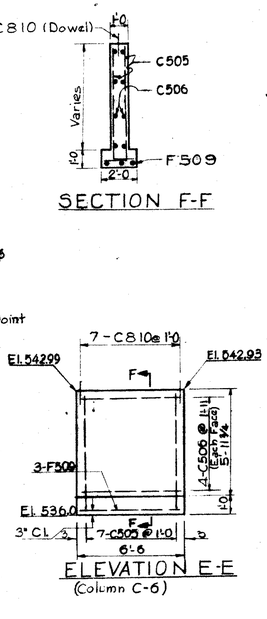

ELEVATION E-E
(Column C-6)

For ground wire to be placed at pier 3 see note on sheet 2/3.

Bridge Seat Reinforcing: Special care shall be taken in placing reinforcing steel in the vicinity of the bridge seat so as to avoid interference with the drilling of anchor rod holes.

Foundation Bearing Pressure: Footings are designed for a maximum bearing pressure of 3 tons per sq. ft.

MICROFILMED
FEB 20 1985

CITY OF CINCINNATI
DEPARTMENT OF PUBLIC WORKS
DIVISION OF ENGINEERING

PIER AND COLUMN DETAILS

BRIDGE NO. HAM-71-0157
I-71 UNDER PEDESTRIAN CROSSING AT COURT ST.

CINCY BRIDGE NO. 7

DESIGNED	DRAWN	TRACED	CHECKED	REVIEWED	DATE	REVISED
L.E.N.	L.E.N.		J.G.T.	W.W.	3-8-65	

HAMILTON COUNTY
HAM-71-(1.56)(2.51)

FED. RD. DIV.	STATE	PROJECT	FISCAL YEAR
2	OHIO		

335/492

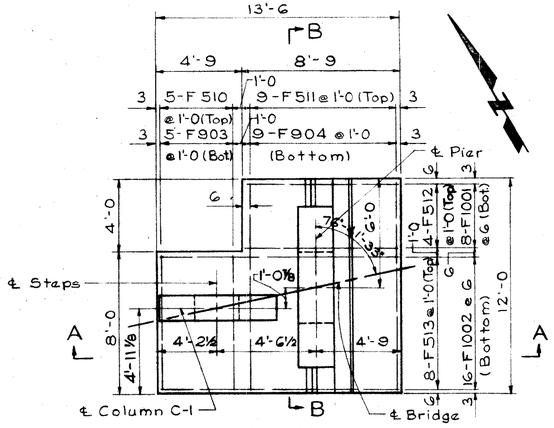

PLAN
(Pier 3 & Column C-1)

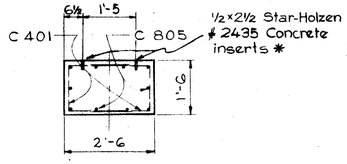

SECTION A-A

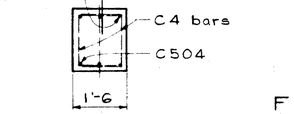

SECTION B-B

Steel sheeting piling (see note 1) shall extend the full width of the excavation, at the elevation of adjacent wall footings, made for the construction of Pier 4.

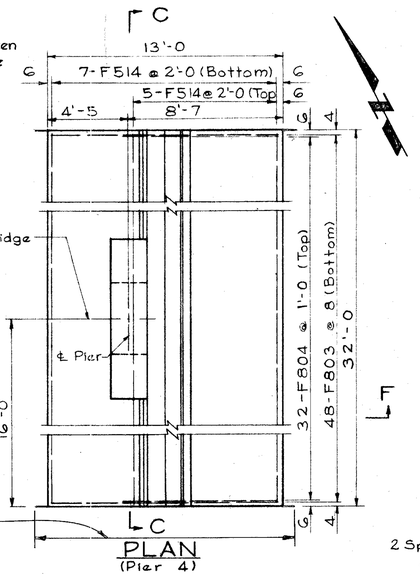

PLAN
(Pier 4)

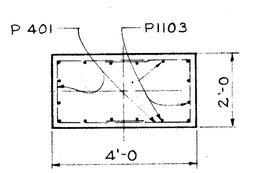

SECTION E-E

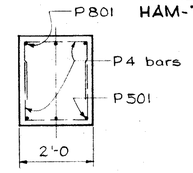

SECTION D-D

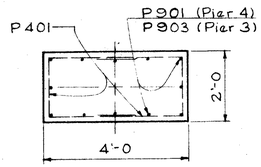

SECTION C-C

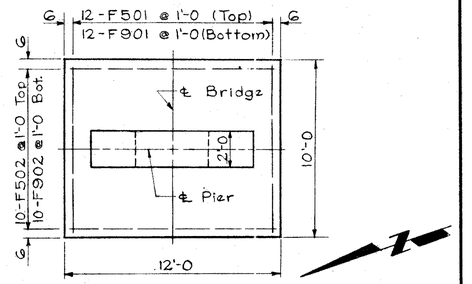

PLAN
(Pier 5)

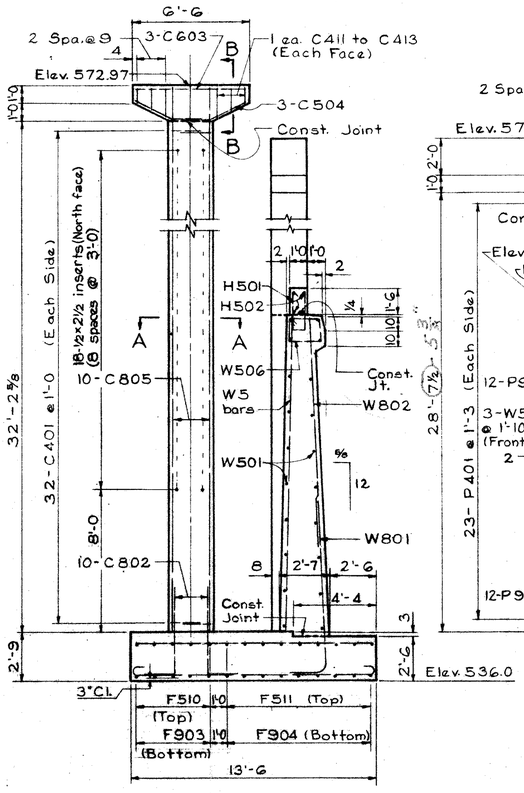

ELEVATION A-A
(Column C-1)

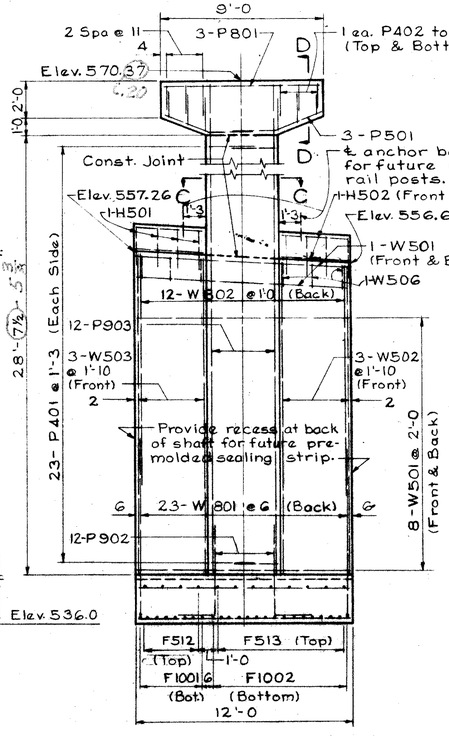

ELEVATION B-B
(Pier 3)

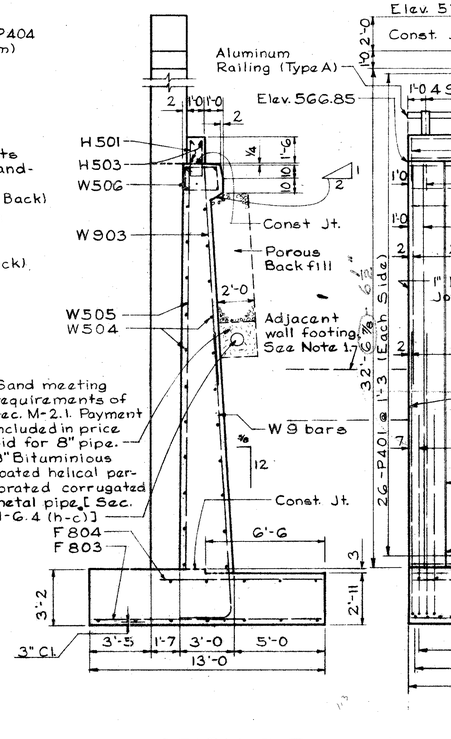

SECTION F-F

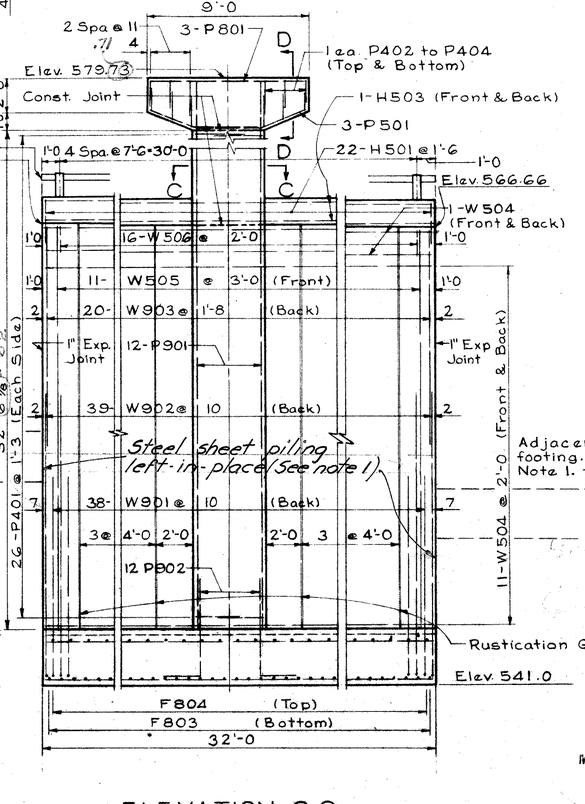

ELEVATION C-C
(Pier 4)

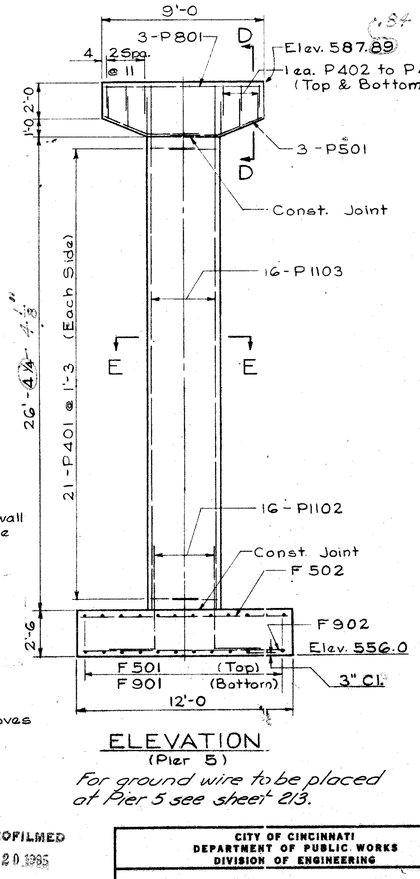

ELEVATION
(Pier 5)

For ground wire to be placed at Pier 5 see sheet 213.

Parapet and anchor bolts shall be included under Item S-14 Railing for payment.

* Inserts to be furnished by the C.&S.B.T. Co. Installation cost shall be included in price bid for Item S-1, - Class "C" Concrete, piers above footings.

NOTE 1: If adjacent wall footing is not on bed rock, the following shall apply:
Steel Sheet Piling having a minimum section modulus of 5.4 in³ per foot of wall, shall be driven into the ground at the offset in the wall footings where indicated. This sheet piling shall be driven to bed rock and shall extend to the bottom of the higher footing. This sheet piling is to be braced adequately at the top and is to be left in place. Payment will be made at the price bid per square foot measured from the bottom of sheet piling as driven; to the bottom of the higher footing; and on the sides to the actual limits as driven. Used piling in good condition may be used. *Mill test reports are not required.*
For details of expansion joints and rustication grooves, see Sheet Nos 245 & 246.

Bridge Seat Reinforcing: Special care shall be taken in placing reinforcing steel in the vicinity of the bridge seat so as to avoid interference with the drilling of anchor rod holes.
Footings for Piers 4 and 5 shall extend a minimum of 3" into undisturbed rock or to the elevation shown, whichever is lower.
Foundation Bearing Pressure: Footings are designed for a maximum bearing pressure of 3 tons per sq. ft.
For Typical Railing Details, see Standard Drawing AR-1-57.

MICROFILMED
FEB 20 1985

CITY OF CINCINNATI
DEPARTMENT OF PUBLIC WORKS
DIVISION OF ENGINEERING

PIER AND COLUMN DETAILS
BRIDGE NO. HAM-71-0157
I-71 UNDER PEDESTRIAN CROSSING AT COURT ST.
CINCY BRIDGE NO. 7

DESIGNED	DRAWN	TRACED	CHECKED	REVIEWED	DATE	REVISED
J.G.T.	J.G.T.		L.E.N.	W.W.	3-8-65	1-7-66

FED. RD. DIV.	STATE	PROJECT	FISCAL YEAR
2	OHIO		

336
402

HAMILTON COUNTY
HAM-71-(15G)(2.51)

Note:

For Bolted Beam Splice Details, see Standard Drawing No. SD-2-64.

For Fixed and Sliding Bearings: Details see Standard Drawing No. FSB-1-62. Increase top plate thickness as necessary. End of girders and end crossframes shall be vertical. Cut flanges parallel to end of deck.
Angles 4x4x5/16 & 4x3x5/16 for conduit supports shall be chargeable to "Cincinnati Gas & Electric Co." and to "C.& S.B. Telephone Co."

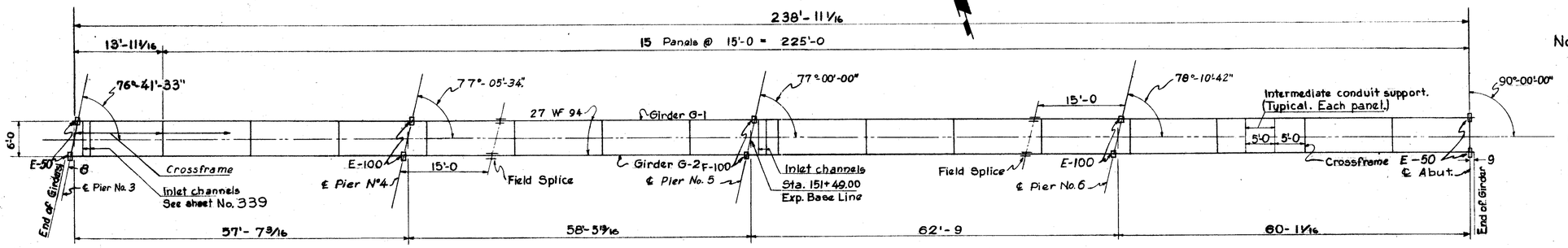

FRAMING PLAN ON EXPRESSWAY - FOUR SPANS

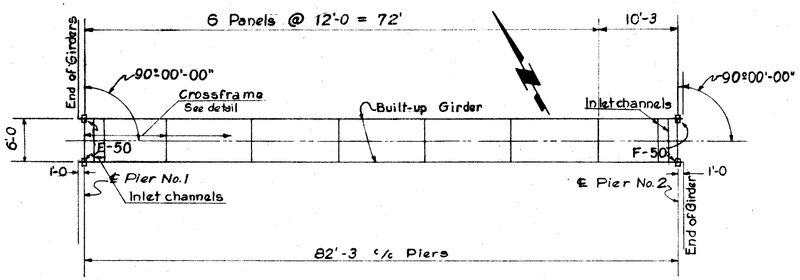

FRAMING PLAN ON GILBERT AVE.

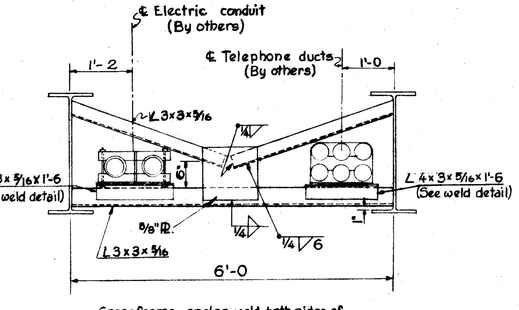

Crossframe angles-weld both sides of vertical leg and topside of horizontal leg to beam with 1/4" continuous fillet.

CROSSFRAME
(Looking West)

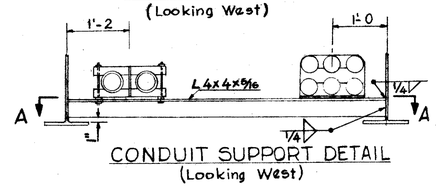

CONDUIT SUPPORT DETAIL
(Looking West)

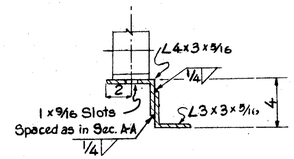

WELD DETAIL

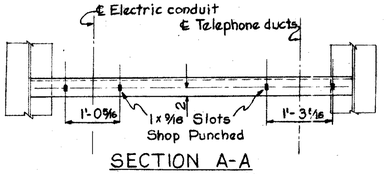

SECTION A-A

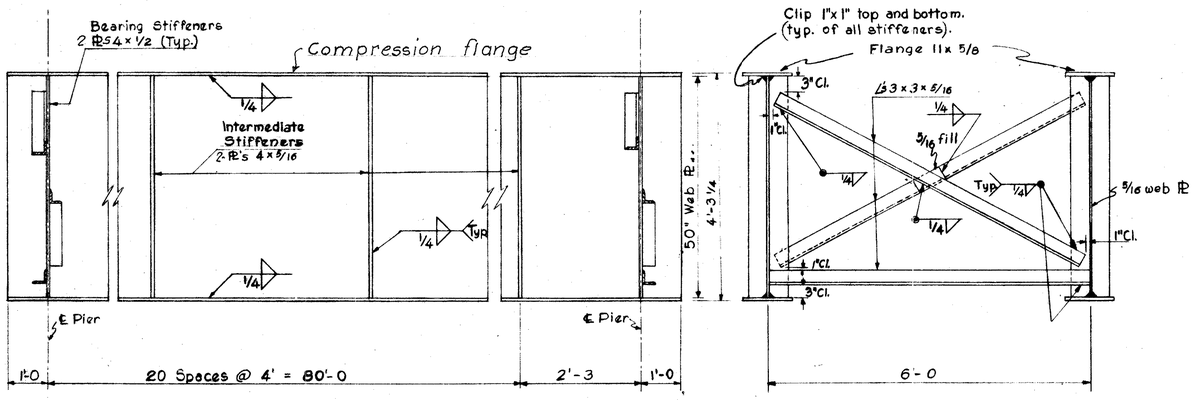

GIRDER ELEVATION - (INSIDE)

CROSSFRAME

NOTE:

Intermediate stiffeners of built-up girders shall have contact bearing with the compression flange, but may have a clearance of not more than 1/8 inch from the tension flange. In shop painting, care shall be taken to make certain that paint is forced through from one side to the other of the 1/8 inch opening.

Bearing stiffeners shall be grooved and fully butt-welded to the lower flange and fitted in close contact without welding to the upper flange.

DEFLECTION & CAMBER OF GIRDER

LOCATION	WELDED BUILT-UP GIRDER 1/4 Span	℄ Span	3/4 Span
Deflection due to weight of steel.	1/4"	5/16"	1/4"
Deflection due to remaining dead load	3/4"	1 1/16"	3/4"
Convexity required for vertical curve	2 1/2"	5"	2 1/2"
Sum of deflection and convexity	3 1/2"	6 3/8"	3 1/2"
REQUIRED CAMBER	3 1/2"	6 3/8"	3 1/2"

DEFLECTION & CAMBER OF BEAMS

	PIER No.	3	4		5		6		Abut.	
GIRDER G-1 Lg 239'-7 1/16	LOCATION	℄	1/4 ℄	3/4	1/4 ℄	3/4	1/4 ℄	3/4	1/4 ℄	3/4
	Length c/c bearings	57.58'	58.48'		62.69'		59.46'			
	Deflection due to weight of steel.	1/8"	0"	1/32"	0"	1/32"	1/16"	1/32"	1/16"	1/8" 3/32"
	Deflection due to remaining dead load.	7/16"	1/32	3/32"	1/16"	5/32"	1/4"	3/32"	1/4"	1/2" 13/32"
	Convexity required for vertical curve.	0	3 3/8	4 7/16	3 1/2	3 15/16	5 1/16	3 13/16	3 3/8	4 7/16 3 3/8
	Sum of Deflection and Convexity	9/16	3 7/16	4 9/16	3 9/16	4 1/8	5 3/8	3 15/16	3 1/16	5 1/16 3 7/8
	REQUIRED CAMBER	none	3 7/16	4 9/16	3 9/16	4 1/8	5 3/8	3 15/16	3 1/16	5 1/16 3 7/8
	PIER No.	3	4		5		6		Abut.	
GIRDER G-2 Lg 241'-0 5/16	LOCATION	℄	1/4 ℄	3/4	1/4 ℄	3/4	1/4 ℄	3/4	1/4 ℄	3/4
	Length c/c bearings	57.62'	58.48'		62.81'		60.72'			
	Deflection due to weight of steel.	1/8	0	1/32	0	1/32	1/16	1/32	1/16	1/8 3/32
	Deflection due to remaining dead load.	7/16	1/32	3/32	1/16	5/32	1/4	7/32	1/4	1/2 13/32
	Convexity required for vertical curve.	0	3 3/8	4 7/16	3 3/8	3 13/16	5 5/16	3 13/16	3 5/8	4 1/16 3 1/2
	Sum of Deflection and Convexity.	9/16	3 7/16	4 9/16	3 7/16	4 1/4	5 1/2	4 1/16	3 15/16	5 5/16 4
	REQUIRED CAMBER	none	3 7/16	4 9/16	3 7/16	4 1/4	5 1/2	4 1/16	3 15/16	5 5/16 4

MICROFILMED
FEB 20 1985

CITY OF CINCINNATI
DEPARTMENT OF PUBLIC WORKS
DIVISION OF ENGINEERING

STRUCTURAL STEEL DETAILS
BRIDGE NO. HAM-71-0157
I-71 UNDER PEDESTRIAN CROSSING AT COURT ST.

CINCY BRIDGE NO. 7

DESIGNED	DRAWN	TRACED	CHECKED	REVIEWED	DATE	REVISED
LEN	LEN		RMB	W.W.	3-8-65	

FED. RD. DIV.	STATE	PROJECT.	FISCAL YEAR
2	OHIO		

337
492

HAMILTON COUNTY
HAM-71-(1.56)(2.51)

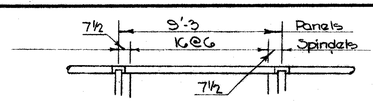

TYPICAL PANEL
(BRIDGE HANDRAIL)

84'-3
9 Handrail Panels @ 9'-3 = 83'-3 (Each Side)
(Shop fabricate railing in 3 panel sections with 3½"ϕ tube one piece for that length. Allow 1" between ends of tube sections and 1" movement at each post.)

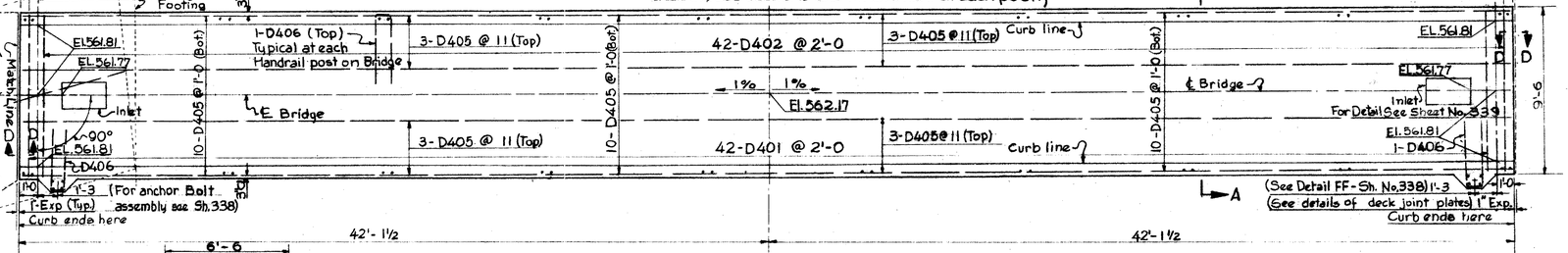

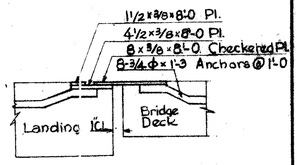

For details not shown see Joint Detail this sheet.

SECTION D-D

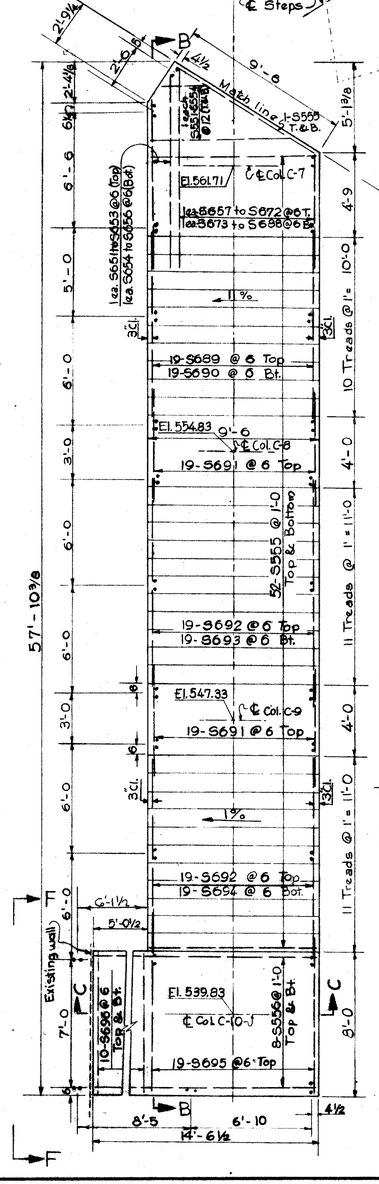

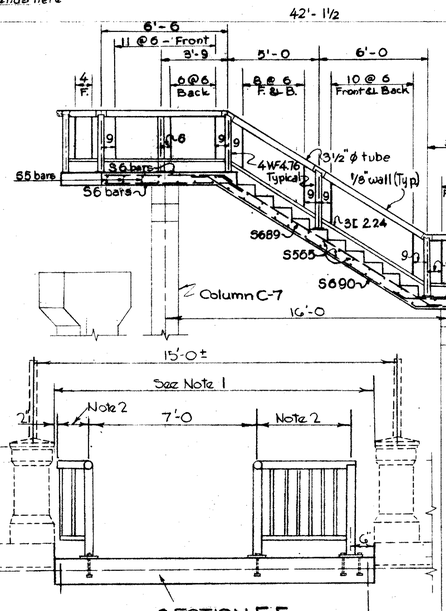

SECTION F-F

Note 1
The existing railing, wall coping and fence between posts shall be removed completely. Provide fence terminal at posts. Cut existing horizontal reinf. bars 1" behind cut concrete surfaces and refinish as directed by Engineer.
Note 2: Posts on wall coping shall be lined up with step railing as shown. Aluminum railing panel dimensions shall then be determined for fabrication with a nominal spindel c-c spacing not to exceed 6".

Wall & Coping Items:
Removal, S-22
Replacement, S-1
(Superstructure and Steps).
Fencing Items:
Removal of existing fencing between posts (Note 1) and providing terminal. Connections shall be included in cost bid for Item I-26

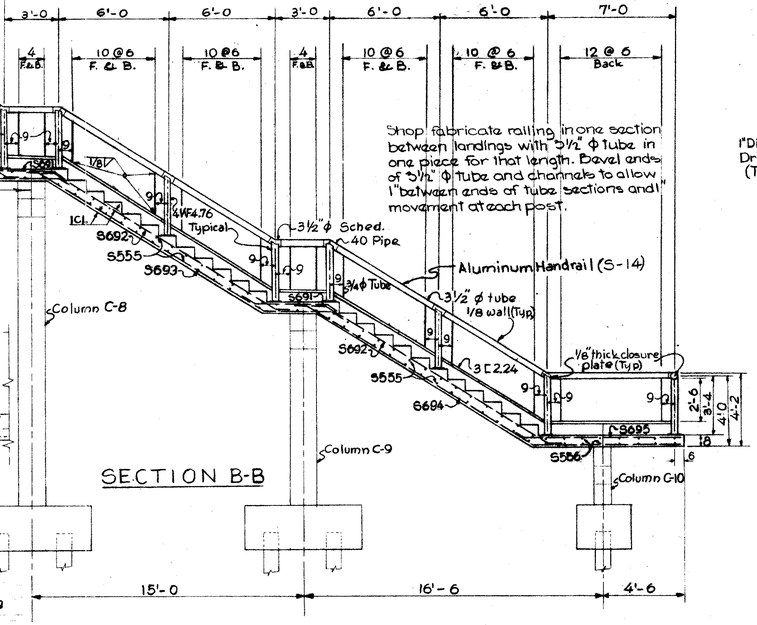

SECTION B-B

Shop fabricate railing in one section between landings with 3½" ϕ tube in one piece for that length. Bevel ends of 3½" ϕ tube and channels to allow 1" between ends of tube sections and 1" movement at each post.

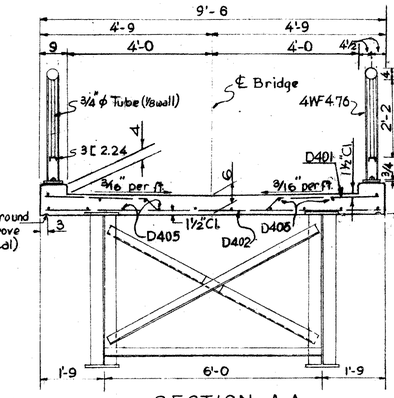

SECTION A-A

For lighting Details, see sheet No. 213.

TYPICAL HANDRAIL DETAILS

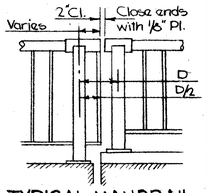

TYPICAL HANDRAIL CLOSURE BETWEEN POSTS

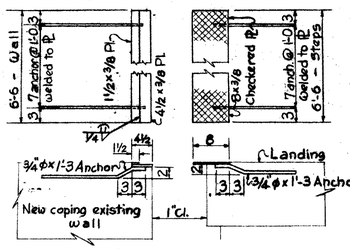

JOINT DETAIL

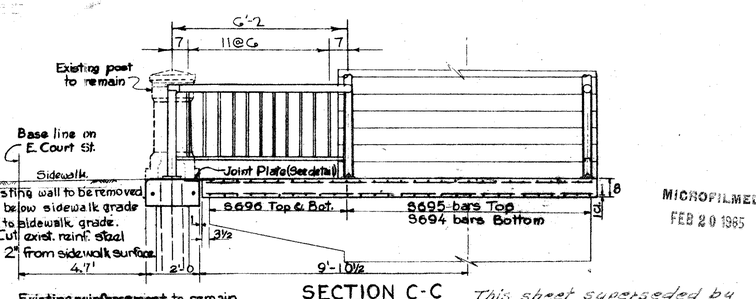

Existing reinforcement to remain as in Section F-F

SECTION C-C

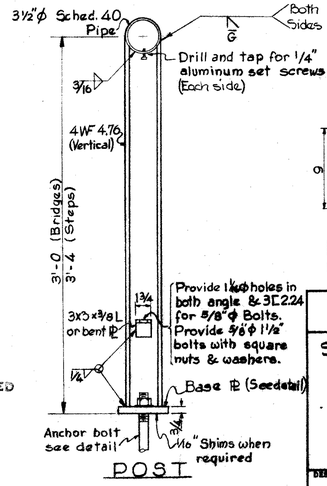

POST

Posts shall be vertical

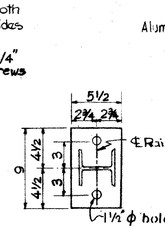

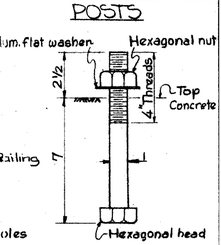

BASE ℄ & ANCHOR BOLT DETAIL

Note: All handrail materials, including anchor bolts, shall be aluminum.

MICROFILMED
FEB 20 1985

This sheet superseded by Sheet No. 337A 9-27-66

CITY OF CINCINNATI
DEPARTMENT OF PUBLIC WORKS
DIVISION OF ENGINEERING

SUPERSTRUCTURE, STEPS AND HANDRAIL DETAILS

BRIDGE NO. HAM-71-0157

I-71 UNDER PEDESTRIAN CROSSING AT COURT ST.

CINCY BRIDGE NO. 7

DESIGNED	DRAWN	TRACED	CHECKED	REVIEWED	DATE	REVISED
L.E.N.	L.E.N.		J.G.T.	W.W.	3-8-65	

FED. RD. DIV.	STATE	PROJECT.	FISCAL YEAR
2	OHIO		

337
492

HAMILTON COUNTY
HAM-71-(1.5G)(2.51)

84'-3

9 Handrail Panels @ 9'-3 = 83'-3 (Each Side)
Shop fabricate railing in 3 panel sections with 5½"ϕ tube one piece for that length. Allow 1" between ends of tube sections and 1" movement at each post.)

TYPICAL PANEL
(BRIDGE HANDRAIL)

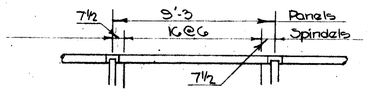

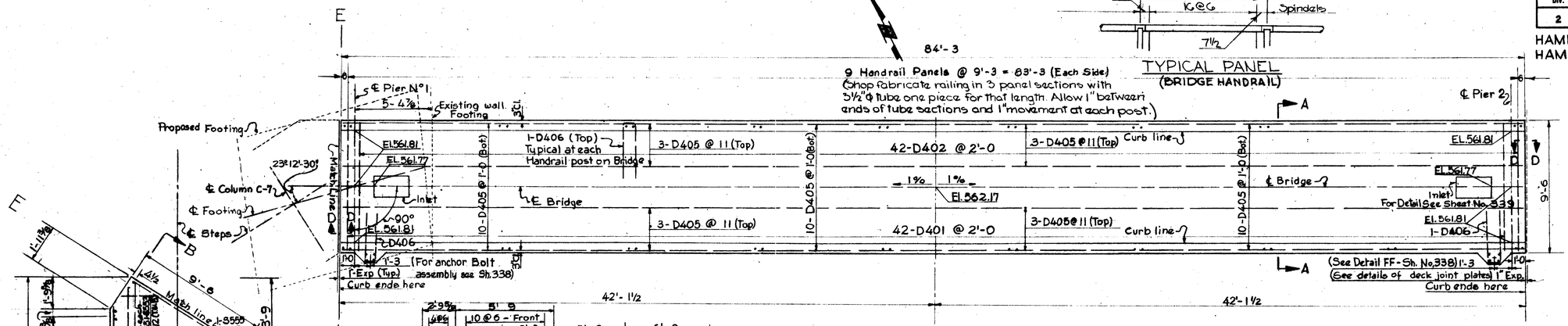

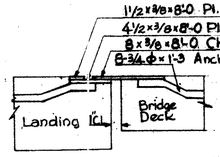

For details not shown see Joint Detail this sheet.

SECTION D-D

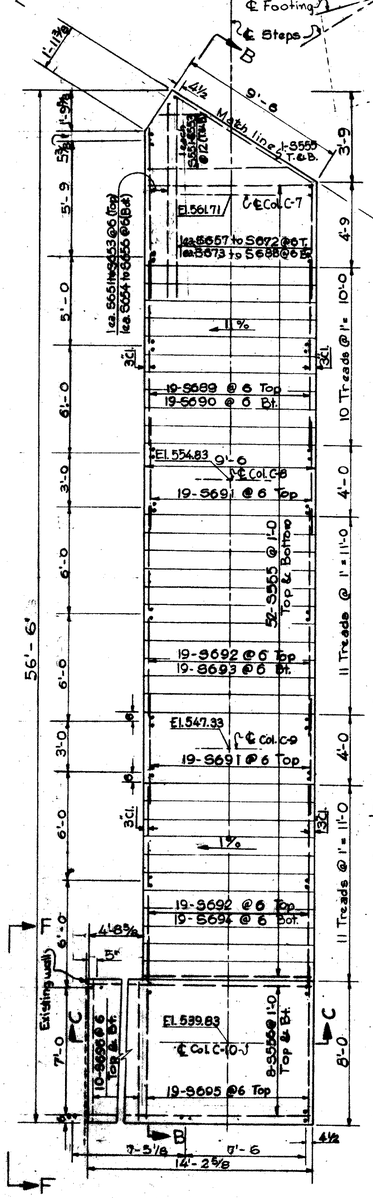

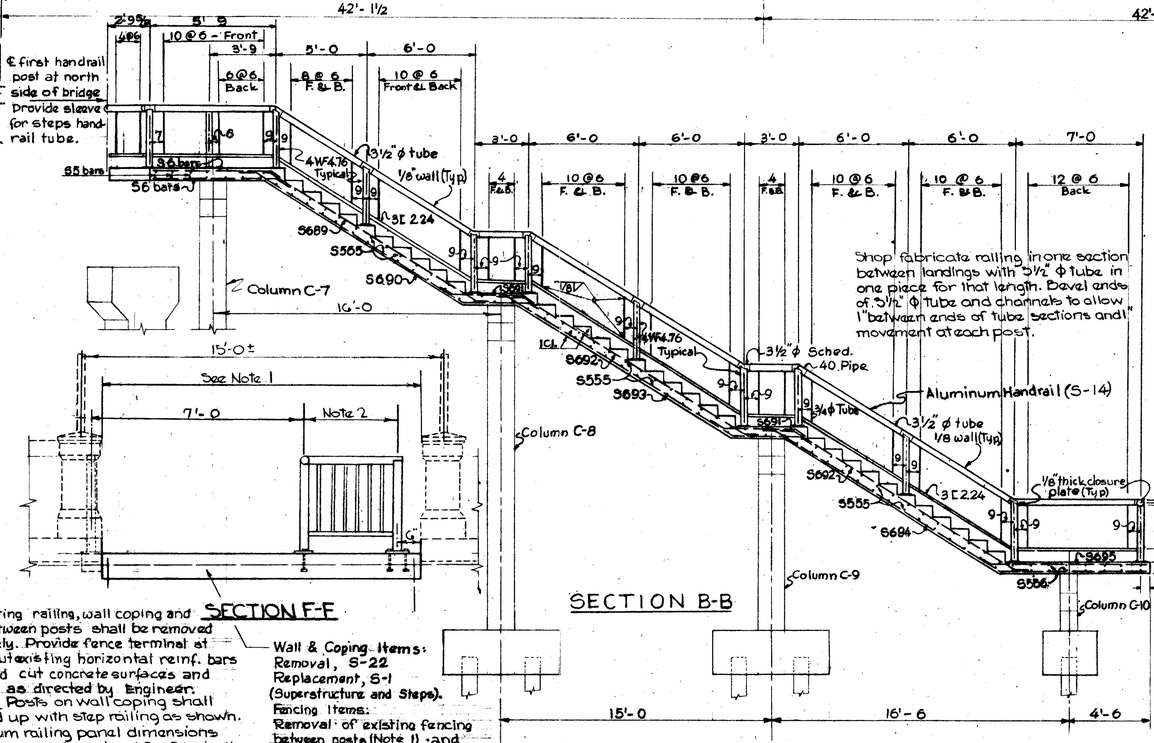

Shop fabricate railing in one section between landings with 5½" ϕ tube in one piece for that length. Bevel ends of 5½" ϕ tube and channels to allow 1" between ends of tube sections and 1" movement at each post.

SECTION B-B

SECTION F-F

Note 1
The existing railing, wall coping and fence between posts shall be removed completely. Provide fence terminal at posts. Cut existing horizontal reinf. bars 1" behind cut concrete surfaces and refinish as directed by Engineer.
Note 2: Posts on wall coping shall be lined up with step railing as shown. Aluminum railing panel dimensions shall then be determined for fabrication with a nominal spindel c-c spacing not to exceed 6".

Wall & Coping Items: Removal, S-22
Replacement, S-1 (Superstructure and Steps).
Fencing Items: Removal of existing fencing between posts (Note 1) and providing terminal. Connections shall be included in cost bid for Item I-26

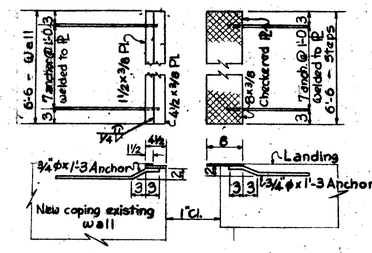

JOINT DETAIL

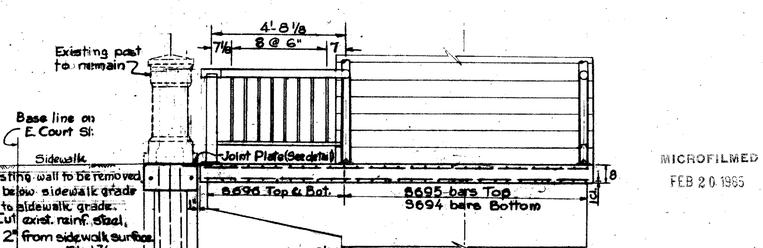

SECTION C-C

This sheet supersedes sheet No. 337 9-27-66

MICROFILMED
FEB 20 1985

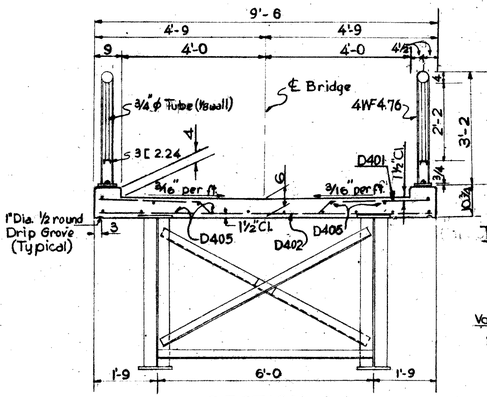

SECTION A-A

For lighting Details, see sheet No.

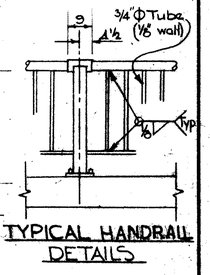

TYPICAL HANDRAIL DETAILS

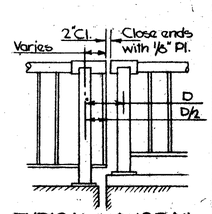

TYPICAL HANDRAIL CLOSURE BETWEEN POSTS

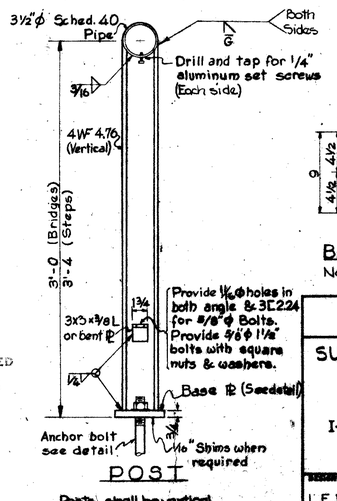

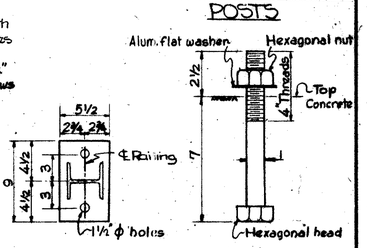

BASE PL & ANCHOR BOLT DETAIL

Note: All handrail materials, including anchor bolts, shall be aluminum.

CITY OF CINCINNATI
DEPARTMENT OF PUBLIC WORKS
DIVISION OF ENGINEERING

SUPERSTRUCTURE, STEPS AND HANDRAIL DETAILS

BRIDGE NO. HAM-71-0157
I-71 UNDER PEDESTRIAN CROSSING AT COURT ST.
CINCY BRIDGE NO. 7

DESIGNED	DRAWN	TRACED	CHECKED	REVIEWED	DATE	REVISED
L.E.N.	L.E.N.		J.G.T.	W.W.	3-8-65	

HAMILTON COUNTY
HAM-71-(1.56)(2.51)

FED. RD. DIV.	STATE	PROJECT	FISCAL YEAR
2	OHIO		

338
492

Note:
Stairway East Fascia
Angle point.
Joint plate assembly
parallele to end of bridge

℄ Steps
10'-24'-30"
2⅜ Exp. (See Details of deck joint plates)
Curb ends here
6'-2 15/16
76°-41'-33"
7'-5⅜
El. 573.70
El. 573.70
B
B
℄ Col. C-1
℄ Bridge
℄ Pier #3
Inlet
El. (See Inlet Detail Sh. 339)
D404 (Bottom)
D406
4-S502 @ 1'-0 T. & B.
4-S503 @ 1'-0 T. & B.
1-S502 & S503 @ 6 T.
1-S502 & S503 @ 6 B.
14-S630 @ 6 T.
14-S631 @ 6 B.
16-S632 @ 6 T.
14-S633 @ 6 T.
14-S634 @ 6 B.
14-S635 @ 6 T.
14-S636 @ 6 B.
14-S637 @ 6 T.
14-S638 @ 6 T.
14-S639 @ 6 B.
14-S638 @ 6 T.
14-S639 @ 6 B.
8 Treads @ 1'= 8'-0
9 Treads @ 1'= 9'-0
10 Treads @ 1'= 10'-0
8'-4
8'-10½
8'-9
9'-6
6'-0
4'-0
5'-0
3'-0
El. 573.05
El. 573.38
El. 568.00
El. 561.79
El. 556.15
El. 549.27
℄ Col. C-2
℄ Col. C-3
℄ Col. C-4
℄ Col. C-5
℄ Col. C-6
Bridge on Gilbert Ave. See next sheet
℄ Steps
88-S504 @ 1'-0 Top & Bottom
4½ Typ.
Match Line
Match Line
D
D
B
B

239'-2 13/16
29 Handrail Panels @ 8'-0 = 232'-0 (Each Side)
For shop fabrication note, See Sheet N° 337
77°-05'-34"
77°00'-00"
78°-10'-42"
90°-00'-00"
A
A
℄ Pier #4
℄ Pier #5
℄ Pier #6
℄ Abstment
Curb line
3-D403 @ 11-Top (7 Sets)
10-D403 @ 1'-0 (7 Sets) Bottom.
121-D402 @ 2'-0
Inlet
120-D401 @ 2'-0
1-D406 (Top) Typical at each Handrail post on Bridge
D406
Curb line
El. 582.91
El. 591.10
El. 596.62
El. 598.58
El. 598.79
*10'-0
D405
D406
See Detail F-F (Typ.)
58'-0
62'-0
58'-0
58'-0
241'-5 13/16
2'-3
*Vary cross-slope to meet joint plate within last 10'-0 of deck.

6'-0
9'-10
18 @ 6 (Front)
10 @ 6 B.
4'-0
6@6 Front
5'-0
8@6 F. & B.
5'-0
8@6 F. & B.
5'-0
8@6 Front & Back
3'-6
8
¾ tubes (Typ)
C.56 bars
C.56 bars
S501
S502
S503
S504
S631
S630
S632
S504
S633
S634
S504
S635
S636
S630
S504
S637
S638
S639
S504
S637
S638
S640
S504
S641
3½" ϕ tube
3½" ϕ Sched. 40 Pipe (Typ.)
3½" ϕ Tube (Typ)
3¼" Tube
Column C-1
Column C-2
Column C-3
Column C-4
Column C-5
Column C-6
4'-10½
8'-9
16@6 Back
8'-10½
16 @ 6 Front & Back
8@6 Front & Back
4WF4.76 (Typ.)
3E 2.24
Aluminum Handrail (S-14)
1⅛" thick closure plate (Typ.)
17'-8½
16'-9
14'-9
14'-0
13'-6
3'-6
1CL
8½
9½
7½
3'-4
4'-0
4'-2
18
20
5½

SECTION B-B

For shop fabrication note, See Sheet N° 337
2⅞" Cl.
8"
2⅞" Cl.

SECTION C-C

9'-6
9
4'-0
4'-0
4½
4 WF 4.76
See Detail Post
¾" ϕ Tube (⅛ wall)
℄ Bridge
D401
1½" Cl.
3/16" per ft.
3/16" per ft.
2'-2
3'-2
10¾
2 Cl.
3
1" Dia. ½ round Drip Groove
D403
1½ Cl.
D402
D403
D406
1'-11½
℄ of Anchor bolt Assembly
6'-0

SECTION A-A

See Sheet No. 337 for Typical Handrail Details
For Lighting Details See Sh.
For Drainage Details See Sh. 339

8'-0
6
8 Anchors @ 1'-0
welded to plate.
10 x 3/8 Pl. (Checkered)
Bridge deck
2¾ ϕ x 1'-6 Anchor
3
3
10
2
6 x 3/8 Plate
1¼
1½ x 3/8 Plate
8 Anchors @ 1'-0
welded to plate
8'-0
Landing
¾ ϕ x 1'-6 Anchor

DECK JOINT PLATES - DETAIL

1¾ (Min.)
Top of curb
¾ ϕ x 13½" Anchor Bolts Shall be vertical
8 x 8 x ½ Pl. (See Detail F-F)
Bottom of slab

ANCHOR BOLT ASSEMBLY

℄ Conduit
⅝ Galv. Screw Concrete Insert @ 4'-± o. c.
6 (Typ.)
1'-0 (Typ.)
1
1¼
7½
3" Min.
1 Cl.
1 Cl.

TYPICAL STEP & ANCHORAGE DETAIL

Curb line
℄ Handrail
D406
℄ Lamp
8" Dia. Bolt Circle
1'-5¼
7
5⅝
9½
3'-6
12 Cl.
3'-6
7'-0

DETAIL F-F

For Details of Plate see Deck Joint Plates - Detail
10
3
Std. Anchor Plates for roadway end dam.
3
Face of Abutment backwall

Note
For Abutment Details See Sheet Nos. 254, 255 & 256.

SECTION E-E

8'-5 13/16
17 @ 6 (Front)
8'-0 (Typ)
15 @ 6
Panels
Spindels
6'-2 3/16
14 @ 6 (Back)
5⅝
8 13/16
Base lamp (See lighting Details Detail A-A Sheet No.)

TYPICAL & END PANELS
(Bridge Handrail - Looking north)

MICROFILMED
FEB 20 1985

MICROFILMED
FEB 20 1985

CITY OF CINCINNATI
DEPARTMENT OF PUBLIC WORKS
DIVISION OF ENGINEERING

SUPERSTRUCTURE, STEPS AND HANDRAIL DETAILS

BRIDGE NO. HAM-71-0157
I-71 UNDER PEDESTRIAN CROSSING AT COURT ST.
CINCY BRIDGE NO. 7

DESIGNED	DRAWN	TRACED	CHECKED	REVIEWED	DATE	REVISED
LEN	LEN		JGT	W.W.	3-8-65	

FED. RD. DIV.	STATE	PROJECT	FISCAL YEAR
2	OHIO		

339
492

HAMILTON COUNTY
HAM-71-(1.56)(2.51)

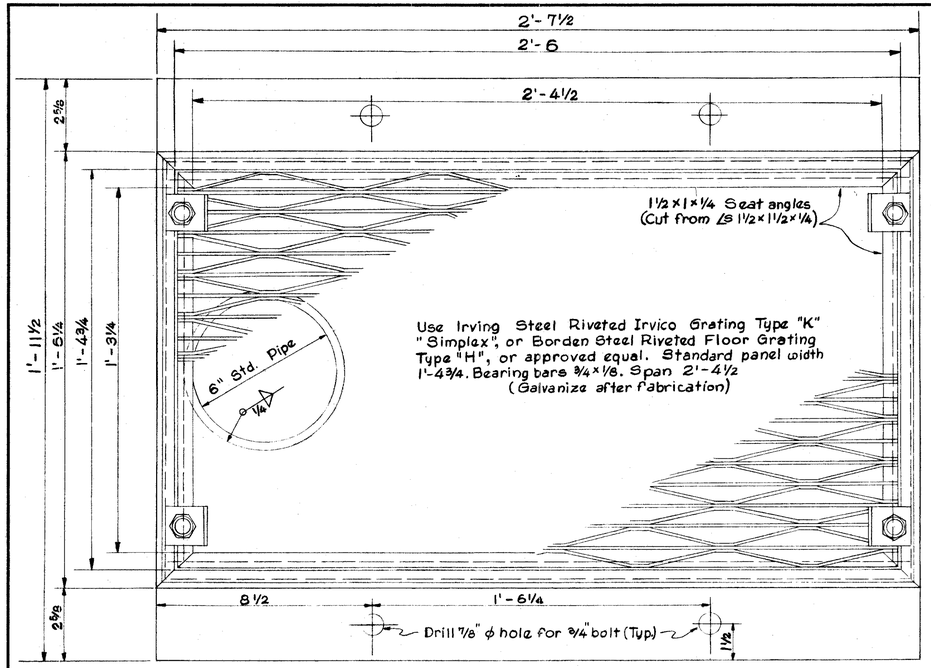

INLET FRAME & GRATING PLAN

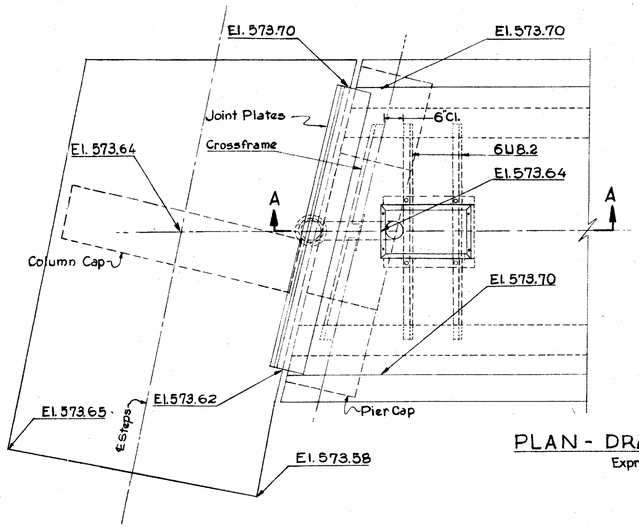

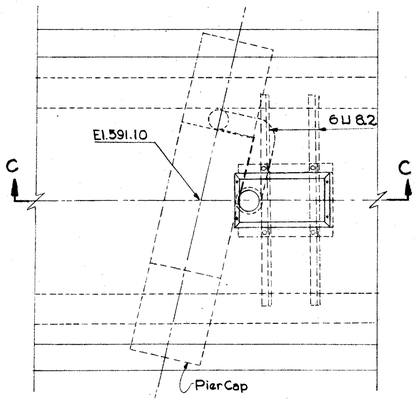

PLAN - DRAINAGE DETAILS
Expressway Bridge

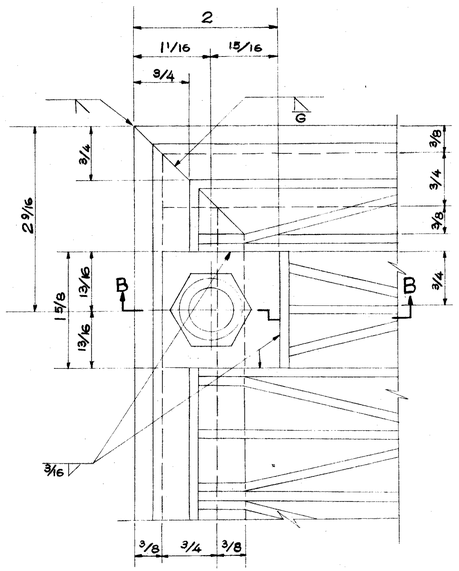

FASTENING DETAIL

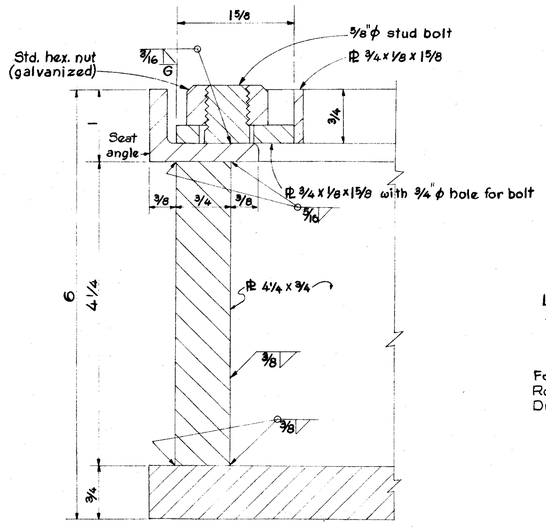

SECTION B-B

Note: For details of Inlet Frame not shown see Standard Drawing Sheet No. 445

MICROFILMED
FEB 20 1965

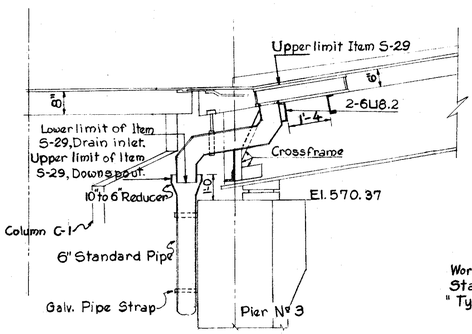

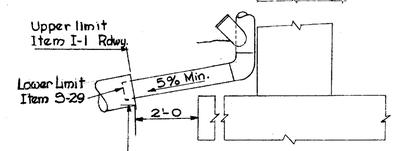

For elevation, see Roadway Drainage Drawings.

SECTION A-A

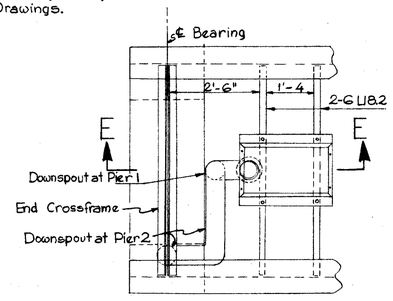

PLAN Gilbert Ave. Bridge

Work this Drawing with Standard Drawing Sheet No. 445 "Typical Drainage Details"

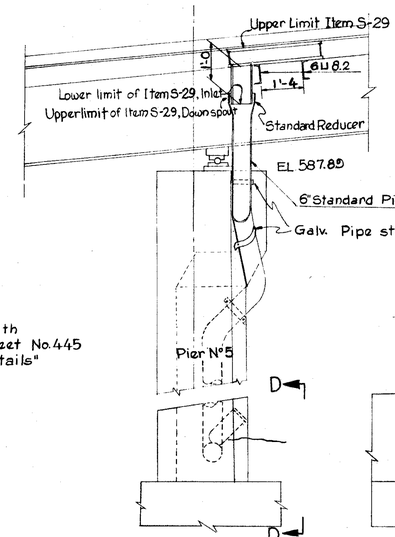

SECTION C-C

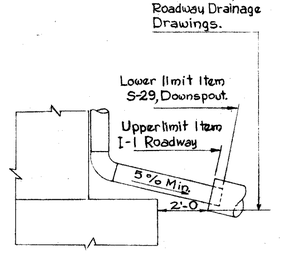

SECTION D-D
For Pier 5 Looking west
For Pier 2 Looking west

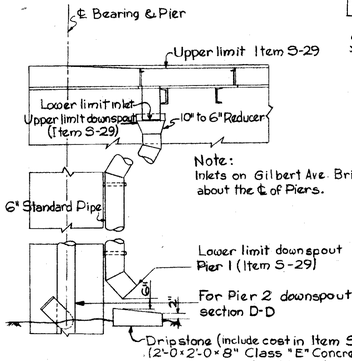

Note:
Inlets on Gilbert Ave. Bridge are similarly located about the ℄ of Piers.

SECTION E-E Looking North for Pier 1
Looking South for Pier 2

CITY OF CINCINNATI
DEPARTMENT OF PUBLIC WORKS
DIVISION OF ENGINEERING

DRAINAGE DETAILS
BRIDGE NO. HAM-71-0157
I-71 UNDER PEDESTRIAN CROSSING AT COURT ST.

CINCY BRIDGE NO. 7

DESIGNED	DRAWN	TRACED	CHECKED	REVIEWED	DATE	REVISED
L.E.N.	L.E.N.		R.M.B.	W.W.	3-8-65	

MICROFILMED
FEB 20 1985

HAMILTON COUNTY
HAM-71-(1.56)(2.51)

FED. RD. DIV.	STATE	PROJECT	FISCAL YEAR
2	OHIO		

340
492

REINFORCING STEEL LIST

MARK	TYPE	NO.	LENGTH	WEIGHT
BRIDGE OVER EXPRESSWAY				
D401	58	120	9'-5	755
D402	Str.	120	5'-2	734
D403	"	112	35'-6	2657
D404	Str.	1	5'-6	6
D406	1	66	6'-9	287
TOTAL WEIGHT				4439
GILBERT AVE. STEPS				
S501	Str.	4	7'-0	29
S502	"	8	6'-10	58
S503	"	8	6-9	58
S504	Str.	176	6'-8	1224
S601				
S602	20	1	10'-8	16
S603	20	1	10'-9	16
S604	20	1	10'-11	16
S605	20	1	11'-0	17
S606	20	1	11'-1	17
S607	20	1	11'-2	17
S608	20	1	11'-4	17
S609	20	1	11'-5	17
S610	20	1	11'-6	17
S611	20	1	11'-7	17
S612	20	1	11'-9	18
S613	20	1	11'-10	18
S614	20	1	11'-11	18
S615	20	1	12'-0	18
S616	20	1	11'-10	18
S617	20	1	11'-11	18
S618	20	1	12'-1	18
S619	20	1	12'-2	18
S620	20	1	12'-3	18
S621	20	1	12'-4	19
S622	20	1	12'-6	19
S623	20	1	12'-7	19
S624	20	1	12'-8	19
S625	20	1	12'-9	19
S626	20	1	12'-11	19
S627	20	1	13'-0	20
S628	20	1	13'-1	20
S629	20	1	13'-2	20
S630	52	42	13'-9	867
S631		14	19'-11	419
S632	51	14	8'-2	172
S633	52	14	15'-0	315
S634		14	24'-8	519
S635	51	14	11'-8	245
S636		14	17'-11	377
S637	51	28	6'-2	259
S638	52	14	16'-2	340
S639		14	20'-4	428
S640	52	14	19'-9	415
S641	20	14	9'-0	189
TOTAL WEIGHT				10,587
BRIDGE OVER GILBERT AVE.				
D401	58	42	9'-5	264
D402	Str.	42	9'-2	257
D405	Str.	48	28'-10	925
D406	1	22	6'-9	99
TOTAL WEIGHT				1,545

MARK	TYPE	NO.	LENGTH	WEIGHT
E. COURT ST. STEPS				
S551	Str.	2	7'-7	16
S552	"	2	6'-0	13
S553	"	2	4'-5	9
S554	"	2	2'-2	5
S555	"	106	9'-2	1013
S556	Str.	16	14'-2	236
S651	20	1	7'-7	11
S652	20	1	8'-5	13
S653	20	1	9'-2	14
S654	20	1	8'-7	13
S655	20	1	9'-8	15
S656	20	1	10'-4	16
S657	20	1	9'-7	14
S658	20	1	9'-3	14
S659	20	1	8'-11	13
S660	20	1	8'-8	13
S661	20	1	8'-4	13
S662	20	1	8'-0	12
S663	20	1	7'-8	11
S664	20	1	7'-4	11
S665	20	1	7'-0	11
S666	20	1	6'-8	10
S667	20	1	6'-4	10
S668	20	1	6'-1	9
S669	20	1	5'-9	9
S670	20	1	5'-5	8
S671	20	1	5'-1	8
S672	20	1	4'-9	7
S673	20	1	10'-9	16
S674	20	1	10'-5	16
S675	20	1	10'-1	15
S676	20	1	9'-10	15
S677	20	1	9'-6	14
S678	20	1	9'-2	14
S679	20	1	8'-10	13
S680	20	1	8'-6	13
S681	20	1	8'-2	12
S682	20	1	7'-10	12
S683	20	1	7'-6	11
S684	20	1	7'-3	11
S685	20	1	6'-11	10
S686	20	1	6'-7	10
S687	20	1	6'-3	9
S688	20	1	5'-11	9
S689	52	15	16'-2	461
S690		15	20'-4	580
S691	51	38	6'-2	352
S692	52	38	17'-4	985
S693		19	21'-6	614
S694	52	19	24'-4	694
S695	20	19	10'-0	285
S696	Str.	20	7'-8	230
TOTAL WEIGHT				7,398
PIER 1				
P401	1	38	6'-8	170
P402	1	4	5'-6	15
P403	1	4	5'-2	14
P404	1	4	4'-10	13
P501	20	6	5'-4	33
P801	Str.	3	8'-8	69
P902	18	14	7'-0	333
P905	Str.	14	26'-8	1269
F801	43	28	13'-2	984
TOTAL WEIGHT				2900

MARK	TYPE	NO.	LENGTH	WEIGHT
PIER 2				
P401	1	24	6'-8	106
P402	1	4	5'-6	15
P403	1	4	5'-2	14
P404	1	4	4'-10	13
P501	20	6	5'-4	33
P801	Str.	3	8'-8	69
P902	18	12	7'-0	333
P904	Str.	12	17'-11	731
F507	Str.	8	11'-8	97
F508	Str.	12	7'-8	96
F703	Str.	12	7'-8	188
F704	Str.	8	11'-8	151
TOTAL WEIGHT				1886
PIER 3				
P401	1	46	6'-8	205
P402	1	4	5'-6	15
P403	1	4	5'-2	14
P404	1	4	4'-10	13
P501	20	6	5'-4	33
P801	Str.	3	8'-8	69
P902	18	12	7'-0	333
P903	Str.	12	31'-5	1282
F510	Str.	5	7'-8	40
F511	Str.	9	11'-8	110
F512	Str.	4	8'-5	35
F513	Str.	8	13'-2	110
F903	Str.	5	7'-8	130
F904	Str.	9	11'-8	357
F1001	43	8	11'-3	387
F1002	43	16	16'-0	1002
W501	Str.	20	11'-8	243
W502	Str.	3	17'-9	54
W503	Str.	3	18'-3	56
W506	36	6	7'-1	44
W801	34	23	11'-9	722
W802	Str.	12	13'-2	416
H501	14	8	5'-9	48
H502	Str.	8	3'-8	——
TOTAL WEIGHT				5818
PIER 4				
P401	1	52	6'-8	232
P402	1	4	5'-6	15
P403	1	4	5'-2	14
P404	1	4	4'-10	13
P501	20	6	5'-4	33
P801	Str.	3	8'-8	69
P901	Str.	12	35'-5	1445
P902	18	12	7'-0	333
F514	Str.	12	31'-8	396
F803	Str.	48	12'-8	1624
F804	Str.	32	8'-8	741
W504	Str.	26	31'-8	859
W505	Str.	11	22'-4	256
W506	36	16	7'-1	118
W901	34	38	12'-10	1658
W902	34	39	17'-10	2364
W903	Str.	20	12'-3	826

MARK	TYPE	NO.	LENGTH	WEIGHT
H501	14	22	5'-9	132
H503	Str.	4	31'-8	——
TOTAL WEIGHT				11142
PIER 5				
P401	1	42	6'-8	187
P402	1	4	5'-6	15
P403	1	4	5'-2	14
P404	1	4	4'-10	13
P501	20	6	5'-4	33
P801	Str.	3	8'-8	69
P1102	18	16	8'-3	701
P1103	Str.	16	29'-2	2479
F501	Str.	12	9'-8	121
F502	Str.	10	11'-8	122
F901	Str.	12	9'-8	395
F902	Str.	10	11'-8	397
TOTAL WEIGHT				4492
COLUMN 1				
C401	1	64	4'-8	200
C411	1	4	4'-1	11
C412	1	4	3'-9	10
C413	1	4	3'-4	9
C504	20	6	4'-2	26
C603	Str.	3	6'-2	28
C802	18	10	6'-5	171
C805	Str.	10	34'-0	908
C810	Str.	7	1'-3	23
TOTAL WEIGHT				1386
For footing steel see Pier 3				
COLUMN 2				
C401	1	54	4'-8	168
C411	1	4	4'-1	11
C412	1	4	3'-9	10
C413	1	4	3'-4	9
C504	20	6	4'-2	26
C603	Str.	3	6'-2	28
C802	18	12	6'-5	206
C806	Str.	12	28'-11	934
C810	Str.	7	1'-3	23
F505	Str.	6	6'-8	42
F506	Str.	7	5'-8	41

MARK	TYPE	NO.	LENGTH	WEIGHT
F701	Str.	6	6'-8	82
F702	Str.	7	5'-8	81
TOTAL WEIGHT				1661
COLUMN 3				
C401	1	42	4'-8	131
C411	1	4	4'-1	11
C412	1	4	3'-9	10
C413	1	4	3'-4	9
C504	20	6	4'-2	26
C603	Str.	3	6'-2	28
C802	18	10	6'-5	171
C807	Str.	10	22'-5	599
C810	Str.	7	1'-3	23
TOTAL WEIGHT				1008
For footing steel see Pier 2				
COLUMN 4				
C401	1	32	4'-8	100
C411	1	4	4'-1	11
C412	1	4	3'-9	10
C413	1	4	3'-4	9
C504	20	6	4'-2	26
C603	Str.	3	6'-2	28
C802	18	8	6'-5	137
C808	Str.	8	17'-10	381
C810	Str.	7	1'-3	23
F702	Str.	7	5'-8	81
F705	Str.	8	4'-8	76
TOTAL WEIGHT				882
COLUMN 5				
C401	1	18	4'-8	56
C411	1	4	4'-1	11
C412	1	4	3'-9	10
C413	1	4	3'-4	9
C504	20	6	4'-2	26
C603	Str.	3	6'-2	28
C802	18	8	6'-5	137
C809	Str.	8	10'-11	233
C810	Str.	7	1'-3	23
F603	Str.	4	4'-8	28
F604	Str.	5	3'-8	28
TOTAL WEIGHT				589
COLUMN 6				
C505	18	14	7'-7	111
C506	Str.	8	6'-2	51
C810	Str.	7	1'-3	23
F505	Str.	3	6'-2	19
TOTAL WEIGHT				204
COLUMN 7				
C401	1	58	4'-8	180
C402	1	4	4'-2	11
C403	1	4	3'-11	10
C404	1	4	3'-7	10
C405	1	4	3'-4	9
C501	20	6	5'-4	33
C601	Str.	3	8'-8	39
C801	Str.	10	31'-1	920

MARK	TYPE	NO.	LENGTH	WEIGHT
C802	18	10	6'-5	171
C810	Str.	9	1'-3	30
TOTAL WEIGHT				1233
For footing steel see Pier 1				
COLUMN 8				
C401	1	32	4'-8	100
C402	1	4	4'-2	11
C403	1	4	3'-11	10
C404	1	4	3'-7	10
C405	1	4	3'-4	9
C501	20	6	5'-4	33
C601	Str.	3	8'-8	39
C802	18	8	6'-5	137
C803	Str.	8	17'-11	383
C810	Str.	9	1'-3	30
F601	43	14	8'-0	168
TOTAL WEIGHT				930
COLUMN 9				
C401	1	16	4'-8	50
C402	1	4	4'-2	11
C403	1	4	3'-11	10
C404	1	4	3'-7	10
C405	1	4	3'-4	9
C501	20	6	5'-4	33
C601	Str.	3	8'-8	39
C802	18	8	6'-5	137
C804	Str.	8	10'-5	223
C810	Str.	9	1'-3	30
F602	43	14	7'-6	158
TOTAL WEIGHT				710
COLUMN 10				
C406	35	1	3'-9	3
C407	35	1	4'-1	3
C408	35	1	4'-7	3
C409	35	1	4-11	3
C410	35	1	5'-5	4
C502	Str.	2	7'-0	15
C503	18	18	6'-3	117
C602	Str.	3	13'-8	62
C810	Str.	14	1'-3	47
F503	Str.	9	2'-8	25
F504	43	4	10'-10	45
TOTAL WEIGHT				327
RE401	Str.		5'-3	——
RE501	Str.		5'-7	——
RE601	Str.		5'-11	——
RE701	Str.		6'-3	——
RE801	Str.		6'-6	——
RE901	Str.		6'-10	——
RE1001	Str.		7'-3	——
RE1101	Str.		7'-7	——

BENDING DETAILS

PIERS AND COLUMNS

MARK	a	b	c	d	e	f	r
P401	1'-8	2'-6					
P402	1'-8	1'-11					
P403	1'-8	1'-9					
P404	1'-8	1'-7					
C401	1'-2	1'-9					
C402	1'-8	1'-3					
C403	1'-5	1'-3					
C404	1'-1	1'-3					
C405	0'-10	1'-3					
C406	0'-8	0'-10					
C407	0'-8	1'-0					
C408	0'-8	1'-3					
C409	0'-8	1'-5					
C410	0'-8	1'-8					
C411	1'-7	1'-3					
C412	1'-3	1'-3					
C413	0'-10	1'-3					
P501	1'-0	5'-1	2'-10	2'-7	2'-6		
C501	0'-7	5'-3	2'-1	2'-0	3'-3		
C503	1'-1	5'-2					
C504	0'-11	3'-11	2'-1	1'-10	2'-1		
C505	1'-2	6'-5					
F504	9'-8						
W506	1'-4	1'-5	1'-10	1'-8	0'-2		
H501	0'-8	2'-2					
F601	6'-8						
F602	6'-2						
C802	1'-8	4'-9					
F801	11'-0						
W801	1'-0	1'-3	1'-11	10'-2	8'-10	0'-5	1'-2
P902	1'-11	5'-1					
W901	1'-2	1'-5	2'-2	11'-0	9'-6	0'-6	1'-4
W902	1'-2	1'-5	2'-2	16'-0	14'-6	0'-9	1'-4
F1001	8'-5						
F1002	13'-2						
P1102	2'-5	5'-10					

MARK	a	b	c	d	e	f	r

Note; H bars listed without weights shall be included with Item 511-14 for payment.

Bar size is indicated in the bar mark. The first digit indicates the bar size number except when the first digit is one (1). In this case the first two digits indicate the bar size number.

Work this sheet with Sheet No. 341 and Standard Drawing No. 5. Sh. No. 446

CITY OF CINCINNATI
DEPARTMENT OF PUBLIC WORKS
DIVISION OF ENGINEERING

REINFORCING STEEL LIST

BRIDGE NO. HAM-71-0157
I-71 UNDER PEDESTRIAN CROSSING AT COURT ST.

CINCY BRIDGE NO. 7

DESIGNED	DRAWN	TRACED	CHECKED	REVIEWED	DATE	REVISED
	J.D.A.		J.G.T.	W.W.	3-8-85	

MICROFILMED
FEB 20 1985

HAMILTON COUNTY
HAM-71-(1.56)(2.51)

FED. RD. DIV.	STATE	PROJECT	FISCAL YEAR
2	OHIO		

340
432

REINFORCING STEEL LIST

MARK	TYPE	NO.	LENGTH	WEIGHT
BRIDGE OVER EXPRESSWAY				
D401	58	120	9'-5	755
D402	Str.	120	5'-2	734
D403	"	112	35'-6	2657
D404	Str.	1	9'-6	6
D406	1	66	6'-9	287
TOTAL WEIGHT				4439
GILBERT AVE. STEPS				
S501	Str.	4	7'-0	29
S502	"	8	6'-10	58
S503	"	8	6-9	58
S504	Str.	176	6'-8	1224
S601				
S602	20	1	10'-8	16
S603	20	1	10'-9	16
S604	20	1	10'-11	16
S605	20	1	11'-0	17
S606	20	1	11'-1	17
S607	20	1	11'-2	17
S608	20	1	11'-4	17
S609	20	1	11'-5	17
S610	20	1	11'-6	17
S611	20	1	11'-7	17
S612	20	1	11'-9	18
S613	20	1	11'-10	18
S614	20	1	11'-11	18
S615	20	1	12'-0	18
S616	20	1	11'-10	18
S617	20	1	11'-11	18
S618	20	1	12'-1	18
S619	20	1	12'-2	18
S620	20	1	12'-3	18
S621	20	1	12'-4	19
S622	20	1	12'-6	19
S623	20	1	12'-7	19
S624	20	1	12'-8	19
S625	20	1	12'-9	19
S626	20	1	12'-11	19
S627	20	1	13'-0	20
S628	20	1	13'-1	20
S629	20	1	13'-2	20
S630	52	42	13'-9	867
S631	*GG	14	19'-11	419
S632	51	14	8'-2	172
S633	52	14	15'-0	315
S634	*GG	14	24'-8	519
S635	51	14	11'-8	245
S636	*GG	14	17'-11	377
S637	51	28	6'-2	259
S638	52	14	16'-2	340
S639	*GG	14	20'-4	428
S640	52	14	19'-9	415
S641	20	14	9'-0	189
TOTAL WEIGHT				10,587
BRIDGE OVER GILBERT AVE.				
D401	58	42	9'-5	264
D402	Str.	42	9'-2	257
D405	Str.	48	28'-10	925
D406	1	22	6'-9	99
TOTAL WEIGHT				1,545

MARK	TYPE	NO.	LENGTH	WEIGHT
E. COURT ST. STEPS				
S551	Str.	2	7'-7"	16
S552	"	2	6'-0"	13
S553	"	2	4'-5"	9
S554	"	2	2'-2"	5
S555	"	106	9'-2	1013
S556	Str.	16	14'-2	236
			13'-10"	
S651	20	1	7'-7"	11
S652	20	1	8'-5"	13
S653	20	1	8'-0"	14
S654	20	1	8'-7"	13
S655	20	1	9'-8"	15
S656	20	1	10'-4"	16
S657	20	1	9'-7"	14
S658	20	1	8'-3"	12
S659	20	1	8'-10"	13
S660	20	1	8'-3"	13
S661	20	1	8'-6"	13
S662	20	1	8'-0"	12
S663	20	1	7'-8"	11
S664	20	1	7'-4	11
S665	20	1	7'-0"	11
S666	20	1	6'-8"	10
S667	20	1	6'-4"	10
S668	20	1	6'-1"	9
S669	20	1	5'-9"	9
S670	20	1	5'-5"	8
S671	20	1	5'-1"	8
S672	20	1	4'-9"	7
S673	20	1	10'-9"	16
S674	20	1	10'-5"	16
S675	20	1	10'-0"	15
S676	20	1	9'-10"	15
S677	20	1	9'-5"	14
S678	20	1	9'-2"	14
S679	20	1	8'-10"	13
S680	20	1	8'-7"	13
S681	20	1	8'-2"	12
S682	20	1	7'-10"	12
S683	20	1	7'-6"	11
S684	20	1	7'-3"	11
S685	20	1	6'-11"	10
S686	20	1	6'-7"	10
S687	20	1	6'-3"	9
S688	20	1	5'-11"	9
S689	52	19	16'-2	461
S690	*GG	19	20'-4	580
S691	51	38	6'-2	352
S692	52	38	17'-4	985
S693	*GG	19	21'-6	614
S694	52	19	24'-4	694
S695	20	19	10'-0	285
S696	Str.	20	7'-8	230
TOTAL WEIGHT			5339	7398
PIER 1				
P401	1	38	6'-8	170
P402	1	4	5'-6	15
P403	1	4	5'-2	14
P404	1	4	4'-10	13
P501	20	6	5'-4	33
P801	Str.	3	8'-8	69
P902	18	14	7'-0	333
P905	Str.	14	26'-8	1269
F801	43	28	13'-2	984
TOTAL WEIGHT				2900

MARK	TYPE	NO.	LENGTH	WEIGHT
PIER 2				
P401	1	24	6'-8	106
P402	1	4	5'-6	15
P403	1	4	5'-2	14
P404	1	4	4'-10	13
P501	20	6	5'-4	33
P801	Str.	3	8'-8	69
P902	18	12	7'-0	333
P904	Str.	12	17'-11	731
F507	Str.	8	11'-8	97
F508	Str.	12	7'-8	96
F703	Str.	12	7'-8	188
F704	Str.	8	11'-8	151
TOTAL WEIGHT				1886
PIER 3				
P401	1	46	6'-8	205
P402	1	4	5'-6	15
P403	1	4	5'-2	14
P404	1	4	4'-10	13
P501	20	6	5'-4	33
P801	Str.	3	8'-8	69
P901	Str.	12	35'-5	1445
P902	18	12	7'-0	333
F514	Str.	12	31'-8	396
F803	Str.	48	12'-8	1624
F804	Str.	32	8'-8	741
W504	Str.	26	31'-8	859
W505	Str.	11	22'-4	256
W506	36	16	7'-1	118
W901	34	38	12'-10	1658
W902	34	39	17'-10	2364
W903	Str.	20	12'-3	826

MARK	TYPE	NO.	LENGTH	WEIGHT
H501	14	22	5'-9	132
H503	Str.	4	31'-8	
TOTAL WEIGHT				11142
PIER 5				
P401	1	42	6'-8	187
P402	1	4	5'-6	15
P403	1	4	5'-2	14
P404	1	4	4'-10	13
P501	20	6	5'-4	33
P801	Str.	3	8'-8	69
P1102	18	16	8'-3	701
P1103	Str.	16	25'-2	2479
F501	Str.	12	9'-8	121
F502	Str.	10	11'-8	122
F901	Str.	12	9'-8	395
F902	Str.	10	11'-8	397
TOTAL WEIGHT				4546
PIER 6				
P401	1	46	6'-8	205
P402	1	4	5'-6	15
P403	1	4	5-2	14
P404	1	4	4'-10	13
P501	20	6	5'-4	33
P801	Str.	3	8'-8	69
P1101	Str.	16	30'-8	2607
P1102	18	16	8'-3	701
F501	Str.	12	9'-8	121
F502	Str.	10	11'-8	122
F901	Str.	12	9'-8	395
F902	Str.	10	11'-8	397
TOTAL WEIGHT				4692
COLUMN 1				
C401	1	64	4'-8	200
C411	1	4	4'-1	11
C412	1	4	3'-9	10
C413	1	4	3'-4	9
C504	20	6	4'-2	26
C603	Str.	3	6'-2	28
C802	18	10	6'-5	171
C805	Str.	10	34'-0	908
C810	Str.	7	1'-3	23
TOTAL WEIGHT				1386
For footing steel see Pier 3				
COLUMN 2				
C401	1	54	4'-8	168
C411	1	4	4'-1	11
C412	1	4	3'-9	10
C413	1	4	3'-4	9
C504	20	6	4'-2	26
C603	Str.	3	6'-2	28
C802	18	12	6'-5	206
C806	Str.	12	28'-11	934
C810	Str.	7	1'-3	23
F505	Str.	6	6'-8	42
F506	Str.	7	5'-8	41

MARK	TYPE	NO.	LENGTH	WEIGHT
F701	Str.	6	6'-8	82
F702	Str.	7	5'-8	81
TOTAL WEIGHT				1661
COLUMN 3				
C401	1	42	4'-8	131
C411	1	4	4'-1	11
C412	1	4	3'-9	10
C413	1	4	3'-4	9
C504	20	6	4'-2	26
C603	Str.	3	6'-2	28
C802	18	10	6'-5	171
C807	Str.	10	22'-5	559
C810	Str.	7	1'-3	23
TOTAL WEIGHT				1008
For footing steel see Pier 2				
COLUMN 4				
C401	1	32	4'-8	100
C411	1	4	4'-1	11
C412	1	4	3'-9	10
C413	1	4	3'-4	9
C504	20	6	4'-2	26
C603	Str.	3	6'-2	28
C802	18	8	6'-5	137
C808	Str.	8	17'-10	381
C810	Str.	7	1'-3	23
F702	Str.	7	5'-8	81
F705	Str.	8	4'-8	76
TOTAL WEIGHT				882
COLUMN 5				
C401	1	18	4'-8	56
C411	1	4	4'-1	11
C412	1	4	3'-9	10
C413	1	4	3'-4	9
C504	20	6	4'-2	26
C603	Str.	3	6'-2	28
C802	18	8	6'-5	137
C809	Str.	8	10'-11	233
C810	Str.	7	1'-3	23
F603	Str.	4	4'-8	28
F604	Str.	5	3'-8	28
TOTAL WEIGHT				589
COLUMN 6				
C505	18	14	7'-7	111
C506	Str.	8	6'-2	51
C810	Str.	7	1'-3	23
F509	Str.	3	6'-2	19
TOTAL WEIGHT				204
COLUMN 7				
C401	1	58	4'-8	180
C402	1	4	4'-2	11
C403	1	4	3'-11	10
C404	1	4	3'-7	10
C405	1	4	3'-4	9
C501	20	6	5'-4	33
C601	Str.	3	8'-8	39
C801	Str.	10	31'-1	920

MARK	TYPE	NO.	LENGTH	WEIGHT
C802	18	10	6'-5	171
C810	Str.	9	1'-3	30
TOTAL WEIGHT				1233
For footing steel see Pier 1				
COLUMN 8				
C401	1	32	4'-8	100
C402	1	4	4'-2	11
C403	1	4	3'-11	10
C404	1	4	3'-7	10
C405	1	4	3'-4	9
C501	20	6	5'-4	33
C601	Str.	3	8'-8	39
C802	18	8	6'-5	137
C803	Str.	8	17'-11	383
C810	Str.	9	1'-3	30
F601	43	14	8'-0	168
TOTAL WEIGHT				930
COLUMN 9				
C401	1	16	4'-8	50
C402	1	4	4'-2	11
C403	1	4	3'-11	10
C404	1	4	3'-7	10
C405	1	4	3'-4	9
C501	20	6	5'-4	33
C601	Str.	3	8'-8	39
C802	18	8	6'-5	137
C804	Str.	8	10'-5	223
C810	Str.	9	1'-3	30
F602	43	14	7'-6	158
TOTAL WEIGHT				710
COLUMN 10				
C406	35	1	3'-9	3
C407	35	1	4'-1	3
C408	35	1	4'-7	3
C409	35	1	4-11	3
C410	35	1	5'-5	4
C502	Str.	2	7'-0	15
C503	18	18	6'-3	117
			13'-2"	
C602	Str.	3	13'-8	62
C810	Str.	14	1'-3	47
F503	Str.	9	2'-8	25
F504	43	4	10'-10	45
TOTAL WEIGHT			325	327
RE401	Str.		5'-3	
RE501	Str.		5'-7	
RE601	Str.		5'-11	
RE701	Str.		6'-3	
RE801	Str.		6'-6	
RE901	Str.		6'-10	
RE1001	Str.		7'-3	
RE1101	Str.		7'-7	

BENDING DETAILS

PIERS AND COLUMNS

MARK	a	b	c	d	e	f	r
P401	1'-8	2'-6					
P402	1'-8	1'-11					
P403	1'-8	1'-9					
P404	1'-8	1'-7					
C401	1'-2	1'-5					
C402	1'-8	1'-3					
C403	1'-5	1'-3					
C404	1'-1	1'-3					
C405	0'-10	1'-3					
C406	0'-8	0'-10					
C407	0'-8	1'-0					
C408	0'-8	1'-3					
C409	0'-8	1'-5					
C410	0'-8	1'-8					
C411	1'-7	1'-3					
C412	1'-3	1'-3					
C413	0'-10	1'-3					
P501	1'-0	2'-6	2'-10	2'-7			
C501	0'-7	3'-3	2'-1	2'-0			
C503	1'-1	5'-2					
C504	0'-11	2'-1	2'-1	1'-10			
C505	1'-2	6'-5					
F504	9'-8						
W506	1'-4	1'-5	1'-10	1'-8	0'-2		
H501	0'-8	2'-2					
FG01	6'-8						
FG02	6'-2						
C802	1'-8	4'-9					
F801	11'-0						
W801	1'-0	1'-3	1'-11	10'-2	8'-10	0'-5	1'-2
P902	1'-11	5'-1					
W901	1'-2	1'-5	2'-2	11'-0	9'-6	0'-6	1'-4
W902	1'-2	1'-5	2'-2	16'-0	14'-6	0'-9	1'-4
F1001	8'-5						
F1002	13'-2						
P1102	2'-5	5'-10					

Note: H bars listed without weights shall be included with Item S-14 for payment.

Bar size is indicated in the bar mark. The first digit indicates the bar size number except when the first digit is one (1). In this case the first two digits indicate the bar size number.

Work this sheet with Sheet No. 341 and Standard Drawing No. S. Sh. No. 446

*-For Type GG bar bending detail see Sheet No. 341A

This sheet supersedes Sheet No. 340 4-21-66

CITY OF CINCINNATI
DEPARTMENT OF PUBLIC WORKS
DIVISION OF ENGINEERING

REINFORCING STEEL LIST
BRIDGE NO. HAM-71-0157
I-71 UNDER PEDESTRIAN CROSSING AT COURT ST.
CINCY BRIDGE NO. 7

DESIGNED	DRAWN	TRACED	CHECKED	REVIEWED	DATE	REVISED
	J.D.A.		J.G.T.	W.W.	3-8-65	5-27-66

HAMILTON COUNTY
HAM-71-(1.56)(2.51)

FED. RD. DIV.	STATE	PROJECT	FISCAL YEAR
2	OHIO		

341
402

ESTIMATED QUANTITIES

ITEM	TOTAL	UNIT	DESCRIPTION	SUPER-STRUCT & STEPS	PIERS	GENERAL
E-2	Lump	Sum	Cofferdams cribs and sheeting.			
E-2	257.0	Sq. Ft.	Steel sheet piling left in place (minimum section modulus of 5.4 in.³ per foot of wall.)		257.0	
E-2	210.0	Cu. Yds.	Unclassified excavation.		210.0	
E-2	279.0	Cu. Yds.	Rock excavation.		279.0	
S-1	108	Cu. Yds.	Class "C" concrete, superstructure and steps.	108		
S-1	162	Cu. Yds.	Class "C" concrete, piers above footings & wall shafts		162	
S-1	122	Cu. Yds.	Class "E" concrete, footings.		122	
S-4	63,900.0	Lbs.	Reinforcing steel.	23,975.	39,925	
* S-7	70,900.0	Lbs.	Structural steel.	70,900.		
* S-8	70,900.0	Lbs.	Field painting of structural steel.	70,900.		
S-14	940.0	Lin. Ft.	Aluminum handrail, as per plan.	940.0		
S-14	32.0	Lin. Ft.	Railing "Type A" (Aluminum rail and supports, concrete parapet)		32.0	
S-16	Lump	Sum	First test pile.			
S-18	430.0	Lin. Ft.	Steel piles, 10BP42.		430.0	
S-22	1.1	Cu. Yds.	Removal of portions of existing structure.			1.1
S-25			Electrical lighting system, see Sheet No. 200.			
S-29	23.0	Cu. Yds.	Porous backfill.		23.0	
S-29	32.0	Lin. Ft.	8" bituminous coated helical perforated corrugated metal pipe Sec. M-6.4 (h-c), including specials and sand.		32.0	
S-29	Lump	Sum	Drain inlets, including supports.			
S-29	129.0	Lin. Ft.	6" standard pipe downspout, wrought iron or hot-dip galvanized steel, including specials.			129.0
S-101	108	Each	Water-reducing, set-retarding admixture.	108		
I-26	70.0	Lin. Ft.	Chain Link Fence, As Per Plan			70.0

*ESTIMATED QUANTITIES

Chargeable to Cincinnati Gas & Electric and C. & S. B. Telephone Companies

S-7	1951.0	Lbs.	Structural Steel.	1951.0

GENERAL NOTES

Design Specifications: This structure conforms to the requirements of "Design Specifications for Highway Structures" of the State of Ohio, Department of Highways, dated 9-1-57, together with current revisions thereof.

Piles shall be 10BP42 driven with a hammer of not less than 11,000 ft lbs. per blow to firm contact with rock and shale. Firm contact shall be considered as attained when the capacity according to the formula Sec. 9-18.05 (Construction and Material Specifications) is not less than the following value for a pile hammer of the indicated energy rating:

50 tons per pile using a 11,000 ft. lb. hammer.
45 tons per pile using a 15,000 ft. lb. hammer.

If the energy rating of the hammer is between the ratings as shown above, the required formula capacity shall be determined by interpolation. (The design load= 30 tons per pile for Pier 1 and 35 tons per pile for E. Court St. Steps.)

Reference shall be made to Standard Construction Drawing F-1.

For additional references and notes see Notes 1 thru 8, General Notes, Sheet No. 443.

Chain Link Fence: Chain Link Fence shall meet the requirements of Item I-26, but shall be a nominal 10 feet in height. The first posts adjacent to the existing wall shall be set as close to the existing wall as possible and to line and grade with the existing posts on top of the wall. The remaining posts shall be set to the approximate elevation of the existing fence. The space between the first posts and the existing posts and the existing wall shall be properly closed with chain link fence.

BENDING DETAILS

STEPS

MARK	a	b	c	d	e	f	g	h
SG02	0'-6	10'-6	1'-0	0'-10	9'-8			
SG03	0'-6	10'-7	1'-0	0'-10	9'-9			
SG04	0'-6	10'-9	1'-0	0'-10	9'-11			
SG05	0'-6	10'-10	1'-0	0'-10	10'-0			
SG06	0'-6	10'-11	1'-0	0'-10	10'-1			
SG07	0'-6	11'-0	1'-0	0'-10	10'-2			
SG08	0'-6	11'-2	1'-0	0'-10	10'-4			
SG09	0'-6	11'-3	1'-0	0'-10	10'-5			
SG10	0'-6	11'-4	1'-0	0'-10	10'-6			
SG11	0'-6	11'-5	1'-0	0'-10	10'-7			
SG12	0'-6	11'-7	1'-0	0'-10	10'-9			
SG13	0'-6	11'-8	1'-0	0'-10	10'-10			
SG14	0'-6	11'-9	1'-0	0'-10	10'-11			
SG15	0'-6	11'-10	1'-0	0'-10	11'-0			
SG16	0'-8	11'-8	1'-3	1'-1	10'-7			
SG17	0'-8	11'-9	1'-3	1'-1	10'-8			
SG18	0'-8	11'-11	1'-3	1'-1	10'-10			
SG19	0'-8	12'-0	1'-3	1'-1	10'-11			
SG20	0'-8	12'-1	1'-3	1'-1	11'-0			
SG21	0'-8	12'-2	1'-3	1'-1	11'-1			
SG22	0'-8	12'-4	1'-3	1'-1	11'-3			
SG23	0'-8	12'-5	1'-3	1'-1	11'-4			
SG24	0'-8	12'-6	1'-3	1'-1	11'-5			
SG25	0'-8	12'-7	1'-3	1'-1	11'-6			
SG26	0'-8	12'-9	1'-3	1'-1	11'-8			
SG27	0'-8	12'-10	1'-3	1'-1	11'-9			
SG28	0'-8	12'-11	1'-3	1'-1	11'-10			
SG29	0'-8	13'-0	1'-3	1'-1	11'-11			
SG30	1'-0	9'-9	1'-3	11'-6	6'-1			
SG32	7'-10	0'-6	1'-0	0'-10	5'-11	0'-8	1'-1	1'-3
SG33	1'-0	10'-10	1'-3	12'-9	6'-9			
SG35	11'-4	0'-6	1'-0	0'-10	9'-5	0'-8	1'-1	1'-3
SG37	5'-10	0'-6	1'-0	0'-10	3'-11	0'-8	1'-1	1'-3
SG38	1'-0	11'-10	1'-3	13'-11	7'-5			
SG40	1'-3	9'-9	7'-0	11'-6	6'-1			
SG41	0'-8	9'-0	1'-3	1'-1	7'-9			
SG51	0'-6	7'-5	1'-0	0'-10	6'-7			
SG52	0'-6	8'-3	1'-0	0'-10	7'-5			
SG53	0'-6	9'-0	1'-0	0'-10	8'-2			
SG54	0'-8	8'-5	1'-3	1'-1	7'-4			
SG55	0'-8	9'-6	1'-3	1'-1	8'-5			
SG56	0'-8	9'-2	1'-3	1'-1	9'-1			
SG57	0'-6	8'-5	1'-0	0'-10	8'-7			
SG58	0'-6	9'-1	1'-0	0'-10	8'-3			
SG59	0'-6	8'-9	1'-0	0'-10	7'-11			
SG60	0'-6	8'-6	1'-0	0'-10	7'-8			
SG61	0'-6	8'-2	1'-0	0'-10	7'-4			
SG62	0'-6	7'-10	1'-0	0'-10	7'-0			
SG63	0'-6	7'-6	1'-0	0'-10	6'-8			
SG64	0'-6	7'-2	1'-0	0'-10	6'-4			
SG65	0'-6	6'-10	1'-0	0'-10	6'-0			
SG66	0'-6	6'-6	1'-0	0'-10	5'-8			
SG67	0'-6	6'-2	1'-0	0'-10	5'-4			
SG68	0'-6	5'-11	1'-0	0'-10	5'-1			
SG69	0'-6	5'-7	1'-0	0'-10	4'-9			
SG70	0'-6	5'-3	1'-0	0'-10	4'-5			
SG71	0'-6	4'-11	1'-0	0'-10	4'-1			
SG72	0'-6	4'-7	1'-0	0'-10	3'-9			
SG73	0'-8	10'-7	1'-3	1'-1	9'-6			
SG74	0'-8	10'-3	1'-3	1'-1	9'-2			
SG75	0'-8	9'-11	1'-3	1'-1	8'-10			
SG76	0'-8	9'-8	1'-3	1'-1	8'-7			
SG77	0'-8	9'-4	1'-3	1'-1	8'-3			
SG78	0'-8	9'-0	1'-3	1'-1	7'-11			
SG79	0'-8	8'-8	1'-3	1'-1	7'-7			
SG80	0'-8	8'-4	1'-3	1'-1	7'-3			

MARK	a	b	c	d	e	f	g	h
SG81	0'-8	8'-0	1'-3	1'-1	6'-11			
SG82	0'-8	7'-8	1'-3	1'-1	6'-7			
SG83	0'-8	7'-4	1'-3	1'-1	6'-3			
SG84	0'-8	7'-1	1'-3	1'-1	6'-0			
SG85	0'-8	6'-9	1'-3	1'-1	5'-8			
SG86	0'-8	6'-5	1'-3	1'-1	5'-4			
SG87	0'-8	6'-1	1'-3	1'-1	5'-0			
SG88	0'-8	5'-9	1'-3	1'-1	4'-8			
SG89	1'-0	11'-10	1'-3	13'-11	7'-5			
SG91	5'-10	0'-6	1'-0	0'-10	3'-11	0'-8	1'-1	1'-3
SG92	1'-0	12'-9	1'-3	15'-1	8'-0			
SG94	1'-3	12'-9	8'-0	15'-1	8'-0			
SG95	0'-8	9'-10	1'-3	1'-1	8'-9			

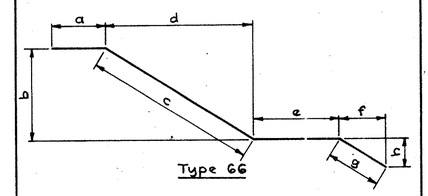

MARK	a	b	c	d	e	f	g	h
SG31	1'-3	6'-1	11'-6	9'-9	5'-11	1'-1	1'-3	0'-8
SG34	1'-3	6'-9	12'-9	10'-10	9'-5	1'-1	1'-3	0'-8
SG36	1'-3	6'-1	11'-6	9'-9	3'-11	1'-1	1'-3	0'-8
SG39	1'-3	7'-5	13'-11	11'-10	3'-11	1'-1	1'-3	0'-8
SG90	1'-3	7'-5	13'-11	11'-10	3'-11	1'-1	1'-3	0'-8
SG93	1'-3	7'-11	15'-1	12'-9	3'-11	1'-1	1'-3	0'-8

SUPERSTRUCTURES

MARK	a	b	c	d	e	f	g	h	j
D401	3'-0	0'-4	0'-5½	2'-9	0'-4	0'-4	2'-9	0'-5½	0'-4
D406	0'-9	3'-0							

This sheet is superseded by Sheet No. 441

Note: Work this sheet with Sheet No. 340 and Bar Banding Schedule Sheet No. 446.

MICROFILMED
FEB 20 1965

CITY OF CINCINNATI
DEPARTMENT OF PUBLIC WORKS
DIVISION OF ENGINEERING

ESTIMATED QUANTITIES AND BAR BENDING DETAILS
BRIDGE NO. HAM-71-0157
I-71 UNDER PEDESTRIAN CROSSING AT COURT ST.
CINCY BRIDGE NO. 7

DESIGNED	DRAWN	TRACED	CHECKED	REVIEWED	DATE	REV
	J.D.A.		J.G.T.	W.W.	3-8-65	

HAMILTON COUNTY
HAM-71-(1.56)(2.51)

FED. RD. DIV.	STATE	PROJECT	FISCAL YEAR
2	OHIO		

341
402

ESTIMATED QUANTITIES

ITEM	TOTAL	UNIT	DESCRIPTION	SUPER-STRUCT & STEPS	PIERS	GENERAL
E-2	Lump	Sum	Coffardams cribs and sheeting.			
E-2	257.0	Sq. Ft.	Steel sheet piling left in place (minimum section modulus of 5.4 in.³ per foot of wall.)		257.0	
E-2	210.0	Cu. Yds.	Unclassified excavation.		210.0	
E-2	279.0	Cu. Yds.	Rock excavation.		279.0	
				107		
S-1	~~107~~ 108	Cu. Yds.	Class "C" concrete, superstructure and steps.	108		
S-1	162.	Cu. Yds.	Class "C" concrete, piers above footings & wall shafts		162	
S-1	122	Cu. Yds.	Class "E" concrete, footings.		122	
	62,382			22,459	39,923	
S-4	~~63,900.0~~	*Lbs.	Reinforcing steel.	23,975	39,925	
* S-7	70,900.0	Lbs.	Structural steel.	70,900.		
* S-8	70,900.0	Lbs.	Field painting of structural steel.	70,900.		
	936.5			936.5		
S-14	~~940.0~~	Lin. Ft.	Aluminum handrail, as per plan.	940.0		
S-14	32.0	Lin. Ft.	Railing Type A" (Aluminum rail and supports, concrete parapet)		32.0	
S-16	Lump	Sum	First test pile.			
S-18	430.0	Lin. Ft.	Steel piles, 12BP42.		430.0	
S-22	1.1	Cu. Yds.	Removal of portions of existing structure.			1.1
S-25			Electrical lighting system, see Sheet No. 200.			
S-29	23.0	Cu. Yds.	Porous backfill.		23.0	
S-29	32.0	Lin. Ft.	8" bituminous coated helical perforated corrugated metal pipe Sec. M-6.4 (h-c), including specials and sand.		32.0	
S-29	Lump	Sum	Drain inlets, including supports.			
S-29	129.0	Lin. Ft.	6" standard pipe downspout, wrought iron or hot-dip galvanized steel, including specials.			129.0
S-101	108	Each	Water-reducing, set-retarding admixture.	108		
I-26	70.0	Lin. Ft.	Chain Link Fence, As per plan			70.0

*ESTIMATED QUANTITIES

Chargeable to Cincinnati Gas & Electric and C. & S. B. Telephone Companies

S-7	1951.0	Lbs.	Structural Steel.	1951.0

GENERAL NOTES

Design Specifications: This structure conforms to the requirements of "Design Specifications for Highway Structures" of the State of Ohio, Department of Highways, dated 9-1-57, together with current revisions thereof.

Piles shall be 10BP42 driven with a hammer of not less than 11,000 ft lbs. per blow to firm contact with rock and shale. Firm contact shall be considered as attained when the capacity according to the formula Sec. S-18.05 (Construction and Material Specifications) is not less than the following value for a pile hammer of the indicated energy rating:

50 tons per pile using a 11,000 ft. lb. hammer.
45 tons per pile using a 15,000 ft. lb. hammer.

If the energy rating of the hammer is between the ratings as shown above, the required formula capacity shall be determined by interpolation. (The design load = 30 tons per pile for Pier 1 and 35 tons per pile for E. Court St. Steps.)

Reference shall be made to Standard Construction Drawing F-1.

For additional references and notes see Notes 1 thru 8, General Notes, Sheet No. 443.

Chain Link Fence: Chain Link Fence shall meet the requirements of Item 1-26, but shall be a nominal 10 feet in height. The first poste adjacent to the existing wall shall be set as close to the existing wall as possible and to line and grade with the existing posts on top of the wall. The remaining posts shall be set to the approximate elevation of the existing fence. The space between the first posts and the existing posts and the existing wall shall be properly closed with chain link fence.

BENDING DETAILS

STEPS

MARK	a	b	c	d	e	f	g	h
SG02	0'-6	9'-8	1'-0	0'-10				
SG03	0'-6	9'-9	1'-0	0'-10				
SG04	0'-6	9'-11	1'-0	0'-10				
SG05	0'-6	10'-0	1'-0	0'-10				
SG06	0'-6	10'-1	1'-0	0'-10				
SG07	0'-6	10'-2	1'-0	0'-10				
SG08	0'-6	10'-4	1'-0	0'-10				
SG09	0'-6	10'-5	1'-0	0'-10				
SG10	0'-6	10'-6	1'-0	0'-10				
SG11	0'-6	10'-7	1'-0	0'-10				
SG12	0'-6	10'-9	1'-0	0'-10				
SG13	0'-6	10'-10	1'-0	0'-10				
SG14	0'-6	10'-11	1'-0	0'-10				
SG15	0'-6	11'-0	1'-0	0'-10				
SG16	0'-8	10'-7	1'-3	1'-1				
SG17	0'-8	10'-8	1'-3	1'-1				
SG18	0'-8	10'-10	1'-3	1'-1				
SG19	0'-8	10'-11	1'-3	1'-1				
SG20	0'-8	11'-0	1'-3	1'-1				
SG21	0'-8	11'-1	1'-3	1'-1				
SG22	0'-8	11'-3	1'-3	1'-1				
SG23	0'-8	11'-4	1'-3	1'-1				
SG24	0'-8	11'-5	1'-3	1'-1				
SG25	0'-8	11'-6	1'-3	1'-1				
SG26	0'-8	11'-8	1'-3	1'-1				
SG27	0'-8	11'-9	1'-3	1'-1				
SG28	0'-8	11'-10	1'-3	1'-1				
SG29	0'-8	11'-11	1'-3	1'-1				
SG30	1'-0	9'-9	1'-3	11'-6	6'-1			
SG32	1'-0	0'-6	0'-10	5'-11	1'-1	1'-3	0'-8	
SG33	1'-0	10'-10	1'-3	12'-9	6'-9			
SG35	1'-0	0'-6	0'-10	9'-5	1'-1	1'-3	0'-8	
SG37	1'-0	0'-6	0'-10	3'-11	1'-1	1'-3	0'-8	
SG38	1'-0	11'-10	1'-3	13'-11	7'-5			
SG40	1'-3	9'-9	7'-0	11'-6	6'-1			
SG41	0'-8	7'-9	1'-3	1'-1				
SG51	0'-6	6'-7 7/8"	1'-0	0'-10				
SG52	0'-6	7'-8 1/2"	1'-0	0'-10				
SG53	0'-6	8'-2 7/8"	1'-0	0'-10				
SG54	0'-8	7'-4 3/8"	1'-3	1'-1				
SG55	0'-8	8'-5 1/4"	1'-3	1'-1				
SG56	0'-8	9'-2 1/8"	1'-3	1'-1				
SG57	0'-6	8'-7 1/4"	1'-0	0'-10				
SG58	0'-6	8'-3 1/8"	1'-0	0'-10				
SG59	0'-6	7'-11 1/2"	1'-0	0'-10				
SG60	0'-6	7'-8 3/8"	1'-0	0'-10				
SG61	0'-6	7'-4 1/4"	1'-0	0'-10				
SG62	0'-6	7'-0 1/8"	1'-0	0'-10				
SG63	0'-6	6'-8 3/8"	1'-0	0'-10				
SG64	0'-6	6'-4"	1'-0	0'-10				
SG65	0'-6	6'-0 3/8"	1'-0	0'-10				
SG66	0'-6	5'-8 1/4"	1'-0	0'-10				
SG67	0'-6	5'-4 1/8"	1'-0	0'-10				
SG68	0'-6	5'-1"	1'-0	0'-10				
SG69	0'-6	4'-9 3/4"	1'-0	0'-10				
SG70	0'-6	4'-5 1/2"	1'-0	0'-10				
SG71	0'-6	4'-1 3/8"	1'-0	0'-10				
SG72	0'-6	3'-9 1/4"	1'-0	0'-10				
SG73	0'-8	6'-6 3/8"	1'-3	1'-1				
SG74	0'-8	6'-2 1/8"	1'-3	1'-1				
SG75	0'-8	5'-10"	1'-3	1'-1				
SG76	0'-8	5'-7 1/4"	1'-3	1'-1				
SG77	0'-8	5'-3 1/2"	1'-3	1'-1				
SG78	0'-8	7'-11 5/8"	1'-3	1'-1				
SG79	0'-8	7'-7 3/4"	1'-3	1'-1				
SG80	0'-8	7'-3 7/8"	1'-3	1'-1				

MARK	a	b	c	d	e	f	g
SG81	0'-8	6'-11 1/2"	1'-3	1'-1			
SG82	0'-8	6'-7 1/4"	1'-3	1'-1			
SG83	0'-8	6'-3 1/8"	1'-3	1'-1			
SG84	0'-8	6'-0"	1'-3	1'-1			
SG85	0'-8	5'-8 3/4"	1'-3	1'-1			
SG86	0'-8	5'-4 5/8"	1'-3	1'-1			
SG87	0'-8	5'-0	1'-3	1'-1			
SG88	0'-8	4'-8 1/2"	1'-3	1'-1			
SG89	1'-0	11'-10	1'-3	13'-11	7'-5		
SG91	1'-0	0'-6	0'-10	3'-11	1'-1	1'-3	0'-8
SG92	1'-0	12'-9	1'-3	15'-1	8'-0		
SG94	1'-3	12'-9	8'-0	15'-1	8'-0		
SG95	0'-8	8'-9	1'-3	1'-1			

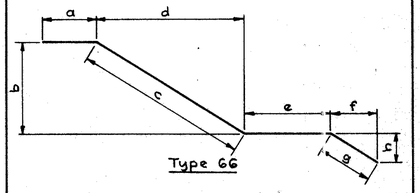

MARK	a	b	c	d	e	f	g	h
SG31	1'-3	6'-1	11'-6	9'-9	5'-11	1'-1	1'-3	0'-8
SG34	1'-3	6'-9	12'-9	10'-10	9'-5	1'-1	1'-3	0'-8
SG36	1'-3	6'-1	11'-6	9'-9	3'-11	1'-1	1'-3	0'-8
SG39	1'-3	7'-5	13'-11	11'-10	3'-11	1'-1	1'-3	0'-8
SG90	1'-3	7'-5	13'-11	11'-10	3'-11	1'-1	1'-3	0'-8
SG93	1'-3	7'-11	15'-1	12'-9	3'-11	1'-1	1'-3	0'-8

SUPERSTRUCTURES

MARK	a	b	c	d	e	f	g	h	i
D401	3'-0	0'-4	0'-5½	0'-4	2'-9	0'-4	0'-4	0'-5½	2'-9
D406	0'-9	3'-0							

This sheet supersedes sheet No. 341 2-21-66

Note: Work this sheet with Sheet No. 340 and Bar Bending Schedule Sheet No. 446.

MICROFILMED
FEB 20 1985

CITY OF CINCINNATI
DEPARTMENT OF PUBLIC WORKS
DIVISION OF ENGINEERING

ESTIMATED QUANTITIES AND BAR BENDING DETAILS
BRIDGE NO. HAM-71-0157
I-71 UNDER PEDESTRIAN CROSSING AT COURT ST.
CINCY BRIDGE NO. 7

DESIGNED	DRAWN	TRACED	CHECKED	REVIEWED	DATE	REVISED
	J.D.A.		J.G.T.	W.W.	3-8-65	9-27-66

FED. RD. DIV.	STATE	PROJECT	FISCAL YEAR
2	OHIO		

342
492

HAMILTON COUNTY
HAM-71-(1.56)(2.51)

Future Bridge No. Ham-471-0072

FUTURE SOUTHBOUND EXPWY BRIDGE CONNECTION

SOUTHBOUND NORTHEAST EXPWY

NORTHBOUND NORTHEAST EXPWY

FUTURE NORTHBOUND EXPWY BRIDGE CONNECTION

RAMP GD

FUTURE RAMP GG

GILBERT AVE.

E. SIXTH ST.

SPAN 1 — SPAN 2 — SPAN 3

Prop. Future Pier #1 — Prop. Future Pier #2 — Prop. Future North Abut.

Limits of Excavation of Unsuitable Material

Ex. 4' Br. Sewer to be Abandoned

Ex. 30" C.I.P. ST. to be abandoned

Prop. 36" Comb. Sewer

Prop. 24" Comb. Sewer

Ex. 1054-70 3 St. Br.

Ex. 1089 1 St. Br.

Ex. 1094 2 St. Br.

Ex. 1164-66 1 St. Br.

Ex. 1112 3 St. Br.

Ex. 1113 4 St. Br.

T.H.B-8-1 — T.H.B-8-2 — T.H.B-8-3 — T.H.B-8-4 — T.H.B-8-5 — T.H.B-8-6 — T.H.B-8-7 — T.H.B-8-8

2" Open Joint (Future)

1" Open Joint

Curve No. 5A — Curve No. 5B — Curve No. 5C — Curve No. 5 NPN — Curve No. GD

Ex. 12" Blk. Wall — Ex. 12" Conc. Blk. Wall — 2½' Conc. Wall — 12" St. Wall — 18" St. Wall — 19" St. Wall — 12" St. Dry Wall — 18" St. Dry Wall — 24" Stone Wall — 9" Conc. Blk. Wall — 30" Conc. Wall

Ex. 8" G.M. — Ex. 4" W.M. — Ex. 10" W.M. — Ex. 36" W.M. — Ex. 6" G.M. — Ex. 8" G.M.

Ex. 12" P.S. — Ex. 18" P.S. — Ex. 24" P.S. — Prop. 12" P.S. — Prop. 24" P.S.

Ex. Tel. Conduit — Ex. Tel. Cond. — Ex. Tel. M.H. — Ex. Elec. Cond. — Ex. Elec. M.H. — Ex. C.G.&E. M.H. — Ex. C.G.&E. Underground — C.G.&E. Transformer Vault — Ex. W.V. Box — Ex. M.H. — Ex. Inlet — Ex. 1 St. Metal Cov. Br. — Ex. Gas Key Blow Cond. — Ex. Abond. 4" W.M.

Bit. Mac. Pav't. — Bit. Mac. Pav't. Parking Area — Bit. Mac. Drive — Granite Blk. Pavmt. — Conc. Pav't. — Conc. Walk — Conc. Curbing — Conc. Gutter — Conc. Apron — Conc. Island — Paved Shoulder — Guard Rail — Wire Mesh Fence against curbing — Fr. Shed — St. Met. Shed — Metal Garage — Billboard — Wood Fence — Roof Line — Exist. Inlet — Earth — Drive — Traverse Line — Curb Line — Fascia Line — Future Curb Line — Slope same as Roadway — Limits of Conc. Slope Protection — Limits of 4" Conc. Pavmt. — Limits of Conc. — Superelevation Varies — Superelevation Prop. 12" P.S. Varies — Tang. @ ℄ Brg. (Typ.) — Tang. @ ℄ Pier (Typ.) — ℄ Conc. Island — ℄ Brg. South Abut. Sta. 159+57.023 — ℄ Brg. North Abut. Sta. 162+42.24 — ℄ Pier #1 Sta. 160+47.23 — ℄ Pier #2 Sta. 161+65.24 — ℄ Ramp GD — ℄ Northeast Expressway & ℄ Guard Rail (Barrier Type) — Ramp GD Nose Sta. P.O.C. 160+91.77 Expwy (54' Rt.) = P.O.C. 160+80.32 NPN (15' Lt.) — 25' Approach Slab — 25' Approach Slab (Future) — 3 St. Br. Bldg. — 1 St. Conc. St. Br. Front — 1 St. Inspl. Br. — 1 St. Metal Gar. — 1 St. Tel. Gar. — 1 St. Inspl. Gar. — 1 St. Conc. Blk. Wall — 2 St. Conc. Blk. — 2 St. Br. — 3 St. Br. — 4 St. Br. — Ex. G.W.M. — Ex. G.G.&E. Yd. — Ex. G.W.M. — Ex. M.H. — Ex. Conc. Wall — Ex. Tel. Pole — Guy Pole — Ex. Tel. M.H. — Ex. C.G.&E. M.H. — Ex. Inlet — Ex. M.H. — Ex. Tel. Cond. — Ex. Elec. Cond. — Ex. Tel. M.H. — Ex. Abond. 4" W.M. — Ex. Gas Key Blow Cond. — Ex. C.G.&E. M.H. — Ex. M.H. — Ex. Inlet — Ex. Tel. Conduit — Ex. Tel. Cond. — Ex. M.H. — Ex. Inlet — Ex. 12" P.S. — Ex. 18" P.S. — Ex. 24" P.S. — Ex. 8" G.M. — Ex. 12" P.S. — Ex. M.H. — Ex. Inlet — Ex. Tel. Cond. — Ex. Tel. M.H. — Ex. Tel. Cond. — Ex. 12" P.S. — Ex. Abond. 4" W.M. — Ex. Tel. Cond. — Ex. 12" P.S. — Ex. M.H. — Ex. Inlet — Ex. M.H. — Ex. 12" P.S. — Ex. M.H. — Ex. 18" P.S. — Ex. 8" G.M. — Ex. M.H. — Ex. Inlet — Ex. Tel. Cond. — Ex. 24" P.S. — Ex. M.H. — Ex. Tel. Cond. — Ex. 12

FED. RD. DIV.	STATE	PROJECT	FISCAL YEAR
2	OHIO		

343
492

HAMILTON COUNTY
HAM-71-(1.56)(2.51)

ESTIMATED QUANTITIES

ITEM	TOTAL	UNIT	DESCRIPTION	SUPER-STRUC-TURE	NORTH ABUT-MENT	SOUTH ABUT-MENT	PIER 1	PIER 2	GENERAL
E-2	2547	Cu. Yds.	Unclassified Excavation, including Rock (or Shale)		574	554	928	491	
S-1	1085	Cu. Yds.	Class "C" Concrete, Superstructure	1085					
S-1	341	Cu. Yds.	Class "C" Concrete, Piers above Footings				185	156	
S-1	659	Cu. Yds.	Class "E" Concrete, Abutments above Footings		302.2	356.8			
S-1	630	Cu. Yds.	Class "E" Concrete, Footings		115.5	134.0	197.3	183.2	
S-3	81	Lin. Ft.	Waterproofing, Premolded Sealing Strip		34	47			
S-4	506 488	Lbs.	Reinforcing Steel	317,811	21,574	24,292	142 811		
S-7	1,250,000	Lbs.	Structural Steel	1,250,000					
S-8	1,250,000	Lbs.	Field Painting of Structural Steel	1,250,000					
S-9	317	Sq. Ft.	1" Preformed Expansion Joint Filler (M-10.02, Type I)		147	170			
S-14	586	Lin. Ft.	Railing Type "A" (Aluminum Rail & Supports, Concrete Parapet)	533	34	19			
S-14	281	Lin. Ft.	Railing (Type I-15.11 Galvanized with Galvanized Steel Posts, Base Plate & Bolts)	281					
S-16*	Lump	Sum	First Test Pile						Lump
S-18	4480	Lin. Ft.	Steel Piles, 10BP42				1920	2560	
S-25			Electric Lighting System (see Sh. No. 204)						
S-29	465	Lin. Ft.	6" Helical Perforated Corrugated Metal Pipe [Sec. M-6.4(h)] (Including Specials).		214	251			
S-29	475	Lin. Ft.	6" Helical Non-Perforated Corrugated Metal Pipe [Sec. M-6.4(h)]		203	272			
S-29	Lump	Sum	Drain Inlets, Including Supports and Horizontal Collector System	Lump					
S-29	145	Lin. Ft.	8" Standard Pipe Downspout, Wrought Iron or Hot-Dip Galvanized Steel, (Including Specials)			31	62	52	
S-29	293	Cu. Yds.	Porous Backfill		133	160			
I-10	2,250	Sq. Yds.	Concrete Slope Protection		1400	850			
S-101	1085	Each	Water-Reducing, Set-Retarding Admixture	1085					

*See note sheet no. 375.

GENERAL NOTES

REFERENCE shall be made to Standard Drawing I-15 No. 2-A.

EXCAVATION QUANTITY includes the removal of fill material required for construction of the Abutments and Piers.

FOUNDATION BEARING PRESSURE: Abutment footings are designed for a maximum bearing pressure of 1.6 tons per Sq. Ft. Pier footings I-N, I-P, I-R and I-S are designed for a maximum bearing pressure of 5.0 tons per sq. ft.

PILES Shall be driven with a hammer of not less than 11,000 ft. lbs per blow to firm contact with shale. If the length of penetration is approximately equal to the depth of shale according to the bridge foundation investigation report, the firm contact shall be considered as attained when the capacity according to the formula in Sec. S-18.05 is not less than the following value for a pile hammer of the indicated energy rating:

50 tons per pile using an 11,000 ft. lb. hammer.
45 tons per pile using a 15,000 ft. lb. hammer.

If the energy rating of the hammer is between the ratings as shown above, the required formula capacity shall be determined by interpolation. The design load is 35 Tons per pile.

POROUS BACKFILL: 1'-6" thick, full length of abutments shall extend up to the underside of the approach slab or to the finished ground surface.

ADDITIONAL NOTES: For Additional Notes see Notes 1, 2, 3, 5, 6, 7, & 8, Sh. No. 443

Design Loading CF = 2000 (57)
Concrete Class C - Basic unit stress 1333 psi.
Concrete Class E - Basic unit stress 1133 psi.
Structural Steel - ASTM A36 - Basic unit stress 20,000 psi (Except for piles, ASTM A7 and A373 steel not permitted)
Reinforcing Steel - ASTM A15, A16, A160. Deformed Intermediate or Hard Grade. Basic unit stress 20,000 psi. Except, spiral reinforcement may be plain, Structural Grade with basic unit stress of 18,000 p.s.i.

MICROFILMED
FEB 20 1985

HAZELET & ERDAL
CONSULTING ENGINEERS
CINCINNATI, OHIO

ESTIMATED QUANTITIES
AND GENERAL NOTES
BRIDGE No. HAM.-71-0173

H&E BRIDGE No. 8

DESIGNED	DRAWN	TRACED	CHECKED	REVIEWED DATE	REVISED
	CIB		JHD 4/26/65	5-20-65	

FED. RD. DIV.	STATE	PROJECT	FISCAL YEAR
2	OHIO		

344
492

HAMILTON COUNTY
HAM-71-(1.56)(2.51)

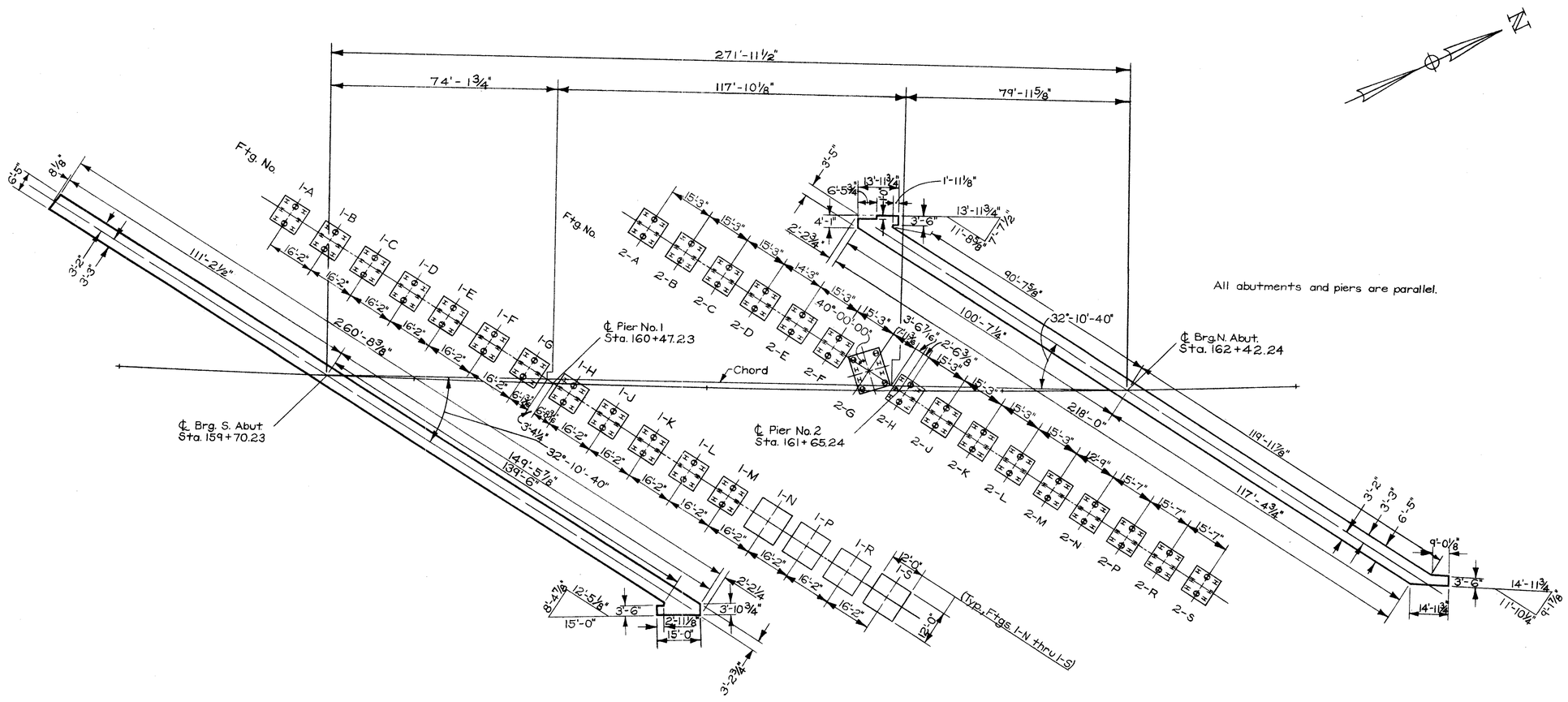

All abutments and piers are parallel.

All piles are steel piles, 10BP42.

(1) Denotes battered piles (1 on 4).

PLAN

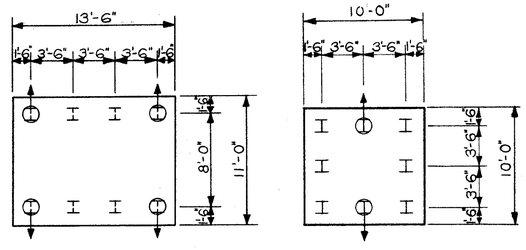

PLAN
FOOTING 2-G

PLAN
ALL FOOTINGS EXCEPT
2-G & 1-N THRU 1-S

MICROFILMED
FEB 20 1965

HAZELET & ERDAL
CONSULTING ENGINEERS
CINCINNATI, OHIO

STAKE-OUT-DIAGRAM

BRIDGE No. HAM-71-0173

H&E BRIDGE No. 8

DESIGNED	DRAWN	TRACED	CHECKED	REVIEWED DATE	REVISED
	CIB		JHO 11/29/65	W.A.E. 5-20-65	

FED. RD. DIV.	STATE	PROJECT	FISCAL YEAR
2	OHIO		

345
492

HAMILTON COUNTY
HAM-71-(1.56) (2.51)

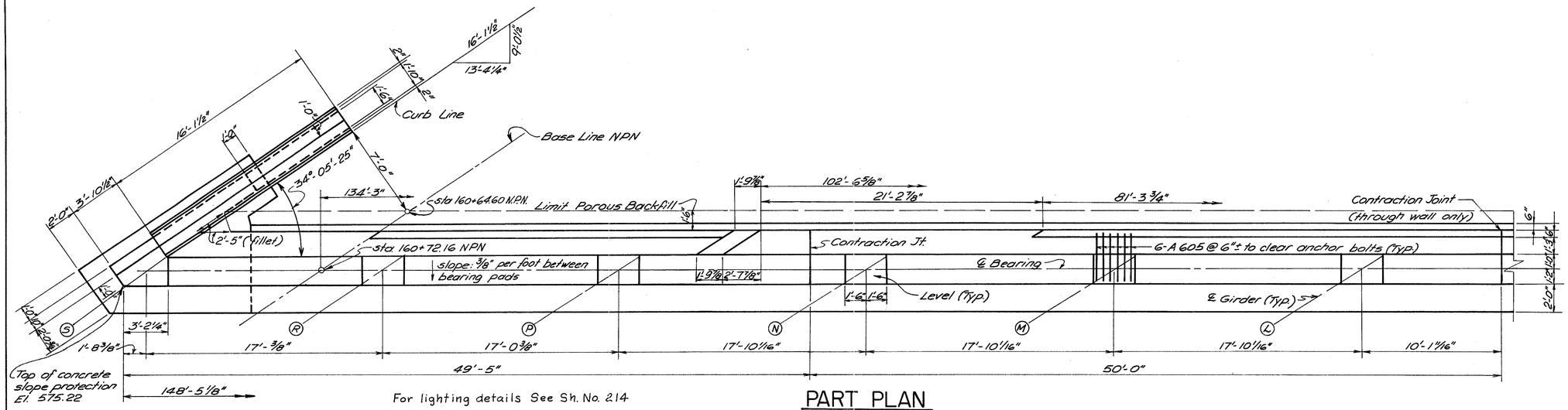

For lighting details See Sh. No. 214

PART PLAN

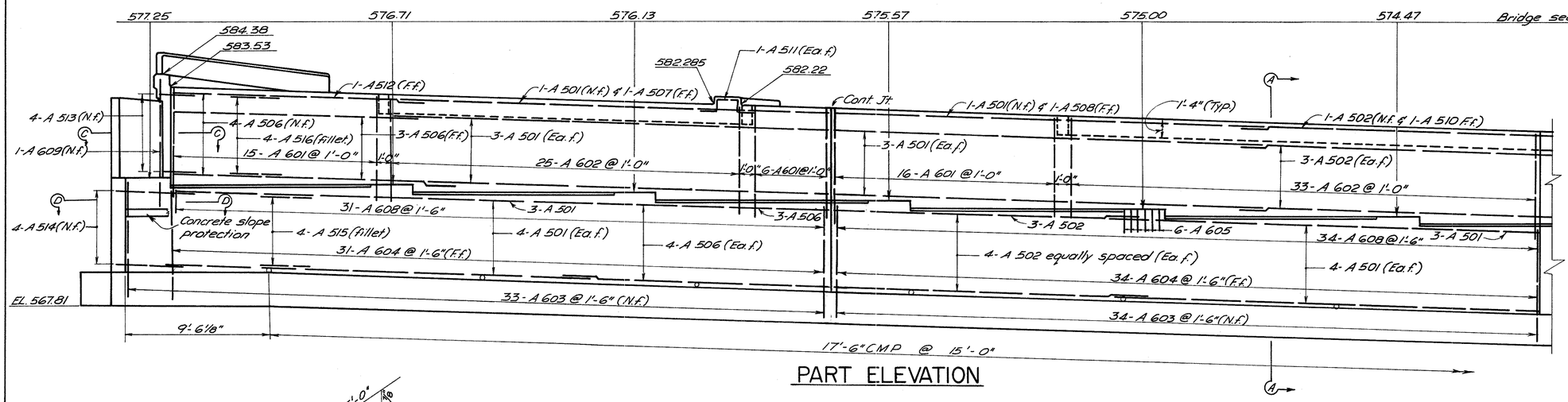

PART ELEVATION

Note: For top of backwall elevations along backwall see End Finish Detail sh. No. 363

Procedure: For procedure note see sh. No. 349

For additional notes see sh. No. 350

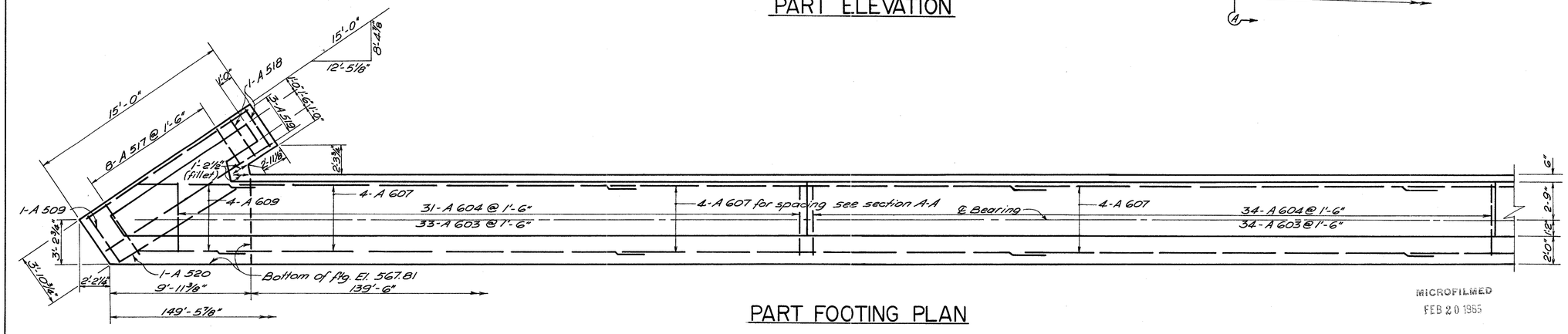

PART FOOTING PLAN

MICROFILMED
FEB 20 1965

work this sheet with shts. 346 thru 348

HAZELET & ERDAL
CONSULTING ENGINEERS
CINCINNATI, OHIO

SOUTH ABUTMENT

BRIDGE NO. HAM.-71-0173

H&E BRIDGE NO. 8

DESIGNED	DRAWN	TRACED	CHECKED	REVIEWED DATE	REVISED
	10-16-64 A.N.	B.Sch.	1-21-65 J.H.O.	H.A.S. 5-20-65	

FED. RD. DIV.	STATE	PROJECT	FISCAL YEAR
2	OHIO		

346
492

HAMILTON COUNTY
HAM-71-(1.56)(2.51)

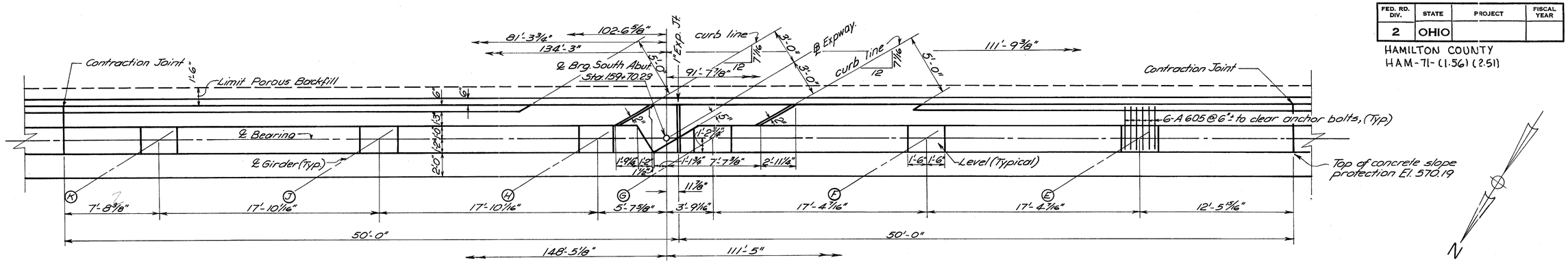

PART PLAN

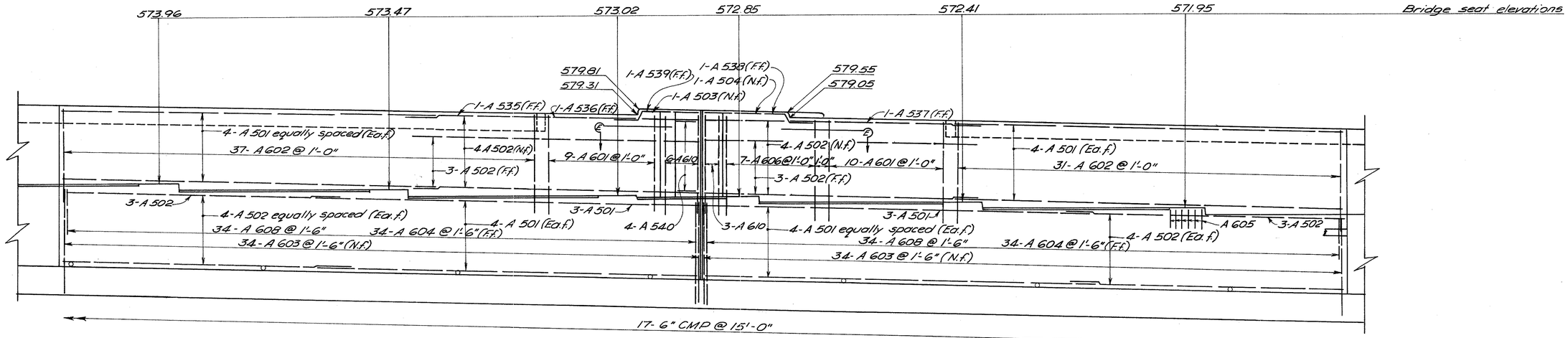

PART ELEVATION

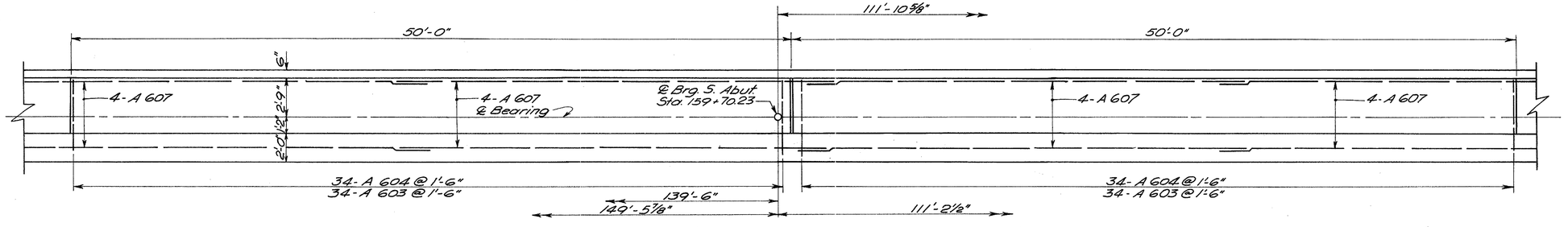

PART FOOTING PLAN

MICROFILMED
FEB 26 1965

work this sheet with sheets 345, 347 & 348

HAZELET & ERDAL
CONSULTING ENGINEERS
CINCINNATI, OHIO

SOUTH ABUTMENT

BRIDGE NO. HAM.-71-0173

H & E BRIDGE NO. 8

DESIGNED	DRAWN	TRACED	CHECKED	REVIEWED DATE	REVISED
	A.N.	B. Sch.	J.H.O. 1-21-65	H.A.Z. 5-20-65	

FED. RD. DIV.	STATE	PROJECT	FISCAL YEAR
2	OHIO		

347
492

HAMILTON COUNTY
HAM-71-(1.56)(2.51)

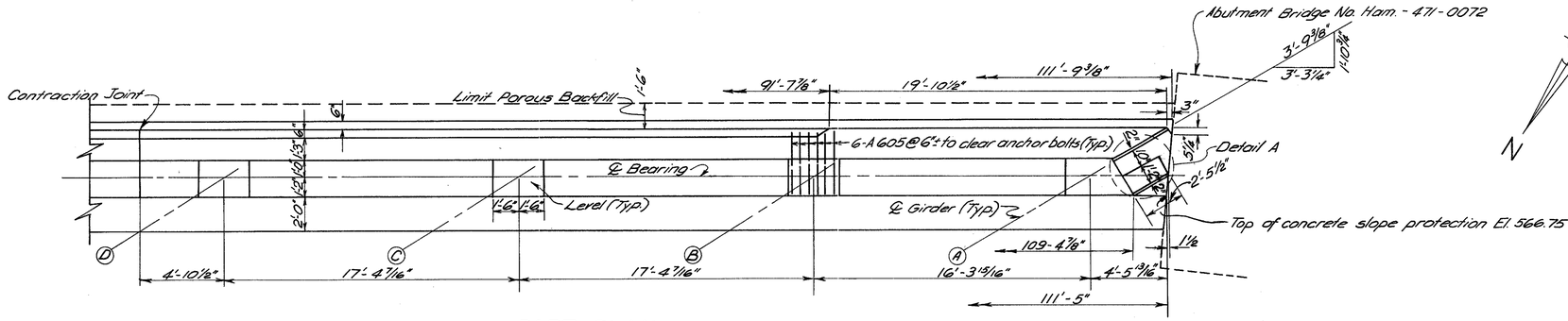

PART PLAN

For lighting details See Sh. No. 214.

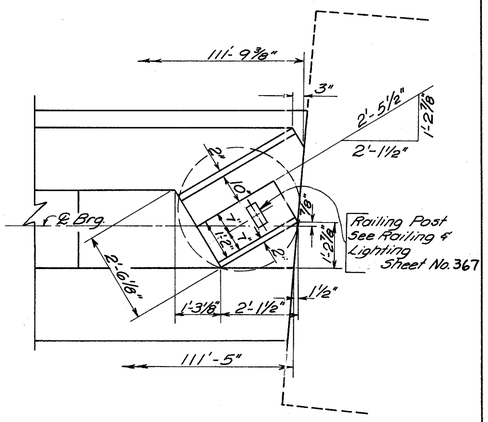

DETAIL A

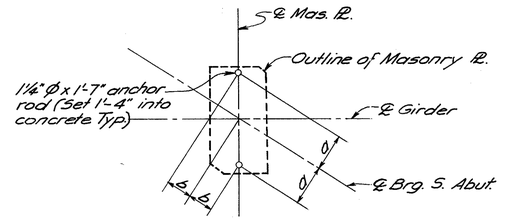

ANCHOR ROD LAYOUT

Girder	a	b
A	8 5/8"	5 1/16"
B thru P	8 7/16"	5 5/16"
R	8 3/16"	5 9/16"
S	8 1/8"	5 7/8"

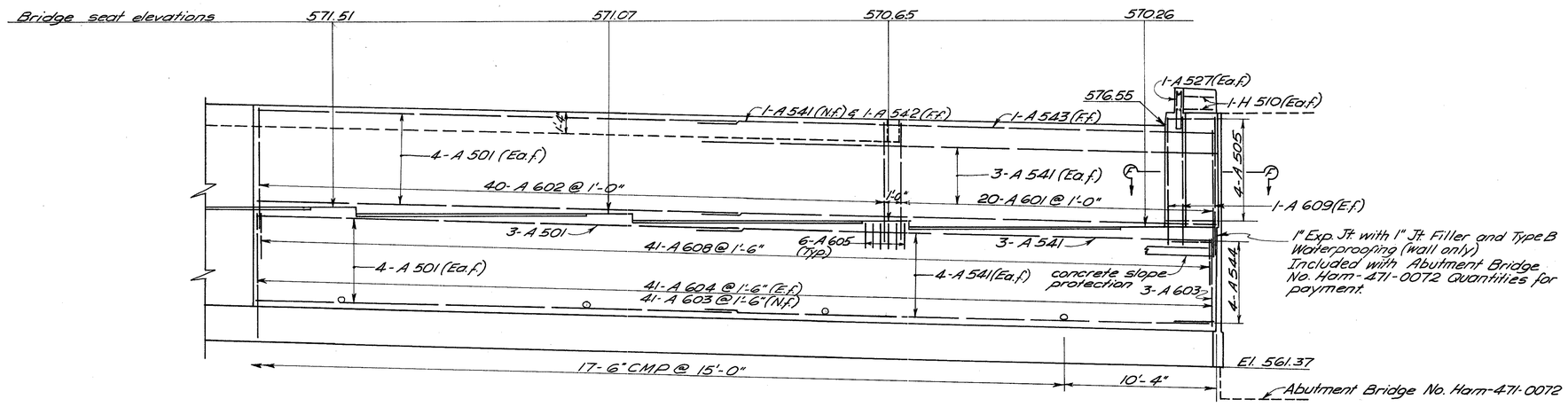

PART ELEVATION

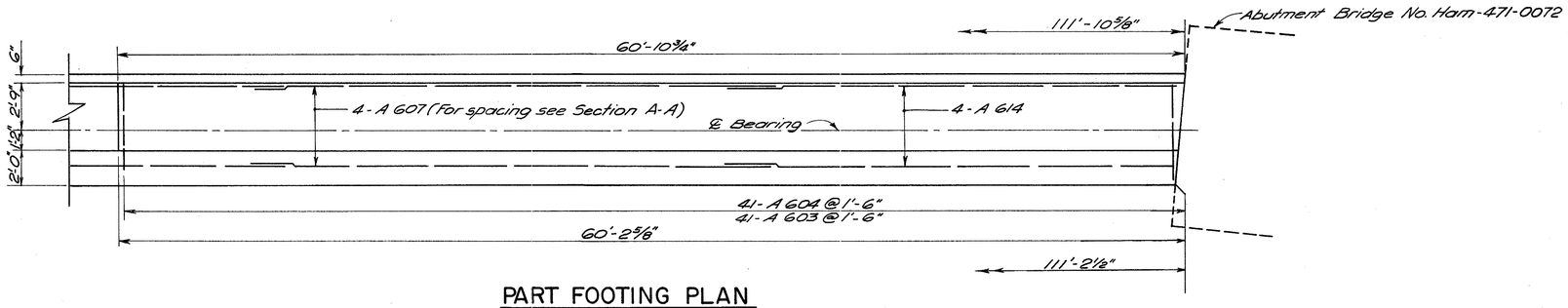

PART FOOTING PLAN

MICROFILMED
FEB 20 1985

work this sheet with sheets 345, 346 & 348

HAZELET & ERDAL
CONSULTING ENGINEERS
CINCINNATI, OHIO

SOUTH ABUTMENT

BRIDGE NO. HAM.-71-0173

H&E BRIDGE NO. 8

DESIGNED	DRAWN	TRACED	CHECKED	REVIEWED DATE	REVISED
	A.N.	B. Sch.	J.H.O. 1-21-65	11-1-83. 5-20-65	

FED. RD. DIV.	STATE	PROJECT	FISCAL YEAR
2	OHIO		

348
492

HAMILTON COUNTY
HAM-71-(1.56)(2.51)

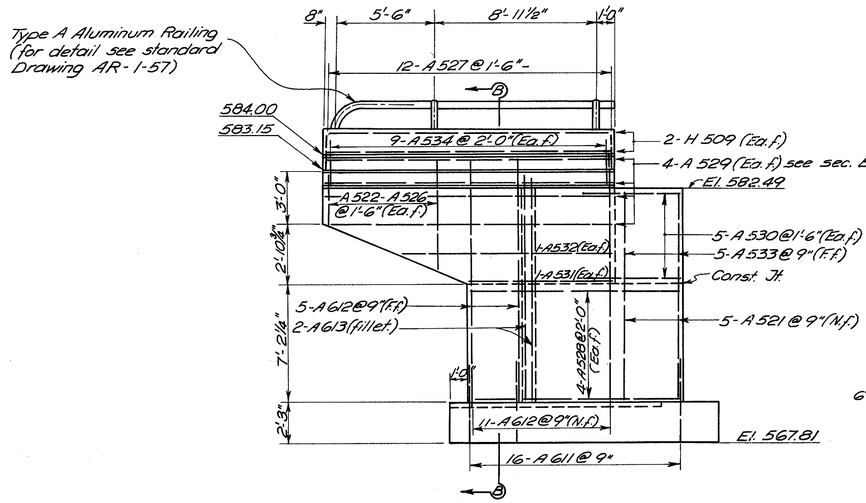

EAST WINGWALL ELEVATION

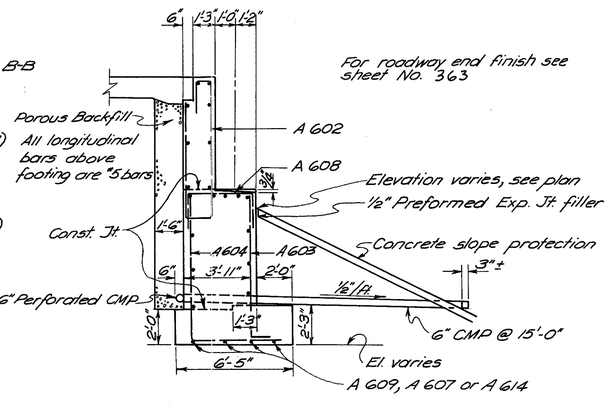

SECTION A-A

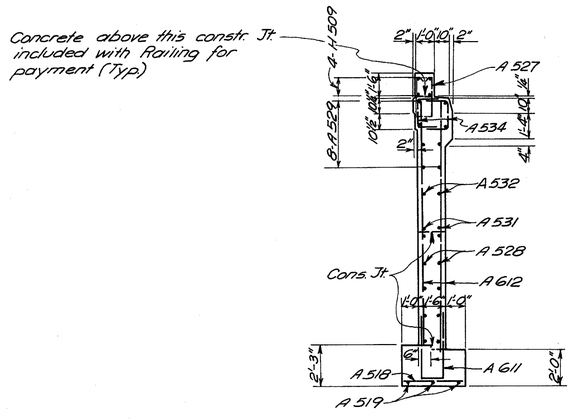

SECTION B-B

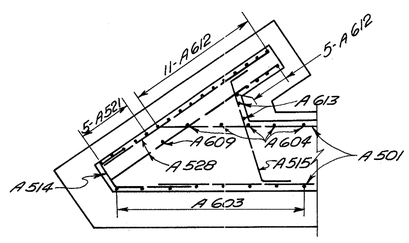

SECTION D-D

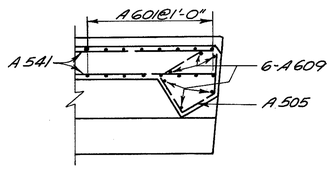

SECTION F-F

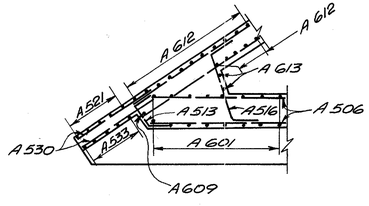

SECTION C-C

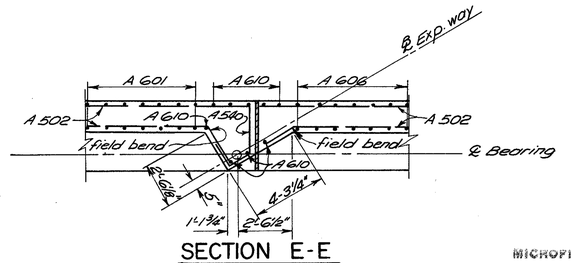

SECTION E-E

MICROFILMED
FEB 20 1985

work this sheet with sheets 345 thru 347

HAZELET & ERDAL
CONSULTING ENGINEERS
CINCINNATI, OHIO

SOUTH ABUTMENT

BRIDGE NO. HAM.-71-0173

H & E BRIDGE NO. 8

DESIGNED	DRAWN	TRACED	CHECKED	REVIEWED DATE	REVISED
	A.N.	B.Sch.	J.H.O.	N.A.E. 5-20-65	

FED. RD. DIV.	STATE	PROJECT	FISCAL YEAR
2	OHIO		

349
492

HAMILTON COUNTY
HAM-71-(1.56)(2.51)

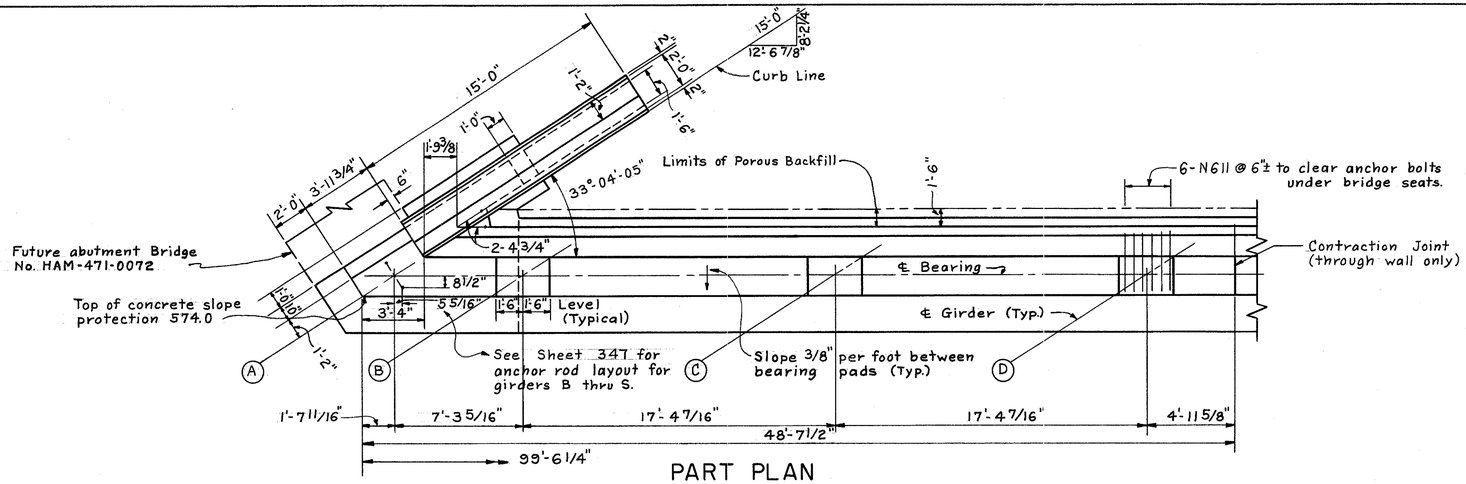

PART PLAN

For lighting details See Sh. No. 214.

Bridge Seat Elevations: 575.47 575.69 576.22 576.74

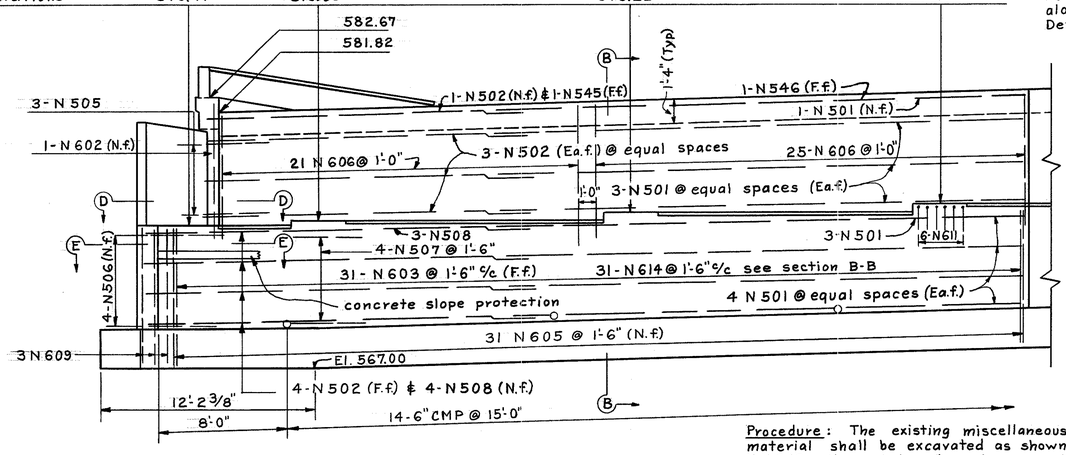

PART ELEVATION

Note: For top of backwall elevations along backwall see End Finish Details Sh. No. 363

Procedure: The existing miscellaneous fill material shall be excavated as shown on sheet No. 342, then replaced and compacted with embankment material. The embankment shall be placed and compacted up to the finished spill-thru slope and to the level of the subgrade for a distance of 200 feet back of the abutment. Excavation for the abutment shall not be done until a minimum period of 60 days after completion of the embankment.

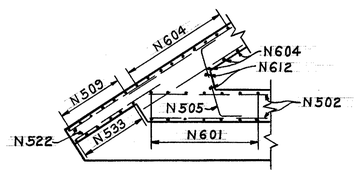

SECTION D-D

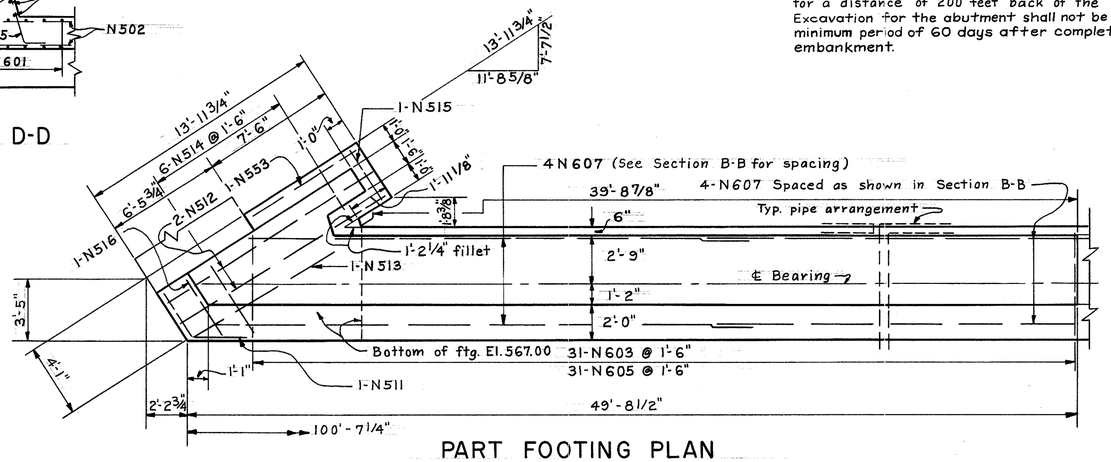

PART FOOTING PLAN

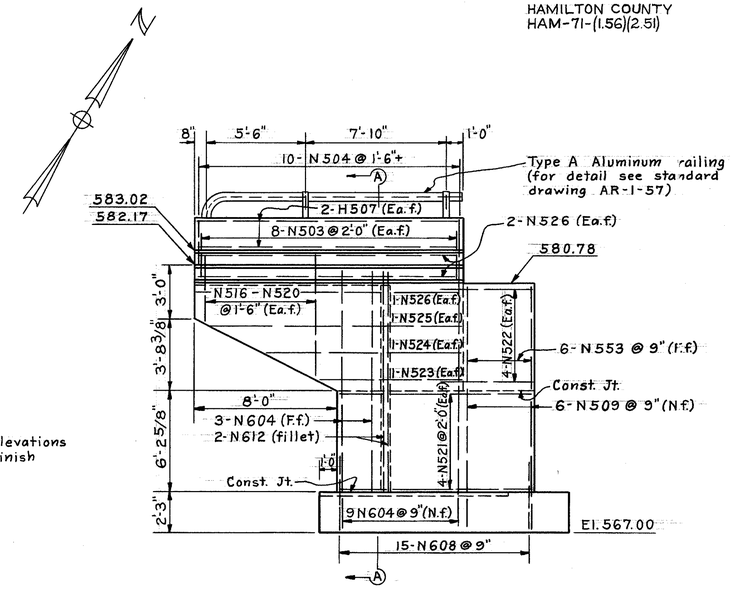

WEST WINGWALL ELEVATION

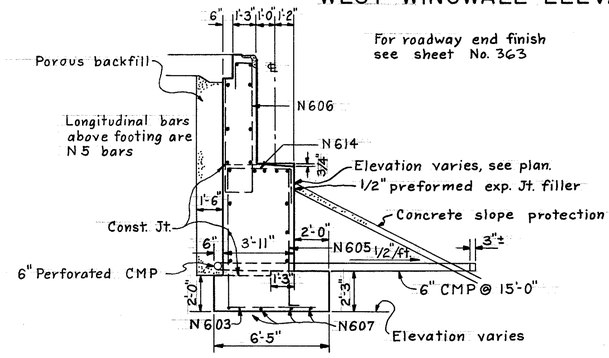

SECTION B-B

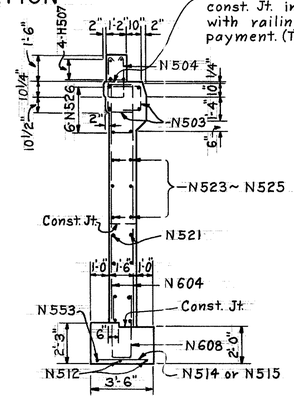

SECTION A-A

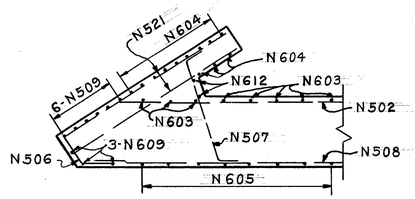

SECTION E-E

MICROFILMED
FEB 28 1985

Work this sheet with sheets 350 & 351

HAZELET & ERDAL
CONSULTING ENGINEERS
CINCINNATI, OHIO

NORTH ABUTMENT

BRIDGE No. HAM.-71-0173

H & E BRIDGE No. 8

DESIGNED	DRAWN	TRACED	CHECKED	REVIEWED DATE	REVISED
	AN	RS	JHO 11/21/65	N.A.B. 5-20-65	

FED. RD. DIV.	STATE	PROJECT	FISCAL YEAR
2	OHIO		

350
492

HAMILTON COUNTY
HAM-71-(1.56)(2.51)

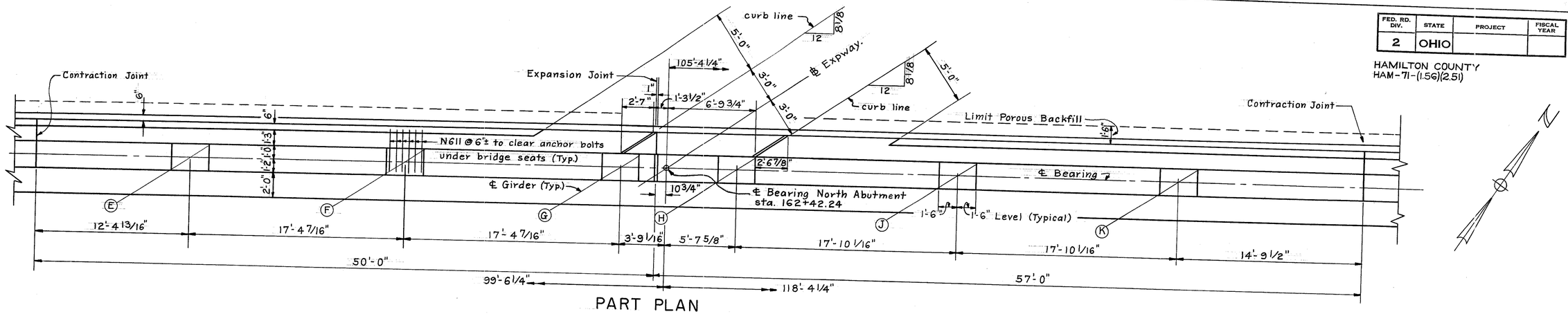

PART PLAN

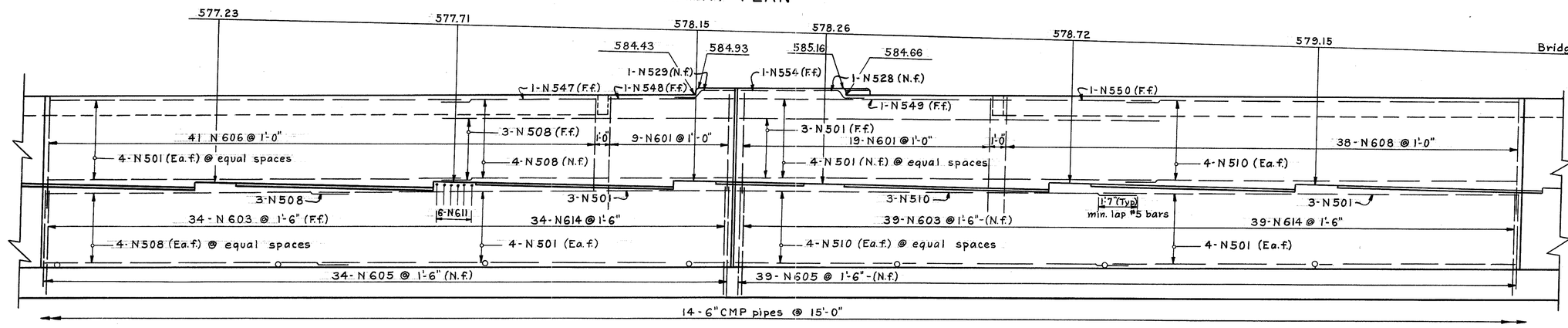

PART ELEVATION

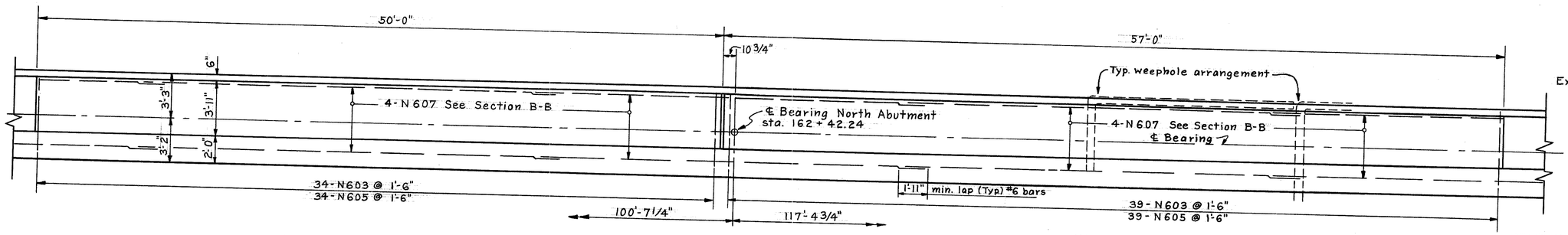

PART FOOTING PLAN

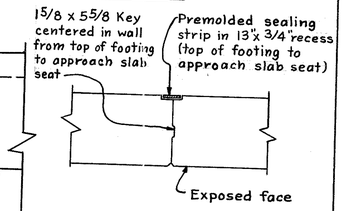

CONTRACTION JOINT DETAIL

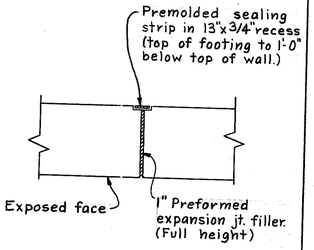

EXPANSION JOINT DETAIL

NOTES:
N.f. is near face; F.f. is far face ; Ea.f. is each face.
Provide 3" clearance to reinforcing steel in footing and 2" clearance in wall minimum.
Concrete above bridge seat const. jt. shall be placed after structural steel is in place.
All concrete Class "E"
Top of backwall elevations shown are at the near face of backwall.
Special care shall be taken in placing steel in the bridge seat, so that it will not interfere with the drilling of anchor rod holes.

MICROFILMED
FEB 20 1965

Work this sheet with sheets 349 & 351

HAZELET & ERDAL
CONSULTING ENGINEERS
CINCINNATI, OHIO

NORTH ABUTMENT

BRIDGE No. HAM.-71-0173

H & E BRIDGE No. 8

DESIGNED	DRAWN	TRACED	CHECKED	REVIEWED DATE	REVISED
	AN	RS	JHC 11/21/64	W.H.B. 5-20-65	

FED. RD. DIV.	STATE	PROJECT	FISCAL YEAR
2	OHIO		

351
492

HAMILTON COUNTY
HAM-71-(1.56)(2.51)

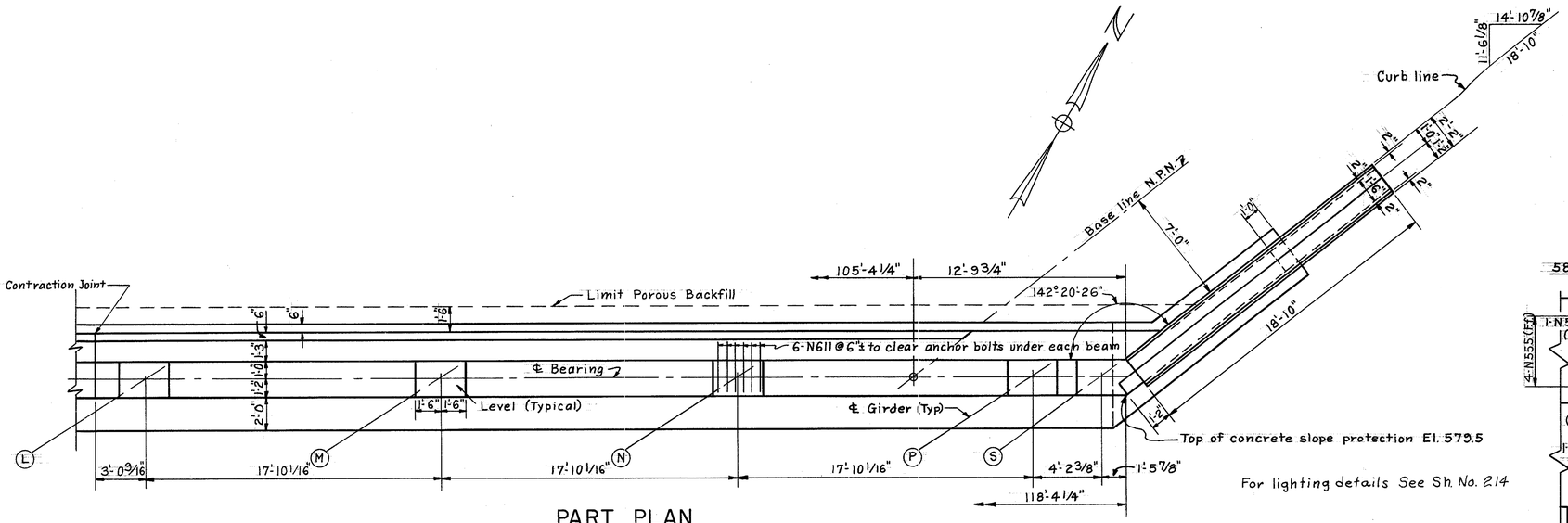

For lighting details See Sh. No. 214

PART PLAN

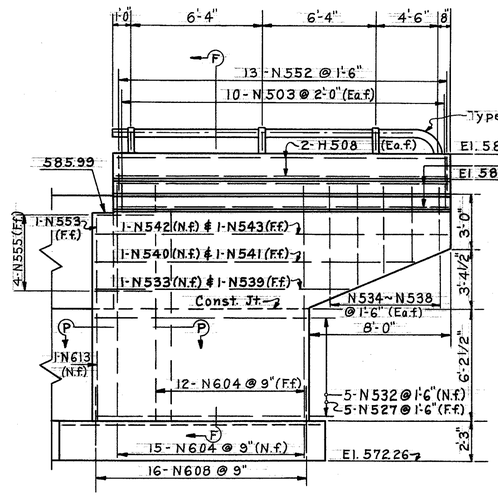

EAST WINGWALL ELEVATION

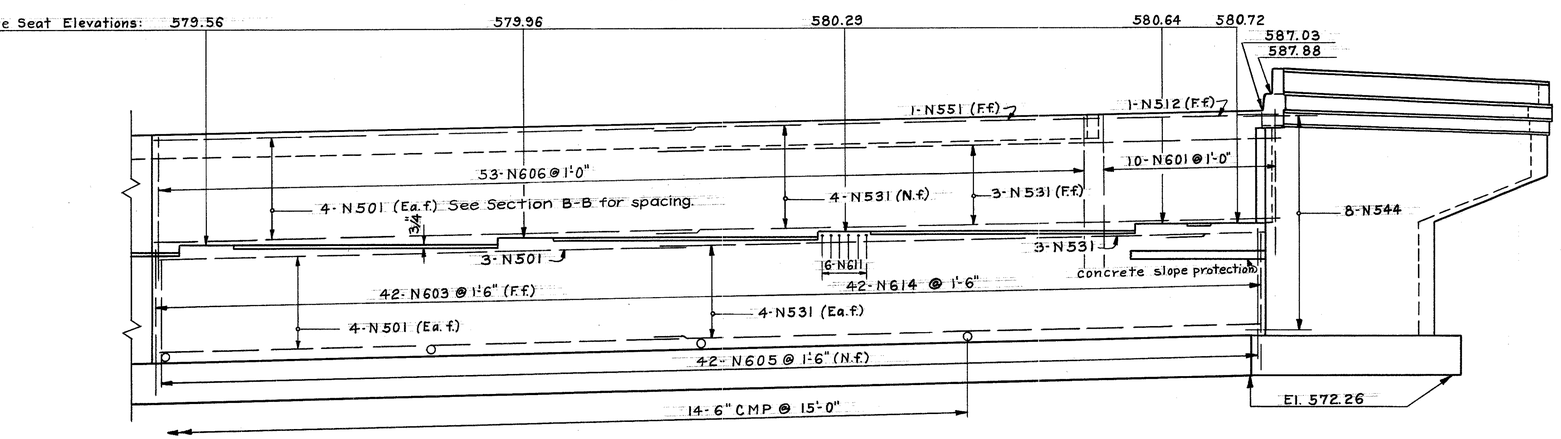

PART ELEVATION

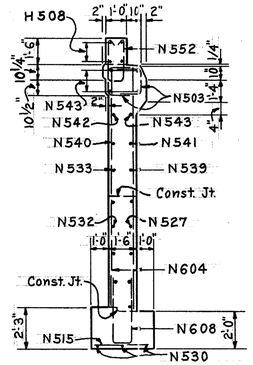

SECTION F-F

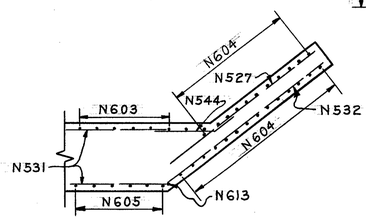

SECTION P-P

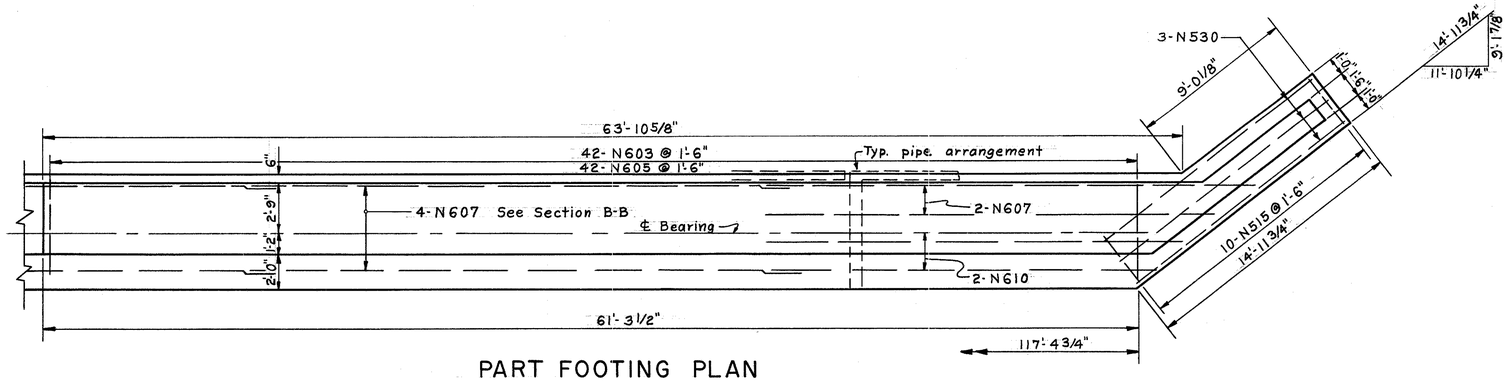

PART FOOTING PLAN

Work this sheet with sheets 349 & 350

HAZELET & ERDAL
CONSULTING ENGINEERS
CINCINNATI, OHIO

NORTH ABUTMENT

BRIDGE No. HAM.-71-0173

H&E BRIDGE No. 8

DESIGNED	DRAWN	TRACED	CHECKED	REVIEWED DATE	REVISED
	AN	RS	JHO 11/21/65	H.A.F. 5-20-65	

RECEIVED
FEB 20 1985

FED. RD. DIV.	STATE	PROJECT	FISCAL YEAR
2	OHIO		

352
492

HAMILTON COUNTY
HAM-71-(1.56)(2.51)

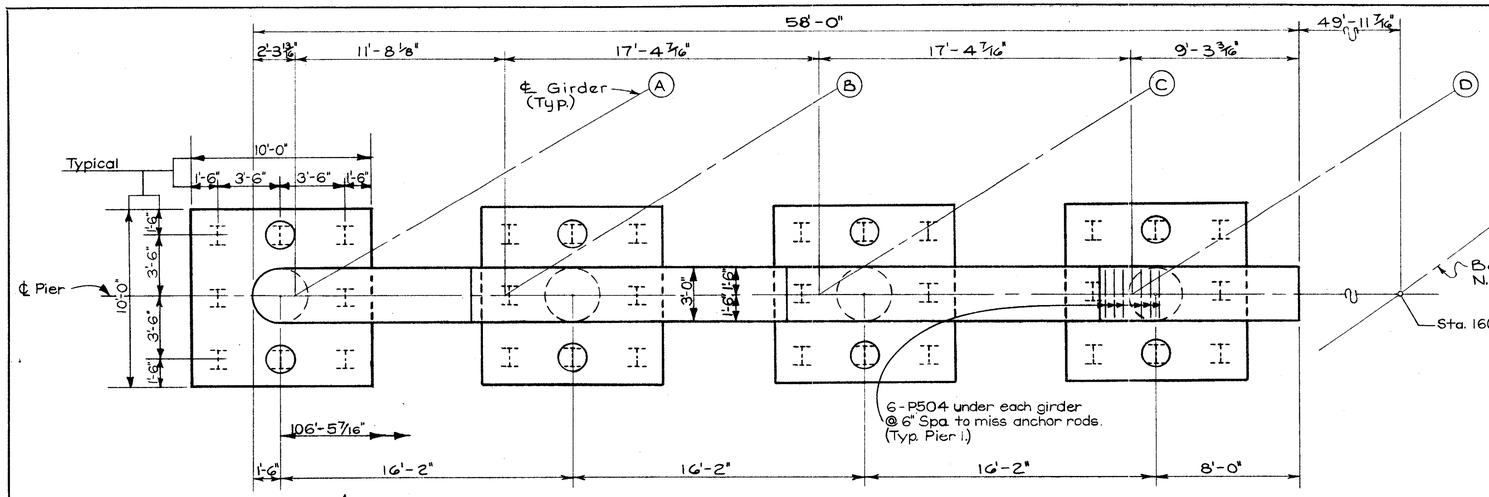

PLAN

Indicates battered pile.

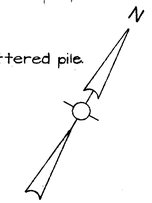

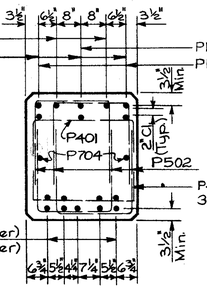

SECTION E-E

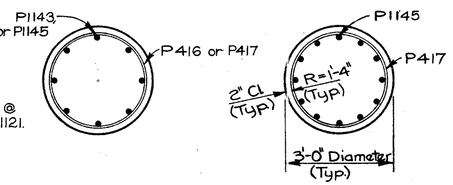

SECTION A-A

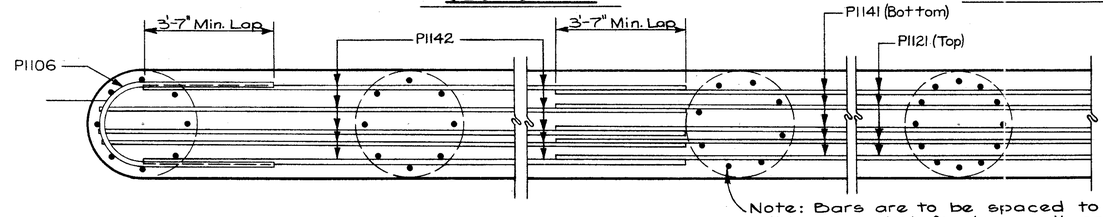

Note: Bars are to be spaced to match bottom cap reinforcing as dimensioned in Section A-A.

SECTION D-D

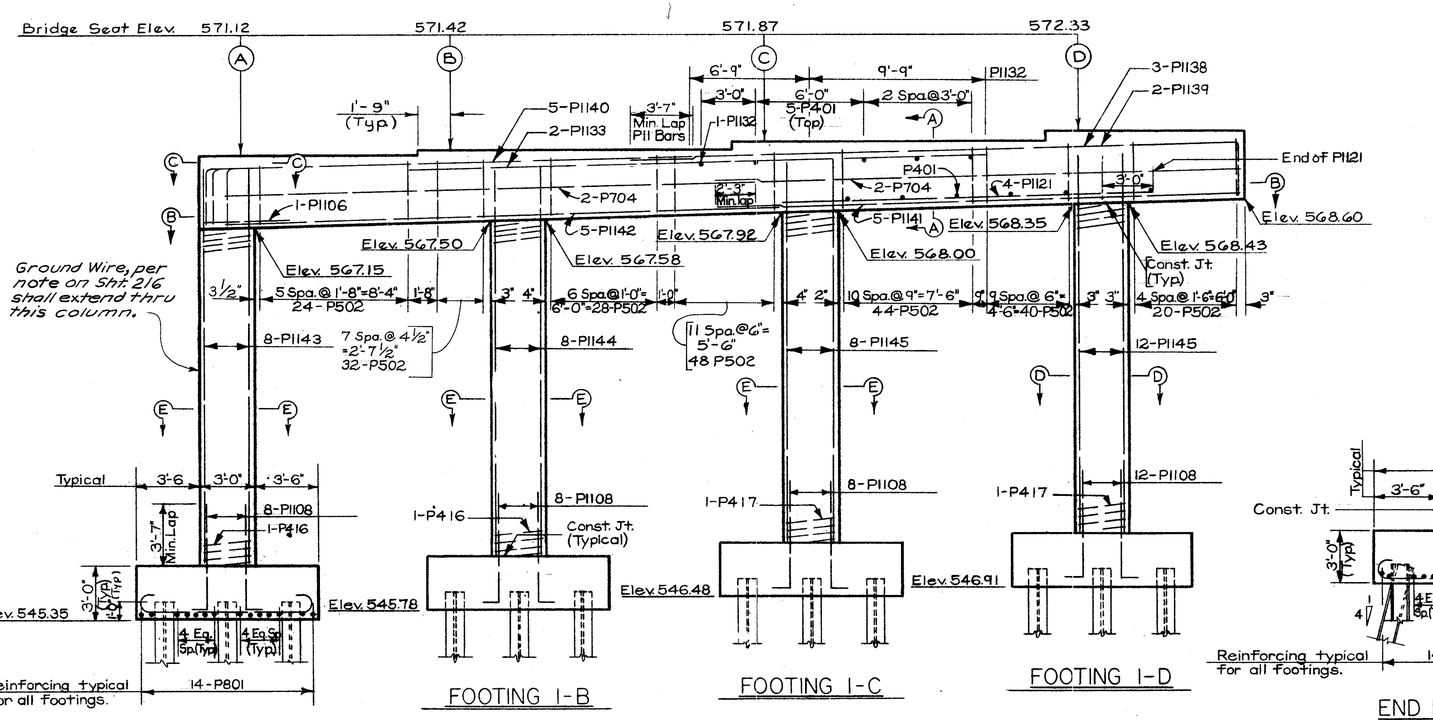

FOOTING I-A

FOOTING I-B

FOOTING I-C

FOOTING I-D

ELEVATION

SECTION B-B

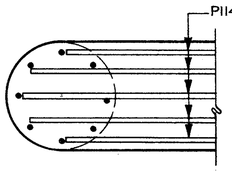

SECTION C-C

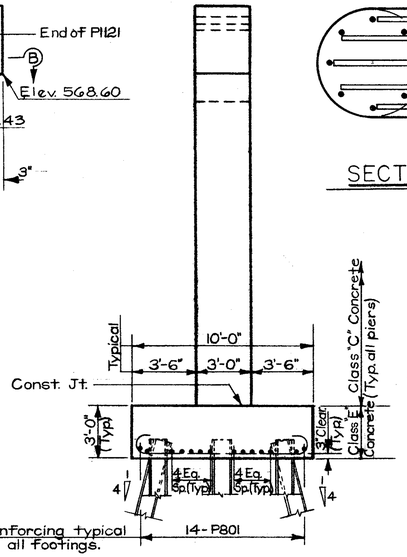

END ELEVATION

NOTES: (Applies to all piers.)

Special care shall be taken in placing steel in the pier cap so that it will not interfere with the drilling of anchor rod holes. Provide 3 clearance to reinforcing steel in footing and 2" clearance to reinforcing steel in cap and column.

All piles shall be 10" BP 42.

For location of 2" galv. metal conduit in Pier See Sh. No. 214

MICROFILMED
FEB 20 1985

HAZELET & ERDAL
CONSULTING ENGINEERS
CINCINNATI, OHIO

PIER NO. 1

BRIDGE No. HAM-71-0173

H&E BRIDGE No. 8

DESIGNED	DRAWN	TRACED	CHECKED	REVIEWED DATE	REVISED
	J.D.C.		J.W.S. 2/5/65	N.A.Z. 5-20-65	

FED. RD. DIV.	STATE	PROJECT	FISCAL YEAR
2	OHIO		

353
492

HAMILTON COUNTY
HAM-71-(1.56)(2.51)

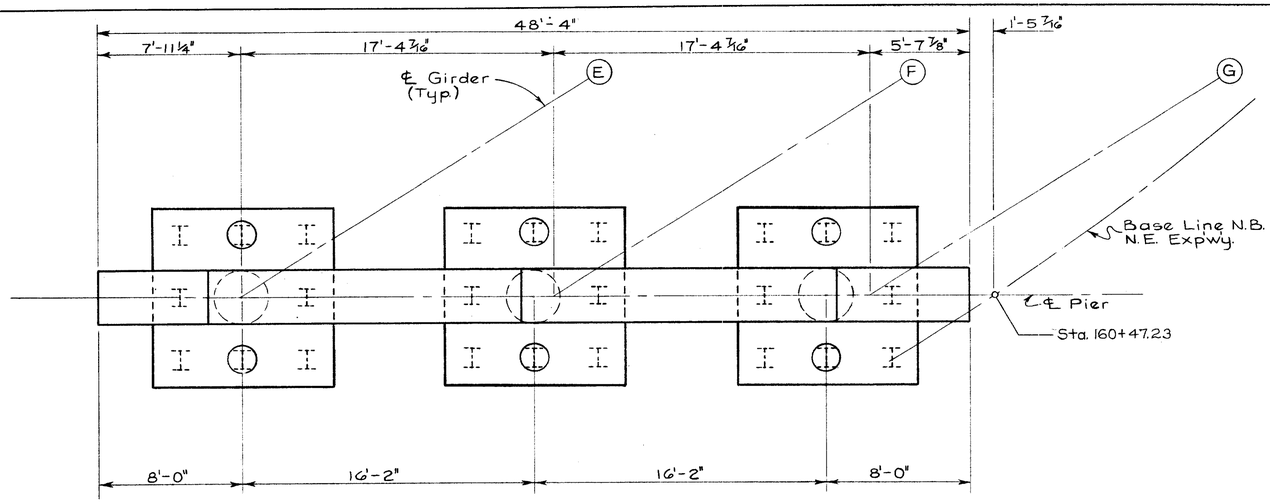

PLAN

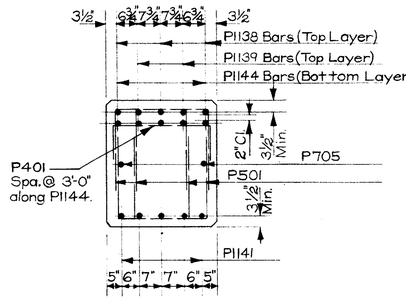

SECTION A-A

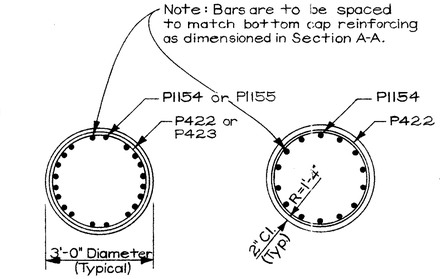

SECTION C-C

SECTION D-D

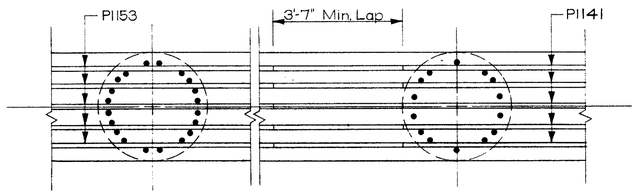

SECTION B-B

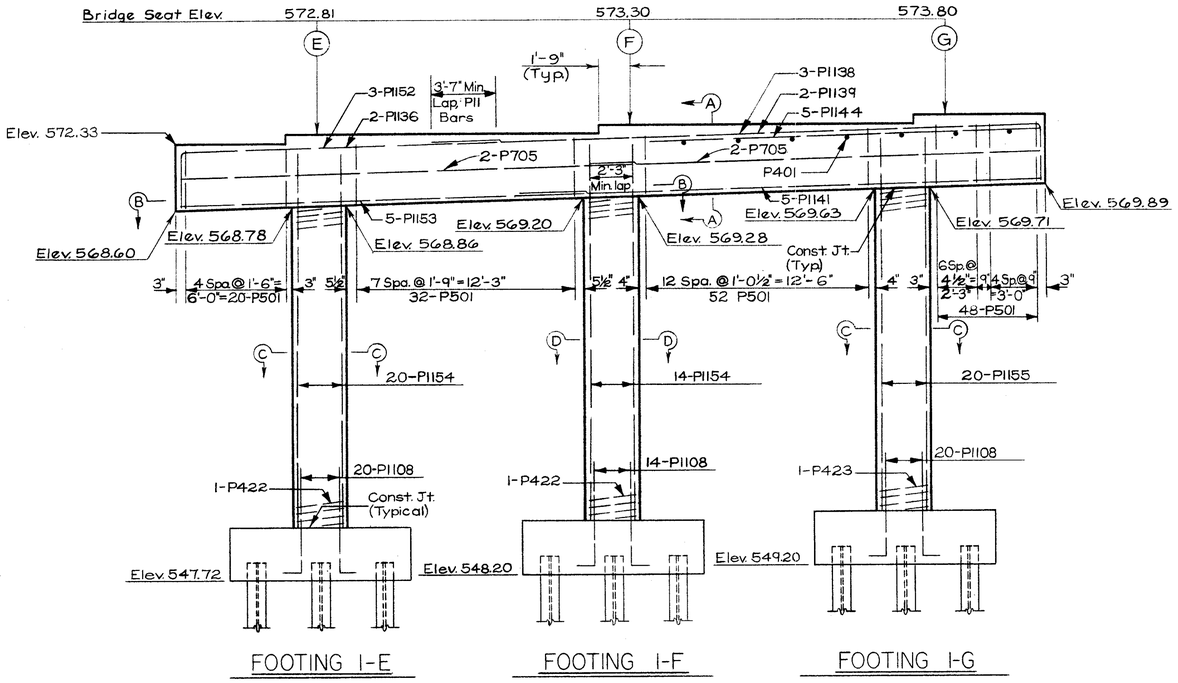

FOOTING I-E

FOOTING I-F

FOOTING I-G

ELEVATION

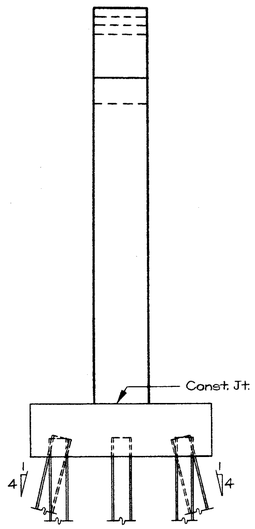

END ELEVATION

Girder	A	B	C	D
A	6"	1'-0⅛"	⅛"	10½"
B thru P	5 1/16"	1'-0 1/16"	½"	10 11/16"
R	5⅜"	1'-0 1/16"	⅞"	10 13/16"
S	5"	1'-0"	1 5/16"	11"

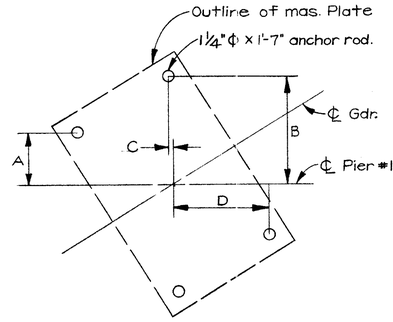

ANCHOR ROD LAYOUT

For footing details and reinforcing steel see Footing I-A, Sheet No. 352

MICROFILMED
FEB 20 1985

HAZELET & ERDAL
CONSULTING ENGINEERS
CINCINNATI, OHIO

PIER NO. 1

BRIDGE No HAM-71-0173

H&E BRIDGE No. 8

DESIGNED	DRAWN	TRACED	CHECKED	REVIEWED DATE	REVISED
	J.D.C.		J.W.D. 2/5/65	H.A.E. 5-20-65	

FED. RD. DIV.	STATE	PROJECT	FISCAL YEAR
2	OHIO		

354
492

HAMILTON COUNTY
HAM-71-(1.56)(2.51)

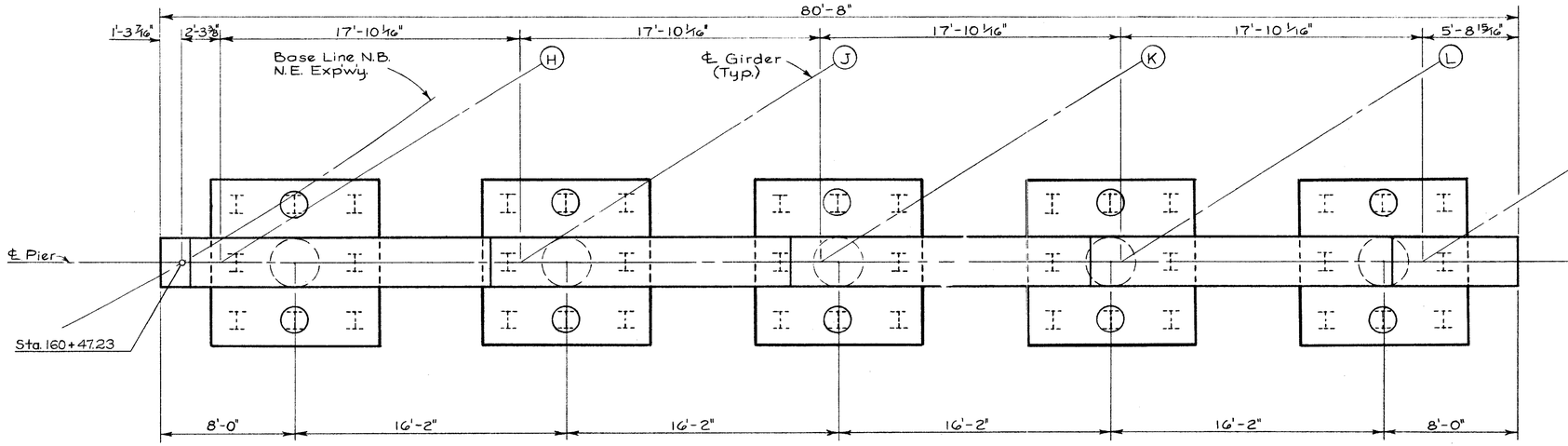

PLAN

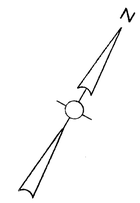

Note: Bars are to be spaced to match bottom cap reinforcing as dimensioned in Section A-A.

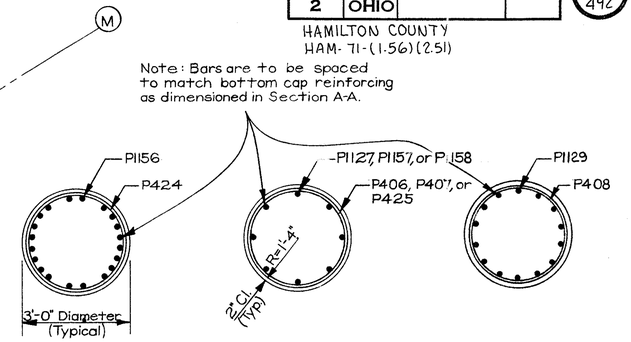

SECTION C-C

SECTION D-D

SECTION E-E

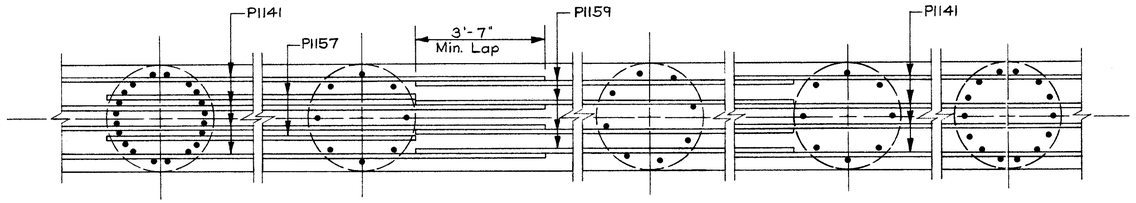

SECTION B-B

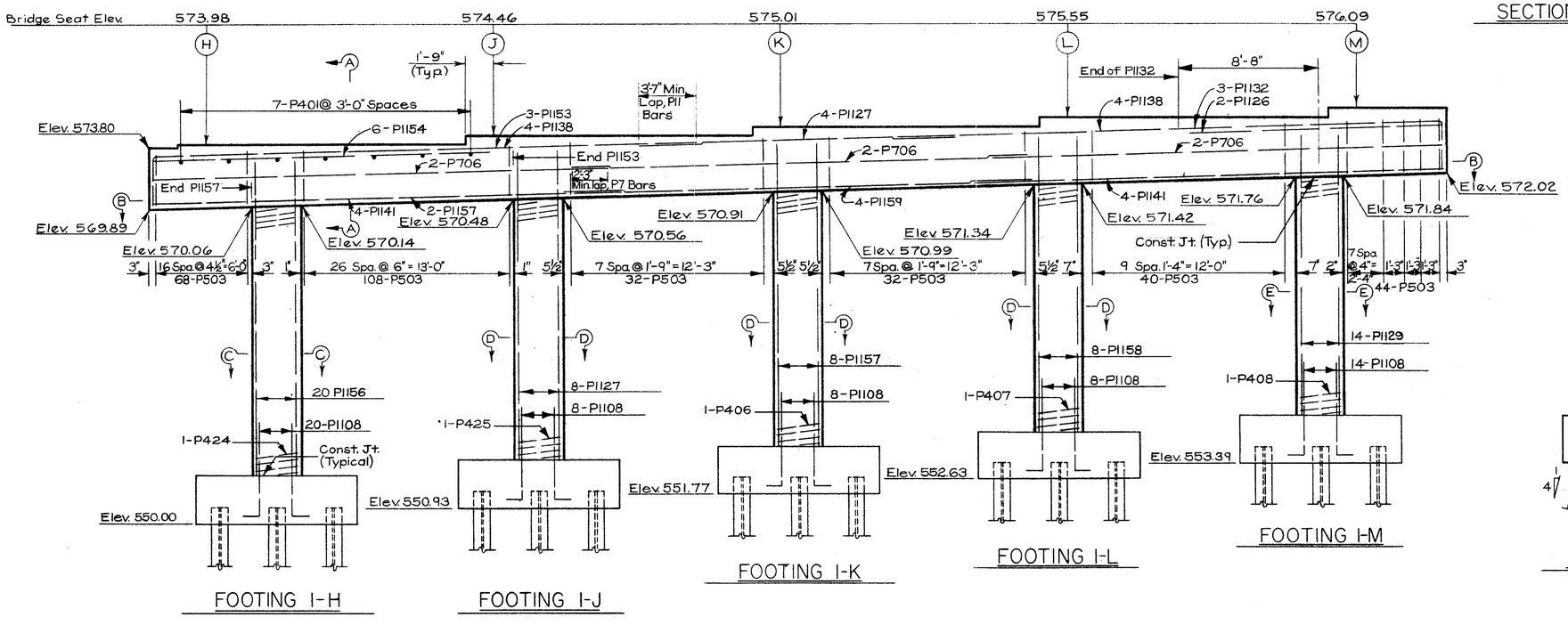

ELEVATION

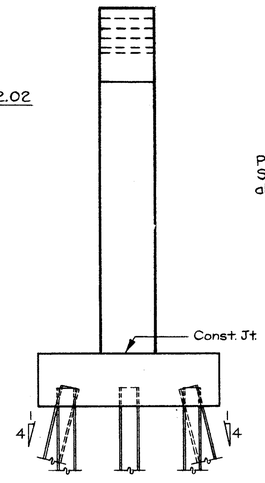

END ELEVATION

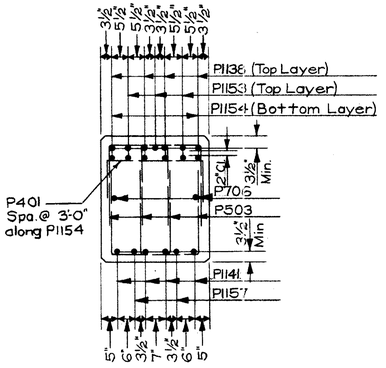

SECTION A-A

MICROFILMED
FEB 20 1985

For footing details and reinforcing steel see Footing I-A, Sh. No. 352

HAZELET & ERDAL
CONSULTING ENGINEERS
CINCINNATI, OHIO

PIER NO. 1

BRIDGE No. HAM-71-0173

H&E BRIDGE No. 8

DESIGNED	DRAWN	TRACED	CHECKED	REVIEWED DATE	REVISED
	J.D.C.		JHO 2/5/65	W.A.E. 5-20-65	

FED. RD. DIV.	STATE	PROJECT	FISCAL YEAR
2	OHIO		

355
472

HAMILTON COUNTY
HAM-71-(1.56)(2.51)

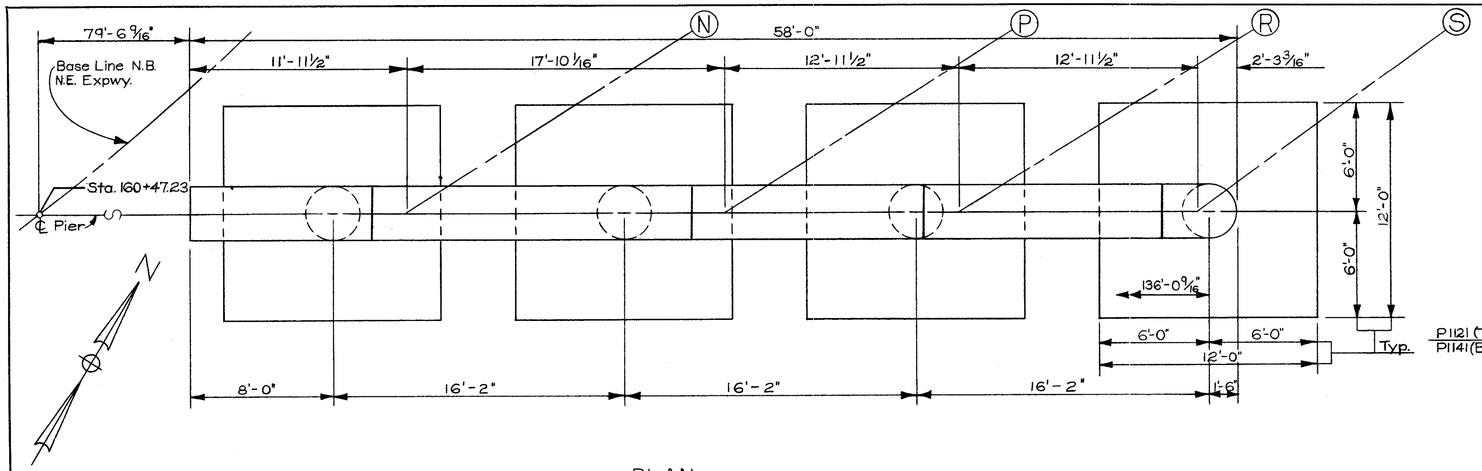

PLAN

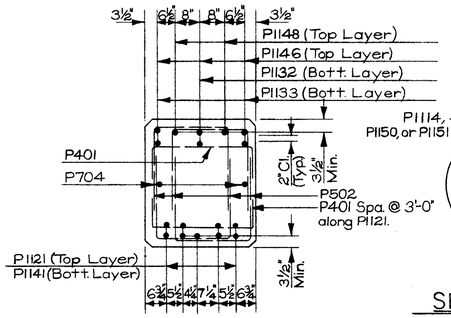

SECTION A-A

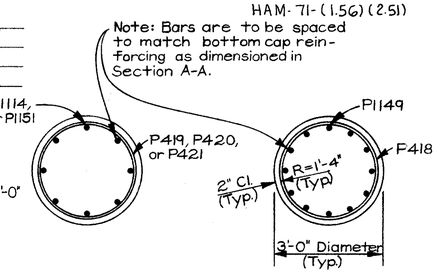

SECTION E E

SECTION D D

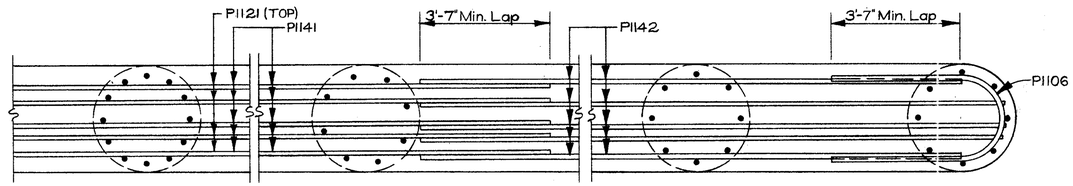

SECTION B B

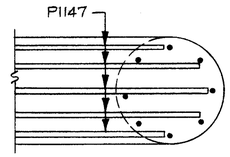

SECTION C-C

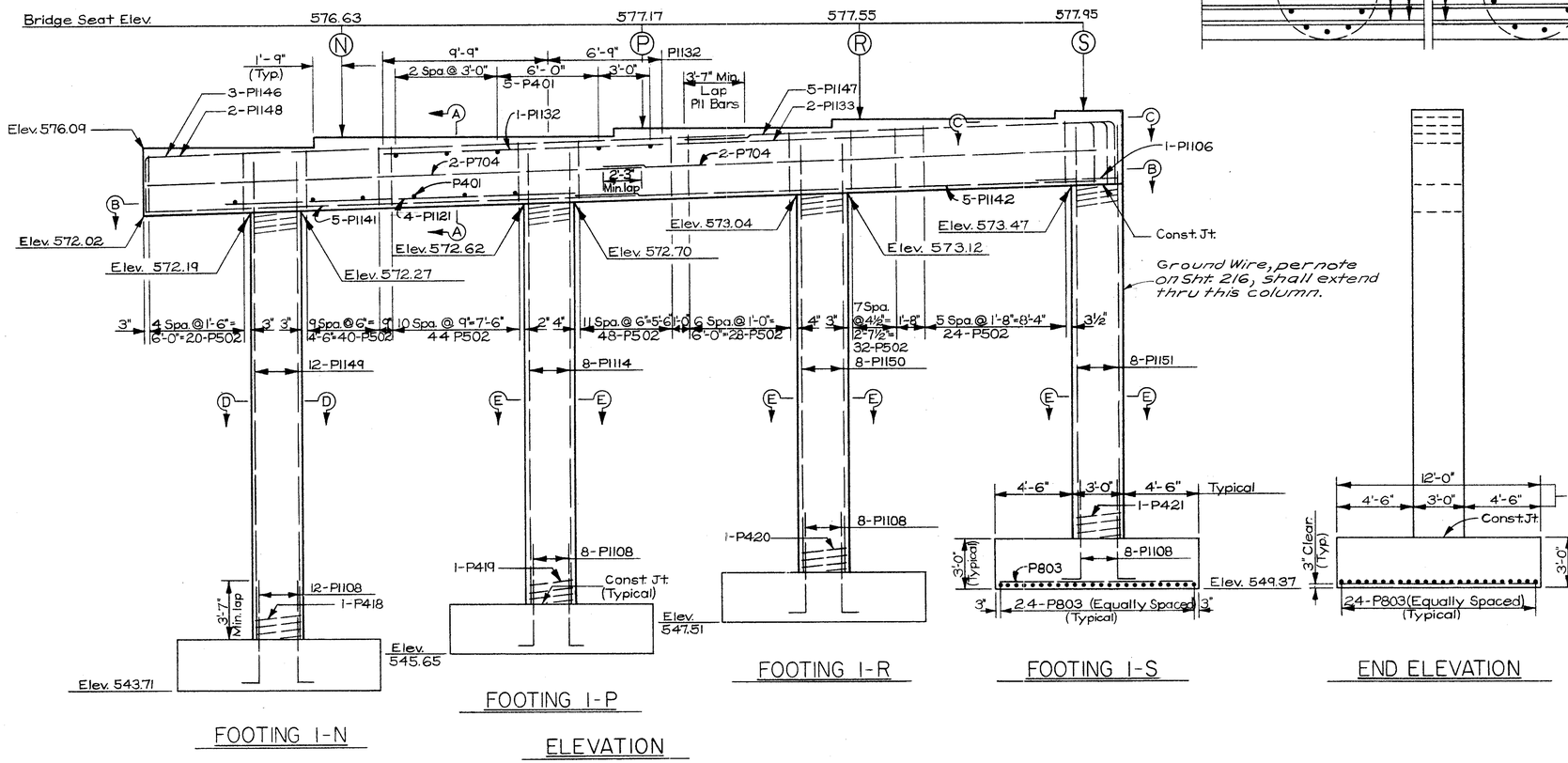

FOOTING I-N

FOOTING I-P

ELEVATION

FOOTING I-R

FOOTING I-S

END ELEVATION

FOOTINGS shall extend a minimum of 3" into undisturbed rock or to the elevation shown, whichever is lower.

MICROFILMED
FEB 20 1985

HAZELET & ERDAL
CONSULTING ENGINEERS
CINCINNATI, OHIO

PIER NO. 1

BRIDGE No. HAM-71-0173

H&E BRIDGE No. 8

DESIGNED	DRAWN	TRACED	CHECKED	REVIEWED DATE	REVISED
	C/B		JHC 2/15/65	N.A.B. 5-20-65	

FED. RD. DIV.	STATE	PROJECT	FISCAL YEAR
2	OHIO		

356
492

HAMILTON COUNTY
HAM-71-(1.56)(2.51)

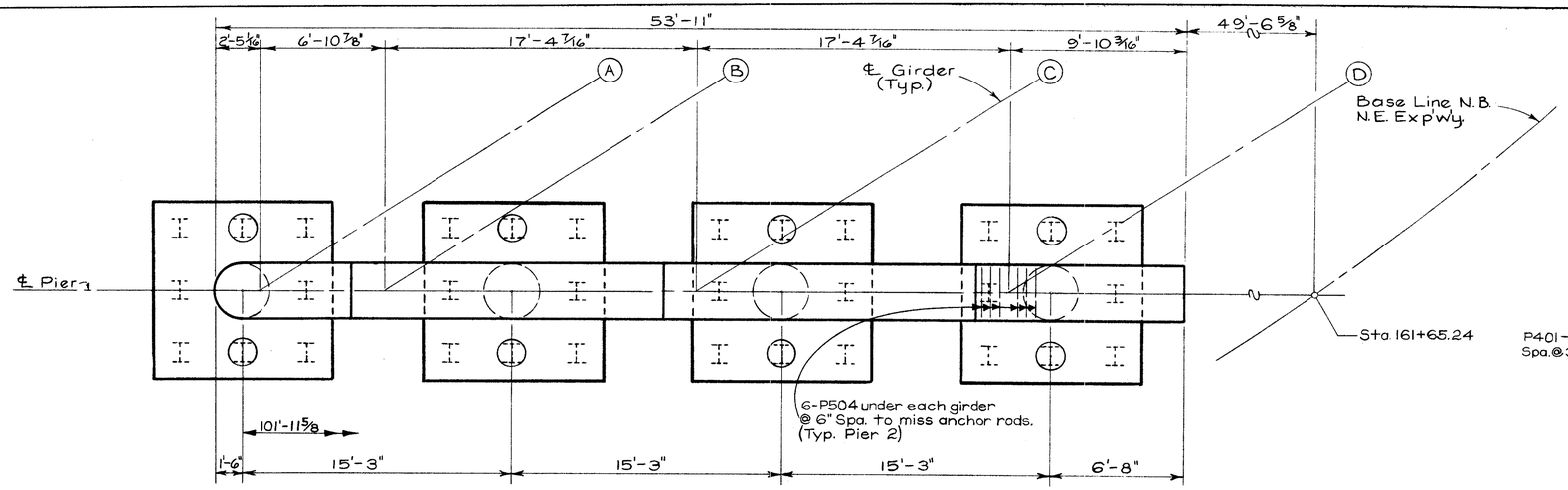

PLAN

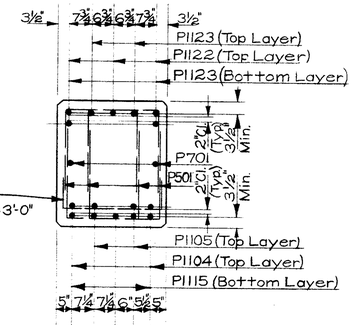

SECTION A-A

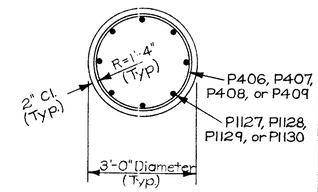

SECTION B-B

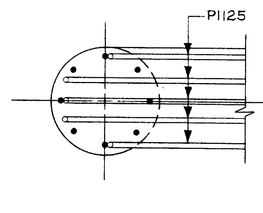

SECTION D-D

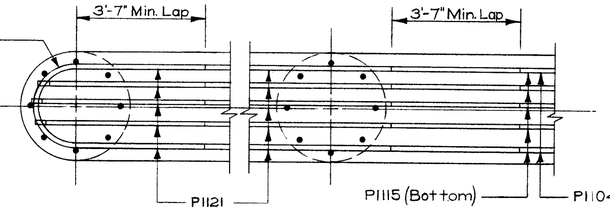

SECTION C-C

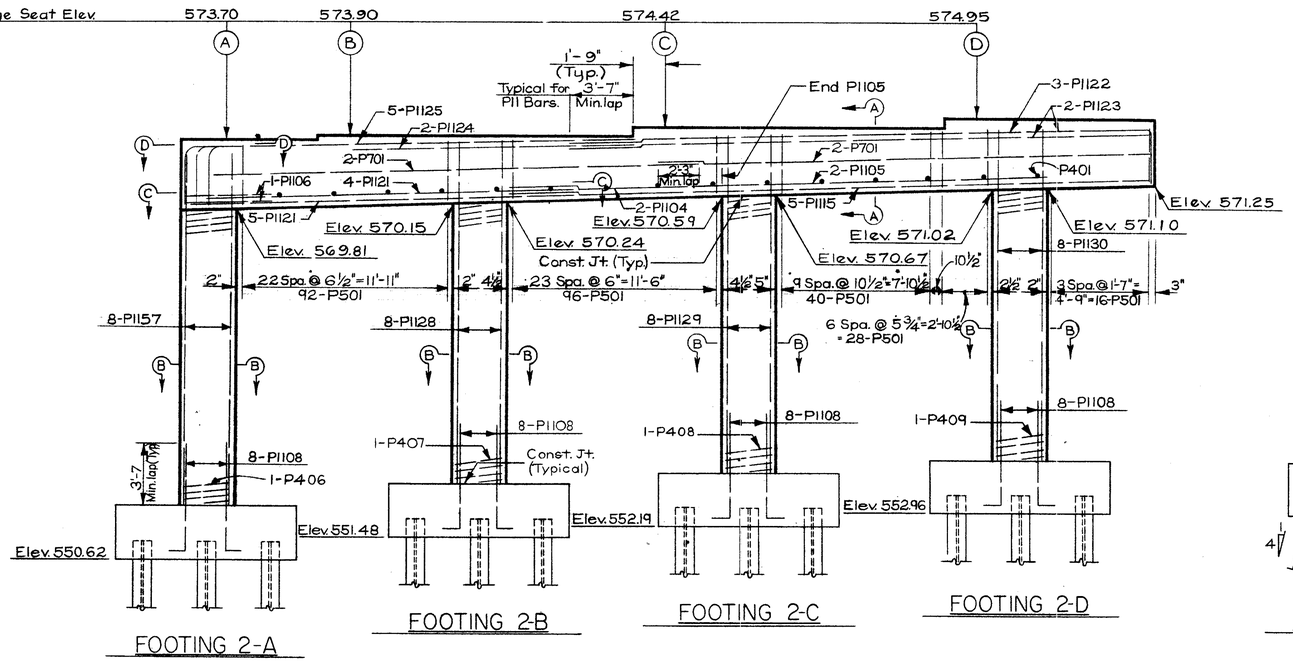

FOOTING 2-A

FOOTING 2-B

FOOTING 2-C

FOOTING 2-D

ELEVATION

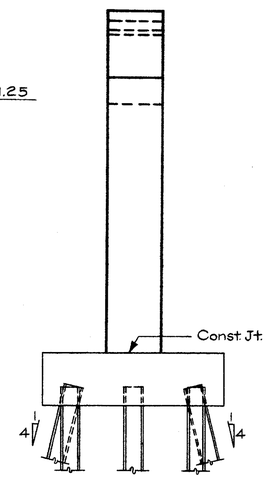

END ELEVATION

Girder	A	B
A	8 7/16"	5 3/8"
B thru P	8 7/16"	5 5/16"
R	8 5/16"	5 9/16"
S	8 1/8"	5 7/8"

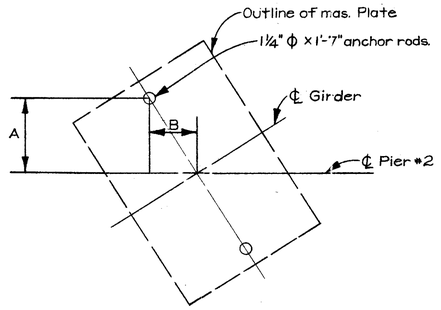

ANCHOR ROD LAYOUT

For Footing details and reinforcing steel see Footing 1-A, Sheet 352

MICROFILMED
FEB 20 1985

HAZELET & ERDAL
CONSULTING ENGINEERS
CINCINNATI, OHIO

PIER NO. 2

BRIDGE No. HAM-71-0173

H&E BRIDGE No. 8

DESIGNED	DRAWN	TRACED	CHECKED	REVIEWED DATE	REVISED
	J.D.C.		JWO 2/15/65	5-18-65 5-20-65	

FED. RD. DIV.	STATE	PROJECT	FISCAL YEAR
2	OHIO		

357
492

HAMILTON COUNTY
HAM-71-(1.56)(2.51)

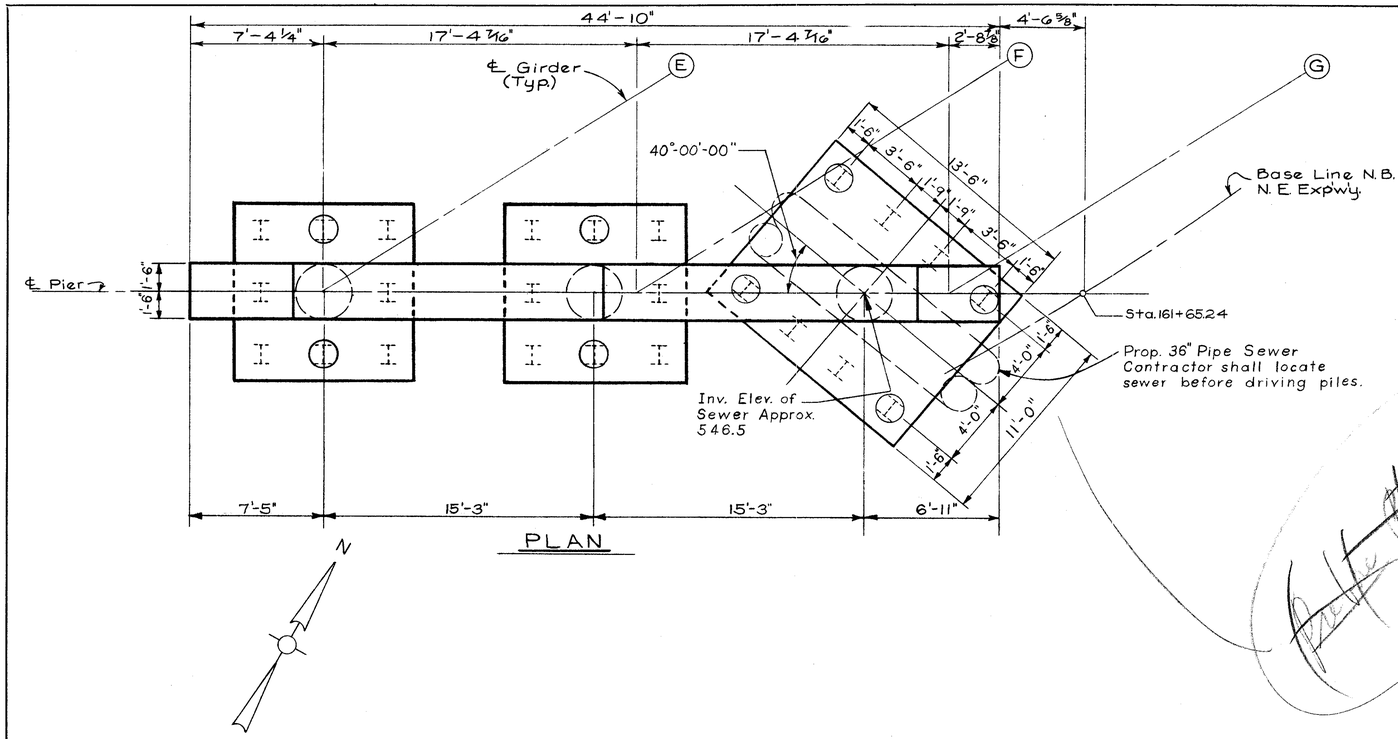

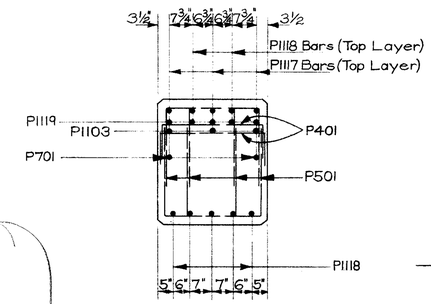

SECTION A-A

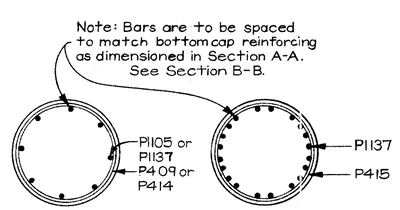

SECTION C-C SECTION D-D

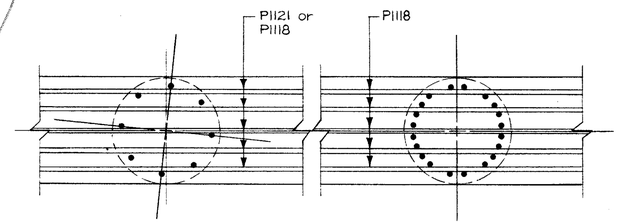

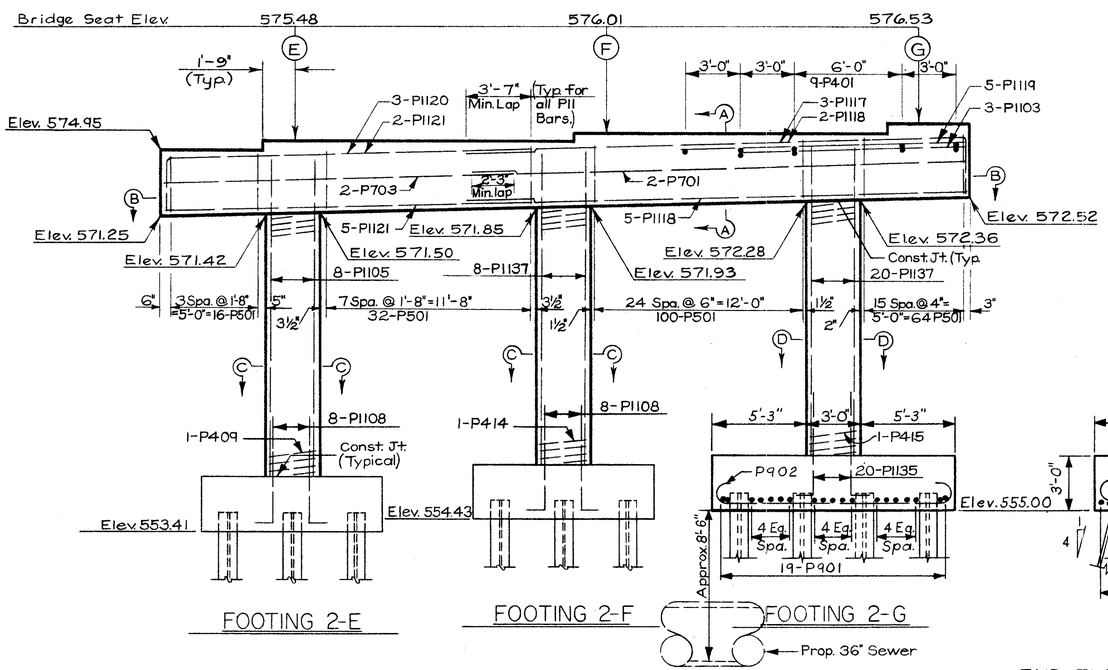

SECTION B-B

END ELEVATION, FOOTING 2-G

For footing details and reinforcing steel for footings 2-E & 2-F see Footing 1-A, Sh. No. 352

MICROFILMED
FEB 20 1985

HAZELET & ERDAL
CONSULTING ENGINEERS
CINCINNATI, OHIO

PIER NO. 2

BRIDGE No. HAM-71-0173

H&E BRIDGE No. 8

DESIGNED	DRAWN	TRACED	CHECKED	REVIEWED DATE	REVISED
	J.D.C.		JHO 2/5/65	W.A.B. 5-26-65	

FED. RD. DIV.	STATE	PROJECT	FISCAL YEAR
2	OHIO		

358
492

HAMILTON COUNTY
HAM-71-(1.56) (2.51)

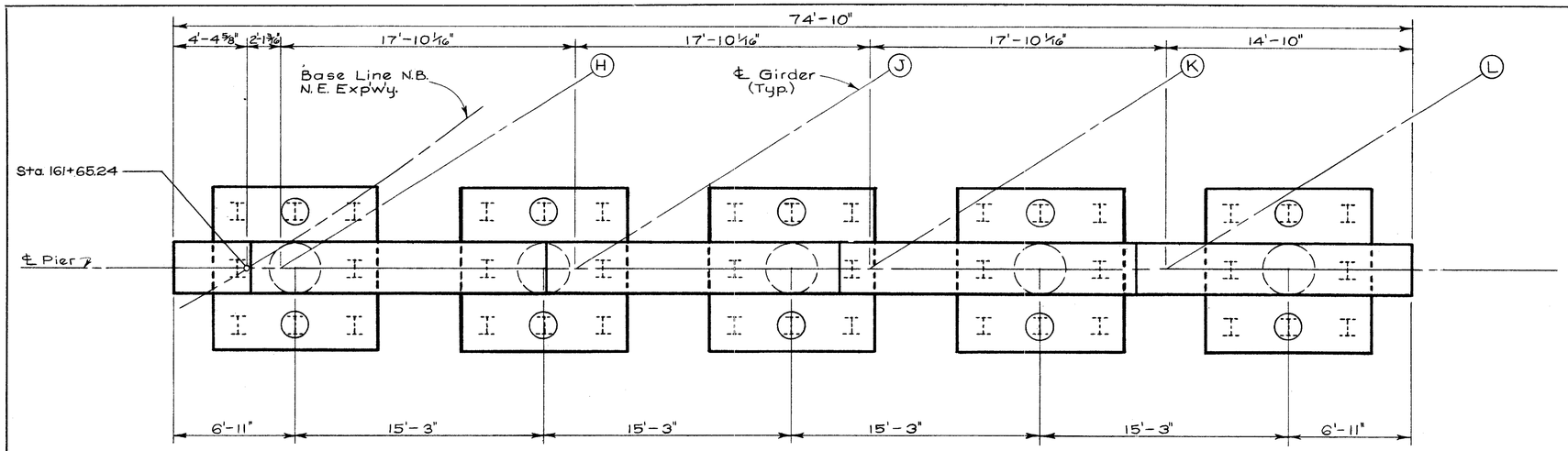

PLAN

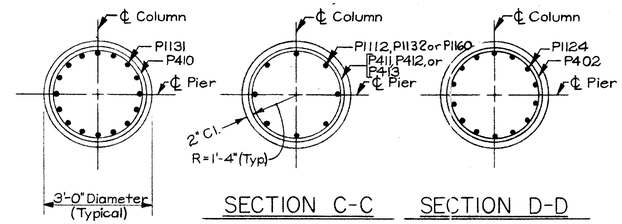

SECTION B-B

SECTION C-C

SECTION D-D

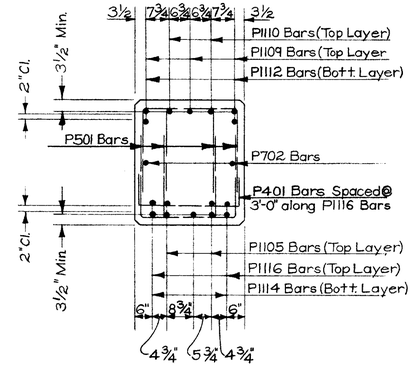

SECTION A-A

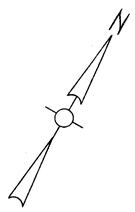

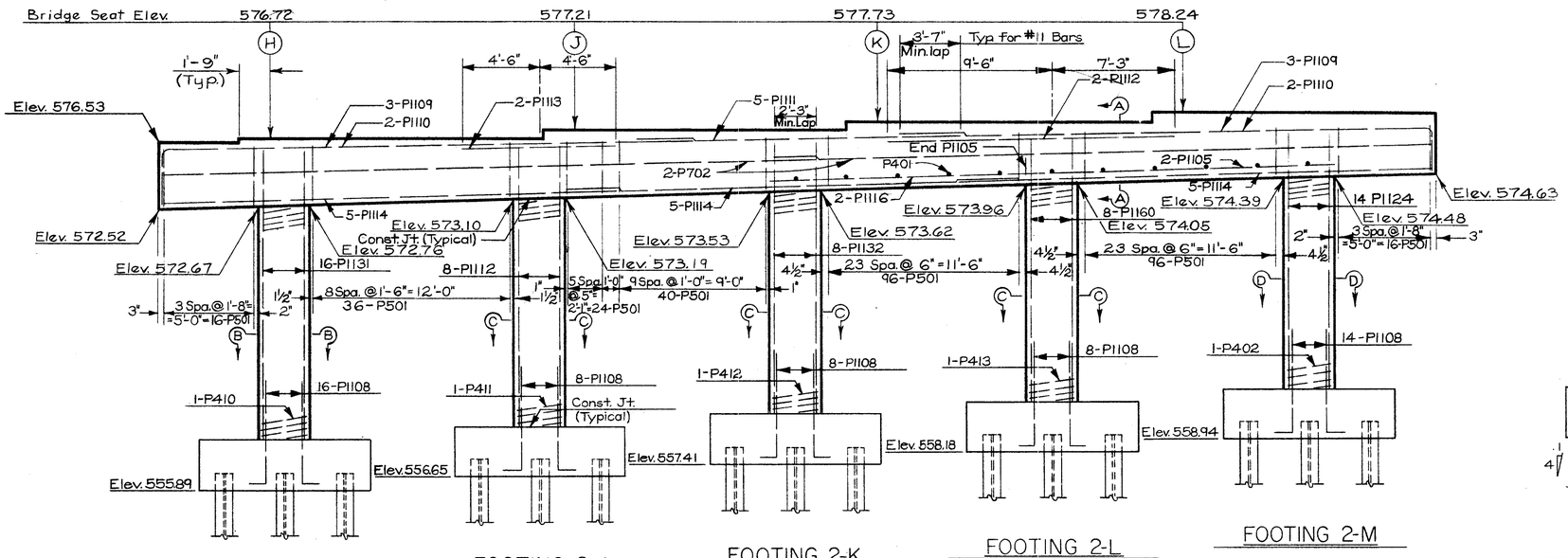

FOOTING 2-H

FOOTING 2-J

FOOTING 2-K

FOOTING 2-L

FOOTING 2-M

ELEVATION

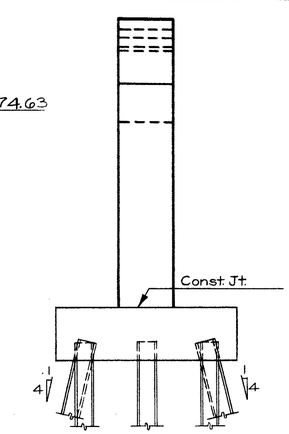

END ELEVATION

MICROFILMED
FEB 20 1985

For footing details and reinforcing steel see footing 1-A, Sheet No. 352

HAZELET & ERDAL
CONSULTING ENGINEERS
CINCINNATI, OHIO

PIER NO. 2

BRIDGE No. HAM-71-0173

H&E BRIDGE No. 8

DESIGNED	DRAWN	TRACED	CHECKED	REVIEWED DATE	REVISED
	J.D.C.		JHO 2/5/65	H.A.Z. 5-20-65	

FED. RD. DIV.	STATE	PROJECT	FISCAL YEAR
2	OHIO		

359
492

HAMILTON COUNTY
HAM-71-(1.56)(2.51)

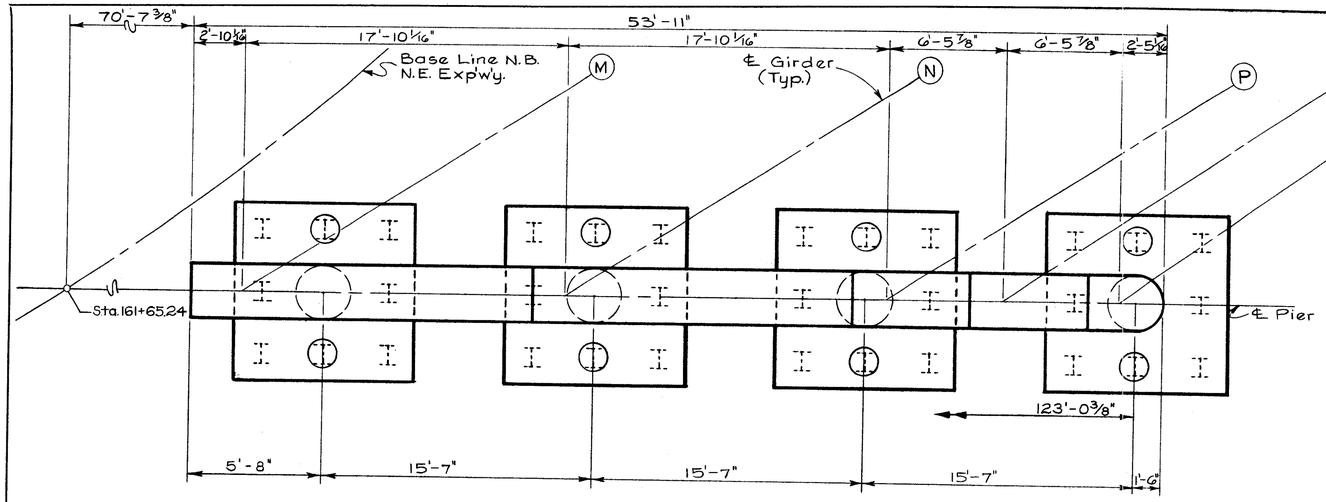

PLAN

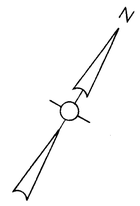

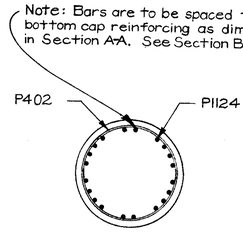

SECTION D-D

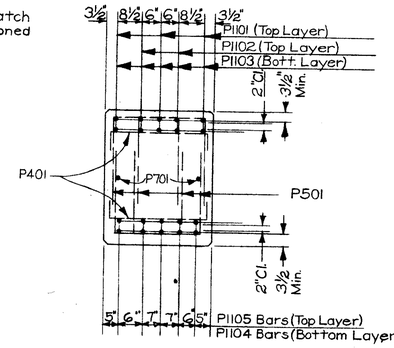

SECTION A-A

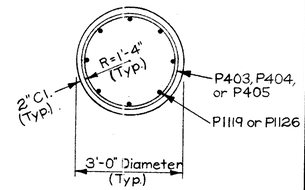

SECTION E-E

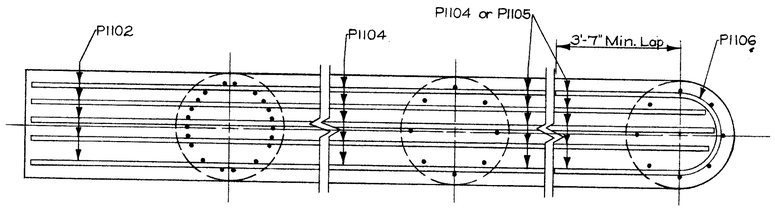

SECTION B-B

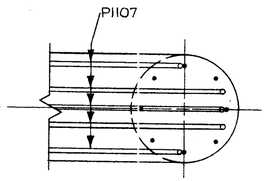

SECTION C-C

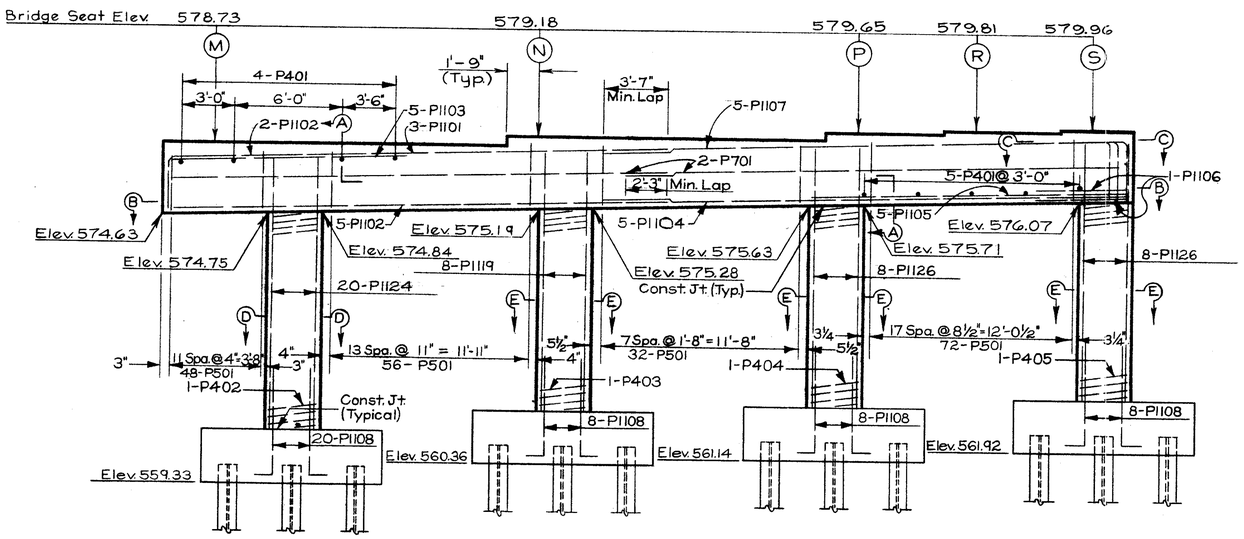

FOOTING 2-N

FOOTING 2-P

FOOTING 2-R

FOOTING 2-S

ELEVATION

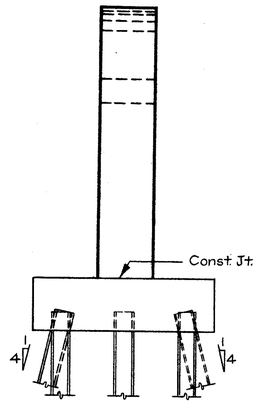

END ELEVATION

For footing details and reinforcing steel see Footing I-A Sheet 352

MICROFILMED
FEB 20 1985

HAZELET & ERDAL
CONSULTING ENGINEERS
CINCINNATI, OHIO

PIER NO. 2

BRIDGE No. HAM-71-0173

H&E BRIDGE No. 8

DESIGNED	DRAWN	TRACED	CHECKED	REVIEWED DATE	REVISED
	J.D.C.		JHO 2/5/65	N.I.J. 5-20-65	

FED. RD. DIV.	STATE	PROJECT	FISCAL YEAR
2	OHIO		

360
492

HAMILTON COUNTY
HAM-71-(1.56)(2.51)

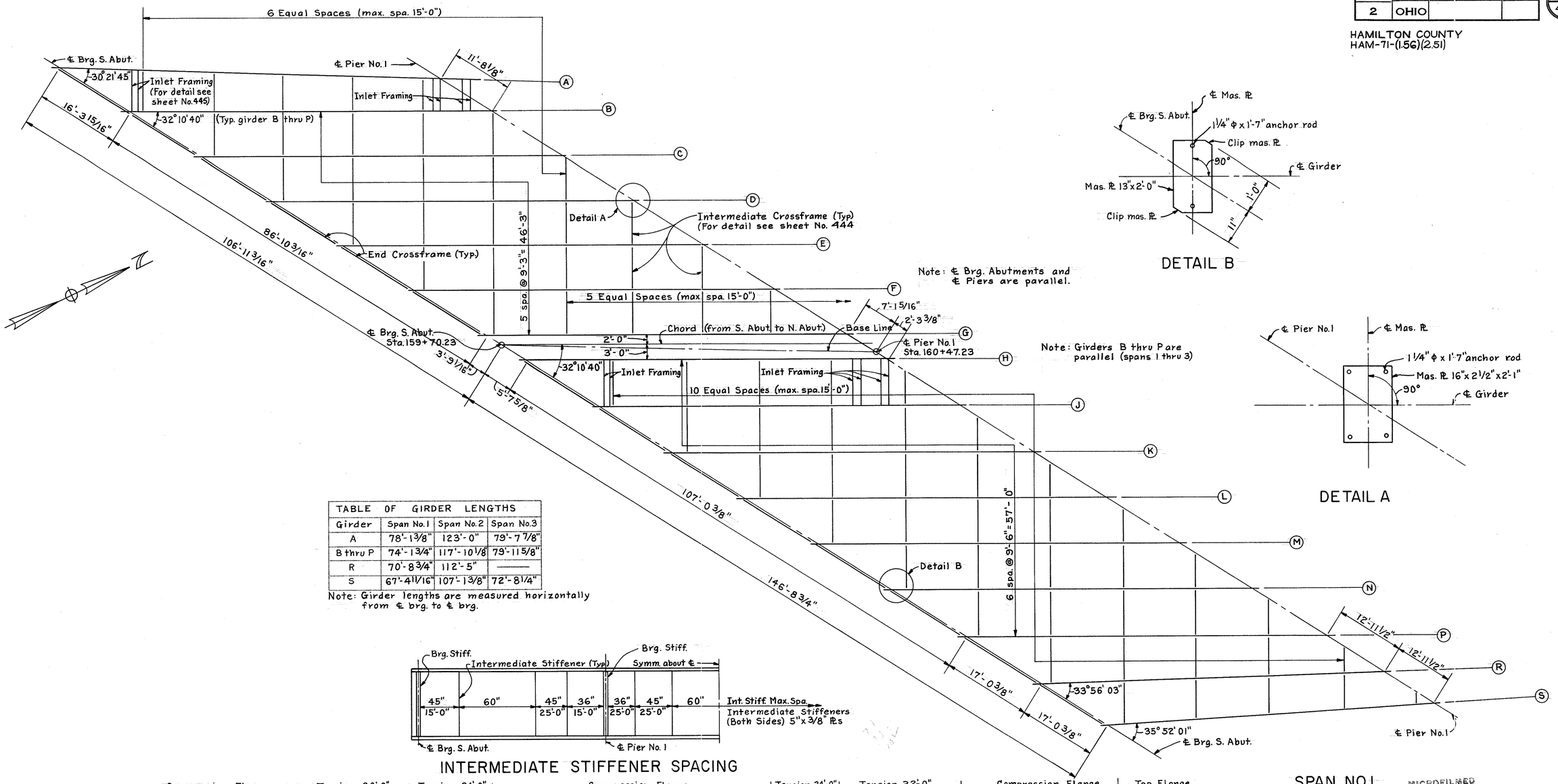

Note: ℄ Brg. Abutments and ℄ Piers are parallel.

Note: Girders B thru P are parallel (spans 1 thru 3)

DETAIL B

DETAIL A

TABLE OF GIRDER LENGTHS			
Girder	Span No. 1	Span No. 2	Span No. 3
A	78'-1 3/8"	123'-0"	79'-7 7/8"
B thru P	74'-1 3/4"	117'-10 1/8"	79'-11 5/8"
R	70'-8 3/4"	112'-5"	———
S	67'-4 11/16"	107'-1 3/8"	72'-8 1/4"

Note: Girder lengths are measured horizontally from ℄ brg. to ℄ brg.

INTERMEDIATE STIFFENER SPACING

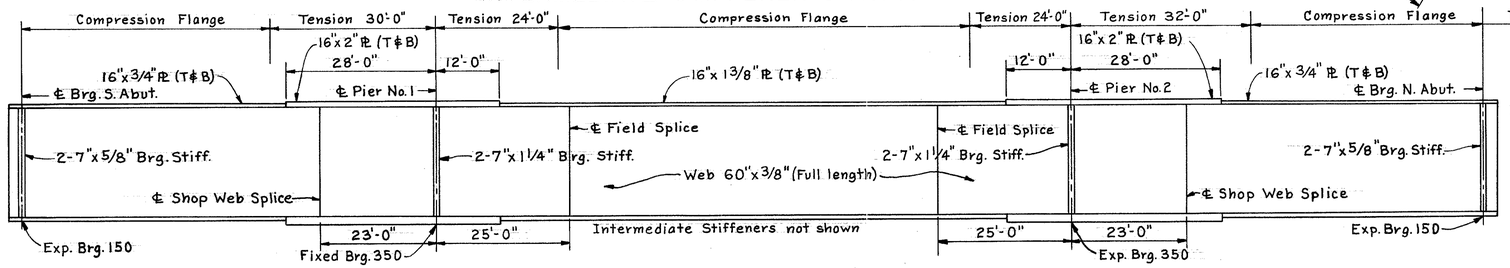

GIRDER ELEVATION

SPAN NO. 1

MICROFILMED
FEB 20 1985

Notes:
For bearing details see drwg. No. FSB-1-62
For typical plate girder elevation see sheet No. 444
For detail of roadway and curb plate end dam details see Sh. 363
For treatment of ends of bridge see drwg. No. SD-1-63, sheet No. 2 "Longitudinal Section."

Work this sheet with sheet Nos. 361 & 362

HAZELET & ERDAL
CONSULTING ENGINEERS
CINCINNATI, OHIO

STRUCTURAL STEEL DETAILS

BRIDGE No. HAM-71-0173

H&E BRIDGE No. 3

DESIGNED	DRAWN	TRACED	CHECKED	REVIEWED DATE	REVISED
	MJE	RS	JHO 8/31/64	H.N.Z. 5-20-65	

FED. RD. DIV.	STATE	PROJECT	FISCAL YEAR
2	OHIO		

361
492

HAMILTON COUNTY
HAM-71-(1.56)(2.51)

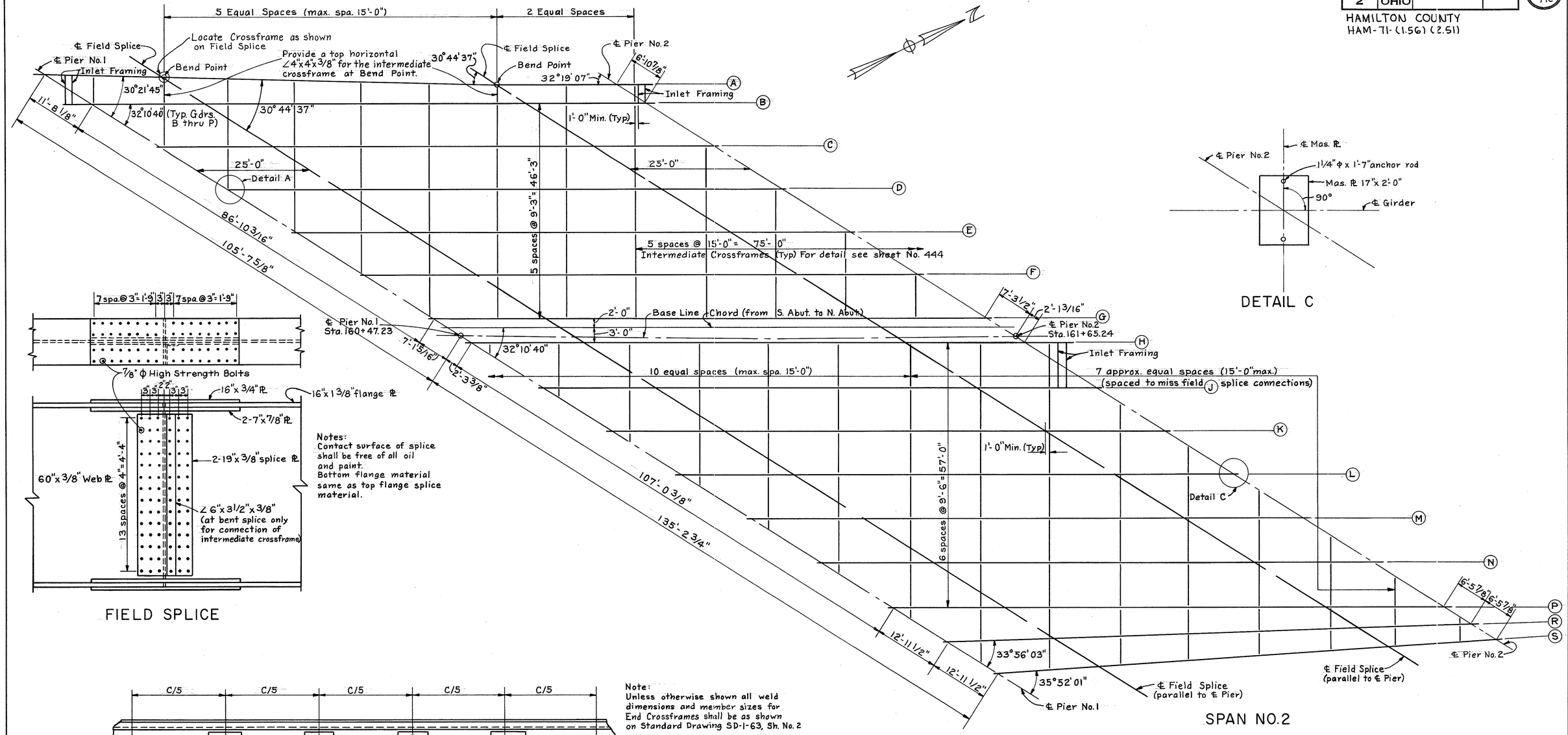

SPAN NO.2

DETAIL C

Notes:
Contact surface of splice shall be free of all oil and paint.
Bottom flange material same as top flange splice material.

FIELD SPLICE

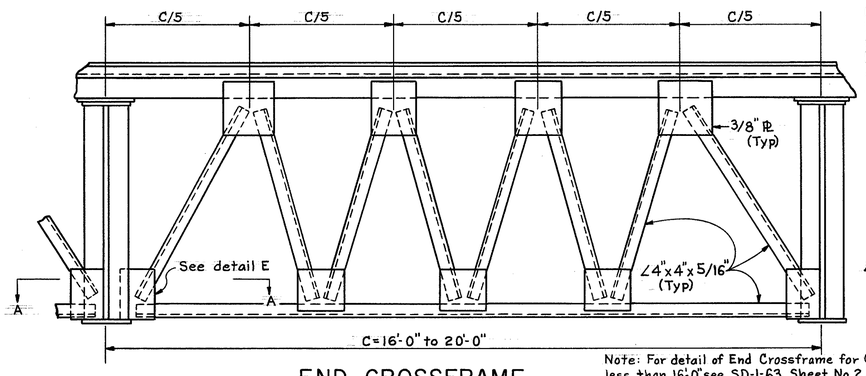

END CROSSFRAME

Note: For detail of End Crossframe for C less than 16'-0" see SD-1-63, Sheet No. 2. Connections to girders to be same as indicated above.

Note:
Unless otherwise shown all weld dimensions and member sizes for End Crossframes shall be as shown on Standard Drawing SD-1-63, Sh. No. 2

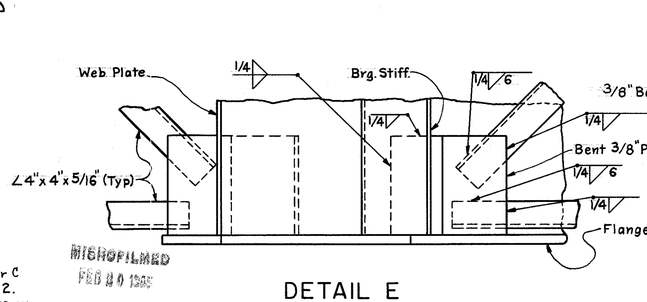

DETAIL E

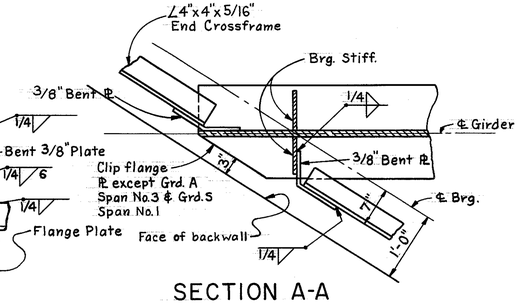

SECTION A-A

MICROFILMED
FEB 20 1967

Work this sheet with sheet Nos. 360 & 362

HAZELET & ERDAL
CONSULTING ENGINEERS
CINCINNATI, OHIO

STRUCTURAL STEEL DETAILS

BRIDGE No. HAM.-71-0173

H&E BRIDGE No. 8

DESIGNED	DRAWN	TRACED	CHECKED	REVIEWED DATE	REVISED
	MJE	RS	JHO 8/31/64	11-18-64 5-20-65	

FED. RD. DIV.	STATE	PROJECT	FISCAL YEAR
2	OHIO		

362
492

HAMILTON COUNTY
HAM-71-(1.56)(2.51)

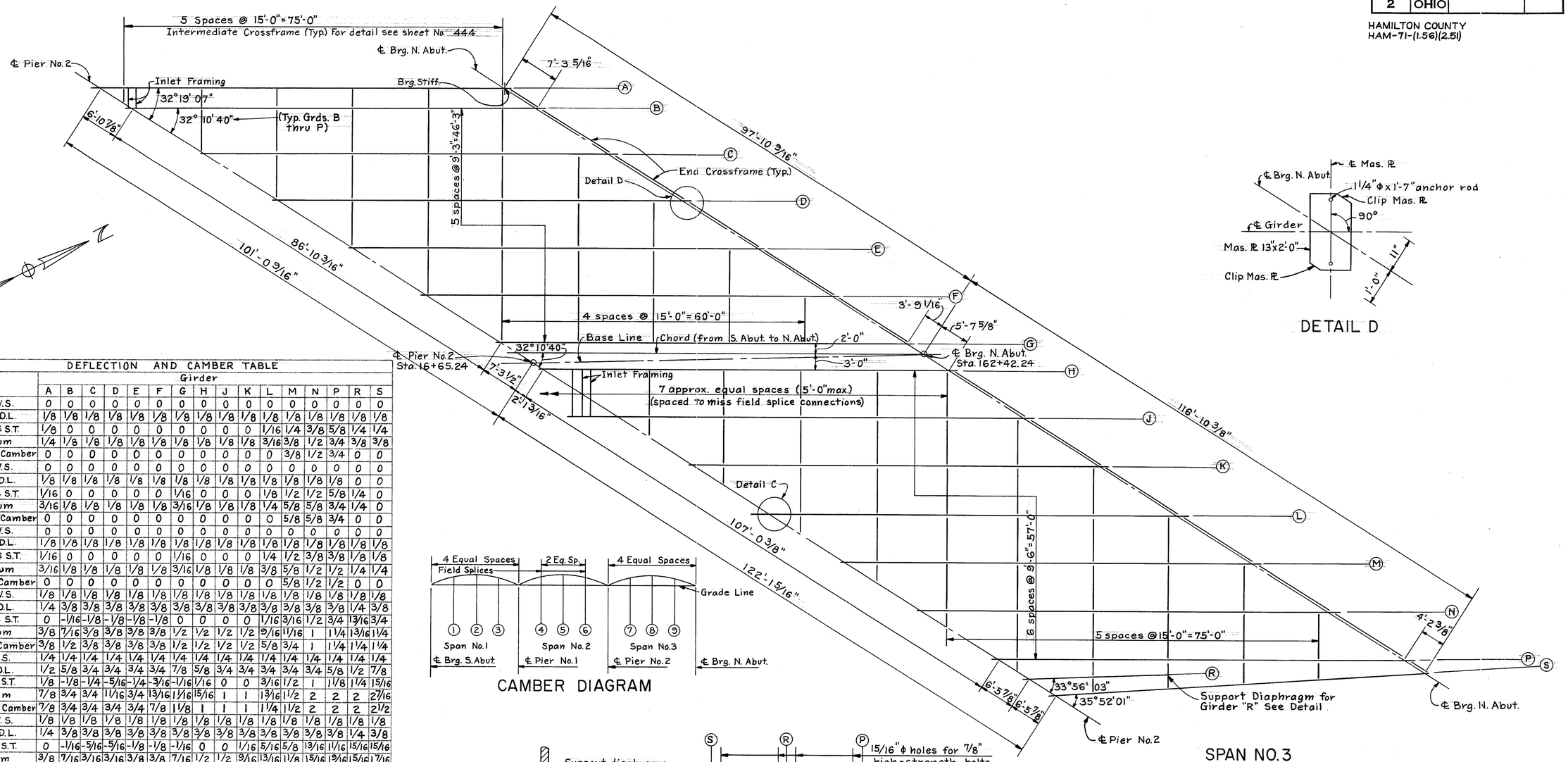

DETAIL D

DEFLECTION AND CAMBER TABLE

Location		Girder A	B	C	D	E	F	G	H	J	K	L	M	N	P	R	S
1	W.S.	0	0	0	0	0	0	0	0	0	0	0	0	0	0	0	0
	R.D.L.	1/8	1/8	1/8	1/8	1/8	1/8	1/8	1/8	1/8	1/8	1/8	1/8	1/8	1/8	1/8	1/8
	C.℄ S.T.	1/8	0	0	0	0	0	0	0	0	0	1/16	1/4	3/8	5/8	1/4	1/4
	Sum	1/4	1/8	1/8	1/8	1/8	1/8	1/8	1/8	1/8	1/8	3/16	3/8	1/2	3/4	3/8	3/8
	Req. Camber	0	0	0	0	0	0	0	0	0	0	0	3/8	1/2	3/4	0	0
2	W.S.	0	0	0	0	0	0	0	0	0	0	0	0	0	0	0	0
	R.D.L.	1/8	1/8	1/8	1/8	1/8	1/8	1/8	1/8	1/8	1/8	1/8	1/8	1/8	1/8	1/8	0
	C.℄ S.T.	1/16	0	0	0	0	0	1/16	0	0	0	1/8	1/2	1/2	5/8	1/4	0
	Sum	3/16	1/8	1/8	1/8	1/8	1/8	3/16	1/8	1/8	1/8	1/4	5/8	5/8	3/4	1/4	0
	Req. Camber	0	0	0	0	0	0	0	0	0	0	0	5/8	5/8	3/4	0	0
3	W.S.	0	0	0	0	0	0	0	0	0	0	0	0	0	0	0	0
	R.D.L.	1/8	1/8	1/8	1/8	1/8	1/8	1/8	1/8	1/8	1/8	1/8	1/8	1/8	1/8	1/8	1/8
	C.℄ S.T.	1/16	0	0	0	0	0	1/16	0	0	0	1/4	1/2	3/8	3/8	1/8	1/8
	Sum	3/16	1/8	1/8	1/8	1/8	1/8	3/16	1/8	1/8	1/8	3/8	5/8	1/2	1/2	1/4	1/4
	Req. Camber	0	0	0	0	0	0	0	0	0	0	0	5/8	1/2	1/2	0	0
4	W.S.	1/8	1/8	1/8	1/8	1/8	1/8	1/8	1/8	1/8	1/8	1/8	1/8	1/8	1/8	1/8	1/8
	R.D.L.	1/4	3/8	3/8	3/8	3/8	3/8	3/8	3/8	3/8	3/8	3/8	3/8	3/8	3/8	1/4	3/8
	C.℄ S.T.	0	-1/16	-1/8	-1/8	-1/8	-1/8	0	0	0	0	1/16	3/16	1/2	3/4	13/16	3/4
	Sum	3/8	7/16	3/8	3/8	3/8	3/8	1/2	1/2	1/2	1/2	9/16	11/16	1	1 1/4	1 3/16	1 1/4
	Req. Camber	3/8	1/2	3/8	3/8	3/8	3/8	1/2	1/2	1/2	1/2	5/8	3/4	1	1 1/4	1 1/4	1 1/4
5	W.S.	1/4	1/4	1/4	1/4	1/4	1/4	1/4	1/4	1/4	1/4	1/4	1/4	1/4	1/4	1/4	1/4
	R.D.L.	1/2	5/8	3/4	3/4	3/4	3/4	7/8	5/8	3/4	3/4	3/4	3/4	3/4	5/8	1/2	7/8
	C.℄ S.T.	1/8	-1/8	-1/4	-5/16	-1/4	-3/16	-1/16	1/16	0	0	3/16	1/2	1	1 1/8	1 1/4	1 5/16
	Sum	7/8	3/4	3/4	11/16	3/4	13/16	1 1/16	15/16	1	1	1 3/16	1 1/2	2	2	2	2 7/16
	Req. Camber	7/8	3/4	3/4	3/4	3/4	7/8	1 1/8	1	1	1	1 1/4	1 1/2	2	2	2	2 1/2
6	W.S.	1/8	1/8	1/8	1/8	1/8	1/8	1/8	1/8	1/8	1/8	1/8	1/8	1/8	1/8	1/8	1/8
	R.D.L.	1/4	3/8	3/8	3/8	3/8	3/8	3/8	3/8	3/8	3/8	3/8	3/8	3/8	3/8	1/4	3/8
	C.℄ S.T.	0	-1/16	-5/16	-5/16	-1/8	-1/8	-1/16	0	0	1/16	5/16	5/8	13/16	1 1/16	15/16	15/16
	Sum	3/8	7/16	3/16	3/16	3/8	3/8	7/16	1/2	1/2	9/16	13/16	1 1/8	1 5/16	1 9/16	1 5/16	1 7/16
	Req. Camber	3/8	1/2	1/4	1/4	3/8	3/8	1/2	1/2	1/2	5/8	7/8	1 1/8	1 3/8	1 5/8	1 3/8	1 1/2
7	W.S.	0	0	0	0	0	0	0	0	0	0	0	0	0	0		0
	R.D.L.	1/8	1/8	1/8	1/8	1/8	1/8	1/8	1/8	1/8	1/8	1/8	1/8	1/8	1/8		1/8
	C.℄ S.T.	-1/16	-1/16	-1/16	0	1/8	1/4	1/2	9/16	9/16	9/16	9/16	9/16	5/8	3/4		5/8
	Sum	1/16	1/16	1/16	1/8	1/4	3/8	5/8	11/16	11/16	11/16	11/16	11/16	3/4	7/8		3/4
	Req. Camber	0	0	0	0	0	3/8	5/8	3/4	3/4	3/4	3/4	3/4	3/4	7/8		3/4
8	W.S.	0	0	0	0	0	0	0	0	0	0	0	0	0	0		0
	R.D.L.	1/8	1/8	1/8	1/8	1/8	1/8	1/8	1/8	1/8	1/8	1/8	1/8	1/8	1/8		1/8
	C.℄ S.T.	-1/16	-1/16	-1/16	1/16	1/4	1/2	13/16	3/4	3/4	3/4	3/4	3/4	1	7/8		5/8
	Sum	1/16	1/16	1/16	3/16	3/8	5/8	15/16	7/8	7/8	7/8	7/8	7/8	1 1/8	1		5/8
	Req. Camber	0	0	0	0	0	5/8	1	7/8	7/8	7/8	7/8	7/8	1 1/8	1		5/8
9	W.S.	0	0	0	0	0	0	0	0	0	0	0	0	0	0		0
	R.D.L.	1/8	1/8	1/8	1/8	1/8	1/8	1/8	1/8	1/8	1/8	1/8	1/8	1/8	1/8		1/8
	C.℄ S.T.	0	-1/16	0	1/8	5/16	7/16	5/8	9/16	9/16	9/16	9/16	9/16	7/8	5/8		7/16
	Sum	1/8	1/16	1/8	1/4	7/16	9/16	3/4	11/16	11/16	11/16	11/16	11/16	1	3/4		9/16
	Req. Camber	0	0	0	0	0	5/8	3/4	3/4	3/4	3/4	3/4	3/4	1	3/4		5/8

W.S. denotes Deflection due to weight of steel.
R.D.L. denotes Deflection due to remaining dead load.
C.℄S.T. denotes Convexity & Superelevation transition.
Sum denotes sum of Deflection and Convexity & Superelevation transition.

Note: Camber girders by cutting webs to a smooth curve.

CAMBER DIAGRAM

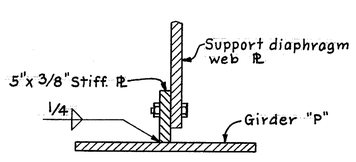

SECTION C-C

MICROFILMED
FEB 20 1985

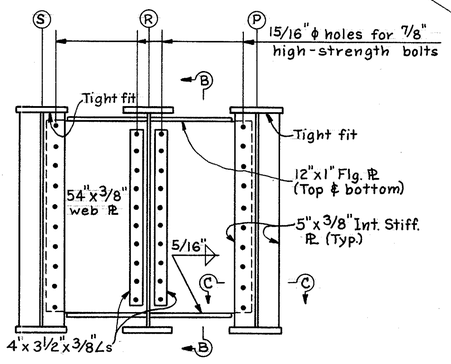

DETAIL OF SUPPORT DIAPHRAGM FOR GIRDER "R"

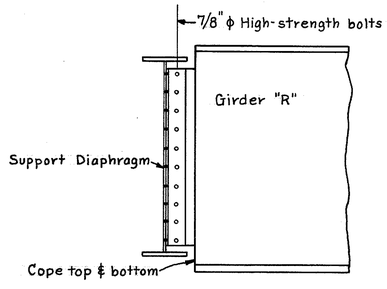

SECTION B-B

MICROFILMED
FEB 20 1985

Work this sheet with sheet Nos. 360 & 361

HAZELET & ERDAL
CONSULTING ENGINEERS
CINCINNATI, OHIO

STRUCTURAL STEEL DETAILS

BRIDGE No. HAM.-71-0173

H&E BRIDGE No. 3

DESIGNED	DRAWN	TRACED	CHECKED	REVIEWED DATE	REVISED
	MJE	RS	JHO 8/31/64	H.A.E. 5-20-65	

FED. RD. DIV.	STATE	PROJECT	FISCAL YEAR
2	OHIO		

363
492

HAMILTON COUNTY
HAM-71-(1.56)(2.51)

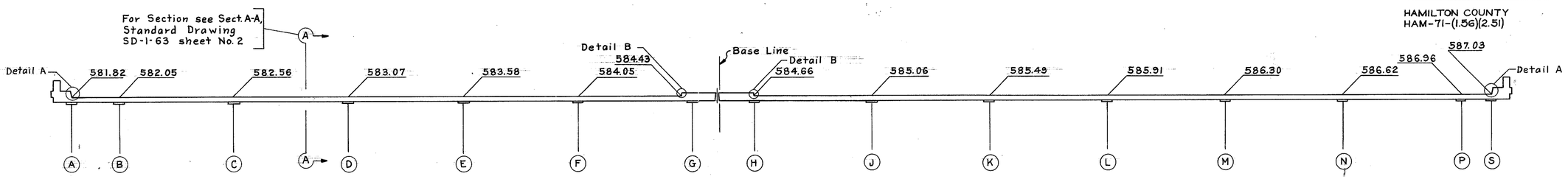

EXPANSION JOINT CROSS SECTION FOR NORTH ABUTMENT

Note:
Elevations given at front face of backwall.
(Back of 7x4x1/2 ∠)

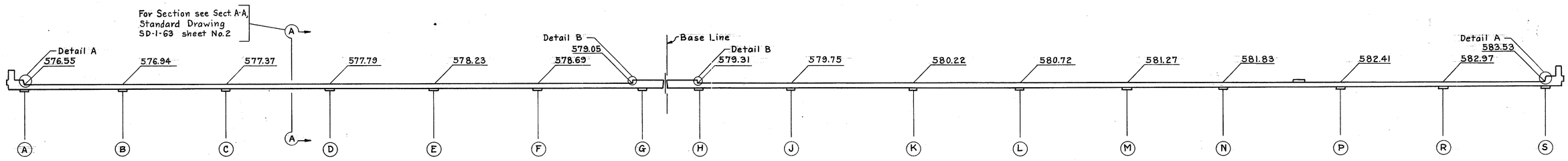

EXPANSION JOINT CROSS SECTION FOR SOUTH ABUTMENT

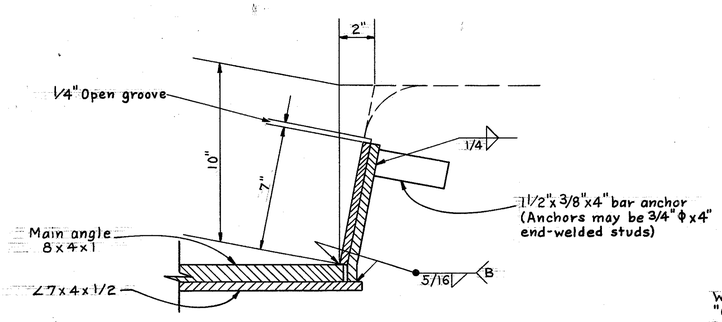

DETAIL A

Work Detail A & Detail B with "Curb Plate Details" Standard Drawing SD-1-63 sheet No. 4

MICROFILMED
FEB 20 1985

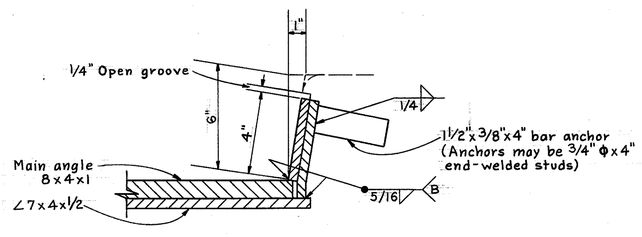

DETAIL B

MICROFILMED
FEB 20 1985

HAZELET & ERDAL
CONSULTING ENGINEERS
CINCINNATI, OHIO

STRUCTURAL STEEL DETAILS

BRIDGE No. HAM.-71-0173

H&E BRIDGE No. 8

DESIGNED	DRAWN	TRACED	CHECKED	REVIEWED DATE	REVISED
	MJE	RS	JHO 2/5/65	N.A.B. 5-20-65	

FED. RD. DIV.	STATE	PROJECT	FISCAL YEAR
2	OHIO		

364
492

MICROFILMED
FEB 19 1965

N

6" 189 - S 501 & S 502 Bars @ 1'-6" ℄ (Measured along curb line)
Fan 5 - S 6021 Bars (Top)
Fan 5 - S 7001 Bars (Bot)
1 Ea. S 6022 thru S 6112 @ 8" (Top)
3'-5" 1 Ea. S 7002 Thru S 7092 @ 8" (Bot.)
See detail A
1 - S 6016 Bar (Top & Bot.)
Drain inlet
6 - S 6001 Bars @ 8½" (Bot)
3 - S 6001 Bars @ 1'-5" (Top)
3 - S 6001 Bars (top) 3 - S 6001 Bars (bot)
2 S 6001 Bars (Top)
Drain inlet
4 - S 6001 Bars (Bot)
2 Rows of 2 - 4 - S 6002 Bars Staggered (Safety Curb)
9 Rows of 8 - 72 - S 6017 Bars (Safety curb & Slab) Spaced as shown in Section A-A
1 - S 6001 Bar (Bot)
1 - S 6001 Bar (Top & Bot.)
1 - S 6008 Bar (Bot.)
1 - S 6008 Bar (Top & Bot.)
1 - S 6001 Bar (Top & Bot.)
Curb Line
Fascia
2 Rows of 2 - 4 - S 6002 Bars Staggered (Safety Curb)
1 - S 6001 Bar (Top & Bot.)
Drain inlet
℄ Girder B
A
329 - S 6156 @ 8" (Top)
329 - S 7136 @ 8" (Bot.)
2 Rows of 39 - 78 - S 6002 Bars Staggered (Top) Space as shown in Section A-A
℄ Brg. Pier # 2
9 Rows of 37 - 333 - S 6001 Bars (Bot.) Spaced as shown in Section A-A
9 Rows of 49 - 441 - S 6001 Bars (Top) Spaced as shown in Section A-A
2 Rows of 41 - 82 - S 6002 Bars Staggered (Top) Space as shown in Section A-A
℄ Brg. Pier # 1
316 - S 6156 @ 8" (Top)
316 - S 7136 @ 8" (Bot.)
1 Ea. S 6046 thru S 6088 @ 8" (Top)
1 Ea. S 7099 thru S 7135 @ 8" (Bot.)
181 - S 504 & S 505 Bars @ 1'-6" ℄ in Section A-A
SPAN 1
SPAN 2
SPAN 3
2 Rows of 4 - 8 - S 6002 Bars Staggered (Median)
℄ Pier 1
Sta. 160 + 47.23
P.C.C. Sta. 160 + 83.66
Median Curb Line
9 Rows of 8 - 72 - S 6018 Bars (Median & Slab) Space as shown in section A-A
1 - S 6001 Bar (Top)
1 - S 6001 Bar (Top)
1 - S 6001 Bar (Top)
1 - S 6001 Bar (Top)
P.C.C. Sta. 159 + 83.66
See Detail B
Sta. 159 + 70.23
℄ Girder G
℄ Open Joint
℄ Expway
Fan 5 - S 6272 Bars (Top)
Fan 5 - S 7252 Bars (Bot)
3 Spaces @ 8½" ℄
1 - S 6006 Bar (Bot)
1 - S 6001 Bar (Top & Bot)
1 - (6001 Bar (Bot)
Drain inlet
1 - S 6001 Bar (Bot)
9 Rows of 8 - 72 - S 6006 Bar (Top & Bot)
1 - S 6015 Bar (Bot)
77 - S 6088 @ 8" (Top)
77 - S 7068 @ 8" (Bot.)
Median Curb Line
245 - S 6432 @ 8" (Top)
245 - S 7412 @ 8" (Bot.)
1 - S 6001 Bar (Top)
1 - S 6002 Bar
2 Rows of 4 - 8 - S 6002 Bars Staggered (Median)
9 Rows of 9 - 81 - S 6019 Bars Median & Slab) Space as shown in section A-A
℄ Girder J
1 Ea. S 6274 thru S 6352 @ 8" (Top)
1 Ea. S 7253 thru S 7331 @ 8" (Bot.)
180 - S 506 & S 507 Bars @ 1'-6"
107'-8" (Measured along edge of slab)
℄ Bearing
Edge of roadway slab
Dividing curb
Face of abutment backwall
9 Rows of 41 - 82 - S 6002 Bars Staggered (Top) Space as shown in Section A-A
1 Ea. S 6355 thru S 6431 @ 8" (Top)
1 Ea. S 7335 thru S 7411 @ 8" (Bot.)
Space as shown in Section A-A
Edge of slab
21 - S 401 Bars @ 1'-6" ℄
℄ Brg. S. Abutment
See detail C
℄ Girder P
33° 19' 04"
30' 5½"
1 Each S 6433 thru S 6451 @ 8" (Top) 1 Ea S 7413 thru S 7431 @ 8" (Bot)
28 - S 6452 @ 8" (Top) 28 - S 7412 @ 8" (Bot)
28 - S 6453 @ 8" (Top) 28 - S 7432 @ 8" (Bot)
28 - S 6454 @ 8" (Top) 28 - S 7433 @ 8" (Bot)
28 - S 6455 @ 8" (Top) 28 - S 7434 @ 8" (Bot)
1 - S 512 Bar
1 - S 511 Bar
2 Rows of 2 - 4 - S 6002 Bars Staggered (Top)
2 - S 6001 Bars @ 8½" (Top)
2 - S 6001 Bars @ 8½" (Bot)
2 - S 6001 Bars @ 1'-5" (Top)
2 - S 6001 Bars @ 1'-5" (Bot)
See Detail J
℄ Girder P
℄ N.P.U
S 6005 Bar (Top & Bot)
1 - S 6004 Bar (Bot)
4 - S 6001 Bars @ 8½" ℄ (Top)
9 Rows of 8 - 72 - S 6020 Bars (Safetey curb & Slab) Space as shown in section A-A
S 6002 Bars
167 - S 509 & S 510 Bars @ 1'-6" ℄ (Measured along curb line)
MATCH LINE

PLAN

3½" Fascia Line
Edge of Slab
Curb line
℄ Bearing
Face of abut. Backwall
Edge of roadway slab
6'
1'-0"

DETAIL A
DETAIL F
(Opposite hand)

Notes
For drainage details see Sh. No. 368 & 369
For lighting details see Sheet No. 214.
For railing details and spacing of bars in parapet see Sh. No. 367
For end finish detail see Sh. No. 363
For spacing of barrier guardrail posts see Sh. No. 367
Field bend longitudinal bars where necessary to miss inlets.
All longitudinal bars except those in the safety curb shall be placed parallel to girders B thru P
Transverse bars shall be placed perpendicular to girders B thru P

3'-10½" S 504 & S 505 Bars @ 1'-6" ℄
Median curb line
5" 5" 3½" 1'-0"
℄ Bearing
℄ Open joint
1 - S 513 Bar
1 - S 515 Bar
Face of abut. backwall
℄ Expway
3½"
1 - S 519 Bar
1 - S 520 Bar
Edge of curb slab
Median curb line
Edge of roadway slab
2'-2"
S 506 & S 507 Bars @ 1'-6" ℄

DETAIL B

DETAIL C

Class C Concrete for parapets above this construction joint is included with railing for payment
Clearance = 2" which includes 1" for monolithic wearing surface
56'-4"
51'-0"
Radial Dimension 3'-0"
2'-4"
2" 1'-2" 1'-0"
S 503 Bars @ 1'-6" ℄ exept where necessary to clear parapet joints
3" Galv. Metal Conduit
2" Radius
S 502 @ 1'-6" ℄
S 501 @ 1'-6" ℄
H 5 Bars
Const. jt. (level)
8 - S 6017 Bars Spaced as shown
3" 3" 2" 8½" 1'-5" 1'-3"
Varies Varies
1" Cl. 9"
10½" *
S 6002 Bars over piers
Super varies see roadway surface elevations
5 Spaces @ 9'-3" girders = 46'-3"
Top
Bottom
7 Equal Spa.
2 Spa @ 1'-3" 6 Spa. @ 8½" = 4'-3" 2 Spa @ 1'-3" 2'-6"
S 6001 Bars Typical Between girders B to G
1'-11" Min. Lap
56 Bars @ 8" ℄
2'-3" Min. Lap
Typ. haunch
S 7 Bars @ 8" ℄
Slab thickness includes 1" for monolithic wearing surface
See detail E
2" 6" 1½" 6"
1 - S 6003 Bar (Bot.)
1" See detail D
℄ open joint
S 505 @ 1'-6"
S 504 @ 1'-6"
1" Dia. half round drip groove
Flush (Typ.)
8 - S 6018 Bars Spaced as shown
3" 12"
Varies
Base Line Expway
A B C D E F G

PART SECTION A-A

A typical haunch width of 9" shall be used for computing quantity of concrete. However, the haunch width may vary between 6" and 12" provided that the slope shall not be more than 1:4 for a haunch less than 9" in width.

* This is a nominal dimension. The quantity of deck concrete to be paid for shall be based upon this dimension even though deviation from it may be necessary because the top flange of the girder may not have the exact camber or conformation required to place it parallel to the finished grade. Deduction shall be made for volume of encased steel plates as per Sec. 5-1.25 of the Construction and Material Specifications.

Work this sheet with Sh. 365

HAZELET & ERDAL
CONSULTING ENGINEERS
CINCINNATI, OHIO

SUPERSTRUCTURE DETAILS

BRIDGE No. HAM-71-0173

H&E BRIDGE No. 8R8L

DESIGNED	DRAWN	TRACED	CHECKED	REVIEWED DATE	REVISE
	G. L.W.	B. Sch.	W. L. 10-16-64	W.A.T. 5-20-65	

FED. RD. DIV.	STATE	PROJECT	FISCAL YEAR
2	OHIO		

HAMILTON COUNTY
HAM-71-(1.56)(2.51)

365
492

S 501 & S 502 Bars
See Detail H
Fascia line
Curb line
℄ Girder B
S 6001 Bars
1 Each - S 6157 thru S 6186 @ 8" (Top)
1 Each S 7137 thru S 7166 @ 8" (Bot)
S 6156 @ 8" (Top)
S 7136 @ 8" (Bot)
8"
SPAN 3
S 6001 Bars
1'-9"
S 6002 Bar
(1) S 6001 Bar (Top)
S 6018 Bars
℄ Girder G
See Detail G
1-S 6025 Bar (Top)
1-S 7085 Bar (Bot.)
Fan 5-S 6021 Bars (Top)
Fan 5-S 7001 Bars (Bot.)
Sta. 162+42.24
℄ Open joint
℄ Expway
1-S 6005 Bar (Bot)
Median Curb line
Drain Inlet
1-S 6001 Bar (Bot) 1-S 6006 Bar (Top & Bot)
S 6432 @ 8" (Top) S 7412 @ 8" (Bot.)
1-S 6001 Bar (Bot)
1-S 6001 Bar (Top & Bot)
℄ Pier 2
Sta. 161+65.24
6'-11"
S 6019 Bars
℄ Girder J
Edge of slab
MATCH LINE
S 506 & S 507 Bars
℄ Brg. N. Abutment
2 Rows of 41-82 S 6002 Bars Spaced as shown in Section A-A
S 6001 Bars (Top)
S 6001 Bars (Bot)
℄ Bearing Pier "2"
Staggered (Top)
1 Ea. S 6460 thru S 6529 @ 8" (Top)
1 Ea. S 7439 thru S 7508 @ 8" (Bot.)
S 6455 @ 8" (Top) S 7434 @ 8" (Bot)
28-S 6456 @ 8" (Top) 28-S 7435 @ 8" (Bot)
28-S 6457 @ 8" (Top) 28-S 7436 @ 8" (Bot)
28-S 6458 @ 8" (Top) 28-S 7437 @ 8" (Bot)
30-S 6459 @ 8" (Top) 30-S 7438 @ 8" (Bot)
70-S 6459 @ 8" (Top)
70-S 7438 @ 8" (Bot)
2 Rows of 4-8 S 6002 Bars Staggered @ 1'-5" (Top)
8"
7-S 6001 Bars @ 1'-5" (Top)
14-S 6001 Bars @ 8½" (Bot)
11-S 6001 Bars @ 8½" (Bot)
4-S 6001 Bars @ 1'-5" (Top)
8-S 6001 Bars @ 8½" (Bot)
4-S 6001 Bars @ 1'-5" (Top)
1'-3½"
1'-4"
17-S 6001 Bars @ 8½" (Bot)
9-S 6001 Bars @ 1'-5" (Top)
4-S 6001 Bars @ 8½" (Top)
Curb line
1-S 6011 (Top & Bot)
5½"
℄ Girder P
@ NPIN
1-S 6001 (Top)
1-S 6005 Bar (Top & Bot)
1-S 6006 Bar (Top & Bot.)
1-S 6003 Bar (Bot)
1-S 6007 Bar (Top & Bot.)
S 6020 Bars
Fascia
2 Rows of 2-4 S 6002 Bars Staggered (Safety Curb)
1-S 6008 Bar (Top & Bot)
1-S 6006 Bar (Top & Bot)
1-S 6009 Bar (Top & Bot)
1-S 6008 Bar (Top & Bot)
1-S 6001 Bar (Top)
See Detail J
1 Ea. S 7509 thru S 7577 @ 8" (Bot)
1 Ea. S 6513 thru S 6555 @ 8" (Top)
1 Ea. S 6530 thru S 6555 @ 8" (Top)
8" spc's
5-S 6001 Bars @ 8½" (Bot)
3-S 6001 Bars @ 1'-5" (Top)
1-S 6001 Bar (Top & Bot)
1-S 6001 Bar (Bot)
1-S 6270 (Top) & 1-S 7250 (Bot)
1-S 6271 (Top) & 1-S 7251 (Bot)
1-S 6273 (Top) & 1-S 7932 (Bot)
1-S 6353 (Top) & 1-S 7333 (Bot)
1-S 6354 (Top) & 1-S 7934 (Bot)
See Detail F
Fan 4-S 6021 Bars (Top)
Fan 4-S 7001 Bars (Bot)
1-S 6011 Bar (Top & Bot)
1-S 6014 Bar (Top & Bot)
1-S 6013 Bar (Bot)
1-S 6012 Bar (Top & Bot)
1-S 6008 Bar (Top & Bot)
1-S 6008 Bar (Bot)
2 Rows of 2-4 S 6002 Bars Staggered (Safety Curb)
S 509 & S 510 Bars

PLAN

Edge of slab
Fascia line
Face of abutment backwall
1'-0" Varies
1½"
11"
1½"
3½"
Brg.
Curb line
5'-1"
1'-0"
S 401 Bars @ 1'-6½"
S 5 Bars
Const. jt.
(N)
(P)

SECTION B-B

DETAIL H
DETAIL D (Opposite hand)

S 504 & S 505 Bars
Edge of roadway slab
Median Curb line
5½"
1-S 514 Bar
1-S 516 Bar
Edge of curb slab
2'-6"
℄ Open Joint
℄ Expway
3'-6"
Face of abut. backwall
℄ Bearing
1-S 517 Bar
1-S 518 Bar
Median Curb Line
Edge of roadway slab
S 506 & S 507 Bars

DETAIL G

6" ℄ Expway
℄ open joint
Type I-15.11 Guard rail
7"
1'-9"
6 WF 15.5 post galvanized as provided in Sec. M-7.4(d)
Galvanized 12 8"x1⅜"x10½"
2"
C
1"
6"
2" Radius
construction joint (level)
5'-0"
11"
3" 4" 4" 3"
2'-6"
3'-6"
1½" ℄ x 2'-6" bar, thread 4" length and provide one hex nut per bar. (Four per post). Bar and nut shall be galvanized.

DETAIL E

For detail of Guard Rail see standard drawing I-15 No. 2-A

S 7579
D
℄ Lamp Standard
Curb Line
S 7580
S 521
S 521
℄ Parapet
H 509
1'-0"
Parapet
1'-4"
2"
1½" Cl. (Typ)
11" 11"
3'-9"
D

DETAIL J

℄ Lamp Standard
℄ Parapet
2'-6"
1'-0" 1'-4"
2"
H 501 or H 502
1-H 509 Bar
2-S 521 Bars
1-S 7580 Bar
2-S 7578 Bars
2-S 7579 Bars
1-S 7580 Bar
½" Cl. (Typ)

SECTION D-D

⅛
1¼ ℄ holes for 1¼ ℄ bars
6 WF 15.5
8"x1⅜"x10½" PL
3½" 4½" 4½"
9"
℄ Post
10½"

SECTION C-C

1'-11" Min. lap
℄ Pier
3'-0" 20'-5" 20'-5" 3'-0"

DIAGRAM SHOWING STAGGER OF S 6002 BARS OVER PIERS

MICROFILMED
FEB 20 1985

Base line NPN
2'-2"
7'-0" Radially
1'-0" 1'-0" 2"
3" Galv. Metal Conduit
2"
H 5 Bars
S 508 Bars @ 1'-6" ℄ except where necessary to clear parapet joints
Class C concrete for parapets above this construction joint is included with railing for payment
2" Radius
10½"
1'-6"
S 510 @ 1'-6" ℄
S 509 @ 1'-6" ℄
3½"
3"
1" Dia. half round drip groove
2"
8-S 6020 Bars (Space as shown)
Varies
Varies
Varies

Work this sheet with sh. 364

PART SECTION A-A

6" 3'-0"
℄ open joint
℄ Expway
S 507 @ 1'-6"
S 506 @ 1'-6"
2"
See detail E
7 Equal Spaces
Top
Bottom
2 Spa. @ 1'-3¼" = 2'-6½"
6 Spa. @ 8½" = 4'-3"
1'-3¼" = 2'-6½"
S 6001 Bars Typical between girders J to P
10½"*
Super
Varies
See roadway surface elevations
Clearance = 2" which includes 1" for monolithic wearing surface
Min. lap 1'-11"
S 6 Bars @ 8" ℄ (Top)
S 6002 Bars over piers
Slab thickness includes 1" for monolithic wearing surface
3"
S 6 Bars @ 8½" ℄ (Bottom)
9 S 6019 Bars Space as shown
Varies
Typ. Haunch
9"
1" Cl.
2'-3" Min. lap
S 7 Bars @ 8" ℄ (Bottom)
6"
1'-4"
S 6 Bars (Top) (See plan for spacing)
S 6 Bars @ 8½" ℄ (Bottom)
A typical haunch width of 9" shall be used for computing quantity of concrete however, the haunch width may vary between 6" and 12" provided that the slope shall not be more than 1:4 for a haunch less than 9" in width.
6 Spaces @ 9'-6" = 57'-0"
(H) (J) (K) (L) (M) (N) (P) (R) (S)

HAZELET & ERDAL
CONSULTING ENGINEERS
CINCINNATI, OHIO

SUPERSTRUCTURE DETAILS

BRIDGE No. HAM-71-0173

H & E BRIDGE No. 8R & L

DESIGNED	DRAWN	TRACED	CHECKED	REVIEWED DATE	REVISED
	G.L.W.	B. Sch.	W.L. 10-16-64	11.17. 5-28-65	

FED. RD. DIV.	STATE	PROJECT	FISCAL YEAR
2	OHIO		

366
492

HAMILTON COUNTY
HAM-71-(1.56)(2.51)

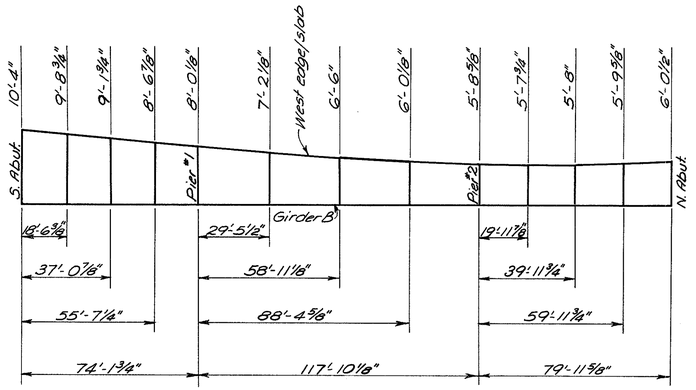

LAYOUT OF WEST EDGE OF ROADWAY SLAB

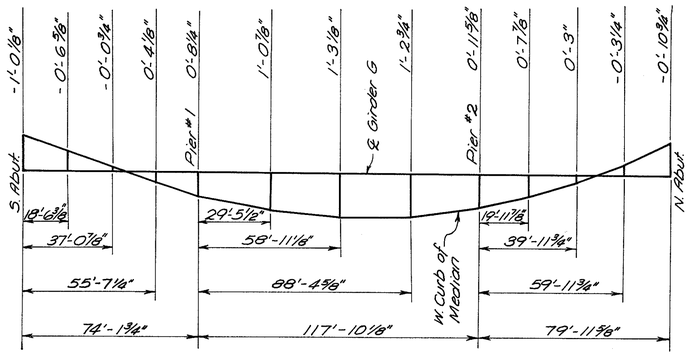

LAYOUT OF WEST CURB OF MEDIAN

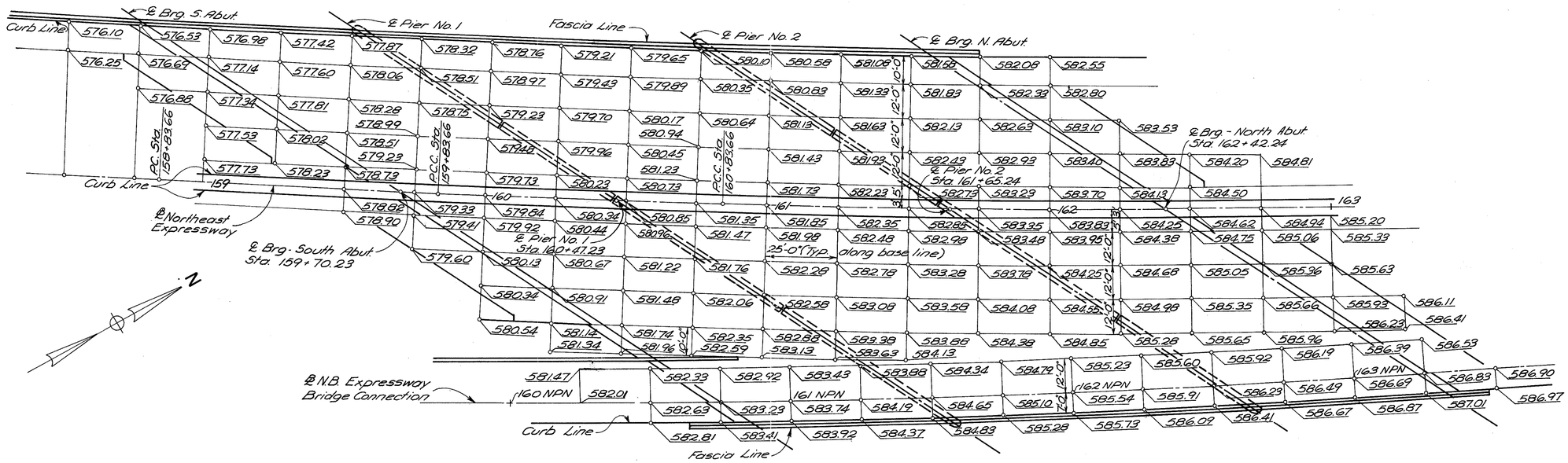

ROADWAY SURFACE ELEVATIONS

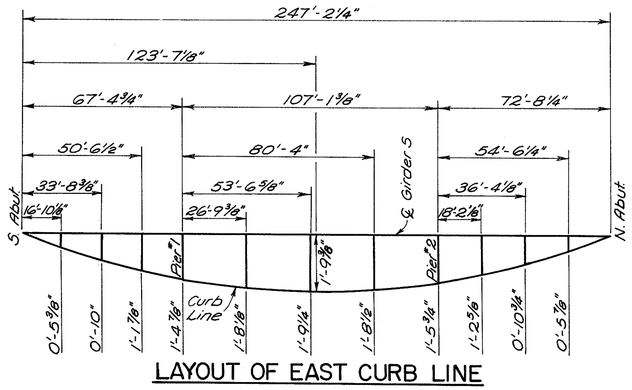

LAYOUT OF EAST CURB LINE

MICROFILMED
FEB 20 1965

HAZELET & ERDAL
CONSULTING ENGINEERS
CINCINNATI, OHIO

SUPERSTRUCTURE DETAILS

BRIDGE NO. HAM.-71-0173

H & E BRIDGE No. 8

DESIGNED	DRAWN	TRACED	CHECKED	REVIEWED DATE	REVISED
	M.J.E.	B. Sch.	J.H.O.	M.A.Z. 5-20-63	

FED. RD. DIV.	STATE	PROJECT	FISCAL YEAR
2	OHIO		

347
492

HAMILTON COUNTY
HAM-71-(1.56)(2.51)

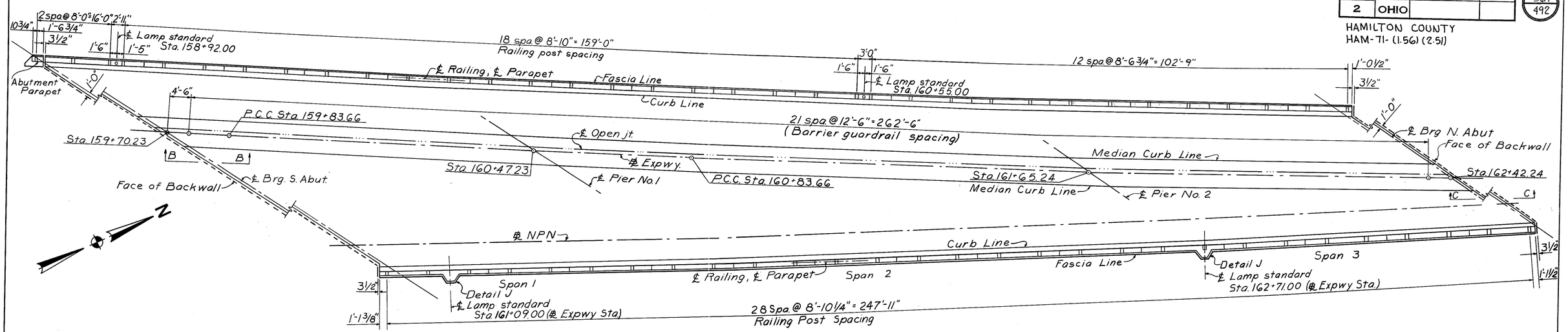

PLAN

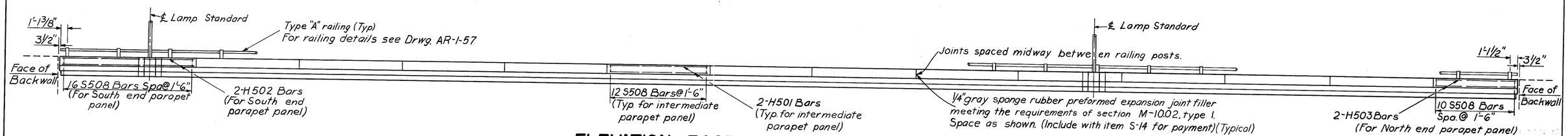

ELEVATION EAST RAILING

Looking West

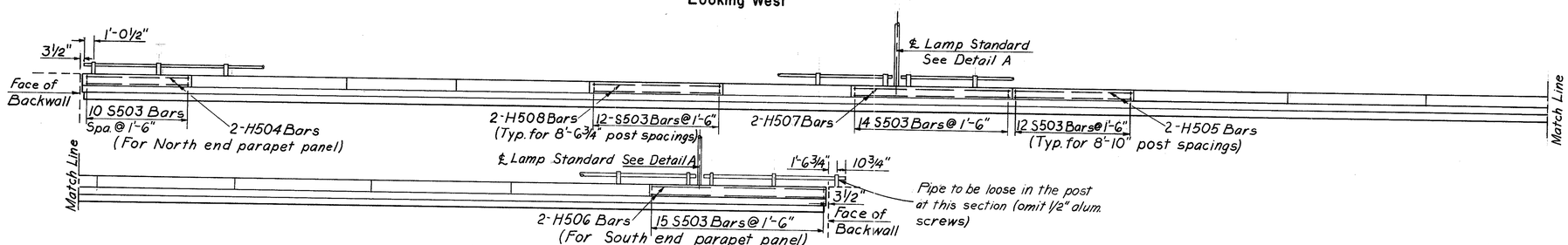

ELEVATION WEST RAILING

Looking East

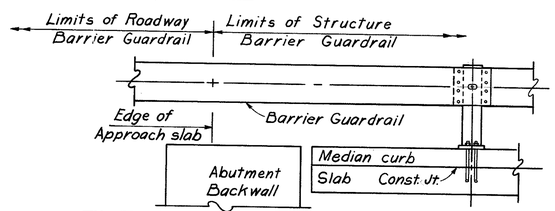

ELEVATION B-B & ELEVATION C-C

Opposite Hand

(End finish not shown)

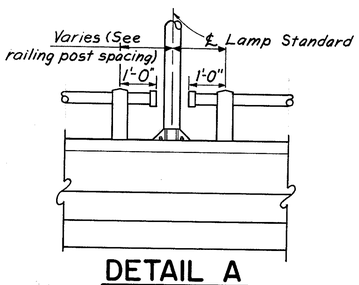

DETAIL A

NOTES:

The location of barrier guardrail posts is measured along ℄ Expwy..

The location of reinforcing steel, railing posts, and west lamp standards is measured along ℄ parapet.

For conduit expansion detail at abutments see sheet No. 214.

For typical lighting details see sheet No. 214.

Work this drawing with lighting plan sheet No. 205, which shows locations of conduits, hand holds, and lamp standards.

For detail J see sheet No. 365

For details of barrier guardrail see sheet No. 365

HAZELET & ERDAL
CONSULTING ENGINEERS
CINCINNATI, OHIO

RAILING & LIGHTING

BRIDGE No. HAM-71-0173

H&E BRIDGE No. 8R&L

DESIGNED	DRAWN	TRACED	CHECKED	REVIEWED DATE	REVISED
	MJE		WL	W.A.F. 5-20-65	

FED. RD. DIV.	STATE	PROJECT	FISCAL YEAR
2	OHIO		

368
492

HAMILTON COUNTY
HAM-71-(1.56)(2.51)

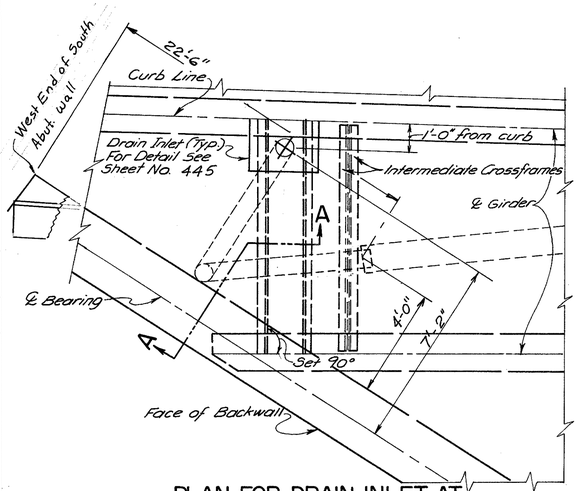

PLAN FOR DRAIN INLET AT
S. ABUT. OF SOUTH BOUND ROADWAY

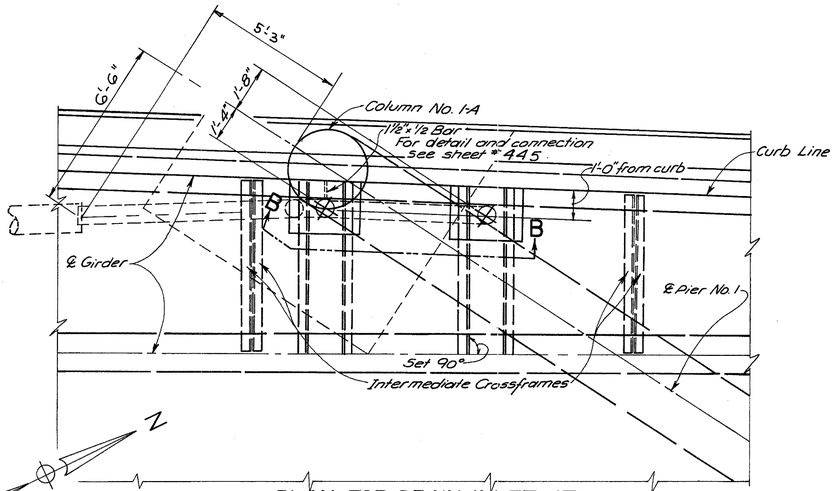

PLAN FOR DRAIN INLET AT
PIER No. 1 OF SOUTH BOUND ROADWAY

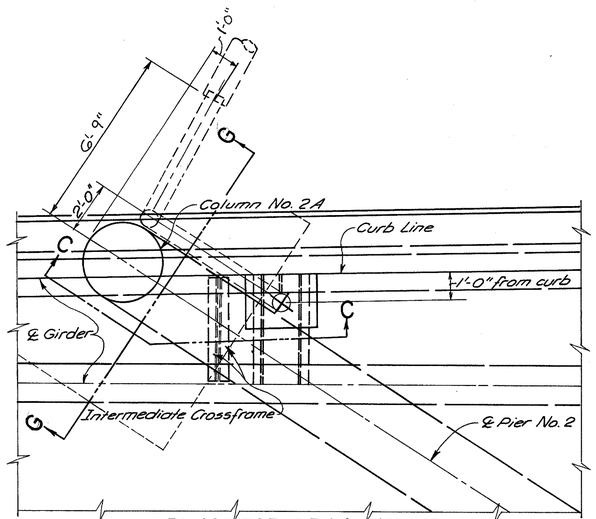

PLAN FOR DRAIN INLET AT
PIER No. 2 OF SOUTH BOUND ROADWAY

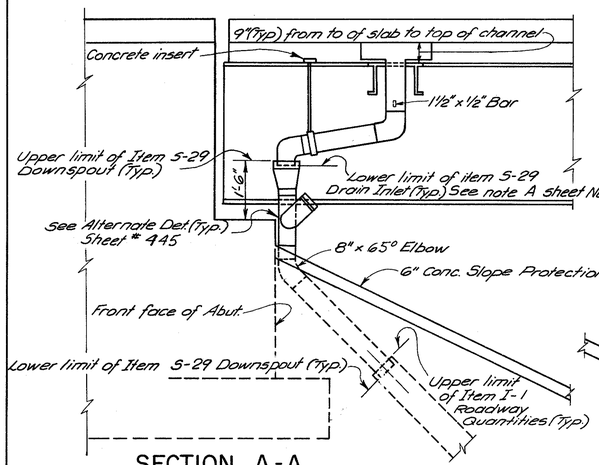

SECTION A-A

Note: Total depth of inlet frame box at S. Abut, Pier No. 1 and Pier No. 2 equals 7¾"

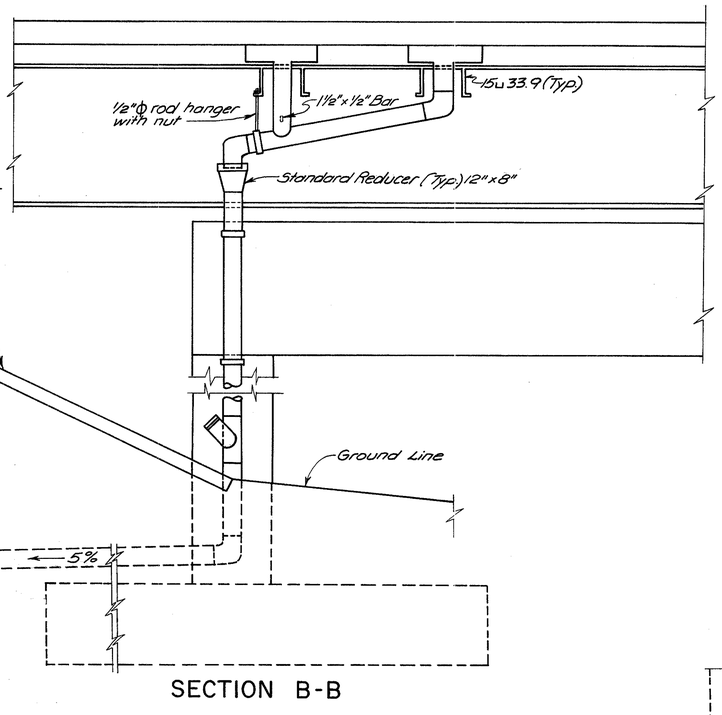

SECTION B-B

8" Pipe Throughout

Work this drawing with typical drawing sheet # 445

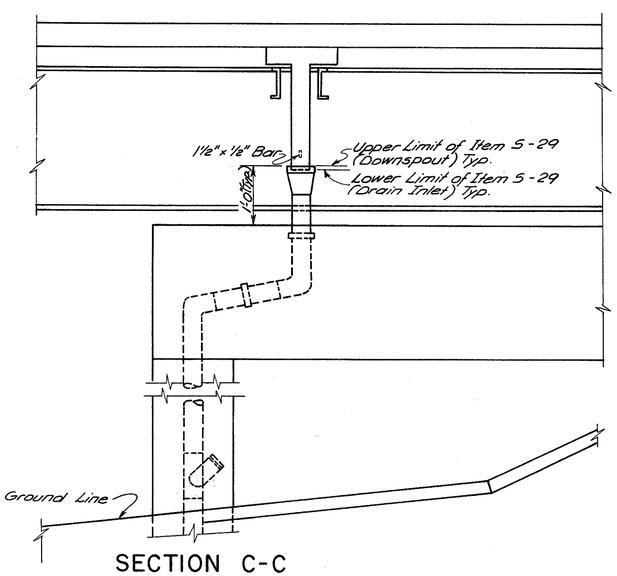

SECTION C-C

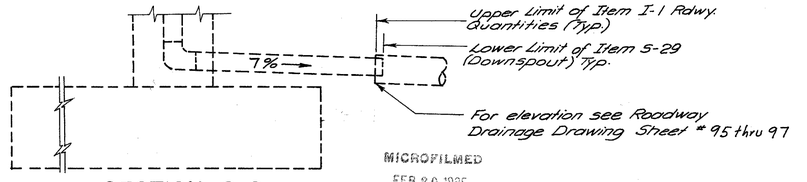

SECTION G-G

MICROFILMED
FEB 20 1985

Work this sheet with Sheet No. 369

HAZELET & ERDAL
CONSULTING ENGINEERS
CINCINNATI, OHIO

DRAINAGE DETAILS

BRIDGE No. HAM.-71-0173

H & E BRIDGE No. 8

DESIGNED	DRAWN	TRACED	CHECKED	REVIEWED DATE	REVISED
	M.E.	B.Sch.	J.H.O. 2-15-65	H.A.Z. 5-20-65	

FED. RD. DIV.	STATE	PROJECT	FISCAL YEAR
2	OHIO		

369
492

HAMILTON COUNTY
HAM-71-(1.56)(2.51)

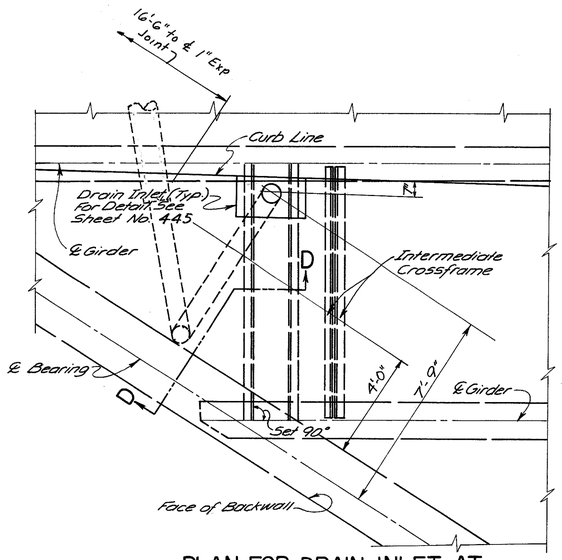

PLAN FOR DRAIN INLET AT
S. ABUT. OF NORTH BOUND ROADWAY

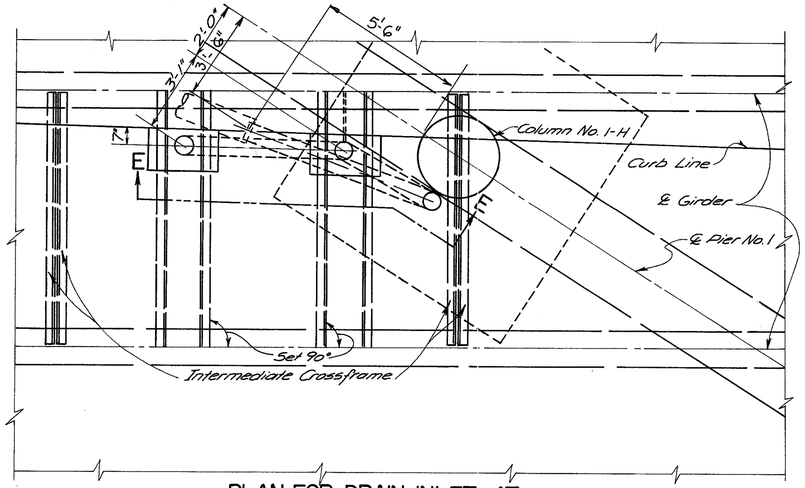

PLAN FOR DRAIN INLET AT
PIER NO. 1 OF NORTH BOUND ROADWAY

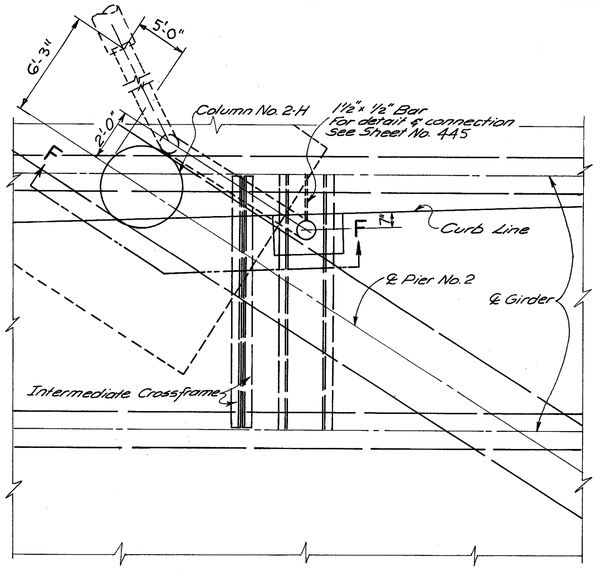

PLAN FOR DRAIN INLET AT
PIER NO. 2 OF NORTH BOUND ROADWAY

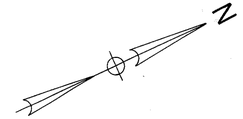

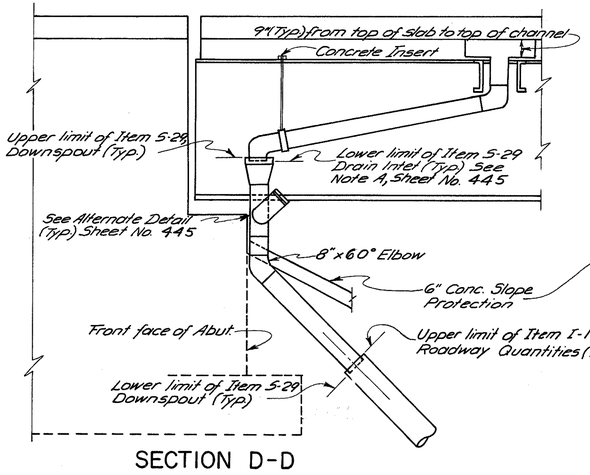

SECTION D-D

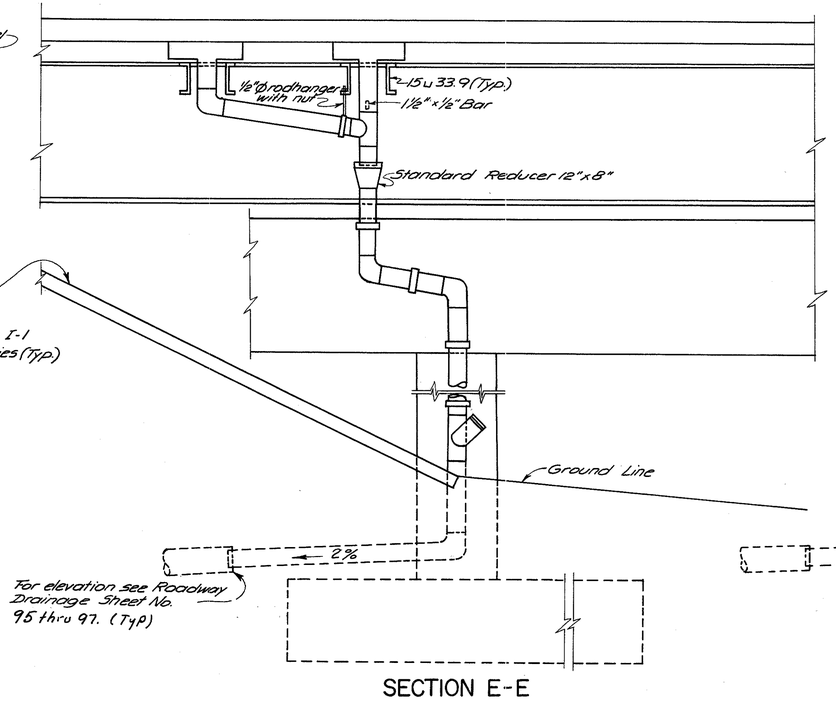

SECTION E-E

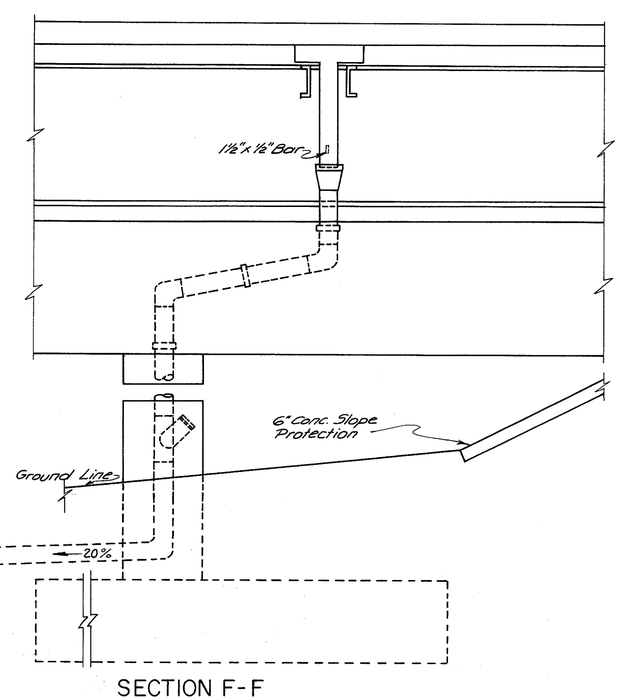

SECTION F-F

MICROFILMED
FEB 20 1985

Work this sheet with sheet No. 368

HAZELET & ERDAL
CONSULTING ENGINEERS
CINCINNATI, OHIO

DRAINAGE DETAILS

BRIDGE No. HAM-71-0173

H & E BRIDGE No. 8

DESIGNED	DRAWN	TRACED	CHECKED	REVIEWED DATE	REVISED
	M. J. E.	B. Sch.	J.H.O.	A.A.S. 5-20-65	

FED. RD. DIV.	STATE	PROJECT	FISCAL YEAR
2	OHIO		

370
492

HAMILTON COUNTY
HAM-71-(1.56) (2.51)

SUPERSTRUCTURE

Mark	Type	No.	Length	Weight
S401	40	21	3'-5"	48
S501	61	189	5'-1"	1002
S502	1	189	2'-8"	526
S503	14	195	5'-9"	1169
S504	21	181	4'-7"	865
S505	1	181	2'-4"	440
S506	21	180	5'-7"	1048
S507	1	180	3'-4"	626
S508	14	170	5'-7"	990
S509	61	167	4'-11"	856
S510	1	167	2'-6"	435
S511	Str.	1	30'-9"	32
S512	Str.	1	31'-6"	33
S513	21	1	6'-0"	6
S514	21	1	5'-8"	6
S515	1	1	3'-10"	4
S516	1	1	3'-6"	4
S517	21	1	7'-5"	8
S518	1	1	5'-3"	5
S519	21	1	4'-6"	5
S520	1	1	2'-3"	2
S521	4	4	9'-8"	10
S6001	Str.	1826	32'-2"	88222
S6002	↑	382	22'-11"	13,149
S6003		2	12'-3"	37
S6004		3	18'-3"	82
S6005		3	19'-0"	86
S6006		9	16'-6"	223
S6007		2	24'-3"	73
S6008		8	27'-6"	330
S6009		2	6'-6"	20
S6010		2	17'-6"	53
S6011		4	7'-6"	45
S6012		2	24'-9"	74
S6013		1	16'-0"	24
S6014		2	7'-0"	21
S6015		1	21'-3"	32
S6016		2	10'-0"	30
S6017		72	33'-3"	3596
S6018		72	32'-3"	3488
S6019		81	32'-1"	3903
S6020		72	29'-6"	3190
S6021		14	3'-0"	63
S6022		1	3'-8"	6
S6023		1	4'-1"	6
S6024		1	4'-6"	7
S6025		2	5'-0"	15
S6026		1	5'-5"	8
S6027		1	5'-9"	9
S6028		1	6'-2"	9
S6029		1	6'-7"	10
S6030		1	7'-0"	11
S6031		1	7'-5"	11
S6032		1	7'-9"	12
S6033		1	8'-2"	12
S6034		1	8'-7"	13
S6035		1	9'-0"	14
S6036		1	9'-5"	14
S6037		1	9'-9"	15
S6038		1	10'-2"	15
S6039		1	10'-7"	16
S6040		1	11'-0"	17
S6041		1	11'-5"	17
S6042		1	11'-9"	18
S6043		1	12'-2"	18
S6044		1	12'-7"	19
S6045		1	13'-0"	20
S6046		2	13'-5"	41
S6047		2	13'-9"	41
S6048		2	14'-2"	43
S6049	↓ Str.	2	14'-7"	44

SUPERSTRUCTURE

Mark	Type	No.	Length	Weight
S6050	Str.	2	15'-0"	45
S6051	↑	2	15'-5"	47
S6052		2	15'-9"	47
S6053		2	16'-2"	49
S6054		2	16'-7"	50
S6055		2	16'-11"	51
S6056		2	17'-4"	52
S6057		2	17'-8"	53
S6058		2	18'-1"	54
S6059		2	18'-6"	56
S6060		2	18'-11"	57
S6061		2	19'-4"	58
S6062		2	19'-8"	59
S6063		2	20'-1"	60
S6064		2	20'-6"	62
S6065		2	20'-11"	63
S6066		2	21'-4"	64
S6067		2	21'-8"	65
S6068		2	22'-1"	66
S6069		2	22'-6"	68
S6070		2	22'-11"	69
S6071		2	23'-4"	70
S6072		2	23'-8"	71
S6073		2	24'-1"	72
S6074		2	24'-5"	73
S6075		2	24'-10"	75
S6076		2	25'-3"	76
S6077		2	25'-7"	77
S6078		2	26'-0"	78
S6079		2	26'-5"	79
S6080		2	26'-10"	81
S6081		2	27'-3"	82
S6082		2	27'-7"	83
S6083		2	28'-0"	84
S6084		2	28'-5"	85
S6085		2	28'-10"	87
S6086		2	29'-3"	88
S6087		2	29'-7"	89
S6088		79	30'-0"	3560
S6089		1	30'-5"	46
S6090		1	30'-10"	46
S6091		1	31'-2"	47
S6092		1	31'-7"	47
S6093		1	32'-0"	48
S6094		1	32'-5"	49
S6095		1	32'-10"	49
S6096		1	33'-2"	50
S6097		1	33'-7"	50
S6098		1	34'-0"	51
S6099		1	34'-5"	52
S6100		1	34'-9"	52
S6101		1	35'-2"	53
S6102		1	35'-7"	53
S6103		1	36'-0"	54
S6104		1	36'-4"	55
S6105		1	36'-9"	55
S6106		1	37'-2"	56
S6107		1	37'-7"	56
S6108		1	38'-0"	57
S6109		1	38'-4"	58
S6110		1	38'-8"	58
S6111		1	39'-2"	59
S6112		1	39'-7"	59
S6113		1	39'-4"	59
S6114		1	38'-10"	58
S6115		1	38'-4"	58
S6116		1	37'-10"	57
S6117		1	37'-4"	56
S6118		1	36'-10"	55
S6119		1	36'-5"	55
S6120		1	35'-11"	54
S6121		1	35'-5"	53
S6122		1	34'-11"	52
S6123		1	34'-6"	52
S6124		1	34'-0"	51
S6125		1	33'-6"	50
S6126		1	33'-0"	50
S6127		1	32'-7"	49
S6128		1	32'-1"	48
S6129		1	31'-7"	47
S6130		1	31'-1"	47
S6131	↓ Str.	1	30'-8"	46

SUPERSTRUCTURE

Mark	Type	No.	Length	Weight
S6132	Str.	1	30'-2"	45
S6133	↑	1	29'-8"	45
S6134		1	29'-2"	44
S6135		1	28'-9"	43
S6136		1	28'-3"	42
S6137		1	27'-9"	42
S6138		1	27'-3"	41
S6139		1	26'-10"	40
S6140		1	26'-4"	40
S6141		1	25'-10"	39
S6142		1	25'-4"	38
S6143		1	24'-11"	37
S6144		1	24'-5"	37
S6145		1	23'-11"	36
S6146		1	23'-5"	35
S6147		1	23'-0"	35
S6148		1	22'-6"	34
S6149		1	22'-0"	33
S6150		1	21'-6"	32
S6151		1	21'-1"	32
S6152		1	20'-7"	31
S6153		1	20'-1"	30
S6154		1	19'-7"	29
S6155		1	19'-2"	29
S6156		645	28'-7"	27691
S6157		1	25'-11"	39
S6158		1	25'-5"	38
S6159		1	25'-0"	38
S6160		1	24'-7"	37
S6161		1	24'-1"	36
S6162		1	23'-8"	36
S6163		1	23'-3"	35
S6164		1	22'-10"	34
S6165		1	22'-5"	34
S6166		1	22'-0"	33
S6167		1	21'-7"	32
S6168		1	21'-2"	32
S6169		1	20'-8"	31
S6170		1	20'-3"	30
S6171		1	19'-9"	30
S6172		1	19'-4"	29
S6173		1	18'-11"	28
S6174		1	18'-5"	28
S6175		1	18'-0"	27
S6176		1	17'-7"	26
S6177		1	17'-2"	26
S6178		1	16'-8"	25
S6179		1	16'-2"	24
S6180		1	15'-9"	24
S6181		1	15'-4"	23
S6182		1	14'-11"	22
S6183		1	14'-6"	22
S6184		1	14'-1"	21
S6185		1	13'-8"	21
S6186		1	13'-3"	20
S6187		1	39'-6"	59
S6188		1	39'-1"	59
S6189		1	38'-8"	58
S6190		1	38'-3"	57
S6191		1	37'-9"	57
S6192		1	37'-4"	56
S6193		1	36'-11"	55
S6194		1	36'-6"	55
S6195		1	36'-1"	54
S6196		1	35'-7"	53
S6197		1	35'-2"	53
S6198		1	34'-9"	52
S6199		1	34'-4"	52
S6200		1	33'-10"	51
S6201		1	33'-5"	50
S6202		1	33'-0"	50
S6203		1	32'-7"	49
S6204		1	32'-1"	48
S6205		1	31'-8"	48
S6206		1	31'-3"	47
S6207		1	30'-10"	46
S6208		1	30'-5"	46
S6209		1	29'-11"	45
S6210		1	29'-6"	44
S6211		1	29'-1"	44
S6212		1	28'-8"	43
S6213	↓ Str.	1	28'-2"	42

SUPERSTRUCTURE

Mark	Type	No.	Length	Weight
S6214	Str.	1	27'-9"	42
S6215	↑	1	27'-4"	41
S6216		1	26'-11"	40
S6217		1	26'-6"	40
S6218		1	26'-0"	39
S6219		1	25'-7"	38
S6220		1	25'-2"	38
S6221		1	24'-9"	37
S6222		1	24'-3"	36
S6223		1	23'-10"	36
S6224		1	23'-5"	35
S6225		1	23'-0"	35
S6226		1	22'-6"	34
S6227		1	22'-1"	33
S6228		1	21'-8"	33
S6229		1	21'-3"	32
S6230		1	20'-9"	31
S6231		1	20'-4"	31
S6232		1	19'-11"	30
S6233		1	19'-6"	29
S6234		1	19'-1"	29
S6235		1	18'-7"	28
S6236		1	18'-2"	27
S6237		1	17'-9"	27
S6238		1	17'-4"	26
S6239		1	16'-10"	25
S6240		1	16'-5"	25
S6241		1	16'-0"	24
S6242		1	15'-7"	23
S6243		1	15'-2"	23
S6244		1	14'-8"	22
S6245		1	14'-3"	21
S6246		1	13'-10"	21
S6247		1	13'-5"	20
S6248		1	12'-11"	19
S6249		1	12'-6"	19
S6250		1	12'-1"	18
S6251		1	11'-8"	18
S6252		1	11'-2"	17
S6253		1	10'-9"	16
S6254		1	10'-4"	16
S6255		1	9'-11"	15
S6256		1	9'-6"	14
S6257		1	9'-0"	14
S6258		1	8'-7"	13
S6259		1	8'-2"	12
S6260		1	7'-9"	12
S6261		1	7'-3"	11
S6262		1	6'-10"	10
S6263		1	6'-5"	10
S6264		1	6'-0"	9
S6265		1	5'-6"	8
S6266		1	5'-1"	8
S6267		1	4'-8"	7
S6268		1	4'-3"	6
S6269		1	3'-8"	6
S6270		1	6'-2"	9
S6271		1	5'-9"	9
S6272		5	4'-0"	30
S6273		1	5'-3"	8
S6274		1	4'-5"	7
S6275		1	4'-10"	7
S6276		1	5'-3"	8
S6277		1	5'-8"	9
S6278		1	6'-1"	9
S6279		1	6'-6"	10
S6280		1	6'-11"	10
S6281		1	7'-3"	11
S6282		1	7'-8"	12
S6283		1	8'-1"	12
S6284		1	8'-6"	13
S6285		1	8'-11"	13
S6286		1	9'-3"	14
S6287		1	9'-8"	15
S6288		1	10'-1"	15
S6289		1	10'-6"	16
S6290		1	10'-11"	16
S6291		1	11'-3"	17
S6292		1	11'-8"	18
S6293		1	12'-1"	18
S6294		1	12'-6"	19
S6295	↓ Str.	1	12'-11"	19

SUPERSTRUCTURE

Mark	Type	No.	Length	Weight
S6296	Str.	1	13'-3"	20
S6297	↑	1	13'-8"	21
S6298		1	14'-1"	21
S6299		1	14'-6"	22
S6300		1	14'-11"	22
S6301		1	15'-4"	23
S6302		1	15'-9"	24
S6303		1	16'-2"	24
S6304		1	16'-7"	25
S6305		1	16'-11"	25
S6306		1	17'-4"	26
S6307		1	17'-9"	27
S6308		1	18'-2"	27
S6309		1	18'-7"	28
S6310		1	18'-11"	28
S6311		1	19'-4"	29
S6312		1	19'-9"	30
S6313		1	20'-2"	30
S6314		1	20'-7"	31
S6315		1	20'-11"	31
S6316		1	21'-4"	32
S6317		1	21'-9"	33
S6318		1	22'-2"	33
S6319		1	22'-7"	34
S6320		1	23'-1"	34
S6321		1	23'-4"	35
S6322		1	23'-9"	36
S6323		1	24'-2"	36
S6324		1	24'-7"	37
S6325		1	24'-11"	37
S6326		1	25'-4"	38
S6327		1	25'-9"	39
S6328		1	26'-2"	39
S6329		1	26'-7"	40
S6330		1	27'-0"	41
S6331		1	27'-5"	41
S6332		1	27'-10"	42
S6333		1	28'-3"	42
S6334		1	28'-8"	43
S6335		1	29'-0"	44
S6336		1	29'-5"	44
S6337		1	29'-10"	45
S6338		1	30'-3"	45
S6339		1	30'-8"	46
S6340		1	31'-0"	47
S6341		1	31'-5"	47
S6342		1	31'-10"	48
S6343		1	32'-3"	48
S6344		1	32'-8"	49
S6345		1	33'-0"	50
S6346		1	33'-5"	50
S6347		1	33'-10"	51
S6348		1	34'-3"	51
S6349		1	34'-8"	52
S6350		1	35'-0"	53
S6351		1	35'-5"	53
S6352		1	35'-10"	54
S6353		1	4'-9"	7
S6354		1	4'-3"	6
S6355		1	8'-2"	12
S6356		1	8'-7"	13
S6357		1	9'-0"	14
S6358		1	9'-5"	14
S6359		1	9'-10"	15
S6360		1	10'-3"	15
S6361		1	10'-8"	16
S6362		1	11'-1"	17
S6363		1	10'-6"	16
S6364		1	11'-11"	18
S6365		1	12'-4"	19
S6366		1	12'-9"	19
S6367		1	13'-2"	20
S6368		1	13'-7"	20
S6369		1	14'-0"	21
S6370		1	14'-4"	22
S6371		1	14'-9"	22
S6372		1	15'-2"	23
S6373		1	15'-7"	23
S6374		1	16'-0"	24
S6375		1	16'-5"	25
S6376	↓ Str.	1	16'-10"	25

SUPERSTRUCTURE

Mark	Type	No.	Length	Weight
S6377	Str.	1	17'-3"	26
S6378	↑	1	17'-8"	27
S6379		1	18'-1"	27
S6380		1	18'-6"	28
S6381		1	18'-11"	28
S6382		1	19'-4"	29
S6383		1	19'-9"	30
S6384		1	20'-2"	30
S6385		1	20'-6"	31
S6386		1	20'-1"	30
S6387		1	21'-4"	32
S6388		1	21'-9"	33
S6389		1	22'-2"	33
S6390		1	22'-7"	34
S6391		1	23'-0"	35
S6392		1	23'-5"	35
S6393		1	23'-10"	36
S6394		1	24'-3"	35
S6395		1	24'-8"	37
S6396		1	25'-1"	38
S6397		1	25'-6"	38
S6398		1	25'-11"	39
S6399		1	26'-3"	39
S6400		1	26'-8"	40
S6401		1	27'-1"	41
S6402		1	27'-6"	41
S6403		1	27'-11"	42
S6404		1	28'-4"	43
S6405		1	28'-9"	43
S6406		1	29'-2"	44
S6407		1	29'-7"	44
S6408		1	30'-0"	45
S6409		1	30'-5"	46
S6410		1	30'-10"	46
S6411		1	31'-3"	47
S6412		1	31'-8"	48
S6413		1	32'-1"	48
S6414		1	32'-6"	49
S6415		1	32'-10"	49
S6416		1	33'-3"	50
S6417		1	33'-8"	51
S6418		1	34'-1"	51
S6419		1	34'-6"	52
S6420		1	34'-11"	52
S6421		1	35'-4"	53
S6422		1	35'-9"	54
S6423		1	36'-2"	54
S6424		1	36'-7"	55
S6425		1	37'-0"	56
S6426		1	37'-5"	56
S6427		1	37'-10"	57
S6428		1	38'-3"	57
S6429		1	38'-8"	58
S6430		1	39'-0"	59
S6431		1	39'-5"	59
S6432		245	40'-0"	14,720
S6433		1	29'-10"	45
S6434		1	30'-3"	45
S6435		1	30'-8"	46
S6436		1	31'-1"	47
S6437		1	31'-6"	47
S6438		1	31'-11"	48
S6439		1	32'-4"	49
S6440		1	32'-9"	49
S6441	↓ Str.	1	33'-2"	50

MICROFILMED
FEB 20 1965

NOTE:
Work this sheet with Typical Drawing No. 4, Sht. No. 446

HAZELET & ERDAL
CONSULTING ENGINEERS
CINCINNATI, OHIO

REINFORCING STEEL LIST
BRIDGE NO. HAM-71-0173
(SHEET NO. 1 OF 4)

H&E BRIDGE NO. 8L&R

DESIGNED	DRAWN	TRACED	CHECKED	REVIEWED DATE	REVISED
	TLZ		1-21-65 GLW	11.1.2. 5-20-65	

FED. RD. DIV.	STATE	PROJECT	FISCAL YEAR
2	OHIO		

371
492

HAMILTON COUNTY
HAM-71-(1.56) (2.51)

SUPERSTRUCTURE

Mark	Type	No.	Length	Weight
56442	Str.	1	33'-7"	50
56443	↑	1	34'-0"	51
56444		1	34'-5"	52
56445		1	34'-10"	52
56446		1	35'-3"	53
56447		1	35'-8"	54
56448		1	36'-1"	54
56449		1	36'-6"	55
56450		1	36'-11"	55
56451		1	37'-4"	56
56452		28	39'-11"	1679
56453		28	39'-4"	1654
56454		28	38'-9"	1630
56455		28	38'-2"	1605
56456		28	37'-7"	1581
56457		28	37'-0"	1556
56458		28	36'-5"	1532
56459		100	35'-10"	5382
56460		1	38'-11"	58
56461		1	38'-6"	58
56462		1	38'-0"	57
56463		1	37'-6"	56
56464		1	37'-0"	56
56465		1	36'-6"	55
56466		1	36'-0"	54
56467		1	35'-6"	53
56468		1	35'-0"	53
56469		1	34'-6"	52
56470		1	34'-2"	51
56471		1	33'-9"	51
56472		1	33'-3"	50
56473		1	32'-9"	49
56474		1	32'-3"	48
56475		1	31'-9"	48
56476		1	31'-4"	47
56477		1	30'-10"	46
56478		1	30'-4"	46
56479		1	29'-11"	45
56480		1	29'-5"	44
56481		1	29'-0"	44
56482		1	28'-6"	43
56483		1	28'-0"	42
56484		1	27'-6"	41
56485		1	27'-0"	41
56486		1	26'-7"	40
56487		1	26'-1"	39
56488		1	25'-8"	39
56489		1	25'-2"	38
56490		1	24'-8"	37
56491		1	24'-2"	36
56492		1	23'-8"	36
56493		1	23'-2"	35
56494		1	22'-9"	34
56495		1	22'-3"	33
56496		1	21'-10"	33
56497		1	21'-4"	32
56498		1	20'-10"	31
56499		1	20'-5"	31
56500		1	19'-11"	30
56501		1	19'-6"	29
56502		1	19'-0"	29
56503		1	18'-6"	28
56504		1	18'-1"	27
56505		1	17'-7"	26
56506		1	17'-2"	26
56507		1	16'-8"	25
56508		1	16'-2"	24
56509		1	15'-8"	24
56510		1	15'-2"	23
56511		1	14'-9"	22
56512		1	14'-3"	21
56513		1	13'-9"	21
56514		1	13'-4"	20
56515		1	12'-10"	19
56516		1	12'-5"	19
56517		1	11'-11"	18
56518		1	11'-5"	17
56519		1	10'-11"	16
56520		1	10'-5"	16
56521		1	10'-0"	15
56522		1	9'-6"	14
56523		1	9'-0"	14
56524	Str.	1	8'-7"	13

SUPERSTRUCTURE

Mark	Type	No.	Length	Weight
56525	Str.	1	8'-1"	12
56526	↑	1	7'-8"	12
56527		1	7'-2"	11
56528		1	6'-8"	10
56529		1	6'-2"	9
56530		1	18'-8"	28
56531		1	18'-2"	27
56532		1	17'-8"	27
56533		1	17'-3"	26
56534		1	16'-9"	25
56535		1	16'-3"	24
56536		1	15'-9"	24
56537		1	15'-4"	23
56538		1	14'-10"	22
56539		1	14'-4"	22
56540		1	13'-10"	21
56541		1	13'-5"	20
56542		1	12'-11"	19
56543		1	12'-5"	19
56544		1	11'-11"	18
56545		1	11'-6"	17
56546		1	11'-0"	17
56547		1	10'-6"	16
56548		1	10'-0"	15
56549		1	9'-7"	14
56550		1	9'-1"	14
56551		1	8'-7"	13
56552		1	8'-1"	12
56553		1	7'-8"	12
56554		1	7'-2"	11
56555	Str.	1	6'-8"	10
57001	Str.	14	3'-0"	86
57002	↑	1	3'-8"	7
57003		1	4'-1"	8
57004		1	4'-6"	9
57005		2	5'-0"	20
57006		1	5'-5"	11
57007		1	5'-9"	12
57008		1	6'-2"	13
57009		1	6'-7"	13
57010		1	7'-0"	14
57011		1	7'-5"	15
57012		1	7'-9"	16
57013		1	8'-2"	17
57014		1	8'-7"	18
57015		1	9'-0"	18
57016		1	9'-5"	19
57017		1	9'-9"	20
57018		1	10'-2"	21
57019		1	10'-7"	22
57020		1	11'-0"	22
57021		1	11'-5"	23
57022		1	11'-9"	24
57023		1	12'-2"	25
57024		1	12'-7"	26
57025		1	13'-0"	27
57026		1	13'-5"	27
57027		1	13'-9"	28
57028		1	14'-2"	29
57029		1	14'-7"	30
57030		1	15'-0"	31
57031		1	15'-5"	32
57032		1	15'-9"	32
57033		1	16'-2"	33
57034		1	16'-7"	34
57035		1	16'-11"	35
57036		1	17'-4"	35
57037		1	17'-8"	36
57038		1	18'-1"	37
57039		1	18'-6"	38
57040		1	18'-11"	39
57041		1	19'-4"	40
57042	Str.	1	19'-8"	40

SUPERSTRUCTURE

Mark	Type	No.	Length	Weight
57043	Str.	1	20'-1"	41
57044	↑	1	20'-6"	42
57045		1	20'-11"	43
57046		1	21'-4"	44
57047		1	21'-8"	44
57048		1	22'-1"	45
57049		1	22'-6"	46
57050		1	22'-11"	47
57051		1	23'-4"	48
57052		1	23'-8"	48
57053		1	24'-1"	49
57054		1	24'-5"	50
57055		1	24'-10"	51
57056		1	25'-3"	52
57057		1	25'-7"	52
57058		1	26'-0"	53
57059		1	26'-5"	54
57060		1	26'-10"	55
57061		1	27'-3"	56
57062		1	27'-7"	56
57063		1	28'-0"	57
57064		1	28'-5"	58
57065		1	28'-10"	59
57066		1	29'-3"	60
57067		1	29'-7"	60
57068		78	30'-0"	4783
57069		1	30'-5"	62
57070		1	30'-10"	63
57071		1	31'-2"	64
57072		1	31'-7"	65
57073		1	32'-0"	65
57074		1	32'-5"	66
57075		1	32'-10"	67
57076		1	33'-2"	68
57077		1	33'-7"	69
57078		1	34'-0"	69
57079		1	34'-5"	70
57080		1	34'-9"	71
57081		1	35'-2"	72
57082		1	35'-7"	73
57083		1	36'-0"	74
57084		1	36'-4"	74
57085		1	36'-9"	75
57086		1	37'-2"	76
57087		1	37'-7"	77
57088		1	38'-0"	78
57089		1	38'-4"	78
57090		1	38'-8"	79
57091		1	39'-2"	80
57092		1	39'-7"	81
57093		1	13'-5"	27
57094		1	13'-10"	28
57095		1	14'-3"	29
57096		1	14'-8"	30
57097		1	15'-0"	31
57098		1	15'-5"	32
57099		1	15'-10"	32
57100		1	16'-3"	33
57101		1	16'-7"	34
57102		1	17'-0"	35
57103		1	17'-5"	36
57104		1	17'-10"	36
57105		1	18'-2"	37
57106		1	18'-7"	38
57107		1	19'-0"	39
57108		1	19'-5"	40
57109		1	19'-10"	41
57110		1	20'-2"	41
57111		1	20'-7"	42
57112		1	21'-0"	43
57113		1	21'-5"	44
57114		1	21'-9"	44
57115		1	22'-2"	45
57116		1	22'-7"	46
57117		1	23'-0"	47
57118		1	23'-4"	48
57119		1	23'-9"	49
57120		1	24'-2"	49
57121		1	24'-7"	50
57122		1	25'-0"	51
57123		1	25'-4"	52
57124		1	25'-9"	53
57125	Str.	1	26'-2"	53

SUPERSTRUCTURE

Mark	Type	No.	Length	Weight
57126	Str.	1	26'-7"	54
57127	↑	1	26'-11"	55
57128		1	27'-4"	56
57129		1	27'-9"	57
57130		1	28'-2"	58
57131		1	28'-7"	58
57132		1	28'-11"	59
57133		1	29'-4"	60
57134		1	29'-9"	61
57135		1	30'-2"	62
57136		645	28'-9"	37903
57137		1	26'-1"	53
57138		1	25'-7"	52
57139		1	25'-2"	51
57140		1	24'-9"	51
57141		1	24'-3"	50
57142		1	23'-10"	49
57143		1	23'-5"	48
57144		1	23'-0"	47
57145		1	22'-7"	46
57146		1	22'-2"	45
57147		1	21'-9"	44
57148		1	21'-4"	44
57149		1	20'-10"	43
57150		1	20'-5"	42
57151		1	19'-11"	41
57152		1	19'-6"	40
57153		1	19'-1"	39
57154		1	18'-7"	38
57155		1	18'-2"	37
57156		1	17'-9"	36
57157		1	17'-4"	35
57158		1	16'-10"	34
57159		1	16'-4"	33
57160		1	15'-11"	33
57161		1	15'-6"	32
57162		1	15'-1"	31
57163		1	14'-8"	30
57164		1	14'-3"	29
57165		1	13'-10"	28
57166		1	13'-5"	27
57167		1	39'-6"	81
57168		1	39'-1"	80
57169		1	38'-8"	79
57170		1	38'-3"	78
57171		1	37'-9"	77
57172		1	37'-4"	76
57173		1	36'-11"	75
57174		1	36'-6"	75
57175		1	36'-1"	74
57176		1	35'-7"	73
57177		1	35'-2"	72
57178		1	34'-9"	71
57179		1	34'-4"	70
57180		1	33'-10"	69
57181		1	33'-5"	68
57182		1	33'-0"	67
57183		1	32'-7"	67
57184		1	32'-1"	66
57185		1	31'-8"	65
57186		1	31'-3"	64
57187		1	30'-10"	63
57188		1	30'-5"	62
57189		1	29'-11"	61
57190		1	29'-6"	60
57191		1	29'-1"	59
57192		1	28'-8"	59
57193		1	28'-2"	58
57194		1	27'-9"	57
57195		1	27'-4"	56
57196		1	26'-11"	55
57197		1	26'-6"	54
57198		1	26'-0"	53
57199		1	25'-7"	52
57200		1	25'-2"	51
57201		1	24'-9"	51
57202		1	24'-3"	50
57203		1	23'-10"	49
57204		1	23'-5"	48
57205		1	23'-0"	47
57206		1	22'-6"	46
57207		1	22'-1"	45
57208	Str.	1	21'-8"	44

SUPERSTRUCTURE

Mark	Type	No.	Length	Weight
57209	Str.	1	21'-3"	43
57210	↑	1	20'-9"	42
57211		1	20'-4"	42
57212		1	19'-11"	41
57213		1	19'-6"	40
57214		1	19'-1"	39
57215		1	18'-7"	38
57216		1	18'-2"	37
57217		1	17'-9"	36
57218		1	17'-4"	35
57219		1	16'-10"	34
57220		1	16'-5"	34
57221		1	16'-0"	33
57222		1	15'-7"	32
57223		1	15'-2"	31
57224		1	14'-8"	30
57225		1	14'-3"	29
57226		1	13'-10"	28
57227		1	13'-5"	27
57228		1	12'-11"	26
57229		1	12'-6"	26
57230		1	12'-1"	25
57231		1	11'-8"	24
57232		1	11'-2"	23
57233		1	10'-9"	22
57234		1	10'-4"	21
57235		1	9'-11"	20
57236		1	9'-6"	19
57237		1	9'-0"	18
57238		1	8'-7"	18
57239		1	8'-2"	17
57240		1	7'-9"	16
57241		1	7'-3"	15
57242		1	6'-10"	14
57243		1	6'-5"	13
57244		1	6'-0"	12
57245		1	5'-6"	11
57246		1	5'-1"	10
57247		1	4'-8"	10
57248		1	4'-3"	9
57249		1	3'-8"	7
57250		1	6'-2"	13
57251		1	5'-9"	12
57252		5	4'-0"	41
57253		1	4'-5"	9
57254		1	4'-10"	10
57255		1	5'-3"	11
57256		1	5'-8"	12
57257		1	6'-1"	12
57258		1	6'-6"	13
57259		1	6'-11"	14
57260		1	7'-3"	15
57261		1	7'-8"	16
57262		1	8'-1"	17
57263		1	8'-6"	17
57264		1	8'-11"	18
57265		1	9'-3"	19
57266		1	9'-8"	20
57267		1	10'-1"	21
57268		1	10'-6"	21
57269		1	10'-11"	22
57270		1	11'-3"	23
57271		1	11'-8"	24
57272		1	12'-1"	25
57273		1	12'-6"	26
57274		1	12'-11"	26
57275		1	13'-3"	27
57276		1	13'-8"	28
57277		1	14'-1"	29
57278		1	14'-6"	30
57279		1	14'-11"	30
57280		1	15'-4"	31
57281		1	15'-9"	32
57282		1	16'-2"	33
57283		1	16'-7"	34
57284		1	16'-11"	35
57285		1	17'-4"	35
57286		1	17'-9"	36
57287		1	18'-2"	37
57288		1	18'-7"	38
57289		1	18'-11"	39
57290		1	19'-4"	40
57291	Str.	1	19'-9"	40

SUPERSTRUCTURE

Mark	Type	No.	Length	Weight
57292	Str.	1	20'-2"	41
57293	↑	1	20'-7"	42
57294		1	20'-11"	43
57295		1	21'-4"	44
57296		1	21'-9"	44
57297		1	22'-2"	45
57298		1	22'-7"	46
57299		1	22'-11"	47
57300		1	23'-4"	48
57301		1	23'-9"	49
57302		1	24'-2"	49
57303		1	24'-7"	50
57304		1	24'-11"	51
57305		1	25'-4"	52
57306		1	25'-9"	53
57307		1	26'-2"	53
57308		1	26'-7"	54
57309		1	27'-0"	55
37310		1	27'-5"	56
57311		1	27'-10"	57
57312		1	28'-3"	58
57313		1	28'-8"	59
57314		1	29'-0"	59
57315		1	29'-5"	60
57316		1	29'-10"	61
57317		1	30'-3"	62
57318		1	30'-8"	63
57319		1	31'-0"	63
57320		1	31'-5"	64
57321		1	31'-10"	65
57322		1	32'-3"	66
57323		1	32'-8"	67
57324		1	33'-0"	67
57325		1	33'-5"	68
57326		1	33'-10"	69
57327		1	34'-3"	70
57328		1	34'-8"	71
57329		1	35'-0"	72
57330		1	35'-5"	72
57331		1	35'-10"	73
57332		1	5'-3"	11
57333		1	4'-9"	10
57334		1	4'-3"	9
57335		1	8'-6"	17
57336		1	8'-11"	18
57337		1	9'-4"	19
57338		1	9'-9"	20
57339		1	10'-2"	21
57340		1	10'-7"	22
57341		1	11'-0"	22
57342		1	11'-5"	23
57343		1	11'-10"	24
57344		1	12'-3"	25
57345		1	12'-7"	26
57346		1	13'-1"	27
57347		1	13'-6"	28
57348		1	13'-11"	28
57349		1	14'-4"	29
57350		1	14'-8"	30
57351		1	15'-1"	31
57352		1	15'-6"	32
57353		1	15'-11"	33
57354		1	16'-4"	33
57355	↓	1	16'-9"	34
57356	Str.	1	17'-2"	35

MICROFILMED
FEB 20 1985

NOTE:
Work this sheet with Typical Drawing No. 4, Sht. No. 446

HAZELET & ERDAL
CONSULTING ENGINEERS
CINCINNATI, OHIO

REINFORCING STEEL LIST
BRIDGE NO. HAM-71-0173
(SHEET NO. 2 OF 4)
H&E BRIDGE NO. 8L&R

DESIGNED	DRAWN	TRACED	CHECKED	REVIEWED DATE	REVISED
	TLZ		1-27-65 GLW	W.A.S. 5-20-65	

FED. RD. DIV.	STATE	PROJECT	FISCAL YEAR
2	OHIO		

372
492

HAMILTON COUNTY
HAM-71-(1.56) (2.51)

SUPERSTRUCTURE

Mark	Type	No.	Length	Weight
S7357	Str.	1	17'-7"	36
S7358		1	18'-0"	37
S7359		1	18'-5"	38
S7360		1	18'-10"	38
S7361		1	19'-3"	39
S7362		1	19'-7"	40
S7363		1	20'-1"	41
S7364		1	20'-6"	42
S7365		1	20'-10"	43
S7366		1	21'-3"	43
S7367		1	21'-7"	44
S7368		1	22'-1"	45
S7369		1	22'-6"	46
S7370		1	22'-11"	47
S7371		1	23'-4"	48
S7372		1	23'-9"	49
S7373		1	24'-2"	49
S7374		1	24'-7"	50
S7375		1	25'-0"	51
S7376		1	25'-5"	52
S7377		1	25'-10"	53
S7378		1	26'-3"	54
S7379		1	26'-7"	54
S7380		1	27'-0"	55
S7381		1	27'-5"	56
S7382		1	27'-10"	57
S7383		1	28'-3"	58
S7384		1	28'-7"	58
S7385		1	29'-1"	59
S7386		1	29'-6"	60
S7387		1	29'-11"	61
S7388		1	30'-4"	62
S7389		1	30'-9"	63
S7390		1	31'-2"	64
S7391		1	31'-7"	65
S7392		1	32'-0"	65
S7393		1	32'-5"	66
S7394		1	32'-10"	67
S7395		1	33'-2"	68
S7396		1	33'-7"	69
S7397		1	34'-0"	69
S7398		1	34'-5"	70
S7399		1	34'-10"	71
S7400		1	35'-3"	72
S7401		1	35'-8"	73
S7402		1	36'-1"	74
S7403		1	36'-6"	75
S7404		1	36'-11"	75
S7405		1	37'-4"	76
S7406		1	37'-9"	77
S7407		1	38'-2"	78
S7408		1	38'-7"	79
S7409		1	39'-0"	80
S7410		1	39'-4"	80
S7411		1	39'-9"	81
S7412		273	40'-0"	22,345
S7413		1	30'-2"	62
S7414		1	30'-7"	63
S7415		1	31'-0"	63
S7416		1	31'-5"	64
S7417		1	31'-10"	65
S7418		1	32'-3"	66
S7419		1	32'-8"	67
S7420		1	33'-1"	68
S7421		1	33'-6"	68
S7422		1	33'-11"	69
S7423		1	34'-4"	70
S7424		1	34'-9"	71
S7425		1	35'-2"	72
S7426		1	35'-7"	73
S7427		1	36'-0"	74
S7428		1	36'-5"	74
S7429		1	36'-10"	75
S7430		1	37'-3"	76
S7431		1	37'-7"	77
S7432		28	39'-9"	2275
S7433		28	39'-2"	2242
S7434		28	38'-7"	2208
S7435		28	38'-0"	2175
S7436		28	37'-5"	2141
S7437		28	36'-10"	2108
S7438		100	36'-3"	7410
S7439	Str.	1	38'-11"	80

SUPERSTRUCTURE

Mark	Type	No.	Length	Weight
S7440	Str.	1	38'-6"	79
S7441		1	38'-0"	78
S7442		1	37'-6"	77
S7443		1	37'-0"	76
S7444		1	36'-6"	75
S7445		1	36'-0"	74
S7446		1	35'-6"	73
S7447		1	35'-0"	72
S7448		1	34'-6"	71
S7449		1	34'-2"	70
S7450		1	33'-9"	69
S7451		1	33'-3"	68
S7452		1	32'-9"	67
S7453		1	32'-3"	66
S7454		1	31'-9"	65
S7455		1	31'-4"	64
S7456		1	30'-10"	63
S7457		1	30'-4"	62
S7458		1	29'-11"	61
S7459		1	29'-5"	60
S7460		1	29'-0"	59
S7461		1	28'-6"	58
S7462		1	28'-0"	57
S7463		1	27'-6"	56
S7464		1	27'-0"	55
S7465		1	26'-7"	54
S7466		1	26'-1"	53
S7467		1	25'-8"	52
S7468		1	25'-2"	51
S7469		1	24'-8"	50
S7470		1	24'-2"	49
S7471		1	23'-8"	48
S7472		1	23'-2"	47
S7473		1	22'-9"	47
S7474		1	22'-3"	45
S7475		1	21'-10"	45
S7476		1	21'-4"	44
S7477		1	20'-10"	43
S7478		1	20'-5"	42
S7479		1	19'-11"	41
S7480		1	19'-6"	40
S7481		1	19'-0"	39
S7482		1	18'-6"	38
S7483		1	18'-1"	37
S7484		1	17'-7"	36
S7485		1	17'-2"	35
S7486		1	16'-8"	34
S7487		1	16'-2"	33
S7488		1	15'-8"	32
S7489		1	15'-2"	31
S7490		1	14'-9"	30
S7491		1	14'-3"	29
S7492		1	13'-9"	28
S7493		1	13'-4"	27
S7494		1	12'-10"	26
S7495		1	12'-5"	25
S7496		1	11'-11"	24
S7497		1	11'-5"	23
S7498		1	10'-11"	22
S7499		1	10'-5"	21
S7500		1	10'-0"	20
S7501		1	9'-6"	19
S7502		1	9'-0"	18
S7503		1	8'-7"	18
S7504		1	8'-1"	17
S7505		1	7'-8"	16
S7506		1	7'-2"	15
S7507		1	6'-8"	14
S7508		1	6'-2"	13
S7509		1	39'-4"	80
S7510		1	38'-10"	79
S7511		1	38'-4"	78
S7512		1	37'-10"	77
S7513		1	37'-4"	76
S7514		1	36'-10"	75
S7515		1	36'-3"	74
S7516		1	35'-11"	73
S7517		1	35'-5"	72
S7518		1	34'-11"	71
S7519		1	34'-6"	71
S7520		1	34'-0"	69
S7521		1	33'-6"	68
S7522	Str.	1	33'-0"	67

SUPERSTRUCTURE

Mark	Type	No.	Length	Weight	
S7523	Str.	1	32'-7"	67	
S7524		1	32'-1"	66	
S7525		1	31'-7"	65	
S7526		1	31'-1"	65	
S7527		1	30'-8"	63	
S7528		1	30'-2"	62	
S7529		1	29'-8"	61	
S7530		1	29'-2"	60	
S7531		1	28'-9"	59	
S7532		1	28'-3"	58	
S7533		1	27'-9"	57	
S7534		1	27'-3"	56	
S7535		1	26'-10"	55	
S7536		1	26'-4"	54	
S7537		1	25'-10"	53	
S7538		1	25'-4"	52	
S7539		1	24'-11"	51	
S7540		1	24'-5"	50	
S7541		1	23'-11"	49	
S7542		1	23'-5"	48	
S7543		1	23'-0"	47	
S7544		1	22'-6"	46	
S7545		1	22'-0"	45	
S7546		1	21'-6"	44	
S7547		1	21'-1"	43	
S7548		1	20'-7"	42	
S7549		1	20'-1"	41	
S7550		1	19'-7"	40	
S7551		1	19'-2"	39	
S7552		1	18'-8"	38	
S7553		1	18'-2"	37	
S7554		1	17'-8"	36	
S7555		1	17'-3"	35	
S7556		1	16'-9"	34	
S7557		1	16'-3"	33	
S7558		1	15'-9"	32	
S7559		1	15'-4"	31	
S7560		1	14'-10"	30	
S7561		1	14'-4"	29	
S7562		1	13'-10"	28	
S7563		1	13'-5"	27	
S7564		1	12'-11"	26	
S7565		1	12'-5"	25	
S7566		1	11'-11"	24	
S7567		1	11'-6"	24	
S7568		1	11'-0"	22	
S7569		1	10'-6"	21	
S7570		1	10'-0"	20	
S7571		1	9'-7"	20	
S7572		1	9'-1"	19	
S7573		1	8'-7"	18	
S7574		1	8'-1"	17	
S7575		1	7'-8"	16	
S7576		1	7'-2"	15	
S7577	Str.	1	6'-8"	14	
S7578	61	4	5'-9"	47	
S7579	49	4	6'-2"	50	
S7580	58	4	10'-4"	84	
H501	Str.	48	17'-5"	★	
H502	Str.	4	23'-0"	★	
H503	Str.	4	14'-2"	★	
H504	Str.	4	13'-6"	★	
H505	Str.	32	17'-4"	★	
H506	Str.	4	21'-2"	★	
H507	Str.	4	20'-3"	★	
H508	Str.	20	16'-10"	★	
H509	58	4	8'-1"	★	

Total Super. = 317,811 Pounds

NORTH ABUTMENT

Mark	Type	No.	Length	Weight
N501	Str.	74	30'-0"	2315
N502	Str.	11	17'-9"	204
N503	1	36	4'-2"	156
N504	32	10	5'-9"	60
N505	62	3	6'-10"	21
N506	—	—	—	—
N507	62	4	9'-2"	38
N508	Str.	22	21'-0"	482
N509	Str.	6	11'-3"	70
N510	Str.	19	28'-6"	565
N511	20	1	7'-11"	8
N512	Str.	3	13'-6"	42
N513	Str.	1	11'-0"	11
N514	Str.	6	4'-6"	28
N515	Str.	11	3'-0"	34
N516	Str.	3	3'-6"	11
N517	Str.	2	4'-3"	9
N518	Str.	2	4'-9"	10
N519	Str.	2	5'-8"	12
N520	Str.	2	6'-5"	14
N521	Str.	8	10'-8"	89
N522	Str.	8	5'-3"	44
N523	Str.	2	7'-9"	16
N524	Str.	2	10'-9"	22
N525	Str.	2	13'-9"	29
N526	Str.	12	14'-8"	184
N527	Str.	5	10'-0"	52
N528	52	1	9'-4"	10
N529	52	1	4'-1"	4
N530	Str.	3	14'-6"	45
N531	Str.	18	33'-6"	629
N532	Str.	5	11'-8"	61
N533	Str.	1	14'-2"	15
N534	Str.	2	6'-3"	13
N535	Str.	2	5'-8"	12
N536	Str.	2	5'-1"	11
N537	Str.	2	4'-4"	9
N538	Str.	2	3'-8"	8
N539	Str.	1	11'-9"	12
N540	Str.	1	17'-11"	19
N541	Str.	1	16'-9"	17
N542	Str.	1	19'-8"	21
N543	Str.	5	18'-6"	96
N544	20	8	5'-6"	46
N545	Str.	1	21'-3"	22
N546	Str.	1	26'-0"	27

NORTH ABUTMENT

Mark	Type	No.	Length	Weight
N547	Str.	1	12'-6"	13
N548	Str.	1	8'-8"	9
N549	Str.	1	19'-0"	20
N550	Str.	1	13'-0"	14
N551	Str.	1	25'-6"	27
N552	32	13	5'-7"	76
N553	32	8	7'-0"	58
N554	52	1	11'-11"	12
N555	Str.	4	5'-0"	21
N601	4	38	20'-3"	1156
N602	Str.	1	8'-10"	13
N603	18	146	12'-10"	2814
N604	Str.	39	13'-0"	762
N605	18	146	8'-7"	1882
N606	7	178	17'-11"	4790
N607	Str.	30	29'-6"	1329
N608	1	31	8'-9"	407
N609	Str.	3	7'-9"	35
N610	Str.	2	25'-6"	77
N611	1	90	7'-3"	980
N612	Str.	2	11'-5"	34
N613	Str.	1	11'-2"	17
N614	1	146	6'-6"	1425
H507	Str.	4	14'-8"	★
H508	Str.	4	18'-6"	★

Total N.Abut. = 21,574 Pounds

★ Reinforcing bar mark "H" are included in Item 5-14 (Railing) for payment.

SUPERSTRUCTURE

Mark	a	b	c	d	e	f
S401	1'-0½"	0'-8"	0'-6"	0'-6"		
S501	0'-7½"	1'-4"	1'-8"			
S502	1'-8"	0'-7½"				
S503	0'-10"	2'-2"				
S504	1'-0¾"	1'-1"	0'-7½"	1'-0½"	1'-9"	0'-2"
S505	1'-11"	0'-4"				
S506	1'-0¾"	1'-1"	0'-7½"	1'-0½"	2'-9"	0'-2"
S507	2'-11"	0'-4"				
S508	0'-8"	2'-2"				
S509	0'-7½"	1'-4"	1'-6"			
S510	1'-6"	0'-7½"				
S513	1'-0¾"	1'-1"	0'-7½"	1'-0½"	3'-2"	0'-3"
S514	1'-0¾"	1'-1"	0'-7½"	1'-0½"	2'-10"	0'-3"
S515	3'-5"	0'-4"				
S516	3'-1"	0'-4"				
S517	1'-0¾"	1'-1"	0'-7½"	1'-0½"	4'-7"	0'-3"
S518	4'-10"	0'-4"				
S519	1'-0¾"	1'-1"	0'-7½"	1'-0½"	1'-8"	0'-2"
S520	1'-10"	0'-4"				
S521	2'-2"	1'-10"	2'-2"	2'-1"		

Mark	a	b	c	d	e	f	g	h	i
S7578	0'-5"	1'-4"	2'-11"						
S7579	2'-5"	1'-10½"	1'-3¾"	1'-4"	0'-6"	1'-9"			
S7580	1'-8"	2'-6"	3'-9"	2'-6"	0'-9"	2'-9"	2'-9"	3'-9"	0'-9"
H509	1'-8"	1'-9½"	2'-7½"	1'-9½"	0'-9"	1'-11"	1'-11"	2'-7½"	0'-9"

NORTH ABUTMENT

Mark	a	b	c	d	e	f	g
N503	1'-5"	1'-6"					
N504	0'-10"	2'-2"					
N505	1'-5¼"	0'-5¼"	3'-10"	1'-6"			
N506							
N507	1'-5¼"	0'-5¼"	6'-2"	1'-6"			
N511	4'-2½"	3'-11"	5'-0"				
N528	7'-3"	0'-2"	1'-7"	0'-6½"	0'-6"		
N529	2'-0"	0'-2"	1'-7"	0'-6½"	0'-6"		
N544	0'-11"	4'-0"	1'-6"	1'-2¼"			
N552	0'-8"	2'-2"					
N554	9'-10"	0'-2"	1'-7"	0'-6½"	0'-6"		
N601	1'-5"	8'-0"	2'-0"	1'-5"	8'-0"		
N603	5'-3"	7'-9"					
N605	1'-0"	7'-9"					
N606	0'-11"	8'-0"	1'-6"	1'-5"	6'-8"		
N608	1'-2"	3'-11"					
N611	3'-7"	2'-0"					
N614	3'-7"	1'-7"					

HAZELET & ERDAL
CONSULTING ENGINEERS
CINCINNATI, OHIO

REINFORCING STEEL LIST
BRIDGE NO. HAM-71-0173
(SHEET NO 3 OF 4)

H&E BRIDGE NO. 8L&R

DESIGNED	DRAWN	TRACED	CHECKED	REVISED DATE	REVISED
	TLZ		1-22-68 GLW	11-13-, 5-28-65	

MICROFILMED
FEB 20 1985

NOTE:
Work this sheet with Typical Drawing No. 4 Sht No. 446

FED. RD. DIV.	STATE	PROJECT	FISCAL YEAR
2	OHIO		

373
492

HAMILTON COUNTY
HAM-71-(1.56) (2.51)

SOUTH ABUTMENT

Mark	Type	No.	Length	Weight
A501	Str.	93	30'-0"	2910
A502	Str.	58	21'-3"	1197
A503	52	1	6'-1"	6
A504	52	1	8'-1"	8
A505	17	4	7'-4"	31
A506	Str.	18	17'-6"	329
A507	Str.	1	33'-6"	35
A508	Str.	1	16'-6"	17
A509	20	1	7'-3"	8
A510	Str.	1	35'-0"	37
A511	40	2	5'-9"	12
A512	Str.	1	15'-0"	16
A513	12	4	4'-11"	21
A514	12	4	7'-2"	30
A515	62	4	9'-7"	40
A516	62	4	7'-4"	31
A517	Str.	8	4'-6"	38
A518	Str.	2	3'-0"	6
A519	Str.	3	14'-6"	45
A520	Str.	1	11'-0"	11
A521	Str.	5	12'-0"	63
A522	Str.	2	3'-6"	7
A523	Str.	2	4'-0"	8
A524	Str.	2	4'-7"	10
A525	Str.	2	5'-2"	11
A526	Str.	2	5'-9"	12
A527	32	14	5'-7"	82
A528	Str.	8	11'-6"	96
A529	Str.	8	15'-7"	130
A530	Str.	10	5'-3"	55
A531	Str.	2	7'-6"	16
A532	Str.	2	11'-0"	23
A533	Str.	5	6'-3"	33
A534	1	18	4'-2"	78
A535	Str.	1	14'-0"	15
A536	Str.	1	11'-6"	12
A537	Str.	1	18'-9"	19
A538	52	1	10'-4"	11
A539	52	1	3'-7"	4
A540	17	4	5'-0"	21
A541	Str.	18	32'-4"	607
A542	Str.	1	14'-6"	15
A543	Str.	1	19'-9"	21
A544	2	4	6'-6"	27

SOUTH ABUTMENT

Mark	Type	No.	Length	Weight
A601	4	76	20'-3"	2312
A602	7	166	17'-11"	4467
A603	18	179	8'-7"	2330
A604	18	174	12'-10"	3354
A605	1	96	7'-3"	1045
A606	4	14	21'-3"	447
A607	Str.	32	30'-0"	1442
A608	1	174	6'-6"	1699
A609	Str.	11	9'-0"	149
A610	Str.	9	8'-6"	115
A611	1	16	8'-9"	210
A612	Str.	16	13'-6"	324
A613	Str.	2	12'-8"	38
A614	Str.	4	26'-0"	156
H509	Str.	4	15'-10"	*
H510	Str.	4	2'-1"	*

Total S. Abut. = 24,292 Pounds

SOUTH ABUTMENT

Mark	a	b	c	d	e
A503	4'-0"	0'-2"	1'-7"	0'-6½"	0'-6"
A504	6'-0"	0'-2"	1'-7"	0'-6½"	0'-6"
A505	2'-0"	1'-1½"	2'-0"	1'-8"	3'-6"
A509	3'-1¼"	3'-6"	3'-9"	2'-1¼"	
A511	0'-7"	1'-6"	1'-7"	1'-7"	
A513	1'-9"	1'-5"	0'-11½"	1'-5½"	1'-9"
A514	1'-9"	1'-5"	2'-3"	3'-3¾"	4'-0"
A515	1'-6"	0'-5½"	6'-5"	1'-7"	
A516	1'-6"	0'-5½"	4'-2"	1'-7"	
A527	0'-8"	2'-2"			
A534	1'-5"	1'-6"			
A538	8'-3"	0'-2"	1'-7"	0'-6½"	0'-6"
A539	1'-6"	0'-2"	1'-7"	0'-6½"	0'-6"
A540	1'-2"	1'-4¼"	2'-6"	2'-1¾"	1'-6"
A544	3'-7"	0'-4½"	1'-7"	3'-7"	1'-7"
A601	1'-5"	8'-0"	2'-0"	1'-5"	8'-0"
A602	0'-11"	8'-0"	1'-6"	1'-5"	6'-8"
A603	1'-0"	7'-9"			
A604	5'-3"	7'-9"			
A605	3'-7"	2'-0"			
A606	1'-5"	8'-6"	2'-0"	1'-5"	8'-6"
A608	3'-7"	1'-7"			
A611	1'-2"	3'-11"			

REPLACEMENT BARS

Mark	Type	No	Length
RE401	Str.	1	5'-3"
RE501	Str.	2	5'-7"
RE601	Str.	12	5'-11"
RE701	Str.	6	6'-3"
RE801	Str.	2	6'-6"
RE901	Str	1	6'-10"
RE1101	Str.	5	7'-7"

* Reinforcing bar mark "H" are included in Item S-14 (Railing) for payment.

PIERS

Mark	Type	Bending a	Bending b	Bending c	No. Pier 1	No. Pier 2	No. Total	Length	Weight
P401	1	2'-8"	1'-0"		36	44	80	4'-5"	236
		a	Pitch	No. of Turns					
* P402	64	2'-7"	0'-4½"	36	-	2	2	12'-6"	466
* P403	64	2'-7"	0'-4½"	35	-	1	1	11'-11"	222
* P404	64	2'-7"	0'-4½"	34	-	1	1	11'-7"	216
* P405	64	2'-7"	0'-4½"	33	-	1	1	11'-2"	208
* P406	64	2'-7"	0'-4½"	46	-	1	2	16'-2"	603
* P407	64	2'-7"	0'-4½"	45	1	1	2	15'-9"	587
* P408	64	2'-7"	0'-4½"	44	1	1	2	15'-5"	575
* P409	64	2'-7"	0'-4½"	43	-	2	2	15'-1"	563
* P410	64	2'-7"	0'-4½"	40	-	1	1	13'-10"	258
* P411	64	2'-7"	0'-4½"	39	-	1	1	13'-6"	252
* P412	64	2'-7"	0'-4½"	38	-	1	1	13'-2"	246
* P413	64	2'-7"	0'-4½"	37	-	1	1	12'-10"	239
* P414	64	2'-7"	0'-4½"	42	-	1	1	14'-6"	270
* P415	64	2'-7"	0'-4½"	41	-	1	1	14'-4"	267
* P416	64	2'-7"	0'-4½"	53	2	-	2	18'-10"	702
* P417	64	2'-7"	0'-4½"	52	2	-	2	18'-6"	690
* P418	64	2'-7"	0'-4½"	71	1	-	1	25'-6"	476
* P419	64	2'-7"	0'-4½"	67	1	-	1	24'-0"	448
* P420	64	2'-7"	0'-4½"	63	1	-	1	22'-7"	421
* P421	64	2'-7"	0'-4½"	59	1	-	1	21'-1"	393
* P422	64	2'-7"	0'-4½"	51	2	-	2	18'-1"	675
* P423	64	2'-7"	0'-4½"	50	1	-	1	17'-6"	326
* P424	64	2'-7"	0'-4½"	49	1	-	1	17'-1"	319
* P425	64	2'-7"	0'-4½"	47	1	-	1	16'-7"	309
		a	b	c					
P501	1	2'-1"	2'-7"		152	1016	1168	7'-0"	8528
P502	1	2'-2"	2'-7"		472	-	472	7'-1"	3487
P503	1	1'-9"	2'-7"		324	-	324	6'-8"	2253
P504	1	2'-8"	1'-0"		96	96	192	4'-5"	884
P701	Str.				-	10	10	27'-3"	557
P702	Str.				-	4	4	38'-5"	314
P703	Str.				-	2	2	19'-6"	80
P704	Str.				8	-	8	29'-4"	480
P705	Str.				4	-	4	25'-2"	206
P706	Str.				6	-	6	28'-4"	347
P801	43	9'-6"			336	420	756	11'-8"	23549
P803	Str.				192	-	192	11'-6"	5895
P901	43	10'-6"			-	19	19	13'-0"	840
P902	43	13'-0"			-	15	15	15'-6"	791
		a	b	radius					
P1101	18	3'-5"	26'-7"		-	3	3	29'-8"	473
P1102	Str.				-	7	7	26'-7"	989
P1103	Str.				-	8	8	12'-9"	542
P1104	Str.				-	7	7	30'-6"	1134
P1105	Str.				-	17	17	18'-6"	1671
P1106	6	3'-6"	3'-7"	1'-0½"	2	4	6	10'-8"	340
P1107	18	3'-5"	30'-5"		-	5	5	33'-6"	890
P1108	18	1'-0"	6'-4"		184	146	330	7'-0"	12273
P1109	18	3'-3"	31'-6"		-	6	6	34'-5"	1097
P1110	Str.				-	4	4	31'-6"	669
P1111	Str.				-	5	5	19'-1"	507
P1112	Str.				-	10	10	16'-9"	890
P1113	Str.				-	2	2	9'-0"	96
P1114	Str.				8	15	23	27'-3"	3330
P1115	Str.				-	5	5	35'-4"	939
P1116	Str.				-	2	2	33'-6"	356
P1117	18	3'-0"	27'-6"		-	3	3	30'-2"	481
P1118	Str.				-	7	7	27'-6"	1023
P1119	Str.				-	13	13	15'-3"	1053

PIERS

Mark	Type	Bending a	Bending b	Bending radius	No. Pier 1	No. Pier 2	No. Total	Length	Weight
P1120	18	3'-0"	20'-7"		-	3	3	23'-3"	370
P1121	Str.				8	16	24	20'-7"	2625
P1122	18	3'-0"	32'-1"		-	3	3	34'-9"	554
P1123	Str.				-	4	4	32'-1"	682
P1124	Str.				-	36	36	16'-1"	3076
P1125	18	3'-7"	24'-11"		-	5	5	28'-2"	748
P1126	Str.				2	16	18	14'-9"	1411
P1127	Str.				12	-	12	20'-0"	1275
P1128	Str.				-	8	8	19'-3"	818
P1129	Str.				14	8	22	19'-0"	2221
P1130	Str.				-	8	8	18'-8"	793
P1131	Str.				-	16	16	17'-5"	1481
P1132	Str.				5	8	13	16'-6"	1140
P1133	Str.				4	-	4	32'-0"	680
P1135	18	1'-0"	6'-10"		-	20	20	7'-6"	797
P1136	Str.				2	-	2	18'-1"	192
P1137	Str.				-	28	28	17'-9"	2641
P1138	18	3'-0"	33'-10"		14	-	14	36'-6"	2715
P1139	Str.				4	-	4	33'-0"	719
P1140	18	3'-5"	27'-3"		5	-	5	30'-4"	806
P1141	Str.				23	-	23	29'-1"	3554
P1142	Str.				10	-	10	31'-5"	1669
P1143	Str.				8	-	8	22'-6"	956
P1144	Str.				13	-	13	22'-5"	1548
P1145	Str.				20	-	20	22'-1"	2347
P1146	18	3'-5"	35'-8"		3	-	3	38'-9"	618
P1147	18	3'-7"	25'-5"		5	-	5	28'-8"	762
P1148	Str.				2	-	2	35'-8"	379
P1149	Str.				12	-	12	29'-2"	1860
P1150	Str.				8	-	8	26'-2"	1112
P1151	Str.				8	-	8	24'-8"	1048
P1152	18	3'-2"	17'-9"		3	-	3	20'-7"	328
P1153	Str.				8	-	8	22'-7"	960
P1154	Str.				40	-	40	21'-3"	4516
P1155	Str.				20	-	20	21'-1"	2240
P1156	Str.				20	-	20	20'-10"	2214
P1157	Str.				10	8	18	19'-9"	1889
P1158	Str.				8	-	8	19'-4"	822
P1159	Str.				4	-	4	29'-4"	623
P1160	Str.				-	8	8	16'-3"	691

Total Weight Piers = 142,811 Lbs.

* Note: SPIRAL REINFORCING BARS: The "Length" shown in the steel list for the spiral bars is the distance from the top of the footing to the bottom of the pier cap. The "No. of Turns" shown is the "Length" divided by the pitch, plus 3 turns (total number of closed coils), expressed as the nearest whole number.

Note: Work this sheet with Sht. No. 446

MICROFILMED
FEB 20 1965

HAZELET & ERDAL
CONSULTING ENGINEERS
CINCINNATI, OHIO

REINFORCING STEEL LIST
BRIDGE NO. HAM-71-0173
(SHEET NO 4 OF 4)
H&E BRIDGE NO. 8L&R

Designed	Drawn	Traced	Checked	Reviewed Date	Revised
	TLZ		JHO 2/9/65	N.A.Z. 5-20-65	

FED. RD. DIV.	STATE	PROJECT	FISCAL YEAR
2	OHIO		

374
492

HAMILTON COUNTY
HAM-71-(1.56)(2.51)

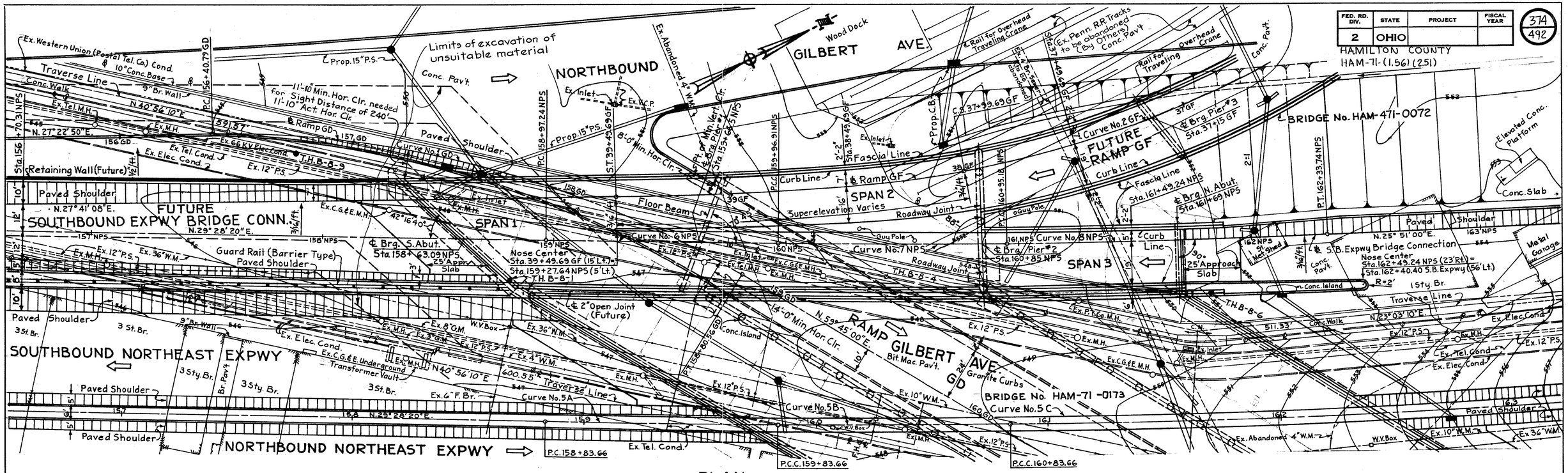
Ex. Western Union (Postal Tel. Co.) Cond.
10"Conc. Base
3" Br. Wall
Traverse Line
Conc. Walk
Ex. Tel. M.H.
N. 27° 22' 50" E.
Ex. M.H.
Ex. Tel. Cond. 1
Ex. Elec. Cond. 2
Ex. 66 KV Elec. Cond.
Ex. 12" P.S.
Retaining Wall (Future)
Paved Shoulder
N. 27° 41' 08" E.
FUTURE SOUTHBOUND EXPWY BRIDGE CONN.
N. 29° 28' 20" E.
Guard Rail (Barrier Type)
Paved Shoulder
Ex. 36" W.M.
Ex. M.H.
Ex. 12" P.S.
Paved Shoulder
3 St. Br.
9" Re. Wall
Ex. E. Elec. Cond.
Ex. C.G.&E. Underground Transformer Vault
SOUTHBOUND NORTHEAST EXPWY
3 Sty. Br.
Br. Pav't.
3 Sty. Br.
3 St. Br.
Paved Shoulder
Paved Shoulder
N. 25° 28' 20" E.
NORTHBOUND NORTHEAST EXPWY
P.C. 156+40.79 GD
Prop. 15" P.S.
Limits of excavation of unsuitable material
Conc. Pav't.
NORTHBOUND
Ex. Inlet
Ex. W.C.P.
11'-10" Min. Hor. Clr. needed for Sight Distance of 240'
11'-10" Act. Hor. Clr.
Ramp GD
Paved Shoulder
Curve No. 1 GD
Ex. Abandoned 4" W.M.
Pt. of Min. Vert. Clr. Sta. 155+66.51 NPS
Prop. 15" P.S.
P.C. 158+97.24 NPS
S.T. 39+42.69 GF
8'-0" Min. Hor. Clr.
Ex. Inlet
Curb Line
Floor Beam
SPAN 1
Ex. M.H.
Ex. C.G.&E. M.H.
42° 16' 40"
℄ Brg. S. Abut. Sta. 158+63.09 NPS
25' App. Slab
Nose Center Sta. 39+49.69 GF (15' Lt.) = Sta. 159+27.64 NPS (5' Lt.)
T.H. B-8-1
Curve No. 6 NPS
Ex. 12" P.S.
Ex. Tel. M.H.
Ex. C.G.&E. M.H.
Ex. M.H.
℄ 2" Open Joint (Future)
Ex. 8" G.M.
W.V. Box
Ex. 36" W.M.
Ex. 4" W.M.
600.55'
Traverse Line
Curve No. 5A
Ex. 6" F. Br.
Ex. M.H.
Ex. 12" P.S.
Curve No. 5B
Ex. Tel. Cond.
P.C. 158+83.66
Wood Dock
GILBERT AVE.
Rail for Overhead Traveling Crane
Ex. Penn. R.R. Tracks to be abandoned (by Others)
Conc. Pav't.
Overhead Crane
Rail for Traveling
Prop. C.B.
C. 37+99.69 GF
Ex. Inlet
Ex. 38+49.69 GF
2'-2"
Sta. 38+49.69 GF
Fascia Line
Curb Line
7'
℄ Ramp GF
SPAN 2
Superelevation Varies
Roadway Joint
Guy Pole
Curve No. 7 NPS
Curve No. 8 NPS
T.H. B-8-4
Ex. Tel. M.H.
Ex. C.G.&E. M.H.
Ex. M.H.
Ex. Inlet
Ex. M.H.
Ex. 12" P.S.
Ex. C.G.&E. M.H.
Ex. 10" W.M.
Curve No. 5C
Ex. 12" P.S.
P.C.C. 159+83.66
P.C.C. 160+83.66
Prop. C.B.
Rail for Overhead Traveling Crane
Ex. Penn. R.R. Tracks to be abandoned (by Others)
Conc. Pav't.
Overhead Crane
Rail for Traveling
BRIDGE No. HAM-471-0072
Elevated Conc. Platform
Conc. Slab
Ex. Inlet
Ex. M.H.
Ex. 38+49.69 GF
Fascia Line
Curb Line
FUTURE RAMP GF
Curve No. 2 GF
℄ Brg. Pier #3 Sta. 37+15 GF
Sta. 161+49.24 NPS
℄ Brg. N. Abut. Sta. 161+69 NPS
Guy Pole
Roadway Joint
SPAN 3
Curve No. 8 NPS
Curve No. 7 NPS
Ex. M.H.
Ex. C.G.&E. M.H.
Ex. P.T.Co. M.H.
Ex. 12" P.S.
Ex. M.H.
Ex. Inlet
Ex. M.H.
Ex. C.G.&E. M.H.
Ex. 12" P.S.
BRIDGE No. HAM-71-0173
Granite Curbs
Curve No. 5C
Ex. 10" W.M.
Ex. Abandoned 4" W.M.
W.V. Box
Ex. 36" W.M.
Paved Shoulder
Ex. 10" W.M.
Ex. 36" W.M.
P.C.C. 160+83.66
Curb Line
Fascia Line
Sta. 161+49.24 NPS
℄ Brg. N. Abut. Sta. 161+69 NPS
P.T. 162+33.74 NPS
Paved Shoulder
Conc. Pav't.
℄ S.B. Expwy Bridge Connection
Nose Center Sta. 162+45.24 NPS (23' Rt.) = Sta. 162+40.40 S.B. Expwy (56' Lt.)
R=2'
Conc. Island
15 Sty. Br.
Traverse Line
N. 23° 03' 10" E.
Conc. Walk
Ex. Elec. Cond.
Ex. 12" P.S.
Ex. M.H.
Ex. Tel. Cond.
Ex. Elec. Cond.
Ex. 12" P.S.
Ex. Inlet
Ex. M.H.
Paved Shoulder
Ex. 10" W.M.
Ex. 36" W.M.
Ex. Abandoned 4" W.M.
W.V. Box
Metal Garage
N. 25° 51' 00" E.
Paved Shoulder
163 NPS
162 NPS
90° 25' Approach Slab
Conc. Pav't.
Conc. Island
R=2'
15 Sty. Br.
Traverse Line
N. 23° 03' 10" E.
Ex. Elec. Cond.
Ex. 12" P.S.
Ex. M.H.
Ex. Tel. Cond.
Ex. Elec. Cond.
Ex. 12" P.S.
Paved Shoulder
Ex. 10" W.M.
Ex. 36" W.M.
Ex. Abandoned 4" W.M.
W.V. Box
Metal Garage
N. 25° 51' 00" E.
Paved Shoulder
163 NPS
162 NPS
90° 25' Approach Slab
Conc. Pav't.
℄ S.B. Expwy Bridge Connection
Nose Center Sta. 162+45.24 NPS (23' Rt.) = Sta. 162+40.40 S.B. Expwy (56' Lt.)
R=2'
Conc. Island
15 Sty. Br.
Traverse Line
N. 23° 03' 10" E.
Conc. Walk
Ex. Elec. Cond.
Ex. 12" P.S.
Ex. M.H.
Ex. Tel. Cond.
Ex. Elec. Cond.
Ex. 12" P.S.
Ex. Inlet
Ex. M.H

FED. RD. DIV.	STATE	PROJECT	FISCAL YEAR
2	OHIO		

375
492

HAMILTON COUNTY
HAM-71-(1.56)(2.51)

ESTIMATED QUANTITIES

ITEM	TOTAL	UNIT	DESCRIPTION	SOUTH ABUTMENT
E-2	480	Sq. Ft.	Steel Sheet Piling Left in Place (Min. Sect. Modulus of 7in.^{3} per foot of wall.)	480
E-2	440	Cu. Yds.	Unclassified Excavation	440
S-1	144	Cu. Yds.	Class "E" Concrete, Abutments above Footings	144
S-1	96	Cu. Yds.	Class "E" Concrete, Footing	96
S-3	7	Sq. Yds.	Type "B" Waterproofing	7
S-3	20	Lin. Ft.	Waterproofing, Premolded Sealing Strip	20
S-4	20314	Lbs.	Reinforcing Steel	20314
S-9	20	Lin. Ft.	1" Preformed Expansion Joint Filler (M10.02, Type 1)	20
S-18	1420	Lin. Ft.	Steel Piles, 10BP42	1420
S-29	58	Cu. Yds.	Porous Backfill	58
S-29	18	Lin. Ft.	8" Bituminous Coated Helical Perforated Corrugated Metal Pipe [Sec. M-6.4 (h-c)] (Including Specials)	18
S-29	20	Lin. Ft.	8" Bituminous Coated Helical Corrugated Metal Pipe [Sec. M-6.4 (h-c)] (Including Specials)	20
S-29	87	Lin. Ft.	8" Bituminous Coated Helical Perforated Corrugated Metal Pipe [Sec. M-6.4 (h-c)] (Including Specials and Sand)	87
S-29	8	Lin. Ft.	12" Reinforced Concrete Sewer Pipe [Sec. M-6.6 (a.)]	8
I-10	425	Sq. Yds.	Concrete Slope Protection	425
E-2	Lump	Sum	Cofferdams, Cribs and sheeting	Lump

GENERAL NOTES

PILES shall be driven with a hammer of not less than 11,000 ft. lbs per blow to firm contact with limestone. If the length of penetration is approximately equal to the depth of limestone according to the bridge foundation investigation report, the firm contact shall be considered as attained when the capacity according to the formula in Sec. S-18.05 is not less than the following value for a pile hammer of the indicated energy rating.

50 Tons per pile for South Abutment using an 11,000 ft. lb. hammer.
45 Tons per pile for South Abutment using a 15,000 ft. lb. hammer.

If the energy rating of the hammer is between the rating as shown above, the required formula capacity shall be determined by interpolation. The design load is 35 Tons per pile.

ADDITIONAL NOTES: For additional notes see Notes 2, 6, & 7 Sh. No. 4-4-3.

Design Loading - CF = 2000(57)
Concrete Class E - basic unit stress, 1,133 psi.
Reinforcing Steel - ASTM A15, A16, A160, Deformed, Intermediate, or Hard Grade. Basic unit stress 20,000 psi.

FIRST TEST PILE: Item S-16 in the Estimated Quantities for Bridge No. HAM-71-0173 may be driven at either HAM-71-0173 or HAM-471-0072. Payment will be made for only one first test pile.

MICROFILMED
FEB 20 1985

HAZELET & ERDAL
CONSULTING ENGINEERS
CINCINNATI, OHIO

ESTIMATED QUANTITIES AND GENERAL NOTES
BRIDGE No. HAM-471-0072

DESIGNED	DRAWN	TRACED	CHECKED	REVIEWED DATE	REVISED
	⊕		W.L. 3-5-65	JHO 5/20/65	

FED. RD. DIV.	STATE	PROJECT	FISCAL YEAR
2	OHIO		

376
492

HAMILTON COUNTY
HAM-71-(1.56)(2.51)

1" Expansion Jt. with 1" Jt. Filler and Type B Waterproofing included with this structure for payment

Detail A

Bridge No. HAM-71-0173 (S. ABUT.)

Top of concrete slope protection EL 566.75

1-A513 · 3" (Typ.) · 1" (Typ.) · 42°-51'-51" (Girder T thru Y) · ℄ Girder (Typ.)

Contr. Jt. (Wall Only) · Base Line NPS · 42°-16'-40" · ℄ Brg. S. Abut. Sta. 158+63.09 NPS

Level (Typ.) · Steel Sheet Piling · 1'-0" (Typ.)

7-A513@1'-5" (Typ. between brgs.) · 6-A513@6" Under Each Girder (Typ.) · 3" W.I. pipe (Typ.)

1-A513 · 8"ϕ W.I. Drain Pipe with 12"x8" Reducer · Slope ½"/ft. between brg. areas (Typ.)

Contr. Jt. (Wall Only) · ℄ Brg.

Prepare end for future premolded sealing strip

Future Ret. Wall

Locate pipe so that it does not interfere with future mosonry plate.

indicates battered piles

Top of concrete slope protection EL. =548.67

77'-2⅝"

2 Equal Spaces = 24'-3 1/16" · 5'-2⅞" · 6'-10 11/16" · 9'-9 5/16" · 14'-2 11/16" · 24'-0" · 2 Equal Spaces = 24'-3 1/16" · 4'-11⅛" · 4'-10½" · 15'-0" · 1'-0" (Typ.) · 23'-3½" · 24'-0" · 28'-10½" · 2'-1 13/16" · 1'-0 5/8"

3'-10¾" · 4'-0⅜" · 2'-2¾" · 6'-9⅜" · 44°-03'-52" · 10'-11⅝"

PLAN

Future 8" Downspout

8" Bituminous Coated Corrugated Metal Pipe (water-tight joints)

Pipe Clamp.

8" BCCMP

12" Reinforced Concrete Sewer Pipe [Sec. M-6.6(a)]

SECTION H-H

Concrete above Constr. Jt. to be removed for future construction

3" W.I. pipe 5'-0" long located midway between brg. areas as shown on plan. Include with abutment concrete for payment (Typ.)

℄ Brg. · Constr. Jt. · 1'-9" · 1'-2" · 1'-0" · A605 · A508 · A536 · 1'-9" (Min.) · 45° · A513 · 2'-0" · A518 · A703 · Future 8" Pipe (6'-0" Length) · Proposed Ground Line · 8" Bit. Coated Helical Perforated Corrugated Metal Pipe [Sec. M-6.4(h-c)] · A501 (NF) · A527 (FF) · 6'-3" · 2'-6" · A1002 · Elev. Varies 6" · Concrete Slope Protection · Porous Backfill A1101 · Constr. Jt. · A8 Bars, 9 · 10'-6" · 5'-10" · 2'-0" · 3'-0" · A515 · A516 · A517 · 2'-9" · ℄ Row 1 · ℄ Row 2 · A1003 · ℄ Row 3 · 1'-6" · 3'-6" · 8'-6" · 15'-0"

Sand meeting requirements of Sec. M-2.1. Payment included in price bid for 8" pipe (Typ.)

SECTION A-A

Bridge Seat EL. 568.28 · 567.99 · 567.70 · 567.42 · 567.13 · 566.84 · 566.72

EL. 577.50 · EL. 571.20 · EL. 573.77 · EL. 569.20 · EL. 555.50 · EL. 548.00

Upper limits of Type B waterproofing EL. 576.65

Concrete Slope Protection EL. 566.75

Proposed Ground Line at Far Face of Wall

Upper Limits of Premolded Sealing Strip EL. 571.20

Upper limits of Premolded Sealing Strip EL. 567.13

El. 561.37 Cap End

Inv. Elev. Front 547.00 Back 547.05

Inv. Elevs. Front-547.00 Back-547.05

12" Reinforced Conc. Sewer Pipe Sec. M-6.6(a)

Concrete Slope Protection EL. 548.67

1-A528 · 1-A507(NF) · 1-A504(FF) · 7-A503@3'-0"(EF) · 24-A602@1'-0" · 1-A510(NF) · 1-A533(FF) · 1-A501(EF) · 25-A608@1'-0"± · 2-A604 · 3-A528 · 1-A523(EF) D · 3-A510@2'-0"(NF) · 3-A533@2'-0"(EF) · 3-A506@2'-11"(NF) · 1-A522(FF) · 3-A501@2'-0"(EF) · 2-A524@3'-0"(NF) · 1-A511(EF) · 23-A605@1'-0" · 1-A606(FF) · 2-A529@2'-11"(NF) · 4-A531@2'-11"(NF) · 4-A607@2'-11"(FF) · 3-A603@2'-11"(FF) · 1-A502(EF) · 5-A526@3'-0"(NF) · 5-A525@3'-0"(NF) · 1-A536(FF) · 1-A508(NF) · 6-A505@2'-0±(NF) · 6-A535@2'-0±(FF) · 4-A522@1'-6"(FF) · 8-A521@1'-6"(FF) · 4-A520@1'-6"(FF) · 3-A519@2'-9"(NF) · 6-A518@3'-0"(NF) · 17-A701@1'-5½"(FF) · 0.5% · 8"ϕ Pipe · 1-A802(FF) · 9-A702@2'-0"(FF) · 9-A703@2'-0"(FF) · 11-A501@2'-0"(NF) · 11-A527@2'-0"(FF) · 16-A802@1'-6"(FF) · 1-A530 · 1-A803 · 1-A534, 1-A535, 1-A501, & 1-A536 · 1-A803 · 5-A803 (Typ.) · 9-A501@2'-0" (EF) · 24-A901@1'-0"(FF) · 24-A1001@1'-0"(FF) · 23-A1002@1'-0"(FF) · 45-A1101@6"(FF) · 1-A902 · 4-A501 · 7-A501 · 1-A902 · 6-A902 (Typ.) · 1'-0" (Typ.) · 1'-0" (Typ.) 3-A515, 1-A516, & 1-A517 · 6-1003 (7 Groups) · 1-A1009 · 1-A1010 · 1-A1003 · 8 Spaces @ 3'-2" = 25'-4" · 17-A801@1'-6"(Top) · 6-A515, 1-A516, & 1-A517 · 1 Ea.-A1003 thru. A1008 · 1 Ea.-A804 thru. A806 (Top)

Pile Spacing, row 1 · Pile Spacing, row 2 and row 3 · 4 Spaces @ 5'-1" = 20'-4" · 2 Spaces @ 10'-2" = 20'-4" · 1 Ea.-A532 thru. A535, 1-A501 & 1-A536 · 16-A530@1'-6"(Top) · 6 Spaces @ 3'-6" = 21'-0" · 3 Spaces @ 7'-0" = 21'-0" · 20-A601@1'-3"(Top) · Pile Spacing, row 1 and 2 · Pile Spacing, row 3

Steel Sheet Piling (27# per Sq. ft) Left in Place (Typ.)

Steel Sheet Piling left in place shall have a minimum section modulus of 7 in³ per foot of wall. *Mill test reports not required.*

ELEVATION

PROCEDURE

The existing miscellaneous fill material shall be excavated as shown on sheet 374, then replaced and compacted with embankment material. The embankment shall be placed and compacted up to the finished spill-thru slope and to the level of the subgrade for a distance of 200 feet back of the abutment. Excavation for the abutment shall not be done until a minimum period of 60 days after completion of the embankment.

For Notes see Sheet 377

Work this sheet with sheet 377

MICROFILMED
FEB 20 1985

HAZELET & ERDAL
CONSULTING ENGINEERS
CINCINNATI, OHIO

SOUTH ABUTMENT

BRIDGE NO. HAM-471-0072

DESIGNED	DRAWN	TRACED	CHECKED	REVIEWED DATE	REVISED
	FN		W.L. 3-5-65	JHO 5/20/65	

FED. RD. DIV.	STATE	PROJECT	FISCAL YEAR
2	OHIO		

377
492

HAMILTON COUNTY
HAM-71-(1.56)(2.51)

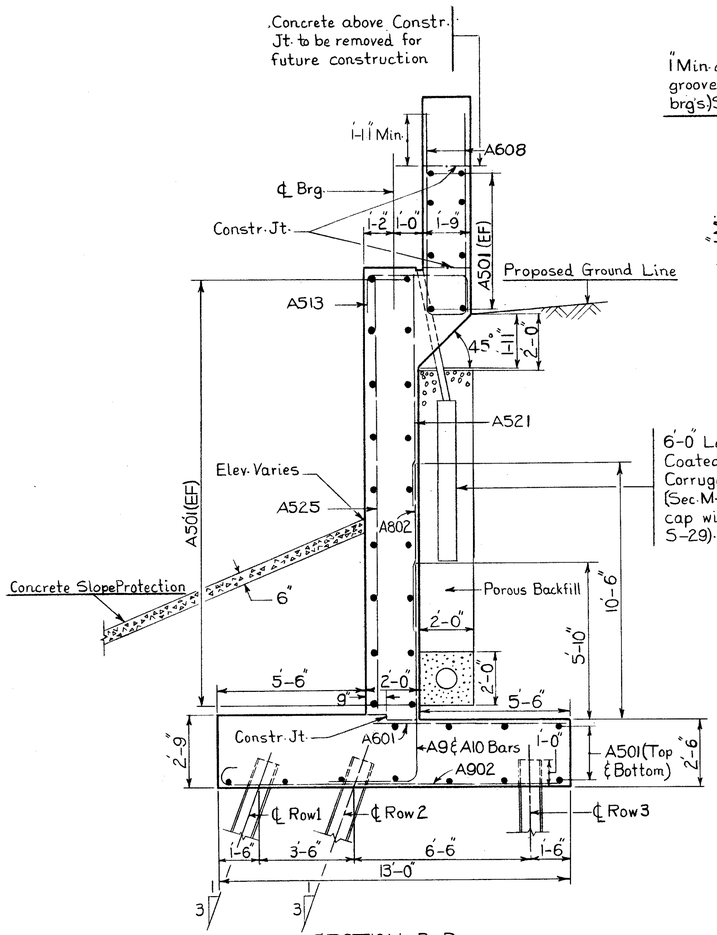

SECTION B-B

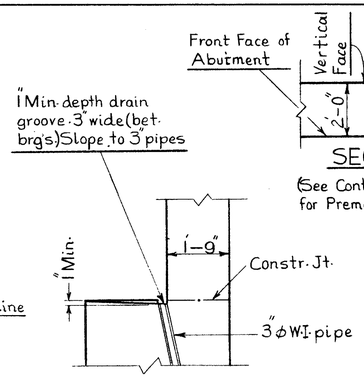

GUTTER DETAIL

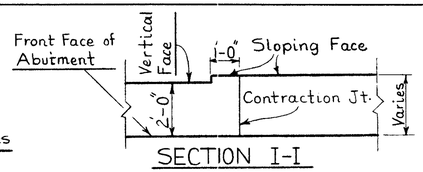

SECTION I-I

(See Contraction Joint Detail Sh. 406 for Premolded Sealing Strip Details)

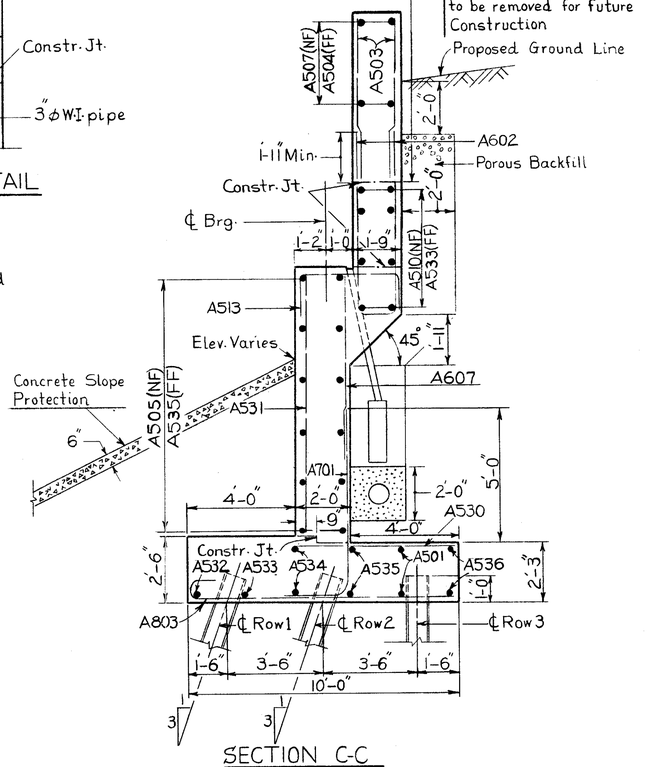

SECTION C-C

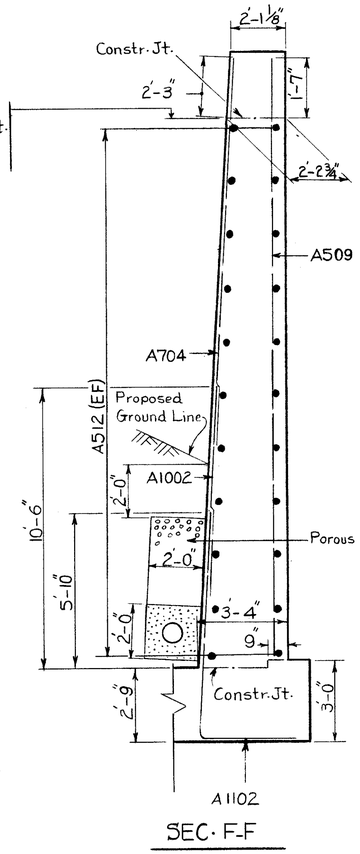

SEC. F-F

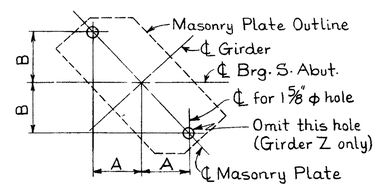

PROPOSED ANCHOR ROD DET.

GIRDER	A	B
T thru Y	7 15/16"	8 7/16"
Z	8"	8 1/4"

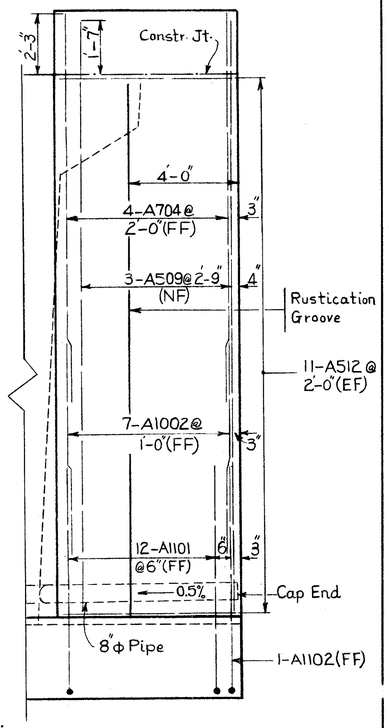

ELEV. GG

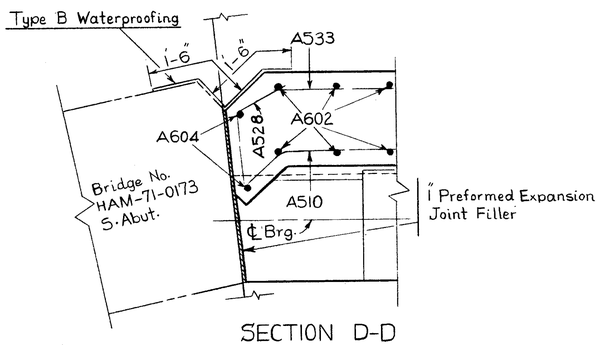

SECTION D-D

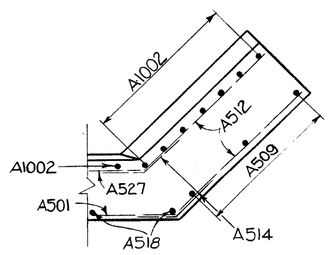

SEC. EE

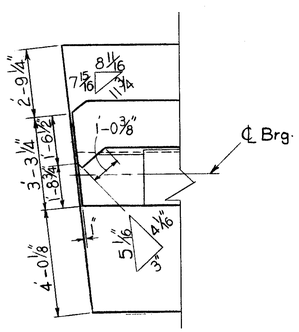

DETAIL A

NOTES

EF denotes Each Face
NF denotes Near Face
FF denotes Far Face
Provide 3" clearance to reinforcing steel in footing and 2" clearance to reinforcing steel in wall, minimum.
Special care shall be taken in placing steel in the bridge seat so that it will not interfere with drilling of future anchor rod holes
For Contraction Joint Detail see sheet 406
For Rustication Groove Detail see sheet 393
All piles are 10 BP 42
All concrete shall be Class "E" Concrete
For Abutment Drainage Clamp Detail see sheet 393

Work this sheet with sheet 376

HAZELET & ERDAL
CONSULTING ENGINEERS
CINCINNATI, OHIO

SOUTH ABUTMENT

BRIDGE NO. HAM-471-0072

DESIGNED	DRAWN	TRACED	CHECKED	REVIEWED DATE	REVISED
	FN		W.L. 3-5-65	JHO 5/20/65	

MICROFILMED
FEB 20 1965

FED. RD. DIV.	STATE	PROJECT	FISCAL YEAR
2	OHIO		

376
492

HAMILTON COUNTY
HAM-71-(1.56)(2.51)

SOUTH ABUTMENT

MARK	TYPE	a	b	c	d	NO.	LENGTH	WEIGHT
A501	Str.					50	23'-8"	1234
A502	Str.					2	5'-8"	12
A503	Str.					14	6'-2"	90
A504	Str.					2	19'-1"	40
A505	Str.					6	23'-4"	146
A506	Str.					3	9'-6"	30
A507	20	0'-7½"	18'-10"	0'-11"	0'-8"	2	19'-9"	41
A508	Str.					1	22'-8"	23
A509	Str.					3	21'-9"	68
A510	20	0'-7½"	22'-10"	0'-11"	0'-8"	4	23'-9"	99
A511	Str.					2	5'-11"	12
A512	Str.					22	6'-3"	144
A513	1	3'-7"	1'-7"			81	6'-6"	549
A514	20	1'-2½"	1'-9"	1'-9"	1'-3"	22	3'-6"	81
A515	Str.					9	28'-5"	267
A516	Str.					2	26'-10"	56
A517	Str.					2	24'-10"	52
A518	Str.					6	20'-1"	126
A519	Str.					3	20'-6"	64
A520	Str.					4	7'-7"	32
A521	Str.					8	7'-10"	65
A522	Str.					5	8'-2"	43
A523	Str.					2	5'-1"	11
A524	Str.					2	16'-2"	34
A525	Str.					5	16'-6"	86
A526	Str.					2	16'-9"	35
A527	Str.					11	22'-9"	261
A528	20	0'-7"	1'-5"	0'-9"	0'-5¾"	5	2'-2"	11
A529	Str.					2	10'-1"	21
A530	Str.					17	5'-9"	102
A531	Str.					4	9'-10"	41
A532	Str.					1	22'-11"	24
A533	Str.					5	23'-1"	120
A534	Str.					2	23'-3"	48
A535	Str.					8	23'-6"	196
A536	Str.					3	23'-10"	75
A601	Str.					20	7'-3"	218
A602	1	1'-5"	7'-2"			24	15'-5"	556
A603	Str.					3	6'-9"	30
A604	Str.					2	10'-10"	33
A605	1	1'-5"	3'-9"			23	8'-7"	297
A606	Str.					2	7'-4"	22
A607	Str.					4	7'-0"	42
A608	1	1'-5"	7'-9"			25	16'-7"	623
A701	18	2'-3"	7'-0"			17	9'-1"	316
A702	Str.					3	12'-6"	77
A703	Str.					9	12'-1"	222
A704	Str.					4	14'-4"	117

SOUTH ABUTMENT

MARK	TYPE	a	b	c	d	NO.	LENGHT	WEIGHT
A801	Str.					17	8'-6"	386
A802	Str.					17	7'-2"	325
A803	44	9'-6"				24	10'-7"	678
A804	Str.					1	7'-7"	20
A805	Str.					1	6'-0"	16
A806	Str.					1	4'-7"	12
A901	18	2'-10"	8'-1"			24	10'-8"	870
A902	44	12'-6"				40	13'-9"	1870
A1001	18	3'-3"	8'-1"			24	11'-1"	1145
A1002	Str.					30	7'-11"	1022
A1003	44	14'-6"				45	15'-11"	3082
A1004	44	14'-5"				1	15'-10"	68
A1005	44	14'-0"				1	15'-5"	66
A1006	44	13'-7"				1	15'-0"	65
A1007	44	13'-2"				1	14'-7"	63
A1008	44	12'-9"				1	14'-2"	61
A1009	44	11'-8"				1	13'-1"	56
A1010	44	10'-8"				1	12'-1"	52
A1101	19	3'-6⅞"	3'-7"	0'-2⅞"	8'-4"	57	11'-7"	3508
A1102	19	2'-11⅞"	3'-0"	0'-2⅞"	8'-4"	1	11'-0"	38
TOTAL WEIGHT = 20314 LBS.								

REPLACEMENT BARS

MARK	TYPE	NO.	LENGTH
RE501	Str.	1	5'-7"
RE601	Str.	1	5'-11"
RE701	Str.	1	6'-3"
RE801	Str.	1	6'-6"
RE901	Str.	1	6'-10"
RE1001	Str.	1	7'-3"
RE1101	Str.	1	7'-7"

NOTE: Work this Sheet with Sheets No. 446.

NOTE: For Bar Bending Schedule see Typical Drawing, Sht. No. 446.

MICROFILMED
FEB 20 1985

HAZELET & ERDAL
CONSULTING ENGINEERS
CINCINNATI, OHIO

REINFORCING STEEL LIST
BRIDGE NO. HAM-471-0072

DESIGNED	DRAWN	TRACED	CHECKED	REVIEWED DATE	REVISED
	TLZ.		W.L. 3-4-65	JHO 5/20/65	

FED. RD. DIV.	STATE	PROJECT	FISCAL YEAR
2	OHIO		

379
492

HAMILTON COUNTY
HAM-71-(1.56)(2.51)

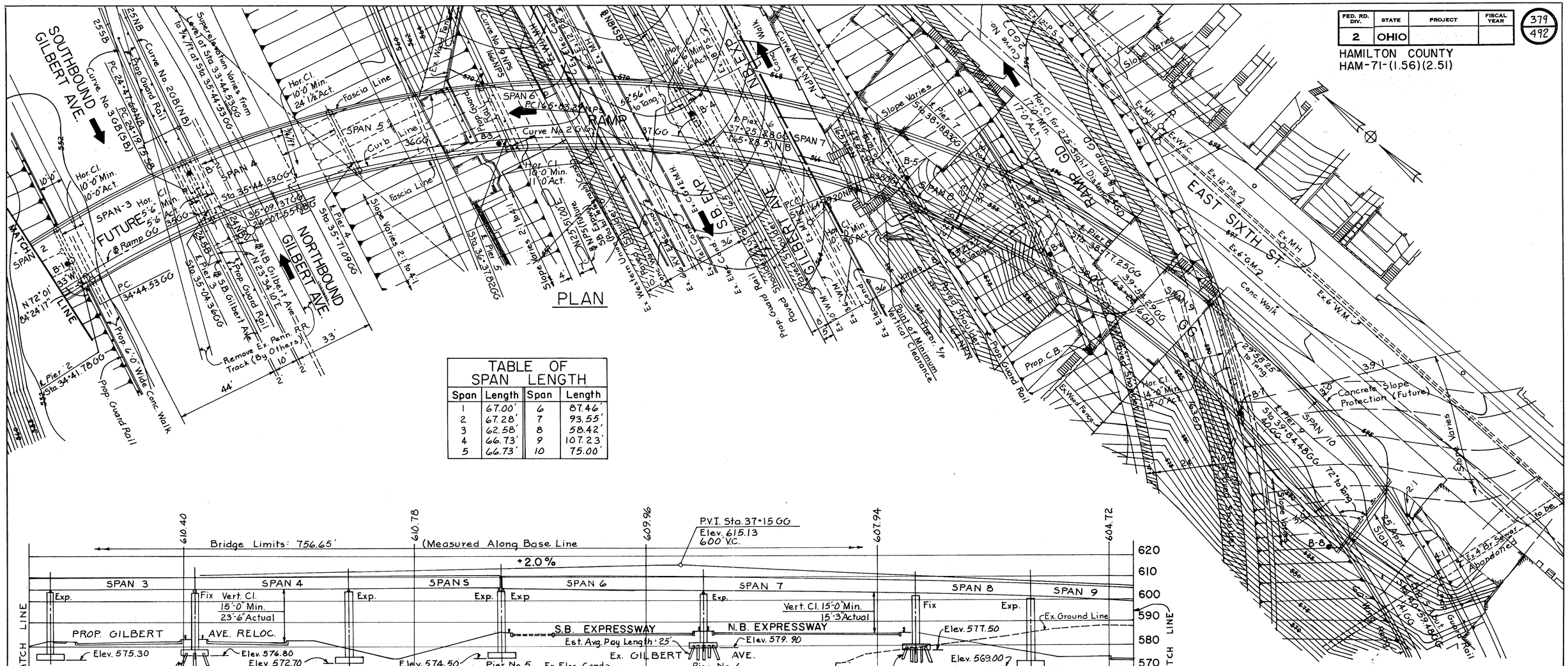

FED. RD. DIV.	STATE	PROJECT	FISCAL YEAR
2	OHIO		

380
492

HAMILTON COUNTY
HAM-71-(1.56) (2.51)

ESTIMATED QUANTITIES

Item	Total	Unit	Description	Pier 3	Pier 6	Pier 7	Pier 8	Pier 9	General
E-2	295	Cu.Yds.	Unclassified Excavation			40	150	105	
S-1	215	Cu.Yds.	Class "C" concrete, piers above footings		37.7	58.2	58.8	60.3	
S-1	266	Cu.Yds.	Class "E" concrete, footings	39	46.7	69.1	53.3	57.9	
S-4	113,544	Lbs.	Reinforcing steel	6,710	18,718	28,017	29,478	30,616	
S-16	Lump	Sum	First test pile						
S-18	3049	Lin. Ft.	Steel piles 10 BP 42	1539	750	760			
E-2	50	Cu Yds.	Rock (or Shale) Excavation				20	30	

GENERAL NOTES

DESIGN NOTES:
Design Loading CF = 2000 (57)
Concrete Class C - Basic unit stress = 1333 psi
Concrete Class E - Basic unit stress = 1133 psi

Reinforcing Steel - ASTM A15, A16, A160 Deformed Intermediate or Hard Grade. Basic unit stress = 20,000 psi. Except spiral reinforcement may be plain structural grade with basic unit stress = 18,000 psi.

STEEL PILES: shall be driven with a hammer of not less than 11,000 ft. lbs. per blow to firm contact with rock or shale. If the length of penetration is approximately equal to the depth of rock or shale according to the bridge foundation investigation report, the firm contact shall be considered as attained when the capacity according to the formula in Section S-18.05 is not less than the following value for a pile hammer of the indicated energy rating: 60 tons per pile using a 11,000 ft. lb hammer or 50 tons per pile using a 15,000 ft. lb hammer for Piers 3, 6 & 7.
If the energy rating of the hammer is between the rating shown above, the required formula capacity shall be determined by interpolation. The design of Piers 3, 6 & 7 is based on 35 Tons per pile.

ADDITIONAL NOTES: For additional notes see Notes 2, 6 & 7. General Notes, Typical Drawing No 443

FOUNDATION BEARING PRESSURE Piers 8 & 9 footings are designed for a maximum bearing pressure of 3 tons per sq. ft.

MICROFILMED
FEB 20 1985

HAZELET & ERDAL
CONSULTING ENGINEERS
CINCINNATI, OHIO

ESTIMATED QUANTITIES & NOTES

BRIDGE NO. HAM-71-0184

DESIGNED	DRAWN	TRACED	CHECKED	REVIEWED DATE	REVISED
	S.U.		R.L.K. 4-15-65	JHO 5/20/05	

FED. RD. DIV.	STATE	PROJECT	FISCAL YEAR
2	OHIO		

381
492

HAMILTON COUNTY
HAM-71-(1.56) (2.51)

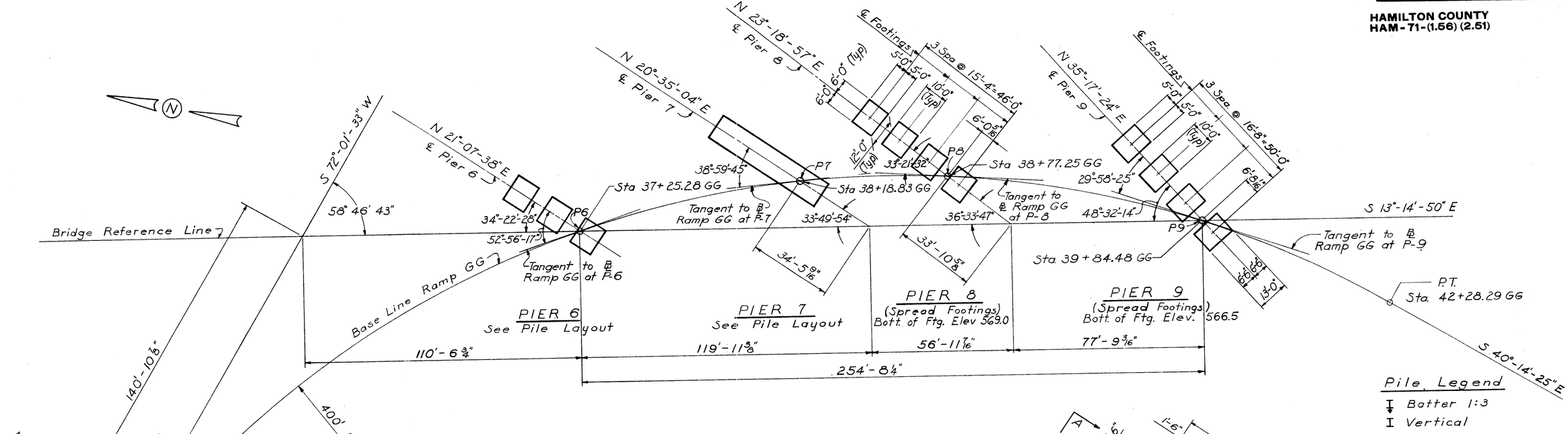

PIER 3
See Pile Layout

STAKEOUT PLAN

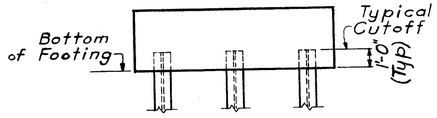

VIEW A-A
Typical Elevation of Pile Footing

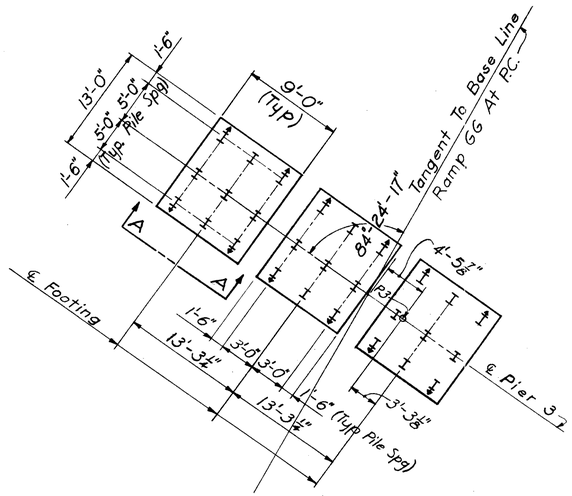

PILE PLAN PIER 3
Bottom of Footing Elev. 576.80
PILES 10BP42

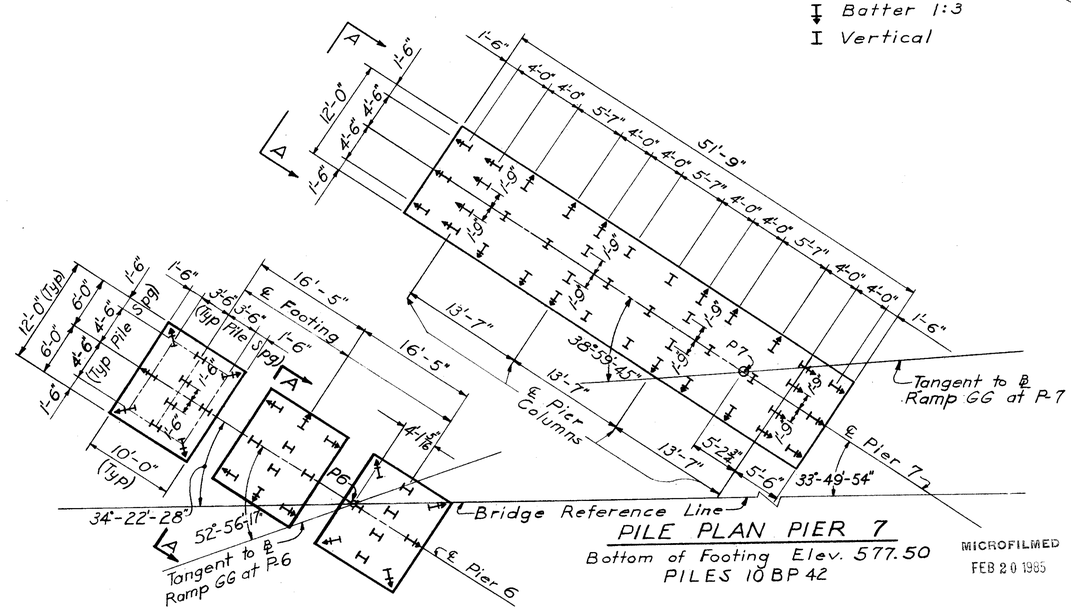

PILE PLAN PIER 7
Bottom of Footing Elev. 577.50
PILES 10BP42

PILE PLAN PIER 6
Bottom of Footing Elev. 579.90
PILES 10BP42

Pile Legend
- Batter 1:3
- Vertical

MICROFILMED
FEB 20 1985

HAZELET & ERDAL
CONSULTING ENGINEERS
CINCINNATI, OHIO

STAKE OUT PLAN

BRIDGE NO. HAM-71-0184

DESIGNED	DRAWN	TRACED	CHECKED	REVIEWED DATE	REVISED
	JLO			JHO 5/20/65	

FED. RD. DIV.	STATE	PROJECT	FISCAL YEAR
2	OHIO		

382
492

HAMILTON COUNTY
HAM-71-(1.56) (2.61)

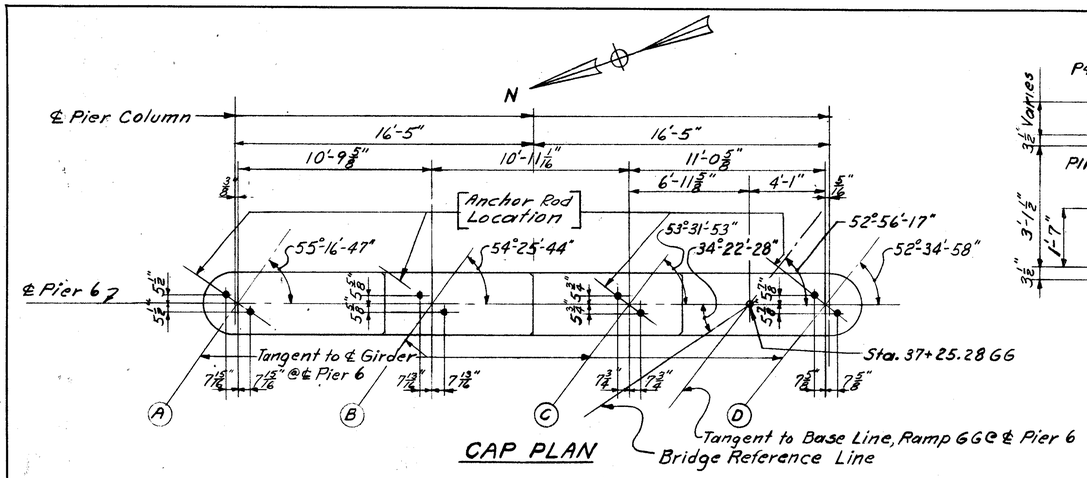

CAP PLAN

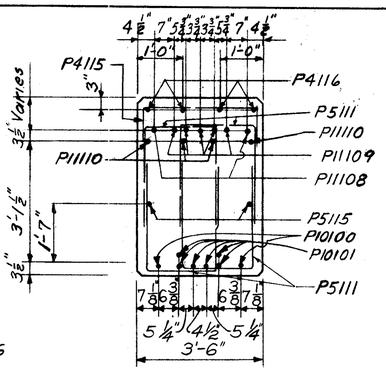

SECTION B-B

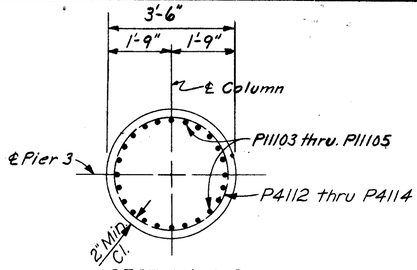

SECTION C-C
TYPICAL COLUMN SECTION

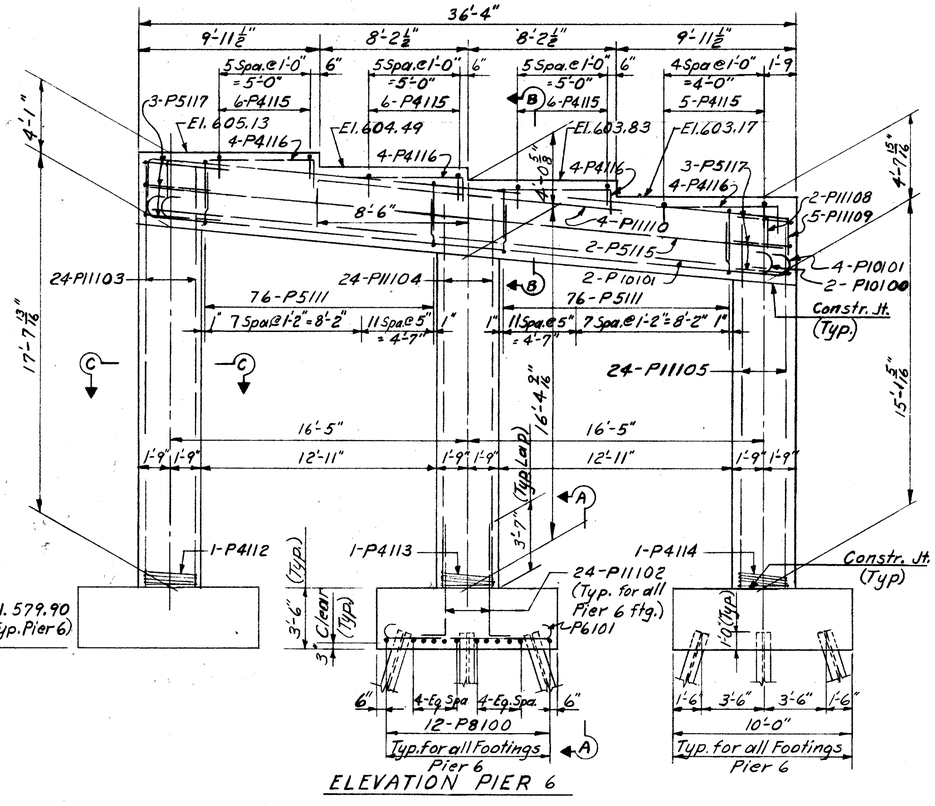

ELEVATION PIER 6

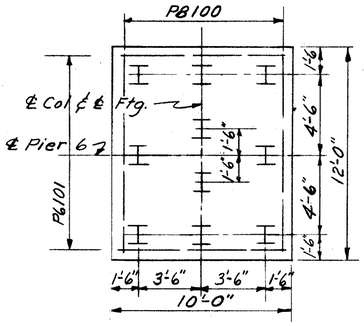

TYPICAL FOOTING PLAN
PIER 6

Note: Pile Batter not shown See Stake Out Plan.

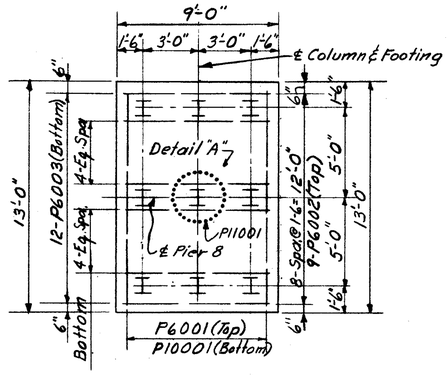

TYPICAL FOOTING PLAN
PIER 3

Note: Pile Batter not shown See Stake Out Plan

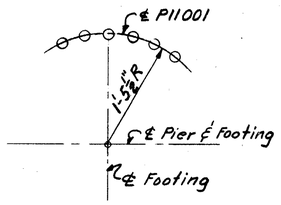

DETAIL "A"

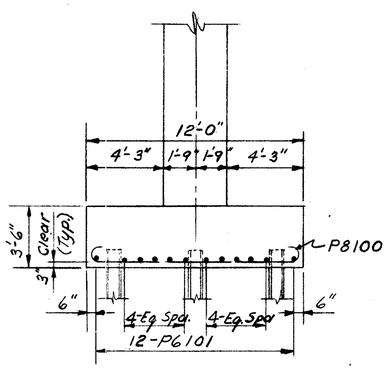

VIEW A-A

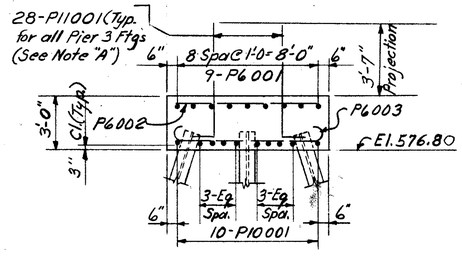

ELEVATION FOOTING
PIER 3 (3 Req'd.)

Note "A": The exposed portion of bars P11001 shall be given an asphaltic coating and wrapped with two layers of plastic film after the footing concrete has been poured. The plastic film shall be securely bound to the bars. This work shall be incidental to the concrete work.

Notes:
Special care shall be taken in placing reinforcing steel in the vicinity of bridge seat so as to avoid interference with the drilling of anchor rod holes. Concrete in footing shall be Class "E" and concrete in columns and caps shall be Class "C"

MICROFILMED
FEB 20 1985

HAZELET & ERDAL
CONSULTING ENGINEERS
CINCINNATI, OHIO

PIER 6 & PIER 3 FOOTING

BRIDGE NO. HAM-71-0184

DESIGNED	DRAWN	TRACED	CHECKED	REVIEWED DATE	REVISED
	H.W.T.		JHO 4-15-65	JHO 5/20/65	

FED. RD. DIV.	STATE	PROJECT	FISCAL YEAR
2	OHIO		

383
492

HAMILTON COUNTY
HAM-71-(1.56) (2.51)

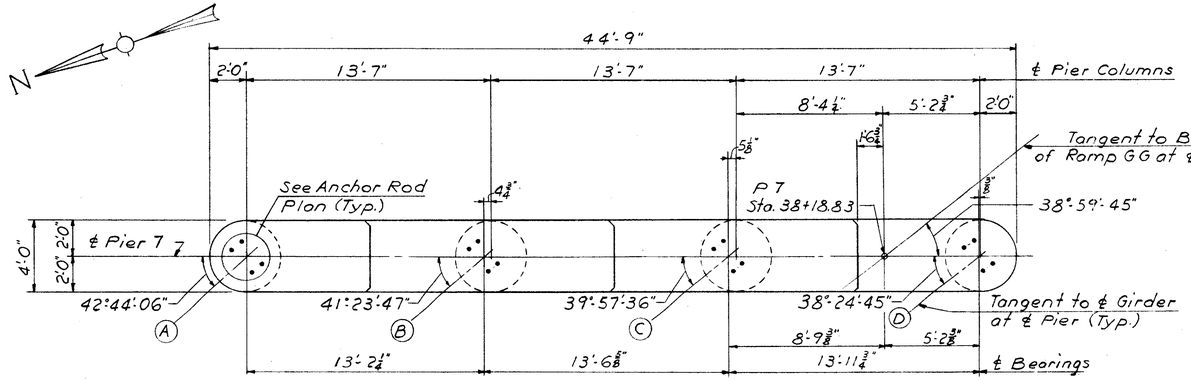

CAP PLAN

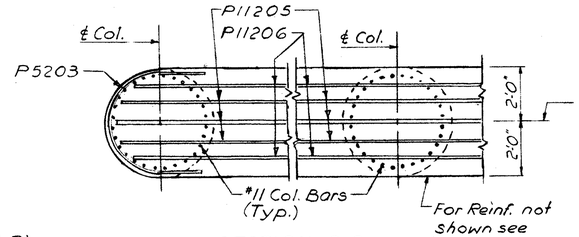

SECTION C-C
(North Half Shown)

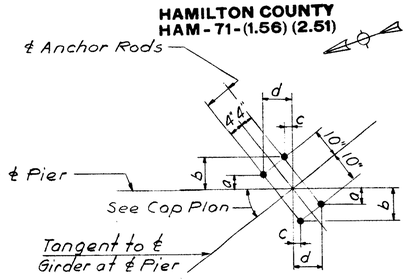

ANCHOR ROD PLAN
(See Table for Dim. a, b, c & d)

ANCHOR ROD PLAN DIMENSIONS				
Girder	a	b	c	d
A	4⅝"	10 1/16"	3⅜"	9 7/16"
B	4⅞"	10⅛"	3⅜"	9 5/16"
C	5⅛"	10¼"	3⅜"	9½"
D	5⅜"	10 5/16"	3 1/16"	9 3/16"

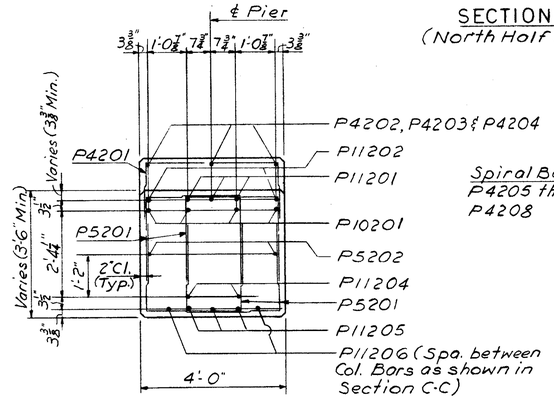

SECTION B-B

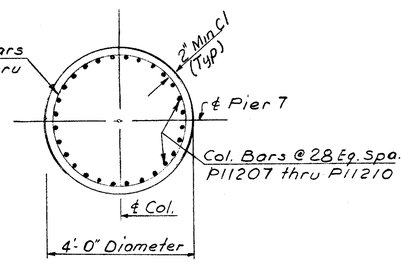

TYP. COLUMN SECTION

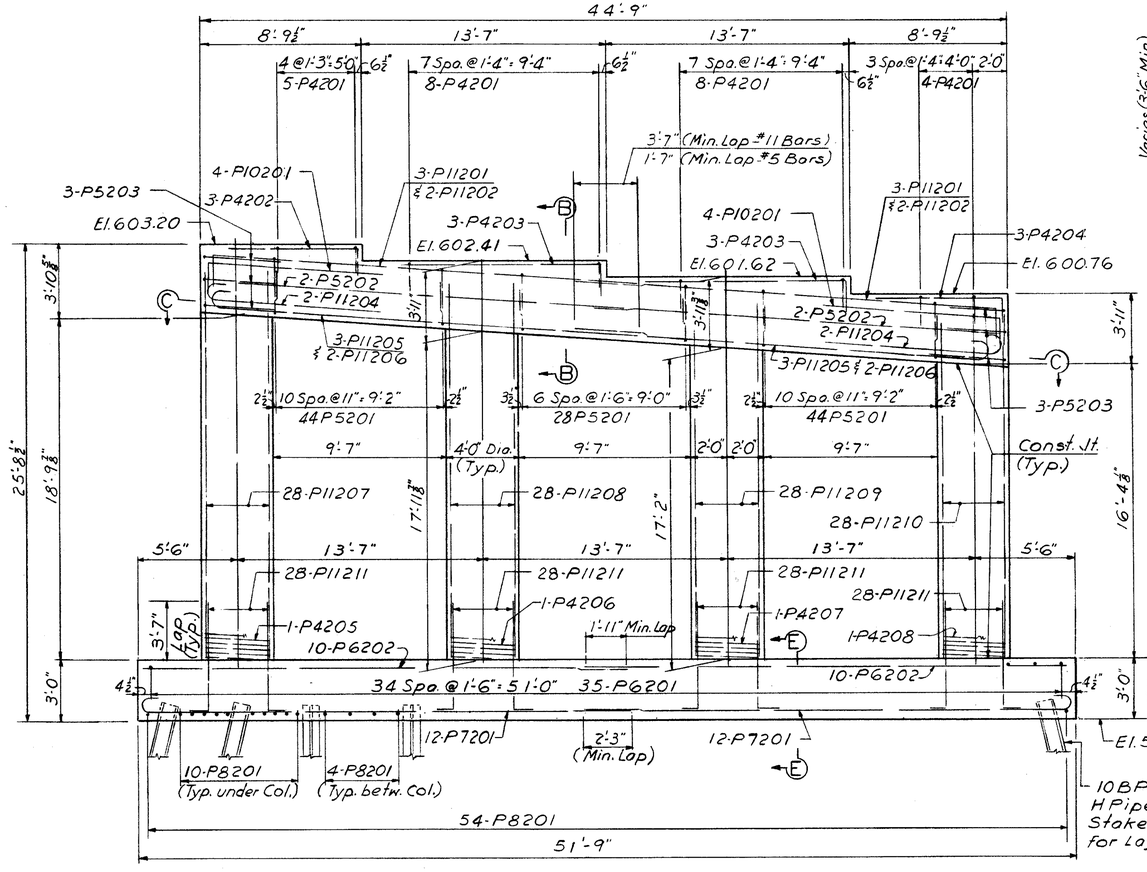

ELEVATION

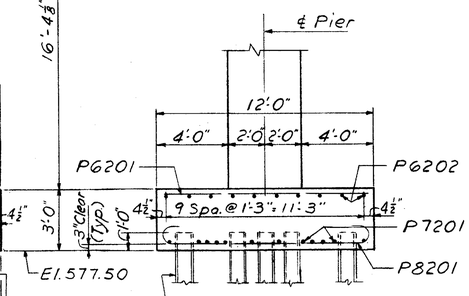

SECTION E-E

Notes:
Special care shall be taken in placing reinforcing steel in the vicinity of bridge seat so as to avoid interference with the drilling of anchor rod holes.
Concrete in footing shall be Class "E" and concrete in columns and cap shall be Class "C".

MICROFILMED
FEB 20 1985

HAZELET & ERDAL
CONSULTING ENGINEERS
CINCINNATI, OHIO

PIER 7

BRIDGE NO. HAM-71-0184

DESIGNED	DRAWN	TRACED	CHECKED	REVIEWED DATE	REVISED
	S.U.		R.L.K 4-15-65	JHO 5/20/65	

FED. RD. DIV.	STATE	PROJECT	FISCAL YEAR
2	OHIO		

384
492

HAMILTON COUNTY
HAM-71-(1.66) (2.61)

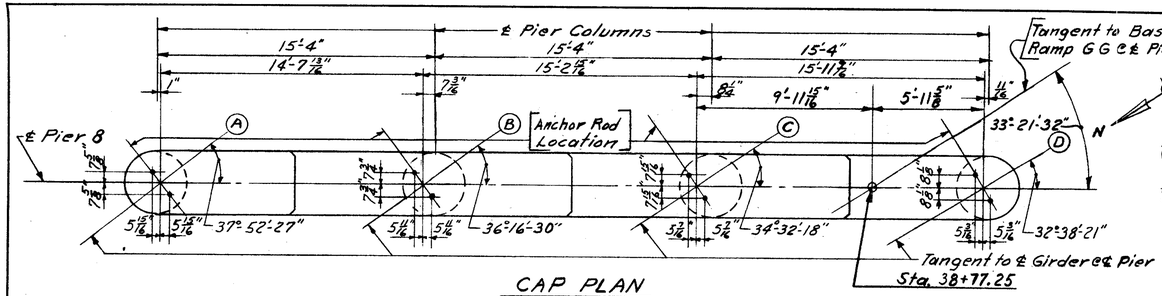

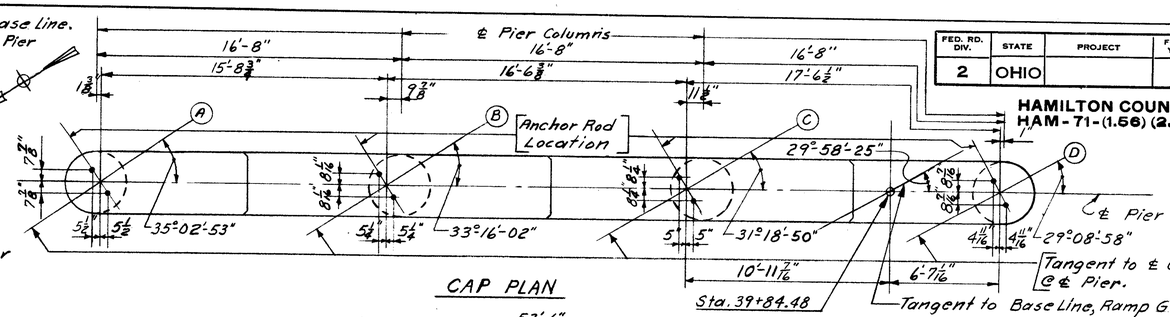

CAP PLAN

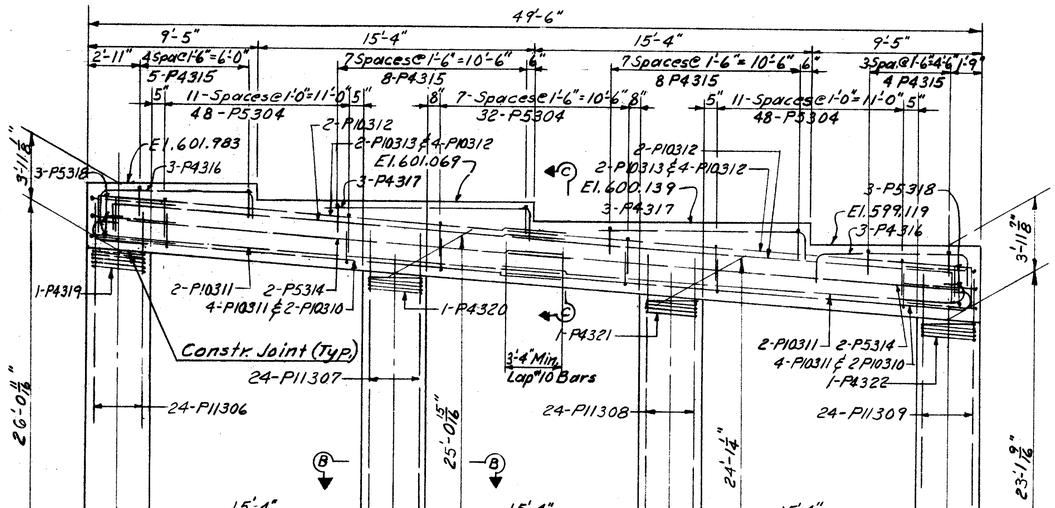

ELEVATION PIER 8

ELEVATION PIER 9

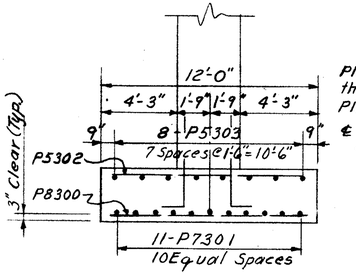

VIEW A-A
Typical all Footings @ Pier 8.

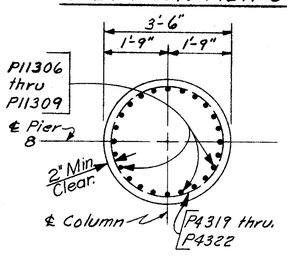

SECTION B-B
(Typical Column Section)

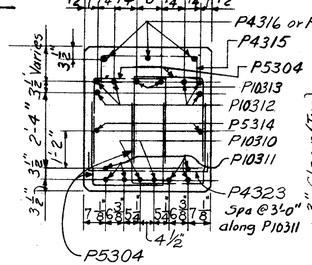

SECTION C-C

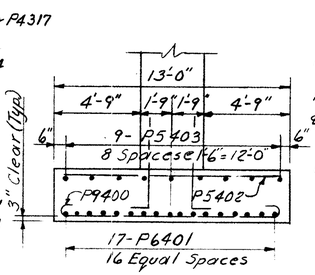

VIEW D-D

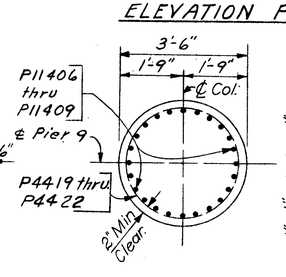

SECTION E-E
(Typical Column Section)

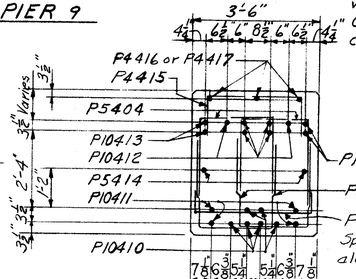

SECTION F-F

Notes:
Special care shall be taken in placing reinforcing steel in the vicinity of bridge seat so as to avoid interference with the drilling of anchor rod holes.
Concrete in footing shall be Class "E" and concrete in columns and caps shall be Class "C."

MICROFILMED
FEB 20 1985

HAZELET & ERDAL
CONSULTING ENGINEERS
CINCINNATI, OHIO

PIERS 8 & 9

BRIDGE NO. HAM-71-0184

DESIGNED	DRAWN	TRACED	CHECKED	REVIEWED DATE	REVISED
	H.W.T.			JHO 5/20/65	

FED. RD. DIV.	STATE	PROJECT	FISCAL YEAR
2	OHIO		

385
492

HAMILTON COUNTY
HAM-71-(1.56) (2.61)

PIER 3

Mark	Type	No. Reqd	Length	Weight
P6001	Str.	27	12'-6"	507
P6002	Str.	27	8'-6"	345
P6003	43	36	9'-10"	532
P10001	43	30	15'-4"	1979
P11001	18	84	7'-6"	3347

Mark	a	pitch	No. of Turns
P4112	3'-1"	2½"	88
P4113	3'-1"	2½"	82
P4114	3'-1"	2½"	75
P4205	3'-7"	2½"	94
P4206	3'-7"	2½"	90
P4207	3'-7"	2½"	86
P4208	3'-7"	2½"	82
P4319	3'-1"	2½"	128
P4320	3'-1"	2½"	123
P4321	3'-1"	2½"	118
P4322	3'-1"	2½"	114
P4419	3'-1"	2½"	120
P4420	3'-1"	2½"	114
P4421	3'-1"	2½"	108
P4422	3'-1"	2½"	103

Type 64 (Spiral Bars)

Mark	a	b	Rad.
P5117	4'-9"	3'-0"	1'-5¾"
P5203	5'-8⅝"	1'-7"	1'-9⅜"
P5318	4'-10"	3'-0"	1'-6¼"
P5418	4'-10"	3'-0"	1'-6¼"

Type 6

PIER 6

Mark	Type	No. Reqd	Length	Weight
P4112	64	1	17'-7⅞"	625
P4113	64	1	16'-4⅜"	582
P4114	64	1	15'-1⅞"	533
P4115	1	23	5'-9"	88
P4116	18	16	8'-5"	90
P5111	1	152	7'-2"	1136
P5115	Str.	2	32'-10"	68
P5117	6	6	10'-9"	68
P6101	43	36	10'-10"	586
P8100	43	36	13'-8"	1314
P10100	43	2	37'-3"	321
P10101	43	6	38'-3"	988
P11102	18	72	7'-6"	2869
P11103	Str.	24	21'-1"	2688
P11104	Str.	24	19'-9"	2518
P11105	Str.	24	18'-6"	2359
P11108	1	2	40'-3"	428
P11109	1	5	41'-3"	1096
P11110	Str.	4	17'-0"	361

REPLACEMENT BARS			
Mark	Type	No.	Length
RE401	Str.	1	5'-3"
RE501	↓	1	5'-7"
RE601	↓	1	5'-11"
RE701	↓	1	6'-3"
RE801	↓	1	6'-6"
RE901	↓	1	6'-10"
RE1001	↓	1	7'-3"
RE1101	Str.	4	7'-7"

PIER 7

Mark	Type	No. Reqd	Length	Weight
P4201	1	25	6'-6"	109
P4202	18	3	8'-2"	16
P4203	18	6	12'-5"	50
P4204	18	3	7'-5"	15
P4205	64	1	18'-10"	668
P4206	↓	1	18'-0"	640
P4207	↓	1	17'-2"	610
P4208	64	1	16'-4"	582
P5201	1	116	7'-3"	877
P5202	Str.	4	21'-3"	89
P5203	6	6	8'-11"	56
P6201	Str.	35	11'-6"	605
P6202	Str.	20	26'-9"	804
P7201	44	24	27'-7"	1353
P8201	43	54	13'-8"	1970
P10201	18	8	12'-3"	422
P11201	18	6	26'-11"	858
P11202	18	4	25'-2"	535
P11204	44	4	11'-1"	236
P11205	44	6	25'-7"	816
P11206	44	4	24'-10"	528
P11207	Str.	28	21'-6"	3198
P11208	↓	28	20'-6"	3050
P11209	↓	28	19'-9"	2938
P11210	Str.	28	19'-0"	2827
P11211	18	112	7'-0"	4165

PIER 8

Mark	Type	No. Reqd	Length	Weight
P4315	1	25	5'-8"	95
P4316	1	6	12'-3"	49
P4317	18	6	8'-11"	36
P4319	64	1	26'-0⅜"	911
P4320	↓	1	25'-1"	875
P4321	↓	1	24'-1⅞"	839
P4322	64	1	23'-1⅜"	811
P4323	1	17	5'-0"	57
P5302	Str.	28	11'-6"	336
P5303	Str.	32	9'-6"	317
P5304	1	128	7'-5"	990
P5314	Str.	4	23'-10"	99
P5318	6	6	10'-10"	68
P7301	43	44	11'-2"	1004
P8300	43	44	13'-8"	1606
P10310	Str.	4	26'-1"	449
P10311	44	12	26'-10"	1386
P10312	18	12	29'-1"	1502
P10313	18	4	29'-3"	503
P11305	18	96	7'-0"	3570
P11306	Str.	24	28'-10"	3671
P11307	↓	24	27'-11"	3560
P11308	↓	24	26'-1"	3433
P11309	Str.	24	25'-1"	3305

PIER 9

Mark	Type	No. Reqd	Length	Weight
P4415	1	29	6'-2"	119
P4416	18	6	15'-8"	63
P4417	1	6	12'-11"	52
P4419	64	1	24'-5"	853
P4420	↓	1	23'-4"	810
P4421	↓	1	22'-0"	767
P4422	64	1	20'-10"	731
P4423	1	18	5'-0"	60
P5402	Str.	28	12'-6"	365
P5403	Str.	36	9'-6"	357
P5404	1	140	7'-5"	1084
P5414	Str.	4	26'-6"	111
P5418	6	6	10'-10"	68
P6401	43	68	10'-10"	1107
P9400	43	48	15'-0"	2448
P10410	Str.	12	28'-0"	1446
P10411	44	8	28'-9"	990
P10412	18	12	31'-0"	1601
P10413	18	8	30'-6"	1050
P11405	18	96	7'-0"	3570
P11406	Str.	24	27'-3"	3475
P11407	↓	24	26'-0"	3315
P11408	↓	24	24'-10"	3167
P11409	Str.	24	23'-7"	3007

Mark	a	b
P4116	7'-0"	1'-6"
P4202	6'-9"	1'-6"
P4203	11'-0"	1'-6"
P4204	6'-0"	1'-6"
P4317	7'-0"	2'-0"
P4416	1'-9"	14'-0"
P10201	9'-6"	3'-0"
P10312	3'-0"	26'-4"
P10313	3'-0"	26'-6"
P10412	3'-0"	28'-3"
P10413	3'-0"	27'-9"
P11001	1'-0"	6'-10"
P11102	1'-0"	6'-10"
P11201	24'-0"	3'-3"
P11202	22'-3"	3'-3"
P11211	1'-0"	6'-4"
P11305	1'-0"	6'-4"
P11405	1'-0"	6'-4"

Type 18

Mark	a	b
P4115	2'-11"	1'-6"
P4201	3'-8"	1'-6"
P4315	2'-10"	1'-6"
P4316	8'-5"	2'-0"
P4415	2'-10"	1'-9"
P4417	9'-1"	2'-0"
P5111	2'-1"	2'-8"
P5201	2'-7"	2'-5"
P5304	2'-2"	2'-9"
P5404	2'-2"	2'-9"
P11108	34'-5"	3'-3"
P11109	35'-5"	3'-3"
P4323	3'-2	1'-0"
P4423	3'-2"	1'-0"

Type 1

Mark	a
P6003	8'-6"
P6101	9'-6"
P6401	9'-6"
P7301	9'-6"
P8100	11'-6"
P8201	11'-6"
P8300	11'-6"
P9400	12'-6"
P10001	12'-6"
P10100	34'-5"
P10101	35'-5"

Type 43

Mark	a
P7201	26'-9"
P10311	25'-5"
P10411	27'-4"
P11204	9'-6"
P11205	24'-0"
P11206	23'-3"

Type 44

Total wgt of reinforcing steel = 113,544 lbs

Note:
For bar bending schedule see sheet No. 446

Note
The "Length" shown in the steel list for the spiral bars is the distance from the top of the footing to the bottom of the pier cap.

The "No. of Turns" shown is the "Length" divided by the pitch, plus 3 turns (total number of closed coils).

MICROFILMED
FEB 20 1985

HAZELET & ERDAL
CONSULTING ENGINEERS
CINCINNATI, OHIO

STEEL REINFORCEMENT LIST

BRIDGE NO. HAM-71-0184

DESIGNED	DRAWN	TRACED	CHECKED	REVIEWED DATE	REVISED
	RAL		WFB 5-11-65	JHO 5/20/65	

FED. RD. DIV.	STATE	PROJECT	FISCAL YEAR
2	OHIO		

386
492

HAMILTON COUNTY
HAM-71-(1.56)(2.51)

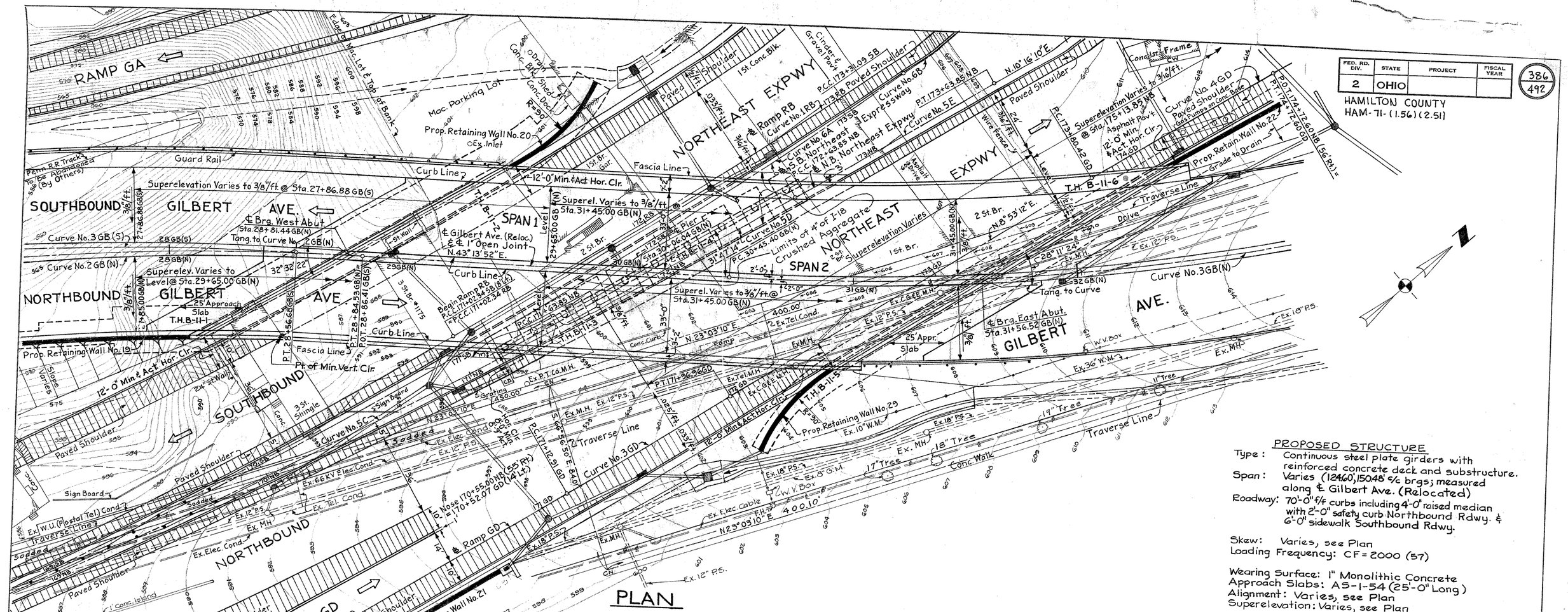
RAMP GA
NORTHEAST EXPWY
Ramp RB
Curve No.1RB
Curve No.6A
Curve No.6B
Curve No.5E
Curve No.5D
Curve No.5C
Curve No.4GD
Curve No.3GD
Curve No.3GB(N)
Curve No.3GB(S)
Curve No.2GB(N)
Mac. Parking Lot
Prop. Retaining Wall No.20
Ex. Inlet
Concr. Block Shed
Concr. Dock
Guard Rail
Penn R.R. Tracks To be Abandoned (By Others)
SOUTHBOUND
GILBERT AVE.
℄ Brg. West Abut. Sta. 28+81.44 GB(N)
Tang. to Curve No. 2GB(N)
Superelevation Varies to 3/8"/ft. @ Sta. 27+86.88 GB(S)
Superelev. Varies to Level @ Sta. 29+65.00 GB(N)
NORTHBOUND
25' Approach Slab T.H. B-11-1
Prop. Retaining Wall No.19
12'-0" Min. & Act. Hor. Clr.
Pt. of Min. Vert. Clr.
Begin Ramp RB P.C.C. 171+02.58 RB = P.C.C. 171+02.94 RB
P.T. 28+84.53 GB(N) = P.O.T. 28+86.41 GB(S)
P.T. 28+56.68 GB(S)
Curb Line
Fascia Line
Paved Shoulder
Sodded
Traverse Line
Ex. W.U. (Plostal Tel) Cond.
Ex. 66 KV Elec. Cond.
Ex. Tel. Cond.
Ex. 12" P.S.
Ex. MH
Sign Board
Utility Pole
Conc. Island
Ramp GD
Prop. Retaining Wall No.21
Nose 170+55.00 NB (55 Rt.) = 170+52.07 GD (14 Lt.)
P.C.C. 171+62.85 NB
P.T.I. 171+36.96 GD
P.C.C. 171+12.91 GD
N 23° 03' 10" E 400.10'
Ex. 18" P.S.
Ex. G & E M.H.
Ex. Tel. M.H.
Ex. P.T. Co. M.H.
Ex. W.M.
Ex. 10" W.M.
Ex. 36" W.M.
Ex. 16" P.S.
Ex. Elec. Cable
Ex. Elec. Conduit
Prop. Retaining Wall No.23
Ex. 12" P.S.
Grating 1450.00
Prop. Retain. Wall No.22
Grade to Drain
Ex. 42" P.S.
Ex. 24" P.S.
Ex. 12" P.S.
Ex. Frame & Cover
Asphalt Pav't.
Wire Fence
Cinder Gravel Path
Paved Shoulder
1st. Conc. Blk.
Fascia Line
1st. Br. Gar.
Curb Line
Superelevation Varies to 3/16"/ft. @ Sta. 175+13.85 NB
2'-0" Min. & Act. Hor. Clr.
Gas Pumps on conc. base
Prop. Retain. Wall No.22
Grade to Drain
Traverse Line
Drive
Ex. 12" P.S.
Ex. M.H.
Ex. 36" W.M.
Ex. 16" P.S.
W.V. Box
11" Tree
19" Tree
17" Tree
18" Tree
Conc. Walk
Ex. 10" W.M.
Ex. 18" P.S.
Ex. G.G.M.
Ex. M.H.
Ex. Elec. Cond.
Ex. Telephone Conduit
Ex. 12" P.S.
Ex. Elec. Conduit
Ex. Tel. Cond.
Ex. 18" P.S.
Ex. M.H.
Ex. 12" P.S

FED. RD. DIV.	STATE	PROJECT	FISCAL YEAR
2	OHIO		

387
492

HAMILTON COUNTY
HAM-71-(1.56) (2.51)

ESTIMATED QUANTITIES

	Item	Total	Unit	Description	Super-structure	East Abutment	West Abutment	Pier	General
	E-2	Lump	Sum	Cofferdams, cribs & sheeting					Lump
	E-2	4775	Cu.Yds.	Unclassified excavation		2440	1650	685	
	E-2	400	Cu.Yds.	Rock (or shale) excavation		270		130	
	S-1	782	Cu.Yds.	Class "C" concrete, superstructure	782				
	S-1	187	Cu.Yds.	Class "C" concrete, piers above footings				187	
	S-1	1044	Cu.Yds.	Class "E" concrete, abutments above footings		584.4	459.6		
	S-1	1050	Cu.Yds.	Class "E" concrete, footings		435	419	196	
	S-3	56	Lin.Ft.	Waterproofing, premolded sealing strip		29	27		
	S-4	460791	Lbs.	Reinforcing Steel	200741	97844	86437	75769	
*	S-7	1243000	Lbs.	Structural Steel	1243000				
*	S-8	1243000	Lbs.	Field painting of structural steel	1243000				
	S-9	113	Sq.Ft.	1" preformed expansion joint filler (M10.02 Type 1)		59	54		
	S-14	595	Lin.Ft.	Railing type "C" (aluminum rail & supports, concrete parapet & end posts)	557	20	18		
	S-16	Lump	Sum	First test pile					Lump
	S-18	3392	Lin.Ft.	Steel piles, 10 BP 42			3392		
	S-25			Electric Lighting System (See Sh. No 204)					
	S-29	640	Cu.Yds.	Porous backfill		360	280		
	S-29	Lump	Sum	Drain inlet including supports and horizontal collector system	Lump				
	S-29	58	Lin.Ft.	8" standard pipe downspout, wrought iron or hot-dipped galvanized steel, including specials				58	
	S-29	108	Lin.Ft.	8" bituminous coated helical perforated corrugated metal pipe [Sec. M-6.4 (h-c)] (including specials)		60	48		
	S-29	348	Lin.Ft.	8" bituminous coated helical perforated corrugated metal pipe [Sec. M-6.4 (h-c)], (including specials and sand)		186	162		
	S-29	26	Lin.Ft.	12" reinforced concrete sewer pipe (Sec. M-6.6(a)]		10	16		
	S-29	48	Lin.Ft.	8" bituminous coated helical corrugated metal pipe [Sec. M-6.4 (h-c)], (including specials)			48		
	S-101	782	Each	Water-reducing set retarding admixture	782				

GENERAL NOTES

STEEL PILES: shall be driven with a hammer of not less than 11,000 ft. lbs. per blow to firm contact with rock or shale. If the length of penetration is approximately equal to the depth of rock and shale according to the bridge foundation investigation report, the firm contact shall be considered as attained when the capacity according to the formula in Section S-18.05 is not less than the following value for a pile hammer of the indicated energy rating.

60 tons per pile for west abutment using a 11,000 ft. lb. hammer or 55 tons per pile using a 15,000 ft. lb. hammer.
If the energy rating of the hammer is between the rating as shown above, the required formula-capacity shall be determined by interpolation.
The design of the west abutment is based on 35 tons per pile.

DESIGN NOTES:
Design Loading CF = 2000(57)
Concrete Class C - Basic unit stress 1333 psi
Concrete Class E - Basic unit stress 1133 psi
Structural Steel - ASTM A36 - Basic unit stress 20,000 psi (ASTM A7 and A373 steel not permitted except for piling)
Reinforcing Steel - ASTM A15, A16, A160. Deformed Intermediate or Hard Grade, Basic unit stress 20,000 psi. Except spiral reinforcement may be plain Structural grade with basic unit stress of 18,000 psi.

FOUNDATION BEARING PRESSURE: the east abutment and pier footings are designed for a maximum bearing pressure of 3.0 tons per sq. ft.

FOOTINGS: for the east abutment and the pier shall extend a minimum of 3" into undisturbed rock or to the elevations shown on the plans, whichever is lower.

MACHINE FINISH OF CONCRETE: at the contractors option, the concrete deck may be finished by the use of a finishing machine.

ADDITIONAL NOTES: For additional notes see Notes 1 thru 8, General Notes, Typical Drawing No. 443

MICROFILMED
FEB 20 1985

* ITEMS CHARGEABLE TO CINCINNATI AND SUBURBAN BELL TELEPHONE CO.

Item	Unit	Description	Amount
S-7	Lbs.	Structural Steel	3600
S-8	Lbs.	Field Painting of Structural Steel	3600

* ITEMS CHARGEABLE TO CINCINNATI GAS AND ELECTRIC CO.

Item	Unit	Description	Amount
S-7	Lbs.	Structural Steel	8550
S-8	Lbs.	Field Painting of Structural Steel	8550

HAZELET & ERDAL
CONSULTING ENGINEERS
CINCINNATI, OHIO

ESTIMATED QUANTITIES & NOTES

BRIDGE NO. HAM - 71-0196

Designed	Drawn	Traced	Checked	Reviewed Date	Revised
	S.U.		DJG 3-17-65	JHO 5/20/65	

FED. RD. DIV.	STATE	PROJECT	FISCAL YEAR
2	OHIO		

388
492

HAMILTON COUNTY
HAM-71-(1.56) (2.51)

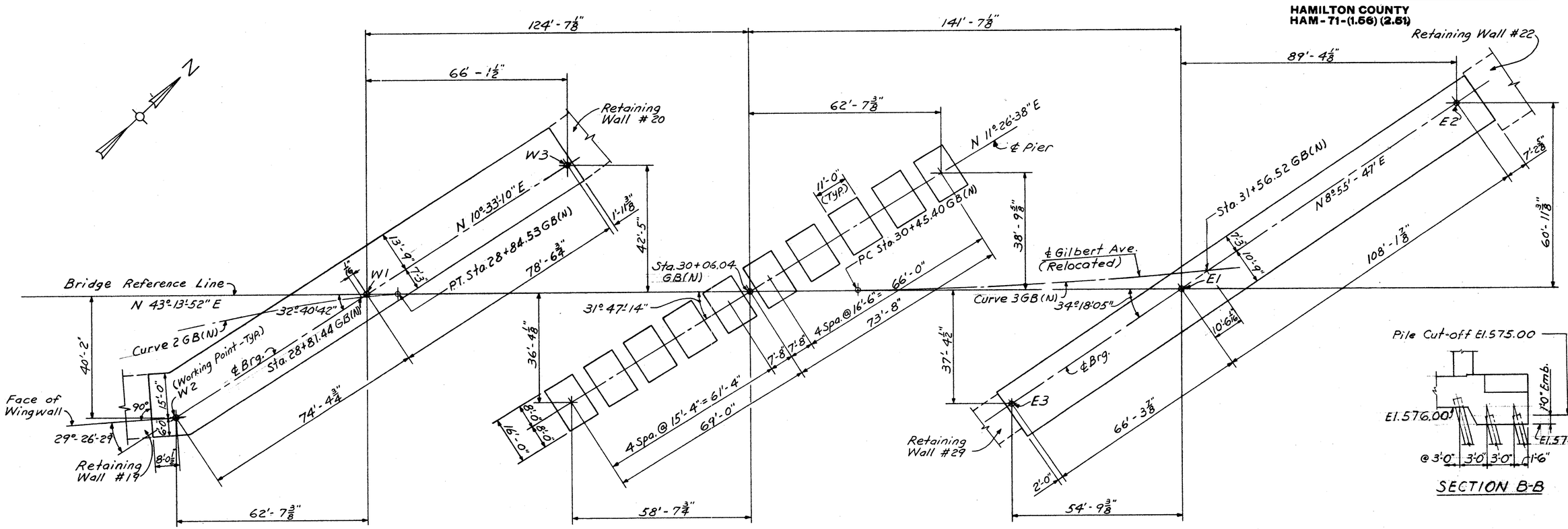

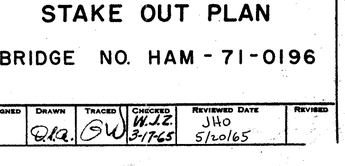

SECTION B-B

WEST ABUTMENT
Bottom of Footing Elev. 576.00
(For pile locations, see Plan below)

PIER
Bottom of Footing Elev. 575.50

EAST ABUTMENT
Bottom of Footing Elev. 582.00

STAKEOUT PLAN

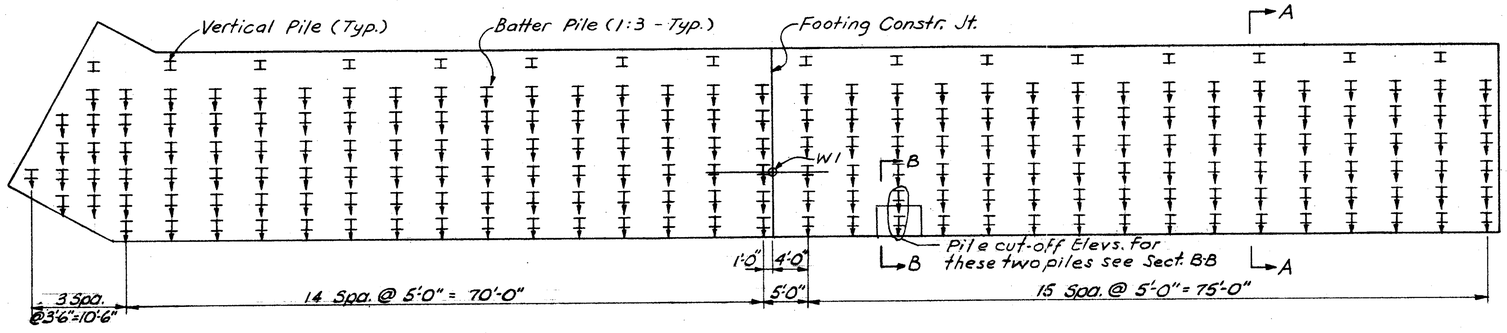

PILE PLAN - WEST ABUTMENT

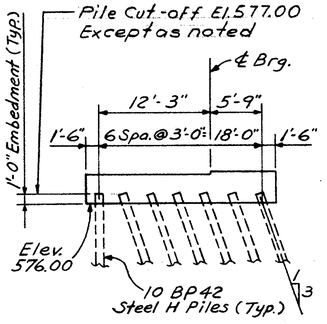

SECTION A-A

Pile Legend
Batter 1:3
Vertical

MICROFILMED
FEB 20 1985

HAZELET & ERDAL
CONSULTING ENGINEERS
CINCINNATI, OHIO

STAKE OUT PLAN

BRIDGE NO. HAM-71-0196

DESIGNED	DRAWN	TRACED	CHECKED	REVIEWED DATE	REVISED
	DRG.	SW	W.J.Z. 3-17-65	JHO 5/20/65	

FED. RD. DIV.	STATE	PROJECT	FISCAL YEAR
2	OHIO		

389
492

HAMILTON COUNTY
HAM-71-(1.56) (2.51)

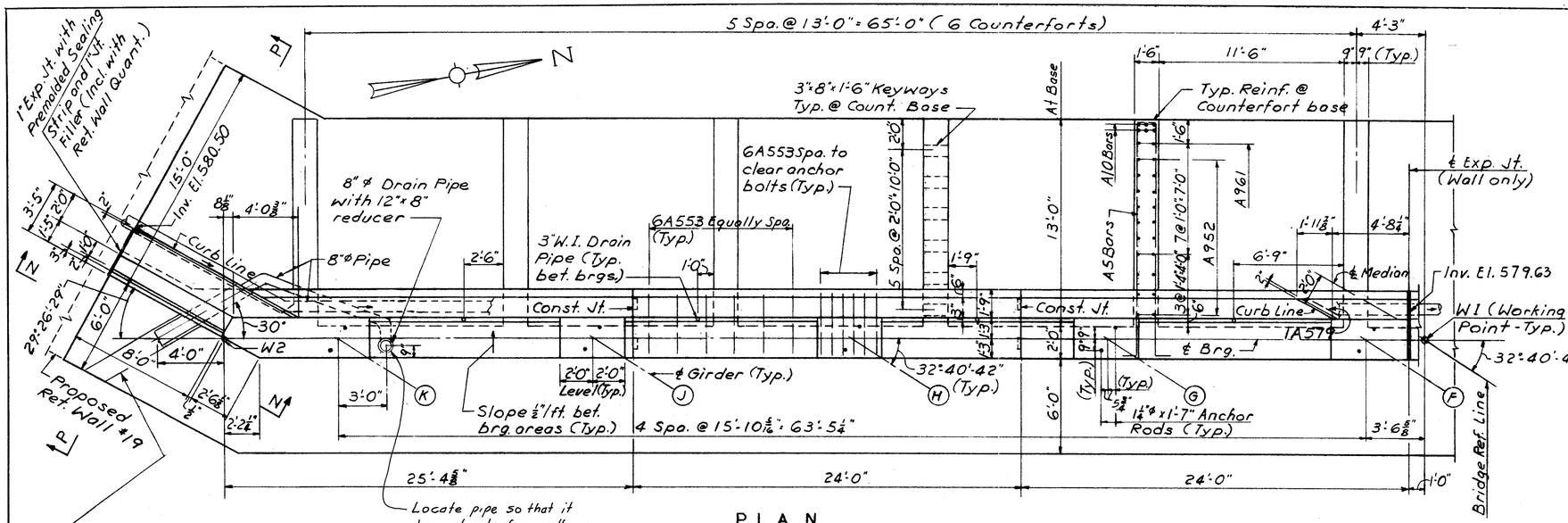

PLAN

Note: Top of backwall elevations shown are of the near face of backwall.

Top of backwall to be constructed to conform to contour of Roadway.

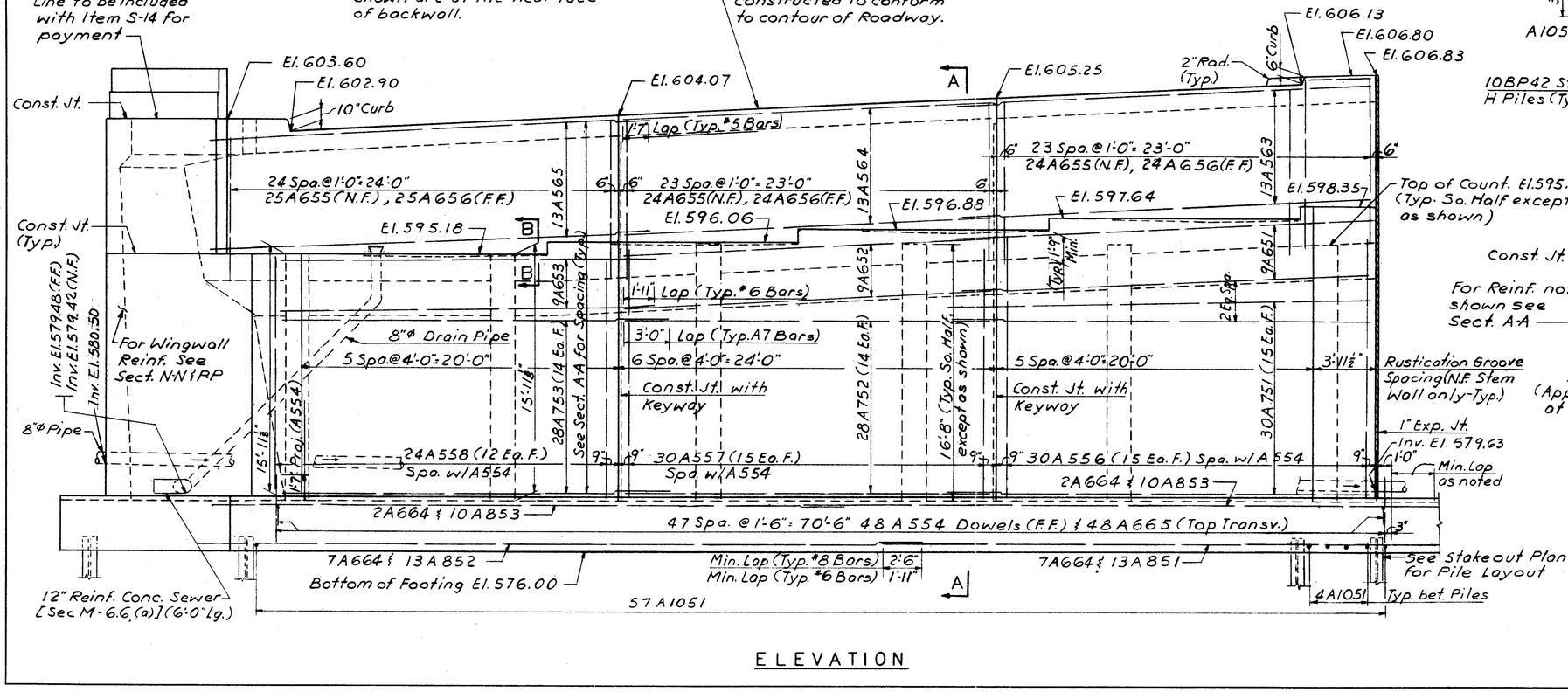

ELEVATION

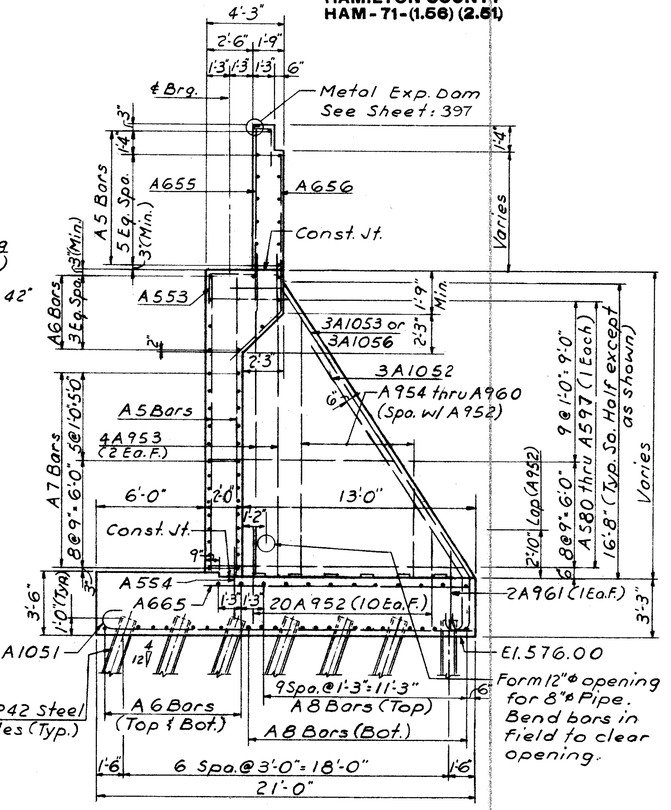

SECTION A-A

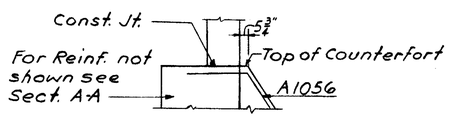

SECTION B-B
(Applies to the two Count. at South End only)

MICROFILMED
FEB 20 1985

Work this sheet with Sheet. 390

HAZELET & ERDAL
CONSULTING ENGINEERS
CINCINNATI, OHIO

WEST ABUTMENT

BRIDGE NO. HAM-71-0196

DESIGNED	DRAWN	TRACED	CHECKED	REVIEWED DATE	REVISED
S.U.	S.U.		W.L.Z. 3-17-65	JHO 5/20/65	

FED. RD. DIV.	STATE	PROJECT	FISCAL YEAR
2	OHIO		

390
492

HAMILTON COUNTY
HAM-71-(1.56)(2.51)

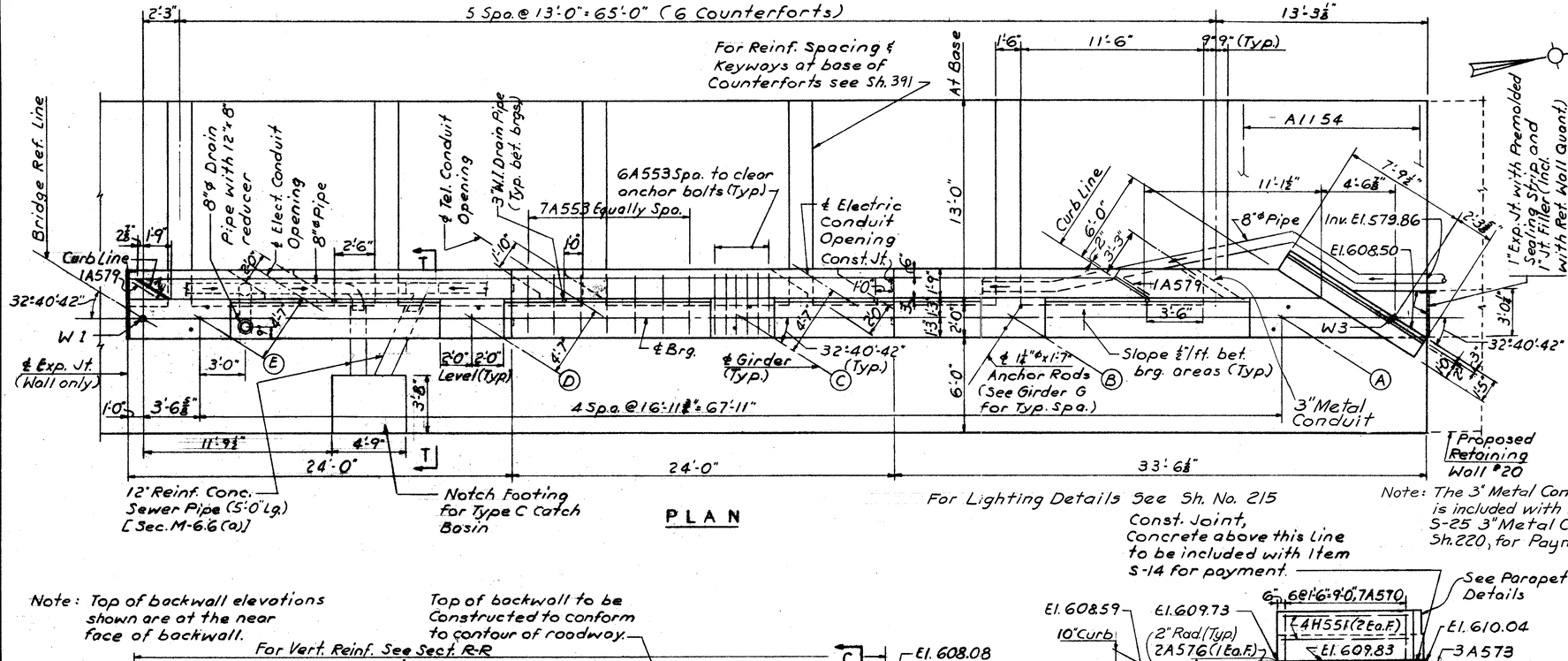

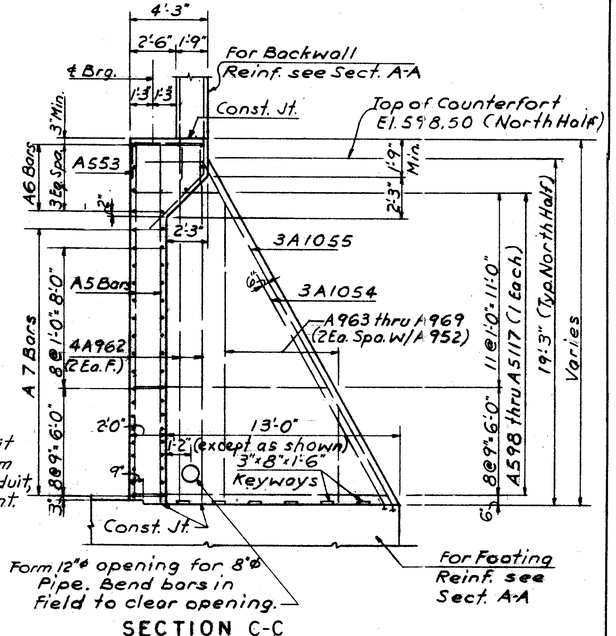

Note: Top of backwall elevations shown are at the near face of backwall.

Top of backwall to be Constructed to conform to contour of roadway.

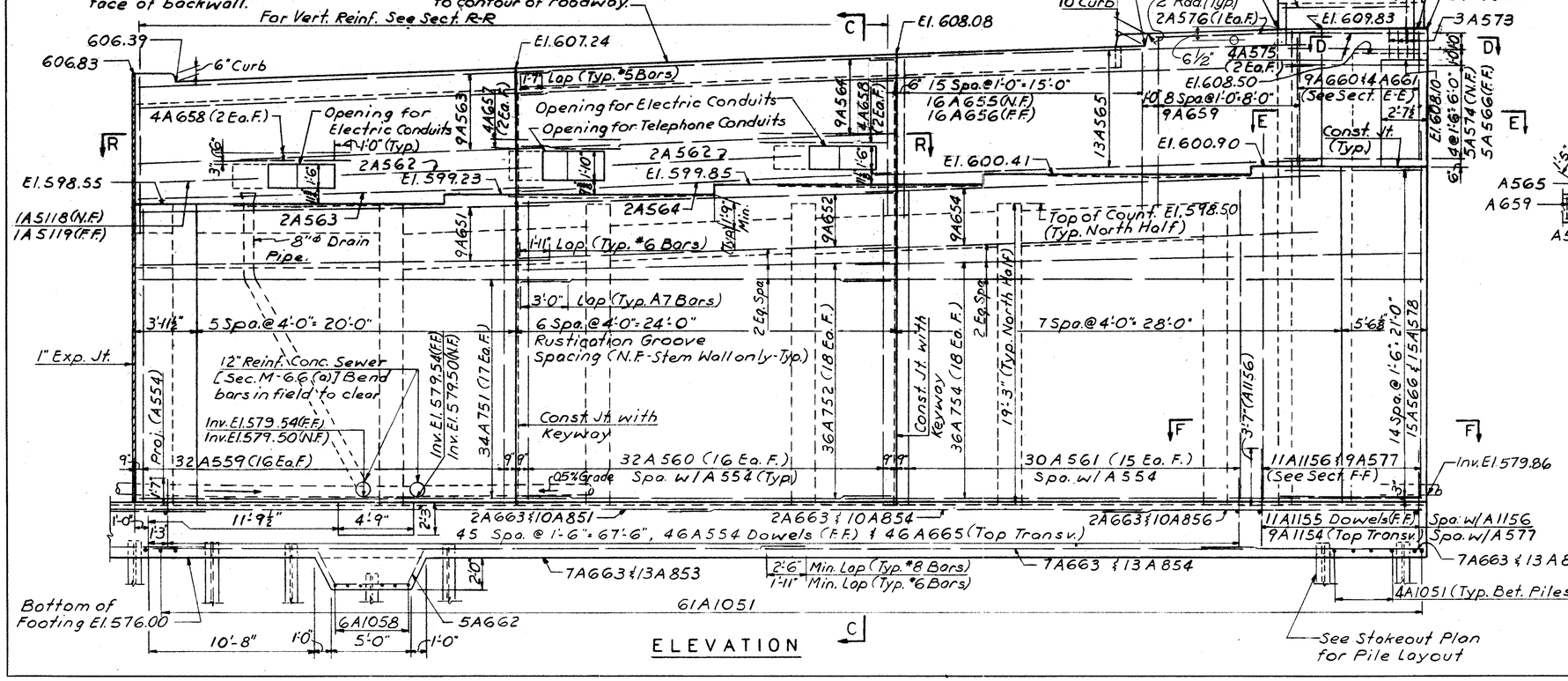

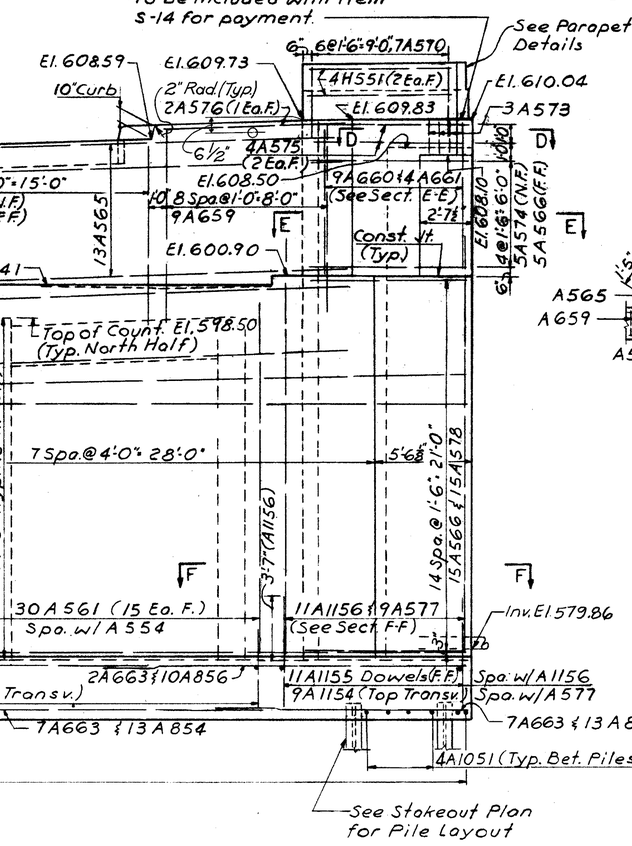

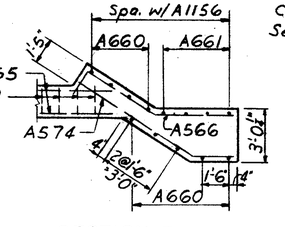

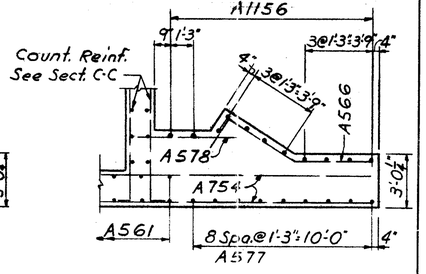

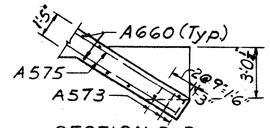

Work this sheet with Sheet 391

HAZELET & ERDAL
CONSULTING ENGINEERS
CINCINNATI, OHIO

WEST ABUTMENT

BRIDGE NO. HAM-71-0196

DESIGNED	DRAWN	TRACED	CHECKED	REVIEWED DATE	REVISED
S.U.	S.U.		W.J.Z. 3-17-65	JHO 5/20/65	

MICROFILMED
FEB 20 1985

FED. RD. DIV.	STATE	PROJECT	FISCAL YEAR
2	OHIO		

391
492

HAMILTON COUNTY
HAM-71-(1.56) (2.51)

ANCHOR ROD LAYOUT DIM.		
Girder	a	b
A	4 3/8"	9 7/16"
B	5 1/16"	9 3/8"
C	5 5/16"	9 1/4"
D	5 3/8"	9 3/16"
E	5 1/2"	9 1/8"
F	5 11/16"	9"
G	5 11/16"	9"
H	5 3/8"	8 15/16"
J	5 3/8"	8 3/8"
K	5 3/8"	8 3/8"

PLAN

ELEVATION

ANCHOR ROD PLAN
(See Table for Dim. a & b)

SECTION G-G

Work this sheet with Sheets 392 & 393

HAZELET & ERDAL
CONSULTING ENGINEERS
CINCINNATI, OHIO

EAST ABUTMENT

BRIDGE NO. HAM-71-0196

DESIGNED	DRAWN	TRACED	CHECKED	REVIEWED DATE	REVISED
S.U.	S.U.		W.J.Z. 3-17-65	JHO 5/20/65	

MICROFILMED
FEB 20 1985

FED. RD. DIV.	STATE	PROJECT	FISCAL YEAR
2	OHIO		

392
492

HAMILTON COUNTY
HAM-71-(1.66) (2.81)

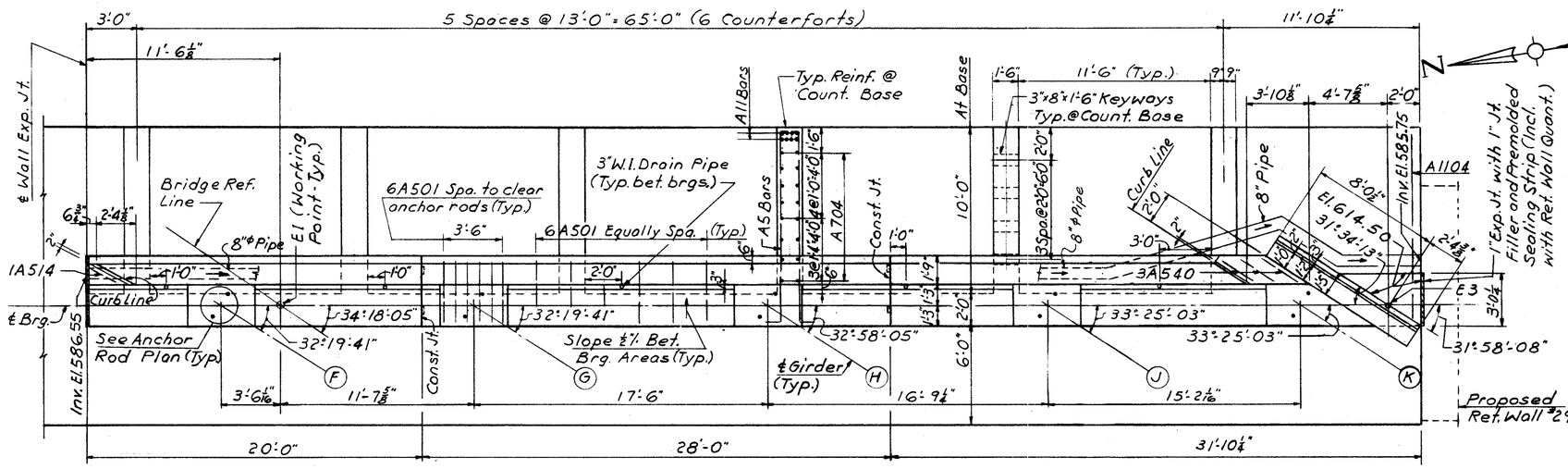

PLAN

For Lighting Details See Sh. No. 215.

Note: Top of backwall elevations shown are of near face of backwall.

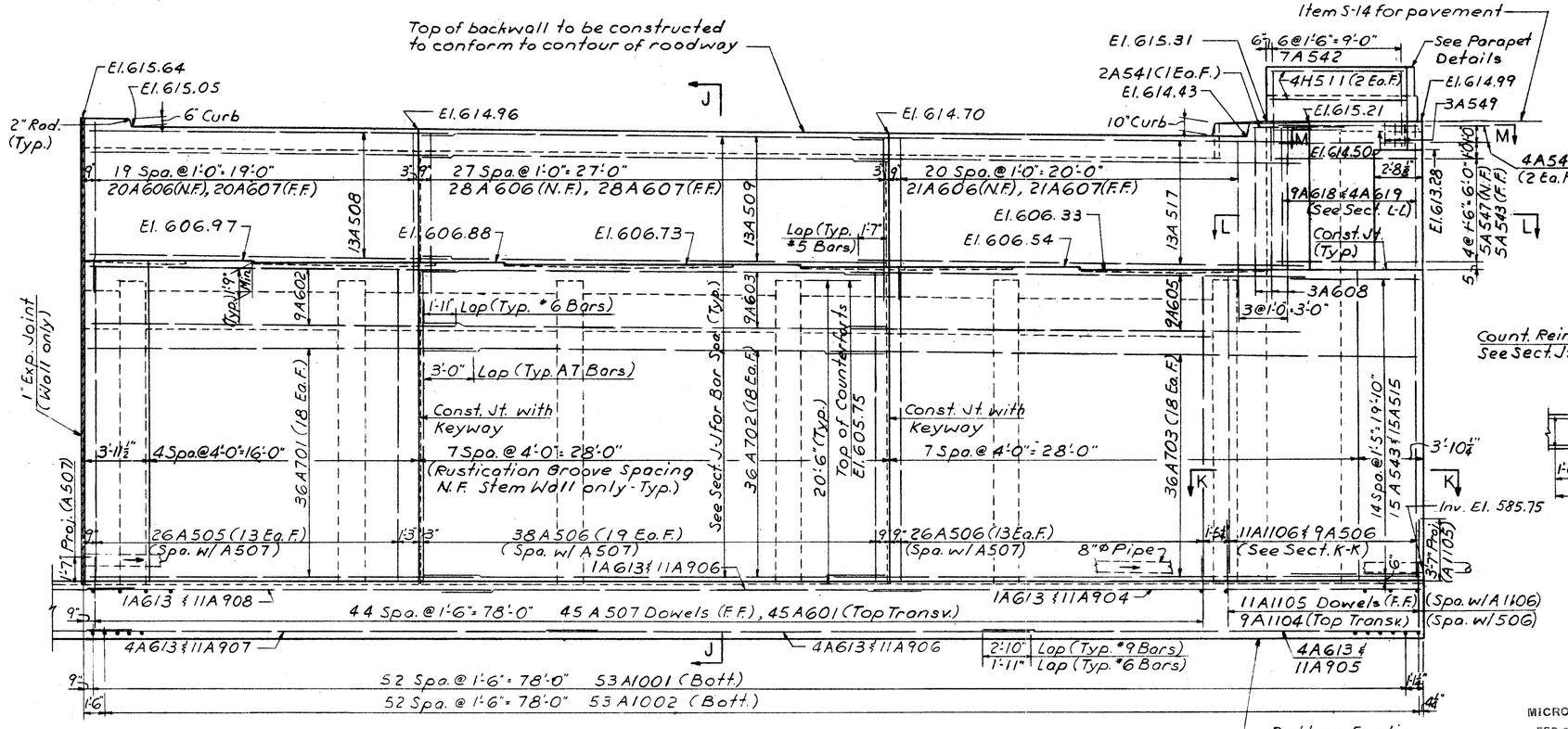

ELEVATION

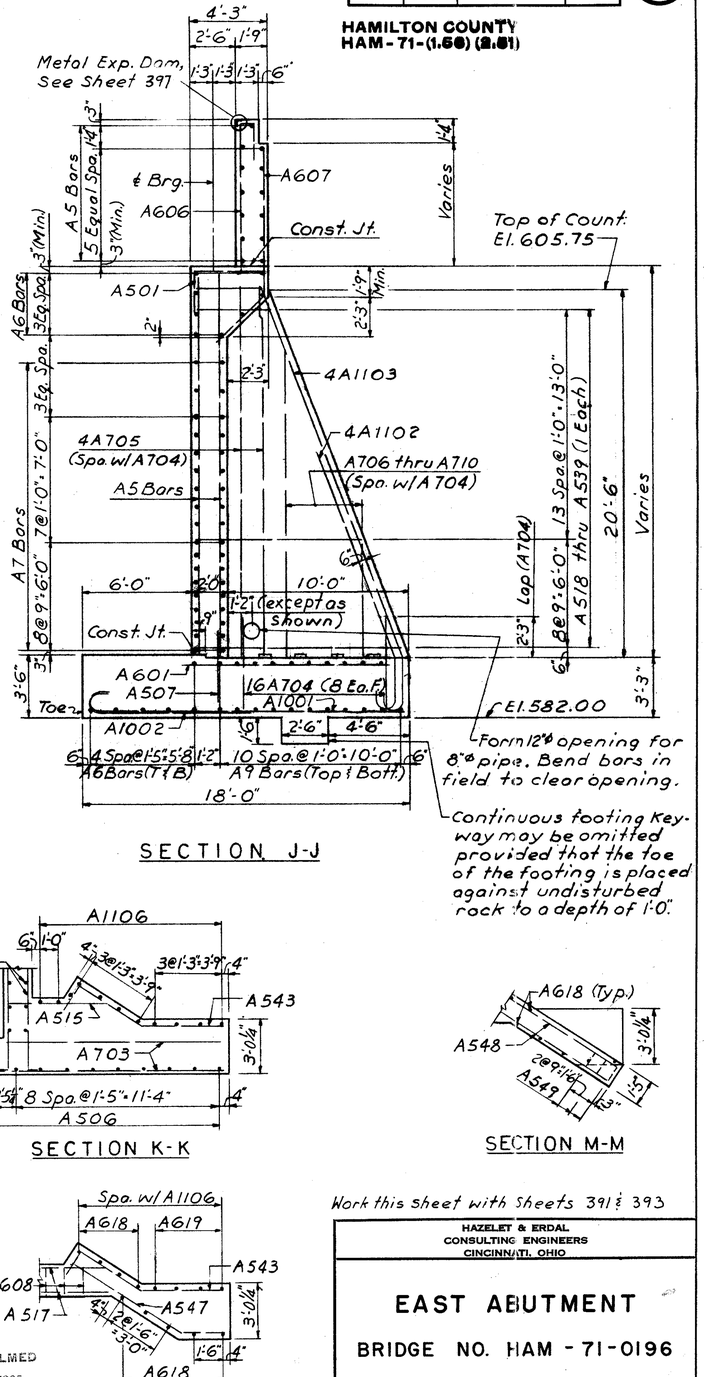

SECTION J-J

SECTION K-K

SECTION M-M

SECTION L-L

MICROFILMED
FEB 20 1985

Work this sheet with Sheets 391 & 393

HAZELET & ERDAL
CONSULTING ENGINEERS
CINCINNATI, OHIO

EAST ABUTMENT

BRIDGE NO. HAM-71-0196

DESIGNED	DRAWN	TRACED	CHECKED	REVIEWED DATE	REVISED
S.U.	S.U.		W.J.Z. 3-17-65	JHO 5/20/65	

FED. RD. DIV.	STATE	PROJECT	FISCAL YEAR
2	OHIO		

393
492

HAMILTON COUNTY
HAM-71-(1.56) (2.51)

8"ø B.tu. C.M.P. (Watertight Jts) with Std. 12'8" reducer for Superstructure Drainage provision. Downspouts at West Abutment only

See Gutter Detail

Porous Backfill

2'0" (Typ.) except as modified at N. End of W. Abut. & S. End of E. Abut.

3" W.I. Pipe 5'0" Long, Location as shown on Plan. Included with abutment concrete for Payment.

6'0" Length of 8" Bituminous Coated Helical Perforated Corrugated Metal Pipe [Sec. M-6.4 (Ch-C)] Provide cap with 3½"ø Hole (Item S-29).

See Detail C

Sand meeting requirements of Sec. M 2.1. Payment included in price bid for 8" Pipe.

12" Reinf. Conc. Sewer [Sec. M-6.6 (a)]

2'0"

8"ø Bituminous Coated Helical Perforated Corrugated Metal Pipe [Sec. M-6.4 (Ch-C)].

Outlet shown is at South Fascia Curb. For outlets at Median Curb see Sect. T-T.

DRAINAGE DETAIL

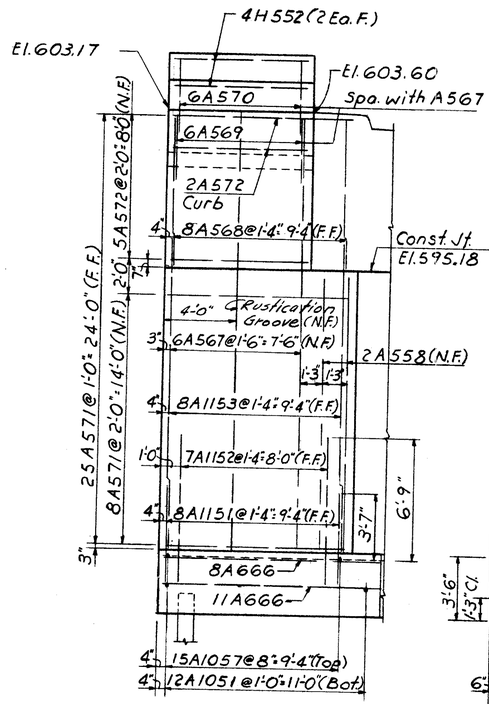

SECTION N-N

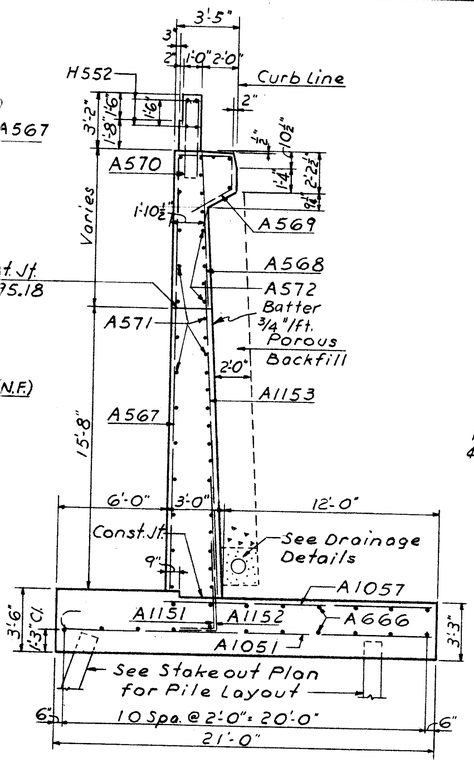

SECTION P-P

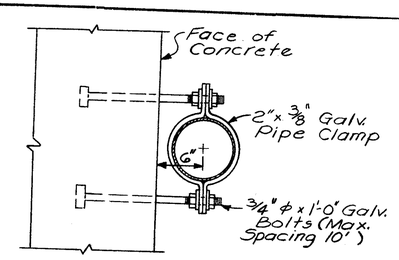

DETAIL C

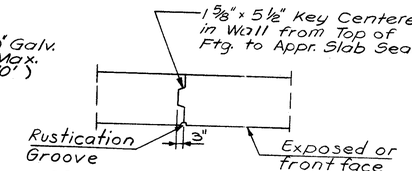

CONSTRUCTION JOINT DETAIL

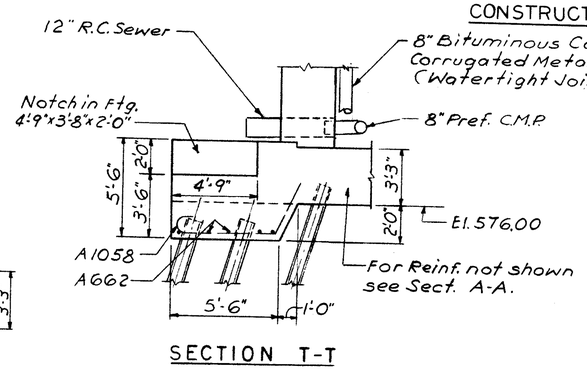

SECTION T-T

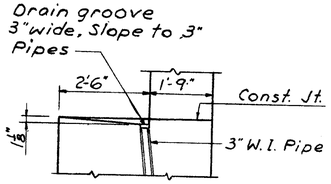

GUTTER DETAIL

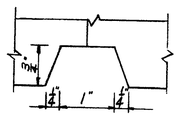

RUSTICATION GROOVE DETAIL

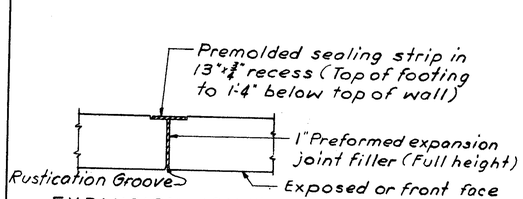

EXPANSION JOINT DETAIL

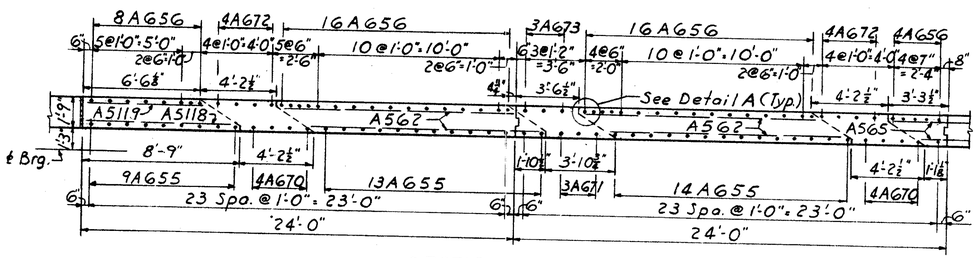

SECTION R-R

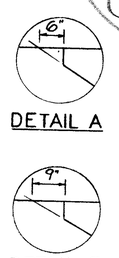

DETAIL A

DETAIL B

Procedure:
Before the backwall is constructed, the embankment shall be placed and compacted up to the level of the subgrade with a 1:1 slope from the bridge seat to the subgrade, for a distance of 200 ft. back of the West Abutment only.
Porous Backfill 2 ft. thick, full length of abutment and wings shall extend up to the under-side of the approach slab or to the finished ground surface.

Notes:
Special care shall be taken in placing reinforcing steel in the vicinity of the bridge seat so as to avoid interference with the drilling of anchor rod holes.
Provide 3" clearance to reinforcing steel in footing and 2" in wall (Min.)
N.F. denotes near face, F.F. denotes far face, Ea. F. denotes each face.
Abutment concrete shall be Class "E".
Concrete above bridge seat construction joint shall not be placed until superstructure steel is in place.

MICROFILMED
FEB 20 1985

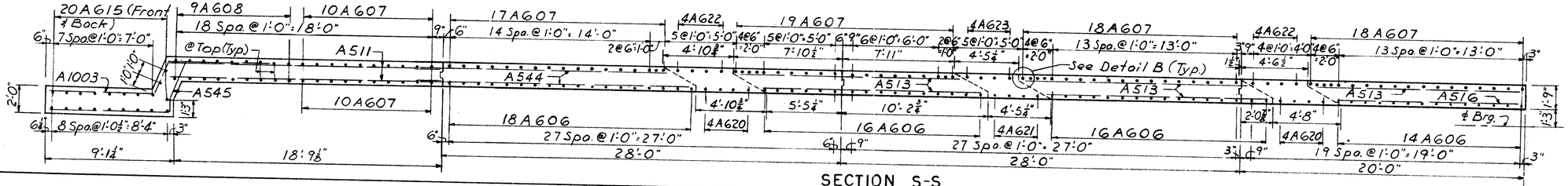

SECTION S-S

Work this sheet with Sheets 391 & 392

HAZELET & ERDAL
CONSULTING ENGINEERS
CINCINNATI, OHIO

ABUTMENT DETAILS

BRIDGE NO. HAM-71-0196

DESIGNED	DRAWN	TRACED	CHECKED	REVIEWED DATE	REVISED
S.U.	S.U.		W.J.Z. 3-17-65	JHO 5/20/65	

FED. RD. DIV.	STATE	PROJECT	FISCAL YEAR
2	OHIO		

394
492

HAMILTON COUNTY
HAM-71-(1.56) (2.61)

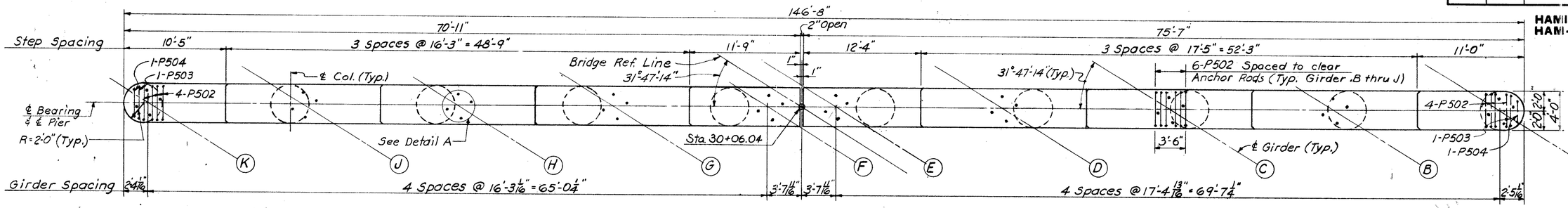

CAP PLAN

Notes:
Special care shall be taken in placing reinforcing steel in the vicinity of the bridge seat so as to avoid interference with the drilling of anchor rod holes.
Concrete in footings shall be Class "E" and concrete in columns and caps shall be class "C".
E.F. denotes Each Face.

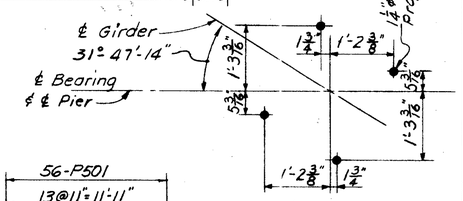

DETAIL A
(TYPICAL ANCHOR ROD PLAN)

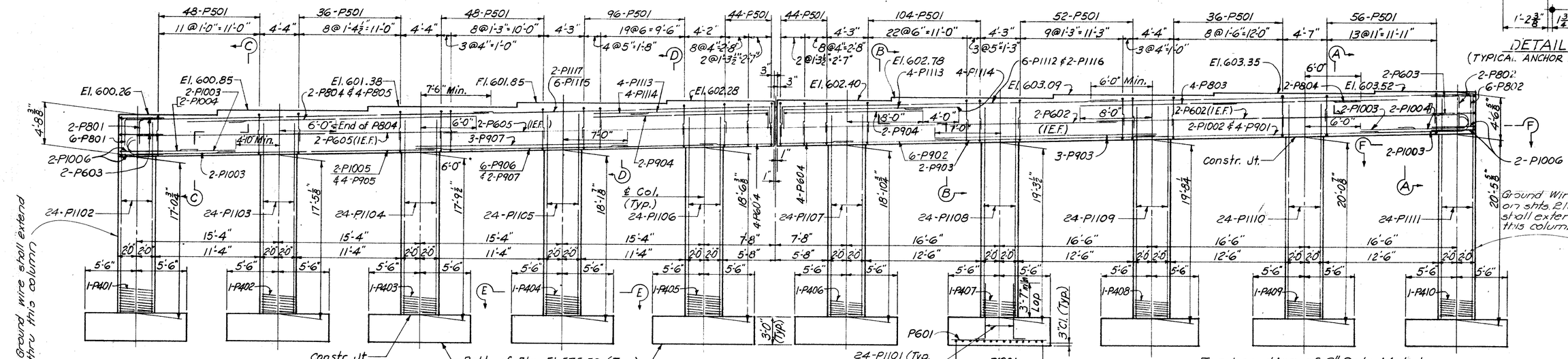

ELEVATION

For Location of 2" Galv. Metal Conduit in Pier see Sh. No. 215

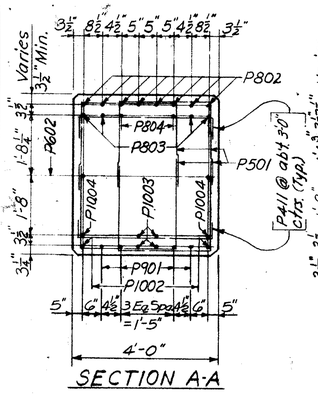

SECTION A-A

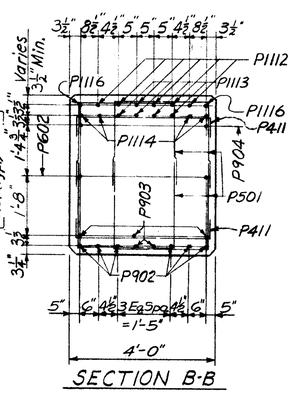

SECTION B-B

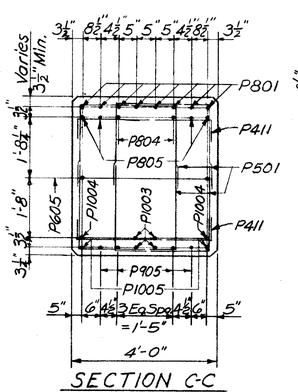

SECTION C-C

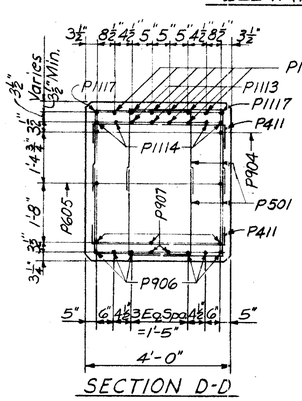

SECTION D-D

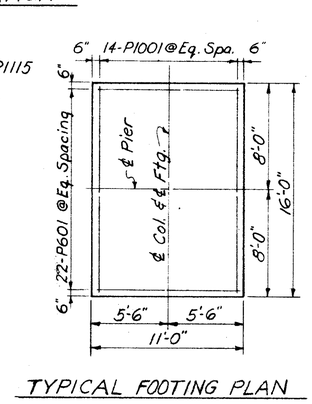

TYPICAL FOOTING PLAN

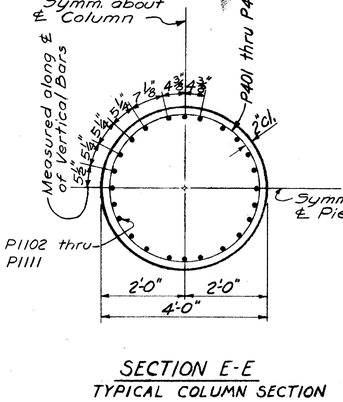

SECTION E-E
TYPICAL COLUMN SECTION

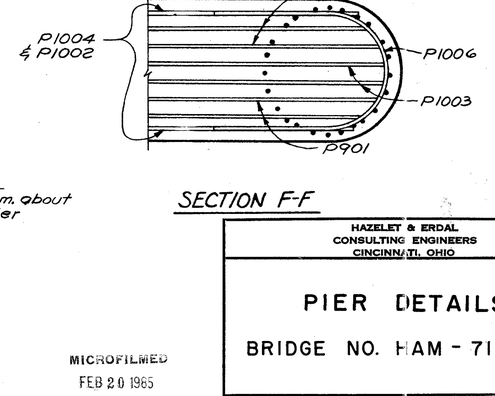

SECTION F-F

MICROFILMED
FEB 20 1985

HAZELET & ERDAL
CONSULTING ENGINEERS
CINCINNATI, OHIO

PIER DETAILS

BRIDGE NO. HAM-71-0196

DESIGNED	DRAWN	TRACED	CHECKED	REVIEWED DATE	REVISED
D.W.	C.B.H		D.V. 3-17-65	JHO 5/20/65	

FED. RD. DIV.	STATE	PROJECT	FISCAL YEAR
2	OHIO		

395
492

HAMILTON COUNTY
HAM - 71 - (1.56) (2.61)

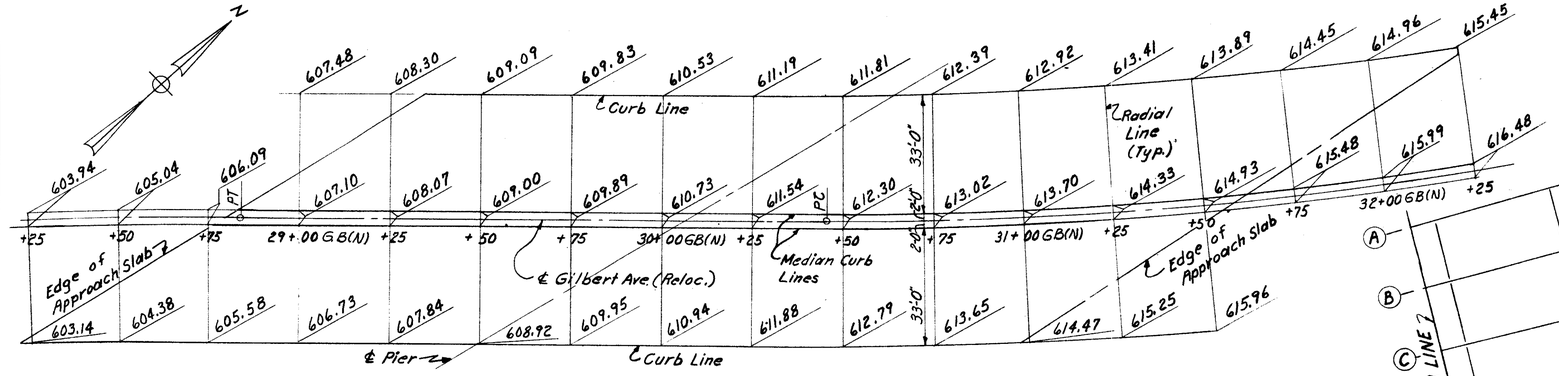

ROADWAY ELEVATIONS

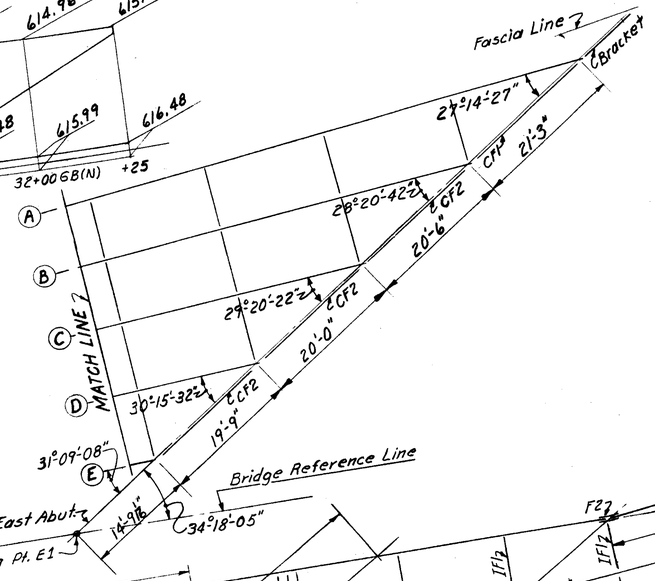

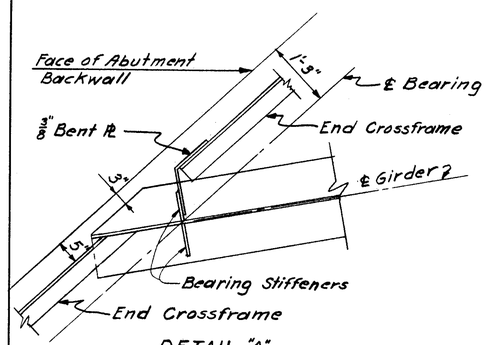

DETAIL "A"

SPAN 1

FRAMING PLAN

SPAN 2

MICROFILMED
FEB 2 0 1985

Notes:

For details of bearings E200 & E250 see std. Drwg. FSB-1-62.
For details not shown see std. Drwgs. SD-1-63. (Sh. 2 & 4) & "Typ. Structural Steel Details", Typical Drawing No. 444

For Inlet framing details see Drainage Details.
Telephone & Electric conduit supports required at each intermediate stiffener location in addition to crossframe locations. See sheet 397 for details.
Expansion joint openings shown on details are for a normal temperature of 70°F.

HAZELET & ERDAL
CONSULTING ENGINEERS
CINCINNATI, OHIO

STRUCTURAL STEEL DETAILS

BRIDGE NO. HAM - 71-0196

DESIGNED	DRAWN	TRACED	CHECKED	REVIEWED DATE	REVISED
	H.W.T.		W.J.Z. 3-17-65	JHO 5/20/65	

FED. RD. DIV.	STATE	PROJECT	FISCAL YEAR
2	OHIO		

396
492

HAMILTON COUNTY
HAM-71-(1.56)(2.51)

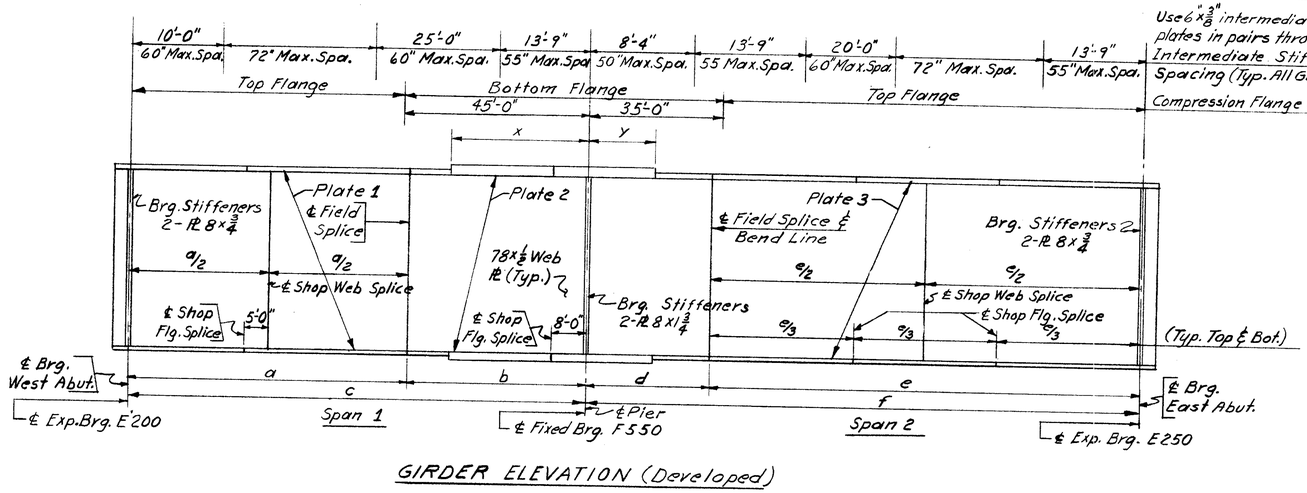

GIRDER ELEVATION (Developed)

Use 6"x3/8" intermediate stiffener plates in pairs throughout.
Intermediate Stiffener Spacing (Typ. All Girders)
Compression Flange Location

TABLE OF FLANGE PL LENGTHS		
Gir. / Lgth.	A thru. E	F thru. K
x	37'-0"	33'-0"
y	18'-0"	23'-0"

TABLE OF FLANGE PLATE SIZES			
PL No. / Girder	1	2	3
A, B, C, D, E,	18x1 1/2	18x3	18x2 3/4
F, G, H, J, K.	18x1 3/4	18x2 1/2	18x1 7/8

TABLE OF GIRDER LENGTH DATA

Girder / Dimension	A	B	C	D	E	F	G	H	J	K
a	85'-1 1/8"	85'-1 1/8"	85'-1 1/8"	85'-1 1/8"	85'-1 3/8"	85'-1 5/8"	85'-1 7/8"	85'-1 1/8"	85'-1 3/8"	85'-1 3/8"
b	41'-7 7/16"	41'-1 7/16"	40'-7 7/16"	40'-1 7/16"	39'-7 7/8"	39'-4 3/4"	38'-11 5/8"	38'-5 1/2"	37'-11 5/8"	37'-6 1/4"
c	126'-8 1/4"	126'-2 1/16"	125'-8 1/16"	125'-2 3/16"	124'-8 3/8"	124'-5 5/8"	124'-0 7/8"	123'-6 5/8"	123'-1"	122'-7 3/8"
d	32'-4 11/16"	32'-10 11/16"	33'-4 7/16"	33'-10 3/16"	34'-4 3/16"	34'-7 3/8"	35'-0 3/8"	35'-6 1/2"	36'-0 5/8"	36'-5 3/4"
e	127'-5 5/8"	123'-10 3/8"	121'-0 7/16"	118'-7 3/8"	116'-5 5/8"	113'-0 1/2"	113'-10 9/16"	112'-8 3/8"	112'-2 7/16"	113'-0 3/8"
f	159'-9 13/16"	156'-9 7/16"	154'-4 3/4"	152'-6 1/8"	150'-10 3/8"	147'-7 3/8"	148'-11 7/16"	148'-3 3/8"	148'-2 7/16"	149'-6 3/8"

DEFLECTION AND CAMBER TABLE

GIRDER	A								B								C								D								E								F				G				H				J				K			
SPAN	1							2								2	1							2	1							2	1							2	1							2	1							2	1							2
LOCATION (See Diagram)	a	b	c	d	e	f	g	h	a	b	c	d	e	f	g	h	a	b	c	d	e	f	g	h	a	b	c	d	e	f	g	h	a	b	c	d	e	f	g	h	a	b	c	d	e	f	g	h	a	b	c	d	e	f	g	h	a	b	c	d	e	f	g	h
Deflection due to Weight of Steel	1/8"	3/16"	1/8"	1/16"	1/4"	1/2"	5/8"	3/8"	1/8"	3/16"	1/8"	1/16"	1/4"	1/2"	9/16"	3/8"	1/8"	3/16"	1/8"	1/16"	1/4"	7/16"	1/2"	5/16"	1/8"	3/16"	1/8"	1/16"	3/16"	7/16"	1/2"	5/16"	1/8"	3/16"	1/8"	1/16"	3/16"	7/16"	1/2"	5/16"	1/8"	3/16"	1/8"	1/16"	1/4"	1/2"	9/16"	3/8"	1/8"	3/16"	1/8"	1/16"	1/4"	1/2"	9/16"	3/8"	1/8"	3/16"	1/8"	1/16"	1/4"	1/2"	9/16"	3/8"
Deflection due to Remaining Dead Load	3/16"	9/16"	7/16"	1/8"	13/16"	1 1/16"	1 3/8"	1 1/4"	1/4"	3/8"	5/16"	1/8"	9/16"	1 1/8"	1 1/4"	13/16"	5/16"	7/16"	3/8"	1/8"	5/8"	1 1/16"	1 3/8"	15/16"	5/16"	7/16"	3/8"	1/8"	1/2"	1"	1 1/16"	3/4"	5/16"	3/8"	1/4"	1/16"	1/2"	1"	1 1/16"	3/4"	7/16"	1/2"	5/16"	1/16"	5/8"	1 1/16"	1 3/8"	15/16"	7/16"	1/2"	5/16"	1/16"	5/8"	1 1/16"	1 3/8"	15/16"	7/16"	1/2"	5/16"	1/16"	5/8"	1 1/16"	1 3/8"	15/16"	7/16"
Convexity ℄ Superelevation Transition	2/8"	1 1/16"	1 5/8"	1 1/16"	2 5/8"	1"	3/8"	3/8"	2/8"	1 1/16"	1 5/8"	1 1/16"	1 1/16"	9/16"	-3/16"	1/8"	2/8"	1 1/16"	1 5/8"	1 1/8"	1 1/4"	1 1/16"	1 5/8"	2/8"	2/8"	1 1/16"	1 5/8"	1 1/8"	1 7/16"	1 1/16"	1 5/8"	2/8"	2/8"	1 1/16"	1 5/8"	1 1/8"	1 7/16"	1 1/16"	1 5/8"	2/8"	2/8"	1 1/16"	1 5/8"	1 1/8"	1 7/16"	1 1/16"	1 5/8"	2/8"	2/8"	1 1/16"	1 5/8"	1 1/8"	1 7/16"	1 1/16"	1 5/8"	2/8"	2/8"	1 1/16"	1 5/8"	1 1/8"	1 7/16"	1 1/16"	1 5/8"	2/8"	2/8"
Sum of Deflection, Convexity ℄ Superelevation Transition	1 3/4"	2 3/16"	2 3/16"	1 5/8"	1 11/16"	2 1/4"	2 3/8"	2"	1/4"	2"	2 1/16"	1 5/8"	1 7/8"	2 3/16"	1 5/8"	1 5/8"	1 5/8"	2 1/16"	2 1/8"	1 9/16"	2 1/8"	3 3/8"	2 7/16"	1 9/16"	1 5/8"	2"	2 1/16"	1 7/16"	2 1/4"	3 3/8"	3 1/4"	2 1/16"	1 5/8"	2"	2 1/16"	1 7/16"	2 1/4"	3 3/8"	3 1/4"	2 1/16"	1 5/8"	2"	2 1/16"	1 7/16"	2 1/4"	3 3/8"	3 1/4"	2 1/16"	1 5/8"	2"	2 1/16"	1 7/16"	2 1/4"	3 3/8"	3 1/4"	2 1/16"	1 5/8"	2"	2 1/16"	1 7/16"	2 1/4"	3 3/8"	3 1/4"	2 1/16"
Required Camber	1 3/8"	2 3/16"	2 3/16"	1 5/8"	1 11/16"	2 1/4"	2 3/8"	2"	1/4"	2"	2 1/16"	1 5/8"	1 7/8"	2 3/16"	1 5/8"	1 5/8"	1 5/8"	2 1/16"	2 1/8"	1 9/16"	2 1/8"	3 3/8"	2 7/16"	1 9/16"	1 5/8"	2"	2 1/16"	1 7/16"	2 1/4"	3 3/8"	3 1/4"	2 1/16"	1 5/8"	2"	2 1/16"	1 7/16"	2 1/4"	3 3/8"	3 1/4"	2 1/16"	1 5/8"	2"	2 1/16"	1 7/16"	2 1/4"	3 3/8"	3 1/4"	2 1/16"	1 5/8"	2"	2 1/16"	1 7/16"	2 1/4"	3 3/8"	3 1/4"	2 1/16"	1 5/8"	2"	2 1/16"	1 7/16"	2 1/4"	3 3/8"	3 1/4"	2 1/16"

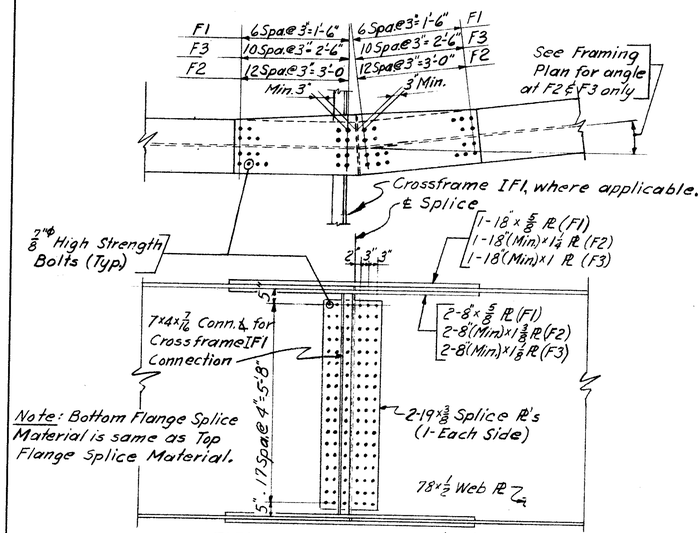

Note: Bottom Flange Splice Material is same as Top Flange Splice Material.

FIELD SPLICE (F1, F2 ℄ F3)

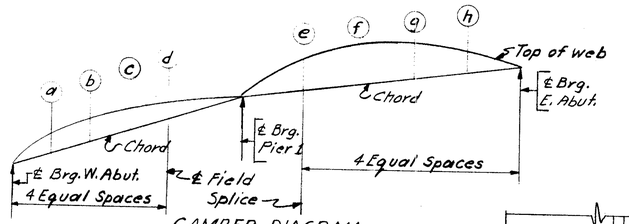

CAMBER DIAGRAM

Note: Cut web to a smooth curve indicated by diagram.

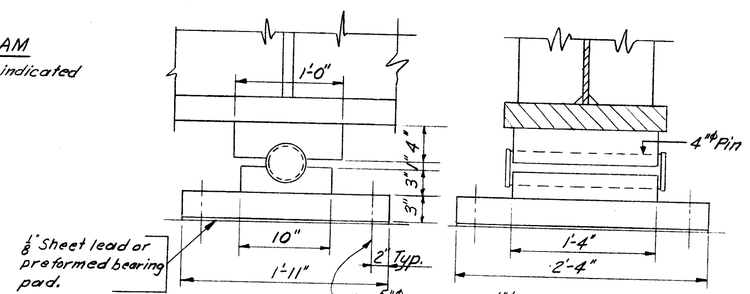

FIXED BEARING F550

For details not shown see Std. Drwg. No. FSB-1-62.

MICROFILMED
FEB 20 1985

HAZELET & ERDAL
CONSULTING ENGINEERS
CINCINNATI, OHIO

STRUCTURAL STEEL DETAILS

BRIDGE NO. HAM-71-0196

DESIGNED	DRAWN	TRACED	CHECKED	REVIEWED DATE	REVISED
	H.W.T.		W.J.E. 5-17-85	JHO 5/20/65	

HAMILTON COUNTY
HAM-71-(1.56) (2.51)

FED. RD. DIV.	STATE	PROJECT	FISCAL YEAR
2	OHIO		

397
492

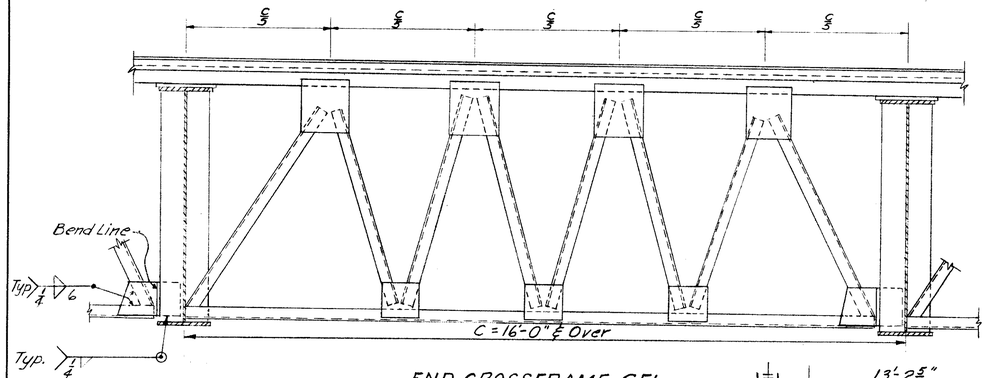

END CROSSFRAME CFI

Note: Unless otherwise shown all weld dimensions & member sizes for end crossframe CFI & CF2 shall be as shown on Standard Drawing SD-1-63, Sheet "2.

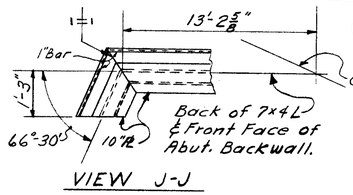

VIEW J-J

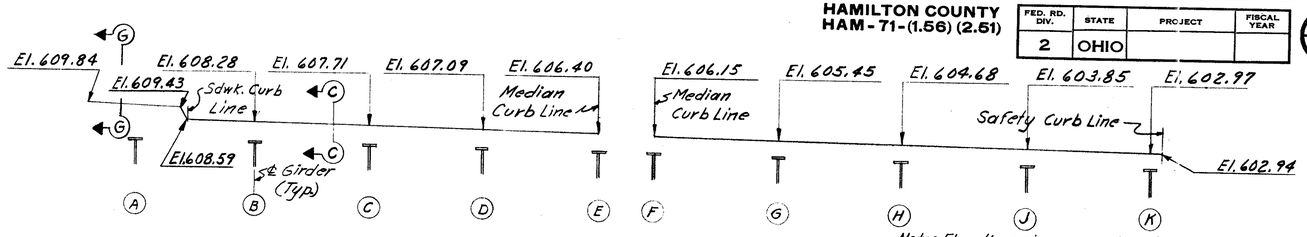

EXPANSION JOINT CROSS SECTION @ WEST ABUT.

Note: Elevations given are at the intersection of ℄ of girder or curb line and ℄ expansion joint (shown on Section C-C)
Roadway expansion joints are to be bent in shop to conform to contour of top of slab.

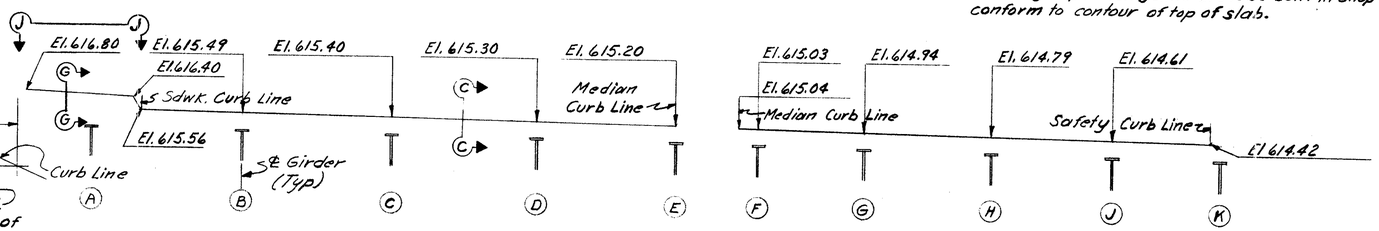

EXPANSION JOINT CROSS SECTION @ EAST ABUT.

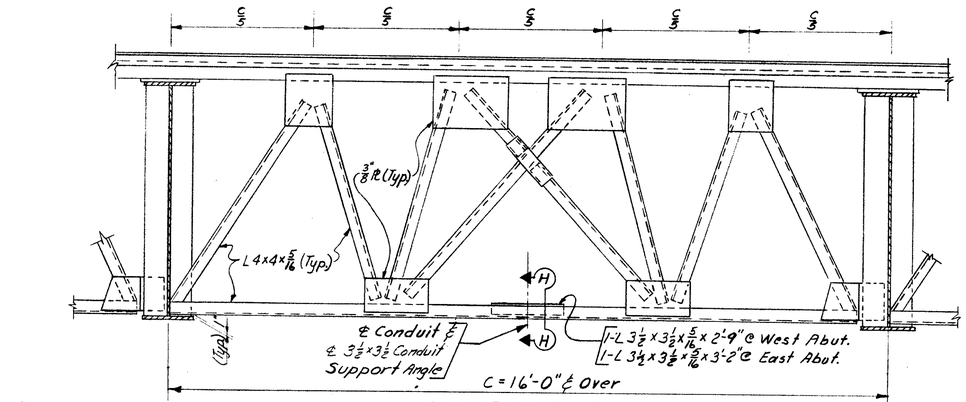

END CROSSFRAME CF2

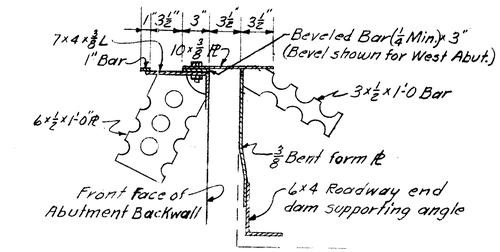

SECTION G-G

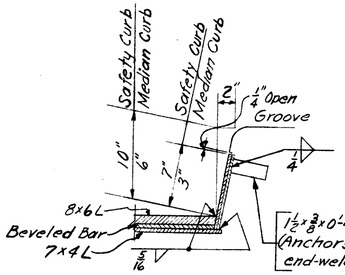

SECTION B-B
(Safety Curbs or Median Curbs)

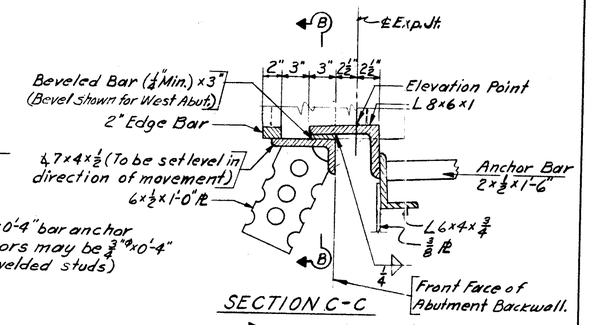

SECTION C-C

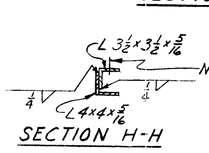

SECTION H-H

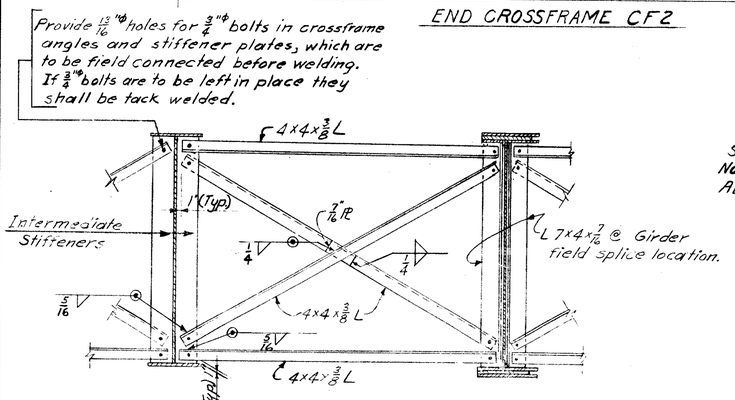

INTERMEDIATE CROSSFRAME IFI

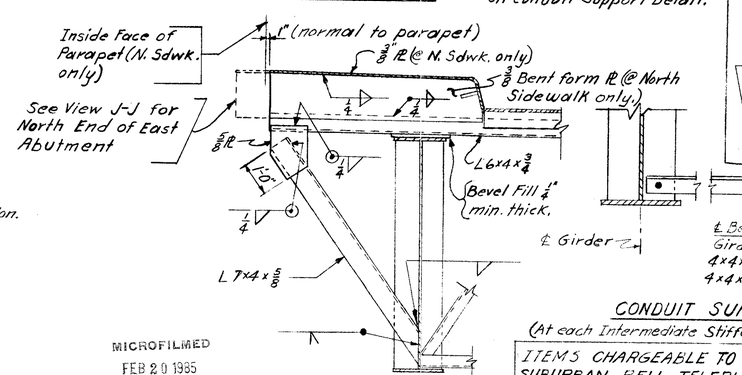

TYPICAL BRACKET DETAIL

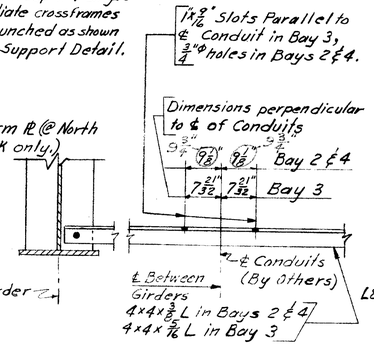

CONDUIT SUPPORT DETAIL
(At each Intermediate Stiffener Between Crossframes)

ITEMS CHARGEABLE TO CINCINNATI AND SUBURBAN BELL TELEPHONE CO.			
Item	Unit	Description	Amount
5-7	Lbs.	Structural Steel	3600

ITEMS CHARGEABLE TO CINCINNATI GAS & ELECTRIC CO.			
Item	Unit	Description	Amount
5-7	Lbs.	Structural Steel	8550

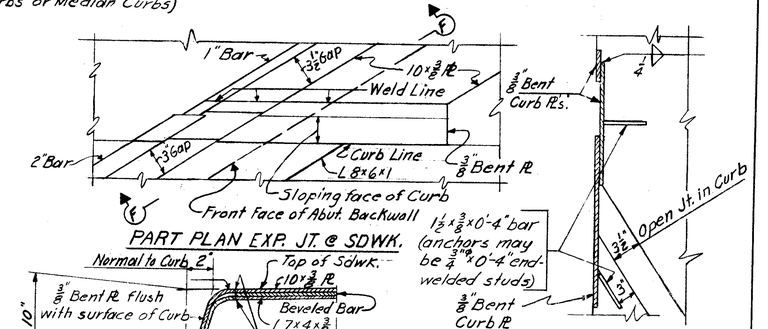

PART PLAN EXP. JT. @ SDWK.

SECTION E-E

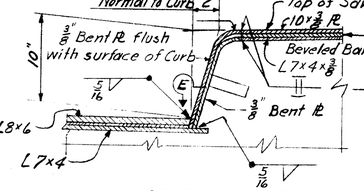

SECTION F-F

MICROFILMED
FEB 20 1985

HAZELET & ERDAL
CONSULTING ENGINEERS
CINCINNATI, OHIO

STRUCTURAL STEEL DETAILS

BRIDGE NO. HAM-71-0196

DESIGNED	DRAWN	TRACED	CHECKED	REVIEWED DATE	REVISED
	H.W.T.		W.J.Z. 3-17-65	JHO 5/20/65	8-7-26

HAMILTON COUNTY
HAM-71-(1.56)(2.51)

FED. RD. DIV.	STATE	PROJECT	FISCAL YEAR
2	OHIO		

398
492

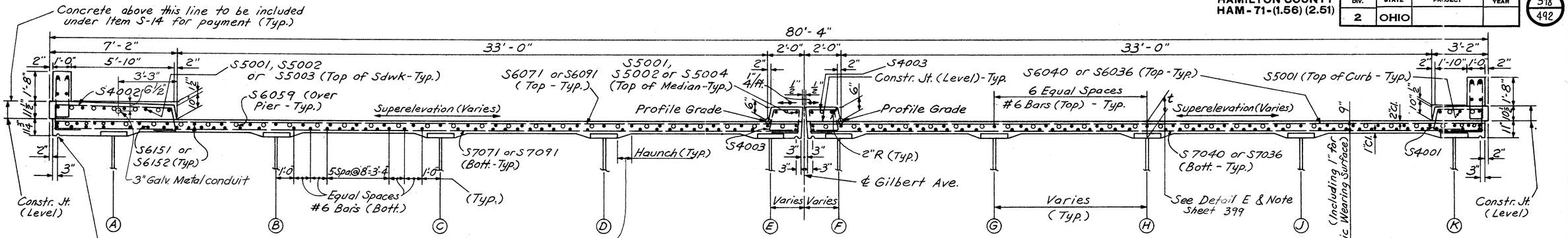

A typical haunch width of 9" shall be used for computing quantity of concrete. However, the haunch width may vary between 6" and 12" provided that the slope shall be not more than 1:4 for a haunch less than 9" wide.

TRANSVERSE SECTION
(Constant Width Portion of Bridge - Looking East)

3" Galv. Metal conduits to be located in sdwk and safety curb see Lighting Plan Sh No 206.

DETAIL A

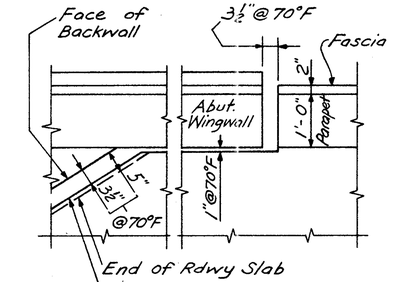

DETAIL B

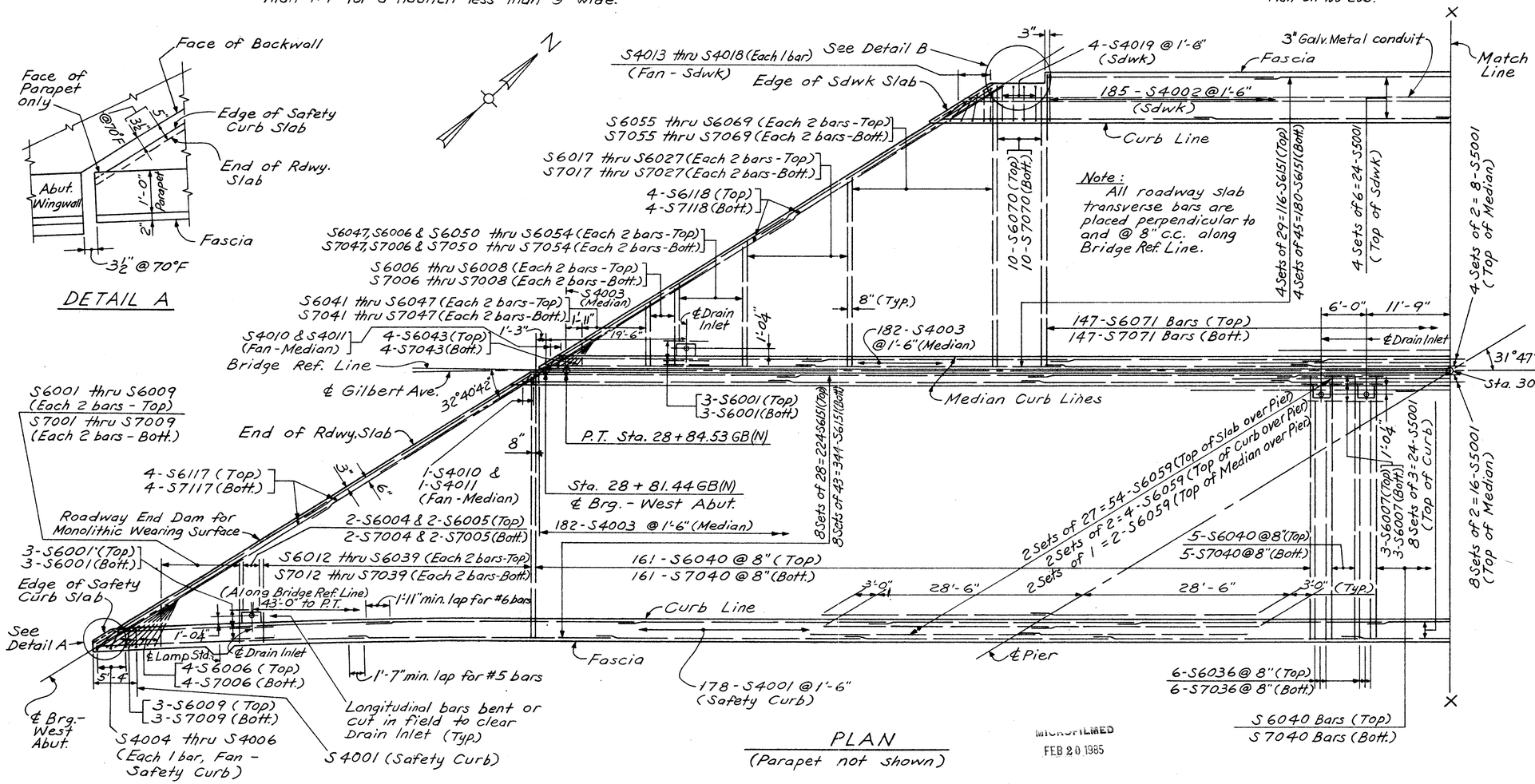

PLAN
(Parapet not shown)

Notes:
For Drainage Details, see Sheet 400
For Lighting Details, see Sheet 215.
For Railing Details and Spacing of bars in parapet see Sheet 400

Work this drawing with Lighting Plan Sh. No 206
For conduit expansion detail at abutments see Sh. No. 214.

Work this sheet with Sheet 399

MICROFILMED
FEB 20 1985

HAZELET & ERDAL
CONSULTING ENGINEERS
CINCINNATI, OHIO

SUPERSTRUCTURE DETAILS

BRIDGE NO. HAM - 71-0196

DESIGNED	DRAWN	TRACED	CHECKED	REVIEWED DATE	REVISED
	GW		D.W. 3-17-65	JHO 5/20/65	

HAMILTON COUNTY
HAM-71-(1.56) (2.51)

FED. RD. DIV.	STATE	PROJECT	FISCAL YEAR
2	OHIO		

399
442

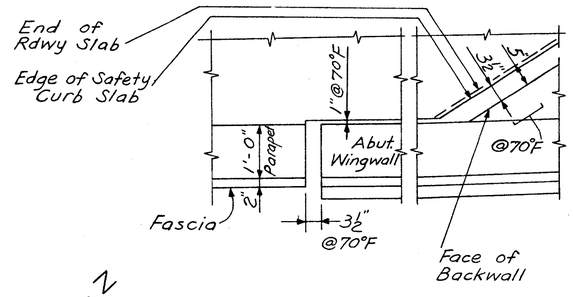

DETAIL C

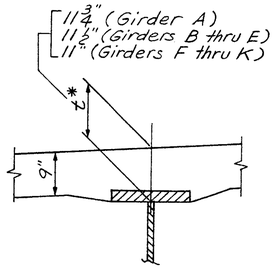

DETAIL E

Note: Slab thickness includes 1" monolithic wearing surface.

* This is the nominal dimension. The quantity of deck concrete to be paid for, shall be based on this dimension, even though deviation from it may be necessary because the top flange of the beam may not have the exact camber or conformation required to place it parallel to the finished grade.
Deduction shall be made for volume of encased steel plates as per Sec. S-1.25 of the Construction and Material Specification.

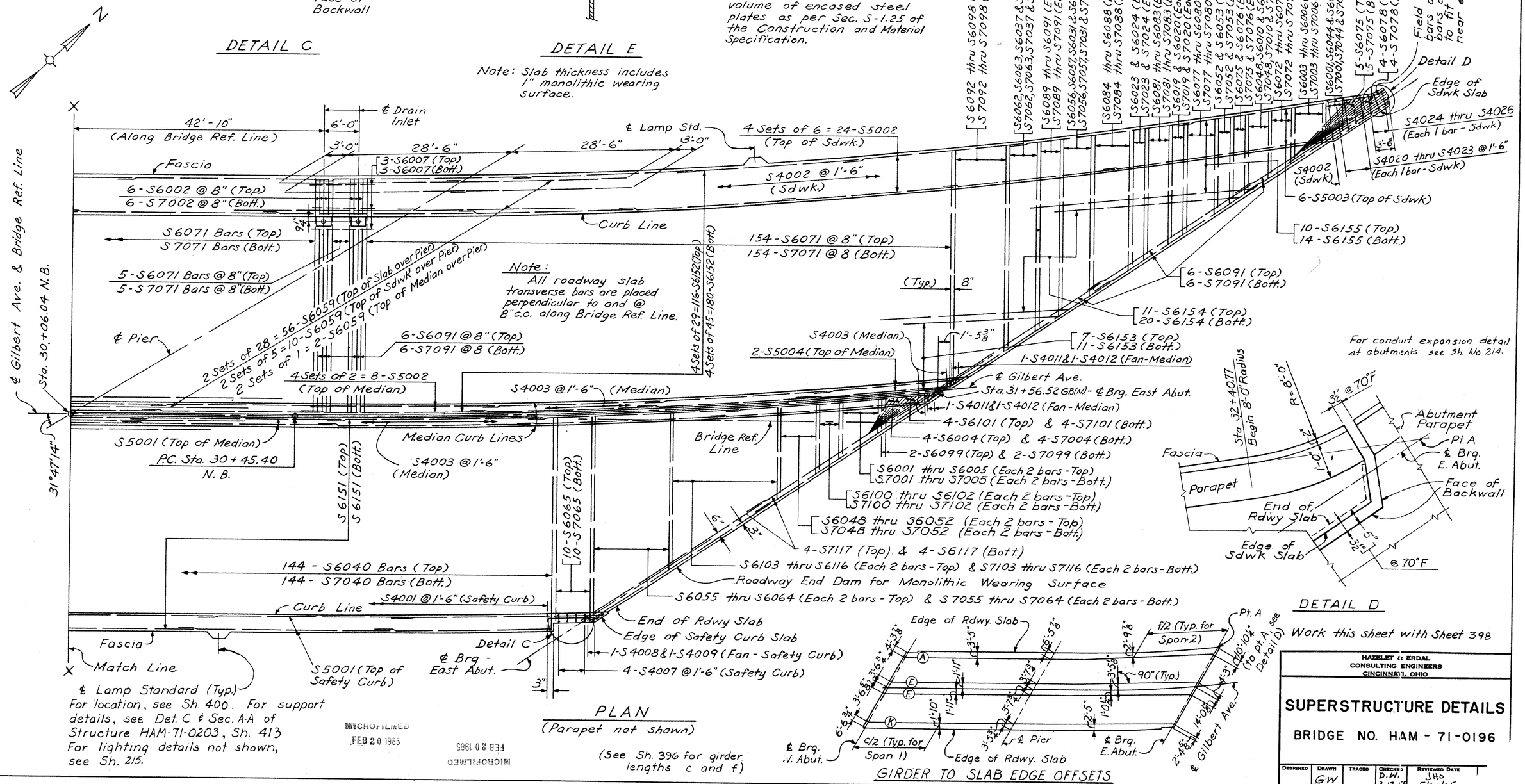

PLAN
(Parapet not shown)

(See Sh. 396 for girder lengths c and f)

For conduit expansion detail at abutments see Sh. No 214.

DETAIL D

Work this sheet with Sheet 398

GIRDER TO SLAB EDGE OFFSETS

MICROFILMED
FEB 20 1985

MICROFILMED
FEB 20 1985

HAZELET & ERDAL
CONSULTING ENGINEERS
CINCINNATI, OHIO

SUPERSTRUCTURE DETAILS

BRIDGE NO. HAM-71-0196

DESIGNED	DRAWN	TRACED	CHECKED	REVIEWED DATE
	GW		D.W. 3-17-05	JHO 5/20/05

FED. RD. DIV.	STATE	PRO. ECT	FISCAL YEAR
2	OHIO		

409
492

HAMILTON COUNTY
HAM-71-(1.56) (2.51)

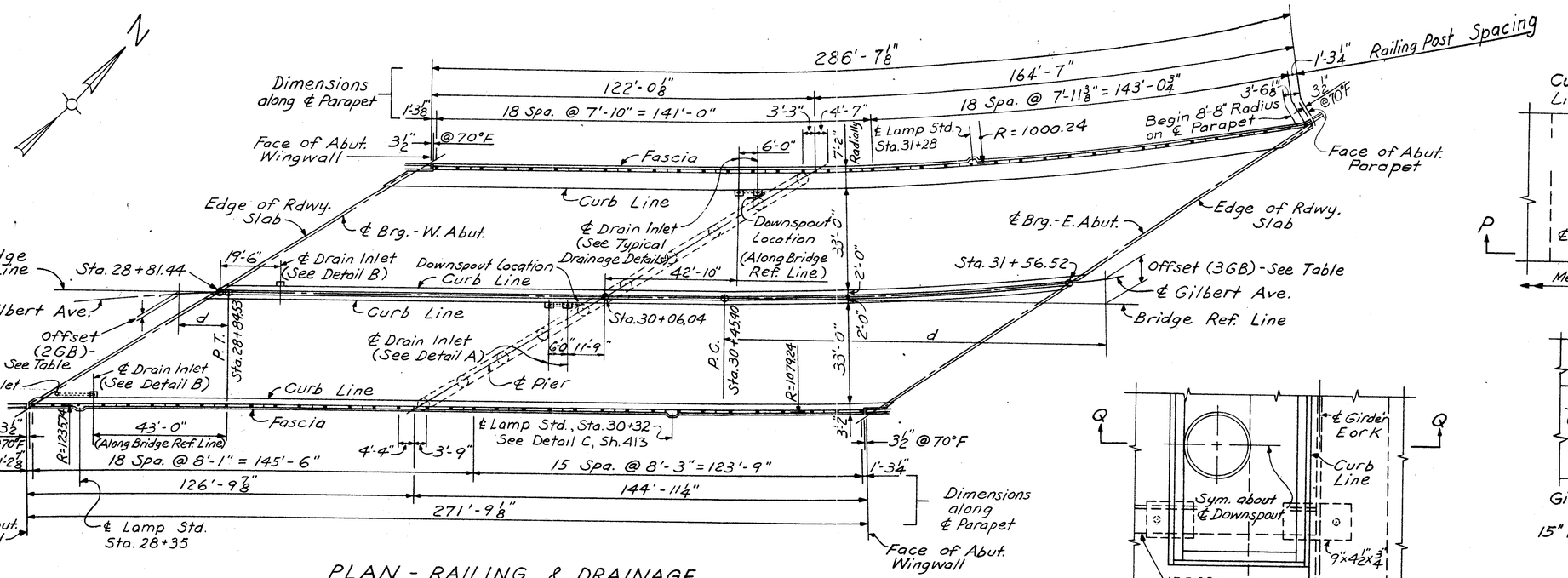

PLAN - RAILING & DRAINAGE

Work this plan with Lighting Plan Sh. No. 206.

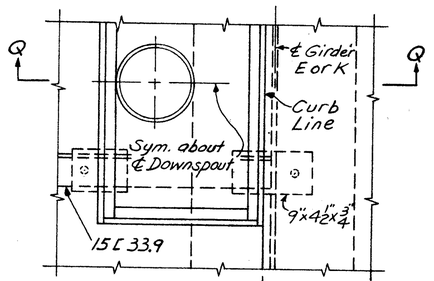

DETAIL B

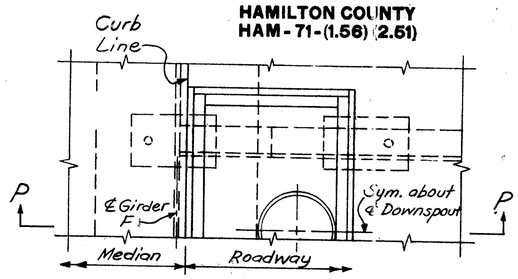

DETAIL A

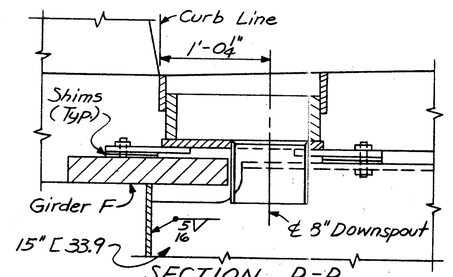

SECTION P-P
(For details not shown, see Typical Drainage Details)

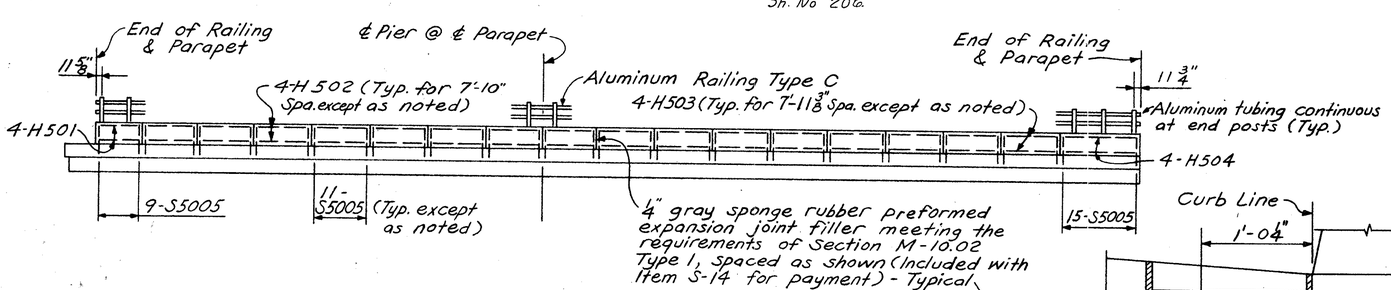

ELEVATION - NORTH RAILING

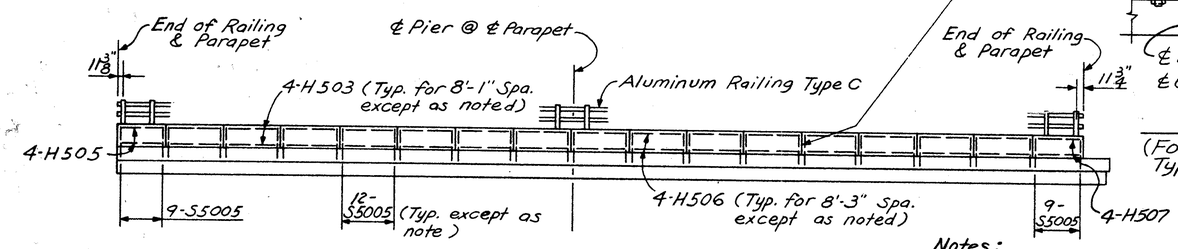

ELEVATION - SOUTH RAILING

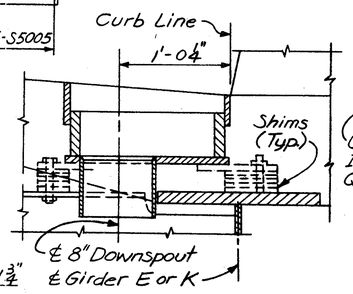

SECTION Q-Q
(For details not shown, see Typical Drainage Details)

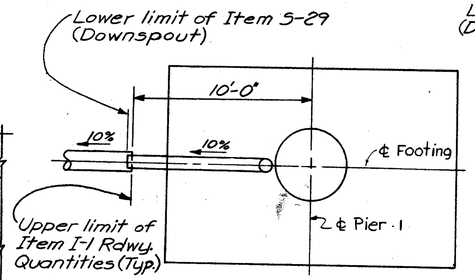

PLAN OF LIMITS OF S-29 & I-1 AT PIER NO. 1 FOR SOUTHBOUND ROADWAY

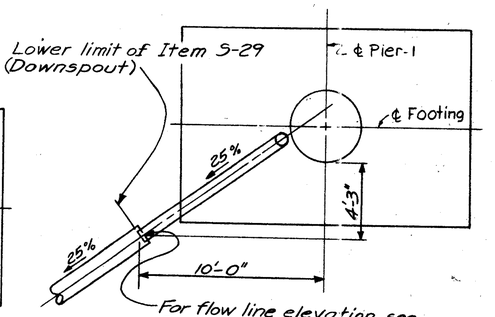

PLAN OF LIMITS OF S-29 & I-1 AT PIER NO. 1 FOR NORTHBOUND ROADWAY

Notes:
For railing details not shown, see Standard Drawing No. AR-1-57
Aluminum tube railing shall be bent to the curvature of the ℄ of parapet.

Location		@ ℄ Brg. Abut.	@ Distance d from P.T. or P.C.							
			25'	50'	75'	100'	125'	150'	175'	200'
Offset	Curve 2GB(NB)	16"	3"	11¾"	2'-2½"	3'-11¾"	–	–	–	–
	Curve 3GB(NB)	5'-11"	3⅝"	1'-2⅜"	2'-8⅝"	4'-9¾"	7'-6⅜"	10'-10½"	14'-9⅝"	19'-4½"

TABLE OF OFFSETS

MICROFILMED
FEB 20 1985

Work this sheet with Sheets 398 & 399

HAZELET & ERDAL
CONSULTING ENGINEERS
CINCINNATI, OHIO

RAILING DETAILS

BRIDGE NO. HAM-71-0196

DESIGNED	DRAWN	TRACED	CHECKED	REVIEWED
	GW		D.W. 3-17-65	

BLACK 204

FED. RD. DIV.	STATE	PROJECT	FISCAL YEAR
2	OHIO		

401 / 492

HAMILTON COUNTY
HAM-71-(1.56)(2.51)

Block 204
401-492

WEST ABUTMENT

Mark	Type	No. Reqd	Length	Weight
A553	18	112	5'-7"	653
A554	Str.	94	3'-6"	343
A556	Str.	32	17'-0"	567
A557	↑	32	16'-3"	542
A558		32	15'-5"	515
A559		32	18'-9"	626
A560		32	19'-6"	651
A561		30	20'-0"	626
A562		4	12'-6"	52
A563		24	25'-7"	640
A564	↓	24	23'-6"	588
A565	Str.	26	28'-0"	759
A566	47	20	10'-1"	211
A567	Str.	6	24'-0"	150
A568	Str.	8	8'-6"	71
A569	17	6	7'-6"	47
A570	32	12	9-7"	120
A571	Str.	33	14'-0"	482
A572	Str.	7	7'-6"	55
A573	1	3	3'-6"	11
A574	20	5	9'-9"	51
A575	Str.	4	9'-6"	40
A576	↕	2	11'-6"	24
A577		9	21'-3"	199
A578	Str.	15	5'-6"	86
A579	1	3	3'-9"	12
A580	40	6	30'-3"	189
A581	↑	6	29'-5"	184
A582		6	28'-5"	177
A583		6	27'-5"	171
A584		6	26'-5"	165
A585		6	25'-5"	159
A586		6	24'-5"	152
A587		6	23'-5"	146
A588		6	22'-5"	140
A589		6	21'-3"	133
A590		6	19'-11"	124
A591		6	18'-7"	116
A592		6	17'-3"	108
A593		6	16'-1"	100
A594		6	14'-9"	92
A595		6	13'-5"	84
A596		6	12'-1"	75
A597		6	10'-9"	67
A598		6	30'-5"	190
A599		6	29'-7"	185
A5100		6	28'-7"	178
A5101		6	27'-9"	173
A5102		6	26'-11"	168
A5103		6	26'-3"	164
A5104		6	25'-3"	158
A5105		6	24'-5"	152
A5106		6	23'-7"	147
A5107		6	22'-7"	141
A5108		6	21'-5"	134
A5109		6	20'-3"	126
A5110		6	19'-3"	120
A5111		6	18'-1"	113
A5112		6	17'-1"	107
A5113		6	15'-11"	99
A5114		6	14'-11"	93
A5115		6	13'-9"	86
A5116		6	12'-7"	78
A5117	40	6	11'-7"	72
A5118	Str.	1	8'-3"	9
A5119	Str.	1	6'-0"	6
A651	Str.	18	26'-0"	703
A652	↕	18	23'-6"	635
A653		9	25'-0"	338
A654	Str.	9	28'6"	385
A655	8	126	12'-4"	2334
A656	20	133	11'-9"	2347

Mark	Type	No. Reqd	Length	Weight
A657	Str.	4	3'-8"	22
A658	Str.	8	4'-0"	48
A659	1	9	22'-7"	305
A660	Str.	9	8'-9"	118
A661	Str.	4	7'-5"	45
A662	62	5	8'-8"	65
A663	Str.	27	28'-0"	1138
A664	↑	18	38'-9"	1048
A665	↓	94	14'-9"	2082
A666	Str.	19	11'-0"	314
A670	8	8	7'-10"	94
A671	8	3	7'-7"	34
A672	Str.	8	3'-9"	45
A673	Str.	3	3'-6"	16
A751	Str.	64	27'-0"	3532
A752	↑	64	23'-6"	3074
A753		28	24'-6"	1402
A754	Str.	36	36'-6"	2686
A851	Str.	23	35'-0"	2149
A852	↑	13	46'-0"	1597
A853		33	41'-0"	3613
A854		23	30'0"	1842
A855	↓	13	14'-6"	504
A856	Str.	10	20'-6"	547
A952	44	240	7'-0"	5712
A953	Str.	24	18'-2"	1482
A954	↑	12	14'-9"	602
A955		12	12'-10"	524
A956		12	11'-3"	459
A957		12	9'-8"	394
A958		12	8'-1"	330
A959	↓	12	6'-6"	265
A960	Str.	12	4'-11"	201
A961	44	4	5'-9"	78
A962	Str.	24	21'-0"	1714
A963	↑	12	17'-3"	704
A964		12	14'-11"	609
A965		12	13'-1"	534
A966		12	11'-2"	456
A967		12	9'-5"	384
A968	↓	12	7'-8"	313
A969	Str.	12	5'-10"	238
A1051	44	130	21'-11"	12260
A1052	22	18	19'-10"	1537
A1053	45	12	26'-11"	1391
A1054	22	18	19'-10"	1537
A1055	45	18	29'-1"	2254
A1056	45	6	26'-5"	682
A1057	Str.	15	16'-3"	1049
A1058	22	6	9'11"	256
A1151	18	8	8'-9"	372
A1152	18	7	11'-8"	434
A1153	Str.	8	17'-6"	744
A1154	Str.	9	16'-7"	793
A1155	44	11	8'-2"	477
A1156	Str.	11	23'-9"	1388
* H551	Str.	4	9'-7"	
* H552	Str.	4	7'-6"	
			Total	86437

EAST ABUTMENT

Mark	Type	No. Reqd	Length	Weight
A501	18	130	5'-7"	756
A502	20	22	5'-5"	124
A503	Str.	102	21'-3"	2261
A504	↑	38	21'-9"	863
A505		26	21'-2"	574
A506		73	20'-8"	1574
A507		116	3'-6"	424
A508		24	21'-7"	540
A509		24	27'-6"	688
A510		11	31'-8"	363
A511		13	19'-0"	258
A512	↓	1	8'-0"	8
A513	Str.	5	15'-0"	78
A514	1	5	3'-10"	20
A515	Str.	17	4'-6"	80
A516	Str.	2	13'-0"	28
A517	Str.	13	26'-9"	363
A518	40	14	24'-7"	359
A519	↑	14	24'-1"	352
A520		14	23'-5"	342
A521		14	22'-11"	335
A522		14	22'-3"	325
A523		14	21'-9"	318
A524		14	21'-1"	308
A525		14	20'-7"	301
A526		14	19'-11"	291
A527		14	19'-3"	281
A528		14	18'-5"	269
A529		14	17'-7"	257
A530		14	16'-9"	245
A531		14	16'-1"	235
A532		14	15'-3"	223
A533		14	14'-7"	213
A534		14	13'-9"	201
A535		14	12'-11"	189
A536		14	12'-1"	177
A537		14	11'-3"	164
A538	↓	14	11'-7"	169
A539	40	14	9'-11"	145
A540	1	3	5'-8"	18
A541	Str.	2	5'-9"	12
A542	32	7	11'-7"	84
A543	47	20	9'-10"	206
A544	Str.	2	19'-0"	40
A545	47	7	11'-8"	85
A546	18	7	9'-4"	68
A547	20	5	9'-6"	50
A548	Str.	4	10'-0"	43
A549	1	3	3'-6"	11
A550	32	7	7'-7"	55
A601	Str.	130	12'-3"	2392
A602	↑	18	22'-0"	595
A603		18	27'-6"	744
A604	↓	9	32'-4"	437
A605	Str.	9	26'-9"	362
A606	8	143	12'-4"	2649
A607	20	151	11'-9"	2665
A608	1	12	22'-3"	401

Mark	Type	No. Reqd	Length	Weight
A612	Str.	15	36'-6"	821
A613	↑	20	28'-4"	854
A614		9	17'-9"	240
A615		20	11'-4"	340
A616		4	5'-11"	36
A617		2	5'-6"	17
A618	↓	9	10'-8"	144
A619	Str.	4	10'-2"	61
A620	8	8	7'-7"	91
A621	8	4	7'-5"	45
A622	Str.	8	3'-8"	44
A623	Str.	4	3'-6"	21
A701	Str.	72	23'-0"	3385
A702	Str.	72	27'-6"	4050
A703	Str.	72	34'-6"	5077
A704	44	224	5'-10"	2671
A705	Str.	28	20'-10"	1192
A706	↑	64	17'-9"	2323
A707		28	14'-3"	816
A708		28	11'-3"	644
A709	↓	28	9'-0"	515
A710	Str.	28	6'-3"	358
A901	Str.	11	36'-9"	1374
A902	↑	33	40'-0"	4488
A903		11	35'-6"	1327
A904		22	32'-3"	2410
A905		11	26'-9"	1000
A906		22	28'-6"	2132
A907	↓	11	30'-3"	1131
A908	Str.	11	24'-9"	926
A1001	44	122	18'-11"	9931
A1002	44	122	10'-5"	5468
A1003	52	7	15'-8"	472
A1004	Str.	22	15'-0"	1420
A1102	22	56	18'-1"	5380
A1103	45	56	29'-4"	8726
A1104	Str.	15	13'-7"	1083
A1106	Str.	11	20'-9"	1213
* H511	Str.	4	9'-11"	
* H512	Str.	4	8'-7"	
			Total	97844

PIER

Mark	Type	No. Reqd	Length	Weight
P401	64	1	17'-0 3/8"	692
P402	↑	1	17'-5 3/8"	708
P403		1	17'-9 1/2"	725
P404		1	18'-1 5/8"	733
P405		1	18'-6 3/8"	749
P406		1	18'-10 3/8"	766
P407		1	19'-3 1/8"	781
P408		1	19'-8 1/4"	798
P409	↓	1	20'-0 1/8"	814
P410	64	1	20'-5 1/8"	831
P411	1	58	5'-6"	212
P501	1	564	7'-7"	4461
P502	↕	56	6'-5"	374
P503		2	6'-0"	13
P504	1	2	5'-3"	11
P601	Str.	220	10'-6"	3470
P602	Str.	4	37'-4"	224
P603	6	4	11'-7"	70
P604	Str.	8	8'-6"	102
P605	Str.	4	35'-3"	212
P801	18	8	43'-3"	923
P802	18	8	44'-0"	939
P803	Str.	4	34'-0"	363
P804	Str.	4	16'-0"	171
P805	Str.	4	31'-4"	335
P901	44	4	38'-0"	517
P902	Str.	6	34'-9"	709
P903	Str.	5	24'-6"	417
P904	Str.	4	15'-3"	208
P905	44	4	35'-1"	477
P906	Str.	6	33'-6"	683
P907	Str.	5	23'-9"	404
P1001	Str.	140	15'-6"	9338
P1002	Str.	2	36'-0"	310
P1003	44	8	13'-8"	470
P1004	Str.	4	10'-3"	176
P1005	Str.	2	33'-4"	287
P1006	6	4	11'-7"	199
P1101	18	240	6'-11"	8820
P1102	Str.	24	21'-0"	2678
P1103	↑	24	21'-3"	2709
P1104		24	21'-6"	2741
P1105		24	22'-0"	2805
P1106		24	22'-3"	2837
P1107		24	22'-9"	2901
P1108		24	23'-0"	2933
P1109		24	23'-6"	2997
P1110	↓	24	24'-0"	3060
P1111	Str.	24	24'-6"	3124
P1112	18	6	37'-7"	1198
P1113	18	8	16'-1"	684
P1114	Str.	8	19'-3"	818
P1115	18	6	33'-7"	1070
P1116	18	2	35'-11"	382
P1117	18	2	32'-0"	340
			Total	75769

Mark	a	b	c	d
A580	14'-3"	1'-2"	0'-6"	0'-6"
A581	13'-10"	↑	↑	↑
A582	13'-4"			
A583	12'-10"			
A584	12'-4"			
A585	11'-10"			
A586	11'-4"			
A587	10'-10"			
A588	10'-4"			
A589	9'-9"			
A590	9'-1"			
A591	8'-5"			
A592	7'-9"			
A593	7'-2"			
A594	6'-6"			
A595	5'-10"			
A596	5'-2"			
A597	4'-6"			
A598	14'-4"			
A599	13'-11"			
A5100	13'-5"			
A5101	13'-0"			
A5102	12'-7"			
A5103	12'-3"			
A5104	11'-9"			
A5105	11'-4"			
A5106	10'-11"			
A5107	10'-5"			
A5108	9'-10"			
A5109	9'-3"			
A5110	8'-9"			
A5111	8'-2"			
A5112	7'-8"			
A5113	7'-1"			
A5114	6'-7"			
A5115	6'-0"			
A5116	5'-5"			
A5117	4'-11"			
A5118	11'-5"			
A5119	11'-2"			
A520	10'-10"			
A521	10'-7"			
A522	10'-3"			
A523	10'-0"			
A524	9'-8"			
A525	9'-5"			
A526	9'-1"			
A527	8'-9"			
A528	8'-4"			
A529	7'-11"			
A530	7'-6"			
A531	7'-2"			
A532	6'-9"			
A533	6'-5"			
A534	6'-0"			
A535	5'-7"			
A536	5'-2"			
A537	4'-9"			
A538	4'-5"	↓	↓	↓
A539	4'-1"	1'-2"	0'-6"	0'-6"

Type 40

Mark	a	b	c
A655	2'-0"	0'-11"	9'-9"
A670	2'-0"	0'-11"	5'-3"
A671	2'-0"	0'-11"	5'-0"

Type 8

Mark	a	Mark	a	Mark	a
A952	5'-9"	A704	5'-0"	P901	36'-9"
A961	4'-6"	A1001	17'-6"		
A1051	20'-6"	A1002	9'-0"	P905	33'-10"
A1053	20'-10"				
A1055	23'-2"			P1003	12'-3"
A1155	6'-7"				

Type 44

Type	Mark	a	b	c	d
22	A1052	2'-11"	15'-6"	13'-0"	8'-4"
	A1054	2'-11"	15'-6"	13'-1"	8'-5"
	A1058	5'-6"	3'-0"	1'-4"	2'-7"
	A1102	2'-11"	13'-7"	13'-4"	1'-3"

Type 22

Mark	a	b	Rad.
P603	5'-6 3/8"	3'-0"	3'-6 5/8"
P1006	5'-1 1/4"	3'-3"	1'-6 3/8"

Type 6

Mark	a	b
A570	0'-8"	4'-0"
A542	0'-8"	5'-0"
A550	0'-8"	3'-0"

Type 32

Mark	a	Pitch	No. of Turns
P401	3'-7"	2 1/2"	85
P402	3'-7"	2 1/2"	87
P403	3'-7"	2 1/2"	89
P404	3'-7"	2 1/2"	90
P405	3'-7"	2 1/2"	92
P406	3'-7"	2 1/2"	94
P407	3'-7"	2 1/2"	96
P408	3'-7"	2 1/2"	98
P409	3'-7"	2 1/2"	100
P410	3'-7"	2 1/2"	102

Type 64 (Spiral Bars)

Note
The "Length" shown in the steel list for the spiral bars is the distance from the top of the footing to the bottom of the pier cap.
The "No. of Turns" shown is the "Length" divided by the pitch, plus 3 turns (total number of closed coils).

Mark	a	b
A553	2'-0"	3'-9"
A1151	3'-7"	5'-6"
A1152	3'-7"	8'-5"
A501	2'-0"	3'-9"
A546	2'-0"	7'-6"
P801	3'-6"	40'-0"
P802	3'-6"	40'-9"
P1101	1'-0"	6'-3"
P1112	1'-2"	36'-9"
P1113	1'-2"	15'-3"
P1115	1'-2"	32'-9"
P1116	1'-2"	35'-1"
P1117	1'-2"	31'-2"

Type 18

Type	Mark	a	b	c	d	e
47	A566	1'-6"	4'-6"	3'-7"	2'-2 5/8"	4'-3"
	A543	1'-6"	4'-0"	3'-10"	2'-3 3/8"	4'-6"
	A545	8'-7"	1'-3"	1'-10"	0'-9 3/4"	2'-0"
17	A569	1'-10"	1'-4"	3'-0"	2'-8"	2'-11"
45	A1053	2'-11"	19'-8"	3'-3"	16'-6"	10'-7"
	A1055	2'-11"	21'-10"	3'-3"	19'-8"	10'-7"
	A1056	2'-11"	18'-8"	3'-9"	15'-8"	10'-1"
	A1103	2'-11"	21'-7"	3'-7"	20'-3"	7'-8"
52	A1003	6'-0"	1'-0"	7'-6"	2'-6"	2'-3"

Types 47, 17, 45 & 52

Mark	a	b
A573	1'-7"	1'-1"
A579	2'-0"	1'-0"
A659	1'-5"	10'-9"
A514	2'-0"	1'-0"
A540	2'-9"	1'-7"
A549	1'-7"	1'-1"
A608	1'-5"	10'-7"

Type 1

Mark	a	b
P501	2'-10"	2'-6"
P502	3'-8"	1'-6"
P503	3'-3"	1'-6"
P504	2'-6"	1'-6"
P411	3'-8"	1'-0"

Type	Mark	a	b	c	d
20	A574	1'-2 5/8"	7'-6	2'-3"	1'-11"
	A656	2'-6"	8'-2	3'-6 5/8"	2'-6"
	A547	1'-5"	7'-0	2'-6"	2'-0"
	A607	2'-6"	8'-2	3'-6 5/8"	2'-6"
	A502	3'-5"	1'-10	3'-9"	1'-6"
62	A662	2'-0"	1'-0"	4'-6"	2'-2 3/8"

Type 20 & 62

MICROFILMED
FEB 20 1985

HAZELET & ERDAL
CONSULTING ENGINEERS
CINCINNATI, OHIO

STEEL REINFORCEMENT LIST

BRIDGE NO. HAM - 71 - 0196

DESIGNED	DRAWN	TRACED	CHECKED	REVIEWED DATE	REVISED
	GW		HEE 5-19-65	JHO 5/20/65	

FED. RD. DIV.	STATE	PROJECT	FISCAL YEAR
2	OHIO		

402
492

HAMILTON COUNTY
HAM-71-(1.56)(2.51)

SUPERSTRUCTURE

Mark	Type	No. Reqd	Length	Weight
S4001	21	178	6'-9"	804
S4002	21	185	10'-9"	1329
S4003	63	364	5'-2"	1257
S4004	21	1	8'-7"	6
S4005	↑	1	7'-8"	5
S4006	↓	1	6'-11"	5
S4007		4	3'-7"	15
S4008		1	5'-11"	4
S4009	21	1	6'-9"	5
S4010	63	2	6'-8"	9
S4011	63	4	5'-8"	15
S4012	63	2	7'-0"	9
S4013	21	1	8'-1"	6
S4014	↑	1	7'-9"	6
S4015		1	7'-5"	5
S4016		1	7'-7"	5
S4017		1	8'-2"	6
S4018	↓	1	9'-1"	6
S4019	21	4	9'-6"	25
S4020	61	1	9'-9"	7
S4021	↑	1	9'-0"	6
S4022		1	8'-4"	6
S4023		1	7'-7"	5
S4024		1	6'-10"	5
S4025	↓	1	6'-3"	4
S4026	61	1	5'-11"	4
S5001	Str.	72	36'-6"	2741
S5002	↕	32	31'-0"	1035
S5003		6	38'-0"	238
S5004	Str.	2	24'-0"	50
S5005	14	398	5'-9"	2387
S6001	Str.	18	5'-9"	155
S6002	↑	10	6'-7"	99
S6003		6	7'-5"	67
S6004		12	8'-2"	147
S6005		8	8'-11"	107
S6006		12	9'-8"	174
S6007		16	10'-6"	252
S6008		4	11'-3"	68
S6009		5	12'-1"	91
S6010		2	12'-11"	39
S6011		2	13'-8"	41
S6012		2	14'-6"	44
S6013		2	15'-4"	46
S6014		2	16'-2"	49
S6015		2	16'-10"	51
S6016		2	17'-7"	53
S6017		4	18'-3"	110
S6018		4	19'-1"	115
S6019		6	19'-11"	179
S6020		6	20'-10"	188
S6021		4	21'-8"	130
S6022		4	22'-6"	135
S6023		6	23'-4"	210
S6024		6	24'-2"	218
S6025		4	25'-1"	151
S6026		4	25'-10"	155
S6027		4	26'-9"	161
S6028		2	27'-5"	82
S6029		2	28'-4"	85
S6030		2	29'-2"	88
S6031		4	30'-0"	180
S6032		4	30'-10"	185
S6033		2	31'-8"	95
S6034		2	32'-6"	98
S6035		2	33'-5"	100
S6036		8	34'-3"	412
S6037		4	35'-1"	211
S6038	↓	4	35'-11"	216
S6039	Str.	2	36'-10"	111
S6040	Str.	310	37'-4"	17383
S6041	↑	2	3'-8"	11
S6042		2	4'-6"	14
S6043		6	5'-4"	48
S6044		4	6'-3"	38
S6045		4	7'-1"	43
S6046		2	7'-11"	24
S6047		4	8'-10"	53
S6048		4	12'-3"	74
S6049		2	13'-1"	39
S6050		4	13'-11"	84
S6051		4	14'-10"	89
S6052		6	15'-7"	140
S6053		4	16'-5"	99
S6054		2	17'-3"	52
S6055		4	27'-6"	165
S6056		6	28'-5"	256
S6057		6	29'-2"	263
S6058		4	30'-2"	181
S6059		132	31'-0"	6146
S6060		4	31'-10"	191
S6061		4	32'-9"	197
S6062		6	33'-7"	303
S6063		6	34'-5"	310
S6064		4	35'-3"	212
S6065		12	36'-1"	650
S6066		2	37'-0"	111
S6067		2	37'-10"	114
S6068		2	38'-8"	116
S6069		2	39'-6"	119
S6070		10	40'-0"	601
S6071		306	41'-3"	18959
S6072		2	10'-4"	31
S6073		2	11'-0"	33
S6074		2	11'-8"	35
S6075		7	14'-4"	151
S6076		2	15'-0"	45
S6077		2	17'-2"	52
S6078		6	17'-11"	161
S6079		2	18'-7"	56
S6080		2	19'-4"	58
S6081		2	21'-3"	64
S6082		2	22'-0"	66
S6083		2	22'-10"	69
S6084		2	24'-11"	75
S6085		2	25'-7"	77
S6086		2	26'-4"	79
S6087		2	27'-2"	82
S6088		2	27'-10"	84
S6089		2	31'-6"	95
S6090		2	32'-2"	97
S6091		14	33'-0"	694
S6092		2	36'-8"	110
S6093		2	37'-4"	112
S6094		2	38'-2"	115
S6095		2	38'-11"	117
S6096		2	39'-8"	119
S6097		2	40'-5"	121
S6098		2	41'-1"	123
S6099		2	5'-1"	15
S6100		2	9'-10"	30
S6101		6	10'-9"	97
S6102		2	11'-6"	35
S6103		2	16'-4"	49
S6104		2	17'-2"	52
S6105		2	18'-0"	54
S6106		2	18'-9"	56
S6107		2	19'-7"	59
S6108		2	20'-6"	62
S6109		2	21'-3"	64
S6110		2	22'-0"	66
S6111		2	22'-10"	69
S6112		2	23'-7"	71
S6113	↓	2	24'-6"	74
S6114	Str.	2	25'-4"	76
S6115	Str.	2	26'-2"	79
S6116	↑	2	27'-0"	81
S6117	↕	8	37'-6"	451
S6118	Str.	4	38'-6"	231
S6151	Str.	864	36'-6"	47367
S6152	↑	296	31'-0"	13782
S6153		18	26'-6"	716
S6154		31	32'-6"	1513
S6155	Str.	24	38'-3"	1379
S7001	Str.	6	5'-8"	69
S7002	↑	10	6'-6"	133
S7003		6	7'-4"	90
S7004		12	8'-1"	198
S7005		8	8'-10"	144
S7006		12	9'-7"	235
S7007		4	10'-4"	84
S7008		4	11'-2"	91
S7009		5	12'-0"	123
S7010		2	12'-10"	52
S7011		2	13'-7"	56
S7012		2	14'-5"	59
S7013		2	15'-3"	62
S7014		2	16'-1"	66
S7015		2	16'-9"	68
S7016		2	17'-6"	72
S7017		4	18'-2"	149
S7018		4	19'-0"	155
S7019		6	19'-10"	243
S7020		6	20'-9"	254
S7021		4	21'-7"	176
S7022		4	22'-5"	183
S7023		6	23'-3"	285
S7024		6	24'-1"	295
S7025		4	25'-0"	204
S7026		4	25'-10"	211
S7027		4	26'-8"	218
S7028		2	27'-4"	112
S7029		2	28'-3"	115
S7030		2	29'-1"	119
S7031		4	29'-11"	245
S7032		4	30'-9"	251
S7033		2	31'-7"	129
S7034		2	32'-5"	133
S7035		2	33'-4"	136
S7036		8	34'-2"	559
S7037		4	35'-0"	286
S7038		4	35'-10"	293
S7039		2	36'-9"	150
S7040	↓	310	37'-3"	23603
S7041		2	3'-7"	15
S7042		2	4'-5"	18
S7043		6	5'-3"	64
S7044		4	6'-2"	50
S7045		4	7'-0"	57
S7046		2	7'-10"	32
S7047		4	8'-9"	72
S7048		4	12'-2"	99
S7049		2	13'-0"	53
S7050		4	13'-10"	113
S7051		4	14'-9"	121
S7052		6	15'-6"	190
S7053		4	16'-4"	134
S7054		2	17'-2"	70
S7055		4	27'-6"	225
S7056		6	28'-4"	347
S7057		6	29'-2"	358
S7058		4	30'-1"	246
S7059		4	30'-11"	253
S7060		4	31'-9"	260
S7061		4	32'-8"	267
S7062	↓	6	33'-6"	411
S7063	Str.	6	34'-4"	421
S7064	Str.	4	35'-2"	288
S7065	↑	12	36'-0"	883
S7066		2	36'-11"	151
S7067		2	37'-9"	154
S7068		2	38'-7"	158
S7069		2	39'-5"	161
S7070		10	39'-11"	816
S7071		306	41'-2"	25748
S7072		2	10'-3"	42
S7073		2	10'-11"	45
S7074		2	11'-7"	47
S7075		7	14'-3"	204
S7076		2	14'-11"	61
S7077		2	17'-1"	70
S7078		6	17'-10"	219
S7079		2	18'-6"	76
S7080		2	19'-3"	79
S7081		2	21'-2"	87
S7082		2	21'-11"	90
S7083		2	22'-9"	93
S7084		2	24'-10"	101
S7085		2	25'-6"	104
S7086		2	26'-3"	107
S7087		2	27'-1"	111
S7088		2	27'-9"	113
S7089		2	31'-5"	128
S7090		2	32'-1"	131
S7091		14	32'-11"	942
S7092		2	36'-7"	150
S7093		2	37'-3"	152
S7094		2	38'-1"	156
S7095		2	38'-10"	159
S7096		2	39'-7"	162
S7097		2	40'-4"	165
S7098		2	41'-0"	168
S7099		2	5'-0"	20
S7100		2	9'-9"	40
S7101		6	10'-8"	131
S7102		2	11'-5"	47
S7103		2	16'-3"	66
S7104		2	17'-1"	70
S7105		2	17'-11"	72
S7106		2	18'-8"	76
S7107		2	19'-6"	80
S7108		2	20'-5"	83
S7109		2	21'-2"	87
S7110		2	21'-11"	90
S7111		2	22'-9"	93
S7112		2	23'-6"	96
S7113		2	24'-5"	100
S7114		2	25'-3"	103
S7115		2	26'-1"	107
S7116		2	26'-11"	110
S7117	↓	8	37'-5"	612
S7118	Str.	4	38'-5"	314
* H501	Str.	4	12'-4"	
H502	↑	32	15'-4"	
H503		64	15'-8"	
H504		4	20'-8"	
H505		4	12'-8"	
H506	↓	28	16'-2"	
H507	Str.	4	12'-11"	
* H510	58	6	8'-0"	
S5006	4	6	9'-9"	61
S7119	49	6	7'-1"	87
S7120	58	6	12'-6"	153
S7121	61	6	8'-0"	98
			Total	200791

Type 21

Mark	a	b	c	d	e	f
S4001	1'-3¼"	1'-3½"	1'-0"	1'-3¼"	2'-7"	3"
S4002	1'-3¼"	1'-3½"	1'-0"	1'-3¼"	6'-7"	3"
S4004	1'-3¼"	1'-4"	1'-0"	1'-3¼"	4'-5"	5"
S4005	1'-3¼"	1'-3⅜"	1'-0"	1'-3¼"	3'-6"	4"
S4006	1'-3¼"	1'-3½"	1'-0"	1'-3¼"	2'-9"	3½"
S4007	1'-3¼"	1'-3½"	1'-0"	1'-3¼"	1'-5"	3"
S4008	1'-3¼"	1'-3½"	1'-0"	1'-3¼"	1'-9"	3½"
S4009	1'-3¼"	1'-4½"	1'-0"	1'-3¼"	2'-6"	6"
S4013	1'-3¼"	1'-4½"	1'-0"	1'-3¼"	3'-10"	6"
S4014	1'-3¼"	1'-4"	1'-0"	1'-3¼"	3'-7"	4½"
S4015	1'-3¼"	1'-3½"	1'-0"	1'-3¼"	3'-3"	3½"
S4016	1'-3¼"	1'-3½"	1'-0"	1'-3¼"	3'-5"	3"
S4017	1'-3¼"	1'-3½"	1'-0"	1'-3¼"	4'-0"	3"
S4018	1'-3¼"	1'-3½"	1'-0"	1'-3¼"	4'-11"	3"
S4019	1'-3¼"	1'-3½"	1'-0"	1'-3¼"	5'-4"	3"

Type 63

Mark	a	b&f	c&g	d&h	e&j
S4003	1'-6"	4"	1'-0"	1'-04"	1'-0"
S4010	3'-0"	4"	1'-0"	1'-04"	1'-0"
S4011	2'-0"	4"	1'-0"	1'-04"	1'-0"
S4012	3'-4"	4"	1'-0"	1'-04"	1'-0"

Type 61

Mark	a	b	c
S4020	1'-0"	1'-3¼"	5'-7"
S4021	1'-0"	1'-3¼"	4'-10"
S4022	1'-0"	1'-3¼"	4'-2"
S4023	1'-0"	1'-3¼"	3'-5"
S4024	1'-0"	1'-3¼"	2'-8"
S4025	1'-0"	1'-3¼"	2'-1"
S4026	1'-0"	1'-3¼"	1'-9"
S7121	1'-0"	1'-4½"	3'-11"

REPLACEMENT BARS

Mark	Type	No.	Length
RE401	Str.	1	5'-3"
RE501	"	2	5'-7"
RE601	"	8	5'-11"
RE701	"	6	6'-3"
RE801	"	1	6'-6"
RE901	"	2	6'-10"
RE1001	"	3	7'-3"
RE1101	"	5	7'-7"

Type 14

Type	Mark	a	b	c	d	e	f	g	h	i
4	S5006	2'-3¼"	1'-10"	1'-10"	2'-2¾"	2'-1"	–	–	–	–
49	S7119	3'-4"	1'-10½"	1'-4"	1'-4"	0'-6"	1'-6"	–	–	–
58	S7120	1'-9"	2'-8½"	4'-7½"	2'-8½"	0'-9"	3'-9"	3'-9"	4'-7½"	0'-9"
58	H510	1'-9"	1'-4½"	2'-4½"	1'-4½"	0'-9"	1'-11"	1'-11"	2'-4½"	0'-9"

Types 4, 49 & 58

* Reinforcing Bars marked H are included in Item S-14 (Railing) for payment.

Total wgt. reinf steel = 460,791 lbs.

For bar bending schedule see Sh No. 446

HAZELET & ERDAL
CONSULTING ENGINEERS
CINCINNATI, OHIO

STEEL REINFORCEMENT LIST

BRIDGE NO. HAM-71-0196

DESIGNED	DRAWN	TRACED	CHECKED	REVIEWED DATE	REVISED
	GW		HEE 5-8-65	JHO 5/20/65	

FED. RD. DIV.	STATE	PROJECT	FISCAL YEAR
2	OHIO		

403
492

HAMILTON COUNTY
HAM-71-(1.56)(2.51)

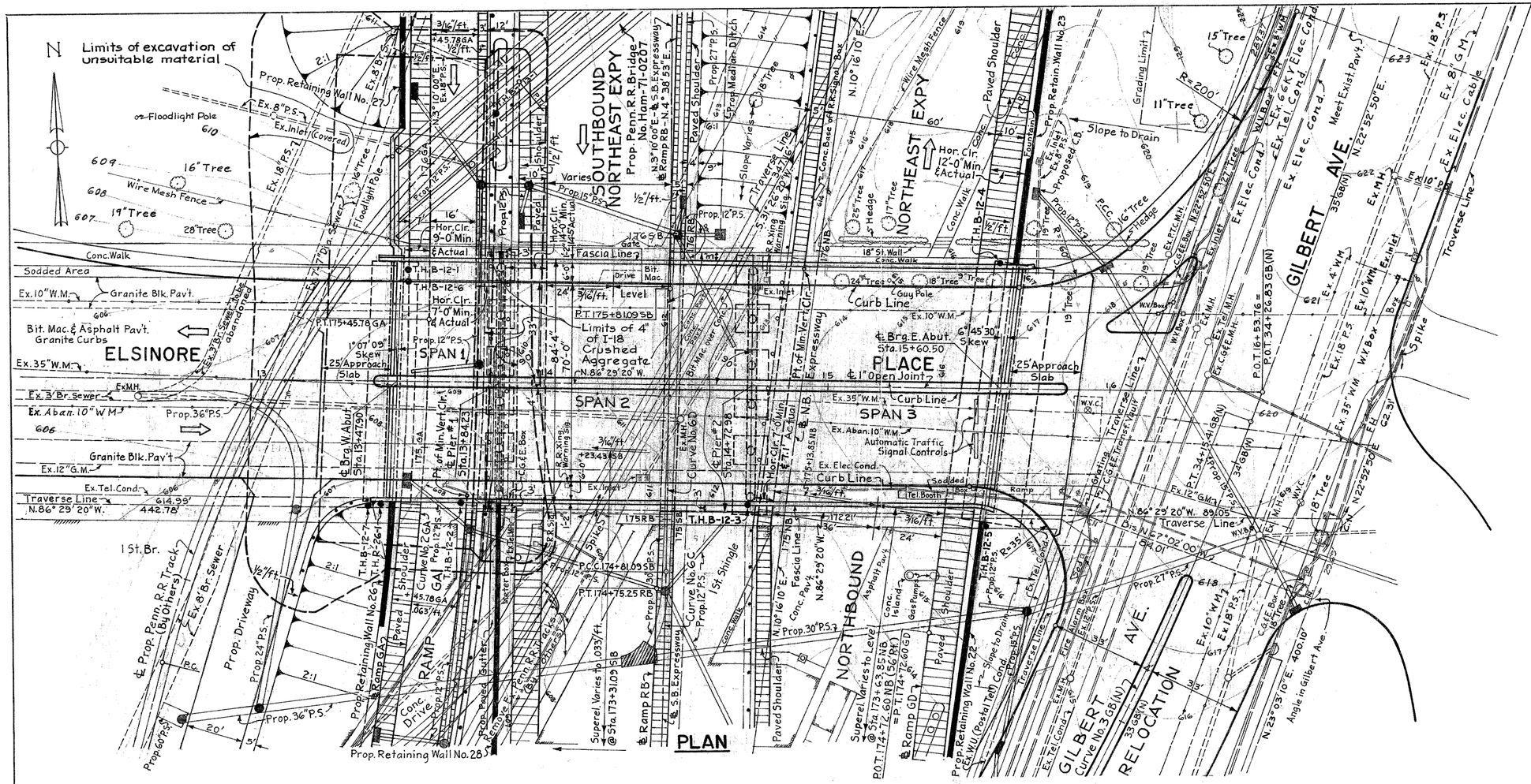
N
Limits of excavation of unsuitable material
Prop. Retaining Wall No. 27
Ex. 8" P.S.
Ex. Inlet (Covered)
Floodlight Pole
16" Tree
19" Tree
28" Tree
Wire Mesh Fence
Conc. Walk
Sodded Area
Ex. 10" W.M.
Granite Blk. Pav't.
Bit. Mac. & Asphalt Pav't.
Granite Curbs
ELSINORE PLACE
Ex. 35" W.M.
Ex. 3' Br. Sewer
Ex. Aban. 10" W.M.
Prop. 36" P.S.
Ex. 12" G.M.
Ex. Tel. Cond.
Traverse Line
N. 86° 29' 20" W.
614.59'
442.78'
1st. Br.
Prop. Penn. R.R. Track (By Others)
Ex. 8' Br. Sewer
Prop. Driveway
Prop. 24" P.S.
Prop. 60" P.S.
Prop. Retaining Wall No. 26
Prop. Retaining Wall No. 28
RAMP GA
Conc. Drive
Prop. Paved Gutter
Remove ex. Penn. R.R. Jacks
Ex. Bldg. to be abandoned
Ex. 7'-10" Sewer
Ex. 3'8" Sewer to be abandoned
SOUTHBOUND NORTHEAST EXPY
Prop. Penn. R.R. Bridge No. Ham-71-0207
Prop. 27" P.S.
Prop. Median Ditch
Slope Varies
Prop. 12" P.S.
Paved Shoulder
Hor. Clr. 9'-0" Min. & Actual
Hor. Clr. 12'-0" Min. & Actual
Fascia Line
Bit. Mac.
Drive
Level
Limits of 4" of I-18 Crushed Aggregate
N. 86° 29' 20" W.
Curb Line
Guy Pole
Ex. Inlet
Ex. 10" W.M.
Ex. Manhole
Ex. 3' Br. Sewer
Ex. Aban. 10" W.M.
Prop. 12" P.S.
Ex. 12" G.M.
Ex. Tel. Cond.
Ex. Elec. Cond.
Ex. Aban. 10" W.M.
Automatic Traffic Signal Controls
Ex. 35" W.M.
Ex. 12" G.M.
Ex. 18" P.S.
Ex. 8" G.M.
Ex. Elec. Cable
Ex. 4" W.M.
Ex. 10" W.M.
Ex. 18" P.S.
Ex. 8" G.M.
Ex. 66 KV Elec. Cond.
Ex. Tel. Cond.
Ex. Elec. Cond.
Ex. P.T.C. M.H.
Ex. Inlet
Ex. Tel. M.H.
Ex. C.&E. M.H.
Ex. 4" W.M.
Ex. 10" W.M.
Ex. 18" P.S.
Ex. 8" G.M.
Ex. Elec. Cable
Ex. 10" W.M.
Ex. 18" P.S.
Ex. 12" G.M.
Ex. Min. Sp.
Ex. 18" P.S.
Ex. 8" G.M.
Ex. Elec. Cable
Ex. Tel. Cond.
Ex. Elec. Cond.
Ex. Tel. Cond.
Ex. Elec. Cond.
Ex. Tel. Cond.
Ex. 12" P.S

FED. RD. DIV.	STATE	PROJECT	FISCAL YEAR
2	OHIO		

404
492

HAMILTON COUNTY
HAM-71-(1.56) (2.61)

ESTIMATED QUANTITIES

Item	Total	Unit	Descriptions	Super-structure	West Abutment	East Abutment	Pier 1	Pier 2	General
E2	Lump	Sum	Cofferdams, cribs & sheeting						Lump
E2	2288	Cu. Yds.	Unclassified Excavation		40	1845	52	351	
S-1	630	Cu. Yds.	Class "C" concrete, superstructure	630					
S-1	142	Cu. Yds	Class "C" concrete, piers above footings				79.8	62.2	
S-1	399	Cu. Yds.	Class "E" concrete, abutments above footings		153.7	245.3			
S-1	541	Cu. Yds.	Class "E" concrete, footings		148.8	238.8	66.7	86.7	
S-3	42	Lin. Ft.	Waterproofing, premolded sealing strip		42				
S-3	8	Sq. Yds.	Type "B" waterproofing		8				
S-4	~~255,113~~ 255099	Lbs.	Reinforcing steel	120788	33532	49013	~~19981~~ 19967	31785	
S-7	565000	Lbs.	Structural Steel	565000					
S-8	565000	Lbs.	Field painting of structural steel	565000					
S-9	56	Sq. Ft.	1" Preformed expansion joint filler		51		5		
S-14	442	Lin. Ft.	Railing, type "C" (aluminum rail & supports, concrete parapet & end posts)	423	12	7			
S-16	Lump	Sum	First test pile						Lump
S-18	8307	Lin. Ft.	Steel piles 10 BP 42	2400	2667	1728	1512		
S-25			Electric Lighting System (See Sh. No 204)						
S-29	291	Cu. Yds.	Porous backfill		134	157			
S-29	Lump	Sum	Drain inlet including supports and horizontal collector system	Lump					
S-29	108	Lin. Ft.	6" standard pipe downspout, wrought iron or hot-dip galvanized steel, including specials.				49	59	
S-29	96	Lin. Ft.	8" bituminous coated helical perforated corrugated metal pipe [Sec. M-6.4 (h-c)] (Including Specials)		48	48			
S-29	178	Lin. Ft.	8" bituminous coated helical perforated corrugated metal pipe [Sec. M-6.4 (h-c)] (Including specials & sand)		86	92			
S-29	4	Lin. Ft.	12" reinforced concrete sewer pipe [Sec. M-6.6 (a)]		4				
S-29	31	Lin. Ft.	8" bituminous coated helical corrugated metal pipe [Sec. M-6.4 (h-c)] (Including specials)		31				
S-101	630	Each	Water-reducing set-retarding admixture	630					

GENERAL NOTES

STEEL PILES: shall be driven with a hammer of not less than 11,000 ft. lbs. per blow to firm contact with rock or shale. If the length of penetration is approximately equal to the depth of rock and shale according to the bridge foundation investigation report, the firm contact shall be considered as attained when the capacity according to the formula in Section S-18.05 is not less than 50 tons per pile using an 11,000 ft. lb. hammer or 45 tons per pile using a 15,000 ft. lb. hammer
If the energy rating of the hammer is between the rating as shown above, the required formula capacity shall be determined by interpolation. The design of abutments and piers is based on 35 tons per pile.

DESIGN NOTES:
Design Loading CF = 2000 (57)
Concrete Class C - Basic unit stress 1333 psi.
Concrete Class E - Basic unit stress 1133 psi.
Structural Steel - ASTM A36 - Basic unit stress 20,000 psi. (ASTM A7 and A373 steel not permitted except for piling)
Reinforcing Steel - ASTM A15, A16, A160. Deformed Intermediate or Hard Grade, Basic unit stress 20,000 psi. Except spiral reinforcement may be plain structural grade with basic unit stress of 18,000 psi.

MACHINE FINISH OF CONCRETE: The concrete bridge deck shall be finished by the use of a finishing machine.

ADDITIONAL NOTES: For additional notes see Notes 1 thru 8, General Notes, Typical Drawing No. 443

EXCAVATION for the purpose of driving battered piles at the East Abutment (Shown hatched on Sheet No. 403) shall be included with "Unclassified Excavation" for payment.

EXCAVATION OF UNSUITABLE MATERIALS: After the unsuitable materials have been removed to elevation 580.0, at the West Abutment as shown on the Site Plan, the Engineer shall make a careful inspection to ascertain that all unsuitable materials have been removed to a stable subsoil. If necessary, the excavation limits shall be extended to remove additional unstable materials and be replaced with materials meeting the requirements of Section E-1 of the Specifications.

Embankment to replace unsuitable material shall be compacted to a minimum of 8" above the bottom of footing elevations before proceeding with structure excavation, (Item E-2, unclassified excavation) at the West abutment and Pier 1.

MICROFILMED
FEB 20 1985

HAZELET & ERDAL
CONSULTING ENGINEERS
CINCINNATI, OHIO

ESTIMATED QUANTITIES & NOTES

BRIDGE NO. HAM-71-0203

DESIGNED	DRAWN	TRACED	CHECKED	REVIEWED DATE	REVISED
	S.W.		W.J.E. 3-19-65	JHO 5/20/65	3-29

HAMILTON COUNTY
HAM-71-(1.56)(2.51)

FED. RD. DIV.	STATE	PROJECT	FISCAL YEAR
2	OHIO		

405/492

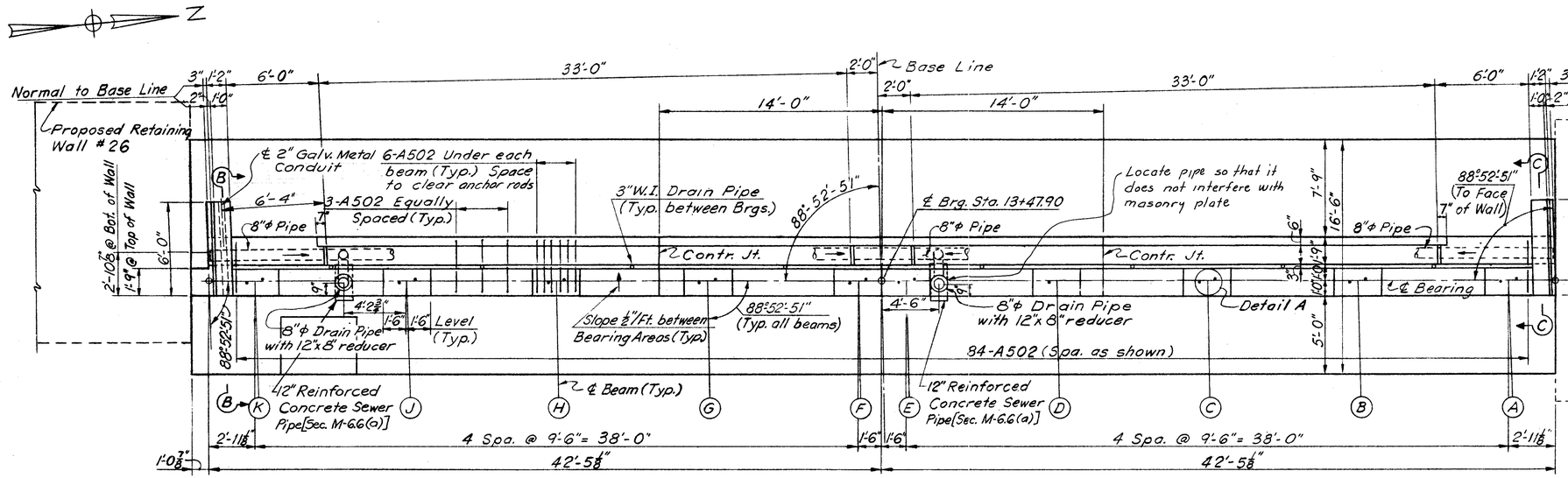

For lighting details see Sh. No. 216.

Note: The 2" Metal Conduit is included with Item 3-25 Metal Conduit, Sh. No. 220, for Payment.

ABUTMENT PLAN

Note: Superstructure drainage provision shown on Section A-A applies at fascia curb. For drainage connection at median curb see Sheet 406

SECTION A-A

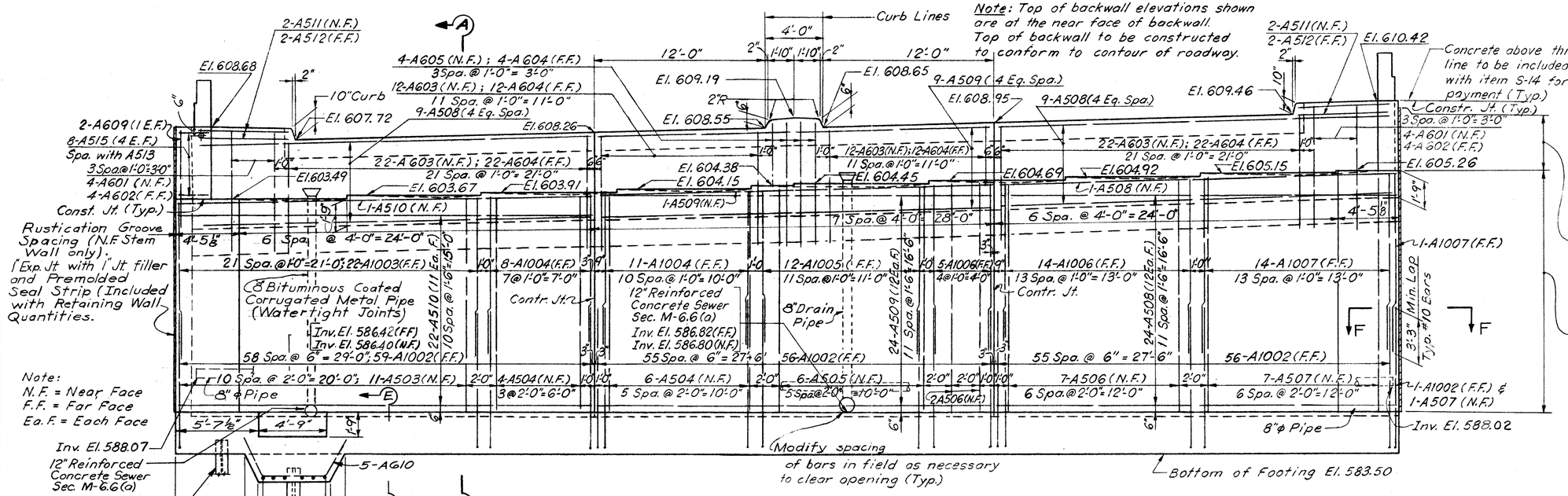

FRONT ELEVATION

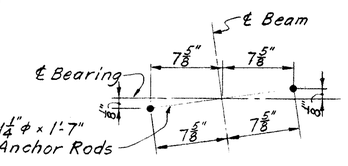

DETAIL A
(Typical all beams)

1" Exp. Jt. with 1" Jt. filler and Type B Waterproofing (Incl. with Quantities for Abutment of Structure No. HAM-71-0203) (See Sect. B-B Bridge No. HAM-71-0207)

1" Exp. Jt. with 1" Jt. filler and Premolded Sealing Strip (Incl. with Quantities for Abutment of Structure No. HAM-71-0203)

Work this sheet with sheet 406

HAZELET & ERDAL
CONSULTING ENGINEERS
CINCINNATI, OHIO

WEST ABUTMENT

BRIDGE NO. HAM-71-0203

DESIGNED	DRAWN	TRACED	CHECKED	REVIEWED DATE	REVISED
TFL	TFL		W.L.Z. 3-19-65	5/20/65	

MICROFILMED
FEB 20 1985

FED. RD. DIV.	STATE	PROJECT	FISCAL YEAR
2	OHIO		

406
492

HAMILTON COUNTY
HAM-71-(1.56) (2.51)

Z

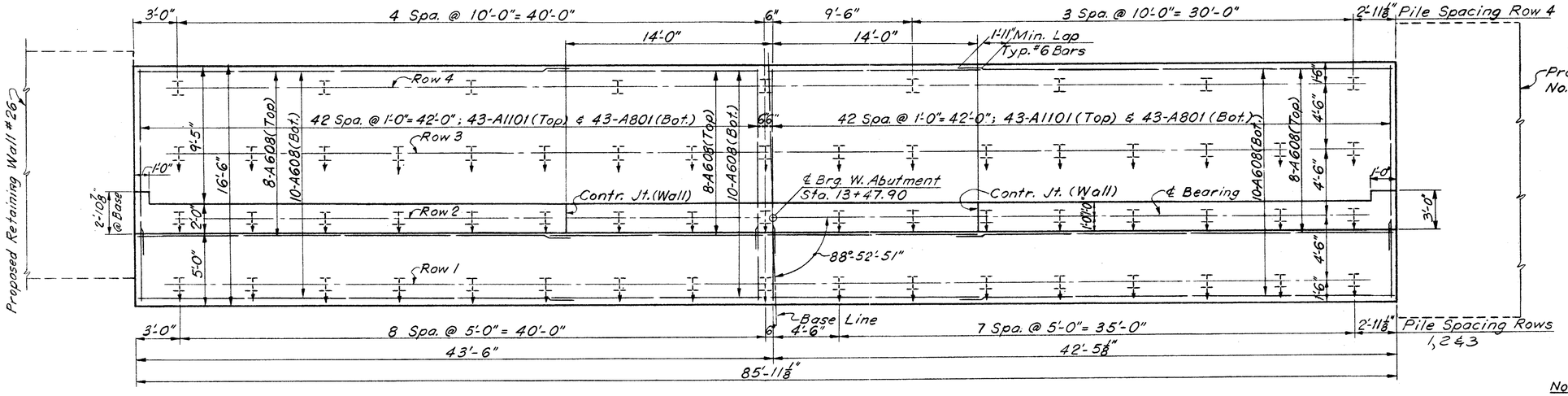

FOOTING PLAN

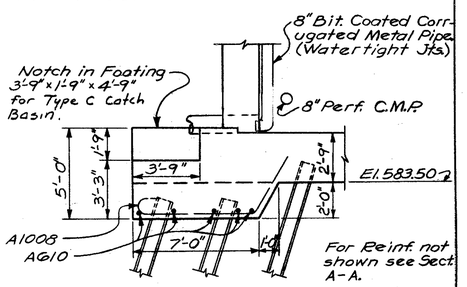

SECTION E-E

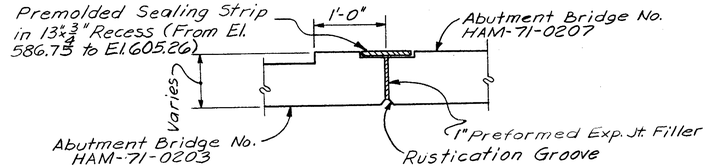

SECTION F-F

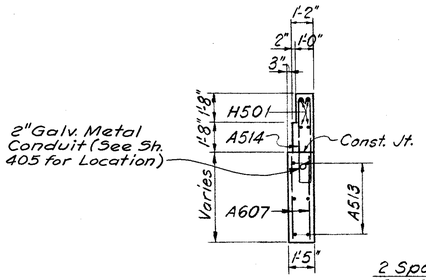

SECTION D-D

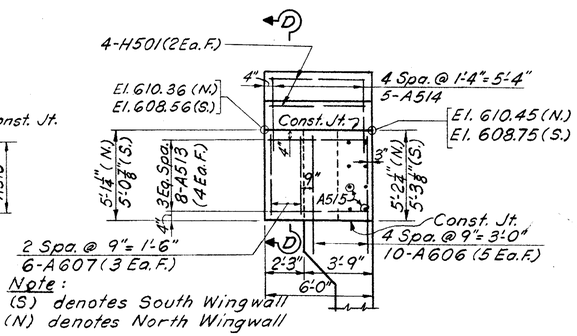

Note:
(S) denotes South Wingwall
(N) denotes North Wingwall

SECTION B-B

SECTION C-C (Similar, opposite hand except as noted)

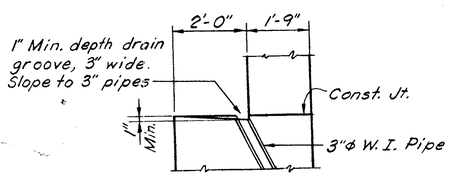

GUTTER DETAIL

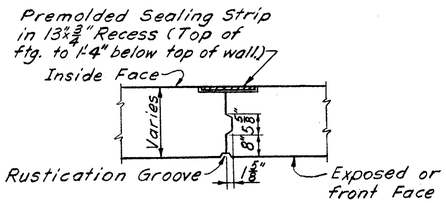

CONTRACTION JOINT DETAIL

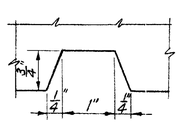

RUSTICATION GROOVE DETAIL

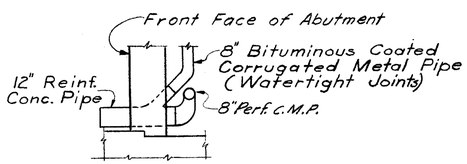

At Median Curb of West Abut.

DRAINAGE CONNECTION DETAILS

Notes:

Provide 3" clearance to reinforcing steel in footing.
All piles shall be 10BP42 Steel H piles.
Abutment concrete shall be Class "E"
Concrete above bridge seat construction joint shall not be placed until Superstructure Steel is in place.
Special care shall be taken in placing reinforcing steel in the vicinity of the bridge seat so as to avoid interference with the drilling of anchor rod holes.

PROCEDUCE: Before the backwall is constructed the embankment behind the West abutment shall be placed and compacted up to the level of the existing ground (With a 1:1 slope from the bridge seat to the existing ground) and extending to the limits for excavation of unsuitable material.

Note:
Porous Backfill 2 ft. thick, full length of abutment and wings shall extend up to the underside of the approach slab or to the finished ground surface.

MICROFILMED
FEB 20 1985

Work this sheet with Sheet 405

HAZELET & ERDAL
CONSULTING ENGINEERS
CINCINNATI, OHIO

WEST ABUTMENT

BRIDGE NO. HAM-71-0203

DESIGNED	DRAWN	TRACED	CHECKED	REVIEWED DATE	REVIS
TFL	TFL		W.J.Z. 3-19-65	JHo 5/20/65	

FED. RD. DIV.	STATE	PROJECT	FISCAL YEAR
2	OHIO		

407
492

HAMILTON COUNTY
HAM-71-(1.56) (2.51)

Proposed Retaining Wall #23

92'-0"

6 Spa. @ 13'-0" = 78'-0" (Counterfort Spacing)

6'-0" 8'-0"

1" Exp. Jt. with 1" Jt. filler and Premoulded Sealing Strip (Incl. with Ret. Wall Quantities.)

Type C alum. railing post

Varies, 1'-9⅝" Max

See Anchor Rod Layout

3" W.I. Drain Pipe (Typ. bet. brgs. except bet. girders E & F)

Base line

Curb line

Const. Jt.

Slope ½"/ft. between Brg. Areas (Typ.)

11 Spa. @ 1'-0" = 11'-0"

A8 Bars

A1051

A5 Bars

5 Spa. @ 2'-0" = 10'-0" 2'-0" (Typ.)

1'-6" (Typ.)

3" x 8" x 1'-6" (Typ.) Keyways @ Base of Counterforts

11'-8¼"

4 A656 Eq. Spa. (Typ.)

6-A656 Under Each Girder; Space to clear anchor rods (Typ.)

1¼ϕ x 1'-7" anchor rods (Typ.)

℄ Brg. (Work Pt. E1) Sta. 15+60.50

83°-14'-30"

83°-14'-30" (Typ. all girders)

1'-6" 1'-6" Level (Typ.)

6'-4"

℄ Girder (Typ.)

℄ Bearing

℄ 2" Galv. Metal Conduit

Type C alum. railing posts

1" Exp. Jt. with 1" Jt. filler and premolded sealing strip (Incl. with ret. wall quant.)

Proposed Retaining Wall #22

9'-6 13/16" (Typ.)

42'-4" 42'-10¾" 4'-8¾"

16'-4½" 15'-7½"

28'-0" 32'-0" 32'-0"

For lighting details see Sh. 216. No.

PLAN

Notes:

Provide 3" clearance to reinforcing steel in footing and 2" clearance in the wall.

All piles shall be 10BP42 Steel H Piles.

Abutment concrete shall be Class 'E'.

The 2" Metal Conduit is included with Item 5-25 Metal Conduit, Sh. 220, for Payment.

⊢ denotes vertical pile.

⊢→ denotes batter pile (batter 1 on 3).

(N.F.) denotes near face.

(F.F.) denotes far face.

(Ea.F.) denotes each face.

For details of aluminum railing see Standard drawing AR-1-57.

Concrete above bridge seat construction joint shall not be placed until superstructure steel is in place. Special care shall be taken in placing reinforcing steel in the vicinity of the bridge seat so as to avoid interference with the drilling of anchor rod holes.

A661 A573 A581 A557 A582

SECTION F-F

A575 A580 A661 A579 A585

SECTION E-E

A578 A586 A554 A751

SECTION B-B

2A555 (F.F.) Eq. Spa. 2A556 (N.F.) Eq. Spa. El. 618.59

Top of backwall to be constructed to conform to contour of roadway

4 Approx. Eq. Spa. (Fan) 10A573 (5 Ea.F.)

El. 617.60 El. 617.30

1A573 (F.F.) 1A574 (F.F.) 1A575 (F.F.)

2A584 (1 Ea.F.) 2A584 (1 Ea.F.) 2A584 (1 Ea.F.)

El. 617.08 El. 617.62 El. 617.01

4 Approx. Eq. Spa. (Fan) 10A574 (5 Ea.F.)

El. 616.82

Note: Top of backwall elevations shown are at near face of backwall.

1'-7" Min. Lap #5 Bars

4 Approx. Eq. Spa. (Fan) 10A575 (5 Ea.F.)

Concrete above this line to be included with Item S-14 for payment. (Typ.)

2A576 (N.F.) Eq. Spa. 2A577 (F.F.) Eq. Spa.

El. 616.31 El. 617.23

3 Spa. @ 1'-5" = 4'-3" 8A583 (3 Ea.F.)

4H553 (2 Ea.F.) 4A583 (2 Ea.F.)

6A661

5 Spa. @ 1'-0" = 5'-0" 1'-8" 18 Spa. @ 1'-0" = 18'-0"

El. 610.99

6A659 (F.F.) 6A660 (N.F.) 19A651 (F.F.) 19A652 (N.F.)

El. 611.40 El. 611.30

6" 31 Spa. @ 1'-0" = 31'-0" 32A651 (F.F.) 32A652 (N.F.)

El. 611.01 El. 610.87 El. 610.82 El. 610.62

8" 20 Spa. @ 1'-0" = 20'-0" 21A651 (F.F.) 21A652 (N.F.)

El. 610.42 El. 610.23 El. 610.02

1'-8" 6 Spa. @ 1'-0" = 6'-0" 7A660 (N.F.) 7A659 (F.F.)

El. 617.15

10A661

Const. Jt. (Typ.)

4H552 (2 Ea.F.) 5 Eq. Spa. 6A579, 6A580 ℄ 6A585

Constr. Jt.

5 Eq. Spa. 6A581, 6A582 ℄ 6A557

2-A578 (F.F.)

10 Spa. @ 2'-0" = 20'-0" 11'-A586

30 A751 (15 Ea.F.) 7 Spa. @ 1'-3" = 8'-9"

30 A752 (15 Ea.F.) 7 Spa. @ 1'-3" = 8'-9"

30 A753 (15 Ea.F.) 7 Spa. @ 1'-3" = 8'-9"

4 A751 (N.F.) 3 Eq. Spa. (Fan)

4 A752 (N.F.) 3 Eq. Spa. (Fan)

4 A753 (N.F.) 3 Eq. Spa. (Fan)

38 A554 (19 Ea.F.) Spa. w/A551

44 A553 (22 Ea.F.) Spa. w/A551

44 A552 (22 Ea.F.) Spa. w/A551

2'-3" Min. Lap #7 Bars

1'-7" Min. Lap #5 Bars

7 Spa. @ 1'-0" = 7'-0"

7 Spa. @ 1'-0" = 7'-0"

7 Spa. @ 1'-3" = 8'-9"

8" ϕ Bit. Coated Helical Perf. C.M.P.

Inv. El. 592.01

Inv. El. 590.17

18 Spa. @ 1'-6" = 27'-0" 19A551 Dowels (F.F.)

21 Spa. @ 1'-6" = 31'-6" 22A551 Dowels (F.F.)

17 Spa. @ 1'-6" = 25'-6" 18A551 Dowels (F.F.)

1'-4" 1'-4" 1'-4" 1'-4" 1'-4"

10BP42 Steel H Piles (Typ.)

Bot. of Ftg. El. 586.67

4A551 (F.F.)

FRONT ELEVATION

Note: Porous backfill 2 ft. thick, full length of abutment and wings, shall extend up to the underside of the approach slab or to the finished ground surface.

Work this sheet with Sheet 408

HAZELET & ERDAL
CONSULTING ENGINEERS
CINCINNATI, OHIO

EAST ABUTMENT

BRIDGE NO. HAM-71-0203

DESIGNED	DRAWN	TRACED	CHECKED	REVIEWED DATE	REVISED
	AFS		W.J.E. 3-1965	JHO 5/20/65	

FED. RD. DIV.	STATE	PROJECT	FISCAL YEAR
2	OHIO		

408
492

HAMILTON COUNTY
HAM-71-(1.56) (2.51)

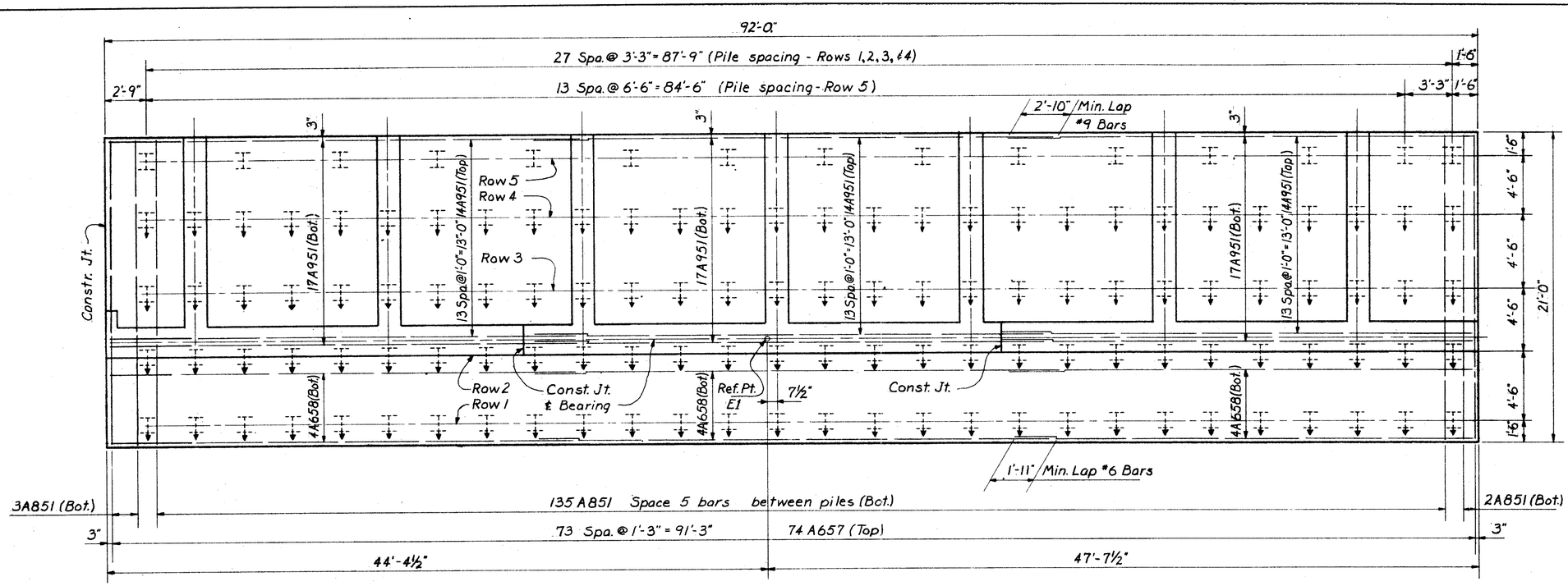

FOOTING PLAN

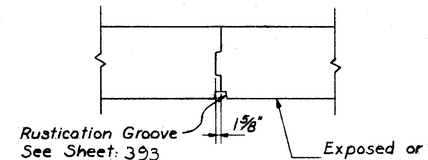

CONSTRUCTION JOINT DETAIL

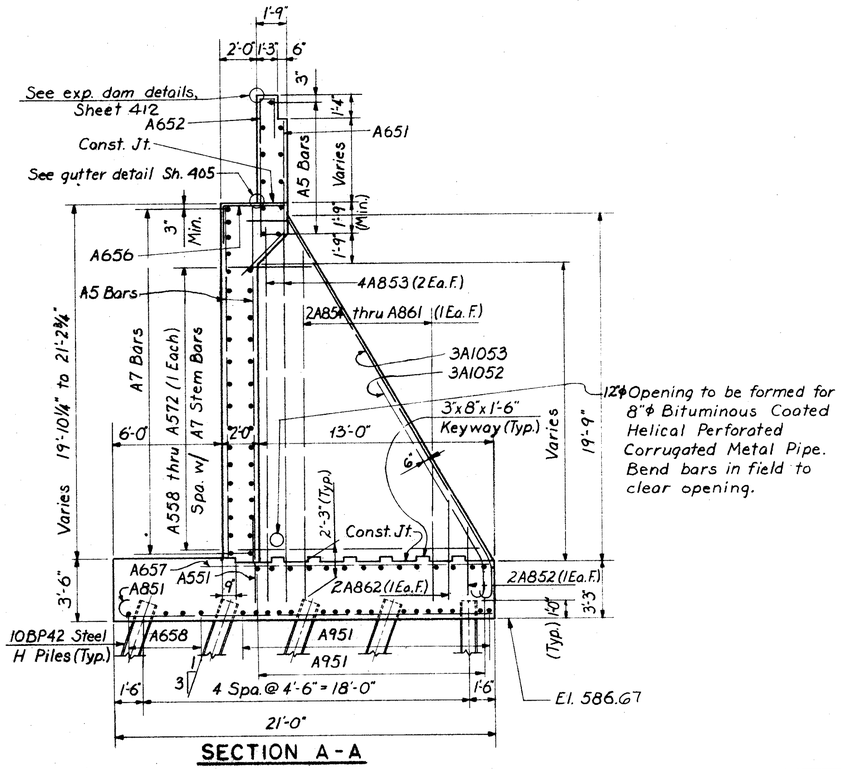

SECTION A-A

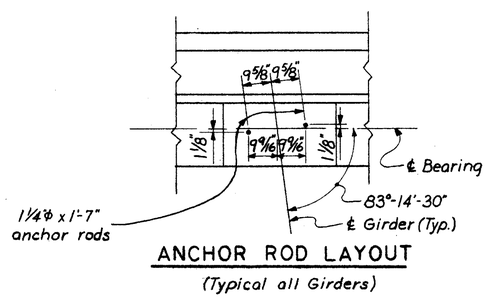

ANCHOR ROD LAYOUT
(Typical all Girders)

MICROFILMED
FEB 20 1985

Work this sheet with Sheet 407

HAZELET & ERDAL
CONSULTING ENGINEERS
CINCINNATI, OHIO

EAST ABUTMENT

BRIDGE NO. HAM-71-0203

DESIGNED	DRAWN	TRACED	CHECKED	REVIEWED DATE	REVISED
	AFS		W.J.Z. 3-19-65	JHO 5/20/65	

FED. RD. DIV.	STATE	PROJECT	FISCAL YEAR
2	OHIO		

409
492

HAMILTON COUNTY
HAM-71-(1.56)(2.51)

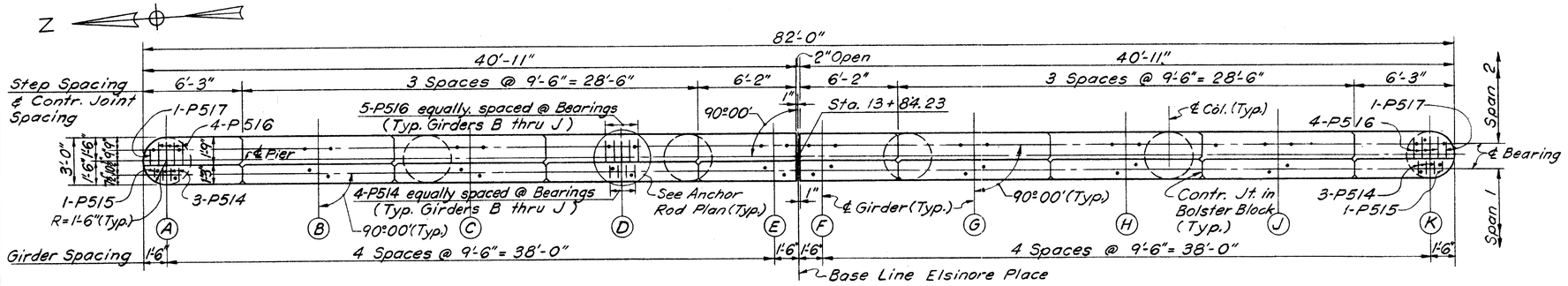

CAP PLAN

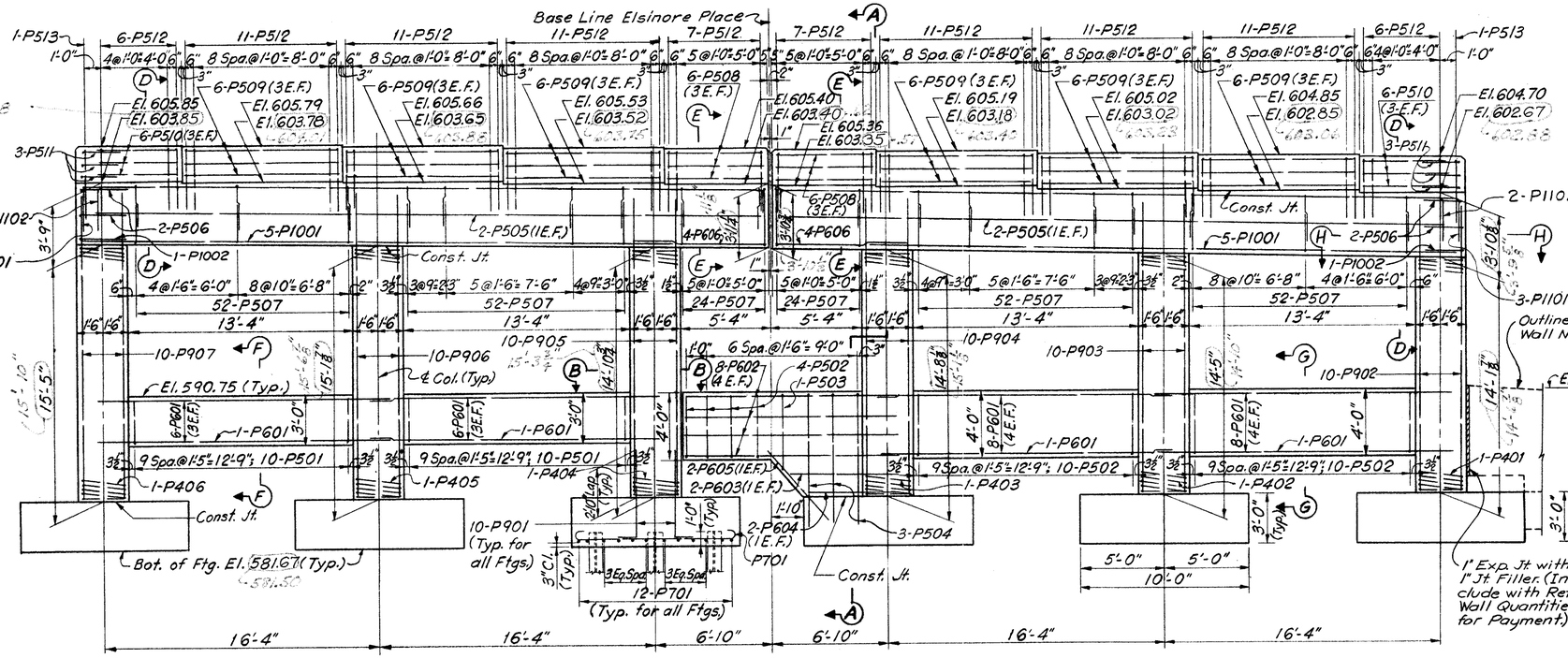

ELEVATION

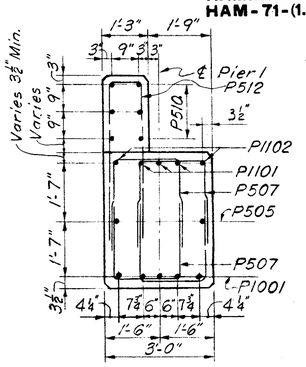

SECTION D-D

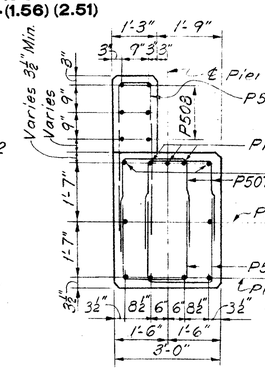

SECTION E-E

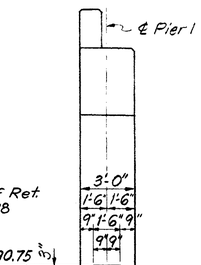

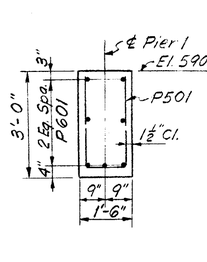

SECTION F-F

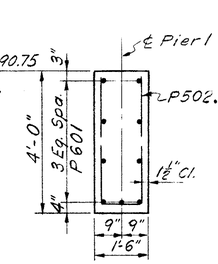

SECTION G-G

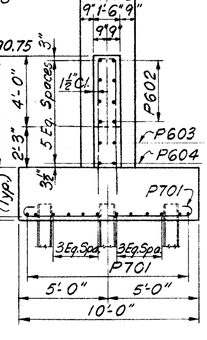

SECTION A-A

Notes

Special care shall be taken in placing reinforcing steel in the vicinity of the bridge seat so as to avoid interference with the drilling of anchor rod holes.

All piles shall be 10BP42 Steel H-Piles.

Concrete in footing shall be Class "E" and concrete in columns and caps shall be Class "C."

Concrete in walls between columns shall be Class "C" and shall be included with Pier 1 Quantities for payment.

E.F. denotes Each Face

⊣⊢ denotes batter pile 1:4

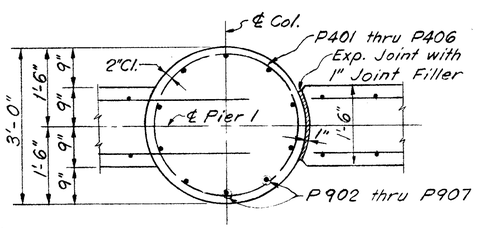

SECTION B-B
TYPICAL COLUMN SECTION

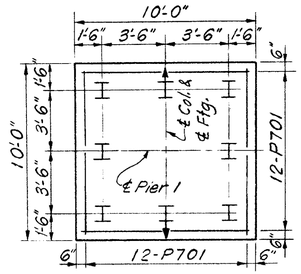

TYPICAL FOOTING PLAN

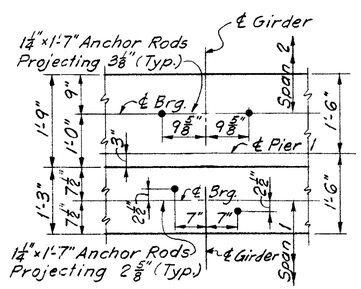

ANCHOR ROD PLAN
Girders A thru E shown
Girders F thru K opposite hand

For Location of 2" Galv. Metal Conduit See Sh. No. 216.

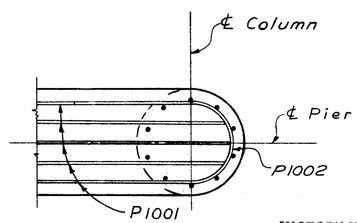

SECTION H-H

MICROFILMED
FEB 20 1985

HAZELET & ERDAL
CONSULTING ENGINEERS
CINCINNATI, OHIO

PIER 1

BRIDGE NO. HAM-71-0203

DESIGNED	DRAWN	TRACED	CHECKED	REVIEWED DATE	REVISED
JYH	TFL		D.W. 3-19-65	JHO 5/20/65	

FED. RD. DIV.	STATE	PROJECT	FISCAL YEAR
2	OHIO		

410
492

HAMILTON COUNTY
HAM - 71 - (1.56) (2.51)

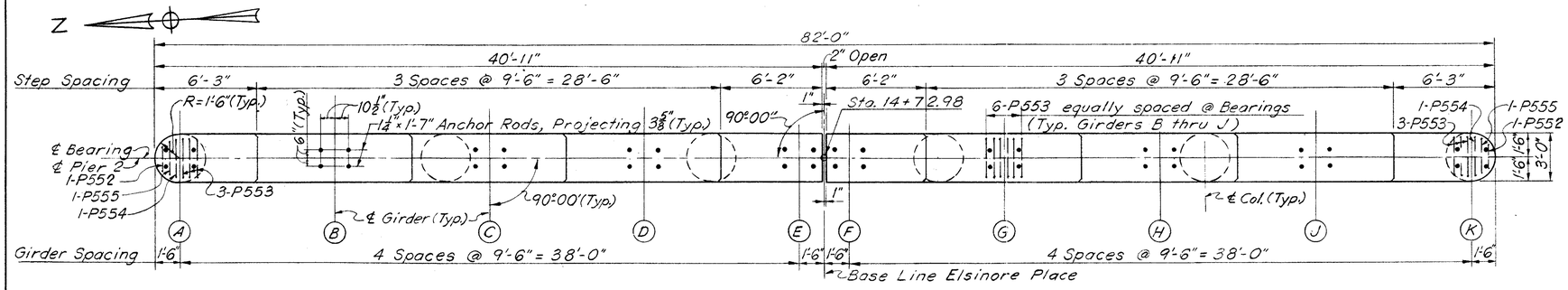

CAP PLAN

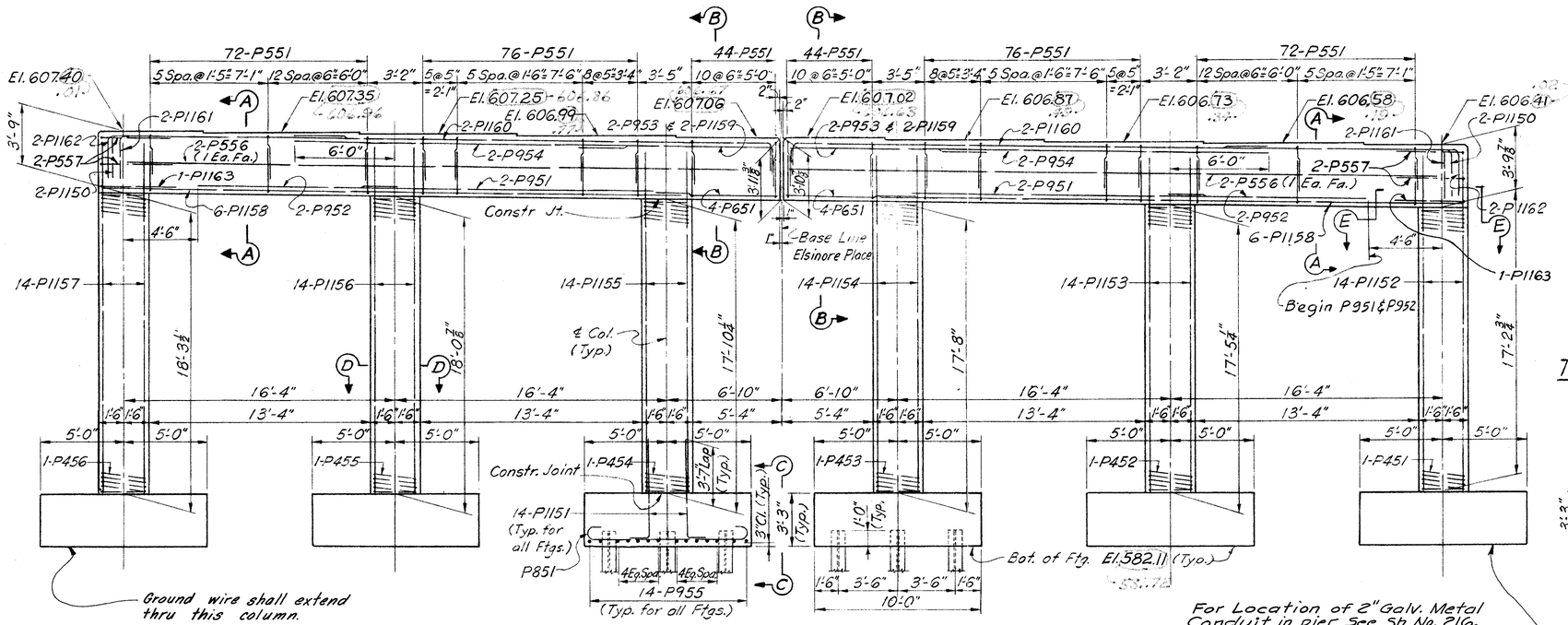

ELEVATION

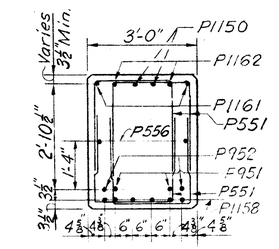

SECTION A-A

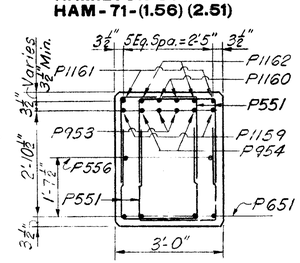

SECTION B-B

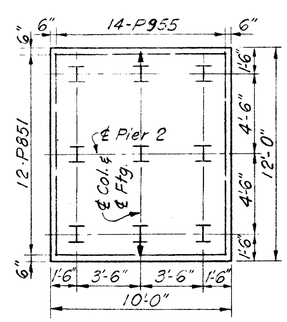

TYPICAL FOOTING PLAN

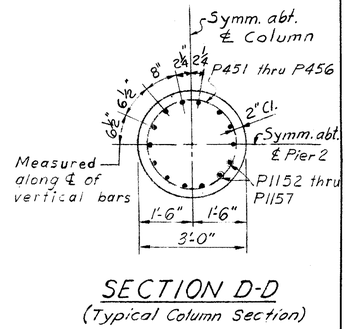

SECTION D-D
(Typical Column Section)

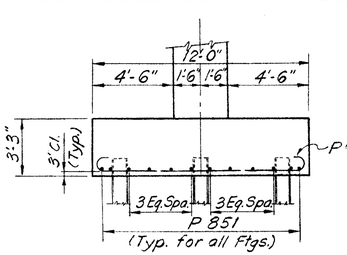

VIEW C-C

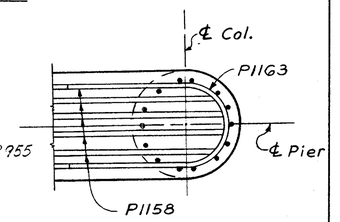

SECTION E-E

Notes:
Special care shall be taken in placing reinforcing steel in the vicinity of the bridge seat so as to avoid interference with the drilling of anchor rod holes.
Concrete in footing shall be Class "E" and concrete in columns and caps shall be Class "C".
All piles shall be 10BP42 Steel H-Piles.
E.F. denotes Each Face.
⟵| denotes batter pile 1:4

HAZELET & ERDAL
CONSULTING ENGINEERS
CINCINNATI, OHIO

PIER 2

BRIDGE NO. HAM - 71-0203

DESIGNED	DRAWN	TRACED	CHECKED	REVIEWED DATE	REVISED
JYH	TFL		D.W. 3-19-65	JHO 5/20/65	

MICROFILMED
FEB 20 1965

FED. RD. DIV.	STATE	PROJECT	FISCAL YEAR
2	OHIO		

411
492

HAMILTON COUNTY
HAM-71-(1.56) (2.51)

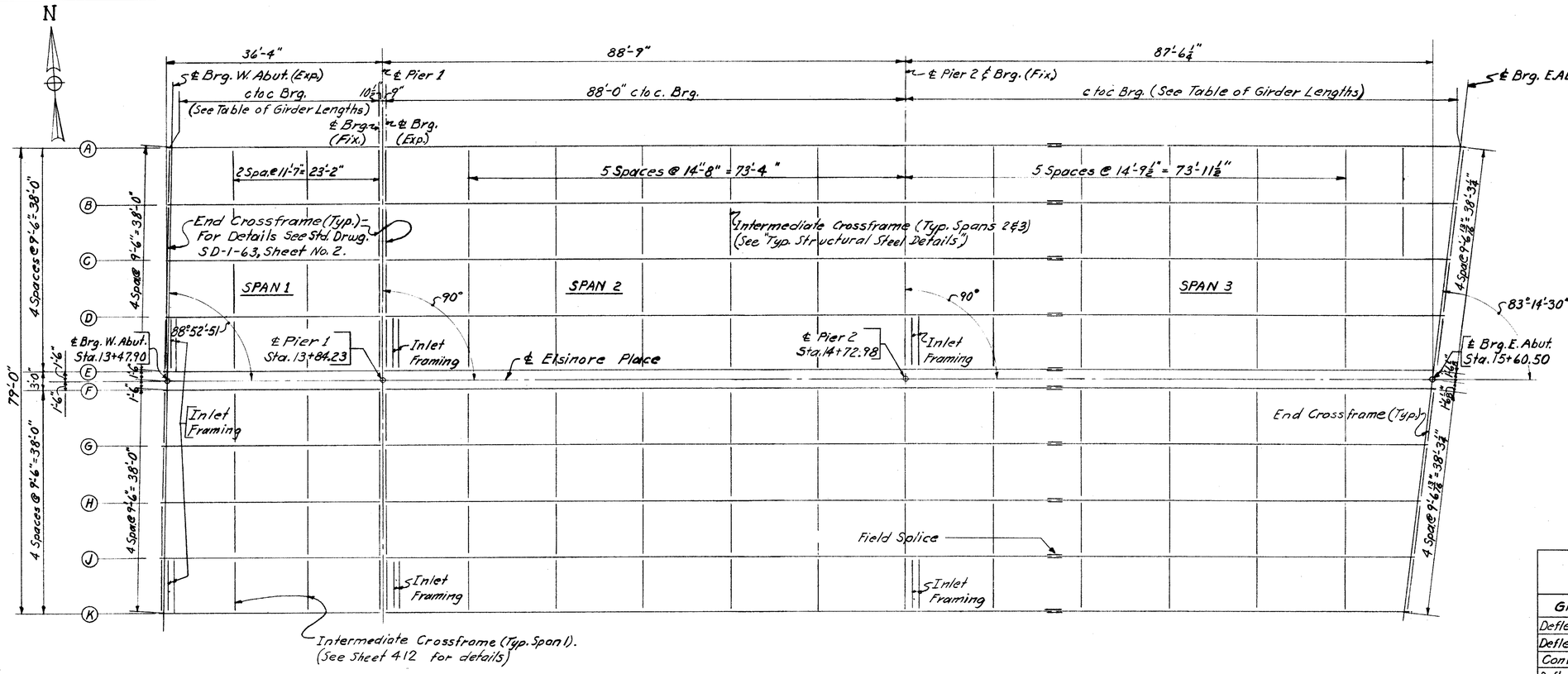

FRAMING PLAN

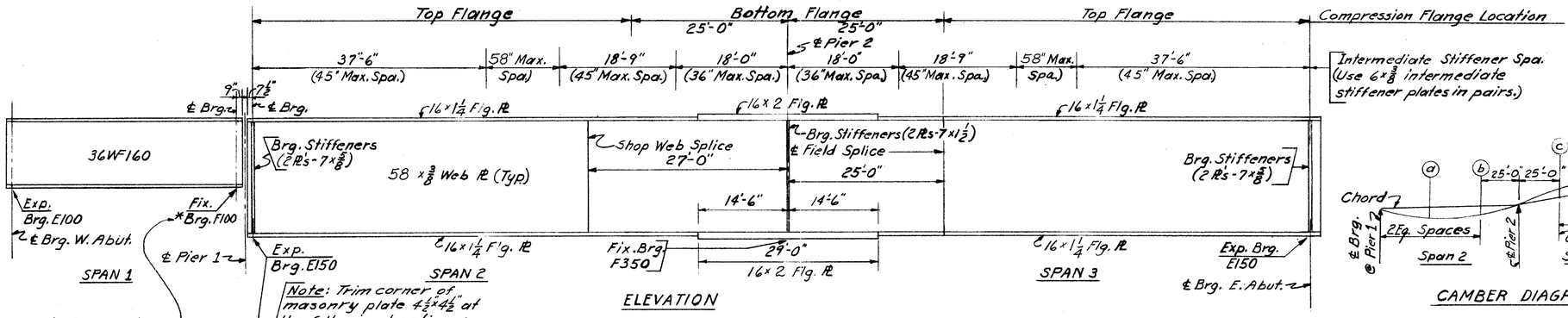

*Note: See Pier 1 details for variation in location of anchor rods.

Note: Trim corner of masonry plate 4½" x 4½" at the following locations: N.E. Corner Girder A S.E. Corner Girder K.

ELEVATION

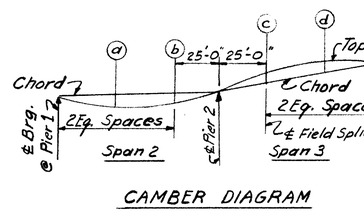

® Note: Minus sign in table indicates camber ordinates measured below chord. No sign indicates camber ordinates measured above chord.

CAMBER DIAGRAM

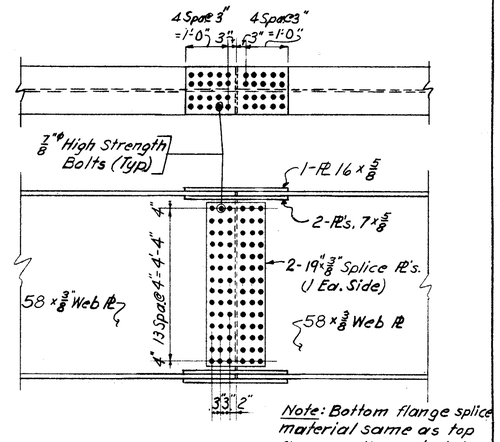

Note: Bottom flange splice material same as top flange splice material.

FIELD SPLICE

DEFLECTION AND CONVEXITY TABLE SPAN 2 @ ℄ OF SPAN

GIRDER	A	B	C	D	E	F	G	H	J	K
Deflection due to Weight of Steel	0	0	0	0	0	0	0	0	0	0
Deflection due to Remaining D.L	⅛	⅛	⅛	⅛	⅛	⅛	⅛	⅛	⅛	¼
Convexity ® & Superelevation Trans.	-⅛	-1	-⅞	-⅞	-¾	-¾	-⅝	-½	-⅜	-⅜
Defl., Convexity & Superelevation Trans.	-1'	-⅞	-¾	-¾	-⅝	-⅝	-½	-⅜	-¼	-⅛

Note: ® Sign denotes "Sag Vertical Curve Effect". No Camber required for beams in span 1.

GIRDER LENGTHS (c to c Brg.)

Girder	A	B	C	D	E	F	G	H	J	K
Span 1	34'-8 3/16"	34'-10 7/16"	35'-0 11/16"	35'-2 7/8"	35'-5 3/16"	35'-5 13/16"	35'-8 7/16"	35'-10 1/4"	36'-0 1/2"	36'-2 3/4"
Span 3	92'-2 7/16"	91'-0 15/16"	89'-11 7/16"	88'-9 15/16"	87'-8 7/16"	87'-4 1/8"	86'-2 5/8"	85'-1 1/8"	83'-11 5/8"	82'-10 1/8"

DEFLECTION AND CAMBER TABLE FOR SPANS 2 & 3

SPAN	2																																	
GIRDER	A		B		C		D		E		F		G		H		J		K		A		B		C		D		E		F		G		H	
LOCATION (See Diagram)	a	b	a	b	a	b	a	b	a	b	a	b	a	b	a	b	a	b	a	b	c	d	c	d	c	d	c	d	c	d	c	d	c	d	c	d
Deflection due to Wt. of Steel	⅛	0	⅛	0	⅛	0	⅛	0	⅛	0	⅛	0	⅛	0	⅛	0	⅛	0	⅛	0	⅛	⅛	⅛	⅛	0	⅛	0	⅛	0	⅛	0	⅛	0	⅛	0	⅛
Deflection due to Remaining D.L.	½	¼	½	¼	½	¼	⅜	¼	⅜	¼	⅜	¼	½	¼	½	¼	½	¼	½	¼	¼	0	½	¼	½	¼	½	¼	½	¼	½	¼	½	¼	½	¼
Convexity & Super. elev. Trans.	-⅛	-¾	-⅛	-¾	-⅛	-⅝	-⅛	-½	-⅛	-½	-⅛	-⅜	-⅛	-⅜	-⅛	-¼	-⅛	-⅛	-⅛	-⅛	0	0	0	0	0	0	0	0	0	0	0	0	0	0	0	0
Defl., Convexity & Superelev. Trans.	-⅛	-½	-1	-½	-¾	-⅜	-⅝	-⅜	-1	-½	-⅝	-⅜	-⅝	-⅜	-⅝	0	0	⅛	0	¼	⅛	⅜	¼	½	⅜	⅝	½	⅝	½	⅝	½	⅝	½	⅝	½	⅝
Required Camber ®	-⅛	-½	-1	-½	-¾	-⅜	-⅝	-⅜	-1	-½	-⅝	-⅜	-⅝	-⅜	-⅝	0	0	⅛	0	¼	⅛	⅜	¼	½	⅜	⅝	½	⅝	½	⅝	½	⅝	½	⅝	½	⅝

MICROFILMED
FEB 20 1965

HAZELET & ERDAL
CONSULTING ENGINEERS
CINCINNATI, OHIO

STRUCTURAL STEEL DETAILS

BRIDGE NO. HAM-71-0203

DESIGNED	DRAWN	TRACED	CHECKED	REVIEWED DATE	REVISED
	H.W.T.		W.J.Z. 3-19-65	JHO 5/20/65	

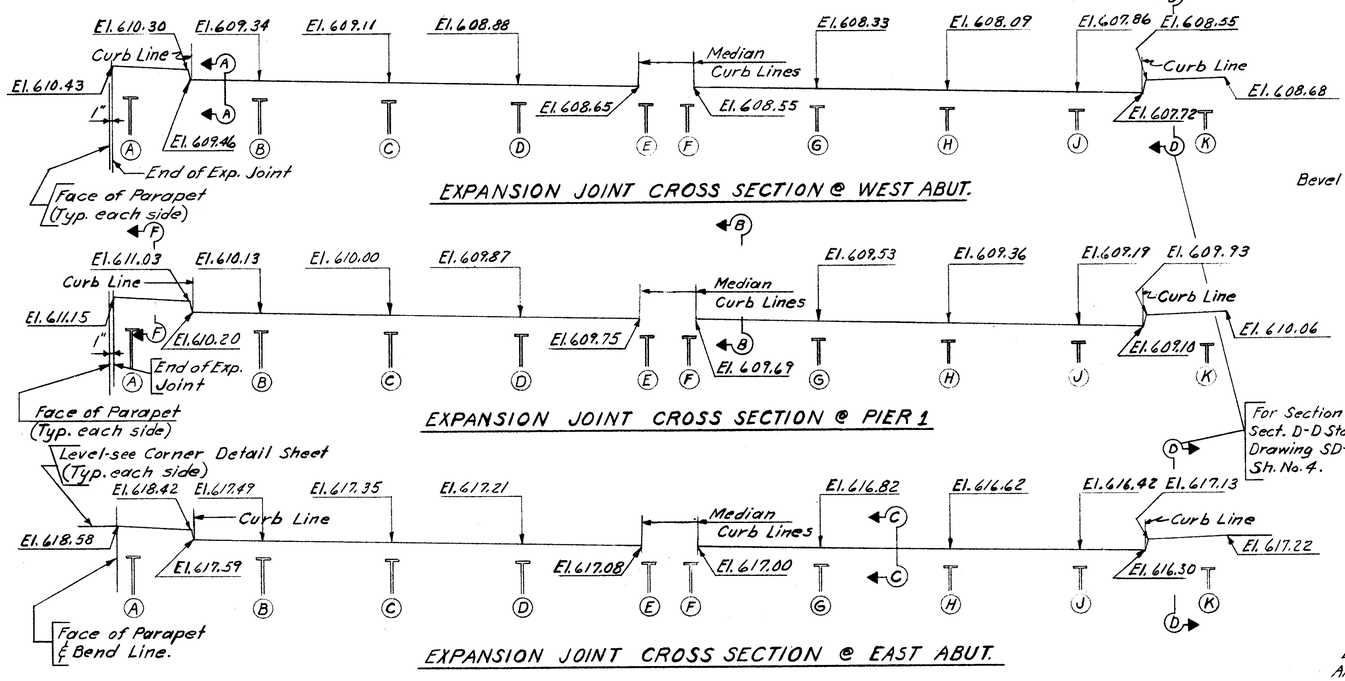

EXPANSION JOINT CROSS SECTION @ WEST ABUT.

EXPANSION JOINT CROSS SECTION @ PIER 1

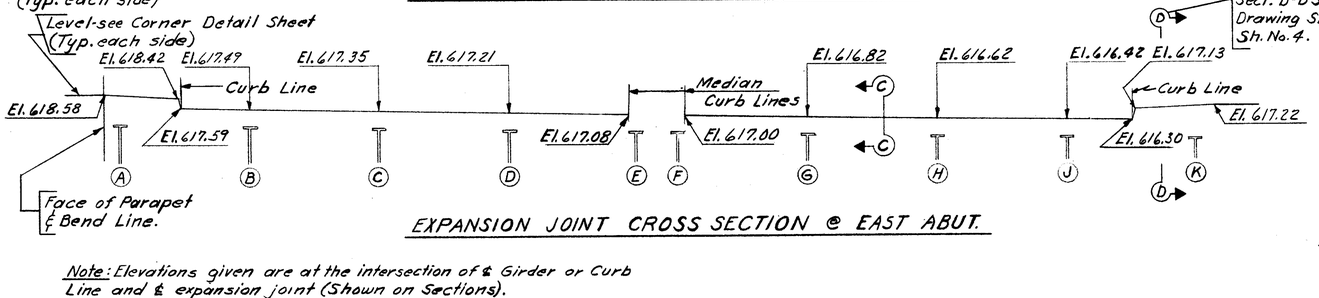

EXPANSION JOINT CROSS SECTION @ EAST ABUT.

Note: Elevations given are at the intersection of ℄ Girder or Curb Line and ℄ expansion joint (Shown on Sections). Roadway expansion joints are to be bent in shop to conform to contour of top of slab.

TYPICAL INTERMEDIATE CROSSFRAME SPAN 1

SECTION F-F

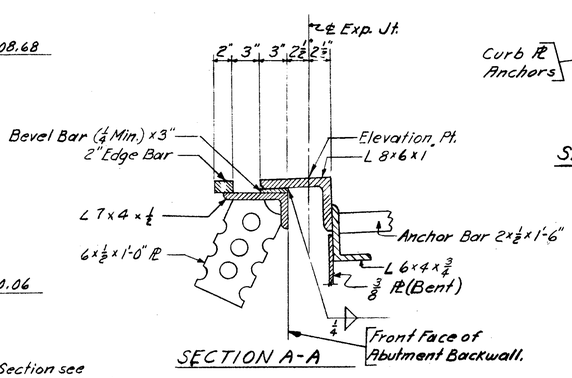

SECTION A-A

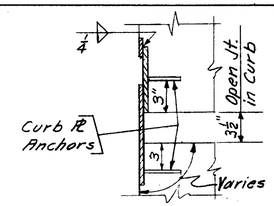

SECTION G-G

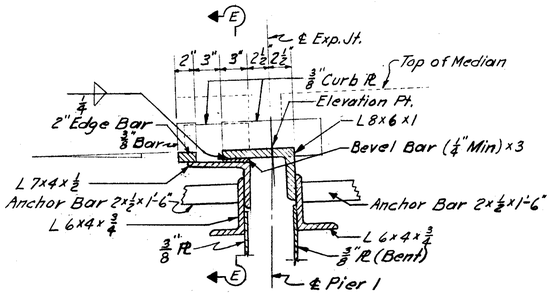

SECTION B-B

SECTION C-C

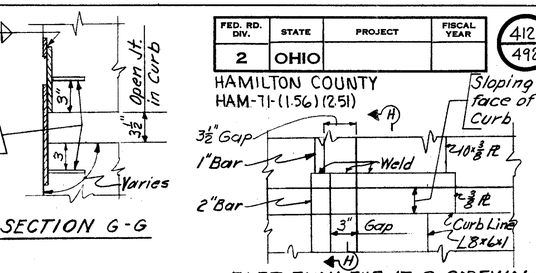

PART PLAN EXP. JT. @ SIDEWALK

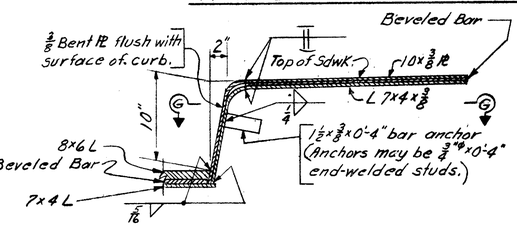

SECTION H-H
(Typ. @ Sidewalk Curbs)

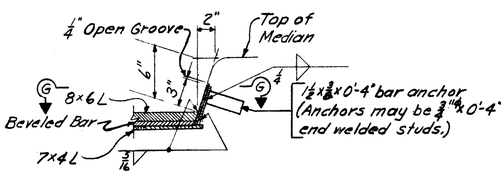

SECTION E-E
(Typ. @ Median Curbs)

Notes: For details not shown see Std. Drwg. SD-1-63, Sheets 2 & 4 and "Typical Structural Steel Details." Sheet No. 444
For details of bearings see Std. Drwgs. FSB-1-62

For Inlet Framing details see drainage details.
Expansion joint openings shown on details are for a normal temperature of 70°F.

MICROFILMED
FEB 20 1985

HAZELET & ERDAL
CONSULTING ENGINEERS
CINCINNATI, OHIO

STRUCTURAL STEEL DETAILS

BRIDGE NO. HAM - 71-0203

DESIGNED	DRAWN	TRACED	CHECKED	REVIEWED DATE	REVISED
	H.W.T.		W.J.L. 3-19-65	J.H.O. 5/20/65	

HAMILTON COUNTY
HAM-71-(1.56)(2.51)

FED. RD. DIV.	STATE	PROJECT	FISCAL YEAR
2	OHIO		

413
492

Concrete above this line to be included with Item S-14 for payment (Typ.)

84'-4"
7'-2" | 33'-0" | 2'-0" | 2'-0" | 33'-0" | 7'-2"
2" | 1'-0" | 5'-10" | 2" | 2" | 5'-10" | 1'-0" | 2"
Constr. Jt. (Level) | S4001 or S4003 | S5001 or S5002 (Typ.) | S6001 or S6019 (Top - Typ.) | 7 Equal Spaces (Typ.) | S5001 or S5004 (Top of Median - Typ.) | S4002 (Typ.) | Slope 1/4"/ft. | Slope varies - 1/2"/ft. min. | Constr. Jt. (Same slope as roadway - Typ.) | S6001 or S6020 (Top - Typ.) | S5001 or S5003 (Typ.) | Constr. Jt. (Level) | S4001 or S4003
.0100'/ft. min. Superelevation (Varies) | .0156'/ft. min. Superelevation (Varies)
t* (Span 2 & 3) | t* (Span 1)
11⅝" | 1'-8" | 10½" | 1½" | 9" | 2"Cl. | 12"Cl. | 11½" | 1'-8"
2" | 3" | S6051 or S6052 (Typ. in north slab) | S6054 (over Pier 2 - Typ.) | S7001 or S7019 (Bott. - Typ.) | Haunch (Typ.) | Profile Grade | 3" | 3" | Base Line Elsinore Place | S7001 or S7020 (Bott. - Typ.) | Monolithic Wearing Surface (Including 1")
S6051 or S6053 (Typ. in south slab) | 2"Galv. Metal Conduit, South side only | 2" | 3"
A | B | C | D | E | F | G | H | J | K
2@1'-3¾" = 2'-7½" | 6 @ 8½" = 4'-3" (Typ.) | 2@1'-3¾" = 2'-7½" | 9'-6" (Typ.) | 1'-6" | 1'-6"

A typical haunch width of 9" shall be used for computing quantity of concrete. However, the haunch width may vary between 6" and 12" provided that the slope shall be not more than 1:4 for a haunch less than 9" wide.

TRANSVERSE SECTION - Typical
(Looking east)

* See Detail B & Note (Sheet 414)

3"Galv. Steel Conduit to be located in sdwk see Lighting Plan Sh. No. 206.

1"Dia. Halfround Drip Groove (Typ.)

2-S4003
4-S6002 (Top) | 4-S7002 (Bott.) | ℄ Lamp Std.
4-S6019 @8"(Top) | 4-S7019@8"(Bott.)
Fascia
23-S4001 @ 1'-6" | 121-S4001 @ 1'-6"
Detail A (See Sheet 414)
Curb Line
3-S6001 @ 8" (Top) | 3-S7001 @ 8" (Bott.)
SPAN 1 | SPAN 2 | SPAN 3
℄ Drain Inlet (See Det. C-Sh. 415)
Metal Exp. Dam
3'-6" | ℄ Drain Inlet (See Detail D - Sheet 415)
3-S6023 (Top) | 3-S6023 (Bott.)
4-S6019 @8"(Top) | 4-S7019 @8"(Bott.) | 3-S6023 (Top) | 3-S6023 (Bott.)
47-S6001 @ 8" (Top) | 47-S7001 @ 8" (Bott.) | 127-S6001 @ 8" (Top) | 127-S7001 @ 8" (Bott.)
3'-6" | 24-S4002 @1'-6" | Sta. 13+84.23 (℄ Pier 1) | Median Curb Lines | Sta. 14+72.98 (℄ Pier 2)
24-S4002 @1'-6" | 118-S4002 @1'-6" | 118-S4002 @ 1'-6"
47-S6001 @8"(Top) | 47-S7001 @8"(Bott.) | 127-S6001 @ 8" (Top) | 127-S7001 @ 8" (Bott.) | 113-S6001 @ 8" (Top) | 113-S7001 @ 8" (Bott.)
4-S6020 @8"(Top) | 4-S7020@8(Bott.)
4-S6020 @ 8" (Top) | 4-S7020 @ 8" (Bott.) | 4-S6020 @8"(Top) | 4-S7020 @8"(Bott.)
3-S6001 @ 8" (Top) | 3-S7001 @ 8" (Bott.)
℄ Drain Inlet (See Detail E - Sheet 415)
3'-6" | ℄ Drain Inlet (See Detail F - Sheet 415)
2-S6001 (Top) | 2-S7001 (Bott.)
3-S6023 (Top) | 3-S6023 (Bott.) | 3-S6023 (Top) | 3-S6023 (Bott.)
℄ Downspout
Curb Line
9" (Typ.)
24-S4001 @1'-6" | 113-S4001 @1'-6"
Fascia
3'-0" | 19'-6" | 19'-6" | 3'-0"
1'-10⅝" | ℄ Drain Inlet (See Typical Drainage Details & Detail G - Sheet 415)
4-S6024 @8"(Top) | 4-S7024@8"(Bott.)
15+21 ℄ Pole TCP 3-30 | 2"Galv. Metal Conduit | 2-S4001
3-S6002 (Top) | 3-S7002 (Bott.)
℄ Brg. - West Abut.
End of Rdwy. Slab
2-S4003
6" | 4½" | ℄ Pier 1
3-S6023 (Top) | 3-S6023 (Bott.)
4-S6024 @8"(Top) | 4-S7024 @8"(Bott.)
3½" | ℄ Pier 2
℄ Lamp Standard (Typ.) See Det. C & Sec. A-A. For location, see Sh. 414
1'-11" Min. Lap for #6 Bars
1'-7" Min. Lap for #5 Bars
℄ Girder K | ℄ Brg. - E. Abut. | Edge of rdwy. slab | 3-1⅜"
SLAB OFFSET AT S.E. CORNER
℄ Brg. - East Abut.
Corner Detail (See Sheet 414)
R = 35' | Sta. 15+30.64

2 Sets of 2 = 4-S5001 (Top of Median) | Sta. 13+47.90 (℄ Brg. W. Abut.)
2 Sets of 31 = 62-S6051 (Top) | 2 Sets of 40 = 80-S6055 (Bott.)
2 Sets of 6 = 12-S5001 (Top of Sdwk)
2 Sets of 31 = 62-S6055 (Top) | 2 Sets of 40 = 80-S6055 (Bott.)
2 Sets of 2 = 4-S5001 (Top of Median) | 88°52'51"
5 Sets of 31 = 155-S6052 (Top) | 5 Sets of 40 = 200-S6052 (Bott.)
5 Sets of 31 = 155-S6053 (Top) | 5 Sets of 40 = 200-S6053 (Bott.)
3'-6" | 3'-6"
5 Sets of 6 = 30-S5002 (Top of Sdwk)
5 Sets of 6 = 30-S5003 (Top of Sdwk)
3'-6" | 3'-6"
2-S6021 (Top) | 2-S7021 (Bott.)
S6009 & S6010 (Each 2 bars - Top) | S7009 & S7010 (Each 2 bars - Bott.)
2-S6011 (Top) | 2-S7011 (Bott.)
S6012 thru S6018 (Top) | S7012 thru S7018 (Bott.)
2-S6022 (Top) | 2-S7022 (Bott.)
End of Rdwy. Slab
Edge of Sdwk. Slab (Typ.)
5 Sets of 2 = 10-S5004 (Top of Median) | 83°14'30"
Base Line Elsinore Place
S6003 thru S6008 (Top) | S7003 thru S7008 (Bott.)
Corner Detail (See Sheet 414)
℄ Lamp Std.
2-S4001

PLAN
(Parapet not shown)

Notes:
For Drainage Details, see Sheet 415
For Railing Details & Spacing of bars in parapet, see Sheet 414
For Lighting details not shown, see Sheets 216.

Work this sheet with Sheet 414

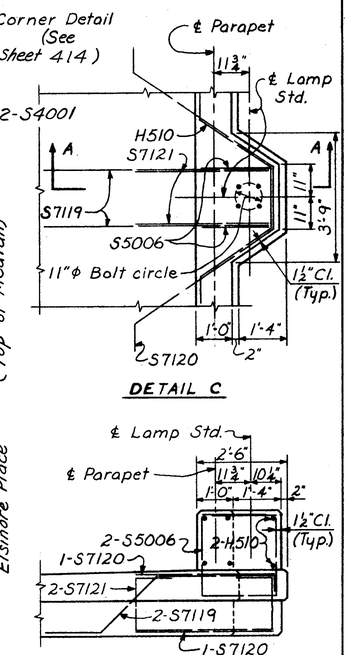

DETAIL C

SECTION A-A

HAZELET & ERDAL
CONSULTING ENGINEERS
CINCINNATI, OHIO

SUPERSTRUCTURE DETAILS

BRIDGE NO. HAM-71-0203

DESIGNED	DRAWN	TRACED	CHECKED	REVIEWED DATE	REVISED
	GW		D.W. 3-19-65	JHo 5/20/65	

MICROFILMED
FEB 20 1965

FED. RD. DIV.	STATE	PROJECT	FISCAL YEAR
2	OHIO		

414
492

HAMILTON COUNTY
HAM-71-(1.66)(2.51)

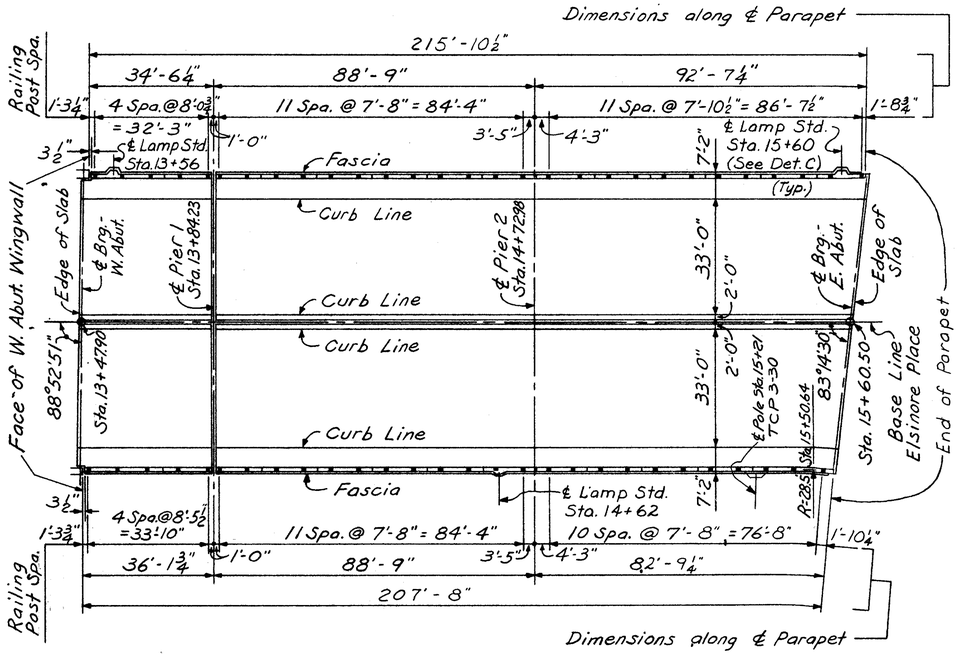

PLAN - RAILING

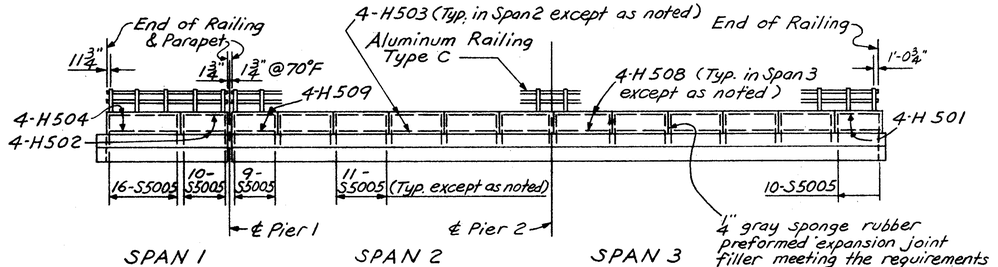

ELEVATION - NORTH RAILING

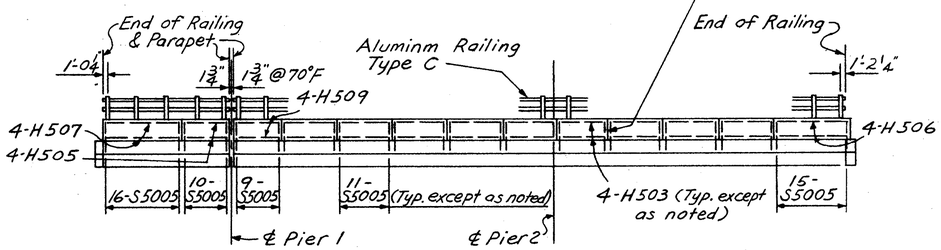

ELEVATION - SOUTH RAILING

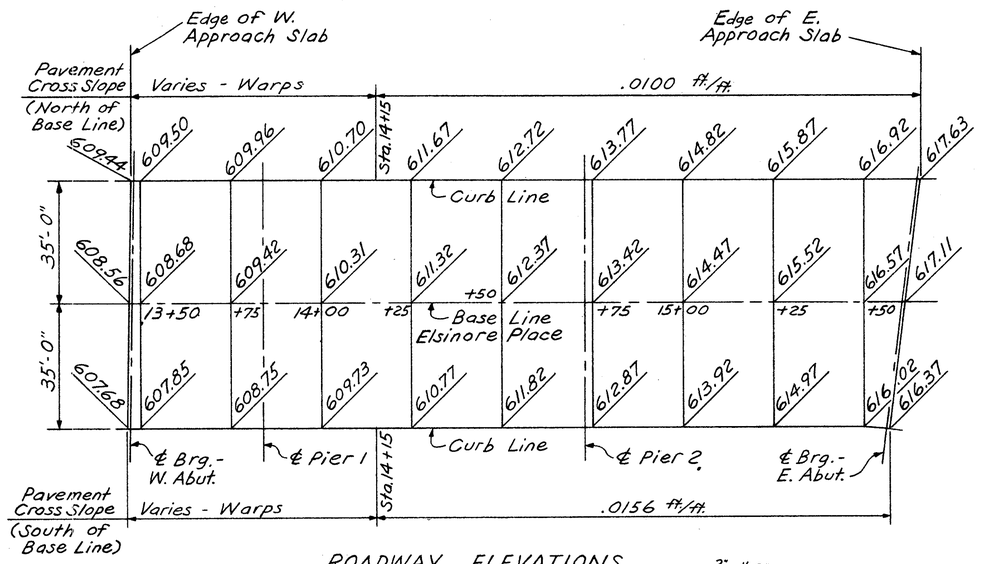

ROADWAY ELEVATIONS

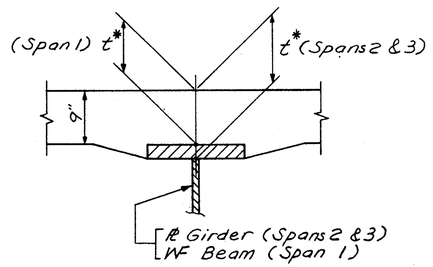

DETAIL B

SLAB THICKNESS t *			
Girder	Span 1		Spans 2 & 3
	℄ Brg.	℄ Span	
A	10⅛"	9"	10 3/8"
B	10	9	10 3/8
C & D	10	9⅛	10 3/8
E & F	10	9¼	10 3/8
G	10	9 3/8	10 3/8
H	10	9½	10 3/8
J	10	9 5/8	10 3/8
K	10⅝	10¼	11 3/8

Note
Slab thickness includes 1" monolithic wearing surface.

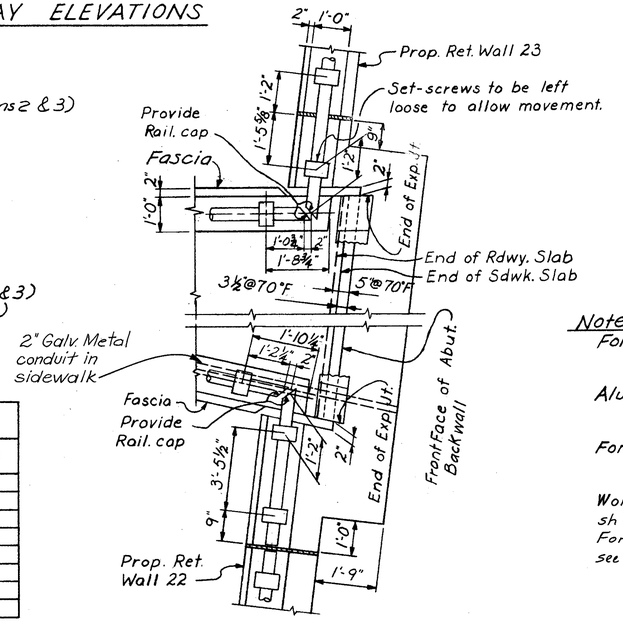

CORNER DETAIL
(N.E. & S.E. Quadrants)

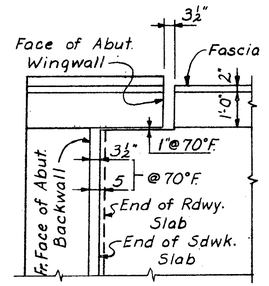

DETAIL A
N.W. Quadrant
(S.W. Quad. similar, opp. hand)

Notes
For railing details not shown, see Standard Drawing No. AR-1-57.
Aluminum tube railing should be bent to the curvature of the ℄ of Parapet.
For Bridge Lighting Details, see Sheet 216.

Work this drawing with Lighting Plan sh no. 206
For conduit expansion detail at abutments see Sh. no. 214.

Work this sheet with Sheet 413

* This is the nominal dimension. The quantity of deck concrete to be paid for shall be based on this dimension, even though deviation from it may be necessary because the top flange of the beam may not have the exact camber or conformation required to place it parallel to the finished grade. Deduction shall be made for volume of encased steel plates as per Sec. S-1.25 of the Construction and Material Specification.

MICROFILMED
FEB 20 1985

HAZELET & ERDAL
CONSULTING ENGINEERS
CINCINNATI, OHIO

RAILING DETAILS

BRIDGE NO. HAM-71-0203

DESIGNED	DRAWN	TRACED	CHECKED	REVIEWED DATE	REVISED
	GW		D.W. 3-1965	JHO 5/20/65	

FED. RD. DIV.	STATE	PROJECT	FISCAL YEAR
2	OHIO		

415
492

HAMILTON COUNTY
HAM-71-(1.56)(2.51)

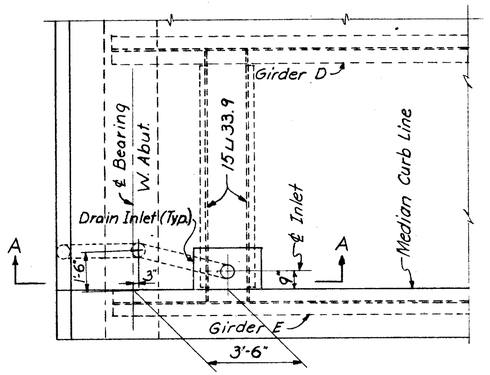

DETAIL C
DETAIL E SIMILAR

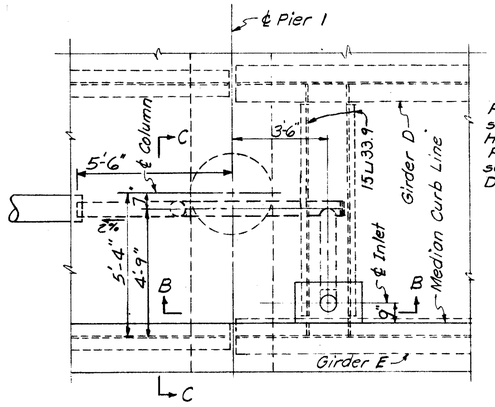

DETAIL D

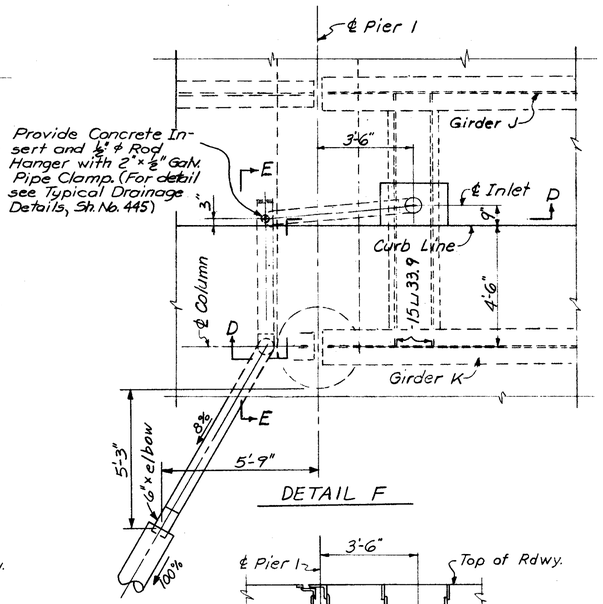

DETAIL F

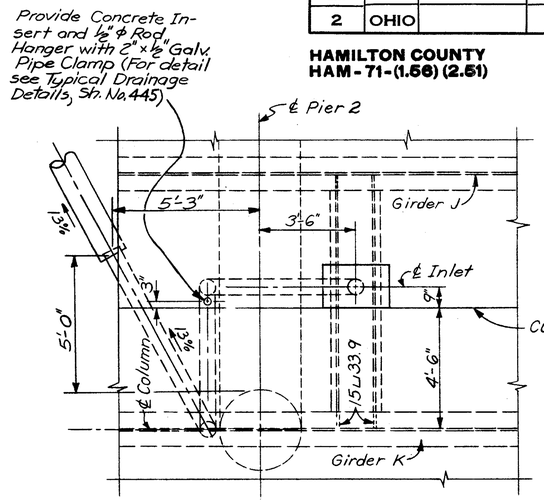

DETAIL H

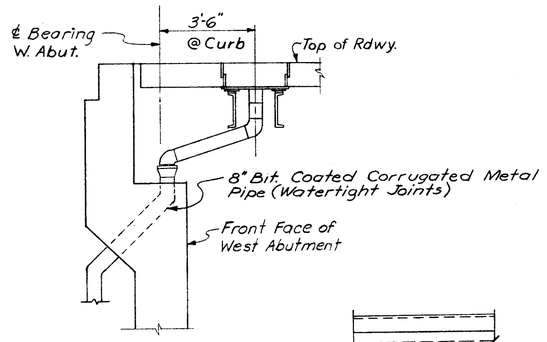

SECTION A-A

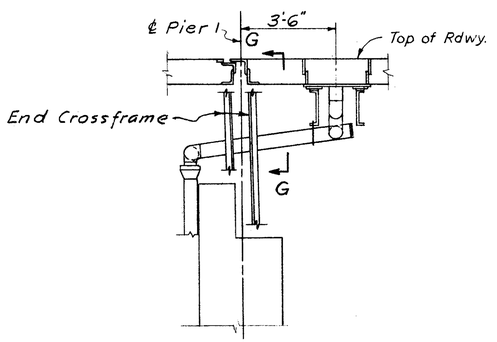

SECTION B-B

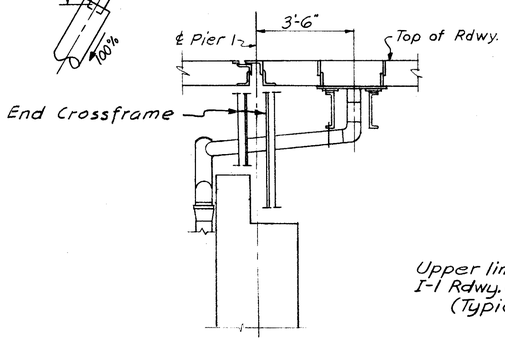

SECTION D-D

DETAIL -G

For flow line elevation see Roadway Drainage Drawing Sh. No. 95 thru 97 (Typ.)

Note:
For details not shown, see Typical Drainage Details. Sh. No 445
6" Pipe shall be used for all downspouts.

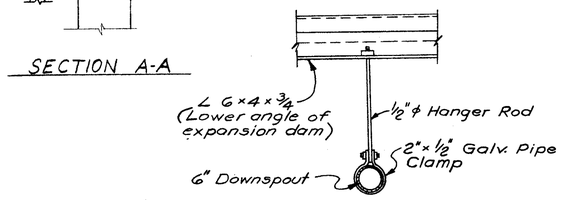

SECTION G-G

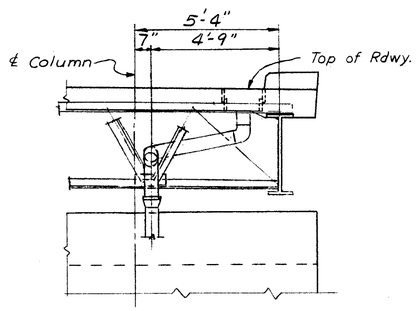

SECTION C-C

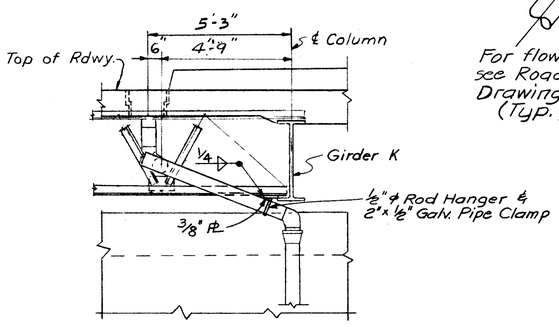

SECTION E-E

Work this Sheet with Sheet 413

HAZELET & ERDAL
CONSULTING ENGINEERS
CINCINNATI, OHIO

DRAINAGE DETAILS

BRIDGE NO. HAM-71-0203

DESIGNED	DRAWN	TRACED	CHECKED	REVIEWED DATE	REVISED
	C.B.H.		D.W. 3-17-65	JHo 5/20/65	

MICROFILMED
FEB 20 1985

HAMILTON COUNTY
HAM - 71 - (1.56) (2.51)

FED. RD. DIV.	STATE	PROJECT	FISCAL YEAR
2	OHIO		

416
492

SUPERSTRUCTURE

Mark	Type	No. Reqd	Length	Weight
S4001	21	285	10'-9"	2047
S4002	63	284	5'-2"	980
S4003	21	4	9'-7"	26
S5001	Str.	32	19'-6"	651
S5002	↑	30	37'-6"	1173
S5003	↓	30	35'-7"	1113
S5004	Str.	20	36'-6"	761
S5005	14	304	5'-9"	1823
S6001	Str.	596	41'-6"	37150
S6002	↑	7	40'-3"	423
S6003		1	37'-8"	57
S6004		1	31'-8"	48
S6005		1	25'-8"	39
S6006		1	20'-6"	31
S6007		1	13'-8"	21
S6008		1	7'-8"	12
S6009		2	41'-8"	125
S6010		2	41'-10"	126
S6011		2	41'-11"	126
S6012		1	42'-0"	63
S6013		1	37'-9"	57
S6014		1	31'-6"	47
S6015		1	25'-6"	38
S6016		1	19'-6"	29
S6017		1	13'-6"	20
S6018		1	7'-6"	11
S6019		12	38'-0"	685
S6020		12	33'-0"	595
S6021		2	41'-8"	125
S6022		2	42'-3"	127
S6023		36	5'-0"	270
S6024		12	6'-6"	117
S6051		142	19'-3"	4106
S6052		355	37'-9"	2013
S6053		355	36'-6"	1946
S6054	↓	74	42'-0"	4668
S6055	Str.	142	19'-8"	4195
S7001	Str.	596	41'-5"	50455
S7002	Str.	7	40'-2"	575

Mark	Type	No. Reqd	Length	Weight
S7003	Str.	1	37'-7"	77
S7004	↑	1	31'-7"	65
S7005		1	25'-7"	52
S7006		1	20' 7"	42
S7007		1	13'-7"	28
S7008		1	7'-7"	16
S7009		2	41'-7"	170
S7010		2	41'-9"	171
S7011		2	41'-10"	171
S7012		1	41'-11"	86
S7013		1	37'-5"	76
S7014		1	31'-5"	64
S7015		1	25'-5"	52
S7016		1	19'-5"	40
S7017		1	13'-5"	27
S7018		1	7'-5"	15
S7019		12	38'-0"	932
S7020		12	32'-11"	807
S7021		2	41'-7"	170
S7022	↓	2	42'-2"	172
S7024	Str.	12	6'-6"	159
* H501	Str.	4	13'-4"	
H502	↑	4	12'-7"	
H503		56	14'-11"	
H504		4	20'-10"	
H505		4	13'-2"	
H506		4	20'-8"	
H507		4	22'-0"	
H508	↓	20	15'-4"	
H509	Str.	8	12'-0"	
* H510		58	8	8'-0"
S5006	4	8	9'-9"	81
S7119	49	8	7'-1"	116
S7120	58	8	12'-6"	204
S7121	61	8	8'-0"	131
			Total	120788

WEST ABUTMENT

Mark	Type	No. Reqd	Length	Weight
A502	8	84	6'-0"	526
A503	Str.	11	16'-9"	192
A504	↑	10	17'-2"	179
A505		6	17'-8"	111
A506		9	17'-11"	168
A507		8	18'-5"	154
A508		43	28'-0"	1256
A509		34	27'-6"	975
A510		23	29'-0"	696
A511		4	6'-9"	28
A512	↓	4	6'-0"	25
A513	Str.	16	5'-6"	92
A514	14	10	10'-7"	110
A515	18	8	3'-0"	25
A601	8	8	10'-11"	131
A602	20	8	9'-9"	117
A603	8	68	9'-5"	962
A604	20	76	7'-6"	856
A605	8	4	9'-11"	60
A606	Str.	20	6'-9"	203
A607	↑	12	4'-6"	81
A608	↓	54	30'-0"	2433
A609	Str.	2	7'-0"	21
A610	62	5	10'-8"	80
A801	44	86	17'-1"	3923
A1002	18	172	11'-2"	8264
A1003	↑	22	14'-5"	1364
A1004		19	14'-8"	1199
A1005		12	15'-2"	783
A1006		19	15'-5"	1261
A1007	↓	15	15'-11"	1027
A1008	22	6	11'-3"	290
A1101	Str.	86	13'-0"	5940
* H511	Str.	8	7'-6"	
			Total	33532

EAST ABUTMENT

Mark	Type	No. Reqd	Length	Weight
A551	Str.	63	3'-6"	230
A552	↑	44	19'-6"	895
A553		44	20'-3"	929
A554		38	20'-9"	822
A555	↓	2	7'-8"	16
A556	Str.	2	8'-6"	18
A557	39	6	5'-1"	32
A558	40	7	30'-2"	220
A559	↑	7	29'-0"	211
A560		7	27'-10"	203
A561		7	26'-8"	194
A562		7	25'-6"	186
A563		7	24'-4"	177
A564		7	23'-4"	170
A565		7	22'-2"	161
A566		7	20'-8"	151
A567		7	19'-4"	141
A568		7	17'-10"	130
A569		7	16'-6"	120
A570		7	15'-0"	109
A571	↓	7	13'-8"	99
A572	40	7	12'-4"	90
A573	Str.	11	26'-4"	302
A574	↑	11	35'-2"	403
A575		11	28'-7"	328
A576	↓	2	6'-9"	19
A577	Str.	2	6'-1"	18
A578	Str.	2	20'-10"	43
A579	19	6	7'-8"	48
A580	18	6	4'-4"	27
A581	18	6	4'-4"	27
A582	18	6	2'-4"	15
A583	Str.	12	3'-1"	39
A584	Str.	2	3'-4"	7
A585	1	6	5'-5"	34
A586	1	11	3'-6"	40
A651	20	72	10'-0"	1081
A652	8	72	10'-0"	1081
A656	18	92	5'-1"	702
A657	Str.	74	16'-0"	1778
A658	Str.	12	32'-0"	577
A659	20	13	10'-10"	212
A660	8	13	10'-4"	202
A661	Str.	16	9'-1"	218
A662	Str.	20	7'-0"	210

Mark	Type	No. Reqd	Length	Weight
A751	Str.	34	27'-9"	1929
A752	Str.	34	36'-6"	2537
A753	Str.	34	31'-9"	2206
A851	44	140	21'-7"	8068
A852	↑	14	8'-9"	327
A853		28	22'-4"	1670
A854		14	21'-9"	813
A855		14	20'-0"	748
A856		14	18'-4"	685
A857		14	16'-5"	614
A858		14	14'-7"	545
A859		14	12'-10"	480
A860		14	11'-1"	414
A861	↓	14	9'-4"	349
A862	44	14	7'-1"	265
A951	Str.	93	32'-7"	10303
A1052	22	21	18'-5"	1664
A1053	45	21	29'-4"	2681
* H552	Str.	4	4'-4"	
* H553	Str.	4	1'-7"	
			Total	49013

Mark	a	Mark	a
A801	16'-0"	A857	15'-4"
A851	20'-6"	A858	13'-6"
A852	7'-8"	A859	11'-9"
A853	21'-3"	A860	10'-0"
A854	20'-8"	A861	8'-3"
A855	18'-11"	A862	6'-0"
A856	17'-3"		

Type 44

PIER 1

Mark	Type	No. Reqd	Length	Weight
P401	64	1	14'-1 7/8"	429
P402	↑	1	14'-5"	436
P403		1	14'-8 1/8"	447
P404		1	14'-10 3/4"	453
P405		1	15'-1 3/8"	459
P406	64	1	15'-5"	466
P501	1	20	6'-0"	125
P502	1	24	8'-0"	201
P503	1	1	9'-8"	10
P504	1	3	16'-6"	52
P505	Str.	4	39'-3"	164
P506	6	4	10'-1"	42
P507	1	256	6'-9"	1802
P508	Str.	12	5'-9"	72
P509	Str.	36	9'-1"	341
P510	Str.	12	4'-6"	56
P511	59	6	5'-9"	36
P512	1	92	7'-10"	752
P513	Str.	2	3'-7"	7
P514	1	38	3'-8"	145
P515	1	2	3'-4"	7
P516	18	48	3'-10"	192
P517	18	2	3'-4"	7
P601	Str.	32	17'-4"	833
P602	↑	8	12'-5"	149
P603		2	6'-3"	19
P604		2	5'-3"	16
P605	↓	2	6'-0"	18
P606	Str.	8	7'-6"	90
P701	43	144	11'-2"	3287
P901	18	60	6'-3"	1275
P902	Str.	10	17'-7"	598
P903	↑	10	17'-8"	601
P904		10	18'-0"	612
P905		10	18'-2"	618
P906		10	18'-5"	626
P907	Str.	10	18'-9"	638
P1001	Str.	10	35'-0"	1506
P1002	6	2	10'-1"	87
P1101	8	6	43'-9"	1395
P1102	8	4	42'-11"	912
			Total	19981

PIER 2

Mark	Type	No. Reqd	Length	Weight
P451	64	1	17'-2 3/4"	520
P452	↑	1	17'-5 1/4"	526
P453		1	17'-8"	532
P454		1	17'-10 3/4"	539
P455	↓	1	18'-0 3/8"	545
P456	64	1	18'-3 2"	550
P551	1	384	7'-0"	2804
P552	↑	2	4'-6"	9
P553		54	5'-5"	305
P554	↓	2	5'-4"	11
P555	1	2	5'-2"	10
P556	Str.	4	39'-3"	164
P557	6	4	10'-1"	42
P651	Str.	8	7'-6"	90
P751	43	72	11'-8"	2243
P951	Str.	4	27'-3"	371
P952	Str.	4	12'-0"	163
P953	18	4	12'-7"	172
P954	18	4	29'-8"	404
P955	43	84	14'-0"	3998
P1150	18	4	10'-11"	232
P1151	18	84	7'-1"	3161
P1152	Str.	14	20'-8"	1537
P1153	↑	14	20'-5"	1519
P1154		14	20'-8"	1537
P1155		14	20'-9"	1543
P1156		14	21'-0"	1562
P1157	↓	14	21'-7"	1605
P1158	Str.	12	35'-0"	2231
P1159	18	4	12'-10"	273
P1160	18	4	29'-9"	632
P1161	8	4	42'-11"	912
P1162	8	4	43'-9"	930
P1163	6	2	10'-8"	113

REPLACEMENT BARS

Mark	Type	No. Reqd	Length
Re401	Str.	1	5'-3"
Re501		2	5'-7"
Re601		4	5'-11"
Re701		4	6'-3"
Re801		2	6'-6"
Re901		2	6-10"
Re1011	↓	2	7'-3"
Re1101	Str.	2	7'-6"

Pier #2 Total 31785

Total wgt of reinf steel = 255099 lbs

Type	Mark	a	b	c	d	e	f	g	h	i
21	S4001	1'-3¼"	1'-3½"	1'-0"	1'-3¼"	6'-7"	3"	-	-	-
	S4003	1'-3¼"	1'-3½"	1'-0"	1'-3¼"	5'-5"	3"	-	-	-
63	S4002	1'-6"	4"	1'-0"	1'-0⅛"	1'-0"	4"	1'-0"	1'-0⅛"	1'-0"
58	S7120	1'-9"	2'-8⅛"	4'-7⅝"	2'-8⅛"	0'-9"	3'-9"	3'-9"	4'-7⅝"	0'-9"
	H510	1'-9"	1'-4½"	2'-4½"	1'-4½"	0'-9"	1'-1"	1'-11"	2'-4½"	0'-9"

Types 21, 63 & 58

Mark	a	b	c	d
A602	2'-1½"	6'-9"	3'-0"	2'-1½"
A604	2'-1½"	4'-6"	3'-0"	2'-1½"
A651	1'-2¾"	6'-6"	3'-6"	1'-2¾"
A659	1'-2¾"	7'-4"	3'-6"	1'-2¾"

Type 20

Type	Mark	a	b	c
14	S5005	8"	2'-3"	-
	A514	8"	4'-6"	-
8	A502	1'-5"	3'-5"	1'-5"
	A601	3'-0"	1'-3"	7'-0"
	A603	3'-0"	0'-9"	6'-0"
	A605	3'-0"	0'-9"	6'-6"
	A652	2'-0"	0'-11"	7'-5"
	A660	1'-0"	1'-5"	8'-3"
	P1101	1'-2"	40'-0"	3'-3"
	P1102	1'-2"	39'-2"	3'-3"
	P1161	1'-2"	39'-2"	3'-3"
	P1162	1'-2"	40'-0"	3'-3"
61	S7121	1'-0"	1'-4⅝"	3'-11"

Type	Mark	a	b
18	A515	1'-5"	1'-9"
	A580	1'-6"	3'-0"
	A1002	1'-6"	10'-0"
	A1003	1'-6"	13'-3"
	A1004	1'-6"	13'-6"
	A1005	1'-6"	14'-0"
	A1006	1'-6"	14'-3"
	A1007	1'-6"	14'-4"
	A656	2'-0"	3'-3"
	P516	1'-6"	2'-6"
	P517	1'-6"	2'-0"
	P901	1'-0"	5'-6"

Type	Mark	a	b
18	P953	1'-0"	11'-10"
	P954	1'-0"	28'-11"
	P1151	1'-0"	6'-5"
	P1159	1'-2"	12'-0"
	P1160	1'-2"	28'-11"
	A581	1'-7"	2'-10"
	A582	1'-2"	1'-3"
	P1150	8'-6"	3'-3"

Types 14, 8, 61 & 18

Mark	a	b	c	d
A558	14'-3"	1'-2"	0'-6"	0'-6"
A559	13'-8"	↑	↑	↑
A560	13'-1"			
A561	12'-6"			
A562	11'-11"			
A563	11'-4"			
A564	10'-10"			
A565	10'-3"			
A566	9'-6"			
A567	8'-10"			
A568	8'-1"			
A569	7'-5"			
A570	6'-8"			
A571	6'-0"	↓	↓	↓
A572	5'-4"	1'-2"	0'-6"	0'-6"

Type 40

Mark	a	b
A586	0'-5"	1'-8"
P501	1'-3"	2'-6"
P502	1'-3"	3'-6"
P503	1'-3"	4'-4"
P504	1'-3"	7'-9"
P507	1'-11½"	2'-6"
P512	0'-11"	3'-7"
P514	0'-11"	1'-6"
P515	0'-7"	1'-6"
P551	2'-3"	2'-6"
P552	1'-9"	1'-6"
P553	2'-8"	1'-6"
P554	2'-7"	1'-6"
P555	2'-5"	1'-6"

Type 1

Mark	a	Pitch	No. of Turns
P401	2'-7"	2½"	71
P402	2'-7"	2½"	72
P403	2'-7"	2½"	74
P404	2'-7"	2½"	75
P405	2'-7"	2½"	76
P406	2'-7"	2½"	77
P451	2'-7"	2¾"	86
P452	2'-7"	2¾"	87
P453	2'-7"	2¾"	88
P454	2'-7"	2¾"	89
P455	2'-7"	2¾"	90
P456	2'-7"	2¾"	91

Type 64 (Spiral Bars)

Type	Mark	a	b	Rad.
6	P506	4'-0¾"	3'-0"	1'-3¾"
	P557	4'-0¾"	3'-0"	1'-3¾"
	P1002	3'-7"	3'-3"	1'-1"
	P1163	3'-6"	3'-7"	1'-0⅜"
43	P701	9'-6"	-	-
	P851	9'-6"	-	-
	P955	11'-6"	-	-

Types 6 & 43

Type	Mark	a	b	c	d	e
19	A579	4'-4½"	4'-4½"	0'-5¾"	3'-5"	-
4	S5006	2'-3½"	1'-10"	1'-10"	2'-3½"	2'-1"
22	A1008	6'-5¾"	3'-8¼"	1'-7½"	3'-3½"	-
22	A1052	2'-3"	14'-9"	10'-0"	5'-8¼"	-
45	A1053	2'-3"	22'-8¾"	3'-3"	19'-9"	11'-3"
39	A557	1'-8"	1'-2"	0'-3½"	2'-5¾"	2'-6"

Types 19, 22, 39, 4 & 45

Type	Mark	a	b	c	d	e	f
49	S7119	3'-4"	1'-10½"	1'-4"	1'-4"	0'-6"	1'-6"
59	P511	2'-10"	2'-0"	0'-10"	1'-2"	0'-9½"	-
62	A610	2'-11"	1'-5½"	4'-6"	3'-3"	-	-

Types 49, 59 & 62

Note

The "Length" shown in the steel list for the spiral bars is the distance from the top of the footing to the bottom of the pier cap.
The "No. of Turns" shown is the "Length" divided by the pitch plus 3 turns (total number of closed coils).

* Reinforcing Bars marked H are included in Item S-14 (Railing) for payment.

For bar bending schedule see Sh No. 446

MICROFILMED
FEB 20 1985

HAZELET & ERDAL
CONSULTING ENGINEERS
CINCINNATI, OHIO

STEEL REINFORCEMENT LIST

BRIDGE NO. HAM - 71-0203

DESIGNED	DRAWN	TRACED	CHECKED	REVIEWED DATE	REVISED
	GW		HEE 5-7-65	JHo 5/20/65	

FED. RD. DIV.	STATE	PROJECT	FISCAL YEAR
2	OHIO		

417
492

HAMILTON COUNTY
HAM-71-(1.56)(2.51)

PLAN

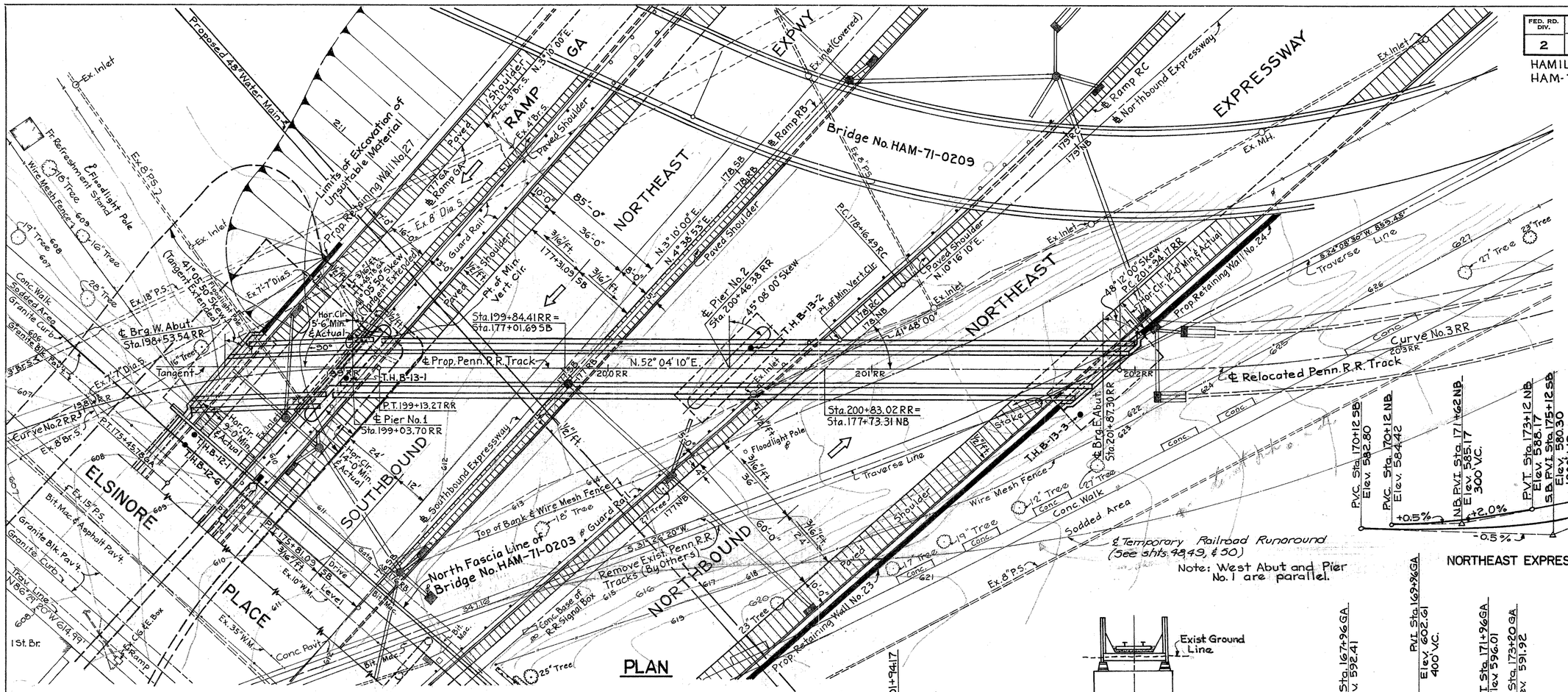
Proposed 48" Water Main
Ex. Inlet
Limits of Excavation of Unsuitable Material
Prop. Retaining Wall No. 27
Ex. 8" P.S.
Fr. Refreshment Stand
Floodlight Pole
Wire Mesh Fence
115 Tree
609
16" Tree
19" Tree
608
607
28" Tree
Conc. Walk
Sodded Area
Granite Curb
606
3.8% S.R.
Ex. 18" P.S.
Ex. 7'-7" Dia. S.
℄ Brg. W. Abut. Sta. 198+53.54 RR
16" Tree
Tangent
41°-05'-50" Skew (Tangent Extended)
Ex. Inlet
Hor. Clr. 5'-6" Min. ℄ Actual
50'
39'
198 WB RR
℄ Prop. Penn. R.R. Track
T.H. B-13-1
Curve No. 2 RR
Ex. 8'-8" P.S.
P.T. 199+13.27 RR
℄ Pier No. 1 Sta. 199+03.70 RR
Hor. Clr. 9'-0" Min. ℄ Actual
Hor. Clr. 22'-0" Min. ℄ Actual
24'
12'
T.H. B-12-1
T.H. B-12-2
P.T. 175+45.78
ELSINORE PLACE
Bit. Mac. & Asphalt Pavt.
Granite Blk. Pavt.
Granite Curb
Trav. Line N 86° 29' 20" W 613.98
608
609
610
611
1 St. Br.
Ex. 35" W.M.
Conc. Pavt.
Ex. 8" P.S.
Ex. Inlet
Ex. 8" Dia. S.
Prop. Retaining Wall No. 26
Paved Shoulder
Ex. 4 Br. S.
Ramp GA
Ramp RC
Ramp RB-1
Bridge No. HAM-71-0209
EXPWY
Ex. Inlet (Covered)
N 3° 10' 00" E.
85'-0"
NORTHEAST
EXPRESSWAY
Northbound Expressway
Ex. MH.
175 RC
175 NB
Ex. 8" P.S.
Ex. Inlet
Ex. 8" Dia. S.
Ramp GA
Guard Rail
Paved Shoulder
Ex. 4 Br. S.
Ramp RB-1
178 SB
178 RB
N. 3° 10' 00" E.
N. 3° 38' 53" E.
36'-0"
3/16" / Ft.
177+31.05 SB
Pt. of Min. Vert. Clr.
Sta. 199+84.41 RR = Sta. 177+01.69 SB
Ex. Inlet
Paved Shoulder
N. 10° 16' 10" E.
PC 178+16.49 RC
48° 12' 00" Skew
PC 201+34.17 RR
Hor. Clr. 12'-0" Min. ℄ Actual
Prop. Retaining Wall No. 24
Traverse Line
627
27" Tree
23" Tree
℄ Pier No. 2 Sta. 200+46.38 RR
45° 06' 00" Skew
T.H. B-13-2
Pt. of Min. Vert. Clr.
176 RC
176 NB
41° 48' 00"
NORTHEAST
Ex. Inlet
Sta. 200+83.02 RR = Sta. 177+73.31 NB
201 RR
200 RR
N. 52° 04' 10" E.
℄ Relocated Penn. R.R. Track
Curve No. 3 RR
205 RR
202 RR
Conc.
624
625
626
Ex. Inlet
Ex. 8" P.S.
Ex. 8" Dia. S.
Ramp GA
Guard Rail
Paved Shoulder
Ex. 4 Br. S.
Ramp RB-1
177 SB
177

FED. RD. DIVISION	STATE	PROJECT	
2	OHIO		

418
492

HAMILTON COUNTY
HAM-71-(1.56)(2.51)

ESTIMATED QUANTITIES

ITEM	TOTAL	UNIT	DESCRIPTION	SUPER-STRUCT-URE	WEST ABUT-MENT	EAST ABUT-MENT	PIER 1	PIER 2	GENERAL
E-2	Lump	Sum	Cofferdams, Cribs & Sheeting						Lump
E-2	902	Cu. Yds.	Unclassified Excavation		24	700	18	160	
S-1	287	Cu. Yds.	Class C Concrete, Piers above Footings				160.4	126.6	
S-1	205	Cu. Yds.	Class E Concrete, Abutments above Footings		106.0	99.0			
S-1	363	Cu. Yds.	Class E Concrete, Footings		103.6	98.7	74.7	86.0	
S-3	220	Sq. Yds.	Type A Waterproofing		112	108			
S-3	41	Lin. Ft.	Waterproofing, Premolded Sealing Strip		20	21			
S-4	61681	Lbs.	Reinforcing Steel		25323	22,174	6321	7863	
S-107	158,000	Lbs.	Structural Steel - Wrought Iron (Deck)	158,000					
S-107	995,000	Lbs.	Structural Steel	995,000					
S-8	1,153,000	Lbs.	Field Painting of Structural Steel	1,153,000					
S-14	13	Lin. Ft.	Railing, Type C (Aluminum Rail, Supports, Concrete Parapet & End Posts)		4	9			
S-16	Lump	Sum	First Test Pile						Lump
S-18	8239	Lin. Ft.	Steel Piles, 10BP42		1994	1,789	1,864	2592	
S-29	124	Cu. Yds.	Porous Backfill		65	59			
S-29	209	Lin. Ft.	6" Standard Pipe Downspout, Wrought Iron, or Hot-dipped Galvanized Steel, Including Specials		51		82	76	
S-29	24	Lin. Ft.	8" Bituminous Coated Helical Perforated Corrugated Metal Pipe (Sec. M6.4(h-c) (Including Specials)		12	12			
S-29	86	Lin. Ft.	8" Bituminous Coated Helical Perforated Corrugated Metal Pipe (Sec. M6.4(h-c) (Including Specials & Sand)		44	42			
S-29	9	Lin. Ft.	12" Reinforced Concrete Sewer Pipe Sec. M-6.6(a) .		9				
S-29	677	Lin. Ft.	8" W. I. Half Round Deck Drain with Specials	677					
Special	36	Cu. Yds.	Asphalt Portland Cement Concrete	36					
Special	170	Lin. Ft.	Prebored Holes		170				

SHEETING AND BRACING: Before construction is started, eight sets of prints showing details of the sheeting and bracing to be used for excavation adjacent to the railroad tracks shall be submitted to the Director for approval by the Department of Highways and by the Railroad Company.

EXCAVATION OF UNSUITABLE MATERIAL: After the unsuitable materials have been removed to elevation 580.0, at the West Abutment as shown on the Site Plan, the Engineer shall make a careful inspection to ascertain that all unsuitable materials have been removed to a stable subsoil. If necessary, the excavation limits shall be extended to remove additional unstable materials and be replaced with materials meeting the requirements of Section E-1 of the Specifications.

Embankment to replace unsuitable material shall be compacted to a minimum of 8" above the bottom of footing elevations before proceeding with structure excavation, (Item E-2, unclassified excavation) at the West Abutment and Pier 1.

GENERAL NOTES

DESIGN SPECIFICATIONS: The design of this structure conforms to the requirements of the Specifications for Steel Railway Bridges of the American Railway Engineering Association, 1964 Edition, except that sections governed by a loaded length of live load of 60 feet or less shall be based on the unit stresses given in the 1961 Edition for ASTM A-7 steel.

Live Load - Cooper's E72.

Impact for diesels without hammer blow.

Concrete Class C - basic unit stress 1,333 psi
Concrete Class E - basic unit stress 1,133 psi
Structural Steel - ASTM A36 basic unit stress 20,000 psi except as noted above. (ASTM A7 or A373 steel not permitted except for piling.) Plates 3/4" to 1-1/2" in thickness that carry stresses shall be silicon killed fine grain practice.
Reinforcing Steel - ASTM A15, A16, A160. Deformed Intermediate or Hard Grade. Basic unit stress 20,000 psi.

CONSTRUCTION SPECIFICATIONS: State of Ohio, Department of Highways, Construction and Material Specifications, 1963, also Supplemental Specification No. S-107 revised February 16, 1965, Supplemental Specification No. S-307 revised 10-1-64 and Standard Drawing AR-1-57 revised 4-2-62, shall govern this project; except as otherwise noted on the plans.

WELDING to be in accordance with American Welding Society Specifications for Welded Highway and Railway Bridges D2.0-63. All welds to be continuous unless otherwise shown. All welders to be qualified in accordance with P. R. R. regulations or other regulations meeting with the approval of the Engineer.

All welds connecting flange plate to web plate must be made by automatic submerged arc welding.

All grinding shall be done in the direction of applied stresses. Transverse tack welds will not be permitted on the tension flange plates.

50% of web flange weld to be subjected to magnetic particle inspection.

Mill scale to be ground off flange plates at web to flange weld.

PILES shall be driven to firm contact with rock. If the length of penetration is approximately equal to the depth to rock according to the bridge foundation investigation report, the firm contact shall be considered as attained when the capacity, according to the formula in Sec. S-18.05, is not less than 45 tons per pile using a 15,000 ft. lb. hammer.

The design of abutments and piers is based on 35 tons per pile.

TIES, RAILS, FASTENINGS and other railroad equipment will be furnished and installed by the Railroad Company.

DOWNSPOUTS shall be 6" standard wrought iron pipe or hot-dipped galvanized steel pipe. Joints shall be made by welding or by the use of a clamp type coupling with a ring gasket. All welding shall be done before galvanizing. Straps or clamps for attaching downspouts shall be wrought iron or hot-dipped galvanized steel. On bolts, galvanizing as called for in Sec. M-10.30 will be considered sufficient.

EXCAVATION: For the purpose of driving battered piles at the East Abutment (shown hatched on Sheet No. 417) shall be included with "Unclassified Excavation" for payment.

DECK WATERTIGHTNESS: The deck shall be watertight.

TYPE A WATERPROOFING shall be applied to the back of the abutments from top of footings to top of backwall and to finished ground line.

ADDITIONAL NOTES: For additional notes see Notes 2, 6 & 8 General Notes, Typical Drawing No. 443.

ITEM SPECIAL - ASPHALT PORTLAND CEMENT CONCRETE

Use:
This concrete is to be used as a protection course over membrane waterproofing and as a protection course over metal decks of railroad bridges.

Materials:
1. Emulsified Asphalt shall be in accordance with Federal Specifications SS-A-674b.
2. Fine aggregate shall be as specified for concrete.
3. Coarse aggregate shall be as specified for concrete with the following gradation:

Sieve Size (Inches)	Percent Passing by Weight
3/4"	100
1/2"	90 - 100
3/8"	40 - 70
No. 4	0 - 15

Mix:
The asphalt concrete shall be proportioned by volume, 1 part portland cement, 2 parts fine aggregate, 3 parts coarse aggregate, 1-1/2 parts emulsified asphalt Type SS-1 and minimum amount of water required to make a workable mix. The dry materials shall first be thoroughly mixed then the water added to produce a uniform mixture after which the emulsified asphalt is added and mixing continued until of uniform color.

Application:
Work shall be done only when the temperature will be above 40°F. for a period of at least 24 hours after starting application.

Surface to be covered shall be thoroughly cleaned and given a uniform primer or bond coating of Emulsified Asphalt Type RS-1, using not less than 1 gallon per 80 sq. ft.

The asphalt concrete shall then be screeded over the primed area to the thickness indicated on the drawings. After the asphalt concrete has set sufficiently to allow a man to walk upon it without indentation but prior to final set, it shall be given a uniform coating of emulsified asphalt type RS-2 applied at the rate of one gallon per 50 sq. ft. This final coating shall be covered with clean sand.

METHOD OF MEASUREMENT:

The yardage to be paid for shall be the number of cubic yards as determined by calculations from plan dimension, in place, completed and accepted.

BASIS OF PAYMENT:

The yardage measured as provided above shall be paid for at the contract unit price per cubic yard bid for "Item Special Asphalt Portland Cement Concrete" which price and payment shall constitute full compensation for furnishing, placing, finishing and curing, and all labor, equipment, tools and incidentals necessary to complete the item.

PREBORED HOLES: Where directed by the Engineer, piles of West Abutment as indicated on the footing plan Sheet No. 419 adjacent to the existing 8' Brick Sewer, shall be started in 12" minimum diameter prebored holes to a minimum depth of 1'-0" below the bottom of sewer. Payment shall include the preboring of the hole and also filling of the hole with materials conforming to Item M-2.1, in the contract unit price per linear foot bid for "Item Special." The Contractor shall verify the line and grade of the existing 8' Brick Sewer before starting any prebored holes.

HARRELL & HAMILTON
CONSULTING ENGINEERS
CINCINNATI, OHIO

ESTIMATED QUANTITIES AND GENERAL NOTES

BRIDGE NO. HAM.-71-0207

DESIGNED	DRAWN	TRACED	CHECKED	REVIEWED DATE	REVISED
	BJM		ME	JHO 5/22/65	

HAMILTON COUNTY
HAM-71-(1.56)(2.51)

FED. RD. DIV.	STATE	PROJECT	FISCAL YEAR
2	OHIO		

419
492

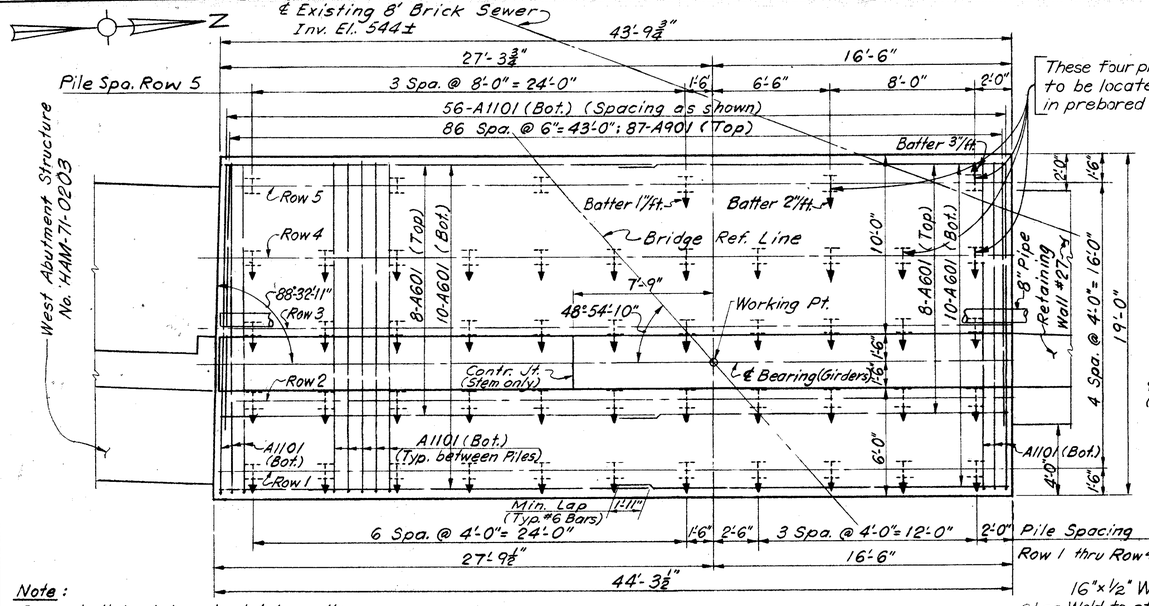

Note:
Care shall be taken in driving piles in the vicinity of the existing brick sewer to avoid any damage to it.

FOOTING PLAN

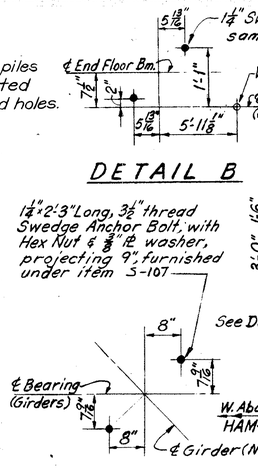

DETAIL B

DETAIL C
(North & South Girders)

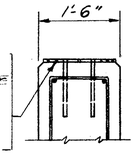

16"x½" W.I. ℄ - Shop Weld to studs ~~after Concrete is set~~ (Furnished under item S-107)

DETAIL A

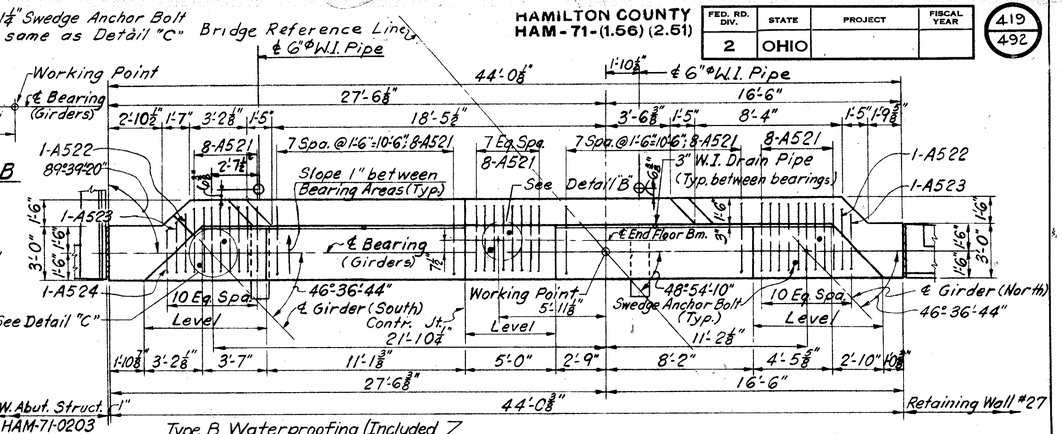

Type B Waterproofing (Included with Bridge No. HAM.-71-0203 for Payment) From Elev. 605.26 to Elev. 609.40 Abutment of Bridge No. HAM-71-0203.

STEM PLAN

1" Min. depth drain groove, 3" wide. Slope ⅝"/ft. toward 3" pipe outlets

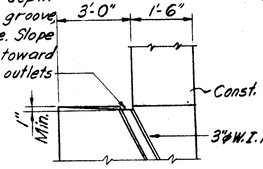

GUTTER DETAIL

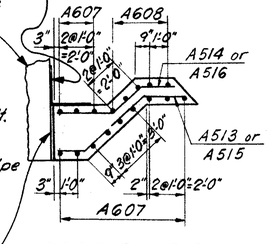

SECTION B-B

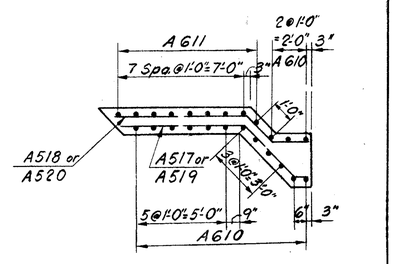

SECTION D-D

Concrete above this line to be included with item S-14 for payment.

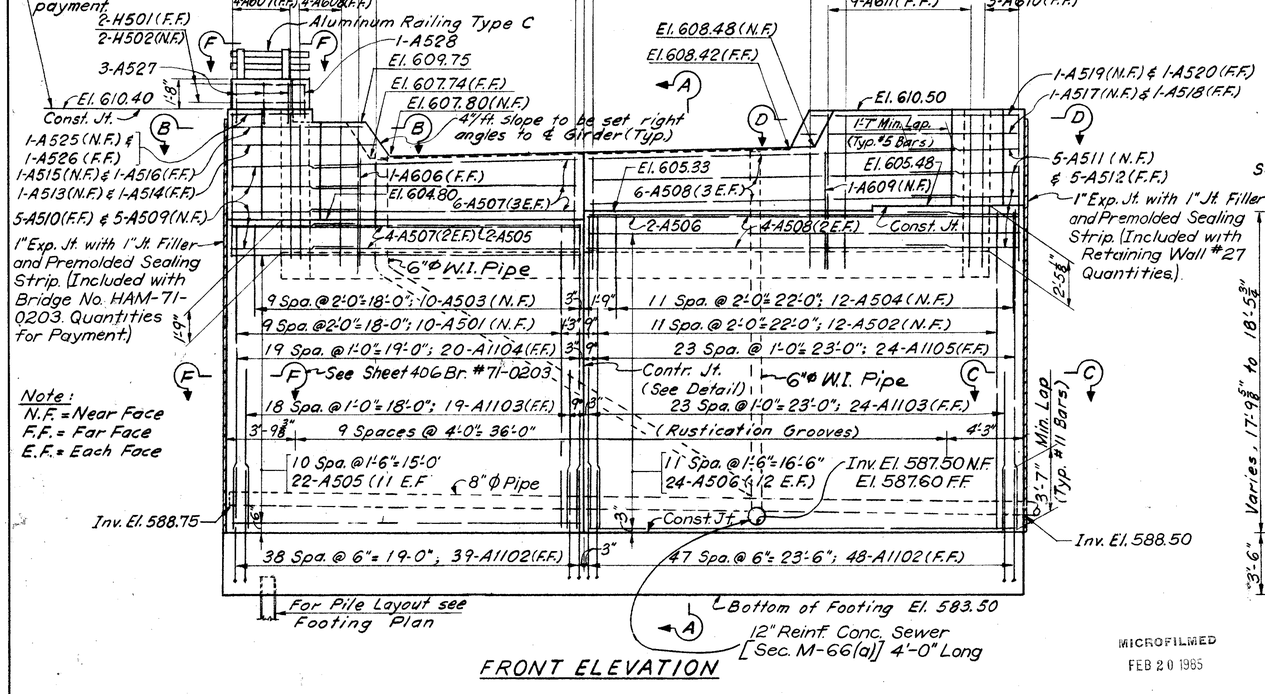

Note:
N.F. = Near Face
F.F. = Far Face
E.F. = Each Face

FRONT ELEVATION

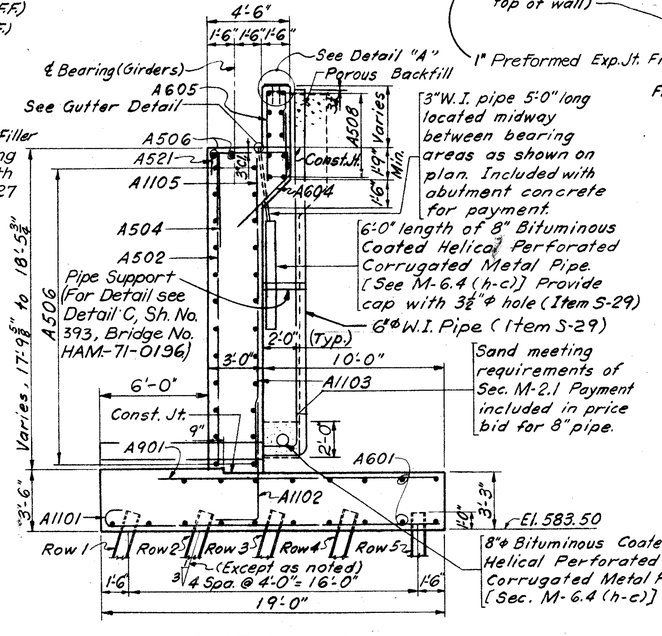

SECTION A-A

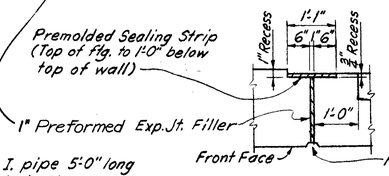

SECTION C-C

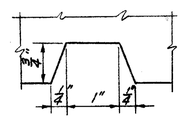

RUSTICATION GROOVE DETAIL

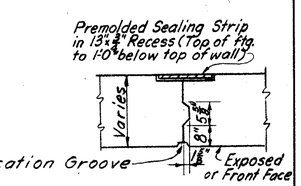

CONTRACTION JOINT DETAIL

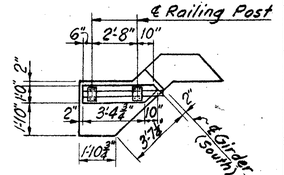

VIEW F-F

Notes:
For Notes see Sheet: 420

MICROFILMED
FEB 20 1985

HAZELET & ERDAL
CONSULTING ENGINEERS
CINCINNATI, OHIO

WEST ABUTMENT

BRIDGE NO. HAM-71-0207

DESIGNED	DRAWN	TRACED	CHECKED	REVIEWED DATE	REVISED
TFL	TFL		D.W. 12-18-64	JHO 5/22/65	11-23-65

FED. RD. DIV.	STATE	PROJECT	FISCAL YEAR
2	OHIO		

420
492

HAMILTON COUNTY
HAM-71-(1.56) (2.51)

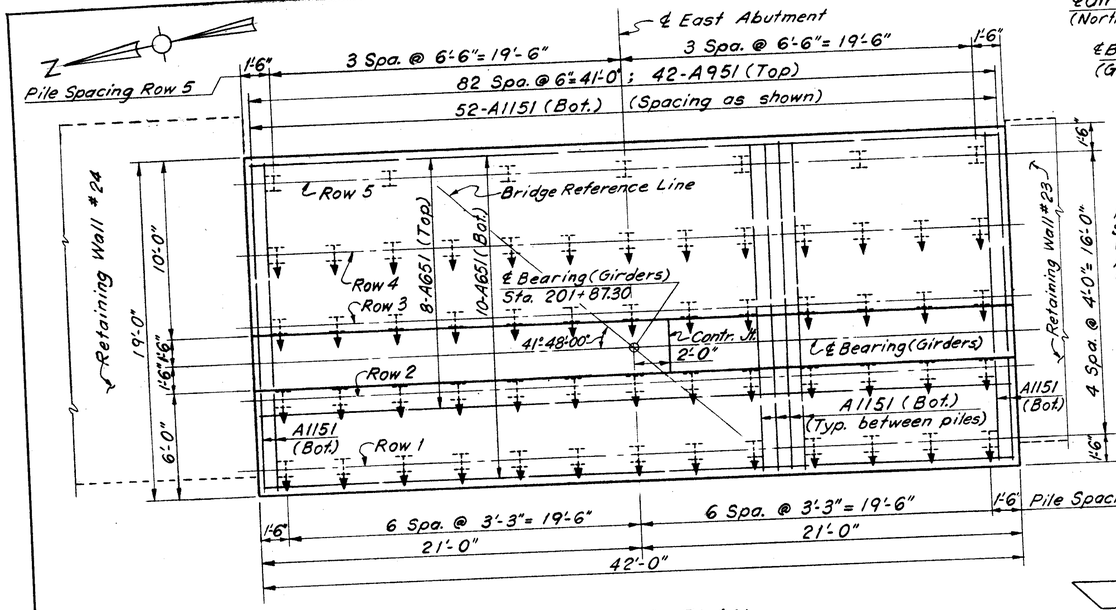

FOOTING PLAN

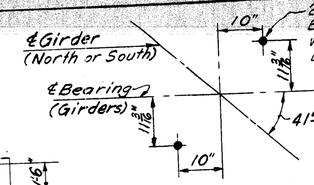

DETAIL C
(North & South Girders)

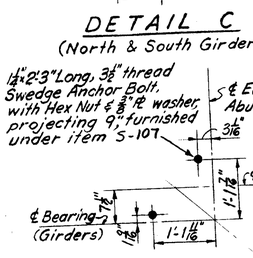

DETAIL B

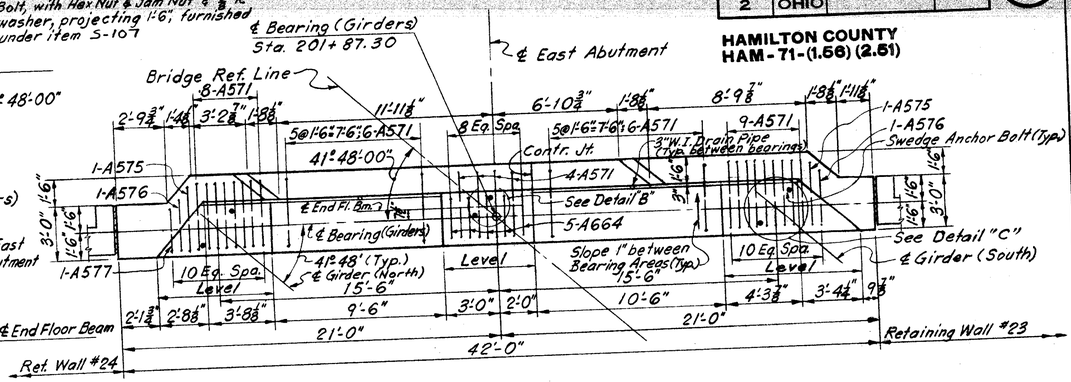

STEM PLAN

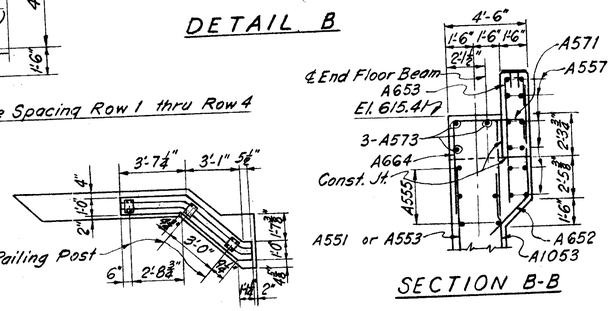

SECTION B-B

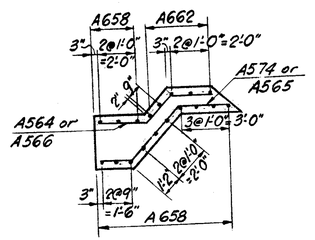

SECTION E-E

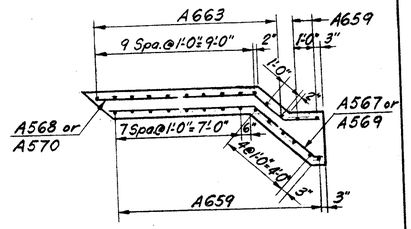

SECTION D-D

VIEW G-G

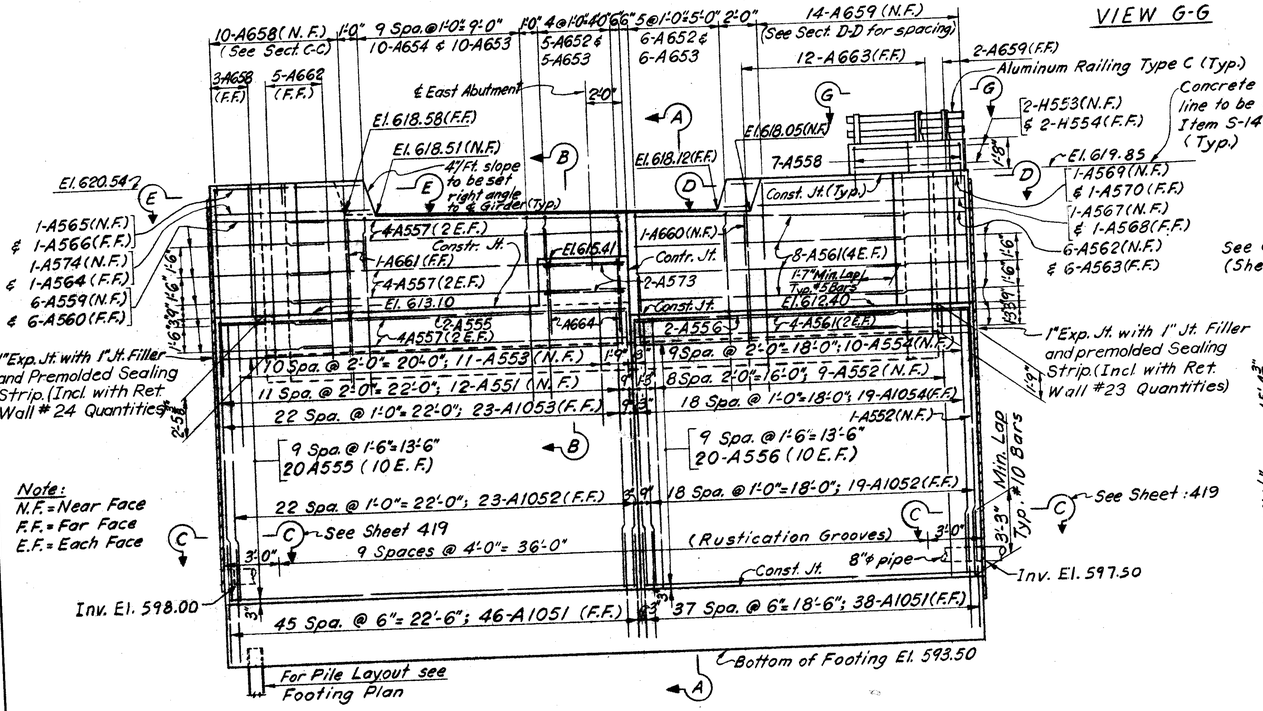

FRONT ELEVATION

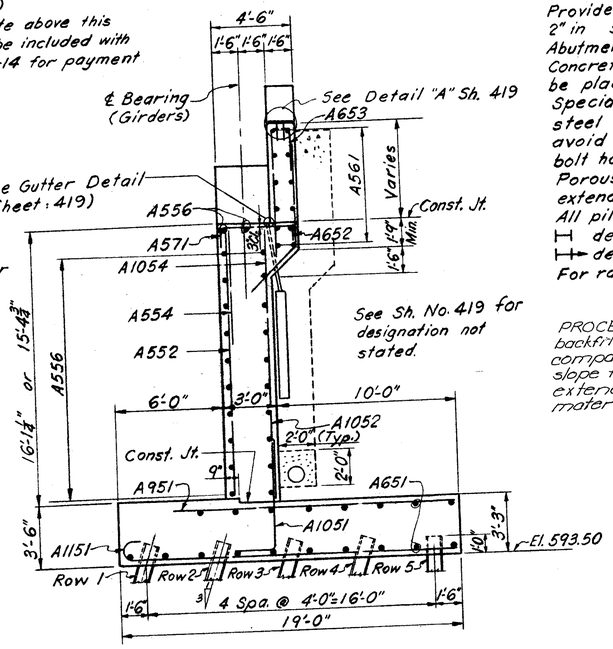

SECTION A-A

Notes:

Provide 3" clearance to reinforcing steel in footing and 2" in stem (Min).
Abutment concrete shall be Class "E".
Concrete above bridge seat construction joint shall not be placed until Superstructure Steel is in place.
Special care shall be taken in placing reinforcing steel in the vicinity of the bridge seat so as to avoid interference with the drilling of swedge anchor bolt holes.
Porous Backfill 2 ft. thick, full length of abutment shall extend up to the bottom of ballast.
All piles shall be 10 BP42 Steel H piles.
H denotes vertical piles
H denotes batter piles (4:12 except as noted).
For railing details not shown, see Standard Drawing No. AR-1-57.

PROCEDURE: Before the backwall is constructed the backfill behind the West Abutment shall be placed and compacted up to the level of the existing ground (with a 1:1 slope from the bridge seat to the existing ground) and extending to the limits for excavation of unsuitable material.

HAZELET & ERDAL
CONSULTING ENGINEERS
CINCINNATI, OHIO

EAST ABUTMENT

BRIDGE NO. HAM-71-0207

DESIGNED	DRAWN	TRACED	CHECKED	REVIEWED DATE	REVISE
TFL	TFL		D.W. 1-5-65	JHO 5/22/65	

MICROFILMED
FEB 20 1985

FED. RD. DIV.	STATE	PROJECT	FISCAL YEAR
2	OHIO		

421
432

HAMILTON COUNTY
HAM-71-(1.56) (2.51)

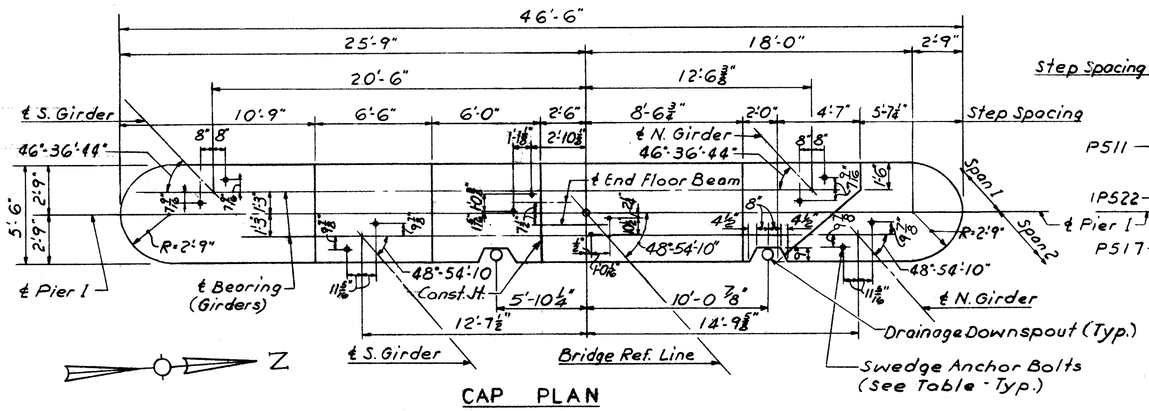

CAP PLAN

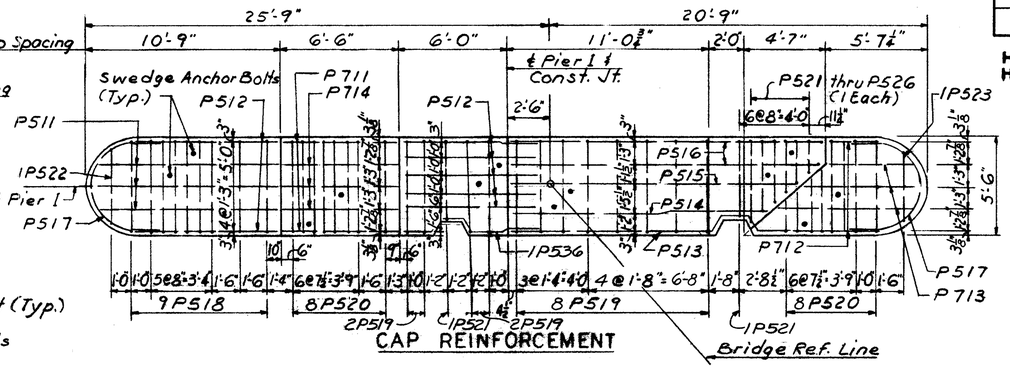

CAP REINFORCEMENT

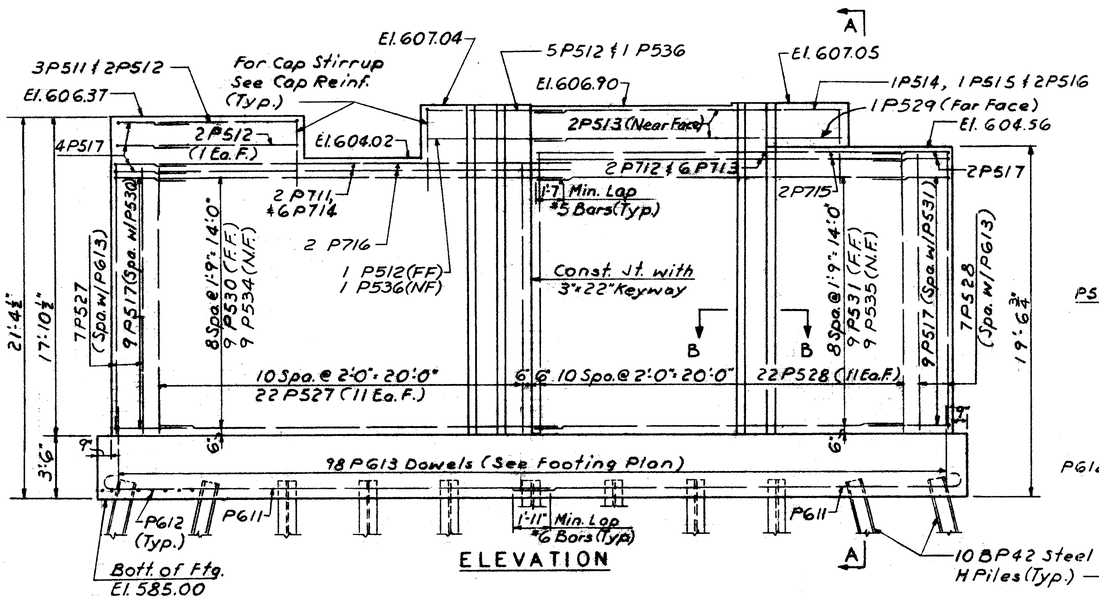

ELEVATION

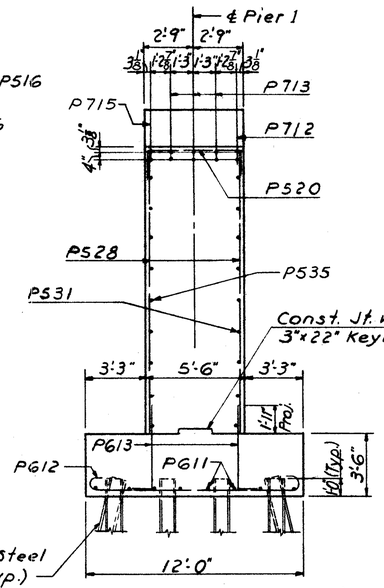

SECTION A-A

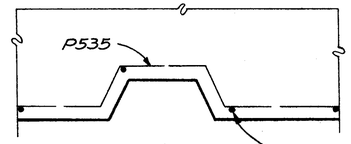

SECTION B-B

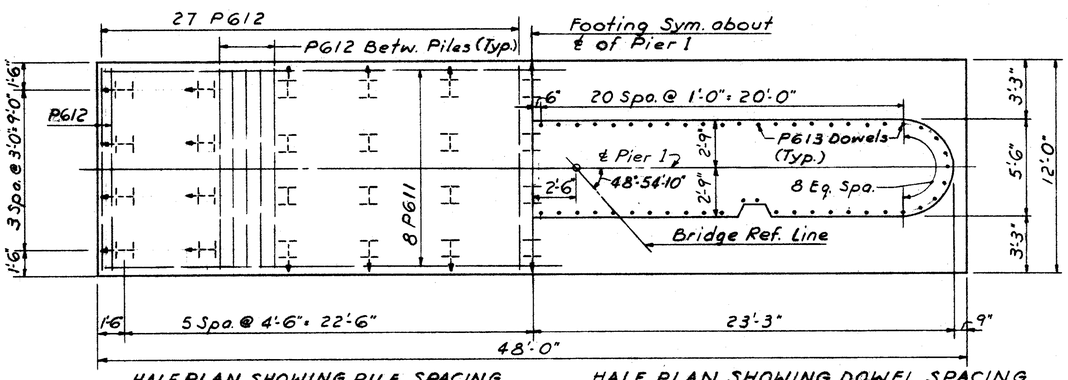

HALF PLAN SHOWING PILE SPACING AND FOOTING BOTTOM BARS

HALF PLAN SHOWING DOWEL SPACING

FOOTING PLAN

SWEDGE ANCHOR BOLT TABLE				
Location		Size ℄ Length	Thread	Proj.
Span 1	N ℄ S Girder	1 1/4" ø x 2'-0"	3 5/8"	6"
	End Floor Bm.	1 1/4" ø x 2'-0"	3 1/2"	6"
Span 2	N ℄ S Girder	2" ø x 3'-0"	6"	1'-6"
	End Floor Bm.	1 1/4" ø x 2'-3"	3 5/8"	9"

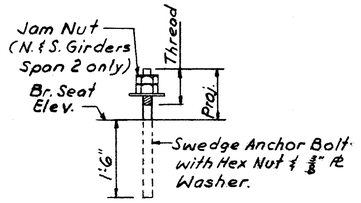

SWEDGE ANCHOR BOLT DETAIL
(See Table)
(Furnished under Item S-107)

Notes:
Provide 3" clearance to reinforcing steel in footing and 2" in wall (Min.)
Concrete in footing shall be class "E" and concrete in wall shall be class "C".
Special care shall be taken in placing reinforcing steel in the vicinity of the bridge seat so as to avoid interference with the drilling of swedge anchor bolt holes.
Ea. F. denotes each face.
All Piles shall be 10 BP42 Steel H Piles.
⊢ denotes Vertical Piles.
⊢→ denotes Batter (4:12) Piles.
For Vertical Construction Joint Details see Sheet: 422

MICROFILMED
FEB 20 1985

HAZELET & ERDAL
CONSULTING ENGINEERS
CINCINNATI, OHIO

PIER 1

BRIDGE NO. HAM-71-0207

DESIGNED	DRAWN	TRACED	CHECKED	REVIEWED DATE	REVISED
S.U.	S.U.		D.W. 1-5-65	JHO 5/22/65	

FED. RD. DIV.	STATE	PROJECT	FISCAL YEAR
2	OHIO		

422
492

HAMILTON COUNTY
HAM-71-(1.56) (2.51)

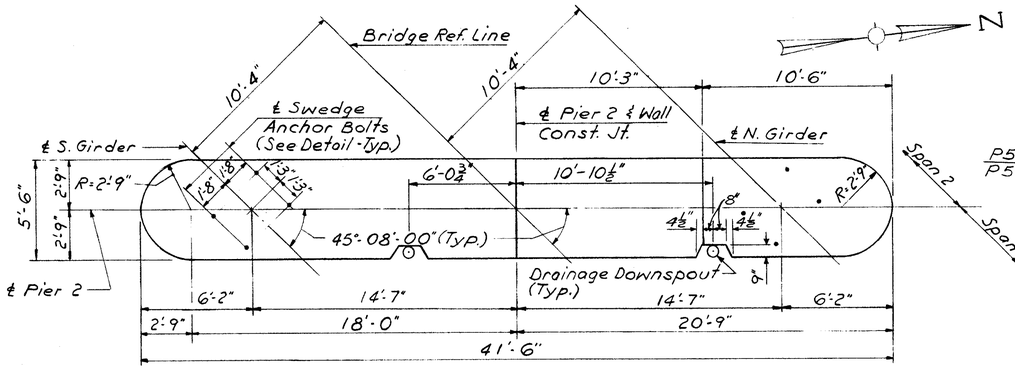

CAP PLAN

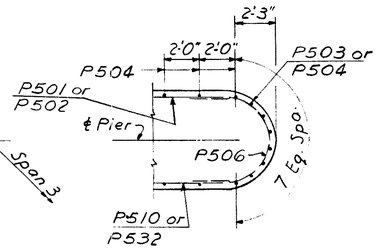

• SECTION A-A
(Sect. B-B Opposite Hand)

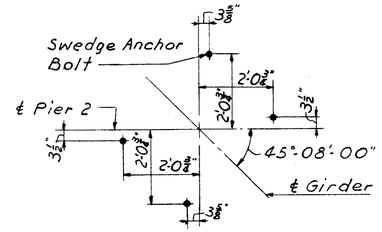

SWEDGE ANCHOR BOLT SPACING

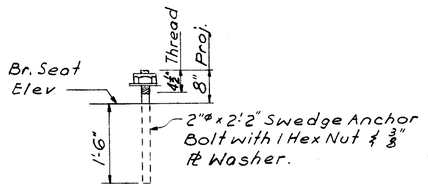

SWEDGE ANCHOR BOLT DETAIL
(Furnished under Item S-107)

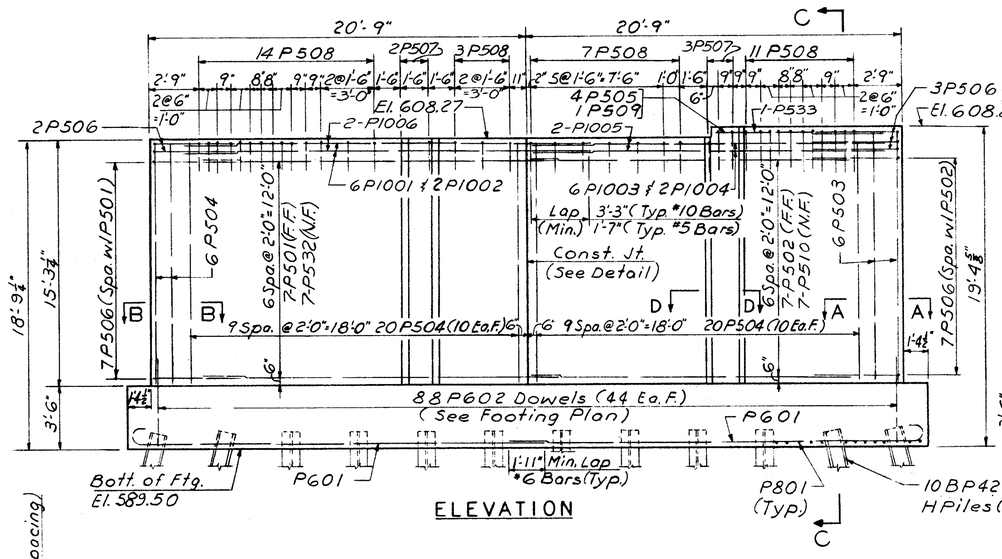

ELEVATION

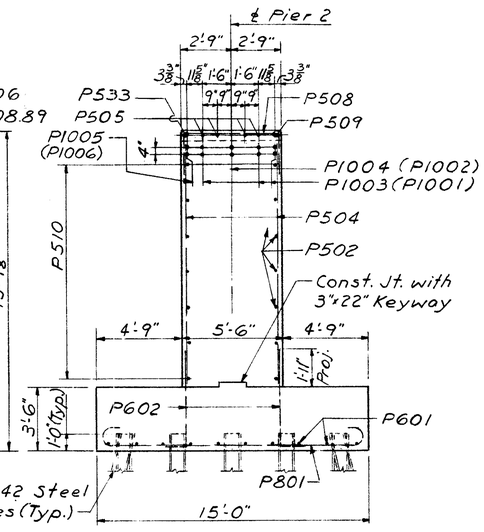

SECTION C-C

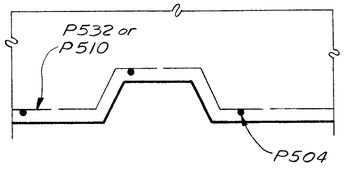

SECTION D-D

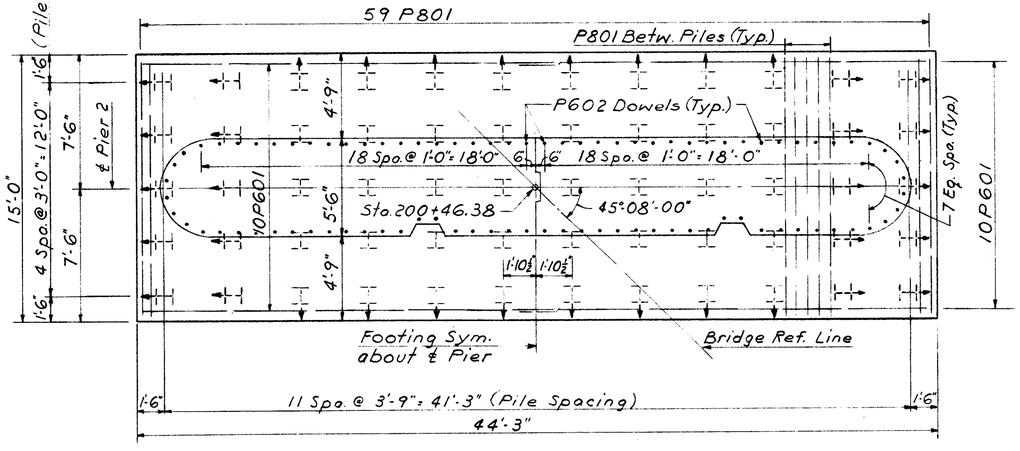

FOOTING PLAN

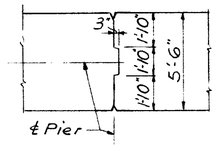

VERT. CONST. JOINT DETAIL

Notes:
Provide 3" clearance to reinforcing steel in footing and 2" in wall (Min.).
Concrete in footing shall be class "E" & Concrete in wall shall be class "C".
Special care shall be taken in placing reinforcing steel in the vicinity of the bridge seat so as to avoid interference with the drilling of swedge anchor bolt holes.
All Piles shall be 10 BP 42 Steel H Piles.
⊢ denotes Vertical Piles
⊢→ denotes Batter (4:12) Piles
Ea. F. denotes Each Face.

MICROFILMED
FEB 20 1985

HAZELET & ERDAL
CONSULTING ENGINEERS
CINCINNATI, OHIO

PIER 2

BRIDGE NO. HAM-71-0207

DESIGNED	DRAWN	TRACED	CHECKED	REVIEWED DATE	REVISED
S.V.	S.V.		D.W. 1-5-65	JHD 5/12/65	

HAMILTON COUNTY
HAM-71-(1.66) (2.51)

FED. RD. DIV.	STATE	PROJECT	FISCAL YEAR
2	OHIO		

423
492

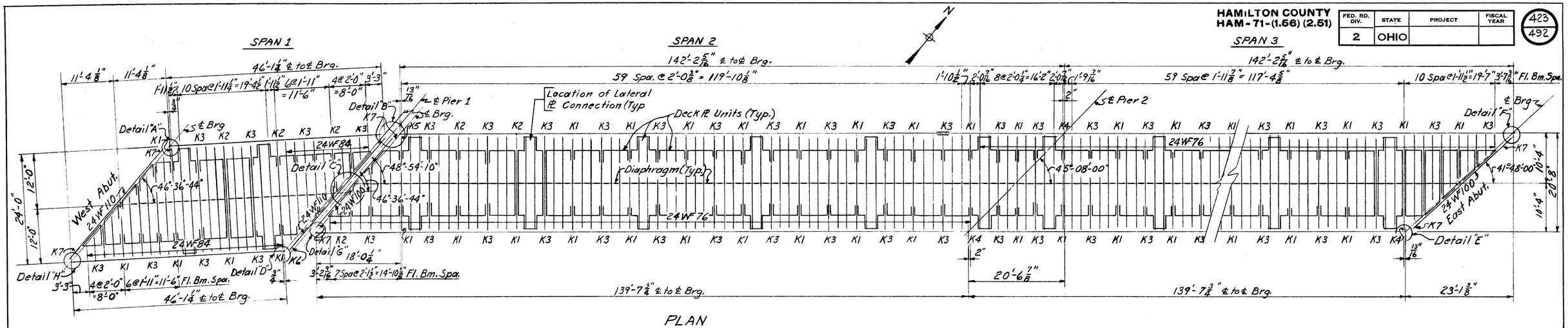

PLAN

Note: For Details of Deck Plates including lateral ℄ connections. See Deck Details.

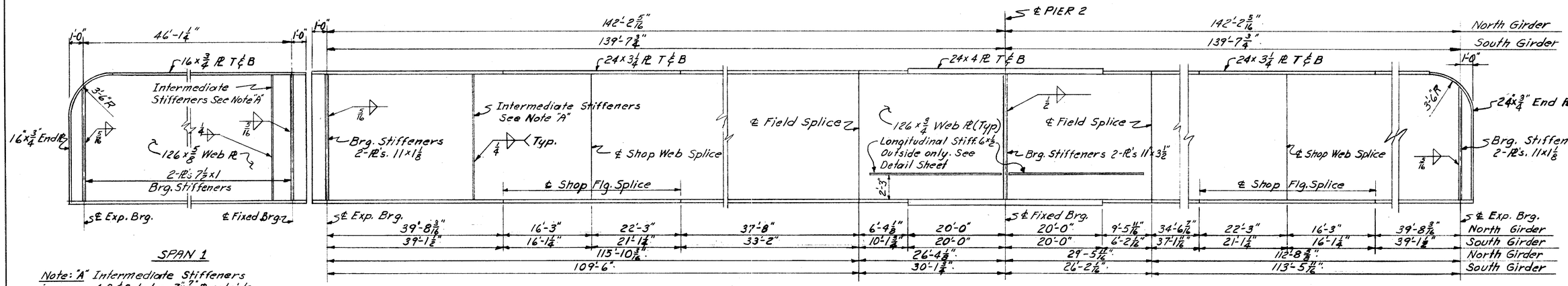

ELEVATION

SPAN 1

Note: "A" Intermediate Stiffeners in spans 1, 2 & 3 to be 7"x 7/16" ℝ outside ℄ 7 1/2"x 1/2" ℝ on inside of girders. Stiffeners shall be spaced @ each Bracket K1, K2, K3 & K4

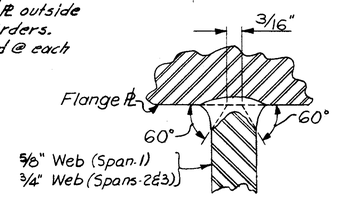

DETAIL of GIRDER FLANGE WELDING
Full Size

LOADING DATA

DEAD LOAD (#/Lin. Ft Track)	SPAN 1	SPANS 2 & 3
Track & Fastening	200	200
Ballast	2820	2300
Asph. P.C. Concrete Deck Protection	540	440
Steel Weight	2990	3310
Total Dead Load	6550	6250

LIVE LOAD

Coopers E72 & Diesel Impact (Without Hammer Blow)

DESIGN DATA

ITEM	UNIT	GIRDERS SPAN 1	GIRDERS SPANS 2 & 3 POSITIVE	GIRDERS SPANS 2 & 3 NEGATIVE	INTERIOR FLOOR BEAMS SPAN 1	INTERIOR FLOOR BEAMS SPANS 2 & 3
Dead Load Moment	(Ft.-Kip.)	787	4020	8360	38	28
Live Load Moment	(Ft.-Kip.)	1550	8750	10800	157	127
Impact Moment	(Ft.-Kip.)	619	2290	2820	67	56
Misc. (Eccen. & Centrif. Force) Mom.	(Ft.-Kip.)	42	–	–	2	8
Total		2998	15,060	21,980	264	219
Dead Load Shear	(Kip)	72		250	5.6	4.5
Live Load Shear	(Kip)	165		400	17.5	16.2
Impact Shear	(Kip)	67		105	7.5	7.2
Misc. Shear	(Kip)	4		–	0.5	1.0
Total Shear	(Kip)	308		755	31.1	28.9
Net I of Section	(in⁴)	200,200	775,000	935,000	2111	1870
Flange Stress	(Ksi)	11.5	15.4*	18.9	18.1	16.9
Max Shear Stress	(Ksi)	3.9	–	8.0	2.8	2.8

*Section Governed by A.R.E.A. Allow. Live Load Deflection

MICROFILMED
FEB 20 1985

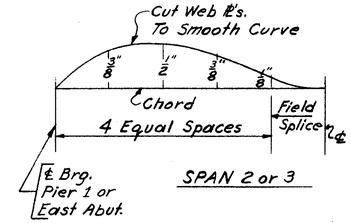

SPAN 2 or 3

CAMBER FOR GIRDERS

No Camber for Span 1 Girders

Notes:
For Joint Preparation for Submerged Arc Weldments see "Typical Structural Steel Details" Sheet No. 444
Intermediate and bearing stiffeners, floorbeam connection plates, girder end plates and all field attached sections shall be set at right angles to the girder flanges.
The shop welded web and flange splices may be moved a maximum of 3'-0" to suit the material to be used by the fabricator.

HAZELET & ERDAL
CONSULTING ENGINEERS
CINCINNATI, OHIO

STRUCTURAL STEEL DETAILS

BRIDGE NO. HAM - 71 - 0207

DESIGNED	DRAWN	TRACED	CHECKED	REVIEWED DATE	REVISED
WFB	H.W.T.		R.L.K. 1-7-65	JHO 5/22/65	

FED. RD. DIV.	STATE	PROJECT	FISCAL YEAR
2	OHIO		

424
492

HAMILTON COUNTY
HAM-71-(1.56)(2.51)

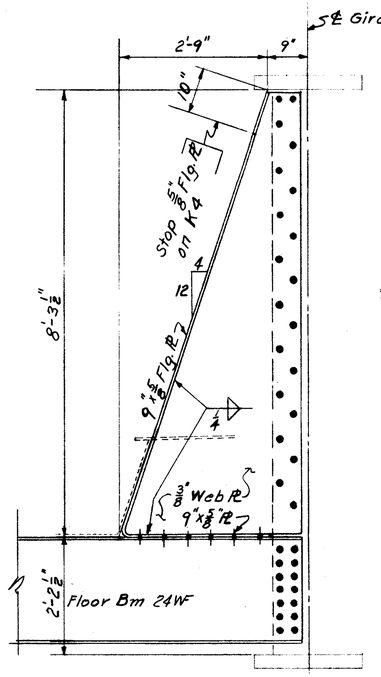

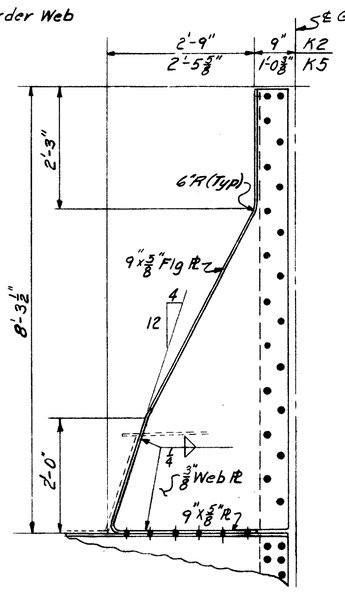

KNEE BRACKET - K2
do do - K5

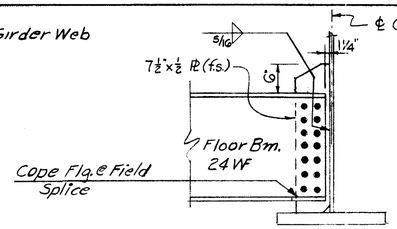

TYPICAL FLOOR BEAM CONNECTION BETWEEN STIFFENERS

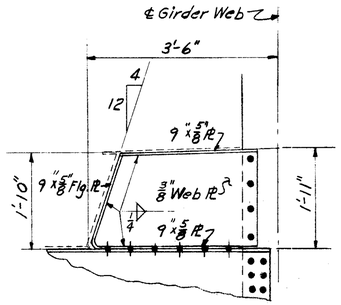

BRACKET - K3

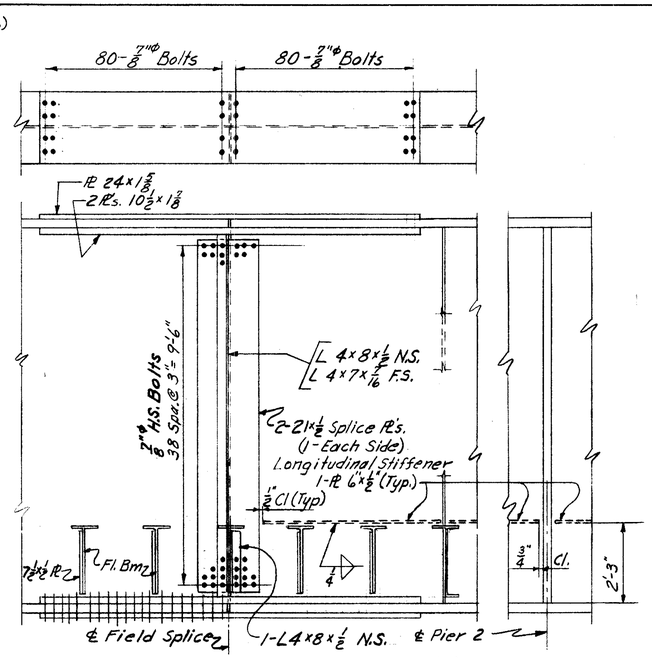

FIELD SPLICE (Span 2 ℄ 3)

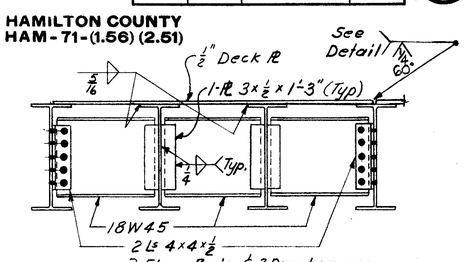

DIAPHRAGMS ℄ FLOOR BEAM DETAILS

Normal unit shown. Special units can have different numbers of floor beams at option of fabricator.

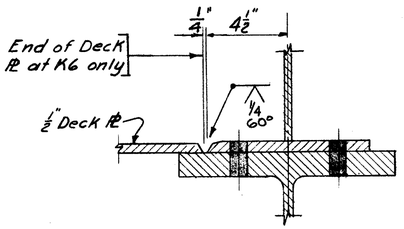

DETAIL "J"

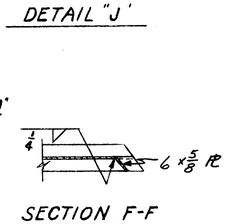

SECTION F-F

Note: Typical Floor Beam Connection at Stiffeners.

KNEE BRACKET - K1
do do - K4

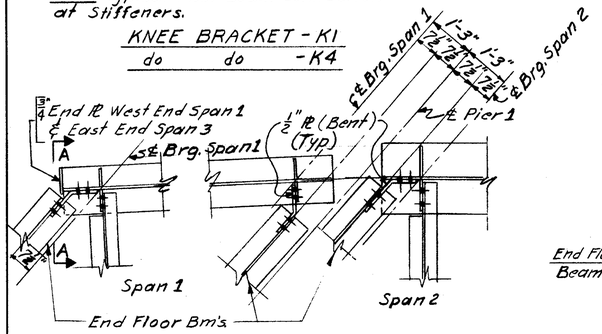

DETAIL "A"
DETAIL "D" Similar by Rotation
DETAIL "E"

DETAIL "B"

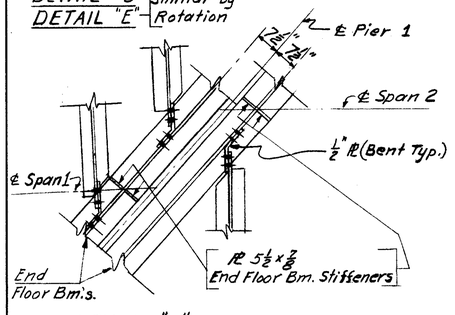

DETAIL "C"

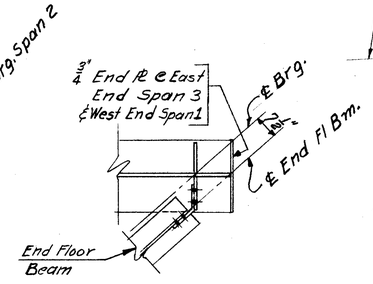

DETAIL "F"
DETAIL "G" ℄ "H"
(Similar by Rotation)

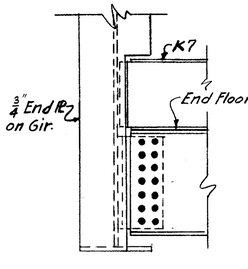

SECTION A-A

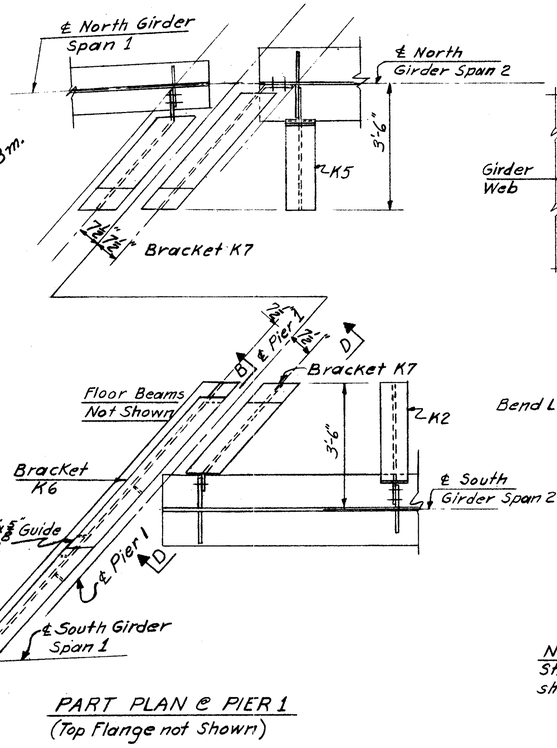

PART PLAN @ PIER 1
(Top Flange not Shown)

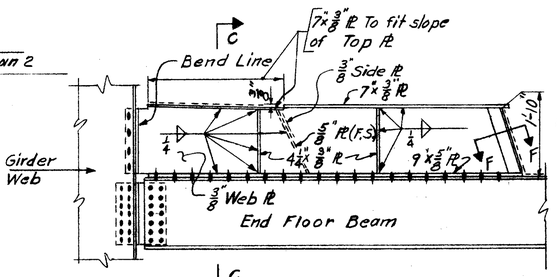

SECTION B-B
BRACKET K6

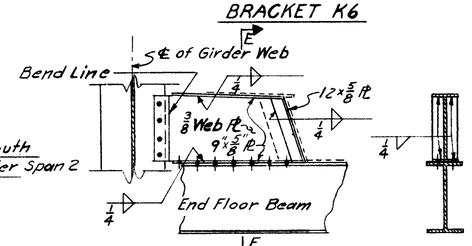

SECTION D-D
BRACKET K7

SECTION E-E

SECTION C-C

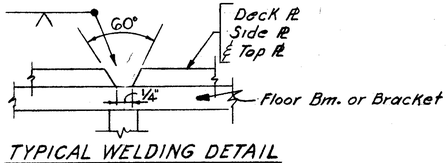

TYPICAL WELDING DETAIL
For Deck Pl's., Side Pl's. ℄ Top Pl's.

Note:
Structural steel inaccesible for painting after erection shall be given final field coats prior to erection.

MICROFILMED
FEB 20 1985

MICROFILMED
FEB 20 1985

HAZELET & ERDAL
CONSULTING ENGINEERS
CINCINNATI, OHIO

STRUCTURAL STEEL DETAILS

BRIDGE NO. HAM - 71- 0207

DESIGNED	DRAWN	TRACED	CHECKED	REVIEWED DATE	REVISED
WFB	H.W.T.		R.L.K. 1-11-65	JHO 5/22/65	

FED. RD. DIV.	STATE	PROJECT	FISCAL YEAR
2	OHIO		

425
492

HAMILTON COUNTY
HAM-71-(1.56) (2.51)

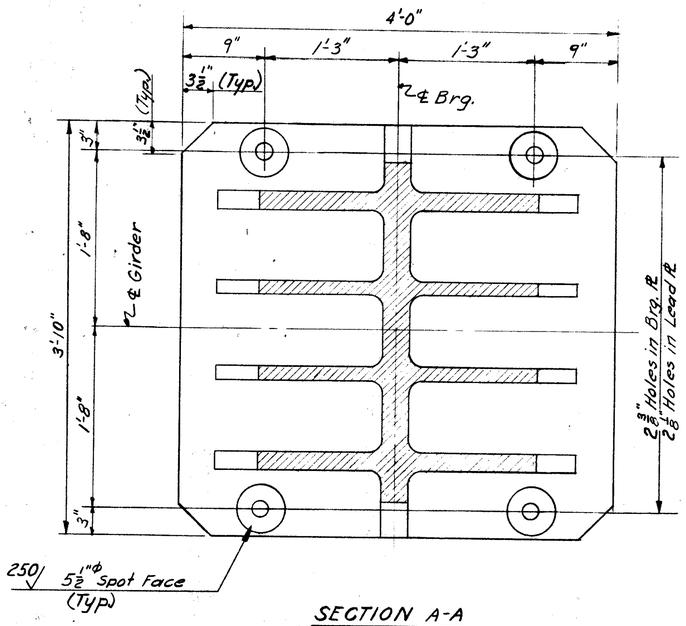

SECTION A-A

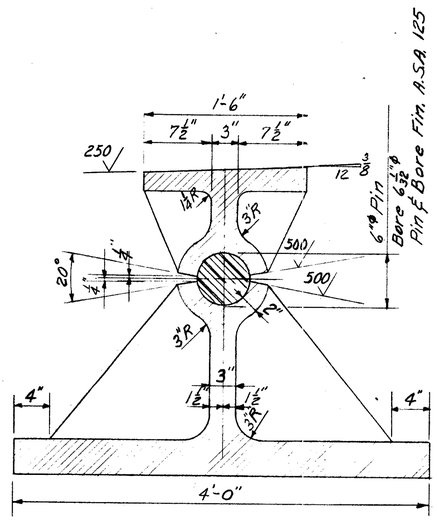

SECTION B-B

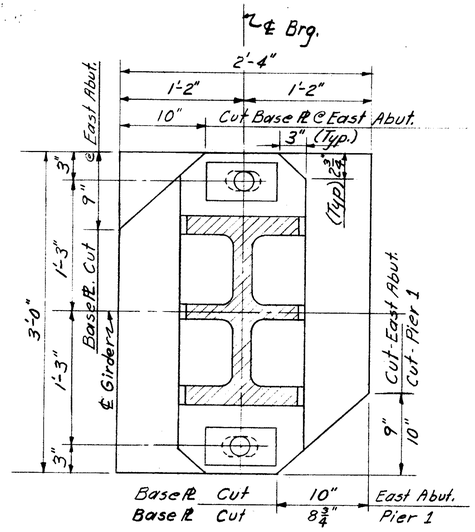

SECTION C-C

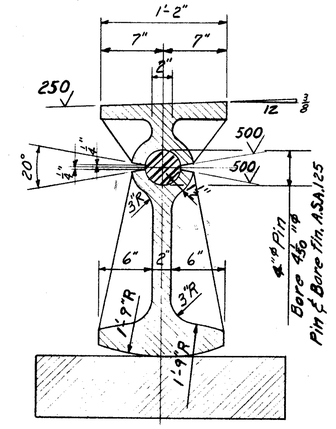

SECTION D-D

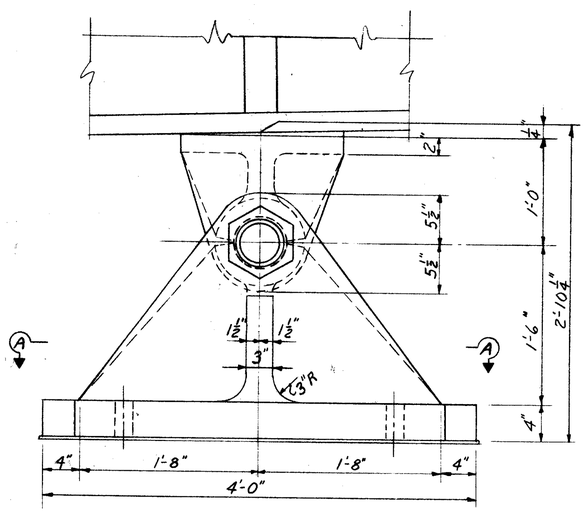

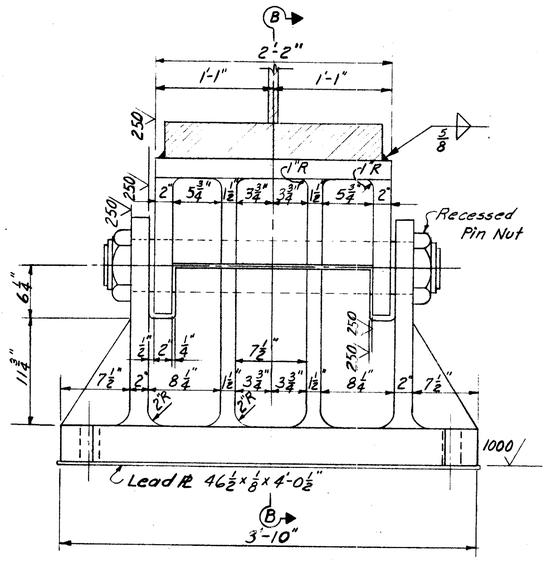

FIXED BEARING
(@ Pier 2)
(Cast Steel, 2 Req'd.)

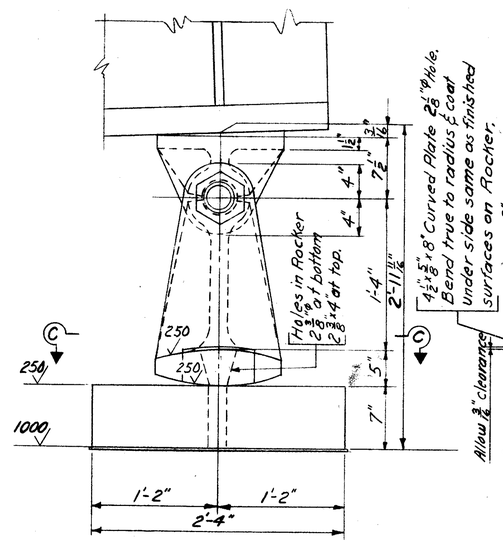

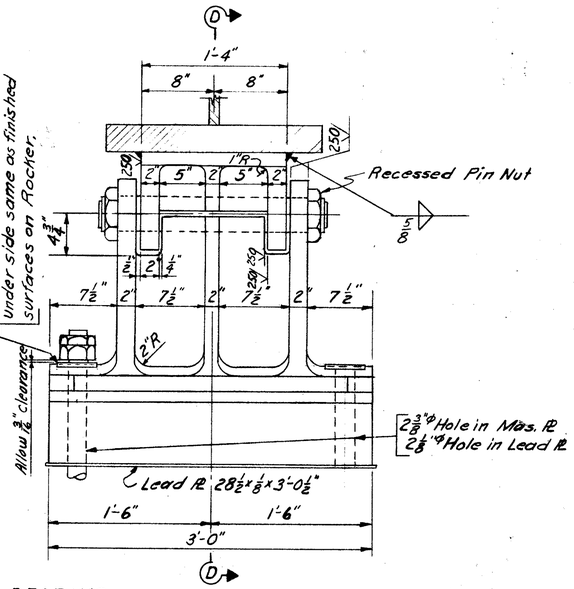

EXPANSION BEARING
(@ Pier 1 & East Abut. Span 2 & 3)
(Cast Steel, 4 Req'd.)

Work Sheets: 425 & 426 Together

MICROFILMED
FEB 20 1985

HAZELET & ERDAL
CONSULTING ENGINEERS
CINCINNATI, OHIO

STRUCTURAL STEEL DETAILS

BRIDGE NO. HAM - 71 - 0207

DESIGNED	DRAWN	TRACED	CHECKED	REVIEWED DATE	REVISED
WFB			WFB 1-7-65	JHO 5/22/65	

FED. RD. DIV.	STATE	PROJECT	FISCAL YEAR
2	OHIO		

426
492

HAMILTON COUNTY
HAM-71-(1.56)(2.51)

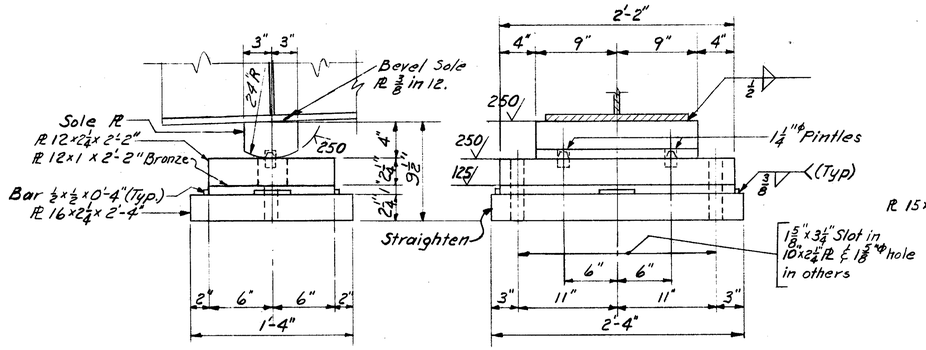

EXPANSION BEARING
(@ West Abut. Span 1)
(2- Req'd.)

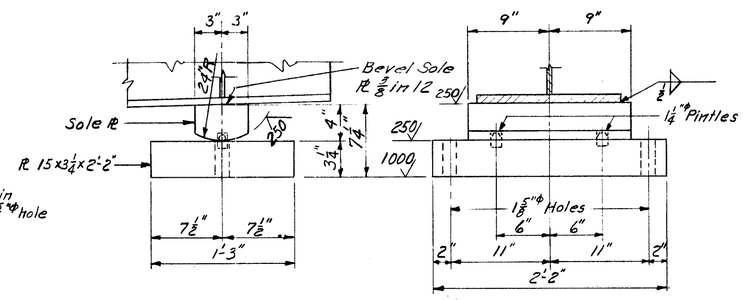

FIXED BEARING
(@ Pier 1 Span 1)
(2- Req'd)

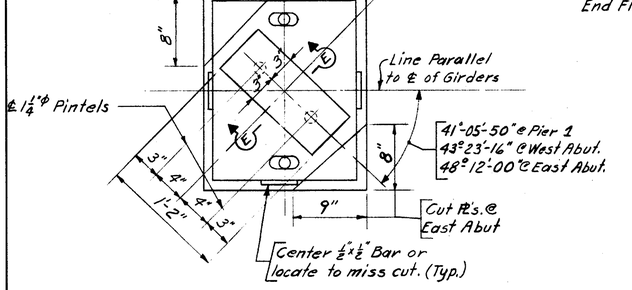

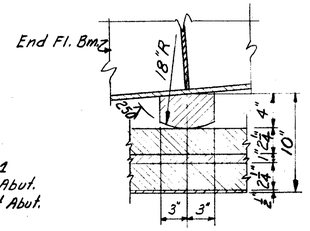

SECTION E-E

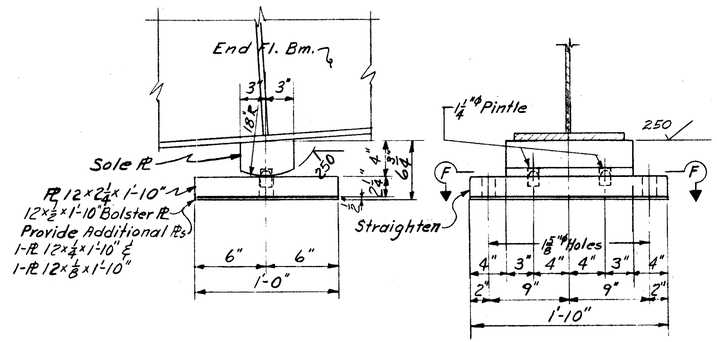

FIXED BEARING
(Under End Floor Bm. @ Pier 1 Span 1)
(1- Req'd.)

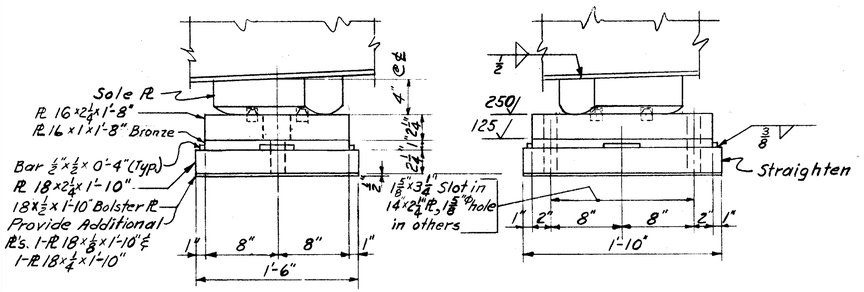

EXPANSION BEARINGS
(Under End Floor Bm. @ Pier 1 Span 2,
East Abut. Span 3 ℄ West Abut. Span 1)
(3- Req'd.)

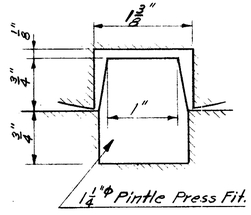

PINTLE DETAIL

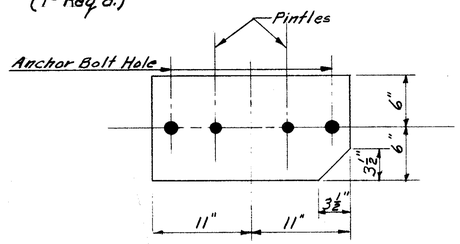

SECTION F-F

BEARING NOTES:

Material- Structural steel A36 or equal unless noted.
Steel castings A27 Grade 65-35, fully annealed
Bronze Plate as per A.S.T.M. Specifications B-22
Class-B with Trepanned Graphite Inserts.

Pins may be either A235 Grade C1 annealed forgings or A108 Grade 1016 to 1030 cold finished shafting.
Recessed pin nuts may be either pressed or caststeel.
Sheet lead B29 common desilverized grade.
Finish designations indicated thus √ refer to A.S.A. standard B46.1-1955
See Abutment and Pier drawing for anchor bolt details.

MICROFILMED
FEB 20 1965

Work Sheets 425 & 426 together

HAZELET & ERDAL
CONSULTING ENGINEERS
CINCINNATI, OHIO

STRUCTURAL STEEL DETAILS

BRIDGE NO. HAM-71-0207

DESIGNED	DRAWN	TRACED	CHECKED	REVIEWED DATE	REVISED
WFB	H.W.T.		WFB 1-7-65	JHD 5/22/65	

FED. RD. DIV.	STATE	PROJECT	FISCAL YEAR
2	OHIO		

427
492

HAMILTON COUNTY
HAM-71-(1.56) (2.51)

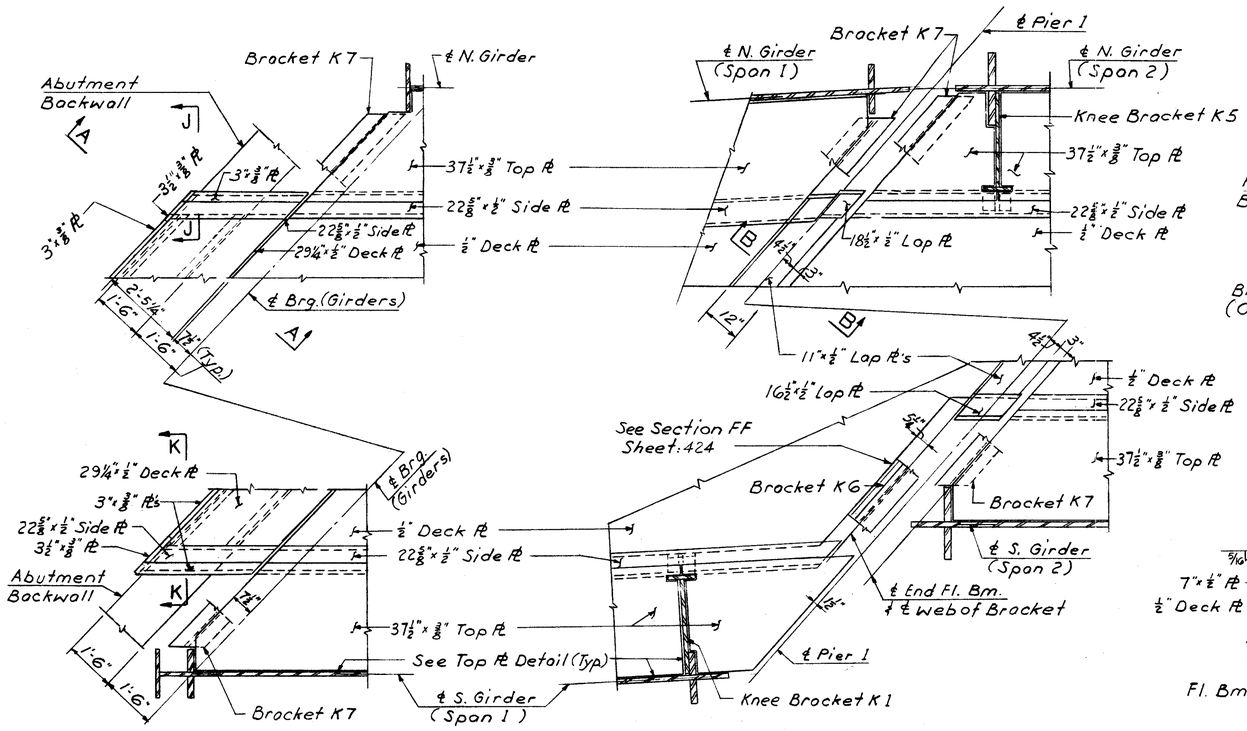

PART DECK PLAN AT WEST ABUTMENT
(Deck Plan At East Abut. Similar By Rotation)

PART DECK PLAN AT PIER 1

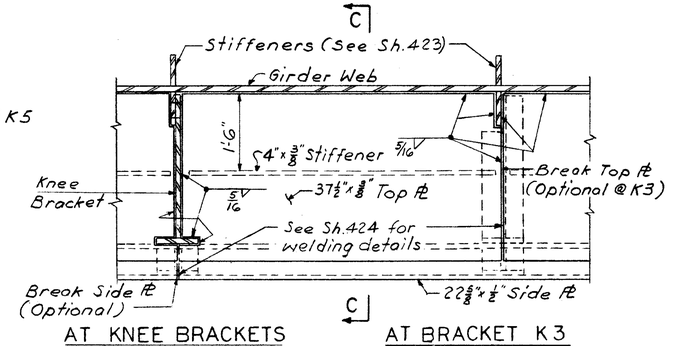

AT KNEE BRACKETS K1, K2, K4 OR K5

AT BRACKET K3

TOP PLATE DETAILS

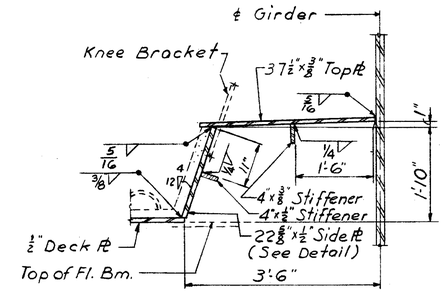

SECTION C-C

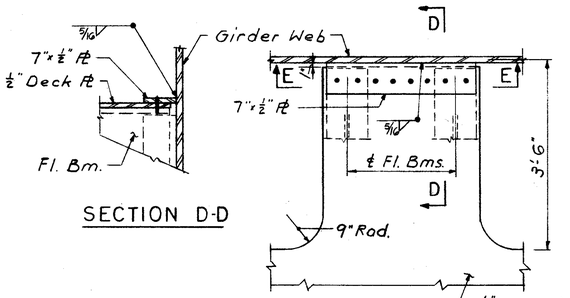

SECTION D-D

LATERAL PLATE CONN.
(For location See Sheet:423)

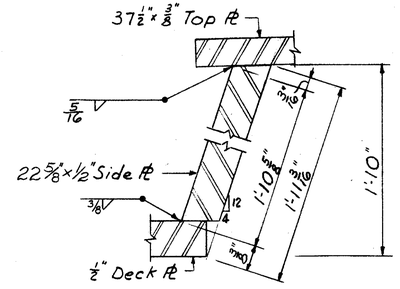

SIDE PLATE DETAIL

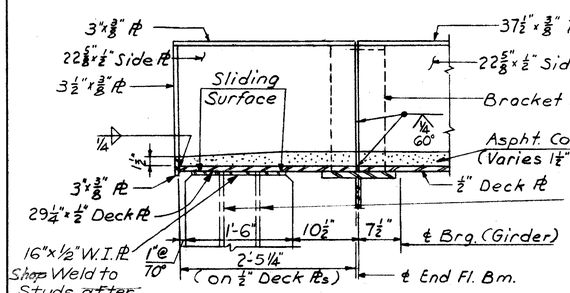

SECTION A-A

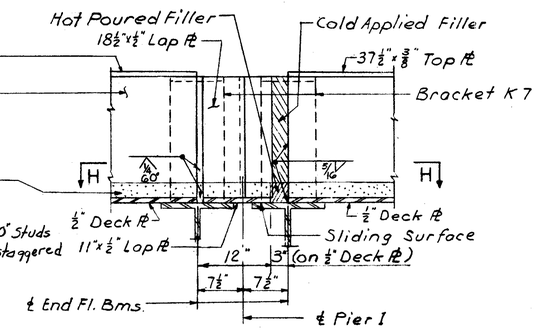

SECTION B-B

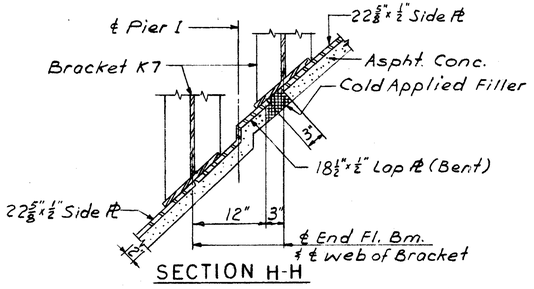

SECTION H-H

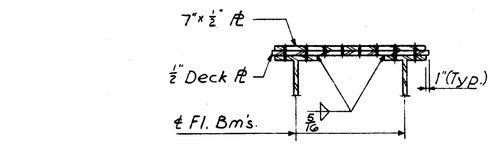

SECTION E-E

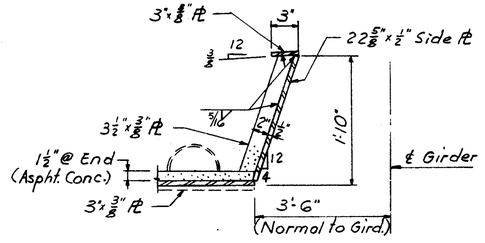

SECTION J-J
(SECTION K-K OPP. HAND)

Notes :
Deck plates, side plates and top plates shall be wrought iron.

Expansion Joint openings shown on details are for a normal temperature of 70° F.
Hot Poured Filler & Cold Applied Filler incidental to Asphalt Conc. Deck Protection.

MICROFILMED
FEB 20 1985

HAZELET & ERDAL
CONSULTING ENGINEERS
CINCINNATI, OHIO

DECK DETAILS

BRIDGE NO. HAM-71-0207

DESIGNED	DRAWN	TRACED	CHECKED	REVIEWED DATE	REVISED
	S.U.		R.L.K 1-11-65	JHO 5/12/65	11-23-65

FED. RD. DIV.	STATE	PROJECT	FISCAL YEAR
2	OHIO		

428
492

HAMILTON COUNTY
HAM-71-(1.56) (2.51)

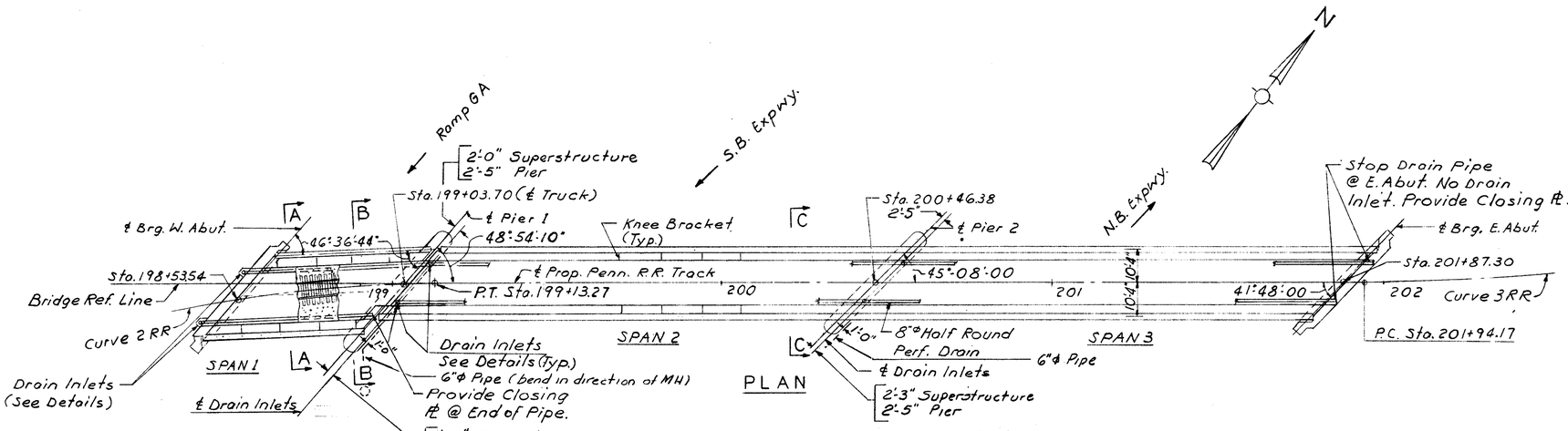

PLAN

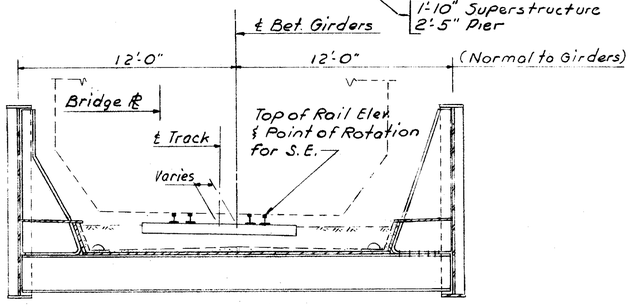

SECTION A-A
(For Details not shown see Sect. C-C)

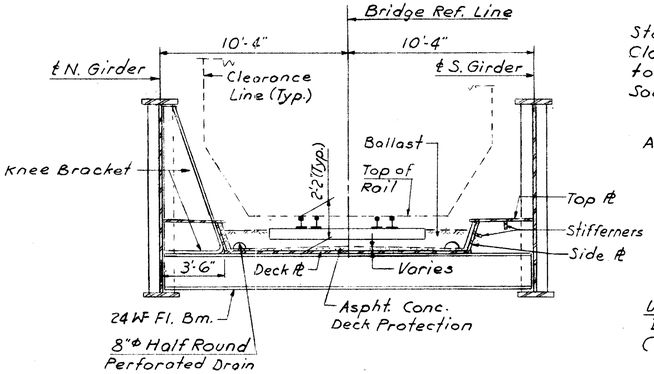

SECTION C-C

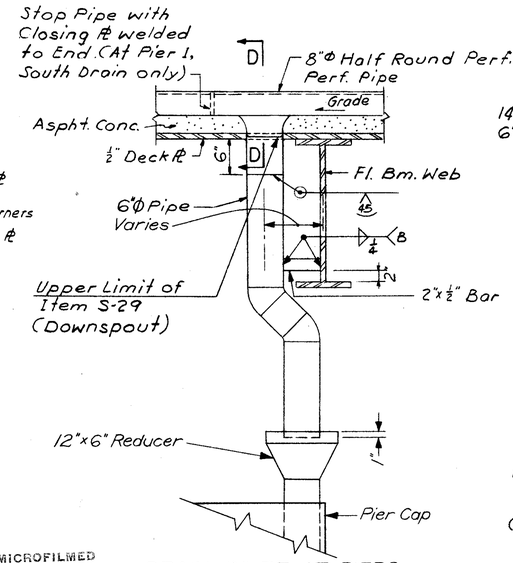

MICROFILMED
FEB 20 1985

DRAIN INLET AT PIERS
(Downspout at Piers 1 & 2.)

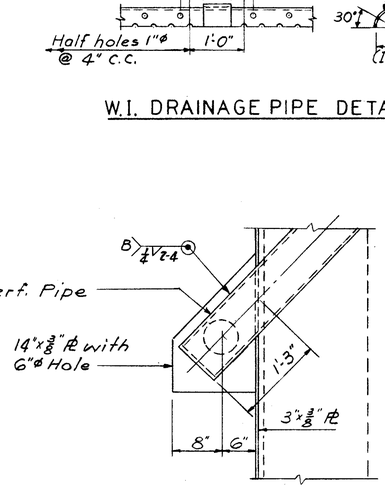

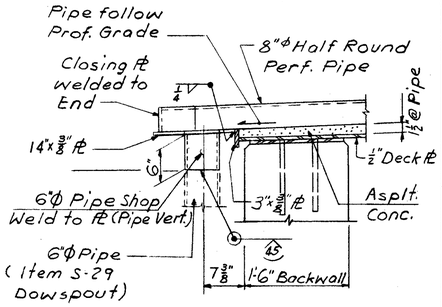

DRAIN INLET AT WEST ABUT.

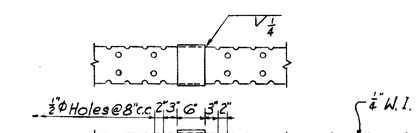

W.I. DRAINAGE PIPE DETAILS

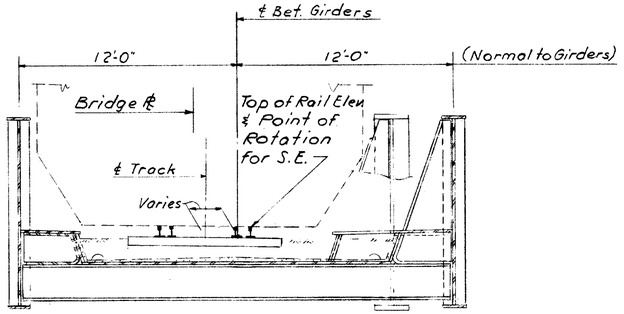

SECTION B-B
(For Details not shown see Sect. C-C)

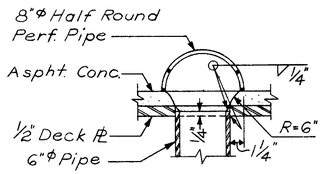

SECTION D-D

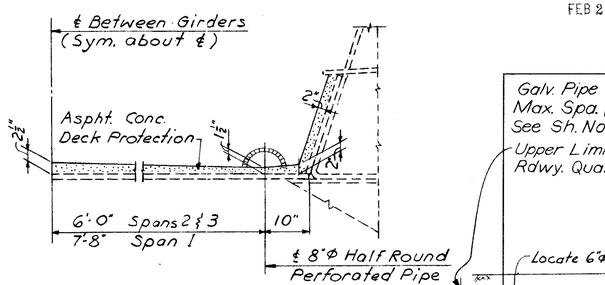

ASPHALT CONC. DECK PROTECTION

MICROFILMED
FEB 20 1985

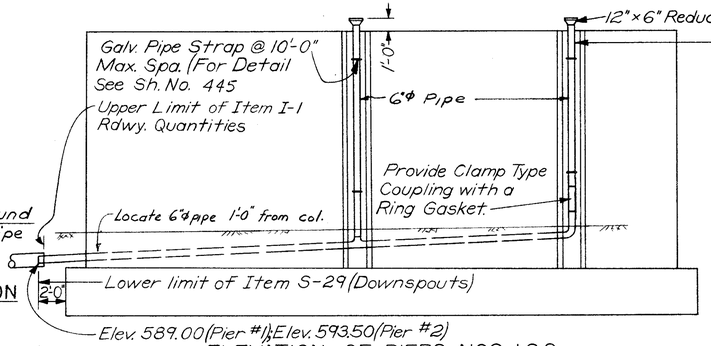

ELEVATION OF PIERS NOS. 1 & 2
SHOWING LOCATION OF DOWNSPOUTS

HAZELET & ERDAL
CONSULTING ENGINEERS
CINCINNATI, OHIO

DECK DETAILS

BRIDGE NO. HAM-71-0207

DESIGNED	DRAWN	TRACED	CHECKED	REVIEWED DATE	REVISED
	S.U.		R.L.K. 1-11-65	JJH 5/22/65	

FED. RD. DIV.	STATE	PROJECT	FISCAL YEAR
2	OHIO		

429
492

HAMILTON COUNTY
HAM-71-(1.56) (2.51)

WEST ABUTMENT

Mark	Type	No.Req'd.	Length	Weight
A501	Str.	10	17'-6"	183
A502	↓	12	18'-0"	225
A503		10	5'-6"	57
A504		12	6'-0"	75
A505		24	19'-3"	482
A506		26	23'-9"	644
A507	↓	10	14'-9"	154
A508	Str.	10	20'-3"	211
A509	52	5	7'-10"	41
A510	↑	5	7'-1"	37
A511		5	6'-8"	35
A512		5	6'-0"	31
A513		1	9'-2"	10
A514		1	7'-10"	8
A515		1	8'-2"	9
A516		1	6'-10"	7
A517		1	12'-6"	13
A518		1	12'-1"	13
A519	↓	1	11'-5"	12
A520	52	1	11'-4"	12
A521	1	40	6'-11"	289
A522	1	2	6'-6"	14
A523	1	2	6'-0"	13
A524	1	1	5'-6"	6
A525	20	1	4'-11"	5
A526	20	1	3'-8"	4
A527	14	3	5'-9"	18
A528	14	1	6'-0"	6
A601	Str.	36	22'-9"	1230
A602	20	12	7'-6"	135
A603	8	12	9'-1"	164
A604	20	13	8'-1"	158
A605	8	13	9'-7"	187
A606	20	1	8'-3"	12
A607	Str.	13	8'-3"	161
A608	20	4	9'-11"	60
A609	Str.	1	6'-9"	10
A610	Str.	15	8'-6"	192
A611	20	9	10'-9"	145
A901	Str.	86	15'-6"	4532
A1101	44	56	20'-1"	5975
A1102	18	87	7'-7"	3505
A1103	Str.	43	9'-0"	2056
A1104	Str.	20	17'-6"	1860
A1105	Str.	24	18'-3"	2327
H501*	Str.	2	3'-10"	
H502*	Str.	2	3'-2"	
			Total	25323

EAST ABUTMENT

Mark	Type	No.Req'd.	Length	Weight
A551	Str.	12	15'-9"	197
A552	↑	10	15'-0"	156
A553		11	5'-3"	60
A554		10	4'-6"	47
A555		22	22'-6"	516
A556	↓	22	18'-6"	425
A557	Str.	12	18'-3"	228
A558	14	7	5'-9"	42
A559	52	6	7'-7"	47
A560	52	6	7'-0"	44
A561	Str.	12	14'-9"	185
A562	52	6	6'-10"	43
A563	↓	6	6'-5"	40
A564		1	7'-10"	8
A565		1	8'-7"	9
A566		1	6'-11"	7
A567		1	13'-2"	14
A568		1	13'-6"	14
A569	↓	1	12'-7"	13
A570	52	1	12'-10"	13
A571	1	33	6'-11"	238
A573	Str.	3	4'-8"	15
A574	52	1	9'-1"	10
A575	1	2	6'-6"	14
A576	1	2	6'-0"	13
A577	1	1	5'-5"	6
A651	Str.	18	41'-6"	1122
A652	20	11	10'-3"	169
A653	8	21	10'-10"	342
A654	20	10	10'-4"	155
A658	Str.	13	10'-0"	195
A659	Str.	16	9'-6"	228
A660	Str.	1	8'-0"	12
A661	20	1	10'-9"	16
A662	20	5	12'-7"	95
A663	20	12	11'-10"	213
A664	1	5	11'-10"	89
A951	Str.	82	15'-6"	4322
A1051	18	84	7'-4"	2650
A1052	Str.	42	10'-0"	1807
A1053	Str.	23	15'-9"	1559
A1054	Str.	19	15'-3"	1247
A1151	44	52	20'-1"	5549
H553*	52	2	7'-8"	
H554*	52	2	7'-8"	
			Total	22174

PIER 1

Mark	Type	No.Req'd.	Length	Weight
P511	Str.	6	9'-9"	61
P512	Str.	10	7'-9"	81
P513	52	2	13'-10"	29
P514	Str.	1	14'-0"	15
P515	Str.	1	15'-9"	16
P516	18	2	21'-8"	45
P517	6	24	11'-3"	282
P518	1	9	13'-5"	126
P519	↑	12	14'-1"	176
P520		16	7'-11"	132
P521		3	13'-4"	42
P522		2	13'-2"	27
P523		2	12'-7"	26
P524		1	12'-0"	13
P525	↓	1	11'-5"	12
P526	1	1	10'-10"	12
P527	Str.	29	15'-3"	461
P528	Str.	29	15'-9"	476
P529	Str.	1	17'-3"	18
P530	Str.	9	22'-4"	210
P531	Str.	9	20'-3"	190
P534	58	9	22'-9"	213
P535	58	9	20'-8"	194
P536	58	2	8'-2"	17
P611	44	16	25'-5"	611
P612	43	54	12'-10"	1041
P613	18	98	5'-10"	859
P711	Str.	2	23'-0"	94
P712	Str.	2	20'-3"	83
P713	Str.	6	22'-3"	273
P714	Str.	6	25'-0"	307
P715	58	2	20'-6"	84
P716	58	2	23'-3"	95
			Total	6321

PIER 2

Mark	Type	No.Req'd.	Length	Weight
P501	Str.	7	19'-10"	145
P502	Str.	7	17'-9"	130
P503	Str.	6	15'-8"	98
P504	Str.	46	15'-0"	720
P505	Str.	4	9'-3"	39
P506	6	19	11'-3"	223
P507	1	5	8'-6"	44
P508	1	35	9'-3"	338
P509	Str	1	7'-6"	8
P510	58	7	18'-2"	133
P532	58	7	20'-3"	148
P533	52	1	7'-9"	8
P601	44	20	23'-7"	708
P602	18	88	5'-10"	771
P801	43	59	16'-8"	2626
P1001	Str.	6	21'-3"	549
P1002	Str.	2	23'-9"	204
P1003	Str.	6	18'-0"	465
P1004	Str.	2	20'-0"	172
P1005	58	2	17'-9"	153
P1006	58	2	21'-0"	181
			Total	7863

REPLACEMENT BARS

Mark	Type	No.Req'd.	Length
Re 501	Str.	1	5'-7"
Re 601	↑	1	5'-11"
Re 701		1	6'-3"
Re 801		1	6'-6"
Re 901		1	6'-10"
Re 1001		1	7'-3"
Re 1101	Str.	2	7'-6"

TYPE 52

Type	Mark	a	b	c	d	e
52	A509	1'-8"	3'-1⅛"	2'-0"	4'-4"	3'-0⅜"
	A510	2'-10"	1'-5⅜"	2'-3"	2'-2⅝"	1'-6⅛"
	A511	0'-9"	2'-10⅞"	2'-0"	4'-2"	3'-0⅜"
	A512	1'-9"	1'-5⅛"	2'-5"	2'-1"	1'-6⅝"
	A513	1'-8"	3'-1⅛"	3'-4"	4'-4"	3'-0⅜"
	A514	2'-10"	1'-5⅜"	3'-0"	2'-2⅝"	1'-6⅛"
	A515	1'-8"	3'-1⅛"	2'-4"	4'-4"	3'-0⅜"
	A516	2'-10"	1'-5⅜"	2'-0"	2'-2⅝"	1'-6⅛"
	A517	0'-9"	2'-10⅞"	7'-10"	4'-2"	3'-0⅜"
	A518	1'-9"	1'-5⅛"	8'-6"	2'-1"	1'-6⅝"
	A519	0'-9"	2'-10⅞"	6'-9"	4'-2"	3'-0⅜"
	A520	1'-9"	1'-5⅛"	7'-9"	2'-1"	1'-6⅝"
	A559	1'-10"	2'-7"	2'-0"	3'-11⅝"	3'-0⅜"
	A560	2'-10"	1'-4"	2'-5"	2'-0"	1'-6⅜"
	A562	0'-6"	3'-4⅜"	2'-0"	4'-6"	3'-0⅜"
	A563	1'-11"	1'-8"	2'-5"	2'-3"	1'-6⅜"
	A564	2'-10"	1'-4"	3'-3"	2'-0"	1'-6⅜"
	A565	1'-10"	2'-7"	3'-0"	3'-11⅝"	3'-0⅜"
	A566	2'-10"	1'-4"	2'-4"	2'-0"	1'-6⅜"
	A567	0'-6"	3'-4⅜"	3'-4"	4'-6"	3'-0⅜"
	A568	1'-11"	1'-8"	9'-6"	2'-3"	1'-6⅜"
	A569	0'-6"	3'-4⅜"	7'-9"	4'-6"	3'-0⅜"
	A570	1'-11"	1'-8"	8'-10"	2'-3"	1'-6⅜"
	A574	1'-10"	2'-7"	3'-6"	3'-11⅝"	3'-0⅜"
	H553	3'-1¼"	3'-1⅜"	0'-6⅜"	4'-2"	2'-9⅛"
	H554	3'-4"	3'-1⅜"	0'-4"	4'-2"	2'-9⅛"
	P513	11'-1"	0'-4½"	2'-2"	0'-10"	0'-9"
	P533	1'-4"	0'-4½"	5'-10⅛"	0'-10"	0'-9"

TYPES 20, 8, 14 & 18

Type	Mark	a	b	c	d
20	A525	2'-4"	1'-6"	3'-5"	2'-5½"
	A526	0'-7½"	2'-9"	0'-10⅛"	0'-7½"
	A602	2'-3½"	4'-3"	3'-3"	2'-3⅝"
	A604	2'-3⅝"	4'-10"	3'-3"	2'-3⅝"
	A606	2'-3⅝"	5'-0"	3'-3"	2'-3⅝"
	A608	2'-3⅝"	6'-8"	3'-3"	2'-3⅝"
	A611	2'-3⅝"	7'-6"	3'-3"	2'-3⅝"
	A652	2'-3⅝"	7'-0"	3'-3"	2'-3⅝"
	A654	2'-3⅝"	7'-1"	3'-3"	2'-3⅝"
	A661	2'-3⅝"	7'-6"	3'-3"	2'-3⅝"
	A662	2'-3⅝"	9'-4"	3'-3"	2'-3⅝"
	A663	2'-3⅛"	8'-7"	3'-3"	2'-3⅛"
	H551	1'-4⅜"	2'-7⅛"	1'-10⅜"	1'-2⅜"
	H552	1'-2"	2'-4"	1'-6⅛"	1'-0⅜"
8	A603	2'-9"	1'-2"	5'-6"	—
	A605	2'-9"	1'-2"	6'-0"	—
	A653	2'-6"	1'-2"	7'-6"	—
14	A527	0'-8"	2'-3"	—	—
	A528	0'-11"	2'-3"	—	—
	A558	0'-8"	2'-3"	—	—
18	A1051	1'-6"	6'-2"	—	—
	A1102	1'-6"	6'-5"	—	—
	P516	17'-3"	4'-7"	—	—
	P602	5'-0"	1'-0"	-	—
	P613	5'-0"	1'-0"	—	—

TYPE 1

Type	Mark	a	b
1	A521	4'-2"	1'-6"
	A522	3'-9"	1'-6"
	A523	3'-3"	1'-6"
	A524	2'-9"	1'-6"
	A571	4'-2"	1'-6"
	A575	3'-9"	1'-6"
	A576	3'-3"	1'-6"
	A577	2'-8"	1'-6"
	A664	2'-8"	4'-9"
	P507	4'-5"	2'-2"
	P508	5'-2"	2'-2"
	P518	5'-2"	4'-3"
	P519	5'-2"	4'-7"
	P520	5'-2"	1'-6"
	P521	4'-5"	4'-7"
	P522	4'-3⅛"	4'-7"
	P523	3'-8⅝"	4'-7"
	P524	3'-1⅛"	4'-7"
	P525	2'-6⅜"	4'-7"
	P526	1'-11⅝"	4'-7"

TYPE 58

Type	Mark	a	b	c	d	e	f	g	h	i
58	P510	1'-8"	0'-4½"	0'-10"	0'-4½"	5'-11"	0'-9"	0'-9"	0'-10"	9'-5"
	P532	1'-8"	0'-4½"	0'-10"	0'-4½"	6'-8"	0'-9"	0'-9"	0'-10"	10'-9"
	P534	1'-8"	0'-4½"	0'-10"	0'-4½"	4'-0"	0'-9"	0'-9"	0'-10"	15'-11"
	P535	1'-8"	0'-4½"	0'-10"	0'-4½"	6'-8½"	0'-9"	0'-9"	0'-10"	11'-1½"
	P536	1'-8"	0'-4½"	0'-10"	0'-4½"	4'-1"	0'-9"	0'-9"	0'-10"	1'-3"
	P715	1'-8½"	0'-4½"	0'-10"	0'-4½"	6'-8½"	0'-9"	0'-9"	0'-10"	11'-1"
	P716	1'-8½"	0'-4½"	0'-10"	0'-4½"	4'-7½"	0'-9"	0'-9"	0'-10"	15'-11"
	P1005	1'-9"	0'-4½"	0'-10"	0'-4½"	5'-10⅝"	0'-9"	0'-9"	0'-10"	9'-7½"
	P1006	1'-9"	0'-4½"	0'-10"	0'-4½"	8'-1"	0'-9"	0'-9"	0'-10"	10'-8"

TYPE 43

Type	Mark	a
43	P612	11'-6"
	P801	14'-6"

TYPE 44

Type	Mark	a
44	A1101	18'-6"
	A1151	18'-6"
	P601	22'-11"
	P611	24'-9"

TYPE 6

Type	Mark	a	b	Radius
6	P506	8'-1"	1'-7"	2'-6 1/2"
	P517	8'-1"	1'-7"	2'-6 3/4"

MICROFILMED
FEB 20 1985

* Reinforcing bars marked H are included in Item S-14 (Railing) for payment.

Total wgt reinf steel = 61,681 lbs.

HAZELET & ERDAL
CONSULTING ENGINEERS
CINCINNATI, OHIO

STEEL REINFORCEMENT LIST

BRIDGE NO. HAM-71-0207

DESIGNED	DRAWN	TRACED	CHECKED	REVIEWED DATE	REVISED
	TFL		D.W. 1-12-65	JHO 5/22/65	

FED. RD. DIV.	STATE	PROJECT	FISCAL YEAR
2	OHIO		

430
492

HAMILTON COUNTY
HAM-71-(1.56)(2.51)

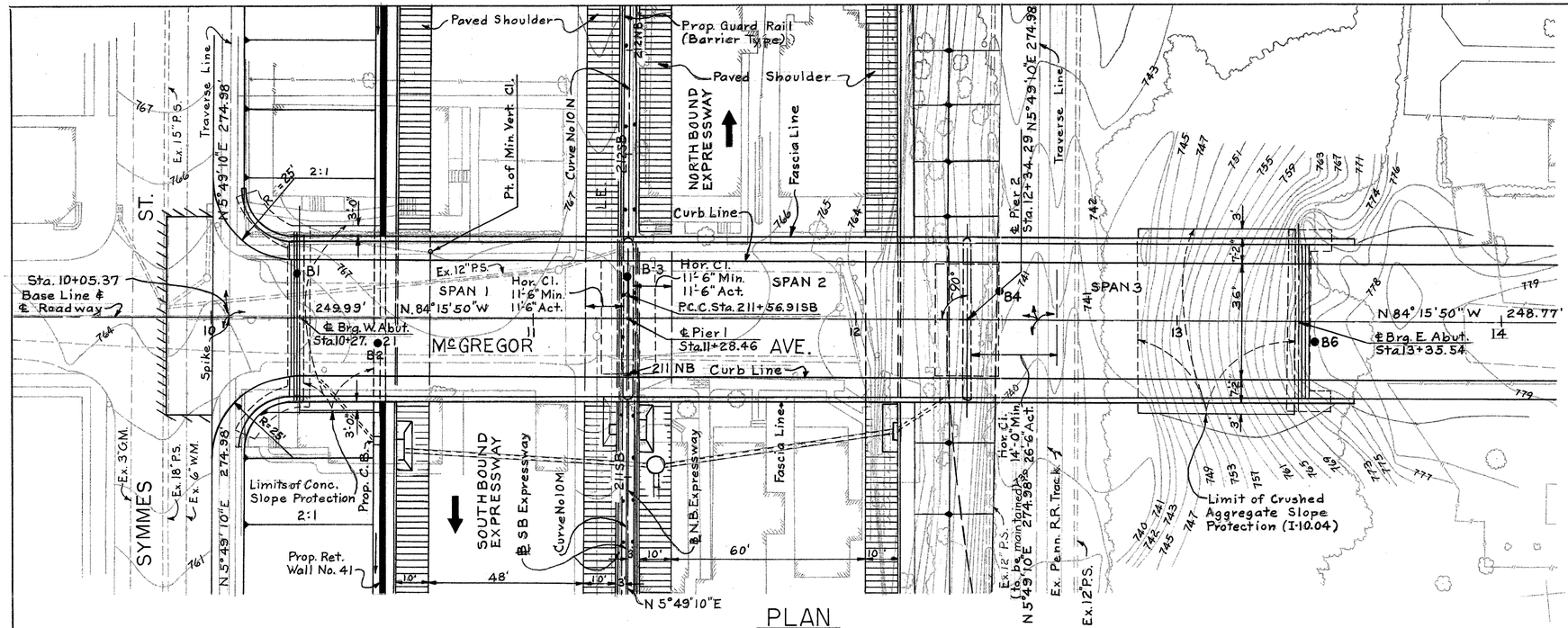

PLAN

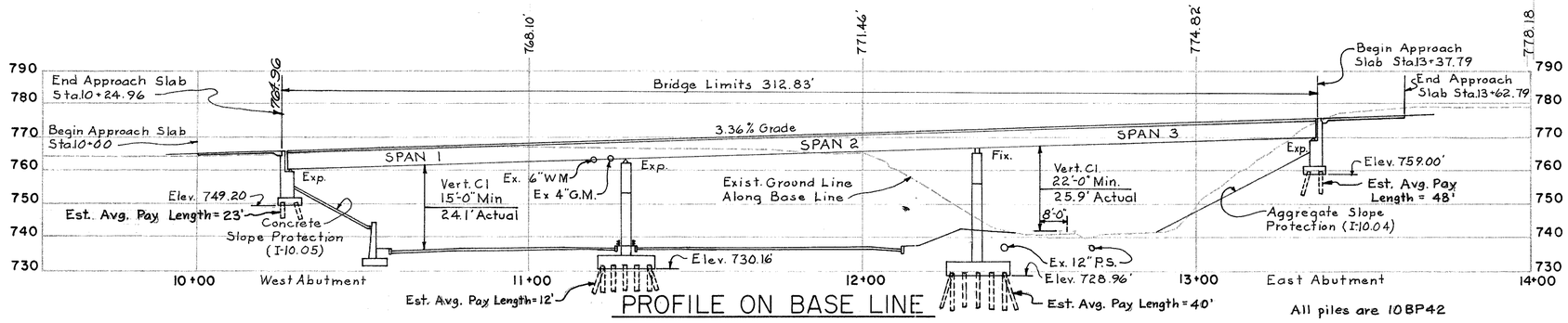

PROFILE ON BASE LINE

All piles are 10BP42

GENERAL NOTES

- Symbol denotes Test Boring

Abutments & Bearings ℄ of Piers are parallel
For Test Boring Data, see sheet 13 of 13
For Bench Marks, see sheet 40

MICROFILMED
FEB 20 1965

PROPOSED STRUCTURE

TYPE: 3 Span Continuous Plate Girder with reinforced concrete deck and substructure
SPANS: 101.25', 105.83', 101.25', ℄ brg. measured along base line.
ROADWAY: 36'-00 ½ curbs
SIDEWALK: 6'-0 Both sides
LOAD FREQUENCY: CF-400(57)

SKEW: None
WEARING SURFACE: 1" Monolithic concrete
APPROACH SLABS: AS-1-54 (25' long)

ALIGNMENT: Tangent
SUPERELEVATION: As shown

1986 Traffic Count ADT = 5400
E. Bound DHV = 460
W. Bound DHV = 380

HAZELET & ERDAL
CONSULTING ENGINEERS
CINCINNATI, OHIO

SITE PLAN
BRIDGE No. HAM-71-0271
McGREGOR AVE. OVER I-71

H & E BRIDGE NO. 20

DESIGNED	DRAWN	TRACED	CHECKED	REVIEWED DATE	REVISED
	A.L.T.	A.L.T.	W.A.Z.	JHO 5/20/65	

FED. RD. DIV.	STATE	PROJECT	FISCAL YEAR
2	OHIO		

431
492

HAMILTON COUNTY
HAM-71-(1.56)(2.51)

ESTIMATED QUANTITIES

	ITEM	TOTAL	UNIT	DESCRIPTION	SUPER-STRUC-TURE	WEST ABUT-MENT	EAST ABUT-MENT	PIER 1	PIER 2	GENERAL
	E-2	Lump	Sum	Cofferdams, Cribs, & Sheeting						Lump
	E-2	1200	Cu. Yds.	Unclassified Excavation		400	380	130	290	
	S-1	570	Cu. Yds.	Class "C" Concrete, Superstructure	570					
	S-1	187	Cu. Yds.	Class "C" Concrete, Piers above Footings				88	99	
	S-1	185	Cu. Yds.	Class "E" Concrete, Abutments above Footings		98	87			
	S-1	307	Cu. Yds.	Class "E" Concrete, Footings		68.7	52.3	87.8	98	
	S-4	222,991	Lbs.	Reinforcing Steel						
*	S-7	560,000	Lbs.	Structural Steel	560000					
*	S-8	560,000	Lbs.	Field Painting of Structural Steel	560000					
	S-14	707	Lin. Ft.	Railing Type "C" (Aluminum Rail & Supports, Concrete Parapet)	619.2	54.8	33.0			
	S-16	Lump	Sum	First Test Pile						Lump
	S-18	4320	Lin. Ft.	Steel Piles, 10BP42		830	1150	540	1800	
	S-25			Electric Lighting System (See Sh. No. 204)						
	S-29	96	Cu. Yds.	Porous Backfill		63	33			
	S-29	130	Lin. Ft.	6" Helical Perforated Corrugated Metal Pipe [Sec. M-6.4(h)] (Including Specials).		86	44			
	S-29	107	Lin. Ft.	6" Helical Non-Perforated Corrugated Metal Pipe [Sec. M-6.4(h)]		47	60			
	S-29	Lump	Sum	Drain Inlets, Including supports and Horizontal Collector System	Lump					
	S-29	113	Lin. Ft.	8" Standard Pipe Downspout, Wrought Iron or Hot-dip Galvanized Steel, Including Specials.		14		44	55	
	I-10	157	Sq. Yds.	Concrete Slope Protection		157				
	I-10	325	Sq. Yds.	Crushed Aggregate Slope Protection			325			
	S-101	570	Each	Water-Reducing, Set-Retarding Admixture	570					

* ITEMS CHARGEABLE TO CINCINNATI GAS & ELECTRIC CO

ITEM	UNIT	DESCRIPTION	TOTAL
S-7	Lbs.	Structural Steel	4940
S-8	Lbs.	Field Painting of Structural Steel	4940

GENERAL NOTES

REFERENCE shall be made to Standard Drawing I-15, No. 6

POROUS BACKFILL: 1'-6" thick, full length of abutments and wings of West Abutment shall extend up to the underside of the approach slab or to the finished ground surface.

MACHINE FINISH: The Concrete bridge deck shall be finished by the use of a finishing machine.

RAILROAD AERIAL LINES will be relocated by the railroad. The contractor shall use all precautions necessary to see that the lines are not disturbed during the construction stage and shall cooperate with the railroad in the relocation of these lines. The cost of the relocation shall be included in the railroad force account work.

CONSTRUCTION CLEARANCE of 21'-0" vertically above the top of the railroad rails and 8'-0" horizontally from the center of tracks shall be maintained at all times.

SHEETING AND BRACING: Before construction is started, eight sets of prints showing details of the sheeting and bracing to be used for excavation adjacent to the railroad tracks shall be submitted to the Director for approval by the Department of Highways and by the Railroad Company.

ALIGNING RAILROAD TRACKS: After the Contractor has completed all excavation and backfill adjacent to the railroad tracks in compliance with Sec. E-2.04 and E-2.08 of the Construction and Material Specifications, subject to the Supervision of the Railroad Company, nothing in Sec. E-2.04, E-2.08 or G-8.07 of the Specifications shall be construed to hold the Contractor liable for aligning and resurfacing the railroad tracks.

Piles shall be driven with a hammer of not less than 11,000 ft. lbs. per blow to firm contact with limestone. If the length of penetration is approximately equal to the depth of limestone according to the bridge foundation investigation report, the firm contact shall be considered as attained when the capacity according to the formula in Sec. S-18.05 is not less than the following value for a pile hammer of the indicated energy rating.

50 Tons per pile for West Abutment using an 11,000 ft. lb. hammer
45 Tons per pile for West Abutment using a 15,000 ft. lb. hammer
50 Tons per pile for Piers No. 1, 2 using an 11,000 ft. lb. hammer
45 Tons per pile for Piers No. 1, 2 using a 15,000 ft. lb. hammer
50 Tons per pile for East Abutment using an 11,000 ft. lb. hammer
45 Tons per pile for East Abutment using a 15,000 ft. lb. hammer

If the energy rating of the hammer is between the rating as shown above, the required formula capacity shall be determined by interpolation. The design load is 35 Tons per pile.

ADDITIONAL NOTES: For additional notes see notes 1, 2, 3, 5, 6, 7, & 8, Sh. No. 443

Design Loading - CF 2000 (57)
Concrete Class C - basic unit stress 1,333 p.s.i.
Concrete Class E - basic unit stress 1,133 p.s.i.
Structural Steel - ASTM A 36 - basic unit stress 20,000 p.s.i.
(Except for Piles, ASTM A7 and A373 steel not permitted)
Reinforcing Steel - ASTM A15, A16, A160, Deformed, Intermediate or Hard Grade. Basic unit stress 20,000 p.s.i.

MICROFILMED
FEB 20 1985

HAZELET & ERDAL
CONSULTING ENGINEERS
CINCINNATI, OHIO

ESTIMATED QUANTITIES AND GENERAL NOTES
BRIDGE No. HAM.-71-0271

H&E BRIDGE No 20

DESIGNED	DRAWN	TRACED	CHECKED	REVIEWED DATE	REVISED
	CIB		JHO	H.A.B. 5-20-65	

FED. RD. DIV.	STATE	PROJECT	FISCAL YEAR
2	OHIO		

432
492

HAMILTON COUNTY
HAM-71-(1.56)(2.51)

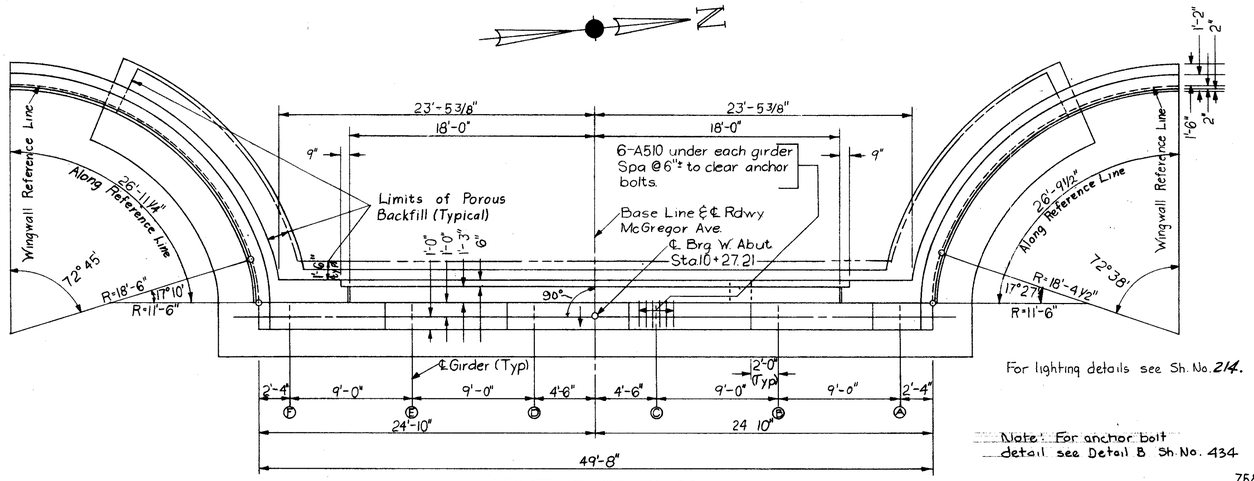

ABUTMENT PLAN

For lighting details see Sh. No. 214.

Note: For anchor bolt detail see Detail B Sh. No. 434

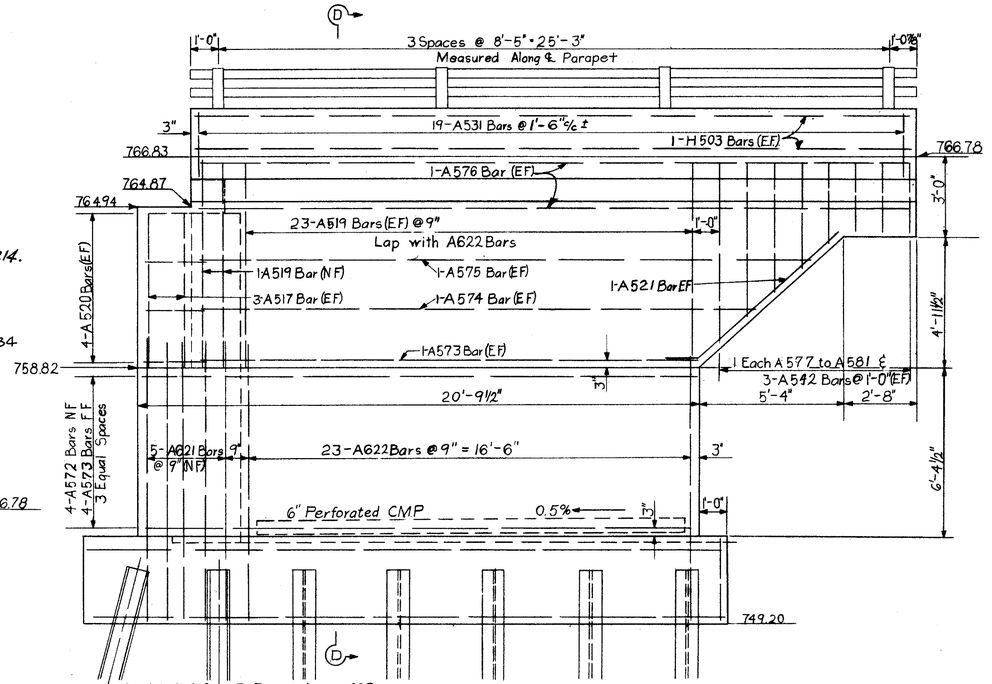

NORTH WINGWALL

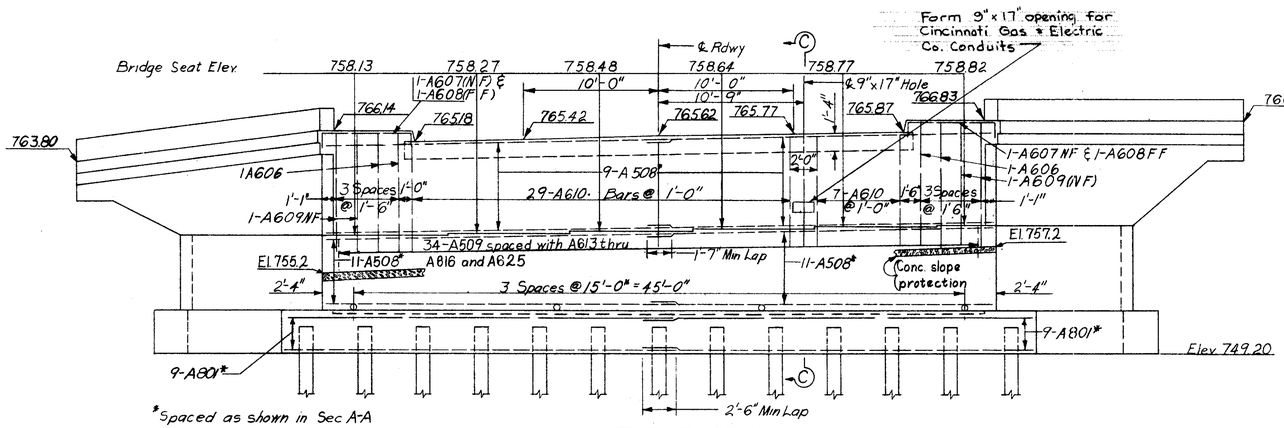

FRONT ELEVATION

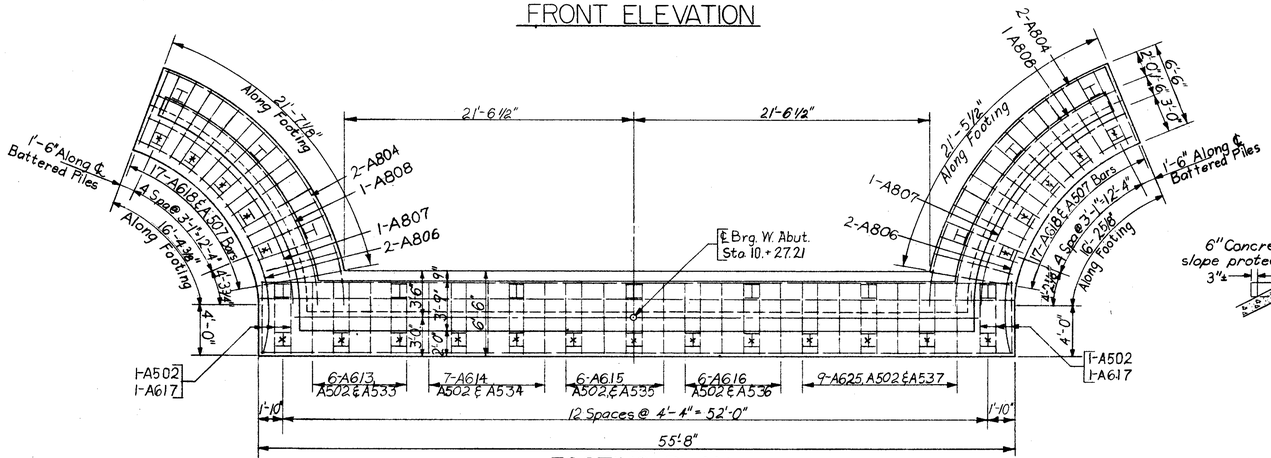

FOOTING PLAN

℄ Indicates battered piles

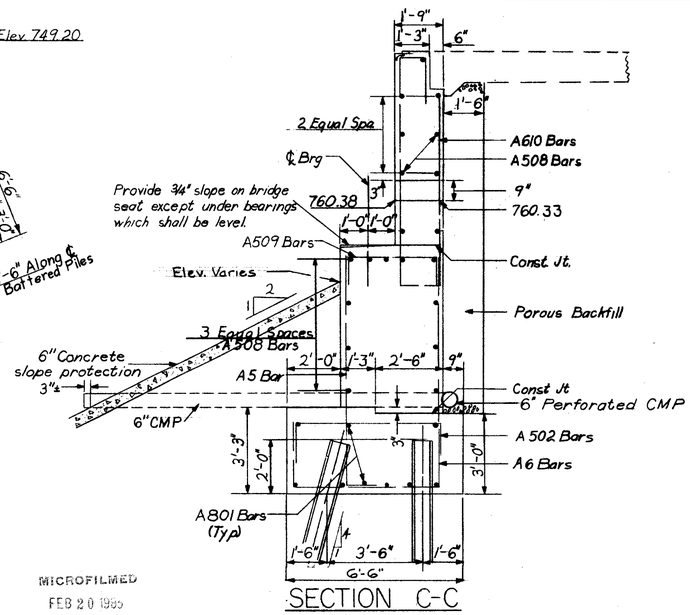

SECTION C-C

Notes: Bars A538 thru A541, A572 thru A576 and H502, H503 will be bent in the field.
For general notes see sh No. 434

Work this sheet with sheet 433

HAZELET & ERDAL
CONSULTING ENGINEERS
CINCINNATI, OHIO

WEST ABUTMENT

BRIDGE No. HAM.-71-0271

H&E BRIDGE No. 20

DESIGNED	DRAWN	TRACED	CHECKED	REVIEWED DATE	REVISED
	ME		JHO	W. A. E. 5-20-65	

MICROFILMED
FEB 20 1965

FED. RD. DIV.	STATE	PROJECT	FISCAL YEAR
2	OHIO		

433
492

HAMILTON COUNTY
HAM-71-(1.56)(2.51)

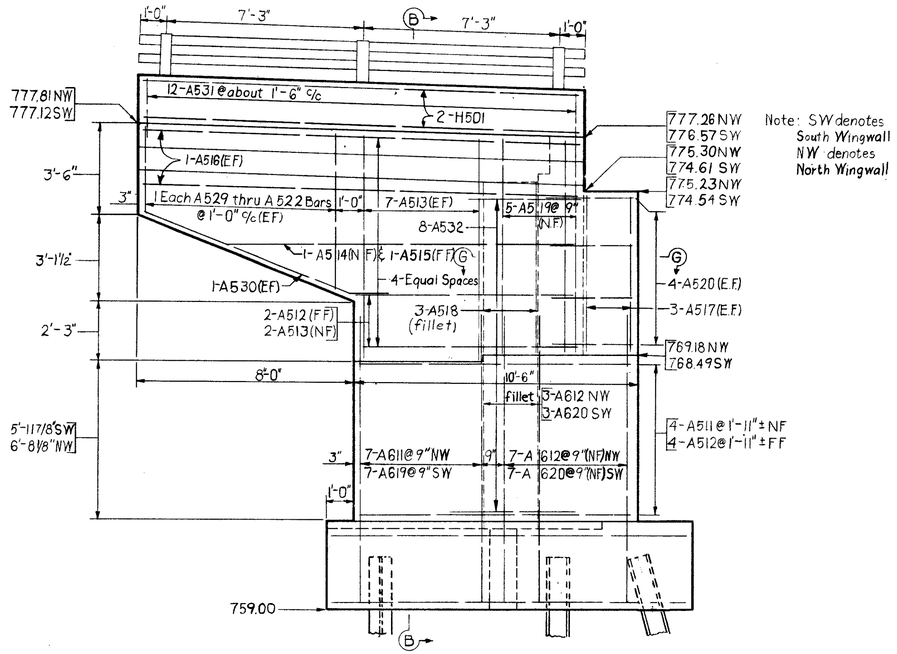

EAST ABUTMENT WINGWALL ELEVATIONS

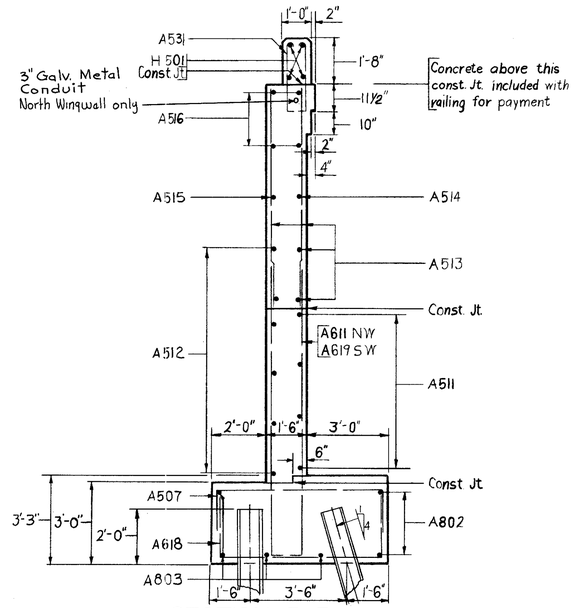

SECTION B-B

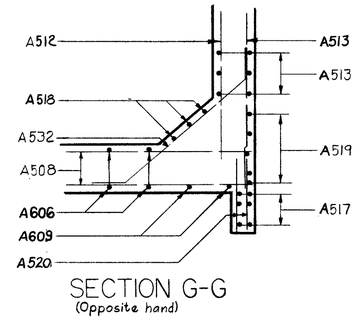

SECTION G-G
(Opposite hand)

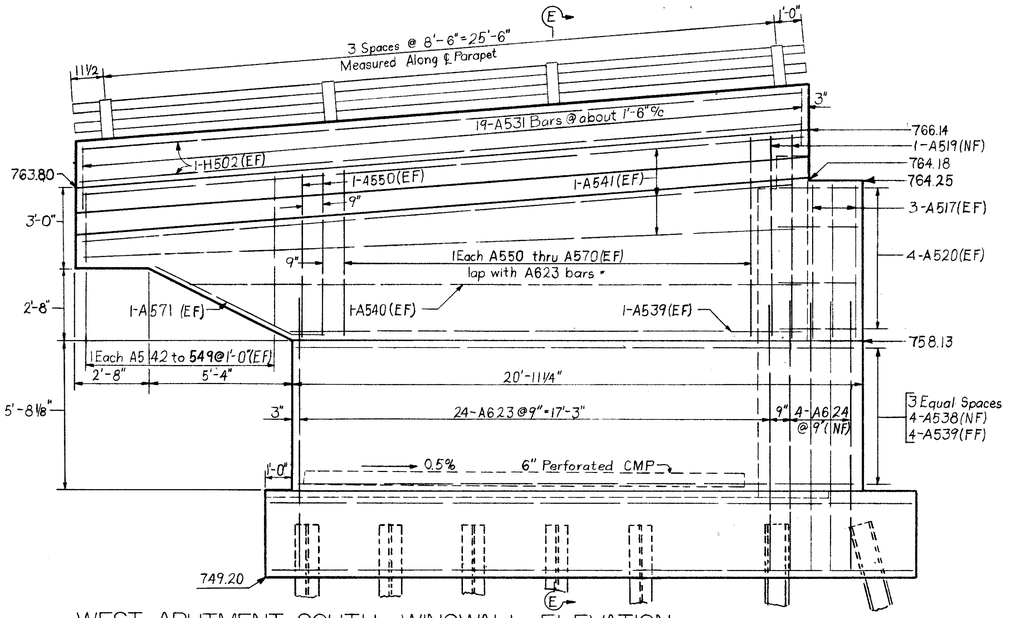

WEST ABUTMENT SOUTH WINGWALL ELEVATION

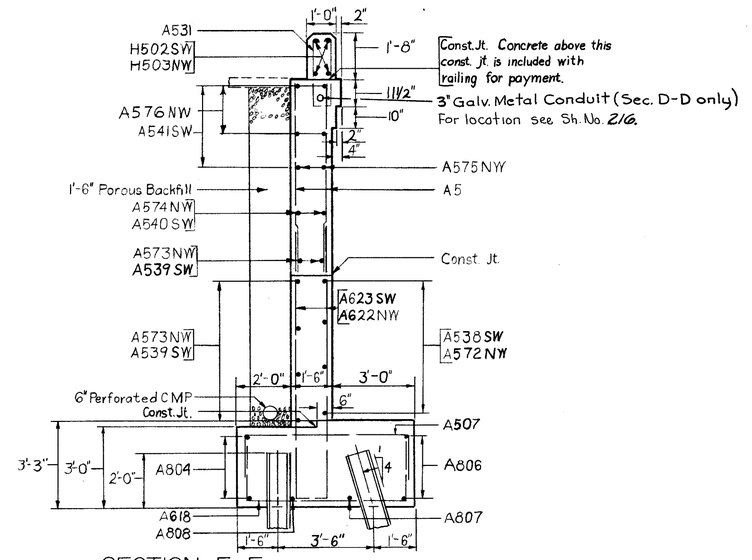

SECTION E-E SOUTH WINGWALL
SECTION D-D NORTH WINGWALL
For location of Sect. D-D see sh. no. 432

MICROFILMED
FEB 20 1985

Work this sheet with Sheets 432 & 434

HAZELET & ERDAL
CONSULTING ENGINEERS
CINCINNATI, OHIO

ABUTMENT WINGWALL DETAILS

BRIDGE No. HAM.-71-0271

H&E BRIDGE NO. 20

DESIGNED	DRAWN	TRACED	CHECKED	REVIEWED DATE	REVISED
	ME		JHO	N.A.Z. 5-20-65	

FED. RD. DIV.	STATE	PROJECT	FISCAL YEAR
2	OHIO		

434
492

HAMILTON COUNTY
HAM-71-(1.56)(2.51)

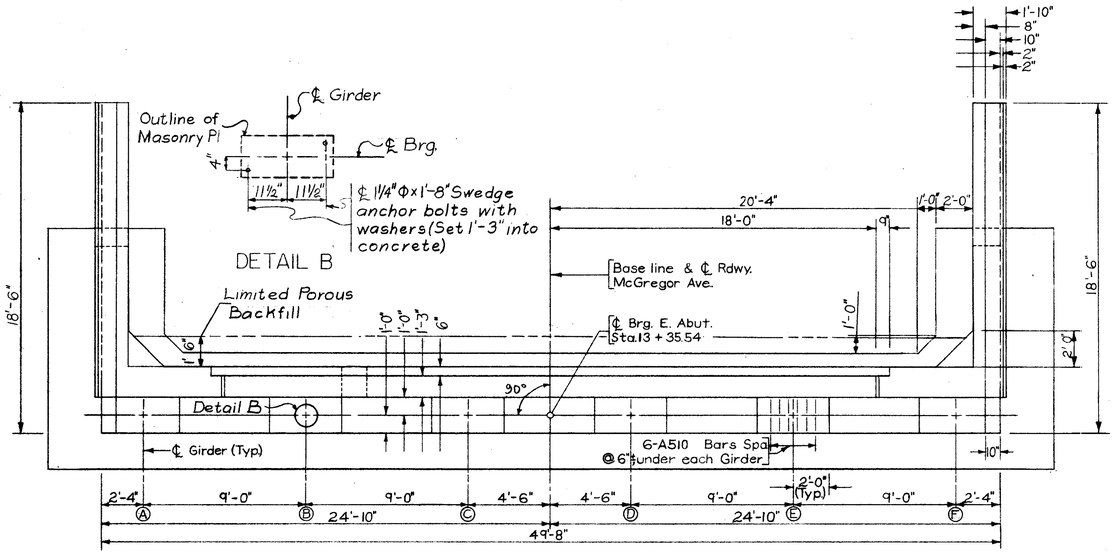

For lighting details see Sh. No. 214.

ABUTMENT PLAN

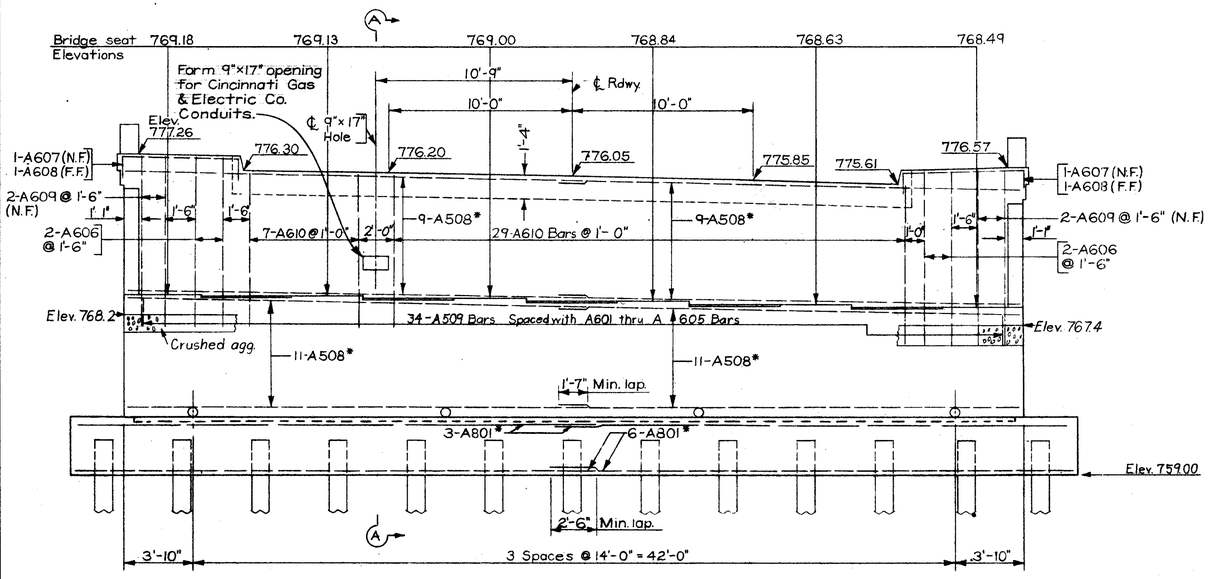

* Spaced as shown in Sec. A-A

FRONT ELEVATION

MICROFILMED
FEB 20 1985

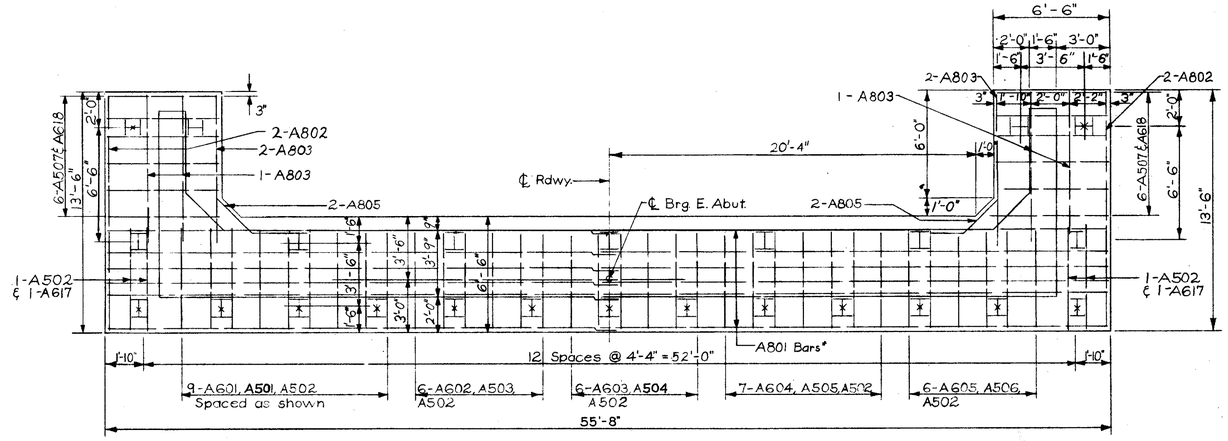

X Indicates battered piles

FOOTING PLAN

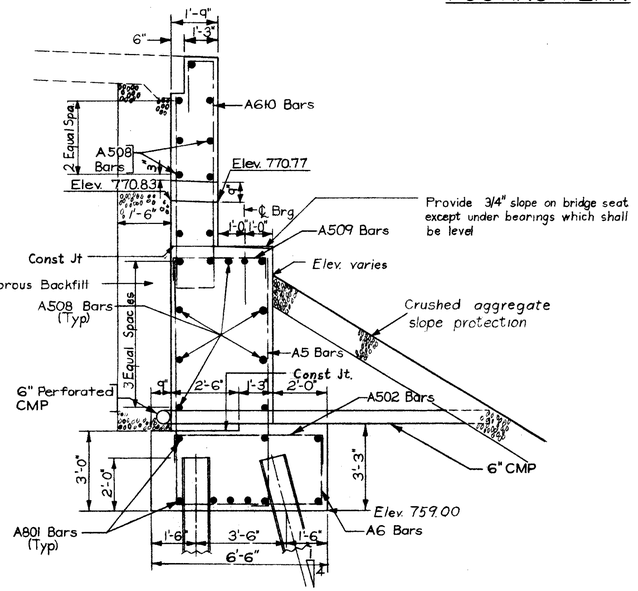

SECTION A-A

Notes:
N.F. denotes near face. F.F. denotes far face. E.F. denotes each face.
Provide 3" clearance to reinforcing steel in footing, and 2" clearance to reinforcing steel in wall, minimum.
Special care shall be taken in placing steel in the abutment seat, so that it will not interfere with the drilling of anchor bolt holes.
Top of backwall elevations shown are at the near face of backwall.
Concrete above bridge seat constr. Jt. shall be placed after superstructure steel is in place.
For roadway & sidewalk end finish details see Sh. 437
For railing details see Sh. 433
All piles are 10 BP 42.

MICROFILMED
FEB 20 1985

Work this sheet with Sh. No. 433

HAZELET & ERDAL
CONSULTING ENGINEERS
CINCINNATI, OHIO

EAST ABUTMENT

BRIDGE No HAM.-71-0271

H&E BRIDGE No. 20

DESIGNED	DRAWN	TRACED	CHECKED	REVIEWED DATE	REVISED
	CIB		JHO	7-1-64, 5-20-65	

FED. RD. DIV.	STATE	PROJECT	FISCAL YEAR
2	OHIO		

435
492

HAMILTON COUNTY
HAM-71-(1.56)(2.51)

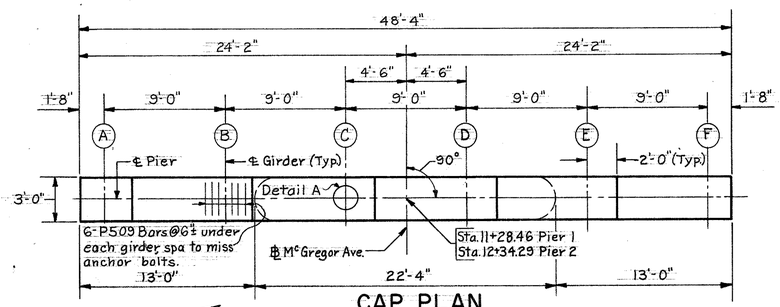

CAP PLAN

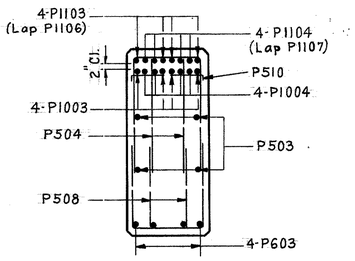

SECTION A-A

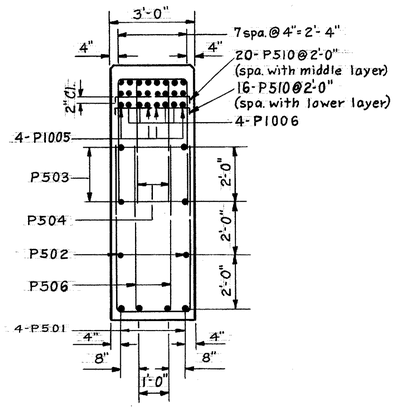

SECTION B-B

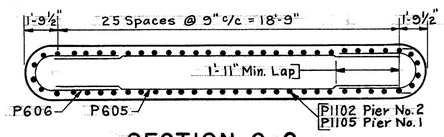

SECTION C-C

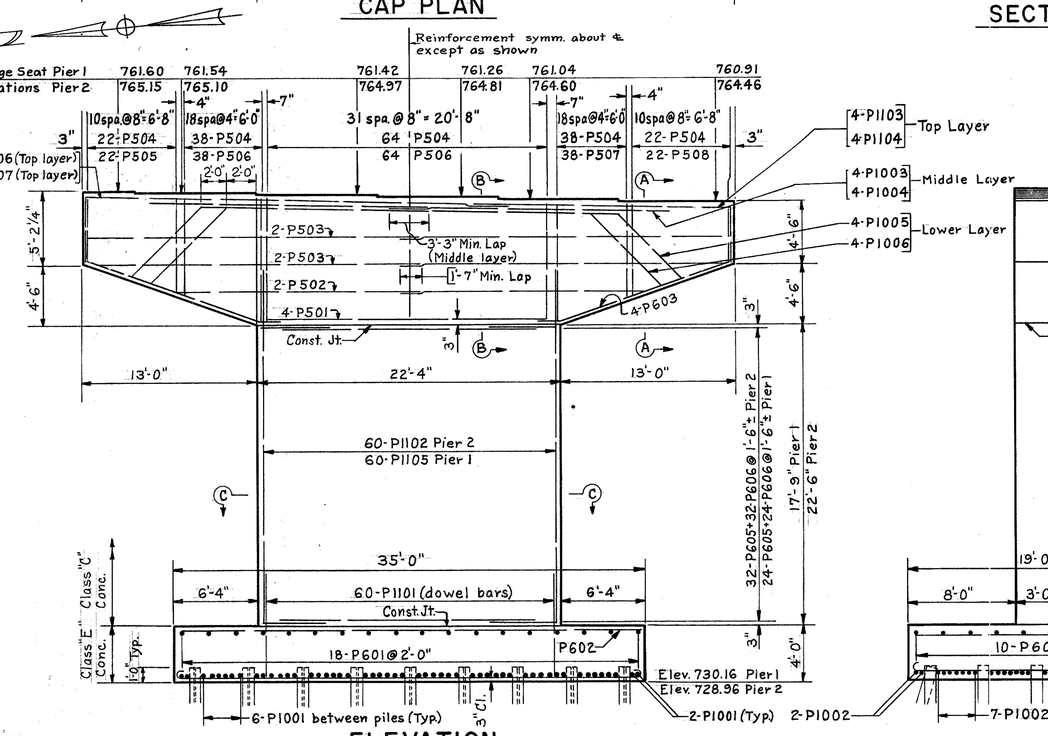

ELEVATION

Footing shown for Pier 2 only
for Pier 1 see Section D-D

For Ground Wire to be encased in North end of Pier 2 see note on sheet 216.

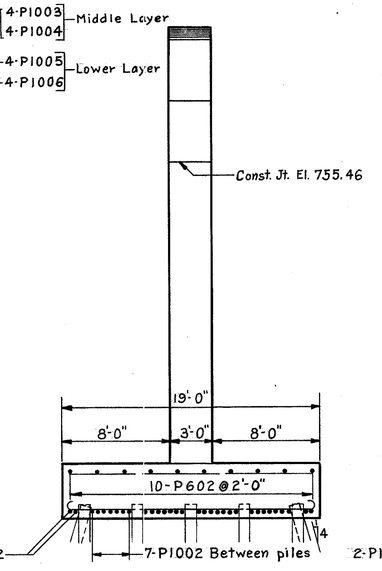

END ELEVATION PIER 2

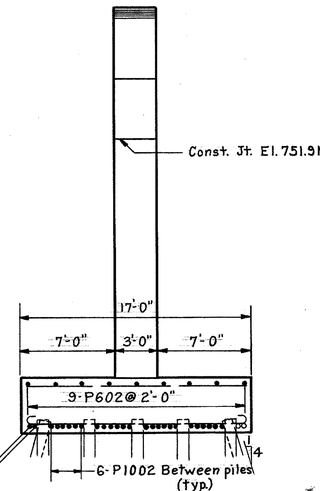

END ELEVATION PIER 1

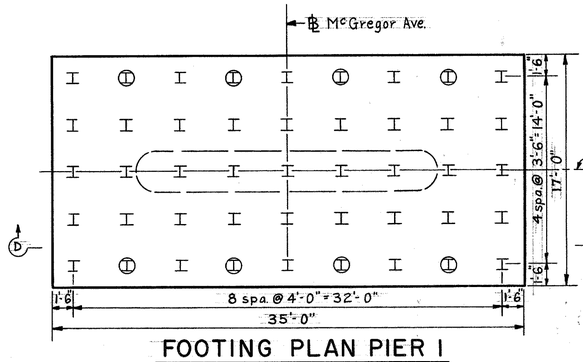

FOOTING PLAN PIER 1

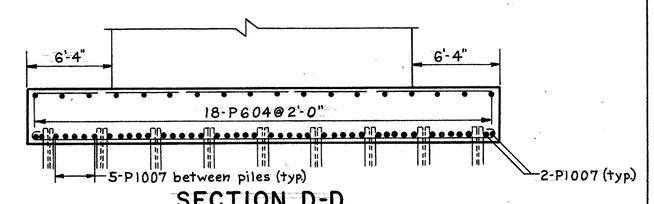

SECTION D-D

Notes: Ⓣ denotes battered piles.
All piles to be 10 BP 42
All reinforcing steel shall be 2" clear from face of concrete except as shown.
Special care shall be taken in placing reinforcing in cap so that it will not interfere with the masonry plate anchor bolts.
Special care shall be taken in placing reinforcing steel in top of footing of Pier No. 1 so as to avoid interference with the drilling of anchor bolt holes for anchoring guard rail posts to footing as shown on Standard Drawing I-15 No. 6.

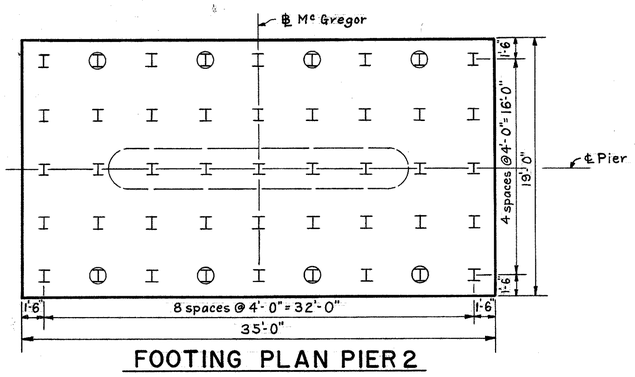

FOOTING PLAN PIER 2

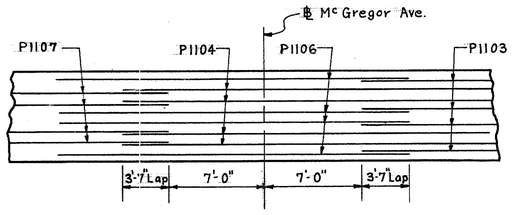

VIEW D-D

Showing Top Layer of Bars in Cap

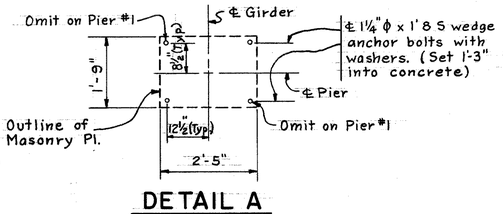

DETAIL A

MICROFILMED
FEB 20 1985

HAZELET & ERDAL
CONSULTING ENGINEERS
CINCINNATI, OHIO

PIERS 1 & 2

BRIDGE NO. HAM.-71-0271

H & E BRIDGE No. 20

DESIGNED	DRAWN	TRACED	CHECKED	REVIEWED DATE	REVISED
	ME	RS	JHO	H.A.E. 5-20-65	

FED. RD. DIV.	STATE	PROJECT	FISCAL YEAR
2	OHIO		

436
492

HAMILTON COUNTY
HAM-71-(1.56)(2.51)

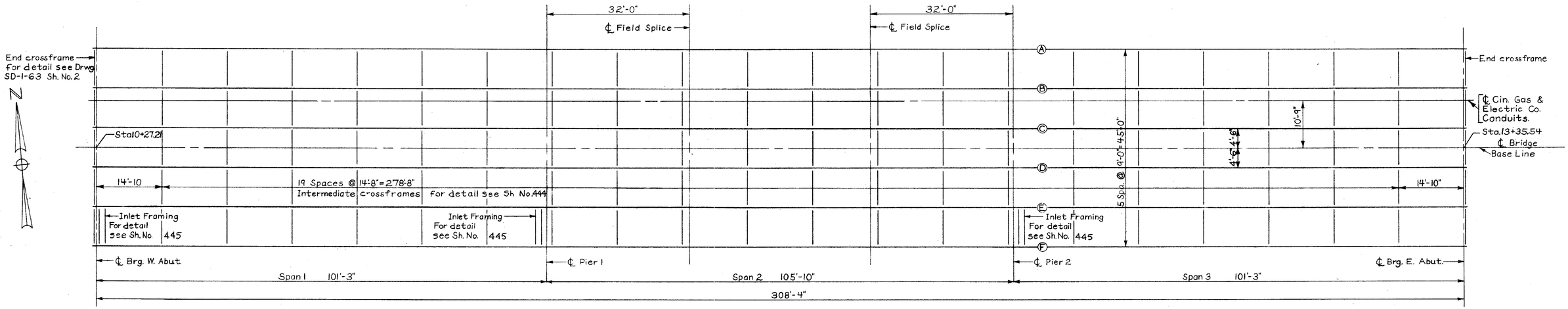

FRAMING PLAN

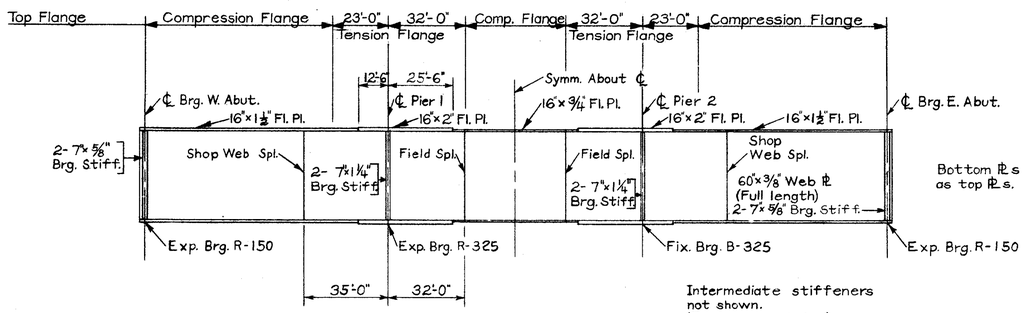

GIRDER ELEVATION

For bearing details see Sh. No. 438

For typical plate girder elevation see Sh. No. 444
For detail of roadway and sidewalk end dam details see Sh. No. 437

For treatment of ends of bridge see Drawing No. SD-1-63, Sh. No. 2, "Longitudinal Section."

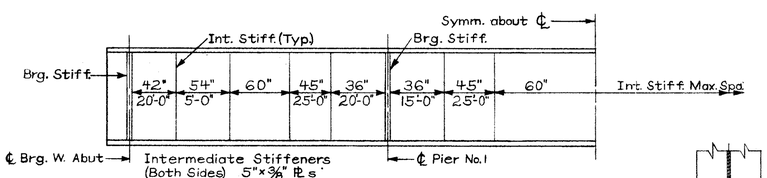

INTERMEDIATE STIFFENER SPACING

Girder	Deflection Due to:	①	②	③	④	⑤	⑥	⑦	⑧	⑨
A&F	Steel Wt.	3/16"	3/16"	1/8"	0	1/16"	0	1/8"	3/16"	3/16"
	Remaining DL	11/16"	13/16"	3/8"	0	3/16"	0	3/8"	13/16"	11/16"
	Total D.L.	7/8"	1"	1/2"	0	1/4"	0	1/2"	1"	7/8"
B thru E	Steel Wt.	1/8"	3/16"	1/8"	0	1/16"	0	1/8"	3/16"	1/8"
	Remaining DL	5/8"	11/16"	3/8"	0	3/16"	0	3/8"	11/16"	5/8"
	Total D.L.	3/4"	7/8"	1/2"	0	1/4"	0	1/2"	7/8"	3/4"

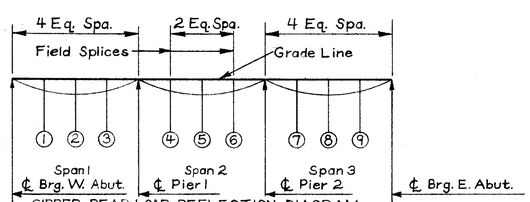

GIRDER DEAD LOAD DEFLECTION DIAGRAM

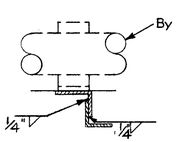

SECTION B-B

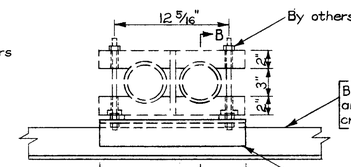

TREATMENT OF END CROSSFRAME FOR CONDUIT SUPPORT

Note: Bottom angles of intermediate crossframes and end crossframes to be shop punched as shown on Sect. A-A for conduits.

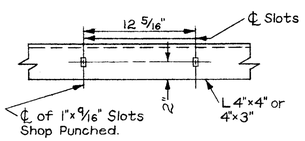

SECTION A-A

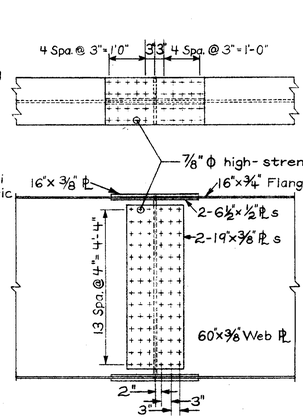

FIELD SPLICE

Note: Contact surface of splice shall be free of all oil or paint.

Note: Bottom flange splice material same as top flange splice material.

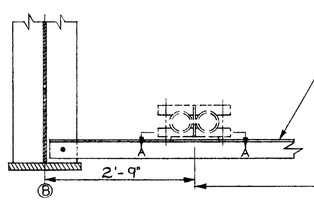

ELECTRIC CONDUIT SUPPORT DETAIL

Note: Camber girders by cutting webs to a smooth curve. Camber shall be equal to the total dead load deflection ordinates shown in box.

MICROFILMED
FEB 20 1985

ITEMS CHARGEABLE TO CINCINNATI GAS & ELECTRIC CO.			
Item	Unit	Description	Amount
S-7	Lbs.	Structural Steel	4940

MICROFILMED
FEB 20 1985

HAZELET & ERDAL
CONSULTING ENGINEERS
CINCINNATI, OHIO

STRUCTURAL STEEL DETAILS
BRIDGE No. HAM-71-0271

H&E BRIDGE No. 20

DESIGNED	DRAWN	TRACED	CHECKED	REVIEWED DATE	RE
	CIB		JHO 7/28/64	7/A.E. 5-20-65	

FED. RD. DIV.	STATE	PROJECT	FISCAL YEAR
2	OHIO		

437
492

HAMILTON COUNTY
HAM-71-(1.56)(2.51)

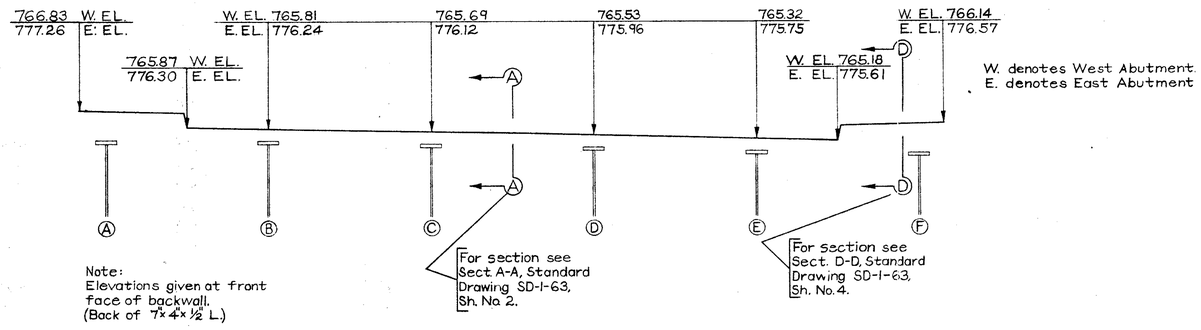

EXPANSION JOINT CROSS SECTION

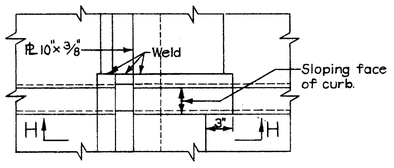

PART PLAN

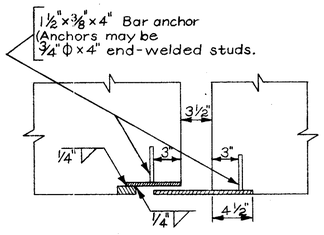

SECTION K K

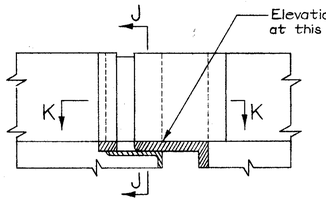

SECTION H-H

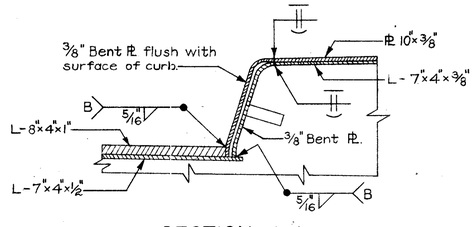

SECTION J J

CURB PLATE DETAILS

MICROFILMED
FEB 20 1985

HAZELET & ERDAL
CONSULTING ENGINEERS
CINCINNATI, OHIO

STRUCTURAL STEEL DETAILS
BRIDGE No. HAM.-71-0271

H&E BRIDGE No 20

DESIGNED	DRAWN	TRACED	CHECKED	REVIEWED DATE	REVISED
	CIB		JHQ	H.A.E. 5-20-65	

FED. RD. DIV.	STATE	PROJECT	FISCAL YEAR
2	OHIO		

438
492

HAMILTON COUNTY
HAM-71-(1.56)(2.51)

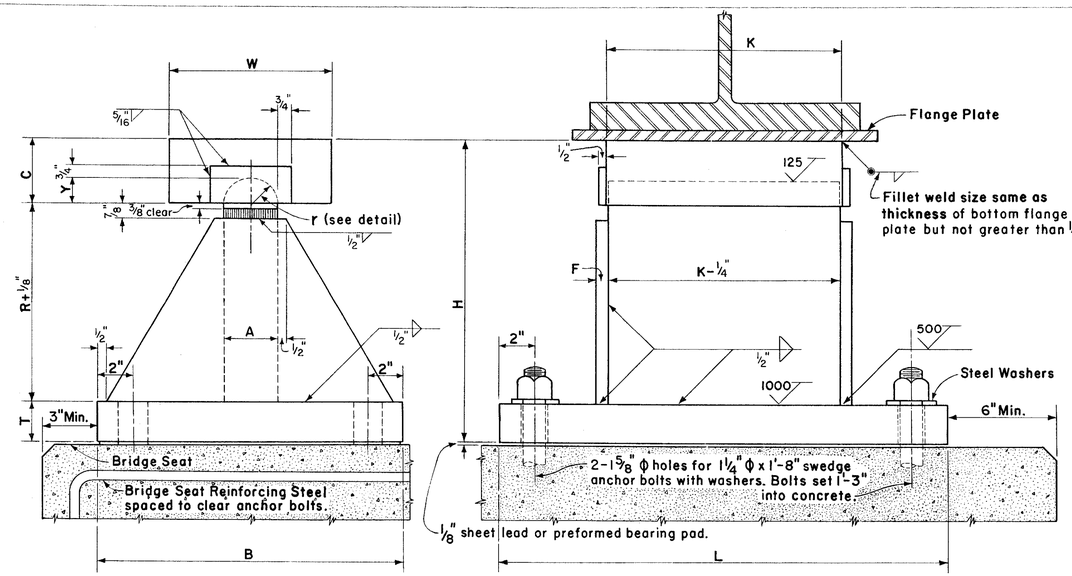

STRUCTURAL STEEL BOLSTER

See Table below for additional dimensions.

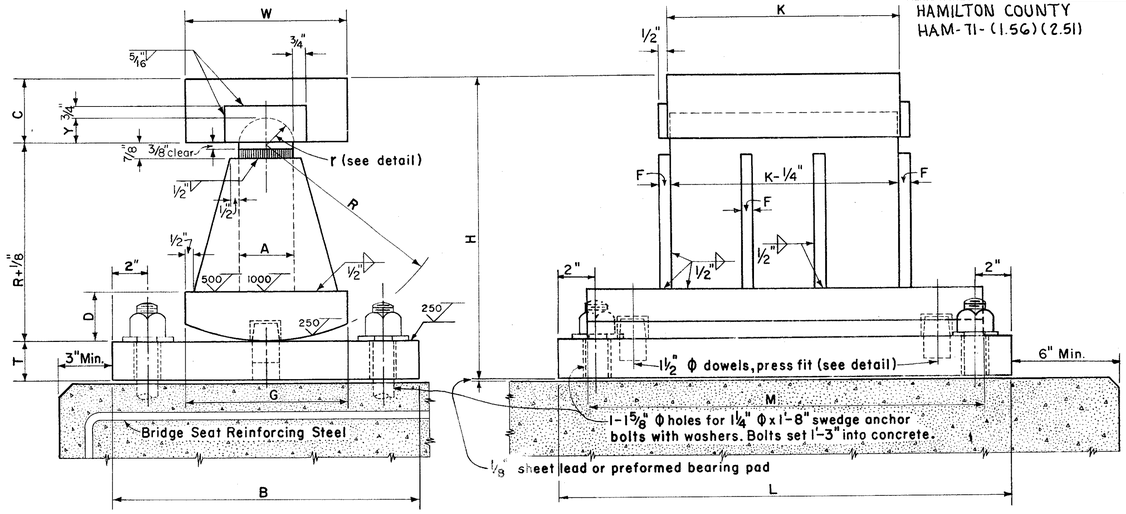

STRUCTURAL STEEL ROCKER

See Table below for additional dimensions.

BOLSTER No.	ROCKER No.	A	B	C	D	F	G	H	K	L	M	R	T	W	Y
B-325	R-325	4	21	4	3 1/2	3/4	13	20 3/8	15	29	26	13	3 1/4	9	1 15/16
	R-150	3	12	3	2 1/4	1/2	8 1/2	13 3/8	11 1/2	27	19	8 1/2	1 3/4	9	1 7/16

Design Specifications: This drawing conforms to the requirements of "Design Specifications for Highway Structures" of the State of Ohio, Department of Highways, dated Sept. 1, 1957, together with revisions thereof dated Feb. 21, 1958.

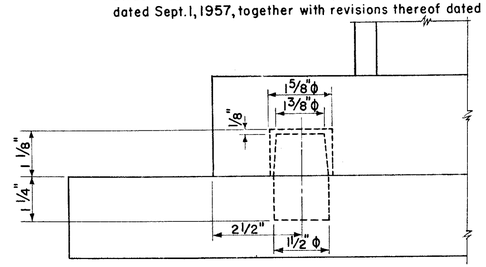

DOWEL DETAIL

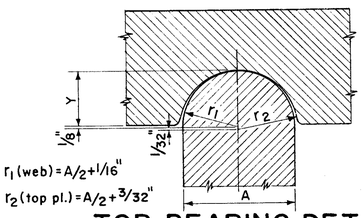

r_1 (web) = $A/2 + 1/16$"

r_2 (top pl.) = $A/2 + 3/32$"

TOP BEARING DETAIL

HAZELET & ERDAL
CONSULTING ENGINEERS
CINCINNATI, OHIO

ROCKERS AND BOLSTERS

DESIGNED	DRAWN	TRACED	CHECKED	REVIEWED DATE	REVISED
			JHO	H.A.Z. 5-20-65	

MICROFILMED
FEB 20 1965

FED. RD. DIV.	STATE	PROJECT	FISCAL YEAR
2	OHIO		

439
492

HAMILTON COUNTY
HAM-71-(1.56)(2.51)

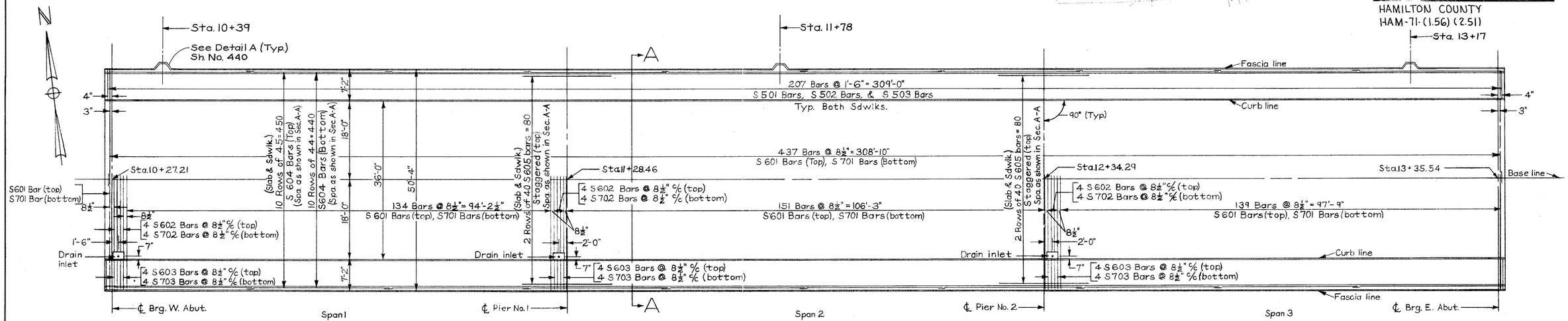

PLAN

All longitudinal bars S 604 except as otherwise shown Lap S604 bars 1'-11" minimum.

Notes:
For drainage details see Sh. No. 441
For end finish details see Sh. No. 437

For lighting details see Sh. No. 216.
For railing details and spacing of bars in parapet, see Sh. No. 440
Field bend or cut longitudinal bars where necessary to miss inlets.

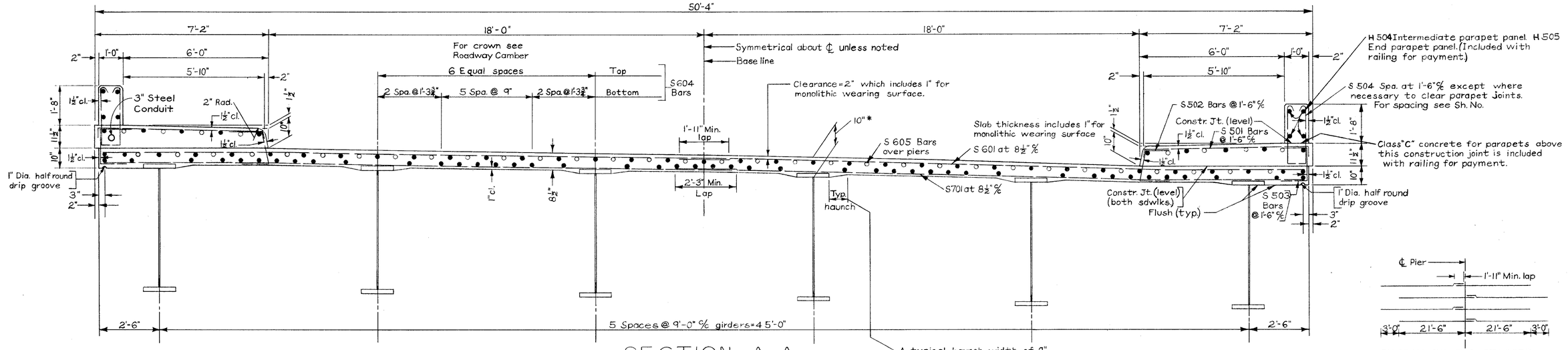

SECTION A-A

* This is the nominal dimension. The quantity of deck concrete to be paid for shall be based upon this dimension, even though deviation from it may be necessary because the top flange of the girder may not have the exact camber or conformation required to place it parallel to the finished grade. Deduction shall be made for volume of encased steel plates as per Sec. S-1.25 of the Construction and Material Specifications.

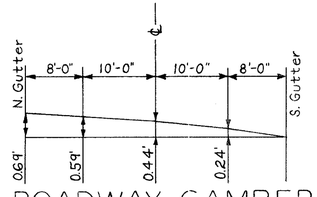

ROADWAY CAMBER

A typical haunch width of 9" shall be used for computing quantity of concrete. However, the haunch width may vary between 6" and 12" provided that the slope shall be not more than 1:4 for a haunch less than 9" in width.

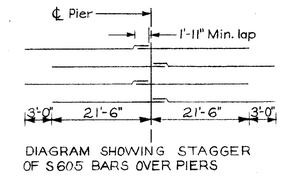

DIAGRAM SHOWING STAGGER OF S605 BARS OVER PIERS

REINFORCING STEEL: The S601 and S701 Bars may be furnished in pairs of equal lengths (as shown), lapped 30 diameters at the centerline of roadway, or they may be furnished in pairs of different length in order to place the lap beyond a longitudinal construction joint at the centerline of roadway, at the option of the contractor. Determination of the pay quantity will be according to the number and length of bars as shown on Reinforcing Steel List.

MICROFILMED
FEB 20 1985

HAZELET & ERDAL
CONSULTING ENGINEERS
CINCINNATI, OHIO

SUPERSTRUCTURE DETAILS

BRIDGE No. HAM-71-0271

H&E BRIDGE No. 20

DESIGNED	DRAWN	TRACED	CHECKED	REVIEWED DATE	REVISED
	CIB		JHC 7/28/64	A.A.B. 5-20-65	

FED. RD. DIV.	STATE	PROJECT	FISCAL YEAR
2	OHIO		

HAMILTON COUNTY
HAM-71-(1.56)(2.51)

440
492

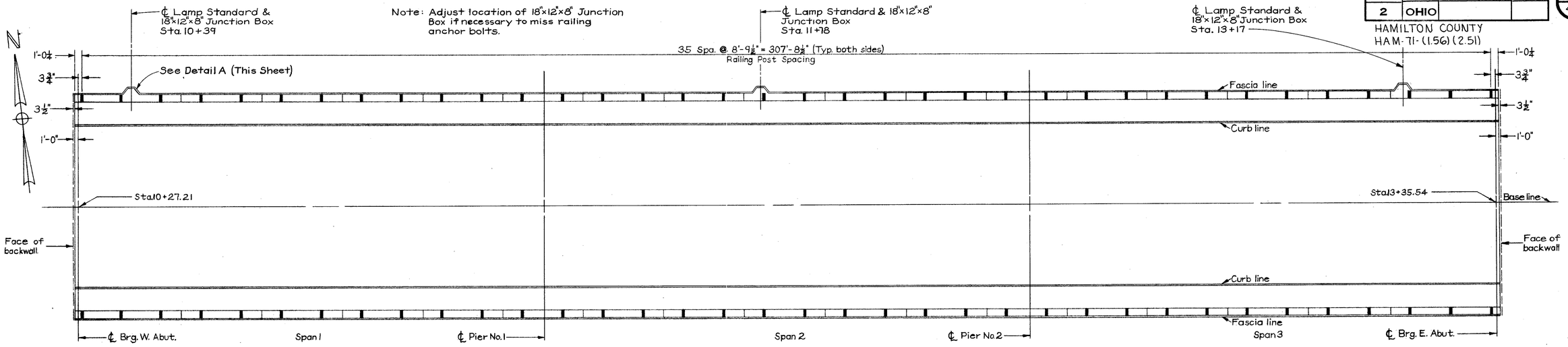

PLAN

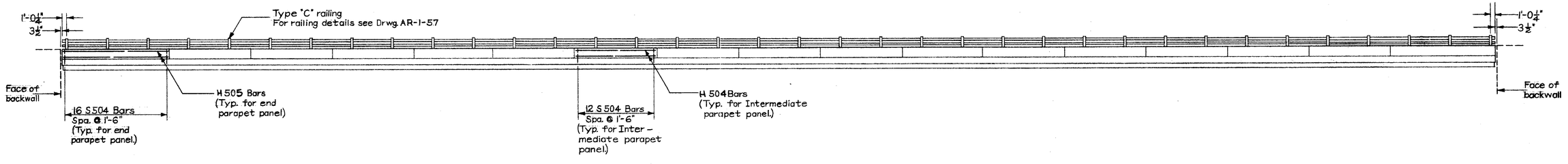

ELEVATION

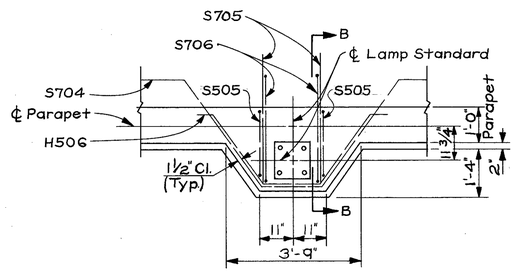

DETAIL A

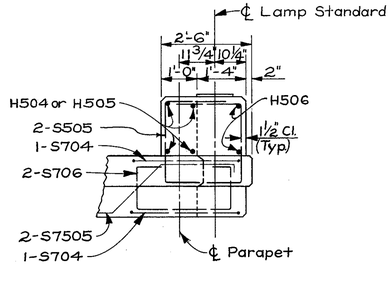

SECTION B-B

Note: Work this drawing with Lighting Plan, Sheet No. 207.
For typical lighting details see Sh. No. 216

For conduit expansion at abutments see Sh. No. 214.

MICROFILMED
FEB 20 1985

HAZELET & ERDAL
CONSULTING ENGINEERS
CINCINNATI, OHIO

RAILING & LIGHTING

BRIDGE No. HAM-71-0271

H&E BRIDGE No. 20

DESIGNED	DRAWN	TRACED	CHECKED	REVIEWED DATE	REVISED
	CIB		JHO	N.A.Z. 5-20-65	

FED. RD. DIV.	STATE	PROJECT	FISCAL YEAR
2	OHIO		

441
492

HAMILTON COUNTY
HAM-71-(1.56)(2.51)

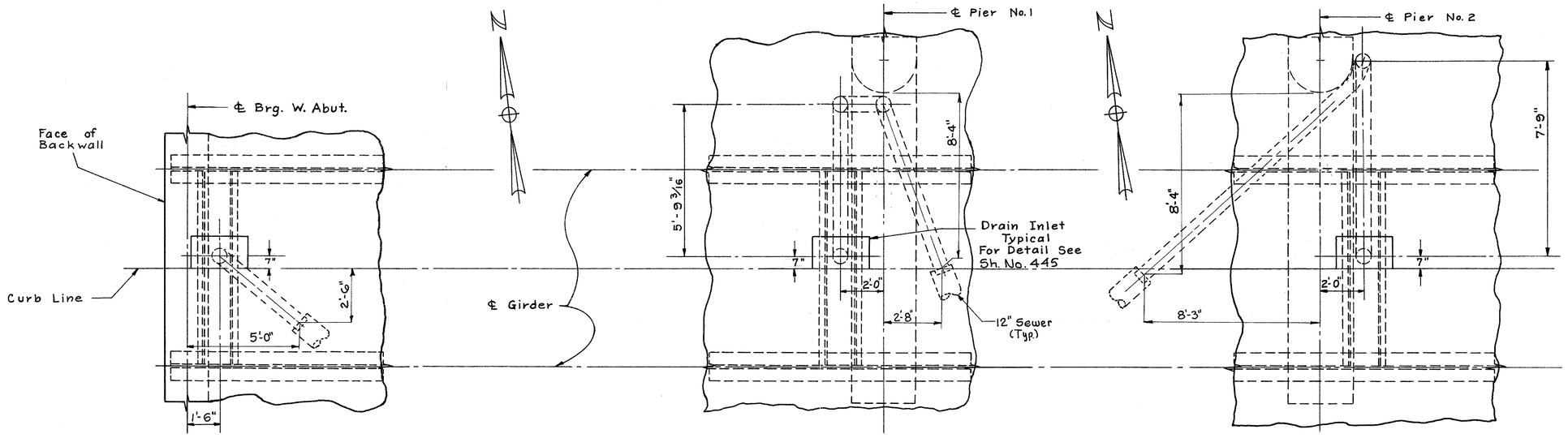

PLAN

Note: Total Depth of Inlet Frame Box at W. Abut., Pier No. 1, and Pier No. 2 Equal 7¼".

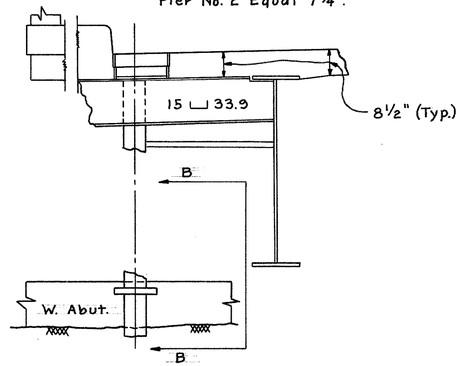

ELEVATION
(LOOKING WEST)

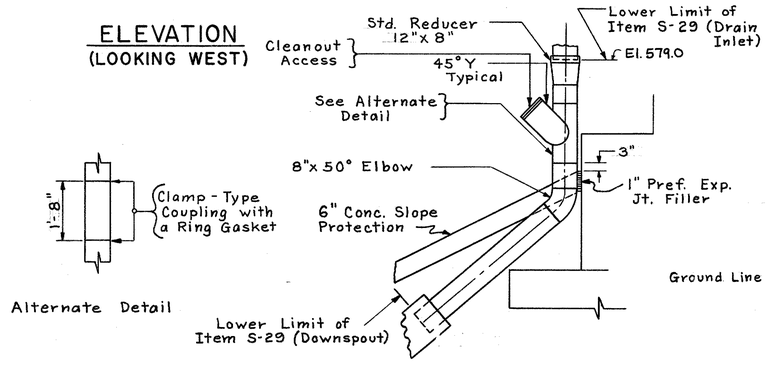

SECTION B-B

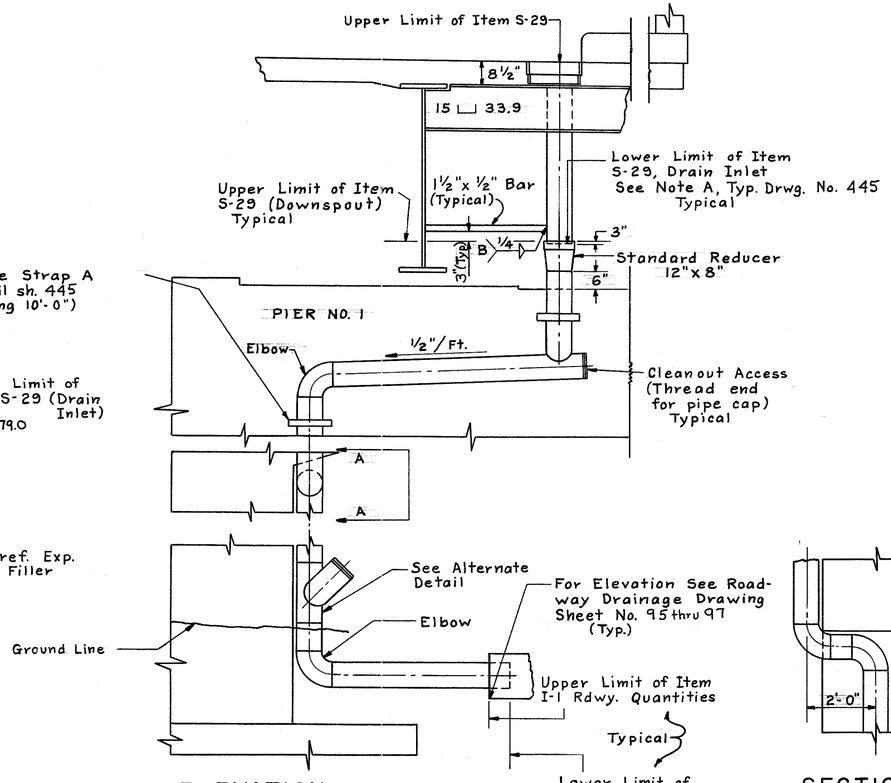

ELEVATION
(LOOKING EAST)

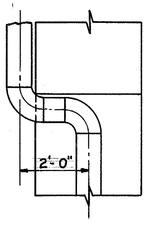

SECTION A-A

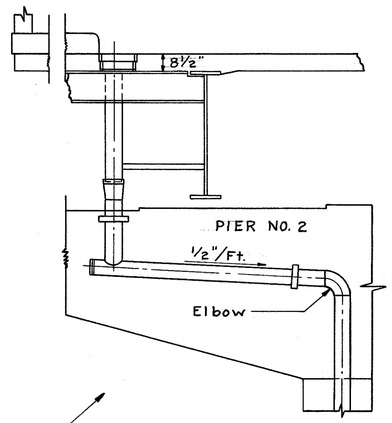

All Notes and Dimensions on Pier No. 1 Elevation Apply to Pier No. 2 Elevation

ELEVATION
(LOOKING WEST)

8" Pipe Throughout

Work This Drawing With Typical Drawing Sheet No. 445 "Typical Drainage Details"

MICROFILMED
FEB 20 1965

HAZELET & ERDAL
CONSULTING ENGINEERS
CINCINNATI, OHIO

DRAINAGE DETAILS

BRIDGE No. HAM.-71-0271

H&E BRIDGE No. 20

DESIGNED	DRAWN	TRACED	CHECKED	REVIEWED DATE	REVISED
	L.B.K.	R.S.	J.H.O. 8/20/64	H.A.E. 5-20-65	

FED. RD. DIV.	STATE	PROJECT	FISCAL YEAR
2	OHIO		

442
492

HAMILTON COUNTY
HAM-71-(1.56) (2.51)

SUPERSTRUCTURE

Mark	Type	No.	Length	Weight
S501	GO	414	7'-7"	3274
S502	2	414	3'-4"	1439
S503	1	414	3'-3"	1403
S504	14	360	6'-0"	2253
S505	4	6	10'-0"	63
S601	Str.	862	25'-10"	33447
S602	Str.	12	17'-5"	315
S603	Str.	12	6'-10"	123
S604	Str.	890	32'-9"	43779
S605	Str.	160	24'-0"	5768
S701	Str	862	26'-0"	45810
S702	Str.	12	17'-7"	431
S703	Str.	12	6'-10"	168
S704	58	6	10'-4"	127
S705	43	6	6'-2"	76
S706	61	6	5'-9"	71
H504	Str.	120	17'-3"	*
H505	Str.	16	22'-9"	*
H506	58	6	8'-1"	*

Total Super. = 138,547 Pounds

WEST ABUTMENT

Mark	Type	No.	Length	Weight	Mark	Type	No.	Length	Weight
A502	1	40	8'-3"	34	A576	Str.	4	26'-5"	110
A507	1	34	8'-11"	316	A577	Str.	2	6'-8"	14
A508	Str	40	25'-6"	1064	A578	Str.	2	5'-9"	12
A509	1	34	6'-4"	225	A579	Str.	2	4'-9"	10
A510	1	36	5'-2"	194	A580	Str.	2	3'-10"	8
A517	Str.	12	5'-10"	73	A581	Str.	2	3'-0"	6
A519	Str.	50	7'-11"	413					
A520	Str.	16	3'-7"	60					
A521	20	2	9'-5"	20					
A531	32	38	6'-4"	251					
A533	18	6	10'-0"	63					
A534	18	7	10'-2"	74	A606	1	4	19'-9"	119
A535	18	6	10'-4"	64	A607	1	2	8'-2"	25
A536	18	6	10'-6"	66	A608	1	2	7'-5"	22
A537	18	9	10'-8"	100	A609	Str.	4	9'-10"	60
A538	Str.	4	20'-7"	86	A610	7	36	19'-6"	1054
A539	Str.	6	18'-9"	117	A613	8	6	16'-1"	145
A540	Str.	2	22'-9"	47	A614	8	7	16'-3"	171
A541	Str.	6	26'-7"	166	A615	8	6	16'-5"	148
A542	Str.	8	2'-8"	22	A616	8	6	16'-7"	149
A543	Str.	2	2'-9"	6	A617	1	6	10'-2"	92
A544	Str.	2	2'-10"	6	A618	1	34	10'-10"	553
A545	Str.	2	3'-3"	7	A621	Str.	5	11'-3"	84
A546	Str.	2	3'-10"	8	A622	1	23	23'-4"	806
A547	Str.	2	4'-5"	9	A623	1	24	22'-0"	793
A548	Str.	2	5'-0"	10	A624	Str.	4	10'-7"	64
A549	Str.	2	5'-7"	12	A625	8	9	16'-9"	226
A550	Str.	6	6'-2"	39					
A551	Str.	2	6'-3"	13					
A552	Str.	2	6'-4"	13					
A553	Str.	2	6'-5"	13					
A554	Str.	2	6'-6"	14	A801	Str.	18	28'-10"	1386
A555	Str.	2	6'-7"	14	A804	46	4	23'-1"	247
A556	Str.	2	6'-8"	14	A806	46	4	20'-1"	214
A557	Str.	2	6'-9"	14	A807	46	2	17'-1"	91
A558	Str.	2	6'-10"	14	A808	46	2	20'-11"	112
A559	Str.	2	6'-11"	14					
A560	Str.	2	7'-0"	15					
A561	Str.	2	7'-1"	15					
A562	Str.	2	7'-2"	15					
A563	Str.	2	7'-3"	15	H502	Str.	4	26'-7"	*
A564	Str.	2	7'-4"	15	H503	Str.	4	26'-5"	*
A565	Str.	2	7'-5"	15					
A566	Str.	2	7'-6"	16					
A567	Str.	2	7'-7"	16					
A568	Str.	2	7'-8"	16					
A569	Str.	2	7'-9"	16					
A570	Str.	2	7'-10"	16					
A571	20	2	8'-1"	17					
A572	Str.	4	20'-5"	85					
A573	Str.	6	18'-7"	116					
A574	Str.	2	20'-10"	43					
A575	Str.	2	22'-11"	48					

Total W. Abut. = 10,875 Pounds

EAST ABUTMENT

Mark	Type	No.	Length	Weight	Mark	Type	No.	Length	Weight
A501	18	9	11'-1"	104					
A502	1	38	8'-3"	327					
A503	18	6	11'-0"	69					
A504	18	6	10'-10"	68					
A505	18	7	10'-8"	78					
A506	18	6	10'-6"	66					
A507	1	12	8'-11"	112					
A508	Str.	40	25'-6"	1064					
A509	1	34	6'-4"	225					
A510	1	36	5'-2"	194					
A511	Str.	8	10'-2"	85					
A512	Str.	12	6'-4"	79					
A513	Str.	32	8'-2"	273					
A514	Str.	2	13'-2"	27					
A515	Str.	2	11'-5"	24					
A516	Str.	8	16'-2"	135					
A517	Str.	12	5'-10"	73					
A518	Str.	6	5'-11"	37					
A519	Str.	10	7'-11"	83					
A520	Str.	16	3'-7"	60					
A522	Str.	4	5'-9"	24					
A523	Str.	4	5'-4"	22					
A524	Str.	4	5'-0"	21					
A525	Str.	4	4'-8"	19					
A526	Str.	4	4'-3"	18					
A527	Str.	4	3'-11"	16					
A528	Str.	4	3'-6"	15					
A529	Str.	4	3'-2"	13					
A530	20	4	10'-5"	43					
A531	32	2A	6'-4"	159					
A532	56	16	9'-5"	157					
A601	8	9	17'-3"	233					
A602	8	6	17'-2"	155					
A603	8	6	17'-0"	153					
A604	8	7	16'-10"	177					
A605	8	6	16'-8"	150					
A606	1	4	19'-9"	119					
A607	1	2	8'-2"	25					
A608	1	2	7'-5"	22					
A609	Str.	4	9'-10"	59					
A610	7	36	19'-6"	1054					
A611	1	7	24'-0"	252					
A612	Str.	10	11'-10"	178					
A617	1	4	10'-2"	61					
A618	1	12	10'-10"	195					
A619	1	7	22'-8"	238					
A620	Str.	10	11'-2"	168					
A801	Str.	18	28'-10"	1386					
A802	Str.	4	13'-0"	139					
A803	Str.	8	9'-6"	203					
A805	56	4	7'-9"	83					
H501	Str.	8	16'-2"	*					

Total E. Abut. = 8,740 Pounds

PIERS

Mark	Type	No. Pier 1	No. Pier 2	No. Total	Length	Weight
P501	Str.	4	4	8	22'-4"	186
P502	Str.	2	2	4	34'-0"	142
P503	Str.	8	8	16	24'-10"	414
P504	1	184	184	368	10'-0"	3838
P505	1	22	22	44	10'-8"	490
P506	1	102	102	204	15'-2"	3227
P507	1	38	38	76	14'-6"	1149
P508	1	22	22	44	9'-6"	436
P509	1	36	36	72	6'-5"	482
P510	1	36	36	72	5'-5"	407
P601	Str.	-	18	18	18'-6"	500
P602	Str.	9	10	19	34'-6"	985
P603	20	8	8	16	15'-9"	379
P604	Str.	-	18	18	16'-6"	446
P605	Str.	24	32	56	19'-4"	1626
P606	6	24	32	56	7'-10"	659
P1001	43	-	52	52	21'-4"	4773
P1002	43	28	32	60	37'-4"	9639
P1003	Str	8	8	16	23'-0"	1584
P1004	Str	8	8	16	20'-0"	1377
P1005	62	4	4	8	43'-10"	1509
P1006	62	4	4	8	41'-4"	1423
P1007	43	44	-	44	19'-4"	3660
P1101	44	60	60	120	8'-11"	5685
P1102	Str.	-	60	60	26'-1"	8315
P1103	18	4	4	8	20'-8"	878
P1104	Str	4	4	8	34'-7"	1470
P1105	Str.	60	-	60	21'-4"	6801
P1106	18	4	4	8	38'-3"	1626
P1107	Str	4	4	8	17'-0"	723

Total Piers = 64,829 Pounds

WEST ABUTMENT

Mark	a	b	c	d	e
A502	5'-4"	1'-7"			
A507	6'-0"	1'-7"			
A509	3'-5"	1'-7"			
A510	3'-5"	1'-0"			
A521	1'-4½"	7'-5"	2'-0"	1'-5½"	
A531	0'-8"	2'-6			
A533	1'-7"	8'-6"			
A534	1'-7"	8'-8"			
A535	1'-7"	8'-10"			
A536	1'-7"	9'-0"			
A537	1'-7"	9'-2"			
A571	0'-10½"	6'-1"	2'-0"	1'-9"	
A606	1'-5"	9'-4"			
A607	6'-6"	1'-0"			
A608	5'-9"	1'-0"			
A610	0'-11"	8'-7"	1'-11"	1'-5"	7'-3"
A613	2'-7"	5'-4"	8'-6"		
A614	2'-7"	5'-4"	8'-8"		
A615	2'-7"	5'-4"	8'-10"		
A616	2'-7"	5'-4"	9'-0"		
A617	5'-4"	2'-7"			
A618	6'-0"	2'-7"			
A622	1'-2"	11'-3"			
A623	1'-2"	10'-7"			
A625	2'-7"	5'-4"	9'-2"		

Mark	Radius
A804	22'-0"
A806	18'-9"
A807	16'-6"
A808	20'-0"
	21'-6"
	16'-0"
	17'-9"
	19'-9"

SUPERSTRUCTURE

Mark	a	b	c	d	e	f	g	h	i
S501	0'-6"	6'-9"	0'-1¾"	0'-6"	0'-6"				
S502	1'-4"	0'-3"	1'-0"	1'-3¾"	1'-0"				
S503	1'-6"	1'-0"							
S504	0'-9"	2'-4"							
S505	2'-4"	1'-10"	1'-10"	2'-4"	2'-1"	2'-9"	2'-9"	3'-9"	0'-9"
S704	1'-8"	2'-6"	3'-9"	2'-6"	0'-9"	1'-9"			
S705	2'-5"	1'-10½"	1'-3¾"	1'-4"	0'-6"				
S706	0'-5"	1'-4"	2'-11"						
H506	1'-8"	1'-9½"	2'-7½"	1'-9½"	0'-9"	1'-11"	1'-11"	2'-7½"	0'-9"

PIERS

Mark	a	b	c	d	e
P504	1'-10½"	4'-2"			
P505	1'-10½"	4'-6"			
P506	1'-10½"	6'-9"			
P507	1'-10½"	6'-5"			
P508	1'-10½"	3'-11"			
P509	2'-8"	2'-0"			
P510	2'-8"	1'-6'			
P603	0'-8"	13'-9"	2'-0"	1'-10½"	
P606	3'-10"	2'-0"	Radius = 1'-2		
P1001	18'-6"				
P1002	34'-6"				
P1005	4'-9"	4'-9"	30'-4"	6'-9"	
P1006	5'-3½"	5'-3½"	26'-4"	7'-6"	
P1007	16'-6"				
P1101	7'-4"				
P1103	4'-0"	17'-0"			
P1106	4'-0"	34'-7"			

★ Note Reinforcing bar mark "H" are included in Item 5-14 (Railing) for payment.

MICROFILMED
FEB 20 1965

EAST ABUTMENT

Mark	a	b	c	d	e
A501	1'-7"	9'-8"			
A502	5'-4"	1'-7"			
A503	1'-7"	9'-7"			
A504	1'-7"	9'-5"			
A505	1'-7"	9'-3"			
A506	1'-7"	9'-1"			
A507	6'-0"	1'-7"			
A509	3'-5"	1'-7"			
A510	3'-5"	1'-0"			
A530	3'-0½"	2'-0"	8'-5"	7'-10"	
A531	0'-8"	2'-6"			
A532	4'-5"	1'-7"	6'-3"	1'-7"	4'-5"
A601	2'-7"	5'-4"	9'-8"		
A602	2'-7"	5'-4"	9'-7"		
A603	2'-7	5'-4"	9'-5"		
A604	2'-7"	5'-4"	9'-3"		
A605	2'-7"	5'-4"	9'-1"		
A606	1'-5"	9'-4"			
A607	6'-6"	1'-0"			
A608	5'-9"	1'-0"			
A610	0'-11"	8'-7"	1'-11"	1'-5"	7'-3"
A611	1'-2"	11'-7"			
A617	5'-4"	2'-7"			
A618	6'-0"	2'-7"			
A619	1'-2"	10'-11"			
A805	1'-11"	2'-6"	2'-9"	2'-6"	1'-11"

REPLACEMENT BARS

Mark	Type	No	Length
RE501	Str.	2	5'-7"
RE601	Str.	5	5'-11"
RE701	Str.	3	6'-3"
RE801	Str.	1	6'-6"
RE1001	Str	2	7'-3"
RE1101	Str	2	7'-7"

NOTE:
Work this sheet with Typical Drawing No. 446

HAZELET & ERDAL
CONSULTING ENGINEERS
CINCINNATI, OHIO

REINFORCING STEEL LIST

BRIDGE NO. HAM-71-0271

H&E BRIDGE NO. 20

DESIGNED	DRAWN	TRACED	CHECKED	REVIEWED DATE	REVISED
	TLZ		JHO	W.A.Z. 5-20-65	

FED. RD. DIV.	STATE	PROJECT	FISCAL YEAR
2	OHIO		

443
492

HAMILTON COUNTY
HAM-71-(1.56)(2.51)

Note 1

REFERENCE shall be made to Standard Drawings AR-1-57 "Revised 4-2-62", FSB-1-62 "Revised 1-15-63", SD-1-63 dated 11-12-63 Sheet Nos. 2 and 4, Supplemental Specification No. S-307 "Rev. 10-1-64," Supplemental Specification No. I-129 "Revised 4-5-61", and Supplemental Specification No. S-101 dated 7-12-62.

Note 2

PILES: Since the structures of this project are to constructed in a metropolitan area where there are numerous areas in which buildings have been dismantled and the existing basements filled with boulders, gravel, bricks, and other random debris, the Contractor shall use augering, spudding or whatever means are necessary to permit the piles to be driven without damaging them whenever the above conditions are encountered.

Note 3

WELDING shall be Class "A" except as shown. Any welds shown as field welds may, at the option of the Contractor, be made in the shop. Class "B" welds are shown thus: B

Note 4

POROUS BACKFILL (where called for in the plans) shall be 2ft. thick and shall extend up to the underside of the approach slab or sidewalk unless otherwise noted.

Note 5

DECK PLACING PROCEDURE: In placing the deck concrete, construction joints will be permitted parallel to the transverse reinforcing steel and near the middle of any span. Because of the flow of curing water from the surface of previously placed concrete, the sequence of pours shall be upgrade, starting at the lowest point or points in the grade line.

Note 6

UTILITY LINES: All labor and expense involved in relocating (installing) the affected utility lines shall be borne by the owners. The Contractor and Owners are requested to cooperate by arranging their work in such a manner that inconvenience to either will be held to a minimum.

Note 7

DESIGN SPECIFICATIONS: This structure conforms to the requirements of "Design Specifications for Highway Structures" of the State of Ohio, Department of Highways, dated 9-1-57, together with current revisions thereof.

Note 8

HIGH-STRENGTH STEEL BOLTS: Item S-7.10, paragraph two (2), shall be completely revised and the last sentence of paragraph four (4) revised to read as follows:

"In the final assembly of the parts to be bolted, drift pins shall be placed in a sufficient number of holes (not less than 25 percent for field erection) to provide and maintain accurate alignment of holes and parts, and sufficient bolts shall be installed and brought to a snug tight condition to bridge the parts into complete contact. Bolts shall then be installed in any remaining open holes and tightened to a snug tight fit, after which all bolts shall be tightened completely by calibrated wrenches or by the turn-of-nut method. Drift pins shall then be replaced with bolts, tightened in the same manner.

"Bolt lengths determined by the use of Table No. I shall be adjusted to the next 1/4 inch length increment."

MICROFILMED
FEB 20 1985

HAZELET & ERDAL
CONSULTING ENGINEERS
CINCINNATI, OHIO

GENERAL NOTES

DESIGNED	DRAWN	TRACED	CHECKED	REVIEWED DATE	REVISED
	MJE 8-5-64		JHO 8-11-64	R.A.B. 5-20-65	

FED. RD. DIV.	STATE	PROJECT	FISCAL YEAR
2	OHIO		

444
492

HAMILTON COUNTY
HAM-71-(1.56)(2.51)

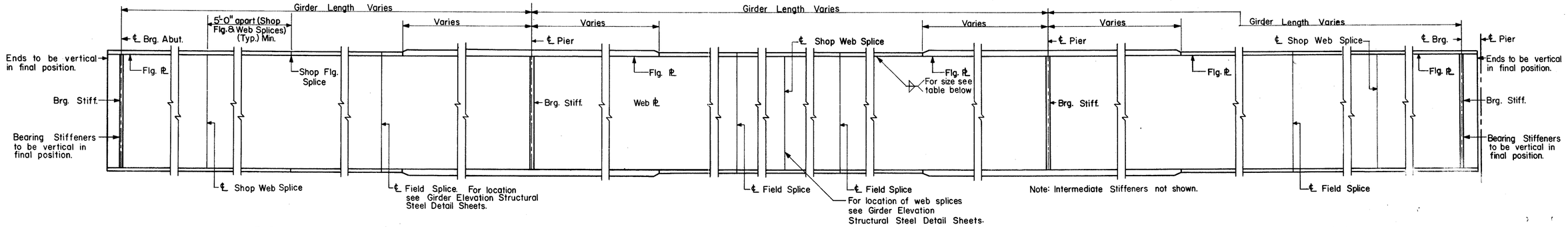

END SPAN BETWEEN ABUT. & PIER — INTERIOR SPAN — END SPAN BETWEEN PIERS

TYPICAL PLATE GIRDER ELEVATIONS

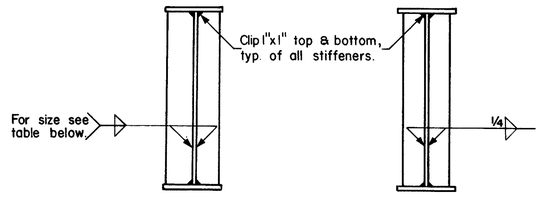

BEARING STIFFENERS — INTERMEDIATE STIFFENERS

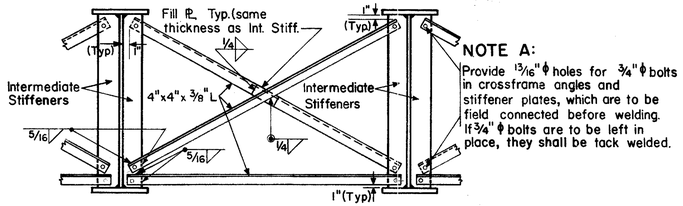

TYPICAL INTERMEDIATE CROSSFRAME
(Unless otherwise noted)

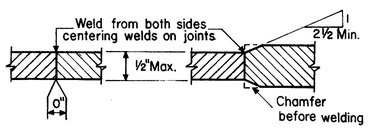

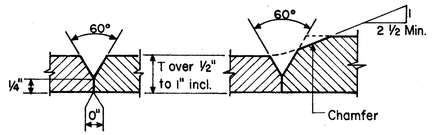

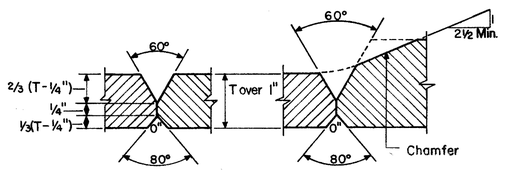

JOINT PREPARATION FOR SUBMERGED ARC WELDMENTS

All of the above full penetration welds shall be back-gouged and welded after welding far side.

Butt welds on beam and girder flange plates shall be ground flush, the finish grinding being parallel to the direction of stress.

MICROFILMED
FEB 20 1965

TABLE OF FILLET WELD SIZES

Plate Thickness	Fillet Weld Size
Up to 3/4"	1/4"
Over 3/4" to 1 1/2"	5/16"
Over 1 1/2" to 2 1/4"	3/8"
Over 2 1/4" to 6"	1/2"

Plate Thickness refers to the thickness of the thicker part joined.

NOTES:

Bearing Stiffeners over abutments and piers shall be grooved and fully butt-welded to the lower flange and fitted in close contact without welding to the upper flange.

Intermediate Stiffeners shall have contact bearing with the compression flange, but may have a clearance of not more than 1/8" from the tension flange. In shop painting care shall be taken to make certain that paint is forced through from one side to the other of the 1/8" opening.

For examination of welds for all plate girder spans see Supplemental Specification No. S-307.

The contractor shall submit to the Director, for approval, 3 prints showing erection procedure for the plate girders.

Structural Steel- ASTM A36 —basic unit stress 20,000psi

MICROFILMED
FEB 20 1965

HAZELET & ERDAL
CONSULTING ENGINEERS
CINCINNATI, OHIO

TYPICAL STRUCTURAL STEEL DETAILS

DESIGNED	DRAWN	TRACED	CHECKED	REVIEWED DATE	REVISED
	M.J.E.		J.H.O.	W.A.Z. 5-20-65	

FED. RD. DIV.	STATE	PROJECT	FISCAL YEAR
2	OHIO		

HAMILTON COUNTY
HAM-71-(1.56)(2.51)

For location of drain inlets, see superstructure details.

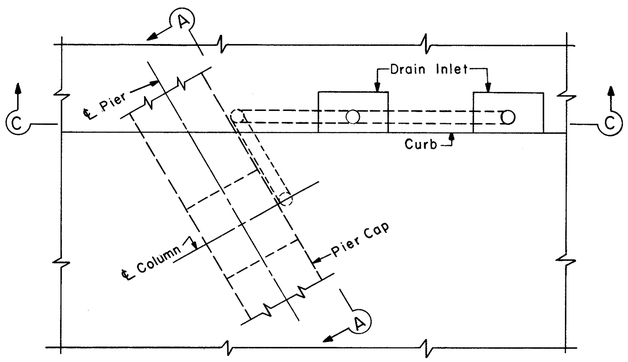

PLAN

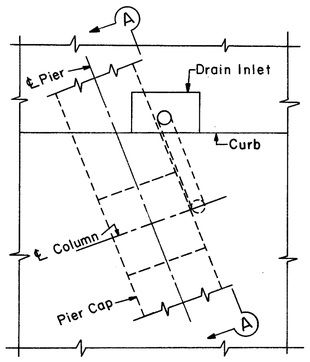

PLAN

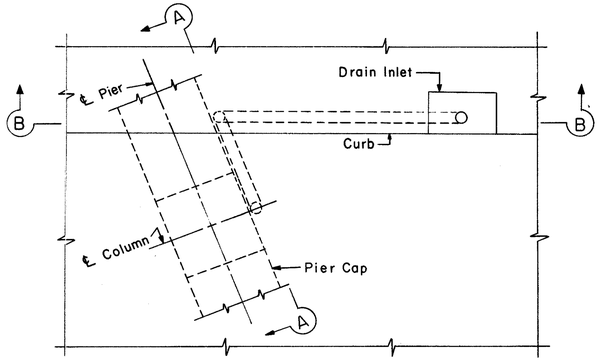

PLAN

Note: Type of Plan to be used depends upon location of inlet with respect to pier.

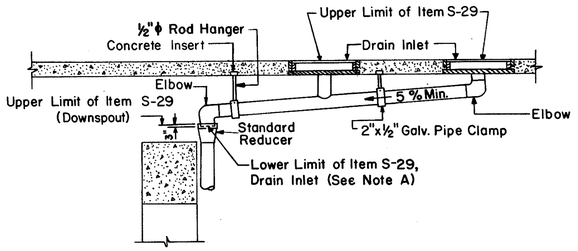

SECTION C-C

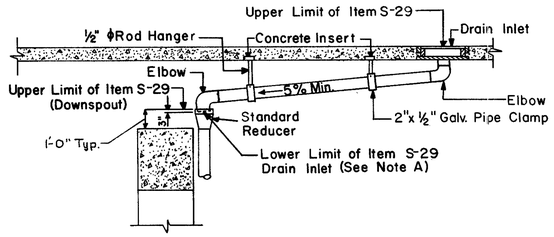

SECTION B-B

NOTE: Downspouts shall be 6"or 8" standard wrought iron pipe or hot-dipped galvanized steel pipe. (For size see superstructure) Joints shall be made by welding or by the use of a clamp type coupling with a ring gasket. All welding shall be done before galvanizing. Straps or clamps for attaching downspouts shall be wrought iron or hot-dipped galvanized steel. On bolts, galvanizing as called for in SEC. M-10.30 will be considered sufficient.

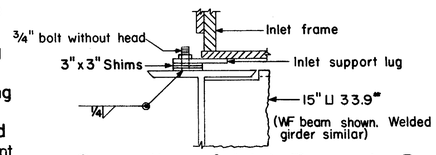

Connection of Inlet Frame to Beam
(Unless otherwise noted)

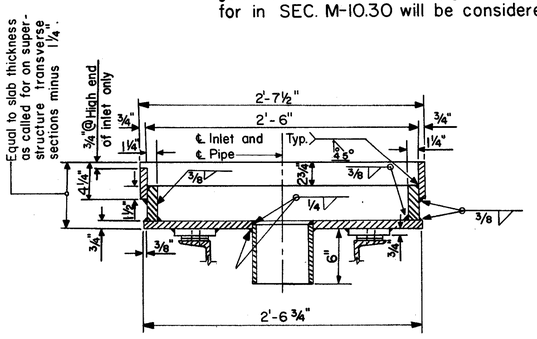

SECTION P-P

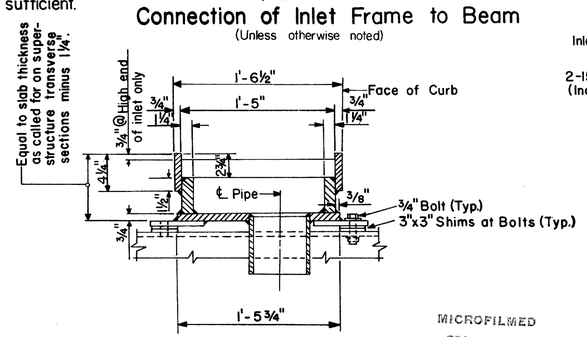

SECTION R-R

MICROFILMED
FEB 20 1985

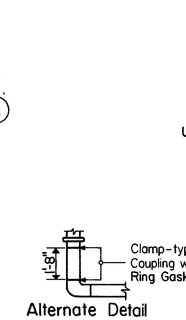

SECTION A-A

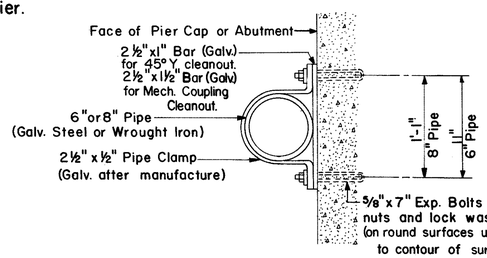

STRAP DETAIL "A"
For mounting on flat surface.

NOTE A:
"Drain inlet including Supports and Horizontal Collector System" shall include inlet grating, inlet frame, lugs, concrete insert, ½" ϕ rod hanger, 2"x½" galvanized pipe clamp, and standard pipe for payment, Item S-29.

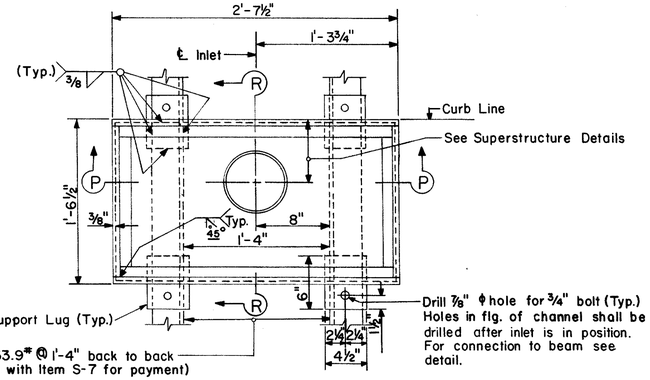

INLET FRAME

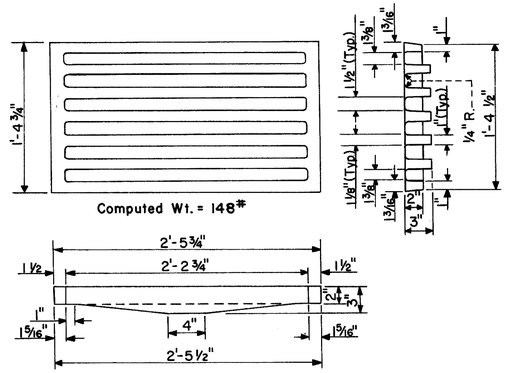

INLET GRATING
(City of Cincinnati Acc. No. 49012)

NOTES:-

For location of inlets, see superstructure details.

Inlet grating castings shall meet the requirements of Sec. M-7.8 of the Material Specifications of the State of Ohio.

Gratings and Inlets shall be fitted to each other without rattling by grinding grating casting as necessary.

Inlet frame to be welded structural steel plates and standard steel pipe, galvanized after fabrication

Weld channels to beam with ⅝" continuous fillet weld. Weld to beam webs only.

Space lugs on inlets to permit bolting to supporting channels and beams.

Where drain inlet is located adjacent to beams without cover plates, cope channels so top of channel is flush with top of beams.

Where drain inlet is located adjacent to beams with cover plates, cope channels so that the distance top of channel to top of slab is equal to the minimum slab thickness as called for on the superstructure transverse sections.

HAZELET & ERDAL
CONSULTING ENGINEERS
CINCINNATI, OHIO

TYPICAL DRAINAGE DETAILS

DESIGNED	DRAWN	TRACED	CHECKED	REVIEWED DATE	REVISED
		M.J.E.	J.H.O.	N.A.Z. 5-20-65	

FED. RD. DIV.	STATE	PROJECT	FISCAL YEAR
2	OHIO		

446
492

HAMILTON COUNTY
HAM-71-(1.56)(2.51)

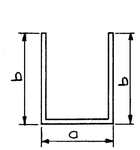
Type 1

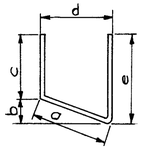
Type 2

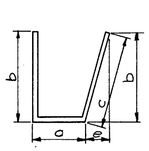
Type 3

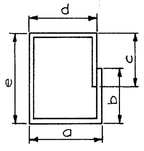
Type 4

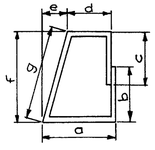
Type 5

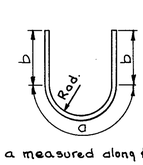
a measured along ℄ bar
Type 6

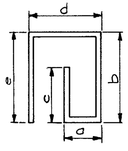
Type 7

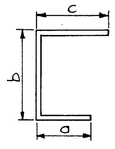
Type 8

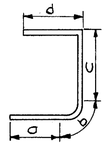
b measured along ℄ bar
Type 9

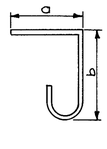
Type 10

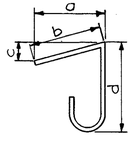
Type 11

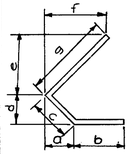
Type 12

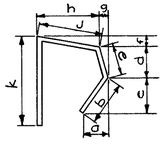
Type 13

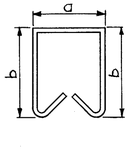
Type 14

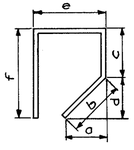
Type 15

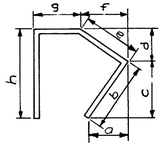
Type 16

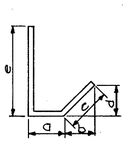
Type 17

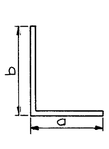
Type 18

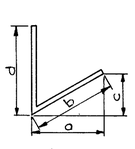
Type 19

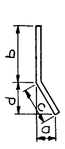
Type 20

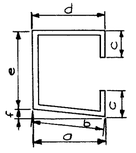
Type 21

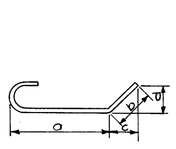
Type 22

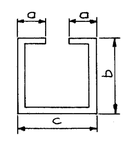
Type 61

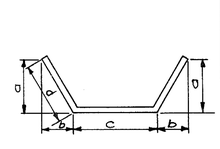
Type 62

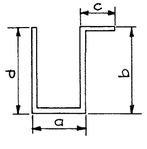
Type 23

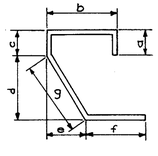
Type 24

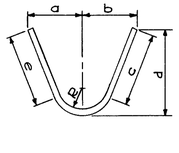
Type 25

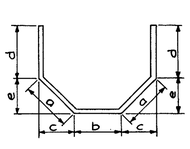
Type 26

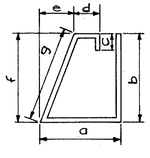
Type 27

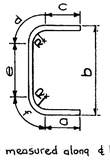
d & f measured along ℄ bar
Type 28

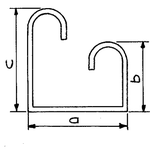
Type 29

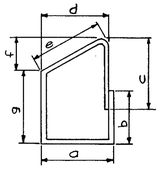
Type 30

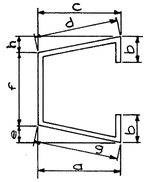
Type 31

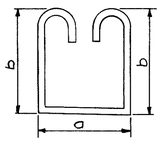
Type 32

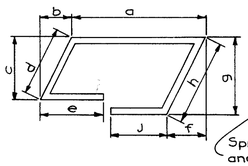
Type 63

Spiral bar (For pitch and number of turns see Steel Reinf. List)

Type 64

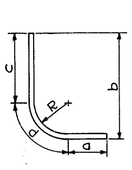
d measured along ℄ bar
Type 33

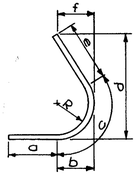
c measured along ℄ bar
Type 34

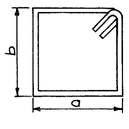
Type 35

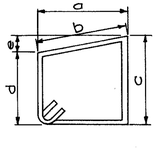
Type 36

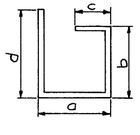
Type 37

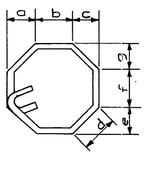
Type 38

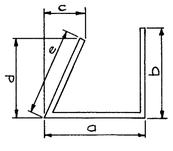
Type 39

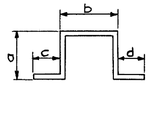
Type 40

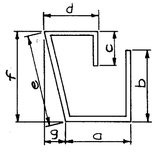
Type 41

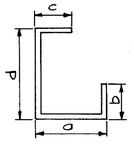
Type 42

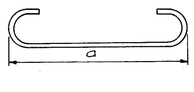
Type 43

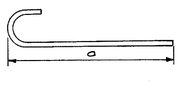
Type 44

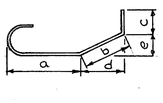
Type 45

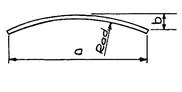
Type 46

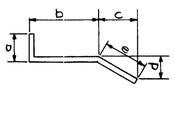
Type 47

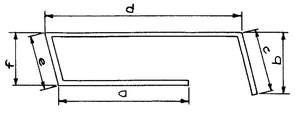
Type 48

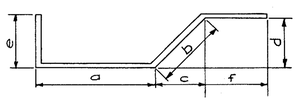
Type 49

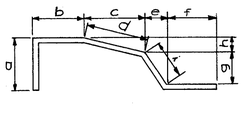
Type 50

MICROFILMED
FEB 20 1965

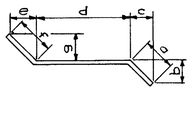
Type 51

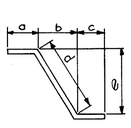
Type 52

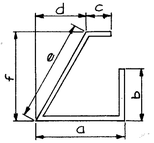
Type 53

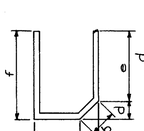
Type 54

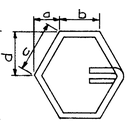
Type 55

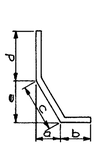
Type 56

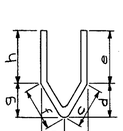
Type 57

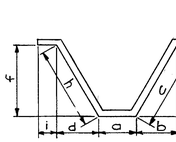
Type 58

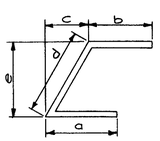
Type 59

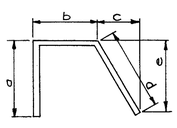
Type 60

NOTES

Bars shall be carefully shaped to the pertinent dimensions shown in table I Standard Bends Sheet 212 of the State of Ohio Construction and Material Specifications, unless otherwise indicated above.

Bar size is indicated in the bar mark. The first digit in bar mark beginning with numbers 4 thru 9 indicate the bar size. The first two digits in bar marks beginning with numbers 10 or 11 indicate the bar size.

Spiral reinforcing bars shall not have deformations but shall in other respects conform to Item 5-4.1½ closed coils shall be provided at the ends of each spiral unit.

Four (or three) steel channel tee or angle spacers, weighing approximately 0.68 lbs. per lin. ft. of spacer, shall be provided for each spiral unit. They shall be equally spaced along the periphery of the coil. The number of pounds of these spacers, based on 0.68 lbs. per. lin. ft. will be paid for as reinforcing and is included in the tabulated quantity of spiral bars.

HAZELET & ERDAL
CONSULTING ENGINEERS
CINCINNATI, OHIO

BAR BENDING SCHEDULE

DESIGNED	DRAWN	TRACED	CHECKED	REVIEWED DATE	REVISED
	M.C.P.		JHO 12/3/65	W.H.E. 5-28-65	

LIMITED ACCESS

THIS IMPROVEMENT HAS BEEN DECLARED A LIMITED ACCESS HIGHWAY OR FREEWAY BY ACTION OF THE DIRECTOR OF HIGHWAYS IN ACCORDANCE WITH THE PROVISIONS OF SECTION 5511.02 REVISED CODE OF OHIO AND IS ESPECIALLY DESIGNED FOR THROUGH TRAFFIC.

STATE OF OHIO
DEPARTMENT OF HIGHWAYS

I-71-1(28)03

FED. RD. DIV.	STATE	PROJECT	FISCAL YEAR
2	OHIO	I-71-1(28)03	

44.7
492

1
66

HAM-71-1.56 & 2.51
R/W PLAN
LIMITED ACCESS
HAM-71-0.93 (R/W ONLY)

NORTHEAST EXPRESSWAY HAM-71-(1.56)(2.51)

GRADE SEPARATION WITH THE PENNSYLVANIA RAILROAD CO.

HAMILTON COUNTY

CITY OF CINCINNATI

CONVENTIONAL SIGNS

CENTER LINE
PROPERTY LINE
FENCE ..... EXISTING ... PROPOSED
RAILROAD ..... OR
POLES ..... TELEPHONE ... POWER ... LIGHT
GUARD RAIL ..... EXISTING ... PROPOSED
DRAIN OR SEWER PIPE ... EXISTING ... PROPOSED
CATCH BASIN ..... EXISTING ... PROPOSED
MANHOLES ... EXISTING ... ADJUSTED TO GRADE ... PROPOSED
VALVE CHAMBERS ... EXISTING ... ADJUSTED TO GRADE ... PROPOSED
TELEPHONE CHAMBERS ..... EXISTING ... OR
ELECTRIC CHAMBERS ..... EXISTING ... OR
GAS MAIN
WATER MAIN ..... EXISTING
TELEPHONE CONDUIT ... EXISTING
ELECTRIC CONDUIT ... EXISTING
EXISTING RIGHT OF WAY (Exist R/W)
LIMITED ACCESS (L/A)
PROPOSED RIGHT OF WAY (R/W)
PROPOSED LIMITED ACCESS RIGHT OF WAY (L/A R/W)
TREES OR STUMPS ..... EXIST

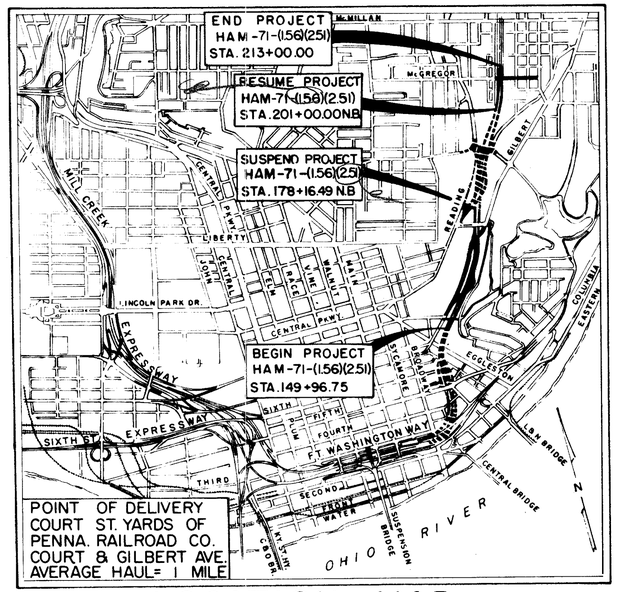

LOCATION MAP

0 ¼ ½ ¾ 1 2
SCALE OF MILES

PORTION TO BE IMPROVED
PORTION TO BE IMPROVED UNDER SEPERATE CONTRACT

SCALE
1" = 20'

THE STANDARD SPECIFICATIONS OF THE STATE OF OHIO, DEPARTMENT OF HIGHWAYS, INCLUDING CHANGES AND SUPPLEMENTAL SPECIFICATIONS LISTED IN THE PROPOSAL SHALL GOVERN THIS IMPROVEMENT.

I HEREBY APPROVE THESE PLANS AND DECLARE THAT THE MAKING OF THIS IMPROVEMENT WILL NOT REQUIRE THE CLOSING TO TRAFFIC OF THE HIGHWAY AND THAT PROVISIONS FOR MAINTENANCE AND SAFETY OF TRAFFIC WILL BE AS SET FORTH IN THESE PLANS AND ESTIMATES.

THE RIGHT OF WAY FOR THIS IMPROVEMENT WILL BE PROVIDED BY THE STATE OF OHIO.

APPROVED: _____
DATE: _____ DIVISION DEPUTY DIRECTOR

APPROVED: _____
DATE: _____ ENGINEER OF BRIDGES

APPROVED: _____
DATE: _____ ENGINEER OF LOCATION & DESIGN

APPROVED: _____
DATE: _____ DEPUTY DIRECTOR OF DESIGN & CONSTRUCTION

APPROVED: _____
DATE: _____ DEPUTY DIRECTOR OF RIGHT OF WAY

APPROVED: _____
DATE: _____ DEPUTY DIRECTOR OF PLANNING & PROGRAMMING

APPROVED: _____
DATE: _____ FIRST ASSISTANT DIRECTOR

APPROVED: _____
DATE: _____ DIRECTOR OF HIGHWAYS

APPROVED: A.D. Bird
DATE: 5-21-65 ACTING CITY MANAGER, CITY OF CINCINNATI

PLANS PREPARED BY
HAZELET & ERDAL - CONSULTING ENGINEERS
CINCINNATI, OHIO

FILE Nº	HAMILTON COUNTY HAM-71-(1.56)(2.51) DATE OF LETTING _____ CONTRACT Nº _____

SCHEMATIC PLAN

FED. RD. DIV.	STATE	PROJECT	FISCAL YEAR
2	OHIO		

448
492

2
66

HAM-71-1.56
R/W PLAN
LIMITED ACCESS
HAM-71-0.93 (R/W ONLY)

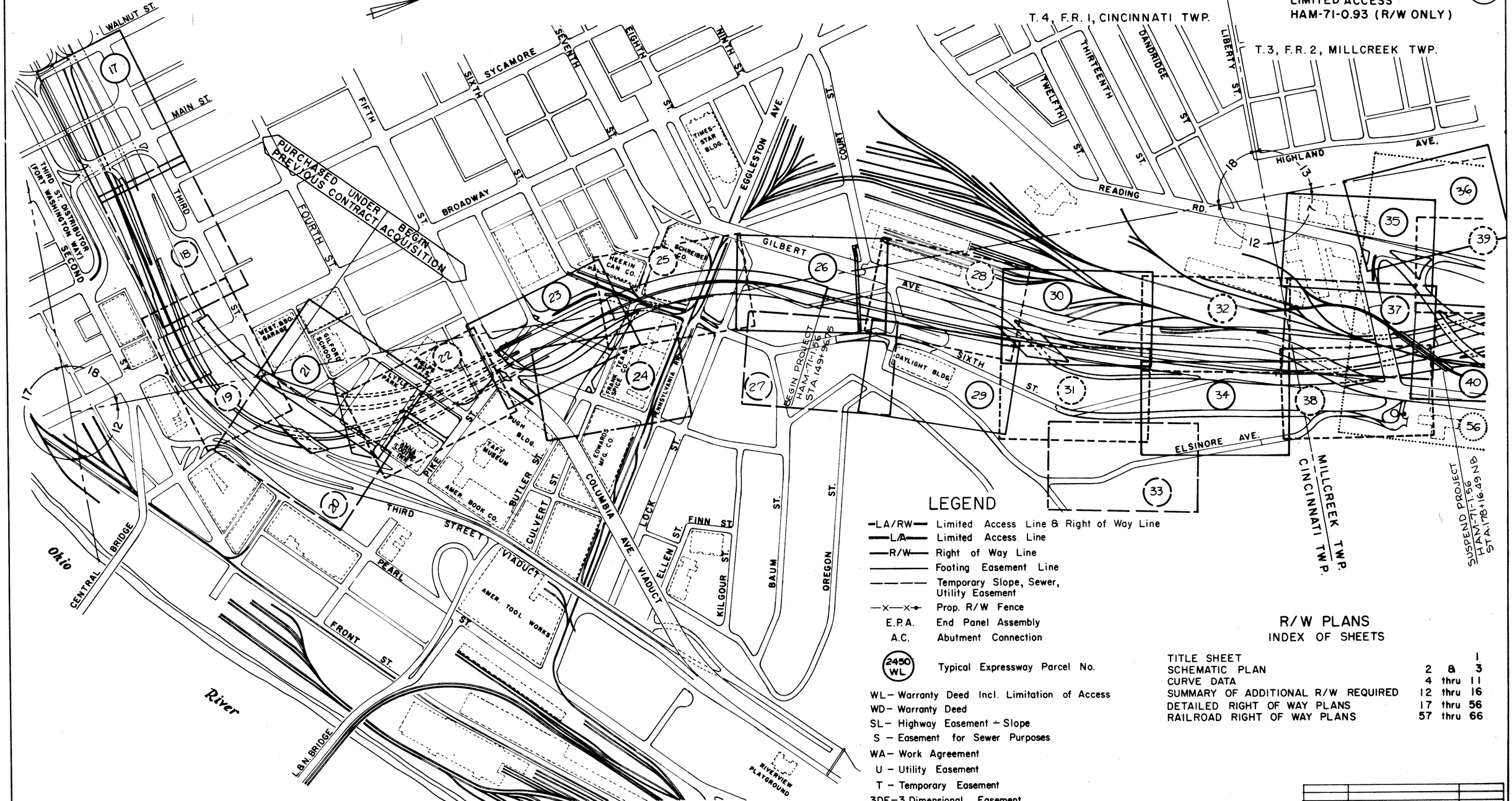

LEGEND

—LA/RW—	Limited Access Line & Right of Way Line
—L/A—	Limited Access Line
—R/W—	Right of Way Line
———	Footing Easement Line
- - - -	Temporary Slope, Sewer, Utility Easement
—x—x—•	Prop. R/W Fence
E.P.A.	End Panel Assembly
A.C.	Abutment Connection
2450 WL	Typical Expressway Parcel No.

WL – Warranty Deed Incl. Limitation of Access
WD – Warranty Deed
SL – Highway Easement – Slope
S – Easement for Sewer Purposes
WA – Work Agreement
U – Utility Easement
T – Temporary Easement
3DE – 3 Dimensional Easement
(No Letter Designation) Footing Easement
EL – Excess Land
AR – Aerial Right

R/W PLANS
INDEX OF SHEETS

TITLE SHEET			1
SCHEMATIC PLAN	2	&	3
CURVE DATA	4	thru	11
SUMMARY OF ADDITIONAL R/W REQUIRED	12	thru	16
DETAILED RIGHT OF WAY PLANS	17	thru	56
RAILROAD RIGHT OF WAY PLANS	57	thru	66

Date	Revised	By

RIGHT OF WAY PLAN

SCHEMATIC PLAN

FED. RD. DIV.	STATE	PROJECT	FISCAL YEAR
2	OHIO		

449/492

3/66

HAM-71-2.51
R/W PLAN
LIMITED ACCESS
HAM-71-0.93 (R/W ONLY)

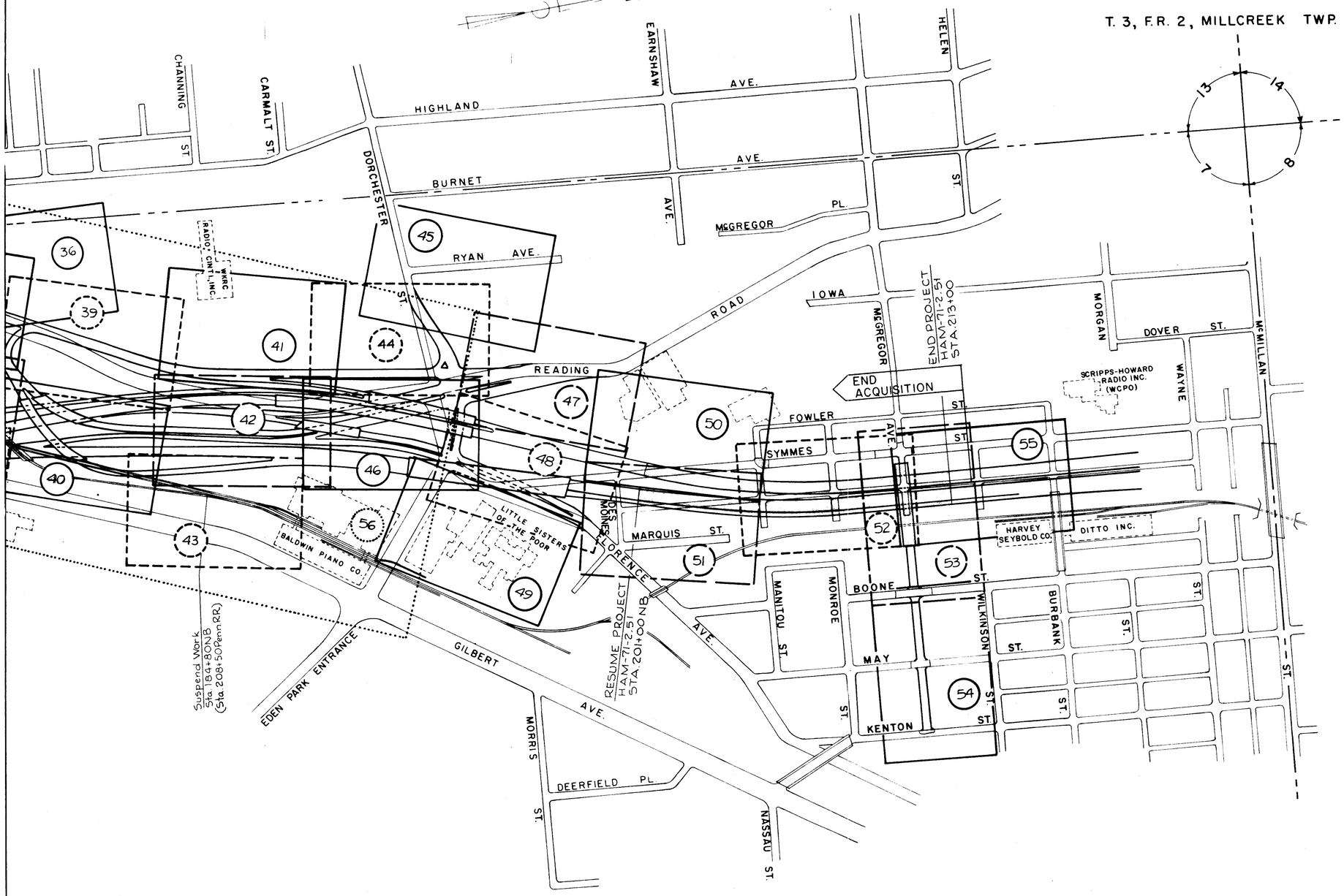

Date	Revised	By

RIGHT OF WAY PLAN

FED. RD. DIV.	STATE	PROJECT	FISCAL YEAR
2	OHIO		

450
492

7
66

HAM-71-1.56
R/W PLAN
LIMITED ACCESS
HAM-71-0.93(R/W ONLY)

NOTE: All traverse points shown are cut notches unless otherwise noted.

1GB(N)
P.I. Sta.13+27.84 GB(N)
P.C. Sta.10+00.00 GB(N)
P.T. Sta.16+54.07 GB(N)
Δ = 9° 48' 40"
D = 1° 30' 00"
R = 3,819.72'
L = 654.07'
T = 327.84'

1GB(S)
P.I. Sta.17+16.58 GB(S)
P.C. Sta.16+54.07 GB(S)
P.T. Sta.17+79.07 GB(S)
Δ = 1° 52' 30"
D = 1° 30' 00"
R = 3,819.72'
L = 125.00'
T = 62.51'

2GB(S)
P.I. 20+22.20 GB(S)
P.C. 19+59.70 GB(S)
P.T. 20+84.70 GB(S)
Δ = 1° 52' 30"
D = 1° 30' 00"
R = 3,819.72'
L = 125.00'
T = 62.51'

4GB(S)
Δ = 5° 42' 00"
D = 3° 00' 00"
R = 1,909.86'
L = 190.00'
T = 95.08'

5GB(S)
Δ = 5° 42' 00"
D = 3° 00' 00"
R = 1,909.86'
L = 190.00'
T = 95.08'

6BB
P.I. Sta.150+69.88 B
P.C.C. Sta.149+69.88 B
P.T. Sta.151+69.88 B
Δ = 1° 00' 00"
D = 0° 30' 00"
R = 11,459.16'
L = 200.00'
T = 100.00'

1S
P.I. Sta.22+73.27 S
P.C. Sta.20+57.00 S
P.T. Sta.24+76.32 S
Δ = 34° 35' 40"
D = 8° 15' 00"
R = 694.49'
L = 419.32'
T = 216.27'

3L
P.I. Sta. 149+19.94
P.C.C. Sta.148+69.94
P.C.C. Sta.149+69.94
Δ = 1° 54' 41"
D = 1° 54' 41"
R = 2,997.60'
L = 100.00'
T = 50.00'

3M
P.I. Sta. 150+19.94
P.C.C. Sta.149+69.94
P.C.C. Sta.150+69.94
Δ = 1° 21' 45"
D = 1° 21' 45"
R = 4,205.20'
L = 100.00'
T = 50.00'

3N
P.I. Sta. 151+19.94
P.C.C. Sta.150+69.94
P.T. Sta. 151+69.94
Δ = 0° 16' 23"
D = 0° 16' 23"
R = 20,983.20'
L = 100.00'
T = 50.00'

5A
P.I. Sta. 159+33.66
P.C. Sta. 158+83.66
P.C.C. Sta.159+83.66
Δ = 0° 15' 01"
D = 0° 15' 01"
R = 22,892.88'
L = 100.00'
T = 50.00'

5B
P.I. Sta. 160+33.66
P.C.C. Sta.159+83.66
P.C.C. Sta.160+83.66
Δ = 1° 14' 59"
D = 1° 14' 59"
R = 4,584.68'
L = 100.00'
T = 50.00'

1GD
P.I. Sta.157+63.97 GD
P.C. Sta.156+40.79 GD
P.T. Sta.158+80.56 GD
Δ = 32° 22' 10"
D = 13° 30' 00"
R = 424.41'
L = 239.77'
T = 123.18'

2GD
P.I. Sta.163+32.39 GD
P.C. Sta.161+36.27 GD
P.T. Sta.165+03.69 GD
Δ = 49° 36' 09"
D = 13° 30' 00"
R = 424.41'
L = 367.42'
T = 196.12'

5NPN
P.I. Sta. 161+33.71 NPN
P.C. Sta. 157+86.72 NPN
P.C.C. Sta.164+79.20 NPN
Δ = 9° 13' 59"
D = 1° 20' 00"
R = 4,297.19'
L = 692.48'
T = 346.99'

1SE
P.I. Sta.111+71.64 SE
P.C. Sta.10+13.55 SE
P.T. Sta.13+22.05 SE
Δ = 30° 51' 00"
D = 10° 00' 00"
R = 572.96'
L = 308.50'
T = 158.09'

1A-SE
Δ = 30° 51' 00"
D = 10° 00' 00"
R = 572.96'
L = 308.50'
T = 158.09'

ALIGNMENT & WITNESS PLAN

NOTE: All traverse points shown are cut notches unless otherwise noted.

FED. RD. DIV.	STATE	PROJECT	FISCAL YEAR
2	OHIO		

HAM-71-1.56
R/W PLAN
LIMITED ACCESS
HAM-71-0.93 (R/W ONLY)

451
492

8
66

1GA
P.I. Sta. 167+20.48 GA
P.C.Sta.166+36.70 GA
P.T. Sta.168+04.24 GA
Δ = 2° 30' 47"
D = 1° 30' 00"
R = 3,819.72'
L = 167.54'
T = 83.78'

2GA
P.I. Sta. 173+57.40 GA
P.C.Sta. 171+63.85 GA
P.T. Sta. 175+45.78 GA
Δ = 22° 54' 57"
D = 6° 00' 00"
R = 954.93'
L = 381.93'
T = 193.55'

3GB(S)
P.I. Sta. 26+40.39 GB(S)
P.C.Sta. 24+19.76 GB(S)
P.T. Sta. 28+56.69 GB(S)
Δ = 19° 39' 42"
D = 4° 30' 00"
R = 1,273.24'
L = 436.93'
T = 220.63'

2GB(N)
P.I. Sta. 26+68.23 GB(N)
P.C.Sta. 24+47.60 GB(N)
P.T. Sta. 28+84.53 GB(N)
Δ = 19° 39' 42"
D = 4° 30' 00"
R = 1,273.24'
L = 436.93'
T = 220.63'

3GB(N)
P.I. Sta. 32+32.38 GB(N)
P.C.Sta. 30+45.40 GB(N)
P.T. Sta. 34+15.41 GB(N)
Δ = 20° 21' 02"
D = 5° 30' 00"
R = 1,041.74'
L = 370.01'
T = 186.98'

1RB
P.I. Sta. 172+88.94 RB
P.C.C.Sta. 171+02.34 RB
P.T. Sta. 174+75.25 RB
Δ = 5° 35' 37"
D = 1° 30' 00"
R = 3,819.72'
L = 372.91'
T = 186.60'

1NBR
P.I. Sta. 13+68.92 NBR
P.C. Sta. 13+06.63 NBR
P.T. Sta. 14+31.04 NBR
Δ = 7° 27' 53"
D = 6° 00' 00"
R = 954.93'
L = 124.41'
T = 62.29'

6NPN
P.I. Sta. 166+29.68 NPN
P.C.C. Sta. 164+79.20 NPN
P.T. Sta. 167+80.00 NPN
Δ = 4° 30' 43"
D = 1° 30' 00"
R = 3,819.72'
L = 300.80'
T = 150.48'

5C
P.I. Sta. 166+27.38 NB
P.C.C. Sta. 160+83.66 NB
P.C.C. Sta. 171+63.85 NB
Δ = 16° 12' 10"
D = 1° 30' 00"
R = 3,819.72'
L = 1,080.19'
T = 543.72'

5D
P.I. Sta. 172+13.85 NB
P.C.C. Sta. 171+63.85 NB
P.C.C. Sta. 172+63.85 NB
Δ = 1° 14' 59"
D = 1° 14' 59"
R = 4,584.68'
L = 100.00'
T = 50.00'

5E
P.I. Sta. 173+13.85 NB
P.C.C. Sta. 172+63.85 NB
P.T. Sta. 173+63.85 NB
Δ = 0° 15' 01"
D = 0° 15' 01"
R = 22,892.88'
L = 100.00'
T = 50.00'

6A
P.I. Sta. 169+73.58 SB
P.C.C. Sta. 166+12.27 SB
P.C.C. Sta. 173+31.09 SB
Δ = 14° 22' 35"
D = 2° 00' 00"
R = 2,864.79'
L = 718.82'
T = 361.31'

6B
P.I. Sta. 173+56.09 SB
P.C.C. Sta. 173+31.09 SB
P.C.C. Sta. 173+81.09 SB
Δ = 0° 54' 00"
D = 1° 48' 00"
R = 3,183.10'
L = 50.00'
T = 25.00'

6C
P.I. Sta. 174+31.09 SB
P.C.C. Sta. 173+81.09 SB
P.C.C. Sta. 174+81.09 SB
Δ = 1° 19' 59"
D = 1° 19' 59"
R = 4,298.08'
L = 100.00'
T = 50.00'

6D
P.I. Sta. 175+31.09 SB
P.C.C. Sta. 174+81.09 SB
P.T. Sta. 175+81.09 SB
Δ = 0° 16' 01"
D = 0° 16' 01"
R = 21,463.56'
L = 100.00'
T = 50.00'

2GD
P.I. Sta. 163+32.38 GD
P.C. Sta. 161+36.27 GD
P.T. Sta. 165+03.69 GD
Δ = 49° 36' 09"
D = 13° 30' 00"
R = 424.41'
L = 367.42'
T = 196.11'

3GD
P.I. Sta. 171+54.94 GD
P.C. Sta. 171+12.91 GD
P.T. Sta. 171+96.96 GD
Δ = 1° 15' 51"
D = 1° 30' 00"
R = 3,819.72'
L = 84.05'
T = 42.03'

4GD
P.I. Sta. 174+26.51 GD
P.C. Sta. 173+80.42 GD
P.T. Sta. 174+72.60 GD
Δ = 1° 22' 58"
D = 1° 30' 00"
R = 3,819.72'
L = 92.19'
T = 46.09'

1RD
P.I. Sta. 173+69.57 RD
P.C. Sta. 171+49.15 RD
P.T. Sta. 175+64.20 RD
Δ = 47° 43' 50"
D = 11° 30' 00"
R = 498.22'
L = 415.05'
T = 220.42'

2SE
P.I. Sta. 16+87.96 SE
P.C. Sta. 15+88.12 SE
P.T. Sta. 17+87.29 SE
Δ = 9° 57' 30"
D = 5° 00' 00"
R = 1,145.92'
L = 199.17'
T = 99.84'

3SE
P.I. Sta. 20+79.53 SE
P.C. Sta. 19+51.35 SE
P.T. Sta. 22+06.65 SE
Δ = 12° 45' 54"
D = 5° 00' 00"
R = 1,145.92'
L = 255.30'
T = 128.18'

4SE
P.I. Sta. 20+59.15 SE(E)
P.C. Sta. 20+28.28 SE(E)
P.T. Sta. 20+88.48 SE(E)
Δ = 31° 21' 21"
D =
R = 110.00'
L = 60.20'
T = 30.87'

5SE
P.I. Sta. 23+84.71 SE
P.C. Sta. 23+61.88 SE
P.C.C. Sta. 24+06.69 SE
Δ = 27° 01' 28"
D =
R = 95.00'
L = 44.81'
T = 22.83'

6SE
P.I. Sta. 24+65.05 SE
P.C.C. Sta. 24+06.69 SE
P.R.C. Sta. 24+64.99 SE
Δ = 133° 37' 24"
D =
R = 25.00'
L = 58.30'
T = 58.36'

7SE
P.I. Sta. 25+23.34 SE(E)
P.R.C. Sta. 24+90.98 SE(E)
P.T. Sta. 25+48.42 SE(E)
Δ = 65° 49' 16"
R = 50.00'
L = 57.44'
T = 32.36'

8SE
P.I. Sta. 24+32.77 ℄
P.C. Sta. 23+59.55 ℄
P.T. Sta. 24+90.83 ℄
Δ = 63° 12' 37"
R = 119.00'
L = 131.28'
T = 73.22'

9SE
P.I. Sta. 24+27.78 SE(E)
P.C. Sta. 23+52.67 SE(E)
P.R.C. Sta. 24+90.98 SE(E)
Δ = 55° 25' 05"
R = 143.00'
L = 138.31'
T = 75.11'

11SE
P.I. Sta. 21+64.77 SE(E)
P.C. Sta. 21+20.94 SE(E)
P.T. Sta. 22+05.49 SE(E)
Δ = 37° 15' 50"
R = 130.00'
L = 84.55'
T = 43.83'

ALIGNMENT & WITNESS PLAN

FED. RD. DIV.	STATE	PROJECT	FISCAL YEAR
2	OHIO		

452
492

10
66

HAM-71-2.51
R/W PLAN
LIMITED ACCESS
HAM-71-0.93 (R/W ONLY)

NOTE: All traverse points shown are cut notches unless otherwise noted.

8F
P.I. Sta. 191+52.67 SB
P.C.C. Sta. 191+02.67 SB
P.C.C. Sta. 192+02.67 SB
Δ = 1° 50' 06"
D = 1° 50' 06"
R = 3,122.39'
L = 100.00'
T = 50.00'

8G
P.I. Sta. 192+52.67 SB
P.C.C. Sta. 192+02.67 SB
P.C.C. Sta. 193+02.67 SB
Δ = 1° 09' 48"
D = 1° 09' 48"
R = 4,925.14'
L = 100.00'
T = 50.00'

8H
P.I. Sta. 193+52.67 SB
P.C.C. Sta. 193+02.67 SB
P.C.C. Sta. 194+02.67 SB
Δ = 0° 50' 08"
D = 0° 50' 08"
R = 6,857.21'
L = 100.00'
T = 50.00'

8J
P.I. Sta. 194+52.67 SB
P.C.C. Sta. 194+02.67 SB
P.T. Sta. 195+02.67 SB
Δ = 0° 09' 58"
D = 0° 09' 58"
R = 34,492.45'
L = 100.00'
T = 50.00'

10A
P.I. Sta. 198+14.55 SB
P.C. Sta. 197+64.55 SB
P.C.C. Sta. 198+64.55 SB
Δ = 0° 07' 59"
D = 0° 07' 59"
R = 43,061.42'
L = 100.00'
T = 50.00'

10B
P.I. Sta. 199+14.55 SB
P.C.C. Sta. 198+64.55 SB
P.C.C. Sta. 199+64.55 SB
Δ = 0° 40' 00"
D = 0° 40' 00"
R = 8,594.37'
L = 100.00'
T = 50.00'

10C
P.I. Sta. 200+14.55 SB
P.C.C. Sta. 199+64.55 SB
P.C.C. Sta. 200+64.55 SB
Δ = 0° 56' 04"
D = 0° 56' 04"
R = 6,131.54'
L = 100.00'
T = 50.00'

10D
P.I. Sta. 201+14.55 SB
P.C.C. Sta. 200+64.55 SB
P.C.C. Sta. 201+64.55 SB
Δ = 1° 27' 51"
D = 1° 27' 51"
R = 3,913.20'
L = 100.00'
T = 50.00'

10E
P.I. Sta. 201+89.55 SB
P.C.C. Sta. 201+64.55 SB
P.C.C. Sta. 202+14.55 SB
Δ = 0° 50' 14"
D = 1° 40' 28"
R = 3,421.78'
L = 50.00'
T = 25.00'

5EP(S)
P.I. Sta. 11+29.39 EP(S)
P.C. Sta. 10+91.15 EP(S)
P.T. Sta. 11+67.33 EP(S)
Δ = 12° 11' 20"
D = 16° 00' 00"
R = 358.10'
L = 76.18'
T = 38.24'

1EP(N)
P.I. Sta. 10+81.23 EP(N)
P.C. Sta. 10+05.32 EP(N)
P.T. Sta. 11+55.59 EP(N)
Δ = 20° 01' 20"
D = 13° 19' 29"
R = 430.00'
L = 150.27'
T = 75.91'

1EP
P.I. Sta. 10+94.64 EP
P.C. Sta. 10+22.57 EP
P.T. Sta. 11+65.38 EP
Δ = 19° 01' 42"
D = 13° 19' 29"
R = 430.00'
L = 142.81'
T = 72.07'

2EP
P.I. Sta. 15+41.95 EP
P.C. Sta. 12+88.02 EP
P.T. Sta. 17+44.65 EP
Δ = 62° 24' 22"
D = 13° 40' 00"
R = 419.24'
L = 456.63'
T = 253.93'

4EP
P.I. Sta. 13+32.12 EP(S)
P.C. Sta. = P.O.T. 12+54.21 EP(S)
P.T. Sta. = P.O.C. 29+36.55 SBR
Δ = 114° 37' 00"
R = 50.00'
L = 100.02'
T = 77.91'

6EP
P.I. Sta. 13+97.32 EP(S)
P.C. Sta. 13+08.27 EP(S)
P.T. Sta. = P.O.T. 192+91.48 RF (16' Lt.)
Δ = 99° 47' 30"
R = 75.00'
L = 130.63'
T = 89.05'

3SBR
P.I. Sta. 28+72.60 SBR
P.C. Sta. 28+04.31 SBR
P.T. Sta. 29+40.82 SBR
Δ = 4° 46' 40"
D = 3° 30' 00"
R = 1,637.02'
L = 136.51'
T = 68.29'

3RF
P.I. Sta. 195+31.41 RF
P.C. Sta. 193+57.62 RF
P.T. Sta. 197+03.90 RF
Δ = 12° 07' 11"
D = 3° 30' 00"
R = 1637.02'
L = 346.28'
T = 173.79'

4NBR
P.I. Sta. 34+16.69 NBR
P.C. Sta. 32+42.90 NBR
P.T. Sta. 35+89.18 NBR
Δ = 12° 07' 11"
D = 3° 30' 00"
R = 1,637.02'
L = 346.28'
T = 173.79'

10F
P.I. Sta. 202+39.55 SB
P.C.C. Sta. 202+14.55 SB
P.C.C. Sta. 202+64.55 SB
Δ = 0° 57' 52"
D = 1° 55' 44"
R = 2,970.40'
L = 50.00'
T = 25.00'

10G
P.I. Sta. 205+11.34 SB
P.C.C. Sta. 202+64.55 SB
P.C.C. Sta. 207+56.91 SB
Δ = 9° 50' 50"
D = 2° 00' 00"
R = 2,864.79'
L = 492.36'
T = 246.79'

3G-GA
P.I. Sta. 193+57.95 GA
P.C.C. Sta. 190+50.37 GA
P.T. Sta. 196+64.06 GA
Δ = 9° 41' 47"
D = 1° 34' 48"
R = 3,626.32
L = 613.69'
T = 307.58

2RA
P.I. Sta. 192+54.02 RA
P.C.C. Sta. 190+87.20 RA
P.T. Sta. 194+20.25 RA
Δ = 8° 19' 34"
D = 2° 30' 00"
R = 2,291.83'
L = 333.05'
T = 166.82

3RA
P.I. Sta. 199+47.65 RA
P.C. Sta. 198+30.55 RA
P.C.C. Sta. 200+64.55 RA
Δ = 5° 51' 00"
D = 2° 30' 00"
R = 2,291.83'
L = 234.00'
T = 117.10'

2RE
P.I. Sta. 192+88.79 RE
P.C. Sta. 191+86.89 RE
P.T. Sta. 193+88.58 RE
Δ = 20° 10' 07"
D = 10° 00' 00"
R = 572.96'
L = 201.69'
T = 101.90'

3RE
P.I. Sta. 199+40.20 RE
P.C. Sta. 198+92.79 RE
P.T. Sta. 199+86.88 RE
Δ = 17° 24' 26"
D = 18° 30' 00"
R = 309.71'
L = 94.09'
T = 47.41'

4RB
P.I. Sta. 193+36.59 RB
P.C. Sta. 192+45.82 RB
P.T. Sta. 194+26.51 RB
Δ = 13° 33' 07"
D = 7° 30' 00"
R = 763.94'
L = 180.69'
T = 90.77'

5RB
P.I. Sta. 197+75.42 RB
P.C. Sta. 196+00.56 RB
P.C.C. Sta. 199+50.04 RB
Δ = 5° 14' 32"
D = 1° 30' 00"
R = 3,819.72'
L = 349.48'
T = 174.86'

6RB
P.I. Sta. 199+83.04 RB
P.C.C. Sta. 199+50.04 RB
P.T. Sta. 200+15.79 RB
Δ = 12° 09' 54"
D = 18° 30' 00"
R = 309.71'
L = 65.76'
T = 33.00'

9A
P.I. Sta. 199+87.43 NB
P.C.C. Sta. 199+37.43 NB
P.C.C. Sta. 200+37.43 NB
Δ = 0° 07' 59"
D = 0° 07' 59"
R = 43,061.42'
L = 100.00'
T = 50.00'

9B
P.I. Sta. 200+87.43 NB
P.C.C. Sta. 200+37.43 NB
P.C.C. Sta. 201+37.43 NB
Δ = 0° 40' 00"
D = 0° 40' 00"
R = 8,594.37'
L = 100.00'
T = 50.00'

9C
P.I. Sta. 201+87.43 NB
P.C.C. Sta. 201+37.43 NB
P.C.C. Sta. 202+37.43 NB
Δ = 0° 56' 04"
D = 0° 56' 04"
R = 6,131.54'
L = 100.00'
T = 50.00'

9D
P.I. Sta. 202+87.43 NB
P.C.C. Sta. 202+37.43 NB
P.C.C. Sta. 203+37.43 NB
Δ = 1° 27' 51"
D = 1° 27' 51"
R = 3,913.20'
L = 100.00'
T = 50.00'

9E
P.I. Sta. 203+62.43 NB
P.C.C. Sta. 203+37.43 NB
P.C.C. Sta. 203+87.43 NB
Δ = 0° 50' 14"
D = 1° 40' 28"
R = 3,421.78'
L = 50.00'
T = 25.00'

9F
P.I. Sta. 204+12.43 NB
P.C.C. Sta. 203+87.43 NB
P.C.C. Sta. 204+37.43 NB
Δ = 0° 57' 52"
D = 1° 55' 44"
R = 2,970.40'
L = 50.00'
T = 25.00'

9G
P.I. Sta. 205+26.63 NB
P.C.C. Sta. 204+37.43 NB
P.C.C. Sta. 206+15.76 NB
Δ = 3° 34' 00"
D = 2° 00' 00"
R = 2,864.79'
L = 178.33'
T = 89.20'

ALIGNMENT & WITNESS PLAN

FED. RD. DIV.	STATE	PROJECT	FISCAL YEAR
2	OHIO		

453
492

11
66

HAM-71-2.51
R/W PLAN
LIMITED ACCESS
HAM-71-0.93 (R/W ONLY)

10G
P.I. Sta. 205+11.34 SB
P.C.C. Sta. 202+64.55 SB
P.C.C. Sta. 207+56.91 SB
Δ = 9° 50' 50"
D = 2° 00' 00"
R = 2,864.79'
L = 492.36'
T = 246.79'

10H
P.I. Sta. 207+81.91 SB
P.C.C. Sta. 207+56.91 SB
P.C.C. Sta. 208+06.91 SB
Δ = 0° 57' 52"
D = 1° 55' 44"
R = 2,970.40'
L = 50.00'
T = 25.00'

10J
P.I. Sta. 208+31.91 SB
P.C.C. Sta. 208+06.91 SB
P.C.C. Sta. 208+56.91 SB
Δ = 0° 50' 14"
D = 1° 40' 28"
R = 3,421.78'
L = 50.00'
T = 25.00'

10K
P.I. Sta. 209+06.91 SB
P.C.C. Sta. 208+56.91 SB
P.C.C. Sta. 209+56.91 SB
Δ = 1° 27' 51"
D = 1° 27' 51"
R = 3,913.20'
L = 100.00'
T = 50.00'

10L
P.I. Sta. 210+06.91 SB
P.C.C. Sta. 209+56.91 SB
P.C.C. Sta. 210+56.91 SB
Δ = 0° 56' 04"
D = 0° 56' 04"
R = 6,131.54'
L = 100.00'
T = 50.00'

10M
P.I. Sta. 211+06.91 SB
P.C.C. Sta. 210+56.91 SB
P.C.C. Sta. 211+56.91 SB
Δ = 0° 40' 00"
D = 0° 40' 00"
R = 8,594.37'
L = 100.00'
T = 50.00'

10N
P.I. Sta. 212+06.91 SB
P.C.C. Sta. 211+56.91 SB
P.T. Sta. 212+56.91 SB
Δ = 0° 07' 59"
D = 0° 07' 59"
R = 43,061.42'
L = 100.00'
T = 50.00'

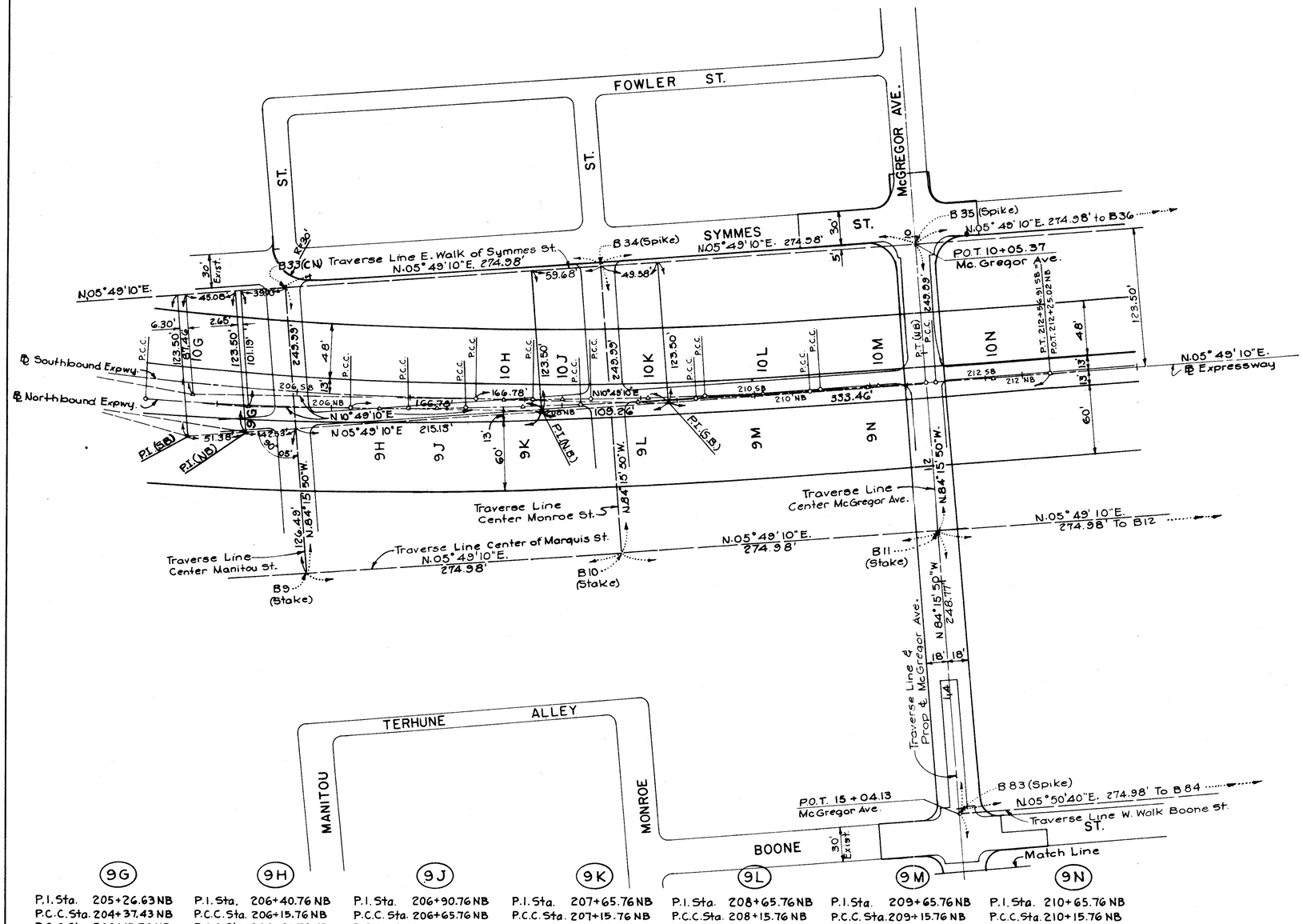

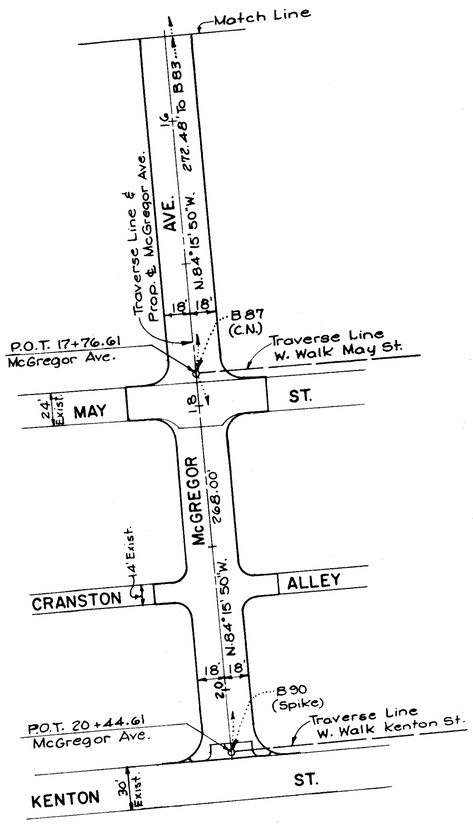

9G
P.I. Sta. 205+26.63 NB
P.C.C. Sta. 204+37.43 NB
P.C.C. Sta. 206+15.76 NB
Δ = 3° 34' 00"
D = 2° 00' 00"
R = 2,864.79'
L = 178.33'
T = 89.20'

9H
P.I. Sta. 206+40.76 NB
P.C.C. Sta. 206+15.76 NB
P.C.C. Sta. 206+65.76 NB
Δ = 0° 57' 52"
D = 1° 55' 44"
R = 2,970.40'
L = 50.00'
T = 25.00'

9J
P.I. Sta. 206+90.76 NB
P.C.C. Sta. 206+65.76 NB
P.C.C. Sta. 207+15.76 NB
Δ = 0° 50' 14"
D = 1° 40' 28"
R = 3,421.78'
L = 50.00'
T = 25.00'

9K
P.I. Sta. 207+65.76 NB
P.C.C. Sta. 207+15.76 NB
P.C.C. Sta. 208+15.76 NB
Δ = 1° 27' 51"
D = 1° 27' 51"
R = 3,913.20'
L = 100.00'
T = 50.00'

9L
P.I. Sta. 208+65.76 NB
P.C.C. Sta. 208+15.76 NB
P.C.C. Sta. 209+15.76 NB
Δ = 0° 56' 04"
D = 0° 56' 04"
R = 6,131.54'
L = 100.00'
T = 50.00'

9M
P.I. Sta. 209+65.76 NB
P.C.C. Sta. 209+15.76 NB
P.C.C. Sta. 210+15.76 NB
Δ = 0° 40' 00"
D = 0° 40' 00"
R = 8,594.37'
L = 100.00'
T = 50.00'

9N
P.I. Sta. 210+65.76 NB
P.C.C. Sta. 210+15.76 NB
P.T. Sta. 211+15.76 NB
Δ = 0° 07' 59"
D = 0° 07' 59"
R = 43,061.42'
L = 100.00'
T = 50.00'

ALIGNMENT & WITNESS PLAN

FED. RD. DIV.	STATE	PROJECT	FISCAL YEAR
2	OHIO		

454
492

HAM-71-1.56
R/W PLAN
LIMITED ACCESS
HAM-71-0.93 (R/W ONLY)

12
66

SUMMARY OF ADDITIONAL RIGHT OF WAY REQUIRED

Parcel No.	Owner	Deed Record Book	Deed Record Page	R/W Area (Sq. Ft.) Total Area	To Be Acquired Land	To Be Acquired Bldg's	Residue Left	Residue Right	R/W Sheet No.	Remarks
5101WL	A.G. Tool + Die Co.	2878	208	3563	3563	No	0	0	~~25+26~~	
① 5113WL	Wm. E. Ross	~~2597~~	~~304~~	~~1625~~	~~1625~~	~~Yes~~	0	0	26+27	
③ 5114WL	Elix F. Rhodes	2161	599	1625	1625	Yes	0	0	~~26+27~~	
5115WL	Ann M. Mayer, Trustee	2495	79	1625	1625	Yes	0	0	26+27	
5116WL	Rose Vornhagen	1464	32	1593	1593	Yes	0	0	26+27	
5117-5199										Not Needed
5200WL	Western & Southern Life Ins Co.	2373	551	43,130	829	No	42,301	0	21	
5200		2497	60		23	No				Footing Easement
5200WA										
5201WL	Leelanav Realty Co.	2388	291	1790	627	Yes	1163	0	21	
5201WA						Yes				
5202WL	Leelanav Realty Co.	1773	365	1872	905	Yes	967	0	21	
5202WA						Yes				
5203WL	Mary Demet et.al.	2888	453	2019	1036	Yes	0	0	21	
5203E L		2060	585		983	Yes				
5204WL	Julia A. Rouse	RL		1739	1272	Yes	0	0	21	Registered Land
5204EL		*29724			467	Yes				
5205WL	Leelanav Realty Co.	1385	65	1208	1119	Yes	89	0	21	
5205WA		1759	451			Yes				
52065209										Not Needed
5210WL	Sarah Lucas et.al.	2572	410	1853	1853	Yes	0	0	21	
5211WL	Morton W. Olman et.al.	2953	647	1190	1190	Yes	0	0	21	
5212WL	Lillian Ramsey	2283	195	1209	1209	Yes	0	0	21	
5213WL	Sophia P. Solomon	2284	255	1159	1159	Yes	0	0	21	
5214WL	Amelia N. Contadino et.al.	2161	599	1529	1529	Yes	0	0	21	
5215WL	Robert Hanlon et.al.	2309	503	8	8	No	0	0	21	
5216WL	Mary McDonald et.al.	2070	555	902	420	No	0	0	21	
5216WD					482	No				
5217WL	Central Church of Christ of Cinti.	2548	116	2639	1796	Yes	0	0	21	
5217WD					843	Yes				
5218WD	Cincinnati Amalgamated Clothing Workers Center	2440	250	4335	4335	Yes	0	0	21	
5219-3DE-1	City of Cincinnati	925	453	47822	1449	No	30629	17193	21+22	Lytle Park
5219-3DE-2	(Park Board)	926	424		15752	Yes				
5219WA-1		927	364			No				
5219WA-2		928	352			Yes				
5219WA-3		929	354			No				
		930	182							
5220WL	Cincinnati Union Bethel	1151	291	25250	117	No	0	25,133	22	
5220U					381	No				
5221WL	Blue Ridge Realty Co.	2618	527	8048	1105	No	0	6943	22	
5221T					511	No				
5222-3DE	City of Cincinnati			18156	12556	No	0	18156	22	Lytle Park
5222WA	(Park Board)	2435	216			No				
5223										Not Needed
5224WD	Karl J. Alter, Trustee	1301	187	10,672	1509	Yes	9163	0	22	* To Be Sold
5224T		1312	497		1276	Yes				
*** 5224WA						Yes				
5225WD-1	Essie M. Levine	2089	545	14078	12226	Yes	1836	0	22	* To Be Sold
5225WD2					16	No				Pike St. Widening
5225T					903	Yes				
5225WA						Yes				
5226WD-1	The Women's City Club of Cincinnati.	2391	307	2869	2580	Yes	0	0	22	* To Be Sold
5226WD2					289	Yes				Pike St. Widening
5227WD-1	William A. Rudd, Inc.	2352	268	2450	996	Yes	0	0	22	* To Be Sold
5227WD2					1454	Yes				Pike St. Widening
5228WD-1	Chelsea Moore Corp.	RL		23656	7927	Yes	14961	0	22	* To Be Sold
5228WD2		*39812			768	Yes				Pike St. & Buchanan St.
5228T-1		3065	166		978	Yes				Registered Land
5228T-2					2947	No				(T-2 only)
5228WA						Yes				
5229-5230										Not Needed
5231WL	Lillie Mae Boggiana et.al.	2694	360	1370	600	Yes	0	0	23	
5231WD					770	Yes				For Sentinel St.
① 5102-5112										Not Needed

③ Symbol indicates a parcel previously acquired for construction contract HAM-71-1.30

SUMMARY OF ADDITIONAL RIGHT OF WAY REQUIRED

Parcel No.	Owner	Deed Record Book	Deed Record Page	R/W Area (Sq. Ft.) Total Area	To Be Acquired Land	To Be Acquired Bldg's	Residue Left	Residue Right	R/W Sheet No.	Remarks
5232WD	James H. Van Matre	2405	402	5197	5197	Yes	0	0	23	For Sentinel St.
5233										Not Needed
5234										
5235WD	Harry O'Conner	2498	92	1280	1280	Yes	0	0	23	For Sentinel St.
5236WD	Est of J.N. Mulroy	740	589	1703	1703	Yes	0	0	23	For Sentinel St.
5237										Not Needed
5238WL	Sarah Miller	2599	355	16641	16624	Yes	0	0	23	
5238WD					17	Yes				For Sentinel St.
5239WL	Mary Gibbons et.al.	1431	287	1447	1129	Yes	0	0	23	
5239WD		2442	491		318	Yes				For Sentinel St.
5240WL	Simon Rosenberg	2799	26	3300	3300	No	0	0	23	
5241WL	Jane P. Bingham	2783	367	8000	8000	No	0	0	23+24	
5242WL	Columbia Motor Sales Co.	3007	269	6240	6240	No	0	0	23	
5243WL	Barq Bottling Co. of Portmouth Ohio	3003	162	21878	19986	Yes	0	0	23+24	
5243WD					1892					
5244WL	Wong K. Hin et.al.	2458	451	2200	2200	Yes	0	0	24	
5245WL	Marie Kurrie			5599	2785	Yes	0	0	24	
5245WD		1758	265		2814	Yes				
5246WD	Aaron B. Horowitz et.al.	3095 & 518	403 & 130	1800	1800	Yes	0	0	24	
5247WL	A.G. Tool & Die Co.	RL	*37541	7834	7834	Yes	0	0	23+25	Registered Land
5248WL	Court Investment Co.	2393	556	3009	3009	No	0	0	23	
5249WL	The Frank Tea & Spice Co.	2280	120	3118	3118	No	0	0	23	
5250WL	J.W. Brown Trustee	3014	660	2908	2908	Yes	0	0	23	
5251WL	Vista Realty Co.	RL		51,914	9002	Yes	0	0	23	Registered Land
5251WD-1		*8173			11688	No				
5251WD2					10538	Yes				
5251WD-3					20686	Yes				For Sentinel St.
5252WL	Robert Bishow	2277	186	580	580	Yes	0	0	23	
5253WL	Chas. B. Lester et.al	2894	141	636	403	Yes	0	0	23	
5253WD					233	Yes				For Sentinel St.
5254WL	Daisy T. Halford	2294	88	740	84	Yes	0	0	23	
5254WD					656					For Sentinel St.
5255WD	Myrtle Downey	2838	189	851	851	Yes	0	0	23	For Sentinel St.
5256WD	Britamarte G. Wimmer	2838	164	905	905	Yes	0	0	23	For Sentinel St.
5257WD	Sonia Vonderhaar et.al.	2972	546	1005	1005	Yes	0	0	23	For Sentinel St.
5258WD	Simon Rosenberg	2955	239	740	740	Yes	0	0	23	For Sentinel St.
5259WD	Michael M. Mikolin	2944	371	1955	1765	Yes	0	0	23	For Sentinel St.
5259EL					190	No				
5260WD	Security Realties, Inc.	2402	399	22010	768	No	21242	0	23	For Sentinel St.
** 5260T					981	No				
** 5260WA						No				
5261										Not Needed
5266										
① 5267WD-1	The Frank Tea & Spice Co.	2891	558	86996	4206	No	0	55787	24+25	For Sentinel St.
5267WD2		RL *8173			960	No				" " "
5267WD-3					5145	No				Registered Land
5267WD-4					1	No				For Sentinel St.
5267T-1					2662	No				
5267T-2					457	No				
② 5267WD-5					8199 (4)	Yes				Registered Land
5267WD-6					12698 (**)	Yes				
5267T-3					644	Yes				

~~* Note~~: A Three Dimensional Easement will be conveyed to the ~~State~~ of Ohio by the City of Cincinnati.

** Note: The Temporary Easement 5260T shall extend for a period of time not to exceed three (3) months for the construction of a concrete retaining wall including necessary excavation, grading and backfilling. The work agreement 5260WA shall be completed within one (1) month from the starting date of the work.

*** Note: The ~~Work~~ Agreement 5224 WA shall extend for a period of ninety (90) days from the date of contract award.

① Parcels required for ~~I-71~~
② " " " I-471
④ Area includes 5267 T-1
(**) " " 5267 T-2

Date	Revised	By

RIGHT OF WAY PLAN

FED. RD. DIV.	STATE	PROJECT	FISCAL YEAR
2	OHIO		

455/492

13/66

HAM-71-1.56
R/W PLAN
LIMITED ACCESS
HAM-71-0.93 (R/W ONLY)

SUMMARY OF ADDITIONAL RIGHT OF WAY REQUIRED

Parcel No.	Owner	Deed Record Book	Deed Record Page	R/W Area (Sq. Ft.) Total Area	To Be Acquired Land	To Be Acquired Bldg's	Residue Left	Residue Right	R/W Sheet No.	Remarks
5268WD1	The American Tool Works Co.			35802	21742	No	13036	0	25	
5268WD2					1024	No				For Culvert St.
5268T		1176	287		13036	Yes				
5269										Not Needed
5270WL	The Whitaker Paper Co.			5600	1540	Yes	0	0	25	
5270WD		3204	665		4060	Yes				
5271WL	The Diem & Wing Paper Co.			16086	10504	Yes	0	0	25	
5271WD		1543	133		5582	Yes				
5272WL	Elmer Steely et.al.	~~2918~~	4	1781	1781	Yes	0	0	26	
5273WL	The Diem & Wing Paper Co.	2681	211	1781	1781	No	0	0	26	
5274WL	Simon Rosenberg	2771	505	1781	1781	Yes	0	0	26	
5275WL	Irwin S. Rhodes	1617	384	1781	1781	Yes	0	0	26	
5275A-WL	Simon Rosenberg	2771	400&505	4750	4750	Yes	0	0	26&27	
5276WL	Harry A. Schwartz	3037	260	2375	2375	Yes	0	0	26&27	
5277WL	Benjamin Simkin	2938	302	2375	2375	Yes	0	0	26&27	
5278WL	Sophia S. Silverman et. al.	2917	635	2375	2375	Yes	0	0	26&27	
5279WL	Mary Gallagher	2031, 2351, 2379	70, 287, 262	1900	1900	No	0	0	26&27	
5280WL	Sophia Shane	1693	13	1900	1900	No	0	0	26&27	
5281WL	Loretta Simms	3041	692	2340	2340	Yes	0	0	26&27	
5282WL	Leonard Kirschner	2498	85	1650	1650	Yes	0	0	26&27	
5283WL	Jacob Richter	1180	319	2928	2928	Yes	0	0	26&27	
①5284WL	Elizabeth F. Rhodes	2161	599	3250	3250	Yes	0	0	26&27	
①5285WL	Chauncey A. Garnes	1219	175	1495	1495	No	0	0	26&27	
①5286WL	Charles W. Neyer	2844 2869	148 293	8028	8028	Yes	0	0	26	
5287										Not Needed
5288WL	Pauline A. Neyer	2714	587	6175	6175	Yes	0	0	26&28	
5289WL	Dorothy Schottenstein et.al.	2744	627	1625	1625	Yes	0	0	26&28	
5290WL	Metropoliton Motor Co. Inc.	2336	164	3545	3545	No	0	0	26&28	
5291WL	Sisters of The Poor of St. Francis	2847	601	2275	2275	No	0	0	26&27	
5292WL	Rose Vornhagen	1371	369	1300	1300	Yes	0	0	26&27	
5293WL	Celby Edwards	2402 2896	601 405	1300	1300	Yes	0	0	26&27	
5294WL	Selma Rosedale et.al.	2525	403	1300	1300	Yes	0	0	26&27	
5294A-WL	Thea B. Schuberth	2820	8	1300	1300	Yes	0	0	26	
5295WL	Elsie P. Hyman et.al.	2740	514	1300	1300	Yes	0	0	26	
5296WL	Rybolt Heating Co.	2684	70	1625	1625	Yes	0	0	26	
5297WL	Alberta Blaine	3147	179	1625	1625	Yes	0	0	26	
5298WL	Elsie P. Hyman et.al.	2759 2841	499 491	4513	4513	Yes	0	0	26&28	
5299WL	The A.A.K. Co.	2447	135	1827	1827	No	0	0	28	
5300										Not Needed
5301WD	John Bezler	2972	604	2438	8	Yes	0	0	27	E. Sixth St.
5301EL					2430	Yes				
5302WD	Irwin S. Rhodes			1950	44	No	0	0	27	E. Sixth St.
5302EL		1817	305		1906	No				
5303WD	Dorothy Schottenstein et.al.			1950	95	Yes	0	0	27	E. Sixth St.
5303EL		2812	570		1855	Yes				
5304WD	Katherine M. Niehaus			1950	158	Yes	0	0	27&29	E. Sixth St.
5304EL		3131	207		1792	Yes				
5305WD	Marvin B. Cramer et.al.			2214	490	Yes	0	0	27&29	E. Sixth St.
5305EL		2997	491		1724	Yes				
5306WD	The New Unity Baptist Church	975	74	4600	665	Yes	0	1656	27&29	E. Sixth St.
5306SL		2296	206		2279	Yes				
5306WA						Yes				
5307WL	Seybold Paper Co.	1578 2037 2090	528 313 159	14851	8860	Yes	0	0	26	
5307WD					5991	Yes				
5308WL	The Pilgrim Baptist Church of Cincinnati	2987	19	9034	8729	Yes	0	0	26	
5308WD					305	No				
5308A-WD	Mary E. Moorehead	1436	493	1026	1026	No	0	0	26	
5309WL	Irwin S. Rhodes	1617 1893	384 542	5160	5160	Yes	0	0	26	
5310WL	Gladys Rosenbaum	2588	19	2043	2043	No	0	0	26	

SUMMARY OF ADDITIONAL RIGHT OF WAY REQUIRED

Parcel No.	Owner	Deed Record Book	Deed Record Page	R/W Area (Sq. Ft.) Total Area	To Be Acquired Land	To Be Acquired Bldg's	Residue Left	Residue Right	R/W Sheet No.	Remarks
①5311WL	Central Outdoor Advertising Co.	2343	68	4418	4418	No	0	0	26	
①5312WL	Simon Rosenberg	2744	465	4743	4743	Yes	0	0	26	
5313WL	Gladys Rosenbaum	2588	19	2137	2137	No	0	0	26	
5314WL	Irwin S. Rhodes	1893	542	1850	1850	Yes	0	0	26	
5315WL	Wm. R. Steltenpohl	3038	93	4820	4820	Yes	0	0	26	
5316-5317										Not Needed
5318WD	Seybold Paper Co.	1579	52	1650	1650	No	0	0	26	
5319										Not Needed
①5320WL	City of Cincinnati	1035 1032 CPC#43430	76 181	35110	3055	No	32055	0	26	
5320WA										
5321WL	Metropoliton Motor Co. Inc.	2710	613	16440	16440	Yes	0	0	28	
5322WL	The Elsinore Realty Co.	1253	275	8550	8550	Yes	0	0	28	
5323WL	Iphigene M. Bettman	1294	35	14106	14160	Yes	0	0	28	
5324WL	M & M Realty Inc.	2323	355	5700	5700	Yes	0	0	28	
5325WL	Magabe Realty Inc.	2340	377	2375	2375	Yes	0	0	28	
5326WL	The Sullivan Printing Works Co.	959-989 1027-1777	510-490 264-166	26850	26850	Yes	0	0	28&30	
5327WL	Helen A. Potterson et.al.	2220	325	19395	19395	Yes	0	0	30&31	
5328WL	Evelyn Pollak	2332 2749	58 285	8347	8347	Yes	0	0	31	
5329WL	Georgianna McGowan	2701	320	7500	7500	Yes	0	0	31	
5330WL	Central Outdoor Adv. Co. Inc.	2343	535	1750	1750	No	0	0	31	
5331WL	Dorothy Schottenstein et.al.	2915	567	2891	2891	Yes	0	0	31	
5332WL	Central Outdoor Adv. Co. Inc.	2354	116	336	336	No	0	0	31	
5333WL	Raymond M. Gordon et.al.	2388 2435	206 437	5294	5294	Yes	0	0	34	
5333AWL	Mohawk Savings & Loan Co.	3156	170	1727	1727	Yes	0	0	34	
5334WL	Elmer A. Oberrecht	2700	563	9219	9219	Yes	0	0	31&34	
5335										Not Needed
5336WL	Lawrence Lee et.al.	2653	131	2375	2375	Yes	0	0	31	
5337WL	Isabell L. Kircher, Trustee, et.al.	2356	380	2375	2375	No	0	0	31	
5338										Not Needed
5339WL	Simon Rosenberg	2796 2802	345 549	9500	9500	Yes	0	0	31	
5340WL	Dorothy Schottenstein et.al.	2793	439	3230	3230	Yes	0	0	31	
5341WL	Clara Ryan	1358	168	1637	1637	Yes	0	0	31	
5342WL	Harry G. Sander et.al.	2985	460	1637	1637	Yes	0	0	31	
5343WL	Arthur Fleischman et.al.	2626	347	2338	2338	Yes	0	0	31	
5344WL	Isaac Starks et.al.	2121	382	4218	4218	Yes	0	0	31	
5344AWL	Andrew O. Haefner	2563	20	139	139	No	0	0	31	
5345WL	Frances Fleischman	1870	181	1875	1875	Yes	0	0	31	
5346WL	Willie Howard et.al.	2245	122	2338	2338	Yes	0	0	31	
5347WL	Irwin S. Rhodes	1817	404	4675	4675	Yes	0	0	31	
5348WL	David Speckter	2843	176	1824	1824	No	0	0	31	
5349WL	John M. Wilson	2661	57	2339	2339	Yes	0	0	31	
5350WL	Ulysses S. Greene et.al.	2174	610	7017	7017	Yes	0	0	29&31	
5351WL	Walter Counts	2160	454	2339	2339	Yes	0	0	29	
5352WL	Jessie L. Palmer	1870	181	2339	2339	No	0	0	29	
5353WL	Mazell Haughbook	1375	50	2339	2339	Yes	0	0	28&29	
5354WL	Mary Kennedy	1906	418	2339	2339	No	0	0	28&29	
5355WL	Iphigene M. Bettman	1817	404	2339	2339	Yes	0	0	28&29	
5356										Not Needed
5434T	W.B. Bush			5102	1636	No	0	5102	33	
5435T	Robert Fosdick			4750	1500	No	0	4750	33	
5436T	Mervin Rosenberg et al			4750	1500	No	0	4750	33	
5437T	Chase Realty Co.			4750	1500	No	0	4750	33	
5438T	Herman F. Menke et al			2375	750	No	0	2375	33	
5439T	M. Simkin			2375	750	No	0	2375	33	

See R/W Sh. No. 15

① Symbol indicates a parcel within the construction limits of HAM-71-1.56 but previously acquired for construction contract HAM-71-1.30.

Date	Revised	By

RIGHT OF WAY PLAN

FED. RD. DIV.	STATE	PROJECT	FISCAL YEAR
2	OHIO		

456
492

14
66

HAM-71-1.56
R/W PLAN
LIMITED ACCESS
HAM-71-0.93 (R/W ONLY)

SUMMARY OF ADDITIONAL RIGHT OF WAY REQUIRED

Parcel No.	Owner	Deed Record Book	Deed Record Page	R/W Area (Sq. Ft.) Total Area	To Be Acquired Land	To Be Acquired Bldg's	Residue Left	Residue Right	R/W Sheet No.	Remarks
5357 WL	Isabell L. Kircher et al. Trustee	2072	157	24,757	2589	No	0	11,355	31 & 33	
5357 WD					10813	No				Van Meter St.
5357 T					3867	No				" " "
5357 S					460	No				
5358WL	Abby C. Goines et al	2962	670	2465	1244	Yes	0	0	31 & 33	
5358WD					1221	Yes				Van Meter St
5359WL	Dorothy Schottenstein et al	2793	439	2465	1419	Yes	0	0	31 & 33	
5359WD					1046	Yes				Van Meter St.
5360WL	Oscar Lerner	2587	369	2500	1588	Yes	0	0	31	
5360WD					912	Yes				Van Meter St.
5361WL	James Campbell et al	2949	7	2500	1709	Yes	0	0	31	
5361WD					791	No				Van Meter St.
5362WL	James T Keating	1929	443	2500	1803	Yes	0	0	31	
5362WD					697	No				Van Meter St.
5363WL	Pete Denson et al.	3025	392	2500	1890	Yes	0	0	31 & 34	
5363WD					610	No				Van Meter St
5364WL	Vivien Strifler	3152	132	5000	4219	Yes	0	0	34	
5364WD					781	No				Van Meter St
5364AWL	Alma Sanders	3152	130	2500	1978	Yes	0	0	34	
5364AWD					522	Yes				Van Meter St.
5365WL	Pinkie Hawkins			2500	2241	Yes	0	0	34	
5365WD		2979	633		259	No				Van Meter St
5366WL	Samuel Johnson et al.			2500	2328	Yes	0	0	34	
5366WD		3097	348		172	No				Van Meter St.
5367WL	Dorothy Schottenstein et al.			5000	4907	Yes	0	0	34	
5367WD		2809	609		93	No				Van Meter St.
5368WL	James Keating et al.	2887	418	2500	2500	Yes	0	0	34	
5369WL	Margaret J. Brearton	1631	541	2500	2500	No	0	0	34	
5370WL	T.J. Geisler et al.	1645	441	2500	2500	No	0	0	34	
5371WL	Edward J. Hanlon Jr. et al.	2955	408	2500	2500	No	0	0	34	
5372WL	Edythe G. Ferris	3091	685	5000	5000	Yes	0	0	34	
5373WL	Central Outdoor Advertising Co. Inc.	2040	649	21,825	21,825	No	0	0	34 & 38	
5373AWL	University of Cincinnati	Will Book	49	8924	1927	No	0	2587	31, 33 & 34	
5373AWD		# 141			4410	No				Van Meter St
5373A-T					1344	No				Van Meter St.
5374WD	University of Cincinnati	Will Book	49	38060	731	No	0	37329	31 & 33	Van Meter St.
5374 T		# 141			16817	No			31 & 33	Van Meter St.
5375WD	Edward C. Williams	1752	462	9959	9959	No	0	0	33 & 34	Van Meter St
5376WD	Mabel G. Gowdy et al.	2521	562	23417	6503	No	0	16914	33 & 34	Van Meter St.
5376 T					4186	No				Van Meter St.
5377WD	Evelyn Bisher	2100	490	5234	1868	No	0	3366	34	Van Meter St
5377 T					770	No				
5378WD	David Griffin et al	1966	169	3795	1164	No	0	2631	34	Van Meter St.
5378 T					327	No				
5379WL	John Heenan	1753	105 &	11672	378	No	0	7527	34	
5379WD			118		3767	No				Van Meter St.
5379 T					1421	No				
5380WL	Louise Delle Donne	2093	174	8403	1023	No	0	4677	34	
5380WD		2925	533		2703	No				Van Meter St.
5380 T					1189	No				
5381WL	James R. Larkin	3099	217	8830	2241	No	0	4044	34	
5381WD					2545	No				Van Meter St.
5381 T					1009	No				
5382WL	Evelyn Emma Hennekes	3169	142	17 458	6038	No	0	0	34	
5382WD					11420	Yes				Van Meter St.
5383										Not Needed
5384WL	Thomas John Jones	2593	287	8458	3648	No	0	0	34	
5384WD					4810	Yes				Van Meter St.

① - 5397 T-1 shall extend for a period of time not to exceed three (3) months from the starting date of the demolition of the building and dock.
② - 5397 T-2 shall extend for the period of time while the temporary run-around is in use.
③ - 5398 - Not needed.

SUMMARY OF ADDITIONAL RIGHT OF WAY REQUIRED

Parcel No.	Owner	Deed Record Book	Deed Record Page	R/W Area (Sq. Ft.) Total Area	To Be Acquired Land	To Be Acquired Bldg's	Residue Left	Residue Right	R/W Sheet No.	Remarks
5385WL	Kenneth Oelker	2614	56	16372	8450	No	0	0	34 & 38	
5385WD					7922	Yes				Van Meter St.
5386WD	City of Cincinnati	259	449		30546	No			33 & 38	Elsinore St.
5386T-1	(Park Board) (Eden Park)	518	168		27455	No				
5386 T-2		524	86		24599	No				Tower to remain
5387WL-1	The Connecting Railway Co.	516	447		58120	No			28,30,32,	Gilbert Ave.
5387WL-2		557	14		75	No			37,57,58	
5387WL-3		801	604		25	No			59 & 60	Gilbert Ave.
5387WL-4		877	492		9371	No				
5387WD		883	454		93111	No				Gilbert Ave.
5387T-1		1301	135		56391	No				Gilbert Ave.
5387T-2		1303	615		9	No				
5387WA		2731	348			No				
5388WL	The Cincinnati Enquirer	R L		108750	72,843	Yes	0	0	30 & 32	Registered Land
5388WD		# 27519			35907	Yes				Gilbert Ave.
5389-5395										Not Needed
5396WL	Marvin Realty Co	3064	391	80459	30	No	77464	0	37	
5396WD					2965	No				* See Note Below
5397WL	Leblond Realty Co.	2304	13	46690	5265	Yes	32870	0	37	
5397WD		2473	253		8555	Yes				* See Note Below
5397 S					4021	Yes				* See Note Below
① 5397 T-1					4939	Yes				
② 5397 T-2					1171	Yes				
③ 5399WL	Edythe Lutchin	2644	321	1360	1360	Ye	0	0	32	
5400WL	James Merritt et al	3172	454	1340	1340	Yes	0	0	32	
5401										Not Needed
5402WL	Spur Realty Co. of Ohio	3035	22	7736	7736	No	0	0	32	
5403WL	Mary E. Salzer	2528	142	2305	2305	Yes	0	0	32	
5404WL	Spur Realty Co. of Ohio	3035	22	2419	2419	No	0	0	32	
5405WL	David E. Ulland	1741	374	2585	2585	No	0	0	32	
5406WL	Mildred G. Wessinger	R L	%1-20598	6013	6013	Yes	0	0	32,37 & 38	Registered Land
5407WL	Nathan Lerman	2489	233	30730	30730	Yes	0	0	37 & 38	
5408WL	Elmer C. Decker et al.	2621	281							
5409WL	Helen A. Patterson et al.	2201	163	7911	7911	Yes	0	0	37 & 38	
5409WD		2341	40	16133	14488	Yes	0	0	37 & 38	
5410WL	H. Dennert Distributing Co.	2218	85	6553	1645	No				Gilbert Ave.
5411WL	City of Cincinnati (Park Board)	2220	1		6553		0	0	37 & 38	
5411WD	(Deer Creek Commons)	**	**	545010	437388	Yes	0	North 5861 & South 36833	35, 37, 39 40, 42, 43 & 46	Reading Rd.
5411T					64928	No				
5411S					262	No				
5411WA					2687	No				
						Yes				
5412WL	The Connecting Railway Co.	Insolvency			36016	No			37, 38, 40	
5412WD		Court			375	No			42, 43, 60	
5412		Case			1285	No			61, 62	
5412T		# 1025			1182	No				
5413WL-1	City of Cincinnati (Park Board)	518	164	98830	5949	No	0	55,142	37, 38, 40	
5413WL-2	(Johnson Park)	524	86, 87		5713	No			43, 61, 62	
5413WD-1		C.P.C.			27786	No				* See Note Below
5413WD-2		Bk. # 351	257		984	No				Gilbert Ave.
5413					3256	No				
5413T-1					6919	No				
5413T-2					1368	No				
5413T-3					5215	No				

* Note: Parcels 5396WD, 5397WD, & 5413WD-1 are to be acquired in the name of the Connecting Railway Co. except that sewer easement 5397S is to be reserved in the name of the City of Cincinnati

**

BOOK	PAGE	BOOK	PAGE
518	164	1047	4
524	86, 87	1057	539
931	389	1108	361
932	279, 280, 281, 283, 284	1113	46
933	307, 310, 313, 391	2759	148
934	291, 293, 296, 297	C.P.C.	
935	280, 281, 284	Vol. 352	435
936	80, 82, 84, 85	Vol. 452	496
980	383		

Date	Revised	By

RIGHT OF WAY PLAN

FED. RD. DIV.	STATE	PROJECT	FISCAL YEAR
2	OHIO		

457
492

15
66

HAM-71-2.51
R/W PLAN
LIMITED ACCESS
HAM-71-0.93 (R/W ONLY)

SUMMARY OF ADDITIONAL RIGHT OF WAY REQUIRED

Parcel No.	Owner	Deed Record Book	Deed Record Page	R/W Area Total Area	To Be Acquired Land	To Be Acquired Bldg's	Residue Left	Residue Right	R/W Sheet No.	Remarks
5414WL-2 5414 S 5414WL-1	The Baldwin Piano Co.	893	45	131 391	7725 5770 469	Yes Yes Yes	0	123,197	42&46	
5415WL 5415WD	Samuel L. Harris Inc.	3147	646	23657	428 23229	Yes Yes	0	0	44	Reading Rd.
5416WL 5416WD	Robert A. Sloane	2784	272	2000	450 1550	Yes Yes	0	0	44	Reading Rd.
5417WL 5417WD	Mark Wortcki	2014 2755	239 266	39959	18101 21,858	Yes Yes	0	0	41,44&46	Reading Rd.
5418WD 5418T	Taft Broadcasting Co.	1062 1073	307 386	308,800	35,121 7102	No No	273679	0	41&44	Reading Rd
5419WL 5419WD	The Ruthman Machinery Co.	1906 1915	409 503	22 204	16272 5932	Yes No	0	0	41, 42, 44&46	Reading Rd.
5420WL 5420WD	Sujer Inc.	2763	531	24328	13537 10791	Yes No	0	0	41&42	Reading Rd.
5421WL 5421WD	The Ruthman Machinery Co.	1936	471	22437	9384 13053	Yes No	0	0	41&42	Reading Rd.
5422WL 5422WD	Central Outdoor Advertising Co. Inc.	2084	143	5100	2200 2900	No No	0	0	41&42	Reading Rd.
5423WD	Horace L. Mayne et.al.	1936	537	5024±	5024±	No	0	0	41	Reading Rd.
5424WL 5424WD	Juanita Stampinato	2964	236	23030	3933 19097	Yes Yes	0	0	41&42	Reading Rd.
5425WL 5425WD	Central Outdoor Advertising Co. Inc.	2084	101	26224	3028 23196	No No	0	0	39, 41&42	Reading Rd.
5426WL 5426WD 5426 T	Etheleen Luken	2944	551	32419	828 11212 843	Yes Yes No	20379	0	39&41	Reading Rd.
5427WD 5427 T	Sam Schwartz	2480	109	28625	3474 2990	Yes Yes	25151	0	39	Reading Rd.
5428WD 5428 T	Daniel J. Foley et.al.	2747	274	46210	4181 7693	Yes Yes	42029	0	39	Reading Rd.
5429WD 5429 T	Fred Kotros et.al. "TRS"	3153	266	54600	1876 24204	No Yes	52 724	0	39	Reading Rd.
5430 T	Helen Grecni et.al.	3128	696	17988	4014	Yes	17 988	0	39	
5431 T	Marguerite Feuerstein	1237	584	9416	1540	Yes	9416	0	39	
5432 T	Lucile M. Rodgers	2021-2038 2150-2238	19-213 65-273	79570	14713	Yes	79570	0	35&39	
5433 T ①	Albert Wehming	2786	313	20354	288	No	20354	0	35	
~~5440-5697~~										Not Needed
5698WD 5698T	Frank Stampinato et.al.	2001	412	3888	90 178	No No	3798	0	44&45	Dorchester St.
5699WD 5699 T	Fuller Ford Inc.	2714	233	16.600±	1463 1426	No No	15 137±	0	44&45	Dorchester St.
5700WD 5700 T-1 5700 S 5700 T-2	Geneva L. Wood et.al.	1657 1679 1969 2477 2489	368 141 284 211 259	59040	18 030 6801 1161	No No No No	41 010	0	44&47	Dorchester St. & Reading Rd.
5701WD 5701T 5701WA	The LeBlond Realty Co.	2748	42	32130	49 154	No No No	32081	0	47	Reading Rd.
5702										Not Needed
5703WL 5703WD	The Royell Co.	2277	324	20813	8809 12004	Yes Yes	0	0	46,47&48	Eden Park Entrance
5704WL 5704WD	Norman Horwitz	2272	53	2500	2028 472	No No	0	0	47&48	Reading Rd.
5705WL 5705WD	Mose Marcus et.al.	3090	558	3750	3275 475	No No	0	0	47&48	Reading Rd.
5706WL 5706WD	Jacob J. Guttman	2464 2899	107 344	3855	3282 573	Yes Yes	0	0	47&48	Reading Rd.
5707WL 5707WD	Dragul & Spivak Inc.	R.L. "36786		3300	2848 452	Yes Yes	0	0	47&48	Registered Land Reading Rd.
5708WL ~~5708WD~~ ~~5708~~EL	Ethel D. Kirtley et.al.	2080 2894	522 296	11692	6946 1850 2896	Yes No Yes	0	0	47&48	Reading Rd.

① See R/W Sh. No. 13 for Parcels 5434 thru 5439.

SUMMARY OF ADDITIONAL RIGHT OF WAY REQUIRED

Parcel No.	Owner	Deed Record Book	Deed Record Page	R/W Area (Sq. Ft.) Total Area	To Be Acquired Land	To Be Acquired Bldg's	Residue Left	Residue Right	R/W Sheet No.	Remarks
5709WL 5709WD 5709EL	Robert E. Tuke	1853	555	4066	683 669 2714	No No Yes	0	0	47	Reading Rd.
5710WD 5710T 5710WA	C. Kenneth Shields et.al.	3233	247	3750±	561 123	Yes Yes Yes	0	3189±	47	Reading Rd.
5711WD 5711T	Shirley Horwitz	2875 2919	43 677	12000±	1481 399	No No	0	10519±	47	Reading Rd.
5712WD-1 5712WD-2 5712T-1 5712T-2	Margaret S. Walsh	2721 R.L.Bk"38 P.11865	367	11,400±	426 416 148 174	No No No No	0	10558±	47	Reading Rd. Reading Rd. Registered Land
5712AWD 5712AT	Mose Marcus et.al.	2412	83	21300±	730 608	No No	0	20570±	47&50	Reading Rd.
5713WL 5713WD	Charles Watson et.al.	2566	136	4700	2852 1848	Yes Yes	0	0	46&48	Eden Park Entrance
5714WL 5714WD	Ruth R. Twachtman	2661	75	11285	3471 7814	Yes Yes	0	0	46&48	Eden Park Entrance
5715WL 5715 WD	Thomas A. Waltz et.al.	2952	577	15896	11812 4084	Yes Yes	0	0	48	Florence Ave.
5716WL 5716WD-1 5716WD-2 5716EL	J.B. Schroder Co.	1255 1302	117 192	78,986	69,448 5675 544 3319	Yes No No No	0	0	47,48,50 &51	Florence Ave.
5717WL 5717T	The Baldwin Piano Co.	2276	116	66700±	2224 11177	Yes Yes	0	64476±	48&49	
5718										Not Needed
5719WL 5719WD	Jack Goldberg	2469	500	5559	1880 3679	Yes Yes	0	0	48	Florence Ave.
5720WL 5720WD	D. Pendery et.al.	1306 2197	331 475	2295	1722 573	Yes Yes	0	0	48	Florence Ave.
5721WL 5721WD	Elden C. Saunders	2126	105	2435	1984 451	Yes Yes	0	0	48	Florence Ave.
5722WL 5722WD 5722EL	Albert Hirst	1854 1889	343 508	10280	7228 279 2701	Yes Yes Yes	0	0	48&51	Florence Ave.
5723WL	Juanita Hughes	3091	508	6025±	6025±	Yes	0	0	48&51	
5724WL 5724EL	Ruby M. Busch	3251	626	2474	356 2118	No Yes	0	0	51	
5725WL 5725WD	Albert J. Mayer Jr. et.al.	1112 3145	66 526	41106	17311 19668	No No	4127	0	50	
5726										Not Needed
5727LA	Wolf Machine Co.	Rl "37888		41921	0	No	41921	0	50&52	Registered Land
5728WL	Arthur Jackson	2560	58	2500	2500	Yes	0	0	51	
5729WL	Phil Warfield	3060	59	2500	2500	Yes	0	0	51	
5730WL	Boyd D. Lair	2097	75	2500	2500	Yes	0	0	51	
5731WL	Mitchell Milon	2171	100	2500	2500	Yes	0	0	51	
5732WL	Phil Warfield	2622	547	2000	2000	Yes	0	0	51	
5733WL	Mary W. Coles et.al.	2758	511	5500	5500	Yes	0	0	50, 51	
5734										Not Needed
5735WL	Ben Levinson et.al.	2678 2602	311 456	5000	5000	No	0	0	50, 51	
5736WL	Robert Crockett et.al.	2604	614	2500	2500	Yes	0	0	50, 51	
5737WL	Fred Haynes et.al.	2812	240	2674	2674	Yes	0	0	50, 51	
5738WL	Blanche Morrison	2026	489	2326	2326	Yes	0	0	50,51	
5739WL	George Gentry et.al.	2982	434	2500	2500	Yes	0	0	50, 51	
5740WL	Mitchell Milon et.al.	3163	83	2500	2500	Yes	0	0	50, 51	
5741WL	Stephen Kasteiner	3240	26	2500	2500	Yes	0	0	50,51	
5742WL	Lawyer Smith et.al.	2031	546	2500	2500	Yes	0	0	50,52	
5743WL	Robert A. Sloane	3160	358	2500	2500	Yes	0	0	50,52	

*Notes:
Temporary Easement ~~5717 T shall extend for a period of time not to exceed six (6) months~~ from the date of contract.

Date	Revised	By

RIGHT OF WAY PLAN

FED. RD. DIV.	STATE	PROJECT	FISCAL YEAR
2	OHIO		

458
492

16
66

HAM-71-2.51
R/W PLAN
LIMITED ACCESS
HAM-71-0.93 (R/W ONLY)

SUMMARY OF ADDITIONAL RIGHT OF WAY REQUIRED

Parcel No.	Owner	Deed Record		R/W Area (Sq. Ft.)					R/W Sheet No.	Remarks
		Book	Page	Total Area	To Be Acquired Land	To Be Acquired Bldg's	Residue Left	Residue Right		
5744WL	Dragul & Spivak Inc.	2962	181	2500	2500	Yes	0	0	50&52	
5745WL	Lillie Andrews et al.	2077	538	2500	94	No	0	0	51	
5745EL					2406	Yes				
5746WL	Mary Smith	2696	546	2500	281	No	0	0	51	
5746EL					2219	Yes				
5747WL	Marg. C. Riley et al	2353	254	2500	469	Yes	0	0	51	
5747EL		3091	151		2031	Yes				
5748WL	Stella Schlotman	2841	533	2500	657	No	0	0	51	
5748EL					1843	Yes				
5749WL	Robert P. Goldman	2673	276	3300	1154	Yes	0	0	51	
5749EL					2146	Yes				
5750WL	Wm. Brueggeman	2379	296	3300	1481	Yes	0	0	51	
5750EL					1819	Yes				
5751WL	Dragul & Spivak Inc.	2884	549	3400	1866	Yes	0	0	51	
5751EL					1534	Yes				
5752WL	Burton E. Robinson	2969	521	4000	4000	Yes	0	0	51	
5753WL	Rose Fogarty	1207 1305	30 102	1000	1000	No	0	0	51	
5754WL	Emmett Fogarty	1279	132	3500	3500	No	0	0	51	
5755WL	Thos. Fogarty	1443	621	4000	4000	Yes	0	0	51	
5756WL	Eliz. Davis et. al.	1818 3044	187 257	2500	2500	Yes	0	0	51	
5757WL	Mayme F. Patterson	2062	230	2500	2500	Yes	0	0	51	
5758WL	Amy Vinegar et. al.	3115	428	2500	2500	Yes	0	0	51	
5759WL	Lucius Smedley et. al.	2683	604	2500	2500	Yes	0	0	51	
5760WL	Wm. S. Hauer et. al.	3008	23	5000	5000	Yes	0	0	51&52	
5761WL	Luther McConnel	3143	163	2500	2500	Yes	0	0	51&52	
5762WL	The Connecting Railway Co.	480	533		596	No			51,52,53,	
5762WD-1		516	413-416		1093	No			55,63,64,	
5762WD-2		1222	322		1093	No			65&66	
5762WD-3		1327	454		549	No				
5762AR		2216	430		3600	No				
5762T-1		Insolvency Court Case #1025			13708	No				
5762T-2					24784	No				
5762S					554	No				
5762WA-1										
5762WA-2										
5763WL	Theodore N. Berry, Trustee	1919	402	2613	2613	Yes	0	0	52	
5764WL	Gabriela Mazzaro	1305 1692	306 40	10000	10000	Yes	0	0	52	
5765WL	Richard Mc Dowell et. al.	2915	224	2500	2500	Yes	0	0	52	
5766WL	John Ferguson et al.	2814	246	5000	5000	Yes	0	0	52	
5767WL	M. Simkin	2198	215	2500	2500	No	0	0	52	
5768WL	The City of Cincinnati	2802	495	7500	7500	No	0	0	52	
5769WL	Cyrus Manuel et. al.	2927	674	2500	2500	Yes	0	0	52	
5770WL	Clifford A. Sims	3079	484	5000	5000	Yes	0	0	52	
5771WL	Mercantile Bldg & Loan Co.	3203	297	5000	5000	Yes	0	0	52	
5772WL	Harry N. Carter et. al.	2832	560	4750	4750	Yes	0	0	52	
5773WL	Pettis C. Allman et. al.	3145 3145	369 394	2250	2250	Yes	0	0	52	
5774WL	Ethel Turner et. al.	3062	582	2200	2200	Yes	0	0	52	
5775WL	John Evans et. al.	2820	181	2250	2250	Yes	0	0	52	
5776WL	Alfred V. Evans et. al.	2920	124	2300	2300	Yes	0	0	52	
5777WL	Mae Bell Davis	2802	596	3750	3750	Yes	0	0	52,53	
5778WL	Herbert W. Wilson et. al.	2845	100	2500	2500	Yes	0	0	52,53&55	
5779WL	Cleveland Hooks et. al.	2794	259	2500	2500	Yes	0	0	52,53&55	
5780WL	Celestine Jucker	2388	184	5000	5000	Yes	0	0	52	
5781WL	Naoma C. Naderman	2267	186	2500	2500	No	0	0	52	
5782WL	George M. Asher et. al.	1669 3261	146 244	4900	4900	Yes	0	0	52	
5783EL	George Childers	2256	589	2550	2550	Yes	0	0	52	
5784WL	Marjorie Morton	2919	23	1812	1812	Yes	0	0	52,53,55	
5785WL	John Mitchell et. al.	3081	86	1925	1925	Yes	0	0	52,53&55	
5786WL	Ernest Moore et. al.	1896	214	3813	3813	Yes	0	0	52,53&55	
5787WL	Henry P. Shaw et. al.	2248	125	1305	1305	No	0	0	50	
5788WL	Charles J. Sanker	3232	117	3252	3252	No	0	0	50	
5789WL	Alberta Hyde	3023	552	2145	1787	No	0	0	50	
5789EL					358					
1 5763A-WL	Gabriela Mazzaro et al	1907	194	2387	2387	Yes	0	0	52	

SUMMARY OF ADDITIONAL RIGHT OF WAY REQUIRED

Parcel No.	Owner	Deed Record		R/W Area (Sq. Ft.)					R/W Sheet No.	Remarks
		Book	Page	Total Ared	To Be Acquired Land	To Be Acquired Bldg's	Residue Left	Residue Right		
5790WL	Ralph Taylor et. al.	2392	58	2365	1016	Yes	0	0	50	
5790EL					1349	Yes				
5791WL	Jack Kennedy et. al.	3128	60	2584	575	Yes	0	0	50	
5791EL					2009	Yes				
5792WL	Cyrus Manuel et. al.	3120	364	2804	475	Yes	0	0	50	
5792EL					2329	Yes				
5793										Not Needed
5794										
5795T	Mary Lou Andrews	2646	554	4970	398	No	0	4970	53	
5796T	Jos. Carciferro	3010	41	4970	795	No	4970	0	53	
5797SL	Walnut Hills Savings & Loan Co.	3031	153	1253	253	No	0	1000	54	
5798SL	Reid Jerrels et. al.	2618	439	2506	733	No	0	1773	53&54	
5798T					274	No				
5799SL	Norbert J. Giver	RL BK 137 P. 49030		5000	1340	No	3660	0	53&54	Registered Land
5799T					360	No				
5800WD	Jack Kennedy et. al.	3247	417	7500	7500	Yes	0	0	54	
5801WD	Nancy Shank Arnn	3274	132	5000	5000	Yes	0	0	54	
5802T	Fred Hockney et. al.	3209	186	5013	576	No	5013	0	54	
5803WD	Floyd Black et. al.	2925	677	2500	11	No	0	2489	54	McGregor & Cranston
5803T					554	No				
5803WA										
5804WD	Anthony DeNuccio	2709	327	5000	5000	Yes	0	0	54	
5805										Not Needed
5806										
5807WD-1	Aldon M McLeod	2875	488	2500	34	No	0	2455	54	McGregor & Kenton
5807WD2					11	No				McGregor & Cranston
5807T					120	No				
5808WD	Willie A. Westbrooks	2761	192	2500	2500	Yes	0	0	54	
5809 thru 5824										Not Needed
5825WL	Katherine M. Niehaus	2559	398	5000	5000	Yes	0	0	53&55	
5826WL	Eva Sparks	2478	367	5000	5000	Yes	0	0	53&55	
5827WL	Minnie Mc Dowell et. al.	2693	130	5000	5000	Yes	0	0	55	
5828WL	Leroy Webster et. al.	2561	101	5000	5000	Yes	0	0	55	
5829WL	Henry Neloms et. al.	3096	225	2500	2500	Yes	0	0	55	
5830WL	Rose Bamonte	2532	148	6750	6750	Yes	0	0	53&55	
5831WL	John Bamonte et. al.	2620	336	4500	4500	Yes	0	0	53&55	
5832WL	Antonio Frasca	1432	245	4500	4500	Yes	0	0	55	
5833WL	John Benevengo	1432	183	6750	6750	Yes	0	0	55	

Date	Revised	By

RIGHT OF WAY PLAN

FED. RD. DIV.	STATE	PROJECT	FISCAL YEAR
2	OHIO		

459
492

26
66

HAM-71-1.56
R/W PLAN
LIMITED ACCESS
HAM-71-0.93 (R/W ONLY)

Sec.18 T.4 F.R.1 Cincinnati Twp.

GILBERT AVENUE VIADUCT

EIGHTH ST.

LOCK ST.

EAST EIGHTH STREET

SOUTHBOUND EXP

NORTHBOUND EXP

PEDESTRIAN BRIDGE

CONNECTION

AERIAL L/A

FUTURE HUBBARD & WILLIAMS

SAML. HUBBARD'S SUB.

SAML. HUBBARD'S 2nd SUB.

HUBBARD & WILLIAMS SUB.

CLARK-WILLIAMS SUB.

SUB. R.O. 2nd R.O.

Seybold Paper Co. R.O.

Seybold Paper Co. Area

Limit of Work Agreement

Const. Limit

Prop. R/W Fence

Asphalt Parking Area

Gravel Parking Area

Hwy. Maint. Sheds under Viaduct

Connecting Ry. Co.

Western Union (Postal Telegraph) Cond.

Central Outdoor Advertising Co.

Billboard

Fascia Line

Wire Fence

Grating

Conc. Wall

Conc. Bl. Wall

Earth

Cinder Parking Area

Ramp

Inlet

Gas V. Box

Gas Pump

Fire Cistern

Coal Hole

Traverse Line 1

Traverse Line 2

Traverse Line

Ex. 12" P.S.

Ex. 2" G.M. (Aban)

Ex. 4" W.M.

Ex. 6" W.M.

Ex. 36" W.M.

Ex. 1st R/W

Ex. R/W

Ex. Elec. Cond.

Ex. Tel. Cond.

Ex. 1st R/W Elec. Cond.

Ex. 1st R/W Tel. Cond.

Ex. C&E Pull Box

Ex. C&E M.H.

Ex. C&E Sign Post

Ex. C&E Vents

Ex. C&E K.V. Elec. Cond.

Ex. C&E Elec. Cond. Ex. G.W.M.

Ex. 40" W.M.

Ex. 3" G.M.

Ex. 12" P.S.

Ex. 1st R/W Elec. Cond.

Ex. 1st R/W Tel. Cond.

Ex. 2" Br. S.

Ex. 6" P.S.

Ex. 2" Br. S.

Ex. 8" G.M.

Ex. 4" W.M.

Ex. G" W.M.

Ex. Tel. Cond.

Ex. 15" P.S.

Ex. 12" P.S.

Ex. G" G.M.

Ex. 4" W.M.

Ex. 12" P.S.

Ex. G" W.M.

Ex. 12" P.S.

Ex. G" G.M.

Ex. 12" P.S.

Ex. 3" G.M.

Ex. 12" P.S.

Ex. 12" P.S.

Ex. 12" P.S.

Ex. 12" P.S.

Ex. 12" P.S.

Ex. 12" P.S.

Ex. 2" G.M. (Aban)

Ex. 2" G.M. (Aban)

Ex. 2" G.M. (Aban)

Ex. 4" W.M.

Ex. 4" W.M.

Ex. 12" P.S.

Ex. G" W.M.

Ex. 12" P.S.

Ex. G" G.M.

Ex. 4" W.M.

Ex. 12" P.S.

Ex. G" W.M.

Ex. 12" P.S.

Ex. G" G.M.

Ex. 12" P.S.

Ex. 12" P.S.

Ex. 12" P.S.

Ex. 12" P.S.

Ex. 12" P.S.

Ex. 12" P.S

FED. RD. DIV.	STATE	PROJECT	FISCAL YEAR
2	OHIO		

460
492

27
66

HAM-71-1.56
R/W PLAN
LIMITED ACCESS
HAM-71-0.93 (R/W ONLY)

See Below

SIXTH STREET

FUTURE NB EXIT RAMP

FUTURE VAN METER ST.

EAST

HUBBARD

WILLIAMS

Railing on Ret. Wall

Prop. R/W Fence

Exist R/W

Traverse Line

Ex. 3"GM

Ex. 6"WM

Ex. 24"PS

Ex. 12"PS

Ex. 4"GM

Ex. 2"GM

Ex. 4"WM

Ex. 8"SS

Ex. 15"FS

Ex. 12"SS

Ex. 8"WM

Ex. 6"GM

Ex. 4"GM

Ex. 12"PS

Ex. 12"PS

Ex. 3"GM

Ex. 12"PS

Ex. 4"GM

Ex. 4"GM

Ex. 6"WM

Ex. 24

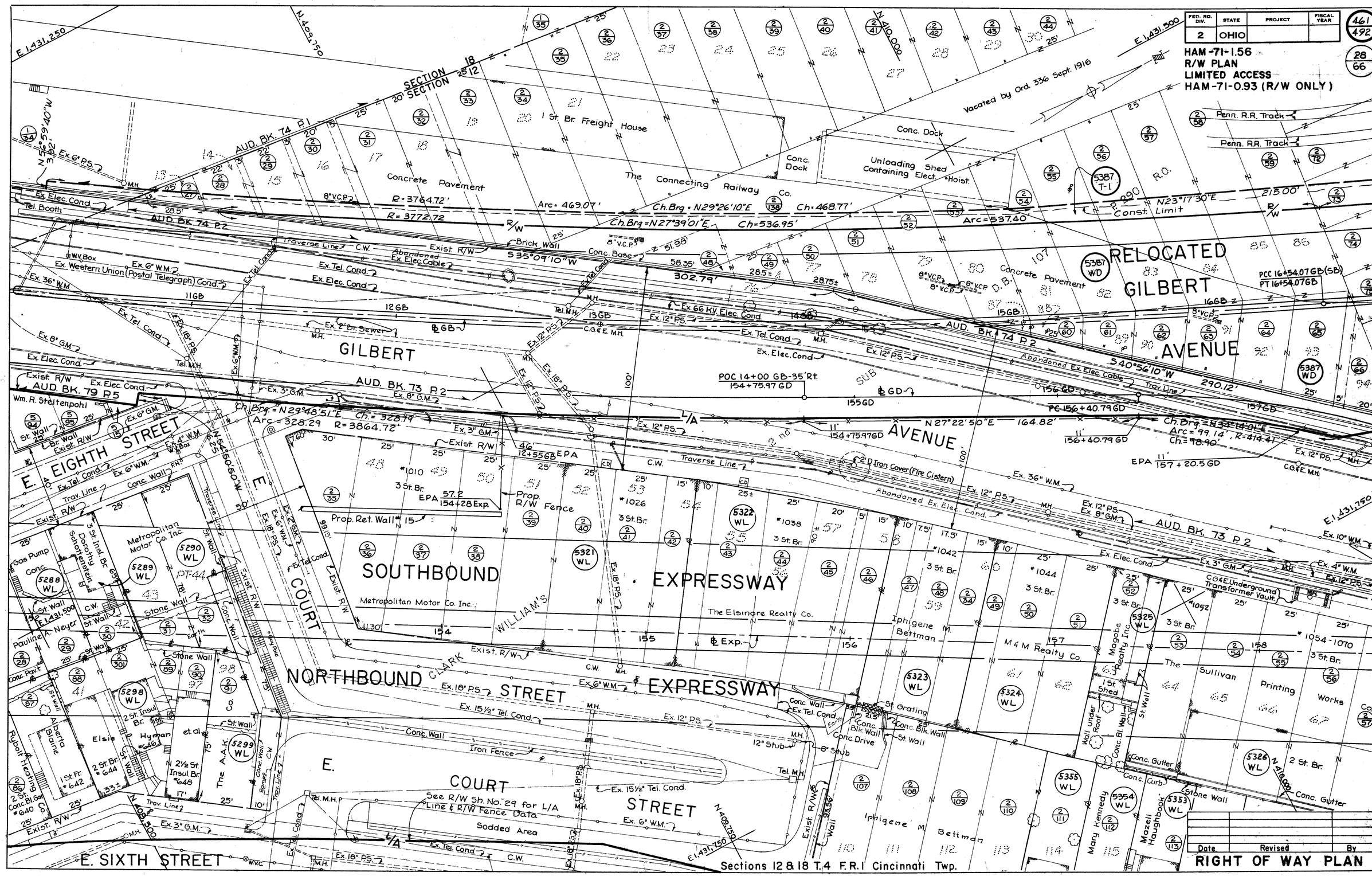

FED. RD. DIV. 2
STATE OHIO
PROJECT
FISCAL YEAR
461/492
28/66
HAM-71-1.56
R/W PLAN
LIMITED ACCESS
HAM-71-0.93 (R/W ONLY)
RELOCATED GILBERT AVENUE
GILBERT AVENUE
SOUTHBOUND EXPRESSWAY
NORTHBOUND EXPRESSWAY
E. EIGHTH STREET
E. COURT STREET
E. SIXTH STREET
CLARK WILLIAMS
The Connecting Railway Co.
Concrete Pavement
Unloading Shed Containing Elect. Hoist
Vacated by Ord. 336 Sept. 1916
Penn. R.R. Track
Const. Limit
Metropolitan Motor Co. Inc.
The Elsinore Realty Co.
Iphigene M. Bettman
M & M Realty Co.
The Sullivan Printing Works Co.
Magobe Realty Inc.
Mary Kennedy
Mazell Haughbook
Sodded Area
See R/W Sh. No. 29 for L/A Line & R/W Fence Data
Sections 12 & 18 T.4 F.R.1 Cincinnati Twp.
Date
Revised
By
RIGHT OF WAY PLAN

FED. RD. DIV.	STATE	PROJECT	FISCAL YEAR
2	OHIO		

462
492

29
66

HAM-71-1.56
R/W PLAN
LIMITED ACCESS
HAM-71-0.93 (R/W ONLY)

E. COURT
FUTURE N.B. EXP. BRIDGE CONN.
STREET

RELOC. E. SIXTH ST.

SIXTH STREET

E. COURT STREET

Const. Limit

Exist. R/W

Prop. R/W Fence

Traverse Line

Iron Fence

Conc. Wall

Stone Wall

Conc. Gutter

Conc. Curb

Conc. Blk. Wall

Conc. Drive

Conc. Pavt.

Conc. Steps

Conc. Ramp

Conc. Deck Roof Protected

Wire Mesh Fence

St. Grating

St. Wall

St. Dry Wall

Gran. Blk. Wall

Ex. 12" P.S.

Ex. 18" P.S.

Ex. 16" P.S.

Ex. 15" P.S.

Ex. 6" W.M.

Ex. Tel. Cond.

Ex. Elec. Cond.

Ex. 3" G.M.

Tel. M.H.

Inlet

W.V.

W.V.Box

Met. Steps

Met. Shed

Ex. 1" Met.

Ex. 1" Plastic

Ex. 1" Iron Pipe

Ex. Iron Post

Ex. Concrete Post

Ex. Wood Post

Ex. Wood Fence

Ex. Chain Link Fence

Ex. Wire Fence

Ex. Concrete Steps

Ex. Concrete Ramp

Ex. Concrete Drive

Ex. Concrete Pavt.

Ex. Concrete Wall

Ex. Concrete Curb

Ex. Concrete Gutter

Ex. Concrete Deck

Ex. Concrete Roof

Ex. Concrete Roof Protected

Ex. Concrete Roof Protected Wall

Ex. Concrete Roof Protected Steps

Ex. Concrete Roof Protected Ramp

Ex. Concrete Roof Protected Drive

Ex. Concrete Roof Protected Pavt.

Ex. Concrete Roof Protected Curb

Ex. Concrete Roof Protected Gutter

Ex. Concrete Roof Protected Deck

FED. RD. DIV.	STATE	PROJECT	FISCAL YEAR
2	OHIO		

463/492

30/66

HAM-71-1.56
R/W PLAN
LIMITED ACCESS
HAM-71-0.93 (R/W ONLY)

SOUTHBOUND
NORTHBOUND
GILBERT
AVENUE
EXPRESSWAY
RAMP GD
Limit of Temp. Ease
Connecting Railway
Prop. Ret. Wall
Prop. Tail Track
Prop. 15" P.S.
Prop. 12" P.S.
Vacated by Ord. 336 Sept. 1916
Abandoned 4" W.M.
Ex. 8' Brick Sewer
Ex. 4' Brick Sewer
Penn. R.R. Track
Overhead Crane Track
Reloc. Tracks
Reloc. Track
Const. Limit
Prop. R/W Fence
Ex. Western Union (Postal Telegraph) Cond.
Ex. Tel. Cond.
Ex. Elec. Cond.
Ex. 66 KV Elec. Cond.
Ex. 12" P.S.
Ex. 24" P.S.
Ex. 18" P.S.
Ex. 10" W.M.
Ex. 8" G.M.
Ex. 36" W.M.
Ex. 4" W.M.
Aud. Bk. 73 P. 2
Aud. Bk. 73 P. 3
Aud. Bk. 74 P. 2
Traverse Line
Abandoned Ex. Elec. Cond.
Trav. Line
Wood Dock
Conc. Island
Conc. Pavt.
Conc. Slab
Conc. Curb
Conc. Gutter
Conc. Wall
Hedge
Billboard
Metal Garage
Corr. Metal Garage
Elevated Conc. Platform
Guy Pole
Inlet
M.H.
W.V. Box
Tel. M.H.
C.G.&E. M.H.
C.G.&E. Underground Transformer Vault
Ex. C.G.&E. M.H.
Ex. Tel. Cond.
Ex. Elec. Cond.
Ex. 66 KV Elec. Cond.
Ex. 12" P.S.
Ex. Tel. P.S.
Ex. C.G.&E. M.H.
Ex. Tel. Cond.
Ex. 66 KV Elec. Cond.
Ex. 12" P.S.
Ex. Tel. Cond.
Ex. Elec. Cond.
Ex. 12" P.S.
Ex. 24" P.S.
Ex. 18" P.S.
Ex. 10" W.M.
Ex. 8" G.M.
Ex. 36" W.M.
Ex. 4" W.M.
Ex. 8" G.M.
Ex. 3" G.M.
Ex. 10" W.M.
Ex. 12" P.S.
Ex. 4" W.M.
Ex. 12" P.S.
Ex. 8" G.M.
Ex. 12" P.S.
Ex. 8" G.M.
Ex. 12" P.S.
Ex. 8" G

FED. RD. DIV.	STATE	PROJECT	FISCAL YEAR
2	OHIO		

464
492

31
66

HAM-71-1.56
R/W PLAN
LIMITED ACCESS
HAM-71-0.93 (R/W ONLY)

NORTHBOUND FUTURE NB EXP. BRIDGE

GILBERT AVENUE

EXPRESSWAY

SIXTH STREET

VAN METER ST.

RAMP

RAMP

GD

STREET

Prop. R/W Fence

Exist R/W

Traverse Line

Abandoned Ex. Elec. Cond.

Ex. Tel. Cond.

Ex. Elec. Cond.

Ex. 66 K.V. Elec. Cond.

Ex. Tel. M.H.

Ex. Tel. Cond.

Ex. M.H.

Ex. 12" P.S.

Ex. 8" G.M.

Ex. 4" W.M.

Aban. 4" W.M.

Ex. 24" P.S.

Ex. 10" W.M.

Ex. 36" W.M.

Ex. 18" P.S.

Ex. C.G.&E. M.H.

Ex. 4" Brick S.

Ex. 3" G.M.

Ex. 6" W.M.

Ex. 15" P.S.

Ex. 30" C.I.P.

Ex. 12" P.S.

Ex. 6" W.M.

Ex. M.H.

Ex. 12" P.S.

Ex. 6" W.M.

Ex. M.H.

Ex. 12" P.S.

Ex. M.H.

Ex. 15" P.S.

Ex. M.H.

Ex. 15" P.S.

Ex. M.H.

Ex. 15

FED. RD. DIV.	STATE	PROJECT	FISCAL YEAR
2	OHIO		

465
492

32
66

HAM-71-1.56
R/W PLAN
LIMITED ACCESS
HAM-71-0.93 (R/W ONLY)

J. BURNS SUB.
OUTLOTS 5 & 6
D.B. E2 E 62 R.O.

N 410,750
1,431,750
N 411,000
N 411,250
E 432,000

508°48'16"E
51.25

Ex. 15" P.S.
M.H. (Covered)
Ex. 24" P.S.
N 30° 26' 10"E 430'
Const. Limit
Ex. 8' Brick Sewer
Ex. 48" Br. S.
Prop. Ret. Wall
Prop. Tail Track
Prop. Ret. Wall
The Connecting Railway
91.41'
Vacated by Ord. 336 Sept. 1916
1½ St. Conc. Block Warehouse
239'
Penn. R.R. Track
Penn. R.R. Track
Co. SUB.
41'
Penn. R.R. Track
N 30° 26' 10"E L/A
Relocated Tracks
25'
255.88'

N 23° 34' 10"E R/W 364.99'
M.H.
Ex. 18" V.C.P.
Begin Ramp GA PC 166+36.70 GA 24+19.75 GB(SB) 46' Lt.
Ch. Brg = N 24° 49' 34"E, Ch = 168.05, Arc = 168.06, R = 3831.72'
PT 168+04.24 GA
N 26° 04' 57"E 74.00'
49.08'
84.08'
N 63° 55' 03"W
35.00'
169 GA
℄ GA
170 GA
25'
23.15'
S 86° 29' 20"E
10.18'
S 23° 03' 10"W
RAMP GA
Vacated Ord 336 Sept. 1916
AVE.
Penn. R.R. Track
AUD. BK. 71 P. 3
SECTION 12
Nathan & Lerman
S 38° 56' 50"E 54.09'
5387 WL-3
5406 WL
R/W
25.08'
20.51'
P.T. 28+54.53 GB(NB)
P.O.T. 28+86.16 GB(SB)
David & Lillard
Mildred Wessing
11.27'
11.69'
N 411,250
E 1,432,250
171 SB
35t. Br. #1175
A-25.92'
Exist. Tel. Cond.
℄ SB Exp.
Sign Board
Spur Realty Co. of Ohio
Mary E. Selzer
Spur Realty Co.
Stone Wall
3 St. Shingle #1167
5405 WL
5404 WL
5403 WL
5402 WL
5399 WL
Edythe Lutchin
James et. al
Merritt
5400 WL
3 St. Br. #1155
3 St. Br. #1157
Conc.
Fr. Shed
St. Wall
5387 WL-2
Ex. R/W
11.95'
20.80'
47.89'
55.58'
82.74'
83.74'
65.85'
25.90'
Ord 383 1954
Vac. Ord. No. 373 1954
Billboard
Billboard
26.70'
Ex. R/W
706.40' To 3 Line Elsinore Place
EXPRESSWAY
HALL
147 146 145 144 143 141 140 159 138 137 136 135
151 150 149 148 152 153 154 155 156 157 158 159 160
104 103 102 101 100 99 98 97 96 95 94 93 92 91 90 89 88 87 86 85 84 83 82 81 80
112 111 110 109 108 107 106 105
115 114 113 112 111 110 109 108 107 106 105 104 103 102 101 100 99 98 97 96 95 94 93 92 91 90 89 88 87 86 85 84 83 82 81 80

5387 WD
5388 WD
5387 T-1
5387 WL-1
5388 WL

S 23° 03' 10"W 645.64' (S 18° 15' W 645.64' R.L.)
321.31' (N 18° 15'E 321.31' R.L.)
N 23° 03' 10"E
54.17'
PC 24+19.75 GB(SB)
23 GB(NB)
24 GB(NB)
24 GB(SB)
25 GB(NB)
26 GB(NB)
27 GB(NB)
27 GB(SB)
℄ GB(NB)
℄ GB(SB)
170 Sur.
150' Sur.
7"x74' Conc. Dividers
Hopper
Enquirer
Enquirer Paper Warehouse
N 23° 34' 10"E 454.87' (N 18° 46' E.R.L.)
Prop. R/W Fence
*1125
Arc = 172.01', Ch. = 171.87', Ch. Brg. = N 27° 34' 53"E, R = 1228.24' (N 22° 46' 43"E R.L.)
1 St. Corr Metal
1 St. Br. Service Sta.
1 St. Corr. Metal
Billboard
St. Wall
Conc. Pump Island
Conc. Pav't.
Bit. Macadam Pav't.
Conc. Curb
Conc. Apron
Sodded
Conc. Apron
Ex. 66 KV Elec. Cond.
Ex. 12" P.S.
Ex. Telephone Cond.
C.G.t.E. M.H.
Ex. 10" W.M.
Ex. 36" W.M.
Ex. 18" P.S.
Abandoned 4" W.M.
1' Conc. Wall
0.8' Conc. Wall
Hedge
Conc. Curb
Water Meter
Conc.
Conc.
Drain
Ex. R/W
Vac. Ord. No. 373 1954
Ord 383 1954
Billboard
Billboard
26.70'
Ex. R/W
Ex. Western Union (Postal Telegraph) Cond.
Traverse Line
Abandoned Ex. Elec. Cond.
Ex. 12" P.S.
C.W.
Tel. Box
E Box
Conc.
Sodded
Conc.
Tel. M.H.
C.G.t.E. M.H.
Conc. Traffic Island
Sign Board
Exist. Tel. Cond.
℄ NB Exp.
169 SB
169 NB
170 SB
171 SB
Exp. ℄
165
166
N 410,750
AUD. BK. 74 P. 2 P. 3
POC 166+12.27 SB
POC 166+12.27
Abandoned Ex. Elec. Cond.
M.H.
M.H.
M.H

FED. RD. DIV.	STATE	PROJECT	FISCAL YEAR
2	OHIO		

466
492

33
66

HAM-71-1.56
R/W PLAN
LIMITED ACCESS
HAM-0.93 (R/W ONLY)

N410,250

E1,432,500

MATCH LINE SEE SH. No. 34

MATCH LINE SEE SH. No. 38

HOPPER WOOD MILES & HALL
DB 112 P 240 RO
Isabell L Kircher et.al. "TR."

Heavily Wooded Hillside
The City of Cincinnati

Mary J. Bezler et.al.
Fred H. Tuke

ALLEY
(Not Dedicated)
University of Cincinnati

Conc. Steps

Ch. Brg. = N 37°2'07"E
Ch. = 79.95' Arc = 80'

N 54° 07' 05" E 127.82'

N 84° E 25'

S 02°12'00" W

N 02°12'00" E 125.39'

Ch. Brg. = S 20° 19' 33" W
Ch. = 38.57' Arc = 38.58'
R = 623.96'

N 49° E 169.66'

Const. Limits

Heavily Wooded Hillside

J.C. FIEDELDEY'S
University of Cincinnati P.B. 5 - P 67 RO

S 06° 33' 00" W 77.12'

Ch. Brg. = S 14° 58' 10" W Ch. = 78.03'
Arc = 78.08' R = 623.96'

S 02°12'00" W 24.46'

S 02°12'00" W 24.46'

S 02°12'00" W 51.82'

S 02°12'00" W 77.40'

S 83° 29' 31" E 112.59'

N 83° 29' 31" W 135.60'

N 06° 37' E 48.16'

N 07° 31' 28" E 58.26'

N 10° 10' 30" E 165.39'

342.67'
P-3

389.15'

75.24'

Edward C. Williams

Earth

St. Wall

Conc. Pav't

Wire Fence

Fr. Gar. Met. Clad.

25 St. Sh.

3 St. Br. #1237-41-45

Drain

Conc. Area

Mac. Area

Conc. Wall

Evelyn Bisher

2 St. Fr. #7249

Gowdy et.al.
Mabel

1st. Met. Garage

R/W

Ex. R/W

75.03' R/W

Conc. Approx. Limestone Curb

C.W.

Traverse Line

Ex. 6" W.M.

Ex. M.H.

Ex. 12" P.S.

ELSINORE AVE.

Ex. 6" GM

Limestone Curb

Conc.

Sodded

Field St. Pav't

Drive

Ex. 4" Underdrain

Conc. Curb

Conc. Covered With Mac.

Sodded

C.W.

C.N.

W.V. Box

Ex. M.H.

5357 WD
5358 WD
5359 WD
5374 WD
5375 WD
5376 WD
5373A WD
5376 T
5357 S
5357 T
5373A T
5374 T

MATCH LINE SEE SH. No. 34

18 SE(E) | 19 SE(E) | 20 SE(E)

N 06° 33' 00" E

Ex. R/W

119.67

5386 WD

R/W Ch. Brg. = N 09° 59' 12" W
Ch. = 61.31, Arc = 61.99'
R = 120'

5386 T-2

N 28° 47' 11" W
104.01'

N 03° 50' 00" W
51.70'

S 06° 27' 44" W 54.20'

S 06° 33' 00" W

S 83° 27' 00" E

S 83° 27' 00" E

S 81° 49' 20" E

29.93'

55.05'

Lot	Owner
75	M. Simkin
76	Herman F. Menke et.al.
77	Chase Realty Co.
78	
79	Marvin Rosanberg et.al.
80	
81	Robert Fosdick
82	
83	W.B. Bush

5434 T
5435 T
5436 T
5437 T
5438 T
5439 T

Const. Limit

City of Cincinnati
EDEN PARK

Section 12 T.4 F.R.1 Cincinnati Twp.

Date	Revised	By

RIGHT OF WAY PLAN

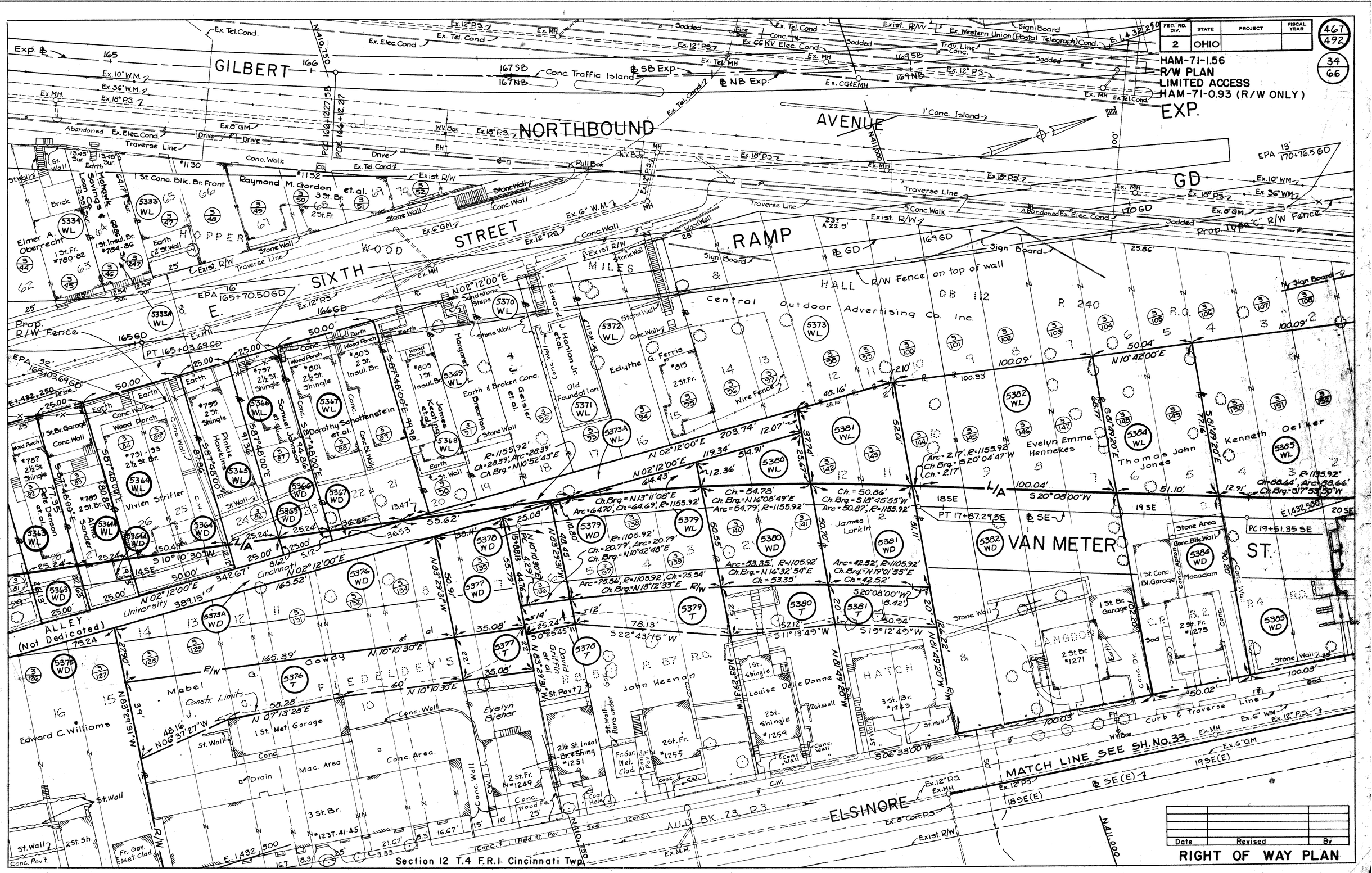

FED. RD. DIV. 2
STATE OHIO
PROJECT
FISCAL YEAR
467/492
34/66
HAM-71-1.56
R/W PLAN
LIMITED ACCESS
HAM-71-0.93 (R/W ONLY)
EXP.
GILBERT
NORTHBOUND
AVENUE
GD
SIXTH
STREET
RAMP
VAN METER
ST.
ELSINORE
MATCH LINE SEE SH. No. 33
Section 12 T.4 F.R.1 Cincinnati Twp.
Date
Revised
By
RIGHT OF WAY PLAN

FED. RD. DIV.	STATE	PROJECT	FISCAL YEAR
2	OHIO		

4.68
492

35
66

HAM-71-1.56
R/W PLAN
LIMITED ACCESS
HAM-71-0.93 (R/W ONLY)

N.411,500
E.1,431,750
N411,750
N412,000
E1,432,000

T. R. F. and Co. Inc.
Sylvester & Wm. Myer
Ethel R. Sweeney
J. KAUFFMAN'S HEIRS
Lucile M. Rodgers
Albert Wehming
Marvin Realty Inc.
Marvin Realty Co.
Leblond Realty Co.
The C.J. Krehbiel Co.
The Connecting Ry. Co.
Macadam Parking Lot
Macadam Pavt.
Gasoline Intake
1 St. Metal Gas Station
Granite Blk. Pavt.
Bit. Mac. Pavt.
Conc. Parking Lot
Tel Booth
Fountain
Conc Slab w/Fence
Wire Mesh Fc.
Conc. Stands
Conc. Gutter
Drainage Ditch
Wood Fence
Stone Wall
Conc. Wall w/Wire Fc.
Conc. Wall
Conc. Blk. Wall
Conc. Island
Conc. Pillar
Gratings
Inlet
Iron Pole
Iron Pole on Conc. Base
Iron Light Pole
Fire Alarm Box
Light Std.
Sign Bd.
Cyc. Fence
Iron Grating
Gasoline Transformer Pit
Fr. Garage
Constr. Limit
Top of Bank
Traverse Line
Exist. R/W
Aban. 4" WM
Ex. 20" WM
Ex. 35" WM
Ex. 16" GM
Ex. 20" PS
Ex. 18" PS
Ex. 12" PS
Ex. 6" WM
Ex. Tel. Cond.
Ex. Elec. Cond.
Ex. 3' Cir. Br. S.
Aban. 20" WM
Aban. 10" WM
Ex. 10" WM
Ex. 6" PS
Ex. 8" PS
Ex. 10" PS
Aban. 4" W.M.
Ex. 16" GM
Ex. 20" W.M.
Aban. 4" W.M.
Ex. 12" GM
Ex. 35" WM
Ex. 12" PS
Ex. 10" PS
Ex. 6" PS
Ex. 8" PS
Ex. 10" PS
Ex. 12" PS
Ex. 10" PS
Ex. 12" PS
Ex. 10" PS
Ex. 12

FED. RD. DIV.	STATE	PROJECT	FISCAL YEAR
2	OHIO		

469/492

37/66

HAM-71-1.56
R/W PLAN
LIMITED ACCESS
HAM-71-0.93 (R/W ONLY)

NOTE
Parcels 5396 WD & 5397 WD are to be acquired in the name of the Connecting Railway Co. except that sewer easement 5397 S is to be reserved in the name of the City of Cincinnati

5411 WD

5411 WL

5387 T-2

5397 T-1

5397 T-2

5396 WD

5397 WD

5397 S

5387 WA

5387 WL-1

5396 WL

5397 WL

5408 WL

5407 WL

5406 WL

5410 WL

5409 WL

5412 WL

5413 WL-1

5413

Marvin Realty Co.

Vacated Sept 1916

Penn RR Tracks

The Connecting Ry.

RAMP GA

RAMP RD

EXPRESSWAY

ELSMORE PL

PROP RELOCATED PENN RR TRACK

PROP DRIVEWAY

Prop Sewers

Prop R/W Fence

Nathan Lerman

H. Dennert Distributing Co.

Helen Patterson et al

Elmer C. Decker et al

Millard G. Wessinger

CREEK

Cincinnati (Park Board)

CITY OF CINCINNATI (PARK BOARD)

EDEN PARK SUB.

EDWIN JOHNSON PARK

SOUTHBOUND RELOCATED GILBERT AVE

NORTHBOUND

Fountain

Fr. Refresh. Stand.

Flood light

Granite Bk Pavt.

Ex. 8' Brick Sewer

Ex. 4' Brick Sewer

Ex. 18" PS

Ex. 8' Diam. Sewer

Ex. 4' Br. Sewer

Vacated Ord. 192 April 1912

Ex. 10" PS

Ex. 8" PS

Ex. 8" Diam. Sewer

Ex. 12" PS

Ex. 4' PS

Ex. Elec Cond.

Ex. Tel Cond.

Ex. 12" GM

Ex. 10" WM

Ex. 35" WM

Abon 10" WM

Ex. 8" Br. Sewer

Ex. 15" PS

Ex. 1st R/W

Ex. 2nd R/W

Ex. Underground Tel & Telegraph Cable

Iron Grating

CG&E Transformer Pit

Inlet (Covered)

Inlet

Meter Box

Gas Pump

Fr Shed

Conc. Bl Shed

Conc Dock

Conc Wall

Wire Fence

Conc. Pavt.

Conc. Limit

Traverse Line

Tel. MH

Co. Gate MH

Drain

Tr. Sig Cont.

RR Sig Box

Ex. 1st Br. Gor

1 St. Insul Br.

1 St. Br.

2 St. Br.

3 St. Br. & Conc.

1 St. Conc. Blk.

Penn RR Track

Penn RR Track 2

Conc. Dock

Ex. 4 Brick S.

Ex. 8 Br. S.

Ex. 8 Diam. S.

Ex. 8 PS

Ex. 18" PS

Ex. 8 PS 2

Ex. 8 PS 3

Ex. 10" PS 2

Ex. 8" Diam. S.

Ex. 18" PS

Ex. 10" PS

Ex. 10" PS 2

Ex. 8" PS

Ex. 8" PS 2

Ex. 8" PS 3

Ex. 8" PS 4

Ex. 8" PS 5

Ex. 8" PS 6

Ex. 8" PS 7

Ex. 8" PS 8

Ex. 8" PS 9

Ex. 8" PS 10

Ex. 8" PS 11

Ex. 8" PS 12

Ex. 8" PS 13

Ex. 8" PS 14

Ex. 8" PS 15

Ex. 8" PS 16

Ex. 8" PS 17

Ex. 8" PS 18

Ex. 8" PS 19

Ex. 8" PS 20

Ex. 8" PS 21

Ex. 8" PS 22

Ex. 8" PS 23

Ex. 8" PS 24

Ex. 8" PS 25

Ex. 8" PS 26

Ex. 8" PS 27

Ex. 8" PS 28

Ex. 8" PS 29

Ex. 8" PS 30

Ex. 8" PS 31

Ex. 8" PS 32

Ex. 8" PS 33

Ex. 8" PS 34

Ex. 8" PS 35

Ex. 8" PS 36

Ex. 8" PS 37

Ex. 8" PS 38

Ex. 8" PS 39

Ex. 8" PS 40

Ex. 8" PS 41

Ex. 8" PS 42

Ex. 8" PS 43

Ex. 8" PS 44

Ex. 8" PS 45

Ex. 8" PS 46

Ex. 8" PS 47

Ex. 8" PS 48

Ex. 8" PS 49

Ex. 8" PS 50

Ex. 8" PS 51

Ex. 8" PS 52

Ex. 8" PS 53

Ex. 8" PS 54

Ex. 8" PS 55

Ex. 8" PS 56

Ex. 8" PS 57

Ex. 8" PS 58

Ex. 8" PS 59

Ex. 8" PS 60

Ex. 8" PS 61

Ex. 8" PS 62

Ex. 8" PS 63

Ex. 8" PS 64

Ex. 8" PS 65

Ex. 8" PS 66

Ex. 8" PS 67

Ex. 8" PS 68

Ex. 8" PS 69

Ex. 8" PS 70

Ex. 8" PS 71

Ex. 8" PS 72

Ex. 8" PS 73

Ex. 8" PS 74

Ex. 8" PS 75

Ex. 8" PS 76

Ex. 8" PS 77

Ex. 8" PS 78

Ex. 8" PS 79

Ex. 8" PS 80

Ex. 8" PS 81

Ex. 8" PS 82

Ex. 8" PS 83

Ex. 8" PS 84

Ex. 8" PS 85

Ex. 8" PS 86

Ex. 8" PS 87

Ex. 8" PS 88

Ex. 8" PS 89

Ex. 8" PS 90

Ex. 8" PS 91

Ex. 8" PS 92

Ex. 8" PS 93

Ex. 8" PS 94

Ex. 8" PS 95

Ex. 8" PS 96

Ex. 8" PS 97

Ex. 8" PS 98

Ex. 8" PS 99

Ex. 8" PS 100

Ex. 8" PS 101

Ex. 8" PS 102

Ex. 8" PS 103

Ex. 8" PS 104

Ex. 8" PS 105

Ex. 8" PS 106

Ex. 8" PS 107

Ex. 8" PS 108

Ex. 8" PS 109

Ex. 8" PS 110

Ex. 8" PS 111

Ex. 8" PS 112

Ex. 8" PS 113

Ex. 8" PS 114

Ex. 8" PS 115

Ex. 8" PS 116

Ex. 8" PS 117

Ex. 8" PS 118

Ex. 8" PS 119

Ex. 8" PS 120

Ex. 8" PS 121

Ex. 8" PS 122

Ex. 8" PS 123

Ex. 8" PS 124

Ex. 8" PS 125

Ex. 8" PS 126

Ex. 8" PS 127

Ex. 8" PS 128

Ex. 8" PS 129

Ex. 8" PS 130

Ex. 8" PS 131

Ex. 8" PS 132

Ex. 8" PS 133

Ex. 8" PS 134

Ex. 8" PS 135

Ex. 8" PS 136

Ex. 8" PS 137

Ex. 8" PS 138

Ex. 8" PS 139

Ex. 8" PS 140

Ex. 8" PS 141

Ex. 8" PS 142

Ex. 8" PS 143

Ex. 8" PS 144

Ex. 8" PS 145

Ex. 8" PS 146

Ex. 8" PS 147

Ex. 8" PS 148

Ex. 8" PS 149

Ex. 8" PS 150

Ex. 8" PS 151

Ex. 8" PS 152

Ex. 8" PS 153

Ex. 8" PS 154

Ex. 8" PS 155

Ex. 8" PS 156

Ex. 8" PS 157

Ex. 8" PS 158

Ex. 8" PS 159

Ex. 8" PS 160

Ex. 8" PS 161

Ex. 8" PS 162

Ex. 8" PS 163

Ex. 8" PS 164

Ex. 8" PS 165

Ex. 8" PS 166

Ex. 8" PS 167

Ex. 8" PS 168

Ex. 8" PS 169

Ex. 8" PS 170

Ex. 8" PS 171

Ex. 8" PS 172

Ex. 8" PS 173

Ex. 8" PS 174

Ex. 8" PS 175

Ex. 8" PS 176

Ex. 8" PS 177

Ex. 8" PS 178

Ex. 8" PS 179

Ex. 8" PS 180

Ex. 8" PS 181

Ex. 8" PS 182

Ex. 8" PS 183

Ex. 8" PS 184

Ex. 8" PS 185

Ex. 8" PS 186

Ex. 8" PS 187

Ex. 8" PS 188

Ex. 8" PS 189

Ex. 8" PS 190

Ex. 8" PS 191

Ex. 8" PS 192

Ex. 8" PS 193

Ex. 8" PS 194

Ex. 8" PS 195

Ex. 8" PS 196

Ex. 8" PS 197

Ex. 8" PS 198

Ex. 8" PS 199

Ex. 8" PS 200

Ex. 8" PS 201

Ex. 8" PS 202

Ex. 8" PS 203

Ex. 8" PS 204

Ex. 8" PS 205

Ex. 8" PS 206

Ex. 8" PS 207

Ex. 8" PS 208

Ex. 8" PS 209

Ex. 8" PS 210

Ex. 8" PS 211

Ex. 8" PS 212

Ex. 8" PS 213

Ex. 8" PS 214

Ex. 8" PS 215

Ex. 8" PS 216

Ex. 8" PS 217

Ex. 8" PS 218

Ex. 8" PS 219

Ex. 8" PS 220

Ex. 8" PS 221

Ex. 8" PS 222

Ex. 8" PS 223

Ex. 8" PS 224

Ex. 8" PS 225

Ex. 8" PS 226

Ex. 8" PS 227

Ex. 8" PS 228

Ex. 8" PS 229

Ex. 8" PS 230

Ex. 8" PS 231

Ex. 8" PS 232

Ex. 8" PS 233

Ex. 8" PS 234

Ex. 8" PS 235

Ex. 8" PS 236

Ex. 8" PS 237

Ex. 8" PS 238

Ex. 8" PS 239

Ex. 8" PS 240

Ex. 8" PS 241

Ex. 8" PS 242

Ex. 8" PS 243

Ex. 8" PS 244

Ex. 8" PS 245

Ex. 8" PS 246

Ex. 8" PS 247

Ex. 8" PS 248

Ex. 8" PS 249

Ex. 8" PS 250

Ex. 8" PS 251

Ex. 8" PS 252

Ex. 8" PS 253

Ex. 8" PS 254

Ex. 8" PS 255

Ex. 8" PS 256

Ex. 8" PS 257

Ex. 8" PS 258

Ex. 8" PS 259

Ex. 8" PS 260

Ex. 8" PS 261

Ex. 8" PS 262

Ex. 8" PS 263

Ex. 8" PS 264

Ex. 8" PS 265

Ex. 8" PS 266

Ex. 8" PS 267

Ex. 8" PS 268

Ex. 8" PS 269

Ex. 8" PS 270

Ex. 8" PS 271

Ex. 8" PS 272

Ex. 8" PS 273

Ex. 8" PS 274

Ex. 8" PS 275

Ex. 8" PS 276

Ex. 8" PS 277

Ex. 8" PS 278

Ex. 8" PS 279

Ex. 8" PS 280

Ex. 8" PS 281

Ex. 8" PS 282

Ex. 8" PS 283

Ex. 8" PS 284

Ex. 8" PS 285

Ex. 8" PS 286

Ex. 8" PS 287

Ex. 8" PS 288

Ex. 8" PS 289

Ex. 8" PS 290

Ex. 8" PS 291

Ex. 8" PS 292

Ex. 8" PS 293

Ex. 8" PS 294

Ex. 8" PS 295

Ex. 8" PS 296

Ex. 8" PS 297

Ex. 8" PS 298

Ex. 8" PS 299

Ex. 8" PS 300

Ex. 8" PS 301

Ex. 8" PS 302

Ex. 8" PS 303

Ex. 8" PS 304

Ex. 8" PS 305

Ex. 8" PS 306

Ex. 8" PS 307

Ex. 8" PS 308

Ex. 8" PS 309

Ex. 8" PS 310

Ex. 8" PS 311

Ex. 8" PS 312

Ex. 8" PS 313

Ex. 8" PS 314

Ex. 8" PS 315

Ex. 8" PS 316

Ex. 8" PS 317

Ex. 8" PS 318

Ex. 8" PS 319

Ex. 8" PS 320

Ex. 8" PS 321

Ex. 8" PS 322

Ex. 8" PS 323

Ex. 8" PS 324

Ex. 8" PS 325

Ex. 8" PS 326

Ex. 8" PS 327

Ex. 8" PS 328

Ex. 8" PS 329

Ex. 8" PS 330

Ex. 8" PS 331

Ex. 8" PS 332

Ex. 8" PS 333

Ex. 8" PS 334

Ex. 8" PS 335

Ex. 8" PS 336

Ex. 8" PS 337

Ex. 8" PS 338

Ex. 8" PS 339

Ex. 8" PS 340

Ex. 8" PS 341

Ex. 8" PS 342

Ex. 8" PS 343

Ex. 8" PS 344

Ex. 8" PS 345

Ex. 8" PS 346

Ex. 8" PS 347

Ex. 8" PS 348

Ex. 8" PS 349

Ex. 8" PS 350

Ex. 8" PS 351

Ex. 8" PS 352

Ex. 8" PS 353

Ex. 8" PS 354

Ex. 8" PS 355

Ex. 8" PS 356

Ex. 8" PS 357

Ex. 8" PS 358

Ex. 8" PS 359

Ex. 8" PS 360

Ex. 8" PS 361

Ex. 8" PS 362

Ex. 8" PS 363

Ex. 8" PS 364

Ex. 8" PS 365

Ex. 8" PS 366

Ex. 8" PS 367

Ex. 8" PS 368

Ex. 8" PS 369

Ex. 8" PS 370

Ex. 8" PS 371

Ex. 8" PS 372

Ex. 8" PS 373

Ex. 8" PS 374

Ex. 8" PS 375

Ex. 8" PS 376

Ex. 8" PS 377

Ex. 8" PS 378

Ex. 8" PS 379

Ex. 8" PS 380

Ex. 8" PS 381

Ex. 8" PS 382

Ex. 8" PS 383

Ex. 8" PS 384

Ex. 8" PS 385

Ex. 8" PS 386

Ex. 8" PS 387

Ex. 8" PS 388

Ex. 8" PS 389

Ex. 8" PS 390

Ex. 8" PS 391

Ex. 8" PS 392

Ex. 8" PS 393

Ex. 8" PS 394

Ex. 8" PS 395

Ex. 8" PS 396

Ex. 8" PS 397

Ex. 8" PS 398

Ex. 8" PS 399

Ex. 8" PS 400

Ex. 8" PS 401

Ex. 8" PS 402

Ex. 8" PS 403

Ex. 8" PS 404

Ex. 8" PS 405

Ex. 8" PS 406

Ex. 8" PS 407

Ex. 8" PS 408

Ex. 8" PS 409

Ex. 8" PS 410

Ex. 8" PS 411

Ex. 8" PS 412

Ex. 8" PS 413

Ex. 8" PS 414

Ex. 8" PS 415

Ex. 8" PS 416

Ex. 8" PS 417

Ex. 8" PS 418

Ex. 8" PS 419

Ex. 8" PS 420

Ex. 8" PS 421

Ex. 8" PS 422

Ex. 8" PS 423

Ex. 8" PS 424

Ex. 8" PS 425

Ex. 8" PS 426

Ex. 8" PS 427

Ex. 8" PS 428

Ex. 8" PS 429

Ex. 8" PS 430

Ex. 8" PS 431

Ex. 8" PS 432

Ex. 8" PS 433

Ex. 8" PS 434

Ex. 8" PS 435

Ex. 8" PS 436

Ex. 8" PS 437

Ex. 8" PS 438

Ex. 8" PS 439

Ex. 8" PS 440

Ex. 8" PS 441

Ex. 8" PS 442

Ex. 8" PS 443

Ex. 8" PS 444

Ex. 8" PS 445

Ex. 8" PS 446

Ex. 8" PS 447

Ex. 8" PS 448

Ex. 8" PS 449

Ex. 8" PS 450

Ex. 8" PS 451

Ex. 8" PS 452

Ex. 8" PS 453

Ex. 8" PS 454

Ex. 8" PS 455

Ex. 8" PS 456

Ex. 8" PS 457

Ex. 8" PS 458

Ex. 8" PS 459

Ex. 8" PS 460

Ex. 8" PS 461

Ex. 8" PS 462

Ex. 8" PS 463

Ex. 8" PS 464

Ex. 8" PS 465

Ex. 8" PS 466

Ex. 8" PS 467

Ex. 8" PS 468

Ex. 8" PS 469

Ex. 8" PS 470

Ex. 8" PS 471

Ex. 8" PS 472

Ex. 8" PS 473

Ex. 8" PS 474

Ex. 8" PS 475

Ex. 8" PS 476

Ex. 8" PS 477

Ex. 8" PS 478

Ex. 8" PS 479

Ex. 8" PS 480

Ex. 8" PS 481

Ex. 8" PS 482

Ex. 8" PS 483

Ex. 8" PS 484

Ex. 8" PS 485

Ex. 8" PS 486

Ex. 8" PS 487

Ex. 8" PS 488

Ex. 8" PS 489

Ex. 8" PS 490

Ex. 8" PS 491

Ex. 8" PS 492

Ex. 8" PS 493

Ex. 8" PS 494

Ex. 8" PS 495

Ex. 8" PS 496

Ex. 8" PS 497

Ex. 8" PS 498

Ex. 8" PS 499

Ex. 8" PS 500

Ex. 8" PS 501

Ex. 8" PS 502

Ex. 8" PS 503

Ex. 8" PS 504

Ex. 8" PS 505

Ex. 8" PS 506

Ex. 8" PS 507

Ex. 8" PS 508

Ex. 8" PS 509

Ex. 8" PS 510

Ex. 8" PS 511

Ex. 8" PS 512

Ex. 8" PS 513

Ex. 8" PS 514

Ex. 8" PS 515

Ex. 8" PS 516

Ex. 8" PS 517

Ex. 8" PS 518

Ex. 8" PS 519

Ex. 8" PS 520

Ex. 8" PS 521

Ex. 8" PS 522

Ex. 8" PS 523

Ex. 8" PS 524

Ex. 8" PS 525

Ex. 8" PS 526

Ex. 8" PS 527

Ex. 8" PS 528

Ex. 8" PS 529

Ex. 8" PS 530

Ex. 8" PS 531

Ex. 8" PS 532

Ex. 8" PS 533

Ex. 8" PS 534

Ex. 8" PS 535

Ex. 8" PS 536

Ex. 8" PS 537

Ex. 8" PS 538

Ex. 8" PS 539

Ex. 8" PS 540

Ex. 8" PS 541

Ex. 8" PS 542

Ex. 8" PS 543

Ex. 8" PS 544

Ex. 8" PS 545

Ex. 8" PS 546

Ex. 8" PS 547

Ex. 8" PS 548

Ex. 8" PS 549

Ex. 8" PS 550

Ex. 8" PS 551

Ex. 8" PS 552

Ex. 8" PS 553

Ex. 8" PS 554

Ex. 8" PS 555

Ex. 8" PS 556

Ex. 8" PS 557

Ex. 8" PS 558

Ex. 8" PS 559

Ex. 8" PS 560

Ex. 8" PS 561

Ex. 8" PS 562

Ex. 8" PS 563

Ex. 8" PS 564

Ex. 8" PS 565

Ex. 8" PS 566

Ex. 8" PS 567

Ex. 8" PS 568

Ex. 8" PS 569

Ex. 8" PS 570

Ex. 8" PS 571

Ex. 8" PS 572

Ex. 8" PS 573

Ex. 8" PS 574

Ex. 8" PS 575

Ex. 8" PS 576

Ex. 8" PS 577

Ex. 8" PS 578

Ex. 8" PS 579

Ex. 8" PS 580

Ex. 8" PS 581

Ex. 8" PS 582

Ex. 8" PS 583

Ex. 8" PS 584

Ex. 8" PS 585

Ex. 8" PS 586

Ex. 8" PS 587

Ex. 8" PS 588

Ex. 8" PS 589

Ex. 8" PS 590

Ex. 8" PS 591

Ex. 8" PS 592

Ex. 8" PS 593

Ex. 8" PS 594

Ex. 8" PS 595

Ex. 8" PS 596

Ex. 8" PS 597

Ex. 8" PS 598

Ex. 8" PS 599

Ex. 8" PS 600

Ex. 8" PS 601

Ex. 8" PS 602

Ex. 8" PS 603

Ex. 8" PS 604

Ex. 8" PS 605

Ex. 8" PS 606

Ex. 8" PS 607

Ex. 8" PS 608

Ex. 8" PS 609

Ex. 8" PS 610

Ex. 8" PS 611

Ex. 8" PS 612

Ex. 8" PS 613

Ex. 8" PS 614

Ex. 8" PS 615

Ex. 8" PS 616

Ex. 8" PS 617

Ex. 8" PS 618

Ex. 8" PS 619

Ex. 8" PS 620

Ex. 8" PS 621

Ex. 8" PS 622

Ex. 8" PS 623

Ex. 8" PS 624

Ex. 8" PS 625

Ex. 8" PS 626

Ex. 8" PS 627

Ex. 8" PS 628

Ex. 8" PS 629

Ex. 8" PS 630

Ex. 8" PS 631

Ex. 8" PS 632

Ex. 8" PS 633

Ex. 8" PS 634

Ex. 8" PS 635

Ex. 8" PS 636

Ex. 8" PS 637

Ex. 8" PS 638

Ex. 8" PS 639

Ex. 8" PS 640

Ex. 8" PS 641

Ex. 8" PS 642

Ex. 8" PS 643

Ex. 8" PS 644

Ex. 8" PS 645

Ex. 8" PS 646

Ex. 8" PS 647

Ex. 8" PS 648

Ex. 8" PS 649

Ex. 8" PS 650

Ex. 8" PS 651

Ex. 8" PS 652

Ex. 8" PS 653

Ex. 8" PS 654

Ex. 8" PS 655

Ex. 8" PS 656

Ex. 8" PS 657

Ex. 8" PS 658

Ex. 8" PS 659

Ex. 8" PS 660

Ex. 8" PS 661

Ex. 8" PS 662

Ex. 8" PS 663

Ex. 8" PS 664

Ex. 8" PS 665

Ex. 8" PS 666

Ex. 8" PS 667

Ex. 8" PS 668

Ex. 8" PS 669

Ex. 8" PS 670

Ex. 8" PS 671

Ex. 8" PS 672

Ex. 8" PS 673

Ex. 8" PS 674

Ex. 8" PS 675

Ex. 8" PS 676

Ex. 8" PS 677

Ex. 8" PS 678

Ex. 8" PS 679

Ex. 8" PS 680

Ex. 8" PS 681

Ex. 8" PS 682

Ex. 8" PS 683

Ex. 8" PS 684

Ex. 8" PS 685

Ex. 8" PS 686

Ex. 8" PS 687

Ex. 8" PS 688

Ex. 8" PS 689

Ex. 8" PS 690

Ex. 8" PS 691

Ex. 8" PS 692

Ex. 8" PS 693

Ex. 8" PS 694

Ex. 8" PS 695

Ex. 8" PS 696

Ex. 8" PS 697

Ex. 8" PS 698

Ex. 8" PS 699

Ex. 8" PS 700

Ex. 8" PS 701

Ex. 8" PS 702

Ex. 8" PS 703

Ex. 8" PS 704

Ex. 8" PS 705

Ex. 8" PS 706

Ex. 8" PS 707

Ex. 8" PS 708

Ex. 8" PS 709

Ex. 8" PS 710

Ex. 8" PS 711

Ex. 8" PS 712

Ex. 8" PS 713

Ex. 8" PS 714

Ex. 8" PS 715

Ex. 8" PS 716

Ex. 8" PS 717

Ex. 8" PS 718

Ex. 8" PS 719

Ex. 8" PS 720

Ex. 8" PS 721

Ex. 8" PS 722

Ex. 8" PS 723

Ex. 8" PS 724

Ex. 8" PS 725

Ex. 8" PS 726

Ex. 8" PS 727

Ex. 8" PS 728

Ex. 8" PS 729

Ex. 8" PS 730

Ex. 8" PS 731

Ex. 8" PS 732

Ex. 8" PS 733

Ex. 8" PS 734

Ex. 8" PS 735

Ex. 8" PS 736

Ex. 8" PS 737

Ex. 8" PS 738

Ex. 8" PS 739

Ex. 8" PS 740

Ex. 8" PS 741

Ex. 8" PS 742

Ex. 8" PS 743

Ex. 8" PS 744

Ex. 8" PS 745

Ex. 8" PS 746

Ex. 8" PS 747

Ex. 8" PS 748

Ex. 8" PS 749

Ex. 8" PS 750

Ex. 8" PS 751

Ex. 8" PS 752

Ex. 8" PS 753

Ex. 8" PS 754

Ex. 8" PS 755

Ex. 8" PS 756

Ex. 8" PS 757

Ex. 8" PS 758

Ex. 8" PS 759

Ex. 8" PS 760

Ex. 8" PS 761

Ex. 8" PS 762

Ex. 8" PS 763

Ex. 8" PS 764

Ex. 8" PS 765

Ex. 8" PS 766

Ex. 8" PS 767

Ex. 8" PS 768

Ex. 8" PS 769

Ex. 8" PS 770

Ex. 8" PS 771

Ex. 8" PS 772

Ex. 8" PS 773

Ex. 8" PS 774

Ex. 8" PS 775

Ex. 8" PS 776

Ex. 8" PS 777

Ex. 8" PS 778

Ex. 8" PS 779

Ex. 8" PS 780

Ex. 8" PS 781

Ex. 8" PS 782

Ex. 8" PS 783

Ex. 8" PS 784

Ex. 8" PS 785

Ex. 8" PS 786

Ex. 8" PS 787

Ex. 8" PS 788

Ex. 8" PS 789

Ex. 8" PS 790

Ex. 8" PS 791

Ex. 8" PS 792

Ex. 8" PS 793

Ex. 8" PS 794

Ex. 8" PS 795

Ex. 8" PS 796

Ex. 8" PS 797

Ex. 8" PS 798

Ex. 8" PS 799

Ex. 8" PS 800

Ex. 8" PS 801

Ex. 8" PS 802

Ex. 8" PS 803

Ex. 8" PS 804

Ex. 8" PS 805

Ex. 8" PS 806

Ex. 8" PS 807

Ex. 8" PS 808

Ex. 8" PS 809

Ex. 8" PS 810

Ex. 8" PS 811

Ex. 8" PS 812

Ex. 8" PS 813

Ex. 8" PS 814

Ex. 8" PS 815

Ex. 8" PS 816

Ex. 8" PS 817

Ex. 8" PS 818

Ex. 8" PS 819

Ex. 8" PS 820

Ex. 8" PS 821

Ex. 8" PS 822

Ex. 8" PS 823

Ex. 8" PS 824

Ex. 8" PS 825

Ex. 8" PS 826

Ex. 8" PS 827

Ex. 8" PS 828

Ex. 8" PS 829

Ex. 8" PS 830

Ex. 8" PS 831

Ex. 8" PS 832

Ex. 8" PS 833

Ex. 8" PS 834

Ex. 8" PS 835

Ex. 8" PS 836

Ex. 8" PS 837

Ex. 8" PS 838

Ex. 8" PS 839

Ex. 8" PS 840

Ex. 8" PS 841

Ex. 8" PS 842

Ex. 8" PS 843

Ex. 8" PS 844

Ex. 8" PS 845

Ex. 8" PS 846

Ex. 8" PS 847

Ex. 8" PS 848

Ex. 8" PS 849

Ex. 8" PS 850

Ex. 8" PS 851

Ex. 8" PS 852

Ex. 8" PS 853

Ex. 8" PS 854

Ex. 8" PS 855

Ex. 8" PS 856

Ex. 8" PS 857

Ex. 8" PS 858

Ex. 8" PS 859

Ex. 8" PS 860

Ex. 8" PS 861

Ex. 8" PS 862

Ex. 8" PS 863

Ex. 8" PS 864

Ex. 8" PS 865

Ex. 8" PS 866

Ex. 8" PS 867

Ex. 8" PS 868

Ex. 8" PS 869

Ex. 8" PS 870

Ex. 8" PS 871

Ex. 8" PS 872

Ex. 8" PS 873

Ex. 8" PS 874

Ex. 8" PS 875

Ex. 8" PS 876

Ex. 8" PS 877

Ex. 8" PS 878

Ex. 8" PS 879

Ex. 8" PS 880

Ex. 8" PS 881

Ex. 8" PS 882

Ex. 8" PS 883

Ex. 8" PS 884

Ex. 8" PS 885

Ex. 8" PS 886

Ex. 8" PS 887

Ex. 8" PS 888

Ex. 8" PS 889

Ex. 8" PS 890

Ex. 8" PS 891

Ex. 8" PS 892

Ex. 8" PS 893

Ex. 8" PS 894

Ex. 8" PS 895

Ex. 8" PS 896

Ex. 8" PS 897

Ex. 8" PS 898

Ex. 8" PS 899

Ex. 8" PS 900

Ex. 8" PS 901

Ex. 8" PS 902

Ex. 8" PS 903

Ex. 8" PS 904

Ex. 8" PS 905

Ex. 8" PS 906

Ex. 8" PS 907

Ex. 8" PS 908

Ex. 8" PS 909

Ex. 8" PS 910

Ex. 8" PS 911

Ex. 8" PS 912

Ex. 8" PS 913

Ex. 8" PS 914

Ex. 8" PS 915

Ex. 8" PS 916

Ex. 8" PS 917

Ex. 8" PS 918

Ex. 8" PS 919

Ex. 8" PS 920

Ex. 8" PS 921

Ex. 8" PS 922

Ex. 8" PS 923

Ex. 8" PS 924

Ex. 8" PS 925

Ex. 8" PS 926

Ex. 8" PS 927

Ex. 8" PS 928

Ex. 8" PS 929

Ex. 8" PS 930

Ex. 8" PS 931

Ex. 8" PS 932

Ex. 8" PS 933

Ex. 8" PS 934

Ex. 8" PS 935

Ex. 8" PS 936

Ex. 8" PS 937

Ex. 8" PS 938

Ex. 8" PS 939

Ex. 8" PS 940

Ex. 8" PS 941

Ex. 8" PS 942

Ex. 8" PS 943

Ex. 8" PS 944

Ex. 8" PS 945

Ex. 8" PS 946

Ex. 8" PS 947

Ex. 8" PS 948

Ex. 8" PS 949

Ex. 8" PS 950

Ex. 8" PS 951

Ex. 8" PS 952

Ex. 8" PS 953

Ex. 8" PS 954

Ex. 8" PS 955

Ex. 8" PS 956

Ex. 8" PS 957

Ex. 8" PS 958

Ex. 8" PS 959

Ex. 8" PS 960

Ex. 8" PS 961

Ex. 8" PS 962

Ex. 8" PS 963

Ex. 8" PS 964

Ex. 8" PS 965

Ex. 8" PS 966

Ex. 8" PS 967

Ex. 8" PS 968

Ex. 8" PS 969

Ex. 8" PS 970

Ex. 8" PS 971

Ex. 8" PS 972

Ex. 8" PS 973

Ex. 8" PS 974

Ex. 8" PS 975

Ex. 8" PS 976

Ex. 8" PS 977

Ex. 8" PS 978

Ex. 8" PS 979

Ex. 8" PS 980

Ex. 8" PS 981

Ex. 8" PS 982

Ex. 8" PS 983

Ex. 8" PS 984

Ex. 8" PS 985

Ex. 8" PS 986

Ex. 8" PS 987

Ex. 8" PS 988

Ex. 8" PS 989

Ex. 8" PS 990

Ex. 8" PS 991

Ex. 8" PS 992

Ex. 8" PS 993

Ex. 8" PS 994

Ex. 8" PS 995

Ex. 8" PS 996

Ex. 8" PS 997

Ex. 8" PS 998

Ex. 8" PS 999

Ex. 8" PS 1000

Sec. 12, T.4, F.R.1, Cincinnati Twp.

Sec. 7, T.3, F.R.2, Millcreek Twp.

Date	Revised	By

RIGHT OF WAY PLAN

FED. RD. DIV.	STATE	PROJECT	FISCAL YEAR
2	OHIO		

4-70
4-92

38
66

HAM-71-1.56
R/W PLAN
LIMITED ACCESS
HAM-71-0.93 (R/W ONLY)

RIGHT OF WAY PLAN

Date	Revised	By

Sec. 12, T.4, F.R.1, Cincinnati Twp.

Sec. 7, T.3, F.R.2, Millcreek Twp.

MATCH LINE SEE SHEET No. 33

FED. RD. DIV.	STATE	PROJECT	FISCAL YEAR
2	OHIO		

471
492

39
66

HAM-71-1.56
R/W PLAN
LIMITED ACCESS
HAM-71-0.93 (R/W ONLY)

Sec. 7, T. 3, F.R. 2, Millcreek Twp.

Date	Revised	By

RIGHT OF WAY PLAN

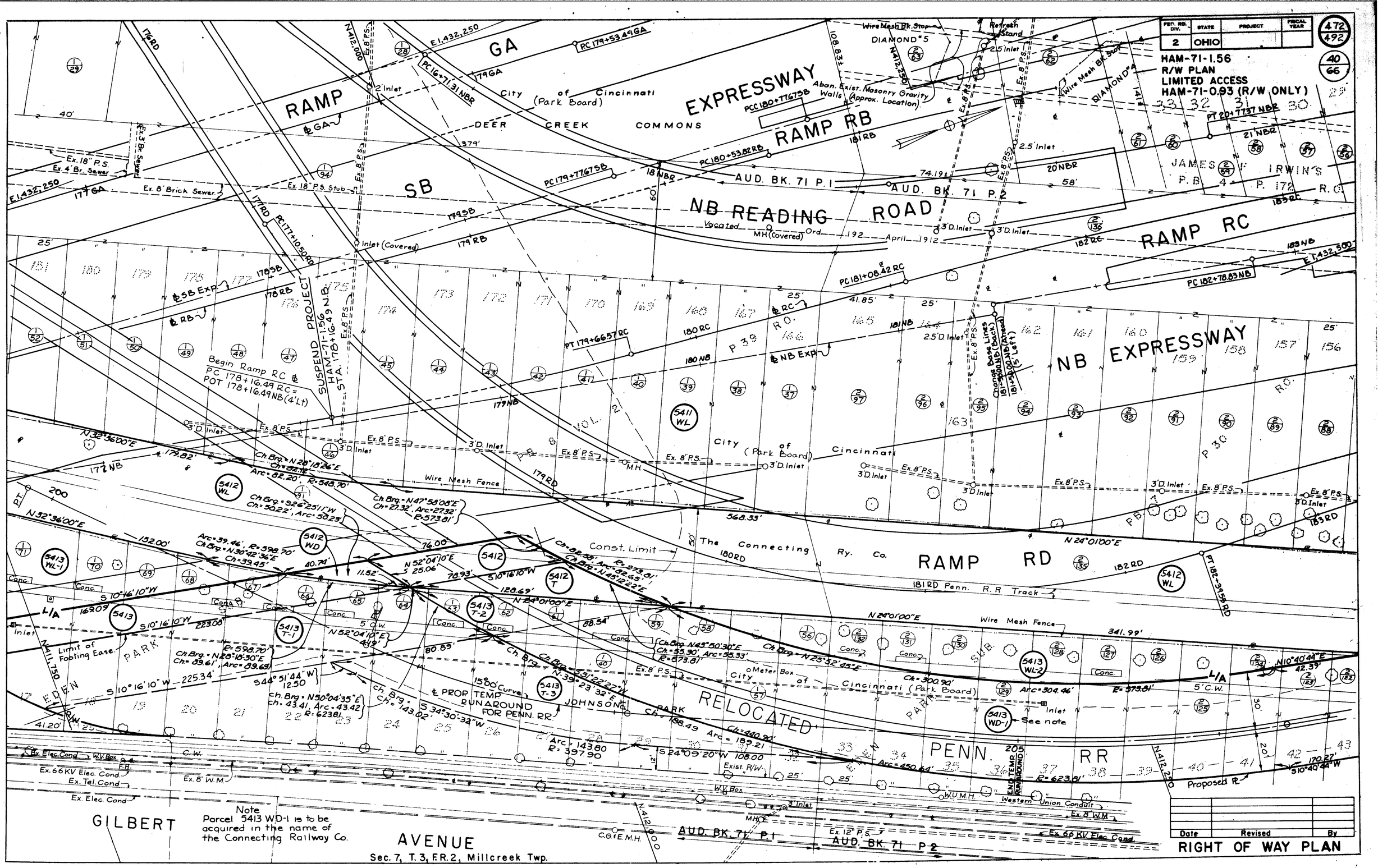

FED. RD. DIV. 2
STATE OHIO
PROJECT
FISCAL YEAR
472/492
40/66
HAM-71-1.56
R/W PLAN
LIMITED ACCESS
HAM-71-0.93 (R/W ONLY)
RAMP GA
EXPRESSWAY
RAMP RB
SB
NB READING ROAD
RAMP RC
NB EXPRESSWAY
RAMP RD
RELOCATED PENN. RR
City of Cincinnati (Park Board)
DEER CREEK COMMONS
JAMES F. IRWIN'S P.B. 4 P. 172 R.O.
Vacated Ord. 192 April 1912
AUD. BK. 71 P.1
AUD. BK. 71 P.2
SUSPEND PROJECT HAM-71-1.56 STA. 178+16.49 N.B.
Begin Ramp RC ℄ PC 178+16.49 RC = POT 178+16.49 NB (4' Lt)
The Connecting Ry. Co.
181 RD Penn. R.R. Track
Wire Mesh Fence
Const. Limit
Limit of Footing Ease.
℄ PROP TEMP RUNAROUND FOR PENN. RR.
JOHNSON PARK
Proposed ℄
Western Union Conduit
Ex. 66 KV Elec. Cond.
Ex. Tel. Cond.
Ex. Elec. Cond.
Ex. 8" W.M.
Ex. 12" P.S.
Note
Parcel 5413 WD-1 is to be acquired in the name of the Connecting Railway Co.
GILBERT AVENUE
Sec. 7, T. 3, F.R. 2, Millcreek Twp.
Date
Revised
By
RIGHT OF WAY PLAN

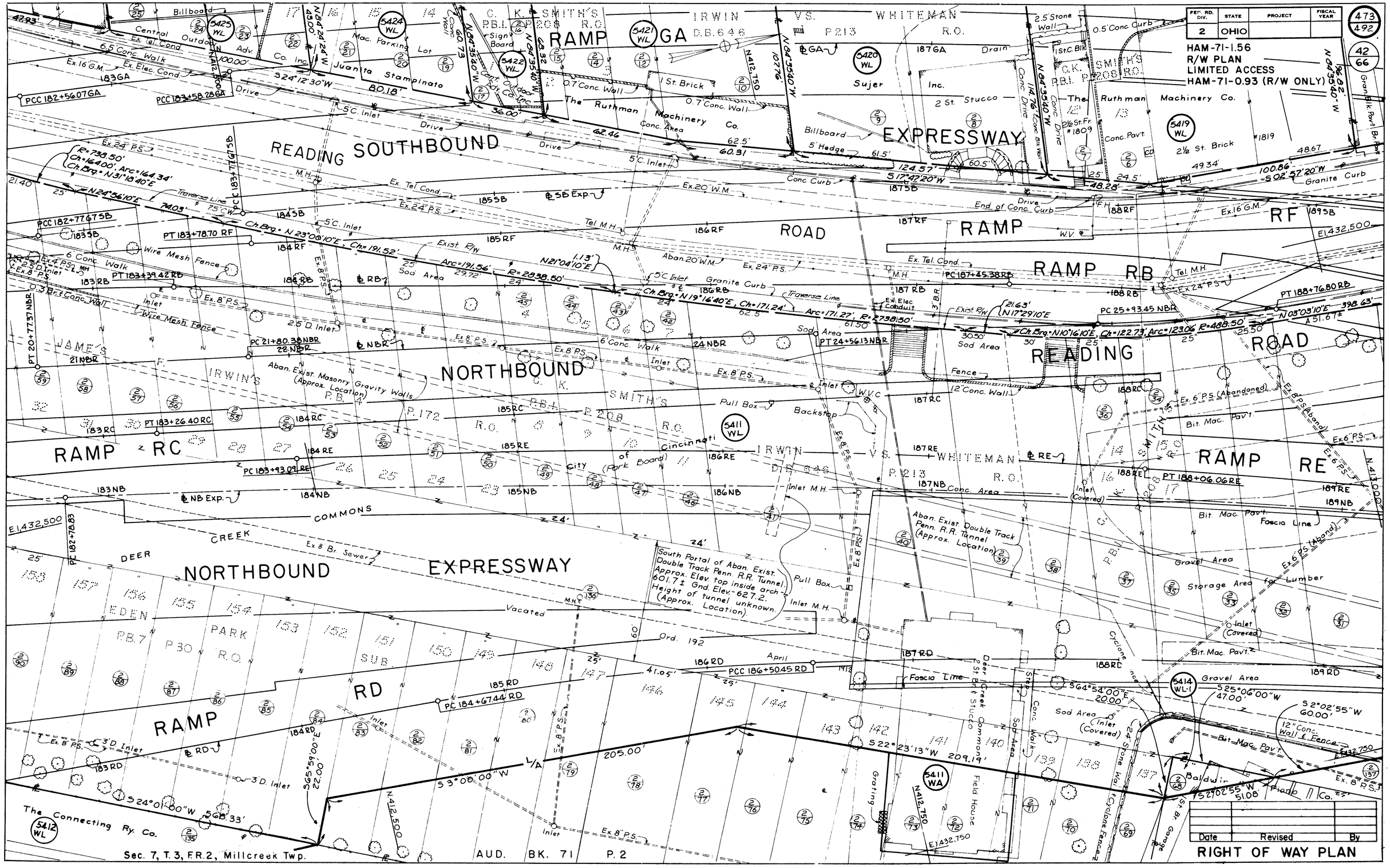

FED. RD. DIV. 2
STATE OHIO
PROJECT
FISCAL YEAR
473
492
42
66
HAM-71-1.56
R/W PLAN
LIMITED ACCESS
HAM-71-0.93 (R/W ONLY)
READING SOUTHBOUND
EXPRESSWAY
RAMP GA
RAMP RF
RAMP RB
READING ROAD
NORTHBOUND
RAMP RC
RAMP RE
NORTHBOUND EXPRESSWAY
RAMP RD
IRWIN VS. WHITEMAN
C. K. SMITH'S
The Ruthman Machinery Co.
Sujer Inc.
Juanita Stampinato
Central Outdoor Adv. Co. Inc.
Mac. Parking Lot
Billboard
Sod Area
Granite Curb
Wire Mesh Fence
Aban. Exist. Masonry Gravity Walls (Approx. Location)
Aban. Exist. Double Track Penn. R.R. Tunnel (Approx. Location)
South Portal of Aban. Exist. Double Track Penn. R.R. Tunnel. Approx. Elev. top inside arch 601.7± Gnd. Elev. 627.2. Height of tunnel unknown. (Approx. Location)
Deer Creek Commons
Field House
Baldwin Piano Co.
The Connecting Ry. Co.
Sec. 7, T. 3, F.R. 2, Millcreek Twp.
AUD. BK. 71 P. 2
Date
Revised
By
RIGHT OF WAY PLAN

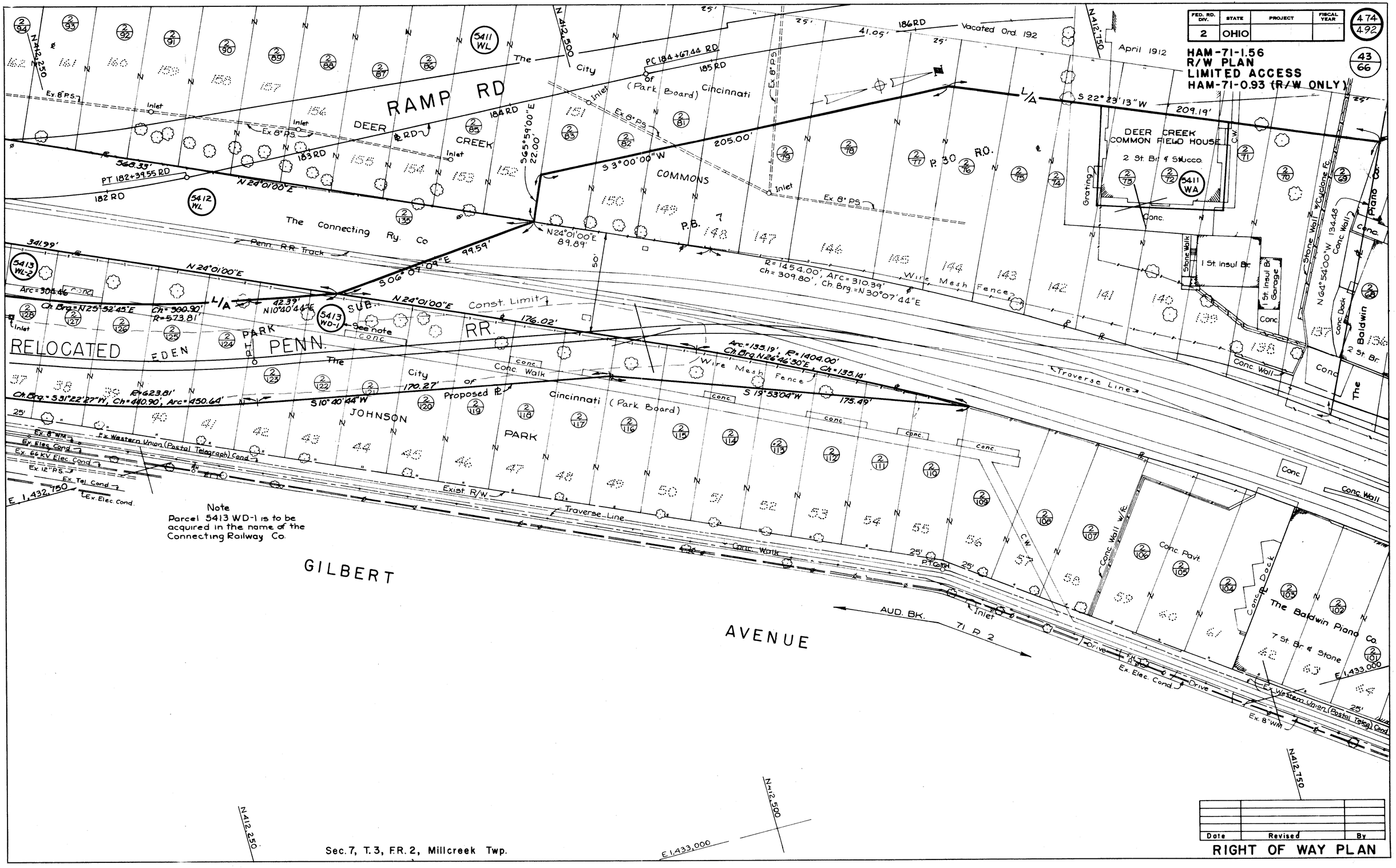

FED. RD. DIV. 2
STATE OHIO
PROJECT
FISCAL YEAR
474
492
43
66
HAM-71-1.56
R/W PLAN
LIMITED ACCESS
HAM-71-0.93 (R/W ONLY)
RAMP RD
DEER CREEK
COMMONS
The City of Cincinnati (Park Board)
The Connecting Ry. Co
Penn. R.R. Track
RELOCATED PENN. RR.
EDEN PARK SUB.
JOHNSON PARK
The City of Cincinnati (Park Board)
Proposed ℄
Const. Limit
Wire Mesh Fence
Traverse Line
Conc. Walk
Conc. Wall
Conc. Pavt.
Conc. Dock
Ex. Western Union (Postal Telegraph) Cond.
Ex. Elec. Cond.
Ex. 66 KV Elec. Cond.
Ex. 12" P.S.
Ex. Tel. Cond.
Exist. R/W
Note
Parcel 5413 WD-1 is to be acquired in the name of the Connecting Railway Co.
GILBERT AVENUE
AUD. BK. 71 P. 2
DEER CREEK COMMON FIELD HOUSE
2 St. Br. & Stucco
1 St. Insul Br.
1 St. Insul Br. Garage
The Baldwin Piano Co.
7 St. Br. & Stone
Stone Wall w/Cyclone Fc.
Vacated Ord. 192
April 1912
Sec. 7, T. 3, F.R. 2, Millcreek Twp.
Date
Revised
By
RIGHT OF WAY PLAN

FED. RD. DIV.	STATE	PROJECT	FISCAL YEAR
2	OHIO		

4.75
492

46
66

HAM-71-1.56
R/W PLAN
LIMITED ACCESS
HAM-71-0.93 (R/W ONLY)

Date	Revised	By

RIGHT OF WAY PLAN

Sec. 7, T. 3, F.R. 2, Millcreek Twp.

FED. RD. DIV.	STATE	PROJECT	FISCAL YEAR
2	OHIO		

476
492

50
66

HAM-71-2.51
R/W PLAN
LIMITED ACCESS
HAM-71-0.93 (R/W ONLY)

READING ROAD
Ex. Tel. Cond.
Ex. 20' WM
Exist. R/W
3803' C.N.
25'
N10°44'00"E 123.30'
121.61'
S 06°26'17"W 121.38'
Constr. Limits
5712A WD
5712A T
6' Conc. Wall
Ex. Sign Board
N 88°35'30"E 505'
150'
Traverse Line
Ex. 6" FBr. 2' 6" Pipe & Wall
Ex. MH
2,060 4 St. Conc.
Blacktop
Conc.
N Conc. Wall
Blacktop
Johnston
The
Paper Co. Inc.
N 414,250
R
2/30
2/207
2/29
American Linen Supply
The Dorst Jewelry Co.
Fas Foto Inc.
2/201
2/32
2/51
191.69
193.10'D
2/33
Ben Levinson et. al.
Moses Marcus et. al.
N 414,000
E 1,432,750
N 10°44'00"E 59.69'
R/W
S 84°15'50"E 47.46'
N 10°51'33"E 33.77'
5716 WD-1
3/171
41.04'
N 25°27'16"E
Ch=155.75', Arc=155.79', R=2258.83
Ch. Brg.=N 27°48'24"E
L/A
8.80'
RA
200 RA
30'
168.48'
220'
5716 WL
N 84°15'50"W
Exist. R/W
11303'
STREET
DES MOINES
Exist. R/W
581.1'
DOVER STREET
RESUME PROJECT HAM-71-2.51 STA. 201+00 N.B.
N05°05'38"W 204.83'
Constr. Limit
N 17°08'58"E 137.12'
R/W
Exist. R/W
5725 WD
Ch. = 213.51', Arc = 213.54'
Ch. Brg. = N 22°50'04"E
R = 3807.20'
Prop. R/W Fence
Albert J. Moyer Jr. et. al.
Heavy Woods
5725 WL
SOUTHBOUND
EXPRESSWAY
S 05°49'10"W 275.19'
Exist R/W
Ex. 21" PB.?
Ex. M.H.
Limestone Curb
Traverse Line
AUD. BK. 90 P2
AUD. BK. 71 P3
Ex. 3" GM.?
S 05°49'10"W 190'
Exist R/W
Ex. M.H.
Ch. Lk. Fence
W.V. Box
F.H.
Picket Fence
Exist R/W
C.W.
Wire Fence
Stone Wall
Phil Warfel et al
5733 WL
3/109
3/110
3/111
3/112
3/113
3/114
3/115
5735 WL
Mary W. Coles et al.
Ben Levinson et. al.
202 N.B.
N414,250
Ex. 18" RCP
Ex. 12" RCP
Ex. 6" W.M.
Ex. G.W.M.
Sign
Ex. M.H.
Ex. 18" PB.?
W.V. Box
F.H.
Limestone Curb
Ch. Lk. Fence
Picket Fence
Concr. Wall
Conc. Blk. Wall
Ex. G.W.M.
Traverse Line
(No Curbs)
Ex. 12" P.S.
Ex. 6" W.M.
Ex. 12" P.S.
Ex. 6" W.M.
Ex. 8" P.S.
C.W.
Ex. M.H.
Ex. 18" P.S.
Ex. G.W.M.
Sign
Ex. 3" G.M.
Ex. 18" PB.?
Ex. M.H.

FED. RD. DIV.	STATE	PROJECT	FISCAL YEAR
2	OHIO		

477
492

51
66

HAM-71-2.51
R/W PLAN
LIMITED ACCESS
HAM-71-0.93 (R/W ONLY)

STREET

SYMMES

AUD. BK. 71 P. 3

AUD. BK. 90 P. 2

Const. Limits

AUD. BK. 71 P.3

Limestone Curb

Ex. 21"PS

Ex. R/W

Ex. MH

Ex. W.M.

Traverse Line

Ex. 3"GM

Ex. 6"WM

Ex. 3"GM

Ex. 4"WM

Ex. 4"GM

Ex. 24"PS

Ex. 18"PS

Ex. Tel. M.H.

Ex. Tel. Cond.

Ex. Tel. Cond. Pav't (No Curbs)

Ex. 3' Stone S.

Ex. 3.5"BS

Ex. 4.8"BS

Ex. 3"WM

Ex. 3"GM

Ex. 20"WM

Ex. 8

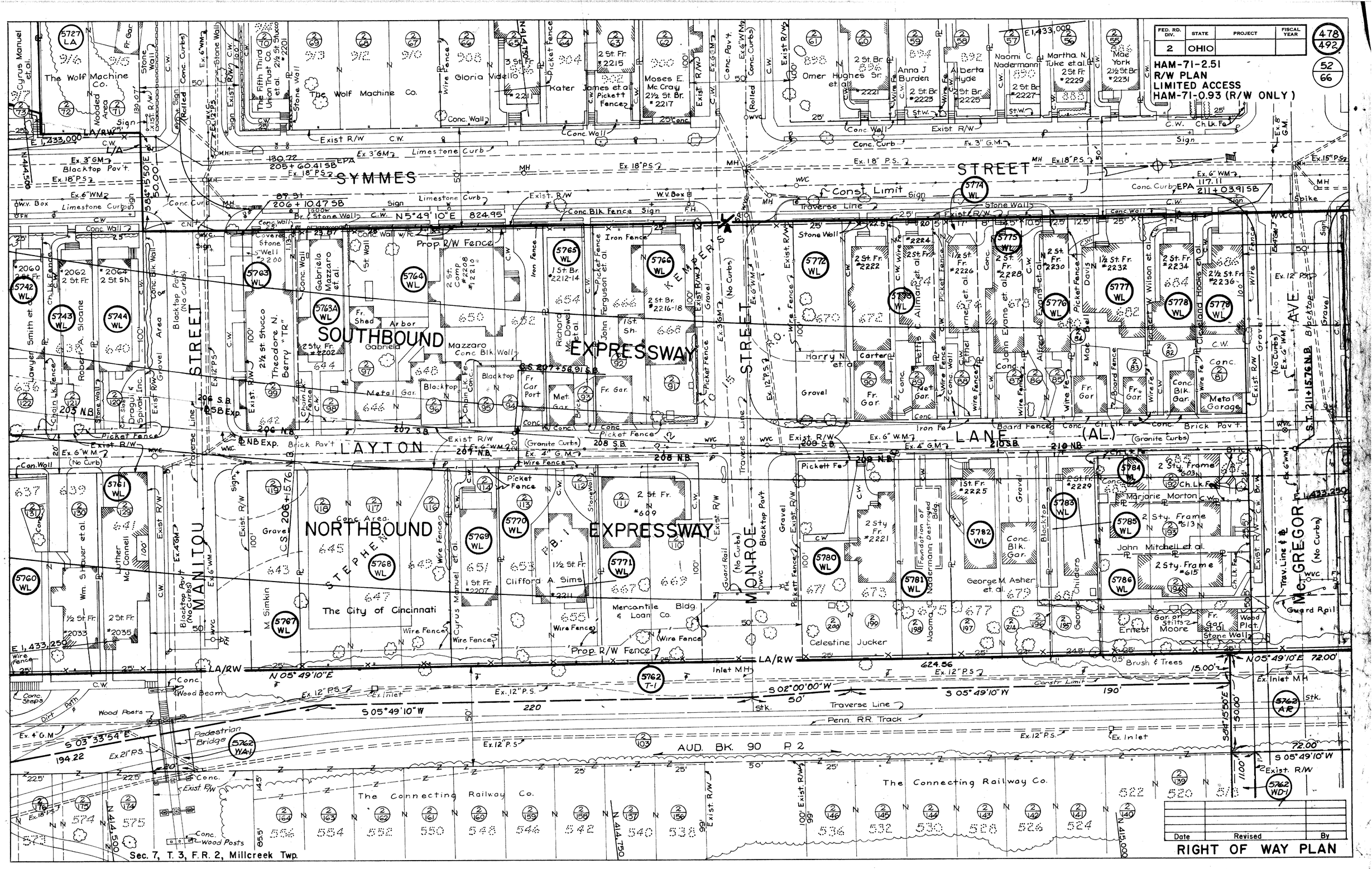

FED. RD. DIV. 2
STATE OHIO
PROJECT
FISCAL YEAR
478/492
52/66
HAM-71-2.51
R/W PLAN
LIMITED ACCESS
HAM-71-0.93 (R/W ONLY)
SYMMES STREET
SOUTHBOUND EXPRESSWAY
NORTHBOUND EXPRESSWAY
LAYTON LANE (AL.)
MANITOU STREET
MONROE STREET
McGREGOR AVE.
The Wolf Machine Co.
The City of Cincinnati
The Connecting Railway Co.
AUD. BK. 90 P. 2
Sec. 7, T. 3, F.R. 2, Millcreek Twp.
Date
Revised
By
RIGHT OF WAY PLAN

FED. RD. DIV.	STATE	PROJECT	FISCAL YEAR
2	OHIO		

479
492

53
66

HAM-71-2.51
R/W PLAN
LIMITED ACCESS
HAM-71-0.93 (R/W ONLY)

N.415,250

E.1,433,500

E.1,433,250

N 145,250

S.B. EXPRESSWAY
ST 212+56.91 SB=
POT 212+25.03 NB

N.B. EXPRESSWAY

Prop. R/W Fence

Ex. R/W

Exp. 1

213 NB

Prop. R/W Fence

12.5' x 1 LA/RW

N05°19'10"E

Constr. Limit

1054'

50'

S05°49'10"W

1124.74'

15.00'

1100'

72.00'

50.00'

N05°49'10"E

S05°49'10"W

N05°49'55"E

S05°49'55"W

400'

S05°50'40"W

800'

N05°50'40"E

1100'

N05°49'55"E

S05°49'55"W

1100'

N05°49'10"E

S05°49'10"W

632'

190'

24.5'

0.3'

1100'

50.00'

50.00'

50.00

FED. RD. DIV.	STATE	PROJECT	FISCAL YEAR
2	OHIO		

480 / 492

54 / 66

N415,250 — HAM-71-2.51
R/W PLAN
LIMITED ACCESS
HAM-71-0.93 (R/W ONLY)

E1,433,750

E1,434,000

N415,250

N 415,000

N 415,000

5807 WD-2 — 5807 T — 4.86' — 38.14' — Ex. R/W — 41.49' — 7.98' — Ex R/W
R=9', Arc=4.55'
Ch. Brg=S53°58'39"W
Ch=4.51
R=9', Arc=9.84'
Ch. Brg=S37°09'11"W
Ch.=9.36'

The City of Cincinnati
336 STEPHEN KEMPER'S SUB
Norbert J Giver (S89°34E-RL)
S84°15'50"E 10.00
Woods (N34°47'19"E-RL) N34°47'E 53.30
(N0°32'E-RL) N5°50'10"E-6.00
R.L. 334 #2300
Stone Foundation 332
60.00' 100' 40.00'
5799 SL
5799 T
N84°15'50"W (N89°34'W-RL)
McGREGOR AUD BK. 68 P.2 AUD BK. 69 P.1
Picket Fence
5798 T
Bk 'tp Dr. Picket Fe
Fr. Gar.
St. Wall
Ex. R/W
S84°15'50"E 66.28'
34.00'
N84°15'50"W 31.28'
2 St. Fr. #2238
N05°50'40"E 5.00'
Reid Jerrels etal
5798 SL
N84°15'50"W 15.00'
328 The Walnut Hills Savings & Loan Co.
5797 SL
Oliver W. Hardin
326 STEPHEN KEMPER'S
324
BOONE
PRESLEY
Ex. 18" P.S.
Ex. 15" P.S.
Ex. 4" G.M.
Ex. 6" W.M.
C.W.
Ex. M.H.
W.V. Box
Limestone Curbs
Bit. Macadam Pav't
Traverse Line
Spike
Fence
Constr. Limit

5802 T — Fred Hockney et. al. — S84°15'50"E 55.00' — S57°41'50"E 20.12' — N84°15'50"W 73.00' — St. Wall — N05°50'10"E 9.00' — 25'
Nancy Shank Arnn
5801 WD
335 KEMPER'S SUB
333
Conc. Blk. 1 St. Fr. #2303
Conc. Wall
Conc. Ramp
Ex. R/W 100'
Jack Kennedy et.al.
331
1 St. Fr. #2227
329
OTHERS SUB
5800 WD
Conc. Drive
1 St. Fr. Shed
N05°49'55"E 8.00'
S05°49'55"W 25.00'
N84°15'50"W 25.00'
S84°15'50"E 21.85'
20.24'
327
Constr. Limit
Fence
Ex. 15" P.S.
Ex. 6" W.M.
Traverse Line
Ex. R/W
Conc.
Curb

Owen Rivers et.al.
2 St. Fr.
250
P.B.I —
St. Wall
252
5804 WD
1½ St. Fr. #2302
254
Constr. Limit
Anthony DeNuccio
Ex. R/W 100'
AVE.
Traverse Line
5803 T
5803 WD
Stone Wall
S05°11"E
S84°15'50"E
N05°49'10"E 3.00'
N84°15'50"W 45.00'
2½ St. Fr. #2230
N84°15'50"W 5.00'
Floyd Black et.al.
Conc.
256
N05°49'10"E 4.00'
5803 WA
Delphy J. Wiehold
258
PBI-MZ TO IS-RC
Albert Lee et.al.
260
Arc=9.87, R=9', Ch.=9.38'
Ch. Brg.=S25°34'51"E
MAY
CRANSTON
Ex. 18" P.S.
Conc. Rolled Curbs
Pav't
Ex. 1/4" G.M.
Limestone Curbs
Brick

251
P.I2. To I5 R.Q.
253 Craig Belcher et.al.
5808 WD
Ex. 12" P.S.
25' Stone Wall
1st. Br. Gar.
255
2½ St Fr. #2301
Willie A. Westbrooks
Stone Wall
Bitum. Macadam.
Ex. 6" W.M.
W.V. Box
Blacktop Over Brick. Pav't (Granite Curbs)
5.04'
46.75'
S84°15'50"E
2½ St. Fr. #2231
41.49'
257
Aldon A. Mc Leod
5807 T
5807 WD-1
R=30'
Arc=13.17, R=25'
Ch=13.01', Ch.Brg.N46°06'14"W
5807 WD-2
Anna Harris
259
261
Mary S. Rhoades
KENTON
Ex. 12" G.M.
Ex. 12" P.S.
S05°51'10"W
N05°50'10"E
S05°50'10"W 3.00'
38.14'
10.25'
8.04'
7.98'
1.98'
4.83'
8.02'
Ex. R/W
C.W.
Traverse Line
Ex. 4" W.M.
W.V. Box
Ex. M.H.
Spike
Cond.

Sec. 7. T 3. F.R. 2 Millcreek Twp.

E1,433,750

E1,434,000

Date	Revised	By

RIGHT OF WAY PLAN

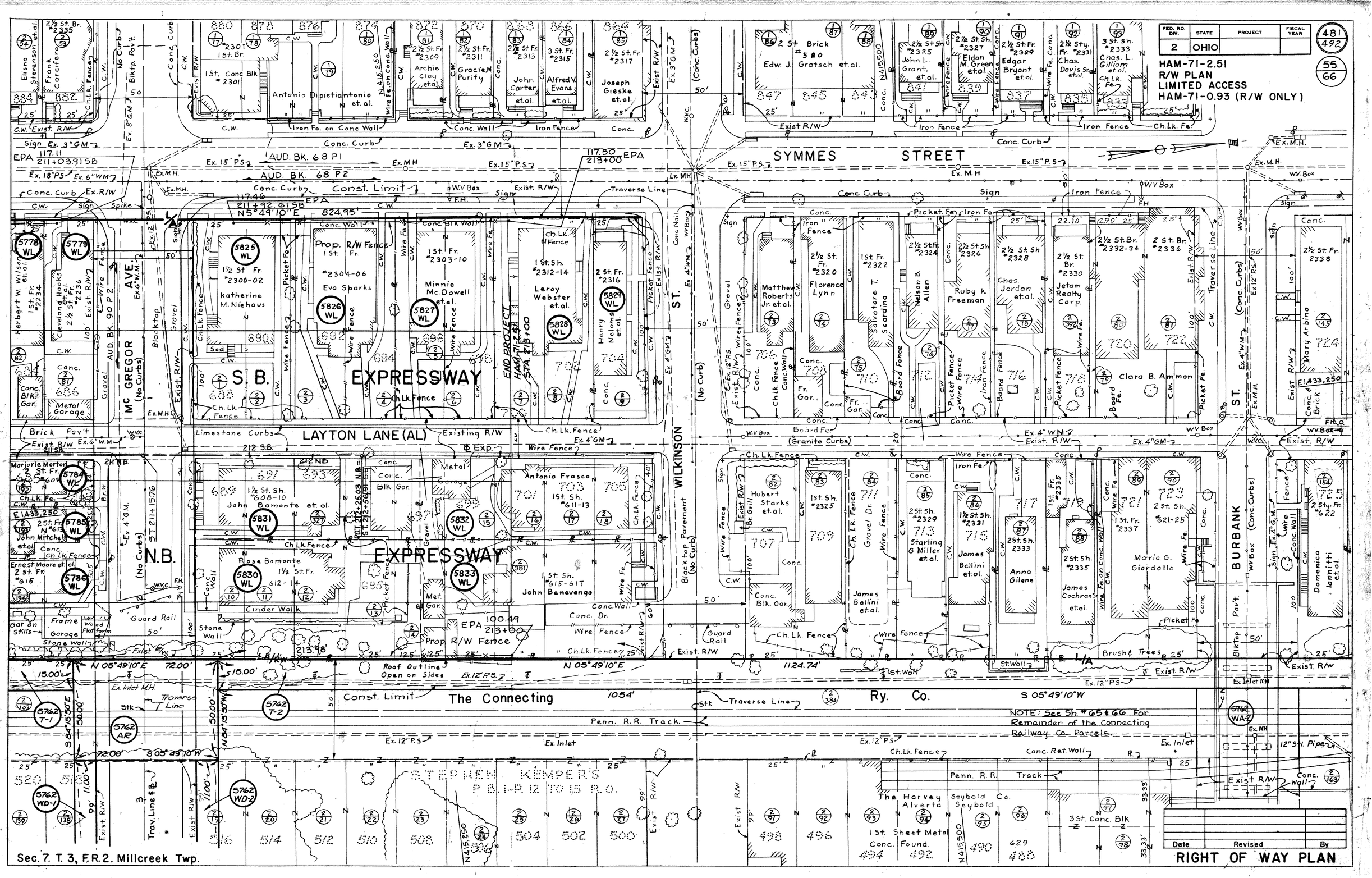
FED. RD. DIV. 2
STATE OHIO
PROJECT
FISCAL YEAR
481/492
55/66
HAM-71-2.51
R/W PLAN
LIMITED ACCESS
HAM-71-0.93 (R/W ONLY)
SYMMES STREET
S. B. EXPRESSWAY
N. B. EXPRESSWAY
LAYTON LANE (AL)
WILKINSON ST.
BURBANK ST.
McGREGOR AVE.
The Connecting Ry. Co.
STEPHEN KEMPER'S
P.B. 1-P. 12 TO 15 R.O.
NOTE: See Sh. #65 & 66 For Remainder of the Connecting Railway Co. Parcels.
Sec. 7. T. 3, F.R. 2. Millcreek Twp.
Date
Revised
By
RIGHT OF WAY PLAN

FED. RD. DIV.	STATE	PROJECT	FISCAL YEAR
2	OHIO		

482/492

HAM-71-1.56
R/W PLAN
LIMITED ACCESS
HAM-71-0.93 (R/W ONLY)

56/66

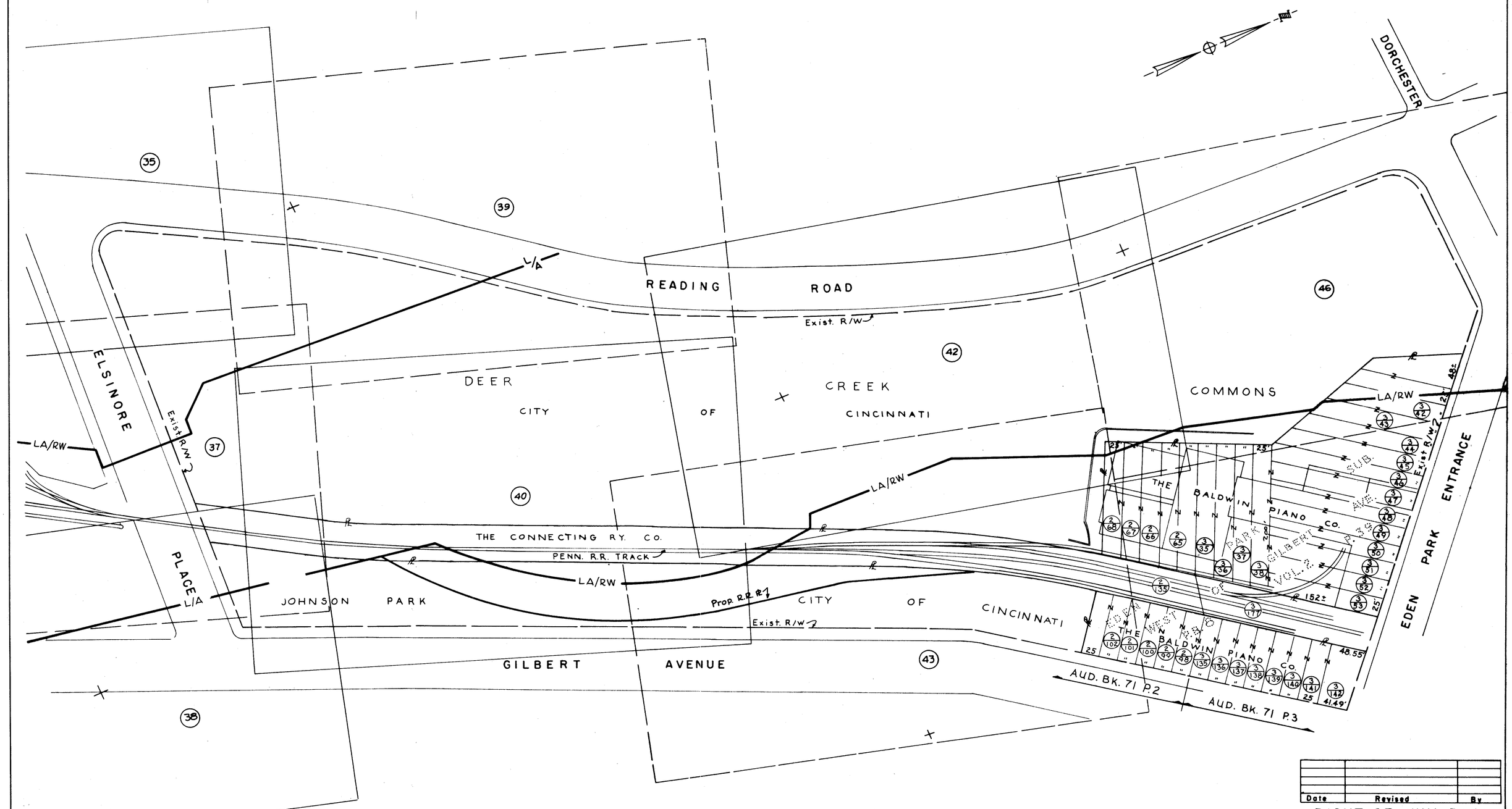

Date	Revised	By

Sec. 7, T.3, F.R. 2, Millcreek Twp.

RIGHT OF WAY PLAN

FED. RD. DIV.	STATE	PROJECT	FISCAL YEAR
2	OHIO		

483/492

57/66

HAM-71-1.56
R/W PLAN
LIMITED ACCESS
HAM-71-0.93 (R/W ONLY)

PROPERTY PLAT
THE CONNECTING RAILWAY CO.—BASE FEE OWNER
THE PENNSYLVANIA RAILROAD CO.-LESSEE

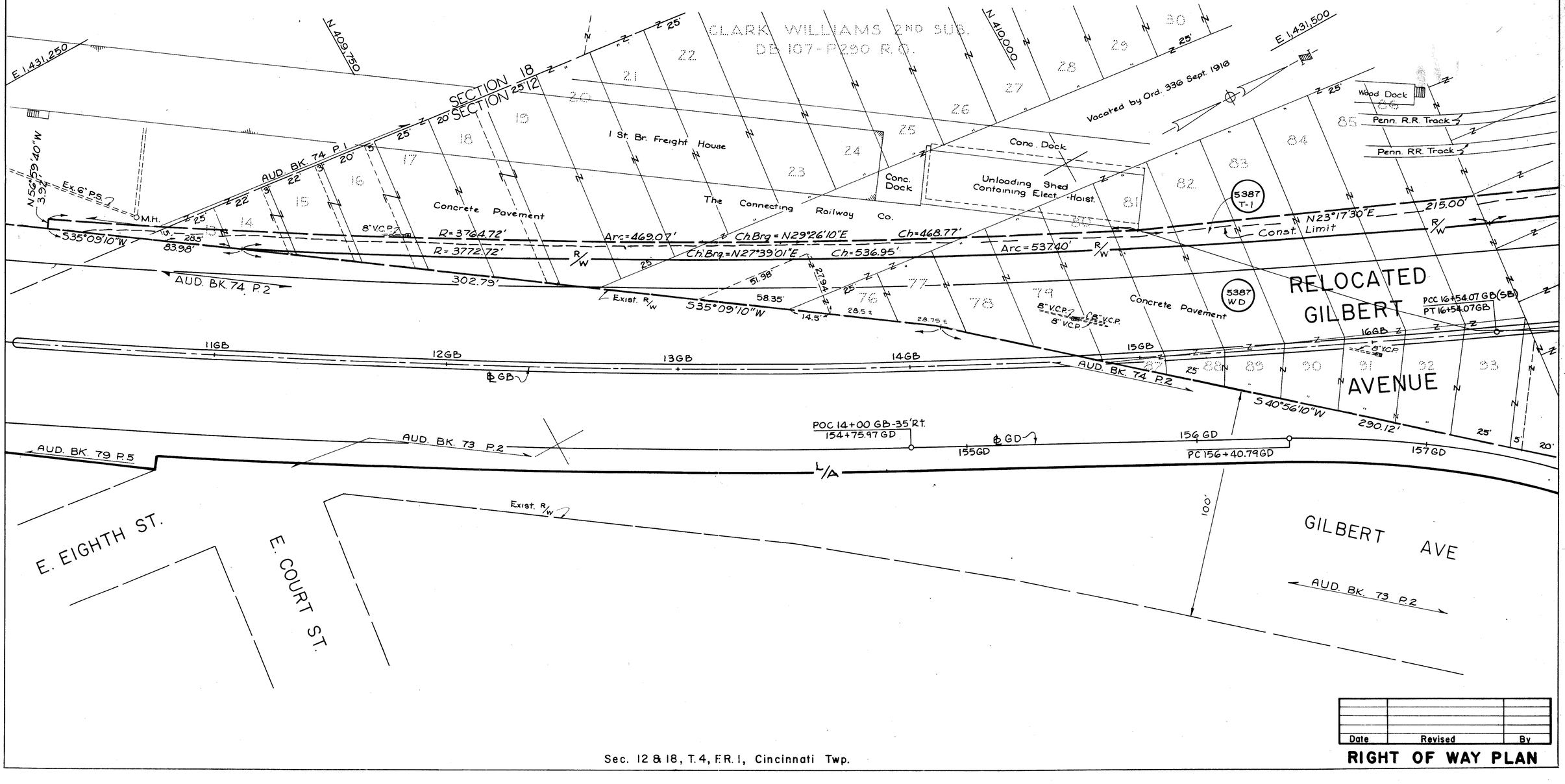

Date	Revised	By

RIGHT OF WAY PLAN

Sec. 12 & 18, T. 4, F.R. 1, Cincinnati Twp.

FED. RD. DIV.	STATE	PROJECT	FISCAL YEAR
2	OHIO		

484/492

58/66

HAM-71-1.56
R/W PLAN
LIMITED ACCESS
HAM-71-0.93 (R/W ONLY)

PROPERTY PLAT
THE CONNECTING RAILWAY CO.— BASE FEE OWNER
THE PENNSYLVANIA RAILROAD CO.-LESSEE

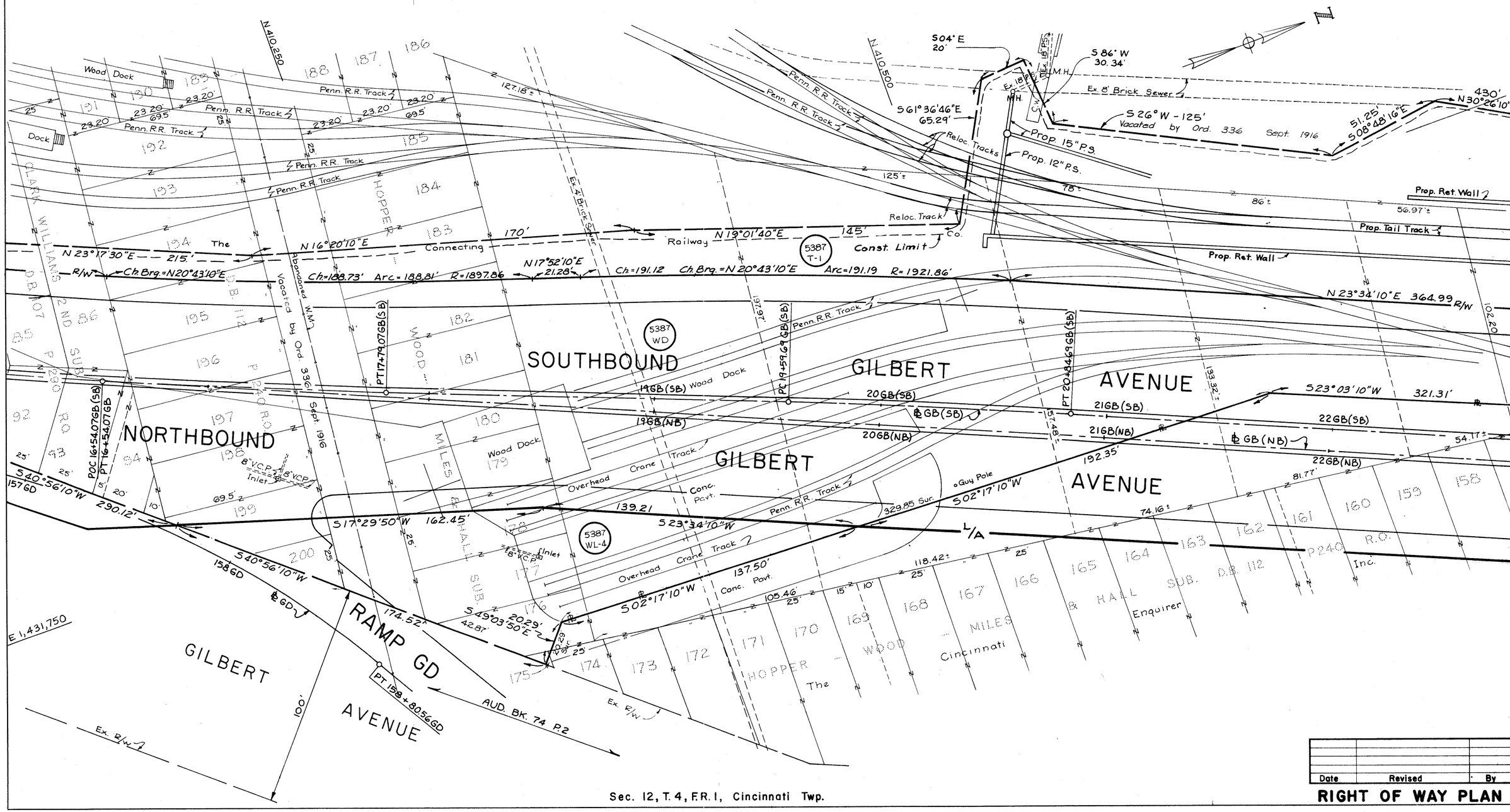

Sec. 12, T. 4, F.R. 1, Cincinnati Twp.

Date	Revised	By

RIGHT OF WAY PLAN

PROPERTY PLAT
THE CONNECTING RAILWAY CO.— BASE FEE OWNER
THE PENNSYLVANIA RAILROAD CO.- LESSEE

FED. RD. DIV.	STATE	PROJECT	FISCAL YEAR
2	OHIO	-	

485/492

HAM -71-1.56
R/W PLAN
LIMITED ACCESS
HAM-71-0.93 (R/W ONLY)

59/66

INSERT "A"

Penn. R.R. Tracks

Match Line - See Sh. No. 60

The Connecting Railway Co.

N 411,250

N 411,000

1½ St. Conc. Block Warehouse

Ex. 15" P.S.

M.H. (Covered)

Ex. 24" P.S.

Vacated by Ord.

Ex. 8" Brick Sewer

Ex. 48" Br. S.

336 Sept. 1916

Penn. R.R. Track

Penn. R.R. Track

E 1,432,000

N 410,790

℄ Const. Limit

N 30° 26' 10" E 430'

Co. SUB.

Relocated Tracks

Prop. Ret. Wall

Railway

Penn. R.R. Track

N 30° 26' 10" E

Prop. Tail Track

91.41'

Connecting

The

Prop. Ret. Wall

Begin Ramp GA PC 166+36.76 GA 24+19.75 GB(SB) 46 Lt.

5387 T-1

N 23° 34' 10" E 364.99'

Ch. Brg = N 24° 49' 34" E, Ch. = 168.05, Arc = 168.06, R = 3831.72'

R/N

N 26° 04' 57" E 74.00'

M.H.

Ex. 18" V.C.P.

167 GA

PT 168+04.24 GA

5387 WD

S 23° 03' 10" W 321.31'

321.31' Sur.

PC 24+19.75 GB(SB)

23 GB(SB)

24 GB(SB)

25 GB(SB)

125' Sur.

S 23° 03' 10" W 125.00' R/

N 66° 56' 50" W 25.00'

Inlet

3" Drain

26 GB(NB)

23 GB(NB)

24 GB(NB)

PC 24+47.60 GB(NB)

Br. Macadam Pav't.

HOPPER

WOOD

NORTHBOUND

SOUTHBOUND

ENQUIRER PAPER WAREHOUSE

1 St. Conc. Mezz. #1125

L/A

Aband. 4" W.M.

24" + 14" Conc. Drains

P. 240

The Cincinnati Enquirer R.L. D.B. 112 Inc.

E 1,432,000

Ex. R/W

GILBERT AVE

Sec. 12, T. 4, F.R. 1, Cincinnati Twp.

N 66° 56' 50" W 69.02' Sur.

N 40° 11' 45" W 60.90'

Vac. by Ord. 373 1954

S 00° 42' 40" W 5.08'

Ord 383 1954

Vacated L/A

49.08' 84.08' LA/RW

N 63° 55' 03" W 35.00'

HALL

RAMP GA

169 GA ℄ GA

170 GA

5387 WL-1

Ord. 336 Sept. 1916

GILBERT AVE

27 GB(SB)

27 GB(NB)

℄ GB(NB) ℄ GB(SB)

Penn. R.R. Track

Ex. R/W

The Connecting Railway Co.

L.O. S 81° 56' 50" E 25.04'

5387 WL-3

S 10° 30' 10" W 275.34'

L.O. S 81° 56' 50" E 75.12'

5387 WL-2

St. Wall

James Merritt et. al.

Edythe Lutchin

Spur Realty Co. of Ohio

Mary E. Salzer

Spur Realty Co. of Ohio

David E. Ulland

Mildred Wessinger

R.L.

Fr.

Barn

E 1,432,250

255.88' LA/RW

405.98' S 31° 20' 40" W

23.15' S 86° 29' 20" E

10.18' S 23° 03' 10" W

54.09' S 81° 56' 50" E

SECTION 12

Nathan

Lerman

AUD. BK. 71 PG. 1

AUD BK. 74 PG. 3

Date	Revised	By

RIGHT OF WAY PLAN

PROPERTY PLAT
THE CONNECTING RAILWAY CO.— BASE FEE OWNER
THE PENNSYLVANIA RAILROAD CO.- LESSEE

FED. RD. DIV.	STATE	PROJECT	FISCAL YEAR
2	OHIO		

486/492

60/66

HAM-71-1.56
R/W PLAN
LIMITED ACCESS
HAM-71-0.93 (R/W ONLY)

Note
Parcels 5396 WD & 5397 WD are to be acquired in the name of the Connecting Railway Co. except that sewer easement 5397 S is to be reserved in the name of the City of Cincinnati

See Insert "A" - Sh. No. 59 Match Line

1 St. Insul. Br.

Marvin Realty Co.

E 1,432.000

N 411,500

S 84°42'20"E 282.71'

Area Conc.

3. St. Br. & Conc.

Leblond Realty Co.

198.03'

N05°25'19"E 702

See note on Summary Sh.

5397 T-1

5397 T-2

N 31°16'08"W 57.04'

S 86°29'20"E 50'

1 Sty. Br.

60' 129.45' 50'

N 84°42'20"W 75.45'

Penn RR Track

Conc Dock

SEE NOTE

5396 WD

5397 WD

N 27°30'00"E 85.56'

N23°57'05"E 70.17'

58.04'

Ex. 18" P.S.

Ex. 8" Brick Sewer

Ex. 4" Brick Sewer

Ex. Tel Cond.

Penn RR Track

S 65°36'40"W 65.49'

Ex. 12" P.S.

N 8°30'00"E 7.91'

Ex. Elec. Cond.

Conc Pavt.

Vacated Ex. 10" P.S.

Drain

Ex. 10" P.S.

Ch Brg = S 6°12'00"W
Ch = 47.72'
Arc = 47.72'
R = 316.21'

5387 WA

Conc. M.H.

Tel. M.H.

Penn. R.R.

LA/RW

Penn. R.R. Track

Track

N 7°04'20"W 75.45'

Ch Brg = S 5°57'20"W
Arc = 12.14'
Ch = 12.14'
R = 316.21'

S 69°00'00"W 95'

PROP. DRIVEWAY

5397 S

LA/RW N18°40'00"E 125.82'

Prop. Sewers

5397 WL

S 47°31'22"W 17.16'

Drain

S 30°21'40"W 24.28'

S 37°27'40"W 92.00'

Ex. 12" P.S.

Tel. MH.

Meter Box

R.R. Sig.

Inlet

N30°26'10"E 255.88'

N18°40'00"E 188.04'

Prop. R/W Fence

5387 WL-1

PC 171+63.85 GA

173 GA

The Connecting Railway Co.

172 GA

Wood Ret. Wall

S 31°20'40"W 405.98'

Conc. Wall

Wire Fence

Fr. Shed

2 St. Br.

Drain

H. Dennert Distributing Co.

15' Shingle

PCC 174+15.25 RB

PT 174+15.25 RB

80.80

55.67

G 5.76

PROP. RELOCATED PENN. R.R. TRACK

Ex. 8" Diam Sewer

Ex. 7.6 Diam Sewer

Ex. 8" P.S.

Ex. 4" Br. Sewer

Ex. 8" Brick Sewer

Ex. 8" Diam Sewer

Vacated Ord. 192 April 1912

ELSINORE

Exist R/W

N 411,750

Const. Limit

L/A

COMMONS

Cincinnati (Park Board)

178 GA

El. 1,432.250

DEER CREEK

177 GA

PT 175+45.78 GA

41.86

25'

EXPRESSWAY

SUB. PARK

178 179 180 181 182 183 184

80.0'

City

Wire Fence

N 32°36'00"E 179.82

5412 WL

The Connecting Railway Co.

177 NB

PT 175+81.09 SB

N 06°29'20"W 52.22'

50'

RR Sig. Box

PT

S 32°36'00"W 152.00'

EXPRESSWAY

PROP TEMP RUNAROUND FOR PENN RR.

BEGIN TEMP RUNAROUND

PLACE

72.03'

Conc.

5' CW

Fountain

City of Cincinnati (Park Board)

LA/RW

JOHNSON PARK

El. 1,432.500

51.41'

Exist R/W

L/A

SECTION 12 SECTION 7

AUD. BK. 7

EDEN PARK SUB. 1 2 3 4 5 6 7 8 9 10 11 12 13 14 15 16

P.B. VOL. 2 P. 39 R.O.

2 St. Br.

Exist R/W

P.S.

Nathan Lerman

SOUTHBOUND

RELOCATED GILBERT AVE.

29 GB

173 RB

173 SB

Elmer C. Decker et al.

PCC 173+31.09 SB

PCC 173+81.09 SB

173 RB

174 RB

174 SB

℄ RB

℄ NB Exp.

174 NB

PT 173+69.85 NB

℄ SB

PCC 172+69.85 NB

173 NB

Helen A. Patterson et. al.

NORTHBOUND

175 NB

Exist R/W

141.41'

L/A

Sec. 7, T. 3, F.R. 2, Millcreek Twp.

Date	Revised	By

RIGHT OF WAY PLAN

PROPERTY PLAT
THE CONNECTING RAILWAY CO.— BASE FEE OWNER
THE PENNSYLVANIA RAILROAD CO.- LESSEE

FED. RD. DIV.	STATE	PROJECT	FISCAL YEAR
2	OHIO		

48T 492

61 66

HAM-71-1.56
R/W PLAN
LIMITED ACCESS
HAM-71-0.93 (R/W ONLY)

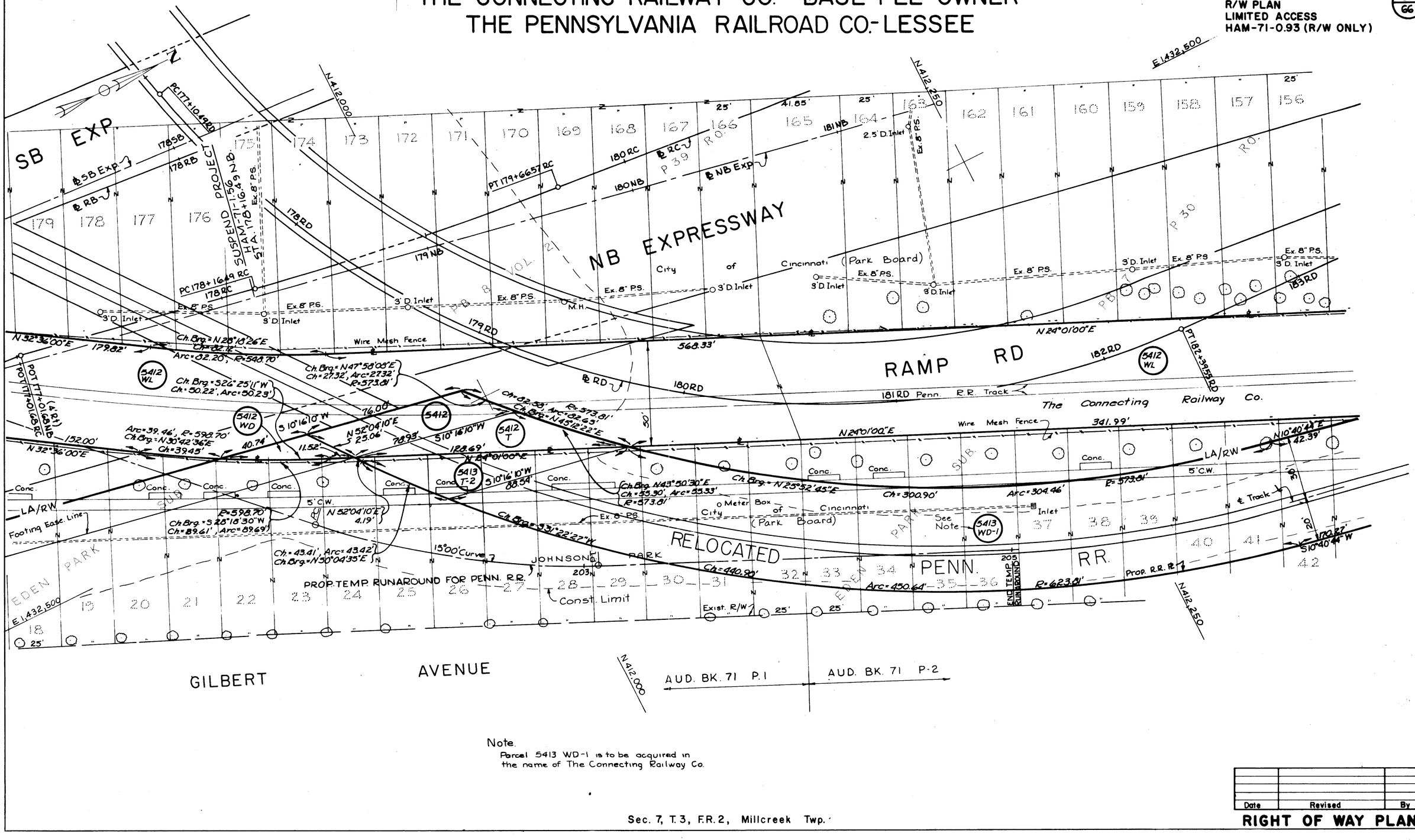

Note.
Parcel 5413 WD-1 is to be acquired in the name of The Connecting Railway Co.

Sec. 7, T. 3, F.R. 2, Millcreek Twp.

Date	Revised	By

RIGHT OF WAY PLAN

PROPERTY PLAT
THE CONNECTING RAILWAY CO.— BASE FEE OWNER
THE PENNSYLVANIA RAILROAD CO. LESSEE

FED. RD. DIV.	STATE	PROJECT	FISCAL YEAR
2	OHIO		

4.88 / 4.92

62 / 66

HAM-71-1.56
R/W PLAN
LIMITED ACCESS
HAM-71-0.93 (R/W ONLY)

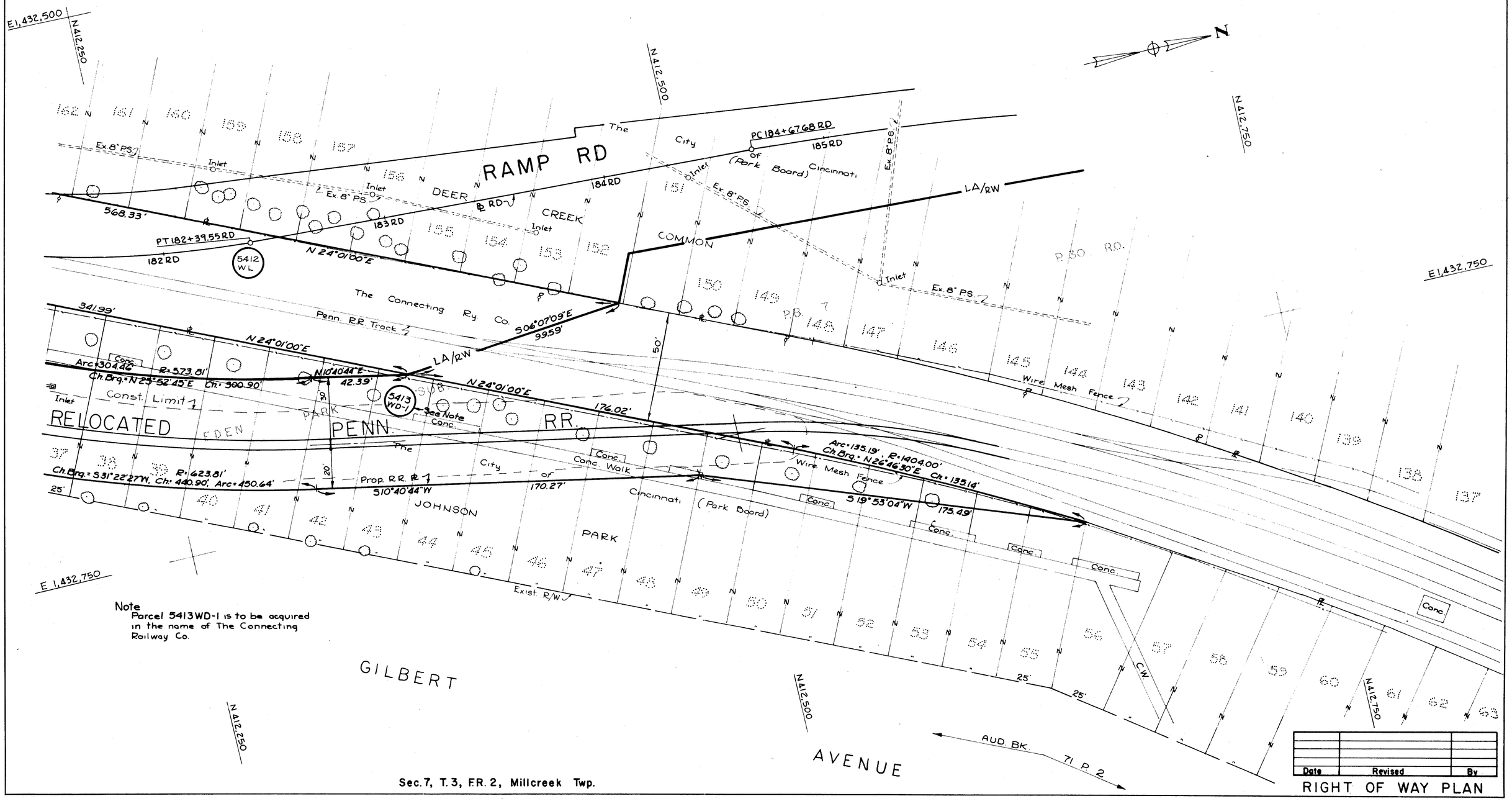

Note
Parcel 5413WD-1 is to be acquired in the name of The Connecting Railway Co.

Sec. 7, T. 3, F.R. 2, Millcreek Twp.

Date	Revised	By

RIGHT OF WAY PLAN

FED. RD. DIV.	STATE	PROJECT	FISCAL YEAR
2	OHIO		

489
492

63
66

HAM-71-2.51
R/W PLAN
LIMITED ACCESS
HAM-71-0.93 (R/W ONLY)

PROPERTY PLAT
THE CONNECTING RAILWAY CO. — BASE FEE OWNER
THE PENNSYLVANIA RAILROAD CO.- LESSEE

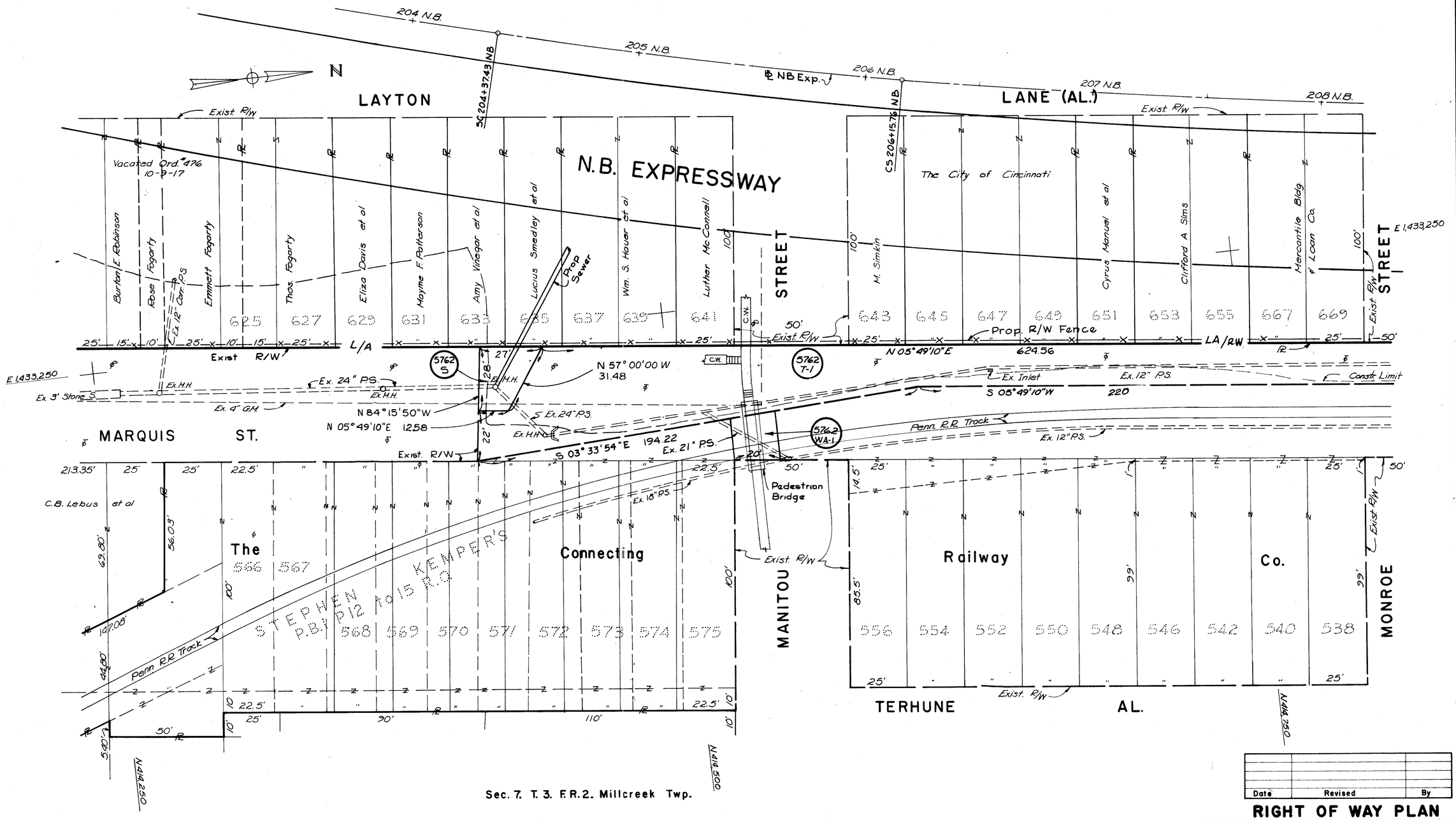

Sec. 7. T. 3. F.R. 2. Millcreek Twp.

Date	Revised	By

RIGHT OF WAY PLAN

PROPERTY PLAT
THE CONNECTING RAILWAY CO.— BASE FEE OWNER
THE PENNSYLVANIA RAILROAD CO.-LESSEE

FED. RD. DIV.	STATE	PROJECT	FISCAL YEAR
2	OHIO		

490/492

64/66

HAM-71-2.51
R/W PLAN
LIMITED ACCESS
HAM-71-0.93 (R/W ONLY)

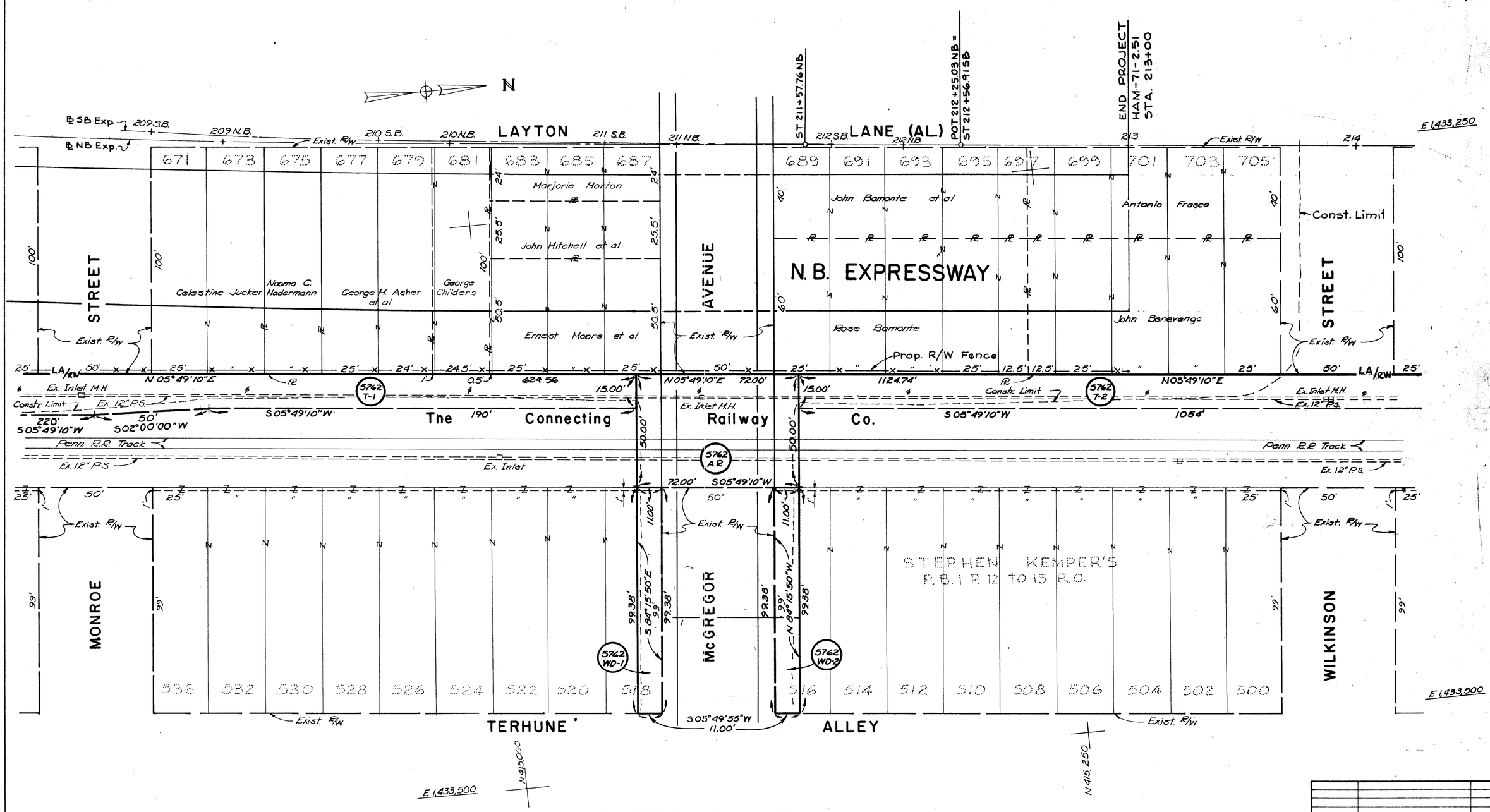

Sec. 7. T. 3. F. R. 2. Millcreek Twp.

Date	Revised	By

RIGHT OF WAY PLAN

PROPERTY PLAT
THE CONNECTING RAILWAY CO.— BASE FEE OWNER
THE PENNSYLVANIA RAILROAD CO.-LESSEE

FED. RD. DIV.	STATE	PROJECT	FISCAL YEAR
2	OHIO		

491
492

65
66

HAM-71-2.51
R/W PLAN
LIMITED ACCESS
HAM-71-0.93 (R/W ONLY)

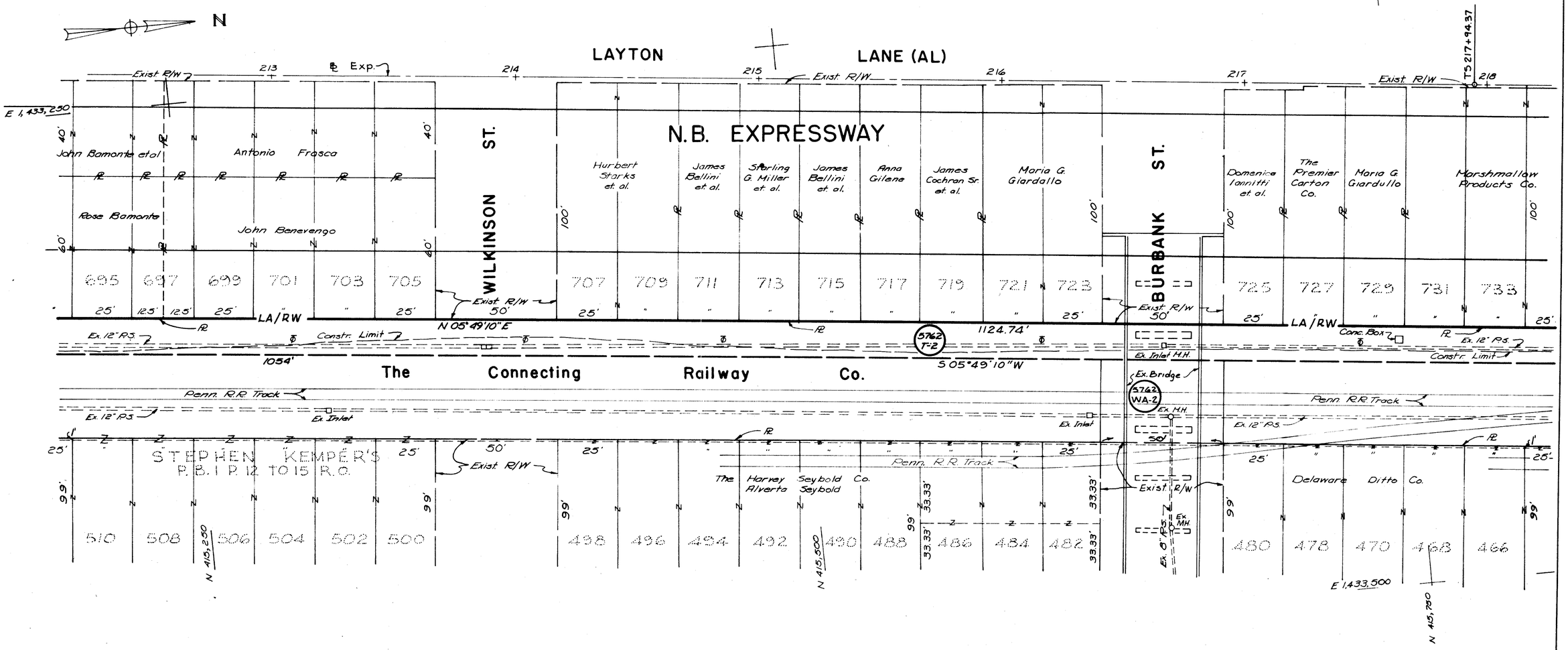

Sec. 7. T. 3. F.R. 2. Millcreek Twp.

Date	Revised	By

RIGHT OF WAY PLAN

PROPERTY PLAT
THE CONNECTING RAILWAY CO.– BASE FEE OWNER
THE PENNSYLVANIA RAILROAD CO.-LESSEE

FED. RD. DIV.	STATE	PROJECT	FISCAL YEAR
2	OHIO		

492/492

66/66

HAM-71-2.51
R/W PLAN
LIMITED ACCESS
HAM-71-0.93 (R/W ONLY)

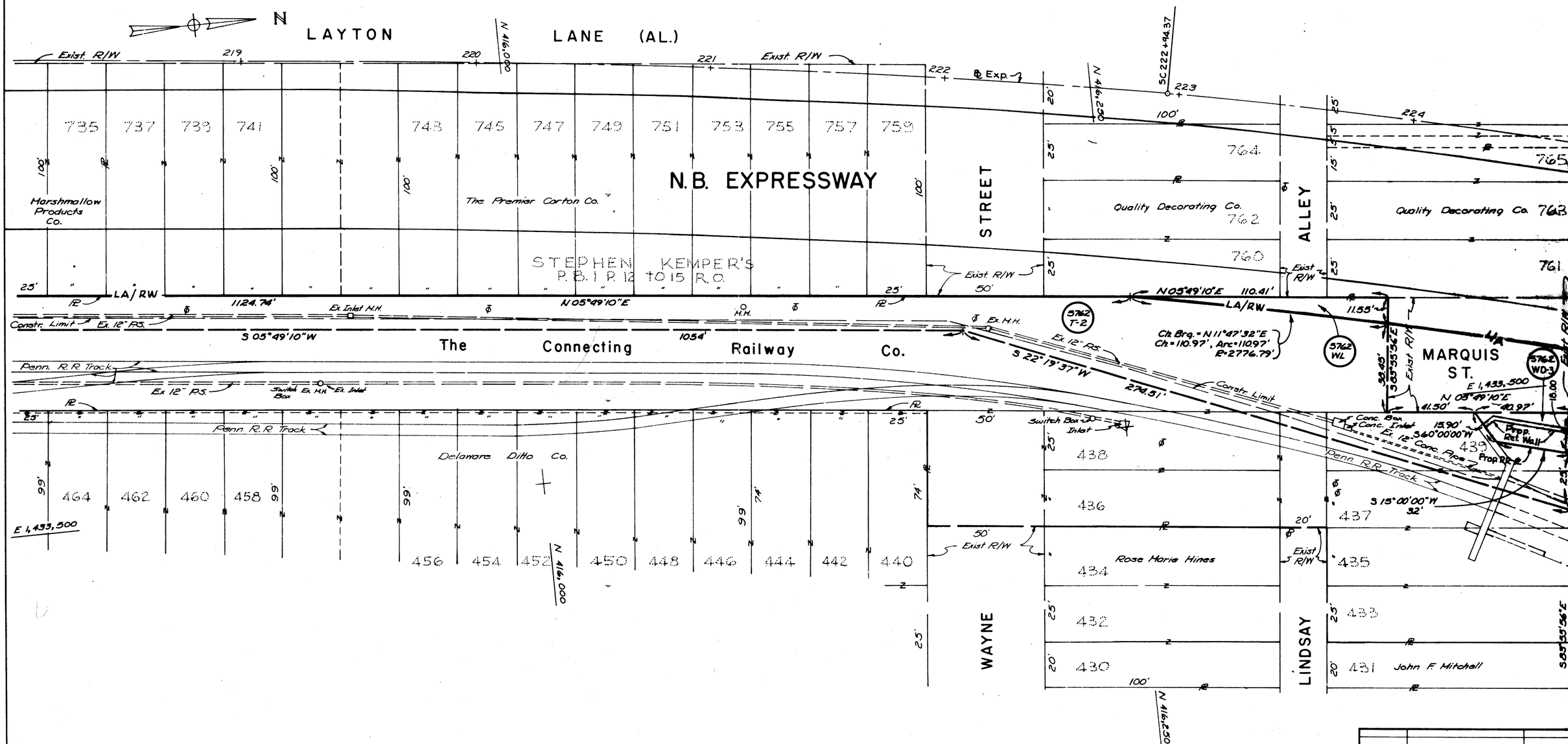

Sec. 7. T. 3. F.R. 2. Millcreek Twp.

Date	Revised	By

RIGHT OF WAY PLAN

FED. RD. DIV.	STATE	PROJECT	FISCAL YEAR
2	OHIO		

1/20

HAMILTON COUNTY
HAM-71-(1.56), (2.51)

Black 205 I-20

Note: Information shown by this subgrade profile was obtained solely for use in establishing design controls for the project. The State of Ohio does not guarantee the accuracy of this data and it is not to be construed as a part of the plans governing construction of the project.

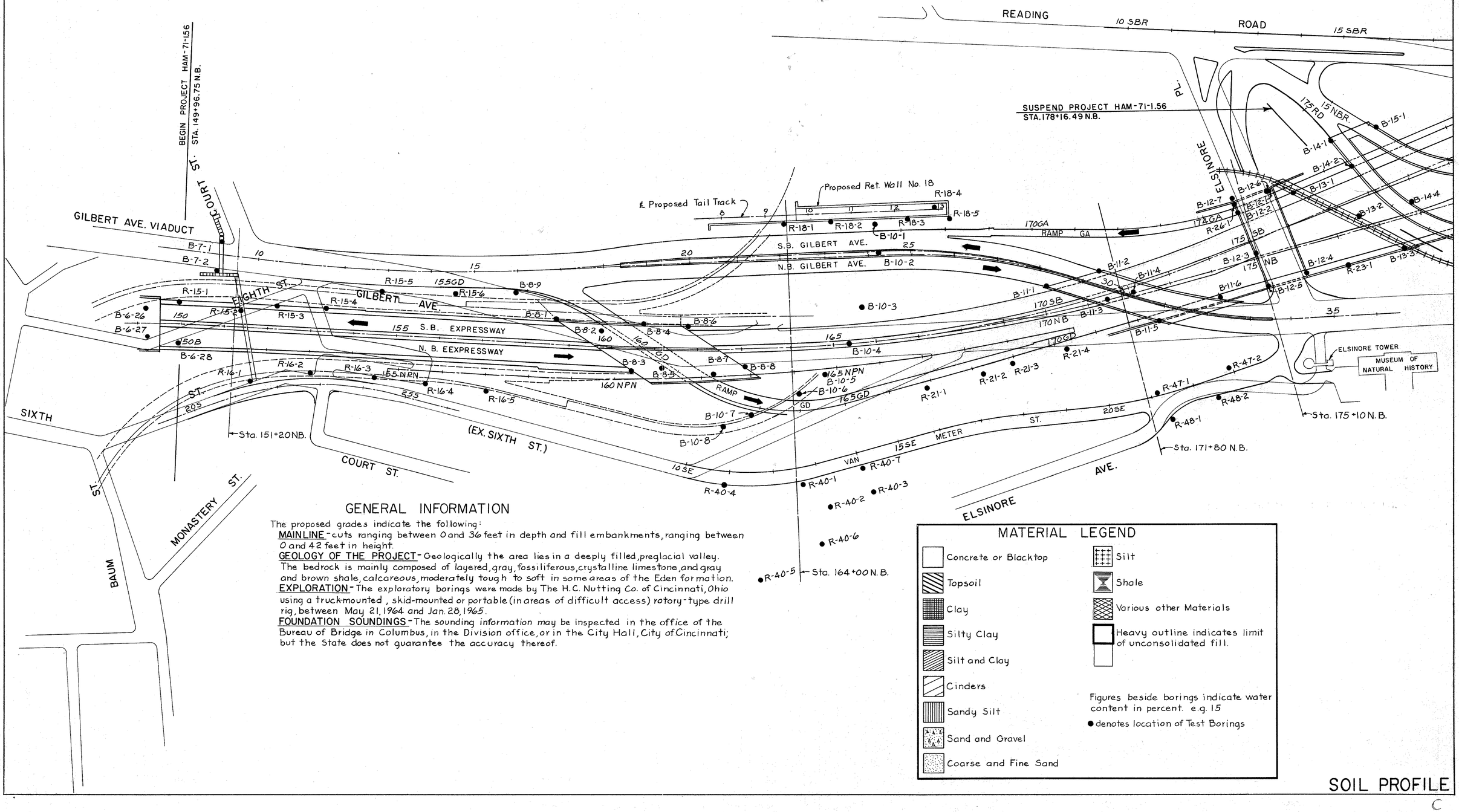

GENERAL INFORMATION

The proposed grades indicate the following:

MAINLINE - cuts ranging between 0 and 36 feet in depth and fill embankments, ranging between 0 and 42 feet in height.

GEOLOGY OF THE PROJECT - Geologically the area lies in a deeply filled, preglacial valley. The bedrock is mainly composed of layered, gray, fossiliferous, crystalline limestone, and gray and brown shale, calcareous, moderately tough to soft in some areas of the Eden formation.

EXPLORATION - The exploratory borings were made by The H.C. Nutting Co. of Cincinnati, Ohio using a truck-mounted, skid-mounted or portable (in areas of difficult access) rotory-type drill rig, between May 21, 1964 and Jan. 28, 1965.

FOUNDATION SOUNDINGS - The sounding information may be inspected in the office of the Bureau of Bridge in Columbus, in the Division office, or in the City Hall, City of Cincinnati; but the State does not guarantee the accuracy thereof.

MATERIAL LEGEND

- Concrete or Blacktop
- Topsoil
- Clay
- Silty Clay
- Silt and Clay
- Cinders
- Sandy Silt
- Sand and Gravel
- Coarse and Fine Sand
- Silt
- Shale
- Various other Materials
- Heavy outline indicates limit of unconsolidated fill.

Figures beside borings indicate water content in percent. e.g. 15

● denotes location of Test Borings

SOIL PROFILE

C

FED. RD. DIV.	STATE	PROJECT	FISCAL YEAR
2	OHIO		

2
20

HAMILTON COUNTY
HAM-71-(1.56) (2.51)

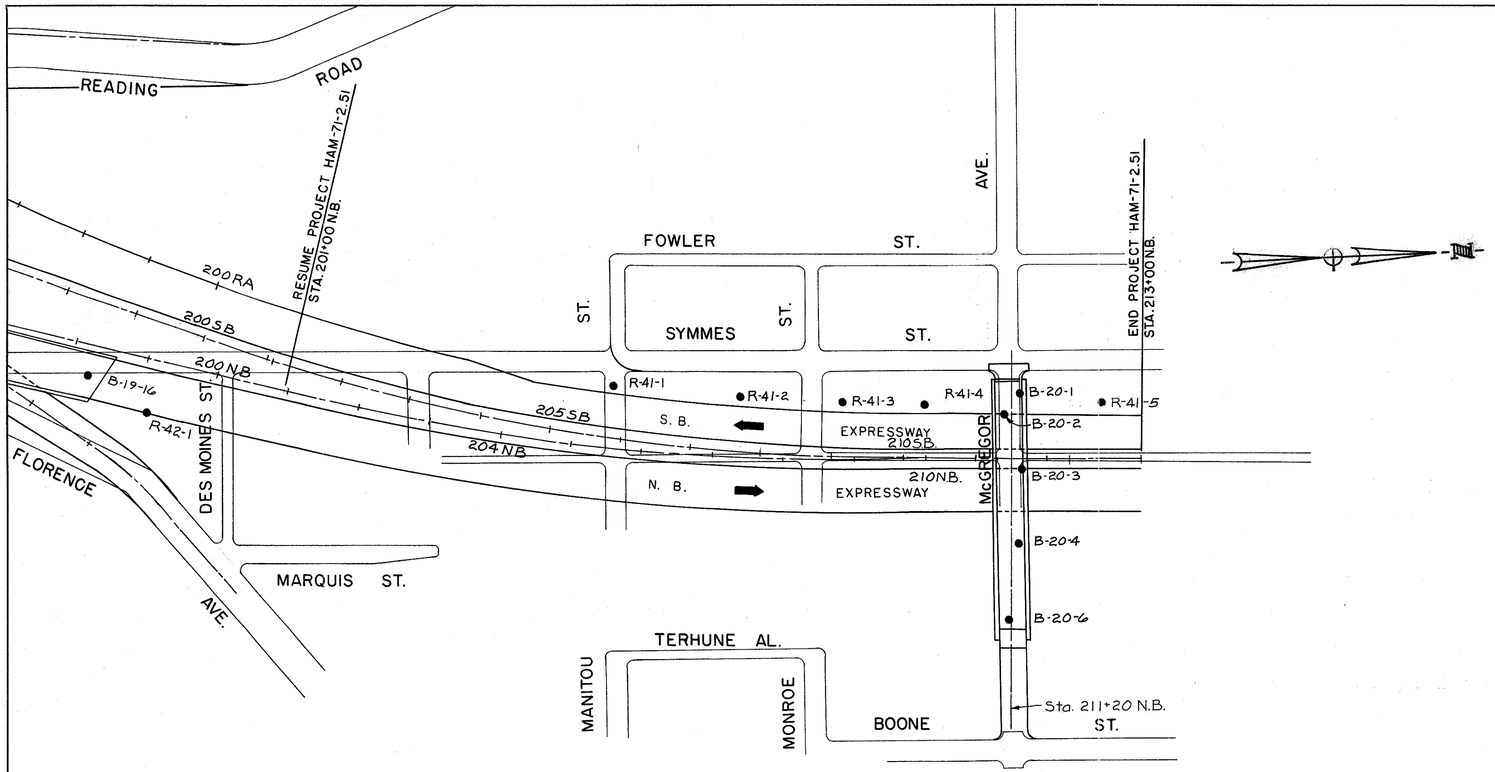

SOIL PROFILE

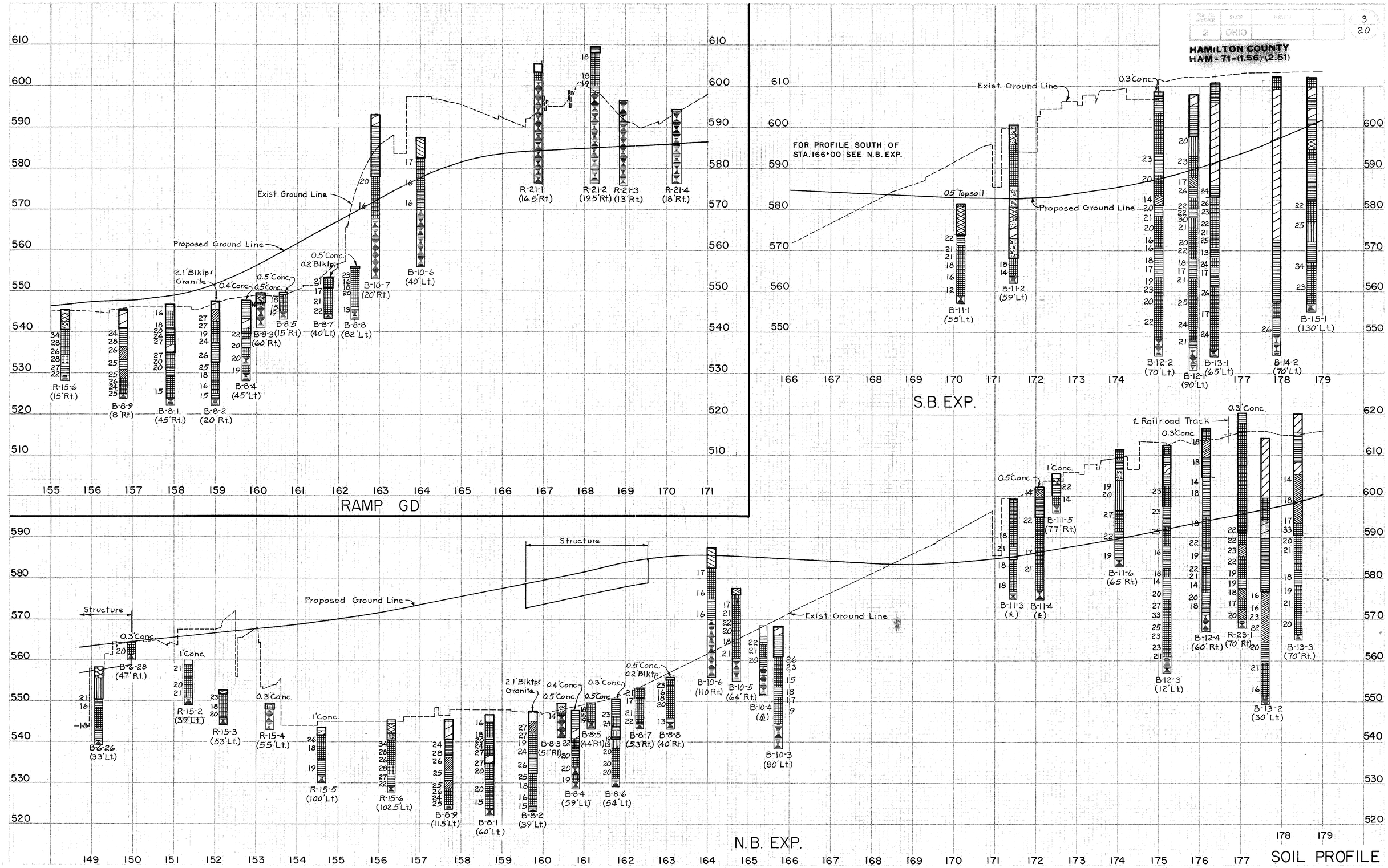

HAMILTON COUNTY
HAM-71-(1.56)(2.51)
3
20
RAMP GD
Exist Ground Line
Proposed Ground Line
2.1' Blktp & Granite
0.4' Conc.
0.5' Conc.
0.2' Blktp
R-15-6 (15' Rt.)
B-8-9 (8' Rt.)
B-8-1 (45' Rt.)
B-8-2 (20' Rt.)
B-8-3 (60' Rt.)
B-8-4 (45' Lt.)
B-8-5 (15' Rt.)
B-8-7 (40' Lt.)
B-8-8 (82' Lt.)
B-10-7 (20' Rt.)
B-10-6 (40' Lt.)
R-21-1 (16.5' Rt.)
R-21-2 (19.5' Rt.)
R-21-3 (13' Rt.)
R-21-4 (18' Rt.)
S.B. EXP.
FOR PROFILE SOUTH OF STA. 166+00 SEE N.B. EXP.
0.5' Topsoil
Exist. Ground Line
Proposed Ground Line
0.3' Conc.
B-11-1 (55' Lt.)
B-11-2 (59' Lt.)
B-12-2 (70' Lt.)
B-12-1 (90' Lt.)
B-13-1 (65' Lt.)
B-14-2 (70' Lt.)
B-15-1 (130' Lt.)
N.B. EXP.
Structure
Proposed Ground Line
Exist. Ground Line
0.3' Conc.
1' Conc.
0.5' Conc.
0.2' Blktp
B-6-28 (47' Rt.)
B-6-26 (33' Lt.)
R-15-2 (39' Lt.)
R-15-3 (53' Lt.)
R-15-4 (55' Lt.)
R-15-5 (100' Lt.)
R-15-6 (102.5' Lt.)
B-8-9 (115' Lt.)
B-8-1 (60' Lt.)
B-8-2 (39' Lt.)
B-8-3 (51' Rt.)
B-8-4 (59' Lt.)
B-8-5 (44' Rt.)
B-8-6 (54' Lt.)
B-8-7 (53' Rt.)
B-8-8 (40' Rt.)
B-10-6 (110' Rt.)
B-10-5 (64' Rt.)
B-10-4 (℄)
B-10-3 (80' Lt.)
B-11-3 (℄)
B-11-4 (℄)
B-11-5 (77' Rt.)
B-11-6 (65' Rt.)
B-12-3 (12' Lt.)
B-12-4 (60' Rt.)
R-23-1 (70' Rt.)
B-13-2 (30' Lt.)
B-13-3 (70' Rt.)
℄ Railroad Track
SOIL PROFILE

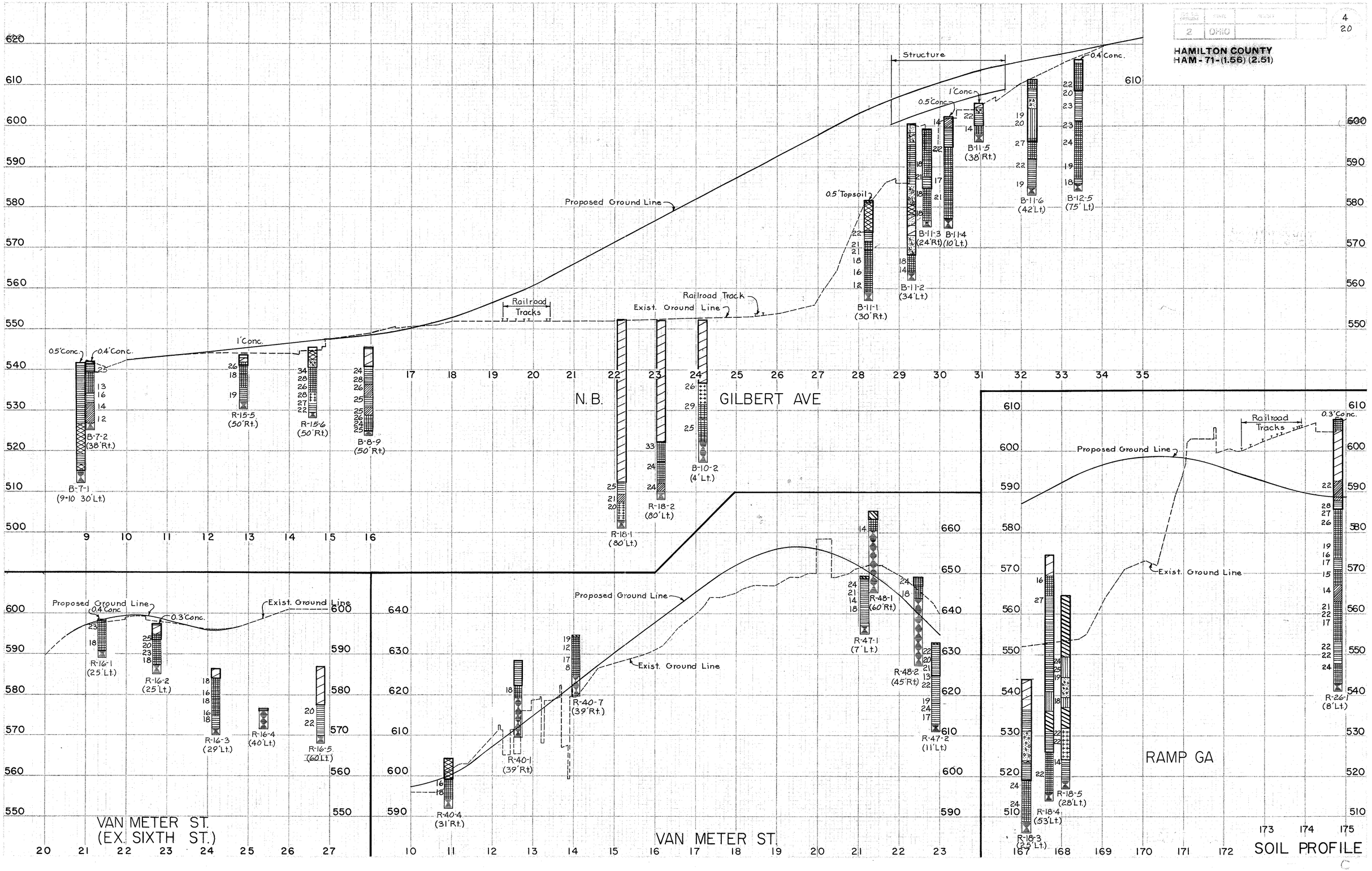

HAMILTON COUNTY
HAM-71-(1.56) (2.51)
4
20
Structure
Proposed Ground Line
Railroad Tracks
Railroad Track
Exist. Ground Line
N.B.
GILBERT AVE
0.5'Conc.
0.4'Conc.
1'Conc.
0.5'Topsoil
B-7-1 (9+10 30'Lt.)
B-7-2 (38'Rt.)
R-15-5 (50'Rt.)
R-15-6 (50'Rt.)
B-8-9 (50'Rt.)
R-18-1 (80'Lt.)
R-18-2 (80'Lt.)
B-10-2 (4'Lt.)
B-11-1 (30'Rt.)
B-11-2 (34'Lt.)
B-11-3 (24'Rt.)
B-11-4 (10'Lt.)
B-11-5 (38'Rt.)
B-11-6 (42'Lt.)
B-12-5 (75'Lt.)
VAN METER ST.
(EX. SIXTH ST.)
R-16-1 (25'Lt.)
R-16-2 (25'Lt.)
R-16-3 (29'Lt.)
R-16-4 (40'Lt.)
R-16-5 (60'Lt.)
0.3'Conc.
R-40-4 (31'Rt.)
R-40-1 (39'Rt.)
R-40-7 (39'Rt.)
R-47-1 (7'Lt.)
R-48-1 (60'Rt.)
R-48-2 (45'Rt.)
R-47-2 (11'Lt.)
VAN METER ST.
RAMP GA
R-18-3 (25'Lt.)
R-18-4 (53'Lt.)
R-18-5 (28'Lt.)
R-26-1 (8'Lt.)
SOIL PROFILE

HAMILTON COUNTY
HAM-71-(1.56) (2.51)

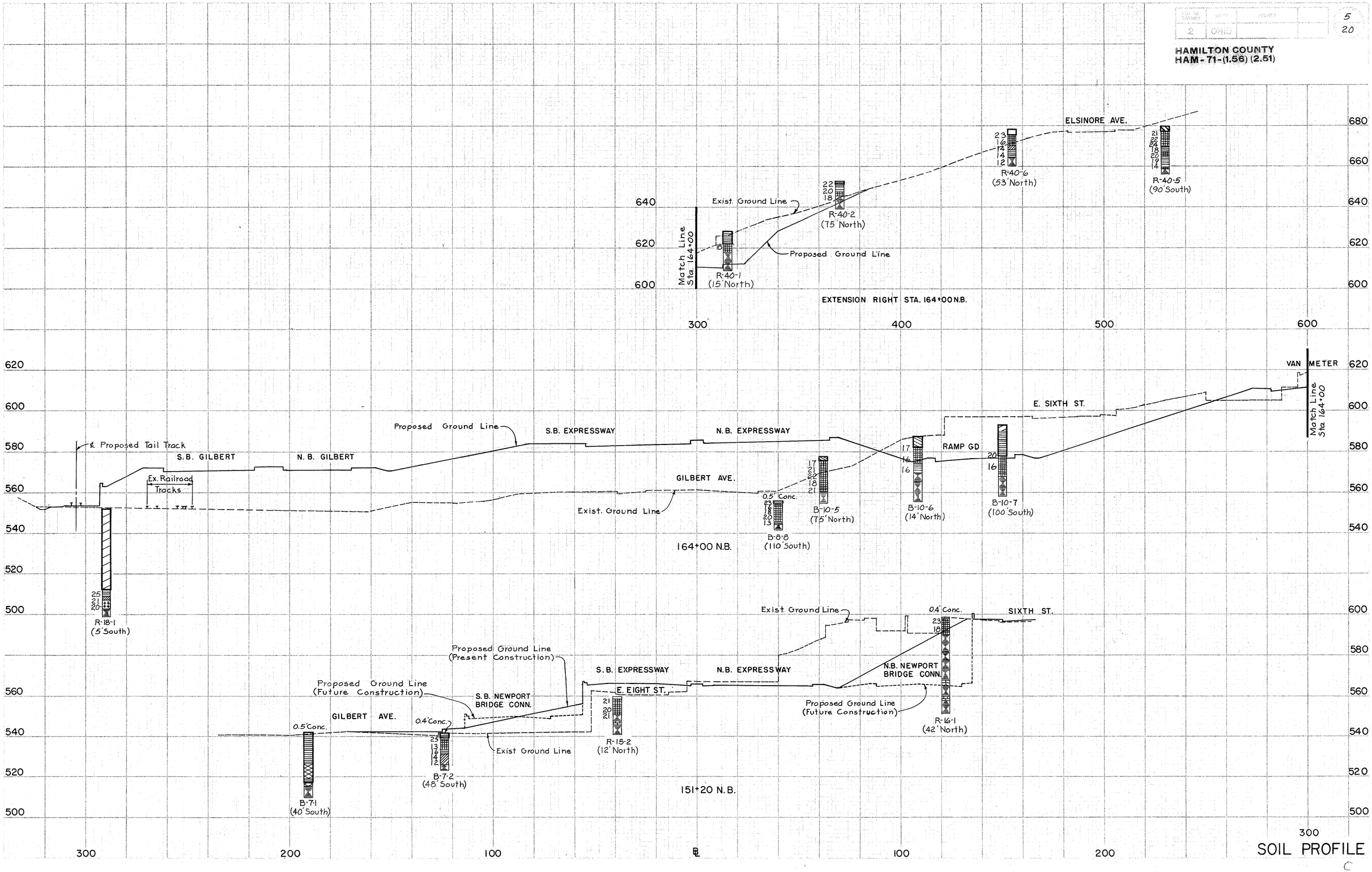

SHEET NO.	STATE			6
2	OHIO			20

HAMILTON COUNTY
HAM-71-(1.56) (2.51)

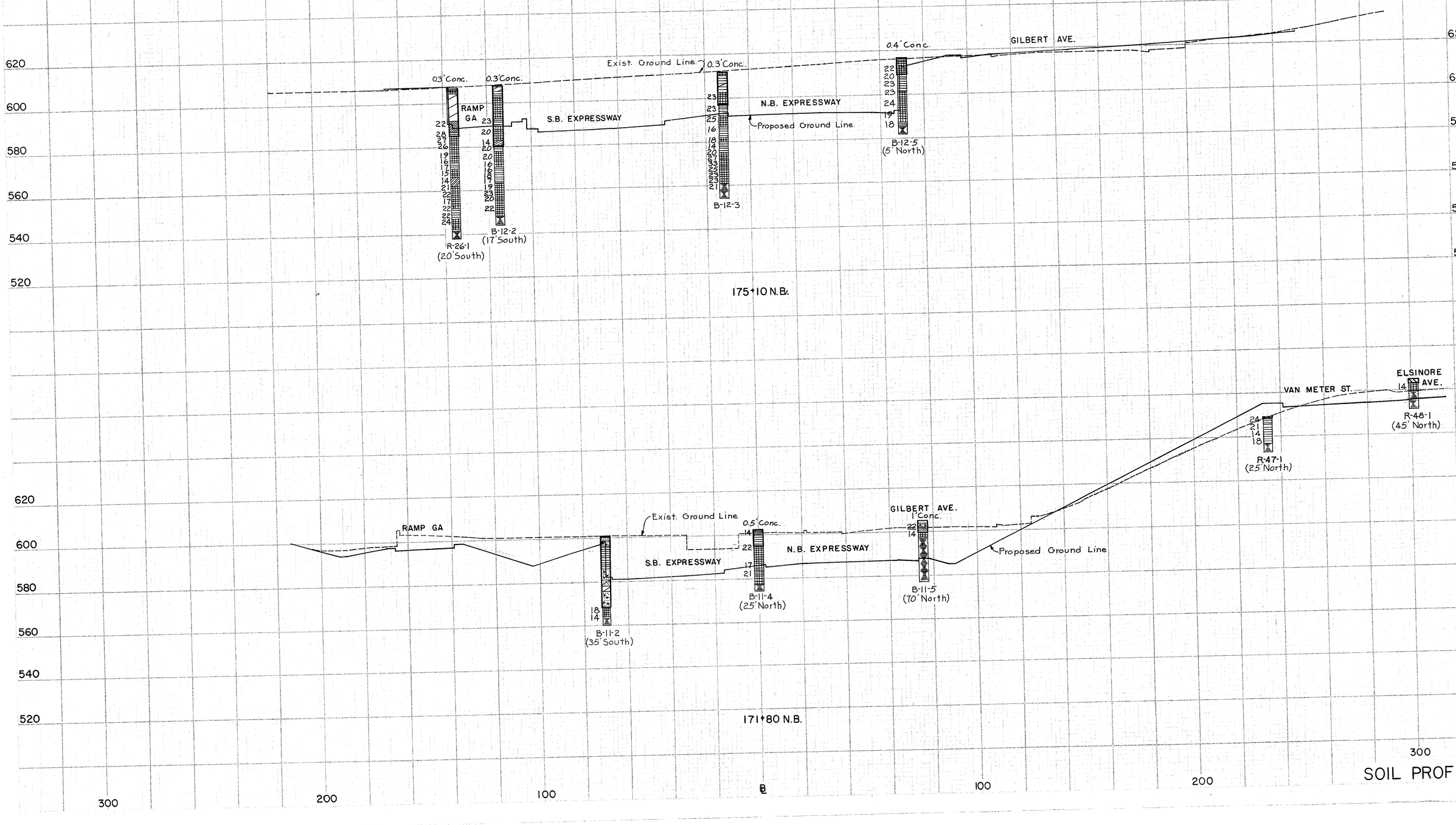

HAMILTON COUNTY
HAM-71-(1.56) (2.51)

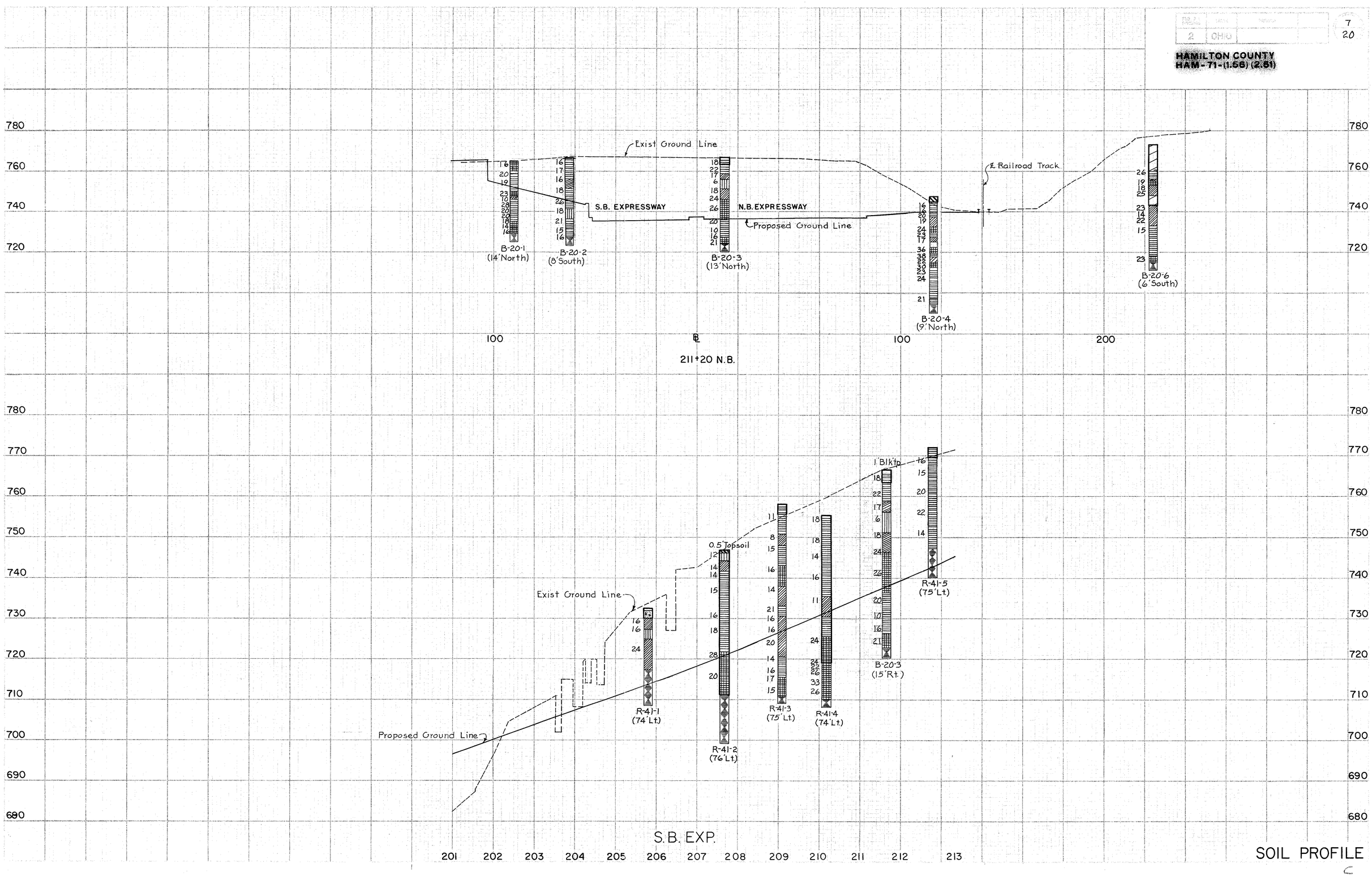

SOIL PROFILE

FED. RD. DIV.	STATE	PROJECT	FISCAL YEAR
2	OHIO		

7A
20

HAMILTON COUNTY
HAM-71-(1.56)(2.51)

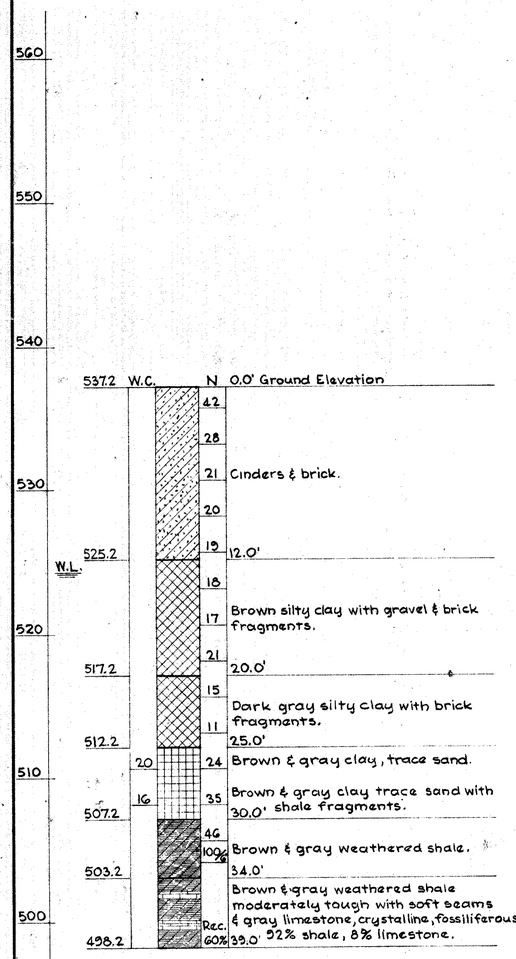

BORING B-7-3
22' S. OF S. CURB E. COURT ST.
78' W. OF W. CURB GILBERT AVE.

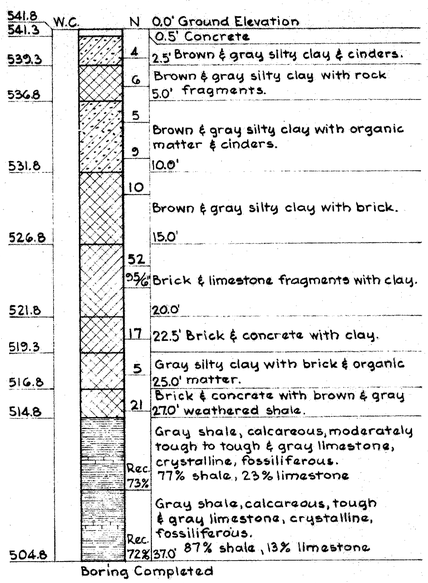

Boring Completed

BORING B-7-1
Sta. 150+86, 191' L.

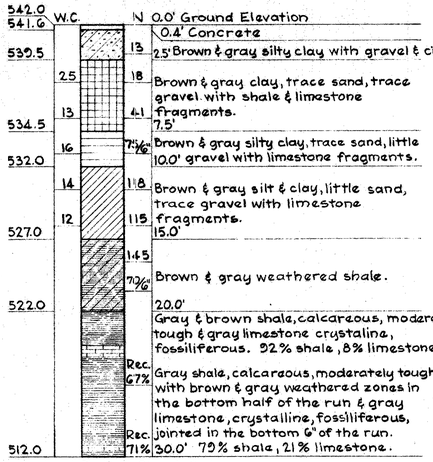

Boring Completed

BORING B-7-2
Sta. 150+75, 124' L.

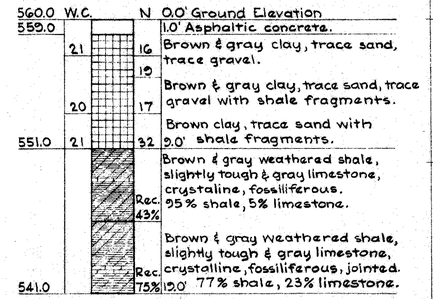

BORING R-15-2
Sta. 151+38, 39' L.

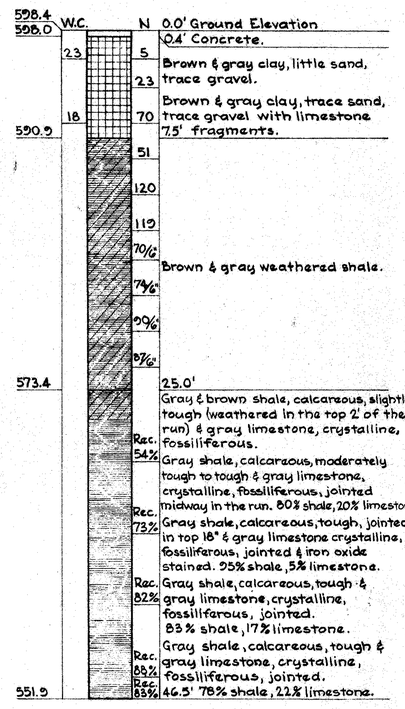

BORING R-16-1
Sta. 151+68, 122' R. RETAINING WALL 16

NOTE: Borings taken between July 20, 1964 & September 9, 1964.

N- Column of figures indicates number of blows required to drive 2" O.D. Split Spoon the last 12" of a sample run using 140 lb. weight falling 30 inches.

Panm Core Barrel was used for the last 5 ft. of each boring.

W.C. : Column of figures indicates moisture content of sample in per cent of dry weight.

Description of material is based on laboratory test data and visual examination. Representative samples only were tested.

Modifying discriptions in per cent of dry weight : trace 1-10%; little 10-20%; some 20-35%; and 35-50%.

W.L. = Water level reading ~ immediate.

For location of borings see Sheet No. 332

CITY OF CINCINNATI
DEPARTMENT OF PUBLIC WORKS
DIVISION OF ENGINEERING

LOG OF BORINGS

BRIDGE NO. HAM-71-0157
I-71 UNDER PEDESTRIAN CROSSING
AT COURT ST.

CINCY BRIDGE NO. 7

DESIGNED	DRAWN	TRACED	CHECKED	REVIEWED	DATE	REVISED
	J.D.A.		W.W.	W.W	3-8-65	

FED. RD. DIV.	STATE	PROJECT	FISCAL YEAR
2	OHIO		

8
20

HAMILTON COUNTY
HAM-71-(1.56) (2.51)

B-8-1

Elev. 546.9'

8	Asphaltic conc. granite blk. pav't. Clay, sand, gravel, limestone and shale fragments (fill)
6	Silty clay, sand, limestone and
5	shale fragments (fill)
12	Clay, trace sand, gravel (fill)
9	Brick, cinders, organic matter (fill)
	Br. clay, trace sand
29	Br. silt, clay, sand, limestone frag.
32	Br. clay, trace sand limestone frag
40	
118	Br. & gray shale & limestone
60% Rec.	Gray shale & limestone (87% shale 13% limestone)

Elev. 517.9' - 29'

B-8-2

Elev. 547.7'

6	2.1' Blacktop, granite block pavement
10	Silt, clay, trace sand, gravel (fill)
8	Clay, trace sand, gravel (fill)
9	
7	Silty clay, sand, gravel brick
11	fragments, organic matter (fill)
52	Br. & gray clay, trace sand, gravel
82	0.5' Possible limestone layer
94	Br. & gr. clay, some sand, gravel; shale &
59	limestone
130	Br. & Gr. silty clay, trace sand, gravel,
40% Rec.	shale & limestone fragments
	90% gray shale & 10% limestone

Elev. 517.7' - 30'

B-8-3

Elev. 549.6'

6	0.5' concrete
20	Sand, gravel, cinders (fill)
58	Brown & gray clay, trace sand, gravel
98	Br. & gr. weathered shale, limestone
117	layers
	Gray shale & limestone
80% Rec.	93% shale 7% limestone

Elev. 536.1' - 13.5'

B-8-4

Elev. 547.9'

3	0.4' Concrete
12	Silty clay, sand, gravel, cinders (fill)
2	Silty clay, limestone frag. (Fill)
11	Cinders, sand, gravel, coal (fill)
8	Br & gr. clay, little sand, gravel
24	Br. silty clay, trace sand, gravel
62% Rec.	Br. & gr. clay, trace sand, gravel
109	Br. weathered shale & limestone
25% Rec.	(90% shale 10% limestone)
42% Rec.	Br. & gr. clay, trace sand
140	100% br. & gr. weathered shale
60% Rec.	90% gr. shale 10% limestone
80% Rec.	88% gr. shale 12% limestone
	100% gray shale

Elev. 519.4' - 28.5'

B-8-5

Elev. 549.8'

29	0.5' Concrete
31	Brown clay, trace sand, gravel, shale &
33	limestone fragments
128	Brown & gray shale
	Gray shale & limestone
77% Rec.	67% shale 33% limestone
86% Rec.	92% shale 8% limestone
87% Rec.	100% shale

Elev. 532.8' - 17'

B-8-6

Elev. 551.0'

6	0.3' Concrete
8	Silty clay gravel, brick frag. (fill)
6	Silty clay, sand, gravel, brick frag. (fill)
5	Clay, trace sand, gravel (fill)
8	
4	Sandy clay, gravel (fill)
8	Br. & gr. silty clay, trace sand
14	Gr. sandy silt, trace gravel
13	Br. & gr. clay, trace sand, shale frag.
24	
110	
108	Gr. shale & limestone
111	
58% Rec.	62% gray shale 38% limestone
78% Rec.	98% gray shale 2% limestone

Elev. 519.5' - 31.5'

Elev. 500'

HAZELET & ERDAL
CONSULTING ENGINEERS
CINCINNATI, OHIO

LOG OF BORINGS

SHEET 1 of 13

DESIGNED	DRAWN	TRACED	CHECKED	REVISED DATE	REVISED
	A.L.T.		G.N.W.	JHD 5/18/65	

FED. RD. DIV.	STATE	PROJECT	FISCAL YEAR
2	OHIO		

9
20

HAMILTON COUNTY
HAM-71-(1.56)(2.51)

B-8-7

Elev. 553.2'
8 — 0.2' Blacktop
17 — Clay, gravel (fill)
17
129
145 — Brown & gray clay, trace sand gravel limestone fragments
83% Rec — Gray shale
67% Rec — 100% gr. shale, br. weathered zones
80% Rec — 84% Gray shale, 16% Gr. limestone
96% Gray shale 4% Gray limestone
Elev. 533.2'-20'

Elev. 500'

B-8-8

Elev. 556.0'
45 — 0.5' concrete and cinders (fill)
32
WL — Brown & Gray clay, sand, gravel
180 — limestone & shale fragments
166 — Brown & gray silty clay, sand,
99 — gravel, limestone fragments
92 — Limestone fragments
68% Rec — Gray shale & limestone
94% shale 6% limestone
Elev. 539.5'-16.5'

For Boring B-8-9
see Sheet 10 of 13

R-18-1

Elev. 552.3'
10
7
2
3
3
3
5
4
7 — Cinders (fill)
6
WL 6
5 — Cinders & organic matter (fill)
7
17 — Br. & gr. silty clay, trace sand
27 — Gr. silt & clay, trace sand
192 — Br. & gr. silt, trace sand, trace gravel, silt layers & limestone fragments
75% Rec. — Gr. shale
86% gr. shale 14% gr. limestone
Elev. 497.3'-55'

R-18-2

Elev. 552.2'
25
15
4
4
3
2
WL 2
3
5
5
7
6
38 — Cinders & brick fragments (fill)
48
47 — Cinders & coal (fill)
39
69 — Br. & gr. clay, little sand, little gravel, rock fragments
47% Rec — Br. & gr. clay, trace sand, trace gravel, shale & limestone fragments 72% Rec.
Br. & gr. silt & clay, little sand, shale & limestone fragments
80% gr. shale 20% gr. limestone
Elev. 505.2'-47'

R-18-3

Elev. 554.0'
20
20
12
5 — Cinders & limestone (fill)
WL 2 — Cinders & sand (fill)
3 — Br. silty clay, brick frag. (fill)
2 — Gr. silty clay, coal. frag. (fill).
2
400 — Gr. sand, brick frag. (fill)
16 — Wood
18 — Dark br. silty clay (fill)
25 — Br. & gr. clay, trace sand, trace gravel
95 — Gr. shale
Gr. shale
Elev. 511.0'-43'

R-18-4

Elev. 574.8'
2 — Cinders, topsoil (fill)
25 — Topsoil, cinders, brick (fill)
20 — Brown clay, little sand, trace gravel,
18 — topsoil, brick fragments (fill)
4 — Br. & gr. silty clay, little sand, trace
10 — gravel, topsoil, brick fragments (fill)
Br. & gr. silty clay, topsoil, sand,
10 — brick fragments (fill)
9 — Brick, gravel, wood fragments, br.
11 — silty clay (fill)
9 — Br. silty clay, topsoil, brick & rock
6 — fragments (fill)
10
9
8 — Br. clayey sand, brick, rock & wood
8 — fragments (fill)
9 — Topsoil, cinders, wood & brick
7 — fragments (fill)
9 — Br. & gr. silty clay, sand, cinders
(fill)
46 — Br. & gr. clay, sand
41 — Br. & gr. clay, trace sand, limestone
fragments
66 — Gray shale
70% Rec. — 87% gr. shale 13% gr. limestone
Elev. 507.3'-67.5'

R-18-5

Elev. 564.7'
18
18 — Topsoil, cinders & clay (fill)
17
7
7 — Topsoil, sand, ashes & brick frag (fill)
6
5 — Br. sandy silt, some gravel, ashes &
6 — brick fragments (fill)
10 — Br. gravelly sand, little clay, little silt,
7 — ashes & brick fragments (fill)
5 — Br. silty sand, little clay, some
11 — gravel, ashes & brick frag. (fill)
4 — Topsoil, sand, ashes brick frag. (fill)
4 — Br. silt, little sand, little gravel, ashes &
14 — brick fragments (fill)
Br. & gr. silt, trace sand (possible fill)
59 — Br. & gr. silty clay, trace sand
68 — Br. weathered shale
60% Rec. — 100% gr. shale
90% Rec.
Elev. 510.7'-54'

Elev. 500'

R-18-1 R-18-2 R-18-3 R-18-4 R-18-5

HAZELET & ERDAL
CONSULTING ENGINEERS
CINCINNATI, OHIO

LOG OF BORINGS

SHEET 2 of 13

DESIGNED	DRAWN	TRACED	CHECKED	REVIEWED DATE	REVISED
	ALT		G.N.W.	JLH0 5/18/65	

FED. RD. DIV.	STATE	PROJECT	FISCAL YEAR
2	OHIO		

10
20

HAMILTON COUNTY
HAM-71-(1.56) (2.51)

R-40-1

Elev. 652.2'

3	Black silty clay (fill)
10	Br. silty clay, little sand, gravel
35	Br. clay, little sand, limestone frag.
32% Rec.	Br. weathered shale & limestone (80% shale 20% limestone)
48% Rec.	
20% Rec.	

Elev. 638.5'-13.7'

Elev. 628.3'

5	Black silty clay, cinders, rock (fill)
10	
15	
30	Brown clay, trace sand
38% Rec.	Br. weathered shale & limestone 95% shale 5% limestone
33% Rec.	Br. & gr. weathered shale & limestone 99% shale 1% limestone

Elev. 609.3'-19'

Elev. 600'

R-40-2

R-40-3

Elev. 660.0'

2	Cinders (fill)
4	Br. clay, trace sand, gravel, (fill)
12	Limestone fragments
32	Br. silty clay, trace sand, gravel, limestone fragments
40	
32	Br. clay, trace sand, gravel, limestone fragments
44	
84	Br. & gr. shale
71% Rec.	Gr. shale & limestone (83% shale 17% limestone)

Elev 633.0'-27.0'

R-40-4

Elev. 604.3'

22	Concrete, sandstone, clay, brick, cinders (fill)
29	
17	Br. & gr. clay, trace sand, gravel, limestone fragments
57	
53	Br. & gr. shale
100	Gr. shale
70% Rec.	Gr. shale & limestone (95% shale 5% limestone)

Elev. 584.3'-20'

R-40-5

Elev. 679.8'

10	Topsoil, clay, limestone fragments (fill)
7	Br. clay, trace sand, gravel, limestone fragments
6	Br. silty clay & gravel, trace sand, shale and limestone fragments
8	Br. & gr. clay & gravel, trace sand shale & limestone fragments
7	Br. silty clay, little sand, gravel, shale & limestone fragments
13	Br. clay, trace sand
86	
97	Gray shale
70% Rec.	Gray shale & limestone 70% shale 30% limestone

Elev. 645.8'-34'

R-40-6

Elev. 678.1'

16	Concrete, clay, cinder and limestone fragments (fill)
9	Br. clay, gravel, sand, limestone fragments
55	
32	Br. silt & clay, sand, gravel, limestone fragments
45	
55	Br. & gr. silty clay, sand, gravel
63	Br. & gr. weathered shale
97% Rec.	Gr. shale & limestone (90% shale 10% limestone)

Elev. 655.1'-23'

R-40-7

Elev. 634.6'

1	0.2' Topsoil
13	Br. clay, trace sand, gravel, limestone fragments
28	
50	
38% Rec.	Br. weathered shale & limestone (91% shale 9% limestone)
20% Rec.	

Elev. 619.6'-15'

Elev. 600'

Note: A 3.5" hammer was used on Borings R-40-1, R-40-2, and R-40-7. Blow counts shown on these borings have been changed to equivalent 140" blow counts.
(one 140 lb. blow = four 35 lb. blows)

HAZELET & ERDAL
CONSULTING ENGINEERS
CINCINNATI, OHIO

LOG OF BORINGS

SHEET 3 of 13

DESIGNED	DRAWN	TRACED	CHECKED	REVIEWED DATE	REVISED
	A.L.T.		G.N.W.	JHO 5/18/65	

FED. RD. DIV.	STATE	PROJECT	FISCAL YEAR
2	OHIO		

11
20

HAMILTON COUNTY
HAM-71-(1.56) (2.51)

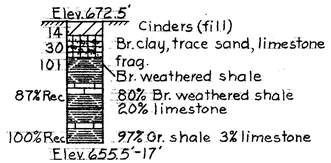

R-42-1

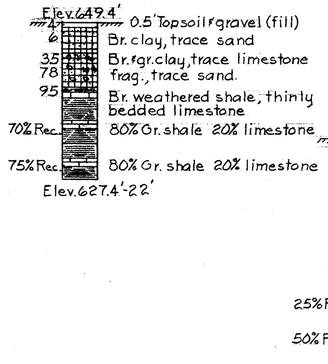

R-47-1

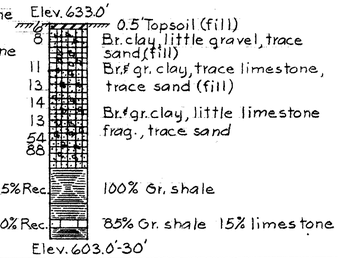

R-47-2

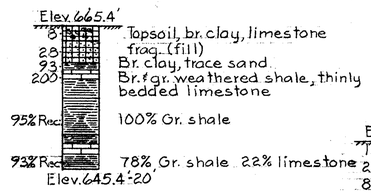

R-48-1

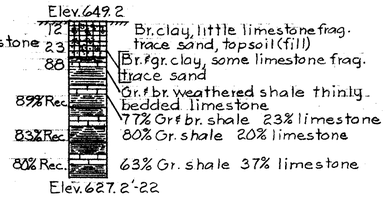

R-48-2

Elev. 600

Elev. 600

HAZELET & ERDAL
CONSULTING ENGINEERS
CINCINNATI, OHIO

LOG OF BORINGS

SHEET 4 of 13

DESIGNED	DRAWN	TRACED	CHECKED	REVIEWED DATE	REVISED
	ALT.		GNW	JHO 5/18/65	

FED. RD. DIV.	STATE	PROJECT	FISCAL YEAR
2	OHIO		

12
20

HAMILTON COUNTY
HAM-71-(1.56) (2.51)

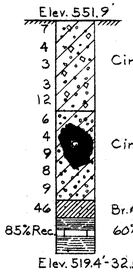

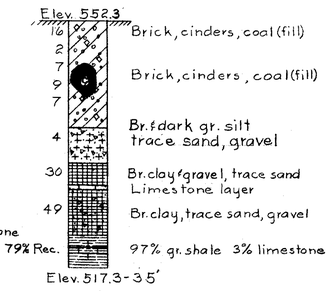

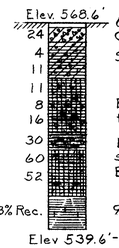

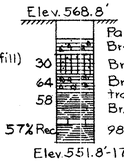

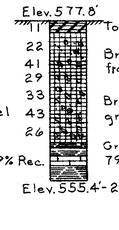

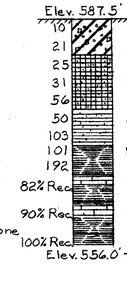

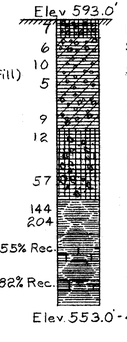

Elev 500'

Elev 500'

B-10-1

B-10-2

B-10-3

B-10-4

B-10-5

B-10-6

B-10-7
For Boring B-10-8
see Sheet 10 of 13

HAZELET & ERDAL
CONSULTING ENGINEERS
CINCINNATI, OHIO

LOG OF BORINGS

SHEET 5 of 13

DESIGNED	DRAWN	TRACED	CHECKED	REVIEWED DATE	REVISED
	ALT		G.N.W.	JHO 5/18/65	

FED. RD. DIV.	STATE	PROJECT	FISCAL YEAR
2	OHIO		

13/20

HAMILTON COUNTY
HAM-71-(1.56)(2.51)

Elev. 560.0'
16
19
17
32
43% Rec.
75% Rec.
Asphaltic concrete
Brown & gr. clay, trace sand, trace gravel, shale fragments
Br. & gr. weathered shale & limestone 95% shale 5% limestone
77% shale 23% limestone
Elev. 541.0'-19'

Elev. 552.7'
13
24
29
19% Rec.
135
67% Rec.
Concrete, cinders (fill)
Br. clay, trace sand, gravel, shale frag.
81% br. weathered shale 19% limestone
Br. & gr. weathered shale
95% gr. shale 5% limestone
Elev. 535.2'-17.5'

Elev. 549.5'
10
28
49
75% Rec.
74% Rec.
Concrete
Br. clay, cinders, gravel (fill)
Br. weathered shale
Br. & gr. weathered shale
99% gr. shale 1% limestone
83% gr. shale 17% limestone
Elev. 533.0'-16.5'

Elev. 598.4'
5
23
70
51
120
109
98
107
127
128
54% Rec.
73% Rec.
82% Rec.
88% Rec.
83% Rec.
0.4' concrete
Br. & gr. clay, trace sand, gravel, limestone fragments
Br. & gr. weathered shale
Gr. & br. shale & limestone
Gr. shale & limestone
80% shale 20% limestone
95% shale 5% limestone
83% shale 17% limestone
78% shale 22% limestone
Elev. 551.9'-46.5'

Elev. 597.6'
10
25
27
28
20
63
80
82
160
133
133
83% Rec.
88% Rec.
50% Rec.
89% Rec.
50% Rec.
0.3' Concrete
Cinders (fill)
Br. clay, trace sand, brick frag. (fill)
Br. & gr. clay, trace sand, gravel
Br. & gr. weathered shale
80% gr. & br. shale. 20% limestone
88% gr. shale 12% limestone
86% gr. shale 14% limestone
88% gr. shale 12% limestone
100% gr. shale
Elev. 553.6'-44'

Elev. 586.4'
30
17
39
55
67
91% Rec.
25% Rec.
91% Rec.
53% Rec.
73% Rec.
Cinders, limestone (fill)
Br. clay, little sand, trace gravel
Br. clay, trace sand
Br. silty clay, trace sand, gravel
59% gray shale 41% limestone
100% gray shale
88% gray shale 12% limestone
73% gray shale 27% limestone
Elev. 556.4-30'

Elev. 500'

Elev. 500'

R-15-2

R-15-3

R-15-4
For Borings R-15-5 & R-15-6 see Sheet 10 of 13

R-16-1

R-16-2

R-16-3
For Borings R-16-4 & R-16-5 see Sheet 10 of 13

HAZELET & ERDAL
CONSULTING ENGINEERS
CINCINNATI, OHIO

LOG OF BORINGS

SHEET 6 of 13

DESIGNED	DRAWN	TRACED	CHECKED	REVIEWED DATE	REVISED
	A.L.T.		G.N.W.	JHO 5/18/65	

FED. RD. DIV.	STATE	PROJECT	FISCAL YEAR
2	OHIO		

14
20

HAMILTON COUNTY
HAM-71-(1.56) (2.51)

R-21-1

Elev. 605.3'

11	Cinders, topsoil, brick (fill)
46	Br. clay, trace sand, trace gravel, shale & limestone fragments
43	Br. weathered shale
60% Rec.	Br. & gr. weathered shale (trace limestone)
17% Rec.	99% br. & gr. weathered shale 1% limestone
31% Rec.	92% br. & gr. weathered shale 8% limestone
80% Rec.	95% gr. shale 5% gr. limestone
54% Rec.	95% gr. shale 5% gr. limestone

Elev. 576.3'-29'

R-21-2

Elev. 609.7'

7	Gr. silty clay topsoil & cinders (fill)
26	Br. clay, trace sand, trace gravel,
31	shale & limestone fragments.
46	Br. & gr. clay, trace sand, shale &
60	limestone fragments
53% Rec.	Br. silty clay, little sand, shale & limestone fragments
63% Rec.	97% gr. shale 3% gr. limestone
	95% gr. shale 5% gr. limestone
51% Rec.	84% gr. shale 16% gr. limestone
75% Rec.	100% gr. shale
60% Rec.	100% gr. shale

Elev. 576.2'-33.5'

R-21-3

Elev. 596.5'

15	Brown weathered shale, limestone fragments
75	Br. & gr. shale, limestone frag.
70	62% Br. & gr. weathered shale 38%
83% Rec.	limestone
90% Rec.	100% gray shale
89% Rec.	86% gray shale 14% limestone
91% Rec.	100% gray shale
100% Rec.	94% gray shale 6% limestone

Elev. 576.0'-20.5'

R-21-4

Elev. 594.3'

13	Cinders (fill)
89	Br. & gray weathered shale
97	Gray shale
171	
80% Rec.	94% gray shale 6% limestone
61% Rec.	98% gray shale 2% limestone

Elev. 576.3'-18'

B-11-1

Elev. 581.5'

	Topsoil
7	Clayey sand, brick fragments (fill)
7	Clayey sand, coal fragments (fill)
12	Br. silty clay, little sand
13	Br. & gr. clay, trace sand
47	Br. & gr. clay, trace sand, shale frag.
46	Br. & gr. clay, little sand
48	Brown weathered shale
72% Rec.	94% gr. shale 6% limestone

Elev. 551.5'-30'

B-11-2

Elev. 600.7'

12	Blacktop, sand, gravel and brick (fill)
4	Sand, cinders and brick (fill)
4	Sand, clay, concrete, brick (fill)
4	Sand, clay, trace cinders (fill)
10	
9	Sand, gravel and brick (fill)
6	Brick fragments (fill)
4	Sand, cinders and clay (fill)
4	Cinders (fill)
6	Sand, gravel and cinders (fill)
22	Brown & gray clay, trace sand,
117	shale fragments
143	Brown and gray weathered shale
72% Rec.	90% gray shale 10% limestone

Elev. 555.7'-45'

Elev. 550

Note: A 70# hammer was used on Borings R-21-1 and R-21-2. Blow counts shown on these borings have been changed to equivalent 140# blow counts.
(one 140 lb blow = two 70 lb. blows)

HAZELET & ERDAL
CONSULTING ENGINEERS
CINCINNATI, OHIO

LOG OF BORINGS

SHEET 7 of 13

DESIGNED	DRAWN	TRACED	CHECKED	REVIEWED DATE	REVISED
	ALT		GNW	JHO 5/18/65	

FED. RD. DIV.	STATE	PROJECT	FISCAL YEAR
2	OHIO		

15
20

HAMILTON COUNTY
HAM-71-(1.56) (2.51)

Elev. 599.4'

22	Concrete, blacktop, sand, gravel, clay, brick and cinders (fill)
5	Clay and cinders (fill)
6	Brown clay, little sand, gravel,
5	shale and limestone frag. (fill)
	Brown silty clay, sand, gravel,
7	brick and cinder fragments (fill)
	Brown fgr. clay, trace sand, gravel,
43	shale and limestone fragments
87	Brown & Gray Shale
106	Gray Shale
70% Rec.	95% gray shale 5% limestone
75% Rec.	93% gray shale 7% limestone

Elev. 562.4' - 37'

Elev. 602.4'

10	0.5' concrete
16	Br fgr. silt, clay, sand, trace gravel
20	shale fragments (fill)
13	Gray silty clay, brick, cinders (fill)
	Br & gray clay, little sand, trace
	gravel, shale fragments
24	Br. clay trace sand, some gravel
	shale fragments
69% Rec.	
17	Br. clay, trace sand, trace gravel
20	shale fragments
66% Rec.	
188	Br & gray weathered shale
70% Rec.	83% Br fgr. shale 17% gr limestone
70% Rec.	94% gray shale 6% gr. limestone
29% Rec.	91% gray shale 9% gr. limestone

Elev. 564.9' - 37.5'

Elev. 605.6'

10	1.0' concrete
16	Gravel (fill)
WL 24	Br fgr. silty clay, little sand, gravel
75	(probable fill)
	Br. clay, trace sand, gravel,
	limestone fragments
	Brown weathered shale
73	
	95% gray shale 5% limestone
69% Rec.	
66% Rec.	100% gray shale

Elev. 577.1' - 28.5'

Elev. 611.5'

21	Blacktop, concrete, clay, sand
7	gravel, cinders (fill)
9	Silty clay, gravel (fill)
4	Sand, cinders, gravel, rock frag. (fill)
3	Br fgr. sandy silt, gravel brick
WL 13	cinders (fill)
31	Br. fgr. clay, trace sand, gravel
	limestone frag.
80	Br. silty clay, trace sand, gravel
79	limestone fragments
84	Brown clay, trace sand
72	Brown fgray shale
	Gray shale
63% Rec.	93% gray shale 7% limestone
88% Rec.	93% gray shale 7% limestone

Elev. 546.5' - 45'

Elev. 607.6'

10	0.3' concrete
2	Clay, cinders (fill)
2	Cinders (fill)
2	Cinders, clay (fill)
6	Br fgr. silt & clay, some sand, trace
	gravel, cinders, shale frag. (fill) - M.S.
6	Br. fdark gr. silty clay, some
WL 7	sand, trace gravel, cinders (fill) - M.S.
20	Br. fgr. clay, trace sand, little
26	gravel, shale & limestone frag. - S.
18	Br. fgr. silty clay, little sand, little
19	gravel, shale & limestone frag. - S
26	Br. fgr. clay, trace sand, trace
	gravel, shale & limestone frag. - S
25	Gr. silt & clay, trace sand, trace
	gravel, shale fragments - S 43% Rec.
20	Br. fgr. clay, trace sand, trace
	gravel - S
25	Br. clay, little sand, trace gravel,
15	limestone fragments - S
151	Br. fgr. silty clay - S
75% Rec.	Br. fgr. silty clay, trace sand, organic matter - M.S.
	Br. fgr. clay, little sand, little gravel,
	limestone fragments - M.S.
	Gray shale - H
	90% gr. shale 10% gr. limestone - M.T.T.

Elev. 536.6' - 71'

Elev. 620.4'

8	0.3' concrete
10	Br. silty clay, cinders (fill)
6	
4	
5	Clay, sand, gravel, brick, cinders
	(fill)
7	
WL 3	
8	Br. fgr. clay, little sand, trace
	gravel, limestone fragments
11	Br. fgr. silt & clay, trace sand
16	Br. fgr. clay, trace sand
23	Br. clay, little sand, trace gravel,
25	limestone fragments
27	Br. silty clay, trace sand, trace
	gravel, limestone fragments
30	Br. silt & clay, little sand, trace
27	gravel, limestone fragments
44	Br. clay, little sand, little gravel,
	limestone fragments
	Br. silt & clay, little sand, limestone
	fragments
	Br. fgr. weathered shale
	95% gr. shale 5% gr. limestone

Elev. 560.4' - 60'

Elev. 608.0'

18	Cinders (fill) - M. S.
10	Silty clay, cinders and brick (fill) -
16	M.S.
3	Br. fgr. silty clay, shale frag. (fill)
7	VS to S
	Br. fgr. sandy silt, trace gravel,
	shale fragments - M.S.
17	Gr. clay, trace sand, shale frag.
	V. S.
31	Br. fgr. silt & clay trace sand, gravel,
WL	shale fragments - M.S.
26	Br. fgr. silty clay, trace sand, gravel,
20	shale fragments - M.S.
	Br. fgr. clay, trace sand, gravel V.S.
9	Br. fgr. silty clay trace sand, shale
	frag. - M.S.
20	Br. sandy silt, trace gravel, shale
22	frag. - M.S.
	Br. fgr. clay, trace sand, gravel shale
37	fragments. - V.S.
30	Br. silty clay, trace sand, gravel
27	limestone fragments - M.S.
	Br. clay, little sand trace gravel
89	limestone frag. - M.S.
	Br. clay, trace sand, limestone
74	fragments - M. S.
	Br. fgr. clay, trace sand, trace
	gravel, limestone frag. - M.S.
83	Br. silty clay, little sand, gravel
	limestone fragments
12% Rec.	Br. fgr. weathered shale & limestone
60	(88% shale 12% limestone) - So.
	Br. fgr. weathered shale - V.S.
32% Rec.	94% gray shale 6% limestone - M.T.

Elev. 534.5' - 73.5'

Elev. 525'

B-11-3 | B-11-4 | B-11-5 | B-11-6 | R-26-1 | R-23-1 | B-12-1

Note: M.S. denotes medium stiff
V.S. denotes very stiff
So. denotes soft
S. denotes stiff
H denotes hard
M.T. denotes moderately tough
M.T.T. denotes moderately tough to tough

HAZELET & ERDAL
CONSULTING ENGINEERS
CINCINNATI, OHIO

LOG OF BORINGS

SHEET 8 of 13

DESIGNED	DRAWN	TRACED	CHECKED	REVIEWED DATE	REVISED
	A.L.T.		G.N.W.	JHO 5/18/65	

FED. RD. DIV.	STATE	PROJECT	FISCAL YEAR
2	OHIO		

16
20

HAMILTON COUNTY
HAM-71-(1.56) (2.51)

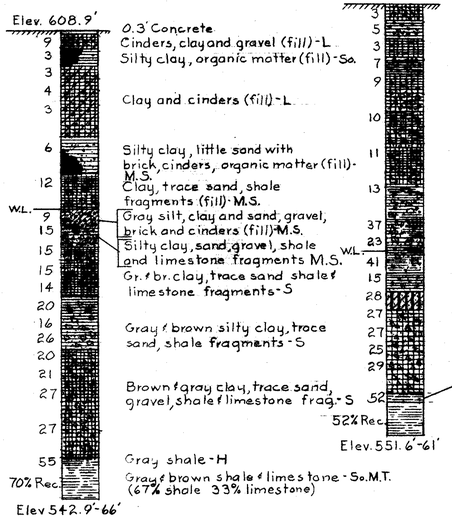

Elev. 525'

Elev. 525'

B-12-2

B-12-3

B-12-4

B-12-5

For Borings B-12-6 and B-12-7 see sheet No. 11 of 13

B-13-1

B-13-2

B-13-3

Note: V.S. denotes very stiff
M.S. denotes medium stiff
M.D. denotes medium dense
V.L. denotes very loose
L. denotes loose
S. denotes stiff
So denotes soft
T. denotes tough
M.T. denotes moderately tough
So.M.T. denotes soft to moderately tough

HAZELET & ERDAL
CONSULTING ENGINEERS
CINCINNATI, OHIO

LOG OF BORINGS

SHEET 9 of 13

DESIGNED	DRAWN	TRACED	CHECKED	REVIEWED DATE	REVISED
	A.L.T.		G.N.W.	JHO 5/14/65	

FED. RD. DIV.	STATE	PROJECT	FISCAL YEAR
2	OHIO		

17
20

HAMILTON COUNTY
HAM-71-(1.56)(2.51)

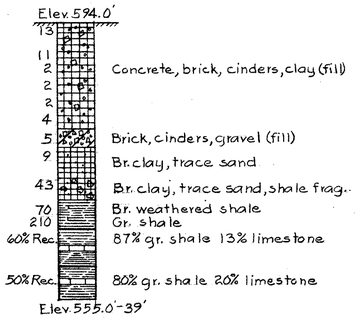

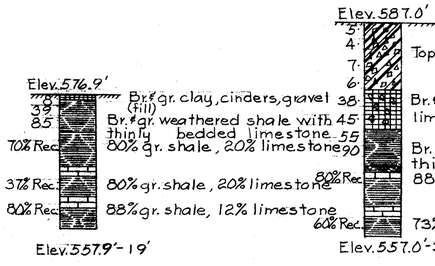

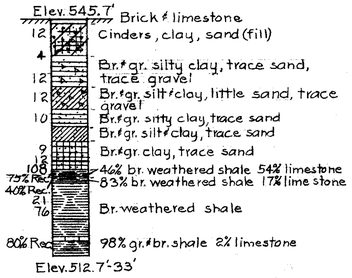

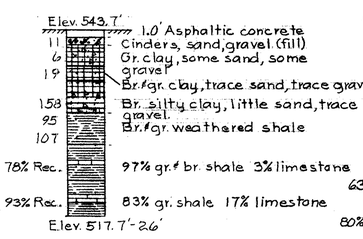

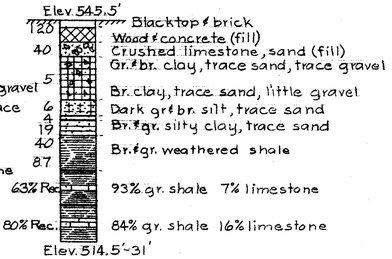

Elev. 500

Elev. 500

B-8-9 B-10-8 R-15-5 R-15-6 R-16-4 R-16-5

HAZELET & ERDAL
CONSULTING ENGINEERS
CINCINNATI, OHIO

LOG OF BORING

SHEET 10 of 13

DESIGNED	DRAWN	TRACED	CHECKED	REVIEWED DATE	REVISED
	ALT		GNW	JHO 5/18/65	

FED. RD. DIV.	STATE	PROJECT	FISCAL YEAR
2	OHIO		

18
20

HAMILTON COUNTY
HAM-71-(1.56)(2.51)

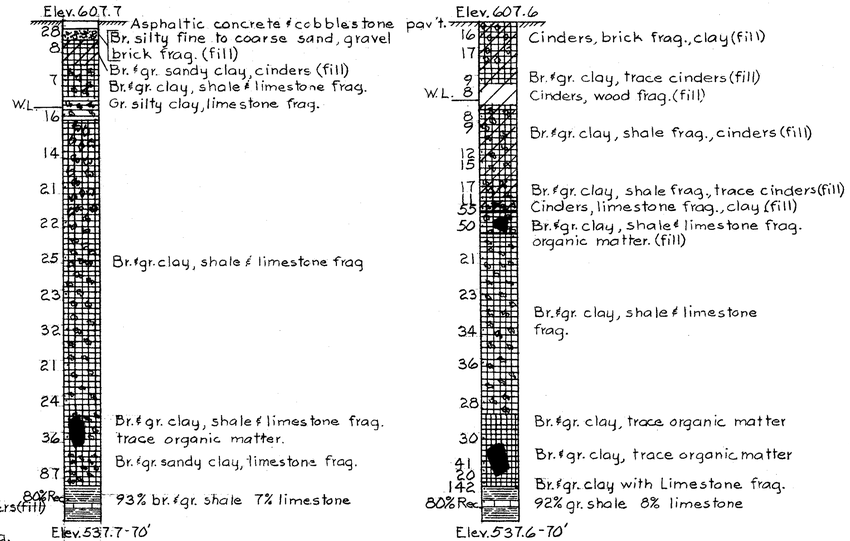

B-7-1 B-7-2 B-12-6 B-12-7

HAZELET & ERDAL
CONSULTING ENGINEERS
CINCINNATI, OHIO

LOG OF BORINGS

SHEET 11 of 13

DESIGNED	DRAWN	TRACED	CHECKED	REVIEWED DATE	REVISED
	A.L.T.		GNW	JHO 5/18/65	

FED. RD. DIV.	STATE	PROJECT	FISCAL YEAR
2	OHIO		

19
20

HAMILTON COUNTY
HAM-71-(1.56) (2.51)

Elev. 653.2
6 — 0.5' Asphaltic concrete
14 — Br. silty clay, trace cinders, topsoil, rock frag. (fill)
18 — Br. silty clay, rock frag.
36 — Br. silty clay, Limestone frag. trace sand
88 — Br. & gr. silt, clay, Limestone frag., trace sand
71% Rec. — 82% Gr. shale 18% limestone
50% Rec. — 70% Gr. shale 30% limestone
Elev 631.2-22'

B-19-15

Elev. 660.3
13 — 0.5' Concrete
56 — Gr. clay, trace sand, little shale frag.
82 — Br. & gr. silty clay, little sand, some limestone frag.
52% Rec. — Gr. shale & limestone frag.
87% Rec. — 90% gr. shale 10% limestone
90% gr. shale 10% limestone
Elev. 644.3-16'

B-19-16

Elev. 600

Elev. 732.3'
26 — Blacktop
16 — Asphaltic conc., sand, gravel (fill)
9 — Br. silt, clay, sand, gravel limestone fragments
12 — Br. sandy silt, trace gravel, limestone fragments
13 — Br. silt & clay, sand, gravel, limestone fragments
88 — Br. weathered shale limestone frag.
120 — Br. & gr. shale & limestone
49% Rec. — 83% shale 17% limestone
67% Rec. — Gr. shale & limestone
82% shale 18% limestone
Elev. 700.3'-32'

R-41-1

Elev. 747.2'
16 — 0.5' topsoil
27 — Br. clay, sand, gravel, limestone fragments
12 — Br. silt & clay, sand, gravel, limestone fragments
21
19
20 — Br. silty clay, little sand, gravel, limestone fragments
18
11
33
64 — Br. & gr. clay, trace sand, gravel, limestone fragments
95% Rec. — Br. & gr. weathered shale
63% Rec. — Br. & gr. weathered shale & limestone 78% shale 22% limestone
Gr. & br. shale & limestone 83% shale 17% limestone
Elev. 699.2'-48'

R-41-2

Elev. 680'

Elev. 758.5'
23 — Br. & gr. silty clay, rock frag. wood (fill)
18 — Br. & gray silty clay, trace sand, trace gravel, shale & limestone frag.
10
26 — Br. & gr. silt & clay, trace sand, trace gravel, shale & limestone frag
26 — Br. silty clay, trace sand, little gravel, shale & limestone frag.
27 — Br. & gr. clay, little sand, little gravel, shale & limestone fragments
11 — Br. silt & clay trace sand, some gravel, shale & limestone frag.
12 — Br. silty clay, trace sand, trace gravel, shale & limestone frag.
15
16 — Br. & gr. silt & clay, little sand, trace gravel
16 — Br. & gr. silt & clay, little sand, shale & limestone fragments
26 — Br. silt & clay, trace sand, trace gravel, shale & limestone frag.
24 — Br. silty clay, little sand, little gravel
36 — topsoil, shale & limestone frag.
88 — Br. clay, trace sand, trace gravel
70 — Br. weathered shale & limestone
85 — Br. & gr. shale — 61% Rec.
88% Rec. — 96% gray shale 4% limestone
97% Rec. — 53% gray shale 47% limestone
85% Rec. — 68% gray shale 32% limestone
Elev. 694.5'-64'

R-41-3

Elev. 755.0'
8
9 — Br. & gr. silty clay, little sand, gravel (fill)
15 — Br. & gr. silty clay, trace sand, some gravel (fill)
18
22 — Br. & gr. silty clay & gravel, trace sand, limestone frag. (fill) — 50% Rec.
14
34 — Br. & gr. silt & clay, trace sand, gravel, limestone frag. (fill) — 91% Rec.
WL
55 — Br. silty clay, brick frag. (fill)
22 — Gray clay, trace sand, organic matter (fill)
20
24 — Br. & gr. clay, trace sand, gravel
38
57
Gray & br. shale & limestone 67% shale 33% limestone
Gray shale & limestone 80% shale 20% limestone
Elev. 700.0'-55'

R-41-4

Elev. 680'

Elev. 772.0'
32 — Br. & Gr. silty clay, brick frag. cinders (fill)
20
18 — Br. & gray silty clay, trace sand, gravel, shale fragments
24
53 — Br. silty clay & gravel, trace sand, limestone fragments
16 — Br. & gr. silty clay, trace sand, gravel, shale fragments
72 — Br. & gr. silty clay, trace sand, gravel, limestone fragments
210 — Br. weathered shale & limestone
Br. & gr. weathered shale & limestone 72% shale 28% limestone
53% shale 47% limestone — 50% Rec.
Gr. & br. shale & limestone 56% shale 44% limestone — 50% Rec.
Elev. 732.0'-40'

R-41-5

HAZELET & ERDAL
CONSULTING ENGINEERS
CINCINNATI, OHIO

LOG OF BORINGS

SHEET 12 of 13

DESIGNED	DRAWN	TRACED	CHECKED	REVIEWED DATE	REVISED
	ALT		G.N.W.	JHO 5/20/65	

FED. RD. DIV.	STATE	PROJECT	FISCAL YEAR
2	OHIO		20/20

HAMILTON COUNTY
HAM-71-(1.56) (2.51)

Elev 765.7'

19		Br.&gr. clay, gravel, trace sand limestone fragments
11		
11		
12		Br. & gr. silty clay, little sand, gravel, limestone fragments.
20		
11		Br.&gr. clay, sand, gravel, limestone frag. Br. silt & clay, sand, limestone frag.
13		Br.&gr. silty clay, sand, gravel, limestone fragments
16		
24		Br.&gr. silty clay, trace sand, gravel, limestone fragments
109		
65		
210		Br. &gr. clay, trace sand, gravel limestone frag. Br.&gr. weathered shale
119		
89% Rec.		70% gray shale 30% limestone

Elev. 720.7'-45'

B-20-1

Elev. 766.2'

24		Asphaltic concrete
17		Br.&gr. silty clay rock frag.
12		Br.&gr. silty clay, trace sand, gravel limestone fragments
13		
10		Br silt & clay, little sand, gravel, limestone fragments
10		Br. silty clay, trace sand, gravel, limestone fragments
10		
10		Br.&gr. sandy silt, little sand, gravel, limestone fragments
15		Br.&gr. silty clay, trace sand, gravel, limestone fragments
51		Br.&gr. clay, trace sand, gravel, limestone fragments
57		
139		Br.&gr. silty clay, trace sand, gravel, limestone fragments
131		
133		Br.&gr. weathered shale
81% Rec.		50% br.&gr. shale 50% limestone
78% Rec.		68% gray shale 32% limestone

Elev. 709.2'-57'

B-20-2

Elev. 766.2'

17		1' Blacktop and brick Br. silty clay, shale & limestone frag. (fill)
21		Br.&gr. silty clay, little sand, little gravel, shale & limestone fragments
12		
17		Br.&gr. silt & clay, little sand, little gravel shale & limestone fragments
17		Br. sandy silt, some gravel, shale & limestone fragments
22		Br. silt, clay, gravel, little sand, shale & limestone fragments
WL 20		Br.&gr. clay, trace sand, little gravel, shale & limestone fragments
8		Br.&gr. clay, trace sand, shale & limestone fragments
16		Br. silty clay, little sand, some gravel shale & limestone fragments
47		Br.&gr. silty clay little sand, shale & limestone fragments
42		
47		Br. clay, trace sand, trace gravel shale & limestone fragments
140		Br.&gr. weathered shale
32% Rec.		62% br.&gr. weathered shale 38% limestone
62% Rec.		62% br.&gr. weathered shale 38% limestone

Elev. 710.2'-56'

B-20-3

Elev. 747.8'

9		Topsoil, cinders (fill)
43		Br.&gr. silty clay, little sand some gravel, rock fragments
31		Br.&gray silty clay, little sand little gravel, shale fragments
13		Br.&gray silt & clay, little sand some gravel, organic matter, rock fragments
16		Br.&gr. clay, trace sand, little gravel, organic matter, rock fragments
12		Br.&gr. silty clay, trace sand, trace gravel, topsoil
8		Br.&gr. silt & clay, little sand, trace gravel, topsoil
7		Gr. clay, trace sand, organic matter
7		Gr. silty clay, trace sand, organic matter
2		Br.&gr. silt & clay, trace sand, organic matter
3		Br. clay, trace sand
9		Br.&gr. silty clay, little sand, little gravel, topsoil
12		
11		Br.&gray silty clay, trace sand, organic matter
42		
58		Br.&gray silty clay, trace sand
80% Rec.		55% gray shale 45% gr. limestone

Elev 689.8'-58'

B-20-4

Elev. 773.2'

5		Cinders, topsoil, clay, brick, concrete (fill)
8		
3		
7		
4		Br.&gr. silty clay, little sand, some gravel cinders, topsoil, brick, concrete (fill)
9		
9		Br.&gr. silt, clay, little sand, little gravel, cinders, topsoil, brick, conc. (fill)
48		Br.&gr. shale & clay (fill)
11		Br.&gr. silt & clay, some sand, little gravel, shale fragments (fill)
11		Br.&gr. silt, clay, gravel, little sand, weathered shale. (fill)
12		Cinders (fill)
6		Br.&gr. silt, clay, gravel, little sand shale & limestone fragments
13		
17		
40		Br.&gr. silty clay, trace sand, some gravel, limestone & shale fragments
19		Br.&gr. silty clay, shale & limestone fragments
13		
62		Brown & gray clay, trace sand
12		55% br. weathered shale 45% limestone
62% Rec.		66% gray shale, 34% limestone
63% Rec.		

Elev. 709.8'-63.4'

B-20-6

Elev. 700'

Elev. 700'

HAZELET & ERDAL
CONSULTING ENGINEERS
CINCINNATI, OHIO

LOG OF BORINGS

SHEET 13 of 13

DESIGNED	DRAWN	TRACED	CHECKED	REVIEWED DATE	REVISED
	ALT		G.N.W.	JHo 5/20/65	