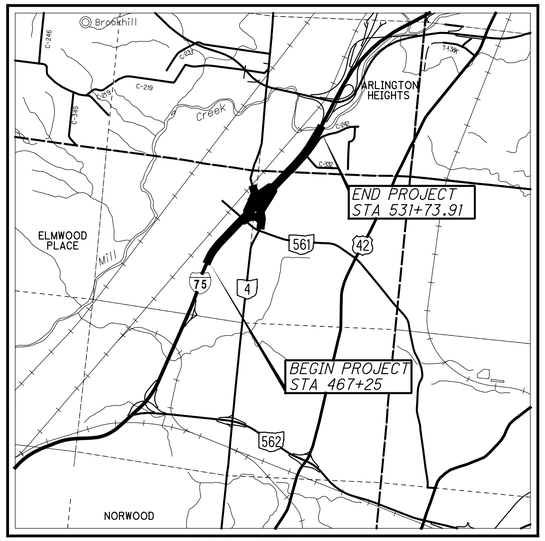

LOCATION MAP

LATITUDE: N39°11'20" LONGITUDE: W84°28'50"

SCALE IN MILES

0 1/2 1

N

PORTION TO BE IMPROVED

INTERSTATE HIGHWAY

FEDERAL ROUTES

STATE ROUTES

COUNTY & TOWNSHIP ROADS

OTHER ROADS

DESIGN DESIGNATION - I.R. 75 & TOWNE ST

	I.R. 75	TOWNE ST
CURRENT ADT (2010)	173,800	8,340
DESIGN YEAR ADT (2030)	203,000	8,340
DESIGN HOURLY VOLUME (2030)	17,050	900
DIRECTION DISTRIBUTION	53%	76%
TRUCKS (24 HOUR B&C)	14%	7%
DESIGN SPEED	60	40
LEGAL SPEED	55	35
DESIGN FUNCTIONAL CLASSIFICATION	01 URBAN INTERSTATE	05 URBAN COLLECTOR
NHS PROJECT	YES	NO

DESIGN EXCEPTIONS

DESIGN FEATURE	APPROVAL DATE	SHEET NUMBERS
SHOULDER WIDTH	3/2/2015	14 , 200

ADA DESIGN WAIVERS

NONE REQUIRED

UNDERGROUND UTILITIES

Contact Two Working Days Before You Dig

OHIO811.org Before You Dig

OHIO811. 8-1-1. or 1-800-362-2764
(Non-members must be called directly)

PLAN PREPARED BY:

EMH&T

Evans, Mechwart, Hambleton & Tilton, Inc.
Engineers • Surveyors • Planners • Scientists
5500 New Albany Road, Columbus, OH 43054
Phone: 614.775.4500 Fax: 614.775.4800

M C M X X V I

J:\20240445\ODOT\HAM\117525\Design\Roadway\Sheets\77889GT001.dgn 4/16/2025 11:38:03 AM hbrendlinger

STATE OF OHIO

DEPARTMENT OF TRANSPORTATION

HAM-75-8.91

CITY OF CINCINNATI

HAMILTON COUNTY

PROJECT DESCRIPTION

THE PROJECT CONSISTS OF ASPHALT PAVEMENT RECONSTRUCTION AND WIDENING OF 1.3 MILES OF IR 75, ADDING AN ADDITIONAL LANE NORTHBOUND AND SOUTHBOUND. ADDITIONAL WORK INCLUDES MINOR IMPROVEMENTS TO THE PADDOCK ROAD INTERCHANGE, CLOSURE OF THE TOWNE STREET RAMPS, ONE PEDESTRIAN BRIDGE, NOISE WALLS, ITS, LIGHTING, ANS STORM SEWER SYSTEMS. THIS IS PHASE 8C OF THE MILLCREEK EXPRESSWAY PROJECT.

PROJECT EARTH DISTURBED AREA:	49.2 ACRES
ESTIMATED CONTRACTOR EARTH DISTURBED AREA:	1.0 ACRES
NOTICE OF INTENT EARTH DISTURBED AREA:	50.2 ACRES

LIMITED ACCESS

THIS IMPROVEMENT IS ESPECIALLY DESIGNED FOR THROUGH TRAFFIC AND HAS BEEN DECLARED A LIMITED ACCESS HIGHWAY OR FREEWAY BY ACTION OF THE DIRECTOR IN ACCORDANCE WITH THE PROVISIONS OF SECTION 5511.02 OF THE OHIO REVISED CODE.

2023 SPECIFICATIONS

THE STANDARD SPECIFICATIONS OF THE STATE OF OHIO, DEPARTMENT OF TRANSPORTATION, INCLUDING CHANGES AND SUPPLEMENTAL SPECIFICATIONS LISTED IN THE PROPOSAL SHALL GOVERN THIS IMPROVEMENT.

I HEREBY APPROVE THESE PLANS AND DECLARE THAT THE MAKING OF THIS IMPROVEMENT WILL NOT REQUIRE THE CLOSING TO TRAFFIC OF THE HIGHWAY AND SIDE ROADS EXCEPT AS NOTED ON SHEETS 37 & 38, AND THAT PROVISIONS FOR THE MAINTENANCE AND SAFETY OF TRAFFIC WILL BE AS SET FORTH ON THE PLANS AND ESTIMATES.

Tammy K. Campbell

Tammy K. Campbell, P.E.
District 08 Deputy Director

Pamela Boratyn

Pamela Boratyn
Director, Department of Transportation

ENGINEERS SEAL:	ENGINEERS SEAL:	ENGINEERS SEAL:	ENGINEERS SEAL:
FOR ROADWAY:	FOR ITS/LIGHTING, TRAFFIC SIGNALS	BRIDGE: HAM-75-0992, RETAINING WALL: L	RETAINING WALLS: J1, J3, K, V, Y & Z
STATE OF OHIO — HEATH R. BRENDLINGER E-77786 — REGISTERED PROFESSIONAL ENGINEER	STATE OF OHIO — JASON D. SMALLWOOD E-66540 — REGISTERED PROFESSIONAL ENGINEER	STATE OF OHIO — PAUL PASQUALE ANTONELLI E-76901 — REGISTERED PROFESSIONAL ENGINEER	STATE OF OHIO — S. SAM KHORSHIDI E-61030 — REGISTERED PROFESSIONAL ENGINEER

STANDARD CONSTRUCTION DRAWINGS

BP-2.1	1/21/22	DM-2.1	1/18/13	MGS-2.1	1/19/18	AS-1-15	1/20/23	HL-40.20	7/19/24	MT-98.11	1/17/20	MT-103.10	1/21/22	TC-42.20	10/18/13	TC-85.20	4/21/23
BP-2.2	1/15/21	DM-4.1	7/17/20	MGS-3.1	1/19/18	AS-2-15	7/21/23	HL-50.11	1/16/15	MT-98.20	4/19/19	MT-104.10	1/19/24	TC-51.11	1/15/16		
BP-3.1	1/19/24	DM-4.3	1/15/16	MGS-3.2	1/18/13	EXJ-2-81	7/15/22	HL-50.21	7/15/22	MT-98.21	7/21/23	MT-105.10	1/17/20	TC-51.12	1/15/16	ITS-10.10	7/19/24
BP-5.1	7/15/22	DM-4.4	1/15/16	MGS-4.2	7/19/13	VPF-1-90	7/21/23	HL-60.11	7/21/17	MT-98.22	1/17/20	MT-110.10	7/19/13	TC-52.10	10/18/13	ITS-10.11	7/19/24
BP-6.1	7/19/13			MGS-4.3	1/18/13			HL-60.21	7/20/18	MT-98.28	1/17/20			TC-52.20	1/15/21	ITS-12.10	7/15/22
BP-7.1	7/19/24	I-3B, 3B1	7/19/24	MGS-5.2	7/15/16	HL-10.11	7/21/23	HL-60.31	7/19/24	MT-98.29	1/17/20	TC-12.31	4/15/22	TC-61.10	4/21/23	ITS-14.10	7/19/24
BP-9.1	1/18/19	I-3C, 3C1	7/19/24	MGS-5.3	7/15/16	HL-10.12	7/21/23			MT-98.30	7/16/21	TC-15.116	1/19/24	TC-61.30	7/19/24	ITS-14.11	7/19/24
		I-3D	7/19/24	MGS-6.1	1/19/18	HL-10.13	1/20/23	MT-95.30	7/19/19	MT-99.20	4/19/19	TC-21.11	7/16/21	TC-65.10	1/17/14	ITS-14.50	7/19/24
CB-2-3, 2-4	7/19/24					HL-10.31	7/15/22	MT-95.31	7/19/19	MT-99.30	1/17/20	TC-21.21	1/20/23	TC-65.11	1/19/24	ITS-14.60	1/19/24
CB-3	7/19/24	MH-1	7/15/22	RM-3.1	7/20/18	HL-20.11	7/21/23	MT-95.32	4/19/19	MT-100.00	1/19/24	TC-21.50	4/17/20	TC-71.10	4/21/23	ITS-15.10	7/19/24
CB-3A	7/19/24	MH-3	7/19/24	RM-4.1	1/17/20	HL-20.13	7/21/23	MT-95.40	7/21/23	MT-101.60	4/21/23	TC-22.20	1/17/14	TC-72.20	7/21/23	ITS-15.11	7/19/24
CB-4A, 5A, 8A	7/19/24			RM-4.2	7/19/24	HL-20.21	1/15/21	MT-95.45	7/21/23	MT-101.70	7/19/24	TC-41.10	7/19/13	TC-73.20	7/19/24	ITS-18.00	7/16/21
CB-5	7/19/24	F-1.1	7/19/13	RM-4.3	1/21/22	HL-20.24	1/15/21	MT-95.50	7/21/17	MT-101.75	7/21/23	TC-41.20	10/18/13	TC-74.10	7/21/23	ITS-18.10	7/16/21
CB-6	7/19/24	F-3.1	7/19/13	RM-4.4	7/21/23	HL-30.11	7/21/23	MT-95.70	7/21/23	MT-101.80	1/17/20	TC-41.30	4/21/23	TC-81.22	7/21/23	ITS-30.11	7/19/24
CB-8	7/19/24	F-3.3	7/19/13	RM-4.5	7/19/24	HL-30.21	4/17/20	MT-95.71	7/21/23	MT-101.90	7/17/20	TC-41.40	10/18/13	TC-83.10	1/17/20	ITS-30.12	7/19/24
		F-3.4	7/19/13	RM-4.6	7/19/24	HL-30.22	1/15/21	MT-95.73	7/19/24	MT-102.10	7/21/23	TC-41.41	7/19/19	TC-83.20	7/19/24	ITS-30.13	7/19/24
DM-1.1	7/17/20			RM-5.2	7/21/23	HL-30.31	7/19/24	MT-95.82	7/19/13	MT-102.20	4/19/19	TC-41.50	10/18/13	TC-84.20	1/19/24	ITS-50.10	7/15/22
DM-1.2	7/16/21	MGS-1.1	7/16/21			HL-30.41	1/21/22	MT-98.10	1/17/20	MT-102.30	10/16/15	TC-42.10	10/18/13	TC-85.10	1/19/24	ITS-50.11	7/19/24

MSD STANDARD DRAWINGS
49005
49003
49031
49032
49037
49040
49046
49048
49058A

CITY OF CINCINNATI STANDARD DRAWINGS	
ES-7	4/27/05

ITS-50.12	7/19/24
ITS-76.10	7/19/24

SUPPLEMENTAL SPECIFICATIONS

800-2023	7/19/24	905	4/17/20
804	7/19/24	908	10/20/17
807	1/21/22	909	7/19/24
808	7/19/24	913	4/16/21
809	7/19/24	921	7/19/24
813	7/21/23	939	1/17/20
821	4/20/12		
825	7/19/24		
832	7/19/24		
839	7/16/21		
840	7/19/24		
850	7/21/23		
866	4/21/17		
867	4/15/22		
878	1/21/22		
896	7/21/17		
902	7/19/19		
904	7/15/22		

FEDERAL PROJECT NO. E240415

PID NO. 117525

CONSTRUCTION PROJECT NO.

RAILROAD INVOLVEMENT NONE

HAM-75-8.91

UTILITIES

LISTED BELOW ARE ALL UTILITIES LOCATED WITHIN THE PROJECT CONSTRUCTION LIMITS TOGETHER WITH THEIR RESPECTIVE OWNERS:

GAS
DUKE ENERGY (GAS)
139 EAST 4TH ST., ROOM 460A
CINCINNATI, OH 45202
OH/KYHOUSEBILL@DUKE-ENERGY.COM

OIL
BP PIPELINES (NORTH AMERICA) INC.
BLAKE PATRICK
30 SOUTH WACKER DRIVE
SUITE 900
CHICAGO, IL 60606
312-809-3155
BLAKE.PATRICK@BP.COM
BPPIPELINESROW@BP.COM

BP PIPELINES NORTH AMERICA, INC.
KIM MILLER
930 TENNESSEE AVENUE
CINCINNATI, OH 45229
513-649-6187

ELECTRIC:
DUKE ENERGY - ELECTRIC (DISTRIBUTION)
AARON WRIGHT
2010 DANA AVE
CINCINNATI, OH 45207
513-514-8211
AARON.WRIGHT@DUKE-ENERGY.COM

DUKE ELECTRIC - TRANSMISSION
TIM MEYER
139 EAST 4TH STREET, 552A
CINCINNATI, OH 45202
513-287-1266

CABLE
CHARTER COMMUNICATIONS
KENT RIEGER
10920 KENWOOD ROAD
BLUE ASH, OHIO 45242
DL-SOUTHERN-OHIO-OUTSIDE-PLANT@CHARTER.COM
513-386-5499
KENT.REIGER@CHARTER.COM

TELEPHONE
CINCINNATI BELL - AERIAL & PLACING
ROB STROCHINSKY
221 E. 4TH STREET
BLDG. 121-900
CINCINNATI, OH 45201
513-565-6014
ROBERT.STROCHINSKY@CINBELL.COM
ROADPROJECTS@CINBELL.COM

CINCINNATI BELL - UNDERGROUND STRUCTURES
BRECK COWAN
221 E. 4TH STREET
BLDG. 121-900
CINCINNATI, OH 45201
513-565-7187 - OFFICE
BRECK.COWAN@CINBELL.COM

VERIZON
ALLEN GUEST
120 RAVINE STREET
AKRON, OH 44303
330-253-8267

UTILITIES (CONT)

TELEPHONE (CONT)
SPRINT NEXTEL
STEVE HUGHES
11370 ENTERPRISE PARK DRIVE
SHARONVILLE, OH 45251
513-459-5796
STEVEN.HUGHES@SPRINT.COM

QWEST/CENTURYLINK/LUMEN
JORDAN LANGSTON
20 N MECHANIC STREET
LEBANON, OH 45036
513-933-3502
RELOCATIONS@LUMEN.COM

SANITARY SEWER
CINCINNATI METROPOLITAN SEWER DISTRICT
ROBERT FRANKLIN
1600 GEST STREET
CINCINNATI, OH 45204
513-577-7188
MSDUTILITYREVIEW@CINCINNATI-OH.GOV
ROB.FRANKLIN@CINCINNATI-OH.GOV

WATER
GREATER CINCINNATI WATER WORKS
KYLE BUCKLEY
3845 EASTERN AVENUE
CINCINNATI, OH 45226
513-591-7874
KYLE.BUCKLEY@GCWW.CINCINNATI-OH.GOV

SOUTHWESTERN OHIO WATER COMPANY
MIKE FLAVIN
600 W. LOVELAND AVENUE, SUITE 3
LOVELAND, OH 45140
513-489-4844

STORM
CINCINNATI STORMWATER MANAGEMENT UTILITY
ROBERT GOODPASTER
4747 SPRING GROVE AVENUE
CINCINNATI, OHIO 45232
513-591-7746
ROBERT.GOODPASTER@CINCINNATI-OH.GOV
SMUPLANREVIEW@CINCINNATI-OH.GOV

MISC
GIVAUDAN FLAVORS CORPORATION
FRED WILSON
1199 EDISON DRIVE
CINCINNATI, OH 45216
PHONE: 513.948.4284
MOBILE: 847.226.3863
FAX: 513.482.8535

ODOT ITS
CENTRAL OFFICE ODOT ITS
1606 WEST BROAD STREET
COLUMBUS, OH 43223
614.387.4113
CEN.ITS.LAB@DOT.OHIO.GOV

THE LOCATION OF THE UNDERGROUND UTILITIES SHOWN ON THE PLANS ARE AS OBTAINED FROM THE OWNERS AS REQUIRED BY SECTION 153.64 O.R.C.

UTILITY NOTIFICATION

THE OHIO DEPARTMENT OF TRANSPORTATION HAS UTILITY FACILITIES (HIGHWAY LIGHTING, TRAFFIC SIGNALS, ITS) WITHIN THE LIMITS OF THIS PROJECT.

IN ADDITION TO THE INFORMATION OUTLINED IN THE 4A NOTES OF THIS CONTRACT, AND EVEN THOUGH ODOT IS LISTED AS A MEMEBER OF THE OHIO UTILITIES PROTECTION

UTILITY NOTIFICATION (CONT)

SERVICES (OUPS), THE CONTRACTOR ON THIS PROJECT IS REQUIRED TO CONTACT ODOT, DISTRICT 8, TRAFFIC DEPARTMENT, AND ARTIMIS DIRECTLY SO THAT THE ODOT UTILITIES, LOCATED WITHIN THIS PROJECT, ARE MARKED. THE CONTRACTOR SHALL NOTIFY DISTRICT 8, TRAFFIC AT 513-933-6689, ARTIMIS AT 513-564-6118, AND THE PROJECT ENGINEER, FOURTEEN (14) CALENDAR DAYS IN ADVANCE OF ANY WORK, FOR THE NEED TO MARK ODOT'S OWNED UTILITIES.

THE ABOVE REQUIREMENTS ARE IN ADDITION TO SECTION 105.07 & 107.16 OF THE CONSTRUCTION AND MATERIAL SPECIFICATIONS AND THE 4A PROPOSAL NOTE.

THE CONTRACTOR SHALL NOTIFY OTHER UTILITIES THOUGH OUPS OR DIRECTLY A MINIMUM OF FORTY-EIGHT (48) HOURS IN ADVANCE OF ANY WORK.

THE COST FOR THE ABOVE DESCRIBED WORK IS IDENTICAL TO THE OVERALL BID PRICE OF THE PROJECT.

EXISTING OVERHEAD ELECTRIC FACILITIES

WITHIN THE CORRIDOR SEVERAL OVERHEAD ELECTRIC FACILITIES EXIST. CONTRACTOR TO EXERCISE CAUTION WHEN WORKING UNDER OR NEAR ANY ELECTRIC UTILITY.

GIVAUDAN FLAVORS COORDINATION

GIVAUDAN FLAVORS HAS AN EXISTING 8" GAS LINE, UTILITY TUNNEL, FIBER OPTIC LINE (OVERHEAD AT SEYMOUR AVENUE BRIDGE), AND FACILITIES LOCATED ON THE EAST AND WEST SIDE OF I-75. COORDINATION WITH GIVAUDAN THROUGH ALL PHASES OF CONSTRUCTION WILL BE REQUIRED BY THE CONTRACTOR. CONTACT INFORMATION FOR GIVAUDAN IS INCLUDED WITH IN THE UTILITIES SECTION OF THE GENERAL NOTES. SPECIFIC COORDINATION ITEMS WITH GIVAUDAN FLAVORS ARE INCLUDED PER APPLICABLE PLAN NOTES. THIS WORK IS CONSIDERED INCIDENTAL TO ALL OTHER WORK ON THE PROJECT.

METROPOLITAN SEWER DISTRICT COORDINATION

ALL PROPOSED COMBINED SEWER AND SANITARY PIPING AND RELATED APPURTENANCES TO BE PROVIDED TO THE METROPOLITAN SEWER DISTRICT MUST BE INSTALLED AND TESTED IN ACCORDANCE WITH MSD RULES AND REGULATIONS AND STANDARD DRAWINGS. ALL MATERIALS MUST CONFORM TO MSD RULES AND REGULATIONS AND STANDARD DRAWINGS. MSD MUST BE CONTACTED FOR INSPECTION 48 HOURS PRIOR TO THE BEGINNING OF ANY MSD WORK. ALL STORMWATER CONNECTIONS TO THE COMBINED SEWER REQUIRE A STORMWATER CONNECTION PERMIT FROM MSD'S DEVELOPMENT SERVICES OFFICE. THE PERMIT IS AVAILABLE FROM THE FOLLOWING WEBSITE: http://www.msdgc.org/downloads /customer_care/permits_and_records/sewer_tap_application.pdf

ALL EXISTING SEWERS TO REMAIN IN SERVICE MUST BE VIDEO RECORDED PRE AND POST CONSTRUCTION PER THE REQUIREMENTS OF ODOT SUPPLEMENTAL SPECIFICATON 902, SECTION 902.01. ANY DAMAGE CAUSED TO THE SEWERS DURING CONSTRUCTION MUST BE REPAIRED TO THE SATISFACTION OF MSD. MSD RULES AND REGULATIONS AND STANDARD CONSTRUCTION DRAWINGS MAY BE FOUND AT THE FOLLOWING WEBSITE: http://www.msdgc.org/ABOUT_MSD/LEGAL_AND_ORGANIZATIONAL_DOCUMENTS/INDEX.HTML

THE FOLLOWING QUANTITY HAS BEEN CARRIED TO THE GENERAL SUMMARY.
ITEM 611E97910 - SANITARY SEWER: MSD SANITARY SEWER PROTECTION - LUMP

SURVEYING PARAMETERS

PRIMARY PROJECT CONTROL MONUMENTS GOVERN ALL POSITIONING ON ODOT PROJECTS. SEE SHEET 9 OF THE PLANS FOR A TABLE CONTAINING PROJECT CONTROL INFORMATION.

USE THE FOLLOWING PROJECT CONTROL, VERTICAL POSITIONING, AND HORIZONTAL POSITIONING PARAMETERS FOR ALL SURVEYING:

PROJECT CONTROL

POSITIONING METHOD: STATIC GPS OBSERVATIONS FOR HORIZONTAL CONTROL AND DIFFERENTIAL LEVELING FOR VERTICAL CONTROL

MONUMENT TYPE: TYPE A

VERTICAL POSITIONING

ORTHOMETRIC HEIGHT DATUM: NAVD 88
GEOID: 03

HORIZONTAL POSITIONING

REFERENCE FRAME: NAD 83 (1995)
ELLIPSOID: GRS 80
MAP PROJECTION: LAMBERT CONFORMAL CONIC
COORDINATE SYSTEM: OHIO STATE PLANE (SOUTH ZONE)
COMBINED SCALE FACTOR: 0.999916593
ORIGIN OF COORDINATE
SYSTEM: NORTHING: 0.0, EASTING 0.0

USE THE POSITIONING METHODS AND MONUMENT TYPE USED IN THE ORIGINAL SURVEY TO RESTORE ALL MONUMENTS RELATED TO PRIMARY PROJECT CONTROL THAT ARE DAMAGED OR DESTROYED BY CONSTRUCTION ACTIVITIES. RESTORE THE DAMAGED OR DESTROYED MONUMENTS IN ACCORDANCE WITH SUPPLEMENTAL SPECIFICATION 823.

UNITS ARE IN U.S. SURVEY FEET. USE THE FOLLOWING CONVERSION FACTOR: 1 METER = 3.280833333 U.S. SURVEY FEET.

WORK LIMITS

THE WORK LIMITS SHOWN ON THESE PLANS ARE FOR PHYSICAL CONSTRUCTION ONLY. PROVIDE THE INSTALLATION AND OPERATION OF ALL WORK ZONE TRAFFIC CONTROL AND WORK ZONE TRAFFIC CONTROL DEVICES REQUIRED BY THESE PLANS WHETHER INSIDE OR OUTSIDE THESE WORK LIMITS.

RECONNECT SEWER LATERAL

THE CONTRACTOR SHALL RECONNECT ANY SEWER LATERAL DISTURBED DURING CONSTRUCTION PER MSD RULES AND REGULATIONS. THIS WORK SHALL BE INCLUDED IN THE UNIT PRICE FOR ITEM 611 - 8" CONDUIT, TYPE B, 706.02, JOINTS PER 706.11 - 50 LF

CALCULATED SEA
CHECKED DLR

GENERAL NOTES

HAM-75-8.91

22
826

J:\20240445\ODOT\HAM\117525\Design\Roadway\Sheets\77889GN001.dgn 4/18/2025 12:17:32 PM hbrendlinger

UNDERDRAIN CONNECTIONS

ALL EXISTING UNDERDRAINS SHALL BE CONNECTED INTO THE PROPOSED UNDERDRAINS AS SHOWN IN UNDERDRAIN PLAN AND DETAILS. SECTIONS OF EXISTING UNDERDRAIN DESIGNATED TO BE REMOVED SHALL BE CONSIDERED TO BE INCIDENTAL TO THE EXCAVATION. ALL MATERIAL, LABOR AND INCIDENTALS, INCLUDING BENDS AND BRANCHES NECESSARY TO PROVIDE THE CONNECTION OF THE EXISTING UNDERDRAINS SHALL BE INCLUDED IN ITEM 611 - 6" CONDUIT, TYPE F.

ITEM SPECIAL - PIPE CLEANOUT

THIS WORK CONSISTS OF REMOVING SEDIMENT AND DEBRIS FROM THE EXISTING DRAINAGE CONDUITS SPECIFIED IN THE PLANS. DISPOSE OF ALL MATERIAL PER 105.16 AND 105.17. CLEAN OUT TO THE APPROVAL OF THE ENGINEER. CLEANOUT OF THE PIPE IS PAID FOR AT THE UNIT PRICE BID FOR ITEM SPECIAL, PIPE CLEANOUT. THIS PRICE INCLUDES THE COST FOR MATERIAL, EQUIPMENT, LABOR, AND ALL INCIDENTALS REQUIRED TO COMPLETE THE CLEANOUT.

THE FOLLOWING ESTIMATED QUANTITIES HAVE BEEN INCLUDED IN THE GENERAL SUMMARY FOR THE WORK NOTED ABOVE:

ITEM SPECIAL, PIPE CLEANOUT, 24" AND UNDER	100 FT.
ITEM SPECIAL, PIPE CLEANOUT, 27" TO 48"	100 FT.
ITEM SPECIAL, PIPE CLEANOUT, OVER 48"	100 FT.

POST CONSTRUCTION STORM WATER TREATMENT

THIS PLAN UTILIZES STRUCTURAL BEST MANAGEMENT PRACTICES (BMPS) FOR POST CONSTRUCTION STORM WATER TREATMENT.

VEGETATED FILTER STRIP

THIS PLAN UTILIZES VEGETATED FILTER STRIP(S) FOR POST CONSTRUCTION STORM WATER TREATMENT. PLACE EITHER ITEM 660 SODDING OR ITEM 659 SEEDING AND MULCHING WITH A 4-INCH LIFT OF TOPSOIL AND ITEM 670, SLOPE EROSION PROTECTION TO ALL DISTURBED AREAS DESIGNATED AS VEGETATED FILTER STRIPS, THE EDGE OF SHOULDER, AND THE FORESLOPE AS SPECIFIED IN THE PLANS.

VEGETATED BIOFILTER

THIS PLAN UTILIZES VEGETATED BIOFILTER(S) FOR POST CONSTRUCTION STORM WATER TREATMENT. PLACE EITHER ITEM 660 SODDING OR ITEM 659 SEEDING AND MULCHING WITH A 4-INCH LIFT OF TOPSOIL AS SHOWN IN THE PLANS TO ANY DISTURBED AREA ON THE SHOULDER AND FORESLOPE DRAINING TO A VEGETATED BIOFILTER. THE DITCH FOR EACH VEGETATED BIOFILTER SHALL BE TRAPEZOIDAL, AS SHOWN IN THE PLAN CROSS SECTIONS. PROVIDE ITEM 670 AS SPECIFIED IN THE PLANS.

CROSSINGS AND CONNECTIONS TO EXISTING PIPES AND UTILITIES

WHERE PLANS PROVIDE FOR A PROPOSED CONDUIT TO BE CONNECTED TO, OR CROSS OVER OR UNDER AN EXISTING SEWER OR UNDERGROUND UTILITY, THE CONTRACTOR SHALL LOCATE THE EXISTING PIPES OR UTILITIES BOTH AS TO LINE AND GRADE BEFORE STARTING TO LAY THE PROPOSED CONDUIT.

IF IT IS DETERMINED THAT THE ELEVATION OF THE EXISTING CONDUIT, OR EXISTING APPURTENANCE TO BE CONNECTED, DIFFERS FROM THE PLAN ELEVATION OR RESULTS IN A CHANGE IN THE PLAN CONDUIT SLOPE, THE ENGINEER SHALL BE NOTIFIED BEFORE STARTING CONSTRUCTION OF ANY PORTION OF THE PROPOSED CONDUIT WHICH WILL BE AFFECTED BY THE VARIANCE IN THE EXISTING ELEVATIONS.

IF IT IS DETERMINED THAT THE PROPOSED CONDUIT WILL INTERSECT AN EXISTING SEWER OR UNDERGROUND UTILITY IF CONSTRUCTED AS SHOWN ON THE PLAN, THE ENGINEER SHALL BE NOTIFIED BEFORE STARTING CONSTRUCTION OF ANY PORTION OF THE PROPOSED CONDUIT WHICH WOULD BE AFFECTED BY THE INTERFERENCE WITH AN EXISTING FACILITY.

PAYMENT FOR ALL THE OPERATIONS DESCRIBED ABOVE SHALL BE INCLUDED IN THE CONTRACT PRICE FOR THE PERTINENT 611 CONDUIT ITEM.

BENCHING OF FOUNDATION SLOPES

ALTHOUGH CROSS-SECTIONS INDICATE SPECIFIC DIMENSIONS FOR PROPOSED BENCHING OF THE EMBANKMENT FOUNDATIONS IN CERTAIN AREAS AS SHOWN BELOW, NO WAIVER OF THE SPECIFICATIONS IS INTENDED. BENCH ALL OTHER SLOPED EMBANKMENT AREAS AS SET FORTH IN SECTION 203.05 OF THE CONSTRUCTION AND MATERIAL SPECIFICATIONS (C&MS). NO ADDITIONAL PAYMENT WILL BE MADE FOR BENCHING REQUIRED UNDER THE PROVISIONS OF SECTION 203.05 NOT INDICATED IN THE PLANS.

SHEET	BENCHING
225	172 CY
229	141 CY
231	56 CY

THE FOLLOWING ESTIMATED QUANTITIES HAVE BEEN CARRIED TO THE GENERAL SUMMARY FOR THIS WORK.

ITEM 203 - EXCAVATION	369 CY
ITEM 203 - EMBANKMENT	369 CY

ITEM SPECIAL - TEMPORARY DRAINAGE PUMP

THIS WORK WILL BE THE INSTALLATION AND MAINTENANCE OF A TEMPORARY DRAINAGE PUMP FOR DRAINAGE STRUCTURE 620 AT STATION 500+28 LT. THE CONTRACTOR SHALL PROVDE ALL LABOR, MATERIALS AND EQUIPMENT NECESSARY TO PUMP 5.40 CFS OF FLOW FROM STRUCTURE 620 TO STRUCTURE 603 (STATION 496+64 LT). THE PUMP SHALL BE OPERATIONAL FROM THE INSTALLATION OF STRUCTURE 620 UNTILL THE FINAL CONNECTION CAN BE MADE TO STRUCTURE 606 (STATION 499+50 CL).

THE PAYMENT OF ALL WORK ASSOCIATED WITH THE TEMPORARY PUMP SHALL BE INCLUDED IN THE FOLLOWING ITEM.

ITEM SPECIAL - TEMPORARY DRAINAGE PUMP - 12 MNTH

ITEM 611 DRAINAGE STRUCTURE, MISC.: CHECK VALVE FOR 54" CONDUIT

PROVIDE AND INSTALL AN INLINE CHECK VALVE SUCH AS THE TIDEFLEX CHECKMATE OR APPROVED EQUAL AT THE LOCATIONS SHOWN IN THE PLANS. THE INTERNAL DIAMETER OF THE CHECK VALVE PROVIDED SHALL BE THE MAXIMUM SIZE AVAILABLE FROM INDUSTRY FOR THE SPECIFIC CONDUIT IN WHICH IT IS BEING INSTALLED. THE CHECK VALVE SHALL PREVENT ALL COMBINED SEWER BACKFLOW FROM PASSING THROUGH IT AND BE AN ALL RUBBER OR NEOPRENE LOW-HEADLOSS CHECK SLEEVE WITH NO MECHANICAL PARTS AND SHALL OPERATE ON DIFFERENTIAL PRESSURE AS A PASSIVE DEVICE. THE VALVE SHALL OPEN WITH AS LITTLE AS ONE INCH OF HEAD PRESSURE AND BE SELF DRAINING. THE VALVE SHALL HAVE A MINIMUM 25 YEAR SERVICE LIFE. INSTALL THE CHECK VALVE PER THE MANUFACTURE'S RECOMMENDATIONS.

INCLUDE ALL LABOR, EQUIPMENT AND MATERIALS REQUIRED FOR INSTALLATION IN THE UNIT PRICE BID FOR 611, DRAINAGE STRUCTURE, MISC.: CHECK VALVE FOR 54" CONDUIT.

REVIEW OF DRAINAGE FACILITIES

BEFORE ANY WORK IS STARTED ON THE PROJECT AND AGAIN BEFORE FINAL ACCEPTANCE BY THE STATE, REPRESENTATIVES OF THE STATE AND THE CONTRACTOR, ALONG WITH LOCAL REPRESENTATIVES, SHALL MAKE AN INSPECTION OF ALL EXISTING SEWERS WHICH ARE TO REMAIN IN SERVICE AND WHICH MAY BE AFFECTED BY THE WORK. THE CONDITION OF THE EXISTING CONDUITS AND THEIR APPURTENANCE SHALL BE DETERMINED FROM FIELD OBSERVATIONS. RECORDS OF THE INSPECTION SHALL BE KEPT IN WRITING BY THE STATE.

ALL NEW CONDUITS, INLETS, CATCH BASINS, AND MANHOLES CONSTRUCTED AS A PART OF THE PROJECT SHALL BE FREE OF ALL FOREIGN MATTER AND IN A CLEAN CONDITION BEFORE THE PROJECT WILL BE ACCEPTED BY THE STATE.

ALL EXISTING SEWERS INSPECTED INITIALLY BY THE ABOVE MENTIONED PARTIES SHALL BE MAINTAINED AND LEFT IN A CONDITION REASONABLY COMPARABLE TO THAT DETERMINED BY THE ORIGINAL INSPECTION. ANY CHANGE IN THE CONDITION RESULTING FROM THE CONTRACTOR'S OPERATIONS SHALL BE CORRECTED BY THE CONTRACTOR TO THE SATISFACTION OF THE ENGINEER.

PAYMENT FOR ALL OPERATIONS DESCRIBED ABOVE SHALL BE INCLUDED IN THE CONTRACT PRICE FOR THE PERTINENT 611 CONDUIT ITEMS.

ITEM 611 - CONDUIT BORED OR JACKED

WHERE IT IS SPECIFIED THAT A CONDUIT BE INSTALLED BY THE METHOD OF BORING OR JACKING, NO TRENCH EXCAVATION SHALL BE CLOSER THAN 6 FEET TO THE (EDGE OF PAVEMENT) (NEAREST RAIL). PROVIDE A 0.50 INCH UNGALVANIZED CASING PIPE CONFORMING TO 748.06 THAT HAS JOINTS WITH A CIRCUMFERENCIAL FULLY PENETRATING B-U4B WELD THAT IS PERFORMED BY AN ODOT APPROVED FIELD WELDER. THE INSTALLED CASING PIPE IS THE STORM WATER CONVEYANCE CARRIER UNLESS OTHERWISE SPECIFIED IN THE PLANS. HYDROSTATIC TESTING IS NOT REQUIRED FOR THE CASING PIPE.

ITEM 204 - PROOF ROLLING

THE FOLLOWING QUANTITY IS PROVIDED IN THE GENERAL SUMMARY TO ADDRESS LOCATIONS REQUIRING PROOF ROLLING.

ITEM 204 - PROOF ROLLING 50 HOUR.

DEWATERING

THE CONTRACTOR HAS THE TOTAL RESPONSIBILITY FOR MAINTAINING THE SITE IN DEWATERED CONDITION THROUGHOUT THE CONSTRUCTION PERIOD AS NECESSARY TO BUILD THE PROPOSED INFRASTRUCTURE. PREVENT SUBSURFACE WATER FROM FLOWING INTO EXCAVATIONS AND FROM FLOODING ADJACENT AREAS. REMOVE WATER FROM THE EXCAVATION AS FAST AS IT COLLECTS. USE WELL POINTS, SUMPS, PUMPING, COFFERDAMS, OR OTHER ACCEPTABLE METHODS TO PERMIT CONSTRUCTION UNDER DRY CONDITIONS. MAINTAIN DRY CONDITIONS UNTIL FRESH CONCRETE HAS REACHED SUFFICIENT STRENGTH TO WITHSTAND EARTH AND HYDROSTATIC LOADS. MAINTAIN THE GROUND WATER LEVEL AT A MINIMUMN OF 18 INCHES BELOW THE BOTTOM OF THE EXCAVATION TO PROVIDE A STABLE SLOPE AND SURFACE FOR CONSTRUCTION OPERATIONS, A STABLE SUBGRADE FOR THE PERMANENT WORK, AND TO PREVENT DAMAGE TO THE WORK DURING ALL STAGES OF CONSTRUCTION. OBTAIN THE ENGINEER'S CONCURRENCE BEFORE SHUTTING DOWN THE DEWATERING SYSTEM FOR ANY REASON. DISPOSE OF ALL WATER REMOVED FROM THE EXCAVATION IN SUCH A MANNER AS NOT TO ENDANGER PUBLIC HEALTH, PROPERTY, OR ANY PORTION OF THE WORK UNDER CONSTRUCTION OR COMPLETED. DISPOSE OF WATER IN SUCH A MANNER AS TO CAUSE NO INCONVEINENCE TO THE OWNER OR OTHERS INVOLVED IN WORK AROUND THE SITE. PUMP INTAKES SHOULD WITHDRAW WATER FROM THE SURFACE OF THE TRENCH OR WORK AREA IN ORDER NOT TO RE-SUSPEND OR CONTNUALLY MIX WATER. CONVEY WATER AWAY FROM THE CONSTRUCTION SITE IN A CLOSED CONDUIT. DISCHARGED WATER SHALL NOT FLOW OVER DISTURBED AREAS RESULTING IN CONTAMINATED DISCHARGES. DO NOT USE TRENCH EXCAVATIONS AS TEMPORARY DRAINAGE DITCHES. OBTAIN PERMITS AS REQUIRED BY STATE, LOCAL, AND FEDERAL AGENCIES WHERE APPLICABLE.

ALL COSTS ASSOCIATED WITH DEWATERING SHALL BE INCLUDED IN THE VARIOUS BID ITEMS TO BE COMPLETED.

CHEMICALLY STABILIZED SUBGRADE

THE ROADWAY SUBGRADE SHALL BE CEMENT STABILIZED AT THE LOCATIONS DESIGNATED IN THE TYPICAL SECTIONS. ALL CEMENT STABILIZATION SHALL BE 14" DEEP AND SHALL BE CONSTRUCTED PER THE REQUIREMENTS STATED IN CMS SPECIFICATION ITEM 206.

THE FOLLOWING ESTIMATED QUANTITIES HAVE BEEN INCLUDED IN THE GENERAL SUMMARY FOR THE USE TO COMPLETE THE WORK NOTED ABOVE (FOR ESTIMATING CEMENT, A SPREAD RATE OF 5 PERCENT PER A SOIL DRY UNIT WEIGHT OF 115 POUNDS PER CUBIC FOOT WAS USED.):

206, CEMENT 4,174 TONS

206, CEMENT STABILIZED SUBGRADE, 14" DEEP 135,130 SQ YD

206, CURING COAT 135,130 SQ YD

206, MIXTURE DESIGN FOR CHEMICALLY STABILIZED SOILS LUMP

CALCULATED SEA
CHECKED DLR

GENERAL NOTES

HAM-75-8.91

J:\2024044S\ODOT\HAM\117525\Design\Roadway\Sheets\77889GN001.dgn 4/18/2025 12:19:47 PM hbrendlinger

ENVIRONMENTAL COMMITMENTS

NOTIFICATION OF TRAFFIC RESTRICTIONS

THROUGHOUT THE DURATION OF THE PROJECT, THE CONTRACTOR SHALL NOTIFY THE PROJECT ENGINEER IN WRITING OF ALL TRAFFIC RESTRICTIONS AND UPCOMING MAINTENANCE OF TRAFFIC CHANGES. THE CONTRACTOR SHALL ENSURE THE WRITTEN NOTIFICATION IS SUBMITTED IN A TIMELY MANNER TO ALLOW THE PROJECT ENGINEER TO MEET THE REQUIRED TIME FRAMES SET FORTH IN THE TABLE BELOW TO INFORM THE SPCIAL HUALING PERMIST SECTION (HAULING.PERMITS@DOT.OHIO.GOV) AND THE DISTRICT PUBLIC INFORMATION OFFICE (PIO). THIS NOTIFICATION SHALL BE RECEIVED BY THE PROJECT ENGINEER PRIOR TO THE PHYSICAL SETUP OF ANY APPLICABLE SIGNS OR MESSAGE BOARDS.

INFORMATION SHOULD INCLUDE, BUT IS NO LIMITED TO, ALL CONSTRUCTION ACTIVITIES THAT IMPACT OR INTERFERE WITH TRAFFIC AND SHALL LIST THE SPECIFIC LOCATION, TYPE OF WORK, ROAD STATUS, DATE AND TIME OF RESTRICTION, DURATION OF RESTRICTION, NUMBER OF LANES MAINTAINED, NUMBER OF LANES CLOSED, MINIMUM VERTICAL CLEARNACE, MINIMUM WIDTH OF DRIVABLE PAVEMENT, DETOUR ROUTES, IF APPLICABLE, AND ANY OTHER INFORMATION REQUESTED BY THE PROJECT ENGINEER.

NOTIFICATION OF TRAFFIC RESTRICTIONS TIME TABLE

ITEM	DURATION OF CLOSURE	NOTICE DUE TO PERMITS & IPO
RAMP & ROAD CLOSURES	* 2 WEEKS	21 CALENDAR DAYS PRIOR TO CLOSURE
	> 12 HOURS & < 2 WEEKS	14 CALENDAR DAYS PRIOR TO CLOSURE
	* 12 HOURS	4 BUSINESS DAYS PRIOR TO CLOSURE
LANE CLOSURES & RESTRICTIONS	* 2 WEEKS	14 CALENDAR DAYS PRIOR TO CLOSURE
	< 2 WEEKS	5 BUSINESS DAYS PRIOR TO CLOSURE
START OF CONSTRUCTION & TRAFFIC PATTERN CHANGES	N/A	14 CALENDAR DAYS PRIOR TO IMPLEMENTATION

ANY UNFORSEEN CONDITIONS NOT SPECIFIED IN THE PLANS REQUIRINGTRAFFIC RESTRICTIONS SHALL ALSO BE REPORTED TO THE PROJECTENGINEER USING THE NOTIFICATION TIME TABLE.

EARTH DISTURBANCE

NO VEGETATION SHALL BE REMOVED/DAMAGED OUTSIDE OF THE PHYSICAL WORK LIMITS. THE CONTRACTOR WILL BE REQUIRED TO NOTIFY THE ENGINEER IF THE VEGETATION OUTSIDE OF THE WORK LIMITS WILL BE IMPACTED PRIOR TO COMMENCING WORK.

THREATENED & ENDANGERED SPECIES

THE PROJECT LIES WITHIN THE RANGE OF THE INDIANA BAT (ENDANGERED) AND NORTHERN LONG-EARED BAT (THREATENED). AS SUCH, ANY UNAVOIDABLE TREE REMOVAL SHALL OCCUR AFTER SEPTEMBER 30 AND BEFORE APRIL 1 TO AVOID DIRECT IMPACTS TO THESE SPECIES.

PRIOR TO BRIDGE DEMOLITION ACTIVITIES, THE UNDERSIDE OF THE BRIDGES SHALL BE CAREFULLY EXAMINED FOR THE PRESENCE OF BATS, ESPECIALLY FROM APRIL 1 TO SEPTEMBER 30. IF ANY BATS ARE FOUND ROOSTING ON THE UNDERSIDE OF THE BRIDGE, THE USFWS, ODOT OFFICE OF ENVIRONMENTAL SERVICES AND ODOT DISTRICT 8 ENVIRONMENTAL SECTION SHALL BE CONTACTED TO PROVIDE THIS INFORMATION.

ENVIRONMENTAL COMMITMENTS (CONT)

ENDANGERED BAT HABITAT REMOVAL

THE PROJECT IS LOCATED WITHIN THE KNOWN HABITAT RANGES OF THE FEDERALLY LISTED AND PROTECTED INDIANA BAT AND NORTHERN LONG-EARED BAT. NO TREES SHALL BE REMOVED UNDER THIS PROJECT FROM APRIL 1 THROUGH SEPTEMBER 30. ALL NECESSARY TREE REMOVAL SHALL OCCUR FROM OCTOBER 1 THROUGH MARCH 31. THIS REQUIREMENT IS NECESSARY TO AVOID AND MINIMIZE IMPACTS TO THESE SPECIES AS REQUIRED BY THE ENDANGERED SPECIES ACT. FOR THE PURPOSES OF THIS NOTE, A TREE IS DEFINED AS A LIVE, DYING, OR DEAD WOODY PLANT, WITH A TRUNK THREE INCHES OR GREATER IN DIAMETER AT A HEIGHT OF 4.5 FEET ABOVE THE GROUND SURFACE, AND WITH A MINIMUM HEIGHT OF 13 FEET.

PARKS AND RECREATIONAL AREAS

ELMWOOD PLACE MEMORIAL PARK - THE EXISTING BALLFIELD FENCE WILL BE EXTENDED AND CONNECTED TO THE PROPOSED IR75 RETAINING WALL TO BE CONSTRUCTED IMMEDIATELY ADJACENT TO THE PARK. AS SUCH, COORDINATION WITH THE VILLAGE OF ELMWOOD PLACE WILL BE REQUIRED A MINIMUM OF FOURTEEN (14) DAYS PRIOR TO BEGINNING WORK IN THIS AREA.

ASBESTOS CONTAINING MATERIALS

HIRE A LICENSED ASBESTOS HAZARD EVALUATION SPECIALIST TO DETERMINE IF REGULATED ASBESTOS IS PRESENT ON THE FOLLOWING STRUCTURE: SFN 3110133. THE SPECIALIST WILL DETERMINE IF REGULATED ASBESTOS IS PRESENT IN EXCESS OF THE ALLOWABLE REGULATORY LIMITS AND REQUIRES ABATEMENT. THE HAZARD EVALUATION SPECIALIST SHALL PREPARE AN ASBESTOS INSPECTION REPORT CONTAINING THE QUANTITIES AND LOCATIONS OF ASBESTOS CONTAINING MATERIALS. SUBMIT A COMPLETED NOTIFICATION OF DEMOLITION AND RENOVATION FORM (NDRF), APPLICABLE FEES, AND THE ASBESTOS INSPECTION REPORT TO THE OEPA AT LEAST 10 DAYS PRIOR TO ANY DEMOLITION ACTIVITY, RENOVATION ACTIVITY, OR BOTH.

ALL MATERIALS, LABOR, EQUIPMENT AND INCIDENTALS NECESSARY TO COMPLETE THIS WORK WILL BE PAID FOR UNDER ITEM SPECIAL 690E71000 - ASBESTOS ABATEMENT, SFN 3110133 - LUMP SUM

PERMITS

THE CONTRACTOR MUST ENSURE THAT A NOTICE OF INTENT (NOI) IS SUBMITTED TO THE OHIO ENVIRONMENTAL PROTECTION AGENCY (OEPA) A MINIMUM OF TWENTY-ONE (21) DAYS PRIOR TO CONSTRUCTION FOR COVERAGE UNDER THE NPDES CONSTRUCTION STORMWATER GENERAL PERMIT. AS REQUIRED BY THE PERMIT, A STORMWATER POLLUTION PREVENTION PLAN MUST BE DEVELOPED AND IMPLEMENTED PRIOR TO PROJECT CONSTRUCTION IN ACCORDANCE WITH ODOT CONSTRUCTION AND MATERIAL SPECIFICATIONS.

FIELD OFFICE, TYPE C AS PER PLAN

IN ADDITION, TO THE REQUIREMENTS OF ITEM 619, THE CONTRACTOR SHALL PROVIDE/LEASE A SUITABLE FIELD OFFICE WITH A MINIMUM OF 1500 SF OF USABLE OFFICE SPACE. OFFICE TO INCLUDE A SEPARATE MINIMUM 12 X36 CONFERENCE ROOM, AND SIX (6) SEPARATE OFFICES WITH SHELVING UNITS. FURTHER ITEMS ARE AS FOLLOWED:

1) FURNITURE:
   - ELEVEN (11) SETS OF DESKS, OFFICE CHAIRS, AND FOUR DRAWER FILE CABINETS
   - TWO (2) LOCKABLE FILE CABINETS
   - TEN (10) 2'X8' COLLAPSIBLE TABLES
   - TWENTY (20) FOLDING CHAIRS
2) COPY MACHINE WITH SCAN/PRINT/FAX/INTERNET HOOKUP CAPABILITIES. THE COPIER WILL PRINT 25PPM AND CAPABLE OF PRINTING SHEETS 8.5"X11", 8.5"X14", AND 11"X17". COPIER PAPER SUPPLIES AND MAINTENANCE TO BE INCLUDED.
3) CONTRACTOR TO PROVIDE INTERNET SERVICES WITH A MINIMUM SPEED OF 100 MBPS. THE CONTRACTOR SHALL SUPPLY THE PROJECT WITH THE IP ADDRESS SO THAT ODOT CAN ATTACH AN ODOT OWNED HUB. ODOT'S OWNED HUB WILL PROVIDE THE STAFF WITH A WIRELESS ROUTER AND ODOT FIREWALL.
4) ONE (1) SEPARATE WATER COOLER AND SERVICE.
5) FIELD OFFICE SHALL INCLUDE A SECURE PARKING AREA NOT LESS THAN 4000 SF CAPABLE OF SUPPLYING 10 EA ALL WEATHER PARKING SPOTS. "ALL WEATHER" SHALL BE DEFINED AS A HARD SMOOTH SURFACE THAT WILL ALLOW FOR SNOW REMOVAL. GRAVEL SURFACE IS NOT ACCEPTABLE. PARKING AREA TO BE SURROUNDED BY A 6' HIGH SECURITY FENCE WITH A LOCKABLE GATE INCLUDING KEYS AND ILLUMINATED BY SECURITY LIGHTING.
6) SNOW REMOVAL SHALL BE REQUIRED FOR PARKING AREA.
7) BI-WEEKLY CLEANING SERVICE.
8) DUMPSTER WITH NECESSARY SERVICE.
9) FIVE (5) EACH TELEPHONES.

THE CONTRACTOR SHALL OBTAIN APPROVAL OF THE PROPOSED FACILITY FROM THE ENGINEER PRIOR TO USE. THE FACILITY SHALL BE AVAILABLE FOR ODOT USE NOT MORE THAN 30 DAYS FROM THE AWARD OF CONTRACT.

INTERIM COMPLETION REQUIREMENTS

THE PROJECT HAS AN INTERIM COMPLETION DATE OF 11/01/2028. ON OR BEFORE THE INTERIM COMPLETION DATE, THE PAVEMENT SHALL BE PLACED UP TO AND INCLUDING THE INTERMEDIATE COURSE AND ALL PAVEMENT MARKINGS PLACED IN THE FINAL CONDITION AND OPEN TO TRAFFIC.

THE CONTRACT WILL BE SUBJECT TO DAILY DISINCENTIVES FOR FAILURE TO COMPLETE ALL THE REQUIRED WORK, AND ASSOCIATED INCIDENTALS RELATED TO THE WORK, AS OUTLINED IN THE TABLE INCLUDED IN THIS NOTE. APPLICATION OF THE DISINCENTIVES WILL BE BASED ON THE OVERALL CONTRACT AMOUNT. DAILY DISINCENTIVES ARE APPLICABLE TO THE WORK REQUIRED TO THE INTERIM COMPLETION DATE ONLY. THE CONTRACT IS STILL SUBJECT TO LIQUIDATED DAMAGES AS OUTLINED IN CMS 108.07 FOR THE REMAINDER OF THE CONTRACT.

DESCRIPTION OR LOCATION OF CRITICAL WORK	COMPLETION DATE	TIME PERIOD	DISINCENTIVE $ PER TIME PERIOD
PLACE INTERMEDIATE COURSE AND PAVEMENT MARKINGS IN FINAL CONDITION	11/01/2028	DAY	$7,500

ITEM 202 - PORTIONS OF STRUCTURES REMOVED, AS PER PLAN

THIS ITEM INCLUDES THE REMOVAL AND/OR ABANDONMENT OF THE EXISTING UTILITY TUNNEL LOCATED NEAR STA. 488+25 (MAINLINE I-75). THE CONTRACTOR SHALL CONTACT GIVAUDAN FLAVORS CORPORATION IN WRITING, PER THE CONTACT INFORMATION INCLUDED IN THE PLANS, A MINIMUM OF 30 DAYS PRIOR TO BEGINNING WORK ON THE TUNNEL. GIVAUDAN WILL PROVIDE WRITTEN CONCURRENCE TO THE CONTRACTOR THAT ALL OF THE EXISTING UTILITIES WITHIN THE TUNNEL ARE ABANDONED, ARE NO LONGER OPERATING, AND ARE CLEAR TO BE REMOVED BY THE CONTRACTOR. ONCE THE UTILITY CLEARANCE IS PROVIDED TO THE CONTRACTOR, THE TUNNEL WORK CAN COMMENCE. DURING THE TUNNEL REMOVAL AND/OR ABANDONMENT, THE CONTRACTOR SHALL BULKHEAD THE REMAINING TUNNEL PER THE STATION/OFFSET LOCATIONS PROVIDED IN THE PLANS (SEE SHEET 199 AND 513).

THE BULKHEAD INSTALLATION SHALL PROVIDE A PERMANENT SEAL USING CAST IN PLACE CONCRETE OR CONCRETE BLOCK AND MORTAR JOINTS. ALL PORTIONS OF THE TUNNEL BETWEEN THE BULKHEADS AND WITHIN THE LA R/W THAT ARE NOT REMOVED IN THEIR ENTIRETY, SHALL BE FILLED WITH A LOW STRENGTH MORTAR MIX IN ACCORDANCE WITH SECTION 613. ALL APPLICABLE CMS SPECIFICATIONS SHALL APPLY TO THE PERFORMANCE OF THIS WORK. ALL LABOR, EQUIPMENT, AND MATERIALS NECESSARY TO PERFORM THE WORK ARE INCLUDED IN THIS PAY ITEM PER THE GENERAL SUMMARY.

ITEM 202 - PORTIONS OF STRUCTURES REMOVED, AS PER PLAN - LUMP SUM

ITEM 202 - REMOVAL MISC.: ACCESS HATCH REMOVAL

THIS ITEM INCLUDES THE REMOVAL OF THE EXISTING ACCESS HATCH AND SIDEWALK NECESSARY TO PERFORM THE REMOVALS. THE CONTRACTOR SHALL NOT DISTURB THE EXISTING TRUCK APRON ADJACENT TO THE ACCESS HATCH.

THE CONTRACTOR SHALL INSTALL A REINFORCED SLAB ON GRADE PER THE DETAIL ON SHEET 31 .

THE CONTRACTOR SHALL CONTACT GIVAUDAN FLAVORS IN WRITING, PER THE CONTACT INCLUDED IN THE PLANS, A MINIMUM OF 30 DAYS PRIOR TO PERFORMING THE WORK. GIVAUDAN FLAVORS WILL PROVIDE ACCESS FROM LONGVIEW STREET WITHIN THE EXISTING FACILITY TO PERFORM THE WORK.

ALL MATERIALS, LABOR EQUIPMENT AND INCIDENTALS MECESSARY TO COMPLETE THIS ITEM SHALL BE INCLUDED IN THE CONTRACT PRICE FOR THIS WORK.

ITEM 202 - REMOVAL MISC.: ACCESS HATCH REMOVAL - LUMP SUM

CALCULATED SEA CHECKED DLR

GENERAL NOTES

HAM-75-8.91

J:\20240445\ODOT\HAM\117525\Design\Roadway\Sheets\77889GN001.dgn 4/17/2025 11:33:35 AM hbrendlinger

ELECTRONIC TICKETING

PURPOSE:
PROVIDE ELECTRONIC MATERIAL TICKETS IN AN ELECTRONIC FORMAT DIRECTLY RECORDED FROM THE MATERIAL LOADING SOURCE.

PROVIDE ELECTRONIC MATERIAL TICKETS FOR THE FOLLOWING MATERIALS:

AGGREGATE
ASPHALT CONCRETE
PORTLAND CONCRETE

THIS NOTE IN NO WAY SUPERSEDES ANY OTHER COMMERCIAL REGULATIONS OR ANY OTHER LEGAL REQUIREMENTS REGULATING THE TRANSPORTATION OF COMMERCIAL MATERIALS.

REQUIREMENTS:
AT THE PRE-CONSTRUCTION MEETING, SUBMIT AN ELECTRONIC TICKETING PLAN TO THE ENGINEER DESCRIBING THE PROPOSED ELECTRONIC TICKET DELIVERY METHOD. THE ELECTRONIC MATERIAL TICKET SHALL CONTAIN INFORMATION AS REQUIRED PER THE APPLICABLE MATERIAL SPECIFICATION FOR WEIGHT MEASUREMENT AND OTHER MATERIAL CHARACTERISTICS; PROVIDE AN EXAMPLE(S) OR A MOCK-UP OF THE PROPOSED ELECTRONIC TICKET TO SHOW THE DETAILS ON WHAT IS TO BE TRANSMITTED TO THE DEPARTMENT. NAMING OF THE ELECTRONIC MATERIAL TICKET FILES SHALL BE DISTINCT SUCH THAT THE TICKET S REPRESENTED MATERIAL IS EASILY DETERMINED; INCLUDE THE PROPOSED NAMING CONVENTION. DELIVERY MAY BE THROUGH A PRODUCER WEBSITE UPLOAD ACCESSIBLE TO THE ENGINEER, ODOT PROJECT SPECIFIC SHAREPOINT DOCUMENTATION SITE UPLOAD, OR ANOTHER SECURE ELECTRONIC TRANSMITTAL MEANS. EMAILING OF A TICKET TO AN ODOT CONTACT IS ACCEPTABLE BUT IS NOT PREFERRED. THE ELECTRONIC TICKETING PLAN SHALL IDENTIFY A CONTINGENCY METHOD FOR MANUALLY CAPTURING AND DELIVERING TICKET INFORMATION IF ELECTRONIC TRANSMISSION IS TEMPORARILY UNAVAILABLE. AN ELECTRONIC TICKETING PLAN WHICH INCLUDES SOLELY THE USE OF DIGITAL PHOTOS OF PAPER TICKETS IS NOT ACCEPTABLE.

THE DEPARTMENT RECOGNIZES THAT VARIOUS DIGITAL TICKETING SYSTEMS MAY BE COMMERCIALLY AVAILABLE AND USED TO ACCOMMODATE INDIVIDUAL CONTRACTORS AND MATERIAL SUPPLIER CAPABILITIES. THE CONTRACTOR MAY PROVIDE A DIGITAL TICKETING SYSTEM GIVING SECURE ACCESS TO ORGANIZED DIGITAL DATA. IF UTILIZED, THE DIGITAL TICKETING SYSTEM MAY ALSO BE ACCESSIBLE BY REAL-TIME MONITORING WITH A MOBILE COMMUNICATION DEVICE SUCH AS A TABLET, SMARTPHONE, ETC. THROUGH MOBILE DEVICE APPLICATIONS (MOBILE APP) IF ACCEPTABLE TO THE DEPARTMENT. IF A DIGITAL TICKETING SYSTEM REQUIRES A MOBILE APP, THE MOBILE APP SHALL BE AT NO COST TO THE DEPARTMENT. THE DIGITAL DATA MUST BE ABLE TO BE EXPORTED IN A FORMAT USABLE BY THE ENGINEER UPON REQUEST (I.E. MICROSOFT WORD, MICROSOFT EXCEL, PDF FORMATS).

DELIVER EACH ELECTRONIC MATERIAL TICKET TO THE ENGINEER PRIOR TO THE PLACEMENT OF MATERIAL, BUT NOT PRIOR TO THE LOADING OF MATERIAL AT THE SOURCE.

PROVIDE THE ENGINEER A DAILY MATERIAL SUMMARY REPORT BY THE END OF THE DAY S HAULING ACTIVITIES, OR AT A TIME AS APPROVED BY THE ENGINEER. THE DAILY MATERIAL SUMMARY REPORT INCLUDES SUMMARY INFORMATION LISTED FOR EACH MATERIAL AS OUTLINED IN THE RESPECTIVE MATERIAL SPECIFICATION.

PAYMENT:
COSTS FOR THE ELECTRONIC TICKETING SHALL BE INCIDENTAL TO THE PROJECT.

DRAINAGE ALTERNATES

FOR CLARITY, DRAINAGE ALTERNATE 1 IS DEPICTED ON SHEETS 400, 402 AND 406 AND DRAINAGE ALTERNATE 2 IS DEPICTED ON SHEETS 400, 402 AND 406. CONDUIT SIZES SHOWN ON THE RESPECTIVE DRAINAGE ALTERNATE SHEETS CORRESPOND TO THE DRAINAGE ALTERNATES SHOWN IN THE GENERAL SUMMARY.

ALTERNATE PIPE SIZES ARE SHOWN AND LABELED ON THE STORM SEWER PROFILES SHEETS 427AND 428 .

ITEM 611 - 15" CONDUIT, TYPE C WITH CLASS II BEDDING
ITEM 611 - 18" CONDUIT, TYPE C WITH CLASS II BEDDING
ITEM 611 - 30" CONDUIT, TYPE B WITH CLASS II BEDDING
ITEM 611 - 30" CONDUIT, TYPE C WITH CLASS II BEDDING
ITEM 611 - 36" CONDUIT, TYPE B WITH CLASS II BEDDING
ITEM 611 - 36" CONDUIT, TYPE C WITH CLASS II BEDDING
ITEM 611 - 48" CONDUIT, TYPE B WITH CLASS II BEDDING
ITEM 611 - 54" CONDUIT, TYPE C WITH CLASS II BEDDING
ITEM 611 - CONDUIT BORED OR JACKED: 36", TYPE B WITH JOINTS PER 706.11

BACKFILL SHALL BE IN ACCORDANCE WITH MSD STANDARD CONSTRUCTION DRAWING ACC. NO. 49032.

PIPE MATERIAL SHALL BE IN ACCORDANCE WITH MSDGC APPROVED PIPE MATERIALS LIST UPDATED APRIL 23, 2015.

https://prod.msdgc.org/sites/default/assets/downloads/doing_business/capital_project_resource_library/Design/MSDGC_approved_pipe_materials.pdf

MSD SANITARY SEWER BY-PASS PUMPING

SANITARY AND COMBINED SEWER FLOWS MUST BE MAINTAINED AT ALL TIMES. CONTRACTOR SHALL SUBMIT A BYPASS PUMPING PLAN TWO (2) WEEKS PRIOR TO WORK. CONTRACTOR WILL BE RESPONSIBLE FOR ANY SEWER BACKUPS THAT OCCUR DURING CONSTRUCTION IF THE CONSTRUCTION WORK IS PROVEN TO BE THE CAUSE.

MSD SANITARY SEWER NOTES

1. ALL PLANS AND CONSTRUCTION WITHIN HAMILTON COUNTY SHALL COMPLY WITH THE LATEST EDITION OF THE "RULES AND REGULATIONS" MANUAL GOVERNING THE DESIGN, CONSTRUCTION, MAINTENANCE, OPERATION AND USE OF SANITARY AND COMBINED SEWERS IN THE METROPOLITAN SEWER DISTRICT OF GREATER CINCINNATI, HAMILTON COUNTY, OHIO, EFFECTIVE MARCH 1, 2001. COPIES MAY BE OBTAINED FROM THE DIVISION OF WASTEWATER ENGINEERING MSD, 1600 GEST STREET, CINCINNATI, OHIO 45204.
2. ALL SANITARY SEWERS SHALL BE CONSTRUCTED UNDER THE INSPECTION OF THE CHIEF ENGINEER, MSD.
3. THE OWNERS OF ALL PROPERTIES SHOWN ON THIS IMPROVEMENT PLAN SHALL BE SUBJECT TO ALL APPLICABLE SEWER SERVICE CHARGES, ASSESSMENTS, TAP-IN CHARGES OR FEES WHICH HAVE BEEN OR MAY BE ESTABLISHED BY THE BOARD OF COUNTY COMMISSIONERS.
4. APPROPRIATE UTILITY COMPANIES SHALL BE NOTIFIED AT LEAST 48 HOURS PRIOR TO BREAKING GROUND FOR THE PURPOSE OF VERIFYING BY FIELD INSPECTION THE EXACT LOCATION OF UNDERGROUND UTILITIES.
5. ALL SANITARY SEWER PIPE SHALL BE PVC, SDR35, ASTM D-3034 IN ACCORDANCE WITH MSD RULES AND REGULATIONS, EXCEPT WHERE NOTED.
6. ALL MANHOLES ON SANITARY SEWERS SHALL BE TYPE "S" MSD ACCESSION NO. 49037.
7. SANITARY MANHOLES SHALL BE TEMPORARILY CONSTRUCTED TO AN ELEVATION OF TWO FEET ABOVE THE SURROUNDING GRADE BY MEANS OF AN ADDITIONAL MANHOLE SECTION OR BRICK MASONRY ON TOP OF THE CONE.
8. SANITARY BUILDING SEWERS FOR PUBLIC AND PRIVATE SEWERS SHALL NOT BE EXTENDED MORE THAN TEN (10) FEET BEYOND THE PROPOSED RIGHT-OF-WAY LINE, EASEMENT LINE OR, IN CASES OF PRIVATE SEWERS, NO MORE THAN TEN (10) FEET BEYOND THE MAIN LINE SEWER PRIOR TO ISSUANCE OF TAP PERMITS.
9. TWO-WAY CLEANOUTS SHALL BE INSTALLED AT THE RIGHT-OF-WAY LINE OR SANITARY SEWER EASEMENT, WHERE APPLICABLE, IN ACCORDANCE TO MSD ACCESSION NO. 61979.
10. ALL LOWEST FINISHED FLOOR ELEVATIONS SHALL BE AT LEAST 36 INCHES ABOVE THE CROWN OF THE SEWER AT THE POINT OF TAP CONNECTION TO SAID SEWER, WHETHER PUBLIC OR PRIVATE, AND/OR IN ACCORDANCE WITH CITY OF CINCINNATI SUPPLEMENT CC-51-49. ANY BUILDING TO BE SERVED BY MEANS OTHER THAN GRAVITY MUST BE SO NOTED ON THE PLANS.
11. ALL MANHOLES ON PUBLIC SANITARY SEWERS SHALL HAVE STANDARD LIDS AND FRAMES, MSD ACCESSION. NO 49005, EXCEPT WHERE NOTED. THE FRAME SHALL BE SECURELY FASTENED TO THE TOP MANHOLE SECTION BY FOUR 3/4-INCH STAINLESS STEEL CINCH ANCHORS.

MSD SANITARY SEWER NOTES (CONT)

12. CONTRACTOR'S LICENSE - ALL WORK DONE ON SANITARY AND/OR COMBINED SEWERS WITHIN THE JURISDICTION OF THE METROPOLITAN SEWER DISTRICT MUST BE DONE BY A CONTRACTOR WHO IS AN APPROVED SEWER TAPPER PROPERLY LICENSED BY THE DEPARTMENT AND BONDED.
13. SANITARY BUILDING SEWERS SHALL BE CONNECTED TO THE MAIN LINE WITH WYES. TEE FITTINGS ARE TO BE USED ONLY WHERE SHOWN ON THE APPROVED PLAN.
14. A TAP PERMIT IS REQUIRED FOR EACH BUILDING. BOND OR FINAL APPROVAL OF THE MAIN LINE IS REQUIRED PRIOR TO ISSUANCE OF A TAP PERMIT.
15. SANITARY SEWER CONSTRUCTION MUST COMMENCE WITHIN 12 MONTHS AND BE COMPLETED WITHIN 36 MONTHS OF THE DATE OF APPROVAL SHOWN HEREON OR THESE PLANS BECOME VOID.
16. FOR SANITARY SEWER MANHOLES CONSTRUCTED IN PARKING LOTS, THE RIM ELEVATION SHALL BE 1" HIGHER THAN THE SURROUNDING GRADE AND THE PAVEMENT SHALL BE FEATHERED AWAY FROM THE MANHOLE RIM AT A GRADUAL SLOPE.
17. FOR SANITARY MANHOLES CONSTRUCTED IN GRASS AREAS, THE RIM ELEVATION SHALL BE 3" HIGHER THAN THE SURROUNDING GRADE, AND THE FILL SHALL BE FEATHERED AWAY FROM THE MANHOLE RIM AT A GRADUAL SLOPE.
18. ROOF DRAINS, FOUNDATION DRAINS, COOLING WATER, SWIMMING POOL WATER OR OTHER CLEAN WATER CONNECTIONS TO THE SANITARY SEWER SYSTEM ARE PROHIBITED.
19. TO ASSURE THAT STORMWATER DOES NOT ENTER THE SANITARY SEWER SYSTEM, A SCHEMATIC PLAN OF THE FOOTING AND FOUNDATION DRAINAGE SYSTEM, INCLUDING THE POINT OF DISCHARGE, IS NECESSARY.
20. THE CONTRACTOR SHALL TEST ALL MANHOLES LEAKAGE BY MEANS OF VACUUM TESTING. THE VACUUM TESTING CANNOT BE DONE UNTIL AFTER THE MANHOLES ARE SET TO FINAL GRADE AND THE MANHOLE CASTINGS ARE BOLTED DOWN. ALL LIFT HOLES SHALL BE PLUGGED. ANY OTHER OPENINGS, SUCH AS FOR PRESSURE RELIEF VALVES, SHALL BE TEMPORARILY PLUGGED TO ALLOW THE VACUUM TEST. ALL PIPES ENTERING THE MANHOLE SHALL BE PLUGGED AND CARE SHALL BE TAKEN TO SECURELY BRACE THE PLUGS FROM BEING DRAWN INTO THE MANHOLE. THE VACUUM EQUIPMENT TEST HEAD SHALL BE PLACED IN THE OPENING OF THE CASTING ONLY, AND THE SEAL INFLATED IN ACCORDANCE WITH THE MANUFACTURER'S RECOMMENDATIONS. VACUUM TESTING SHALL BE IN ACCORDANCE WITH ASTM C1244. A VACUUM OF 10 INCHES MERCURY (10" HG) SHALL BE DRAWN AND THE VACUUM PUMP SHUT OFF. WITH THE VALVES CLOSED, THE TIME SHALL BE MEASURED FOR THE VACUUM TO DROP TO NINE INCHES MERCURY (9" HG). THE MANHOLE SHALL PASS IF THE TIME MEETS OR EXCEEDS THE ALLOWABLE TIMES AS CALCULATED FROM ASTIM C1244, OR AS APPROVED BY THE ENGINEER. ALL MANHOLE REPAIR AND RETESTING REQUIRED BECAUSE OF THE FAILURE TO MEET THE TESTING REQUIREMENTS SHALL BE BORNE BY THE CONTRACTOR AT HIS COST.

CALCULATED SEA
CHECKED DLR

GENERAL NOTES

HAM-75-8.91

J:\20240445\ODOT\HAM\117525\Design\Roadway\Sheets\77889GN015.dgn 4/16/2025 12:29:07 PM hbrendlinger

PORTABLE BARRIER
32" PORTABLE BARRIER SHALL BE ANCHORED ANYTIME THERE IS LESS THAN 2' BETWEEN THE BACK OF BARRIER AND THE WORK ZONE. PORTABLE BARRIER QUANTITIES HAVE BEEN SPLIT INTO ANCHORED AND UNANCHORED LENGTHS ACCORDINGLY.

WORK ZONE MARKINGS
THE FOLLOWING ESTIMATED QUANTITIES HAVE BEEN CARRIED TO THE GENERAL SUMMARY FOR USE AT LOCATIONS IDENTIFIED BY THE ENGINEER FOR WORK ZONE PAVEMENT MARKINGS PER THE REQUIREMENTS OF C&MS 614.04 AND 614.11. THESE QUANTITIES HAVE BEEN PROVIDED AS A CONTINGENCY FOR PLACEMENT ON THE ASPHALT SURFACE COURSE PRIOR TO APPLICATION OF PERMANENT PAVEMENT MARKINGS.

ITEM 614, WORK ZONE LANE LINE, CLASS III, 642 PAINT 7.04 MILE
ITEM 614, WORK ZONE EDGE LINE, CLASS III, 642 PAINT 8.1 MILE
ITEM 614, WORK ZONE CHANNELIZING LINE, CLASS III, 642 PAINT 10,304 FEET
ITEM 614, WORK ZONE DOTTED LINE, CLASS III, 642 PAINT 7,560 FEET

ITEM 614, REPLACEMENT SIGN
FLATSHEET SIGNS FURNISHED BY THE CONTRACTOR IN ACCORDANCE WITH THE REQUIREMENTS OF THE PLANS, SPECIFICATIONS AND PROPOSAL WHICH BECOME DAMAGED BY TRAFFIC FOR REASONS BEYOND THE CONTROL OF THE CONTRACTOR SHALL BE REPLACED IN KIND WHEN ORDERED BY THE ENGINEER. REPLACEMENT SIGNS SHALL BE NEW. OTHER MATERIALS MAY BE IN USED, BUT GOOD, CONDITION SUBJECT TO APPROVAL BY THE ENGINEER.

PAYMENT FOR THE NEW SIGNS SHALL BE MADE AT THE CONTRACT PRICE PER EACH FOR ITEM 614, REPLACEMENT SIGN, AND SHALL INCLUDE THE COST OF REMOVING AND DISPOSING OF DAMAGED SIGNS, HARDWARE AND SUPPORTS, AND PROVIDING THE NECESSARY REPLACEMENT HARDWARE, SUPPORTS, ETC.

AN ESTIMATED QUANTITY OF 10 EACH HAS BEEN PROVIDED IN THE GENERAL SUMMARY.

ITEM 614, REPLACEMENT DRUM
DRUMS FURNISHED BY THE CONTRACTOR IN ACCORDANCE WITH THE REQUIREMENTS OF THE PLANS, SPECIFICATIONS AND PROPOSAL WHICH BECOME DAMAGED BY TRAFFIC FOR REASONS BEYOND THE CONTROL OF THE CONTRACTOR SHALL BE REPLACED IN KIND WHEN ORDERED BY THE ENGINEER. REPLACEMENT DRUMS SHALL BE NEW.

PAYMENT FOR THE NEW DRUMS SHALL BE MADE AT THE CONTRACT PRICE PER EACH FOR ITEM 614, REPLACEMENT DRUM, AND SHALL INCLUDE THE COST OF REMOVING AND DISPOSING OF THE DAMAGED DRUM, AND PROVIDING AND MAINTAINING THE REPLACEMENT DRUM IN ACCORDANCE WITH THE CONTRACT REQUIREMENTS FOR THE ORIGINAL DRUM.

AN ESTIMATED QUANTITY OF 100 EACH HAS BEEN PROVIDED IN THE GENERAL SUMMARY.

PERMITTED LANE CLOSURE TIMES
SHORT TERM LANE CLOSURES ARE THOSE WHICH ARE PERMITTED BY THE PERMITTED LANE CLOSURE NOTE. THESE TIMES SHALL NOT BE REVISED WITHOUT PRIOR APPROVAL FROM THE DISTRICT 8 WORK ZONE TRAFFIC CONTROL MANAGER. SHORT TERM LANE CLOSURES SHALL ONLY BE IMPLEMENTED WHEN WORK IS BEING CONTINUOUSLY PERFORMED IN THE LANE. THE CLOSURE SHALL BE REMOVED AS SOON AS POSSIBLE AFTER WORK HAS STOPPED. PERMITTED LANE CLOSURES SHALL ONLY BE ALLOWED DURING THE TIMES SPECIFIED IN THE PERMITTED LANE CLOSURE TIMES AND UNAUTHORIZED LANE USE TABLE INCLUDED IN THESE PLANS. NO LANE OR SHOULDER CLOSURE SHALL BE IN PLACE WHEN NO WORK IS BEING PERFORMED.

WORK ZONE SPEED ZONES (WZSZS)
THE FOLLOWING WORK ZONE SPEED ZONE (WZSZ) SPEED LIMIT REVISION(S) HAVE BEEN APPROVED FOR USE ON THIS PROJECT WHEN WORK ZONE CONDITIONS AND FACTORS ARE MET AS DESCRIBED BELOW:

WZSZ REVISION NUMBER	COUNTY-ROUTE-SECTION	DIRECTION
45099-B	HAM-75-8.91	NB & SB

POTENTIAL WZSZ LOCATIONS SHALL HAVE AN ORIGINAL (PRE-CONSTRUCTION) POSTED SPEED LIMIT OF 55 MPH OR GREATER, A QUALIFYING WORK ZONE CONDITION OF AT LEAST 0.5 MILE IN LENGTH, AN EXPECTED WORK DURATION OF AT LEAST THREE HOURS, AND A WORK ZONE CONDITION IN PLACE THAT REDUCES THE EXISTING FUNCTIONALITY OF THE TRAVEL LANES OR SHOULDERS (I.E., LANE CLOSURE, LANE SHIFT, CROSSOVER, CONTRAFLOW AND/OR SHOULDER CLOSURE). THE LENGTH OF THE WORK ZONE CONDITION IS MEASURED FROM THE BEGINNING OF THE TAPER FOR THE SUBJECT WORK ZONE CONDITION IMPACTING THE TRAVEL LANES AND/OR SHOULDER TO THE END OF THE DOWNSTREAM TAPER, WHERE DRIVERS ARE RETURNED TO TYPICAL ALIGNMENT. AN EXPECTED WORK DURATION OF AT LEAST THREE HOURS IS REQUIRED TO BALANCE THE ADDITIONAL EXPOSURE CREATED BY INSTALLING AND REMOVING WZSZ SIGNING WITH THE TIME NEEDED TO COMPLETE THE WORK.

IF THE WORK ZONE MEETS THESE MINIMUM CRITERIA, IT SHALL BE ANALYZED FURTHER USING TABLE 1 BELOW TO DETERMINE IF AND WHEN IT QUALIFIES FOR A SPEED LIMIT REDUCTION. DEPENDING ON THE ORIGINAL POSTED SPEED LIMIT, THE TYPE OF TEMPORARY TRAFFIC CONTROL USED, AND WHETHER OR NOT WORKERS ARE PRESENT, A WARRANTED WZSZ WILL VARY IN THE APPROVED SPEED LIMIT TO BE POSTED OVER TIME.

C&MS ITEM 614, PARAGRAPH 614.02(B), INDICATES THAT TWO DIRECTIONS OF A DIVIDED HIGHWAY ARE CONSIDERED SEPARATE HIGHWAY SECTIONS. THEREFORE, IF THE WORK ON A MULTI-LANE DIVIDED HIGHWAY IS LIMITED TO ONLY ONE DIRECTION, A SPEED LIMIT REDUCTION IN THE DIRECTION OF THE WORK DOES NOT AUTOMATICALLY CONSTITUTE A SPEED LIMIT REDUCTION IN THE OPPOSITE DIRECTION. EACH DIRECTION SHALL BE ANALYZED INDEPENDENTLY FROM EACH OTHER.

ALL WZSZS FLUCTUATE BETWEEN TWO APPROVED REDUCED SPEED LIMITS OR BETWEEN AN APPROVED REDUCED SPEED LIMIT AND THE ORIGINAL POSTED SPEED LIMIT. ONLY ONE OF TWO SIGNING STRATEGIES SHALL BE USED TO IMPLEMENT A WZSZ.

WZSZS USING DSL SIGN ASSEMBLIES SHALL BE IN ACCORDANCE WITH THIS NOTE, APPROVED LIST, SUPPLEMENTAL SPECIFICATIONS (SS) 808 AND 908, AND TRAFFIC SCD MT-104.10.

PERMITTED LANE CLOSURE TIMES AND UNAUTHORIZED LANE USE TABLE

LOCATION	DIRECTION	EX. NO. OF THRU	1 LANE CLOSED		2 LANES CLOSED		15 MINUTE SHORT DURATION	COMPLETE CLOSURE	TIME UNIT	DISINCENTIVE PER LANE PER TIME	NOTES
			WEEKDAY	WEEKEND	WEEKDAY	WEEKEND					
IR-75	BOTH	3	8 PM - 6	7 PM - 6 AM	11PM - 5	10 PM - 6 AM	12 AM -4 AM	MOTPE #1	1 MINUTE	$540	NOTE 1(SB), NOTE 2 (NB), NOTE 3, MOTPE (THIS SHEET)
RAMPS	BOTH		NONE	NONE	NONE	NONE	NONE	10 PM-5 AM	1 MINUTE	$540	NOTE 4
TOWNE ST.	BOTH	1	ANYTIME	ANYTIME	NONE	NONE	11PM - 5 AM	NONE	1 MINUTE	$50	
PADDOCK RD.	BOTH	2	8 PM - 6	7 PM - 7 AM	NONE	NONE	NONE	NONE	1 MINUTE	$130	
SEYMOUR AVE.	BOTH	2	ANYTIME	ANYTIME	NONE	NONE	NONE	NONE	1 MINUTE	$140	
SUMMIT RD.	BOTH	1	ANYTIME	ANYTIME	N/A	N/A	NONE	WEEKEND	1 MINUTE	$50	WEEKEND HOURS = 7 PM FRIDAY - 7 AM MONDAY

NOTES
1 NO CLOSURES 2 HOURS BEFORE TO 1 HOUR AFTER THE START TIME OF EVENTS AT GREAT AMERICAN BALL PARK, PAUL BROWN STADIUM, OR HERITAGE BANK ARENA.
THIS RESTRICTION ALSO APPLIES TO ANY OTHER LOCAL VENUE REACHING AN ATTEDANCE OF 20,000+
2 NO CLOSURES FROM 30 MINUTES BEFORE THE SCHEDULED FINISH TIME TO 2 HOURS AFTER EVENTS AT GREAT AMERICAN BALL PARK, PAUL BROWN STADIUM, OR HERITAGE BANK AREANA.
THIS RESTRICTION ALSO APPLIES TO ANY OTHER LOCAL VENUE REACHING AN ATTEDANCE OF 20,000+
3 NO SHORT TERM SHOULDER CLOSURES BETWEEN THE HOURS OF 6 AM TO 9 AM AND 3 PM TO 7 PM MONDAY THROUGH FRIDAY.
4 RAMPS ARE PERMITTED TO BE CLOSED OVERNIGHT FOR MOT TRAFFIC SWITCHES AND FINAL SURFACING ONLY. ONE ONE RAMP IS PERMITTED TO BE CLOSED AT A TIME.

WZSZS USING DSL SIGN ASSEMBLIES SHALL BE IN ACCORDANCE WITH THIS NOTE, APPROVED LIST, SUPPLEMENTAL SPECIFICATIONS (SS) 808 AND 908, AND TRAFFIC SCD MT-104.10.

ONLY ONE WARRANTED SPEED LIMIT APPLIES AT ANY ONE TIME; SPEED LIMIT REDUCTIONS ARE NOT CUMULATIVE. WZSZS SHALL NOT BE USED FOR MOVING/MOBILE ACTIVITIES, AS DEFINED IN OMUTCD PART 6.

WHEN LOOKING UP THE WARRANTED WORK ZONE SPEED LIMITS, ALWAYS USE THE ORIGINAL, PRE-CONSTRUCTION, POSTED SPEED LIMIT. DO NOT USE A PRIOR OR CURRENT WORK ZONE SPEED LIMIT AS A LOOK UP VALUE IN THE TABLE. POSITIVE PROTECTION IS GENERALLY REGARDED AS PORTABLE BARRIER OR OTHER RIGID BARRIER IN USE ALONG THE WORK AREA WITHIN THE SUBJECT WARRANTED WORK ZONE CONDITION. WITHOUT POSITIVE PROTECTION IS GENERALLY REGARDED AS USING DRUMS, CONES, SHADOW VEHICLE, ETC., ALONG THE WORK AREA WITHIN THE SUBJECT WARRANTED WORK ZONE CONDITION. WORKERS ARE CONSIDERED AS BEING PRESENT WHEN ON-SITE, WORKING WITHIN THE SUBJECT WARRANTED WORK ZONE CONDITION. WHEN THE WORK ZONE CONDITION REDUCING THE EXISTING FUNCTIONALITY OF THE TRAVEL LANES OR SHOULDERS IS REMOVED, THE SPEED LIMIT DISPLAYED SHALL RETURN TO THE ORIGINAL POSTED SPEED LIMIT.

ITEM 808 DIGITAL SPEED LIMIT SIGN ASSEMBLY HAS BEEN SEPERATELY ITEMIZED IN THE PLANS. QUANTITIES FOR EACH SIGN HAVE BEEN SHOWN IN THE SUB-SUMMARY WITH THEIR ASSOCIATED PLAN SHEET. A SUMMARY OF DSL SIGN ASSEMBLIES IS AS FOLLOWS:
5 SIGNS FOR 24 MONTHS
1 SIGN FOR 12 MONTHS

	WITH POSITIVE PROTECTION		WITHOUT POSITIVE PROTECTION	
ORIGINAL POSTED SPEED LIMIT	WORKERS PRESENT	WORKERS NOT PRESENT	WORKERS PRESENT	WORKERS NOT PRESENT
55	50	55	45	55

APPROVED MAINTENANCE OF TRAFFIC (MOT) POLICY EXCEPTION (MOTPE)
PORTIONS OF THE MOT PLANS AS DESCRIBED BELOW HAVE APPROAVED MOT EXCEPTION(S) PER TRAFFIC MANAGEMENT IN WORK ZONES POLICY (21-008(P)) AND STANDARD PROCEDURE (123-001(SP)).

APPROVED MOT EXCEPTION(S) INCLUDE:
MOTPE #1 - ONE NIGHTTIME (12PM - 4AM) CLOSURE PER DIRECTION OF I-75 TO INSTALL THE PEDESTRIAN BRIDGE.

A MAINTENANCE OF TRAFFIC MEETING SHALL BE HELD A MINIMUM OF 30 CALENDAR DAYS PRIOR TO IMPLEMENTATION OF EACH APPROVED MOT EXCEPTION. THIS MEETING SHALL INCLUDE THE DISTRICT WORK ZONE TRAFFIC MANAGER AS WELL AS THE CONTRACTOR WORKSITE TRAFFIC SUPERVISOR (WTS) AND ANY SUBCONTRACTORS INVOLVED WITH TEMPORARY TRAFFIC CONTROL.

IN ADDITION TO ANY NOTIFICATIONS REQUIRED IN OTHER NOTES, THE CONTRACTOR SHALL NOTIFY THE PROJECT ENGINEER AT LEAST 3 BUSINESS DAYS IN ADVANCE OF IMPLEMENTATION OF THE APPROVED MOT EXCEPTION(S) REFERENCED ABOVE SO THAT THE PROJECT ENGINEER CAN SEND EMAIL NOTIFICATION TO THE OFFICE OF ROADWAY ENGINEERING, STATEWIDE TMC, DWZTM AND SPECIAL HAULING PERMITS AT LEAST 2 BUSINESS DAYS IN ADVANCE OF THE IMPLEMENTATION OF THE APPROVED MOT EXCEPTION(S) REGERENCED ABOVE. REFERENCE "EXCEPTION REQUEST APPROVAL DATED _/_/_ FOR PID 100424" IN THE NOTIFICATION OF OTHER CORRESPONDENCE.

ANY CHANGES TO THE MOT PLAN THAT IMPACT THE PREVIOUSLY APPROVED MOT EXCEPTION(S) LISTED ABOVE SHALL BE APPROVED IN WRITING BY THE MOT EXCEPTION COMMITTEE (MOTEC). IN THE EVENT THAT SUCH CHANGES ARE PROPOSED, THE REQUEST SHALL BE COORDINATED THROUGH THE DISTRICT WORK ZONE TRAFFIC MANAGER (DWZTM) A MINIMUM OF 30 CALENDAR DAYS PRIOR TO THE DESIRED IMPLEMENTATION DATE. IF THE DISTRICT AGREES WITH THE PROPOSED CHANGES THE DWZTM SHALL SEEK APPROVAL FROM THE MOTEC. IN THE EVENT THE PROPOSED CHANGES ARE APPROVED IN WRITING, THE CLOSURES ARE STILL SUBJECT TO NOTIFICATION REQUIREMENTS WITHIN THIS NOTE PRIOR TO IMPLEMENTATION.

ITEM 614, WORK ZONE INCREASED PENALTIES SIGN (R11-H5A)
R11-H5A-48 SIGNS SHALL BE FURNISHED, ERECTED, AND MAINTAINED IN GOOD CONDITION AND/OR REPLACED AS NECESSARY AND SUBSEQUENTLY REMOVED BY THE CONTRACTOR. SIGNS SHALL BE MOUNTED AT THE APPROPRIATE OFFSETS AND ELEVATIONS AS PRESCRIBED BY THE OHIO MANUAL OF UNIFORM TRAFFIC CONTROL DEVICES. THEY SHALL BE MAINTAINED ON SUPPORTS MEETING CURRENT SAFETY CRITERIA.

THE SIGNS MAY BE ERECTED OR UNCOVERED NO MORE THAN FOUR HOURS BEFORE THE ACTUAL START OF WORK. THE SIGNS SHALL BE REMOVED OR COVERED NO LATER THAN FOUR HOURS FOLLOWING RESTORATION OF ALL LANES TO TRAFFIC WITH NO RESTRICTIONS, OR SOONER AS DIRECTED BY THE ENGINEER. TEMPORARY SIGN COVERING AND UNCOVERING DUE TO TEMPORARY LANE RESTORATIONS SHALL BE GUIDED BY THE FOUR-HOUR LIMITATIONS STATED ABOVE. SUCH LANE RESTORATIONS SHOULD BE EXPECTED TO REMAIN IN EFFECT FOR 30 OR MORE CONSECUTIVE CALENDAR DAYS, SUCH AS DURING WINTER SHUT-DOWNS.

THE SIGNS ON THE MAINLINE SHALL BE DUAL MOUNTED UNLESS NOT PHYSICALLY POSSIBLE. THE FIRST SIGN SHALL BE PLACED BETWEEN THE ROAD WORK AHEAD (W20-1) SIGN AND THE NEXT SIGN IN THE SEQUENCE. SIGNS SHALL BE ERECTED ON EACH ENTRANCE RAMP AND EVERY 2 MILES THROUGH THE CONSTRUCTION WORK LIMITS. SIGNS ON THE MAINLINE SHALL BE R11-H5A-48. SIGNS USED ON THE RAMPS SHALL BE R11-H5A-24. R11-H5A-24 SIGNS MAY BE USED IN THE MEDIAN IN LIEU OF R11-H5A-48 SIGNS IF IT IS NOT PHYSICALLY POSSIBLE TO PROVIDE R11-H5A-48 SIGNS IN THE MEDIAN.

CALCULATED BDM CHECKED SMM

MAINTENANCE OF TRAFFIC NOTES

HAM-75-8.91

J:\2024044\5 ODOT\HAM\117525\Design\MOT\Sheets\77889MN002.dgn 4/10/2025 1:06:06 PM bmasterson

THE R11-H5A-48 SIGNS SHALL BE MOUNTED ON 2 NO. 3 POSTS WHEN LOCATED WITHIN CLEAR ZONES.

THE CONTRACTOR MAY USE SIGNS AND SUPPORTS IN USED, BUT GOOD, CONDITION PROVIDED THE SIGNS MEET CURRENT ODOT SPECIFICATIONS. SIGN FACES SHALL BE RETROREFLECTORIZED WITH TYPE G SHEETING COMPLYING WITH THE REQUIREMENTS OF C&MS 730.19.

WORK ZONE INCREASED PENALTIES SIGNS AND SUPPORTS WILL BE MEASURED AS THE NUMBER OF SIGN INSTALLATIONS, INCLUDING THE SIGN AND NECESSARY SUPPORTS. IF A SIGN AND SUPPORT COMBINATION IS REMOVED AND REERECTED AT ANOTHER LOCATION AS DIRECTED BY THE ENGINEER, IT SHALL BE CONSIDERED ANOTHER UNIT.

PAYMENT FOR ACCEPTED QUANTITIES, COMPLETE, IN PLACE WILL BE MADE AT THE CONTRACT UNIT PRICE. PAYMENT SHALL BE FULL COMPENSATION FOR ALL MATERIALS, LABOR, INCIDENTALS AND EQUIPMENT FOR FURNISHING, ERECTING, MAINTAINING, COVERING DURING SUSPENSION OF WORK, AND REMOVAL OF THE SIGN AND SUPPORT.
WORK ZONE INCREASED PENALTIES SIGNS WILL BE PLACED AS DETAILED IN THE PLANS.

ITEM 614, WORK ZONE IMPACT ATTENUATOR FOR 24" WIDE HAZARDS (UNIDIRECTIONAL OR BIDIRECTIONAL)
THIS ITEM SHALL CONSIST OF FURNISHING AND INSTALLING A NON-GATING IMPACT ATTENUATOR. FURNISH AN IMPACT ATTENUATOR FROM THE OFFICE OF ROADWAY ENGINEERING'S APPROVED LIST FOR WORK ZONE IMPACT ATTENUATORS, FROM THE ROADWAY STANDARDS APPROVED PRODUCTS WEB PAGE.

INSTALLATION SHALL BE AT THE LOCATIONS SPECIFIED IN THE PLANS IN ACCORDANCE WITH THE MANUFACTURER'S SPECIFICATIONS.

THE CONTRACTOR SHALL REPAIR OR REPLACE A DAMAGED UNIT WITHIN 24 HOURS OF A DAMAGING IMPACT.

WHEN BIDIRECTIONAL DESIGNS ARE SPECIFIED, THE CONTRACTOR SHALL SUPPLY APPROPRIATE TRANSITIONS. WHEN GATING IMPACT ATTENUATORS ARE DESIRED, THE CONTRACTOR SHALL SUBMIT DOCUMENTATION TO THE ENGINEER FOR ACCEPTANCE.

THE COST FOR THE ADDITIONAL BARRIER REQUIRED FOR A GATING IMPACT ATTENUATOR SHALL BE INCLUDED IN THE COST OF THE GATING IMPACT ATTENUATOR.

PAYMENT FOR THE ABOVE WORK SHALL BE MADE AT THE UNIT PRICE BID AND SHALL INCLUDE ALL LABOR, TOOLS, EQUIPMENT AND MATERIALS NECESSARY TO CONSTRUCT AND MAINTAIN A COMPLETE AND FUNCTIONAL IMPACT ATTENUATOR SYSTEM, INCLUDING ALL RELATED BACKUPS, TRANSITIONS, LEVELING PADS, HARDWARE AND GRADING, NOT SEPARATELY SPECIFIED, AS REQUIRED BY THE MANUFACTURER.

ITEM 614, WORK ZONE CROSSOVER LIGHTING SYSTEM
THIS WORK SHALL CONSIST OF FURNISHING, ERECTING, OPERATING, MAINTAINING AND REMOVING A WORK ZONE LIGHTING SYSTEM FOR A SINGLE CROSSOVER, OR OVERLAPPING A PAIR OF CROSSOVERS. THE SYSTEM SHALL BE AS SHOWN ON TRAFFIC SCD MT-100.00. THE CONTRACTOR SHALL ARRANGE FOR AND PAY FOR POWER. ALL MATERIALS AND CONSTRUCTION SHALL COMPLY WITH APPLICABLE PORTIONS OF 625 AND 725 EXCEPT: THE PERFORMANCE TEST OF 625.19F, AND CERTIFIED DRAWING REQUIREMENT OF 625.04, ARE WAIVED AND USED MATERIALS IN GOOD CONDITION ARE ACCEPTABLE.

POLES WHICH ARE NOT PROTECTED BY GUARDRAIL OR PORTABLE BARRIER SHALL BE LOCATED OUTSIDE THE CLEAR ZONE, AND SHOULD BE LOCATED AT LEAST 30 FEET (PREFERABLY 40 FEET) FROM THE EDGE OF PAVEMENT WHEN POSSIBLE. ADDITIONAL POLE LINES, CABLES AND APPURTENANCES NECESSARY TO FURNISH POWER TO THE LIGHTING SYSTEM SHALL BE INCLUDED IN THIS ITEM. SERVICE POLES SHALL BE POSITIONED WITH THE SAME CONSTRAINTS AS THE LIGHTING POLES AS A MINIMUM.

PAYMENT WILL BE MADE AT THE UNIT PRICE PER EACH FOR ITEM 614, WORK ZONE CROSSOVER LIGHTING SYSTEM THROUGHOUT ALL PHASES OF WORK WHEN THE CROSSOVER ROADWAYS ARE USED.

ITEM 614, PORTABLE CHANGEABLE MESSAGE SIGN, AS PER PLAN
THE CONTRACTOR SHALL FURNISH, INSTALL, MAINTAIN AND REMOVE, WHEN NO LONGER NEEDED, PORTABLE CHANGEABLE MESSAGE SIGNS (PCMS) AS DETAILED WITHIN. IN ADDITION TO THE SPECIFIC LOCATIONS AND APPLICATIONS DETAILED IN THE PLAN SHEETS, THE CONTRACTOR SHALL PROVIDE PCMS PRIOR TO EACH MAJOR PHASE CHANGE. SIGNS SHALL BE IN PLACE 7 DAYS PRIOR TO AND 7 DAYS AFTER EACH PHASE CHANGE AND SHALL BE LOCATED A MINIMUM OF 1500' IN ADVANCE OF THE TEMPORARY TRAFFIC CONTROL SETUP FOR SB I-75 AND NB I-75. THE PCMS LOCATIONS SHALL NOT BE IN CONFLICT WITH ANY OTHER EXISTING OR TEMPORARY SIGNAGE. PRIOR TO THE PHASE CHANGE, THE MESSAGE SHOULD READ "NEW TRAFFIC PATTERN/*DATE*". AFTER THE PHASE CHANGE, THE MESSAGE SHOULD READ "NEW TRAFFIC PATTERN". AN ADDITIONAL 14 SIGN MONTHS OF ITEM 614, PORTABLE CHANGEABLE MESSAGE SIGNS, AS PER PLAN HAS BEEN CARRIED TO THE GENERAL SUMMARY FOR PCMS UTILIZED FOR PHASE CHANGES.

ALL SIGNS SHALL BE OF A TYPE SHOWN ON A LIST OF APPROVED PCMS UNITS AVAILABLE ON THE OFFICE OF MATERIALS MANAGEMENT WEB PAGE. THE LIST CONTAINS CLASS A AND B UNITS WITH MINIMUM LEGIBILITY DISTANCES OF 800 FEET AND 650 FEET, RESPECTIVELY.

EACH SIGN SHALL BE TRAILER-MOUNTED AND EQUIPPED WITH A FUNCTIONAL DIMMING MECHANISM, TO DIM THE SIGN DURING DARKNESS, AND A TAMPER AND VANDAL PROOF ENCLOSURE. EACH SIGN SHALL BE PROVIDED WITH APPROPRIATE TRAINING AND OPERATION INSTRUCTIONS TO ENABLE ON-SITE PERSONNEL TO OPERATE AND TROUBLESHOOT THE UNIT. THE SIGN SHALL ALSO BE CAPABLE OF BEING POWERED BY AN ELECTRICAL SERVICE DROP FROM A LOCAL UTILITY COMPANY. THE PCMS SHALL BE DELINEATED IN ACCORDANCE WITH C&MS 614.03.

THE PROBABLE PCMS LOCATIONS AND WORK LIMITS FOR THOSE LOCATIONS ARE SHOWN IN THE PLANS. PLACEMENT, OPERATION, MAINTENANCE AND ALL ACTIVATION OF THE SIGNS BY THE CONTRACTOR SHALL BE AS DIRECTED BY THE ENGINEER. THE PCMS SHALL BE LOCATED IN A HIGHLY VISIBLE POSITION YET PROTECTED FROM TRAFFIC. THE CONTRACTOR SHALL, AT THE DIRECTION OF THE ENGINEER, RELOCATE THE PCMS TO IMPROVE VISIBILITY OR ACCOMMODATE CHANGED CONDITIONS. WHEN NOT IN USE, THE PCMS SHALL BE TURNED OFF. ADDITIONALLY, WHEN NOT IN USE FOR EXTENDED PERIODS OF TIME, THE PCMS SHALL BE TURNED AWAY FROM ALL TRAFFIC.

THE ENGINEER SHALL BE PROVIDED ACCESS TO EACH SIGN UNIT AND SHALL BE PROVIDED WITH APPROPRIATE TRAINING AND OPERATION INSTRUCTIONS TO ENABLE ODOT PERSONNEL TO OPERATE AND TROUBLESHOOT THE UNIT, AND TO REVISE SIGN MESSAGES, IF NECESSARY.

ALL MESSAGES TO BE DISPLAYED ON THE SIGN WILL BE PROVIDED BY THE ENGINEER. A LIST OF ALL REQUIRED PRE-PROGRAMMED MESSAGES WILL BE GIVEN TO THE CONTRACTOR AT THE PROJECT PRECONSTRUCTION CONFERENCE. THE SIGN SHALL HAVE THE CAPABILITY TO STORE UP TO 99 MESSAGES. MESSAGE MEMORY OR PRE-PROGRAMMED DISPLAYS SHALL NOT BE LOST AS A RESULT OF POWER FAILURES TO THE ON-BOARD COMPUTER. THE SIGN LEGEND SHALL BE CAPABLE OF BEING CHANGED IN THE FIELD. THREE-LINE PRESENTATION FORMATS WITH UP TO SIX MESSAGE PHASES SHALL BE SUPPORTED. PCMS FORMAT SHALL PERMIT THE COMPLETE MESSAGE FOR EACH PHASE TO BE READ AT LEAST TWICE.

THE PCMS SHALL CONTAIN AN ACCURATE CLOCK AND PROGRAMMING LOGIC WHICH WILL ALLOW THE SIGN TO BE ACTIVATED, DEACTIVATED OR MESSAGES CHANGED AUTOMATICALLY AT DIFFERENT TIMES OF THE DAY FOR DIFFERENT DAYS OF THE WEEK.

THE PCMS UNIT SHALL BE MAINTAINED IN GOOD WORKING ORDER BY THE CONTRACTOR IN ACCORDANCE WITH THE PROVISIONS OF C&MS 614.07. THE CONTRACTOR SHALL, PRIOR TO ACTIVATING THE UNIT, MAKE ARRANGEMENTS, WITH AN AUTHORIZED SERVICE AGENT FOR THE PCMS, TO ASSURE PROMPT SERVICE IN THE EVENT OF FAILURE. ANY FAILURE SHALL NOT RESULT IN THE SIGN BEING OUT OF SERVICE FOR MORE THAN 12 HOURS, INCLUDING WEEKENDS. FAILURE TO COMPLY MAY RESULT IN AN ORDER TO STOP WORK AND OPEN ALL TRAFFIC LANES AND/OR IN THE DEPARTMENT TAKING APPROPRIATE ACTION TO SAFELY CONTROL TRAFFIC. THE ENTIRE COST TO CONTROL TRAFFIC, ACCRUED BY THE DEPARTMENT DUE TO THE CONTRACTOR'S NONCOMPLIANCE, WILL BE DEDUCTED FROM MONEYS DUE, OR TO BECOME DUE THE CONTRACTOR ON HIS CONTRACT.

THE CONTRACTOR SHALL BE RESPONSIBLE FOR 24-HOUR-PER-DAY OPERATION AND MAINTENANCE OF THESE SIGNS ON THE PROJECT FOR THE DURATION OF THE PHASES WHEN THE PLAN REQUIRES THEIR USE.

PAYMENT FOR THE ABOVE DESCRIBED ITEM SHALL BE AT THE CONTRACT UNIT PRICE. PAYMENT SHALL INCLUDE ALL LABOR, MATERIALS, EQUIPMENT, FUELS, LUBRICATING OILS, SOFTWARE, HARDWARE AND INCIDENTALS TO PERFORM THE ABOVE DESCRIBED WORK.

ITEM 614, PORTABLE CHANGEABLE MESSAGE SIGN, AS PER PLAN HAS BEEN SEPERATELY ITEMIZED IN THE PLANS. QUANTITIES FOR EACH PCMS HAVE BEEN SHOWN IN THE SUB-SUMMARY WITH THEIR ASSOCIATED PLAN SHEET.

A SUMMARY FOR PCMS IS AS FOLLOWS:
-14 SIGN MONTHS FOR PHASE CHANGES AS DESCRIBED ABOVE, ASSUMING 2 PCMS SIGNS FOR 7 MONTHS.
-8 SIGN MONTHS FOR MOTPE DETOUR PLAN (SEE SHEETS 51A & 51B), ASSUMING 8 PCMS SIGNS FOR 1 MONTH.
-6 SIGN MONTHS FOR S.R. 126 EB PCMS (PHASE 1 ONLY, SEE SHEET 71), ASSUMING 1 PCMS SIGN FOR 6 MONTHS.
-24 SIGN MONTHS FOR I.R. 75 SB PCMS (SEE SHEET 72), ASSUMING 1 PCMS SIGN FOR 24 MONTHS.

ITEM 614, WORKSITE TRAFFIC SUPERVISOR
SUBJECT TO APPROVAL OF THE ENGINEER, THE CONTRACTOR SHALL EMPLOY AND IDENTIFY (SOMEONE OTHER THAN THE SUPERINTENDENT) A PREQUALIFIED WORKSITE TRAFFIC SUPERVISOR (WTS) BEFORE STARTING WORK IN THE FIELD. THE WTS SHALL BE TRAINED IN ACCORDANCE WITH CMS 614.03, SHALL HAVE SUCCESSFULLY COMPLETED ODOT ADMINISTERED WTS TESTING (AND RE-TESTING WHEN APPLICABLE) AND BE LISTED ON THE ODOT PREQUALIFIED WTS ROSTER. PREQUALIFICATION EXPIRES EVERY 5 YEARS. RE-TESTING SHALL BE SUCCESSFULLY REPEATED EVERY 5 YEARS TO REMAIN PREQUALIFIED.

THE NAME OF THE PREQUALIFIED WTS AND RELATED 24-HOUR CONTACT INFORMATION SHALL BE PROVIDED TO THE ENGINEER AT THE PRECONSTRUCTION CONFERENCE. IF THE DESIGNATED WTS WILL NOT BE AVAILABLE FULL TIME (24/7), THE CONTRACTOR MAY DESIGNATE AN ALTERNATE (SECONDARY) WTS TO BE AVAILABLE WHEN THE PRIMARY IS OFF DUTY; HOWEVER THE PRIMARY WTS SHALL REMAIN THE POINT OF CONTACT AT ALL TIMES. ANY ALTERNATE (SECONDARY) WTS IS SUBJECT TO THE SAME TRAINING, PREQUALIFICATION AND OTHER REQUIREMENTS OUTLINED WITHIN THIS PLAN NOTE. AT ALL TIMES THE ENGINEER, OR ENGINEER'S REPRESENTATIVES, MUST BE INFORMED OF WHO THE PRIMARY WTS (AND SECONDARY WTS, IF APPLICABLE) IS AT THE CURRENT TIME.

THE WTS POSITION HAS THE PRIMARY RESPONSIBILITY OF IMPLEMENTING THE TRAFFIC MANAGEMENT PLAN (TMP), MONITORING THE SAFETY AND MOBILITY OF THE ENTIRE WORK ZONE, AND CORRECTING TEMPORARY TRAFFIC CONTROL (TTC) DEFICIENCIES FOR THE ENTIRE WORK ZONE. THE WTS, AND ALTERNATE WTS WHEN ON DUTY, SHALL HAVE SUFFICIENT AUTHORITY TO EFFECTIVELY CARRY OUT THE IDENTIFIED WTS RESPONSIBILITIES AND DUTIES. THE DUTIES OF THE WTS ARE AS FOLLOWS:

1. BE AVAILABLE ON A 24-HOUR PER DAY BASIS.
2. BE ON SITE FOR ALL EMERGENCY TTC NEEDS WITHIN ONE HOUR OF NOTIFICATION BY POLICE OR PROJECT STAFF, AND EFFECT CORRECTIVE MEASURES IMMEDIATELY ON EXISTING WORK ZONE TTC DEVICES.
3. ATTEND PRECONSTRUCTION MEETING AND ALL PROJECT MEETINGS WHERE TTC MANAGEMENT IS DISCUSSED.
4. BE AVAILABLE ON SITE FOR OTHER MEETINGS OR DISCUSSIONS WITH THE ENGINEER UPON REQUEST.
5. BE AWARE OF ALL EXISTING AND PROPOSED TTC OPERATIONS OF THE CONTRACTOR, SUBCONTRACTORS AND SUPPLIERS, AND ENSURE COORDINATION OCCURS BETWEEN THEM TO ELIMINATE CONFLICTING TEMPORARY AND/OR PERMANENT TRAFFIC CONTROL.
6. COORDINATE PROJECT ACTIVITIES WITH ALL LAW ENFORCEMENT OFFICERS (LEOS). THE WTS SHALL ALSO BE THE MAIN CONTACT PERSON WITH THE LEOS WHILE LEOS ARE ON THE PROJECT.
7. COORDINATE AND FACILITATE MEETINGS WITH ODOT PERSONNEL, LEOS AND OTHER APPLICABLE ENTITIES BEFORE EACH PLAN PHASE SWITCH TO DISCUSS THE WORK ZONE TTC FOR IMPLEMENTING THE PHASE SWITCH. SUBMIT A WRITTEN DETAIL OF MOT OPERATIONS AND SCHEDULE OF EVENTS TO IMPLEMENT THE SWITCH BETWEEN PHASE PLANS TO THE ENGINEER 5 CALENDAR DAYS PRIOR TO THIS MEETING.
8. BE PRESENT, ON SITE FOR, AND INVOLVED WITH, EACH TTC SET UP/TAKE DOWN AND EACH PHASE CHANGE IN ACCORDANCE WITH CMS 614.03.
9. ON A CONTINUAL BASIS ENSURE THAT THE TTC ZONE AND ALL RELATED DEVICES ARE INSTALLED, MAINTAINED AND REMOVED IN COMPLIANCE WITH THE CONTRACT DOCUMENTS.

CALCULATED BDM CHECKED SMM

MAINTENANCE OF TRAFFIC NOTES

HAM-75-8.91

J:\2024044S\ODOT\HAM\117525\Design\MOT\Sheets\77889MN003.dgn 4/10/2025 1:06:27 PM bmasterson

SHEET NUMBER									ITEM	ITEM EXT.	TOTALS CARRIED TO GENERAL SUMMARY	UNIT	DESCRIPTION	SEE SHEET NO.
46	47	48												
													MAINTENANCE OF TRAFFIC	
150									253	90000	150	CU YD	PAVEMENT REPAIR, MISC.: PERFORMED IN 2025	42
300									253	90000	300	CU YD	PAVEMENT REPAIR, MISC.: PERFORMED IN 2026	42
150									253	90000	150	CU YD	PAVEMENT REPAIR, MISC.: PERFORMED IN 2027	42
LUMP									503	11101	LUMP		COFFERDAMS AND EXCAVATION BRACING, AS PER PLAN, TS1	42
LUMP									503	11101	LUMP		COFFERDAMS AND EXCAVATION BRACING, AS PER PLAN, TS2	42
LUMP									503	11101	LUMP		COFFERDAMS AND EXCAVATION BRACING, AS PER PLAN, TS3	42
LUMP									503	11101	LUMP		COFFERDAMS AND EXCAVATION BRACING, AS PER PLAN, TS4	42
LUMP									503	11101	LUMP		COFFERDAMS AND EXCAVATION BRACING, AS PER PLAN, TS5	42
LUMP									503	11101	LUMP		COFFERDAMS AND EXCAVATION BRACING, AS PER PLAN, TS6	42
	4								606	60022	4	EACH	IMPACT ATTENUATOR, TYPE 2 (UNIDIRECTIONAL) 60 MPH, 48" WIDE	
1500									614	11110	1500	HOUR	LAW ENFORCEMENT OFFICER WITH PATROL CAR FOR ASSISTANCE	
11300									614	11630	11300	FT	INCREASED BARRIER DELINEATION	
4	5	14							614	12380	23	EACH	WORK ZONE IMPACT ATTENUATOR, 24" WIDE HAZARDS (UNIDIRECTIONAL)	
	1	1							614	12400	2	EACH	WORK ZONE IMPACT ATTENUATOR, MISC.: 24" WIDE HAZARDS (UNIDIRECTIONAL), TYPE 3	
LUMP		LUMP							614	12420	LUMP		DETOUR SIGNING	
	17	4							614	12484	21	EACH	WORK ZONE INCREASED PENALTIES SIGN	
10									614	12500	10	EACH	REPLACEMENT SIGN	
100									614	12600	100	EACH	REPLACEMENT DRUM	
2									614	12756	2	EACH	WORK ZONE CROSSOVER LIGHTING SYSTEM	
250									614	12800	250	EACH	WORK ZONE RAISED PAVEMENT MARKER	
1650									614	12801	1650	EACH	WORK ZONE RAISED PAVEMENT MARKER, AS PER PLAN	40
75									614	13000	75	CU YD	ASPHALT CONCRETE FOR MAINTAINING TRAFFIC	
1565									614	13310	1565	EACH	BARRIER REFLECTOR, TYPE 1, BIDIRECTIONAL	
10									614	13312	10	EACH	BARRIER REFLECTOR, TYPE 2, BIDIRECTIONAL	
1275									614	13350	1275	EACH	OBJECT MARKER, ONE WAY	
300									614	13360	300	EACH	OBJECT MARKER, TWO WAY	
22	30								614	18601	52	SNMT	PORTABLE CHANGEABLE MESSAGE SIGN, AS PER PLAN	39

CALCULATED BDM CHECKED SMM

MAINTENANCE OF TRAFFIC SUBSUMMARY

HAM-75-8.91

J:\2024\0445\ODOT\HAM\117525\Design\MOT\Sheets\77889MS006.dgn 4/4/2025 3:34:43 PM bmasterson

SHEET NUMBER									ITEM	ITEM EXT.	TOTALS CARRIED TO GENERAL SUMMARY	UNIT	DESCRIPTION	SEE SHEET NO.
46	47	48												
	5.7	8.4							614	20056	14.1	MILE	WORK ZONE LANE LINE, CLASS I, 6", 807 PAINT	
4.2									614	20366	4.2	MILE	WORK ZONE LANE LINE, CLASS I, 6", 648	
7.04									614	20560	7.04	MILE	WORK ZONE LANE LINE, CLASS III, 6", 642 PAINT	
	24.5	13.2							614	22056	37.7	MILE	WORK ZONE EDGE LINE, CLASS I, 6", 807 PAINT	
10.0									614	22336	10	MILE	WORK ZONE EDGE LINE, CLASS I, 6", 648	
8.1									614	22360	8.1	MILE	WORK ZONE EDGE LINE, CLASS III, 6", 642 PAINT	
	28040	21304							614	23110	49344	FT	WORK ZONE CHANNELIZING LINE, CLASS I, 12", 807 PAINT	
5650									614	23140	5650	FT	WORK ZONE CHANNELIZING LINE, CLASS I, 8", 648	
10304									614	23690	10304	FT	WORK ZONE CHANNELIZING LINE, CLASS III, 12", 642 PAINT	
	12991	9102							614	24102	22093	FT	WORK ZONE DOTTED LINE, CLASS I, 6", 807 PAINT	
2580									614	24142	2580	FT	WORK ZONE DOTTED LINE, CLASS I, 6", 648	
7560									614	24612	7560	FT	WORK ZONE DOTTED LINE, CLASS III, 6", 642 PAINT	
	502	796							614	25200	1298	FT	WORK ZONE TRANSVERSE/DIAGONAL LINE, CLASS I, 642 PAINT	
		56							614	26200	56	FT	WORK ZONE STOP LINE, CLASS I, 642 PAINT	
		378							614	27050	378	FT	WORK ZONE CROSSWALK LINE, CLASS I, 12", 642 PAINT	
	156								614	28200	156	FT	WORK ZONE GORE MARKING, CLASS II, 642 PAINT	
		26							614	30200	26	EACH	WORK ZONE ARROW, CLASS I, 642 PAINT	
LUMP									615	10000	LUMP		ROADS FOR MAINTAINING TRAFFIC	
3131	1470	57							615	20000	4658	SQ YD	PAVEMENT FOR MAINTAINING TRAFFIC, CLASS A	
4830									615	20001	4830	SQ YD	PAVEMENT FOR MAINTAINING TRAFFIC, CLASS A, AS PER PLAN	42
810									616	10000	810	MGAL	WATER	
	14823								622	41011	14823	FT	PORTABLE BARRIER, 50", AS PER PLAN	42
	4								622	41060	4	EACH	DUAL PORTABLE BARRIER TRANSITION/TERMINATION	
2920	27076	20927							622	41100	50923	FT	PORTABLE BARRIER, UNANCHORED	
	8395	2310							622	41110	10705	FT	PORTABLE BARRIER, ANCHORED	
	132								808	18700	132	SNMT	DIGITAL SPEED LIMIT (DSL) SIGN ASSEMBLY	
96									896	00010	96	SNMT	PORTABLE NON-INTRUSIVE TRAFFIC SENSOR, CLASS I	
24									896	00021	24	SNMT	PORTABLE CHANGEABLE MESSAGE SIGN, AS PER PLAN	43
													INCIDENTALS	
LUMP									614	11000	LUMP		MAINTAINING TRAFFIC	37

CALCULATED BDM CHECKED SMM

OFFICE OF TRAFFIC SUBSUMMARY

MAINTENANCE

HAM-75-8.91

J:\2024044S\ODOT\HAM\117525\Design\MOT\Sheets\77889MS007.dgn 4/10/2025 1:06:53 PM bmasterson

SHEET NO.	253 PAVEMENT REPAIR, MISC.:BY YEAR	503 COFFERDAMS AND EXCAVATION BRACING, AS PER PLAN(BY LOCATION)	614 MAINTAINING TRAFFIC	614 LAW ENFORCEMENT OFFICER WITH PATROL CAR FOR ASSISTANCE	614 INCREASED BARRIER DELINEATION	614 WORK ZONE IMPACT ATTENUATOR, 24" WIDE HAZARDS, (UNIDIRECTIONAL)	614 DETOUR SIGNING	614 REPLACEMENT SIGN	614 REPLACEMENT DRUM	614 WORK ZONE CROSSOVER LIGHTING SYSTEM	614 WORK ZONE RAISED PAVEMENT MARKER	614 WORK ZONE RAISED PAVEMENT MARKER, AS PER PLAN	614 ASPHALT CONCRETE FOR MAINTAINING TRAFFIC	614 BARRIER REFLECTOR, TYPE 1, BIDIRECTIONAL	614 BARRIER REFLECTOR, TYPE 2, BIDIRECTIONAL	614 OBJECT MARKER, ONE WAY	614 OBJECT MARKER, TWO WAY	614 PORTABLE CHANGEABLE MESSAGE SIGN, AS PER PLAN	614 WORK ZONE LANE LINE, CLASS I, 6", 648	614 WORK ZONE LANE LINE, CLASS III, 6", 642 PAINT	614 WORK ZONE EDGE LINE, CLASS I, 6", 648	614 WORK ZONE EDGE LINE, CLASS III, 6", 642 PAINT	614 WORK ZONE CHANNELIZING LINE, CLASS I, 8", 648	614 WORK ZONE CHANNELIZING LINE, CLASS III, 12", 642 PAINT	614 WORK ZONE DOTTED LINE, CLASS I, 6", 648	614 WORK ZONE DOTTED LINE, CLASS III, 6", 642 PAINT	615 ROADS FOR MAINTAINING TRAFFIC	615 PAVEMENT FOR MAINTAINING TRAFFIC, CLASS A	615 PAVEMENT FOR MAINTAINING TRAFFIC, CLASS A, AS PER PLAN	616 WATER	622 PORTABLE BARRIER, UNANCHORED	896 PORTABLE NON-INTRUSIVE TRAFFIC SENSOR, CLASS I	896 PORTABLE CHANGEABLE MESSAGE SIGN, AS PER PLAN
	CY			HOUR	FT	EACH		EACH	EACH	EACH	EACH	EACH	CY	EACH	EACH	EACH	EACH	SNMT	MILE	MILE	MILE	MILE	FT	FT	FT	FT		SY	SY	MGAL	FT	SNMT	SNMT
37			LUMP										75																810			
38								10	100											7.04		8.10		10304		7560							
39										2								14															
40											250	1650																					
41				1500	11300									1565	10	1275	300		4.2		10.0		5650		2580							
42	600	LUMP																									LUMP		4830				
43																																96	24
51A							LUMP											4															
51B							LUMP											4															
52						2																					712			2030			
53																											713						
54																											293						
55																											716						
56																											55						
57																											309						
58						2																					257			890			
59																											76						

SHEET NO.	PHASE	606		614	614		614	614	614	614	614	614	614	614		615		622	622	622	622		808		
		IMPACT ATTENUATOR, TYPE 2 (UNIDIRECTIONAL)60 MPH, 48" WIDE		WORK ZONE IMPACT ATTENUATOR, 24" WIDE HAZARDS, (UNIDIRECTIONAL)	WORK ZONE IMPACT ATTENUATOR, MISC.:24" WIDE HAZARDS (UNIDIRECTIONAL) TYPE 3		WORK ZONE INCREASED PENALTIES SIGN	PORTABLE CHANGEABLE MESSAGE SIGN, AS PER PLAN	WORK ZONE LANE LINE, CLASS I, 6", 807 PAINT	WORK ZONE EDGE LINE, CLASS I, 6", 807 PAINT	WORK ZONE CHANNELIZING LINE, CLASS I, 12", 807 PAINT	WORK ZONE DOTTED LINE, CLASS I, 6", 807 PAINT	WORK ZONE TRANSVERSE/DIAGONAL LINE, CLASS I, 642 PAINT	WORK ZONE GORE MARKING, CLASS II, 642 PAINT		PAVEMENT FOR MAINTAINING TRAFFIC, CLASS A		PORTABLE BARRIER, 50", AS PER PLAN	DUAL PORTABLE BARRIER TRANSITION/TERMINATION	PORTABLE BARRIER, UNANCHORED	PORTABLE BARRIER, ANCHORED		DIGITAL SPEED LIMIT (DSL) SIGN ASSEMBLY		
		EACH		EACH	EACH		EACH	SNMT	FT	FT	FT	FT	FT	FT		SY		FT	EACH	FT	FT		SNMT		
60	1						2				678												24		
61	1						1			3951	2580	124						400							
62	1								1757	4800	643	707				978		800		874			24		
63	1								2400	4800		79				317		800		1600					
64	1								2400	4800		800						800		1600					
65	1								2400	5477		784						800		1106			36		
66	1			2			1		2400	5982	68							800		960	350				
67	1	1					1		2400	6426	199	241		94				800	1	1560					
68	1								2400	5056		1220		18				800		800					
69	1								1976	4800	424	85						800		800			24		
70	1			1	1					4178	2517	873		44				590		450	190				
71	1						1	6		36	1696												24		
72	1						6	24			83														
73	1																								
74	1									327															
75	1															113									
76	1															62									
77	1A									308		308													
78	1A									908	342	350													
79	1A									2138										810					
80	1A									2248										1050	550				
81	1A			1			1			1333										810	180				
82	1A			1						1366										200					
83	1A									1058	339									120	320				
84	1A									2400										1600					
85	1A	1								1900		420	88						1	360					
86	2									730	365														
87	2									1600	800									375					
88	2								600	1600	200	300								800					
89	2								800	2040		580								800					
90	2								412	3200	388									800					
91	2									1742	800									200	600				
92	2									2054	800		139							800					
93	2								37	2050	763	575	50							800					
94	2								550	1700	300	850								850					
95	2	1								2252	626	12	120						1	370	20				
96	3																								
97	3																								
98	3									1837	939	248						450							
99	3	1								4800	2400	526						800	1	755	275				
100	3								1850	4800	550	80						800		800	800				
101	3								2400	4800		830						800		800	800				
102	3								1300	5358	1100	431						800		800	800				
103	3								800	4800	1600							800		640	960				
104	3								1110	5258	1600		70					800		800	800				
105	3								1491	5182	1004	1229	35					800		800	800				
106	3								711	4800	1689	800						800		800	800				
107	3						4			4714	2547	539						583		386	150				
SUBTOTAL									30194	129609															
TOTALS CARRIED TO GENERAL SUMMARY		4		5	1		17	30	5.7 MI	24.5 MI	28040	12991	502	156		1470		14823	4	27076	8395		132		

CALCULATED BDM
CHECKED SMM

MAINTENANCE OF TRAFFIC ESTIMATED QUANTITIES

HAM-75-8.91

J:\2024044S\ODOT\HAM\117525\Design\MOT\Sheets\77889MS002.dgn 4/10/2025 1:07:18 PM bmasterson

MAINTENANCE OF TRAFFIC ESTIMATED QUANTITIES

CALCULATED BDM CHECKED SMM

HAM-75-8.91

SHEET NO.	PHASE	614 WORK ZONE IMPACT ATTENUATOR, 24" WIDE HAZARDS, (UNIDIRECTIONAL) EACH	614 WORK ZONE IMPACT ATTENUATOR, MISC.:24" WIDE HAZARDS (UNIDIRECTIONAL) TYPE 3 EACH	614 DETOUR SIGNING		614 WORK ZONE INCREASED PENALTIES SIGN EACH	614 WORK ZONE LANE LINE, CLASS 1, 6", 807 PAINT FT	614 WORK ZONE EDGE LINE, CLASS 1, 6", 807 PAINT FT	614 WORK ZONE CHANNELIZING LINE, CLASS 1, 12", 807 PAINT FT	614 WORK ZONE DOTTED LINE, CLASS 1, 6", 807 PAINT FT	614 WORK ZONE TRANSVERSE/DIAGONAL LINE, CLASS 1, 642 PAINT FT	614 WORK ZONE STOP LINE, CLASS 1, 642 PAINT FT	614 WORK ZONE CROSSWALK LINE, CLASS 1, 12", 642 PAINT FT	614 WORK ZONE ARROW, CLASS 1 EACH		615 PAVEMENT FOR MAINTAINING TRAFFIC, CLASS A SY		622 PORTABLE BARRIER, 50", AS PER PLAN FT	622 PORTABLE BARRIER, UNANCHORED FT	622 PORTABLE BARRIER, ANCHORED FT				
107A	3															57								
108	4					2																		
109	4							1150	1150	34														
110	4	1	1					2321	1750	316									420					
111	4						1550	2475	100										825					
112	4						1600	2400											800					
113	4	2					500	2371	1100										1436					
114	4	1				1		1479	1600										719	360				
115	4	1						2400	1600										1467					
116	4						600	1012	1000	694									800					
117	4							800	1600	405									640	160				
118	4							800	1600	197									630	60				
119	4							511	96	73														
120	4							60																
121	4							80																
122	4			LUMP																				
123	4A							600																
124	4A							1200																
125	4A							1400		224														
126	4A	1						2208		196	39								450					
127	4A							1236											480					
128	4A	1				1		1147												540				
129	4A							2035											770	190				
130	4A							345																
131	4A																							
132	4A																							
133	4A																							
135	5	1																	690					
136	5						344	344											230					
137	5	2					3200	3200											1450					
138	5	1					3200	3200		813									2080					
139	5	1					4800	3736	1526	665	387													
140	5						4800	4800	1970															
141	5	1					5600	6480	1000						8				440					
142	5						4542	5638	966			56	378	4					600	1000				
143	5						3835	4602	2190	500				14					1600					
144	5						3200	3200	856	1985									1600					
145	5						3200	3200		2400	50								1600					
146	5	1					3200	3200	1200	600	320								1200					
SUBTOTAL							44171	69630																
TOTALS CARRIED TO GENERAL SUMMARY		14	1	LUMP		4	8.4 MI	13.2 MI	21304	9102	796	56	378	26		57			20927	2310				

J:\2024044S\ODOT\HAM\117525\Design\MOT\Sheets\77889MS003.dgn 4/10/2025 1:07:39 PM bmasterson

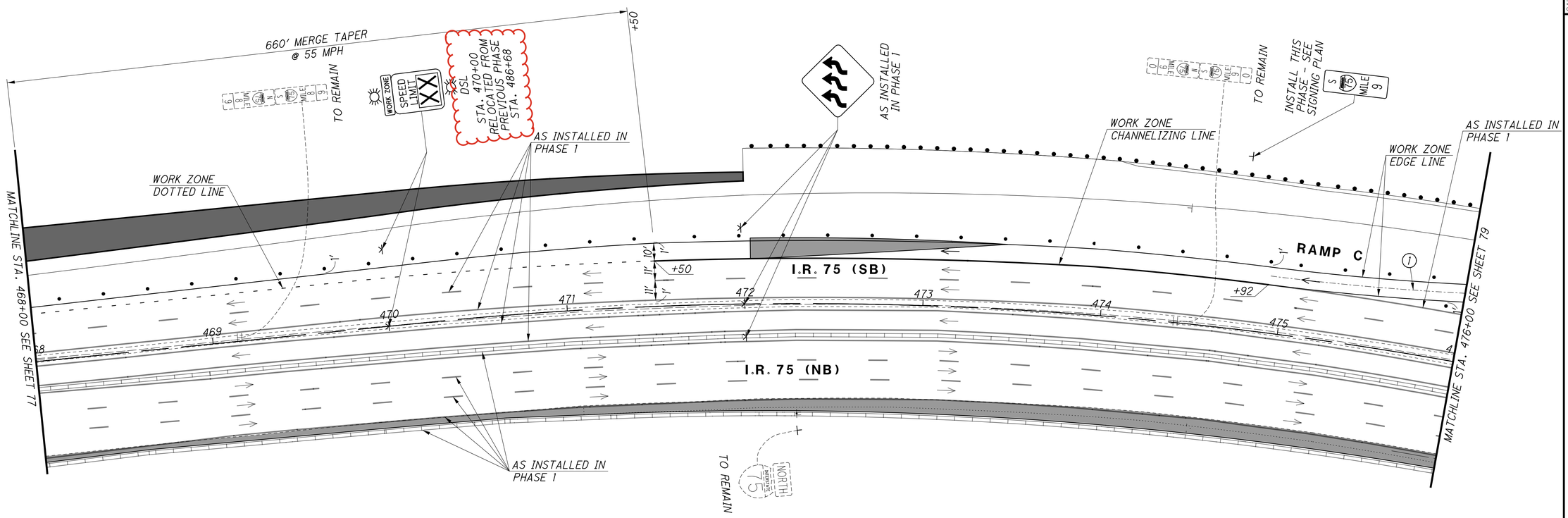

LEGEND

- PORTABLE BARRIER
- DRUM
- TEMPORARY SIGN SUPPORT
- EXISTING SIGN SUPPORT
- PROPOSED SIGN SUPPORT
- OPEN TRAVEL LANE

I.R. 75 MAINLINE LANES SHALL REMAIN IN THE PHASE 1 SET-UP.

(1) Δ = 04° 33′ 29″ (LT)
Dc = 04° 00′ 04″
R = 1432.00′
T = 57.00′
L = 113.92′
E = 1.13′
C = 113.89′
C.B. = N 29° 31′ 56″ E

DRUM SPACING CHART	
TANGENT	80′ c/c
TAPER	55′ c/c
RADII	10′ c/c

HORIZONTAL SCALE IN FEET
0 15 30 60

CALCULATED BDM
CHECKED SMM

MAINTENANCE OF TRAFFIC PLAN - PHASE 1A
I.R. 75 - STA. 468+00 TO STA. 476+00

HAM-75-8.91

J:\2024045\ODOT\HAM\117525\Design\MOT\Sheets\77889MP184.dgn 4/10/2025 1:08:06 PM bmasterson

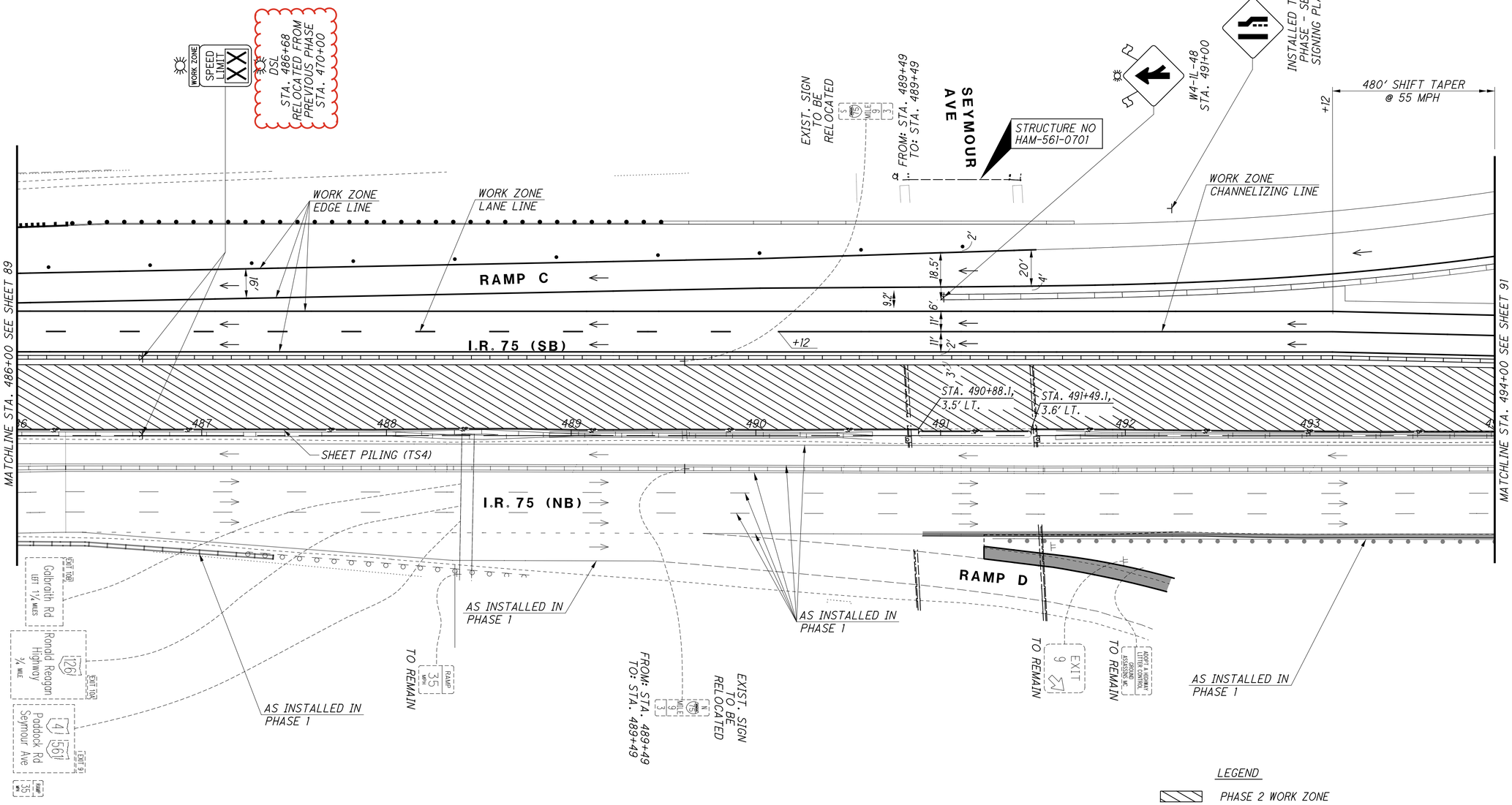

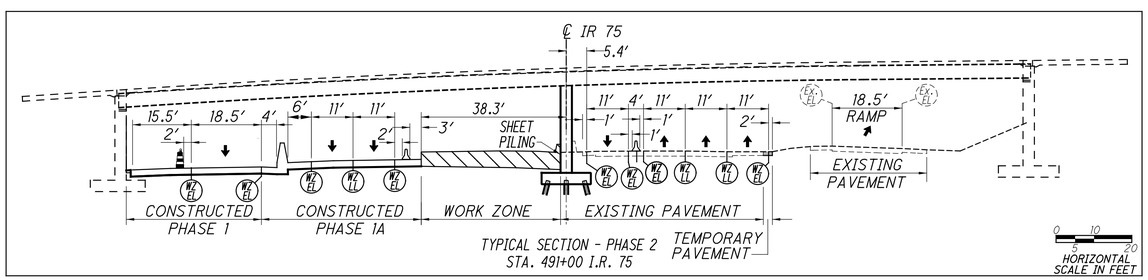

LEGEND

- PHASE 2 WORK ZONE
- PORTABLE BARRIER
- TEMPORARY PAVEMENT
- DRUM
- TEMPORARY SIGN SUPPORT
- EXISTING SIGN SUPPORT
- PROPOSED SIGN SUPPORT
- OPEN TRAVEL LANE

NOTE: THE CONTRACTOR SHALL REVIEW THE UTILITY PLANS AND HAVE ALL UNDERGROUND UTILITIES MARKED IN THE FIELD PRIOR TO PLACING SHEET PILING.

HORIZONTAL SCALE IN FEET: 0, 15, 30, 60

CALCULATED BDM
CHECKED SMM

MAINTENANCE OF TRAFFIC PLAN - PHASE 2
I.R. 75 - STA. 486+00 TO STA. 494+00

HAM-75-8.91

90
826

J:\20240445\ODOT\HAM\117525\Design\MOT\Sheets\77886MP170.dgn 4/10/2025 1:08:28 PM bmasterson

J:\20240445\ODOT\HAM\117525\Design\MOT\Sheets\77889MP242.dgn 4/10/2025 1:08:50 PM bmasterson

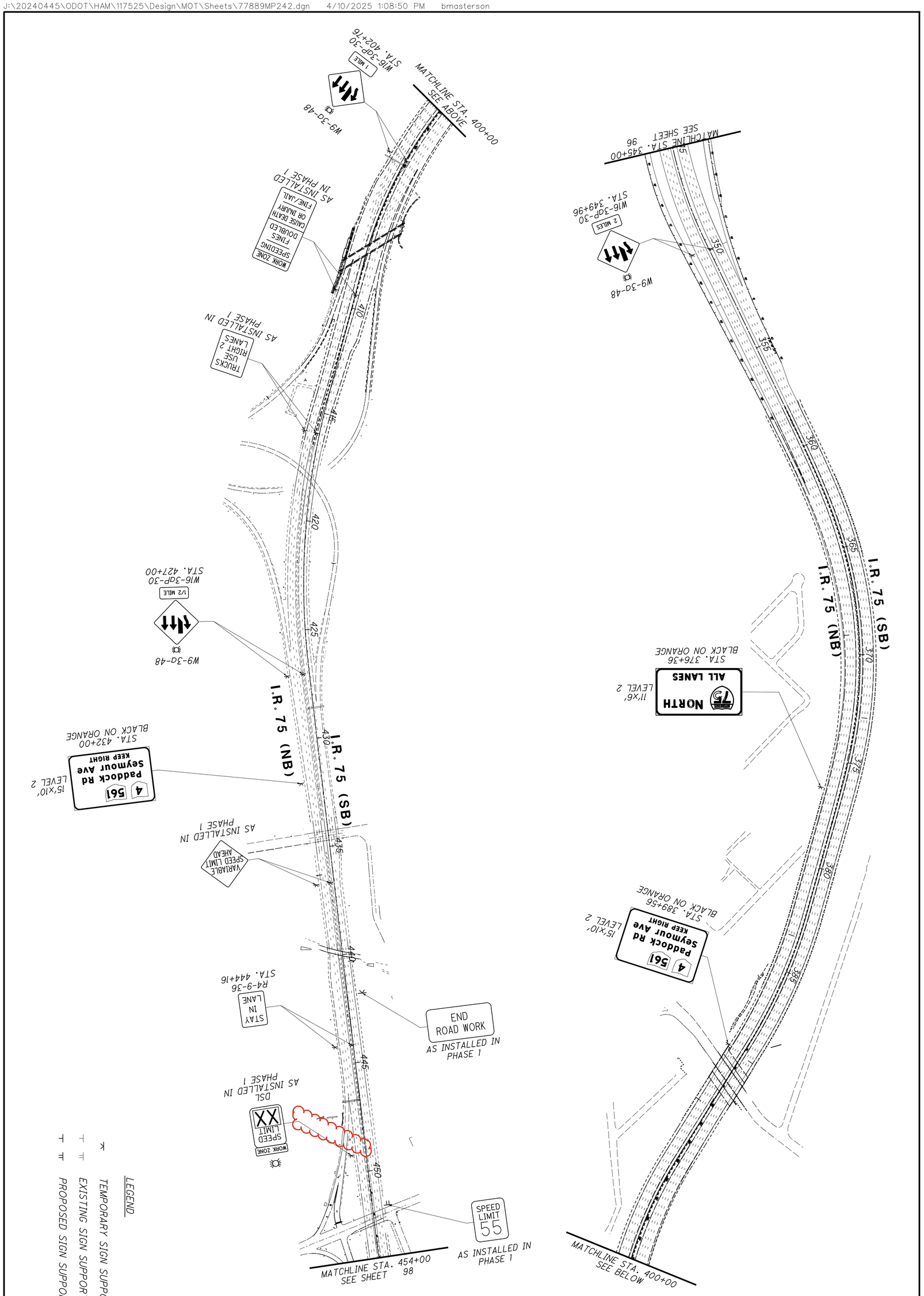

97 826	HAM-75-8.91	MAINTENANCE OF TRAFFIC PLAN - PHASE 3 I.R. 75 - STA. 345+00 TO STA. 454+00	CALCULATED BDM CHECKED SMM	0 100 50 200 HORIZONTAL SCALE IN FEET

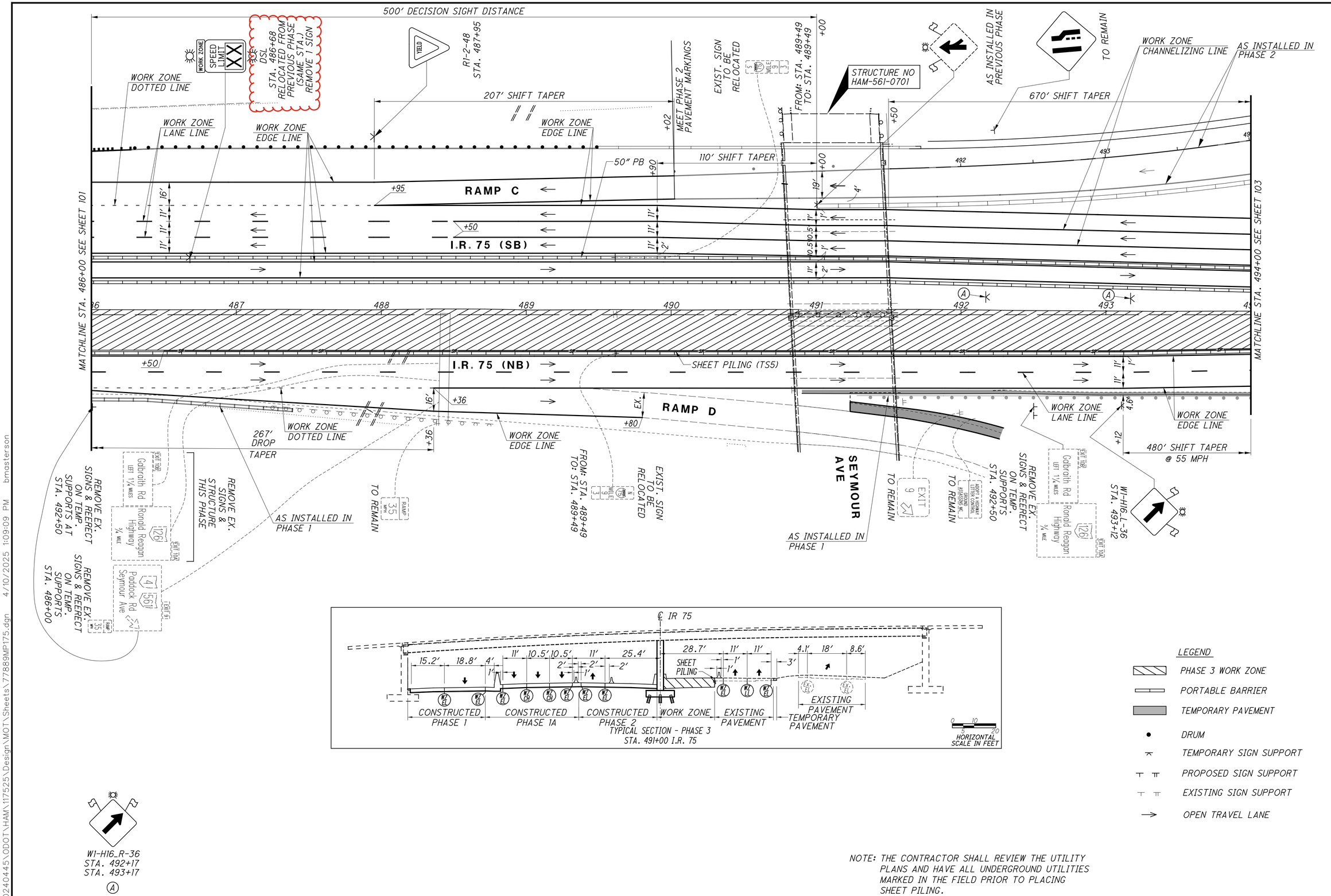

LEGEND

- PHASE 3 WORK ZONE
- PORTABLE BARRIER
- TEMPORARY PAVEMENT
- DRUM
- TEMPORARY SIGN SUPPORT
- PROPOSED SIGN SUPPORT
- EXISTING SIGN SUPPORT
- OPEN TRAVEL LANE

NOTE: THE CONTRACTOR SHALL REVIEW THE UTILITY PLANS AND HAVE ALL UNDERGROUND UTILITIES MARKED IN THE FIELD PRIOR TO PLACING SHEET PILING.

HORIZONTAL SCALE IN FEET 0 15 30 60

CALCULATED BDM
CHECKED SMM

MAINTENANCE OF TRAFFIC PLAN - PHASE 3
I.R. 75 - STA. 486+00 TO STA. 494+00

HAM-75-8.91

J:\20240445\ODOT\HAM\117525\Design\MOT\Sheets\77889MP175.dgn 4/10/2025 1:09:09 PM bmasterson

NOTES:
1. UTILIZE MT-95.30 FOR TEMPOARAY LANE CLOSURES FOR CONSTRUCTION TRAFFIC EXITING THE WORK ZONE.
2. CONNECT PORTABLE BARRIER AND EXISTING MEDIAN UTILZING MT-101.80.
3. REVISE PHASE 1 WORK ZONE CHANNELIZING LINE BEYOND STA. 535+54 ON I.R. 75 SB TO WORK ZONE LANE LINE.

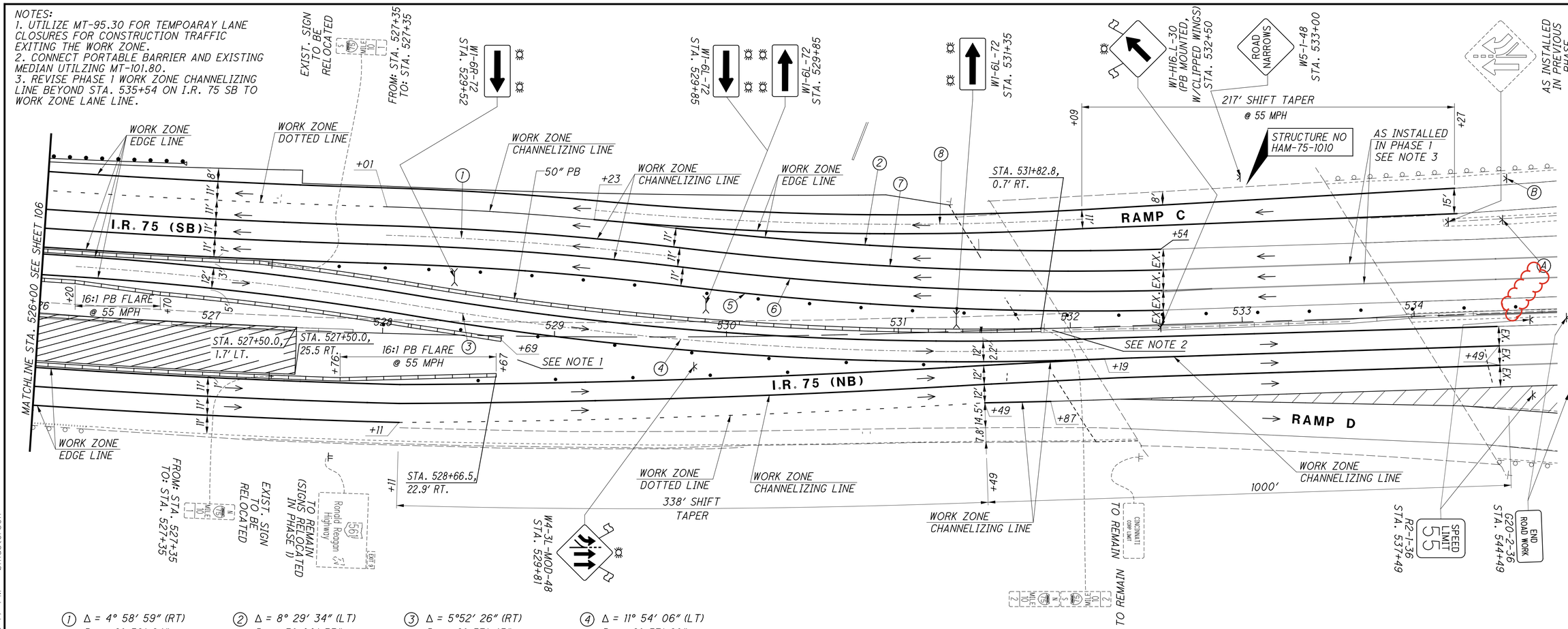

① Δ = 4° 58′ 59″ (RT)
Dc = 2° 59′ 24″
R = 1920.50′
T = 83.57′
L = 167.02′
E = 1.82′
C = 166.97′
C.B. = N 34° 01′ 27″ E

② Δ = 8° 29′ 34″ (LT)
Dc = 3° 00′ 33″
R = 1904.00′
T = 141.37′
L = 282.23′
E = 5.24′
C = 281.97′
C.B. = N 32° 16′ 10″ E

③ Δ = 5°52′ 26″ (RT)
Dc = 2° 57′ 45″
R = 1934.00′
T = 99.22′
L = 198.27′
E = 2.54′
C = 198.18′
C.B. = N 36° 22′ 18″ E

④ Δ = 11° 54′ 06″ (LT)
Dc = 2° 57′ 28″
R = 1937.10′
T = 201.92′
L = 402.37′
E = 10.50′
C = 401.65′
C.B. = N 33° 21′ 29″ E

⑤ Δ = 8° 15′ 03″ (LT)
Dc = 2° 57′ 30″
R = 1937.00′
T = 139.71′
L = 278.94′
E = 5.03′
C = 278.69′
C.B. = N 32° 38′ 31″ E

⑥ Δ = 8° 17′ 46″ (LT)
Dc = 2° 58′ 30″
R = 1926.00′
T = 139.68′
L = 278.87′
E = 5.06′
C = 278.63′
C.B. = N 32° 34′ 12″ E

⑦ Δ = 8°23′ 24″ (LT)
Dc = 2° 59′ 31″
R = 1915.00′
T = 140.46′
L = 280.42′
E = 5.14′
C = 280.17′
C.B. = N 32° 25′ 35″ E

⑧ Δ = 8° 30′ 26″ (LT)
Dc = 3° 00′ 02″
R = 1909.50′
T = 142.02′
L = 283.52′
E = 5.27′
C = 283.26′
C.B. = N 30° 50′ 58″ E

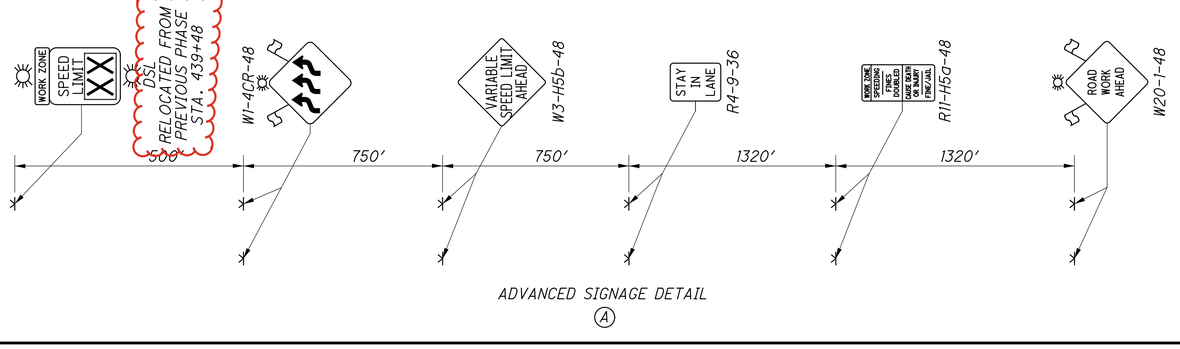

ADVANCED SIGNAGE DETAIL (A)

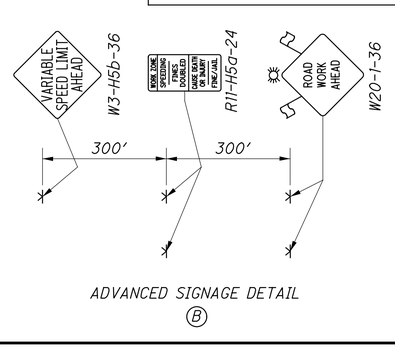

ADVANCED SIGNAGE DETAIL (B)

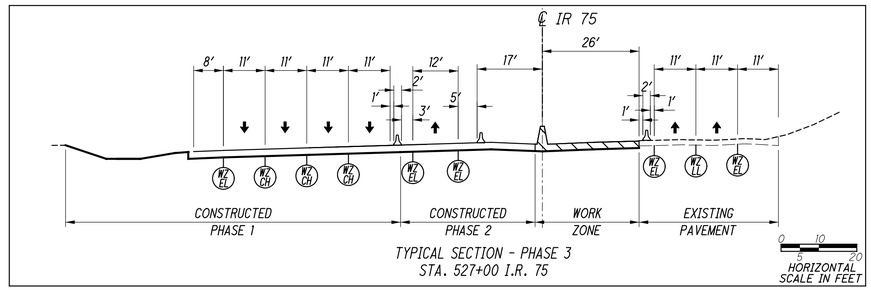

TYPICAL SECTION - PHASE 3
STA. 527+00 I.R. 75

LEGEND
- PHASE 3 WORK ZONE
- DRUM
- PORTABLE BARRIER
- IMPACT ATTENUATOR
- TEMPORARY SIGN SUPPORT
- EXISTING SIGN SUPPORT
- PROPOSED SIGN SUPPORT
- OPEN TRAVEL LANE
- TYPE III BARRICADE

DRUM SPACING CHART	
TANGENT	80′ c/c
TAPER	55′ c/c
RADII	10′ c/c

HORIZONTAL SCALE IN FEET
0 15 30 60

CALCULATED BDM
CHECKED SMM

MAINTENANCE OF TRAFFIC PLAN - PHASE 3
I.R. 75 - STA. 526+00 TO STA. 534+50

HAM-75-8.91

107
826

J:\2024045\ODOT\HAM\117525\Design\MOT\Sheets\77889MP037.dgn 4/10/2025 1:09:47 PM bmasterson

MAINTENANCE OF TRAFFIC PLAN - PHASE 4
I.R. 75 - STA. 446+00 TO STA. 454+00

HAM-75-8.91

CALCULATED BDM
CHECKED SMM

HORIZONTAL SCALE IN FEET
0 15 30 60

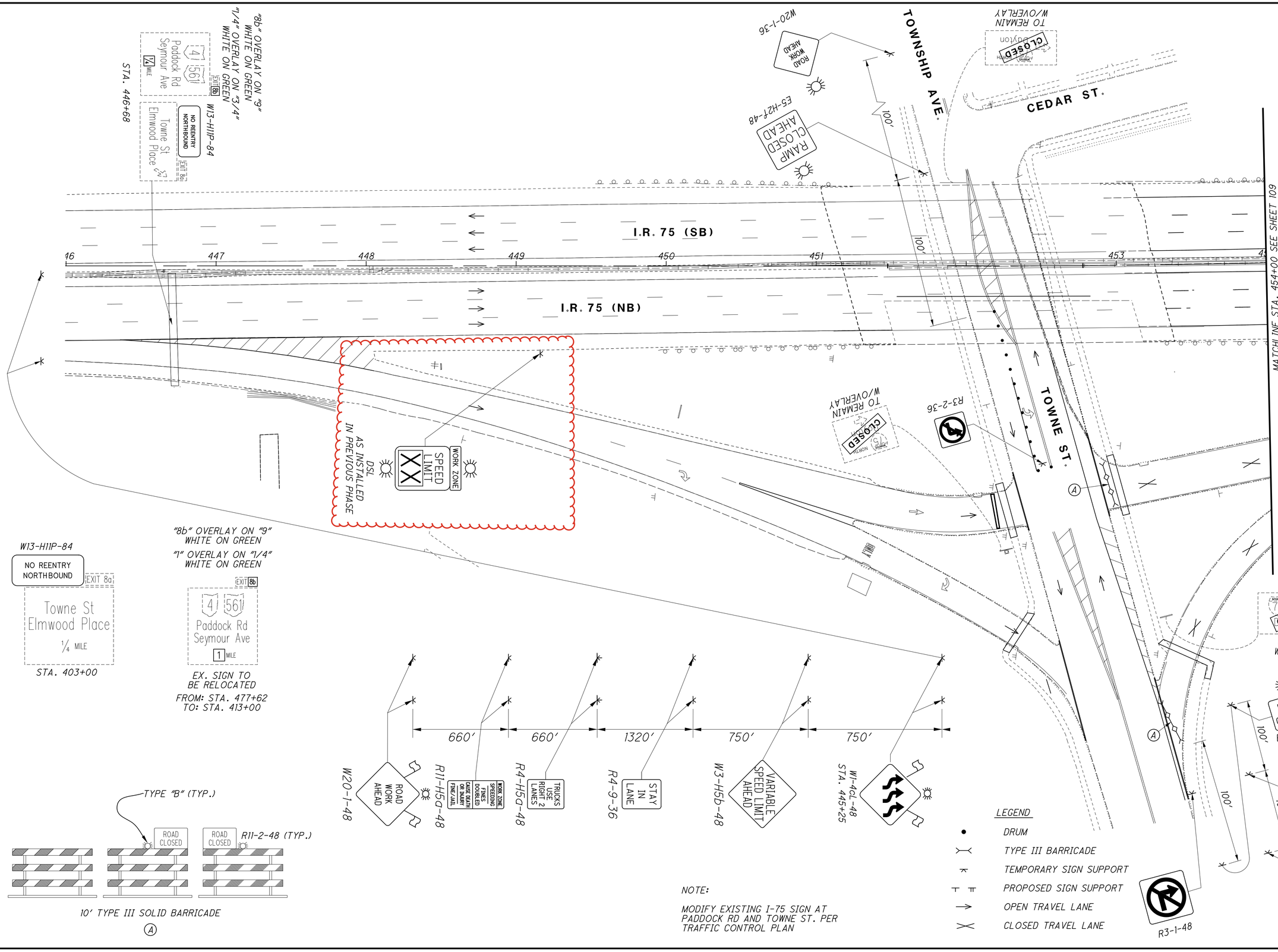

J:\20240445\ODOT\HAM\117525\Design\MOT\Sheets\77889MP043.dgn 4/10/2025 1:29:39 PM bmasterson

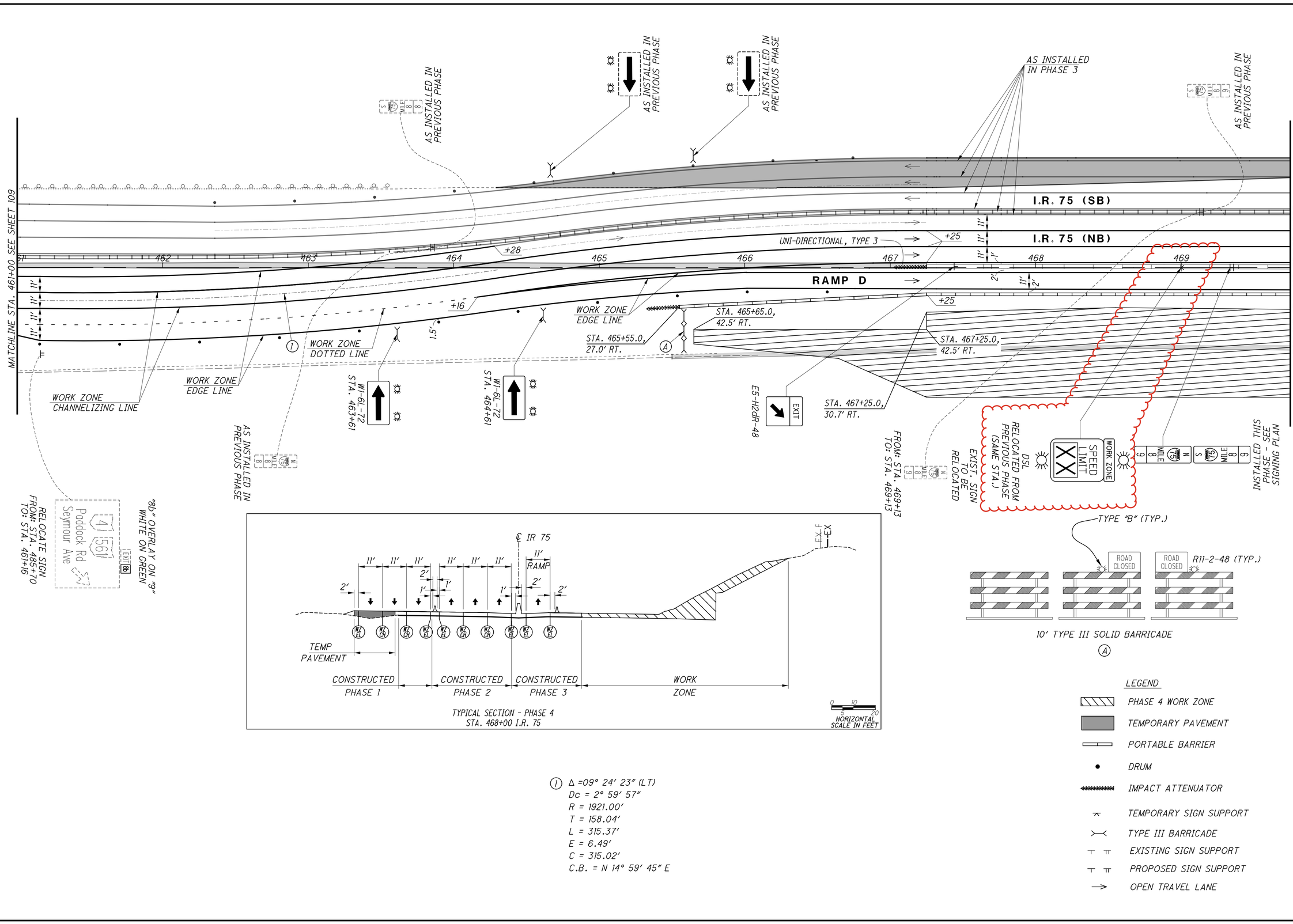

TYPICAL SECTION - PHASE 4
STA. 468+00 I.R. 75

(1) Δ =09° 24' 23" (LT)
Dc = 2° 59' 57"
R = 1921.00'
T = 158.04'
L = 315.37'
E = 6.49'
C = 315.02'
C.B. = N 14° 59' 45" E

LEGEND
- PHASE 4 WORK ZONE
- TEMPORARY PAVEMENT
- PORTABLE BARRIER
- DRUM
- IMPACT ATTENUATOR
- TEMPORARY SIGN SUPPORT
- TYPE III BARRICADE
- EXISTING SIGN SUPPORT
- PROPOSED SIGN SUPPORT
- OPEN TRAVEL LANE

HORIZONTAL SCALE IN FEET: 0, 15, 30, 60

CALCULATED BDM
CHECKED SMM

MAINTENANCE OF TRAFFIC PLAN - PHASE 4
I.R. 75 - STA. 461+00 TO STA. 469+75

HAM-75-8.91

110
826

J:\20240445\ODOT\HAM\117525\Design\MOT\Sheets\77889MP044.dgn 4/10/2025 1:33:50 PM bmasterson

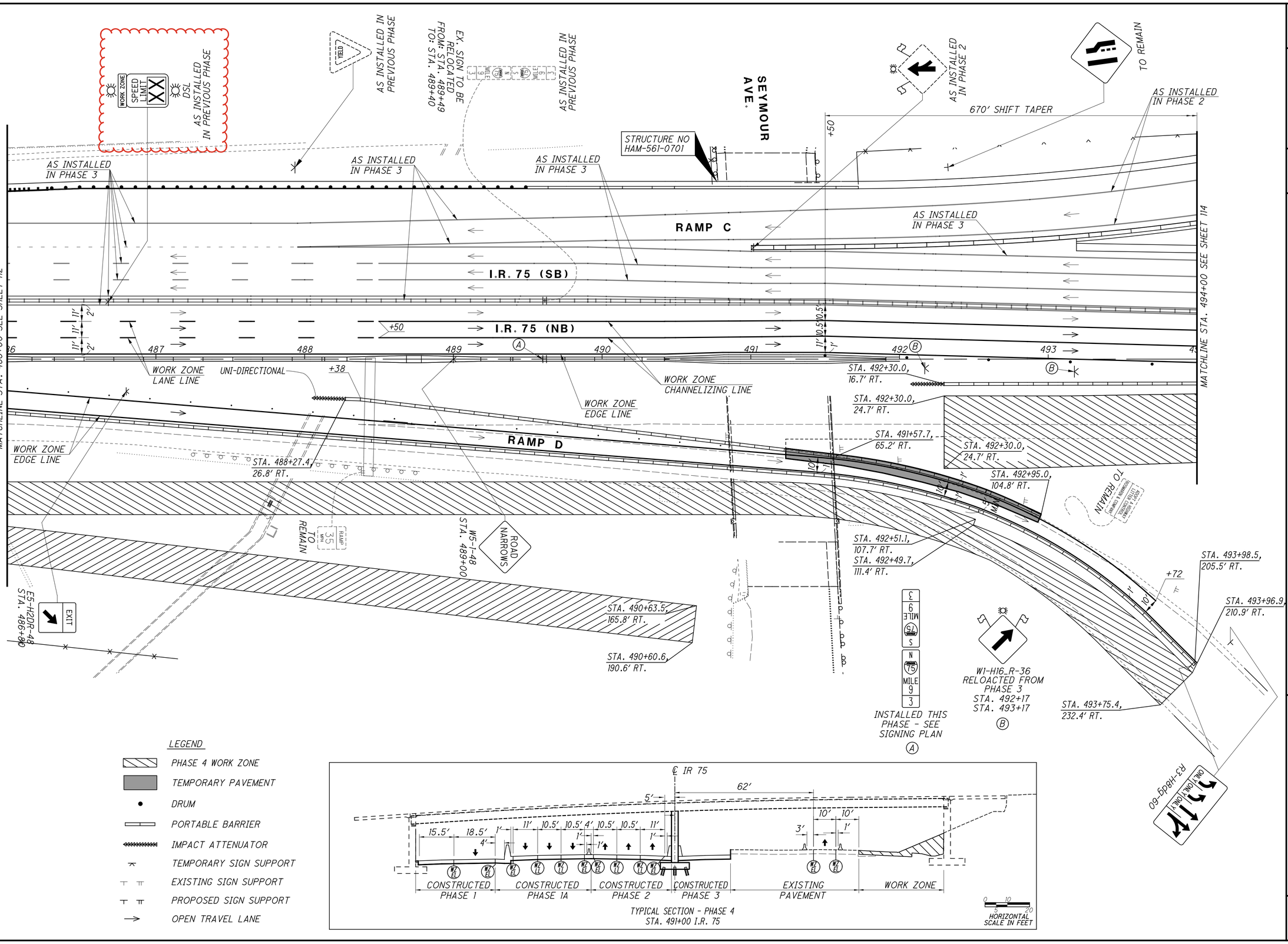

HORIZONTAL SCALE IN FEET

CALCULATED BDM
CHECKED SMM

MAINTENANCE OF TRAFFIC PLAN - PHASE 4
I.R. 75 - STA. 486+00 TO STA. 494+00

HAM-75-8.91

J:\20240445\ODOT\HAM\117525\Design\MOT\Sheets\77889MP046.dgn 4/10/2025 1:36:31 PM bmasterson

TYPICAL SECTION - PHASE 4
STA. 498+50 I.R. 75

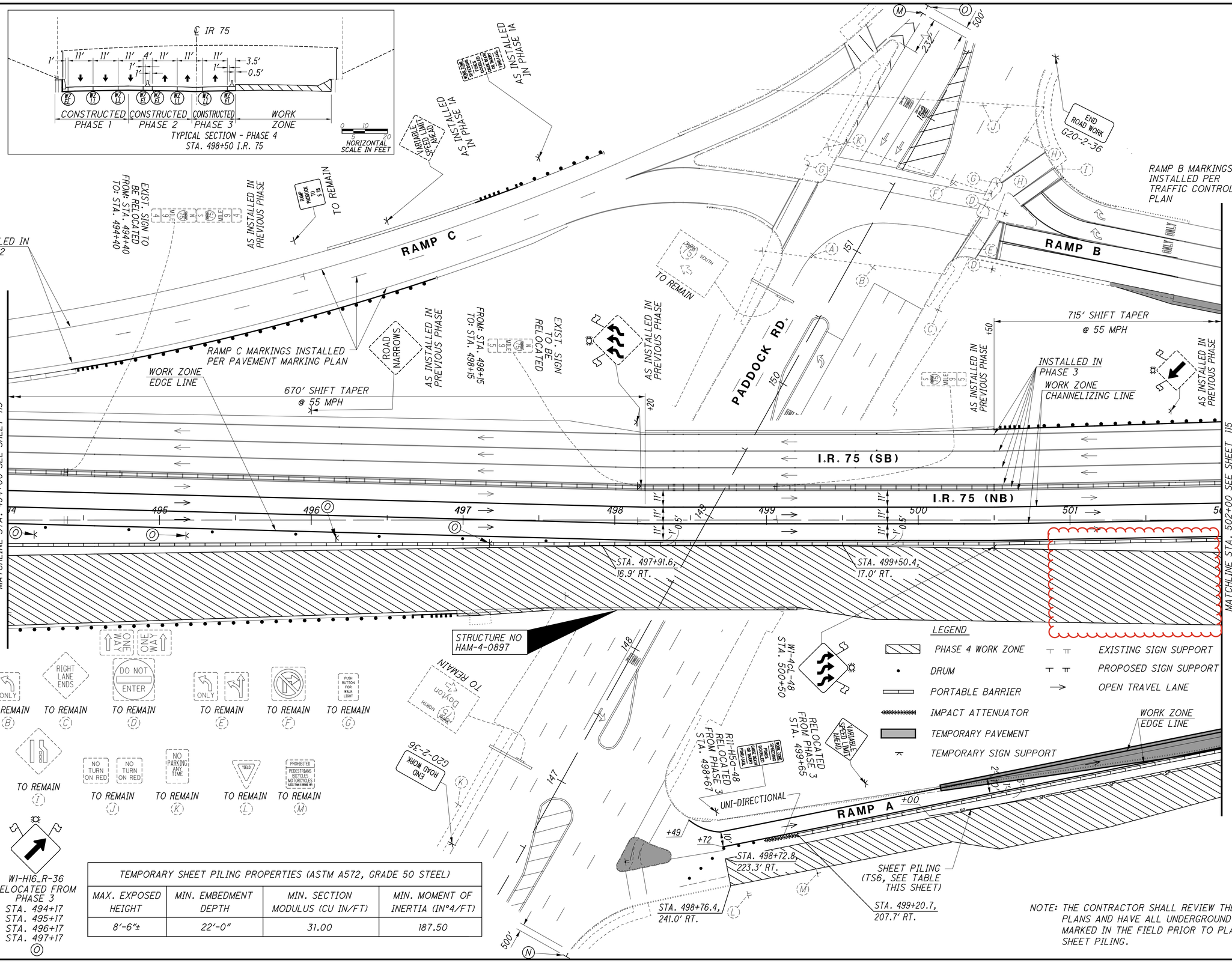

TEMPORARY SHEET PILING PROPERTIES (ASTM A572, GRADE 50 STEEL)			
MAX. EXPOSED HEIGHT	MIN. EMBEDMENT DEPTH	MIN. SECTION MODULUS (CU IN/FT)	MIN. MOMENT OF INERTIA (IN^4/FT)
8′-6″±	22′-0″	31.00	187.50

LEGEND

- PHASE 4 WORK ZONE
- DRUM
- PORTABLE BARRIER
- IMPACT ATTENUATOR
- TEMPORARY PAVEMENT
- TEMPORARY SIGN SUPPORT
- EXISTING SIGN SUPPORT
- PROPOSED SIGN SUPPORT
- OPEN TRAVEL LANE

NOTE: THE CONTRACTOR SHALL REVIEW THE UTILITY PLANS AND HAVE ALL UNDERGROUND UTILITIES MARKED IN THE FIELD PRIOR TO PLACING SHEET PILING.

HORIZONTAL SCALE IN FEET
0 15 30 60

CALCULATED BDM
CHECKED SMM

MAINTENANCE OF TRAFFIC PLAN - PHASE 4
I.R. 75 - STA. 494+00 TO STA. 502+00

HAM-75-8.91

114
826

J:\2024045\ODOT\HAM\117525\Design\MOT\Sheets\77889MP047.dgn 4/10/2025 1:10:45 PM bmasterson

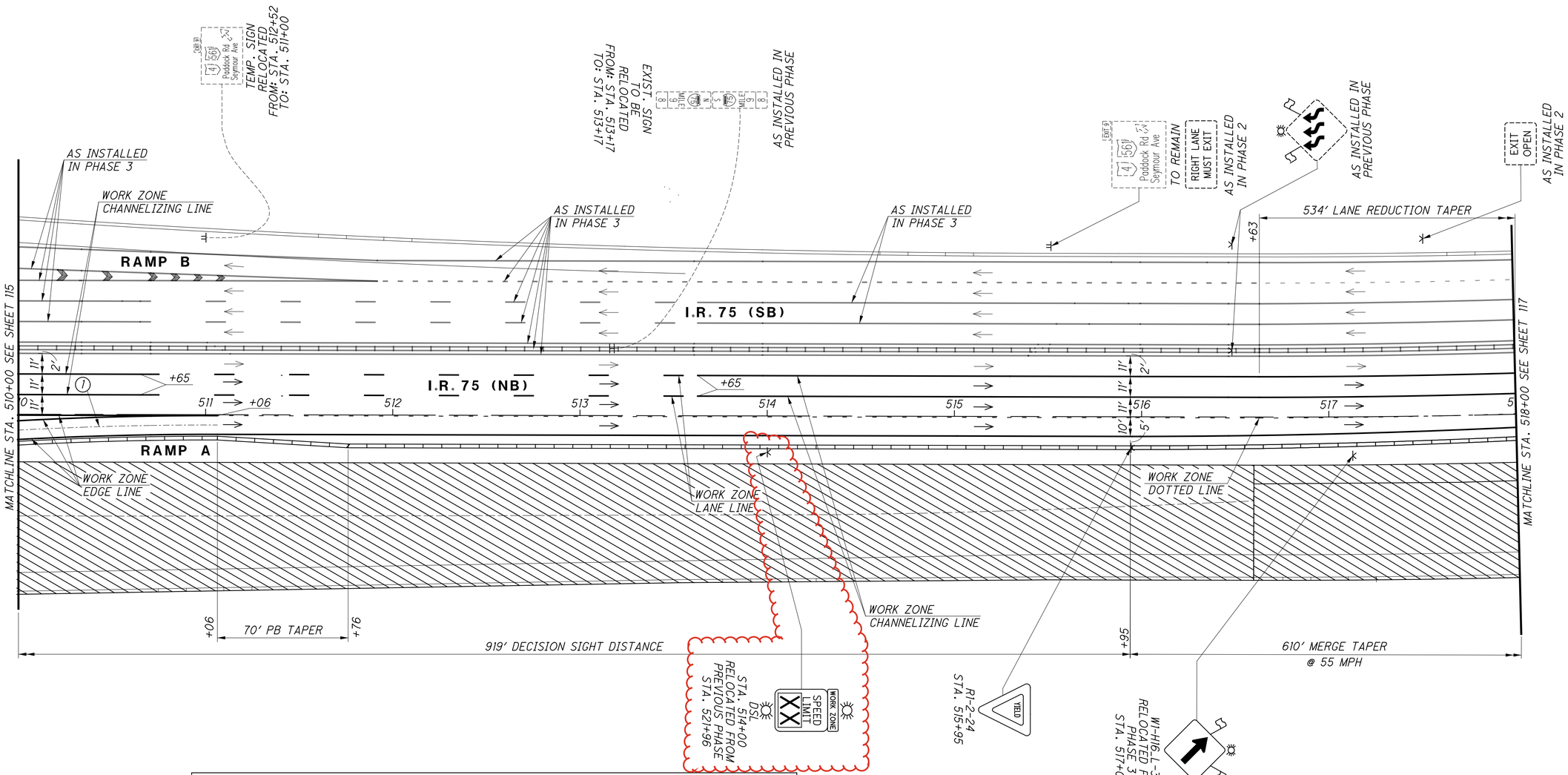

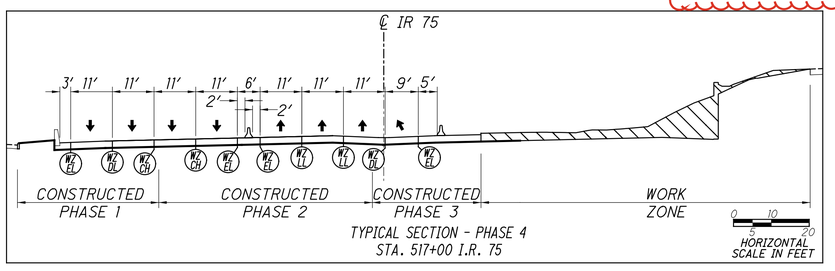

TYPICAL SECTION - PHASE 4
STA. 517+00 I.R. 75

(1) Δ = 10° 47' 22" (RT)
Dc = 2° 59' 59"
R = 1909.00'
T = 180.28'
L = 359.48'
E = 8.49'
C = 358.95'
C.B. = N 38° 33' 56" E

DRUM SPACING CHART	
TANGENT	80' c/c
TAPER	55' c/c
RADII	10' c/c

LEGEND

- PHASE 4 WORK ZONE
- DRUM
- PORTABLE BARRIER
- TEMPORARY SIGN SUPPORT
- EXISTING SIGN SUPPORT
- PROPOSED SIGN SUPPORT
- OPEN TRAVEL LANE

HORIZONTAL SCALE IN FEET 0 15 30 60

CALCULATED BDM
CHECKED SMM

MAINTENANCE OF TRAFFIC PLAN - PHASE 4
I.R. 75 - STA. 510+00 TO STA. 518+00

HAM-75-8.91

J:\20240445\ODOT\HAM\117525\Design\MOT\Sheets\77889MP049.dgn 4/10/2025 1:11:01 PM bmasterson

MATCHLINE STA. 461+00 SEE SHEET 109 (PHASE 4)

AS INSTALLED IN PHASE 3

AS INSTALLED IN PHASE 4

TO REMAIN

AS INSTALLED IN PHASE 3

AS INSTALLED IN PHASE 3

AS INSTALLED IN PHASE 3

I.R. 75 (SB)

I.R. 75 (NB)

RAMP D

461 462 463 464 465 466 467 468 469

MATCHLINE STA. 470+00 SEE SHEET 124

11'

WORK ZONE EDGE LINE

E5-2-48
EXIT OPEN
STA. 462+85

TO REMAIN

AS INSTALLED IN PREVIOUS PHASE

AS INSTALLED IN PREVIOUS PHASE

0+00 MEET PHASE 4 PAVEMENT MARKINGS

AS INSTALLED IN PREVIOUS PHASE

EXIT

AS INSTALLED IN PHASE 3

WI-6-22
STA. 469+00

WI-6-22
STA. 470+00

TO REMAIN

AS INSTALLED IN PREVIOUS PHASE

DSL

SPEED LIMIT XX

WORK ZONE

RELOCATE SIGN
FROM: STA. 481+30
TO: STA. 467+20

EXIT 86
Paddock Rd
Seymour Ave

① Δ = 13° 16′ 27″ (RT)
Dc = 2° 59′ 59″
R = 1910.00′
T = 222.25′
L = 442.50′
E = 12.89′
C = 441.52′
C.B. = N 25° 31′ 14″ E

LEGEND

- TEMPORARY PAVEMENT
- DRUM
- PORTABLE BARRIER
- IMPACT ATTENUATOR
- TEMPORARY SIGN SUPPORT
- EXISTING SIGN SUPPORT
- PROPOSED SIGN SUPPORT
- OPEN TRAVEL LANE
- TYPE III BARRICADE

N

0 15 30 60
HORIZONTAL SCALE IN FEET

CALCULATED BDM
CHECKED SMM

MAINTENANCE OF TRAFFIC PLAN - PHASE 4A
I.R. 75 - STA. 461+00 TO STA. 470+00

HAM-75-8.91

123
826

J:\20240445\ODOT\HAM\117525\Design\MOT\Sheets\77889MP131.dgn 4/10/2025 1:40:40 PM bmasterson

AS INSTALLED IN PHASE 3

AS INSTALLED IN PREVIOUS PHASE

AS INSTALLED IN PHASE 3

AS INSTALLED IN PHASE 4

WORK ZONE SPEED LIMIT XX

DSL AS INSTALLED IN PREVIOUS PHASE

AS INSTALLED IN PHASE 3

YIELD

AS INSTALLED IN PHASE 4

AS INSTALLED IN PHASE 3

I.R. 75 (SB)

I.R. 75 (NB)

MATCHLINE STA. 483+00 SEE SHEET 125

483 484 485 486 487 488 489

MATCHLINE STA. 489+50 SEE SHEET 127

(A)

STA. 485+77.8, 50.8' RT.

STA. 484+98.0, 86.4' RT.

STA. 485+77.8, 82.5' RT.

9'

UNI-DIRECTIONAL

14.8'

14.5'

+96

+03

12'

2'

16'

RAMP D

RAMP E

WORK ZONE DOTTED LINE

WORK ZONE EDGE LINE

WORK ZONE TRANSVERSE LINE

420' OPENING

575' SHIFT TAPER

102' TAPER

+96

+98

INSTALL PERMANENT SIGNS AND TRUSS PRIOR TO THIS PHASE SEE SIGNING PLAN

Paddock Rd 4

Seymour Ave 561

AS INSTALLED IN PREVIOUS PHASE

ROAD NARROWS

INSTALLED THIS PHASE - SEE SIGNING PLAN

RAMP N TS TO SEYMOUR

INSTALLED THIS PHASE - SEE SIGNING PLAN

RAMP N TS TO PADDOCK

DO NOT ENTER

WRONG WAY

INSTALLED THIS PHASE - SEE SIGNING PLAN

TO REMAIN (4)

℄ IR 75

23' 16' 11' 11' 11' 6' 11' 11' 11' 24' 4' 12' 3' 16' 6'

2' 2' 2' 2' 2' RAMP RAMP

CONSTRUCTED PHASE 1 | CONSTRUCTED PHASE 1A | CONSTRUCTED PHASE 2 | CONSTRUCTED PHASE 3 | WORK ZONE | CONSTRUCTED PHASE 4

TYPICAL SECTION - PHASE 4A
STA. 487+00 I.R. 75

0 10 5 20 HORIZONTAL SCALE IN FEET

LEGEND

- PHASE 4A WORK ZONE
- PORTABLE BARRIER
- IMPACT ATTENUATOR
- ORANGE DRUM
- TEMPORARY SIGN SUPPORT
- EXISTING SIGN SUPPORT
- PROPOSED SIGN SUPPORT
- OPEN TRAVEL LANE

0 15 30 60 HORIZONTAL SCALE IN FEET

CALCULATED BDM CHECKED SMM

MAINTENANCE OF TRAFFIC PLAN - PHASE 4A
I.R. 75 - STA. 483+00 TO STA. 489+50

HAM-75-8.91

126
826

J:\2024045\ODOT\HAM\117525\Design\MOT\Sheets\77889MP092.dgn 4/10/2025 1:11:39 PM bmasterson

MAINTENANCE OF TRAFFIC PLAN - PHASE 4A
I.R. 75 - STA. 497+00 TO STA. 504+00

HAM-75-8.91

128
826

CALCULATED BDM
CHECKED SMM

HORIZONTAL SCALE IN FEET
0 15 30 60

TYPICAL SECTION - PHASE 4A
STA. 498+50 I.R. 75

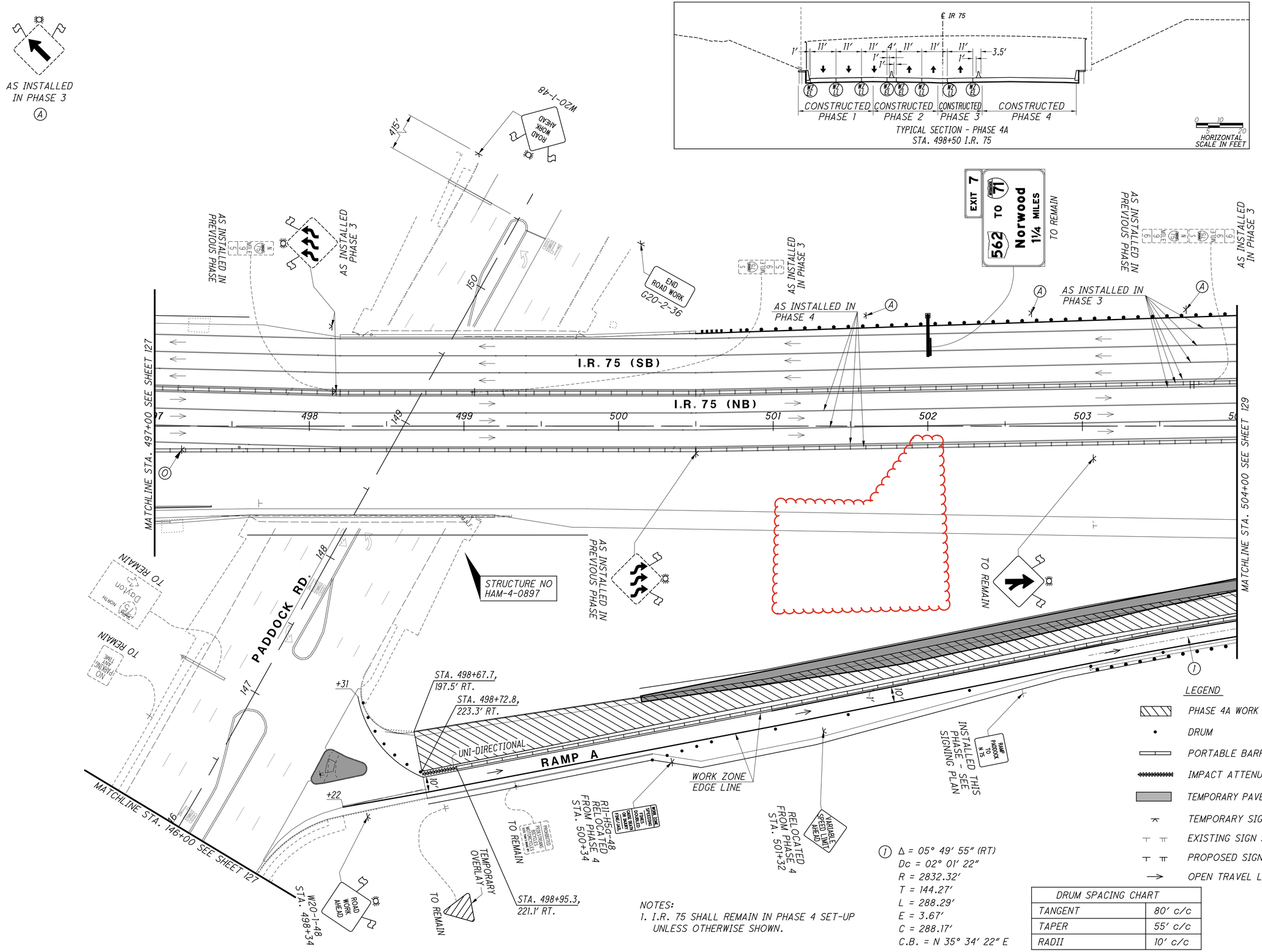

LEGEND

- PHASE 4A WORK ZONE
- DRUM
- PORTABLE BARRIER
- IMPACT ATTENUATOR
- TEMPORARY PAVEMENT
- TEMPORARY SIGN SUPPORT
- EXISTING SIGN SUPPORT
- PROPOSED SIGN SUPPORT
- OPEN TRAVEL LANE

(1) Δ = 05° 49′ 55″ (RT)
Dc = 02° 01′ 22″
R = 2832.32′
T = 144.27′
L = 288.29′
E = 3.67′
C = 288.17′
C.B. = N 35° 34′ 22″ E

NOTES:
1. I.R. 75 SHALL REMAIN IN PHASE 4 SET-UP UNLESS OTHERWISE SHOWN.

DRUM SPACING CHART	
TANGENT	80′ c/c
TAPER	55′ c/c
RADII	10′ c/c

J:\20240445\ODOT\HAM\117525\Design\MOT\Sheets\77889MP102.dgn 4/10/2025 1:12:01 PM bmasterson

(1) Δ = 13° 45′ 44″ (RT)
Dc = 03° 00′ 05″
R = 1909.00′
T = 230.38′
L = 458.54′
E = 13.85′
C = 457.44′
C.B. = N 37° 04′ 45″ E

LEGEND

- PORTABLE BARRIER
- DRUM
- TEMPORARY SIGN SUPPORT
- PROPOSED SIGN SUPPORT
- OPEN TRAVEL LANE

HORIZONTAL SCALE IN FEET
0 150 300 600

CALCULATED BDM
CHECKED SMM

MAINTENANCE OF TRAFFIC PLAN - PHASE 4A
I.R. 75 - STA. 512+00 TO STA. 520+00

HAM-75-8.91

130
826

J:\2024044S\ODOT\HAM\117525\Design\MOT\Sheets\77889MP190.dgn 4/10/2025 1:12:31 PM bmasterson

SHEET NUM.											PART.			ITEM	ITEM EXT	GRAND TOTAL	UNIT	DESCRIPTION	SEE SHEET NO.
24	27	164	165	166	167	168	169	179	171		01/IMS/04	02/IMS/03	03/IMS/10						
																		ROADWAY	
	LUMP										LUMP	LUMP		202	11201	LS		PORTIONS OF STRUCTURE REMOVED, AS PER PLAN	
				3							2	1		202	20010	3	EACH	HEADWALL REMOVED	
		56,389	28,044	7,484							67,099	24,818		202	23001	91,917	SY	PAVEMENT REMOVED, AS PER PLAN	27
		56,389	27,966	7,484							67,042	24,797		202	23500	91,839	SY	WEARING COURSE REMOVED	
		2,248	638	768							2,667	987		202	30000	3,654	SF	WALK REMOVED	
		789				5,370	3,765				7,245	2,679		202	30700	9,924	FT	CONCRETE BARRIER REMOVED	
			1,827	2,115							2,878	1,064		202	32000	3,942	FT	CURB REMOVED	
		815	500								960	355		202	32600	1,315	FT	GUTTER REMOVED	
		3,639	1,976	3,406							6,585	2,436		202	35100	9,021	FT	PIPE REMOVED, 24" DIAMETER AND UNDER	
		1,087	2,025	41							2,302	851		202	35200	3,153	FT	PIPE REMOVED, OVER 24" DIAMETER	
						2,546	4,326				5,016	1,856		202	38000	6,872	FT	GUARDRAIL REMOVED	
		7	13	22							31	11		202	58000	42	EACH	MANHOLE REMOVED	
		17	32	11							44	16		202	58100	60	EACH	CATCH BASIN REMOVED	
		21	8								21	8		202	58200	29	EACH	INLET REMOVED	
			2								1	1		202	58700	2	EACH	MANHOLE ABANDONED	
			1,348	36							1,010	374		SPECIAL	20270000	1,384	FT	FILL AND PLUG EXISTING CONDUITVARIES	23
100											73	27		SPECIAL	20270110	100	FT	PIPE CLEANOUT, 24" AND UNDER	24
100											73	27		SPECIAL	20270120	100	FT	PIPE CLEANOUT, 27" TO 48"	24
100											73	27		SPECIAL	20270130	100	FT	PIPE CLEANOUT OVER 48"	24
								9,367			6,838	2,529		202	75000	9,367	FT	FENCE REMOVED	
								1			1			202	75250	1	EACH	GATE REMOVED	
											LUMP	LUMP		202	98000	LS		REMOVAL MISC.: ACCESS HATCH REMOVAL	26
	56										41	15		202	98100	56	EACH	REMOVAL MISC.: DRAINAGE STRUCTURE ABANDONED, AS PER PLAN	27
	1,824										1,332	492		202	98200	1,824	FT	REMOVAL MISC.: DRAINAGE PIPE ABANDONED, 24" AND UNDER, AS PER PLAN	27
396									162,256		118,736	43,916		203	10000	162,652	CY	EXCAVATION	
396									25,780		19,109	7,067		203	20000	26,176	CY	EMBANKMENT	
50											37	13		204	45000	50	HOUR	PROOF ROLLING	
4,174											3,047	1,127		206	10500	4,174	TON	CEMENT	
135,130											98,645	36,485		206	11000	135,130	SY	CURING COAT	
135,130											98,645	36,485		206	15020	135,130	SY	CEMENT STABILIZED SUBGRADE, 14 INCHES DEEP	
LUMP											LUMP	LUMP		206	30000	LS		MIXTURE DESIGN FOR CHEMICALLY STABILIZED SOILS	
						4,900	3,333				6,010	2,223		606	15050	8,233	FT	GUARDRAIL, TYPE MGS	
						25					18	7		606	15150	25	FT	GUARDRAIL, TYPE MGS HALF POST SPACING	
						6	2				6	2		606	26150	8	EACH	ANCHOR ASSEMBLY, MGS TYPE E (MASH 2016)	
						6	1				5	2		606	26550	7	EACH	ANCHOR ASSEMBLY, MGS TYPE T	
						6	4				7	3		606	35002	10	EACH	MGS BRIDGE TERMINAL ASSEMBLY, TYPE 1	
						5					4	1		606	35102	5	EACH	MGS BRIDGE TERMINAL ASSEMBLY, TYPE 2	
						2	1				2	1		606	60040	3	EACH	IMPACT ATTENUATOR, TYPE 3 UNIDIRECTIONALSEE PLANS FOR WIDTH AND SPEED INFORMATION	
								8,736			6,377	2,359		607	23000	8,736	FT	FENCE, TYPE CLT	
								508			371	137		607	23001	508	FT	FENCE, TYPE CLT, AS PER PLAN	25
								8,736			6,377	2,359		607	70000	8,736	FT	FENCELINE SEEDING AND MULCHING	
					250			250			365	135		607	98000	500	FT	FENCE, MISC.: WOOD FENCE	
					1,251						913	338		608	10000	1,251	SF	4" CONCRETE WALK	
					236						172	64		608	52000	236	SF	CURB RAMP	
						2,157	2,767				3,595	1,329		622	10100	4,924	FT	CONCRETE BARRIER, SINGLE SLOPE, TYPE B1	
						2,151					1,570	581		622	10140	2,151	FT	CONCRETE BARRIER, SINGLE SLOPE, TYPE C1	
						267	3,288				2,595	960		622	10160	3,555	FT	CONCRETE BARRIER, SINGLE SLOPE, TYPE D	
						1					1			622	10200	1	EACH	BARRIER TRANSITION	
						2					1	1		622	24850	2	EACH	CONCRETE BARRIER END SECTION, TYPE B1	
						1					1			622	24860	1	EACH	CONCRETE BARRIER END SECTION, TYPE C1	
						4	6				7	3		622	25000	10	EACH	CONCRETE BARRIER END SECTION, TYPE D	
						23	31				39	15		622	25006	54	EACH	CONCRETE BARRIER, END ANCHORAGE, REINFORCED, TYPE B1	
						3	7				7	3		622	25007	10	EACH	CONCRETE BARRIER, END ANCHORAGE, REINFORCED, TYPE B1, AS PER PLAN	29
						18					13	5		622	25014	18	EACH	CONCRETE BARRIER, END ANCHORAGE, REINFORCED, TYPE C1	
						2					1	1		622	25015	2	EACH	CONCRETE BARRIER, END ANCHORAGE, REINFORCED, TYPE C1, AS PER PLAN	29
						6	26				23	9		622	25050	32	EACH	CONCRETE BARRIER, END ANCHORAGE, REINFORCED, TYPE D	
							1				1			622	25051	1	EACH	CONCRETE BARRIER, END ANCHORAGE, REINFORCED, TYPE D, AS PER PLAN	29
											LUMP	LUMP		878	25000	LS		INSPECTION AND COMPACTION TESTING OF UNBOUND MATERIALS	

CALCULATED DLR CHECKED EDK

GENERAL SUMMARY

HAM-75-8.91

J:\2024045\ODOT\HAM\117525\Design\Roadway\Sheets\77889GG001.dgn 4/18/2025 12:27:54 PM hbrendlinger

SHEET NUM.											PART.			ITEM	ITEM EXT	GRAND TOTAL	UNIT	DESCRIPTION	SEE SHEET NO.
22	23	186	187	188	189	190	180	494			01/IMS/04	02/IMS/03	03/IMS/10						
																		DRAINAGE	
							8				6	2		601	32200	8	CY	ROCK CHANNEL PROTECTION, TYPE C WITH FILTER	
							3				2	1		602	20000	3	CY	CONCRETE MASONRY	
		8,119	8,553	6,736	7,527						22,583	8,352		605	11100	30,935	FT	6" SHALLOW PIPE UNDERDRAINS	
				108	322	189					452	167		605	13300	619	FT	6" UNCLASSIFIED PIPE UNDERDRAINS	
		4,390	5,639	4,038	4,991	798					14,495	5,361		605	14000	19,856	FT	6" BASE PIPE UNDERDRAINS	
	200	646	546	512	611	32					1,859	688		611	00510	2,547	FT	6" CONDUIT, TYPE F FOR UNDERDRAIN OUTLETS	
	100										73	27		611	00900	100	FT	6" CONDUIT, TYPE B	
	100							644			73	671		611	01100	744	FT	6" CONDUIT, TYPE C	
	100										73	27		611	01400	100	FT	6" CONDUIT, TYPE E	
	100										73	27		611	01500	100	FT	6" CONDUIT, TYPE F	
	100										73	27		611	01800	100	FT	8" CONDUIT, TYPE B	
50											37	13		611	01800	50	FT	8" CONDUIT, TYPE B, 706.02, JOINTS PER 706.11	
	100										73	27		611	02000	100	FT	8" CONDUIT, TYPE C	
							159				116	43		611	04400	159	FT	12" CONDUIT, TYPE B	
							90				66	24		611	04600	90	FT	12" CONDUIT, TYPE C	
							2,951				2,154	797		611	05900	2,951	FT	15" CONDUIT, TYPE B	
							114				83	31		611	05900	114	FT	15" CONDUIT, TYPE B, WITH JOINTS PER 706.11	
							934				682	252		611	06100	934	FT	15" CONDUIT, TYPE C	
							183				134	49		611	06100	183	FT	15" CONDUIT, TYPE C, WITH CLASS II BEDDING	
							907				662	245		611	07400	907	FT	18" CONDUIT, TYPE B	
							160				117	43		611	07600	160	FT	18" CONDUIT, TYPE C	
							212				155	57		611	07600	212	FT	18" CONDUIT, TYPE C, WITH CLASS II BEDDING	
							37				27	10		611	08900	37	FT	21" CONDUIT, TYPE B	
							53				39	14		611	09100	53	FT	21" CONDUIT, TYPE C	
							1,092				797	295		611	10400	1,092	FT	24" CONDUIT, TYPE B	
							200				146	54		611	10600	200	FT	24" CONDUIT, TYPE C	
							581				424	157		611	13400	581	FT	30" CONDUIT, TYPE B	
							798				583	215		611	13600	798	FT	30" CONDUIT, TYPE C	
							135				99	36		611	13600	135	FT	30" CONDUIT, TYPE C, WITH CLASS II BEDDING	
							70				51	19		611	14200	70	FT	30" CONDUIT, TYPE F	
							719				525	194		611	16400	719	FT	36" CONDUIT, TYPE B	
							15				11	4		611	16600	15	FT	36" CONDUIT, TYPE C	
							90				66	24		611	16600	90	FT	36" CONDUIT, TYPE C, WITH CLASS II BEDDING	
							878				641	237		611	19400	878	FT	42" CONDUIT, TYPE B	
							302				220	82		611	19600	302	FT	42" CONDUIT, TYPE C	
							984				718	266		611	20900	984	FT	48" CONDUIT, TYPE B	
							295				215	80		611	20900	295	FT	48" CONDUIT, TYPE B, WITH CLASS II BEDDING	
							10				7	3		611	22400	10	FT	54" CONDUIT, TYPE B, WITH CLASS II BEDDING	
							265				193	72		611	52502	265	FT	24" X 38" CONDUIT, TYPE B, 706.04	
							252				184	68		611	96600	252	FT	CONDUIT, BORED OR JACKED 15", TYPE B	
							310				226	84		611	96600	310	FT	CONDUIT, BORED OR JACKED 18", TYPE B	
							80				58	22		611	96600	80	FT	CONDUIT, BORED OR JACKED 24", TYPE B	
							190				139	51		611	96600	190	FT	CONDUIT, BORED OR JACKED 30" TYPE B	
							69				50	19		611	96600	69	FT	CONDUIT, BORED OR JACKED 36", TYPE B	
							472				345	127		611	96600	472	FT	CONDUIT, BORED OR JACKED 42", TYPE B	
LUMP											LUMP	LUMP		SPECIAL	61197910	LS		SANITARY SEWERMSD SANITARY SEWER PROTECTION	
							14				10	4		611	98150	14	EACH	CATCH BASIN, NO. 3	
							2				1	1		611	98151	2	EACH	CATCH BASIN, NO. 3, AS PER PLAN	27
							9				7	2		611	98180	9	EACH	CATCH BASIN, NO. 3A	
							11				8	3		611	98300	11	EACH	CATCH BASIN, NO. 5	
							12				9	3		611	98370	12	EACH	CATCH BASIN, NO. 6	

THESE QUANTITIES WERE MOVED FROM SHEET 152. NO QUANTITY CHANGES WERE MADE

CALCULATED DLR
CHECKED EDK

GENERAL SUMMARY

HAM-75-8.91

J:\2024045\ODOT\HAM\117525\Design\Roadway\Sheets\77889GG001.dgn 4/18/2025 2:05:03 PM hbrendlinger

SHEET NUM. 23	24	180	PART. 01/IMS/04	02/IMS/03	03/IMS/10	ITEM	ITEM EXT	GRAND TOTAL	UNIT	DESCRIPTION	SEE SHEET NO.
										DRAINAGE	
		9	7	2		611	98410	9	EACH	CATCH BASIN, NO. 8	
		4	3	1		611	98434	4	EACH	CATCH BASIN, NO. 8A	
		1	1			611	98470	1	EACH	CATCH BASIN, NO. 2-2B	
		11	8	3		611	98510	11	EACH	CATCH BASIN, NO. 2-3	
		2	1	1		611	99100	2	EACH	INLET, NO. 3 FOR SINGLE SLOPE BARRIER, TYPE B1	
		5	4	1		611	99101	5	EACH	INLET, NO. 3 FOR SINGLE SLOPE BARRIER, TYPE B1, AS PER PLAN	25
		6	4	2		611	99101	6	EACH	INLET, NO. 3 FOR SINGLE SLOPE BARRIER, TYPE B1, AS PER PLAN, A	31A
		7	5	2		611	99101	7	EACH	INLET, NO. 3 FOR SINGLE SLOPE BARRIER, TYPE B1, AS PER PLAN, B	32
		2	1	1		611	99101	2	EACH	INLET, NO. 3 FOR SINGLE SLOPE BARRIER, TYPE B1, AS PER PLAN, C	33
		8	6	2		611	99110	8	EACH	INLET, NO. 3 FOR SINGLE SLOPE BARRIER, TYPE C1	
		1	1			611	99111	1	EACH	INLET, NO. 3 FOR SINGLE SLOPE BARRIER, TYPE C1, AS PER PLAN	34
		9	7	2		611	99114	9	EACH	INLET, NO. 3 FOR SINGLE SLOPE BARRIER, TYPE D	
		1	1			611	99115	1	EACH	INLET, NO. 3 FOR SINGLE SLOPE BARRIER, TYPE D, AS PER PLAN, A	35
		1	1			611	99115	1	EACH	INLET, NO. 3 FOR SINGLE SLOPE BARRIER, TYPE D, AS PER PLAN, B	36
		4	3	1		611	99115	4	EACH	INLET, NO. 3 FOR SINGLE SLOPE BARRIER, TYPE D, AS PER PLAN, C	27
		24	18	6		611	99574	24	EACH	MANHOLE, NO. 3	
		1	1			611	99575	1	EACH	MANHOLE, NO. 3, AS PER PLAN	27
		1	1			611	99900	1	EACH	DRAINAGE STRUCTURE, MISC.: CHECK VALVE FOR 54" CONDUIT	24
		1	1			SPECIAL	69098000	1	EACH	MANHOLE MISC.: SANITARY MANHOLE PER MSD ACC NO. 49003	
		4	3	1		SPECIAL	69098000	4	EACH	MANHOLE MISC.: SANITARY MANHOLE PER MSD ACC NO. 49037	
		2	1	1		SPECIAL	69098000	2	EACH	MANHOLE MISC.: SANITARY MANHOLE PER MSD ACC NO. 49040	
		876	639	237		839	30000	876	FT	TRENCH DRAIN, TYPE B WITH STANDARD GRATE	
5			4	1		611	99710	5	EACH	PRECAST REINFORCED CONCRETE OUTLET	
	12		9	3		SPECIAL	69099550	12	MNTH	TEMPORARY DRAINAGE PUMP	24
										DRAINAGE ALTERNATES - 69TH STREET - STA 481	
				34		611	06100	34	FT	15" CONDUIT, TYPE C, WITH CLASS II BEDDING (ALTERNATE 1)	
				126		611	13400	126	FT	30" CONDUIT, TYPE B, WITH CLASS II BEDDING (ALTERNATE 1)	
				1		SPECIAL	69098000	1	EACH	MANHOLE MISC.: SANITARY MANHOLE PER MSD ACC NO. 49003 (ALTERNATE 1)	
				1		SPECIAL	69098000	1	EACH	MANHOLE MISC.: SANITARY MANHOLE PER MSD ACC NO. 49037 (ALTERNATE 1)	
		34		34		611	06100	34	FT	15" CONDUIT, TYPE C, WITH CLASS II BEDDING (ALTERNATE 2)	
		126		126		611	13400	126	FT	30" CONDUIT, TYPE B, WITH CLASS II BEDDING (ALTERNATE 2)	
		1		1		SPECIAL	69098000	1	EACH	MANHOLE MISC.: SANITARY MANHOLE PER MSD ACC NO. 49003 (ALTERNATE 2)	
		1		1		SPECIAL	69098000	1	EACH	MANHOLE MISC.: SANITARY MANHOLE PER MSD ACC NO. 49037 (ALTERNATE 2)	
		18		18		611	16600	18	FT	36" CONDUIT, TYPE C, WITH CLASS II BEDDING (ALTERNATE 2)	
		252		252		611	96600	252	FT	CONDUIT, BORED OR JACKED 36", TYPE B, WITH JOINTS PER 706.11 (ALTERNATE 2)	
		3		3		611	99574	3	EACH	MANHOLE, NO. 3 (ALTERNATE 2)	
										DRAINAGE ALTERNATES - SEYMORE AVE - STA 492	
				93		611	06100	93	FT	15" CONDUIT, TYPE C, WITH CLASS II BEDDING (ALTERNATE 1)	
				256		611	96600	256	FT	CONDUIT, BORED OR JACKED 36", TYPE B, WITH JOINTS PER 706.11 (ALTERNATE 1)	
				23		611	16600	23	FT	36" CONDUIT, TYPE C, WITH CLASS II BEDDING (ALTERNATE 1)	
				3		SPECIAL	69098000	3	EACH	MANHOLE MISC.: SANITARY MANHOLE PER MSD ACC NO. 49037 (ALTERNATE 1)	
		256		256		611	96600	256	FT	CONDUIT, BORED OR JACKED 36", TYPE B, WITH JOINTS PER 706.11 (ALTERNATE 2)	
		23		23		611	16600	23	FT	36" CONDUIT, TYPE C, WITH CLASS II BEDDING (ALTERNATE 2)	
		2		2		SPECIAL	69098000	2	EACH	MANHOLE MISC.: SANITARY MANHOLE PER MSD ACC NO. 49037 (ALTERNATE 2)	
		235		235		611	22400	235	FT	54" CONDUIT, TYPE B, WITH CLASS II BEDDING (ALTERNATE 2)	
		112		112		611	22600	112	FT	54" CONDUIT, TYPE C, WITH CLASS II BEDDING (ALTERNATE 2)	
		2		2		SPECIAL	69098000	2	EACH	MANHOLE MISC.: SANITARY MANHOLE PER MSD ACC NO. 49040 (ALTERNATE 2)	
										DRAINAGE ALTERNATES - WOODLAND/SUMMIT - STA 525	
		32		32		611	05900	32	FT	15" CONDUIT, TYPE B (ALTERNATE 1)	
		79		79		611	07400	79	FT	18" CONDUIT, TYPE B (ALTERNATE 1)	
		147		147		611	08900	147	FT	21" CONDUIT, TYPE B (ALTERNATE 1)	
		312		312		611	10400	312	FT	24" CONDUIT, TYPE B (ALTERNATE 1)	
		244		244		611	10600	244	FT	24" CONDUIT, TYPE C (ALTERNATE 1)	
				223		611	10400	223	FT	24" CONDUIT, TYPE B (ALTERNATE 2)	
				32		611	13400	32	FT	30" CONDUIT, TYPE B (ALTERNATE 2)	
				135		611	16400	135	FT	36" CONDUIT, TYPE B (ALTERNATE 2)	
				244		611	16600	244	FT	36" CONDUIT, TYPE C (ALTERNATE 2)	
				180		611	19400	180	FT	42" CONDUIT, TYPE B (ALTERNATE 2)	

CALCULATED DLR
CHECKED EDK

GENERAL SUMMARY

HAM-75-8.91

J:\20240445\ODOT\HAM\117525\Design\Roadway\Sheets\77889GG001.dgn 4/18/2025 11:48:03 AM hbrendlinger

SHEET NUM.											PART.			ITEM	ITEM EXT	GRAND TOTAL	UNIT	DESCRIPTION	SEE SHEET NO.
26	27	494	619								01/IMS/04	02/IMS/03	03/IMS/10						
																		RETAINING WALLS (MSE)	
		70										70		203	35111	70	CY	GRANULAR MATERIAL, TYPE B, AS PER PLAN	492
		5										5		SPECIAL	20365000	5	EACH	SETTLEMENT PLATFORM	493
		LUMP										LUMP		503	11101	LS		COFFERDAMS AND EXCAVATION BRACING, AS PER PLAN	492
		2,304										2,304		512	10001	2,304	SY	SEALING OF CONCRETE SURFACES, AS PER PLAN	492
		2,304										2,304		512	10101	2,304	SY	SEALING OF CONCRETE SURFACES (EPOXY-URETHANE), AS PER PLAN	492
		56										56		516	13600	56	SF	1" PREFORMED EXPANSION JOINT FILLER	
		537										537		517	76300	537	FT	RAILING, MISC.: TRAFFIC BARRIER ON MSE WALL	492
		LUMP										LUMP		SPECIAL	53000200	LS		STRUCTURES PROTECTION OF FACILITIES	
		9										9		601	21000	9	SY	CONCRETE SLOPE PROTECTION	
		489										489		601	37500	489	FT	PAVED GUTTER, TYPE 1-2	
		19,813										19,813		840	20001	19,813	SF	MECHANICALLY STABILIZED EARTH WALL, AS PER PLAN	492
		5,447										5,447		840	21000	5,447	CY	WALL EXCAVATION	
		1,619										1,619		840	22000	1,619	SY	FOUNDATION PREPARATION	
		4,940										4,940		840	23000	4,940	CY	SELECT GRANULAR BACKFILL	
		657										657		840	23050	657	CY	NATURAL SOIL	
		2,962										2,962		840	25010	2,962	FT	6" DRAINAGE PIPE, PERFORATED	
		92										92		840	25020	92	FT	6" DRAINAGE PIPE, NON-PERFORATED	
		1,219										1,219		840	26000	1,219	FT	CONCRETE COPING	
		17,377										17,377		840	26050	17,377	SF	AESTHETIC SURFACE TREATMENT	
		5										5		840	27000	5	DAY	ON-SITE ASSISTANCE	
																		STRUCTURE OVER 20 FOOT SPAN (HAM-75-0992)	
			LUMP										LUMP	202	11002	LS		STRUCTURE REMOVED, OVER 20 FOOT SPAN	
			65										65	203	35110	65	CY	GRANULAR MATERIAL, TYPE B	
			LUMP										LUMP	503	11100	LS		COFFERDAMS AND EXCAVATION BRACING	
			103										103	503	21100	103	CY	UNCLASSIFIED EXCAVATION	
			LUMP										LUMP	505	11100	LS		PILE DRIVING EQUIPMENT MOBILIZATION	
			1,350										1,350	507	00600	1,350	FT	14" CAST-IN-PLACE REINFORCED CONCRETE PILES, DRIVEN	
			1,460										1,460	507	00650	1,460	FT	14" CAST-IN-PLACE REINFORCED CONCRETE PILES, FURNISHED	
			11,324										11,324	509	10000	11,324	LB	EPOXY COATED STEEL REINFORCEMENT	
			45										45	511	46510	45	CY	CLASS QC1 CONCRETE, FOOTING	
			72										72	511	53014	72	CY	CLASS QC3 CONCRETE, MISC.:CONCRETE WITH QC/QA, BRIDGE DECK, AS PER PLAN	616
			52										52	511	53014	52	CY	CLASS QC3 CONCRETE, MISC.:CONCRETE WITH QC/QA, SUBSTRUCTURE, AS PER PLAN	617
			10										10	511	53014	10	CY	CLASS QC3 CONCRETE, MISC.:CONCRETE, SIDEWALK, AS PER PLAN	617
			133										133	512	10100	133	SY	SEALING OF CONCRETE SURFACES (EPOXY-URETHANE)	
			LUMP										LUMP	513	95020	LS		STRUCTURAL STEEL, MISC.:PREFABRICATED BRIDGE	617
			12										12	516	10010	12	FT	ARMORLESS PREFORMED JOINT SEAL	
			42										42	516	10501	42	FT	STRUCTURAL EXPANSION JOINT INCLUDING ELASTOMERIC COMPRESSION SEAL, AS PER PLAN	618
			68										68	516	13600	68	SF	1" PREFORMED EXPANSION JOINT FILLER	
			96										96	517	76300	96	FT	RAILING, MISC.: STEEL ORNAMENTAL RAILING	618
			6										6	523	20000	6	EACH	DYNAMIC LOAD TESTING	
			6										6	523	20500	6	EACH	RESTRIKE	
			28										28	526	10000	28	SY	REINFORCED CONCRETE APPROACH SLABS (T=12")	
			12										12	526	90030	12	FT	TYPE C INSTALLATION	
			421										421	607	39921	421	FT	VANDAL PROTECTION FENCE, 10' CURVED, COATED FABRIC, AS PER PLAN	618
			55										55	622	10161	55	FT	CONCRETE BARRIER, SINGLE SLOPE, TYPE D, AS PER PLAN	618
LUMP													LUMP	SPECIAL	69071000	LS		ASBESTOS ABATEMENT, SFN 3110133	26
																		MISCELLANEOUS STRUCTURE	
	375										274	101		512	10000	375	SY	SEALING OF CONCRETE SURFACES (GRAFFITI PROTECTION)	
	175										128	47		512	10100	175	SY	SEALING OF CONCRETE SURFACES (EPOXY-URETHANE)	

CALCULATED DLR CHECKED EDK

GENERAL SUMMARY

HAM-75-8.91

J:\2024045\ODOT\HAM\117525\Design\Roadway\Sheets\77889GG001.dgn 4/11/2025 10:23:30 AM hbrendlinger

SHEET NUM.												PART.			ITEM	ITEM EXT	GRAND TOTAL	UNIT	DESCRIPTION	SEE SHEET NO.
44												01/IMS/04	02/IMS/03	03/IMS/10						
																			MAINTENANCE OF TRAFFIC	
150												110	40		253	90000	150	CY	PAVEMENT REPAIR, MISC.: PERFORMED IN 2025	43
300												219	81		253	90000	300	CY	PAVEMENT REPAIR, MISC.: PERFORMED IN 2026	43
150												110	40		253	90000	150	CY	PAVEMENT REPAIR, MISC.: PERFORMED IN 2027	43
LUMP												LUMP	LUMP		503	11101	LS		COFFERDAMS AND EXCAVATION BRACING, AS PER PLAN, TS1	42
LUMP												LUMP	LUMP		503	11101	LS		COFFERDAMS AND EXCAVATION BRACING, AS PER PLAN, TS2	42
LUMP												LUMP	LUMP		503	11101	LS		COFFERDAMS AND EXCAVATION BRACING, AS PER PLAN, TS3	42
LUMP												LUMP	LUMP		503	11101	LS		COFFERDAMS AND EXCAVATION BRACING, AS PER PLAN, TS4	42
LUMP												LUMP	LUMP		503	11101	LS		COFFERDAMS AND EXCAVATION BRACING, AS PER PLAN, TS5	42
LUMP												LUMP	LUMP		503	11101	LS		COFFERDAMS AND EXCAVATION BRACING, AS PER PLAN, TS6	42
4												3	1		606	60022	4	EACH	IMPACT ATTENUATOR, TYPE 2 (UNIDIRECTIONAL), 60 MPH, 48" WIDE	
1,500												1,095	405		614	11110	1,500	HOUR	LAW ENFORCEMENT OFFICER WITH PATROL CAR FOR ASSISTANCE	
11,300												8,249	3,051		614	11630	11,300	FT	INCREASED BARRIER DELINEATION	
23												17	6		614	12380	23	EACH	WORK ZONE IMPACT ATTENUATOR, 24" WIDE HAZARDS, (UNIDIRECTIONAL)	
2												1	1		614	12400	2	EACH	WORK ZONE IMPACT ATTENUATOR, MISC.: 24" WIDE HAZARDS (UNIDIRECTIONAL), TYPE 3	
LUMP												LUMP	LUMP		614	12420	LS		DETOUR SIGNING	
21												15	6		614	12484	21	EACH	WORK ZONE INCREASED PENALTIES SIGN	
10												7	3		614	12500	10	EACH	REPLACEMENT SIGN	
100												73	27		614	12600	100	EACH	REPLACEMENT DRUM	
2												1	1		614	12756	2	EACH	WORK ZONE CROSSOVER LIGHTING SYSTEM	
250												183	67		614	12800	250	EACH	WORK ZONE RAISED PAVEMENT MARKER	
1,650												1,205	445		614	12801	1,650	EACH	WORK ZONE RAISED PAVEMENT MARKER, AS PER PLAN	41
75												55	20		614	13000	75	CY	ASPHALT CONCRETE FOR MAINTAINING TRAFFIC	
1,565												1,142	423		614	13310	1,565	EACH	BARRIER REFLECTOR, TYPE 1, BIDIRECTIONAL	
10												7	3		614	13312	10	EACH	BARRIER REFLECTOR, TYPE 2, BIDIRECTIONAL	
1,275												931	344		614	13350	1,275	EACH	OBJECT MARKER, ONE WAY	
300												219	81		614	13360	300	EACH	OBJECT MARKER, TWO WAY	
52												38	14		614	18601	52	SNMT	PORTABLE CHANGEABLE MESSAGE SIGN, AS PER PLAN	40

CALCULATED DLR CHECKED EDK

GENERAL SUMMARY

HAM-75-8.91

J:\20240445\ODOT\HAM\117525\Design\Roadway\Sheets\77889GG001.dgn 4/17/2025 4:55:31 PM hbrendlinger

SHEET NUM.	PART.			ITEM	ITEM EXT	GRAND TOTAL	UNIT	DESCRIPTION	SEE SHEET NO.
45	01/IMS/04	02/IMS/03	03/IMS/10						
								MAINTENANCE OF TRAFFIC	
14.1	10.29	3.81		614	20056	14.1	MILE	WORK ZONE LANE LINE, CLASS I, 6", 807 PAINT	
4.2	3.07	1.13		614	20366	4.2	MILE	WORK ZONE LANE LINE, CLASS I, 6", 648	
7.04	5.14	1.9		614	20560	7.04	MILE	WORK ZONE LANE LINE, CLASS III, 6", 642 PAINT	
37.7	27.52	10.18		614	22056	37.7	MILE	WORK ZONE EDGE LINE, CLASS I, 6", 807 PAINT	
10	7.3	2.7		614	22336	10	MILE	WORK ZONE EDGE LINE, CLASS I, 6", 648	
8.1	5.91	2.19		614	22360	8.1	MILE	WORK ZONE EDGE LINE, CLASS III, 6", 642 PAINT	
49,344	36,021	13,323		614	23110	49,344	FT	WORK ZONE CHANNELIZING LINE, CLASS I, 12", 807 PAINT	
5,650	4,125	1,525		614	23140	5,650	FT	WORK ZONE CHANNELIZING LINE, CLASS I, 8", 648	
10,304	7,522	2,782		614	23690	10,304	FT	WORK ZONE CHANNELIZING LINE, CLASS III, 12", 642 PAINT	
22,093	16,128	5,965		614	24102	22,093	FT	WORK ZONE DOTTED LINE, CLASS I, 6", 807 PAINT	
2,580	1,883	697		614	24142	2,580	FT	WORK ZONE DOTTED LINE, CLASS I, 6", 648	
7,560	5,519	2,041		614	24612	7,560	FT	WORK ZONE DOTTED LINE, CLASS III, 6", 642 PAINT	
1,298	948	350		614	25200	1,298	FT	WORK ZONE TRANSVERSE/DIAGONAL LINE, CLASS I, 642 PAINT	
56	41	15		614	26200	56	FT	WORK ZONE STOP LINE, CLASS I, 642 PAINT	
378	276	102		614	27050	378	FT	WORK ZONE CROSSWALK LINE, CLASS I, 12", 642 PAINT	
156	114	42		614	28200	156	FT	WORK ZONE GORE MARKING, CLASS II, 642 PAINT	
26	19	7		614	30200	26	EACH	WORK ZONE ARROW, CLASS I, 642 PAINT	
LUMP	LUMP	LUMP		615	10000	LS		ROADS FOR MAINTAINING TRAFFIC	
4,658	3,400	1,258		615	20000	4,658	SY	PAVEMENT FOR MAINTAINING TRAFFIC, CLASS A	
4,830	3,526	1,304		615	20001	4,830	SY	PAVEMENT FOR MAINTAINING TRAFFIC, CLASS A, AS PER PLAN	42
810	591	219		616	10000	810	MGAL	WATER	
14,832	10,827	4,005		622	41011	14,832	FT	PORTABLE BARRIER, 50", AS PER PLAN	42
4	3	1		622	41060	4	EACH	DUAL PORTABLE BARRIER TRANSITION/TERMINATION	
50,923	37,174	13,749		622	41100	50,923	FT	PORTABLE BARRIER, UNANCHORED	
10,705	7,815	2,890		622	41110	10,705	FT	PORTABLE BARRIER, ANCHORED	
132	96	36		808	18700	132	SNMT	DIGITAL SPEED LIMIT (DSL) SIGN ASSEMBLY	
96	70	26		896	00010	96	SNMT	PORTABLE NON-INTRUSIVE TRAFFIC SENSOR, CLASS I	
24	18	6		896	00021	24	SNMT	PORTABLE CHANGEABLE MESSAGE SIGN, AS PER PLAN	42
								INCIDENTALS	
	LUMP	LUMP	LUMP	108	10000	LS		CPM PROGRESS SCHEDULE	
	25,500	23,500	1,000	SPECIAL	11110100	50,000	EACH	DEPARTMENTS SHARE FACILITATED PARTNERING COSTS	
	LUMP	LUMP	LUMP	614	11000	LS		MAINTAINING TRAFFIC	
	18	17	1	619	16021	36	MNTH	FIELD OFFICE, TYPE C, AS PER PLAN	26
	LUMP	LUMP	LUMP	623	10000	LS		CONSTRUCTION LAYOUT STAKES AND SURVEYING	
	LUMP	LUMP	LUMP	624	10000	LS		MOBILIZATION	
	LUMP	LUMP	LUMP	SPECIAL	69098400	LS		CONSULTANT FOR CONCRETE QUALITY CONTROL INCLUDING TESTING AND INSPECTION	27

CALCULATED DLR CHECKED EDK

GENERAL SUMMARY

HAM-75-8.91

J:\20240445\ODOT\HAM\117525\Design\Roadway\Sheets\77889GG001.dgn 4/17/2025 4:56:23 PM kbendlinger

ESTIMATED QUANTITIES SHEET NO.	601 ROCK CHANNEL PROTECTION, TYPE C WITH FILTER CU YD	602 CONCRETE MASONRY CU YD	611 12" CONDUIT, TYPE B FT	611 12" CONDUIT, TYPE C FT	611 15" CONDUIT, TYPE B FT	611 15" CONDUIT, TYPE B WITH JOINTS PER 706.11 FT	611 15" CONDUIT, TYPE C FT	611 15" CONDUIT, TYPE C, WITH CLASS II BEDDING FT		611 18" CONDUIT, TYPE B FT	611 18" CONDUIT, TYPE C FT	611 18" CONDUIT, TYPE C, WITH CLASS II BEDDING FT		611 21" CONDUIT, TYPE B FT	611 21" CONDUIT, TYPE C FT	611 24" CONDUIT, TYPE B FT	611 24" CONDUIT, TYPE C FT	611 30" CONDUIT, TYPE B FT	611 30" CONDUIT, TYPE C FT	611 30" CONDUIT, TYPE B, WITH CLASS II BEDDING	611 30" CONDUIT, TYPE C, WITH CLASS II BEDDING FT	611 30" CONDUIT, TYPE F FT	611 36" CONDUIT, TYPE B FT	611 36" CONDUIT, TYPE C FT	611 36" CONDUIT, TYPE B, WITH CLASS II BEDDING FT	611 42" CONDUIT, TYPE B FT	611 42" CONDUIT, TYPE C FT	611 48" CONDUIT, TYPE B FT	611 48" CONDUIT, TYPE B, WITH CLASS II BEDDING FT	611 54" CONDUIT, TYPE B, WITH CLASS II BEDDING FT	611 54" CONDUIT, TYPE C, WITH CLASS II BEDDING FT	611 24" X 38" CONDUIT, TYPE B, 706.04 FT		
181					630	114	8	217		42	148	212				555		490		126	176		307		18		302							
182	8	1			882		139			314									40				102	15	23					245	112		
183					876		65			404	12				53	200		91	158			70	310			300						265	
184					438		689									307	444		600							578		984					
185		2	159	90	125		33			147				184		30									49				295				
TOTALS CARRIED TO GENERAL SUMMARY	8	3	159	90	2,951	114	934	217		907	160	212		184	53	1,092	444	581	798	126	176	70	719	15	90	878	302	984	295	245	112	265		

ESTIMATED QUANTITIES SHEET NO.		611 CONDUIT BORED OR JACKED: 15", TYPE B FT	611 CONDUIT BORED OR JACKED: 18", TYPE B FT	611 CONDUIT BORED OR JACKED: 24", TYPE B FT	611 CONDUIT BORED OR JACKED: 30", TYPE B FT	611 CONDUIT BORED OR JACKED: 36", TYPE B FT	611 CONDUIT BORED OR JACKED: 36", TYPE B WITH JOINTS PER 706.11 EACH	611 CONDUIT BORED OR JACKED: 42", TYPE B EACH	611 CATCH BASIN, NO. 3 EACH	611 CATCH BASIN, NO. 3, AS PER PLAN EACH	611 CATCH BASIN, NO. 3A EACH	611 CATCH BASIN, NO. 5 EACH	611 CATCH BASIN, NO. 6 EACH	611 CATCH BASIN, NO. 8 EACH	611 CATCH BASIN, NO. 8A EACH	611 CATCH BASIN, NO. 22B EACH	611 CATCH BASIN, NO. 23 EACH	611 INLET, NO. 3 FOR SINGLE SLOPE BARRIER, TYPE B1 EACH	611 INLET, NO. 3 FOR SINGLE SLOPE BARRIER, TYPE B1, AS PER PLAN EACH	611 INLET, NO. 3 FOR SINGLE SLOPE BARRIER, TYPE B1, AS PER PLAN, A EACH	611 INLET, NO. 3 FOR SINGLE SLOPE BARRIER, TYPE B1, AS PER PLAN, B EACH	611 INLET, NO. 3 FOR SINGLE SLOPE BARRIER, TYPE B1, AS PER PLAN, C EACH	611 INLET, NO. 3 FOR SINGLE SLOPE BARRIER, TYPE C1 EACH	611 INLET, NO. 3 FOR SINGLE SLOPE BARRIER, TYPE C1, AS PER PLAN EACH	611 INLET, NO. 3 FOR SINGLE SLOPE BARRIER, TYPE D EACH	611 INLET, NO. 3 FOR SINGLE SLOPE BARRIER, TYPE D, AS PER PLAN, A EACH	611 INLET, NO. 3 FOR SINGLE SLOPE BARRIER, TYPE D, AS PER PLAN, B EACH	611 INLET, NO. 3 FOR SINGLE SLOPE BARRIER, TYPE D, AS PER PLAN, C EACH	611 MANHOLE NO. 3 EACH	611 MANHOLE NO. 3, AS PER PLAN EACH	690 DRAINAGE STRUCTURE, MISC.: CHECK VALVE FOR 54" CONDUIT EACH		
181		252			190		252	323			1	5	1	7	2	1		2	5	1			7	1	2				7	1			
182			145			69	256	149					8	1	2					2			1		2				7		1		
183			85	80					3	2	8	5		1			1			2	4				1	1		4	2				
184									8				2				10				3	2			3		1		6				
185									3			1	1							1					1				2				
TOTALS CARRIED TO GENERAL SUMMARY		252	230	80	190	69	508	472	14	2	9	11	12	9	4	1	11	2	5	6	7	2	8	1	9	1	1	4	24	1	1		

	690 MANHOLE MISC.: SANITARY MANHOLE PER MSD ACC NO. 49003 FT	690 MANHOLE MISC.: SANITARY MANHOLE PER MSD ACC NO. 49037 FT	690 MANHOLE MISC.: SANITARY MANHOLE PER MSD ACC NO. 49040 FT	690 MANHOLE MISC.: SANITARY MANHOLE PER MSD ACC NO. 49046 FT	839 TRENCH DRAIN, TYPE B WITH STANDARD GRATE FT
181	1	5		1	
182		2	3		876
183					
184					
185				1	
TOTALS CARRIED TO GENERAL SUMMARY	1	7	3	2	876

CALCULATED RSH
CHECKED DLR

DRAINAGE SUBSUMMARY

HAM-75-8.91

180
826

J:\20240445\ODOT\HAM\117525\Design\Drainage\Sheets\77889DS001_Drainage.dgn 4/18/2025 1:49:47 PM hbrendlinger

DRAINAGE ESTIMATED QUANTITIES

REF. NO.	SHEET NO.	STATION FROM	STATION TO	SIDE	CENTERLINE ROADWAY REFERENCE	611 15" CONDUIT, TYPE B FT	611 15" CONDUIT, TYPE B WITH JOINTS PER 706.11 FT	611 15" CONDUIT, TYPE C, WITH CLASS II BEDDING FT	611 15" CONDUIT, TYPE C FT		611 18" CONDUIT, TYPE B FT	611 18" CONDUIT, TYPE C FT	611 18" CONDUIT, TYPE C, WITH CLASS II BEDDING FT		611 24" CONDUIT, TYPE B FT	611 30" CONDUIT, TYPE B FT	611 30" CONDUIT, TYPE B, WITH CLASS II BEDDING FT	611 30" CONDUIT, TYPE C, WITH CLASS II BEDDING FT	611 36" CONDUIT, TYPE B FT	611 36" CONDUIT, TYPE B, WITH CLASS II BEDDING FT	611 42" CONDUIT, TYPE C FT	611 CONDUIT BORED OR JACKED: 15", TYPE B FT	611 CONDUIT BORED OR JACKED: 30", TYPE B FT	611 CONDUIT BORED OR JACKED: 42", TYPE B FT	611 CATCH BASIN, NO. 3A EACH	611 CATCH BASIN, NO. 5 EACH	611 CATCH BASIN, NO. 6 EACH	611 CATCH BASIN, NO. 8 EACH	611 CATCH BASIN, NO. 8A EACH	611 CATCH BASIN, NO. 2-2B EACH	611 INLET, NO. 3 FOR SINGLE SLOPE BARRIER, TYPE B1 EACH	611 INLET, NO. 3 FOR SINGLE SLOPE BARRIER, TYPE B1, AS PER PLAN EACH	611 INLET, NO. 3 FOR SINGLE SLOPE BARRIER, TYPE B1, AS PER PLAN, A EACH	611 INLET, NO. 3 FOR SINGLE SLOPE BARRIER, TYPE C1 EACH	611 INLET, NO. 3 FOR SINGLE SLOPE BARRIER, TYPE C1, AS PER PLAN EACH	611 INLET, NO. 3 FOR SINGLE SLOPE BARRIER, TYPE D EACH	611 MANHOLE NO. 3 EACH	611 MANHOLE 3, AS PER PLAN EACH	611 CONDUIT BORED OR JACKED: 36", TYPE B WITH JOINTS PER 706.11 FT	690 MANHOLE MISC.: SANITARY MANHOLE PER MSD ACC NO. 49003 EACH	690 MANHOLE MISC.: SANITARY MANHOLE PER MSD ACC NO. 49037 EACH	690 MANHOLE MISC.: SANITARY MANHOLE PER MSD ACC NO. 49046 EACH
D1	397	440+42		RT	I.R. 75																							1															
D2	397	443+25		RT	I.R. 75																							1															
D2	398	446+29		RT	I.R. 75																							1															
D3	398	451+33		RT	I.R. 75																							1															
D4	398	452+08		RT	I.R. 75																							1															
D5	398	453+16		RT	I.R. 75																							1															
D6	398	455+33		RT	I.R. 75																							1															
D1	399	458+26		CL	I.R. 75																													1									
D2	399	459+27		CL	I.R. 75																													1									
D3	399	460+27		CL	I.R. 75																													1									
D4	399	462+48		CL	I.R. 75																													1									
D5	399	465+19		CL	I.R. 75																													1									
D6	399	467+95		CL	I.R. 75																												1										
D1	400	473+82	474+10	LT	I.R. 75																		92																			1	
D2	400	474+10	474+36	RT	I.R. 75																		77																		1		
D3	400	476+00	476+07	RT	I.R. 75					42																	1																
D4	400	476+08	476+20	RT	I.R. 75																		83																		1		
D5	400	478+50	480+69	RT	I.R. 75	219																																		1			
D6	400	480+68	480+75	RT	I.R. 75	72																																			1		
D7	400	480+58	480+68	LT	I.R. 75		114																							1												
D8	400	480+75	484+40	RT	I.R. 75										365																								1			
D9	400	479+01	480+75	LT	I.R. 75										173																								1			
D10	400	480+75	480+75	RT	I.R. 75	44																					1															
D11	400	475+87	477+84	RT	I.R. 75			183																																	1		
D12	400	477+84	479+41	RT	I.R. 75							151																													1		
D13	400	479+41	479+41	RT	I.R. 75							61																													1		
D14	400	479+41	481+17	RT	I.R. 75													176																							1		1
D15	400	474+36	476+07	RT	I.R. 75	165																																			1		
D16	400	480+96	480+96	RT	I.R 75															18																					1		
D17	400	480+74	480+96	RT/LT	I.R 75																																				2		252	
D18	400	481+17	481+17	RT	I.R 75			34																																		1	
D19	400	481+14	481+17	RT	I.R 75											126																										1	
D20	400	476+07	479+01	LT	I.R 75										282																										1		
D1	402	484+40	486+41	RT	I.R 75																200																				1		
D2	402	486+41	486+90	RT	I.R 75																61																				1		
D3	402	486+86	486+90	RT	I.R 75																46																				1		
D4	402	486+86	489+86	RT	I.R 75																	302								1												
D5	402	484+40	485+88	RT	I.R 75						148																1															
D6	402	485+88	486+86	RT	I.R 75										100												1															
D7	402	489+86	493+09	RT	I.R 75																			323																1		
D8	402	489+85	489+86	RT	I.R 75				8																		1															
D9	402	489+40	490+24	LT	I.R 75	84																																				1	
D10	402	489+40	489+40	LT	I.R 75	5																																1				
D11	402	489+40	489+50	LT	I.R 75	41																				1															
D12	402	489+50	489+50	RT	I.R 75																				73																1	
D13	402	489+50	489+50	RT	I.R 75																				117																	
D14	402	489+90	489+91	RT	I.R 75										42																										1		
D15	402	489+86	489+91	RT	I.R 75										83																												
TOTALS CARRIED TO DRAINAGE SUBSUMMARY						630	114	217	8	42	148	212		555	490	126	176	307	18	302	252	190	323	1	5	1	7	2	1	2	5	1	7	1	2	7	1	252	1	5	1

CALCULATED RSH
CHECKED DLR

HAM-75-8.91

J:\20240445\ODOT\HAM\117525\Design\Drainage\Sheets\77889DS001_Drainage.dgn 4/18/2025 1:46:58 PM hbrendlinger

REF. NO.	SHEET NO.	STATION FROM	STATION TO	SIDE	CENTERLINE ROADWAY REFERENCE	611 15" CONDUIT, TYPE B FT	611 15" CONDUIT, TYPE C FT	611 18" CONDUIT, TYPE B FT	611 18" CONDUIT, TYPE C FT	611 21" CONDUIT, TYPE C FT	611 24" CONDUIT, TYPE B FT	611 30" CONDUIT, TYPE B FT	611 30" CONDUIT, TYPE C FT	611 30" CONDUIT, TYPE F FT	611 36" CONDUIT, TYPE B FT	611 42" CONDUIT, TYPE B FT	611 24" X 38" CONDUIT, TYPE B, 706.04 FT	611 CONDUIT BORED OR JACKED: 18", TYPE B FT	611 CONDUIT BORED OR JACKED: 24", TYPE B FT	611 CATCH BASIN, NO. 3 EACH	611 CATCH BASIN, NO. 3, AS PER PLAN EACH	611 CATCH BASIN, NO. 3A EACH	611 CATCH BASIN, NO. 5 EACH	611 CATCH BASIN, NO. 8 EACH	611 CATCH BASIN, NO. 2-3 EACH	611 INLET, NO. 3 FOR SINGLE SLOPE BARRIER, TYPE B1, AS PER PLAN, B EACH	611 INLET, NO. 3 FOR SINGLE SLOPE BARRIER, TYPE B1, AS PER PLAN, A EACH	611 INLET, NO. 3 FOR SINGLE SLOPE BARRIER, TYPE D EACH	611 INLET, NO. 3 FOR SINGLE SLOPE BARRIER, TYPE D, AS PER PLAN, A EACH	611 INLET, NO. 3 FOR SINGLE SLOPE BARRIER, TYPE D, AS PER PLAN, C EACH	611 MANHOLE NO. 3 EACH
D1	404	494+50	494+76	LT	I.R. 75	74																						1				
D2	404	494+50	496+64	LT	I.R. 75			214																1								
D3	404	494+35	495+64	RT	I.R. 75										129											1						
D4	404	495+64	496+64	RT	I.R. 75										100											1						
D6	404	496+64	497+45	LT	I.R. 75										81											1						
D7	404	497+45	500+10	LT	I.R. 75												265									1						
D8	404	499+65	500+10	RT	I.R. 75													85					1									
D9	404	500+10	500+50	LT	I.R. 75														80				1									
D10	404	500+28	500+50	LT	I.R. 75		65																									
D11	404	500+10	502+00	RT	I.R. 75			190																			1					
D12	404	502+00	502+50	RT	I.R. 75	94																	1									
D13	404	502+00	505+00	RT	I.R. 75	300																					1					
D14	404	504+48	505+96	RT	RAMP A								148												1							
D15	404	504+46	504+51	RT	RAMP A				12																							
D16	404	504+47	504+48	RT	RAMP A								10																			1
D17	404	504+37	504+47	RT	RAMP A							38								1												
D18	404	504+37	504+50	RT	RAMP A									70						1												
D19	404	504+50	505+00	RT	RAMP A							53											1									
D20	404	505+00	506+50	RT	RAMP A											150													1			
D21	404	502+50	503+80	LT	RAMP B	130																1										
D22	404	503+80	504+60	LT	RAMP B	80																1										
D23	404	504+60	505+30	LT	RAMP B	70																1										
D24	404	505+30	505+90	LT	RAMP B	60																1										
D25	404	505+90	506+58	LT	RAMP B	68																1										
D26	404	506+58	507+25	LT	RAMP B						67									1												
D27	404	506+58	506+58	LT	RAMP B					11													1									
D28	404	506+50	508+00	RT	RAMP A											150																1
D29	404	498+01		LT	RAMP A																1											
D30	404	498+21		LT	RAMP A																1											
D1	405	507+25	507+80	LT	RAMP B						55											1										
D2	405	507+80	508+22	LT	RAMP B					42												1										
D3	405	508+22	509+00	LT	RAMP B						78											1										
D4	405	509+00		LT	IR 75																										1	
D5	405	511+84		LT	IR 75																										1	
D6	405	514+85		LT	IR 75																										1	
D7	405	005+18		LT	IR 75																										1	
TOTALS CARRIED TO DRAINAGE SUBSUMMARY						876	65	404	12	53	200	91	158	70	310	300	265	85	80	3	2	8	5	1	1	4	2	1	1	4	2

CALCULATED RSH CHECKED DLR

DRAINAGE ESTIMATED QUANTITIES

HAM-75-8.91

J:\20240445\ODOT\HAM\117525\Design\Drainage\Sheets\75HAMSS001_Drainage.dgn 4/17/2025 5:22:03 PM hbrendlinger

REF. NO.	SHEET NO.	STATION FROM	STATION TO	SIDE	CENTERLINE ROADWAY REFERENCE	611 15" CONDUIT, TYPE B FT	611 15" CONDUIT, TYPE C FT	611 24" CONDUIT, TYPE B FT	611 24" CONDUIT, TYPE C FT	611 30" CONDUIT, TYPE C FT	611 42" CONDUIT, TYPE B FT	611 48" CONDUIT, TYPE B FT	611 CATCH BASIN, NO. 3 EACH	611 CATCH BASIN, NO. 6 EACH	611 CATCH BASIN, NO. 2-3 EACH	611 INLET, NO. 3 FOR SINGLE SLOPE BARRIER, TYPE B1, AS PER PLAN, B EACH	611 INLET, NO. 3 FOR SINGLE SLOPE BARRIER, TYPE B1, AS PER PLAN, C EACH	611 INLET, NO. 3 FOR SINGLE SLOPE BARRIER, TYPE D EACH	611 INLET, NO. 3 FOR SINGLE SLOPE BARRIER, TYPE D, AS PER PLAN, B EACH	611 MANHOLE NO. 3 EACH
D8	405	508+00	508+00	RT	I.R. 75						98								1	
D9	405	508+00	511+00	LT	I.R. 75						300						1			
D10	405	511+00	514+00	LT	I.R. 75							300				1				
D11	405	511+00	511+00	RT	I.R. 75	93												1		
D12	405	514+00	517+00	LT	I.R. 75							300				1				
D13	405	514+00	514+00	RT	I.R. 75	88												1		
D14	405	517+00	520+00	LT	I.R. 75							300				1				
D15	405	517+00	517+00	RT	I.R. 75	83												1		
D16	405	506+07	508+21	RT	I.R. 75					218					1					
D17	405	508+21	509+94	RT	I.R. 75					173					1					
D18	405	509+93	509+94	RT	I.R. 75	41							1							
D19	405	509+94	512+03	RT	I.R. 75					209					1					
D20	405	512+03	514+03	RT	I.R. 75				200						1					
D21	405	514+01	514+03	RT	I.R. 75		21							1						
D22	405	514+03	514+03	RT	I.R. 75	37							1							
D23	405	514+03	517+13	RT	I.R. 75		311								1					
D24	405	517+13	517+13	RT	I.R. 75	38							1							
D25	405	517+03	517+13	RT	I.R. 75		22							1						
D26	405	518+41	520+58	RT	I.R. 75		223								1					
D1	406	520+00	520+00	LT	I.R. 75							84					1			
D2-D8		NOT USED																		
D9	406	520+58	521+60	RT	I.R. 75			108												1
D10	406	520+57	520+58	RT	I.R. 75		20								1					
D11	406	520+58	520+58	RT	I.R. 75		13						1							
D12	406	520+58	520+59	RT	I.R. 75	29							1							
D13	406	521+60	522+54	RT	I.R. 75			97							1					
D14	406	522+54	524+91	RT	I.R. 75				244						1					
D15	406	522+54	522+54	RT	I.R. 75		30						1							
D16	406	524+90	524+91	RT	I.R. 75			56							1					
D17	406	524+49	524+49	RT	I.R. 75	29							1							
D18	406	524+49	524+49	RT	I.R. 75		6						1							
D19	406	524+49	524+91	RT	I.R. 75		43													1
D20	406	524+91	524+91	RT	I.R. 75			26												1
D21	406	524+91	525+00	RT	I.R. 75			10												1
D22	406	525+00	525+00	RT	I.R. 75						180									1
D23	406	525+00	525+09	RT	I.R. 75			10												1
TOTALS CARRIED TO DRAINAGE SUBSUMMARY						438	689	307	444	600	578	984	8	2	10	3	2	3	1	6

DRAINAGE ESTIMATED QUANTITIES

CALCULATED RSH
CHECKED DLR

HAM-75-8.91

184
826

J:\20240445\ODOT\HAM\117525\Design\Drainage\Sheets\77889DS001_Drainage.dgn 4/18/2025 10:01:52 AM hbrendlinger

REF. NO.	SHEET NO.	STATION FROM	STATION TO	SIDE	CENTERLINE ROADWAY REFERENCE	602 CONCRETE MASONRY	611 12" CONDUIT, TYPE B	611 12" CONDUIT, TYPE C	611 15" CONDUIT, TYPE B	611 15" CONDUIT, TYPE C	611 18" CONDUIT, TYPE B	611 21" CONDUIT, TYPE B	611 24" CONDUIT, TYPE B	611 36" CONDUIT, TYPE B, WITH CLASS II BEDDING	611 48" CONDUIT, TYPE B, WITH CLASS II BEDDING	611 CATCH BASIN, NO. 3	611 CATCH BASIN, NO. 5	611 CATCH BASIN, NO. 6	611 INLET, NO. 3 FOR SINGLE SLOPE BARRIER, TYPE B1, AS PER PLAN, A	611 INLET, NO. 3 FOR SINGLE SLOPE BARRIER, TYPE D	611 MANHOLE NO. 3	690 MANHOLE MISC.: SANITARY MA6NHOLE PER MSD ACC NO. 49046
						CY	FT	FT	FT	FT	FT	FT	FT	FT	FT	EACH	EACH	EACH	EACH	EACH	EACH	EACH
D24	406	525+09	525+09	RT	I.R. 75								30								1	
D25	406	525+09	525+86	RT	I.R. 75							79									1	
D26	406	525+84	525+86	RT	I.R. 75				32							1						
D27	406	525+86	526+21	RT	I.R. 75						35					1						
D28	406	526+21	527+30	RT	I.R. 75						112					1						
D29	406	527+30	527+33	RT	I.R. 75					33								1				
D30	406	527+00	527+33	RT	I.R. 75				93											1		
D31	406	527+00	527+02	LT	I.R. 75							105							1			
D32	406	528+75	528+77	LT	I.R. 75		61															
D33	406	530+30	531+15	LT	I.R. 75		98															
D34	406	531+50	532+39	RT	I.R. 75			90									1					
D35	406	526+21	526+40	LT	I.R. 75	1.5								49								
D36	406	526+40	529+40	LT	I.R. 75										295							1
TOTALS CARRIED TO DRAINAGE SUBSUMMARY						2	159	90	125	33	147	184	30	49	295	3	1	1	1	1	2	1

CALCULATED RSH
CHECKED DLR

DRAINAGE ESTIMATED QUANTITIES

HAM-75-8.91

185
826

J:\2024\0445\ODOT\HAM\117525\Design\Drainage\Sheets\77889DS001_Drainage.dgn 4/18/2025 10:00:10 AM hbrendlinger

CROSS REFERENCES

SHEET NO	DESCRIPTION
397 - 407	DRAINAGE PLANS
408 - 428	STORM AND SANITARY SEWER PROFILES
164 - 191	ESTIMATED QUANTITIES
375 - 384	SUPERELEVATION TABLES
506 - 511	ROADSIDE BARRIER PLANS
385 - 393	INTERCHANGE DETAILS
595 - 614	LIGHTING PLANS
633 - 637	FENCING PLANS

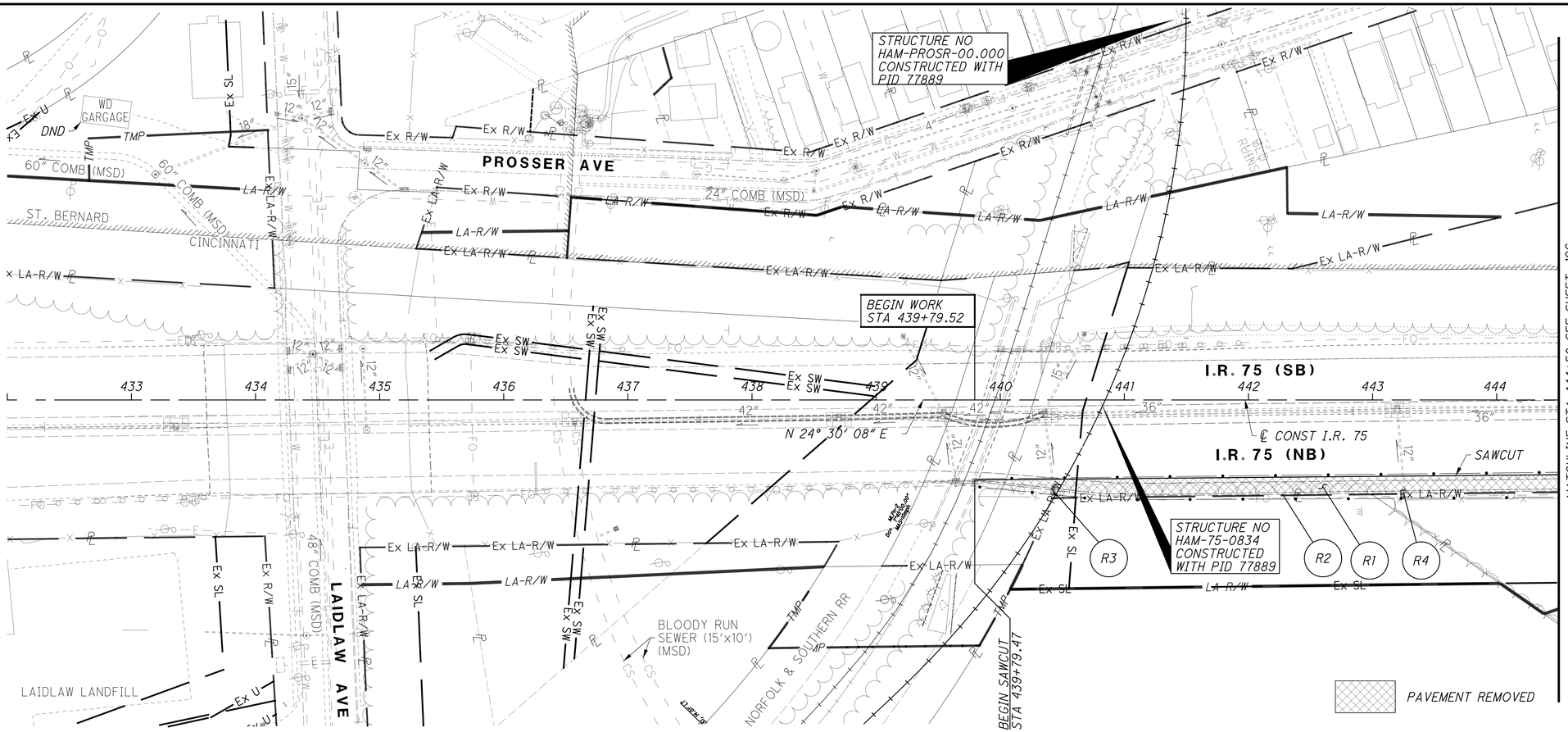

CFN	LENGTH (FT)	SIZE	TYPE	SLOPE	START STRUCTURE	START INVERT ELEV	STOP STRUCTURE	STOP INVERT ELEV
1997466	169.00	15"	TYPE B	3.37%	306	563.17	323	557.49
1997491	83.00	15"	TYPE B	3.11%	304	553.70	322	551.12
1997479	187.00	15"	TYPE B	1.04%	317	538.96	307	536.75
1997465	44.00	15"	TYPE B	1.07%	321	539.50	307	538.75
1997489	251.00	36"	TYPE B	4.48%	319	532.00	307	520.73
1997490	126.00	30"	TYPE B	5.40%	312	526.39	311	519.59
1997486	191.00	30"	TYPE B	0.26%	402	526.25	407	525.75
1997667	41.00	15"	TYPE B	1.22%	402	528.50	402	528.00
1997668	42.00	15"	TYPE B	0.48%	506	529.50	501	528.00
1997469	83.00	30"	TYPE B	0.78%	501	525.65	500	525.00
1997463	256.00	36"	TYPE B	0.49%	906	528.00	905	526.75
1997476	235.00	54"	TYPE B	0.66%	904	526.81	902	525.25
1997480	68.00	36"	TYPE B	0.47%	EX INLET	526.48	T102	526.19
1997464	42.00	15"	TYPE B	0.60%	924	526.50	922	526.25
1997670	59.00	36"	TYPE B	0.91%	T101	525.98	T100	525.44
1997470	84.00	18"	TYPE B	0.28%	619	529.25	606	529.01
1997470	80.00	18"	TYPE B	0.30%	620	529.25	606	529.01
1997483	94.00	15"	TYPE B	0.26%	608	530.63	607	530.39
1997482	98.00	42"	TYPE B	0.17%	739	528.5	738	528.33
1997472	93.00	15"	TYPE B	0.47%	737	535.62	736	535.18
1997477	88.00	15"	TYPE B	1.00%	733	537.09	732	536.21
1997485	83.00	15"	TYPE B	1.01%	730	540.04	729	539.2
1997487	84.00	48"	TYPE B	0.15%	728	526.25	707	526.12
1997488	180.00	42"	TYPE B	1.30%	771	536.35	770	534
1997478	105.00	21"	TYPE B	1.05%	725	528.5	704	527.4
1997669	93.00	15"	TYPE B	3.20%	726	539.59	725	536.61

HORIZONTAL SCALE IN FEET
0 25 50 100

CALCULATED SEA
CHECKED DLR

PLAN - I.R. 75
STA 432+00 TO STA 444+50

HAM-75-8.91

195
826

J:\2024\0445\ODOT\HAM\117525\Design\Roadway\Sheets\77889GP004.dgn 4/9/2025 1:41:16 PM hbrendlinger

PAVEMENT REMOVED

PAVEMENT PLANING AND OVERLAY

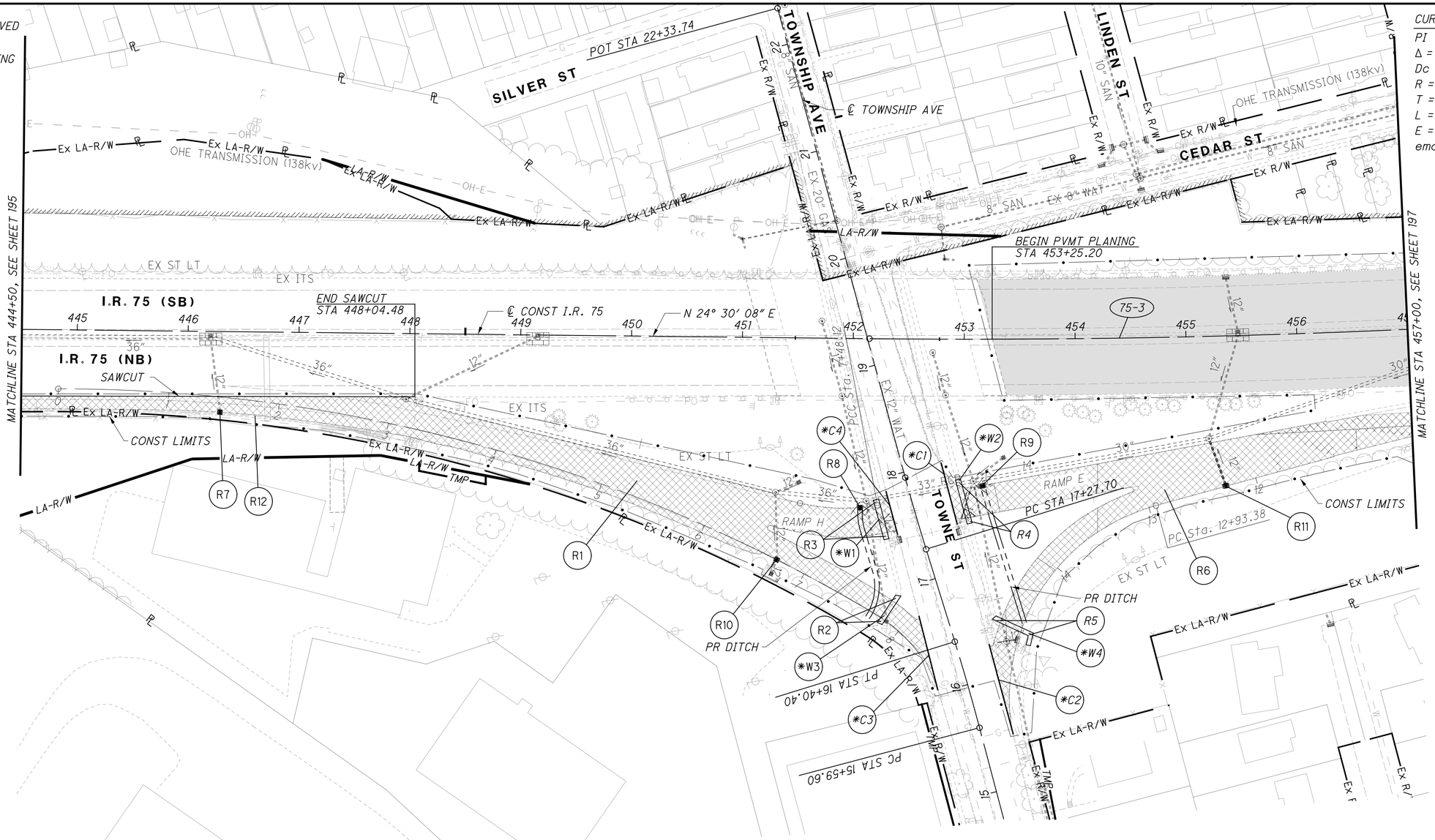

CURVE 75-3
PI STA 456+41.20
Δ = 5°41'01" (LT)
Dc = 0°40'00"
R = 8,594.37'
T = 426.63'
L = 852.56'
E = 10.58'
emax = 0.019

HORIZONTAL SCALE IN FEET
0 25 50 100

CALCULATED CFR
CHECKED JLM

CROSS REFERENCES	
SHEET NO	DESCRIPTION
~~397 - 407~~	~~DRAINAGE PLANS~~
408 - 428	STORM AND SANITARY SEWER PROFILES
~~164 - 191~~	~~ESTIMATED QUANTITIES~~
375 - 384	SUPERELEVATION TABLES
506 - 511	ROADSIDE BARRIER PLANS
385 - 393	INTERCHANGE DETAILS
595 - 614	LIGHTING PLANS
633 - 637	FENCING PLANS

* SEE ESTIMATED QUANTITIES FOR BEGIN/END WALK AND CURB STATIONING. MATCH EXISTING ELEVATIONS AT ALL TIE IN POINTS.

PLAN - I.R. 75
STA 444+50 TO STA 457+00

HAM-75-8.91

196
826

J:\20240445\ODOT\HAM\117525\Design\Roadway\Sheets\77889GP401.dgn 4/9/2025 1:42:07 PM hbrendlinger

PAVEMENT REMOVED

PAVEMENT PLANING AND OVERLAY

CURVE 75-3
PI STA 456+41.20
Δ = 5°41'01" (LT)
Dc = 0°40'00"
R = 8,594.37'
T = 426.63'
L = 852.56'
E = 10.58'
emax = 0.019

MATCHLINE STA 457+00, SEE SHEET 196

MATCHLINE STA 469+50, SEE SHEET 198

CEDAR ST

MAPLE ST

POPLAR ST

HASLER LN

PT STA 460+67.13

BEGIN BARRIER
STA 457+96.50

CONST LIMITS

I.R. 75 (SB)

I.R. 75 (NB)

N 18° 49' 07" E

℄ CONST I.R. 75

PROP MEDIAN BARRIER

PR ETW

SAWCUT

PR DITCH

TOWANDA TERR.

BEGIN PROJECT
STA 467+25.00
SLM = 8.86

E240 (415)

+22.08 BEGIN FULL DEPTH PVMT LT
BEGIN LANE TAPER LT
BEGIN SHLDR TAPER LT

+25.00 BEGIN FULL DEPTH PVMT RT/RT

+29.09 END SHLDR TAPER LT

+65.00 BEGIN FULL DEPTH PVMT RT
BEGIN LANE TAPER RT
BEGIN SHLDR TAPER RT

+65.00 END LANE TAPER RT
END SHLDR TAPER RT

+14.61 BEGIN LANE TAPER RT

OHE TRANSMISSION (138kV)

EX ITS

CROSS REFERENCES	
SHEET NO	DESCRIPTION
397 - 407	DRAINAGE PLANS
408 - 428	STORM AND SANITARY SEWER PROFILES
164 - 191	ESTIMATED QUANTITIES
375 - 384	SUPERELEVATION TABLES
506 - 511	ROADSIDE BARRIER PLANS
385 - 393	INTERCHANGE DETAILS
595 - 614	LIGHTING PLANS
633 - 637	FENCING PLANS

STA 458+26.50, 0.00' LT
EX. CB, GRATE ELEV 546.44
EX. 27" RCP N 537.69
EX. 30" RCP S 537.60
EX. 12" RCP W 537.69

STA 458+35.66, 53.44' LT
EX. CB, GRATE ELEV 545.41
EX. 12" RCP E 542.41

STA 459+27.0677, 2.76' LT
EX. CB, GRATE ELEV 545.99
EX. 21" RCP N 537.29
EX. 18" RCP E 539.39
EX. 27" RCP S 536.39
EX. 12" RCP W 539.39

STA 459+35.37, 75.13' RT
EX. CB, GRATE ELEV 546.19
EX. 18" RCP E 541.09
EX. 12" RCP S 543.59
EX. 18" RCP W 541.09

STA 459+35.57, 79.29' RT
EX. CB, GRATE ELEV 547.29
EX. 6" UD N 545.99
EX. 6" UD S 545.99
EX. 18" RCP W 541.29

STA 459+37.24, 53.10' LT
EX. CB, GRATE ELEV 545.06
EX. 12" RCP E 541.76

STA 460+27.70, 2.83' LT
EX CB, GRATE ELEV 546.39
EX 18" RCP N 538.08
EX 21" RCP S 538.08
EX 12" RCP NW 538.08

STA 460+36.82, 53.08' LT
EX CB, GRATE ELEV 545.51
EX 12" RCP SE 542.61

STA 462+58.22, 72.05' LT
EX CB, GRATE ELEV 546.92
EX 12" RCP E 545.51

STA 462+57.22, 66.35' RT
EX CB, GRATE ELEV 549.90
EX 6" UD N 547.20
EX 12" RCP W 546.80

STA 462+48.23, 2.97' LT
EX CB, GRATE ELEV 550.12
EX 15" RCP N 541.42
EX 12" RCP E 541.42
EX 18" RCP S 541.42
EX 12" RCP W 541.42

STA 465+29.48, 60.19' RT
EX CB, GRATE ELEV 558.06
EX 12" RCP W 553.03
EX 12" RCP E 553.03

STA 465+18.94, 2.80' LT
EX CB, GRATE ELEV 558.17
EX 12" RCP N 549.68
EX 12" RCP E 549.68
EX 15" RCP S 549.68

STA 465+30.94, 63.57' RT
EX CB, GRATE ELEV 558.48
EX 18" RCP E 556.28
EX 24" RCP NW 556.23

STA 467+95.17, 67.82' LT
EX CB, GRATE ELEV 563.59
EX 12" RCP SE 561.02

STA 467+94.52, 0.42' RT
EX CB, GRATE ELEV 566.23
EX 12" RCP S 561.07
EX 12" RCP W 561.07
EX 12" RCP NW 559.72

GRAPHIC GRADE

FUTURE PROPOSED PROFILE

EX PROFILE

EX 12" RCP

EX 15" RCP

EX 18" RCP

565.07 565.71 566.33 566.88 567.39 567.84 568.24 568.59 568.88

547.62 546.80 546.26 546.13 545.95 546.05 546.44 547.02 547.93 549.02 550.29 551.73 553.18 554.74 556.25 557.68 559.17 560.65 562.23 563.78 565.25 566.29 567.54 568.44 569.06

457+00 458+00 459+00 460+00 461+00 462+00 463+00 464+00 465+00 466+00 467+00 468+00 469+00

570 565 560 555 550 545 540

HORIZONTAL SCALE IN FEET 0 25 50 100

CALCULATED CFR CHECKED JLM

PLAN AND PROFILE - I.R. 75
STA 457+00 TO STA 469+50

HAM-75-8.91

197
826

J:\20240445\ODOT\HAM\117525\Design\Roadway\Sheets\77889GP402.dgn 4/9/2025 1:42:55 PM hbrendlinger

CROSS REFERENCES	
SHEET NO	DESCRIPTION
397 - 407	DRAINAGE PLANS
408 - 428	STORM AND SANITARY SEWER PROFILES
164 - 191	ESTIMATED QUANTITIES
375 - 384	SUPERELEVATION TABLES
506 - 511	ROADSIDE BARRIER PLANS
385 - 393	INTERCHANGE DETAILS
595 - 614	LIGHTING PLANS
633 - 637	FENCING PLANS

CURVE 75-4
PI STA 474+88.06
Δ = 25°08'30" (RT)
Dc = 2°45'00"
R = 2,083.48'
T = 464.60'
L = 914.25'
E = 51.17'
emax = 0.053

BEGIN SHLD TAPER STA 474+04.00, 87.50' LT
END/BEGIN SHLD TAPER STA 474+14.00, 85.50' LT
END SHLD TAPER STA 475+14.00, 83.50' LT
BEGIN WALL J1 STA 475+87.30, 123.80' LT
BEGIN SHOULDER TAPER STA 481+49.06, 96.48' LT
PR PAVED CONC GUTTER
UNDERGROUND ELECTRIC RELOCATION (BY OTHERS)
EX 24" WAT
EX 24" WAT (ABANDONED)
CONST LIMITS
PROP MEDIAN BARRIER
BARRIER TYPE D
WALL J1
N 18° 49' 07" E
PC STA 470+23.46
PT STA 473+28.16
PC STA 469+71.68
N 34° 18' 41" E
N 43° 59' 00" E
PT STA 479+37.71
I.R. 75 (SB)
I.R. 75 (NB)
RAMP D
℄ CONST I.R. 75
℄ CONST RAMP D
STA 472+00.00, 80.41' RT
STA 472+00.00, 94.79' RT
PC STA 475+01.01
℄ CONST RAMP E
STA 479+67.49 RAMP D= PC STA 479+67.49 BEGIN ℄ RAMP E
PT STA 479+83.46 -RAMP D
MATCHLINE STA 469+50, SEE SHEET 197
MATCHLINE STA 482+00, SEE SHEET 199
EX MOUNTABLE CONC APRON, DND
1 69 KV TRANSMISSION POWER LINES ELEV UNKNOWN, CONTRACTOR TO FIELD VERIFY

P.V.I. STA 471+00.00 ELEV = 577.28'
1,000.00' VC
K=159
+3.00 %
-3.30 %
FUTURE PROPOSED PROFILE
GRAPHIC GRADE
PROPOSED PROFILE
EX PROFILE
(TO BE REMOVED) STA 473+86.50, 0.31' RT EX CB, GRATE ELEV 565.24 EX 12" RCP NE 558.42
(TO BE REMOVED) STA 476+12.94, 55.27' RT EX CB, GRATE ELEV 555.75 EX 12" RCP NW 551.55 EX 6" UD W 553.45
(TO BE REMOVED) STA 476+18.65, 62.36' RT EX CB, GRATE ELEV 558.09 EX 12" RCP N 550.29 EX 12" RCP SW 550.89
STA 476+00.00 ELEV 560.78
(TO BE REMOVED) STA 476+65.28, 1.77' LT EX CB, GRATE ELEV 557.10 EX 18" RCP N 543.80 EX 12" RCP SE 543.80 EX 12" RCP S 543.80
(TO BE ABANDONED) STA 479+41.50, 70.14' RT EX CB, GRATE ELEV 547.56 EX 21" RCP NW 533.44 EX 21" RCP NW 533.64
(TO BE REMOVED) STA 479+43.07, 78.32' RT EX MH-1, GRATE ELEV 550.84 EX 21" RCP SE 533.62
(TO BE REMOVED) STA 479+45.63, 1.24' LT EX CB, GRATE ELEV 548.53 EX 21" RCP N 531.99 EX 21" RCP E 531.99 EX 18" RCP S 531.99
(TO BE ABANDONED) STA 481+14.54, 1.96' LT EX CB, GRATE ELEV 544.44 EX 12" RCP N 519.59 EX 12" RCP E 519.59 EX 21" RCP S 519.59 EX 30" RCP W 519.03
STA 479+00.00 ELEV 550.88
P.V.I. STA 481+00.00 ELEV = 544.28'
400.00' VC
K = 164
-3.30 %
-0.86 %
15" B
EX 12" RCP (TBR)
EX 18" RCP (TBR)
305
304
303
302
311

HORIZONTAL SCALE IN FEET
CALCULATED JLM CHECKED CFR

PLAN AND PROFILE - I.R. 75
STA 469+50 TO STA 482+00

HAM-75-8.91

198
826

J:\2024044S\ODOT\HAM\117525\Design\Roadway\Sheets\77889GP403.dgn 4/16/2025 10:48:47 AM hbrendlinger

CROSS REFERENCES	
SHEET NO	DESCRIPTION
~~397 - 407~~	~~DRAINAGE PLANS~~
408 - 428	STORM AND SANITARY SEWER PROFILES
~~164 - 191~~	~~ESTIMATED QUANTITIES~~
375 - 384	SUPERELEVATION TABLES
506 - 511	ROADSIDE BARRIER PLANS
385 - 393	INTERCHANGE DETAILS
595 - 614	LIGHTING PLANS
633 - 637	FENCING PLANS

EX MOUNTABLE CONC APRON, DND

RESURFACING

1 ℄ CONST I.R. 75 491+17.27= ℄ CONST SEYMOUR AVE 9+17.97

2 10.6'

A CONTRACTOR TO ABANDON EXISTING UTILITY TUNNEL. PROVIDE BULKHEADS AT STATION/OFFSET LOCATIONS PER THIS SHEET. SEE SHEET 26 FOR PLAN NOTES AND PAY ITEMS FOR THIS WORK.

MATCHLINE STA 482+00, SEE SHEET 198

MATCHLINE STA 494+50, SEE SHEET 200

LONGVIEW ST

I.R. 75 (SB)

I.R. 75 (NB)

RAMP C

RAMP D

RAMP E

S.R. 561 SEYMOUR AVE

STRUCTURE NO HAM-561-0701

END SHOULDER TAPER
BEGIN SHOULDER TAPER
STA 486+49.58, 114.50' LT

BEGIN CURB, TYPE 4C, APP
END WALL J1 (ML I.R. 75 SB)
STA 486+00.08, 114.38' LT

POT Sta. 484+50.00

CONST LIMITS

EX ABANDONED PRIVATE UTILITY TUNNEL TO REMAIN

BULKHEAD
STA 489+03.90, 139.77' LT

BULKHEAD
STA 488+91.68, 137.84' LT

END CURB TYPE 6
STA 489+49.68, 115.00' LT

BEGIN WALL J3
STA 490+35.29, 116.17' LT

END WALL J3
STA 490+70.29, 116.17' LT

POT Sta. 490+88.00

BEGIN SHLD TAPER
STA 491+00.40, 73.50' LT

END SHLD TAPER
STA 493+19.00, 81.10' LT

BEGIN PVMT SHIFT
STA 492+80.00, 13.50' LT

BEGIN PVMT SHIFT
STA 492+80.00, 13.50' RT

END WALL Y
STA 493+22.60, 73.99' RT

BEGIN SHLD TAPER
STA 492+80.00, 73.50' RT

EX 16" GAS (TO BE RELOCATED)

WALL J1

WALL K

WALL Y

WALL Z

PROP BARRIER

CURB, TYPE 4C, APP

+48.98 ℄ CONST RAMP C

PROP MEDIAN BARRIER

℄ CONST RAMP D

℄ CONST RAMP E

℄ CONST I.R. 75

N 43° 59' 00" E

N 43° 57' 37" E

N 50° 33' 00" E

BEGIN WALL Z
STA 487+47.38, 120.41' RT

BEGIN WALL Y
STA 490+65.00, 76.50' RT

PC STA 490+69.03

SEE NOTE A

EX ITS

EX ST LT

EX TRUCK APRON (DND)

EX 24" WAT

EX 8" SAN

EX 6" GAS

EX 8" GAS

EX 16" WAT

EX 8" WAT

EX 12" SAN

EX 8" SAN

EX 6" SAN

EX 15" SSC

EX 16" SSC

EX 33" COMB (MSD)

EX 36" COMB (MSD)

EX 42" COMB (MSD)

EX 54" COMB (MSD)

EX 24" COMB

EX 36" COMB

EX 48" COMB

EX 12" RCP (TBR)

EX 15" RCP

EX 24" RCP

EX 36" B

EX 54" B

EX 8" GAS (TO BE RELOCATED)

EX ABANDONED PRIVATE UTILITY TUNNEL

EX 8-4" FIBER OPTIC DUCT BANK

PT STA 486+03.92

BULKHEAD
STA 486+78.52, 194.88' RT

BULKHEAD
STA 486+89.61, 196.84' RT

EX ABANDONED PRIVATE UTILITY TUNNEL TO REMAIN

END WALL Z
STA 490+30.96, 120.01' RT

STA 490+25.18

PT STA 493+78.68

HORIZONTAL SCALE IN FEET
0 25 50 100

CALCULATED CFR
CHECKED JLM

PLAN AND PROFILE - I.R. 75
STA 482+00 TO STA 494+50

HAM-75-8.91

199
826

J:\20240445\ODOT\HAM\117525\Design\Roadway\Sheets\77889GP404.dgn 4/9/2025 1:44:46 PM hbrendlinger

PROPOSED PROFILE

P.V.I. STA 481+00.00
ELEV = 544.28'
400.00' VC
K = 164

STA 483+00.00
ELEV 542.56

STA 490+75.00
ELEV 535.89

MIN. VERTICAL CLEARANCE 16' PROVIDED 15'-6" REQUIRED

P.V.I. STA 495+75.00 ELEV = 531.59'
1,000.00' VC
K = 685

EX PROFILE

(TO BE REMOVED)
STA 482+39.99, 1.91' LT
EX CB, GRATE ELEV 542.84
EX 12" RCP SW 535.22

(TO BE REMOVED)
STA 486+84.18, 56.86' RT
EX CB, GRATE ELEV 539.87

STA 485+97.93, 1.88' LT
EX CB, GRATE ELEV 540.71
EX 12" RCP NE 536.87
(TO BE REMOVED)

(TO BE REMOVED)
STA 490+10.26, 76.13' LT
EX CB, GRATE ELEV 535.18
EX 12" RCP E 532.73

STA 489+25.43, 2.13' RT
EX CB, GRATE ELEV 538.98
EX 15" RCP N 531.26
EX 15" RCP NE 531.13
EX 12" RCO S 532.03
EX 12" RCP W 532.98
(TO BE REMOVED)

(TO BE REMOVED)
STA 490+09.01, 2.49' LT
EX CB, GRATE ELEV 538.50
EX 12" RCP NW 531.89
EX 24" RCP NE 530.30
EX 24" RCP SW 530.31
(TO BE REMOVED)

A STA 490+88.76, 78.13' LT
EX. CB, GRATE ELEV 538.05
EX. 8" RCP NW 532.81
EX. 12" RCP NE 532.16
(TO BE REMOVED)

(TO BE REMOVED)
STA 491+32.90, 77.93' LT
B EX. CB, GRATE ELEV 537.
EX. 12" RCP SW 531.49
EX. 12" RCP E 531.48
EX. 8" RCP NW 532.54

(TO BE REMOVED)
STA 491+61.72, 63.41' LT
EX. MH-1, GRATE ELEV 536.92
C EX. 54" RCP NW 524.81
EX. 54" RCP SE 524.81
EX. 24" RCP SE 527.50
EX. 18" RCP E 527.50

(TO BE REMOVED)
STA 492+43.09, 1.64' LT
EX CB, GRATE ELEV 537.20
EX 33" RCP N 526.14
EX 12" RCP E 529.10
EX 33" RCP S 526.48

(TO BE REMOVED)
STA 493+23.46, 74.48' LT
D EX CB, GRATE ELEV 535.78
EX 18" RCP NE 529.64
EX 12" RCP NW 531.66
EX 18" RCP SW 529.61

406 614 615 623

482+00 483+00 484+00 485+00 486+00 487+00 488+00 489+00 490+00 491+00 492+00 493+00 494+00

520 525 530 535 540 545 550 555 560

END WALL K (RAMP C)
STA 496+20.38, 10.80' LT

WALL K

1 ℄ CONST I.R. 75 498+60.85= ℄ CONST PADDOCK RD 148+97.21

2 EX 30" WATERLINE IN 60" CASING ℄ = 524.50 ±

3 EX 24" WATERLINE IN 42" CASING ℄ = 526.71 ±

* (NDC 10')

PUMP STATION PER PID 117526

STRUCTURE NO HAM-4-0897

MATCHLINE STA 494+50, SEE SHEET 199

MATCHLINE STA 507+00, SEE SHEET 201

RESURFACING

LIMITS OF PAVEMENT REMOVED

LONGVIEW ST

RAMP C

RAMP B

RAMP A

RAMP D

PADDOCK RD

SUMMIT RD

I.R. 75 (SB)

I.R. 75 (NB)

℄ CONST RAMP C

℄ CONST RAMP B

℄ CONST RAMP A

℄ PADDOCK RD

℄ CONST I.R. 75

℄ SUMMIT RD

CONST LIMITS

END SHLD TAPER STA 498+20.00, 57.50' LT

BEGIN SHLD TAPER STA 497+70.00, 65.50' LT

BEGIN SHLD TAPER STA 499+80.00, 57.50' LT

END SHLD TAPER STA 504+60.00, 73.50' LT

PT Sta. 505+48.04

PT Sta. 501+69.65

END PVMT SHIFT STA 497+60.00, 5.50' LT

BEGIN PVMT SHIFT STA 499+80.00, 5.50' LT

END PVMT SHIFT STA 504+60.00, 13.50' LT

PROP BARRIER

PROP MEDIAN BARRIER

END PVMT SHIFT STA 497+60.00, 5.50' RT

BEGIN PVMT SHIFT STA 499+80.00, 5.50' RT

END PVMT SHIFT STA 504+60.00, 13.50' RT

END SHLD TAPER STA 499+70.00, 65.50' RT

VBF #15

VBF #16

18"PROP BARRIER

END SHLD TAPER STA 497+60.00, 57.50' RT

BEGIN SHLD TAPER STA 499+20.00, 57.50' RT

PC STA 503+00.12

N 43° 59' 00" E

+45.32 52' RT.

+58.29 - 88.32 56' RT - 55' RT.

+26.34 56' RT.

+76.19 41' LT.

+27.29 41' LT.

+34.51 57' RT.

+09.65 58' RT.

+87.17

R1 R2 R3 R4 R5 R6 R7 R8 R9 R10

WALL V

EX OHE TRANSMISSION LINE (69kV)

EX 24" WAT

EX ITS

EX ST LT

EX LA-R/W

CROSS REFERENCES	
SHEET NO	DESCRIPTION
397 - 407	DRAINAGE PLANS
408 - 428	STORM AND SANITARY SEWER PROFILES
164 - 191	ESTIMATED QUANTITIES
375 - 384	SUPERELEVATION TABLES
506 - 511	ROADSIDE BARRIER PLANS
385 - 393	INTERCHANGE DETAILS
595 - 614	LIGHTING PLANS
633 - 637	FENCING PLANS

HORIZONTAL SCALE IN FEET
0 25 50 100

CALCULATED CFR CHECKED JLM

PLAN AND PROFILE - I.R. 75
STA 494+50 TO STA 507+00

HAM-75-8.91

200 826

J:\2024045\ODOT\HAM\117525\Design\Roadway\Sheets\77889GP405.dgn 4/9/2025 1:45:34 PM hbrendlinger

(TO BE REMOVED) STA 497+18.99, 1.66' LT
EX CB, GRATE ELEV 534.56
EX 30" RCP N 527.70
EX 12" RCP E 528.05
EX 33" RCP S 527.60
EX 12" RCP W 528.05

STA 497+25.77, 45.39' RT
EX CB, GRATE ELEV 534.28
EX 12" RCP NW 529.73
EX 12" RCP SE 529.74

(TO BE REMOVED) STA 497+10.61, 65.18' RT
EX CB, GRATE ELEV 532.47
EX 12" CPP SW 530.47
EX 12" RCP NW 530.22

STA 496+91.54, 65.14' RT
EX CB, GRATE ELEV 532.40
EX 12" CPP NE 530.57

(TO BE REMOVED) STA 498+05.23, 13.56' LT
EX MH, GRATE ELEV 534.63
EX 27" RCP NE 528.88
EX 27" RCP SE 528.87

STA 498+05.75, 50.26' RT
EX CB, GRATE ELEV 534.60
EX 12" RCP NW 530.32
EX 8" CPP S 531.70
EX 6" CPP SW 531.32
EX 6" CPP NE 531.13

(TO BE REMOVED) STA 499+46.32, 62.42' RT
EX CB, GRATE ELEV 532.38
EX 12" RCP NW 530.82

(TO BE REMOVED) STA 499+86.51, 3.42' LT
EX CB, GRATE ELEV 534.12
EX 30" RCP SW 527.92
EX 27" RCP N 528.17
EX 12" RCP SE 529.71

(TO BE REMOVED) STA 499+96.65, 65.57' LT
EX CB, GRATE ELEV 538.65
EX 12" HDPE NE 530.94
EX 15" HDPE NW 531.00
EX 12" HDPE SE 530.85
EX 12" HDPE SE 531.40

STA 500+16.35, 2.47' LT
EX CB, GRATE ELEV 535.38
EX 12" RCP NW 530.22
EX 18" RCP SW 530.04
EX 18" RCP NE 530.05
(TO BE REMOVED)

(TO BE REMOVED) STA 506+71.98, 66.27' RT
EX MH, GRATE ELEV 538.79
EX 24" RCP S 533.57
EX 27" RCP N 533.32

(TO BE REMOVED) STA 506+63.16, 75.25' RT
EX CB, GRATE ELEV 538.47
EX 24" RCP N 533.23
EX 24" RCP S 533.20

(TO BE REMOVED) STA 506+39.34, 73.28' LT
EX MH, GRATE ELEV 538.89
EX 18" RCP SW 533.27
EX 27" RCP NE 532.27

(TO BE REMOVED) STA 499+68.71, 2.63' LT
EX CB, GRATE ELEV 535.05
EX 12" RCP NW 530.01
EX 12" RCP NW 529.95
EX 18" RCP NE 529.54
EX 12" RCP SE 529.69
EX 24" RCP SW 528.87

(TO BE REMOVED) STA 500+37.90, 65.82' LT
EX CB, GRATE ELEV 533.53
EX 12" CPP SW 531.10

(TO BE REMOVED) STA 503+46.62, 2.52' LT
EX CB, GRATE ELEV 537.57
EX 15" RCP SW 533.76
EX 12" RCP SE 533.76
EX 12" RCP NW 533.76

STA 497+28.49, 65.43' LT
EX CB, GRATE ELEV 532.06
EX 6" HDPE NE 530.66
EX 12" HDPE E 529.06
EX 6" HDPE SE 530.56

P.V.I. STA 495+75.00
ELEV = 531.59'
1,000.00' VC
K = 685

STA 500+75.00
ELEV 534.59

MIN. VERTICAL CLEARANCE 15'-6" REQUIRED 16.9' PROVIDED

EX PROFILE

PROPOSED PROFILE

-0.86 %

+0.60 %

EX 24" RCP (TBR)

EX 33" RCP (TBR)

EX 12" RCP

EX 27" RCP (TBR)

EX 18" RCP

EX 12" HDPE

EX 15" RCP

EX 24" RCP (TBR)

EX 27" RCP (TBR)

36" B

24" X 38" B

18" B

15" B

606 607 616 605 604 622

533.69 533.62 533.56 533.50 533.46 533.42 533.39 533.37 533.36 533.36 533.37 533.39 533.41 533.45 533.50 533.55 533.61 533.69 533.77 533.86 533.96 534.07 534.18 534.31 534.45 534.59 534.74 534.89 535.04 535.19 535.34 535.49 535.64 535.79 535.94 536.09 536.24 536.39 536.54 536.69 536.84 536.99 537.14 537.29 537.44 537.59 537.74 537.89 538.04 538.19 538.34

536.01 535.73 535.45 535.14 534.90 534.61 534.53 534.21 534.33 534.63 535.03 535.28 535.64 536.01 536.31 536.63 537.00 537.30 537.73 538.12 538.48 538.79 539.10 539.38 539.73 539.91

550 545 540 535 530 525 520

495+00 496+00 497+00 498+00 499+00 500+00 501+00 502+00 503+00 504+00 505+00 506+00 507+00

CROSS REFERENCES	
SHEET NO	DESCRIPTION
397 - 407	DRAINAGE PLANS
408 - 428	STORM AND SANITARY SEWER PROFILES
164 - 191	ESTIMATED QUANTITIES
375 - 384	SUPERELEVATION TABLES
506 - 511	ROADSIDE BARRIER PLANS
385 - 393	INTERCHANGE DETAILS
595 - 614	LIGHTING PLANS
633 - 637	FENCING PLANS

LIMITS OF PAVEMENT REMOVED

CITY OF CINCINNATI
SPRINGFIELD TWP

CURVE 75-5
PI STA 523+96.89
Δ = 16°02'37" (LT)
Dc = 1°06'00"
R = 5,208.71'
T = 734.06'
L = 1,458.52'
E = 51.47'
emax = 0.029

HORIZONTAL SCALE IN FEET
0 25 50 100

CALCULATED CFR CHECKED JLM

PC STA 508+10.27
BEGIN SHLD TAPER
STA 508+01.16, 109.01' LT
END SHLD TAPER
STA 508+49.90, 114.87' LT
EX. ASPHALT TO REMAIN
PT STA 515+59.35
END ℄ RAMP B
STA 516+62.83
EX. ASPHALT TO REMAIN
CONST LIMITS
MATCHLINE STA 507+00, SEE SHEET 200
MATCHLINE STA 519+50, SEE SHEET 202
RAMP B
RAMP A
℄ CONST RAMP B
℄ CONST RAMP A
℄ CONST I.R. 75
I.R. 75 (SB)
I.R. 75 (NB)
N 43° 59' 00" E
SUMMIT RD
PROP MEDIAN BARRIER
PROP BARRIER
END PVMT TAPER
STA 515+53.88, 73.50' RT
WALL V
CONST LIMITS
BEGIN SHLD TAPER
STA 513+52.79, 87.50' RT
END SHLD TAPER
STA 515+53.88, 85.50' RT
EX OHE TRANSMISSION (69 KV)
69 KV TRANSMISSION POWER LINES 20.84' (583.34), ABOVE SUMMIT STREET (562.50), 37.81' ABOVE I.R. 75 (545.53)
BEGIN SHLD TAPER
STA 508+50.30, 95.56' RT
END ℄ RAMP A
STA 509+00.12
END SHLD TAPER
STA 509+00.12, 96.50' RT
CORP LINE
Ex LA-R/W
TMP
EX ITS
EX ST LT
PROP BARRIER
R1 R2 R3 R4 R5 R6 R7 R8 R9 R10 R11 R12 R13
C1
75-5

(TO BE REMOVED)
STA 507+13.4965, 69.48' RT
EX. CB, GRATE ELEV 538.76

(TO BE REMOVED)
STA 507+36.42, 2.71' RT
EX CB, GRATE ELEV 539.86
EX 27" RCP N 533.04
EX 27" RCP S 533.04
EX 8" CPP SE 537.08

(TO BE REMOVED)
STA 507+76.17, 57.50' LT
EX MH, GRATE ELEV 539.89
EX 18" SW 533.27
EX. 30" NE 532.27
EX. 27" S 532.52
EX. 6" UD 534.27

(TO BE REMOVED)
STA 510+19.70, 65.33' RT
EX MH, GRATE ELEV 540.93

(TO BE REMOVED)
STA 510+19.61, 63.26' RT
EX CB, GRATE ELEV 540.41
EX 6" CLAY NE 534.37
EX 6" CMP NE 536.47
EX 12" RCP E 534.64
EX 15" RCP W 533.31

(TO BE REMOVED)
STA 510+64.38, 47.85' LT
EX MH, GRATE ELEV 541.47
EX 15" RCP SE 532.26
EX 30" RCP SW 530.81
EX 33" RCP NE 530.56

(TO BE REMOVED)
STA 510+76.17, 1.79' LT
EX CB, GRATE ELEV 541.63
EX 12" RCP NW 538.28

PROPOSED PROFILE
EX PROFILE
+0.60 %

(TO BE REMOVED)
STA 513+69.22, 63.26' RT
EX CB, GRATE ELEV 542.25
EX 6" CLAY N 536.25
EX 6" CLAY N 538.25
EX 18" CMP E 536.35
EX 21" CMP W 535.20

(TO BE ABANDONED)
STA 513+59.50, 52.12' LT
EX MH, GRATE ELEV 542.57
EX 6" CLAY N 536.67
EX 6" CLAY NE 539.02
EX 12" RCP E 529.77
EX 33" RCP S 528.77
EX 36" RCP N 528.77

(TO BE REMOVED)
STA 513+86.53, 1.67' RT
EX CB, GRATE ELEV 542.92
EX 12" RCP NW 539.85

(TO BE ABANDONED)
STA 516+88.22, 52.39' LT
EX MH, GRATE ELEV 543.46
EX 12" RCP N 530.76
EX 6" CLAY NE 539.86
EX 12" RCP SE 537.96
EX 36" RCP N & S 527.26
EX 12" RCP W 534.46

(TO BE REMOVED)
STA 516+90.36, 53.08' RT
EX CB, GRATE ELEV 560.50
EX 12" CMP SE 539.92
EX 15" RCP NW 533.17

(TO BE REMOVED)
STA 516+84.30, 78.83' LT
EX CB, GRATE ELEV 538.23
EX 12" RCP E 535.23

(TO BE REMOVED)
STA 516+69.26, 1.76' RT
EX CB, GRATE ELEV 544.03
EX 12" RCP NW 540.32

(TO BE REMOVED)
STA 518+80.16, 1.49' RT
EX CB, GRATE ELEV 545.03
EX 12" RCP NE 541.40

738 736 732 729
EX. 27" RCP
EX 30" RCP (TBR)
EX 15" RCP
EX 33" RCP (TBR)
EX 36" RCP (TBA)
42" B
48" B
EX FIBER OPTIC

538.34 538.49 538.64 538.79 538.94 539.09 539.24 539.39 539.54 539.69 539.84 539.99 540.14 540.29 540.44 540.59 540.74 540.89 541.04 541.19 541.34 541.49 541.64 541.79 541.94 542.09 542.24 542.39 542.54 542.69 542.84 542.99 543.14 543.29 543.44 543.59 543.74 543.89 544.04 544.19 544.34 544.49 544.64 544.79 544.94 545.09 545.24 545.39 545.54 545.69 545.84
539.91 540.00 540.30 540.55 540.82 541.17 541.32 541.57 541.78 542.11 542.34 542.57 542.79 543.04 543.13 543.30 543.32 543.47 543.70 543.93 544.41 544.71 544.88 545.11 545.39 545.61
555 550 545 540 535 530 525 520
507+00 508+00 509+00 510+00 511+00 512+00 513+00 514+00 515+00 516+00 517+00 518+00 519+00

PLAN AND PROFILE - I.R. 75
STA 507+00 TO STA 519+50

HAM-75-8.91

201
826

J:\20240445\ODOT\HAM\117525\Design\Roadway\Sheets\77889GP406.dgn 4/9/2025 1:46:32 PM hbrendlinger

CROSS REFERENCES	
SHEET NO	DESCRIPTION
397 - 407	DRAINAGE PLANS
408 - 428	STORM AND SANITARY SEWER PROFILES
164 - 191	ESTIMATED QUANTITIES
375 - 384	SUPERELEVATION TABLES
506 - 511	ROADSIDE BARRIER PLANS
385 - 393	INTERCHANGE DETAILS
595 - 614	LIGHTING PLANS
633 - 637	FENCING PLANS

CURVE 75-5
PI STA 523+96.89
Δ = 16°02'37" (LT)
Dc = 1°06'00"
R = 5,208.71'
T = 734.06'
L = 1,458.52'
E = 51.47'
emax = 0.030

1 ℄ CONST I.R. 75 522+55.68=
℄ CONST PED PATH 7+57.41

RESURFACING

END PROJECT
STA 531+73.91
SLM = 10.16

END SHLDR TAPER LT
STA 531+31.45

BEGIN SHLDR TAPER LT
STA 530+95.00

END WORK
STA 538+00.00

E240 (415)

STRUCTURE NO
HAM-75-0992

EX ASPHALT TO REMAIN

CITY OF CINCINNATI
SPRINGFIELD TOWNSHIP

BEGIN PVMT SHIFT
STA 528+00.00, 13.50' LT

CONST LIMITS

PT STA 531+21.35

N 27° 55' 00" E

BEGIN APP SLAB
531+73.91

END PVMT SHIFT
STA 531+21.35, 8.20' LT

+50.00
60' LT

+50.00
48' RT

END PVMT SHIFT
STA 531+21.35, 8.20' RT

MATCHLINE STA 519+50, SEE SHEET 201

I.R. 75 (SB)

I.R. 75 (NB)

75-5

1 PROP MEDIAN BARRIER

PT STA 36+95.90

℄ CONST I.R. 75

SUMMIT RD

℄ SUMMIT RD

EX 18" WATER

24" COMB

EX ITS

EX ST LT

EX TELEPHONE

TBRO

SECTION ST

WOODLAND AVE

CONST LIMITS

BEGIN PVMT TAPER
STA 524+72.45, 73.50' RT

BEGIN PVMT SHIFT
STA 528+00.00, 13.50' RT

END PVMT TAPER
STA 527+50.00, 78.00' RT

WALL V

EQUATION:
STA 44+13.54 BK =
STA 44+15.49 AH

STRUCTURE NO
HAM-75-1010

R1 R2 R3 R4 R5 R6 R7 R8 R9 R10 R11 R12 R13 R14 C1

(TO BE ABANDONED)
STA 520+08.04, 52.47' LT
EX MH, GRATE ELEV 544.73
EX 30" RCP N 525.45
EX 12" RCP N 529.18
EX 12" RCP E 529.18
EX 36" RCP N & S 525.45

(TO BE REMOVED)
STA 520+07.37, 5.49' LT
EX CB, GRATE ELEV 546.03
EX 12" RCP N 540.38
EX 12" RCP S 540.08
EX 15" RCP W 537.83

(TO BE REMOVED)
STA 520+39.66, 69.16' LT
EX CB, GRATE ELEV 540.76
EX 12" RCP S 538.68

(TO BE ABANDONED)
STA 523+01.43, 25.83' LT
EX MH, GRATE ELEV 546.5±
EX 36" RCP SW 525.45±
EX 36" RCP NE 525.45±
(PAVED OVER)

(TO BE REMOVED)
STA 526+23.88, 60.76' LT
EX CB, GRATE ELEV 543.01
EX 12" RCP E 539.16
EX 6" CMP S 539.36

(TO BE REMOVED)
STA 526+25.16, 52.75' LT
EX MH, GRATE ELEV 543.42
EX 48" RCP N 520.62
EX 12" CLAY E 538.17
EX 36" RCP SE 521.32
EX 36" RCP S 521.22
EX 12" CLAY W 536.77

(TO BE REMOVED)
STA 526+27.32, 1.18' RT
EX CB, GRATE ELEV 544.30
EX 12" RCP NW 541.58

(TO BE ABANDONED)
STA 528+74.92, 53.53' LT
EX MH, GRATE ELEV 540.08
EX 42" RCP N 519.18
EX 12" RCP E 534.93
EX 42" RCP S 519.18
EX 12" RCP W 533.43

(TO BE REMOVED)
STA 528+75.76, 67.03' LT
EX CB, GRATE ELEV 539.49
EX 12" RCP E 535.70
EX 12" RCP W 535.80

STA 528+75.99, 1.57' LT
EX CB, GRATE ELEV 541.20
EX 12" ECP NW 538.28

(TO BE REMOVED)
STA 520+98.83, 1.27' RT
EX CB, GRATE ELEV 546.12

PROPOSED PEDESTRIAN BRIDGE

MIN. VERT. CLEARANCE 17'-0" REQUIRED 17'-10⅝" PROVIDED

P.V.I. STA 523+50.00 ELEV = 548.24'
400.00' VC
K = 211

STA 521+50.00
ELEV 547.04

STA 525+50.00
ELEV 545.64

PVI STA 527+50.00
EX ELEV 543.29

+0.60 %

-1.20 %

EX PROFILE

PROPOSED PROFILE

PROPOSED 12" WATERLINE

EX 12" WATERLINE

EX ITS

EX TELEPHONE

(TBR) EX 12" RCP

42" B

15" B

FUTURE I.R. 75 PROFILE 1.20%

-1.39 %

MATCH STA 531+73.91 EX ELEV.537.55

725 722A 723A 728

520+00 521+00 522+00 523+00 524+00 525+00 526+00 527+00 528+00 529+00 530+00 531+00

545.84 545.99 546.14 546.29 546.44 546.59 546.74 546.89 547.04 547.18 547.29 547.37 547.42 547.44 547.44 547.40 547.34 547.25 547.14 546.99 546.82 546.62 546.39 546.13 545.84 545.54 545.24 544.94 544.64 544.34 544.04 543.74 543.29 542.93 542.64 542.28 541.96 541.61 541.29 540.96 540.66 540.32 539.88 539.52 539.21 538.90 538.56 538.17 537.77

545.61 545.96 546.09 546.30 546.70 547.05 547.41 547.40 547.65 547.19 546.90 546.41 545.81 545.14 544.40 543.97 543.29 542.64 541.96 541.29 540.66 539.88 539.21 538.56 537.77

570 565 560 555 550 545 540 535 530

HORIZONTAL SCALE IN FEET
0 25 50 100

CALCULATED CFR CHECKED JLM

PLAN AND PROFILE - I.R. 75
STA 519+50 TO STA 532+00.00

HAM-75-8.91

202
826

J:\2024044S\ODOT\HAM\117525\Design\Roadway\Sheets\77889GP407.dgn 4/9/2025 1:47:22 PM hbrendlinger

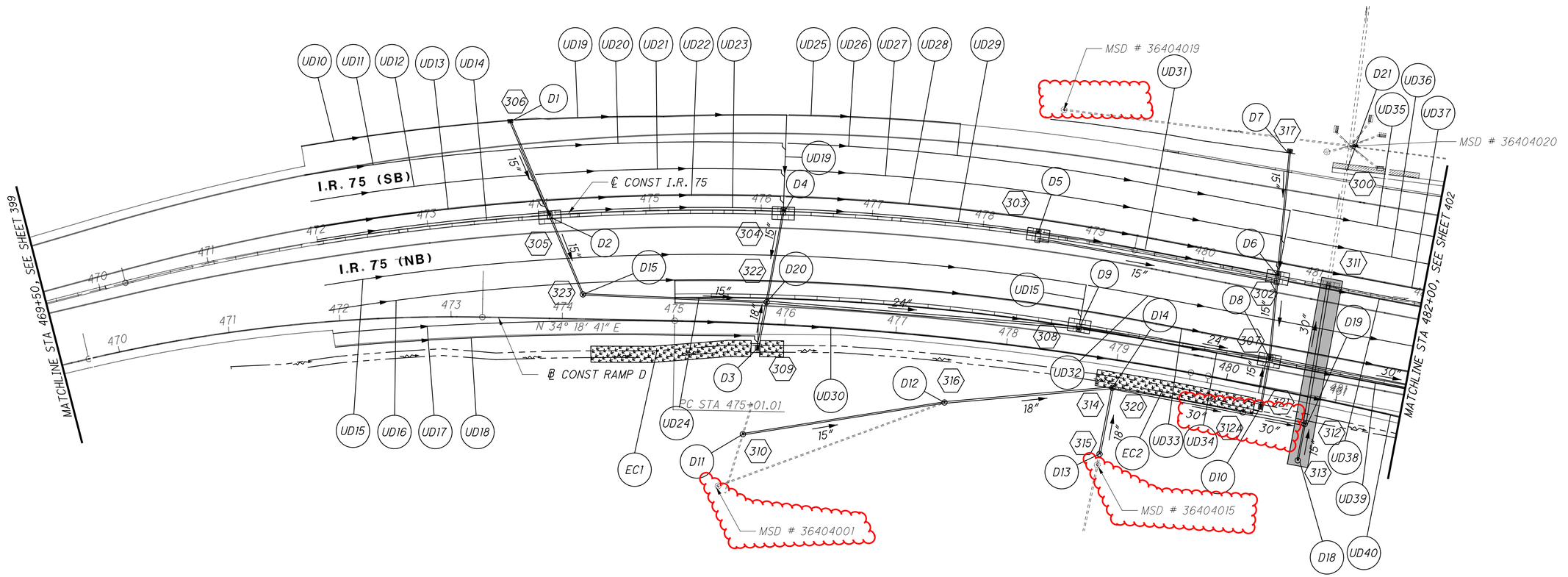

LEGEND

DRAINAGE ALTERNATE 1

NOTE: SHEETS 400 AND 401 ARE IDENTICAL WITH THE EXCEPTION OF THE SHADED DRAINAGE ALTERNATE

HORIZONTAL SCALE IN FEET
0 25 50 100

CALCULATED CT
CHECKED SSK

DRAINAGE PLANS - I.R. 75
STA 469+50 TO STA 482+00

HAM-75-8.91

400
826

J:\20240445\ODOT\HAM\117525\Design\Drainage\Sheets\77889DM403.dgn 4/16/2025 10:43:43 AM hbrendlinger

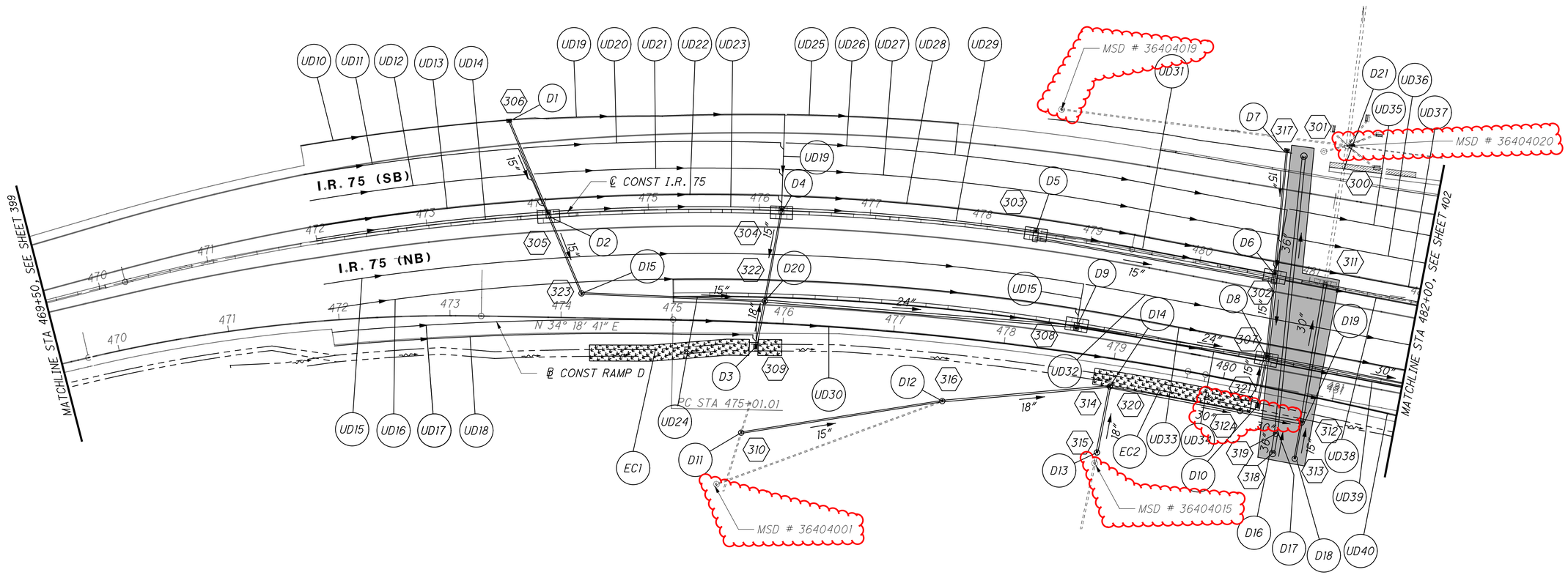

LEGEND

DRAINAGE ALTERNATE 2

NOTE: SHEETS 400 AND 401 ARE IDENTICAL WITH THE EXCEPTION OF THE SHADED DRAINAGE ALTERNATE

HORIZONTAL SCALE IN FEET
0 25 50 100

CALCULATED CT
CHECKED SSK

DRAINAGE PLANS - I.R. 75
STA 469+50 TO STA 482+00

HAM-75-8.91

401
826

J:\20240445\ODOT\HAM\117525\Design\Drainage\Sheets\77889DM403A.dgn 4/16/2025 10:45:02 AM hbrendlinger

J:\20240445\ODOT\HAM\117525\Design\Drainage\Sheets\77889DM405.dgn 4/17/2025 3:09:34 PM hbrendlinger

HORIZONTAL SCALE IN FEET
0 25 50 100

CALCULATED CT
CHECKED SSK

DRAINAGE PLANS - I.R. 75
STA 494+50 TO STA 507+00

HAM-75-8.91

404
826

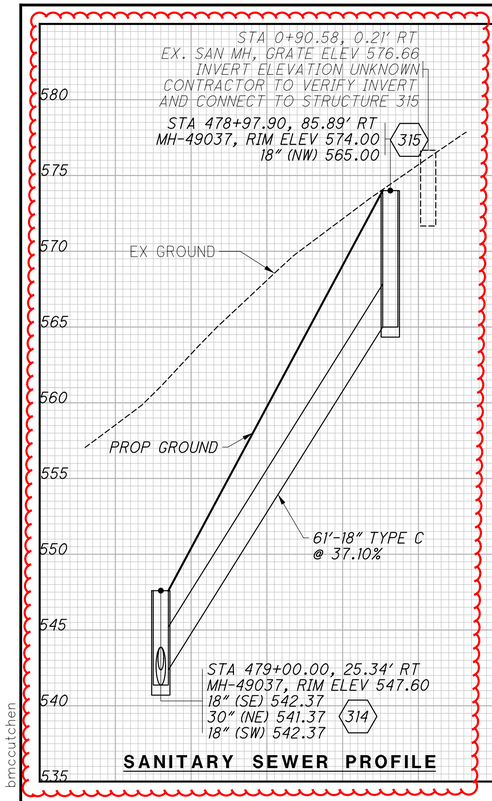

SANITARY SEWER PROFILE

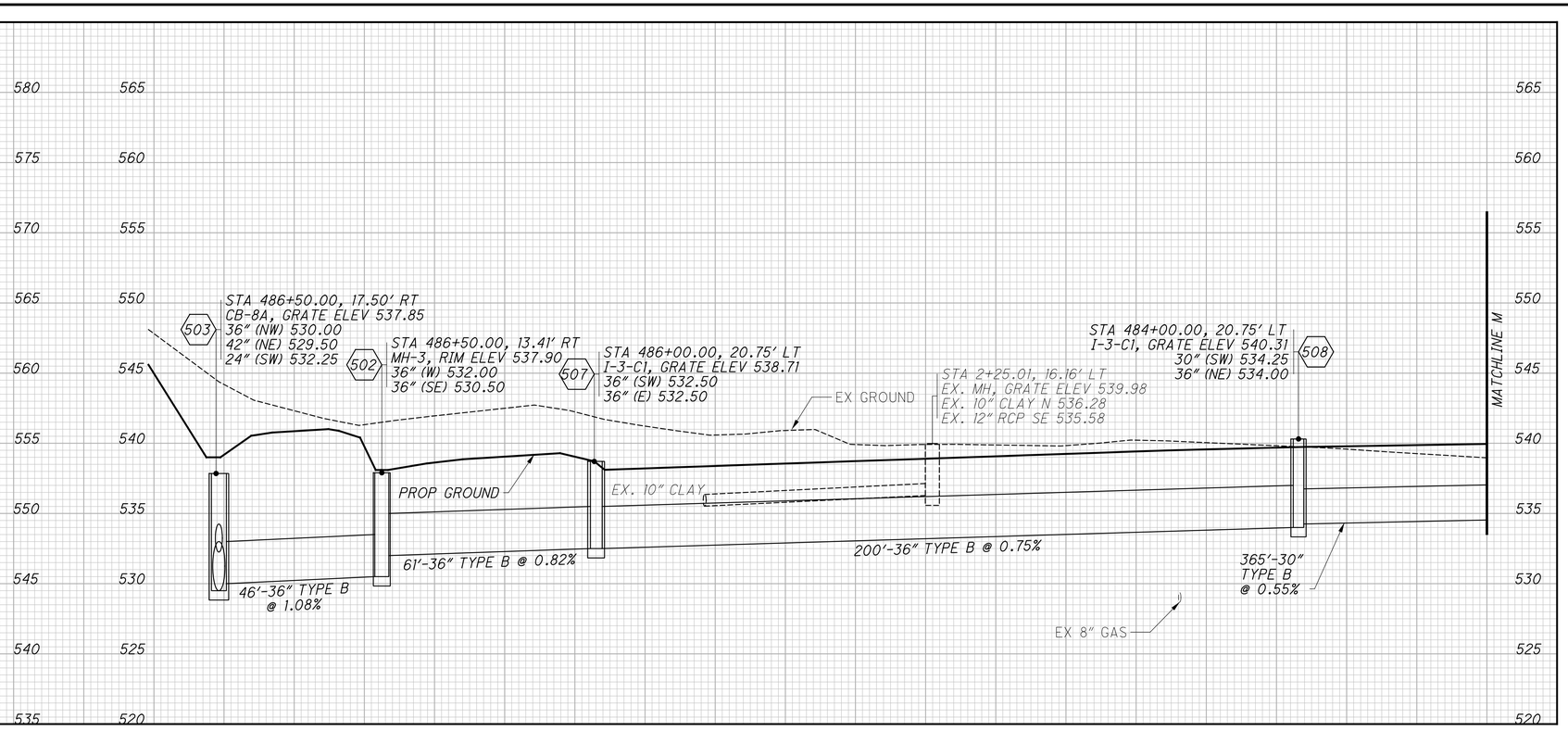

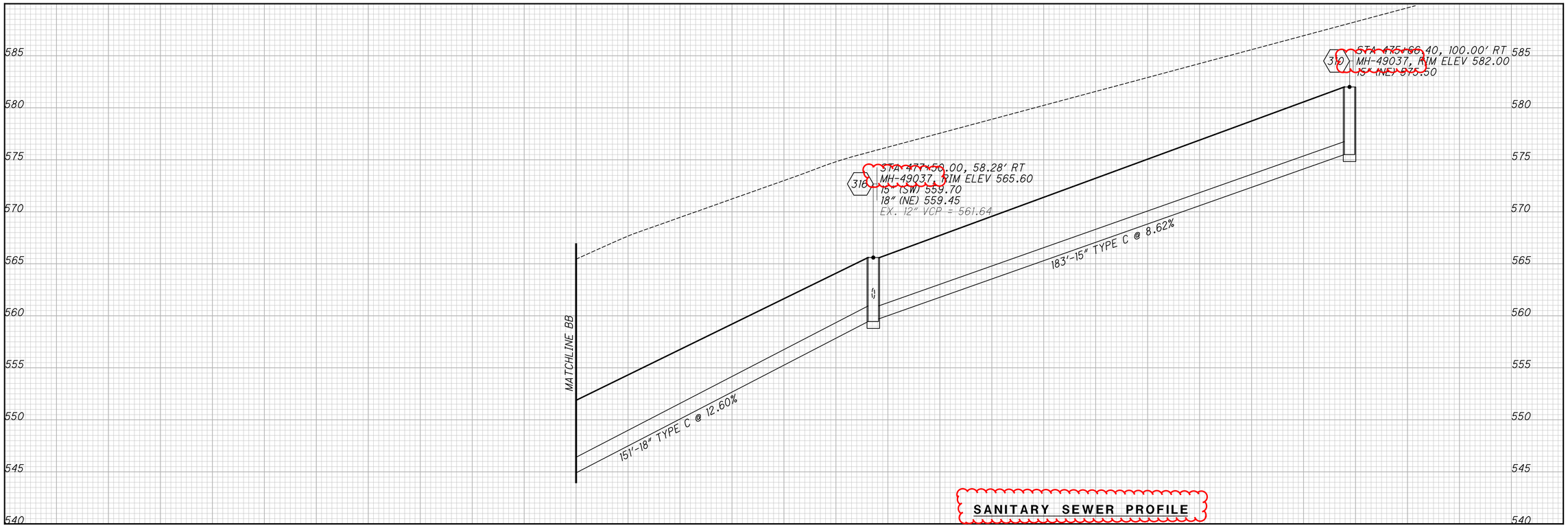

SANITARY SEWER PROFILE

CALCULATED ECH
CHECKED SSK

STORM SEWER PROFILES

HAM-75-8.91

411
826

J:\20240445\ODOT\HAM\117525\Design\Drainage\Sheets\77889DF407A.dgn 4/15/2025 10:55:33 AM bmccutchen

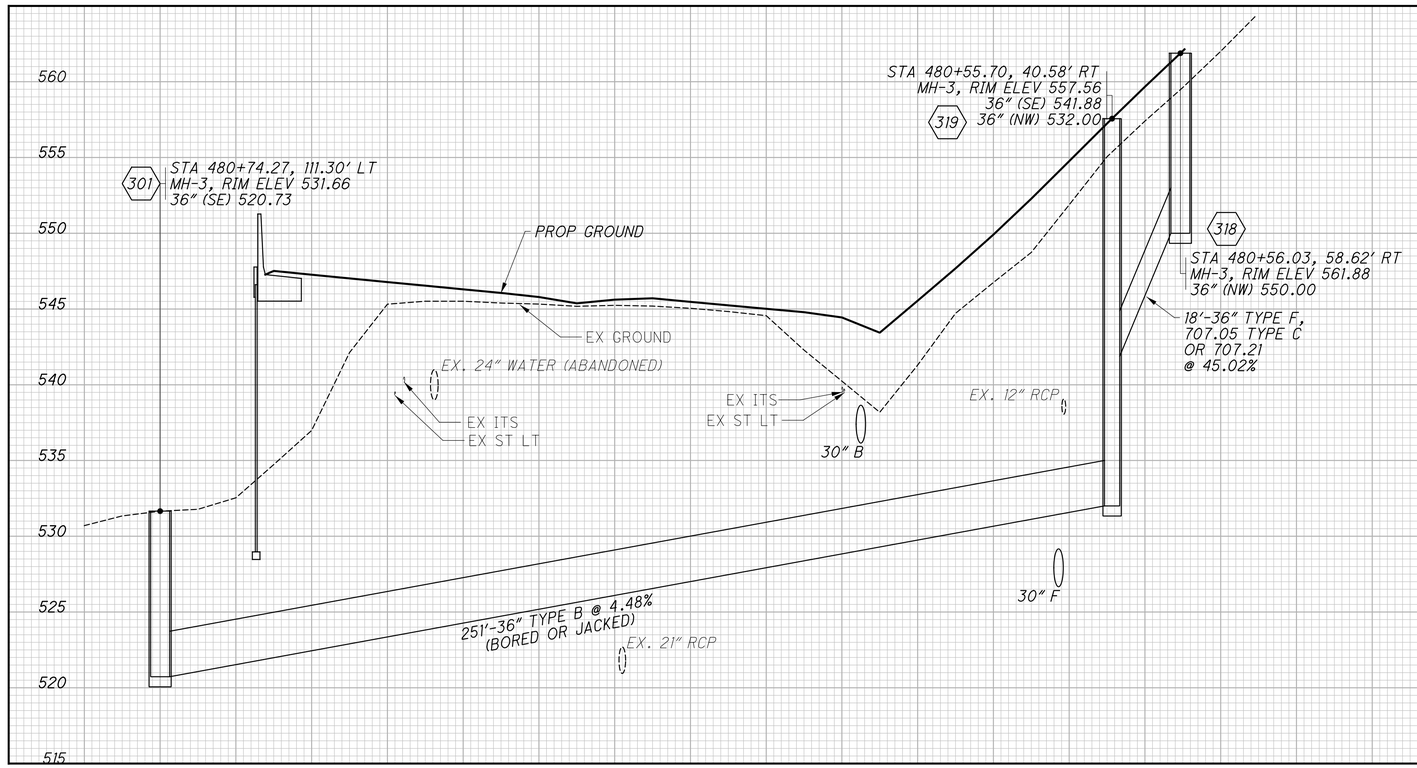

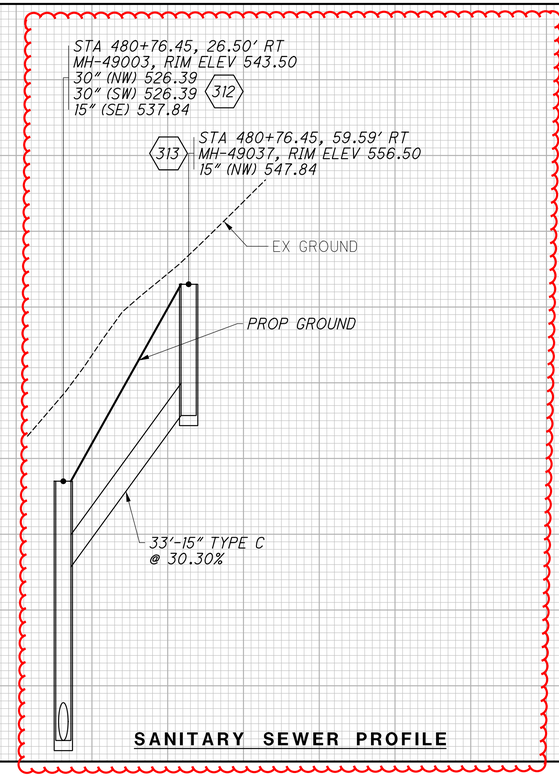

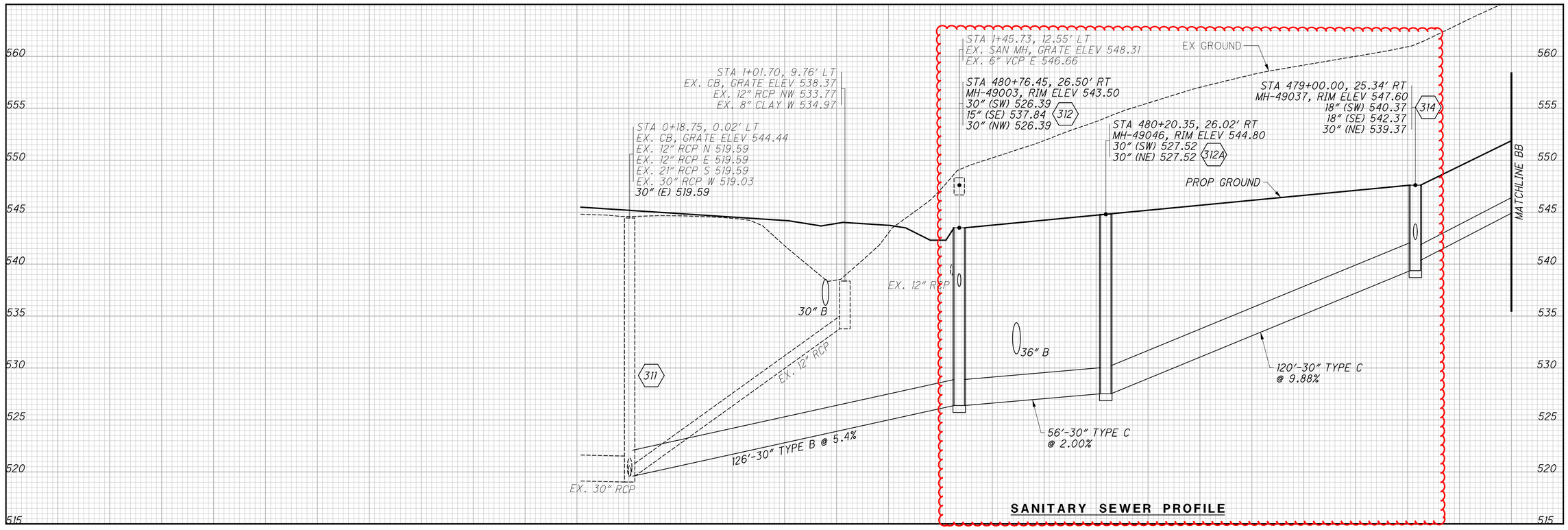

CALCULATED ECH
CHECKED SSK

STORM SEWER PROFILES

HAM-75-8.91

412
826

J:\20240445\ODOT\HAM\117525\Design\Drainage\Sheets\77889DF407B.dgn 4/15/2025 10:55:33 AM bmccutchen

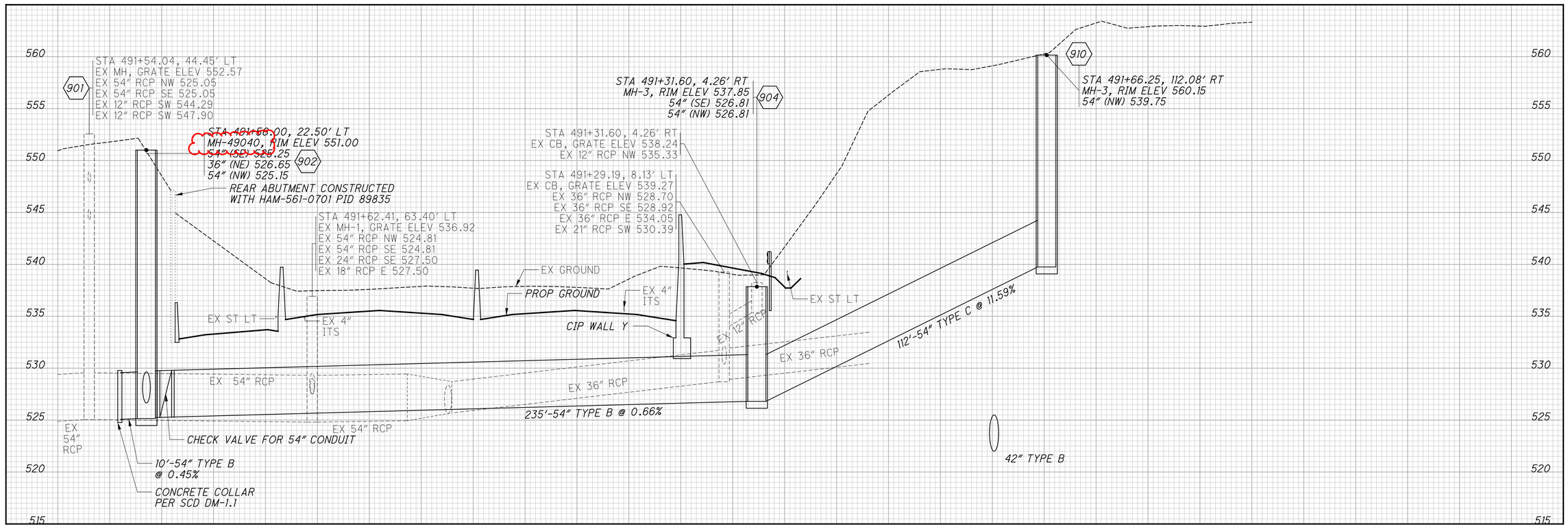

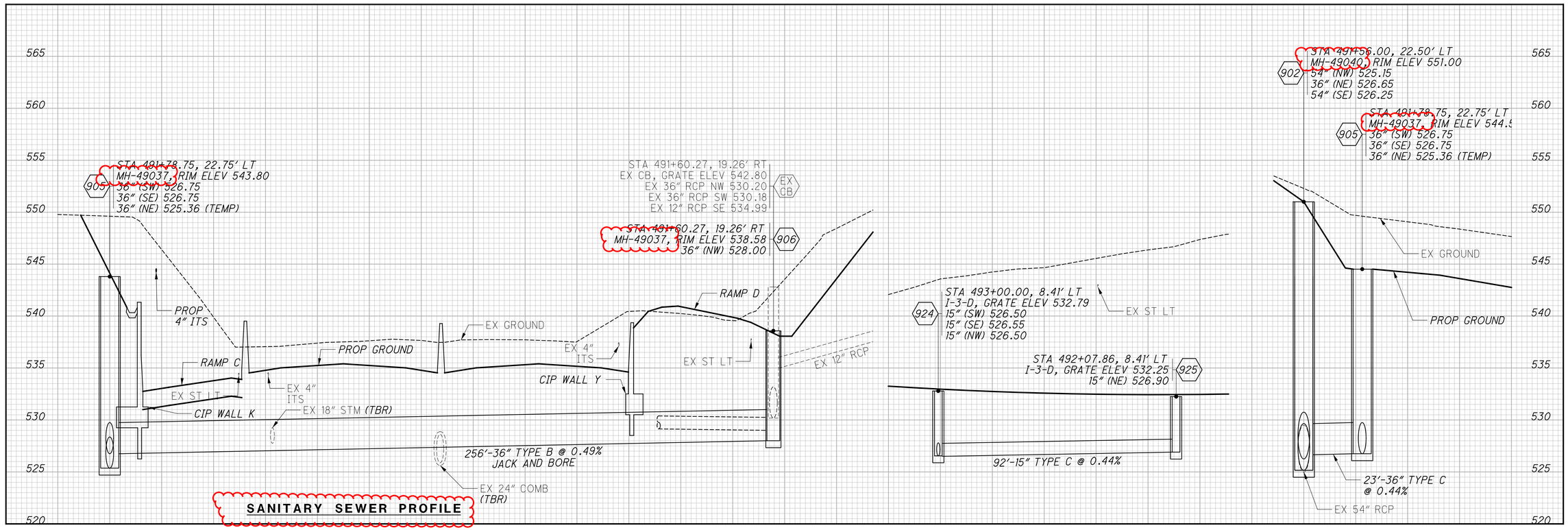

CALCULATED ECH
CHECKED SSK

STORM SEWER PROFILES

HAM-75-8.91

417
826

J:\20240445\ODOT\HAM\117525\Design\Drainage\Sheets\77889DF411.dgn 4/15/2025 10:55:34 AM bmccutchen

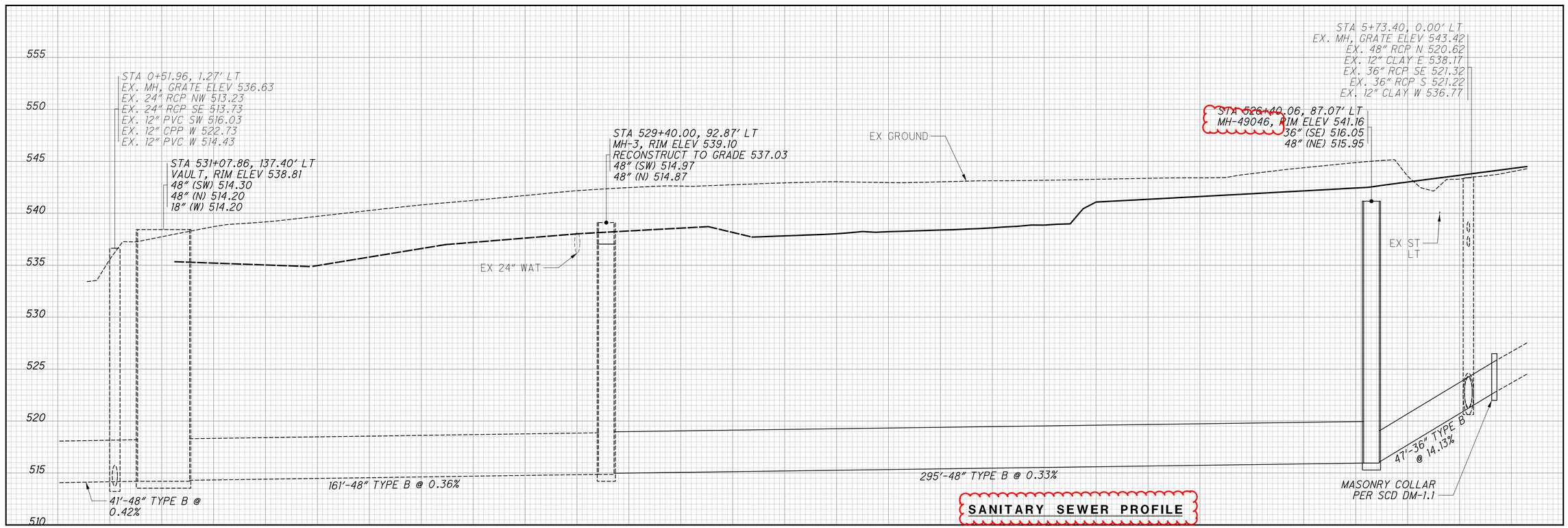

CALCULATED ECH
CHECKED SSK

STORM SEWER PROFILES

HAM-75-8.91

J:\20240445\ODOT\HAM\117525\Design\Drainage\Sheets\77889DF421.dgn 4/15/2025 10:55:34 AM bmccutchen

REFERENCE SHALL BE MADE TO SUPPLEMENTAL SPECIFICATION

840 DATED 4-16-21

867 DATED 1-15-21

REFERENCE SHALL BE MADE TO SUPPLEMENT

1083 DATED 1-20-17

DESIGN SPECIFICATIONS

THIS STRUCTURE CONFORMS TO THE 9TH EDITION OF THE "LRFD BRIDGE DESIGN SPECIFICATIONS" ADOPTED BY THE AMERICAN ASSOCIATION OF STATE HIGHWAY AND TRANSPORTATION OFFICIALS, 2020, AND THE ODOT BRIDGE DESIGN MANUAL, 2020.

DESIGN DATA

CONCRETE CLASS QC1 - COMPRESSIVE STRENGTH 4000 PSI (CIP FACING AND SLEEPER SLAB)

REINFORCING STEEL - ASTM A615 OR A996 GRADE 60, MINIMUM YIELD STRENGTH 60,000 PSI

FOUNDATION BEARING RESISTANCE

THE FACTORED BEARING RESISTANCE FOR EACH WALL IS LISTED IN THE TABLE BELOW:

FOUNDATION BEARING RESISTANCE

WALL NUMBER	WALL LIMITS		FACTORED BEARING RESISTANCE
	FROM STA	TO STA	
L	ALL		25.7

MINIMUM SOIL REINFORCEMENT LENGTHS

THE FOLLOWING TABLE LISTS THE MINIMUM SOIL REINFORCEMENT LENGTHS FOR EACH WALL. SOIL REINFORCEMENT LENGTHS FOR ALL OTHER MSE WALL LOCATIONS NOT INCLUDED IN THE TABLE SHALL BE 0.7H OR 8'-0", WHICHEVER IS GREATER, WHERE H = THE WALL HEIGHT AS DETERMINED ACCORDING TO 840.04.

SOIL REINFORCEMENT LENGTHS

MSE WALL	WALL STATION RANGE		SOIL REINFORCEMENT LENGTH
	FROM STA	TO STA	
J1	483+80.00	484+00.00	10'-0"
	484+00.00	484+80.00	9'-0"
	484+80.00	486+00.00	8'-0"

PROPRIETARY RETAINING WALL DATA:

THE PROPRIETARY WALL SUPPLIER SHALL DESIGN THE INTERNAL STABILITY OF THE MECHANICALLY STABILIZED EARTH (MSE) WALL IN ACCORDANCE WITH SS840 TO SUPPORT THE ABUTMENTS. THE DESIGN FOR INTERNAL STABILITY SHALL INCLUDE A NOMINAL (I.E. UNFACTORED) HORIZONTAL STRIP LOAD DUE TO FRICTION (FR) FROM THE SUPERSTRUCTURES LISTED IN THE FOLLOWING TABLE, APPLIED PERPENDICULAR TO THE FACE OF WALL AT THE BASE OF THE CONCRETE FOOTING. THIS STRIP LOAD DOES NOTE INCLUDE EARTH PRESSURE LOADS FROM THE ABUTMENT BACKFILL. HOWEVER, THE PROPRIETARY WALL SUPPLIER SHALL INCLUDE EARTH PRESSURE LOADS FROM THE ABUTMENT BACKFILL IN THE DESIGN CALCULATIONS.

BRIDGE SUPERSTRUCTURE LOADINGS

MSE WALL	BRIDGE NUMBER	HORIZONTAL LOAD (K/FT)
L	HAM-75-0992	0.9

ITEM 203 - GRANULAR MATERIAL, TYPE B, AS PER PLAN

THIS PAY ITEM INCLUDES THE PORTION OF GRANULAR MATERIAL WHICH WILL ENCASE SOIL REINFORCEMENTS FROM THE PORTION OF MSE WALL ADJACENT TO THE BARRIER AND MOMENT SLAB. THIS GRANULAR MATERIAL SHALL MEET THE REQUIREMENTS OF SUPPLEMENTAL SPECIFICATION 840.

ITEM 503 - COFFERDAMS AND EXCAVATION BRACING, AS PER PLAN

THE DESIGN SHOWN ON THE PLANS FOR TEMPORARY SUPPORT OF EXCAVATION IS ONE REPRESENTATIVE DESIGN THAT MAY BE USED TO CONSTRUCT THE PROJECT. THE CONTRACTOR MAY CONSTRUCT THE DESIGN SHOWN ON THE PLANS OR PREPARE AN ALTERNATE DESIGN TO SUPPORT THE SIDES OF EXCAVATIONS. IF CONSTRUCTING AN ALTERNATE DESIGN FOR TEMPORARY SUPPORT OF EXCAVATION, PREPARE AND PROVIDE PLANS IN ACCORDANCE WITH CMS 501.05. THE DEPARTMENT WILL PAY FOR THE TEMPORARY SUPPORT OF EXCAVATION AT THE CONTRACT LUMP SUM PRICE FOR COFFERDAMS AND EXCAVATION BRACING. NO ADDITIONAL PAYMENT WILL BE MADE FOR PROVIDING AN ALTERNATE DESIGN.

ITEM 512 - SEALING OF CONCRETE SURFACES (EPOXY-URETHANE), AS PER PLAN

SEALING OF THE MSE WALL PANELS, COPINGS, AND RAILING SHALL BE AS PER ITEM 512 AND THE COLOR SHALL BE LIGHT NEUTRAL MEETING FEDERAL COLOR STANDARD NO. 595B-17778. THE ADDITIONAL MATERIAL AND LABOR REQUIRED TO SEAL THE AESTHETIC TREATMENT FINISH WITH THE MINIMUM OF 1" AND MAXIMUM OF 1½" RELIEF SHALL BE INCLUDED IN THE UNIT PRICE BID PER SQUARE YARD PER CMS 512.09.

ITEM 512 - SEALING OF CONCRETE SURFACES, AS PER PLAN (PERMANENT GRAFFITI PROTECTION)

APPLY A PERMANENT GRAFFITI COATING QUALIFIED ACCORDING TO SUPPLEMENT 1083 THAT IS COMPATIBLE WITH THE CONCRETE SEALER OVER WHICH IT IS APPLIED. APPLY THE GRAFFITI COATING IN ACCORDANCE WITH THE MANUFACTURER'S PRINTED INSTRUCTIONS.

THE ADDITIONAL MATERIAL AND LABOR REQUIRED TO SEAL THE AESTHETIC TREATMENT FINISH WITH THE MINIMUM OF 1" AND MAXIMUM OF 1½" RELIEF SHALL BE INCLUDED IN THE UNIT PRICE BID PER SQUARE YARD PER CMS 512.09.

ITEM 517 - RAILING, MISC.: TRAFFIC BARRIER ON MSE WALL

THIS ITEM PERTAINS TO ALL BARRIER AND MOMENT SLABS THAT DO NOT SUPPORT NOISE BARRIERS. THIS ITEM SHALL INCLUDE, BUT IS NOT LIMITED TO THE CONCRETE, REINFORCING STEEL, DOWELS, SLEEVES, PEJF, AND JOINT SEAL NECESSARY TO FORM AND PLACE THE CONCRETE RAILING AND BARRIER MOMENT SLAB. PAYMENT FOR THIS ITEM SHALL ALSO INCLUDE ALL OTHER NECESSARY MATERIAL, LABOR, AND EQUIPMENT AND SHALL BE INCLUDED IN THE UNIT PRICE BID PER LINEAR FOOT FOR ITEM 517 - RAILING, MISC.: TRAFFIC BARRIER ON MSE WALL

ITEM 840 - MECHANICALLY STABILIZED EARTH WALL, AS PER PLAN

DO NOT FABRICATE WALL TOP PANELS OR INSTALL COPINGS, BARRIER MOMENT SLABS, OR RAILINGS LOCATED ON TOP OF MSE WALLS UNTIL AFTER THE MSE WALL EMBANKMENT HAS BEEN CONSTRUCTED TO WITHIN 1 FOOT OF THE PROPOSED FINISHED GRADE AND THE SETTLEMENT REQUIREMENTS HAVE BEEN MET. THE CONTRACTOR SHALL FABRICATE THE TOP PANEL TO ACCOUNT FOR THE ACTUAL SETTLEMENT. NO SEPARATE PAYMENT WILL BE MADE TO EXCAVATE AND RE-COMPACT MATERIAL NECESSARY TO PLACE THE TOP PANEL, BUT THE COST THEREOF SHALL BE INCLUDED WITH ITEM 840 - MECHANICALLY STABILIZED EARTH WALL, AS PER PLAN FOR PAYMENT.

ITEM 840 - CONCRETE COPING

PROVIDE EPOXY COATED REINFORCING AND CLASS QC1 CONCRETE AS SHOWN IN THE PLANS. THE COPING SHALL NOT BE CONSTRUCTED UNTIL ALL PHASES OF MSE WALL CONSTRUCTION ARE COMPLETE. THE COPING JOINTS SHALL BE PLACED ON A MAXIMUM 20'-0" SPACING AND SHALL ALIGN WITH A PANEL JOINT. CONCRETE AND REINFORCING STEEL IN THE COPING, ADDITIONAL CONCRETE AND REINFORCING STEEL AT ROADWAY FEATURES, PEJF BETWEEN COPING AND BARRIER, AND EXPANSION AND CONTRACTION JOINTS SHALL BE INCLUDED IN THE UNIT BID PRICE PER FOOT FOR THIS ITEM.

ITEM 840 - AESTHETIC SURFACE TREATMENT

ALL MSE WALL PANELS SHALL HAVE AN "ASHLAR STONE" FINISH WITH A MINIMUM OF 1" AND A MAXIMUM OF 1½" RELIEF. THE MSE WALL ASHLAR STONE SHALL MATCH OTHER ASHLAR STONE PATTERNS SPECIFIED FOR THE PROJECT.

ALL MSE WALL BASELINES ARE ALONG THE STRUCTURAL FACE OF A 5½" MINIMUM FACING PANEL.

DESIGN AGENCY EMH&T

DESIGNED RJE | DRAWN GB | CHECKED RMW | REVIEWED CAS | DATE 11-15-24 | REVISED - | STRUCTURE FILE NUMBER

GENERAL NOTES - MSE WALLS

MSE RETAINING WALLS J1 AND L

HAM-75-8.91

PID No. 117525

PLOTTED BY hbrendlinger 3/21/2025 12:09:40 PM:J:\20240445\ODOT\HAM\117525\Design\Structures\WALL_00B\sheets\77889_00BWN001.dgn

ESTIMATED QUANTITIES (02/IMS/03)							SEE STRUCTURE SHEET NO.
WALL J1	WALL L	ITEM	ITEM EXT	TOTAL	UNIT	DESCRIPTION	
	70	203	35111	70	CU YD	GRANULAR MATERIAL, TYPE B, AS PER PLAN	1/10
5		SPECIAL	20365000	5	EACH	SPECIAL - SETTLEMENT PLATFORM	2/10
LUMP		503	11101		LUMP	COFFERDAMS AND EXCAVATION BRACING, AS PER PLAN	1/10
2108	124	512	10001	2304	SQ YD	SEALING OF CONCRETE SURFACES, AS PER PLAN (PERMANENT GRAFFITI PROTECTION)	1/10
2108	124	512	10101	2304	SQ YD	SEALING OF CONCRETE SURFACES (EPOXY-URETHANE), AS PER PLAN	1/10
	56	516	13600	56	SQ FT	1" PREFORMED EXPANSION JOINT FILLER	
537		517	76300	537	FT	RAILING, MISC.: TRAFFIC BARRIER ON MSE WALL	1/10
LUMP		530	00200		LUMP	STRUCTURE MISC.: PROTECTION OF FACILITIES	
	9	601	21000	9	SQ YD	CONCRETE SLOPE PROTECTION	
489		601	37500	489	FT	PAVED GUTTER, TYPE 1-2	
18,006	1807	840	20001	19,813	SQ FT	MECHANICALLY STABILIZED EARTH WALL, AS PER PLAN	1/10
4742	705	840	21000	5447	CU YD	WALL EXCAVATION	
1396	223	840	22000	1619	SQ YD	FOUNDATION PREPARATION	
4004	936	840	23000	4940	CU YD	SELECT GRANULAR BACKFILL	
599	58	840	23050	657	CU YD	NATURAL SOIL	
2798	164	840	25010	2962	FT	6" DRAINAGE PIPE, PERFORATED	
30	62	840	25020	92	FT	6" DRAINAGE PIPE, NON-PERFORATED	
1052	167	840	26000	1219	FT	CONCRETE COPING	1/10
15,902	1475	840	26050	17,377	SQ FT	AESTHETIC SURFACE TREATMENT	1/10
5	1	840	27000	5	DAY	ON-SITE ASSISTANCE	

NOTE

1. SEE SHEET 2/10 FOR ABBREVIATION LEGEND.

DESIGN AGENCY
EMH&T
Engineers • Surveyors • Planners • Scientists
5500 New Albany Road, Columbus, OH 43054
Phone: 614.775.4500

DESIGNED	DRAWN	REVIEWED	DATE
RJE	GB	CAS	11-15-24
CHECKED	REVISED	STRUCTURE FILE NUMBER	
RMW	-		

ESTIMATED QUANTITIES - MSE WALLS
MSE RETAINING WALLS J1 AND L

HAM-75-8.91
PID No. 117525

3 / 10

494
826

PLOTTED BY hbrendlinger 3/24/2025 11:20:05 AM J:\20240445\ODOT\HAM\117525\Design\Structures\WALL_00B\sheets\77889_00BEQ001.dgn