MICROFILMED
AUG 25 1981

STATE OF OHIO
DEPARTMENT OF TRANSPORTATION

I-275-3(4)37

FED. RD. DIVISION	STATE	PROJECT	
2	OHIO	I-275-3(4)37	

1/305

HAMILTON COUNTY
HAM-275-0.00

430 Red
1-102

HAM-275-0.00

WHITEWATER TOWNSHIP
GRADE SEPARATION WITH THE
PENN CENTRAL TRANSPORTATION COMPANY
HAMILTON COUNTY
DEARBORN COUNTY, INDIANA

LINE DATA	
BEGIN PROJECT	STA. 1+30.36
END PROJECT	STA. 205+00.00
NET LENGTH PROJECT(RURAL	STA. 20,369.64 LIN. FT. OR 3.857 MILES
ADD FOR APPROACHES MAIN LINE STEPHENS ROAD	 STA. 996+03.38 TO STA 1000+03.38 (INDIANA)= 400.00 LIN.FT. STA. 7+15.64 TO STA. 20+00.00 BK = 1284.36 LIN.FT. STA. 20+00.00 BK = STA. 47+20.00 STA. 47+20.00 AH TO STA. 58+50.00 = 1130.00 LIN. FT.
SAND RUN ROAD	STA. 93+50.00 TO 99+88.29 = 638.29 LIN. FT.
NET LENGTH OF WORK(RURAL)	23,822.29 LIN.FT. OR 4.511 MILES

Sheet 228 revised 2-11-74 EBL
Sheet 12 revised 6-13-74 A.W.G.
Sheets 228-234, [illegible]
Sheet 233 revised 3-22-76 EBL

MICROFILMED
AUG 25 1981

CONVENTIONAL SIGNS

STATE LINE
COUNTY LINE
TOWNSHIP LINE
SECTION LINE
CENTER LINE
CORPORATION LINE
FENCE LINE
GUARD RAIL EXISTING
GUARD RAIL PROPOSED
STEAM RAILROAD
POWER POLES
TELEPHONE POLES
TREE OR STUMP EXISTING — 12" 18" 24" 30"
PROPERTY LINE — P/L
LIMITED ACCESS & RIGHT OF WAY — L.A RW
RIGHT OF WAY ONLY — R W
EXISTING RIGHT OF WAY
LIMITED ACCESS ONLY — L.A.
UNDERGROUND WATER LINE — W W W W
UNDERGROUND GAS LINE — G G G G
CONSTRUCTION LIMITS

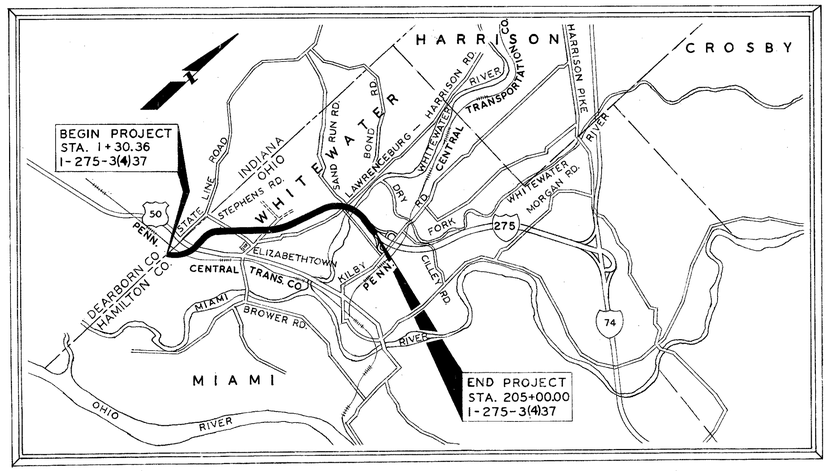

LOCATION MAP
SCALE OF MILES

0 1 2 3 4

PORTION TO BE IMPROVED UNDER THIS CONTRACT
PORTION TO BE IMPROVED UNDER SEPARATE CONTRACT
FUTURE CONSTRUCTION
STATE & FEDERAL ROADS
OTHER ROADS

INDEX OF SHEETS

TITLE SHEET	1
SCHEMATIC LAYOUT PLAN AND DESIGN DESIGNATION	2 — 3
TYPICAL SECTIONS	4 — 7
SUPERELEVATION TABLES	8
GENERAL NOTES	9 — 11
GENERAL SUMMARY AND TABULATION OF QUANTITIES	12 — 14
MISCELLANEOUS DETAILS, PAVEMENT SYMBOLS, AND DRIVEWAY DETAILS	15 — 16
PLAN AND PROFILE - I-275 MAINLINE	17 — 36
CROSS SECTIONS - I-275 MAINLINE	37 — 109
KILBY ROAD INTERCHANGE: SCHEMATIC AND GEOMETRIC LAYOUT PLANS; CROSS SECTION LAYOUT; GRADING PLANS, PLAN AND PROFILE, PAVEMENT DETAILS AND CROSS SECTIONS OF RAMPS C AND D	110 — 125
STEPHENS ROAD; PLAN AND PROFILE, SUPERELEVATION TABLE AND PAVEMENT DETAIL AND CROSS SECTIONS	126 — 134
HAYES-MC KINNEY - PLAN AND PROFILE AND CROSS SECTIONS	135 — 142
SAND RUN ROAD - PLAN AND PROFILE AND CROSS SECTIONS	143 — 144
CROSSSECTIONS WHITEWATER RIVER CHANNEL EXCAVATION	146 — 148
PIPE CULVERTS, STORM SEWERS, AND DRAINAGE DETAILS	149 — 163
SIGNING DETAILS	164 — 185, 175A & 175B
STRUCTURES OVER 20' SPAN	208 — 279, 279A
RIGHT OF WAY	281 — 305
SHEETS NOT USED	145, 155, 186 THRU 207, 280

SCALE

PLAN — 0 50 100
PROFILE HORIZONTAL — 0 50 100
PROFILE VERTICAL — 0 10 20
CROSS SECTIONS HORIZONTAL AND VERTICAL — 0 10 20

LIMITED ACCESS

THIS IMPROVEMENT IS ESPECIALLY DESIGNED FOR THROUGH TRAFFIC AND HAS BEEN DECLARED A LIMITED ACCESS HIGHWAY OR FREEWAY BY ACTION OF THE DIRECTOR IN ACCORDANCE WITH THE PROVISIONS OF SECTION 5511.02 OF THE REVISED CODE OF OHIO

1973 SPECIFICATIONS

THE STANDARD SPECIFICATIONS OF THE STATE OF OHIO DEPARTMENT OF TRANSPORTATION, INCLUDING CHANGES AND SUPPLEMENTAL SPECIFICATION LISTED IN THE PROPOSAL SHALL GOVERN THIS IMPROVEMENT

THE RIGHT-OF-WAY FOR THIS IMPROVEMENT WILL BE PROVIDED BY THE STATE OF OHIO

I HEREBY APPROVED THESE PLANS AND DECLARE THAT THE MAKING OF THIS IMPROVEMENT WILL NOT REQUIRE THE CLOSING TO TRAFFIC OF THE HIGHWAY AND THAT PROVISIONS FOR THE MAINTENANCE AND SAFETY OF TRAFFIC WILL BE AS SET FORTH ON THE PLANS AND ESTIMATES.

APPROVED R. F. Bevis
DATE 11/17/72 DISTRICT DEPUTY DIRECTOR OF TRANSPORTATION

APPROVED Robert B. Pfeifer
DATE 10-19-73 ENGINEER, BUREAU OF BRIDGES

APPROVED [illegible]
DATE 10-23-73 ENGINEER, BUREAU OF ROADWAY DESIGN

APPROVED William E. Shell
DATE 10-25-73 ASSISTANT DEPUTY DIRECTOR FOR HIGHWAY DESIGN

APPROVED Julius J. Seeward
DATE 10-22-73 ASSISTANT DEPUTY DIRECTOR FOR REAL ESTATE

APPROVED William Bunkley
DATE 10-25-73 ASSISTANT DEPUTY DIRECTOR FOR PROGRAM DEVELOPMENT

APPROVED
DATE CHIEF ENGINEER, DIVISION OF HIGHWAYS

APPROVED William W. Hafer
DATE 10-25-73 DEPUTY DIRECTOR, DIVISION OF HIGHWAYS

APPROVED William P. McKenna
DATE 10-26-73 ASSISTANT DIRECTOR, DEPARTMENT OF TRANSPORTATION

APPROVED Phillip R. Bunkley
DATE 10/29/73 DIRECTOR, DEPARTMENT OF TRANSPORTATION

PREPARED BY
VOGT, IVERS & ASSOCIATES
ENGINEERS
CINCINNATI, OHIO

SUPPLEMENTAL PRINTS OF STANDARD CONSTRUCTION DRAWINGS

BP-1	6-1-65	BP-9	1-1-71	F-2	1-1-71	GR-2B	11-9-71	BR-1-67	10-15-71	MC-4	6-13-69
BP-2	12-1-68	CB-2-2A&B	6-1-65	F-3	3-10-69	GR-3	11-9-71			MC-5	6-1-65
BP-3	1-1-71	CB-2-3&2-4	6-1-65			GR-4	11-9-71			MC-7	10-1-68
BP-4	1-1-71	CB-3A	6-1-65	F-5	3-10-69	GR-5	1-1-71	HW-4	1-1-70	MC-8	12-1-67
BP-5	6-1-72	CB-4	9-1-69	F-6	10-1-66	GR-6	1-1-71	HW-D	6-1-65	MH-1	10-1-68
BP-6	6-1-65	CB-5	9-1-69			GR-2A	1-1-71	L-1	6-1-73	MH-1A	10-1-68
BP-7	1-1-66	CB-6	6-1-65			RB-1-55	2-2-59	MC-1	6-13-69		
						SD-1-69	6-12-69	MC-3	6-1-73	AS-1-72	6-30-72

SUPPLEMENTAL SPECS.	
808	1-1-71
815	9-20-72
816	9-20-72
1001	9-20-72
811	1-1-69
836	1-1-71
941	11-25-70

DEPARTMENT OF TRANSPORTATION
FEDERAL HIGHWAY ADMINISTRATION

APPROVED

DIVISION ENGINEER DATE

FILE NO	HAMILTON COUNTY	HAM-275-0.00
	DATE OF LETTING	19
	CONTRACT NO.	

FED. RD. DIVISION	STATE	PROJECT	
2	OHIO		

HAM. 275 - 0.00
HAMILTON COUNTY

2 / 305

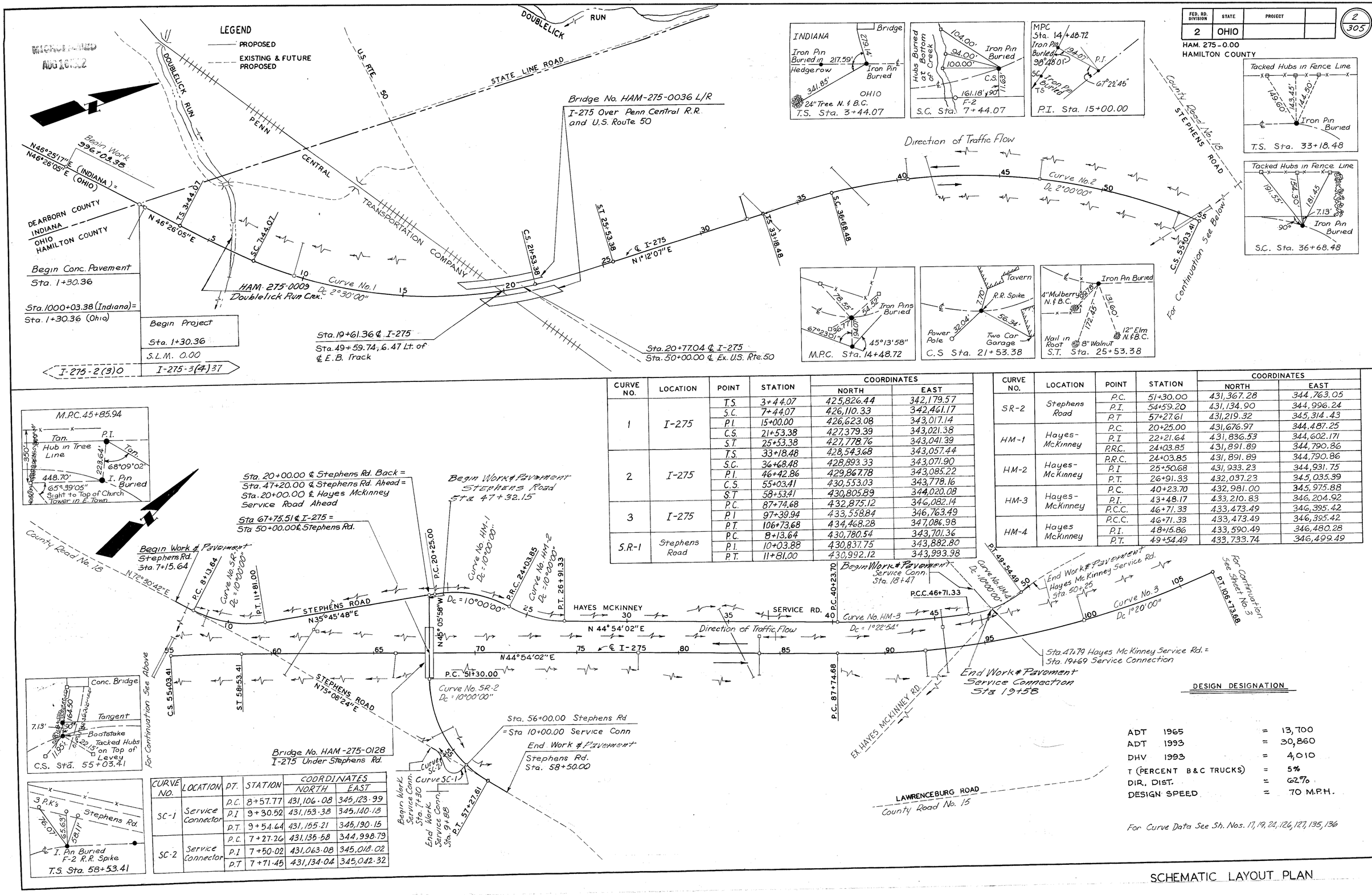

CURVE NO.	LOCATION	POINT	STATION	COORDINATES NORTH	COORDINATES EAST
1	I-275	T.S.	3+44.07	425,826.44	342,179.57
		S.C.	7+44.07	426,110.33	342,461.17
		P.I.	15+00.00	426,623.08	343,017.14
		C.S.	21+53.38	427,379.39	343,021.38
		S.T.	25+53.38	427,778.76	343,041.39
2	I-275	T.S.	33+18.48	428,543.68	343,057.44
		S.C.	36+68.48	428,893.33	343,071.90
		P.I.	46+42.86	429,867.78	343,085.22
		C.S.	55+03.41	430,553.03	343,778.16
		S.T.	58+53.41	430,805.89	344,020.08
3	I-275	P.C.	87+74.68	432,875.12	346,082.14
		P.I.	97+39.94	433,558.84	346,763.49
		P.T.	106+73.68	434,468.28	347,086.98
S.R-1	Stephens Road	P.C.	8+13.64	430,780.54	343,701.36
		P.I.	10+03.88	430,837.75	343,882.80
		P.T.	11+81.00	430,992.12	343,993.98

CURVE NO.	LOCATION	POINT	STATION	COORDINATES NORTH	COORDINATES EAST
SR-2	Stephens Road	P.C.	51+30.00	431,367.28	344,763.05
		P.I.	54+59.20	431,134.90	344,996.24
		P.T	57+27.61	431,219.32	345,314.43
HM-1	Hayes-McKinney	P.C.	20+25.00	431,676.97	344,487.25
		P.I	22+21.64	431,836.53	344,602.171
		P.R.C.	24+03.85	431,891.89	344,790.86
HM-2	Hayes-McKinney	P.R.C.	24+03.85	431,891.89	344,790.86
		P.I	25+50.68	431,933.23	344,931.75
		P.T.	26+91.33	432,037.23	345,035.39
HM-3	Hayes-McKinney	P.C.	40+23.70	432,981.00	345,975.88
		P.I.	43+48.17	433,210.83	346,204.92
		P.C.C.	46+71.33	433,473.49	346,395.42
HM-4	Hayes McKinney	P.C.C.	46+71.33	433,473.49	346,395.42
		P.I.	48+15.86	433,590.49	346,480.28
		P.T.	49+54.49	433,733.74	346,499.49

CURVE NO.	LOCATION	P.T.	STATION	COORDINATES NORTH	COORDINATES EAST
SC-1	Service Connector	P.C.	8+57.77	431,106.08	345,123.99
		P.I	9+30.52	431,153.38	345,140.18
		P.T.	9+54.64	431,155.21	345,190.15
SC-2	Service Connector	P.C.	7+27.26	431,135.58	344,998.79
		P.I	7+50.02	431,063.08	345,018.02
		P.T	7+71.45	431,134.04	345,042.32

DESIGN DESIGNATION

ADT 1965	=	13,700
ADT 1993	=	30,860
DHV 1993	=	4,010
T (PERCENT B&C TRUCKS)	=	5%
DIR. DIST.	=	62%
DESIGN SPEED	=	70 M.P.H.

For Curve Data See Sh. Nos. 17, 19, 24, 126, 127, 135, 136

SCHEMATIC LAYOUT PLAN

FED. RD. DIVISION	STATE	PROJECT	
2	OHIO		

HAM. 275-0.00

HAMILTON COUNTY

3/305

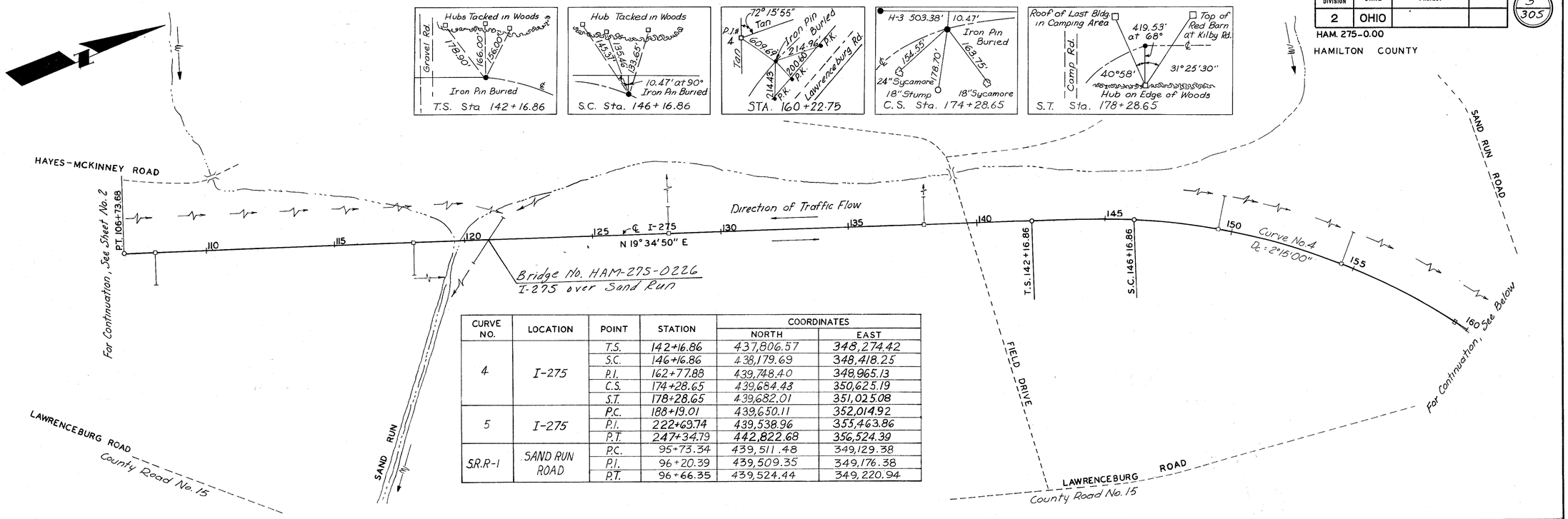

CURVE NO.	LOCATION	POINT	STATION	COORDINATES NORTH	COORDINATES EAST
4	I-275	T.S.	142+16.86	437,806.57	348,274.42
		S.C.	146+16.86	438,179.69	348,418.25
		P.I.	162+77.88	439,748.40	348,965.13
		C.S.	174+28.65	439,684.43	350,625.19
		S.T.	178+28.65	439,682.01	351,025.08
5	I-275	P.C.	188+19.01	439,650.11	352,014.92
		P.I.	222+69.74	439,538.96	355,463.86
		P.T.	247+34.79	442,822.68	356,524.39
S.R.R-1	SAND RUN ROAD	P.C.	95+73.34	439,511.48	349,129.38
		P.I.	96+20.39	439,509.35	349,176.38
		P.T.	96+66.35	439,524.44	349,220.94

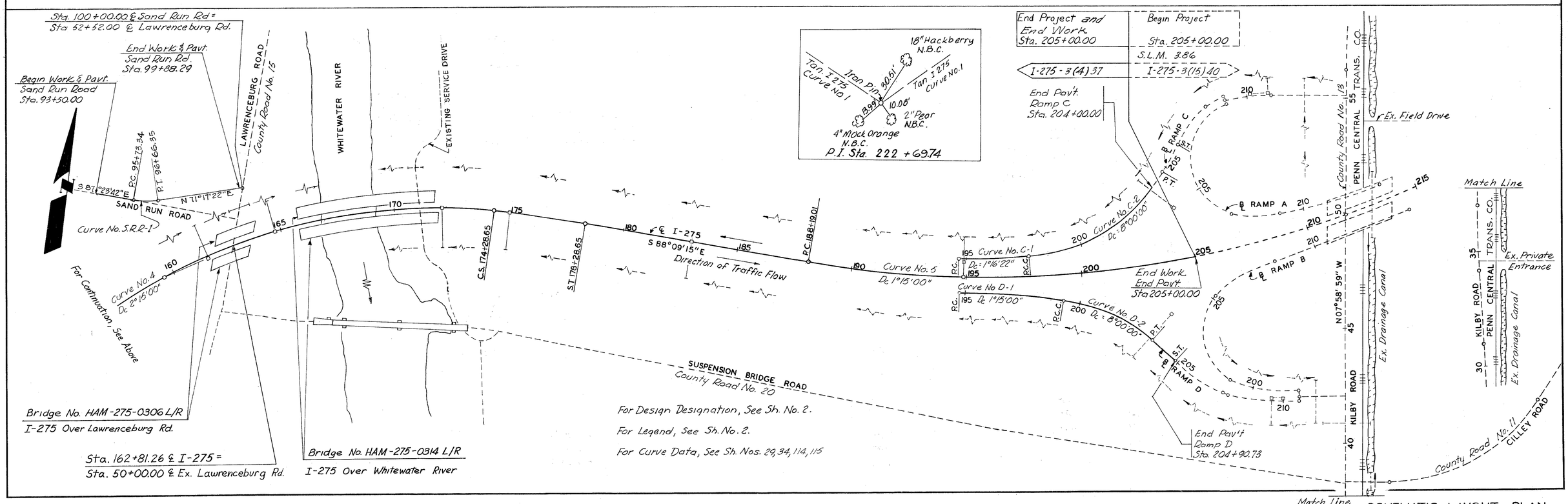

SCHEMATIC LAYOUT PLAN

FED. RD. DIVISION	STATE	PROJECT	
2	OHIO		

HAM-275-0.00
HAMILTON COUNTY

TYPICAL SECTIONS
TYPE 451

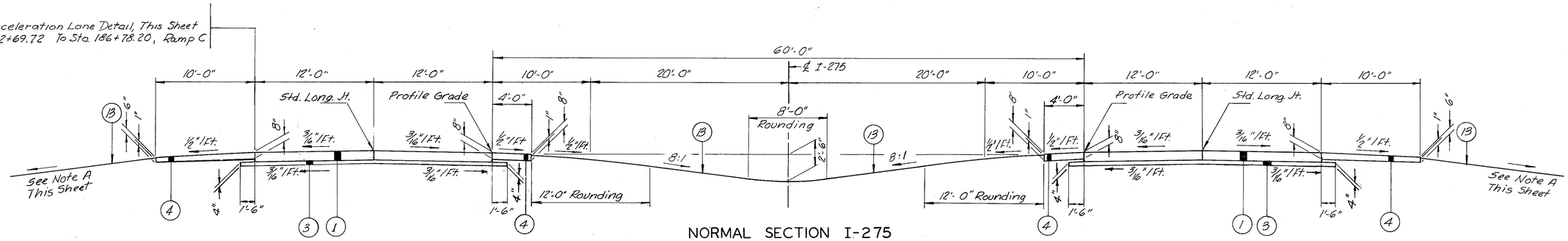

NORMAL SECTION I-275
Limiting Stations
Sta. 1+30.36 to Sta. 2+69.07
Sta. 26+28.38 to Sta. 32+43.48
Sta. 59+28.41 to Sta. 86+25.76
Sta 108+22.59 to Sta. 141+41.86
Sta. 179+03.65 to Sta. 186+78.20

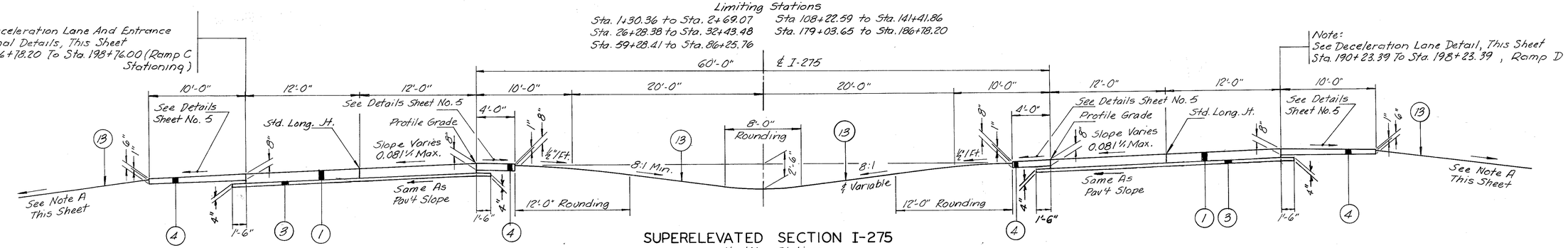

SUPERELEVATED SECTION I-275
Limiting Stations
Sta. 2+69.07 to Sta. 18+11.83
Deduct Sta. 18+11.83 to Sta. 22+40.67 (Bridge & Appr. Slabs)
Sta. 22+40.67 to Sta. 26+28.38
Sta. 32+43.48 to Sta. 59+28.41 (Opposite Hand)
Sta. 86+25.76 to Sta. 108+22.59
Sta. 141+41.86 to Sta. 161+76.33
Sta. 161+76.33 to Sta. 163+84.67 (Bridge & Appr. Slabs) Deduct
Sta. 163+84.67 to Sta. 165+75.66
Sta. 165+75.66 to Sta. 171+36.35 (Bridge & Appr. Slabs) Deduct
Sta. 172+01.38 to Sta. 179+03.65
Sta. 186+78.20 to Sta. 205+00.00

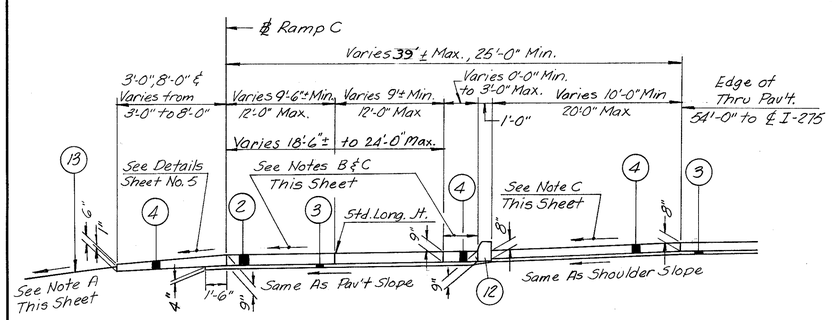

TYPICAL ENTRANCE TERMINAL I-275
Limiting Stations
Ramp C: Sta. 194+69.72 to Sta. 198+76.00 (Ramp C Stationing)

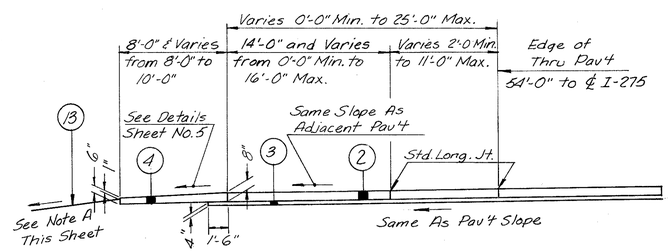

TYPICAL ACCELERATION LANE I-275
Limiting Stations
Ramp C: Sta. 182+69.72 to Sta. 194+69.72 (I-275 Stationing)

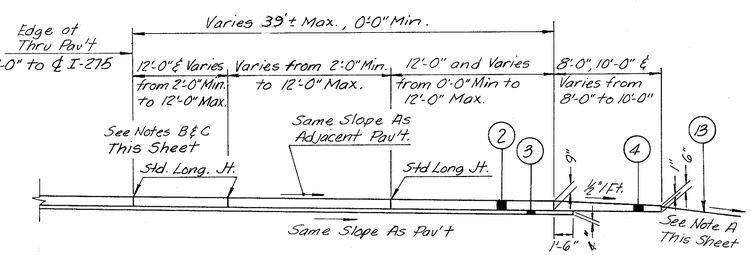

TYPICAL DECELERATION LANE I-275
Limiting Stations
Ramp D: Sta. 190+23.39 to 198+23.39 (I-275 Stationing)

ITEM LEGEND

(1)	Item 451	10" Reinforced Portland Cement Concrete Pavement
(2)	Item 451	9" Reinforced Portland Cement Concrete Pavement
(3)	Item 301	4" Bituminous Aggregate Base, 702.01 (85-100 or AC-20) or 702.09, RT-11 or RT-12
(4)	Item 301	Bituminous Aggregate Base, 702.01 (85-100 or AC 20) or 702.09, RT-11 or RT-12, Thickness as per typical section
(5)	Item 301	3" Bituminous Aggregate Base, 702.01 (85-100 or AC20) or 702.09 RT-11 or RT-12.
(6)	Item 404	2" Asphalt Concrete (70-85 or AC20)
(7)	Item 609	Standard Type 3, Combination Curb & Gutter
(8)	Item 408	Bituminous Prime Coat, 702.09, RT-2 or RT-3 Applied at the rate of 0.40 gallon per square yard
(9)	Item 304	Aggregate Base, Thickness as per typical section
(10)	Item 310	Subbase, Grading 'A' as per plan.
(11)	Item 606	Guard Rail, Type 5
(12)	Item 609	Curb, Type 8
(13)	Item 659	Seeding and Mulching (See general note)
(14)	Item 411	8" Stabilized Crushed Aggregate

NOTES

A. The slope rate appearing throughout these typical sections shall be considered to read: Slope rates shall be as shown on Sideslope Treatment Details Sheet Nos. 5 & 6 or otherwise shown on cross sections.
B. For pavement edge elevations, see Superelevation Tables or Pavement Detail sheets.
C. For pavement and shoulder slopes and variation in widths, see Pavement Detail sheets and plan sheets.

FED. RD. DIVISION	STATE	PROJECT	
2	OHIO		

5
305

HAM-275-0.00
HAMILTON COUNTY

TYPICAL SECTIONS

TYPE 451

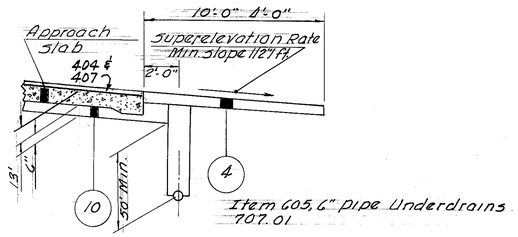

APPROACH SLAB UNDERDRAIN

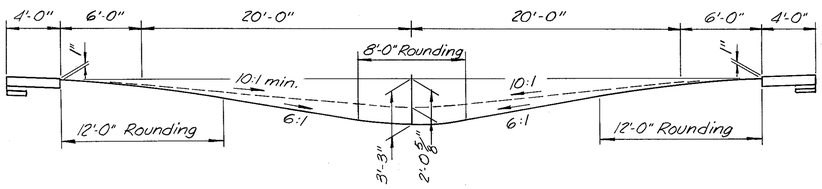

DETAIL OF MEDIAL DITCH WARPING

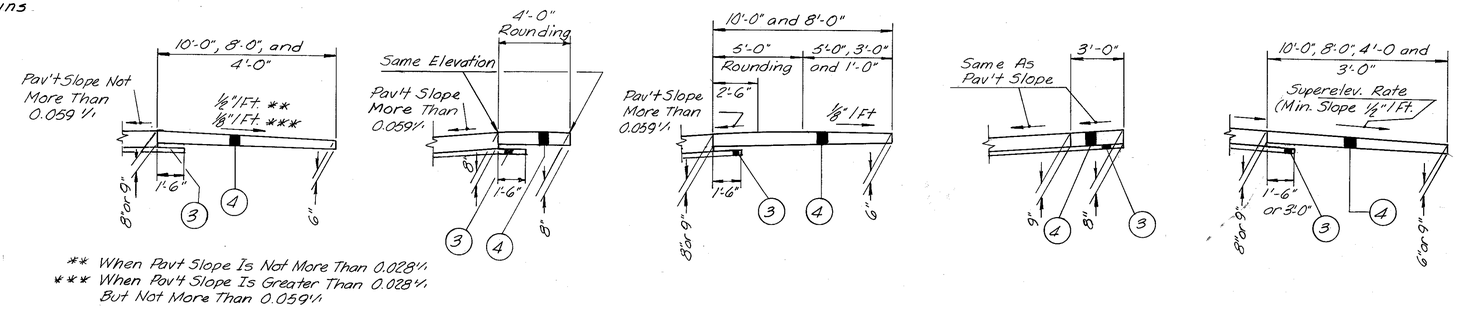

** When Pavt Slope Is Not More Than 0.028 1/1
*** When Pav't Slope Is Greater Than 0.028 1/1 But Not More Than 0.059 1/1

SHOULDER CONDITIONS IN SUPERELEVATED SECTIONS
I-275 AND RAMPS

SIDE SLOPE TREATMENT I-275

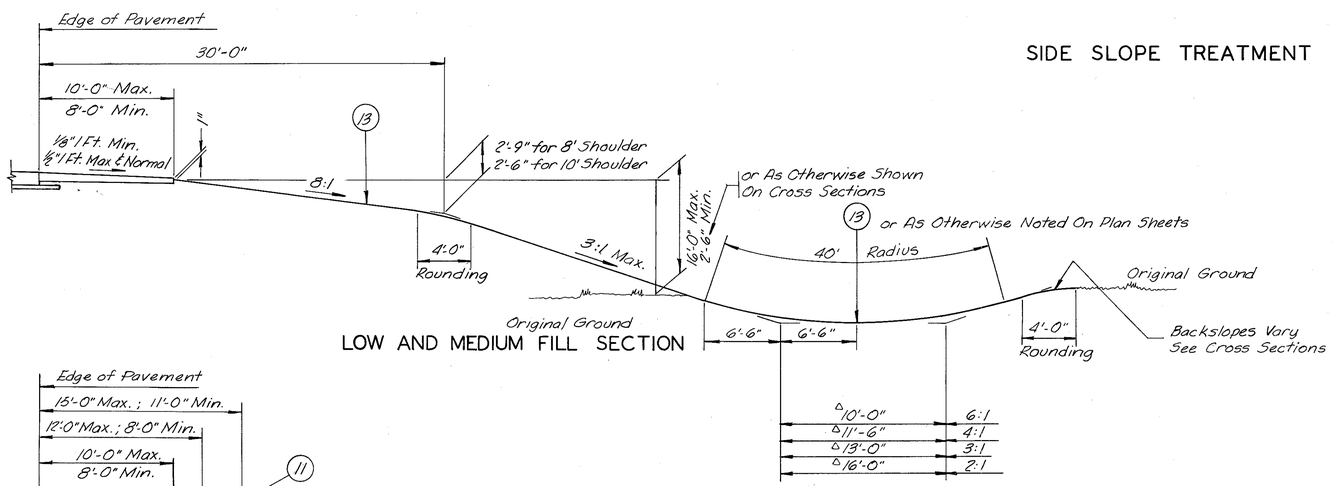

LOW AND MEDIUM FILL SECTION

Note:
△ Bottom Width Of Ditch Before Rounding.

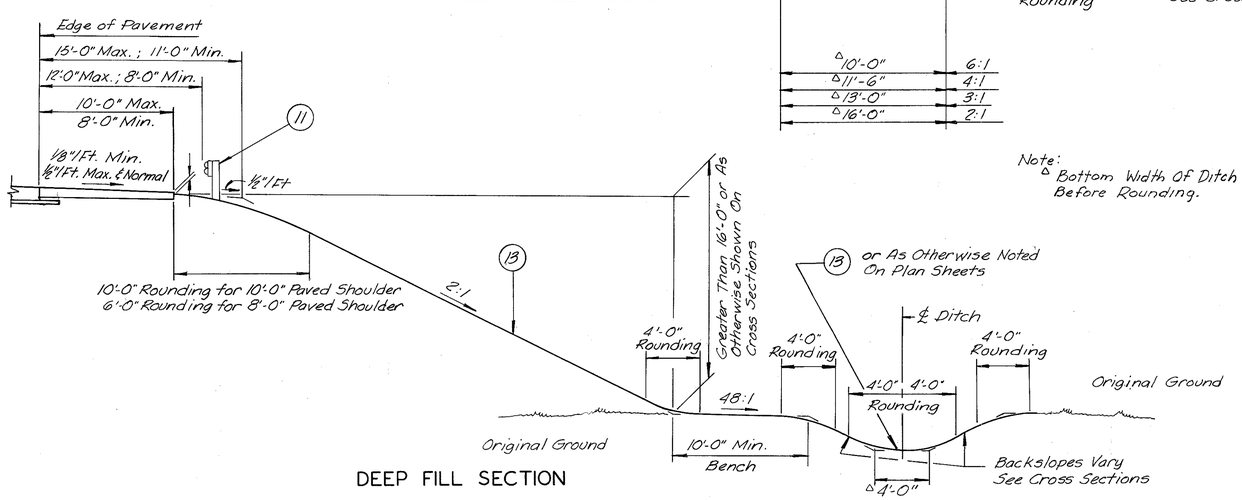

DEEP FILL SECTION

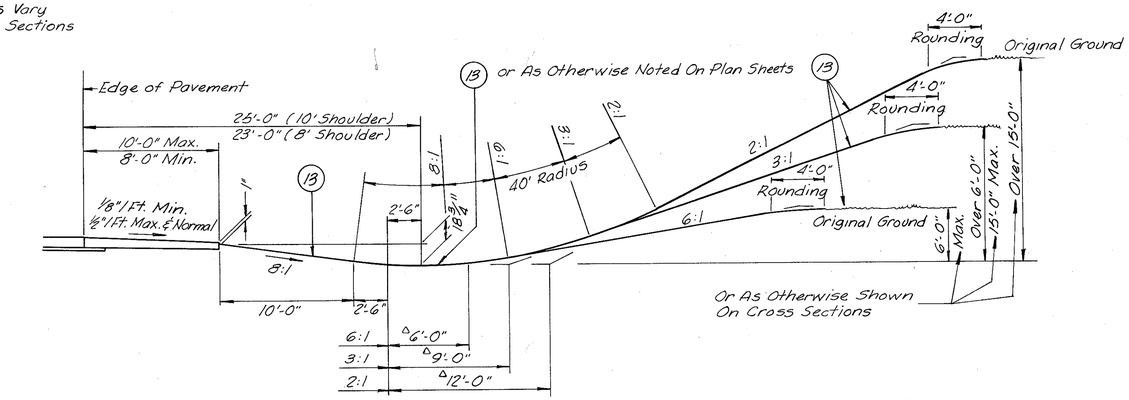

CUT SECTION

Note:
For Item Legend See Sh. No. 4

FED. RD. DIVISION	STATE	PROJECT	
2	OHIO		

6
305

HAM-275-0.00
HAMILTON COUNTY

TYPICAL SECTIONS

TYPE 451 (REINFORCED PORTLAND CEMENT CONCRETE PAVEMENT)

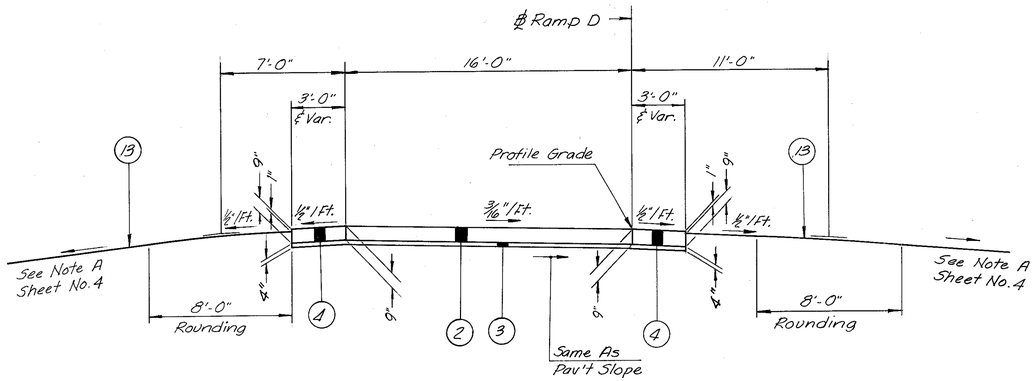

NORMAL RAMP SECTION
Limiting Stations
Ramp D: Sta. 204+41.40 to Sta. 204+90.73

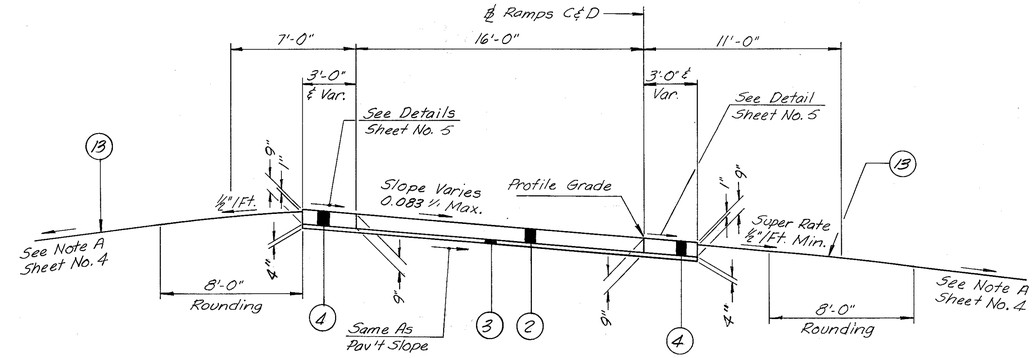

SUPERELEVATED RAMP SECTION
Limiting Stations
Ramp C: Sta. 198+76.00 to Sta. 204+00.00
Ramp D: Sta. 198+28.01 to Sta. 204+41.40

SIDE SLOPE TREATMENT RAMPS

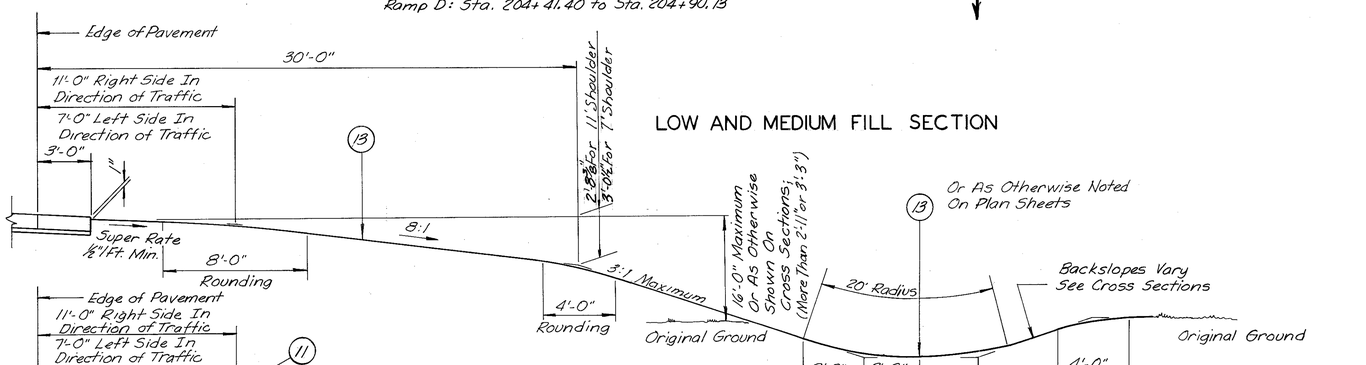

LOW AND MEDIUM FILL SECTION

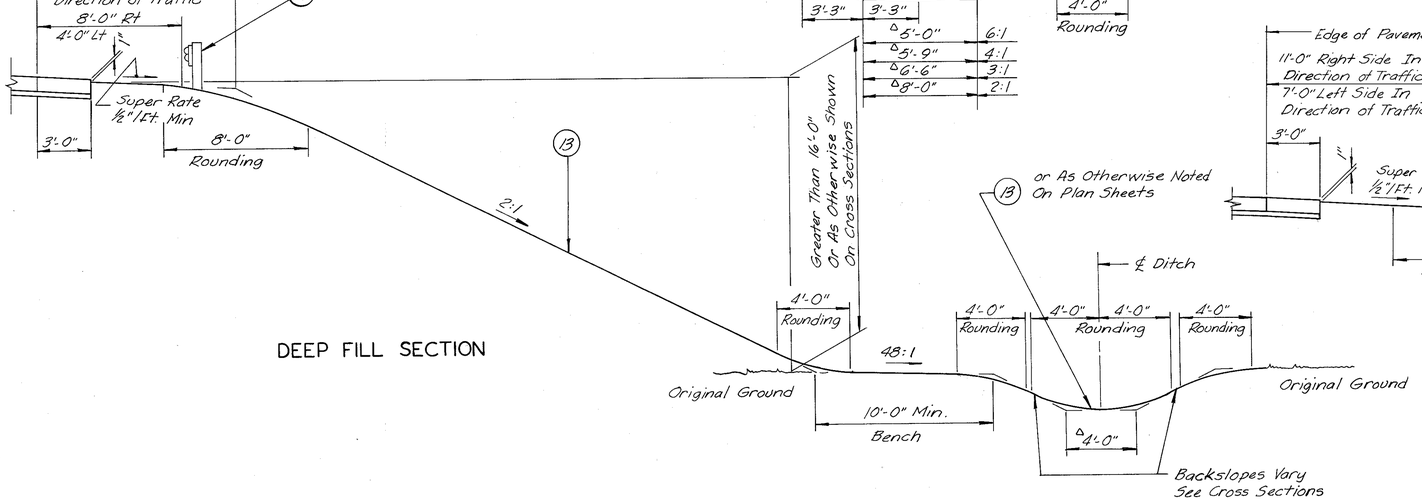

DEEP FILL SECTION

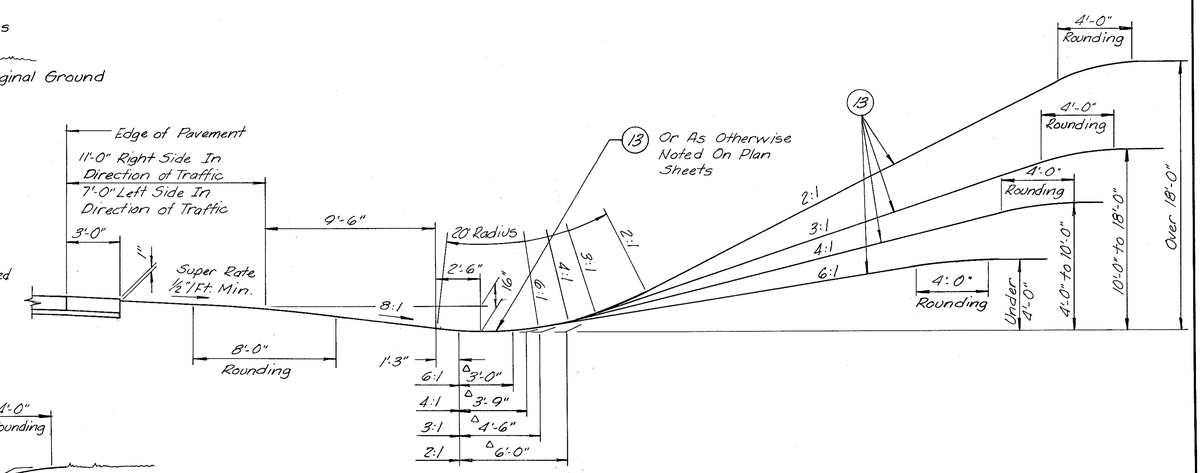

CUT SECTION

Note:
△ Bottom Width Of Ditch Before Rounding.

Note:
For Item Legend See Sh. No. 4

RAMP TYPICAL SECTIONS

FED. RD. DIVISION	STATE	PROJECT	
2	OHIO		

7
305

HAM-275-0.00
HAMILTON COUNTY

TYPICAL SECTIONS

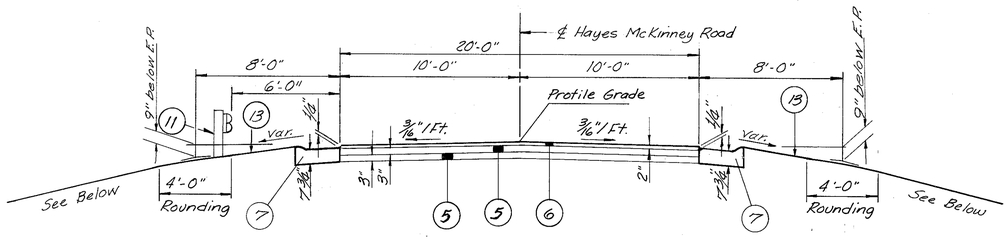

NORMAL SECTION HAYES MCKINNEY SERVICE ROAD

Limiting Stations
Sta. 27+90.33 to Sta. 45+72.33

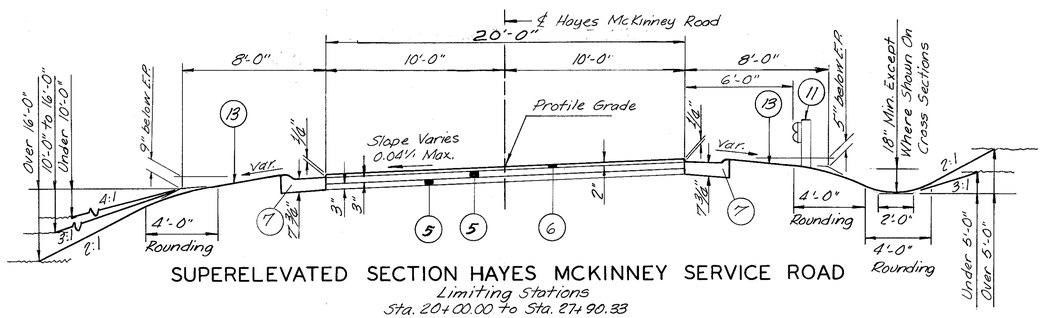

SUPERELEVATED SECTION HAYES MCKINNEY SERVICE ROAD

Limiting Stations
Sta. 20+00.00 to Sta. 27+90.33
Sta. 45+72.33 to Sta. 50+25.00
Sta 20+41.39 to Sta 20+91.39 width varies 24' to 20'
Sta 49+54.49 to Sta 50+25.00 width varies 20' to 12'

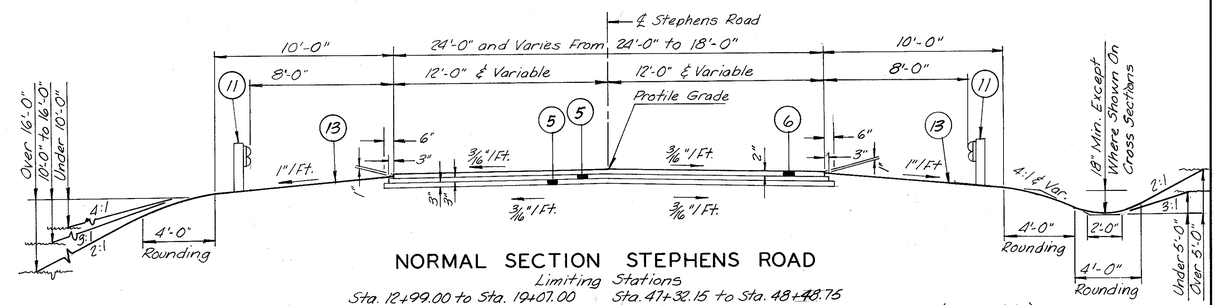

NORMAL SECTION STEPHENS ROAD

Limiting Stations
Sta. 12+99.00 to Sta. 19+07.00 Sta. 47+32.15 to Sta. 48+48.75
Sta. 20+00.00 Bk = Sta. 47+20.00 Ah Sta 48+48.75 to Sta. 51+46.20 (Structures & Appr Slabs)
Sta. 58+37.61 to Sta. 58+50.00

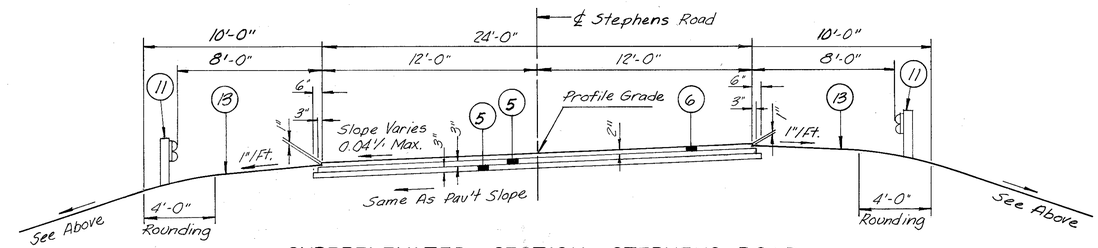

SUPERELEVATED SECTION STEPHENS ROAD

Limiting Stations
Sta. 7+15.64 to Sta. 12+99.00 Sta. 20+00.00 Bk = Sta. 47+20.00 Ah.
Sta. 19+07.00 to Sta. 20+00.00 Sta. 51+21.50 to Sta. 51+46.50 (Appr. Slab)
Sta. 51+46.50 to Sta. 58+37.61
Sta 57+27.61 to Sta 58+37.61 width varies 24' to 22'

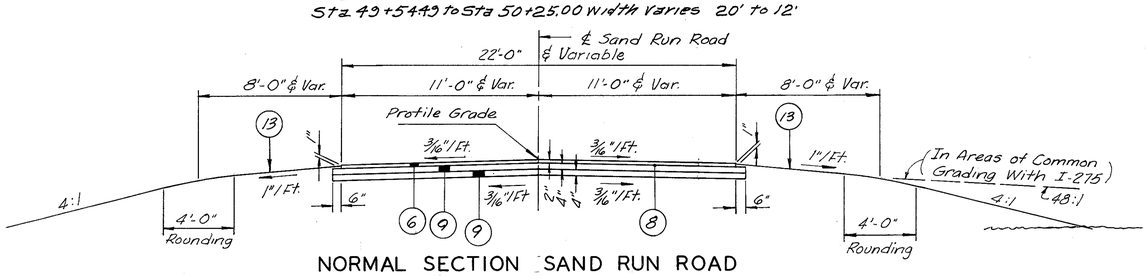

NORMAL SECTION SAND RUN ROAD

Limiting Stations
Sta. 93+50.00 to Sta. 94+85.84
Sta. 97+53.85 to Sta. 99+88.29

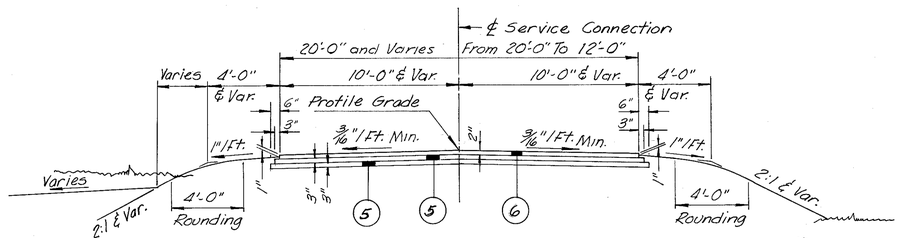

NORMAL SECTION STEPHENS RD. SERVICE CONNECTION*

Limiting Stations
Sta. 7+30.00 to Sta. 9+88.00

*Typical Also Applies To Hayes McKinney Service Rd. Connection.
Limiting Stations
Sta. 18+47 to Sta. 19+58

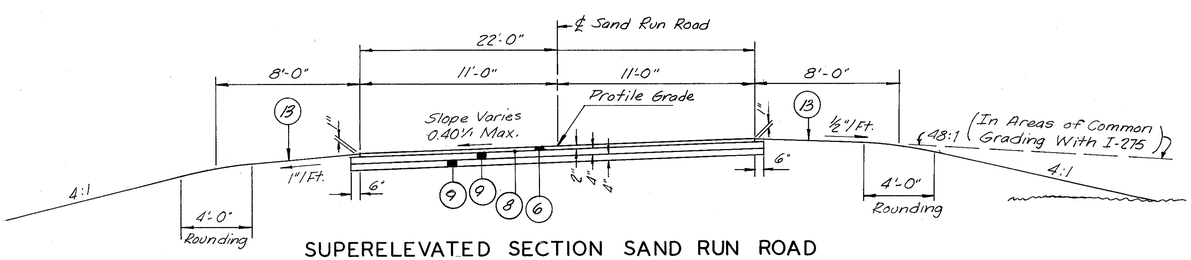

SUPERELEVATED SECTION SAND RUN ROAD

Limiting Stations
Sta. 94+85.84 to Sta. 97+53.85

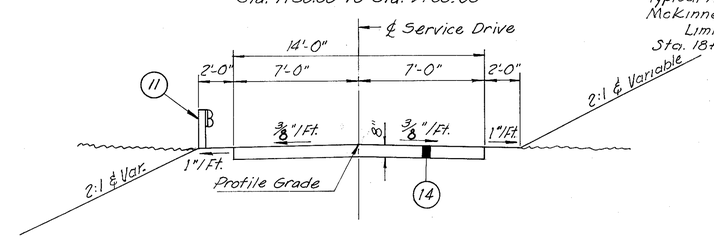

NORMAL SECTION SERVICE DRIVE

Limiting Stations
Sta. 5+95.00 to Sta. 14+17.00

Note:
For Item Legend See Sh. No. 4

SIDE ROAD TYPICAL SECTIONS

FED. RD. DIVISION	STATE	PROJECT	
2	OHIO		

8
305

HAM-275-0.00
HAMILTON COUNTY

SUPERELEVATION TABLES

CURVE NO. 1

D 2° 30' 00" — S.E. 0.081 ft/ft

STATION	PROFILE GRADE	WESTBOUND LANE ℄	WESTBOUND LANE OUTER EDGE	EASTBOUND LANE ℄	EASTBOUND LANE OUTER EDGE
2+69.07	505.41	506.60	505.41	505.60	505.41
+75	505.43	505.60	505.41	505.62	505.43
3+00	505.51	505.62	505.43	505.70	505.59
+25	505.59	505.64	505.45	505.78	505.73
T.S. +44.07	505.65	505.65	505.46	505.84	505.84
+50	505.67	505.64	505.46	505.86	505.88
+75	505.75	505.61	505.43	505.94	506.07
3+86.77	505.79	505.60	505.41	505.98	506.17
4+00	505.83	505.61	505.40	506.05	506.26
+25	505.91	505.64	505.37	506.18	506.45
+50	505.99	505.66	505.34	506.32	506.64
+75	506.07	505.69	505.31	506.45	506.83
5+00	506.15	505.71	505.28	506.59	507.02
+25	506.23	505.74	505.25	506.72	507.21
+50	506.36	505.75	505.21	506.85	507.40
+75	506.39	505.79	505.19	506.99	507.59
6+00	506.56	505.84	505.19	507.16	507.81
+25	506.64	505.93	505.22	507.35	508.06
+50	506.80	506.04	505.27	507.56	508.33
+75	506.98	506.16	505.34	507.80	508.62
7+00	507.18	506.30	505.43	508.06	508.93
+25	507.40	506.47	505.54	508.33	509.28
S.C. +44.07	507.60	506.63	505.66	508.57	509.54
FROM STA. 7+44.07 TO STA. 21+58.38					
CONSTANT		-0.97	-1.94	+0.97	+1.94
21+58.38	525.54	524.57	523.60	526.51	527.48
+75	525.48	524.56	523.63	526.40	527.33
22+00	525.41	524.54	523.67	526.28	527.15
+25	525.31	524.49	523.68	526.13	526.94
+50	525.19	524.48	523.67	525.95	526.71
+75	525.04	524.34	523.63	525.74	526.45
23+00	524.87	524.22	523.57	525.52	526.17
+25	524.68	524.08	523.49	525.28	525.87
+50	524.48	523.94	523.40	525.02	525.56
+75	524.24	523.76	523.27	524.72	525.21
24+00	524.01	523.58	523.15	524.44	524.87
+25	523.74	523.36	522.99	524.12	524.49
+50	523.46	523.14	522.82	523.78	524.10
+75	523.16	522.89	522.63	523.43	523.69
25+00	522.86	522.65	522.44	523.07	523.28
+10.68	522.73	522.54	522.35	522.92	522.11
+25	522.56	522.44	522.25	522.75	522.07
+50	522.26	522.24	522.06	522.45	522.46
S.T. +53.38	522.22	522.22	522.03	522.41	522.41
+75	521.97	522.02	521.84	522.16	522.10
26+00	521.67	521.79	521.60	521.86	521.74
+25	521.37	521.55	521.36	521.56	521.98
+28.38	521.33	521.52	521.33	521.52	521.33

CURVE NO. 2

D 2° 0' 00" — S.E. 0.064 ft/ft

STATION	PROFILE GRADE	WESTBOUND LANE ℄	WESTBOUND LANE OUTER EDGE	EASTBOUND LANE ℄	EASTBOUND LANE OUTER EDGE
32+43.48	514.01	514.20	514.01	514.20	514.01
+50	513.94	514.13	513.96	514.11	513.92
+75	513.64	512.83	513.72	513.75	513.56
33+00	513.34	513.53	513.43	513.39	513.20
+18.48	513.12	513.31	513.31	513.12	512.93
+25	513.04	513.23	513.25	513.02	512.93
+50	512.74	512.93	513.05	512.67	512.43
+67.14	512.54	512.73	542.92	512.35	542.16
+75	512.45	512.65	512.85	512.25	512.05
34+00	512.15	512.40	512.65	511.90	511.65
+25	511.85	512.15	512.45	511.55	511.25
+50	511.56	511.91	512.25	511.21	510.87
+75	511.26	511.66	512.05	510.86	510.47
35+00	510.96	511.40	511.85	510.52	510.07
+25	510.66	511.15	511.65	510.17	509.68
+50	510.36	510.90	511.44	509.84	509.28
+75	510.07	510.66	511.25	509.49	508.89
36+00	509.77	510.41	511.04	509.13	508.50
+25	509.47	510.15	510.84	508.79	508.10
+50	509.18	509.91	510.64	508.35	507.72
S.C. +68.48	508.96	509.73	510.50	508.19	507.42

CURVE NO. 2

D 2° 00' 00" — S.E. 0.064 ft/ft

STATION	PROFILE GRADE	WESTBOUND LANE ℄	WESTBOUND LANE OUTER EDGE	EASTBOUND LANE ℄	EASTBOUND LANE OUTER EDGE
FROM STA. 36+68.48 TO STA. 55+03.41					
CONSTANT		+0.77	+1.54	-0.77	-1.54
T.S. 55+03.41	512.12	512.89	513.66	511.35	510.58
+25	512.22	512.95	513.67	511.49	510.77
+50	512.32	513.00	513.68	511.64	510.96
+75	512.42	513.05	513.69	511.79	511.16
56+00	512.53	513.11	513.69	511.93	511.37
+25	512.64	513.17	513.71	512.11	511.57
+50	512.74	513.23	513.71	512.25	511.77
+75	512.84	513.28	513.72	512.40	511.96
57+00	512.95	513.34	513.73	512.56	512.17
+25	513.06	513.40	513.74	512.72	512.38
+50	513.16	513.45	513.75	512.87	512.57
+75	513.26	513.50	513.75	513.02	512.77
58+00	513.37	513.57	513.76	513.17	512.98
+04.74	513.39	513.58	513.77	513.20	513.01
+25	513.48	513.67	513.78	513.37	513.18
+50	513.58	513.77	513.78	513.57	513.38
+53.41	513.59	513.79	513.78	513.59	513.40
+75	513.68	513.87	513.81	513.73	513.55
59+00	513.79	513.98	513.86	513.91	513.72
+25	513.90	513.99	513.91	514.08	513.89
+28.41	513.91	514.10	513.91	514.10	513.91

CURVE NO. 3

D 1° 20' 00" — S.E. 0.043 ft/ft

STATION	PROFILE GRADE	WESTBOUND LANE ℄	WESTBOUND LANE OUTER EDGE	EASTBOUND LANE ℄	EASTBOUND LANE OUTER EDGE
86+25.76	506.20	506.39	506.20	506.39	506.20
+50		506.33	506.14		506.26
+75		506.26	506.08		506.32
87+00		506.20	506.01		506.39
+00.76		506.20	506.01		506.39
+25		506.09	505.90		506.50
+42.95		506.01	505.82	506.39	506.58
+50		505.00	505.79	506.40	506.61
+74.68		505.94	505.68	506.46	506.72
+75		505.94	505.68	506.46	506.72
88+00		505.89	505.57	506.51	506.83
+25		505.83	505.46	506.57	506.94
+50		505.78	505.35	506.62	507.05
+75		505.72	505.24	506.68	507.16
+90.78	506.20	505.68	505.17	506.72	507.23
FROM STA. 88+90.78 TO STA. 105+57.58					
CONSTANT		-0.52	-1.03	+0.52	+1.03
105+57.58	506.20	505.68	505.17	506.72	507.23
+75		505.72	505.24	506.68	507.16
106+00		505.78	505.36	506.62	507.04
+25		505.83	505.47	506.57	506.93
+50		505.89	505.58	506.51	506.82
+73.68		505.94	505.68	506.46	506.72
+75		505.94	505.69	506.46	506.71
107+00		506.00	505.80	506.40	506.60
+05.40		506.11	505.82	506.39	506.58
+25		506.10	505.91		506.49
+47.59		506.20	506.01		506.39
+50		506.20	506.02		506.38
+75		506.27	506.08		506.32
108+00		506.33	506.14		506.26
+22.59	506.20	506.39	506.20	506.39	506.20

CURVE NO. 4

D 2° 15' 00" — S.E. 0.073 ft/ft

STATION	PROFILE GRADE	WESTBOUND LANE ℄	WESTBOUND LANE OUTER EDGE	EASTBOUND LANE ℄	EASTBOUND LANE OUTER EDGE
141+41.86	506.41	506.60	506.41	506.60	506.41
+50	506.42	506.61	506.44	506.59	506.40
+75	506.46	506.65	506.54	506.56	506.38
142+00	506.52	506.71	506.66	506.06	506.38
+16.86	506.55	506.74	506.74	506.55	506.36
+25	506.57	506.76	506.79	506.54	506.35
+50	506.63	506.82	506.95	506.50	506.31
+64.80	506.66	506.85	504.04	501.47	506.28
+75	506.69	506.90	507.11	506.43	506.27
143+00	506.76	507.02	507.27	506.00	506.25
+25	506.83	507.13	507.44	506.53	506.22

CURVE NO. 4

D 2° 15' 00" — S.E. 0.073 ft/ft

STATION	PROFILE GRADE	WESTBOUND LANE ℄	WESTBOUND LANE OUTER EDGE	EASTBOUND LANE ℄	EASTBOUND LANE OUTER EDGE
143+50	506.90	507.25	507.61	506.55	506.19
+75	506.97	507.37	507.71	506.57	506.16
144+00	507.04	507.49	507.94	506.59	506.14
+25	507.11	507.61	508.11	506.61	506.11
+50	507.17	507.72	508.26	506.62	506.07
+75	507.23	507.83	508.43	506.63	506.03
145+00	507.28	507.93	508.58	506.64	505.98
+25	507.34	508.04	508.73	506.64	505.95
+50	507.38	508.12	508.87	506.64	505.89
+75	507.42	508.21	509.01	506.63	505.83
146+00	507.46	508.30	509.14	506.62	505.77
S.C. +16.86	507.48	508.36	509.23	506.60	505.73
FROM STA. 146+16.86 TO STA. 174+28.65					
CONSTANT		+0.88	+1.75	-0.88	-1.75
174+28.65	507.60	508.48	509.35	506.72	505.85
+50		508.43	509.27	506.77	505.93
+75		508.38	509.17	506.81	506.03
175+00		508.34	509.07	506.86	506.13
+25		508.29	508.98	506.91	506.22
+50		508.24	508.88	506.96	506.32
+75		508.19	508.78	507.01	506.42
176+00		508.14	508.68	507.06	506.52
+25		508.09	508.58	507.11	506.62
+50		508.04	508.49	507.16	506.71
+75		507.99	508.39	507.21	506.81
177+00		507.94	508.29	507.26	506.91
+25		507.90	508.19	507.30	507.01
+50		507.85	508.10	507.35	507.10
+75		507.80	508.00	507.40	507.20
+80.71		507.79	507.98	507.41	507.22
178+00			507.90	507.49	507.30
+25			507.80	507.59	507.40
+28.65			507.79	507.60	507.41
+50			507.73	507.65	507.47
+75			507.67	507.72	507.53
179+00			507.61	507.78	507.59
+08.65	507.60	507.79	507.60	507.79	507.60

CURVE NO. 5

D 1° 15' 00" — S.E. 0.040 ft/ft

STATION	PROFILE GRADE	WESTBOUND LANE ℄	WESTBOUND LANE OUTER EDGE	EASTBOUND LANE ℄	EASTBOUND LANE OUTER EDGE
186+78.20	508.19	508.38	508.19	508.38	508.19
187+00	508.29	508.42	508.24	508.48	508.34
+25	508.40	508.47	508.28	508.59	508.52
+50	508.54	508.55	508.36	508.73	508.72
+58.20	508.55	508.55	508.36	508.74	508.74
+75	508.67	508.57	508.40	508.86	508.95
+95.38	508.79	508.66	508.41	508.98	509.17
188+00	508.82	508.62	508.42	509.02	509.22
+19.01	508.94	508.70	508.46	509.18	509.42
+25	508.97	508.72	508.46	509.22	509.48
+50	509.12	508.81	508.50	509.43	509.74
+75	509.27	508.91	508.54	509.63	510.00
189+00	509.43	509.01	508.59	509.85	510.27
+25	509.58	509.10	508.63	510.06	510.53
+27.10	509.59	509.11	508.63	510.07	510.55
FROM STA. 189+27.10 TO STA. 246+26.79					
CONSTANT		-0.48	-0.96	+0.48	+0.96

GENERAL NOTES

DEVELOPED		CHECKED	
10-71	J.M.	12-71	R.D.

FED. RD. DIVISION	STATE	PROJECT	
2	OHIO		

9
305

HAM-275-0.00
HAMILTON COUNTY

MAINTAINING TRAFFIC

Minimum provisions for the maintenance of traffic on roads affected by this improvement shall be as follows:

1. U. S. Route 50

   Two lanes of traffic, in each direction, shall be maintained at all times on existing U. S. Route 50 except that if it becomes necessary during the Contractor's normal working operations, a minimum of one lane of traffic, in each direction, can then be maintained on existing U. S. Route 50 for limited periods of time as approved by the Engineer.

2. Stephens Road

   One lane of traffic, in each direction, shall be maintained at all times on existing Stephens Road until the proposed Stephens Road bridge and relocated approach pavements, including the service connection, have been completed and are ready to sustain traffic. During the construction of the easterly and westerly connections of relocated Stephens Road to existing Stephens Road two lane traffic (one lane in each direction) shall be maintained at all times, except during the Contractor's normal working operations, at which time one lane of two way traffic shall be maintained by use of either the existing pavement, the proposed pavement, temp. road or the existing or proposed shoulders surfaced with Item 410 Aggregate and stabilized with Item 616, Calcium Chloride.

   Upon completion of the foregoing and when approved by the Engineer all Stephens Road traffic shall be transferred to the new construction.

3. Hayes McKinney Road

   One lane of traffic, in each direction, shall be maintained at all times on existing Hayes McKinney Road, except during the Contractor's normal working operations, at which time one lane of two way traffic shall be maintained (until the proposed Hayes McKinney Service Road, including the service connection, and relocated Stephens Road have been constructed and opened to traffic) by use of the existing pavement, the proposed pavement, and the existing or proposed shoulders surfaced with Item 410 Aggregate and stabilized with Item 616, Calcium Chloride.

4. Sand Run Road

   One lane of traffic, in each direction, shall be maintained at all times on existing Sand Run Road, except during the Contractor's normal working operations, at which time one lane of two way traffic shall be maintained (until the relocated Sand Run Road has been constructed and opened to traffic) by use of the existing pavement, the proposed pavement and the existing or proposed shoulders surfaced with Item 410 Aggregate and stablized with Item 616, Calcium Chloride.

5. Lawrenceburg Road

   One lane of traffic, in each direction, shall be maintained at all times on existing Lawrenceburg Road, except during the Contractor's normal working operations, at which time one lane of two way traffic shall be maintained by use of the existing pavement and existing shoulders surfaced with Item 410 Aggregate and stabilized with Item 616, Calcium Chloride.

   During the erection of structural steel over U. S. Route 50 and Lawrenceburg Road the Contractor will be permitted to temporarily close both lanes of traffic for the period of time necessary to place one (1) beam in the initial position on the piers. The traffic shall then be cleared before placing the next beam. This **procedure shall be adhered to in the placing of all structural steel, the maximum duration of temporary closing of both lanes shall be held to fifteen (15) minutes at any one time.**

   The installation of the 36 inch culvert at Lawrenceburg Road Station 51+64 shall be staged so as to maintain at least one single lane of traffic, for alternate two way traffic movements on Lawrenceburg Road during the Contractor's normal working operations, by use of the existing pavement and/or existing shoulders surfaced with Item 410 Aggregate and stabilized with Item 616, Calcium Chloride.

The traffic, in all cases, shall be channelized in accordance with "Ohio Manual of Uniform Traffic Control Devices for Streets and Highways", current edition, latest revisions.

If the Contractor so elects, he may submit alternate methods for the maintenance of traffic provided the intent of the above provisions is followed and no additional inconvenience to the traveling public results therefrom. No alternate plan shall be placed into effect until approval has been granted, in writing, by the Director.

It is not intended that temporary roadways be used exclusively for maintaining traffic on this project but that maximum usage be made of existing and proposed pavements.

The limits and duration of use of temporary roadways shall be held to an absolute minimum, and in all cases shall be subject to the approval of the Engineer.

Payment for all of the foregoing, except Items 410 and 616, is included in the lump sum price bid for Item 614, Maintaining Traffic.

ESTIMATED QUANTITIES

Specific locations and usage of estimated quantities set up on this plan to be used "as directed by the Engineer" shall be made a matter of record by incorporation into the final change order governing completion of this project. Estimated quantities of materials shall not be ordered for delivery to the project unless authorized by the Engineer.

Item 410	Traffic Compacted Surface Type A or B	1,250 cu. yd.
Item 616	Calcium Chloride	25 tons
Item 616	Water	100 M. Gal.

ROADWAY

FIELD OFFICE

The Contractor shall provide a suitable field office having a minimum of 800 sq. ft. of floor space and in addition to the requirements of Item 619, he shall provide and maintain sanitary provisions as per 107.06. All the above is included in the lump sum price bid for Item 619, Field Office.

ROUNDING OF CORNERS SHOWN ON CROSS SECTIONS

The rounded corners shown on the typical sections, apply to all cross sections even though otherwise shown on these plans.

UNDERGOUND UTILITIES

The locations of the underground utilities shown on the plans have been obtained by diligent field checks and searches of available records. It is believed that they are essentially correct, but the State of Ohio does not guarantee their accuracy or completeness.

PAVEMENT DESIGN

Subsequent to completion of these plans the pavement design was changed from an 8" Continuously Reinforced Concrete Pavement to a 10" Reinforced Portland Cement Concrete Pavement and the 301 Bituminous Aggregate Base under all areas of 10" and 9" 451 changed from 3" thickness to 4".
No changes were made to the cross sections, however the following estimated earthwork quantity adjustments are carried to the General Summary on Sheet 12:

203	Excavation	+ 1350 Cu. Yds.
203	Embankment	- 8400 Cu. Yds.

SEQUENCE OF OPERATIONS AND COOPERATION

In order that the Contractor for Project HAM-275-3.86 can install lighting from Station 186+00± to Station 205+00± on this project, the Contractor for this project is hereby advised to give first priority to placing the fill for the mainline and ramps from Station 185+00 to Station 205+00 and to schedule his paving operations in this area only after the electrical conduit is placed across the mainline and ramps and properly backfilled.

The Contractor for this project is further advised that the Contractor for Project HAM-275-3.86 will be working within the area from Station 171+00± to Station 205+00±. Conduct of the work shall be in accordance with 105.07.

MONUMENTS

Monuments shall be constructed in accordance with details shown on Standard Drawing MC-1. For locations, see Sheet No. 283

Item 604, Monument Assemblies	14 Each
Item 604, Centerline Reference Monuments	40 Each

UTILITY OWNERS

The utility owners involved in this project are as follows:

Cincinnati Gas and Electric Company
Cincinnati Bell, Inc.
Hamilton County Water Works

ITEM 203 - PAVEMENT REMOVAL OUTSIDE NORMAL CONSTRUCTION LIMITS

The existing pavement as indicated on the plans shall be removed and disposed of, the old roadway graded to the level of the surrounding ground, the old ditches filled, and the disturbed areas sloped to drain and left in a neat condition ready for seeding. Seeding shall be measured and paid for in accordance with Item 659.

Payment for the above, except seeding, shall be included in the unit price bid for Item 203, "Excavation not Including Embankment Construction, as Per Plan."

ITEM 203 - PROOF ROLLING

An estimated quantity for this item has been provided in the general summary for use in proof rolling of subgrade for the mainline and ramp pavements, and for paved shoulders, in accordance with 203.

LOCATIONS OF GUARDRAIL

The locations of guardrail runs as shown in these plans are subject to adjustment to assure that the planned installations will afford maximum protection for traffic.

REMOVAL OF TREES AND STUMPS

All trees and stumps specifically marked for removal within the construction limits of this project shall be removed under the lump sum price bid for Item 201 Clearing and Grubbing, except that those trees for which protection and preservation work is indicated elsewhere in these plans shall not be removed.

The following is an approximate estimate of the number of trees and stumps to be removed.

SIZES	NO. TREES	NO. STUMPS
18"	224	1
30"	197	1
48"	40	0
60"	1	0

The above estimate is approximate and the State of Ohio reserves the right to order the removal of additional trees or stumps outside of the limits of construction but within the right-of-way and/or easement lines. Payment for the removal of these additional trees or stumps shall be included in the lump sum price bid for Item 201, Clearing and Grubbing.

REV. 12-3-73

GENERAL NOTES

REMOVAL OF EXISTING PIPE

The removal of all existing pipe drains which would normally be removed in various excavation items shall be included for payment in the unit prices bid for the respective excavation items, unless otherwise itemized in the plans.

WATER POLLUTION, SOIL EROSION AND SILTATION CONTROL

The following estimated quantities are to be used as directed by the Engineer for erosion and siltation control measures.

Item 207,	Temporary Seeding and Mulching	114,300 sq. yd.
Item 659,	Commercial Fertilizer (12-12-12)	6 ton
Item 207,	Water	247 M. gallon
Item 207,	Temporary Slope Drains	1,920 lin. ft.
Item 207,	Temporary Benches, Dikes, Dams and Sediment Basins	3,100 cu. yd.
Item 659,	Repair Seeding and Mulching	28,600 sq. yd.
Item 207,	Mowing	1,286 M. sq. ft.

ITEM SPECIAL, DRILLED WELL ABANDONED

The existing concrete or stone slab well cover and pumping equipment shall be removed and disposed of. The casing shall be cut off at least one (1) foot below the proposed finished grade outside proposed pavement areas or at least one (1) foot below the proposed subgrade elevation inside proposed pavement areas and capped with Class C concrete or a standard threaded pipe cap.

The unit price bid for each "drilled well abandoned" shall include payment for all labor, tools, materials, and incidentals necessary to complete this item.

Drilled wells are indicated on the plans at each of the following, approximate locations:

Station 21 41, Lt. C.L. I-275
Station 60 25, Lt. C.L. I-275
Station 9 45, Lt. C.L. Stephens Road

SEEDING

1. Outside Interstate Limits

   Quantities for seeding are calculated for the soil areas between the work limits, as shown on the cross sections.

2. Interstate Limits

   Quantities for seeding are calculated for the soil areas between the right-of-way fence lines, between the right-of-way lines in unfenced areas, and within the work limits for areas outside the right-of-way lines covered by work agreement or slope easement.

AGRICULTURAL LIMING, AS PER PLAN

The location and need for agricultural liming will be determined by laboratory tests, after rough grading operations have been performed. Quantities of agricultural liming, as shown on the plans, are sufficient for the entire project, but will be nonperformed for the areas where tests show that the liming is not required.

EARTHWORK VOLUME COMPUTATIONS

The volume computations in non-tangent cross sections was obtained by the following formula:

$$V \quad \frac{L_1 \quad A_1 \quad A_2}{54} \quad (cy)$$

Where:
- Lo Length between Stations
- Ro Curve Radius
- Ri Adjusted Radius
- Ro $\frac{(a \quad b)}{2}$
- L_1 Corrected Arc Length
- Lo $\frac{Ri}{Ro}$
- A. End Area Station #1
- $\frac{1}{2}$ End Area Station #2

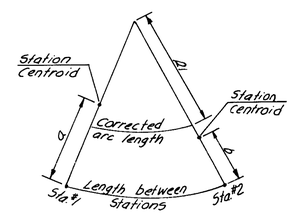

PAVEMENT

CONTRACTION AND EXPANSION JOINTS

Although specific locations of certain expansion and contraction joints have been detailed on this plan, no waiver of the specification is intended. Provision of expansion joints at all major structures and the maximum spacing between contraction joints shall in all cases be in accordance with the Standard Construction Drawings and the Specifications.

ITEM 310 - SUBBASE, GRADING A AS PER PLAN

Material for this item shall meet the requirements of grading A of 310.02 except that no more than 10% of the material shall pass a No. 200 sieve after all operations of placing and compacting have been completed.

DRAINAGE

SPECIAL DITCHES

For special ditch grades, see cross section and grading plans.

LOCATION OF DRAINAGE STRUCTURES

The following criteria shall be used for determining the location of drainage structures.

Manholes:	Station and offset are given to the center of the manhole base. Top of cover elevation is also shown.
Ditch Catch Basins:	Station and offset are given to the center of the catch basin base. Grate elevation, including standard depression, is also shown.
Curb Type Catch Basins:	Station and offset are to the center of the catch basin base. Grate elevation, including standard depression, is also shown.

EROSION CONTROL

Items 601, 660 and 667 are provided in the plans for erosion control. Rock of a stable nature will not be removed in order to place any of these items. The Engineer shall check and non-perform quantities or adjust locations and quantities for these items where indicated by field conditions during construction.

CONNECTIONS TO EXISTING PIPE

Where the plans provide for proposed conduit to be connected to, or to cross either over or under an existing sewer, it shall be the responsibility of the Contractor to locate the existing pipe as to line and grade before he starts to lay the proposed conduit.

Payment for all operations described above shall be included in the unit price bid for the pertinent 603 conduit items.

CHANNEL EMBANKMENTS

Portions of the existing channel outside the roadbed shall be filled and sloped to drain as called for on the plans and included for payment in the price bid for Item 203, Embankment. The Contractor shall use either suitable or unsuitable material to the extent available for channel embankments.

Areas where channel embankments are to be placed shall be cleared of weeds and brush.

The requirements for moisture, density control, benching, and suitable materials shall be waived.

The depth of layers in which the embankments are placed and their compaction shall, in lieu of the requirements of Item 203, conform with acceptable construction practices as determined by the Engineer.

No provision of the specifications shall be waived for embankments which support any portion of the new roadbed or structural members.

An estimated quantity of 900 cu. yds. has been provided in the plans for channel embankments.

DEVELOPED		CHECKED	
10-71	J.M.	12-71	R.D.

FED. RD. DIVISION	STATE	PROJECT	
2	OHIO		

11
305

HAM. 275-0.00
HAMILTON COUNTY

GENERAL NOTES

DRAINAGE

FARM DRAINS

All farm drains which are encountered during construction shall be provided with unobstructed outlets under the direction of the Engineer. Existing collectors which are located below the roadway ditch elevations and which cross the roadway shall be replaced within the right-of-way limits by Item 603, Conduit, Type B, one commercial size larger than the existing conduit.

Existing collectors and isolated farm drains which are encountered above the elevation of the roadway ditches shall be outletted into the roadway ditch by 603 Type F conduit. The optimum outlet elevation shall be, if possible, one foot above the flowline elevation of the ditch. Laterial tile fields which cross the roadway shall be intercepted by 603 Type E conduit and carried in a longitudinal direction to an adequate outlet or roadway crossing.

The location, type, size and grade of required replacements shall be determined by the Engineer during construction and payment shall be made on final measurements.

The following estimated quantities have been included in the general summary for the work noted above:

Item 603	6" Conduit, Type B	200 Lin. Ft.
Item 603	8" Conduit, Type B	200 Lin. Ft.
Item 603	6" Conduit, Type E	500 Lin. Ft.
Item 603	6" Conduit, Type F	100 Lin. Ft.
Item 601	Rock Channel Protection Type B (18" Thick)	20 Cu. Yds.

All necessary bends and branches shall be included for payment in the pertinent conduit item.

None of the above materials shall be ordered by the Contractor until requested by the Engineer.

MAINTENANCE OF SEWER FLOWS

The Contractor shall conduct his operations so as to maintain at all times sewer flows through existing facilities to remain in place and through existing facilities to be replaced until new facilities are completed and placed into use.

Payment for any additional cost involved in maintaining these flows by pumping or by any other means approved by the Engineer shall be included in the unit prices bid for the respective items of 603, Conduit.

REMOVAL OF EXISTING HOUSE DRAINS

The removal, where required, of all existing house connections, which include sanitary, yard, roof, basement or other similar pipe drains within the construction limits shall be included in the price bid for Item 203, Excavation, not including embankment construction, as per plan, unless itemized for payment otherwise in the plan.

SODDING

All sod shall be placed on a minimum 6" of soil; payment for which shall be included under Item 660.

NO. 6 CATCH BASINS MODIFIED AS PER PLAN

A 3" depression shall be provided for all CB-6 catch basins constructed in the shoulder area in lieu of the 1" depressed pavement as called for on the Standard Drawing No. CB-6, 6-1-65.

PIPE CUT-OFFS

When bell and spigot pipe is used, any necessary pipe cut-offs will be made at the spigot end of the length of pipe adjacent to the end length. When tongue and groove pipe is used, the length of pipe next to the end length shall be cut and butt joint formed with a collar as detailed in Standard Drawing No. MC-4. The cost of the joint and collar shall be included in the contract unit price bid for the pertinent 603 conduit item.

PIPE ENDS

All culverts, whether terminating in headwalls or endwalls, shall begin and end with pipe ends as normally fabricated by the manufacturer. Ends shall not be cut to fit either skew or slope. If field cutting is found to be necessary to fit an exact length control, the cut end shall be located at an interior joint and cradle, collar or band shall be provided to assure a stable joint. Payment for the joint shall be included in the price bid for the pertinent 603 conduit item.

SANITARY FLOW INTO INTERSTATE HIGHWAY DRAINAGE SYSTEMS

This plan makes no provision for connecting, nor shall the Engineer or Contractor connect, any existing or new drainage into the highway drainage system when such drains carry flow from any plumbing fixtures including floor drains and sink drains or drains from livestock lots or barns *or polluted water of any kind.*

Existing pipe carrying flow which comes within the category outlined above shall be plugged with Class C concrete at the right-of-way line. Payment for said plugging shall be included in the unit price bid for Item 203, Excavation not including embankment construction as per plan.

TREATED SANITARY FLOW INTO HIGHWAY DRAINAGE SYSTEMS OTHER THAN INTERSTATE

Treated sanitary flow may be discharged into the highway drainage system provided the owner has secured the approval of the local health authorities and has acquired from the State Highway Department, the offical permit to have the connection made.

In each case where a permit has been issued for a sanitary connection to be made into a highway drainage conduit, it shall be provided with an inspection well, in accordance with the Standard Drawing MC-8.

The following estimated quantities have been included in the general summary, for use as directed by the Engineer, in making the above described connections:

Item 603	6" Conduit, Type C	500 Lin. Ft.
*Item 604	Inspection Wells	2 Each

All necessary bends or branches shall be included for payment in the pertinent conduit item.

None of the above materials shall be ordered by the Contractor until authorized by the Engineer.

* No inspection well is required if effluent is discharged into an open ditch channel, catch basin or manhole.

SPRING DRAINS

Reference is made to Standard Drawing MC-1 showing the method of draining any spring that may be shown on the plan or encountered during construction as determined by the Engineer. The following estimated quantities have been included in the general summary for this purpose:

Item 605	6" Unclassified Pipe Underdrain, 707.01 Type III or 707.12 as per plan	500 Lin. Ft.
Item 605	Aggregate Drains for Springs as per plan	25 Lin. Ft.

The Contractor shall not order materials for "spring drains" until authorized by the Engineer and in the event no springs are encountered, the item shall be non-performed.

EROSION PROTECTION AT CULVERTS AND OTHER OUTLETS

Erosion protection, such as paved gutters, rock channel protection, etc., where provided in the plan at structures and other pipe outlets, shall be placed immediately after installation of the pipe or structure.

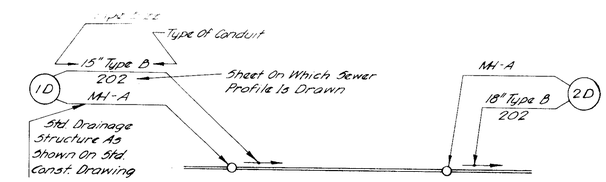

LEGEND FOR PLAN SHEETS

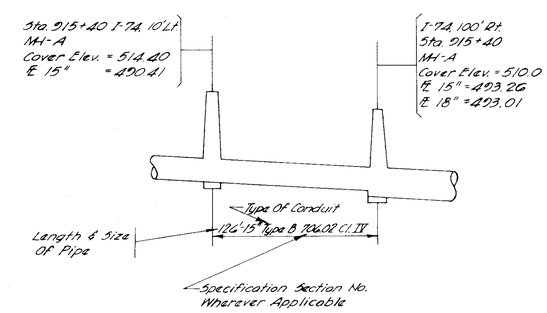

LEGEND FOR SEWER PROFILE SHEETS

FED. RD. DIVISION	STATE	PROJECT	
2	OHIO		

12
305

HAM-275-0.00
HAMILTON COUNTY

GENERAL SUMMARY

SHEET NUMBER

ITEM	TYPE CODE 7223												TYPE CODE Y005											ITEM	QUAN.	UNIT	DESCRIPTION
	9	10	14	20	25	30	35	116	127	137	143	26		10	11	14	21	26	31	36		116		137				
																											ROADWAY
201	Lump																								201	Lump	Lump	Clearing and Grubbing
202				6	15		33		35																89	Sq. Yd.	Pavement Removed
202									217																217	Sq. Ft.	Sidewalk Removed
203	+13,500		194,179		47							190													195,529	Cu. Yd.	Excavation, Not Including Embankment Construction, As Per Plan
203	-8,400	900	3,025,312																						3,017,812	Cu. Yd.	Embankment
203			191,030																						191,030	Sq. Yd.	Subgrade Compaction
203			58.4																						58.4	Hour	Proof Rolling
604	14																								14	Each	Monument Assembly
604	40																								40	Each	Centerline Reference Monument
606				6,050	4,562.5	11,000	6,962.4	1,950	887.5	350															31,762.4	Lin. Ft.	Guard Rail, Type 5
606				100			100																		200	Lin. Ft.	Guard Rail, Type 5, Barrier Design
606				8	6		4		6	2															20	Each	Anchor Assembly
606				2	2		2																		6	Each	Anchor Assembly, Barrier Design
606				6			14		4																24	Each	Bridge Terminal Assembly, Type A
607			39,282																						39,282	Lin. Ft.	Fence, Type 4A
410	1250								200																1,450	Cu. Yds.	Traffic compacted surface, Type A or B
616	100								4																104	M Gals.	Water
616	25								4																29	Tons	Calcium Chloride
202				1					1																2	Each	Septic Tank removed
Special				1	1				1																3	Each	Drilled Well Abandoned
																											PAVEMENT
301				5,869	7,177	7,118	5,891	669	1,166	1,194															29,084	Cu. Yd.	Bituminous Aggregate Base; 702.01 (AC-10 or AC-20) or 702.09, RT-11 or RT-12
304									3	5	393														401	Cu. Yd.	Aggregate Base
404				12	21		51		385	405	91														965	Cu. Yd.	Asphalt Concrete (70-85 or AC-20)
408									7	12	680														699	Gals.	Bituminous Prime Coat; 702.09, RT-2 or RT-3
411									5																5	Cu. Yd.	Stabilized Crushed Aggregate
451				23,684	29,333	29,333	19,578																		101,928	Sq. Yd.	10" Reinforced Portland Cement Concrete Pavement
451							3,445	2,810																	6,255	Sq. Yd.	9" Reinforced Portland Cement Concrete Pavement
609								86																	86	Lin. Ft.	Concrete Curb, Standard TYPE 7
609								406																	406	Lin. Ft.	Concrete Curb, Standard TYPE 8
611				266			532		134																932	Sq. Yd.	Reinforced Concrete Approach Slabs (T=13")
310				48			96		24																168	Cu. Yd.	Subbase, Grading A, As Per Plan
407				28			56		14																98	Gals	Tack Coat; 702.04, MS-2 or RS-1 or 702.02 RC-70 or RC-250
407				1.2			2.4		0.6																4.2	Tons	Cover Aggregate
609													5	385											5385	Lin. Ft.	Combination Curb and gutter, Standard Type 3
																											EROSION CONTROL
601																		17						19	36	Sq. Yd.	Riprap, Using 6" Reinforced Concrete Slab
601																	408	72	640						1,120	Cu. Yd.	Rock Channel Protection, Type A
601													20				27	54	88	85				209	483	Cu. Yd.	Rock Channel Protection, Type B
601																		124							124	Lin. Ft.	Paved Gutter, Standard Type 1-4
659															571,644										571,644	Sq. Yd.	Seeding and Mulching
659		6													53.04										59.04	Tons	Commercial Fertilizer (12-12-12)
659															265.19										265.19	Tons	Agricultural Liming, As Per Plan
660															13,341	5,319	4,681	2,600		800		743		2,621	30,155	Sq. Yd.	Sodding
660															976	354				471				195	1,996	Sq. Yd.	Sodding For Special Berm and Slope Protection As Per Plan
667															3,294	1,989				936				504	6,713	Sq. Yd.	Seeding and Jute Matting
207		114,300																							114,300	Sq. Yd.	Temporary Seeding and Mulching
207			247																						247	M Gals	Water
																										Cu. Yd.	
207		1,920																							1,920	Lin. Ft.	Temporary Slope Drains
207		3,100																							3,100	Sq. Yd.	Temporary Benches, Dikes, Dams, and Sediment Basins
659		28,600																							28,600	Sq. Yd.	Repair Seeding and Mulching
207		1,286																							1,286	M. Sq. Ft.	Mowing
																											BUILDING REMOVALS
202																									lump	lump	Parcel No. 103-WL, removal of one land 2-story block and frame commercial building with partial basement; concrete block incinerator
202																									lump	lump	Parcel No. 108-WL, W.O. X.T. removal of one land 2-story frame residence, concrete block pump house

DEVELOPED 7/71 JM | CHECKED 12/71 R.D.

Rev. 6-13-74 A.W.G.

HAM.-275-0.00
HAMILTON COUNTY

GENERAL SUMMARY

SHEET NUMBER

TYPE CODE 7223

★ Farm Drain Crossings

ITEM	9	11	21	26	31	36	137	ITEM	QUAN.	UNIT	DESCRIPTION
											DRAINAGE
202				Lump				202	Lump	Lump	Existing Structure Removed
202				1			1	202	2	Each	Headwall Removed
202				36			192	202	228	Lin. Ft.	Pipe Removed, 24" and Under
202				15				202	15	Lin. Ft.	Pipe Removed, Over 24"
602			4.5	18.3	1.6	3.1	5.3	602	32.8	Cu. Yd.	Concrete Masonry
603							82	603	82	Lin. Ft.	24" Conduit, Type A, 706.01, 706.02 or 706.08
603							42	603	42	Lin. Ft.	30" Conduit, Type A, 707.05
603							116	603	116	Lin. Ft.	30" Conduit, Type A, 706.02 Cl. III; 706.08
603			93					603	93	Lin. Ft.	Conduit, Type A, 33" 707.05; or 30" 706.02 or 706.08
603			86					603	86	Lin. Ft.	Conduit, Type A, 36" 707.05; or 33" 706.02 or 706.08
603				222		96		603	318	Lin. Ft.	36" Conduit, Type A, 706.02 or 706.08
603				172				603	172	Lin. Ft.	48" Conduit, Type A, 706.02
603				260				603	260	Lin. Ft.	54" Conduit, Type A, 706.02
603				374				603	374	Lin. Ft.	108" Conduit, Type A, 707.03 (0.109" - 0.138")
603		200						603	★ 200	Lin. Ft.	6" Conduit, Type B
603				86				603	86	Lin. Ft.	36" Conduit, Type B, 706.02, Cl. III or 707.13
603		200						603	★ 200	Lin. Ft.	8" Conduit, Type B
603							87	603	87	Lin. Ft.	12" Conduit, Type B
603			496	352	426	376		603	1650	Lin. Ft.	15" Conduit, Type B
603				86		72		603	158	Lin. Ft.	18" Conduit, Type B
603				72				603	72	Lin. Ft.	21" Conduit, Type B
603				222				603	222	Lin. Ft.	36" Conduit, Type B, 706.02 Cl. IV or 707.13
603		500						603	500	Lin. Ft.	6" Conduit, Type C
603				30		210		603	240	Lin. Ft.	12" Conduit, Type C
603				22				603	22	Lin. Ft.	15" Conduit, Type C
603		500						603	500	Lin. Ft.	6" Conduit, Type E
603		100						603	100	Lin. Ft.	6" Conduit, Type F
603							97	603	97	Lin. Ft.	12" Conduit, Type F
603			322	120	346	412		603	1,200	Lin. Ft.	15" Conduit, Type F
603						60		603	60	Lin. Ft.	18" Conduit, Type F
603				40				603	40	Lin. Ft.	21" Conduit, Type F
604						2	1	604	3	Each	Standard No. 2-2-B catch basin
604			6	6	7	4		604	23	Each	Standard No 4 catch basin
604				1				604	1	Each	Standard No. 2-4 catch basin
604				3				604	3	Each	Standard No. 5 catch basin
604						1		604	1	Each	Standard No. 6 catch basin, modified as per plan
604				1				604	1	Each	Standard No. 1A manhole
604		2						604	2	Each	Inspection Well
605		500						605	500	Lin. Ft.	6" Unclassified Pipe Underdrains, 707.01 Type III or 707.12 As Per Plan
605			100			200		605	300	Lin. Ft.	6" Unclassified Pipe Underdrains, 707.01
605		25						605	25	Lin. Ft.	Aggregate Drains For Springs, As Per Plan
604							5	604	5	Each	Standard No. 3-A Catch Basin
202				2				202	2	Each	Catch Basin Removed
614	Lump							614	Lump	Lump	Maintaining Traffic
619	Lump							619	Lump	Lump	Field office
623	Lump							623	Lump	Lump	Construction Layout Stakes
											For Signing Quantities, See Sh No. 167
											STRUCTURES OVER 20 FOOT SPAN
											Bridge No. HAM-275-0009 for Quantities See Sh. No 209
											Bridge No. HAM-275-0036 L/R For Quantities See Sh. No. 229
											Bridge No. HAM-275-0128 For Quantities See Sh No. 248
											Bridge No. HAM-275-0226 For Quantities See Sh No. 219
											Bridge No. HAM-275-0306 L/R For Quantities See Sh. No 255
											Bridge No. HAM-275-0314 L/R For Quantities See Sh. No 268

DEVELOPED		CHECKED	
7/71	J M	12/71	R.D

ITEM 607 RIGHT OF WAY FENCE			
STATION TO STATION		Type 47	Sheet No.
-00+70.46 to 10+00	Rt.	1049	291
3+08.03 to 10+00	Lt.	672	291
10+00 to 25+00	Lt.	1175	292
18+18± to 22+35±	Lt.&Rt.	120	292
10+00 to 25+00	Rt.	1350	292
25+00 to 40+00	Lt.&Rt.	3014	293
40+00 to 55+00	Lt.&Rt.	3086	294
55+00 to 70+00	Lt.&Rt.	3172	295
70+00 to 85+00	Lt.&Rt.	3078	296
85+00 to 100+00	Lt.&Rt.	3024	297
100+00 to 115+00	Lt.&Rt.	3011	298
115+00 to 130+00	Lt.&Rt.	2991	299
130+00 to 145+00	Lt.&Rt.	3021	300
145+00 to 160+00	Lt.&Rt.	3036	301
160+00 to 175+00	Lt.&Rt.	2122	302
161+87± to 171+75±	Lt.&Rt.	194	302
175+00 to 190+00	Lt.&Rt.	3015	303
190+00 I-275 to 202+00 Ramp "C"	Lt.	1150	304
190+00 I-275 to 202+00 Ramp "D"	Rt.	1002	304
Total to General Summary		39,282	

ITEM 604
CENTERLINE REFERENCE MONUMENTS
40 Each See Sheet No. 283 For Tabulation

ITEM 604
MONUMENT ASSEMBLY
14 Each See Sheet No. 283 For Tabulation

203 PROOF ROLLING		
Location	Sq. Yd.	Hours @ 3000 S.Y Per Hour
Mainline (451)	105,373	35.1
Mainline Paved Shlder's	64,701	21.6
Ramps C,D (451)	2,945	1.0
Ramps Paved Shoulders	1113	0.4
Approach Slabs	932	0.3
TOTAL	175,064	58.4

203 SUBGRADE COMPACTION	
Location	Sy. Yd.
Mainline and Ramps (451)	108,318
Mainline and Ramps Paved Shlders	65,814
Approach Slabs	932
Stephens Road	5,750
Hayes - McKinney	8,515
Sand Run	1,701
TOTAL	191,030

SEEDING CALCULATIONS		
	Area Within Construction Limits	Area Const. Limits to R.O.W.
Mainline I-275	Sq. Yd.	Sq. Yd.
1+30.36 - 30+00	106,574	25,017
30+00 - 105+00	101,180	32,983
105+00 - 160+00	123,358	36,111
160+00 - 205+00	70,909	10,459
Ramps C & D	20,266	9,822
Stephens Road	14,991	0
Hayes-McKinney	17,092	0
Sand Run Road	2,882	0
Sub-Totals	457,252	114,392
Net Area To Be Seeded And Protected	571,644	

FERTILIZER & LIMING MATERIAL	
Seeding Area	571,644
Sodding Area	13,391
Sodding For Special Slope And Berm Protection, As Per Plan	976
Seeding And Jute Matting	3,294
Total Area (Sq. Yd.)	589,305
Fertilizer @ 20 lbs / 1000 sq. ft. (Tons)	53
Lime @ 100 lbs. / 1000 sq. ft. (Tons)	265

* (Not Including Embankment Construction, As Per Plan)

EXCAVATION AND EMBANKMENT		
Station to Station	Excavation 203 *	Embankment 203
	Cu. Yd.	Cu. Yd.
Mainline I-275		
1+30.36 - 10+00	1403	369,962
10+00 - 25+00	1766	408,088
25+00 - 40+00	11,224	166,078
40+00 - 50+00	2846	39,854
50+00 - 65+00	35,428	7,231
65+00 - 80+00	47,118	477
80+00 - 95+00	25,584	112,431
95+00 - 105+00	1,064	155,239
105+00 - 120+00	7,616	253,584
120+00 - 135+00	1,390	244,913
135+00 - 150+00	302	204,294
150+00 - 160+00	897	140,027
160+00 - 175+00	1,311	172,851
175+00 - 190+00	1,086	295,870
190+00 - 205+00	431	246,390
Kilby Road Interchange		
Ramp C	0	64,839
Ramp D	116	82,160
Stephens Road		
7+15.64 - 20+00	1167	9,565
47+20 - 58+37.61	289	22,588
Service Connection	69	547
Hayes - McKinney		
20+00 - 35+00	2113	23,485
35+00 - 50+25	7906	3,941
Ex Hayes - McKinney	521	58
Sand Run Road	467	890
Whitewater River	42,065	0
TOTAL	194,179	3,025,312

PAVEMENT SYMBOLS

Mainline Pavement		Item 451 10" Reinforced Portland Cement Concrete Pavement Item 301 4" Bituminous Aggregate Subbase; 702.01 (85-100 or AC-20) 702.09, RT-11 or RT-12 AC-20. Item 451 9" Reinforced Portland Cement Concrete Pavement Item 301 4" Bituminous Aggregate Subbase; 702.01 (85-100 or AC-20) or 702.09, RT-11 or RT-12
Mainline Shoulders		Item 301 Bituminous Aggregate Base; 702.01 (85-100 or AC-20) or 702.09, RT-11 or RT-12 Thickness as per typical section
Stephens Rd & Service Conn. Hayes McKinney & Service Conn. T-Turnaround		Item 404 2" Asphalt Concrete (70-85 or AC-20) Item 301 Bituminous Aggregate Base; 702.01 (85-100 or AC-20) or 702.09, RT-11 or RT-12, 3" Thick Item 301 Bituminous Aggregate Base; 702.01 (85-100 or AC-20) or 702.09, RT-11 or RT-12, 3" Thick
Sand Run Road		Item 404 2" Asphalt Concrete (70-85 or AC-20) Item 408 Bituminous Prime Coat; 702.09, RT-2 or RT-3 Applied at the rate of 0.40 gallon per square yard Item 304 Aggregate Base, 4" Thick Item 304 Aggregate Base, 4" Thick
Driveways		Item 411 Stabilized Crushed Aggregate, 8" as per Driveway Details
Driveways		Item 404 2" Asphalt Concrete (70-85 or AC-20) Item 408 Bituminous Prime Coat; 702.09, RT-2 or RT-3 Applied at the rate of 0.40 gallon per square yard Item 304 6" Aggregate Base Coarse
Service Drive		Item 605 8" Stabilized Crushed Aggregate
		Item 203 Pavement Removal Outside Normal Construction

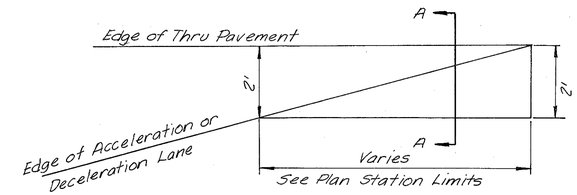

Note: The Shaded Area shown shall be constructed of Concrete 451 to an elevation 2" lower than the adjacent pavement and surfaced with 2" of 301 material.
The Shaded Area shall be paid for as full depth 451 and the surface treatment shall be paid for as 301

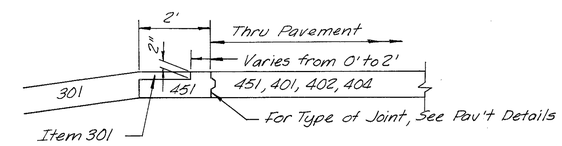

SECTION A-A

DETAIL AT END OF ACCELERATION OR DECELERATION TAPER

FED. RD. DIVISION	STATE	PROJECT	
2	OHIO		

16
305

HAM-275-0.00
HAMILTON COUNTY

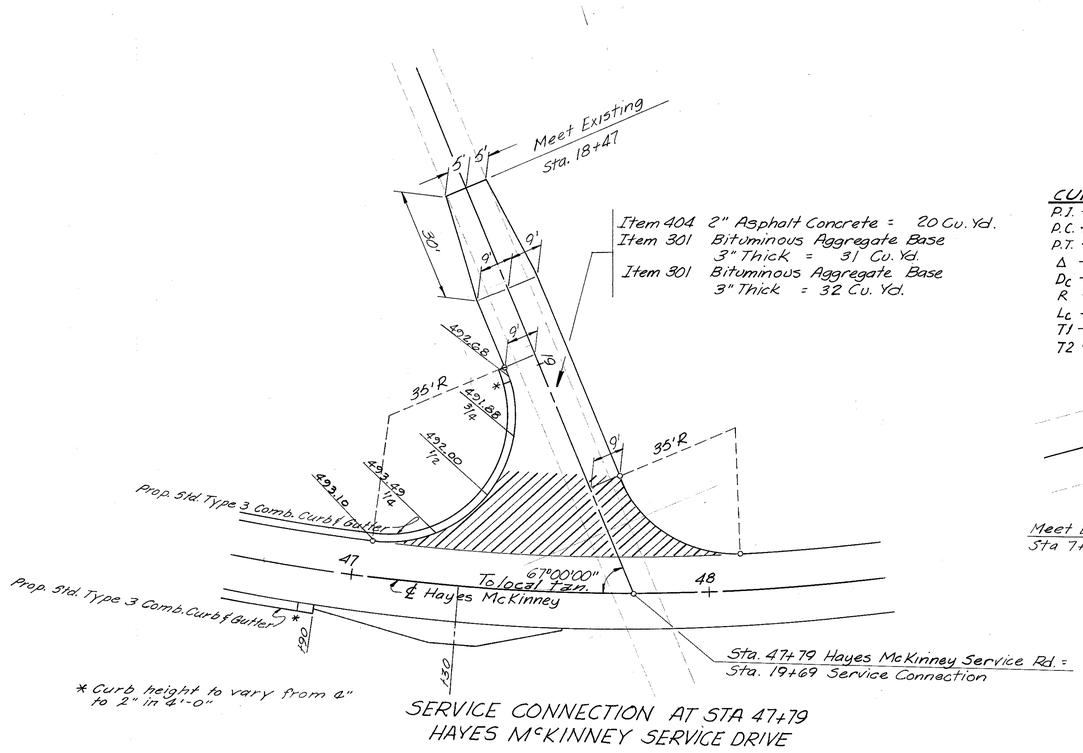

* Curb height to vary from 0" to 2" in 4'-0"

SERVICE CONNECTION AT STA 47+79
HAYES McKINNEY SERVICE DRIVE

CURVE SC-2
P.I. - 7+50.02
P.C. - 7+27.26
P.T. - 7+71.45
Δ - 33° 45' 37"
D_c - 76° 23' 52"
R - 75.00'
L_c - 44.19'
T1 - 22.76
T2 - 22.76

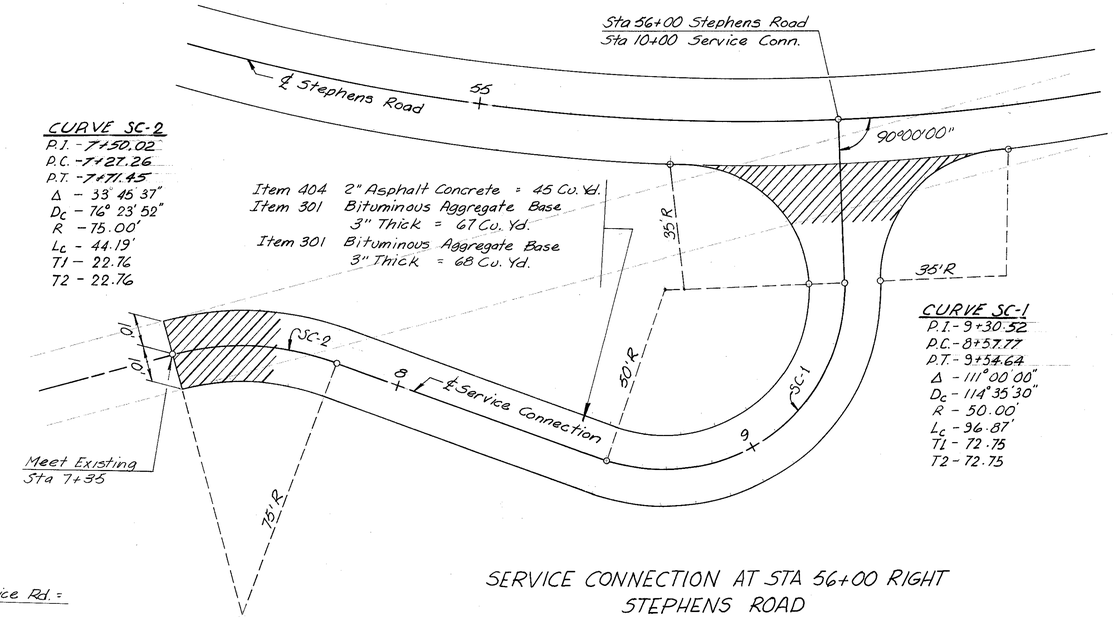

CURVE SC-1
P.I. - 9+30.52
P.C. - 8+57.77
P.T. - 9+54.64
Δ - 111° 00' 00"
D_c - 114° 35' 30"
R - 50.00'
L_c - 96.87'
T1 - 72.75
T2 - 72.75

SERVICE CONNECTION AT STA 56+00 RIGHT
STEPHENS ROAD

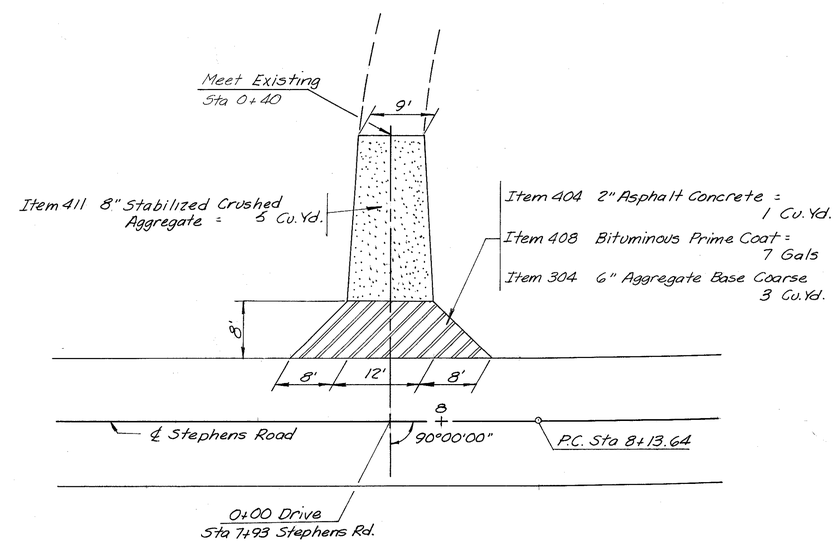

DRIVEWAY AT STA 7+92 LEFT
STEPHENS ROAD

Note:
For Service Connection And Driveway Profiles, See Station Cross Sections Sheet Nos. 129, 134 & 141

DEVELOPED		CHECKED	
11/71	J.M.	12/71	M.S.

DRIVEWAY DETAILS

HAM. 275-0.00
HAMILTON COUNTY

B.M. 20-B Elev. 473.998
Square Cut in S.W. corner headwall on West Side Doublelick Creek 270'± Lt Sta. 4+15

Begin Project
Sta. 1+30.36
I-275-2(30)0
I-275 3(4)37
S.L.M. 0.00

Begin Work 400' West of Sta 1+30.36

Sta 1000+03.88 Bk.
Sta 1+30.36 Ah.

Anchor Assembly

Tractor Road

12" Conduit

Dearborn County Indiana
Hamilton County Ohio

Wood Bridge Steel Supported 12.5' x 29'

Sta. 5+54
Begin Earth Dike Construction

Rock Channel Protection Type B 6x4x18" 158 (8D)

Earth Dike Elev. = 474.0

LA-R/W

Rock Channel Prot. Type B, 5'x4'x18" (10D)

Constr. Limit

15" Type "F" 159
15" Type "B" 59 (9D)

15" Type F 159
15" Type B 159 (7D)

C.B.-4 (1D) Sodding 158

T.S. 3+44.07
N 46°26'05"E
200' Taper
R=16.2'
R=35.6'
R=35.6'
R=16.2'
23°20'
Sta 5+93.88
Curve No. 1
℄ I-275
S.C. 7+44.07

15" Type B 159 (2D)

(5P)

Anchor Assembly

15" Type F 159 (3D)

(1R)

C.B.-4 (9D) Sodding

C.B.-4 (6D) Sodding 158

SEC. 30, T1 R1E
SEC. 31, T1 R1E

Curve #1
P.I. Sta. 15+00.00
Δ = 45°13'58" Lt.
D_c = 2°30'00"
R_c = 2,291.83'
T_c = 1,155.93'
E_s = 194.07'
L_c = 1,809.31'
L_s = 400.00'

Rock Channel Protection Type B 5'x4'x18" 158 (4D)

Rock Channel Protection Type A 2@75'x12'x36" 158 (5D)

For Superelevation Tables See Sh. No. 8

For Quantities See Sh. Nos. 20, 21

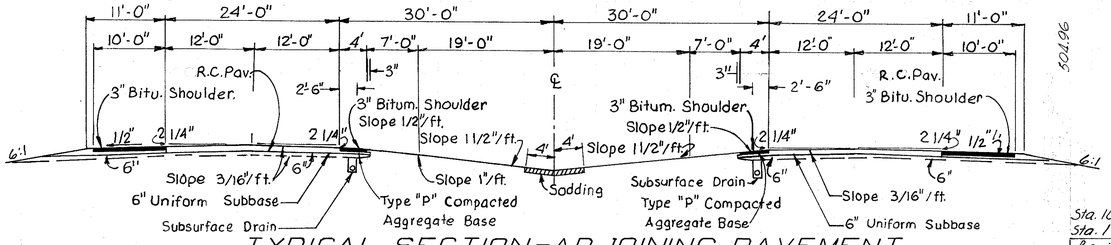

TYPICAL SECTION-ADJOINING PAVEMENT

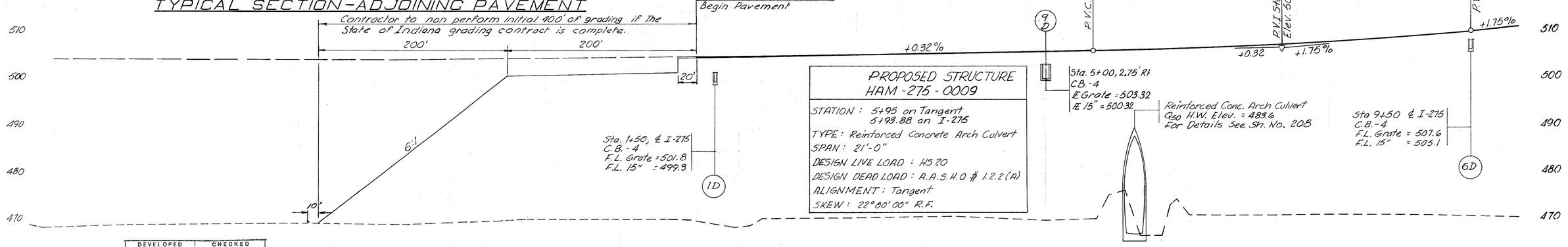

INDIANA BENCH MARK

B.M. #20B - Square Cut In S.W. Corner Headwall On W. Side Doublelick Creek.
El. 474.149
BENCH MARK EQUATION.
I-275-2(30)0 B.M. #20B From West - El. 474.149
I-275-3(4)37 B.M. 20B From East El. 473.996

PROPOSED STRUCTURE
HAM-275-0009

STATION: 5+95 on Tangent
5+93.88 on I-275
TYPE: Reinforced Concrete Arch Culvert
SPAN: 21'-0"
DESIGN LIVE LOAD: HS 20
DESIGN DEAD LOAD: A.A.S.H.O # 1.2.2 (A)
ALIGNMENT: Tangent
SKEW: 22°00'00" R.F.

DEVELOPED		CHECKED	
10-71	J.M.	12-71	R.O.

Item 203 Excavation (not inc. Emb)	1403	C.Y.
" 203 Embankment	369962	C.Y.
" 659 Seeding & Mulching	33078	S.Y.

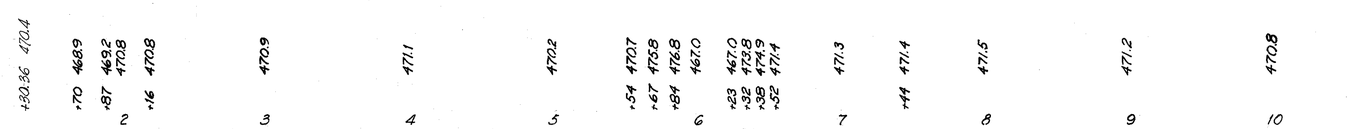

I-275 STA 1+30.36 TO STA. 10+00

HAM. 275-0.00
HAMILTON COUNTY

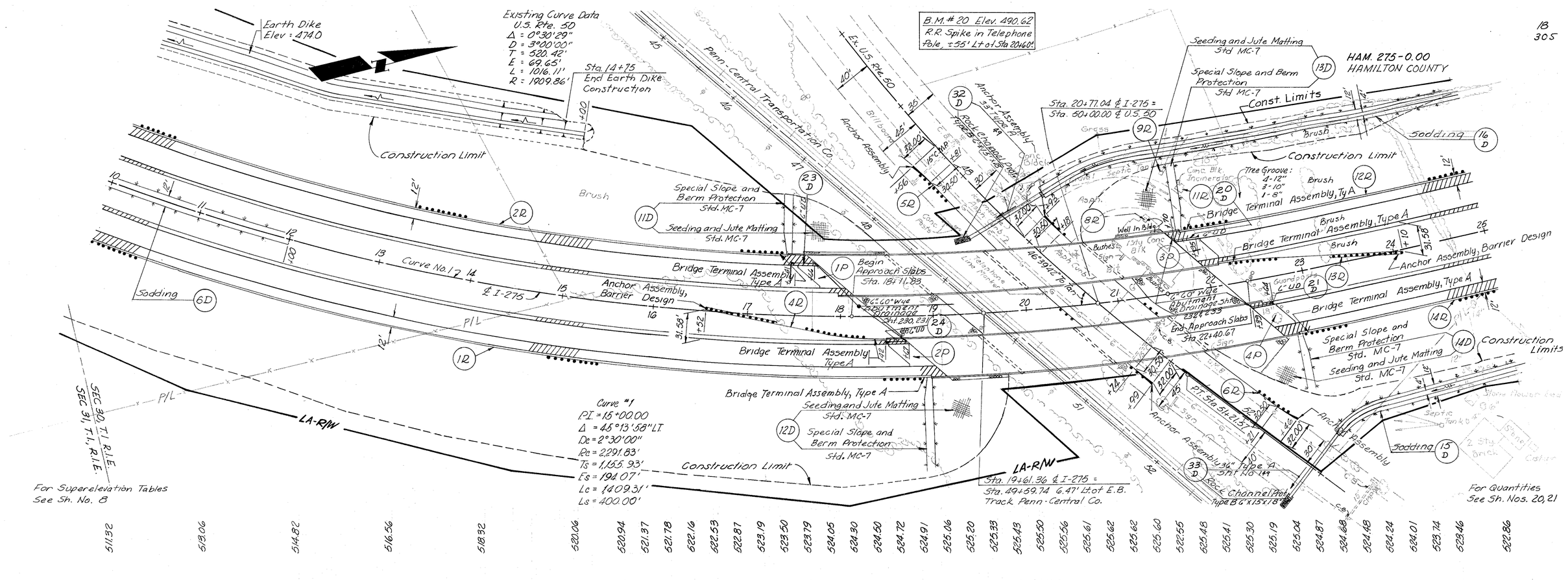

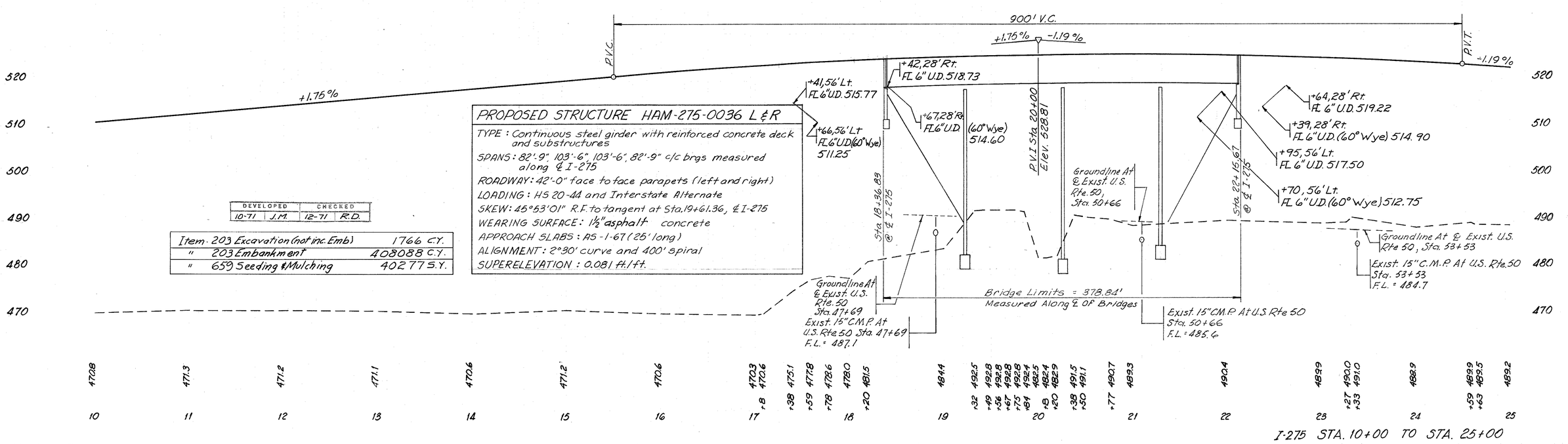

DEVELOPED		CHECKED	
10-71	J.M.	12-71	R.D.

Item 203 Excavation (not inc. Emb)	1766 C.Y.
" 203 Embankment	408088 C.Y.
" 659 Seeding & Mulching	40277 S.Y.

PROPOSED STRUCTURE HAM-275-0036 L & R

TYPE: Continuous steel girder with reinforced concrete deck and substructures

SPANS: 82'-9", 103'-6", 103'-6", 82'-9" c/c brgs measured along ℄ I-275

ROADWAY: 42'-0" face to face parapets (left and right)

LOADING: HS 20-44 and Interstate Alternate

SKEW: 45°53'01" R.F. to tangent at Sta. 19+61.36, ℄ I-275

WEARING SURFACE: 1½" asphalt concrete

APPROACH SLABS: AS-1-67 (25' long)

ALIGNMENT: 2°30' curve and 400' spiral

SUPERELEVATION: 0.081 ft./ft.

HAM. 275-0.00
HAMILTON COUNTY

B.M #21 Elev. 499.74
R.R. spike in root of 8" hackberry, 150' Lt of ℄ Sta. 32+50.

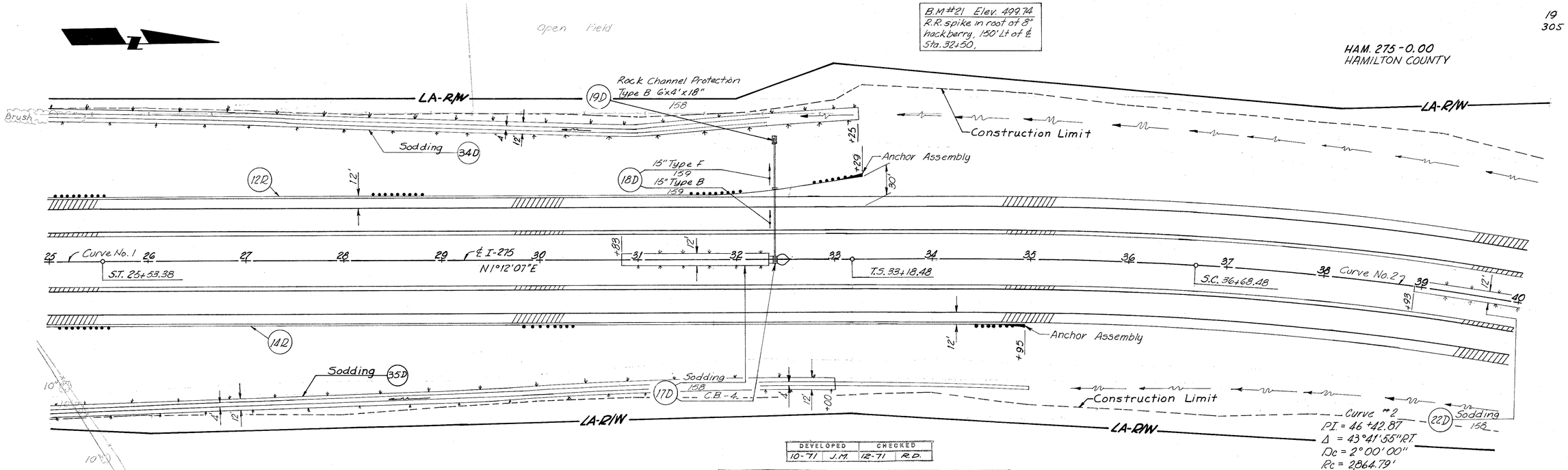

DEVELOPED		CHECKED	
10-71	J.M.	12-71	R.D.

Item 203 Excavation (not inc. Emb)	11224	C.Y.
" 203 Embankment	166078	C.Y.
" 659 Seeding & Mulching	36942	S.Y.

For Curve No. 1 Data
See Sh. No. 18

For Superelevation Tables
See Sh. No. 8

For Quantities
See Sh. Nos. 20, 21

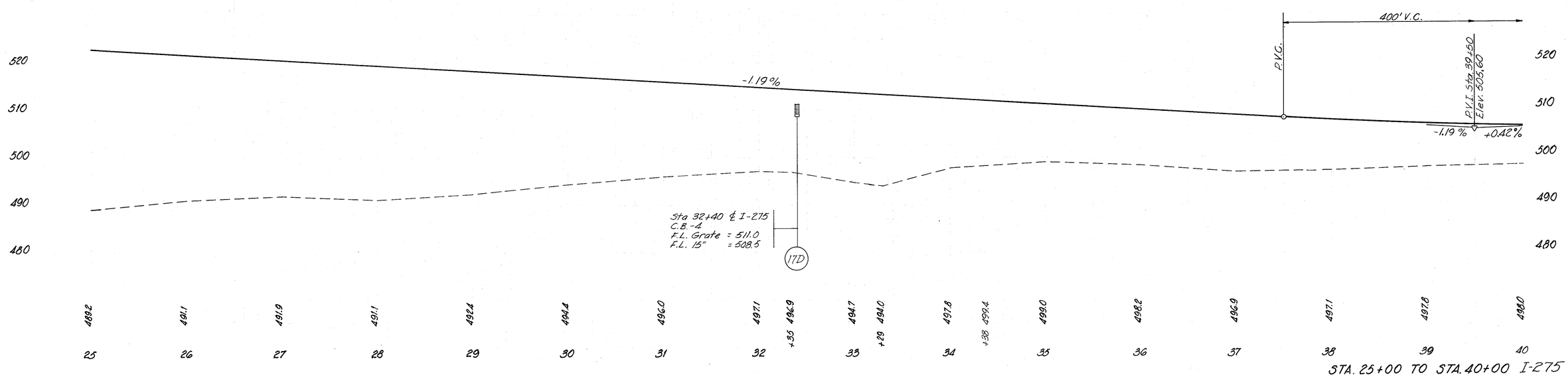

STA. 25+00 TO STA. 40+00 I-275

HAM. 275-0.00
HAMILTON COUNTY

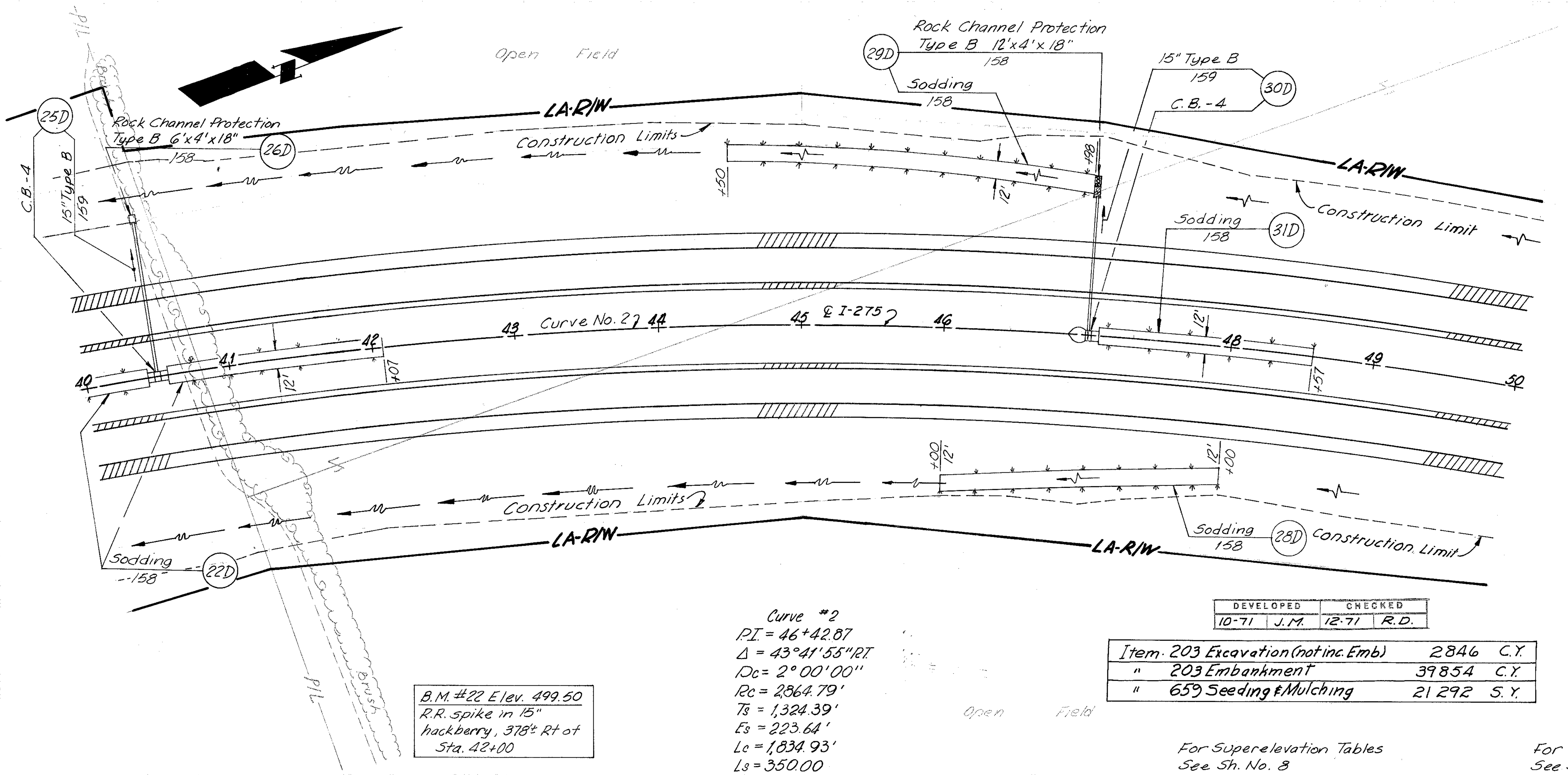

Curve #2
P.I. = 46+42.87
Δ = 43°41'55" RT.
Dc = 2°00'00"
Rc = 2,864.79'
Ts = 1,324.39'
Es = 223.64'
Lc = 1,834.93'
Ls = 350.00

B.M. #22 Elev. 499.50
R.R. spike in 15" hackberry, 378'± Rt of Sta. 42+00

DEVELOPED		CHECKED	
10-71	J.M.	12-71	R.D.

Item		Quantity	Unit
Item 203	Excavation (not inc. Emb)	2846	C.Y.
" 203	Embankment	39854	C.Y.
" 659	Seeding & Mulching	21 292	S.Y.

For Superelevation Tables See Sh. No. 8

For Quantities See Sh. Nos. 20,21

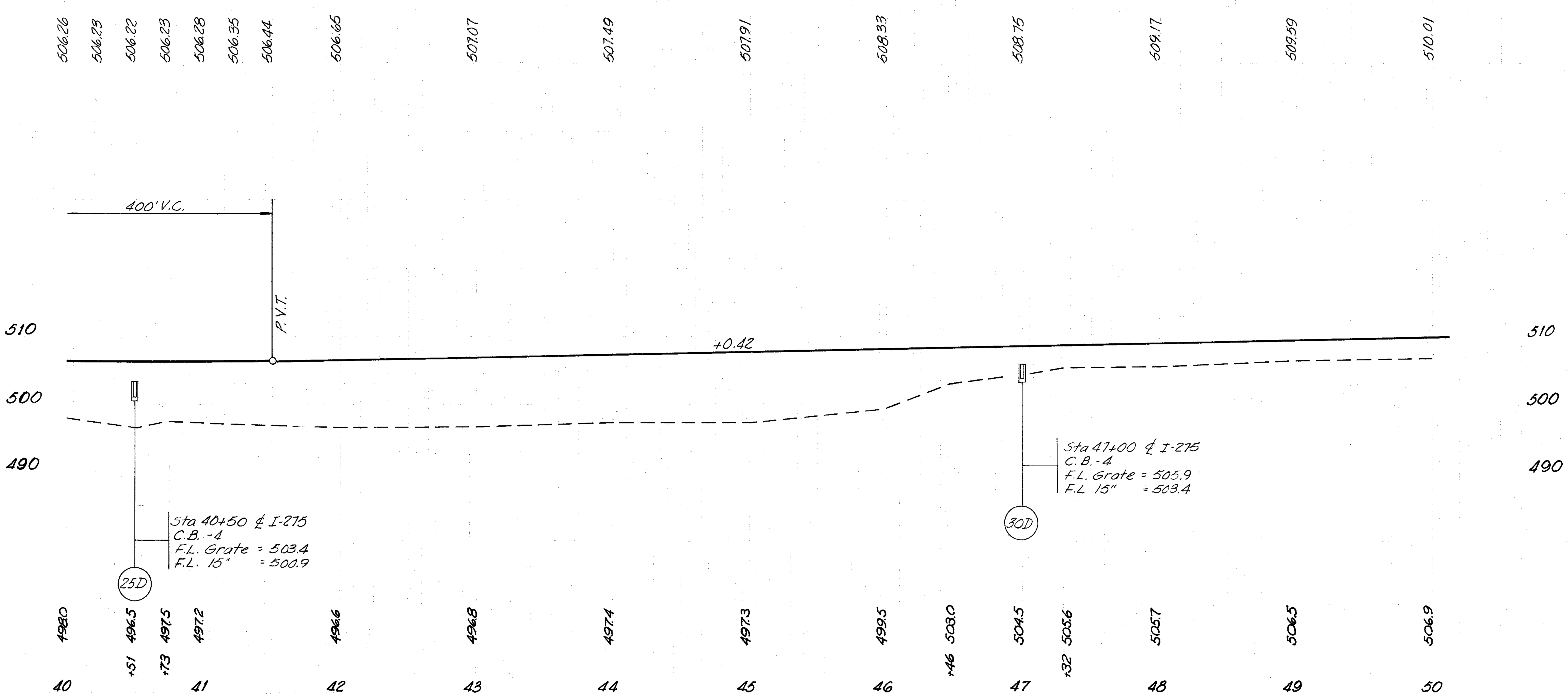

★ @ 0.10 Gal./S.Y.

	Location	Side	301 Bitum. Aggr. Base Cu.Yd.	301 Bitum. Aggr. Base (Shlder) Cu.Yd.	301 Bitum. Aggr. Base 8" Cu.Yd.	451 10" Reinf. Conc. Pav't. Sq.Yd.	611 Reinf. Conc. Appr. Slab T=13" Sq.Yd.	310 Subbase Cu.Yd.	407 Tack ★ Gal.	407 Cover Ton	202 Septic Tank Removed Each	Special Drilled Well Aband. Each	202 Pavement Removed Sq.Yd.	Guard Rail Type 5 L.F.	Guard Rail Type 5 Barr. Des. L.F.	606 Anchor Assem. Each	Anchor Assem. Barr. Des. Each	Bridge Terminal Assem. Type A Each	404 1½" Asph. Conc. Cu.Yd.
PAVEMENT	1+30.36 - 10+00	Lt & Rt.	579	547		4638													
	10+00 - 25+00	Lt & Rt.	715	706		5713													
	25+00 - 40+00	Lt & Rt.	999	942		8000													
	40+00 - 50+00	Lt & Rt.	666	629		5333													
1P	18+11.83 - 18+36.83	Lt.					66.5	12	7	0.3									3
2P	18+11.83 - 18+36.83	Rt.					66.5	12	7	0.3									3
3P	22+15.67 - 22+40.67	Lt.					66.5	12	7	0.3									3
4P	22+15.67 - 22+40.67	Rt.					66.5	12	7	0.3									3
5P	4+50 Crossover	Lt. & Rt.			86														
ROADWAY 1R	1+37 - 18+94	Rt.												1762.5		1		1	
2R	1+45 - 17+42	Lt.												1525		1		1	
3R																			
4R	16+52 - 18+50	Lt & Rt												125	50		1	1	
5R	47+56 - 50+99 (Rte 50 Sta)	Rt.												300		2			
6R	48+93 - 52+46 (Rte 50 Sta)	Lt.												300		2			
7R	21+41	Lt										1							
8R	21+66	Lt									1								
9R																			
10R																			
11R	21+86	Lt											6						
12R	21+73 - 33+29	Lt.												1125		1		1	
13R	22+12 - 24+10	Lt & Rt.												125	50		1	1	
14R	22+85 - 34+95	Rt.												787.5		1		1	
Total			2959	2824	86	23,684	266	48	28	1.2	1	1	6	6050	100	8	2	6	12
			5869																

DEVELOPED		CHECKED	
10/71	J.M	12/71	R.D.

STA. 40+00 TO STA. 50+00 I-275

ESTIMATED QUANTITIES

FED. RD. DIVISION	STATE	PROJECT	
2	OHIO		

21/305

HAM-275-0.00
HAMILTON COUNTY

REF. NO.	STATION TO STATION	SIDE	Bends 15" 15°	Bends 15" 25°	Bends 6" Wye	202 Pipe Removed 24" & Under	202 Pipe Removed Over 24"	601 Rock Channel Protect. Type A	601 Rock Channel Protect. Type B	602 Conc. Masonry	603 Type A 33"707.05 or 30"706.08 & 30"706.02	603 Type A 36"707.05 or 33"706.08 & 33"706.02	603 Type B 15"	603 Type F 15"	604 Catch Basin C.B.-4	605 Unclassified Pipe Underdrains 707.01 6"	660 Sodding	660 Sdng For Spec Berm & Slope Protect.	667 Seeding & Jute Matting	SEE SHEET NO.
	UNIT					L.F.	L.F.	Cu. Yd.	Cu. Yd.	Cu. Yd.	L.F.	L.F.	L.F.	L.F.	Each	L.F.	Sq. Yd.	Sq. Yd.	Sq. Yd.	
	DRAINAGE																			
1D	1+57 - 3+07	℄													1		200			17
2D	1+50	Rt.	2							*0.10			80							17
3D	1+50	Rt.								0.27				100						17
4D	1+50	Rt.							2											17
5D	5+95	Rt.						4.08												17
6D	9+57 - 12+00	℄													1		324			17
7D	9+50	Lt.	2							0.27 *0.10			68	96						17
8D	9+50	Lt.							2											17
9D	5+00 – 6+57	℄ & Lt.		2						0.27 *0.10			74	76	1		200			17
10D	5+00	Lt.							2											17
11D	17+43	Lt.																86	367	18
12D	18+96	Rt.																114	786	18
13D	21+77	Lt.																86	421	18
14D	22+85	Rt.																68	412	18
15D	23+00 – 25+00	Rt.															417			18
16D	20+25 – 25+00	Lt.															613			18
17D	30+83 - 32+33	℄													1		200			19
18D	32+40	Lt.		2						0.27 *0.10			74	50						19
19D	32+40	Lt.							2											19
20D	21+70 – 21+95	Lt.			1											25				18
21D	22+39 - 22+64	Rt.			1											25				18
22D	38+93 - 42+07	℄															400			19
23D	17+41 – 17+66	Lt.			1											25				18
24D	18+42 - 18+67	Rt.			1											25				18
25D	40+50	℄ & Lt.								0.25			104		1					20
26D	40+50	Lt.							2											20
27D																				
28D	46+00 - 48+00	Rt.															267			20
29D	44+50 - 46+98	Lt.							4								331			20
30D	47+00	℄ & Rt.								0.25			96		1					20
31D	47+07 - 48+57	℄															200			20
32D	48+50 – 48+74	Lt. & Rt.							6.7	1.36	93									18
33D	52+90	Lt. & Rt.							6.7	1.52		86								18
34D	25+00 – 33+25	Lt.															1,100			19
35D	25+00 – 33+00	Rt.															1,067			19
TOTALS			4	4	4			4.08	27	4.46	93	86	496	322	6	100	5,319	354	1989	

*Concrete Collar (For Information Only Not Included In Total)

DEVELOPED		CHECKED	
10/71	J.M.	12/71	R.D.

Sta. 1+30.36 to Sta. 50+00

Curve #2
P.I. = 46+42.87
Δ = 43°41'55" RT
Dc = 2°00'00"
Rc = 2,864.79'
Ts = 1,324.39'
Es = 223.64'
Lc = 1,834.93'
Ls = 350.00'

B.M. #23 Elev. 517.33
R.R. spike in 15" hackberry 267'± Lt. of Sta 54+80±, West side of Stephens Road

For Stephens Road Plan and Profile See Sh. No. 126

Constr. Limit

HAM. 275-0.00
HAMILTON COUNTY

6D Sodding 158

Paved Gutter, Type 1-4

4D 36" Type A 152

Earth Dike Elev. 512.0

LA-R/W

Construction Limit

1R

R/W

351'-5 1/2"

℄ Stephens Rd

LA

48" Type A 153 13D

MH-1A

Sodding 158 15D

C.B.-5 14D

Sodding 158 7D

Remove Ex. 18" C.M.P. Pipe 9D

2D

15" Type C Below

Guardposts

Well & Pump House

℄ I-275

Remove Exist. 54" C.M.P. 8D

T.S. 58+33.41

Remove Exist. Stone Headwall

Curve No. 2

12" Type C See Below 2D

C.B.-4

C.S. 55+03.41

Sodding 158 5D

Remove Exist. 6'x3' R.C. Box Culvert 10D

54" Type A 153 12D

6R Relocate Existing Mailbox

Standard Terminal

4R

1P

Construction Limit

Sodding 158 1D

Construction Limit

LA-R/W

LA-R/W

Rock Channel Protection Type B 10'x6'x18" 158 3D

Riprap Using 6" Reinf. Conc. 5'x9' 11D

Rock Channel Protection Type B 30'x9'x30" 158

Reloc. Mailbox

Ex. R.O.W.

Ex. Stephens Rd. (Bitum)

Ex. R.O.W.

B.M. #24 Elev. 516.20
R.R. spike in Telephone Pole 195'± Rt. of Sta 62+60± on North Side of Stephens Road.

For Quantities See Sh. Nos. 25, 26

DEVELOPED		CHECKED	
10-71	J.M.	12-71	R.D.

Item 203	Excavation (not inc. Emb)	35428 C.Y.
" 203	Embankment	7231 C.Y.
" 659	Seeding & Mulching	36368 S.Y.

For Superelevation Tables See Sh. No. 8

510.01 510.43 510.85 511.27 511.69 512.11 512.53 512.95 513.37 513.79 514.21 514.63 514.13 514.81 514.87 514.93 514.97 514.99 514.99 514.99 514.96 514.93 514.87 514.80 514.72 514.62 514.51 514.38

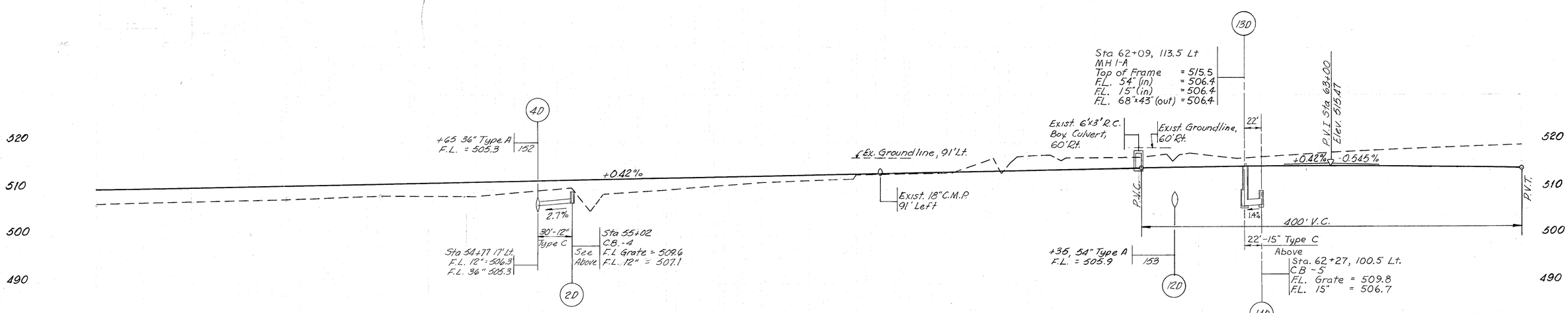

506.9 507.4 508.0 508.9 508.7 510.4 510.4 509.0 510.0 511.7 512.3 513.1 513.7 516.8 513.5 513.9 517.0 517.1 517.2 517.2 516.1 516.8 516.9 517.5 516.0 517.3 517.8 516.6 517.9 518.8 519.4

+20 +33 +96 +43 +52 +61 +69 +86 +4 +15 +21 +26 +33 +40 +51

30 31 32 33 34 35 36 37 38 39 40 41 42 43 44 45

STA. 30+00 TO STA. 65+00

HAM. 275-0.00
HAMILTON COUNTY

For Hayes McKinney Service Road
Plan and Profile
See Sh. No. 135

For Stephens Road
Plan and Profile
See Sh. Nos. 126, 127

For Quantities
See Sh. Nos. 25, 26

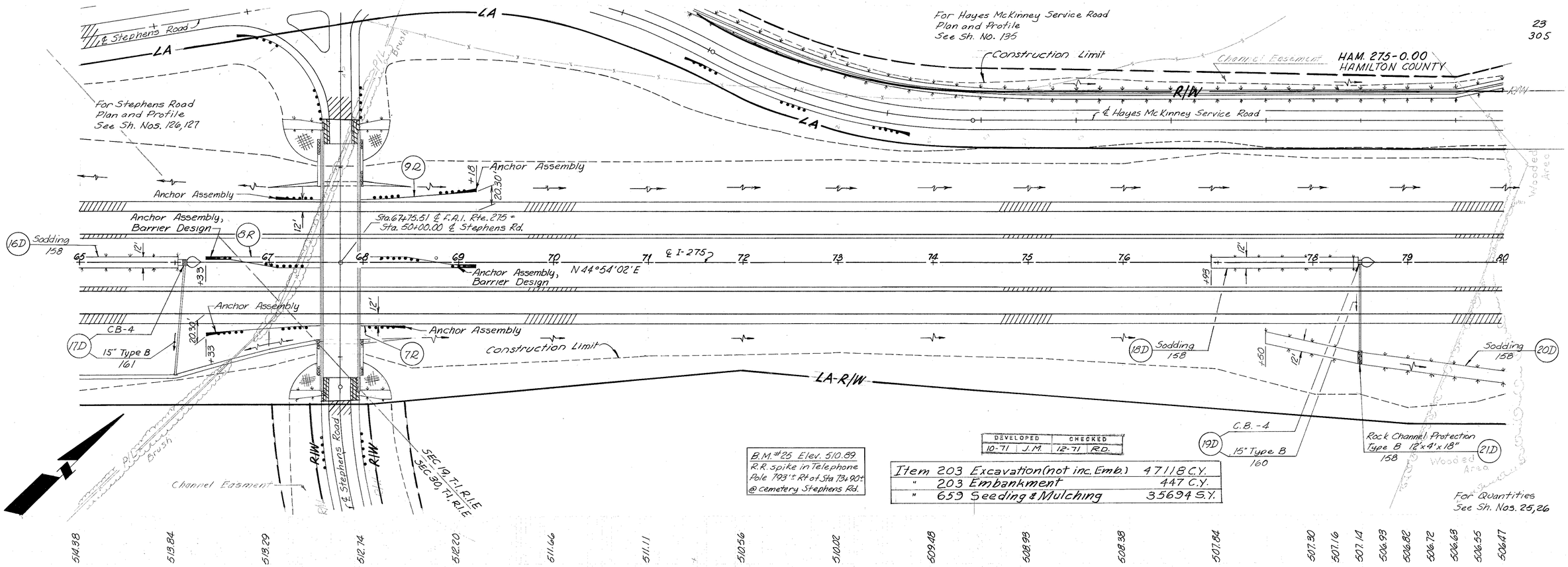

B.M. #25 Elev. 510.89
R.R. spike in Telephone Pole 793'± Rt of Sta 73+90± @ cemetery Stephens Rd.

DEVELOPED		CHECKED	
10-71	J.M.	12-71	R.D.

Item	203 Excavation (not inc. Emb.)	47118 C.Y.
"	203 Embankment	447 C.Y.
"	659 Seeding & Mulching	35694 S.Y.

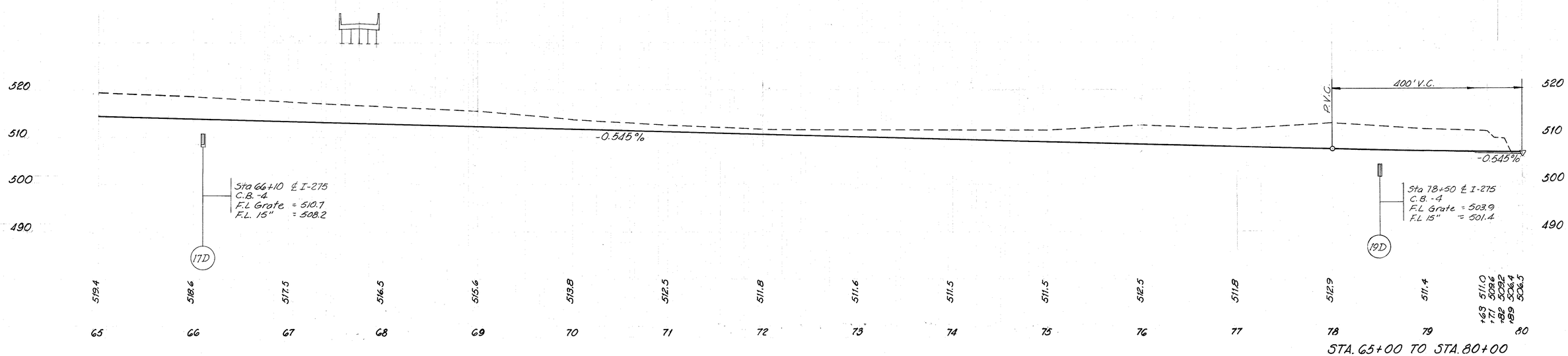

STA. 65+00 TO STA. 80+00

Curve #3
P.I. Sta. 97+39.94
Δ = 25°19'12" Lt
D_c = 1°20'00"
R_c = 4,297.18'
T = 965.26'
E = 107.08'
L_c = 1,899.00'

For Hayes - Mc Kinney Service Road
Plan and Profile
See Sh. Nos. 135, 136

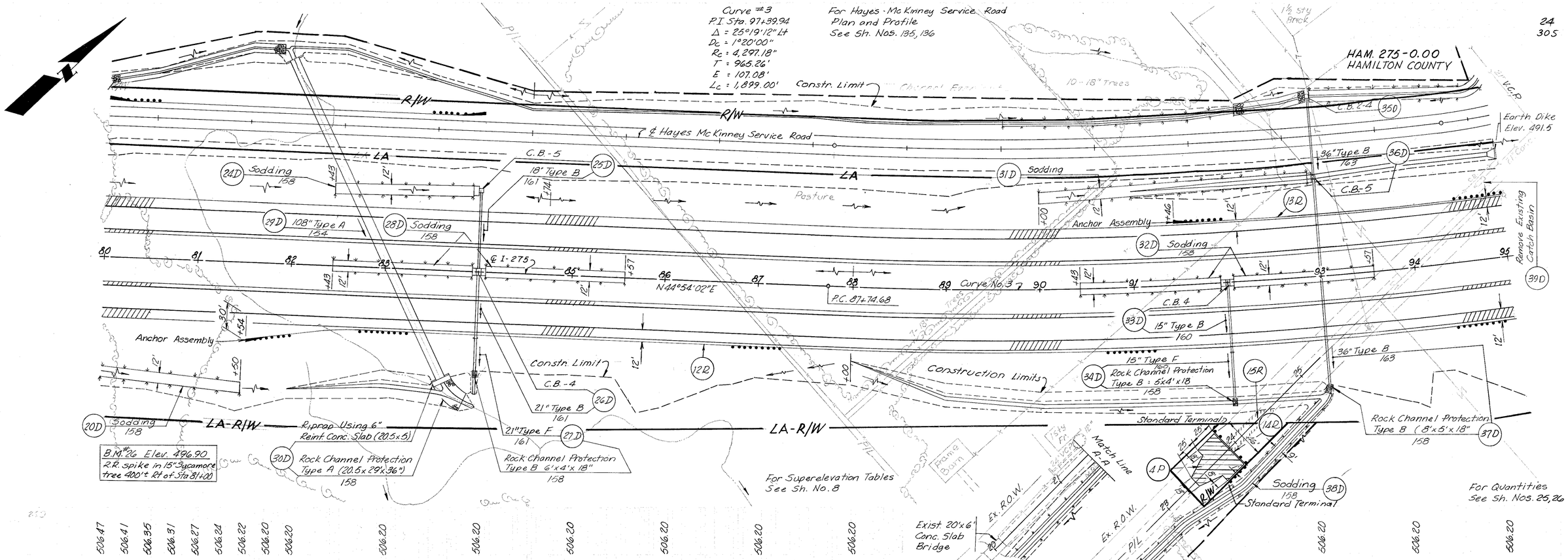

DEVELOPED		CHECKED	
10-71	J.M.	12-71	R.D.

Item 203	Excavation (not inc. Emb)	255584 C.Y.
" 203	Embankment	112431 C.Y.
" 659	Seeding & Mulching	34560 S.Y.

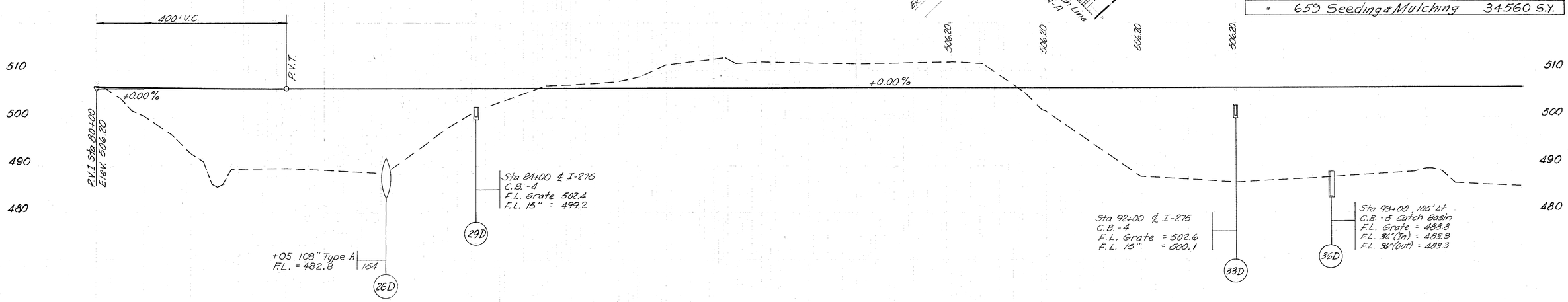

STA. 80+00 TO 95+00

HAM. 275-0.00
HAMILTON COUNTY

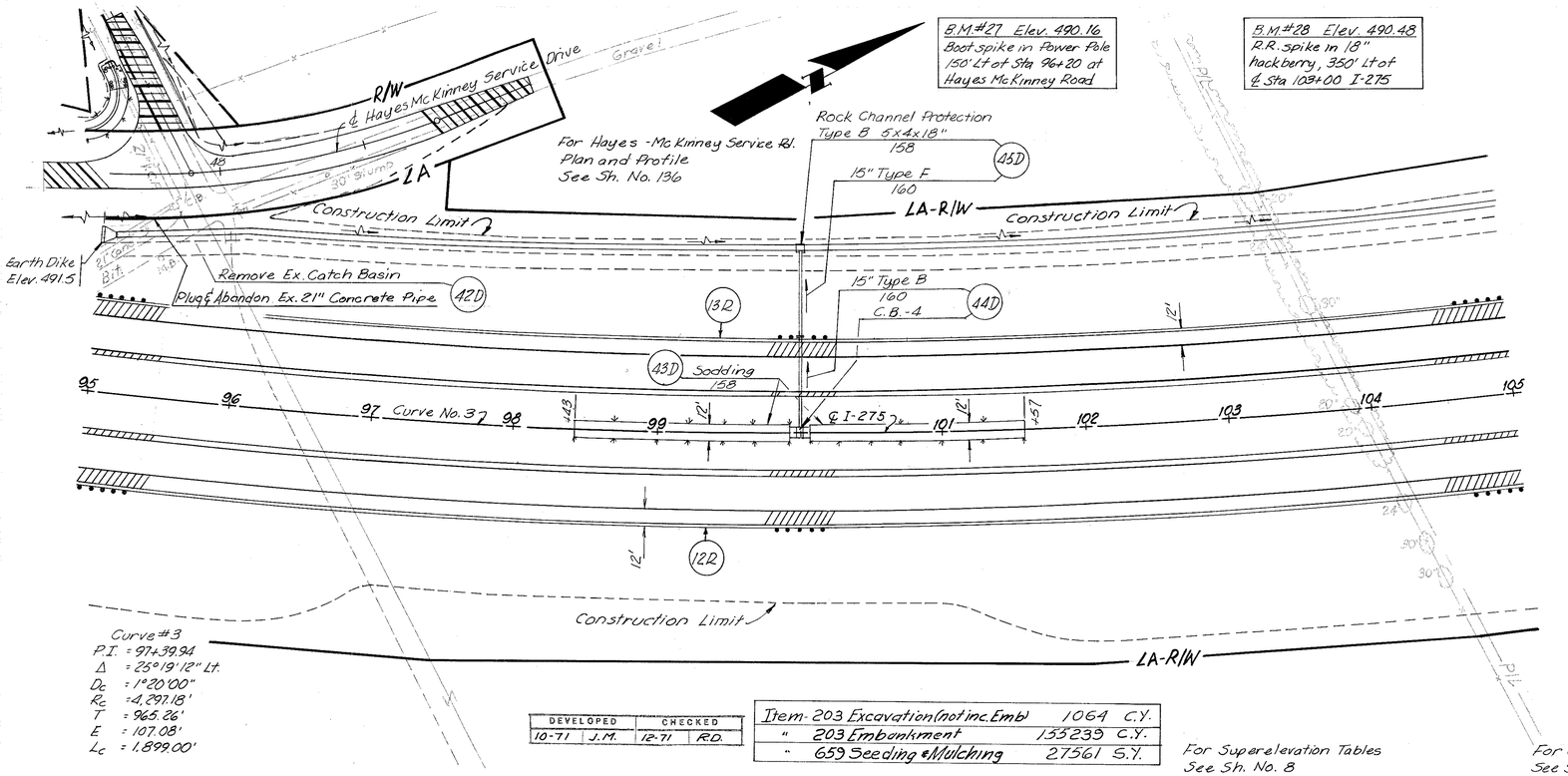

DEVELOPED		CHECKED	
10-71	J.M.	12-71	R.D.

Item-203 Excavation (not inc. Emb)	1064	C.Y.
" 203 Embankment	135239	C.Y.
" 659 Seeding & Mulching	27561	S.Y.

For Superelevation Tables
See Sh. No. 8

For Quantities
See Sh. Nos. 25,26

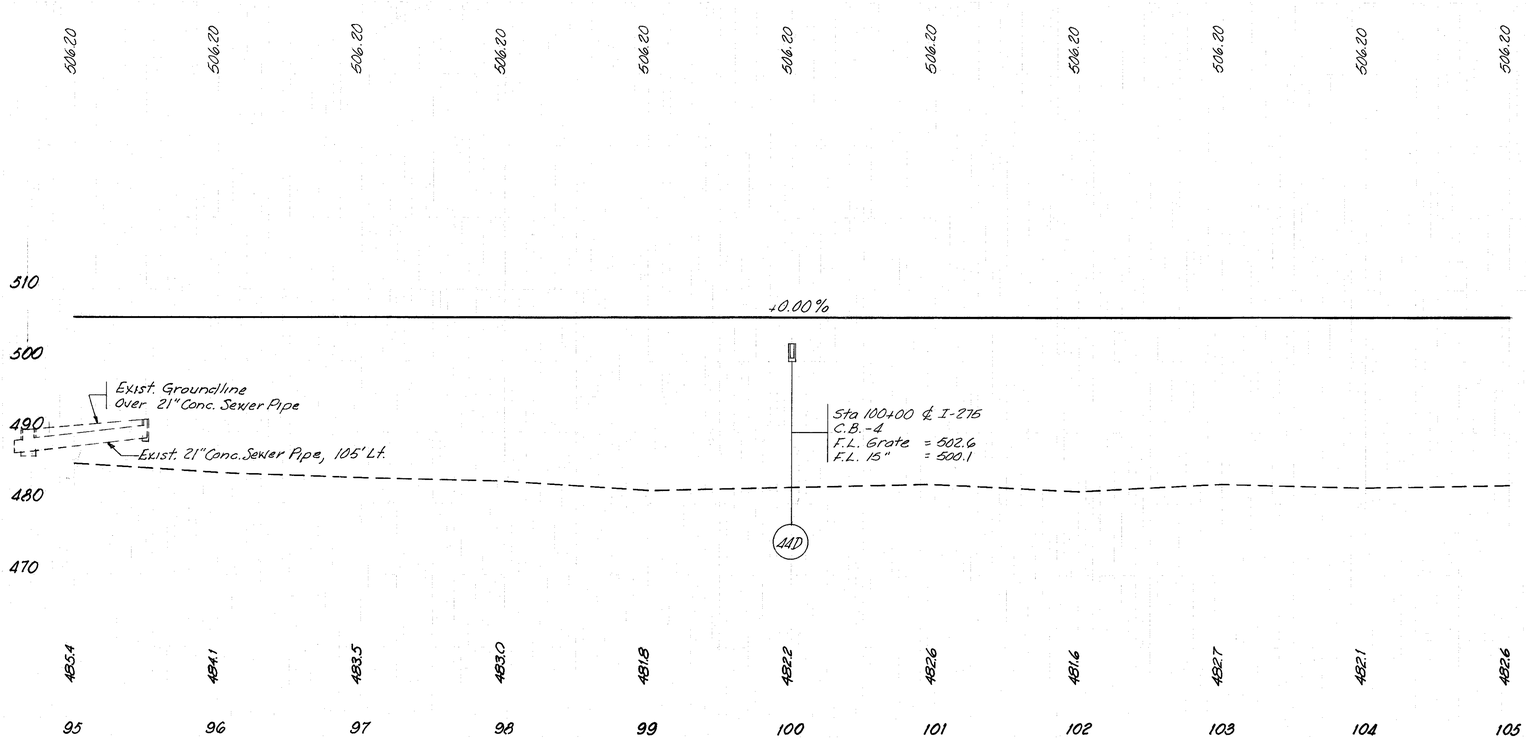

Special	202	203	Guard Rail Type 5	606 Anchor Assemb.	Anchor Assemb. Barrier Design
Drilled Well Aband.	Pav't Removal As Per Plan	Ex. Not Incl. Emb. Cont.	L.F.	Each	Each
Each	Sq. Yd.	Cu. Yd.			
15			25		
1					
		26	162.5	2	2
			475		
			162.5	2	
			2350	1	
		21	1912.5	1	
			75		
1	15	47	4662.5	6	2

301			404	451
Bitum. Agg. Base (Shldr.) Cu. Yd.		Cu. Yd.	Asph Conc. 2" Cu. Yd.	10" Conc. Pav't Sq. Yd.
939	LT.&RT.	942		8000
939	LT.&RT.	942		8000
939	LT.&RT.	942		8000
666	LT.&RT.	629		5333
	RT. 28		10	
	RT. 31		11	

PAVEMENT

50+00 - 65+00		
65+00 - 80+00		
80+00 - 95+00		
95+00 - 105+00		
1P	63+00	
2P		
3P		
4P	91+80	

ROADWAY

1R	56+40	LT.
2R	60+25	LT.
3R		
4R	62+65	RT.
5R		
6R	62+50	RT.
7R	66+33 - 68+44	RT.
8R	66+39 - 69+18	℄
9R	67+07 - 69+18	LT.
10R		
11R	81+54 - 105+03	RT.
12R	81+46 - 105+04	LT.
13R	91+93	RT.
14R	92+00	RT.
15R		

3722	3455	21	29,333
7177			

DEVELOPED		CHECKED	
10/71	J.M.	12/71	R.D.

STA. 95+00 TO STA. 105+00

ESTIMATED QUANTITIES

FED. RD. DIVISION	STATE	PROJECT	
2	OHIO		

HAM-275-0.00
HAMILTON COUNTY

REF. NO.	STATION TO STATION	SIDE	Bends & Branches: Bends 15° 25°	Bends 21° 25°	Tees 12" x 36"	202 Exist. Structure Removed	202 Pipe Removed 24" & Under	202 Pipe Removed Over 24"	202 Remove Exist. Catch Basin	202 Headwall Removed	203 Excav. Not Incl. Embank. Const.	601 Paved Gutter Type 1-4	601 Riprap Using 6" Reinf. Conc. Slab	601 Rock Channel Protect. Type A	601 Rock Channel Protect. Type B	602 Conc. Masonry	603 Type B 706.02 Cl. III or 707.13 36"	603 Type A 706.02 or 706.08 36"	603 Type A 706.02 48"	603 Type A 706.02 54"	603 Type A 707.03 (0.109"-0.138") 108"	603 Type B 15"	603 Type B 18"	603 Type B 21"	603 Type B 706.02 Cl. III or 707.15 36"	603 Type C 12"	603 Type C 15"	603 Type F 15	603 Type F 21	604 Catch Basins C.B. 2-4	604 Catch Basins C.B.-4	604 Catch Basins C.B.-5	604 Manholes MH-1A	660 Sodding	SEE SHEET NO.
	UNIT					Lump Sum	L.F.	L.F.	Each	Each	Cu. Yd.	L.F.	Sq. Yd.	Cu. Yd.	Cu. Yd.	Cu. Yd.		L.F.	L.F.	L.F.	L.F.	L.F.	L.F.	L.F.	L.F.	L.F.	L.F.	L.F.	L.F.	Each	Each	Each	Each	Sq. Yd.	
	DRAINAGE																																		
1D	53+75 - 64+00	Rt.																								30					1			725	22
2D	55+02	℄ & Lt.													5																				22
3D	54+65	Rt.														1.38		222																	22
4D	54+65	Lt. & Rt.			1						199	124																							22
5D	55+09 - 56+59	℄																																200	22
6D	55+50	Lt.																																41	22
7D	55+36 - 57+00	Lt.																																219	22
8D	56+42	Lt.						15																											22
9D	58+25	Lt.					36			1																									22
10D	60+91	Rt.				Lump																													22
11D	61+35	Rt.											5		35																				22
12D	61+35	Lt. & Rt.														2.41				260															22
13D	61+35	Lt.																	172													1			22
14D	62+05 - 62+27	Lt.																									22				1				22
15D	62+34 - 63+84	Lt																																200	22
16D	64+53 - 66+03	℄																																200	22 & 23
17D	66+10	℄ & Rt.														0.25						118									1				23
18D	76+93 - 78+43	℄																																200	23
19D	78+50	℄ & Rt.														0.25						94									1				23
20D	77+50 - 81+50	Rt.																																533	23 & 24
21D	78+50	Rt													4																				23
22D																																			
23D																																			
24D	82+43 - 83+93	Lt.																																200	24
25D	84+00	Lt.																					86								1				24
26D	84+00	℄ & Rt.		2												*0.13								72							1				24
27D	84+00	Rt.													2	0.39													40						24
28D	82+43 - 85+57	℄																																400	24
29D	83+05	Lt. & Rt.														12.42					374														24
30D	83+05	Rt.											12	72																					24
31D	90+00 - 92+93	Lt.																																391	24
32D	90+43 - 93+57	℄																																400	24
33D	92+00	Rt.	2													*.10						72									1				24
34D	92+00	Rt													2	0.27												56							24
35D	93+00	Lt																												1					24
36D	93+00	Lt.															86															1			24
37D	93+00	Lt. & Rt.													4	0.69									222										24
38D	93+00	Rt.																																572	24
39D	94+80	Lt							1																										24
40D																																			
41D																																			
42D	95+50								1																										25
43D	98+43 - 101+57	℄																																400	25
44D	100+00	℄ & Lt	2													*0.10						68									1				25
45D	100+00	Lt.													2	0.27									64										25
TOTALS			4	2	1	Lump	36	15	2	1	199	124	17	72	54	18.33	86	222	172	260	374	352	86	72	222	30	22	120	40	1	6	3	1	4681	

*Concrete Collar (For Information Only Not Included In Total)

DEVELOPED		CHECKED	
10/71	J.M.	12/71	R.D

Sta. 50+00 to Sta. 105+00

HAM. 275-0.00
HAMILTON COUNTY

B.M. #29 Elev. 488.63
R.R. spike in Power Pole
247'± Lt of Sta 114+91±

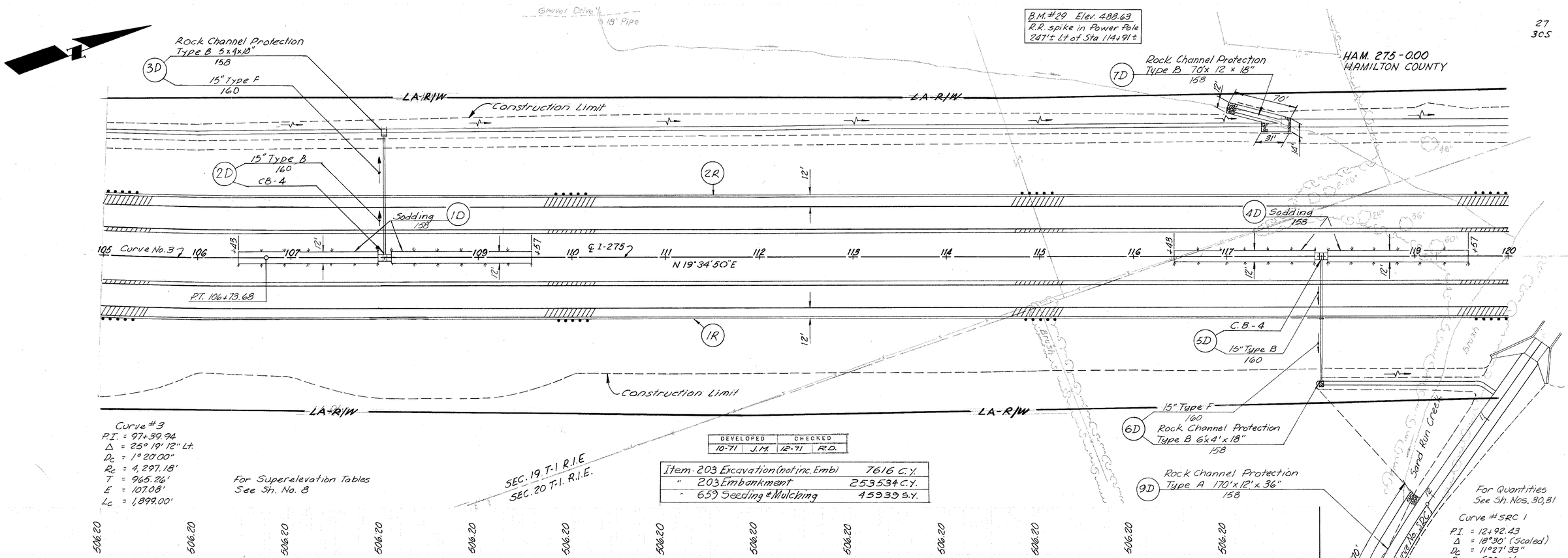

Curve #3
P.I. = 97+39.94
Δ = 25° 19' 12" Lt.
Dc = 1° 20' 00"
Rc = 4,297.18'
T = 965.26'
E = 107.08'
Lc = 1,899.00'

For Superelevation Tables
See Sh. No. 8

DEVELOPED		CHECKED	
10-71	J.M.	12-71	R.D.

Item	203 Excavation (not inc. Emb)	7616 C.Y.
"	203 Embankment	253534 C.Y.
"	659 Seeding & Mulching	45939 S.Y.

For Quantities
See Sh. Nos. 30, 31

Curve #SRC 1
P.I. = 12+92.43
Δ = 18°30' (Scaled)
Dc = 11°27' 33"
Rc = 500.00'
T = 81.43'
E = 6.59'
Lc = 161.44'

STA. 105+00 TO STA. 120+00

HAM-275-0.00
HAMILTON COUNTY

B.M.#30 Elev. 487.18
R.R. Spike in 15" dry locast on East bank of creek - edge of plowed field, 225'± Lt of ℄ Sta. 131+00

Rock Channel Protection Type A 64'x36'x36" (10D) 158

Match Exist. Channel

Sand Run Creek

LA-R/W

Brush

Construction Limit

Rock Channel Protection Type B 5x4'x18" 158 (13D)

15" Type B 161 (12D) C.B.-4

15" Type F 161

(2R) (1R)

℄ I-275

N 19° 34' 50" E

(11D) Sodding 158

120 121 122 123 124 125 126 127 128 129 130 131 132 133 134 135

SAN RUN CREEK
TYPICAL RELOCATED
CHANNEL SECTION

2:1 24:1 24:1 2:1
21'-0"

SEC. 17, T-1, R.1E.
SEC. 20, T-1, R.1E.

DEVELOPED		CHECKED	
10-71	J.M.	12-71	R.D.

Item- 203 Excavation (not inc. Emb)	1390	C.Y.
" 203 Embankment	244913	C.Y.
659 Seeding & Mulching	46402	S.Y.

For Quantities
See Sh. Nos. 30, 31

506.20 506.20 506.20 506.20 506.20 506.20 506.20 506.20 506.20 506.20 506.20 506.20 506.20 506.20 506.20 506.20

PROPOSED STRUCTURE
HAM-275-0226

STATION : 121+00
TYPE : Reinforced Concrete Arch Culvert
SPAN : 21'-0"
DESIGN LIVE LOAD : HS 20
DESIGN DEAD LOAD : A.A.S.H.O. ¶ 1.2.2(A)
ALIGNMENT : Tangent
SKEW : 35°00'00" L.F.

510 500 490 480 470

+0.00 %

Reinforced Conc. Arch Culvert
Q50 H.W. Elev. = 488.0
For Details See Sh. No. 243

Sta. 128+00 ℄ I-275
C.B.-4
F.L. Grate = 502.4
F.L. 15" = 499.9

(12D)

475.7 +26 482.9 482.8 +78 483.9 483.8 482.1 481.5 481.7 482.5 482.2 482.2 483.0 483.2 484.7 483.6 483.6 484.0 484.0

120 121 122 123 124 125 126 127 128 129 130 131 132 133 134 135

STA. 120+00 TO STA. 135+00

HAM. 275-0.00
HAMILTON COUNTY

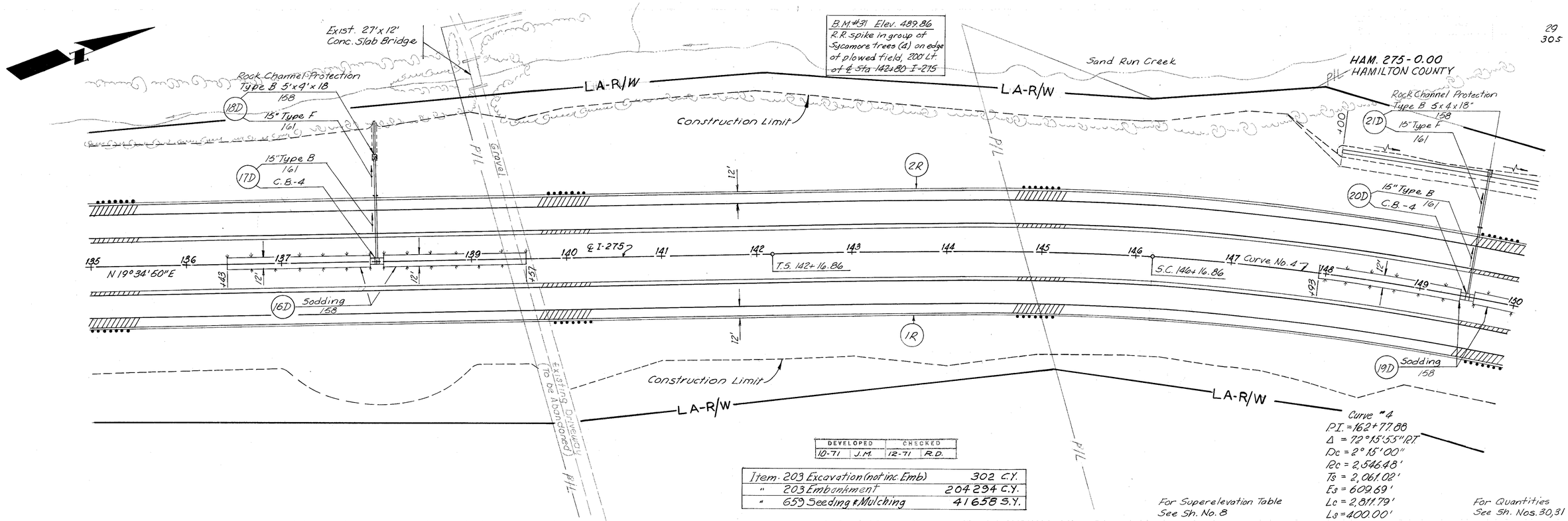

DEVELOPED		CHECKED	
10-71	J.M.	12-71	R.D.

Item 203 Excavation (not inc. Emb)	302 C.Y.
" 203 Embankment	204 294 C.Y.
" 659 Seeding & Mulching	41 658 S.Y.

For Superelevation Table
See Sh. No. 8

Curve #4
P.I. = 162+77.88
Δ = 72°15'55" Rt.
Dc = 2°15'00"
Rc = 2,546.48'
Ts = 2,061.02'
Es = 609.69'
Lc = 2,811.79'
Ls = 400.00'

For Quantities
See Sh. Nos. 30, 31

506.20 506.20 506.20 506.20 506.20 506.20 506.21 506.21 506.24 506.25 506.28 506.31 506.34 506.38 506.42 506.46 506.52 506.57 506.63 506.69 506.76 507.04 507.11 507.17 507.23 507.28 507.34 507.38 507.42 507.46 507.49 507.52 507.55 507.56 507.58 507.59 507.60 507.60 507.60 507.60

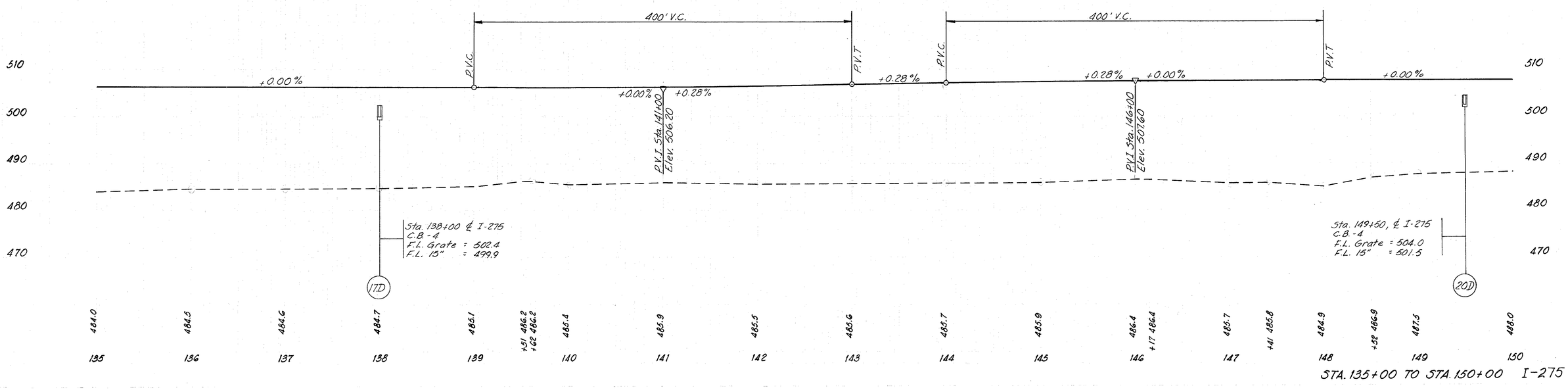

STA. 135+00 TO STA. 150+00 I-275

HAM. 275 - 0.00
HAMILTON COUNTY

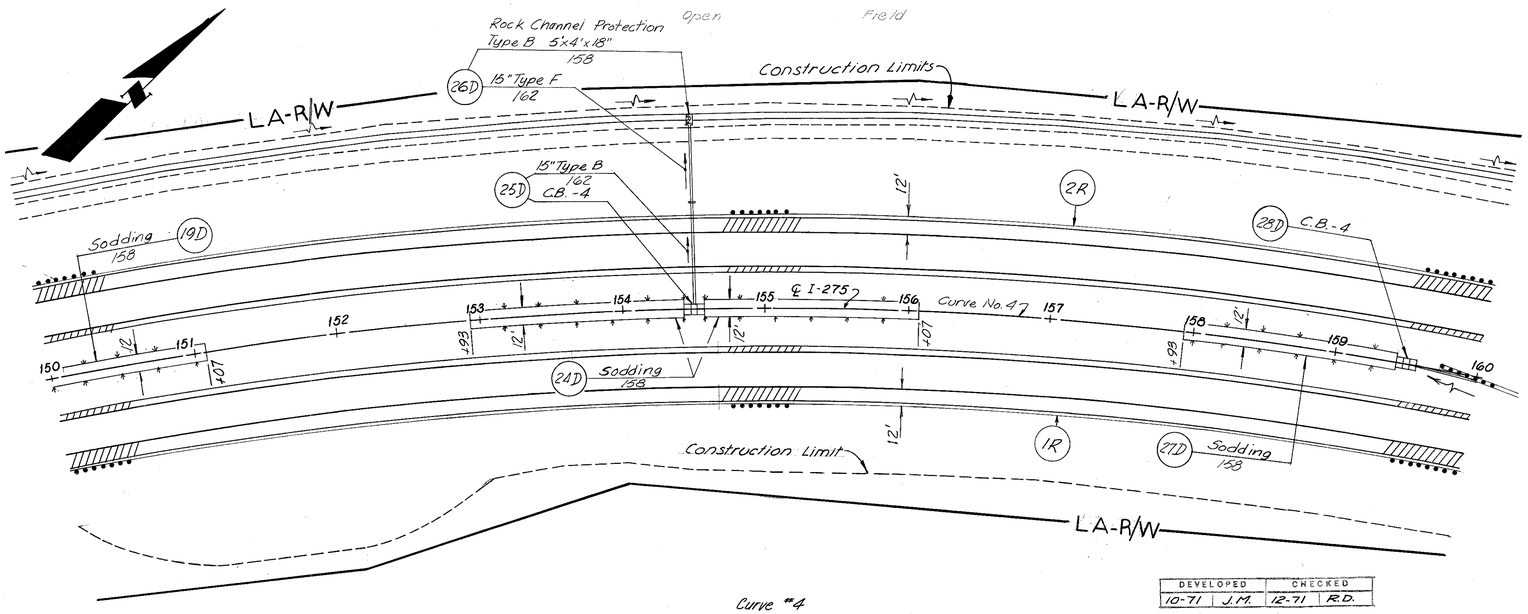

DEVELOPED		CHECKED	
10-71	J.M.	12-71	R.D.

Item - 203 Excavation (not inc. Emb.)	897	C.Y.
" 203 Embankment	14 002	C.Y.
" 659 Seeding & Mulching	2.54	S.Y.

B.M. #31 Elev. 489.86
R.R. spike in group of Sycamore trees (4) on edge of plowed field 200' Lt. of ℄ Sta. 142+80 I-275

Open

Field

Curve #4
P.I. = 162+77.88
Δ = 72° 15' 55" Rt.
Dc = 2° 15' 00"
Rc = 2,546.48'
Ts = 2,061.02'
Es = 60.969'
Lc = 2,811.79'
Ls = 400.00'

For Superelevation Tables
See Sh. No. 8

For Quantities
See Sh. Nos. 30, 31

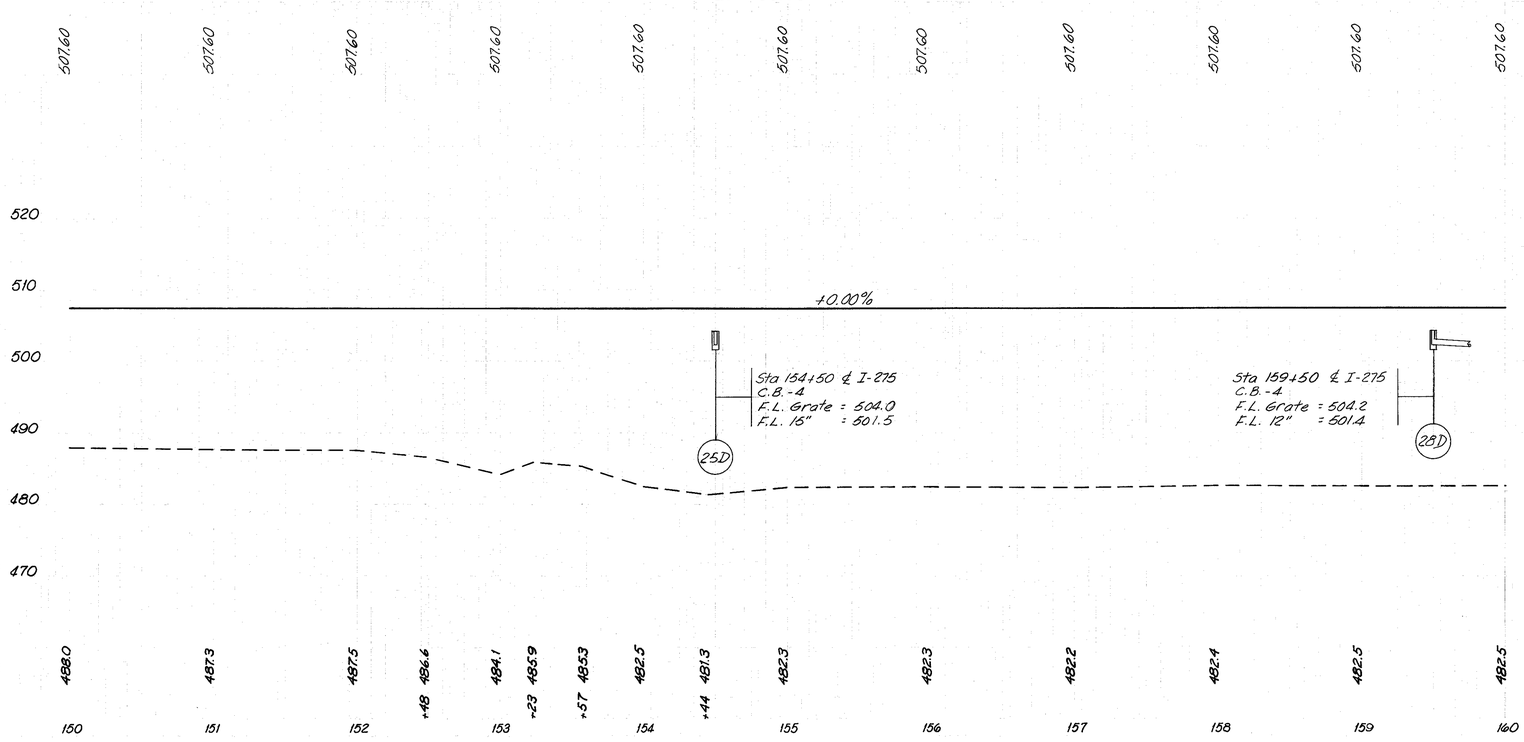

301 Bitum. Aggr. Base Cu. Yd.		451 10" Reinf. Conc. Pav't. Sq. Yd.
PAVEMENT		
105+00 - 120+00	Lt. & Rt.	959	8000
120+00 - 135+00	Lt. & Rt.	959	8000
135+00 - 150+00	Lt. & Rt.	959	8000
150+00 - 160+00	Lt. & Rt.	666	5333
ROADWAY			
1R 105+03 - 160+02	Rt.	942	
2R 105+04 - 160+03	Lt.	942	
		629	

608 Guard Rail Type 5 L.F.
5462.5
5597.5
3663
3455
7118

11,020

29,333

DEVELOPED		CHECKED	
10/71	J.M.	12/71	R.D.

STA. 150+00 TO STA. 160+00

ESTIMATED QUANTITIES

FED. RD. DIVISION	STATE	PROJECT	
2	OHIO		

31
305

HAM-275-0.00
HAMILTON COUNTY

REF. NO.	STATION TO STATION	SIDE	15" 25°	202 Pipe Removed 24" & Under	202 Pipe Removed Over 24"	601 Rock Channel Protect. Type A	601 Rock Channel Protect. Type B	602 Conc. Masonry	603 Type B 15"	603 Type F 15"	604 Catch Basin C.B.-4	660 Sodding	SEE SHEET NO.
	UNIT			L.F.	L.F.	Cu. Yd.	Cu. Yd.	Cu. Yd.	L.F.	L.F.	Each	Sq. Yd.	
	DRAINAGE												
1D	106+43-109+57	℄										400	27
2D	108+00	℄ & Rt.	2					*0.10	70		1		27
3D	108+00	Rt.					2	0.27		68			27
4D	116+43-119+57	℄										400	27
5D	118+00	℄ & Rt.						*0.10	70		1		27
6D	118+00	Lt.	2				2	0.27		70			27
7D	117+64	Lt.					76						
8D													
9D	118+50	Rt				340							27
10D	121+75	Lt.				300							28
11D	126+43-129+57	℄										400	28
12D	128+00	℄ & Lt.	2					*0.10	68		1		28
13D	128+00	Lt.					2	0.27		48			28
14D													
15D													
16D	136+43-139+57	℄										400	29
17D	138+00	℄ & Lt.	2					*0.10	70		1		29
18D	138+00	Lt.					2	0.27		40			29
19D	147+93-151+07	℄										400	29 & 30
20D	149+50	℄ & Lt.	2					*0.10	74		1		29
21D	149+50	Lt.					2	0.27		60			29
22D													
23D													
24D	152+93-156+07	℄										400	30
25D	154+50	℄ & Lt.	2					*0.10	74		1		30
26D	154+50	Lt.					2	0.27		60			30
27D	157+93-159+49	℄										200	30
28D	159+50	℄									1		30
TOTALS			12			640	88	1.62	426	346	7	2600	

*Concrete Collar (For Information Only Not Included In Total)

DEVELOPED		CHECKED	
10/71	J.M	12/71	R.D.

Sta. 105+00 to Sta. 160+00

HAM. 275-0.00
HAMILTON COUNTY

Curve #4
P.I. = 162+77.88
Δ = 72°15'55" Rt.
Dc = 2°15'00"
Rc = 2,546.48'
Ts = 2,061.02'
Ls = 609.69
Lc = 2,811.79
Ls = 400.00'

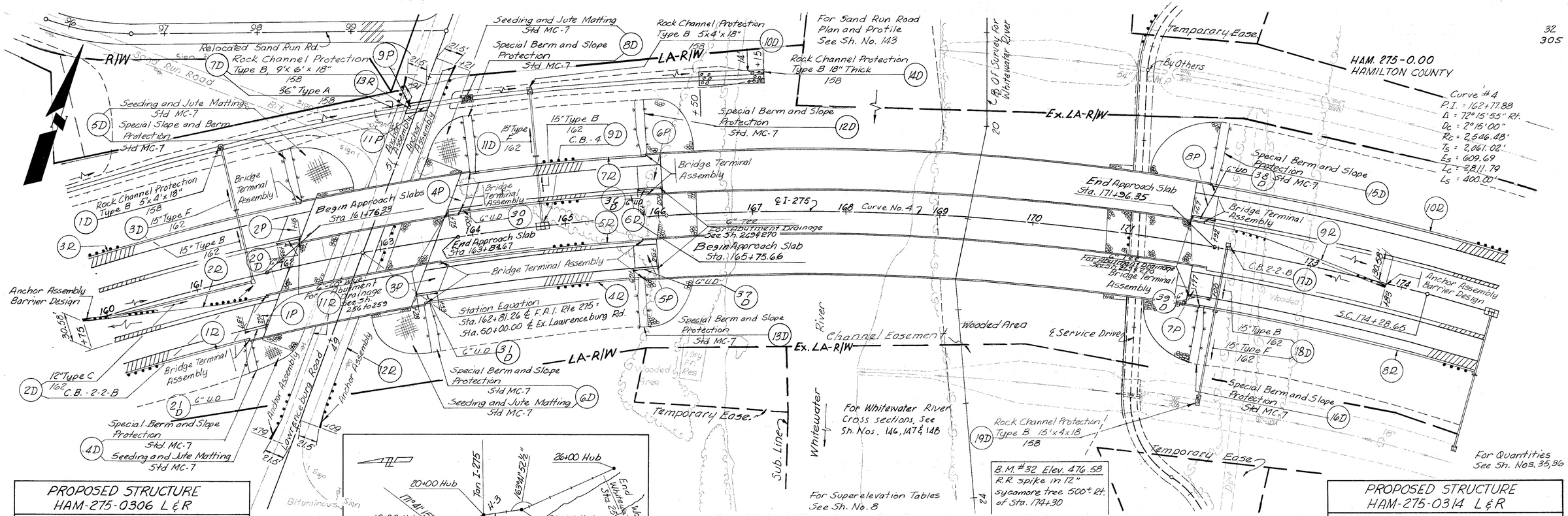

PROPOSED STRUCTURE
HAM-275-0306 L&R

TYPE: 3 Span continuous steel beams with reinforced concrete deck and substructures

SPANS: 47'-0", 59'-0", 47'-0" c/c Brgs measured along local tangent.

ROADWAY: 42'-0" face to face of parapets

LOADING: HS 20-44 and Interstate Alternate Loading

SKEW: 31°40'50" L.F. (to local tangent)

WEARING SURFACE: 2½" asphalt concrete

APPROACH SLABS: AS-1-67 (25' long)

ALIGNMENT: 2°15'00" curve to right

SUPERELEVATION: 0.073 ft./ft.

PROPOSED STRUCTURE
HAM-275-0314 L&R

TYPE: Continuous welded steel girder with reinforced concrete deck and substructures

SPANS: 98'-6", 123'-0", 123'-0", 123'-0", 98'-6" c/c brgs measured along centerlines of bridges.

ROADWAY: 2 at 42'-0" face to face parapets

LOADING: HS 20-44 and Interstate Alternate Loading

SKEW: Radial

WEARING SURFACE: 2½" asphalt concrete

APPROACH SLABS: AS-1-67 (25' long)

ALIGNMENT: 2°15'00" Curve to right

SUPERELEVATION: 0.073 ft./ft.

HAM. 275-0.00
HAMILTON COUNTY

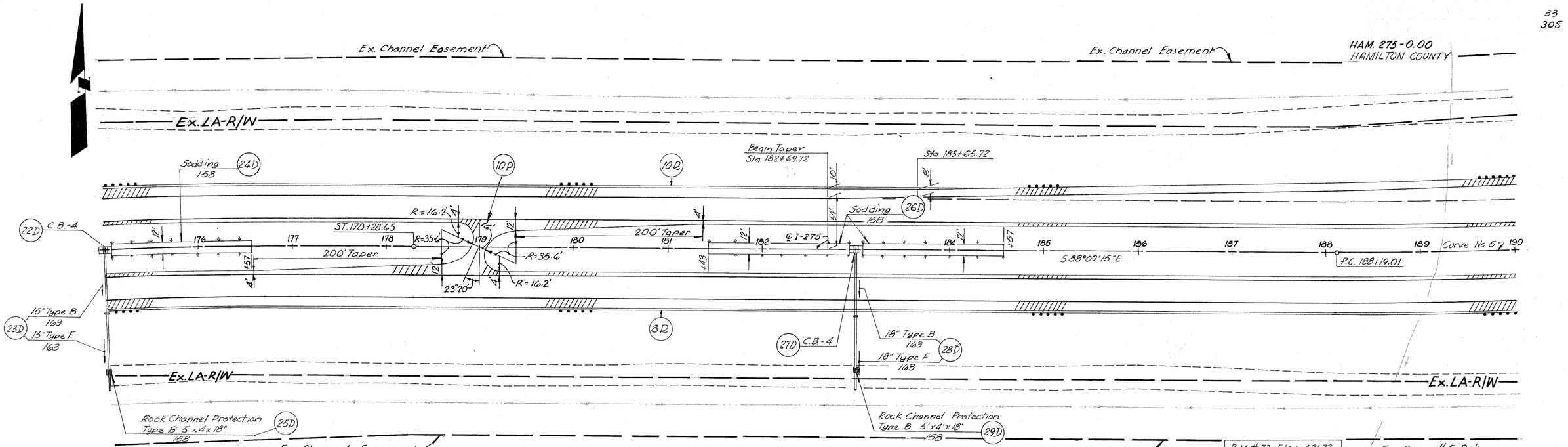

DEVELOPED		CHECKED	
10-71	J.M.	12-71	R.D.

Item 203 Excavation (not inc. Emb.)	1,086	C.Y.
" 203 Embankment	295,870	C.Y.
" 659 Seeding & Mulching	35,192	S.Y.

STA. 175+00 TO STA. 190+00 I-275

HAM. 275-0.00
HAMILTON COUNTY

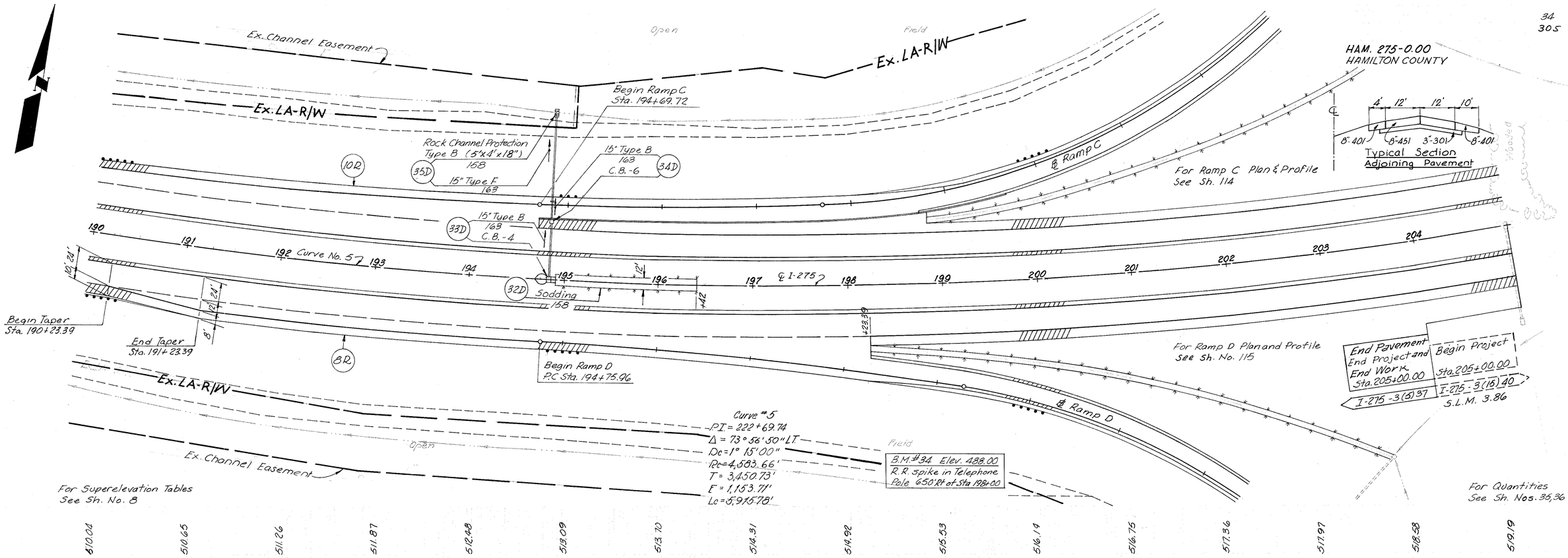

DEVELOPED		CHECKED	
10-71	J.M.	12-71	R.D.

Item 203 Excavation (not inc. Emb)	431 C.Y.
" 203 Embankment	246,390 C.Y.
" 659 Seeding & Mulching	22,040 S.Y.

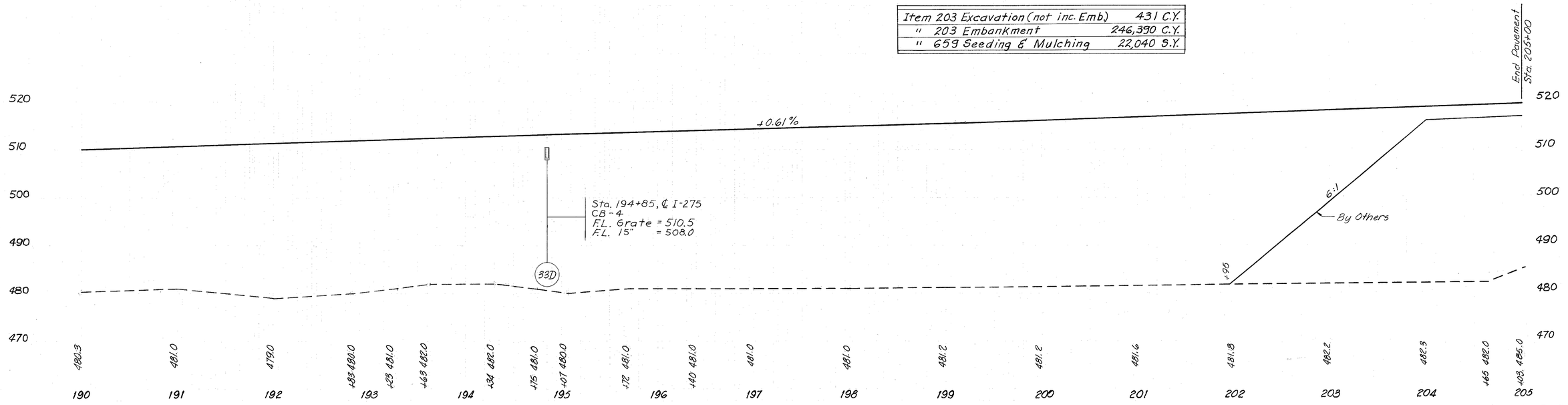

STA. 190+00 TO STA. 205+00 I-275

HAM. 275-0.00

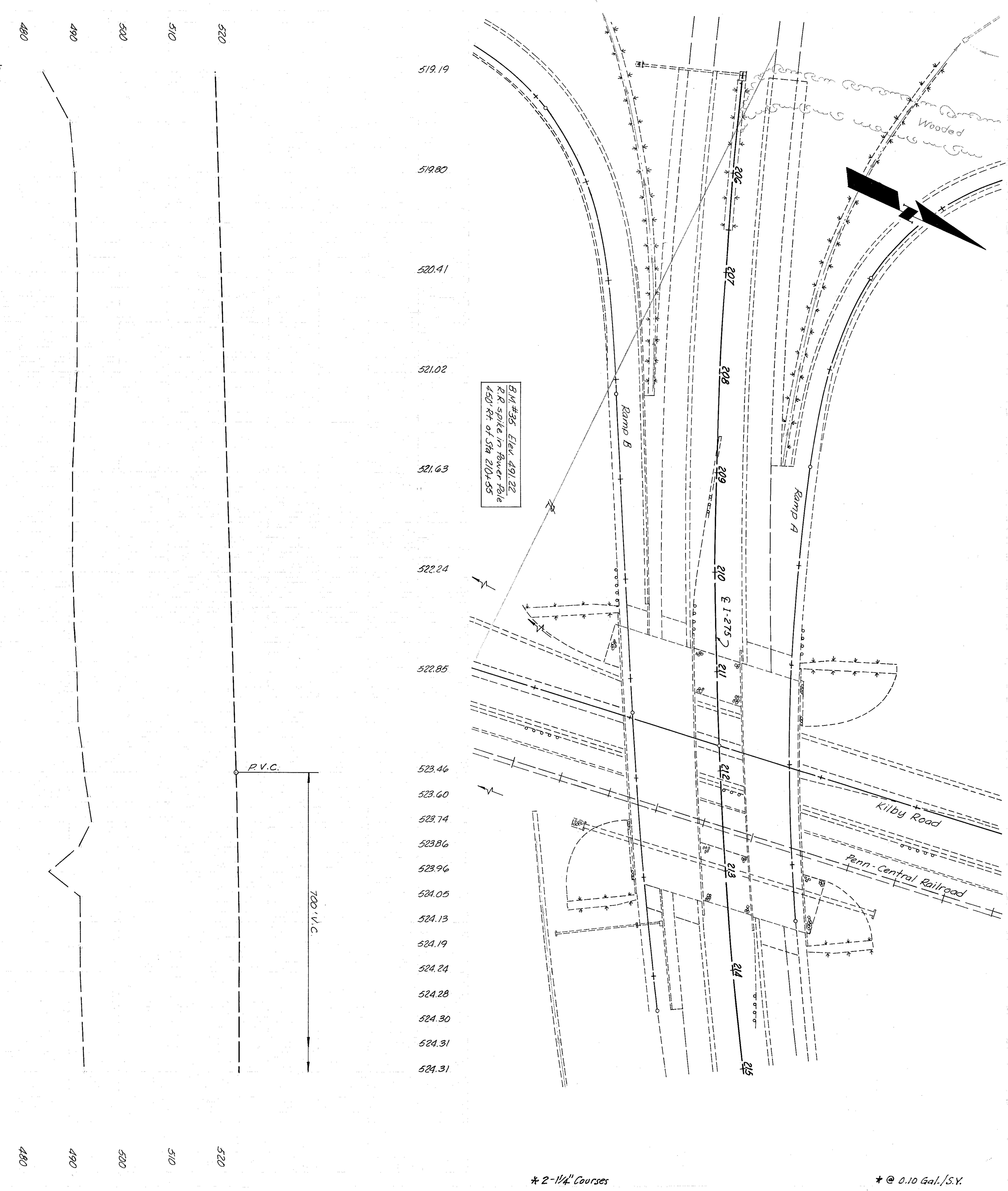

* 2-1¼" Courses

* @ 0.10 Gal./S.Y.

			301		301	451	451	611	310	404	202	606					407	
			Bitum Aggr Base	Bitum Aggr Base (Shlder)	Bitum. Aggr. Base 8"	10" Reinf. Concr. Pav't.	9" Port. Cement Conc. Pav't	Reinf. Conc. Appr. Slab T=13	Subbase	Asphalt Concrete	Pavement Removed	Guard Rail Type 5	Bridge Termin. Assemb. Type A	Anchor Assemb. Barrier Design	Guard Rail Type 5 Barr. Des.	Anchor Assemb.	Tack *	Cover
PAVEMENT			Cu. Yd.	Cu. Yd.	Cu. Yd.	Sq. Yd.	Sq. Yd.	Sq. Yd.	Cu. Yd.	Cu. Yd.	Sq. Yd.	L.F.	Each	Each	L.F.	Each	Gal.	Ton
	160+00 - 175+00	Lt.&Rt.	778	837		3578												
	175+00 - 190+00	Lt.&Rt.	986	912		8000												
	190+00 - 205+00	Lt.&Rt.	975	916		8000												
1P	161+76.33 - 162+01.33	Rt.						66.5	12	5 *							7	0.3
2P	161+76.33 - 162+01.33	Lt.						66.5	12	5 *							7	0.3
3P	163+59.67 - 163+84.67	Rt.						66.5	12	5 *							7	0.3
4P	163+59.67 - 163+84.67	Lt.						66.5	12	5 *							7	0.3
5P	165+70.62 - 165+95.62	Rt.						66.5	12	5 *							7	0.3
6P	165+80.70 - 166+05.70	Lt.						66.5	12	5 *							7	0.3
7P	171+76.38 - 172+01.38	Rt.						66.5	12	5 *							7	0.3
8P	171+66.30 - 171+91.30	Lt.						66.5	12	5 *							7	0.3
9P	163+55	Lt.								11								
10P	179+00 Crossover	Lt.&Rt.			86													
	Acceleration Taper 182+69.72 - 194+69.72	Lt.	196				1,667											
	Deceleration Taper 190+23.39 - 198+23.39	Rt.	205				1,778											
ROADWAY																		
1R	160+02 - 161+43	Rt.										137.5	1					
2R	159+75 - 161+71	Med.										125	1	1	50			
3R	160+03 - 162+22	Lt.										225	1					
4R	163+34 - 165+77	Rt.										236.7	2					
5R	163+58 - 165+77	Lt.										218.4	2					
6R	163+85 - 166+88	Lt.& Med.										308.6	2					
7R	164+09 - 166+88	Lt.										286.2	2					
8R	171+94 - 194+74	Rt.										2275	1					
9R	171+80 - 173+83	Med.										125	1	1	50			
10R	171+83 I-275 - 197+77 RampC	Lt.										2300	1					
11R	47+79 - 51+91	Lt. Lawrenceburg Rd.										362.5				2		
12R	48+09 - 52+21	Rt. Lawrenceburg Rd.										362.5				2		
13R	163+55	Lt.									33							
			3140	2655 5891	86	19,578	3445	532	96	51	33	6962.4	14	2	100	4	56	2.4

DEVELOPED		CHECKED	
10/71	J.M.	12/71	R.D

STA. 205+00 TO 215+00

ESTIMATED QUANTITIES

FED. RD. DIVISION	STATE	PROJECT	
2	OHIO		

36
305

HAM-275-0.00
HAMILTON COUNTY

REF. NO.	STATION TO STATION	SIDE	Bends 15° 25°	Bends 18° 25°	Bends 6" WYE	Bends 6" TEE	202 Pipe Removed 24"-5 Under	202 Pipe Removed Over 24"	601 Rock Channel Protect. Type B	602 Conc. Masonry	603 Type A 706.02 or 706.08 36"	603 Type B 15"	603 Type B 18"	603 Type C 12"	603 Type F 15"	603 Type F 18"	604 Catch Basins C.B. 2-2-B	604 Catch Basins C.B.-4	604 Catch Basins C.B.-6	605 Unclassified Pipe Underdrains 707.01 6"	660 Sodding	660 Sdng For Spec. Berm & Slope Protect.	667 Seeding & Jute Matting	SEE SHEET NO.
	UNIT						L.F.	L.F.	Cu. Yd.	Cu. Yd.	L.F.	L.F.	L.F.	L.F.	L.F.	L.F.	Each	Each	Each	L.F.	Sq. Yd.	Sq. Yd.	Sq. Yd.	
	DRAINAGE																							
1D	161+60	Lt.							2															32
2D	159+50 - 161+60	℄ & Rt.												210			1							32
3D	161+60	Lt. & Rt.	2							0.27 *0.10		78			88									32
4D	161+38	Rt.																				35	102	32
5D	162+28	Lt.																				62	300	32
6D	163+40	Rt.																				55	267	32
7D	163+50	Lt.							4	1.38	96													32
8D	164+09	Lt.																				64	257	32
9D	164+75	℄ & Lt.								*0.10		74						1						32
10D	164+75	Lt							2															
11D	164+75	Lt	2							0.27					72									32
12D	165+85	Lt																				62		32
13D	165+78	Rt																				55		32
14D	166+50 - 167+15	Lt							67															32
15D	171+85	Lt.																				71		32
16D	171+97	Rt.																				67		32
17D	172+10	Lt.															1							32
18D	172+10	℄ & Rt	2							0.27 *0.10		70			94									32
19D	172+10	Rt.							4															32
20D	161+93 - 162+18	Lt.			1															25				
21D	161+37 - 161+62	Rt.			1															25				
22D	175+00	℄																1						33
23D	175+00	Rt	2							0.27 *0.10		68			66									33
24D	175+07 - 176+57	℄																			200			33
25D	175+00	Rt							2															33
26D	181+43 - 184+57	℄																			400			33
27D	183+00	℄																1						33
28D	183+00	Rt.		2						0.33 * 0.12			72			60								33
29D	183+00	Rt.							2															33
30D	163+75 - 164+00	Lt.			1															25				
31D	163+28 - 163+53	Rt.			1															25				
32D	194+92 - 196+42	℄																			200			34
33D	194+85	℄ & Lt.										64						1						34
34D	194+85	Lt								*0.10		22							1					34
35D	194+85	Lt.	2						2	0.27					92									34
36D	165+79 - 166+04	Lt.				1														25				32
37D	165+69 - 165+94	Rt				1														25				32
38D	171+67 - 171+92	Lt				1														25				32
39D	171+77 - 172+02	Rt				1														25				32
TOTALS			10	2	4	4			85	3.06	96	376	72	210	412	60	2	4	1	200	800	471	926	

*Concrete Collar (For Information Only Not Included In Total)

DEVELOPED		CHECKED	
10/71	J.M	12/71	R.O.

Sta. 160+00 to Sta. 205+00

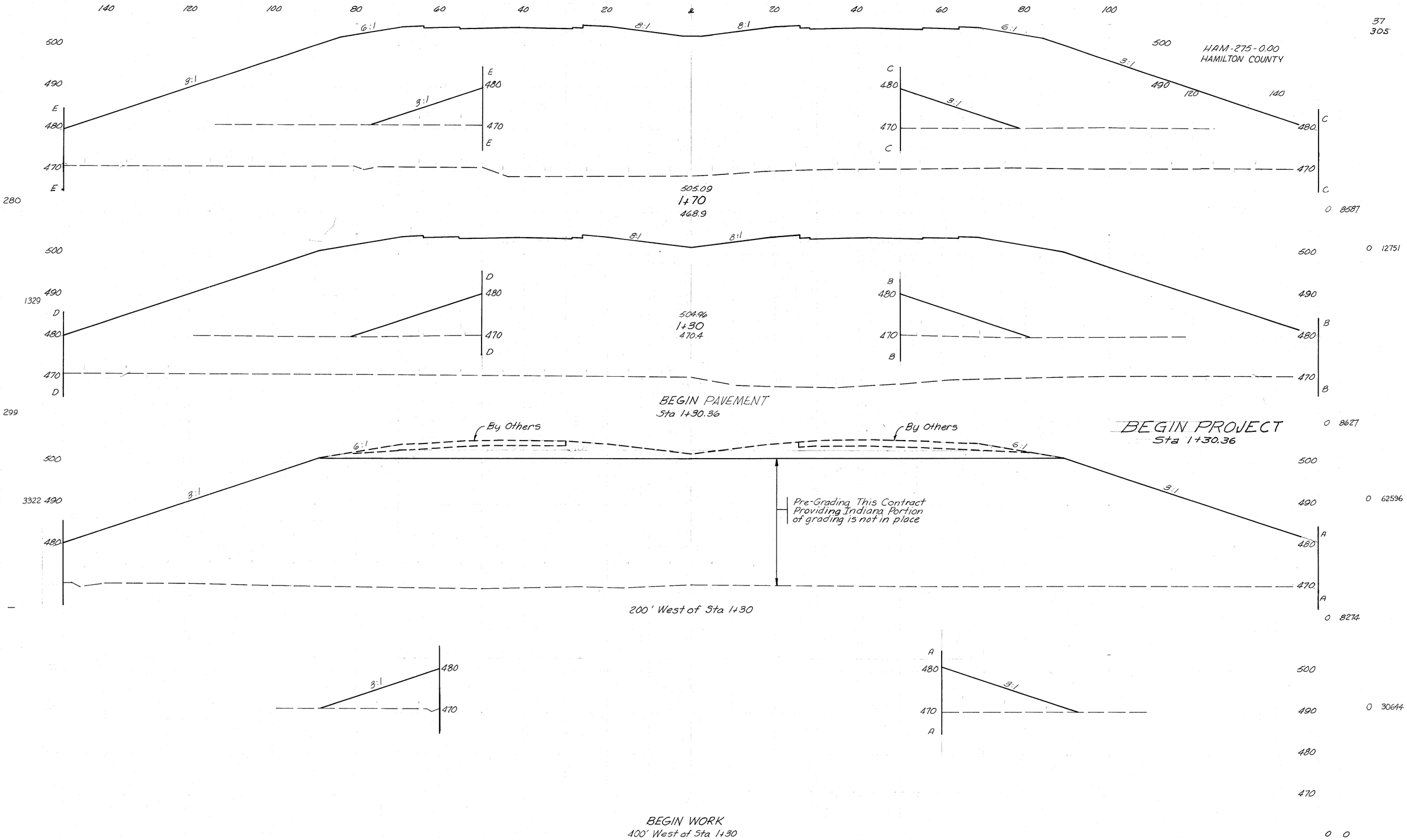

DEVELOPED		CHECKED	
6-67	J.M.	8-70	M.S.

Sta 1+30 to Sta. 1+70 I-275

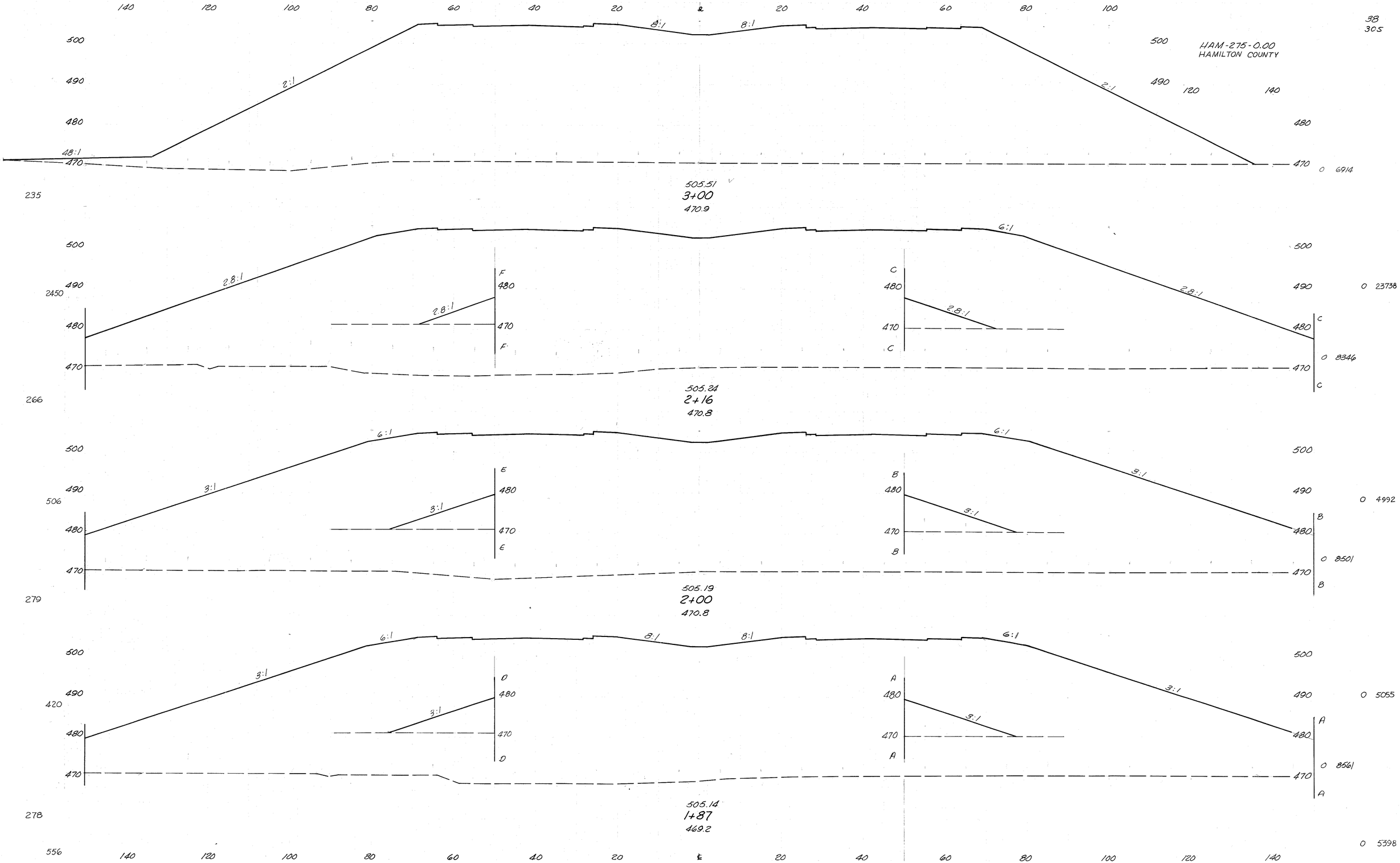

6-67 J.M. 8-70 M.S. Sta. 1+87 to Sta. 3+00 I-275

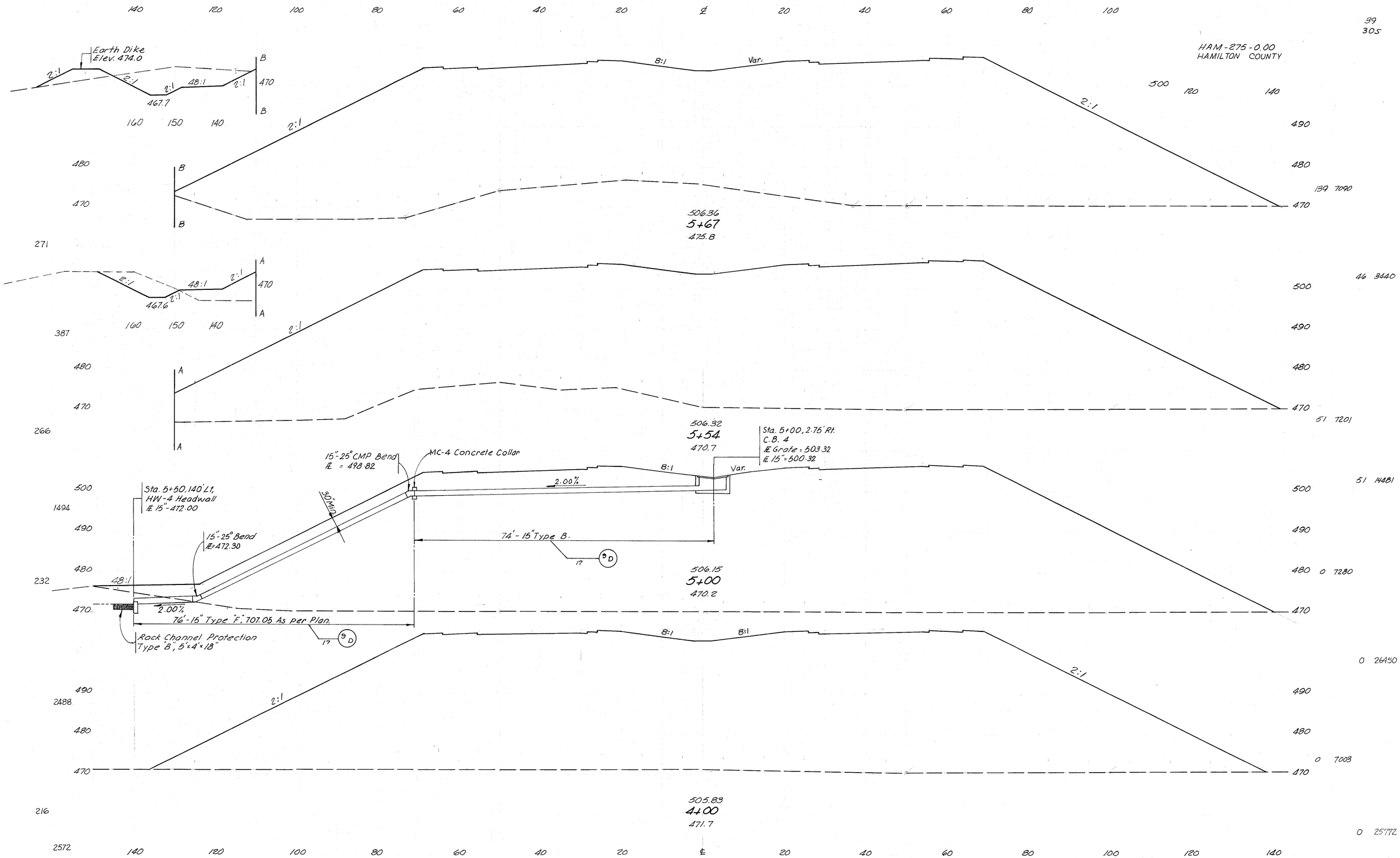
HAM-275-0.00
HAMILTON COUNTY
Earth Dike
Elev. 474.0
467.7
467.6
506.36
5+67
475.8
506.32
5+54
470.7
Sta. 5+00, 2.75' Rt.
C.B. 4
IE Grate = 503.32
IE 15" = 500.32
15"-25° CMP Bend
IE = 498.82
MC-4 Concrete Collar
Sta. 5+50, 140' Lt.
HW-4 Headwall
IE 15" - 472.00
15"-25° Bend
IE=472.30
30' Min.
74' - 15" Type B.
506.15
5+00
470.2
76' - 15" Type "F", 707.05 As per Plan.
Rock Channel Protection
Type "B", 5'x4'x18"
505.83
4+00
471.7
Var.
8:1
2:1
48:1
2.00%
Sta. 4+00 to Sta. 5+67 I-275

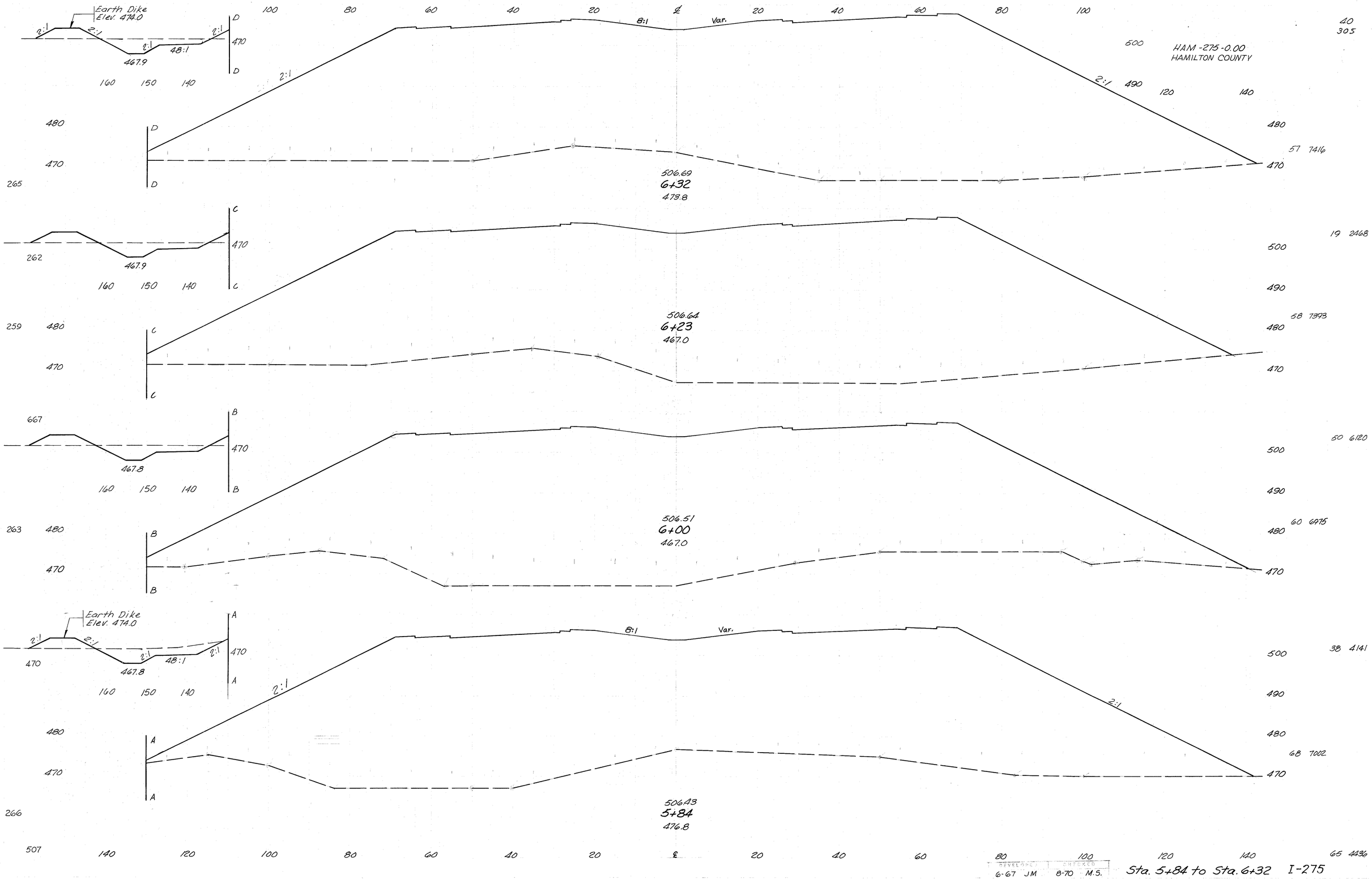
HAM-275-0.00
HAMILTON COUNTY
Earth Dike
Elev. 474.0
2:1
48:1
467.9
467.8
8:1
Var.
506.69
6+32
473.8
506.64
6+23
467.0
506.51
6+00
467.0
506.43
5+84
476.8
57 7416
19 2468
58 7393
50 6120
60 6975
38 4141
68 7002
65 4436
Sta. 5+84 to Sta. 6+32 I-275
DEVELOPED 6-67 JM
CHECKED 8-70 M.S.

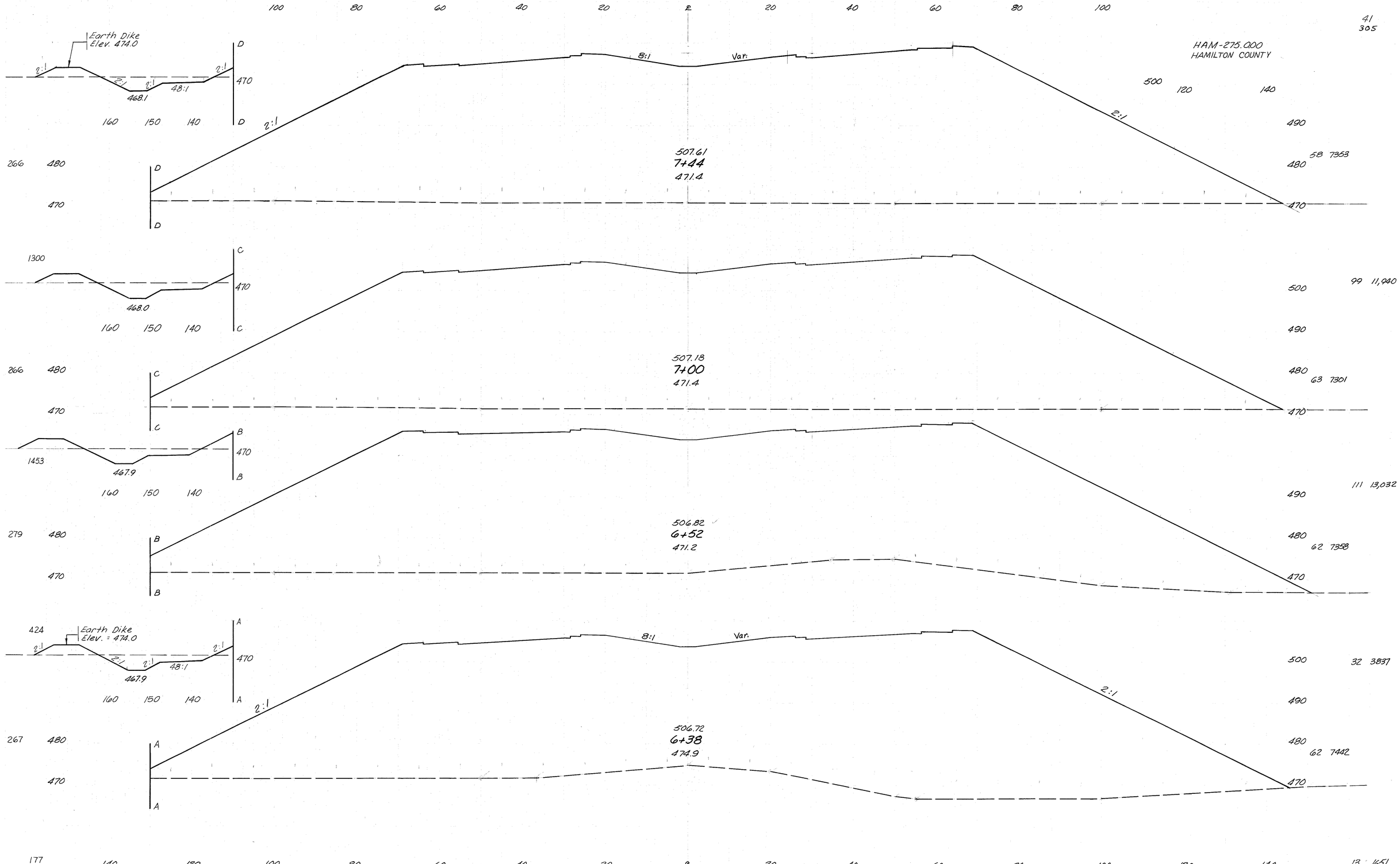

DEVELOPED		CHECKED	
6-67	J.M.	8-70	M.S.

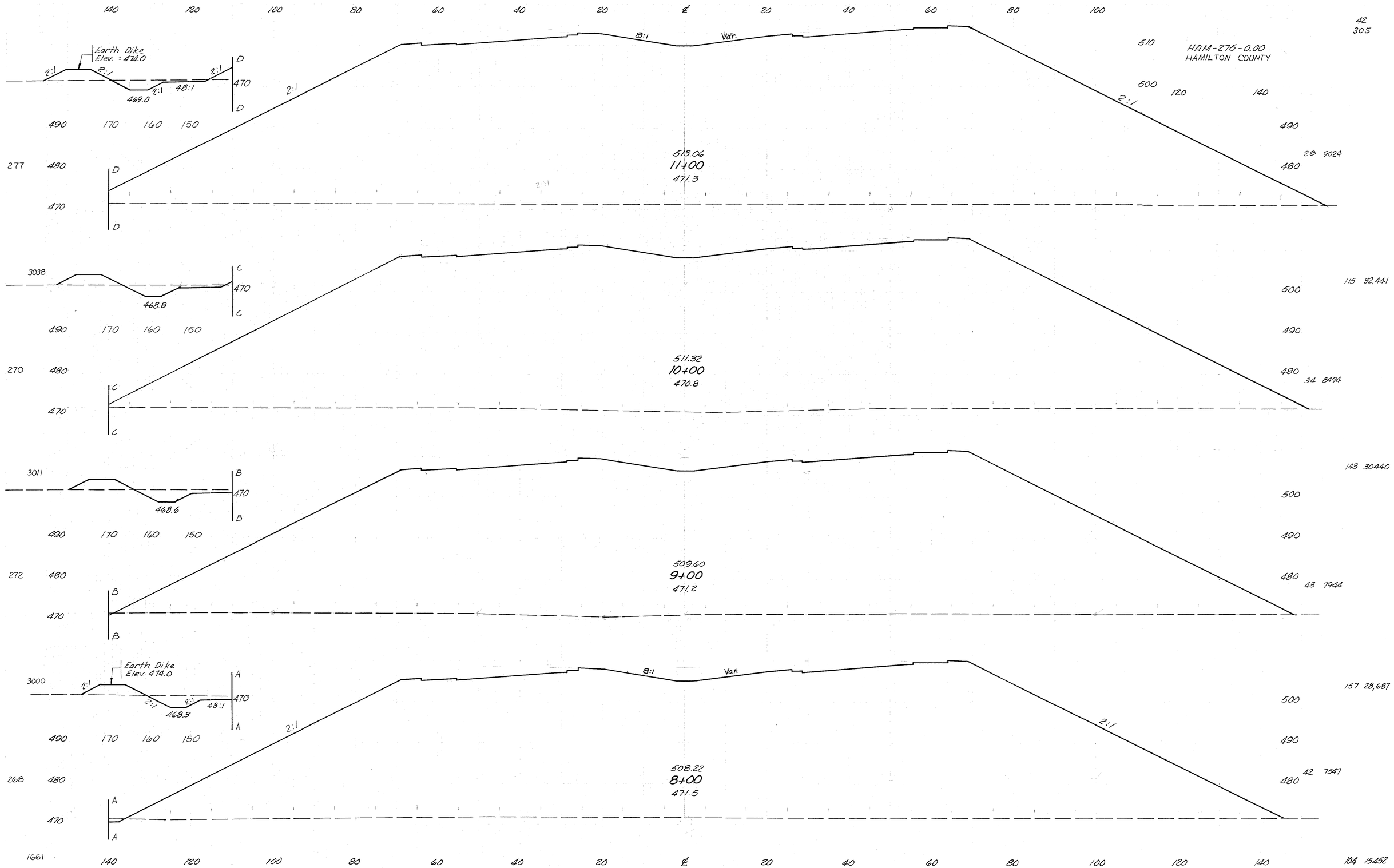
HAM-275-0.00
HAMILTON COUNTY
Earth Dike
Elev. = 474.0
8:1
Var.
2:1
48:1
469.0
468.8
468.6
468.3
513.06
11+00
471.3
511.32
10+00
470.8
509.60
9+00
471.2
508.22
8+00
471.5
42 305
28 9024
115 32,441
34 8494
143 30440
43 7944
157 28,687
42 7547
104 15452
Sta. 8+00 to Sta. 11+00 I-275
DEVELOPED
CHECKED
6-67 J.M.
8-70 M.S.

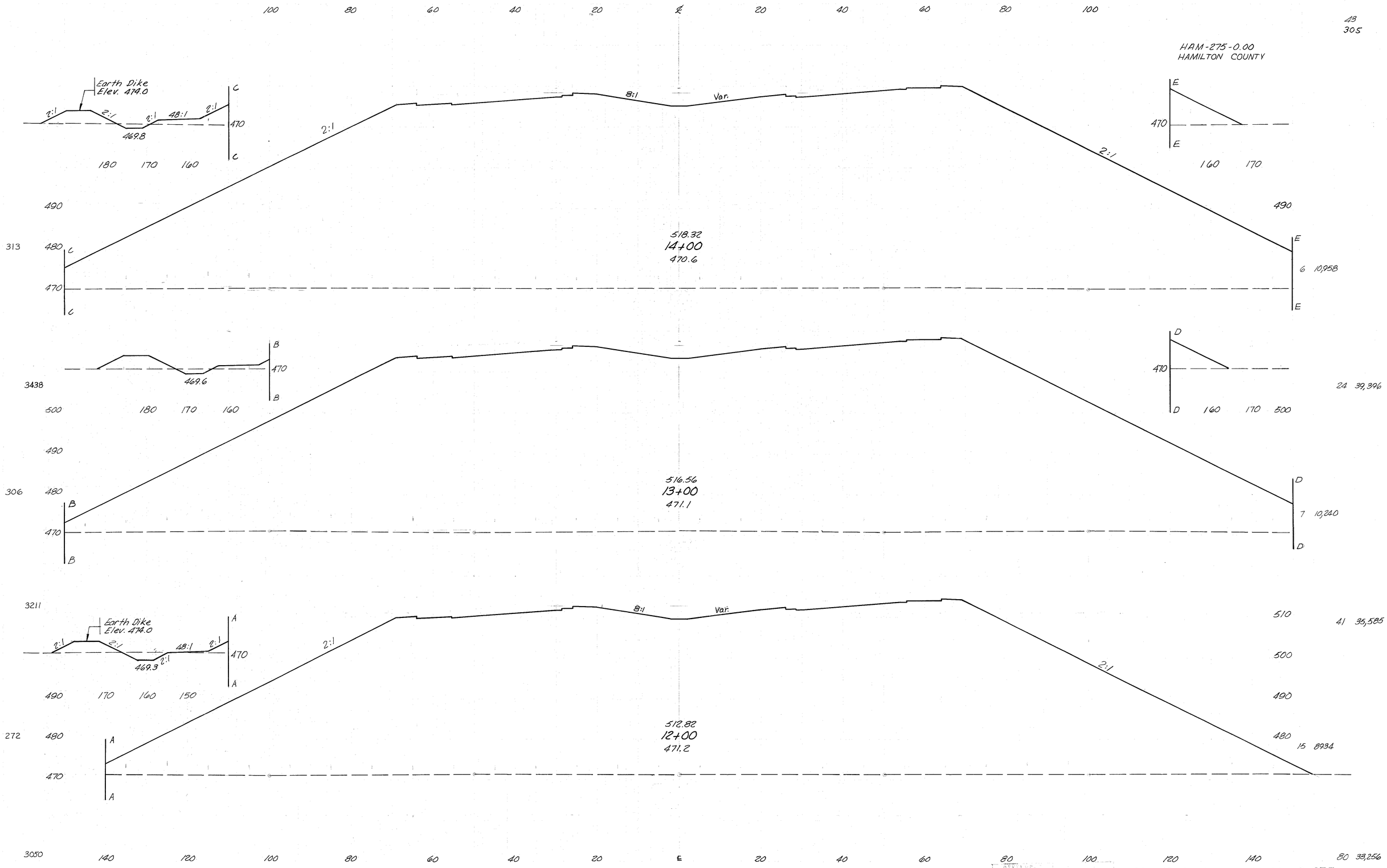
HAM-275-0.00
HAMILTON COUNTY
Earth Dike
Elev. 474.0
469.8
469.6
469.3
8:1
Var.
2:1
48:1
518.32
14+00
470.6
516.56
13+00
471.1
512.82
12+00
471.2
313
3438
306
3211
272
3050
10,958
10,240
39,396
35,585
8934
33,256
Sta. 12+00 to Sta. 14+00 I-275
6-67 J.M. 8-70 M.S.

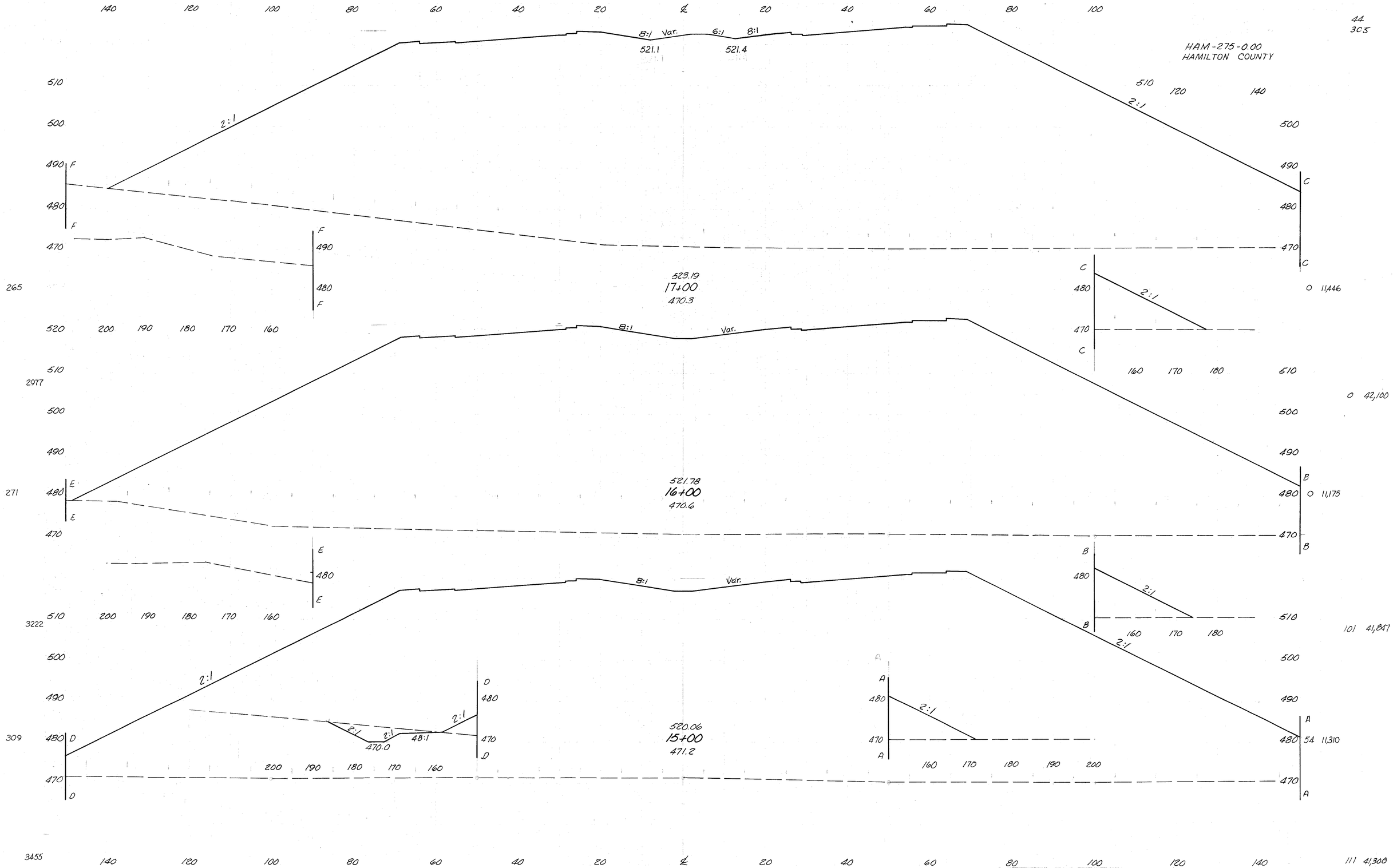

STANDARD		SHEET	
6-67	J.M.	8-70	M.S.

Sta. 15+00 to Sta. 17+00 I-275

HAM-275-0.00
HAMILTON COUNTY

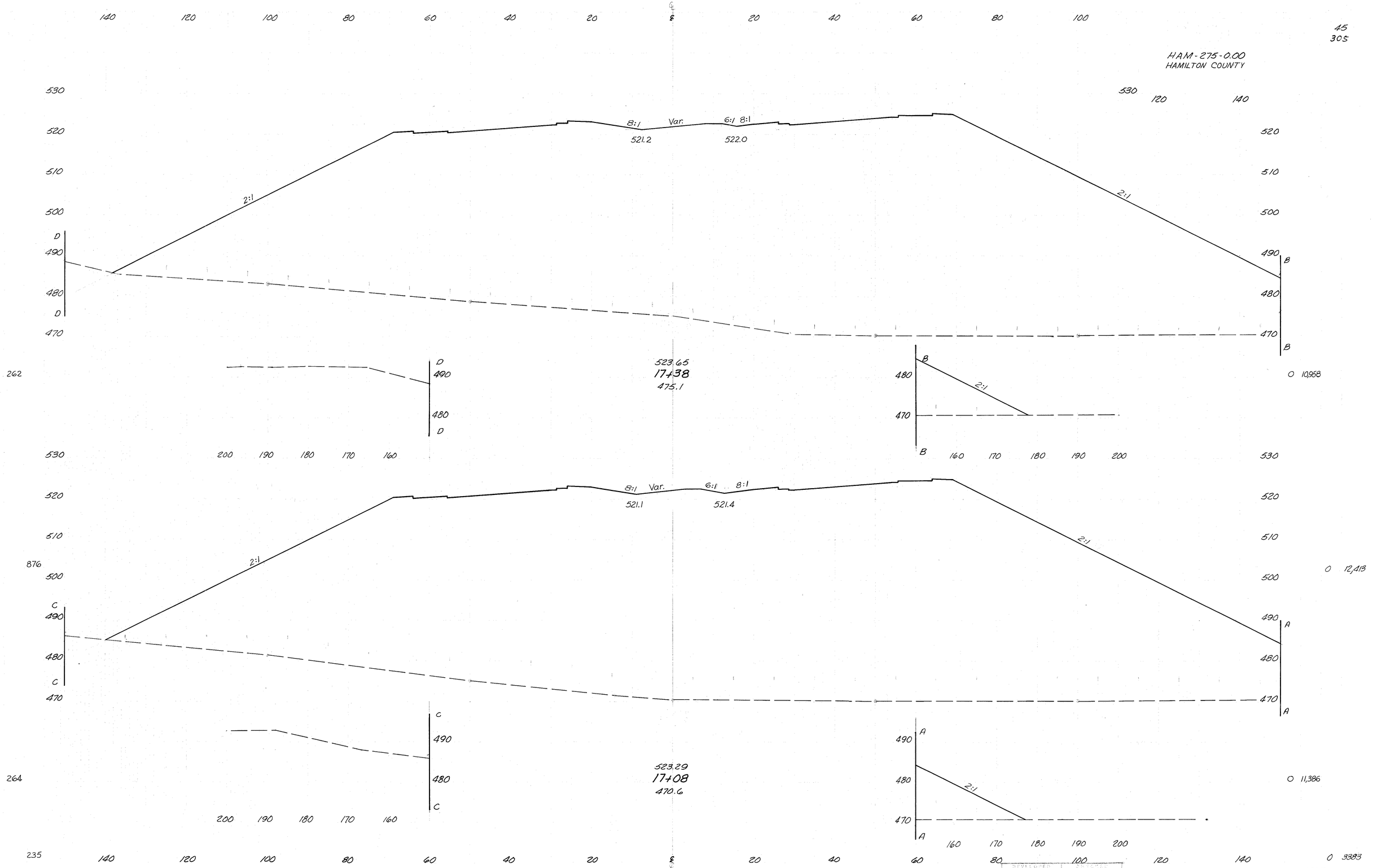

6-67 J.M. 8-70 M.S. Sta. 17+08 to Sta. 17+38 I-275

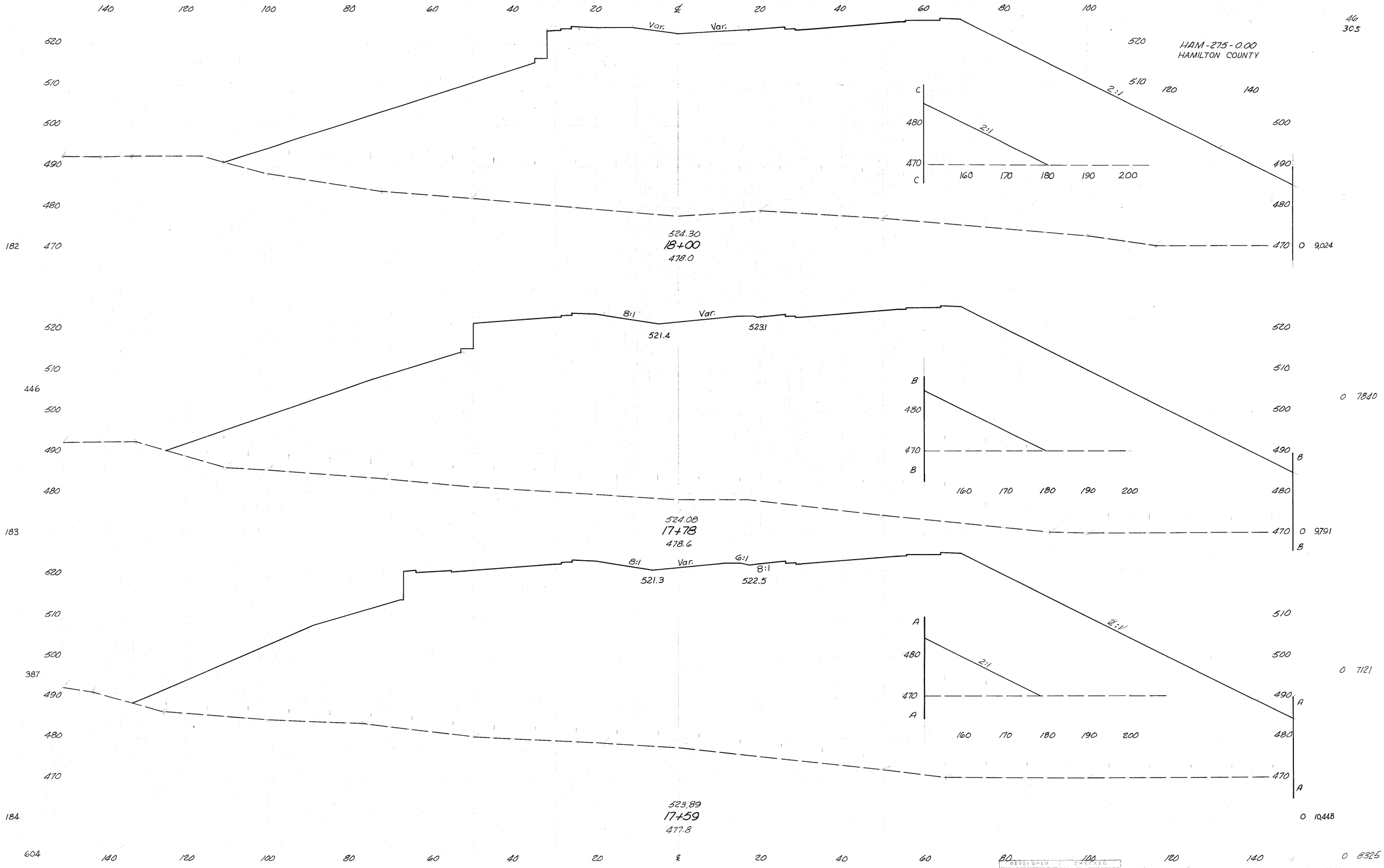
HAM-275-0.00
HAMILTON COUNTY
46
305
Var.
Var.
2:1
524.30
18+00
478.0
182
0 9,024
8:1
Var.
521.4
523.1
446
0 7840
524.08
17+78
478.6
183
0 9,791
8:1
Var.
6:1
8:1
521.3
522.5
387
0 7121
523.89
17+59
477.8
184
0 10,448
604
0 8325
DEVELOPED
CHECKED
6-67 J.M.
8-70 M.S.
Sta. 17+59 to Sta. 18+00 I-275

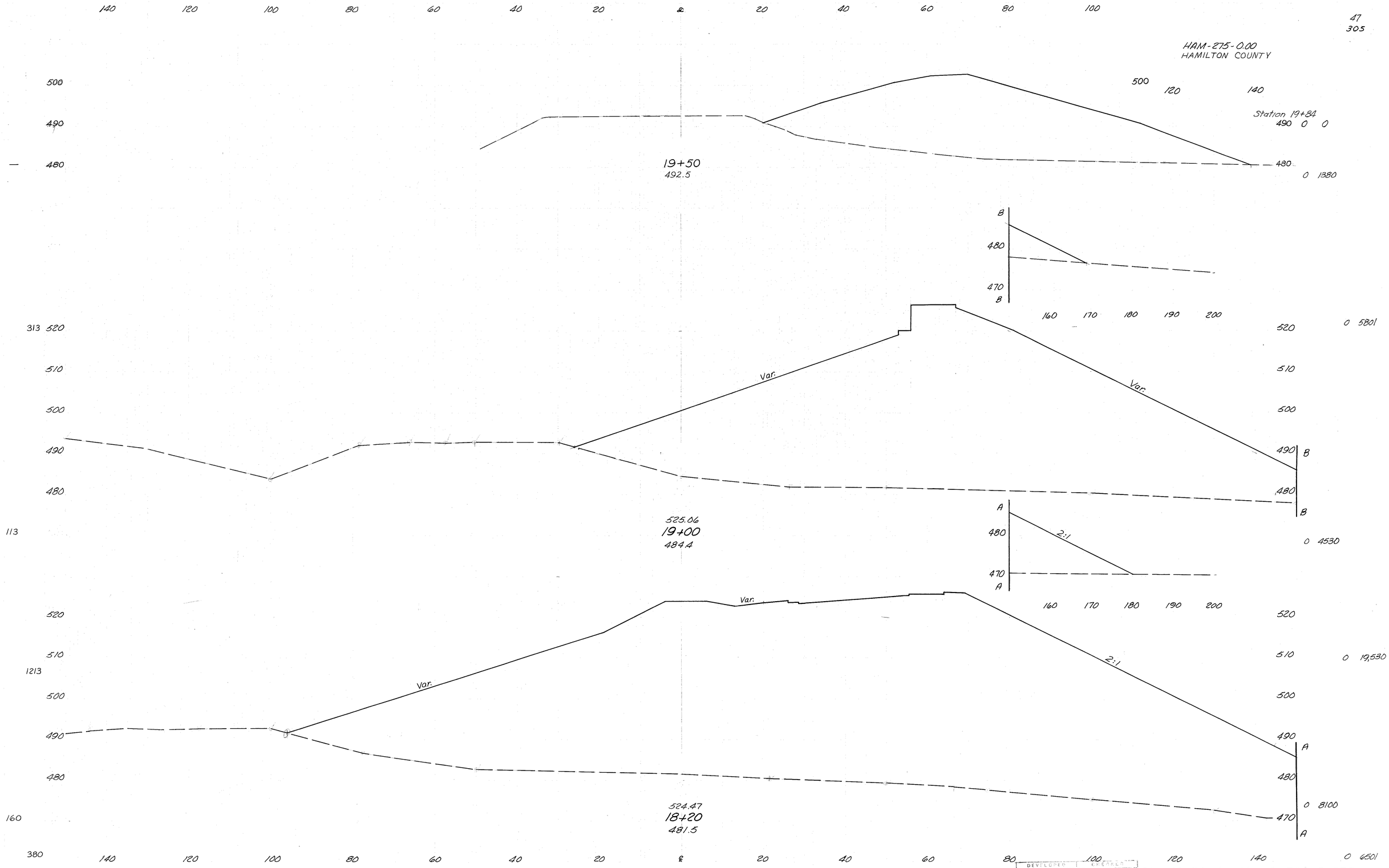

DEVELOPED		REVIEWED		
6-67	J.M.	8-70	M.S.	Sta. 18+20 to Sta. 19+50 I-275

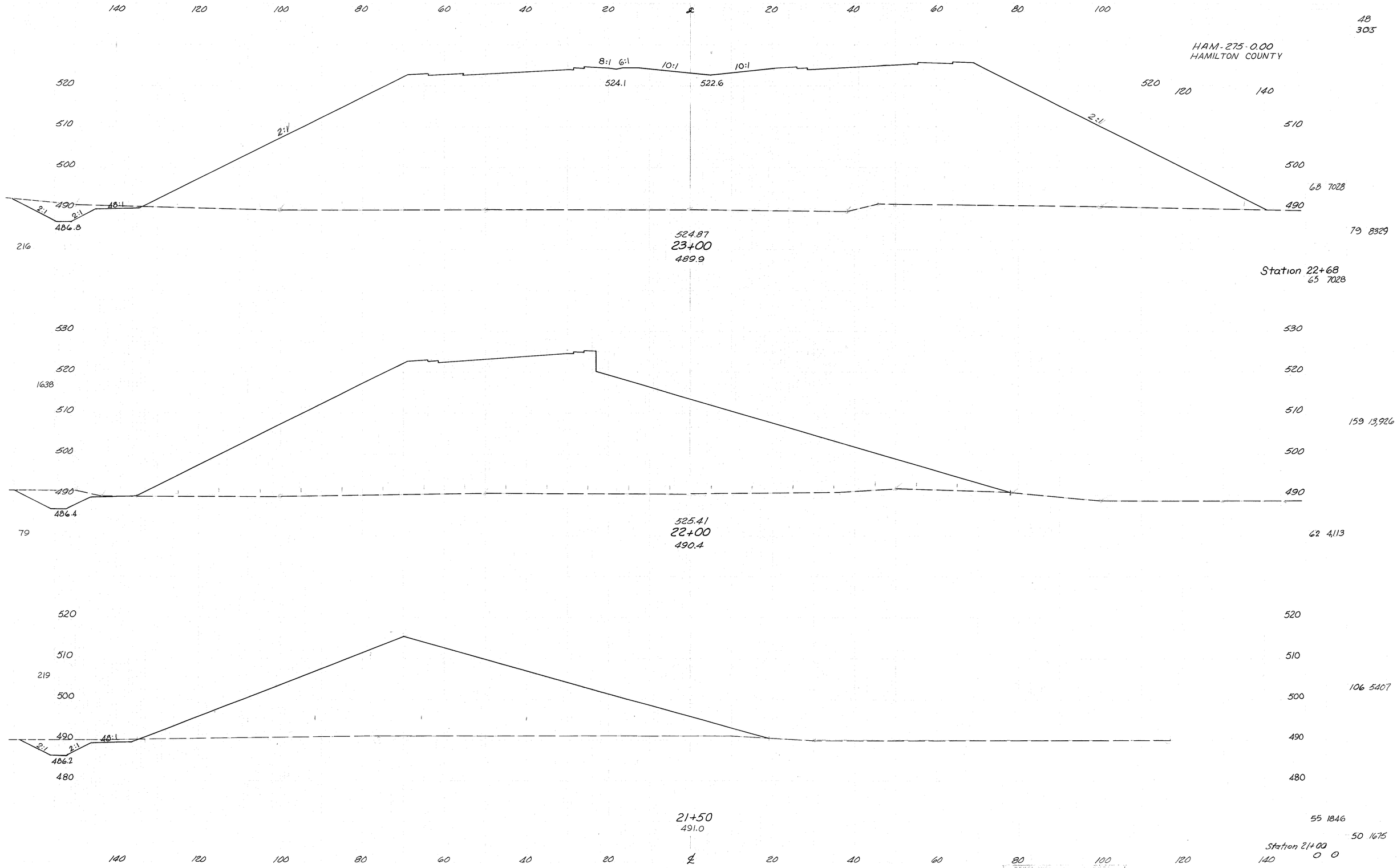
HAM-275-0.00
HAMILTON COUNTY
48
305
68 7028
79 8329
Station 22+68
65 7028
159 13,926
62 4,113
106 5407
55 1846
50 1675
Station 21+00
0 0
216
1638
79
219
524.87
23+00
489.9
525.41
22+00
490.4
21+50
491.0
524.1
522.6
486.8
486.4
486.2
8:1
6:1
10:1
10:1
2:1
2:1
2:1
2:1
2:1
48:1
48:1
DEVEL
6-67 J.M.
B-70 M.S.
Sta. 21+00 to Sta. 23+00
I-275

HAM-275-0.00
HAMILTON COUNTY

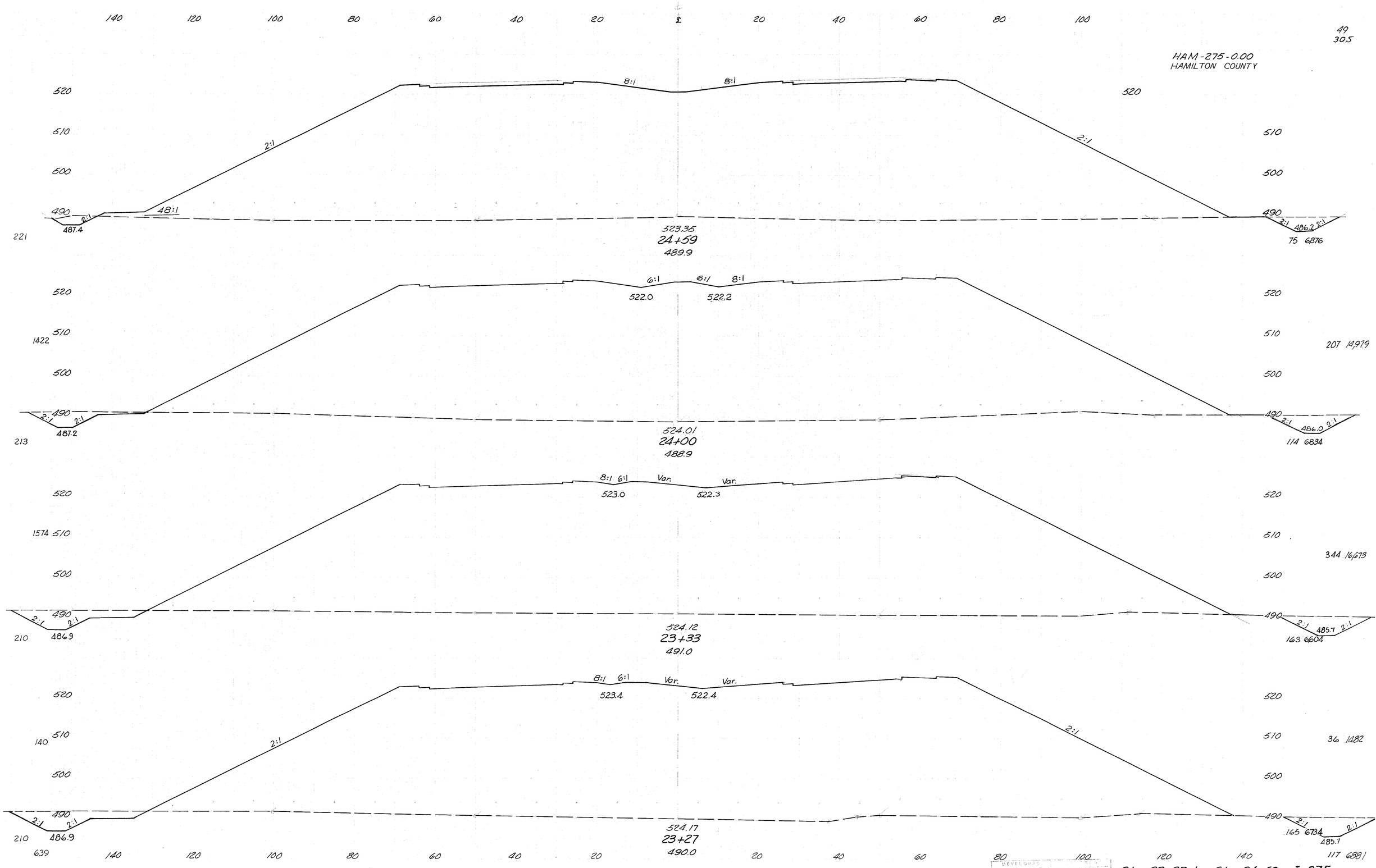

DEVELOPED			
6-67	J.M.	8-70	M.S.

Sta. 23+27 to Sta. 24+59 I-275

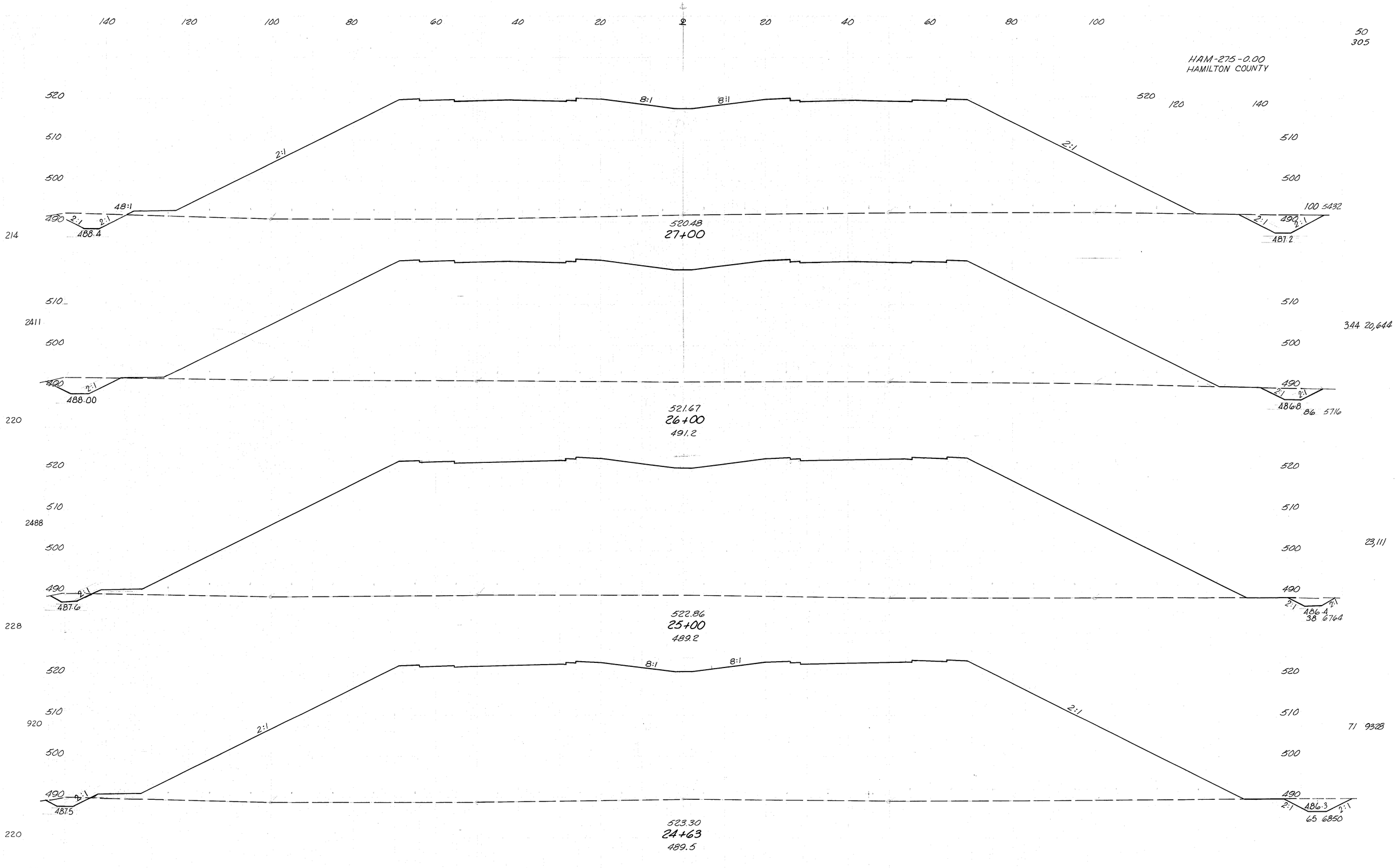

6-67	J.M.	8-70	M.S.

Sta. 24+63 to Sta. 27+00 I-275

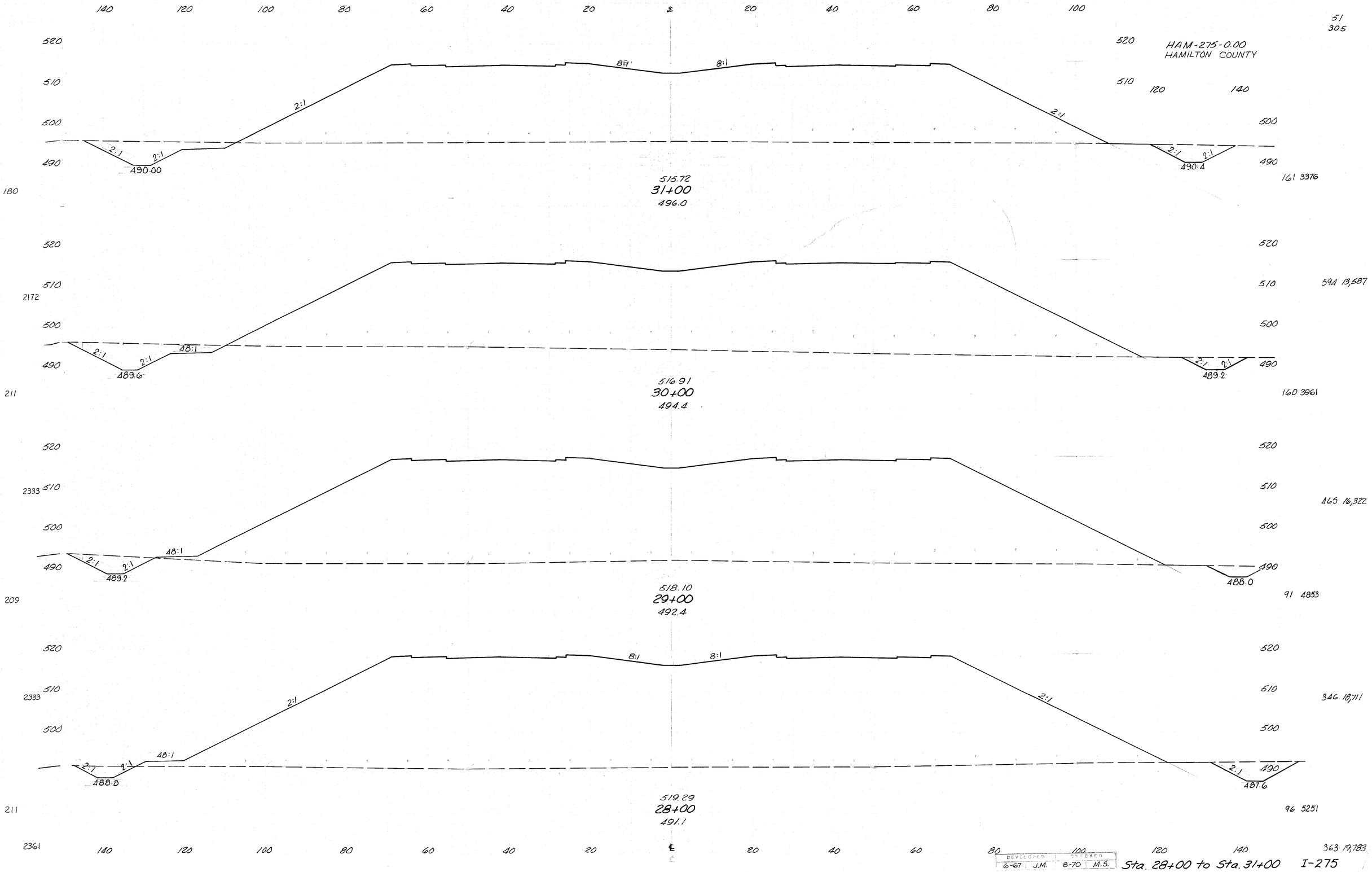

DEVELOPED		CHECKED	
6-67	J.M.	8-70	M.S.

Sta. 28+00 to Sta. 31+00 I-275

52
305

HAM-275-0.00
HAMILTON COUNTY

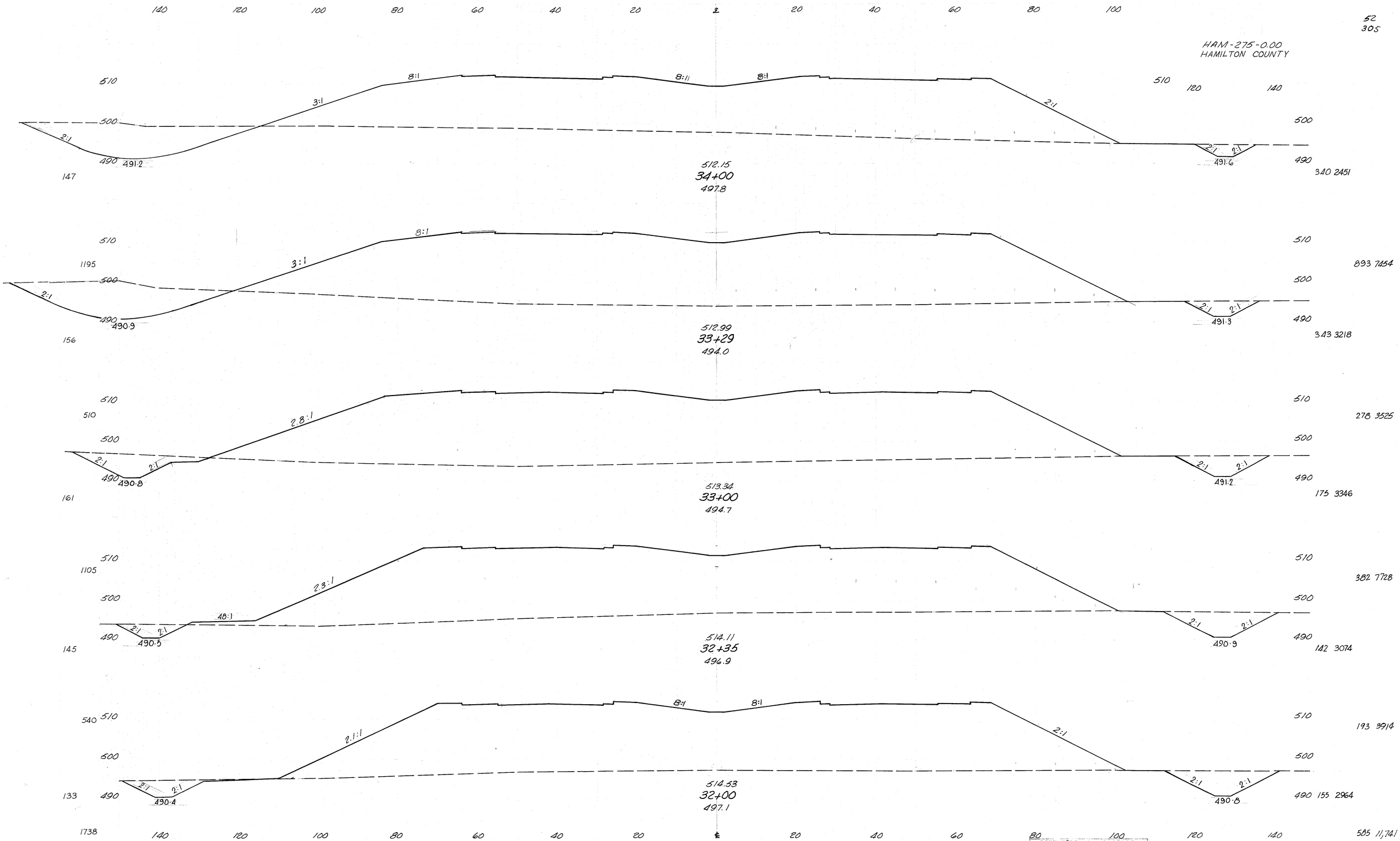

DEVELOPED		CHECKED	
6-67	J.M.	8-70	M.S.

Sta. 32+00 to Sta. 34+00 I-275

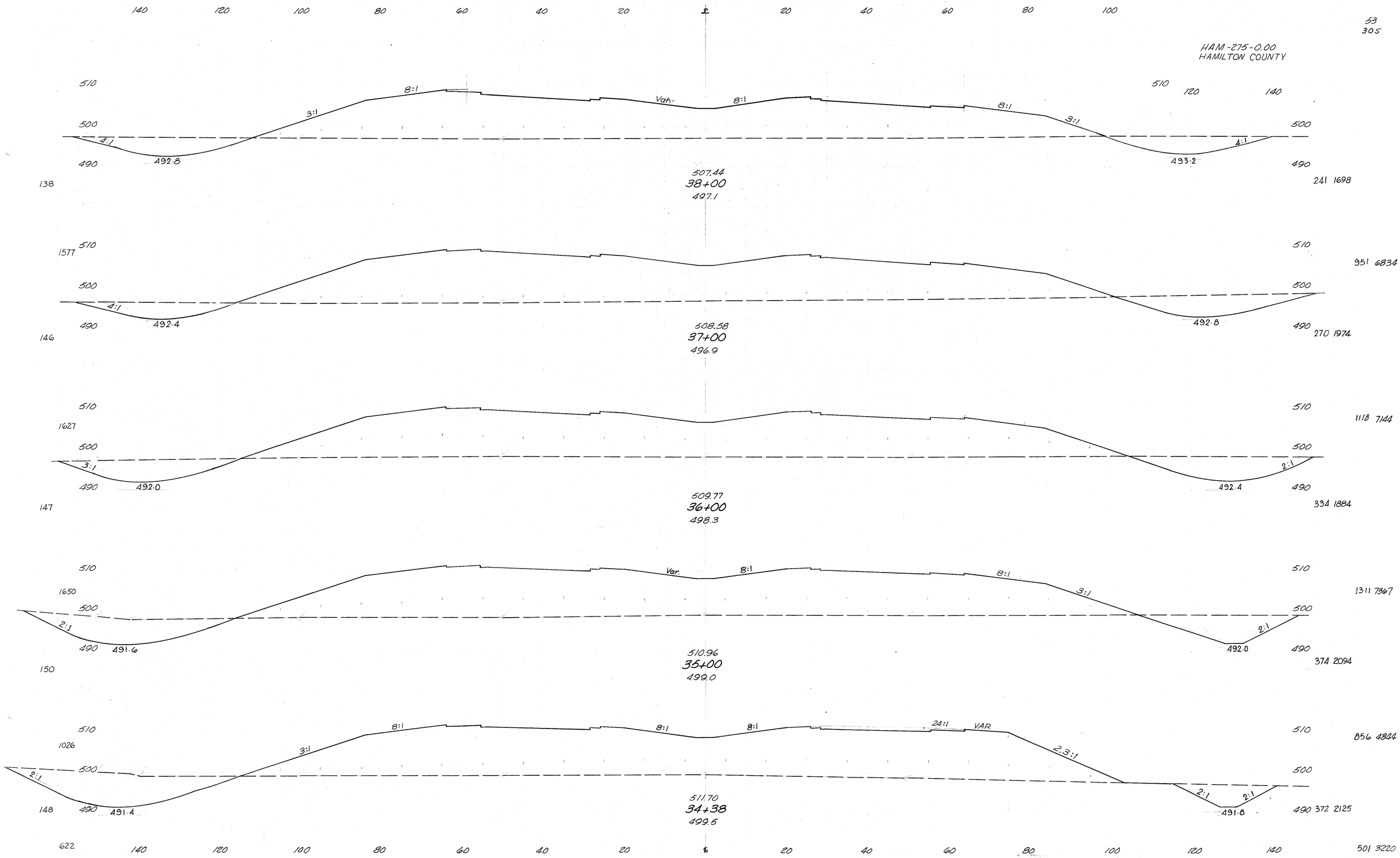
53
305
HAM-275-0.00
HAMILTON COUNTY
140 120 100 80 60 40 20 ℄ 20 40 60 80 100
510
500
490
4:1
492.8
3:1
8:1
Var.
8:1
8:1
3:1
4:1
493.2
120 140
138
507.44
38+00
497.1
241 1698
1577
492.4
508.58
37+00
496.9
951 6834
146
1627
3:1
492.0
509.77
36+00
498.3
2:1
492.4
1118 7144
147
1650
2:1
491.6
510.96
35+00
499.0
Var.
8:1
8:1
3:1
2:1
492.0
1311 7367
150
1026
2:1
491.4
8:1
8:1
8:1
24:1
VAR
2.3:1
2:1
2:1
491.6
511.70
34+38
499.5
856 4844
148
622
501 3220
6-67 J.M. 8-70 M.S.
Sta. 34+38 to Sta. 38+00 I-275

HAM-275-0.00
HAMILTON COUNTY

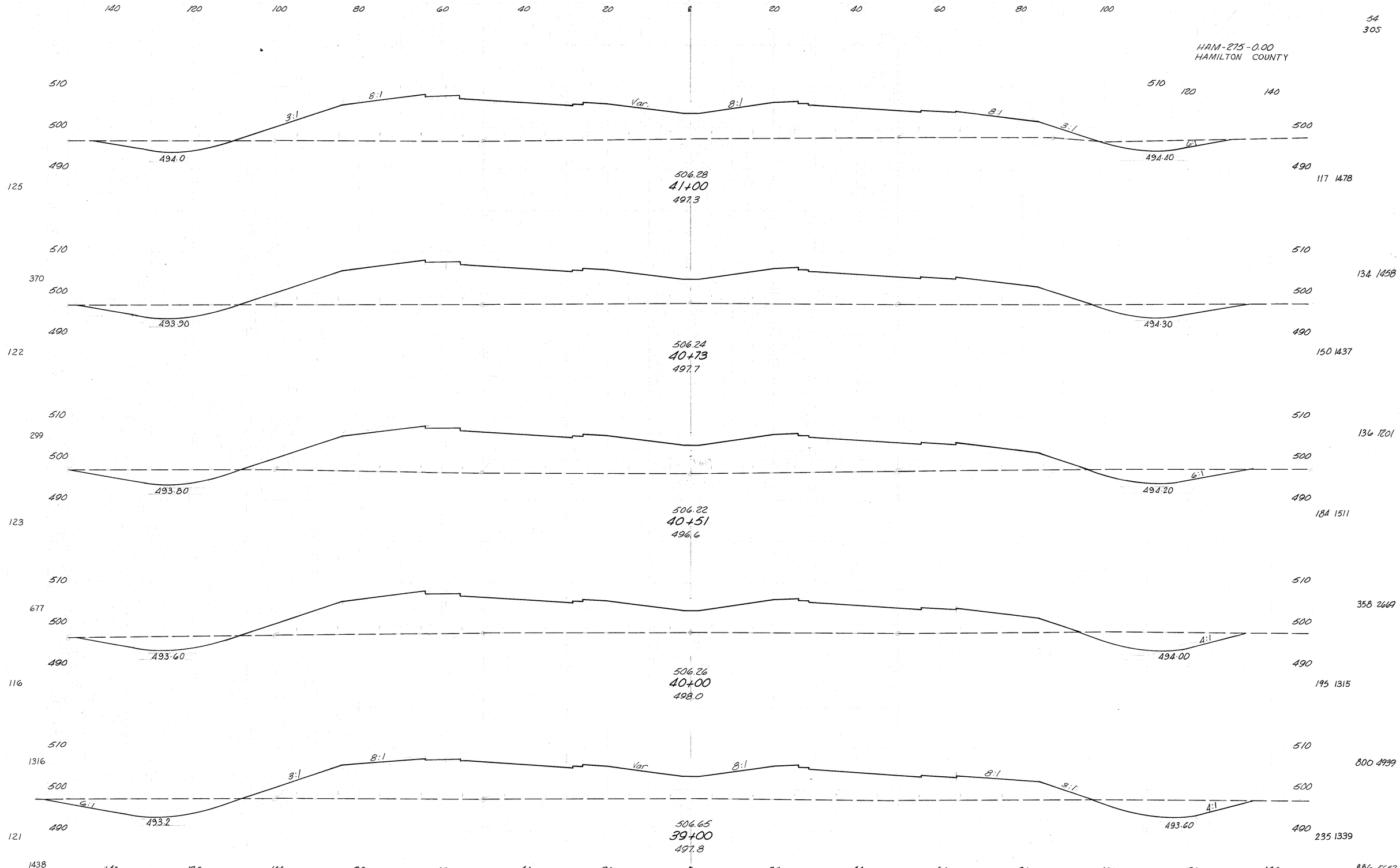

REVISIONS				
6-67	J.M.	8-70	M.S.	Sta. 39+00 to Sta. 41+00 I-275

HAM-275-0.00
HAMILTON COUNTY

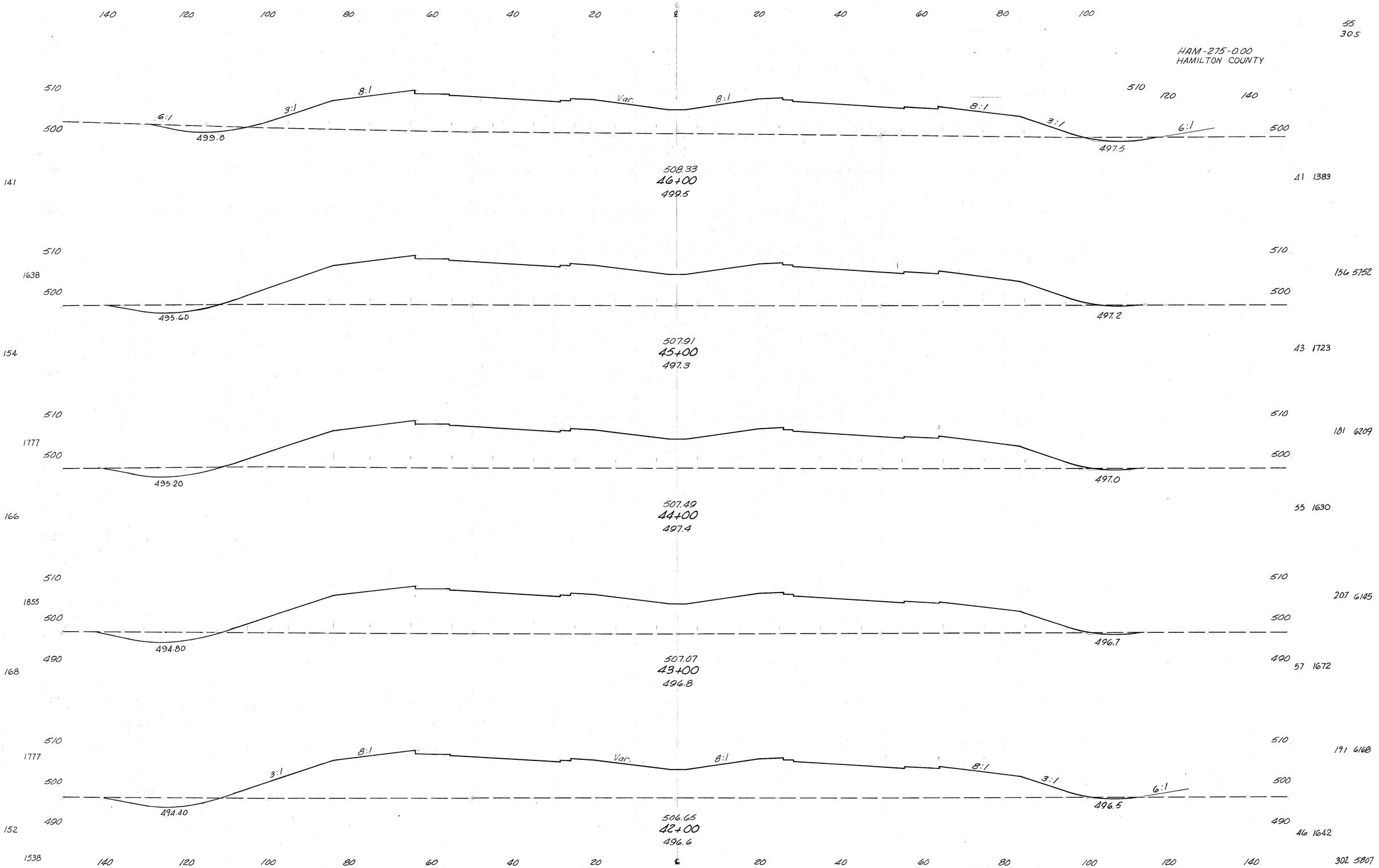

LEVEL		CKD	
6-67	J.M.	8-70	M.S.

Sta. 42+00 to Sta. 46+00 I-275

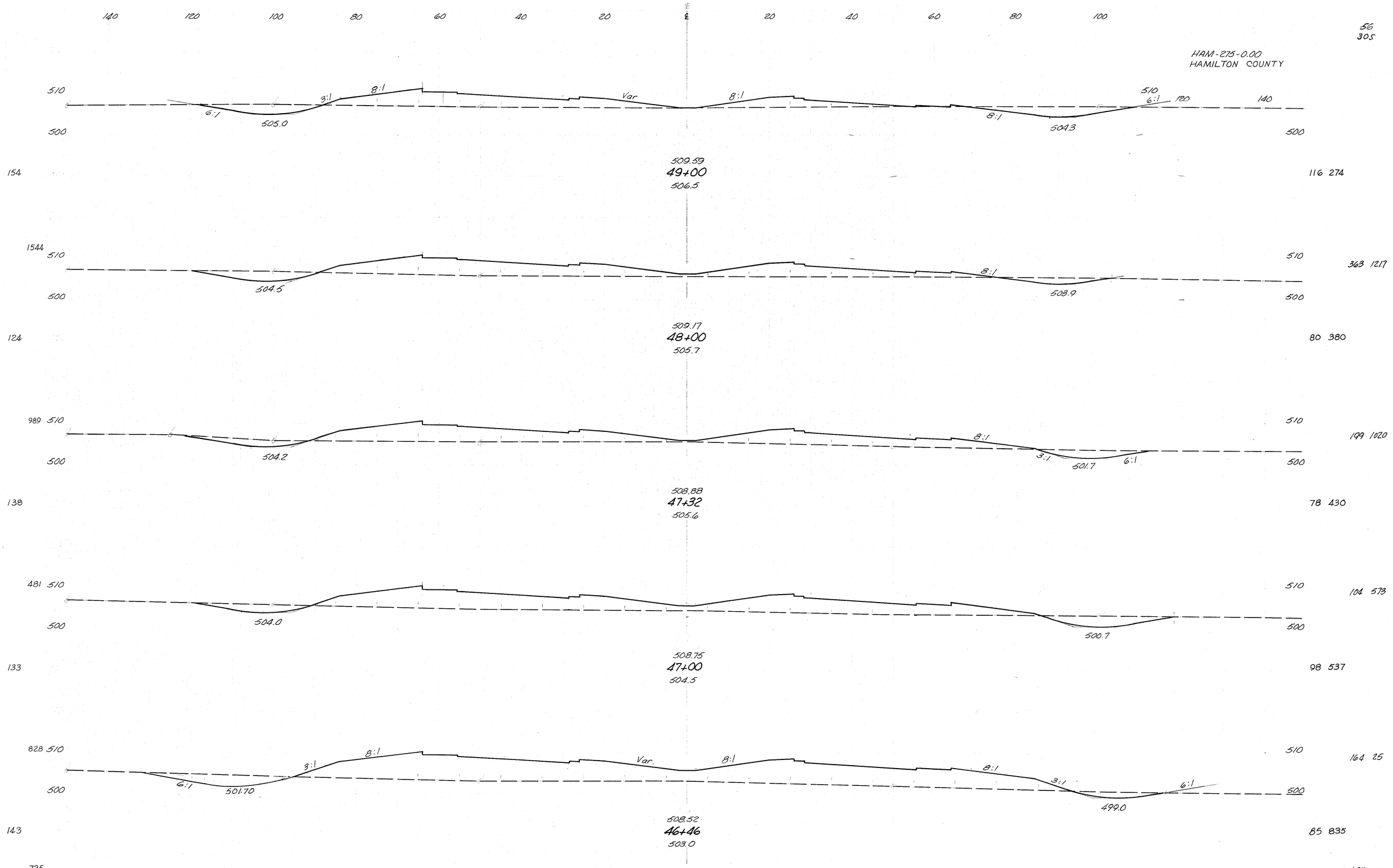
HAM-275-0.00
HAMILTON COUNTY
140 120 100 80 60 40 20 ℄ 20 40 60 80 100
56
305
510
500
6:1
505.0
3:1
8:1
Var
8:1
8:1
504.3
6:1
120
140
154
509.59
49+00
506.5
116 274
1544
504.5
8:1
503.9
363 1217
124
509.17
48+00
505.7
80 380
989
504.2
8:1
3:1
501.7
6:1
199 1020
138
508.88
47+32
505.6
78 430
481
504.0
500.7
104 573
133
508.75
47+00
504.5
98 537
828
6:1
501.70
3:1
8:1
Var.
8:1
8:1
3:1
499.0
6:1
164 25
143
508.52
46+46
503.0
85 835
725
107 1889
DEVELOPED
CHKED
6-67 J.M. 8-70 M.S.
Sta. 46+46 to Sta. 49+00
I-275

HAM-275-0.00
HAMILTON COUNTY

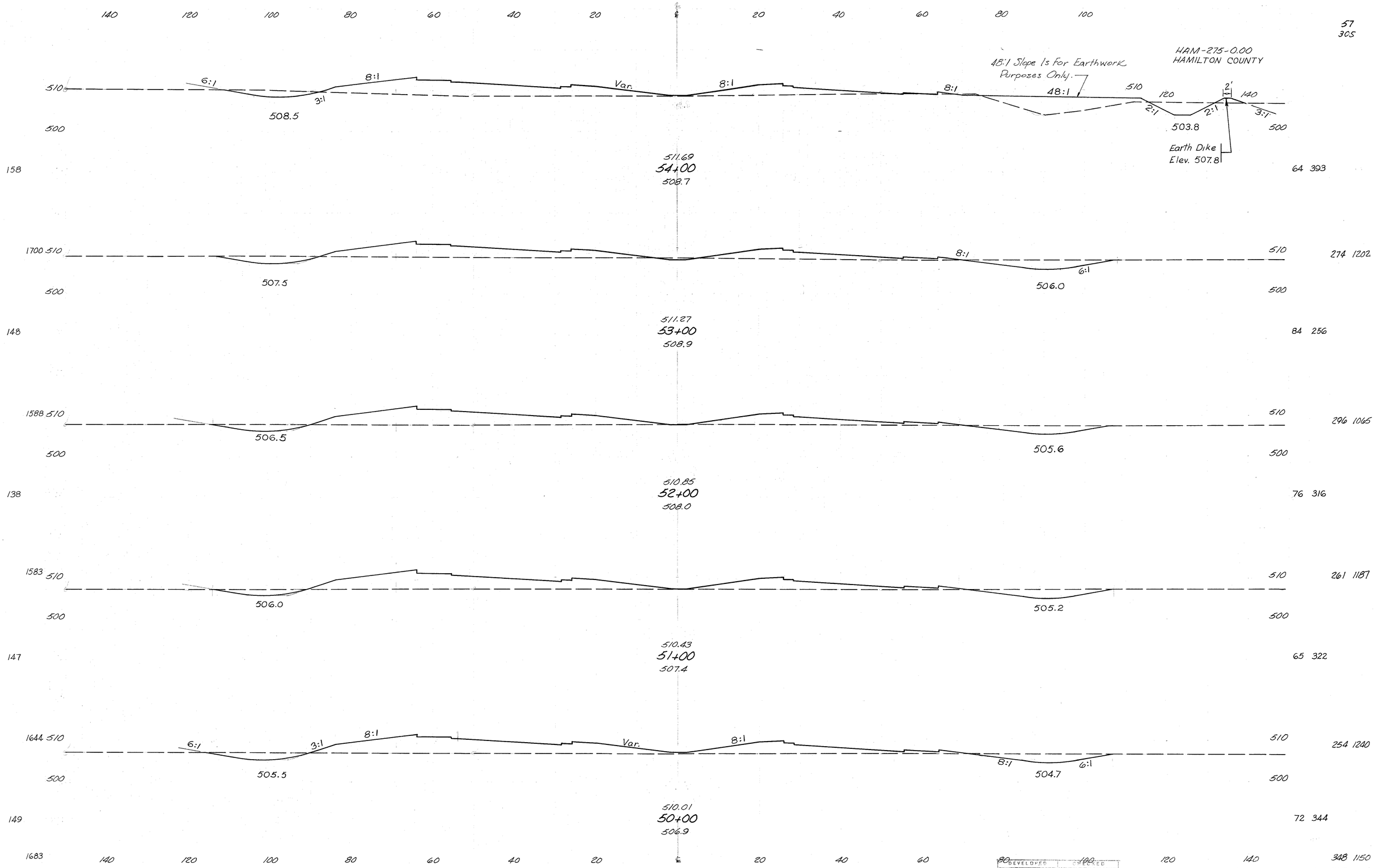

DEVELOPED		CHECKED	
9-66	P.T.	7-70	R.D.

Sta. 50+00 to Sta. 54+00 I-275

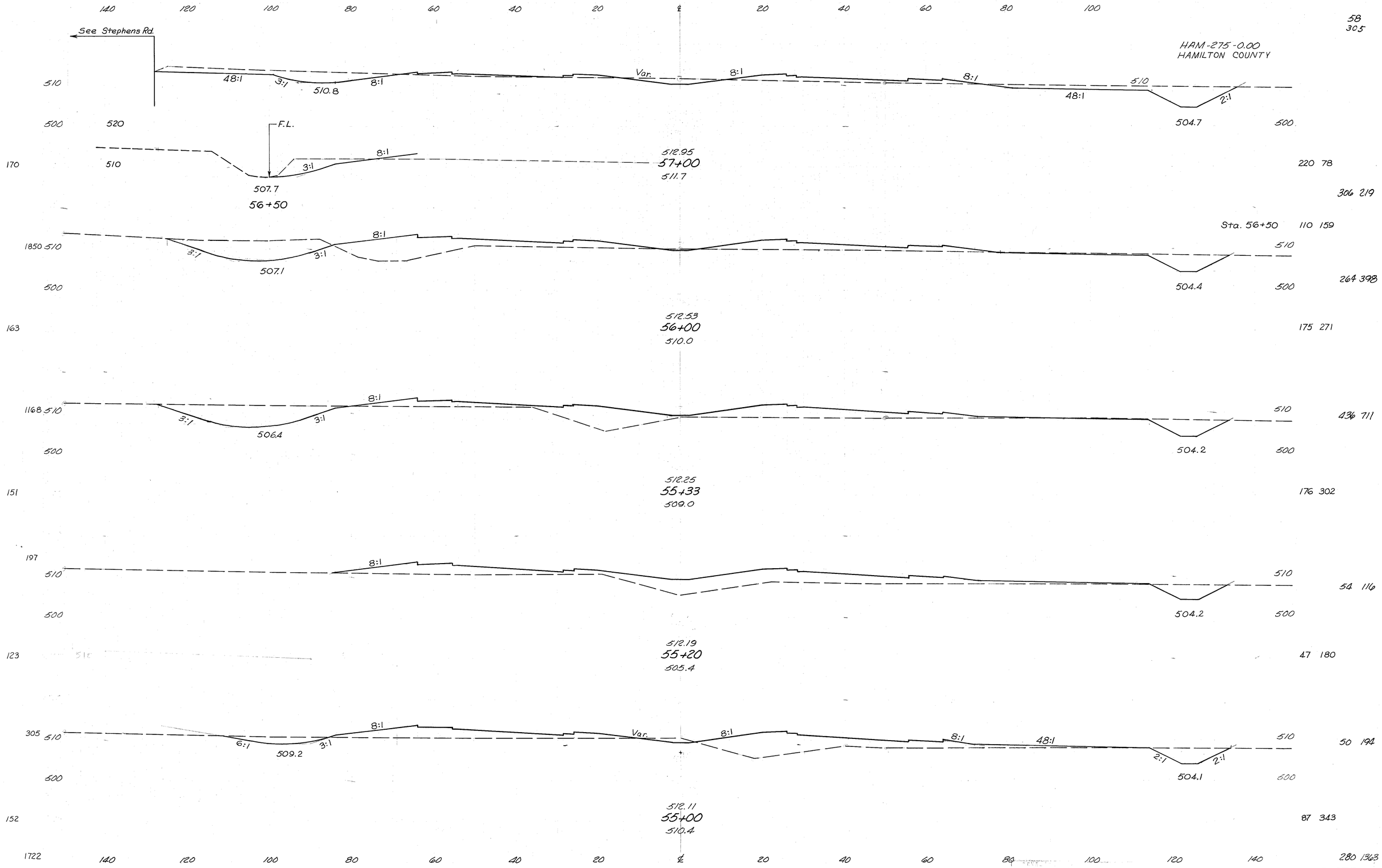
58
305
HAM-275-0.00
HAMILTON COUNTY
See Stephens Rd.
140 120 100 80 60 40 20 ℄ 20 40 60 80 100
510
500
520
48:1
3:1
510.8
8:1
Var.
8:1
8:1
48:1
510
2:1
504.7
F.L.
170
510
8:1
3:1
507.7
56+50
512.95
57+00
511.7
220 78
306 219
Sta. 56+50
110 159
1850 510
8:1
3:1
3:1
507.1
510
504.4
500
264 398
512.53
56+00
510.0
163
175 271
1168 510
8:1
3:1
3:1
506.4
510
504.2
500
436 711
512.25
55+33
509.0
151
176 302
197
510
8:1
510
504.2
500
54 116
512.19
55+20
505.4
123
47 180
305 510
8:1
6:1
3:1
509.2
Var.
8:1
8:1
48:1
510
2:1
2:1
504.1
500
50 194
512.11
55+00
510.4
152
87 343
1722
280 1363
9-66 P.T. 7-70 R.D. Sta. 55+00 to Sta. 57+00 I-275

HAM-275-0.00
HAMILTON COUNTY

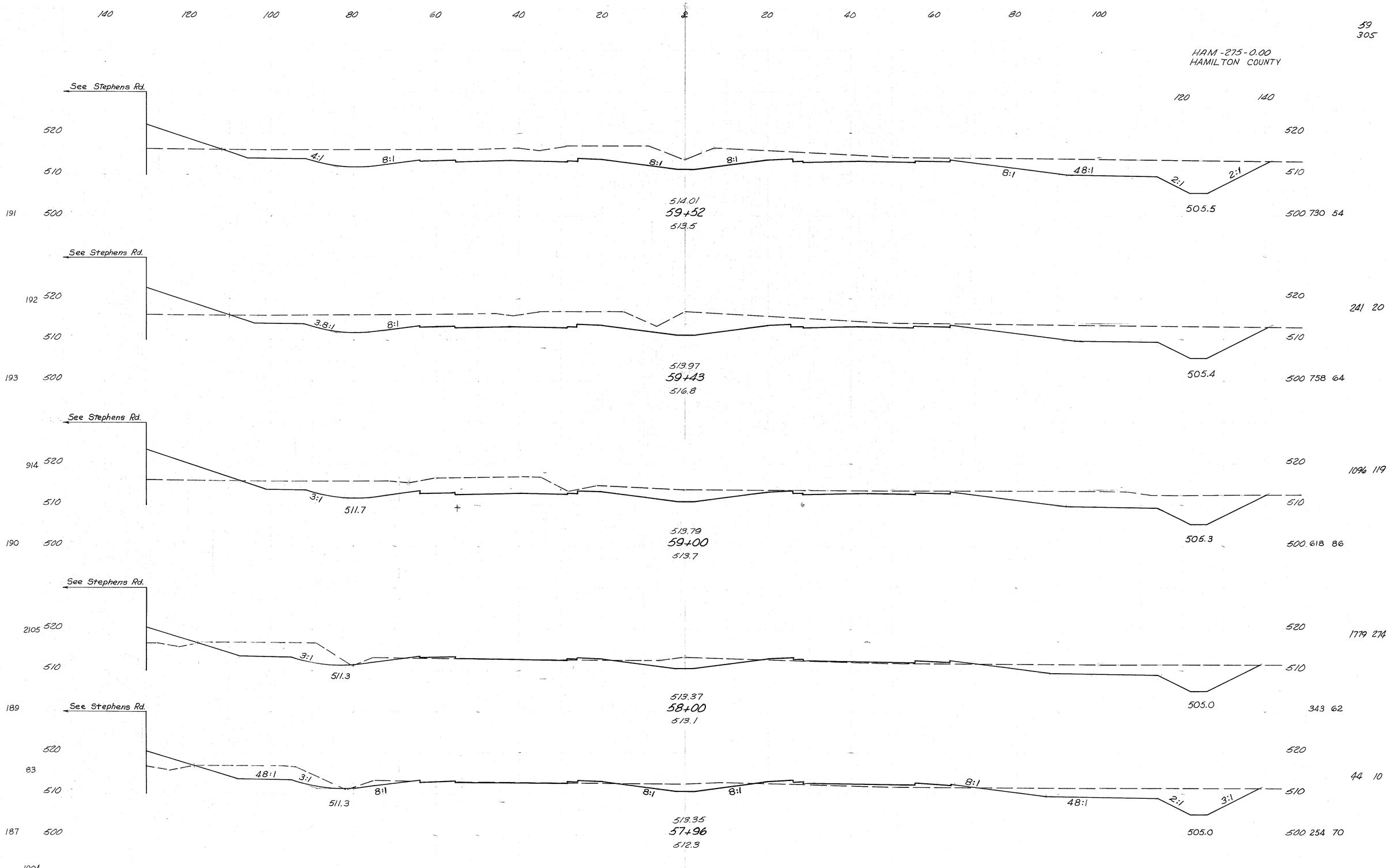

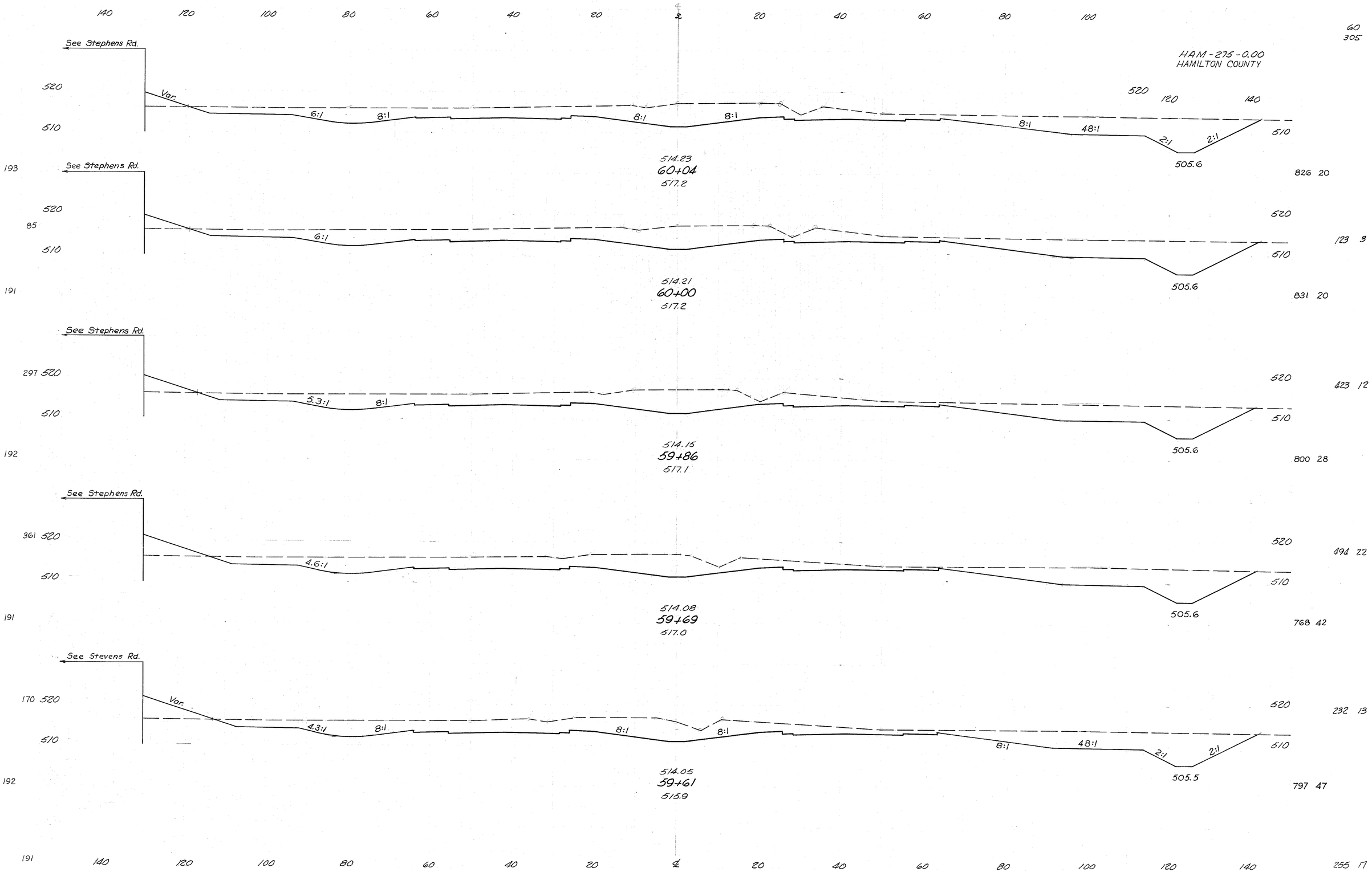

9-66 P.T. 7-70 R.D. Sta. 59+61 to Sta. 60+04 I-275

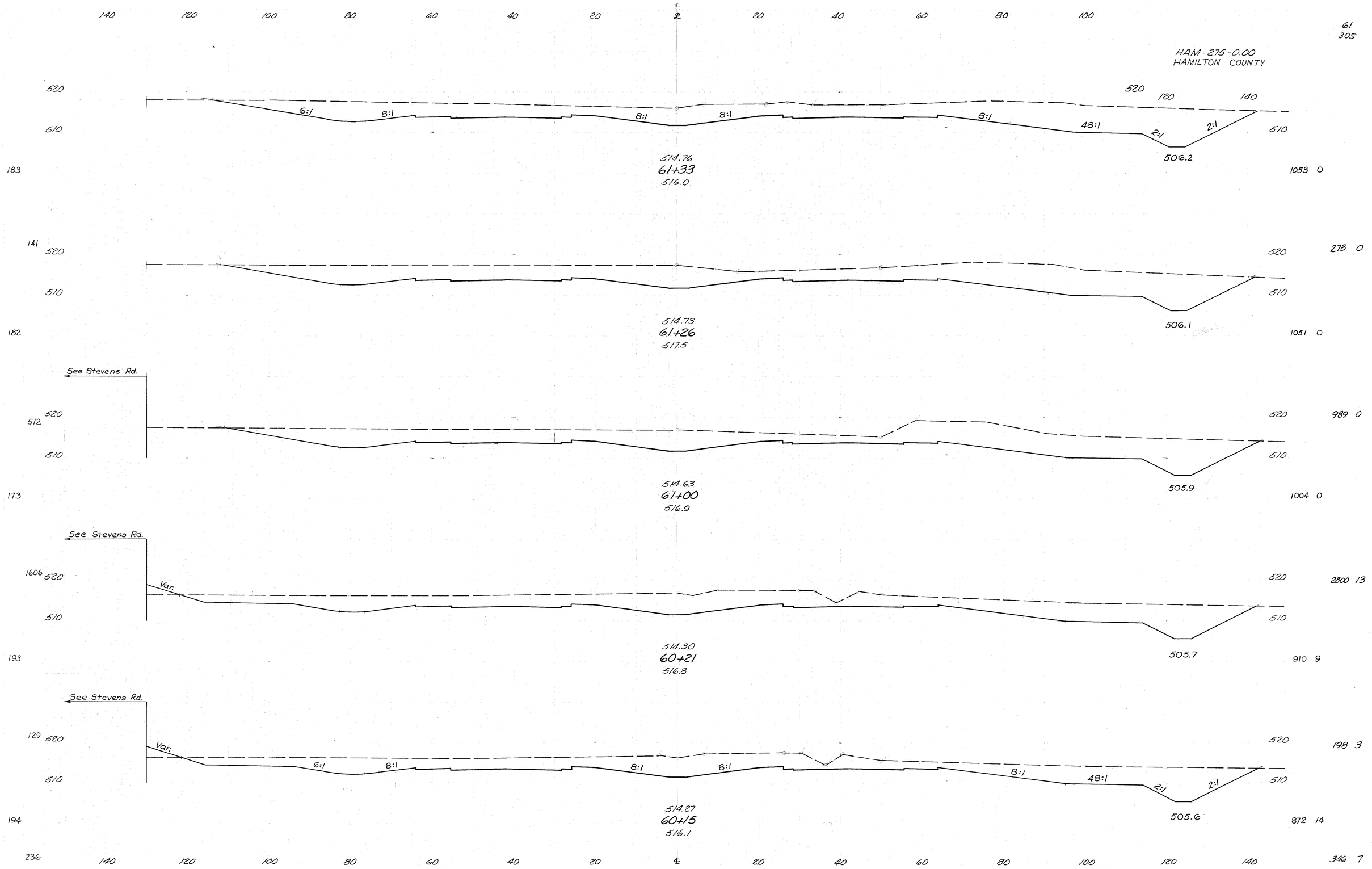
HAM-275-0.00
HAMILTON COUNTY
140 120 100 80 60 40 20 ℄ 20 40 60 80 100
61
305
520
510
6:1
8:1
8:1
8:1
8:1
48:1
2:1
2:1
520 120 140
506.2
514.76
61+33
516.0
183
1053 0
141
520
510
514.73
61+26
517.5
506.1
182
1051 0
273 0
See Stevens Rd.
512
520
510
514.63
61+00
516.9
505.9
173
1004 0
989 0
See Stevens Rd.
1606
520
510
Var.
514.30
60+21
516.8
505.7
193
910 9
2800 13
See Stevens Rd.
129
520
510
Var.
6:1
8:1
8:1
8:1
8:1
48:1
2:1
2:1
514.27
60+15
516.1
505.6
194
872 14
198 3
236
140 120 100 80 60 40 20 ℄ 20 40 60 80 100 120 140
346 7
Sta. 60+15 to Sta. 61+33
I-275

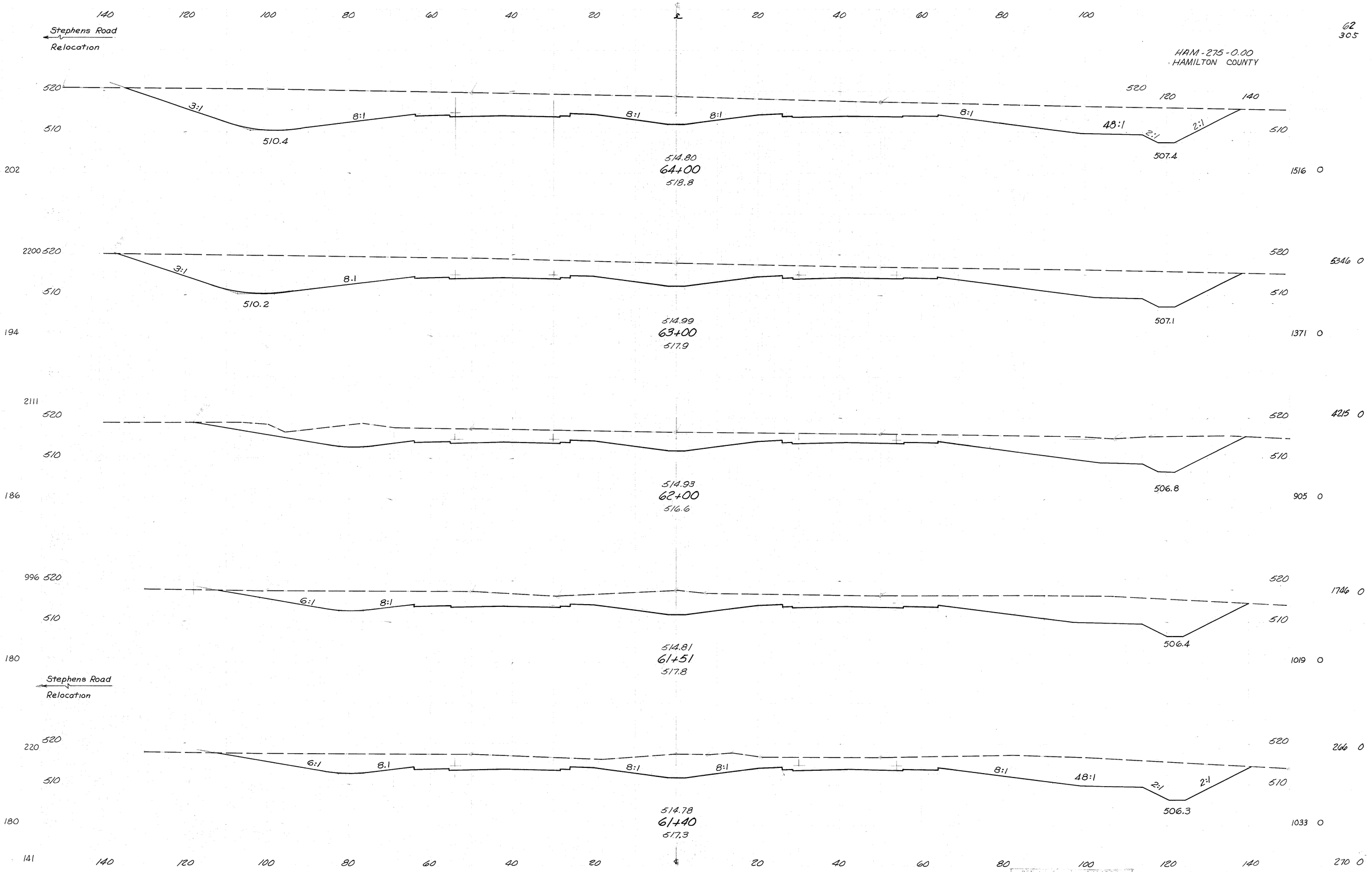
Stephens Road
Relocation
HAM-275-0.00
HAMILTON COUNTY
62
305
140 120 100 80 60 40 20 ℄ 20 40 60 80 100
520
510
3:1
8:1
510.4
514.80
64+00
518.8
48:1
2:1
507.4
202
1516 0
2200 520
510.2
514.99
63+00
517.9
507.1
194
1371 0
5346 0
2111
514.93
62+00
516.6
506.8
186
905 0
4215 0
996 520
6:1
514.81
61+51
517.8
506.4
180
1019 0
1746 0
220
514.78
61+40
517.3
506.3
141
1033 0
266 0
270 0
9-66 P.T. 7-70 R.D.
Sta. 61+40 to Sta. 64+00
I-275

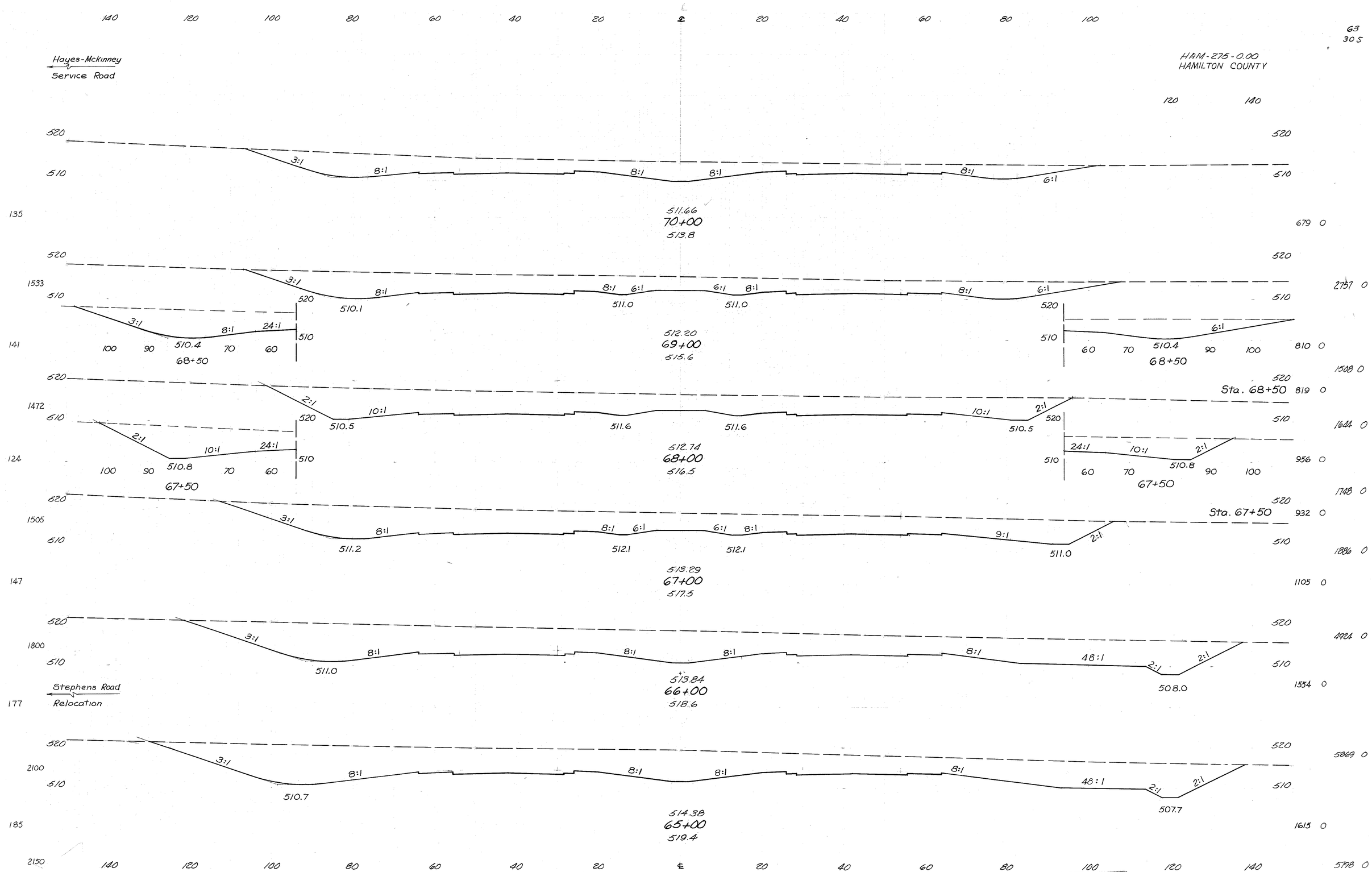
63
30 S
HAM-275-0.00
HAMILTON COUNTY
Hayes-McKinney
Service Road
Stephens Road
Relocation
Sta. 68+50
Sta. 67+50
Sta. 65+00 to Sta. 70+00
I-275
511.66
70+00
513.8
512.20
69+00
515.6
512.74
68+00
516.5
513.29
67+00
517.5
513.84
66+00
518.6
514.38
65+00
519.4
68+50
67+50
510.4
510.8
510.5
511.6
511.0
510.1
511.2
512.1
508.0
507.7
9-66 P.T. 7-70 R.D.

HAM-275-0.00
HAMILTON COUNTY

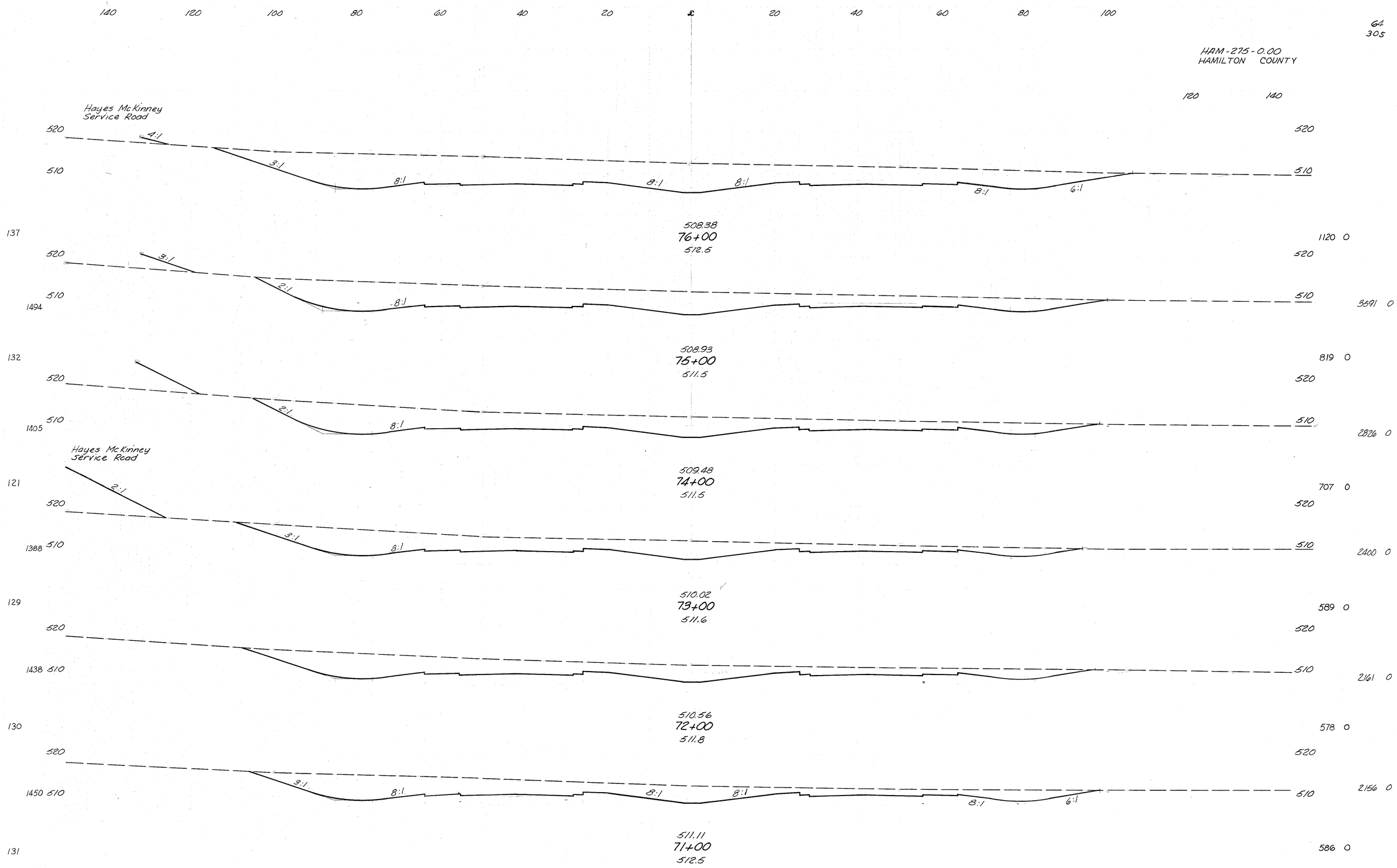

DEVELOPED		CHECKED	
9-66	P.T.	7-70	R.D.

Sta. 71+00 to Sta. 76+00 I-275

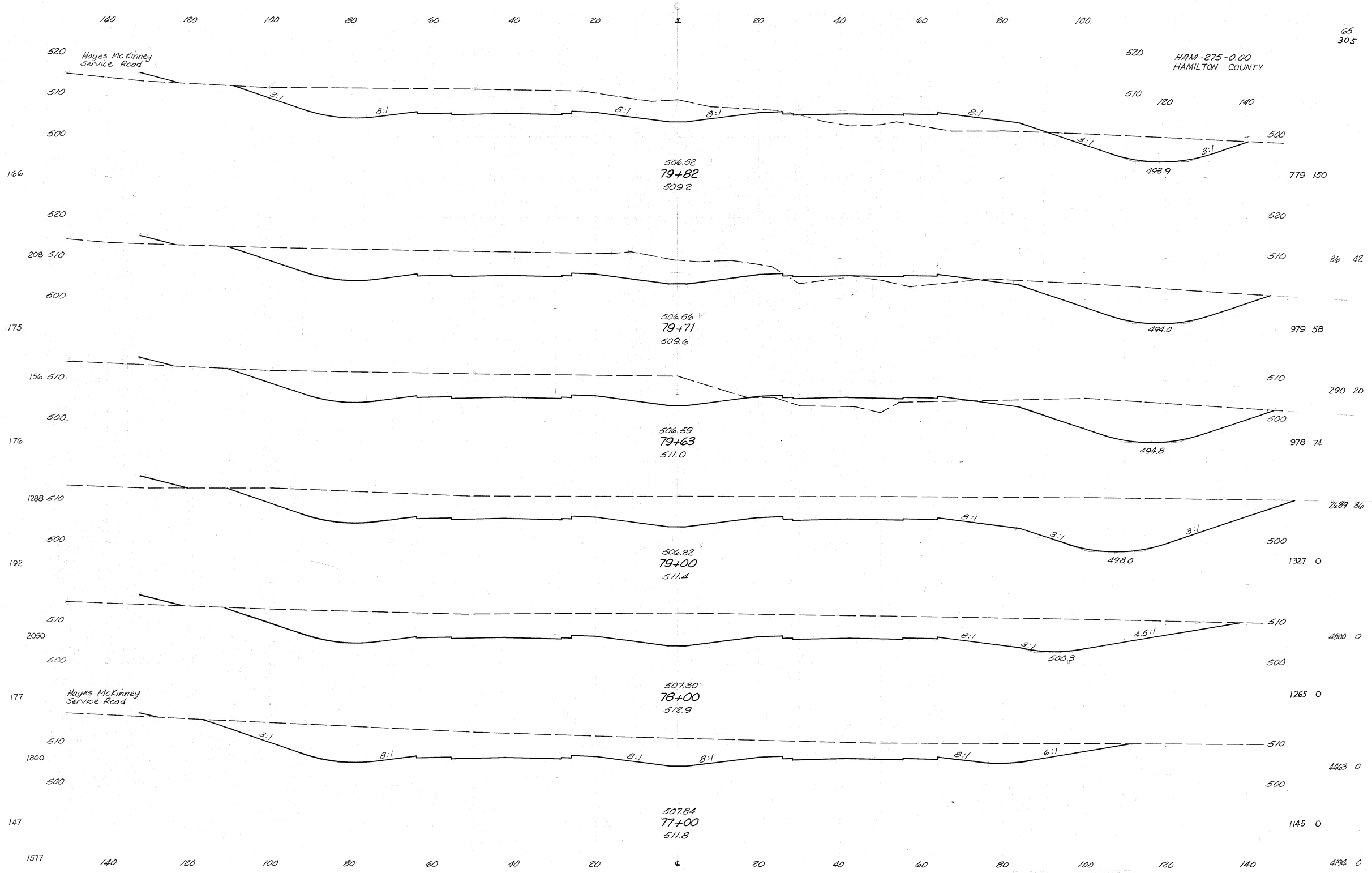
HAM-275-0.00
HAMILTON COUNTY
Hayes McKinney Service Road
506.52
79+82
509.2
506.56
79+71
509.6
506.59
79+63
511.0
506.82
79+00
511.4
507.30
78+00
512.9
507.84
77+00
511.8
498.9
494.0
494.8
498.0
500.3
Hayes McKinney Service Road
65
305
779 150
979 58
978 74
2689 86
1327 0
4800 0
1265 0
4463 0
1145 0
4192 0
166
175
176
192
177
147
208
156
1288
2050
1800
1577
9-66 P.T. 7-70 R.D.
Sta. 77+00 to Sta. 79+82 I-275

HAM-275-0.00
HAMILTON COUNTY

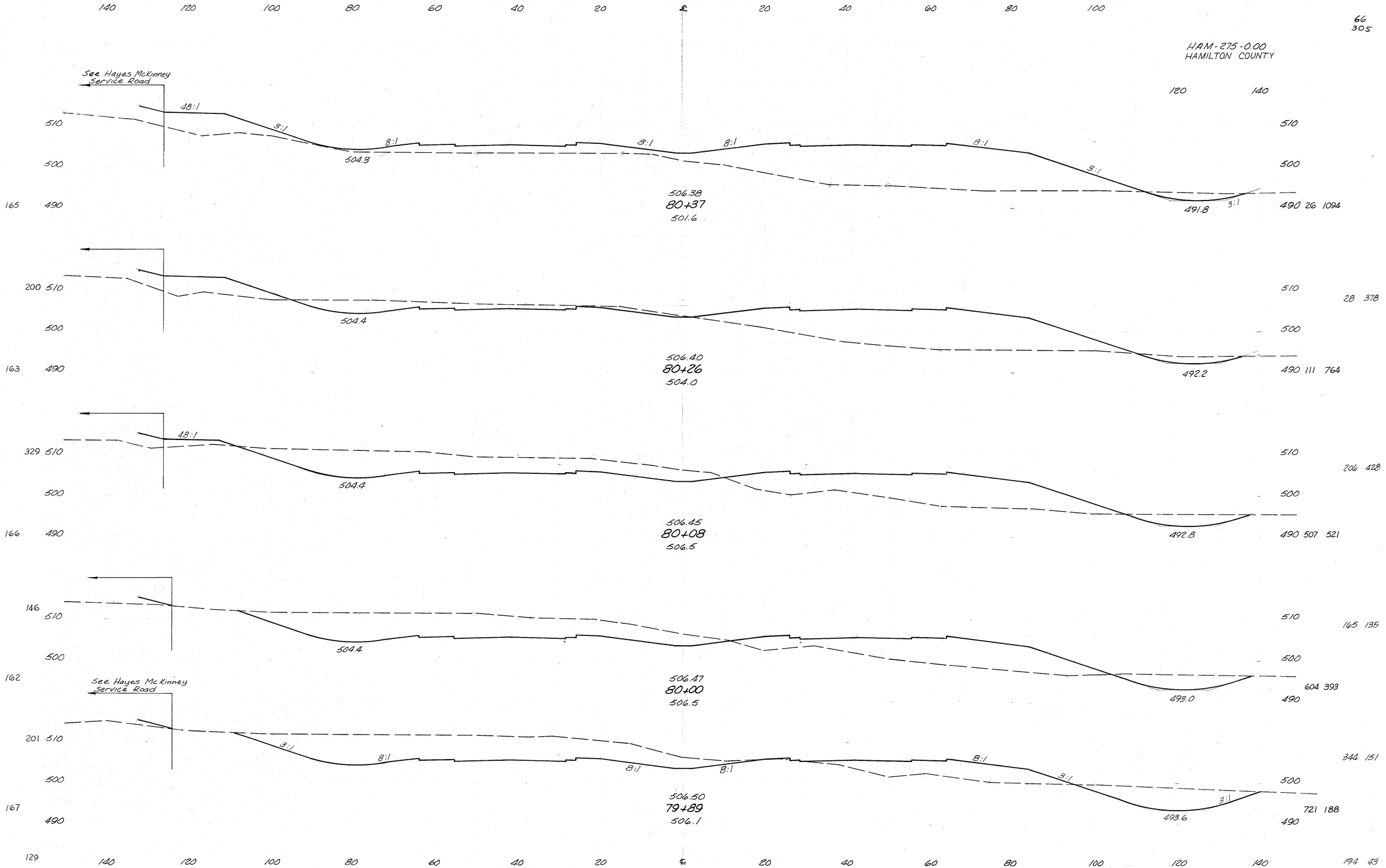

9-66 P.T. 7-70 R.D. Sta. 79+89 to Sta. 80+37 I-275

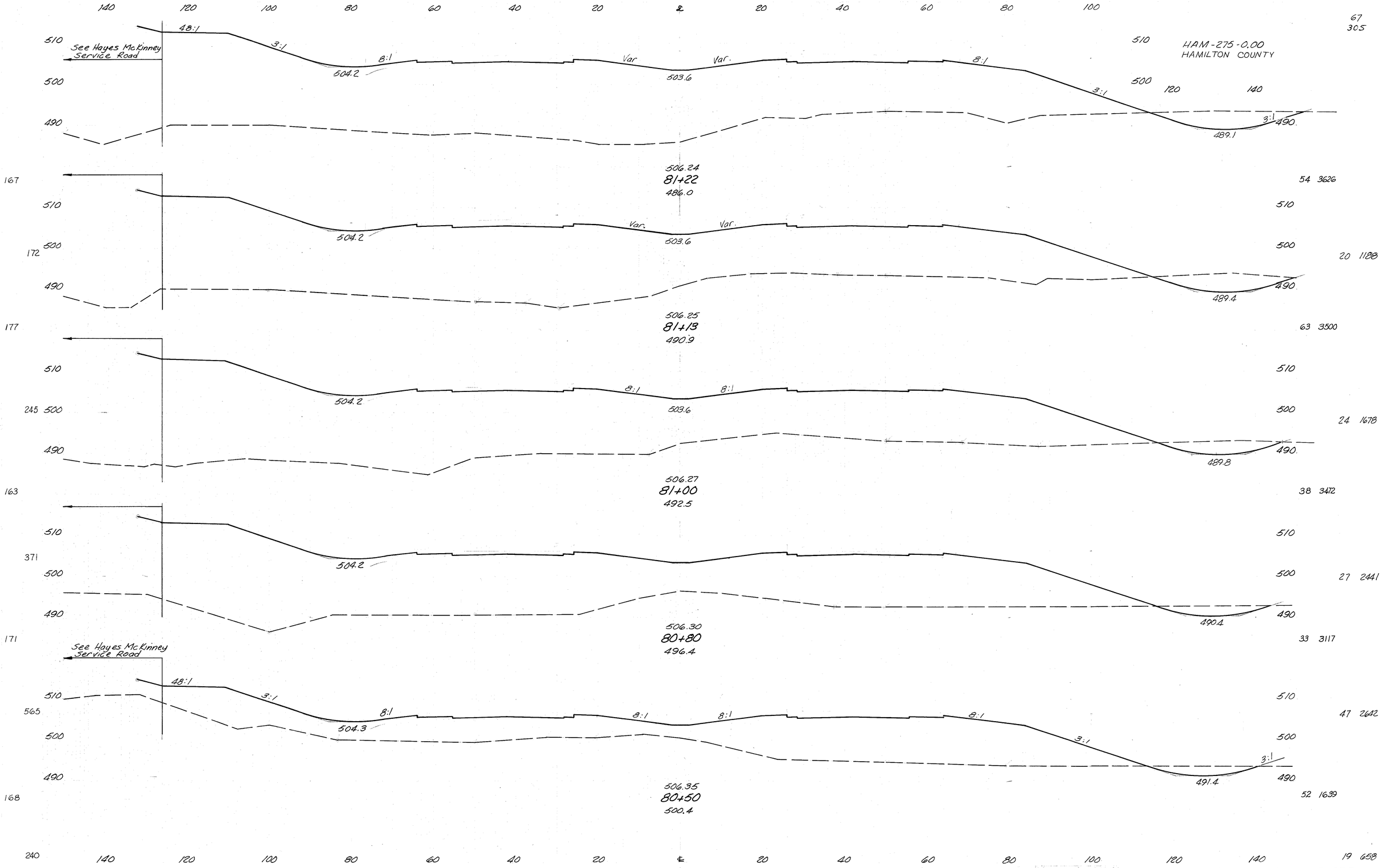

9-66 P.T. 7-70 R.D. Sta. 80+50 to Sta. 81+22 I-275

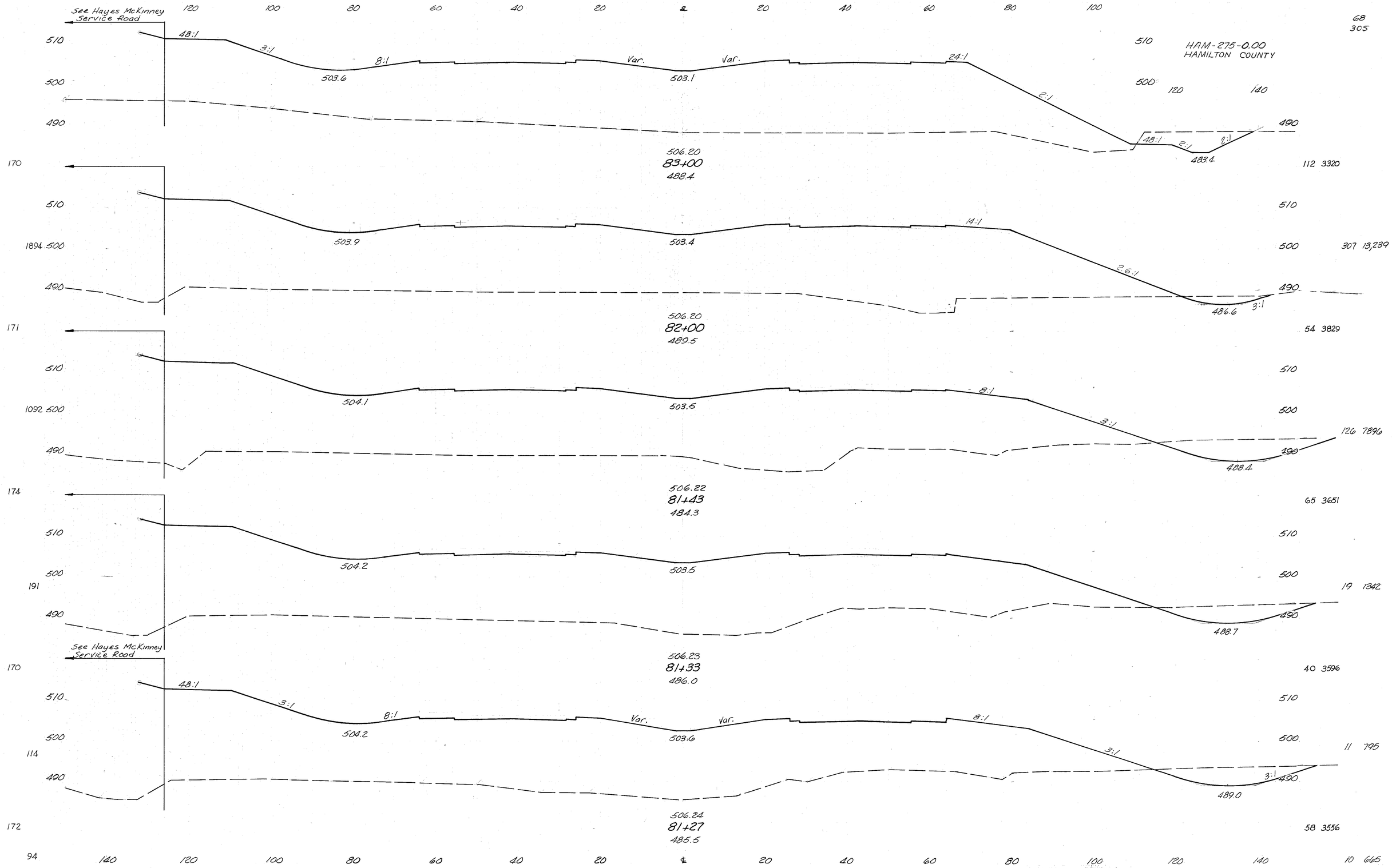

9-66	P.T.	7-70	R.D.	Sta. 81+27 to Sta. 83+00 I-275

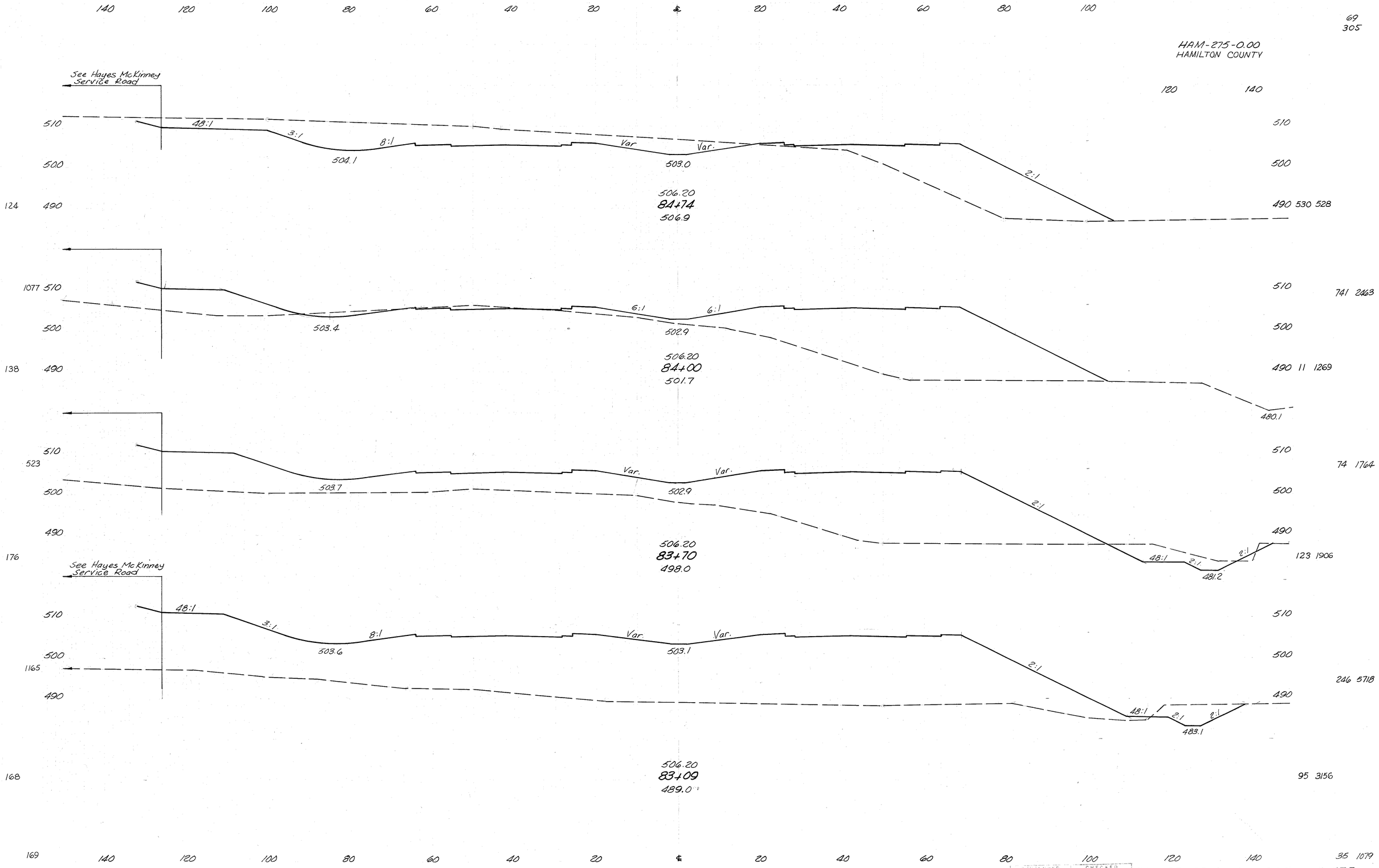

DEVELOPED		CHECKED	
9-66	P.T.	7-70	R.D.

Sta. 83+09 to Sta. 84+74 I-275

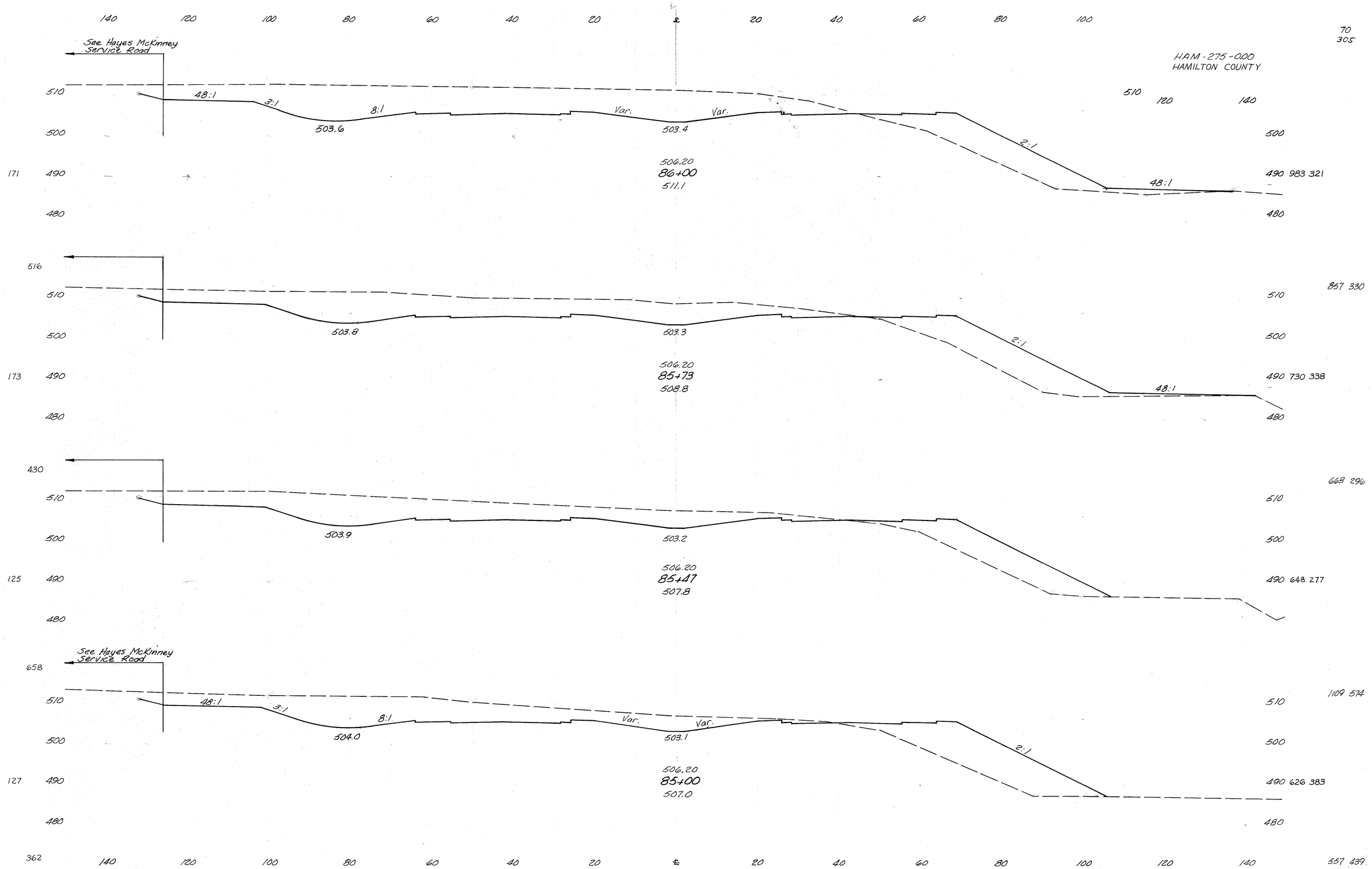

9-66 P.T. 7-70 R.D. Sta. 85+00 to Sta. 86+00 I-275

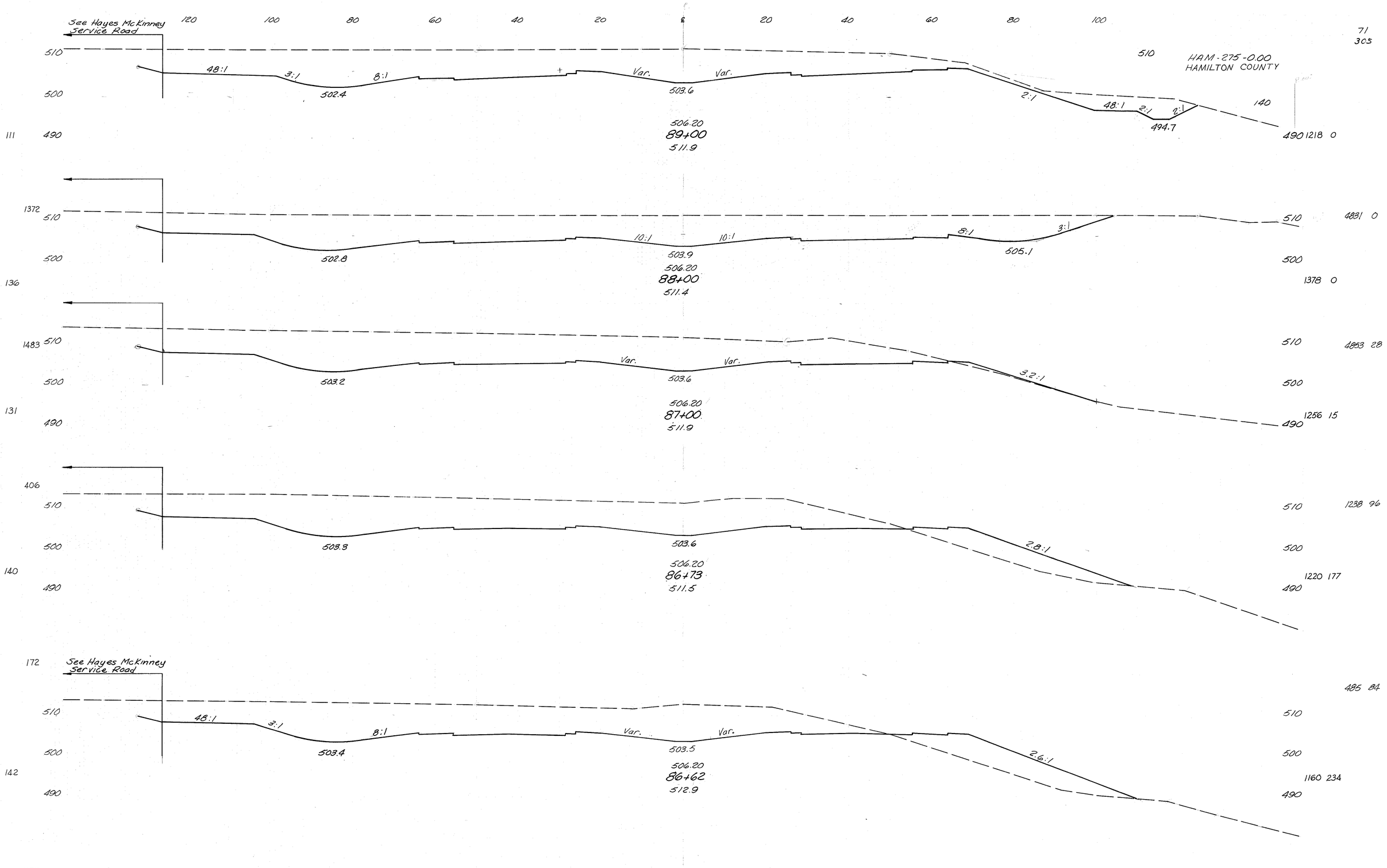

9-66	P.T.	7-70	R.D.

CHECKED

Sta. 86+62 to Sta. 89+00 I-275

HAM-275-0.00
HAMILTON COUNTY

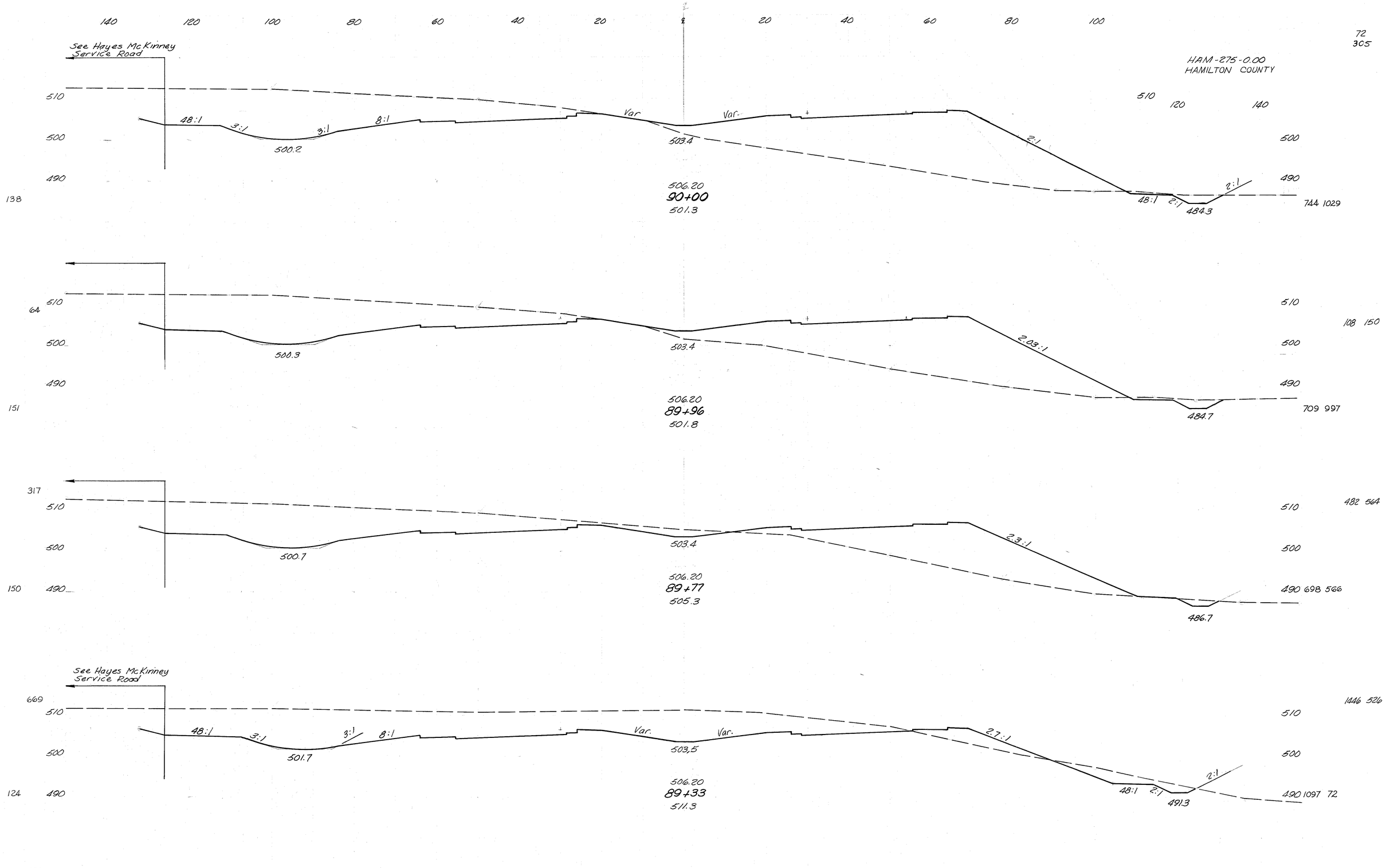

DEVELOPED		CHECKED	
9-66	P.T.	7-70	R.D.

Sta. 89+33 to Sta. 90+00 I-275

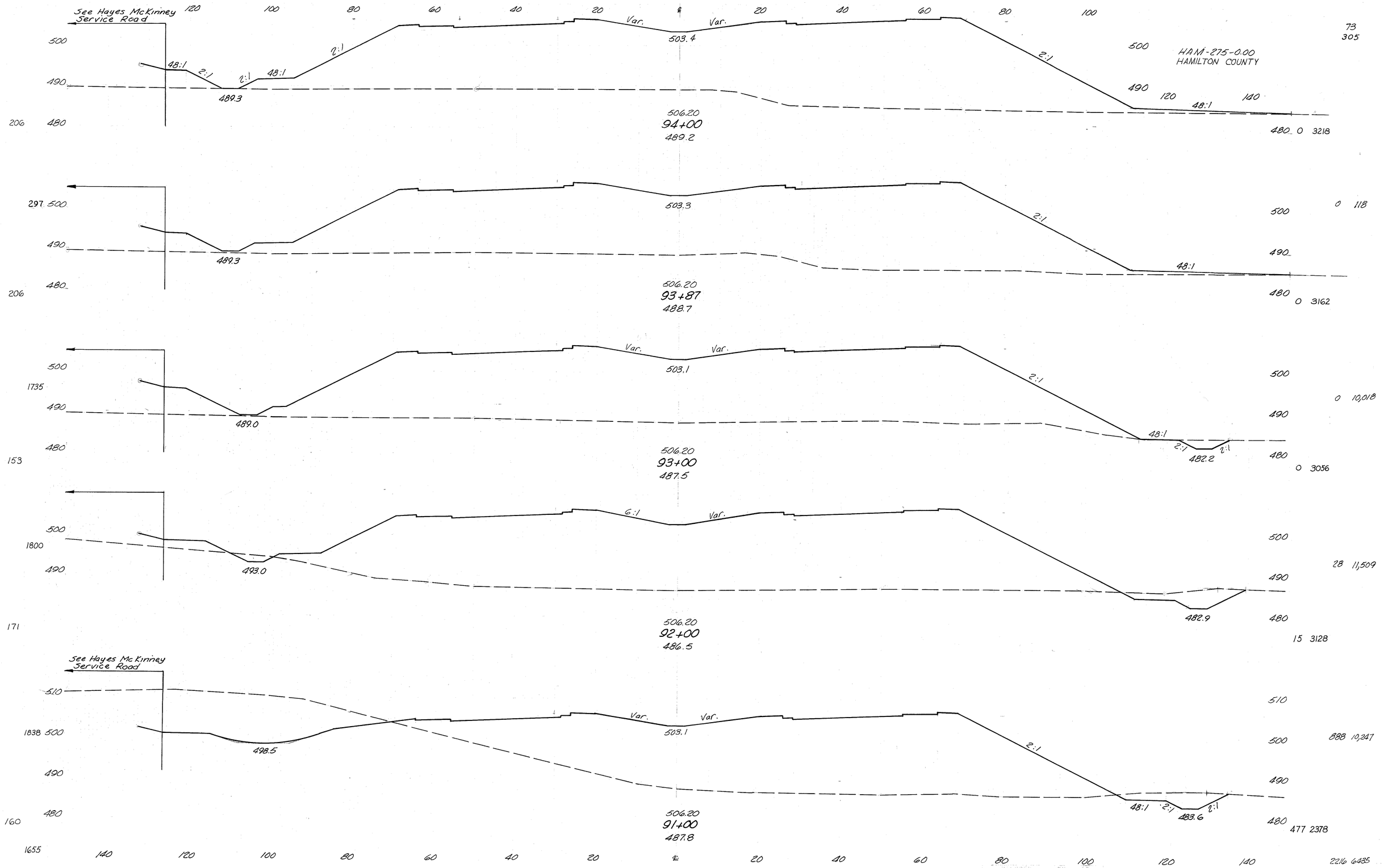
See Hayes McKinney Service Road
HAM-275-0.00
HAMILTON COUNTY
506.20
94+00
489.2
506.20
93+87
488.7
506.20
93+00
487.5
506.20
92+00
486.5
506.20
91+00
487.8
See Hayes McKinney Service Road
Var.
503.4
503.3
503.1
489.3
489.0
493.0
498.5
482.2
482.9
483.6
48:1
2:1
6:1
73 305
206 480 0 3218
297 500 0 118
206 480 0 3162
1735 500 0 10,018
153 480 0 3056
1800 500 28 11,509
171 480 15 3128
1838 500 888 10,247
160 480 477 2378
1655 2216 6435
9-66 PT 7-70 RD
Sta 91+00 to Sta 94+00 T-27.5

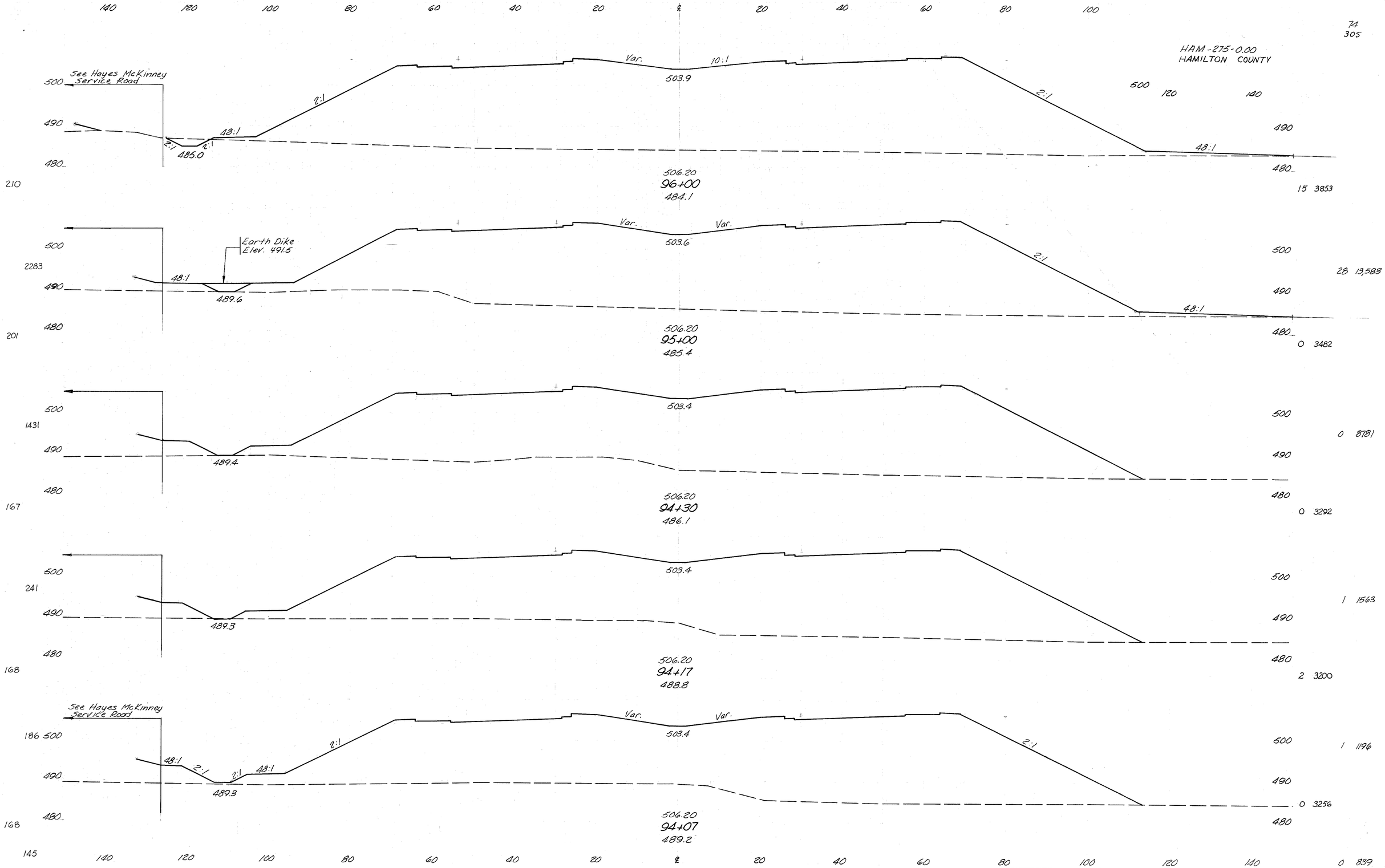
HAM-275-0.00
HAMILTON COUNTY
74
305
See Hayes McKinney Service Road
Earth Dike Elev. 491.5
Var.
10:1
2:1
48:1
503.9
485.0
506.20
96+00
484.1
503.6
489.6
506.20
95+00
485.4
503.4
489.4
506.20
94+30
486.1
489.3
506.20
94+17
488.8
489.2
506.20
94+07
489.2
500
490
480
120
140
210
15 3853
2283
28 13,583
201
0 3482
1431
0 8781
167
0 3292
241
1 1563
168
2 3200
186
1 1196
0 3256
145
0 839
9-66 P.T. 7-70 R.D.
Sta. 94+07 to Sta. 96+00
I-275

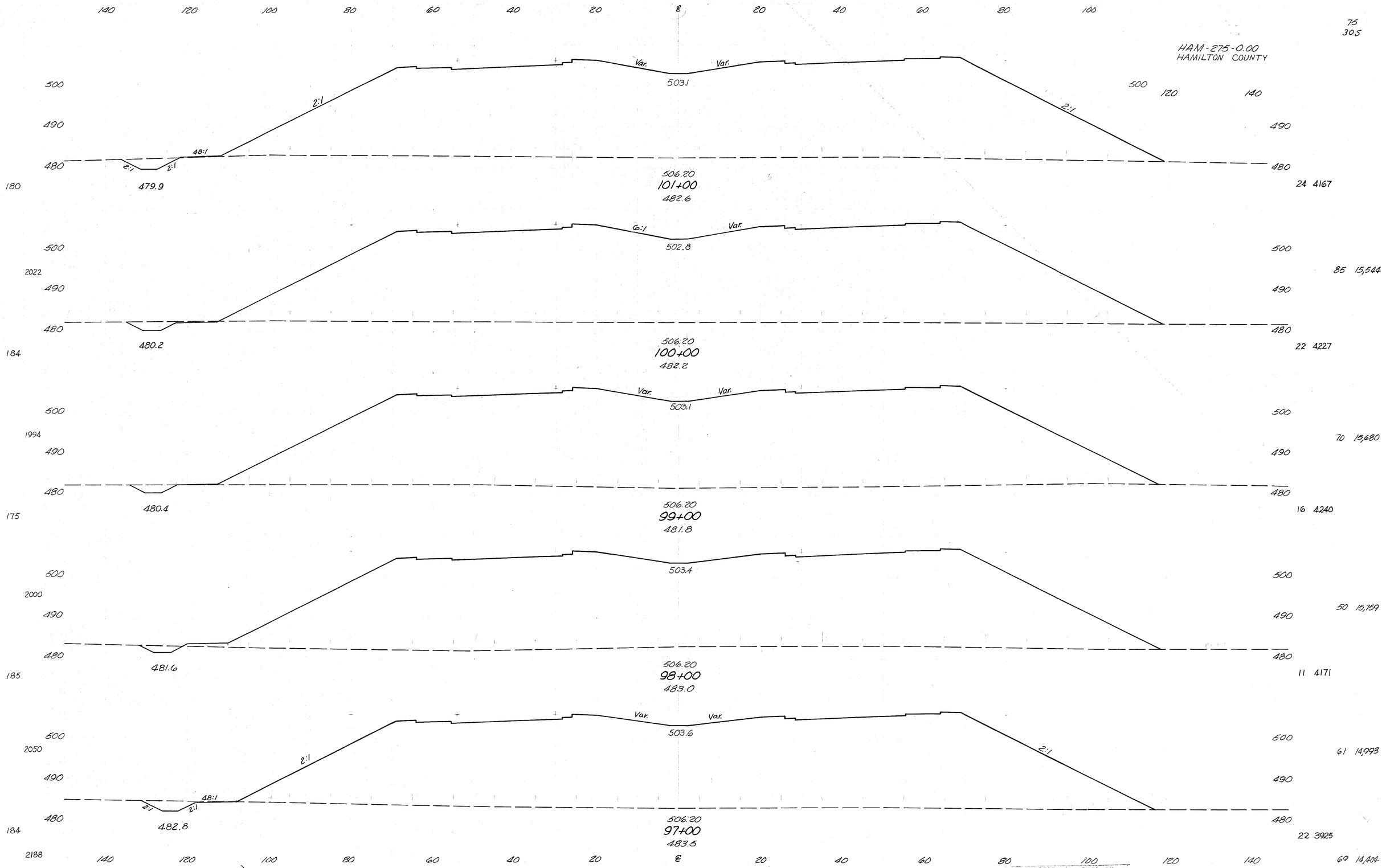
HAM-275-0.00
HAMILTON COUNTY
140 120 100 80 60 40 20 ℄ 20 40 60 80 100
75
30.5
500
490
480
Var.
Var.
503.1
2:1
48:1
2:1
2:1
479.9
506.20
101+00
482.6
180
24 4167
2022
6:1
Var.
502.8
480.2
506.20
100+00
482.2
184
85 15,544
1994
503.1
480.4
506.20
99+00
481.8
175
70 15,680
16 4240
2000
503.4
481.6
506.20
98+00
483.0
185
50 15,759
11 4171
2050
503.6
2:1
48:1
2:1
2:1
482.8
506.20
97+00
483.5
184
61 14,993
22 3925
2188
69 14,404
REV. PRED. 8-67 C.H.
REC'D. 10-70 J.B.
Sta. 97+00 to Sta. 101+00
I-275

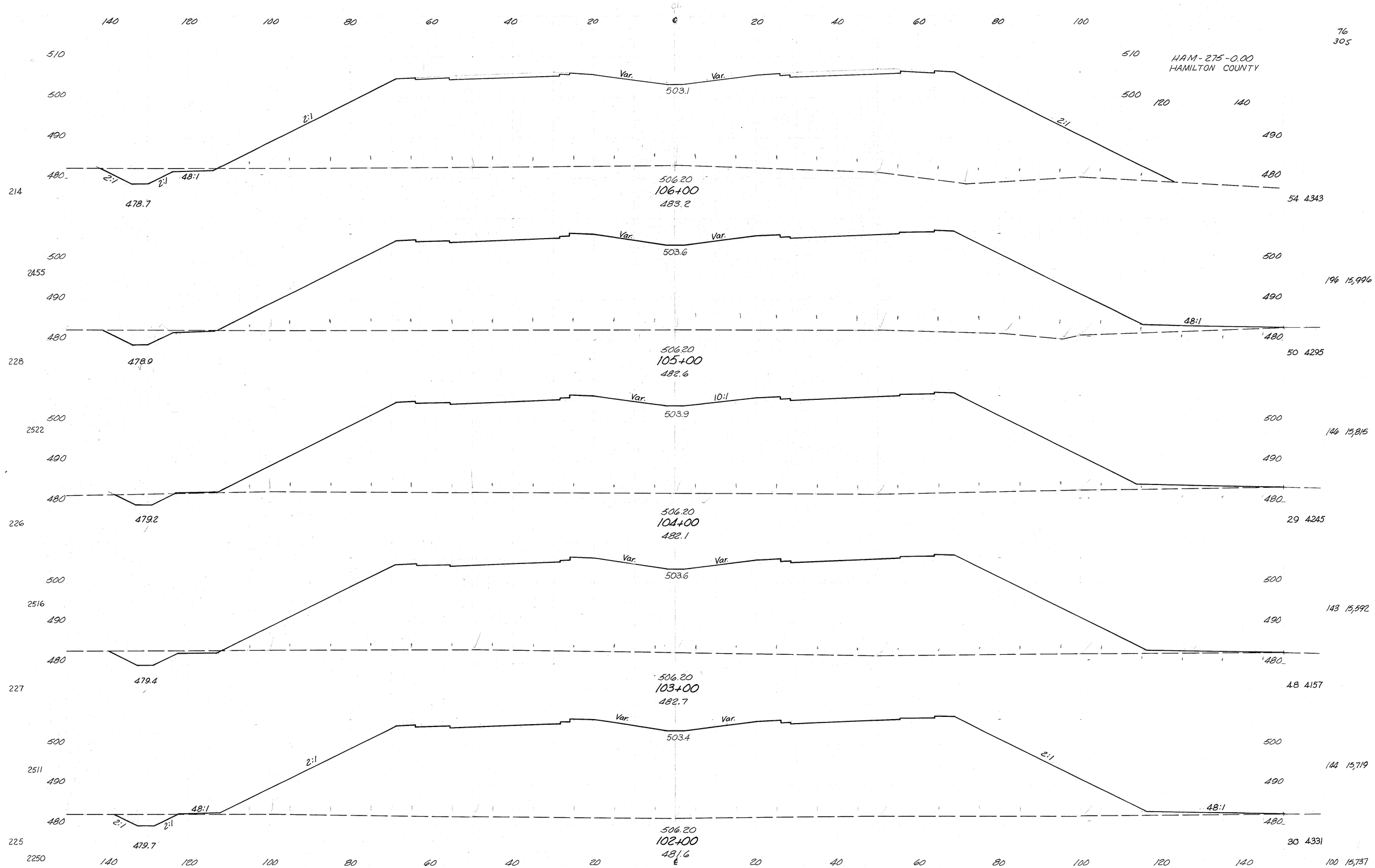
HAM-275-0.00
HAMILTON COUNTY
76
305
Var.
503.1
506.20
106+00
483.2
478.7
214
54 4343
503.6
506.20
105+00
482.6
478.9
228
2455
196 15,996
503.9
506.20
104+00
482.1
479.2
226
2522
29 4245
146 15,815
503.6
506.20
103+00
482.7
479.4
227
2516
143 15,592
503.4
506.20
102+00
481.6
479.7
225
2511
2250
48 4157
30 4331
144 15,719
100 15,737
2:1
48:1
10:1
Sta. 102+00 to Sta. 106+00
I-275

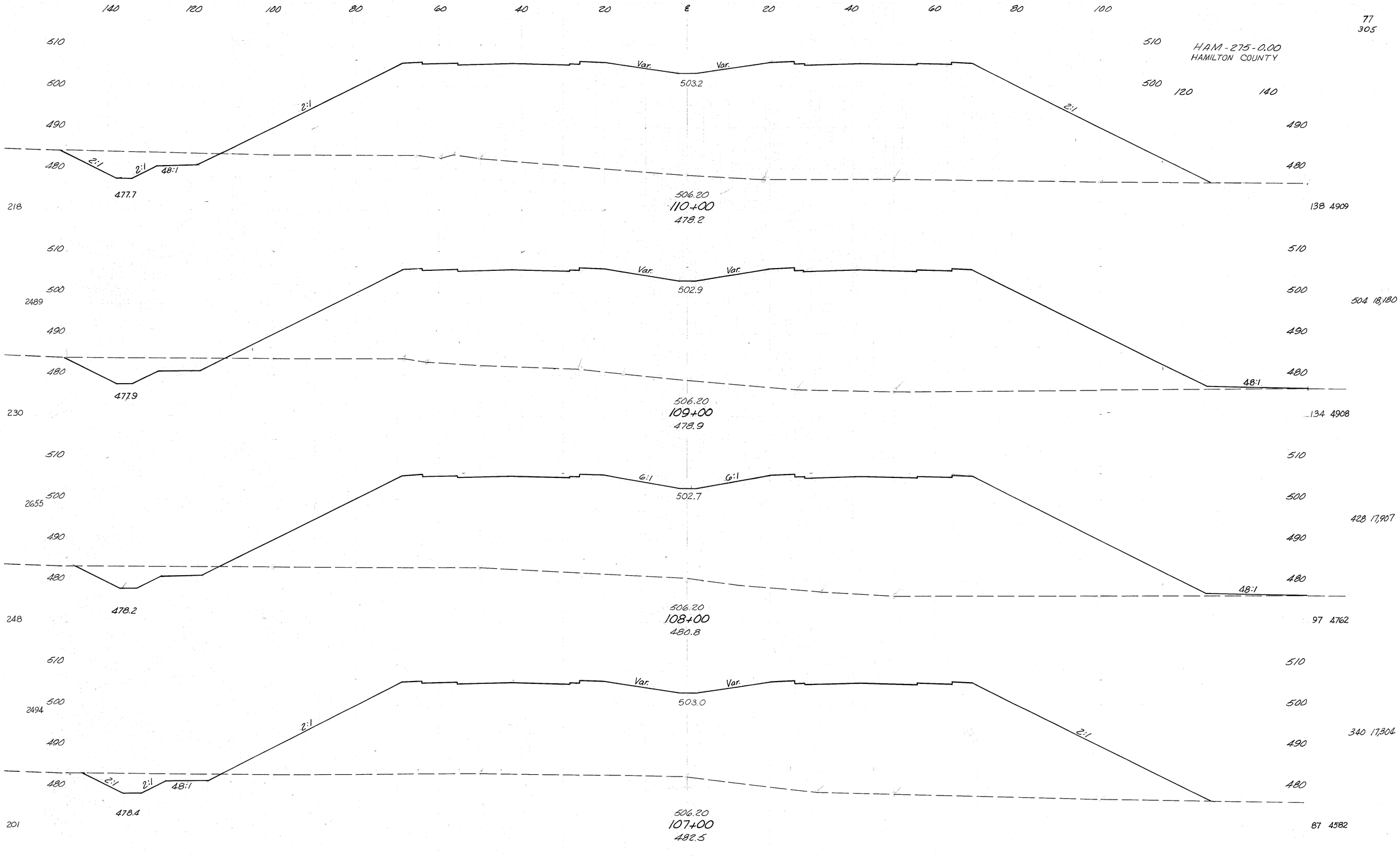

8-67 C.H. 10-70 J.B. Sta. 107+00 to Sta. 110+00 I-275

HAM-275-0.00
HAMILTON COUNTY

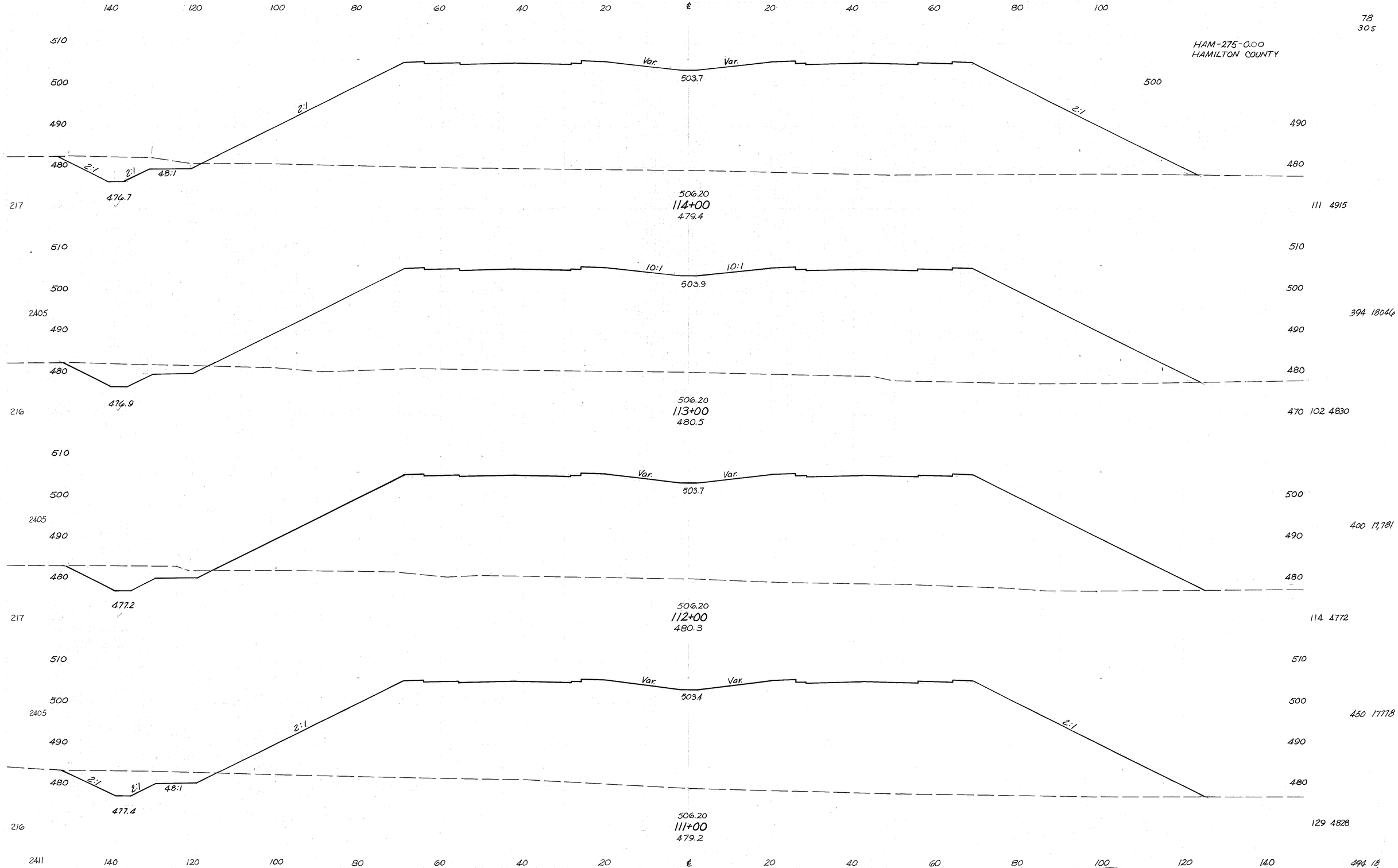

DESIGNED		CHECKED	
8-67	C.H.	10-70	J.B.

Sta. 111+00 to Sta. 114+00 I-275

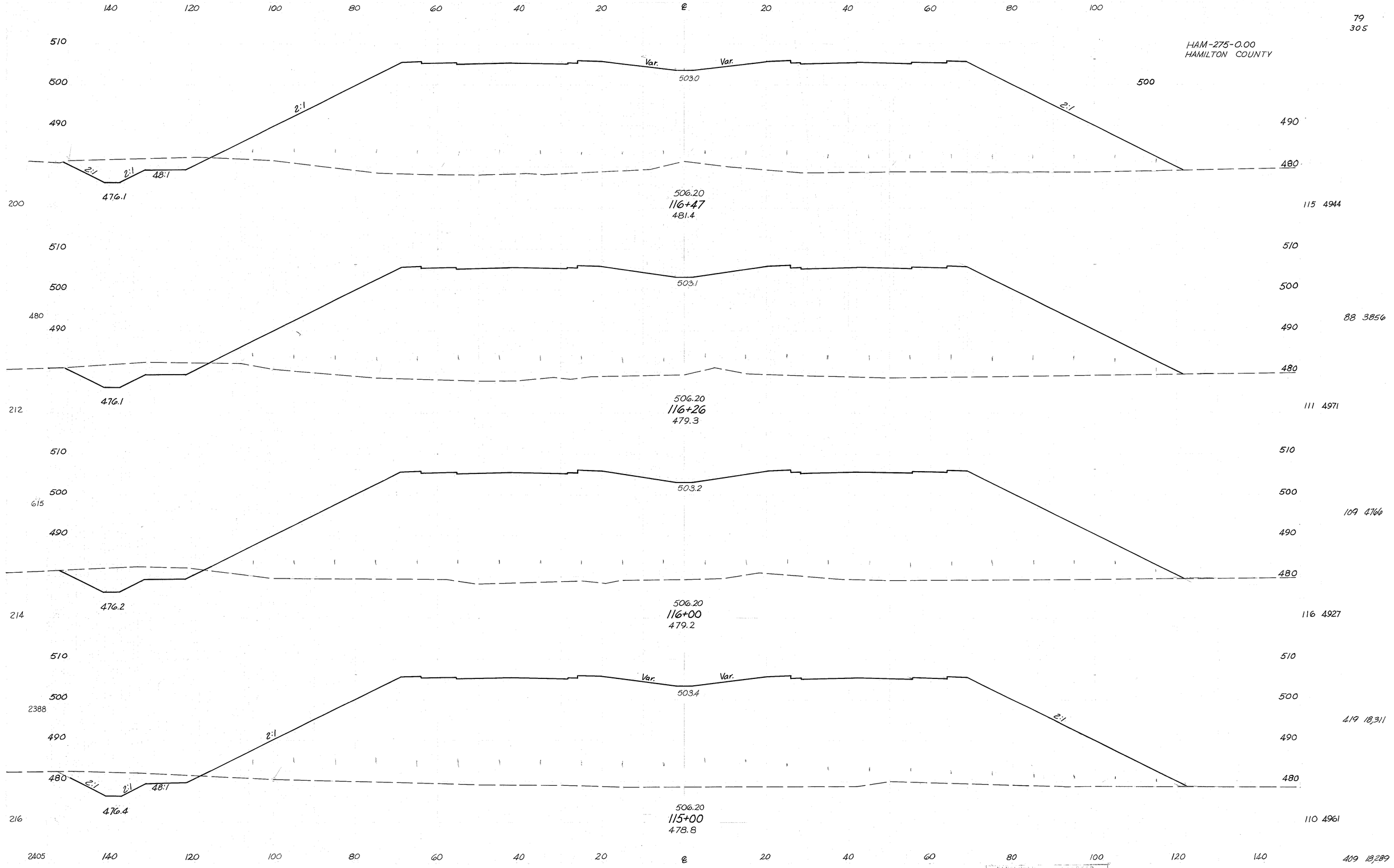
HAM-275-0.00
HAMILTON COUNTY
140 120 100 80 60 40 20 ℄ 20 40 60 80 100
510
500
490
480
Var. Var.
503.0
2:1
2:1
2:1
48:1
476.1
506.20
116+47
481.4
200
115 4944
503.1
476.1
506.20
116+26
479.3
480
212
111 4971
503.2
476.2
506.20
116+00
479.2
615
214
116 4927
503.4
476.4
506.20
115+00
478.8
2388
216
110 4961
2405
109 4766
419 18,311
409 18,289
79
305
88 3856
DESIGNED 8-67 C.H.
CHECKED 10-70 J.B.
Sta. 115+00 to Sta. 116+47
I-275

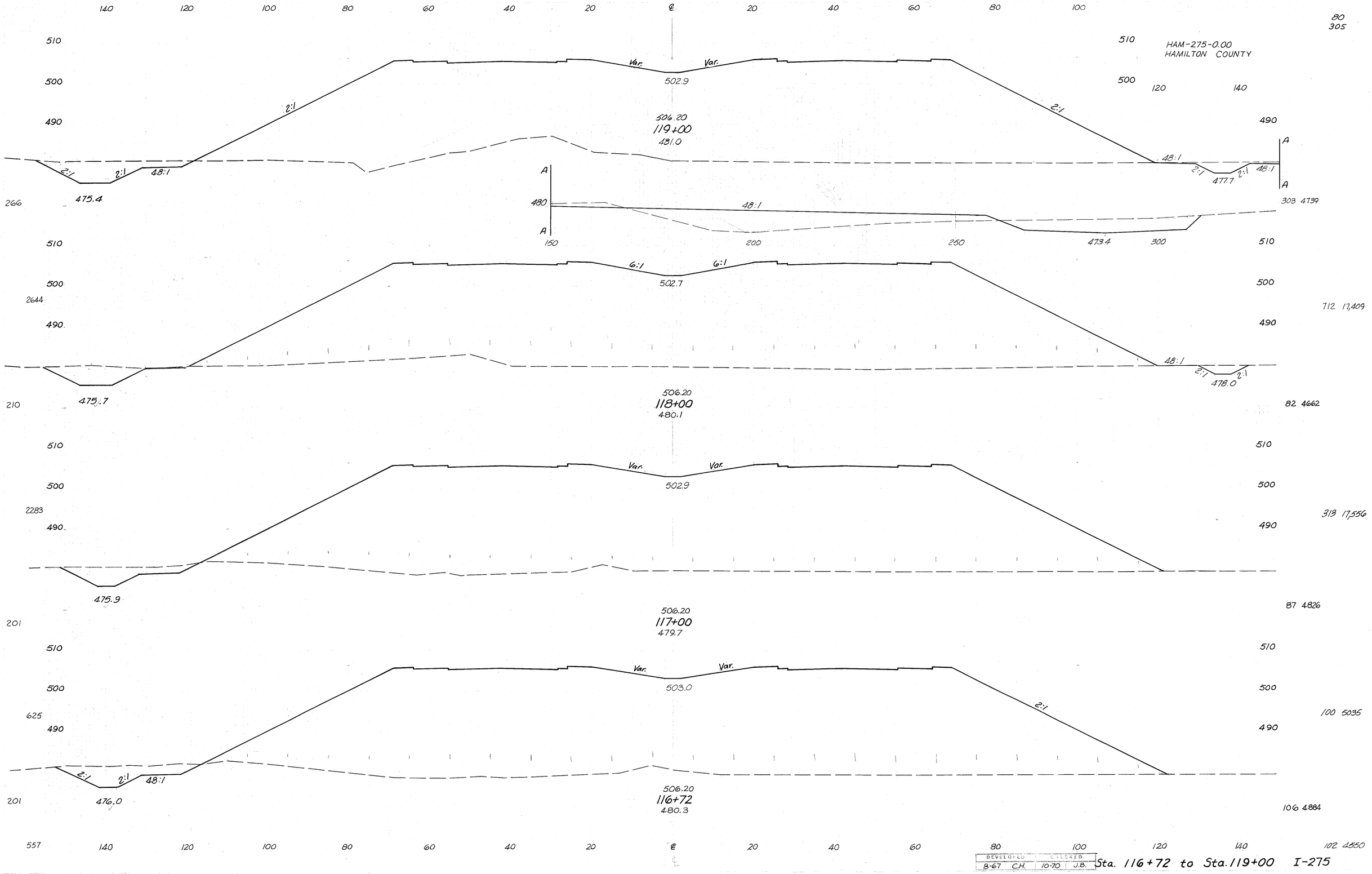

DEVELOPED		CHECKED	
8-67	C.H.	10-70	J.B.

Sta. 116+72 to Sta. 119+00 I-275

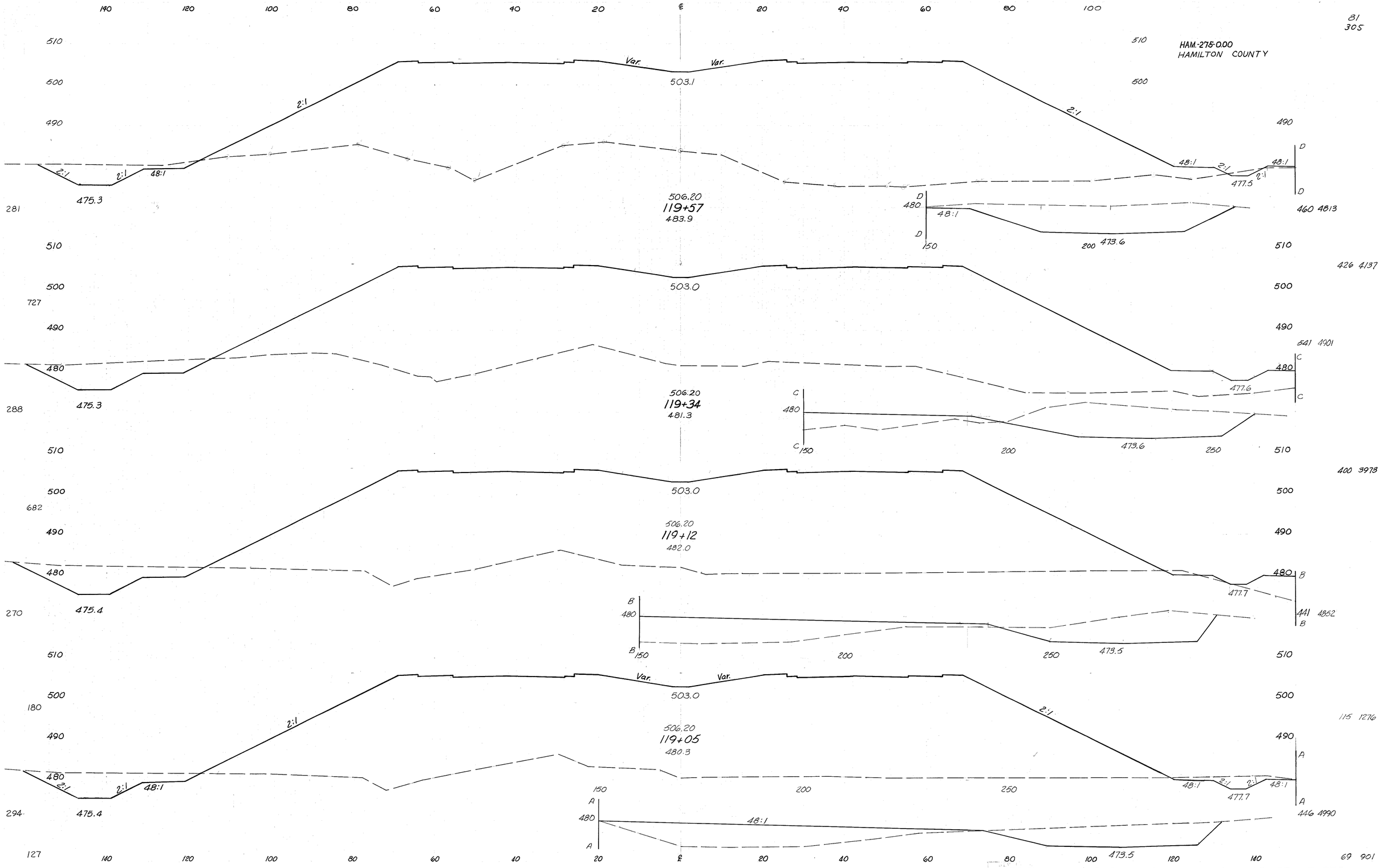
HAM.-275-0.00
HAMILTON COUNTY
81
305
Var.
Var.
503.1
2:1
48:1
475.3
506.20
119+57
483.9
477.5
473.6
460 4813
426 4137
503.0
506.20
119+34
481.3
477.6
473.6
541 4901
400 3973
506.20
119+12
482.0
475.4
477.7
473.5
441 4852
506.20
119+05
480.3
477.7
473.5
446 4990
115 1276
69 901
8-67 C.H. 10-70 J.B. Sta. 119+05 to Sta 119+57 I-275

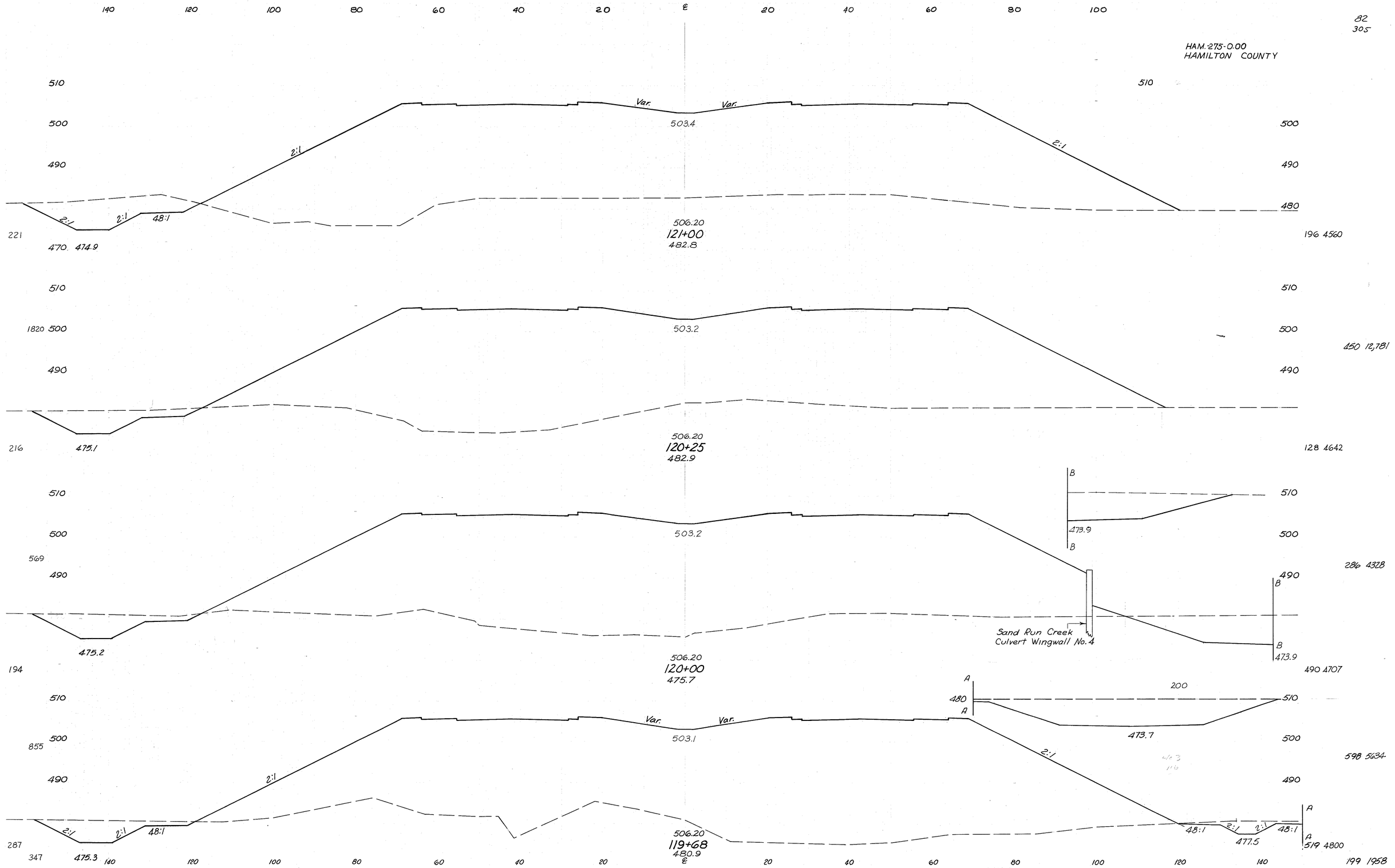

8-67 C.H. 10-70 J.B. Sta. 119+68 to Sta. 121+00 I-275

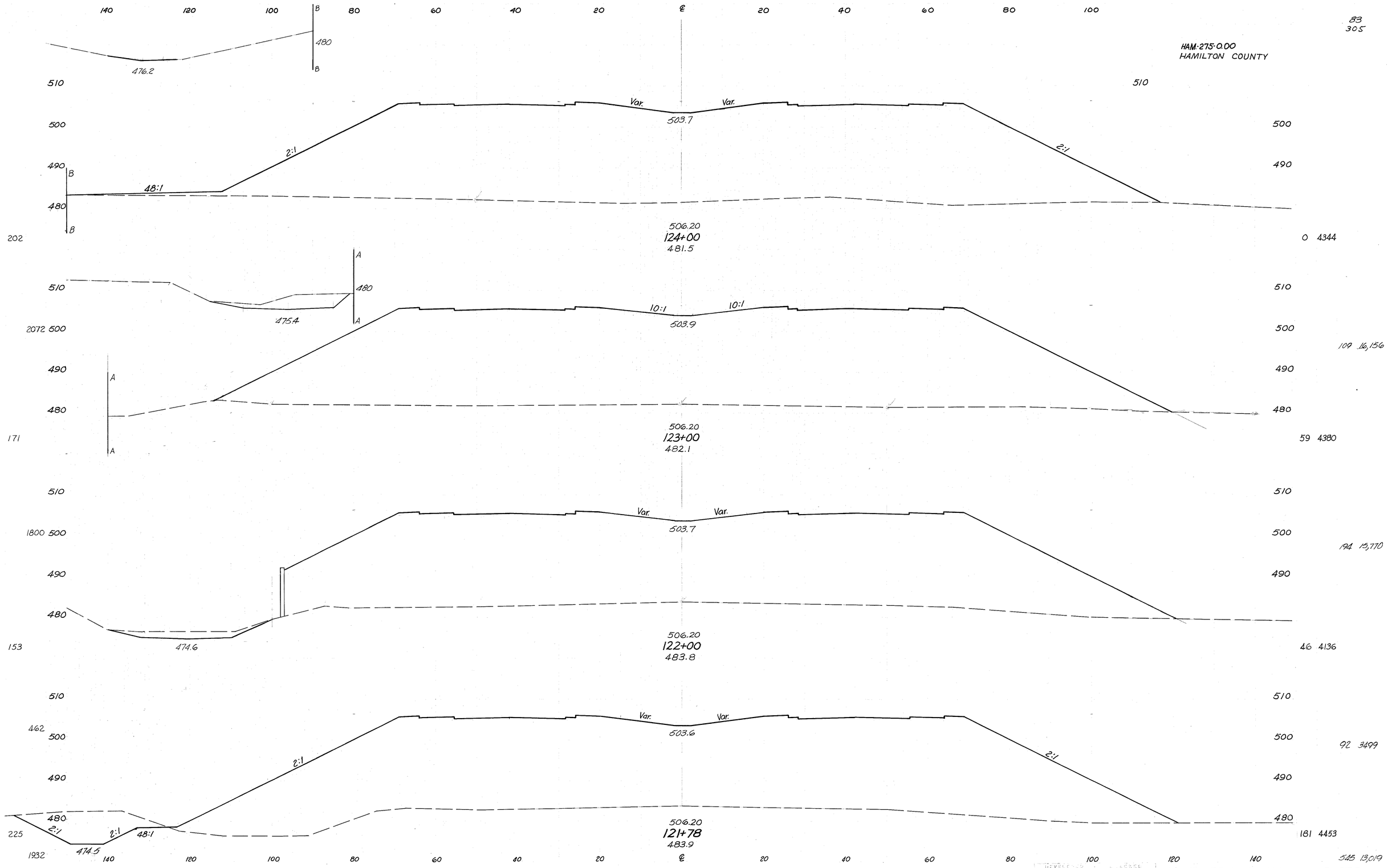
HAM-275-0.00
HAMILTON COUNTY
83
305
140 120 100 80 60 40 20 ℄ 20 40 60 80 100
476.2
480
Var. Var.
503.7
2:1
48:1
506.20
124+00
481.5
202
0 4344
475.4
10:1
503.9
506.20
123+00
482.1
171
59 4380
109 16,156
474.6
506.20
122+00
483.8
1800
153
46 4136
194 13,770
474.5
503.6
506.20
121+78
483.9
462
225
1932
181 4453
92 3499
545 13,019
DEVELOPED
DESIGNED
8-67 C.H. 10-70 J.B.
Sta 121+78 to Sta 124+00
I-275

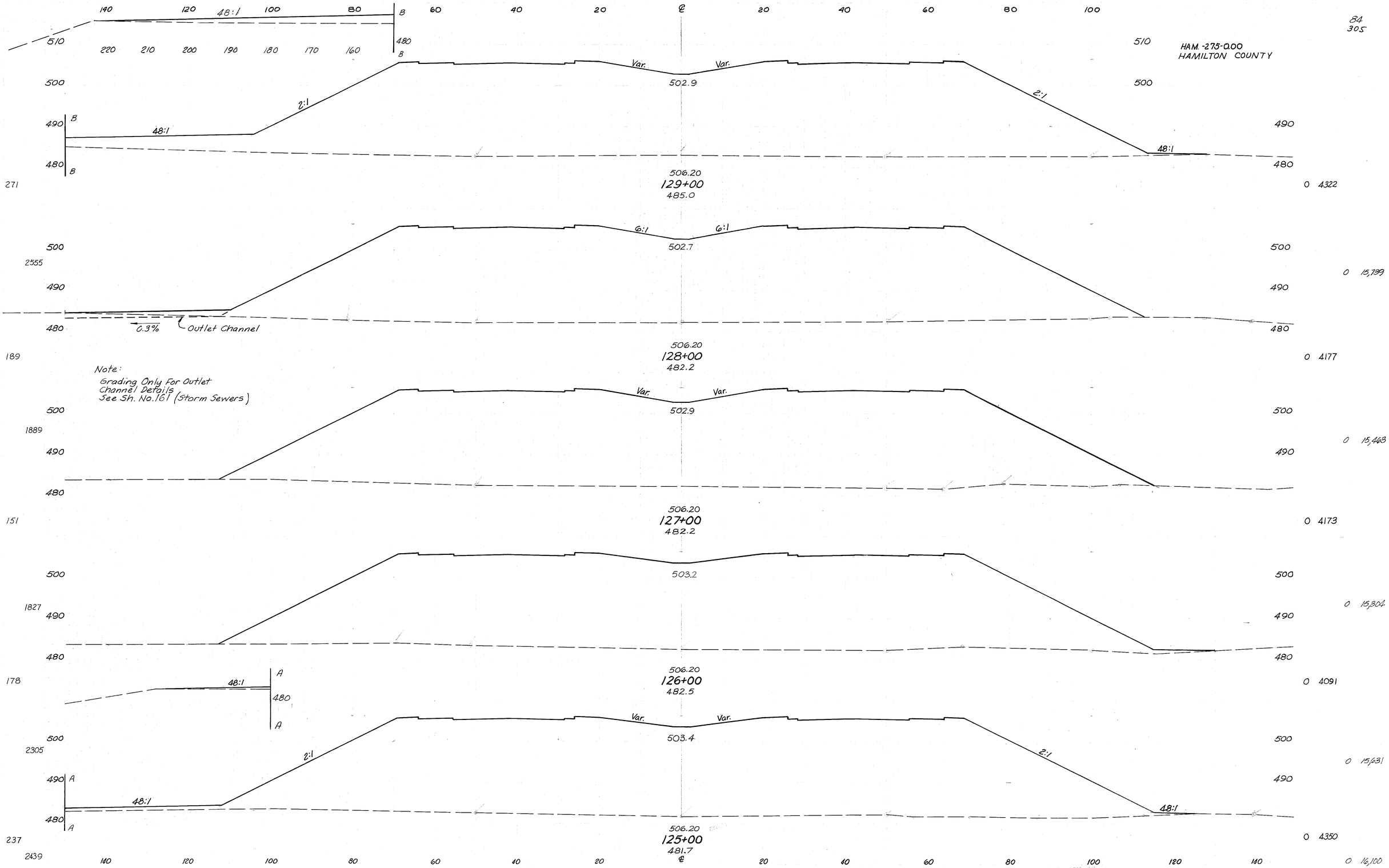

DESIGNED		DRAWN	
8-67	C.H.	10-70	J.B.

Sta. 125+00 to Sta 129+00 I-275

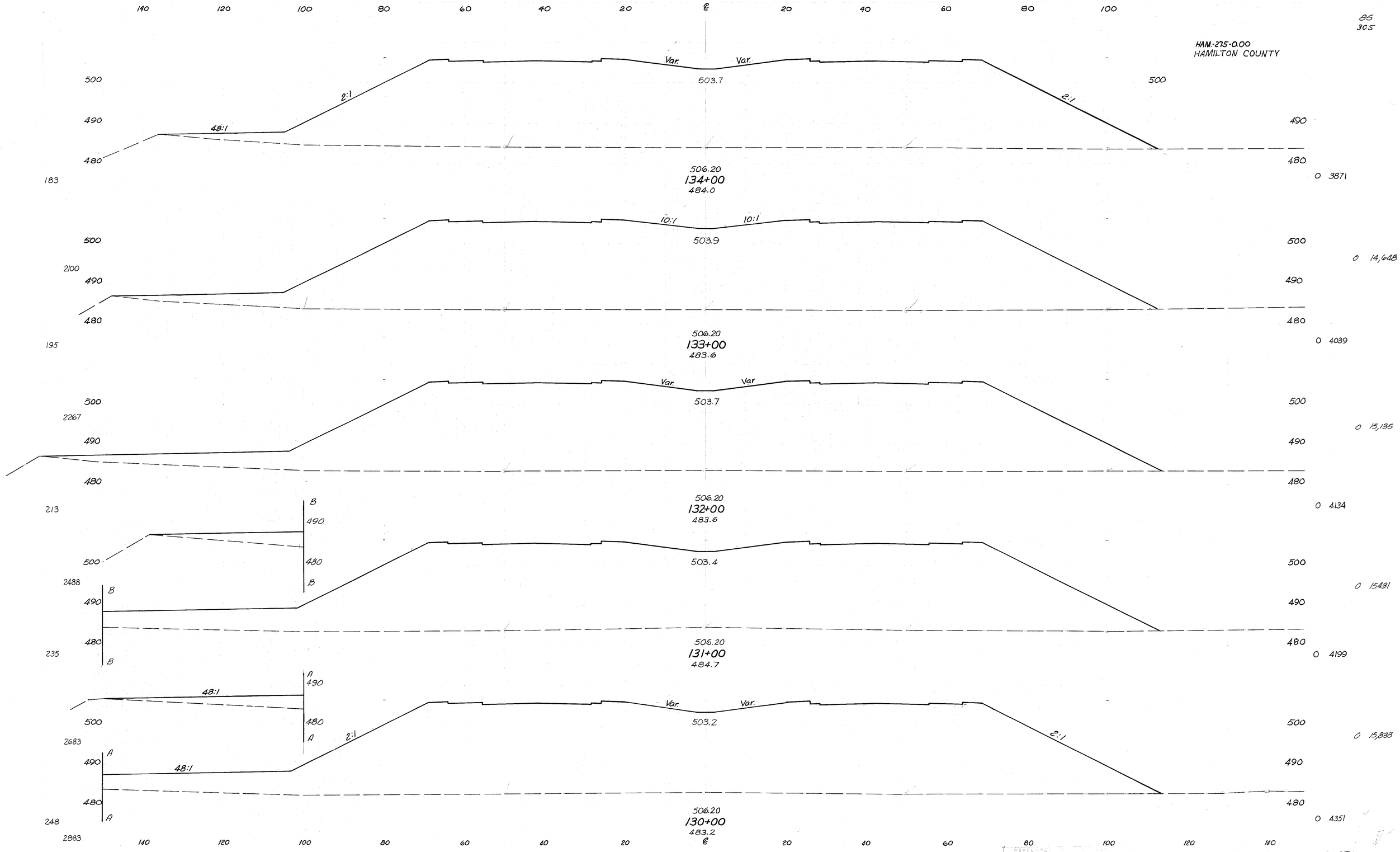
HAM-275-0.00
HAMILTON COUNTY
85
305
140 120 100 80 60 40 20 ℄ 20 40 60 80 100
500
490
480
Var. Var.
503.7
2:1
48:1
506.20
134+00
484.0
183
0 3871
10:1 10:1
503.9
2100
0 14,648
506.20
133+00
483.6
195
0 4039
Var. Var
503.7
2267
0 15,135
506.20
132+00
483.6
213
0 4134
B
503.4
2488
0 15431
506.20
131+00
484.7
235
0 4199
A
Var. Var.
503.2
2683
0 15,833
506.20
130+00
483.2
248
2883
0 4351
8-67 C.H. 10-70 J.B. Sta. 130+00 to Sta. 134+00 I-27

HAM.-275-0.00
HAMILTON COUNTY

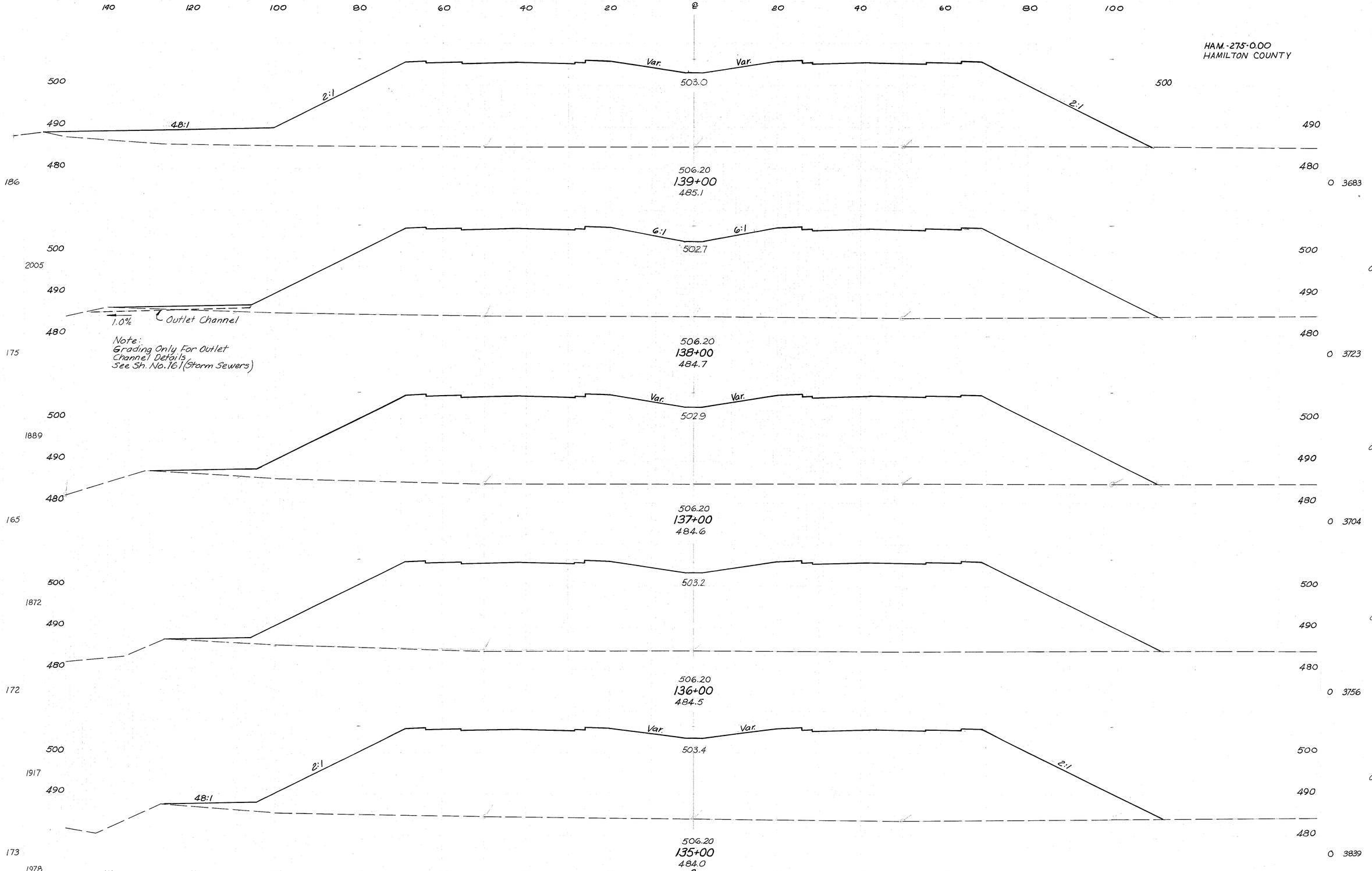

SEVERINGHAUS			
8-67	C.H.	10-70	J.B.

Sta. 135+00 to Sta. 139+00 I-275

87
305

HAM-275-0.00
HAMILTON COUNTY

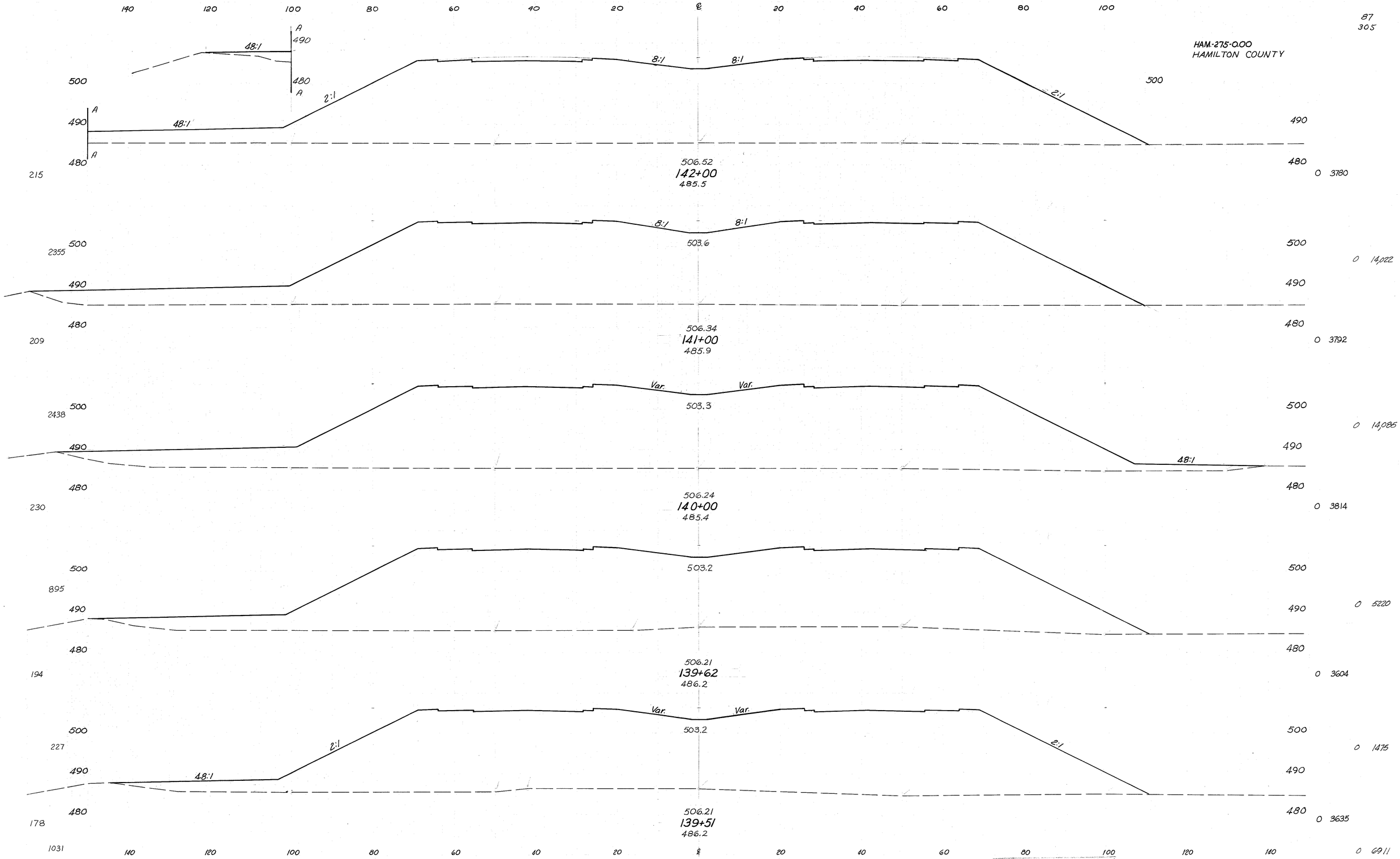

DEVELOPED		REVIEWED	
8-67	C.H.	10-71	J.B.

Sta. 139+51 to Sta. 142+00 I-275

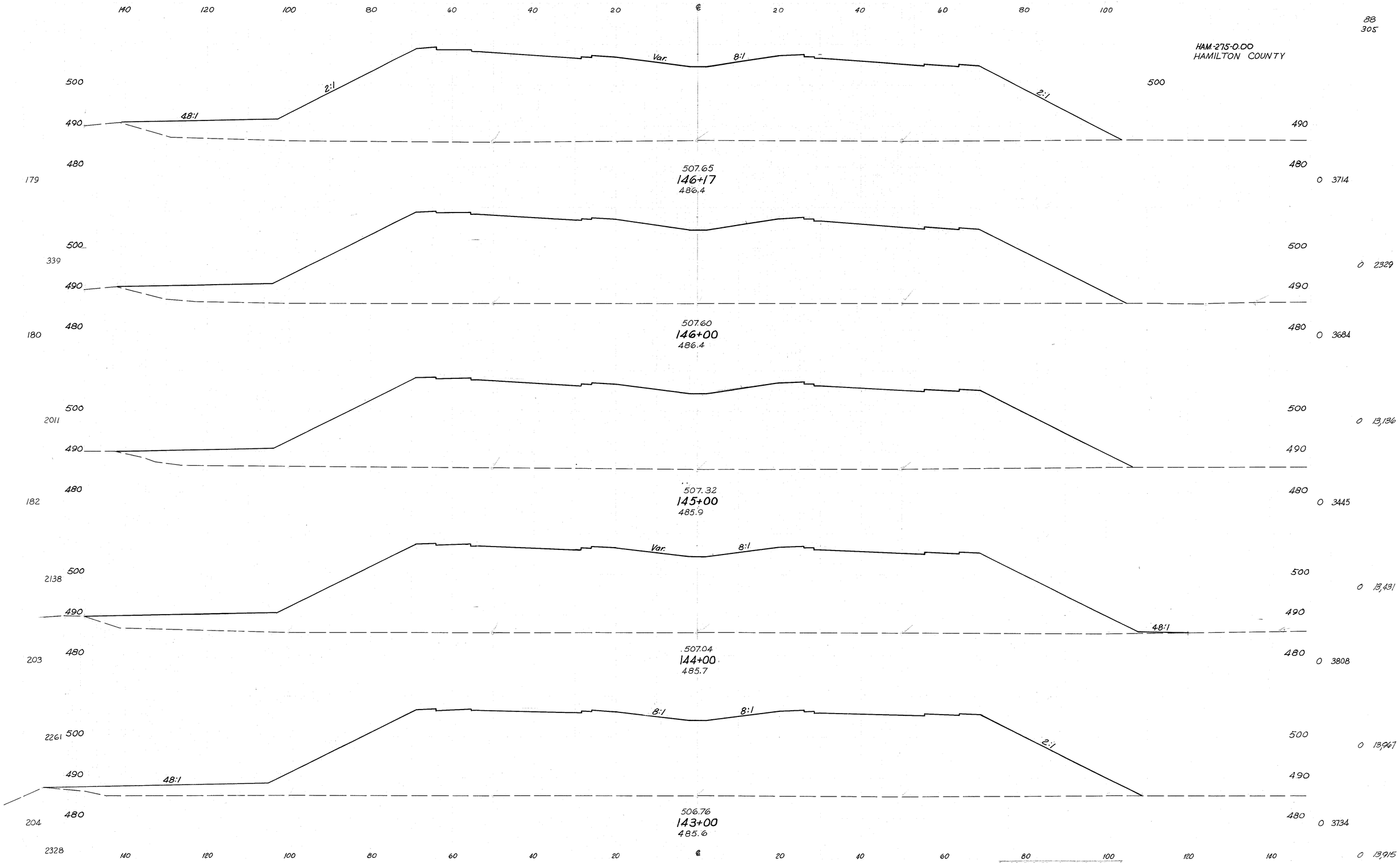
140 120 100 80 60 40 20 ℄ 20 40 60 80 100
88
305
HAM-275-0.00
HAMILTON COUNTY
500
490
480
48:1
2:1
Var.
8:1
2:1
507.65
146+17
486.4
179
0 3714
339
0 2329
507.60
146+00
486.4
180
0 3684
2011
0 13,136
507.32
145+00
485.9
182
0 3445
2138
0 13,431
48:1
507.04
144+00
485.7
203
0 3808
2261
0 13,967
48:1
2:1
506.76
143+00
485.6
204
0 3734
2328
0 13,915
DEVELOPED 8-67 C.H.
CHECKED 10-70 J.B.
Sta. 143+00 to Sta. 146+17
I-275

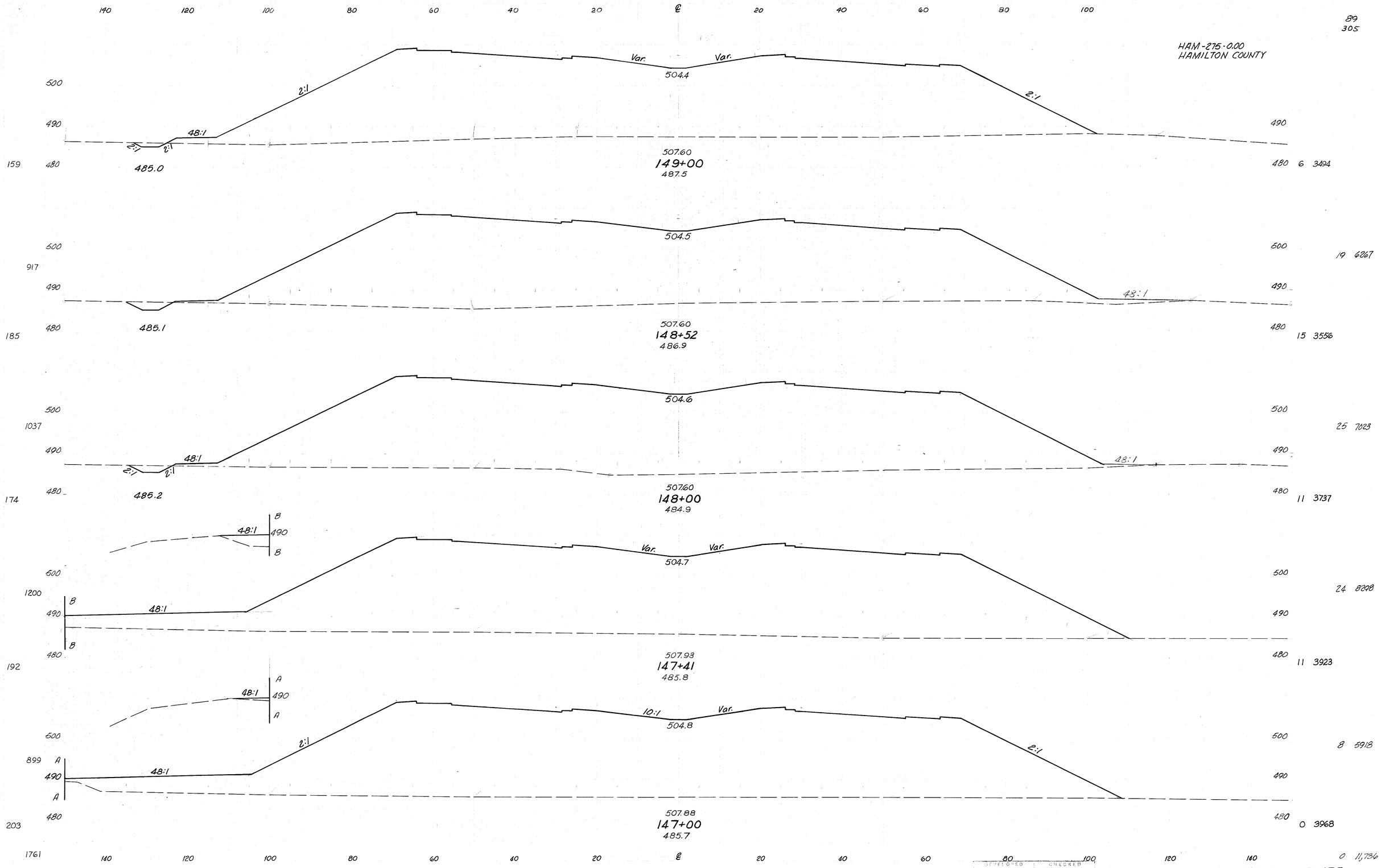
HAM-275-0.00
HAMILTON COUNTY
89
305
140 120 100 80 60 40 20 ℄ 20 40 60 80 100
500
490
480
Var.
Var.
504.4
2:1
48:1
485.0
507.60
149+00
487.5
159
6 3494
504.5
917
485.1
507.60
148+52
486.9
185
15 3556
504.6
1037
485.2
507.60
148+00
484.9
174
11 3737
B
48:1
490
504.7
1200
507.93
147+41
485.8
192
11 3923
A
10:1
504.8
899
507.88
147+00
485.7
203
0 3968
19 6267
25 7023
24 8298
8 5918
1761
0 11,736
DEVELOPED
CHECKED
8-67 C.H. 10-70 J.B.
Sta. 147+00 to Sta. 149+00 I-275

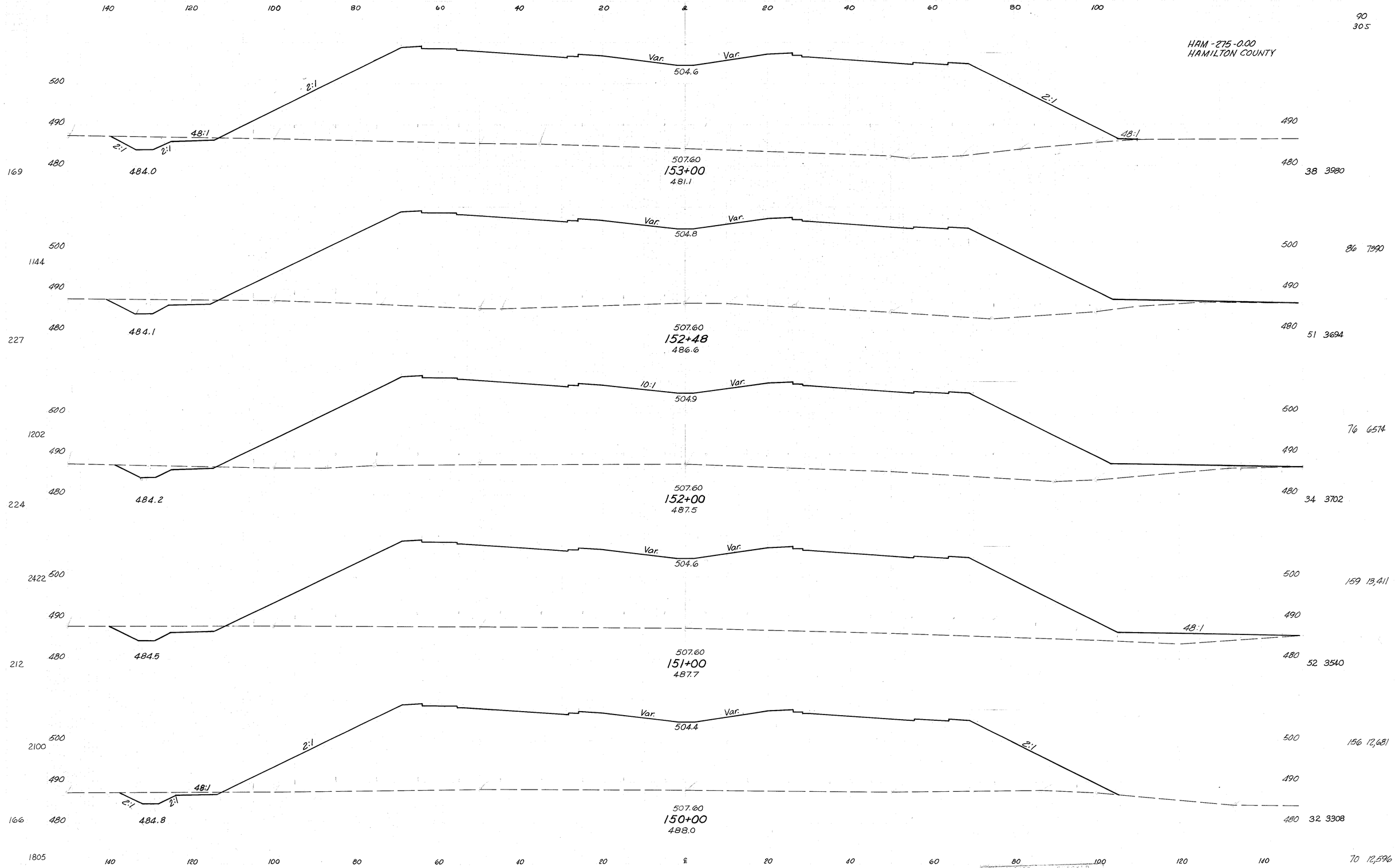
HAM-275-0.00
HAMILTON COUNTY
140 120 100 80 60 40 20 ℄ 20 40 60 80 100
90
30.5
500
490
480
Var. Var.
504.6
2:1
48:1
2:1
2:1
484.0
507.60
153+00
481.1
169
38 3980
Var. Var.
504.8
1144
484.1
507.60
152+48
486.6
227
51 3694
10:1 Var.
504.9
1202
484.2
507.60
152+00
487.5
224
34 3702
76 6574
Var. Var.
504.6
2422
484.5
507.60
151+00
487.7
212
52 3540
159 13,411
48:1
Var. Var.
504.4
2100
2:1
2:1
48:1
2:1
2:1
484.8
507.60
150+00
488.0
166
32 3308
156 12,681
1805
70 12,596
DEVELOPED
CHECKED
8-67 C.H. 10-70 J.B.
Sta. 150+00 to Sta. 153+00 I-275

HAM-275-0.00
HAMILTON COUNTY

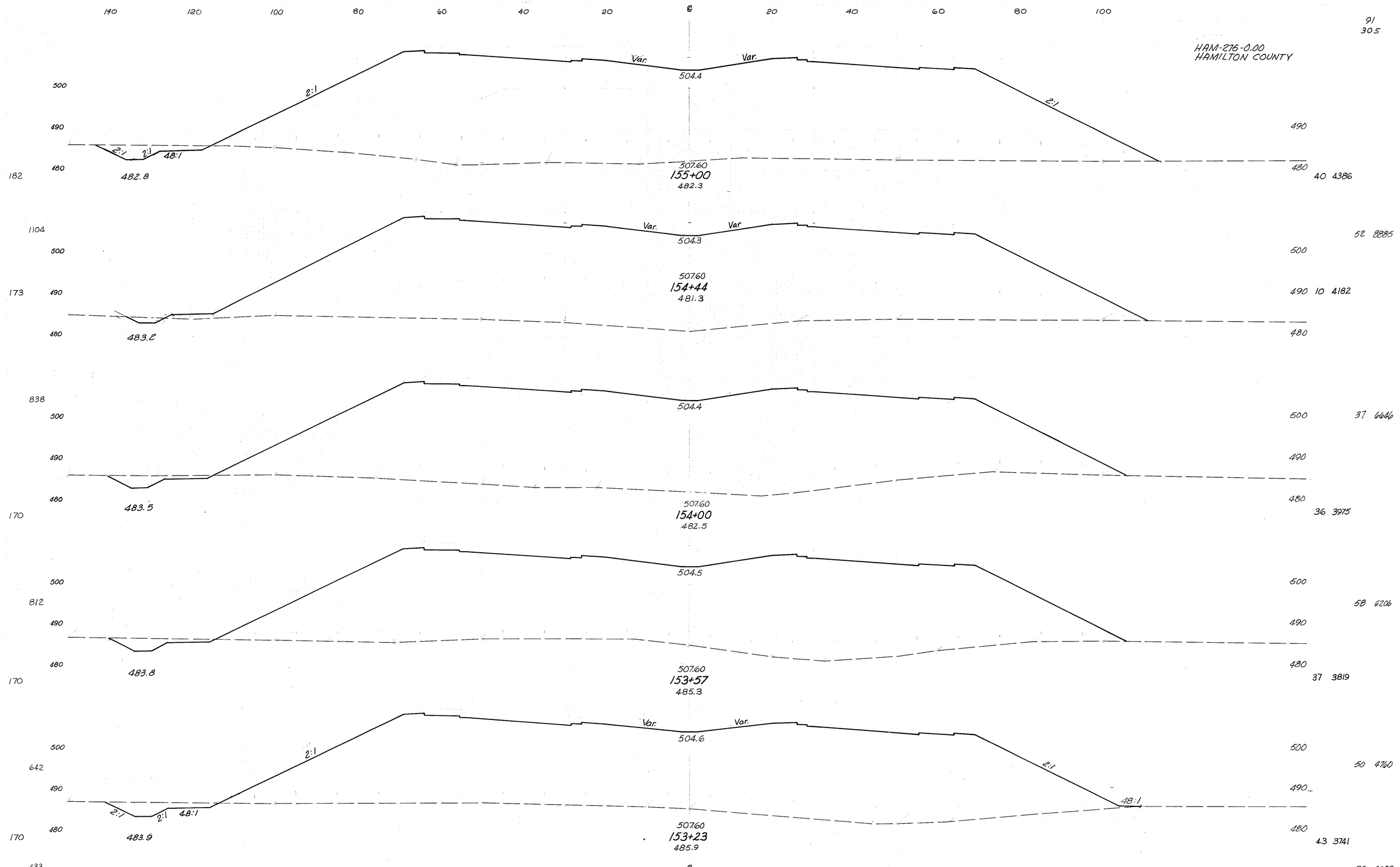

DESIGNED		REVIEWED	
8-67	C.H.	10-70	J.B.

Sta. 153+23 to Sta. 155+00 I-275

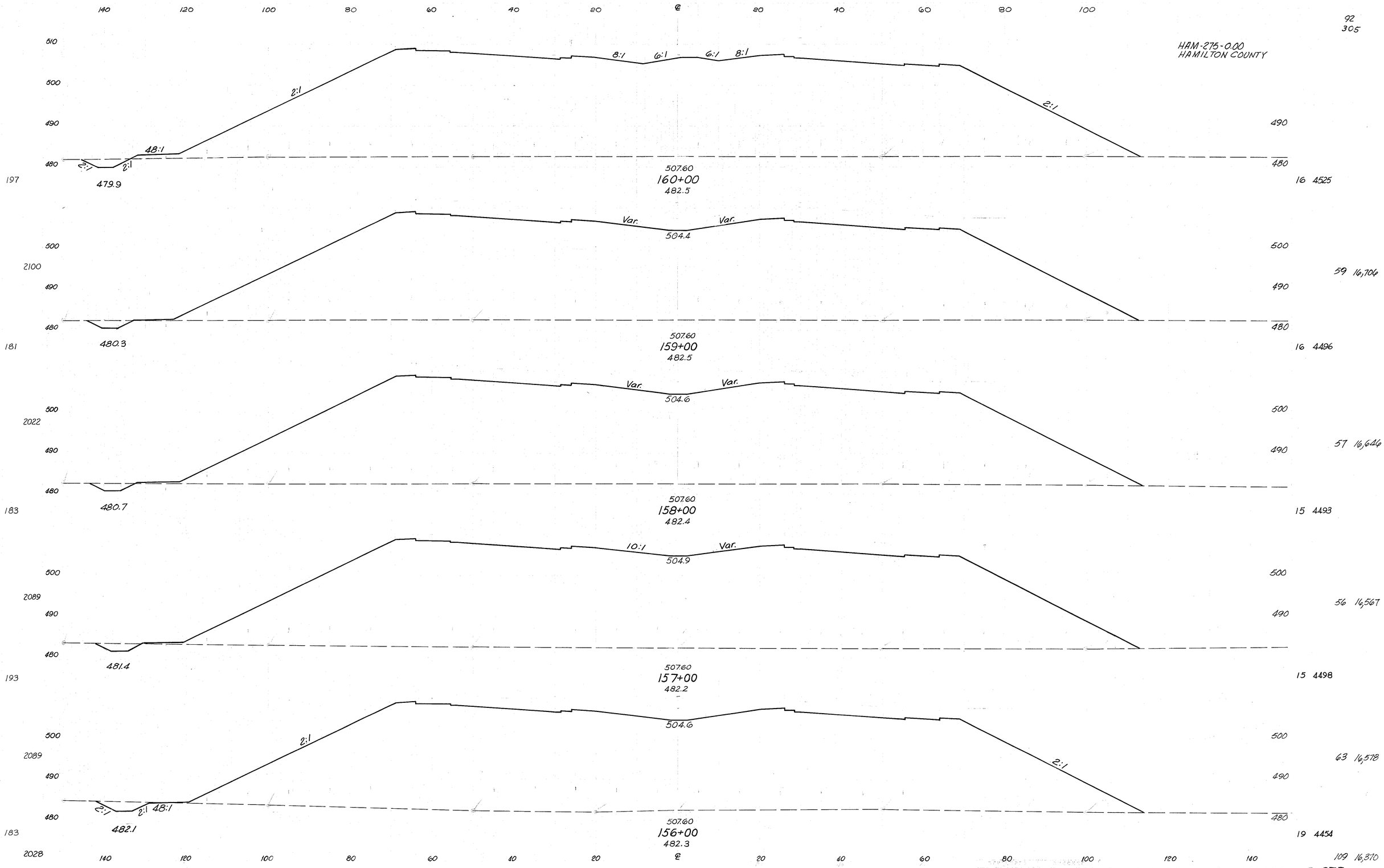
92
305
HAM-275-0.00
HAMILTON COUNTY
140 120 100 80 60 40 20 ℄ 20 40 60 80 100
510
500
490
480
8:1 6:1 6:1 8:1
2:1
48:1
2:1
2:1
479.9
507.60
160+00
482.5
197
16 4525
Var. Var.
504.4
2100
59 16,706
480.3
507.60
159+00
482.5
181
16 4496
Var. Var.
504.6
2022
57 16,646
480.7
507.60
158+00
482.4
183
15 4493
10:1 Var.
504.9
2089
56 16,567
481.4
507.60
157+00
482.2
193
15 4498
504.6
2089
63 16,578
482.1
507.60
156+00
482.3
183
19 4454
2028
109 16,370
8-67 C.H. 10-70 J.B. Sta. 156+00 to Sta. 160+00 I-275

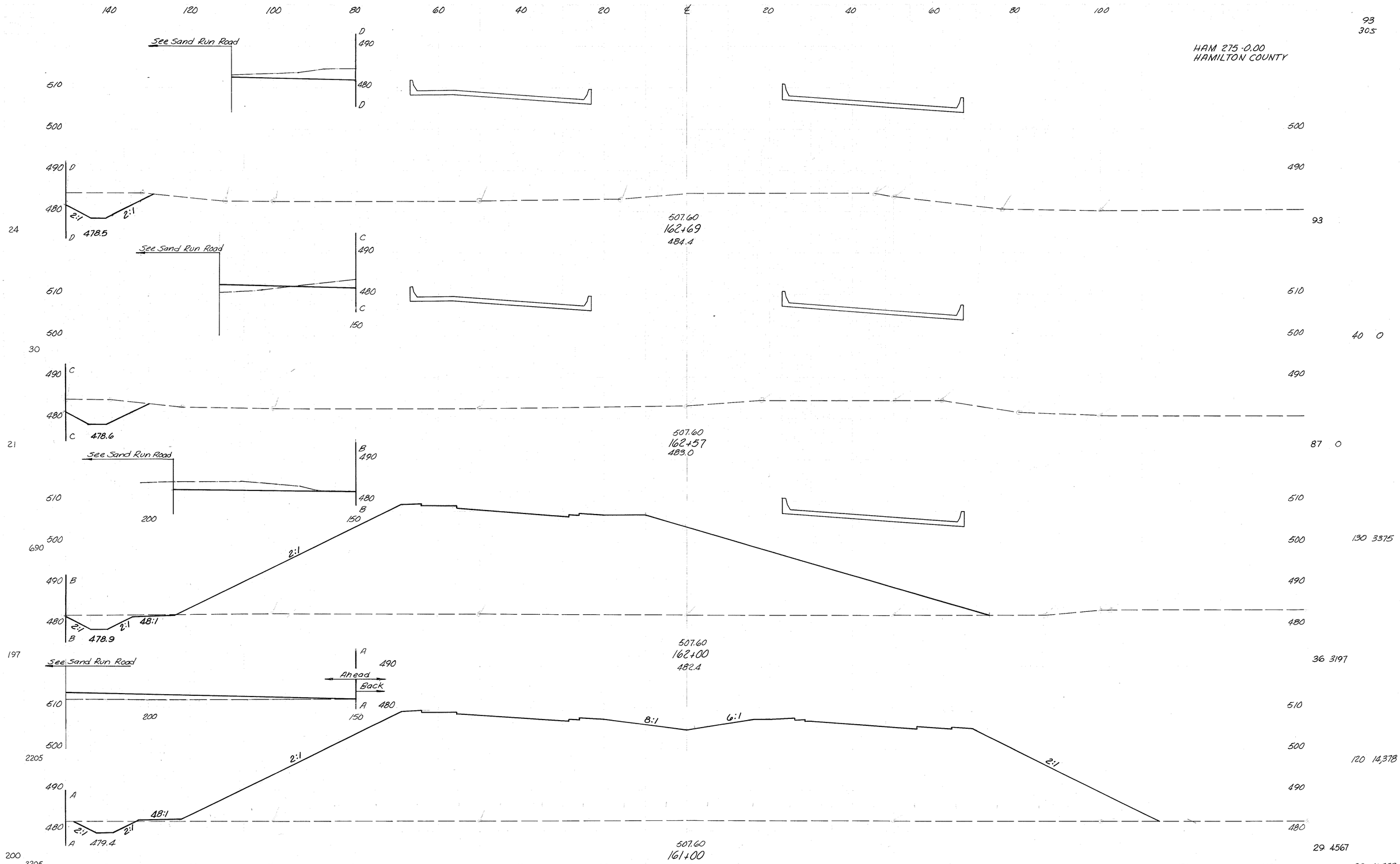
HAM 275-0.00
HAMILTON COUNTY
See Sand Run Road
2:1
478.5
507.60
162+69
484.4
478.6
507.60
162+57
489.0
478.9
48:1
507.60
162+00
482.4
Ahead
Back
8:1
6:1
479.4
507.60
161+00
482.5
93
305
93
40 0
87 0
130 3375
36 3197
120 14,378
29 4567
83 16,753
8-67 C.H. 10-70 J.B.
Sta 161+00 to Sta 162+69
I-275

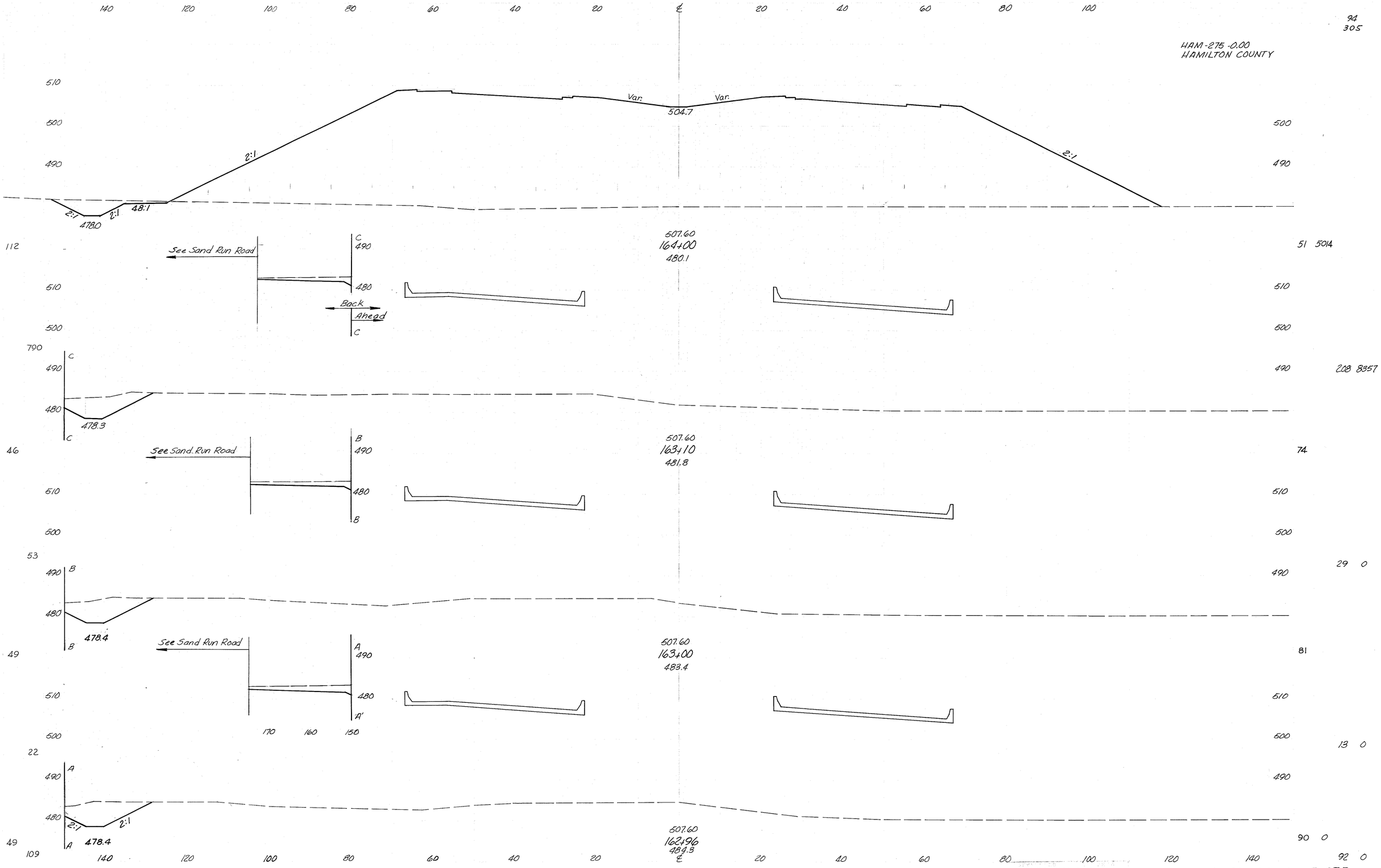
HAM-275-0.00
HAMILTON COUNTY
94
305
Var.
Var.
504.7
2:1
2:1
2:1
2:1
48:1
478.0
See Sand Run Road
Back
Ahead
507.60
164+00
480.1
478.3
See Sand Run Road
507.60
163+10
481.8
478.4
See Sand Run Road
507.60
163+00
483.4
478.4
507.60
162+96
484.3
112
51 5014
790
208 8357
46
74
53
29 0
49
81
22
13 0
49
90 0
109
92 0
8-67 C.H. 10-70 J.B.
Sta 162+96 to Sta 164+00
I-275

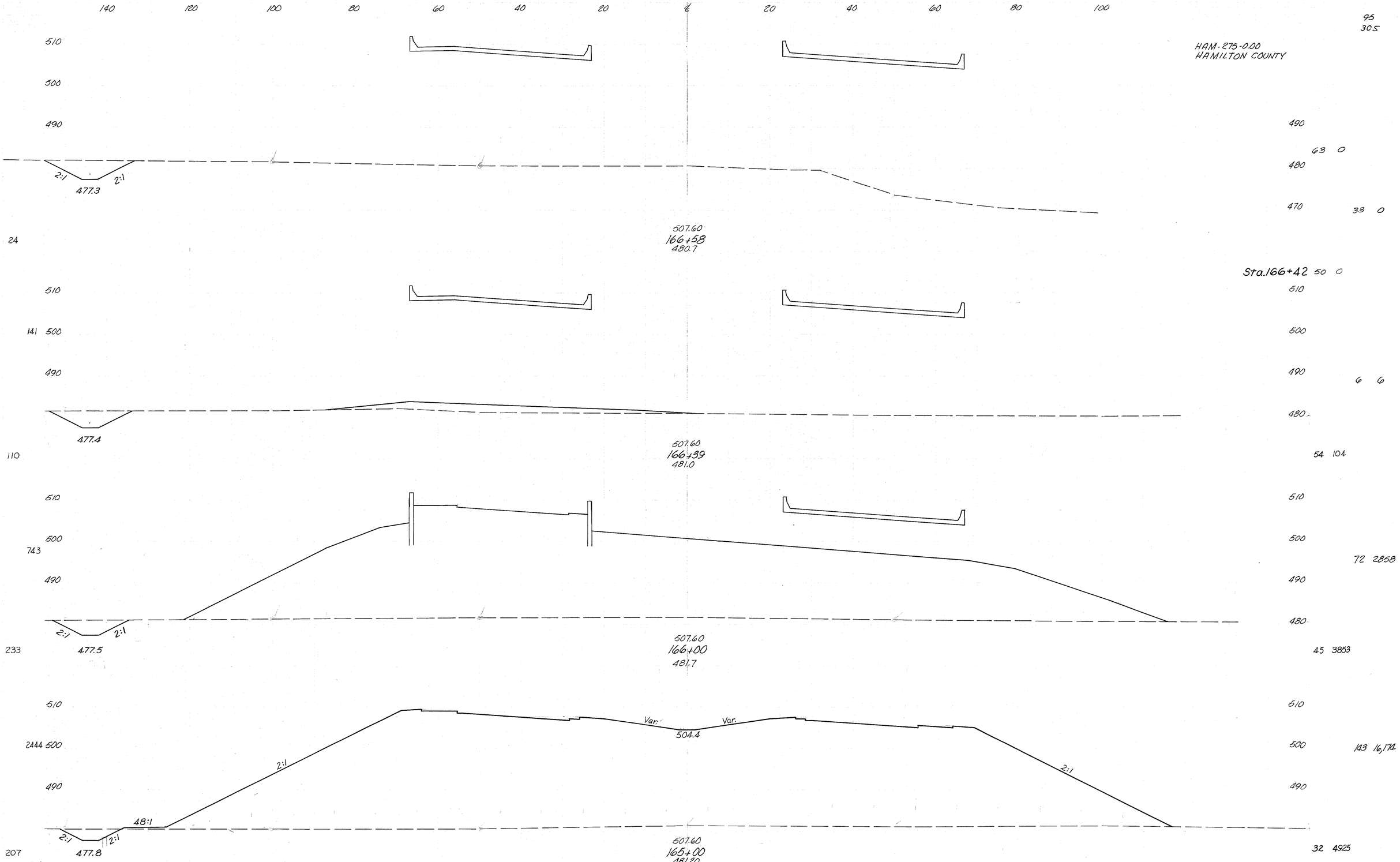
HAM-275-0.00
HAMILTON COUNTY
Sta.166+42
2:1
477.3
507.60
166+58
480.7
477.4
507.60
166+39
481.0
477.5
507.60
166+00
481.7
Var.
504.4
48:1
477.8
507.60
165+00
481.20
Sta 165+00 to Sta 166+58
I-275
DESIGNED
CHECKED
8-67
C.H.
10-70
J.B.

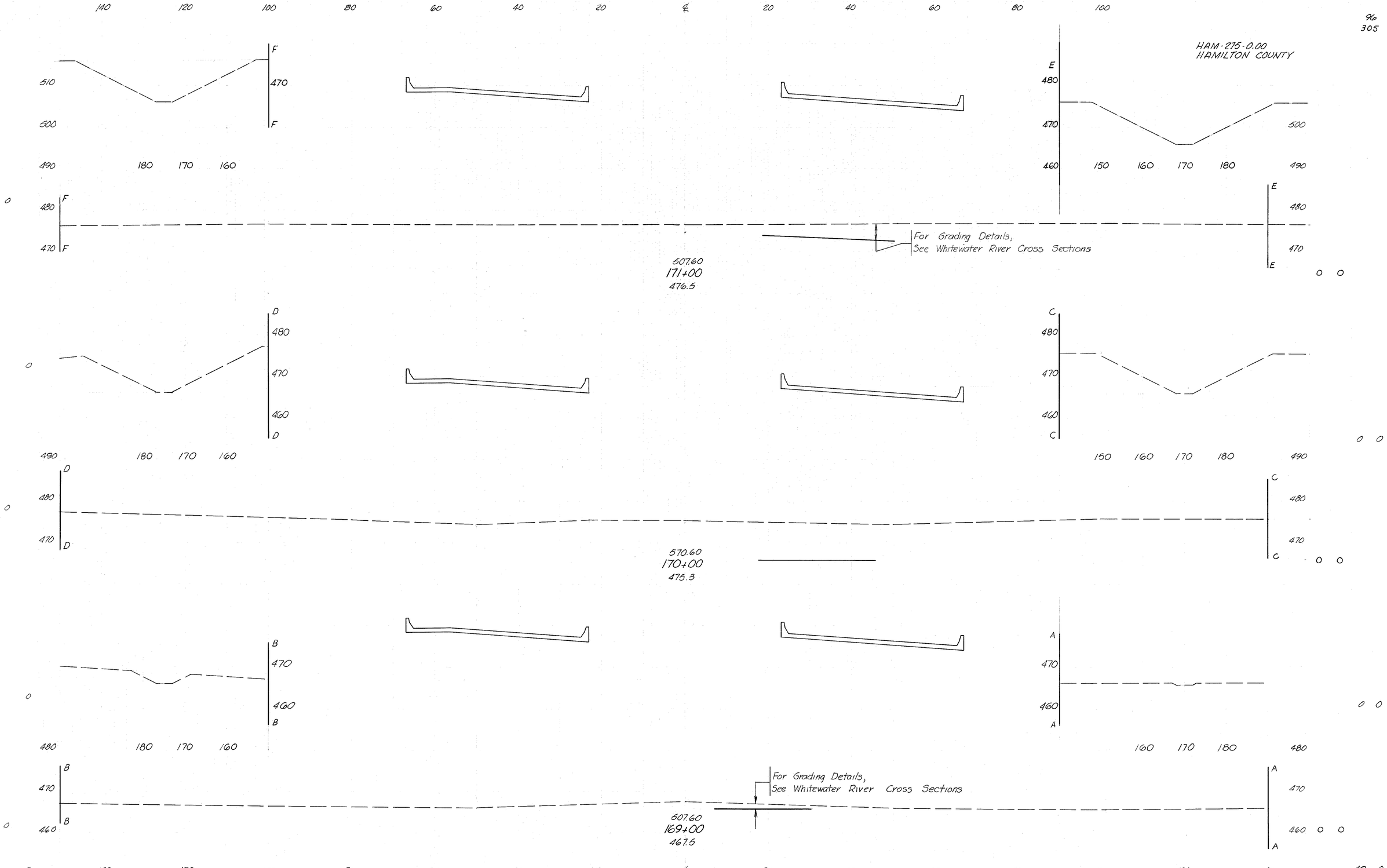

8-67 | C.H. | 10-70 | J.B. Sta. 169+00 to Sta. 171+00 I-275

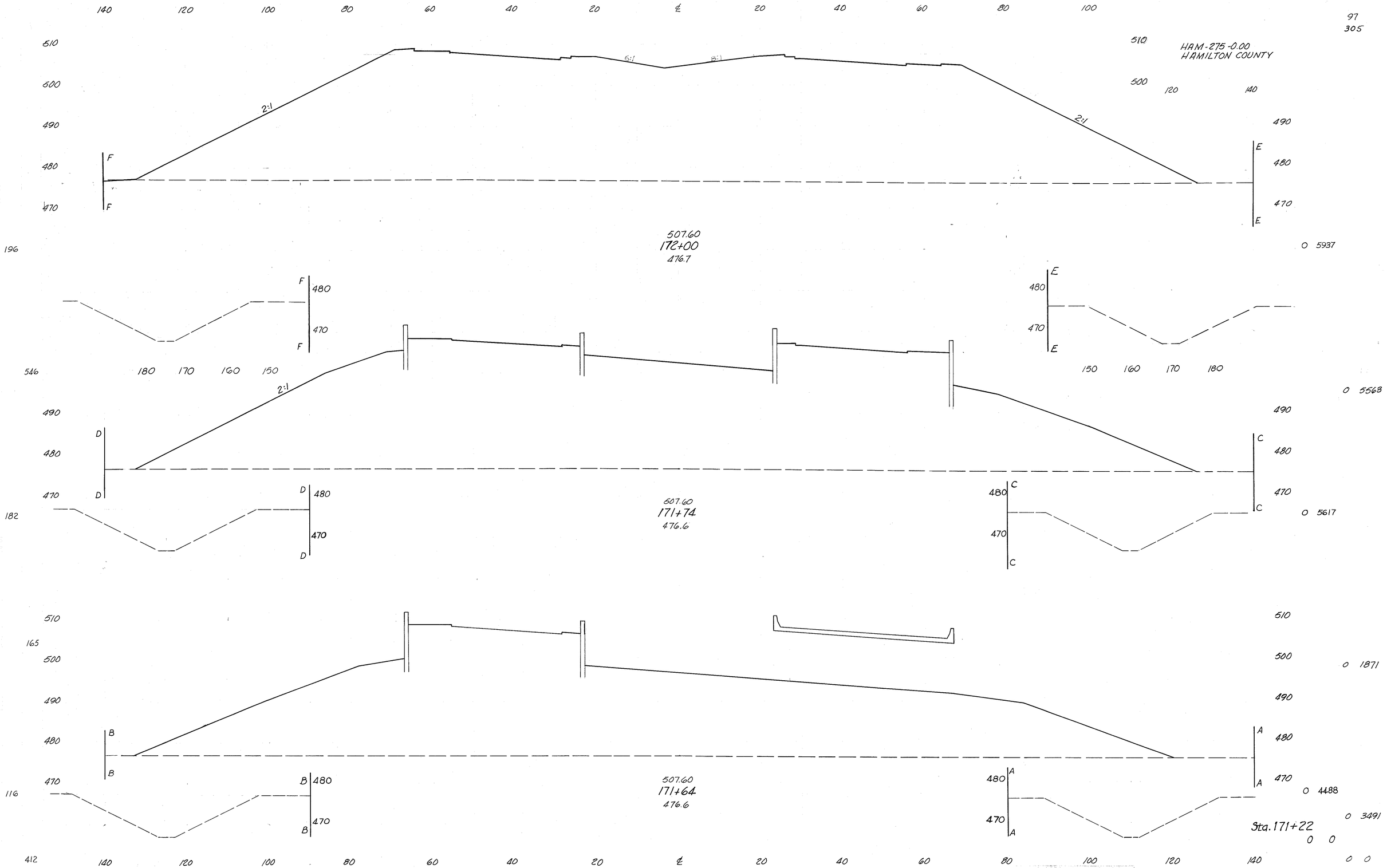
HAM-275-0.00
HAMILTON COUNTY
97
305
140 120 100 80 60 40 20 ℄ 20 40 60 80 100
510
500
490
480
470
2:1
F
E
196
0 5937
507.60
172+00
476.7
546
180 170 160 150
150 160 170 180
0 5568
D
C
182
507.60
171+74
476.6
0 5617
165
B
A
116
507.60
171+64
476.6
0 4488
0 3491
Sta. 171+22
0 0
0 0
412
8-67 C.H. 10-70 J.B.
Sta 171+64 to Sta 172+00
I-275

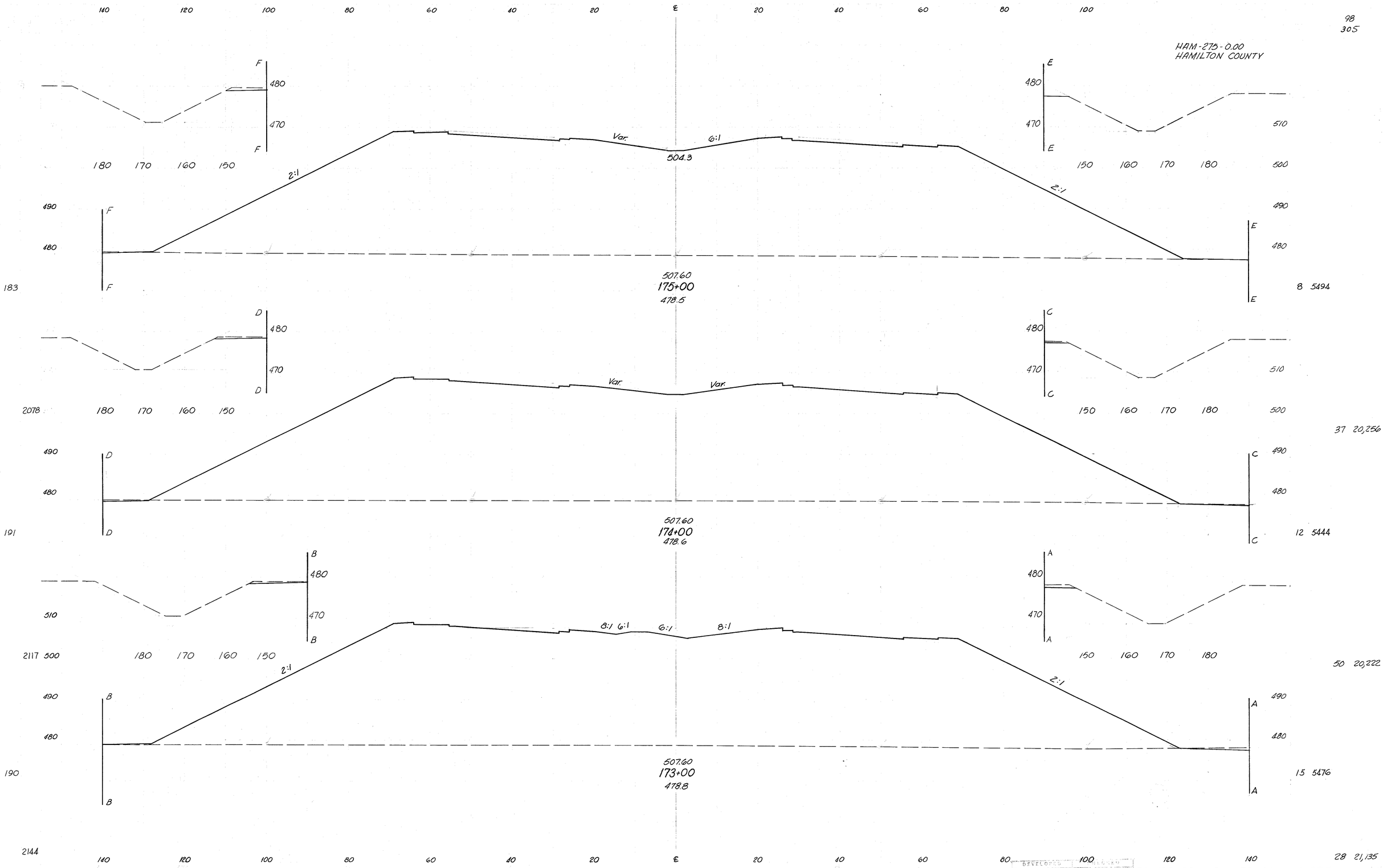

DEVELOPED		DESIGN	
8-67	C.H.	10-70	J.B.

Sta 173+00 to Sta 175+00 I-275

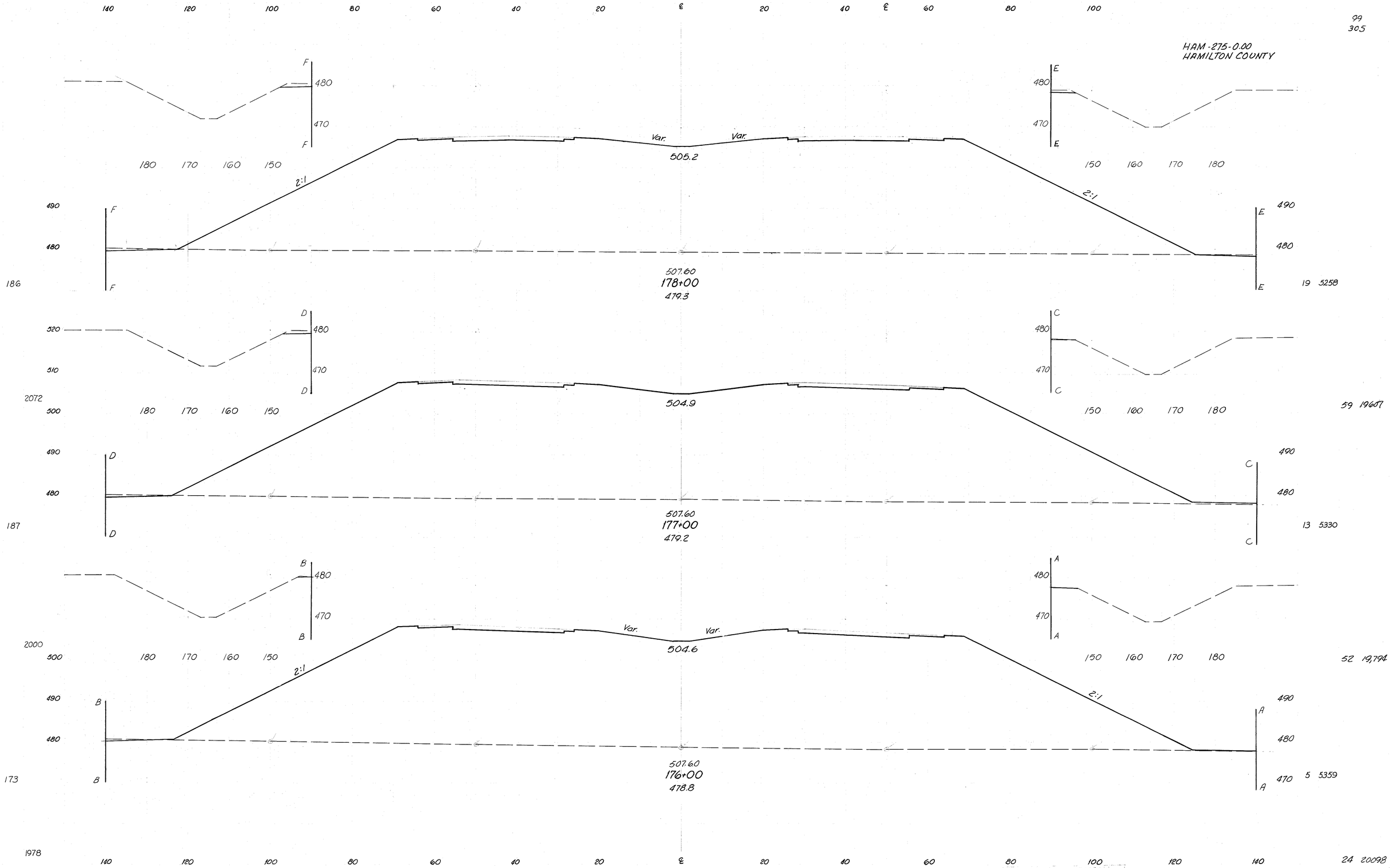

8-67	C.H.	10-70	J.B.

Sta. 176+00 to Sta. 178+00 I-275

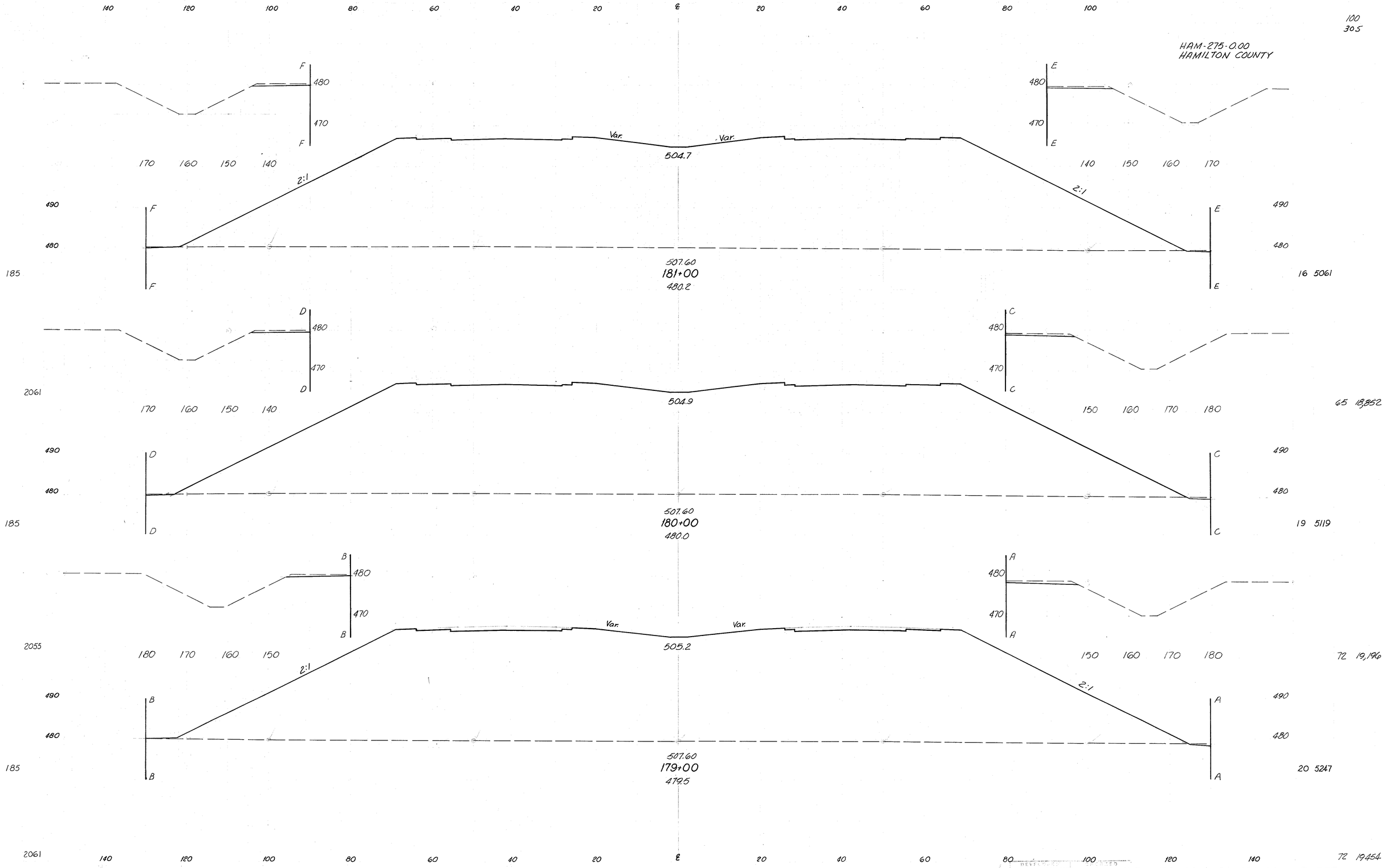
HAM-275-0.00
HAMILTON COUNTY
100
305
Var.
Var.
504.7
2:1
507.60
181+00
480.2
16 5061
504.9
507.60
180+00
480.0
19 5119
65 13,852
Var.
Var.
505.2
507.60
179+00
479.5
20 5247
72 19,196
72 19454
8-67 C.H. 10-70 J.B. Sta 179+00 to Sta 181+00 I-275

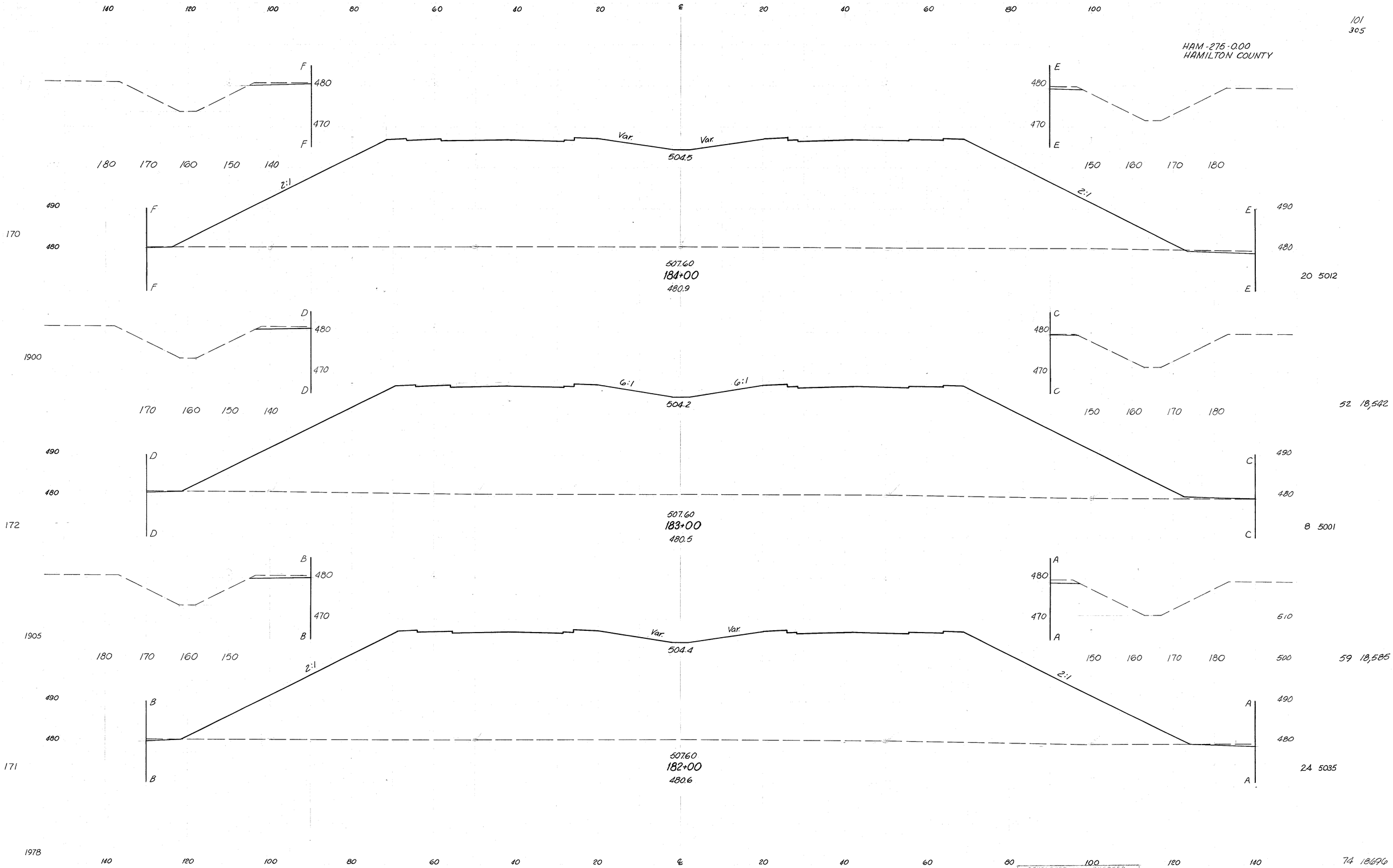

DEVELOPED		CHECKED	
8-67	C.H.	10-70	J.B.

Sta. 182+00 to Sta. 184+00 I-275

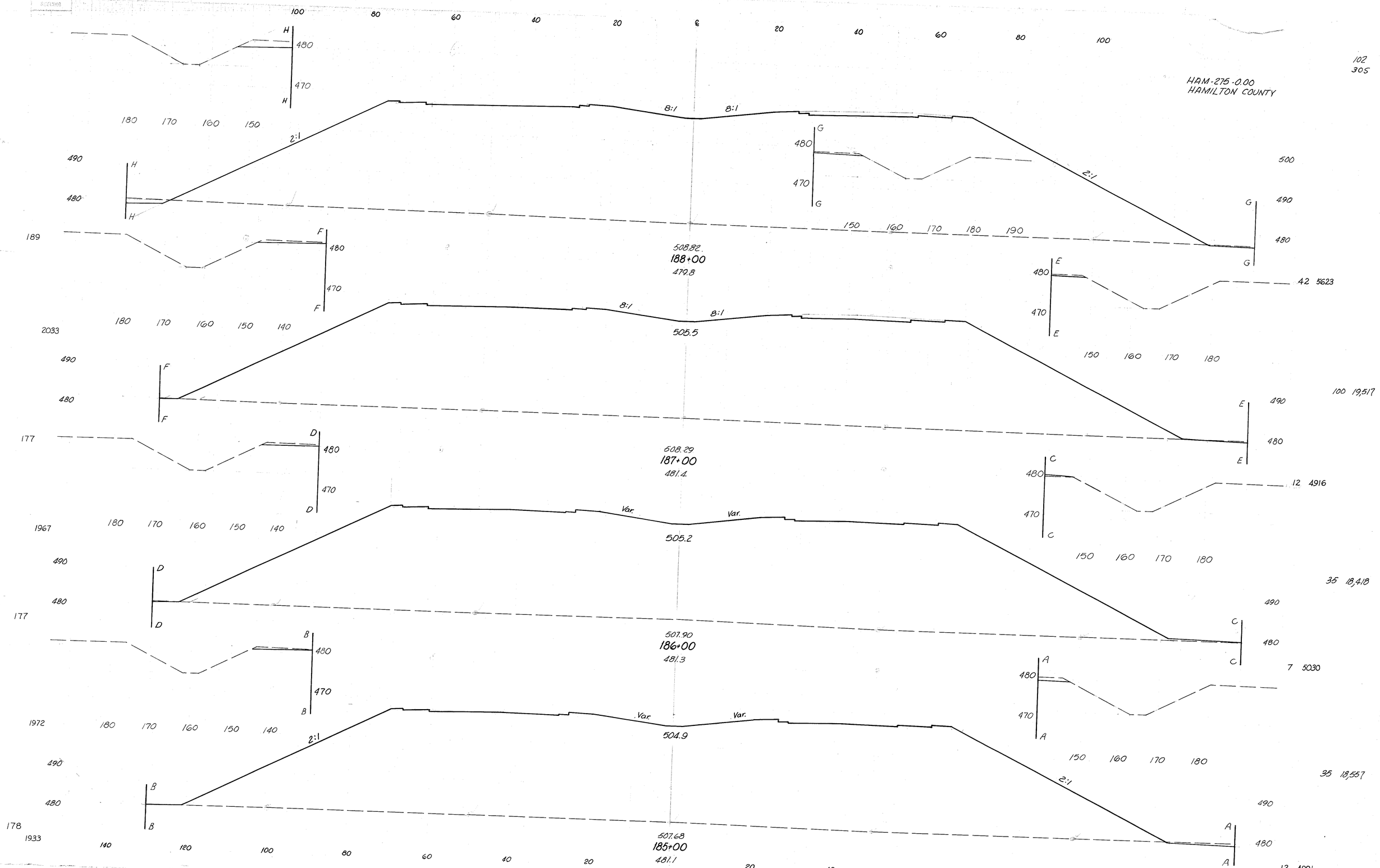
HAM-275-0.00
HAMILTON COUNTY
102
305
100 80 60 40 20 ℄ 20 40 60 80 100
8:1 8:1
2:1
2:1
508.82
188+00
479.8
8:1 8:1
505.5
42 5623
100 19,517
508.29
187+00
481.4
Var. Var.
505.2
12 4916
35 18,418
507.90
186+00
481.3
Var. Var.
504.9
7 5030
35 18,557
507.68
185+00
481.1
12 4991

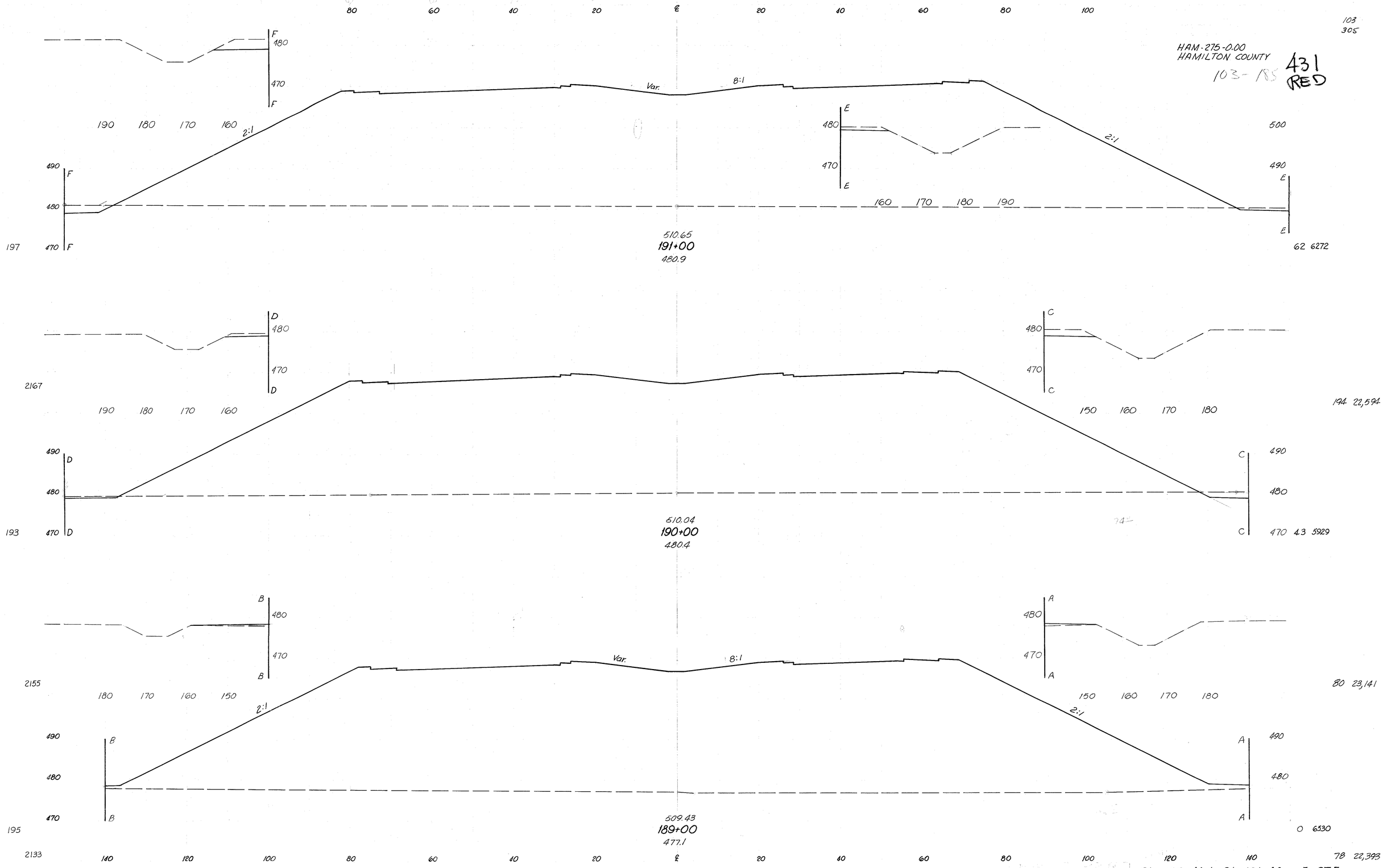
HAM-275-0.00
HAMILTON COUNTY
103-185
431
RED
103
305
Var.
8:1
2:1
510.65
191+00
480.9
510.04
190+00
480.4
509.43
189+00
477.1
194 22,594
193 4.3 5929
80 23,141
195 0 6530
78 22,393
7-66 M.L. 1-71 J.M.
Sta. 189+00 to Sta. 191+00
I-275

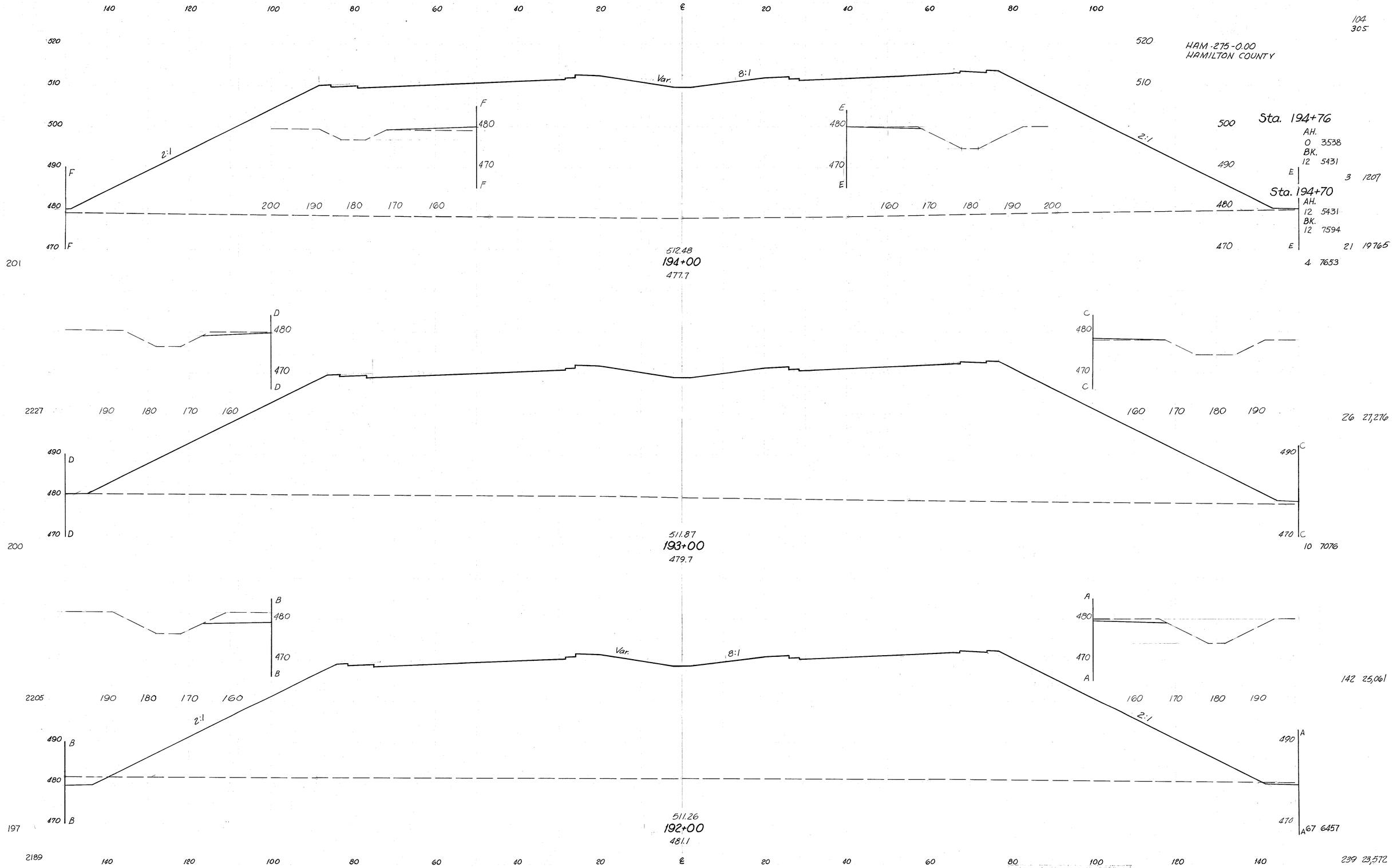
HAM-275-0.00
HAMILTON COUNTY
104
305
Sta. 194+76
AH.
0 3538
BK.
12 5431
3 1207
Sta. 194+70
AH.
12 5431
BK.
12 7594
21 19765
4 7653
512.48
194+00
477.7
26 27,276
10 7076
511.87
193+00
479.7
142 25,061
67 6457
511.26
192+00
481.1
239 23,572
Var.
8:1
2:1
7-66 M.L. 1-71 J.M.
Sta. 192+00 to Sta. 194+00
I-275

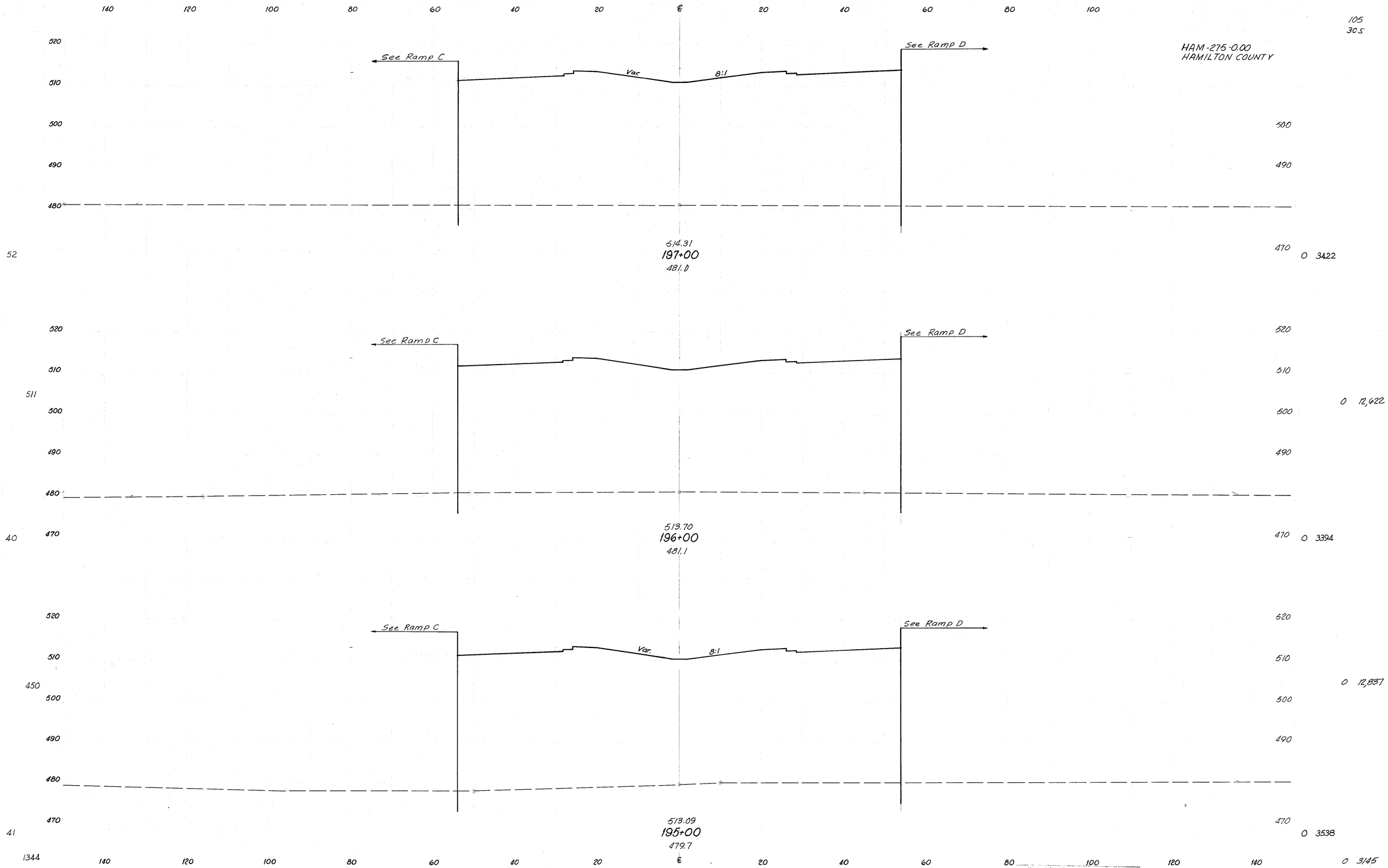
140 120 100 80 60 40 20 ℄ 20 40 60 80 100
105
305
HAM-275-0.00
HAMILTON COUNTY
See Ramp C
See Ramp D
Var.
8:1
520
510
500
490
480
470
52
514.31
197+00
481.0
0 3422
See Ramp C
See Ramp D
511
513.70
196+00
481.1
40
0 3394
0 12,622
See Ramp C
See Ramp D
Var.
8:1
450
513.09
195+00
479.7
41
0 3538
0 12,837
0 3145
1344
DRAWN 7-66 ML.
CHECKED 1-71 J.M.
Sta. 195+00 to Sta. 197+00
I-275

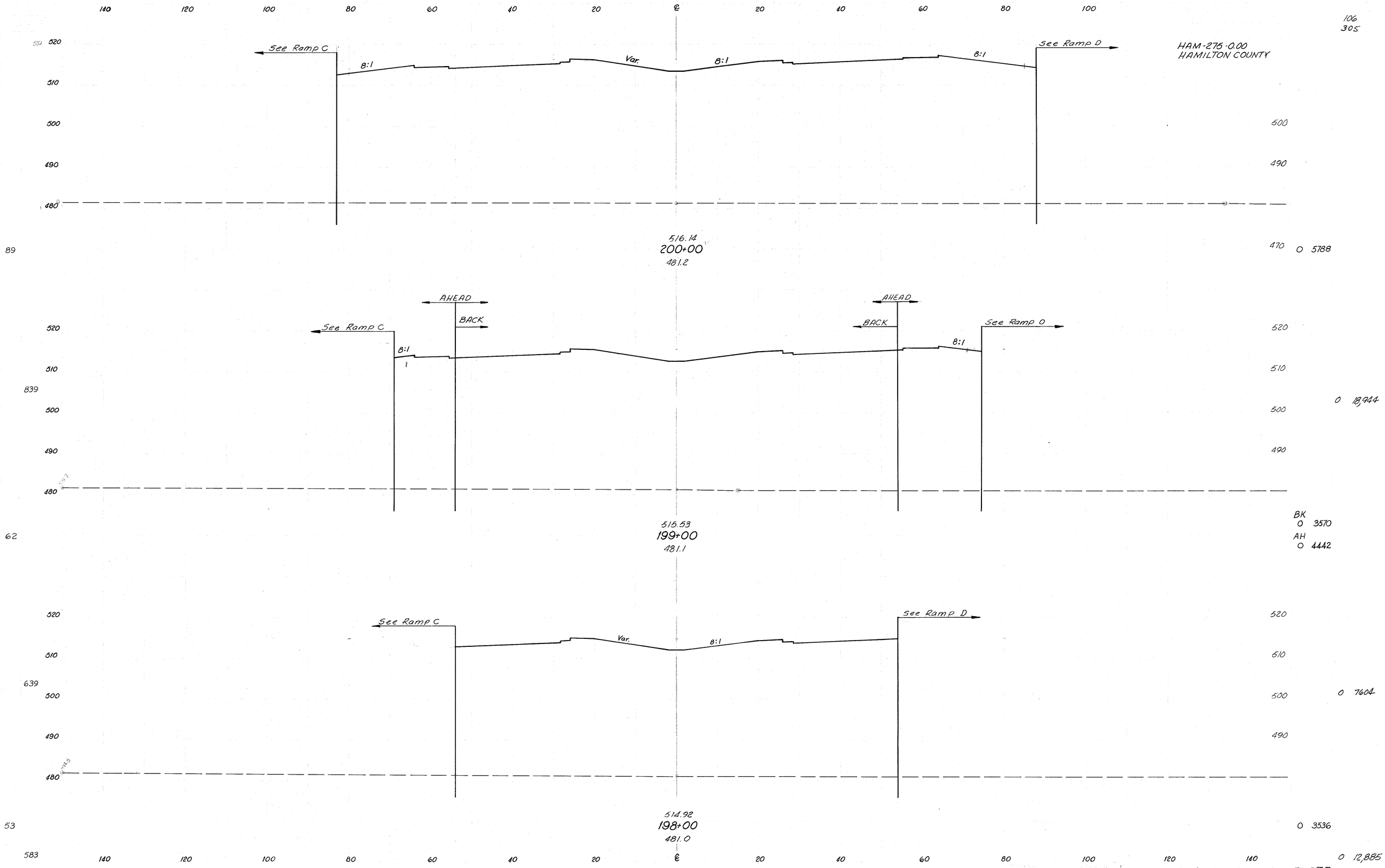

7-66 M.L. 1-71 J.M. Sta 198+00 to Sta 200+00 I-275

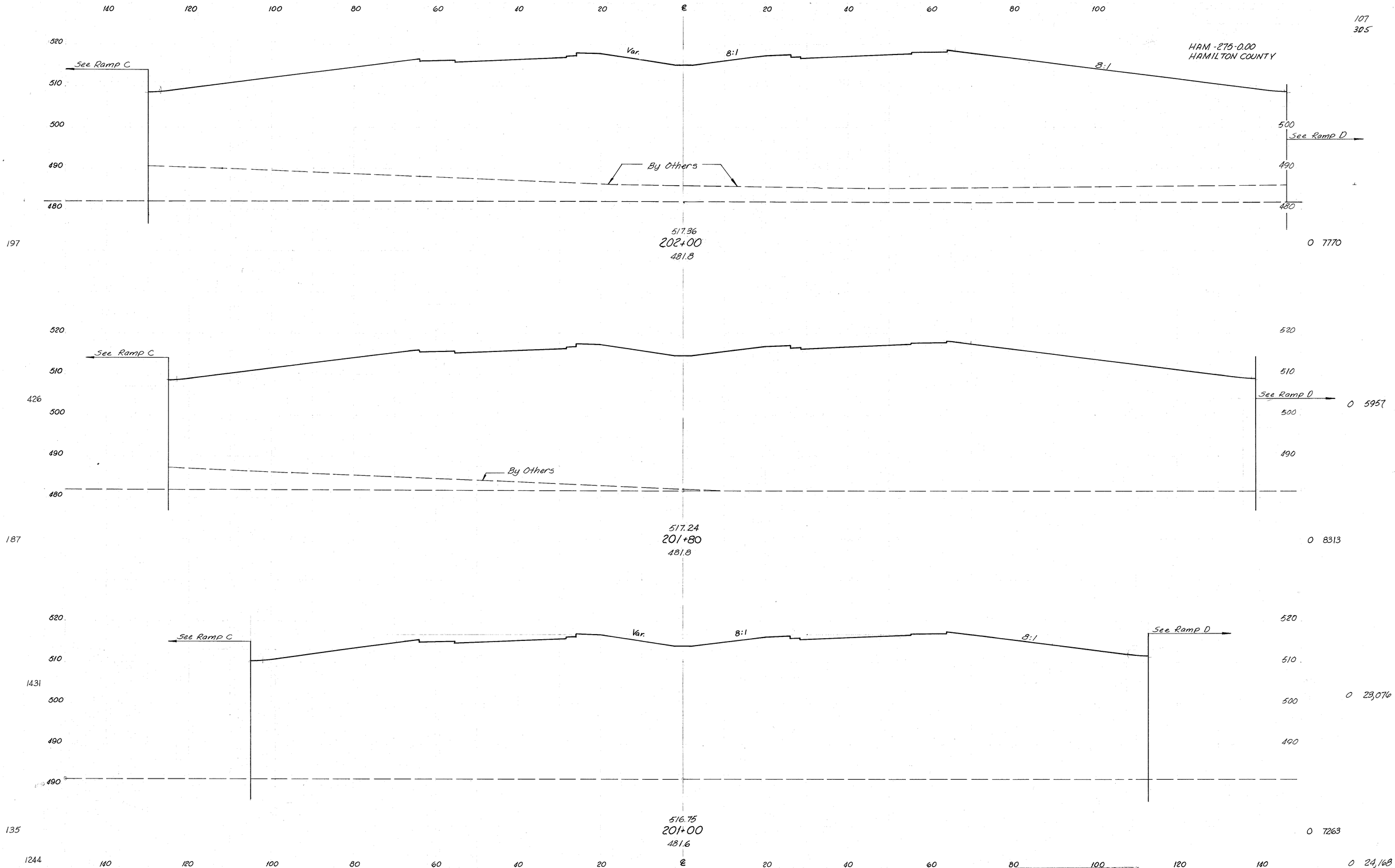

DEVELOPED		CHECKED	
7-66	M.L.	1-71	J.M.

Sta 201+00 to Sta 202+00 I-275

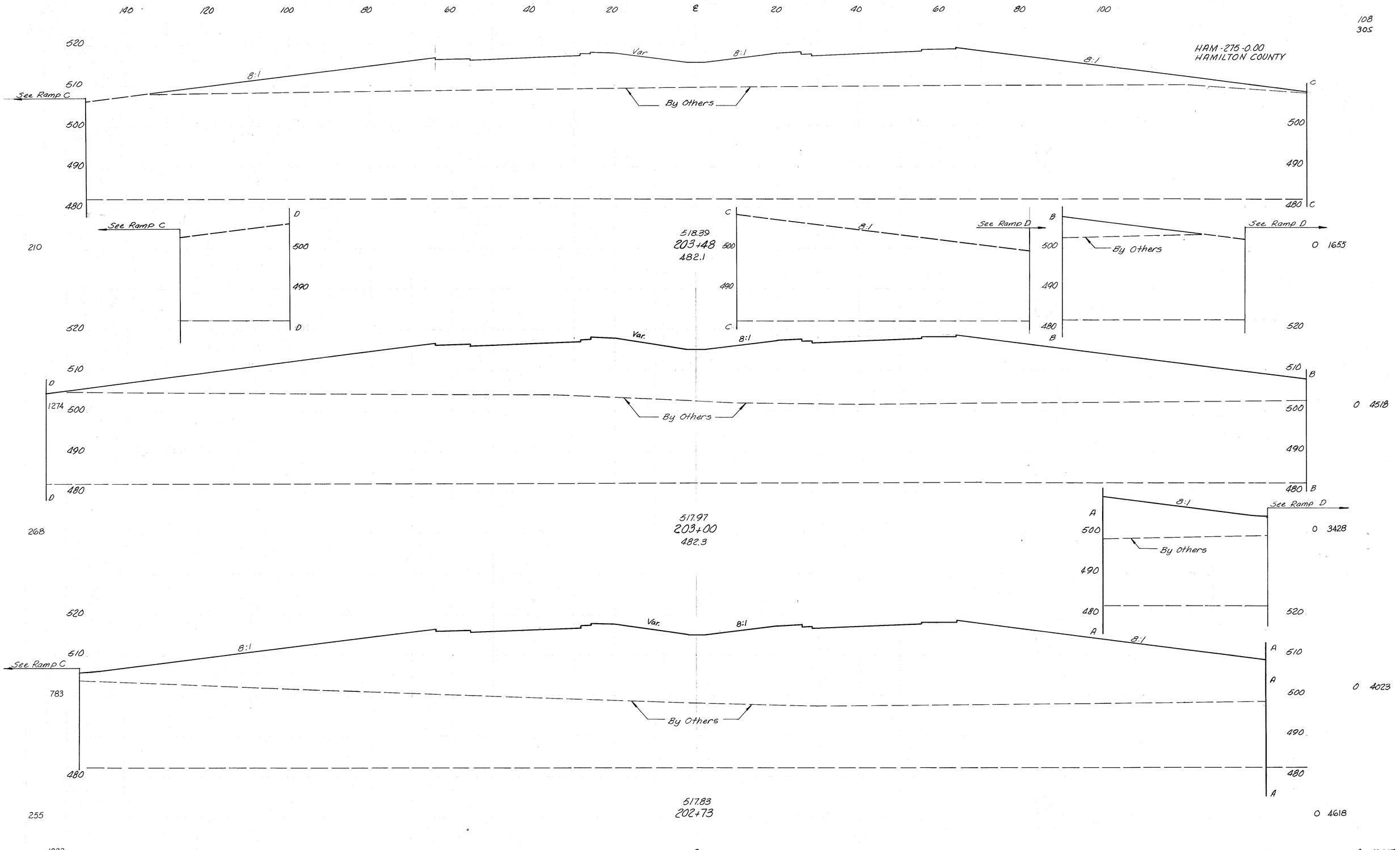
108
305
HAM-275-0.00
HAMILTON COUNTY
140 120 100 80 60 40 20 ℄ 20 40 60 80 100
520
510
500
490
480
See Ramp C
8:1
Var.
By Others
C
See Ramp C
D
210
518.39
203+48
482.1
See Ramp D
B
0 1655
1274
0 4518
517.97
203+00
482.3
268
A
0 3428
783
517.83
202+73
255
0 4618
1833
0 16,747
7-66 M.L. 1-71 J.M.
Sta 202+73 to Sta 203+58 I-275

HAM-275-0.00
HAMILTON COUNTY

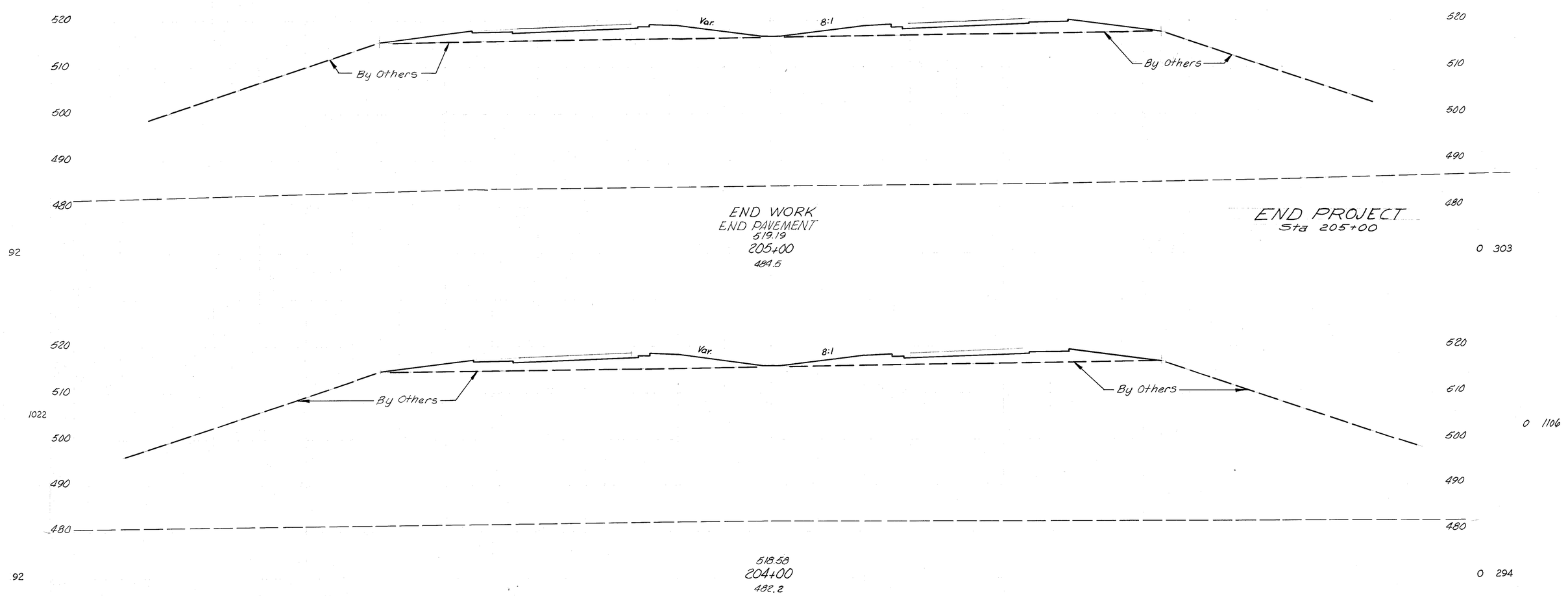

DEV	DED	CHECKED	
7-66	M.L.	1-71	J.M.

Sta 204+00 to Sta 205+00

I-275

FED. RD. DIVISION	STATE	PROJECT	
2	OHIO		

110
305

HAM-275-0.00
HAMILTON COUNTY

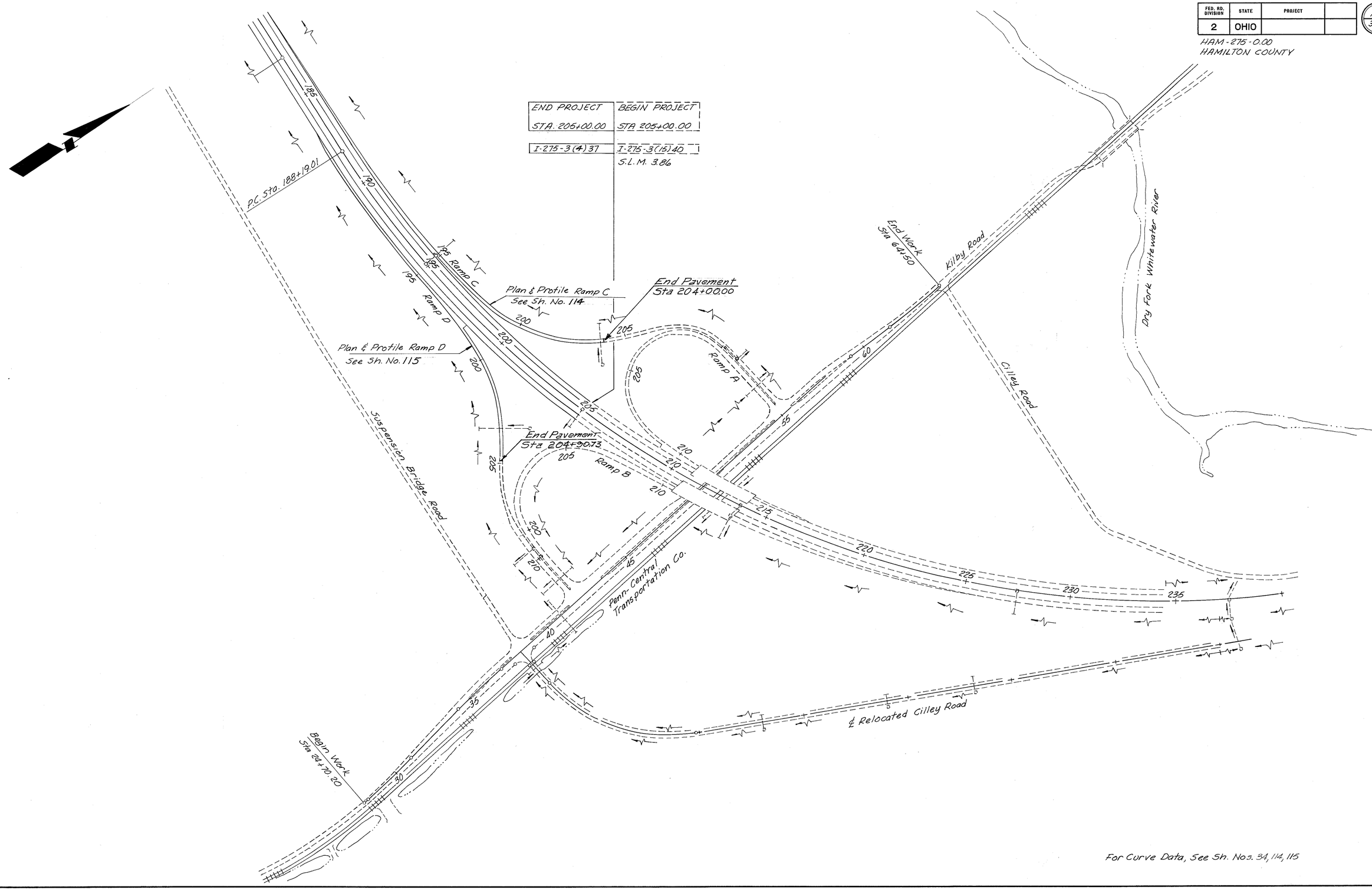

For Curve Data, See Sh. Nos. 34, 114, 115

SCHEMATIC PLAN KILBY ROAD INTERCHANGE

FED. RD. DIVISION	STATE	PROJECT	
2	OHIO		

111
305

HAM-275-0.00
HAMILTON COUNTY

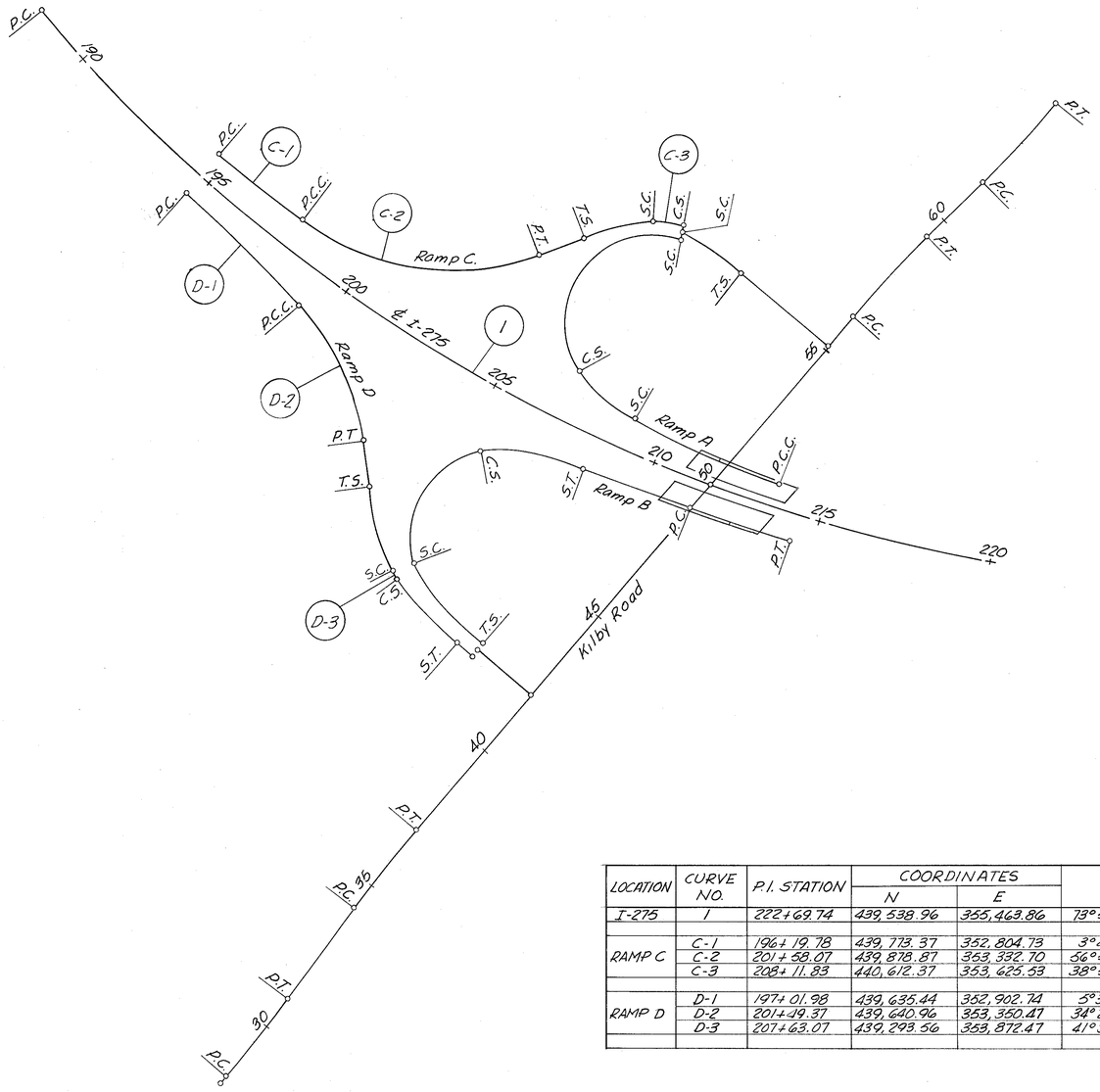

LOCATION	CURVE NO.	P.I. STATION	COORDINATES N	COORDINATES E	Δ	D_C	R_C	L_C	T_1	T_2	L_S	θ_S	θ_{S2}	E
I-275	1	222+69.74	439,538.96	355,463.86	73°56'50"	1°15'00"	4,583.66	5,915.78	3,450.73	3450.73	—	—	—	1,153.71
RAMP C	C-1	196+19.78	439,773.37	352,804.73	3°49'06"	1°16'22"	4,501.63	300.00	150.06	150.06	—	—	—	2.50
	C-2	201+58.07	439,878.87	353,332.70	56°56'13"	8°00'00"	716.20	711.71	388.35	388.35	—	—	—	98.52
	C-3	208+11.83	440,612.37	353,625.53	38°50'37"	20°01'32"	286.11	93.97	193.27	110.13	200.00	20°01'32"	—	3.90
RAMP D	D-1	197+01.98	439,635.44	352,902.74	5°39'19"	1°15'00"	4,583.66	452.43	226.40	226.40	—	—	—	5.59
	D-2	201+49.37	439,640.96	353,350.47	34°21'03"	8°00'00"	716.20	429.38	221.36	221.36	—	—	—	33.43
	D-3	207+63.07	439,293.56	353,872.47	41°37'40"	15°00'00"	381.97	277.52	272.34	272.34	250.00	18°45'00"	18°45'00"	0.25

GEOMETRIC LAYOUT KILBY ROAD INTERCHANGE

FED. RD. DIVISION	STATE	PROJECT	
2	OHIO		

112
30.5

HAM-275-0.00
HAMILTON COUNTY

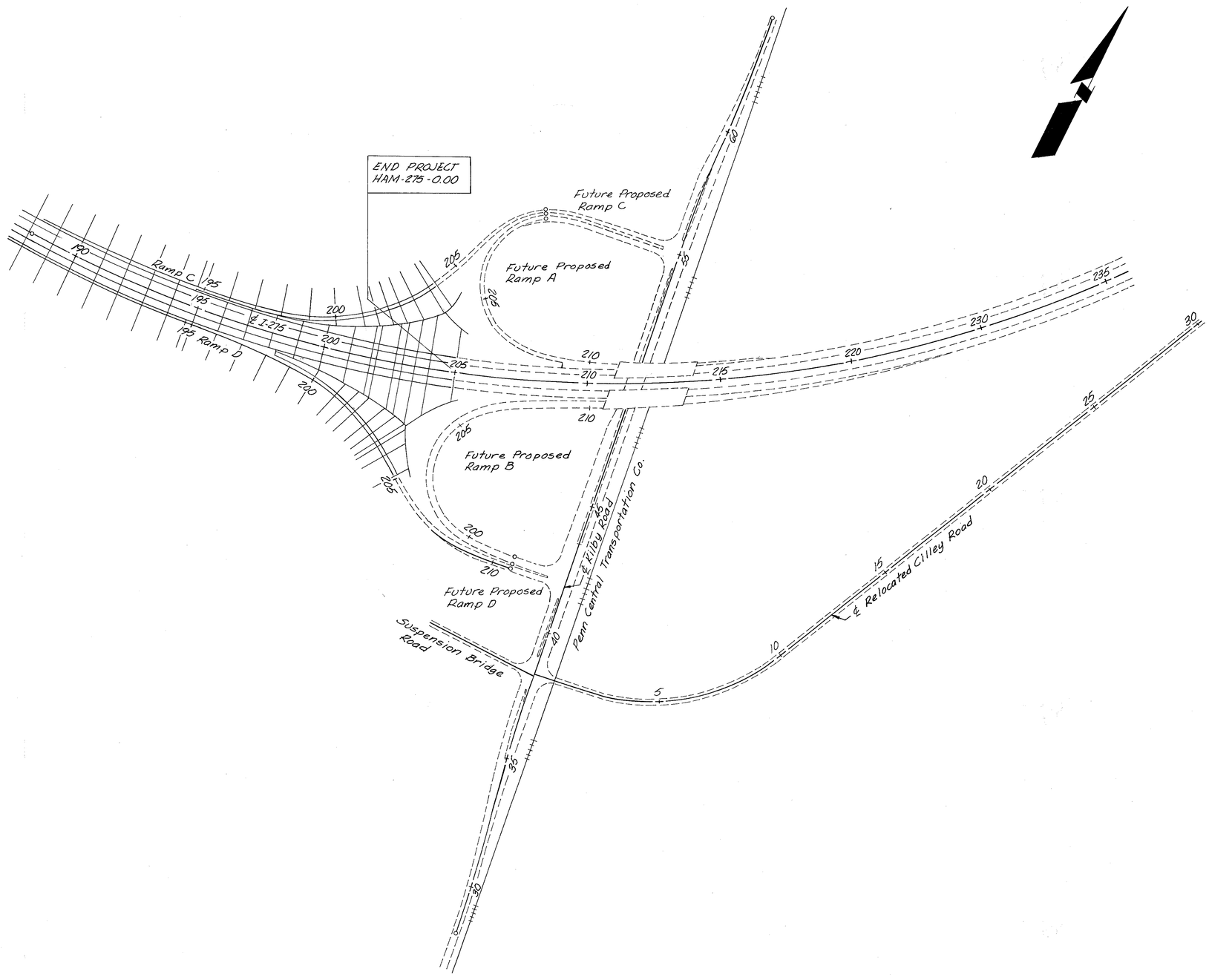

CROSS SECTION LAYOUT KILBY ROAD INTERCHANGE

FED. RD. DIVISION	STATE	PROJECT	
2	OHIO		

113
305

HAM 275-0.00
HAMILTON COUNTY

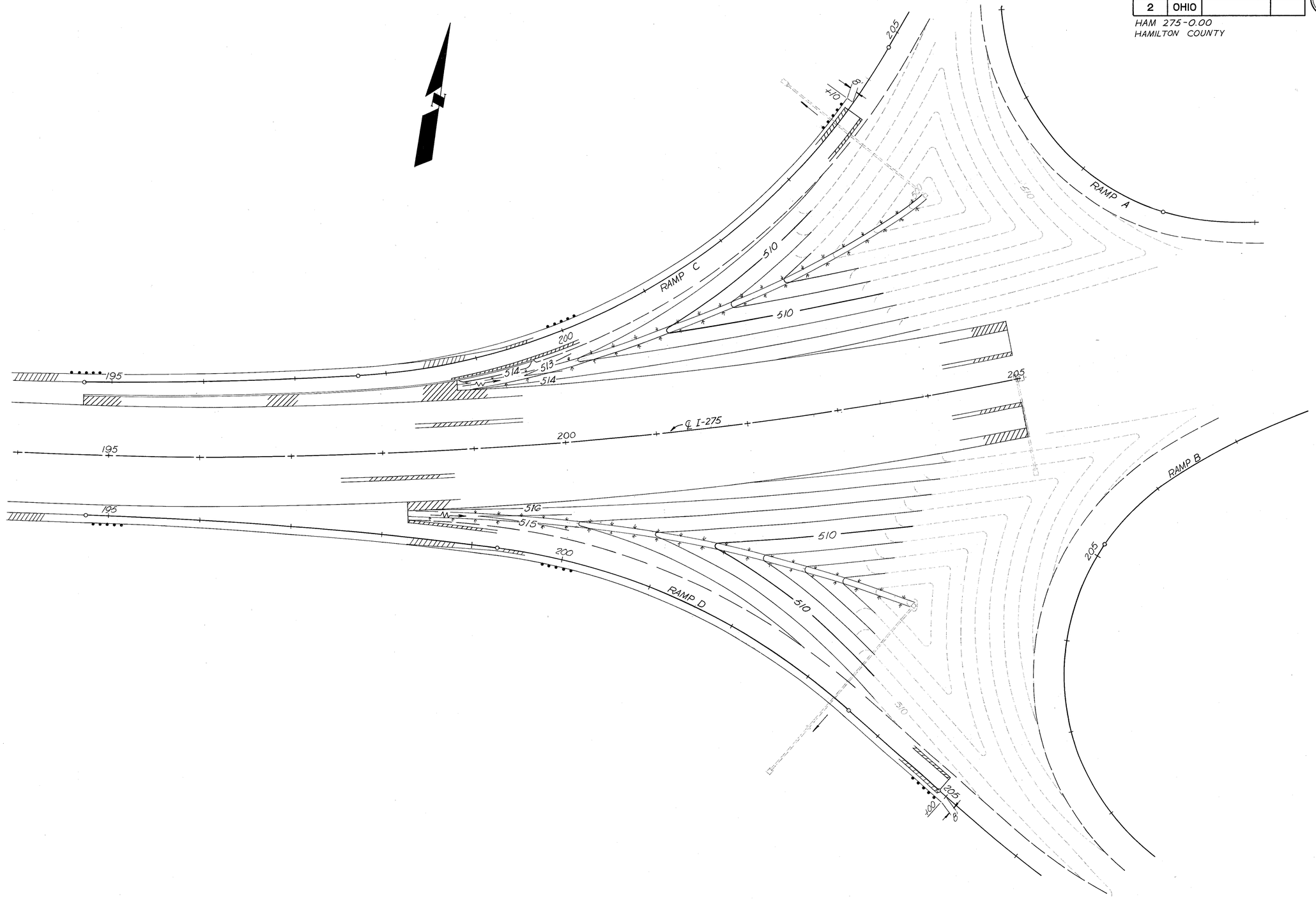

GRADING PLAN KILBY ROAD INTERCHANGE NW & SW QUADRANTS

FED. RD. DIVISION	STATE	PROJECT	
2	OHIO		

114/305

HAM-275-0.00
HAMILTON COUNTY

CURVE NO. C-1
P.I. Sta. 196+19.78
Δ = 3°49'06"
D_C = 1°16'22"
R_C = 4,501.63'
L_C = 300.00'
T = 150.06'
E = 2.50

B.M. #34 Elev. 488.00
R.R. spike in Telephone Pole 650' Rt. of Sta. 198+00

CURVE NO. C-2
P.I. Sta. 201+58.07
Δ = 56°56'13"
D_C = 8°00'00"
R_C = 716.20
L_C = 711.71
T = 388.35
E = 98.52

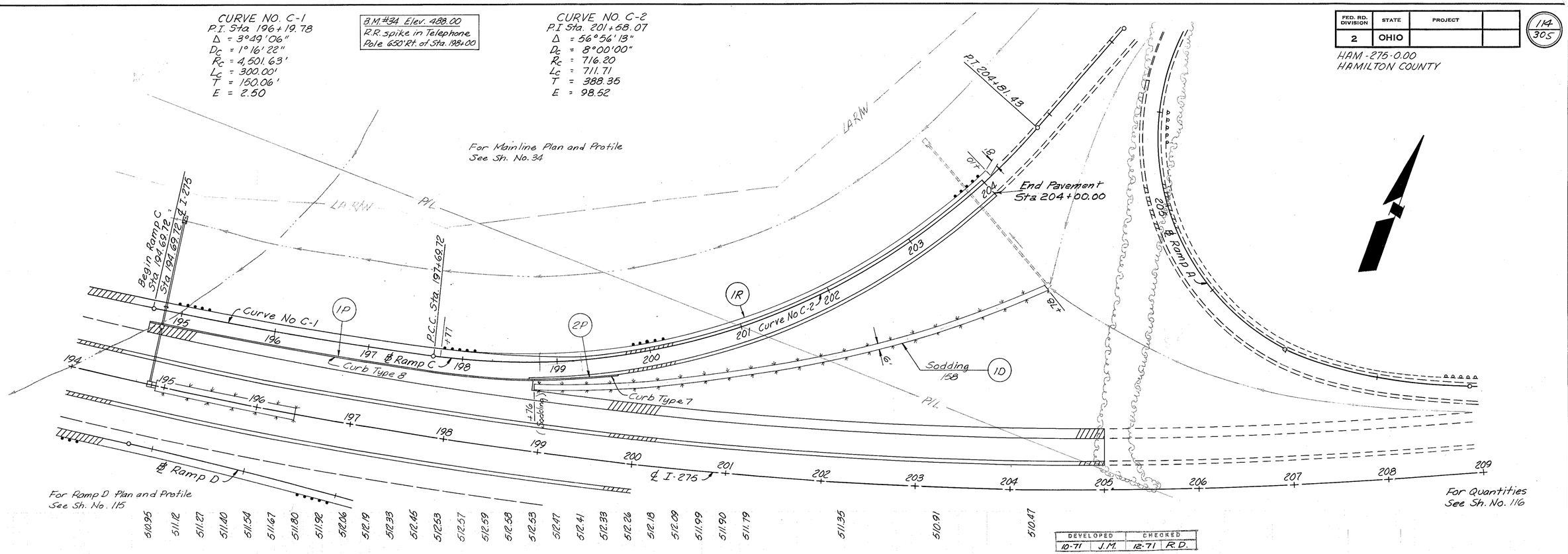

DEVELOPED		CHECKED	
10-71	J.M.	12-71	R.D.

Item 203	Excavation (not inc. Emb.)	0	C.Y.
"	203 Embankment	64,839	C.Y.
"	659 Seeding & Mulching	14,439	S.Y.

SUPERELEVATION TABLE

Station	P.G.	Right Side Width	Right Side Elevation
Sta. 194+69.72 to Sta. 199+03.72 See 20 Scale Detail Sheet No.			
Sta 199+03.72 to Sta 203+49.43			
Constant		16'	+1.33
203+49.43	510.91	16'	512.24
+50	510.69	16'	512.02
+75	510.58	16'	511.78
204+00	510.47	16'	511.55

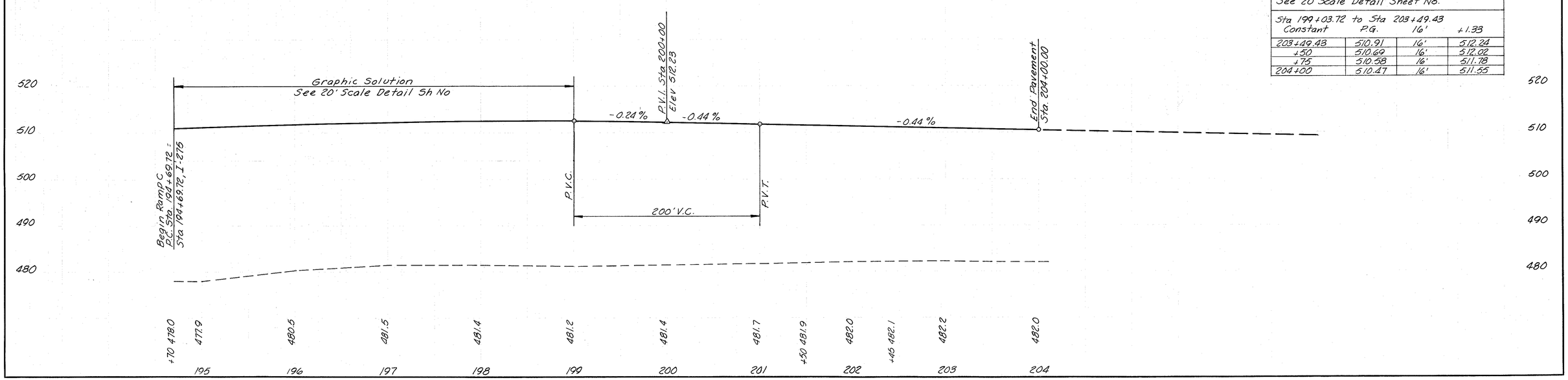

RAMP C Sta 194+69.72 to Sta 204+00

FED. RD. DIVISION	STATE	PROJECT	
2	OHIO		

115
305

HAM-275-0.00
HAMILTON COUNTY

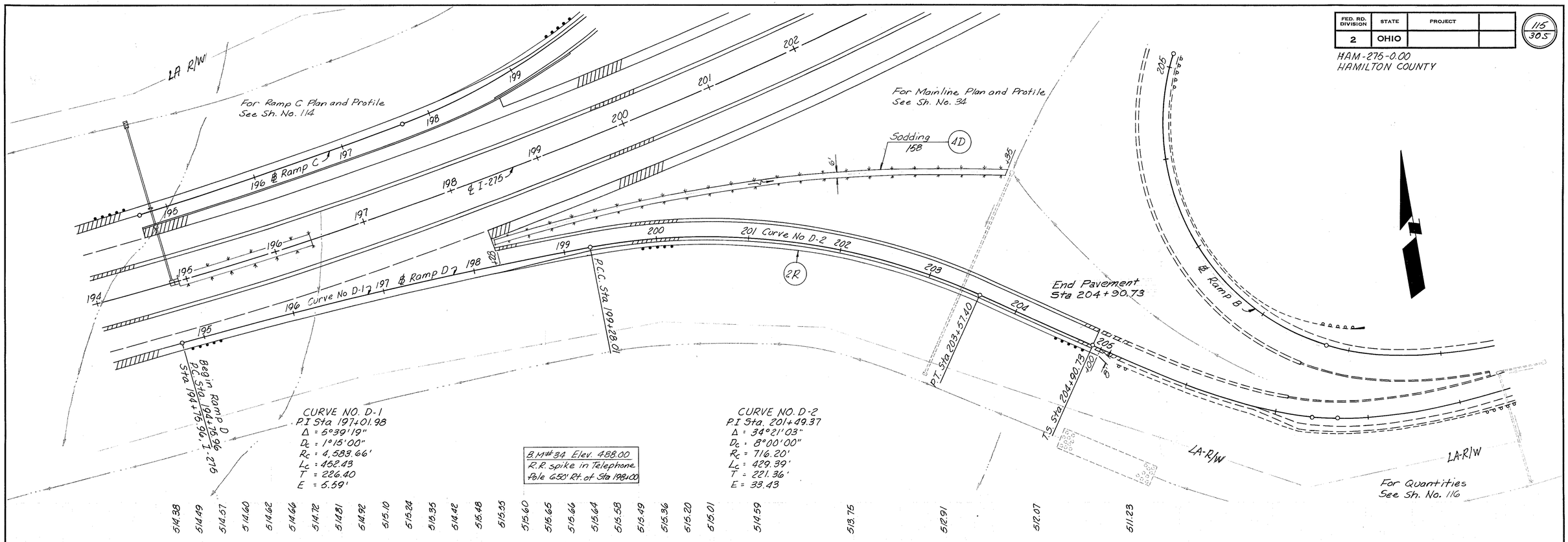

Item 203 Excavation (not inc. Emb.)	116	C.Y.
" 203 Embankment	82,160	C.Y.
" 659 Seeding & Mulching	15,649	S.Y.

DEVELOPED		CHECKED	
10-71	J.M.	12-71	R.D.

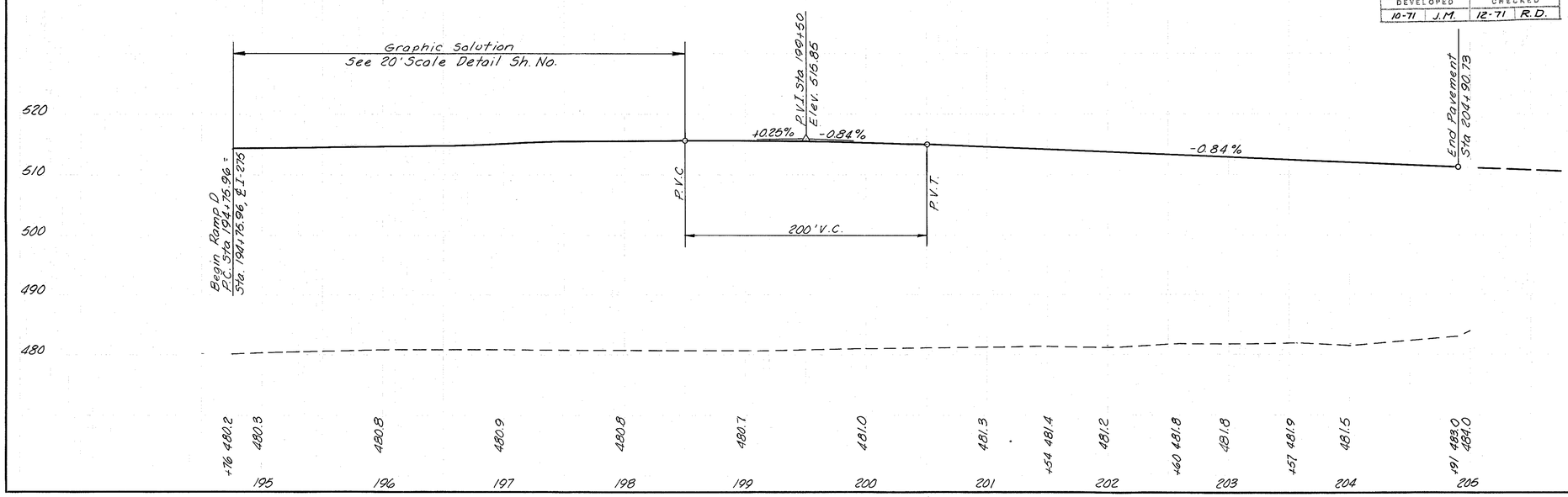

SUPERELEVATION TABLES

Station	Left Side Elevation	Left Side Width	P.G.
Sta. 194+75.96 to Sta. 198+62.01 See 20 Scale Detail Sheet No.			
198+62.01	515.99	16'	515.65
+75	516.05	16'	515.65
199+00	516.19	16'	515.66
+25	516.29	16'	515.64
+28.01	516.31	16'	515.64
+50	516.36	16'	515.58
+75	516.39	16'	515.49
200+00	516.39	16'	515.36
+25	516.35	16'	515.20
+50	516.29	16'	515.01
+60.01	515.92	16'	514.59
Sta. 200+60.01 to Sta. 202+25.40 Constant	+1.33	16'	P.G.
202+25.40	514.87	16'	513.54
+50	514.54	16'	513.33
+75	514.20	16'	513.12
203+00	513.87	16'	512.91
+25	513.53	16'	512.70
+50	513.20	16'	512.49
+57.40	513.09	16'	512.42
+75	512.86	16	512.28
204+00	512.53	16'	512.07
+25	512.19	16'	511.86
+41.40	511.97	16'	511.72
+50	511.85	16'	511.65
+75	511.52	16'	511.44
+90.73	511.31	16'	511.31

RAMP D Sta 194+75.96 to Sta 204+90.73

ESTIMATED QUANTITIES

FED. RD. DIVISION	STATE	PROJECT	
2	OHIO		

116
305

HAM-275-0.00
HAMILTON COUNTY

REF. NO.	STATION TO STATION	SIDE	Bends	202 Pipe Removed 24" & Under	202 Pipe Removed Over 24"	451 9" Port. Cement Conc. Pav't	609 Curb Type 7	609 Curb Type 8	660 Sodding	606 Guard Rail Type 5	SEE SHEET NO.
	UNIT			L.F.	L.F.	Sq. Yd.	L.F.	L.F.	Sq. Yd.	L.F.	
	DRAINAGE										
	RAMP C										
1D	198+76 - 203+78	Rt.							371		114
2D											
3D											
	RAMP D										
4D	198+28 - 203+35	Lt.							372		115
	TOTALS								743		
	PAVEMENT										
	RAMP C										
	194+69.72 - 204+00	Rt.		226	155	1632					116
1P	194+69.72 - 198+76	Rt.						406			
2P	198+76 - 199+62	Rt.					86				
	RAMP D										
	198+28.01 - 204+90.72	Lt.		180	108	1178					116
	ROADWAY										
	RAMP C										
1R	197+77 - 204+10	Lt.								925	116
	RAMP D										
2R	194+74 I-275 - 205+00 Ramp D	Rt.								1025	116
TOTALS				406	263	2810	86	406		1950	
				669							

DEVELOPED		CHECKED	
10/71	J.M.	12/71	R.D.

RAMPS C & D

FED. RD. DIVISION	STATE	PROJECT	
2	OHIO		

117
305

HAM-275-0.00
HAMILTON COUNTY

JOINT LEGEND:-

1. Standard Longitudinal Joint.
2. Standard Expansion Joint.
3. Standard Contraction Joint.

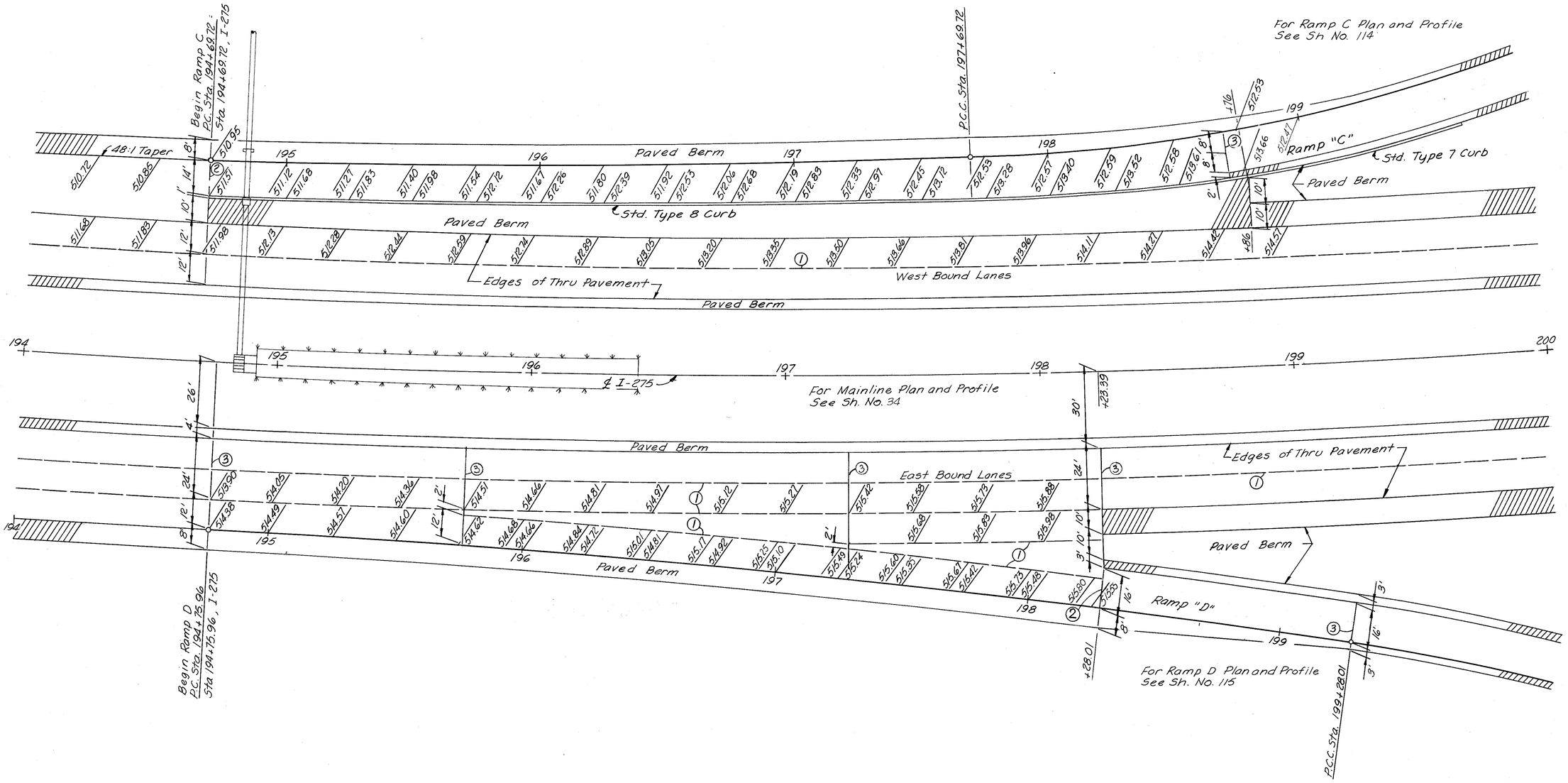

SCALE OF FEET
0 20 40 60

PAVEMENT DETAILS KILBY ROAD INTERCHANGE RAMPS C & D

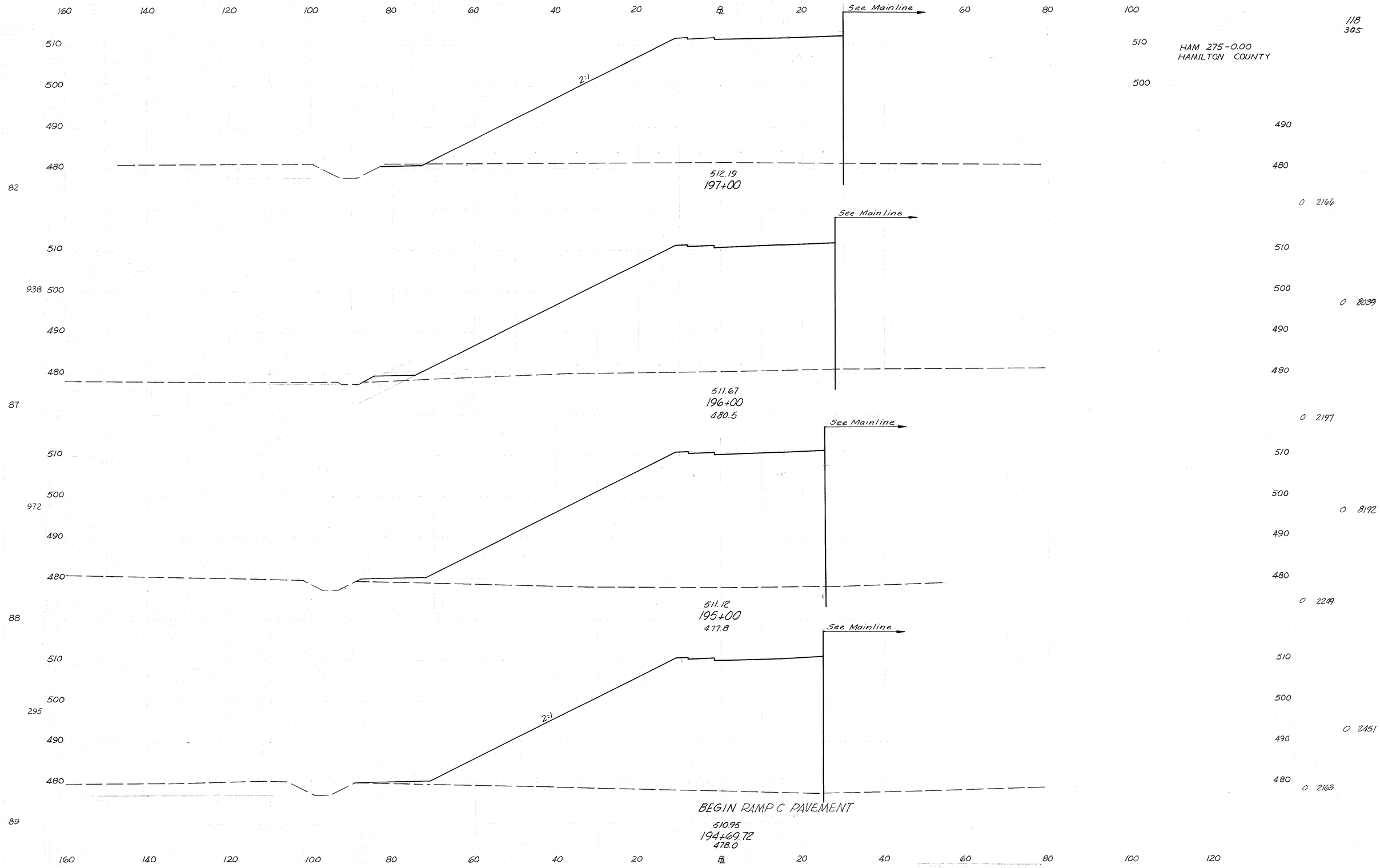

9-68 J.M. 6-71 M.S. RAMP C Sta. 194+69.72 to Sta. 197+00

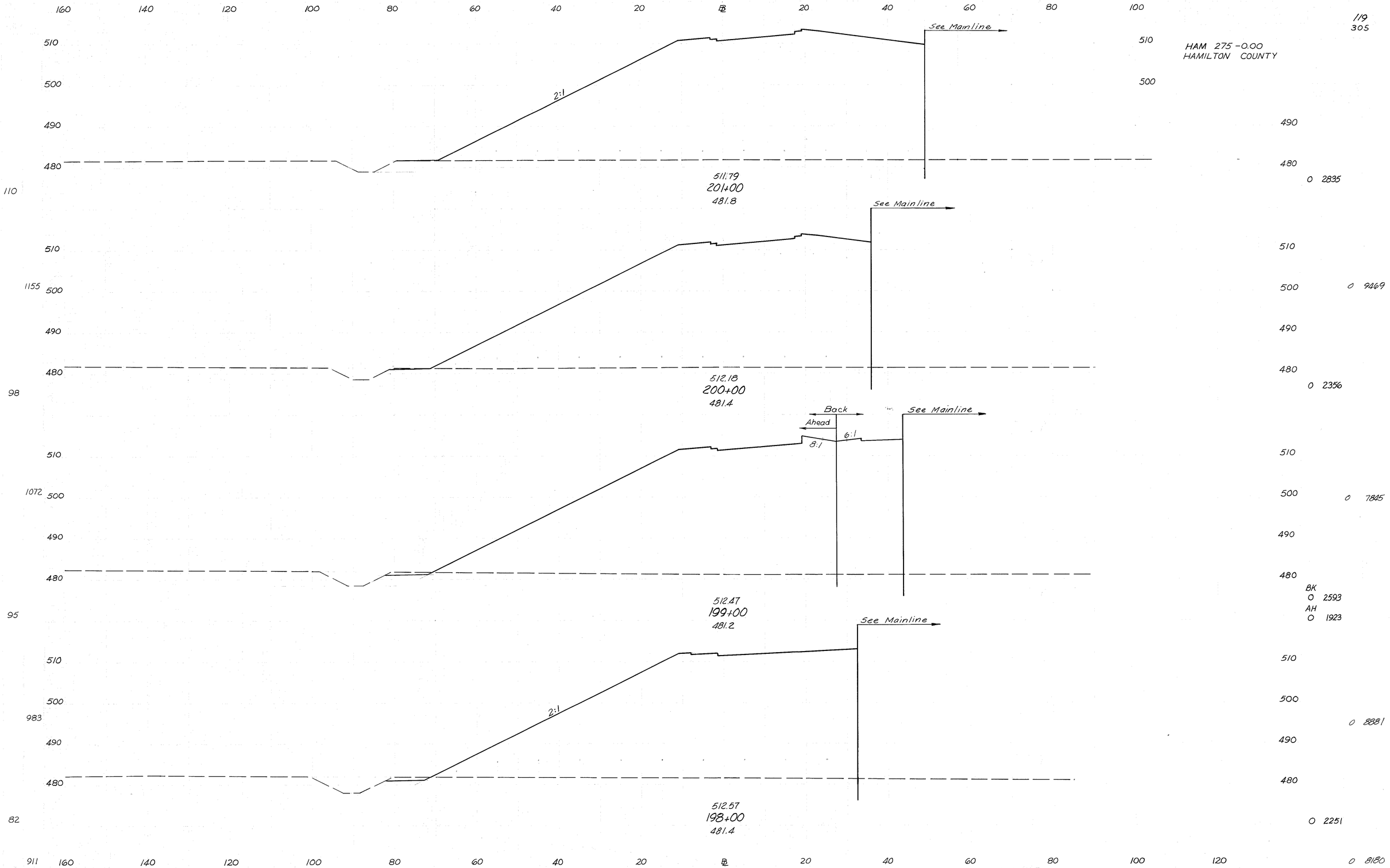

REVISED		REVISED	
9-68	J.M.	6-71	M.S.

RAMP C Sta. 198+00 to Sta. 201+00

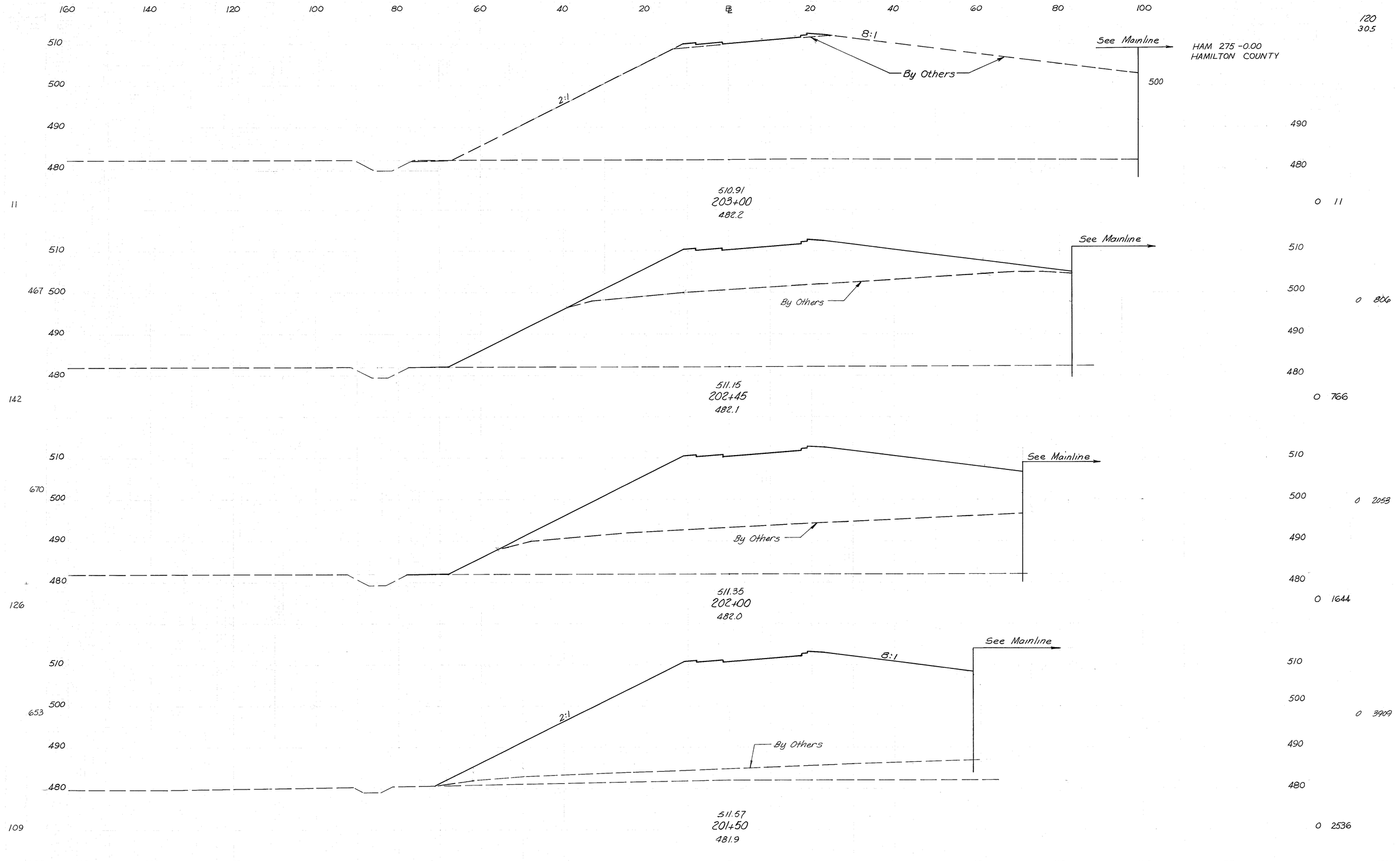

DRAWN		CHECKED	
9-68	J.M.	6-71	M.S.

RAMP C Sta. 201+50 to Sta. 203+00

121
305

HAM-275-0.00
HAMILTON COUNTY

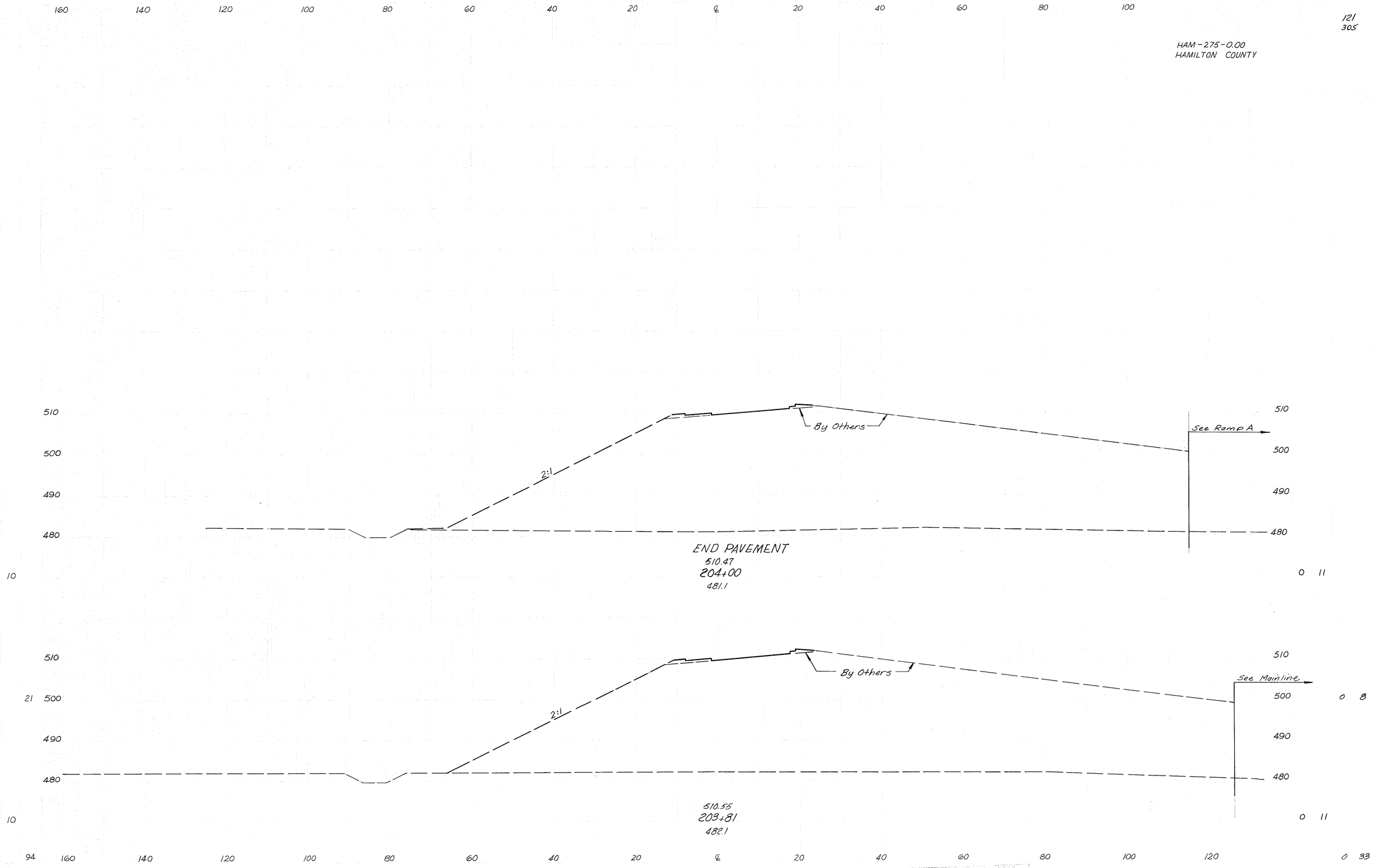

DEVELOPED 9-68 J.M. 6-71 M.S.

RAMP C Sta. 203+70 to Sta. 204+00

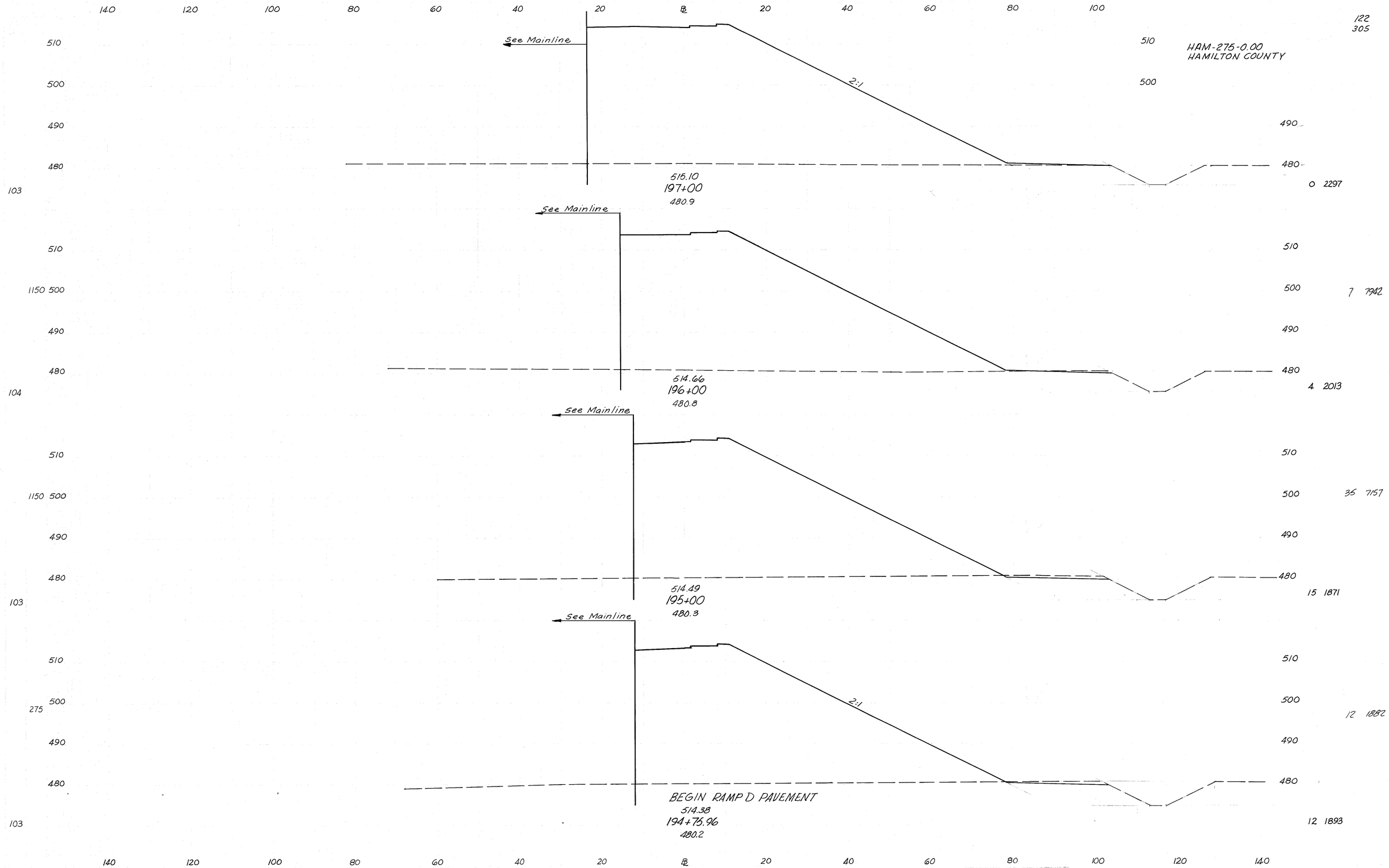
140 120 100 80 60 40 20 ℄ 20 40 60 80 100
HAM-275-0.00
HAMILTON COUNTY
See Mainline
2:1
515.10
197+00
480.9
514.66
196+00
480.8
514.49
195+00
480.3
514.38
194+75.96
480.2
BEGIN RAMP D PAVEMENT
510
500
490
480
103
104
1150
275
122 305
0 2297
7 7942
4 2013
35 7157
15 1871
12 1882
12 1893
7-68 C.H.
9-71 R.D.
RAMP D Sta 194+75.96 to Sta. 197+00

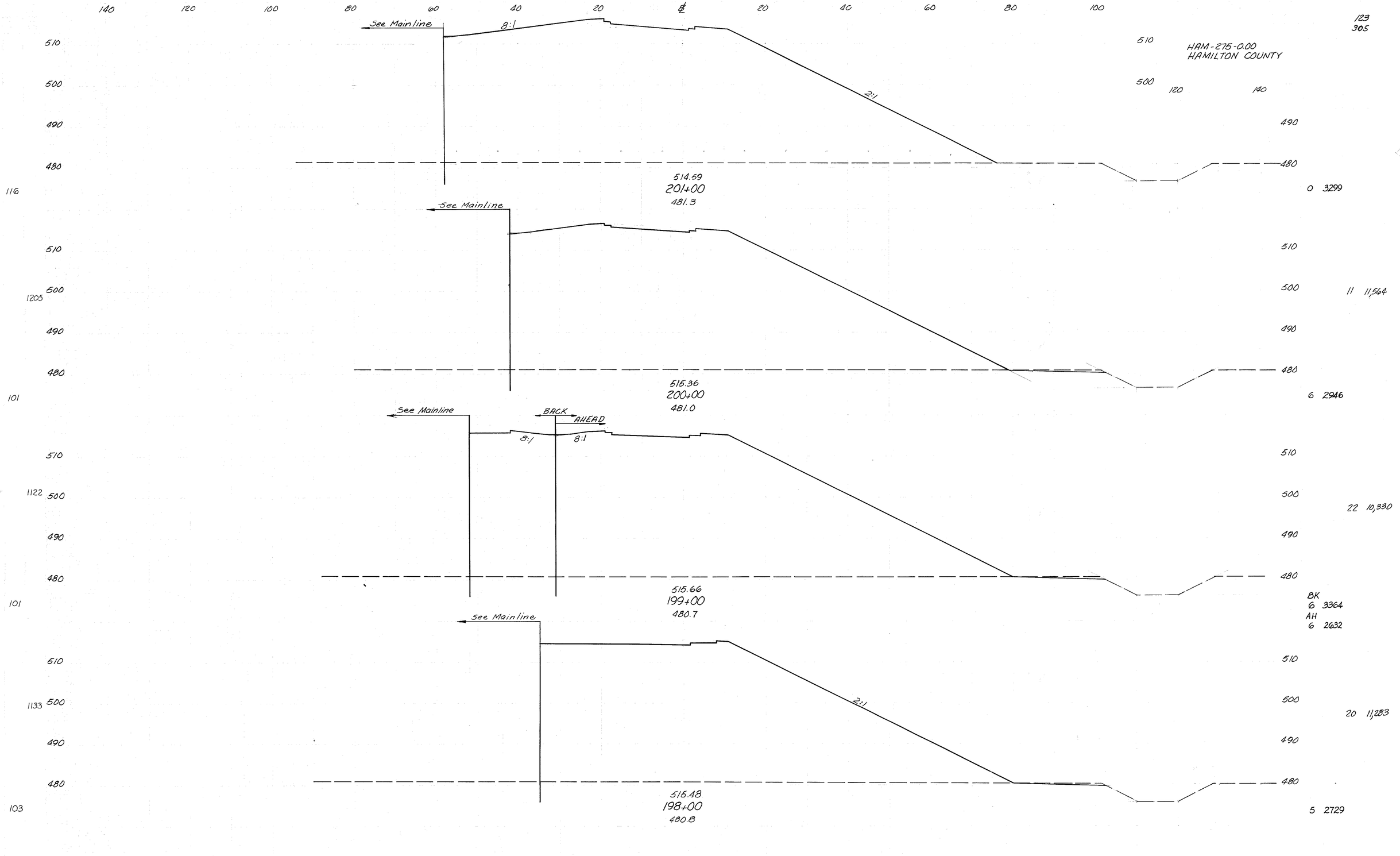

DEVELOPED		CHECKED	
7-68	C.H.	9-71	R.D.

RAMP D Sta 198+00 to Sta. 201+00

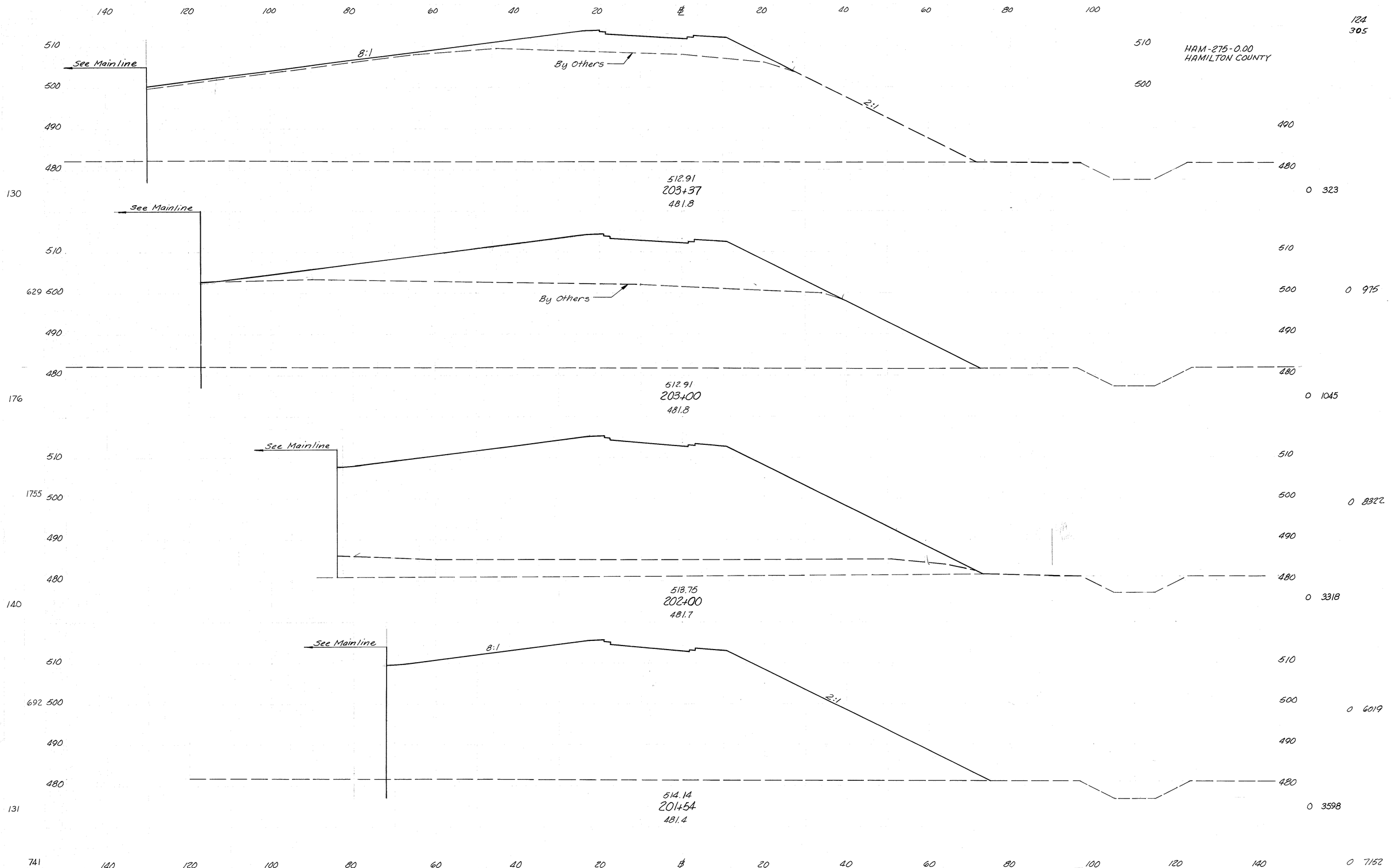

DESIGNED		DRAWN	
7-68	C.H.	9-71	R.D.

RAMP D Sta 201+54 to Sta 203+37

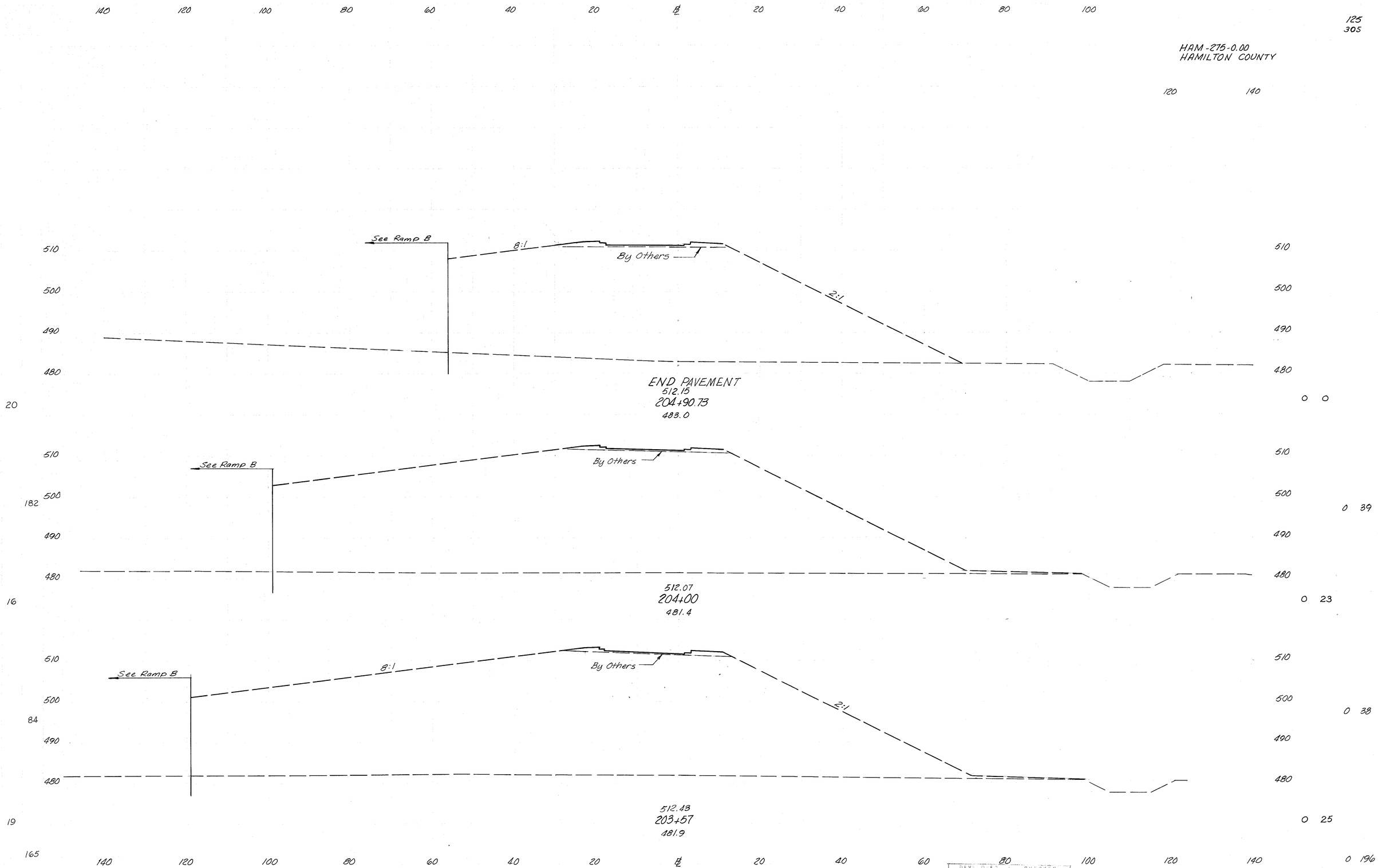
HAM-275-0.00
HAMILTON COUNTY
See Ramp B
8:1
By Others
2:1
END PAVEMENT
512.15
204+90.73
483.0
512.07
204+00
481.4
512.43
203+57
481.9
RAMP D Sta. 203+57 to Sta 204+90.73
DEV. O.K.
CHECKED
7-68
C.H.
9-71
R.D.

HAM-275-0.00
HAMILTON COUNTY

B.M.#23 Elev. 517.33
R.R. spike in 15" hackberry 267'± Lt. of Sta. 54+80±, West side of Stephens Road

CURVE NO. SR-1
P.I. Sta. 10+03.88
Δ = 36°44'09"
Dc = 10°00'00"
R = 572.96'
T = 190.24'
L = 361.86'

For Superelevation Tables
See Sh. No. 128

B.M.#24 Elev. 516.20
R.R. spike in Telephone Pole 135'± Rt. of Sta. 62+60± on North Side of Stephens Road

Heavy Wooded Area

Sta. 20+00.00 Hayes McKinney Service Road (Ahead) =
Sta. 47+20.00 Stephens Road (Ahead) =
Sta. 20+00.00 Stephens Road (Back)

For Hayes-McKinney Plan and Profile
See Sh. No. 135

Begin Work
Sta. 7+15.64
Begin full depth pavt. construction
Begin Taper, Sta. 7+15.64
Remove 2-Exist. Stone Headwalls
Remove Exist. 24" C.M.P.
End Taper
Sta. 8+00
P.C. Sta. 8+15.64
Remove Ex. 15" Clay Pipe
Remove Ex. Conc. Headwall
Frame
Conc. Block and Frame Barn
Frame Corn Crib
Silo
Frame
Frame House
Stone House
Garden
Pasture
Gravel
Sodding 158
Earth Dike Elev. 522.0
Channel Easement
R/W
LA
N 36°45'48"E
P.T. Sta 11+81.00
℄ Stephens Rd
Curve No. SR-1
Anchor Assembly
Construction Limit
Open Field
For Mainline Plan and Profile See Sh. Nos. 22, 23
℄ Hayes McKinney Service Road
Begin Pavement Stephens Road Sta 47+32.15
N 45°05'58"W
℄ Stephens Road
Special Berm and Slope Protection Std MC-7
Seeding and Jute Matting Std MC-7
30" Type A 156
Remove Exist. 24" Clay Pipe
Remove 2-Exist. Conc. And Stone Headwalls
Anchor Assembly
24" Type A 157
Riprap Using 6" Reinf. Conc. Slab (5'x4')
Rock Channel Protection Type B (9'x4'x30") 158
Guardposts
Well & Pump House
℄ I-275
N 44°54'02"E
Sta. 67+75.51 I-275 =
Sta. 50+00.00 Stephens Rd.
LA-R/W

For Quantities
See Sh. Nos. 127, 137

DEVELOPED		CHECKED	
10-71	J.M.	12-71	R.D.

Item 203	Excavation (not inc. Emb.)	1,167 C.Y.
" 203	Embankment	9,565 C.Y.
" 659	Seeding & Mulching	7,256 S.Y.

Sta. 20+00.00 Stephens Road (Back) =
Sta. 47+20.00 Stephens Road (Ahead) =
Sta. 20+00.00 Hayes McKinney Service Road (Ahead)

Hayes McKinney Service Road Construction
For Details, See Sh. Nos. 135, 136

Begin Pavement Construction
Sta. 7+15.64

200' V.C.
P.V.C.
P.V.T.
+0.00%
+1.48%
+2.28%
P.V.I. Sta. 10+00
Elev. 518.20
P.V.I. Sta. 15+00
Elev. 525.60
Exist. 24" C.M.P.
Exist. 15" Clay Pipe
+76, 30" Type A
F.L. = 513.3
+94, 24" Type A
F.L. = 511.6

STEPHENS ROAD Sta. 7+15.64 to Sta. 20+00.00

HAM-275-0.00
HAMILTON COUNTY

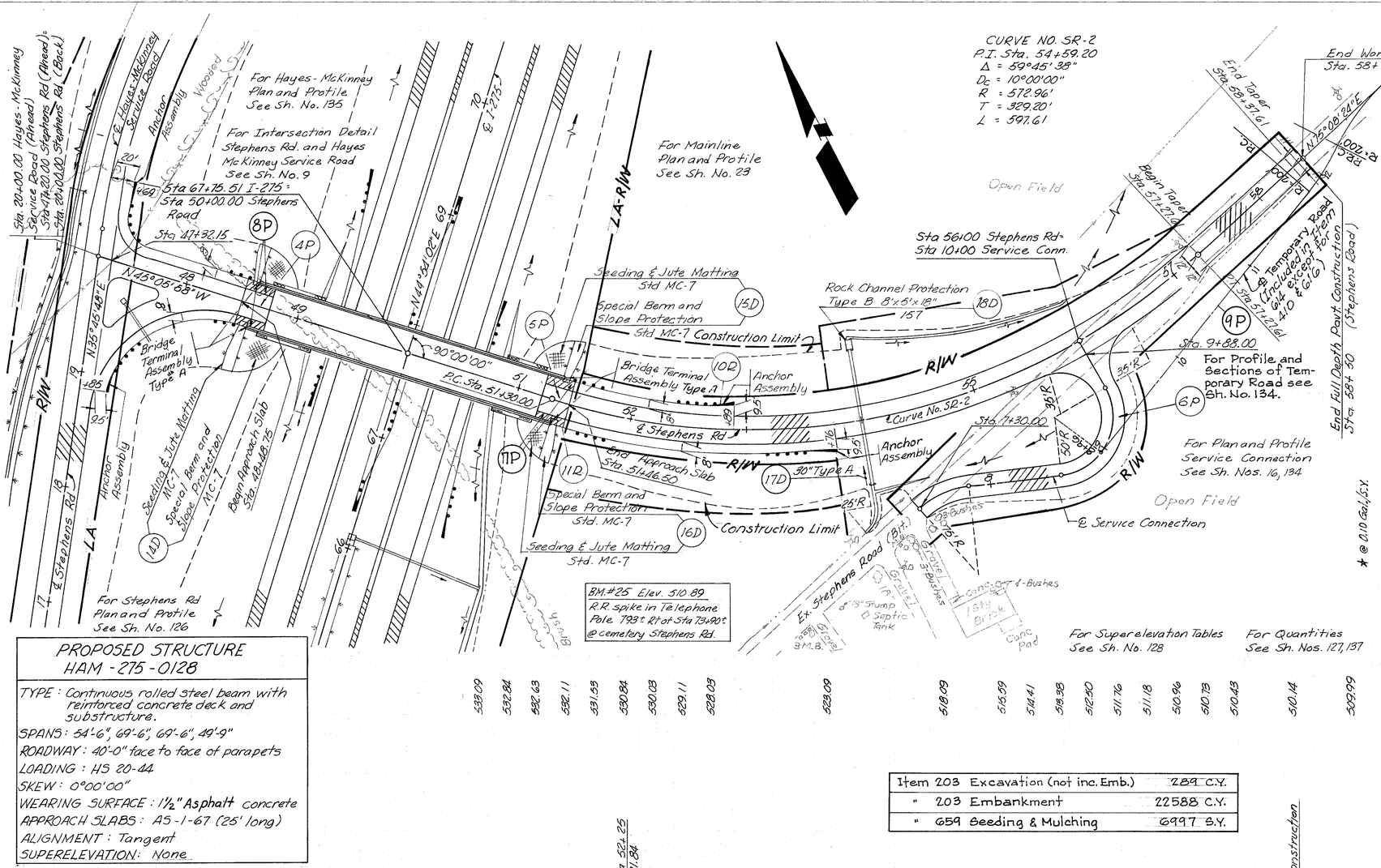

PROPOSED STRUCTURE
HAM-275-0128

TYPE: Continuous rolled steel beam with reinforced concrete deck and substructure.
SPANS: 54'-6", 69'-6", 69'-6", 49'-9"
ROADWAY: 40'-0" face to face of parapets
LOADING: HS 20-44
SKEW: 0°00'00"
WEARING SURFACE: 1½" Asphalt concrete
APPROACH SLABS: AS-1-67 (25' long)
ALIGNMENT: Tangent
SUPERELEVATION: None

Item 203	Excavation (not inc. Emb.)	289 C.Y.
" 203	Embankment	22588 C.Y.
" 659	Seeding & Mulching	6997 S.Y.

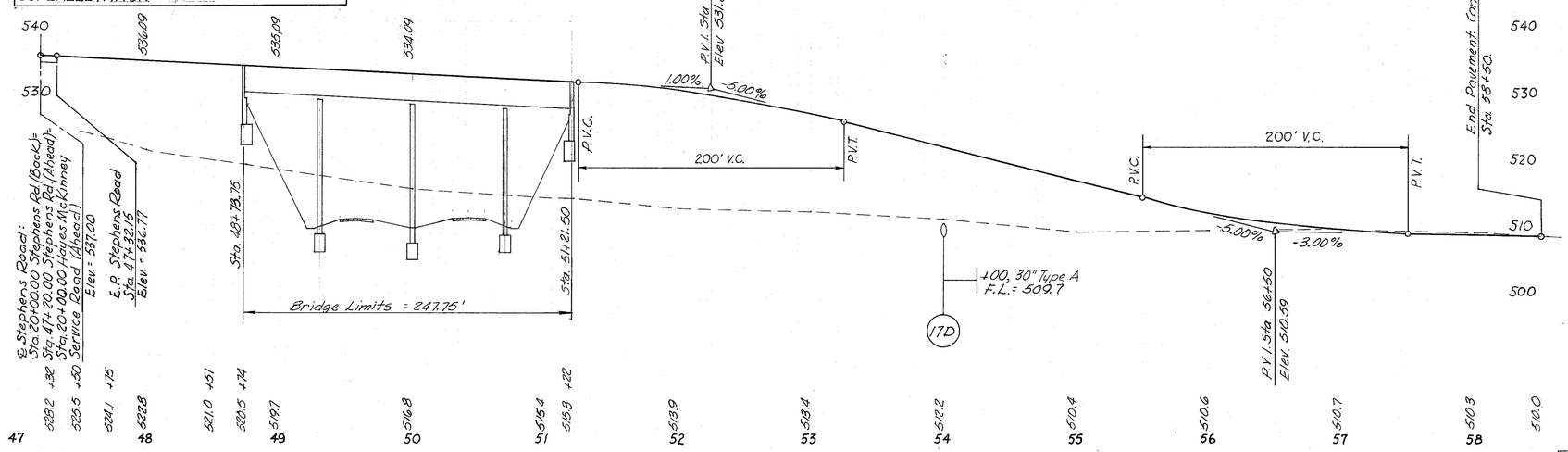

Station	Elev.
540	
536.09	
535.09	
534.09	
533.09	
532.84	
532.63	
532.11	
531.53	
530.84	
530.03	
529.11	
528.03	
523.09	
518.09	
515.59	
514.41	
513.38	
512.50	
511.76	
511.18	
510.96	
510.73	
510.43	
510.14	
509.99	
530	
528.2	+32
525.5	+50
524.1	+75
522.8	
521.0	+51
520.5	+74
519.7	
516.8	
515.4	
515.3	+22
513.9	
513.4	
512.2	
510.4	
510.6	
510.7	
510.3	
510.0	
520	
510	
500	
47	
48	
49	
50	
51	
52	
53	
54	
55	
56	
57	
58	

Station	301 Bitum. Agg. Base Cu. Yd.	304 Agg. Base Cu. Yd.	404 Asph. Conc. 1½" Cu. Yd.	408 Bitum. Prime Coat Gals	411 Stabilized Crushed Aggr. Cu. Yd.	611 Aggr. Slabs 7"-13" Cu. Yd.	410 Traffic Comp. Surface Cu. Yd.	616 Water M. Gal.	616 Calcium Chloride Ton	3.10 Sub-base G" Cu. Yd.	407 Tack Cover *	407 Tack Cover * Gal. Ton
PAVEMENT												
71+15.64 - 20+00			172									
47+32.15 - 58+37.61			155*									
* Includes Right Turn Lane Sta 47+70, Rt. & Island												
1P 7+92 Lt.		3	1	7	5							
2P												
3P												
4P 48+48.75 - 48+73.75 Lt. & Rt.												
5P 51+21.50 - 51+46.50 Lt. & Rt.					3 (1½")	67				12	7	0.3
					3 (1½")	67				12	7	0.3
6P 56+00 Rt.			45									
7P 51+21.50 - 51+46.50 Lt. & Rt.	135											
8P 48+48.75 - 48+73.75 Lt. & Rt.	9											
	9											
9P Temporary Road							200	4	4	24	14	0.6
ROADWAY												
1R 8+50 - 11+64 Rt.												
2R 9+60 Lt. & Rt.												
3R 9+45 Lt.												
4R 9+72 Lt.												
5R 9+91 Lt.												
6R 181+54 BK - 48+60 AH Rt.												
7R 20+69 BK - 48+60 AH Lt.												
8R												
9R												
10R 51+86 - 53+76 Rt.												
11R 51+86 - 52+99 Lt.												

Station	202 Pavement Removed Sq. Yd.	202 Sidewalk Removed Sq. Ft.	202 Special Drilled Well Aband. Each	202 Septic Tank Removed Each	202 Guard Rail Type 5 L.F.	606 Anchor Assem. Each	606 Bridge Term. Assem. Type 5 Each
1P							
2P							
3P							
4P							
5P							
6P							
7P							
8P							
9P							
1R							
2R							
3R							
4R							
5R							
6R							
7R							
8R							
9R							
10R							
11R							
Totals	35	217	1	1	275	2	1
					125	1	1
					137.5	1	1
					225	1	1
					125	1	1

Station	1.66 Bituminous Aggregate Base Cu. Yd.	3	385	7	5	134	200	4	4	4

DEVELOPED		CHECKED	
10/71	J.M.	12/71	R.D.

STEPHENS ROAD Sta. 47+20 to Sta. 58+50

Rev. 12-3-73

FED. RD. DIVISION	STATE	PROJECT	
2	OHIO		

128
305

HAM-275-0.00
HAMILTON COUNTY

STEPHENS ROAD

Station	Left Side Elevation	Left Side Width	Profile Grade	Right Side Width	Right Side Elevation
7+15.64	518.06	9.0	518.20	9.0	518.06
+25	518.06	9.0	518.20	9.0	518.08
+50	518.06	9.0	518.20	9.0	518.15
+71.64	518.06	9.0	518.20	9.0	518.20
+75	518.06	9.0	518.20	9.0	518.22
+96.14	518.06	9.0	518.20	9.0	518.34
8+00	518.04	9.0	518.20	9.0	518.36
+13.64	517.96	9.5	518.20	9.5	518.44
+25	517.90	10.0	518.20	10.0	518.50
+50	517.75	11.0	518.20	11.0	518.65
+55.64	517.72	11.2	518.20	11.2	518.68
Sta. 8+55.64 to Sta. 11+39.00					
Constant	+0.48	12.0	P.G.	12.0	-0.48
11+39.00	519.78	12.0	520.26	12.0	520.78
+50	520.00	12.0	520.42	12.0	520.84
+75	520.52	12.0	520.79	12.0	521.06
+81	520.64	12.0	520.88	12.0	521.12
+89.75	521.80	12.0	520.99	12.0	521.18
12+00	520.97	12.0	521.16	12.0	521.29
+23	521.31	12.0	521.50	12.0	521.50
+25	521.34	12.0	521.53	12.0	521.53
+50	521.71	12.0	521.90	12.0	521.83
+75	522.08	12.0	522.27	12.0	522.14
12+99.00	522.43	12.0	522.62	12.0	522.43
Sta. 12+99.00 to Sta. 19+07.00					
Constant	-0.19	12.0	P.G.	12.0	-0.19
19+07.00	534.69	12.0	534.88	12.0	534.69
+25	535.10	12.0	535.29	12.0	535.10
+50	535.67	12.0	535.86	12.0	535.67
+75	536.24	12.0	536.43	12.0	536.24
+83	536.42	12.0	536.61	12.0	536.42
20+00.00	537.10	12.0	537.00	12.0	536.81
Sta. 20+00.00 Bk = Sta. 47+20.00 Ah.					
Sta. 48+20.00 to Sta. 51+21.50					
Constant	-0.19	12.0	P.G.	12.0	-0.19
51+21.50	532.69	12.0	532.88	12.0	532.69
+25	532.63	12.0	532.84	12.0	532.67
+30	532.53	12.0	532.77	12.0	532.63
+50	532.28	12.0	532.63	12.0	532.60
+54.75	532.07	12.0	532.45	12.0	532.45
+72	531.64	12.0	532.12	12.0	532.19
+75	531.63	12.0	532.11	12.0	532.18
52+00	531.05	12.0	531.53	12.0	531.76
+25	530.36	12.0	530.84	12.0	531.21
+38.75	530.23	12.0	530.71	12.0	531.19
Sta. 52+38.75 to Sta. 56+85.61					
Constant	+0.48	12.0	P.G.	12.0	-0.48
56+85.61	510.48	12.0	510.96	12.0	511.44
57+00	510.33	12.0	510.73	12.0	511.13
+25	510.17	12.0	510.45	12.0	510.69
+27.61	510.18	12.0	510.42	12.0	510.66
+39.86	510.14	11.88	510.31	11.88	510.48
+50	510.12	11.80	510.29	11.80	510.40
+69.61	510.06	11.66	510.23	11.66	510.23
+75	510.05	11.57	510.22	11.57	510.21
58+00	509.97	11.34	510.14	11.34	510.06
+25	509.89	11.11	510.06	11.11	509.92
+37.61	509.86	11.00	510.03	11.00	509.86

HAYES McKINNEY SERVICE ROAD

Station	Left Side Elevation	Left Side Width	Profile Grade	Right Side Width	Right Side Elevation
20+00.00	537.10	12.00	537.00	12.00	536.81
+16.25	537.56	12.00	537.37	12.00	537.18
+25	537.81	12.00	537.57	12.00	537.33
+41.39	538.27	12.00	537.94	12.00	537.61
+50	538.48	11.66	538.14	11.66	537.80
+60.64	538.74	11.23	538.38	11.23	538.02
+75	539.09	10.70	538.71	10.70	538.33
+91.39	539.48	10.00	539.04	10.00	538.68
Sta. 20+91.39 to Sta. 23+39.85					
Constant	+0.40	10.00	P.G.	10.00	-0.40
23+39.85	538.51	10.00	538.11	10.00	537.71
+50	537.97	10.00	537.66	10.00	537.35
+75	537.01	10.00	536.85	10.00	536.69
24+00	535.94	10.00	535.92	10.00	535.90
+09.85	535.77	10.00	535.77	10.00	535.77
+25	534.74	10.00	534.86	10.00	534.98
+50	533.48	10.00	533.74	10.00	534.00
+73.85	532.27	10.00	532.67	10.00	533.07
Sta. 24+73.85 to Sta. 26+56.33					
Constant	-0.40	10.00	P.G	10.00	+0.40
26+56.33	524.10	10.00	524.50	10.00	524.90
+75	523.43	10.00	523.72	10.00	524.01
+91.33	522.88	10.00	523.08	10.00	523.28
+98.33	522.66	10.00	522.82	10.00	522.98
27+00	522.61	10.00	522.77	10.00	522.92
+25	521.77	10.00	521.93	10.00	521.94
+26.33	521.73	10.00	521.89	10.00	521.89
+50	521.05	10.00	521.21	10.00	521.15
+75	520.44	10.00	520.60	10.00	520.48
27+90.33	520.12	10.00	520.28	10.00	520.12
Sta 27+90.33 to Sta. 45+72.33					
Constant	-0.16	10.00	P.G.	10.00	-0.16
45+72.33	496.89	10.00	497.05	10.00	496.89
+75	496.82	10.00	496.98	10.00	496.83
46+00	496.14	10.00	496.30	10.00	496.21
+25	495.46	10.00	495.62	10.00	495.59
+36.33	495.15	10.00	495.31	10.00	495.31
+50	494.78	10.00	494.94	10.00	495.02
+64.33	494.39	10.00	494.55	10.00	494.71
+71.33	494.16	10.00	494.36	10.00	494.56
+75	494.04	10.00	494.26	10.00	494.48
47+00	493.22	10.00	493.58	10.00	493.94
+06.33	493.01	10.00	493.41	10.00	493.81
Sta. 47+06.33 to Sta 49+19.49					
Constant	-0.40	10.00	P.G.	10.00	+0.40
49+19.49	487.94	10.00	488.34	10.00	488.74
+25	487.88	10.00	488.25	10.00	488.62
+50	487.72	10.00	487.94	10.00	488.16
+61.49	487.65	10.00	487.81	10.00	487.97
+75	487.52	10.00	487.68	10.00	487.76
+89.49	487.39	10.00	487.55	10.00	487.55
50+00	487.31	8.82	487.47	8.82	487.45
+25	487.14	6.00	487.30	6.00	487.21

SUPERELEVATION TABLES

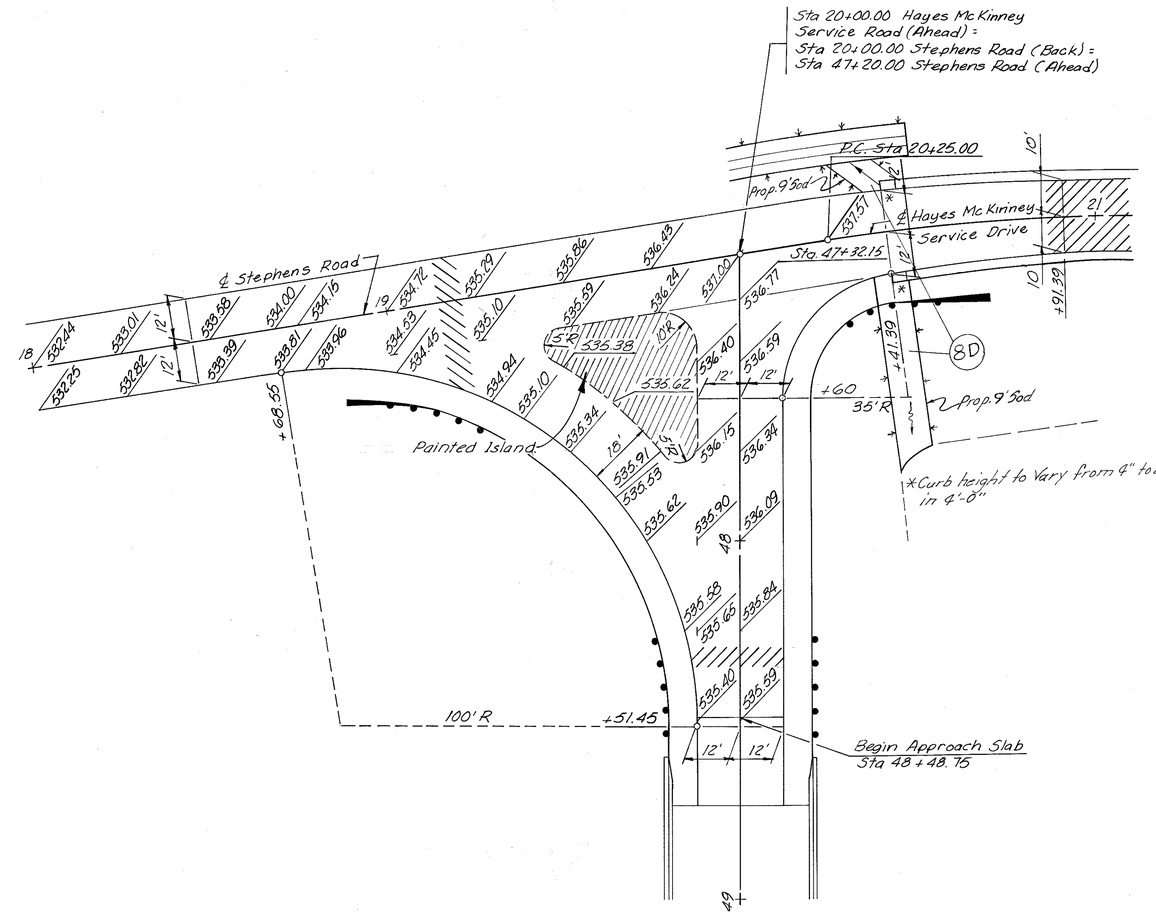

PAVEMENT DETAIL

STEPHENS ROAD AT HAYES McKINNEY SERVICE DRIVE

SCALE OF FEET
0 20 40

SUPERELEVATION TABLES AND PAV'T DETAILS FOR STEPHENS RD AND HAYES - McKINNEY SERVICE R

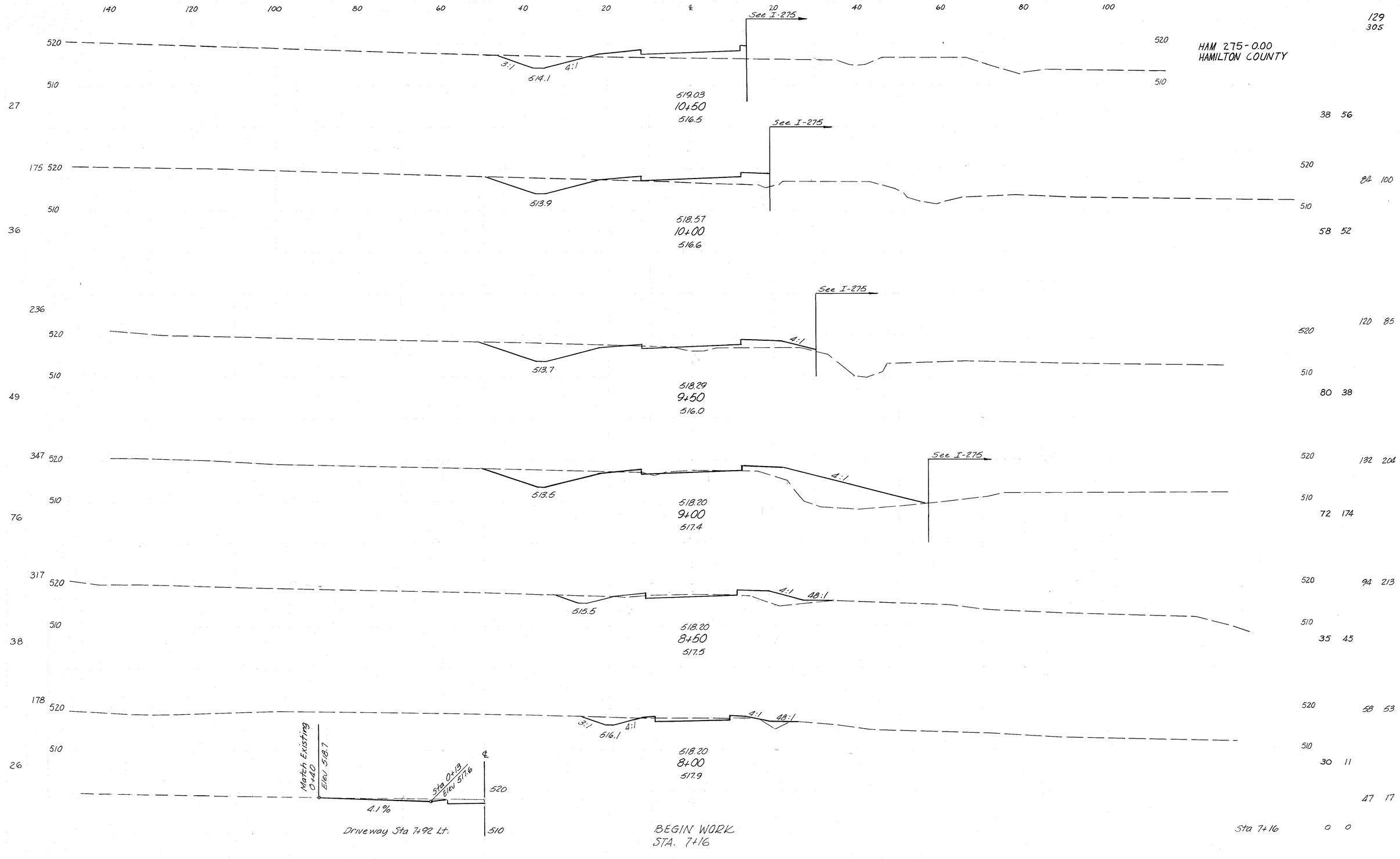
140 120 100 80 60 40 20 ℄ 20 40 60 80 100
See I-275
520
510
3:1
514.1
4:1
519.03
10+50
516.5
HAM 275-0.00
HAMILTON COUNTY
129
305
27
38 56
See I-275
175 520
513.9
518.57
10+00
516.6
84 100
36
58 52
See I-275
236
513.7
4:1
518.29
9+50
516.0
120 85
49
80 38
See I-275
347
513.5
4:1
518.20
9+00
517.4
132 204
76
72 174
317
515.5
4:1
48:1
518.20
8+50
517.5
94 213
38
35 45
178
3:1
516.1
4:1
4:1
48:1
518.20
8+00
517.9
58 53
26
30 11
Match Existing
0+40
Elev 518.7
Sta 0+19
Elev 517.6
℄
4.1%
Driveway Sta 7+92 Lt.
BEGIN WORK
STA. 7+16
47 17
Sta 7+16
0 0
DEVELOPED 9-66 M.L.
CHECKED 10-71 J.M.
STEPHENS ROAD Sta 7+16 to Sta 10+50

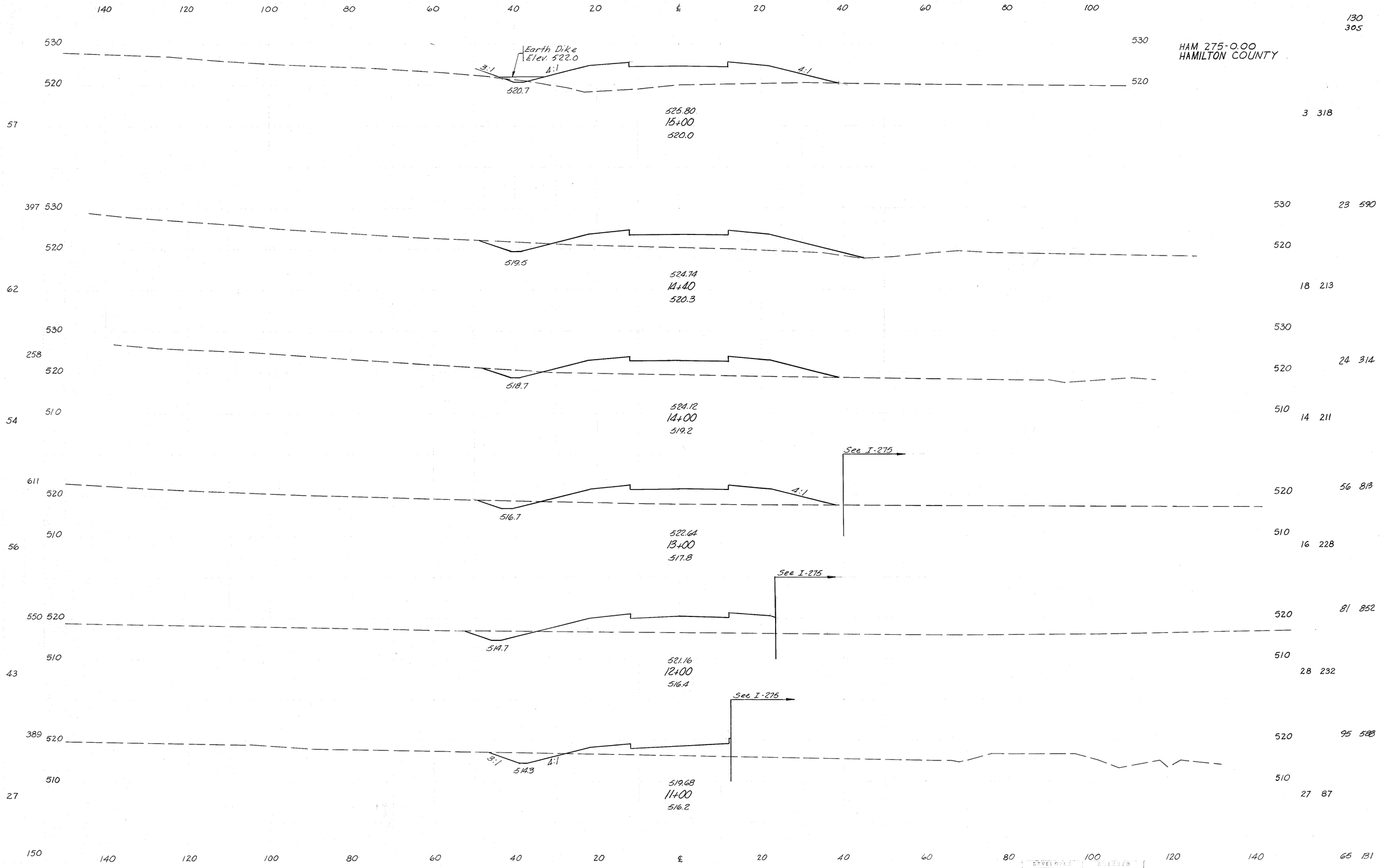
HAM 275-0.00
HAMILTON COUNTY
Earth Dike
Elev. 522.0
3:1
4:1
520.7
525.80
15+00
520.0
519.5
524.74
14+40
520.3
518.7
524.12
14+00
519.2
See I-275
516.7
522.64
13+00
517.8
514.7
521.16
12+00
516.4
514.3
519.68
11+00
516.2
DEVELOPED
DESIGNED
9-66
M.L.
10-71
J.M.
STEPHENS ROAD Sta 11+00 to Sta. 15+00

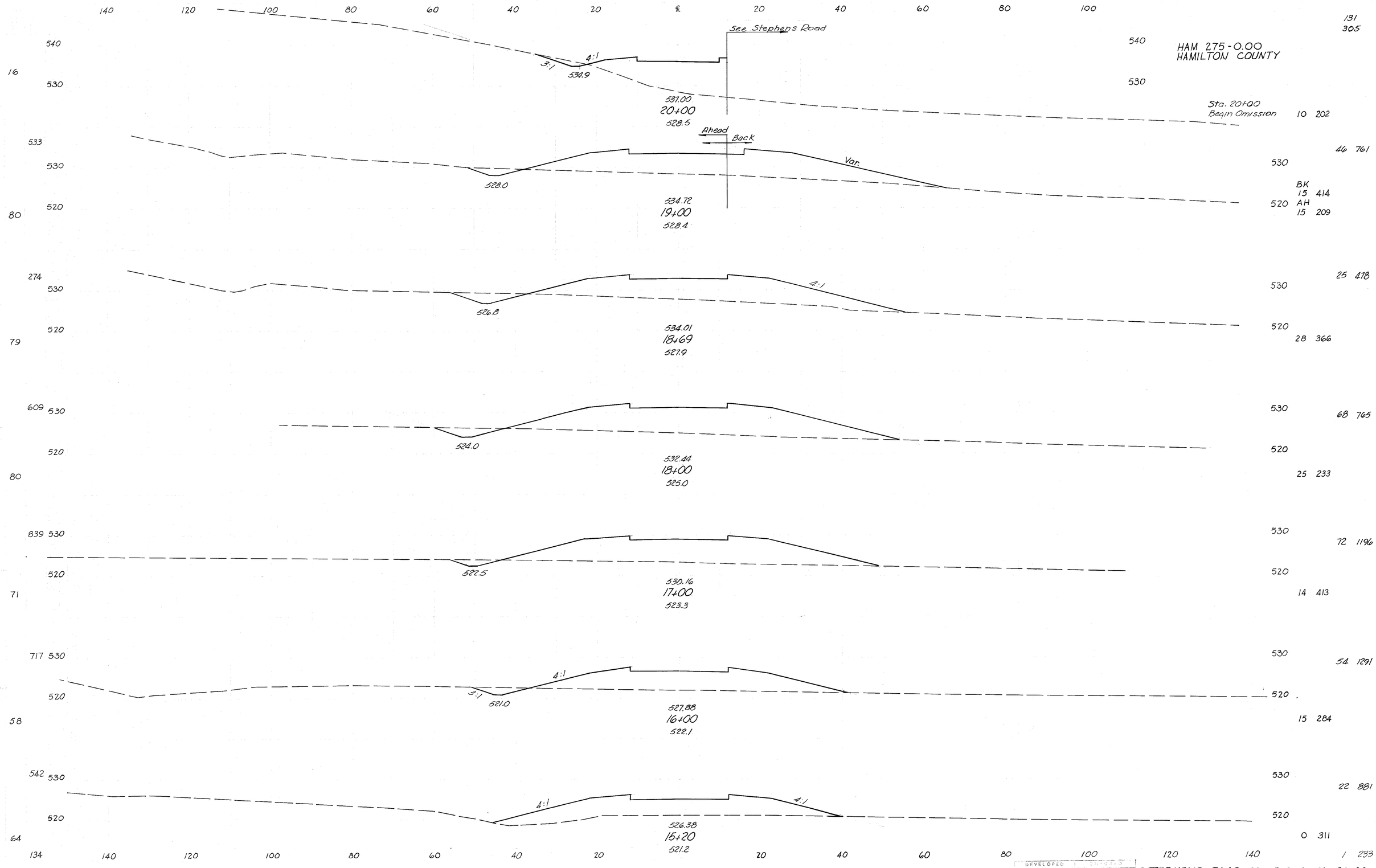
HAM 275-0.00
HAMILTON COUNTY
See Stephens Road
Sta. 20+00
Begin Omission
Ahead
Back
Var.
4:1
3:1
534.9
537.00
20+00
528.5
528.0
534.72
19+00
528.4
526.8
534.01
18+69
527.9
524.0
532.44
18+00
525.0
522.5
530.16
17+00
523.3
521.0
527.88
16+00
522.1
526.38
15+20
521.2
BK
AH
131 305
10 202
46 761
15 414
15 209
25 478
28 366
68 765
25 233
72 1196
14 413
54 1291
15 284
22 881
0 311
1 233
DEVELOPED
CHECKED
9-66 M.L.
10-71 J.M.
STEPHENS ROAD Sta 15+20 to Sta. 20+00

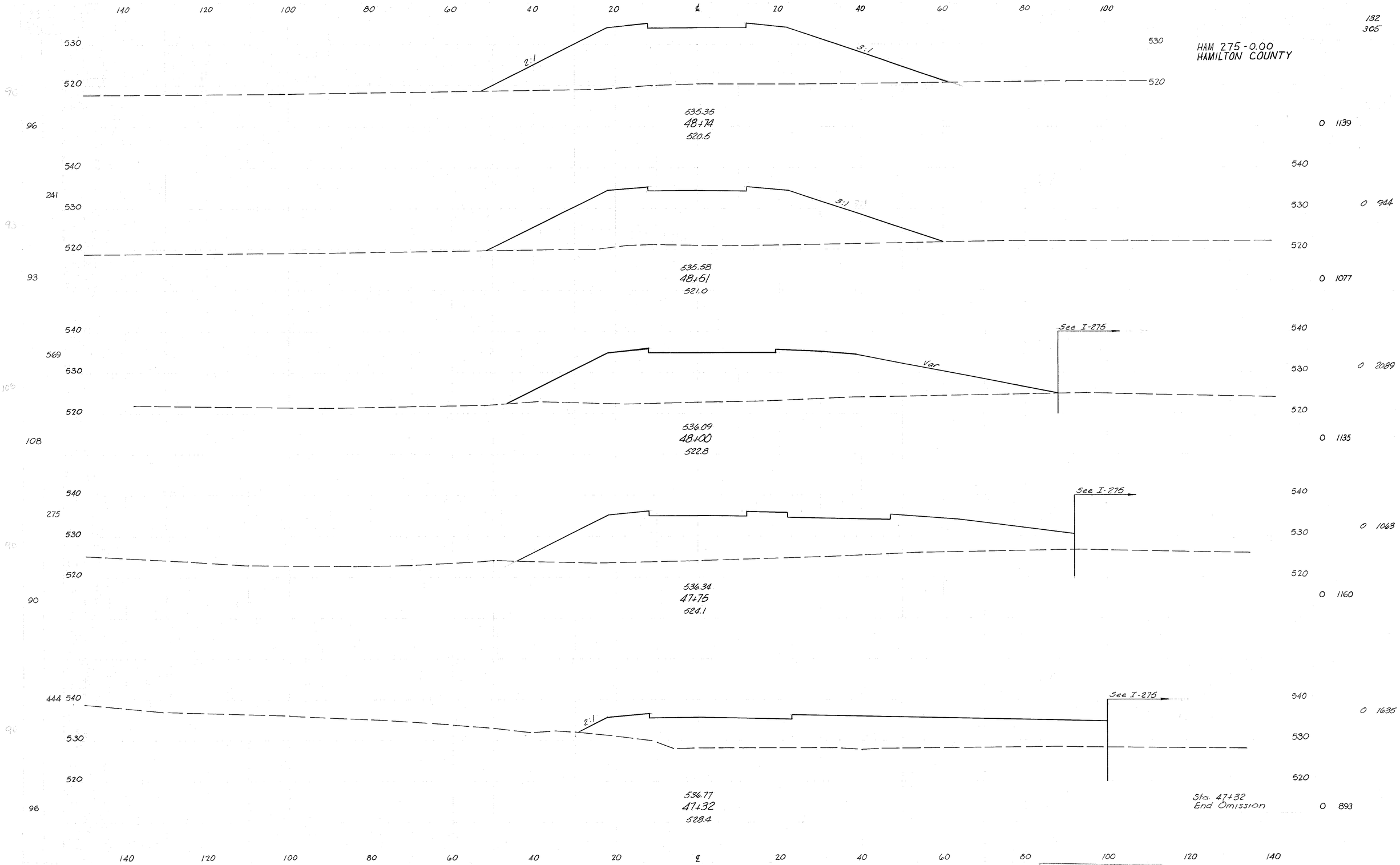

DEVELOPED		CHECKED	
9-66	M.L.	10-71	J.M.

STEPHENS ROAD Sta 47+32 to Sta. 48+74

HAM 275 - 0.00
HAMILTON COUNTY

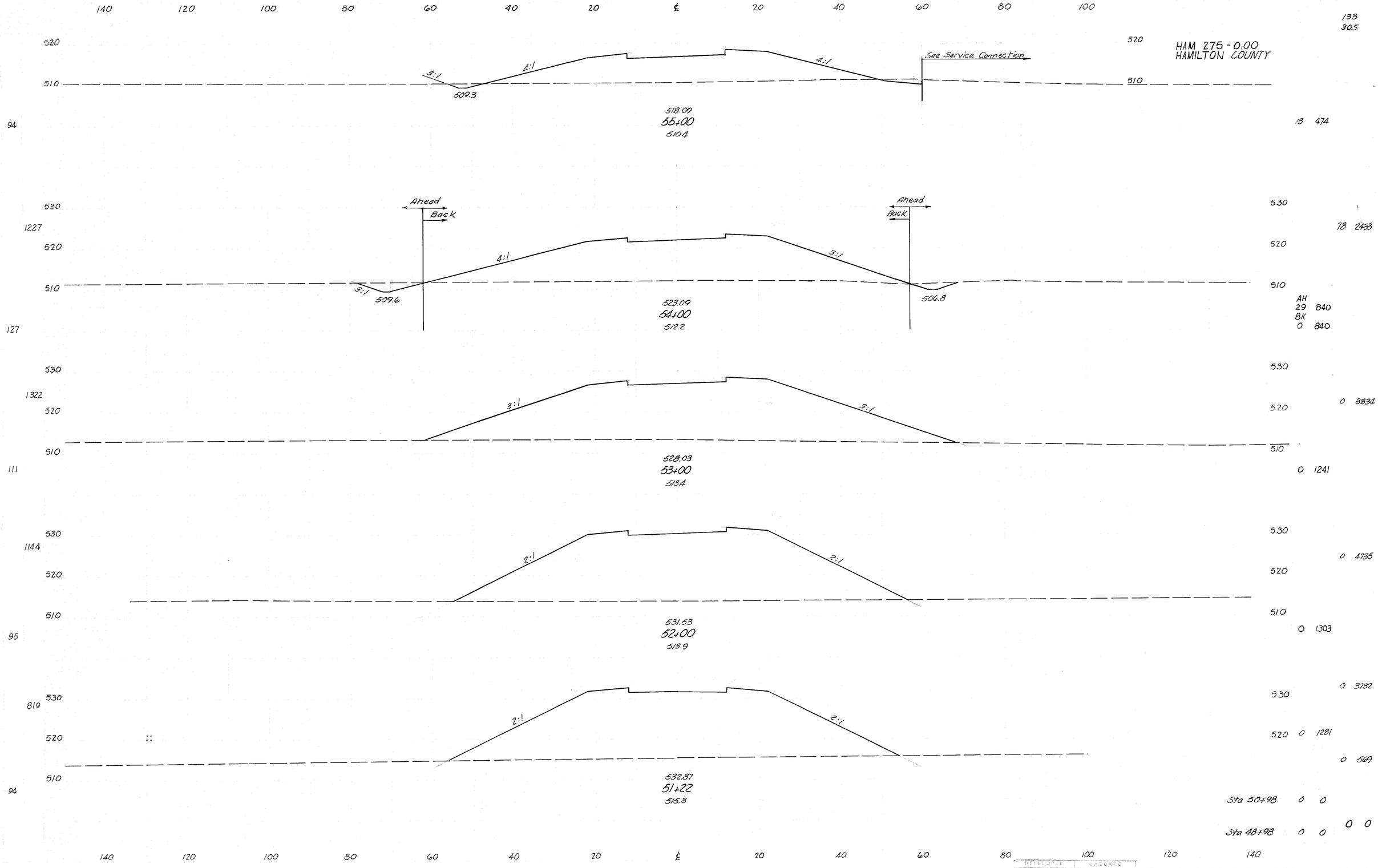

DEVELOPED		CHECKED	
9-66	M.L.	10-71	J.M.

STEPHENS ROAD Sta 48+98 to Sta. 55+00

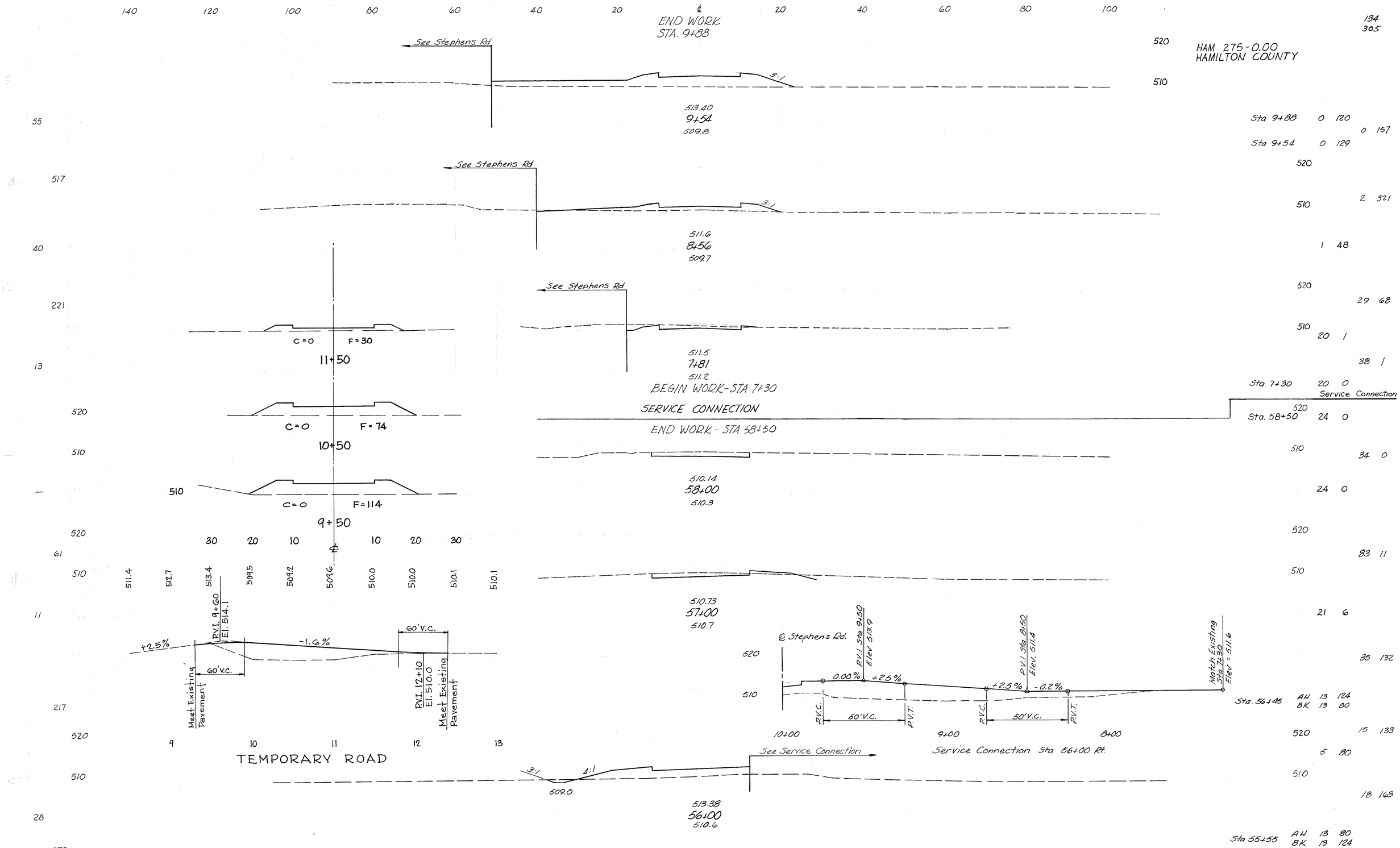
END WORK
STA. 9+88
See Stephens Rd
3:1
518.40
9+54
509.8
See Stephens Rd
3:1
511.6
8+56
509.7
See Stephens Rd
C = 0
F = 30
11+50
511.5
7+81
511.2
BEGIN WORK-STA 7+30
SERVICE CONNECTION
END WORK - STA 58+50
C = 0
F = 74
10+50
510.14
58+00
510.3
C = 0
F = 114
9+50
510.73
57+00
510.7
511.4
512.7
513.4
514.5
514.2
514.6
510.0
510.0
510.1
510.1
P.V.I. 9+60
El. 514.1
+2.5%
-1.6%
60' V.C.
60' V.C.
Meet Existing Pavement
P.V.I. 12+10
El. 510.0
Meet Existing Pavement
TEMPORARY ROAD
℄ Stephens Rd.
P.V.I. Sta 9+50
Elev 513.9
P.V.I. Sta 8+50
Elev. 511.4
Match Existing
Sta 7+30
Elev = 511.6
0.00%
+2.5%
+2.5%
-0.2%
P.V.C.
50' V.C.
P.V.T.
P.V.C.
50' V.C.
P.V.T.
10+00
9+00
8+00
See Service Connection
Service Connection Sta 56+00 Rt.
3:1
4:1
509.0
513.38
56+00
510.6
HAM 275-0.00
HAMILTON COUNTY
Sta 9+88 0 120
Sta 9+54 0 129
Sta 7+30 20 0
Service Connection
Sta. 58+50 24 0
Sta. 56+45 AH 13 124
BK 13 80
Sta 55+55 AH 13 80
BK 13 124
134
305
0 157
2 321
1 48
29 68
20 1
38 1
34 0
24 0
83 11
21 6
35 132
15 133
5 80
18 163
26 609
DEVELOPED
DRAWN
9-66 M.L. 10-71 J.M.
STEPHENS ROAD Sta 56+00 to Sta 58+38 and SERVICE CONNECTION Sta. 7+30 to Sta. 9+88

HAM-275-0.00
HAMILTON COUNTY

DEVELOPED		CHECKED	
10-71	J.M.	12-71	R.D.

Item 203 Excavation (not inc. Emb.)	2,113 C.Y.
" 203 Embankment	23,485 C.Y.
" 659 Seeding & Mulching	9,716 S.Y.

For Stephens Road Plan and Profile See Sh. No. 127

Curve No. HM-1
P.I. Sta 22+21.64
Δ = 37°53'06"
Dc = 10°00'00"
R = 572.96'
T = 196.64'
L = 378.85'

Curve No HM-2
P.I. Sta. 25+50.68
Δ = 28°44'52"
Dc = 10°00'00"
R = 572.96
T = 146.83'
L = 287.48'

For Superelevation Tables See Sh. No. 128

B.M.#25 Elev. 510.89
R.R. spike in Telephone Pole 793'± Rt. of Sta. 73+90'± @ cemetery Stephens Road

For Mainline Plan and Profile See Sh. Nos. 23, 24

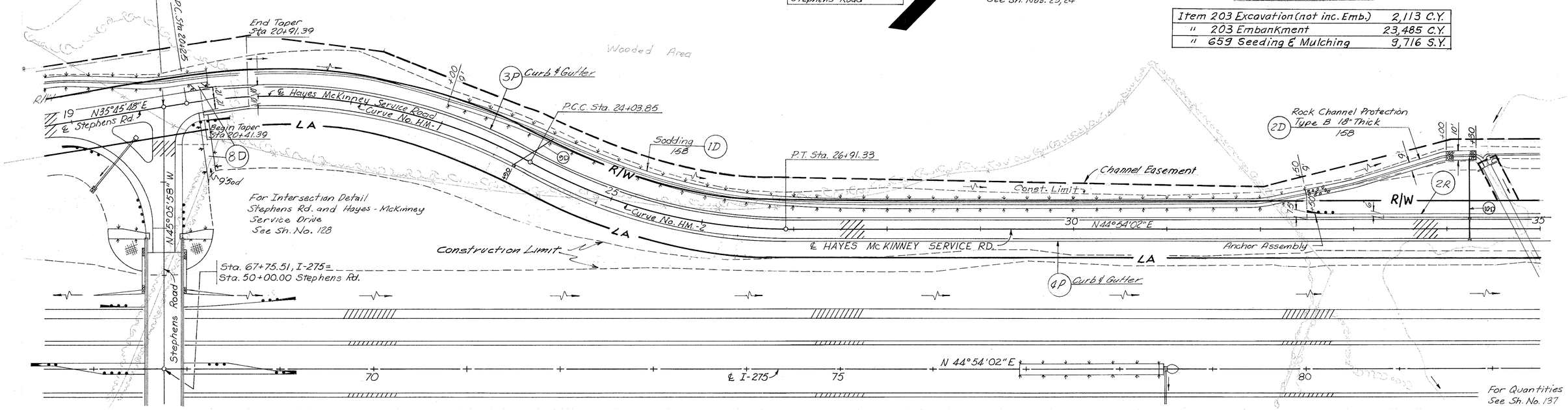

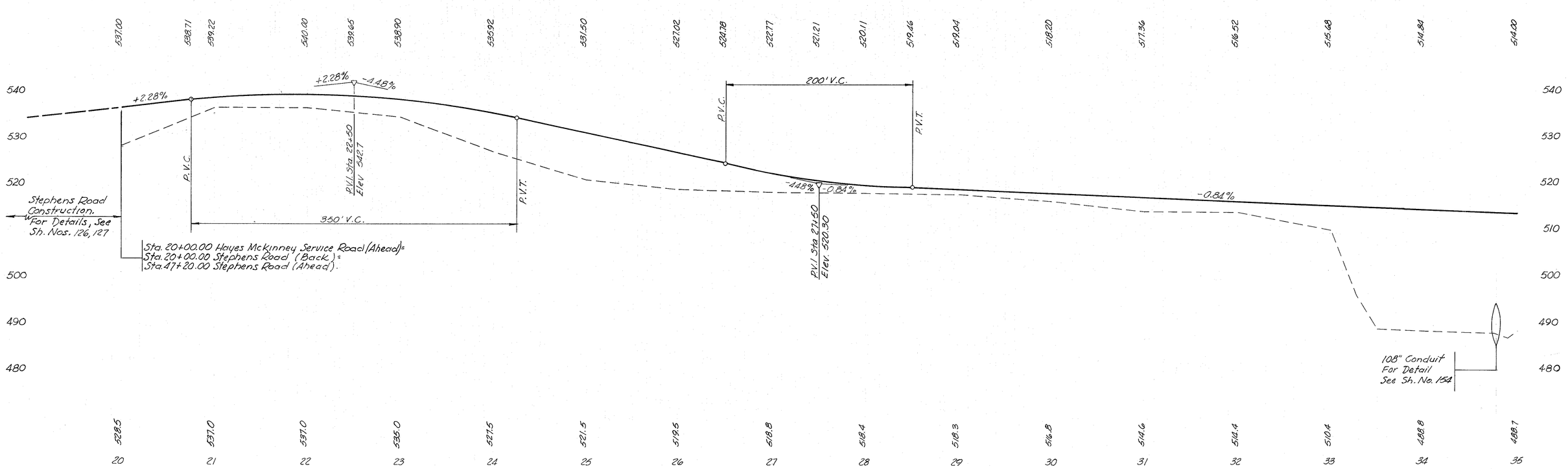

HAYES-McKINNEY SERVICE ROAD Sta. 20+00.00 to Sta. 35+00

136
30.5

HAM-275-0.00
HAMILTON COUNTY

BM #26 Elev 496.90
R.R. spike in 15" Sycamore tree 400' Rt of Sta 81+00

Curve No. HM-3
P.I. Sta. 43+48.17
Δ = 8°56'53"
D_c = 1°22'54"
R = 4,146.86'
T = 324.47'
L = 647.63'

For Superelevation Tables
See Sh. No. 128

For Service Connection
Detail See Sh. No. 16, 141

Curve No. HM-4
P.I. Sta. 48+15.86
Δ = 28°18'57"
D_c = 10°00'00"
R = 572.96'
T = 144.53'
L = 289.16'

BM #27 Elev. 490.16
Boot spike in Power Pole 150' Lt of Sta 96+20 at Hayes McKinney Rd.

For Mainline Plan and Profile
See Sh. Nos. 24, 25

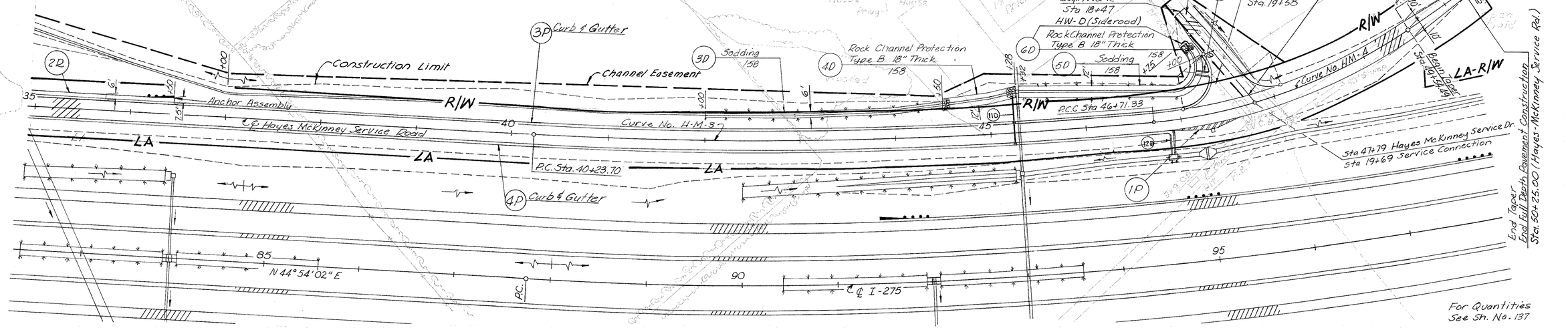

For Quantities
See Sh. No. 137

DEVELOPED		CHECKED	
10-71	J.M.	12-71	R.D.

Item 203 Excavation (not inc. Emb.)	7,906 C.Y.
" 203 Embankment	3,941 C.Y.
" 659 Seeding & Mulching	7,366 S.Y.

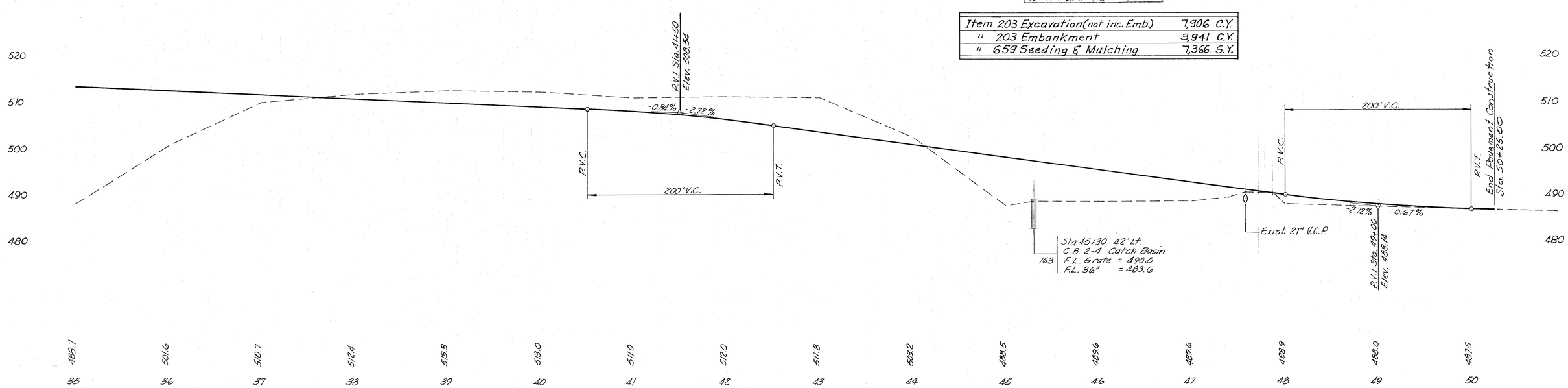

HAYES - McKINNEY SERVICE ROAD Sta. 35+00 to Sta. 50+25

ESTIMATED QUANTITIES

FED. RD. DIVISION	STATE	PROJECT	
2	OHIO		

137
305

HAM-275-0.00
HAMILTON COUNTY

REF. NO.	STATION TO STATION	SIDE	Bends	202 Pipe Removed 24" & Under	202 Pipe Removed Over 24"	202 Headwalls Removed	601 Riprap Using 6" Reinf. Conc. Slab	601 Rock Channel Protect. Type B	602 Conc. Masonry	603 Type A 706.01 706.02 706.08 24"	603 Type A 707.05 30"	603 Type A 706.02 Cl. III 706.08 30"	603 Type B 12"	603 Type F 12"	604 Catch Basin C.B. 2-2-B	604 Catch Basin Std. C.B. 3-A	660 Sodding	660 Sing For Spec. Berm & Slope Protect.	661 Seeding & Jute Matting	SEE SHEET NO.
	UNIT			L.F.	L.F.	Each	Sq. Yd.	Cu. Yd.	Cu. Yd.	L.F.	L.F.	L.F.	L.F.	L.F.	Each	Each	Sq. Yd.	Sq. Yd.	Sq. Yd.	
	DRAINAGE																			
	STEPHENS ROAD																			
1D	7+76	Lt & Rt.							1.20		42									126
2D	7+85	Lt. & Rt.		38																126
3D	8+80	Rt.		16																126
4D	8+94	Lt & Rt.							0.86	82										126
5D	8+94	Rt.					2	4												126
6D	9+05	Lt & Rt.		26		1														126
7D	8+50 - 14+50	Lt.															556			126
8D	15+40 - 20+50	Lt.															510			126
11D	48+56	Lt & Rt																88	250	126
14D	48+56	Rt																33	90	127
15D	51+37	Lt.																37	82	127
16D	51+37	Rt.																37	82	127
17D	54+00	Lt & Rt.							1.12			116								127
18D	54+00	Lt.						3												127
	HAYES McKINNEY SERVICE ROAD																			
9D	23+90	Lt.						1.5	0.20				41			1				
10D	34+25	Lt. & Rt.											23	69		2				
11D	45+25	Lt. & Rt.											23	28		2				
12D	46+90	Rt.					12										4			
13D	19+18 (Service Connection)	Rt.					5													
1D	22+00-32+50	Lt.															1050			135
2D	32+50-34+30	Lt.						120												135
3D	42+00-44+50	Lt															233			
4D	44+50-46+28	Lt.						69												
5D	45+32 H.M. - 19+00 H.M.S.C	Lt.															210			136
6D	18+75 - 19+00 H.M.S.C	Rt						11	1.9											
7D	18+75 - 19+87 H.M.S.C.	Rt.		112													62			
8D	20+21.39	Lt. & Rt.																		
TOTALS				192		1	19	209	5.28	82	42	116	87	97	1	5	2625	195	504	

REF. NO.	STATION TO STATION	SIDE	301 Bitum. Aggr. Base	304 Aggr. Base	404 Asph. Conc. T=2"	408 Bitum. Prime Coat	609 Std. Type 3 Combination Curb & Gutter	606 Guard Rail Type 5	606 Anchor Assemb.	SEE SHEET NO.
	HAYES McKINNEY SERVICE ROAD									
	PAVEMENT		Cu. Yd.	Cu. Yd.	Cu. Yd.	Gals.	Lin. Ft.	L.F.	Each	
	20+00 - 35+00	Lt & Rt.	597		196					135
	35+00 - 50+25	Lt & Rt.	571		187					136
1P	47+30	Rt.		5	2	12				136
2P	47+79	Lt.	63		20					136
3P	20+21.39 - 18+97	Lt.	-19				2736.6			
4P	20+21.39 - 26+90	Rt.	-18				2648.6			
	ROADWAY									
2R	32+50 - 50+50	Lt.						350	2	135 & 136
TOTALS			1196	5	405	12	5385.2	350	2	

DEVELOPED		CHECKED	
10/71	J.M	12/71	R.D

STEPHENS ROAD & HAYES McKINNEY SERVICE ROAD

HAM. 275-0.00
HAMILTON COUNTY

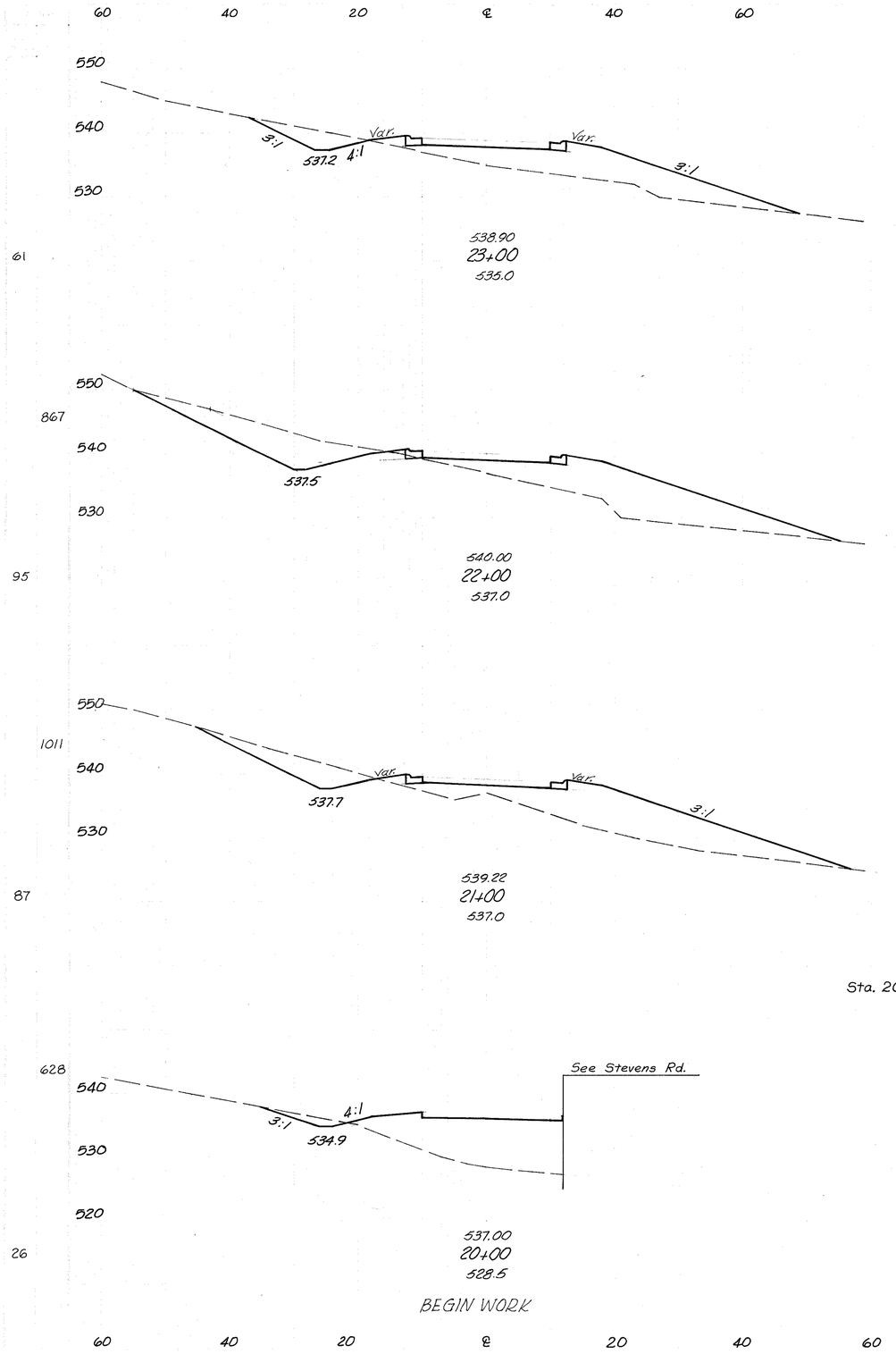

	End Area		Volume		Seeding	
	Cut	Fill	Cut	Fill	End Width	Sq. Yds.
550						
540						
530						
	36	195			43	
550						
			295	768		528
540						
530						
	116	235				
					52	
550						
540			355	884		
530						
	65	262				
			79	796	67	
Sta. 20+40	AH 9	437				
	BK 9	202				
540						
530			13	299		
520						
	10	202			83	

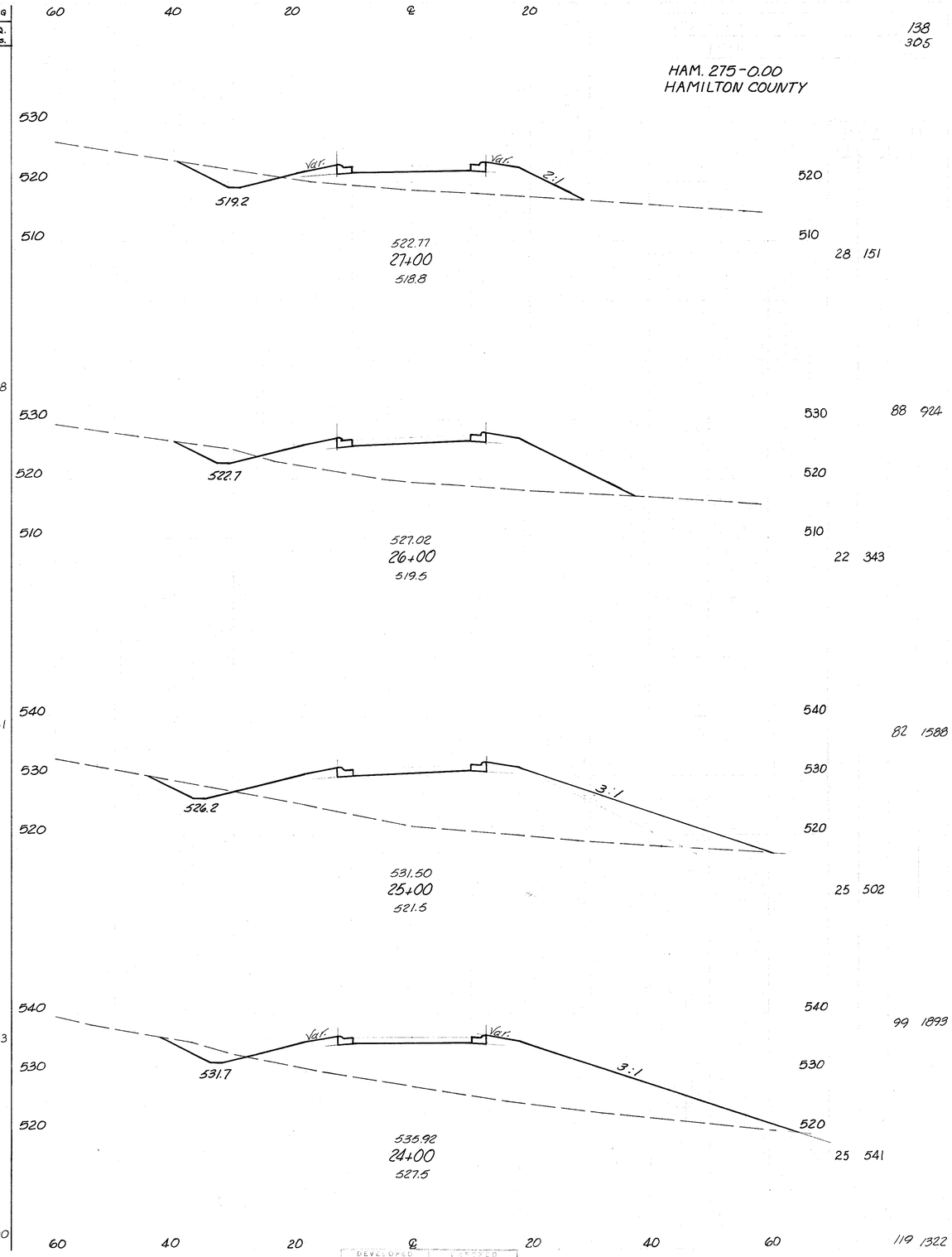

Developed		Checked	
9-69	E.S.	11-71	J.B.

HAYES McKINNEY Sta. 20+00 to Sta. 27+00

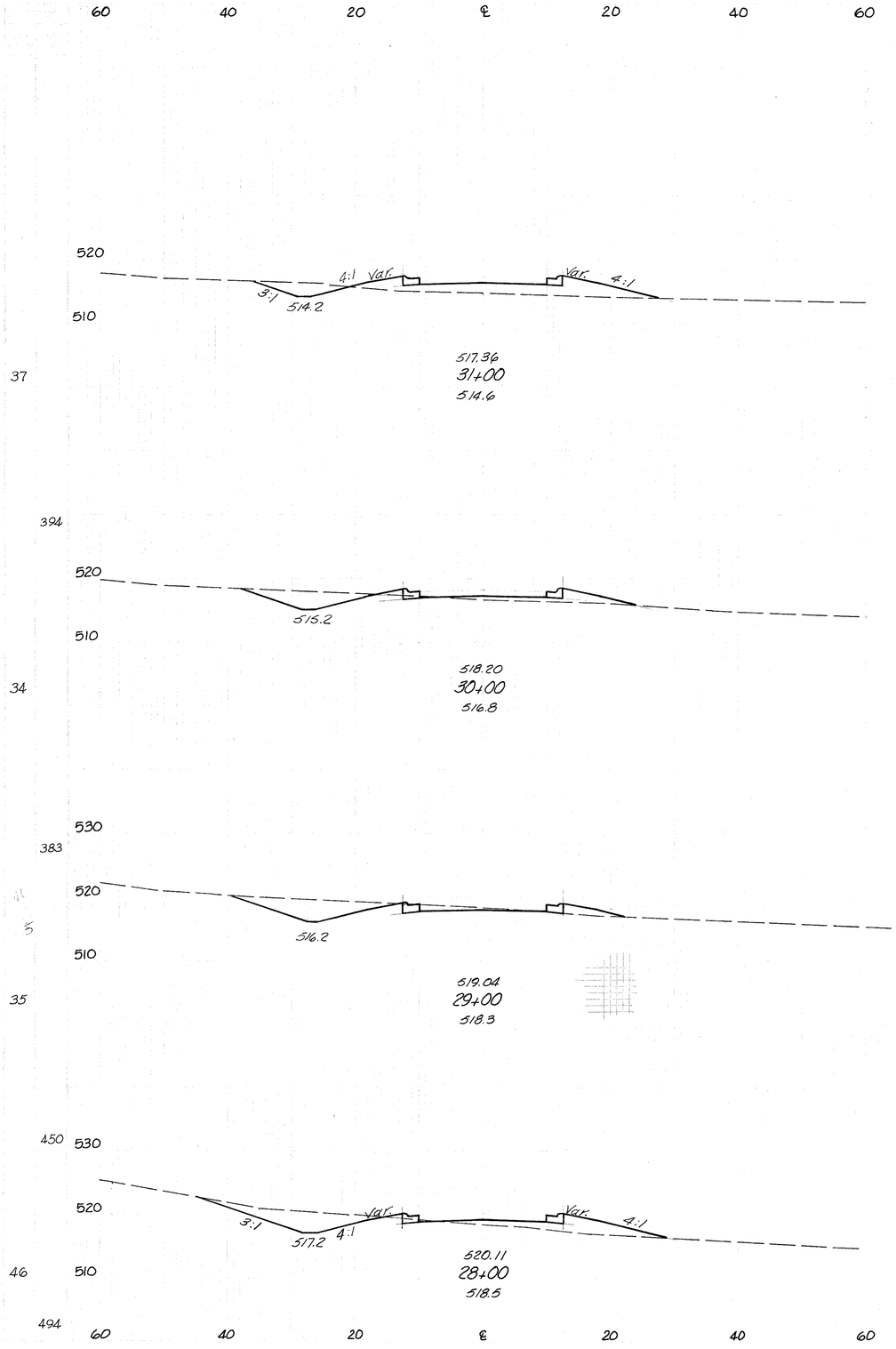

End Area		Volume		Seeding	
Cut	Fill	Cut	Fill	End Width	Sq. Yds.
17	78			95	
					1005
		91	198		
32	29			86	
					767
		174	74		
62	11			52	
		202	104		
					494
47	45				
				37	
		139	363		411

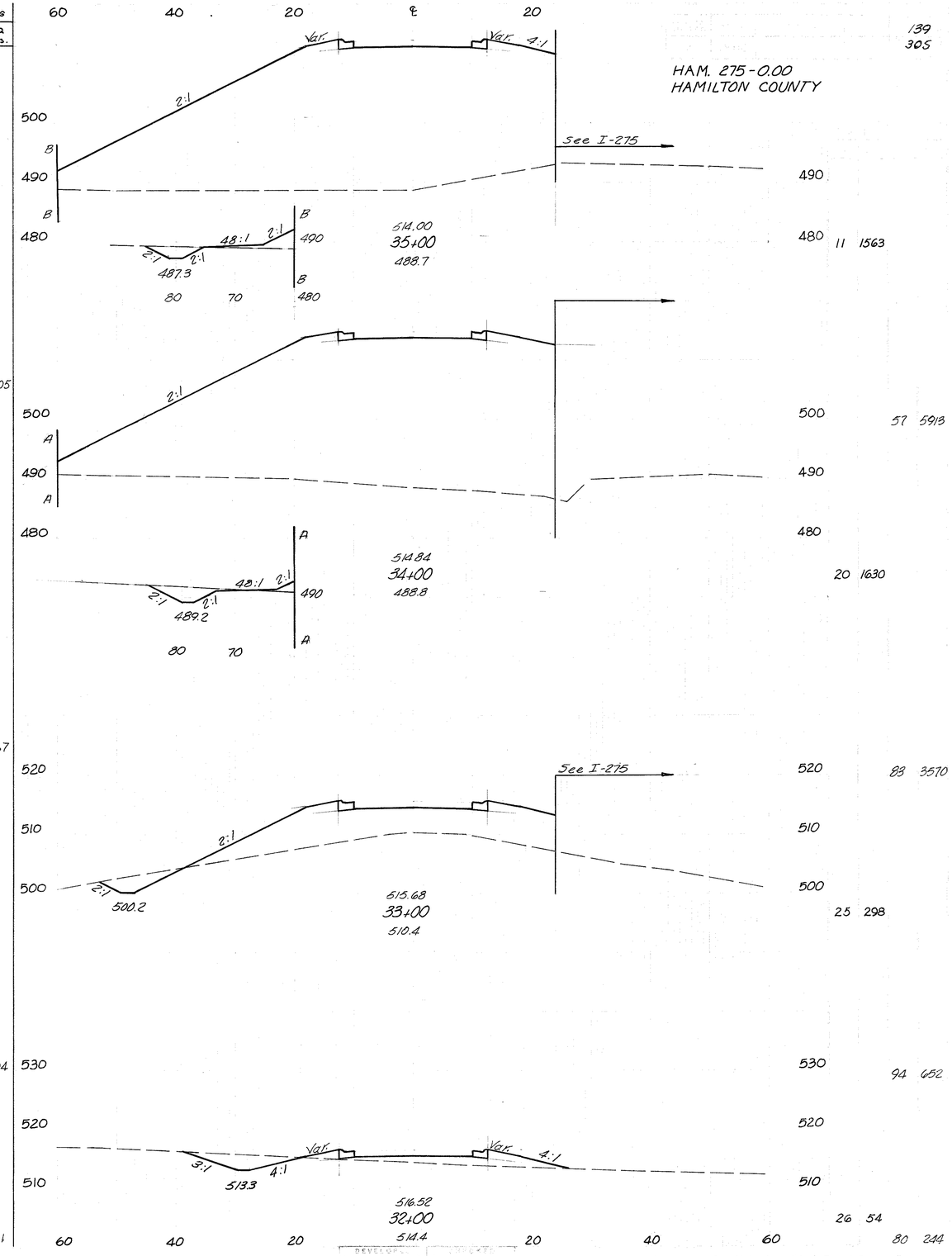

139
305

HAM. 275-0.00
HAMILTON COUNTY

57 5913

88 3570

94 652

Develop.		Check		
9-69	E.S.	11-71	J.J.B.	

HAYES Mc KINNEY Sta 28+00 to Sta. 35+00

HAM. 275-0.00
HAMILTON COUNTY

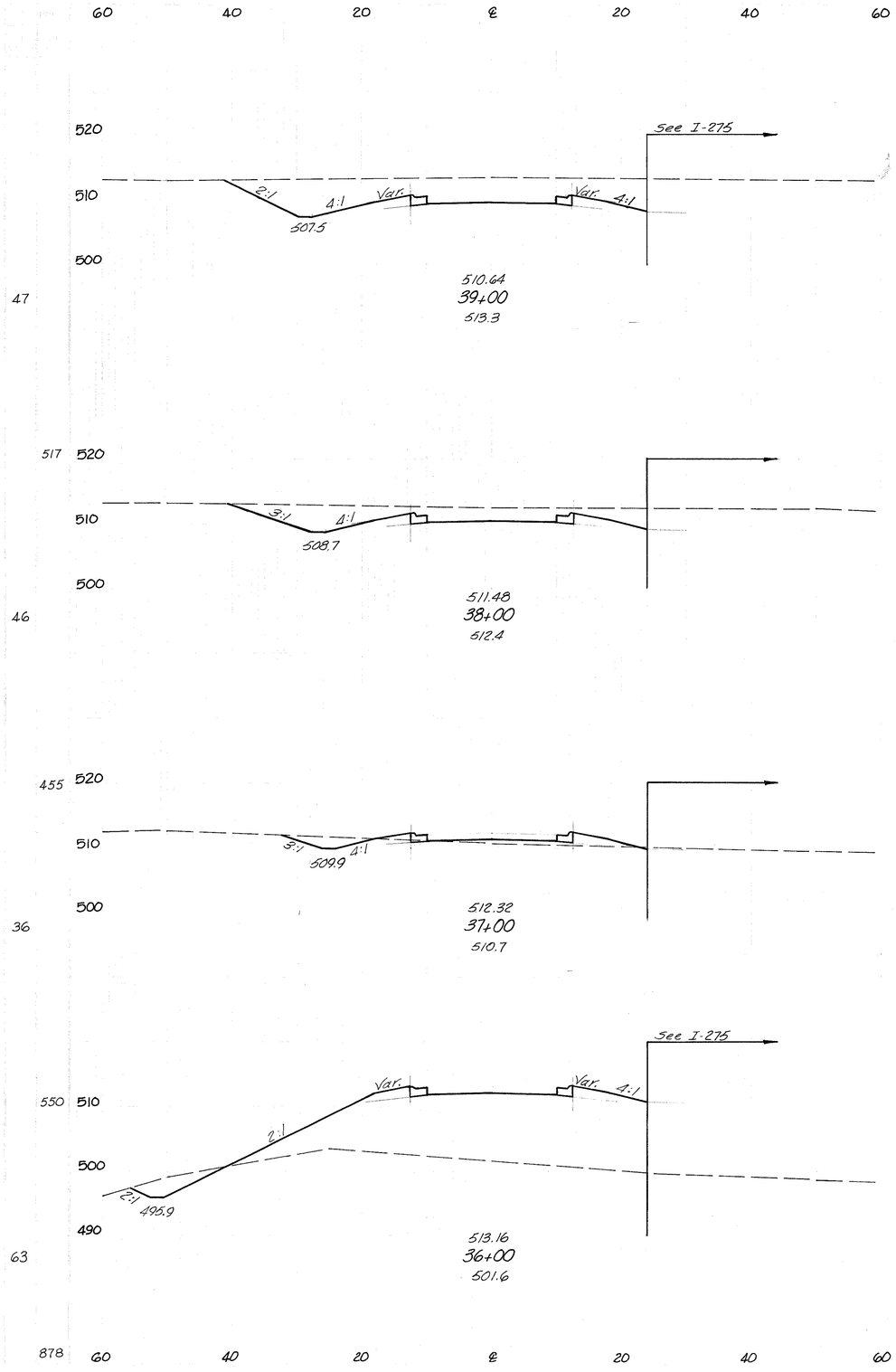

	End Area Cut	End Area Fill	Volume Cut	Volume Fill	Seeding End Width	Seeding Sq. Yds.
	252	0			43	
			741	0		
	148	0				489
					45	
	17	27	306	50		
			74	1008	46	
	23	539				
			63	3893	54	

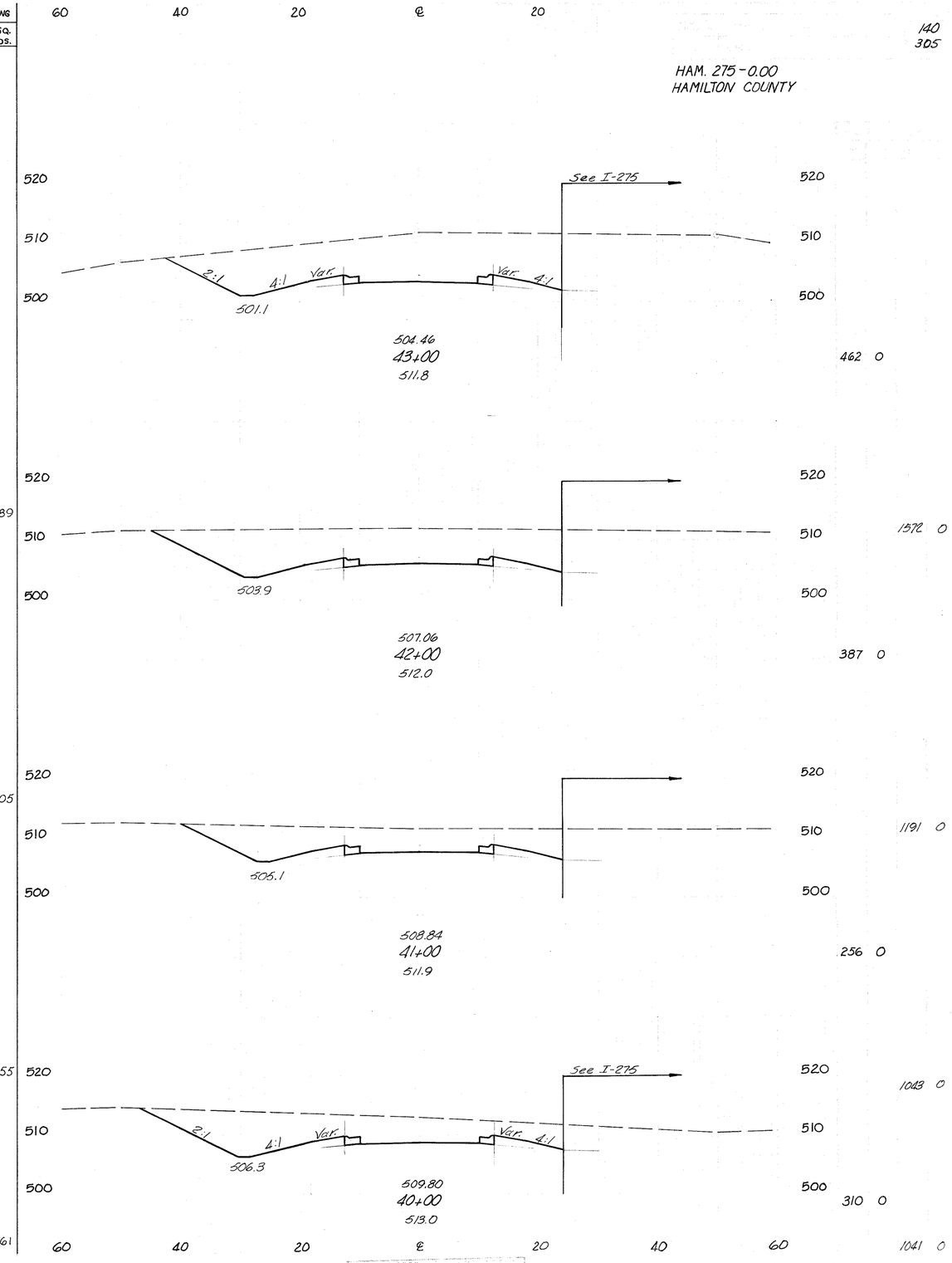

DEVELOPED				
9-69	E.S.	11-71	J.B.	

HAYES McKINNEY Sta. 36+00 to Sta. 43+00

HAM. 275-0.00
HAMILTON COUNTY

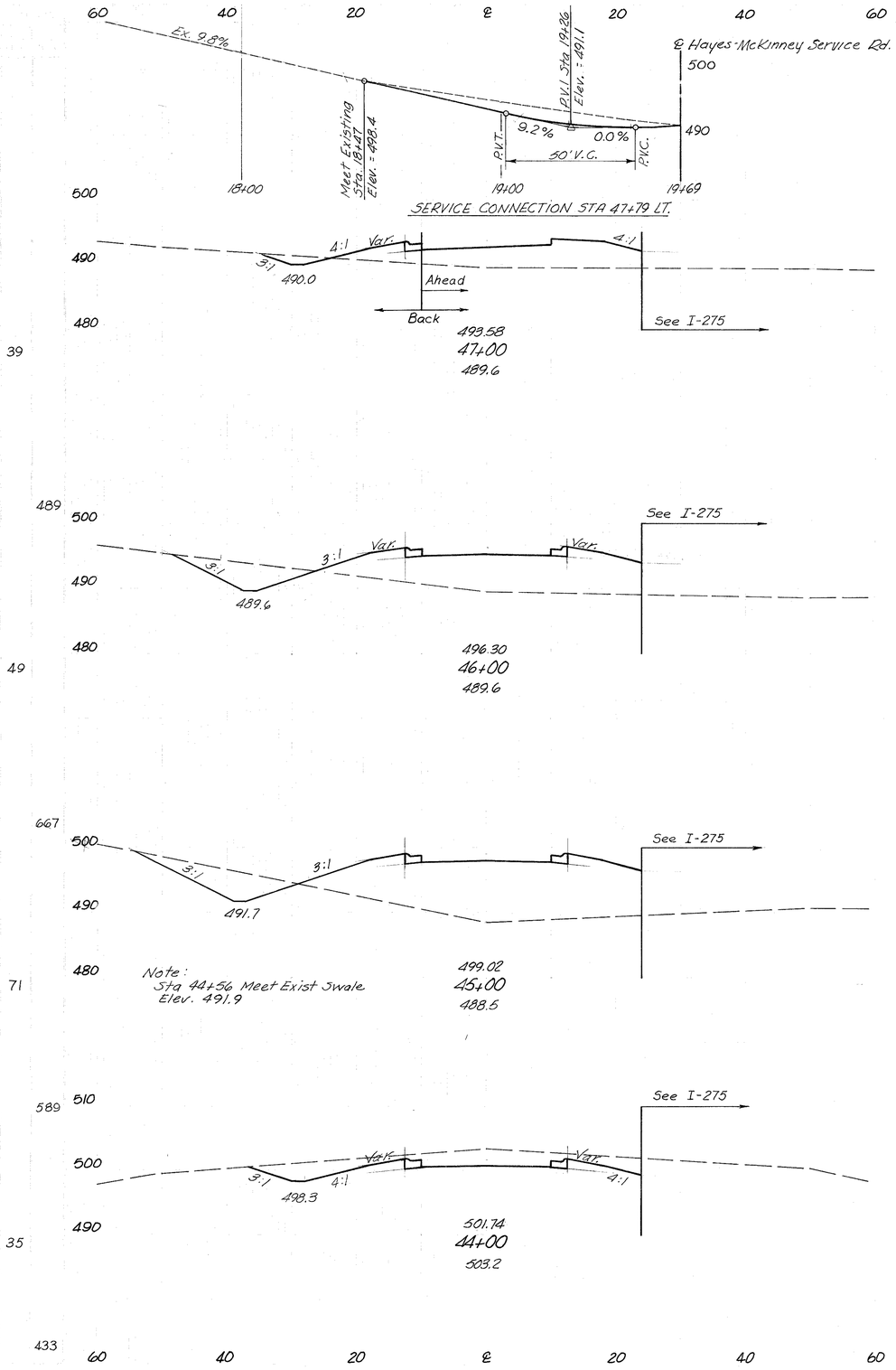

	End Area		Volume		Seeding	
	Cut	Fill	Cut	Fill	End Width	Sq. Yds.
	BK 8	141				
	AH 8	27				
			55	712		
	22	244				
			282	1162		
	132	384			25	
			457	711	300	
	116	0				
			1070	0		378

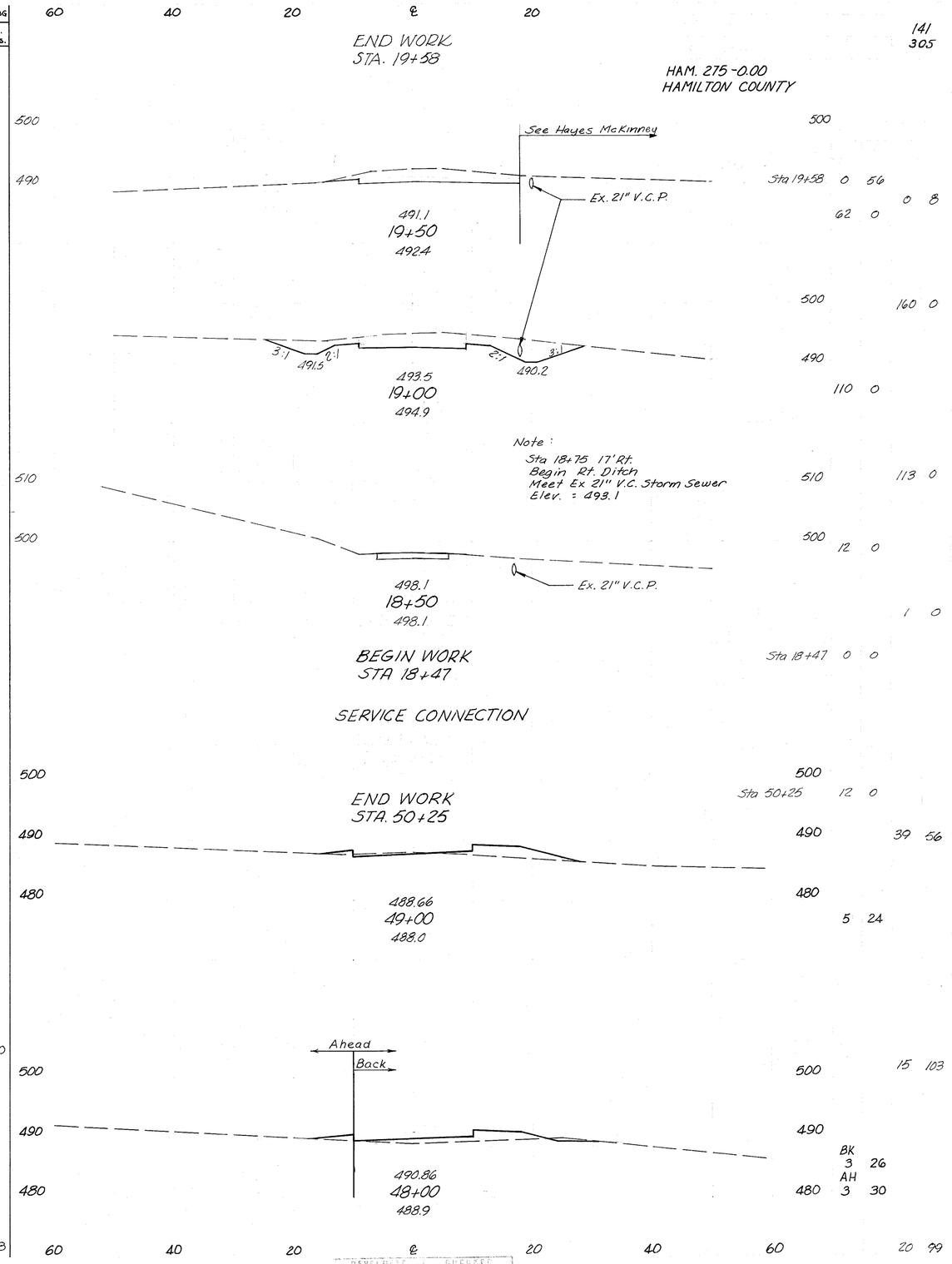

Station	Cut	Fill
Sta 19+58	0	56
	62	0
		0 8
	160	0
	110	0
	113	0
	12	0
	1	0
Sta 18+47	0	0
Sta 50+25	12	0
	39	56
	5	24
	15	103
	BK 3	26
	AH 3	30
	20	99

Designed		Checked	
9-69	E.S.	11-71	J.J.B.

HAYES McKINNEY Sta. 44+00 to Sta. 50+25

HAM-275-0.00
HAMILTON COUNTY

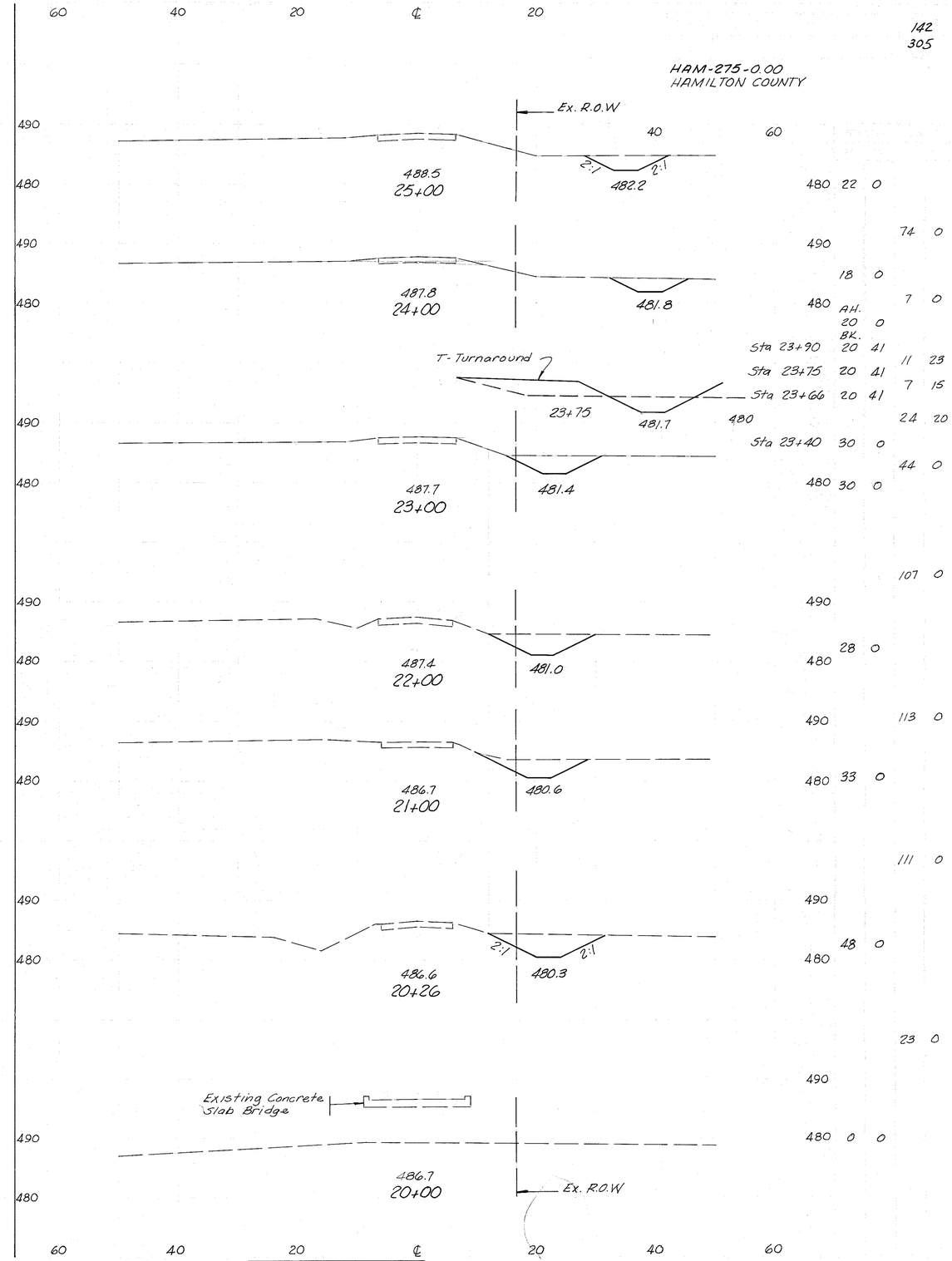

DEVELOPED		CHECKED	
10/71	J.M.	12/71	R.O.

EX. HAYES McKINNEY ROAD Sta 20+00 to 25+00

HAM 275-0.00
HAMILTON COUNTY

CURVE NO. SR-1
P.I. Sta. 96+20.39
$\Delta = 21°18'50''$
$D_c = 22°55'06''$
$R_c = 250.00'$
$L_c = 93.01'$
$T = 47.05'$
$E = 4.39'$

B.M. #31 Elev. 489.86
R.R. spike in group of Sycamore Trees (4) on edge of plowed field 200' Lt. of ℄ Sta. 142+80 I-275

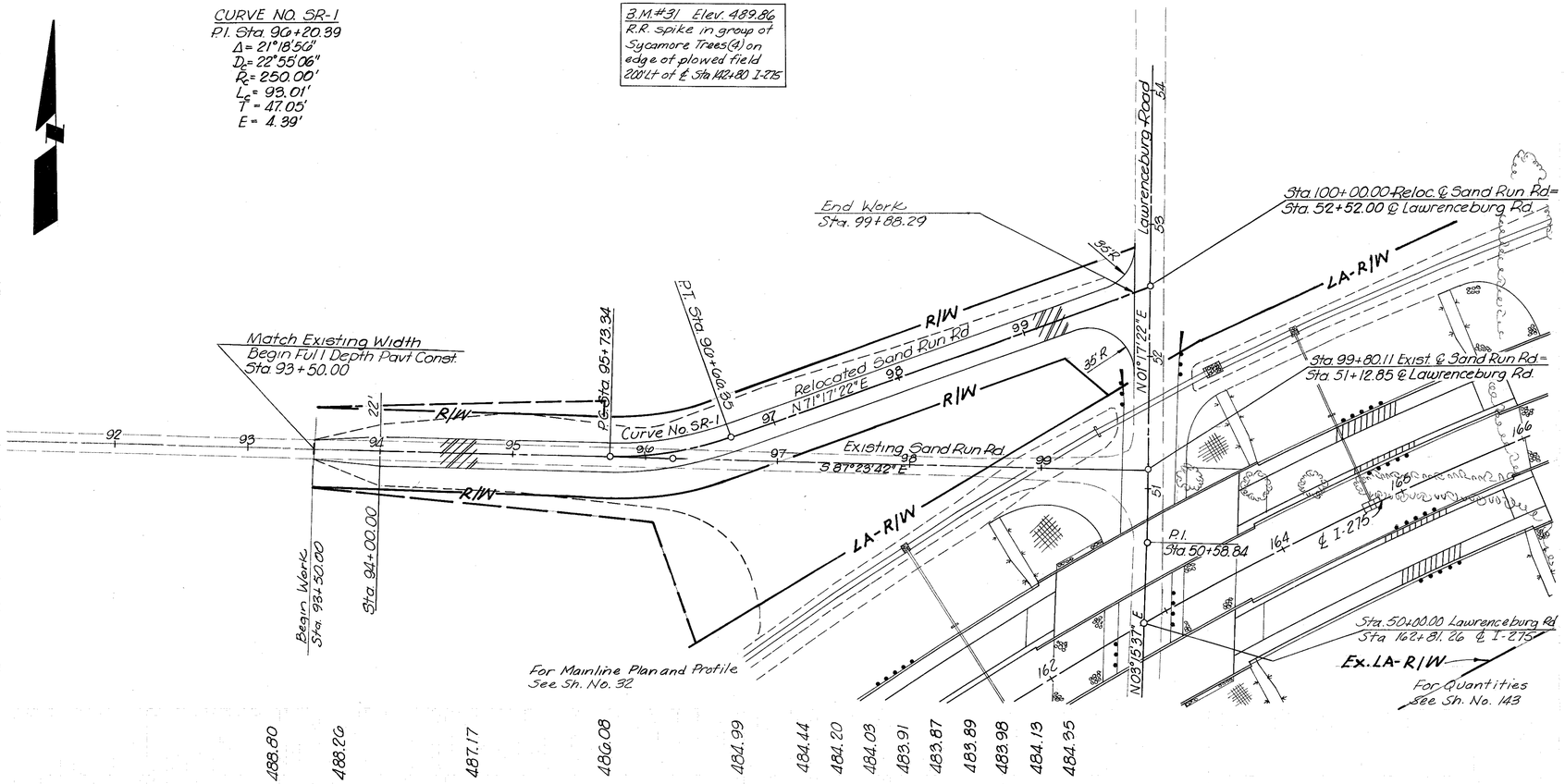

SUPERELEVATION TABLE					
Station	Left Side		Profile Grade	Right Side	
	Elevation	Width		Width	Elevation
94+85.84	487.15	11.00	487.32	11.00'	487.15
95+00	487.00	↓	487.17	↑	487.04
95+25	486.72		486.89		486.84
95+41.84	486.54		486.71		486.71
95+50	486.45		486.62		486.68
95+66.84	486.27		486.44		486.61
95+75	486.12		486.35		486.58
96+00	485.67	↓	486.08	↑	486.49
96+04.84	485.58	11.00	486.02	11.00'	486.46
Sta. 96+04.84 to Sta. 96+34.85					
Constant	-0.44	11.00	P.G.	11.00'	+0.44
96+34.85	485.26	11.00'	485.70	11.00'	486.14
96+50	485.20	↓	485.53	↑	485.86
96+73.35	485.11		485.28		485.45
96+75	485.09		485.26		485.42
96+97.85	484.84		485.01		485.01
97+00	484.82		484.99		484.98
97+25	484.54		484.71		484.63
97+50	484.27	↓	484.44		484.28
97+53.85	484.23	11.00'	484.40	11.00'	484.23

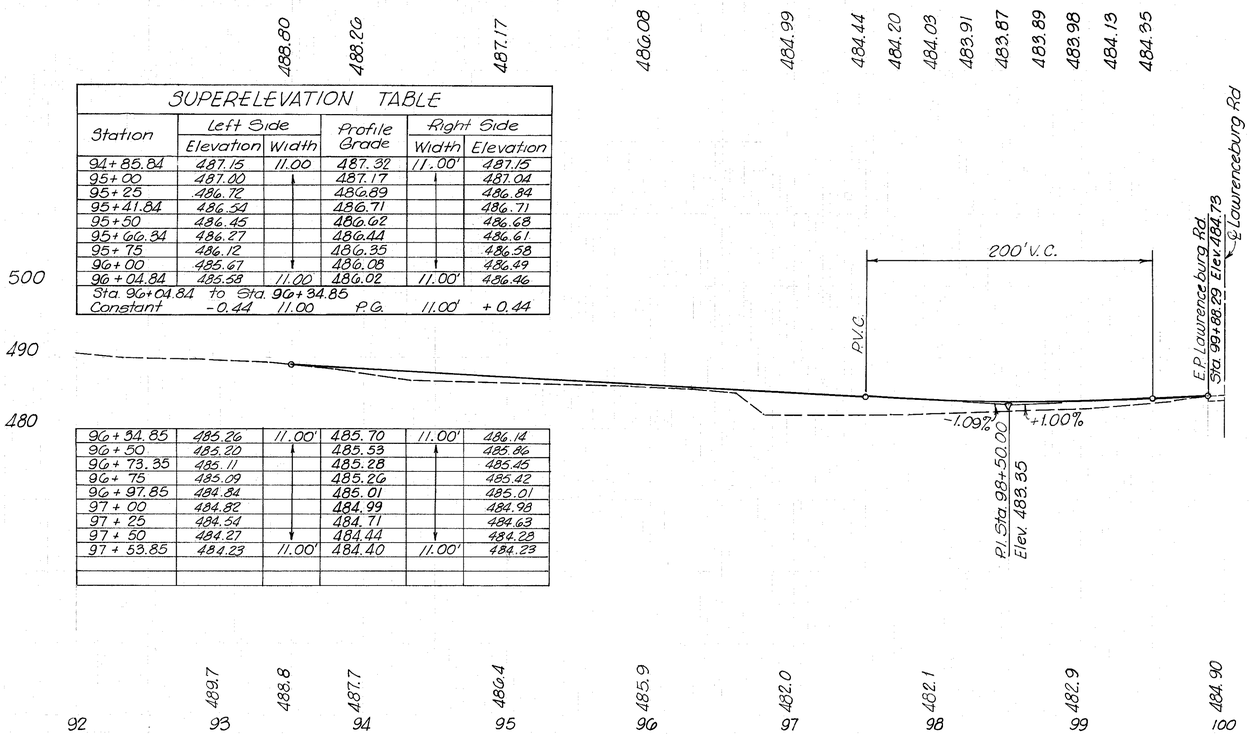

	304 Aggr Base	404 Asph Conc.	408 Bitum Prime Coat
	Cu. Yd.	Cu. Yd.	Gals.
PAVEMENT 93+50 - 99+88	14+RH 393	91	680

DEVELOPED		CHECKED	
10/71	J.M.	12/71	M.S.

SAND RUN ROAD Sta. 93+50 to Sta. 99+88.29

HAM 275-0.00
HAMILTON COUNTY

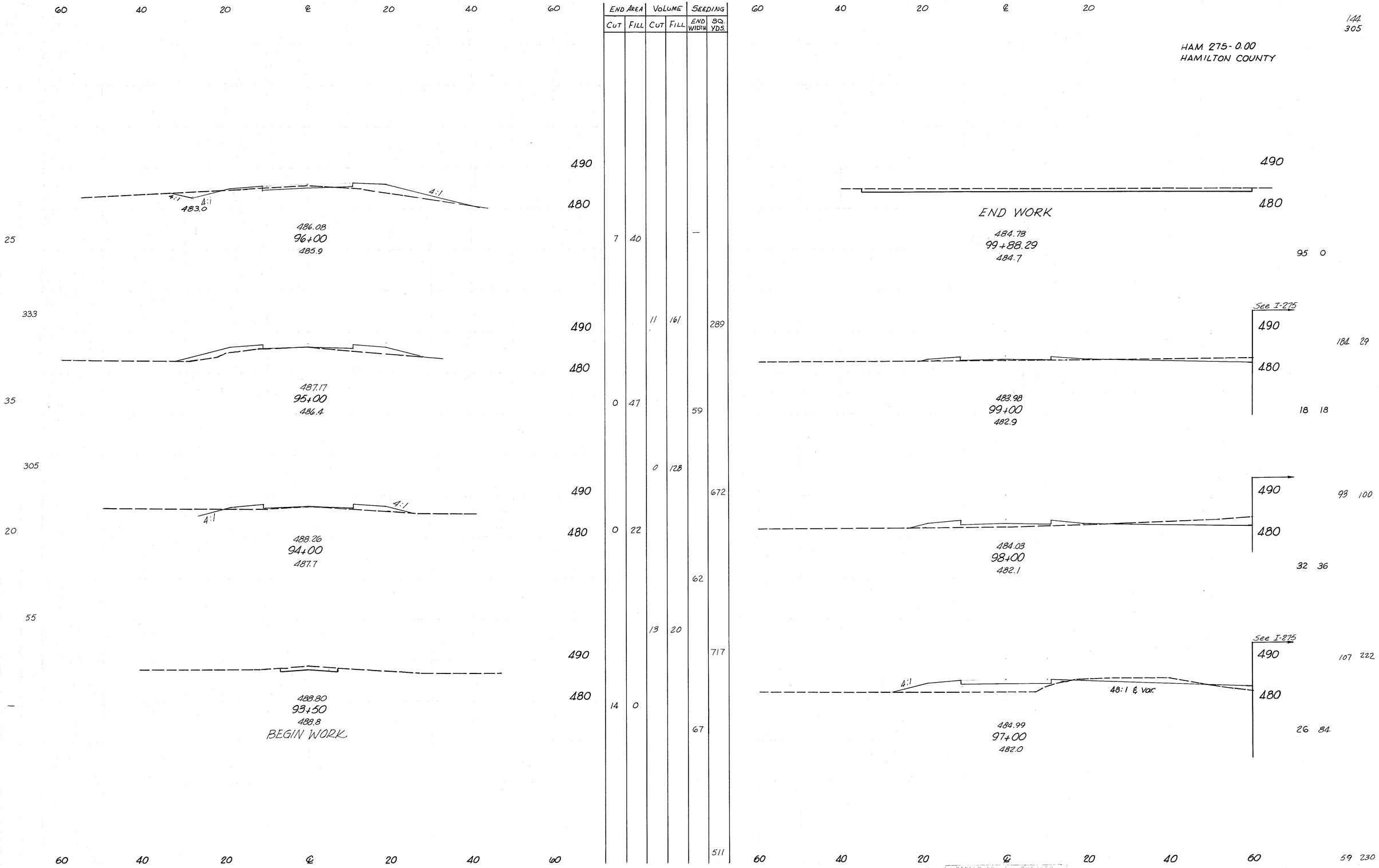

DEVELOPED		CHECKED	
2/70	E.S.	8/71	J.M.

SAND RUN ROAD STA. 93+50 TO STA 99+88.29

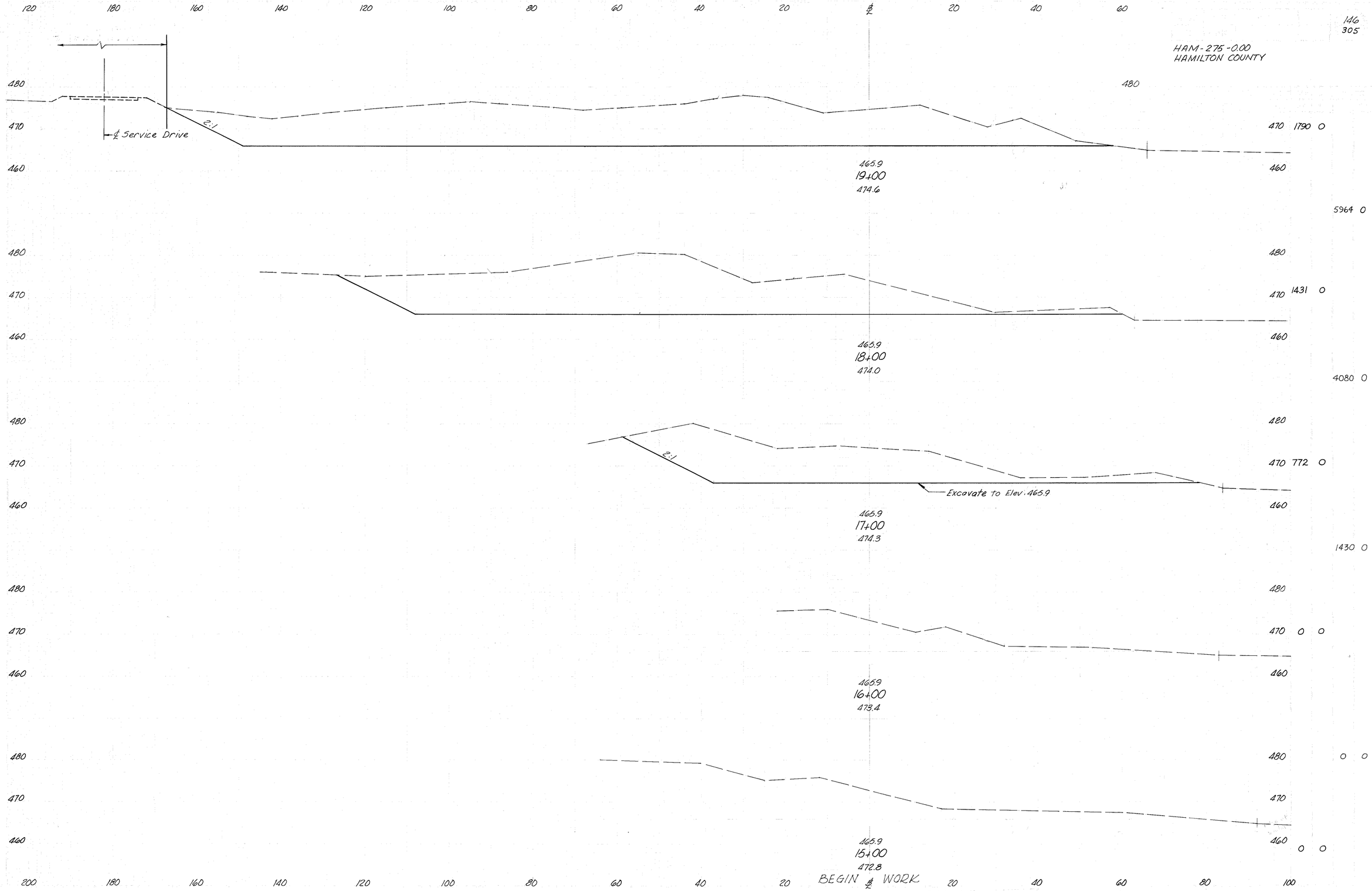
HAM-275-0.00
HAMILTON COUNTY
146
305
℄ Service Drive
2:1
465.9
19+00
474.6
1790 0
5964 0
465.9
18+00
474.0
1431 0
4080 0
465.9
17+00
474.3
Excavate to Elev. 465.9
772 0
1430 0
465.9
16+00
473.4
0 0
465.9
15+00
472.8
0 0
BEGIN ℄ WORK
Sta. 15+00 to Sta 19+00 WHITEWATER RIVER

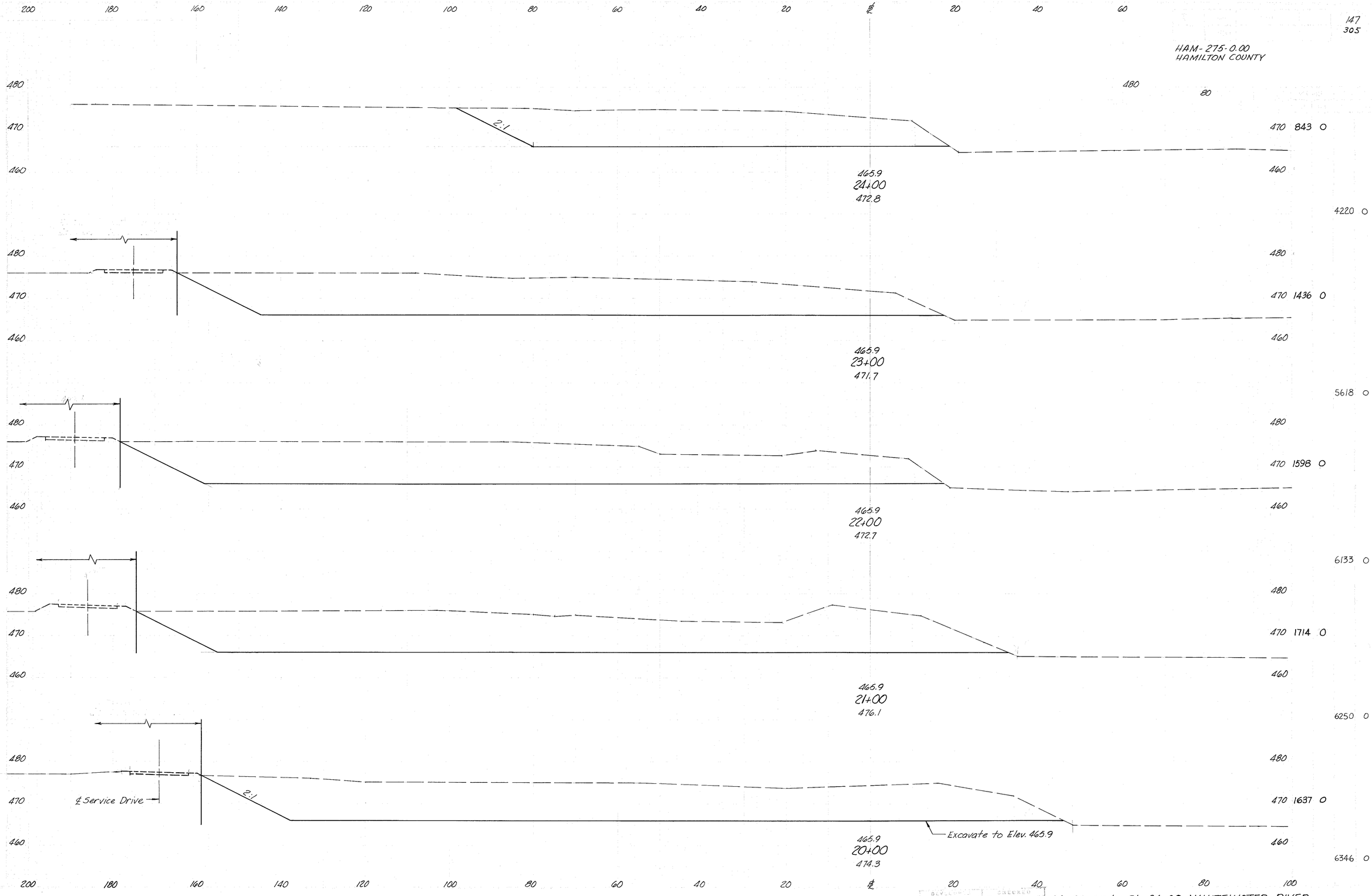

DESIGNED		CHECKED	
5/71	J.M.	8/71	M.S.

Sta 20+00 to Sta. 24+00 WHITEWATER RIVER

148
305

HAM-275-0.00
HAMILTON COUNTY

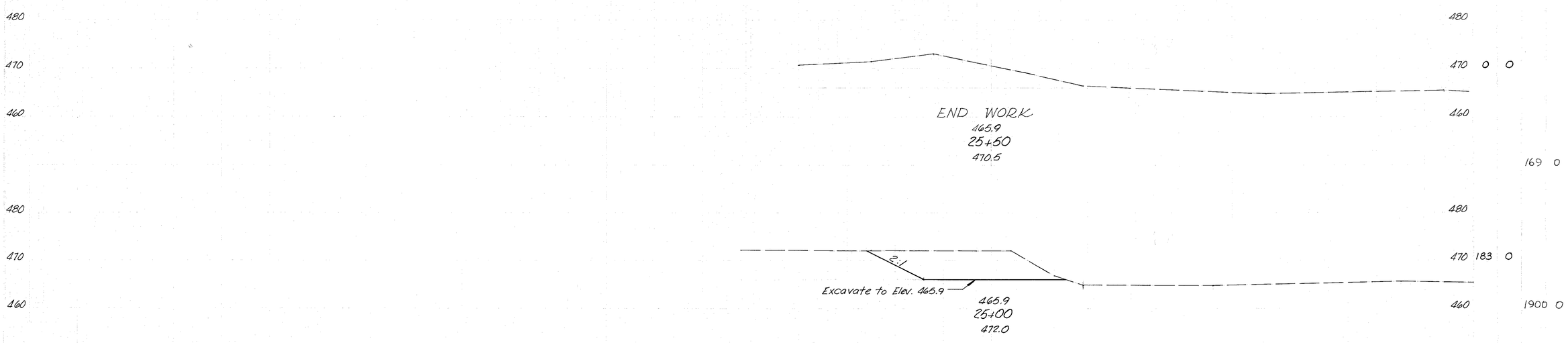

DEVELOPED		CHECKED	
5/71	J.M.	8/71	M.S

Sta 25+00 to Sta 25+50 WHITEWATER RIVER

FED. RD. DIVISION	STATE	PROJECT	
2	OHIO		

149
305

HAM-275-0.00
HAMILTON COUNTY

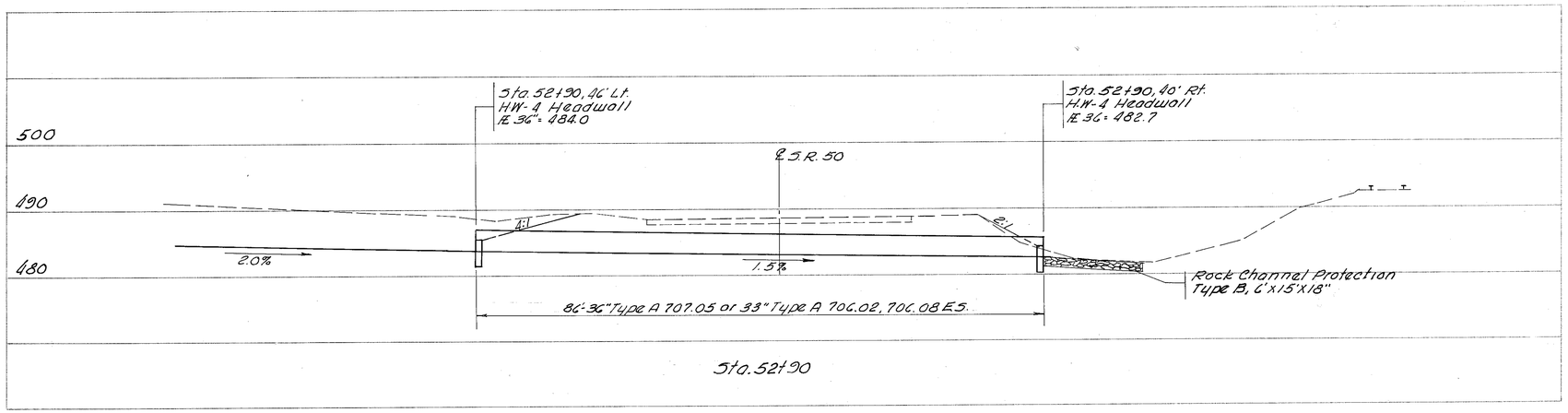

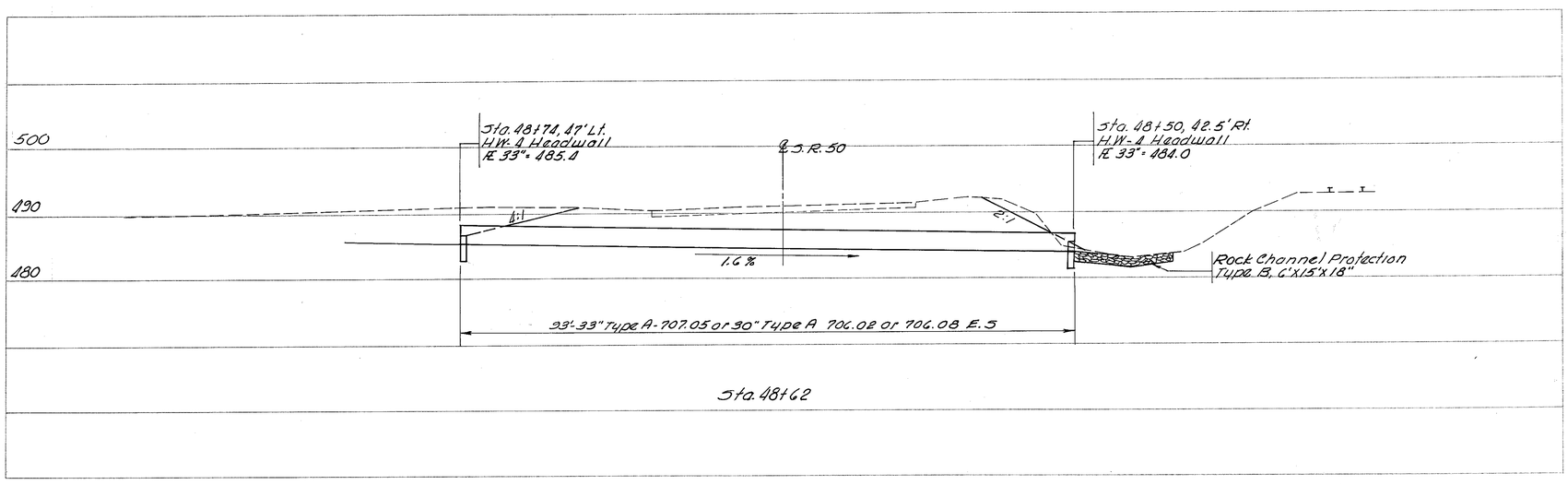

0 5 10 20

PIPE CULVERT STA. 48+62 & 52+90 S.R.50

FED. RD. DIVISION	STATE	PROJECT	
2	OHIO		

150
305

HAM-275-0.00
HAMILTON COUNTY

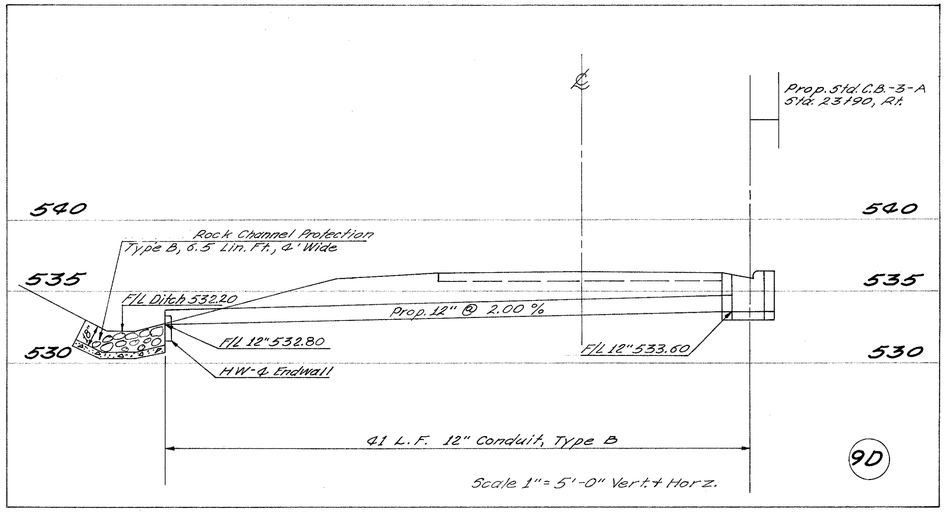

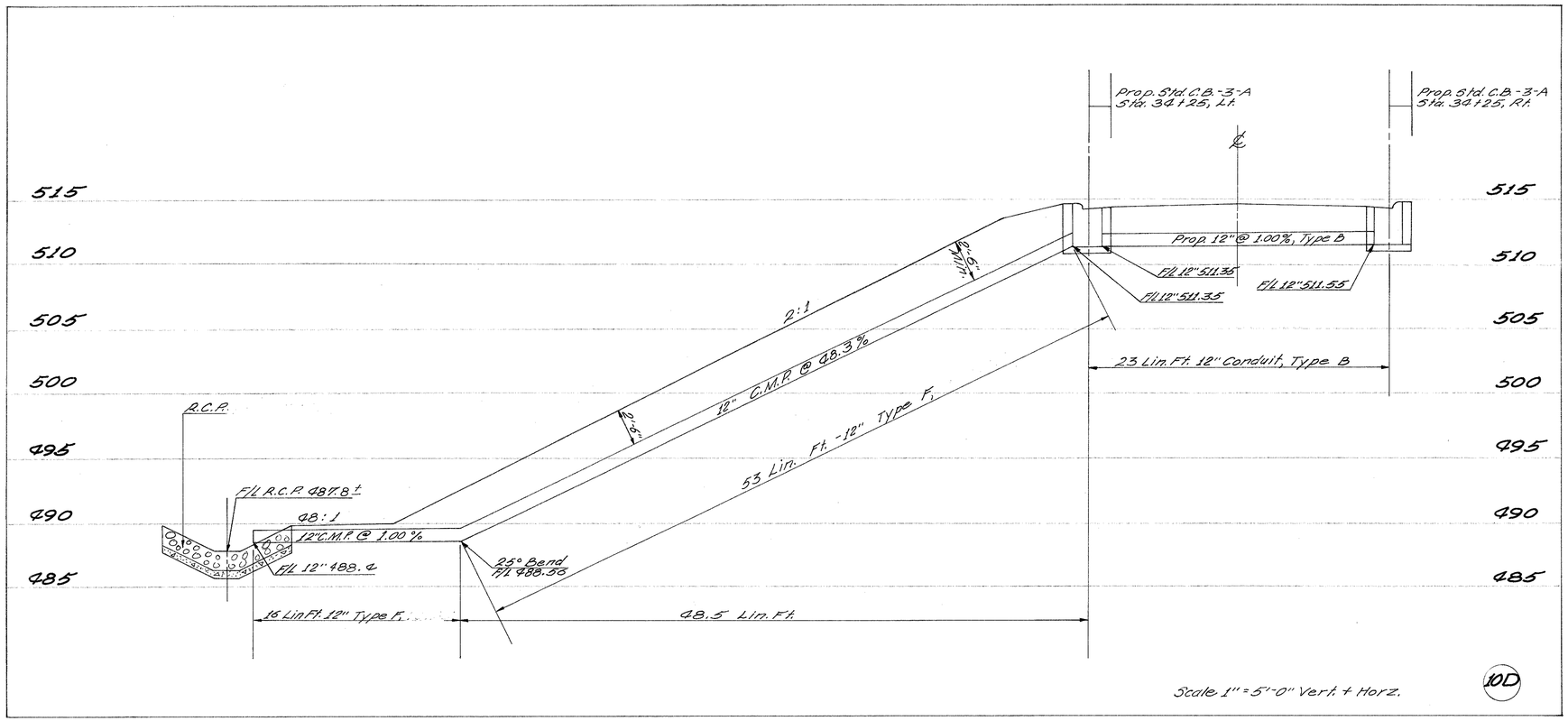

HAYES – McKINNEY ROAD

STORM SYSTEMS

FED. RD. DIVISION	STATE	PROJECT	
2	OHIO		

151
305

HAM-275-0.00
HAMILTON COUNTY

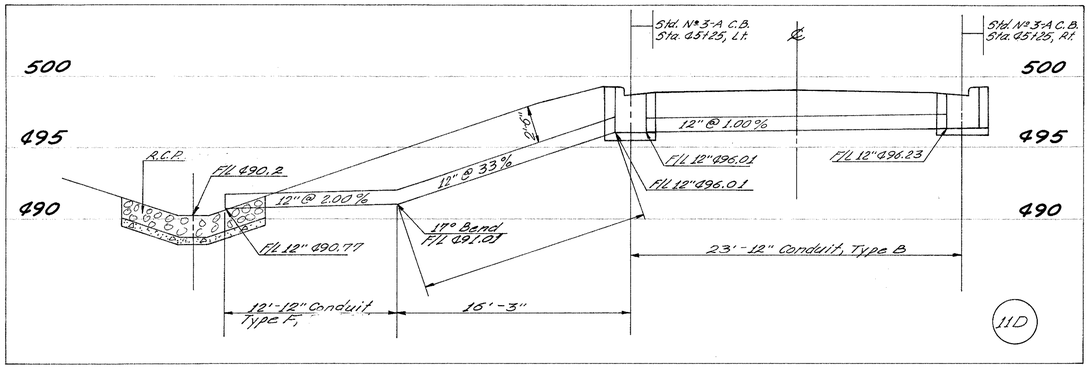

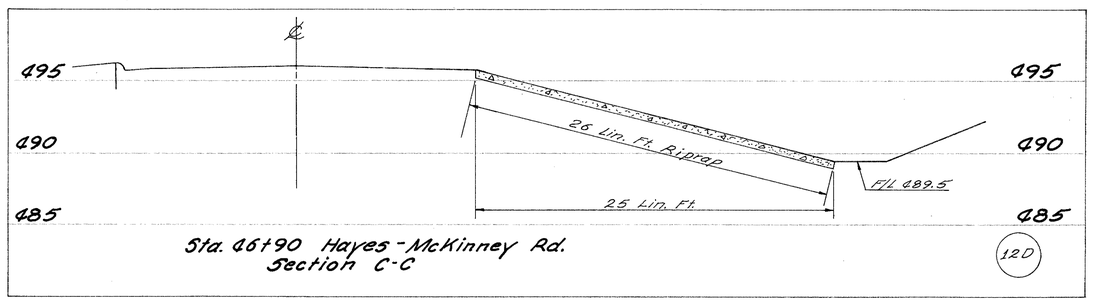

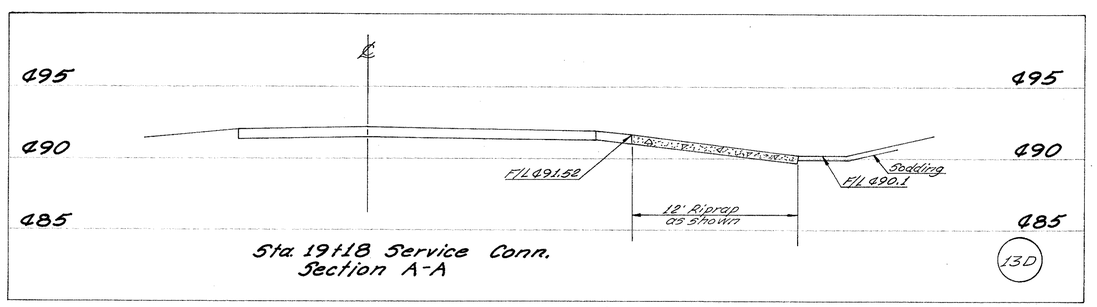

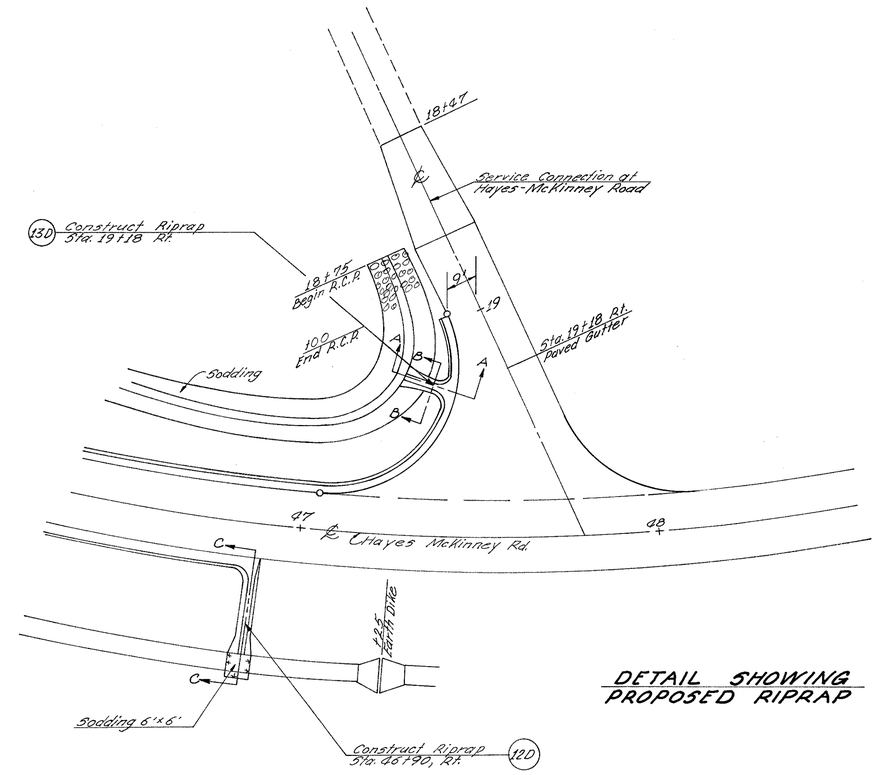

DETAIL SHOWING
PROPOSED RIPRAP

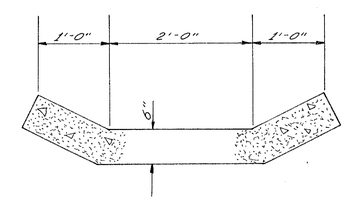

SECTION B-B

HAYES-McKINNEY ROAD

STORM SYSTEMS

FED. RD. DIVISION	STATE	PROJECT	
2	OHIO		

152
30.5

HAM-275-0.00
HAMILTON COUNTY

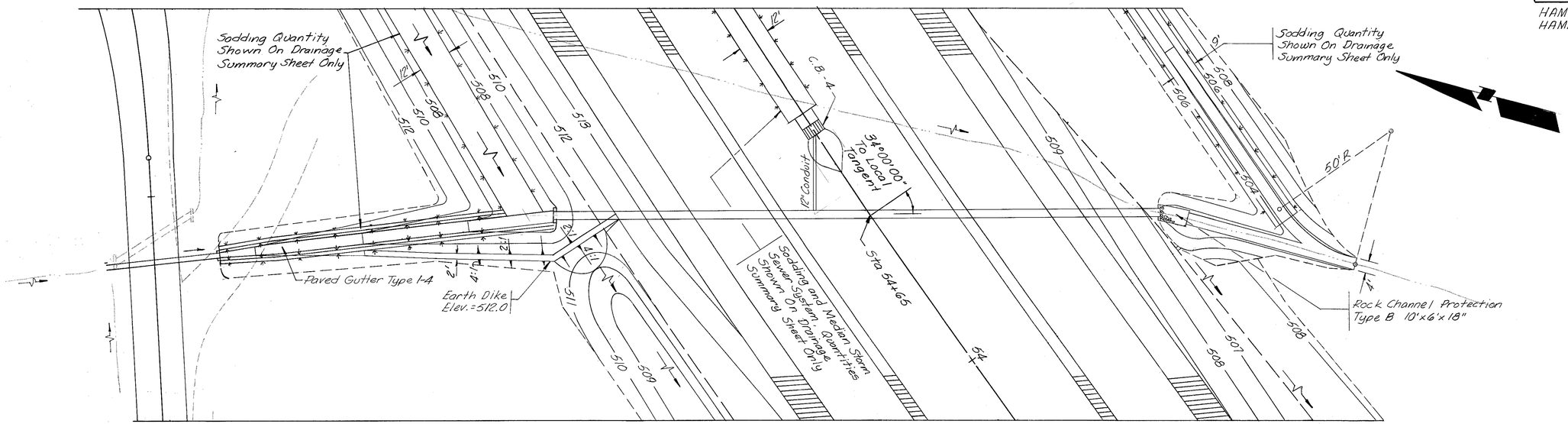

D.A.	30 Acres
Q_{50}	75 c.f.s.

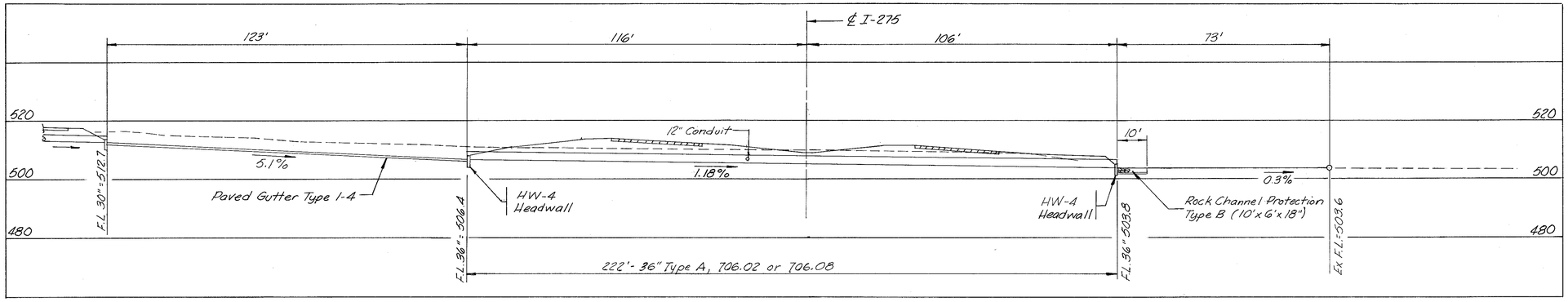

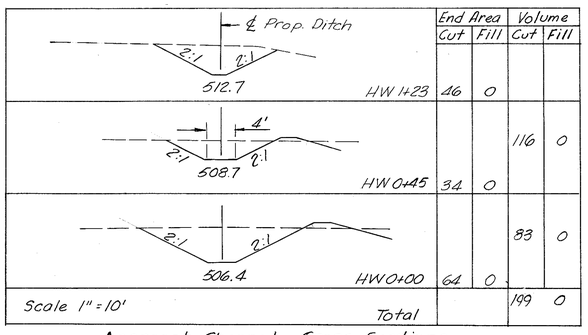

	End Area Cut	End Area Fill	Volume Cut	Volume Fill
HW 1+23	46	0		
			116	0
HW 0+45	34	0		
			83	0
HW 0+00	64	0		
Total			199	0

Scale 1" = 10'

Approach Channel Cross Sections

601	Paved Gutter Type 1-4	124 Lin. Ft.
601	Rock Channel Protection Type B	5 Cu. Yd.
602	Concrete Masonry	1.38 Cu. Yd.
603	36" Conduit Type A 706.02 or 706.08	222 Lin. Ft
203	Excavation Not Including Embankment Construction	199 Cu. Yd.

SCALE OF FEET
0 20 40

DEVELOPED		CHECKED	
10/70	JM	8/71	R.D

PIPE CULVERT Sta. 54+65 I-275

FED. RD. DIVISION	STATE	PROJECT	
2	OHIO		

153/305

HAM-275-0.00
HAMILTON COUNTY

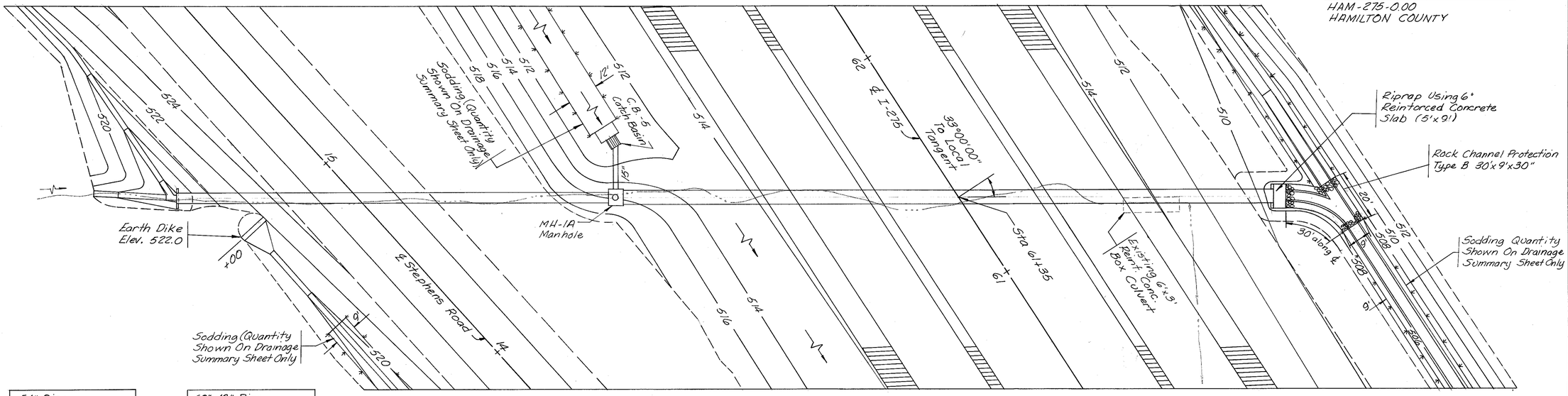

54" Pipe	
D.A.	= 67 Acres
Q_{50}	= 122 c.f.s.

68"x43" Pipe	
D.A.	= 70 Acres
Q_{50}	= 127 c.f.s.

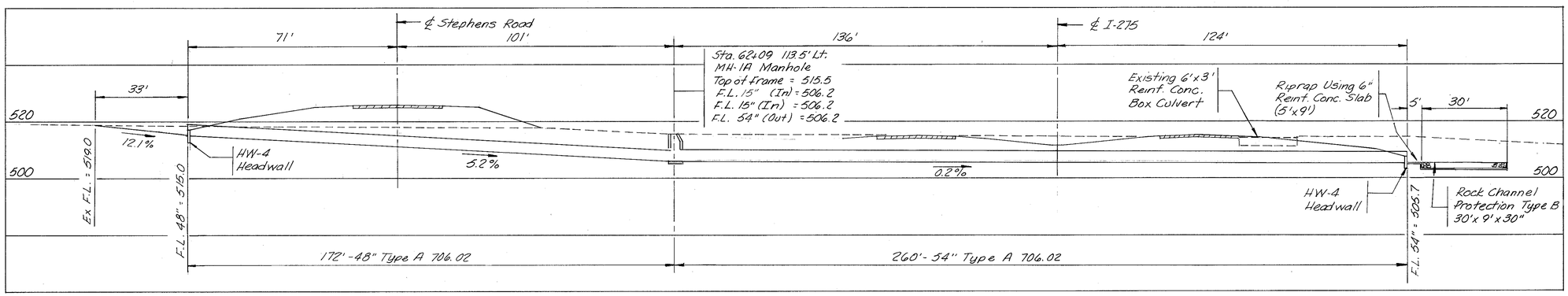

ESTIMATED QUANTITIES

202	Existing Structures Removed	Lump Sum
601	Rock Channel Protection Type B	35 Cu. Yd.
601	Riprap (Using 6" Reinforced Concrete)	5 Sq. Yd
602	Concrete Masonry	2.41 Cu. Yd.
603	54" Conduit Type A 706.02	260 Lin. Ft.
603	48" Conduit Type A 706.02	172 Lin. Ft.
604	Manhole MH-1A	1 Each

SCALE OF FEET
0 20 40

DEVELOPED		CHECKED	
10/70	J.M.	8/71	R.D.

PIPE CULVERT Sta 61+35 I-275

FED. RD. DIVISION	STATE	PROJECT	
2	OHIO		

154
305

HAM-275-0.00
HAMILTON COUNTY

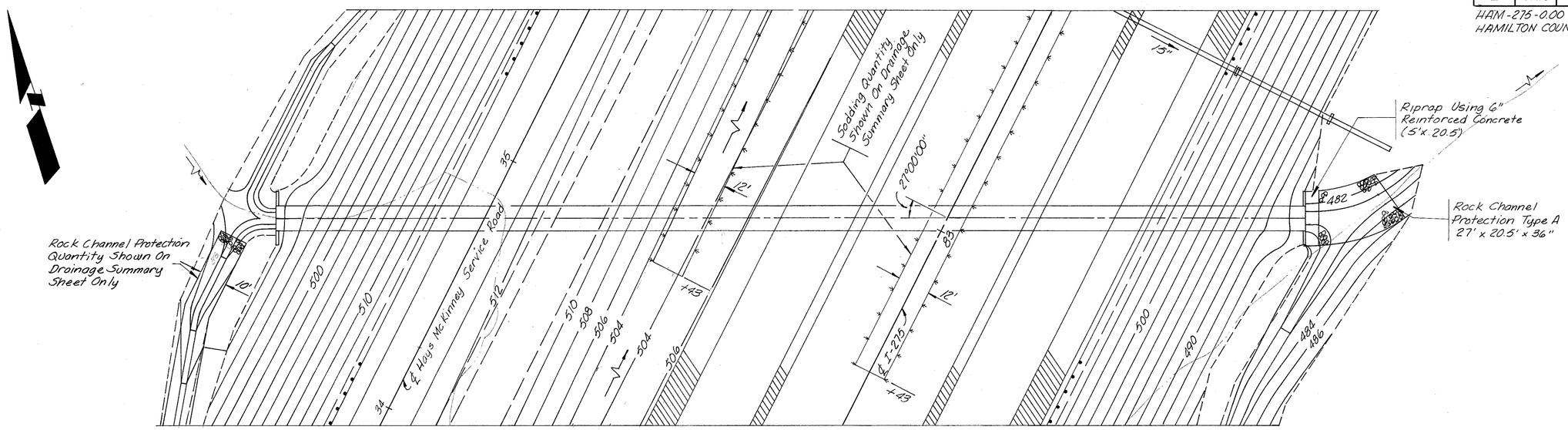

D.A.	=	535 Ac.
Q_{50}	=	740 c.f.s.

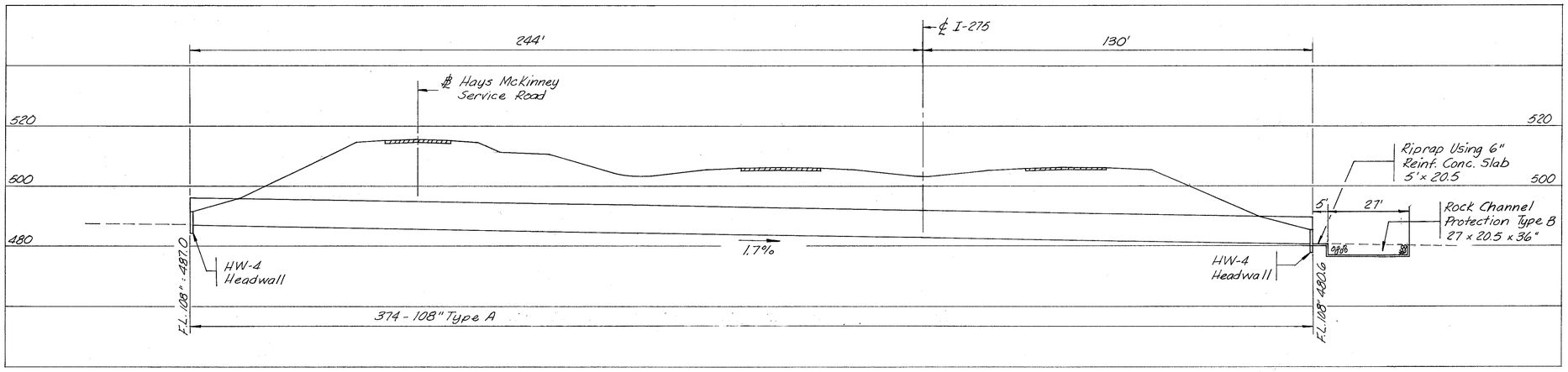

ESTIMATED QUANTITIES

601	Rock Channel Protection Type A	72	Cu. Yd.
601	Riprap (Using 6" Reinforced Concrete)	12	Sq. Yd.
602	Concrete Masonry	12.42	Cu. Yd.
603	108" Conduit, Type A (0.109"-0.138")	374	Lin. Ft.

SCALE OF FEET
0 20

DEVELOPED		CHECKED	
6/71	JM	9/71	R.D

PIPE CULVERT Sta. 83+05 I-275

FED. RD. DIVISION	STATE	PROJECT	
2	OHIO		

156
305

HAM-275-0.00
HAMILTON COUNTY

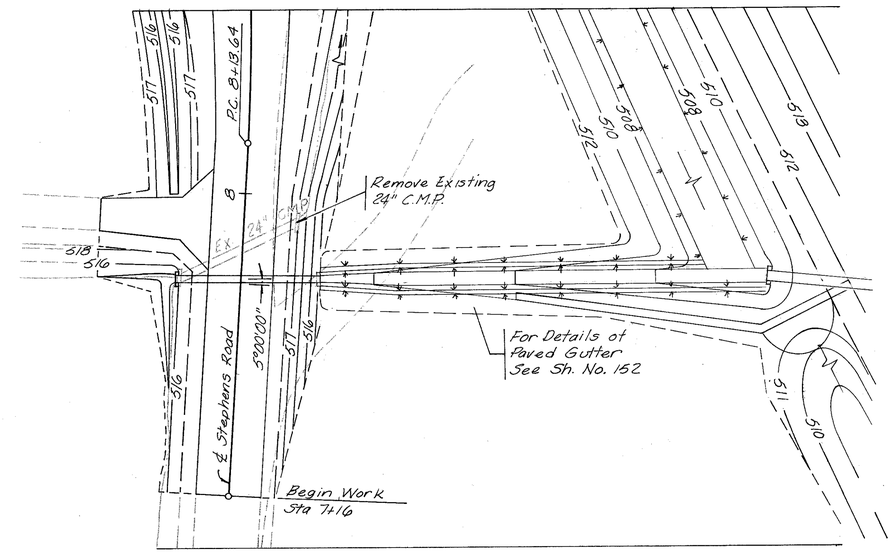

D.A.	23 Acres
Q_{10}	27 c.f.s.

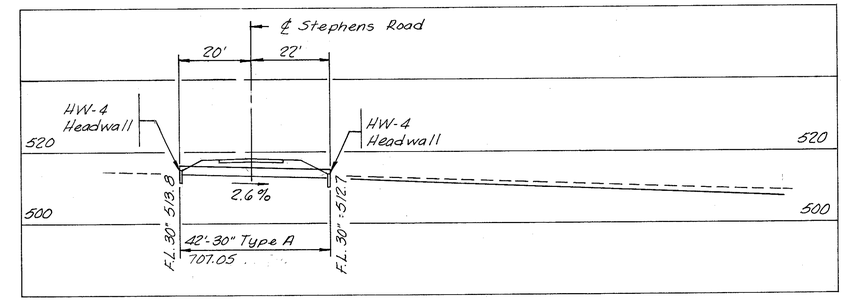

ESTIMATED QUANTITIES

602	Concrete Masonry	1.20 Cu. Yd.
603	30" Conduit Type A 707.05	42 Lin. Ft.

DEVELOPED		CHECKED	
11/71	JM	12/71	R.D

PIPE CULVERT

Sta 7+76
Stephens Road

FED. RD. DIVISION	STATE	PROJECT	
2	OHIO		

157
305

HAM-275-0.00
HAMILTON COUNTY

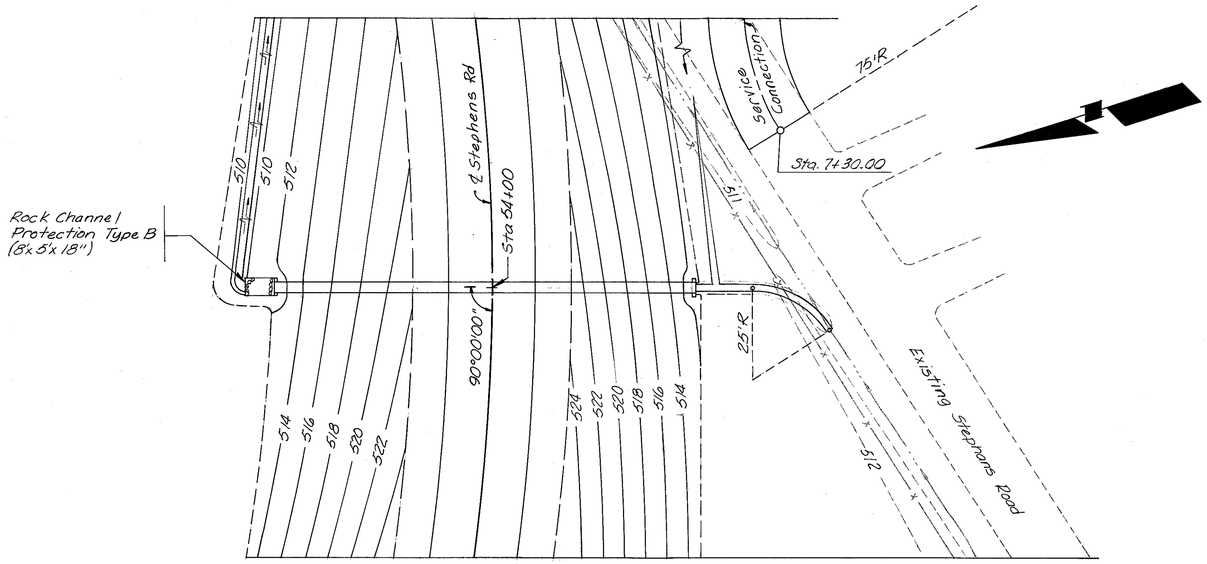

D.A.	4 Acres
Q10	11 c.f.s.

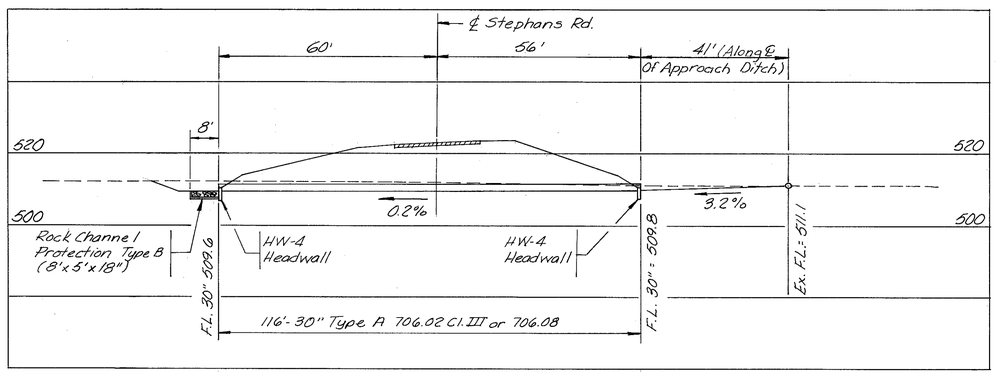

ESTIMATED QUANTITIES

601	Rock Channel Protection Type B	3 Cu. Yd.
602	Concrete Masonry	1.12 Cu. Yd.
603	30" Conduit Type A 706.02 Cl. III or 706.08	116 Lin. Ft

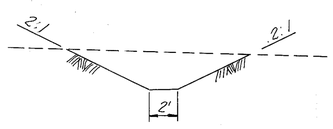

TYPICAL SECTION
INLET CHANNEL
-No Scale-

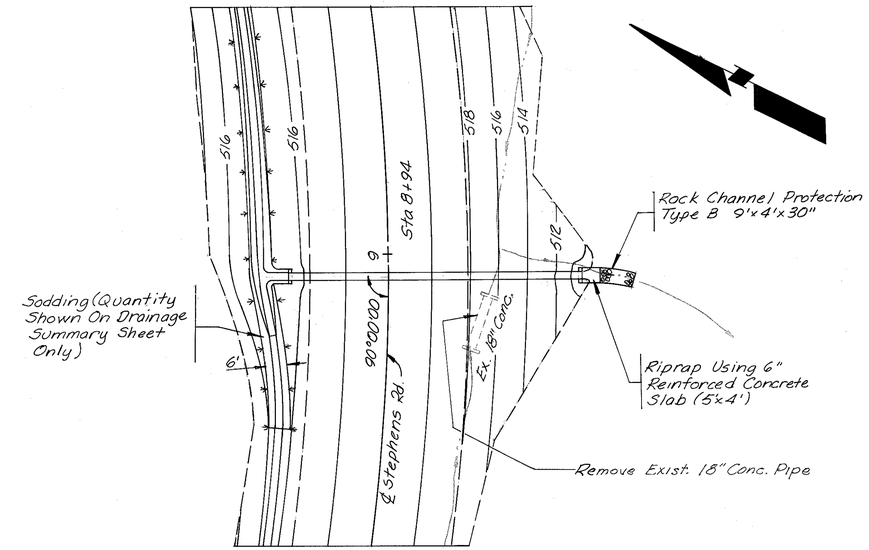

D.A.	4 Acres
Q10	13 c.f.s.

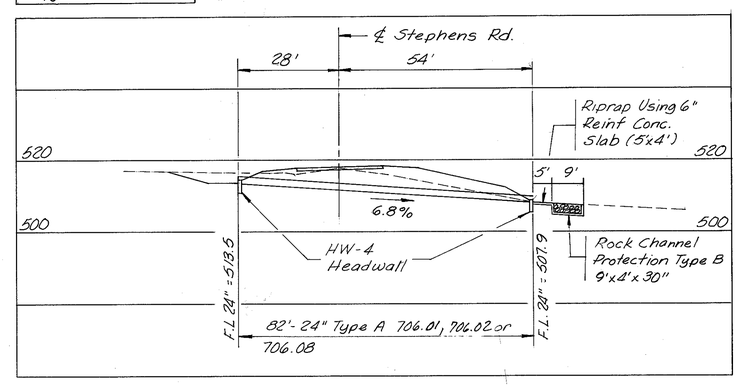

202	Pipe Removed 24" and Under	16 Lin. Ft.
601	Rock Channel Protection Type B	4 Cu. Yd.
601	Riprap (Using 6" Reinforced Concrete)	2 Sq. Yd.
602	Concrete Masonry	0.86 Cu. Yd.
603	24" Conduit Type A 706.01, 706.02 or 706.08	82 Lin. Ft.

SCALE OF FEET
0 20 40

DEVELOPED		SUM.		
11/70	JM	10/71	R.D.	

PIPE CULVERT STEPHENS ROAD Sta. 8+94 54+00

FED. RD. DIVISION	STATE	PROJECT	
2	OHIO		

158/305

HAM-275-0.00
HAMILTON COUNTY

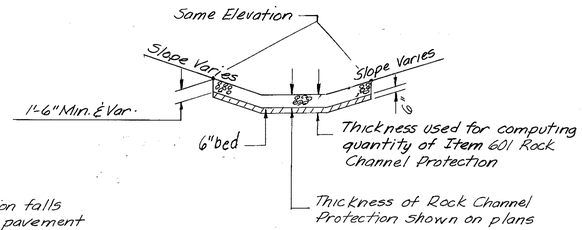

Note: When protection falls within 30' of pavement edge, full depth No. 1 stone shall be used in lieu of Rock Channel Protection. Pavement shall be made under 601 Rock Channel Protection as per plan

ROCK CHANNEL PROTECTION

SOD

TYPICAL
DITCH PROTECTION

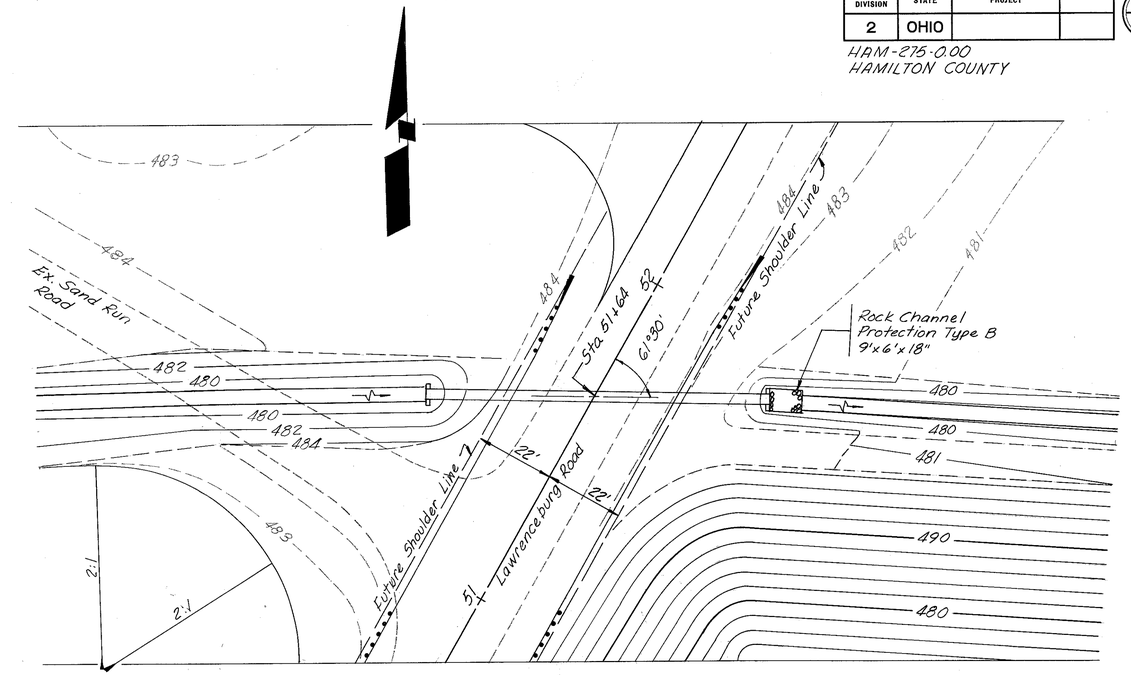

D.A.	= 22 Acres
Q_{10}	= 42 c.f.s.

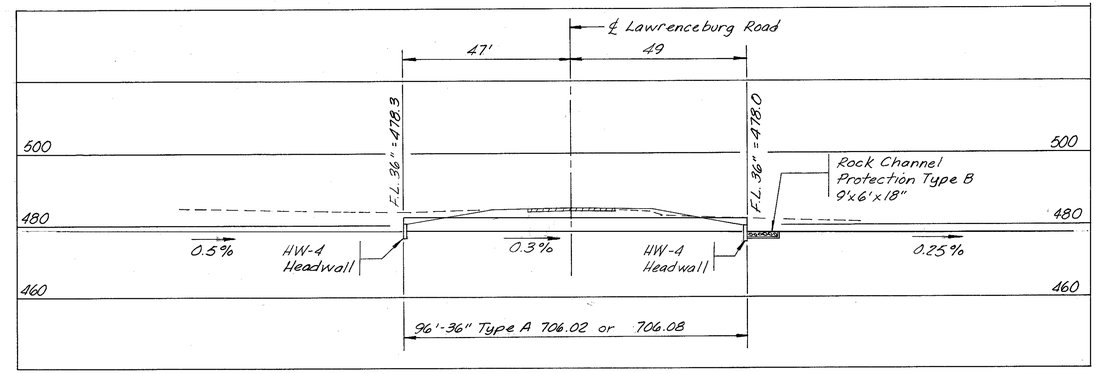

ESTIMATED QUANTITIES

601	Rock Channel Protection Type B	4.0 Cu. Yd.
602	Concrete Masonry	1.38 Cu. Yd.
603	36" Conduit Type A, 706.02 or 706.08	96 Lin. Ft.

SCALE OF FEET
0 20 40

DRAINAGE DETAILS

DEVELOPED		CHECKED	
11/70	J.M.	10/71	R.D.

PIPE CULVERT Lawrenceburg Road Sta. 51+

FED. RD. DIVISION	STATE	PROJECT	
2	OHIO		

159/305

HAM 275-0.00
HAMILTON COUNTY

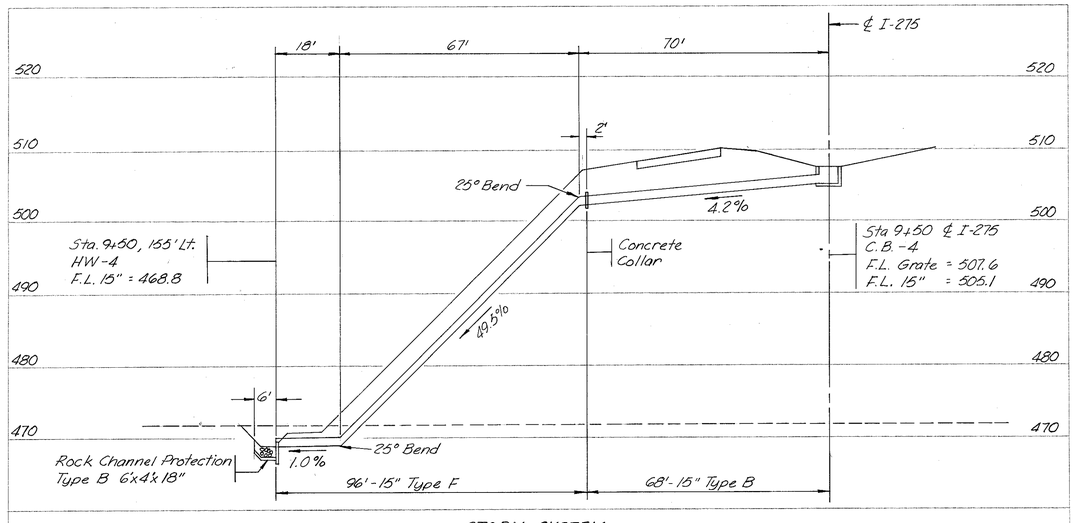

STORM SYSTEM
Sta. 9+50
I-275

Scale:
Vert. 1" = 10'
Horiz. 1" = 20'

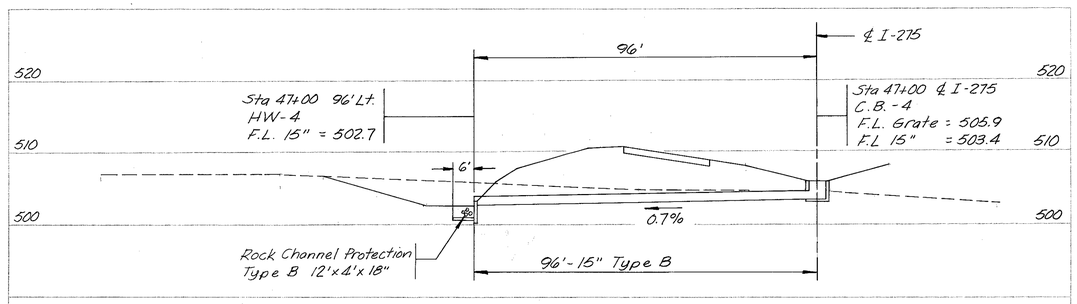

STORM SYSTEM
Sta. 47+00
I-275

Scale
Vert. = 1"-10'
Horiz. = 1"=20'

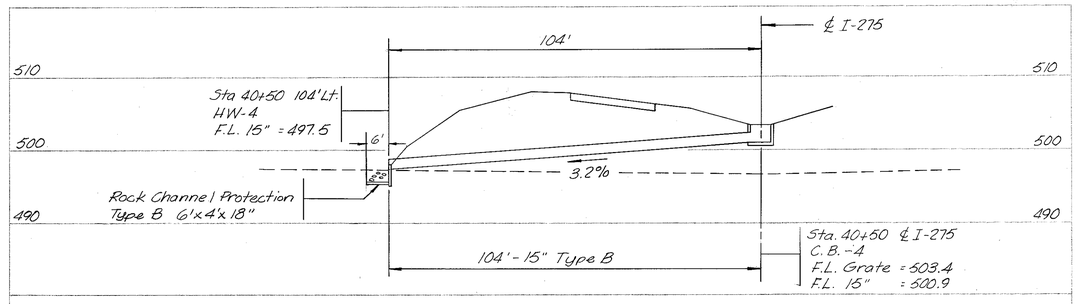

STORM SYSTEM
Sta 40+50
I-275

Scale
Vert. 1" = 10'
Horiz. 1" = 20'

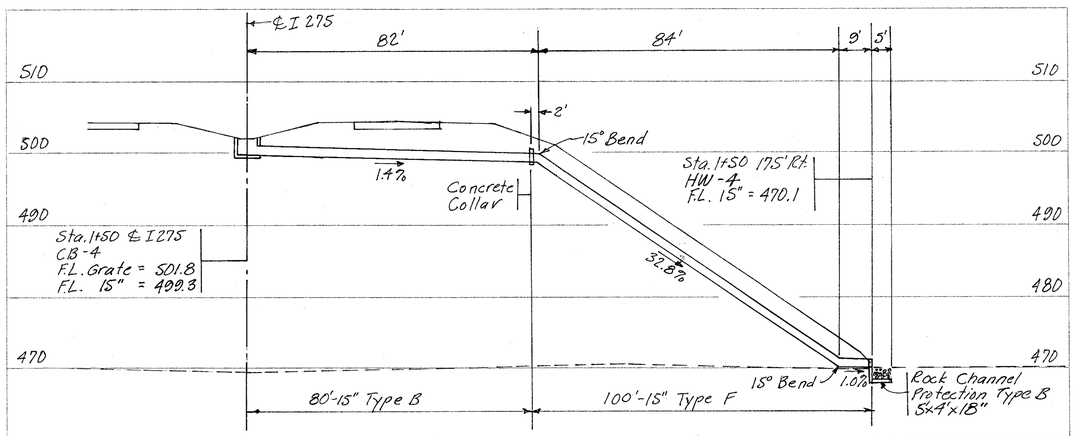

STORM SYSTEM
Sta. 1+50
I 275

Scale:
Vert: 1" = 10'
Horiz: 1" = 20'

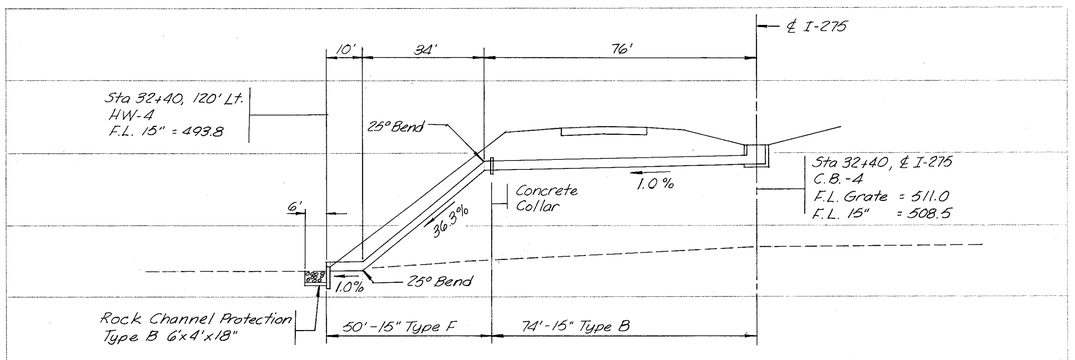

STORM SYSTEM
Sta 32+40
I-275

Scale:
Vert: 1" = 10'
Horiz. 1" = 20'

DEVELOPED		CHECKED	
10-71	R.W.	12-71	J.M.

STORM SYSTEMS

FED. RD. DIVISION	STATE	PROJECT	
2	OHIO		

160/305

HAM-275-0.00
HAMILTON COUNTY

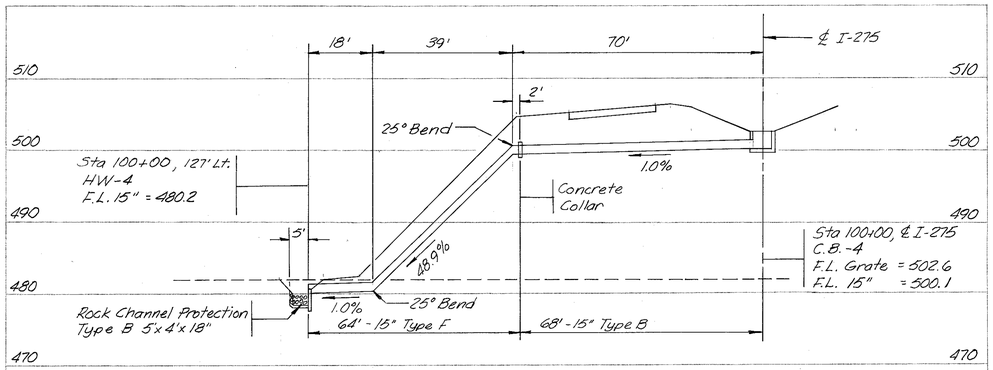

STORM SYSTEM
Sta. 100+00
I-275

Scale:
Vert. 1" = 10'
Horiz. 1" = 20'

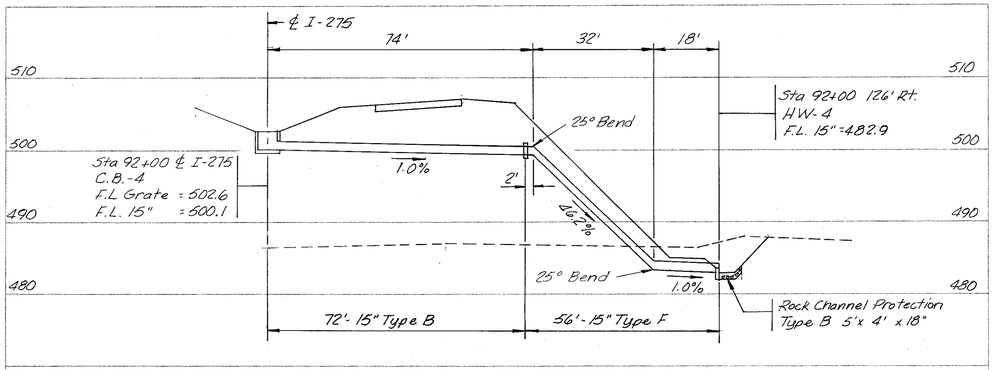

STORM SYSTEM
Sta 92+00
I-275

Scale
Vert. 1" = 10'
Horiz. 1" = 20'

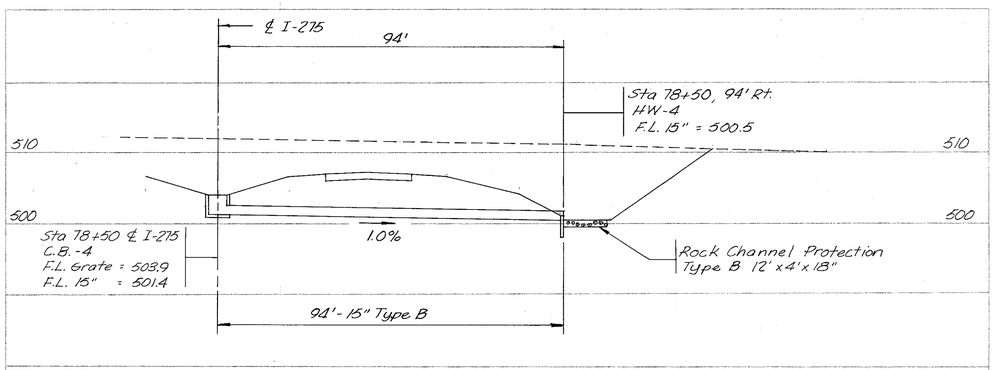

STORM SYSTEM
Sta 78+50
I-275

Scale:
Vert. 1" = 10'
Horiz. 1" = 20'

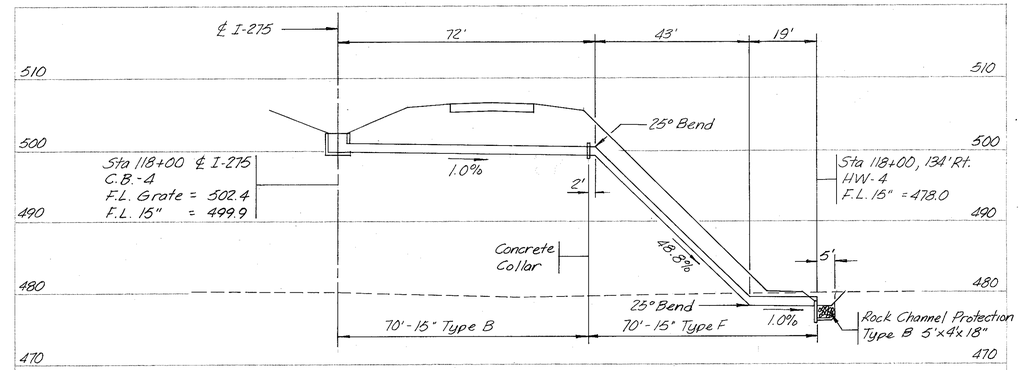

STORM SYSTEM
Sta 118+00
I-275

Scale:
Vert. 1" = 10'
Horiz. 1" = 20'

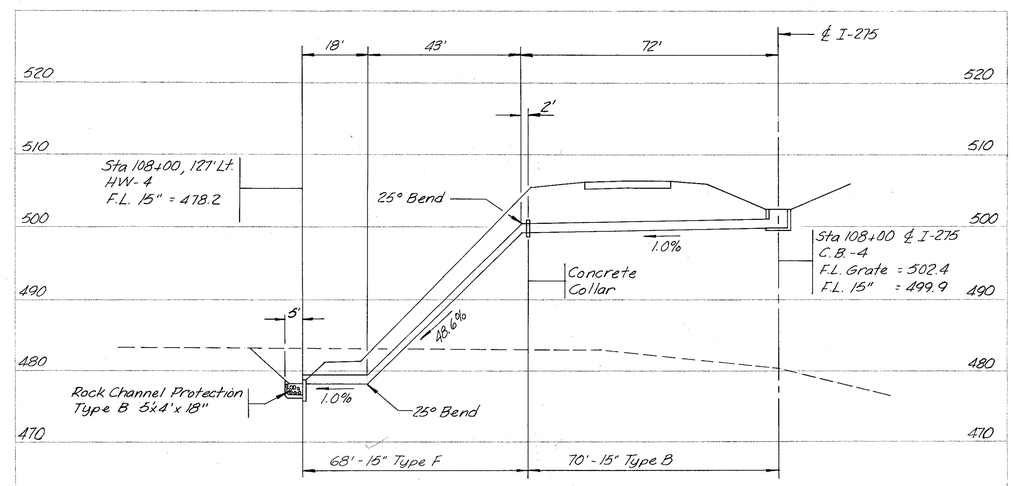

STORM SYSTEM
Sta 108+00
I-275

Scale:
Vert. 1" = 10'
Horiz. 1" = 20'

For Storm System
Sta 66+10
See Sh. No. 161

DIETZGEN - CINCINNATI, OHIO

DEVELOPED		CHECKED	
10-71	R.W.	12-71	J.M.

STORM SYSTEMS

FED. RD. DIVISION	STATE	PROJECT	
2	OHIO		

161
305

HAM-275-0.00
HAMILTON COUNTY

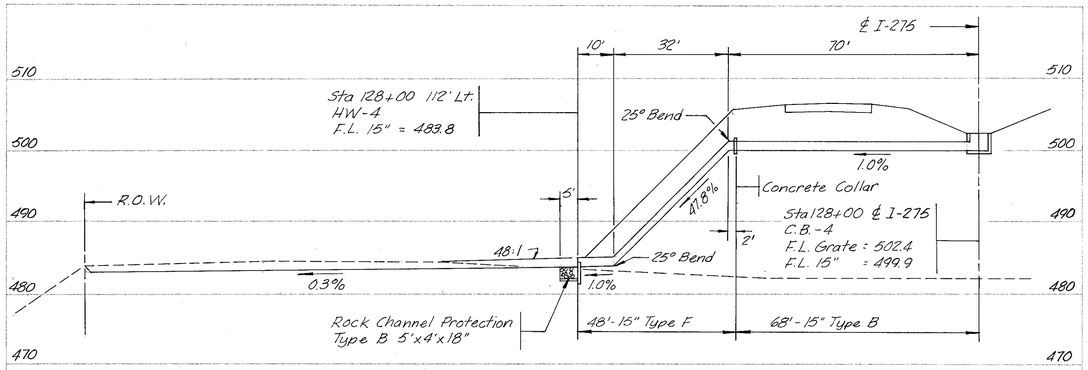

STORM SYSTEM
Sta 128+00
I-275

Scale
Vert. 1" = 10'
Horiz. 1" = 20'

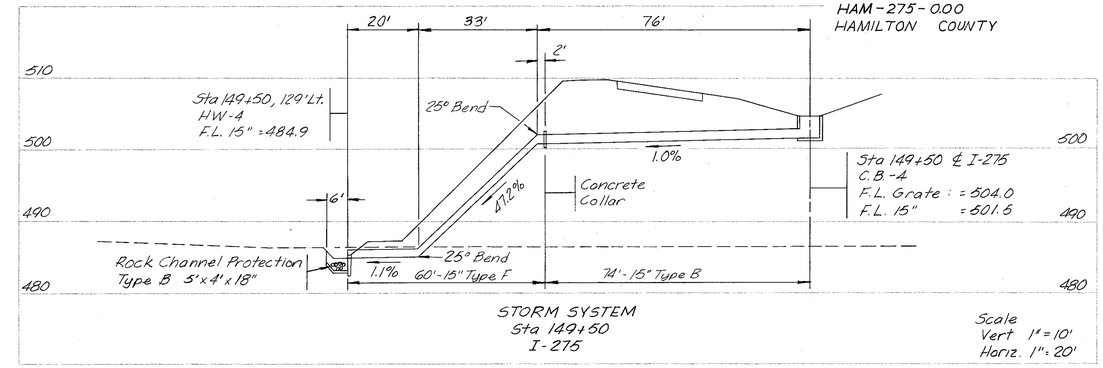

STORM SYSTEM
Sta 149+50
I-275

Scale
Vert 1" = 10'
Horiz. 1" = 20'

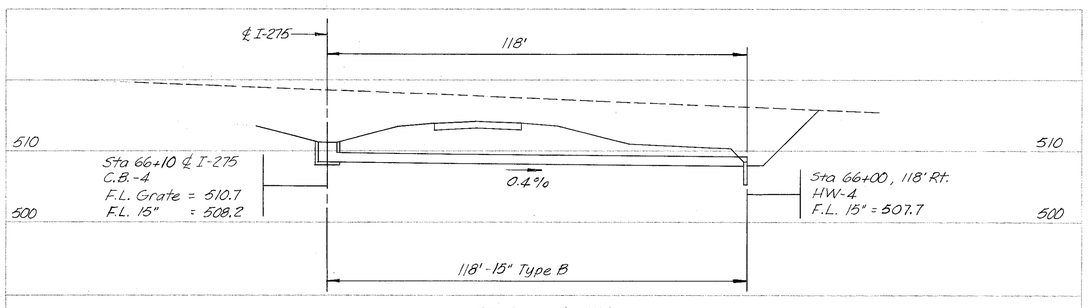

STORM SYSTEM
Sta 66+10
I-275

Scale
Vert. 1" = 10'
Horiz. 1" = 20'

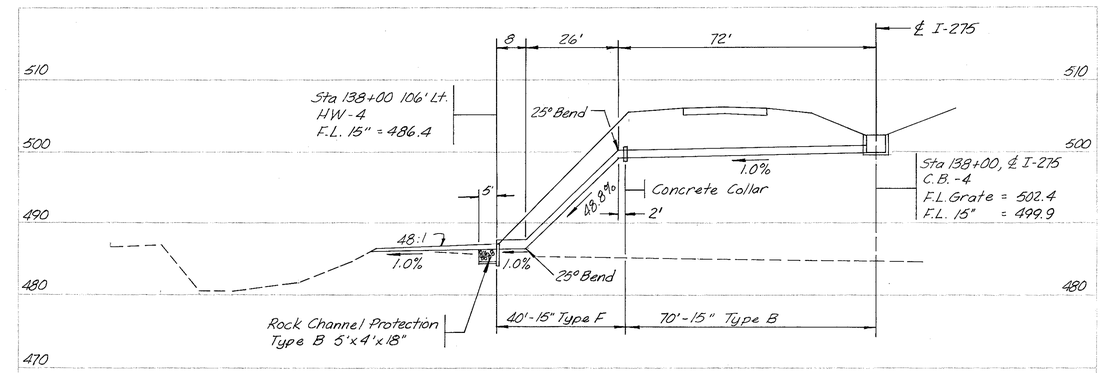

STORM SYSTEM
Sta 138+00
I-275

Scale:
Vert. 1" = 10'
Horiz. 1" = 20'

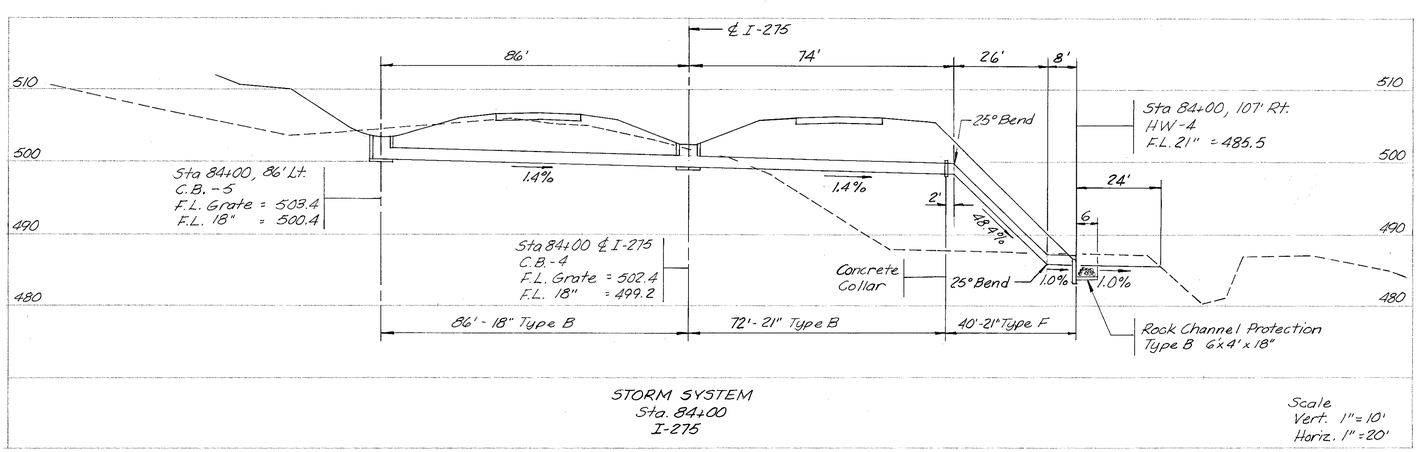

STORM SYSTEM
Sta. 84+00
I-275

Scale
Vert. 1" = 10'
Horiz. 1" = 20'

DEVELOPED		CHECKED	
10-71	R.W.	12-71	J.M.

STORM SYSTEMS

FED. RD. DIVISION	STATE	PROJECT	
2	OHIO		

162
302

HAM-275-000
HAMILTON COUNTY

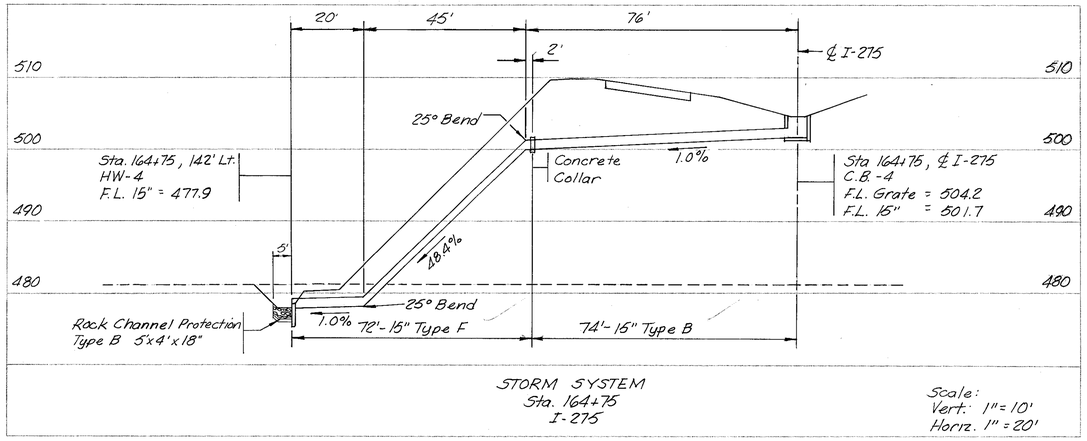

STORM SYSTEM
Sta. 164+75
I-275

Scale:
Vert: 1" = 10'
Horiz. 1" = 20'

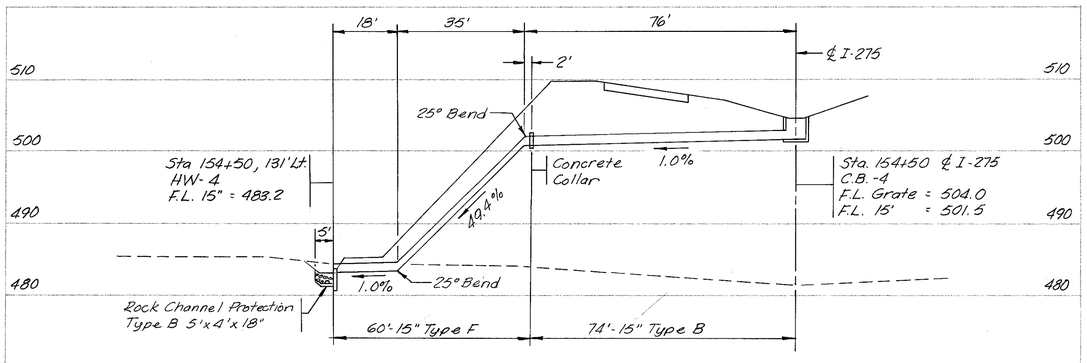

STORM SYSTEM
Sta. 154+50
I-275

Scale:
Vert. 1" = 10'
Horiz. 1" = 20'

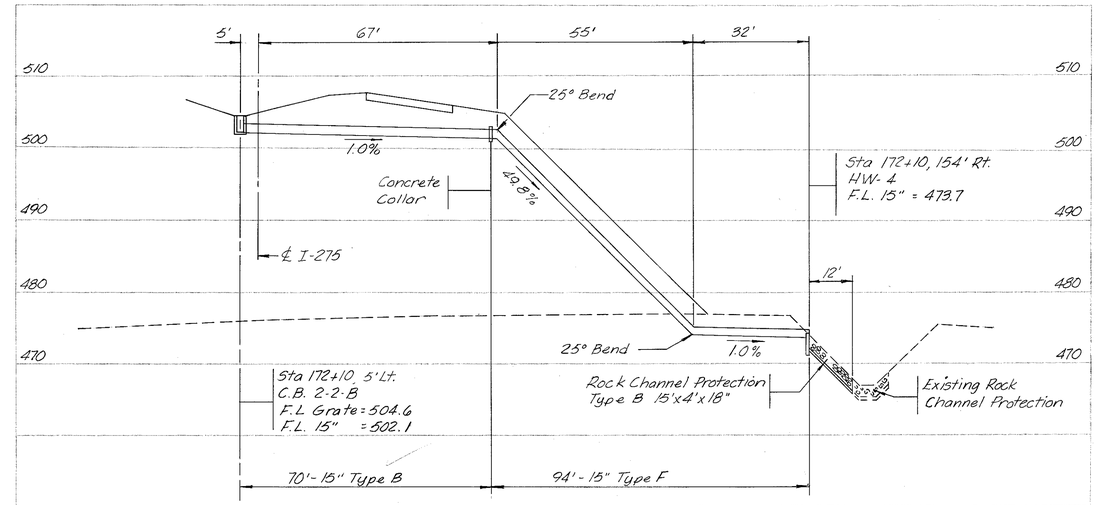

STORM SYSTEM
Sta 172+10
I-275

Scale
Vert. 1" = 10'
Horiz. 1" = 20'

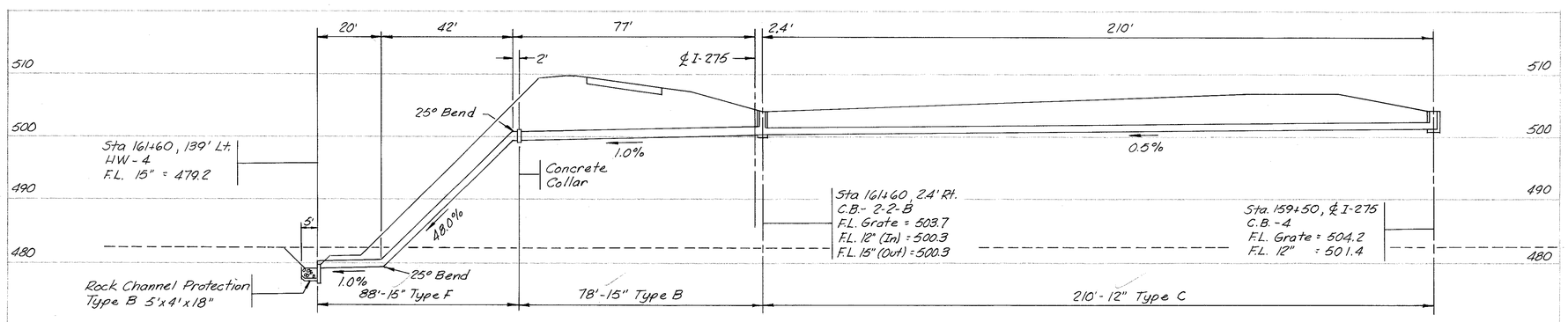

STORM SYSTEM
Sta. 159+50 to Sta 161+60
I-275

Scale:
Vert. 1" = 10'
Horiz. 1" = 20'

DEVELOPED		CHECKED	
10-71	R.W.	12-71	J.M.

STORM SYSTEMS

FED. RD. DIVISION	STATE	PROJECT	
2	OHIO		

163
305

HAM-275-0.00
HAMILTON COUNTY

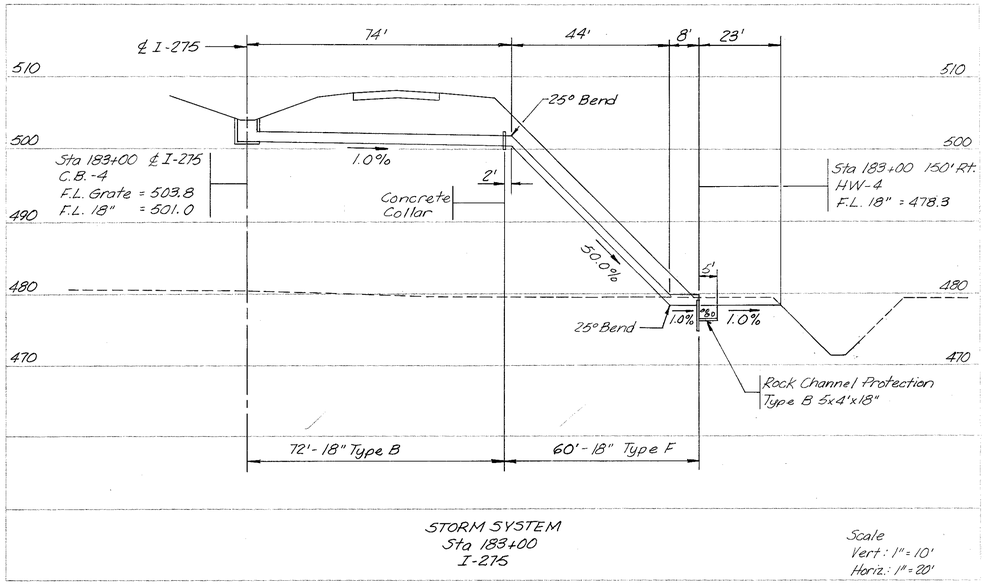

STORM SYSTEM
Sta 183+00
I-275

Scale
Vert: 1" = 10'
Horiz.: 1" = 20'

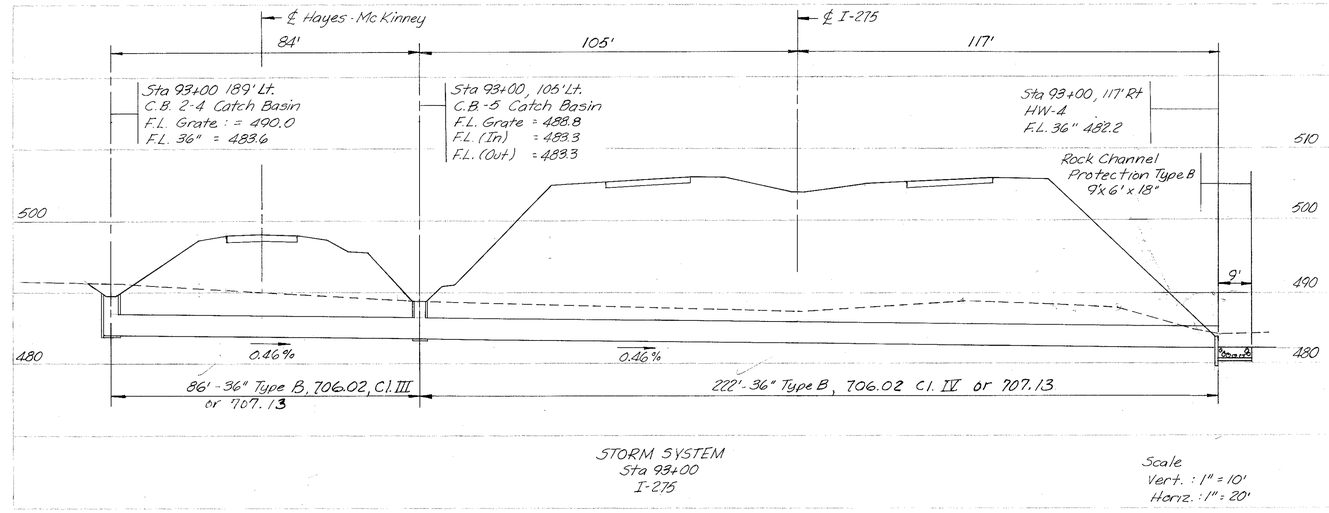

STORM SYSTEM
Sta 93+00
I-275

Scale
Vert.: 1" = 10'
Horiz.: 1" = 20'

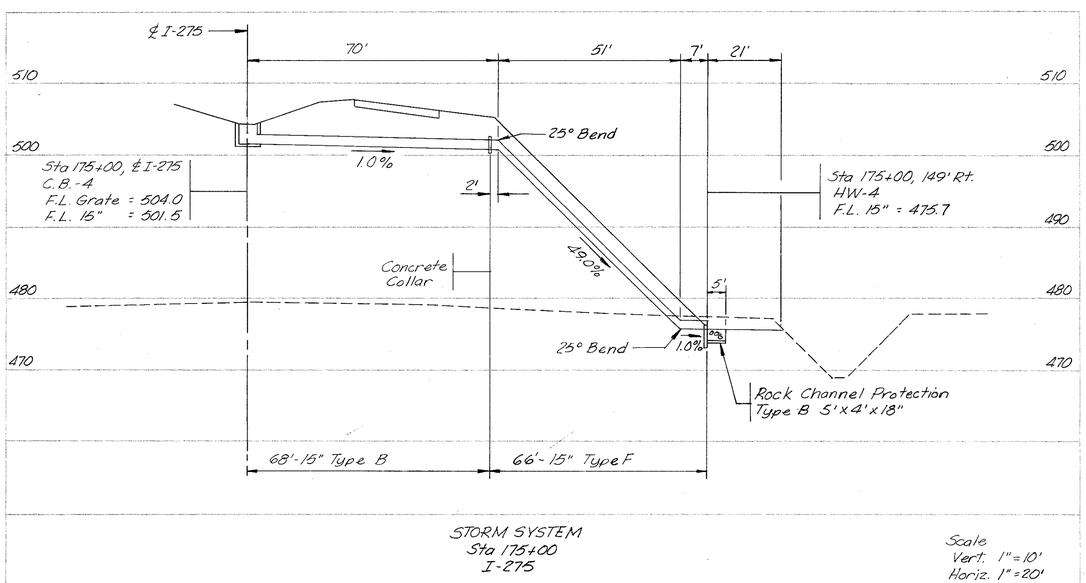

STORM SYSTEM
Sta 175+00
I-275

Scale
Vert. 1" = 10'
Horiz. 1" = 20'

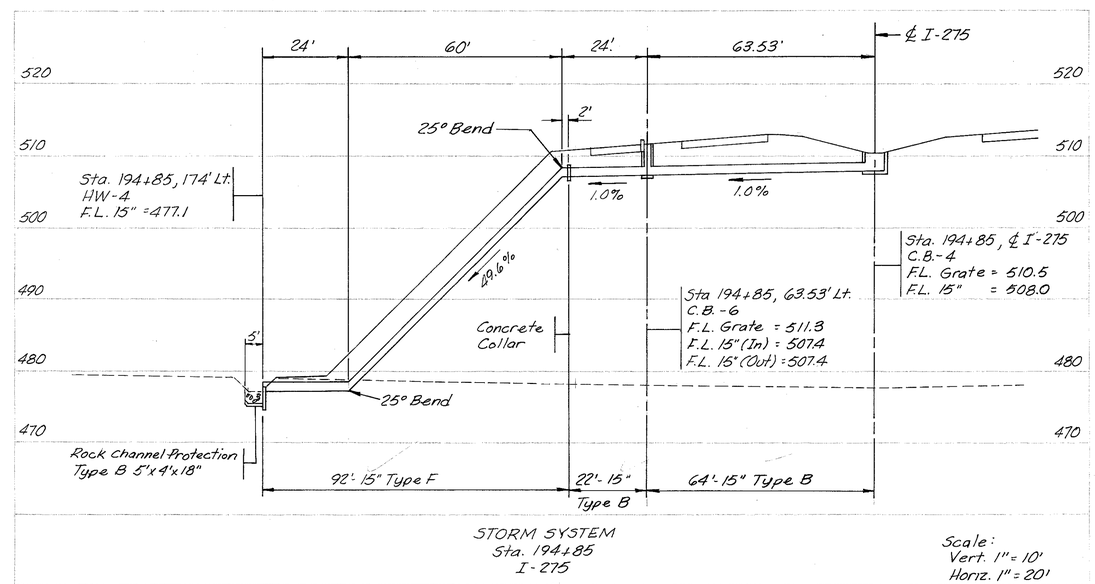

STORM SYSTEM
Sta. 194+85
I-275

Scale:
Vert. 1" = 10'
Horiz. 1" = 20'

DEVELOPED		CHECKED	
10-71	R.W.	12-71	J.M.

STORM SYSTEMS

SIGNING TITLE SHEET

FED. RD. DIVISION	STATE	PROJECT	
2	OHIO		

164/305

HAM-275-0.00
HAMILTON COUNTY

CONVENTIONAL SIGNS

COUNTY LINE
CORPORATION LINE
GUARD RAIL (EXISTING)
GUARD RAIL (PROPOSED)
GROUND MOUNTED SIGNS ON ONE SUPPORT
GROUND MOUNTED SIGNS ON TWO SUPPORTS
GROUND MOUNTED SIGNS ON THREE SUPPORTS
GROUND MOUNTED SIGNS, BACK-TO-BACK ON ONE SUPPORT
GROUND MOUNTED SIGNS, BACK-TO-BACK ON TWO SUPPORTS
SPECIAL "ONE WAY" SIGN SUPPORT
OVERHEAD SIGN SUPPORTS
OVERHEAD SIGN SUPPORT (CANTILEVER TYPE)
OVERHEAD SIGN SUPPORT (BUTTERFLY TYPE)

INDEX

TITLE SHEET — 1
GENERAL NOTES — 2 & 3
TRAFFIC CONTROL SUMMARY — 4
SIGNING PLANS — 5 Thru 8
SIGNING DETAILS — 9
PAVEMENT MARKING DETAILS — 9
PAVEMENT MARKING QUANTITIES — 10
TRAFFIC CONTROL QUANTITIES — 10
SUPPLEMENTAL STD. TRACINGS — 11 Thru 22

SIGNING GENERAL NOTES

816 STRUCTURAL SUPPORTS, STEEL BEAM (TYPE)

The structural steel beam supports including 6 pound beams, 4 pound post and hardware shall be galvanized in accordance with ASTM A-123 and A-153 respectively. All fabrication shall be completed prior to galvanizing.

Quantities for Item 816 Structural Supports, Steel Beam (Type), appearing in the quantity tables are approximate. The Contractor shall be responsible for determining exact support lengths prior to fabrication and galvanizing of supports. Payment shall be at the contract unit price bid per lin. ft. which price and payment shall include all costs in connection with the embedment of the supports.

The cost of the concrete used for embedment if required will be a separate pay item.

815 SIGN ERECTION, EXTRUSHEET OR FLAT SHEET TYPE

The Contractor shall erect sign panels as indicated on the schematic signing plan sheet numbers 5, 6, 7 and 8. The panels will be furnished by others and shall be mounted on the brackets or beam supports provided in the plans.
All sign material and accessories will be furnished and transported by others to a delivery point designated by the Contractor on or near the subject project. The Contractor shall be responsible for the handling, protection and storage of the sign panels and accessories from the time of unloading by others at the delivery point.
Large guide signs (over 8 feet in height) may be delivered in two pieces. Work shall also consist of assembly of these panels including attachment of demountable sign legend, where necessary, and erection of signs in conformance with the schematic sign plan.
The Contractor shall submit, in three copies, a schedule for sign erection to the Engineer at least 120 calendar days prior to the start of any scheduled erection work. The schedule shall include proposed dates, sign numbers and delivery point. The Engineer shall furnish copies of the schedule to the District Traffic Engineer and to the Engineer of Design Services, 25 South Front Street, Columbus, Ohio, 43215.
The price bid per square foot for "Item 815, Sign Erection, By Type" shall include payment for all necessary equipment, labor and tools to store, assemble and erect the signs as specified.

CONCRETE FOUNDATIONS, FOR SIGN SUPPORTS

Payment for this item shall be based on plan dimensions (or dimensions as modified by the Engineer in lieu of plan quantities) as required in Supplemental Specification 816.

Payment for reinforcing steel and installation only of conduit ells shall be included in the cost of concrete foundations for overhead sign supports. Concrete shall be Class "C".

Basis of payment shall be as follows:

1. Concrete for overhead sign support foundation, per cubic yard.
2. Concrete for ground mounted sign support foundations, per cubic yard.

620 DELINEATORS, AS PER PLAN

The Contractor shall have the option of driving or concrete embedding the delineator post in accordance with details of Sheet 21.

Posts may be trimmed on the embedded ends to adjust for grade and required delineator mounting height. Concrete shall be Class "C".

In either case, the Contractor shall be responsible for damage to underground utilities or cable during performance of this item of work.

The quantity furnished and installed shall be paid for at the price bid per each which price shall be full compensation for either type of installation.

REMOVAL OF EXISTING SIGNS AND SUPPORTS

All signs and supports on the main roadways, ramps, and approaches within work limits existing at the time of opening of bids for this project shall be removed by the Contractor unless otherwise indicated in the plans or noted herein.

Certain regulatory and warning signs on city streets as designated by the Engineer in cooperation with the City Traffic Engineer are to remain in place.

On the main roadways a minimum of two (2) major guide signs shall be in place at all times to direct motorists to appropriate exits or through roadways. The Contractor shall submit to the Engineer for approval, a written schedule of sign removal concurrent with submission requirements under sequence of operations. The Contractor shall obtain the approval of the Engineer a minimum of five (5) working days in advance of any removals, if he desires to modity the written schedule of removals approved by the Engineer.

Existing signs shall be removed as soon as practical by the Contractor, a maximum of three (3) calendar days following erection of new signs.

Foundations encountered in the removal of supports shall be removed and disposed of in conformance with Item 202. Where foundations have adjoining pull boxes, the Contractor must protect and preserve all pull boxes and the electrical circuits contained therein. The Contractor must protect from damage any electrical equipment attached to overhead supports.

The following items removed are to be salvaged and hauled by the Contractor to sites designed below and unloaded for storage:

1. Overhead sign supports, small flat sheet regulatory and warning signs and drive post supports are to be carefully removed and delivered to the Division Highway Garage, Lebanon, Ohio.

   Each overhead sign support shall be clearly identified and match marked by station location on separate components removed prior to dismantling and shipment. Method of marking shall be subject to approval of the Engineer.

2. Large guide signs (extrusheet) removed shall be carefully removed and delivered and unloaded at the State Highway Sign Shop, 837 East 17th Street, Columbus, Ohio.

3. The Contractor shall notify the Division Traffic Engineer a minimum of twenty-four (24) hours prior to delivery of items, removed as outlined, in Items one (1) and two (2) above.

The price bid per "each" for the removal of overhead supports shall include all necessary equipment, labor, and incidentals required for removal and hauling of existing overhead supports as designated above.

The lump sum bid for the removal of all signs and ground mounted supports shall include all necessary equipment, labor, and incidentals required for removal and hauling of existing signs and groundmounted supports as designated above.

621 EXISTING INTERIM PAVEMENT MARKINGS REMOVED

This item shall consist of the removal or obliteration of interim pavement markings on the pavement.

The markings may be removed by applying heat or a solvent (pull up tape) or by any other method approved by the Engineer except that the method shall not be injurious to the appearance, texture or strength of the pavement.

Upon removal of all pull up tape, the primer stains shall be removed by use of kerosine, gasoline or other approved solvent.

Payment for Item 621 existing interim pavement markings removed shall be made at the contract unit price per linear foot and shall constitute full compensation for all work, including materials, equipment, labor, incidentals and disposal of surplus materials.

621 INTERIM PAVEMENT MARKING, BY TYPE

This work shall consist of the furnishing and installation of interim removable markings as specified herein and shown on the plans.

1. Material

   Material shall consist of a backing coated with a pressure-sensitive adhesive and a weather and traffic resistant reflective white or yellow colored surface and additional requirements as follows:

   a. Reflection - The white and yellow striping material shall be reflex-reflective reflecting white or yellow respectively and shall be readily visible when viewed with automobile headlights at night.

   b. Adhesive - The striping material shall have a precoated pressure-sensitive adhesive which shall not require a liner for protection from contamination, pre-adhesion, or blocking within the roll as delivered.

   c. Conformability - The striping material shall be thin, flexible, formable, and following application, shall remain conformed to the texture of the pavement surface.

   d. Removability - The striping material backing shall permit removal without requiring sandblast, solvent, or grinding methods.

   e. Durability - The striping material applied in accordance with recommended procedures shall be weather resistant and show no appreciable fading, lifting or shrinkage, prior to completion of this project.

   f. General - The striping material as supplied shall be of good appearance, free from cracks, and edges shall be true, straight, and unbroken. The striping material shall be supplied in rolls and there shall be no more than 3 splices per 60 yards of length.

   The striping material shall be prepared for delivery in standard commercial containers so constructed as to insure acceptance by the carrier and prevent damage during proper shipment and storage.

   The Contractor shall store the material in a cool, dry location where temperature will not exceed 100 degrees F. prior to application of marking on roadway surfaces.

2. Road Surface Preparation

   The road surface must be clean and dry, free of oils and grease, dust or dirt. All surfaces must be primed.

   Concrete pavement shall be surface treated in accordance with Section 621.04. Surface shall then be generously flushed with clean water and allowed to dry thoroughly prior to application of primer and interim markings.

3. Priming

   Method of priming shall be as approved by the Engineer. The Contractor shall submit a proposal for type of priming to be used. Cost for priming surfaces shall be incidental to the cost of various items included in Item 615, Temporary Roads, as per plan.

4. Application

   Interim lines shall be applied to the road surface with a roller type applicator and rolled immediately afterwards by rubber-tired roller with approximate single wheel load between one thousand (1000) and two thousand (2000) pounds.

5. Special Plan Details

   Details for location of interim markings are shown on Sign location plan sheets.

6. Basis of Payment

   Cost of furnishing and installation of interim pavement marking shall be included at the contract unit price per linear foot.

614 TEMPORARY SIGNS AND SUPPORTS FOR MAINTAINING TRAFFIC

The following requirements shall be adhered to regarding materials and placement of signs to be furnished, installed, maintained, and subsequently removed by the Contractor in accordance with the plans.

Signs shall be aluminum sheet or plywood type with reflective sheeting in accordance with Supplemental Specification 815. Sign Material shall conform with the following schedule:

Individual Sign Area	Material
less than 10 Sq. Ft.	0.060 Alum. Sheet
10-16 Sq. Ft.	0.080 Alum. Sheet
16-20 Sq. Ft.	0.100 Alum. Sheet
over 20 Sq. Ft.	3/4 inch Plywood

The Contractor shall have the option of furnishing extrusheet aluminum panels as a substitute for plywood.

All supports for ground mounted signs not erected on drums or overpass mounted shall be steel channel type, driven to a minimum depth of 5 feet. Signs shall have 1, 2, or 3 separate supports in accordance with the following schedule:

Total Sign Assembly Area (Sq. Ft.)	Support Type Sign Length (Horiz.) 4 Ft. or Less	4-10 Ft.	11 Ft. or More
10 or Less	1-4 Lb. Post	2-3 Lb. Post	-
10-20	1-6 Lb. Beam	2-4 Lb. Post	-
21-40	-	2-6 Lb. Beam	3-6 Lb. Beam
41-75	-	-	3-6 Lb. Beam

Supports for ground mounted signs greater than 75 sq. ft. in area shall be as directed by the Engineer.

Mounting height and lateral placement of temporary signs shall be in accordance with Figures S-2 and S-3 (Pages 2-9 and 2-10) of the Ohio Manual of Uniform Traffic Control Devices.

Standards and sign layouts for temporary signs are available from the Bureau of Design Services, 25 South Front Street, Columbus, Ohio, 43215.

The Contractor shall be responsible for removal of all temporary signs and supports when no longer needed, and he shall restore each sign site to its original condition.

All signs and supports furnished, erected, maintained, and removed by the Contractor shall become the property of the Contractor.

Basis of payment for the above described work shall be included in the Lump Sum Item of Work for Item 614, Maintaining Traffic.

816 STRUCTURAL SUPPORTS DRIVEN TYPE

Driven type structural supports will be driven to a depth of five feet (5'-0") minimum below ground line in such a manner that no deformative within the length of the support, or damage to the support, will occur.
Prior to installation each support shall be significantly marked with paint at a location on the support 5'-6" from the embedded end, and approved by the Engineer.
"Structural Supports, 6 Lb. Beam, Driven" will include the 10" X 12" X 1/4" soil plate detailed in the plans.
Payment for installation of sign supports by the above method shall be included in the cost of the various support types specified including all labor, equipment and materials required.

SIGNING GENERAL NOTES

FED. RD. DIVISION	STATE	PROJECT	
2	OHIO		

166/305

HAM.-275-0.00
HAMILTON COUNTY

625 TRANSFORMER, BY TYPE

This item of work shall consist of furnishing and installing transformers as detailed and specified on Sheet 16.

Basis of payment for this item shall be at contract unit price per each, which shall include all labor, material and equipment required for this complete item of work.

625 BALLAST, BY TYPE

Ballast for fixtures shall be weatherproof outdoor type for a 120 volt 60 cycle system and shall provide lamp starting at an ambient temperature of -20 degrees F.

This item of work shall consist of furnishing all ballast Types A through D as detailed and specified on sheet 16.

Basis of payment for this item shall be at contract unit price per each, furnished to the job for installation under Item 625 "Signs Wired, Complete".

625 SIGN SERVICE

This item shall consist of the completion of the electrical system and components from the connectors in the pull box (included within the roadway lighting quantities) to the primary side of the disconnect switch.

Work will include furnishing and installing (including trenching and backfilling) the 2 inch galvanized steel conduit and couplings from the pull box to the conduit ell in the sign support foundation.

This item will also include furnishing and installing No. 4 or 6 AWG 600 volt distribution circuit cable as per 713.02 from the connectors to the disconnect switch.

Basis of payment for this item shall be at contract unit price per each, which shall include all labor, material, and equipment required to complete this item of work.

625 SIGNS WIRED, COMPLETE

This item shall consist of the completion of the electrical sign lighting system for each illuminated sign.

Work shall include installation of light fixtures and ballasts, and furnishing and installation of all rigid and flexible conduit, condulets, junction boxes, cable, fasteners, hardware, and all other items required to energize the sign lighting system (EI-1 and 2, ES-3A). See details on Sheets 15, 16 & 17.

The cost of furnishing and installing cable, cable grips, cable splice units, and necessary fasteners from the disconnect switch to the signs (or between signs) within sign support members shall be included in this item of work.

Basis of payment shall be at the contract unit price per each sign wired which price shall include all labor, materials, tools, equipment, and other incidentals to provide a complete and accepted item of work.

Illuminated signs requiring two (2) ballasts shall be considered as an equivalent of two (2) separate signs for determination of payment quantities.

625 LIGHT FIXTURE WITH LAMP, BY TYPE AND SIZE

This item of work shall consist of furnishing all light fixtures and lamps, types and sizes as specified on sheet 16.

Basis of payment for this item shall be at contract unit price per each, furnished to the job for installation under Item 625 Signs Wired, Complete.

FIXTURES AND LAMPS

Illumination of signs on this project shall be by attached fluorescent fixtures as shown on illuminated sign detail sheets. Light fixtures shall be attached to bottom of signs except for Type H signs. Proximity of light fixtures from sign is shown in the table on Sheet 15.

Lighting fixtures shall be constructed of corrosion resistant materials or with high quality corrosion resistant finish. All fixtures shall be specifically designed for outdoor sign lighting service. Major components shall include weather-proof cast aluminum mounting hubs designed to securely lock the fixture at any angle through 360 degrees. Indicators in 10 degree increments shall be stamped or cast into the hub to facilitate proper aiming of the fixture. Final adjustments of fixture shall be done at night under the Project Engineer's direction.

Exterior finish of the fixture body shall be interstate green color, heat resistant, baked enamel such as Universal Paint and Varnish Inc. No. 9850 or equivalent by Midwestern Color Works or approved equal. Reflector, lamp and sockets shall be protected by a hinged door of clear acrylic plastic with aluminum or stainless steel frame and neoprene gasket.

Lamps shall be Type F72 or F96 - T12/CW/HO as manufactured by Westinghouse, Sylvania and General Electric or approved equal for signs to a maximum height of 6'-6". Lamp type shall be F72 or F-96 - T12/CW/SHO as manufactured by Westinghouse, Sylvania, or approved equal for signs 7'-0" or greater in height.

625 DISCONNECT SWITCH WITH TYPE "Y" OR "Z" ENCLOSURE

This item shall include furnishing of a 30 amp. 600 volt fused disconnect switch of type and make as indicated on sheet 16 and shall be mounted in a Nema 4 stainless steel enclosure type "Y" or "Z" and attached to each sign support by means of a mounting bracket as described in detail on sheet 17.

Each switch enclosure shall be furnished with one padlock. Padlocks shall have a brass body and wrought iron shackle equal to Russwin No. 2882 KA or Master No. 4 KA or approved equal.

Basis of payment for this item shall be per each at contract unit price, which shall include all labor, material, and equipment to complete this item at work.

625 INSPECTION AND TESTING OF SIGN LIGHTING

Electrical tests of sign lighting circuits shall conform to the requirements of Section 625.22 with the following additions:

1. A voltage and amperage measurement shall be made at the sign support switch.
2. Where a low voltage tap transformer is used, the voltage shall be measured to determine the applicable tap.
3. During the performance test period, adjustments to fixture aiming angles shall be made to obtain maximum uniformity as directed by the Engineer.

The above measurements and voltage tap selection notations shall be included in the test reports furnished to the Engineer.

CONSTRUCTION LAYOUT STAKES FOR SIGNS

The Contractor shall stake out all sign supports in accordance with Supplemental Specification 816 prior to installation of any foundations or supports.

After stakeout the Contractor shall notify the Engineer a minimum of seven (7) days in advance of scheduled work. Support locations for each support will be field checked taking into account both underground and overhead obstructions and conflicts and approved by the Engineer who shall coordinate with the District Traffic Engineer prior to proceeding with construction work required.
If both major and minor type supports are included within the project it will be permissible to perform the construction stakeout and field inspection in two (2) stages, one for major supports and one for minor supports.

Cost for this item of work will be included in the lump sum bid for Item 623 "Construction Layout Stakes, As Per Plan".

CERTIFICATION AND APPROVAL OF SIGN SUPPORT & SIGN LIGHTING ITEMS

The Contractor shall submit through proper channels the drawings, information and samples as required below:

A. 8 Copies of shop drawings and material lists for approval:
   a. Overhead sign supports
   b. Sign lighting layout plan and details for wiring, conduit size and placement from sign disconnect switch to fixture.
B. 8 Copies of catalog cuts descriptions of samples of fabricators standard items as shown in the plans or their equals for approval of their use.
C. Certifications and/or samples for all material which have been approved above under "A" and "B".
D. Approval of items under "A" and "B" shall be in the hand of the Contractor prior to any purchase or installation.
E. Certifications of samples under "C" must be in hand and approved prior to contract completion.

MILE MARKER LOCATION

The Bureau of Transportation Technical Services will locate the longitudinal position of mile markers by a paint blotch on the completed pavement edge.
On divided highways only one pavement edge will be marked. Markers for the opposite direction will be set "across" from those on the marked edge. The Contractor shall notify the Project Engineer who shall notify the Bureau of Transportation Technical Services by letter 30 days in advance of the planned marker installation. Any delineator that is within fifty (50') feet of a mile marker shall be non-performed.

816 SIGN SUPPORT FOR MILEAGE MARKER MOUNTED ON BRIDGE

This item of work shall consist of the furnishing, fabrication, and erection in accordance with materials and requirements specified in these plans and detailed on Sheet 8.
Basis of payment shall be at the bid price per each "Sign Support for Mileage Marker Mounted on Bridge" including all materials, equipment, labor and incidentals required to perform the item of work.

OVERHEAD SIGN SUPPORT, BY TYPE

All component parts of the overhead sign supports shall be steel, except for the truss and components for the Number 7 series which shall be aluminum. For specific details and materials, see Sheet Numbers 11 & 12.

Cost of furnishing and installing the sign brackets and the fixture support arm, length "G", with mounting holes and hardware shall be included in the contract unit price bid for overhead sign supports.

Modifying supplemental specification 816 switch enclosure mounting brackets including mounting bolts and drilled holes shall be furnished and installed under payment for 816 Overhead Sign Support Structures at the contract price per overhead sign support, by type.

Payment for this item shall be made at the contract unit price bid for each overhead sign support, by type, installed in place and accepted, which price shall be full compensation for furnishing all anchor bolts, 2" and 3/4" EHT conduit ells (for installation under 816 Concrete Foundations, for sign Supports), and for furnishing and installing each overhead sign support structure shown on Sheets 9, 11 & 12 including fixture support arms, switch enclsoure mounting bracket, Sign brackets and all component parts necessary to make a complete workable installation ready for sign erection, installation of disconnect switch and enclosure, ground rod and wire connections and sign wiring.

Erection of these supports shall be accomplished in a manner meeting the requirements of supplemental specification 816.

ALTERNATE DESIGNS FOR OVERHEAD SIGN SUPPORTS

If the Contractor desires to furnish an alternate design for overhead sign supports, the alternate designs must be submitted to the State at least 21 days prior to opening of bids. The bidder will be notified as to acceptance or rejection of alternate design at least 7 days before bids are to be opened. Alternate designs must utilize tubular structural members. Submissions shall be made to Ohio Department of Transportation, Bureau of Design Services, 25 South Front Street, Columbus, Ohio 43215.

ERECTION OF OVERHEAD SPAN TYPE SIGN SUPPORTS (7 SERIES)

In All cases, span type overhead sign supports and signs shall be erected concurrently At no time shall the box trusses be erected without the sign being in place within eight (8) hours.

816 OVERHEAD SIGN SUPPORT FABRICATION

In lieu of plan details, the following are fabrication requirements for supports in this project:

All handholes fabricated for supports shall be 4" x 8" in size with face flush with pole exterior at the required locations described in plans.

The electrical service entry through each vertical sign support pole shall be provided by means of a two inch (2") half-coupling centered at a height of 5'-0" above the bottom of the base plate.

The Type "Y" or "Z" disconnect switch enclosure shall be mounted in such a manner that the bottom of the enclosure will be 4'-9-1/2" (± 1/4") above bottom of base plate.

Payment for the fabrication requirement specified above shall be incidental to the cost of each support structure.

DEVELOPED		CHECKED	
A.R.S.	4-1972	R.E.P.	4-1972

FED. RD. DIVISION	STATE	FISCAL YEAR	
2	OHIO		

HAM-275-0.00
HAMILTON COUNTY

TRAFFIC CONTROL SUMMARY

▲ All quantities for sign #95 are 100% STATE

TYPE CODE 7223

OVERHEAD SIGNING AND SIGN LIGHTING QUANTITIES

ITEM	▲ SIGN #95	SIGN #96	TOTAL SHEET #4	TOTAL SHEET	TOTAL SHEET #10	ITEM	QUAN.	UNIT	DESCRIPTION
816					66	816	66	L.F.	Structural Supports, 2# Post, Driven
816					31	816	31	L.F.	Structural Supports, 4# Post, Driven
816					250	816	250	L.F.	Structural Supports, 6# Beam, Driven
816					91.5	816	91.5	L.F.	Structural Supports, Steel Beam 10 WF 21
816					61	816	61	L.F.	Structural Supports, Steel Beam 12 WF 31
816					2	816	2	Ea.	Sign Support for Mileage Marker Mounted on Bridge
816	1		1			816	1	Ea.	Overhead Sign Support No. 7.2, Des. 1, Modified, Spa. 49'0"
816		1	1			816	1	Ea.	Overhead Sign Support No. 12.24, Des. 4, Arms 22'0"
816	6.2	3.1	9.3		—	816	9.3	C.Y.	Concrete for Overhead Sign Support Foundations
816			—		8.0	816	8.0	C.Y.	Concrete for Ground Mounted Sign Support Foundations
815					175	815	175	Sq. Ft.	Sign Erection, Flat Sheet Type
815	172.5	98.00*	270.5		455.0	815	725.5	Sq. Ft.	Sign Erection, Extra Sheet Type
625	1	1	2			625	2	Ea.	Sign Service
625	1	1	2			625	2	Ea.	Disconnect Switch With Type 1 Enclosure
625		1	1			625	1	Ea.	0.50 KVA Transformer, Type II
625	1		1			625	1	Ea.	0.75 KVA Transformer, Type III
625	1		1			625	1	Ea.	Ballasts, Type A
625	1	1	2			625	2	Ea.	Ballasts, Type B
625	2	2	4			625	4	Ea.	72" Light Fixture With HO Lamps
625	1		1			625	1	Ea.	96" Light Fixture With HO Lamps
625	1	1	2			625	2	Ea.	Ground Rods
625	2	1	3			625	3	Ea.	Signs Wired, Complete
					184	620	184	Ea.	Delineators, Type A, Post Mounted
					12	620	12	Ea.	Delineators, Type A, Bracket Mounted
					65	620	65	Ea.	Delineators, Type D, Post Mounted
					16.06	621	16.06	Mi.	Edge Lines
					0.10	621	0.10	Mi.	4" Lane Lines
					7.72	621	7.72	Mi.	6" Lane Lines
					1.04	621	1.04	Mi.	Center Line
					12	621	12	L.F.	24" Stop Lines
					666	621	666	L.F.	Channelizing Lines
					422	621	422	L.F.	24" Broad Transverse Lines
					493	621	493	L.F.	Curb Marking
					94	621	94	L.F.	12" Broad Transverse Lines
						621	0.50	Mi.	Removal of Existing Interim Marking, 4" Edge Line (From Proj. Ham-275-3.86)

*INCLUDES EXIT PANEL

FED. RD. DIVISION	STATE	FEDERAL AID PROJECT	
2	OHIO		

168
305

HAM-275-0.00
HAMILTON COUNTY

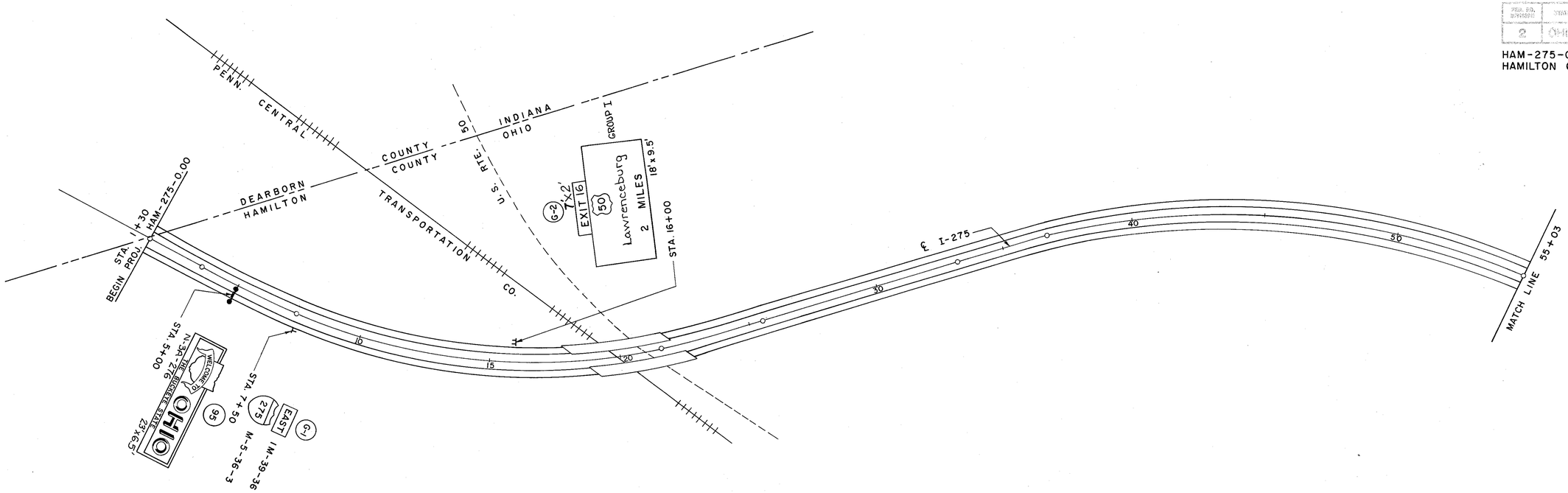

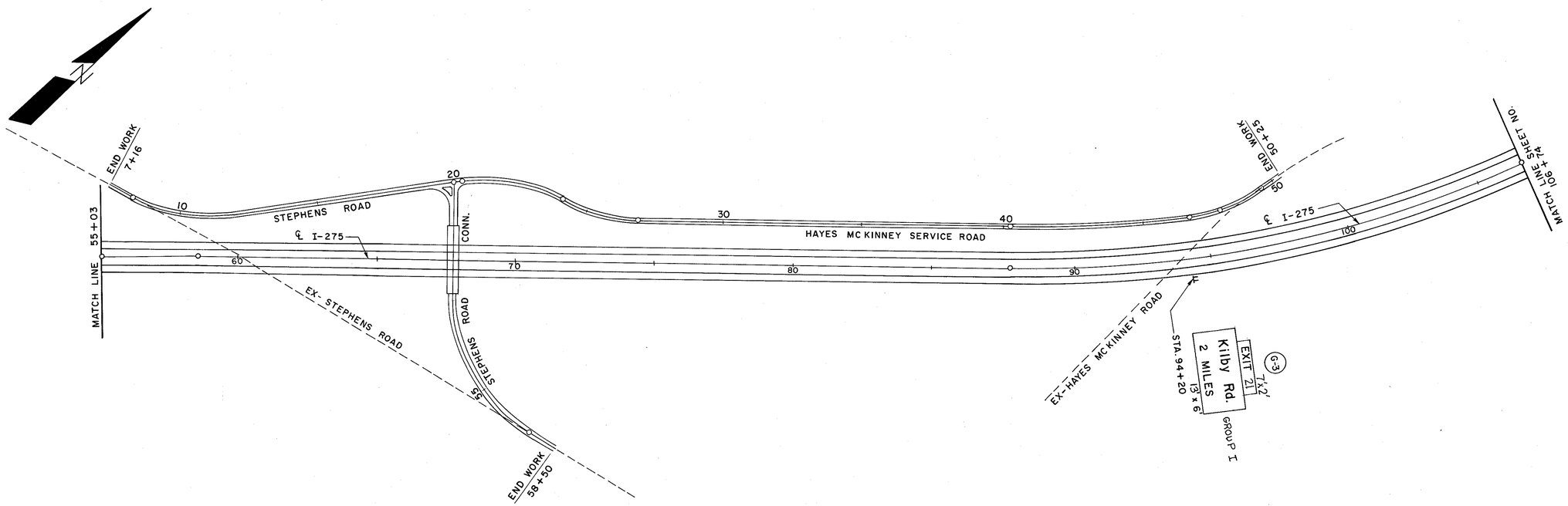

SCALE: 1" = 200'

GUIDE SIGNS
SIGNING LAYOUTS

5
22

FED. RD. DIVISION	STATE	PROJECT	
2	OHIO		

169
305

HAM-275-0.00
HAMILTON COUNTY

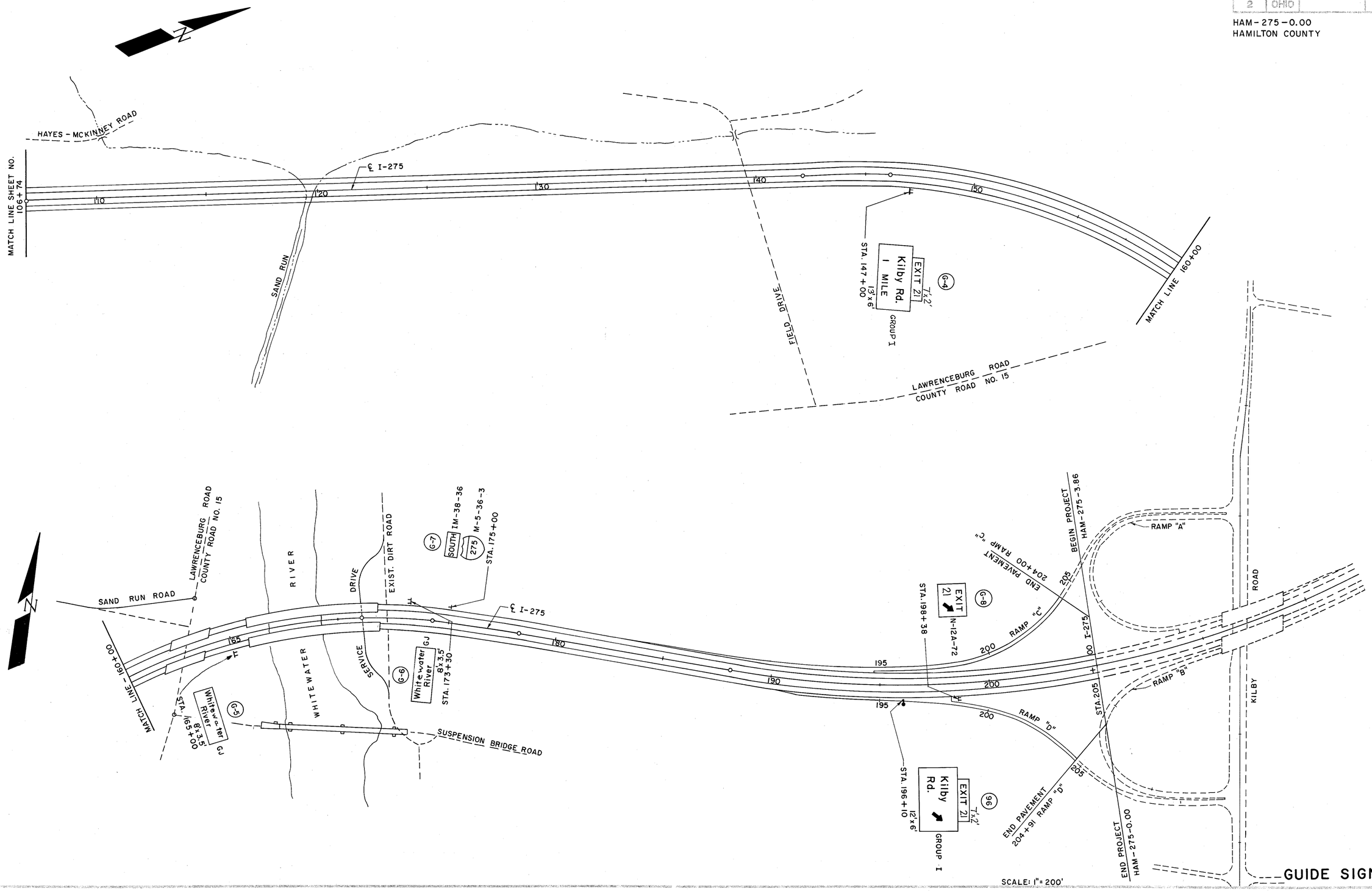

GUIDE SIGNS

SIGNING LAYOUTS

6
22

FED. RD. DIVISION	STATE	PROJECT	
2	OHIO		

170
305

HAM-275-0.00
HAMILTON COUNTY

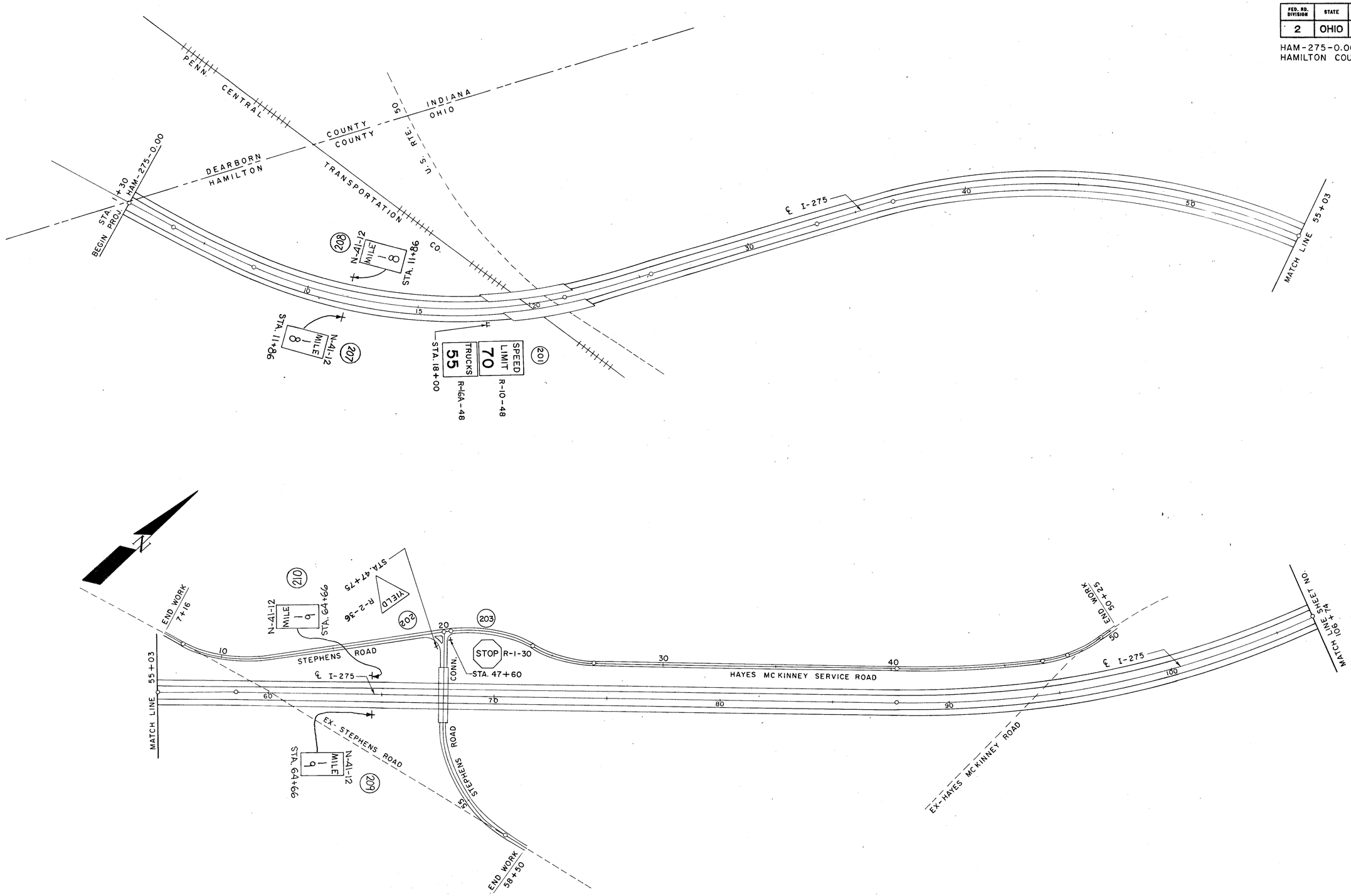

SCALE: 1" = 200'

REGULATORY & WARNING SIGNS

7
22

SIGNING LAYOUTS

FED. RD. DIVISION	STATE	PROJECT	
2	OHIO		

171/305

HAM-275-0.00
HAMILTON COUNTY

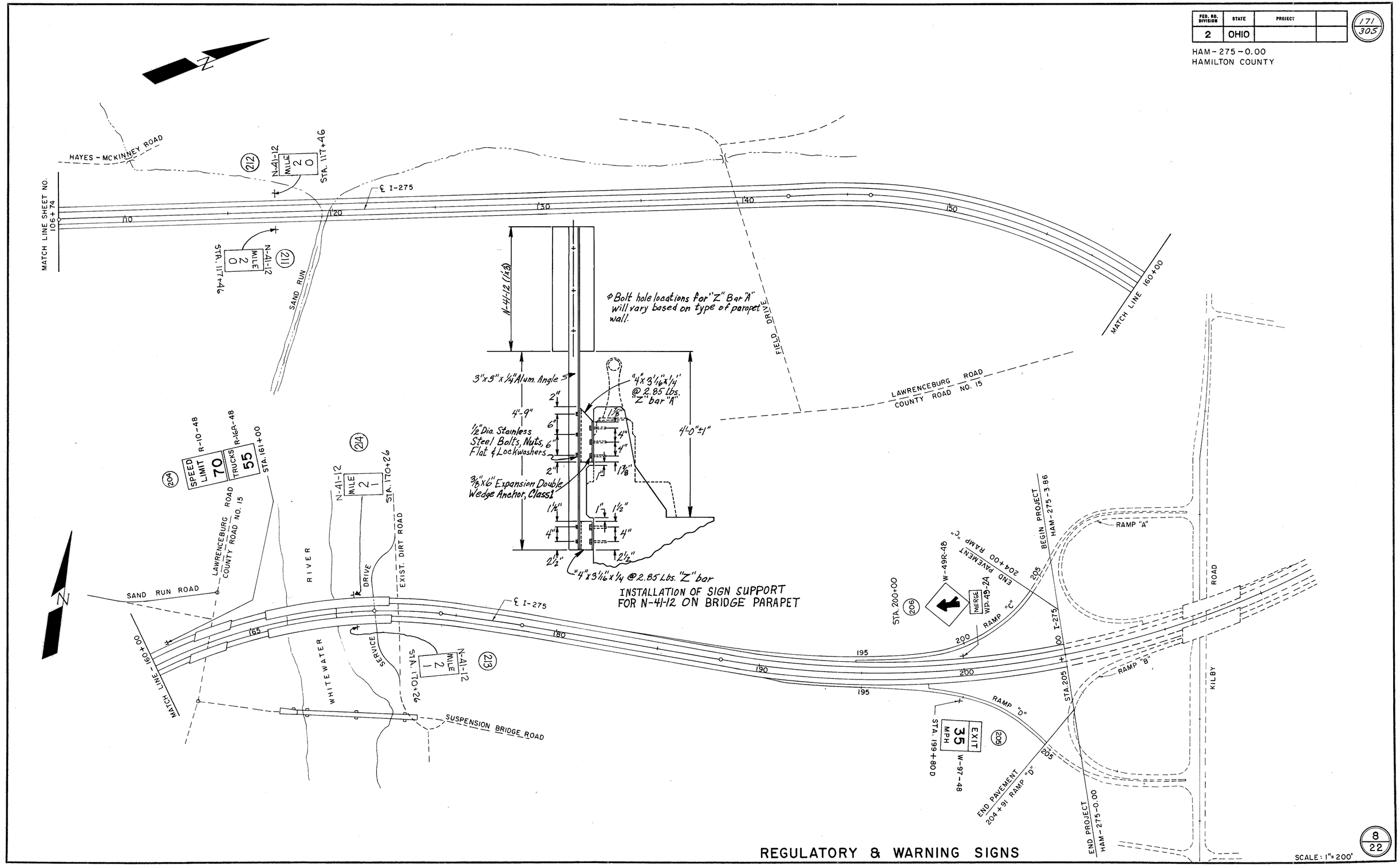

REGULATORY & WARNING SIGNS

8/22

SIGNING LAYOUTS

FED. RD. DIVISION	STATE	PROJECT	
2	OHIO		

172
305

HAM-275-0.00
HAMILTON COUNTY

BALLAST	LAMPS
I-A	2-72" HO
I-B	I-96" HO

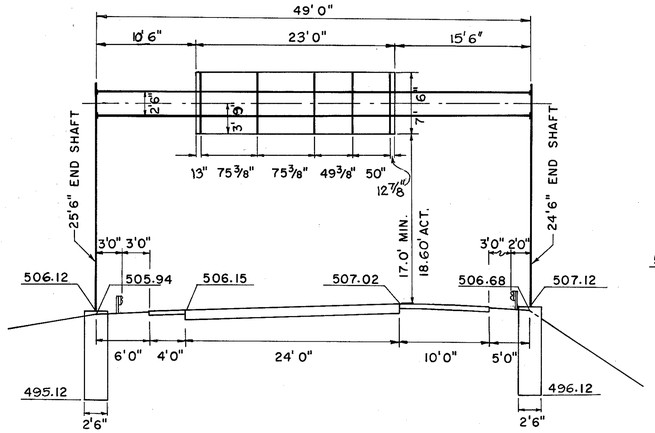

OVERHEAD SIGN SUPPORT NO. 95

Sta. 5+00 I-275 Rt.
816 No. 7.2, Design-1, Modified
Span 49'0"
Y-Brackets - Aluminum
Illuminated

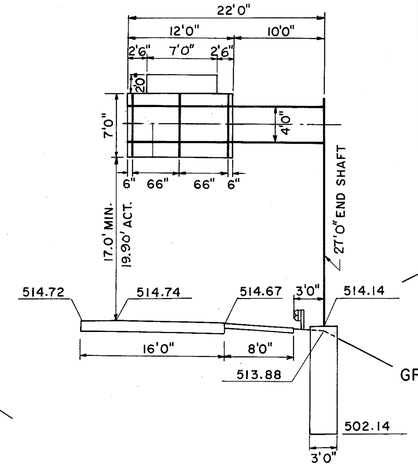

OVERHEAD SIGN SUPPORT NO. 96

Sta. 196+10 I-275 Rt.
816 No. 12.30 Design 4
Arms - 22'0"
Y-Brackets, Alluminum
Illuminated

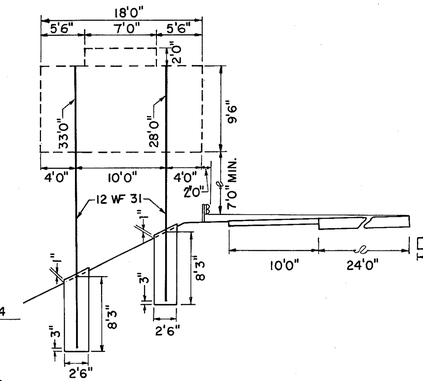

GROUND MOUNTED SIGN SUPPORT NO. G-2

Sta. 16+00 I-275 Lt.

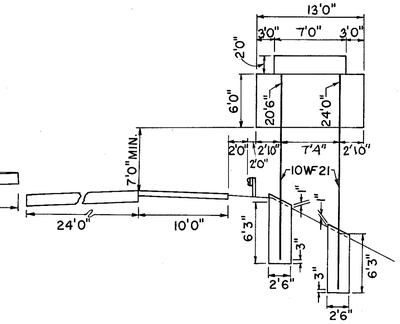

GROUND MOUNTED SIGN SUPPORT NO. G-3

Sta. 94 +20 I-275 Rt.

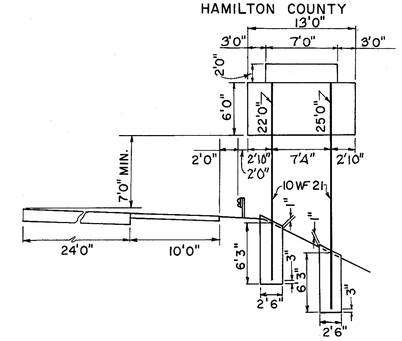

GROUND MOUNTED SIGN SUPPORT NO. G-4

Sta. 147+00 I-275 Rt.

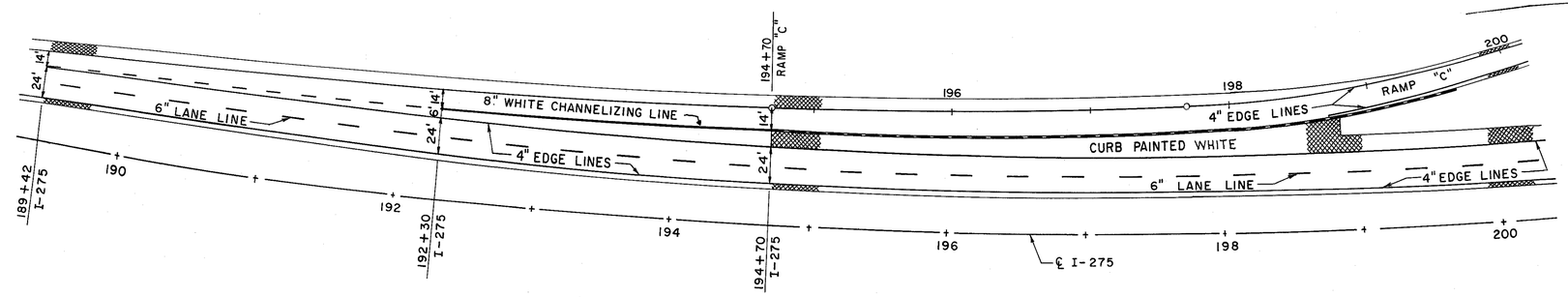

ENTRANCE TERMINAL I-275 WB & RAMP "C"

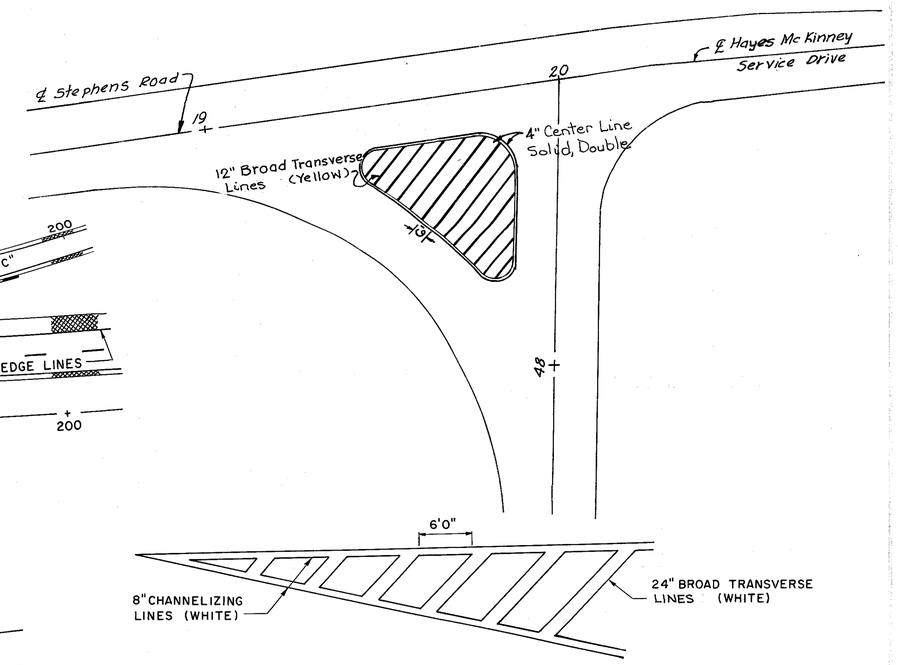

GORE PAINTED ISLAND DETAIL

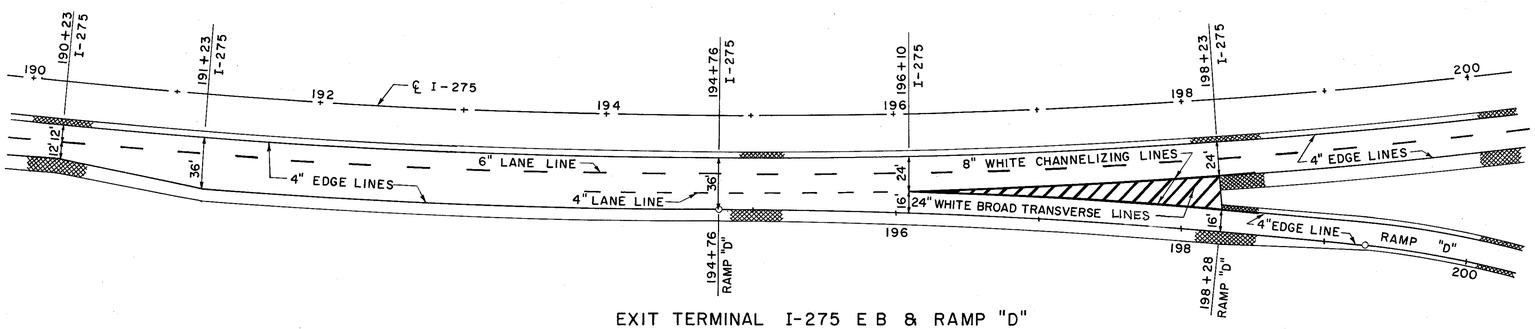

EXIT TERMINAL I-275 EB & RAMP "D"

9
22

PAVEMENT MARKING DETAILS & SIGNING DETAILS

DEVELOPED		CHECKED	
A.R.S.	4-1972	R.E.P.	4-1972

HAM-275-0.00
HAMILTON COUNTY

ITEM 621 PAVEMENT MARKING QUANTITIES

SHEET NO.	LOCATION	STATION	TO STATION	4" EDGE LINE (WHITE) LIN. FT.	4" LANE LINE LIN. FT.	6" LANE LINE LIN. FT.	8" CHANNELIZING LINE LIN. FT.	12" BROAD TRANSVERSE LINES (YELLOW) LIN. FT.	CURB PAINTING (WHITE) LIN. FT.	24" STOP LINES LIN. FT.	4" CENTER LINE, SOLID, DOUBLE LIN. FT.	4" EDGE LINE (YELLOW) LIN. FT.	24" BROAD TRANSVERSE LINES (WHITE) LIN. FT.	PARTICIPATION
5,6 & 9	℄ I-275 Rt	1+30	193+70	19240		19240						19240		
		193+70	196+10	240	240	240						240		
		196+10	198+23	213		213	426					213	422	
	↓	198+23	205+00	677		677						677		
5,6 & 9	℄ I-275 Lt	1+30	189+42	18812		18812						18812		
		189+42	192+30	576	288	288						288		
		192+30	194+70	480		240	240					240		
	↓	194+70	205+00	1030		1030						1030		
9	℄ RAMP "C"	194+70	198+70	400					400					
		198+70	199+63	93					93			93		
	↓	199+63	204+00	437								437		
9	℄ RAMP "D"	198+28	204+91	663								663		
7	STEPHENS RD. CONN.	7+16	19+76								1260			
7	STEPHENS RD. CONN.	47+60	58+50					94		12	1220			
7	HAYES-McKINNEY SERVICE RD.	20+40	50+25								2985			
TOTAL		LIN. FT.		42861	528	40740	666	94	493	12	5465	41933	422	
		MILE		8.12	0.10	7.72					1.04	7.94		

GROUND MOUNTED GUIDE WARNING REGULATORY SIGNS

SIGN NO.	CODE NO.	LOCATION	815 SIGN ERECTION EXTRU. SHEET SQ. FT.	815 SIGN ERECTION FLAT SHEET SQ. FT.	816 SIGN SUPPORTS 4# POST LIN. FT.	6# BEAM LIN. FT.	10 WF 21 LIN. FT.	12 WF 31 LIN. FT.	2# POST LIN. FT.	CONCRETE CU. YD.	SIGN SUPPORT FOR MILEAGE MARKER MOUNTED ON BRIDGE
G-1	IM-39-36 M-5-36-3	7+50 I-275 R		4.50 10.50		17.0					
G-2		16+00 I-275 L	185.00*					28.0 33.0		3.0	
G-3		94+20 I-275 R	92.00*				20.5 24.0			2.5	
G-4		147+00 I-275 R	92.00*				22.0 25.0			2.5	
G-5	G J	165+00 I-275 R	28.00			16.0 18.0					
G-6	G J	173+30 I-275 L	28.00			16.0 18.0					
G-7	IM-38-36 M-5-36-3	175+00 I-275 L		4.50 10.50		17.0					
G-8	N-12A-72	198+38 I-275 R	30.00			17.5 17.5					
201	R-10-48 R-16A-48	18[illegible]+00 I-275 R		20.00 16.00		19.5 20.0					
202	R-2-36	47+75 STEPHENS RD. CONN.		3.89	16.0						
203	R-1-30	47+60 STEPHENS RD. CONN.		6.25	15.0						
204	R-10-48 R-16A-48	161+00 I-275 L		20.00 16.00		19.5 20.0					
205	W-97-48	199+80 RAMP "D"		20.00		17.0					
206	W-49R-48 WP-49-24	200+00 I-275 L		16.00 2.00		17.0					
207	N-41-12	11+86 I-275 R		3.00					11.0		
208	N-41-12	11+86 I-275 L		3.00					11.0		
209	N-41-12	64+66 I-275 R		3.00					11.0		
210	N-41-12	64+66 I-275 L		3.00					11.0		
211	N-41-12	117+46 I-275 R		3.00					11.0		
212	N-41-12	117+46 I-275 L		3.00					11.0		
213	N-41-12	170+26 I-275 R		3.00							1
214	N-41-12	170+26 I-275 L		3.00							1
TOTAL			455.00	174.14	31.0	250.0	91.5	61.0	66.0	8.0	2

*INCLUDES EXIT PANEL

ITEM 620 DELINEATOR

REFERENCE	STATION	TO STATION	SIDE	INTERVAL	A POST	A BRACKET	D POST	D BRACKET	PARTICIPATION
℄ I-275	1+23	189+23	RT.	200'	89	6			
	190+23	198+23	RT.	100'			9		
	NOSE	198+23	I-275 RT.						
		198+28	RAMP "D"						
↓	200+23	204+23		200'	3				
℄ I-275	1+23	189+23	LT.	200'	89	6			
	190+23	199+23	LT.	100'			10		
	NOSE	198+86	I-275 LT.						
		198+76	RAMP "C"						
↓	201+23	205+23	LT.	200'	3				
RAMP "C"	198+76	199+01	LT. & RT.	60'			4		
	199+31	206+71	RT.	30'			19		
RAMP "D"	198+28	199+48	RT. & LT.	60'			6		
	199+78	204+58	LT.	30'			17		
TOTAL					184	12	65		

PAVEMENT MARKING AND TRAFFIC CONTROL QUANTITIES

FED. RD. DIVISION	STATE	PROJECT	
2	OHIO		

174
305

HAM-275-0.00
HAMILTON COUNTY

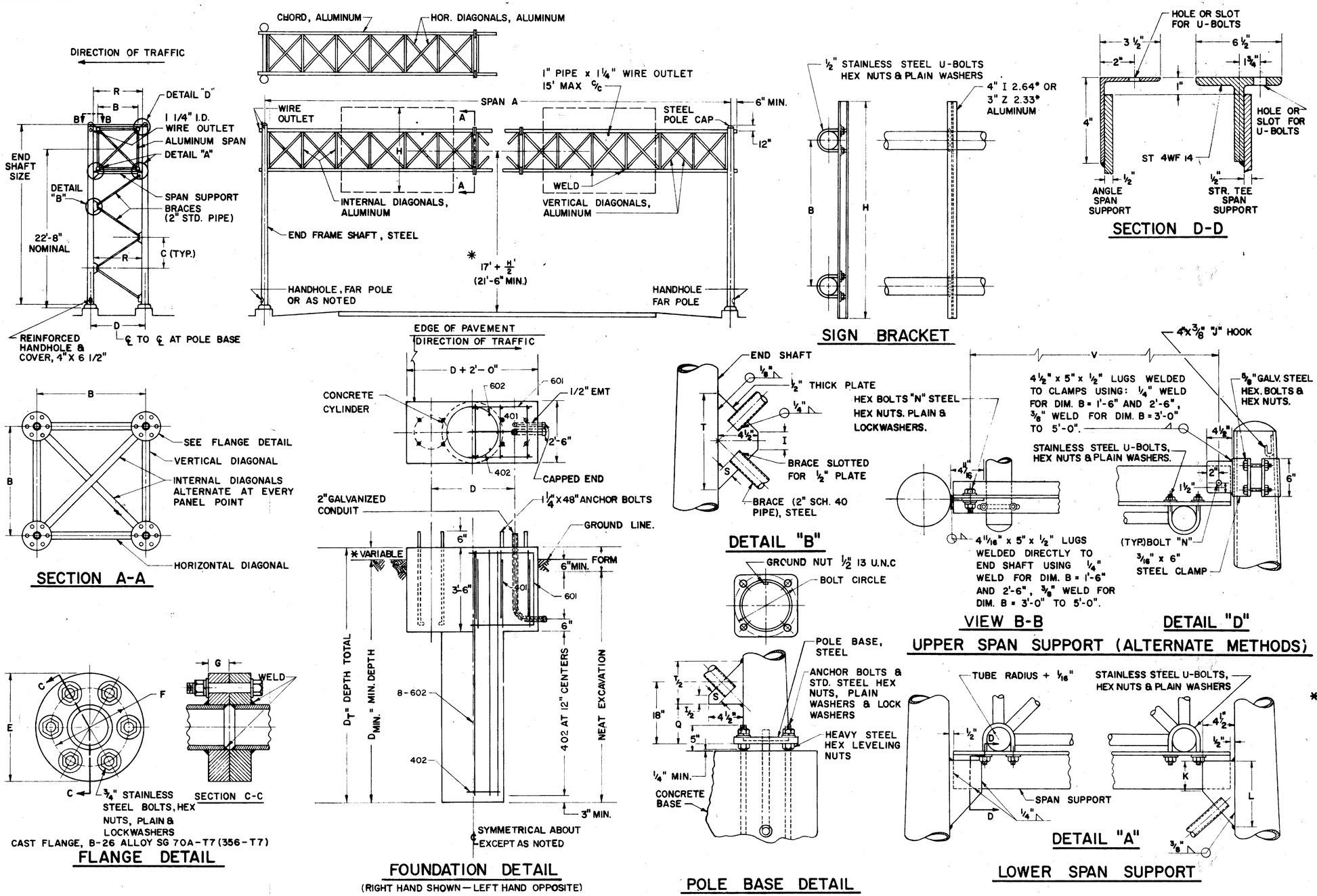

NOTES

MATERIALS

THE OVERHEAD SPAN TRUSS SHALL BE ALUMINUM AND THE END FRAMES SHALL BE STEEL.

SPAN TRUSS AND END FRAMES, INCLUDING HARDWARE, SHALL BE IN ACCORDANCE WITH SUPPLEMENTAL SPECIFICATION 816 UNLESS OTHERWISE NOTED.

STEEL POLE BASES AND GUSSETS SHALL CONFORM TO THE REQUIREMENTS OF ASTM SPECIFICATION A-373.

AFTER FABRICATION THE TAPERED POLES SHALL HAVE A MINIMUM YIELD STRENGTH OF 48,000 PSI.

FABRICATION

THE ENTIRE STEEL END FRAME SHALL BE HOT DIP GALVANIZED IN ACCORDANCE WITH SEC. M-7.4(d).

MAXIMUM LENGTH OF SPAN SECTIONS IS 30 FT.

ERECTION

USE A MINIMUM OF 1" CAMBER IN SPAN TRUSS MEMBER FOR A 50' SPAN; ADD 1/4" OF CAMBER FOR EACH 5' OF INCREASE IN SPAN OVER 50'.

PAYMENT

PAYMENT FOR THE GALVANIZED CONDUIT SHALL BE INCLUDED IN THE UNIT PRICE BID FOR OVERHEAD SIGN SUPPORTS.

SOILS

THE FOUNDATION DETAILS SHOWN ARE FOR AVERAGE SOIL CONDITIONS (MEDIUM CLAY, CEMENTED SAND AND GRAVEL, SANDY CLAY, OR STIFF CLAY).

FOR POOR SOIL CONDITIONS, INCREASE "D" MIN. BY: 50% IN DRY OR WET SAND, 60% IN SILTY CLAY, 100% IN SOFT CLAY, AND FROM 75% TO 150% IN WET SILT, DEPENDING ON QUICKSAND ACTION.

REINFORCING STEEL

COST OF REINFORCING STEEL SHALL BE INCLUDED IN THE UNIT PRICE FOR ITEM 816 CONCRETE FOR SIGN SUPPORT FOUNDATIONS.

BAR SIZE IS INDICATED IN THE BAR MARK. THE FIRST DIGIT WHERE THREE DIGITS ARE USED AND THE FIRST TWO DIGITS WHERE FOUR ARE USED, INDICATE THE BAR SIZE NUMBER.

*** FOUNDATION ELEVATION**

ELEVATION OF TOPS OF FOUNDATIONS SHALL BE BUILT UP SO THAT 17' CLEARANCE IS MAINTAINED OVER ENTIRE WIDTH OF THE PAVEMENT AND SHOULDERS.

DESIGN

THE DESIGN OF OVERHEAD SUPPORTS IS IN ACCORDANCE WITH A.A.S.H.O. SPECIFICATION FOR THE DESIGN AND CONSTRUCTION OF STRUCTURAL SUPPORTS FOR HIGHWAY SIGNS, ADOPTED JUNE 12, 1961.

DESIGN NO.	SPAN A	B	C	D	D-MIN.	END SHAFT	BRACE LENGTH	E	F	G	I	K	L	N	P	Q	R	S	T	U BOLTS	V	BOLT CIRCLE	SPAN SUPPORT SECTION D-D	CHORDS	VERTICAL, INTERNAL & HORIZONTAL DIAGONALS
1	50' Thru 70'	2'-6"	5'-1"	3'-10"	9'-0"	7" x 3.54" x 24'-9" 7GA	5'-7 13/16"	7"	5 1/2"	1 1/4"	3 1/2"	4 3/4"	7 1/4"	5/8"	12"	5 1/4"	3'-3"	1 1/2"	9"	5/8"	2'-9 5/8"	10"	3/8" ANGLE x 3'-2"	3 1/2" x .188"	1.660" x .140"
2	71' Thru 85'	3'-0"	4'-11 3/4"	4'-5"	9'-0"	8" x 4.5" x 25'-0" 3GA	5'-10 13/16"	7"	5 1/2"	1 1/4"	3 1/2"	4 3/4"	8"	1"	12"	6 5/8"	3'-9"	1 1/2"	10"	5/8"	3'-3 5/8"	11"	SPLIT TEE 3'-8"	3 1/2" x .188"	1.660" x .140"
3	86' Thru 105'	4'-0"	4'-10 1/4"	5'-7"	9'-0"	8" x 6.22" x 25'-6" 3GA	6'-7 1/8"	9 1/4"	7 7/16"	1 3/8"	5/8"	4 3/8"	7 3/4"	1"	12"	6 1/4"	4'-11"	1 1/2"	9 1/2"	5/8"	4'-5 5/8"	11"	SPLIT TEE 4'-10"	4 3/4" x .188"	1.900" x .145"

REINFORCEMENT SCHEDULE

MARK	NO.	LENGTH	TYPE
401	12" C/C	7'-6"	101
402	12" C/C	7'-6"	103
601	6	2D + 9'-6"	102
602	16	D_T - 6"	STR.

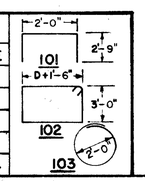

BUREAU OF TRAFFIC
OHIO DEPARTMENT OF HIGHWAYS

OVERHEAD SIGN SUPPORTS

816 No. 7.2

DATE 7-25-62 5-5-64 6-20-66

APPROVED _____ ENGINEER OF TRAFFIC

11/22

200 SQ. FT. SIGN AREA

OVERHEAD SIGN SUPPORT, 816 NO. 7.2

HAM-275-0.00
HAMILTON COUNTY

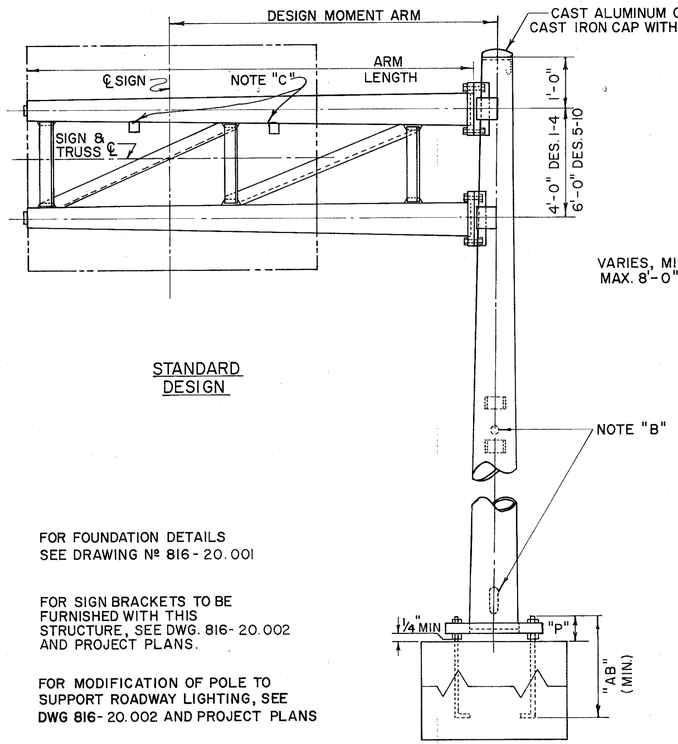

STANDARD DESIGN

FOR FOUNDATION DETAILS SEE DRAWING Nº 816-20.001

FOR SIGN BRACKETS TO BE FURNISHED WITH THIS STRUCTURE, SEE DWG. 816-20.002 AND PROJECT PLANS.

FOR MODIFICATION OF POLE TO SUPPORT ROADWAY LIGHTING, SEE DWG 816-20.002 AND PROJECT PLANS

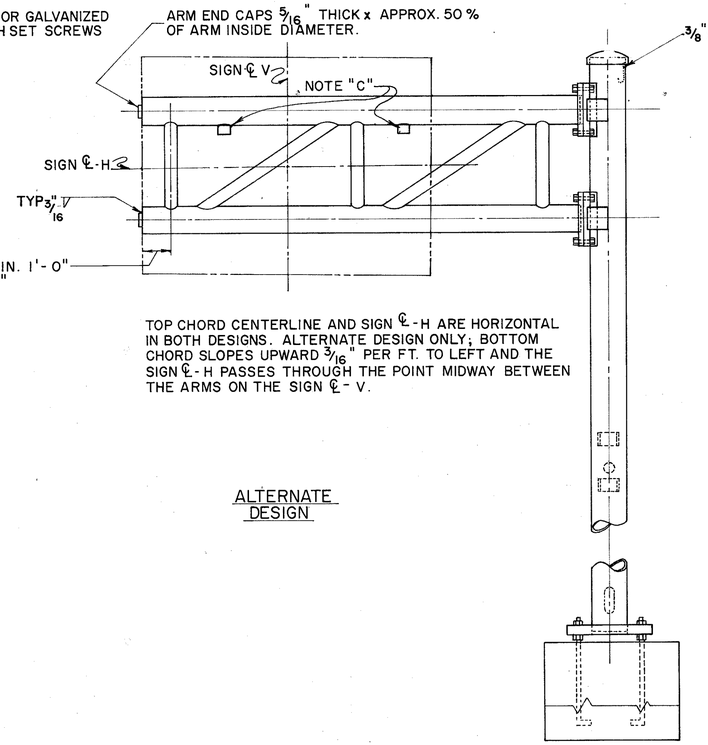

TOP CHORD CENTERLINE AND SIGN ℄-H ARE HORIZONTAL IN BOTH DESIGNS. ALTERNATE DESIGN ONLY; BOTTOM CHORD SLOPES UPWARD 3/16" PER FT. TO LEFT AND THE SIGN ℄-H PASSES THROUGH THE POINT MIDWAY BETWEEN THE ARMS ON THE SIGN ℄-V.

ALTERNATE DESIGN

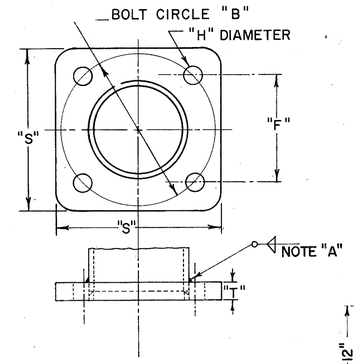

POLE BASE DETAIL

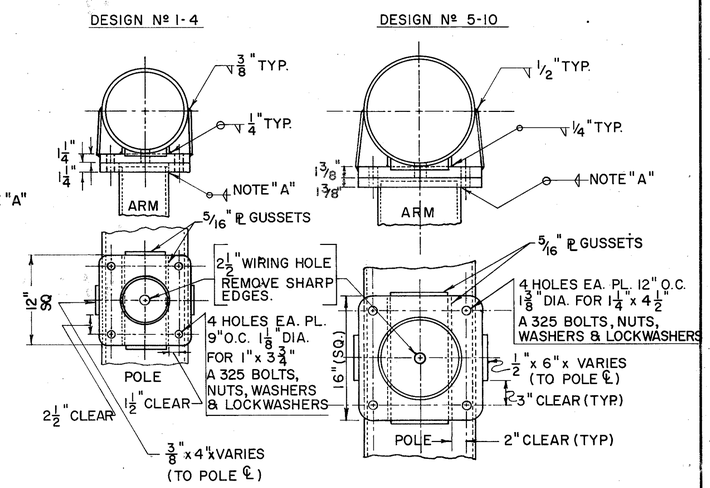

ARM ATTACHMENT DETAIL

NOTE "A"

POLE BASE AND ARM ATTACHMENT PLATE TO BE WELDED INSIDE AND OUTSIDE WITH FILLET WELDS. EACH FILLET WELD SHALL BE EQUAL TO THE WALL THICKNESS OF THE RESPECTIVE TUBING.

NOTE "B"

CONSTRUCTION DETAILS AND LOCATION OF HANDHOLE AND SWITCH GEAR MOUNTING BRACKETS ARE SHOWN ON DRAWING 816-20.002

NOTE "C"

SIGNS UNDER 20'-0" LONG, ONE 1 1/4" PIPE COUPLING WELDED TO THE TOP CHORD APPROXIMATELY 12" OUTBOARD OF FIRST SIGN BRACKET. FOR SIGNS 20'-0" OR OVER, A SECOND 1 1/4" PIPE COUPLING IS REQUIRED APPROXIMATELY 12" OUTBOARD OF THE SECOND SIGN BRACKET. ALL SHARP EDGES INSIDE THE CHORD AND PIPE COUPLING MUST BE REMOVED.

1. UNLESS OTHERWISE NOTED, DIMENSIONS AND INSTRUCTIONS APPLY TO BOTH THE STANDARD DESIGN AND ALTERNATE DESIGN.
2. SIGN SUPPORT ARMS UNDER 18'-0" LONG DO NOT REQUIRE TRUSSING.
3. THE DESIGN OF THESE OVERHEAD SIGN SUPPORTS IS IN ACCORDANCE WITH THE AASHO SPECIFICATIONS FOR THE DESIGN AND CONSTRUCTION OF STRUCTURAL SUPPORTS FOR HIGHWAY SIGNS AS REVISED IN 1968.

ACCEPTABLE TRUSS JOINTS

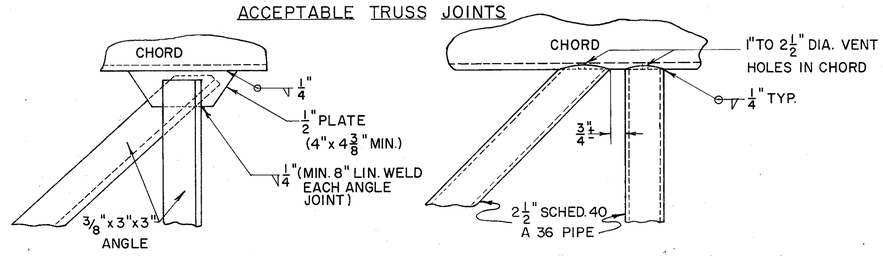

DESIGN NUMBER	POLE SIZE OUTSIDE DIAMETERS	ARM SIZE OUTSIDE DIAMETERS
1	2 PLY. 7 GA. 10" x 6.50" x 25'-0"	7 GA. 6" x 3.76" x 16'-0"
1 ALT	8 5/8" x .500" WALL x 25'-0"	5 9/16" x .258" WALL x 16'-0"
2	2 PLY. 7 GA. 10" x 6.50" x 25'-0"	3 GA. 6" x 4.60" x 20'-0"
2 ALT	8 5/8" x .562" WALL x 25'-0"	5 9/16" x .344" WALL x 20'-0"
3	0 GA. 13" x 9.22" x 27'-0"	7 GA. 8" x 5.76" x 16'-0"
3 ALT	10 3/4" x .438 WALL x 27'-0	6 5/8" x .250" WALL x 16'-0"
4	0 GA. 13" x 9.22" x 27'-0"	7 GA. 9" x 6.20" x 20'-0"
4 ALT	10 3/4" x .500" WALL x 27'-0"	6 5/8 x .344" WALL x 20'-0"
5	0 GA. 15" x 11.08" x 28'-0"	7 GA. 9.5" x 6.42" x 22'-0"
5 ALT	12 3/4" x .500" WALL x 28'-0"	8 5/8" x .250" WALL x 22'-0"
6	2 PLY. 7 GA. 15" x 11.08" x 28'-0"	3 GA. 10" x 6.36" x 26'-0"
6 ALT	12 3/4" x .562" WALL x 28'-0"	8 5/8" x .322" WALL x 26'-0"
7	2 PLY. 7 GA. 16.5" x 12.58" x 28'-0"	3 GA. 10" x 6.64" x 24'-0"
7 ALT	14" x .562" WALL x 28'-0"	8 5/8" x .322" WALL x 24'-0"
8	2 PLY. 3 GA. 16.5" x 12.58" x 28'-0"	3 GA. 11" x 7.08" x 28'-0"
8 ALT	14" x .594" WALL x 28'-0"	10 3/4" x .279" WALL x 28'-0"
9	2 PLY. 3 GA. 16.5" x 12.30" x 30'-0"	3 GA. 11" x 7.36" x 26'-0"
9 ALT	14" x .688" WALL x 30'-0"	10 3/4" x .279" WALL 26'-0"
10	2 PLY. 3 GA. 18" x 13.80" x 30'-0"	3 GA. 13" x 8.80" x 30'-0"
10 ALT	16" x .656" WALL x 30'-0"	10 3/4" x .438" WALL x 30'-0"

DESIGN NUMBER	DESIGN SIZE (SQ. FT.)	DESIGN MOMENT ARM (FT.)	DIM. "F" (IN)	DIM. "P" (IN)	DIM. "S" (IN.)	DIM. "T" (IN.)	BOLT CIRCLE "B" (IN.)	ANCHOR BOLTS "AB" (IN.)	DIM. "H" (IN.)
1	80	12	10 5/8	7 3/4	15 5/8	2	15	1 3/4 x 84	2 1/8
2	80	16	10 5/8	7 3/4	15 5/8	2	15	1 3/4 x 84	2 1/8
3	120	12	12 3/4	8 1/2	18 1/2	2	18	2 x 90	2 3/8
4	120	16	12 3/4	8 1/2	18 1/2	2	18	2 x 90	2 3/8
5	180	14	15 1/2	8 1/2	23	2	22	2 x 90	2 3/8
6	180	18	15 1/2	8 1/2	23	2	22	2 x 90	2 3/8
7	240	14	16 5/8	9 3/4	24 1/2	2 1/2	23 1/2	2 1/2 x 114	2 7/8
8	240	18	16 5/8	9 3/4	24 1/2	2 1/2	23 1/2	2 1/2 x 114	2 7/8
9	300	15 1/2	16 5/8	9 3/4	24 1/2	2 1/2	23 1/2	2 1/2 x 114	2 7/8
10	300	19 1/2	18	9 3/4	26 1/2	2 1/2	25 1/2	2 1/2 x 114	2 7/8

MATERIAL SPECIFICATIONS

POLE & ARMS: ANY STEEL WITH MIN. 52,000 P.S.I. YIELD STRESS AFTER ERECTION.
TRUSS MEMBERS: ASTM A-36
BASE & OTHER PLATE STOCK: ASTM A-36
ANCHOR BOLTS: MIN. 54,000 P.S.I. YIELD STRESS AS ERECTED.
ARM ATTACHMENT BOLTS: ASTM A-325
MISC. BOLTS & NUTS: ASTM A-307 (GALVANIZED PER ASTM A-153)
WELDING: SECTION 513.17, OHIO CONST. & MAT. SPECIFICATIONS
GALVANIZING AFTER FABRICATION, ALL STRUCTURAL PARTS: ASTM A-123

GALVANIZE ONLY TOP 16" OF ALL ANCHOR BOLTS PER ASTM A-123

BUREAU OF DESIGN SERVICES
OHIO DEPARTMENT OF HIGHWAYS

OVERHEAD SIGN SUPPORT

Date 3-23-72

STANDARD CONSTRUCTION DRAWING 816-12.30

APPROVED W. O. Cunningham
ENGINEER OF DESIGN SERVICES

12/22

BRUNING 44-560 10943

HAM-275-0.00
HAMILTON COUNTY

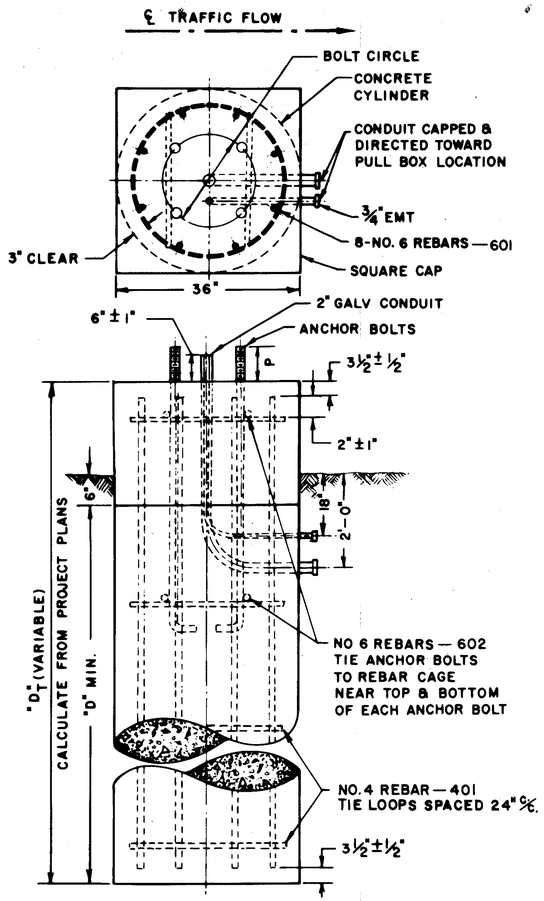

816-12.30 FOUNDATIONS

DESIGN NUMBERS	ANCHOR BOLTS (in.)	BOLT CIRCLE (in.)	"P" (in.)	"D" (ft.)
1 & 2	1¾ x 84	15	7¾	9
3 & 4	2 x 90	18	8½	11
5 & 6	2 x 90	22	8½	11
7, 8 & 9	2½ x 114	23½	9¾	15
10	2½ x 114	25½	9¾	17

REINFORCEMENT SCHEDULE

MARK	NO.	LENGTH	TYPE
401	24" c/c	8'-6"	401
601	8	D_T 6"	STR.
602	4	2'-5"	STR.

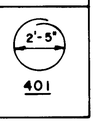

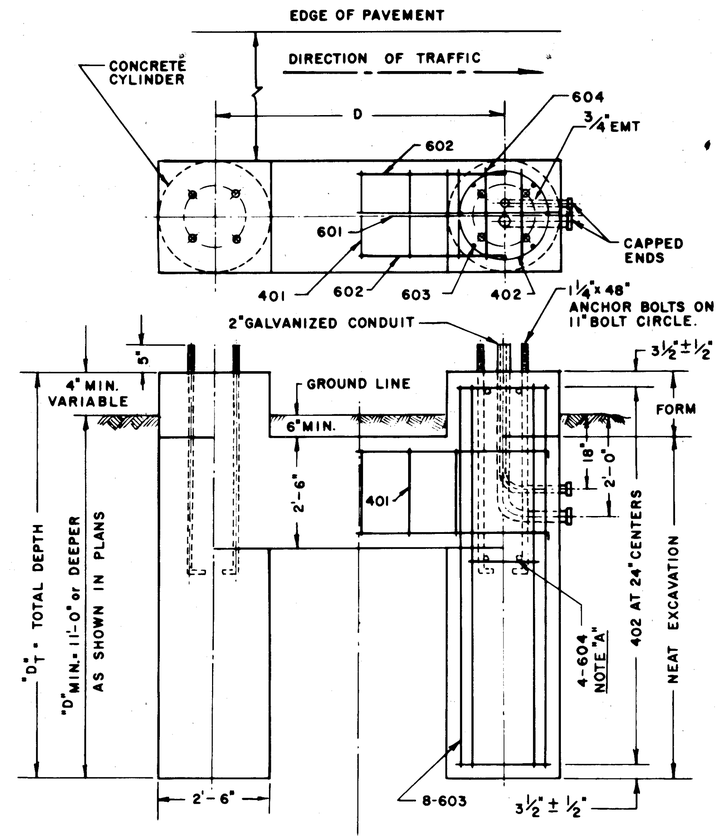

816-7.xx FOUNDATIONS

(RIGHT HAND SHOWN — LEFT HAND OPPOSITE)

NOTE "A" TIE ANCHOR BOLTS TO REBAR CAGE NEAR TOP & BOTTOM OF ANCHOR BOLTS.

ALUMINUM TRUSS BOX SIZE	"D"
3'-0"	4'-5"
4'-0"	5'-7"
5'-0"	6'-7"

REINFORCEMENT SCHEDULE
FOR ALUMINUM TRUSS FOUNDATIONS

MARK	NO.	LENGTH	TYPE
401	12" c/c	8'-6"	401
402	24" c/c	7'-6"	402
601	4	D = 4'-0"	601
602	8	D = 2'-0"	602
603	32	D = 0'-6"	STR.
604	16	2'-0"	STR.

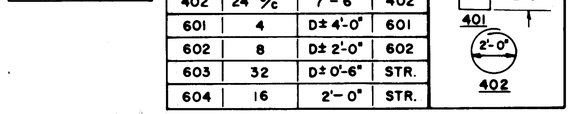

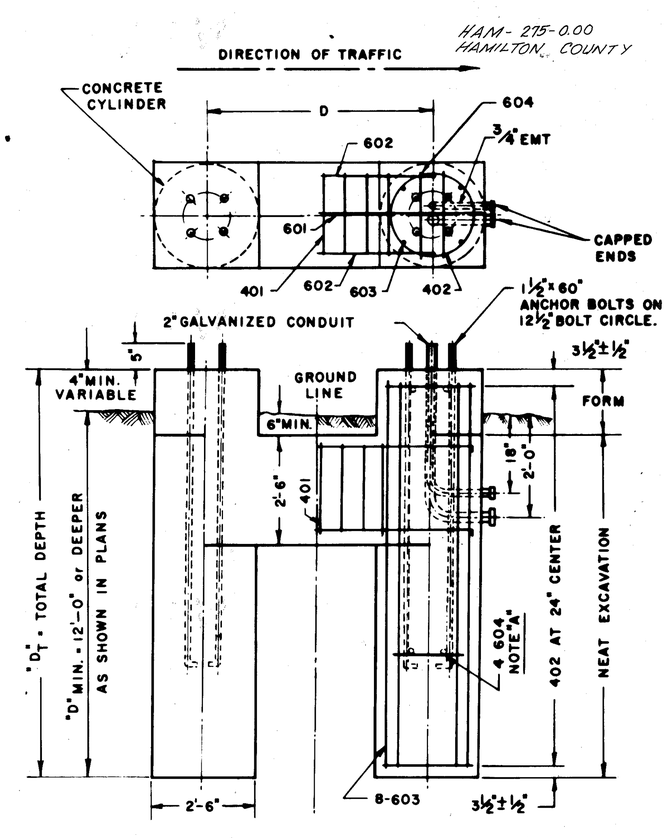

816-15.xx FOUNDATIONS

(RIGHT HAND SHOWN — LEFT HAND OPPOSITE)

STEEL TRUSS BOX SIZE	"D"
3'-4" ±	5'-3"
5'-0"	6'-7"

REINFORCEMENT SCHEDULE
FOR STEEL TRUSS FOUNDATIONS

MARK	NO.	LENGTH	TYPE
401	12" c/c	8'-6"	401
402	24" c/c	7'-6"	402
601	4	D ± 4'-0"	601
602	8	D ± 2'-0"	602
603	32	D ± 0'-6"	STR.
604	16	2'-0"	STR.

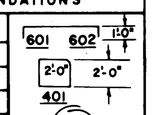

NOTE "A" TIE ANCHOR BOLTS TO REBAR CAGE NEAR TOP & BOTTOM OF ANCHOR BOLTS

BUREAU OF DESIGN SERVICES
OHIO DEPARTMENT OF HIGHWAYS

SIGN SUPPORT FOUNDATIONS

DATE 3-23-72

STANDARD CONSTRUCTION DRAWING 816-20.001

APPROVED W. J. Cunningham
ENGINEER OF DESIGN SERVICES

12A
22

175B
30.5

HAM- 275-0.00
HAMILTON COUNTY

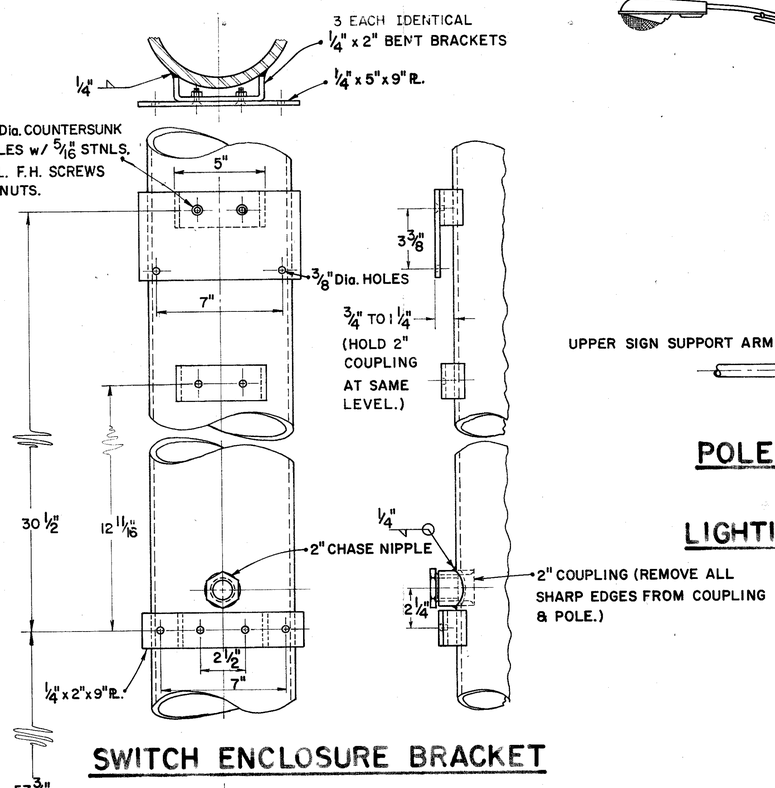

SWITCH ENCLOSURE BRACKET

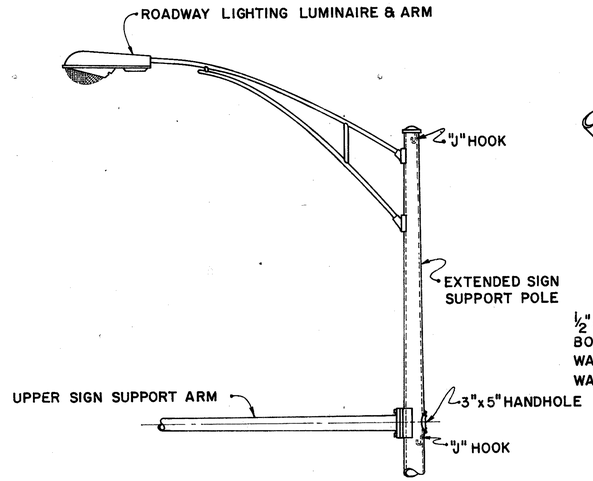

POLE EXTENSION FOR LIGHTING LUMINAIRE

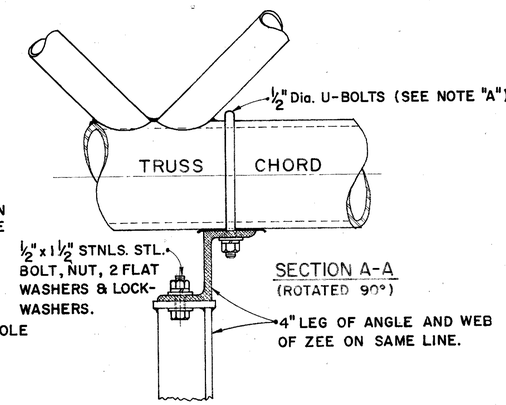

SIGN ATTACHMENT FOR BOX TRUSS

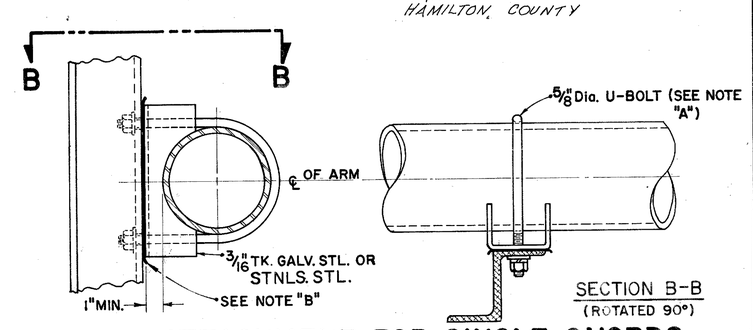

SIGN ATTACHMENT FOR SINGLE CHORDS

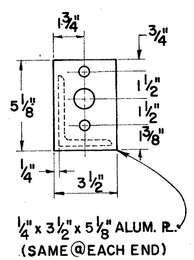

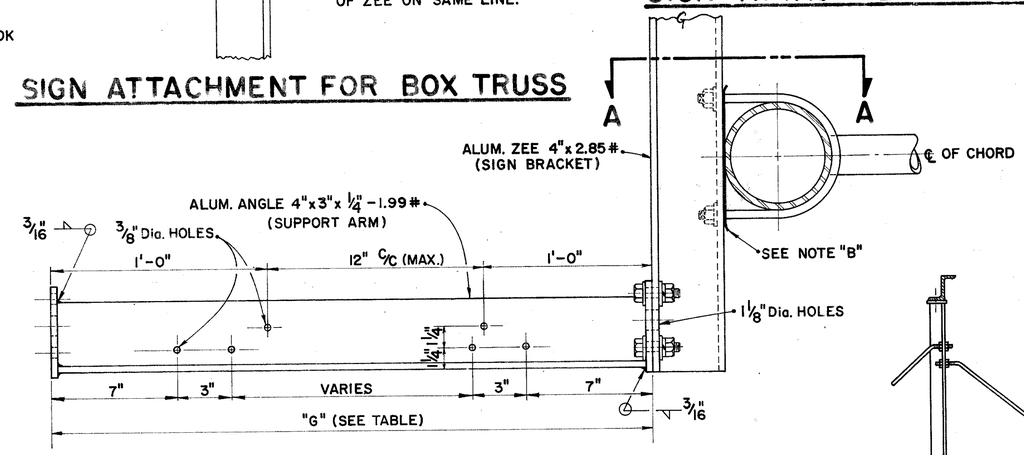

SUPPORT ARM & SIGN BRACKET

(MAKE AS LEFTS & RIGHTS FOR EACH SIGN)

SIGN HEIGHT	SUPPORT ARM LENGTH "G"	BRACING ROD REQUIRED
4'-0" to 6'-0"	2'-9"	NO
6'-6" to 7'-6"	3'-3"	NO
8'-0" to 11'-0"	4'-3"	YES
11'-6" to 14'-0"	5'-9"	YES

NOTE:
FOR LENGTH AND QUANTITY OF SIGN BRACKETS SEE PROJECT PLAN.

UNLESS OTHERWISE NOTED, MIDPOINT OF SIGN BRACKETS AND TRUSS CENTER-LINE SHALL BE AT THE SAME ELEVATION.

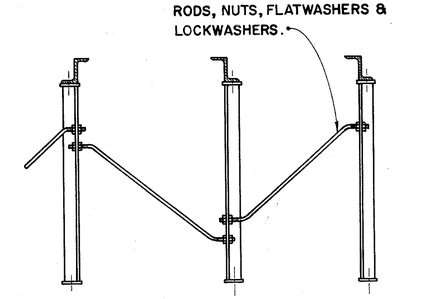

BRACING ROD ARRANGEMENT

WHEN ONLY TWO SUPPORT ARMS REQ'D PER SIGN, USE TWO BRACING RODS TO FORM "X" BRACING.

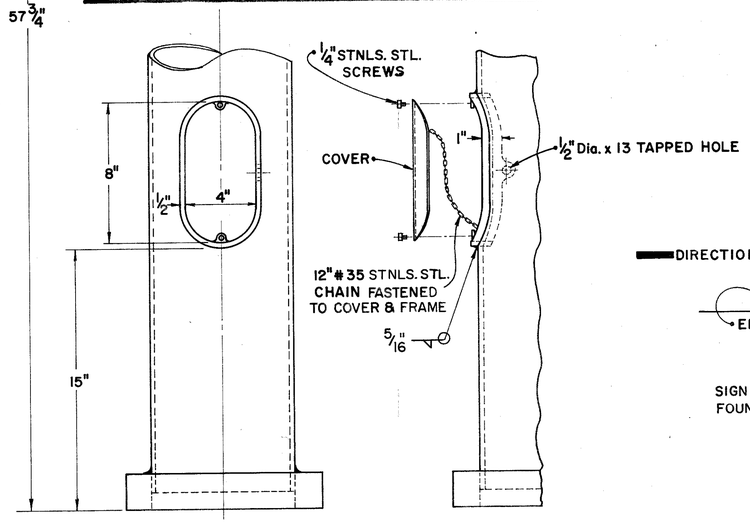

4" x 8" CURVED HANDHOLE

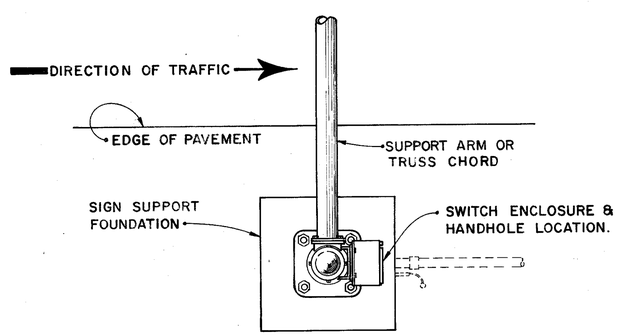

SWITCH ENCLOSURE & HANDHOLE ORIENTATION

NOTE "A"
U-BOLTS, NUTS & WASHERS SHALL BE STAINLESS STEEL FOR USE WITH ALUMINUM TRUSS CHORDS. WHEN USED WITH GALVANIZED CHORDS, THE U-BOLT ONLY MAY BE GALVANIZED STEEL.

NOTE "B"
CONTACT BETWEEN ALUMINUM AND GALVANIZED PARTS MUST BE PREVENTED WITH A MIN. 1/16" THICK NEOPRENE GASKET OR APPROVED SUBSTITUTE. NO GASKET IS REQUIRED BETWEEN STAINLESS STEEL AND ALUMINUM.

NOTE:
ALL STL. PARTS (EXCEPT STNLS.) SHALL BE GALVANIZED AFTER FABRICATION PER ASTM A-123.

BUREAU OF DESIGN SERVICES
OHIO DEPARTMENT OF HIGHWAYS

MISCELLANEOUS
OVERHEAD SIGN SUPPORT DETAILS

DATE 3-23-72

STANDARD CONSTRUCTION DRAWING 816-20.002

APPROVED M. J. Cunningham
ENGINEER OF DESIGN SERVICES

12B
2.2

BRUNING 44.560 10943

FED. RD. DIVISION	STATE	PROJECT	
2	OHIO		

176
305

HAM-275-0.00
HAMILTON COUNTY

12" EXTRUSHEET PANEL

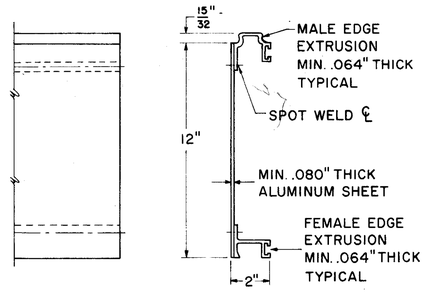

FRONT VIEW SIDE VIEW

18" EXTRUSHEET PANEL

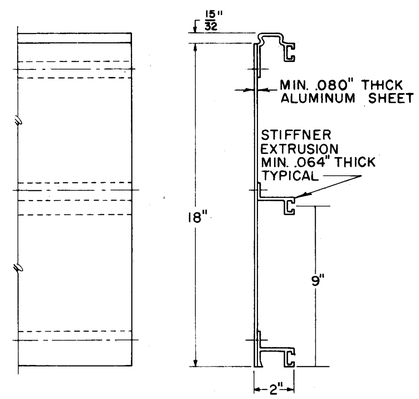

FRONT VIEW SIDE VIEW

24" EXTRUSHEET PANEL

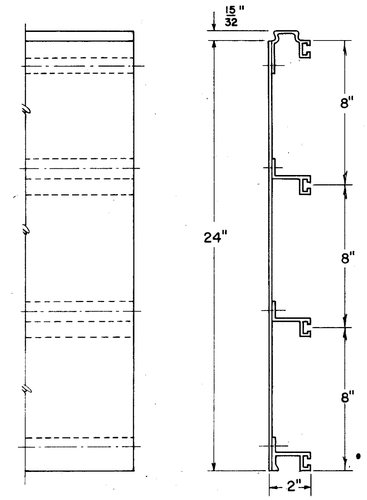

FRONT VIEW SIDE VIEW

NOTES:

EXTRUSHEET PANELS SHALL BE ALUMINUM; SPOT WELDING AND ALL MATERIALS SHALL CONFORM WITH SUPPLEMENTAL SPECIFICATION

COMBINATIONS OF 12", 18", AND 24" PANELS ARE USED TO ATTAIN REQUIRED SIGN HEIGHT.

INDIVIDUAL PANELS SHALL BE THE SAME LENGTH AS THE HORIZONTAL LENGTH OF SIGN WITH NO SPLICES.

PANELS SHALL BE INTERLOCKED AND ERECTED WITH THE MALE EXTRUSION LOCATED AT THE TOP EDGE OF THE SIGN.

EXTRUSHEET PANELS SHALL BE FASTENED TO EACH VERTICAL SUPPORT MEMBER WITH MOUNTING CLIPS; ALTERNATELY AT EACH HORIZONTAL EXTRUSION; BOTH SIDES AT EACH JOINT, AND ON BOTH SIDES AT TOP AND BOTTOM EDGE OF SIGN.

THE PANELS SHALL BE DESIGNED TO WITHSTAND A WIND LOAD OF 35 POUNDS PER SQUARE FOOT, IN ACCORDANCE WITH THE A.A.S.H.O. SPECIFICATION FOR DESIGN AND CONSTRUCTION OF STRUCTURAL SUPPORTS FOR HIGHWAY SIGNS.

THE MAXIMUM SIGN LENGTH FOR TWO SUPPORTS IS 19'-0".
THE MAXIMUM SIGN LENGTH FOR THREE SUPPORTS IS 29'-0".

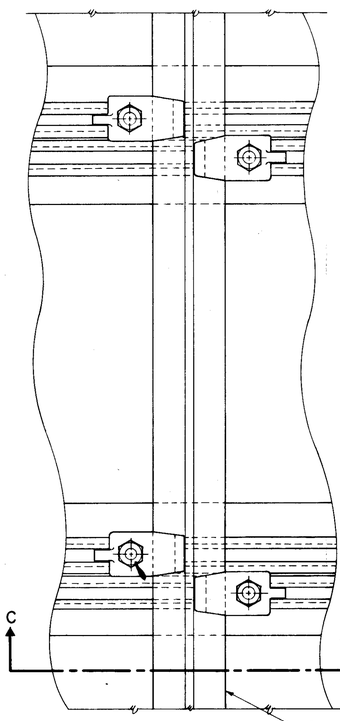

SECTION A-A

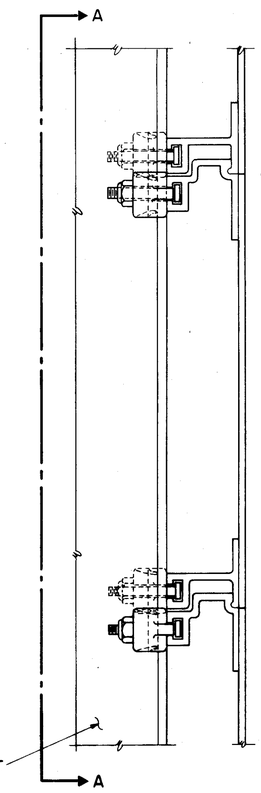

SECTION B-B

GENERAL ARRANGEMENT

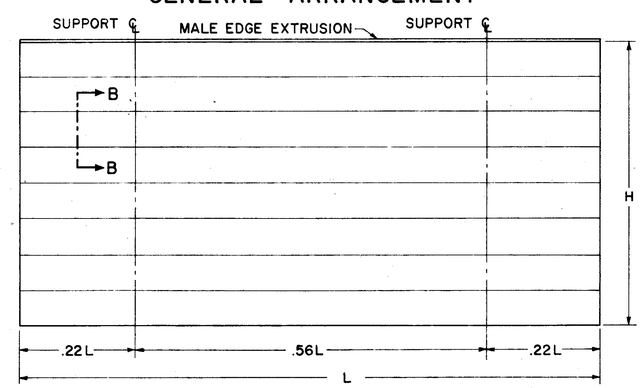

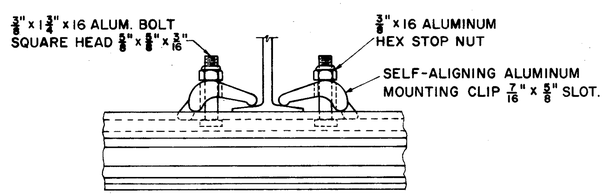

SECTION C-C

CLIP DETAIL

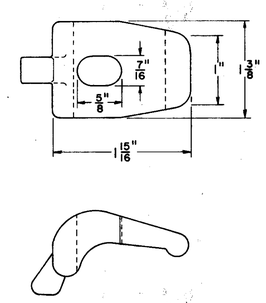

SPOT WELDS

PANEL SIZE	MAXIMUM SPOT WELD SPACING	
	CENTER TO CENTER	BETWN ROWS
12 INCH	4 INCH	10 INCH
18 & 24 INCH	4 INCH	8 INCH

BUREAU OF TRAFFIC
OHIO DEPARTMENT OF HIGHWAYS

ALUMINUM EXTRUSHEET PANEL SIGN

ECD 1

DATE
9-25-63
5-19-64
10-21-65
5-24-67

APPROVED Fred C. Talbot
ENGINEER OF TRAFFIC

13/22

ALUMINUM EXTRUSHEET PANEL SIGN

FED. RD. DIVISION	STATE	PROJECT	
2	OHIO		

177
305

HAM-275-0.00
HAMILTON COUNTY

12" BOLTED-EXTRUSHEET PANEL

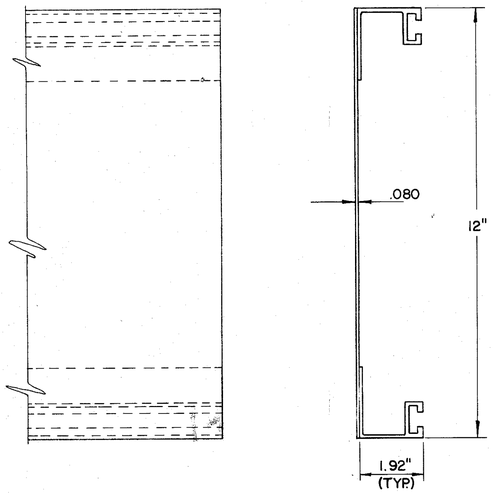

FRONT VIEW

SIDE VIEW

18" BOLTED-EXTRUSHEET PANEL

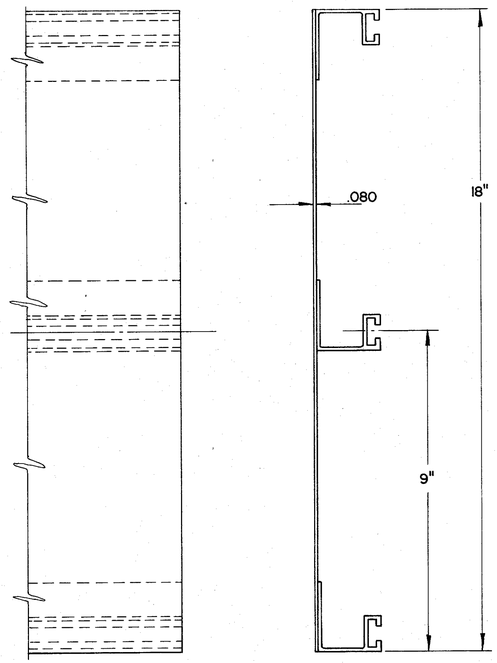

FRONT VIEW

SIDE VIEW

24" BOLTED-EXTRUSHEET PANEL

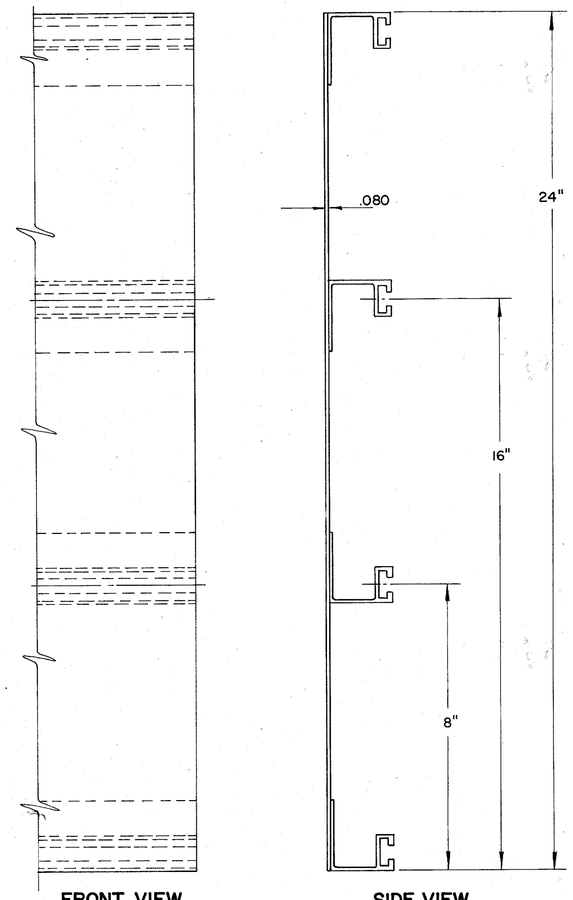

FRONT VIEW

SIDE VIEW

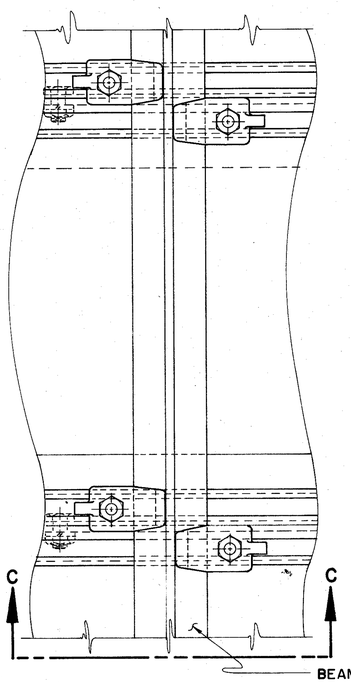

SECTION A-A

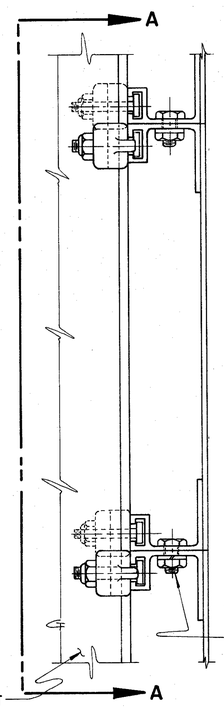

SECTION B-B

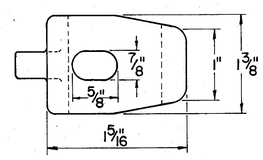

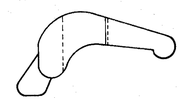

CLIP DETAIL

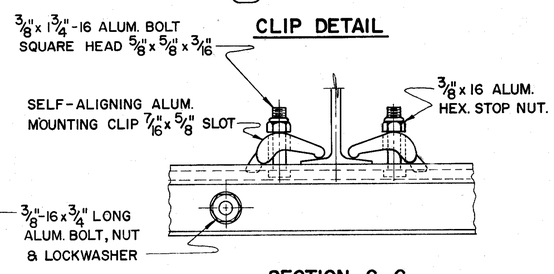

SECTION C-C

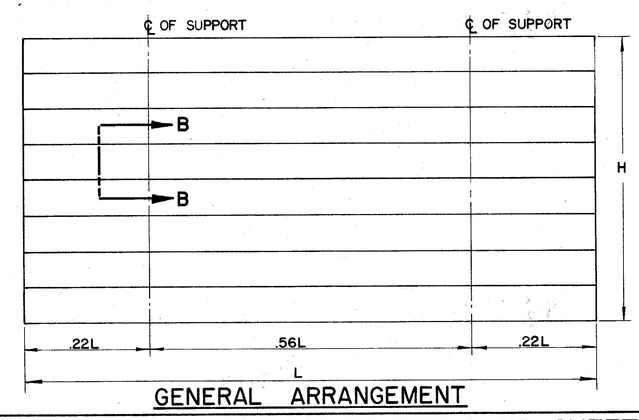

GENERAL ARRANGEMENT

NOTES

EXTRU-SHEET PANELS SHALL BE ALUMINUM; SPOT WELDING, MATERIALS AND HARDWARE SHALL CONFORM WITH SPECIFICATION NO. 815

COMBINATIONS OF 12", 18" AND 24" PANELS ARE TO BE USED TO ATTAIN REQUIRED SIGN HEIGHT.

INDIVIDUAL PANELS SHALL BE THE SAME LENGTH AS THE HORIZONTAL LENGTH OF SIGN, WITH NO SPLICES.

THE PANELS SHALL BE ERECTED HORIZONTALLY AND BOLTED ON 24" CENTERS.

THE PANELS SHALL BE FASTENED TO EACH VERTICAL SUPPORT MEMBER WITH MOUNTING CLIPS; ALTERNATELY AT EACH HORIZONTAL EXTRUSION; BOTH SIDES AT EACH JOINT, AND BOTH SIDES AT TOP AND BOTTOM EDGES OF SIGN.

THE PANELS SHALL BE DESIGNED IN ACCORDANCE WITH THE A.A.S.H.O SPECIFICATION FOR THE DESIGN AND CONSTRUCTION OF STRUCTURAL SUPPORTS FOR HIGHWAY SIGNS, BASE ON A WIND LOAD OF 35#/SQ. FT.

THE MAXIMUM SIGN LENGTH FOR TWO SUPPORTS IS 19'-0". THE MAXIMUM SIGN LENGTH FOR THREE SUPPORTS IS 29'-0".

SPOT WELDS

PANEL SIZE	MAXIMUM SPOT WELD SPACING	
	CENTER TO CENTER	BETWN ROWS
12 INCH	4 INCH	10 INCH
18 & 24 INCH	4 INCH	8 INCH

BUREAU OF TRAFFIC
OHIO DEPARTMENT OF HIGHWAYS

ALUMINUM BOLTED EXTRUSHEET PANEL SIGN

ECD 2

DATE 10-14-65

APPROVED Fred C. Talbot
ENGINEER OF TRAFFIC

14/22

ALUMINUM BOLTED-EXTRUSHEET PANEL SIGN

FED. RD. DIVISION	STATE	PROJECT	
2	OHIO		

178
305

HAM.- 275- 0.00
HAMILTON COUNTY

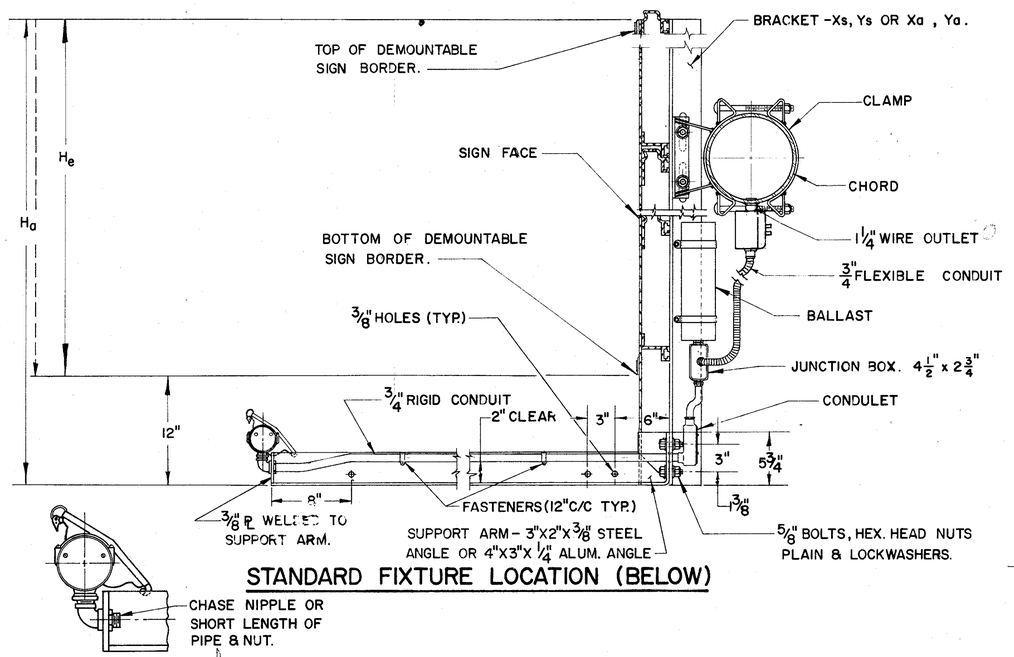

STANDARD FIXTURE LOCATION (BELOW)

FIXTURE CONNECTION WHERE WIRING CONDUIT IS NOT NEEDED.

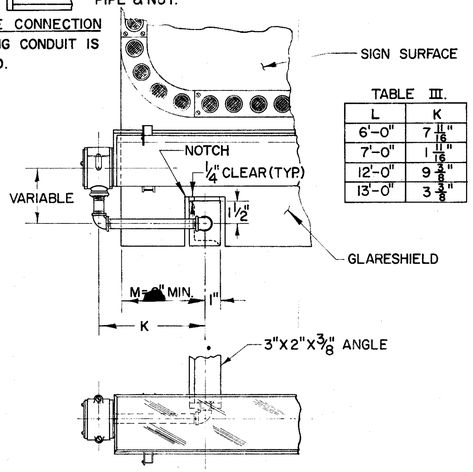

TABLE III.

L	K
6'-0"	7 11/16"
7'-0"	1 11/16"
12'-0"	9 3/8"
13'-0"	3 3/8"

ALTERNATE FIXTURE CONNECTIONS FOR SIGN 6', 7', 12' & 13' IN LENGTH.

DETAIL A.

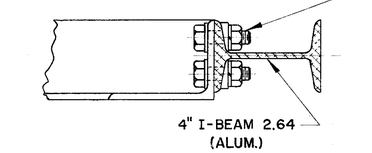

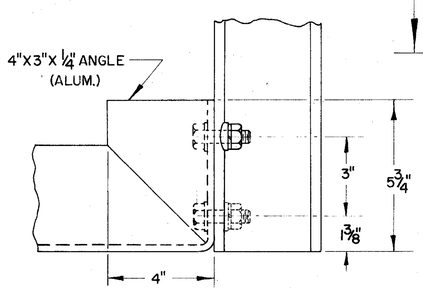

FOR SUPPORTS 7.2-7.6

DETAIL B.

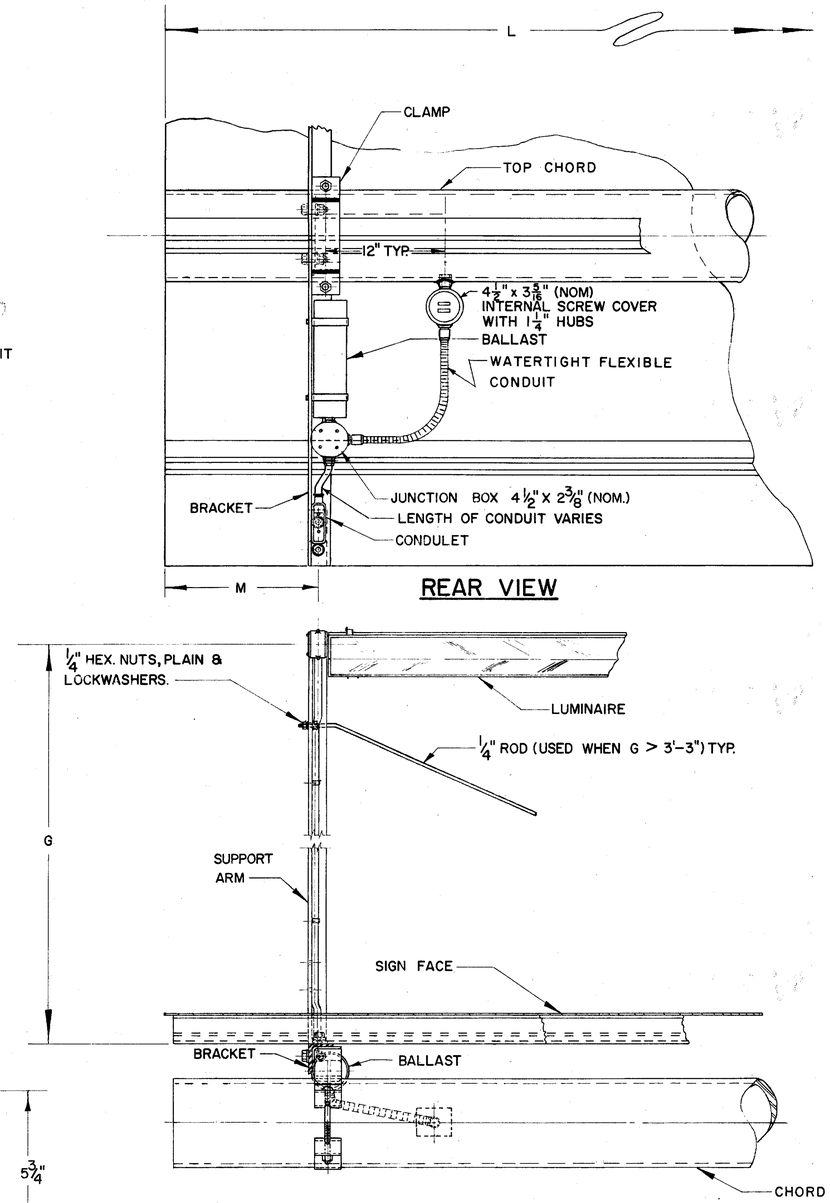

REAR VIEW

TOP VIEW

FABRICATION — ALL STRUCTURAL COMPONENTS SHOWN ON THIS SHEET SHALL CONFORM TO SUPPLEMENT SPECIFICATIONS 816.

MATERIALS — THE MATERIALS USED IN THE COMPONENTS SHOWN ON THIS SHEET SHALL BE IN CONFORMANCE WITH THE MATERIALS USED IN THE SIGN SUPPORT

TABLE I.

"L" SIGN LENGTH A	"L" SIGN LENGTH B	FIXTURES 75 LBS	FIXTURES 99 LBS	NUMBER OF FIXTURES	"M" EDGE DISTANCE A LT.	"M" EDGE DISTANCE A RT.	"M" EDGE DISTANCE B LT.	"M" EDGE DISTANCE B RT.	NO. BALLAST
6'-0"	7'-0"	1			6"	6"	6"	6"	1
8'-0"	9'-0"	1			10 3/8	10 1/4	16 3/8	16 1/4	1
10'-0"	11'-0"			1	10 3/8	10 1/4	16 3/8	16 1/4	1
12'-0"	13'-0"	2			6"	6	6	6	1
14'-0"	15'-0"	2			8 5/8	8 5/8	14 5/8	14 5/8	1
16'-0"	17'-0"	1	1		8 5/8	8 5/8	14 5/8	14 5/8	1
18'-0"	19'-0"		2		8 5/8	8 5/8	14 5/8	14 5/8	1
20'-0"	21'-0"	3			7"	6 7/8	13	12 7/8	2
22'-0"	23'-0"	2	1		7"	6 7/8	13	12 7/8	2
24'-0"	25'-0"	1	2		7"	6 7/8	13	12 7/8	2
26'-0"	27'-0"		3		7"	6 7/8	13	12 7/8	2

Sn= Nominal Fixture Length, 72" & 96" respectively.
Sa= Actual Fixture Length, for mounting purposes, 75 5/8" and 99 5/8" respectively. (Slight variation for different manufacturers.)
M= Distance from edge of sign to ℄ of notch, min. 6". When the length of the sign minus 1'-0" is less than the sum of the actual fixture lengths, an offset "K" is used. For additional details see detail A and table III.

TABLE II

MAX. BRACKET SPACING FOR EXTERNALLY ILLUMINATED SIGNS

ACTUAL SIGN HEIGHT "Ha"	SUPPORT TYPES: 9.12, 11.08, 13.2, 7.2 — SINGLE TUBE DOUBLE TUBE LESS 36" C/C	9.24, 10.48, 12.24, 14.5, 15.8, 7.2 to 7.6 — DOUBLE TUBE C/C 36"-42"	C/C 48"-54"	C/C 60"-72"
	MAXIMUM BRACKET SPACING			
to 5'-0"	6'-4" with X 8'-4" with Y	8'-4" with X	8'-4" with X	8'-4" with X
5'-6" to 8'-0"	6'-4" with Y	4'-2" with X 6'-4" with Y	6'-4" with X 8'-4" with Y	8'-4" with X
8'-6" to 10'-0"	3'-2" with X 4'-2" with Y	6'-4" with Y	6'-4" with Y	8'-4" with Y
10'-6" to 12'-0"	———	4'-2" with Y	6'-4" with Y	6'-4" with Y
12'-6" to 14'-0"	———	3'-2" with Y	3'-2" with Y	4'-2" with Y

Ha= ACTUAL SIGN HEIGHT
He= EFFECTIVE SIGN HEIGHT
BRACKET SIZE: Xs = 3 1/2" X 2 1/2" X 5/16" — L @ 6.1 LB. STEEL; Ys = 4" X 3 1/16" X 1/4" — Z @ 8.2 LB. STEEL } 9.12, 10.48, 11.08, 12.24, 14.5 & 15.8
Xa = 3" X 2 11/16" X 1/4" — Z @ 2.33 LB. ALUM.; Ya = 4" X 2 23/32" X 3/16" — I @ 2.64 LB. ALUM. } 7.2 Thru 7.6

WHEN MAX. ALLOWABLE SPACING IS LESS THAN ACTUAL FIXTURE LENGTHS, Sa, ADDITIONAL STANDARD BRACKETS MUST BE FURNISHED, EQUAL IN HEIGHT TO "Ha".

SUPPORTS 7.2 THROUGH 7.6 SHALL HAVE AN ALUMINUM FIXTURE ARM, 4"X3"X1/4" ANGLE. SEE DETAIL B. BOLTS AND ACCESSORIES SHALL BE STAINLESS STEEL.

BUREAU OF TRAFFIC
OHIO DEPARTMENT OF HIGHWAYS

STRUCTURAL DETAILS FOR EXTERNALLY ILLUMINATED SIGNS

EI-1

APPROVED Jack C Tarbox
ENGINEER OF TRAFFIC

15
22

STRUCTURAL DETAILS FOR EXTERNALLY ILLUMINATED SIGNS

FED. RD. DIVISION	STATE	PROJECT	
2	OHIO		

179/305

HAM.-275-0.00
HAMILTON COUNTY
SIGN LIGHTING NOTES

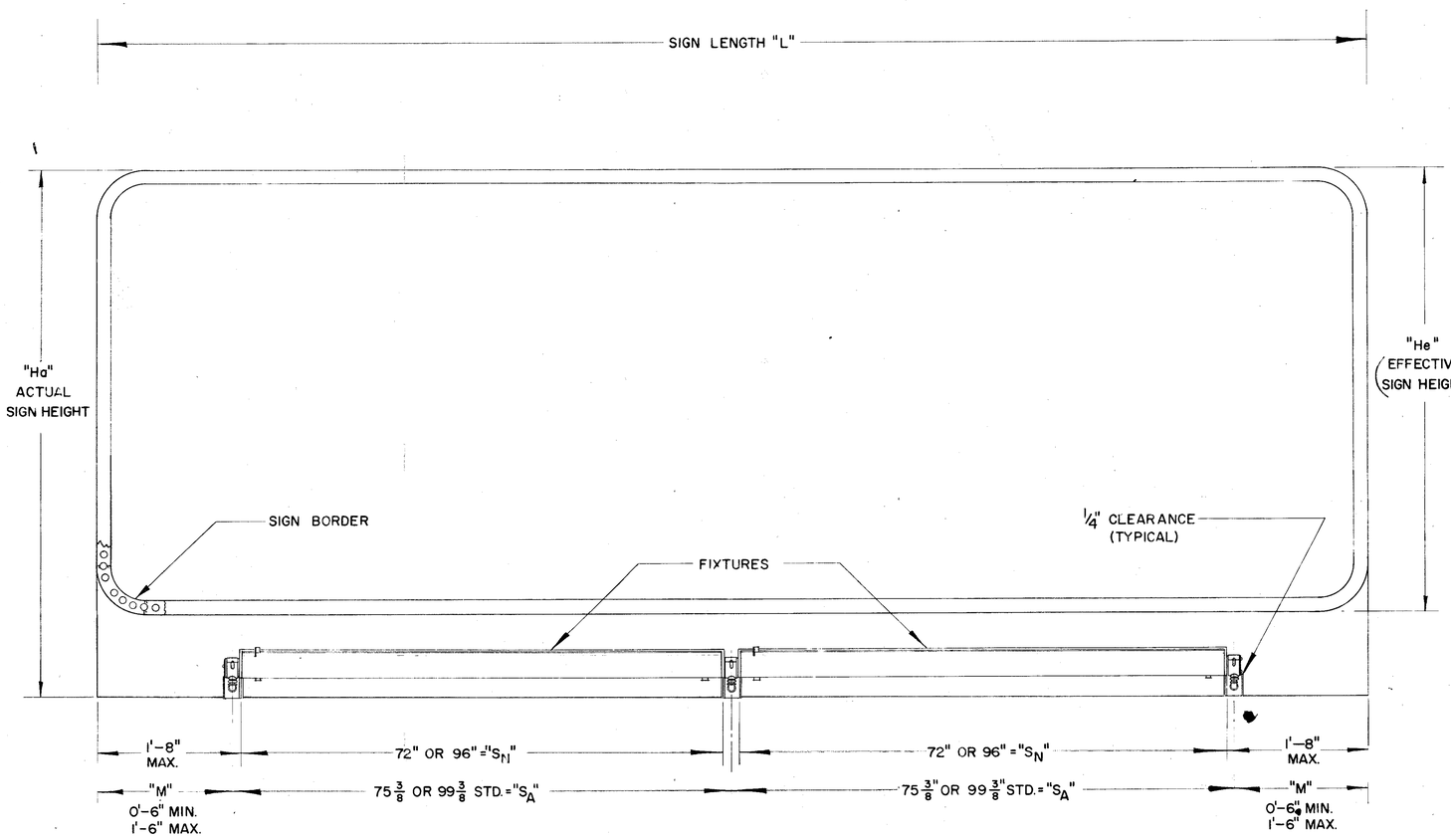

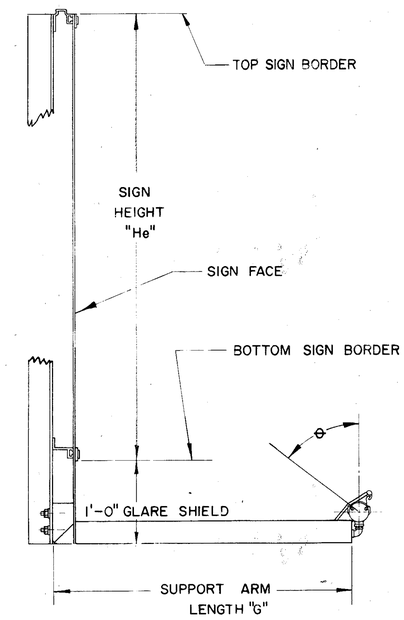

SIGN ILLUMINATION

SIGN ILLUMINATION SHALL BE BY ATTACHED FLUORESCENT FIXTURES AS SHOWN ON ILLUMINATED SIGN DETAIL SHEETS.

LAMPS

LAMPS SHALL BE TYPE F72 OR F96-T12/CW/HO AS MANUFACTURED BY WESTINGHOUSE, GENERAL ELECTRIC OR APPROVED EQUAL FOR SIGNS TO A MAXIMUM HEIGHT OF 6'-6". LAMP TYPE SHALL BE F72 OR F96-T12/CW/SHO AS MANUFACTURED BY WESTINGHOUSE, F72 OR F96-T12/CW/1500 AS MANUFACTURED BY GENERAL ELECTRIC OR APPROVED EQUAL FOR SIGNS THAT ARE 7'-0" OR GREATER IN HEIGHT.

LAMP FIXTURES

LIGHTING FIXTURES SHALL BE CONSTRUCTED OF CORROSION RESISTANT MATERIALS OR WITH HIGH QUALITY CORROSION RESISTANT FINISH. ALL FIXTURES SHALL BE SPECIFICALLY DESIGNED FOR OUTDOOR SIGN LIGHTING SERVICE. MAJOR COMPONENTS SHALL INCLUDE WEATHERPROOF CAST ALUMINUM MOUNTING HUBS DESIGNED TO SECURELY LOCK THE FIXTURES AT ANY ANGLE THROUGH 360 DEGREES. INDICATORS IN 10 DEGREE INCREMENTS SHALL BE STAMPED OR CAST INTO THE HUB TO FACILITATE PROPER AIMING OF THE FIXTURE. FINAL ADJUSTMENT OF FIXTURE SHALL BE DONE AT NIGHT UNDER THE PROJECT ENGINEER'S DIRECTION.

THE BODY DESIGN OF THE FIXTURE SHALL PROVIDE AN ASYMMETRIC SPECULAR ALZAK REFLECTOR TO GIVE A HIGH LEVEL OF UNIFORM ILLUMINATION AND SHALL PROVIDE A WIREWAY FROM END TO END. WHEN ADJACENT FIXTURES ARE WIRED TOGETHER THROUGH THE WIREWAY, WIRE BETWEEN FIXTURES SHALL BE ENTIRELY ENCLOSED.

EXTERIOR FINISH OF THE FIXTURE BODY SHALL BE INTERSTATE GREEN COLOR, HEAT RESISTANT BAKED ENAMEL AS #8950 UNIVERSAL PAINT AND VARNISH INC., OR MIDWESTERN COLOR WORKS, OR APPROVED EQUAL. REFLECTOR, LAMP AND SOCKETS SHALL BE PROTECTED BY A HINGED DOOR OF CLEAR ACRYLIC PLASTIC WITH ALUMINUM OR STAINLESS STEEL FRAME AND NEOPRENE GASKETING.

BALLASTS

BALLASTS FOR FIXTURES SHALL BE WEATHER-PROOF OUTDOOR TYPE FOR A 120 VOLT 60 CYCLE SYSTEM AND SHALL PROVIDE LAMP STARTING AT AN AMBIENT TEMPERATURE OF -20°F. BALLASTS SHALL BE MOUNTED ON SIGN BRACKET ONLY. WIRING SHALL BE ACCOMPLISHED IN SUCH A MANNER THAT THE SIGN MAY BE REMOVED WITHOUT DISTURBING THE ELECTRICAL WIRING.

EFFECTIVE SIGN HEIGHT "H"	SUPPORT ARM LENGTH "G"	APPROX. AIMING ANGLE θ
3'-0" to 5'-0"	2'-9"	25°
5'-0" to 6'-6"	3'-3"	25°
7'-0" to 10'-0"	4'-3"	17°
10'-6" to 13'-0"	5'-9"	23°

"L" SIGN LENGTH	NO. OF FIXTURES			He=3'-0" to 6'-6" LAMP=T12/cw/ho			He=7'-0" to 13'-0" LAMP=T12/cw/sho		
		72	96	BALLAST NO.	BALLAST TYPE	WATTAGE PER SIGN	BALLAST NO.	BALLAST TYPE	WATTAGE PER SIGN
6'-0" to 7'-0"		1		1	A	190	1	C	250
8'-0" to 9'-0"		1		1	A	190	1	C	250
10'-0" to 11'-0"			1	1	A	190	1	C	250
12'-0" to 13'-0"		2		1	B	250	1	D	425
14'-0" to 15'-0"		2		1	B	250	1	D	425
16'-0" to 17'-0"		1	1	1	B	250	1	D	425
18'-0" to 19'-0"			2	1	B	250	1	D	425
20'-0" to 21'-0"		3		2	A & B	440	2	C & D	675
22'-0" to 23'-0"		2	1	2	A & B	440	2	C & D	675
24'-0" to 25'-0"		1	2	2	A & B	440	2	C & D	675
26'-0" to 27'-0"			3	2	A & B	440	2	C & D	675

BALLASTS

TYPE	MANUFACTURERS G.E.	MANUFACTURERS JEFFERSON	WATTAGE
A	GG 3583	257-321	190
B	GG 3535	257-331	250
C	GG 3585	257-361	250
D	GG 3588	257-371	425

BALLASTS SHALL BE GENERAL ELECTRIC, JEFFERSON AS SPECIFIED ABOVE OR EQUAL.

TRANSFORMERS

TYPE	MANUFACTURERS G.E.	MANUFACTURERS JEFFERSON	OUTPUT K.V.A.	SWITCH TRANSFORMER ENCLOSURE
I	9T51Y7	211-041	.25	Y
II	9T51Y8	211-051	.50	Y
III	9T51Y9	211-061	.75	Y
IV	9T51Y10	211-071	1.00	Z
V	9T51Y11	211-081	1.50	Z
VI	9T51Y12	211-091	2.00	Z
VII	9T51Y13	211-2102	3.00	Z

BUREAU OF TRAFFIC
OHIO DEPARTMENT OF HIGHWAYS

ELECTRICAL DETAILS FOR EXTERNALLY ILLUMINATED SIGNS

EI-2

DATE 10-31-63, 5-6-64, 10-29-64, 03-29-67, 1-4-72

APPROVED Fred C. Talbot
ENGINEER OF TRAFFIC

16/22

FED. RD. DIVISION	STATE	PROJECT	
2	OHIO		

HAM.-275-0.00
HAMILTON COUNTY

180
305

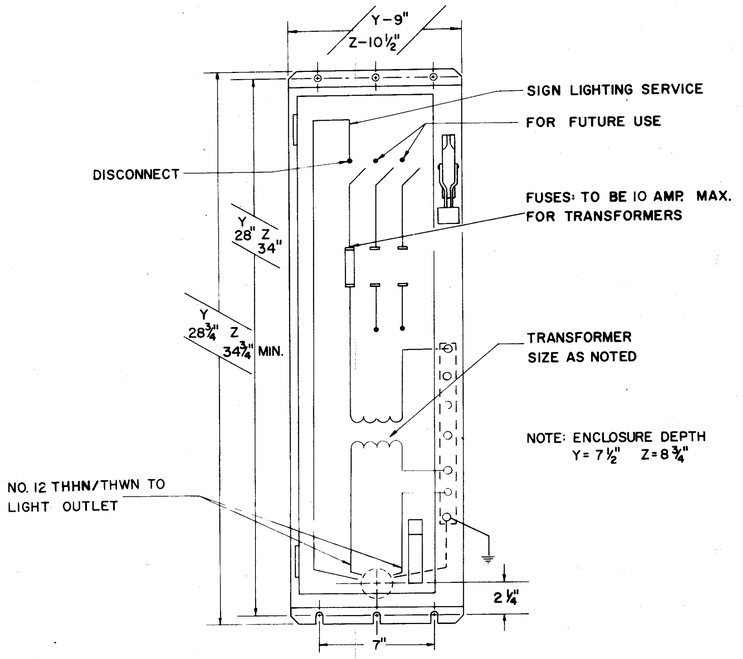

TYPICAL ENCLOSURE DETAIL

480 VOLT SIGN LIGHTING SERVICE

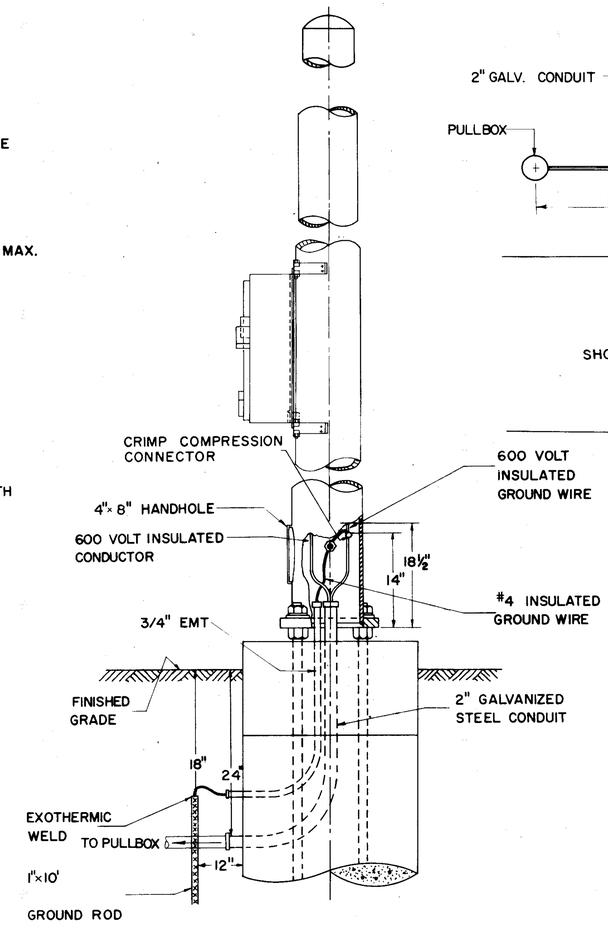

SIGN SUPPORT DETAIL FOR ILLUMINATED SIGNS

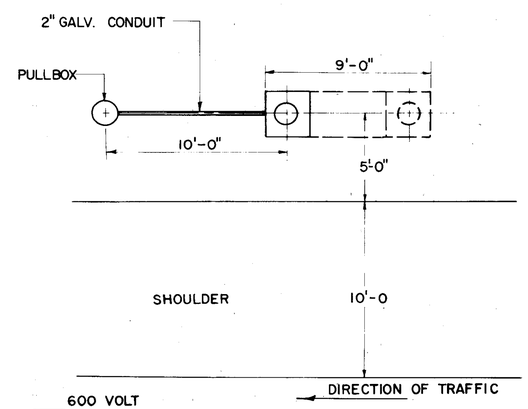

PULLBOX LOCATION

NOTES

GENERAL

DETAILS OF THIS SHEET SHALL APPLY TO EACH OVERHEAD SIGN STRUCTURE TO SUPPORT EXTERNALLY ILLUMINATED SIGNS.

SERVICE

ELECTRIC SERVICE SHALL ENTER THROUGH A 2" GALVANIZED RIGID STEEL CONDUIT INSTALLED IN STRUCTURE FOUNDATION AS PER DETAIL. SIGN SERVICE OR CIRCUITRY SHALL BE CONTROLLED AS REQUIRED BY THE SYSTEM DESIGN AT THE PRIMARY SOURCE.

SERVICE CONDUCTORS SHALL BE THE SIZE AND TYPE AS SPECIFIED.

COMBINATION SWITCH AND TRANSFORMER

(TYPE Y OR Z ENCLOSURE REQUIRED AS PER SCHEDULE ON THIS SHEET)

THIS COMBINATION SHALL BE A 30 OR 60 AMPERE 600 VOLT SWITCH WITH A .25 TO 3.0 KVA TRANSFORMER. THE COMBINATION AND ENCLOSURE SHALL BE AS SQUARE D CLASS 9421, COLUMBUS ELECTRIC WORKS CLASS 101, PANALS INCORPORATED-CLASS 9400, OR APPROVED EQUAL.

TRANSFORMER

THE TRANSFORMER SHALL BE DRY TYPE SINGLE PHASE 240/480 VOLT PRIMARY 120/240 VOLT SECONDARY, THE TYPE AND CAPACITY AS SPECIFIED IN DETAILED SCHEDULE ON THIS SHEET.

ENCLOSURE

THE ENCLOSURE SHALL BE NEMA #4 WATER TIGHT .063 GAGE STAINLESS STEEL ASTA 302-303. A DISCONNECT HANDLE SHALL BE FLANGE MOUNTED AND CAPABLE OF BEING LOCKED IN EITHER POSITION. THE ENCLOSURE SHALL BE EQUIPPED WITH A DOOR LOCKING MECHANISM WITH A DEFEATER THAT NECESSITATES TWO HANDS TO OPERATE MECHANISM WITH THE SWITCH IN OFF POSITION. SPACE FOR A 2" INSULATED CHASE NIPPLE SHALL BE PROVIDED APPROXIMATELY 2¼" ABOVE THE CENTER LINE OF THE LOWER MOUNTING SLOT. THIS ENCLOSURE AND STRUCTURE SHALL BE FIELD DRILLED AND TAPPED FOR THE REQUIRED NIPPLE AS SHOWN ON THE DETAIL ON THIS SHEET.

THIS ENCLOSURE SHALL BE FLANGE MOUNTED ON BRACKETS WITH 5/16-18x¾" HEX HEAD CADMIUM PLATED MACHINE BOLTS. ENCLOSURES SHALL BE TYPE Y OR Z AS SPECIFIED AND DIMENSIONED ON THIS SHEET.

ENCLOSURE MOUNTING BRACKET

THE ENCLOSURE MOUNTING BRACKET SHALL BE FABRICATED THEN GALVANIZED BEFORE ASSEMBLY. THE BRACKET SHALL BE FIELD MOUNTED WITH 5/16 HEX HEAD SELF TAPPING CADMIUM PLATED SCREWS. THE SIGN SUPPORT SHALL BE FIELD DRILLED, AS PER DETAIL.

WIRE AND CABLE

ALL WIRE AND CABLE SHALL BE 600 VOLT AND CONFORM TO SECTION 713.02

GROUNDING

EACH SIGN SUPPORT OR STRUCTURE SHALL BE GROUNDED WITH A #4 INSULATED CONDUCTOR. THE GROUNDING CONDUCTOR SHALL BE CONNECTED TO THE SWITCH THEN TO THE COMPRESSION CONNECTOR IN THE SIGN SUPPORT THEN TO A 1"x10' GROUND ROD. GROUND CONDUCTOR SHALL BE EXOTHERMICALLY WELDED TO GROUND ROD AND THEN TAPED WITH PLASTIC ELECTRICAL TAPE AT EACH EXPOSED PORTION OF CONDUCTOR. THE WELDED CONNECTION AND TAPED PORTION SHALL BE PAINTED 2 COATS OF INSULATING ENAMEL.

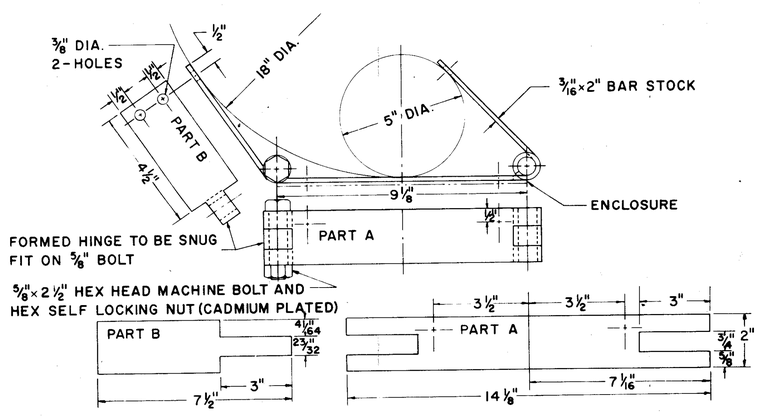

ENCLOSURE MOUNTING BRACKET

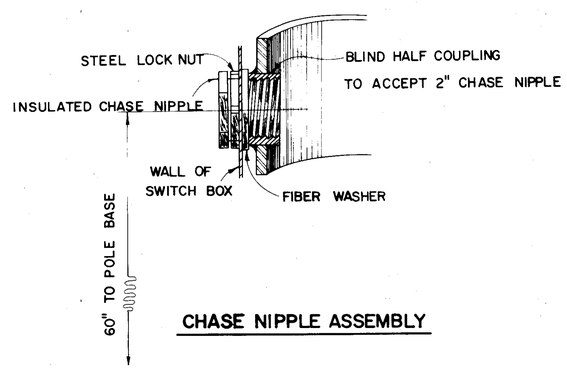

CHASE NIPPLE ASSEMBLY

TRANSFORMERS

TYPE	MANUFACTURERS G.E.	MANUFACTURERS JEFFERSON	OUTPUT K.V.A.	SWITCH TRANSFORMER ENCLOSURE
I	9T51Y7	211-041	.25	Y
II	9T51Y8	211-051	.50	Y
III	9T51Y9	211-061	.75	Y
IV	9T51Y10	211-071	1.00	Z
V	9T51Y11	211-081	1.50	Z
VI	9T51Y12	211-091	2.00	Z
VII	9T51Y13	211-2102	3.00	Z

BUREAU OF TRAFFIC
OHIO DEPARTMENT OF HIGHWAYS

ELECTRICAL SIGN SERVICE DETAILS 480 VOLT SYSTEM

ES-3A

DATE 6-18-64 9-1-6 7-31-70 2-03-72

APPROVED _____
ENGINEER OF TRAFFIC

17/22

FED. RD. DIVISION	STATE	PROJECT	
2	OHIO		

181/305

HAM.-275-0.00
HAMILTON COUNTY

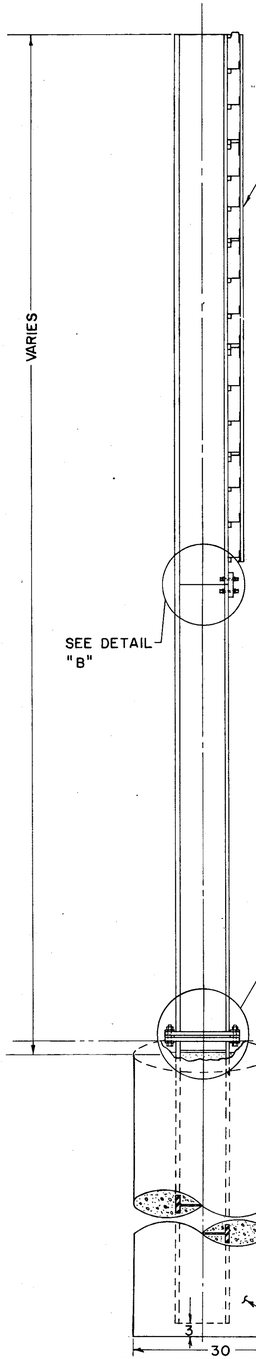

SIDE ELEVATION

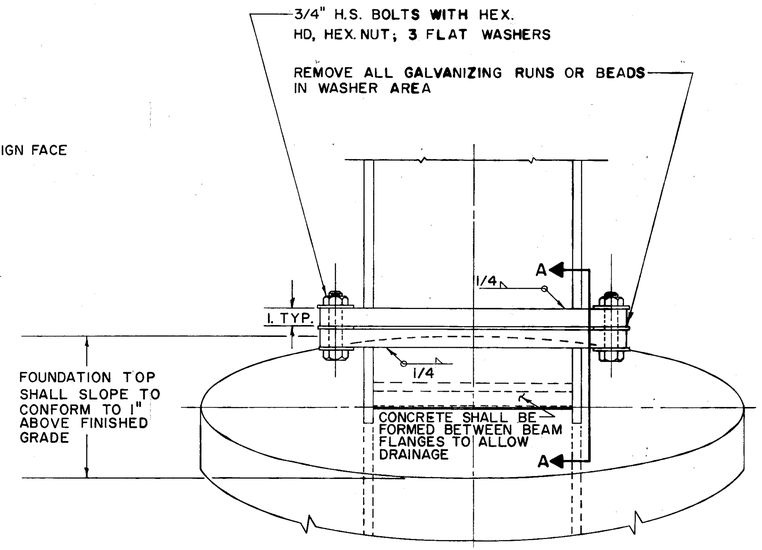

BOLTING PROCEDURE

1. ASSEMBLE POST TO STUB W/BOLTS & ONE FLAT WASHER ON EACH BOLT BETWEEN PLATES.
2. TIGHTEN ALL BOLTS THE MAXIMUM POSSIBLE W/12" TO 15" WRENCH TO BED & TO CLEAN BOLT THREADS. LOOSEN EACH BOLT IN TURN & RETIGHTEN BOLTS IN A SYSTEMATIC ORDER TO THE PRESCRIBED TORQUE OF 750 IN. LBS.
3. BURR THREADS AT JUNCTION W/NUT USING A CENTER PUNCH TO PREVENT NUT LOOSENING.

NOTE: TIGHTEN THE H.S. BOLTS IN THE BASE CONNECTION ONLY TO GIVEN TORQUE DO NOT OVER TIGHTEN

VIEW "A" ROTATED 180°

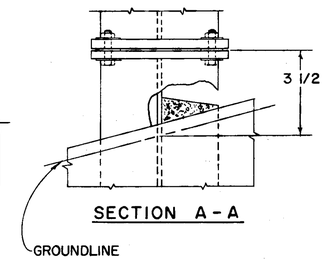

SECTION A-A

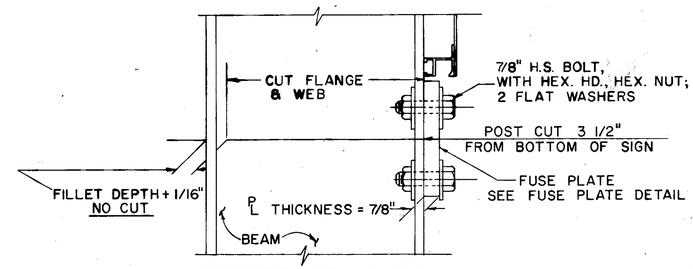

FABRICATOR NOTE: ALL FRICTION FUSE BOLTS SHALL BE TIGHTENED IN THE SHOP FOLLOWING A METHOD APPROVED BY THE ENGINEER. TIGHTENING SHALL BE TO SUCH A DEGREE AS TO OBTAIN MINIMUM RESIDUAL TENSION IN EACH BOLT OF 36,050 LBS.

NOTE: INSTALL FUSE PLATE WITH NOTCHES TOWARD BASE

DETAIL "B"

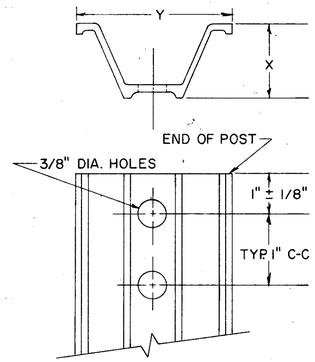

WEIGHT PER FOOT	X ± 3/32"	Y ± 1/8"
2.00 #	1 15/32"	3 1/16"
3.00 #	1 7/8"	3 1/2"
4.00 #	2"	3 5/8"

DRIVE POST DETAIL

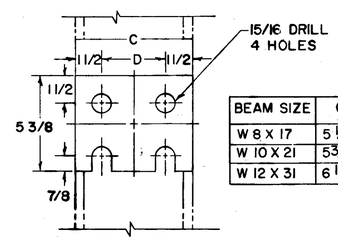

BEAM SIZE	C	D
W 8 X 17	5 1/4"	2 1/4"
W 10 X 21	5 3/4"	2 3/4"
W 12 X 31	6 1/2"	3 1/2"

FUSE PLATE DETAIL

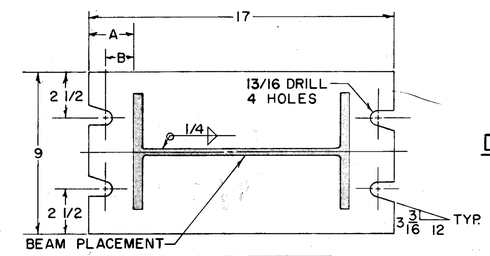

BEAM SIZE	A	B
W 8 X 17	4 1/2"	3 5/8"
W 10 X 21	3 1/2"	2 5/8"
W 12 X 31	2 1/2"	1 5/8"

BASE PLATE DETAIL

(TOP VIEW)

NOTES: ALL MATERIALS SHALL CONFORM TO THE STATE OF OHIO, CONSTRUCTION & MATERIALS SPECIFICATIONS OR AS OTHERWISE SPECIFIED

1.) 511 FOUNDATIONS
2.) 711.01 STRUCTURAL STEEL SHAPES & PLATES
3.) 711.09 H.S. STEEL BOLTS, NUTS & WASHERS

ALL DIMENSIONS IN INCHES UNLESS OTERWISE SHOWN

BREAKAWAY SIGN SUPPORT BASE PLATE ORIENTATION

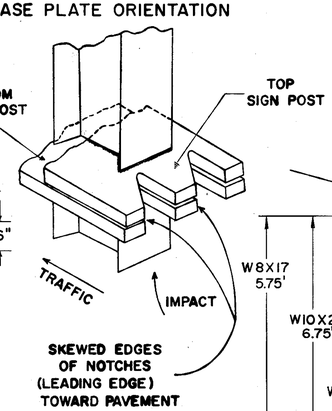

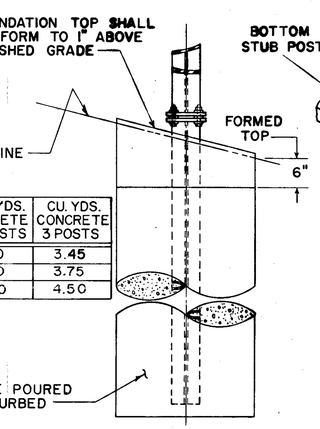

FOUNDATION TABLE	CU. YDS. CONCRETE 2 POSTS	CU. YDS. CONCRETE 3 POSTS
W 8 X 17	2.30	3.45
W 10 X 21	2.50	3.75
W 12 X 31	3.00	4.50

FRONT ELEVATION

BREAK-AWAY SUPPORT

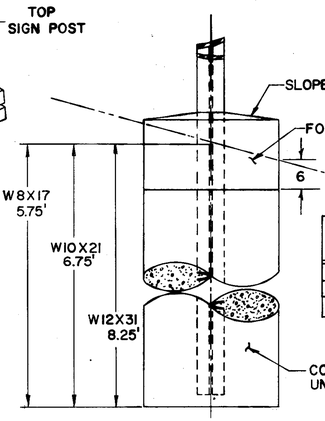

FOUNDATION TABLE	CU. YDS. CONCRETE 2 POSTS	CU. YDS. CONCRETE 3 POSTS
W 8 X 17	2.30	3.45
W 10 X 21	2.50	3.75
W 12 X 31	3.00	4.50

FRONT ELEVATION

STANDARD SUPPORT

STRUCTURAL SUPPORTS

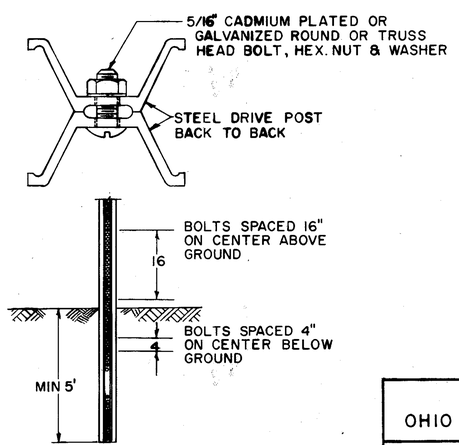

6# BEAM DETAIL

BUREAU OF TRAFFIC
OHIO DEPARTMENT OF HIGHWAYS

GROUND MOUNTED SIGN SUPPORTS

GMSS

DATE
5-10-68
7-12-68
5-23-69
9-16-69
12-20-71

APPROVED _____
ENGINEER OF TRAFFIC

18/22

FED. RD. DIVISION	STATE	PROJECT	
2	OHIO		

182/305

HAM-275-0.00
HAMILTON COUNTY

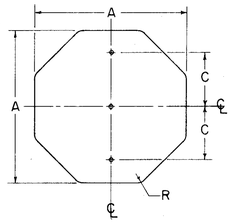

A	C	R	GAUGE
30	8	1 1/2	.080
36	8	1 1/2	.080

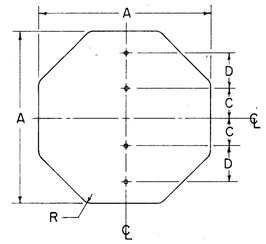

A	C	D	R	GAUGE
48	8	10	1 1/2	.100

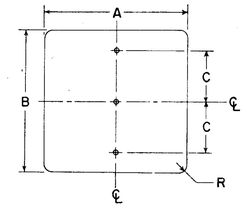

A	B	C	R	GAUGE
24	30	8	1 1/2	.063
24	48	15	1 1/2	.100
30	36	11	1 1/2	.080
30	42	12	1 1/2	.080
36	36	11	1 1/2	.080
36	42	15	1 1/2	.080
36	48	15	1 1/2	.080
48	24	10	3	.100
48	36	13	3	.100

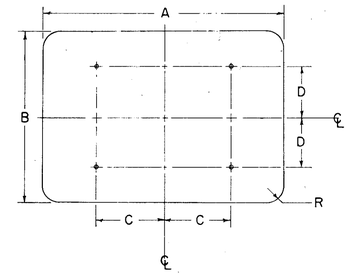

A	B	C	D	R	GAUGE
48	48	22	16	3	.100
48	60	22	22	3	.100

SPEED LIMIT SIGNS ON TWO SUPPORTS

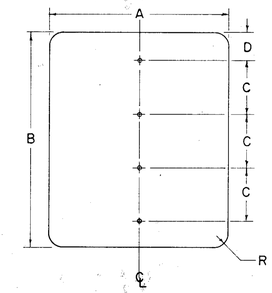

A	B	C	D	R	GAUGE
48	48	12	6	3	.100
48	60	15	7 1/2	3	.100

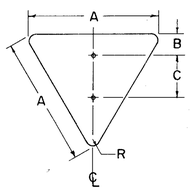

A	B	C	R	GAUGE
36	3	16	2 1/2	.080

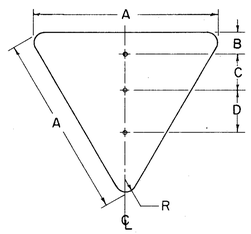

A	B	C	D	R	GAUGE
48	4	10	15	3	.100
60	5	10	15	4	.100

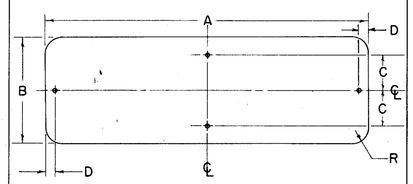

A	B	C	D	R	GAUGE
36	12	4	1	1 1/2	.080
72	12	—	16	1 1/2	.100
60	12	—	13	1 1/2	.100

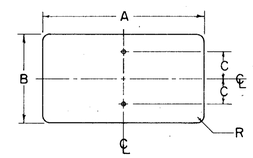

A	B	C	R	GAUGE
12	6	1 1/2	1 1/2	.063
20	15	6	1 1/2	.063
24	12	4 1/2	1 1/2	.063
24	18	7 1/2	1 1/2	.063
8	26	8	1	.063
36	18	7 1/2	1 1/2	.080

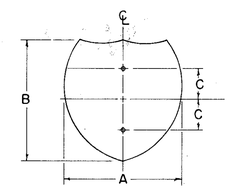

A	B	C	GAUGE
24	24	8	.063
30	24	8	.080

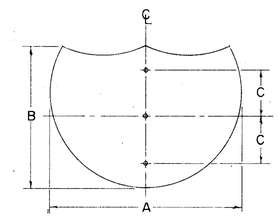

A	B	C	GAUGE
36	36	11	.080
48	36	11	.100

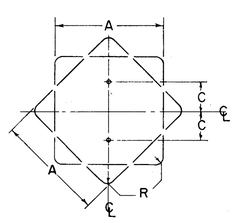

A	C	R	GAUGE
18	7 1/2	1 1/2	.063
24	8	1 1/2	.063
30	8	1 1/2	.080

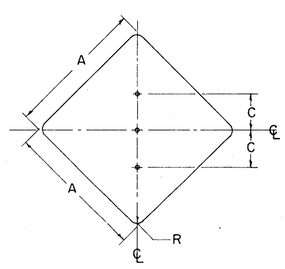

A	C	R	GAUGE
36	12	1 1/2	.080
48	14	3	.100

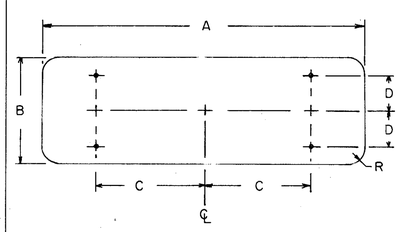

A	B	C	D	R	GAUGE
72	18	20	6	1 1/2	.100
72	24	20	8	1 1/2	.100
60	30	17	10	1 1/2	.100
96	18	27	6	1 1/2	.100

Location of holes on "Demountable Shields" (attached to guide signs)

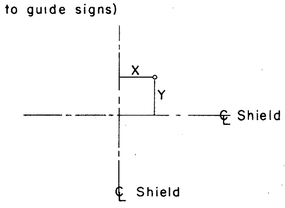

SIZE	NO. HOLES	X	Y
(26) 24X24	4	7	7
30X24	4	8	8
(39) 36X36	4	10	10
		0	10
48X36	6	15	10

For notes on fastening see drawing for miscellaneous "Signing Items" sheet.

NOTES:

ALL DIMENSIONS ARE IN INCHES UNLESS OTHERWISE SHOWN.

MATERIAL

FLAT SIGN BLANKS SHALL BE FURNISHED IN ALUMINUM ALLOY 6061-T6, (ASTM-B209, GS11A-T6) WITH MILL FINISH.

BOLT HOLES

THE BOLT HOLES SHALL BE 3/8" IN DIAMETER, AND MAY BE DRILLED, BLANKED OR PUNCHED TO FINISHED SIZE.

BUREAU OF TRAFFIC
OHIO DEPARTMENT OF HIGHWAYS

SIGN BLANK DETAILS

SBD

DATE
4-14-67
5-10-68
10-1-68
5-27-69
6-18-69

APPROVED _____
ENGINEER OF TRAFFIC

19/22

FED. RD. DIVISION	STATE	PROJ.	
2	OHIO		

183/305

HAM.-275-0.00
HAMILTON COUNTY

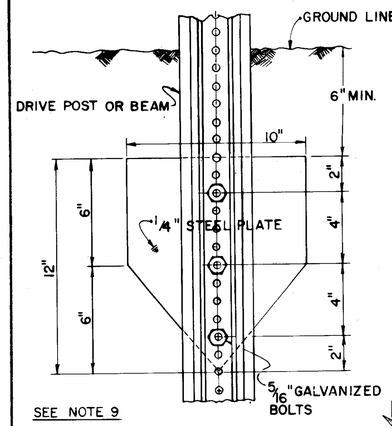

SOIL PLATE DETAIL

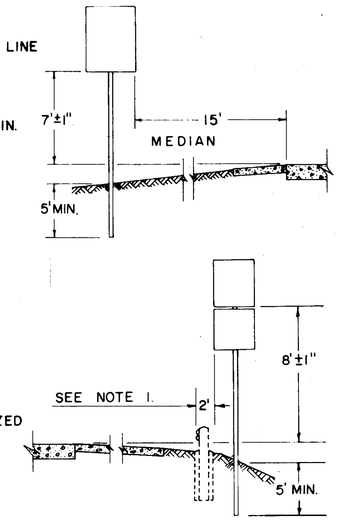

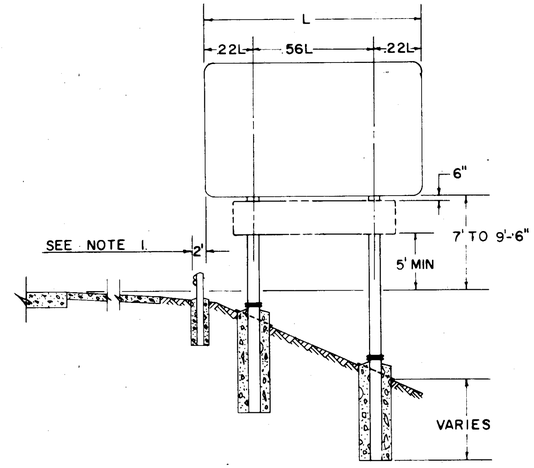

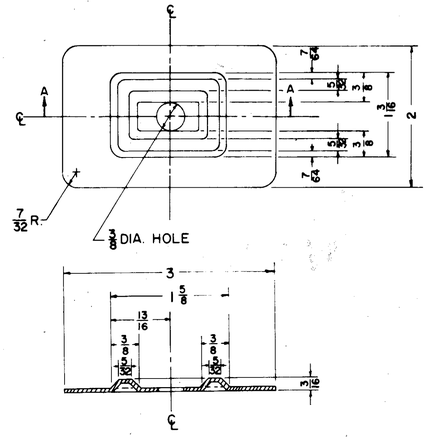

SECTION AA

NOTE:
THE PLATE IS SYMMETRICAL ABOUT EITHER CENTERLINE.
METAL SHALL BE 16 GAUGE STEEL.
ALL DIMENSIONS ARE IN INCHES.

BEARING PLATE DETAIL

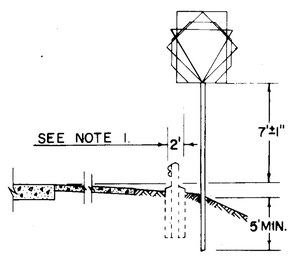

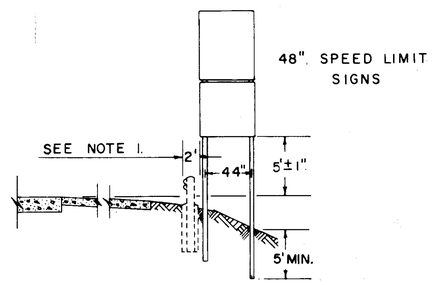

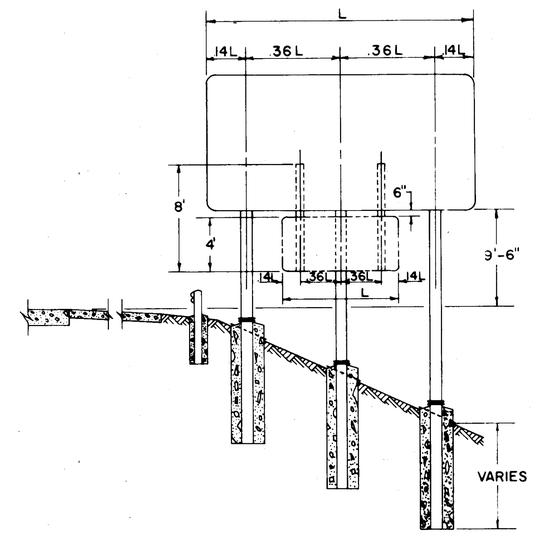

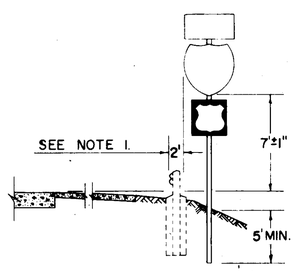

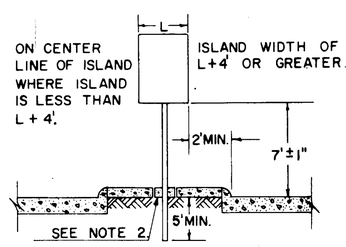

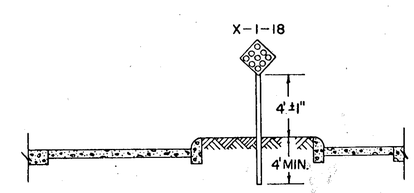

SIGN SUPPORT SPACING

L=FT	2 SUPPORTS		3 SUPPORTS		L=FT	2 SUPPORTS		3 SUPPORTS	
	.22	.56	.14	.36		.22	.56	.14	.36
5.0	1.10	2.80	0.70	1.80	17.0	3.74	9.52	2.38	6.12
6.0	1.32	3.36	0.84	2.16	18.0	3.96	10.08	2.52	6.48
7.0	1.54	3.92	0.98	2.52	19.0	4.18	10.64	2.66	6.84
8.0	1.76	4.48	1.12	2.88	20.0			2.80	7.20
9.0	1.98	5.04	1.26	3.24	21.0			2.94	7.56
10.0	2.20	5.60	1.40	3.60	22.0			3.08	7.92
11.0	2.42	6.16	1.54	3.96	23.0			3.22	8.28
12.0	2.64	6.72	1.68	4.32	24.0			3.36	8.64
13.0	2.86	7.28	1.82	4.68	25.0			3.50	9.00
14.0	3.08	7.84	1.96	5.04	26.0			3.64	9.36
15.0	3.30	8.40	2.10	5.40	27.0			3.78	9.72
16.0	3.52	8.96	2.24	5.76	28.0			3.92	10.08

NOTES

1. THE NEAR EDGE OF ALL MAIN LINE SIGNS, EXCEPT GORE INSTALLATIONS, SHALL BE LOCATED TWO FEET (2') BACK OF GUARD RAIL FACE. THIS DIMENSION SHALL BE DETERMINED BY ROADWAY TYPICAL SECTION & USED WHETHER OR NOT GUARD RAIL IS PRESENT.

ON RAMPS THE NEAR EDGE OF SIGNS SHALL BE LOCATED TWO FEET (2') BACK OF GUARD RAIL FACE. THIS DIMENSION WILL BE DETERMINED AND USED AS FOR MAIN LINE ABOVE.

ON APPROACHES THE NEAR EDGE OF SIGNS SHALL BE

(A) TWO FOOT (2') BEHIND EXISTING GUARD RAIL

(B) TWO FEET (2') FROM THE EDGE OF PAVED OR TRAVELED SHOULDER WITH A MINIMUM OF 6' FROM EDGE OF ROADWAY PAVEMENT.

2. POSTS PLACED IN CONCRETE MEDIANS SHALL BE INSTALLED BY DRIVING THROUGH A 6" SLEEVE OR CORE DRILLED HOLE. THE HOLE SHALL BE FILLED WITH ASPHALTIC CONCRETE AFTER THE POST IS IN THE PROPER POSITION.

3. HORIZONTAL BACK BRACING SHALL ALWAYS BE MOUNTED ON THE FRONT FLANGE OF THE SUPPORT EXCEPT WHERE SIGNS ARE MOUNTED BACK TO BACK. BACK BRACING SHALL NEVER EXTEND ABOVE TOP EDGE OF UPPERMOST SIGN PLATE AND SHALL BE ATTACHED TO SUPPORTS USING 5/16" GALVANIZED STEEL BOLTS.

4. SCREWS, NUTS, AND WASHERS FOR SIGN ERECTION SHALL BE ALUMINUM EXCEPT AS NOTED ABOVE. 5/16" TRUSS HEAD SLOTTED MACHINE SCREWS WITH HEX. NUTS PLAIN AND LOCKWASHERS SHALL BE USED. PLAIN WASHERS SHALL BE 5/16" "WIDE", USED ON SIGN FACE ONLY

5. SIGN INSTALLATIONS SHALL BE PLACED SO THAT SUPPORTS ARE NOT PLACED IN DRAINAGE DITCHES.

6. HORIZONTAL CLEARANCES SHOWN PERTAIN TO NON-CURBED SECTIONS. SECTIONS WITH UNMOUNTABLE CURB SHALL HAVE A HORIZONTAL CLEARANCE OF 2'-0" MINIMUM FROM THE CURB FACE TO THE SIGN EDGE.

7. VERTICAL AND HORIZONTAL CLEARANCE BETWEEN SIGNS ON ONE ASSEMBLY SHALL BE A MAXIMUM OF 2" AND A MINIMUM OF 1".

8. GALVANIZED STEEL BEARING PLATES SHALL BE INCLUDED BETWEEN ALL SHEET ALUMINUM SIGNS ATTACHED TO VERTICAL SUPPORTS AT EACH SIGN BOLT LOCATION.

9. SOIL PLATES SHALL BE ATTACHED TO ALL 6 LB. BEAMS BETWEEN POSTS AS DETAILED ON THIS SHEET, EXCEPT WHERE BEAMS ARE PLACED IN CONCRETE MEDIANS AS COVERED IN NOTE 2.

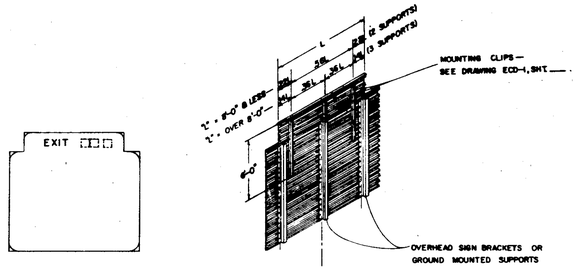

"EXIT" SIGN ATTACHMENT DETAIL

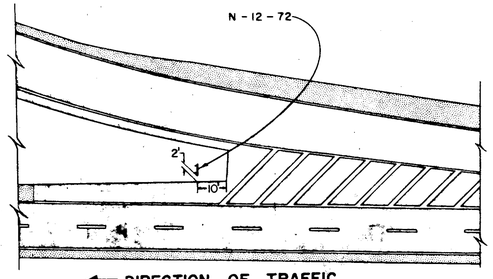

DIRECTION OF TRAFFIC

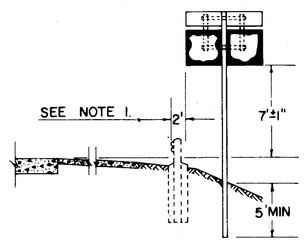

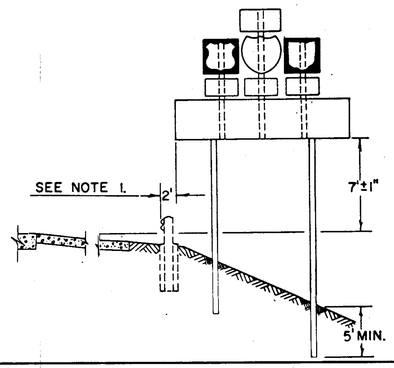

BUREAU OF TRAFFIC
OHIO DEPARTMENT OF HIGHWAYS

TYPICAL PLACEMENT OF SIGNS

TPS-1

DATE
9-27-67
7-12-68
5-13-69
3-5-71
12-21-71
3-7-72

20/22

APPROVED _____
ENGINEER OF TRAFFIC

ROUND DELINEATORS

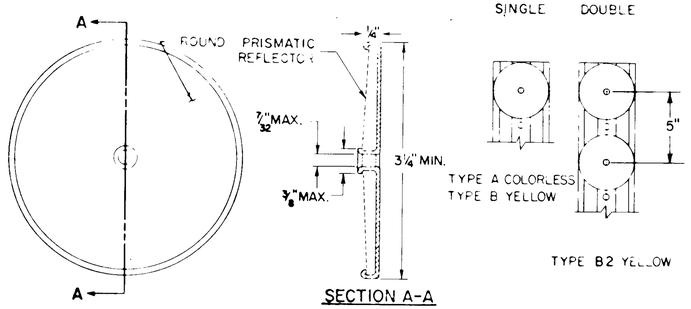

SECTION A-A

RECTANGULAR SHEET DELINEATORS

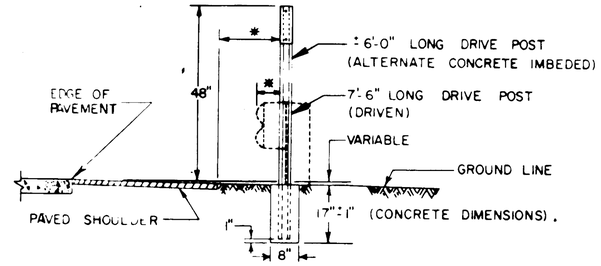

LATERAL PLACEMENT OF DELINEATORS

* DELINEATORS SHALL BE 6" BEHIND FACE OF TYPICAL GUARDRAIL LOCATION BUT WITH A MINIMIMUM DISTANCE OF 2'6" FROM EDGE OF PAVED SHOULDER WHERE GUARDRAIL IS NOT PRESENT.

NOTE:

(A) RECTANGULAR YELLOW DELINEATORS TYPE D SHALL BE PLACED ON ALL RAMPS AS SHOWN. *

(B) ROUND COLORLESS DELINEATORS TYPE A SHALL BE PLACED ON ALL MAINLINES AS SHOWN. *

HAM-275-0.00
HAMILTON COUNTY

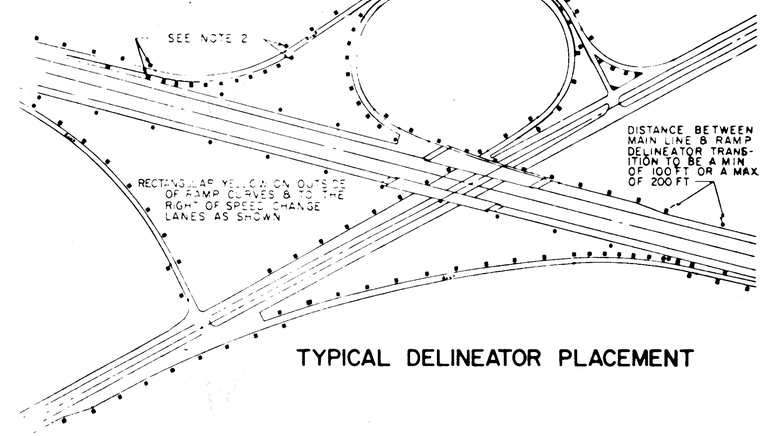

TYPICAL DELINEATOR PLACEMENT

EMBEDDED GLASS SPHERE REFLECTOR

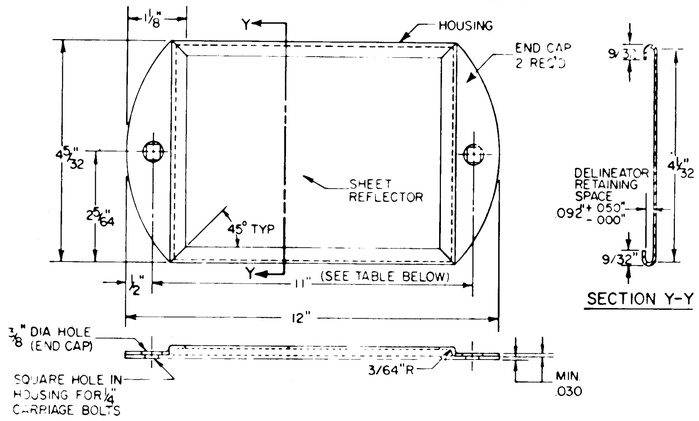

ACRYLIC PLASTIC PRISMATIC REFLECTOR

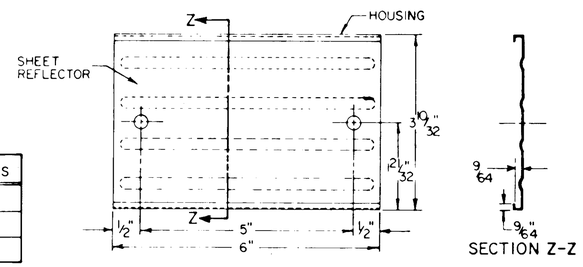

RECTANGULAR TYPES
C - COLORLESS
D - YELLOW
E - RED

REFLECTIVE SHEETING REFLECTOR

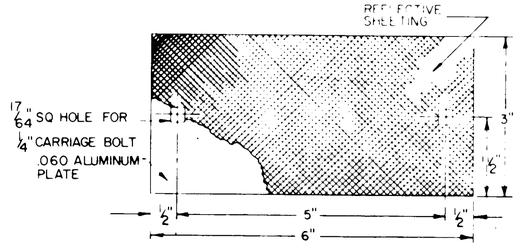

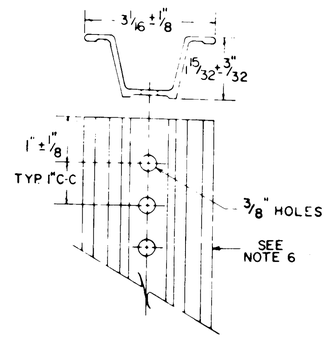

2 LB./FT. DELINEATOR DRIVE POST

TAMPER RESISTANT FASTENERS SHALL BE USED TO FASTEN DELINEATORS TO POST AS/OR SIMILAR TO ONE SHOWN ABOVE.

TAMPER RESISTANT FASTNERS

DELINEATOR SPACING ON RAMP HORIZONTAL CURVES

RADII, FT.		SPACING ON CURVE	* TRANSITION SPACING	
FROM	TO			
TANGENT	1,801	100'	100'	100'
1,800	1,401	80'	100'	100'
1,400	1,001	70'	100'	100'
1,000	751	60'	100'	100'
750	551	50'	80'	100'
550	326	40'	70'	100'
325	——	30'	60'	100'

* SUCH AS 40' TO 70' TO 100' OR 100' TO 80' TO 50' OR ANY OTHER COMBINATION SHOWN ABOVE.

NOTES

1. TYPE A DELINEATORS ON THE RIGHT OF THE THROUGH ROADWAY ARE TO BE SPACED AT 200 FT. INTERVALS THROUGHOUT, REGARDLESS OF CURVES.

2. WHEN CROSSING FROM LEFT TO RIGHT OR FROM RIGHT TO LEFT ON THE RAMPS THE DELINEATORS AT THE POINT OF CROSSOVER ARE TO BE AT THE SAME STATION ON EACH SIDE.

3. NO DELINEATORS ARE TO BE PLACED IN PAVED BERM

4. WHEN RADII OF CURVE ON RAMPS REQUIRE 100' SPACING THE DELINEATORS SHALL BE PLACED ON THE RIGHT IN RELATION TO THE FLOW OF TRAFFIC.

5. IN ADDITION TO MATERIALS LISTED IN 620.02, RECTANGULAR SHEET REFLECTORS MAY CONSIST OF REFLECTIVE SHEETING COMPOSED OF GLASS SPHERES IMBEDDED IN A WEATHER PROOF SYNTHETIC RESIN SHEET, THE REFLECTIVE FACE OF WHICH SHALL BE PLACED BEHIND AND SEALED TO A WEATHERPROOF RIGID PLASTIC FACE OF METHYL METHACRYLATE OF 0.060 INCHES MINIMUM THICKNESS.

6. SUPPLEMENTING THE DRIVE POST DETAILS SHOWN, ALTERNATE POST SECTIONS MAY BE FURNISHED. ANY ALTERNATE SECTION FURNISHED SHALL MEET ALL THE MATERIAL REQUIREMENTS OF 620, HAVE A SHAPE APPROXIMATELY AS DETAILED, AND HAVE A MOMENT OF INERTIA EQUAL TO OR GREATER THAN THE SECTION DETAILED. THE REQUIREMENTS OF 712.20 REALTIVE TO MAXIMUM WEIGHT TOLERANCE ARE HEREBY WAIVED. NO ALTERNATE SECTION FURNISHED SHALL EXCEED THE WEIGHT OF THE CORRESPONDING SECTION BY MORE THAN 10 PERCENT.

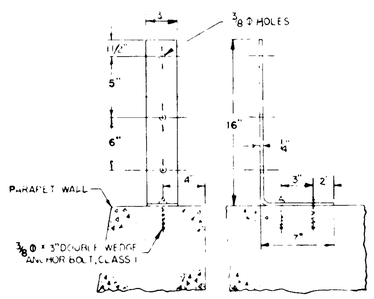

BRIDGE PARAPET BRACKET

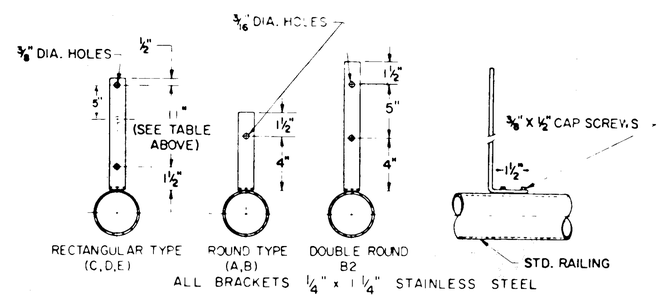

BRIDGE RAIL BRACKET

BUREAU OF DESIGN SERVICES
DIVISION OF HIGHWAYS
OHIO DEPARTMENT OF TRANSPORTATION

DELINEATOR DETAILS

DATE 1/1/73 3/12/73

APPROVED _____
ENGINEER OF DESIGN SERVICES

FED. RD. DIVISION	STATE	PROJECT	
2	OHIO		

185/305

HAM-275-0.00
HAMILTON COUNTY

ENTRANCE TERMINAL - PARALLEL ACCELERATION LANE

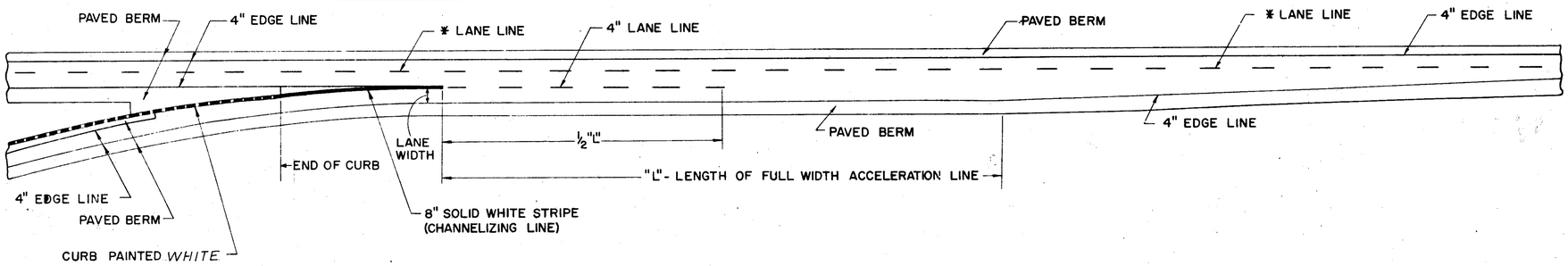

ENTRANCE TERMINAL - TAPERED ACCELERATION LANE

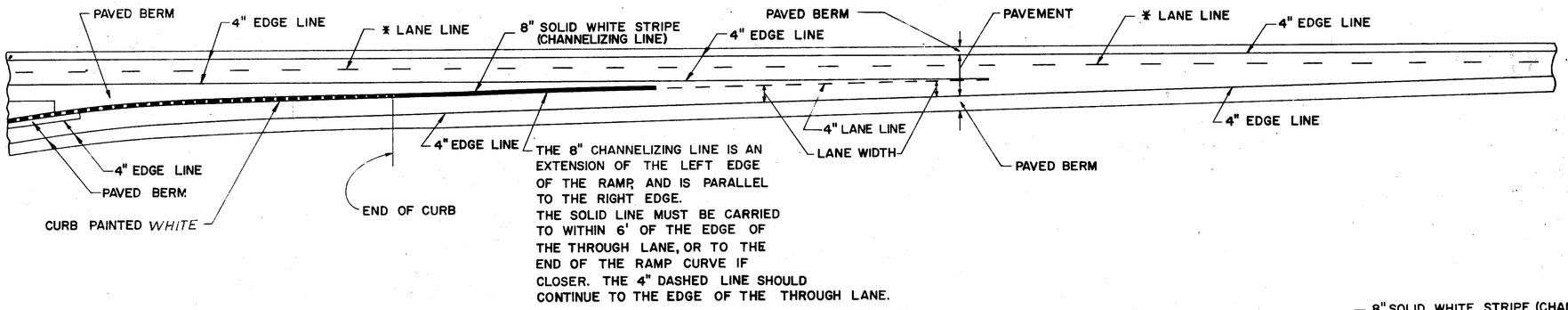

NOTES

DIAGONAL STRIPES AT EXIT RAMPS SHALL BE 24" BROAD TRANSVERSE STRIPES, 621.11, WITH A 6' SPACE BETWEEN STRIPES.

* 6" LANE LINE ON INTERSTATE HIGHWAYS ONLY.
4" LANE LINE ON ALL OTHER HIGHWAYS.

CURBED EXIT TERMINAL - PARALLEL DECELERATION LANE

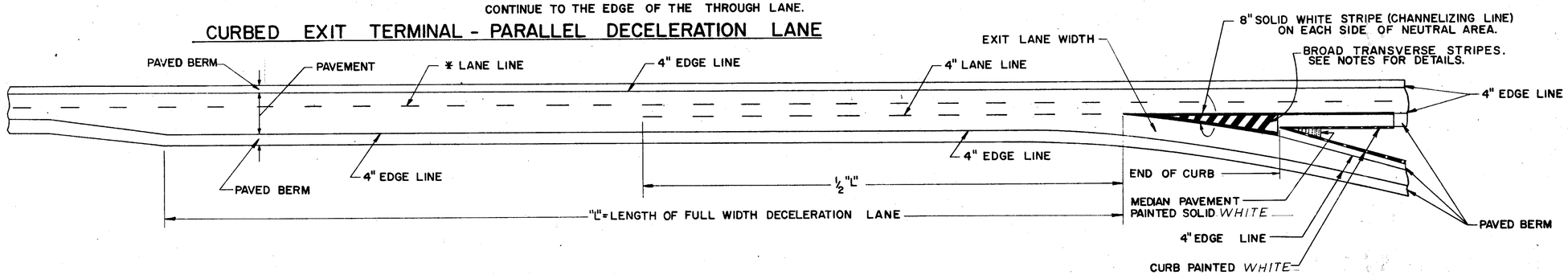

UNCURBED EXIT TERMINAL - PARALLEL DECELERATION LANE

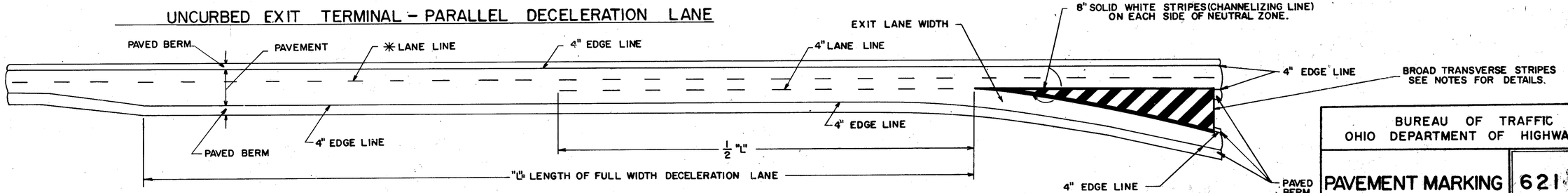

BUREAU OF TRAFFIC
OHIO DEPARTMENT OF HIGHWAYS

PAVEMENT MARKING | 621

DATE
7-17-61
4-6-62
5-24-65
9-2[illegible]-67
4-17-68
1-11-72

APPROVED Robert E. Lower
ENGINEER OF TRAFFIC

22/22

FED. RD. DIVISION	STATE	PROJECT	
2	OHIO		

HAM-275-0.00

208/302

432 RC
1132 Recd
208-149

CURVE DATA

Δ = 45°13'58" LT.
D_c = 2°30'00"
R_c = 2291.83'
T_s = 1155.93'
E_s = 194.07'
L_c = 1409.31'
L_s = 400.00'
P.I. = STA. 15+00.00

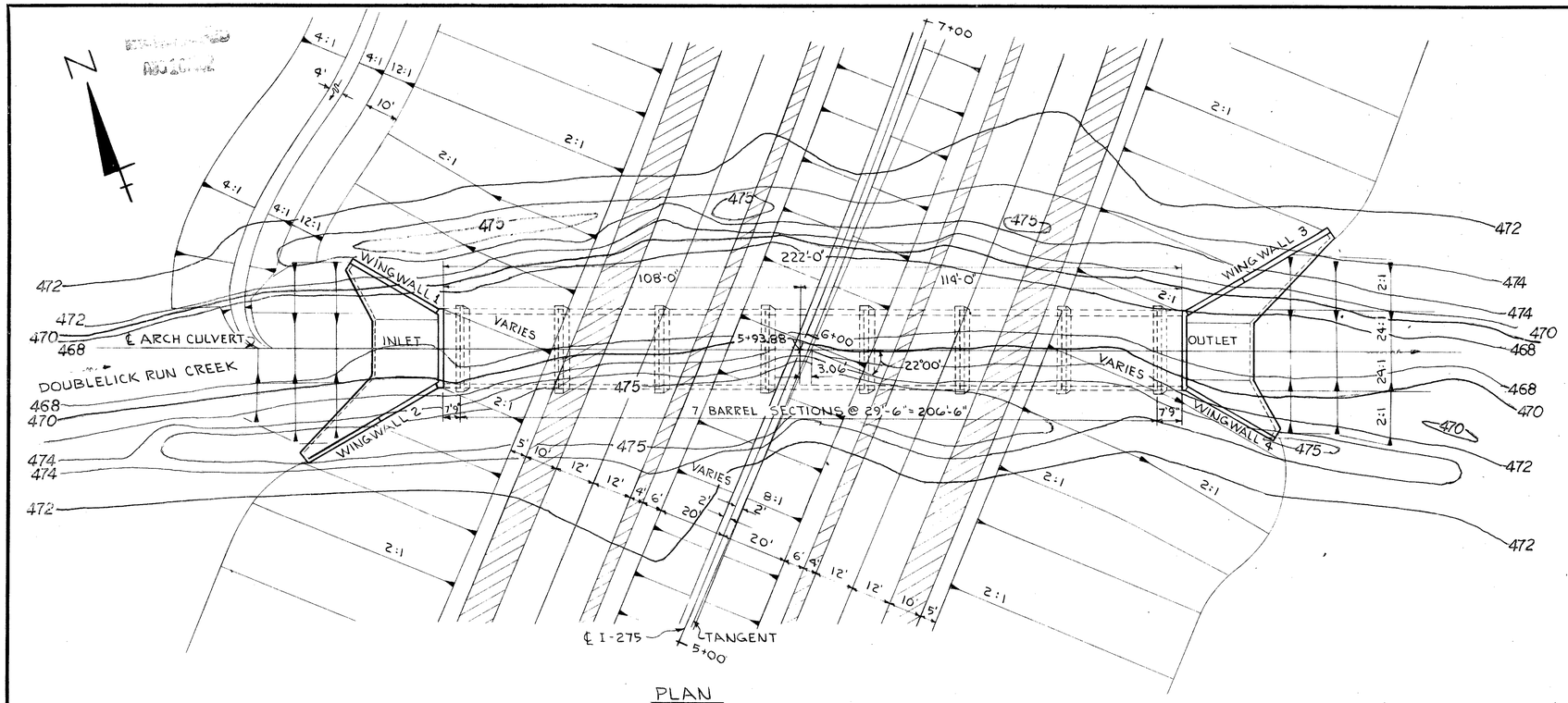

PLAN

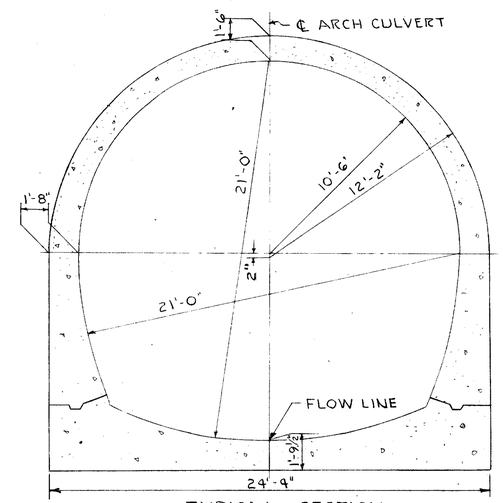

TYPICAL SECTION

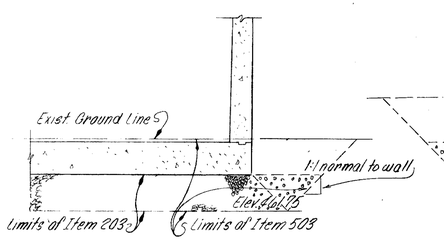

SECTION A-A

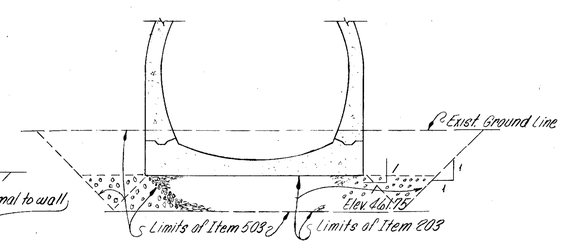

SECTION B-B

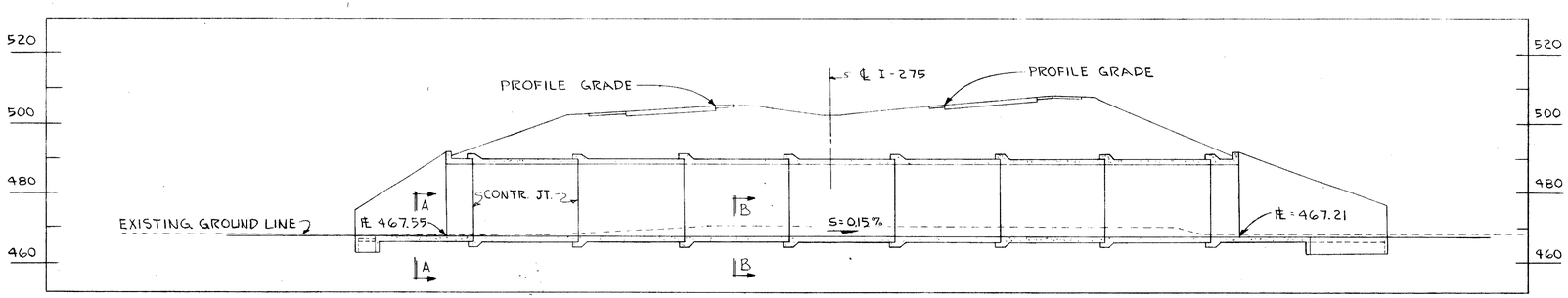

PROFILE

DRAINAGE AREA = 3190 ACRES
Q 50 = 2760 CFS
H.W. ELEV. = 483.6
VELOCITY = 12.3 FT/SEC.

PROPOSED STRUCTURE

TYPE: REINFORCED CONCRETE ARCH CULVERT
SPAN: 21'-0"
DESIGN LIVE LOAD: HS20
DESIGN DEAD LOAD: A.A.S.H.O. # 1.2.2 (A)
ALIGNMENT: TANGENT
SKEW: 22° R.F.

VOGT, IVERS, & ASSOCIATES — ENGINEERS CINCINNATI — ARCHITECTS CHICAGO — 1/10

SITE PLAN

BRIDGE NO. HAM-275-0009
DOUBLELICK RUN CREEK CULVERT

HAMILTON COUNTY STA. 5+95 ON TANGENT
STA. 5+93.88 ON I-275

PRESENT TOPOGRAPHY		PROPOSED WORK			
SURVEYED	DRAWN	DESIGNED	DRAWN	CHECKED	REVISIONS
VIA	WHH	RDU	JM	RDU	

FED. RD. DIVISION	STATE	PROJECT	
2	OHIO		

209/302

HAM-275-0.00

ESTIMATED QUANTITIES

ITEM	TOTAL	UNIT	DESCRIPTION	INLET	BARREL	OUTLET	GENERAL	CHECKED BY & DATE			
203	1615	Cu. Yds.	Embankment (Granular Material)				1615	B.C.S.	June 72		
503	3717	Cu. Yds.	Unclassified Excavation	—	—	—	3717	W.H.H.	Aug. 69		
503	Lump	Sum	Cofferdams, Cribs and Sheeting	—	—	—	Lump	W.H.H.	Aug. 69		
509	221,872	Lbs.	Reinforcing Steel	23,245	175,230	23,397		W.H.H.	Aug. 69		
511	2,020	Cu. Yds.	Class "C" Concrete	329	1,440	251		W.H.H.	Aug. 69		
512	116	Lin. Ft.	Premolded Sealing Strip	58	—	58		W.H.H.	Aug. 69		
516	2,164	Sq. Ft.	1/2" Preformed Expansion Joint Filler	—	2,164	—		W.H.H.	Aug. 69		
518	1,482	Cu. Yds.	Porous Backfill	—	—	—	1,482	W.H.H.	Aug. 69		

AUG 26 1972

GENERAL NOTES

SPECIFICATIONS

Design: This structure conforms to the current requirements of the "Standard Specifications for Highway Bridges", AASHO, Ninth Edition, *including the Ohio "Supplement" to these specifications.*

DESIGN DATA

Design Loading: HS-20-44

MATERIALS

* Reinforcing Steel: ASTM A615, A616, A617
Basic unit stress 20,000 psi.

Class "C" Concrete: Basic unit stress 1,333 psi.

** If bars in accordance with ASTM A616 are provided they shall be subject to bend tests as per AASHO Designation M42-70.*

UTILITY LINES

All expense involved in relocating (installing) the affected utility lines shall be borne by the Owner(s). The Contractor and the Owners are requested to cooperate by arranging their work in such a manner that inconvenience to either will be held to a minimum.

FOUNDATION

Foundation Material of approximately uniform bearing capacity is contemplated. Spots of soft earth beneath the level of granular material shown on plans shall be removed and be replaced with thoroughly compacted granular material.

VOGT, IVERS, & ASSOCIATES — 2/10
ENGINEERS CINCINNATI — ARCHITECTS CHICAGO

ESTIMATED QUANTITIES
AND GENERAL NOTES

DOUBLELICK RUN CREEK CULVERT

HAMILTON COUNTY — STA. 5+95 ON TANGENT
STA. 5+93.88 ON I-275

DESIGNED	DRAWN	TRACED	CHECKED	REVIEWED	DATE	REVISED
RDU	WHH	~		RDU	6/18/69	

FED. RD. DIVISION	STATE	PROJECT	
2	OHIO		

210/302

HAM-275-0.00

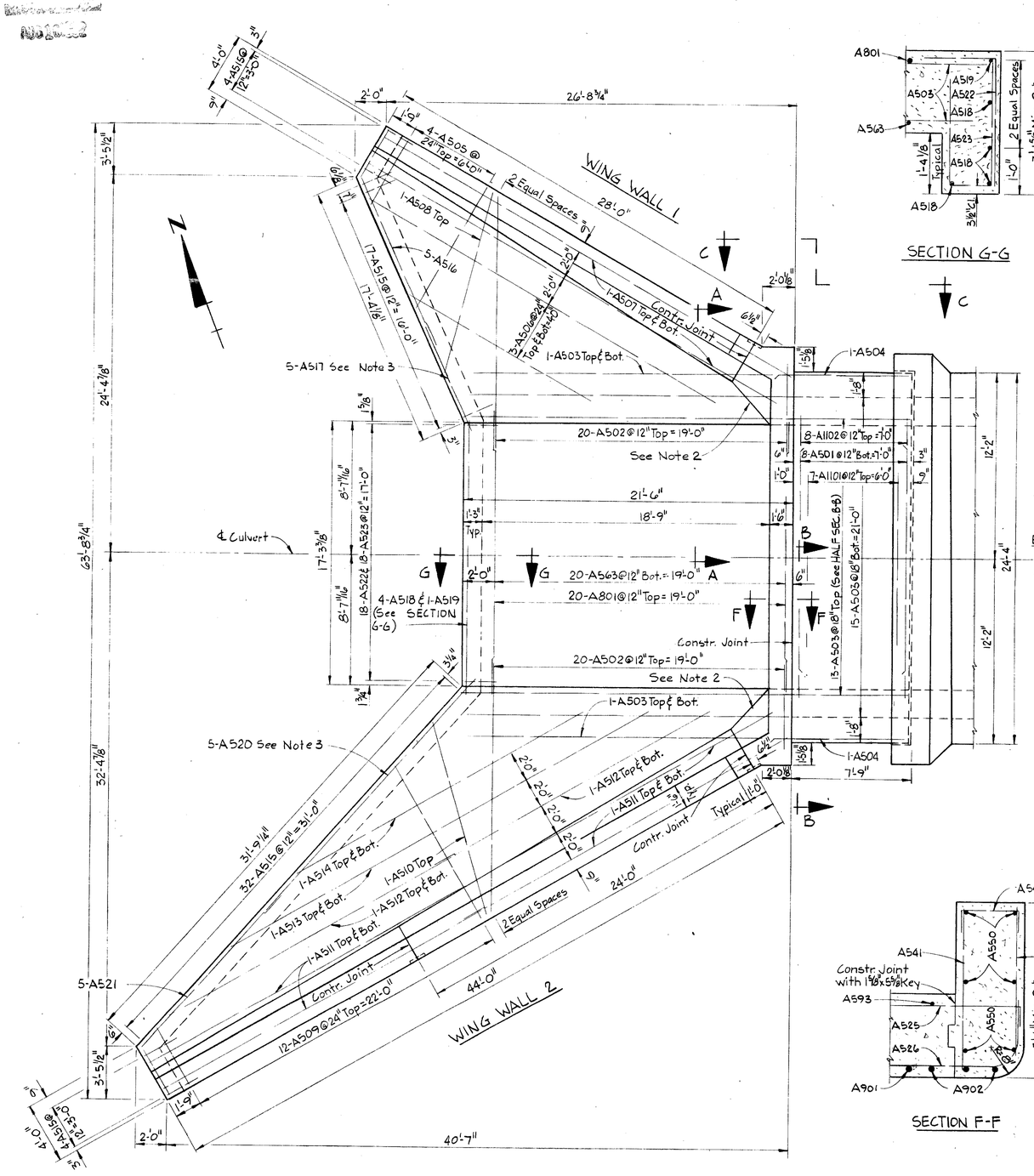

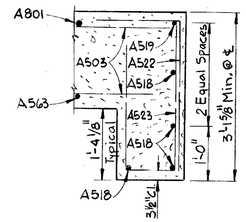

SECTION G-G

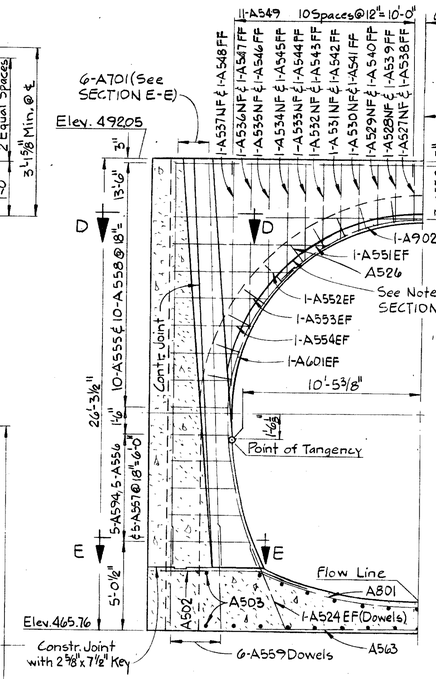

HALF SECTION A-A

Symmetrical about ℄ Culvert

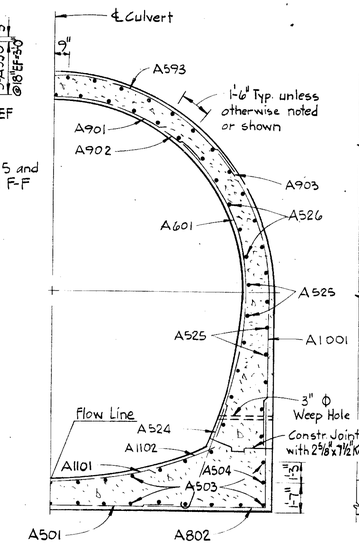

HALF SECTION B-B

Symmetrical about ℄ Culvert

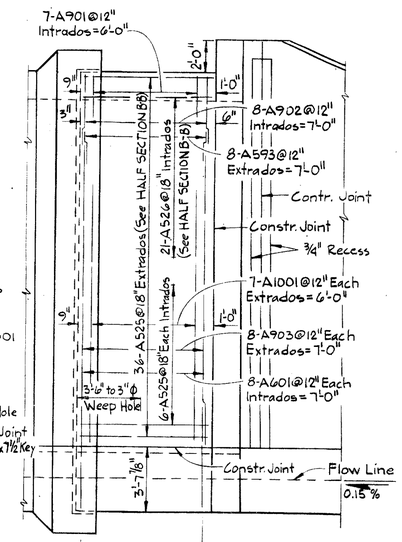

VIEW C-C

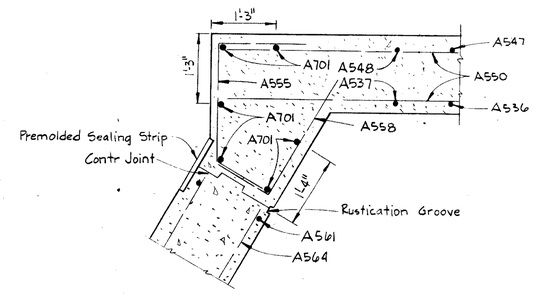

SECTION D-D

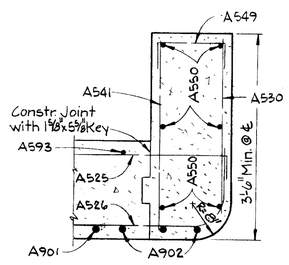

SECTION F-F

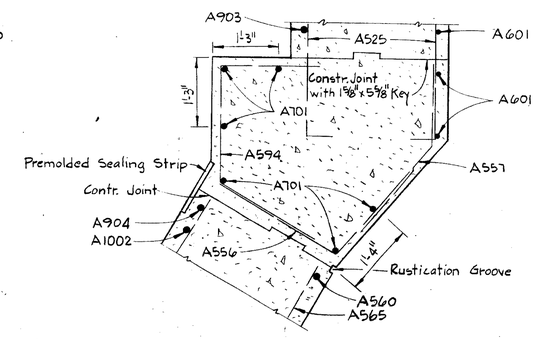

SECTION E-E

LEGEND

EF = Each Face
NF = Near Face
FF = Far Face

NOTES

1) For REINFORCING BAR LIST, see sheet 8/10
2) The surface area bounded by the contraction joint, intrados of arch, top of footing and the point of tangency shall be formed to fit in the field.
3) For WING WALL 1 and 2, CONTRACTION JOINT, and RUSTICATION GROOVE DETAILS, see sheet 4/10
4) For BARREL DETAILS, see sheet 5/10
5) Inlet to be rounded and transitioned above point of tangency.

VOGT, IVERS, & ASSOCIATES 3/10
ENGINEERS CINCINNATI — ARCHITECTS CHICAGO

INTLET DETAILS

DOUBLELICK RUN CREEK CULVERT

HAMILTON COUNTY

STA. 5+95 ON TANGENT
STA. 5+93.88 ON I-275

DESIGNED	DRAWN	TRACED	CHECKED	REVIEWED	DATE	REVISED
TBD	WHH	—	TBD	RDU	6/18/69	

FED. RD. DIVISION	STATE	PROJECT	
2	OHIO		

211/302

HAM-275-0.00

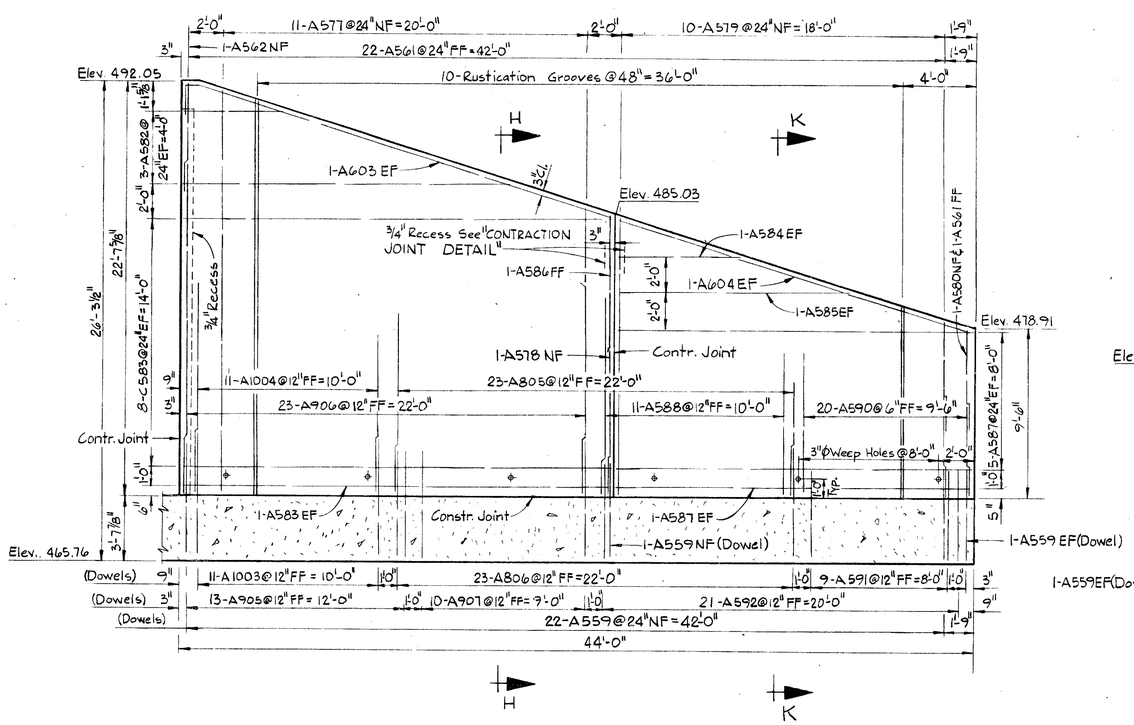

ELEVATION WING WALL 2

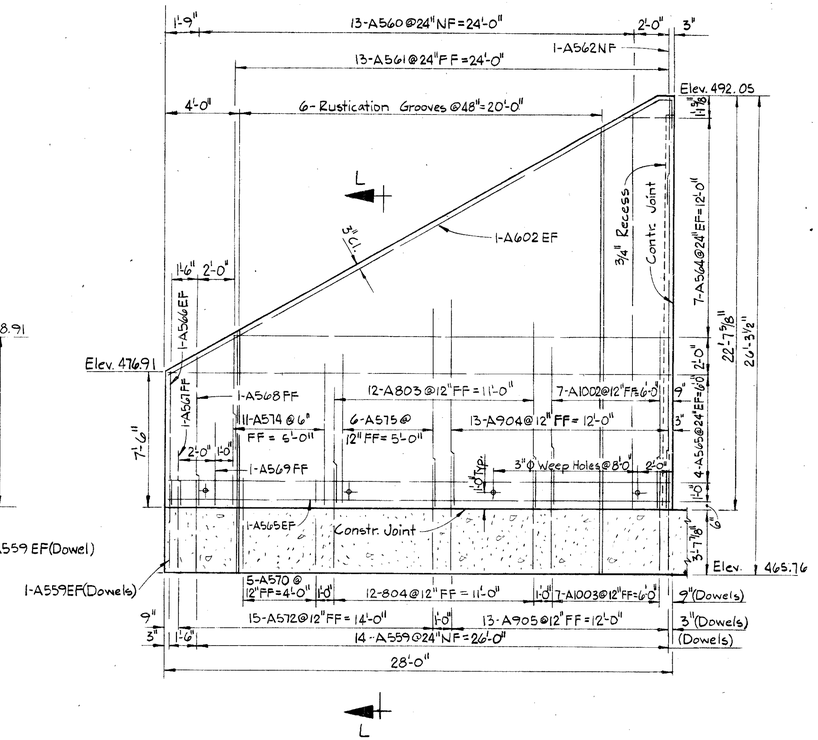

ELEVATION WING WALL 1

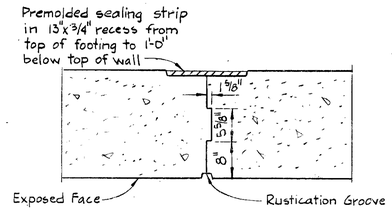

CONTRACTION JOINT DETAIL

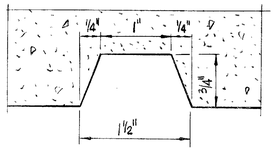

RUSTICATION GROOVE DETAIL

LEGEND

EF = Each Face
NF = Near Face
FF = Far Face

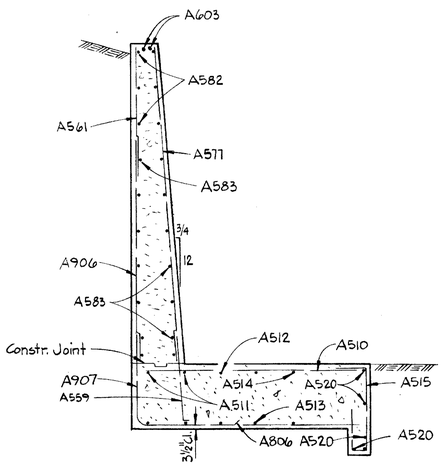

SECTION H-H

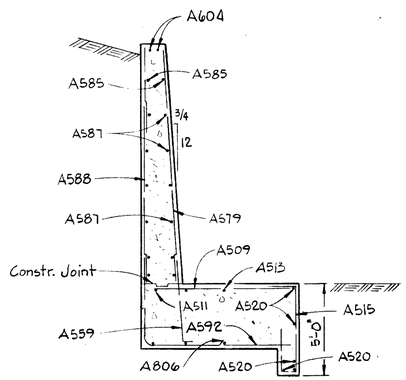

SECTION K-K

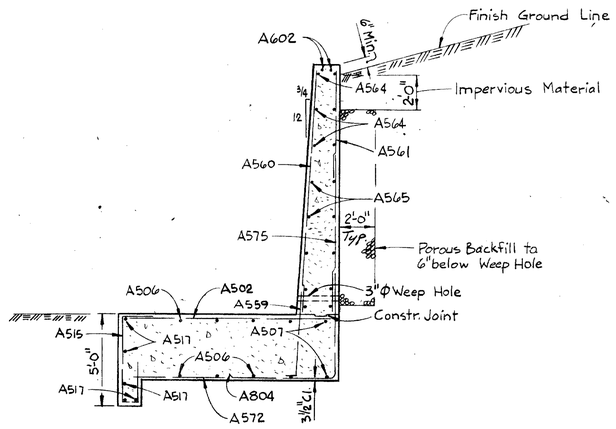

SECTION L-L

NOTES

1) For REINFORCING BAR LIST, see sheet 8/10

VOGT, IVERS, & ASSOCIATES 4/10
ENGINEERS CINCINNATI — ARCHITECTS CHICAGO

INTLET WALL DETAILS

DOUBLELICK RUN CREEK CULVERT

HAMILTON COUNTY — STA. 5+95 ON TANGENT, STA. 5+93.88 ON I-275

DESIGNED	DRAWN	TRACED	CHECKED	REVIEWED	DATE	REVISED
TBD	WHH	~	TBD	RDU	6/18/69	

FED. RD. DIVISION	STATE	PROJECT	
2	OHIO		

212/302

HAM-275-0.00

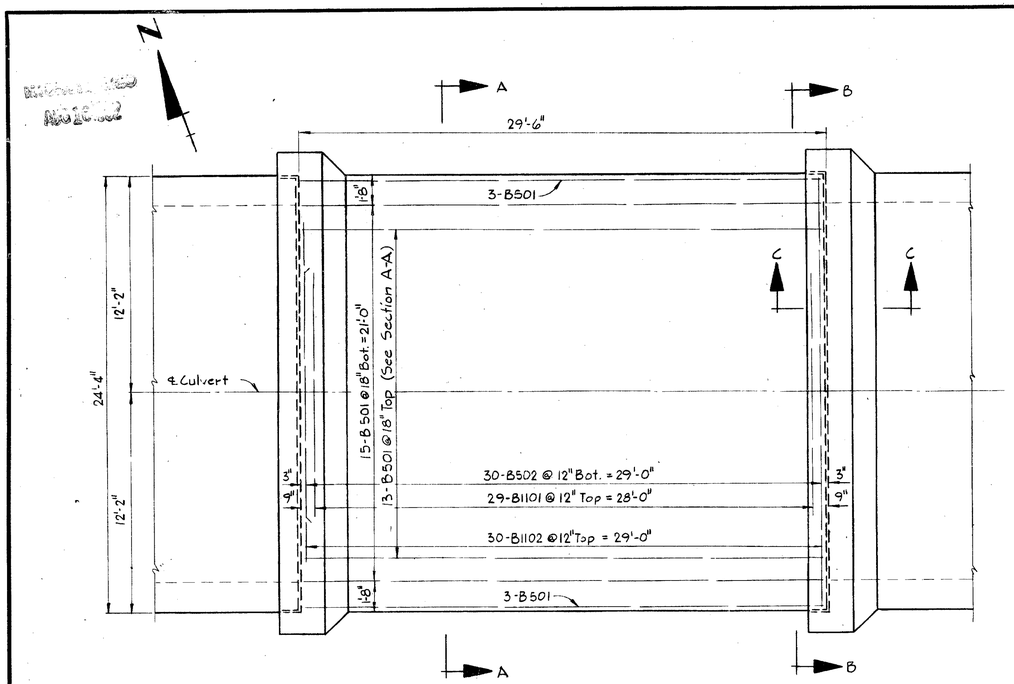

PLAN

Bars shown are below Constr. Joint.

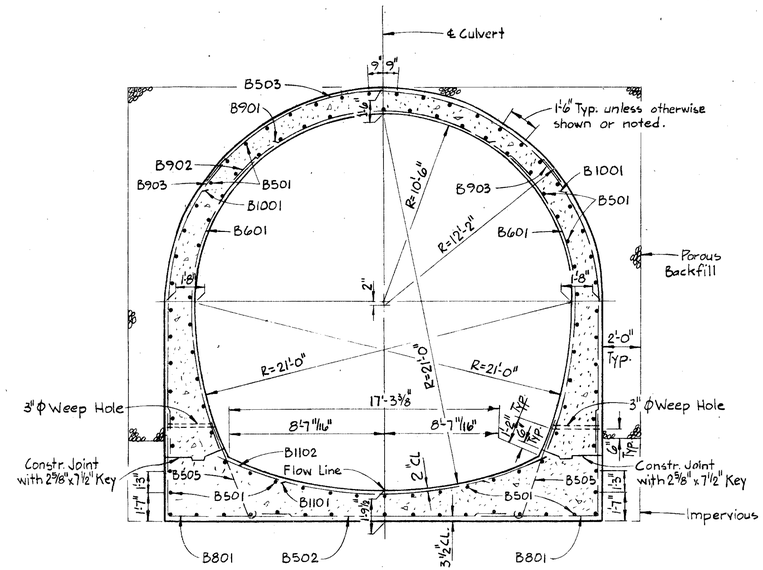

SECTION A-A

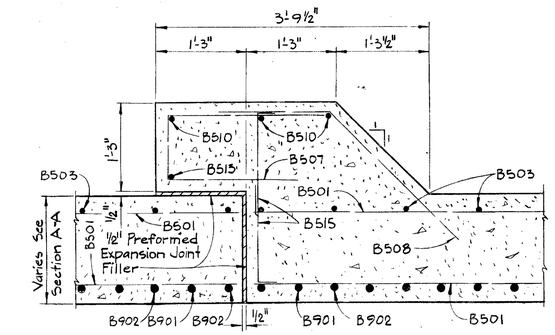

SECTION C-C

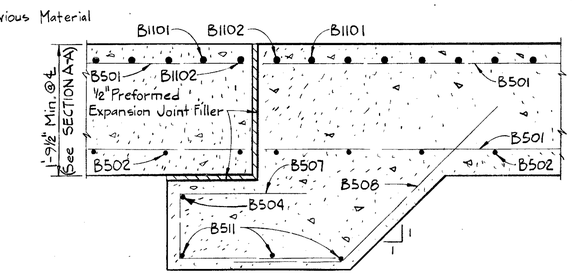

SECTION D-D

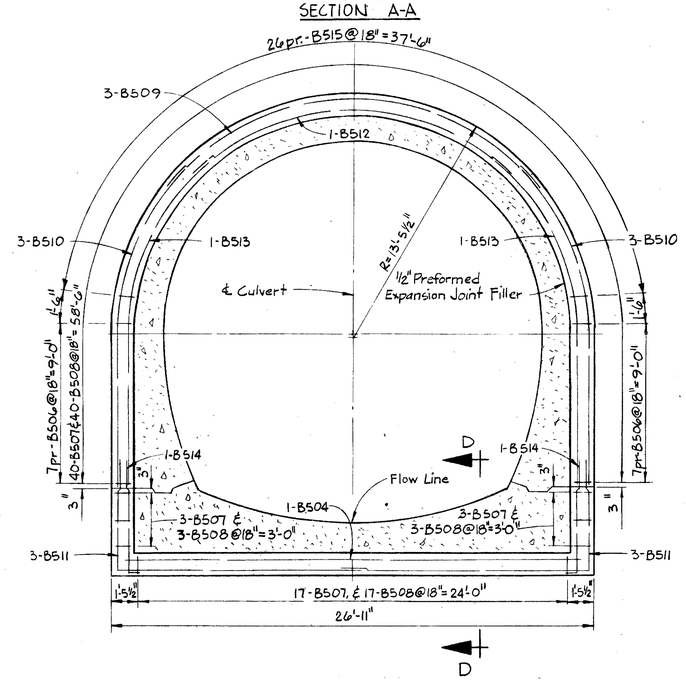

SECTION B-B

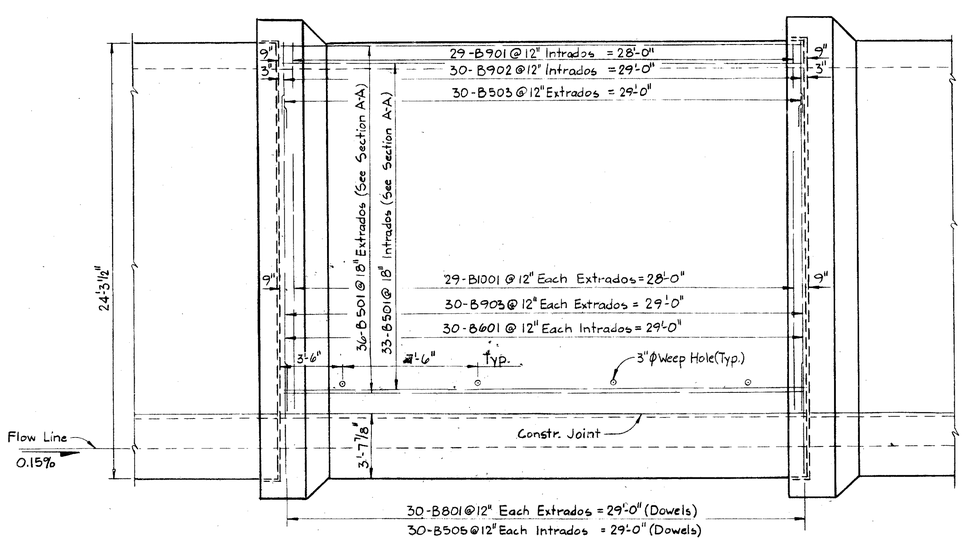

ELEVATION

Bars shown are above Constr Joint.

NOTES

1) For REINFORCING BAR LIST, see sheet 8/10

VOGT, IVERS, & ASSOCIATES — ENGINEERS CINCINNATI — ARCHITECTS CHICAGO

5/10

BARREL DETAILS

DOUBLELICK RUN CREEK CULVERT

HAMILTON COUNTY — STA. 5+95 ON TANGENT, STA. 5+93.88 ON I-275

DESIGNED	DRAWN	TRACED	CHECKED	REVIEWED	DATE	REVISED
TBD	WHH	~	TBD	RDU	6/18/69	

FED. RD. DIVISION	STATE	PROJECT	
2	OHIO		

213/302

HAM-275-0.00

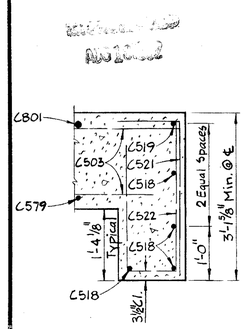

SECTION G-G

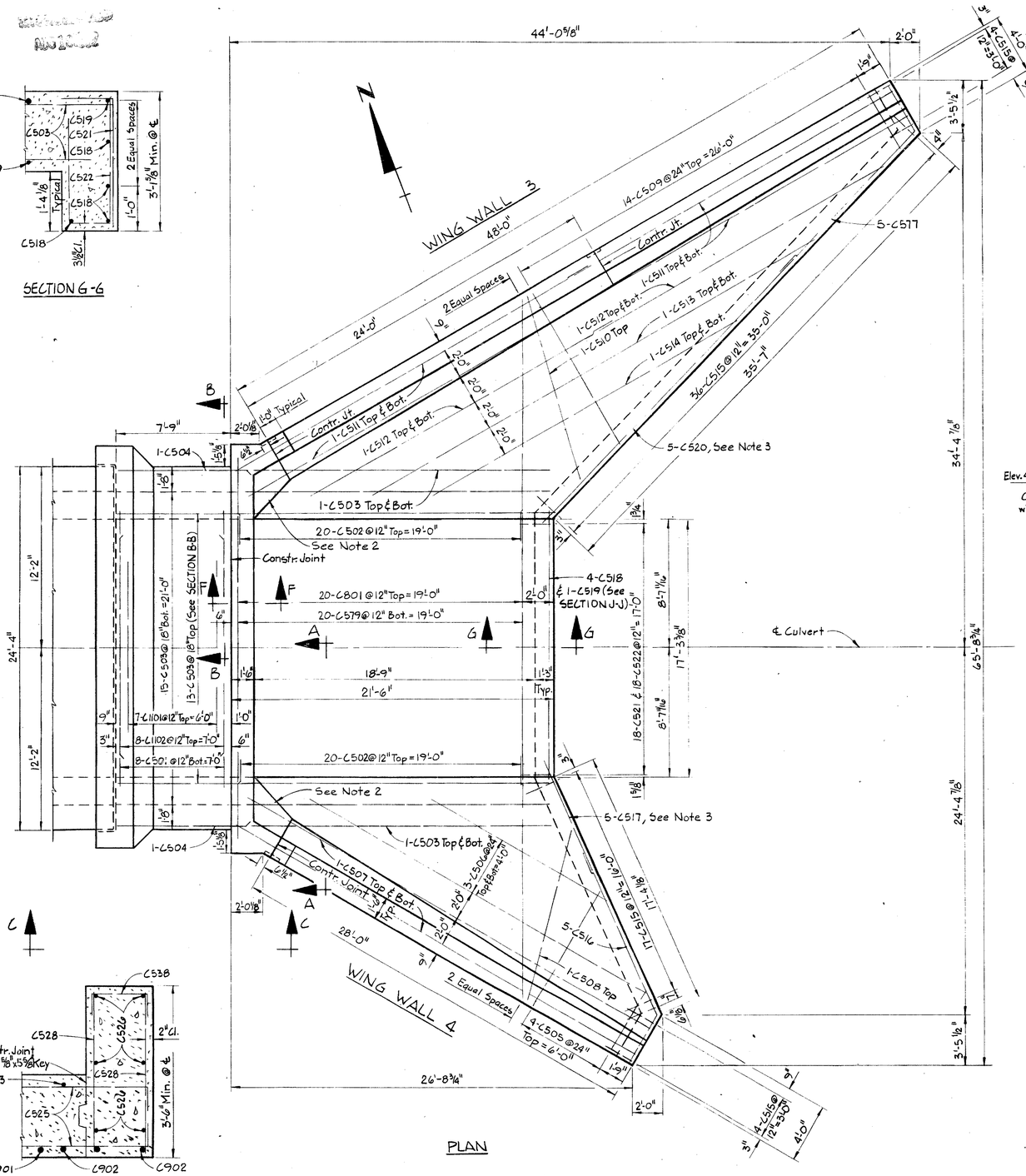

PLAN

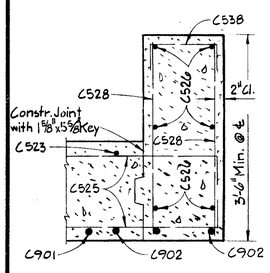

SECTION F-F

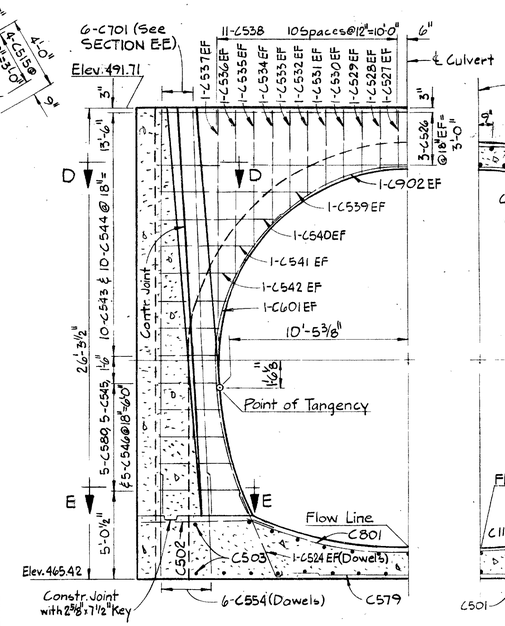

HALF SECTION A-A

Symmetrical about ℄ Culvert

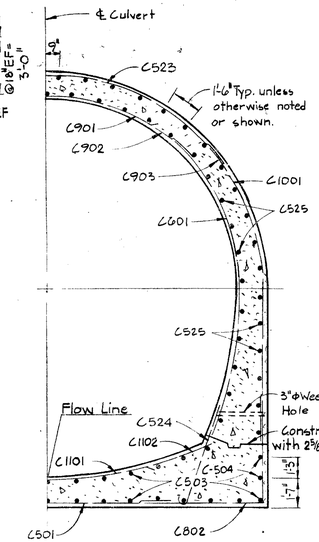

HALF SECTION B-B

Symmetrical about ℄ Culvert

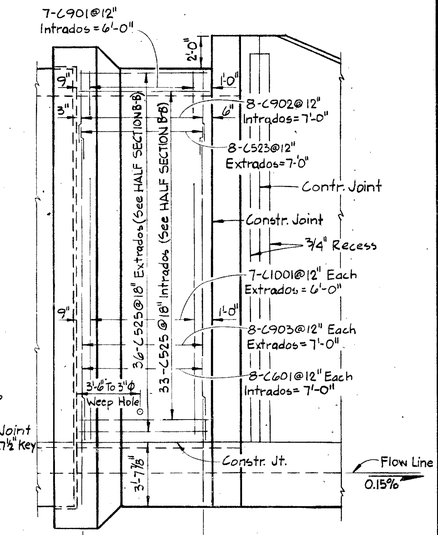

VIEW C-C

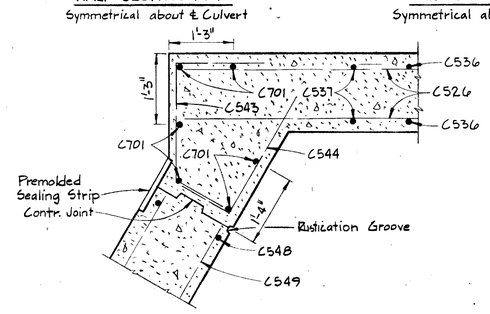

SECTION D-D

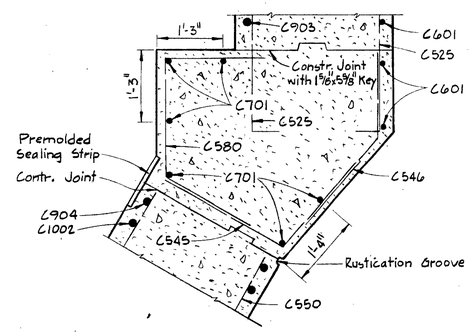

SECTION E-E

LEGEND

EF = Each Face

NOTES

1) For REINFORCING BAR LIST, see sheet 8/10.
2) The surface area bounded by the contraction joint, intrados of arch, top of footing and the point of tangency shall be formed to fit in the field.
3) For WING WALL 3 and 4 DETAILS, see sh. 7/10
4) For CONTRACTION JOINT and RUSTICATION GROOVE DETAILS, see sheet 4/10
5) For BARREL DETAILS, see sheet 5/10

VOGT, IVERS, & ASSOCIATES — ENGINEERS CINCINNATI — ARCHITECTS CHICAGO — 6/10

OUTLET DETAILS

DOUBLELICK RUN CREEK CULVERT

HAMILTON COUNTY

STA. 5+95 ON TANGENT
STA. 5+93.88 ON I-275

DESIGNED	DRAWN	TRACED	CHECKED	REVIEWED	DATE	REVISED
TBD	WHH	~	TBD	RDU	6/18/69	

FED. RD. DIVISION	STATE	PROJECT	
2	OHIO		

214
302

HAM-275-0.00

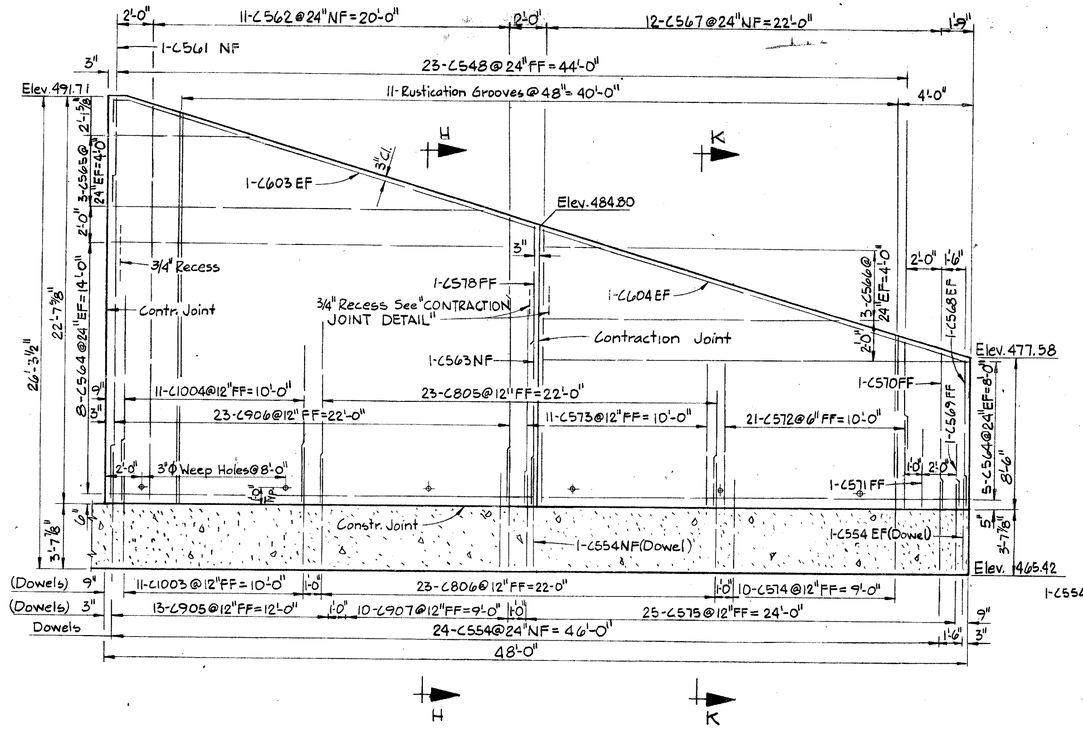

ELEVATION WING WALL 3

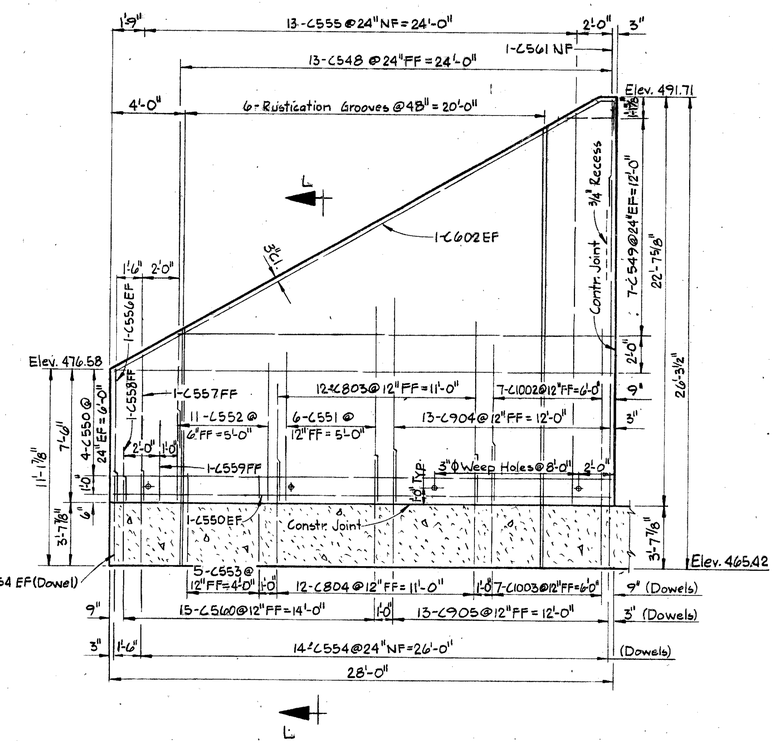

ELEVATION WING WALL 4

LEGEND

EF = Each Face
FF = Far Face
NF = Near Face

NOTES

1) For REINFORCING BAR LIST, see sh. 8/10

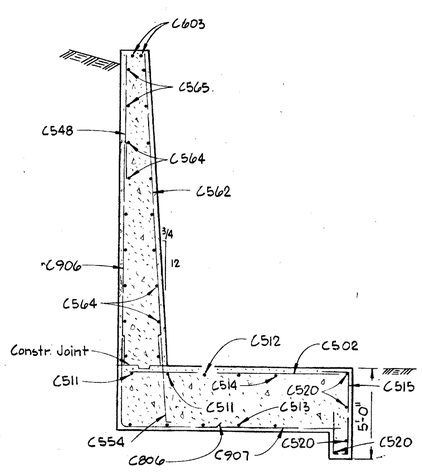

SECTION H-H

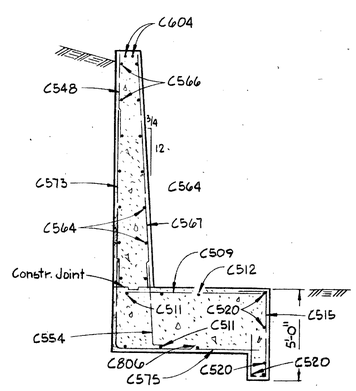

SECTION K-K

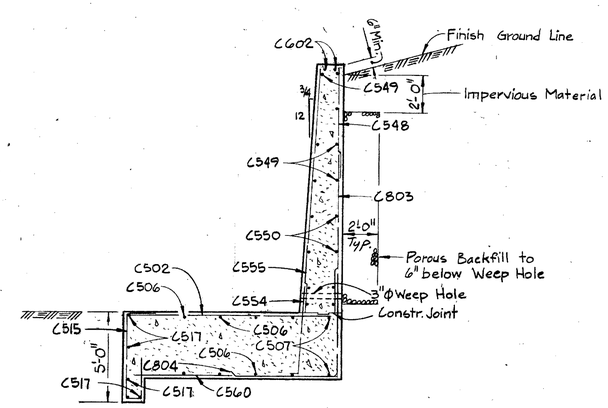

SECTION L-L

VOGT, IVERS, & ASSOCIATES
ENGINEERS CINCINNATI — ARCHITECTS CHICAGO

7/10

OUTLET WALL DETAILS

DOUBLELICK RUN CREEK CULVERT

HAMILTON COUNTY

STA. 5+95 ON TANGENT
STA. 5+93.88 ON I-275

DESIGNED	DRAWN	TRACED	CHECKED	REVIEWED	DATE	REVISED
TBD	WHH	~	TBD	RDU	6/18/69	

INLET

MARK	NO.	LENGTH	TYPE	WEIGHT
A501	8	14'-3"	Str.	119
A502	40	4'-11" to 16'-0" by 7" (2 ea)	Bt.	436
A503	32	28'-11"	Str.	965
A504	2	8'-11"	Str.	19
A505	4	4'-10" to 9'-1" by 1'-5"	Str.	29
A506	6	15'-2" to 27'-8" by 1'-3" (2 ea)	Str.	134
A507	4	31'-0"	Str.	129
A508	1	12'-0"	Str.	13
A509	12	4'-2" to 11'-6" by 8"	Str.	98
A510	1	13'-3"	Str.	14
A511	8	24'-2"	Str.	202
A512	4	21'-9"	Str.	91
A513	2	32'-6"	Str.	68
A514	2	23'-0"	Str.	48
A515	57	9'-0"	Bt.	535
A516	5	13'-1"	Bt.	68
A517	5	10'-4"	Str.	52
A518	4	18'-3"	Str.	76
A519	1	18'-6"	Bt.	19
A520	5	20'-9"	Str.	108
A521	5	16'-8"	Bt.	87
A522	18	4'-2"	Bt.	78
A523	18	5'-9"	Bt.	108
A524	20	6'-3"	Bt.	130
A525	48	9'-5"	Bt	471
A526	21	10'-9"	Bt.	236
A527	2	2'-8"	Str.	6
A528	2	3'-0"	Str.	6
A529	2	3'-2"	Str.	7
A530	2	3'-5"	Str.	7
A531	2	3'-10"	Str.	8
A532	2	4'-5"	Str.	9
A533	2	5'-1"	Str.	11
A534	2	5'-11"	Str.	12
A535	2	7'-1"	Str.	15
A536	2	8'-8"	Str.	18
A537	2	11'-8"	Str.	24
A538	2	3'-2"	Str.	7
A539	2	3'-4"	Str.	7
A540	2	3'-6"	Str.	7
A541	2	3'-9"	Str.	8
A542	2	4'-2"	Str.	9
A543	2	4'-9"	Str.	10
A544	2	5'-5"	Str.	11
A545	2	6'-3"	Str.	13
A546	2	7'-5"	Str.	15
A547	2	9'-0"	Str.	19
A548	2	12'-0"	Str.	25
A549	22	2'-2"	Bt.	50
A550	6	26'-10"	Str.	168
A551	4	8'-2"	Str.	34
A552	4	6'-1"	Str.	25
A553	4	4'-10"	Str.	20
A554	4	3'-11"	Str.	16
A555	20	4'-7"	Bt.	96
A556	10	4'-3"	Bt.	44
A557	10	3'-7"	Bt.	37
A558	20	3'-4" to 4'-1" by 1" (2 ea)	Bt.	77
A559	53	5'-8"	Bt.	313
A560	13	8'-4" to 21'-10" by 1½"	Str	205
A561	36	6'-3"	Str.	235
A562	2	22'-6"	Str.	47
A563	20	17'-6"	Str.	365
A564	14	2'-5" to 23'-11" by 3'-7"	Str	192
A565	10	27'-8"	Str	289
A566	2	7'-4"	Str.	15
A567	1	3'-0"	Str.	3
A568	1	8'-4"	Str.	9
A569	1	4'-6"	Str.	5
A570	5	8'-3" to 9'-7" by 4"	Bt.	46
A572	15	8'-3" to 18'-2" by 8½"	Bt.	207
A574	11	5'-0" to 8'-4" by 4"	Str.	76
A575	6	8'-6" to 11'-0" by 6"	Str.	61
A577	11	16'-2" to 22'-0" by 7"	Str.	219
A578	1	15'-6"	Str.	16
A579	10	9'-11" to 15'-0" by 7"	Str.	131
A580	1	9'-11"	Str.	10
A582	6	4'-2" to 17'-2" by 6'-6"	Str.	67
A583	18	23'-8"	Str.	444
A584	2	6'-5"	Str.	13
A585	2	13'-1"	Str.	27
A586	1	8'-11"	Str.	9
A587	12	19'-8"	Str.	246
A588	11	8'-6" to 11'-0" by 3"	Str.	112
A590	20	5'-0" to 8'-2" by 2"	Str	137
A591	9	7'-4" to 8'-4" by 1½"	Bt.	74
A592	21	8'-1" to 14'-9" by 4"	Bt.	250
A593	8	22'-2"	Bt.	185
A594	10	5'-8"	Bt.	59

MARK	NO.	LENGTH	TYPE	WEIGHT
A601	20	17'-8"	Bt.	531
A602	2	32'-9"	Bt.	98
A603	2	26'-1"	Bt.	78
A604	2	20'-6"	Str.	62
A701	12	22'-5"	Str.	550
A801	20	18'-6"	Bt.	988
A802	16	12'-4"	Bt.	527
A803	12	6'-6" to 10'-2" by 4"	Str	267
A804	12	10'-9" to 13'-6" by 3"	Bt.	388
A805	23	6'-6" to 10'-2" by 2"	Str.	512
A806	23	9'-4" to 12'-1" by 3" (2 ea)	Bt.	658
A901	7	12'-2"	Bt.	290
A902	10	18'-8"	Bt.	635
A903	16	18'-1"	Bt.	984
A904	13	11'-11" to 17'-11" by 6"	Str.	657
A905	26	11'-2" to 18'-2" by 7" (2 ea)	Bt.	1 297
A906	23	11'-6" to 17'-11" by 3½"	Str	1 150
A907	10	16'-1" to 19'-1" by 4"	Bt.	598
A1001	14	15'-9"	Bt.	949
A1002	7	9'-0" to 10'-0" by 2"	Str.	286
A1003	18	11'-1"	Bt.	858
A1004	11	9'-2" to 10'-0" by 1"	Str.	454
A1101	7	11'-7"	Bt.	431
A1102	8	18'-3"	Bt.	776

BARREL

MARK	NO.	LENGTH	TYPE	WEIGHT
B501	721	29'-2"	Str.	21 934
B502	210	14'-3"	Str.	3 121
B503	210	22'-2"	Bt.	4855
B504	8	24'-10"	Str.	207
B505	420	6'-3"	Bt.	2738
B506	224	2'-5" to 3'-2" by 1½" (2 ea)	Bt.	652
B507	504	4'-8"	Bt.	2453
B508	504	4'-0"	Bt	2103
B509	24	23'-7"	Bt	590
B510	48	19'-1"	Bt.	955
B511	48	20'-2"	Bt.	1010
B512	8	19'-6"	Bt.	163
B513	16	19'-6"	Bt.	325
B514	16	6'-6"	Bt.	108
B515	416	2'-7"	Bt.	1121
B601	420	17'-8"	Bt.	11 145
B801	420	12'-4"	Bt.	13 830
B901	203	12'-2"	Bt.	8398
B902	210	18'-8"	Bt.	13 328
B903	420	18'-1"	Bt.	25 873
B1001	406	15'-9"	Bt.	27 516
B1101	203	11'-7"	Bt.	12 493
B1102	210	18'-3"	Bt.	20 302

OUTLET

MARK	NO.	LENGTH	TYPE	WEIGHT
C501	8	14'-3"	Str.	119
C502	40	4'-11" to 16'-0" by 7" (2 ea)	Bt.	436
C503	32	28'-11"	Str.	965
C504	2	8'-11"	Str.	19
C505	4	4'-10" to 9'-1" by 1'-5"	Str.	29
C506	6	15'-2" to 27'-8" by 1'-3" (2 ea)	Str.	134
C507	4	31'-0"	Str.	129
C508	1	12'-0"	Str.	13
C509	14	4'-2" to 11'-9" by 7"	Str.	116
C510	1	13'-0"	Str.	14
C511	8	26'-2"	Str.	218
C512	4	23'-3"	Str.	97
C513	2	35'-0"	Str.	73
C514	2	25'-4"	Str.	53
C515	61	9'-1"	Bt	578
C516	5	13'-1"	Bt.	68
C517	5	10'-0"	Str.	52
C518	4	18'-3"	Str.	76
C519	1	18'-6"	Bt.	19
C520	5	27'-10"	Str	145
C521	18	4'-2"	Bt.	78
C522	18	5'-8"	Bt.	106
C523	8	22'-2"	Bt.	185
C524	12	6'-3"	Bt.	78
C525	69	9'-5"	Bt.	678
C526	6	26'-10"	Str.	168
C527	4	3'-2"	Str.	13
C528	4	3'-4"	Str.	14
C529	4	3'-6"	Str.	15
C530	4	3'-9"	Str.	16
C531	4	4'-2"	Str.	17
C532	4	4'-9"	Str.	20
C533	4	5'-5"	Str.	23
C534	4	6'-3"	Str.	26
C535	4	7'-5"	Str.	31
C536	4	9'-0"	Str.	37
C537	4	12'-0"	STR.	50
C538	22	2'-2"	Bt.	50
C539	4	8'-2"	Str	34
C540	4	6'-1"	Str.	25
C541	4	4'-10"	Str.	20
C542	4	3'-11"	Str.	16
C543	20	4'-8"	Bt.	97
C544	20	3'-4" to 4'-1" by 1" (2 ea)	Bt.	77
C545	10	4'-3"	Bt.	44
C546	10	3'-7"	Bt.	37
C548	36	6'-3"	Str.	235
C549	14	2'-5" to 23'-11" by 3'-7"	Str	1 192
C550	10	27'-8"	Str.	289
C551	6	8'-6" to 11'-0" by 6"	Str.	61
C552	11	5'-0" to 8'-4" by 4"	Str.	76
C553	5	8'-3" to 9'-7" by 2"	Bt.	46
C554	53	5'-8"	Bt.	313
C555	13	8'-4" to 21'-4" by 1'-1"	Str	201
C556	2	7'-4"	Str.	15
C557	1	8'-4"	Str.	9
C558	1	3'-0"	Str.	3
C559	1	4'-6"	Str.	5
C560	15	8'-3" to 18'-2" by 8½"	Bt.	207
C561	2	22'-6"	Str.	47
C562	11	16'-1" to 21'-11" by 7"	Str.	218
C563	1	15'-8"	Str.	16
C564	26	23'-8"	Str.	642
C565	6	7'-5" to 20'-9" by 6" (2 ea)	Str.	88
C566	6	3'-6" to 16'-10" by 6" (2 ea)	Str	64
C567	12	9'-0" to 16'-5" by 7"	Str.	153
C568	2	8'-4"	Str	17
C569	1	4'-0"	Str.	4
C570	1	8'-10"	Str.	9
C571		4'-6"	Str.	5
C572	21	5'-0" to 8'-4" by 2"	Str.	146
C573	11	11'-0" to 8'-6" by 3"	Str	112
C574	10	7'-3" to 8'-4" by 1½"	Bt.	81
C575	25	8'-5" to 14'-5" by 3"	Bt.	298
C577	5	13'-1"	Bt.	68
C578	1	9'-1"	Str	9
C579	20	17'-6"	Str.	365
C580	10	5'-8"	Bt.	59

MARK	NO.	LENGTH	TYPE	WEIGHT
C601	20	17'-8"	Bt.	531
C602	2	32'-9"	Bt.	98
C603	2	26'-0"	Bt	78
C604	2	24'-8"	Str.	74
C701	12	22'-5"	Str.	550

MARK	NO.	LENGTH	TYPE	WEIGHT
C801	20	18'-6"	Bt.	988
C802	16	12'-4"	Bt.	527
C803	12	6'-6" to 10'-2" by 4"	Str.	267
C804	12	10'-9" to 13'-6" by 3"	Bt.	388
C805	23	6'-6" to 10'-2" by 2"	Str.	512
C806	23	9'-4" to 12'-1" by 1½"	Bt.	658
C901	7	12'-2"	Bt.	290
C902	10	18'-8"	Bt.	635
C903	16	18'-1"	Bt.	984
C904	13	11'-11" to 17'-11" by 6"	Str	659
C905	26	11'-2" to 18'-2" by 7" (2 ea)	Bt	1 297
C906	23	11'-6" to 17'-11" by 3½"	Str.	1 150
C907	10	16'-5" to 18'-8" by 3"	Bt.	596
C1001	14	15'-9"	Bt.	949
C1002	7	9'-0" to 10'-0" by 2"	Str.	286
C1003	18	11'-1"	Bt.	858
C1004	11	9'-2" to 10'-0" by 1"	Str.	454
C1101	7	11'-7"	Bt.	431
C1102	8	18'-3"	Bt.	776

REPLACEMENT BARS

MARK	NO.	LENGTH	TYPE	WEIGHT
R501	3	5'-7"	Str	—
R601	1	5'-11"	Str	—
R701	1	6'-3"	Str	—
R801	1	6'-6"	Str	—
R901	3	6'-10"	Str	—
R1001	2	7'-3	Str	—
R1101	2	7'-7"	Str	—

FED. RD. DIVISION	STATE	PROJECT	
2	OHIO		

215
302

HAM-275-0.00

NOTES

1. BAR SIZE IS INDICATED IN THE BAR MARK. THE FIRST DIGIT WHERE THREE DIGITS ARE USED AND THE FIRST TWO DIGITS WHERE FOUR ARE USED, INDICATE THE BAR SIZE NUMBER.
2. BARS MARKED WITH AN ASTERISK TO BE INCLUDED FOR PAYMENT UNDER ITEM 517, RAILING.
3. SPIRAL REINFORCING BARS: THE "LENGTH" SHOWN IN THE STEEL LIST FOR THE SPIRAL BARS IS THE DISTANCE FROM TOP OF THE FOOTING TO THE BOTTOM OF CAP, OR TO WITHIN 2" (±) OF THE TOP OF COLUMN FOR PIERS WITHOUT CAPS, TO THE NEAREST INCH.
   ~~SPIRAL REINFORCING BARS SHALL NOT HAVE DEFORMATIONS BUT SHALL IN OTHER RESPECTS CONFORM TO ITEM 509.~~
   FOUR STEEL CHANNEL, TEE OR ANGLE SPACERS, WEIGHING NOT LESS THAN 0.80 LB. PER LIN. FT. OF SPACER, SHALL BE PROVIDED FOR EACH SPIRAL UNIT. THEY SHALL BE EQUALLY SPACED ALONG THE PERIPHERY OF THE COIL. THE NUMBER OF POUNDS OF THESE SPACERS, BASED ON 0.80 LB. PER LIN. FT., WILL BE PAID FOR AS REINFORCING STEEL AND IS INCLUDED IN THE TABULATED QUANTITY OF SPIRAL BARS.
4. SEE SH 9 & 10/10 FOR BENDING DETAILS.

VOGT, IVERS & ASSOCIATES
ENGINEERS CINCINNATI — ARCHITECTS CHICAGO

8/10

REINFORCING BAR LIST
DOULBLELICK RUN CREEK CULVERT

HAMILTON COUNTY — STA. 5+95 ON TANGENT
STA. 5+93 BK ON I-275

DESIGNED	DRAWN	TRACED	CHECKED	REVIEWED	DATE	REVISED
TBD	WHH	~	TBD	SDC	6/18/69	

FED. RD. DIVISION	STATE	PROJECT	
2	OHIO		

216/302

HAM-275-0.00

MARK	TYPE	DIMENSIONS FOR BENDING A	B	C	D	E	F	G	H	J	K	R	O
A502	19		–	3'-4" to 4'-5" by 7"	1'-7"				6"		1'-6"		
A515	17		1'-7"	4'-7"	11"	2'-4"	–						
A516	19		–	9'-6"	3'-8"				3'-0"		2'-2"		
A519	9			17'-10¾"					11'-11¾"			21'-2¼"	
A521	19		–	13'-0"	3'-7"				3'-4"		1'-1"		
A522	17		1'-7"	2'-9"	–	–	–						
A523	17		–	2'-9"	11"	2'-4"	–						
A524	1	6"	5'-9"					–					
A525	2	6"	8'-11"					–					
A526	11	–	1'-6"	11"	8'-4"							7"	8'-11"
A549	2	6"	1'-2"					6"					
A555	16	–	1'-7"	2'-3"	1'-0"				6"		11"		
A556	14		2'-2"	2'-3"	–	–	–		4"		2'-2"		
A557	14		1'-7"	2'-2"	–	–	–		1'-8"		1'-4"		
A558	20		1'-0" to 1'-9" by 1"	2'-6"	–								
A559	2	6"	5'-2"					–					
A570	20		5'-1"	3'-4" to 4'-8" by 4"	–								
A572	20		5'-1"	3'-4" to 13'-3" by 8½	–								
A591	20		5'-0"	2'-6" to 3'-6" by 11½	–								
A592	20		5'-0"	3'-3" to 5'-11" by 4"									
A593	9			19'-1"					4'-9"			11'-11¾"	
A594	16	–	1'-7"	2'-3"	2'-0"				1'-0"		1'-9"		
A601	26		8'-5"	9'-3"	8'-4¼"	21'-1¾"			2'-0"		5"	10'-7"	8'-11½"
A602	16	–	1'-7"	7"	30'-10"				26'-10"		15'-2"		
A603	16	–	1'-7"	9"	24'-0"				22'-11"		7'-0"		
A801	9			17'-10¾"					1'-11¾"			21'-2½"	
A802	17		–	6'-0"	6'-7"	–	–						
A804	20		5'-11"	5'-0" to 7'-9" by 3"	–								
A806	20		5'-11"	3'-7" to 6'-4" by 3"	–								
A901	9			11'-6"					1'-8"			10'-8"	
A902	9			16'-4¼"					3'-9¾"			10'-8"	
A903	27		8'-8"	9'-5"					11"			11'-1½"	
A905	20		6'-2"	5'-3" to 12'-3" by 7"	–								
A907	20		6'-2"	10'-2" to 13'-2" by 4"	–								
A1001	27		8'-8"	7'-1"					6¼"			11'-11½"	
A1003	20		6'-8"	4'-9"	–								
A1101	9			10'-11½"					8¾"			21'-2½"	
A1102	9			17'-2¾"					1'-10"			21'-2½"	
B503	9			19'-1"					4'-9"			11'-11¾"	
B505	1	6"	5'-9"					–					
B506	17		6"	2'-1" to 2'-10" by 1½	–	–	–						
B507	17		–	2'-2"	11"	1'-10"	–						
B508	19		–	1'-7"	2'-6"				1'-9"				3'-4"
B509	9			20'-7¼"					4'-11"			13'-3¼"	
B510	27		8'-8"	10'-5"					1'-0"			13'-3¼"	
B511	17		–	6'-2"	14'-1"	–	–						
B512	9			17'-6½"					3'-7½"			12'-4¾"	
B513	27		8'-8"	10'-6"					1'-2"			12'-4¾"	
B514	17		6"	6'-2"	–	–	–						
B515	2	6"	2'-1"					–					
B601	26		8'-5"	9'-3"	8'-4¼"	21'-1¾"			2'-0"		5"	10'-7"	8'-11½"
B801	17		–	6'-0"	6'-7"	–	–						
B901	9			11'-6"					1'-8"			10'-8"	
B902	9			16'-4¼"					3'-9¾"			10'-8"	
B903	27		8'-8"	9'-5"					11"			11'-1½"	
B1001	27		8'-8"	7'-1"					6¼"			11'-11½"	
B1101	9			10'-11½"					8¾"			21'-2¼"	
B1102	9			17'-2¾"					1'-10"			21'-2¼"	

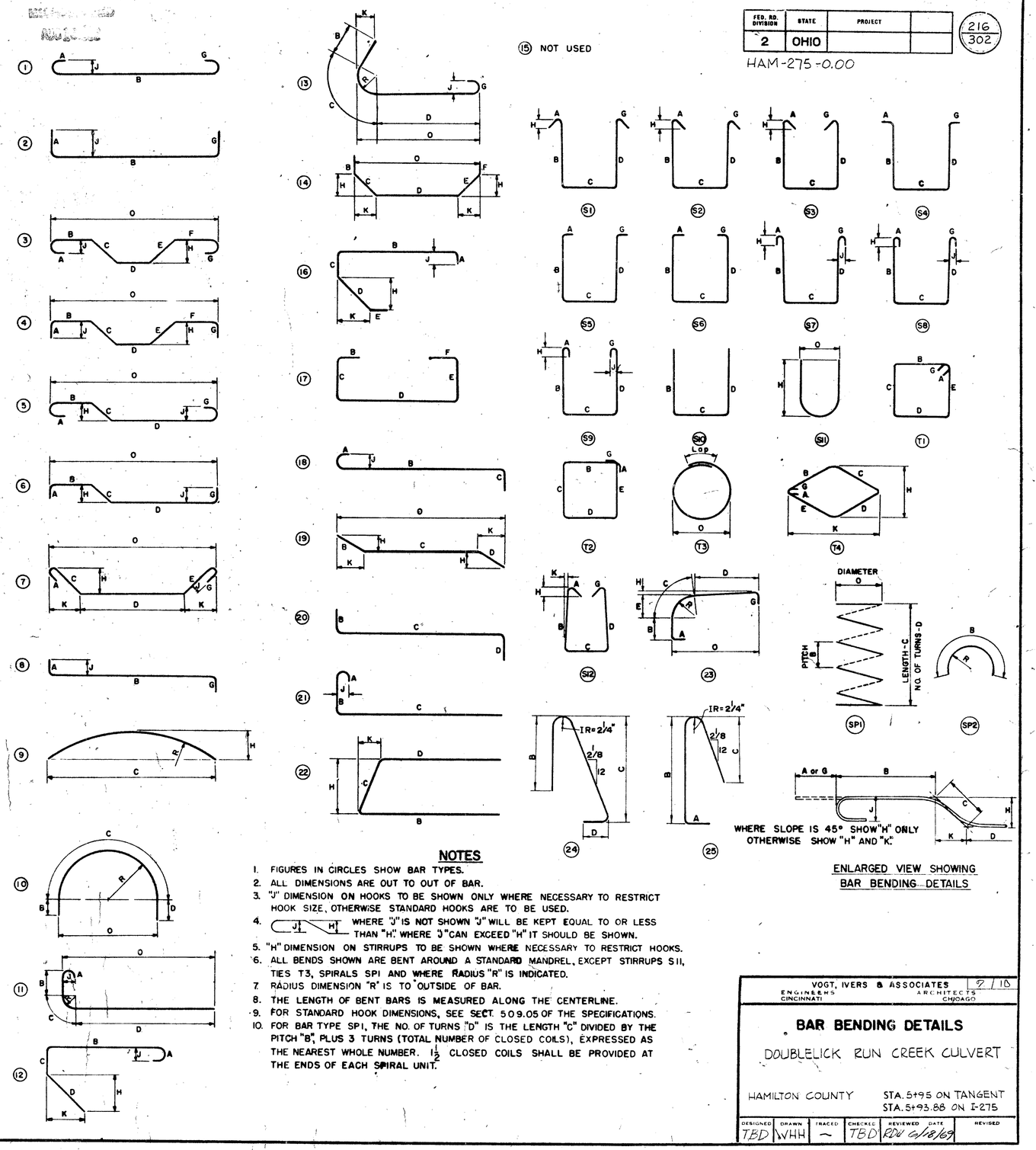

ENLARGED VIEW SHOWING BAR BENDING DETAILS

NOTES

1. FIGURES IN CIRCLES SHOW BAR TYPES.
2. ALL DIMENSIONS ARE OUT TO OUT OF BAR.
3. "J" DIMENSION ON HOOKS TO BE SHOWN ONLY WHERE NECESSARY TO RESTRICT HOOK SIZE, OTHERWISE STANDARD HOOKS ARE TO BE USED.
4. WHERE "J" IS NOT SHOWN "J" WILL BE KEPT EQUAL TO OR LESS THAN "H". WHERE J "CAN EXCEED "H" IT SHOULD BE SHOWN.
5. "H" DIMENSION ON STIRRUPS TO BE SHOWN WHERE NECESSARY TO RESTRICT HOOKS.
6. ALL BENDS SHOWN ARE BENT AROUND A STANDARD MANDREL, EXCEPT STIRRUPS S11, TIES T3, SPIRALS SP1 AND WHERE RADIUS "R" IS INDICATED.
7. RADIUS DIMENSION "R" IS TO OUTSIDE OF BAR.
8. THE LENGTH OF BENT BARS IS MEASURED ALONG THE CENTERLINE.
9. FOR STANDARD HOOK DIMENSIONS, SEE SECT. 509.05 OF THE SPECIFICATIONS.
10. FOR BAR TYPE SP1, THE NO. OF TURNS "D" IS THE LENGTH "C" DIVIDED BY THE PITCH "B", PLUS 3 TURNS (TOTAL NUMBER OF CLOSED COILS), EXPRESSED AS THE NEAREST WHOLE NUMBER. 1½ CLOSED COILS SHALL BE PROVIDED AT THE ENDS OF EACH SPIRAL UNIT.

VOGT, IVERS & ASSOCIATES
ENGINEERS — CINCINNATI
ARCHITECTS — CHICAGO

BAR BENDING DETAILS

DOUBLELICK RUN CREEK CULVERT

HAMILTON COUNTY

STA. 5+95 ON TANGENT
STA. 5+93.88 ON I-275

DESIGNED	DRAWN	TRACED	CHECKED	REVIEWED	DATE	REVISED
TBD	WHH	–	TBD	RDW	6/18/69	

FED. RD. DIVISION	STATE	PROJECT	
2	OHIO		

217
302

HAM-275-0.00

DIMENSIONS FOR BENDING

MARK	TYPE	A	B	C	D	E	F	G	H	J	K	M	O
C502	19		–	3'-4" to 14'-5" by 7"	1'-7"				6"		1'-6"		
C515	17		1'-7"	4'-7"	11"	2'-4"	–						
C516	19		–	9'-6"	3'-8"				3'-0"		2'-2"		
C519	9			17'-10¾"					11'-11¾"			21'-2¼"	
C521	17		1'-7"	2'-9"	–	–	–						
C522	17		–	2'-9"	11"	2'-4"							
C523	9			19'-1"					4'-9"			11'-11¾"	
C524	1	6"	5'-9"					–					
C525	2	6"	8'-11"					–					
C538	2	6"	1'-2"					6"					
C543	16	–	1'-7"	2'-3"	1'-0"				6"		10"		
C544	20		1'-0" to 1'-9" by 1"	2'-6"	–								
C545	14	–	2'-2"	2'-3"	–	–	–		4"		2'-2"		
C546	14	–	1'-7"	2'-2"	–	–	–		1'-8"		1'-4"		
C553	20		5'-1"	3'-4" to 4'-8" by 2"	–								
C554	2	6"	5'-2"					–					
C560	20		5'-1"	3'-4" to 13'-3" by 8½"	–								
C574	20		5'-0"	2'-4" to 3'-6" by 1½"	–								
C575	20		5'-0"	3'-7" to 9'-7" by 3"	–								
C577	19		–	9'-6"	3'-8"				3'-5"		1'-3"		
C580	16	–	1'-7"	2'-3"	2'-0"				1'-0"		1'-9"		
C601	26		8'-5"	9'-3"	8'-4¼"	21'-1¾"			2'-0"		5"	10'-7"	8'-11½"
C602	12	–	1'-7"	7"	30'-10"				26'-10"		15'-2"		
C603	12	–	1'-7"	10"	23'-10"				22'-10"		10'-11"		
C801	9			17'-10¾"					11'-11¾"			21'-2½"	
C802	17		–	6'-0"	6'-7"	–	–						
C804	20		5'-11"	5'-0" to 7'-9" by 3"	–								
C806	20		5'-11"	3'-7" to 6'-4" by 3"	–								
C901	9			11'-6"					1'-8"			10'-8"	
C902	9			16'-4¼"					3'-9¾"			10'-8"	
C903	27		8'-8"	9'-8"					11"			11'-11½"	
C905	20		6'-2"	5'-3" to 12'-3" by 7"	–								
C907	20		6'-2"	10'-6" to 12'-9" by 3"	–								
C1001	27		8'-8"	7'-1"					6¼"			11'-11½"	
C1003	20		6'-8"	4'-9"	–								
C1101	9			10'-11½"					8¾"			21'-2¼"	
C1102	9			17'-2¾"					1'-10"			21'-2¼"	

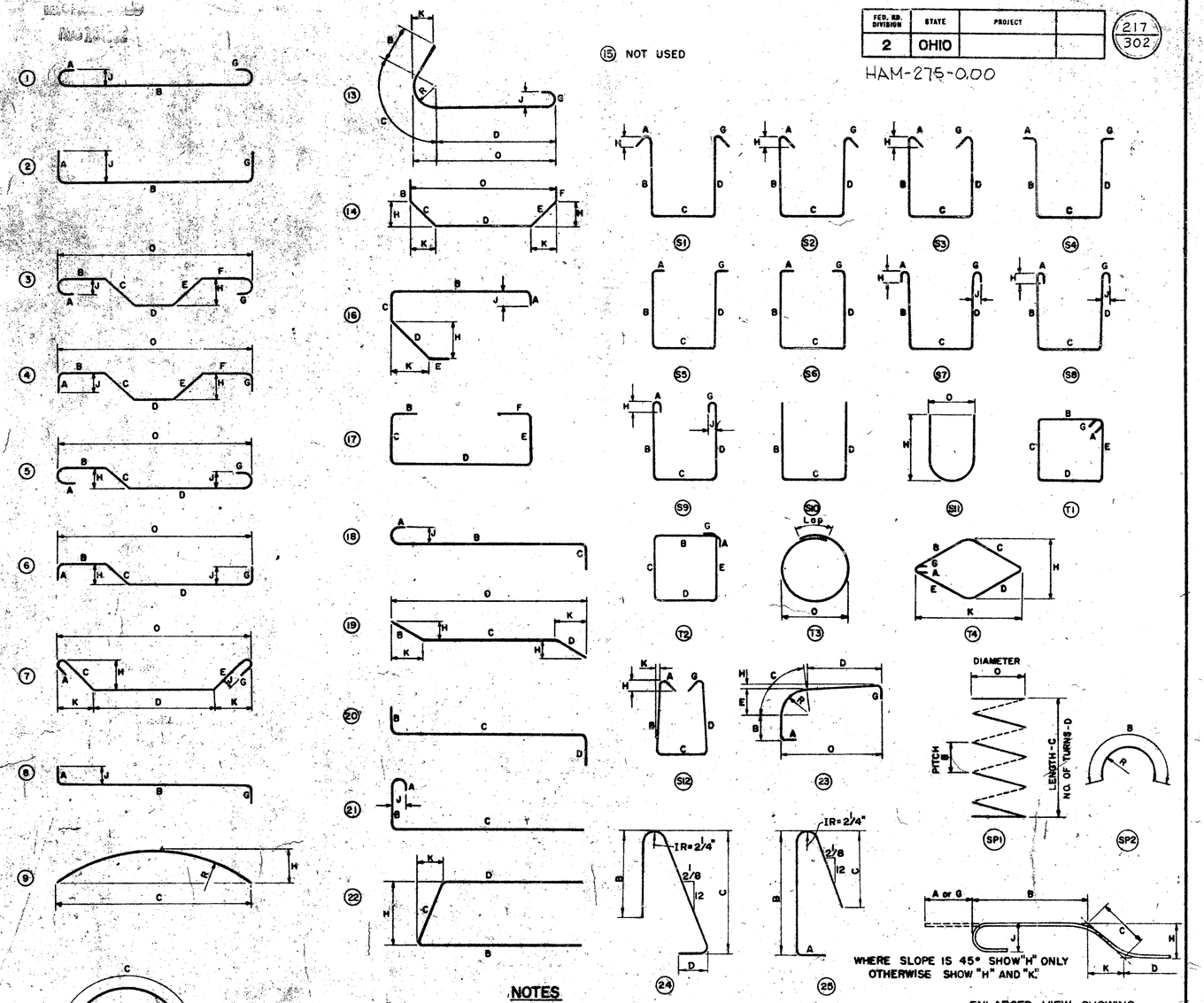

ENLARGED VIEW SHOWING BAR BENDING DETAILS

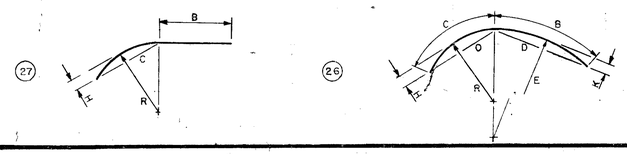

NOTES

1. FIGURES IN CIRCLES SHOW BAR TYPES.
2. ALL DIMENSIONS ARE OUT TO OUT OF BAR.
3. "J" DIMENSION ON HOOKS TO BE SHOWN ONLY WHERE NECESSARY TO RESTRICT HOOK SIZE, OTHERWISE STANDARD HOOKS ARE TO BE USED.
4. WHERE "J" IS NOT SHOWN "J" WILL BE KEPT EQUAL TO OR LESS THAN "H." WHERE "J" CAN EXCEED "H" IT SHOULD BE SHOWN.
5. "H" DIMENSION ON STIRRUPS TO BE SHOWN WHERE NECESSARY TO RESTRICT HOOKS.
6. ALL BENDS SHOWN ARE BENT AROUND A STANDARD MANDREL, EXCEPT STIRRUPS S11, TIES T3, SPIRALS SP1 AND WHERE RADIUS "R" IS INDICATED.
7. RADIUS DIMENSION "R" IS TO OUTSIDE OF BAR.
8. THE LENGTH OF BENT BARS IS MEASURED ALONG THE CENTERLINE.
9. FOR STANDARD HOOK DIMENSIONS, SEE SECT. 509.05 OF THE SPECIFICATIONS.
10. FOR BAR TYPE SP1, THE NO. OF TURNS "D" IS THE LENGTH "C" DIVIDED BY THE PITCH "B", PLUS 3 TURNS (TOTAL NUMBER OF CLOSED COILS), EXPRESSED AS THE NEAREST WHOLE NUMBER. 1½ CLOSED COILS SHALL BE PROVIDED AT THE ENDS OF EACH SPIRAL UNIT.

VOGT, IVERS & ASSOCIATES 10-7-10
ENGINEERS CINCINNATI — ARCHITECTS CHICAGO

BAR BENDING DETAILS

DOUBLELICK RUN CREEK CULVERT

HAMILTON COUNTY

STA. 5+95 ON TANGENT
STA. 5+93.88 ON I-275

DESIGNED	DRAWN	TRACED	CHECKED	REVIEWED	DATE	REVISED
TBD	WHH	~	TBD	RDU	6/12/69	

FED. RD. DIVISION	STATE	PROJECT	
2	OHIO		

HAM-275-0.00

218/302

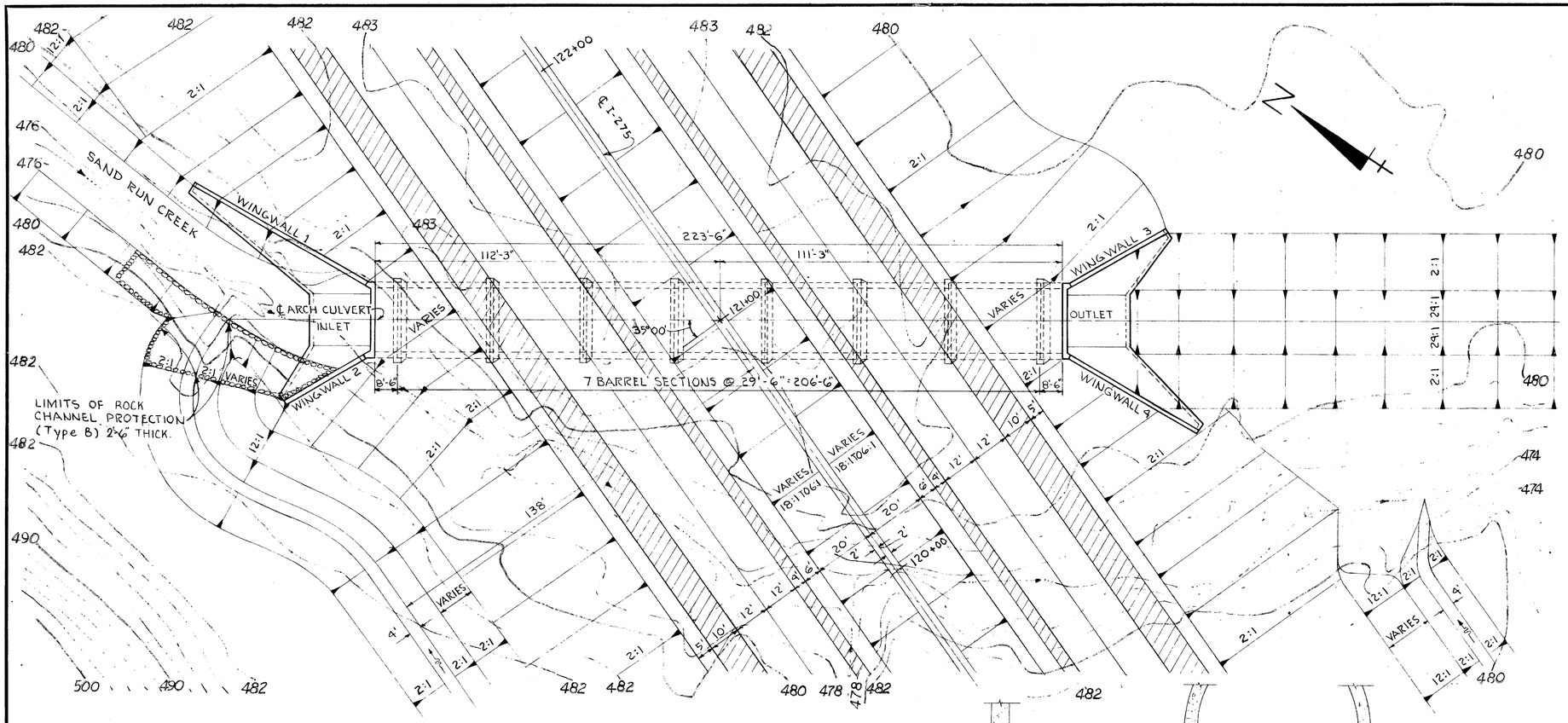

PLAN

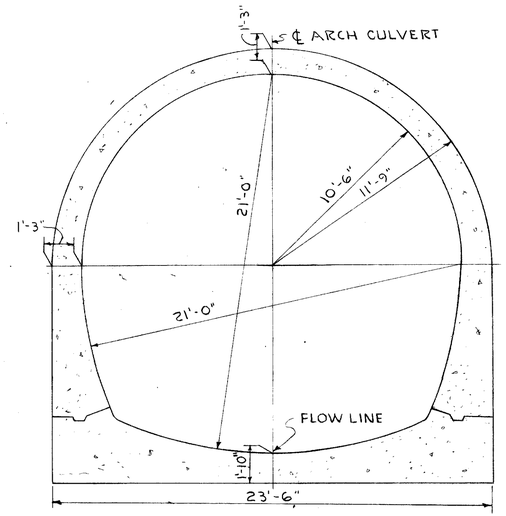

TYPICAL SECTION

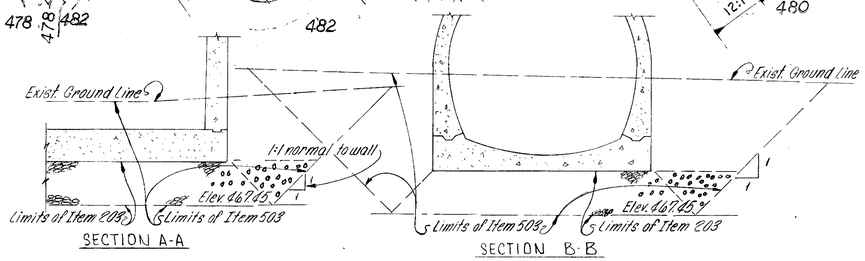

SECTION A-A

SECTION B-B

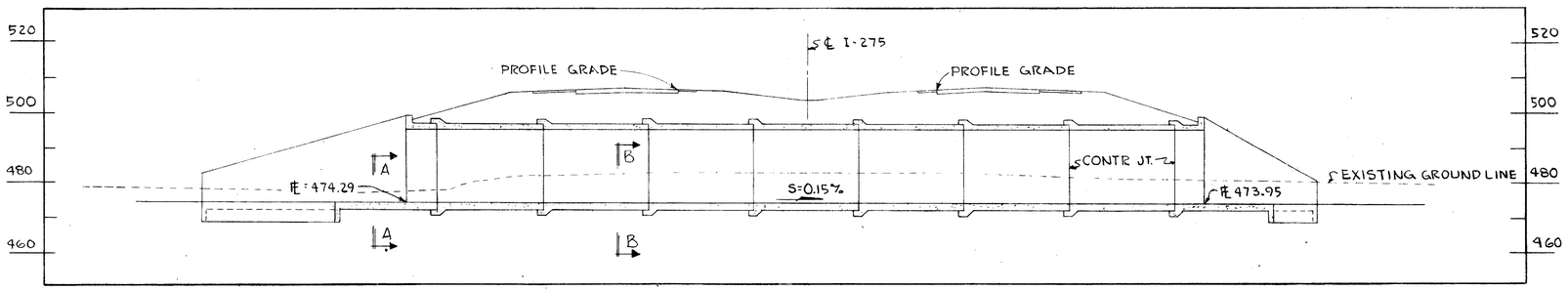

PROFILE

DRAINAGE AREA	=	2200 ACRES
Q50	=	2170 CFS
H.W. ELEV.	=	488.0
VELOCITY	=	11.5 FT/SEC.

PROPOSED STRUCTURE

TYPE: REINFORCED CONCRETE ARCH CULVERT
SPAN: 21'-0"
DESIGN LIVE LOAD: HS20
DESIGN DEAD LOAD: A.A.S.H.O. #1.2.2 (A)
ALIGNMENT: TANGENT
SKEW: 35°00' L.F.

VOGT, IVERS, & ASSOCIATES
ENGINEERS CINCINNATI — ARCHITECTS CHICAGO

1/10

SITE PLAN

BRIDGE NO. HAM-275-0226
SAND RUN CREEK CULVERT

HAMILTON COUNTY STA. STA. 121+00

PRESENT TOPOGRAPHY		PROPOSED WORK			
SURVEYED	DRAWN	DESIGNED	DRAWN	CHECKED	REVISIONS
VIA	WHH	RDU	JM	RDU	

FED. RD. DIVISION	STATE	PROJECT	
2	OHIO		

219
302

HAM-275-0.00

ESTIMATED QUANTITIES

ITEM	TOTAL	UNIT	DESCRIPTION	INLET	BARREL	OUTLET	GENERAL	CHECKED BY & DATE			
203	2178	Cu. Yds.	Embankment (Granular Material)				2178	B.C.S.	June 72		
503	6422	Cu. Yds.	Unclassified Excavation	—	—	—	6422	W.H.H.	Aug. 69		
503	Lump	Sum	Cofferdams, Cribs and Sheeting	—	—	—	Lump	W.H.H.	Aug. 69		
509	195,606	Lbs.	Reinforcing Steel	25,704	145,169	24,733		W.H.H.	Aug. 69		
511	1,855	Cu. Yds.	Class "C" Concrete	295	1,273	287		W.H.H.	Aug. 69		
512	115	Lin. Ft.	Premolded Sealing Strip	56	—	59		W.H.H.	Aug. 69		
516	1,979	Sq. Ft.	1/2" Preformed Expansion Joint Filler	—	1,979	—		W.H.H.	Aug. 69		
518	1,464	Cu. Yds.	Porous Backfill	—	—	—	1,464	W.H.H.	Aug. 69		
601	133	Cu. Yds	Rock Channel Protection, Type B	—	—	—	133	B.C.S.	June 72		

GENERAL NOTES

SPECIFICATIONS

Design: This structure conforms to the current requirements of the "Standard Specifications for Highway Bridges", AASHO, Ninth Edition, *including the Ohio "Supplement" to these specifications*

DESIGN DATA

Design Loading: HS-20-44

MATERIALS

* Reinforcing Steel: ASTM A 615, A616, A617
Basic unit stress 20,000 psi

Class "C" Concrete: Basic unit stress 1,333 psi.

** If bars in accordance with ASTM A616 are provided they shall be subject to bend tests as per AASHO Designation M 42-70.*

UTILITY LINES

All expense involved in relocating (installing) the affected utility lines shall be borne by the Owner(s). The Contractor and the Owners are requested to cooperate by arranging their work in such a manner that inconvenience to either will be held to a minimum.

FOUNDATION

Foundation material of approximately uniform bearing capacity is contemplated. Spots of soft earth beneath the level of granular material shown on plans shall be removed and be replaced with thoroughly compacted granular material.

VOGT, IVERS, & ASSOCIATES — 2/10
ENGINEERS CINCINNATI — ARCHITECTS CHICAGO

ESTIMATED QUANTITIES AND GENERAL NOTES

SAND RUN CREEK CULVERT

HAMILTON COUNTY — STA. 121+00 — STA.

DESIGNED	DRAWN	TRACED	CHECKED	REVIEWED	DATE	REVISED
RDU	WHH	~		RDU	6/20/69	

FED. RD. DIVISION	STATE	PROJECT	
2	OHIO		

HAM-275-0.00

220/302

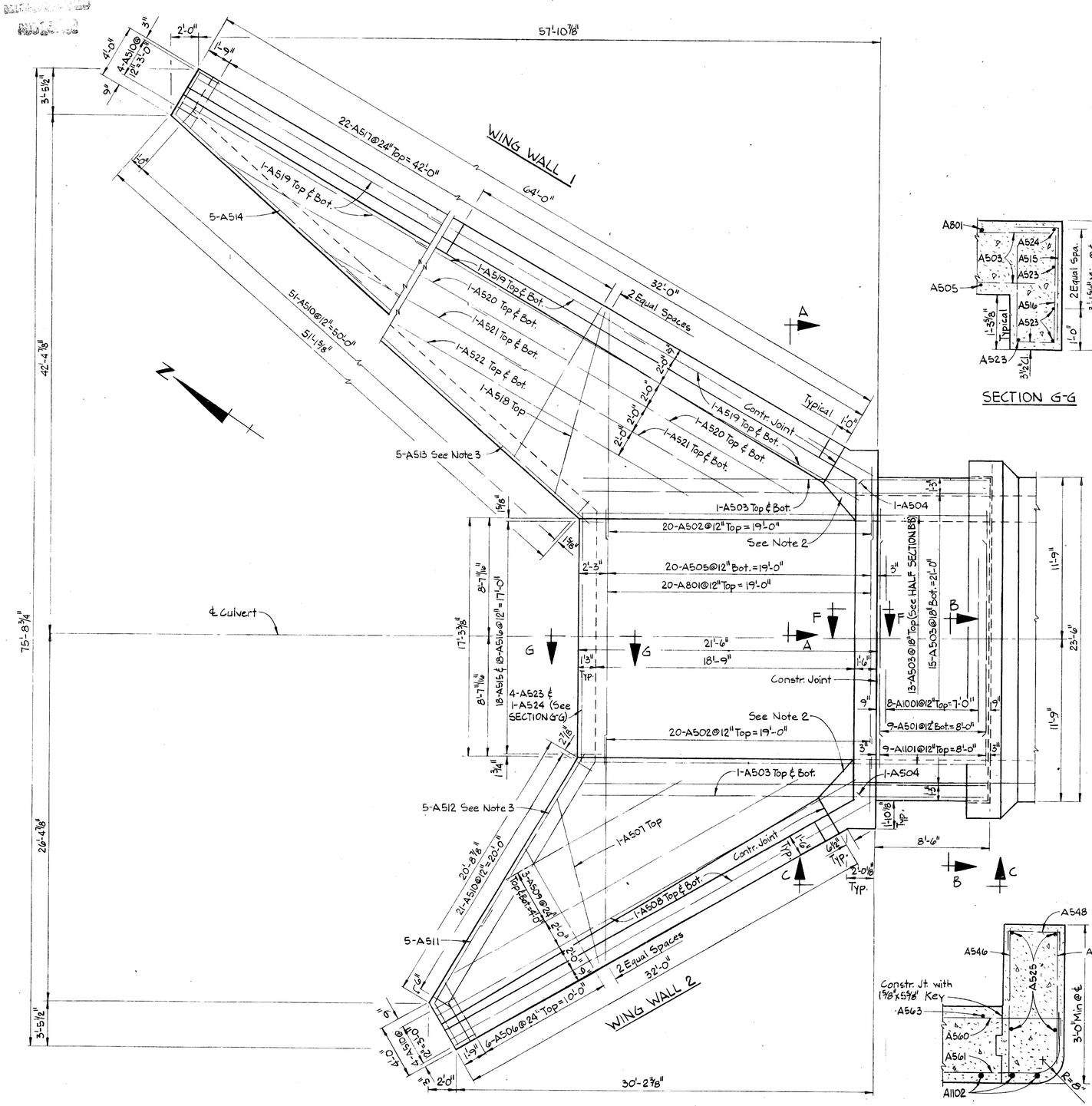

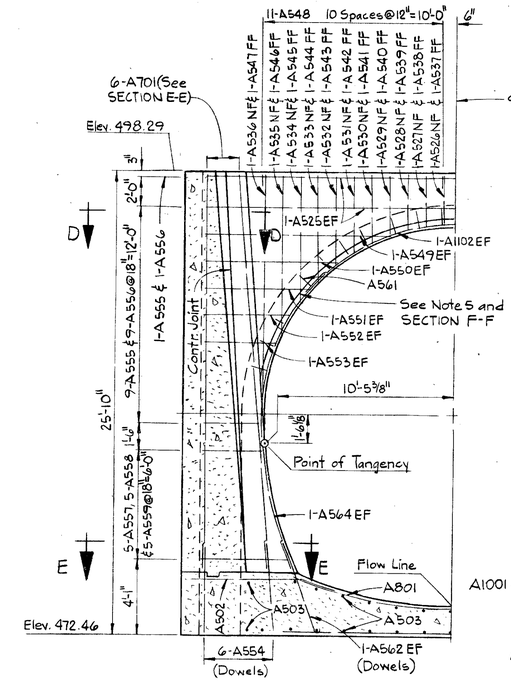

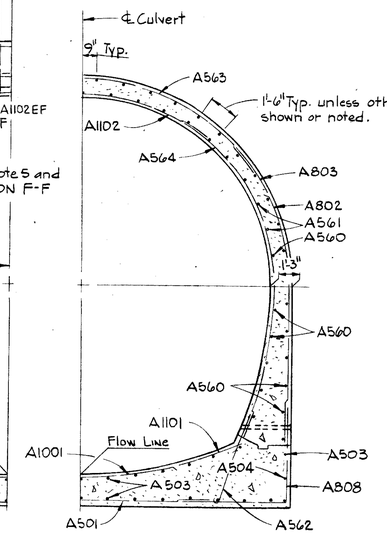

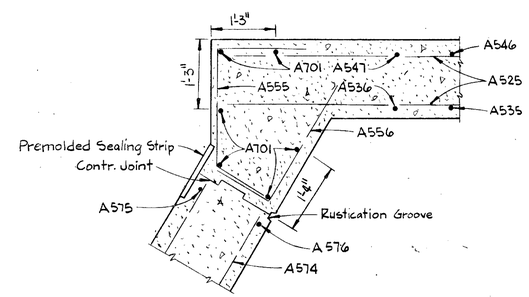

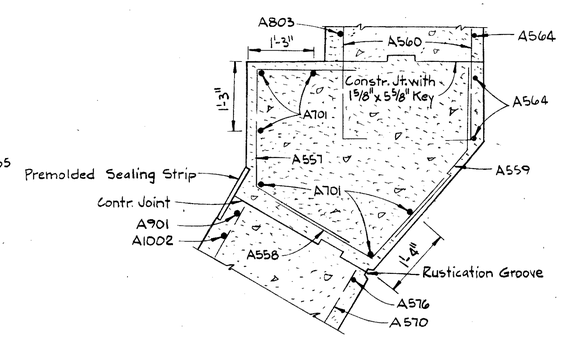

LEGEND

EF = Each Face
NF = Near Face
FF = Far Face

NOTES

1) For REINFORCING BAR LIST, see sheet 8/10
2) The surface area bounded by the contraction joint, intrados of arch, top of footing, and the point of tangency shall be formed to fit in the field.
3) For WING WALL 1 and 2, CONTRACTION JOINT, and RUSTICATION GROOVE DETAILS, see sheet 4/10
4) For BARREL DETAILS, see sheet 5/10
5) Inlet to be rounded and transitioned above point of tangency.

VOGT, IVERS, & ASSOCIATES
ENGINEERS CINCINNATI — ARCHITECTS CHICAGO

3/10

INLET DETAILS

SAND RUN CREEK CULVERT

HAMILTON COUNTY STA. 121+00
STA.

DESIGNED	DRAWN	TRACED	CHECKED	REVIEWED	DATE	REVISED
TBD	WHH	~	TBD	RDU	6/20/69	

FED. RD. DIVISION	STATE	PROJECT	
2	OHIO		

221/302

HAM-275-0.00

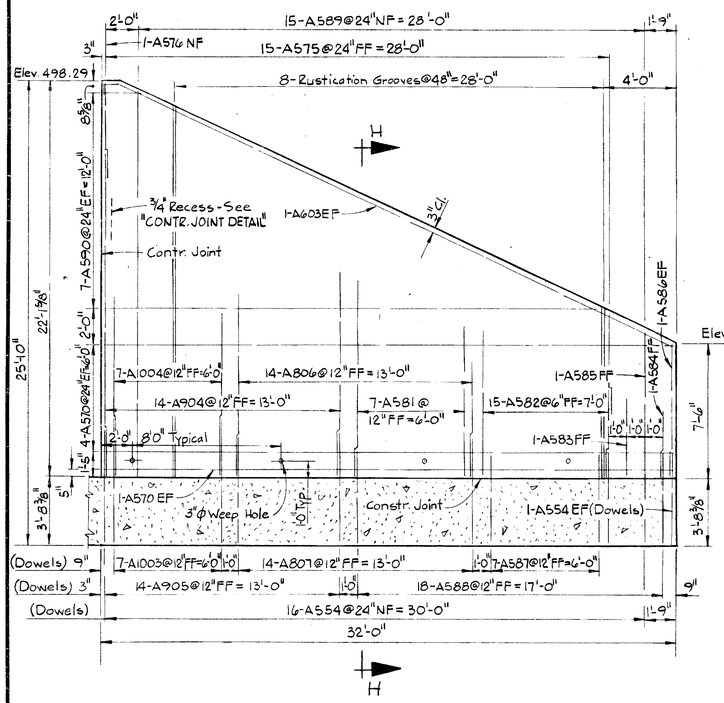

ELEVATION WING WALL 2

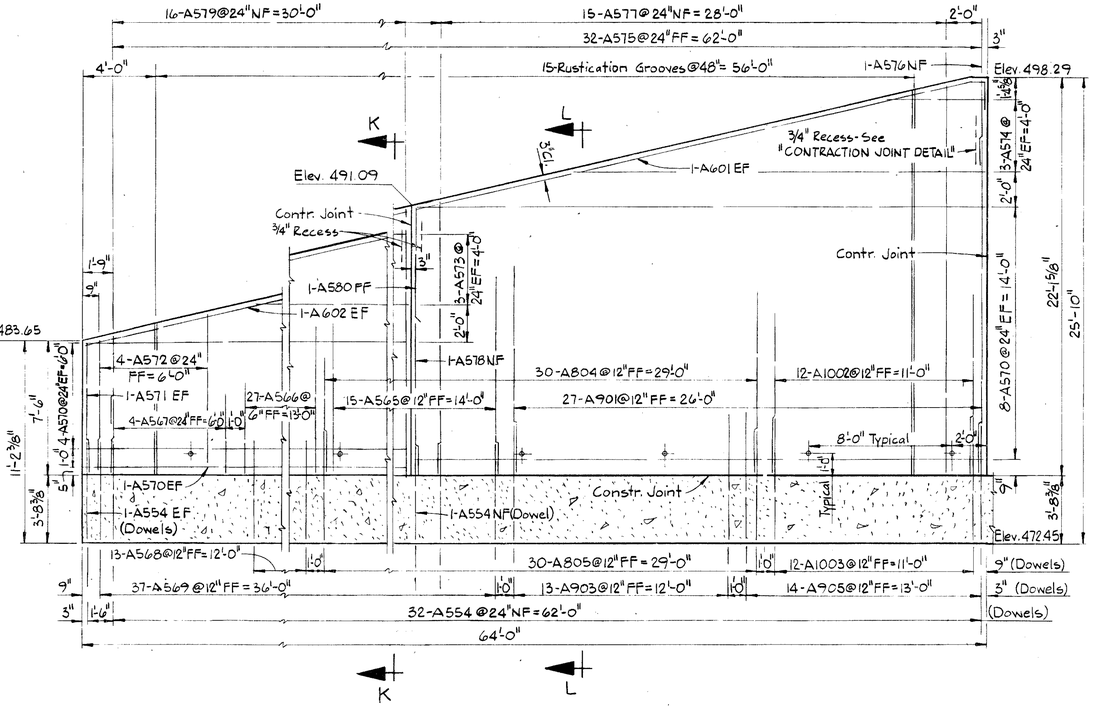

ELEVATION WING WALL 1

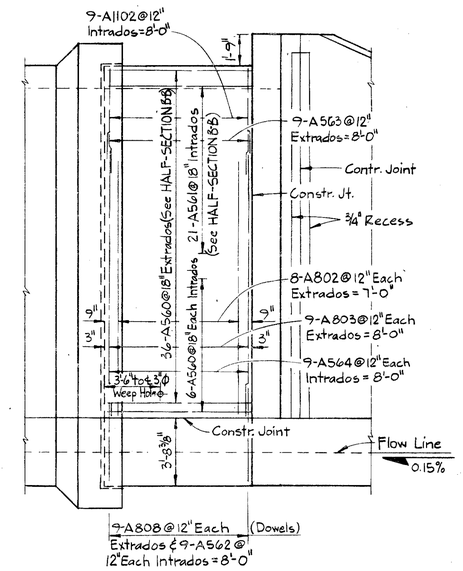

VIEW C-C

LEGEND

EF = Each Face
NF = Near Face
FF = Far Face

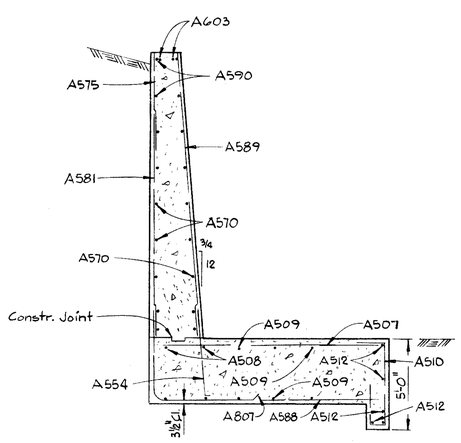

SECTION H-H

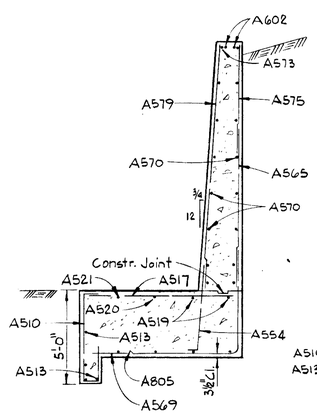

SECTION K-K

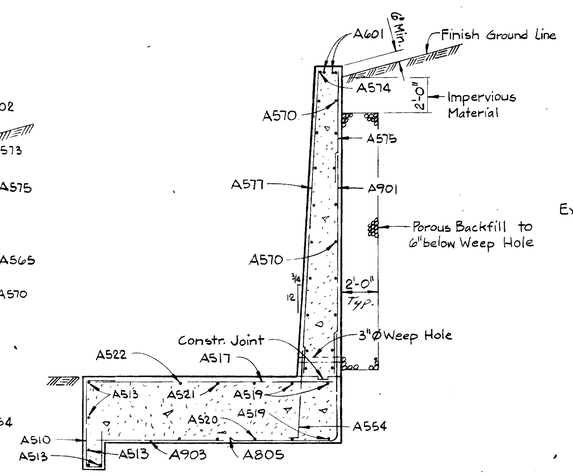

SECTION L-L

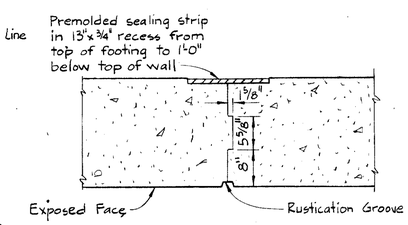

CONTRACTION JOINT DETAIL

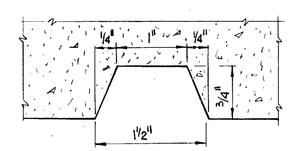

RUSTICATION GROOVE DETAIL

NOTES

1) For REINFORCING BAR LIST, see sheet 8/10

VOGT, IVERS, & ASSOCIATES — 4/10
ENGINEERS CINCINNATI — ARCHITECTS CHICAGO

INLET WALL DETAILS

SAND RUN CREEK CULVERT

HAMILTON COUNTY — STA. 121+00 — STA.

DESIGNED	DRAWN	TRACED	CHECKED	REVIEWED	DATE	REVISED
TBD	WHH	~	TBD	RDW	6/20/09	

FED. RD. DIVISION	STATE	PROJECT	
2	OHIO		

222/302

HAM-275-0.00

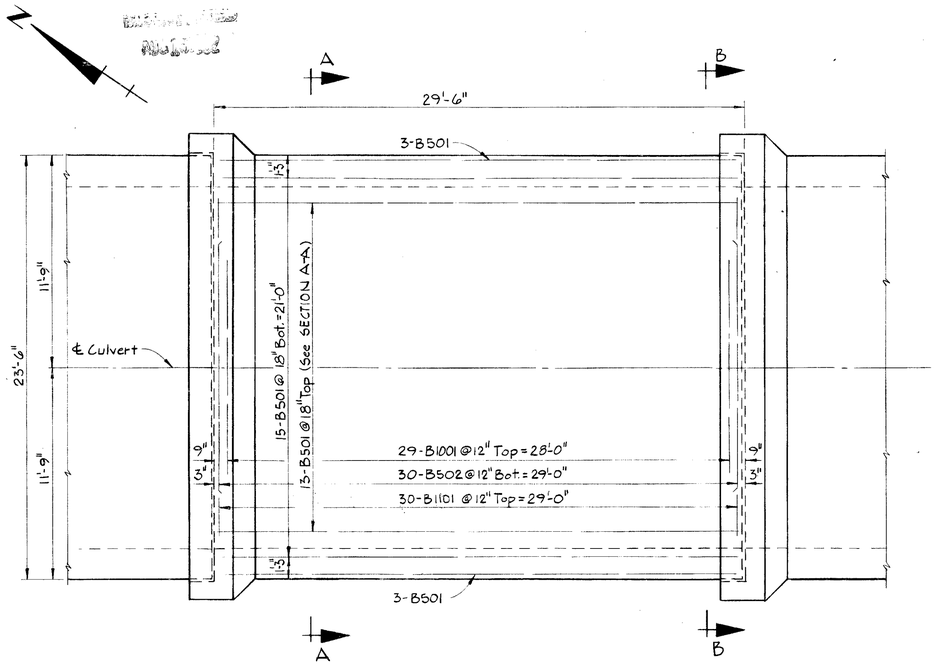

PLAN

Bars shown are below Constr. Joint

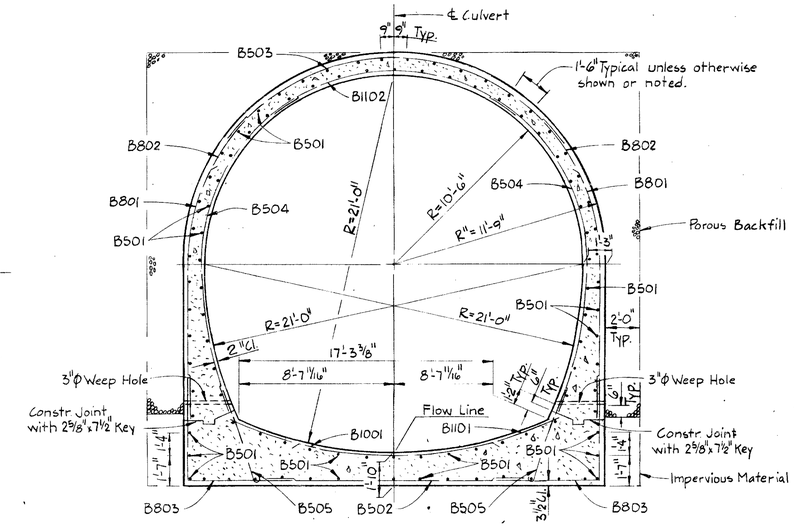

SECTION A-A

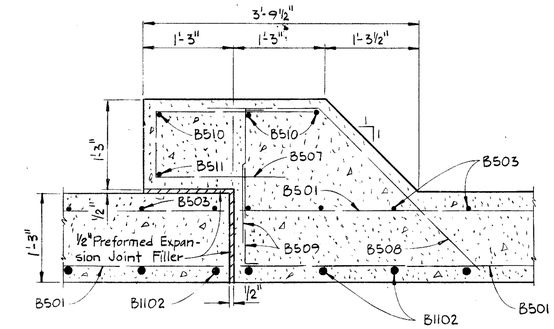

SECTION C-C

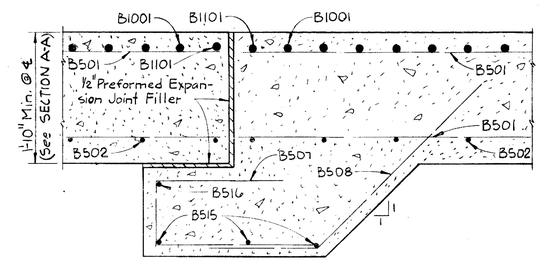

SECTION D-D

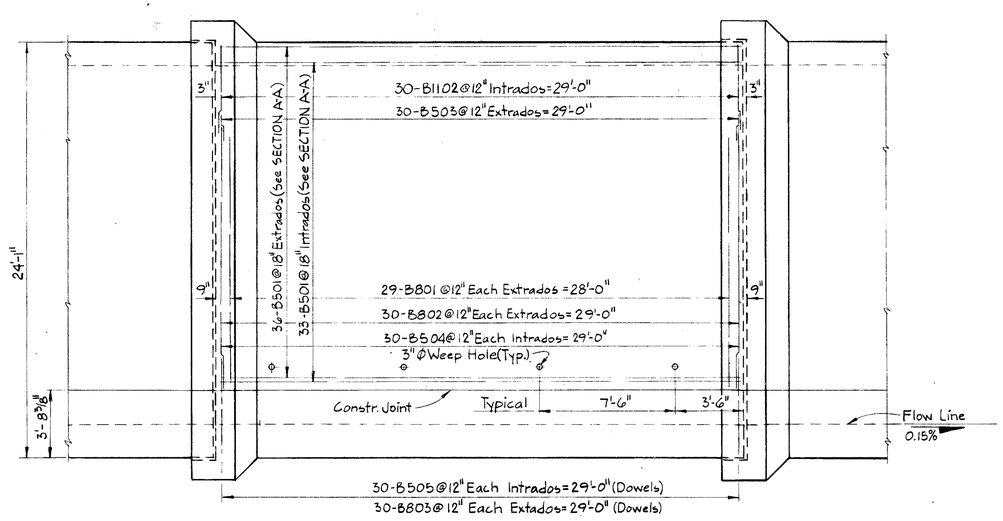

ELEVATION

Bars shown are above Constr. Joint and dowels

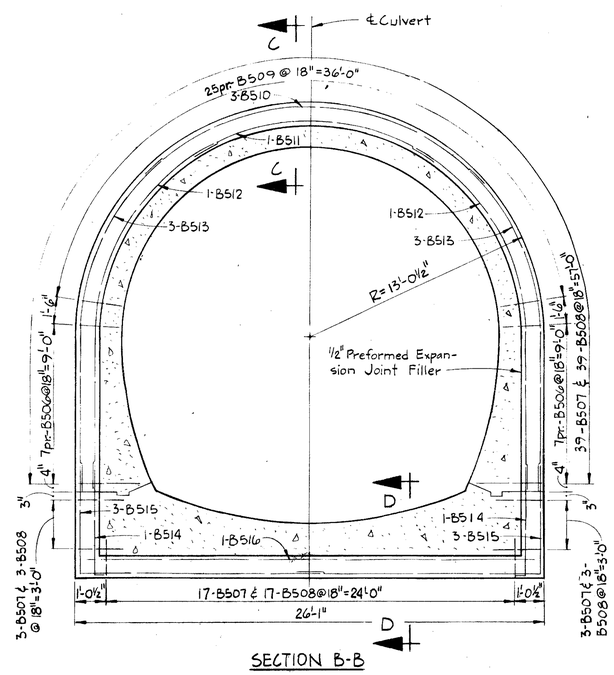

SECTION B-B

NOTES

1) For REINFORCING BAR LIST, see sheet 8/10

VOGT, IVERS, & ASSOCIATES
ENGINEERS CINCINNATI — ARCHITECTS CHICAGO

5/10

BARREL DETAILS

SAND RUN CREEK CULVERT

HAMILTON COUNTY STA. 121+00
STA.

DESIGNED	DRAWN	TRACED	CHECKED	REVIEWED	DATE	REVISED
TBD	WHH	—	TBD	EDH	6/20/69	

FED. RD. DIVISION	STATE	PROJECT	
2	OHIO		

223/302

HAM-275-0.00

SECTION F-F

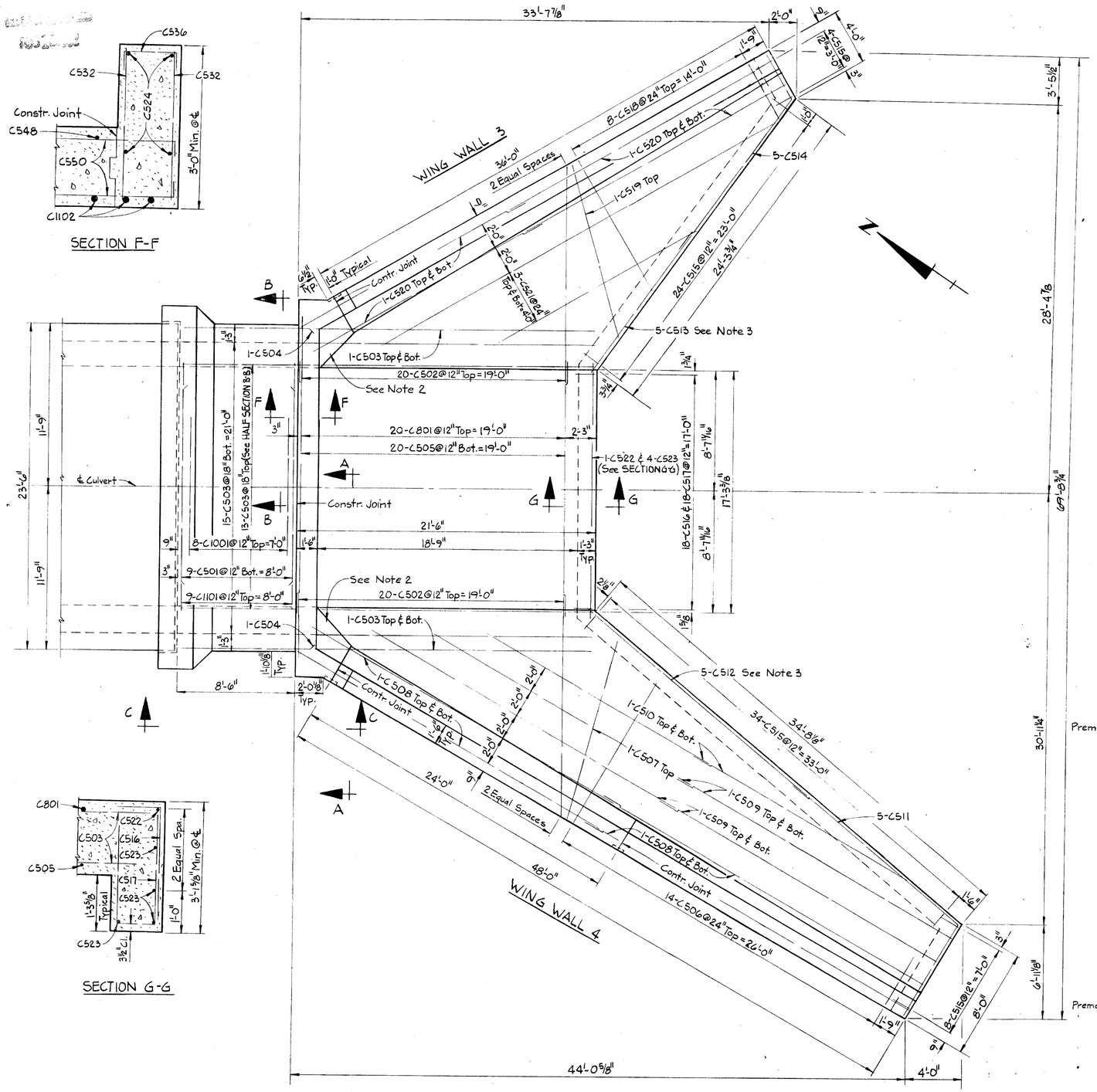

PLAN

SECTION G-G

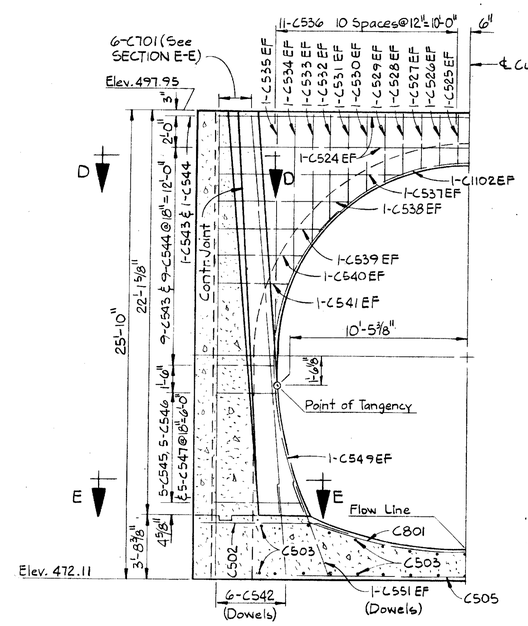

HALF SECTION A-A

Symmetrical about ℄ Culvert.

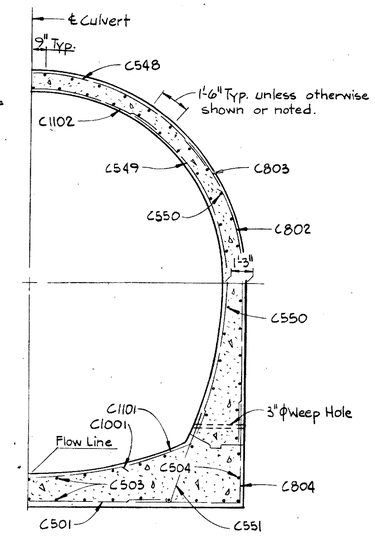

HALF SECTION B-B

Symmetrical about ℄ Culvert.

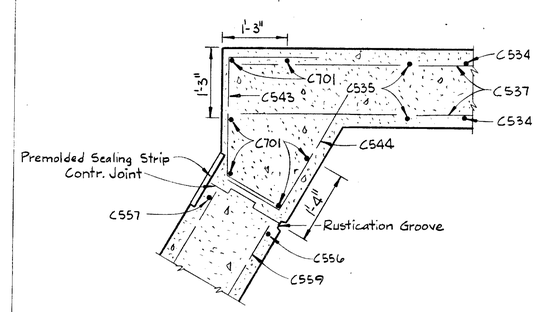

SECTION D-D

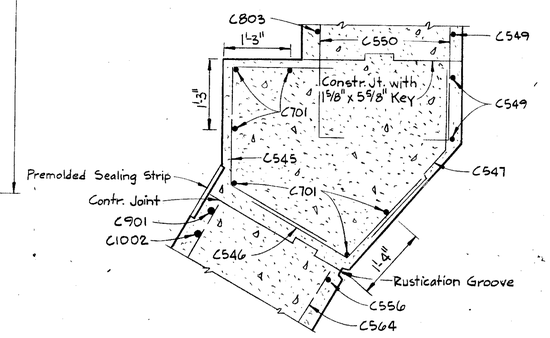

SECTION E-E

LEGEND

EF = Each Face
NF = Near Face
FF = Far Face

NOTES

1) For REINFORCING BAR LIST, see sheet 8/18
2) The surface bounded by the contraction joint, intrados of arch, top of footing, and the point of tangency shall be formed to fit in the field.
3) For WING WALL 3 and 4 DETAILS, see sh. 7/18
4) For CONTRACTION JOINT and RUSTICATION GROOVE DETAILS, see sheet 4/18
5) For BARREL DETAILS, see sheet 5/18

VOGT, IVERS, & ASSOCIATES 6/18
ENGINEERS CINCINNATI — ARCHITECTS CHICAGO

OUTLET DETAILS

SAND RUN CREEK CULVERT

HAMILTON COUNTY STA. 121+00
STA.

DESIGNED	DRAWN	TRACED	CHECKED	REVIEWED	DATE	REVISED
TBD	WHH	~	TBD	RDU	6/29/69	

FED. RD. DIVISION	STATE	PROJECT	
2	OHIO		

224/302

HAM-275-0.00

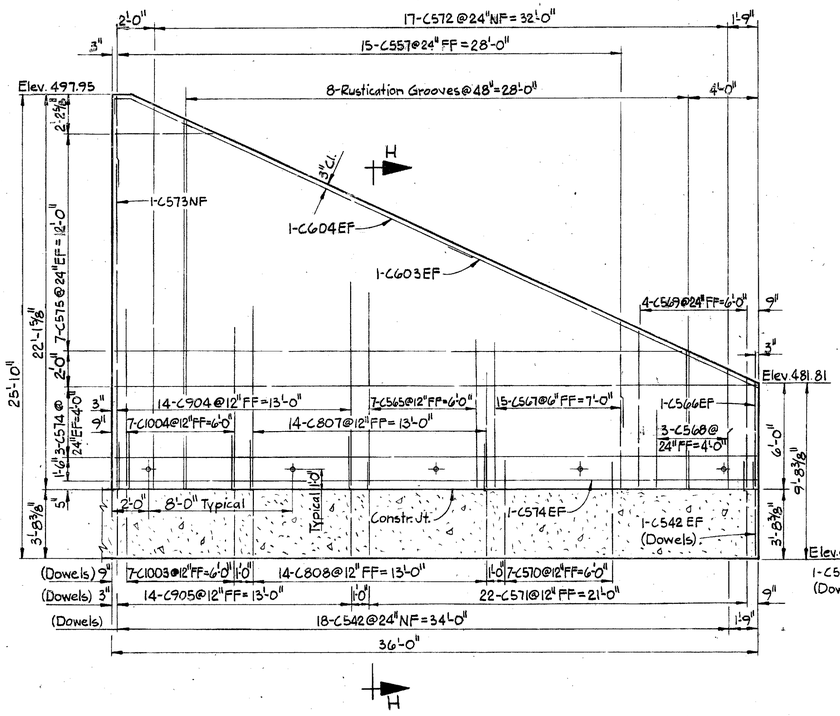

ELEVATION WING WALL 3

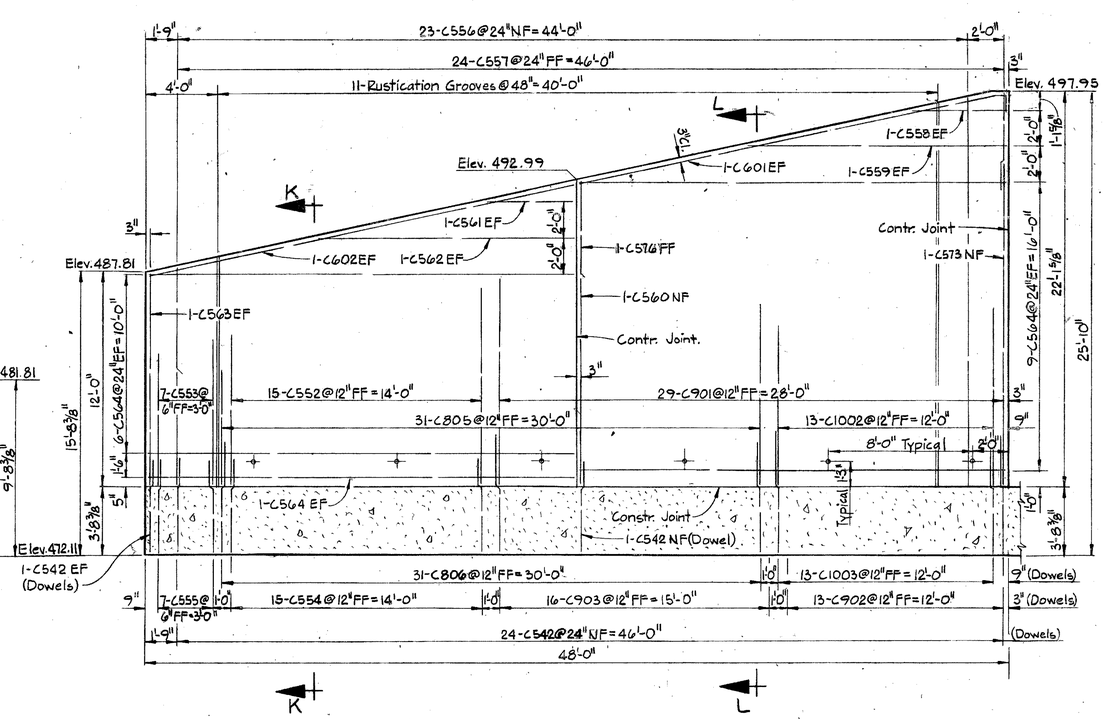

ELEVATION WING WALL 4

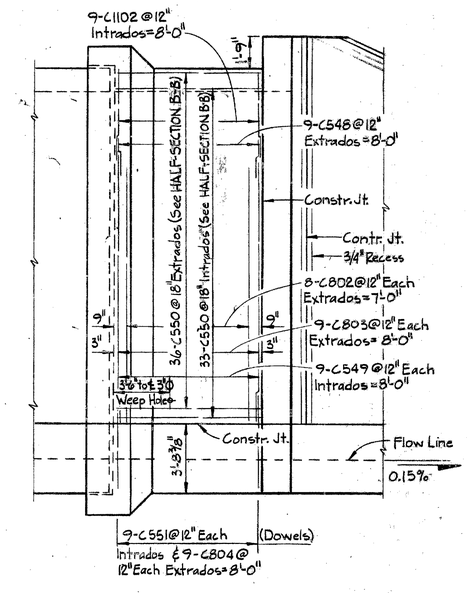

VIEW C-C

LEGEND

EF = Each Face
NF = Near Face
FF = Far Face

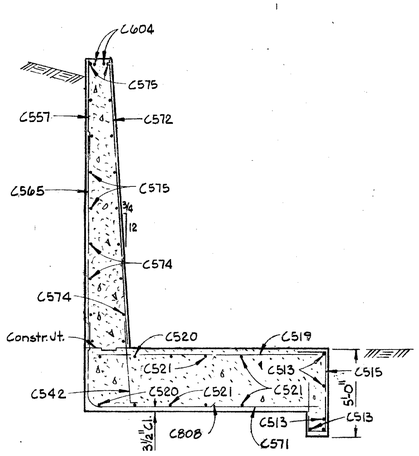

SECTION H-H

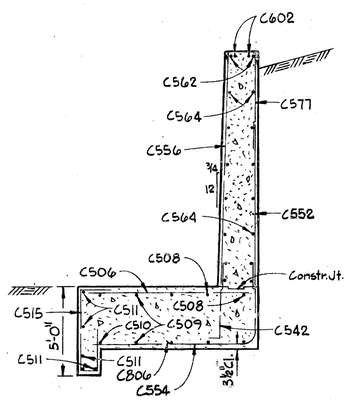

SECTION K-K

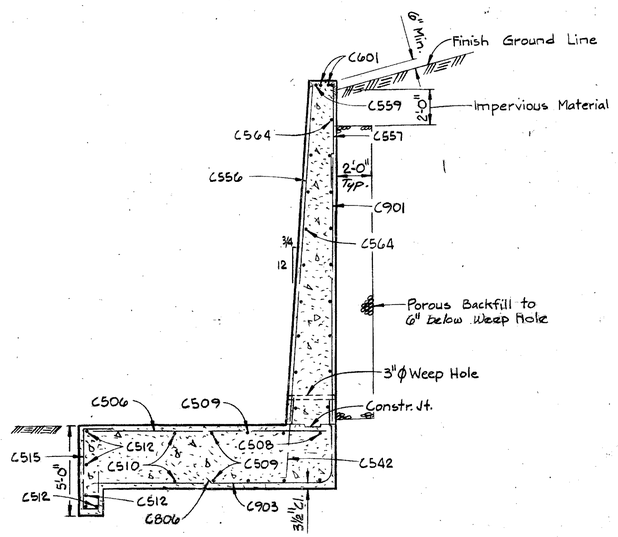

SECTION L-L

NOTES

1) For REINFORCING BAR LIST, see sheet 8/10

VOGT, IVERS, & ASSOCIATES 7/10
ENGINEERS CINCINNATI — ARCHITECTS CHICAGO

OUTLET WALL DETAILS

SAND RUN CREEK CULVERT

HAMILTON COUNTY STA. 121+00
STA.

DESIGNED	DRAWN	TRACED	CHECKED	REVIEWED	DATE	REVISED
TBO	WHH	~	TBO	RDU	6/20/69	

INLET

MARK	NO.	LENGTH	TYPE	WEIGHT
A501	9	14'-3"	Str.	134
A502	40	4'-1"to6'-0"by7" (2ea)	Bt.	436
A503	32	29'-8"	Str.	990
A504	2	9'-6"	Str	20
A505	20	17'-6"	Str.	365
A506	6	4'-6"to9'-11"by1'-1"	Str.	45
A507	1	12'-7"	Str.	13
A508	4	35'-0"	Str.	146
A509	6	11'-2"by3'-2"by7'-0"	Str.	151
A510	80	9'-0"	Bt.	751
A511	5	12'-6"	Bt.	65
A512	5	14'-5"	Str.	75
A513	5	32'-0"	Str.	167
A514	5	24'-10"	Bt.	126
A515	18	4'-2"	Bt.	78
A516	18	5'-8"	Bt.	106
A517	22	3'-8"to18'-5"by 5"	Str.	185
A518	1	13'-8"	Str.	14
A519	12	23'-3"	Str.	291
A520	4	30'-6"	Str.	127
A521	4	33'-10"	Str.	99
A522	2	32'-8"	Str.	68
A523	4	18'-3"	Str.	76
A524	1	18'-6"	Bt.	19
A525	4	26'-10"	Str.	112
A526	2	2'-2"	Str.	5
A527	2	2'-6"	Str.	5
A528	2	2'-8"	Str.	6
A529	2	2'-11"	Str.	6
A530	2	3'-4"	Str.	7
A531	2	3'-11"	Str.	8
A532	2	4'-7"	Str.	10
A533	2	5'-5"	Str.	11
A534	2	6'-7"	Str.	14
A535	2	8'-2"	Str.	17
A536	2	11'-2"	Str.	23
A537	2	2'-8"	Str.	6
A538	2	2'-10"	Str.	6
A539	2	3'-0"	Str.	6
A540	2	3'-3"	Str.	7
A541	2	3'-8"	Str.	8
A542	2	4'-3"	Str.	9
A543	2	4'-11"	Str.	10
A544	2	5'-9"	Str.	12
A545	2	6'-11"	Str.	14
A546	2	8'-6"	Str.	18
A547	2	11'-6"	Str.	24
A548	22	2'-2"	Bt.	50
A549	4	8'-9"	Str.	37
A550	4	6'-5"	Str.	27
A551	4	4'-11"	Str.	21
A552	4	4'-0"	Str.	17
A553	4	3'-4"	Str.	14
A554	65	5'-8"	Bt.	384
A555	20	4'-7"	Bt.	92
A556	20	3'-4"to4'-1"by1" (2ea)	Bt.	77
A557	10	5'-8"	Bt.	59
A558	10	4'-3"	Bt.	44
A559	10	3'-7"	Bt.	37
A560	48	10'-2"	Bt.	509
A561	21	11'-5"	Bt.	250
A562	20	6'-3"	Bt.	130
A563	9	20'-3"	Bt.	190
A564	22	19'-7"	Bt.	449
A565	15	8'-8"to11'-0" by 2"	Str.	154
A566	27	5'-0"to8'-3"by1½"	Str.	187
A567	4	3'-6"to5'-0"by6"	Str.	18
A568	13	8'-3"to9'-3"by1"	Bt.	119
A569	37	8'-5"to14'-5"by2"	Bt.	441
A570	36	31'-8"	Str.	1189
A571	2	7'-4"	Str.	15
A572	4	7'-6"to8'-9" by 5"	Str.	34
A573	6	8'-3"to22'-9"by8'-9" (2ea)	Str.	88
A574	6	5'-9"to23'-3"or8'-9" (2ea)	Str.	91
A575	47	5'-9"	Str.	282
A576	2	21'-11"	Str.	46
A577	15	15'-2"to21'-7"by5½"	Str.	281
A578	1	14'-9"	Str.	15
A579	16	7'-9"to14'-8"by5½"	Str.	187
A580	1	8'-10"	Str.	9
A581	7	8'-6"to11'-0"by5"	Str.	71
A582	15	5'-0"to8'-6"by3"	Str.	106
A583	1	4'-6"	Str.	5
A584	1	3'-0"	Str.	3
A585	1	8'-2"	Str.	9
A586	2	7'-5"	Str.	15
A587	7	7'-8"to8'-8" by 2"	Bt.	60
A588	18	8'-3"to17'-6"by6½"	Bt.	242
A589	15	8'-2"to21'-0"by 1"	Str.	228
A590	14	5'-10"to27'-4"by4'-3" (2ea)	Str.	213

BARREL

MARK	NO.	LENGTH	TYPE	WEIGHT
B501	721	29'-2"	Str.	21933
B502	210	14'-3"	Str.	3121
B503	210	20'-3"	Bt.	4435
B504	420	19'-7"	Bt.	8579
B505	420	6'-3"	Bt.	2738
B506	224	2'-3"to3'-0"by1½" (32ea)	Bt.	613
B507	496	4'-8"	Bt.	2414
B508	496	4'-0"	Bt.	2069
B509	400	2'-3"	Bt.	939
B510	8	26'-11"	Bt.	225
B511	8	18'-9"	Bt.	156
B512	16	22'-1"	Bt.	369
B513	48	17'-8"	Bt.	884
B514	16	6'-11"	Bt.	115
B515	48	19'-11"	Bt.	997
B516	8	25'-0"	Str.	209
B801	406	14'-4"	Bt.	15538
B802	420	18'-4"	Bt.	20559
B803	420	11'-9"	Bt.	13170
B1001	203	11'-7"	Bt.	10118
B1101	210	18'-3"	Bt.	20362
B1102	210	14'-0"	Bt.	15620

OUTLET

MARK	NO.	LENGTH	TYPE	WEIGHT
C501	9	14'-3"	Str.	134
C502	40	4'-1"to6'-0"by7" (2ea)	Bt.	436
C503	32	29'-8"	Str.	990
C504	2	9'-6"	Str.	20
C505	20	17'-6"	Str.	365
C506	14	7'-11"to12'-3"by4"	Str.	147
C507	1	13'-7"	Str.	14
C508	4	26'-3"	Str.	110
C509	8	25'-2"	Str.	210
C510	4	18'-11"	Str.	79
C511	5	23'-1"	Bt.	120
C512	5	21'-0"	Str.	110
C513	5	17'-8"	Str.	92
C514	5	12'-1"	Bt.	63
C515	70	9'-0"	Bt.	657
C516	18	4'-2"	Bt.	78
C517	18	5'-8"	Bt.	106
C518	8	4'-4"to10'-9"by11"	Str.	63
C519	1	12'-10"	Str.	13
C520	8	20'-2"	Str.	168
C521	6	19'-2"to34'-10"by7" (2ea)	Str.	169
C522	1	18'-6"	Bt.	19
C523	4	18'-3"	Str.	76
C524	4	26'-10"	Str.	112
C525	4	2'-8"	Str.	11
C526	4	2'-10"	Str.	12
C527	4	3'-0"	Str.	13
C528	4	3'-2"	Str.	14
C529	4	3'-8"	Str.	15
C530	4	4'-3"	Str.	18
C531	4	4'-11"	Str.	21
C532	4	5'-9"	Str.	24
C533	4	6'-11"	Str.	29
C534	4	8'-6"	Str.	35
C535	4	11'-6"	Str.	48
C536	22	2'-2"	Bt.	50
C537	4	8'-9"	Str.	37
C538	4	6'-5"	Str.	27
C539	4	4'-11"	Str.	21
C540	4	4'-0"	Str.	17
C541	4	3'-4"	Str.	14
C542	59	5'-8"	Bt.	349
C543	20	4'-7"	Bt.	96
C544	20	3'-4"to4'-1"by1" (2ea)	Bt.	77
C545	10	5'-8"	Bt.	59
C546	10	4'-3"	Bt.	44
C547	10	3'-7"	Bt.	37
C548	9	20'-3"	Bt.	190
C549	22	19'-7"	Bt.	449
C550	69	10'-2"	Bt.	732
C551	22	6'-3"	Bt.	143
C552	15	6'-8"to11'-0"by2"	Str.	154
C553	7	7'-9"to8'-3"by1"	Str.	58
C554	15	12'-10"to15'-2"by2"	Bt.	219
C555	7	11'-11"to12'-5"by1"	Bt.	89
C556	23	12'-2"to21'-4"by5"	Str.	402
C557	39	5'-9"	Str.	234
C558	2	5'-3"	Str.	11
C559	2	14'-4"	Str.	30
C560	1	17'-0"	Str.	18
C561	2	4'-6"	Str.	9
C562	2	13'-11"	Str.	29
C563	2	11'-8"	Str.	24
C564	32	23'-8"	Str.	790
C565	7	8'-6"to11'-0"by5"	Str.	71
C566	2	5'-11"	Str.	12
C567	15	5'-0"to8'-6"by3"	Str.	106
C568	3	3'-0"to4'-6"by9"	Str.	12
C569	4	6'-0"to8'-9"by11"	Str.	31
C570	7	8'-6"to9'-10" by 2"	Bt.	68
C571	22	8'-10"to11'-7"by5"	Bt.	303
C572	17	6'-8"to21'-4"by11"	Str.	248
C573	2	21'-11"	Str.	46
C574	8	35'-8"	Str.	298
C575	14	5'-3"to31'-3"by4'-4" (2ea)	Str.	246
C576	1	9'-6"	Str.	10
C601	2	25'-3"	Bt.	76
C602	2	24'-3"	Str.	73
C603	2	19'-3"	Str.	58
C604	2	22'-7"	Bt.	68
C701	12	21'-11"	Str.	538

REPLACEMENT BARS

MARK	NO.	LENGTH	TYPE	WEIGHT
C801	20	18'-6"	Bt.	928
C802	16	14'-4"	Bt.	612
C803	18	18'-4"	Bt.	881
C804	18	11'-9"	Bt.	565
C805	31	6'-0"to10'-3"by1½"	Str.	693
C806	31	10'-1"to12'-7" by 1"	Bt.	938
C807	14	7'-0"to10'-3"by1½"	Str.	322
C808	14	11'-9"to12'-5"by2"	Bt.	433
C901	29	11'-6"to18'-6"by3"	Str.	1479
C902	13	11'-2"to18'-2"by1"	Bt.	648
C903	16	16'-6"to19'-0"by2"	Bt.	906
C904	7	11'-6"to18'-0"by6"	Str.	351
C905	14	11'-0"to18'-9"by7"	Bt.	717
C1001	8	11'-7"	Bt.	399
C1002	13	7'-0"to10'-0"by1"	Str.	531
C1003	20	11'-1"	Bt.	954
C1004	7	7'-0"to10'-0"by2"	Str.	286
C1101	9	18'-3"	Bt.	872
C1102	11	14'-0"	Bt.	819
R501	4	5'-7"	Str.	—
R601	1	5'-11"	Str.	—
R701	1	6'-3"	Str.	—
R801	3	6'-6"	Str.	—
R901	1	6'-10"	Str.	—
R1001	1	7'-3"	Str.	—
R1101	2	7'-7"	Str.	—

FED. RD. DIVISION	STATE	PROJECT
2	OHIO	

225/302

HAM-275-0.00

NOTES

1. BAR SIZE IS INDICATED IN THE BAR MARK. THE FIRST DIGIT WHERE THREE DIGITS ARE USED AND THE FIRST TWO DIGITS WHERE FOUR ARE USED, INDICATE THE BAR SIZE NUMBER.
2. BARS MARKED WITH AN ASTERISK TO BE INCLUDED FOR PAYMENT UNDER ITEM 517, RAILING.
3. SPIRAL REINFORCING BARS: THE "LENGTH" SHOWN IN THE STEEL LIST FOR THE SPIRAL BARS IS THE DISTANCE FROM TOP OF THE FOOTING TO THE BOTTOM OF CAP, OR TO WITHIN 2" (±) OF THE TOP OF COLUMN FOR PIERS WITHOUT CAPS, TO THE NEAREST INCH.

   SPIRAL REINFORCING BARS SHALL NOT HAVE DEFORMATIONS BUT SHALL IN OTHER RESPECTS CONFORM TO ITEM 509.

   FOUR STEEL CHANNEL, TEE OR ANGLE SPACERS, WEIGHING NOT LESS THAN 0.80 LB. PER LIN. FT. OF SPACER, SHALL BE PROVIDED FOR EACH SPIRAL UNIT. THEY SHALL BE EQUALLY SPACED ALONG THE PERIPHERY OF THE COIL. THE NUMBER OF POUNDS OF THESE SPACERS, BASED ON 0.80 LB. PER LIN. FT., WILL BE PAID FOR AS REINFORCING STEEL AND IS INCLUDED IN THE TABULATED QUANTITY OF SPIRAL BARS.
4. SEE SH. 2610/15 FOR BENDING DETAILS.

VOGT, IVERS & ASSOCIATES — 8/16
ENGINEERS: CINCINNATI — ARCHITECTS: CHICAGO

REINFORCING BAR LIST

SAND RUN CREEK CULVERT

HAMILTON COUNTY STA. 121+00
STA.

DESIGNED	DRAWN	TRACED	CHECKED	REVIEWED	DATE	REVISED
TBD	WHH		TBD	RDH	6/20/69	

FED. RD. DIVISION	STATE	PROJECT	
2	OHIO		

226/302

HAM-275-0.00

MARK	TYPE	DIMENSIONS FOR BENDING A	B	C	D	E	F	G	H	J	K	R	O
A502	19		–	3'-4" to 14'-5" by 7"	1'-7"				6"		1'-6"		
A510	17		–	1'-7"	4'-7"	11"	2'-4"						
A511	19		–	3'-8"	9'-0"				7'-11"		4'-3"		
A514	19		–	3'-8"	21'-4"				20'-11"		4'-2"		
A515	17		1'-7"	2'-9"	–	–	–						
A516	17		–	2'-9"	11"	2'-4"	–						
A524	9			17'-10 3/4"					1'-11 3/4"			21'-2 1/4"	
A548	2	6"	1'-2"					6"					
A554	2	6"	5'-2"					–					
A555	16	–	1'-7"	2'-3"	1'-0"				6"		11"		
A556	20		1'-0" to 1'-9" by 1"	2'-6"	–								
A557	16	–	1'-7"	2'-3"	2'-0"				1'-0"		1'-9"		
A558	14		2'-2"	2'-3"	–	–	–		4"		2'-2"		
A559	14		1'-7"	2'-2"	–	–	–		1'-8"		1'-4"		
A560	2	6"	9'-8"					–					
A561	11	–	1'-6"	11"	9'-0"						7"		
A562	1	6"	5'-9"					–					
A563	9			17'-8 1/2"					4'-1 1/2"			11'-6 3/4"	
A564	26		8'-5"	11'-2"	8'-4 1/2"	21'-1 3/4"			1'-5"		5"	10'-7 3/4"	10'-7 3/4"
A568	20		5'-0"	3'-5" to 9'-5" by 1"	–								
A569	20		5'-0"	3'-7" to 9'-7" by 2"	–								
A587	20		5'-0"	2'-10" to 3'-10" by 2"	–								
A588	20		5'-0"	3'-5" to 12'-8" by 6 1/2	–								
A601	16	–	1'-7"	8"	31'-10"				31'-0"		7'-2"		
A603	16	–	1'-7"	8"	34'-3"				31'-0"		14'-8"		
A801	9			17'-10 3/4"					1'-11 3/4"			21'-2 1/2"	
A802	27		8'-8"	5'-7"					4"			11'-6 1/2"	
A803	27		8'-8"	9'-4 3/4"					1'-0"			11'-6 1/2"	
A805	20		5'-11"	4'-6" to 6'-11" by 1"	–								
A807	20		5'-11"	4'-9" to 6'-11" by 2"	–								
A808	17		6'-0"	6'-0"	–	–	–						
A903	20		6'-3"	10'-9" to 12'-9" by 2"	–								
A905	20		6'-3"	5'-2" to 12'-9" by 7"	–								
A1001	9			10'-11 1/2"					8 3/4"			21'-2 1/2"	
A1003	20		6'-8"	9'-9"	–								
A1101	9			17'-2 3/4"					1'-10"			21'-2 1/2"	
A1102	9			13'-0"					2'-2 1/2"			10'-8 1/4"	
B503	9			17'-8 1/2"					4 1/2"			11'-6 3/4"	
B504	26		8'-5"	11'-2"	8'-4 1/4"	21'-1 3/4"			1'-5"		5"	10'-7 3/4"	10'-7 3/4"
B505	1	6"	5'-9"					–					
B506	17		–	1'-11" to 2'-8" by 1 1/2"	6"								
B507	17		–	2'-2"	11"	1'-10"	–						
B508	19		–	1'-7"	2'-6"				1'-9"				3'-4"
B509	17		–	1'-11"	6"	–	–						
B510	9			22'-3"					6'-5"			12'-10 1/4"	
B511	9			16'-10 3/4"					3'-6"			11'-11 1/4"	
B512	27		8'-8"	12'-6"					11'-7 1/4"			11'-11 1/4"	
B513	27		8'-8"	8'-9 5/8"					9 1/4"			12'-10 1/4"	
B514	2	6"	6'-5"					–					
B515	17		–	6'-5"	13'-8"	–	–						
B801	27		8'-8"	5'-7"					4"			11'-6 1/2"	
B802	27		8'-8"	9'-4 3/4"					1'-0"			11'-6 1/2"	
B803	17		–	6'-0"	6'-0"	–	–						
B1001	9			10'-11 1/2"					8 3/4"			21'-2 1/4"	
B1101	9			17'-2 3/4"					1'-10"			21'-2 1/4"	
B1102	9			13'-0"					2'-2 1/2"			10'-8 1/4"	

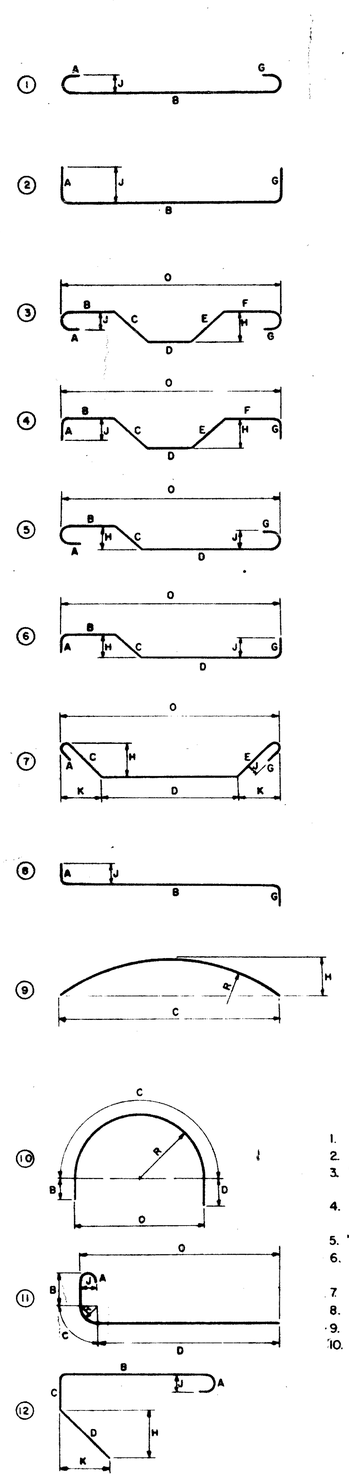

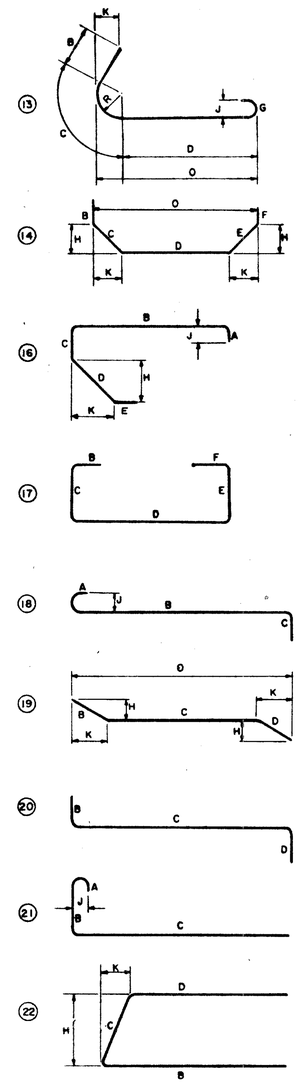

15 NOT USED

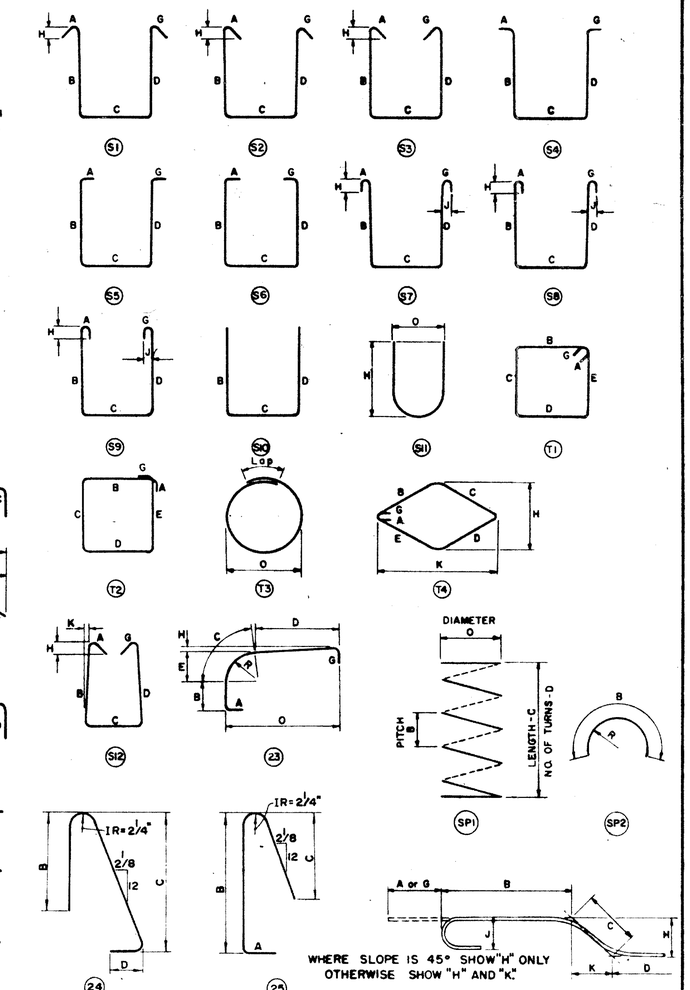

ENLARGED VIEW SHOWING BAR BENDING DETAILS

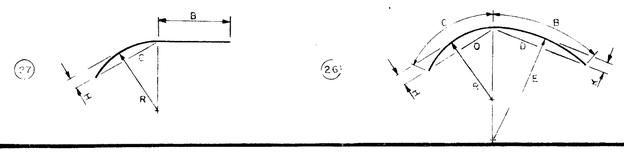

NOTES

1. FIGURES IN CIRCLES SHOW BAR TYPES.
2. ALL DIMENSIONS ARE OUT TO OUT OF BAR.
3. "J" DIMENSION ON HOOKS TO BE SHOWN ONLY WHERE NECESSARY TO RESTRICT HOOK SIZE, OTHERWISE STANDARD HOOKS ARE TO BE USED.
4. J H WHERE "J" IS NOT SHOWN "J" WILL BE KEPT EQUAL TO OR LESS THAN "H". WHERE "J" CAN EXCEED "H" IT SHOULD BE SHOWN.
5. "H" DIMENSION ON STIRRUPS TO BE SHOWN WHERE NECESSARY TO RESTRICT HOOKS.
6. ALL BENDS SHOWN ARE BENT AROUND A STANDARD MANDREL, EXCEPT STIRRUPS S11, TIES T3, SPIRALS SP1 AND WHERE RADIUS "R" IS INDICATED.
7. RADIUS DIMENSION "R" IS TO OUTSIDE OF BAR.
8. THE LENGTH OF BENT BARS IS MEASURED ALONG THE CENTERLINE.
9. FOR STANDARD HOOK DIMENSIONS, SEE SECT. 509.05 OF THE SPECIFICATIONS.
10. FOR BAR TYPE SP1, THE NO. OF TURNS "D" IS THE LENGTH "C" DIVIDED BY THE PITCH "B", PLUS 3 TURNS (TOTAL NUMBER OF CLOSED COILS), EXPRESSED AS THE NEAREST WHOLE NUMBER. 1 1/2 CLOSED COILS SHALL BE PROVIDED AT THE ENDS OF EACH SPIRAL UNIT.

VOGT, IVERS & ASSOCIATES
ENGINEERS CINCINNATI — ARCHITECTS CHICAGO

97/16

BAR BENDING DETAILS

SAND RUN CREEK CULVERT

HAMILTON COUNTY STA. 121+00
STA.

DESIGNED	DRAWN	TRACED	CHECKED	REVIEWED	DATE	REVISED
TBD	WHH	~	TBD	FDU	6/20/97	

FED. RD. DIVISION	STATE	PROJECT	
2	OHIO		

227
302

HAM-275-0.00

MARK	TYPE	DIMENSIONS FOR BENDING											
		A	B	C	D	E	F	G	H	J	K	R	O
C502	19		–	3'-4" to 19'-5" by 7"	1'-7"				6"		1'-6"		
C511	19		–	7'-7"	15'-8"				15'-5"		2'-8"		
C514	19		–	3'-7"	8'-8"				7'-11"		3'-8"		
C515	17		–	1'-7	4'-7"	11"	2'-4"						
C516	20		–	1'-7"	2'-9"								
C517	17		–	2'-9"	11"	2'-4"	–						
C522	9			17'-10 3/4"					1'-11 3/4"			21'-2 1/4"	
C536	2	6"	1'-2"					6"					
C542	2	6"	5'-2"					–					
C543	16	–	1'-7"	2'-3"	1'-0"				6"		11"		
C544	20		1'-0" to 1'-9" by 1"	2'-6"									
C545	16	–	1'-7"	2'-3"	2'-0"				1'-0"		1'-9"		
C546	14		2'-2"	2'-3"	–	–	–		4"		2'-2"		
C547	14		1'-7"	2'-2"	–	–	–		1'-8"		1'-4"		
C548	9			17'-8 1/2"					4 1/2"			11'-6 3/4"	
C549	26		8'-5"	11'-2"	8'-4 1/4"	21'-1 3/4"			1'-5"		5"	10'-7 3/4"	10'-7 3/4"
C550	2	6"	9'-8"					–					
C551	1	6"	5'-9"					–					
C554	20		5'-0"	8'-0" to 10'-4" by 2"	–								
C555	20		5'-0"	7'-1" to 7'-7" by 1"	–								
C570	20		5'-0"	4'-0" to 5'-0" by 2"	–								
C571	20		5'-0"	4'-0" to 12'-9" by 5"	–								
C601	16	–	1'-7"	8"	23'-3"				22'-9"		4'-9"		
C609	16	–	1'-7"	8"	20'-7"				18'-8"		8'-8"		
C801	9			17'-10 3/4"					1'-11 3/4"			21'-2 1/2"	
C802	27		8'-8"	5'-7"					4"			11'-6 1/2"	
C803	27		8'-8"	9'-4 3/4"					1'-0"			11'-6 1/2"	
C809	17		–	6'-0"	6'-0"	–	–						
C806	20		5'-11"	4'-4" to 6'-10" by 1"	–								
C808	20		5'-11"	5'-1" to 6'-9" by 1 1/2"	–								
C902	20		6'-3"	5'-2" to 12'-2" by 7"									
C903	20		6'-3"	10'-6" to 13'-0" by 2"									
C905	20		6'-3"	5'-2" to 12'-9" by 7"									
C1001	9			10'-11 1/2"					8 3/4"			21'-2 1/2"	
C1003	20		6'-8"	4'-9"	–								
C1101	9			17'-2 3/4"					1'-10"			21'-2 1/2"	
C1102	9			13'-6"					2'-2 1/2"			10'-8 1/4"	

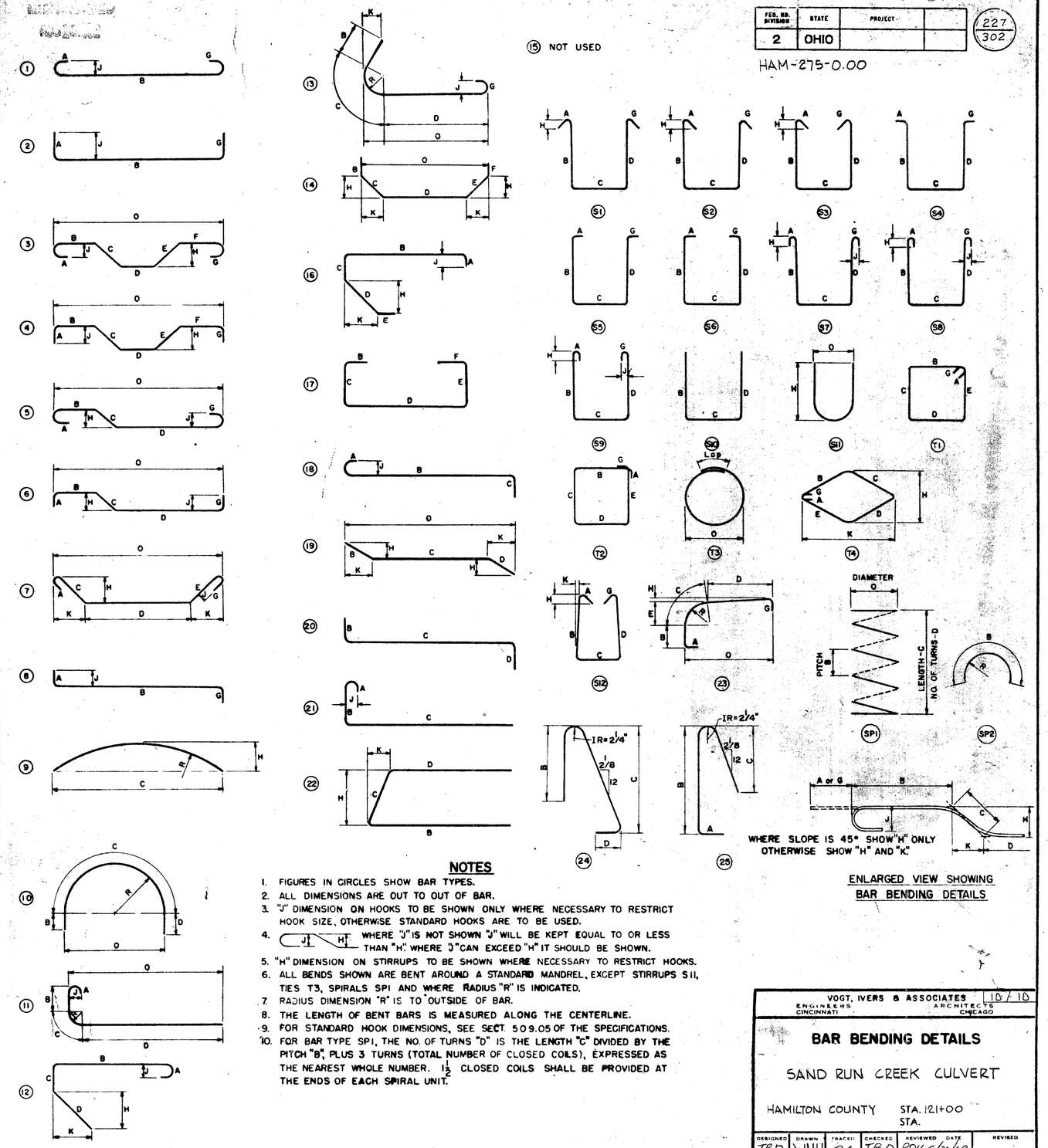

ENLARGED VIEW SHOWING BAR BENDING DETAILS

NOTES

1. FIGURES IN CIRCLES SHOW BAR TYPES.
2. ALL DIMENSIONS ARE OUT TO OUT OF BAR.
3. "J" DIMENSION ON HOOKS TO BE SHOWN ONLY WHERE NECESSARY TO RESTRICT HOOK SIZE, OTHERWISE STANDARD HOOKS ARE TO BE USED.
4. WHERE "J" IS NOT SHOWN "J" WILL BE KEPT EQUAL TO OR LESS THAN "H". WHERE "J" CAN EXCEED "H" IT SHOULD BE SHOWN.
5. "H" DIMENSION ON STIRRUPS TO BE SHOWN WHERE NECESSARY TO RESTRICT HOOKS.
6. ALL BENDS SHOWN ARE BENT AROUND A STANDARD MANDREL, EXCEPT STIRRUPS S11, TIES T3, SPIRALS SP1 AND WHERE RADIUS "R" IS INDICATED.
7. RADIUS DIMENSION "R" IS TO OUTSIDE OF BAR.
8. THE LENGTH OF BENT BARS IS MEASURED ALONG THE CENTERLINE.
9. FOR STANDARD HOOK DIMENSIONS, SEE SECT. 509.05 OF THE SPECIFICATIONS.
10. FOR BAR TYPE SP1, THE NO. OF TURNS "D" IS THE LENGTH "C" DIVIDED BY THE PITCH "B", PLUS 3 TURNS (TOTAL NUMBER OF CLOSED COILS), EXPRESSED AS THE NEAREST WHOLE NUMBER. 1 1/2 CLOSED COILS SHALL BE PROVIDED AT THE ENDS OF EACH SPIRAL UNIT.

VOGT, IVERS & ASSOCIATES
ENGINEERS CINCINNATI — ARCHITECTS CHICAGO

10/10

BAR BENDING DETAILS

SAND RUN CREEK CULVERT

HAMILTON COUNTY STA. 121+00
STA.

DESIGNED	DRAWN	TRACED	CHECKED	REVIEWED	DATE	REVISED
TBD	WHH	~	TBD	RDU	6/20/69	

FED. RD. DIVISION	STATE	PROJECT	
2	OHIO		

228
302

HAM - 275 - 0.00

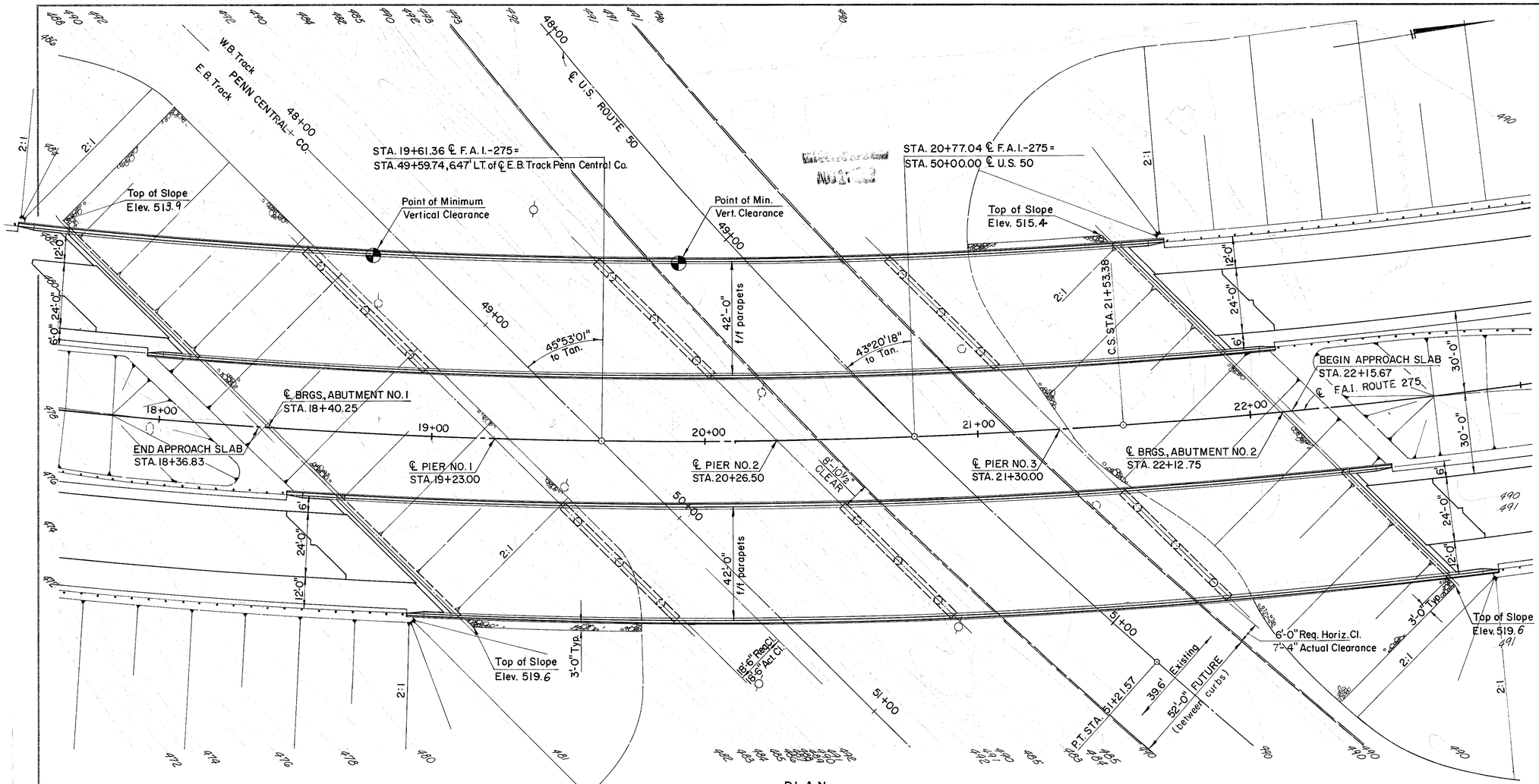

PLAN

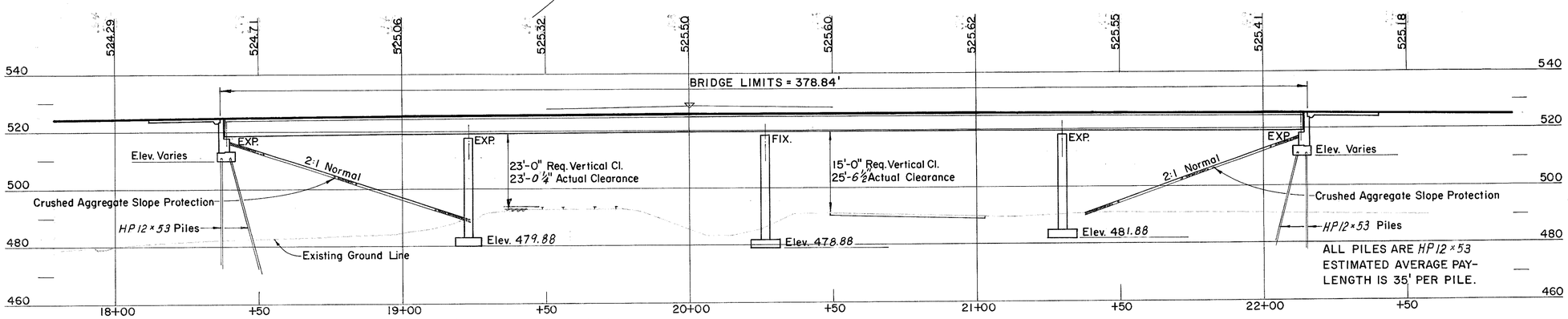

PROFILE along ℄ F.A.I.-275

The vertical curve data does not apply to alignment on the bridge and is provided for information only. Actual alignment is based on the 2° Bridge Formula, certain corrections and the "Ohio Formula" for intermediate spirals.

Rev. 6-5-75

HORIZONTAL CURVE DATA - F.A.I.-275

P.I. STA. 15+00.00
Δ = 45°13'58" LT.
Δc = 35°13'58"
Dc = 2°30'00"
R = 2291.83'
Lc = 1409.31'
Tc = 1155.93'
θs = 5°00'00"
Ls = 400.00'
L.T. = 266.77'
S.T. = 133.43'
Es = 194.07'

HORIZONTAL CURVE DATA - U.S. 50

P.I. STA. 45+26.88
Δ = 30°29'00" LT.
Dc = 03°00'00"
R = 1909.86'
T = 520.42'
L = 1016.11'
E = 69.65'

VERTICAL CURVE DATA - F.A.I.-275

P.V.I. STA. 20+00.00
ELEV. 528.81
V.C. = 900.00'
G_1 = +1.75%
G_2 = -1.19%

NOTE:
Earthwork limits shown are schematic. Actual slopes shall conform to plan cross sections.

A.D.T. (1989)

F.A.I. - 275 = 30,860
U.S. 50 = 10,900

PROPOSED STRUCTURES

TYPE: Continuous steel girder with reinforced concrete deck and substructures.
SPANS: 82'-9", 103'-6", 103'-6", 82'-9" c/c brgs. measured along centerline F.A.I. Route 275.
ROADWAY: 42'-0" f/f parapets (left and right).
LOADING: HS 20-44 and Interstate Alternate.
SKEW: 45°53'01" R.F. to tangent at sta. 19+61.36 centerline F.A.I. Route 275.
SURFACE COURSE: 1½" asphalt concrete
APPROACH SLABS: AS-1-72 (25' long).
ALIGNMENT: 2° 30' curve and 400' spiral.
SUPERELEVATION: 0.081'/ft.

1/18

VOGT, IVERS, & ASSOCIATES
ENGINEERS CINCINNATI — ARCHITECTS CHICAGO

SITE PLAN

BRIDGE NO. HAM-275-0036 L/R
F.A.I. ROUTE 275
OVER U.S. 50 & PENN CENTRAL CO.
HAMILTON COUNTY — STA. 20+26.50

designed	drawn	traced	checked	reviewed	date	revised
M. M.	G.M. D.W.M	—	S.C.	bbl	7-11-69	2-11-74

FED. RD. DIVISION	STATE	PROJECT	
2	OHIO		

HAM - 275 - 0.00

GENERAL NOTES

REFERENCE SHALL BE MADE TO STANDARD DRAWINGS NO:

RB-1-55 REVISED 2-2-59
SD-1-69 SHEETS 1 THROUGH 4 DATED 6-12-69
BR-1-67 Revised 10-15-71.

AND TO SUPPLEMENTAL SPECIFICATIONS:

NO. 808 DATED 1-1-71

NO. 836 DATED 1-1-71

DESIGN SPECIFICATIONS:

THIS STRUCTURE CONFORMS TO "STANDARD SPECIFICATIONS FOR HIGHWAY BRIDGES" ADOPTED BY THE AMERICAN ASSOCIATION OF STATE HIGHWAY OFFICIALS, 1965, INCLUDING THE OHIO "SUPPLEMENT" TO THESE SPECIFICATIONS.

DESIGN DATA:

DESIGN LOADING	HS 20-44 AND THE INTERSTATE ALTERNATE LOADING
CONCRETE CLASS C	UNIT STRESS 1,200 PSI FOR SUPERSTRUCTURE UNIT STRESS 1,333 PSI FOR SUBSTRUCTURES
STRUCTURAL STEEL	ASTM A36 - UNIT STRESS 20,000 PSI
* REINFORCING STEEL	ASTM A615, A616, or A617. UNIT STRESS 20,000 PSI. SPIRAL REINFORCEMENT May BE PLAIN BARS, ASTM A82, A615, A306 OR A499.

EMBANKMENT CONSTRUCTION:

THE EMBANKMENT SHALL BE CONSTRUCTED TO THE LEVEL OF THE SUBGRADE FOR A MINIMUM DISTANCE OF 200 FEET BACK OF THE ABUTMENTS. EXCAVATION SHALL THEN BE MADE FOR THE ABUTMENTS AND PIER NO. 1.

PILES:

PILES SHALL BE DRIVEN TO A MINIMUM BEARING CAPACITY OF 45 TONS PER PILE FOR THE ABUTMENTS.

FOUNDATION BEARING PRESSURE:

PIER FOOTINGS ARE DESIGNED FOR A MAXIMUM BEARING PRESSURE OF 3 TONS PER SQ. FT.

WELDS:

WELDS ON NON-STRESS CARRYING MEMBERS ARE SHOWN THUS: N 1/4

Jacking holes shown on Standard Drawing AS-1-72 shall not be provided

UTILITY LINES:

ALL EXPENSE INVOLVED IN RELOCATING THE AFFECTED UTILITY LINES SHALL BE BORNE BY THE OWNER. THE CONTRACTOR AND OWNER ARE REQUESTED TO COOPERATE BY ARRANGING THEIR WORK IN SUCH A MANNER THAT INCONVENIENCE TO EITHER WOULD BE HELD TO A MINIMUM.

CONSTRUCTION CLEARANCE OF 20' VERTICALLY ABOVE THE TOP OF THE RAILROAD RAILS AND 8' HORIZONTALLY FROM THE CENTER OF TRACKS SHALL BE MAINTAINED AT ALL TIMES.

RAILROAD AERIAL LINES:

RAILROAD AERIAL LINES WILL BE RELOCATED BY THE RAILROAD. THE CONTRACTOR SHALL USE ALL PRECAUTIONS NECESSARY TO SEE THAT THE LINES ARE NOT DISTURBED DURING THE CONSTRUCTION STAGE AND SHALL COOPERATE WITH THE RAILROAD IN THE RELOCATION OF THESE LINES. THE COST OF THE RELOCATION SHALL BE INCLUDED IN THE RAILROAD FORCE ACCOUNT WORK.

* If bars in accordance with ASTM A616 are provided they shall be subject to bend tests as per AASHO Designation M42-70

ESTIMATED QUANTITIES - 2 BRIDGES

ITEM	TOTAL	UNIT	DESCRIPTION	SUPER.	ABUT.	PIER	GEN.	AS BUILT	
404	(93) 155	Cu.Yds.	Asphalt Concrete (70-85 or AC 20) 155	(93)					
503	Lump	Sum	Cofferdams, cribs, and sheeting				Lump		
503	2 025	Cu.Yds.	Unclassified excavation		745	1 280			
505	Lump	Sum	Test pile		Lump				
507	2 170	Lin. Ft.	Steel piles, HP 12 x 53		2 170				
509	480,734	Lbs.	Reinforcing steel	314 610	36,282	129842			
511	(1103)	Cu. Yds.	Class C concrete, superstructure 1.25	(1103)					
511	497	Cu. Yds.	Class C concrete, piers above footings			497			
511	(326) 327	Cu. Yds.	Class C concrete, abutments above footings	327	(326)				
511	597	Cu. Yds.	Class C concrete, footings		210	387			
513	964 000	Lbs.	Structural steel	964 000					
514	964 000	Lbs.	Field painting of structural steel	964 000					
518	120	Each	Subdrainage for wearing surface	120					
518	155	Cu. Yds.	Porous Backfill		155				
518	228	Lin. Ft.	6" perforated, helical C. M. P., including specials, 707.01		228				
518	196	Lin. Ft.	6" non-perforated, helical C. M. P., 707.01		196				
518	24	Each	Scuppers, including supports	24					
601	3500	Sq.Yds.	Crushed aggregate slope protection				3500		
808	1103	Units	Chemical admixture for concrete, Type A, B or D	1103					
Spec.	47	Cu.Yds.	Sand-Asphalt (see Proposal Note)	47					
Spec.	3394	Sq.Yds.	Membrane Waterproofing, Sheet type, (see Proposal Note)	3394					

Computed by: SSR ,Date: July 10, 1969
Checked by: JRP ,Date: July 11, 1969

REV 6-5-75

2/18

VOGT, IVERS, & ASSOCIATES
ENGINEERS CINCINNATI — ARCHITECTS CHICAGO

GENERAL NOTES
ESTIMATED QUANTITIES
BRIDGE NO. HAM-275-0036 L/R
F.A.I. ROUTE 275
OVER U.S. 50 & PENN CENTRAL CO.

HAMILTON COUNTY — STA. 20+26.50

Designed	Drawn	Traced	Checked	Reviewed	Date	Revised
S.C.	D.W.M	—	J.R.P.		7-11-69	

FED. RD. DIVISION	STATE	PROJECT	TYPE FUNDS
2	OHIO		

230/302

HAM-275-0.00

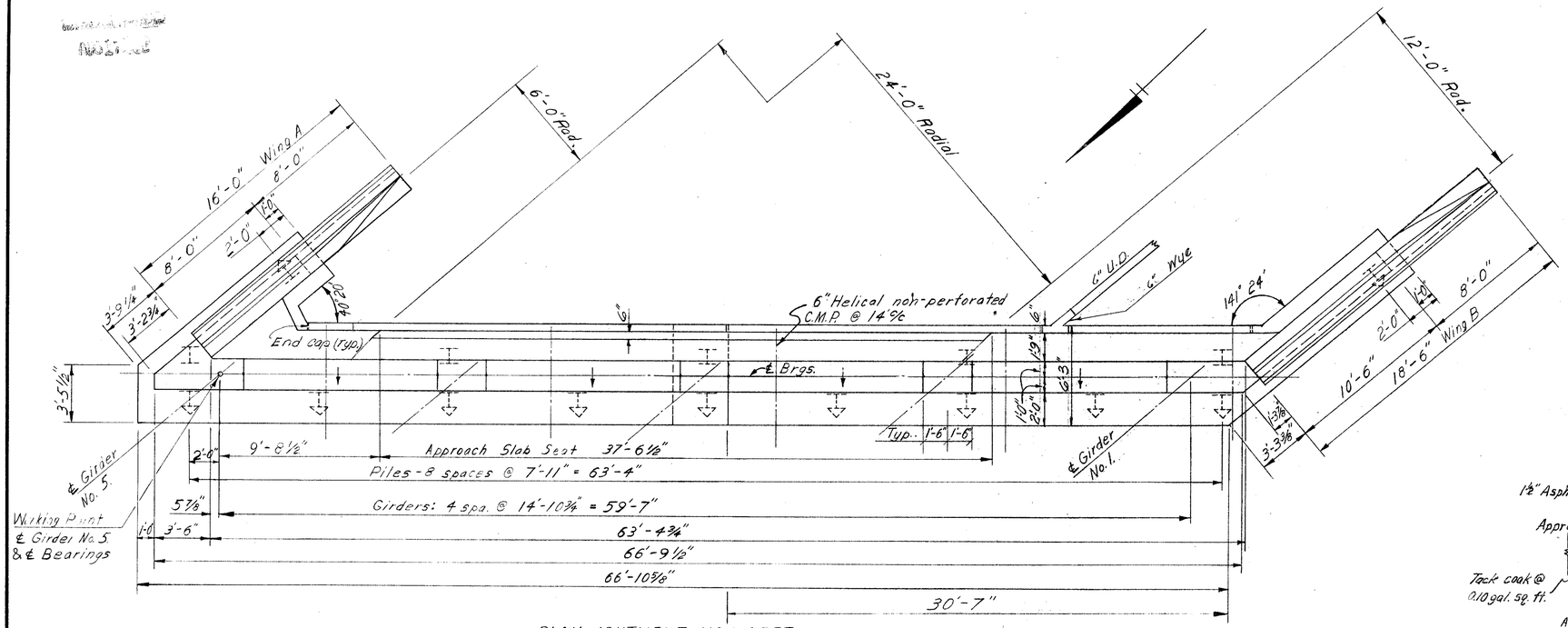

PLAN-ABUTMENT NO. 1. LEFT

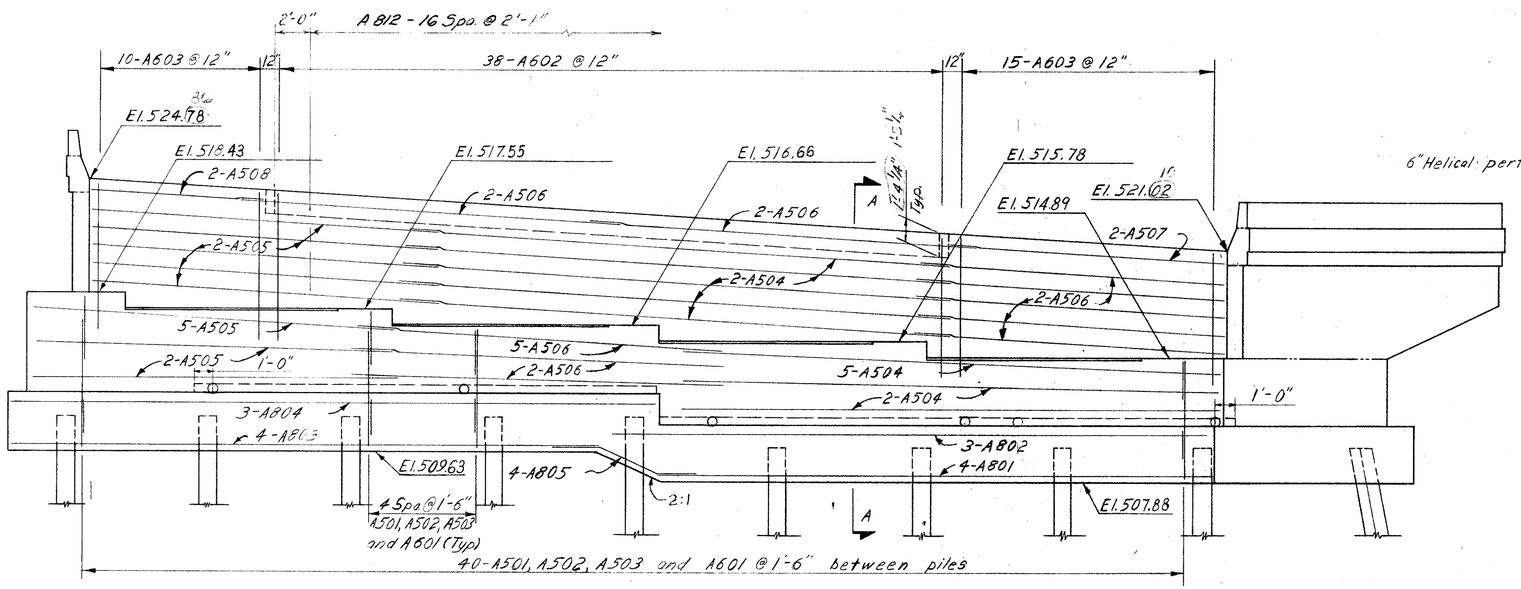

ELEVATION

NOTES

POROUS BACKFILL, 1.5 ft. thick, full length of abutment and wings, shall extend up to the subgrade or to the finished ground surface.

Indicates vertical pile.

Indicates pile battered at 1:4 in the direction of arrow.

ALL piles are 12 BP 53

For Wingwall Details see sheet 7/18

For Working Point Location, see Girder Layout Sheet 11/18

For additional Approach slab details see std. Drag. AS-1-72.
Approach Slab to be 24'-0" wide radially.

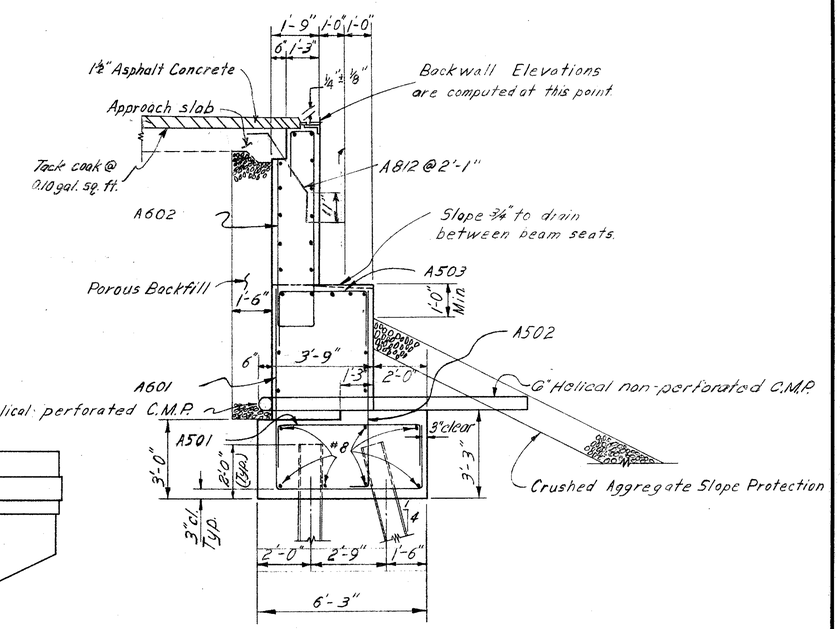

SECTION A-A

3/18

VOGT, IVERS, & ASSOCIATES
ENGINEERS ARCHITECTS
CINCINNATI CHICAGO

ABUTMENT NO. 1 LEFT

BRIDGE NO. HAM-275-0036 L/R
F.A.I. ROUTE 275
OVER U. S. 50 & PENN CENTRAL CO.
HAMILTON COUNTY STA. 20+26.50

DESIGNED	DRAWN	TRACED	CHECKED	REVIEWED	DATE	REVISED
S.C.	S.C.	W.G.	J.R.P.	[illegible]	7-11-69	

REV. 6-5-75

FED. RD. DIVISION	STATE	PROJECT	TYPE FUNDS
2	OHIO		

231/302

HAM-275-0.00

NOTES

For Section A-A and additional notes see sheet 3/18

For Wingwall Details see sheet 7/18

For Working Point Location, see Girder Layout Sheet 11/15

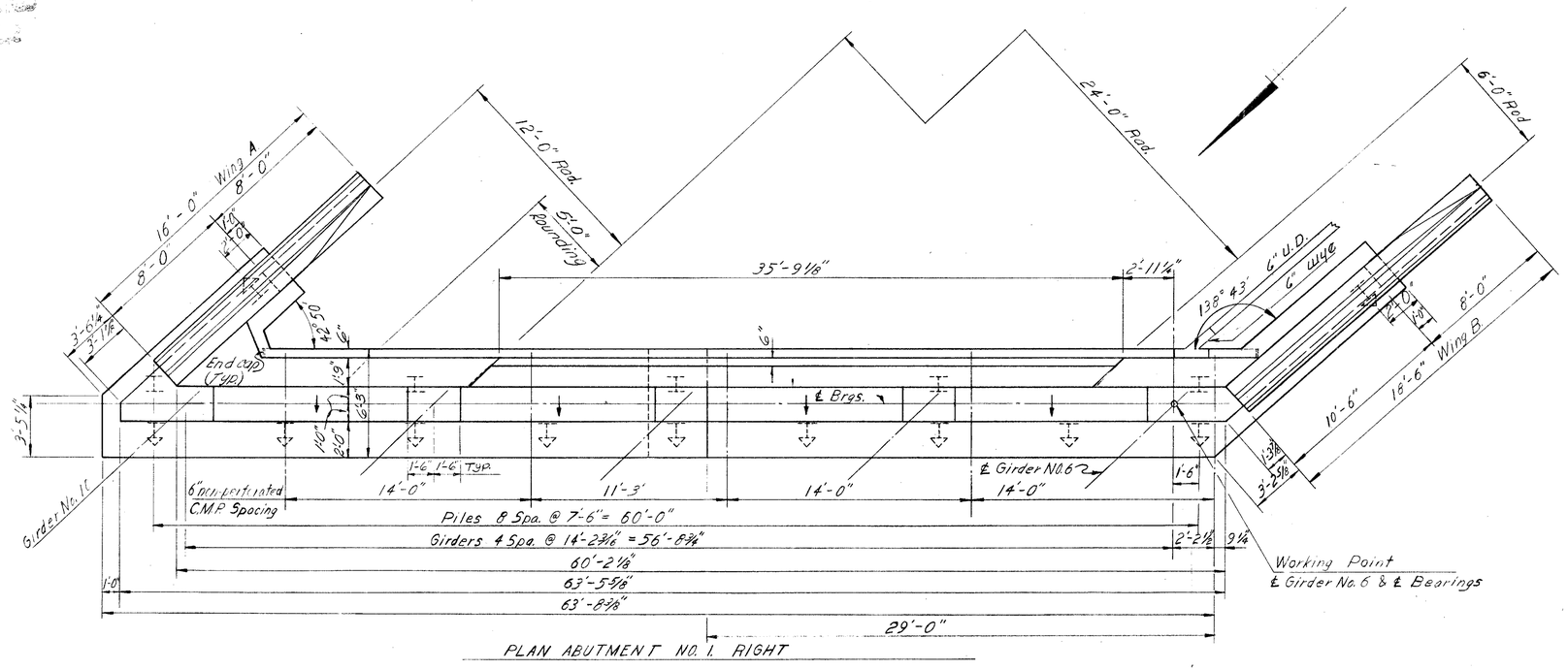

PLAN ABUTMENT NO. 1 RIGHT

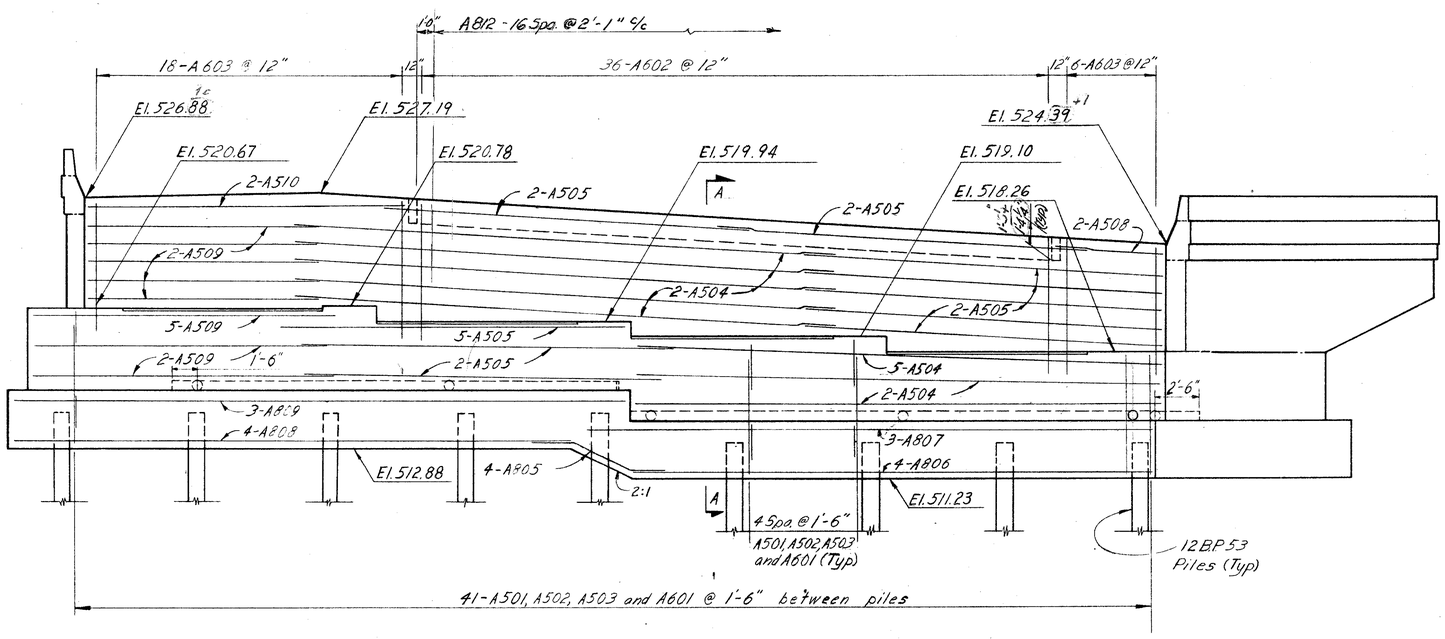

ELEVATION

REV 6-5-75

4/18

VOGT, IVERS, & ASSOCIATES
ENGINEERS ARCHITECTS
CINCINNATI CHICAGO

ABUTMENT NO. 1 RIGHT

BRIDGE NO. HAM-275-0036 L/R
F.A.I. ROUTE 275
OVER U.S. 50 & PENN CENTRAL CO.

HAMILTON COUNTY STA. 20+26.50

DESIGNED	DRAWN	TRACED	CHECKED	REVIEWED	DATE	REVISED
S.C.	S.C.	W.G.	J.R.P.	[illegible]	7-11-69	

FED. RD. DIVISION	STATE	PROJECT	TYPE FUNDS
2	OHIO		

232/302

HAM - 275 - 0.00

NOTES

POROUS BACKFILL, 1.5 ft. thick, full length of abutment and wings, shall extend up to the subgrade to the finished ground surface.

Indicates Vertical pile.
Indicates pile battered at 1:4 in the direction of arrow.

All piles are 12 BP 53

For Wingwall Details see sheet 7/18

For Working Point Location, see Girder Layout Sheet 11/18

For additional Approach slab details see Std Drwg. AS-1-72.
Approach slab to be 24'-0" wide radially.

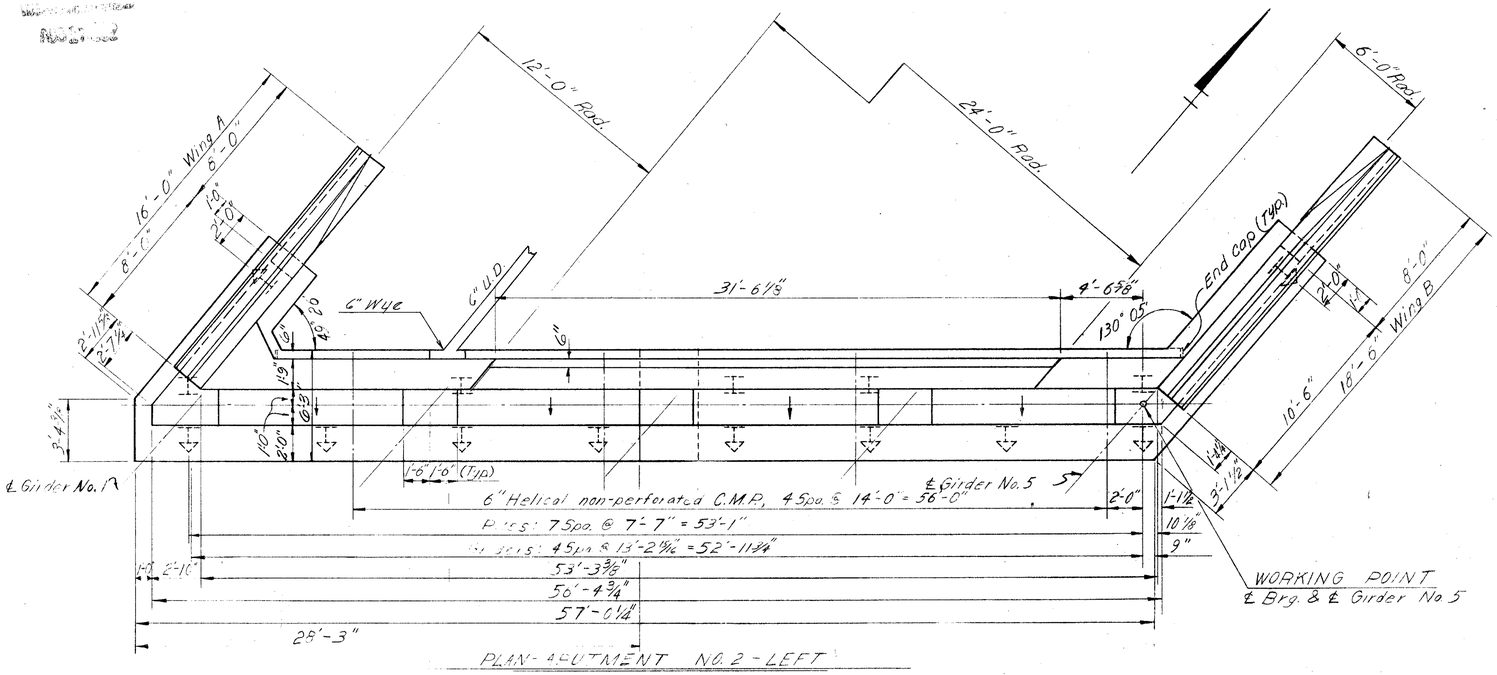

PLAN - ABUTMENT NO. 2 - LEFT

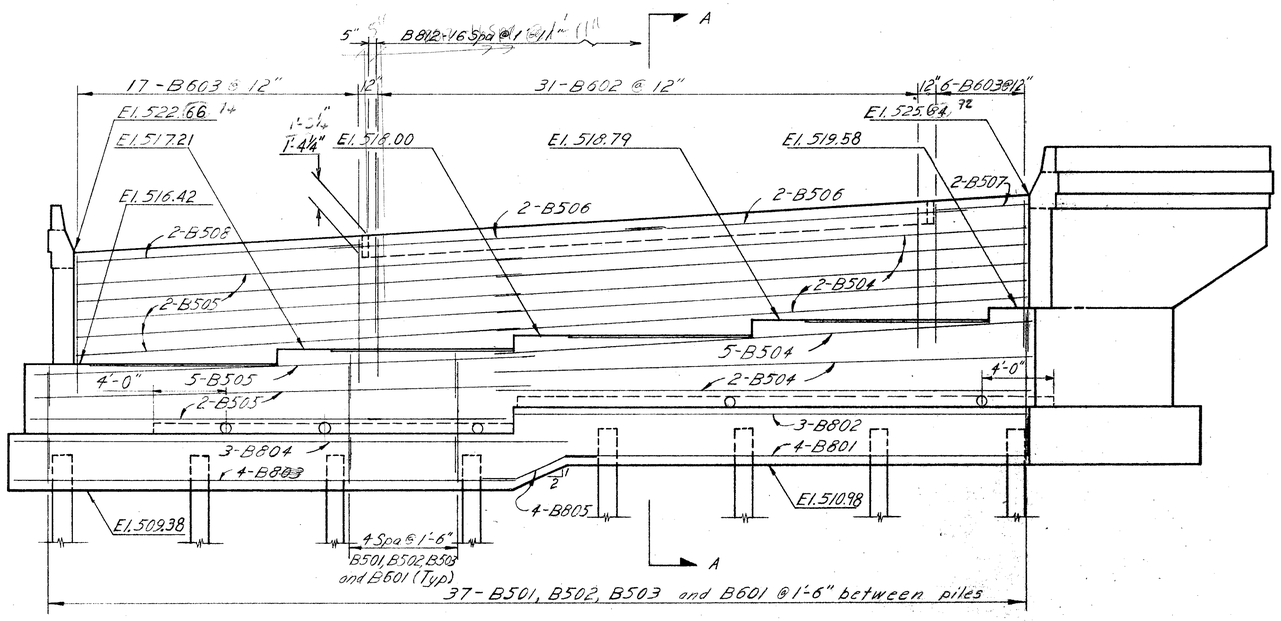

ELEVATION

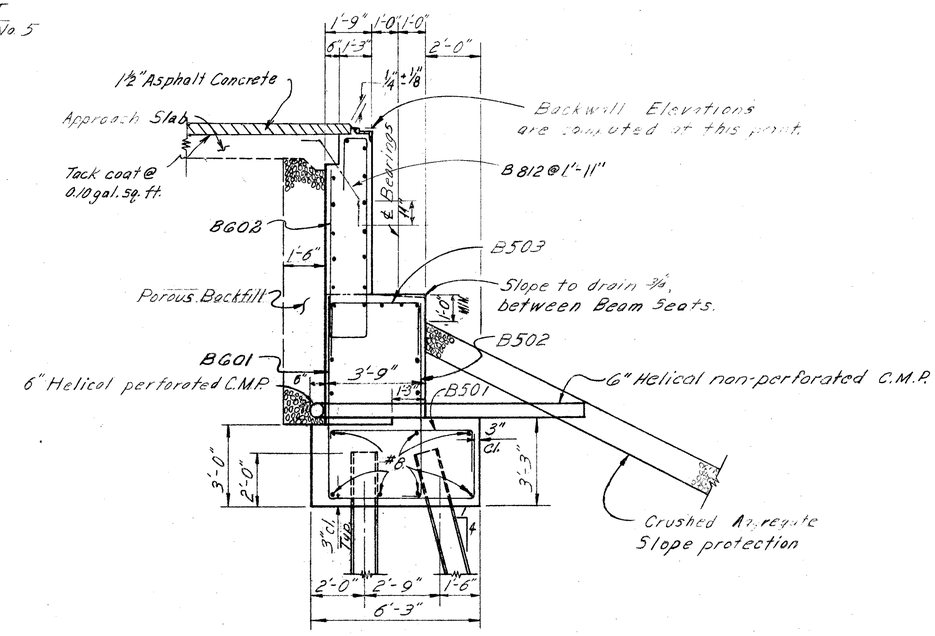

SECTION A-A

R.E. 6-5-75

5/18

VOGT, IVERS, & ASSOCIATES
ENGINEERS CINCINNATI — ARCHITECTS CHICAGO

ABUTMENT NO. 2 LEFT

BRIDGE NO. HAM-275-0036 L/R
F.A.I. ROUTE 275
OVER U.S. 50 & PENN CENTRAL CO.
HAMILTON COUNTY — STA. 20+26.50

DESIGNED	DRAWN	TRACED	CHECKED	REVIEWED	DATE	REVISED
S. C.	S. C.	W. G.	J. R. P.	66	7-11-69	

FED. RD. DIVISION	STATE	PROJECT	TYPE FUNDS
2	OHIO		

233
302

HAM - 275 - 0.00

NOTES

For Section A-A and additional notes see sheet 5/15

For Wingwall details see sheet 7/18
For Working Point Location, see Girder Layout Sheet 11/15

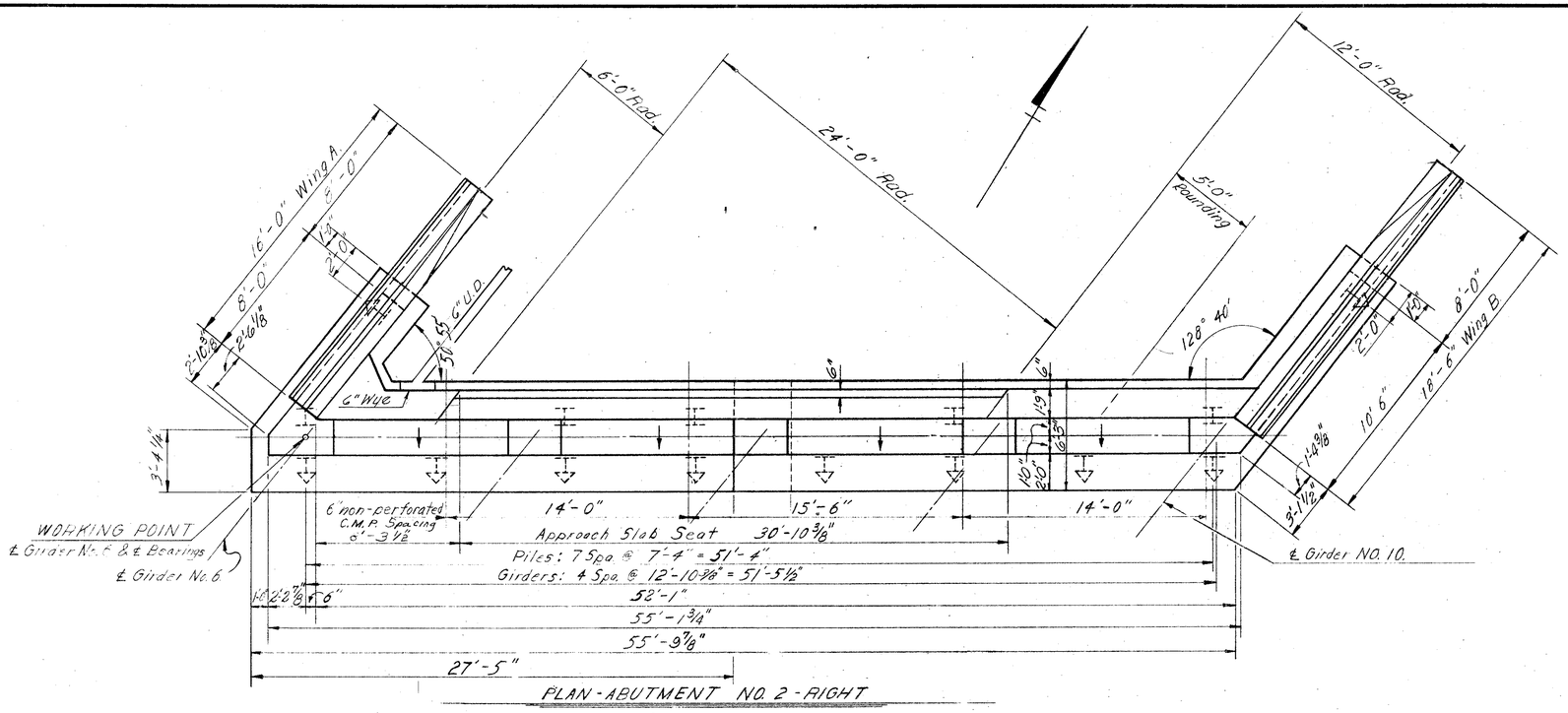

PLAN - ABUTMENT NO. 2 - RIGHT

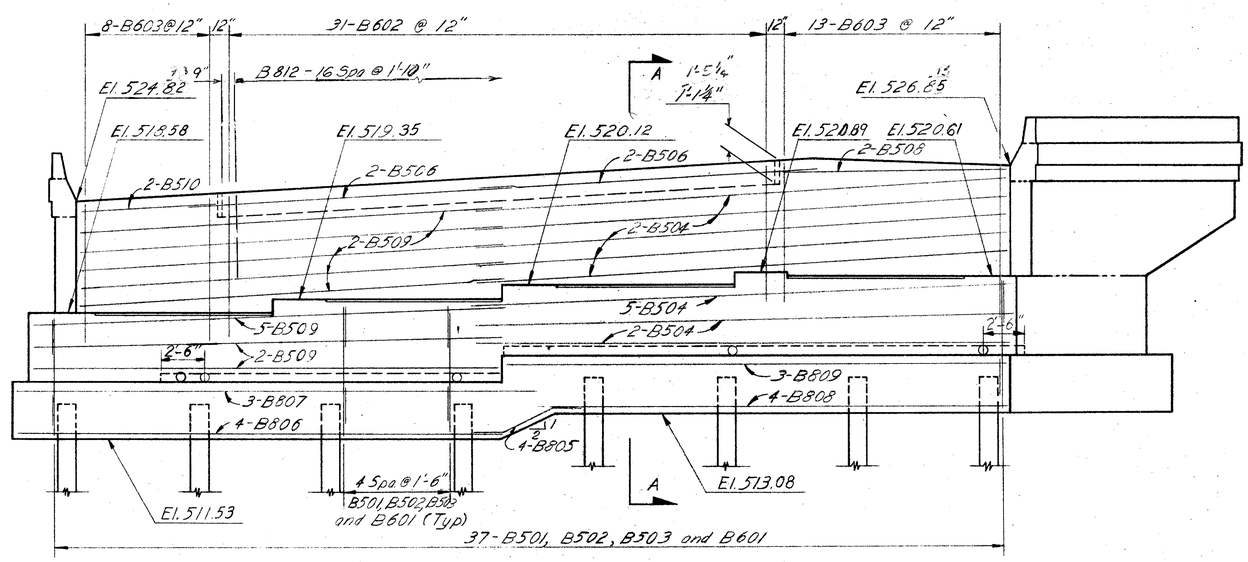

ELEVATION

REV 8-5-75

6/18

VOGT, IVERS, & ASSOCIATES
ENGINEERS CINCINNATI
ARCHITECTS CHICAGO

ABUTMENT NO. 2 RIGHT

BRIDGE NO. HAM-275-0036 L/R
F.A.I. ROUTE 275
OVER U.S. 50 & PENN CENTRAL CO.

HAMILTON COUNTY STA. 20+26.50

DESIGNED	DRAWN	TRACED	CHECKED	REVIEWED	DATE	REVISED
S.C.	S.C.	W.G.	J.R.P.		7-11-69	

FED. RD. DIVISION	STATE	PROJECT	TYPE FUNDS
2	OHIO		

234
302

HAM-275-0.00

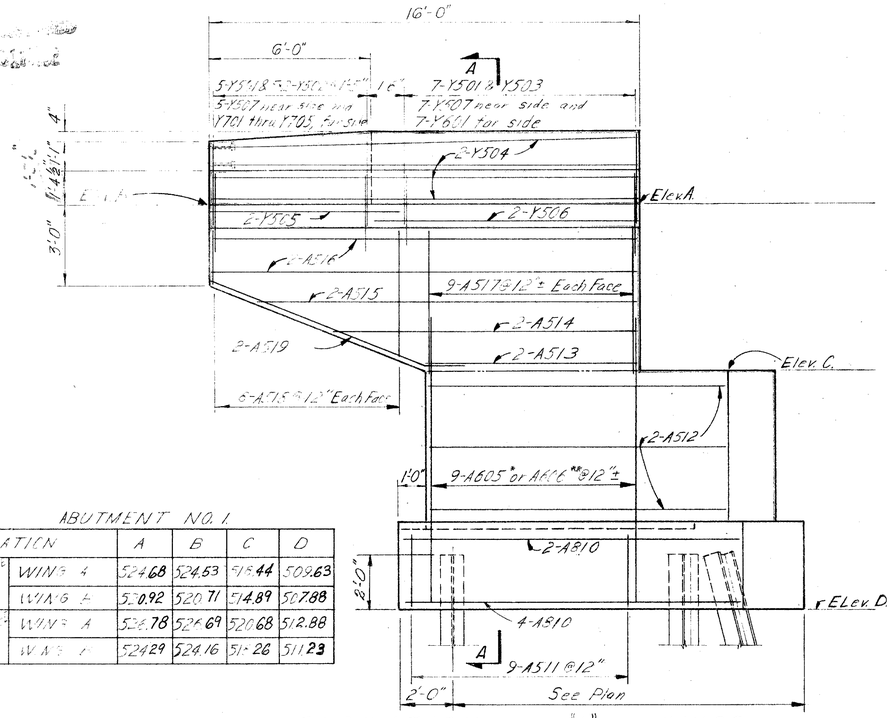

ELEVATION ~ "A" WINGS

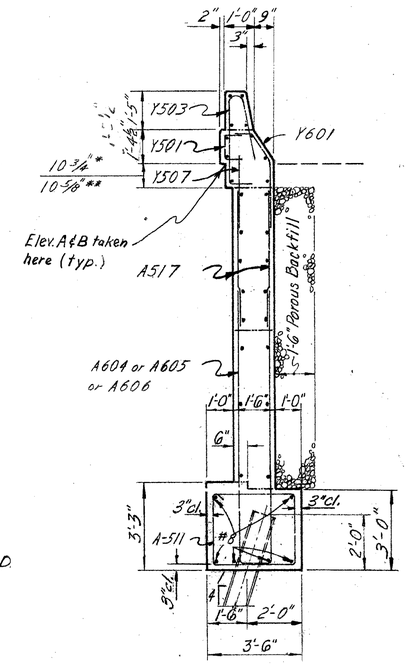

SECTION A-A

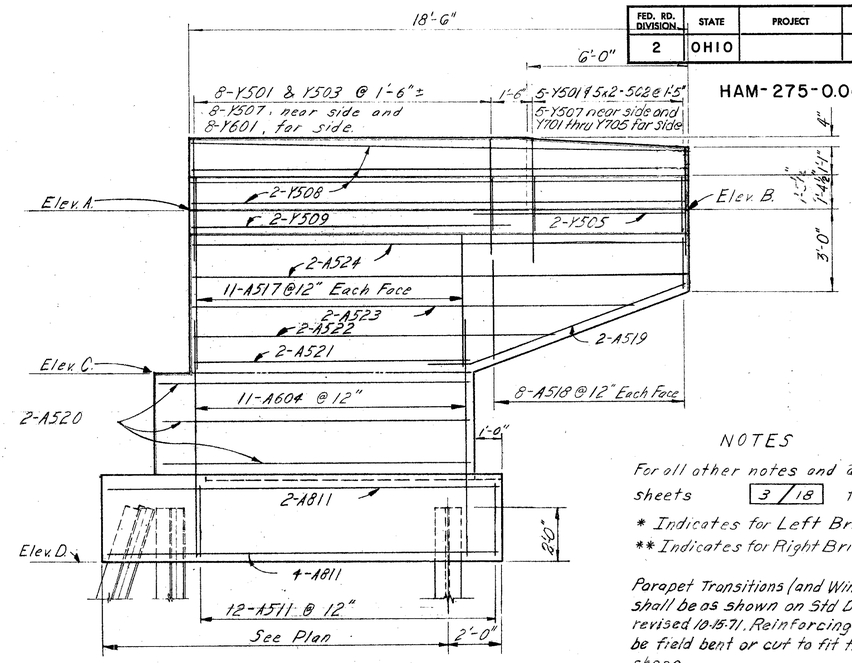

ELEVATION ~ "B" WINGS

NOTES

For all other notes and details see sheets 3/18 thru 6/18

* Indicates for Left Bridge only.
** Indicates for Right Bridge only.

Parapet Transitions (and Wingwall Ends) shall be as shown on Std Drwg. BR-1-67 revised 10-15-71. Reinforcing steel shall be field bent or cut to fit the revised shape

ABUTMENT NO. 1

LOCATION		A	B	C	D
LEFT BRIDGE	WING A	524.68	524.53	516.44	509.63
	WING B	520.92	520.71	514.89	507.88
RIGHT BRIDGE	WING A	526.78	526.69	520.68	512.88
	WING B	524.29	524.16	518.28	511.23

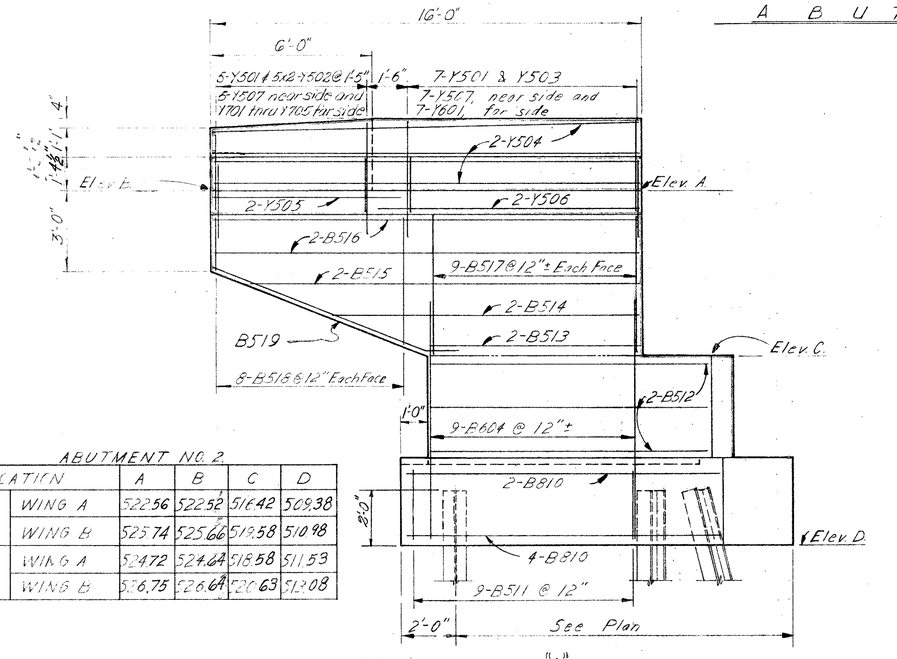

ELEVATION ~ "A" ~ WINGS

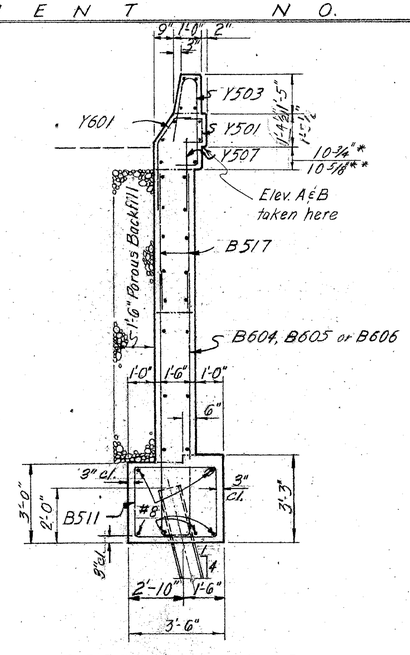

SECTION B-B

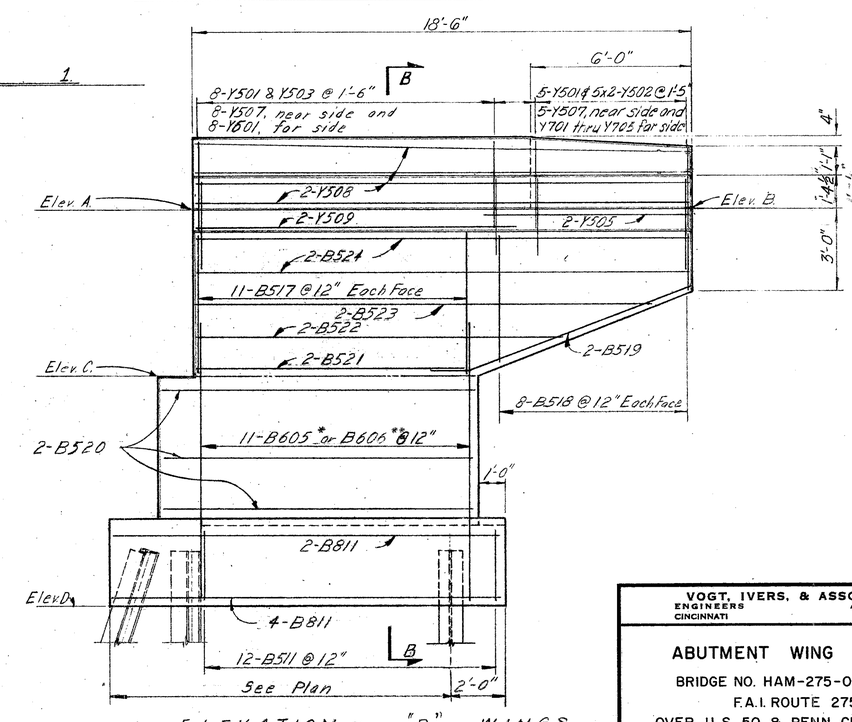

ELEVATION ~ "B" WINGS

ABUTMENT NO. 2

LOCATION		A	B	C	D
LEFT BRIDGE	WING A	522.56	522.52	516.42	509.38
	WING B	525.74	525.66	519.58	510.98
RIGHT BRIDGE	WING A	524.72	524.64	518.58	511.53
	WING B	526.75	526.69	520.63	512.08

ABUTMENT NO. 1.

ABUTMENT NO. 2.

REV. 6-5-75

7/18

VOGT, IVERS, & ASSOCIATES
ENGINEERS — CINCINNATI
ARCHITECTS — CHICAGO

ABUTMENT WING DETAILS

BRIDGE NO. HAM-275-0036 L/R
F.A.I. ROUTE 275
OVER U.S. 50 & PENN CENTRAL CO.
HAMILTON COUNTY STA. 20+26.50

DESIGNED	DRAWN	TRACED	CHECKED	REVIEWED	DATE	REVISED
S.C.	D.W.M	—	J.R.P.	666	7-11-69	

FED. RD. DIVISION	STATE	PROJECT	TYPE FUNDS
2	OHIO		

235
302

HAM – 275 – 0.00

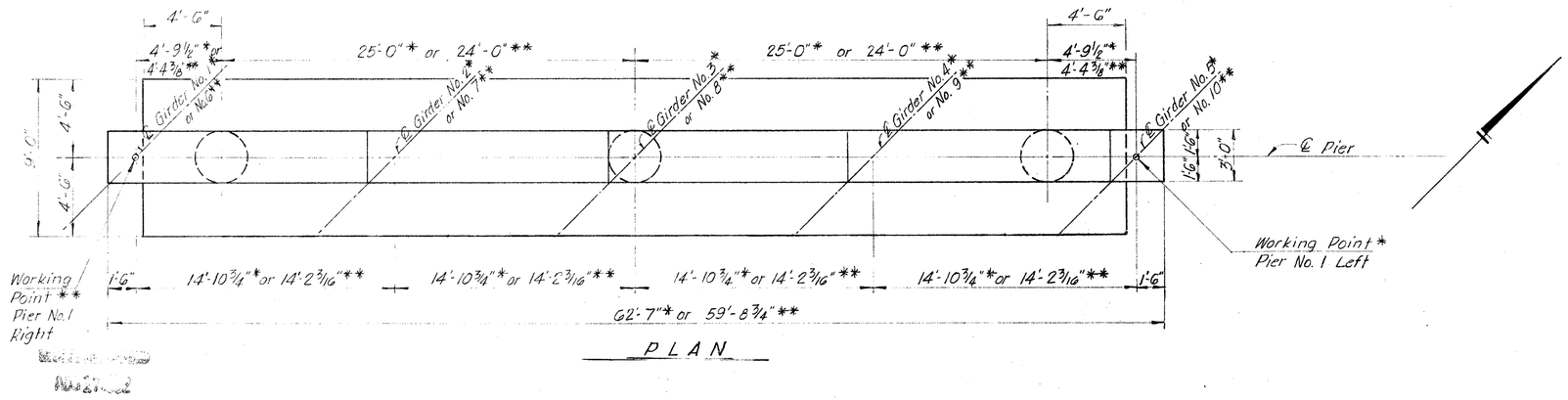

PLAN

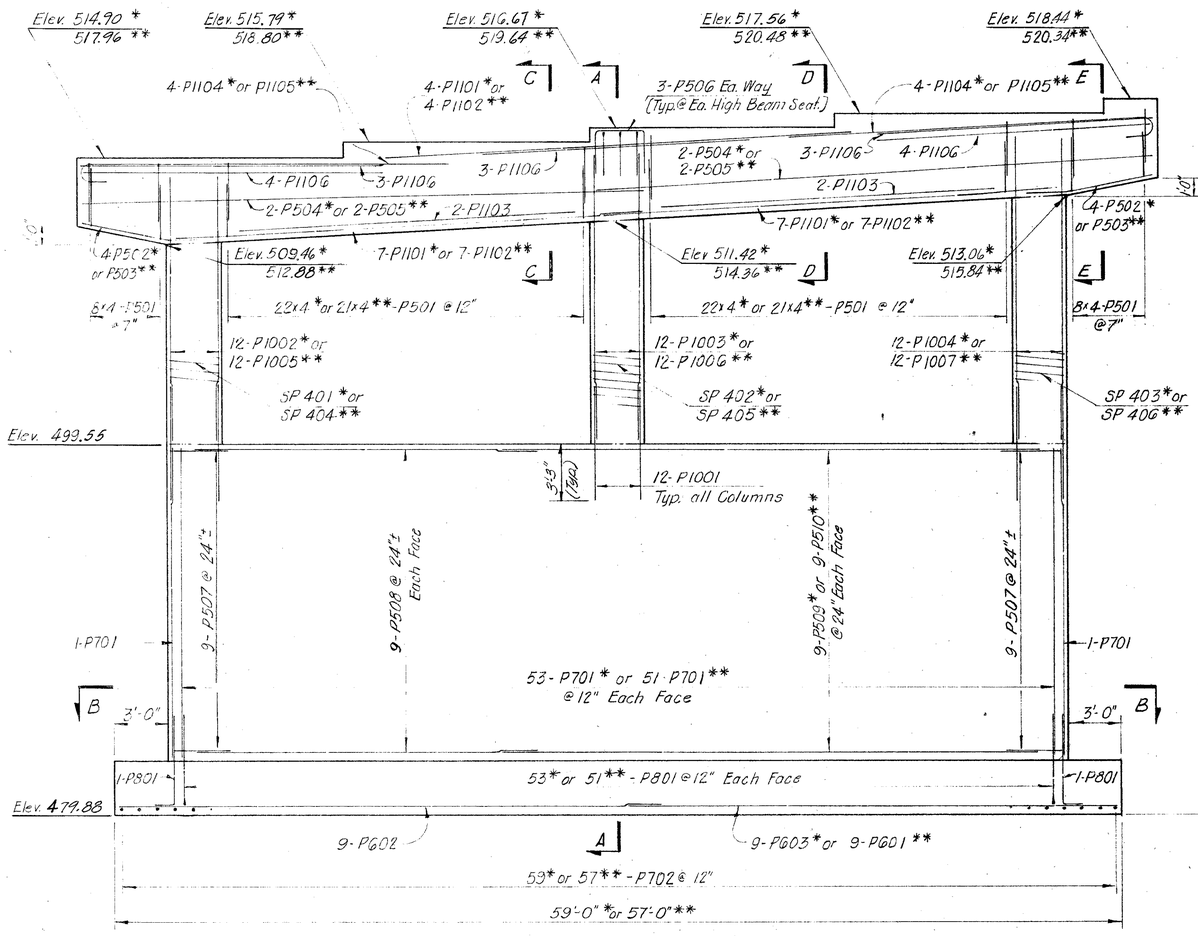

ELEVATION

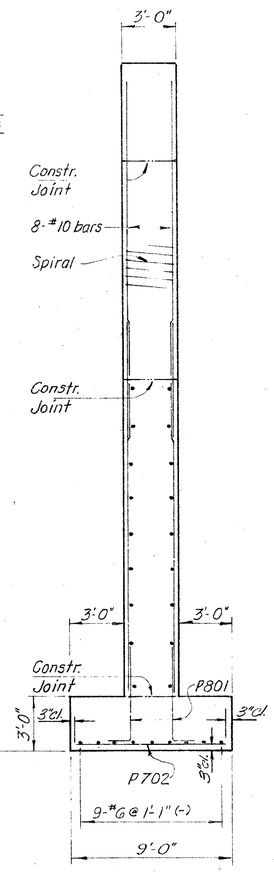

SECTION A-A

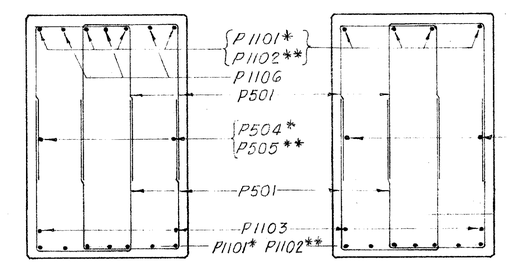

SECTION C-C

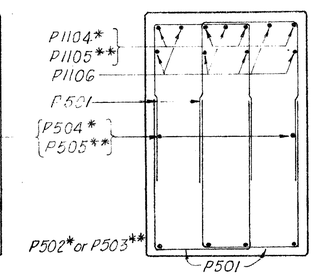

SECTION D-D

SECTION E-E

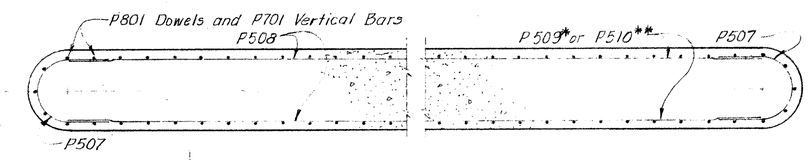

SECTION B-B

NOTES

All dimensions, elevations, & bar marks shown are for both left & right piers, except those with an * are for the left pier only and those with ** are for the right pier only. This note applies to this sheet only.

For Working Point Location, see Girder Layout Sheet 11/18

8/18

VOGT, IVERS, & ASSOCIATES
ENGINEERS CINCINNATI
ARCHITECTS CHICAGO

PIER NO. 1 LEFT & RIGHT

BRIDGE NO. HAM 275 0036 L/R
F.A.I. ROUTE 275
OVER U.S. 50 & PENN CENTRAL CO.
HAMILTON COUNTY STA. 20+26.50

DESIGNED	DRAWN	TRACED	CHECKED	REVIEWED	DATE	REVISED
S.C.	S.C.	D.W.M	J.R.P.	[illegible]	7-11-69	

FED. RD. DIVISION	STATE	PROJECT	TYPE FUNDS
2	OHIO		

236/302

HAM – 275–0.00

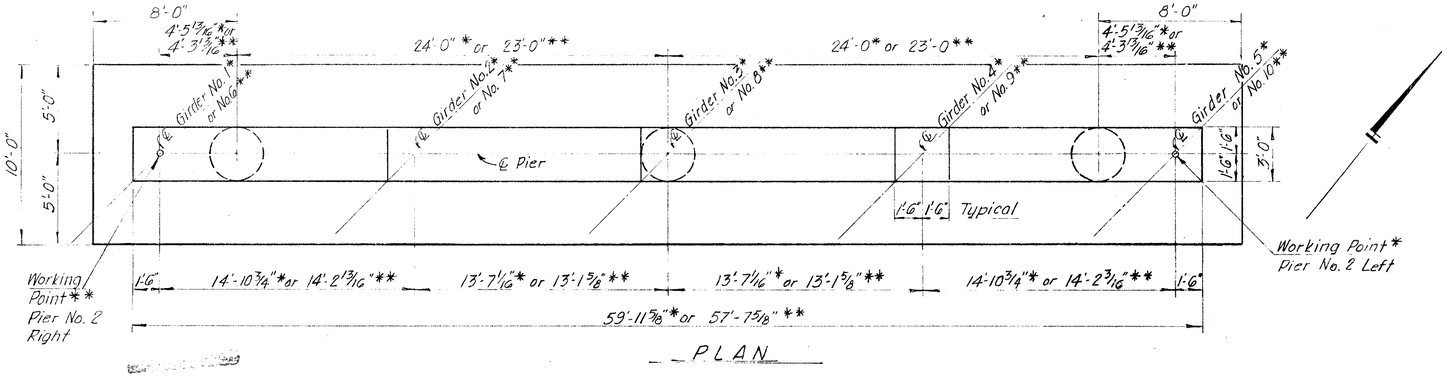

PLAN

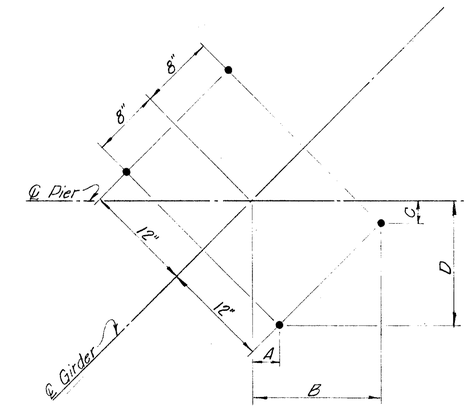

ANCHOR BOLT LAYOUT ~ PIER NO. 2 ONLY

DIMENSIONS				
LOCATION	A	B	C	D
Girder No. 1 & 2	2 3/16"	1'-2 1/16"	3 5/16"	1'-2 1/4"
Girder No. 3	2 1/8"	1'-2 1/16"	3 1/16"	1'-2 3/16"
Girder No. 4 & 5	2 11/16"	1'-2 1/8"	3"	1'-2 3/16"
Girder Nos. 6 & 7	2 9/16"	1'-2 3/16"	2 11/16"	1'-2 1/8"
Girder No. 8	3 1/16"	1'-2 3/16"	2 9/16"	1'-2 1/16"
Girder Nos. 9 & 10	3 3/16"	1'-2 3/16"	2 7/16"	1'-2 1/16"

NOTE:

BRIDGE SEAT REINFORCING: Special care shall be taken in placing reinforcing steel in the vicinity of the bridge seat so as to avoid interference with the drilling of anchor bar (bolt) holes at Pier No. 2.

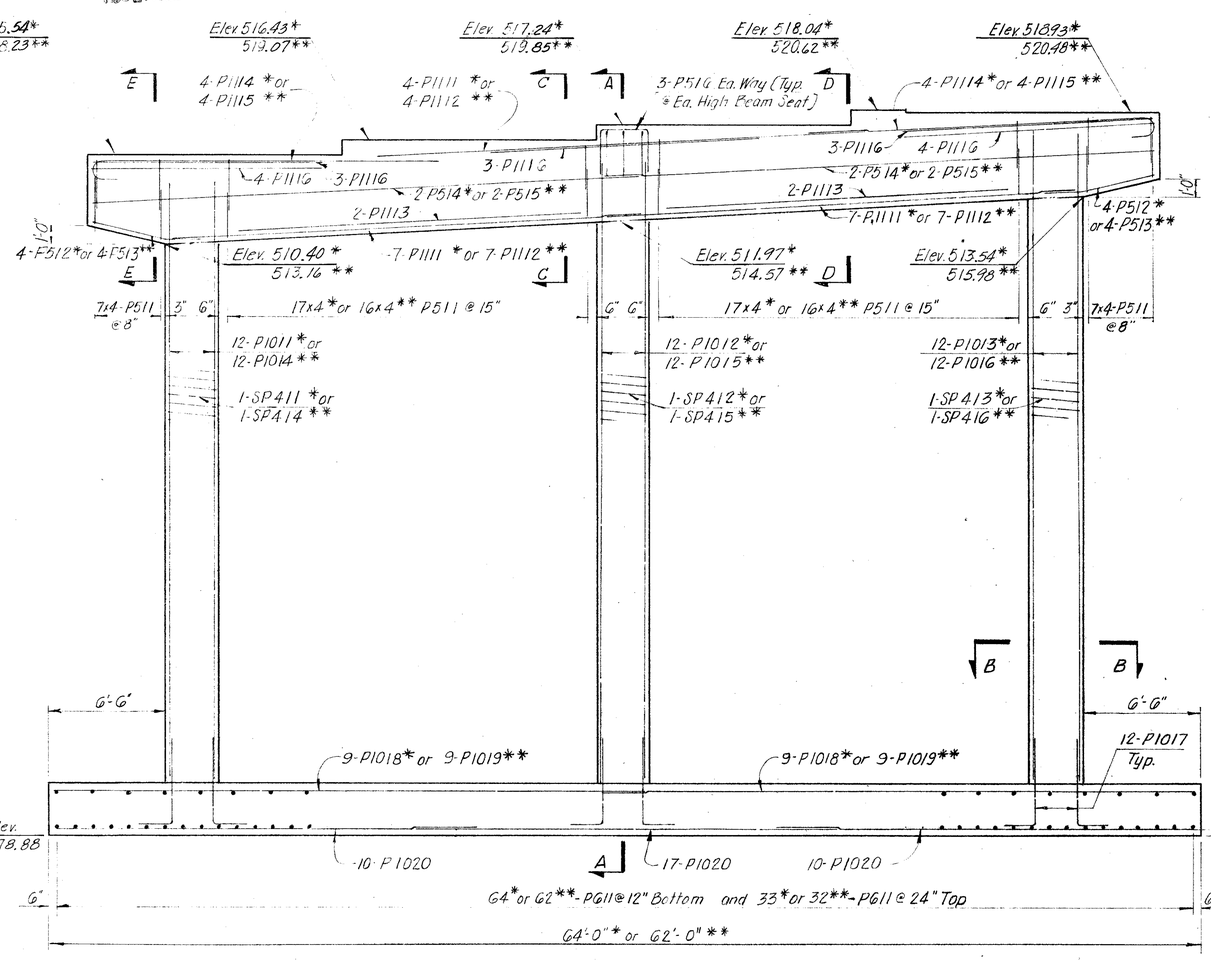

ELEVATION

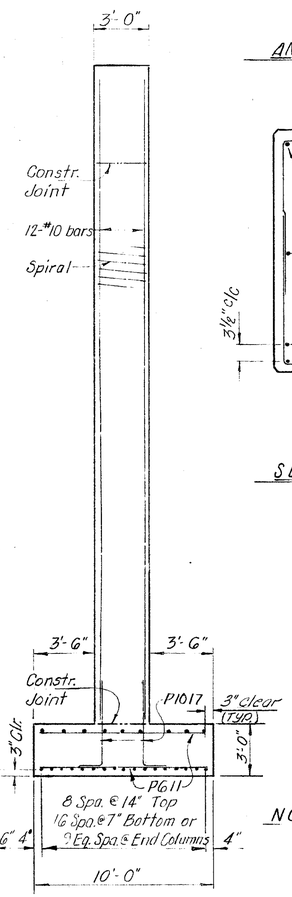

SECTION A-A

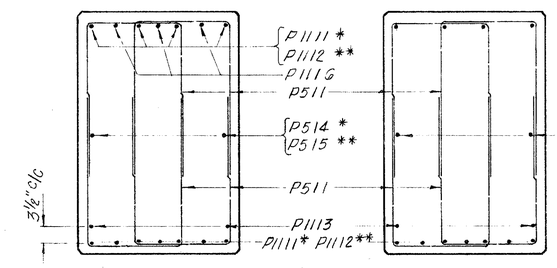

SECTION C-C

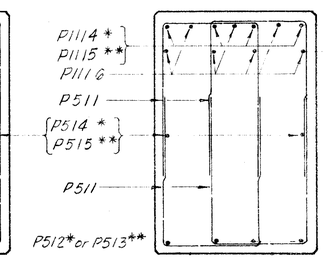

SECTION D-D

SECTION E-E

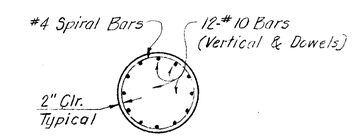

SECTION B-B

NOTES

All dimensions, elevations and bar marks shown are for both left & right piers except those with an * are for the left pier only, and those with ** are for the right pier only. This note applies to this sheet only.

For Working Point Location, see Girder Layout Sheet 11/18

9/18

VOGT, IVERS, & ASSOCIATES
ENGINEERS CINCINNATI — ARCHITECTS CHICAGO

PIER NO. 2 LEFT & RIGHT

BRIDGE NO. HAM-275-0036 L/R
F.A.I. ROUTE 275
OVER U. S. 50 & PENN CENTRAL CO.
HAMILTON COUNTY STA. 20+26.50

DESIGNED	DRAWN	TRACED	CHECKED	REVIEWED	DATE	REVISED
S.C.	S.C.	D.W.M	J.R.P.	[illegible]	7-11-69	

FED. RD. DIVISION	STATE	PROJECT	TYPE FUNDS
2	OHIO		

237/302

HAM-275-0.00

NOTES

All dimensions, elevations, and bar marks shown are for both left & right piers, except those with an * are for the left pier only and those with ** are for the right pier only. This note applies to this sheet only.

For Working Point Location, see Girder Layout Sheet 11/18

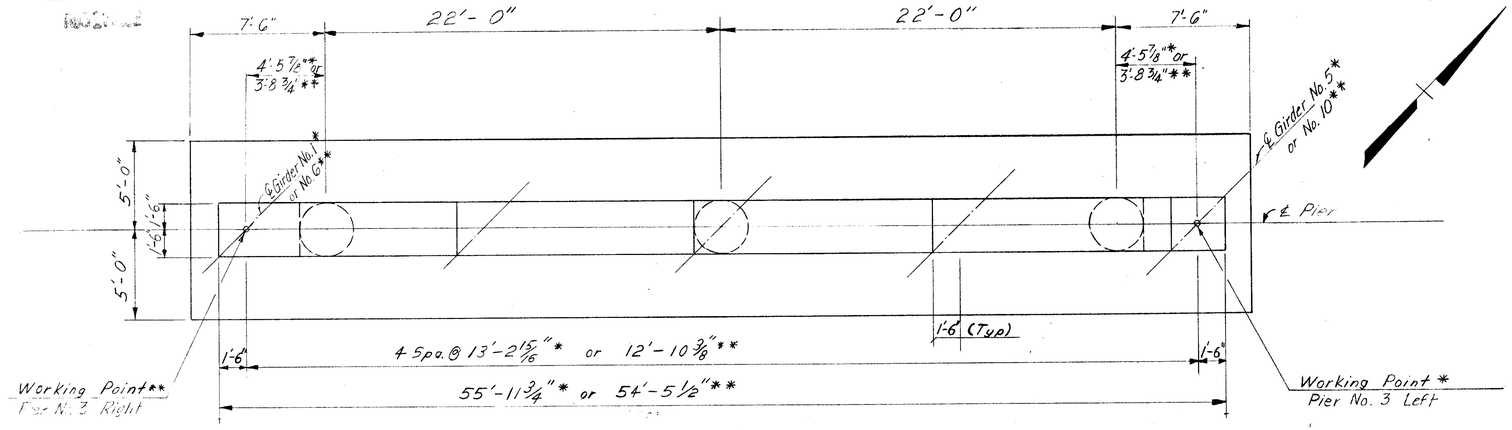

PLAN

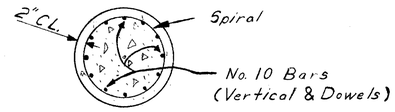

SECTION E-E

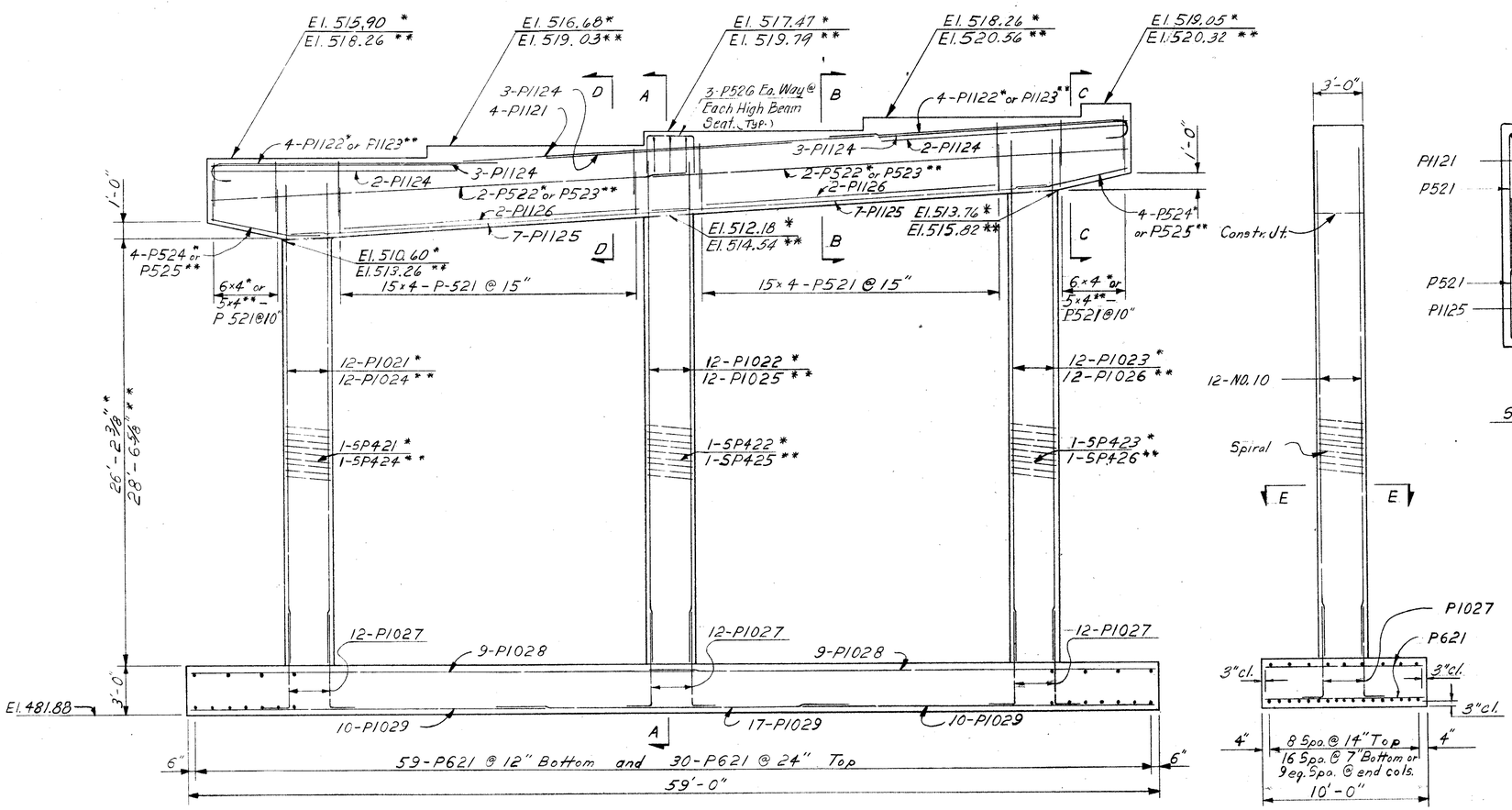

ELEVATION

SECTION A-A

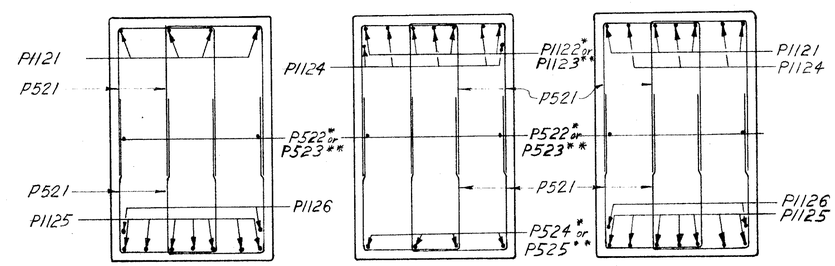

SECTION B-B

SECTION C-C

SECTION D-D

10/18

VOGT, IVERS, & ASSOCIATES
ENGINEERS CINCINNATI
ARCHITECTS CHICAGO

PIER NO. 3 LEFT & RIGHT

BRIDGE NO. HAM-275-0036 L/R
F.A.I. ROUTE 275
OVER U.S. 50 & PENN CENTRAL CO.

HAMILTON COUNTY STA. 20+26.50

DESIGNED	DRAWN	TRACED	CHECKED	REVIEWED	DATE	REVISED
S.C.	S.C.	W.G.	J.R.P.	[illegible]	7-11-69	

FED. RD. DIVISION	STATE	PROJECT	TYPE FUNDS
2	OHIO		

238/302

HAM - 275 - 0.00

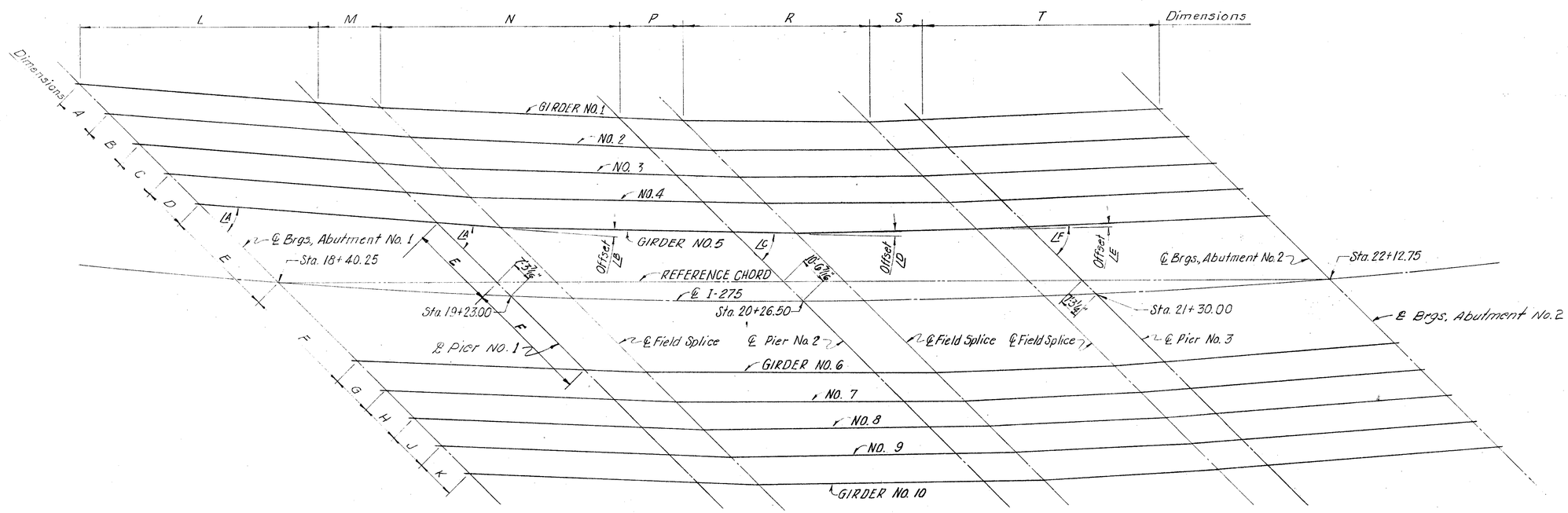

GIRDER LAYOUT

LOCATION	DIMENSIONS							ANGLES					
	L	M	N	P	R	S	T	∠A	∠B	∠C	∠D	∠E	∠E
Girder No. 1	84'-4 7/8"	22'-9 3/4"	84'-1 5/16"	21'-11 3/8"	65'-5"	20'-0 1/8"	83'-8 5/8"	41°06'44"	1°59'33"	43°06'17"	1°15'21"	4°12'33"	48°34'11"
Girder No. 2	84'-4 7/8"	22'-9 3/4"	84'-1 3/16"	21'-11 3/8"	64'-2 7/8"	20'-0 1/8"	83'-8 5/8"	41°06'44"	1°59'33"	43°06'17"	2°17'15"	3°10'39"	48°34'11"
Girder No. 3	84'-4 7/8"	22'-9 3/4"	83'-1 1/8"	21'-8 3/8"	64'-2 1/8"	20'-0 1/8"	83'-8 5/8"	41°06'44"	2°36'37"	43°43'21"	1°40'11"	3°10'39"	48°34'11"
Girder No. 4	84'-4 7/8"	22'-9 3/4"	82'-2 9/16"	21'-5 7/16"	64'-2 1/8"	20'-0 1/8"	83'-8 5/8"	41°06'44"	3°14'31"	44°21'15"	1°02'17"	3°10'39"	48°34'11"
Girder No. 5	84'-4 7/8"	22'-9 3/4"	82'-2 9/16"	21'-5 7/16"	63'-1 1/8"	20'-0 1/8"	83'-8 5/8"	41°06'44"	3°14'31"	44°21'15"	2°06'27"	2°06'29"	48°34'11"
Along Ref. Chord	77'-5 15/16"	Included with N	101'-2 3/8"	Included with R	105'-9"	Included with R	87'-7 3/4"	45°44'19"	0	45°44'19"	0	0	45°44'19"
Girder No. 6	80'-5 1/16"	21'-8 13/16"	80'-7 9/16"	21'-0 1/2"	62'-10 1/8"	19'-5 1/8"	81'-6 9/16"	43°38'19"	1°49'40"	45°27'59"	1°13'59"	3°37'47"	50°19'45"
Girder No. 7	80'-5 1/16"	21'-8 13/16"	80'-7 9/16"	21'-0 1/2"	61'-11 3/8"	19'-5 1/8"	81'-6 9/16"	43°38'19"	1°49'40"	45°27'59"	2°07'16"	2°44'30"	50°19'45"
Girder No. 8	80'-5 1/16"	21'-8 13/16"	79'-10 13/16"	20'-10 3/16"	61'-11 3/8"	19'-5 1/8"	81'-6 9/16"	43°38'19"	2°21'45"	46°00'04"	1°35'11"	2°44'30"	50°19'45"
Girder No. 9	80'-5 1/16"	21'-8 13/16"	79'-2 1/8"	20'-7 15/16"	61'-11 3/8"	19'-5 1/8"	81'-6 9/16"	43°38'19"	2°54'25"	46°32'44"	1°02'31"	2°44'30"	50°19'45"
Girder No. 10	80'-5 1/16"	21'-8 13/16"	79'-2 1/8"	20'-7 15/16"	61'-0 3/4"	19'-5 1/8"	81'-6 9/16"	43°38'19"	2°54'25"	46°32'44"	1°57'20"	1°49'41"	50°19'45"

LOCATION	DIMENSIONS									
	A	B	C	D	E	F	G	H	J	K
℄ Brgs, Abut. No. 1	14'-10 3/4"	14'-10 3/4"	14'-10 3/4"	14'-10 3/4"	39'-7 3/16"	39'-3 1/8"	14'-2 3/16"	14'-2 3/16"	14'-2 3/16"	14'-2 3/16"
℄ Pier No. 1	14'-10 3/4"	14'-10 3/4"	14'-10 3/4"	14'-10 3/4"	30'-1 1/8"	43'-4 7/16"	14'-2 3/16"	14'-2 3/16"	14'-2 3/16"	14'-2 3/16"
℄ Pier No. 2	14'-10 3/4"	13'-7 1/16"	13'-7 1/16"	14'-10 3/4"	24'-9"	45'-0 1/4"	14'-2 3/16"	13'-1 5/8"	13'-1 5/8"	14'-2 3/16"
℄ Pier No. 3	13'-2 15/16"	13'-2 15/16"	13'-2 15/16"	13'-2 15/16"	26'-6 1/4"	41'-6 1/8"	12'-10 3/8"	12'-10 3/8"	12'-10 3/8"	12'-10 3/8"
℄ Brgs, Abut. No. 2	13'-2 15/16"	13'-2 15/16"	13'-2 15/16"	13'-2 15/16"	32'-3 1/2"	32'-4 3/4"	12'-10 3/8"	12'-10 3/8"	12'-10 3/8"	12'-10 3/8"

11/18

VOGT, IVERS, & ASSOCIATES
ENGINEERS — CINCINNATI
ARCHITECTS — CHICAGO

GIRDER LAYOUT

BRIDGE NO. HAM-275-0036 L/R
F.A.I. ROUTE 275
OVER U.S. 50 & PENN CENTRAL CO.
HAMILTON COUNTY — STA. 20+26.50

DESIGNED	DRAWN	TRACED	CHECKED	REVIEWED	DATE	REVISED
S.C.	S.C.	D.W.M	V.K.		7-11-69	

FED. RD. DIVISION	STATE	PROJECT	TYPE FUNDS
2	OHIO		

239/302

HAM - 275 - 0.00

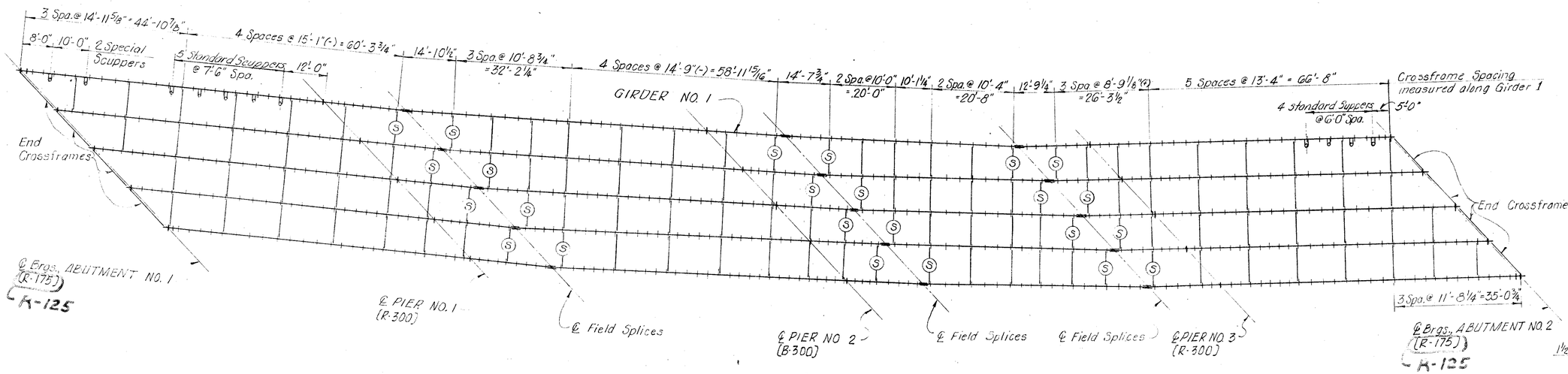

FRAMING PLAN ~ LEFT BRIDGE

NOTES:

(S) indicates special crossframes.

For special crossframes & end crossframes details, see sheet 14/18.

For Intermediate crossframes details, see sheet 15/18.

For Rockers and Expanders details, see Std. Dwg RB-1-55.

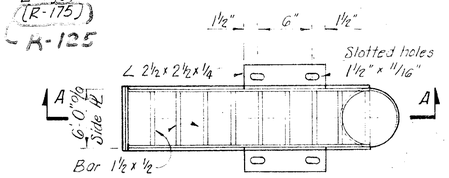

PLAN

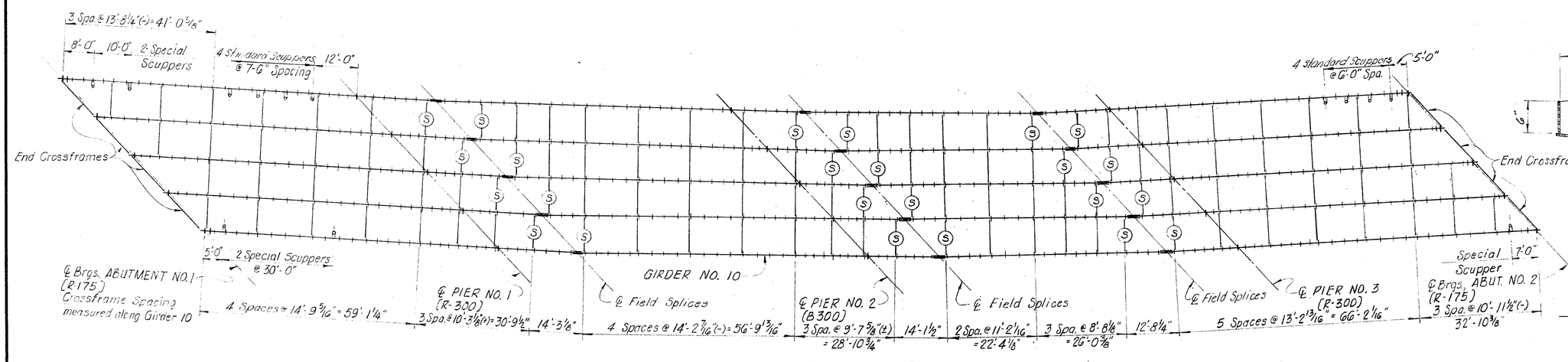

FRAMING PLAN ~ RIGHT BRIDGE

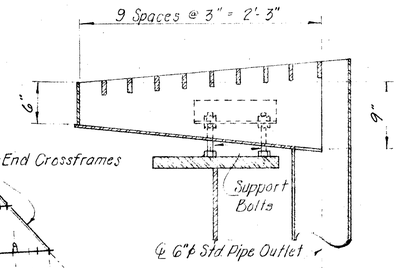

SECTION A-A

For more details, see Std. Drawing SD-1-69, sheet 3 and Sheet No. 279 A/302.

SPECIAL SCUPPER

12/18

VOGT, IVERS, & ASSOCIATES
ENGINEERS CINCINNATI — ARCHITECTS CHICAGO

FRAMING PLAN

BRIDGE NO. HAM-275-0036 L/R
F.A.I. ROUTE 275
OVER U.S. 50 & PENN CENTRAL CO.
HAMILTON COUNTY — STA. 20+26.50

DESIGNED	DRAWN	TRACED	CHECKED	REVIEWED	DATE	REVISED
V.K.	V.K.	D.W.M	S.C.		7-11-69	3-22-76

FED. RD. DIVISION	STATE	PROJECT	TYPE FUNDS
2	OHIO		

240
302

HAM - 275-0.00

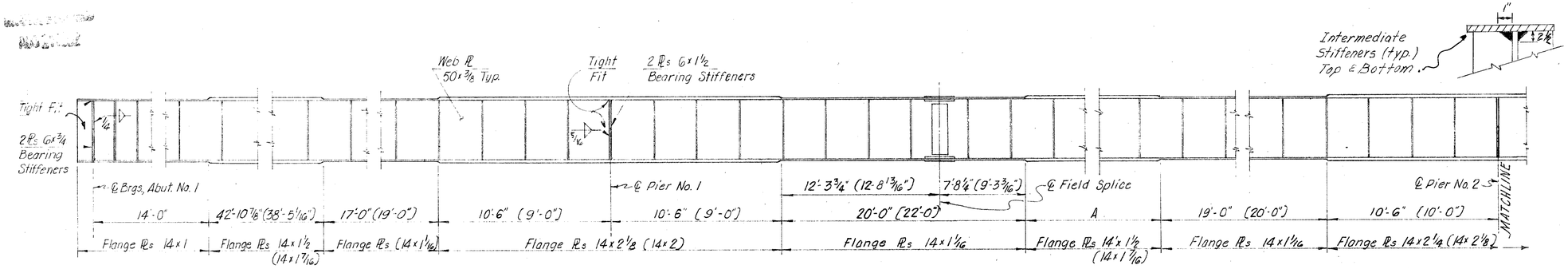

NOTE:
Dimensions shown are typical for all girders except as shown thus ( ) which are for girders 6 thru 10 only.

* Size of fillet welds shall be as follows:
5/16" for over 3/4" to 1 1/2" thick flange plates.
3/8" for over 1 1/2" to 2 1/4" thick flange plates.

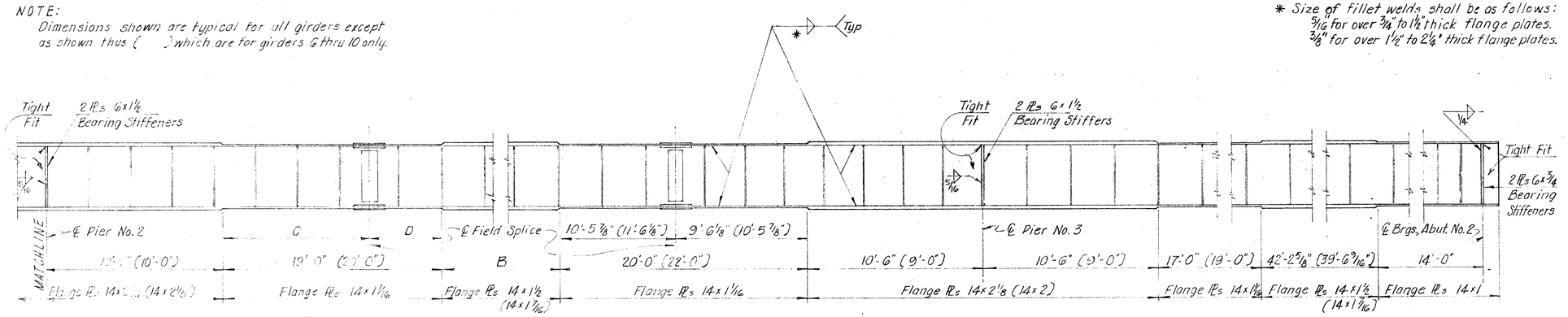

GIRDER ELEVATION
TYPICAL FOR ALL GIRDERS

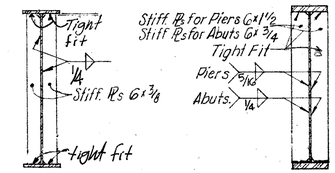

INTERMEDIATE STIFFENERS — BEARING STIFFENERS

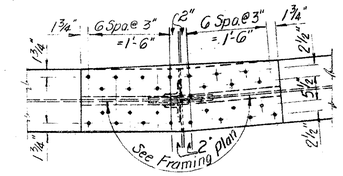

PLAN

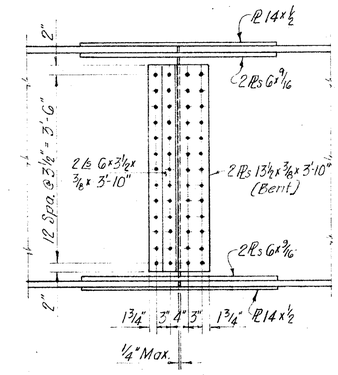

ELEVATION

TYPICAL FIELD SPLICE DETAILS
High Strength Bolts shall be 7/8" diameter.

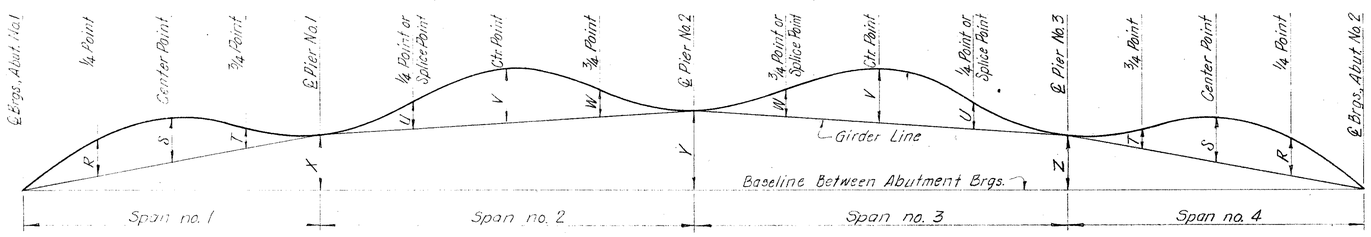

CAMBER DIAGRAM

DEFLECTION AND CAMBER

LOCATION / DESCRIPTION	GIRDERS 1 THROUGH 9						GIRDER 10					
	Span No. 1 or 4			Span no. 2 or 3			Span no. 1 or 4			Span no. 2 or 3		
	1/4 Pt.	Center Pt.	3/4 Pt.	1/4 Pt.	Center Pt.	3/4 Pt.	1/4 Pt.	Center Pt.	3/4 Pt.	1/4 Pt.	Center Pt.	3/4 Pt.
Deflection Due to Weight of Steel	11/16	1/8	11/16	11/16	1/8	11/16	11/16	1/8	11/16	11/16	1/8	11/16
Deflection Due to Remaining D.L.	7/16	1/2	3/16	5/16	5/8	5/16	7/16	1/2	3/16	5/16	5/8	5/16
Adjustment Req'd. for Vertical Curve	1/4	3/8	1/4	3/8	1/2	3/8	1/4	3/8	1/4	3/8	1/2	3/8
Adjustment Req'd for Horizontal Curve	-1/4	-3/8	-1/4	-3/8	-1/2	-3/8	1/8	1/4	1/8	1/8	1/4	1/8
Req'd Shop Camber	1/2	5/8	1/4	3/8	3/4	3/8	7/8	1 1/4	5/8	7/8	1 1/2	7/8

GIRDER DIMENSIONS

Girder No.	A	B	C	D	X	Y	Z
1	46'-11 1/16"	47'-4 1/2"	11'-5 3/8"	7'-6 5/8"	4 3/16"	6 15/16"	5 15/16"
2	46'-11 1/16"	46'-2 3/8"	11'-5 3/8"	7'-6 5/8"	4 3/16"	7 7/16"	5 5/8"
3	45'-11 5/8"	45'-11 3/8"	11'-2 3/8"	7'-9 3/8"	4 11/16"	7 1/8"	5 3/8"
4	45'-0 5/16"	45'-8 7/16"	10'-11 1/16"	8'-0 9/16"	4 5/16"	6 3/4"	5 1/16"
5	45'-0 5/16"	44'-6 1/16"	10'-11 1/16"	8'-0 9/16"	5 3/16"	7 5/16"	4 13/16"
6	41'-4 3/8"	42'-4 1/2"	11'-0 1/2"	8'-11 1/2"	3 1/2"	5 3/8"	4 3/4"
7	41'-4 3/8"	41'-5 3/4"	11'-0 1/2"	8'-11 1/2"	3 11/16"	6 1/16"	4 9/16"
8	40'-7 3/8"	41'-3 7/16"	10'-10 3/16"	9'-1 13/16"	3 15/16"	5 3/4"	4 3/8"
9	39'-10 15/16"	41'-1 3/16"	10'-7 15/16"	9'-4 1/16"	4 1/8"	5 1/2"	4 3/16"
10	39'-10 15/16"	40'-2 9/16"	10'-7 15/16"	9'-4 1/16"	4 3/16"	6 1/8"	4 5/16"

13 / 18

VOGT, IVERS, & ASSOCIATES
ENGINEERS — ARCHITECTS
CINCINNATI — CHICAGO

GIRDER DETAILS

BRIDGE NO. HAM-275-0036 L/R
F.A.I. ROUTE 275
OVER U. S. 50 & PENN CENTRAL CO.
HAMILTON COUNTY — STA. 20+26.50

DESIGNED	DRAWN	TRACED	CHECKED	REVIEWED	DATE	REVISED
S. C.	D-W-M	D-W-M	V. K.	[illegible]	7-11-69	

FED. RD. DIVISION	STATE	PROJECT	TYPE FUNDS
2	OHIO		

241 / 302

HAM - 275 - 0.00

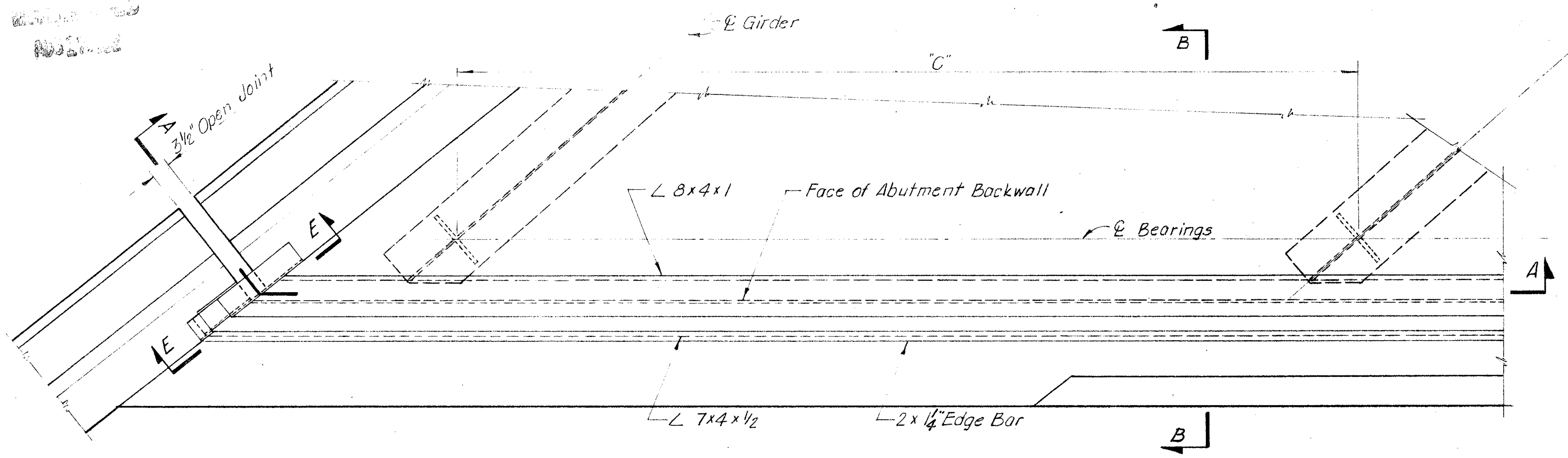

PART PLAN ~ END DAM

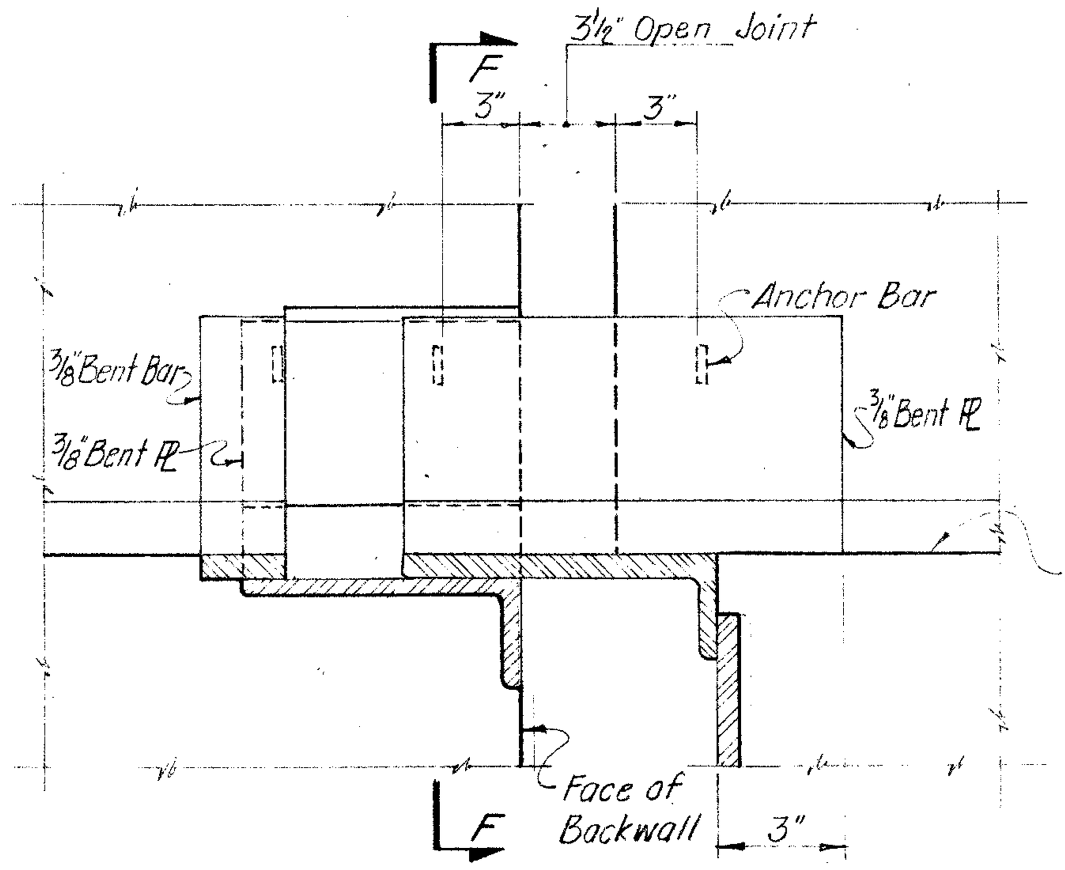

SECTION E~E

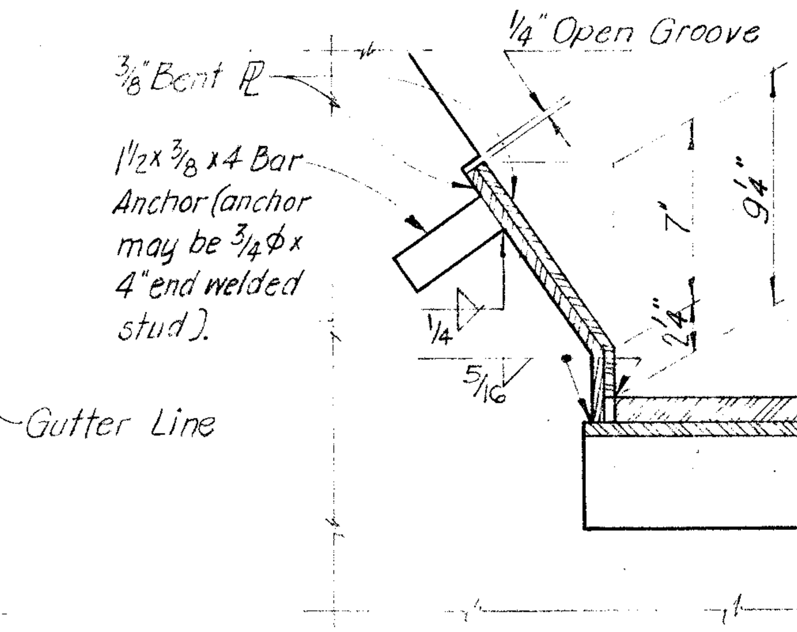

SECTION F~F

CURB DETAILS

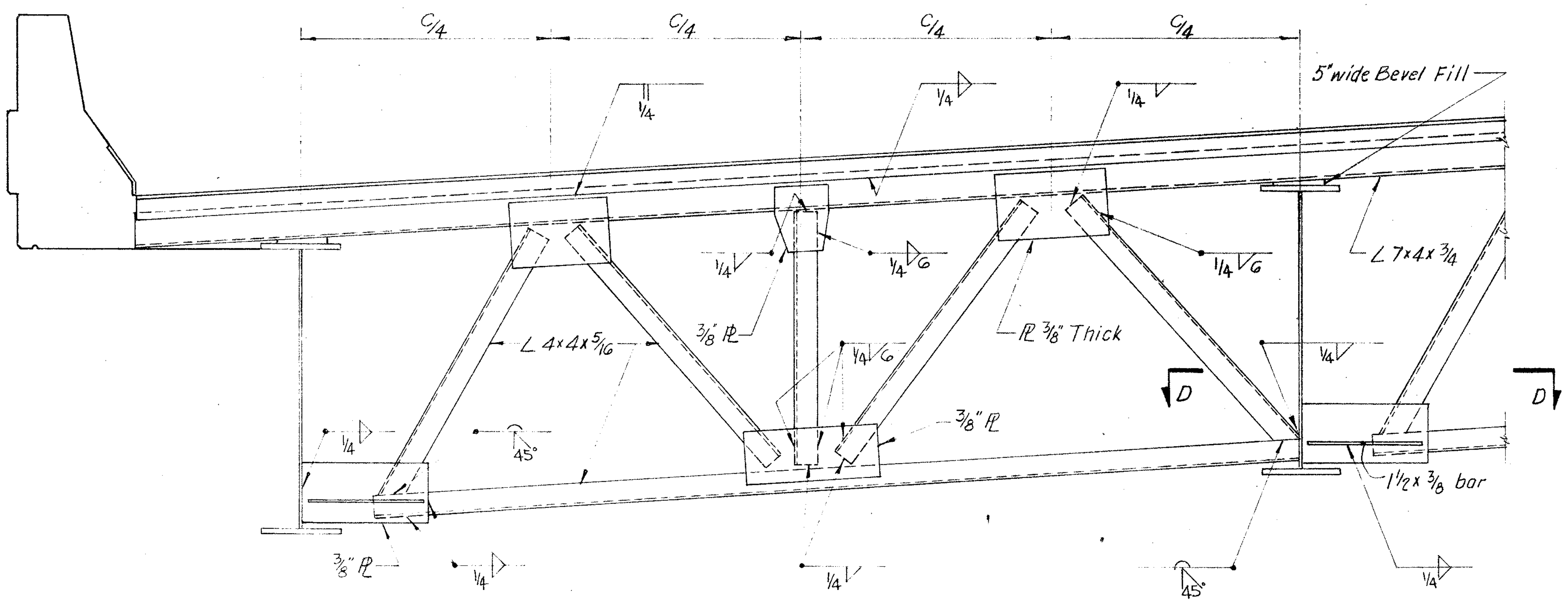

SECTION A - A ~ TYPICAL END CROSSFRAME

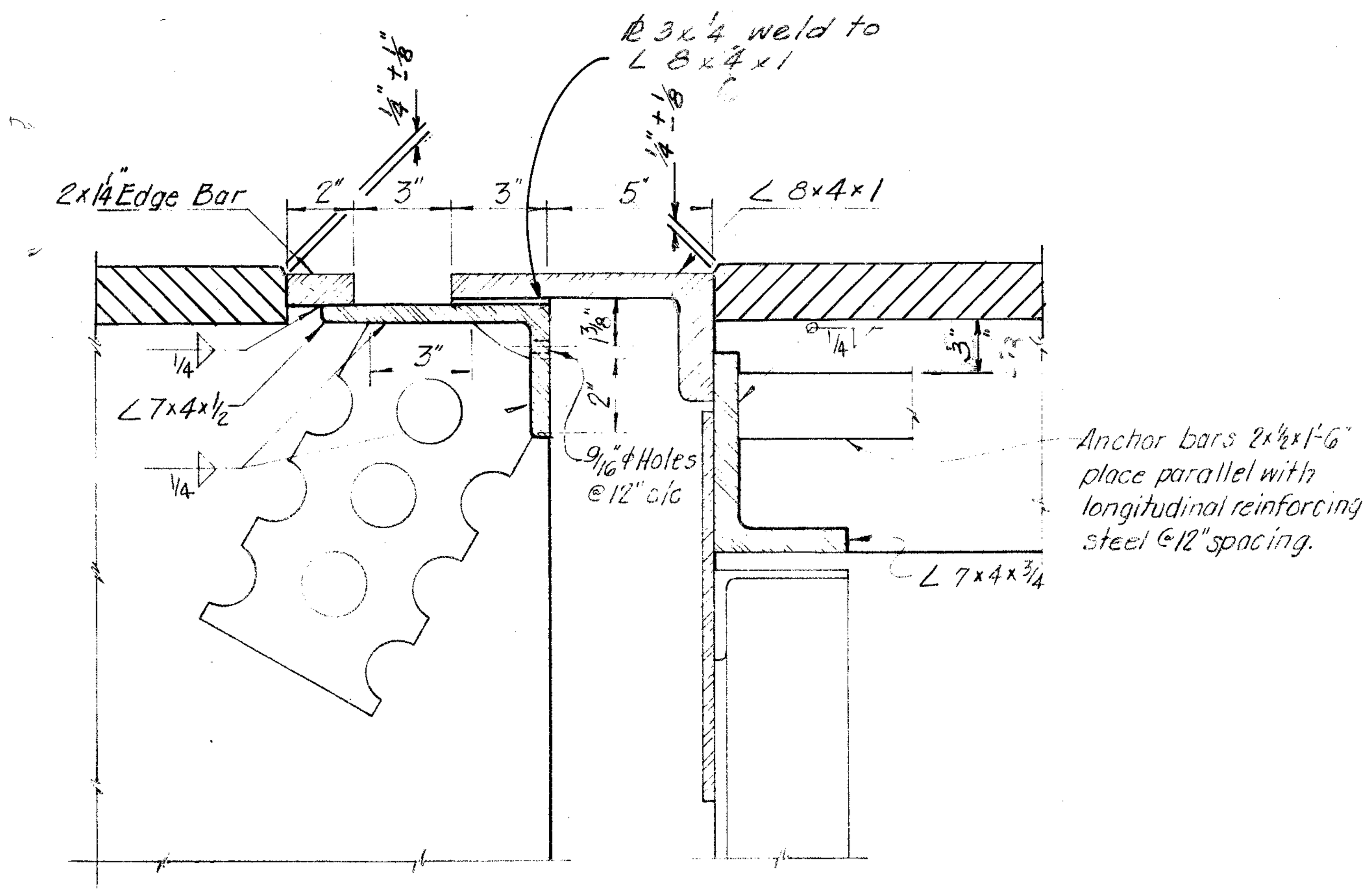

SECTION B - B

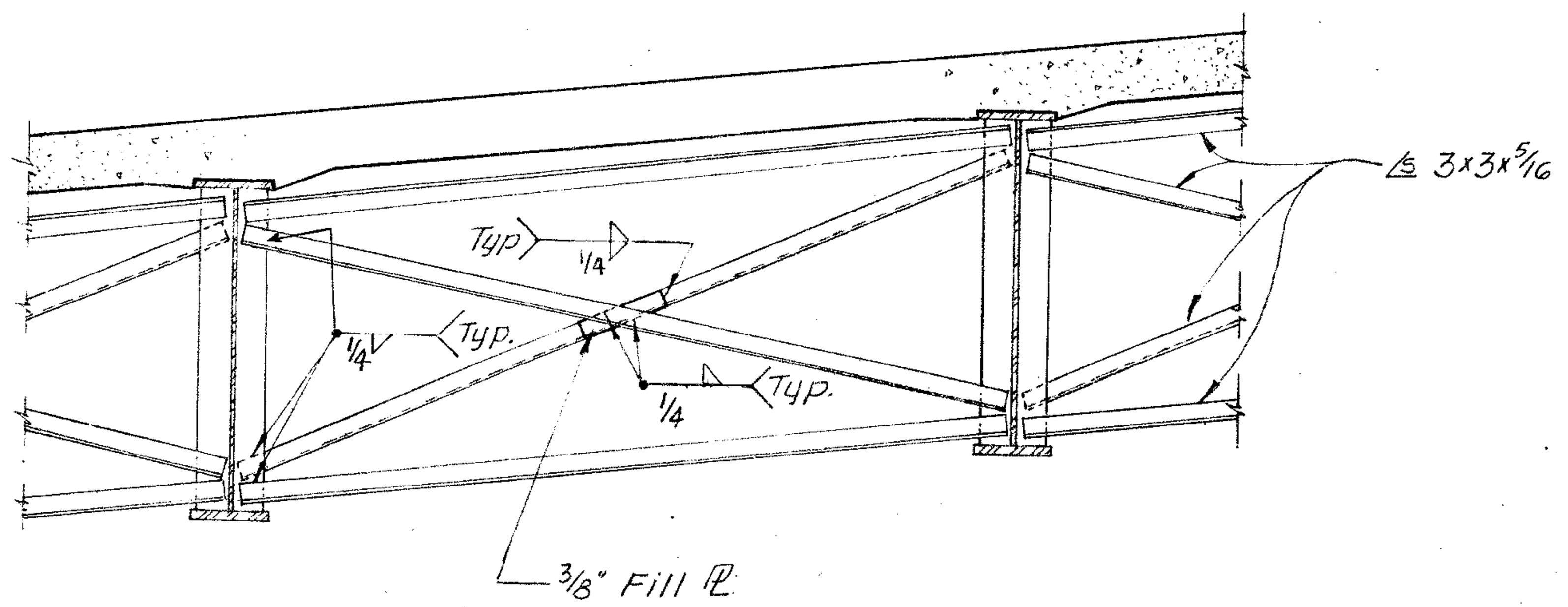

SPECIAL CROSSFRAME

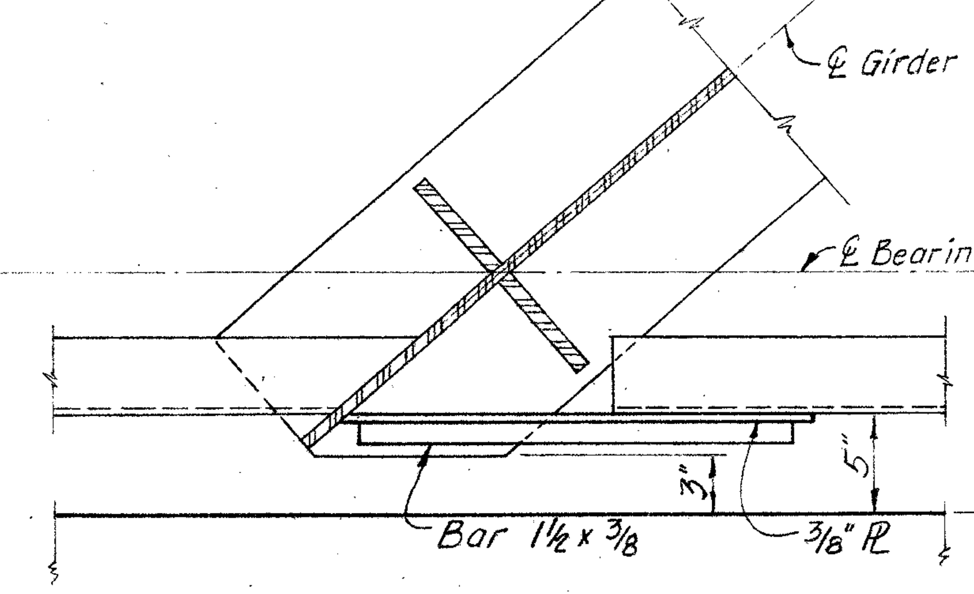

SECTION D~D

NOTES:
For dimension "C", see Girder Layout.

For additional details & notes, see Std. Dwg. SD-1-69 sheet 1 of 4.

REV 6-5-75

14 / 18

VOGT, IVERS, & ASSOCIATES
ENGINEERS ARCHITECTS
CINCINNATI CHICAGO

SUPERSTRUCTURE DETAILS

BRIDGE NO. HAM-275-0036 L/R
F.A.I. ROUTE 275
OVER U. S. 50 & PENN CENTRAL CO.

HAMILTON COUNTY STA. 20+26.50

DESIGNED	DRAWN	TRACED	CHECKED	REVIEWED	DATE	REVISED
V. K.	V. K.	D·W·M	S.C.	GEE	7·11·69	

FED. RD. DIVISION	STATE	PROJECT	TYPE FUNDS
2	OHIO		

242/302

HAM - 275 - 0.00

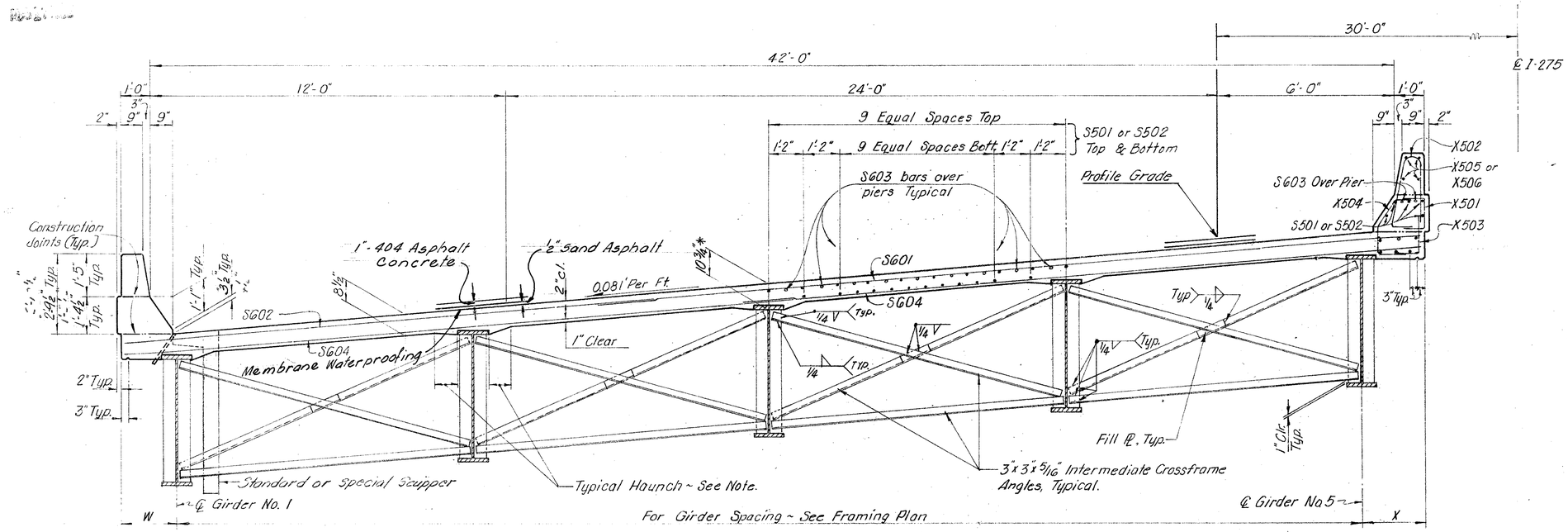

TRANSVERSE SECTION ~ LEFT BRIDGE

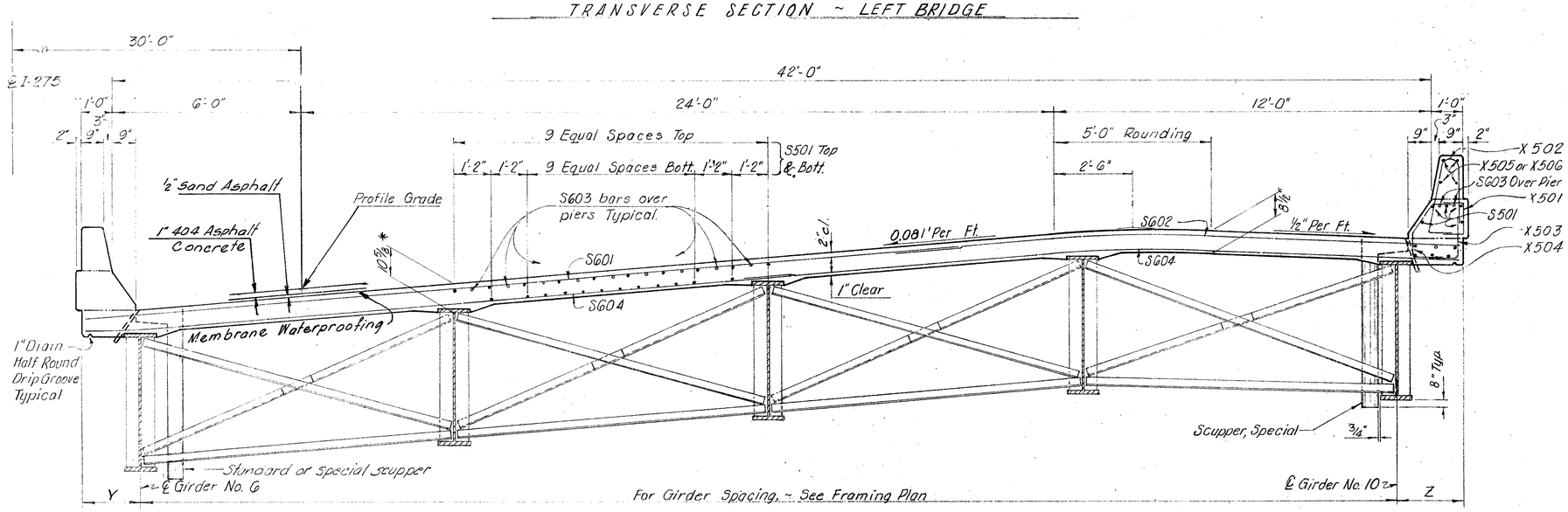

TRANSVERSE SECTION ~ RIGHT BRIDGE

NOTES

* This is the design dimension. The quantity of deck concrete to be paid for shall be based upon this dimension, even though deviation from it may be necessary because the top flange of the girder may not have the exact camber or conformation required to place it parallel to the finished grade. Deduction shall be made for volume of encased steel plates as per 511.19.

A HAUNCH WIDTH of 9" shall be used for computing quantity of concrete. However, the haunch width may vary between 6" and 12" provided that the slope shall not be more than 1:4 for a haunch less than 9" in width.

Structural subdrainage tubing shall be used as shown in right and left bridge transverse section along the full length of the bridge. For additional details see deck drainage details sht. 279A/302

DECK FINISHING: Texturing of the deck surface as provided in 451.09 shall not be done.

DIMENSIONS				
LOCATION	W	X	Y	Z
℄ Brgs. Abut. No. 1	3'-0¾"	2'-10"	2'-11⅞"	2'-9⅝"
℄ Pier No. 1	1'-9½"	2'-4⅞"	1'-10"	2'-6½"
℄ Pier No. 2	1'-10¼"	2'-1¾"	1'-9⅞"	2'-4⅛"
℄ Pier No. 3	2'-1¼"	2'-1½"	2'-8⅜"	2'-3⅜"
℄ Brgs. Abut. No. 2	2'-0"	1'-9"	1'-11⅞"	2'-0¼"

15/18

VOGT, IVERS, & ASSOCIATES
ENGINEERS ARCHITECTS
CINCINNATI CHICAGO

TRANSVERSE SECTIONS

BRIDGE NO. HAM-275-0036 0397 L/R

F.A.I. ROUTE 275

OVER U. S. 50 & PENN CENTRAL CO.

HAMILTON COUNTY STA. 20+26.50

DESIGNED	DRAWN	TRACED	CHECKED	REVIEWED	DATE	REVISED
S.C.	D.W.M	--	V.K.	[illegible]	7-11-69	

REV. 12-5-75

FED. RD. DIVISION	STATE	PROJECT	TYPE FUNDS
2	OHIO		

243 / 302

HAM-275-0.00

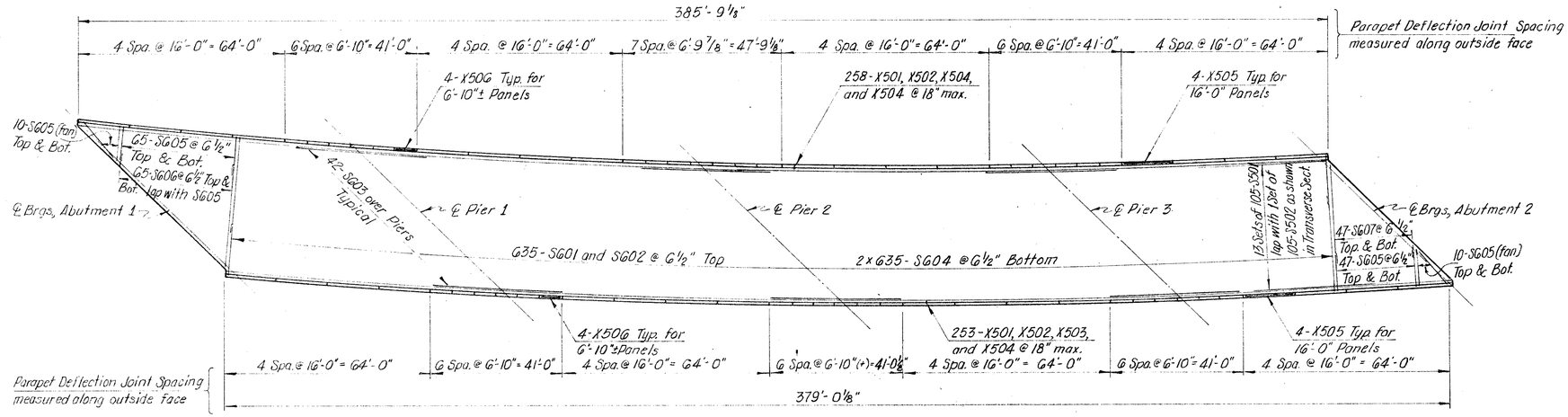

DECK PLAN ~ LEFT BRIDGE

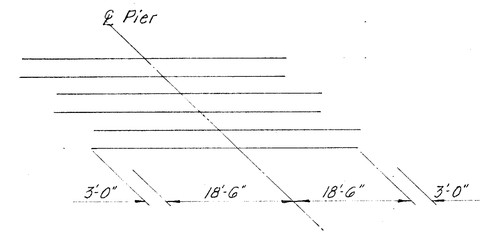

DIAGRAM SHOWING STAGGER SG03 BARS OVER PIERS

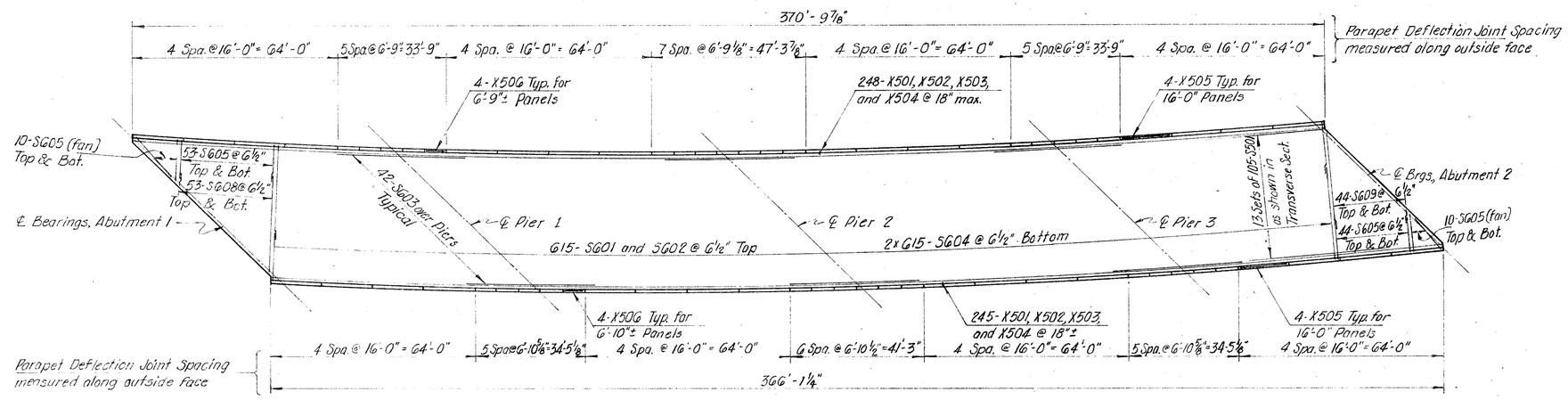

DECK PLAN ~ RIGHT BRIDGE

DECK ELEVATIONS				
LOCATION	LT. BRIDGE		RT. BRIDGE	
	Lt. Curb	Rt. Curb	Lt. Curb	Rt. Curb
℄ Brgs. Abut. 1	520.93	524.70	524.30	526.79
1/4 Point	521.20	524.92	524.48	526.93
Ctr. Point	521.31	525.09	524.61	527.03
3/4 Point	521.58	525.22	524.69	527.08
℄ Pier 1	521.74	525.34	524.77	527.13
1/4 Point	521.97	525.52	524.90	527.23
Ctr. Point	522.17	525.67	525.01	527.30
3/4 Point	522.29	525.76	525.04	527.30
℄ Pier 2	522.39	525.81	525.06	527.29
1/4 Point	522.52	525.90	525.10	527.30
Ctr. Point	522.62	525.96	525.13	527.29
3/4 Point	522.64	525.95	525.08	527.22
℄ Pier 3	522.64	525.92	525.01	527.12
1/4 Point	522.66	525.91	524.97	527.07
Ctr. Point	522.68	525.90	524.93	527.01
3/4 Point	522.65	525.85	524.85	526.90
℄ Brgs. Abut. 2	522.57	525.74	524.72	526.76

The elevations shown are those to which screeds must be set before the concrete is placed. The proper allowance has been made for the anticipated deflection due to the weight of the concrete.

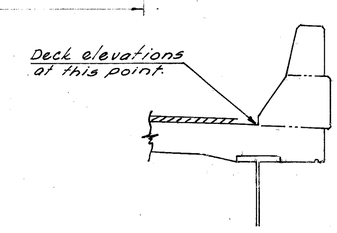

16 / 18

VOGT, IVERS, & ASSOCIATES
ENGINEERS CINCINNATI — ARCHITECTS CHICAGO

DECK DETAILS

BRIDGE NO. HAM-275-0036 L/R
F.A.I. ROUTE 275
OVER U. S. 50 & PENN CENTRAL CO.
HAMILTON COUNTY — STA. 20+26.50

DESIGNED	DRAWN	TRACED	CHECKED	REVIEWED	DATE	REVISED
S.C.	S.C.	D.W.M	V.K.	[illegible]	7-11-69	

REINFORCING STEEL LIST

FED. RD. DIVISION	STATE	PROJECT	TYPE FUNDS
2	OHIO		

244/302

HAM - 275-0.00

BENDING DIAGRAM

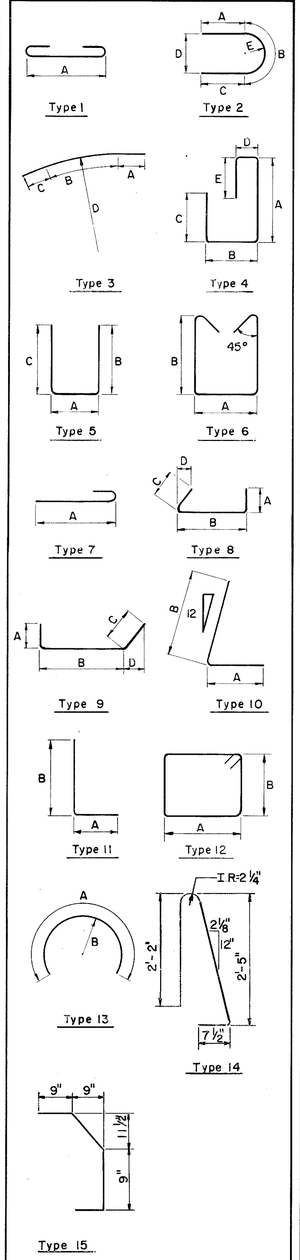

S IN THE COLUMN FOR "TYPE" INDICATES STRAIGHT BARS.

MARK	NO.	LENGTH	WEIGHT	TYPE	A	B	C	D	E
		SUPERSTRUCTURE							
X501	1004	2 - 0	2 094	5	1 - 0	0-7½	0-7½		
X502	1004	5 - 4	5 585	14					
X503	1004	2 - 3	2 356	11	0-7½	1 - 9			
X504	1004	3 - 2	3 316	15					
X505	256	15 - 8	4 183	S					
X506	280	6 - 5	1 874	S					
S501	2730	30 - 0	85 422	S					
S502	105	16 - 0	1 752	S					
S601	1250	28 - 0	52 570	S					
S602	1250	18 - 0	33 795	S					
S603	252	40 - 0	15 140	S					
S604	2500	23 - 0	86 365	S					
S605	498	12 - 0	8 976	S					
S606	130	3-0 to 32-4	3 449	S	2 each, Vary by 5½"				
S607	94	3-6 to 32-3	2 524	S	2 each, Vary by 7½"				
S608	106	3-10 to 32-0	2 852	S	2 each, Vary by 6½"				
S609	88	3-6 to 32-2	2 357	S	2 each, Vary by 8"				
		TOTAL	314 610						

MARK	NO.	LENGTH	WEIGHT	TYPE	A	B	C	D	E
		PIERS							
PIER NO. 1									
P501	472	9'-1"	4472	5	1-10	3-9"	3-9"		
P502	8	6 - 3	52	9	0	4-9	1-7	1-3	
P503	8	6 - 0	50	9	0	4-6	1-7	1-3	
P504	4	32 - 0	134	S					
P505	4	31 - 0	129	S					
P506	42	7 - 5	325	5	2-8	2-6	2-6		
P507	36	6 - 11	260	2	1-7	3-7	1-7	2-4½	1-2¼
P508	36	30 - 0	1 126	S					
P509	18	21 - 6	404	S					
P510	18	19 - 6	366	S					
P601	9	28 - 6	385	S					
P602	18	30 - 0	811	S					
P603	9	30 - 6	412	S					
P701	212	16 - 6	7 150	S					
P702	116	8 - 6	2 015	S					
P801	212	6 - 2	3 491	11	1 - 1	5 - 3			
P1001	72	6 - 6	2 014	S					
P1002	12	3 - 7	701	S					
P1003	12	15 - 0	775	S					
P1004	12	16 - 9	865	S					
P1005	12	16 - 7	856	S					
P1006	12	18 - 0	929	S					
P1007	12	19 - 9	1 020	S					
P1101	18	28 - 0	2 678	S					
P1102	18	27 - 0	2 582	S					
P1103	8	20 - 0	850	S					
P1104	8	22 - 3	946	7	20-8				
P1105	8	21 - 4	907	7	19-9				
P1106	34	15 - 0	2 710	S					
PIER NO. 2.									
P511	376	9' - 1"	3562	5	1 - 10	3-9	3-9		
P512	8	6 - 0	50	9	0	4-6	1-7	1-3	
P513	8	5 - 10	49	9	0	4-4	1-7	1-3	
P514	4	30 - 8	128	S					
P515	4	29 - 6	123	S					
P516	42	7 - 5	325	5	2 - 8	2-6	2-6		
P611	191	9 - 6	2 725	S					
P1011	12	31 - 6	1 627	S					
P1012	12	33 - 5	1 726	S					
P1013	12	35 - 11	1 855	S					
P1014	12	34 - 8	1 790	S					
P1015	12	36 - 0	1 859	S					
P1016	12	37 - 6	1 936	S					
P1017	72	7 - 1	2 195	11	1 - 4/	6 - 0			
P1018	18	33 - 6	2 595	S					
P1019	18	32 - 6	2 517	S					
P1020	74	23 - 5	7 456	S					
P1111	18	27 - 0	2 582	S					
P1112	18	26 - 0	2 486	S					
P1113	8	20 - 0	850	S					
P1114	8	21 - 5	910	7	19-10				
P1115	8	20 - 9	882	7	19-2				

MARK	NO.	LENGTH	WEIGHT	TYPE	A	B	C	D	E
PIER NO. 2. CONT.									
P1116	34	15 - 0	2 710	S					
PIER NO. 3.									
P521	328	9' - 1	3107	5	1 - 10	3 - 9	3 - 9		
P522	4	28 - 8	120	S					
P523	4	27 - 10	116	S					
P524	8	6 - 0	50	9	0	4 - 6	1 - 7	1 - 3	
P525	8	5 - 3	44	9	0	3 - 9	1 - 7	1 - 3	
P526	42	7 - 5	325	5	2 - 8	2 - 6	2 - 6		
P621	178	9 - 6	2 540	S					
P1021	12	29 - 6	1 523	S					
P1022	12	30 - 8	1 584	S					
P1023	12	32 - 3	1 665	S					
P1024	12	31 - 10	1 644	S					
P1025	12	33 - 0	1 704	S					
P1026	12	34 - 3	1 769	S					
P1027	72	7 - 1	2 195	11	1 - 4½	6 - 0			
P1028	36	30 - 10	4 776	S					
P1029	74	21 - 8	6 899	S					
P1121	8	25 - 0	1 063	S					
P1122	8	20 - 5	868	7	18-10				
P1123	8	19 - 8	836	7	18 - 1				
P1124	26	15 - 0	2 072	S					
P1125	28	25 - 0	3 719	S					
P1126	8	17 - 0	723	S					
		SUB TOTAL	121,695						
		SPIRALS	8 147						
		TOTAL	129,842						

NOTES

BAR SIZE is indicated in the bar mark. The first digit where three digits are used, and the first two digits where four are used, indicate the bar size number. For example, A700 is a No. 7 size bar and A1014 is a No. 10 size.

MARK	NO.	LENGTH (HEIGTH)	WEIGHT
SPIRALS - Core Diam. 32" o/o - Pitch 4½" c/c - Other details in accordance with C.R.S.I. standard practice.			
PIER	NO. 1.		
SP401	1	10 - 0	196
SP402	1	11 - 8	225
SP403	1	13 - 5	257
SP404	1	13 - 5	257
SP405	1	14 - 10	282
SP406	1	16 - 2	306
PIER	NO. 2.		
SP411	1	28 - 7	528
SP412	1	30 - 1	555
SP413	1	31 - 7	582
SP414	1	31 - 4	578
SP415	1	32 - 8	601
SP416	1	34 - 0	625
PIER	NO. 3.		
SP421	1	25 - 9	478
SP422	1	27 - 3	504
SP423	1	28 - 9	531
SP424	1	28 - 5	525
SP425	1	29 - 8	548
SP426	1	30 - 10	569
	TOTAL SPIRAL		8147

17/18

VOGT, IVERS, & ASSOCIATES
ENGINEERS CINCINNATI — ARCHITECTS CHICAGO

REINFORCING STEEL LIST

BRIDGE NO. HAM-275-0036 L/R
F.A.I ROUTE 275
OVER U. S. 50 & PENN CENTRAL CO.

HAMILTON COUNTY — STA. 20+26.50

DESIGNED	DRAWN	TRACED	CHECKED	REVIEWED	DATE	REVISED
J.R.P.	W.G.	–	S.C.	7-11-69		

REINFORCING STEEL LIST

FED. RD. DIVISION	STATE	PROJECT	TYPE FUNDS
2	OHIO		

HAM-275-0.00

245/302

BENDING DIAGRAM

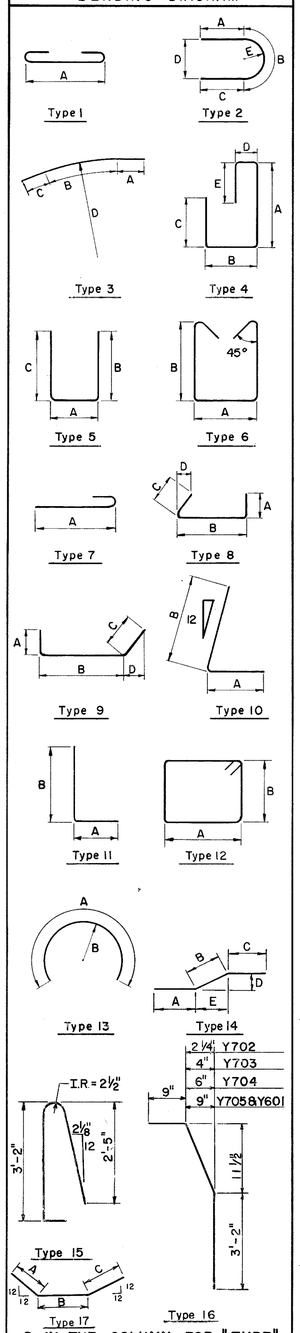

S IN THE COLUMN FOR "TYPE" INDICATES STRAIGHT BARS.

MARK	NO.	LENGTH	WEIGHT	TYPE	A	B	C	D	E
			ABUTMENTS						
ABUTMENT NO. 1.									
A501	81	8 - 3	697	5	5 - 4	1 - 7	1 - 7		
A502	81	7 - 0	591	11	0 - 7½	6 - 6			
A503	81	8 - 4	704	5	3 - 5	2 - 7	2 - 7		
A504	38	30 - 0	1 189	S					
A505	42	20 - 0	876	S					
A506	23	21 - 0	504	S					
A507	2	19 - 0	40	S					
A508	4	9 - 6	40	S					
A509	19	17 - 0	337	S					
A510	2	18 - 0	38	S					
A511	42	11 - 8	511	12	3 - 0	2 - 7			
A512	12	10 - 9	135	S					
A513	4	8 - 0	33	S					
A514	4	11 - 0	46	S					
A515	4	14 - 0	58	S					
A516	8	15 - 8	131	S					
A517	80	5 - 0	417	S					
A518	64	2-0 to 4-4	211	S	8 Sets of 8, Vary by 4"				
A519	8	10 - 0	83	9	0	8 - 6	1 - 7	1 - 3	
A520	12	11 - 5	143	S					
A521	4	10 - 6	44	S					
A522	4	13 - 6	56	S					
A523	4	16 - 6	69	S					
A524	8	18 - 2	152	S					
Y501	50	2 - 0	104	5	1 - 0	0-7½	0-7½		
Y502	40	3 - 0	125	S					
Y503	30	6 - 6	203	15					
Y504	16	15 - 8	261	S					
Y505	8	7 - 3	60	S					
Y506	4	9 - 8	40	S					
Y507	50	2 - 10	148	S					
Y508	16	18 - 2	303	S					
Y509	4	12 - 2	51	S					
A601	81	14 - 2	1 724	5	5 - 4	6 - 7	2 - 7		
A602	74	18 - 4	2 038	4	8 - 0	1 - 5	6 - 8	0 - 11	2 - 0
A603	49	17 - 1	1 257	5	1 - 5	8 - 0	8 - 0		
A604	22	18 - 0	595	5	1 - 2	8 - 7	8 - 7		
A605	9	21 - 6	291	5	1 - 2	10 - 4	10 - 4		
A606	9	19 - 6	264	5	1 - 2	9 - 4	9 - 4		
Y601	30	5 - 0	225	16					
Y701	4	4 - 4	35	S					
Y702	4	4 - 9	39	16					
Y703	4	4 - 10	40	16					
Y704	4	4 - 11	40	16					
Y705	4	5 - 0	41	16					
A801	4	30-0 to 37-0	358	S	1 each, Vary by 2'-4"				
A802	3	32-6 to 39-6	288	S	1 each, Vary by 3'-6"				
A803	4	32 - 6	347	S					
A804	3	33-0 to 36-0	276	S	1 each, Vary by 1'-6"				
A805	8	9 - 0	192	14	2 - 6	4 - 0	2 - 6	1 - 9	3 - 6
A806	4	29-0 to 35-0	342	S	1 each, Vary by 2'-0"				
A807	3	31-6 to 37-6	276	S	1 each, Vary by 3'-0"				
A808	4	31 - 0	331	S					
A809	3	32-0 to 34-0	264	S	1 each, Vary by 1'-0"				
A810	12	12 - 4	395	S					
A811	12	14 - 6	465	S					
A812	34	5'-1"	461	17	1'-6"	2'-10"	0'-11"		
	SUB TOTAL		18,984						

MARK	NO.	LENGTH	WEIGHT	TYPE	A	B	C	D	E
ABUTMENT NO. 2									
B501	74	8 - 3	637	5	5 - 4	1 - 7	1 - 7		
B502	74	7 - 0	540	11	0 - 7½	6 - 6			
B503	74	8 - 4	643	5	3 - 5	2 - 7	2 - 7		
B504	38	30 - 0	1 189	S					
B505	19	28 - 0	555	S					
B506	8	18 - 3	152	S					
B507	2	8 - 6	18	S					
B508	4	15 - 6	65	S					
B509	19	27 - 0	535	S					
B510	2	8 - 0	17	S					
B511	42	11 - 8	511	12	3 - 0	2 - 7			
B512	12	10 - 6	131	S					
B513	4	8 - 0	33	S					
B514	4	11 - 0	46	S					
B515	4	14 - 0	58	S					
B516	8	15 - 8	131	S					
B517	80	5 - 0	417	S					
B518	64	2-0 to 4-4	211	S	8 Sets of 8, Vary by 4"				
B519	8	10 - 0	83	9	0	8 - 6	1 - 7	1 - 3	
B520	12	11 - 6	144	S					
B521	4	10 - 6	44	S					
B522	4	13 - 6	56	S					
B523	4	16 - 6	69	S					
B524	8	18 - 2	152	S					
Y501	50	2 - 0	104	5	1 - 0	0-7½	0-7½		
Y502	40	3 - 0	125	S					
Y503	30	6 - 6	203	15					
Y504	16	15 - 8	261	S					
Y505	8	7 - 3	60	S					
Y506	4	9 - 8	40	S					
Y507	50	2 - 10	148	S					
Y508	16	18 - 2	303	S					
Y509	4	12 - 2	51	S					
B601	74	14 - 2	1 575	5	5 - 4	6 - 7	2 - 7		
B602	62	18 - 4	1 707	4	8 - 0	1 - 5	6 - 8	0 - 11	2 - 0
B603	44	17 - 1	1 129	5	1 - 5	8 - 0	8 - 0		
B604	18	18 - 0	487	5	1 - 2	8 - 7	8 - 7		
B605	11	21 - 6	355	5	1 - 2	10 - 4	10 - 4		
B606	11	19 - 6	322	5	1 - 2	9 - 4	9 - 4		
Y601	30	5 - 0	225	16					
Y701	4	4 - 4	35	S					
Y702	4	4 - 9	39	16					
Y703	4	4 - 10	40	16					
Y704	4	4 - 11	40	16					
Y705	4	5 - 0	41	16					
B801	4	25-0 to 30-0	294	S	1 each, Vary by 1'-8"				
B802	3	28-0 to 33-0	244	S	1 each, Vary by 2'-6"				
B803	4	26-0 to 27-6	286	S	1 each, Vary by 0'-6"				
B804	3	28-6 to 30-0	234	S	1 each, Vary by 0'-9"				
B805	8	8 - 6	182	14	2 - 6	3 - 6	2 - 6	1 - 6	3 - 0
B806	4	25-0 to 27-0	278	S	1 each, Vary by 0'-8"				
B807	3	29 - 6	236	S					
B808	4	25-0 to 29-0	288	S	1 each, Vary by 1'-4"				
B809	3	28-0 to 32-0	240	S	1 each, Vary by 2'-0"				
B810	12	11 - 10	379	S					
B811	12	14 - 0	449	S					
B812	34	5'-1"	461	17	1'-6"	2'-10"	0'-11"		
SUB TOTAL			17,298						
TOTAL ABUTMENTS			36,282						

MARK	NO.	LENGTH	WEIGHT	TYPE	A	B	C	D	E
			REPLACEMENT BARS						
RE 400	1	6 - 3	–	13	6 - 3	1 - 4			
RE 500	7	6 - 7	–	S					
RE 600	12	6 - 11	–	S					
RE 700	1	7 - 2	–	S					
RE 800	1	7 - 6	–	S					
RE1000	3	8 - 2	–	S					
RE1100	2	8 - 6	–	S					

NOTES

BAR SIZE is indicated in the bar mark. The first digit where three digits are used, and the first two digits where four are used, indicate the bar size number. For example, A700 is a No. 7 size bar and A1014 is a No. 10 size.

18/18

VOGT, IVERS, & ASSOCIATES
ENGINEERS CINCINNATI — ARCHITECTS CHICAGO

REINFORCING STEEL LIST

BRIDGE NO. HAM-275-0036 L/R
F.A.I. ROUTE 275
OVER U.S. 50 & PENN CENTRAL CO.

HAMILTON COUNTY — STA. 20+26.50

DESIGNED	DRAWN	TRACED	CHECKED	REVIEWED	DATE	REVISED
J.R.P.	W.G.	-	S.C.	[illegible]	7-11-69	

FED. RD. DIVISION	STATE	PROJECT	
2	OHIO		

246
302

HAM-275-0.00

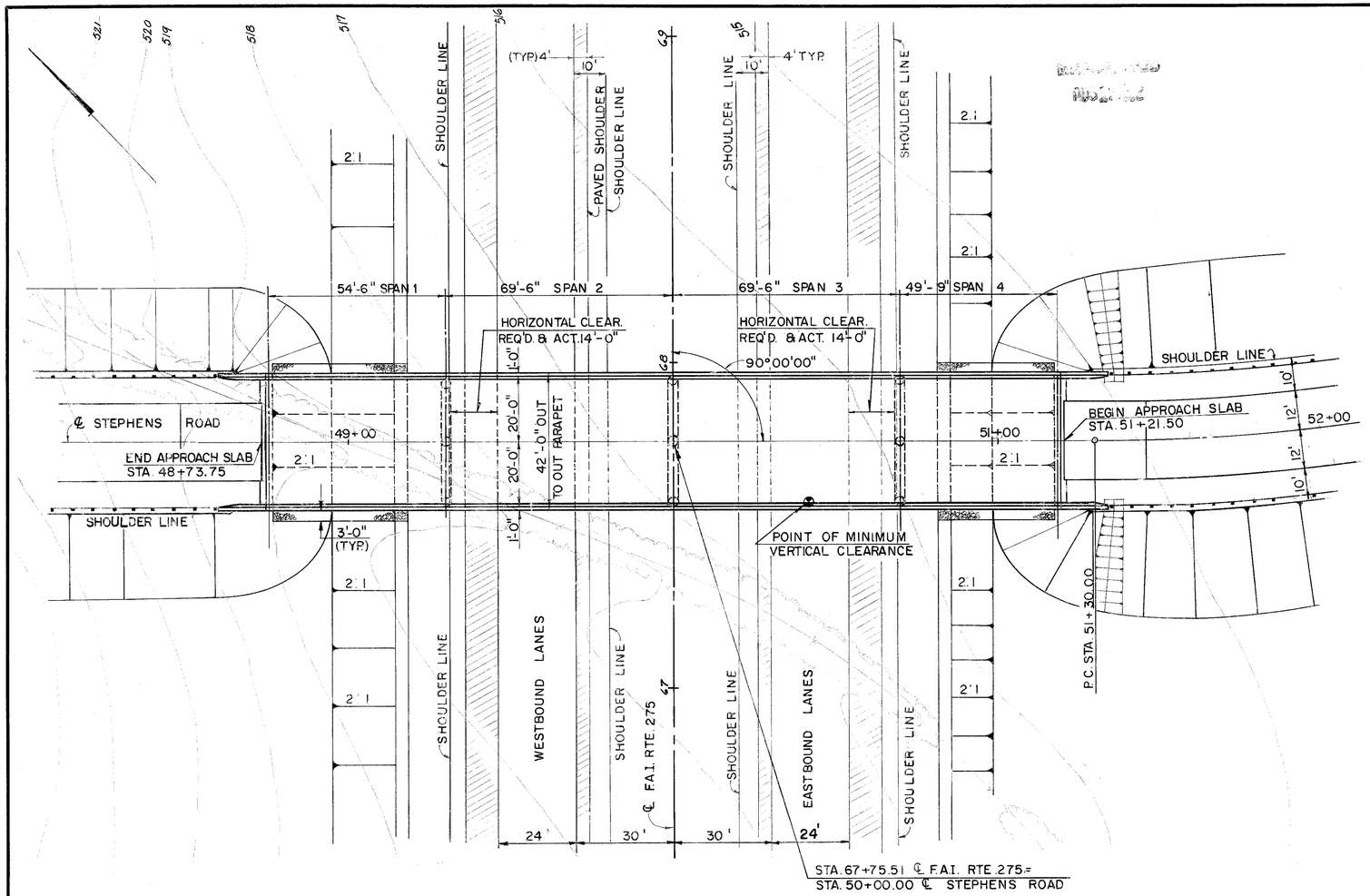

PLAN

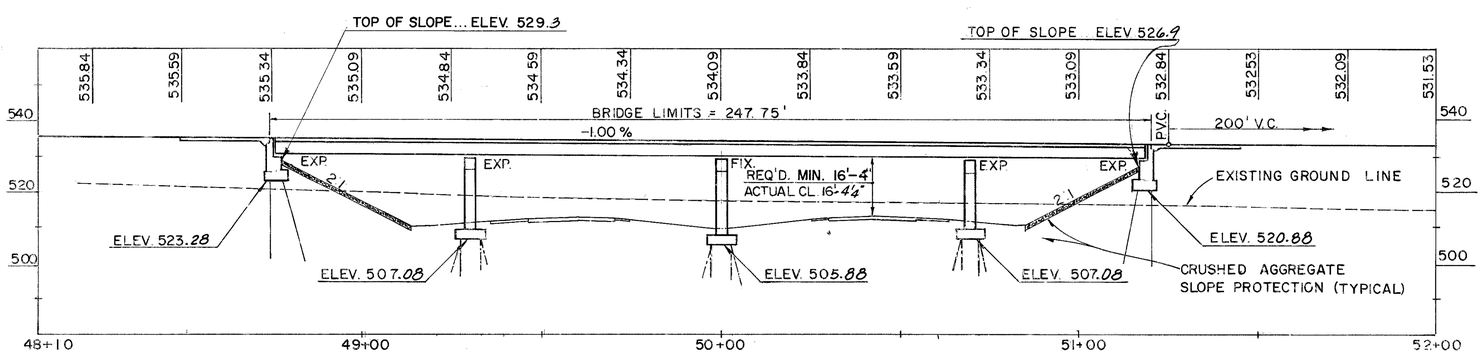

PROFILE

NOTE:
EARTHWORK LIMITS SHOWN ARE SCHEMATIC. ACTUAL SLOPES TO CONFORM TO PLAN CROSS SECTIONS.

1989 A.D.T.:
I-275 = 30.860
STEPHENS RD = 500

STEPHENS ROAD VERTICAL CURVE DATA

P.V.I. = STA. 52+25,
ELEV. 531.84
V.C. = 200'
G_1 = -1.00 %
G_2 = -5.00 %

STEPHENS ROAD HORIZONTAL CURVE DATA

P.I. STA. 54+59.20
D_c = 10° 00' 00"
Δ = 59° 45' 38"
R = 572.96
Lc = 597.61
T = 329.20

BENCH MARK

B.M. # 24 ELEV. 516.20
R.R. SPIKE IN TEL. POLE
ON NORTH SIDE OF STEPHENS RD
135' RT. OF STA. 62+60

ESTIMATED AVERAGE PAY LENGTHS OF HP10x42 PILES
ABUTMENT NO. 1 = 25 FT.
PIER NO. 1 = 15 FT.
PIER NO. 2 = 20 FT.
PIER NO. 3 = 25 FT.
ABUTMENT NO. 2 = 40 FT.

PROPOSED STRUCTURE

TYPE: Continuous rolled steel beam with reinforced concrete deck and substructure.
SPANS: 54'-6, 69'-6", 69'-6", 49'-9"
ROADWAY: 40'-0" face to face of Parapets
LOADING: HS 20-44
SKEW: 0°00'00"
SURFACE COURSE: 1½" Asphalt Conc.
APPROACH SLAB: AS-1-72 (25' long)
ALIGNMENT: TANGENT
SUPERELEVATION: None.

1 / 7

VOGT, IVERS, & ASSOCIATES
ENGINEERS CINCINNATI — ARCHITECTS CHICAGO

SITE PLAN

BRIDGE NO. HAM.-275-0128
STEPHENS ROAD
OVER F.A.I. ROUTE 275
HAMILTON COUNTY — STA. 48+73.75 — STA. 51+21.50

PRESENT TOPOGRAPHY		PROPOSED WORK			
SURVEYED	DRAWN	DESIGNED	DRAWN	CHECKED	REVISIONS
		C.E.	G.M.	L.F.L.	

FED. RD. DIVISION	STATE	PROJECT	TYPE FUNDS
2	OHIO		

247/302

HAM-275-0.00

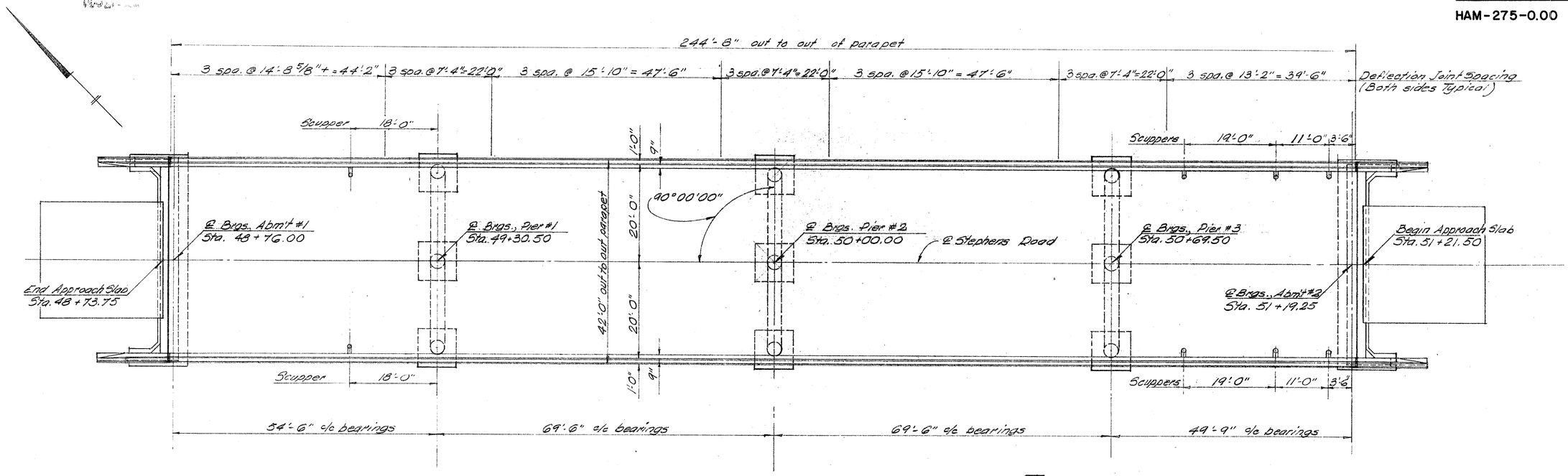

GENERAL PLAN

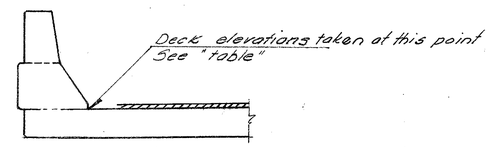

DECK ELEVATIONS			
LOCATION		EAST OR WEST PARAPET Toe	
		STATION	ELEVATION
SPAN 1	℄ Abutment 1	48 + 76.00	534.92
	1/4 Span	48 + 89.62	534.80
	1/2 Span	49 + 03.24	534.67
	3/4 Span	49 + 16.86	534.52
	℄ Pier 1	49 + 30.5	534.37
SPAN 2	1/4 Span	49 + 47.87	534.23
	1/2 Span	49 + 65.24	534.05
	3/4 Span	49 + 82.61	534.86
	℄ Pier 2	50 + 00.00	533.67
SPAN 3	1/4 Span	50 + 17.37	533.52
	1/2 Span	50 + 34.74	533.38
	3/4 Span	50 + 52.11	533.17
	℄ Pier 3	50 + 69.5	532.97
SPAN 4	1/4 Span	50 + 81.94	532.76
	1/2 Span	50 + 94.37	532.84
	3/4 Span	51 + 06.80	532.62
	℄ Abutment 2	51 + 19.25	532.47

NOTE: The elevations shown are those which are required before the concrete deck is placed. Proper allowance has has been made for the dead load deflections caused by the weight of the concrete.

2/7

VOGT, IVERS, & ASSOCIATES
ENGINEERS CINCINNATI — ARCHITECTS CHICAGO

GENERAL PLAN

BRIDGE NO. HAM-275-0128
STEPHENS ROAD
OVER F.A.I. ROUTE 275

HAMILTON COUNTY — STA. 48+73.75 STA. 51+21.50

DESIGNED	DRAWN	TRACED	CHECKED	REVIEWED	DATE	REVISED
W.L.S.	W.L.S.	G.M.	DGH.	666	10-9 68	

FED. RD. DIVISION	STATE	PROJECT	
2	OHIO		

248
302

HAM-275-0.00

GENERAL NOTES

REFERENCE SHALL BE MADE TO STANDARD DRAWINGS NO:

RB-1-55 REVISED 2-2-59
SD-1-69 SHEETS 1 THROUGH 4 DATED 6-12-69
BR-1-67 *Revised 10-15-71*

AND TO SUPPLEMENTAL SPECIFICATIONS:

NO. 808 DATED 1-1-71

NO. 836 DATED 1-1-71

DESIGN SPECIFICATIONS:

THIS STRUCTURE CONFORMS TO "STANDARD SPECIFICATIONS FOR HIGHWAY BRIDGES" ADOPTED BY THE AMERICAN ASSOCIATION OF STATE HIGHWAY OFFICIALS, 1965, INCLUDING THE OHIO "SUPPLEMENT" TO THESE SPECIFICATIONS.

DESIGN DATA:

DESIGN LOADING: - HS 20-44

CONCRETE CLASS C - UNIT STRESS 1,200 PSI FOR SUPERSTRUCTURE
UNIT STRESS 1,333 PSI FOR SUBSTRUCTURES

STRUCTURAL STEEL - ASTM A36 - UNIT STRESS 20,000 PSI

* REINFORCING STEEL - ASTM A615, A616, OR A617. UNIT STRESS 20,000 PSI. SPIRAL REINFORCEMENT *may* BE PLAIN BARS, ASTM A306, A499, *A 82 or A615.*

PROCEDURE: THE EMBANKMENTS SHALL BE CONSTRUCTED TO THE LEVEL OF THE SUBGRADE FOR A MINIMUM DISTANCE OF 200 FEET BACK OF THE ABUTMENTS. EXCAVATION MAY THEN BE MADE FOR THE ABUTMENTS.

WELDS:

WELDS ON NON-STRESS CARRYING MEMBERS ARE SHOWN THUS: N 1/4

PILES shall be driven to refusal on bedrock or to 20 blows per inch for the last few inches of penetration. The design load is 25 tons per pile for the abutment piles and 35 tons per pile for the pier piles.

Jacking holes shown on Standard Drawing AS-1-72 shall not be provided

** If bars in accordance with ASTM A616 are provided they shall be subject to bend tests as per AASHO Designation M 42-70.*

ESTIMATED QUANTITIES

ITEM	TOTAL	UNIT	DESCRIPTION	SUPER.	ABUT.	PIER	GEN.	AS BUILT	
404	29	Cu.Yds	Asphalt concrete (70-85 or AC 20)	29					
503	399	Cu. Yds.	Unclassified excavation		249	150			
505	LUMP	Sum	Test pile				Lump		
507	1,870	Lin. Ft.	Steel Piles, *HP10x42*		910	960			
509	123,251	Lbs.	Reinforcing steel	88,089	12,246	22916			
511	330	Cu. Yds	Class C concrete, superstructure	330					
511	82	Cu.Yds.	Class C concrete, piers above footings			82			
511	95	Cu.Yds.	Class C concrete, abutments above footings		95				
511	143	Cu.Yds.	Class C concrete, footings		73	70			
513	255,000	Lbs.	Structural steel	255,000					
518	42	Cu.Yds.	Porous backfill				42		
518	60	Lin. Ft.	6" perforated, helical CMP, including specials, 707.01		60				
518	51	Lin. Ft.	6" non-perforated, helical CMP, 707.01		51				
518	8	Each	Scuppers, including supports	8					
601	465	Sq.Yds.	Crushed aggregate slope protection				465		
808	330	Units	Chemical admixture for concrete, Type A, B, or D.	330					
503	Lump	SUM	Cofferdams, Cribs, and Sheeting				Lump		
514	255,000	Lbs.	Field painting of structural steel	255,000					
518	66	Each	Subdrainage for wearing surface	66					
Spec.	15	Cu Yds	Sand Asphalt (see Proposal Note)	15					
Spec.	1054	Sq Yds	Membrane waterproofing, Sheet type, (see Proposal Note)	1054					
Calculated by: JRP			,Date 3.3,1970						
Checked by:			,Date 3.3,1970						

3/7

VOGT, IVERS, & ASSOCIATES
ENGINEERS CINCINNATI — ARCHITECTS CHICAGO

GENERAL NOTES
ESTIMATED QUANTITIES
BRIDGE NO. HAM.-275-0128
STEPHENS ROAD
OVER F.A.I. ROUTE 275
HAMILTON COUNTY STA. 48+73.75 STA. 51+21.50

Designed	Drawn	Traced	Checked	Reviewed	Date	Revised
W.L.S 9-9-68	E.R.	—	7-9-68		10-9 68	

Parapet transitions (and wingwall ends) shall be as shown on Std. Drwg. BR-1-67 revised 10-15-71. Reinforcing steel shall be field bent or cut to fit the revised shape.

FED. RD. DIVISION	STATE	PROJECT	TYPE FUNDS
2	OHIO		

249/302

HAM-275-0.00

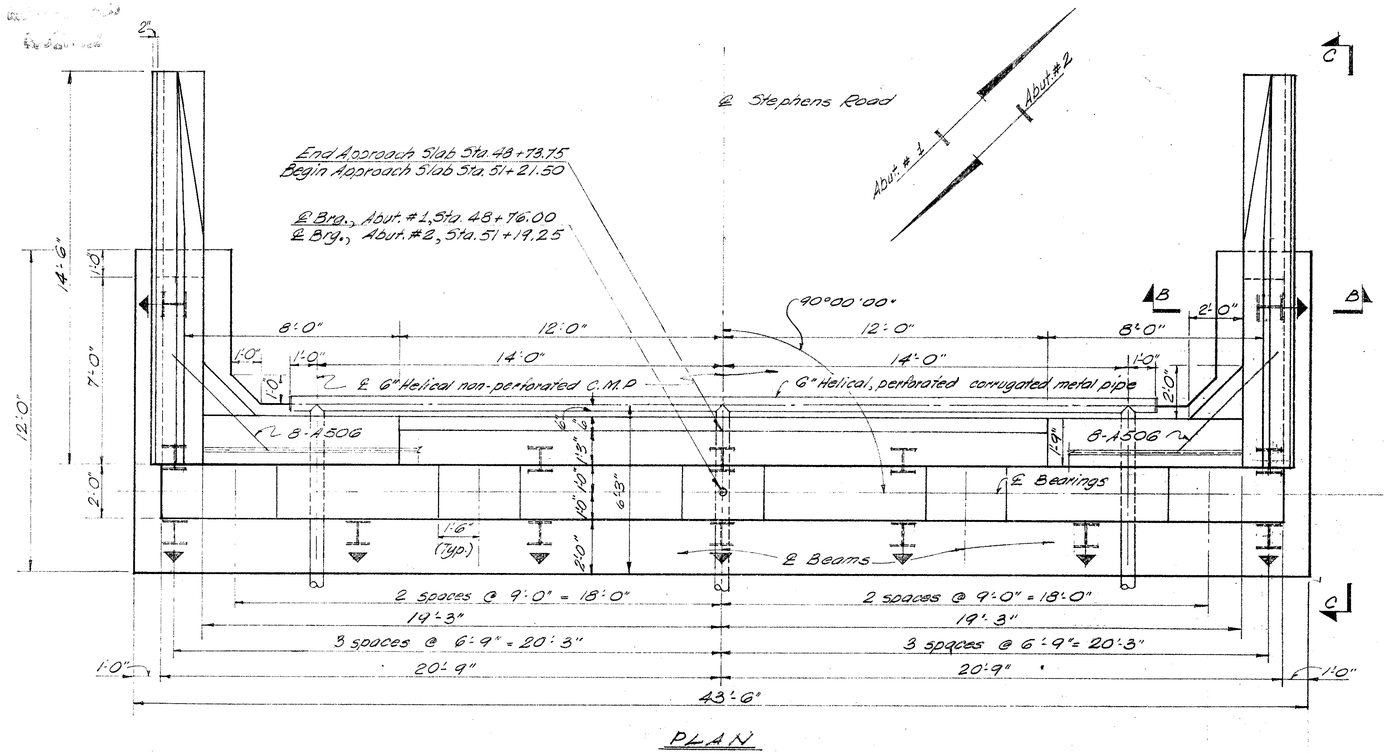

PLAN

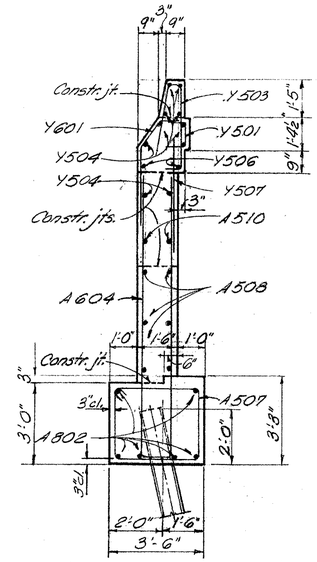

SECTION B-B

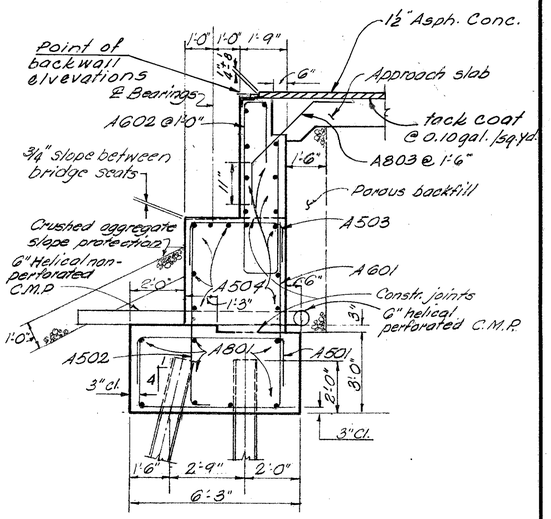

SECTION A-A

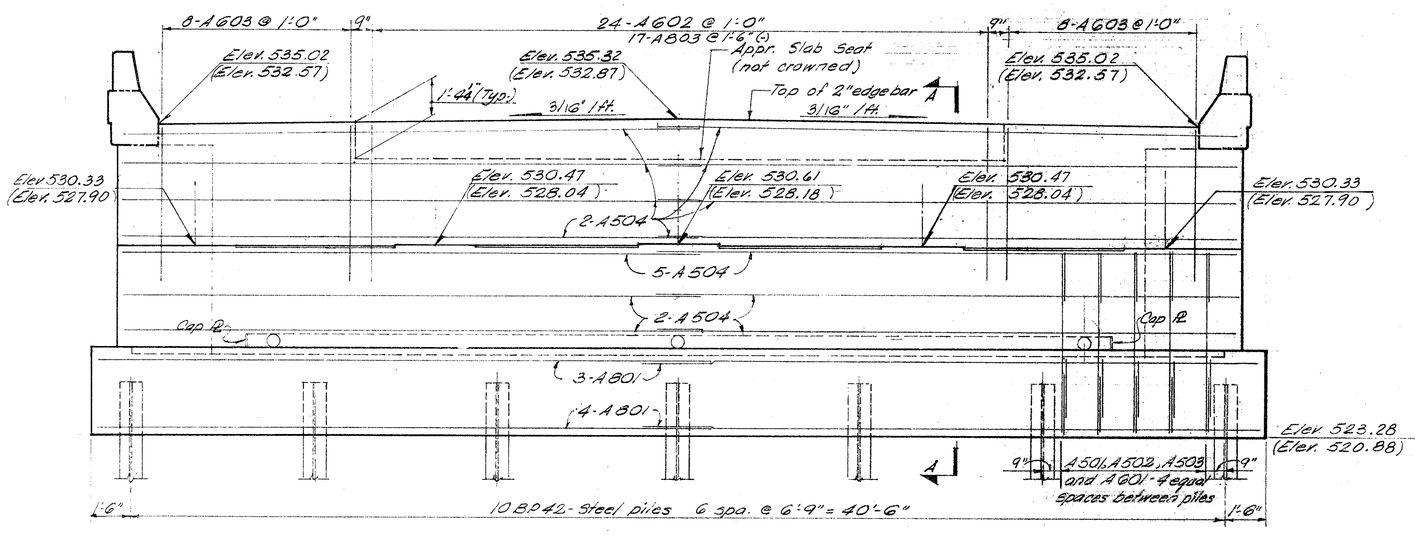

ELEVATION

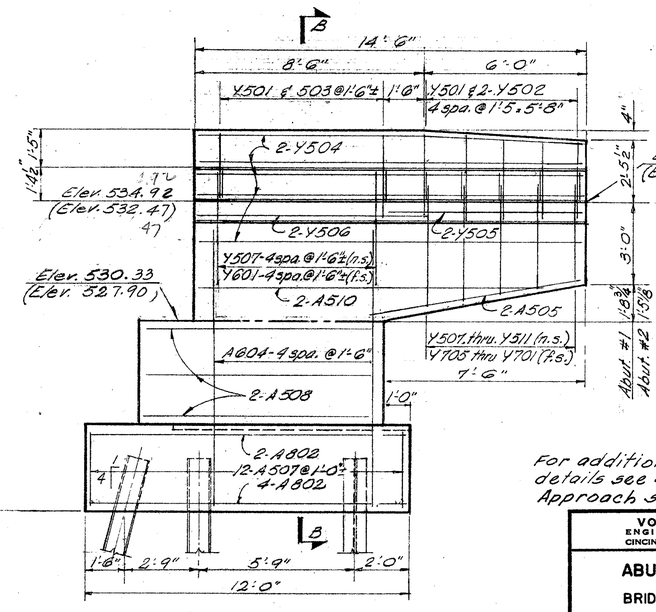

VIEW C-C

NOTE: Elevation shown thus ( ) are for Abutment No. 2, all others are for Abutment No. 1.

NOTE: Porous Backfill 1'-6" thick, full length of Abutment and wings shall extend up to the subgrade or to the finished ground surface.

LEGEND:

Indicates vertical pile

Indicates battered pile 1:4 in the direction of the arrow.

For additional approach slab details see Std. Drwg. AS-1-72
Approach slab width is 24'-0"

4/7

VOGT, IVERS, & ASSOCIATES
ENGINEERS — CINCINNATI
ARCHITECTS — CHICAGO

ABUTMENT NO. 1 AND NO. 2

BRIDGE NO. HAM-275-0128
STEPHENS ROAD
OVER F.A.I. ROUTE 275

HAMILTON COUNTY — STA. 48+73.75 / STA. 51+21.50

DESIGNED	DRAWN	TRACED	CHECKED	REVIEWED	DATE	REVISED
W.L.S.	W.L.S.	G.M.	DGH	GGG	10-9-68	

FED. RD. DIVISION	STATE	PROJECT	TYPE FUNDS
2	OHIO		

250/302

HAM-275-0.00

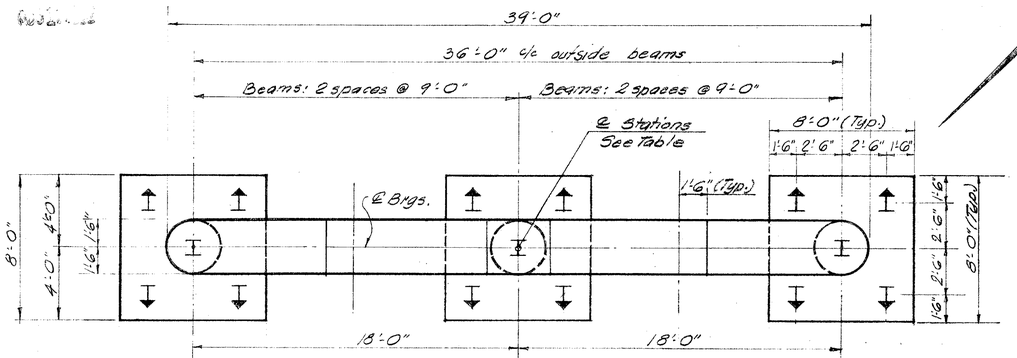

PLAN (PIER 1, 2 & 3)
(Except for footings Pier 2)

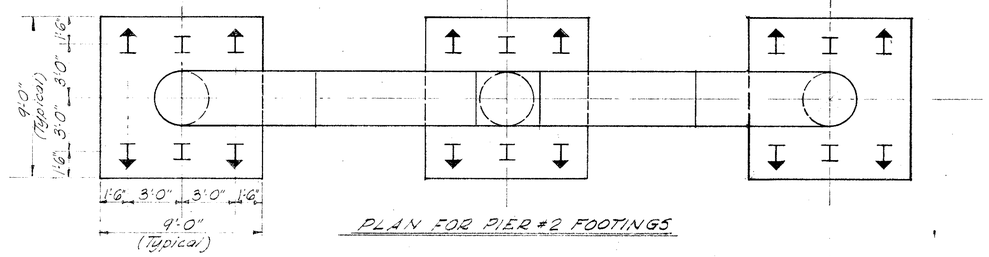

PLAN FOR PIER #2 FOOTINGS

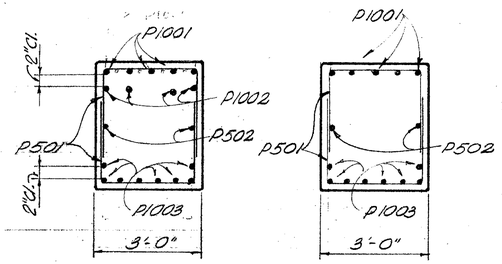

SECTION B-B

SECTION A-A

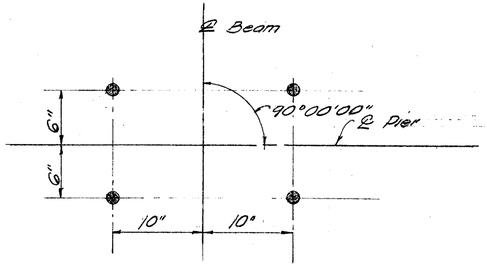

ANCHOR BOLT LAYOUT
(PIER NO. 2 ONLY)

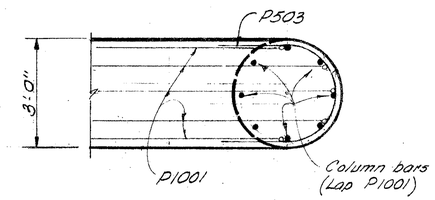

SECTION C-C

NOTES:

BRIDGE SEAT REINFORCING: Special care shall be taken in placing reinforcing steel in the vicinity of the bridge seat of Pier No. 2 so as to avoid interference with the drilling of anchor bolt holes.

LEGEND

I - Indicates vertical pile

I - Indicates battered pile 1:4 in the direction of arrow.

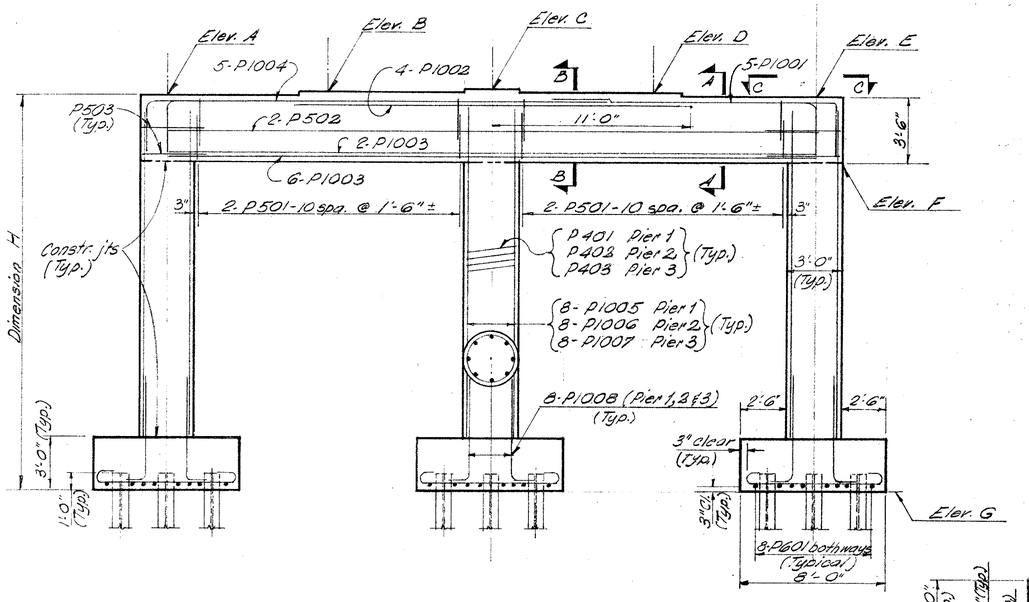

ELEVATION
(PIER 1, 2 & 3)
(Except for footings Pier 2)

LOCATIONS	PIER 1	PIER 2	PIER 3
℄ Stations	49+30.5	50+00	50+69.5
Elev. A	529.26	528.56	527.88
Elev. B	529.40	528.70	528.02
Elev. C	529.54	528.84	528.16
Elev. D	529.40	528.70	528.02
Elev. E	529.26	528.56	527.88
Elev. F	525.76	525.06	524.38
Elev. G	507.08	505.88	507.08
Dimension H	22'-2 1/8"	22'-8 1/8"	20'-9 5/8"

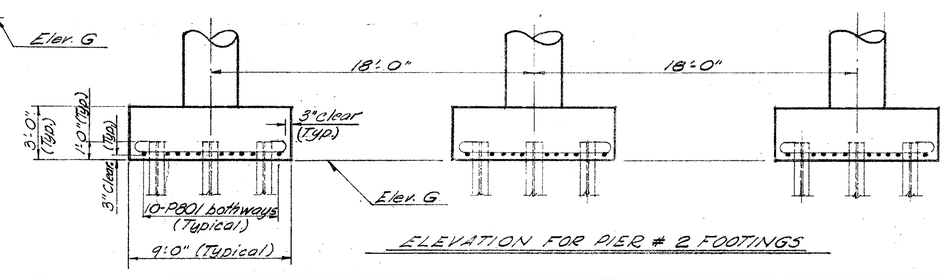

ELEVATION FOR PIER # 2 FOOTINGS

5/7

VOGT, IVERS, & ASSOCIATES
ENGINEERS CINCINNATI — ARCHITECTS CHICAGO

PIER 1, 2 AND 3
BRIDGE NO. HAM - 275-0128
STEPHENS ROAD
OVER F.A.I. ROUTE 275

HAMILTON COUNTY — STA. 48+73.75 STA. 51+21.50

DESIGNED	DRAWN	TRACED	CHECKED	REVIEWED	DATE	REVISED
W.L.S.	W.L.S.	G.M.	D.G.H.	666	10-9-68	

FED. RD. DIVISION	STATE	PROJECT	TYPE FUNDS
2	OHIO		

251/302

HAM-275-0.00

Structural subdrainage tubing shall be used as shown in the transverse section for the full length of the bridge. For additional details see deck drainage details sheet number 279A/302

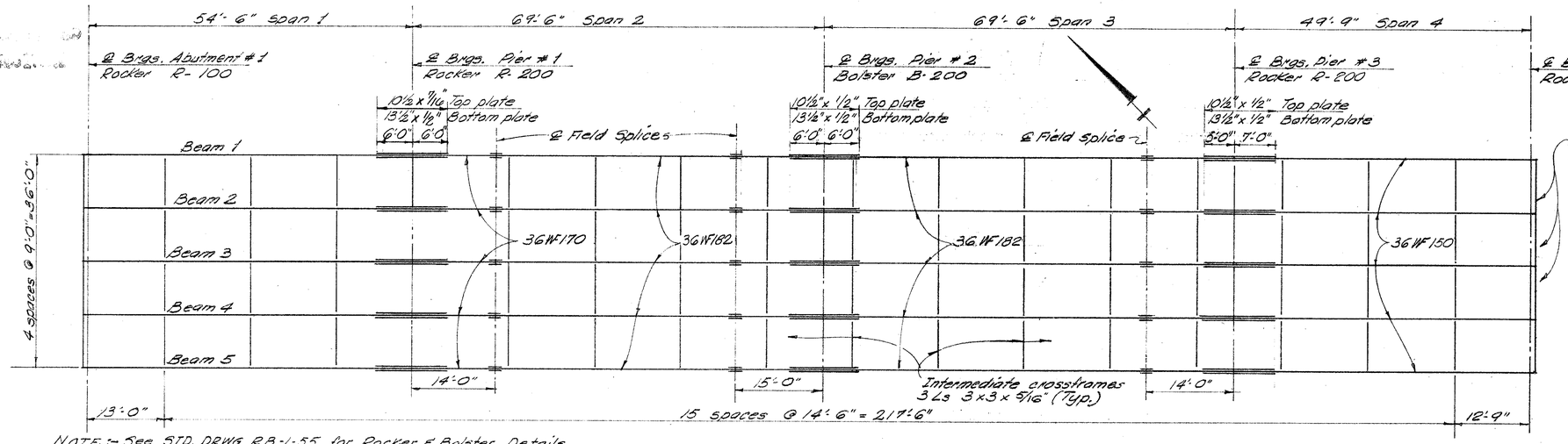

NOTE:- See STD. DRWG RB-1-55 for Rocker & Bolster Details
- See STD. DRWG. SD-1-69 Sht. No. 1 & No 2 and No. 3 for End Dam Details, End Crossframe Details, Moment Plate Welding, and Curb Plate Details

FRAMING PLAN

Deck Finishing Texturing of the deck surface as provided in 451.09 shall not be done.

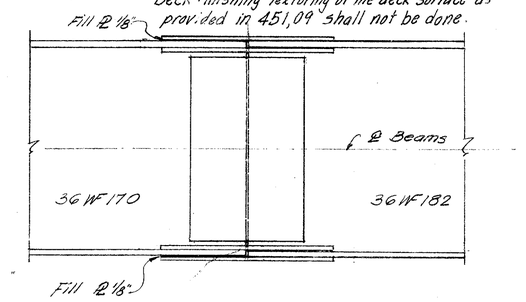

For additional Details of Railing see Std. Dwg. BR-1-67 Sheet #1 and General Plan Sheet No. 2 7

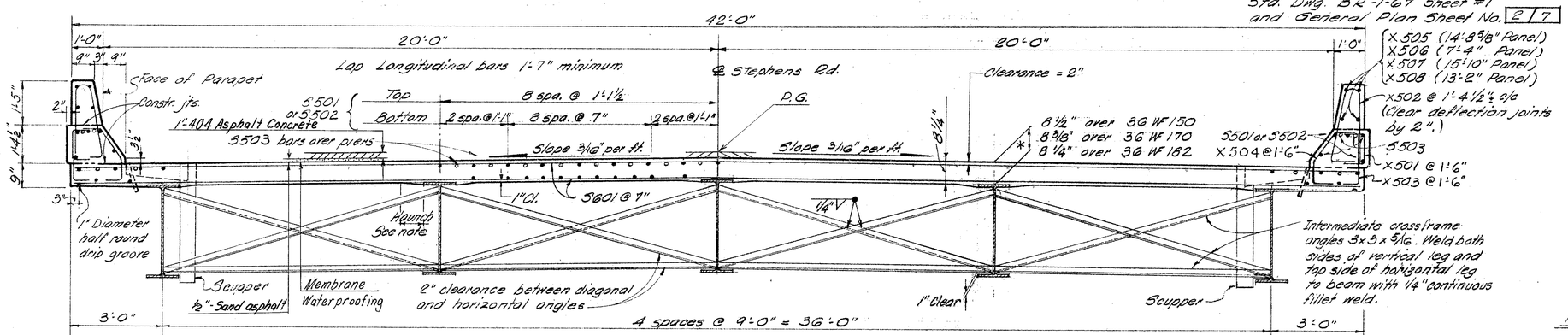

TRANSVERSE SECTION

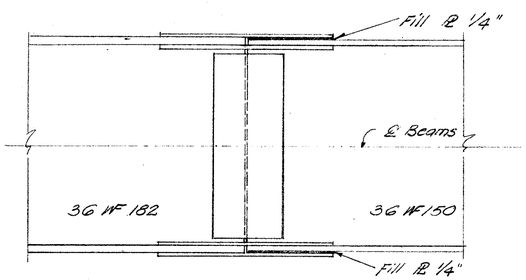

BEAM SPLICE DETAILS

For notes and details not shown see Std. Drgs. SD-1-69 sheet No. 4

Notes:

* DECK SLAB DEPTH: The distance shown from top of deck slab to top of steel beam is the design dimension. The quantity of deck concrete to be paid for shall be based on this dimension, even though deviation from it may be necessary because the top flange of the beam may not have the exact camber or conformation required to place it parallel to the finished grade.

A HAUNCH WIDTH of 9" shall be used for computing quantity of concrete. However, the haunch width may vary between 6" and 12" provided that the slope shall be not more than 1:4 for a haunch less than 9" in width.

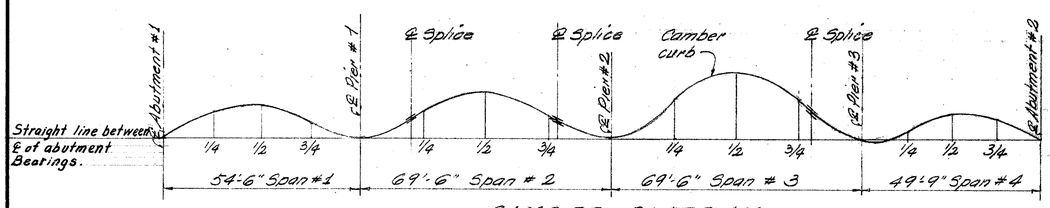

CAMBER DIAGRAM

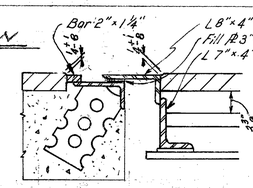

ROADWAY END DAM DETAIL

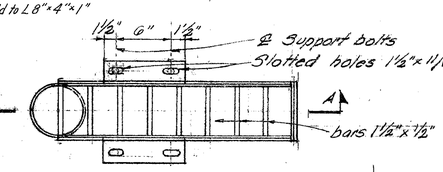

SCUPPER PLAN

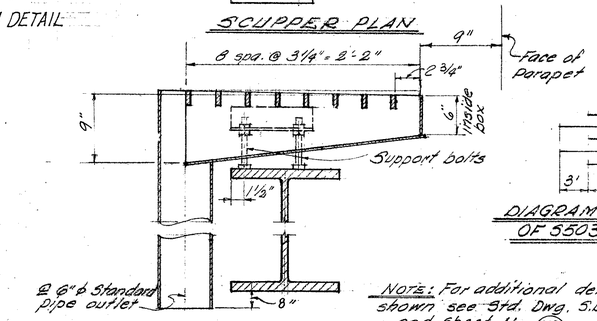

SECTION A-A

Note: For additional details not shown see Std. Dwg. SD-1-69, Sht. No. 3. and Sheet No. 279A/302

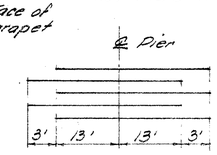

DIAGRAM SHOWING STAGGER OF S503 BARS OVER PIERS

DEFLECTION AND CAMBER

	SPAN #1			SPAN #2				SPAN #3				SPAN #4		
LOCATION	¼	½	¾	Splice	¼	½	¾	Splice	¼	½	¾	Splice	¼	½	¾
Deflection due to weight of steel	0	0	1/16	0	1/16	1/16	0	0	0	1/16	1/16	0	0	0	0
Deflection due to remaining dead load	5/16	3/8	1/8	3/16	1/4	7/16	1/4	3/16	5/16	9/16	5/16	3/16	1/8	1/4	3/16
Required shop camber	5/16	3/8	3/16	3/16	5/16	1/2	1/4	3/16	5/16	5/8	3/8	3/16	1/8	1/4	3/16

6/7

VOGT, IVERS, & ASSOCIATES
ENGINEERS — CINCINNATI
ARCHITECTS — CHICAGO

SUPERSTRUCTURE

BRIDGE NO. HAM-275-0128
STEPHENS ROAD
OVER F.A.I. ROUTE 275

HAMILTON COUNTY — STA. 48+73.75 / STA. 51+21.50

DESIGNED	DRAWN	TRACED	CHECKED	REVIEWED	DATE	REVISED
W.L.S.	W.L.S.	G.M.	D.C.H.	ebb	10-9 68	

REINFORCING STEEL LIST

FED. RD. DIVISION	STATE	PROJECT	TYPE FUNDS
2	OHIO		

252 / 302

HAM-275-0.00

BENDING DIAGRAM

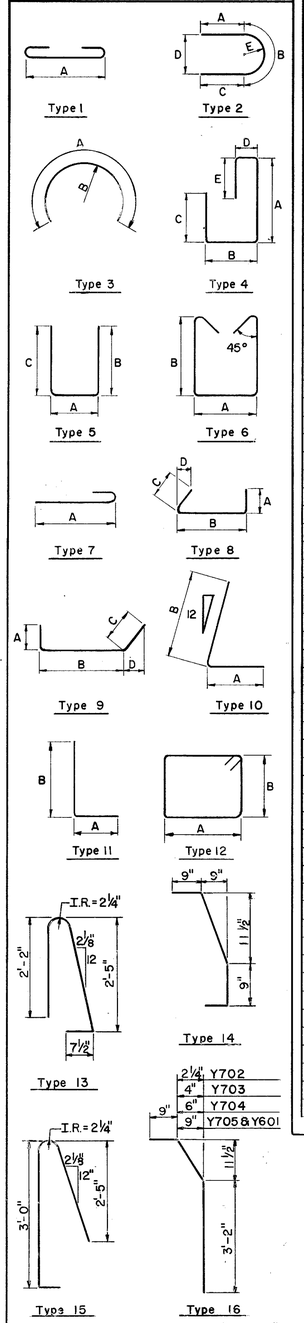

S IN THE COLUMN FOR "TYPE" INDICATES STRAIGHT BARS.

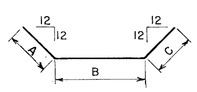

MARK	NO.	LENGTH	WEIGHT	TYPE	A	B	C	D	E
			ABUTMENTS						
A501	60	8'-3"	516	5	5'-4"	1'-7"	1'-7"		
A502	60	8'-0"	501	11	1'-7"	6'-6"			
A503	60	6'-4"	396	5	3'-5"	1'-7"	1'-7"		
A504	68	21'-5"	1519	S					
A505	8	9'-0"	75	S					
A506	32	5'-2"	173	S					
A507	48	11'-8"	584	12	3'-0"	2'-7"			
A508	24	8'-6"	213	S					
A510	8	13'-0"	108	S					
A601	60	14'-1"	1269	5	5'-4"	6'-6"	2'-7"		
A602	48	15'-9"	1136	4	6'-5"	1'-5"	4'-11"	0'-11"	2'-9"
A603	32	13'-11"	669	5	1'-5"	6'-5"	6'-5"		
A604	20	21'-6"	646	5	1'-2"	10'-4"	10'-4"		
A801	28	22'-10"	1707	S					
A802	24	11'-6"	737	S					
A803	34	5'-1"	462	17	1'-6"	2'-10"	0'-11"		
Y501	40	2'-0"	83	5	1'-0"	0"-7½"	0"-7½"		
Y502	40	2'-8"	112	S					
Y503	20	6'-3"	130	15					
Y504	40	14'-2"	591	S°					
Y505	8	7'-3"	60	S					
Y506	8	8'-2"	68	S					
Y507	24	3'-6"	88	S					
Y508	4	4'-2"	17	S					
Y509	4	3'-8"	15	S					
Y510	4	3'-4"	14	S					
Y511	4	3'-0"	13	S					
Y601	20	5'-0"	150	16					
Y701	4	4'-4"	35	S					
Y702	4	4'-9"	39	16					
Y703	4	4'-10"	39	16					
Y704	4	4'-11"	40	16					
Y705	4	5'-0"	41	16					
		TOTAL	12,246		° Bend in field where necessary.				

MARK	NO.	LENGTH	WEIGHT	TYPE	A	B	C	D	E
			PIERS						
P501	132	8'-4"	1147	5	2'-8"	3'-0"	3'-0"		
P502	6	36'-0"	225	S					
P503	12	7'-10"	98	2	1'-10"	4'-2"	1'-10"	2'-8"	1'-3⅜"
P601	96	8'-10"	1273	1	7'-6"				
P801	60	10'-8"	1709	1	8'-6"				
P1001	15	18'-9"	1210	11	3'-2"	15'-10"			
P1002	12	22'-7"	1166	S					
P1003	24	36'-0"	3718	S					
P1004	15	28'-11"	1867	5	3'-2"	26'-0"			
P1005	24	18'-10"	1944	S					
P1006	24	19'-4"	1996	S					
P1007	24	17'-6"	1807	S					
P1008	72	7'-1"	2194	11	1'-5"	6'-0"			
		SUB. TOTAL	20354						
		SPIRALS	2562						
		TOTAL	22916						

MARK	NO.	LENGTH	WEIGHT	TYPE	A	B	C	D	E
			SUPERSTRUCTURE						
S501	760	30'-0"	23,780	S					
S502	95	17'-1"	1693	S					
S503	120	29'-0"	3630	S					
S601	838	41'-8"	52,449	S					
X501	328	2'-0"	684	5	1'-0"	0"-7½"	0'-7½"		
X502	378	5'-4"	2103	13					
X503	328	2'-2"	742	11	0'-7½"	1'-8"			
X504	328	3'-0"	1026	14					
X505	24	14'-4"	359	S					
X506	72	7'-0"	526	S					
X507	48	15'-6"	776	S					
X508	24	12'-10"	321	S					
		TOTAL	88 089						
			REPLACEMENT BARS						
RE401	1	6'-3"	—	3	6'-3"	1'-3½"			
RE501	3	6'-7"	—	S					
RE601	3	6'-11"	—	S					
RE701	1	7'-2"	—	S					
RE801	1	7'-6"	—	S					
RE1001	1	8'-2"	—	S					

NOTES

BAR SIZE is indicated in the bar mark. The first digit where three digits are used, and the first two digits where four are used, indicate the bar size number. For example, A700 is a No. 7 size bar and A1014 is a No. 10 size.

SPIRAL REINFORCING BARS: The "Length" shown in the steel list for the spiral bars is the distance from the top of the footing to the bottom of the pier cap. The "No. of Turns" shown is the "Length" divided by the pitch, plus three turns (total number of closed coils), expressed as the nearest whole number. Spiral reinforcing bars shall not have deformations but shall in other respects conform to Item 509. 1½ closed coils shall be provided at the ends of each spiral unit. Four steel channel, tee or angle spacers, weighing approximately 0.68 lb. per lin. ft. of spacer, shall be provided for each spiral unit. They shall be equally spaced along the periphery of the coil. The number of pounds of these spacers, based on 0.68 lb. per lin. ft., will be paid for as reinforcing steel and is included in the tabulated quantity of spiral bars.

SPIRAL REINFORCEMENT							
MARK	NO.	LENGTH	CORE	PITCH	TURNS	SPACERS	WEIGHT
P401	3	15'-8"	32	4½	45	4	873
P402	3	16'-2"	32	4½	46	4	894
P403	3	14'-3"	32	4½	41	4	795
							2 562

7 / 7

VOGT, IVERS, & ASSOCIATES
ENGINEERS CINCINNATI — ARCHITECTS CHICAGO

REINFORCING BAR LIST

BRIDGE NO. HAM.-275-0128
STEPHENS ROAD
OVER F.A.I. ROUTE 275
STA. 48 +73.75
HAMILTON COUNTY STA. 51 +21.50

DESIGNED	DRAWN	TRACED	CHECKED	REVIEWED	DATE	REVISED
W.L.S. 2-17-68	E.R.	—	DGH	GEG	10-9-68	

FED. RD. DIVISION	STATE	PROJECT	
2	OHIO		

253/302

HAM-275-0.00

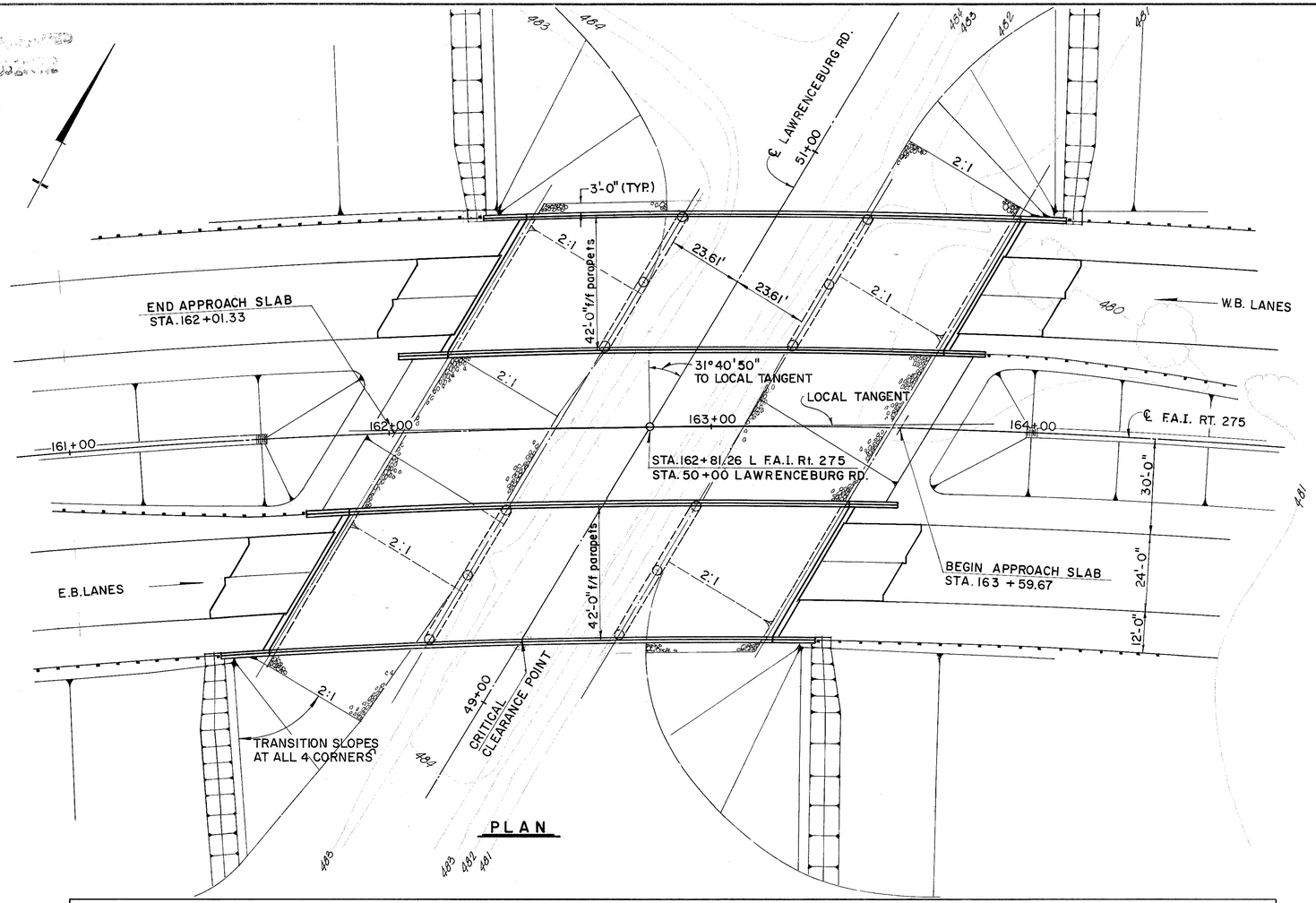

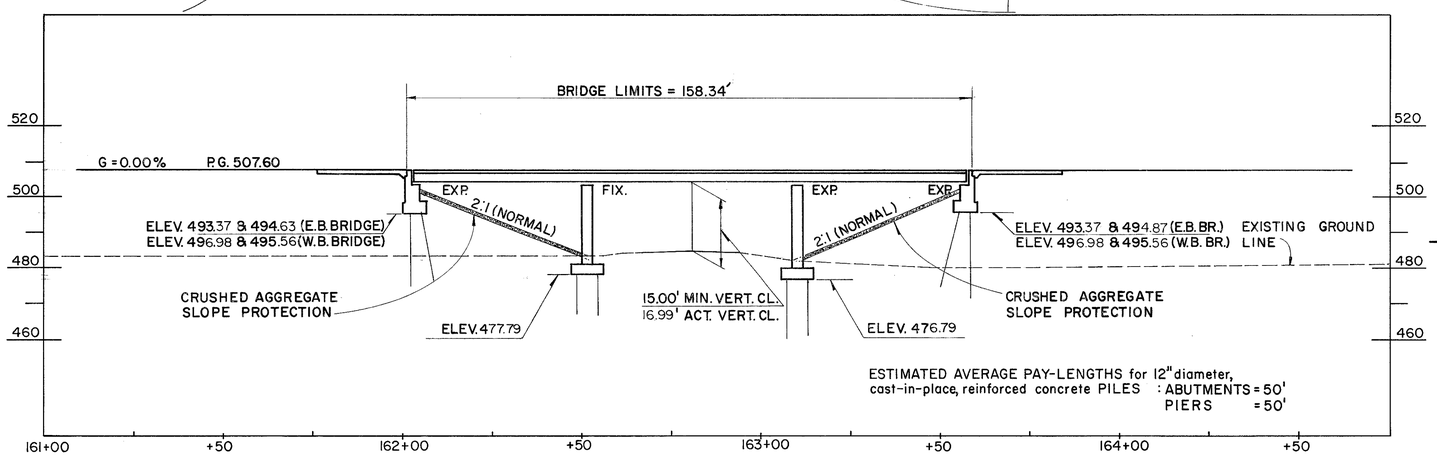

PROFILE

F.A.I. RT. 275 CURVE DATA

P. I. STA. 162+77.88
Δ = 72° 15'55' Rt.
Dc = 2° 15'00"
Rc = 2,546.48'
Ts = 2,061.02'
Es = 609.69'
Lc = 2,811.79'
Ls = 400.00'

F.A.I. RT. 275 PROFILE DATA

G = 0.00%
ELEV. 507.60

Earthwork limits shown are schematic.
Actual slopes shall conform to plan cross sections.

1989 ADT:
F.A.I. RT 275 = 30,860
LAWRENCEBURG RD. = 4,700

PROPOSED STRUCTURE

TYPE: 3 Span continuous steel beams with reinforced concrete deck and sub-structures.

SPANS: 47'-0", 59'-0", 47'-0" c/c Brgs. measured along local tangent.

ROADWAY: 42'-0" f/f of parapets.

LOADING: HS20-44 and Interstate Alternate Loading.

SKEW: 31° 40'50" L.F. (to local tangent).

WEARING SURFACE: 2½" Asphalt Concrete

APPROACH SLABS: AS-1-72 (25' long)

ALIGNMENT: 2° 15'00" curve to right.

SUPERELEVATION: .073 ft/ft.

1/14

VOGT, IVERS, & ASSOCIATES
ENGINEERS CINCINNATI — ARCHITECTS CHICAGO

SITE PLAN

BRIDGE NO. HAM-275-0306 L/R
F.A.I. ROUTE 275
OVER LAWRENCEBURG ROAD

HAMILTON COUNTY STA. 162+81.26

Designed	Drawn	Traced	Checked	Reviewed	Date	Revised
M.M.	G.M.	—	L.F.L.	66	10-9-68	

FED. RD. DIVISION	STATE	PROJECT	TYPE FUNDS
2	OHIO		

254
302

HAM - 275 - 0.00

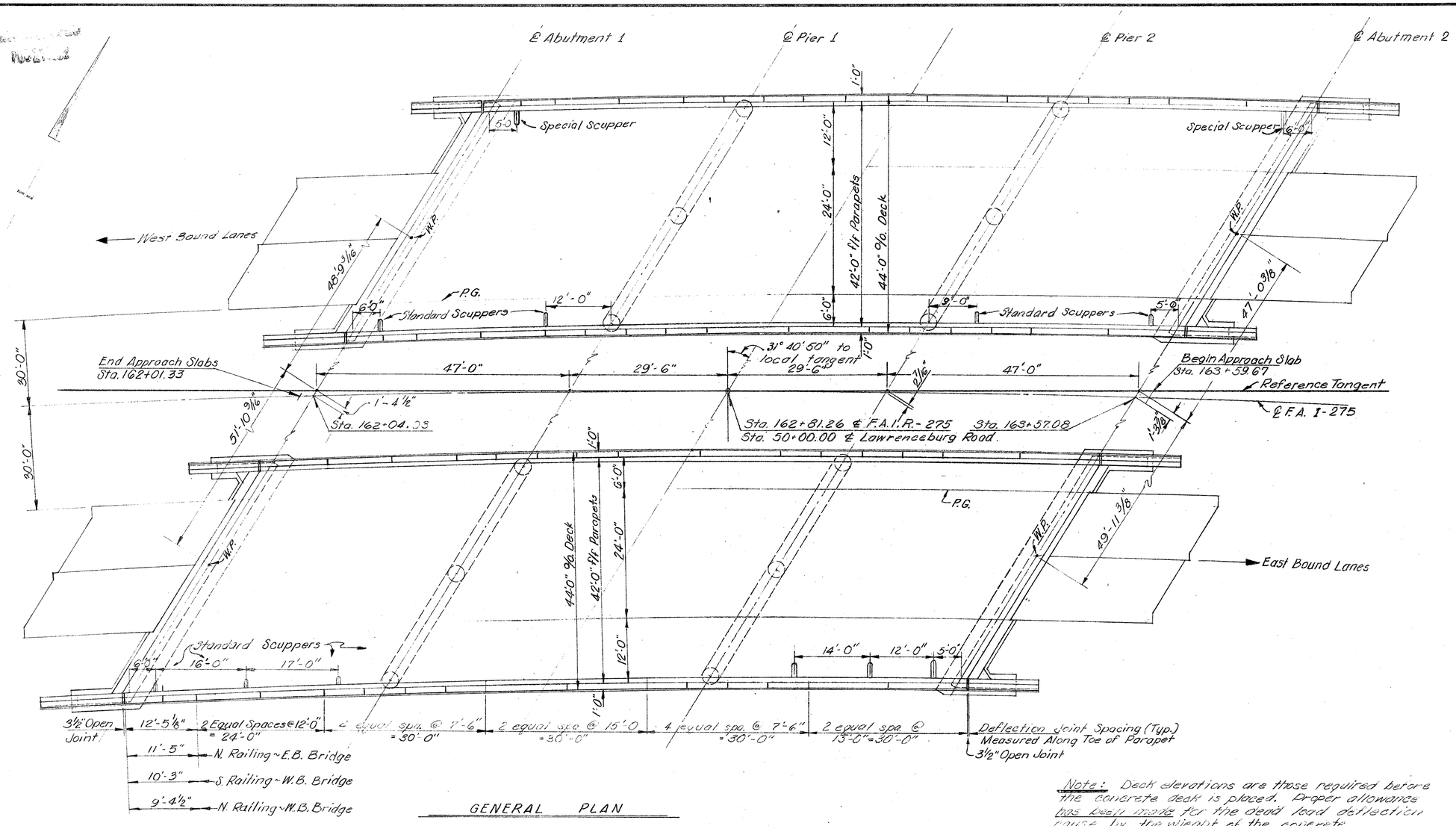

GENERAL PLAN

Note: Deck elevations are those required before the concrete deck is placed. Proper allowance has been made for the dead load deflection cause by the wieght of the concrete.

DECK ELEVATIONS (West Bound Lane)					
LOCATION		Toe of North Parapet		Toe of South Parapet	
		STATION	Elev.	STATION	Elev.
Span No. 1	Abutment No. 1	162 + 45.51	508.96	162 + 20.17	507.01
	1/4 Pt.	162 + 57.05	508.98	162 + 31.93	507.03
	1/2 Pt.	162 + 68.59	508.99	162 + 43.69	507.04
	3/4 Pt.	162 + 80.13	508.97	162 + 55.45	507.02
Span No. 2	Pier No. 1	162 + 91.68	508.96	162 + 67.19	507.01
	1/4 Pt.	163 + 05.91	508.98	162 + 81.64	507.03
	1/2 Pt.	163 + 20.14	508.99	162 + 96.09	507.04
	3/4 Pt.	163 + 34.37	508.98	163 + 10.54	507.03
Span No. 3	Pier No. 2	163 + 48.61	508.96	163 + 25.01	507.01
	1/4 Pt.	163 + 59.64	508.97	163 + 36.59	507.02
	1/2 Pt.	163 + 71.07	508.99	163 + 48.17	507.04
	3/4 Pt.	163 + 82.30	508.98	163 + 59.75	507.03
	Abutment No. 2	163 + 93.55	508.96	163 + 71.33	507.01

DECK ELEVATIONS (East Bound Lane)					
LOCATION		Toe of North Parapet		Toe of South Parapet	
		STATION	Elev.	STATION	Elev.
Span No. 1	Abutment No. 1	161 + 87.03	507.77	161 + 59.58	504.82
	1/4 Pt.	161 + 99.17	507.79	161 + 71.95	504.84
	1/2 Pt.	162 + 11.21	507.80	161 + 84.32	504.85
	3/4 Pt.	162 + 20.33	507.78	161 + 96.69	504.83
Span No. 2	Pier No. 1	162 + 35.44	507.77	162 + 09.07	504.82
	1/4 Pt.	162 + 50.44	507.79	162 + 24.30	504.84
	1/2 Pt.	162 + 65.45	507.80	162 + 39.53	504.85
	3/4 Pt.	162 + 80.45	507.79	162 + 54.76	504.84
Span No. 3	Pier No. 2	162 + 95.47	507.77	162 + 69.97	504.82
	1/4 Pt.	163 + 07.36	507.78	162 + 82.10	504.83
	1/2 Pt.	163 + 19.26	507.80	162 + 94.20	504.85
	3/4 Pt.	163 + 31.15	507.79	163 + 06.30	504.84
	Abutment No. 2	163 + 43.04	507.77	163 + 18.43	504.82

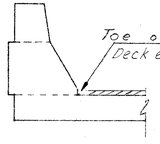

2/14

VOGT, IVERS, & ASSOCIATES
ENGINEERS CINCINNATI
ARCHITECTS CHICAGO

GENERAL PLAN

BRIDGE NO. HAM-275-0306 L/R
F.A.I. ROUTE 275
OVER LAWRENCEBURG ROAD

HAMILTON COUNTY STA. 162+81.26

DESIGNED	DRAWN	TRACED	CHECKED	REVIEWED	DATE	REVISED
W.L.S.	G.M.	—	N.G.I.	GGE	10-9-68	

FED. RD. DIVISION	STATE	PROJECT	
2	OHIO		

255
302

GENERAL NOTES

REFERENCE SHALL BE MADE TO STANDARD DRAWINGS NO:

RB-1-55 REVISED 2-2-59
SD-1-69 SHEETS 1 THROUGH 4 DATED 6-12-69
BR-1-67 *Revised 10-15-71*
AS-1-72 *Sheet 1 and 2 - dated 6-30-72*
AND TO SUPPLEMENTAL SPECIFICATIONS:

NO. 808 DATED 1-1-*71*

NO. 836 DATED *1-1-71*

DESIGN SPECIFICATIONS:

THIS STRUCTURE CONFORMS TO "STANDARD SPECIFICATIONS FOR HIGHWAY BRIDGES" ADOPTED BY THE AMERICAN ASSOCIATION OF STATE HIGHWAY OFFICIALS, 1965, INCLUDING THE OHIO "SUPPLEMENT" TO THESE SPECIFICATIONS.

DESIGN DATA:

DESIGN LOADING: - HS 20-44 AND THE INTERSTATE ALTERNATE LOADING

CONCRETE CLASS C - UNIT STRESS 1,200 PSI FOR SUPERSTRUCTURE
UNIT STRESS 1,333 PSI FOR SUBSTRUCTURES

STRUCTURAL STEEL - ASTM A36 UNIT STRESS 20,000 PSI

* REINFORCING STEEL - ASTM A615, A616, OR A617. UNIT STRESS 20,000 PSI. SPIRAL REINFORCEMENT *MAY* BE PLAIN BARS, ASTM A306 , A499, *A82 or A615.*

PROCEDURE:

THE EMBANKMENTS SHALL BE CONSTRUCTED TO THE LEVEL OF THE SUBGRADE FOR A MINIMUM DISTANCE OF 200 FEET BACK OF THE ABUTMENTS. EXCAVATION MAY THEN BE MADE FOR THE ABUTMENTS AND FOR PIERS.

PILES SHALL BE DRIVEN TO A MINIMUM BEARING CAPACITY OF 35 TONS PER PILE FOR THE ABUTMENTS AND 45 TONS PER PILE FOR THE PIERS.

WELDS

WELDS ON NON-STRESS CARRYING MEMBERS ARE SHOWN THUS: 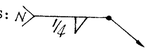

* *If bars in accordance with ASTM A616 are provided they shall be subject to bend tests as per AASHO Designation M 42-70.*

Jacking holes shown on Std. Drwg. AS-1-72, Shall not be provided.

ESTIMATED QUANTITIES (Both Bridges)

ITEM	TOTAL	UNIT	DESCRIPTION	SUPER.	ABUT.	PIER	GEN.	AS BUILT	
503	Lump	Sum	Cofferdams, Cribs, & Sheeting				Lump		
503	838	Cu. Yds.	Unclassified excavation		596	242			
505	Lump	Sum	Test pile				Lump		
507	6200	Lin. Ft.	12" Cast-in-place reinforced concrete piles		3000	3200			
509	*205,779*	Lbs.	Reinforcing steel	124301	*29,689*	*51789*			
511	459	Cu. Yds.	Class C concrete, superstructure	*459*					
511	154	Cu. Yds.	Class C concrete, piers above footings			154			
511	244	Cu Yds.	Class C concrete, abutments above footings		244				
511	290	Cu. Yds.	Class C concrete, footings		184	106			
513	312 000	Lbs.	Structural steel	312 000					
518	106	Cu. Yds.	Porous backfill		106				
518	174	Lin. Ft.	6" perforated, helical CMP, including specials, 707.01		174				
518	170	Lin. Ft.	6" non-perforated, helical CMP, 707.01		170				
518	12	Each	Scuppers, including supports	12					
518	*450*	*Lin.Ft.*	*Subdrainage for wearing surface*	*450*					
601	1695	Sq. Yds.	Crushed aggregate slope protection				1695		
808	459	Units	*Chemical admixture for concrete, Type A, B or D.*	459					
514	312 000	Lbs.	Field painting of structural steel	312000					
404	*77*	*Cu. Yds*	*Asphalt Concrete (70-85 or AC 20)*	*77*					
Special	*19*	*Cu. Yds.*	*Sand-Asphalt (See proposal note)*	*19*					
Special	*1395*	*Sq. Yds.*	*Membrane Waterproofing, Sheet type, (see proposal note)*	*1395*					
Calculated by: JKP			,Date *3.10*,19*70*						
Checked by: [illegible]			,Date *3.10*,19*70*						

3/14

VOGT, IVERS, & ASSOCIATES
ENGINEERS CINCINNATI — ARCHITECTS CHICAGO

GENERAL NOTES & ESTIMATED QUANTITIES
BRIDGE NO. HAM-275-0306 L/R
F.A.I. ROUTE 275
OVER LAWRENCEBURG ROAD
HAMILTON COUNTY STA. 162+81.26

ESTIMATED QUANTITIES D.C.H. 9-4-68 COMPUTED
W.L.S. 9-10-68 CHECKED

Designed	Drawn	Traced	Checked	Reviewed	Date	Revised
W.L.S. 9-10-68	D-W-M	—	D.C.H. 9-4-68	[illegible]	10-9-68	

FED. RD. DIVISION	STATE	PROJECT	TYPE FUNDS
2	OHIO		

256/302

HAM-275-0.00

Parapet transitions (and wingwall ends) shall be as shown on Std. Drwg. BR-1-67 revised 10-15-71 Reinforcing steel shall be field bent or cut to fit the revised shape

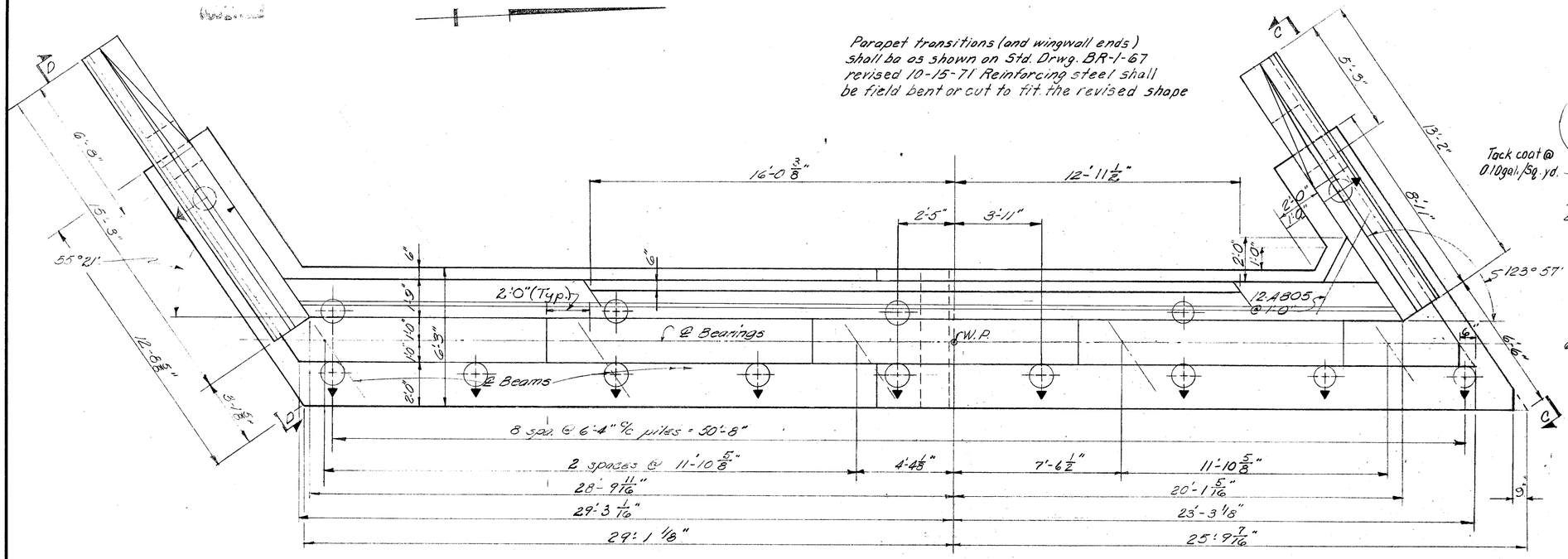

PLAN

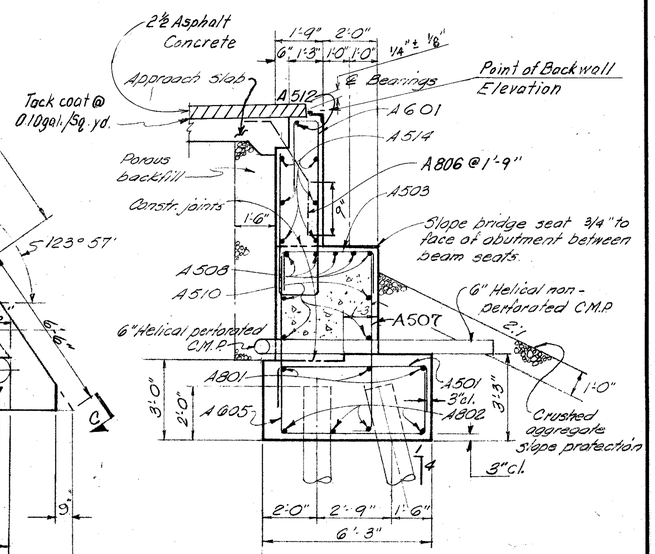

SECTION A-A

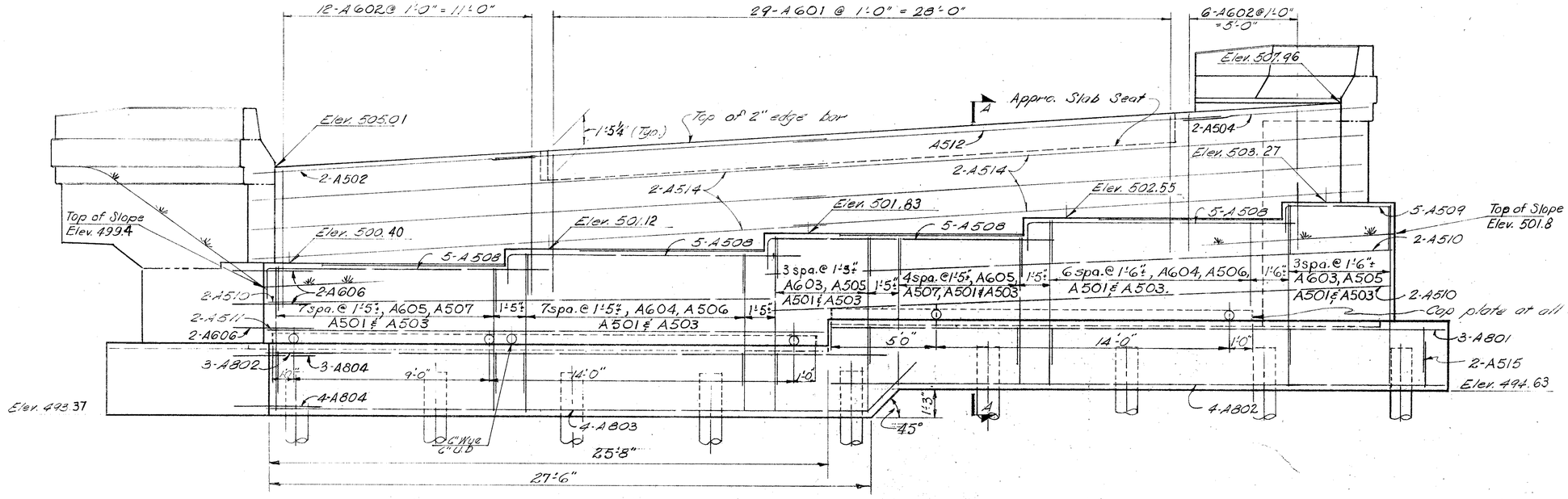

ELEVATION

NOTE:
For location of W.P. from reference tangent, see General Plan, sheet no. 2/14.

Indicates pile battered 1:4

POROUS BACKFILL, 1.5' thick for full length of the abutment and wings, shall extend up to the subgrade or to the finished ground surface.

For additional approach slab details see Std Drwg. AS-1-72. Approach slab width is 24'-0" measured radially.

4/14

VOGT, IVERS, & ASSOCIATES
ENGINEERS CINCINNATI — ARCHITECTS CHICAGO

ABUTMENT NO. 1 EAST BOUND

BRIDGE NO. HAM-275-0306 R
F.A.I. ROUTE 275
OVER LAWRENCEBURG ROAD

HAMILTON COUNTY STA. 162 + 81.26

DESIGNED	DRAWN	TRACED	CHECKED	REVIEWED	DATE	REVISED
W.L.S.	W.L.S.	G.M.	DGH.	GGG	10-9-68	

FED. RD. DIVISION	STATE	PROJECT	TYPE FUNDS
2	OHIO		

257/302

HAM-275-0.00

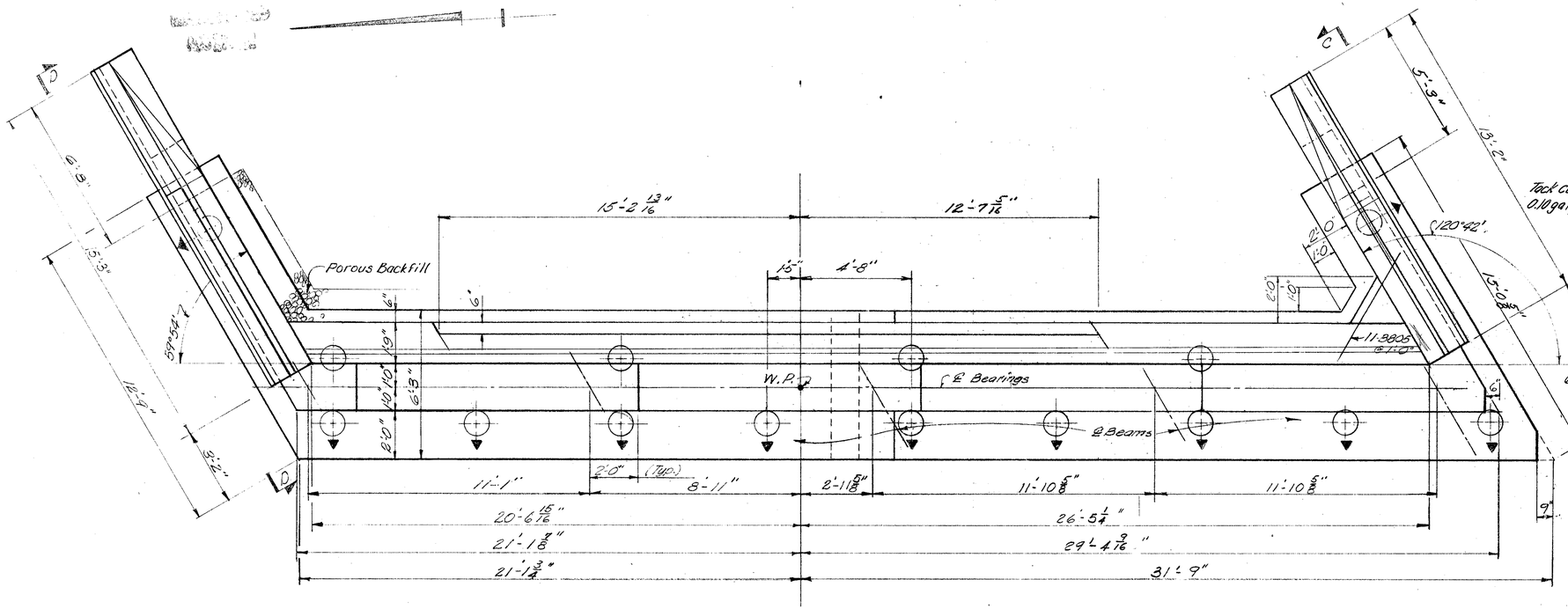

PLAN

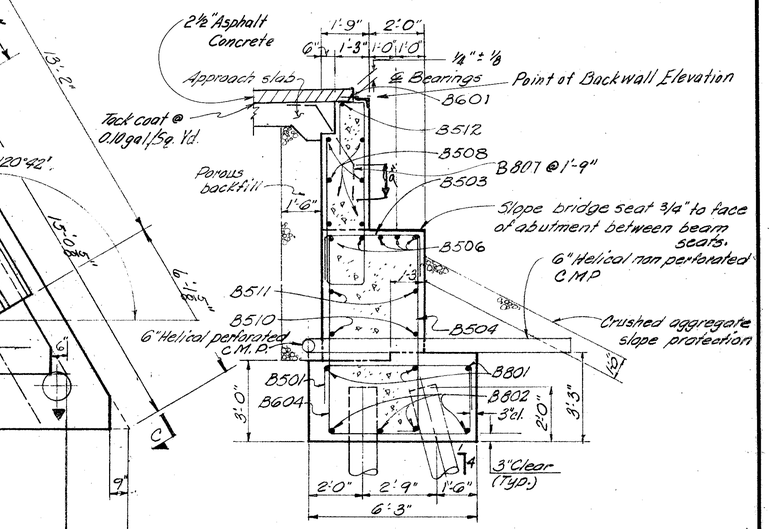

SECTION A-A

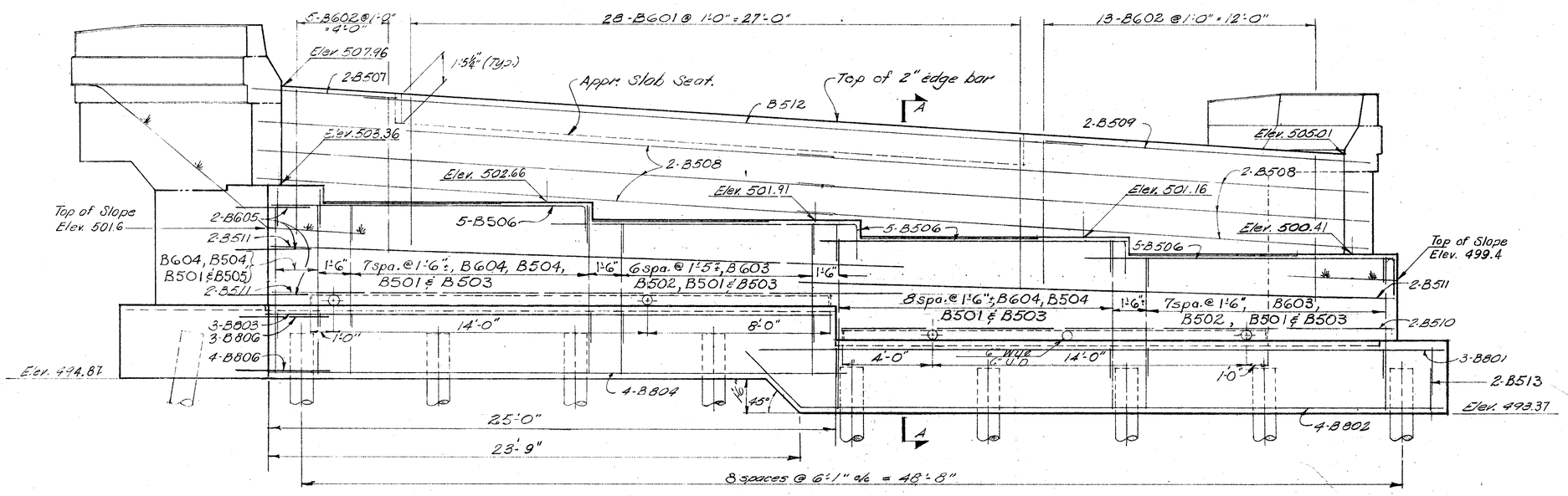

ELEVATION

NOTE:
For location of W.P. from reference tangent, see General Plan, sheet no. 2/14
POROUS BACKFILL 1.5' thick for full length of the abutment and wings, shall extend up to the subgrade or to the finished ground line.

⊕ Indicates pile battered 1:4

For additional approach slab details see Std. Drwg AS-1-72 Approach slab width is 24'-0" measured radially.

5/14

VOGT, IVERS, & ASSOCIATES
ENGINEERS CINCINNATI — ARCHITECTS CHICAGO

ABUTMENT NO. 2 EAST BOUND

BRIDGE NO. HAM-275-0306 R
F.A.I. ROUTE 275
OVER LAWRENCEBURG ROAD

HAMILTON COUNTY STA. 162 + 81.26

DESIGNED	DRAWN	TRACED	CHECKED	REVIEWED	DATE	REVISED
W.L.S.	W.L.S.	G.M.	D.G.H.	GGG	10-9-68	

FED. RD. DIVISION	STATE	PROJECT	TYPE FUNDS
2	OHIO		

258
302

HAM - 275 - 0.00

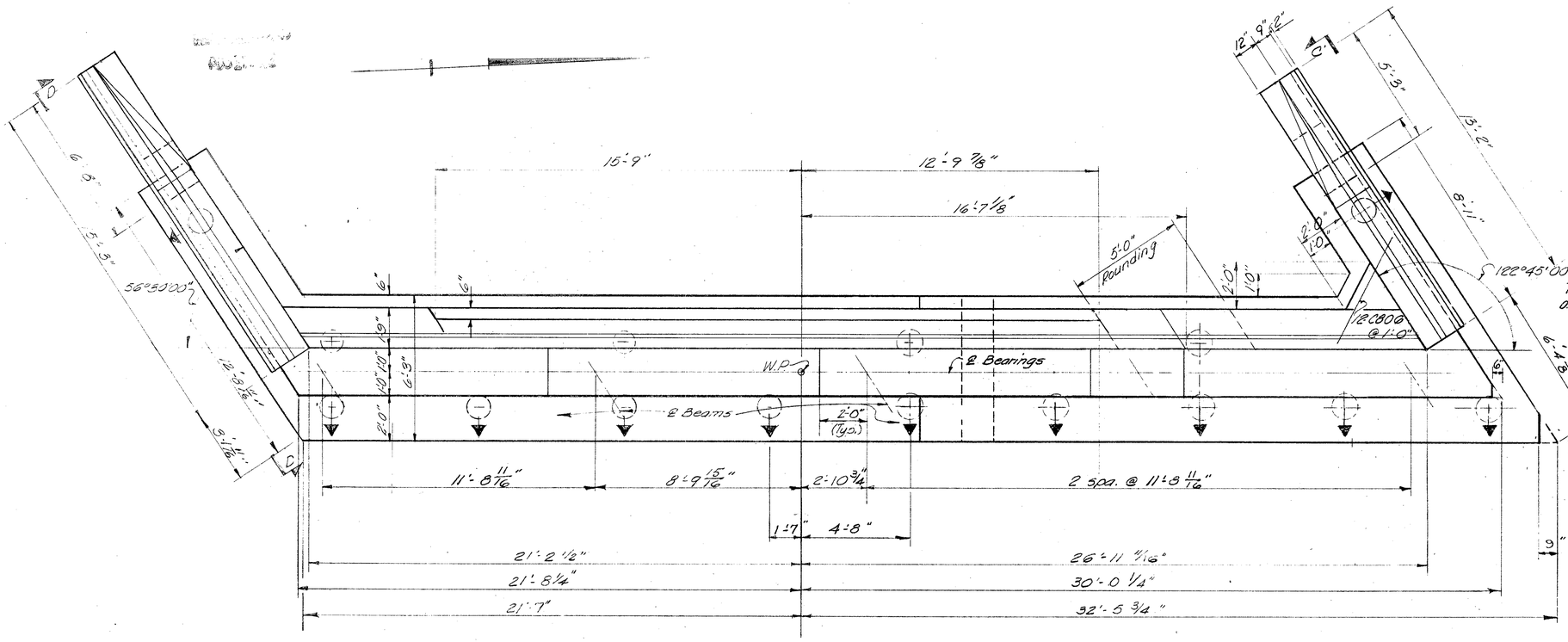

PLAN

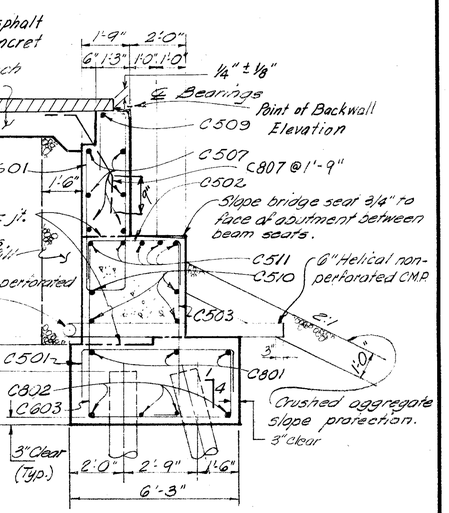

SECTION A-A

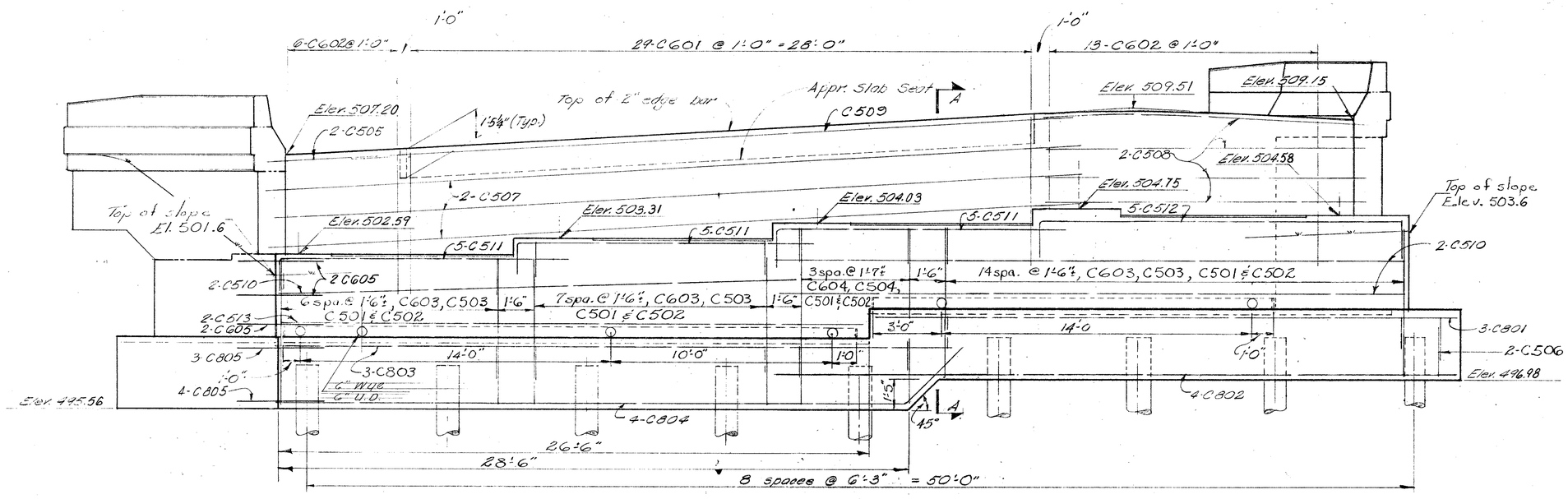

ELEVATION

NOTE: For location of W.P. from reference tangent, See General Plan, Sheet No. 2/14.

Denotes piles battered @ 1:4 in the direction of the arrow.

POROUS BACKFILL 1.5' thick for full length of the abutment and wings, shall extend up to the subgrade or to the finished ground.

For additional approach slab details see Std Drwg. AS-1-72. Approach Slab width is 24'-0" measured radially.

6/14

VOGT, IVERS, & ASSOCIATES
ENGINEERS CINCINNATI — ARCHITECTS CHICAGO

ABUTMENT NO. 1 WEST BOUND

BRIDGE NO. HAM-275-0306 L

F.A.I. ROUTE 275

OVER LAWRENCEBURG ROAD

HAMILTON COUNTY STA. 162 + 81.26

DESIGNED	DRAWN	TRACED	CHECKED	REVIEWED	DATE	REVISED
W.L.S.	W.L.S.	G.M.	B.G.K.	[illegible]	10-9-68	

FED. RD. DIVISION	STATE	PROJECT	TYPE FUNDS
2	OHIO		

259/302

HAM-275-0.00

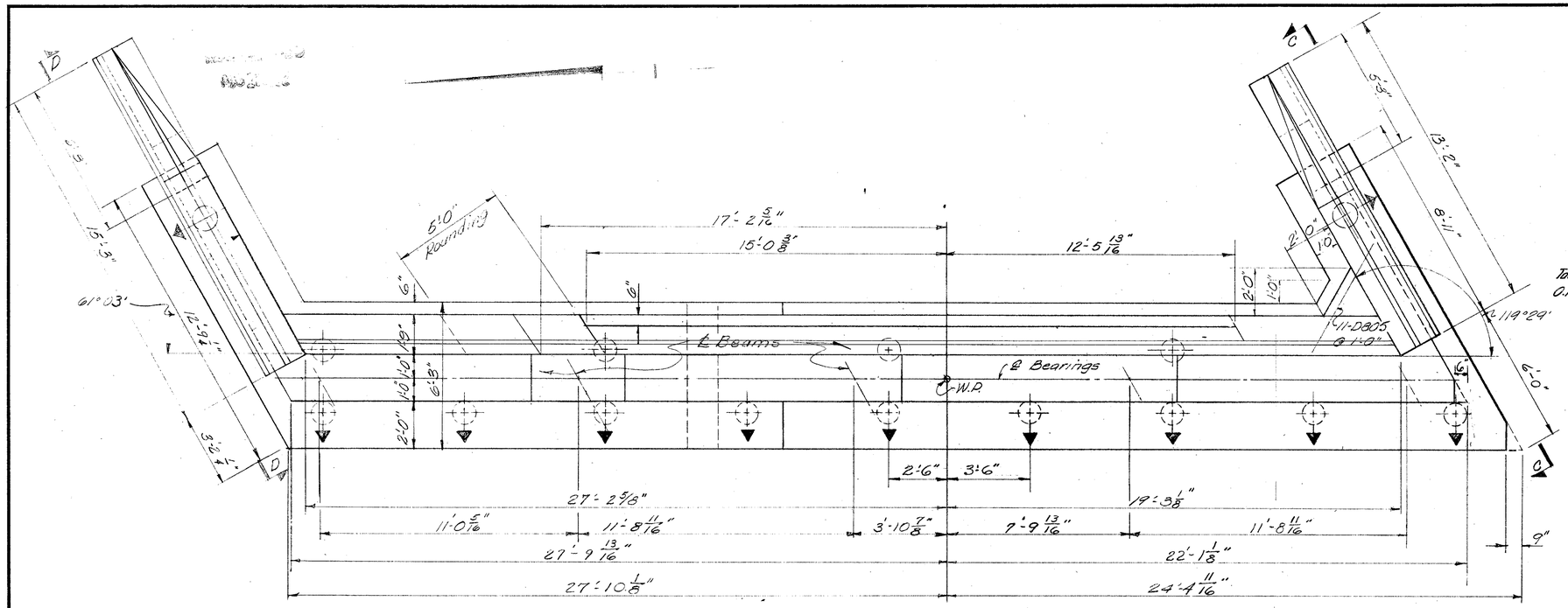

PLAN

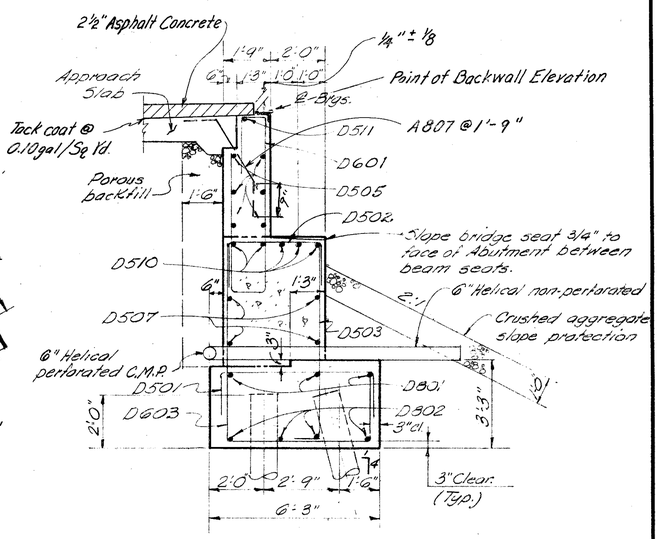

SECTION A-A

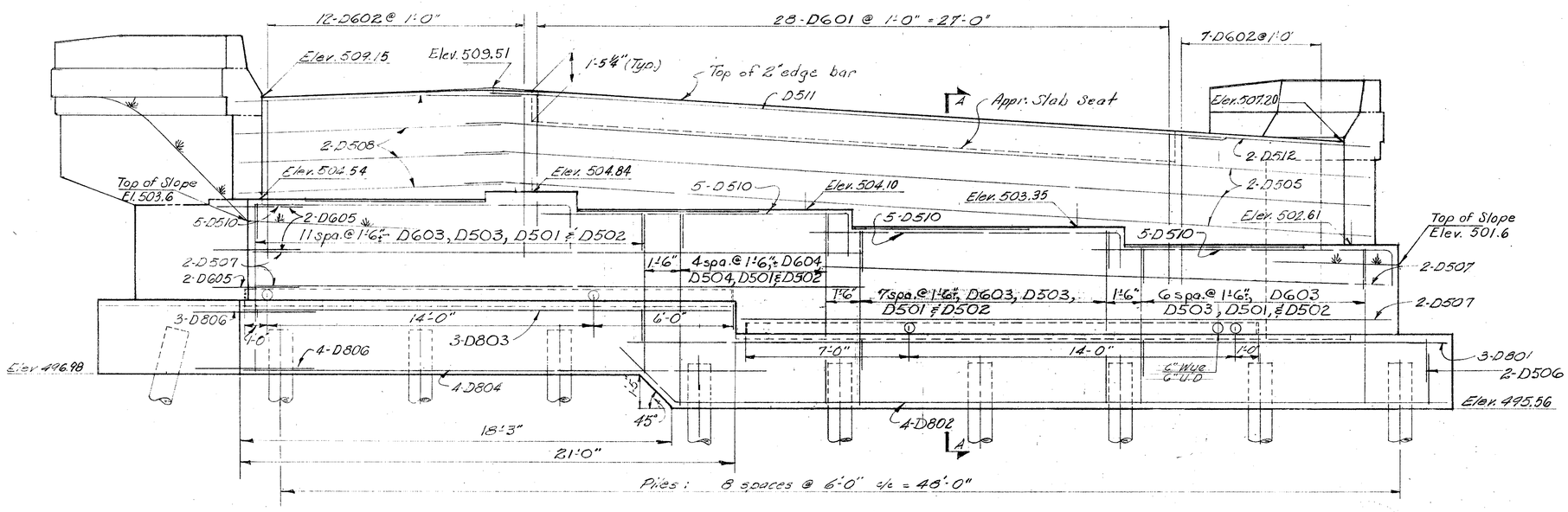

ELEVATION

NOTE:
For location of W.P. from Reference Tangent, see General Plan sht. 2/14.

Denotes pile battered @ 1:4 in the direction of the arrow.

POROUS BACKFILL, 1.5' thick for full length of the abutment and wings, shall extend up to the subgrade or to the finished ground surface.

For additional approach slab details see Std. Drwg. AS-1-72. Approach Slab width is 24'-0" measured radially.

7/14

VOGT, IVERS, & ASSOCIATES
ENGINEERS CINCINNATI — ARCHITECTS CHICAGO

ABUTMENT NO. 2 WEST BOUND

BRIDGE NO. HAM-275-0306 L
F.A.I. ROUTE 275
OVER LAWRENCEBURG ROAD

HAMILTON COUNTY STA. 162 + 81.26

DESIGNED	DRAWN	TRACED	CHECKED	REVIEWED	DATE	REVISED
W.L.S.	W.L.S.	G.M.	D.G.A.	D.G.A.	10-9-68	

FED. RD. DIVISION	STATE	PROJECT	TYPE FUNDS
2	OHIO		

260/302

HAM-275-0.00

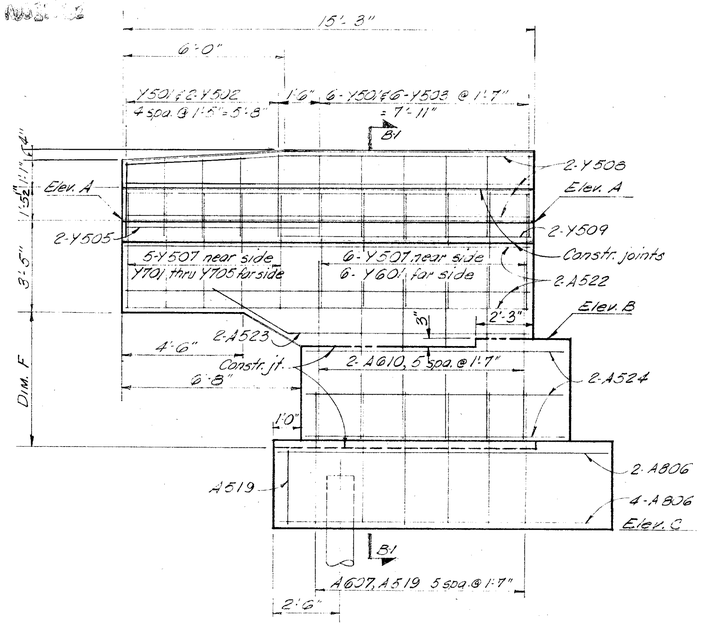

VIEW D-D

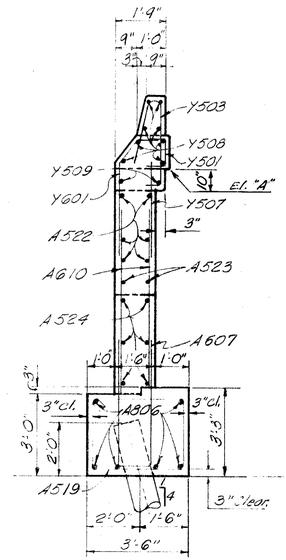

SECTION B-1-B-1

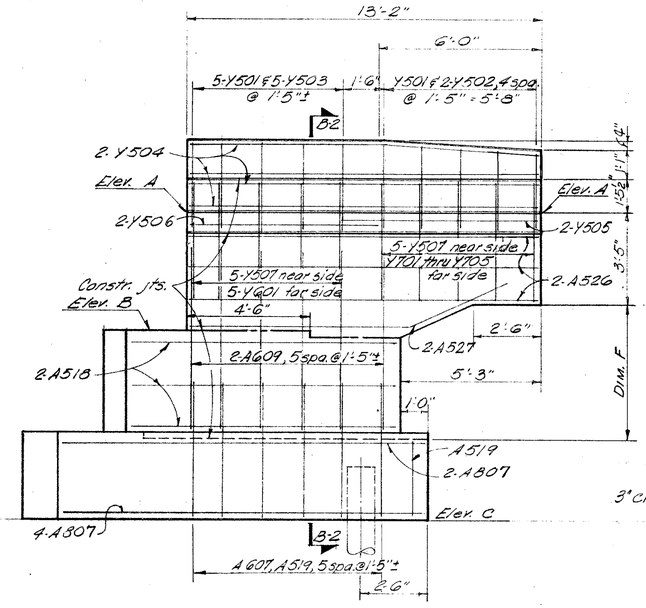

VIEW C-C

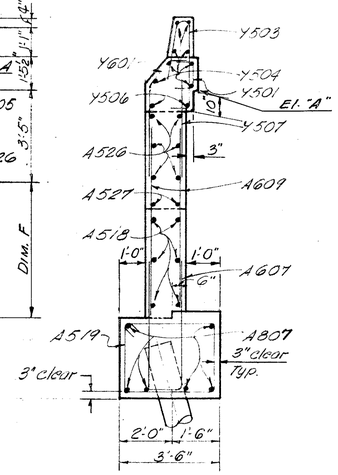

SECTION B-2-B-2

VIEWS	LOCATION OF WINGWALLS		ELEV. A	ELEV. B	ELEV. C	DIM. F
VIEW C-C	NORTH WINGWALL	Abutment 1 (E.B.)	507.77	508.27	494.63	6'-8 5/8"
		Abutment 1 (W.B.)	508.96	504.58	496.98	5'-6 3/4"
	SOUTH WINGWALL	Abutment 2 (E.B.)	504.82	500.41	493.37	5'-0 3/8"
		Abutment 2 (W.B.)	507.01	502.60	495.56	5'-0 3/8"
VIEW D-D	NORTH WINGWALL	Abutment 2 (E.B.)	507.77	503.36	494.87	6'-5 3/4"
		Abutment 2 (W.B.)	508.96	504.54	496.98	5'-6 3/4"
	SOUTH WINGWALL	Abutment 1 (E.B.)	504.82	500.40	493.37	5'-0 3/8"
		Abutment 1 (W.B.)	507.01	502.59	495.56	5'-0 3/8"

DEFLECTION AND CAMBER

		SPAN 1			SPAN 2				SPAN 3		
		1/4	1/2	3/4	Splice		1/2		Splice	1/4	1/2	3/4
Deflection due to weight of steel beam		0	1/32	0	0		1/32		0	0	1/32	0
Deflection due to remaining dead load	Ext. beam	3/16	1/4	3/32	3/16		11/32		3/16	3/32	1/4	3/16
	Int. beam	1/4	9/32	1/8	7/32		3/8		7/32	1/8	9/32	1/4
*Required shop Camber	Ext. beam	3/16	9/32	3/32	3/16		3/8		3/16	3/32	9/32	3/16
	Int. beam	1/4	5/16	1/8	7/32		13/32		7/32	1/8	5/16	1/4

NOTE:
FOR ADDITIONAL DETAILS NOT SHOWN ~ SEE STANDARD DRAWING BR-1-67 SHEET No. 1.

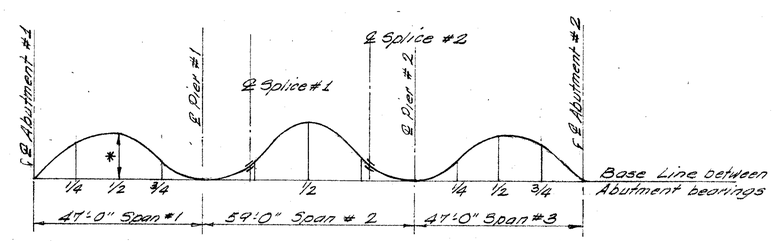

CAMBER DIAGRAM

8/14

VOGT, IVERS, & ASSOCIATES
ENGINEERS CINCINNATI — ARCHITECTS CHICAGO

ABUTMENT WINGWALLS
& SUPERSTRUCTURE DETAILS
BRIDGE NO. HAM-275-0306 L/R
F.A.I. ROUTE 275
OVER LAWRENCEBURG ROAD

HAMILTON COUNTY STA. 162+81.26

DESIGNED	DRAWN	TRACED	CHECKED	REVIEWED	DATE	REVISED
W.L.S.	W.L.S.	G.M.	DGH.	GGH.	10-9-68	

FED. RD. DIVISION	STATE	PROJECT	TYPE FUNDS
2	OHIO		

HAM - 275 - 0.00

261/302

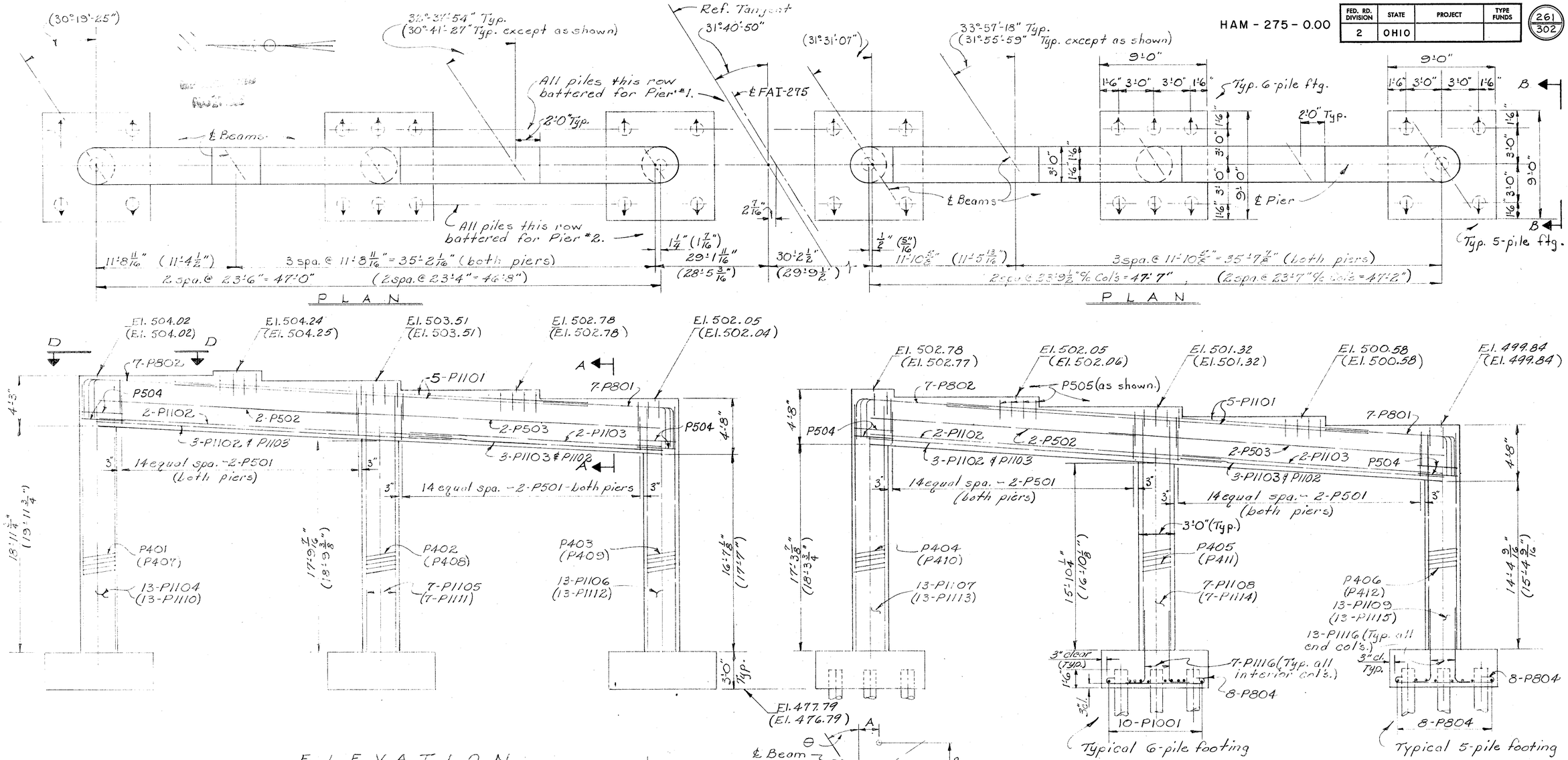

NOTE:
Elevations & Dimensions shown in brackets are for Pier No. 2.

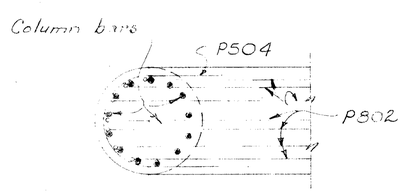

SECTION D-D

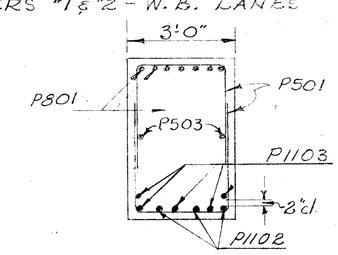

SECTION A-A

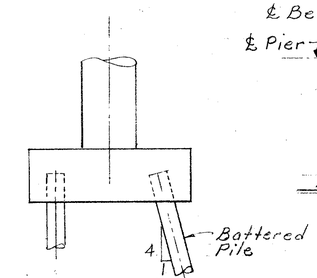

SECTION B-B
Pier #1 Shown

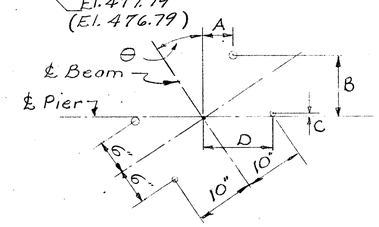

ANCHOR BOLT LAYOUT
BRG. - B-200

	θ	A	B	C	D
Beams E.B. Lane	33°-57'-18"	4 15/16"	10 9/16"	5/8"	11 5/8"
Beams W.B. Lane	32°-31'-54"	5 3/16"	10 1/2"	5/16"	11 5/8"

SPECIAL CARE shall be taken in placing reinforcing steel in the vicinity of the bridge seat so as to avoid interference with the drilling of anchor bolt holes in Pier #1.

9/14

VOGT, IVERS, & ASSOCIATES
ENGINEERS — CINCINNATI
ARCHITECTS — CHICAGO

PIER DETAILS
BRIDGE NO. HAM-275-0306 L/R
F.A.I. ROUTE 275
OVER LAWRENCEBURG ROAD
HAMILTON COUNTY STA. 162 + 81.26

DESIGNED	DRAWN	TRACED	CHECKED	REVIEWED	DATE	REVISED
W.L.S.	D.C.H.	–	D.C.H.	[illegible]	10-9-68	

FED. RD. DIVISION	STATE	PROJECT	TYPE FUNDS
2	OHIO		

Note: X501 thru X504 bars shall be spaced at 1'-6" ctrs. minimum and shall clear parapet detection joints by 2".

Reference shall be made to BR 1-61 Sht. No. 1 for additional Bridge Roadway Railing and to Sht. 2/14 for Bar Lengths.

All longitudinal deck bars to be lapped 1'-7" min., except for S503 bars over piers.

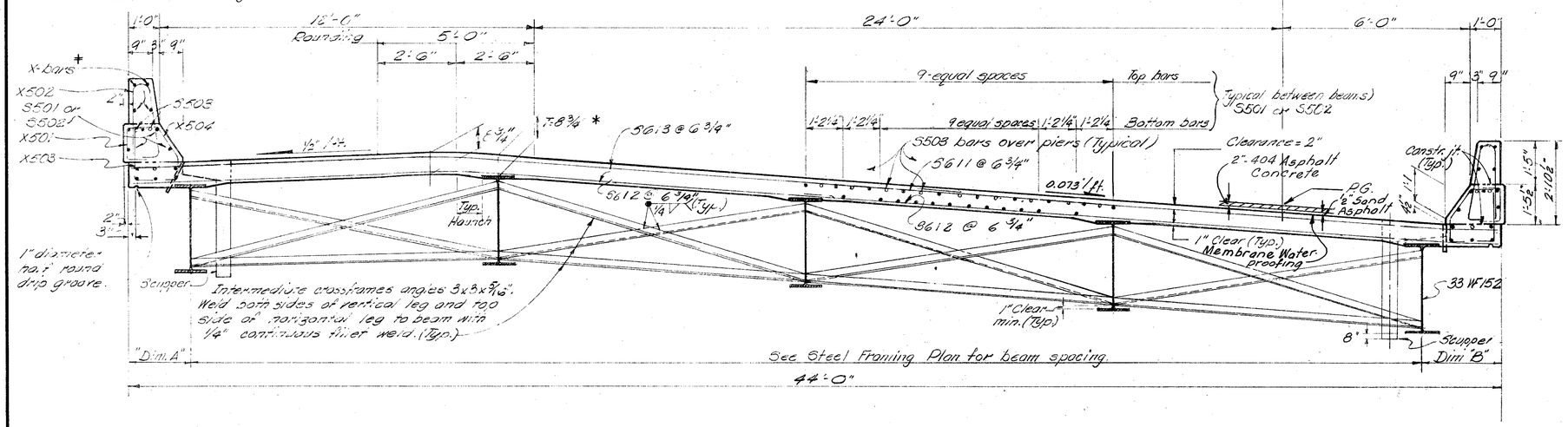

TYPICAL SECTION (W.B. LANES)

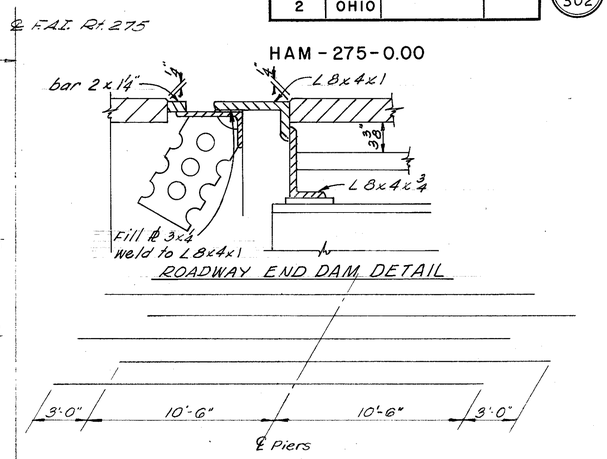

DIAGRAM SHOWING STAGGER OF S503 BARS OVER PIERS

Location	Dim. A	Dim. B	Dim. C	Dim. D
℄ Brng. Abutment #1	2'-9 7/8"	1'-9"	2'-10 5/16"	1'-9"
Midpoint Span #1	2'-8"	1'-8 3/16"	2'-8 7/16"	1'-8 1/16"
℄ Pier #1	2'-3 3/8"	1'-10"	2'-3 9/16"	1'-10"
Midpoint Span #2	2'-2 7/16"	1'-9"	2'-2 3/8"	1'-8 3/4"
℄ Pier #2	2'-3 1/2"	1'-7"	2'-3 3/4"	1'-6 5/16"
Midpoint Span #3	2'-1 7/16"	1'-8 1/4"	2'-1 11/16"	1'-8"
℄ Brng. Abutment #2	1'-9"	2'-0"	1'-9"	2'-0"

All Dimensions Shown are Radial.

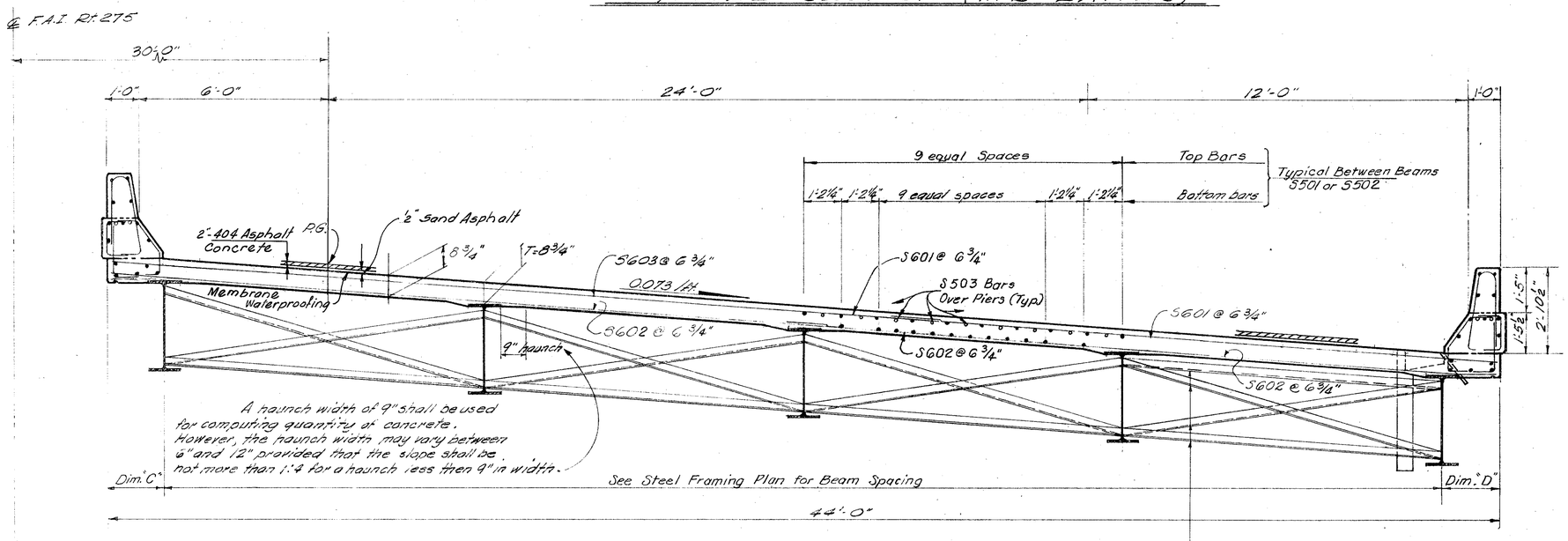

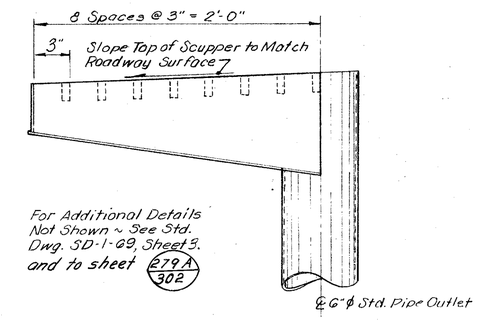

SPECIAL SCUPPER DETAILS

DECK SLAB DEPTH: The distance shown from top of deck slab to top of steel beam is the design dimension. The quantity of deck concrete to be paid for shall be based on this dimension, even though deviation from it may be necessary because the top flange of the beam may not have the exact camber or conformation required to place it parallel to the finished grade.

TYPICAL SECTION (E.B. LANES)

Structural subdrainage tubing shall be used as shown in the typical transverse sections for the full length of the bridge. For additional details see Deck Drainage Details Sht. No. 279A/302

DECK FINISHING: Texturing of the deck surface as provided in 451.09 shall not be done

#RAILING PANEL REINFORCING	
X 505	15'-0" Panel
X 506	7'-6" Panel
X 507	12'-0" Panel
X 508	12'-5 1/8" Panel
X 509	11'-5" Panel
X 510	10'-3" Panel
X 511	9'-4 1/2" Panel

10/14

VOGT, IVERS, & ASSOCIATES
ENGINEERS — CINCINNATI
ARCHITECTS — CHICAGO

SUPERSTRUCTURE

BRIDGE NO. HAM-275-0306 L/R

F.A.I. ROUTE 275

OVER LAWRENCEBURG ROAD

HAMILTON COUNTY — STA. 162 + 81.26

DESIGNED	DRAWN	TRACED	CHECKED	REVIEWED	DATE	REVISED
W.L.S.	W.L.S.	G.M.	D.G.H.	[illegible]	10-9-68	

FED. RD. DIVISION	STATE	PROJECT	TYPE FUNDS
2	OHIO		

263/302

HAM - 275 - 0.00

NOTE: Beams ②, ③, & ④ are parallel to beam line ⑤.
Beams ⑦, ⑧, & ⑨ are parallel to beam line ⑩.

$\theta_1 = 2° 18' 29''$
$\theta_2 = 1° 56' 27''$
$\theta_3 = 2° 26' 11''$
$\theta_4 = 2° 01' 19''$

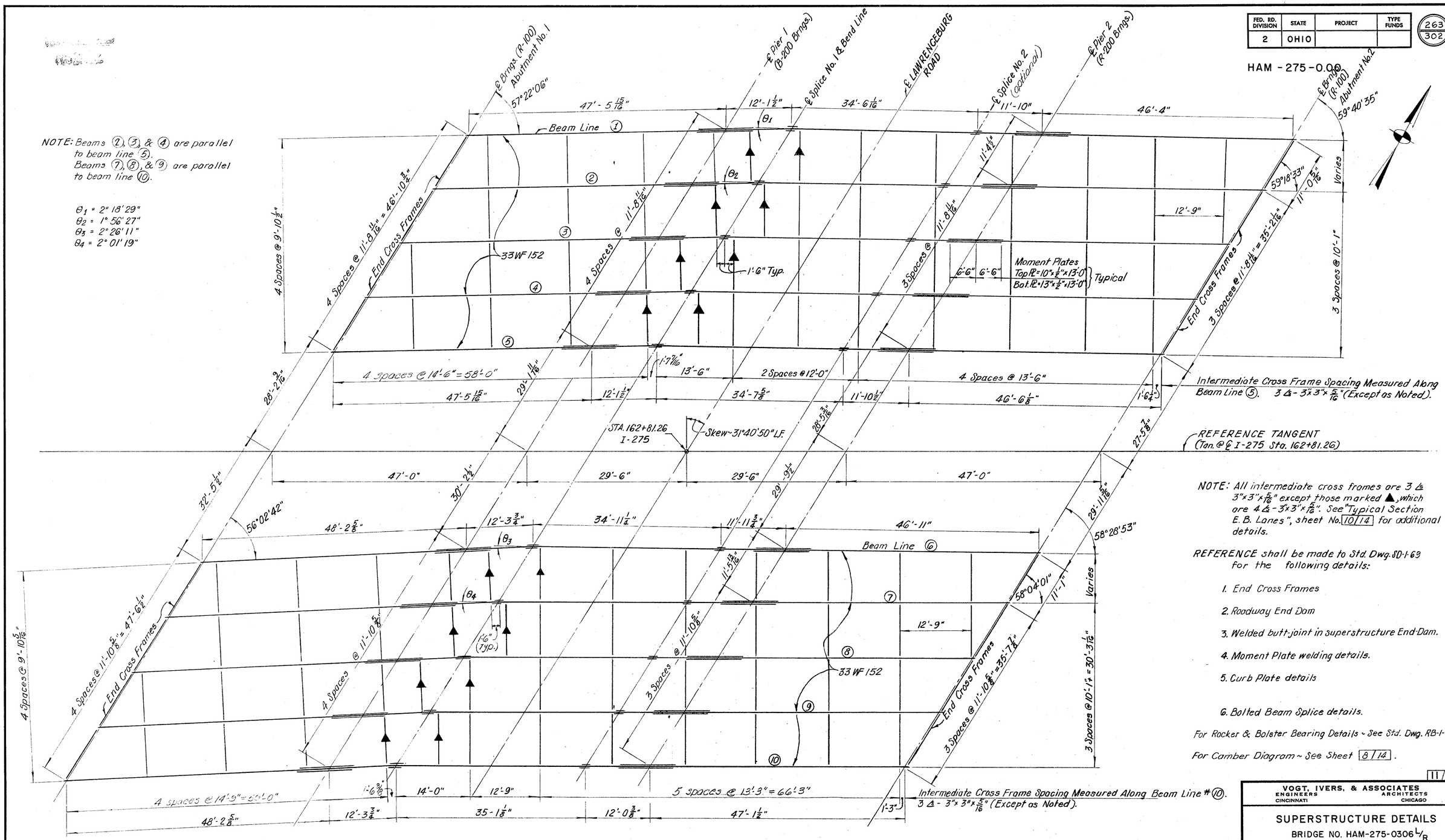

NOTE: All intermediate cross frames are 3 ∠ 3"x3"x5/16" except those marked ▲, which are 4 ∠ - 3"x3"x5/16". See "Typical Section E.B. Lanes", sheet No. 10/14 for additional details.

REFERENCE shall be made to Std. Dwg. SD-1-69 for the following details:

1. End Cross Frames
2. Roadway End Dam
3. Welded butt-joint in superstructure End-Dam.
4. Moment Plate welding details.
5. Curb Plate details
6. Bolted Beam Splice details.

For Rocker & Bolster Bearing Details ~ See Std. Dwg. RB-1-55.

For Camber Diagram ~ See Sheet 8/14.

STEEL FRAMING PLAN

11/14

VOGT, IVERS, & ASSOCIATES
ENGINEERS CINCINNATI — ARCHITECTS CHICAGO

SUPERSTRUCTURE DETAILS
BRIDGE NO. HAM-275-0306 L/R
F.A.I. ROUTE 275
OVER LAWRENCEBURG ROAD
HAMILTON COUNTY — STA. 162 + 81.26

DESIGNED	DRAWN	TRACED	CHECKED	REVIEWED	DATE	REVISED
W.L.S.	E.E.R.	D.W.M.	[illegible]	[illegible]	10-9-68	

FED. RD. DIVISION	STATE	PROJECT	TYPE FUNDS
2	OHIO		

264
302

HAM – 275 – 0.00

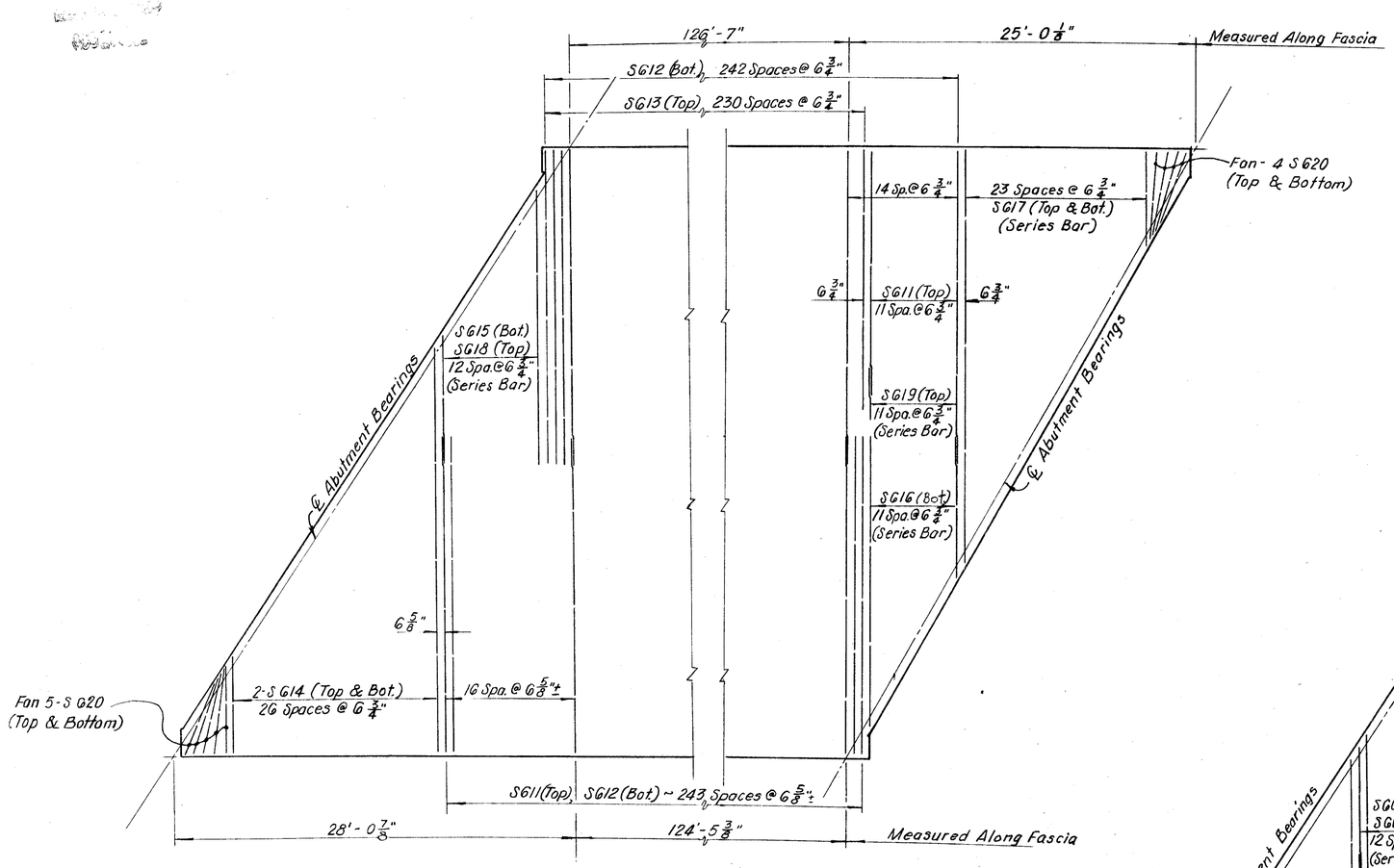

TRANSVERSE REINFORCING STEEL
W. B. BRIDGE

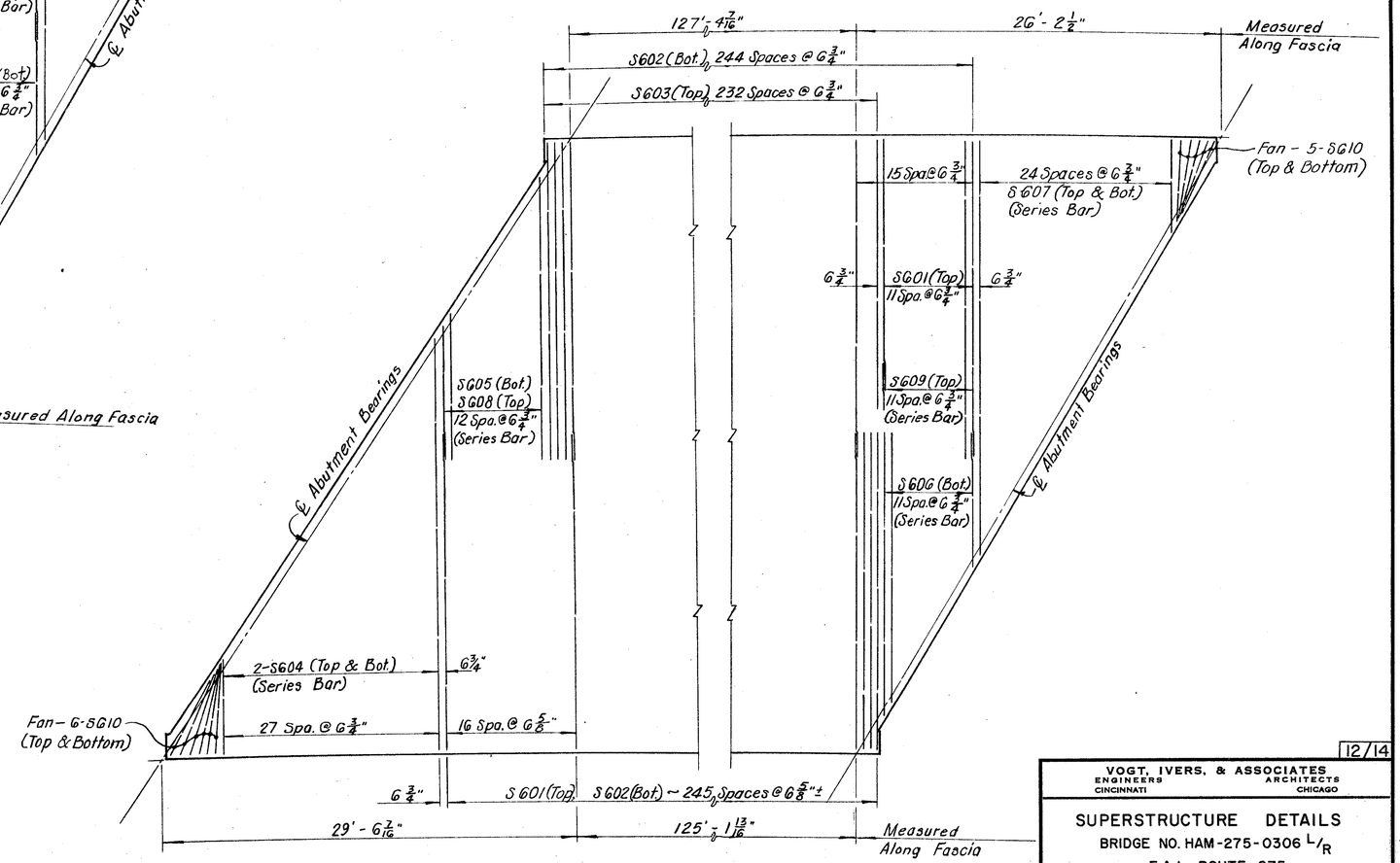

TRANSVERSE REINFORCING STEEL
E. B. BRIDGE

12/14

VOGT, IVERS, & ASSOCIATES
ENGINEERS CINCINNATI — ARCHITECTS CHICAGO

SUPERSTRUCTURE DETAILS
BRIDGE NO. HAM-275-0306 L/R
F.A.I. ROUTE 275
OVER LAWRENCEBURG ROAD
HAMILTON COUNTY STA. 162 + 81.26

DESIGNED	DRAWN	TRACED	CHECKED	REVIEWED	DATE	REVISED
W.L.S.	D·W·M	D·W·M	DGH.	EEE	10·9·68	

REINFORCING STEEL LIST

BRIDGE NO. HAM-275-0306 RIGHT

FED. RD. DIVISION	STATE	PROJECT	TYPE FUNDS
2	OHIO		

265/302

HAM-275-0.00

BENDING DIAGRAM

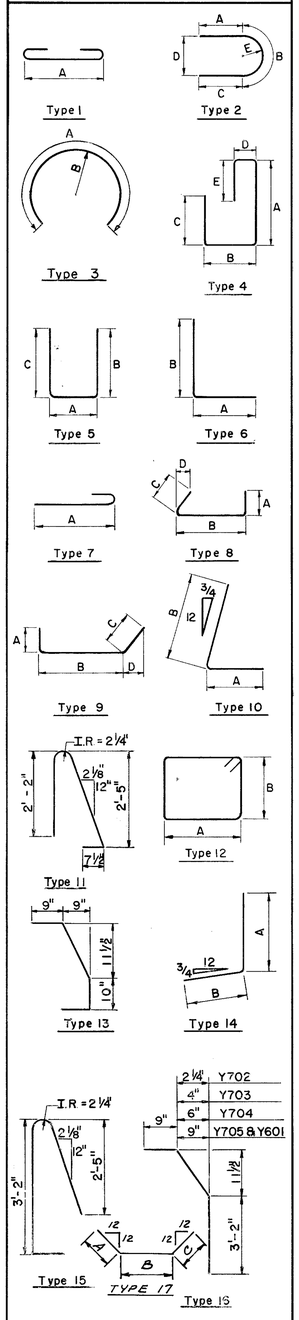

S IN THE COLUMN FOR "TYPE" INDICATES STRAIGHT BARS.

MARK	NO.	LENGTH	WEIGHT	TYPE	A	B	C	D	E
BRIDGE NO. HAM-275-0306 RIGHT (East Bound)									
SUPERSTRUCTURE									
S501	525	30'-0"	16427	S					
S502	105	14'-0"	1533	S					
S503	84	24'-0"	2103	S					
S601	258	18'-0"	6975	S					
S602	491	22'-10"	16839	S					
S603	233	27'-8"	9682	S					
S604	56	6'-11¾" to 30'-0"	1555	S	2 Each; Vary by 10¼"				
S605	13	10'-3" to 20'-6"	300	S	1 Each; Vary by 10¼"				
S606	12	10'-0" to 20'-6½"	275	S	1 Each; Vary by 11½"				
S607	50	6'-9" to 29'-9"	1371	S	2 Each; Vary by 11½"				
S608	13	15'-0" to 25'-3"	393	S	1 Each; Vary by 10¼"				
S609	12	15'-0" to 25'-6½"	365	S	1 Each; Vary by 11½"				
S610	22	6'-0"	198	S					
X501	238	2'-0"	496	5	1'-0"	0'-7½"	0'-7½"		
X502	238	5'-4"	1324	11					
X503	238	2'-3"	559	6	0'-7½"	1'-9"			
X504	238	3'-3"	807	13					
X505	32	14'-8"	490	S					
X506	64	7'-2"	478	S					
X507	16	11'-8"	195	S					
X508	4	12'-1"	50	S					
X509	4	11'-1"	46	S					
SUPERSTR. TOTAL			62461						
PIERS									
P1101	20	35'-0"	3719	S					
P1102	16	30'-0"	2550	S					
P1103	16	21'-1"	1792	S					
P1107	13	21'-4"	1473	S					
P1108	7	18'-10"	700	S					
P1109	13	18'-4"	1266	S					
P1113	13	22'-4"	1543	S					
P1114	7	19'-10"	738	S					
P1115	13	19'-4"	1335	S					
P1116	66	7'-5"	2601	6	1'-5½"	6'-3"			
P1001	20	11'-4"	975	1	8'-6"				
P801	14	13'-5"	502	14	3'-4"	10'-2"			
P802	14	13'-5"	502	10	3'-4"	10'-2			
P804	80	10'-8"	2278	1	8'-6"				
P501	120	9'-5"	1179	5	2'-8"	3'-6"	3'-6"		
P502	4	21'-4"	89	S					
P503	4	28'-1"	117	S					
P504	8	7'-4"	61	2	1'-7"	4'-2"	1'-7"	2'-8"	
P505	32	5'-5"	181	5	2'-8"	1'-6"	1'-6"		
PIER TOTAL			23601						
ABUTMENTS									
A801	3	24'-0" to 27'-6"	205	S	1 Each; Vary by 1'-9"				
A802	7	30'-0"	561	S					
A803	4	30'-9"	328	9	0	27'-3"	3'-6"	2'-6"	
A804	7	6'-0"	112	9	0	3'-0"	3'-0"	1'-8"	
A805	12	5'-3"	168	S					
A806	17	5'-1"	231	17	1'-6"	2'-10"	0'-9"		
A601	29	16'-9"	730	4	7'-0"	1'-5"	5'-6"	0'-11"	2'-6"
A602	18	15'-2"	410	5	1'-5"	7'-0"	7'-0"		
A603	8	15'-5"	185	5	5'-4"	7'-11"	2'-6"		
A604	15	14'-9"	332	5	5'-4"	7'-3"	2'-6"		
A605	13	14'-0"	273	5	5'-4"	6'-6"	2'-6"		
A606	6	4'-0"	36	9	0	2'-0"	2'-0"	1'-2"	
A501	36	8'-3"	310	5	5'-4"	1'-7"	1'-7"		
A502	2	14'-10"	30	S					
A503	36	6'-10"	256	5	3'-5"	1'-10"	1'-10"		
A504	2	8'-0"	17	S					
A505	8	8'-5"	70	6	0'-7½"	7'-11"			
A506	15	7'-9"	121	6	0'-7½"	7'-3"			
A507	13	7'-0"	95	6	0'-7½"	6'-6"			

MARK	NO.	LENGTH	WEIGHT	TYPE	A	B	C	D	E
A508	20	13'-6"	282	6	0'-7½"	13'-0"			
A509	5	4'-6"	23	6	0'-7½"	4'-0"			
A510	6	28'-3"	177	S					
A511	2	25'-6"	53	S					
A512	1	33'-0"	34	S					
A514	12	27'-0"	338	S					
A515	2	9'-10"	21	5	5'-11"	2'-1"	2'-1"		
B801	3	34'-3"	274	S		1 Eq. at; 25'-5", 26'-5", 27'-5", 28'-5"			
B802	4	28'-11" to 31'-11"	325	9	0	3'-6"	2'-6"		
B803	3	24'-8"	198	S					
B804	4	30'-0"	320	S					
B805	11	5'-3"	154	S					
B806	7	6'-0"	112	9	0	3'-0"	3'-0"	1'-5"	
B807	17	5'-1"	231	17	1'-6"	2'-10"	0'-9"		
B601	28	16'-9"	705	4	7'-0"	1'-5"	5'-6"	0'-11"	2'-6"
B602	18	15'-2"	410	5	1'-5"	7'-0"	7'-0"		
B603	15	14'-0	315	5	5'-4"	2'-6"	6'-6"		
B604	19	14'-9"	421	5	5'-4"	2'-6"	7'-3"		
B605	6	4'-0"	36	9	0	2'-0"	2'-0"	1'-0"	
B501	34	8'-3"	293	5	5'-4"	1'-7"	1'-7"		
B502	15	7'-0"	110	6	0'-7½"	6'-6"			
B503	34	6'-10"	242	5	3'-5"	1'-10"	1'-10"		
B504	19	7'-9"	154	6	0'-7½"	7'-3"			
B505	2	8'-4"	17	5	3'-5"	2'-7"	2'-7"		
B506	20	14'-4"	299	6	0'-7½"	13'-10"			
B507	2	7'-3"	15	S					
B508	12	25'-8"	321	S					
B509	2	14'-6"	30	S					
B510	2	23'-0"	48	S					
B511	6	28'-3"	177	S					
B512	1	32'-0"	33	S					
B513	2	9'-10"	21	5	5'-11"	2'-1"	2'-1"		
ABUTMENT TOTAL			10659						
ABUTMENT WINGS									
A806	12	12'-4"	395	S					
A807	12	12'-8"	405	S					
Y701	4	4'-4"	35	S					
Y702	4	4'-9"	39	16					
Y703	4	4'-10"	40	16					
Y704	4	4'-11"	40	16					
Y705	4	5'-0"	41	16					
Y601	22	5'-0"	165	16					
A607	24	11'-0"	397	5	1'-4"	5'-0"	5'-0"		
A609	24	8'-5"	303	S					
A610	24	8'-3"	297	S					
Y501	42	2'-0"	88	5	1'-0"	0'-7½"	0'-7½"		
Y502	40	2'-10"	118	S					
Y503	22	6'-5"	147	15					
Y504	16	12'-10"	214	S+					
Y505	8	7'-3"	60	S					
Y506	4	7'-3"	30	S					
Y507	42	2'-10"	124	S					
Y508	16	14'-11"	249	S+					
Y509	4	9'-4"	39	S					
A518	12	9'-6"	119	S					
A519	28	11'-8"	341	12	3'-0"	2'-7"			
A522	12	14'-11"	187	S					
A523	4	12'-7"	52	9	0	8'-9"	3'-10½"	3'-9"	
A524	12	9'-7"	120	S					
A526	12	12'-10"	161	S					
A527	4	11'-10"	49	9	0	8'-0"	3'-10½"	3'-9"	
ABUT. WING TOTAL			4255						
SUB-TOTAL —			100,976						
SPIRALS			1859						
TOTAL (E.B. BRIDGE)			102,830						

MARK	NO.	LENGTH	WEIGHT	TYPE	A	B	C	D	E
REPLACEMENT BARS (Both Bridges)									
RE401	1	6'-3"	-	3	6'-3"	1'-4"			
RE501	4	5'-7"	-	S					
RE601	5	6'-11"	-	S					
RE701	1	7'-2"	-	S					
RE801	1	7'-6"	-	S					
RE901	1	7'-10"	-	S					
RE1001	1	8'-2"	-	S					
RE1101	2	8'-6"	-	S					

NOTES

BAR SIZE is indicated in the bar mark. The first digit where three digits are used, and the first two digits where four are used, indicate the bar size number. For example, A700 is a No. 7 size bar and A1014 is a No. 10 size.

SPIRAL REINFORCING BARS: The "Length" shown in the steel list for the spiral bars is the distance from the top of the footing to the bottom of the pier cap. The "No. of Turns" shown is the "Length" divided by the pitch plus three turns (total number of closed coils) expressed as the nearest whole number. Spiral reinforcing bars shall not have deformations but shall in other respects conform to Item 509. 1½ closed coils shall be provided at the ends of each spiral unit. Four steel channel, tee or angle, "spacers" weighing approximately 0.80 lb. per lin. ft. of spacer shall be provided for each spiral unit. They shall be equally spaced along the periphery of the coil. The number of pounds of these spacers, based on 0.80 lb. per lin. ft., will be paid for as reinforcing steel and is included in the tabulated quantity of spiral bars.

SPIRAL REINFORCEMENT							
MARK	NO.	LENGTH	CORE	PITCH	TURNS	SPACERS	WEIGHT
P404	1	17'-4"	32"	4½"	49	4	327
P405	1	15'-10"	32"	4½"	45	4	300
P406	1	14'-4"	32"	4½"	41	4	273
P410	1	18'-4"	32"	4½"	52	4	345
P411	1	16'-10"	32"	4½"	46	4	318
P412	1	15'-4"	32"	4½"	44	4	291
SUB-TOTAL —							1854

NOTES:

ALL REINFORCING STEEL FOR THE EAST-BOUND BRIDGE SHALL BE MARKED WITH A SUFFIX "-E".

+ BEND IN FIELD WHERE NECESSARY.

13/14

VOGT, IVERS, & ASSOCIATES
ENGINEERS CINCINNATI — ARCHITECTS CHICAGO

REINFORCING STEEL LIST

BRIDGE NO. HAM-275-0306 R
F.A.I. ROUTE 275
OVER LAWRENCEBURG ROAD

HAMILTON COUNTY — STA. 162 + 81.26

DESIGNED	DRAWN	TRACED	CHECKED	REVIEWED	DATE	REVISED
DGH	D.W.M.	—	W.L.S.	EEE	10-9-68	

MICROFILMED
AUG 17 1990

HAM-275-0.00

BRIDGE NO. HAM-275-0306 LEFT (West Bound)

SUPERSTRUCTURE

S501	525	30'-0"	16,427	S	
S502	105	11'-10"	1 296	S	
S503	84	24'-0"	2 103	S	
S611	256	18'-0"	6 921	S	
S612	487	22'-10"	16 702	S	
S613	231	27'-8"	9 599	S	
S614	54	7'-3" to 30'-0"	1 511	S	2 Each, Vary by 10½"
S615	13	10'-0" to 20'-6"	298	S	1 Each, Vary by 10½"
S616	12	10'-6" to 21'-6"	288	S	1 Each, Vary by 1'-0"
S617	48	7'-4" to 30'-4"	1 358	S	2 Each, Vary by 1'-0"
S618	13	15'-0" to 25'-6"	395	S	1 Each, Vary by 10½"
S619	12	15'-6" to 26'-6"	379	S	1 Each, Vary by 1'-0"
S620	18	6'-6"	176	S	
X501	235	2'-0"	490	5	1'-0" 0'-7½" 0'-7½"
X502	235	5'-4"	1 307	11	
X503	235	2'-3"	551	6	0'-7½" 1'-9"
X504	235	3'-3"	797	13	
X505	32	14'-8"	490	S	
X506	64	7'-2"	478	S	
X507	16	11'-8"	195	S	
X510	4	9'-11"	41	S	
X511	4	9'-0"	38	S	
		SUPERSTRUCTURE	61 840		

PIERS

P1101	20	35'-0"	3 719	S				
P1102	16	30'-0"	2 550	S				
P1103	16	21'-1"	1 792	S				
P1104	13	23'-0"	1 589	S				
P1105	7	20'-10"	775	S				
P1106	13	20'-7"	1 422	S				
P1110	13	24'-0"	1 658	S				
P1111	7	21'-10"	812	S				
P1112	13	21'-7"	1 491	S				
P1116	66	7'-5"	2 601	6	1'-5½"	6'-3"		
P1001	20	11'-4"	975	1	8'-6"			
P801	14	13'-5"	502	14	3'-4"	10'-2"		
P802	14	13'-5"	502	10	3'-4"	10'-2"		
P804	80	10'-8"	2278	1	8'-6"			
P501	120	9'-5"	1179	5	2'-8"	3'-6"	3'-6"	
P502	4	21'-0"	88	S				
P503	4	27'-10"	116	S				
P504	8	7'-4"	61	2	1'-7"	4'-2"	1'-7"	2'-8"
P505	28	5'-5"	158	5	2'-8"	1'-6"	1'-6"	
		PIER TOTAL	24268					

ABUTMENTS

C801	3	23'-0" to 26'-3"	197	S	1 Each, Vary by 1'-1"			
C802	4	30'-0"	320	S				
C803	3	33'-0"	264	S				
C804	4	31'-10"	340	9	0	28'-4"	3'-6"	2'-6"
C805	7	6'-0"	112	9	0	3'-0"	3'-0"	1'-8"
C806	12	5'-3"	168	S				
C807	17	5'-1"	231	17	1'-6"	2'-10"	0'-9"	
C601	29	16'-9"	730	4	7'-0"	1'-5"	5'-6"	0'-11" 2'-6"
C602	19	15'-2"	433	5	1'-5"	7'-0"	7'-0"	
C603	30	14'-1"	635	5	5'-4"	2'-6"	6'-7"	
C604	4	15'-6"	93	5	5'-4"	2'-6"	8'-0"	
C605	6	4'-0"	36	9	0	2'-0"	2'-0"	1'-1"
C501	34	8'-3"	293	5	5'-4"	1'-7"	1'-7"	
C502	34	8'-4"	295	5	3'-5"	2'-7"	2'-7"	
C503	30	7'-0"	219	6	0'-7½"	6'-6"		
C504	4	8'-5"	35	6	0'-7½"	7'-11"		
C505	2	7'-8"	16	S				
C506	2	9'-10"	21	5	5'-11"	2'-1"	2'-1"	
C507	6	38'-7"	241	S				
C508	8	14'-8"	122	S				
C509	1	32'-7"	34	S				
C510	6	28'-0"	175	S				
C511	15	14'-4"	224	6	0'-7½"	13'-10"		
C512	5	15'-0"	78	6	0'-7½"	14'-6"		
C513	2	26'-5"	53	S				
D801	3	35'-0"	280	S				
D802	4	33'-4" to 37'-1"	376	9	0	1 Eq. at: 29'-10", 31'-1", 32'-4", 33'-7"	3'-6"	2'-6"
D803	3	20'-8"	166	S				
D804	4	22'-4"	238	S				
D805	11	5'-3"	154	S				
D806	7	6'-0"	112	9	0	3'-0"	3'-0"	1'-5"
D807	17	5'-1"	231	17	1'-6"	2'-10"	0'-9"	
D601	28	16'-9"	704	4	7'-0"	1'-5"	5'-6"	0'-11" 2'-6"
D602	19	15'-2"	433	5	1'-5"	7'-0"	7'-0"	
D603	27	14'-2"	575	5	5'-4"	2'-6"	6'-8"	
D604	5	15'-7"	117	5	5'-4"	2'-6"	8'-1"	
D605	6	4'-0"	36	9	0	2'-0"	2'-0"	1'-0"
D501	32	8'-3"	275	5	5'-4"	1'-7"	1'-7"	
D502	32	8'-4"	278	5	3'-5"	2'-7"	2'-7"	
D503	27	7'-1"	199	6	0'-7½"	6'-7"		
D504	5	8'-6"	44	6	0'-7½"	8'-0"		
D505	6	39'-0"	244	S				
D506	2	9'-10"	21	5	5'-11"	2'-1"	2'-1"	
D507	8	26'-6"	221	S				
D508	8	13'-0"	108	S				
D510	20	14'-4"	299	6	0'-7½"	13'-10"		
D511	1	31'-6"	33	S				
D512	2	7'-8"	16	S				
		ABUTMENT TOTAL	10,525					

ABUTMENT WINGS

A806	12	12'-4"	395	S				
A807	12	12'-8"	405	S				
Y701	4	4'-4"	35	S				
Y702	4	4'-9"	39	16				
Y703	4	4'-10"	40	16				
Y704	4	4'-11"	40	16				
Y705	4	5'-0"	41	16				
Y601	22	5'-0"	165	16				
A607	24	11'-0"	397	5	1'-4"	5'-0"	5'-0"	
A609	24	8'-5"	303	S				
A610	24	8'-3"	297	S				
Y501	42	2'-0"	88	5	1'-0"	0'-7½"	0'-7½"	
Y502	40	2'-10"	118	S				
Y503	22	6'-5"	147	15				
Y504	16	12'-10"	214	S+				
Y505	8	7'-3"	60	S				
Y506	4	7'-3"	30	S				
Y507	42	2'-0"	124	S				
Y508	16	14'-11"	249	S+				
Y509	4	9'-4"	39	S				
A518	12	9'-6"	119	S				
A519	28	11'-8"	341	12	3'-0"	2'-7"		
A522	12	14'-11"	187	S				
A525	4	12'-7"	52	S	0	8'-9"	3'-10½"	3'-9"
A524	12	9'-7"	120	S				
A526	12	12'-10"	161	S				
A527	4	11'-10"	49	S	0	8'-0"	3'-10½"	3'-9"
		ABUT. WING TOTAL	4255					

SUB-TOTAL — 100,888
SPIRALS 2061
TOTAL (W.B. BRIDGE) — 102,949

TOTAL (E.B. BRIDGE) 102,830
GRAND TOTAL — 205,779

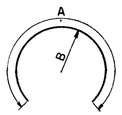

Type 3

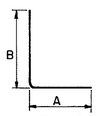

Type 6

3/4

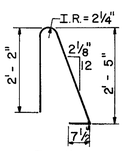

Type 11

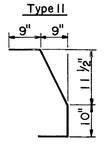

Type 13

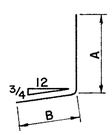

Type 14

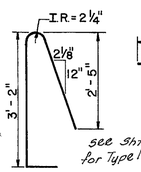

see Sht. 265 for Type 17 302
Type 15

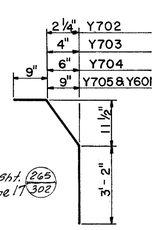

Type 16

SPIRAL REINFORCING BARS: The "Length" shown in the steel list for the spiral bars is the distance from the top of the footing to the bottom of the pier cap. The no. of "Turns" shown is the "Length" divided by the pitch plus three turns (total number of closed coils expressed as the nearest whole number. Spiral reinforcing bars shall not have deformations but shall in other respects conform to Item 509. 1½ closed coils shall be provided at the ends of each spiral unit. Four steel channel, tee or angle, "Spacers" weighing approximatly 0.80 lb. per lin. ft. of spacer shall be provided for each spiral unit. They shall be equally spaced along the periphery of the coil. The number of pounds of these spacers, based on 0.80 lb. per lin. ft., will be paid for as reinforcing steel and is included in the tabulated quantity of spiral bars.

SPIRAL REINFORCEMENT

MARK	NO.	LENGTH	CORE	PITCH	TURNS	SPACERS	WEIGHT
P401	1	19'-0"	32"	4½"	54	4	357
P402	1	17'-9"	32"	4½"	50	4	333
P403	1	16-7"	32"	4½"	47	4	313
P407	1	20'-0"	32"	4½"	56	4	375
P408	1	18'-9"	32"	4½"	53	4	352
P409	1	17'-7"	32"	4½"	50	4	331
			SUB-TOTAL—				2061

NOTES:

ALL REINFORCING STEEL FOR THE WEST-BOUND BRIDGE SHALL BE MARKED WITH A SUFFIX "-W".

+ BEND IN FIELD WHERE NECESSARY.

14/14

REINFORCING STEEL LIST

BRIDGE NO. HAM-275-0306 L
F.A.I. ROUTE 275
OVER LAWRENCEBURG ROAD

HAMILTON COUNTY STA. 162 + 81.26

D.W.M — W.L.S. 10-9-68

FED. RD. DIVISION	STATE	PROJECT	
2	OHIO		

267
302

HAM-275-0.00

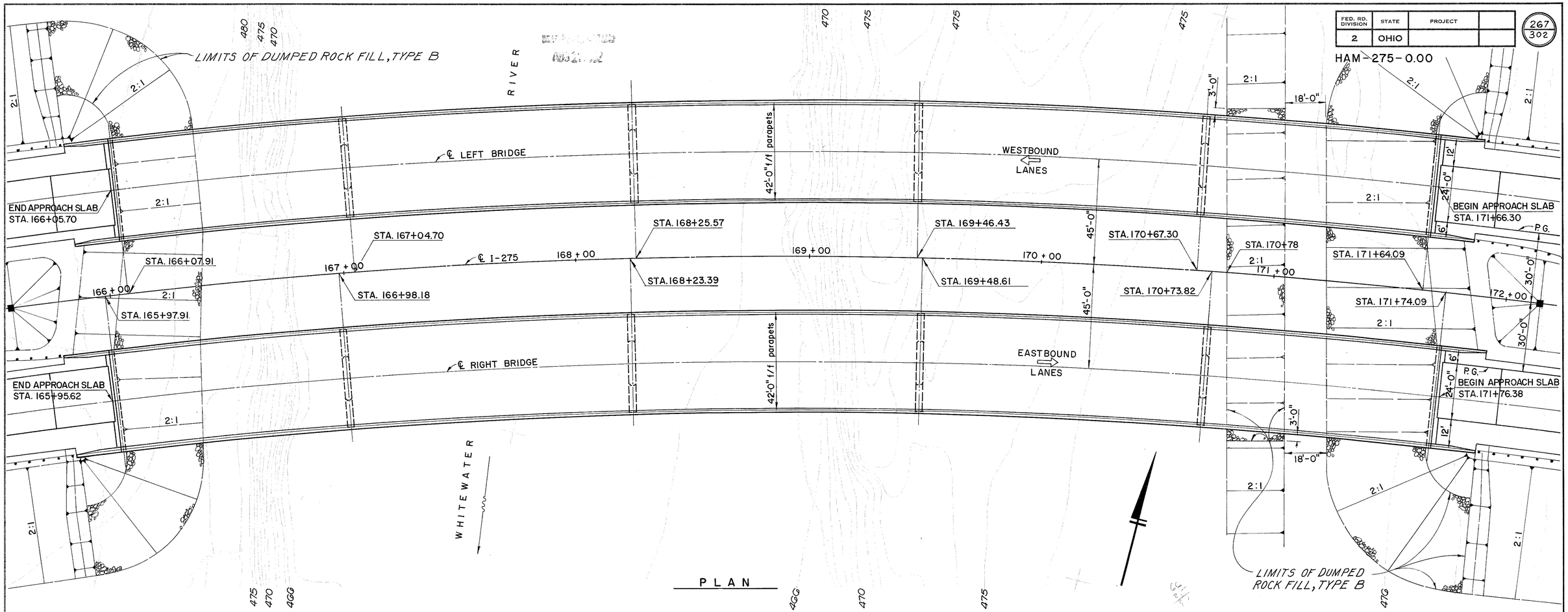

PLAN

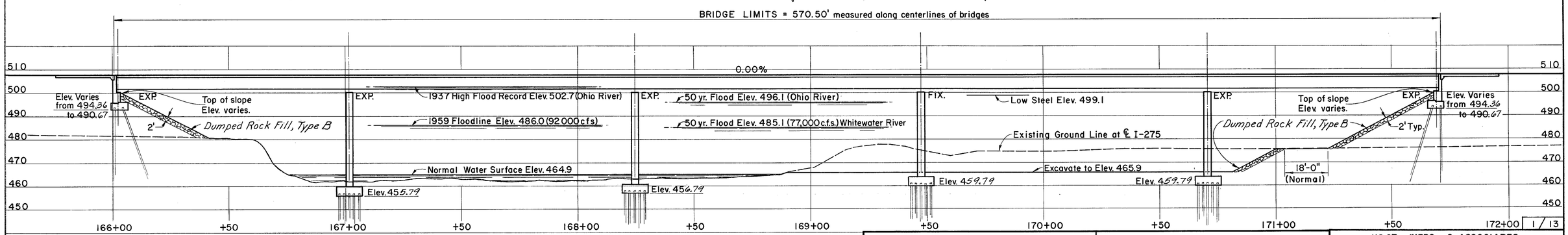

ELEVATION

The estimated average pay length for the 12" diam. cast-in-place reinforced concrete piles are:

- 50' for abutment no. 1
- 35' for pier nos. 1 & 2
- 40' for pier nos. 3 & 4
- 60' for abutment no. 2

Earthwork limits shown are schematic. Actual slopes shall conform to plan cross sections.

PROFILE DATA

P.G. = 507.60
G = 0.00%

A.D.T. (1989)

30 860

CURVE DATA

P.I. STA. 162+77.88
Δ = 72°15'55" RT.
Dc = 2°15'00"
R = 2546.48'
L = 2811.79'

PROPOSED STRUCTURE

TYPE: Continuous welded steel girder with reinforced concrete deck & substructures.

SPANS: 98'-6", 123'-0", 123'-0", 123'-0", 98'-6" c/c brg. measured along centerlines of bridges.

ROADWAY: 2 at 42'-0" face to face of parapets.

LOADING: HS 20-44 and Interstate Alternate Loading.

SKEW: Radial.

SURFACE COURSE: 2½" ASPHALT CONC.

APPROACH SLABS: AS-1-72 (25' long).

ALIGNMENT: 2° 15'00" Curve right.

SUPERELEVATION: 0.073 ft./ft.

VOGT, IVERS, & ASSOCIATES
ENGINEERS CINCINNATI — ARCHITECTS CHICAGO

SITE PLAN

BRIDGE NO. HAM-275-0314 L/R
I-275 over WHITEWATER RIVER
HAMILTON COUNTY — STA. 168+86.00

Designed	Drawn	Traced	Checked	Reviewed	Date	Revised
M.M.	L.B.F.	D.W.M	V.K.		4-10-69	

1/13

FED. RD. DIVISION	STATE	PROJECT	
2	OHIO		

268/302

HAM - 275 - 0.00

GENERAL NOTES

REFERENCE SHALL BE MADE TO STANDARD DRAWINGS NO:

RB-1-55 REVISED 2-2-59
SD-1-69 SHEETS 1 THROUGH 4 DATED 6-12-69
BR-1-67 *Revised 10-15-71.*

AND TO SUPPLEMENTAL SPECIFICATIONS:

NO. 808 DATED 1-1-*71*

NO. 836 DATED *1-1-71*

DESIGN SPECIFICATIONS:

THIS STRUCTURE CONFORMS TO "STANDARD SPECIFICATIONS FOR HIGHWAY BRIDGES" ADOPTED BY THE AMERICAN ASSOCIATION OF STATE HIGHWAY OFFICIALS, 1965, INCLUDING THE OHIO "SUPPLEMENT" TO THESE SPECIFICATIONS.

DESIGN DATA:

DESIGN LOADING: HS 20-44 AND THE INTERSTATE ALTERNATE LOADING

CONCRETE CLASS C- UNIT STRESS 1,200 PSI FOR SUPERSTRUCTURE
UNIT STRESS 1,333 PSI FOR SUBSTRUCTURES

STRUCTURAL STEEL - ASTM A36 - UNIT STRESS 20,000 PSI

* REINFORCING STEEL - ASTM A615, A616 OR A617. UNIT STRESS 20,000 PSI.

EMBANKMENT CONSTRUCTION: THE EMBANKMENTS SHALL BE CONSTRUCTED TO THE LEVEL OF THE SUBGRADE FOR A MINIMUM DISTANCE OF 200 FEET BACK OF THE ABUTMENTS. EXCAVATION SHALL THEN BE MADE FOR THE ABUTMENTS.

PILES: PILES SHALL BE DRIVEN TO A MINIMUM BEARING CAPACITY OF 45 TONS PER PILE FOR THE ABUTMENTS AND 48 TONS PER PILE FOR THE PIERS.

WELDS: WELDS ON NON-STRESS-CARRYING MEMBERS ARE SHOWN THUS: N 1/4

* *If bars in accordance with ASTM A616 are provided they shall be subject to bend tests as per AASHO Designation M 42-70.*

Jacking holes as shown in AS-1-72 shall not be provided.

ESTIMATED QUANTITIES

ITEM	TOTAL	UNIT	DESCRIPTION	LEFT-WESTBOUND SUPER.	LEFT-WESTBOUND ABUT.	LEFT-WESTBOUND PIER	LEFT-WESTBOUND GEN.	RIGHT-EASTBOUND SUPER.	RIGHT-EASTBOUND ABUT.	RIGHT-EASTBOUND PIER	RIGHT-EASTBOUND GEN.	AS BUILT	
503	LUMP	Sum.	Cofferdams, cribs and sheeting				Lump				Lump		
503	1,465	Cu. Yds.	Unclassified excavation		285	438			304	438			
505	LUMP	Sum	Test pile				Lump						
506	LUMP	Sum.	Pile test load				Lump						
506	1	Each	Subsequent pile test load										
507	12,700	Lin. Ft.	12" cast-in-place reinforced concrete piles		1,650	4,700			1,650	4,700			
404	*284*	*Cu. Yds.*	*Asphalt concrete (70-85 or AC20)*	*142*				*142*					
509	*606,394*	Lbs.	Reinforcing steel	227,790	*14,645*	61,332		227,790	*14,718*	60,119			
511	*1728*	Cu. Yds.	Class C concrete, superstructure	*864*				*864*					
511	791	Cu. Yds.	Class C concrete, piers above footings			404				387			
511	*268*	Cu. Yds.	Class C concrete, abutments above footings		*132*				*136*				
511	502	Cu. Yds.	Class C concrete, footings		81	170			81	170			
513	1,630,400	Lbs.	Structural steel	815,200				815,200					
514	1,630,400	Lbs.	Field painting of structural steel	815,200				815,200					
518	162	Cu. Yds.	Porous backfill		81				81				
518	140	Lin. Ft.	6" perforated, helical CMP including specials, 707.01		70				70				
518	128	Lin. Ft.	6" non-perforated, helical CMP, 707.01		64				64				
518	48	Each	Scuppers, including supports	30				18					
518	*1679*	*Lin. Ft.*	*Subdrainage for wearing surface*	*1123*				*556*					
601	1,932	Cu. Yds.	*Dumped rock fill, Type B*										
Spec.	*72*	*Cu. Yds.*	*Sand Asphalt (see Proposal Note)*	*36*				*36*					
Spec.	*5156*	*Sq. Yds.*	*Membrane waterproofing, Sheet type, (see*										
			Proposal Note)	*2578*				*2578*					
808	*1728*	Units	*Chemical admixture for concrete, Type A, B or D*	*864*				*864*					
Calculated by: *JRP*			,Date *4.15,1969*										
Checked by: *[illegible]*			,Date *4.15,1969*										

TEST PILE. Payment will be made for one *test pile*
It may be driven for either the Right or Left bridge.

2 / 13

VOGT, IVERS, & ASSOCIATES
ENGINEERS CINCINNATI — ARCHITECTS CHICAGO

GENERAL NOTES &
ESTIMATED QUANTITIES

BRIDGE NO. HAM 275 0314 L/R
I-275 over WHITEWATER RIVER

HAMILTON COUNTY STA. 168+86.00

DESIGNED	DRAWN	TRACED	CHECKED	REVIEWED	DATE	REVISED
M.M.	S.H.	S.H.	V.K.	*[illegible]*	4-10-69	

FED. RD. DIVISION	STATE	PROJECT	TYPE FUNDS
2	OHIO		

269 / 302

HAM – 275 – 0.00

Parapet transitions (and wingwall ends) shall be as shown on Std. Drwg. BR-1-67 revised 10-15-71. Reinforcing steel shall be field bent or cut to fit the required shape.

For additional approach slab details see Std. Drwg. AS-1-72. Approach slab width is 24'-0" measured radially.

NOTE:
Abutment 1 East-bound shown.
Abutment 2 Similar by opposite hand.

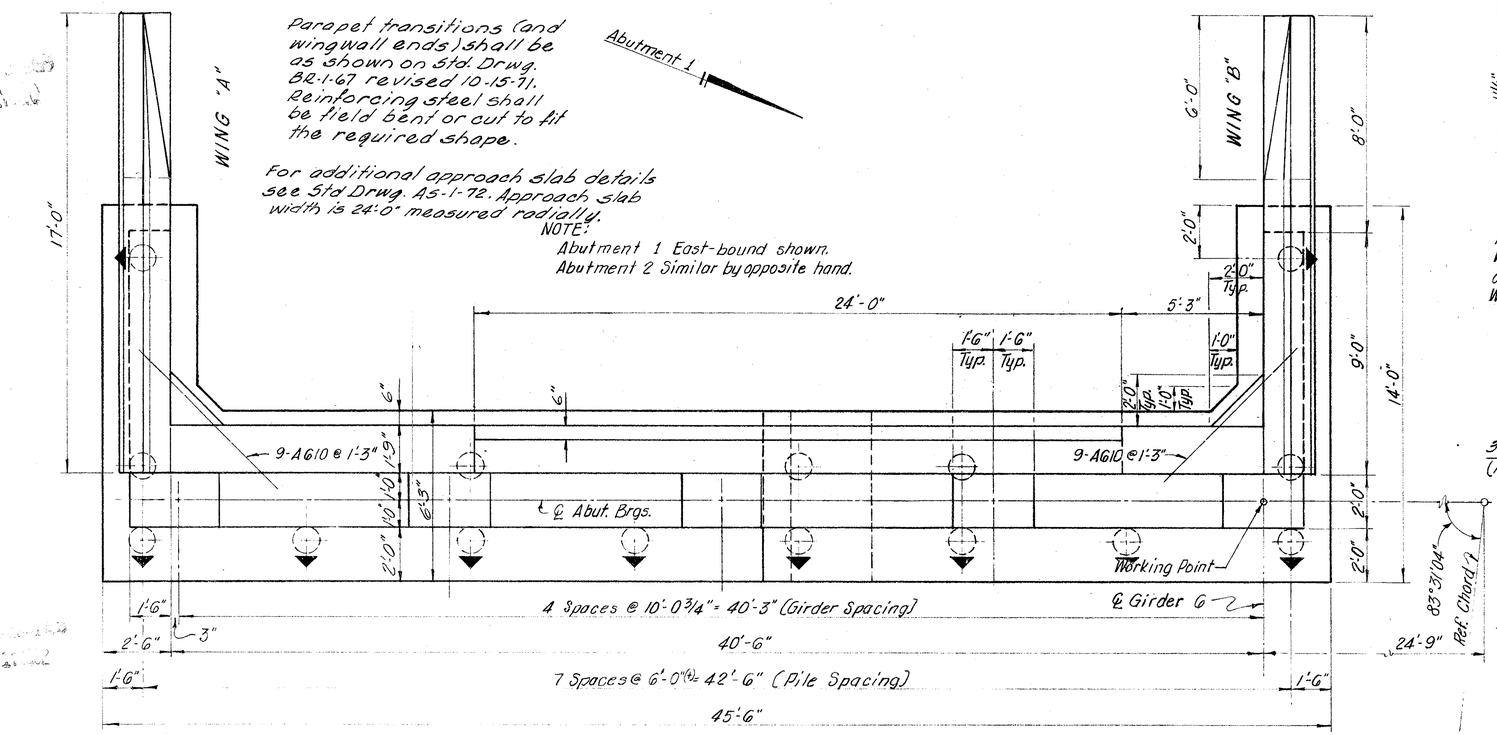

PLAN

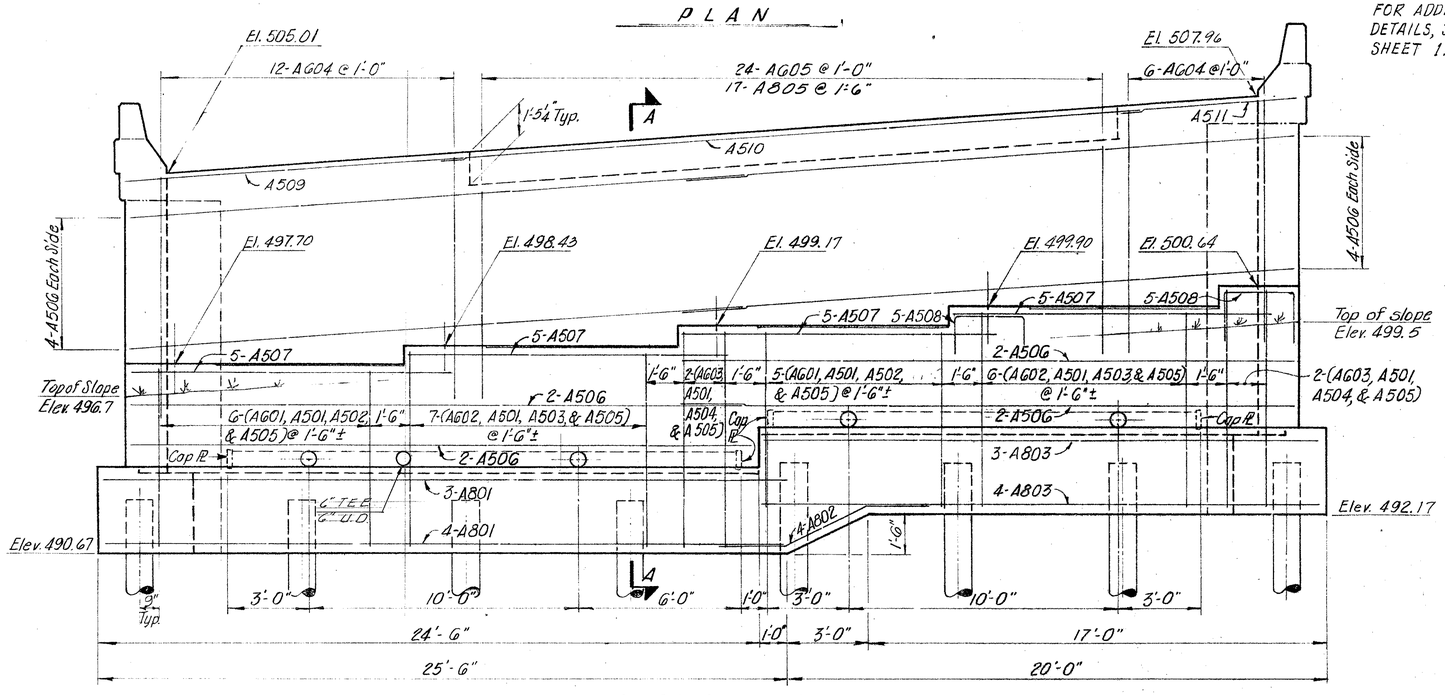

ELEVATION

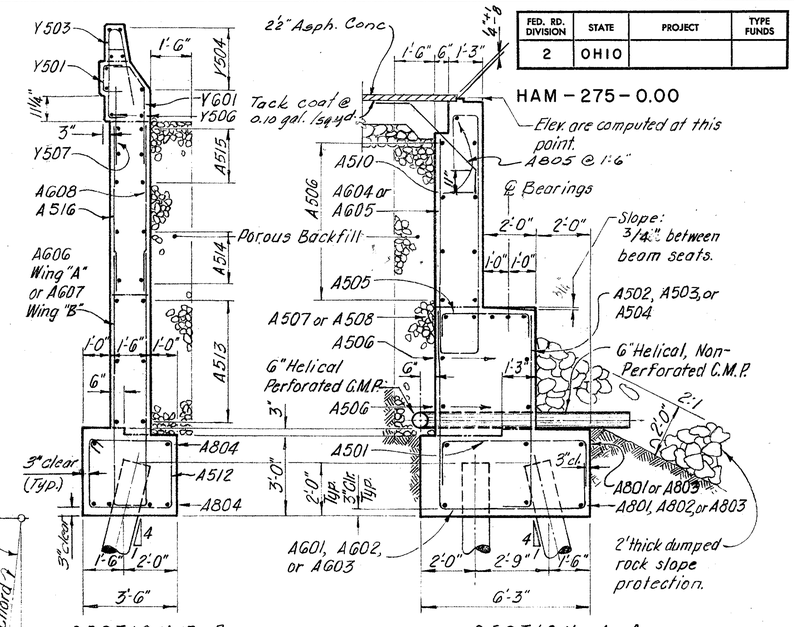

SECTION B-B

SECTION A-A

FOR ADDITIONAL RAILING DETAILS, SEE STD. DWG. BR-1-67, SHEET 1.

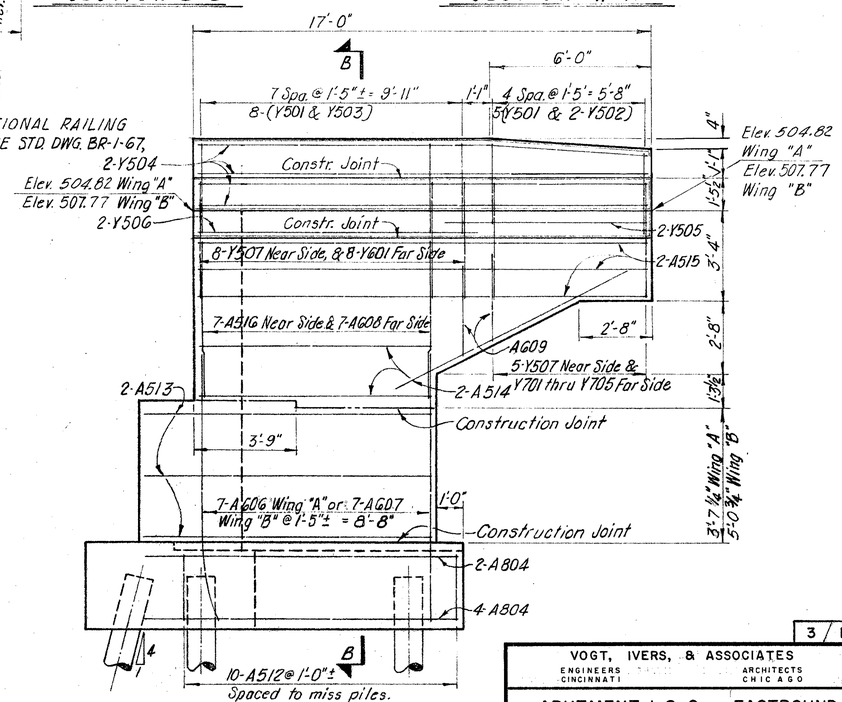

WING "B" – ELEVATION
WING "A" SIMILAR

NOTE: Porous backfill 1'-6" thick for full length of abutment and wings shall extend up to the subgrade or to the finished ground surface.

Indicates pile battered 1:4 in direction of arrow.

3 / 13

VOGT, IVERS, & ASSOCIATES
ENGINEERS CINCINNATI — ARCHITECTS CHICAGO

ABUTMENT 1 & 2 – EASTBOUND

BRIDGE NO. HAM-275-0314 L/R

I-275 over WHITEWATER RIVER

HAMILTON COUNTY — STA. 168+86.00

Designed	Drawn	Checked	Reviewed	Date	Revised	
V. K.	D-W-M	M.M.	[illegible]	4-10-69		

FED. RD. DIVISION	STATE	PROJECT	TYPE FUNDS
2	OHIO		

270
302

HAM - 275 - 0.00

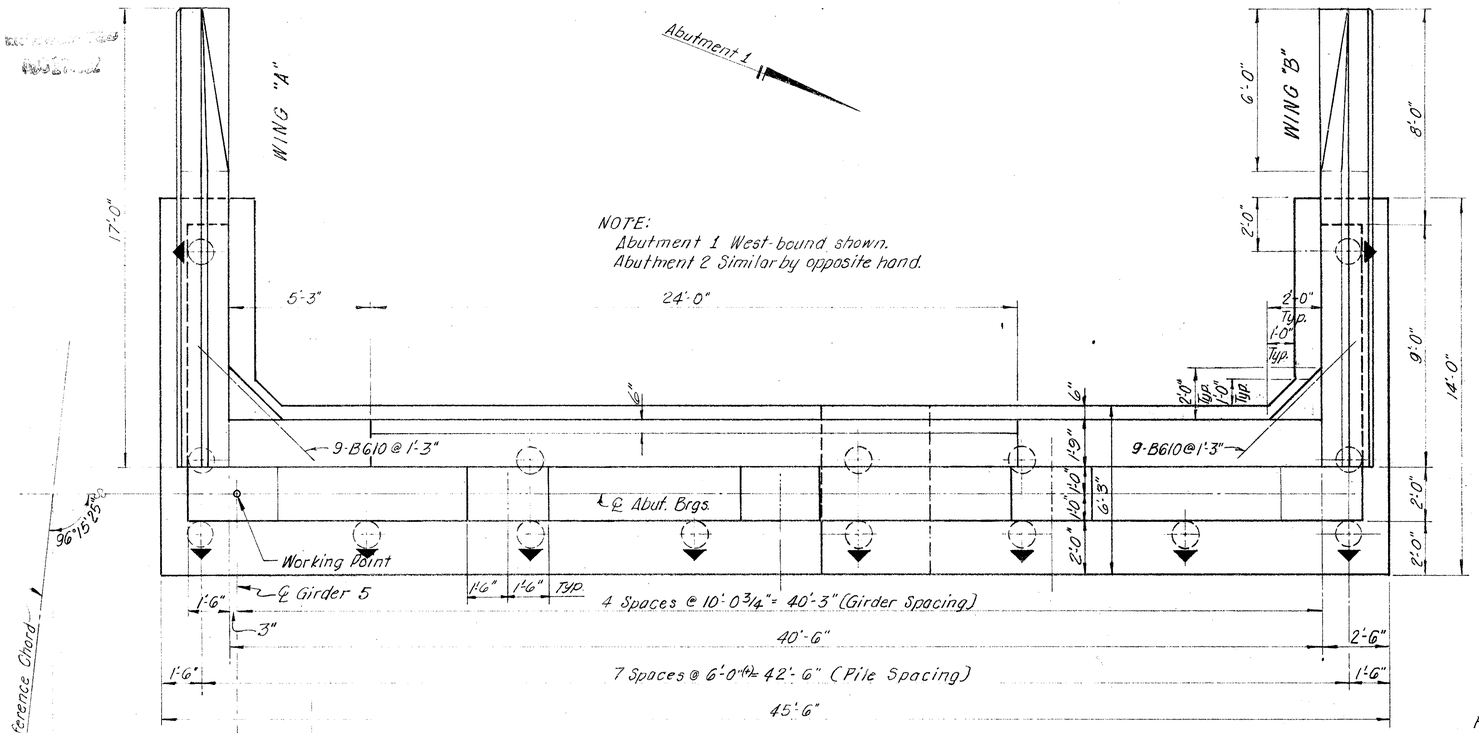

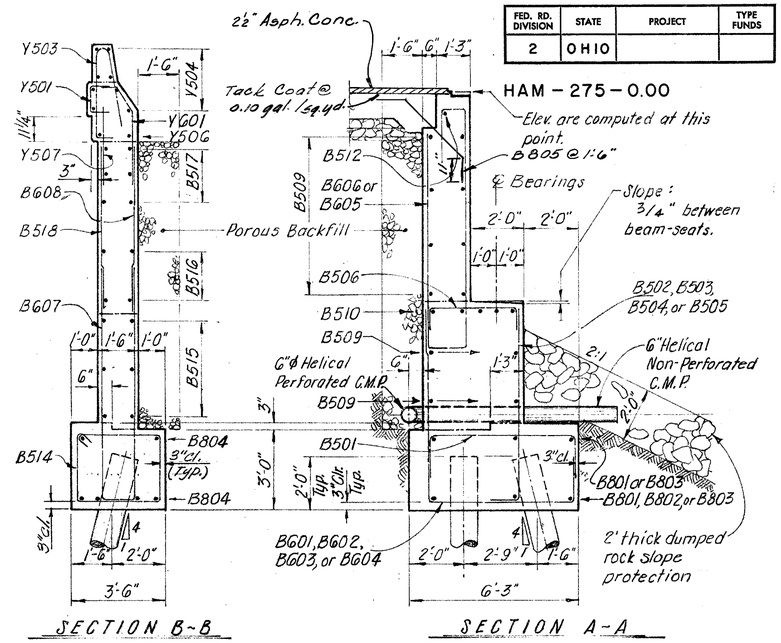

FOR ADDITIONAL RAILING DETAILS, SEE STD. DWG. BP-1-67, SHEET 1.

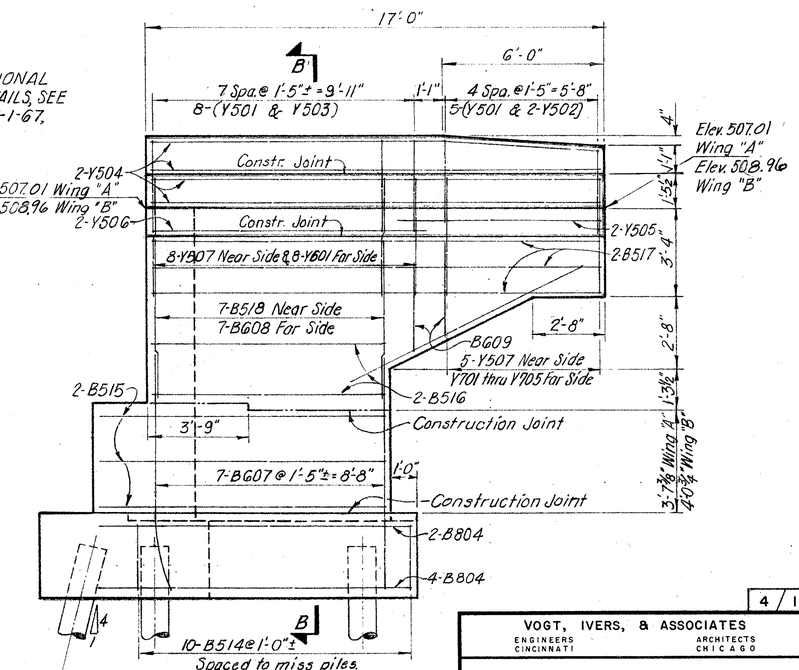

NOTE: Porous backfill 1'-6" thick for full length of abutment and wings shall extend up to the subgrade or to the finished ground surface.

Indicates pile battered 1:4 in direction of arrow.

4 / 13

VOGT, IVERS, & ASSOCIATES
ENGINEERS CINCINNATI — ARCHITECTS CHICAGO

ABUTMENT 1 & 2 - WESTBOUND

BRIDGE NO. HAM-275-0314 L/R

I-275 over WHITEWATER RIVER

HAMILTON COUNTY — STA. 168+86.00

Designed	Drawn	Checked	Reviewed	Date	Revised
V. K.	D.W.M.	M.M.	[illegible]	4-10-69	

HAM - 275 - 0.00

FED. RD. DIVISION	STATE	PROJECT	TYPE FUNDS
2	OHIO		

271/302

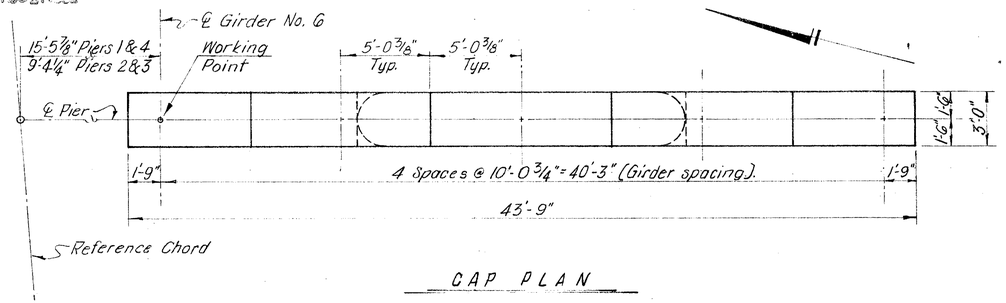

CAP PLAN

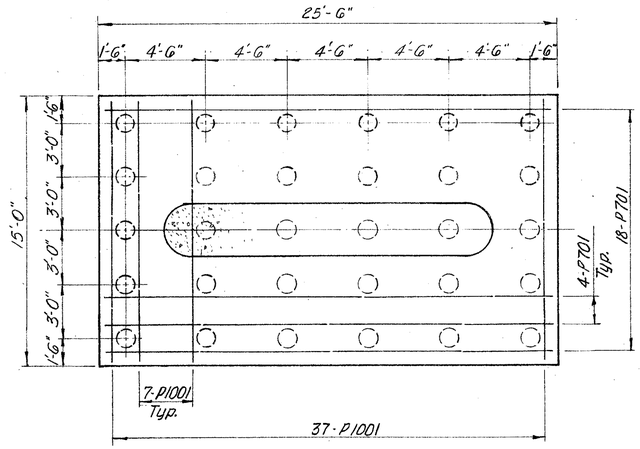

FOOTING PLAN ~ PIERS 1, 2, & 4

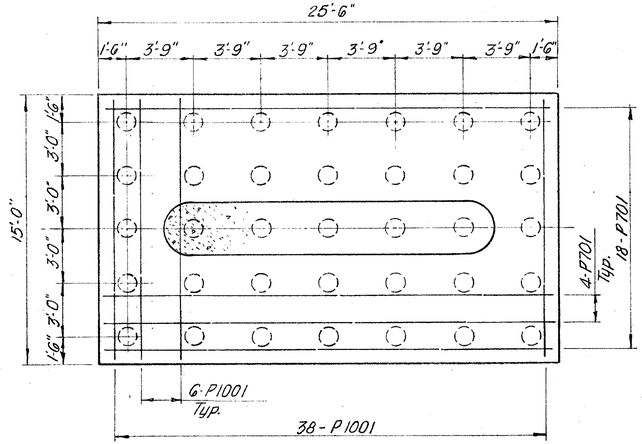

FOOTING PLAN ~ PIER 3

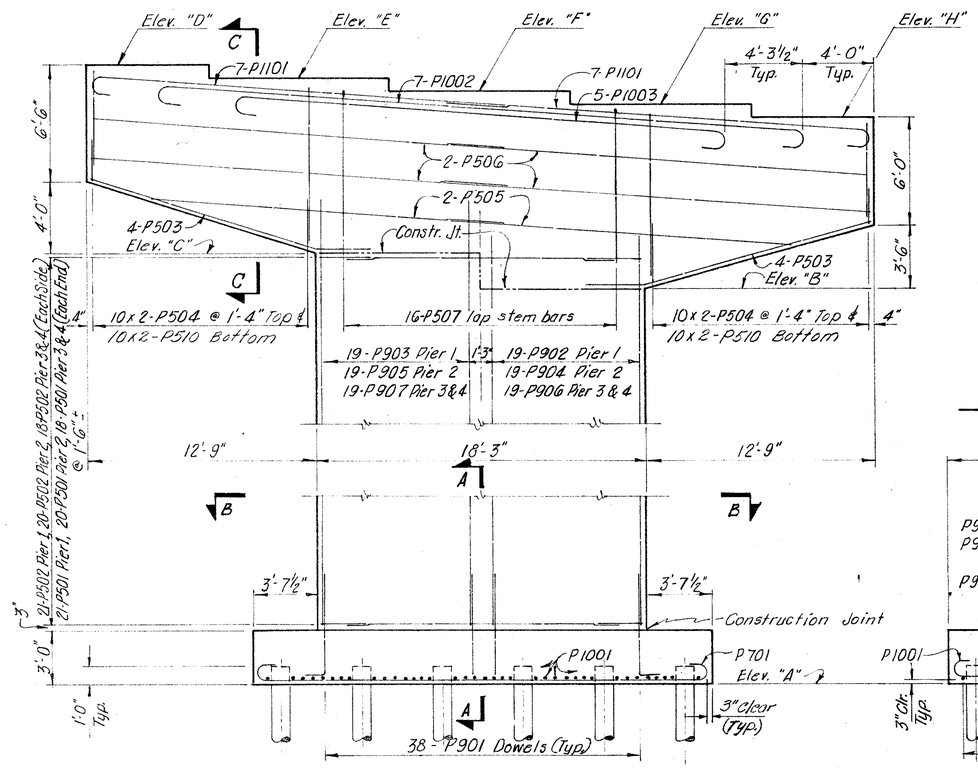

ELEVATION

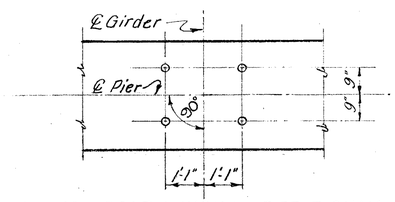

ANCHOR BOLT LAYOUT ~ PIER 3 ONLY

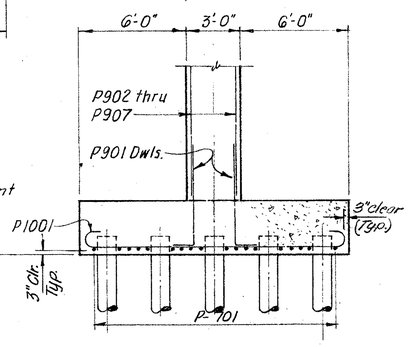

SECTION A~A

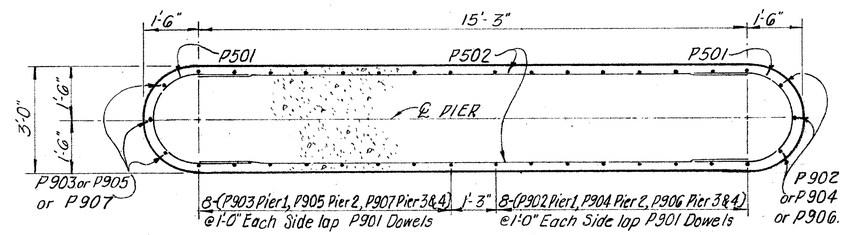

SECTION B~B

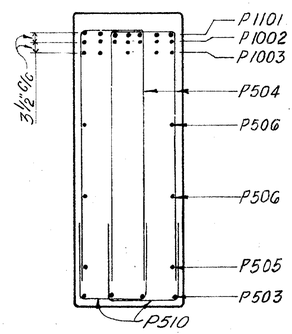

SECTION C~C

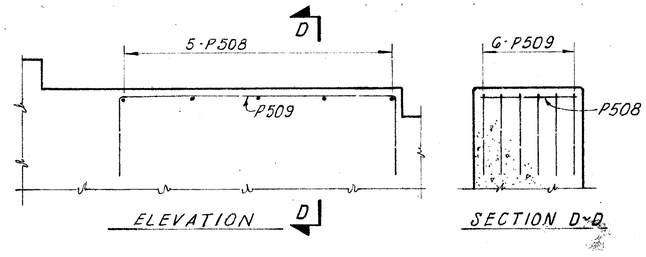

ELEVATION

SECTION D~D

BRIDGE SEAT REINFORCING ~ TYPICAL AT ELEV. "D", "E", "F", & "G"

Location	Elev. "A"	Elev "B"	Elev. "C"	Elev. "D"	Elev. "E"	Elev. "F"	Elev. "G"	Elev. "H"
PIER 1	455.79	487.42	489.36	499.86	499.12	498.39	497.65	496.92
PIER 2	456.79	487.41	489.35	499.85	499.11	498.38	497.64	496.91
PIER 3	459.79	487.41	489.35	499.85	499.11	498.38	497.64	496.91
PIER 4	459.79	487.42	489.36	499.86	499.12	498.39	497.65	496.92

BRIDGE SEAT REINFORCING:
At Pier No. 3:
Special care shall be taken in placing reinforcing steel in the vicinity of the bridge seat so as to avoid interference with the drilling of anchor bolt holes.

5/13

VOGT, IVERS, & ASSOCIATES
ENGINEERS ARCHITECTS
CINCINNATI CHICAGO

EASTBOUND PIER DETAILS

BRIDGE NO. HAM 275 0314 L/R

I-275 over WHITEWATER RIVER

HAMILTON COUNTY STA. 168+86.00

DESIGNED	DRAWN	TRACED	CHECKED	REVIEWED	DATE	REVISED
V.K.	D·W·M	D·W·M	M.M.	[illegible]	4·10·69	

HAM - 275 - 0.00

FED. RD. DIVISION	STATE	PROJECT	TYPE FUNDS
2	OHIO		

272/302

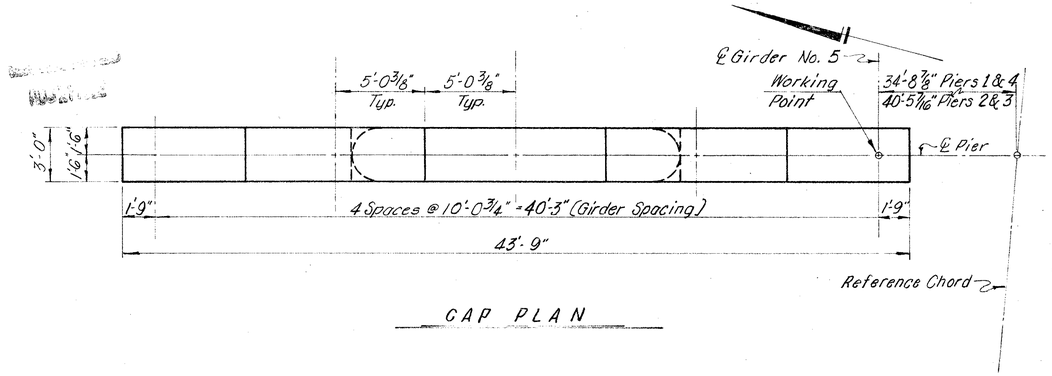

CAP PLAN

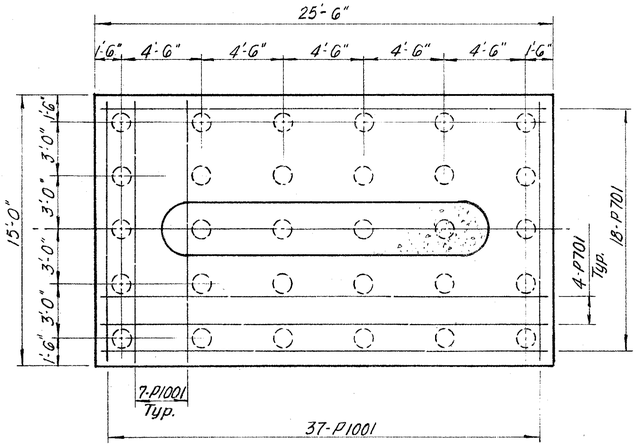

FOOTING PLAN - PIERS 1, 2, & 4

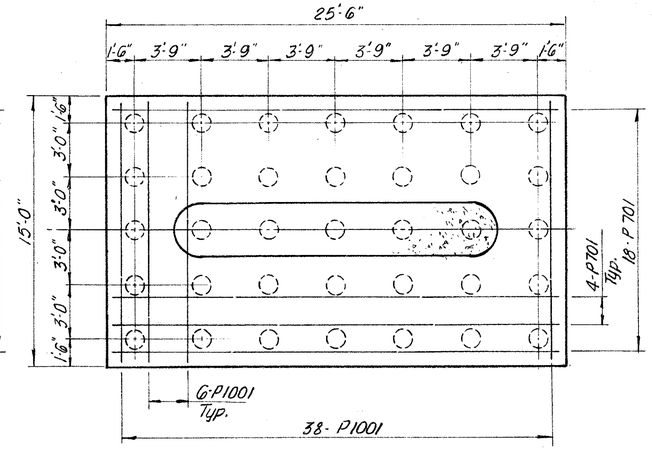

FOOTING PLAN - PIER 3

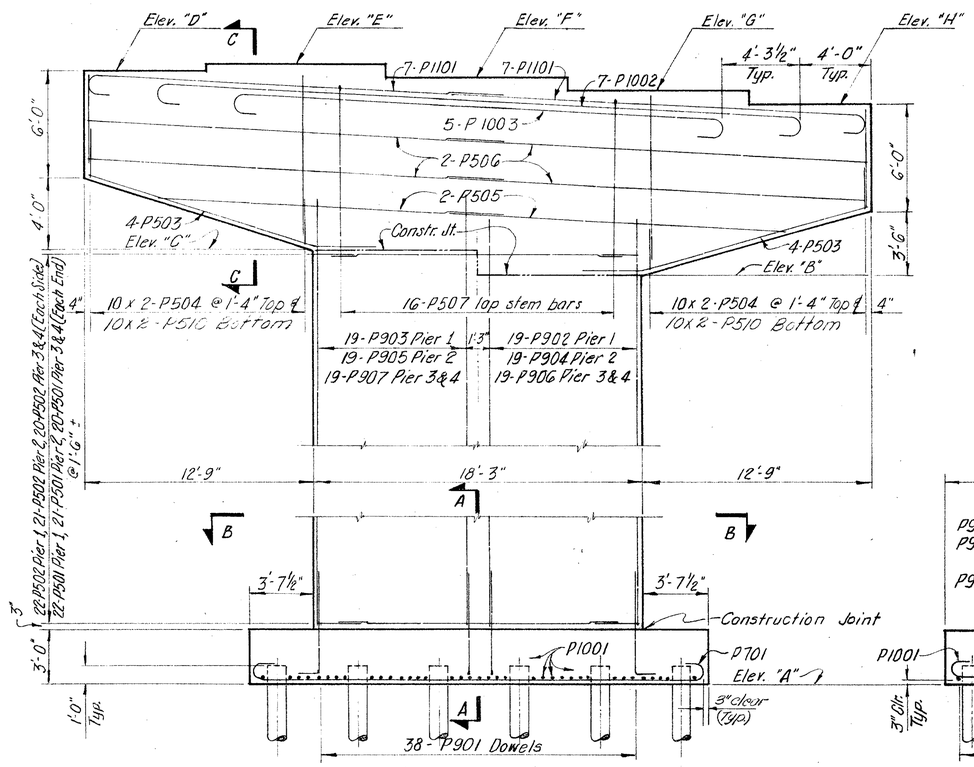

ELEVATION

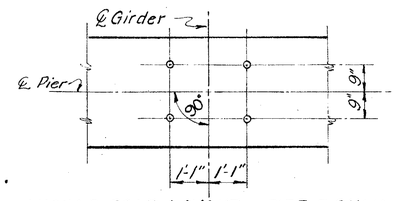

ANCHOR BOLT LAYOUT - PIER 3 ONLY

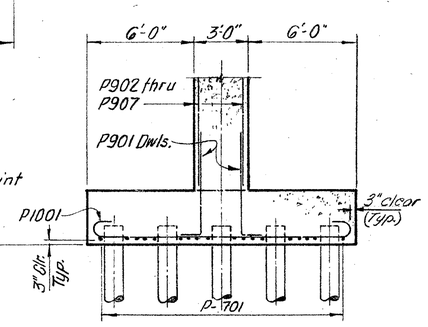

SECTION A-A

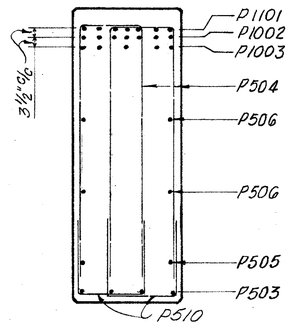

SECTION C-C

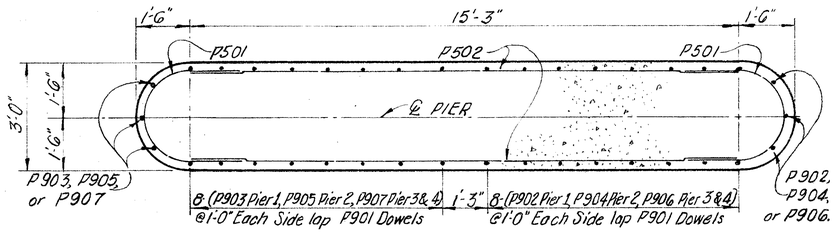

SECTION B-B

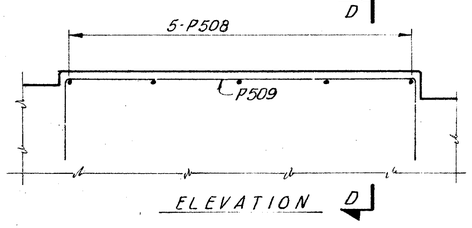

ELEVATION

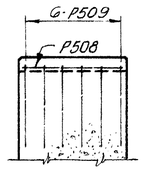

SECTION D-D

BRIDGE SEAT REINFORCING - TYPICAL AT ELEV. "E", "F", & "G"

Location	Elev. "A"	Elev. "B"	Elev. "C"	Elev. "D"	Elev. "E"	Elev. "F"	Elev. "G"	Elev. "H"
PIER 1	455.79	489.61	491.06	501.06	501.31	500.58	499.85	499.11
PIER 2	456.79	489.60	491.05	501.05	501.30	500.57	499.83	499.10
PIER 3	459.79	489.60	491.05	501.05	501.30	500.57	499.83	499.10
PIER 4	459.79	489.61	491.06	501.06	501.31	500.58	499.85	499.11

BRIDGE SEAT REINFORCING:
At Pier No. 3:
Special care shall be taken in placing reinforcing steel in the vicinity of the bridge seat so as to avoid interference with the drilling of anchor bolt holes.

6/13

VOGT, IVERS, & ASSOCIATES
ENGINEERS CINCINNATI — ARCHITECTS CHICAGO

WESTBOUND PIER DETAILS

BRIDGE NO. HAM-275-0314 L/R

I-275 over WHITEWATER RIVER

HAMILTON COUNTY — STA. 168+86.00

DESIGNED	DRAWN	TRACED	CHECKED	REVIEWED	DATE	REVISED
V. K.	D.W.M	D.W.M	M.M.	[illegible]	4-10-69	

FED. RD. DIVISION	STATE	PROJECT	TYPE FUNDS
2	OHIO		

273
302

HAM-275-0.00

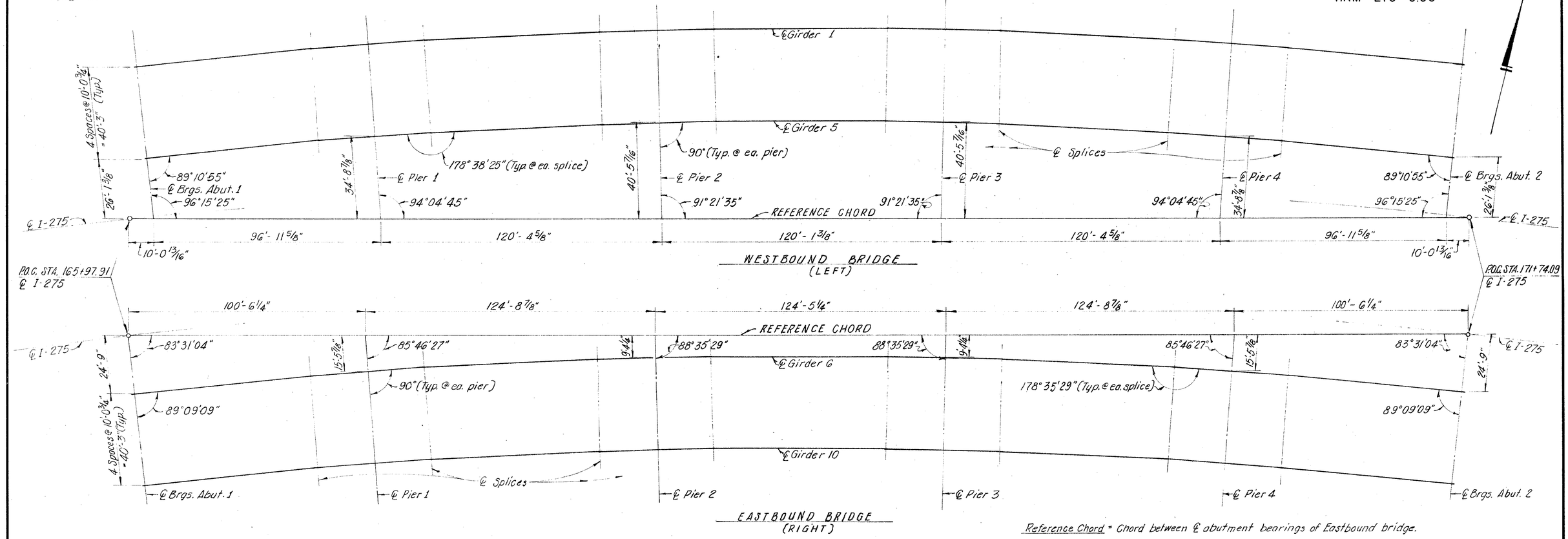

Reference Chord = Chord between ℄ abutment bearings of Eastbound bridge.

GIRDER LAYOUT

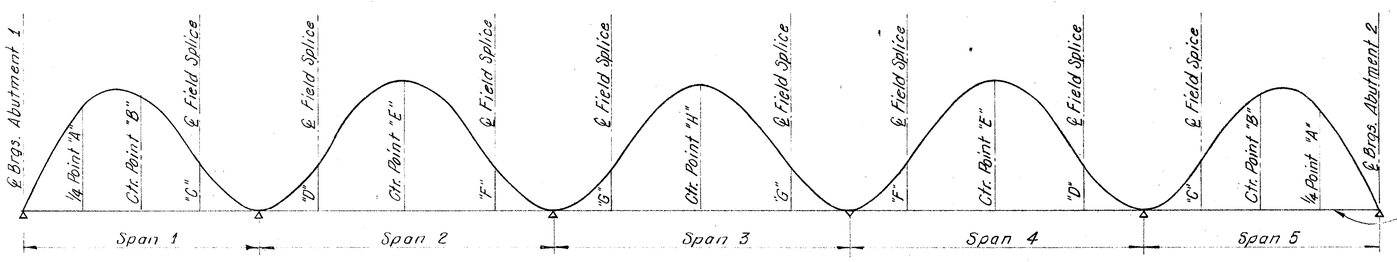

Baseline: line between the abutment bearings is level.

dimensions in inches		¼ point "A"	Center point "B"	Splice point "C"	Splice point "D"	Center point "E"	Splice point "F"	Splice point "G"	Center point "H"
Girders 1,2,3,4,7,8,9	Defl. due to weight of steel	1/8	1/8	1/16	1/16	3/16	1/16	1/16	3/16
	Defl. due to remaining D.L.	5/8	11/16	5/16	1/4	3/4	1/4	1/4	3/4
	Required shop camber	3/4	13/16	3/8	5/16	15/16	5/16	5/16	15/16
Girders 5,6,10	Defl. due to weight of steel	1/8	1/8	1/16	1/16	3/16	1/16	1/16	3/16
	Defl. due to remaining D.L.	7/16	1/2	1/4	3/16	9/16	3/16	3/16	9/16
	Required shop camber	9/16	5/8	5/16	1/4	3/4	1/4	1/4	3/4

DEFLECTION & CAMBER

7/13

VOGT, IVERS, & ASSOCIATES
ENGINEERS — CINCINNATI
ARCHITECTS — CHICAGO

LAYOUT & CAMBER DIAGRAM

BRIDGE NO. HAM-275-0314 L/R

I-275 over WHITEWATER RIVER

HAMILTON COUNTY — STA. 168+86.00

DESIGNED	DRAWN	TRACED	CHECKED	REVIEWED	DATE	REVISED
V.K.	V.K.	D.W.M	M.M.	[illegible]	4-10-69	

FED. RD. DIVISION	STATE	PROJECT	TYPE FUNDS
2	OHIO		

274
302

HAM-275-0.00

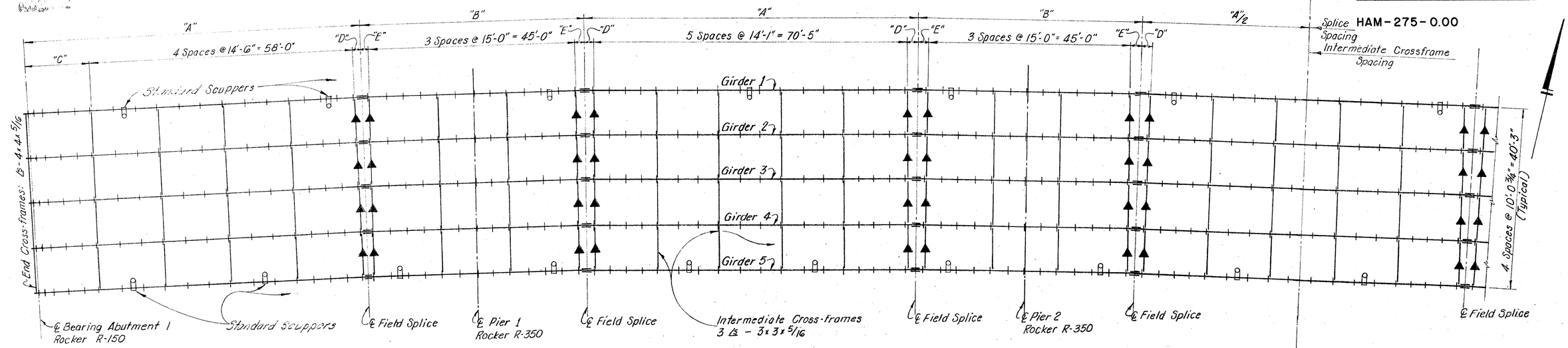

WESTBOUND BRIDGE
(LEFT)

Bridges are symmetrical about this line, except at pier 3 to be bolster B-350.

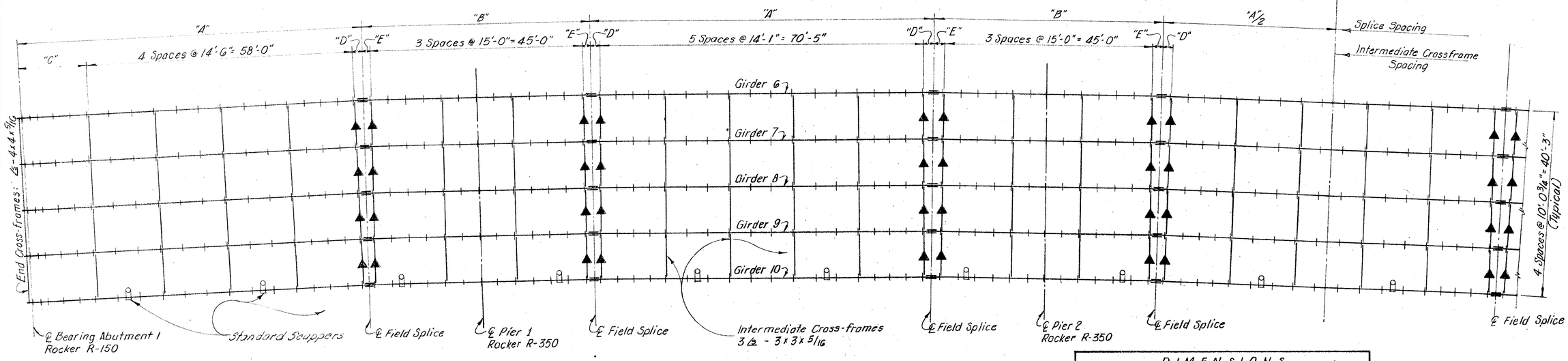

EASTBOUND BRIDGE
(RIGHT)

NOTES:

All intermediate crossframes are 3 ∠s - 3 x 3 x 5/16, except those marked by ▲ which are 4 ∠s - 3 x 3 x 5/16. For details, see "Transverse Sections," sheet 11/13.

For framing plan location according to reference chord, see sheet 7/13.

For rockers & bolsters, see sheet 9/13 and Standard Drawing RB-1-55.

For end crossframe detail, see sheet 10/13.

DIMENSIONS

Girder No.	Dim. "A"	Dim. "B"	Dim. "C"	Dim. "D"	Dim. "E"
1	74'-6 15/16"	49'-4 3/16"	14'-5 31/32"	2'-0 31/32"	2'-2 9/32"
2	74'-3 7/16"	49'-2 5/16"	14'-4 1/32"	1'-11 7/32"	2'-1 5/32"
3	74'-0"	49'-0"	14'-2 1/2"	1'-9 1/2"	2'-0"
4	73'-8 9/16"	48'-9 3/4"	14'-0 25/32"	1'-7 25/32"	1'-10 7/8"
5	73'-5 1/8"	48'-7 7/16"	13'-11 1/16"	1'-6 1/16"	1'-9 23/32"
6	74'-7 3/16"	49'-4 3/4"	14'-6 3/32"	2'-1 3/32"	2'-2 3/8"
7	74'-3 5/8"	49'-2 3/8"	14'-4 5/16"	1'-11 5/16"	2'-1 3/16"
8	74'-0"	49'-0"	14'-2 1/2"	1'-9 1/2"	2'-0"
9	73'-8 7/16"	48'-9 11/16"	14'-0 23/32"	1'-7 23/32"	1'-10 27/32"
10	73'-4 7/8"	48'-7 5/16"	13'-10 15/16"	1'-5 15/16"	1'-9 21/32"

8 / 13

VOGT, IVERS, & ASSOCIATES
ENGINEERS CINCINNATI — ARCHITECTS CHICAGO

FRAMING PLAN
BRIDGE NO. HAM-275-0314 L/R
I-275 over WHITEWATER RIVER

HAMILTON COUNTY — STA. 168+86.00

Designed	Drawn	Checked	Reviewed	Date	Revised
V. K.	D·W·M	M.M.	[illegible]	4·10·69	

FED. RD. DIVISION	STATE	PROJECT	TYPE FUNDS
2	OHIO		

275/302

HAM - 275 - 0.00

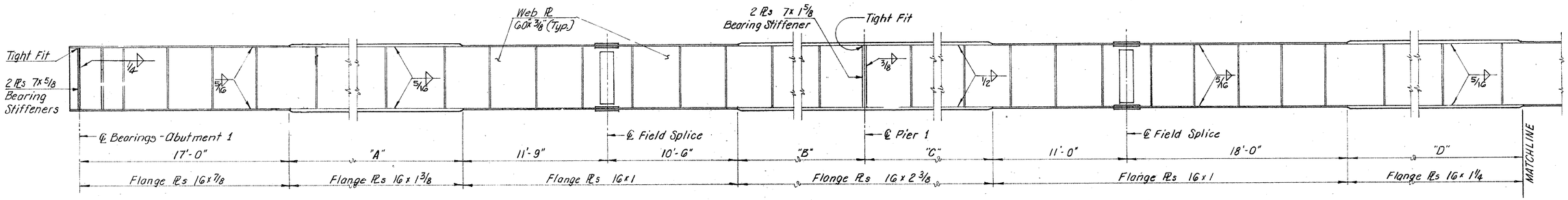

GIRDER ELEVATION

Typical for all girders.

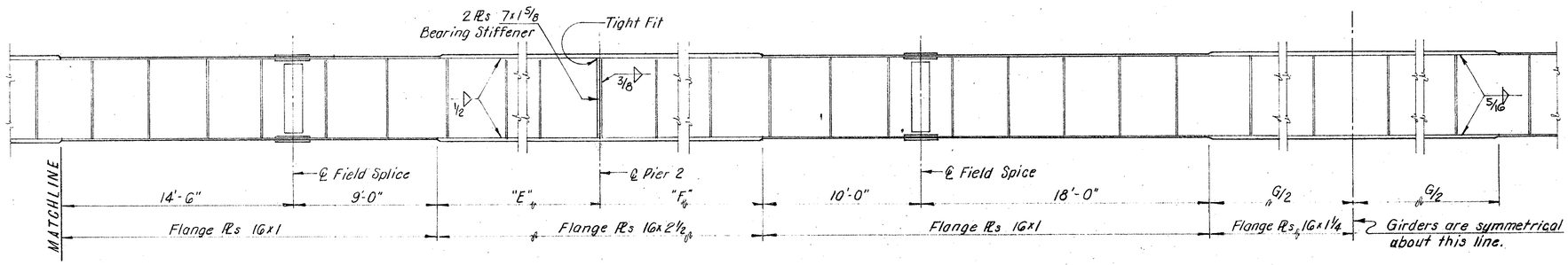

GIRDER ELEVATION

NOTE: For girder camber, see sheet 7/13.
For stiffener spacing, see sheet 8/13.

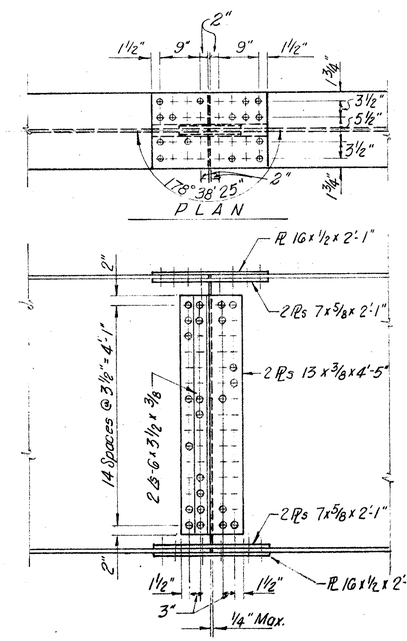

TYP. FIELD SPLICE DETAILS

High-strength bolts shall be 7/8" diameter.

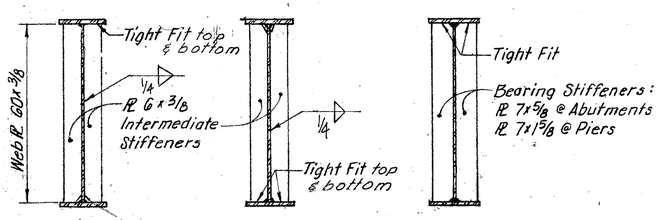

INTERMEDIATE STIFFENERS

BEARING STIFFENERS

GIRDER DIMENSIONS							
Girder No.	A	B	C	D	E	F	G
1	45'-9 15/16"	14'-2 9/32"	13'-8 9/32"	42'-0 15/16"	15'-8 9/32"	14'-8 9/32"	38'-6 15/16"
2	45'-6 7/16"	14'-1 5/32"	13'-7 5/32"	41'-9 7/16"	15'-7 5/32"	14'-7 5/32"	38'-3 7/16"
3	45'-3"	14'-0"	13'-6"	41'-6"	15'-6"	14'-6"	38'-0"
4	44'-11 9/16"	13'-10 7/8"	13'-4 7/8"	41'-2 9/16"	15'-4 7/8"	14'-4 7/8"	37'-8 9/16"
5	44'-8 1/8"	13'-9 23/32"	13'-3 23/32"	40'-11 1/8"	15'-3 23/32"	14'-3 23/32"	37'-5 1/8"
6	45'-10 3/16"	14'-2 3/8"	13'-8 3/8"	42'-1 3/16"	15'-8 3/8"	14'-8 3/8"	38'-7 3/16"
7	45'-6 9/8"	14'-1 3/16"	13'-7 3/16"	41'-9 5/8"	15'-7 3/16"	14'-7 3/16"	38'-3 5/8"
8	45'-3"	14'-0"	13'-6"	41'-6"	15'-6"	14'-6"	38'-0"
9	44'-11 7/16"	13'-10 27/32"	13'-4 27/32"	41'-2 7/16"	15'-4 27/32"	14'-4 27/32"	37'-8 7/16"
10	44'-7 7/8"	13'-9 21/32"	13'-3 21/32"	40'-10 7/8"	15'-3 21/32"	14'-3 21/32"	37'-4 7/8"

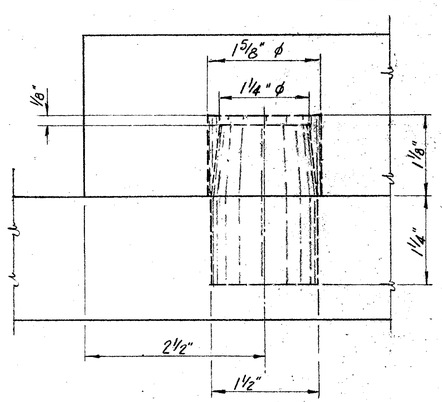

DOWEL DETAIL for R-150 (at Abutment 1 Only)

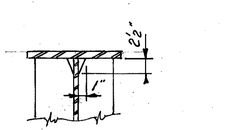

Interm. Stiffener Detail at top & bottom flanges

Bolster No.	Rocker No.	ROCKER & BOLSTER DIMENSIONS (inches)											
		A	B	C	D	F	G	H	K	L	M	R	T	Y
	R-150	3	12	3	2 1/4	1/2	8 1/2	13 3/8	11 1/2	22	19	8 1/2	1 3/4	1 7/16
B-350	R-350	4	22	4	3 1/2	3/4	14	21 1/8	15	30	27	13 1/2	3 1/2	1 15/16

NOTE: For details and notes, see Standard Drawing RB-1-55.

9/13

VOGT, IVERS, & ASSOCIATES
ENGINEERS CINCINNATI — ARCHITECTS CHICAGO

GIRDER DETAILS

BRIDGE NO. HAM-275-0314 L/R

I-275 over WHITEWATER RIVER

HAMILTON COUNTY STA. 168+86.00

DESIGNED	DRAWN	TRACED	CHECKED	REVIEWED	DATE	REVISED
V.K.	V.K.	D.W.M	M.M.	[illegible]	4-10-69	

FED. RD. DIVISION	STATE	PROJECT	TYPE FUNDS
2	OHIO		

276/302

HAM-275-0.00

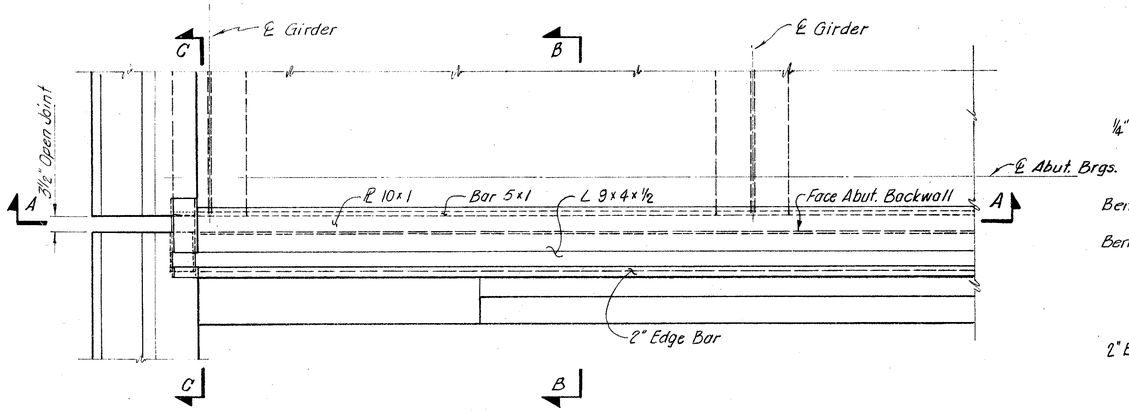

PART PLAN ~ END DAM

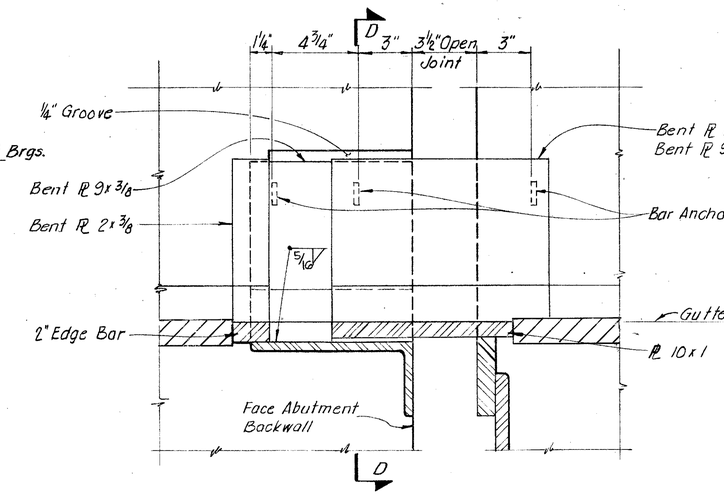

SECTION C-C

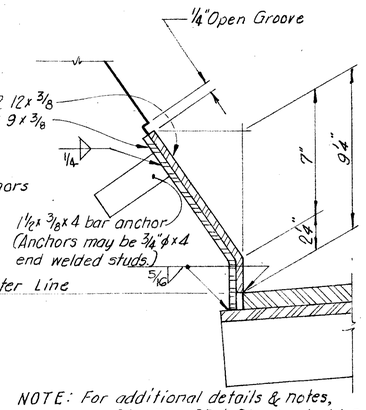

NOTE: For additional details & notes, see Std. Dwg. SD-1-69, sheets 1 & 2.

SECTION D-D

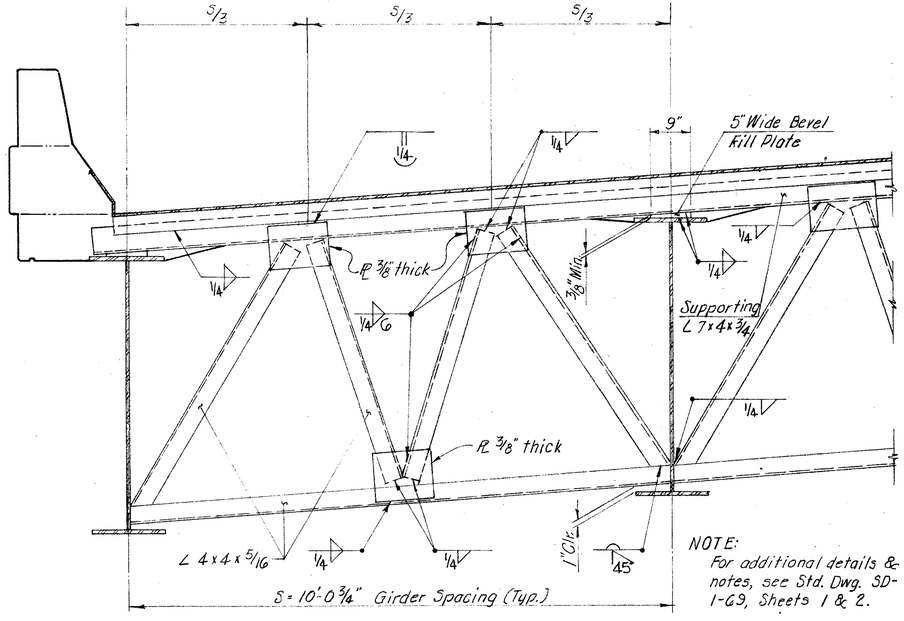

NOTE: For additional details & notes, see Std. Dwg. SD-1-69, Sheets 1 & 2.

SECTION A-A ~ TYPICAL END CROSSFRAME

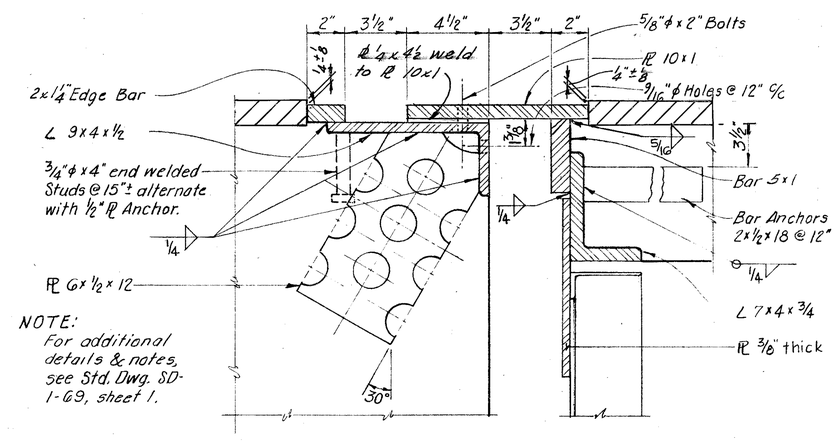

NOTE: For additional details & notes, see Std. Dwg. SD-1-69, sheet 1.

SECTION B-B

10/13

VOGT, IVERS, & ASSOCIATES
ENGINEERS ARCHITECTS
CINCINNATI CHICAGO

SUPERSTRUCTURE DETAILS

BRIDGE NO. HAM-275-0314 L/R

I-275 over WHITEWATER RIVER

HAMILTON COUNTY STA. 168+86.00

DESIGNED	DRAWN	TRACED	CHECKED	REVIEWED	DATE	REVISED
V.K.	V.K.	D.W.M	M.M.	bbb	4-10-69	

FED. RD. DIVISION	STATE	PROJECT	TYPE FUNDS
2	OHIO		

277 / 302

HAM – 275 – 0.00

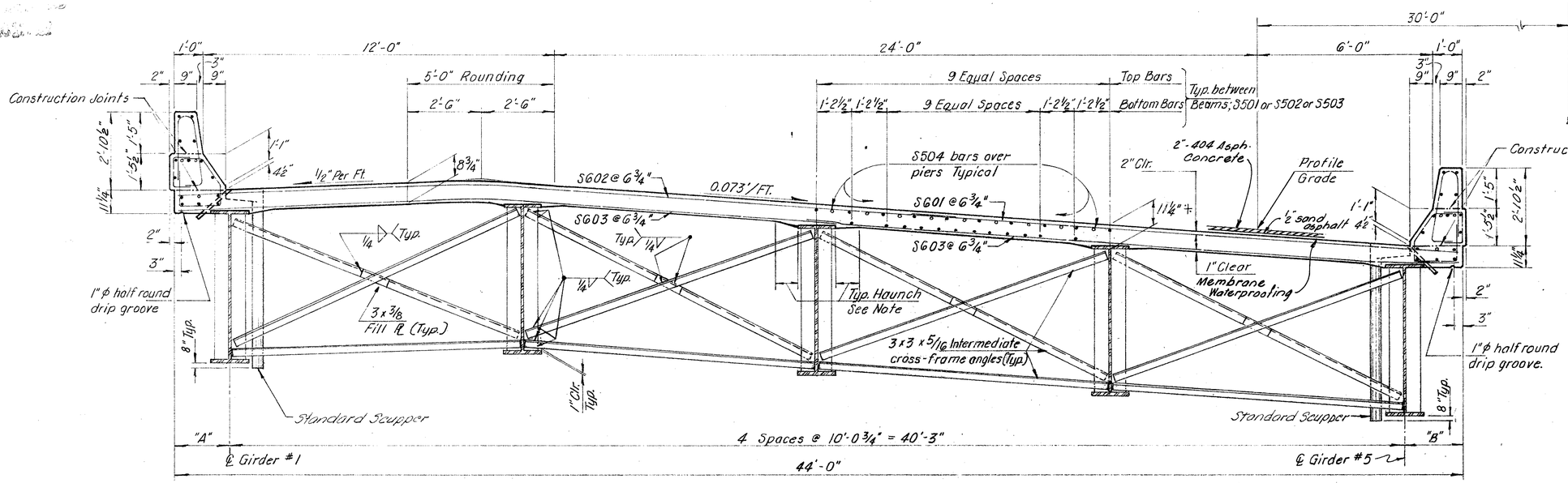

TRANSVERSE SECTION ~ W.B. BRIDGE
(LEFT)

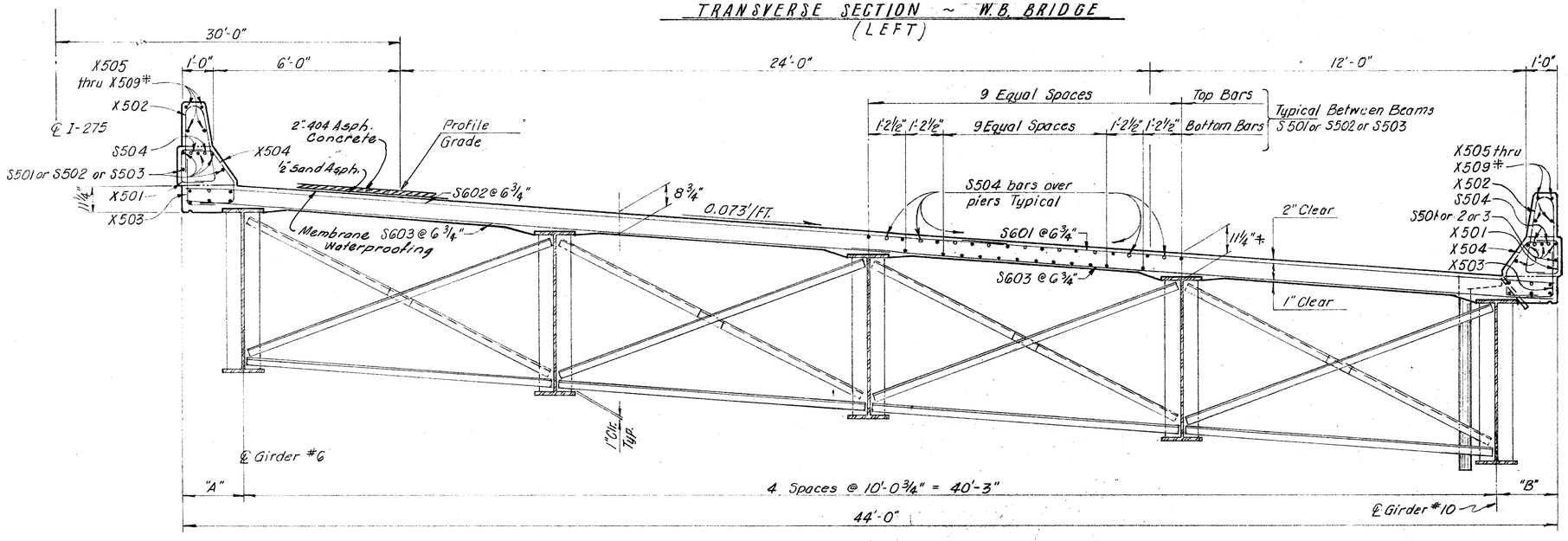

TRANSVERSE SECTION ~ E.B. BRIDGE
(RIGHT)

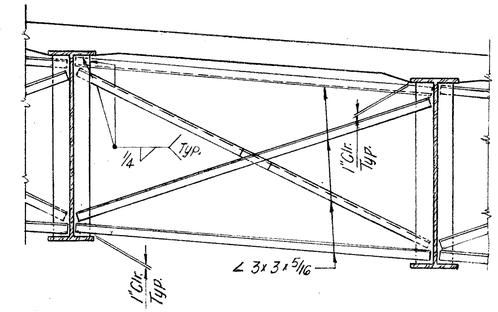

TYPICAL CROSSFRAME AT FIELD SPLICES

NOTES:

A haunch width of 9" shall be used for computing quantity of concrete. However, the haunch width may vary between 6" and 12" provided that the slope shall be not more than 1:4 for a haunch less than 9" in width.

+ This is the design dimension. The quantity of deck concrete to be paid for shall be based upon this dimension, even though deviation from it may be necessary because the top flange of the girder may not have the exact camber or conformation required to place it parallel to the finished grade. Deduction shall be made for volume of encased steel plates as per Sec. 511.19

For locations of bars X505 thru X509 and for the deck plan, see sheet 12/13.

OVERHANG DIMENSIONS	W.B. Bridge "A"	W.B. Bridge "B"	E.B. Bridge "A"	E.B. Bridge "B"
@ Abutment Brgs.	1'-9"	2'-0"	1'-9"	2'-0"
@ Field Splices	1'-9"	2'-0"	1'-9"	2'-0"
@ Piers	1'-10 3/16"	1'-10 5/8"	1'-10 7/16"	1'-10 9/16"
Max. & Min.	2'-0 3/16"	1'-8 7/8"	2'-0 5/16"	1'-8 3/4"

Subdrainage shall be used at both curbs of W.B bridge and South curb of E.B. bridge, full length of bridge. For additional details see Deck Drainage sheet 279A / 302

Texturing of deck surface as provided in 451.09 shall not be done.

11/13

VOGT, IVERS, & ASSOCIATES
ENGINEERS CINCINNATI — ARCHITECTS CHICAGO

TRANSVERSE SECTIONS

BRIDGE NO. HAM-275-0314 L/R

I-275 over WHITEWATER RIVER

HAMILTON COUNTY — STA 168+86.00

DESIGNED	DRAWN	TRACED	CHECKED	REVIEWED	DATE	REVISED
V.K.	D.W.M	D.W.M	M.M.	666	4-10-69	

FED. RD. DIVISION	STATE	PROJECT	TYPE FUNDS
2	OHIO		

278/302

HAM - 275 - 0.00

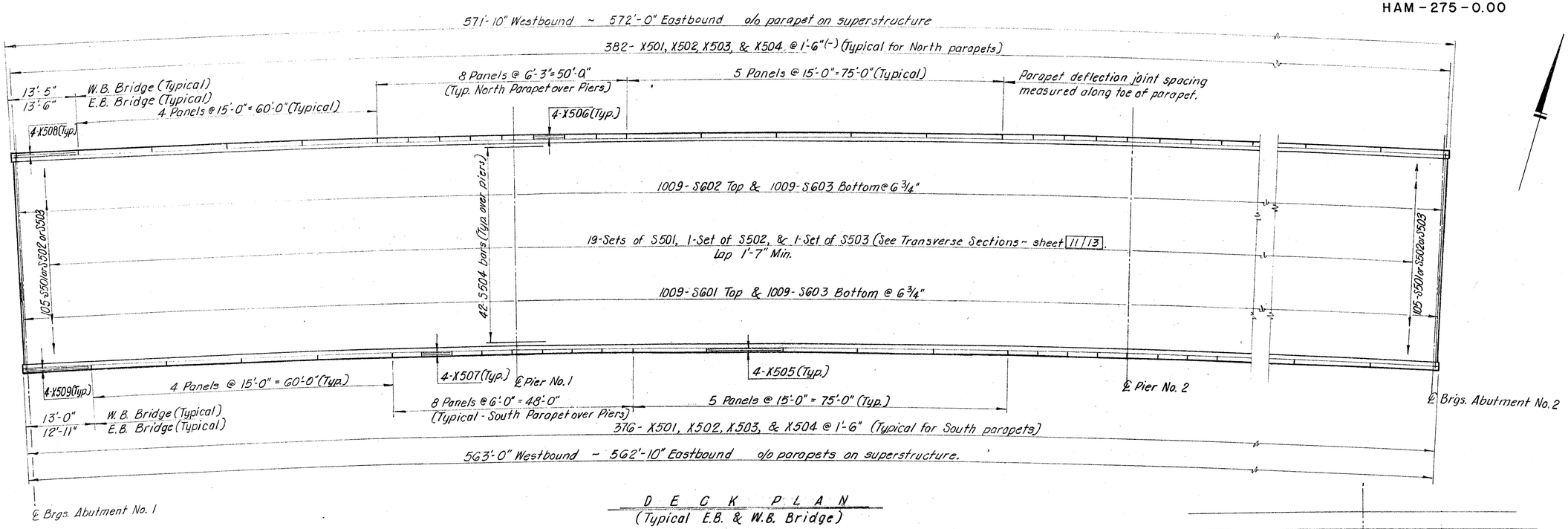

DECK PLAN
(Typical E.B. & W.B. Bridge)

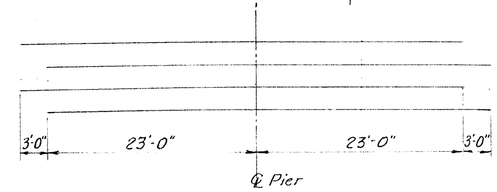

DIAGRAM SHOWING STAGGER OF S 504 BARS OVER PIERS

NOTES:

* Deck elevations are those required before the concrete is placed. Proper allowance has been made for the deflection caused by the weight of the concrete.

Transverse reinforcing shall be placed radially and spaced @ 6 3/4" c/c along centerline of bridge.

DECK ELEVATIONS *

Location		WESTBOUND BRIDGE			EASTBOUND BRIDGE		
		℄ Station	North Toe	South Toe	℄ Station	North Toe	South Toe
Span 1	℄ Brgs. Abut. 1	166+07.91	508.96	507.01	165+97.91	507.77	504.82
	1/4 point	166+32.11	509.01	507.06	166+22.97	507.82	504.87
	1/2 point	166+56.31	509.02	507.06	166+48.04	507.83	504.87
	3/4 point	166+80.51	508.98	507.03	166+73.11	507.80	504.84
Span 2	℄ Pier 1	167+04.70	508.96	507.01	166+98.18	507.77	504.82
	1/4 point	167+34.92	508.99	507.04	167+29.48	507.81	504.85
	1/2 point	167+65.14	509.02	507.07	167+60.79	507.84	504.88
	3/4 point	167+95.35	508.99	507.04	167+92.09	507.81	504.85
Span 3	℄ Pier 2	168+25.57	508.96	507.01	168+23.39	507.77	504.82
	1/4 point	168+55.78	508.99	507.04	168+54.70	507.80	504.85
	1/2 point	168+86.00	509.02	507.07	168+86.00	507.83	504.88
	3/4 point	169+16.22	508.99	507.04	169+17.30	507.80	504.85
Span 4	℄ Pier 3	169+46.43	508.96	507.01	169+48.61	507.77	504.82
	1/4 point	169+76.65	508.99	507.04	169+79.91	507.81	504.85
	1/2 point	170+06.86	509.02	507.07	170+11.21	507.84	504.88
	3/4 point	170+37.08	508.99	507.04	170+42.52	507.81	504.85
Span 5	℄ Pier 4	170+67.30	508.96	507.01	170+73.82	507.77	504.82
	1/4 point	170+91.49	508.96	507.03	170+98.89	507.80	504.84
	1/2 point	171+15.69	509.02	507.06	171+23.96	507.83	504.87
	3/4 point	171+39.89	509.01	507.06	171+49.03	507.82	504.87
	℄ Brgs. Abut. 2	171+64.09	508.96	507.01	171+74.09	507.76	504.82

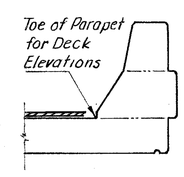

12/13

VOGT, IVERS, & ASSOCIATES
ENGINEERS CINCINNATI — ARCHITECTS CHICAGO

DECK DETAILS

BRIDGE NO. HAM 275 0314 L/R
I-275 over WHITEWATER RIVER

HAMILTON COUNTY — STA. 168+86.00

DESIGNED	DRAWN	TRACED	CHECKED	REVIEWED	DATE	REVISED
V. K.	D.W.M	D.W.M	M.M.	bbb	4-10-69	

HAM - 275 - 0.00

E. B. SUPERSTRUCTURE
(RIGHT)

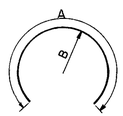

Type 3

S501	1,995	30-0	62,424	S			
S502	105	20-0	2,190	S			
S503	105	13-3	1,451	S			
S504	168	49-0	8,586	S			
			74,651				
S601	1,009	18-0	27,279	S			
S602	1,009	27-8	41,930	S			
S603	2,018	22-10	69,208	S			
			138,417				

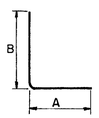

X501	758	2-0	1,581	5	1 - 0	0-7½ 0-7½
X502	758	5-4	4,216	11		
X503	758	2-3	1,779	6	0-7½	1 - 9
X504	758	3-3	2,569	13		
X505	184	14-8	2,815	S		
X506	128	5-11	790	S		
X507	128	5-8	757	S		
X508	8	13-1	109	S		
X509	8	12-8	106	S		
			14,722			

¾"

TOTAL SUPERSTRUCTURE: 227,790

E. B. PIERS

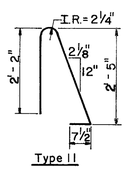

Type 11

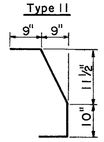

Type 13

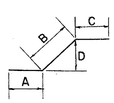

Type 14

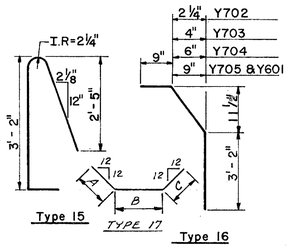

Type 15 TYPE 17 Type 16

P501	154	7 - 6	1,205	2	1 - 10	3 -10	1 -10 2 - 5¾ 1 - 2⅞
P502	154	15 - 0	2,409	S			
P503	32	16 - 0	534	9	0	13-0	3 - 0 2 -10
P504	160	11-7 to 19-1	2,559	5	1-10¼	5-0	5-0 8 sets of 20 to 8-9 to 8-9 vary B & C by 5"
P505	16	19 - 0	317	S			
P506	32	22 - 6	751	S			
P507	64	19 - 5	1,296	5	2 - 8	8 - 6	8 - 6
P508	80	2 - 8	223	S			
P509	96	10 - 0	1,001	5	6 - 5	1 -11	1 -11
P510	160	6 - 0	1,001	5	1-10¼	2-2½	2-2½
			11,296				
P701	72	26 - 8	3,925	1	25 - 0		
P901	152	6 - 6	3,359	6	1 - 3	5 -6	
P902	19	31 - 6	2,035	S			
P903	19	33 - 6	2,164	S			
P904	19	30 - 6	1,970	S			
P905	19	32 - 6	2,100	S			
P906	38	27 - 6	3,553	S			
P907	38	29 - 6	3,811	S			
			18,992				
P1001	149	17 - 4	11,113	1	14 - 6		
P1002	28	38 - 7	4,649	1	35 - 9		
P1003	20	30 - 0	2,582	1	27 - 2		
			18,344				
P1101	56	25 - 5	7,562	7	23 -10		

TOTAL PIERS 60,119

E. B. ABUTMENT - (RIGHT)

A501	56	7 - 7	443	5	5-4	1-3	1-3		
A502	22	7 - 2	164	6	0-9	6-7			
A503	26	7-11	215	6	0-9	7-4			
A504	8	8 - 7	72	6	0-9	8-0			
A505	56	5 - 8	331	5	3-5	1-3	1-3		
A506	48	22 - 6	1,126	S					
A507	40	11 - 8	487	S					
A508	20	6 - 2	129	5	2-7	1-11	1-11		
A509	2	12 - 8	26	S					
A510	2	27 - 0	56	S					
A511	2	6 - 8	14	S					
A512	40	11 - 8	487	12	3-0	2-7			
A513	24	10 - 8	267	S					
A514	24	8 - 8	217	S					
A515	24	16 - 8	417	S					
A516	28	6 - 0	175	S					
			4,626						
A601	22	14 - 2	468	5	5-4	2-7	6-7		
A602	26	14 -11	583	5	5-4	2-7	7-4		
A603	8	15 - 7	187	5	5-4	2-7	8-0		
A604	36	19 - 5	1,050	5	1-5	9-2	9-2		
A605	48	21 - 2	1,526	4	9-2	1-5	7-10	0-11	2-6
A606	14	18 - 4	386	5	1-2	8-9	8-9		
A607	14	21 - 2	445	5	1-2	10-2	10-2		
A608	28	6 - 0	252	S					
A609	8	6-10	82	5	1-2	3-0	3-0		
A610	36	6 - 0	324	S					
			5,303						
AB05	*34*	*5'-1*	*461*	*17*	*1'-6*	*2-10*	*0-11*		
A801	14	25 - 0	934	S					
A802	8	8 - 4	178	14	2-6	3-4	2-6	1 - 6	
A803	14	20 - 8	773	S					
A804	24	11 - 0	705	S					
			3051						

Y501	52	2 - 0	108	5	1 - 0	0-7½ 0-7½
Y502	40	2 -11	122	S		
Y503	32	6 - 5	214	15		
Y504	32	16 - 8	556	S		
Y505	8	7 - 3	60	S		
Y506	8	10 - 8	89	S		
Y507	52	2 -10	154	S		
			1,303			
Y601	32	5 - 0	240	16		
Y701	4	4 - 4	35	S		
Y702	4	4 - 9	39	16		
Y703	4	4-10	40	16		
Y704	4	4-11	40	16		
Y705	4	5 - 0	41	16		
			195			

TOTAL E.B. ABUTMENT 14,718

W. B. SUPERSTRUCTURE - (LEFT)

REINFORCING STEEL SAME AS FOR E. B. SUPERSTRUCTURE

W. B. PIERS

P501	166	7 - 6	1,299	2	1-10	3-10	1-10	2-5¾ 1-2⅞
P502	166	15 - 0	2,597	S				
P503	32	16 - 0	534	9	0	13-0	3-0	2-10
P504	160	11-7 to 19-1	2,559	5	1-10¼	5-0	5-0	8 sets of 20 to 8-9 to 8-9 vary B & C by 5"
P505	16	19-0	317	S				
P506	32	22-6	751	S				
P507	64	19-11	1,329	5	2-8	8-9	8-9	
P508	60	2-8	167	S				
P509	72	13-5	1,008	5	9-8	2-0	2-0	
P510	160	6-0	1,001	5	1-10¼	2-2½	2-2½	
			11,562					

P701	72	26 - 8	3,925	1	25-0	
P901	152	6 - 6	3,359	6	1-3	5-6
P902	19	33 - 8	2,175	S		
P903	19	35 - 0	2,261	S		
P904	19	32 - 8	2,110	S		
P905	19	34 - 0	2,196	S		
P906	38	29 - 8	3,833	S		
P907	38	31 - 0	4,005	S		
			19,939			
P1001	149	17 - 4	11,113	1	14-6	
P1002	28	38 - 7	4,649	1	35-9	
P1003	20	30 - 0	2,582	1	27-2	
			18,344			
P1101	56	25 - 5	7,562	7	23-10	
TOTAL PIERS			61,332			

W. B. ABUTMENT - (LEFT)

B501	56	7 - 7	443	5	5-4	1-3	1-3		
B502	20	7 - 2	150	6	0-9	6-7			
B503	14	7-11	116	6	0-9	7-4			
B504	6	8 - 8	54	6	0-9	8-1			
B505	16	7 - 7	127	6	0-9	7-0			
B506	56	5 - 8	331	5	3-5	1-3	1-3		
B507	6	3 - 5	21	S					
B508	10	6 - 5	67	5	2-8	2-0	2-0		
B509	48	22 - 6	1,126	S					
B510	40	11 - 8	487	S					
B511	2	6 - 8	14	S					
B512	2	27 - 0	56	S					
B513	2	12 - 8	26	S					
B514	40	11 - 8	487	12	3-0	2-7			
B515	24	10 - 8	267	S					
B516	24	8 - 8	217	S					
B517	24	16 - 8	417	S					
B518	14	6 - 0	175	S					
			4,581						
B601	20	14 - 2	426	5	5-4	2-7	6-7		
B602	14	14 -11	314	5	5-4	2-7	7-4		
B603	6	15 - 8	141	5	5-4	2-7	8-1		
B604	16	14 - 9	354	5	5-4	2-7	7-2		
B605	36	19 - 5	1,050	5	1-5	9-2	9-2		
B606	48	21 - 2	1,526	4	9-2	1-5	7-10	0-11	2-6
B607	28	19 - 2	806	5	1-2	9-2	9-2		
B608	28	6 - 0	252	S					
B609	8	6-10	82	5	1-2	3-0	3-0		
B610	36	6 - 0	324	S					
			5,275						
B805	*34*	*5'-1*	*461*	*17*	*1-6*	*2-10*	*0-11*		
B801	14	25 - 0	934	S					
B802	8	8 - 4	178	14	2-6	3-4	2-6	1-6	
B803	7	20 - 8	773	S					
B804	24	11 - 0	705	S					
			3051						

Y5, Y6 AND Y7 BARS SAME AS FOR E. B. ABUTMENT

TOTAL W. B. ABUTMENT 14,645

REPLACEMENT BARS (FOR BOTH STRUCTURES)

RE500	11	6 - 7	S		
RE600	15	6 -11	S		
RE700	1	8 - 0	7	7 - 2	
RE800	1	7 - 6	S		
RE900	2	7 -10	S		
RE1000	2	8 - 3	S		
RE1100	1	8 - 7	S		

13 / 13

STEEL LIST

BRIDGE NO. HAM-275-0314 L/R

I-275 over WHITEWATER RIVER

HAMILTON COUNTY STA 168+86.00

V. K. S.H. S.H. M.M. 4-10-69

433 RED
279A-305 plus soil Prof.

FHWA REGION	STATE	PROJECT	
5	OHIO		

279A 302

HAM 275-0.00

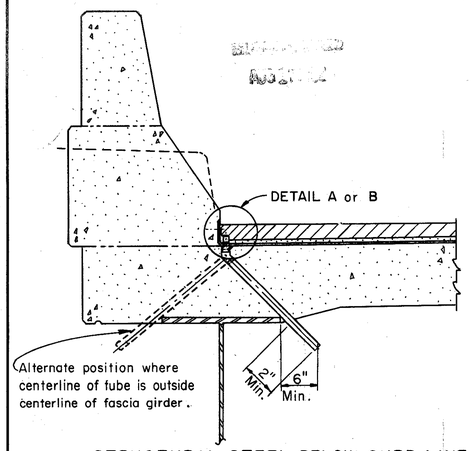

STRUCTURAL STEEL BELOW CURB LINE

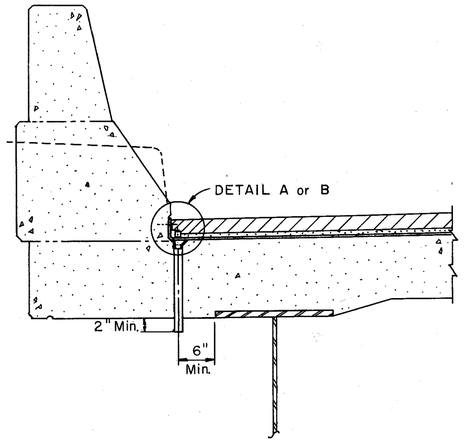

NO STRUCTURAL STEEL BELOW CURB LINE

DRAINAGE TUBE ARRANGEMENT

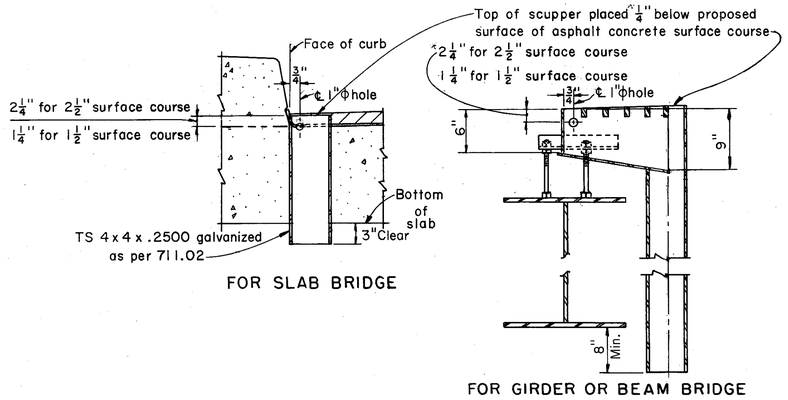

FOR SLAB BRIDGE

FOR GIRDER OR BEAM BRIDGE

SCUPPER DETAILS

(Scupper details conform to SD-1-69 except as noted)

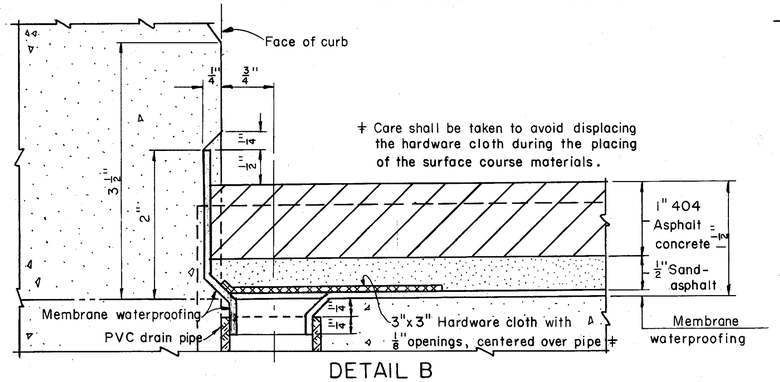

DETAIL B

SUBDRAINAGE FOR 1 1/2" SURFACE COURSE

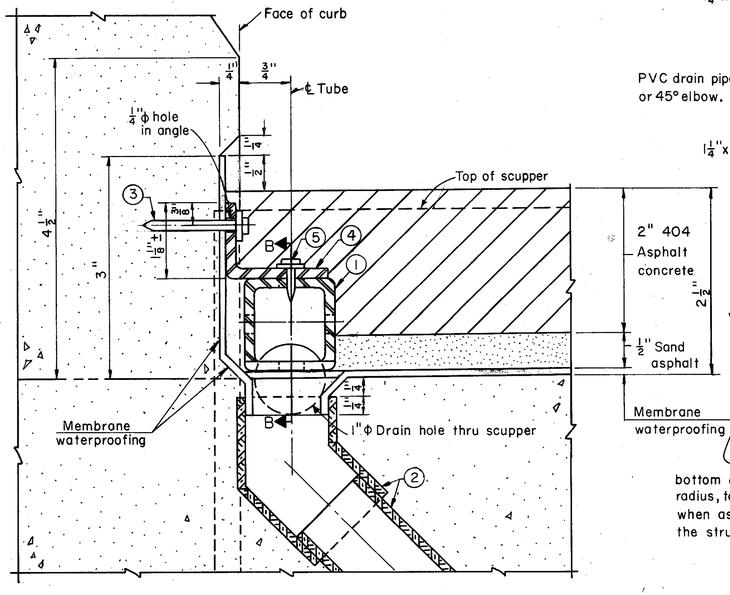

DETAIL A

SUBDRAINAGE FOR 2 1/2" SURFACE COURSE

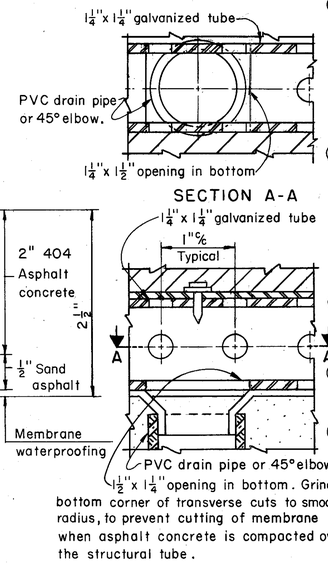

SECTION B-B

SUBDRAINAGE FOR ASPHALT CONCRETE SURFACE COURSE

The subdrainage system shall consist of PVC pipes and fittings and structural tubes as specified on this sheet. The pipes shall be spaced at approximately six foot intervals with a pipe placed within one foot of each expansion joint, except that they shall be relocated or extended as necessary for any discharge to clear bridge seats, structural members such as beams, diaphragms and crossbracing by at least six (6) inches. Pipes shall not be placed over or within four (4) feet of a pavement or sidewalk, within ten (10) feet of the centerline of a railroad track or along curb lines where the deck configuration does not permit water to accumulate.

Where the plans specify a two and one half ($2\frac{1}{2}$) inch surface course, the subdrainage shall be as shown on Detail A. The structural tube may be placed in any convenient lengths using butt joints. The price bid per linear foot for this drainage system shall include all PVC pipe and fittings, structural tubes, and all labor necessary to complete the item. The quantity will be the actual length of structural tube required. Payment will be made at the contract price for: Item 518, Lin. Ft., Subdrainage for wearing course, as per plan.

Where the plans specify a one and one half ($1\frac{1}{2}$) inch surface course, the subdrainage shall be as shown in Detail B. The price bid for each drain shall include the PVC pipe and fitting, the hardware cloth and all necessary labor to complete the item. Payment will be made at the contract price for: Item 518, Ea., Subdrainage for wearing course, as per plan.

If no sand-asphalt is specified, the 404 shall be either $2\frac{1}{2}$" placed in two $1\frac{1}{4}$" courses or $1\frac{1}{2}$" placed in one course.

① $1\frac{1}{4}$"x$1\frac{1}{4}$" galvanized, perforated, structural tube with $\frac{11}{32}$"±Φ holes 1" on centers on all four sides as shown. Cut $1\frac{1}{2}$"± x $1\frac{1}{4}$" opening in bottom, centered over each PVC drain pipe. The steel for the structural tube shall conform to the following:
PREGALVANIZED, ASTM A446, Grade A Steel, Galvanizing as per ASTM A525.
POSTGALVANIZED, ASTM A569 or A366, Galvanizing as per 711.02.

The minimum steel thickness shall be 0.105".
Any damaged galvanizing shall be repaired as per AASHO M36.

② 1" PVC DRAIN PIPE AND 45° ELBOW, SCHEDULE 40. Position accurately to match $1\frac{1}{2}$"x$1\frac{1}{4}$" openings in perforated tube. Place membrane to lap into the pipe, and seal the hole around the lip of the pipe. (This operation is important to the servicability of the membrane.) The drain pipe and elbow shall comply with the dimensions and markings of ASTM D1785 and ASTM D 2466, Type I and II respectively. The elbow shall be used only where structural steel is below curb line. Where the elbow is not adequate to provide clearance between the PVC pipe and the structural steel, the elbow shall be canted as required and cut on a line $\frac{1}{4}$" below and parallel with the deck surface. The solvent cement for the pipe and fittings shall conform to ASTM D2564.

③ $1\frac{1}{4}$"x$\frac{5}{32}$"x$\frac{1}{4}$" flat head drive pin and washer.
Fastening of the structural tube by methods other than shown shall be subject to approval by the Engineer. (Driving pins into bridge deck is prohibited.)

④ L$1\frac{1}{2}$"x$1\frac{1}{2}$"x$\frac{1}{8}$", 3" long, clipped and galvanized, or bent galvanized steel plate $2\frac{1}{2}$"x3"x0.105" thick. Attach to curb at approximately 10'-0"% except near joints, where the angle shall be placed within 6" of the end of each tube section.

⑤ $\frac{1}{2}$"x$\frac{1}{8}$"x$\frac{1}{4}$" flat head drive pin and washer driven thru angle and tube.

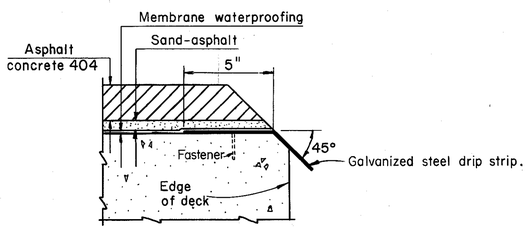

DRIP STRIP
BRIDGES WITHOUT CURBS

Galvanized Steel Drip Strip: Prior to applying deck membrane waterproofing a bent galvanized steel drip strip, 8"x0.105" shall be installed along the edges of the deck as shown. The strips shall be fastened at 3'-0"% maximum with power driven pins or #10 galvanized expansion screws, subject to the approval of the Engineer. The strips shall be placed the full length of the deck. Where splices are required a 3" (min.) lap shall be used, with a fastener through the lap. Steel shall meet the requirements of ASTM A568 and galvanizing shall be in accordance with 711.02. Payment shall be at the contract price bid for Item Special, Sq. Ft., Galvanized steel drip strip, which shall include all materials, labor, tools and incidentals necessary to complete the item.

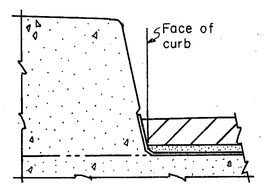

SHAPE OF SIDEWALK CURB

STATE OF OHIO
DEPARTMENT OF TRANSPORTATION
DIVISION OF HIGHWAYS
BUREAU OF BRIDGES

DECK DRAINAGE DETAILS
FOR BRIDGES WITH ASPHALT CONCRETE SURFACE COURSE

DESIGNED	DRAWN	TRACED	CHECKED	REVIEWED	DATE	REVISED
DLM	GJ	——	CPD	WJJ	7-27-73	

LOCATION PLAN

HAM-275-0.00

HAMILTON COUNTY

WHITEWATER TOWNSHIP
SEC. 30, T-1, R.1E
SEC. 31, T-1, R.1E

0 200 400 600

FED. RD. DIVISION	STATE	PROJECT	
2	OHIO	I-275-3(12)	

281/305

HAM. 275-0.00
R/W PLAN
LIMITED ACCESS
SCALE 1" = 200'

1/25

SHEET 1 OF 4

RECEIVED _____ 19____
RECORDED _____ 19____
BOOK _____ PAGE _____
COUNTY RECORDER _____

SIGNED R. F. Bevis
DATE 8/8/73 DIVISION DEPUTY DIRECTOR

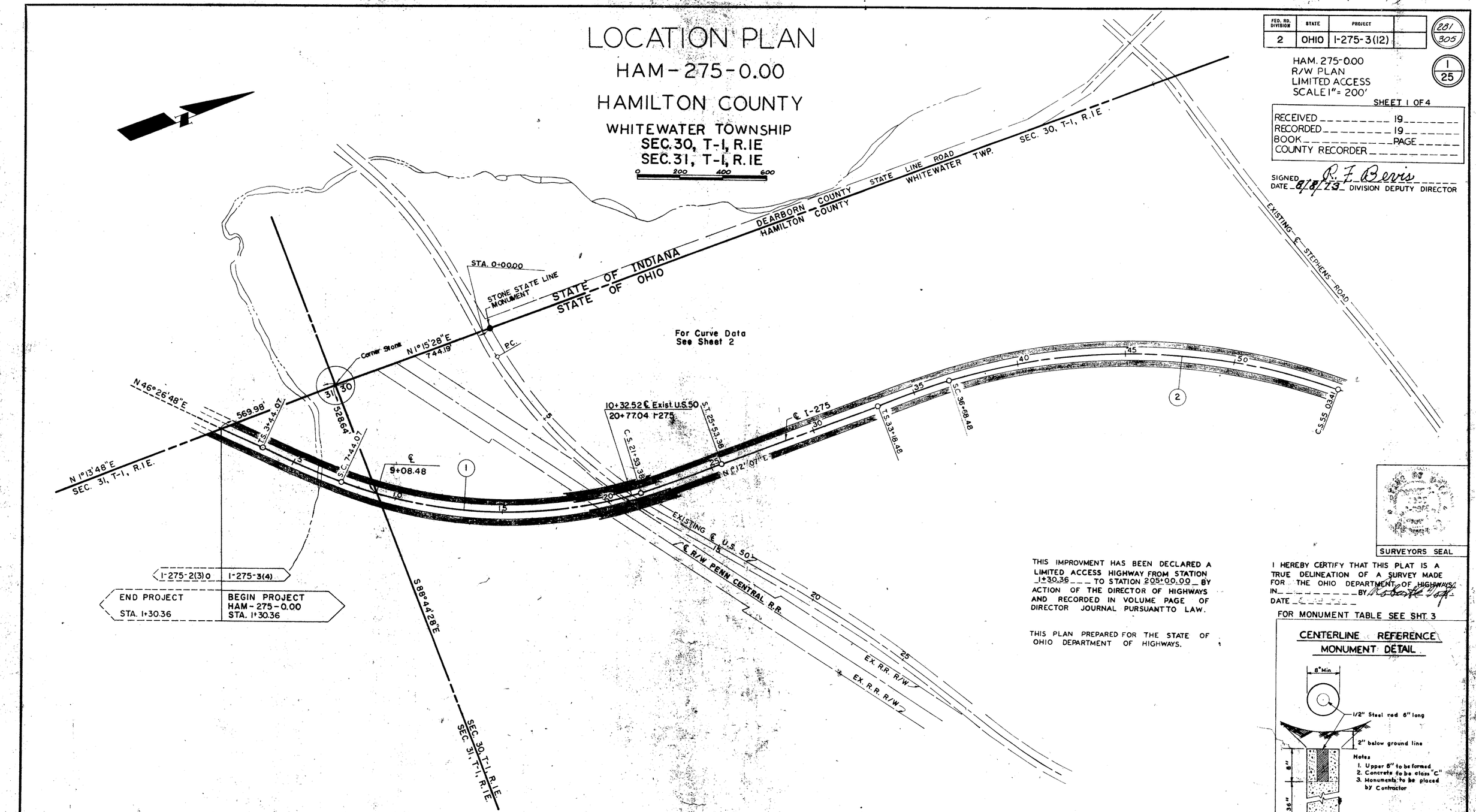

THIS IMPROVMENT HAS BEEN DECLARED A LIMITED ACCESS HIGHWAY FROM STATION 1+30.36 TO STATION 205+00.00 BY ACTION OF THE DIRECTOR OF HIGHWAYS AND RECORDED IN VOLUME PAGE OF DIRECTOR JOURNAL PURSUANT TO LAW.

THIS PLAN PREPARED FOR THE STATE OF OHIO DEPARTMENT OF HIGHWAYS.

SURVEYORS SEAL

I HEREBY CERTIFY THAT THIS PLAT IS A TRUE DELINEATION OF A SURVEY MADE FOR THE OHIO DEPARTMENT OF HIGHWAYS IN _____ BY Robert Dorf
DATE _____

FOR MONUMENT TABLE SEE SHT. 3

CENTERLINE REFERENCE MONUMENT DETAIL

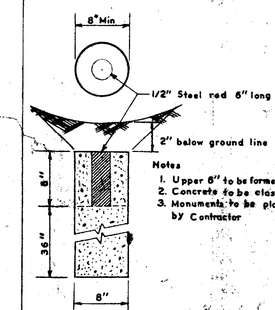

Notes
1. Upper 8" to be formed
2. Concrete to be class "C"
3. Monuments to be placed by Contractor

1/25

DATE	REVISION	BY

R/W PLAN - LOCATION PLAN

FED. RD. DIVISION	STATE	PROJECT	
2	OHIO	I-275-3(12)	

282/305

2/25

HAM. 275-0.00
R/W PLAN
LIMITED ACCESS
SCALE 1" = 200'

SHEET 2 OF 4

LOCATION PLAN

HAM - 275 - 0.00

HAMILTON COUNTY

WHITEWATER TOWNSHIP
SEC. 19, T-1, R.1E
SEC. 30, T-1, R.1E

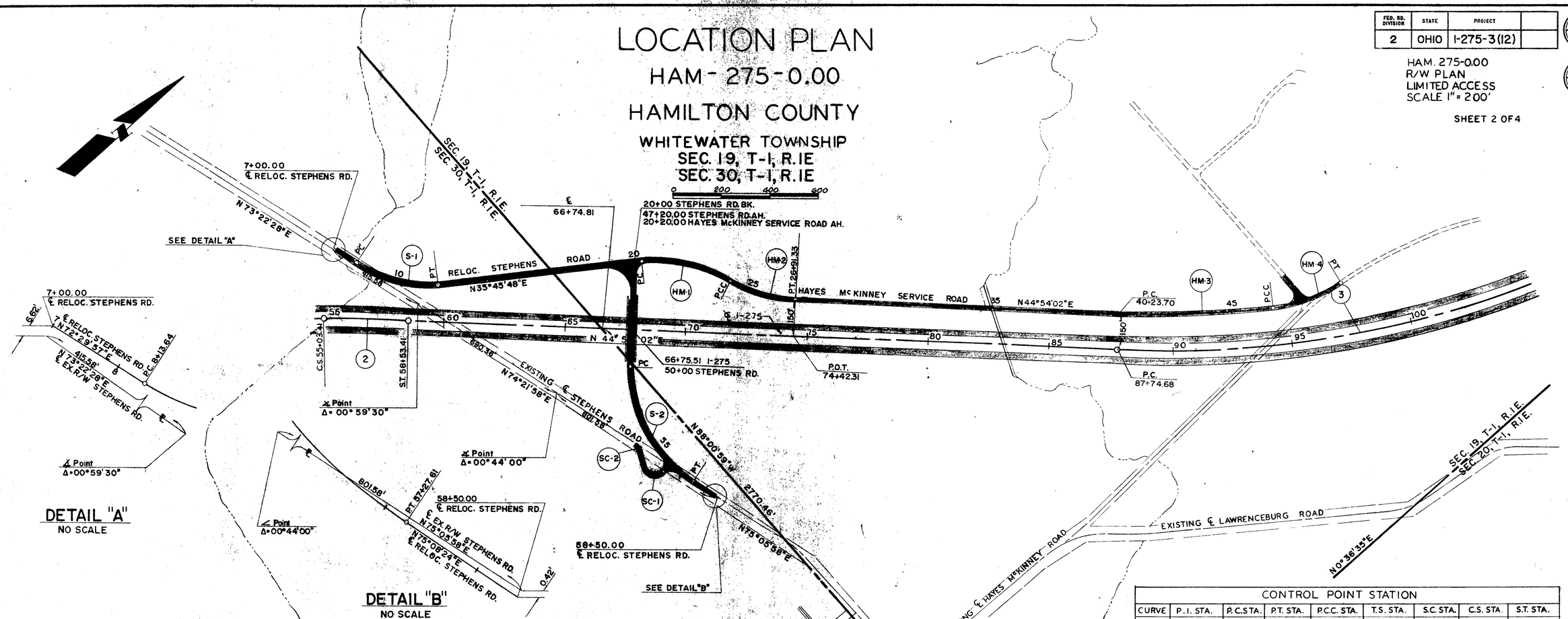

DETAIL "A"
NO SCALE

DETAIL "B"
NO SCALE

CURVE DATA

CURVE	P.I.STA.	Δ	D_c	R_c	L_c	T_1	T_2	L_{S-1}	L_{S-2}	O_{S-1}	O_{S-2}	E
1	15+00.00	45°13'58"	2°30'00"	2,291.83'	1,409.31'	1,155.93'	1,155.93'	400.00'	400.00'	5°00'00"	5°00'00"	194.07'
2	46+42.87	43°41'55"	2°00'00"	2,864.79'	1,834.93'	1,324.39'	1,324.39'	350.00'	350.00'	3°30'00"	3°30'00"	223.64'
3	97+39.94	25°19'12"	1°20'00"	4,297.18'	1,899.00'	965.26'	965.26'					107.08
4	162+77.88	72°15'55"	2°15'00"	2,546.48'	2,811.79'	2,061.02'	2,061.02'	400.00'	400.00'	4°30'00"	4°30'00"	609.69'
5	222+69.74	73°56'50"	1°16'00"	4,583.66'	5,915.78'	3,450.73'	3,450.73'					1,153.71'
C-1	196+19.78	3°49'06"	1°16'22"	4,501.63'	300.00'	150.06'	150.06'					2.50
C-2	201+58.07	56°56'13"	8°00'00"	716.20'	711.71'	388.35'	388.35'					98.52'
C-3	208+82.87	38°50'37"	20°01'32"	286.11'	93.97'	264.31'	47.41'	200.00'		20°01'32"		49.06'
D-1	197+01.98	5°39'19"	1°15'00"	4,583.66'	452.43'	226.40'	226.40'					5.59'
D-2	201+49.37	34°21'03"	8°00'00"	716.20'	429.38'	221.36'	221.36'					33.43'
D-3	207+63.07	41°37'40"	15°00'00"	381.97'	277.52'	272.34'	272.34'	250.00'	250.00'	18°45'00"	18°45'00"	33.93'
KR-1	28+62.47	9°02'41"	2°00'00"	2,864.79'	452.24'	226.59'	226.59'					8.95'
KR-2	35+62.28	3°59'50"	1°25'00"	4,044.41'	282.16'	141.14'	141.14'					2.46'
KR-3	57+78.63	4°32'49"	1°29'00"	3,862.64'	306.54'	153.35'	153.35'					3.04'
KR-4	63+08.25	4°32'49"	1°29'00"	3,862.64'	306.54'	153.35'	153.35'					3.04'
S-1	10+03.88	36°44'09"	10°00'00"	572.96'	367.36'	190.24'	190.24'					
HM-1	22+21.64	37°53'06"	10°00'00"	572.96'	378.85'	196.64'	196.64'					
HM-2	22+50.68	28°44'52"	10°00'00"	572.96'	287.48'	146.83'	146.83'					
HM-3	43+48.17	8°56'53"	1°22'54"	4,146.86'	647.63'	324.47'	324.47'					
HM-4	48+15.86	28°18'57"	10°00'00"	572.96'	283.16'	144.53'	144.53'					
SR-1	96+20.39	21°18'56"	22°55'06"	250.00'	93.01'	47.05'	47.05'					4.39'
SC-1	9+30.52	111°00'00"	114°35'30"	50.00'	96.87	72.75'	72.75'					
SC-2	7+50.02	33°45'37"	76°23'52"	75.00'	44.19'	22.76'	22.76'					
S-2	54+59.20	59°45'38"	10°00'00"	572.96'	597.61'	329.20'	329.20'					

CONTROL POINT STATION

CURVE	P.I. STA.	P.C.STA.	P.T. STA.	P.C.C. STA.	T.S. STA.	S.C. STA.	C.S. STA.	S.T. STA.
1	15+00.00				3+44.07	7+44.07	21+53.38	25+53.38
2	46+42.87				33+18.48	36+68.48	55+03.41	58+53.41
3	97+39.94	87+74.68	106+73.68					
4	162+77.88				142+16.86	146+16.86	174+28.65	178+28.65
5	222+69.74	188+19.01	247+34.79					
C-1	196+19.78	194+69.72		197+69.72				
C-2	201+58.07		204+81.43	197+69.72				
C-3	208+82.87				206+18.56	208+18.56	209+12.53	
D-1	197+01.98	194+75.58		199+28.01				
D-2	201+49.37		203+57.40	199+28.01				
D-3	207+63.07				204+90.73	207+40.73	207+68.25	210+18.25
KR-1	29+62.47	26+35.88	30+88.12					
KR-2	35+62.28	34+21.14	37+03.30					
KR-3	57+78.63	56+25.28	59+31.82					
KR-4	63+08.25	61+54.90	64+61.44					
S-1	10+03.88	8+13.64	11+81.00					
HM-1	22+21.64	20+25.00		24+03.85				
HM-2	22+50.68	26+91.33		24+03.85				
HM-3	43+48.17	40+23.70		46+71.33				
HM-4	48+15.86		49+54.49	46+71.33				
SR-1	96+20.39	95+73.34	96+66.35					
SC-1	9+30.52	8+57.77	9+54.64					
SC-2	7+50.02	7+27.26	7+71.45					
S-2	54+59.20	51+30.00	57+27.61					

AUG 1973

2/25

DATE	REVISION	BY

R/W PLAN - LOCATION PLAN

FED. RD. DIVISION	STATE	PROJECT	
2	OHIO	I-275-3(12)	

283 / 305

3 / 25

HAM. 275-0.00
R/W PLAN
LIMITED ACCESS
SCALE 1" = 200'

SHEET 3 OF 4

LOCATION PLAN

HAM- 275-0.00

HAMILTON COUNTY

WHITEWATER TOWNSHIP
SEC. 17, T-1, R.1E
SEC. 19, T-1, R.1E
SEC. 20, T-1, R.1E

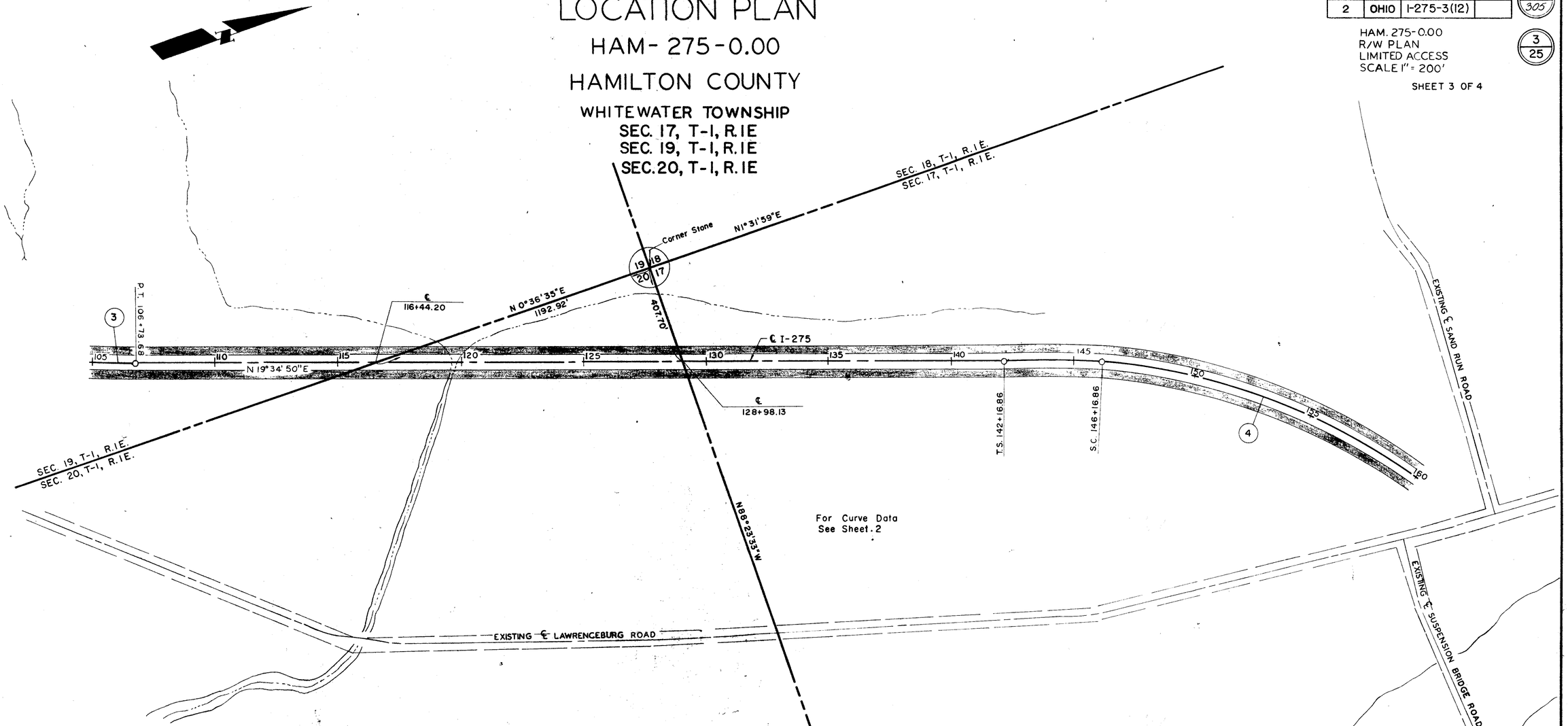

For Curve Data
See Sheet. 2

CENTERLINE REFERENCE MONUMENTS								
STATION	OFFSET	DESCR.	STATION	OFFSET	DESCR.	STATION	OFFSET	DESCR.
℄ I-275			℄ I-275			℄ I-275		
1+30.36	℄	P.O.T.	75+00	℄	P.O.T.	150+00	℄	P.O.C.
3+44.07	℄	T.S.	80+00	℄	P.O.T.	155+00	℄	P.O.C.
7+44.07	℄	S.C.	85+00	℄	P.O.T.	160+00	℄	P.O.C.
15+00.00	℄	P.O.C.	87+74.68	℄	P.C.	165+00	℄	P.O.C.
25+53.38	℄	S.T.	95+00	℄	P.O.C.	174+28.65	℄	C.S.
30+00.00	℄	P.O.T.	100+00	℄	P.O.C.	178+28.65	℄	S.T.
33+18.48	℄	T.S.	106+78.68	℄	P.T.	185+00	℄	P.O.T.
36+68.48	℄	S.C.	110+00	℄	P.O.T.	188+19.01	℄	P.C.
40+00.00	℄	P.O.C.	115+00	℄	P.O.T.	195+00	℄	P.O.C.
45+00.00	℄	P.O.C.	120+00	℄	P.O.T.	200+00	℄	P.O.C.
50+00.00	℄	P.O.C.	125+00	℄	P.O.T.			
55+03.41	℄	C.S.	130+00	℄	P.O.T.			
58+53.41	℄	S.T.	135+00	℄	P.O.T.			
66+00.00	℄	P.O.T.	142+16.86	℄	T.S.			
70+00.00	℄	P.O.T.	146+16.86	℄	S.C.			

MONUMENT	ASSEMBLY	
STATION	OFFSET	DESCR.
~~℄ Reloc. Stephens Rd.~~		
8+19.64	℄	P.C.
11+81.00	℄	P.T.
15+00.00	℄	P.O.T.
20+00.00	℄	P.O.T.
51+30.00	℄	P.C.
57+27.61	℄	P.T.
~~℄ Hopewell-McKinney & Rd.~~		
24+03.85	℄	P.C.C.
30+00.00	℄	P.O.T.
35+00.00	℄	P.O.T.
40+23.70	℄	P.C.
46+71.33	℄	P.C.C.
49+54.40	℄	P.T.
~~℄ Reloc. Sand Run Rd.~~		
96+66.35	℄	P.T.
100+00.00	℄	P.O.T.

3 / 25

DATE	REVISION	BY

R/W PLAN — LOCATION PLAN

FED. RD. DIVISION	STATE	PROJECT	
2	OHIO	I-275-3(12)	

284/305

4/25

HAM. 275-0.00
R/W PLAN
LIMITED ACCESS
SCALE 1" = 200'

SHEET 4 OF 4

LOCATION PLAN

HAM-275-0.00

HAMILTON COUNTY

WHITEWATER TOWNSHIP
SEC. 16, T-1, R.1E
SEC. 17, T-1, R.1E

0 200 400 600

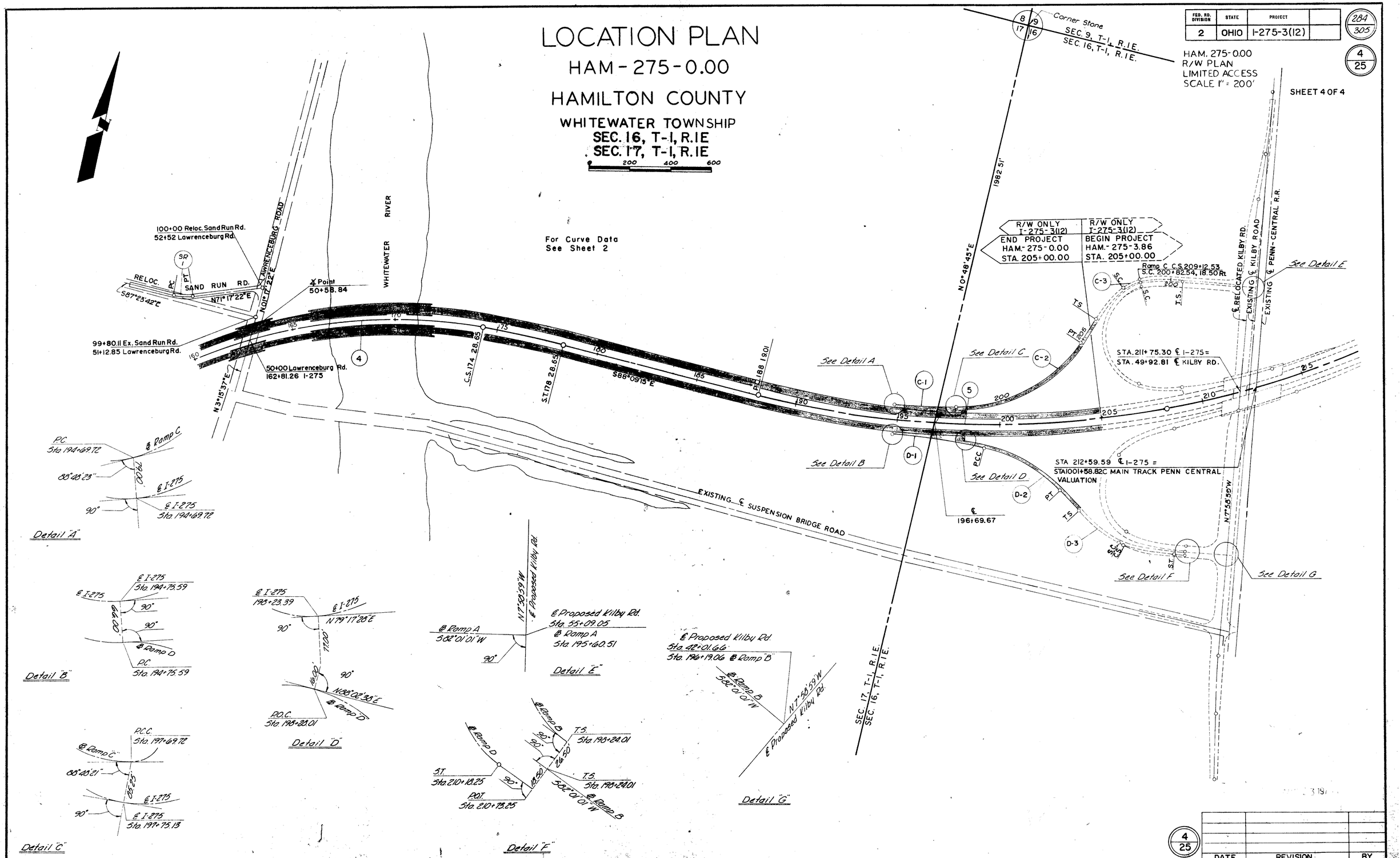

4/25

DATE	REVISION	BY

R/W PLAN – LOCATION PLAN

FED. RD. DIVISION	STATE	PROJECT	
2	OHIO	I-275-3(12)	

285/305

HAM. 275-000
R/W PLAN
LIMITED ACCESS
SCALE 1" = 200'

5/25

PROPERTY MAP

HAM-275-0.00

HAMILTON COUNTY

WHITEWATER TOWNSHIP
SEC. 30, T-1, R.1E
SEC. 31, T-1, R.1E

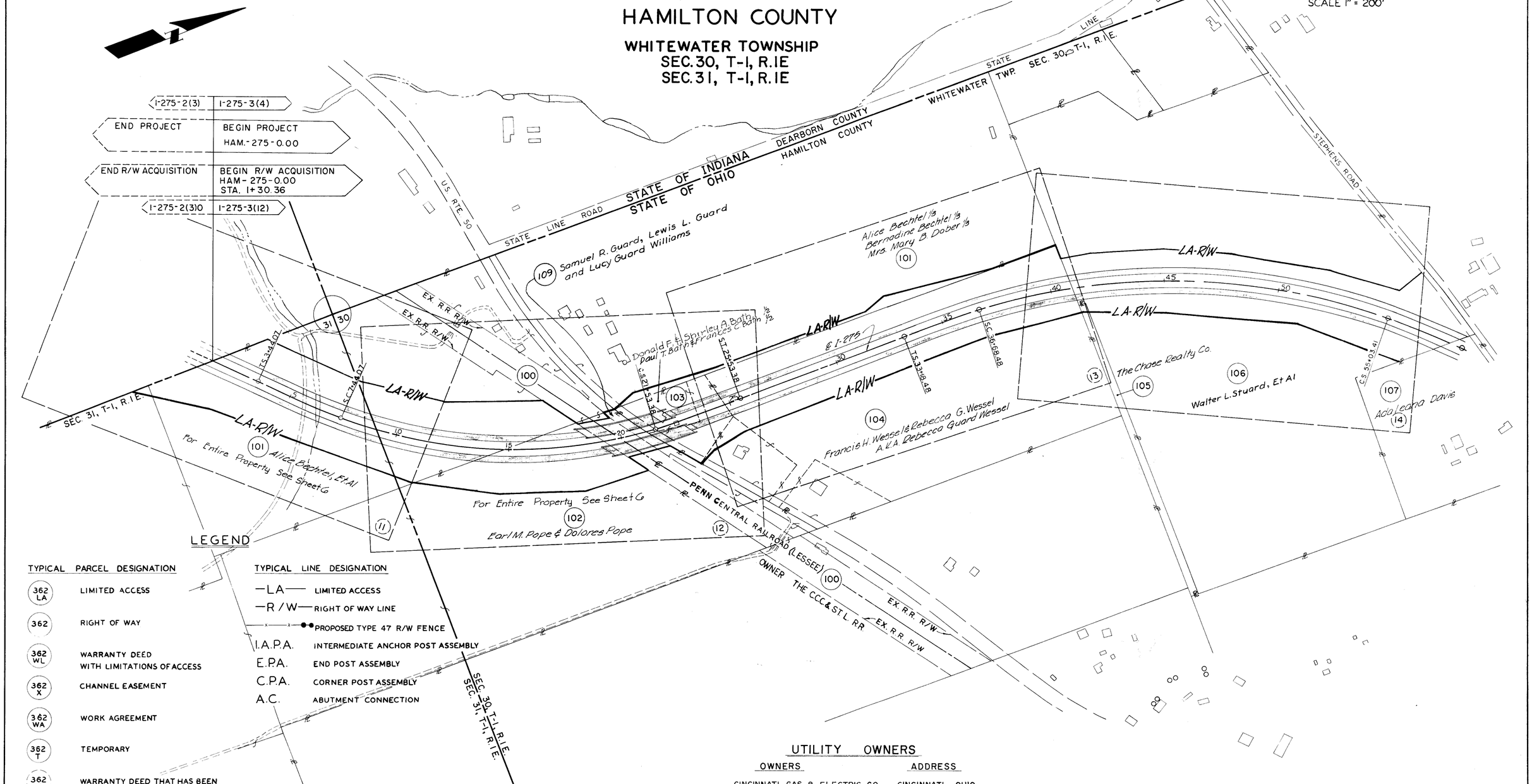

LEGEND

TYPICAL PARCEL DESIGNATION	
362 LA	LIMITED ACCESS
362	RIGHT OF WAY
362 WL	WARRANTY DEED WITH LIMITATIONS OF ACCESS
362 X	CHANNEL EASEMENT
362 WA	WORK AGREEMENT
362 T	TEMPORARY
362 WL	WARRANTY DEED THAT HAS BEEN ACQUIRED UNDER ANOTHER CONTRACT
362 EL	EXCESS LAND

TYPICAL LINE DESIGNATION	
—LA—	LIMITED ACCESS
—R/W—	RIGHT OF WAY LINE
—x—x—●●	PROPOSED TYPE 47 R/W FENCE
I.A.P.A.	INTERMEDIATE ANCHOR POST ASSEMBLY
E.P.A.	END POST ASSEMBLY
C.P.A.	CORNER POST ASSEMBLY
A.C.	ABUTMENT CONNECTION

UTILITY OWNERS

OWNERS	ADDRESS
CINCINNATI GAS & ELECTRIC CO.	CINCINNATI, OHIO
HAMILTON CO. WATER WORKS	" "
CINCINNATI BELL, INC.	" "

5/25

DATE	REVISION	BY
3-29-73	Name Chg. Par. 103	E.H.
11-22-72	Name Correction Parcel 100	P.W.F.

R/W PLAN PROPERTY MAP

FED. RD. DIVISION	STATE	PROJECT	
2	OHIO	I-275-3(12)	

286/305

6/25

HAM. 275-0.00
R/W PLAN
LIMITED ACCESS
SCALE 1" = 200'

PROPERTY MAP

HAM-275-0.00
HAMILTON COUNTY
WHITEWATER TOWNSHIP
SEC. 19, T-1, R.1E
SEC. 30, T-1, R.1E

0 200 400 600

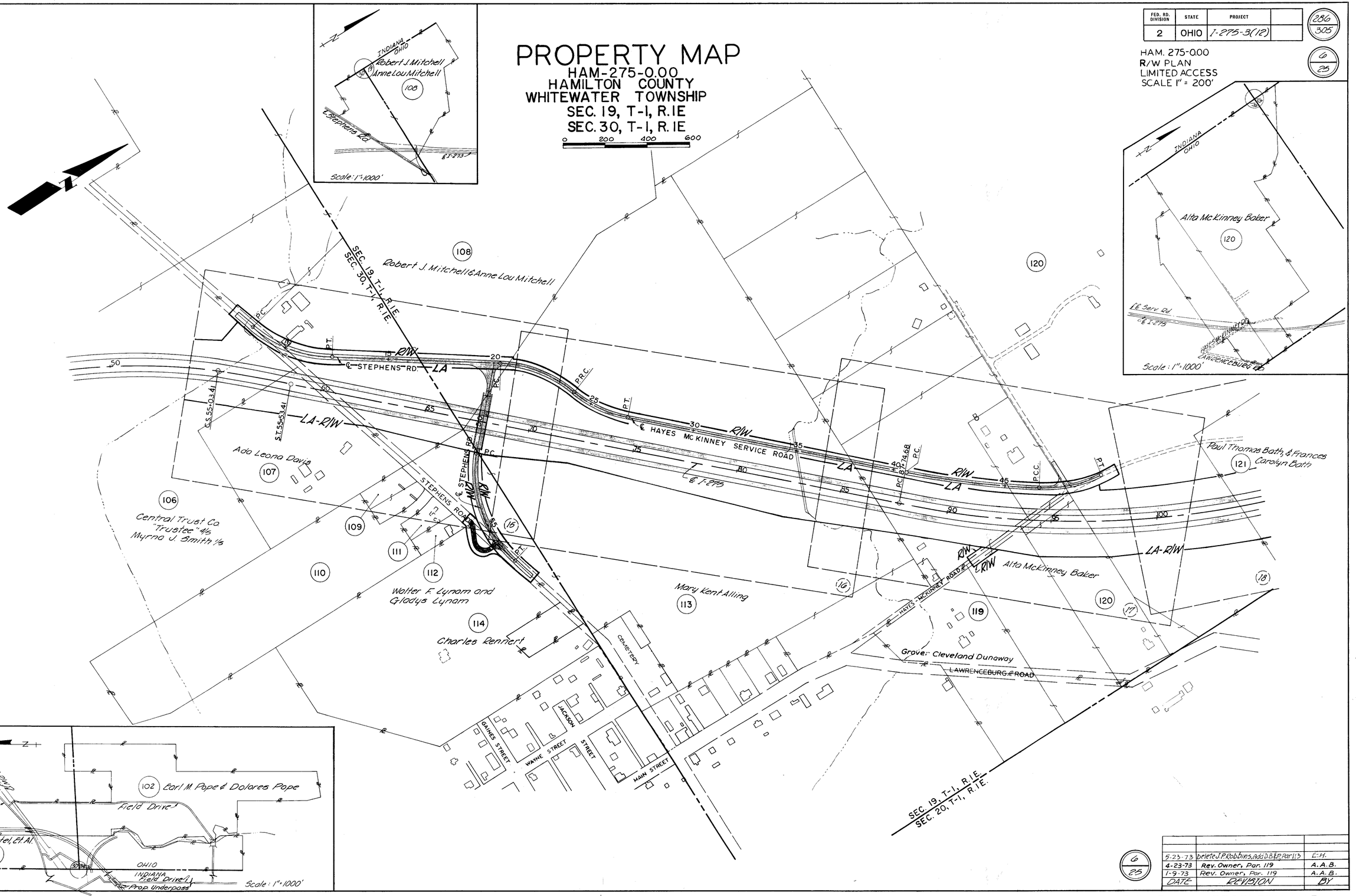

6/25

DATE	REVISION	BY
5-23-73	Delete J.P. Robbins, Add D.B.&P.P. Par 113	E.H.
4-23-73	Rev. Owner, Par. 119	A.A.B.
1-9-73	Rev. Owner, Par. 119	A.A.B.

R/W PLAN PROPERTY MAP

FED. RD. DIVISION	STATE	PROJECT	
2	OHIO	I-275-3(12)	

287/305

7/25

HAM. 275-0.00
R/W PLAN
LIMITED ACCESS
SCALE 1" = 200'

PROPERTY MAP

HAM-275-0.00
HAMILTON COUNTY
WHITEWATER TOWNSHIP
SEC. 17, T-1, R.1E
SEC. 19, T-1, R.1E
SEC. 20, T-1, R.1E

0 200 400 600

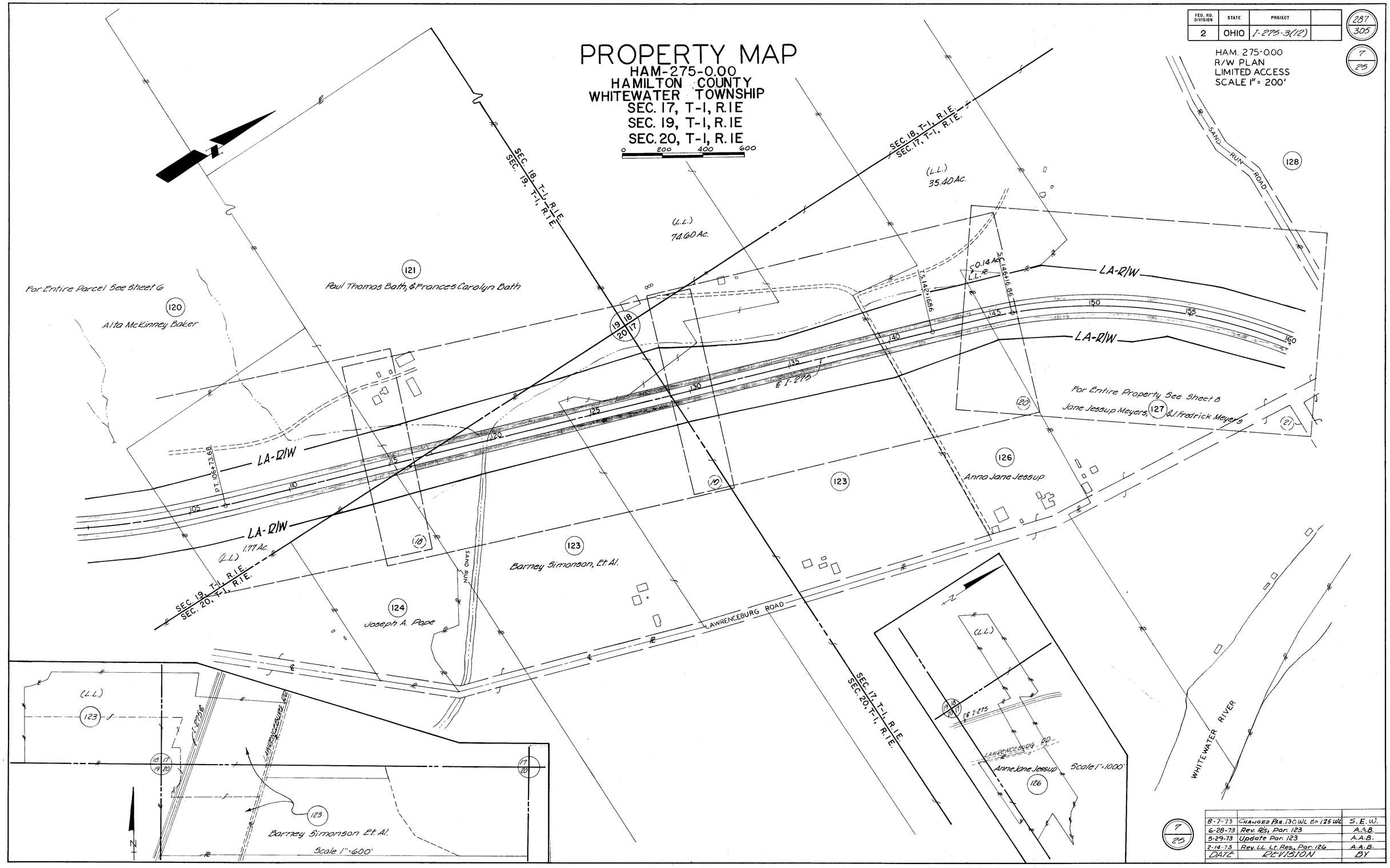

7/25

DATE	REVISION	BY
8-7-73	CHANGED PAR. 130 WL to 125 WL	S.E.W.
6-28-73	Rev. R/S, Par. 123	A.A.B.
5-29-73	Update Par. 123	A.A.B.
2-14-73	Rev. LL. Lt. Res., Par. 126	A.A.B.

R/W PLAN PROPERTY MAP

FED. RD. DIVISION	STATE	PROJECT	
2	OHIO	I-275-3(12)	

288/305

8/25

HAM. 275-0.00
R/W PLAN
LIMITED ACCESS
SCALE 1" = 200'

PROPERTY MAP

HAM-275-0.00
HAMILTON COUNTY
WHITEWATER TOWNSHIP
SEC. 16, T-1, R.1E
SEC. 17, T-1, R.1E

0 200 400 600

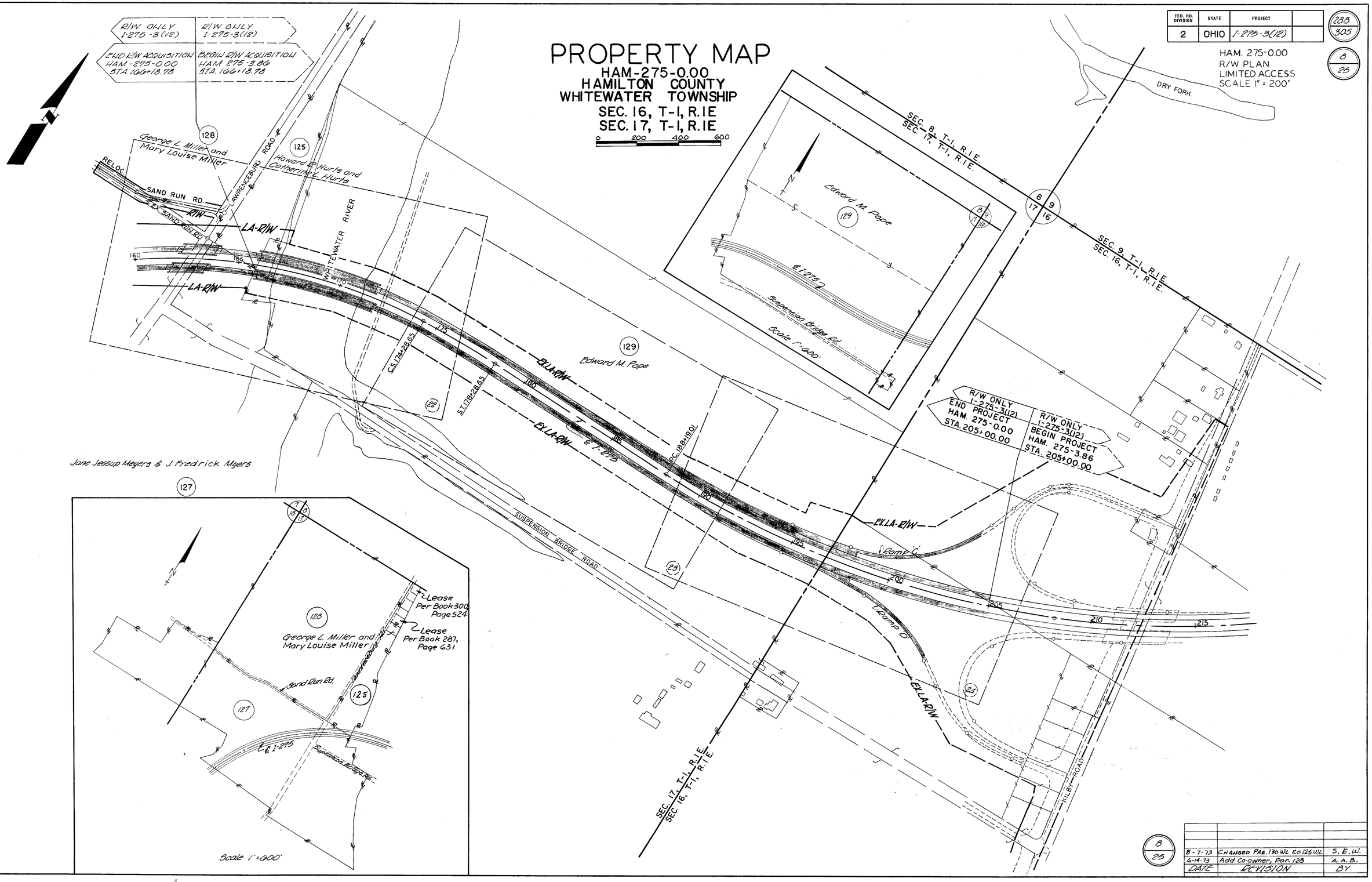

8/25

DATE	REVISION	BY
8-7-73	CHANGED PAR. 130 W.L. to 125 W.L.	S.E.W.
6-14-73	Add Co-owner, Par. 128	A.A.B.

R/W PLAN PROPERTY MAP

R/W JOB NUMBER	FED. RD. DIVISION	STATE	PROJECT	
08535(0)	2	OHIO	I-275-3(12)	

289/305

HAM-275-0.00
R/W PLAN
LIMITED ACCESS

9/25

SUMMARY OF ADDITIONAL RIGHT OF WAY REQUIRED

TOTAL NUMBER OF---
20 Owners
1 Total Takes
2 Owner With Structures Involved

PARCEL NO.	OWNER	RECORDED BOOK	RECORDED PAGE	RECORD AREA	TOTAL P.R.O.	GROSS TAKE	P.R.O IN TAKE	NET TAKE LAND	NET TAKE BLDG.	NET RESIDUE LEFT	NET RESIDUE RIGHT	SHEET NO.	TYPE FUND	REMARKS
100AR	Penn-Central Transportation Company (LESSEE)					23,710 S.F.	0	23,710 S.F.				12,25	I	OWNED BY THE C.C.C. & ST.L. R.R. CO.
100A	" " " "					233 S.F.	0	233 S.F.				12,25		
100B	" " " "					226 S.F.	0	226 S.F.				12,25		
100C	" " " "					671 S.F.	0	671 S.F.				12,25		
100D	" " " "					649 S.F.	0	649 S.F.				12,25		
100SL	" " " "					11,722 S.F.	0	11,722 S.F.				12,25		
101WL-1	Alice Bechtel 1/3, Bernadine Bechtel 1/3, and	2716	285	113.61	1.41	11.87	0	11.87		45.98	55.43	11,12		
101WL-2	Mrs. Mary B. Dober 1/3	2603	509			0.93	0.01	0.92				12,13		
101X	" " "	2010	406			0.07	0	0.07				11		
		2010	433											
102WL	Earl M. Pope & Dolores Pope	2190	534	222.96	0	3.34	0	3.34		0	222.62	12		
		1991	106											
103WL	Donald F. Bath & Shirley A. Bath 1/2	3588	338	2.49	0.31	2.49	0.31	2.18	Yes	0	0	12		Total Take
	Paul T. Bath & Frances C. Bath 1/2	3588	341											
104WL	Francis H. Wessel & Rebecca G. Wessel,	2929	541	30.833	0.412	12.15	0	12.15		0	18.271	12,13,14		
	A.K.A. Rebecca Guard Wessel	2397	464											
105WL	The Chase Realty Company	2206	379	1.04	0	0.04	0	0.04		0	1.00	14		
106WL	Walter L. Stuard, Myrna J. Smith, Anna Mae	See		60.50	1.11	11.28	0.13	11.15		22.60	25.64	14,15		
106WD	Simpson, Thelma M. Labbe and Thelma M. Smith	←"NOTE A"				0.11	0.11	0				15		
107WL	Ada Leona Davis	3328	591	10.00	0.40	1.45	0.23	1.22		0	8.38	15		
108WL	Robert J. Mitchell and Anne Lou Mitchell	3364	509	130.59	1.15	5.74	0.06	5.68	Yes	121.60	0.35	15		
108WD	" " " "					1.79	0.18	1.61	Yes			15		
108X	" " " "					0.98	0	0.98	Yes			15		Channel Easement
108T	" " " "					0.04	0	0.04	Yes			15		Remove Structure & Grade & Seed
109WL	Samuel R. Guard, Lewis L. Guard and Lucy Guard	1763	509			0.25	0.25	0				12		Not to be Acquired
	Williams													
110 & 111														Not Needed
112WD	Walter F. Lynam and Gladys Lynam	3658	202	0.48	0	0.01	0	0.01		0	0.47	16		
113WL	Mary Kent Alling	2479	342	79.34	0.82	13.28	0	13.28		2222	39.68	15,16		
113WD-1	" " "	2050	32			2.33	0	2.33				15,16		
113WD-2	" " "	"	"			0.85	0.26	0.59				15,16		
113SL-1	" " "	"	"			0.23	0	0.23				16		
113SL-2	" " "	"	"			0.19	0	0.19				16		
113X-1	" " "	"	"			0.08	0	0.08				15,16		
113X-2	" " "	"	"			0.24	0	0.24				15,16		
113X-3	" " "	"	"			1.10	0	1.10				15,16		
113S	" " "	"	"			0.02	0	0.02				16		
114WD	Charles Rennert	2677	427	19.00	0.37	0.48	0.23	0.25		0	18.38	16		
115 thru 118														Not Used
119X	Grover Cleveland Dunaway, AKA Cleve Dunaway	3657	450	4.57	0.47	0.24	0	0.24		0	4.10	17		Ruby Irene Dunaway, AKA Irene Dunaway (Deceased)
		3894	612											
120WL	Alta McKinney Baker	2017	303	315.39	0.99	11.67	0.21	11.46		286.26	14.90	17,18		
120WD-1	" " "	2471	500			1.75	0.03	1.72				16,17		
120WD-2	" " "	2471	551			0.11	0.05	0.06				17		
120X-1	" " "	2471	555			0.54	0	0.54				16,17		
120X-2	" " "	3332	307			0.12	0	0.12				17		
120T	" " "	1816	448			0.06	0	0.06				17		Construct Drive & Grade & Seed
120S	" " "					0.01	0	0.01				17		
121WL	Paul Thomas Bath & Frances Carolyn Bath	3016	232	100.00	0	9.89	0	9.89		88.34	1.77 L.L.	18,19		
122														Not Used
123WL	Barney Simonson, Ava Van Treese, Antoinette Acra,	1780	113	143.46	1.60	17.48	0	17.48		74.60 L.L.	49.78	19,20		
123X	A.K.A. Annette Acra, Allen Van Treese, Richard	2960	485		0	0.76	0	0.76				19		
	Van Treese, Harry Van Treese	542	527											
124WL	Joseph A. Pope	3472	314	11.00	0	0.50	0	0.50		0	10.50	18,19	I	
125WL														SEE SHEET 10

NOTE A
Parcel 106: BOOK - PAGE
3430 - 358
3630 - 359
3682 - 974
3682 - 977
3682 - 980
3682 - 983
3702 - 714
3800 - 563

NOTE:
Under no circumstances are the Temporary Easements for purpose of removal of buildings to be used for storage of material and equipment. Upon the completion of work in this area, the Temporary Easements shall be immediately vacated.

REV.	DATE	DESCRIPTION
S.E.W.	8-7-73	CHANGED PAR. 130 WL to 125 WL Par. 123.
A.A.B.	6-29-73	Rev. Owners, Rec. Area & Res.,
A.A.B.	5-30-73	Updated Parcel 123
E.H.	5-23-73	Delete J.P. Robbins, Add D.B.&P. Par 113
A.A.B.	5-15-73	Add D.B. & P., Par. 123
A.A.B.	4-23-73	Rev. Par 119 Owner, Add D.B. & P.
E.H.	3-29-73	Name Chg. D.B.&P. Par 103
E.H.	3-28-73	Add D.B. & Page to Par. 120
A.A.B.	2-5-73	Rev. Par. 120
A.A.B.	1-9-73	Rev. Rt. Res., Par. 114. Rev. Owner, D.B.&P. and P.R.O. in Take, Par. 119.
R.W.F.	11-22-72	Name Correction Parcel 100
S.E.W.	10/26/72	REVISED PAR. 101WL-2; 104WL-2; 105WL, 106WL

9/25

R/W JOB NUMBER	FED. RD. DIVISION	STATE	PROJECT	
08525(0)	2	OHIO	I-275-3(12)	

290/305

HAM-275-0.00
R/W PLAN
LIMITED ACCESS

10/25

SUMMARY OF ADDITIONAL RIGHT OF WAY REQUIRED

TOTAL NUMBER OF---
_____ Owners
_____ Total Takes
_____ Owner With Structures Involved

PARCEL NO.	OWNER	RECORDED BOOK	RECORDED PAGE	DEED AREA	TOTAL P.R.O.	GROSS TAKE	P.R.O IN TAKE	NET TAKE LAND	NET TAKE BLDG.	NET RESIDUE LEFT	NET RESIDUE RIGHT	SHEET NO.	TYPE FUND	REMARKS
126WL	Anna Jane Jessup	2321	514	120.38	1.19	4.12	0	4.12		35.40LL	79.6T	20,21	I	
127WL	Jane Jessup Meyers & J. Fredrick Meyers	2803	629	120.38	3.60	14.05	0.44	13.61		*56.25	44.83	20,21,22		*Includes 0.14Ac. L.L.
127WD	" " " " "					0.24	0.15	0.09				22		
127T	" " " " "					0.36	0	0.36				22		Grade & Seed
128WL	George L. Miller and Mary Louise Miller	3735	338	105.084	2.51	0.09	0.07	0.02		102.104	0	22		
128WD	" "	3847	318			0.63	0.18	0.45				22		
128T-1	" "					0.12	0	0.12				22		Grade & Seed
128T-2	" "					0.03	0.00	0.03				22		Grade & Seed
129WL	Edward M. Pope	2485	532	187.40	2.08	19.64	0	19.64	Yes	138.09	27.99	22,23 & 24		
129X-1	" " "					6.63	0	6.63				22,23 & 24		Channel Easement
129X-2	" " "					7.00	0	7.00				22,23 & 24		
129T-1	" " "					0.61	0	0.61				22		Relocated Access Road
129T-2	" " "					0.48	0	0.48				22		" " "
129T-3	" " "					0.23	0	0.23	Yes			22		Remove Structure & Grade & Seed
125WL	Howard R. Hurts & Catherine L. Hurts	3787	468	6.29	0	1.05	0	1.05				22	I	RECORD AREA EXCLUDES OVERLAP of 0.15 AC.

Acquired under HAM-275-3.86

10/25

REV.	DATE	DESCRIPTION
S.E.W	8-7-73	CHANGED PAR. 130WL to 125WL
A.A.B.	6-14-73	Add Co-owner & D.B.& P., Par. 128.

SUMMARY OF ADDITIONAL RIGHT OF WAY

FED. RD. DIVISION	STATE	PROJECT	
2	OHIO	I-275-3(12)	

HAM. 275-0.00
R/W PLAN
LIMITED ACCESS
SCALE 1" = 50'

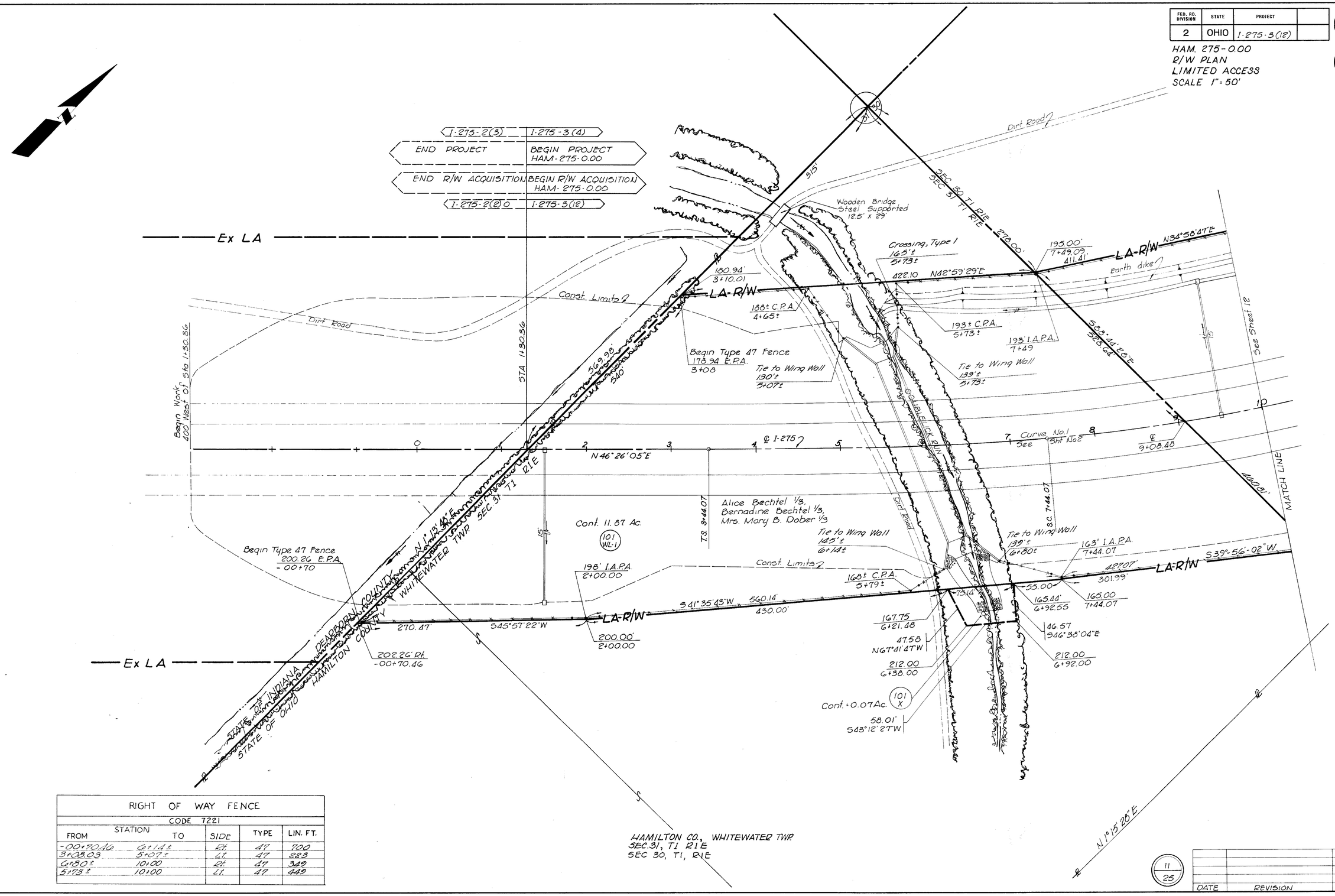

RIGHT OF WAY FENCE				
CODE 7221				
STATION FROM	TO	SIDE	TYPE	LIN. FT.
-00+70.46	6+1.4±	Rt.	47	700
3+08.03	5+07±	Lt.	47	223
6+80±	10+00	Rt.	47	320
5+73±	10+00	Lt.	47	427

DATE	REVISION	BY

R/W PLAN STA. 0+00 TO STA. 10+00

FED. RD. DIVISION	STATE	PROJECT	
2	OHIO	I-275-3(12)	

292/305

12/25

HAM. 275-0.00
R/W PLAN
LIMITED ACCESS
SCALE 1" = 60'

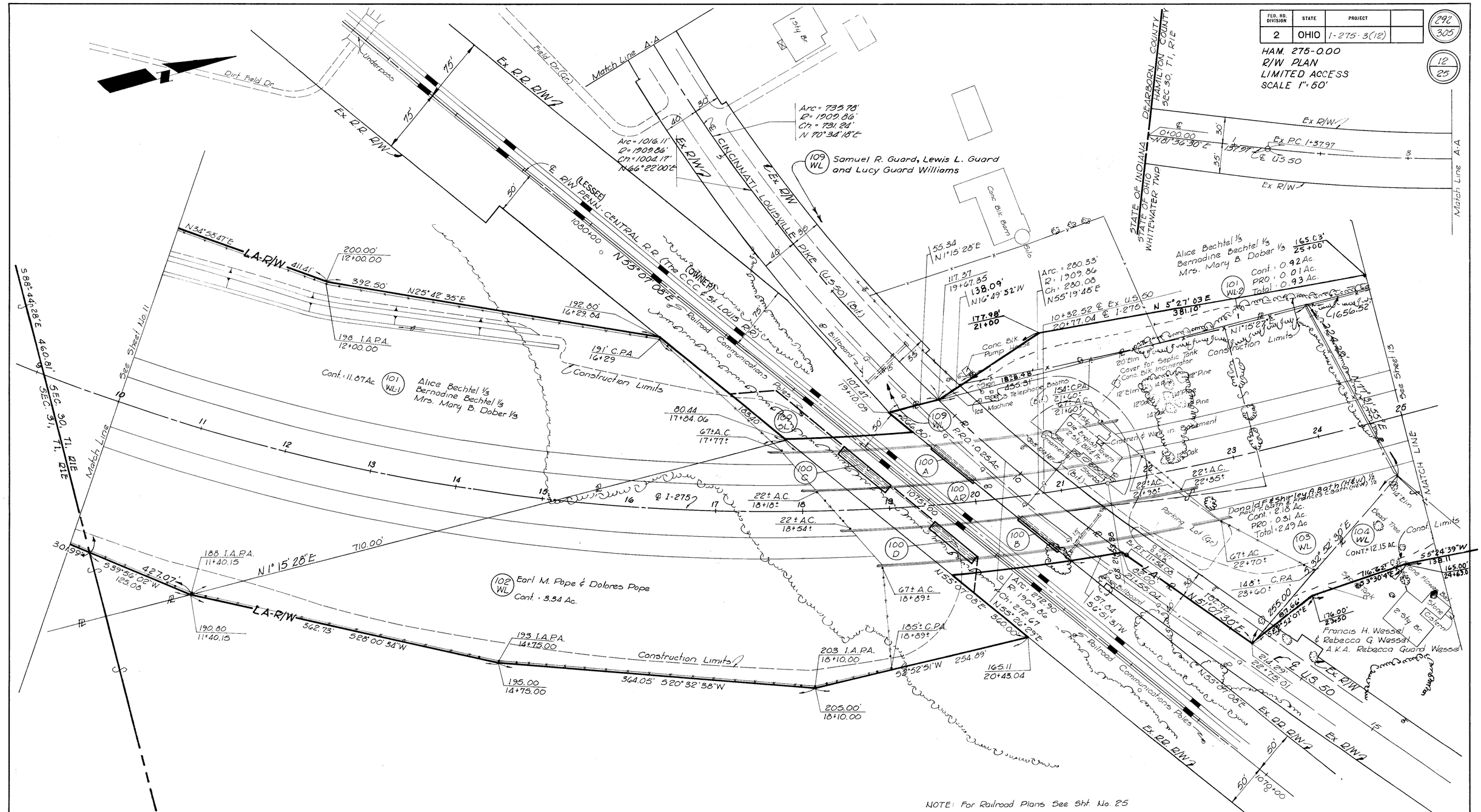

NOTE: For Railroad Plans See Sht. No. 25

RIGHT OF WAY FENCE				
CODE 7221				
STATION FROM	STATION TO	SIDE	TYPE	LIN. FT.
10+00	17+77±	Lt.	4T	768
18+18±	18+54±	Lt. & Rt.	4T	39
21+60±	25+00	Lt.	4T	413
10+00	18+89±	Rt.	4T	1085
21+88±	22+35±	Lt. & Rt.	4T	61
22+70±	25+00	Rt.	4T	265

HAMILTON CO. WHITEWATER TWP.
SEC. 30 T1 R1E
SEC. 31 T1 R1E

12/25

DATE	REVISION	BY
3-29-73	Name Chg. Par. 103	E.H.
11-22-72	Name Correction Parcel 100	R.W.F.
10/26/72	REVISED PAR. 101 WL-2; 104 WL-2	S.E.W.

R/W PLAN STA. 10+00 TO STA. 25+00

FED. RD. DIVISION	STATE	PROJECT	
2	OHIO	I-275-3(12)	

293 / 305

HAM. 275-0.00
R/W PLAN
LIMITED AC
SCALE 1"=50'

13 / 25

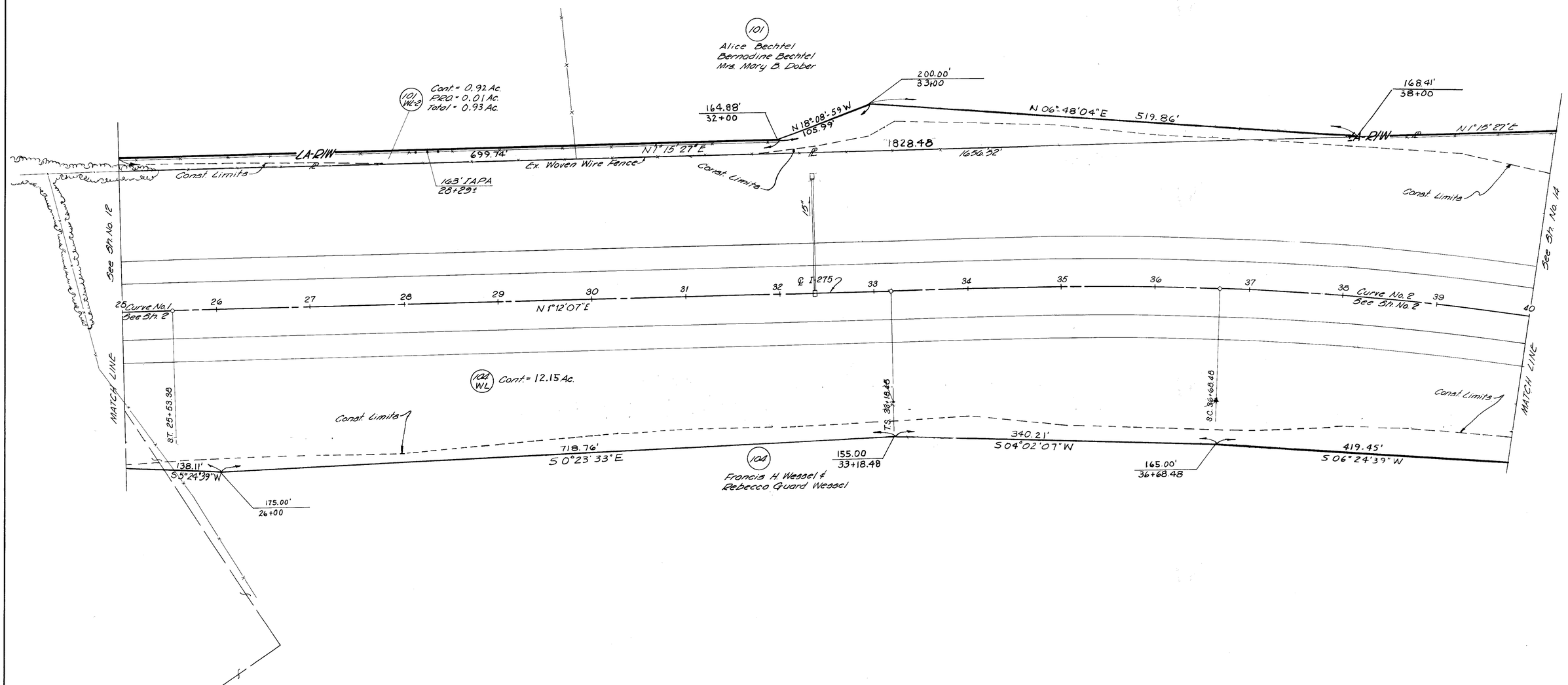

RIGHT OF WAY FENCE				
CODE 7221				
STATION FROM	TO	SIDE	TYPE	LIN. FT.
25+00	40+00	Lt.	AT	1533
25+00	40+00	Lt.	AT	1481

HAMILTON CO. WHITEWATER TWP.
SEC. 30, T-1 R.1E

13 / 25

DATE	REVISION	BY
10/26/72	REVISED PARS. 101 WL-2; 104 WL-2	SEW.

R/W PLAN STA. 25+00 TO 40+00

FED. RD. DIVISION	STATE	PROJECT	
2	OHIO	I-275-3(12)	

294/305

HAM. 275 - 0.00
R/W PLAN
LIMITED ACCESS
SCALE 1" = 50'

14/25

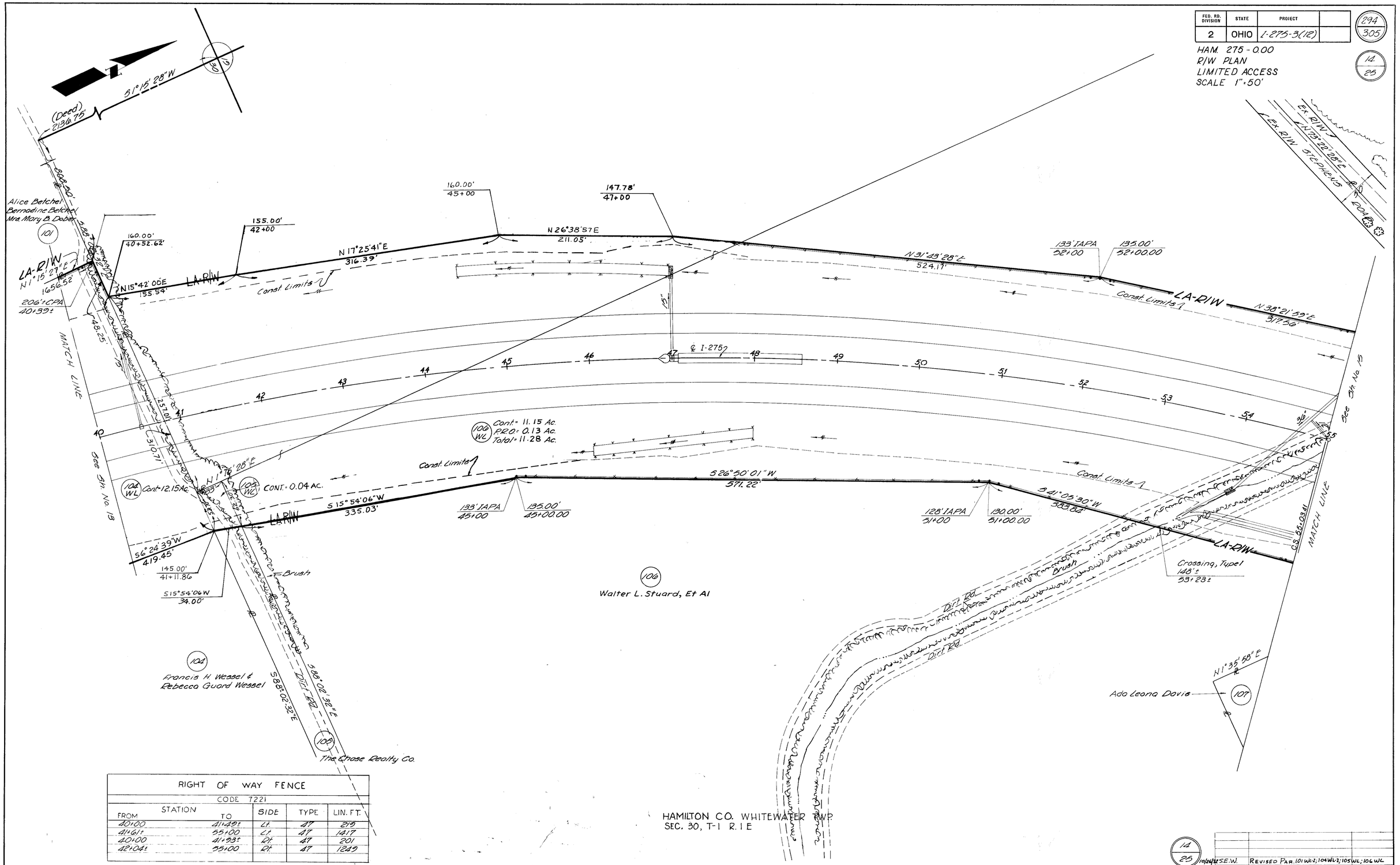

RIGHT OF WAY FENCE				
CODE 7221				
STATION FROM	TO	SIDE	TYPE	LIN. FT.
40+00	41+49±	Lt.	4T	219
41+61±	55+00	Lt.	4T	1417
40+00	41+93±	Rt.	4T	201
42+04±	55+00	Rt.	4T	1249

HAMILTON CO. WHITEWATER TWP
SEC. 30, T-1 R. I E

14/25

DATE	REVISION	BY
10/26/72	REVISED PAR. 101 WL-2; 104 WL-2; 105 WL; 106 WL	S.E.W.

R/W PLAN STA. 40+00 TO STA. 55+00

FED. RD. DIVISION	STATE	PROJECT	
2	OHIO	I-275-3(12)	

295/305

13/25

HAM. 275 - 0.00
R/W PLAN
LIMITED ACCESS
SCALE 1" = 50'

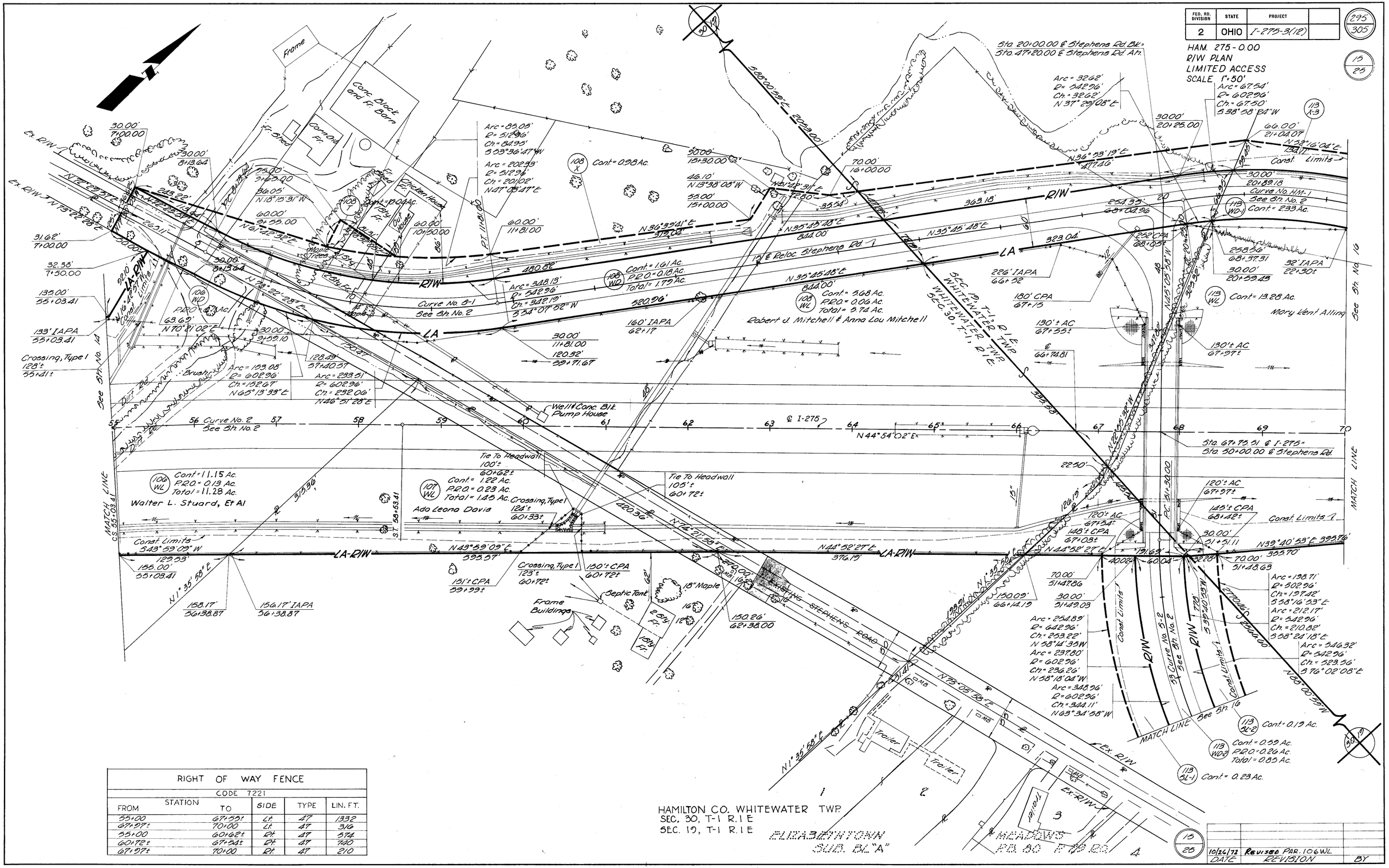

RIGHT OF WAY FENCE				
CODE 7221				
STATION FROM	TO	SIDE	TYPE	LIN. FT.
55+00	67+55±	Lt.	4T	1332
67+97±	70+00	Lt.	4T	316
55+00	60+62±	Rt.	4T	574
60+72±	67+54±	Rt.	4T	720
67+97±	70+00	Rt.	4T	210

DATE	REVISION	BY
10/26/72	REVISED PAR. 106 WL	

13/25

R/W PLAN STA. 55+00 TO STA. 70+00

FED. RD. DIVISION	STATE	PROJECT	
2	OHIO	I-275-3(12)	

296 / 305

16 / 25

HAM. 275-0.00
R/W PLAN
LIMITED ACCESS
SCALE 1"=50'

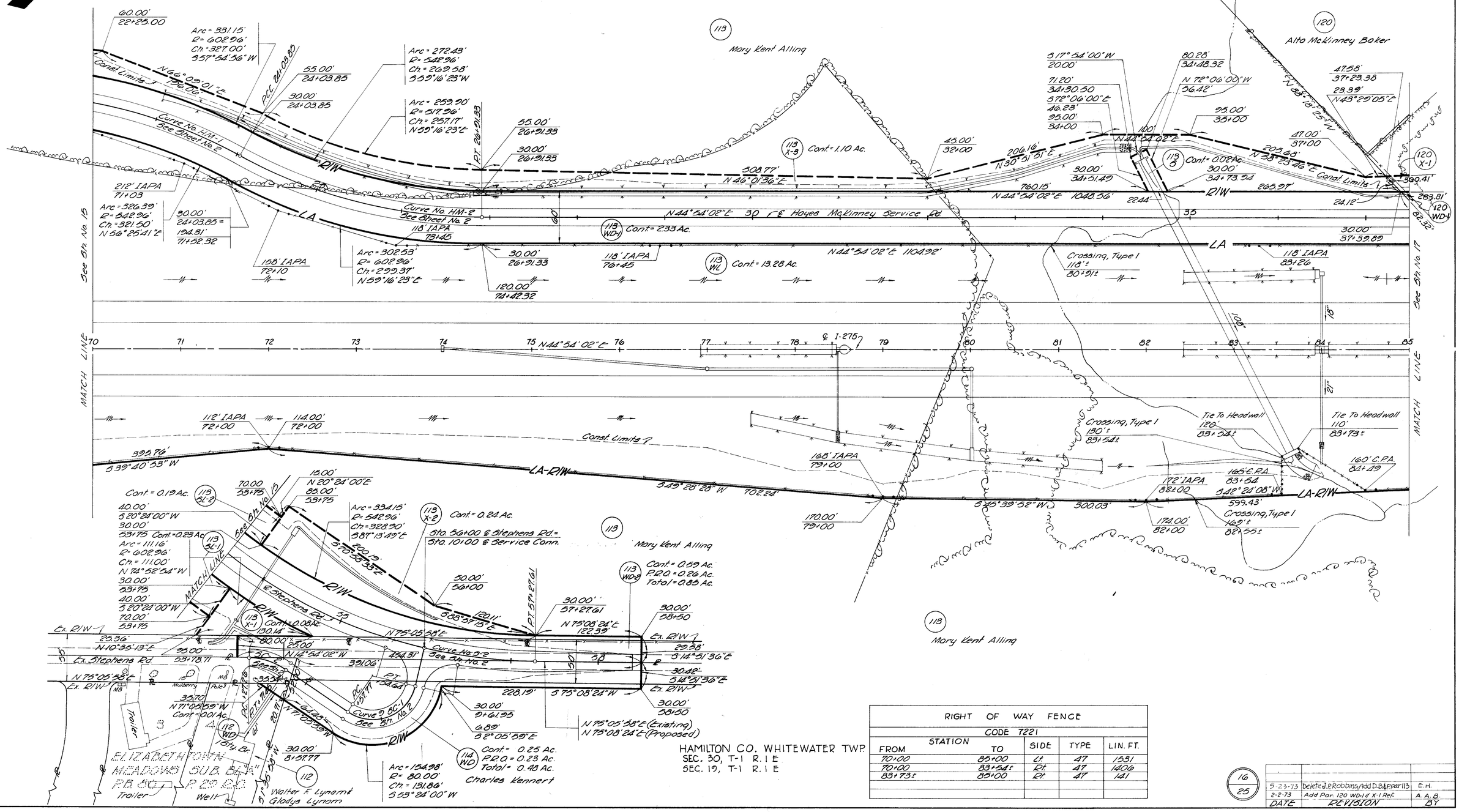

HAMILTON CO. WHITEWATER TWP.
SEC. 30, T-1 R. 1 E
SEC. 19, T-1 R. 1 E

RIGHT OF WAY FENCE				
CODE 7221				
STATION FROM	STATION TO	SIDE	TYPE	LIN. FT.
70+00	85+00	Lt.	4T	1531
70+00	83+54±	Rt.	4T	1400
83+73±	85+00	Rt.	4T	121

16 / 25

DATE	REVISION	BY
5-23-73	Delete J.P. Robbins, Add D.B. & P. parcel 113	E.H.
2-2-73	Add Par. 120 WD-1 & X-1 Ref.	A.A.B.

R/W PLAN STA. 70+00 TO STA. 85+00

FED. RD. DIVISION	STATE	PROJECT	
2	OHIO	I-275-3(12)	

297 / 305

17 / 25

HAM. 275 - 0.00
R/W PLAN
LIMITED ACCESS
SCALE 1" = 50'

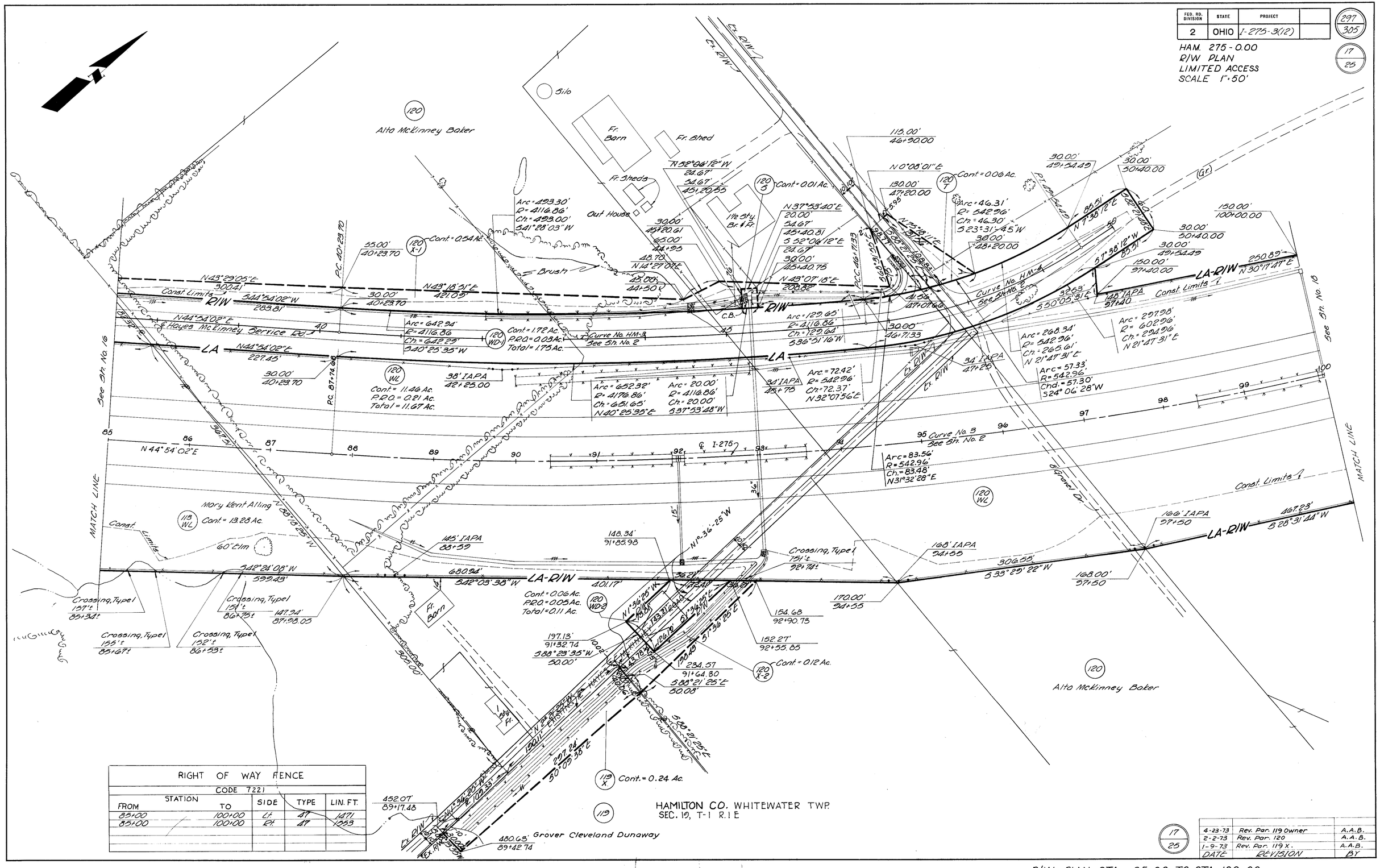

RIGHT OF WAY FENCE				
CODE 7221				
STATION FROM	TO	SIDE	TYPE	LIN. FT.
85+00	100+00	Lt.	4T	1471
85+00	100+00	Rt.	4T	1053

DATE	REVISION	BY
4-23-73	Rev. Par. 119 Owner	A.A.B.
2-2-73	Rev. Par. 120	A.A.B.
1-9-73	Rev. Par. 119 X.	A.A.B.

17 / 25

R/W PLAN STA. 85+00 TO STA. 100+00

FED. RD. DIVISION	STATE	PROJECT	
2	OHIO	I-275-3(12)	

298
305

HAM. 275-0.00
R/W PLAN
LIMITED ACCESS
SCALE 1" = 50'

18
25

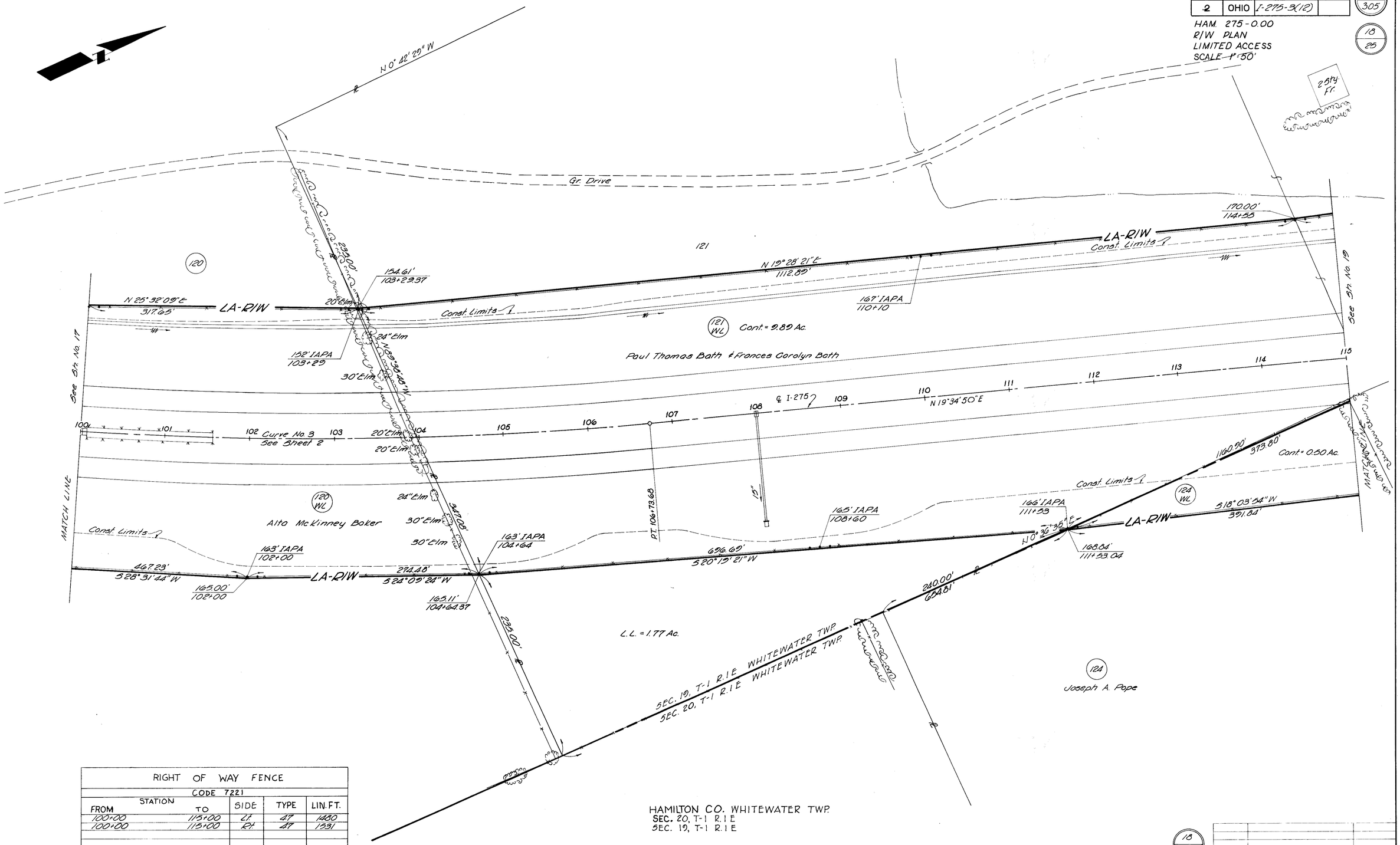

RIGHT OF WAY FENCE				
CODE 7221				
STATION FROM	TO	SIDE	TYPE	LIN. FT.
100+00	115+00	Lt.	4T	1480
100+00	115+00	Rt.	4T	1331

HAMILTON CO. WHITEWATER TWP.
SEC. 20, T-1 R.1 E
SEC. 19, T-1 R.1 E

18
25

DATE	REVISION	BY

R/W PLAN STA. 100+00 TO STA. 115+00

FED. RD. DIVISION	STATE	PROJECT	
2	OHIO	I-275-3(12)	

299 / 305

19 / 25

HAM. 275-0.00
R/W PLAN
LIMITED ACCESS
SCALE 1"=50

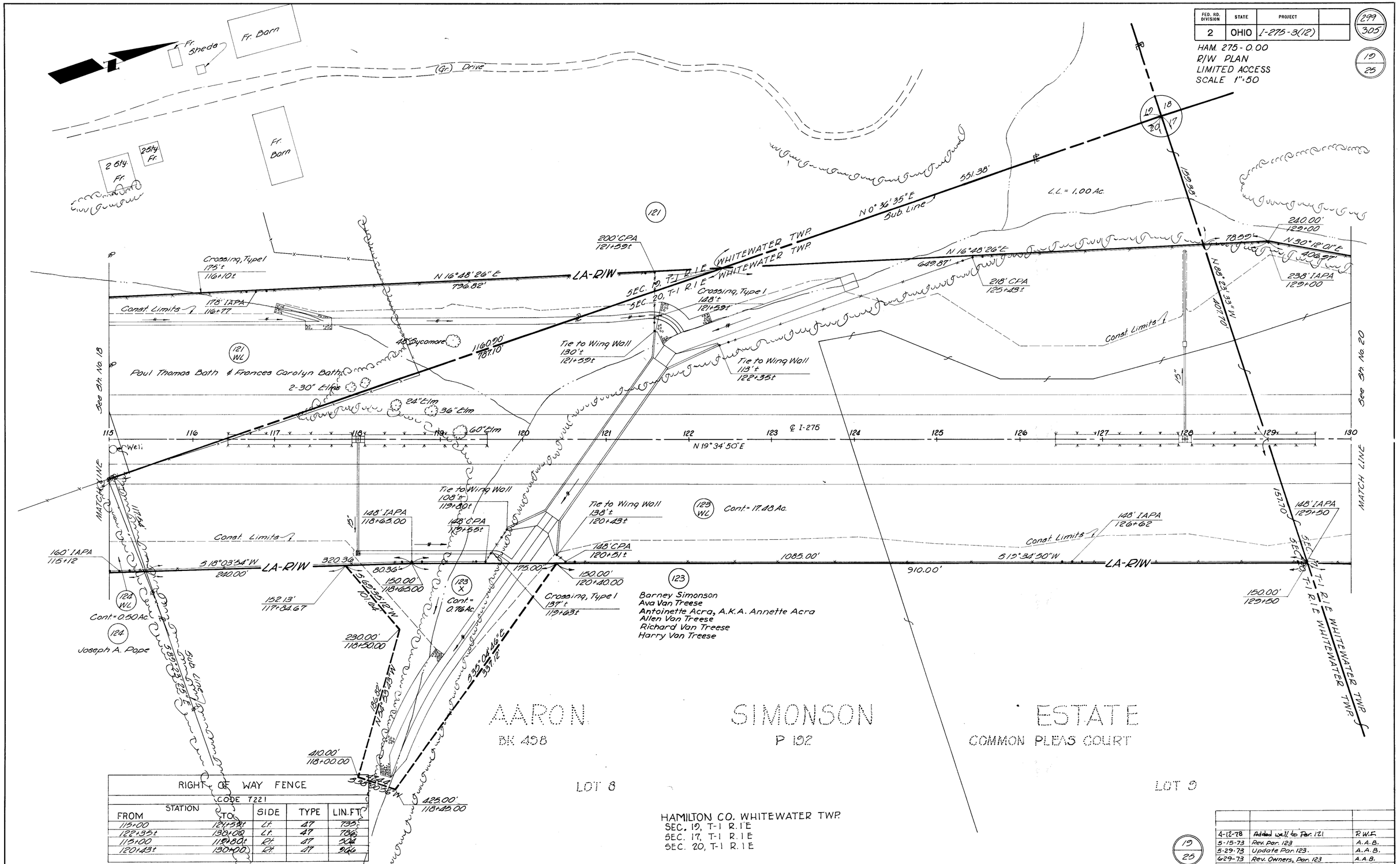

RIGHT OF WAY FENCE

CODE 7221

STATION FROM	TO	SIDE	TYPE	LIN.FT.
115+00	121+59±	Lt.	47	735±
122+35±	130+00	Lt.	47	786±
115+00	119+80±	Rt.	47	504
120+43±	130+00	Rt.	47	904

19 / 25

DATE	REVISION	BY
4-12-78	Added well to Par. 121	R.W.F.
5-15-73	Rev. Par. 123	A.A.B.
5-29-73	Update Par. 123.	A.A.B.
6-29-73	Rev. Owners, Par. 123	A.A.B.

R/W PLAN STA. 115+00 TO STA. 130+00

FED. RD. DIVISION	STATE	PROJECT	
2	OHIO	I-275-3(12)	

300 / 305

HAM. 275-0.00
R/W PLAN
LIMITED ACCESS
SCALE 1"=50"

20 / 25

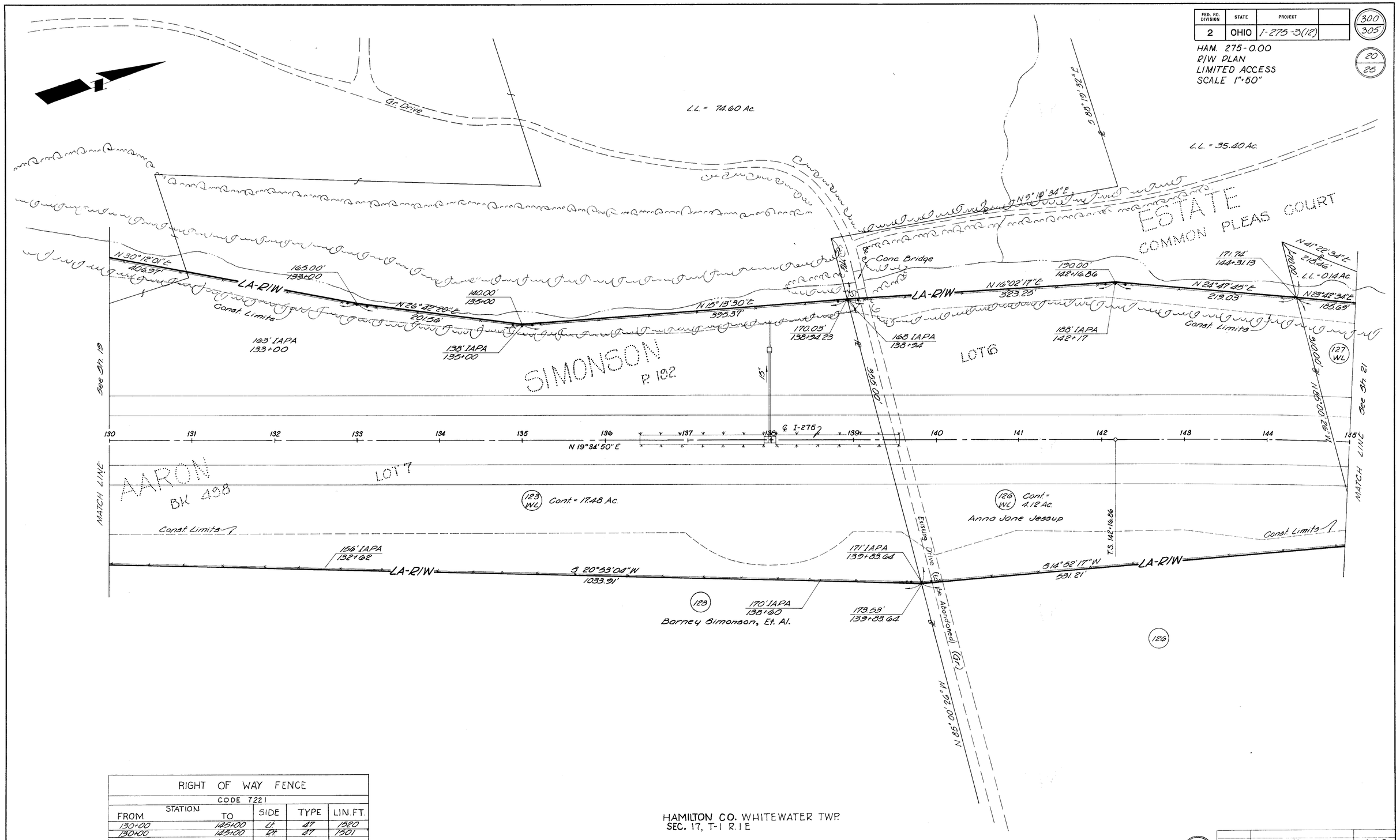

RIGHT OF WAY FENCE				
CODE 7221				
STATION FROM	TO	SIDE	TYPE	LIN. FT.
130+00	145+00	Lt.	47	1520
130+00	145+00	Rt.	47	1501

HAMILTON CO. WHITEWATER TWP.
SEC. 17, T-1 R. 1 E

20 / 25

DATE	REVISION	BY
5-29-73	Rev. Par. 123 Owners.	A.A.B.
5-15-73	Rev. Par. 123.	A.A.B.
2-14-73	Rev. L.L. Lt. Res., Par. 126	A.A.B.

R/W PLAN STA. 130+00 TO STA. 145+00

FED. RD. DIVISION	STATE	PROJECT	
2	OHIO	I-275-3(12)	

301 / 305

21 / 25

HAM. 275-0.00
R/W PLAN
LIMITED ACCESS
SCALE 1"=50'

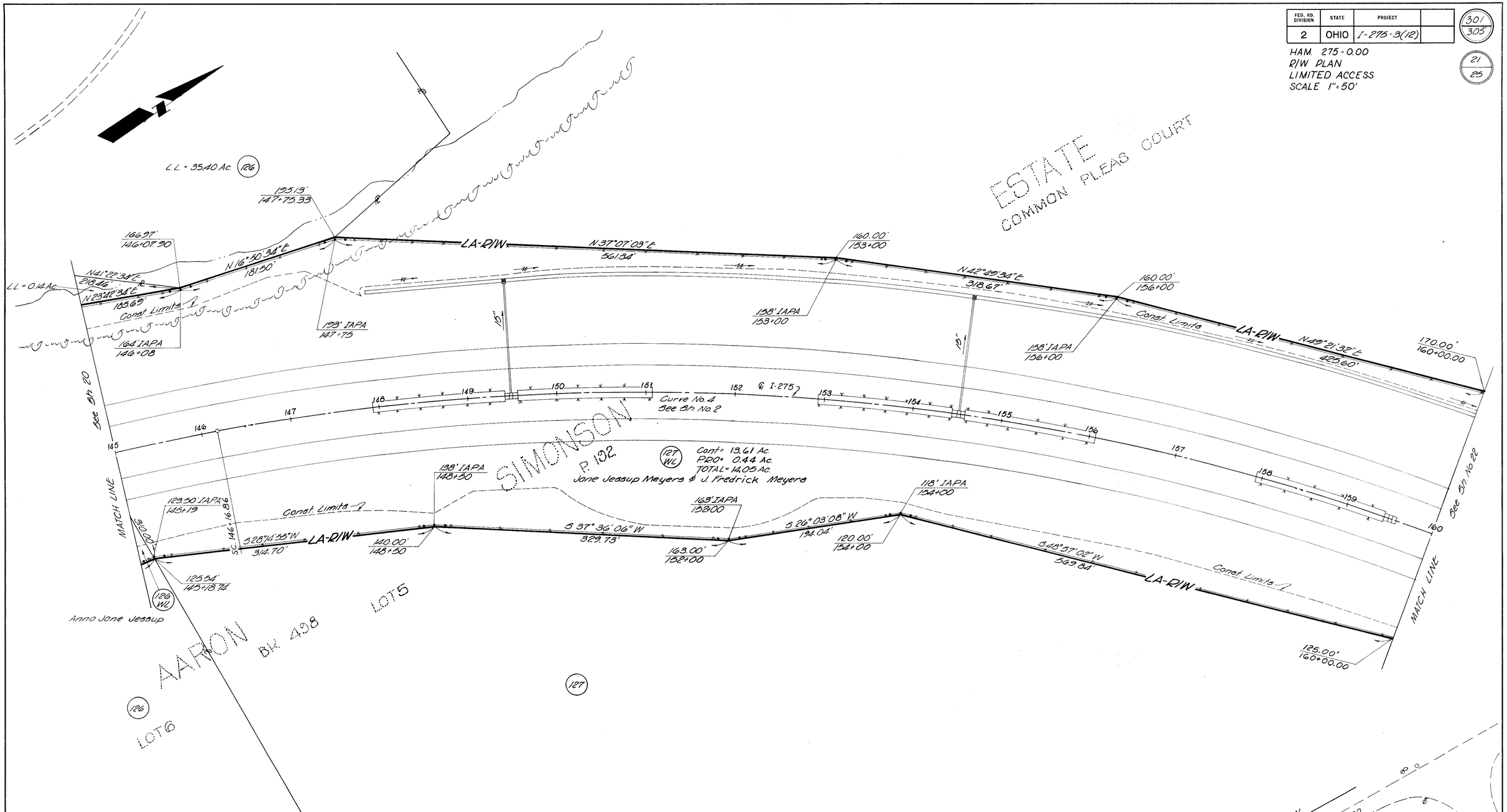

RIGHT OF WAY FENCE					
CODE 7221					
STATION FROM	TO	SIDE	TYPE	LIN. FT.	
145+00	160+00	Lt.	4T	1600	
145+00	160+00	Rt.	4T	1492	

HAMILTON CO. WHITEWATER TWP.
SEC. 17, T-1 R.1 E

DATE	REVISION	BY
2-14-73	Rev. LL Lt. Res., Par. 126	A.A.B.

21 / 25

R/W PLAN STA. 145+00 TO STA. 160+00

FED. RD. DIVISION	STATE	PROJECT	
2	OHIO	I-275-3(12)	

302 / 305

22 / 25

HAM. 275-0.00
R/W PLAN
LIMITED ACCESS
SCALE 1" = 50'

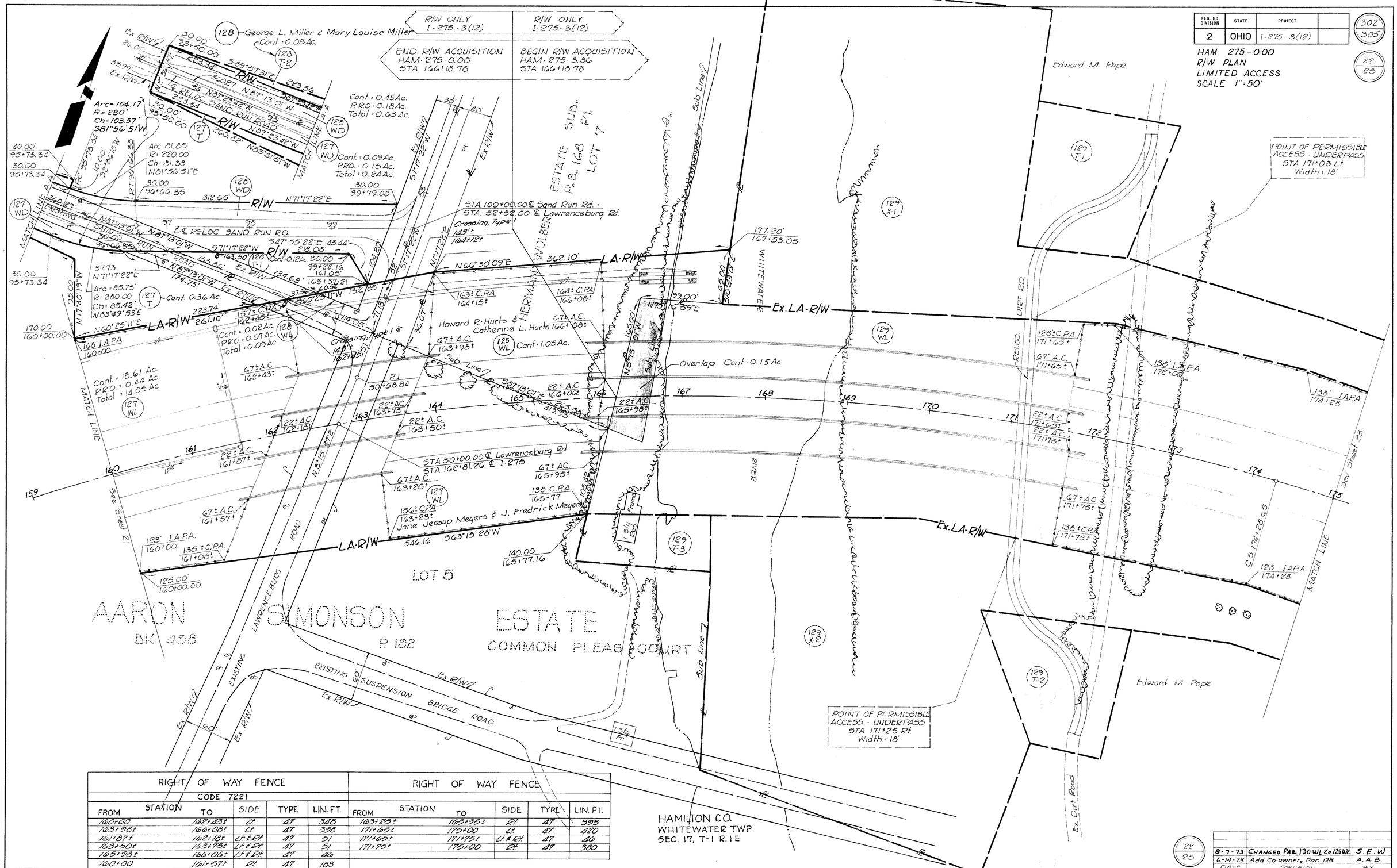

RIGHT OF WAY FENCE CODE 7221					RIGHT OF WAY FENCE				
STATION FROM	TO	SIDE	TYPE	LIN. FT.	STATION FROM	TO	SIDE	TYPE	LIN. FT.
160+00	162+23±	Lt.	AT	348	163+25±	165+95±	Rt.	AT	393
163+98±	166+08±	Lt.	AT	398	171+65±	175+00	Lt.	AT	420
161+87±	162+18±	Lt. & Rt.	AT	31	171+65±	171+75±	Lt. & Rt.	AT	26
163+50±	163+75±	Lt. & Rt.	AT	31	171+75±	175+00	Rt.	AT	380
165+98±	166+06±	Lt. & Rt.	AT	26					
160+00	161+57±	Rt.	AT	183					

22 / 25

DATE	REVISION	BY
8-7-73	CHANGED PAR. 130 WL to 125 WL	S.E.W.
6-14-73	Add Co-owners, Par. 128	A.A.B.

R/W PLAN STA. 160+00 TO STA. 175+00

FED. RD. DIVISION	STATE	PROJECT	
2	OHIO	I-275-3(12)	

303 / 305

HAM. 275-0.00
R/W PLAN
LIMITED ACCESS
SCALE 1"=50'

23 / 25

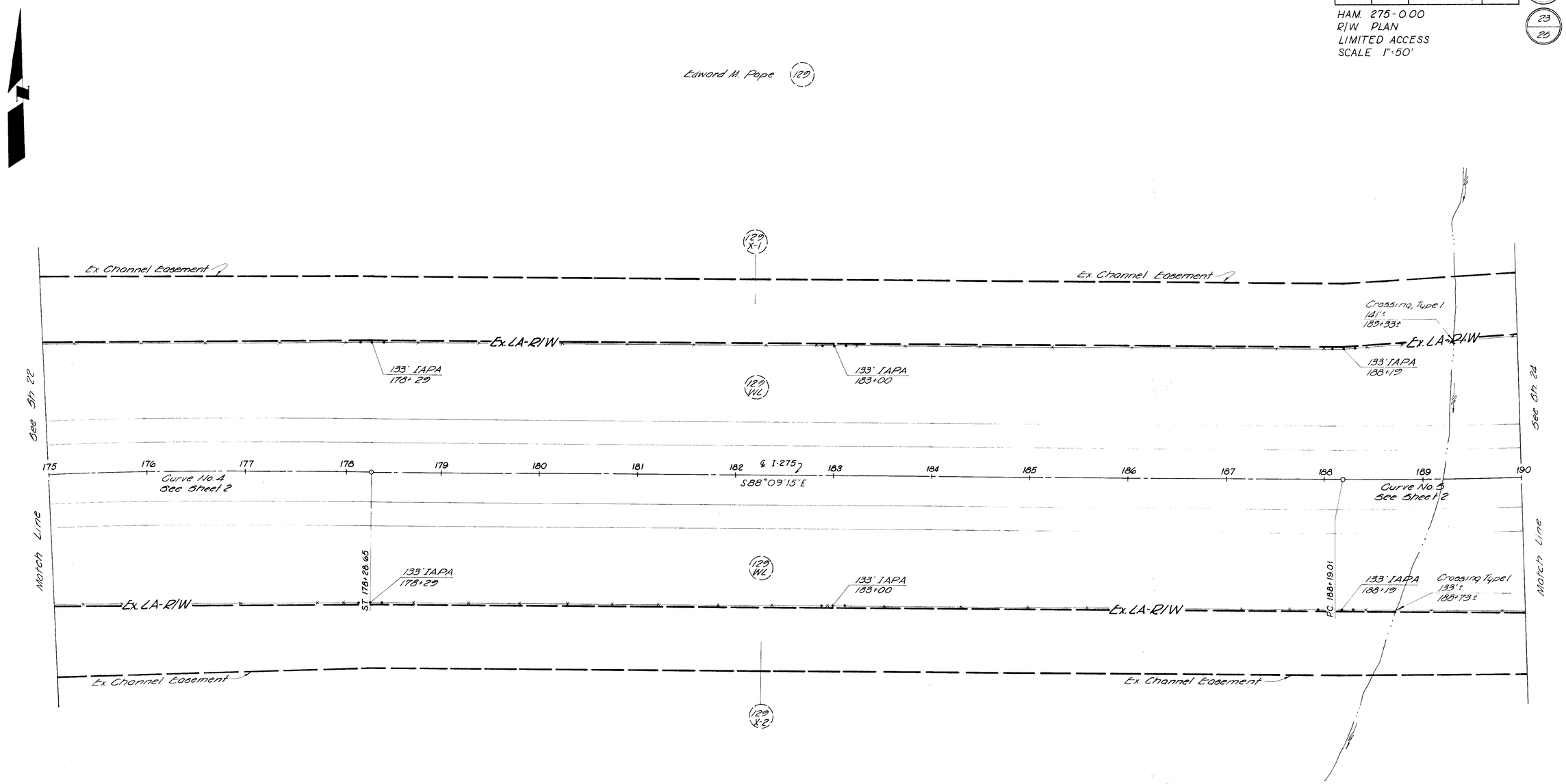

RIGHT OF WAY FENCE					
CODE T221					
FROM	STATION	TO	SIDE	TYPE	LIN. FT.
175+00		190+00	Lt	AT	1509
175+00		190+00	Rt	AT	1506

HAMILTON CO. WHITEWATER TWP.
SEC. 17, T-1 R. 1 E

23 / 25

DATE	REVISION	BY

R/W PLAN STA. 175+00 TO STA. 190+00

FED. RD. DIVISION	STATE	PROJECT	
2	OHIO	I-275-3(12)	

304 / 305

24 / 25

HAM. 275-0.00
R/W PLAN
LIMITED ACCESS
SCALE 1"=50'

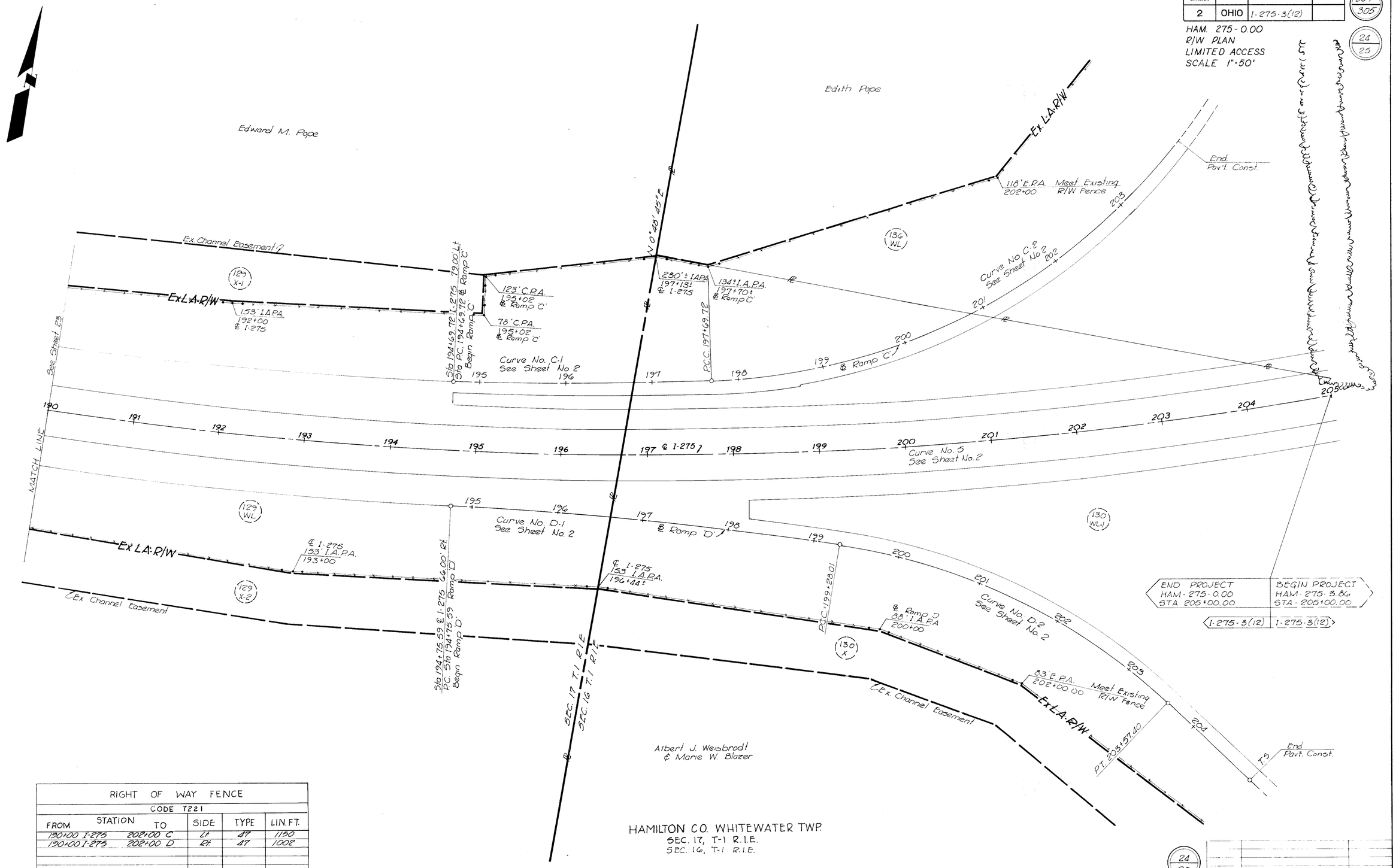

RIGHT OF WAY FENCE				
CODE T221				
STATION FROM	STATION TO	SIDE	TYPE	LIN. FT.
190+00 I-275	202+00 C	Lt.	47	1150
190+00 I-275	202+00 D	Rt.	47	1002

HAMILTON CO. WHITEWATER TWP.
SEC. 17, T-1 R.1.E.
SEC. 16, T-1 R.1.E.

24 / 25

DATE	REVISION	BY

R/W PLAN STA. 190+00 TO STA. 205+00

PENN-CENTRAL TRANSPORTATION CO.

LESSEE

(OCCUPATIONAL, AERIAL AND SLOPE EASEMENTS)

OWNED BY

(THE CLEVELAND, CINCINNATI, CHICAGO AND ST. LOUIS R.R. CO.)

FED. RD. DIVISION	STATE	PROJECT	
2	OHIO	I-275-3(12)	

305/305

HAM.-275-0.00
R/W PLANS
LIMITED ACCESS
SCALE: 1"=20'

25/25

OVERLAP TABLE					
PARCEL NUMBER	EASEMENT REQUIRED	TOTAL AREA SQ. FT.	AREA OF OVERLAP-SQ. FT.		
			AERIAL	OCCUPA.	SLOPE EASE.
100AR	AERIAL	23,710		1,779	8,352
100A	OCCUPA.	233	233		
100B	"	226	226		
100C	"	671	671		671
100D	"	649	649		649
100SL	SLOPE	11,722	8,352	1,320	

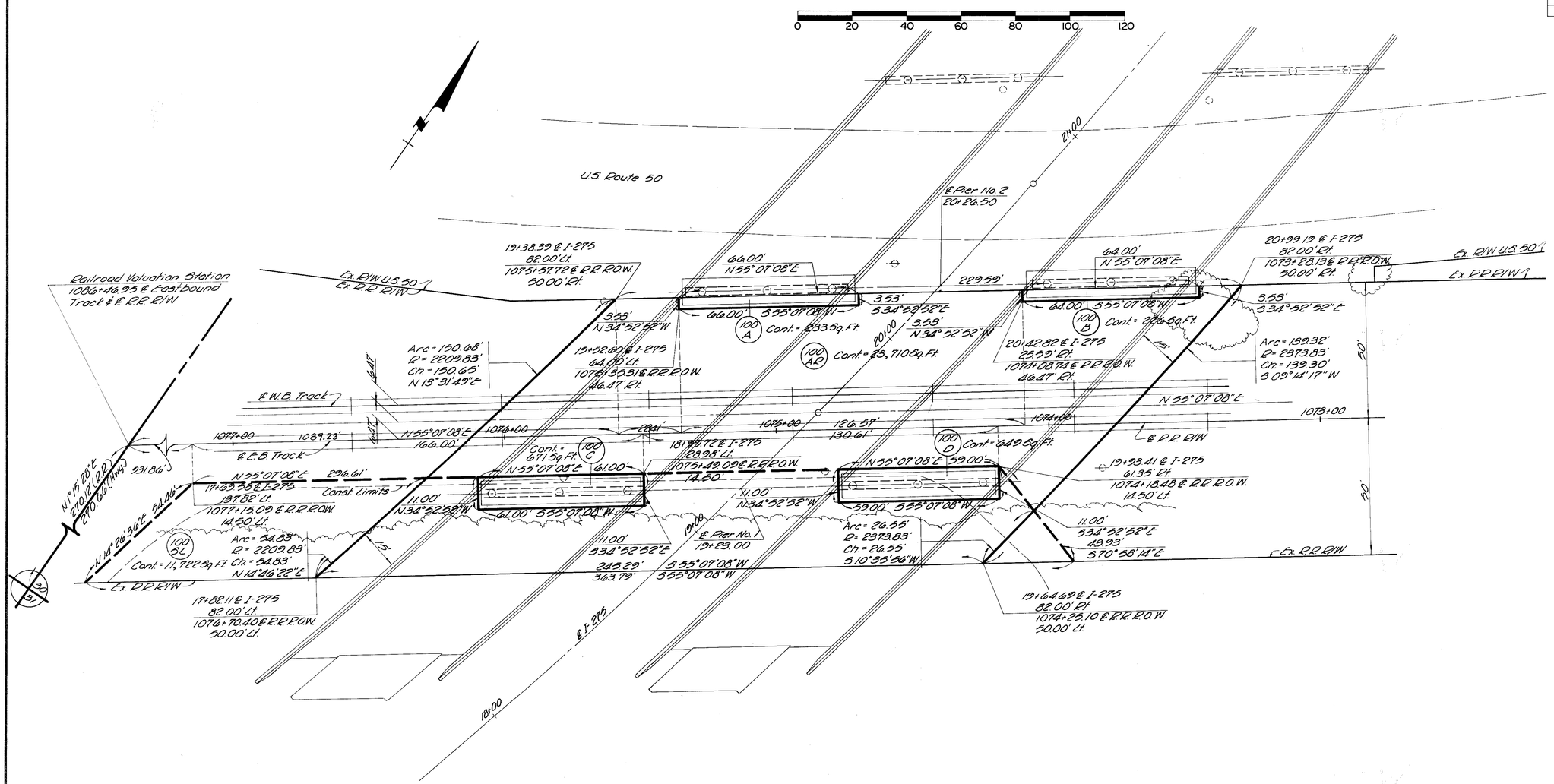

HAMILTON CO. WHITEWATER TWP.
SEC. 30, T-1 R. 1 E.

DATE	REVISION	BY
11-22-72	Name Correction Parcel 100	R.W.F.

25/25

PENN CENTRAL R.R.