CALCULATION INDEX

Gannett Fleming
Engineers and Architects, P.C.
Excellence Delivered ***As Promised***

ISO 9001:2008 **CERTIFIED**

PROJECT: **HAM-75-7.85**
BRIDGE NO: **HAM-75-0834**
Norfolk Southern RR over I.R. 75
DATE: **5/18/16 9:24 AM**

ODOT PID NO: *77889*
GF JOB NO: **54682**
UPDATED BY: VDT
UPDATED DATE: May 18, 2016

CALCULATION NUMBER	CALCULATION SUBJECT (Root Folder #)	Current REV #	DATE	Calc	Check	Update	Verify	Scanned Check	NOTES	Overall Pg. No.
HAM075_0834_01	(10) Geometry: Top of Rail EL, Bottom of Beam EL, Vertical Clearances	02	04/25/16	CTM	VDK	VDT	CTM	Digital		3
HAM075_0834_02_Sp1	(35) Girder: Section Properties - Span 1	03	04/25/16	EFD	VDT	VDT	CTM	Digital	*Includes Proportion Check*	16
HAM075_0834_02_Sp2	(35) Girder: Section Properties - Span 2	02	06/02/15	EFD	VDT	N/A	N/A	Digital	*Includes Proportion Check*	23
HAM075_0834_03_Sp1	(35) Girders: Girder Design Loads, Stresses, and Deflections - Span 1	03	04/25/16	EFD	VDT	VDT	CTM	Digital	*Spreadsheet Linked to 0834_02_Sp1*	30
HAM075_0834_03_Sp2	(35) Girders: Girder Design Loads, Stresses, and Deflections - Span 2	03	04/25/16	EFD	VDT	VDT	CTM	Digital	*Spreadsheet Linked to 0834_02_Sp2*	58
HAM075_0834_04_Rear	(15) Loads: Abutment Design Loads	02	07/17/14	VDK	CTM	EFD	VDT	Digital	*Spreadsheet Linked to 0834_03_Sp1*	93
HAM075_0834_04_Forward	(15) Loads: Abutment Design Loads	02	07/17/14	VDK	CTM	EFD	VDT	Digital	*Spreadsheet Linked to 0834_03_Sp2*	99
HAM075_0834_05_Rear	(25) Abutments: Abutment Analysis (Abut5)	03	04/25/16	VDK	CTM	VDT	CTM	Digital	*Abut 5 Analysis*	105
HAM075_0834_05_Forward	(25) Abutments: Abutment Analysis (Abut5)	03	04/25/16	VDK	CTM	VDT	CTM	Digital	*Abut 5 Analysis*	115
HAM075_0834_06	(15) Loads: Pier Design Loads	01	07/10/14	VDK	VDT	VDK		Digital	*Spreadsheet Linked to 0834_03_Sp1 & _03_Sp2*	125
HAM075_0834_07	(30) Pier Analysis (RCPier)	01	07/10/14	VDK	VDT	VDK		Digital	*RCPier Analysis*	129
HAM075_0834_08	(15) Loads: Retaining Wall Design Loads	01	06/25/14	CTM	VDK	CTM	VDK	Digital		342
HAM075_0834_08T	(15) Loads: Retaining Wall on Top of Caison Design Loads	01	07/16/14	CTM	VDT	VDK		Digital		349

CALCULATION INDEX

Gannett Fleming
Engineers and Architects, P.C.
Excellence Delivered ***As Promised***

ISO 9001:2008 **CERTIFIED**

PROJECT: **HAM-75-7.85**
BRIDGE NO: **HAM-75-0834**
Norfolk Southern RR over I.R. 75
DATE: **5/18/16 9:24 AM**

ODOT PID NO: *77889*
GF JOB NO: **54682**
UPDATED BY: VDT
UPDATED DATE: May 18, 2016

CALCULATION NUMBER	CALCULATION SUBJECT (Root Folder #)	Current REV #	DATE	Calc	Check	Update	Verify	Scanned Check	NOTES	Overall Pg. No.
HAM075_0834_08C	(15) Loads: Permanent Caisson Wall Design Loads	00	07/08/14	VDT	CTM	VDT		Digital		352
HAM075_0834_09P	(25) Abutments: Retaining Wall Analysis: Permanent Caisson Wall	00	07/08/14	VDT	CTM	VDT		Digital		359
HAM075_0834_09	(25) Abutments: Retaining Wall Analysis (Abut5)	00	07/17/14	CTM	VDK	CTM	EFD	Digital		367
HAM075_0834_09T	(25) Abutments: Retaining Wall on Top of Caisson Analysis (Abut5)	00	07/16/14	VDK	VDT	VDK		Digital	*Design only accounts for STEM reinforcement.*	390
HAM075_0834_11	(40) Bearings: Bearing Design	00	04/25/16	VDK	CTM	VDT	CTM	Digital	*****Note: Calculation #10 not used***	398
HAM075_0834_12_Sp1	(45) Connection Details: Girder Connection Details, Span 1	00	05/12/16	VDT	VDK	VDT	CTM	Digital		409
HAM075_0834_12_Sp2	(45) Connection Details: Girder Connection Details, Span 2	00	05/12/16	VDT	VDK	VDT	CTM	Digital		439
HAM075_0834_13_Sp1	(45) Connection Details: Shear Studs, Span 1	00	06/06/14	VDK	VDT	VDK		Digital		469
HAM075_0834_13_Sp2	(45) Connection Details: Shear Studs, Span 2	00	06/06/14	VDK	VDT	VDK		Digital		477
HAM075_0834_14	(50) Deck: Concrete Deck Analysis	00	07/30/14	VDK	CTM/VDK	VDT	EFD	Digital	*Composite*	485
HAM075_0834_15	(60) Quantities: Estimated Project Quantities	02	06/08/15	SNH	CTM	VDT	SNH	Digital		498
HAM075_0834_PP	Pipe Pile Capacity	00	07/17/14	EFD	VDT	N/A	N/A	Digital		509

DESIGN CALCULATION COVER SHEET

Gannett Fleming
Engineers and Architects, P.C.
Excellence Delivered ***As Promised***

ISO 9001:2008 **CERTIFIED**

PROJECT: **HAM-75-7.85**
BRIDGE NO: **HAM-75-0834**
SUBJECT: ***Elevations PGL, Bottom of Beam and Under-Clearances***
FILE NAME(s): *HAM075_0834_01.xlsx*

ODOT PID NO: 77889
EMH&T JOB NO:
GF JOB NO: 54682
CALC NO.: **HAM075_0834_01**
REV NO.: **02**
SHEET: 1 OF 13

SUPERSEDES CALC NO: 01 (Station Update)

CALCULATION DESCRIPTION:

This will calculate points along the vertical profile of the alignment based upon standard geometric calculations.

This will calculate bottom of beam and bottom of bearing elevations. **This assumes that the bottom of beam elevations are equal across the skew.**

This will calculate vertical clearances under the structure.

DESIGN BASIS OR REFERENCES:

EMH&T Suppllied Survey Basemaps
March 2013 NS Meeting - "Red Profile"
GF Proposed Stage 1 Track Layout
GF Proposed Stage 1 Bridge Layout

EFD 12/18/13 Update: Girder bottom flanges are equal in elevation across the skew; resulting in level substructure caps.

VDT 5/22/14 Update: Profile accepted by NS. Revised stationing & elevations for new layout

MISCELLANEOUS NOTES:

PGL is assumed to be the top of low rail

VDT Verify (November 2014): Final verification of stations/offsets of key components

Stage 3: Updated deck thickness, girder flange depths, and bearing heights per NSRR comments

RECORD OF ISSUES:

REV	DESCRIPTION	BY	DATE	VERIF'D	DATE
N/A	Pre-Stage 1 Calculation	EFD	02/13/12		
00	Stage 1 Calculation	CTM	10/16/13		
01	Station Update	VDT	05/22/14		
02	Stage 3 Update	VDT	01/19/16		

RECORD OF CHECK OF CURRENT CALCULATION VERSION

BY	DATE	CHKD	DATE	UPD.	DATE	VERIF'D	DATE
CTM	10/16/13	VDK	10/29/13	EFD	12/18/13	CTM	04/25/16
				VDT	01/19/16		

7/10/2014 GEOPACK OUTPUT OF HORIZONTAL AND VERTICAL ALIGNMENTS ACROSS THE HAM-075-0834 BRIDGE

```
<*       1   DESCRIBE CHAIN RRMLP42                    (HORIZONTAL ALIGNMENT)

Chain RRMLP42 contains:
 35 36 SPI S9 CUR C53 SPI S10 SPI S11 CUR C54 SPI S12 PIMLP11

Beginning chain RRMLP42 description
==============================================================================

Point 35              N     435,177.9979 E   1,406,028.5403 Sta     143+95.95

Course from 35 to 36 N 12° 39' 36.37" E Dist 326.0400

Point 36              N     435,496.1110 E   1,406,099.9975 Sta     147+21.99

Course from 36 to TS S9 N 12° 39' 36.38" E Dist 1.9754

Spiral S9                 Type 1    Spiral Element

Angle       1° 48' 02.93" (LT) P             0.1100   BK N  12° 39' 36.37" E
LS              42.0000        K            20.9993   AH N  10° 51' 33.44" E
R              668.1483        LT           28.0014   CB N  12° 03' 35.41" E
YS               0.4400        ST           14.0013   Defl        0° 36' 00.96"
XS              41.9959        LC           41.9982   Deg         8° 34' 31.11"


                        Spiral Coordinates
                       *------------------*
Point           North                   East                  Station
-----    ------------------    ------------------     ------------------
TS              435,498.0383         1,406,100.4304               147+23.96
PI              435,525.3590         1,406,106.5674               147+51.97
SC              435,539.1096         1,406,109.2052               147+65.96
CC              435,664.9871         1,405,453.0216

                                  Curve Data
                                 *----------*
Curve C53                 (Chord Definition)
P.I.  Station           149+31.39  N        435,701.5694  E      1,406,140.3704
Delta       =      27° 48' 41.96" (LT)
Degree      =       8° 35' 00.00"
Tangent     =            165.4221
Length      =            324.0193
Radius      =            668.1483
External    =             20.1733
Long Chord  =            321.1478
Mid. Ord.   =             19.5821
P.C.  Station           147+65.96  N        435,539.1096  E      1,406,109.2052
P.T.  Station           150+89.98  N        435,859.8035  E      1,406,092.1371
C.C.                               N        435,664.9871  E      1,405,453.0216
Back        = N  10° 51' 33.44" E
Ahead       = N  16° 57' 08.52" W
Chord Bear  = N   3° 02' 47.54" W
```

Spiral S10 Type 2 Spiral Element

Angle	1° 48' 02.93" (LT)	P	0.1100	BK N	16° 57' 08.53" W
LS	42.0000	K	20.9993	AH N	18° 45' 11.46" W
R	668.1483	LT	28.0014	CB N	18° 09' 10.50" W
YS	0.4400	ST	14.0013	Defl	0° 36' 00.96"
XS	41.9959	LC	41.9982	Deg	8° 34' 31.11"

Spiral Coordinates

Point	North	East	Station
CS	435,859.8035	1,406,092.1371	150+89.98
PI	435,873.1965	1,406,088.0547	151+03.99
ST	435,899.7114	1,406,079.0524	151+31.98
CC	435,664.9871	1,405,453.0216	

Course from ST S10 to TS S11 N 18° 45' 11.46" W Dist 138.8565

Spiral S11 Type 1 Spiral Element

Angle	2° 24' 02.41" (LT)	P	0.2165	BK N	18° 45' 11.46" W
LS	62.0000	K	30.9982	AH N	21° 09' 13.87" W
R	739.8643	LT	41.3371	CB N	19° 33' 12.22" W
YS	0.8658	ST	20.6701	Defl	0° 48' 00.76"
XS	61.9891	LC	61.9952	Deg	7° 44' 38.74"

Spiral Coordinates

Point	North	East	Station
TS	436,031.1963	1,406,034.4112	152+70.84
PI	436,070.3389	1,406,021.1216	153+12.18
SC	436,089.6162	1,406,013.6623	153+32.84
CC	435,822.6187	1,405,323.6540	

Curve Data

Curve C54 (Chord Definition)

P.I. Station	156+33.68	N	436,370.1831	E	1,405,905.0975
Delta =	44° 15' 16.82" (LT)				
Degree =	7° 45' 00.00"				
Tangent =	300.8390				
Length =	571.0280				
Radius =	739.8643				
External =	58.8242				
Long Chord =	557.3638				
Mid. Ord. =	54.4917				
P.C. Station	153+32.84	N	436,089.6162	E	1,406,013.6623
P.T. Station	159+03.87	N	436,495.3759	E	1,405,631.5452
C.C.		N	435,822.6188	E	1,405,323.6540
Back =	N 21° 09' 13.87" W				
Ahead =	N 65° 24' 30.68" W				
Chord Bear =	N 43° 16' 52.28" W				

```
Spiral S12                Type 2    Spiral Element

Angle       2° 24' 02.41" (LT) P            0.2165   BK N  65° 24' 30.68" W
LS              62.0000        K           30.9982   AH N  67° 48' 33.09" W
R              739.8643        LT          41.3371   CB N  67° 00' 32.33" W
YS               0.8658        ST          20.6701   Defl        0° 48' 00.76"
XS              61.9891        LC          61.9952   Deg         7° 44' 38.74"


                        Spiral Coordinates
                       *------------------*
Point           North                   East                  Station
-----    -------------------    -------------------     -------------------
CS              436,495.3759         1,405,631.5452              159+03.87
PI              436,503.9777         1,405,612.7499              159+24.54
ST              436,519.5904         1,405,574.4745              159+65.87
CC              435,822.6188         1,405,323.6540

Course from ST S12 to PIMLP11 N 67° 48' 33.09" W Dist 766.4915

Point PIMLP11         N     436,809.0883 E   1,404,864.7562 Sta     167+32.36

==============================================================================
Ending chain RRMLP42 description


<*       2   PRINT PROFILE RRMLP_PG                  (HORIZONTAL ALIGNMENT)


Beginning profile RRMLP_PG description:
==============================================================================

              STATION       ELEV      GRADE    TOTAL L    BACK L    AHEAD L

VPI      1    145+61.79   549.9304

VPC           148+03.11   549.7737    -0.0650  K =  159.2
Low Point     148+13.46   549.7703
VPI      2    149+43.11   549.6827             280.0000  140.0000  140.0000
VPT           150+83.11   552.0538     1.6937

VPC           153+70.00   556.9127     1.6937  K =  105.4  SSD = 484.3
High Point    155+48.52   558.4245
VPI      3    155+70.00   560.3000             400.0000  200.0000  200.0000
VPT           157+70.00   556.0976    -2.1012

VPC           164+07.81   542.6959    -2.1012  K =  386.1  SSD = 4215.9
VPI      4    164+57.81   541.6453             100.0000   50.0000   50.0000
VPT           165+07.81   540.4652    -2.3602

VPI      5    166+00.00   538.2893    -2.3602

==============================================================================
Ending profile RRMLP_PG description
```

Gannett Fleming	GF JOB # 54682	CALC NO.: **HAM075_0834_01**	REV. NO.: **00**
		PROJECT: **HAM-75-7.85**	
ODOT PID NO.: 77889		DESIGNED: *CTM*	DATE: *10/16/13*
BRIDGE NO: *HAM-75-0834*		CHECKED: *VDK*	DATE: *10/29/13*
SUBJECT: *Elevations*		UPDATED: *VDT*	DATE: *05/22/14*
PGL Data		VERIFIED: *CTM*	DATE: *05/28/14*

PGL Vertical Curve & Profile Data (MLP)

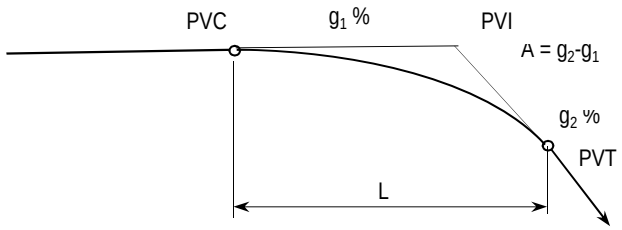

1: STRAIGHT GRADE

L = **286.89**
g = **1.6940%**

PVC Station = **150+83.11**
PVC Elev = **552.050**
PVT Station = **153+70.00**
PVT Elev = **556.910**

2: SYMMETRICAL PARABOLIC CURVE

L = **400**
g1 = **1.6900%**
g2 = **-2.1000%**
PVI Station **155+70.00**
PVI Elev = **560.300**
PVC Station = 153+70.00
PVC Elev = 556.920
PVT Station = 157+70.00
PVT Elev = 556.100
Location & El of High Point= 155+48.36 558.427
Chord elev @ PVI = 556.510
Tangent offset at PVI (e) = -1.8950

3: STRAIGHT GRADE

L = **637.81**
g = **-2.1000%**

PVC Station = **157+70.00**
PVC Elev = **556.100**
PVT Station = **164+07.81**
PVT Elev = **542.706**

Gannett Fleming	GF JOB # 54682	CALC NO.: **HAM075_0834_01**	REV. NO.: **00**
		PROJECT: **HAM-75-7.85**	
ODOT PID NO.: 77889		DESIGNED: *CTM*	DATE: *10/16/13*
BRIDGE NO: *HAM-75-0834*		CHECKED: *VDK*	DATE: *10/29/13*
SUBJECT: *Elevations*		UPDATED: *VDT*	DATE: *05/22/14*
PGL Data		VERIFIED: *CTM*	DATE: *05/28/14*

PGL Vertical Curve & Profile Data (MLP)

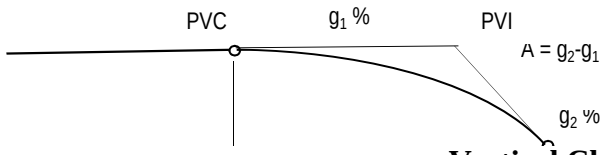

Vertical Clearance Point Entry

2: PARABOLIC CURVE (SPAN 1)			2: PARABOLIC CURVE (SPAN 2)		
Station	Location Description	PGL Elevation	Station	Location Description	PGL Elevation
154+74.72	SP1 Rear: Toe Barrier @ LT Girder	558.17	155+90.07	SP2 Rear: Toe/Barr @ LT Girder	558.34
154+90.16	SP1 Rear: Toe Barrier @ RT Girder	558.27	156+01.74	SP2 Rear: Toe/Barr @ RT Girder	558.29
154+88.10	SP1 Rear: EOP @ LT Girder	558.26	156+99.88	SP2 Rear: PGL/EOP @ LT Girder	557.34
155+03.14	SP1 Rear: EOP @ RT Girder	558.33	156+11.21	SP2 Rear: PGL/EOP @ RT Girder	558.24
155+42.11	SP1: IR 75 Crown @ LT Girder	558.43	156+27.01	SP2: IR 75 Crown @ LT Girder	558.13
155+55.43	SP1: IR 75 Crown @ RT Girder	558.42	156+37.36	SP2: IR 75 Crown @ RT Girder	558.05
155+69.29	SP1 FWD: PGL/EOP @ LT Girder	558.41	156+67.43	SP2 FWD: EOP @ LT Girder	557.76
155+81.69	SP1 FWD: PGL/EOP @ RT Girder	558.37	156+76.28	SP2 FWD: EOP @ RT Girder	557.65
155+79.11	SP1 FWD: Toe/Barr @ LT Girder	558.38	156+80.79	SP2 FWD: Toe Barrier @ LT Girder	557.60
155+91.17	SP1 FWD: Toe/Barr @ RT Girder	558.34	156+89.14	SP2 FWD: Toe Barrier @ RT Girder	557.49

Skew

Substructure units are skewed in relation to the horizontal curvature of the track alignment. As such; the actual station of C/L bearing for each fascia beam will be entered; as to allow for an exact PGL calculation for each bearing.

Gannett Fleming	GF JOB # 54682	CALC NO.: **HAM075_0834_01**	REV. NO.: **00**
ODOT PID NO.: 77889		PROJECT: **HAM-75-7.85**	
BRIDGE NO: *HAM-75-0834*		DESIGNED: *CTM*	DATE: *10/16/13*
SUBJECT: *Elevations*		CHECKED: *VDK*	DATE: *10/29/13*
PGL Data		UPDATED: *VDT*	DATE: *05/22/14*
		VERIFIED: *CTM*	DATE: *05/28/14*

PGL Vertical Curve & Profile Data (MLP)

Note: PGL = Top of low rail. Back of Backwall excludes any backwall haunch.

WP = Working Point = Intersection of PGL Alignment

Station	Element (at PGL, U.N.O.)	PGL Elevation	Main Track Data			Alt. Track Data		
			Super Elevation	High Rail Elev.	Low Rail Elev.	Super Elevation	High Rail Elev.	Low Rail Elev.
153+19.02	Begin 150' Approach	556.05	1.000 in	556.13	556.05	27.000 in	553.88	
153+34.02	0.1	556.30	1.000 in	556.38	556.30	27.000 in	554.13	
153+49.02	0.2	556.55	1.000 in	556.64	556.55	27.000 in	554.39	
153+64.02	0.3	556.81	1.000 in	556.89	556.81	27.000 in	554.64	
153+79.02	0.4	557.07	1.000 in	557.15	557.07	27.000 in	554.90	
153+94.02	0.5	557.30	1.000 in	557.38	557.30	27.000 in	555.13	
154+09.02	0.6	557.51	1.000 in	557.59	557.51	27.000 in	555.34	
154+24.02	0.7	557.69	1.000 in	557.78	557.69	27.000 in	555.53	
154+39.02	0.8	557.86	1.000 in	557.94	557.86	27.000 in	555.69	
154+54.02	0.9	558.01	1.000 in	558.09	558.01	27.000 in	555.84	
154+69.02	Rear Abut @ Rear Face	558.13	1.000 in	558.21	558.13	27.000 in	555.96	
154+74.75	Rear Bkwall, Front Face (WP)	558.17	1.000 in	558.25	558.17	27.000 in	556.00	
154+70.89	Rear Abut, LT Girder CL Brg	558.14	1.000 in	558.23	558.14	27.000 in	555.98	
154+78.38	Rear Abut C/L Brg @ C/L Deck	558.20	1.000 in	558.28	558.20	27.000 in	556.03	
154+85.65	Rear Abut, RT Girder CL Brg	558.24	1.000 in	558.32	558.24	27.000 in	556.07	
154+83.90	0.05 * Span 1 Deck	558.23	1.000 in	558.31	558.23			
154+89.43	0.10 * Span 1 Deck	558.26	1.000 in	558.35	558.26			
154+94.95	0.15 * Span 1 Deck	558.29	1.000 in	558.38	558.29			
155+00.48	0.20 * Span 1 Deck	558.32	1.000 in	558.40	558.32			
155+06.00	0.25 * Span 1 Deck	558.34	1.000 in	558.43	558.34			
155+11.53	0.30 * Span 1 Deck	558.36	1.000 in	558.45	558.36			
155+17.05	0.35 * Span 1 Deck	558.38	1.000 in	558.46	558.38			
155+22.58	0.40 * Span 1 Deck	558.40	1.000 in	558.48	558.40			
155+28.10	0.45 * Span 1 Deck	558.41	1.000 in	558.49	558.41			
155+33.63	0.50 * Span 1 Deck	558.42	1.000 in	558.50	558.42			
155+39.15	0.55 * Span 1 Deck	558.42	1.000 in	558.51	558.42			
155+44.67	0.60 * Span 1 Deck	558.43	1.000 in	558.51	558.43			
155+50.20	0.65 * Span 1 Deck	558.43	1.000 in	558.51	558.43			
155+55.72	0.70 * Span 1 Deck	558.42	1.000 in	558.51	558.42			
155+61.25	0.75 * Span 1 Deck	558.42	1.000 in	558.50	558.42			
155+66.77	0.80 * Span 1 Deck	558.41	1.000 in	558.49	558.41			
155+72.30	0.85 * Span 1 Deck	558.40	1.000 in	558.48	558.40			
155+77.82	0.90 * Span 1 Deck	558.39	1.000 in	558.47	558.39			
155+83.35	0.95 * Span 1 Deck	558.37	1.000 in	558.45	558.37			
155+83.11	Pier #1 LT Girder CL Brg	558.37	1.000 in	558.45	558.37			
155+88.87	Pier #1 C/L Brg @ C/L Deck	558.35	1.000 in	558.43	558.35			
155+94.43	Pier #1 RT Girder CL Brg	558.33	1.000 in	558.41	558.33			

Gannett Fleming	GF JOB # 54682	CALC NO.: **HAM075_0834_01**	REV. NO.: **00**
		PROJECT: **HAM-75-7.85**	
ODOT PID NO.: 77889		DESIGNED: *CTM*	DATE: *10/16/13*
BRIDGE NO: *HAM-75-0834*		CHECKED: *VDK*	DATE: *10/29/13*
SUBJECT: *Elevations*		UPDATED: *VDT*	DATE: *05/22/14*
PGL Data		VERIFIED: *CTM*	DATE: *05/28/14*

PGL Vertical Curve & Profile Data (MLP)

Note: PGL = Top of low rail. Back of Backwall excludes any backwall haunch.

WP = Working Point = Intersection of PGL Alignment

Station	Element (at PGL, U.N.O.)	PGL Elevation	Main Track Data			Alt. Track Data		
			Super Elevation	High Rail Elev.	Low Rail Elev.	Super Elevation	High Rail Elev.	Low Rail Elev.
155+92.50	Pier #1 C/L	558.33	1.000 in	558.42	558.33			
155+86.70	Pier #1, LT Girder CL Brg	558.36	1.000 in	558.44	558.36			
155+92.39	Pier #1 C/L Brg @ C/L Deck	558.34	1.000 in	558.42	558.34			
155+97.89	Pier #1, RT Girder CL Brg	558.31	1.000 in	558.39	558.31			
155+97.23	0.05 * Span 2 Deck	558.31	1.000 in	558.40	558.31			
156+02.08	0.10 * Span 2 Deck	558.29	1.000 in	558.37	558.29			
156+06.92	0.15 * Span 2 Deck	558.26	1.000 in	558.35	558.26			
156+11.76	0.20 * Span 2 Deck	558.24	1.000 in	558.32	558.24			
156+16.60	0.25 * Span 2 Deck	558.21	1.000 in	558.29	558.21			
156+21.45	0.30 * Span 2 Deck	558.17	1.000 in	558.26	558.17			
156+26.29	0.35 * Span 2 Deck	558.14	1.000 in	558.22	558.14			
156+31.13	0.40 * Span 2 Deck	558.10	1.000 in	558.19	558.10			
156+35.97	0.45 * Span 2 Deck	558.06	1.000 in	558.15	558.06			
156+40.82	0.50 * Span 2 Deck	558.02	1.000 in	558.11	558.02			
156+45.66	0.55 * Span 2 Deck	557.98	1.000 in	558.06	557.98			
156+50.50	0.60 * Span 2 Deck	557.93	1.000 in	558.02	557.93			
156+55.34	0.65 * Span 2 Deck	557.88	1.000 in	557.97	557.88			
156+60.19	0.70 * Span 2 Deck	557.83	1.000 in	557.92	557.83			
156+65.03	0.75 * Span 2 Deck	557.78	1.000 in	557.87	557.78			
156+69.87	0.80 * Span 2 Deck	557.73	1.000 in	557.81	557.73			
156+74.71	0.85 * Span 2 Deck	557.67	1.000 in	557.75	557.67			
156+79.56	0.90 * Span 2 Deck	557.61	1.000 in	557.70	557.61			
156+84.40	0.95 * Span 2 Deck	557.55	1.000 in	557.63	557.55			
156+85.29	FWD Abut, LT Girder CL Brg	557.54	1.000 in	557.62	557.54	27.000 in	555.37	
156+89.24	FWD Abut C/L Brg @ C/L Deck	557.49	1.000 in	557.57	557.49	27.000 in	555.32	
156+93.05	FWD Abut, RT Girder CL Brg	557.44	1.000 in	557.52	557.44	27.000 in	555.27	
156+89.79	FWD Bkwall, Front Face (WP)	557.48	1.000 in	557.56	557.48	27.000 in	555.31	
156+93.35	FWD Abut @ Rear Face	557.43	1.000 in	557.51	557.43	27.000 in	555.26	
157+08.35	0.1	557.21	1.000 in	557.30	557.21	27.000 in	555.05	
157+23.35	0.2	556.98	1.000 in	557.06	556.98	27.000 in	554.81	
157+38.35	0.3	556.72	1.000 in	556.80	556.72	27.000 in	554.55	
157+53.35	0.4	556.44	1.000 in	556.52	556.44	27.000 in	554.27	
157+68.35	0.5	556.13	1.000 in	556.22	556.13	27.000 in	553.97	
157+83.35	0.6	555.82	1.000 in	555.90	555.82	27.000 in	553.65	
157+98.35	0.7	555.50	1.000 in	555.59	555.50	27.000 in	553.34	
158+13.35	0.8	555.19	1.000 in	555.27	555.19	27.000 in	553.02	
158+28.35	0.9	554.87	1.000 in	554.96	554.87	27.000 in	552.71	
158+43.35	End 150' Depart	554.56	1.000 in	554.64	554.56	27.000 in	552.39	

Gannett Fleming	GF JOB # 54682	CALC NO.: HAM075_0834_01	REV. NO.: 00
ODOT PID NO.: 77889		PROJECT: HAM-75-7.85	
BRIDGE NO: HAM-75-0834		DESIGNED: CTM	DATE: 10/16/13
SUBJECT: Elevations		CHECKED: VDK	DATE: 10/29/13
Bottom of Beam and Bearing		UPDATED: VDT	DATE: 01/19/16
		VERIFIED: CTM	DATE: 04/25/16

NOTE 1:
8" Minimum ballast thickness is required below the low end of the tie. The Super Adjustment dimension is the extra thickness required over the crown of the deck to account for the tie cross-slope and deck cross-slope, and includes the horizontal eccentricity of the alignment to the C/L deck. The actual ballast depth at the deck crown is the summation of the two values.

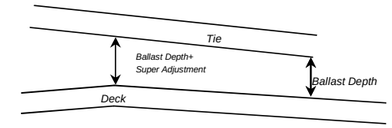

Substructure Elevation Data

Calculation assumes that all girders are at the same elevation along the skew.

Design Span Length (Span Chord Length)	110.500 ft	Deck Cross-Slope	0.010	Super-Elevation	1.000 in.

Live Load Deflection Allowance

Static L/800 LL deflection will be assumed in a straight line approximation. It is assumed that girders will be cambered for DL deflection. *d=1.658 in*

Element/ Location	Span 1: Rear Abutment			Span 1: Pier #1			Span 1: Vertical Clearance Locations									
	Rear Abut, LT Girder CL Brg	Rear Abut C/L Brg @ C/L Deck	Rear Abut, RT Girder CL Brg	Pier #1 LT Girder CL Brg	Pier #1 C/L Brg @ C/L Deck	Pier #1 RT Girder CL Brg	SP1 Rear: Toe Barrier @ LT Girder	SP1 Rear: Toe Barrier @ RT Girder	SP1 Rear: EOP @ LT Girder	SP1 Rear: EOP @ RT Girder	SP1: IR 75 Crown @ LT Girder	SP1: IR 75 Crown @ RT Girder	SP1 FWD: PGL/EOP @ LT Girder	SP1 FWD: PGL/EOP @ RT Girder	SP1 FWD: Toe/Barr @ LT Girder	SP1 FWD: Toe/Barr @ RT Girder
Dist. Along C/L Chord (along skew)	0.0000 ft	0.0000 ft	0.0000 ft	0.0000 ft	0.0000 ft	0.0000 ft	4.2312 ft	4.2312 ft	17.5263 ft	17.5263 ft	70.7069 ft	70.7069 ft	97.2972 ft	97.2972 ft	107.1442 ft	106.8992 ft
Station	154+70.89	154+78.38	154+85.65	155+83.11	155+88.87	155+94.43	154+74.72	154+90.16	154+88.10	155+03.14	155+42.11	155+55.43	155+69.29	155+81.69	155+79.11	155+91.17
PGL Elevation	558.143	558.195	558.241	558.370	558.349	558.327	558.170	558.267	558.255	558.330	558.425	558.425	558.406	558.375	558.382	558.340
C/L to Chord (+ = Right)	2.9999 ft	2.1979 ft	1.4433 ft	-4.2464 ft	-4.1682 ft	-4.0439 ft	2.4144 ft	0.9264 ft	0.7362 ft	-0.5374 ft	-3.5509 ft	-3.9773 ft	-4.2530 ft	-4.2591 ft	-4.2704 ft	-4.1512 ft
141 RE Rail Height	7.438 in	7.438 in	7.438 in	7.438 in	7.438 in	7.438 in	7.438 in	7.438 in	7.438 in	7.438 in	7.438 in	7.438 in	7.438 in	7.438 in	7.438 in	7.438 in
Assumed Tie Plate Thickness	1.000 in	1.000 in	1.000 in	1.000 in	1.000 in	1.000 in	1.000 in	1.000 in	1.000 in	1.000 in	1.000 in	1.000 in	1.000 in	1.000 in	1.000 in	1.000 in
Tie Thickness	7.000 in	7.000 in	7.000 in	7.000 in	7.000 in	7.000 in	7.000 in	7.000 in	7.000 in	7.000 in	7.000 in	7.000 in	7.000 in	7.000 in	7.000 in	7.000 in
Super Adjustment (See Note 1)	0.580 in	0.516 in	0.455 in	0.000 in	0.007 in	0.016 in	0.533 in	0.414 in	0.399 in	0.297 in	0.056 in	0.022 in	0.000 in	0.000 in	0.000 in	0.008 in
Ballast	9.138 in	9.250 in	10.314 in	8.549 in	8.296 in	8.029 in	9.340 in	10.497 in	9.960 in	10.862 in	10.407 in	10.401 in	9.382 in	9.000 in	8.798 in	8.302 in
Waterproofing Thickness	1.125 in	1.125 in	1.125 in	1.125 in	1.125 in	1.125 in	1.125 in	1.125 in	1.125 in	1.125 in	1.125 in	1.125 in	1.125 in	1.125 in	1.125 in	1.125 in
Deck Crown Height	1.500 in	1.500 in	1.500 in	1.500 in	1.500 in	1.500 in	1.500 in	1.500 in	1.500 in	1.500 in	1.500 in	1.500 in	1.500 in	1.500 in	1.500 in	1.500 in
Min Concrete Thickness	10.500 in	10.500 in	10.500 in	10.500 in	10.500 in	10.500 in	10.500 in	10.500 in	10.500 in	10.500 in	10.500 in	10.500 in	10.500 in	10.500 in	10.500 in	10.500 in
Top Flange Thickness	3.000 in	3.000 in	3.000 in	3.000 in	3.000 in	3.000 in	3.000 in	3.000 in	3.000 in	3.000 in	3.000 in	3.000 in	3.000 in	3.000 in	3.000 in	3.000 in
Web Depth	80.000 in	80.000 in	80.000 in	80.000 in	80.000 in	80.000 in	80.000 in	80.000 in	80.000 in	80.000 in	80.000 in	80.000 in	80.000 in	80.000 in	80.000 in	80.000 in
Bottom Flange Thickness	3.000 in	3.000 in	3.000 in	3.000 in	3.000 in	3.000 in	3.000 in	3.000 in	3.000 in	3.000 in	3.000 in	3.000 in	3.000 in	3.000 in	3.000 in	3.000 in
PGL to Bottom of Steel (Feet)	10.357 ft	10.361 ft	10.444 ft	10.259 ft	10.239 ft	10.217 ft	10.370 ft	10.456 ft	10.410 ft	10.477 ft	10.419 ft	10.415 ft	10.329 ft	10.297 ft	10.280 ft	10.239 ft
Min. Bottom of Steel Elevation	547.834	547.834	547.834	548.111	548.111	548.111	547.845	547.845	547.878	547.878	548.011	548.011	548.078	548.078	548.102	548.102
Distance Along C/L Girder	0.000 ft	0.000 ft	0.000 ft	110.500 ft	110.500 ft	110.500 ft	4.231 ft	4.231 ft	17.526 ft	17.526 ft	70.707 ft	70.707 ft	97.297 ft	97.297 ft	107.144 ft	107.144 ft
Max Allowable LL Deflection	0.000 in	0.000 in	0.000 in	0.000 in	0.000 in	0.000 in	0.127 in	0.127 in	0.526 in	0.526 in	1.194 in	1.194 in	0.396 in	0.396 in	0.101 in	0.101 in
Min. Bottom of Steel & Deflection	547.834	547.834	547.834	548.111	548.111	548.111	547.834	547.834	547.834	547.834	547.912	547.912	548.045	548.045	548.094	548.093
Sole Plate Thickness (at CL)	2.250 in	2.250 in	2.250 in	3.000 in	3.000 in	3.000 in										
Bearing Thickness	0.000 in	0.000 in	0.000 in	0.250 in	0.250 in	0.250 in										
Masonry Plate Thickness	3.750 in	3.750 in	3.750 in	4.500 in	4.500 in	4.500 in										
Total Bearing Thickness	0.50 ft	0.50 ft	0.50 ft	0.65 ft	0.65 ft	0.65 ft										
Max. Top of Cap Elevation	547.33	547.33	547.33	547.46	547.46	547.46										

	Rear Abutment	Pier #1, Span 1
Top of Cap Elevation	547.33	547.46
Total Differential (Fascia Girders)	0.000 in	0.000 in
No. of Girder Spaces	7	7
Individual Bearing Thickness Step	0.000 in	0.000 in

Left Girder Slope: 0.2500% | **Deck Crown Long. Slope: 0.2500%** | **Right Girder Slope: 0.2500%**

PGL Chord Slope: 0.1396% | **Beam Differential: 1/32**

Deck extends past bearing CL 2.047 (along CL Girder)
Rear Abut. Deck Low Point = 555.87
Rear Abut. Deck Crown Point: = 556.00

Deck extends past bearing CL 1.616 (along CL Girder)
Pier Deck Low Point = 556.16
Pier Deck Crown Point: = 556.28

Rear Top/Curb (24" Standard) = 558.00
Rear Top/End Dam = 556.08

Pier Top/Curb (24" Standard) = 558.28
Pier Top/End Dam = 556.36

Gannett Fleming	GF JOB # 54682	CALC NO.: HAM075_0834_01	REV. NO.: 00
ODOT PID NO.: 77889		PROJECT: HAM-75-7.85	
BRIDGE NO: HAM-75-0834		DESIGNED: CTM	DATE: 10/16/13
SUBJECT: Elevations		CHECKED: VDK	DATE: 10/29/13
Bottom of Beam and Bearing		UPDATED: VDT	DATE: 01/19/16
		VERIFIED: CTM	DATE: 04/25/16

NOTE 1:
8" Minimum ballast thickness is required below the low end of the tie. The Super Adjustment dimension is the extra thickness required over the crown of the deck to account for the tie cross-slope and deck cross-slope, and includes the horizontal eccentricity of the alignment to the C/L deck. The actual ballast depth at the deck crown is the summation of the two values.

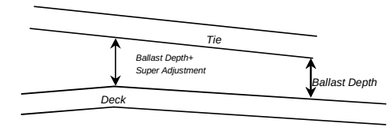

Substructure Elevation Data

Calculation assumes that all girders are at the same elevation along the skew.

Design Span Length (Span Chord Length)	97.250 ft	Deck Cross-Slope	0.010	Super-Elevation	1.000 in.

Live Load Deflection Allowance

Static L/800 LL deflection will be assumed in a straight line approximation. It is assumed that girders will be cambered for DL deflection. d=1.459 in

Element/ Location	Span 2: Pier #1			Span 2: Forward Abutment			Span 2: Vertical Clearance Locations									
	Pier #1, LT Girder CL Brg	Pier #1 C/L Brg @ C/L Deck	Pier #1, RT Girder CL Brg	FWD Abut, LT Girder CL Brg	FWD Abut C/L Brg @ C/L Deck	FWD Abut, RT Girder CL Brg	SP2 Rear: Toe/Barr @ LT Girder	SP2 Rear: Toe/Barr @ RT Girder	SP2 Rear: PGL/EOP @ LT Girder	SP2 Rear: PGL/EOP @ RT Girder	SP2: IR 75 Crown @ LT Girder	SP2: IR 75 Crown @ RT Girder	SP2 FWD: EOP @ LT Girder	SP2 FWD: EOP @ RT Girder	SP2 FWD: Toe Barrier @ LT Girder	SP2 FWD: Toe Barrier @ RT Girder
Dist. Along C/L Chord (along skew)	0.0000 ft	0.0000 ft	0.0000 ft	0.0000 ft	0.0000 ft	0.0000 ft	3.6008 ft	3.6008 ft	13.2028 ft	13.2028 ft	39.7931 ft	39.7931 ft	79.6785 ft	79.6785 ft	92.9737 ft	92.9737 ft
Station	155+86.70	155+92.39	155+97.89	156+85.29	156+89.24	156+93.05	155+90.07	156+01.74	156+99.88	156+11.21	156+27.01	156+37.36	156+67.43	156+76.28	156+80.79	156+89.14
PGL Elevation	558.36	558.34	558.31	557.54	557.49	557.44	558.34	558.29	557.34	558.24	558.13	558.05	557.76	557.65	557.60	557.49
C/L to Chord (+ = Right)	-4.2050 ft	-4.0992 ft	-3.9471 ft	3.6060 ft	4.4897 ft	5.4214 ft	-4.1452 ft	-3.8304 ft	-3.9001 ft	-3.4334 ft	-2.5692 ft	-1.6803 ft	1.2346 ft	2.7639 ft	2.9893 ft	4.7348 ft
141 RE Rail Height	7.438 in	7.438 in	7.438 in	7.438 in	7.438 in	7.438 in	7.438 in	7.438 in	7.438 in	7.438 in	7.438 in	7.438 in	7.438 in	7.438 in	7.438 in	7.438 in
Assumed Tie Plate Thickness	1.000 in	1.000 in	1.000 in	1.000 in	1.000 in	1.000 in	1.000 in	1.000 in	1.000 in	1.000 in	1.000 in	1.000 in	1.000 in	1.000 in	1.000 in	1.000 in
Tie Thickness	7.000 in	7.000 in	7.000 in	7.000 in	7.000 in	7.000 in	7.000 in	7.000 in	7.000 in	7.000 in	7.000 in	7.000 in	7.000 in	7.000 in	7.000 in	7.000 in
Super Adjustment (See Note 1)	0.004 in	0.012 in	0.024 in	0.628 in	0.699 in	0.774 in	0.008 in	0.034 in	0.028 in	0.065 in	0.134 in	0.206 in	0.439 in	0.561 in	0.579 in	0.719 in
Ballast	8.574 in	8.296 in	8.015 in	10.421 in	9.098 in	9.179 in	8.853 in	8.222 in	-2.057 in	8.749 in	10.669 in	9.682 in	10.912 in	9.669 in	10.597 in	9.300 in
Waterproofing Thickness	1.125 in	1.125 in	1.125 in	1.125 in	1.125 in	1.125 in	1.125 in	1.125 in	1.125 in	1.125 in	1.125 in	1.125 in	1.125 in	1.125 in	1.125 in	1.125 in
Deck Crown Height	1.500 in	1.500 in	1.500 in	1.500 in	1.500 in	1.500 in	1.500 in	1.500 in	1.500 in	1.500 in	1.500 in	1.500 in	1.500 in	1.500 in	1.500 in	1.500 in
Min Concrete Thickness	10.500 in	10.500 in	10.500 in	10.500 in	10.500 in	10.500 in	10.500 in	10.500 in	10.500 in	10.500 in	10.500 in	10.500 in	10.500 in	10.500 in	10.500 in	10.500 in
Top Flange Thickness	2.250 in	2.250 in	2.250 in	2.250 in	2.250 in	2.250 in	2.250 in	2.250 in	2.250 in	2.250 in	2.250 in	2.250 in	2.250 in	2.250 in	2.250 in	2.250 in
Web Depth	81.500 in	81.500 in	81.500 in	81.500 in	81.500 in	81.500 in	81.500 in	81.500 in	81.500 in	81.500 in	81.500 in	81.500 in	81.500 in	81.500 in	81.500 in	81.500 in
Bottom Flange Thickness	2.250 in	2.250 in	2.250 in	2.250 in	2.250 in	2.250 in	2.250 in	2.250 in	2.250 in	2.250 in	2.250 in	2.250 in	2.250 in	2.250 in	2.250 in	2.250 in
PGL to Bottom of Steel (Feet)	10.262 ft	10.239 ft	10.217 ft	10.468 ft	10.363 ft	10.376 ft	10.285 ft	10.235 ft	9.378 ft	10.281 ft	10.447 ft	10.371 ft	10.493 ft	10.399 ft	10.478 ft	10.382 ft
Min. Bottom of Steel Elevation	548.096	548.096	548.096	547.124	547.124	547.124	548.060	548.060	547.964	547.964	547.698	547.698	547.299	547.299	547.166	547.166
Distance Along C/L Girder	0.000 ft	0.000 ft	0.000 ft	97.250 ft	97.250 ft	97.250 ft	3.601 ft	3.601 ft	13.203 ft	13.203 ft	39.793 ft	39.793 ft	79.679 ft	79.679 ft	92.974 ft	92.974 ft
Max Allowable LL Deflection	0.000 in	0.000 in	0.000 in	0.000 in	0.000 in	0.000 in	0.108 in	0.108 in	0.396 in	0.396 in	1.194 in	1.194 in	0.527 in	0.527 in	0.128 in	0.128 in
Min. Bottom of Steel & Deflection	548.10	548.10	548.10	547.12	547.12	547.12	548.05	548.05	547.93	547.93	547.60	547.60	547.26	547.26	547.16	547.16
Sole Plate Thickness (at CL)	3.000 in	3.000 in	3.000 in	2.000 in	2.000 in	2.000 in										
Bearing Thickness	0.250 in	0.250 in	0.250 in	0.000 in	0.000 in	0.000 in										
Masonry Plate Thickness	4.375 in	4.375 in	4.375 in	3.750 in	3.750 in	3.750 in										
Total Bearing Thickness	0.64 ft	0.64 ft	0.64 ft	0.48 ft	0.48 ft	0.48 ft										
Max. Top of Cap Elevation	547.46	547.46	547.46	546.64	546.64	546.64										

Left Girder Slope: -1.0000%
Deck Crown Long. Slope: -1.0000%
Right Girder Slope: -1.0000%
PGL Chord Slope: -0.8724%
Beam Differential: - 6/32

Deck extends past bearing CL 1.616 (along CL Girder)
Pier Deck Low Point = 556.15
Pier Deck Crown Point: = 556.28

Deck extends past bearing CL 2.047 (along CL Girder)
FWD Abut. Deck Low Point = 555.14
FWD Abut. Deck Crown Point: = 555.27

	Pier #1, Span 2	Forward Abutment
Top of Cap Elevation	547.46	546.64
Total Differential (Fascia Girders)	0.000 in	0.000 in
No. of Girder Spaces	7	7
Individual Bearing Thickness Step	0.000 in	0.000 in

-0.0496861

Pier Top/Curb (24" Standard) = 558.28
Pier Top/End Dam = 556.36

FWD Top/Curb (24" Standard) = 557.27
FWD Top/End Dam = 555.35

Gannett Fleming	GF JOB # 54682	CALC NO.: **HAM075_0834_01**	EV. NO.: **00**
ODOT PID NO.: 77889		PROJECT: **HAM-75-7.85**	
BRIDGE NO: *HAM-75-0834*		DESIGNED: *CTM*	DATE: *10/17/13*
SUBJECT: *Elevations*		CHECKED: *VDK*	DATE: *10/29/13*
Vertical Clearance Under		UPDATED: *VDT*	DATE: *05/22/14*
Structure		VERIFIED: *CTM*	DATE: *05/28/14*

EMHT VC Data (BF001 File)	
G_1 =	-0.0345
G_2 =	0.0355
VC =	650.00 ft.
PVC Sta. =	436 + 83.340
PVT Sta. =	443 + 33.340
PVC Elev.	534.412
PVT Elev.	534.737

NB Mainline Location Under **NSRR Bridge, SPAN #1**	NSRR Station	Mainline Profile Grade Elev.	Mainline Bottom of Beam Elevation (inc. LL Δ)		IR 71 Station from EX CL Basemap	Crossroad PGL Elevation	Offset To Crown From PGL (ft)	Slope to Crown From PGL	Offset From Crown to Location (ft)	Slope From Crown to Location	Crossroad Pavement Elevation (yellow has special calc.)	Vertical Clearance (ft)
SP1 Rear: Toe Barrier @ LT Girder	154 + 74.720	558.170	547.834		440 + 19.210	528.899	24.000	0.0160	24.000	-0.0160	527.939	19.90
SP1 Rear: Toe Barrier @ RT Girder	154 + 90.160	558.267	547.834		440 + 47.830	528.991	24.000	0.0160	24.000	-0.0160	528.031	19.80
SP1 Rear: EOP @ LT Girder	154 + 88.100	558.255	547.834		440 + 24.930	528.910	24.000	0.0160	24.000	-0.0160	528.430	19.40
SP1 Rear: EOP @ RT Girder	155 + 03.140	558.330	547.834		440 + 53.550	529.020	24.000	0.0160	24.000	-0.0160	528.540	19.29
SP1: IR 75 Crown @ LT Girder	155 + 42.110	558.425	547.912		440 + 47.830	528.991	24.000	0.0160			529.375	18.54
SP1: IR 75 Crown @ RT Girder	155 + 55.430	558.425	547.912		440 + 76.450	529.171	24.000	0.0160			529.555	**18.36**
SP1 FWD: PGL/EOP @ LT Girder	155 + 69.290	558.406	548.045		440 + 59.280	529.052					529.052	18.99
SP1 FWD: PGL/EOP @ RT Girder	155 + 81.690	558.375	548.045		440 + 87.900	529.268					529.268	18.78
SP1 FWD: Toe/Barr @ LT Girder	155 + 79.110	558.382	548.094		440 + 63.410	529.078	-9.750	0.0400			528.688	19.41
SP1 FWD: Toe/Barr @ RT Girder	155 + 91.170	558.340	548.093		440 + 92.030	529.306	-9.750	0.0400			528.916	19.18

SB Mainline Location Under **NSRR Bridge, SPAN #2**	NSRR Station	Mainline Profile Grade Elev.	Mainline Bottom of Beam Elevation (inc. LL Δ)		IR 71 Station from EX CL Basemap	Crossroad PGL Elevation	Offset To Crown From PGL (ft)	Slope to Crown From PGL	Offset From Crown to Location (ft)	Slope From Crown to Location	Crossroad Pavement Elevation (yellow has special calc.)	Vertical Clearance (ft)
SP2 Rear: Toe/Barr @ LT Girder	155 + 90.070	558.345	548.051		440 + 68.020	529.109	-9.750	0.0400			528.719	19.33
SP2 Rear: Toe/Barr @ RT Girder	156 + 01.740	558.292	548.051		440 + 96.640	529.351	-9.750	0.0400			528.961	19.09
SP2 Rear: PGL/EOP @ LT Girder	156 + 99.880	557.340	547.931		440 + 72.150	529.138					529.138	18.79
SP2 Rear: PGL/EOP @ RT Girder	156 + 11.210	558.240	547.931		441 + 00.770	529.393					529.393	18.54
SP2: IR 75 Crown @ LT Girder	156 + 27.010	558.134	547.599		440 + 83.600	529.230	24.000	0.0160			529.614	17.99
SP2: IR 75 Crown @ RT Girder	156 + 37.360	558.052	547.599		441 + 12.220	529.520	24.000	0.0160			529.904	**17.69**
SP2 FWD: EOP @ LT Girder	156 + 67.430	557.756	547.255		441 + 00.770	529.393	24.000	0.0160	24.000	-0.0160	529.153	18.10
SP2 FWD: EOP @ RT Girder	156 + 76.280	557.652	547.255		441 + 29.390	529.737	24.000	0.0160	24.000	-0.0160	529.497	17.76
SP2 FWD: Toe Barrier @ LT Girder	156 + 80.790	557.596	547.156		441 + 06.500	529.455	24.000	0.0160	24.000	-0.0160	528.735	18.42
SP2 FWD: Toe Barrier @ RT Girder	156 + 89.140	557.488	547.156		441 + 35.120	529.816	24.000	0.0160	24.000	-0.0160	529.096	18.06

Gannett Fleming	GF JOB # 54682	CALC NO.: **HAM075_0834_01**	REV. NO.: **00**
		PROJECT: **HAM-75-7.85**	

ODOT PID NO.: 77889		DESIGNED: *EFD*	DATE: *06/03/14*
BRIDGE NO: *HAM-75-0834*		CHECKED: *CTM*	DATE: *07/08/14*
SUBJECT: *Elevations*		UPDATED: *CTM*	DATE: *09/23/14*
SCREED AND FINAL		VERIFIED:	DATE:
DECK ELEVATIONS			DATE:

SPAN 1 TABLES

Exterior Deck Cross Slope: 0.03125
Interior Deck Cross Slope: 0.01190
Span Length: 110.50 ft

Rear Low Point Elevation: 555.876
Forward Low Point Elevation: 556.152

Girder Slope: 0.250%

FINAL DECK ELEVATION TABLE

LINE NO.	LOCATION	Rear Abut. 0.000 L (0.00 ft)	0.125 L (13.81 ft)	0.250 L (27.63 ft)	0.375 L (41.44 ft)	Mid Span 0.500 L (55.25 ft)	0.625 L (69.06 ft)	0.750 L (82.88 ft)	0.875 L (96.69 ft)	Pier 1.000 L (110.50 ft)	Offset from Low Point
LINE 1	LEFT CURB LINE	556.00	556.04	556.07	556.10	556.14	556.17	556.21	556.24	556.28	4.00 ft
LINE 2	LEFT LOW POINT	555.88	555.91	555.95	555.98	556.01	556.05	556.08	556.12	556.15	0.00 ft
LINE 3	DECK CROWN	556.00	556.04	556.07	556.10	556.14	556.17	556.21	556.24	556.28	10.50 ft
LINE 4	RIGHT LOW POINT	555.88	555.91	555.95	555.98	556.01	556.05	556.08	556.12	556.15	0.00 ft
LINE 5	RIGHT CURB LINE	556.00	556.04	556.07	556.10	556.14	556.17	556.21	556.24	556.28	4.00 ft

SCREED ELEVATION TABLE

LINE NO.	LOCATION	Rear Abut. 0.000 L (0.00 ft)	0.125 L (13.81 ft)	0.250 L (27.63 ft)	0.375 L (41.44 ft)	Mid Span 0.500 L (55.25 ft)	0.625 L (69.06 ft)	0.750 L (82.88 ft)	0.875 L (96.69 ft)	Pier 1.000 L (110.50 ft)
LINE 1	LEFT CURB LINE	556.00	556.05	556.11	556.15	556.19	556.22	556.24	556.26	556.28
LINE 2	LEFT LOW POINT	555.88	555.93	555.98	556.03	556.06	556.09	556.12	556.14	556.15
LINE 3	DECK CROWN	556.00	556.05	556.11	556.15	556.19	556.22	556.24	556.26	556.28
LINE 4	RIGHT LOW POINT	555.88	555.93	555.98	556.03	556.06	556.09	556.12	556.14	556.15
LINE 5	RIGHT CURB LINE	556.00	556.05	556.11	556.15	556.19	556.22	556.24	556.26	556.28

DL1 + DL2 Deflections (Excludes Steel Self Weight)	0.00	0.23	0.42	0.55	0.59	0.55	0.42	0.23	0.00

Gannett Fleming	GF JOB # 54682	CALC NO.: **HAM075_0834_01**	REV. NO.: **00**
		PROJECT: **HAM-75-7.85**	

ODOT PID NO.: 77889		DESIGNED: *EFD*	DATE: *06/03/14*
BRIDGE NO: *HAM-75-0834*		CHECKED: *CTM*	DATE: *07/08/14*
SUBJECT: *Elevations*		UPDATED: *CTM*	DATE: *09/23/14*
SCREED AND FINAL		VERIFIED:	DATE:
DECK ELEVATIONS			DATE:

SPAN 2 TABLES

Exterior Deck Cross Slope: 0.03125
Interior Deck Cross Slope: 0.01190
Span Length: 97.25 ft

Rear Low Point Elevation: 556.138
Forward Low Point Elevation: 555.165

Girder Slope: -1.000%

FINAL DECK ELEVATION TABLE

LINE NO.	LOCATION	Pier 0.000 L (0.00 ft)	0.125 L (12.16 ft)	0.250 L (24.31 ft)	0.375 L (36.47 ft)	Mid Span 0.500 L (48.63 ft)	0.625 L (60.78 ft)	0.750 L (72.94 ft)	0.875 L (85.09 ft)	Fwd. Abut. 1.000 L (97.25 ft)	Offset from Low Point
LINE 1	LEFT CURB LINE	556.26	556.14	556.02	555.90	555.78	555.65	555.53	555.41	555.29	4.00 ft
LINE 2	LEFT LOW POINT	556.14	556.02	555.89	555.77	555.65	555.53	555.41	555.29	555.17	0.00 ft
LINE 3	DECK CROWN	556.26	556.14	556.02	555.90	555.78	555.65	555.53	555.41	555.29	10.50 ft
LINE 4	RIGHT LOW POINT	556.14	556.02	555.89	555.77	555.65	555.53	555.41	555.29	555.17	0.00 ft
LINE 5	RIGHT CURB LINE	556.26	556.14	556.02	555.90	555.78	555.65	555.53	555.41	555.29	4.00 ft

SCREED ELEVATION TABLE

LINE NO.	LOCATION	Rear Abut. 0.000 L (0.00 ft)	0.125 L (12.16 ft)	0.250 L (24.31 ft)	0.375 L (36.47 ft)	Mid Span 0.500 L (48.63 ft)	0.625 L (60.78 ft)	0.750 L (72.94 ft)	0.875 L (85.09 ft)	Fwd. Abut. 1.000 L (97.25 ft)
LINE 1	LEFT CURB LINE	556.26	556.16	556.05	555.93	555.81	555.69	555.56	555.43	555.29
LINE 2	LEFT LOW POINT	556.14	556.03	555.92	555.81	555.69	555.56	555.43	555.30	555.17
LINE 3	DECK CROWN	556.26	556.16	556.05	555.93	555.81	555.69	555.56	555.43	555.29
LINE 4	RIGHT LOW POINT	556.14	556.03	555.92	555.81	555.69	555.56	555.43	555.30	555.17
LINE 5	RIGHT CURB LINE	556.26	556.16	556.05	555.93	555.81	555.69	555.56	555.43	555.29

DL1 + DL2 Deflections (Excludes Steel Self Weight)	0.00	0.17	0.31	0.40	0.44	0.40	0.31	0.17	0.00

DESIGN CALCULATION COVER SHEET

Gannett Fleming
Engineers and Architects, P.C.
Excellence Delivered ***As Promised***

ISO 9001:2008 CERTIFIED

PROJECT:	**ODOT/EMH&T: HAM-75-7.85**	*ODOT PID NO:*	*77889*
BRIDGE NO:	**HAM-75-0834**	*EMH&T JOB NO:*	
SUBJECT:	***Girder***	**GF JOB NO:**	**54682**
	Built-Up Section Properties	CALC NO.:	**HAM075_0834_02_Sp1**
		REV NO.:	**03**
FILE NAME(s):	*HAM075_0834_02_Sp1.xlsx*	**SHEET:**	**1 OF 7**

SUPERSEDES CALC NO: 02 (Stage 3)

CALCULATION DESCRIPTION:

This will calculate the section properties of the plate girder and do a preliminary check of stiffener requirements.

DESIGN BASIS OR REFERENCES:

NS Underpass Design Criteria
AREMA (2014) Chapter 15

MISCELLANEOUS NOTES:

The Stage 1 layout will be that of the PAVR Alternative #2.

PAVR Alternative #1 did not meet NS Requirement of 2 supports per rail.

The Stage 2 Layout and Design is updated for final design (conservative). The composite properties are added.

Stage 3: Increased top flange width by 0.5". Bottom flange width reduced by 2" (below top flange width) to account for stiffener connection plate bolts. This gives a conservative result for composite and gross properties, but will ensure the bottom flange yield stress on net section is conservative.

Stage 3: Increased flange length to accommodate fatigue stress limits due to increased LL distribution

RECORD OF ISSUES:

REV	DESCRIPTION	BY	DATE	VERIF'D	DATE
00	Stage 1 Calculation	EFD	01/13/12		
01	Final, Stage 2 Calculation	EFD	05/14/14		
02	Stage 3: Revised Flanges (Net Section)	EFD	05/27/15	VDT	06/02/15
03	Stage 3: Updates	VDT	01/18/16	CTM	04/25/16

RECORD OF CHECK OF CURRENT CALCULATION VERSION

BY	DATE	CHKD	DATE	UPD.	DATE	VERIF'D	DATE
EFD	05/27/15	VDT	06/02/15	VDT	01/18/16	CTM	04/25/16

Gannett Fleming	GF JOB # 54682	CALC NO.: HAM075_0834_02_Sp1	REV. NO.: 03
		PROJECT: ODOT/EMH&T: HAM-75-7.85	
ODOT PID NO.: 77889		DESIGNED: EFD	DATE: 01/13/12
BRIDGE NO: HAM-75-0834		UPDATED: EFD	DATE: 05/14/14
SUBJECT: Girder		CHECKED: VDT	DATE: 05/19/14
Built-Up Section Properties		UPDATED: VDT	DATE: 01/18/16
Includes composite properties		VERIFIED: CTM	DATE: 04/25/16

Indicates user input

Yield Strength of Steel (Fy): 50.0 ksi
TOTAL Girder Depth: 86.000 in

Assumed Fillet Weld Size: 0.3750 in
Assumed Unit Weight: 490.0 pcf

SECTION PROPERTIES ABOUT PRIMARY AXIS - Non Composite (NET)

Note: the "y" C.G. dimension is input from the bottom of the bottom fiber (all values positive)

Description	Element No.	Width (in.)	Height (in.)	Area (A) (in^2)	y (C.G.) (in.)	Ay (in^3)	Ay^2 (in^4)	I_{xo} (in^4)	Ay^2+I_{xo} (in^4)
Top Flange	1	18.000	3.000	54.000	84.5000	4563.00	385573.5	40.5	385614
Web Plate	2	0.875	80.000	70.000	43.0000	3010.00	129430.0	37333.3	166763
Bottom Flange (2 holes)	3	16.000	3.000	48.000	1.5000	72.00	108.0	36.0	144
Total		18.000	86.000	172.000		7645.00			552521.3

Cross Sectional Area:	A =	172.000	in^2
Basic Section Weight:	Steel =	585.3	plf
Weld Weight:	Weld =	1.503	plf (includes four fillet welds)
Design Dead Load:	W =	587	plf (Rounded up to nearest pound)

Distance from Bottom Edge to N.A.:	d_y =	44.448	in.		
Moment of Inertia:	I_x =	212718.9	in^4		
Radius of Gyration:	R_x =	35.17	in.		
Section Modulus:	Bot S_x =	4785.83	in^3	Top S_x =	5119.30 in^3

Gannett Fleming	GF JOB # 54682	CALC NO.: HAM075_0834_02_Sp1	REV. NO.: 03
		PROJECT: ODOT/EMH&T: HAM-75-7.85	
ODOT PID NO.: 77889		DESIGNED: EFD	DATE: 01/13/12
BRIDGE NO: HAM-75-0834		UPDATED: EFD	DATE: 05/14/14
SUBJECT: Girder		CHECKED: VDT	DATE: 05/19/14
Built-Up Section Properties		UPDATED: VDT	DATE: 01/18/16
Includes composite properties		VERIFIED: CTM	DATE: 04/25/16

Indicates user input

SECTION PROPERTIES ABOUT PRIMARY AXIS - COMPOSITE (n=8)

Note: The deck thickness is taken as 7", to allow for construction variation (0.5") as well as a top sacrificial layer (0.5")

Description	Element No.	Width (in.)	Height (in.)	Area (A) (in^2)	y (C.G.) (in.)	Ay (in^3)	Ay^2 (in^4)	I_{xo} (in^4)	Ay^2+I_{xo} (in^4)
Top Flange	1	18.000	3.000	54.000	84.5000	4563.00	385573.5	40.5	385614
Web Plate	2	0.875	80.000	70.000	43.0000	3010.00	129430.0	37333.3	166763
Bottom Flange (gross)	3	18.000	3.000	54.000	1.5000	81.00	121.5	40.5	162
Deck *(3'-6" spa, n=8)*	4	5.250	7.000	36.750	89.5000	3289.13	294376.7	150.1	294527
Total		18.000	93.000	214.750		10943.13			847066.1

Distance from Bottom Edge to N.A.:	d_y =	50.958	in.		
Moment of Inertia:	I_x =	289431.7	in^4		
Radius of Gyration:	R_x =	36.71	in.		
Section Modulus:	Bot S_x =	5679.86	in^3	Top S_x =	6884.27 in^3

Gannett Fleming	GF JOB # 54682	CALC NO.: HAM075_0834_02_Sp1	REV. NO.: 03
		PROJECT: ODOT/EMH&T: HAM-75-7.85	
ODOT PID NO.: 77889		DESIGNED: EFD	DATE: 01/13/12
BRIDGE NO: HAM-75-0834		UPDATED: EFD	DATE: 05/14/14
SUBJECT: Girder		CHECKED: VDT	DATE: 05/19/14
Built-Up Section Properties		UPDATED: VDT	DATE: 01/18/16
Includes composite properties		VERIFIED: CTM	DATE: 04/25/16

Indicates user input

SECTION PROPERTIES ABOUT SECONDARY AXIS

Note: the "x" C.G. dimension is input about the centerline of web. Negative = Left, Positive = Right

Description	Element No.	Width (in.)	Height (in.)	Area (A) (in^2)	x (C.G.) (in.)	Ax (in^3)	Ax^2 (in^4)	I_{yo} (in^4)	Ax^2+I_{yo} (in^4)
Top Flange	1	18.000	3.000	54.000	0.0000	486.00	4374.0	1458.0	5832
Web Plate	2	0.875	80.000	70.000	0.0000	630.00	5670.0	4.5	5674
Bottom Flange (2 holes	3	18.000	3.000	54.000	0.0000	486.00	4374.0	1458.0	5832
Total		18.000	86.000	178.000		1602.00			17338.5

Total Surface Perimeter:	P.tot =	242.250	in
Reduced Perimeter:	P.red	218.3	in (does not include top or sides of top flange)
Total Surface Area:	SA.tot	1.682	ft^2/ft
Reduced Surface Area:	SA.red	1.516	ft^2/ft

Distance from Left Edge to N.A.:	d_x =	9.000	in.
Moment of Inertia:	I_y =	2920.5	in^4
Radius of Gyration:	R_y =	4.05	in.
Section Modulus:	Left S_y =	324.50	in^3

Right S_y = 324.50 in^3

Gannett Fleming	GF JOB # 54682	CALC NO.: HAM075_0834_02_Sp1	REV. NO.: 03
		PROJECT: ODOT/EMH&T: HAM-75-7.85	
ODOT PID NO.: 77889		DESIGNED: EFD	DATE: 01/13/12
BRIDGE NO: HAM-75-0834		UPDATED: EFD	DATE: 05/14/14
SUBJECT: Girder		CHECKED: VDT	DATE: 05/19/14
Built-Up Section Properties		UPDATED: VDT	DATE: 01/18/16
Includes composite properties		VERIFIED: CTM	DATE: 04/25/16

Indicates user input

AREMA 15-1.7 Cross-Sectional Checks

AREMA 15-1.7.1 Compression Flange Bracing

Distance between bracing points:	D.b=	0.000	in	*Continously laterally braced*
Allowable distance between bracing points:	D.b-a =	133.662	in	*AREMA 15-1.7.1.b*
Check compliance:	**BRACING OK**			*Continously laterally braced*

AREMA 15-1.6.2 Outstanding Compression Flange

Thickness of Flange:	T.f=	3.000	in	
Outstanding Width:	W.comp =	8.563	in	
Allowable Outstanding Width:	W.cmp.a =	31.067	in	*AREMA 15-1.6.2.a.(1)*
Check compliance:	**FLANGE OK**			*^^Ties are not directly upon the flange ^^*

AREMA 15-1.7.3 Web Plate Thickness (Without Longitudinal Stiffeners)

Clear distance between flanges:	D.fl=	80.000	in	
Thickness ratio of allowable clear distance between flanges:	D.fl.r=	0.007		*AREMA 15-1.7.3.a* *(Assumes fully stressed top flange)*
Minimum allowable web ratio thickness:	t.w-a1=	0.598	in	
1/6 of flange thickness check:	t.w-a1=	0.500	in	*AREMA 15-1.7.3.c*
Actual web thickness:	t.w=	0.875	in	*NS Requires 1/2" Minimum*
Check compliance:	**WEB OK**			

AREMA 15-1.7.7 Minimum Bearing and Jacking Stiffener Thickness - Preliminary Size

Outstanding Leg:	ℓ.s=	8.563	in	
Minimum Thickness:	ℓ.s=	0.827	in	*AREMA 15-1.6.2.a(2)* *(Bracing and secondary members)* *^^ Equation re-arranged to solve for "t" ^^*
Minimum Bearing Stiffener Thickness:	**0.875 in**			

Gannett Fleming	GF JOB # 54682	CALC NO.: HAM075_0834_02_Sp1	REV. NO.: 03
		PROJECT: ODOT/EMH&T: HAM-75-7.85	
ODOT PID NO.: 77889		DESIGNED: EFD	DATE: 01/13/12
BRIDGE NO: HAM-75-0834		UPDATED: EFD	DATE: 05/14/14
SUBJECT: Girder		CHECKED: VDT	DATE: 05/19/14
Built-Up Section Properties		UPDATED: VDT	DATE: 01/18/16
Includes composite properties		VERIFIED: CTM	DATE: 04/25/16

Indicates user input

AREMA 15-1.7.8.a-c Intermediate Transverse Web Stiffeners - Preliminary Size

Preliminary stiffener thickness:	T.st	0.625	in	*Enter Data (3/8" minimum per AREMA)*
Web depth limit of required stiffeners:	D.fl-ns=	44.674	in	*AREMA 15-1.7.8.a (equation in paragraph)*
Maximum Spacing Equation:	d.st.eq	83.018	in	*AREMA 15-1.7.8.a ("d" equation, assumes S=0.125*Fy)*
				0.125 Fy is based upon Final analysis (conservative)
Requirement Check:	**Stiffeners Required**			
Maximum Spacing from paragraph:	d.st.text	80.000	in	*AREMA 15-1.7.8.a (text in paragraph)*
Minimum Spacing Considered:	d.prelim	78.000	in	*Rounded down to the nearest 6"*
Minimum Moment of Inertia:	I.st.min	45.976	in^3	*AREMA 15-1.7.8.a ("I" equation)*
Preliminary stiffener width:	W.st	5.000	in	*Enter Data*
Minimum allowable stiffener width:	W.min	4.867	in	*AREMA 15-1.7.8.b*
Maximum allowable stiffener width:	W.max	10.000	in	*AREMA 15-1.7.8.b*
Single Plate Moment of Inertia:	I.st-plt	6.510	in^4	
Distance, Plate centroid to web centroid:	R.st-plt	2.938	in	
Area of single stiffener plate:	A.st-plt	3.125	in^2	
Moment of Inertia of Stiffeners:	I.st	66.951	in^4	*Moment of I about CL web, using Parallel Axis Theorem*
Moment of Inertia Check:	**Stiff. Size OK**			

Intermediate Stiffener Details: **Use 0.625in. x 5in. Stiffeners spaced @ 78in. Max**

AREMA 15-1.7.8.f Longitudinal Web Stiffeners - Check that they are not required

NOTE: It is desireable to not include longitudinal web stiffeners. Re-proportion girder if longitudinal stiffers are required

Web depth limit of required stiffeners:	D.ls-max	118.773	in	*AREMA 15-1.7.8.f (assumes f = 0.55 *Fy)*
Actual web depth between flanges:	D.fl=	80.000	in	
Requirement Check:	**Long. Unstiffened**			

SECTION PROPERTIES ABOUT PRIMARY AXIS - Non Composite (GROSS)

Note: the "y" C.G. dimension is input from the bottom of the bottom fiber (all values positive)

Description	Element No.	Width (in.)	Height (in.)	Area (A) (in^2)	y (C.G.) (in.)	Ay (in^3)	Ay^2 (in^4)	I_{xo} (in^4)	Ay^2+I_{xo} (in^4)
Top Flange	1	18.000	3.000	54.000	84.5000	4563.00	385573.5	40.5	385614
Web Plate	2	0.875	80.000	70.000	43.0000	3010.00	129430.0	37333.3	166763
Bottom Flange (2 holes)	3	18.000	3.000	54.000	1.5000	81.00	121.5	40.5	162
Total		18.000	86.000	178.000		7654.00			552539.3

Cross Sectional Area:	A =	178.000	in^2
Basic Section Weight:	Steel =	605.7	plf
Weld Weight:	Weld =	1.503	plf (includes four fillet welds)
Design Dead Load:	W =	608	plf (Rounded up to nearest pound)

Distance from Bottom Edge to N.A.:	d_y =	43.000	in.
Moment of Inertia:	I_x =	223417.3	in^4
Radius of Gyration:	R_x =	35.43	in.
Section Modulus:	Bot S_x =	5195.75	in^3

Top S_x = 5195.75 in^3

DESIGN CALCULATION COVER SHEET

Gannett Fleming
Engineers and Architects, P.C.
Excellence Delivered ***As Promised***

ISO 9001:2008 CERTIFIED

PROJECT:	**ODOT/EMH&T: HAM-75-7.85**	*ODOT PID NO:*	*77889*
BRIDGE NO:	**HAM-75-0834**	*EMH&T JOB NO:*	
SUBJECT:	***Girder***	**GF JOB NO:**	**54682**
	Built-Up Section Properties	CALC NO.:	**HAM075_0834_02_Sp2**
		REV NO.:	**03**
FILE NAME(s):	*HAM075_0834_02_Sp2.xlsx*	**SHEET:**	**1 OF 7**

SUPERSEDES CALC NO: 02 (Stage 3)

CALCULATION DESCRIPTION:

This will calculate the section properties of the plate girder and do a preliminary check of stiffener requirements.

DESIGN BASIS OR REFERENCES:

NS Underpass Design Criteria
AREMA (2014) Chapter 15

MISCELLANEOUS NOTES:

The Stage 2 Layout and Design is updated for final design (conservative). The composite properties are added.

Stage 3: Increased top flange width by 0.5". Bottom flange width reduced by 2" (below top flange width) to account for stiffener connection plate bolts. This gives a conservative result for composite and gross properties, but will ensure the bottom flange yield stress on net section is conservative.

Stage 3: Increased flange thickness to account for increased LL distribution

RECORD OF ISSUES:

REV	DESCRIPTION	BY	DATE	VERIF'D	DATE
00	Stage 1 Calculation	EFD	01/13/12		
01	Final, Stage 2 Calculation	EFD	05/14/14		
02	Stage 3: Revised Flanges (Net Section)	EFD	05/27/15	VDT	06/02/15
03	Stage 3: Updates	VDT	01/18/16	CTM	04/25/16

RECORD OF CHECK OF CURRENT CALCULATION VERSION

BY	DATE	CHKD	DATE	UPD.	DATE	VERIF'D	DATE
EFD	05/27/15	VDT	06/02/15	VDT	01/18/16	CTM	04/25/16

Gannett Fleming	GF JOB # 54682	CALC NO.: HAM075_0834_02_Sp2	REV. NO.: 03
		PROJECT: ODOT/EMH&T: HAM-75-7.85	
ODOT PID NO.: 77889		DESIGNED: EFD	DATE: 01/13/12
BRIDGE NO: HAM-75-0834		UPDATED: EFD	DATE: 05/14/14
SUBJECT: Girder		CHECKED: VDT	DATE: 05/19/14
Built-Up Section Properties		UPDATED: VDT	DATE: 01/18/16
Includes composite properties		VERIFIED:	DATE:

Indicates user input

Yield Strength of Steel (Fy): 50.0 ksi
TOTAL Girder Depth: 86.000 in

Assumed Fillet Weld Size: 0.3750 in
Assumed Unit Weight: 490.0 pcf

SECTION PROPERTIES ABOUT PRIMARY AXIS - Non Composite (NET)

Note: the "y" C.G. dimension is input from the bottom of the bottom fiber (all values positive)

Description	Element No.	Width (in.)	Height (in.)	Area (A) (in^2)	y (C.G.) (in.)	Ay (in^3)	Ay^2 (in^4)	I_{xo} (in^4)	Ay^2+I_{xo} (in^4)
Top Flange	1	17.000	2.250	38.250	84.8750	3246.47	275544.0	16.1	275560
Web Plate	2	0.875	81.500	71.313	43.0000	3066.44	131856.8	39473.0	171330
Bottom Flange	3	15.000	2.250	33.750	1.1250	37.97	42.7	14.2	57
Total		17.000	86.000	143.313		6350.88			446946.9

Cross Sectional Area:	A =	143.313	in^2
Basic Section Weight:	Steel =	487.7	plf
Weld Weight:	Weld =	1.503	plf (includes four fillet welds)
Design Dead Load:	W =	490	plf (Rounded up to nearest pound)

Distance from Bottom Edge to N.A.:	d_y =	44.315	in.
Moment of Inertia:	I_x =	165508.7	in^4
Radius of Gyration:	R_x =	33.98	in.
Section Modulus:	Bot S_x =	3734.83	in^3

Top S_x = 3970.45 in^3

Gannett Fleming	GF JOB # 54682	CALC NO.: HAM075_0834_02_Sp2	REV. NO.: 03
		PROJECT: ODOT/EMH&T: HAM-75-7.85	
ODOT PID NO.: 77889		DESIGNED: EFD	DATE: 01/13/12
BRIDGE NO: HAM-75-0834		UPDATED: EFD	DATE: 05/14/14
SUBJECT: Girder		CHECKED: VDT	DATE: 05/19/14
Built-Up Section Properties		UPDATED: VDT	DATE: 01/18/16
Includes composite properties		VERIFIED:	DATE:

Indicates user input

SECTION PROPERTIES ABOUT PRIMARY AXIS - COMPOSITE (n=8)

Note: The deck thickness is taken as 7", to allow for construction variation (0.5") as well as a top sacrificial layer (0.5")

Description	Element No.	Width (in.)	Height (in.)	Area (A) (in^2)	y (C.G.) (in.)	Ay (in^3)	Ay^2 (in^4)	I_{xo} (in^4)	Ay^2+I_{xo} (in^4)
Top Flange	1	17.000	2.250	38.250	84.8750	3246.47	275544.0	16.1	275560
Web Plate	2	0.875	81.500	71.313	43.0000	3066.44	131856.8	39473.0	171330
Bottom Flange	3	17.000	2.250	38.250	1.1250	43.03	48.4	16.1	65
Deck *(3'-6" spa, n=8)*	4	5.250	7.000	36.750	89.5000	3289.13	294376.7	150.1	294527
Total		17.000	93.000	184.563		9645.06			741481.2

Distance from Bottom Edge to N.A.:	d_y =	52.259	in.		
Moment of Inertia:	I_x =	237439.3	in^4		
Radius of Gyration:	R_x =	35.87	in.		
Section Modulus:	Bot S_x =	4543.51	in^3	Top S_x =	5828.03 in^3

Gannett Fleming	GF JOB # 54682	CALC NO.: HAM075_0834_02_Sp2	REV. NO.: 03
		PROJECT: ODOT/EMH&T: HAM-75-7.85	
ODOT PID NO.: 77889		DESIGNED: EFD	DATE: 01/13/12
BRIDGE NO: HAM-75-0834		UPDATED: EFD	DATE: 05/14/14
SUBJECT: Girder		CHECKED: VDT	DATE: 05/19/14
Built-Up Section Properties		UPDATED: VDT	DATE: 01/18/16
Includes composite properties		VERIFIED:	DATE:

Indicates user input

SECTION PROPERTIES ABOUT SECONDARY AXIS

Note: the "x" C.G. dimension is input about the centerline of web. Negative = Left, Positive = Right

Description	Element No.	Width (in.)	Height (in.)	Area (A) (in^2)	x (C.G.) (in.)	Ax (in^3)	Ax^2 (in^4)	I_{yo} (in^4)	Ax^2+I_{yo} (in^4)
Top Flange	1	17.000	2.250	38.250	0.0000	325.13	2763.6	921.2	3685
Web Plate	2	0.875	81.500	71.313	0.0000	606.16	5152.3	4.5	5157
Bottom Flange	3	17.000	2.250	38.250	0.0000	325.13	2763.6	921.2	3685
Total		17.000	86.000	147.813		1256.41			12526.4

Total Surface Perimeter:	P.tot =	238.250	in
Reduced Perimeter:	P.red	216.8	in (does not include top or sides of top flange)
Total Surface Area:	SA.tot	1.655	ft^2/ft
Reduced Surface Area:	SA.red	1.505	ft^2/ft

Distance from Left Edge to N.A.:	d_x =	8.500	in.		
Moment of Inertia:	I_y =	1846.9	in^4		
Radius of Gyration:	R_y =	3.53	in.		
Section Modulus:	Left S_y =	217.29	in^3	Right S_y =	217.29 in^3

Gannett Fleming	GF JOB # 54682	CALC NO.: HAM075_0834_02_Sp2	REV. NO.: 03
		PROJECT: ODOT/EMH&T: HAM-75-7.85	
ODOT PID NO.: 77889		DESIGNED: EFD	DATE: 01/13/12
BRIDGE NO: HAM-75-0834		UPDATED: EFD	DATE: 05/14/14
SUBJECT: Girder		CHECKED: VDT	DATE: 05/19/14
Built-Up Section Properties		UPDATED: VDT	DATE: 01/18/16
Includes composite properties		VERIFIED:	DATE:

Indicates user input

AREMA 15-1.7 Cross-Sectional Checks

AREMA 15-1.7.1 Compression Flange Bracing

Distance between bracing points:	D.b=	0.000	in	*Continously laterally braced*
Allowable distance between bracing points:	D.b-a =	133.662	in	*AREMA 15-1.7.1.b*
Check compliance:	**BRACING OK**			*Continously laterally braced*

AREMA 15-1.6.2 Outstanding Compression Flange

Thickness of Flange:	T.f=	2.250	in	
Outstanding Width:	W.comp =	8.063	in	
Allowable Outstanding Width:	W.cmp.a =	23.300	in	*AREMA 15-1.6.2.a.(1)*
Check compliance:	**FLANGE OK**			*^^Ties are not directly upon the flange ^^*

AREMA 15-1.7.3 Web Plate Thickness (Without Longitudinal Stiffeners)

Clear distance between flanges:	D.fl=	81.500	in	
Thickness ratio of allowable clear distance between flanges:	D.fl.r=	0.007		*AREMA 15-1.7.3.a* *(Assumes fully stressed top flange)*
Minimum allowable web ratio thickness:	t.w-a1=	0.609	in	
1/6 of flange thickness check:	t.w-a1=	0.375	in	*AREMA 15-1.7.3.c*
Actual web thickness:	t.w=	0.875	in	*NS Requires 1/2" Minimum*
Check compliance:	**WEB OK**			

AREMA 15-1.7.7 Minimum Bearing and Jacking Stiffener Thickness - Preliminary Size

Outstanding Leg:	ℓ.s=	8.063	in	
Minimum Thickness:	ℓ.s=	0.779	in	*AREMA 15-1.6.2.a(2)* *(Bracing and secondary members)* *^^ Equation re-arranged to solve for "t" ^^*
Minimum Bearing Stiffener Thickness:	**0.875 in**			

Gannett Fleming	GF JOB # 54682	CALC NO.: HAM075_0834_02_Sp2	REV. NO.: 03
		PROJECT: ODOT/EMH&T: HAM-75-7.85	
ODOT PID NO.: 77889		DESIGNED: EFD	DATE: 01/13/12
BRIDGE NO: HAM-75-0834		UPDATED: EFD	DATE: 05/14/14
SUBJECT: Girder		CHECKED: VDT	DATE: 05/19/14
Built-Up Section Properties		UPDATED: VDT	DATE: 01/18/16
Includes composite properties		VERIFIED:	DATE:

Indicates user input

AREMA 15-1.7.8.a-c Intermediate Transverse Web Stiffeners - Preliminary Size

Preliminary stiffener thickness:	T.st	0.625	in	*Enter Data (3/8" minimum per AREMA)*
Web depth limit of required stiffeners:	D.fl-ns=	44.674	in	*AREMA 15-1.7.8.a (equation in paragraph)*
Maximum Spacing Equation:	d.st.eq	83.018	in	*AREMA 15-1.7.8.a ("d" equation, assumes S=0.125*Fy)*
				0.125 Fy is based upon Final analysis (conservative)
Requirement Check:	**Stiffeners Required**			
Maximum Spacing from paragraph:	d.st.text	81.500	in	*AREMA 15-1.7.8.a (text in paragraph)*
Minimum Spacing Considered:	d.prelim	78.000	in	*Rounded down to the nearest 6"*
Minimum Moment of Inertia:	I.st.min	51.177	in^3	*AREMA 15-1.7.8.a ("I" equation)*
Preliminary stiffener width:	W.st	5.000	in	*Enter Data*
Minimum allowable stiffener width:	W.min	4.867	in	*AREMA 15-1.7.8.b*
Maximum allowable stiffener width:	W.max	10.000	in	*AREMA 15-1.7.8.b*
Single Plate Moment of Inertia:	I.st-plt	6.510	in^4	
Distance, Plate centroid to web centroid:	R.st-plt	2.938	in	
Area of single stiffener plate:	A.st-plt	3.125	in^2	
Moment of Inertia of Stiffeners:	I.st	66.951	in^4	*Moment of I about CL web, using Parallel Axis Theorem*
Moment of Inertia Check:	**Stiff. Size OK**			

Intermediate Stiffener Details: **Use 0.625in. x 5in. Stiffeners spaced @ 78in. Max**

AREMA 15-1.7.8.f Longitudinal Web Stiffeners - Check that they are not required

NOTE: It is desireable to not include longitudinal web stiffeners. Re-proportion girder if longitudinal stiffers are required

Web depth limit of required stiffeners:	D.ls-max	118.773	in	*AREMA 15-1.7.8.f (assumes f = 0.55 *Fy)*
Actual web depth between flanges:	D.fl=	81.500	in	
Requirement Check:	**Long. Unstiffened**			

SECTION PROPERTIES ABOUT PRIMARY AXIS - Non Composite (GROSS)

Note: the "y" C.G. dimension is input from the bottom of the bottom fiber (all values positive)

Description	Element No.	Width (in.)	Height (in.)	Area (A) (in^2)	y (C.G.) (in.)	Ay (in^3)	Ay^2 (in^4)	I_{xo} (in^4)	Ay^2+I_{xo} (in^4)
Top Flange	1	17.000	2.250	38.250	84.8750	3246.47	275544.0	16.1	275560
Web Plate	2	0.875	81.500	71.313	43.0000	3066.44	131856.8	39473.0	171330
Bottom Flange (2 holes)	3	17.000	2.250	38.250	1.1250	43.03	48.4	16.1	65
Total		17.000	86.000	147.813		6355.94			446954.5

Cross Sectional Area:	A =	147.813	in^2
Basic Section Weight:	Steel =	503.0	plf
Weld Weight:	Weld =	1.503	plf (includes four fillet welds)
Design Dead Load:	W =	505	plf (Rounded up to nearest pound)

Distance from Bottom Edge to N.A.:	d_y =	43.000	in.
Moment of Inertia:	I_x =	173649.2	in^4
Radius of Gyration:	R_x =	34.28	in.
Section Modulus:	Bot S_x =	4038.35	in^3

Top S_x = 4038.35 in^3

DESIGN CALCULATION COVER SHEET

Gannett Fleming
Engineers and Architects, P.C.
Excellence Delivered ***As Promised***

ISO 9001:2008 CERTIFIED

PROJECT:	**ODOT/EMH&T: HAM-75-7.85**	*ODOT PID NO:*	*77889*
BRIDGE NO:	**HAM-75-0834**	*EMH&T JOB NO:*	
SUBJECT:	***Loads***	**GF JOB NO:**	**54682**
	Girders	CALC NO.:	**HAM075-0834_03_Sp1**
	Stresses and Deflection Checks	REV NO.:	**03**
FILE NAME(s):	*HAM075_0834 Index.xlsx*	**SHEET: 1 OF 28**	

SUPERSEDES CALC NO: 02 (Stage 3)

CALCULATION DESCRIPTION:

This will calculate all loads applied to the superstructure.
Vertical beam stresses and deflections will be calculated and checked.
Defleciton calcualtions utilize composite action. Stress calculations do not.
Stage 3 calculation was revise to conservatively use net section modulus for calculating steel stresses in the bottom flange.

DESIGN BASIS OR REFERENCES:

NS Underpass Design Criteria
AREMA (2014) Chapter 15
Calculation: HAM075_0834_02_Sp1 (Beam Properties)
Bridge layout per updated Stage 2 Basemap

MISCELLANEOUS NOTES:

EFD Updates made per CTM Comments; VDK re-check to ensure that this master template follows the current AREMA code and is fully functional before it is used repeatedly on all 3 HAM-75 bridges (4 unique spans)

EFD Updates made at stage 2. Design span length was changed allow the final design to proceed while the stage 1 alignment tweaks are being made. The composite deck allows the increased spann to work without changing girder size (from stage 1)

Stage 3: Tie length updated to 10', Span Stress Check tables are updated to show the 16ksi allowable fatigue stress in the bottom flange due to the bolted stiffener connection.

Stage 3: Tie length reduced to 8.5', deck thickness increased and live load beam distribution increased

RECORD OF ISSUES:

REV	DESCRIPTION	BY	DATE	VERIF'D	DATE
00	Stage 1 Calculation	CTM	10/09/13		
01	Final, Stage 2 Calculations	EFD	05/14/14		
02	Stage 3 Revisions	EFD	05/27/15	VDT	06/02/15
03	Stage 3 Updates	VDT	01/18/16	CTM	04/25/16

RECORD OF CHECK OF CURRENT CALCULATION VERSION

BY	DATE	CHKD	DATE	UPD.	DATE	VERIF'D	DATE
EFD	05/27/15	VDT	06/02/15	VDT	01/18/16	CTM	04/25/16

Gannett Fleming	GF JOB # 54682	CALC NO.: **HAM075-0834_03_Sp1**	REV. NO.: **03**
		PROJECT: **ODOT/EMH&T: HAM-75-7.85**	
ODOT PID NO.: 77889		DESIGNED: CTM	DATE: *10/09/13*
BRIDGE NO: *HAM-75-0834*		UPDATED: EFD	DATE: *05/14/14*
SUBJECT: *Loads*		CHECKED VDT	DATE: *05/19/14*
Girders		UPDATED:	DATE:
Load Combinations		VERIFIED:	DATE:

Load Combinations Considered (NSRR Factors included)

Comb.	DL	LL	I	CF	LF	N	W	WU	SL	Qg	Qb	EQ	CWR	DF	O.Stress Allowed
A1	1	1	1	1											100%
B1	1	1	1		1	1	1						1		125%
B1A	1	1	1		1	1	1						1		100%
C		1	1												f_{fat}
D1	1			1		1	1		1						150%
D2	**1**									**1**					**170%**
E1	1											1			150%
F	1							1							100%
G											1			1	150%
H1	1														150%
H2	*1*														*125%*

Comb.	Description of Use
A1	All members
B1	All members, except floorbeam hangers and high strength bolts
B1A	Floorbeam hangers and high strength bolts
C	All members with Fatigue Details
D1	Members resisting overall instability
D2	**Members resisting overall instability (NSRR)**
E1	All members - Earthquake
F	Members loaded by wind only (Bracing)
G	Cross frames, diaphragms, anchor rods
H1	Members stressed during lifting or jacking
H2	*Members stressed during erection*

DL	Dead loads (self weight,superimposed dead loads, erection loads)
LL	Live loads
I	Impact (dynamic amplification)
CF	Centrifugal force
LF	Longitudinal forces from equipment (braking and locomotive traction)
N	Lateral forces from equipment (nosing)
W	Wind forces loaded bridge
WU	Wind forces on unloaded bridge
SL	Live load on leeward track of 1200 lb/ft without impact
Qg	Derailment load for girder design
Qb	Derailment load for lateral bracing design
EQ	Forces from earthquake (combined transverse and longitudinal)
CWR	Forces from CWR (lateral and longitudinal)
DF	Lateral forces from out-of-plane bending and from load distribution effects (Differential Deflection due to derailment)
f_{fat}	Allowable stress based on member loaded length and fatigue detail category

Gannett Fleming	GF JOB # 54682	CALC NO.: HAM075-0834_03_Sp1	REV. NO.: 03
		PROJECT: ODOT/EMH&T: HAM-75-7.85	
ODOT PID NO.: 77889		DESIGNED: CTM	DATE: 09/27/13
BRIDGE NO: HAM-75-0834		UPDATED: EFD	DATE: 05/14/14
SUBJECT: Loads		CHECKED: VDT	DATE: 05/19/14
Girders		UPDATED: VDT	DATE: 01/18/16
		VERIFIED: CTM	DATE: 04/25/16

Typical Section

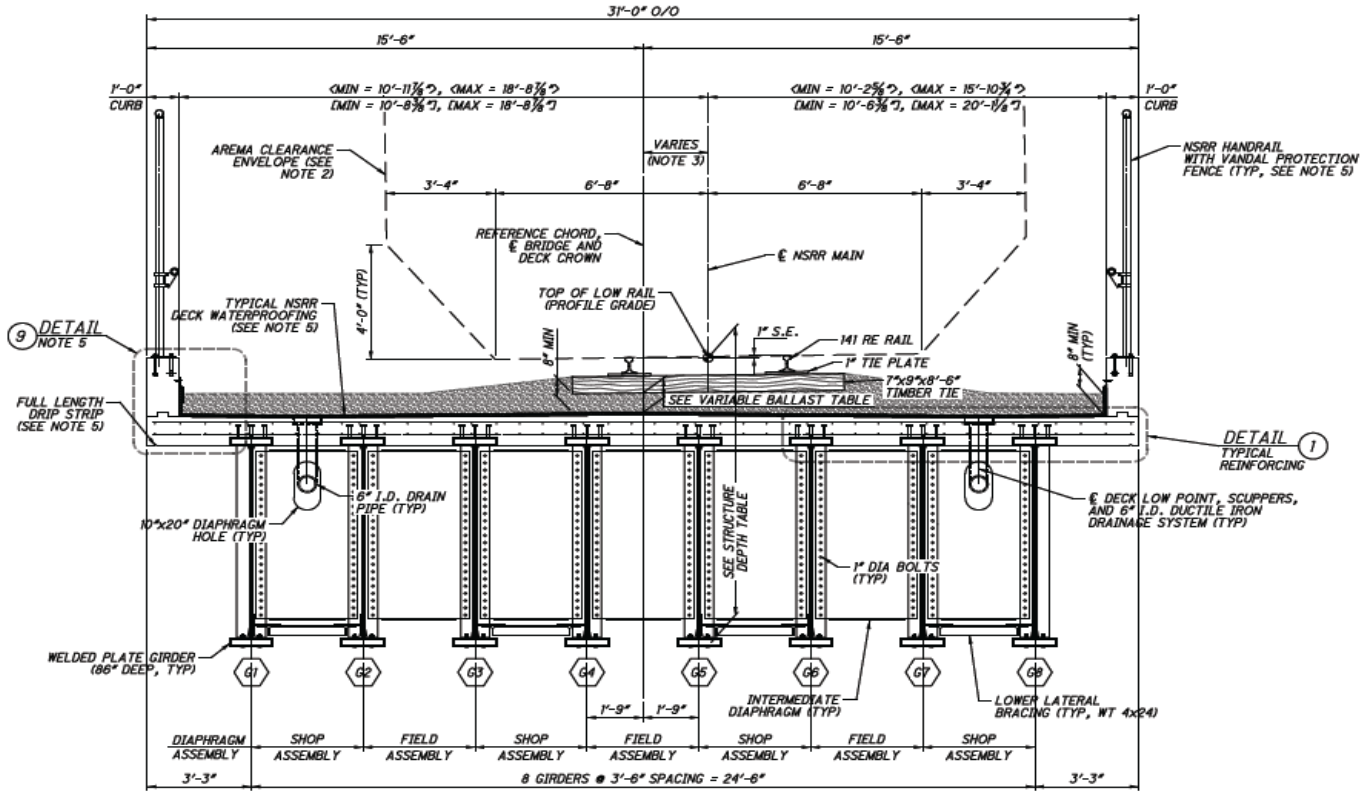

TYPICAL TRANSVERSE SECTION
LOOKING UPSTATION (NOTE 1)

Gannett Fleming	GF JOB # 54682	CALC NO.: HAM075-0834_03_Sp1	REV. NO.: 03
		PROJECT: ODOT/EMH&T: HAM-75-7.85	
ODOT PID NO.: 77889		DESIGNED: CTM	DATE: 09/27/13
BRIDGE NO: HAM-75-0834		UPDATED: EFD	DATE: 05/14/14
SUBJECT: Loads		CHECKED: VDT	DATE: 05/19/14
Girders		UPDATED: VDT	DATE: 01/18/16
		VERIFIED: CTM	DATE: 04/25/16

General Layout Data - Span 1 of 2

Span length is modified for final design and updated to include composite deflection

Span Length Data

C/C Bearings (Max):	110.500 ft	
Front Face/Face of Abut. Backwall:	4.432 ft	
Min. Clearance from Backwall:	3.000 in	0.250 ft
Maximum Beam Length:	113.500 ft	
Beam Extension past C/L Brg.	1.500 ft	

Track Alignment

Degree of Curvature:	7.75 deg	
Radius of Curvature:	739.86 ft	
Superelevation:	0.750 in	0.063 ft
Maximum Design Speed:	15.0 mph	

NOTE: Design Speed increased and super decreased to be conservative

Superstructure Cross Section Data

Out/Out Deck	31.000 ft
Standard Track Gage:	4.708 ft
C/C Rail Heads	4.932 ft
Number of Beams:	8
Standard Beam Spacing:	3.500 ft
Standard Overhang:	3.250 ft
Max Eccentricity, CL Deck/CL Alignment:	21.000 in
Deck Cross-Slope:	1.000%
Cross-Slope Width	10.500 ft
Tie Length:	8.500 ft
Curb Wall Thickness:	1.000 ft
Crossframe Spacing	12.000 ft
Stiffener Spacing	6.000 ft
Bridge Deck Length:	114.932 ft

Will be used to calculate total longitudinal forces

Vertical Tie-In to Top of Top Flange

Rail Height:	6.625 in
Tie Plate:	1.000 in
Tie Thickness:	7.000 in
Average Ballast:	9.250 in
Waterproofing:	1.125 in
Min Deck Thickness:	10.500 in
Max Additional Cross-Slope:	1.260 in
Rail Head to Top of Beam:	d_{top} = 36.760 in
Height of Curb:	H_{curb} = 18.000 in
Bottom of Tie to Top of Beam:	d_b = 21.625 in
Beam Lateral Distribution Length:	DB_{Lat}= 12.10 ft
Deck Lateral Distribution Length:	DDk_{Lat}= 10.30 ft
Deck Long. Distribution Length:	DDK_{Long}= 4.80 ft

AREMA: 15-1.3.4.2.4.a

AREMA: 15-1.3.4.2.2

Tie length reverted back to original length per NSRR comments

Number of beam spaces in lateral distribution length: 3.458

Assumes beam layout centered on alignment

Assumes maximum eccentricity in one direction

Number of beams to distribute live load to: 4

Standard live load and track/rail dead load will be equally divided amongst this many beams

Material & Girder Data

Reference Calculation: HAM075_0834C for beam properties

Basic Girder Data

XS Area:	178.000	in^2
Dead Load:	608	*plf*
Total Depth:	86.000	*in*
Web Depth:	80.000	*in*
Web Thickness:	0.875	*in*
Flange Width:	18.000	*in*
Flange Thickness:	3.000	*in*
Diaphragm Weight:	450.0	*lb*
Stiffener Weight:	70.9	*lb*
Extra Steel Weight:	15%	

Bolts, Gusset Plates, (LLB REQUIRED PER AREMA)

Diaphragm Flanges	45.9	*lb*
Diaphragm Web	404.1	*lb*
Int. Stiff. Width	5.0	*in*
Int. Stiff. Thick	0.6	*in*

Material Densities and Unit Loads

Track (Rails and fastenings):	200.0	*plf*
Steel:	490.0	*pcf*
Reinforced and Prestressed concrete:	150.0	*pcf*
Plain (unreinforced) concrete:	145.0	*pcf*
Timber:	60.0	*pcf*
Sand and Gravel, Compacted (ballast):	120.0	*pcf*
Sand and Gravel, Loose:	100.0	*pcf*
SIP Formwork (including flute concrete):	15.0	*psf*
Deck Waterproofing:	10.0	*psf*
Handrail Weight:	15.0	*plf*

Steel Properties (ASTM A588, Grade 50)

Yeild Stress:	50.0	*ksi*
Ultimate Stress:	70.0	*ksi*
Modulus of Elasticity:	29000.0	*ksi*

Girder Properties

Non-Composite is based on net section, composite is based on gross section

Primary Axis (non-composite)				n=8 Composite
Distance from Bottom Edge to N.A.:	d_y =	44.448	in.	51.0
Moment of Inertia:	I_x =	212718.9	in^4	289431.7
Radius of Gyration:	R_x =	35.17	in.	36.7
Section Modulus:	Bot S_x =	4785.83	in^3	5679.9
	Top S_x =	5119.30	in^3	6884.3

Secondary Axis			
Distance from Bottom Edge to N.A.:	d_x =	9.000	in.
Moment of Inertia:	I_y =	2920.5	in^4
Radius of Gyration:	R_y =	4.05	in.
Section Modulus:	Left S_y =	324.50	in^3
	Right S_y =	324.50	in^3

Basic Live Load Data

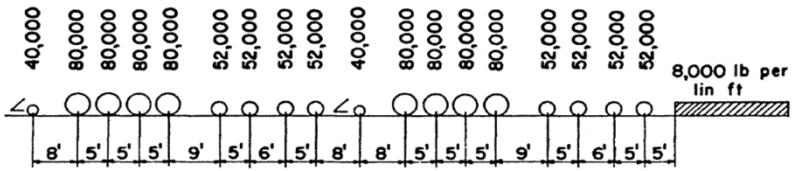

Figure 15-1-2. Cooper E 80 Load

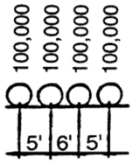

Figure 15-1-3. Alternate Live Load on 4 Axles

Unloaded Leeward Train:

SL= 1.200 klf

AREMA 1.3.10.a

Interpolated Data from AREMA Table 15-1-15 (Single Rail Loads)

Span Length (ft)	Maximum Moment (ft*kips)	Maximum Moment Quarter Point (ft*kips)	Maximum Shears (Kips)			Maximum Pier Reaction (Kips)	
			At End	At Quarter Point	At Center		
100	6446.30	5060.50	300.00	173.12	84.00	474.24	
110.50	7905.3	6130.2	324.9	188.4	86.6	510.9	52.5%
120	9225.40	7098.00	347.35	202.19	88.92	544.14	
110.50	1831.54	1373.65	66.30	33.15	0.00	66.30	**Unloaded Train (SL=1200 plf)**

Live Load Due to Load Eccentricity

AREMA 15-1.3.4.2.4.a states axle loads may be equally distributed to all girders within the lateral width prescribed above.

AREMA 15-1.3.4.2.1.d states that the effects of eccentricity and centrifugal load shall be included for ballasted decks.

Eccentricity due to Horizontal Curvature of Alignment

Eccentricity of load will apply a greater percentage of total load to a pair of girders if 4 are in the zone of influence.

Eccentricity load increase will be applied to a single girder if only 2-3 beams are in the zone of influence.

Standard number of beams to distribute live load to: 4

Percentage increase due to eccentricity: 25.0%

Un-Eccentric % of **rail** load to each beam: 50.0%

Eccentric % of rail load to girders on outside of curve: 60.0%

Note: 1/2 of the increase is taken even though as little as 1/3 could be assumed due to parabolically varying eccentricity. This is conservative.

Eccentricity is calculated by {ECCENTRICITY OF LOAD } / {BEAM SPACING}

A maximum value of 50% is allowed. An eccentricity larger than 50% will begin to distribute load to the next equally space girder.

The eccentric % of rail load to girders on outside of curve was based on the max possible load any girder could see. Using the 12.11 feet of lateral distribution length calculated above, girder spacing (3.5') divided by the lateral distribution length gives us 3.5 / 12.11 = 28.9% of the total load, or 57.8% of any rail load. To be conservative, 60% of a rail load will be applied.

Eccentricity due to Superelevation

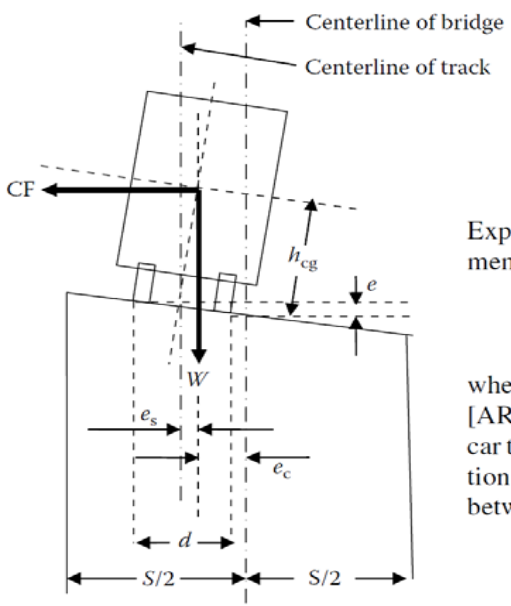

$$e_S = \frac{h_{cg} e}{d}$$

Expressed as a percentage, this will affect the magnitude of forces to supporting members each side of the track in the following proportion:

$$\frac{2e_s}{s}(100), \qquad (3.29)$$

where h_{cg} is the distance from the center of gravity of the rail car to the base of the track [AREMA (2008) recommends 8 ft for the distance from the center of gravity of the car to the top of the rail]; e is the superelevation of the track; d is the horizontal projection of track gage distance (generally taken as 4.9 ft); s is the width of the span (distance between the center of gravity of longitudinal members supporting the curved track).

Gannett Fleming	GF JOB # 54682	CALC NO.: HAM075-0834_03_Sp1	REV. NO.: 03
		PROJECT: ODOT/EMH&T: HAM-75-7.85	
ODOT PID NO.: 77889		DESIGNED: CTM	DATE: 09/27/13
BRIDGE NO: HAM-75-0834		UPDATED: EFD	DATE: 05/14/14
SUBJECT: Loads		CHECKED: VDT	DATE: 05/19/14
Girders		UPDATED: VDT	DATE: 01/18/16
		VERIFIED: CTM	DATE: 04/25/16

Known Variables & Calculations

Deg. of curve, D = 7.75 *deg*

Train Center of gravity, h_{cg} = 8.00 *ft*

Superelevation, SE = 0.750 *in*

Track c/c, d = 4.932 *ft*

C/C of resisting force couple: 7.000 *ft*

Note: Resisting force couple distance is the centroid of the supporting girder pairs for a 4-girder support system. 3 or 2 girder systems will have rocking applied to the outer most supporting girder.

Superelevation Eccentricity, e_s = 1.216 *in*

Superelevation Load +/-, SE = 2.90%

Increases inside of curve, decreases outside of curve

SE Applied Inside of Curve (per Beam) = 1.45%

SE Applied Outside of Curve (per Beam) = -1.45%

Outside of Curve Ecentricity

Vertical Cent. Factor, CF_v = 59.28%

Inside of Curve Eccentricity

Vertical Cent. Factor, CF_v = 40.72%

Applied Loads (Beams Outside of Curve)

	Span Length (ft)	Maximum Moment (ft*kips)	Maximum Moment Quarter Point	Maximum Shears (Kips)			Maximum Pier Reaction (Kips)
				At End	At Quarter Point	At Center	
Standard Live Load	110.50	4685.95	3633.72	192.56	111.66	51.32	302.86
Unloaded Train (SL)	110.50	1085.66	814.25	39.30	19.65	0.00	39.30

Applied Loads (Beams Inside of Curve)

	Span Length (ft)	Maximum Moment (ft*kips)	Maximum Moment Quarter Point	Maximum Shears (Kips)			Maximum Pier Reaction (Kips)
				At End	At Quarter Point	At Center	
Standard Live Load	110.50	3219.37	2496.46	132.30	76.72	35.26	208.07
Unloaded Train (SL)	110.50	745.88	559.41	27.00	13.50	0.00	27.00

Dead Load Geometry

Note: All dead loads are to be uniformly distributed

Concrete Sectional Area

Deck, Min Thickness:	27.13	sq. ft.
Deck, Cross-Slope:	1.10	sq. ft.
Curb:	3.00	sq. ft.
Between Top Flanges:	4.38	sq. ft.
Total Concrete:	**35.60**	**sq. ft.**

Deck Waterproofing

Total Length Across:	**30.50**	**ft**

Total Steel Weight (Interior Beam)

This will also be used for exterior beam DL

Beam:	608	plf
Diaphragm	37.50	plf
Stiffeners:	11.82	plf
Miscellaneous:	98.60	plf
Total Interior Beam:	**756**	**plf**

Ballast Area

Thick, Max (top of tie):	1.35	ft
Thick, Min (at curb):	0.75	ft
NS Criteria, Future Ballast:	0.50	ft
Width, Ballast:	29.00	ft
Area, Max Ballast:	11.51	sq. ft.
Area, Side Ballast:	21.57	sq. ft.
Area, Future Ballast:	**14.50**	**sq. ft.**
Total Placed Ballast:	**33.08**	**sq. ft.**

Gannett Fleming	GF JOB # 54682	CALC NO.: HAM075-0834_03_Sp1	REV. NO.: 03
		PROJECT: ODOT/EMH&T: HAM-75-7.85	
ODOT PID NO.: 77889		DESIGNED: CTM	DATE: 09/27/13
BRIDGE NO: HAM-75-0834		UPDATED: EFD	DATE: 05/14/14
SUBJECT: Loads		CHECKED: VDT	DATE: 05/19/14
Girders		UPDATED: VDT	DATE: 01/18/16
		VERIFIED: CTM	DATE: 04/25/16

DL - Dead Load

Moments, Forces, and Stresses (All Beams)

Load	W (klf)	V_{DL} (kip)	M_{DL} (kip-in)	σ_{DL} (ksi)	Δ_{DL} (inches)	Notes
Steel	0.76	42.90	13846.42	2.89	0.41110	Erection Load
NON_COMPOSITE Concrete	0.61	34.69	11196.13	2.34	0.33241	Deck Pouring
COMPOSITE Concrete	0.05	3.09	995.90	0.21	0.02173	Composite
Waterproofing	0.04	2.16	698.27	0.15	0.01524	
Placed Ballast	0.50	28.16	9087.57	1.90	0.19830	
Future Ballast	0.22	12.34	3983.59	0.83		**NO CAMBER**
Handrail	0.00	0.21	68.68	0.01	0.00150	
Rail/Ties/Clips	0.05	2.84	915.77	0.19	0.01998	Divided by live load # of beams

Total Unfactored Dead Load	**2.23**	**126.39**	**40792.35**	**8.52**	**1.21113**	Track Supporting Beams
Total Unfactored Dead Load	**2.18**	**123.56**	**39876.58**	**8.33**	**1.18394**	Exterior Beams Only

Gannett Fleming	GF JOB # 54682	CALC NO.: **HAM075-0834_03_Sp1**	REV. NO.: **03**
		PROJECT: **ODOT/EMH&T: HAM-75-7.85**	
ODOT PID NO.: 77889		DESIGNED: *CTM*	DATE: *09/27/13*
BRIDGE NO: *HAM-75-0834*		UPDATED: *EFD*	DATE: *05/14/14*
SUBJECT: *Loads*		CHECKED: *VDT*	DATE: *05/19/14*
Girders		UPDATED: *VDT*	DATE: *01/18/16*
		VERIFIED: *CTM*	DATE: *04/25/16*

Calculated Natural Frequency

Unloaded Natural Frequency				Loaded Natural Frequency			
Mass per linial foot:	m=	45.63711	slug/in	Loading (Alt. Load):	P	400000	pounds
First Mode:	ω_1	26.580498	rad/s	First Mode:	ωL_1	22.37737	rad/s
	ω_1	4.2304177	hertz		ωL_1	3.561469	hertz
	t_1	0.2364	seconds		tL_1	0.2808	seconds

TABLE 4.2
Undamped Natural Frequencies of Various Beams

Beam	ω_{mi} (rad/s)
	$\frac{i^2\pi^2}{L^2}\sqrt{\frac{EI}{m}}$
	$\frac{(4i^2+4i+1)\pi^2}{4L^2}\sqrt{\frac{EI}{m}}$
	$\frac{(4i^2-4i+1)\pi^2}{4L^2}\sqrt{\frac{EI}{m}}$
	$\frac{(16i^2+8i+1)\pi^2}{16L^2}\sqrt{\frac{EI}{m}}$

for the span of Example 4.3, $\omega_1 = 66.58$ rad/s = 10.6 Hz, is slightly greater than the estimate of 9.4 Hz for railway ballasted girder spans in Figure 4.8.

Due to the inertial effects of the relatively large railway live load on steel spans, the loaded simply supported beam natural frequencies are required in the dynamic analysis of steel railway superstructures. Approximate equations for the loaded simply supported beam fundamental frequency, ω_{L1}, have been proposed (Fryba, 1972) as

$$\omega_{L1} = \omega_1\sqrt{\frac{1}{1+(2P/mgL)+(m_w/2mg)}} \quad \text{for moving uniform continuous loads} \tag{4.16}$$

and

$$\omega_{L1} = \omega_1\sqrt{\frac{1}{1+(2P/mgL)}} \quad \text{for moving constant concentrated loads.} \tag{4.17}$$

A similar equation for the loaded simply supported beam fundamental frequency, ω_{L1}, was proposed for a moving harmonically varying concentrated force

TABLE 4.3
Unloaded Fundamental Frequencies of Steel Railway Bridges (Empirical Equations from Fryba, 1996)

Superstructure	Unloaded Fundamental Frequency, f_1 (Hz)
Steel truss spans	$1135(L)^{-1.1}$
Ballasted girder spans	$135(L)^{-0.7}$
Open deck girder spans	$680/L$

Note: L = length in feet.

LL - Max Live Load

Moments, Forces, and Stresses

Beams Outside of Curve

Load	Equiv. W (klf)	V_{LL} (kip)	M_{LL} (kip-in)	σ_{LL} (ksi)	Δ_{LL} (inches)	Notes
Standard AREMA Live Load	3.07	192.56	56231.46	11.75	1.22702	Inc. For Deflection
Unloaded Train (SL)	0.71	39.30	13027.93	2.72	0.28428	Composite

Beams Inside of Curve

Load	Equiv. W (klf)	V_{LL} (kip)	M_{LL} (kip-in)	σ_{LL} (ksi)	Δ_{LL} (inches)	Notes
Standard AREMA Live Load	2.11	132.30	38632.47	8.07	0.84299	Inc. For Deflection
Unloaded Train (SL)	0.49	27.00	8950.52	1.87	0.19531	Composite

I - Vertical Live Load Impact

Moments, Forces, and Stresses

Impact Factor

AREMA 15-1.3.5.c (1)

Impact Factor Equation Used: (b)

Impact Factor Applied: 23.45%

Rocking Effect

AREMA 15-1.3.5.d

Rocking Effect Loading 20.0%

C/C Tracks of applied force couple: 4.932 ft

Number of beams resisting force couple: 4

C/C of resisting force couple: 7.000 ft

Additional Rocking Impact Applied: 14.1%

Note: Resisting force couple distance is the centroid of the supporting girder pairs for a 4-girder support system. 3 or 2 girder systems will have rocking applied to the outer most supporting girder.

Total Impact Factor

Total Calculated Impact Factor:	37.5%	
Impact Factor Considered:	90.0%	*AREMA 15-1.3.5(b) allows reduction for ballasted deck.*
Total Applied Impact Factor:	33.8%	

Beams Outside of Curve

Load	Equiv. W (klf)	V_I (kip)	M_I (kip-in)	σ_I (ksi)	Δ_I (inches)	Notes
Standard AREMA Live Load	1.04	65.07	19001.23	3.97	0.41462	Inc. for Deflection
Unloaded Train (SL)	0.24	13.28	4402.28	0.92	0.09606	Composte

Beams Inside of Curve

Load	Equiv. W (klf)	V_I (kip)	M_I (kip-in)	σ_I (ksi)	Δ_I (inches)	Notes
Standard AREMA Live Load	0.71	44.70	13054.34	2.73	0.28486	Inc. for Deflection
Unloaded Train (SL)	0.17	9.12	3024.48	0.63	0.06600	Composite

Δ_v - Vertical Deflection Check

(Live Load + Impact)

AREMA 15-1.2.5.b

AREMA Allowable

L/640 2.072 *in*

MAX Live Load and Impact Deflections

Max Live Load Deflection:	1.227 *in*
Corresponding Impact Deflection:	0.415 *in*
Total Live Load + Impact Deflection:	1.642 *in*

	Actual		*Allowable*	
Deflection Check:	1.642	≤	2.072	**OK**
Deflection Ratio:	L / 808	≤	L / 640	

Gannett Fleming	GF JOB # 54682	CALC NO.: HAM075-0834_03_Sp1	REV. NO.: 03
		PROJECT: ODOT/EMH&T: HAM-75-7.85	
ODOT PID NO.: 77889		DESIGNED: CTM	DATE: 09/27/13
BRIDGE NO: HAM-75-0834		UPDATED: EFD	DATE: 05/14/14
SUBJECT: Loads		CHECKED: VDT	DATE: 05/19/14
Girders		UPDATED: VDT	DATE: 01/18/16
		VERIFIED: CTM	DATE: 04/25/16

CF - Centrifugal Force

Moments, Forces, and Stresses

AREMA 15-1.3.6

Known Variables & Calculations

Deg. of curve, D =	7.75 *deg*	Speed, S =	15.0 *mph*
Train Center of gravity, h_{cg} =	8.00 *ft*	Track c/c, d =	4.932 *ft*
Cent. Factor, CF =	2.04%		
Horizontal Cent. Factor, CF_h =	2.04%	Vertical Cent. Factor, CF_v =	3.31%
Applied to each rail head		*Increases outside of curve, decreases inside of curve*	

Outside of Curve (per beam)		Inside of Curve (per beam)	
Vertical Cent. Factor, CF_v =	**1.65%**	**Vertical Cent. Factor, CF_v =**	**-1.65%**

Beams Outside of Curve

Load	Equiv. W (klf)	V_{CF} (kip)	M_{CF} (kip-in)	σ_{CF} (ksi)	Δ_{CF} (inches)	Notes
Standard AREMA Live Load	0.051	3.19	930.38	0.19	0.02030	Composite
Unloaded Train (SL)	0.012	0.65	215.55	0.05	0.00470	
Horizontal Cent. Load =	3.93	kip / Girder				

Beams Inside of Curve

Load	Equiv. W (klf)	V_{CF} (kip)	M_{CF} (kip-in)	σ_{CF} (ksi)	Δ_{CF} (inches)	Notes
Standard AREMA Live Load	-0.035	-2.19	-639.20	-0.13	-0.01395	Will reduce stresses
Unloaded Train (SL)	-0.008	-0.45	-148.09	-0.03	-0.00323	Will reduce stresses
Horizontal Cent. Load =	2.70	kip / Girder				

LF - Longitudinal Force

Moments, Forces, and Stresses

AREMA 15-1.3.12

The relative stiffness of substructures and related fixity will play a large role in longitudinal force distribution throughout a long structure.

LF herein will be for the worst case for this span.

The force for this individual span will be used to design individual items on this span.

Longitudinal force for the entire bridge length should be calculated and investigated seperately for substructure design and analysis.

Average Carriage Length = 40.0 ft

Front axle to rear axle

$$LF_B = 45 + 1.2L$$

$$LF_T = 25\sqrt{L}$$

Braking - Fully Loaded Bridge

Loaded Length:	114.932	*ft*
Full LF_{B_All}	182.92	*kips*
This Spans Portion of Full $LF_{B_All_Span}$	175.86	*kips*

Braking - This Span Only

LF_{B_Span}	177.60	*kips*
Center of Action	8.00	*ft*
Vertical LF_{BV_Span}	35.52	*kips*

Traction - Fully Loaded Bridge

Loaded Length:	114.932	*ft*
Full LF_{T_All}	268.02	*kips*
This Spans Portion of Full $LF_{T_All_Span}$	257.68	*kips*

Traction - This Span Only

LF_{T_Span}	262.80	*kips*
Center of Action	3.00	*ft*
Vertical LF_{TV_Span}	19.71	*kips*

Controling Load - Total

Maximum Longitudinal Force:	LF_{Max}	262.80	*kips*
Max Shear from LF:	LF_V	35.52	*kips*
Equally distributed shear:	w_{LF}	0.32	*klf*
Moment created from LF_V:	LF_M	5887.44	*kip-in*

Applied Load - Per Rail

Max Shear: LF_V 17.76 *kips*

Moment created from LF_v: LF_M 2943.72 *kip-in*

Beams Outside of Curve

Load	Equiv. W (klf)	V_{LF} (kip)	M_{LF} (kip-in)	σ_{LF} (ksi)	Δ_{LF} (inches)	Notes
Standard AREMA Live Load	0.10	10.53	1744.92	0.36	0.03808	Composite
Unloaded Train (SL)	0.02	2.15	404.27	0.08	0.00882	

Beams Inside of Curve

Load	Equiv. W (klf)	V_{LF} (kip)	M_{LF} (kip-in)	σ_{LF} (ksi)	Δ_{LF} (inches)	Notes
Standard AREMA Live Load	0.07	7.23	1198.80	0.25	0.02616	Composite
Unloaded Train (SL)	0.02	1.48	277.74	0.06	0.00606	

N - Lateral Forces (Nosing)

Moments, Forces, and Stresses

AREMA 15-1.3.9

Not used for girder design. *Will be used for bracing system design.*

a. A single moving concentrated lateral force equal to one-quarter of the weight of the heaviest axle of the specified live load, without impact, shall be applied at the base of rail in either direction and at any point along the span in addition to the other lateral forces specified (Reference 20). On spans supporting multiple tracks, the force shall be applied on one track only.

b. The only resulting stresses to be considered are axial stresses in members bracing the flanges of stringer, beam and girder spans, axial stresses in the chords of truss spans and in members of cross frames of such spans, and stresses from lateral bending of flanges of longitudinal flexural members having no bracing system. The effects of lateral bending between braced points of flanges, axial forces in flanges, vertical forces and forces transmitted to bearings shall be disregarded.

Heaviest Axle: Alt. Load = 100 kip

Notional Lateral Design Load, N = 25.0 kip

W - Wind on Loaded Bridge

Moments, Forces, and Stresses

AREMA 15-1.3.7

In general, the wind force shall be considered as a moving load acting in any horizontal direction. As a minimum, the bridge shall be designed for laterally and longitudinally applied wind forces acting independently as follows:

a. On the train, the lateral wind force shall be taken at 300 lb. per linear foot applied normal to the train on one track at a distance of 8 feet above top of rail.

b. On the bridge, lateral wind pressure shall be taken at 30 lb. per square foot normal to the following surfaces:

(1) For girder spans, 1.5 times the vertical projection of the span.

c. The lateral wind force on girder and truss spans, however, shall not be taken as less than 200 lb. per foot for the loaded chord or flange and 150 lb. per foot for the unloaded chord or flange, neglecting the wind force on the floor system.

d. The longitudinal wind force on spans shall be taken as:

(1) For girder spans, 25 percent of the lateral wind force.

Loaded Length: 113.500 *ft*

Wind on Superstructure

Girder Height:	86.000	*in*
Deck Thickness:	10.50	*in*
Curb Height:	18.00	*in*
Total Height:	9.54	*ft*
1.5 x Total Height:	14.31	*ft*
Wind Pressure:	30.00	*psf*
Wind Load:	429.38	*plf*

Not less than 200 plf, will be used for lateral bracing

Total Wind Force:	48.73	*kip*
Force Centroid:	7.16	*ft*
Resisting Couple	24.50	*ft*
Resisting Force:	14.23	*kip*
Resisting Load/Girder:	62.71	*plf* (up/down)

50% is assumed to be resisted by a single beam

OUTER MOST (windward = up, leeward = down)

Girder Moment from Vertical Component 95.71 *kip*ft*

(Worst Beam)

Wind on Live Load

Lateral Load Applied:	300.000	*plf*
Load Centroid:	8.00	*ft*
Vertical Component:	486.59	*plf*

*Assumed to act down on rail at the **outside of curve***

*Assumed to act up on rail at the **inside of curve***

Total Wind Force:	34.05	*kip*

Girder Moment from Vertical Component 742.67 *kip*ft*

(Total)

NOTE: Lateral Loads will also be used for lateral bracing system design and stability analysis of substructures.

Total Girder Moment and shears are multiplied by eccentricity factors above.

Beams Outside of Curve						
Load	Equiv. W (klf)	V_W (kip)	M_W (kip-in)	σ_W (ksi)	Δ_W (inches)	Notes
Standard AREMA Live Load	0.35	19.93	6431.24	1.34	0.19094	
Unloaded Train (SL)	0.35	19.93	6431.24	1.34	0.19094	

Beams Inside of Curve						
Load	Equiv. W (klf)	V_W (kip)	M_W (kip-in)	σ_W (ksi)	Δ_W (inches)	Notes
Standard AREMA Live Load	-0.26	-14.80	-4777.89	-1.00	-0.14186	Will reduce stress
Unloaded Train (SL)	-0.26	-14.80	-4777.89	-1.00	-0.14186	Will reduce stress

WU - Wind on Unloaded Bridge

Moments, Forces, and Stresses

AREMA 15-1.3.8

a. The lateral wind force on the unloaded bridge shall be taken as 50 lb per square foot of surface as defined in Article 1.3.7b.

b. The longitudinal wind force on the unloaded spans shall be taken as:

(1) For girder spans, 25 percent of the lateral wind force.

Loaded Length: 113.500 *ft*

Lateral on Superstructure

1.5 x Total Height:	14.31 *ft*
Wind Pressure:	50.00 *psf*
Wind Load:	715.63 *plf*

Not less than 200 plf, will be used for lateral bracing

Total Wind Force:	81.22 *kip*

Vertical on Superstructure

Force Centroid:	7.16 *ft*
Resisting Couple	24.50 *ft*
Resisting Force:	23.72 *kip*
Resisting Load/Girder:	104.51 *plf*

OUTER MOST (windward = up, leeward = down)

Girder Moment from Vertical Component	159.52 *kip*ft*

(Worst Beam)

NOTE: Lateral Loads will also be used for lateral bracing system design and stability analysis of substructures.

Total Girder Moment and shears are multiplied by eccentricity factors above

Beams Outside of Curve						
Load	Equiv. W (klf)	V_{WU} (kip)	M_{WU} (kip-in)	σ_{WU} (ksi)	Δ_{WU} (inches)	Notes
Standard AREMA Live Load	0.10	5.93	1914.22	0.40	0.05683	
Unloaded Train (SL)	0.10	5.93	1914.22	0.40	0.05683	

Beams Inside of Curve						
Load	Equiv. W (klf)	V_{WU} (kip)	M_{WU} (kip-in)	σ_{WU} (ksi)	Δ_{WU} (inches)	Notes
Standard AREMA Live Load	-0.10	-5.93	-1914.22	-0.40	-0.05683	Will reduce stress
Unloaded Train (SL)	-0.10	-5.93	-1914.22	-0.40	-0.05683	Will reduce stress

Qg - Derailment Load on Girders

Moments, Forces, and Stresses

NFS_UP2 V.C.2 (Beams - Used for D2 Loadcase)

C. **Design of Superstructure for Derailment:**

2. The supporting steel members, whose centerlines measure not more than 11′-0″ from the outside face of curb shall be considered as carrying the derailed load. An impact load, equal to 0.8x live load, shall be provided. Allowable unit stresses in steel shall be not more than 70 percent greater than the normal allowable unit stresses.

Total Impact Factor

Total Applied Impact Factor: 80.0%

Note: AREMA Rail load will be applied to an individual girder (derail directly atop girder) and multiplied by the impact factor listed above)

Girder Forces below are the total LL+I for the derailed condition - Used for Load Case D2

Derailed Beam						
Load	Equiv. W (klf)	V_Q (kip)	M_Q (kip-in)	σ_Q (ksi)	Δ_Q (inches)	Notes
Standard AREMA Live Load	9.32	346.61	170755.07	35.68	3.72602	Stress Check
Unloaded Train (SL)	2.16	70.74	39561.21	8.27	0.86326	Composite

Qb - Derailment Load on lateral bracing

Moments, Forces, and Stresses

AREMA 15-1.3.10 .b (Cross Frames Only - Used for G Loadcase) - Max Differential Deflections Considered in Connection Calculations

.... "A single line of wheel loads (Q) equal to the design load per rail (Article 1.3.3) including full design impact is to be applied at an eccentricity of 5 feet from the centerline of track as shown in Figure 15-1-4, but no further than the edge of the deck or, for open decks, the bridge ties."

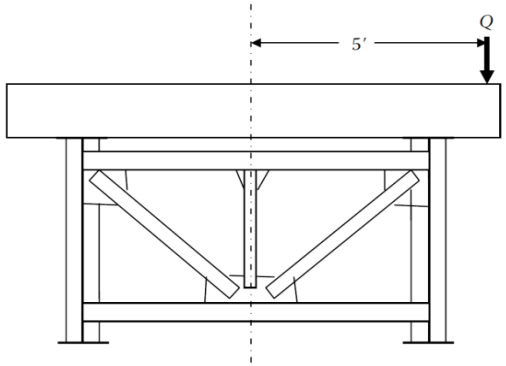

Geometry Considered

The entire load will be applied to a single girder and the vertical force will need to be transmitted to the adjacent girder through the cross frame or diaphragm within the allowable stress (150%).

Total Impact Factor

Total Applied Impact Factor: 33.8%

Cooper E-80 Impact Load for Design

Vertical Point Load: 53.5 kip

Will be applied to cross bracing in lieu of differential deflection analysis.
Overstress allowance applies.

CWR - Continously Welded Rail

Not Required on Ballasted Deck

128 Design of Modern Steel Railway Bridges

4.4.3 Forces From the CWR on Steel Railway Bridges

The magnitude of the CWR–bridge thermal interaction is governed by the following conditions:

- The type of bridge (open deck, ballasted‡) and bridge materials.

‡ For ordinary ballast deck bridges, the differential thermal movements are generally accommodated by the ballast section.

EQ - Earthquake Loads

Not explicity required for a single span bridge

AREMA Chapter 9. *Multi-Span bridges should utilize the ELF Procedure.*

Table 9-1-7. Analysis Procedure Selection

Bridge Configuration	Analysis Procedure[1]
Single-span	No analysis required
Two-span	ELF or MA Procedure
Multi-span regular[2]	ELF or MA Procedure
Multi-span irregular[2]	MA Procedure

Note:
1. ELF denotes Equivalent Lateral Force Procedure, MA denotes Modal Analysis Procedure.
2. Irregular bridges are those structures with significantly irregular configuration or support stiffness.

1.4.5.3 Equivalent Lateral Force Procedure[1]

The Equivalent Lateral Force Procedure may be used for two-span bridges or multi-span regular bridges as described in Paragraph 1.4.5.2. The procedure is described below.

1.4.4.3 Seismic Response Coefficient[1]

The Seismic Response Coefficient (C_m) to be used in the methods of analysis recommended in Paragraph 1.4.5, shall be calculated from the following formula. For areas with soft soil conditions and high seismicity, or close proximity to known faults, use of a site-specific response spectrum is preferred.

$$C_m = \frac{1.2ASD}{T_m^{2/3}} \leq 2.5AD$$

C_m = Seismic Response Coefficient for the mth mode

A = Base Acceleration Coefficient determined in accordance with Paragraph 1.3.3.3 — A = 6% 475 Year Return

S = Site Coefficient determined in accordance with Paragraph 1.4.4.1 — S = 1.2 Rock > 200'

D = Damping Adjustment Factor determined in accordance with Paragraph 1.4.4.2 — D = 1.000 **AREMA 9-1.4.4.2**

(Conservative; assumes 2.5% damping)

T_m = Period of vibration of the mth mode in seconds

Lateral Period of Vibration, $T_m = 2\pi*(W/gK)^{1/2}$ — Per AASHTO LRFD 4.7.4.3.2c

W =	2024839	lbs	
g =	32.17	ft/sec^2	
I =	45043992	in^4	*(Deck)*
E =	3604997	lbs/in^2	
$v_{s,MAX}$ =	0.000290	in	
K=	4753782		
T_m =	0.722986	sec	

Seismic Response Coefficient for the First Mode

Calculated C_m =	10.7%	
Maximum C_m =	15.0%	
Used C_m =	10.7%	Note: For reference, ODOT assumes 20% across the state.

Horizontal Seismic Load

Distributed Weight of Bridge:	17617.75	*plf*
Distributed horizontal Load, p(x):	1889.63	*plf*
Total horizontal Load:	214.47	*kip*

Total Longitudinal Load at each end: 214.47 *kip* (Use for anchor bolt and foundation analysis)

Total Lateral Load at each end: 107.24 *kip* (Use for end diaphragms)

Δ_L - Lateral Deflection Check

AREMA 15-1.2.5.c

Allowable Chord Deflection = 0.250 *in* — *0.25" = Curved, 0.375 "= Tangent*

Chord Length = 31 *feet* — *31' = Curved, 62' = Tangent*

Allowable Span Deflection = 3.17644 *in* — *Squared Proportional to Span Length*

Lateral Centrifugal Force on Fully Loaded Bridge

Horizontal Cent. Factor, CF_h = 4.08%

Total (Applied to both rail heads)

Horizontal Cent. Moment = 3870.80 *kip-in*

(Ratio of vertical moment - load on the total track is considered)

W - Wind Forces On fully loaded bridge

Total Lateral Load: 0.06078 *kips/inch*

Total (Applied to both rail heads)

Total Lateral Moment: 13358.777 *kip-in*

Section Properties Used

"D" of the outer most beams	63.00	*in*
"D" of the inner most beams	21.00	*in*
Girder Sectional Area:	178.00	in^2
Girder Secondary Mom. Of Inertia:	2920.47	in^4
Moment of Inertia of outer pair:	1418804.93	in^4
Moment of Inertia of remaining:	162836.93	in^4
Total Lateral Mom. Of I Considered:	790820.93	in^4

N - Notional Load

Lateral Point Load: 25.0 *kips*

Total Lateral Moment: 8287.5 *kip-in*

Note: The entire bridge will not be assumed for lateral deflection (to be conservative). Only the girders supporting one track will be used and 50% of the the section properties combined using the parallel axis theorem. This assumes a largely rigid lateral system, which is required by AREMA.

Factored Moments Applied

Load Combination A1 =	3870.80	*kip-in*	with	100%	*Allowable*
Load Combination B1 =	21646.28	*kip-in*	with	125%	*Allowable*
Load Combination B1A =	21646.28	*kip-in*	with	100%	*Allowable*
Load Combination D1 =	25517.08	*kip-in*	with	150%	*Allowable*

Calculated Conservative Lateral Deflections

Load Combination A1 =	0.03091	*in*	with	3.176 in	*Allowable*	**OK**
Load Combination B1 =	0.17287	*in*	with	3.971 in	*Allowable*	**OK**
Load Combination B1A =	0.17287	*in*	with	3.176 in	*Allowable*	**OK**
Load Combination D1 =	0.20378	*in*	with	4.765 in	*Allowable*	**OK**

Gannett Fleming	GF JOB # 54682	CALC NO.: HAM075-0834_03_S	REV. NO.: 03
		PROJECT: ODOT/EMH&T: HAM-75-7.85	
ODOT PID NO.: 77889		DESIGNED: CTM	DATE: 10/09/13
BRIDGE NO: HAM-75-0834		UPDATED: EFD	DATE: 05/14/14
SUBJECT: Loads		CHECKED: VDT	DATE: 05/19/14
Girders		UPDATED: EFD	DATE: 05/27/15
		VERIFIED: VDT	DATE: 06/02/15

Unfactored Girder Bending Stresses

Comb.	DL	LL	I	CF	LF	N	W	WU	SL	Qg
Beams Outside of Curve										
Standard AREMA Live Load	8.52 ksi	11.75 ksi	3.97 ksi	0.19 ksi	0.36 ksi		1.34 ksi	0.40 ksi	0.00 ksi	35.68 ksi
Unloaded Train (SL)	8.52 ksi	0.00 ksi	0.92 ksi	0.05 ksi	0.08 ksi		1.34 ksi	0.40 ksi	2.72 ksi	8.27 ksi
Beams Inside of Curve										
Standard AREMA Live Load	8.52 ksi	8.07 ksi	2.73 ksi	-0.13 ksi	0.25 ksi		-1.00 ksi	-0.40 ksi	0.00 ksi	35.68 ksi
Unloaded Train (SL)	8.52 ksi	0.00 ksi	0.63 ksi	-0.03 ksi	0.06 ksi		-1.00 ksi	-0.40 ksi	1.87 ksi	8.27 ksi

Bending Stresses from Girder Load Cases - Outside of Curve

Comb.	DL	LL	I	CF	LF	N	W	WU	SL	Qg	Qb	EQ	CWR	DF	Total	Allowable	Check
A1	8.52 ksi	11.75 ksi	3.97 ksi	0.19 ksi	0.00 ksi	0.00 ksi	0.00 ksi	0.00 ksi	0.00 ksi	0.00 ksi	0.00 ksi	0.00 ksi	0.00 ksi	0.00 ksi	24.44 ksi	27.50 ksi	OK
B1	8.52 ksi	11.75 ksi	3.97 ksi	0.00 ksi	0.36 ksi	0.00 ksi	1.34 ksi	0.00 ksi	0.00 ksi	0.00 ksi	0.00 ksi	0.00 ksi	0.00 ksi	0.00 ksi	25.95 ksi	34.38 ksi	OK
B1A	8.52 ksi	11.75 ksi	3.97 ksi	0.00 ksi	0.36 ksi	0.00 ksi	1.34 ksi	0.00 ksi	0.00 ksi	0.00 ksi	0.00 ksi	0.00 ksi	0.00 ksi	0.00 ksi			
C - FATIGUE	0.00 ksi	11.75 ksi	3.97 ksi	0.00 ksi	0.00 ksi	0.00 ksi	0.00 ksi	0.00 ksi	0.00 ksi	0.00 ksi	0.00 ksi	0.00 ksi	0.00 ksi	0.00 ksi	15.72 ksi	16.00 ksi	OK
D1	8.52 ksi	0.00 ksi	0.00 ksi	0.19 ksi	0.00 ksi	0.00 ksi	1.34 ksi	0.00 ksi	2.72 ksi	0.00 ksi	0.00 ksi	0.00 ksi	0.00 ksi	0.00 ksi	12.78 ksi	41.25 ksi	OK
D2	8.52 ksi	0.00 ksi	0.00 ksi	0.00 ksi	0.00 ksi	0.00 ksi	0.00 ksi	0.00 ksi	0.00 ksi	35.68 ksi	0.00 ksi	0.00 ksi	0.00 ksi	0.00 ksi	44.20 ksi	46.75 ksi	OK
E1	8.52 ksi	0.00 ksi	0.00 ksi	0.00 ksi	0.00 ksi	0.00 ksi	0.00 ksi	0.00 ksi	0.00 ksi	0.00 ksi	0.00 ksi	0.00 ksi	0.00 ksi	0.00 ksi	8.52 ksi	41.25 ksi	OK
F	8.52 ksi	0.00 ksi	0.00 ksi	0.00 ksi	0.00 ksi	0.00 ksi	0.00 ksi	0.40 ksi	0.00 ksi	0.00 ksi	0.00 ksi	0.00 ksi	0.00 ksi	0.00 ksi	8.92 ksi	27.50 ksi	OK
G	0.00 ksi	0.00 ksi	0.00 ksi	0.00 ksi	0.00 ksi	0.00 ksi	0.00 ksi	0.00 ksi	0.00 ksi	0.00 ksi	0.00 ksi	0.00 ksi	0.00 ksi	0.00 ksi	0.00 ksi	41.25 ksi	OK
H1	8.52 ksi	0.00 ksi	0.00 ksi	0.00 ksi	0.00 ksi	0.00 ksi	0.00 ksi	0.00 ksi	0.00 ksi	0.00 ksi	0.00 ksi	0.00 ksi	0.00 ksi	0.00 ksi	8.52 ksi	41.25 ksi	OK
H2	8.52 ksi	0.00 ksi	0.00 ksi	0.00 ksi	0.00 ksi	0.00 ksi	0.00 ksi	0.00 ksi	0.00 ksi	0.00 ksi	0.00 ksi	0.00 ksi	0.00 ksi	0.00 ksi	8.52 ksi	34.38 ksi	OK

Bending Stresses from Girder Load Cases - Inside of Curve

(Multiplied by 16"/14" to account for net section in bottom flange)

Comb.	DL	LL	I	CF	LF	N	W	WU	SL	Qg	Qb	EQ	CWR	DF	Total	Allowable	Check
A1	8.52 ksi	8.07 ksi	2.73 ksi	-0.13 ksi	0.00 ksi	0.00 ksi	0.00 ksi	0.00 ksi	0.00 ksi	0.00 ksi	0.00 ksi	0.00 ksi	0.00 ksi	0.00 ksi	19.19 ksi	27.50 ksi	OK
B1	8.52 ksi	8.07 ksi	2.73 ksi	0.00 ksi	0.25 ksi	0.00 ksi	-1.00 ksi	0.00 ksi	0.00 ksi	0.00 ksi	0.00 ksi	0.00 ksi	0.00 ksi	0.00 ksi	18.58 ksi	34.38 ksi	OK
B1A	8.52 ksi	8.07 ksi	2.73 ksi	0.00 ksi	0.25 ksi	0.00 ksi	-1.00 ksi	0.00 ksi	0.00 ksi	0.00 ksi	0.00 ksi	0.00 ksi	0.00 ksi	0.00 ksi			
C - FATIGUE	0.00 ksi	8.07 ksi	2.73 ksi	0.00 ksi	0.00 ksi	0.00 ksi	0.00 ksi	0.00 ksi	0.00 ksi	0.00 ksi	0.00 ksi	0.00 ksi	0.00 ksi	0.00 ksi	10.80 ksi	16.00 ksi	OK
D1	8.52 ksi	0.00 ksi	0.00 ksi	-0.13 ksi	0.00 ksi	0.00 ksi	-1.00 ksi	0.00 ksi	1.87 ksi	0.00 ksi	0.00 ksi	0.00 ksi	0.00 ksi	0.00 ksi	9.26 ksi	41.25 ksi	OK
D2	8.52 ksi	0.00 ksi	0.00 ksi	0.00 ksi	0.00 ksi	0.00 ksi	0.00 ksi	0.00 ksi	0.00 ksi	35.68 ksi	0.00 ksi	0.00 ksi	0.00 ksi	0.00 ksi	44.20 ksi	46.75 ksi	OK
E1	8.52 ksi	0.00 ksi	0.00 ksi	0.00 ksi	0.00 ksi	0.00 ksi	0.00 ksi	0.00 ksi	0.00 ksi	0.00 ksi	0.00 ksi	0.00 ksi	0.00 ksi	0.00 ksi	8.52 ksi	41.25 ksi	OK
F	8.52 ksi	0.00 ksi	0.00 ksi	0.00 ksi	0.00 ksi	0.00 ksi	0.00 ksi	-0.40 ksi	0.00 ksi	0.00 ksi	0.00 ksi	0.00 ksi	0.00 ksi	0.00 ksi	8.12 ksi	27.50 ksi	OK
G	0.00 ksi	0.00 ksi	0.00 ksi	0.00 ksi	0.00 ksi	0.00 ksi	0.00 ksi	0.00 ksi	0.00 ksi	0.00 ksi	0.00 ksi	0.00 ksi	0.00 ksi	0.00 ksi	0.00 ksi	41.25 ksi	OK
H1	8.52 ksi	0.00 ksi	0.00 ksi	0.00 ksi	0.00 ksi	0.00 ksi	0.00 ksi	0.00 ksi	0.00 ksi	0.00 ksi	0.00 ksi	0.00 ksi	0.00 ksi	0.00 ksi	8.52 ksi	41.25 ksi	OK
H2	8.52 ksi	0.00 ksi	0.00 ksi	0.00 ksi	0.00 ksi	0.00 ksi	0.00 ksi	0.00 ksi	0.00 ksi	0.00 ksi	0.00 ksi	0.00 ksi	0.00 ksi	0.00 ksi	8.52 ksi	34.38 ksi	OK

Gannett Fleming	GF JOB # 54682	CALC NO.: HAM075-0834_03_S	REV. NO.: 03
		PROJECT: ODOT/EMH&T: HAM-75-7.85	
ODOT PID NO.: 77889		DESIGNED: CTM	DATE: 10/09/13
BRIDGE NO: HAM-75-0834		UPDATED: EFD	DATE: 05/14/14
SUBJECT: Loads		CHECKED: VDT	DATE: 05/19/14
Girders		UPDATED: EFD	DATE: 05/27/15
		VERIFIED: VDT	DATE: 06/02/15

Unfactored Girder Shear Loads (At Supports)

Comb.	DL	LL	I	CF	LF	N	W	WU	SL	Qg
Beams Outside of Curve										
Standard AREMA Live Load	126.39 kip	192.56 kip	65.07 kip	3.19 kip	10.53 kip		19.93 kip	5.93 kip	0.00 ksi	346.61 kip
Unloaded Train (SL)	126.39 kip	0.00 ksi	13.28 kip	0.65 kip	2.15 kip		19.93 kip	5.93 kip	39.30 kip	70.74 kip
Beams Inside of Curve										
Standard AREMA Live Load	126.39 kip	132.30 kip	44.70 kip	-2.19 kip	7.23 kip		-14.80 kip	-5.93 kip	0.00 ksi	346.61 kip
Unloaded Train (SL)	126.39 kip	0.00 ksi	9.12 kip	-0.45 kip	1.48 kip		-14.80 kip	-5.93 kip	27.00 kip	70.74 kip

Shear Area
75.25 in^2

Shear Stresses from Girder Load Cases - Outside of Curve

Comb.	DL	LL	I	CF	LF	N	W	WU	SL	Qg	Qb	EQ	CWR	DF	Total	Allowable	Check
A1	1.68 ksi	2.56 ksi	0.86 ksi	0.04 ksi	0.00 ksi	0.00 ksi	0.00 ksi	0.00 ksi	0.00 ksi	0.00 ksi	0.00 ksi	0.00 ksi	0.00 ksi	0.00 ksi	5.15 ksi	17.50 ksi	OK
B1	1.68 ksi	2.56 ksi	0.86 ksi	0.00 ksi	0.14 ksi	0.00 ksi	0.26 ksi	0.00 ksi	0.00 ksi	0.00 ksi	0.00 ksi	0.00 ksi	0.00 ksi	0.00 ksi	5.51 ksi	21.88 ksi	OK
B1A	1.68 ksi	2.56 ksi	0.86 ksi	0.00 ksi	0.14 ksi	0.00 ksi	0.26 ksi	0.00 ksi	0.00 ksi	0.00 ksi	0.00 ksi	0.00 ksi	0.00 ksi	0.00 ksi	5.51 ksi	17.50 ksi	OK
C - FATIGUE	0.00 ksi	2.56 ksi	0.86 ksi	0.00 ksi	0.00 ksi	0.00 ksi	0.00 ksi	0.00 ksi	0.00 ksi	0.00 ksi	0.00 ksi	0.00 ksi	0.00 ksi	0.00 ksi	3.42 ksi		
D1	1.68 ksi	0.00 ksi	0.00 ksi	0.04 ksi	0.00 ksi	0.00 ksi	0.26 ksi	0.00 ksi	0.52 ksi	0.00 ksi	0.00 ksi	0.00 ksi	0.00 ksi	0.00 ksi	2.51 ksi	26.25 ksi	OK
D2	1.68 ksi	0.00 ksi	0.00 ksi	0.00 ksi	0.00 ksi	0.00 ksi	0.00 ksi	0.00 ksi	0.00 ksi	4.61 ksi	0.00 ksi	0.00 ksi	0.00 ksi	0.00 ksi	6.29 ksi	29.75 ksi	OK
E1	1.68 ksi	0.00 ksi	0.00 ksi	0.00 ksi	0.00 ksi	0.00 ksi	0.00 ksi	0.00 ksi	0.00 ksi	0.00 ksi	0.00 ksi	0.00 ksi	0.00 ksi	0.00 ksi	1.68 ksi	26.25 ksi	OK
F	1.68 ksi	0.00 ksi	0.00 ksi	0.00 ksi	0.00 ksi	0.00 ksi	0.00 ksi	0.08 ksi	0.00 ksi	0.00 ksi	0.00 ksi	0.00 ksi	0.00 ksi	0.00 ksi	1.76 ksi	17.50 ksi	OK
G	0.00 ksi	0.00 ksi	0.00 ksi	0.00 ksi	0.00 ksi	0.00 ksi	0.00 ksi	0.00 ksi	0.00 ksi	0.00 ksi	0.00 ksi	0.00 ksi	0.00 ksi	0.00 ksi	0.00 ksi	26.25 ksi	OK
H1	1.68 ksi	0.00 ksi	0.00 ksi	0.00 ksi	0.00 ksi	0.00 ksi	0.00 ksi	0.00 ksi	0.00 ksi	0.00 ksi	0.00 ksi	0.00 ksi	0.00 ksi	0.00 ksi	1.68 ksi	26.25 ksi	OK
H2	1.68 ksi	0.00 ksi	0.00 ksi	0.00 ksi	0.00 ksi	0.00 ksi	0.00 ksi	0.00 ksi	0.00 ksi	0.00 ksi	0.00 ksi	0.00 ksi	0.00 ksi	0.00 ksi	1.68 ksi	21.88 ksi	OK

Shear Stresses from Girder Load Cases - Inside of Curve

Comb.	DL	LL	I	CF	LF	N	W	WU	SL	Qg	Qb	EQ	CWR	DF	Total	Allowable	Check
A1	1.68 ksi	1.76 ksi	0.59 ksi	-0.03 ksi	0.00 ksi	0.00 ksi	0.00 ksi	0.00 ksi	0.00 ksi	0.00 ksi	0.00 ksi	0.00 ksi	0.00 ksi	0.00 ksi	4.00 ksi	17.50 ksi	OK
B1	1.68 ksi	1.76 ksi	0.59 ksi	0.00 ksi	0.10 ksi	0.00 ksi	-0.20 ksi	0.00 ksi	0.00 ksi	0.00 ksi	0.00 ksi	0.00 ksi	0.00 ksi	0.00 ksi	3.93 ksi	21.88 ksi	OK
B1A	1.68 ksi	1.76 ksi	0.59 ksi	0.00 ksi	0.10 ksi	0.00 ksi	-0.20 ksi	0.00 ksi	0.00 ksi	0.00 ksi	0.00 ksi	0.00 ksi	0.00 ksi	0.00 ksi	3.93 ksi	17.50 ksi	OK
C - FATIGUE	0.00 ksi	1.76 ksi	0.59 ksi	0.00 ksi	0.00 ksi	0.00 ksi	0.00 ksi	0.00 ksi	0.00 ksi	0.00 ksi	0.00 ksi	0.00 ksi	0.00 ksi	0.00 ksi	2.35 ksi		
D1	1.68 ksi	0.00 ksi	0.00 ksi	-0.03 ksi	0.00 ksi	0.00 ksi	-0.20 ksi	0.00 ksi	0.36 ksi	0.00 ksi	0.00 ksi	0.00 ksi	0.00 ksi	0.00 ksi	1.81 ksi	26.25 ksi	OK
D2	1.68 ksi	0.00 ksi	0.00 ksi	0.00 ksi	0.00 ksi	0.00 ksi	0.00 ksi	0.00 ksi	0.00 ksi	4.61 ksi	0.00 ksi	0.00 ksi	0.00 ksi	0.00 ksi	6.29 ksi	29.75 ksi	OK
E1	1.68 ksi	0.00 ksi	0.00 ksi	0.00 ksi	0.00 ksi	0.00 ksi	0.00 ksi	0.00 ksi	0.00 ksi	0.00 ksi	0.00 ksi	0.00 ksi	0.00 ksi	0.00 ksi	1.68 ksi	26.25 ksi	OK
F	1.68 ksi	0.00 ksi	0.00 ksi	0.00 ksi	0.00 ksi	0.00 ksi	0.00 ksi	-0.08 ksi	0.00 ksi	0.00 ksi	0.00 ksi	0.00 ksi	0.00 ksi	0.00 ksi	1.60 ksi	17.50 ksi	OK
G	0.00 ksi	0.00 ksi	0.00 ksi	0.00 ksi	0.00 ksi	0.00 ksi	0.00 ksi	0.00 ksi	0.00 ksi	0.00 ksi	0.00 ksi	0.00 ksi	0.00 ksi	0.00 ksi	0.00 ksi	26.25 ksi	OK
H1	1.68 ksi	0.00 ksi	0.00 ksi	0.00 ksi	0.00 ksi	0.00 ksi	0.00 ksi	0.00 ksi	0.00 ksi	0.00 ksi	0.00 ksi	0.00 ksi	0.00 ksi	0.00 ksi	1.68 ksi	26.25 ksi	OK
H2	1.68 ksi	0.00 ksi	0.00 ksi	0.00 ksi	0.00 ksi	0.00 ksi	0.00 ksi	0.00 ksi	0.00 ksi	0.00 ksi	0.00 ksi	0.00 ksi	0.00 ksi	0.00 ksi	1.68 ksi	21.88 ksi	OK

DESIGN CALCULATION COVER SHEET

Gannett Fleming
Engineers and Architects, P.C.
Excellence Delivered ***As Promised***

ISO 9001:2008 CERTIFIED

PROJECT:	**ODOT/EMH&T: HAM-75-7.85**	*ODOT PID NO:*	*77889*
BRIDGE NO:	**HAM-75-0834**	*EMH&T JOB NO:*	
SUBJECT:	***Loads***	**GF JOB NO:**	**54682**
	Girders	CALC NO.:	**HAM075-0834_03_Sp2**
	Stresses and Deflection Checks	REV NO.:	**03**
FILE NAME(s):	*HAM075_0834_03_Sp2.xlsx*	**SHEET: 1 OF 35**	

SUPERSEDES CALC NO: 02 (Stage 3)

CALCULATION DESCRIPTION:

This will calculate all loads applied to the superstructure.
Vertical beam stresses and deflections will be calculated and checked.
Defleciton calcualtions utilize composite action. Stress calculation do not.
Stage 3 calculation was revise to conservatively use net section modulus for calculating steel stresses in the bottom flange.

DESIGN BASIS OR REFERENCES:

NS Underpass Design Criteria
AREMA (2014) Chapter 15
Calculation: HAM075_0834_02_Sp2 (Beam Properties)
Bridge layout per updated Stage 2 Basemap

MISCELLANEOUS NOTES:

EFD Updates made per CTM Comments; VDK re-check to ensure that this master template follows the current AREMA code and is fully functional before it is used repeatedly on all 3 HAM-75 bridges (4 unique spans)

EFD Updates made at stage 2. Design span length was changed allow the final design to proceed while the stage 1 alignment tweaks are being made. The composite deck allows the increased spann to work without changing girder size (from stage 1)

Stage 3: Tie length updated to 10', Span Stress Check tables are updated to show the 16ksi allowable fatigue stress in the bottom flange due to the bolted stiffener connection.

Stage 3: Update deck thickness and Girder LL distribution

RECORD OF ISSUES:

REV	DESCRIPTION	BY	DATE	VERIF'D	DATE
00	Stage 1 Calculation	CTM	10/09/13		
01	Final, Stage 2 Calculations	EFD	05/14/14		
02	Stage 3 Revisions	EFD	05/27/15	VDT	06/02/15
03	Stage 3 Updates	VDT	01/18/16	CTM	04/25/16

RECORD OF CHECK OF CURRENT CALCULATION VERSION

BY	DATE	CHKD	DATE	UPD.	DATE	VERIF'D	DATE
EFD	05/27/15	VDT	06/02/15	VDT	01/18/16	CTM	04/25/16

Gannett Fleming	GF JOB # 54682	CALC NO.: HAM075-0834_03_Sp2	REV. NO.: 03
		PROJECT: ODOT/EMH&T: HAM-75-7.85	
ODOT PID NO.: 77889		DESIGNED: CTM	DATE: *10/09/13*
BRIDGE NO: *HAM-75-0834*		UPDATED: EFD	DATE: *05/14/14*
SUBJECT: *Loads*		CHECKED: VDT	DATE: *05/19/14*
Girders		UPDATED:	DATE:
Load Combinations		VERIFIED:	DATE:

Load Combinations Considered (NSRR Factors included)

Comb.	DL	LL	I	CF	LF	N	W	WU	SL	Qg	Qb	EQ	CWR	DF	O.Stress Allowed
A1	1	1	1	1											100%
B1	1	1	1		1	1	1						1		125%
B1A	1	1	1		1	1	1						1		100%
C		1	1												f_{fat}
D1	1			1		1	1		1						150%
D2	**1**									**1**					**170%**
E1	1											1			150%
F	1							1							100%
G											1			1	150%
H1	1														150%
H2	*1*														*125%*

Comb.	Description of Use
A1	All members
B1	All members, except floorbeam hangers and high strength bolts
B1A	Floorbeam hangers and high strength bolts
C	All members with Fatigue Details
D1	Members resisting overall instability
D2	**Members resisting overall instability (NSRR)**
E1	All members - Earthquake
F	Members loaded by wind only (Bracing)
G	Cross frames, diaphragms, anchor rods
H1	Members stressed during lifting or jacking
H2	*Members stressed during erection*

DL	Dead loads (self weight,superimposed dead loads, erection loads)
LL	Live loads
I	Impact (dynamic amplification)
CF	Centrifugal force
LF	Longitudinal forces from equipment (braking and locomotive traction)
N	Lateral forces from equipment (nosing)
W	Wind forces loaded bridge
WU	Wind forces on unloaded bridge
SL	Live load on leeward track of 1200 lb/ft without impact
Qg	Derailment load for girder design
Qb	Derailment load for lateral bracing design
EQ	Forces from earthquake (combined transverse and longitudinal)
CWR	Forces from CWR (lateral and longitudinal)
DF	Lateral forces from out-of-plane bending and from load distribution effects (Differential Deflection due to derailment)
f_{fat}	Allowable stress based on member loaded length and fatigue detail category

Gannett Fleming	GF JOB # 54682	CALC NO.: HAM075-0834_03_Sp2	REV. NO.: 03
		PROJECT: ODOT/EMH&T: HAM-75-7.85	
ODOT PID NO.: 77889		DESIGNED: CTM	DATE: 09/27/13
BRIDGE NO: HAM-75-0834		UPDATED: EFD	DATE: 05/14/14
SUBJECT: Loads		CHECKED: VDT	DATE: 05/19/14
Girders		UPDATED: VDT	DATE: 01/18/16
		VERIFIED: CTM	DATE: 04/25/16

Typical Section

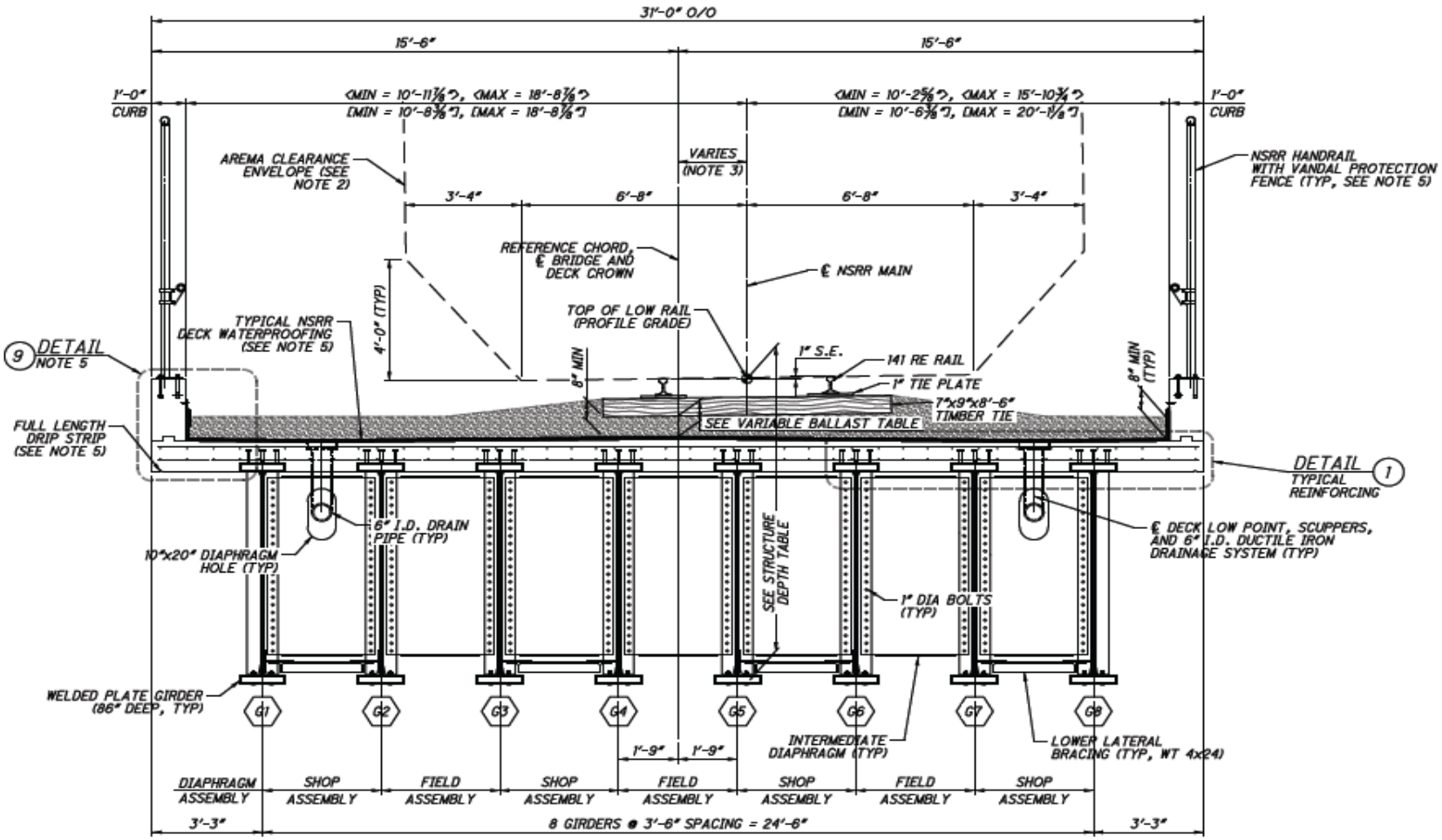

TYPICAL TRANSVERSE SECTION
LOOKING UPSTATION (NOTE 1)

Gannett Fleming	GF JOB # 54682	CALC NO.: HAM075-0834_03_Sp2	REV. NO.: 03
		PROJECT: ODOT/EMH&T: HAM-75-7.85	
ODOT PID NO.: 77889		DESIGNED: CTM	DATE: 09/27/13
BRIDGE NO: HAM-75-0834		UPDATED: EFD	DATE: 05/14/14
SUBJECT: Loads		CHECKED: VDT	DATE: 05/19/14
Girders		UPDATED: VDT	DATE: 01/18/16
		VERIFIED: CTM	DATE: 04/25/16

General Layout Data - Span 2 of 2

Span length is modified for final design and updated to include composite deflection

Span Length Data

C/C Bearings (Max):	97.250 ft	
Front Face/Face of Abut. Backwall:	4.432 ft	
Min. Clearance from Backwall:	3.000 in	0.250 ft
Maximum Beam Length:	100.250 ft	
Beam Extension past C/L Brg.	1.500 ft	

Track Alignment

Degree of Curvature:	7.75 deg	
Radius of Curvature:	739.86 ft	
Superelevation:	0.750 in	0.063 ft
Maximum Design Speed:	15.0 mph	

NOTE: Design Speed increased and super decreased to be conservative

Superstructure Cross Section Data

Out/Out Deck	31.000 ft
Standard Track Gage:	4.708 ft
C/C Rail Heads	4.932 ft
Number of Beams:	8
Standard Beam Spacing:	3.500 ft
Standard Overhang:	3.250 ft
Max Eccentricity,	
CL Deck/CL Alignment:	21.000 in
Deck Cross-Slope:	1.000%
Cross-Slope Width	10.500 ft
Tie Length:	8.500 ft
Curb Wall Thickness:	1.000 ft
Crossframe Spacing	12.000 ft
Stiffener Spacing	6.000 ft
Bridge Deck Length:	101.682 ft

Vertical Tie-In to Top of Top Flange

Rail Height:	6.625 in
Tie Plate:	1.000 in
Tie Thickness:	7.000 in
Average Ballast:	9.250 in
Waterproofing:	1.125 in
Min Deck Thickness:	10.500 in
Max Additional Cross-Slope:	1.260 in
Rail Head to Top of Beam:	d_{top} = 36.760 in
Height of Curb:	H_{curb} = 18.000 in
Bottom of Tie to Top of Beam:	d_b = 21.625 in
Beam Lateral Distribution Length:	DB_{Lat}= 12.10 ft
AREMA: 15-1.3.4.2.4.a	
Deck Lateral Distribution Length:	DDk_{Lat}= 10.30 ft
Deck Long. Distribution Length:	DDK_{Long}= 4.80 ft
AREMA: 15-1.3.4.2.2	

Will be used to calculate total longitudinal forces

Tie length was changed back to original width per NSRR comments.

Number of beam spaces in lateral distribution length: 3.458

Assumes beam layout centered on alignment

Assumes maximum eccentricity in one direction

Number of beams to distribute live load to: 4

Standard live load and track/rail dead load will be equally divided amongst this many beams

Material & Girder Data

Reference Calculation: HAM075_0834C for beam properties

Basic Girder Data

XS Area:	147.813	in^2
Dead Load:	505	*plf*
Total Depth:	86.000	*in*
Web Depth:	81.500	*in*
Web Thickness:	0.875	*in*
Flange Width:	17.000	*in*
Flange Thickness:	2.250	*in*
Diaphragm Weight:	458.0	*lb*
Stiffener Weight:	72.2	*lb*
Extra Steel Weight:	15%	

Bolts, Gusset Plates, (LLB REQUIRED PER AREMA)

Diaphragm Flanges	45.9	*lb*
Diaphragm Web	412.1	*lb*
Int. Stiff. Width	5.0	*in*
Int. Stiff. Thick	0.6	*in*

Material Densities and Unit Loads

Track (Rails and fastenings):	200.0	*plf*
Steel:	490.0	*pcf*
Reinforced and Prestressed concrete:	150.0	*pcf*
Plain (unreinforced) concrete:	145.0	*pcf*
Timber:	60.0	*pcf*
Sand and Gravel, Compacted (ballast):	120.0	*pcf*
Sand and Gravel, Loose:	100.0	*pcf*
SIP Formwork (including flute concrete):	15.0	*psf*
Deck Waterproofing:	10.0	*psf*
Handrail Weight:	15.0	*plf*

Steel Properties (ASTM A588, Grade 50)

Yeild Stress:	50.0	*ksi*
Ultimate Stress:	70.0	*ksi*
Modulus of Elasticity:	29000.0	*ksi*

Girder Properties

Non-Composite is based on net section, composite is based on gross section

Primary Axis (non-composite)				n=8 Composite
Distance from Bottom Edge to N.A.:	d_y =	44.315	in.	52.3
Moment of Inertia:	I_x =	165508.7	in^4	237439.3
Radius of Gyration:	R_x =	33.98	in.	35.9
Section Modulus:	Bot S_x =	3734.83	in^3	4543.5
	Top S_x =	3970.45	in^3	5828.0

Secondary Axis			
Distance from Bottom Edge to N.A.:	d_x =	8.500	in.
Moment of Inertia:	I_y =	1846.9	in^4
Radius of Gyration:	R_y =	3.53	in.
Section Modulus:	Left S_y =	217.29	in^3
	Right S_y =	217.29	in^3

Basic Live Load Data

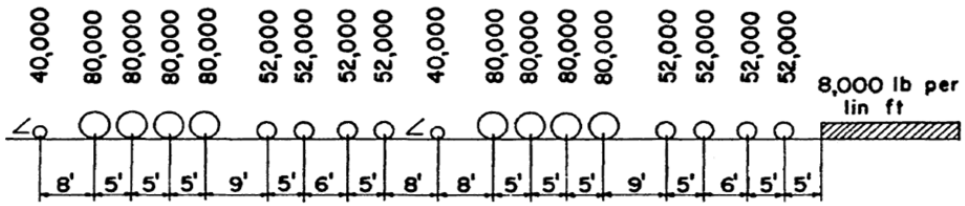

Figure 15-1-2. Cooper E 80 Load

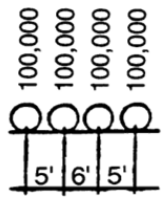

Figure 15-1-3. Alternate Live Load on 4 Axles

Unloaded Leeward Train:

SL= 1.200 klf

AREMA 1.3.10.a

Interpolated Data from AREMA Table 15-1-15 (Single Rail Loads)

Span Length (ft)	Maximum Moment (ft*kips)	Maximum Moment Quarter Point (ft*kips)	Maximum Shears (Kips)			Maximum Pier Reaction (Kips)	
			At End	At Quarter Point	At Center		
90	5339.10	4158.00	274.46	157.47	82.22	437.15	
97.25	6141.8	4812.3	293.0	168.8	83.5	464.0	72.5%
100	6446.30	5060.50	300.00	173.12	84.00	474.24	
97.25	1418.63	1063.98	58.35	29.18	0.00	58.35	**Unloaded Train (SL=1200 plf)**

Live Load Due to Load Eccentricity

AREMA 15-1.3.4.2.4.a states axle loads may be equally distributed to all girders within the lateral width prescribed above.

AREMA 15-1.3.4.2.1.d states that the effects of eccentricity and centrifugal load shall be included for ballasted decks.

Eccentricity due to Horizontal Curvature of Alignment

Eccentricity of load will apply a greater percentage of total load to a pair of girders if 4 are in the zone of influence.

Eccentricity load increase will be applied to a single girder if only 2-3 beams are in the zone of influence.

Standard number of beams to distribute live load to: 4

Percentage increase due to eccentricity: 25.0%

Un-Eccentric % of **rail** load to each beam: 50.0%

Eccentric % of rail load to girders on outside of curve: 60.0%

Note: 1/2 of the increase is taken even though as little as 1/3 could be assumed due to parabolically varying eccentricity. This is conservative.

Eccentricity is calculated by {ECCENTRICITY OF LOAD } / {BEAM SPACING}

A maximum value of 50% is allowed. An eccentricity larger than 50% will begin to distribute load to the next equally space girder.

Eccentricity due to Superelevation

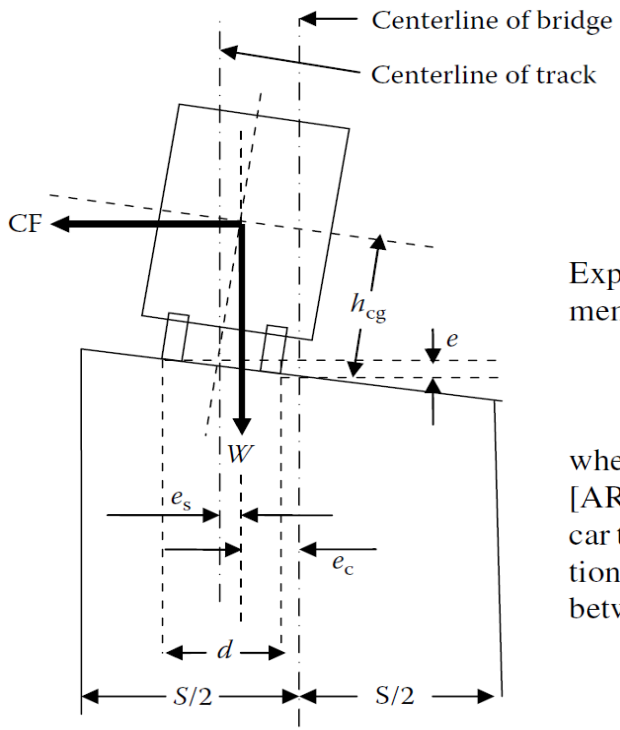

$$e_s = \frac{h_{cg} e}{d}$$

Expressed as a percentage, this will affect the magnitude of forces to supporting members each side of the track in the following proportion:

$$\frac{2e_s}{s}(100), \qquad (3.29)$$

where h_{cg} is the distance from the center of gravity of the rail car to the base of the track [AREMA (2008) recommends 8 ft for the distance from the center of gravity of the car to the top of the rail]; e is the superelevation of the track; d is the horizontal projection of track gage distance (generally taken as 4.9 ft); s is the width of the span (distance between the center of gravity of longitudinal members supporting the curved track).

Known Variables & Calculations

Deg. of curve, D =	7.75 *deg*		
Train Center of gravity, h_{cg} =	8.00 *ft*	Superelevation Eccentricity, e_s =	1.216 *in*
Superelevation, SE =	0.750 *in*		
Track c/c, d =	4.932 *ft*	Superelevation Load +/-, SE =	2.90%
C/C of resisting force couple:	7.000 *ft*	*Increases inside of curve, decreases outside of curve*	

Gannett Fleming	GF JOB # 54682	CALC NO.: HAM075-0834_03_Sp2	REV. NO.: 03
		PROJECT: ODOT/EMH&T: HAM-75-7.85	
ODOT PID NO.: 77889		DESIGNED: CTM	DATE: 09/27/13
BRIDGE NO: HAM-75-0834		UPDATED: EFD	DATE: 05/14/14
SUBJECT: Loads		CHECKED: VDT	DATE: 05/19/14
Girders		UPDATED: VDT	DATE: 01/18/16
		VERIFIED: CTM	DATE: 04/25/16

Note: Resisting force couple distance is the centroid of the supporting girder pairs for a 4-girder support system. 3 or 2 girder systems will have rocking applied to the outer most supporting girder.

SE Applied Inside of Curve (per Beam) = 1.45%
SE Applied Outside of Curve (per Beam) = -1.45%

Outside of Curve Ecentricity

Vertical Cent. Factor, CF_v = 59.28%

Inside of Curve Eccentricity

Vertical Cent. Factor, CF_v = 40.72%

Applied Loads (Beams Outside of Curve)

	Span Length (ft)	Maximum Moment (ft*kips)	Maximum Moment Quarter Point	Maximum Shears (Kips)			Maximum Pier Reaction (Kips)
				At End	At Quarter Point	At Center	
Standard Live Load	97.25	3640.62	2852.54	173.66	100.07	49.50	275.06
Unloaded Train (SL)	97.25	840.91	630.68	34.59	17.29	0.00	34.59

Applied Loads (Beams Inside of Curve)

	Span Length (ft)	Maximum Moment (ft*kips)	Maximum Moment Quarter Point	Maximum Shears (Kips)			Maximum Pier Reaction (Kips)
				At End	At Quarter Point	At Center	
Standard Live Load	97.25	2501.20	1959.77	119.31	68.75	34.01	188.98
Unloaded Train (SL)	97.25	577.73	433.29	23.76	11.88	0.00	23.76

Dead Load Geometry

Note: All dead loads are to be uniformly distributed

Concrete Sectional Area

Deck, Min Thickness:	27.13	sq. ft.
Deck, Cross-Slope:	1.10	sq. ft.
Curb:	3.00	sq. ft.
Between Top Flanges:	3.42	sq. ft.
Total Concrete:	**34.65**	**sq. ft.**

Deck Waterproofing

Total Length Across:	**30.50**	**ft**

Total Steel Weight (Interior Beam)

This will also be used for exterior beam DL

Beam:	505	plf
Diaphragm	38.17	plf
Stiffeners:	12.04	plf
Miscellaneous:	83.28	plf
Total Interior Beam:	**639**	**plf**

Ballast Area

Thick, Max (top of tie):	1.35	ft
Thick, Min (at curb):	0.75	ft
NS Criteria, Future Ballast:	0.50	ft
Width, Ballast:	29.00	ft
Area, Max Ballast:	11.51	sq. ft.
Area, Side Ballast:	21.57	sq. ft.
Area, Future Ballast:	**14.50**	**sq. ft.**
Total Placed Ballast:	**33.08**	**sq. ft.**

Gannett Fleming	GF JOB # 54682	CALC NO.: HAM075-0834_03_Sp2	REV. NO.: 03
		PROJECT: ODOT/EMH&T: HAM-75-7.85	
ODOT PID NO.: 77889		DESIGNED: CTM	DATE: 09/27/13
BRIDGE NO: HAM-75-0834		UPDATED: EFD	DATE: 05/14/14
SUBJECT: Loads		CHECKED: VDT	DATE: 05/19/14
Girders		UPDATED: VDT	DATE: 01/18/16
		VERIFIED: CTM	DATE: 04/25/16

DL - Dead Load

Moments, Forces, and Stresses (All Beams)

Load	W (klf)	V_{DL} (kip)	M_{DL} (kip-in)	σ_{DL} (ksi)	Δ_{DL} (inches)	Notes
Steel	0.64	32.03	9065.07	2.43	0.26793	Erection Load
NON_COMPOSITE Concrete	0.59	29.75	8418.54	2.25	0.24882	Deck Pouring
COMPOSITE Concrete	0.05	2.73	771.38	0.21	0.01589	Composite
Waterproofing	0.04	1.91	540.85	0.14	0.01114	
Placed Ballast	0.50	24.87	7038.86	1.88	0.14502	
Future Ballast	0.22	10.90	3085.53	0.83		**NO CAMBER**
Handrail	0.00	0.19	53.20	0.01	0.00110	
Rail/Ties/Clips	0.05	2.51	709.32	0.19	0.01461	Divided by live load # of beams
Total Unfactored Dead Load	**2.09**	**104.88**	**29682.76**	**7.95**	**0.87732**	Track Supporting Beams
Total Unfactored Dead Load	**2.04**	**102.37**	**28973.45**	**7.76**	**0.85635**	Exterior Beams Only

Calculated Natural Frequency

Unloaded Natural Frequency				Loaded Natural Frequency			
Mass per linial foot:	m=	42.842144	slug/in	Loading (Alt. Load):	P	400000	pounds
First Mode:	ω_1	31.242035	rad/s	First Mode:	ωL_1	25.53124	rad/s
	ω_1	4.9723243	hertz		ωL_1	4.063423	hertz
	t_1	0.2011	seconds		tL_1	0.2461	seconds

TABLE 4.2
Undamped Natural Frequencies of Various Beams

Beam	ω_{ni} (rad/s)
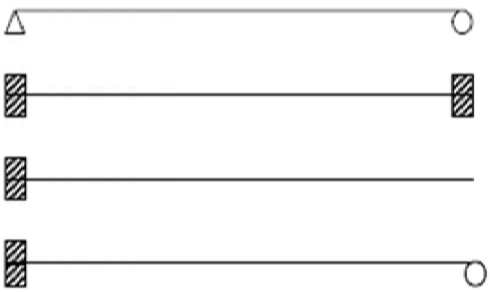	$\frac{i^2\pi^2}{L^2}\sqrt{\frac{EI}{m}}$
	$\frac{(4i^2+4i+1)\pi^2}{4L^2}\sqrt{\frac{EI}{m}}$
	$\frac{(4i^2-4i+1)\pi^2}{4L^2}\sqrt{\frac{EI}{m}}$
	$\frac{(16i^2+8i+1)\pi^2}{16L^2}\sqrt{\frac{EI}{m}}$

for the span of Example 4.3, $\omega_1 = 66.58$ rad/s $= 10.6$ Hz, is slightly greater than the estimate of 9.4 Hz for railway ballasted girder spans in Figure 4.8.

Due to the inertial effects of the relatively large railway live load on steel spans, the loaded simply supported beam natural frequencies are required in the dynamic analysis of steel railway superstructures. Approximate equations for the loaded simply supported beam fundamental frequency, ω_{L1}, have been proposed (Fryba, 1972) as

$$\omega_{L1} = \omega_1\sqrt{\frac{1}{1+(2P/mgL)+(m_w/2mg)}} \quad \text{for moving uniform continuous loads} \tag{4.16}$$

and

$$\omega_{L1} = \omega_1\sqrt{\frac{1}{1+(2P/mgL)}} \quad \text{for moving constant concentrated loads.} \tag{4.17}$$

A similar equation for the loaded simply supported beam fundamental frequency, ω_{L1}, was proposed for a moving harmonically varying concentrated force

TABLE 4.3
Unloaded Fundamental Frequencies of Steel Railway Bridges (Empirical Equations from Fryba, 1996)

Superstructure	Unloaded Fundamental Frequency, f_1 (Hz)
Steel truss spans	$1135(L)^{-1.1}$
Ballasted girder spans	$135(L)^{-0.7}$
Open deck girder spans	$680/L$

Note: L = length in feet.

LL - Max Live Load

Moments, Forces, and Stresses

Beams Outside of Curve

Load	Equiv. W (klf)	V_{LL} (kip)	M_{LL} (kip-in)	σ_{LL} (ksi)	Δ_{LL} (inches)	Notes
Standard AREMA Live Load	3.08	173.66	43687.44	11.70	0.90007	Inc. For Deflection
Unloaded Train (SL)	0.71	34.59	10090.90	2.70	0.20790	Composite

Beams Inside of Curve

Load	Equiv. W (klf)	V_{LL} (kip)	M_{LL} (kip-in)	σ_{LL} (ksi)	Δ_{LL} (inches)	Notes
Standard AREMA Live Load	2.12	119.31	30014.40	8.04	0.61837	Inc. For Deflection
Unloaded Train (SL)	0.49	23.76	6932.71	1.86	0.14283	Composite

I - Vertical Live Load Impact

Moments, Forces, and Stresses

Impact Factor

AREMA 15-1.3.5.c (1)

Impact Factor Equation Used: (b)

Impact Factor Applied: 24.92%

Rocking Effect

AREMA 15-1.3.5.d

Rocking Effect Loading	20.0%	
C/C Tracks of applied force couple:	4.932	ft
Number of beams resisting force couple:	4	
C/C of resisting force couple:	7.000	ft
Additional Rocking Impact Applied:	14.1%	

Note: Resisting force couple distance is the centroid of the supporting girder pairs for a 4-girder support system. 3 or 2 girder systems will have rocking applied to the outer most supporting girder.

Total Impact Factor

Total Calculated Impact Factor:	39.0%	
Impact Factor Considered:	90.0%	*AREMA 15-1.3.5(b) allows reduction for ballasted deck.*
Total Applied Impact Factor:	35.1%	

Beams Outside of Curve

Load	Equiv. W (klf)	V_I (kip)	M_I (kip-in)	σ_I (ksi)	Δ_I (inches)	Notes
Standard AREMA Live Load	1.08	60.98	15339.87	4.11	0.31604	Inc. for Deflection
Unloaded Train (SL)	0.25	12.14	3543.20	0.95	0.07300	Composte

Beams Inside of Curve

Load	Equiv. W (klf)	V_I (kip)	M_I (kip-in)	σ_I (ksi)	Δ_I (inches)	Notes
Standard AREMA Live Load	0.74	41.89	10538.89	2.82	0.21713	Inc. for Deflection
Unloaded Train (SL)	0.17	8.34	2434.27	0.65	0.05015	Composite

Δ_v - Vertical Deflection Check

(Live Load + Impact)

AREMA 15-1.2.5.b

AREMA Allowable		MAX Live Load and Impact Deflections	
L/640	1.823 *in*	Max Live Load Deflection:	0.900 *in*
		Corresponding Impact Deflection:	0.316 *in*
		Total Live Load + Impact Deflection:	1.216 *in*

	Actual		Allowable	
Deflection Check:	1.216	≤	1.823	**OK**
Deflection Ratio:	L / 960	≤	L / 640	

CF - Centrifugal Force

Moments, Forces, and Stresses

AREMA 15-1.3.6

Known Variables & Calculations

Deg. of curve, D =	7.75 *deg*	Speed, S =	15.0 *mph*
Train Center of gravity, h_{cg} =	8.00 *ft*	Track c/c, d =	4.932 *ft*
Cent. Factor, CF =	2.04%		
Horizontal Cent. Factor, CF_h =	2.04%	Vertical Cent. Factor, CF_v =	3.31%
Applied to each rail head		*Increases outside of curve, decreases inside of curve*	

Outside of Curve (per beam)		Inside of Curve (per beam)	
Vertical Cent. Factor, CF_v =	**1.65%**	**Vertical Cent. Factor, CF_v =**	**-1.65%**

Beams Outside of Curve						
Load	Equiv. W (klf)	V_{CF} (kip)	M_{CF} (kip-in)	σ_{CF} (ksi)	Δ_{CF} (inches)	Notes
Standard AREMA Live Load	0.051	2.87	722.83	0.19	0.01489	Composite
Unloaded Train (SL)	0.012	0.57	166.96	0.04	0.00344	
Horizontal Cent. Load =	3.54	kip / Girder				

Beams Inside of Curve						
Load	Equiv. W (klf)	V_{CF} (kip)	M_{CF} (kip-in)	σ_{CF} (ksi)	Δ_{CF} (inches)	Notes
Standard AREMA Live Load	-0.035	-1.97	-496.60	-0.13	-0.01023	Will reduce stresses
Unloaded Train (SL)	-0.008	-0.39	-114.71	-0.03	-0.00236	Will reduce stresses
Horizontal Cent. Load =	2.43	kip / Girder				

LF - Longitudinal Force

Moments, Forces, and Stresses

AREMA 15-1.3.12

The relative stiffness of substructures and related fixity will play a large role in longitudinal force distribution throughout a long structure.

LF herein will be for the worst case for this span.

The force for this individual span will be used to design individual items on this span.

Longitudinal force for the entire bridge length should be calculated and investigated seperately for substructure design and analysis.

Average Carriage Length = 40.0 ft

$$LF_B = 45 + 1.2L$$

Braking - Fully Loaded Bridge

Loaded Length:	101.682	*ft*
Full LF_{B_All}	167.02	*kips*
This Spans Portion of Full $LF_{B_All_Span}$	159.74	*kips*

Braking - This Span Only

LF_{B_Span}	161.70	*kips*
Center of Action	8.00	*ft*
Vertical LF_{BV_Span}	32.34	*kips*

Front axle to rear axle

$$LF_T = 25\sqrt{L}$$

Traction - Fully Loaded Bridge

Loaded Length:	101.682	*ft*
Full LF_{T_All}	252.09	*kips*
This Spans Portion of Full $LF_{T_All_Span}$	241.11	*kips*

Traction - This Span Only

LF_{T_Span}	246.54	*kips*
Center of Action	3.00	*ft*
Vertical LF_{TV_Span}	18.49	*kips*

Controling Load - Total

Maximum Longitudinal Force:	LF_{Max}	246.54	*kips*
Max Shear from LF:	LF_V	32.34	*kips*
Equally distributed shear:	w_{LF}	0.33	*klf*
Moment created from LF_v:	LF_M	4717.598	*kip-in*

Applied Load - Per Rail

Max Shear:	LF_V	16.17	*kips*
Moment created from LF_v:	LF_M	2358.80	*kip-in*

Beams Outside of Curve

Load	Equiv. W (klf)	V_{LF} (kip)	M_{LF} (kip-in)	σ_{LF} (ksi)	Δ_{LF} (inches)	Notes
Standard AREMA Live Load	0.10	9.58	1398.20	0.37	0.02881	Composite
Unloaded Train (SL)	0.02	1.91	322.96	0.09	0.00665	

Beams Inside of Curve

Load	Equiv. W (klf)	V_{LF} (kip)	M_{LF} (kip-in)	σ_{LF} (ksi)	Δ_{LF} (inches)	Notes
Standard AREMA Live Load	0.07	6.59	960.60	0.26	0.01979	Composite
Unloaded Train (SL)	0.02	1.31	221.88	0.06	0.00457	

N - Lateral Forces (Nosing)

Moments, Forces, and Stresses

AREMA 15-1.3.9

Not used for girder design. *Will be used for bracing system design.*

a. A single moving concentrated lateral force equal to one-quarter of the weight of the heaviest axle of the specified live load, without impact, shall be applied at the base of rail in either direction and at any point along the span in addition to the other lateral forces specified (Reference 20). On spans supporting multiple tracks, the force shall be applied on one track only.

b. The only resulting stresses to be considered are axial stresses in members bracing the flanges of stringer, beam and girder spans, axial stresses in the chords of truss spans and in members of cross frames of such spans, and stresses from lateral bending of flanges of longitudinal flexural members having no bracing system. The effects of lateral bending between braced points of flanges, axial forces in flanges, vertical forces and forces transmitted to bearings shall be disregarded.

Heaviest Axle:	Alt. Load =	100	kip
Notional Lateral Design Load, N =		25.0	kip

W - Wind on Loaded Bridge

Moments, Forces, and Stresses

AREMA 15-1.3.7

In general, the wind force shall be considered as a moving load acting in any horizontal direction. As a minimum, the bridge shall be designed for laterally and longitudinally applied wind forces acting independently as follows:

a. On the train, the lateral wind force shall be taken at 300 lb. per linear foot applied normal to the train on one track at a distance of 8 feet above top of rail.

b. On the bridge, lateral wind pressure shall be taken at 30 lb. per square foot normal to the following surfaces:

(1) For girder spans, 1.5 times the vertical projection of the span.

c. The lateral wind force on girder and truss spans, however, shall not be taken as less than 200 lb. per foot for the loaded chord or flange and 150 lb. per foot for the unloaded chord or flange, neglecting the wind force on the floor system.

d. The longitudinal wind force on spans shall be taken as:

(1) For girder spans, 25 percent of the lateral wind force.

Loaded Length: 100.250 *ft*

Wind on Superstructure

Girder Height:	86.000	*in*
Deck Thickness:	10.50	*in*
Curb Height:	18.00	*in*
Total Height:	9.54	*ft*
1.5 x Total Height:	14.31	*ft*
Wind Pressure:	30.00	*psf*
Wind Load:	429.38	*plf*

Not less than 200 plf, will be used for lateral bracing

Total Wind Force:	43.04	*kip*
Force Centroid:	7.16	*ft*
Resisting Couple	24.50	*ft*
Resisting Force:	12.57	*kip*
Resisting Load/Girder:	62.71	*plf* (up/down)

50% is assumed to be resisted by a single beam

OUTER MOST (windward = up, leeward = down)

Girder Moment from Vertical Component 74.13 *kip*ft*

(Worst Beam)

Wind on Live Load

Lateral Load Applied:	300.000	*plf*
Load Centroid:	8.00	*ft*
Vertical Component:	486.59	*plf*

*Assumed to act down on rail at the **outside of curve***

*Assumed to act up on rail at the **inside of curve***

Total Wind Force:	30.08	*kip*

Girder Moment from Vertical Component 575.24 *kip*ft*

(Total)

NOTE: Lateral Loads will also be used for lateral bracing system design and stability analysis of substructures.

Total Girder Moment and shears are multiplied by eccentricity factors above.

Beams Outside of Curve

Load	Equiv. W (klf)	V_W (kip)	M_W (kip-in)	σ_W (ksi)	Δ_W (inches)	Notes
Standard AREMA Live Load	0.35	17.60	4981.37	1.33	0.14723	
Unloaded Train (SL)	0.35	17.60	4981.37	1.33	0.14723	

Beams Inside of Curve

Load	Equiv. W (klf)	V_W (kip)	M_W (kip-in)	σ_W (ksi)	Δ_W (inches)	Notes
Standard AREMA Live Load	-0.26	-13.08	-3700.76	-0.99	-0.10938	Will reduce stress
Unloaded Train (SL)	-0.26	-13.08	-3700.76	-0.99	-0.10938	Will reduce stress

WU - Wind on Unloaded Bridge

Moments, Forces, and Stresses

AREMA 15-1.3.8

a. The lateral wind force on the unloaded bridge shall be taken as 50 lb per square foot of surface as defined in Article 1.3.7b.

b. The longitudinal wind force on the unloaded spans shall be taken as:

(1) For girder spans, 25 percent of the lateral wind force.

Loaded Length: 100.250 *ft*

Lateral on Superstructure

1.5 x Total Height:	14.31	*ft*
Wind Pressure:	50.00	*psf*
Wind Load:	715.63	*plf*

Not less than 200 plf, will be used for lateral bracing

Total Wind Force:	71.74	*kip*

Vertical on Superstructure

Force Centroid:	7.16	*ft*
Resisting Couple	24.50	*ft*
Resisting Force:	20.96	*kip*
Resisting Load/Girder:	104.51	*plf*

OUTER MOST (windward = up, leeward = down)

Girder Moment from Vertical Component	123.56	*kip*ft*

(Worst Beam)

NOTE: Lateral Loads will also be used for lateral bracing system design and stability analysis of substructures.

Total Girder Moment and shears are multiplied by eccentricity factors above

Beams Outside of Curve						
Load	Equiv. W (klf)	V_{WU} (kip)	M_{WU} (kip-in)	σ_{WU} (ksi)	Δ_{WU} (inches)	Notes
Standard AREMA Live Load	0.10	5.24	1482.67	0.40	0.04382	
Unloaded Train (SL)	0.10	5.24	1482.67	0.40	0.04382	

Beams Inside of Curve						
Load	Equiv. W (klf)	V_{WU} (kip)	M_{WU} (kip-in)	σ_{WU} (ksi)	Δ_{WU} (inches)	Notes
Standard AREMA Live Load	-0.10	-5.24	-1482.67	-0.40	-0.04382	Will reduce stress
Unloaded Train (SL)	-0.10	-5.24	-1482.67	-0.40	-0.04382	Will reduce stress

Qg - Derailment Load on Girders

Moments, Forces, and Stresses

NFS_UP2 V.C.2 *(Beams - Used for D2 Loadcase)*

C. Design of Superstructure for Derailment:

2. The supporting steel members, whose centerlines measure not more than 11'-0" from the outside face of curb shall be considered as carrying the derailed load. An impact load, equal to 0.8x live load, shall be provided. Allowable unit stresses in steel shall be not more than 70 percent greater than the normal allowable unit stresses.

Total Impact Factor

Total Applied Impact Factor: 80.0%

Note: AREMA Rail load will be applied to an individual girder (derail directly atop girder) and multiplied by the impact factor listed above)

Girder Forces below are the total LL+I for the derailed condition - Used for Load Case D2

Derailed Beam						
Load	Equiv. W (klf)	V_Q (kip)	M_Q (kip-in)	σ_Q (ksi)	Δ_Q (inches)	Notes
Standard AREMA Live Load	9.35	312.60	132663.31	35.52	2.73320	Stress Check
Unloaded Train (SL)	2.16	62.26	30642.50	8.20	0.63131	Composite

Qb - Derailment Load on lateral bracing

Moments, Forces, and Stresses

AREMA 15-1.3.10 .b *(Cross Frames Only - Used for G Loadcase) - Max Differential Deflections Considered in Connection Calculations*

.... "A single line of wheel loads (Q) equal to the design load per rail (Article 1.3.3) including full design impact is to be applied at an eccentricity of 5 feet from the centerline of track as shown in Figure 15-1-4, but no further than the edge of the deck or, for open decks, the bridge ties."

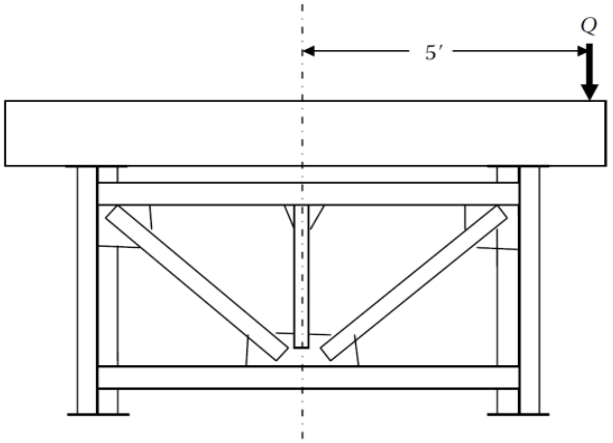

Geometry Considered

The entire load will be applied to a single girder and the vertical force will need to be transmitted to the adjacent girder through the cross frame or diaphragm within the allowable stress (150%).

Total Impact Factor

Total Applied Impact Factor: 35.1%

Cooper E-80 Impact Load for Design

Vertical Point Load: 54.0 kip

Will be applied to cross bracing in lieu of differential deflection analysis.

Overstress allowance applies.

CWR - Continously Welded Rail

Not Required on Ballasted Deck

128 Design of Modern Steel Railway Bridges

4.4.3 Forces From the CWR on Steel Railway Bridges

The magnitude of the CWR–bridge thermal interaction is governed by the following conditions:

- The type of bridge (open deck, ballasted‡) and bridge materials.

‡ For ordinary ballast deck bridges, the differential thermal movements are generally accommodated by the ballast section.

EQ - Earthquake Loads

Not explicity required for a single span bridge

AREMA Chapter 9. *Multi-Span bridges should utilize the ELF Procedure.*

Table 9-1-7. Analysis Procedure Selection

Bridge Configuration	Analysis Procedure[1]
Single-span	No analysis required
Two-span	ELF or MA Procedure
Multi-span regular[2]	ELF or MA Procedure
Multi-span irregular[2]	MA Procedure

Note:
1. ELF denotes Equivalent Lateral Force Procedure, MA denotes Modal Analysis Procedure.
2. Irregular bridges are those structures with significantly irregular configuration or support stiffness.

1.4.5.3 Equivalent Lateral Force Procedure[1]

The Equivalent Lateral Force Procedure may be used for two-span bridges or multi-span regular bridges as described in Paragraph 1.4.5.2. The procedure is described below.

1.4.4.3 Seismic Response Coefficient[1]

The Seismic Response Coefficient (C_m) to be used in the methods of analysis recommended in Paragraph 1.4.5, shall be calculated from the following formula. For areas with soft soil conditions and high seismicity, or close proximity to known faults, use of a site-specific response spectrum is preferred.

$$C_m = \frac{1.2ASD}{T_m^{2/3}} \leq 2.5AD$$

C_m= Seismic Response Coefficient for the mth mode

A= Base Acceleration Coefficient determined in accordance with Paragraph 1.3.3.3

S= Site Coefficient determined in accordance with Paragraph 1.4.4.1

D= Damping Adjustment Factor determined in accordance with Paragraph 1.4.4.2

T_m= Period of vibration of the mth mode in seconds

A = 6% 475 Year Return

S = 1.2 Rock > 200'

D = 1.000 **AREMA 9-1.4.4.2**

(Conservative; assumes 2.5% damping)

Lateral Period of Vibration, $T_m = 2\pi*(W/gK)^{1/2}$

Per AASHTO LRFD 4.7.4.3.2c

W =	1681692	lbs	
g =	32.17	ft/sec^2	
I =	45043992	in^4	*(Deck)*
E =	3604997	lbs/in^2	
$v_{s,MAX}$ =	0.000178	in	
K=	6864838		
T_m =	0.548293	sec	

Seismic Response Coefficient for the First Mode

Calculated C_m =	12.9%	
Maximum C_m =	15.0%	
Used C_m =	12.9%	Note: For reference, ODOT assumes 20% across the state.

Horizontal Seismic Load

Distributed Weight of Bridge:	16538.78	*plf*
Distributed horizontal Load, p(x):	2133.09	*plf*
Total horizontal Load:	213.84	*kip*

Total Longitudinal Load at each end:	213.84	*kip*	(Use for anchor bolt and foundation analysis)
Total Lateral Load at each end:	106.92	*kip*	(Use for end diaphragms)

Gannett Fleming	GF JOB # 54682	CALC NO.: HAM075-0834_03_Sp2	REV. NO.: 03
		PROJECT: ODOT/EMH&T: HAM-75-7.85	
ODOT PID NO.: 77889		DESIGNED: CTM	DATE: 09/27/13
BRIDGE NO: HAM-75-0834		UPDATED: EFD	DATE: 05/14/14
SUBJECT: Loads		CHECKED: VDT	DATE: 05/19/14
Girders		UPDATED: VDT	DATE: 01/18/16
		VERIFIED: CTM	DATE: 04/25/16

Δ_L - Lateral Deflection Check

AREMA 15-1.2.5.c

Allowable Chord Deflection =	0.250	*in*	*0.25" = Curved, 0.375 "= Tangent*
Chord Length =	31	*feet*	*31' = Curved, 62' = Tangent*
Allowable Span Deflection =	2.46034	*in*	*Squared Proportional to Span Length*

Lateral Centrifugal Force on Fully Loaded Bridge

Horizontal Cent. Factor, CF_h = 4.08%

Total (Applied to both rail heads)

Horizontal Cent. Moment = 3007.31 *kip-in*

(Ratio of vertical moment - load on the total track is considered)

W - Wind Forces On fully loaded bridge

Total Lateral Load: 0.06078 *kips/inch*

Total (Applied to both rail heads)

Total Lateral Moment: 10347.164 *kip-in*

Section Properties Used

"D" of the outer most beams	63.00	*in*
"D" of the inner most beams	21.00	*in*
Girder Sectional Area:	147.81	in^2
Girder Secondary Mom. Of Inertia:	1846.92	in^4
Moment of Inertia of outer pair:	1177029.47	in^4
Moment of Inertia of remaining:	134064.47	in^4
Total Lateral Mom. Of I Considered:	655546.97	in^4

N - Notional Load

Lateral Point Load: 25.0 *kips*

Total Lateral Moment: 7293.8 *kip-in*

Note: The entire bridge will not be assumed for lateral deflection (to be conservative). Only the girders supporting one track will be used and 50% of the the section properties combined using the parallel axis theorem. This assumes a largely rigid lateral system, which is required by AREMA.

Factored Moments Applied

Load Combination A1 =	3007.31	*kip-in*	with	100%	*Allowable*
Load Combination B1 =	17640.91	*kip-in*	with	125%	*Allowable*
Load Combination B1A =	17640.91	*kip-in*	with	100%	*Allowable*
Load Combination D1 =	20648.23	*kip-in*	with	150%	*Allowable*

Calculated Conservative Lateral Deflections

Load Combination A1 =	0.02244	*in*	with	2.460 in	*Allowable*	**OK**
Load Combination B1 =	0.13164	*in*	with	3.075 in	*Allowable*	**OK**
Load Combination B1A =	0.13164	*in*	with	2.460 in	*Allowable*	**OK**
Load Combination D1 =	0.15408	*in*	with	3.691 in	*Allowable*	**OK**

Gannett Fleming	GF JOB # 54682	CALC NO.: HAM075-0834_03_S	REV. NO.: 03
		PROJECT: ODOT/EMH&T: HAM-75-7.85	
ODOT PID NO.: 77889		DESIGNED: CTM	DATE: 10/09/13
BRIDGE NO: HAM-75-0834		UPDATED: EFD	DATE: 05/14/14
SUBJECT: Loads		CHECKED: VDT	DATE: 05/19/14
Girders		UPDATED: EFD	DATE: 05/27/15
		VERIFIED: VDT	DATE: 06/02/15

Unfactored Girder Bending Stresses

Comb.	DL	LL	I	CF	LF	N	W	WU	SL	Qg
Beams Outside of Curve										
Standard AREMA Live Load	7.95 ksi	11.70 ksi	4.11 ksi	0.19 ksi	0.37 ksi		1.33 ksi	0.40 ksi	0.00 ksi	35.52 ksi
Unloaded Train (SL)	7.95 ksi	0.00 ksi	0.95 ksi	0.04 ksi	0.09 ksi		1.33 ksi	0.40 ksi	2.70 ksi	8.20 ksi
Beams Inside of Curve										
Standard AREMA Live Load	7.95 ksi	8.04 ksi	2.82 ksi	-0.13 ksi	0.26 ksi		-0.99 ksi	-0.40 ksi	0.00 ksi	35.52 ksi
Unloaded Train (SL)	7.95 ksi	0.00 ksi	0.65 ksi	-0.03 ksi	0.06 ksi		-0.99 ksi	-0.40 ksi	1.86 ksi	8.20 ksi

Bending Stresses from Girder Load Cases - Outside of Curve

Comb.	DL	LL	I	CF	LF	N	W	WU	SL	Qg	Qb	EQ	CWR	DF	Total	Allowable	Check
A1	7.95 ksi	11.70 ksi	4.11 ksi	0.19 ksi	0.00 ksi	0.00 ksi	0.00 ksi	0.00 ksi	0.00 ksi	0.00 ksi	0.00 ksi	0.00 ksi	0.00 ksi	0.00 ksi	23.95 ksi	27.50 ksi	OK
B1	7.95 ksi	11.70 ksi	4.11 ksi	0.00 ksi	0.37 ksi	0.00 ksi	1.33 ksi	0.00 ksi	0.00 ksi	0.00 ksi	0.00 ksi	0.00 ksi	0.00 ksi	0.00 ksi	25.46 ksi	34.38 ksi	OK
B1A	7.95 ksi	11.70 ksi	4.11 ksi	0.00 ksi	0.37 ksi	0.00 ksi	1.33 ksi	0.00 ksi	0.00 ksi	0.00 ksi	0.00 ksi	0.00 ksi	0.00 ksi	0.00 ksi			
C - FATIGUE	0.00 ksi	11.70 ksi	4.11 ksi	0.00 ksi	0.00 ksi	0.00 ksi	0.00 ksi	0.00 ksi	0.00 ksi	0.00 ksi	0.00 ksi	0.00 ksi	0.00 ksi	0.00 ksi	15.80 ksi	16.00 ksi	OK
D1	7.95 ksi	0.00 ksi	0.00 ksi	0.19 ksi	0.00 ksi	0.00 ksi	1.33 ksi	0.00 ksi	2.70 ksi	0.00 ksi	0.00 ksi	0.00 ksi	0.00 ksi	0.00 ksi	12.18 ksi	41.25 ksi	OK
D2	7.95 ksi	0.00 ksi	0.00 ksi	0.00 ksi	0.00 ksi	0.00 ksi	0.00 ksi	0.00 ksi	0.00 ksi	35.52 ksi	0.00 ksi	0.00 ksi	0.00 ksi	0.00 ksi	43.47 ksi	46.75 ksi	OK
E1	7.95 ksi	0.00 ksi	0.00 ksi	0.00 ksi	0.00 ksi	0.00 ksi	0.00 ksi	0.00 ksi	0.00 ksi	0.00 ksi	0.00 ksi	0.00 ksi	0.00 ksi	0.00 ksi	7.95 ksi	41.25 ksi	OK
F	7.95 ksi	0.00 ksi	0.00 ksi	0.00 ksi	0.00 ksi	0.00 ksi	0.00 ksi	0.40 ksi	0.00 ksi	0.00 ksi	0.00 ksi	0.00 ksi	0.00 ksi	0.00 ksi	8.34 ksi	27.50 ksi	OK
G	0.00 ksi	0.00 ksi	0.00 ksi	0.00 ksi	0.00 ksi	0.00 ksi	0.00 ksi	0.00 ksi	0.00 ksi	0.00 ksi	0.00 ksi	0.00 ksi	0.00 ksi	0.00 ksi	0.00 ksi	41.25 ksi	OK
H1	7.95 ksi	0.00 ksi	0.00 ksi	0.00 ksi	0.00 ksi	0.00 ksi	0.00 ksi	0.00 ksi	0.00 ksi	0.00 ksi	0.00 ksi	0.00 ksi	0.00 ksi	0.00 ksi	7.95 ksi	41.25 ksi	OK
H2	7.95 ksi	0.00 ksi	0.00 ksi	0.00 ksi	0.00 ksi	0.00 ksi	0.00 ksi	0.00 ksi	0.00 ksi	0.00 ksi	0.00 ksi	0.00 ksi	0.00 ksi	0.00 ksi	7.95 ksi	34.38 ksi	OK

Bending Stresses from Girder Load Cases - Inside of Curve

Comb.	DL	LL	I	CF	LF	N	W	WU	SL	Qg	Qb	EQ	CWR	DF	Total	Allowable	Check
A1	7.95 ksi	8.04 ksi	2.82 ksi	-0.13 ksi	0.00 ksi	0.00 ksi	0.00 ksi	0.00 ksi	0.00 ksi	0.00 ksi	0.00 ksi	0.00 ksi	0.00 ksi	0.00 ksi	18.67 ksi	27.50 ksi	OK
B1	7.95 ksi	8.04 ksi	2.82 ksi	0.00 ksi	0.26 ksi	0.00 ksi	-0.99 ksi	0.00 ksi	0.00 ksi	0.00 ksi	0.00 ksi	0.00 ksi	0.00 ksi	0.00 ksi	18.07 ksi	34.38 ksi	OK
B1A	7.95 ksi	8.04 ksi	2.82 ksi	0.00 ksi	0.26 ksi	0.00 ksi	-0.99 ksi	0.00 ksi	0.00 ksi	0.00 ksi	0.00 ksi	0.00 ksi	0.00 ksi	0.00 ksi			
C - FATIGUE	0.00 ksi	8.04 ksi	2.82 ksi	0.00 ksi	0.00 ksi	0.00 ksi	0.00 ksi	0.00 ksi	0.00 ksi	0.00 ksi	0.00 ksi	0.00 ksi	0.00 ksi	0.00 ksi	10.86 ksi	16.00 ksi	OK
D1	7.95 ksi	0.00 ksi	0.00 ksi	-0.13 ksi	0.00 ksi	0.00 ksi	-0.99 ksi	0.00 ksi	1.86 ksi	0.00 ksi	0.00 ksi	0.00 ksi	0.00 ksi	0.00 ksi	8.68 ksi	41.25 ksi	OK
D2	7.95 ksi	0.00 ksi	0.00 ksi	0.00 ksi	0.00 ksi	0.00 ksi	0.00 ksi	0.00 ksi	0.00 ksi	35.52 ksi	0.00 ksi	0.00 ksi	0.00 ksi	0.00 ksi	43.47 ksi	46.75 ksi	OK
E1	7.95 ksi	0.00 ksi	0.00 ksi	0.00 ksi	0.00 ksi	0.00 ksi	0.00 ksi	0.00 ksi	0.00 ksi	0.00 ksi	0.00 ksi	0.00 ksi	0.00 ksi	0.00 ksi	7.95 ksi	41.25 ksi	OK
F	7.95 ksi	0.00 ksi	0.00 ksi	0.00 ksi	0.00 ksi	0.00 ksi	0.00 ksi	-0.40 ksi	0.00 ksi	0.00 ksi	0.00 ksi	0.00 ksi	0.00 ksi	0.00 ksi	7.55 ksi	27.50 ksi	OK
G	0.00 ksi	0.00 ksi	0.00 ksi	0.00 ksi	0.00 ksi	0.00 ksi	0.00 ksi	0.00 ksi	0.00 ksi	0.00 ksi	0.00 ksi	0.00 ksi	0.00 ksi	0.00 ksi	0.00 ksi	41.25 ksi	OK
H1	7.95 ksi	0.00 ksi	0.00 ksi	0.00 ksi	0.00 ksi	0.00 ksi	0.00 ksi	0.00 ksi	0.00 ksi	0.00 ksi	0.00 ksi	0.00 ksi	0.00 ksi	0.00 ksi	7.95 ksi	41.25 ksi	OK
H2	7.95 ksi	0.00 ksi	0.00 ksi	0.00 ksi	0.00 ksi	0.00 ksi	0.00 ksi	0.00 ksi	0.00 ksi	0.00 ksi	0.00 ksi	0.00 ksi	0.00 ksi	0.00 ksi	7.95 ksi	34.38 ksi	OK

Gannett Fleming	GF JOB # 54682	CALC NO.: HAM075-0834_03_S	REV. NO.: 03
		PROJECT: ODOT/EMH&T: HAM-75-7.85	
ODOT PID NO.: 77889		DESIGNED: CTM	DATE: 10/09/13
BRIDGE NO: HAM-75-0834		UPDATED: EFD	DATE: 05/14/14
SUBJECT: Loads		CHECKED: VDT	DATE: 05/19/14
Girders		UPDATED: EFD	DATE: 05/27/15
		VERIFIED: VDT	DATE: 06/02/15

Unfactored Girder Shear Loads (At Supports)

Comb.	DL	LL	I	CF	LF	N	W	WU	SL	Qg
Beams Outside of Curve										
Standard AREMA Live Load	104.88 kip	173.66 kip	60.98 kip	2.87 kip	9.58 kip		17.60 kip	5.24 kip	0.00 ksi	312.60 kip
Unloaded Train (SL)	104.88 kip	0.00 ksi	12.14 kip	0.57 kip	1.91 kip		17.60 kip	5.24 kip	34.59 kip	62.26 kip
Beams Inside of Curve										
Standard AREMA Live Load	104.88 kip	119.31 kip	41.89 kip	-1.97 kip	6.59 kip		-13.08 kip	-5.24 kip	0.00 ksi	312.60 kip
Unloaded Train (SL)	104.88 kip	0.00 ksi	8.34 kip	-0.39 kip	1.31 kip		-13.08 kip	-5.24 kip	23.76 kip	62.26 kip

Shear Area
75.25 in^2

Shear Stresses from Girder Load Cases - Outside of Curve

Comb.	DL	LL	I	CF	LF	N	W	WU	SL	Qg	Qb	EQ	CWR	DF	Total	Allowable	Check
A1	1.39 ksi	2.31 ksi	0.81 ksi	0.04 ksi	0.00 ksi	0.00 ksi	0.00 ksi	0.00 ksi	0.00 ksi	0.00 ksi	0.00 ksi	0.00 ksi	0.00 ksi	0.00 ksi	4.55 ksi	17.50 ksi	OK
B1	1.39 ksi	2.31 ksi	0.81 ksi	0.00 ksi	0.13 ksi	0.00 ksi	0.23 ksi	0.00 ksi	0.00 ksi	0.00 ksi	0.00 ksi	0.00 ksi	0.00 ksi	0.00 ksi	4.87 ksi	21.88 ksi	OK
B1A	1.39 ksi	2.31 ksi	0.81 ksi	0.00 ksi	0.13 ksi	0.00 ksi	0.23 ksi	0.00 ksi	0.00 ksi	0.00 ksi	0.00 ksi	0.00 ksi	0.00 ksi	0.00 ksi	4.87 ksi	17.50 ksi	OK
C - FATIGUE	0.00 ksi	2.31 ksi	0.81 ksi	0.00 ksi	0.00 ksi	0.00 ksi	0.00 ksi	0.00 ksi	0.00 ksi	0.00 ksi	0.00 ksi	0.00 ksi	0.00 ksi	0.00 ksi	3.12 ksi		
D1	1.39 ksi	0.00 ksi	0.00 ksi	0.04 ksi	0.00 ksi	0.00 ksi	0.23 ksi	0.00 ksi	0.46 ksi	0.00 ksi	0.00 ksi	0.00 ksi	0.00 ksi	0.00 ksi	2.13 ksi	26.25 ksi	OK
D2	1.39 ksi	0.00 ksi	0.00 ksi	0.00 ksi	0.00 ksi	0.00 ksi	0.00 ksi	0.00 ksi	0.00 ksi	4.15 ksi	0.00 ksi	0.00 ksi	0.00 ksi	0.00 ksi	5.55 ksi	29.75 ksi	OK
E1	1.39 ksi	0.00 ksi	0.00 ksi	0.00 ksi	0.00 ksi	0.00 ksi	0.00 ksi	0.00 ksi	0.00 ksi	0.00 ksi	0.00 ksi	0.00 ksi	0.00 ksi	0.00 ksi	1.39 ksi	26.25 ksi	OK
F	1.39 ksi	0.00 ksi	0.00 ksi	0.00 ksi	0.00 ksi	0.00 ksi	0.00 ksi	0.07 ksi	0.00 ksi	0.00 ksi	0.00 ksi	0.00 ksi	0.00 ksi	0.00 ksi	1.46 ksi	17.50 ksi	OK
G	0.00 ksi	0.00 ksi	0.00 ksi	0.00 ksi	0.00 ksi	0.00 ksi	0.00 ksi	0.00 ksi	0.00 ksi	0.00 ksi	0.00 ksi	0.00 ksi	0.00 ksi	0.00 ksi	0.00 ksi	26.25 ksi	OK
H1	1.39 ksi	0.00 ksi	0.00 ksi	0.00 ksi	0.00 ksi	0.00 ksi	0.00 ksi	0.00 ksi	0.00 ksi	0.00 ksi	0.00 ksi	0.00 ksi	0.00 ksi	0.00 ksi	1.39 ksi	26.25 ksi	OK
H2	1.39 ksi	0.00 ksi	0.00 ksi	0.00 ksi	0.00 ksi	0.00 ksi	0.00 ksi	0.00 ksi	0.00 ksi	0.00 ksi	0.00 ksi	0.00 ksi	0.00 ksi	0.00 ksi	1.39 ksi	21.88 ksi	OK

Shear Stresses from Girder Load Cases - Inside of Curve

Comb.	DL	LL	I	CF	LF	N	W	WU	SL	Qg	Qb	EQ	CWR	DF	Total	Allowable	Check
A1	1.39 ksi	1.59 ksi	0.56 ksi	-0.03 ksi	0.00 ksi	0.00 ksi	0.00 ksi	0.00 ksi	0.00 ksi	0.00 ksi	0.00 ksi	0.00 ksi	0.00 ksi	0.00 ksi	3.51 ksi	17.50 ksi	OK
B1	1.39 ksi	1.59 ksi	0.56 ksi	0.00 ksi	0.09 ksi	0.00 ksi	-0.17 ksi	0.00 ksi	0.00 ksi	0.00 ksi	0.00 ksi	0.00 ksi	0.00 ksi	0.00 ksi	3.45 ksi	21.88 ksi	OK
B1A	1.39 ksi	1.59 ksi	0.56 ksi	0.00 ksi	0.09 ksi	0.00 ksi	-0.17 ksi	0.00 ksi	0.00 ksi	0.00 ksi	0.00 ksi	0.00 ksi	0.00 ksi	0.00 ksi	3.45 ksi	17.50 ksi	OK
C - FATIGUE	0.00 ksi	1.59 ksi	0.56 ksi	0.00 ksi	0.00 ksi	0.00 ksi	0.00 ksi	0.00 ksi	0.00 ksi	0.00 ksi	0.00 ksi	0.00 ksi	0.00 ksi	0.00 ksi	2.14 ksi		
D1	1.39 ksi	0.00 ksi	0.00 ksi	-0.03 ksi	0.00 ksi	0.00 ksi	-0.17 ksi	0.00 ksi	0.32 ksi	0.00 ksi	0.00 ksi	0.00 ksi	0.00 ksi	0.00 ksi	1.51 ksi	26.25 ksi	OK
D2	1.39 ksi	0.00 ksi	0.00 ksi	0.00 ksi	0.00 ksi	0.00 ksi	0.00 ksi	0.00 ksi	0.00 ksi	4.15 ksi	0.00 ksi	0.00 ksi	0.00 ksi	0.00 ksi	5.55 ksi	29.75 ksi	OK
E1	1.39 ksi	0.00 ksi	0.00 ksi	0.00 ksi	0.00 ksi	0.00 ksi	0.00 ksi	0.00 ksi	0.00 ksi	0.00 ksi	0.00 ksi	0.00 ksi	0.00 ksi	0.00 ksi	1.39 ksi	26.25 ksi	OK
F	1.39 ksi	0.00 ksi	0.00 ksi	0.00 ksi	0.00 ksi	0.00 ksi	0.00 ksi	-0.07 ksi	0.00 ksi	0.00 ksi	0.00 ksi	0.00 ksi	0.00 ksi	0.00 ksi	1.32 ksi	17.50 ksi	OK
G	0.00 ksi	0.00 ksi	0.00 ksi	0.00 ksi	0.00 ksi	0.00 ksi	0.00 ksi	0.00 ksi	0.00 ksi	0.00 ksi	0.00 ksi	0.00 ksi	0.00 ksi	0.00 ksi	0.00 ksi	26.25 ksi	OK
H1	1.39 ksi	0.00 ksi	0.00 ksi	0.00 ksi	0.00 ksi	0.00 ksi	0.00 ksi	0.00 ksi	0.00 ksi	0.00 ksi	0.00 ksi	0.00 ksi	0.00 ksi	0.00 ksi	1.39 ksi	26.25 ksi	OK
H2	1.39 ksi	0.00 ksi	0.00 ksi	0.00 ksi	0.00 ksi	0.00 ksi	0.00 ksi	0.00 ksi	0.00 ksi	0.00 ksi	0.00 ksi	0.00 ksi	0.00 ksi	0.00 ksi	1.39 ksi	21.88 ksi	OK

DESIGN CALCULATION COVER SHEET

Gannett Fleming
Engineers and Architects, P.C.
Excellence Delivered ***As Promised***

ISO 9001:2008 CERTIFIED

PROJECT:	**ODOT/EMH&T: HAM-75-7.85**	*ODOT PID NO:*	*77889*
BRIDGE NO:	**HAM-75-0834**	*EMH&T JOB NO:*	
SUBJECT:	***Loads***	**GF JOB NO:**	**54682**
	Abutment Loads for	CALC NO.:	**HAM075_0834_04**
	Abut5 Program	REV NO.:	**02**
FILE NAME(s):	*HAM075_0834_04_Rear.xlsx*	**SHEET: 1 OF 6**	

SUPERSEDES CALC NO: 01 (Prelim Stage 2 Design)

CALCULATION DESCRIPTION:

This will calculate all loads applied to the abutment on a per-foot basis for use in the Abut5 program.

Vertical Loads: The max girder reaction will be divided by the girder spacing to produce the worst loading scenario on an abutment.
Horizontal Loads: The horizontal girder reactions are divided by the a width equal to 66% of the substructure and 33% of the total out-out of the beams. This recognizes the fact that the deck diaphragm action will distribute the loads to all of teh girders, and that the entire stem will resist bending by the time the force is distributed to the foundation. The vertical/longitudinal components will be used as input into Abut5. A single fixed abutment design will be completed.

The forward abutment will be fixed, but the taller rear abutment dimensions will be analyzed to ensure the analysis is conservative and is applicable for both abutments.

DESIGN BASIS OR REFERENCES:

NS Underpass Design Criteria
AREMA (2013) Chapter 8, Section 5
AREMA (2014) Chapter 15, Section 5
Calculation: HAM075_0834_03_Sp1 (Girder Loads and Reactions)
Calculation: HAM075_0834_01 (Elevation Data)
Revised Stage 1 Plans (after addressing comments)

MISCELLANEOUS NOTES:

Abut5 Calculates the abutment self-weight and earth loads automatically. This calculation will determine earth loads based upon rankine.

Bearing stiffness calculations will be completed assuming sliding steel plates.

Loads input into Abut5 will be grouped according to AASHTO.

EFD 7/17/14: Update to 14" pipe piles

RECORD OF ISSUES:

REV	DESCRIPTION	BY	DATE	VERIF'D	DATE
00	Stage 1 Calculation	CTM	11/13/13		
01	Stage 2 Calculation	VDK	06/03/14	CTM	06/16/14
02	Stage 2 Pipe Pile Update	**EFD**	**07/17/14**	VDT	07/17/14

RECORD OF CHECK OF CURRENT CALCULATION VERSION

BY	DATE	CHKD	DATE	UPD.	DATE	VERIF'D	DATE
VDK	06/03/14	CTM	06/13/14	**EFD**	**07/17/14**	VDT	07/17/14

Gannett Fleming	GF JOB # 54682	CALC NO.: **HAM075_0834_04**	REV. NO.: **02**
		PROJECT: **ODOT/EMH&T: HAM-75-7.85**	
ODOT PID NO.: 77889		DESIGNED: *CTM*	DATE: *11/13/13*
BRIDGE NO: *HAM-75-0834*		Stg. 2 UPDATED: *VDK*	DATE: *06/03/14*
SUBJECT: *Loads*		CHECKED: *CTM*	DATE: *06/13/14*
Abutment Loads for		UPDATED *TO 14" PIPE PILES:* **EFD**	DATE: **07/17/14**
Rear Abutment (Worst Case)		VERIFIED: *VDT*	DATE: *07/17/14*

Typical Section

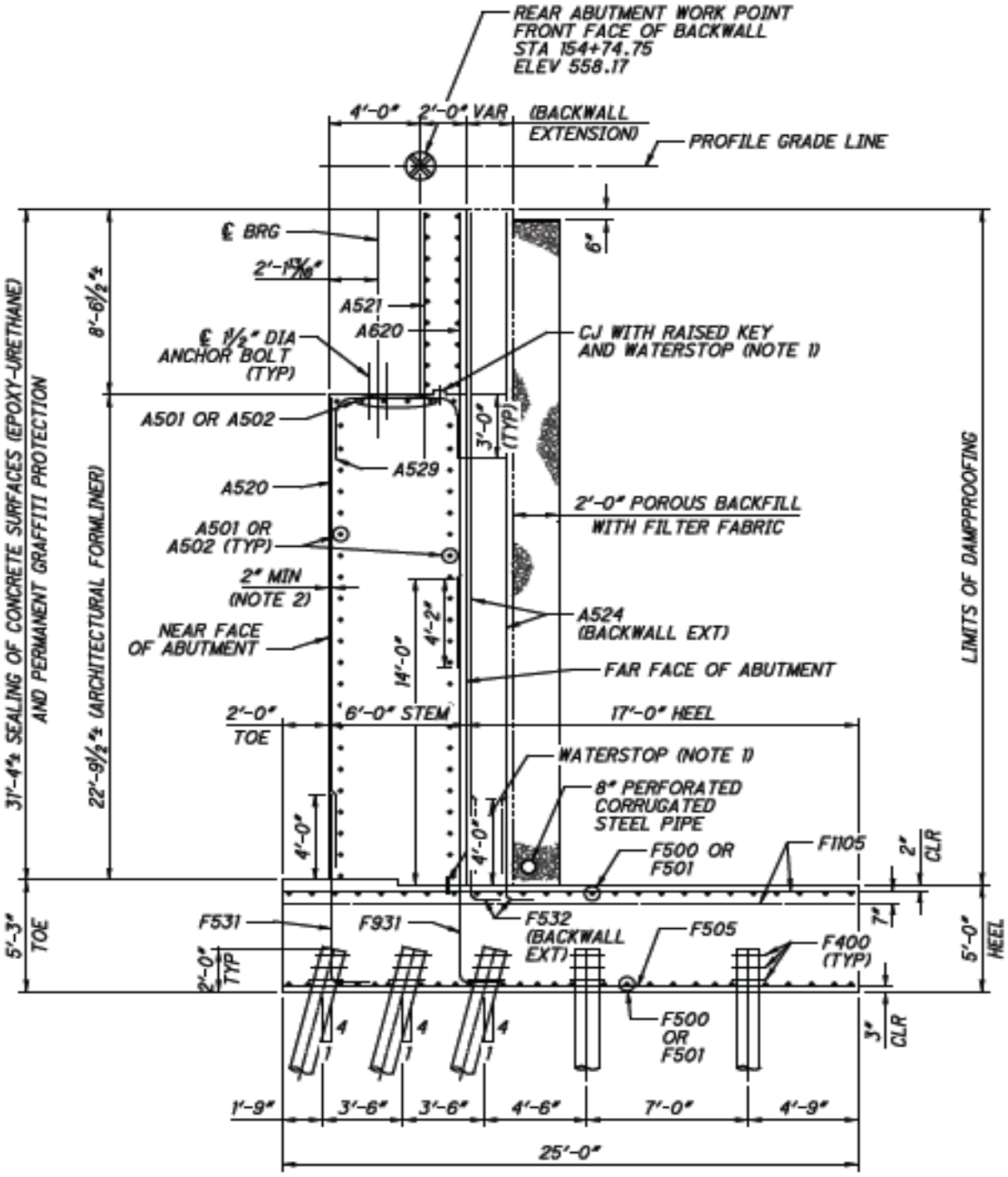

REAR ABUTMENT TYPICAL SECTION

Gannett Fleming	GF JOB # 54682	CALC NO.: **HAM075_0834_04**	REV. NO.: **02**
		PROJECT: **ODOT/EMH&T: HAM-75-7.85**	
ODOT PID NO.: 77889		DESIGNED: *CTM*	DATE: *11/13/13*
BRIDGE NO: *HAM-75-0834*		Stg. 2 UPDATED: *VDK*	DATE: *06/03/14*
SUBJECT: *Loads*		CHECKED: *CTM*	DATE: *06/13/14*
Abutment Loads for		UPDATED *TO 14" PIPE PILES:* ***EFD***	DATE: ***07/17/14***
Rear Abutment (Worst Case)		VERIFIED: *VDT*	DATE: *07/17/14*

General Layout Data (Fixed, Rear Abutment Analysis.)

Girder Layout (For Distribution)

Typical Girder Spacing:	3.500 ft	
^^ *Normal to the C/L of the deck* ^^		
Girder Spacing Used:	3.878 ft	
		Along Skew
C/C Track Supporting Girders:	10.500 ft	11.633 ft
C/C Lateral Girders:	24.500 ft	27.144 ft
Abutment Stem Length:	44.500 ft	
Number of LL Girders:	4	*Vertical Load Distribution*

Trigonometry multipliers to make loads and dimensions normal/parallel to abutment face

Skew Angle:	25.500 deg	0.45 rad
^^ *Normal to the C/L of the girder* ^^		
Girder Spacing (1/cos):	1.108	
Lateral Loads (sin):	0.431	
Longitudinal Loads (cos):	0.903	
Considered Lateral Girders:	8	*Horiz. Load Distrib.*
Bottom/Ftg. ELEV:	**519.50**	*Elevations At Back of Backwall of rear abutment*
PGL ELEV:	558.13	

Reaction Data from calculation HAM075_0834_03_Sp1

Girder Reactions Considered - Span 1

Worst Case Reactions - Standard AREMA Live Load (Girder Outside of Curve)

DL Vert	LL Vert	CF Lat	LF Long	WL Lat	WS Lat	EQ Normal	Qg Vert	Impact Load *(Used to Check Bearing Size)*
126.39 kip	192.56 kip	15.71 kip	262.80 kip	17.03 kip	24.37 kip	214.47 kip	346.61 kip	65.07 kip
		(2)	**(2)**	**(2)**	**(2)**	(1)	(4)	

(1) The total earthquake load is assumed to be in any direction. Normal to the face of abutment is considered herein. (parallel to the face of abutment will not control by inspection)

(2) *The horizontal loads (lateral and longitudinal) are the* ***total force PER abutment.***

(4) This derail load includes impact for substructure design (pier stability)

Abut 5 Load Inputs from Girder Reactions

Abutment Reactions / LF of Abutment

Worst Case Reactions - Standard AREMA Live Load (Girders Outside of Curve)

DL Vert	LL Vert	CF Lat	LF Long	WL Lat	WS Lat	EQ Normal	Qg Vert	Upward Wind
32.59 kip/ft	49.66 kip/ft	0.25 kip/ft	6.19 kip/ft	0.27 kip/ft	0.39 kip/ft	5.39 kip/ft	89.39 kip/ft	1.53 kip/ft
			(1)	(3)	(2)	(4)		

(1) AREMA Commentary 9.1.3.12 explains that there is only a negligible reduction in longitudinal force on a ballasted deck bridge. As such, all of the longitudinal force will be transferred to the fixed abutment. The width that the longitudinal force is distributed across is 66% of the stem width plus 33% of the superstructure width. This recongnizes that stem outside of the superstructure bearing width will resist the bending moment (worst bending moment at the bottom of the stem = more room to dissipate across stem height).

(2) The total reaction given above is per abutment; this load is over the C/C exterior girder width

(3) The total reaction given above is due to a live load per abutment; this load is over the C/C track supporting girders

(4) The earthquake load is reduced by thermal load (calculated below) which allows for the bearing to absorb and transfer some of the ground motion to the expansion abutment. The coefficient of friction is assumed to be 33% of static (for dynamic). The EQ load is distributed laterally in the same manner as the longitudinal loads

Train Surcharge Loading

Cooper E-80 Linear Load: 8000 plf
Assumed Soil Density: 110 pcf
^^ Type 2 Soil, per AREMA Table 8-5-2
Typical Tie Width: 8.500 ft

Bottom/Tie to Bottom/Footing: 37.343 ft
Abut5 TOP FTG TO TOP EMBANK --> 32.343 ft
Bottom of Tie to Top of Backwall: 0.833 ft
Footing Thickness **5.000 ft**
Stem Height (to top of backwall) --> 31.510 ft

Lateral distribution of surcharge at top of backwall:	9.33 ft	*AREMA 8-5.3.1.b*	
Lateral distribution of surcharge at bottom of footing:	44.50 ft	*AREMA 8-5.3.1.b*	*45.84309467*
Equivalent surcharge at the top of backwall:	7.79 ft	*Per foot of abutment width*	
Equivalent surcharge at the bottom of footing:	1.63 ft	*Per foot of abutment width*	

Soil surcharge below is per foot of abutment width, rounded up to the nearest 0.1'

Soil surcharge at a point 1/3 Down from ties	**5.80 ft**	***-- Worst case for overturning & Bending***
Soil surcharge at a point 1/2 Down from ties	4.80 ft	*-- Average Eq. Surcharge (Sliding)*
Soil surcharge at a point 2/3 Down from ties	3.70 ft	*-- Equivilant at the base of the footing*

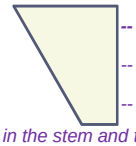

The worst case surcharge (1/3 down) is used for the Abut5 Analysis because it will give the worst case bending in the stem and the worst case overturning (vertical force on piles as well as bending in the foundation). However, ***this will overestimate the required sliding resistance.*** *Due to that, there is no need to be overly conservative on the sliding resistance of the Abut5 output.*

Additional Longitudinal Backwall Forces

Ref: AREMA 8-5.3.1.c - Increase backwall loads by 100% for earth and surcharge pressures.

No additional loading will be added to Abut5; the required reinforcing will be increased by the factor below:

Multiplier due to increased surcharge on backwall: ***2.40***

*^^ Includes a 100% increase to satisfy AREMA 8-5.3.1.c and a ratio of (top of backall)/(applied surcharge)^^*

Thermal Force & Rough Bearing Size - Span #1 (Used for Abutment Design)

A sliding steel expansion bearing will be assumed. Therefore, the maximum thermal force will be dependent upon the force it takes to overcome the static friction of the steel interfaces. It will be assumed that the sliding plate will be a self-lubricating bronze bearing plate. Reference AREMA 15-5 for design parameters.

Steel Expansion Rate 6.50E-06 *in/in/degF*

Max Thermal Change: 90 degF

Span Length: 110.500 ft

Calculated Max Thermal Movement: 0.776 in

Max Thermal Movement Per AREMA 15-5.1.2.c: 1.381 in *(1.25" per 100 feet in Zone 2)*

Max Thermal Movement Considered: 1.381 in *Per foot of abutment width*

Note: AREMA 15-5.1.3.c will require an additional 1" (+/- 0.5") of movement for construction tolerance.

Bronze Bearing Contact Length: 9.00 in *Parallel to Girder*

Bronze Bearing Contact Width: 22.00 in *Normal to Girder*

Bronze Bearing Contact Area 198.0 sq. in

Static coefficient of friction: 0.10

*^^ (AREMA 15-5.4.3.b) ^^*

Allowable Bronze Bearing Pressure: 2.00 ksi

*^^ (AREMA 15-5.2.3) ^^*

Req'd Masonry Plate Length: 15.00 in *Parallel to Girder*

Req'd Masonry Plate Width: 28.00 in *Normal to Girder*

Req'd Masonry Plate Area 420.0 sq. in

Allowable Conc. Bearing Press.: 1.20 ksi

*^^ (AREMA 15-5.2.7 w/ 4ksi concrete) ^^*

Bearing Forces Considered - Span #1

Note: Friction forces will be tabulated upon dead load forces only. Sizing will be checked upon DL+LL+I+CF (Load Case A)

Dead Load: 126.39 kip Impact Load: 65.07 kip

Live Load: 192.56 kip Vert Cent. Load: 3.19 kip *(Ref: HAM075_0834_03)*

Max Static Friction Force: 12.64 kip *From Dead Load*

Thermal Bearing Force used in Abut5: 2.94 kip *Normal to Abutment Face*

Once this force is overcome, the thermal load will simply slide across the pier expansion bearing and induce no further load.

Rough Bearing Size Check

Total Bearing Force: 387.21 kip

Bronze Bearing Stress: 1.956 ksi < 2.00 ksi

Masonry Bearing Stress: 0.922 ksi < 1.20 ksi

Granular Backfill

A select granular backfill will be used behind the abutment.

For the design of the abutment, Backfill Type 2 or 1 of AREMA Table 8-5-1 (Section 8-5.2.5) is assumed.

Using Rankine theory (to match ABUT5 Routine) for a vertical wall, the equivilant fluid pressure is as follows:

Friction btwn backfill and stem concrete δ:	14.0 deg	0.2443	*AASHTO LRFD Table 3.11.3.5.3-1 (Formed concrete)*
Angle of backfill β:	1.4 deg	0.0250	*Assumes a 2.5% profile grade behind the abutment*
Angle of Internal Friction ϕ:	30.0 deg	0.5236	*AREMA Table 8-5-2*
Angle of Stem (Fill-Face) θ:	90.0 deg	1.5708	*Angle from horizontal (90 degrees… less than 90 for a batter*

	Coulomb	***Rankine***
K_a Numerator:	**0.750**	**0.750**
K_a denominator Sqrt Term:	0.585	2.217
K_a denominator Outside Term:	0.970	1.000
K_a Denominator:	**2.438**	**2.217**
Coefficient of Active Earth Pressure K_a:	**0.308**	**0.338**

NOTE: Coulomb is calculated simply for reference should it ever be needed.

Equivalent Fluid Pressure Dry: 37.2 psi *(AREMA Chart C-8-5-6 is conservative and for walls less than 20'. It approximates 38.0 psi)*

DESIGN CALCULATION COVER SHEET

Gannett Fleming
Engineers and Architects, P.C.
Excellence Delivered ***As Promised***

ISO 9001:2008 CERTIFIED

PROJECT:	**ODOT/EMH&T: HAM-75-7.85**	*ODOT PID NO:*	*77889*
BRIDGE NO:	**HAM-75-0834**	*EMH&T JOB NO:*	
SUBJECT:	***Loads***	**GF JOB NO:**	**54682**
	Abutment Loads for	CALC NO.:	**HAM075_0834_04**
	Abut5 Program	REV NO.:	**02**
FILE NAME(s):	*HAM075_0834_04_Forward.xlsx*	**SHEET: 1 OF 6**	

SUPERSEDES CALC NO: 01 (Prelim Stage 2 Design)

CALCULATION DESCRIPTION:

This will calculate all loads applied to the abutment on a per-foot basis for use in the Abut5 program.

Vertical Loads: The max girder reaction will be divided by the girder spacing to produce the worst loading scenario on an abutment.
Horizontal Loads: The horizontal girder reactions are divided by the a width equal to 66% of the substructure and 33% of the total out-out of the beams. This recognizes the fact that the deck diaphragm action will distribute the loads to all of teh girders, and that the entire stem will resist bending by the time the force is distributed to the foundation. The vertical/longitudinal components will be used as input into Abut5. A single fixed abutment design will be completed.

The forward abutment will be fixed, but the taller rear abutment dimensions will be analyzed to ensure the analysis is conservative and is applicable for both abutments.

DESIGN BASIS OR REFERENCES:

NS Underpass Design Criteria
AREMA (2013) Chapter 8, Section 5
AREMA (2014) Chapter 15, Section 5
Calculation: HAM075_0834_03_Sp2 (Girder Loads and Reactions)
Calculation: HAM075_0834_01 (Elevation Data)
Revised Stage 1 Plans (after addressing comments)

MISCELLANEOUS NOTES:

Abut5 Calculates the abutment self-weight and earth loads automatically. This calculation will determine earth loads based upon rankine.

Bearing stiffness calculations will be completed assuming sliding steel plates.

Loads input into Abut5 will be grouped according to AASHTO.

EFD 7/17/14: Update to 14" pipe piles

RECORD OF ISSUES:

REV	DESCRIPTION	BY	DATE	VERIF'D	DATE
00	Stage 1 Calculation	CTM	11/13/13		
01	Stage 2 Calculation	VDK	06/03/14	CTM	06/16/14
02	Stage 2 Pipe Pile Update	**EFD**	**07/17/14**	VDT	07/17/14

RECORD OF CHECK OF CURRENT CALCULATION VERSION

BY	DATE	CHKD	DATE	UPD.	DATE	VERIF'D	DATE
VDK	06/03/14	CTM	06/13/14	**EFD**	**07/17/14**	VDT	07/17/14

Gannett Fleming	GF JOB # 54682	CALC NO.: **HAM075_0834_04**	REV. NO.: **02**
		PROJECT: **ODOT/EMH&T: HAM-75-7.85**	
ODOT PID NO.: 77889		DESIGNED: *CTM*	DATE: *11/13/13*
BRIDGE NO: *HAM-75-0834*		Stg. 2 UPDATED: *VDK*	DATE: *06/03/14*
SUBJECT: *Loads*		CHECKED: *CTM*	DATE: *06/13/14*
Abutment Loads for		UPDATED *TO 14" PIPE PILES:* **EFD**	DATE: ***07/17/14***
Forward Abutment		VERIFIED: *VDT*	DATE: *07/17/14*

Typical Section

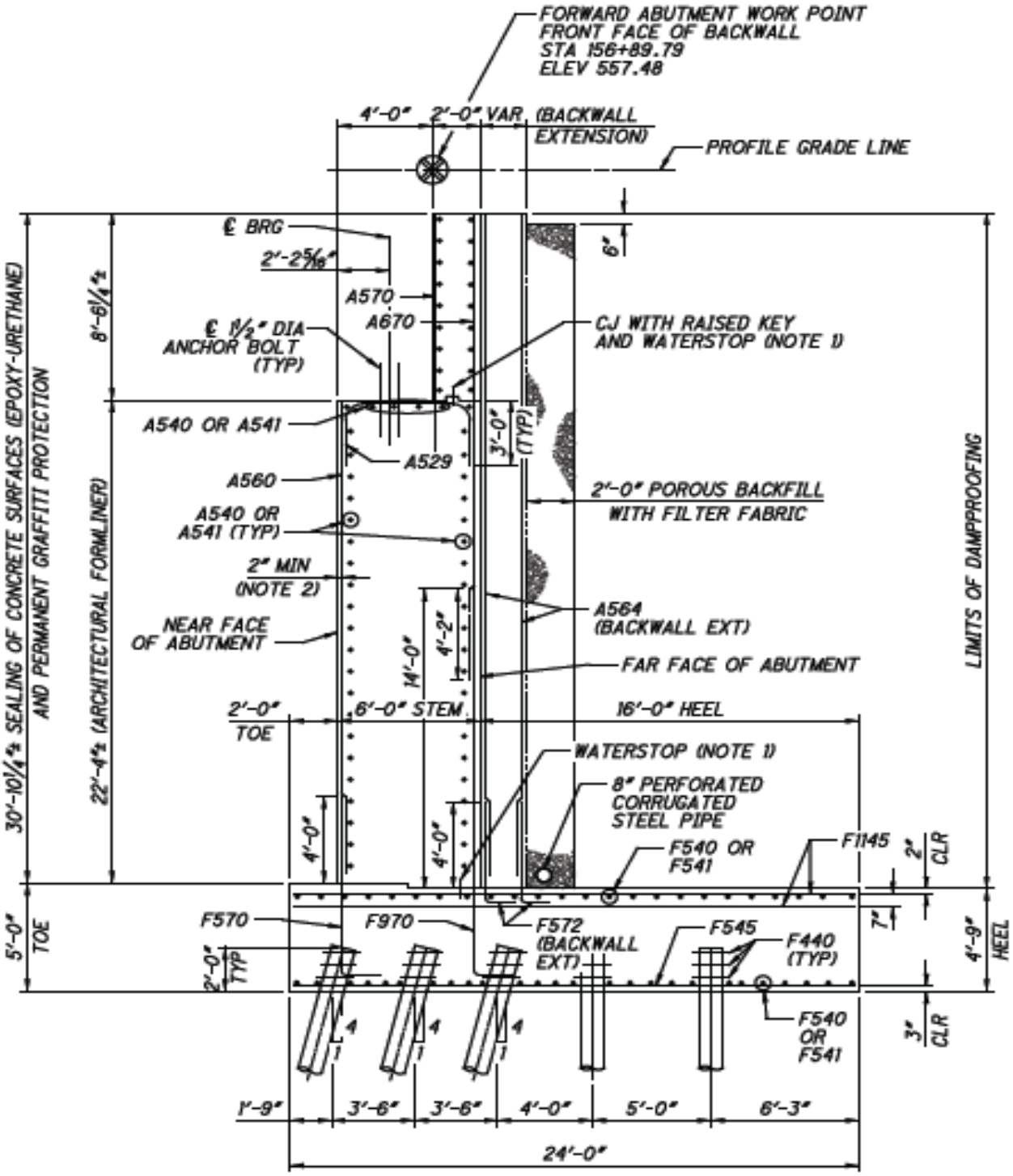

FORWARD ABUTMENT TYPICAL SECTION

Gannett Fleming	GF JOB # 54682	CALC NO.: **HAM075_0834_04**	REV. NO.: **02**
		PROJECT: **ODOT/EMH&T: HAM-75-7.85**	
ODOT PID NO.: 77889		DESIGNED: *CTM*	DATE: *11/13/13*
BRIDGE NO: *HAM-75-0834*		Stg. 2 UPDATED: *VDK*	DATE: *06/03/14*
SUBJECT: *Loads*		CHECKED: *CTM*	DATE: *06/13/14*
Abutment Loads for		UPDATED *TO 14" PIPE PILES:* ***EFD***	DATE: ***07/17/14***
Forward Abutment		VERIFIED: *VDT*	DATE: *07/17/14*

General Layout Data (Fixed, Forward Abutment Analysis.)

Girder Layout (For Distribution)

Typical Girder Spacing:	3.500 ft	
^^ *Normal to the C/L of the deck* ^^		
Girder Spacing Used:	3.878 ft	
		Along Skew
C/C Track Supporting Girders:	10.500 ft	11.633 ft
C/C Lateral Girders:	24.500 ft	27.144 ft
Abutment Stem Length:	42.000 ft	
Number of LL Girders:	4	*Vertical Load Distribution*

Trigonometry multipliers to make loads and dimensions normal/parallel to abutment face

Skew Angle:	25.500 deg	0.45 rad
^^ *Normal to the C/L of the girder* ^^		
Girder Spacing (1/cos):	1.108	
Lateral Loads (sin):	0.431	
Longitudinal Loads (cos):	0.903	
Considered Lateral Girders:	8	*Horiz. Load Distrib.*
Bottom/Ftg. ELEV:	**519.50**	*Elevations At Back of Backwall of forward abutment*
PGL ELEV:	557.43	

Reaction Data from calculation HAM075_0834_03_Sp2

Girder Reactions Considered - Span 2

Worst Case Reactions - Standard AREMA Live Load (Girder Outside of Curve)

DL Vert	LL Vert	CF Lat	LF Long	WL Lat	WS Lat	EQ Normal	Qg Vert	Impact Load *(Used to Check Bearing Size)*
104.88 kip	173.66 kip	14.17 kip	246.54 kip	15.04 kip	21.52 kip	213.84 kip	312.60 kip	60.98 kip
		(2)	**(2)**	**(2)**	**(2)**	(1)	(4)	

(1) The total earthquake load is assumed to be in any direction. Normal to the face of abutment is considered herein. (parallel to the face of abutment will not control by inspection)

(2) *The horizontal loads (lateral and longitudinal) are the* ***total force PER abutment.***

(4) This derail load includes impact for substructure design (pier stability)

Abut 5 Load Inputs from Girder Reactions

Abutment Reactions / LF of Abutment

Worst Case Reactions - Standard AREMA Live Load (Girders Outside of Curve)

DL Vert	LL Vert	CF Lat	LF Long	WL Lat	WS Lat	EQ Normal	Qg Vert	Upward Wind
27.05 kip/ft	44.78 kip/ft	0.22 kip/ft	6.07 kip/ft	0.24 kip/ft	0.34 kip/ft	5.65 kip/ft	80.61 kip/ft	1.35 kip/ft
			(1)	(3)	(2)	(4)		

(1) AREMA Commentary 9.1.3.12 explains that there is only a negligible reduction in longitudinal force on a ballasted deck bridge. As such, all of the longitudinal force will be transferred to the fixed abutment. The width that the longitudinal force is distributed across is 66% of the stem width plus 33% of the superstructure width. This recongnizes that stem outside of the superstructure bearing width will resist the bending moment (worst bending moment at the bottom of the stem = more room to dissipate across stem height).

(2) The total reaction given above is per abutment; this load is over the C/C exterior girder width

(3) The total reaction given above is due to a live load per abutment; this load is over the C/C track supporting girders

(4) The earthquake load is reduced by thermal load (calculated below) which allows for the bearing to absorb and transfer some of the ground motion to the expansion abutment. The coefficient of friction is assumed to be 33% of static (for dynamic). The EQ load is distributed laterally in the same manner as the longitudinal loads

Train Surcharge Loading

Cooper E-80 Linear Load: 8000 plf
Assumed Soil Density: 110 pcf
^^ Type 2 Soil, per AREMA Table 8-5-2
Typical Tie Width: 8.500 ft

Bottom/Tie to Bottom/Footing: 36.645 ft
Abut5 TOP FTG TO TOP EMBANK --> 31.895 ft
Bottom of Tie to Top of Backwall: 0.833 ft
Footing Thickness **4.750 ft**
Stem Height (to top of backwall) --> 31.062 ft

Lateral distribution of surcharge at top of backwall:	9.33 ft	AREMA 8-5.3.1.b	
Lateral distribution of surcharge at bottom of footing:	42.00 ft	AREMA 8-5.3.1.b	45.144853
Equivalent surcharge at the top of backwall:	7.79 ft	Per foot of abutment width	
Equivalent surcharge at the bottom of footing:	1.73 ft	Per foot of abutment width	

Soil surcharge below is per foot of abutment width, rounded up to the nearest 0.1'

Soil surcharge at a point 1/3 Down from ties	**5.80 ft**	***-- Worst case for overturning & Bending***
Soil surcharge at a point 1/2 Down from ties	4.80 ft	*-- Average Eq. Surcharge (Sliding)*
Soil surcharge at a point 2/3 Down from ties	3.80 ft	*-- Equivilant at the base of the footing*

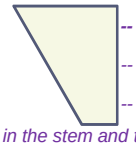

The worst case surcharge (1/3 down) is used for the Abut5 Analysis because it will give the worst case bending in the stem and the worst case overturning (vertical force on piles as well as bending in the foundation). However, ***this will overestimate the required sliding resistance.*** *Due to that, there is no need to be overly conservative on the sliding resistance of the Abut5 output.*

Additional Longitudinal Backwall Forces

Ref: AREMA 8-5.3.1.c - Increase backwall loads by 100% for earth and surcharge pressures.

No additional loading will be added to Abut5; the required reinforcing will be increased by the factor below:

Multiplier due to increased surcharge on backwall: ***2.40***

*^^ Includes a 100% increase to satisfy AREMA 8-5.3.1.c and a ratio of (top of backall)/(applied surcharge)^^*

Thermal Force & Rough Bearing Size - Span #2 (Used for Abutment Design)

A sliding steel expansion bearing will be assumed. Therefore, the maximum thermal force will be dependent upon the force it takes to overcome the static friction of the steel interfaces. It will be assumed that the sliding plate will be a self-lubricating bronze bearing plate. Reference AREMA 15-5 for design parameters.

Steel Expansion Rate 6.50E-06 *in/in/degF*

Max Thermal Change: 90 degF

Span Length: 97.250 ft

Calculated Max Thermal Movement: 0.683 in

Max Thermal Movement Per AREMA 15-5.1.2.c: 1.216 in *(1.25" per 100 feet in Zone 2)*

Max Thermal Movement Considered: 1.216 in *Per foot of abutment width*

Note: AREMA 15-5.1.3.c will require an additional 1" (+/- 0.5") of movement for construction tolerance.

Bronze Bearing Contact Length: 8.00 in *Parallel to Girder*

Bronze Bearing Contact Width: 21.00 in *Normal to Girder*

Bronze Bearing Contact Area 168.0 sq. in

Static coefficient of friction: 0.10

*^^ (AREMA 15-5.4.3.b) ^^*

Allowable Bronze Bearing Pressure: 2.00 ksi

*^^ (AREMA 15-5.2.3) ^^*

Req'd Masonry Plate Length: 14.00 in *Parallel to Girder*

Req'd Masonry Plate Width: 27.00 in *Normal to Girder*

Req'd Masonry Plate Area 378.0 sq. in

Allowable Conc. Bearing Press.: 1.20 ksi

*^^ (AREMA 15-5.2.7 w/ 4ksi concrete) ^^*

Bearing Forces Considered - Span #2

Note: Friction forces will be tabulated upon dead load forces only. Sizing will be checked upon DL+LL+I+CF (Load Case A)

Dead Load: 104.88 kip Impact Load: 60.98 kip

Live Load: 173.66 kip Vert Cent. Load: 2.87 kip *(Ref: HAM075_0834_03)*

Max Static Friction Force: 10.49 kip *From Dead Load*

Thermal Bearing Force used in Abut5: 2.44 kip *Normal to Abutment Face*

Once this force is overcome, the thermal load will simply slide across the pier expansion bearing and induce no further load.

Rough Bearing Size Check

Total Bearing Force: 342.40 kip

Bronze Bearing Stress: 2.038 ksi < 2.00 ksi

Masonry Bearing Stress: 0.906 ksi < 1.20 ksi

Granular Backfill

A select granular backfill will be used behind the abutment.

For the design of the abutment, Backfill Type 2 or 1 of AREMA Table 8-5-1 (Section 8-5.2.5) is assumed.

Using Rankine theory (to match ABUT5 Routine) for a vertical wall, the equivilant fluid pressure is as follows:

Friction btwn backfill and stem concrete δ:	14.0 deg	0.2443	*AASHTO LRFD Table 3.11.3.5.3-1 (Formed concrete)*
Angle of backfill β:	1.4 deg	0.0250	*Assumes a 2.5% profile grade behind the abutment*
Angle of Internal Friction ϕ:	30.0 deg	0.5236	*AREMA Table 8-5-2*
Angle of Stem (Fill-Face) θ:	90.0 deg	1.5708	*Angle from horizontal (90 degrees… less than 90 for a batter*

	Coulomb	***Rankine***
K_a Numerator:	**0.750**	**0.750**
K_a denominator Sqrt Term:	0.585	2.217
K_a denominator Outside Term:	0.970	1.000
K_a Denominator:	**2.438**	**2.217**
Coefficient of Active Earth Pressure K_a:	**0.308**	**0.338**

NOTE: Coulomb is calculated simply for reference should it ever be needed.

Equivalent Fluid Pressure Dry: 37.2 psi *(AREMA Chart C-8-5-6 is conservative and for walls less than 20'. It approximates 38.0 psi)*

DESIGN CALCULATION COVER SHEET

Gannett Fleming
Engineers and Architects, P.C.
Excellence Delivered ***As Promised***

ISO 9001:2008 CERTIFIED

PROJECT: **ODOT/EMH&T: HAM-75-7.85**
BRIDGE NO: **HAM-75-0834**
SUBJECT: ***Analysis***
Abutment, Backwall, Stability
Abut5 Program
FILE NAME(s): *AB5_0834_Sp1.dat & AB5_0834.out*

ODOT PID NO: 77889
EMH&T JOB NO:
GF JOB NO: 54682
CALC NO.: **HAM075_0834_05_Rear**
REV NO.: **03**
SHEET: 1 OF 10

SUPERSEDES CALC NO: (Rev. 02)

CALCULATION DESCRIPTION:

This will analyze the proposed abutment utilizing previously calculated load, geometric, and soil input within the Abut5 program. The rear abutment will be analyzed, and the same design will be used for both abutments at Stage 2.

DESIGN BASIS OR REFERENCES:

NS Underpass Design Criteria
AREMA (2008) Chapter 8, Section 5
Calculation: HAM075_0834_04_Rear (Abutment Loads)
Calculation: HAM075_0834_01 (Elevation Data)
Existing PAVR Plans for bottom of footing elevation
Abut5 Users Manual (PennDOT)

MISCELLANEOUS NOTES:

Abut5 Calculates the abutment self-weight and earth loads automatically.

Loads input into Abut5 are be grouped according to AASHTO but are very similar to AREMA Load Cases.

No tension is allowed in piles while vertical surcharge load is applied.

Minimum tension will be allowed in piles without vertical surcharge load is applied, since the lateral component is still applied. Minimum tension will be allowed for seismic.

Stage 3: Updates to applied loads in Abut5 due to increased LL distribution, increased deck thickness, and increased girder sections

EFD 7/17/14: Update to 14" pipe piles

RECORD OF ISSUES:

REV	DESCRIPTION	BY	DATE	VERIF'D	DATE
00	Stage 1 Calculation	CTM	10/08/13		
01	Stage 2 Calculation	VDK	06/06/14	CTM	06/16/14
02	Stage 2 Pipe Pile Update	EFD	07/17/14	VDT	07/17/14
03	Stage 3 Update	VDT	01/19/16	CTM	04/25/16

RECORD OF CHECK OF CURRENT CALCULATION VERSION

BY	DATE	CHKD	DATE	UPD.	DATE	VERIF'D	DATE
VDK	06/06/14	CTM	06/13/14	VDT	01/19/16	CTM	04/25/16

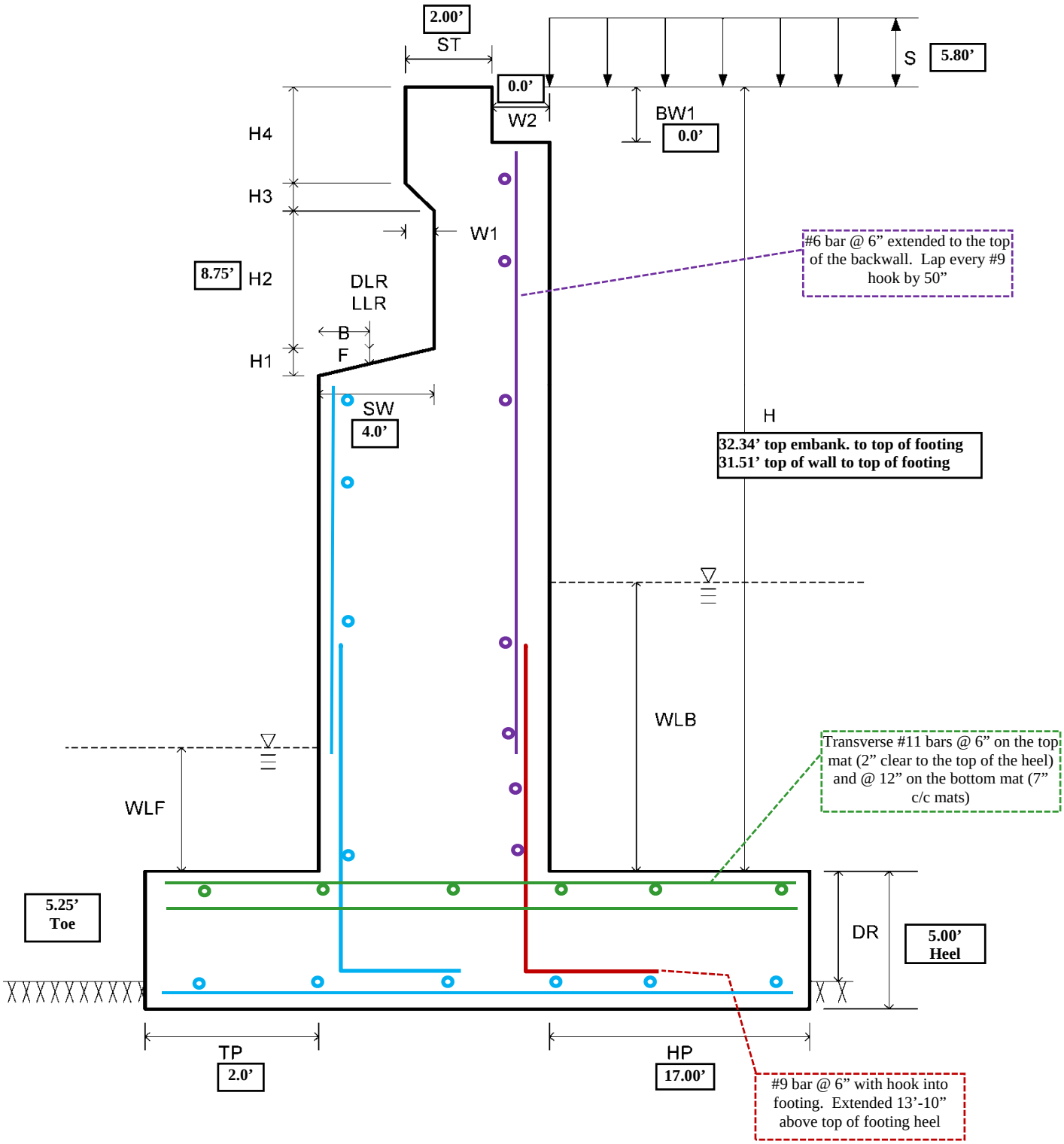

Figure 5.2.1 Input Dimensions - Abutment Type I

NOTE: Heights "H" are increased (approximately 6") in this analysis to ensure conservative design will still apply subject to any potential minor elevation changes during final detailing.

Reinforcing Note: All other bars shall be #5's at 12". 3" Clear to bottom of footing. 2" clear to all other surfaces. Vertical stem rebar should be outside of horizontal rebar. Transverse footing rebar should be on the top/bottom of longitudinal rebar.

```
   ---------------------------------------------------------------------------
                              ECHO OF INPUT FILE
   ---------------------------------------------------------------------------
**PROJECT: ODOT/EMH&T: HAM-75-7.85, GF Job # 054682
*CALC: VDK, 6/3/2014
**NSRR Over HAM-75-0834 Rear abutment
**Seperate design for RA and FA due to difference of spans.
**ASD Design as per AREMA Chapter 8, Part 5 and NS Standards
* ** Created by EngAsst **
* EngAsst Information: [Program=ABUT5] [Version=5.4.0.0]
* ** Data Records Start Here **
*Pressure as per Rankine Equation
SLA12140Y5 372     28620700    3234        0580     40004000400060   000   YYN  ! Criteria
315120002001700         00008750000000000000   0000    02150400      500        ! Dimensions
*EFD Preliminary Numbers
0306080912YSSS000102000300020002750400065004000300                              ! Rebar
*NOTE: Seismic Not Considered for a Single Span as per AREMA
3059465200270038    0148061900230276                       051901000            ! Loading
013000175003501000                                                              ! Pile
023000350003501000                                                              ! Pile
033000350003500500                                                              ! Pile
04  0045000700                                                                  ! Pile
05  0070000700                                                                  ! Pile
```

```
                    LFD Abutment and Retaining Wall                    333067

PROGRAM P4354040                                          01/19/2016 09:20
VERSION 5.4.0.0           LAST UPDATED 05/05/2005        DOCUMENTATION 05/2005

INPUT: ... ents\Abutment Analysis\Abut5\Rear\AB-834-R.dat

*PROJECT: ODOT/EMH&T: HAM-75-7.85, GF JOB # 054682
CALC: VDK, 6/3/2014
*NSRR OVER HAM-75-0834 REAR ABUTMENT


                             ANALYSIS OF
                     ABUTMENT WITH BACKWALL TYPE I

                       TYPE OF FOOTING : ON PILES
                                                                EQUIV FLUID
DESIGN                   FTG    PILE            PILE             PRESSURE
METHOD   A OR D   TYPE   TYPE     D   EMBEDDED  ROWS   R OR S     DRY   SAT
  SL       A       1      2     14.0     Y       5               37.2

                       ALLOW SOIL   WATER  TOP FTG   WATER    TOP WALL   LIVE
COEFF OF  BACKFILL  PRESS OR AXIAL LEVEL  TO TOP    LEVEL     TO TOP    LOAD
FRICTION    SLOPE     PILE CAPAC    BACK  EMBANK    FRONT    BACKFILL   SURCH
            28.6        207.00             32.34                        5.80

TOP FTG  F'C                                    LATERAL                     PILE
TO ROCK  BACK   F'C    F'C  REBAR   PILE  PILE  PILE      REBAR  OVR  80%   ROW
SURFACE  WALL   STEM   FTG  GRADE  BATTER  OPT  CAPAC  Kv  DES   STR  RULE  OPT
        4000.  4000.  4000.   60.                0.0        Y     Y    N

  TOP OF
(BACK)WALL                                          MAX
TO TOP OF     TOP      PROJECTION          MAX    FTG
 FOOTING   THICKNESS   TOE   HEEL  T OR H  PROJ  WIDTH   H1     H2    H3    H4
  31.51      2.00      2.00 17.00                       0.00   8.75  0.00  0.00

                           FRONT           HEIGHT
                           FACE   BRIDGE     OF
                           TO DL   SEAT   BACKWALL  BACK   FOOTING  PILE  FTG
 W1   W2   W3   BW1   BW2   REACT   WIDTH   BATTER  BATTER THICKNESS COST  COST
0.00 0.00       0.00         2.15    4.00                    5.00

     TRIAL
 REBAR SPACING  BAR   BW    STEM    FTG    MIN
 1  2  3  4  5  LOC  EXPOS  EXPOS  EXPOS   As
 3  6  8  9 12   Y     S      S      S    0.001

     STEM REBAR COVER           FOOTING REBAR COVER
 VERT  HORIZ   VERT  HORIZ    LONG  TRANS   LONG  TRANS
 2.00   3.00   2.00   2.75    4.00   6.50   4.00   3.00

                                          LONG
                      WIND   WIND         FORCE
 DL     LL    WIND    ON     ON   UPWARD  FROM   CENTR  TEMP
REACT  REACT  ON LL  SUPER   SUB   WIND    LL    FORCE  FORCE
32.59  49.66   0.27   0.38          1.53   6.19   0.25   2.94

                             BACKWALL            ALLOW
    PARAPET OR EXTERNAL      LIVE LOAD  SEISMIC   PILE
 HORZ   DIST   VERT   DIST   VERT   HORZ   LOAD   UPLIFT
                                           5.39   10.00
```

ROW NO	PILE BATTER	DISTANCE BETWEEN ROWS	PILE SPACING	PERCENT ROW BATTERED
1	3.0	1.75	3.50	100.0
2	3.0	3.50	3.50	100.0
3	3.0	3.50	3.50	50.0
4		4.50	7.00	
5		7.00	7.00	

14" OD x 0.5" wall thickness cast in place pipe piles with structural allowable of 239 Kips (after accounting for future degradation of 0.05")

```
                    REINFORCEMENT SUMMARY
                    ---------------------
                     REBAR SPACINGS (in):
                              3.
                              6.
                              8.
                              9.
                             12.

          REBAR COVERS (in):   (C.G. OF BAR TO OUTER FACE)
                   STEM                      FOOTING
          BACK          FRONT          TOP         BOTTOM
       VERT  HORIZ   VERT  HORIZ  LONG   TRANS  LONG   TRANS
       2.00   3.00   2.00   2.75  4.00    6.50  4.00    3.00

                     BACK WALL -- SEVERE
       EXPOSURES:    STEM ------- SEVERE
                     FOOTING ---- SEVERE

       MINIMUM AREA OF STEEL PER FOOT: 0.001 SQUARE INCHES


***  NOTE  ***
 - THE REBARS IN THE BOTTOM OF THE FOOTING ARE BELOW THE TOP OF THE PILES.



                         PILE FOOTING ANALYSIS
                        ---------------------

***  WARNING  ***
 - EITHER THE FRONT OR BACK PILE LOADS ARE EXCESSIVE.


***  NOTE  ***
 - SINCE Kv WAS NOT ENTERED,  0.0 WAS COMPUTED AND USED.

 - FOR THE TEMPORARY CONSTRUCTION LOADING CONDITION (GROUP T) - FILL HEIGHT
   TO ABUTMENT SEAT, LIVE LOAD SURCHARGE, BUOYANCY AND WIND ON SUBSTRUCTURE
   (IF APPLICABLE):
    > PILE CAPACITY HAS BEEN INCREASED BY A FACTOR OF 1.25.

 - FOR PILE ROWS WITH BOTH VERTICAL AND BATTERED PILES, PILE LOADS ARE
   FOR THE MAXIMUM CONDITION (AXIAL LOAD IN BATTERED PILES).


***  SEISMIC DESIGN - DESIGNER NOTES  ***
 1. BRIDGE BEARING SEAT LENGTH MUST BE CHECKED VERSUS THE MINIMUM REQUIRED
    BEARING SUPPORT LENGTHS AS DETERMINED BY SECTION 4.8, APPENDIX A, DM-4.
 2. VERTICAL REINFORCEMENT ON BACK FACE OF STEM MUST BE HOOKED INTO THE
    FOOTING.
 3. TOP REINFORCEMENT IN THE FOOTING, BOTH LONGITUDINAL AND TRANSVERSE,
    SHALL BE A MINIMUM OF #5's @ 12" SPACING.
 4. VERTICAL REINFORCEMENT, #4's @ 4' SPACING, ARE REQUIRED TO TIE THE
    TOP AND BOTTOM MATS OF REINFORCING IN THE FOOTING TOGETHER.
```

STABILITY ANALYSIS (SERVICE LOADS) - WITH VERTICAL COMPONENT OF LL SURCHARGE

AASHTO GROUP	BAL. SUM V	BAL. MOMENT	O.T. SUM H	O.T. MOMENT	FRONT ROW TO RESULT	PILE LOAD FRONT	PILE LOAD BACK	PILE LOAD ALLOW	LAT. RESIST	F.S. O.T.
1	200.22	1601.97	34.24	480.14	5.60	206.74	126.94	207.00	35.86	3.34
2	137.20	1304.60	26.31	333.33	7.08	107.40	150.21	258.75	44.83	3.91
3	199.76	1600.87	40.81	662.63	4.70	236.89	70.13	258.75	44.83	2.42
4	200.22	1601.97	37.18	561.75	5.20	220.55	101.46	258.75	44.83	2.85
5	137.20	1304.60	29.25	414.95	6.48	121.21	124.73	289.80	50.20	3.14
6	199.76	1600.87	43.75	744.25	4.29	250.70	44.65	289.80	50.20	2.15
7	138.73	1308.27	31.32	472.41	6.03	133.34	106.23	477.69	82.76	2.77
T	97.50	1127.51	21.37	233.07	9.17	41.76	170.50	258.75	44.83	4.84

NOTE: Max Pile Reaction under Primary Loads is 207 Kips. It is 237 kips when longitudinal live load is added.

STABILITY ANALYSIS (SERVICE LOADS) - WITHOUT VERTICAL COMPONENT OF LL SURCHARGE

AASHTO GROUP	BAL. SUM V	BAL. MOMENT	O.T. SUM H	O.T. MOMENT	FRONT ROW TO RESULT	PILE LOAD FRONT	PILE LOAD BACK	PILE LOAD ALLOW	LAT. RESIST	F.S. O.T.
1	188.39	1427.45	34.24	480.14	5.03	212.83*	85.65	207.00	35.86	2.97
2	137.20	1304.60	26.31	333.33	7.08	107.40	150.21	258.75	44.83	3.91
3	187.93	1426.35	40.81	662.63	4.06	242.99	28.85	258.75	44.83	2.15
4	188.39	1427.45	37.18	561.75	4.60	226.64	60.17	258.75	44.83	2.54
5	137.20	1304.60	29.25	414.95	6.48	121.21	124.73	289.80	50.20	3.14
6	187.93	1426.35	43.75	744.25	3.63	256.79	3.37	289.80	50.20	1.92
7	138.73	1308.27	31.32	472.41	6.03	133.34	106.23	477.69	82.76	2.77
T	85.66	952.98	21.37	233.07	8.40	47.86	129.22	258.75	44.83	4.09

* - PILE LOAD EXCEEDS AXIAL PILE CAPACITY

FOOTING ANALYSIS (SERVICE LOADS) - WITH VERTICAL COMPONENT OF LL SURCHARGE

AASHTO GROUP	TOE MOMENT	TOE SHEAR @	HEEL MOMENT	HEEL SHEAR @
1	12.83	0.00 D	394.48	0.96 F
2	5.94	0.00 D	280.62	3.55 F
3	14.92	0.00 D	512.77	13.49 F
4	13.78	0.00 D	447.42	6.52 F
5	6.90	0.00 D	333.57	9.10 F
6	15.87	0.00 D	565.72	19.04 F
7	7.74	0.00 D	371.16	12.66 F
T	1.39	0.00 D	195.01	3.69 F

FOOTING ANALYSIS (SERVICE LOADS) - WITHOUT VERTICAL COMPONENT OF LL SURCHARGE

AASHTO GROUP	TOE MOMENT	TOE SHEAR @	HEEL MOMENT	HEEL SHEAR @
1	13.25	0.00 D	386.29	1.79 F
2	5.94	0.00 D	280.62	3.55 F
3	15.34	0.00 D	504.59	14.31 F
4	14.21	0.00 D	439.24	7.34 F
5	6.90	0.00 D	333.57	9.10 F
6	16.29	0.00 D	557.53	19.87 F
7	7.74	0.00 D	371.16	12.66 F
T	1.82	0.00 D	186.83	4.52 F

FOOTING DESIGN - WITH AND WITHOUT VERTICAL COMPONENT OF LL SURCHARGE

FOOTING WIDTH	FOOTING THICKNESS	TOE PROJ	HEEL PROJ	EFFECTIVE DEPTH TOE	EFFECTIVE DEPTH HEEL
25.00	5.00	2.00	17.00	4.750	4.458

SHEAR STR TOE	ALLOWABLE SHEAR TOE	SHEAR STR HEEL	ALLOWABLE SHEAR HEEL	TRANS REINFORCEMENT TOE-BOT	TRANS REINFORCEMENT HEEL-TOP	LONGITUDINAL REINFORCEMENT
0.000	0.060	0.030	0.060	0.15	4.22	0.24

LONGITUDINAL MOMENT CALCULATIONS - WITH VERTICAL COMPONENT OF LL SURCHARGE
GROUP 1 GOVERNS

MAX UNIFORM LOAD (w) = 8.009 K/FT
MAX UNIFORM SERVICE LOAD (w) = 8.009 K/FT
MAX PILE SPACING = 7.00 FEET
MAX LONGITUDINAL MOMENT = 19.62 K-FT
MAX LONG. MOMENT (SERVICE) = 19.62 K-FT

NOTE: 4.22 Square inches of heel reinforcing is required at a centroid distance of 6.5" from the top. #11 bars @ 6" on the top mat and #11 bars at 12" on a mat 7" lower will result in adequate reinforcing (4.68 sq. in. @ centroid 5.07" down)

PILE PATTERN

ROW	BATTER	DISTANCE	SPACING	% BATTERED
1	3.0 ON 12	1.75	3.50	100.0
2	3.0 ON 12	5.25	3.50	100.0
3	3.0 ON 12	8.75	3.50	50.0
4	VERT	13.25	7.00	0.0
5	VERT	20.25	7.00	0.0

C.G. OF PILES 8.12 FT. FROM TOE I OF PILES PER FOOT 38.839
PILE DENSITY 1.1429 PILES PER FOOT

STEM ANALYSIS

DESIGN OF STEM SECTION AT 4.38 FT FROM TOP

AASHTO GROUP (SERVICE)	1	2	3	4	5	6	7
MOMENT	2.58	0.52	2.58	2.58	0.52	2.58	0.52
AXIAL FORCE	1.31	1.31	1.31	1.31	1.31	1.31	1.31
SHEAR	1.30	0.36	1.30	1.30	0.36	1.30	0.36

SECTION THICKNESS	SHEAR STRESS	ALLOWABLE SHEAR	BACK FACE REINF
2.000	0.005	0.060	0.041

DESIGN OF STEM SECTION AT 8.75 FT FROM TOP

AASHTO GROUP (SERVICE)	1	2	3	4	5	6	7
MOMENT	12.41	4.15	12.41	12.41	4.15	12.41	4.15
AXIAL FORCE	2.62	2.62	2.62	2.62	2.62	2.62	2.62
SHEAR	3.31	1.42	3.31	3.31	1.42	3.31	1.42

SECTION THICKNESS	SHEAR STRESS	ALLOWABLE SHEAR	BACK FACE REINF
2.000	0.013	0.060	**0.317**

NOTE: 2.40 x the backwall reinforcing per AREMA 8-5.3.1.c and to account for higher effective surcharge at the top of the backwall
REQUIRED: 0.317 in^2/ft * 2.40 = 0.76 in^2/ft
AREMA Minimum is 0.250 in^2/ft

Proposed: #6's @ 6" = 0.88 in^2/ft

DESIGN OF STEM SECTION AT 14.44 FT FROM TOP

AASHTO GROUP (SERVICE)	1	2	3	4	5	6	7	T
MOMENT	120.96	47.16	157.89	137.68	63.89	174.62	61.89	4.63
AXIAL FORCE	90.00	38.81	89.54	90.00	38.81	89.54	40.34	5.12
SHEAR	7.24	4.26	13.82	10.18	7.20	16.76	6.57	1.83

SECTION THICKNESS	SHEAR STRESS	ALLOWABLE SHEAR	BACK FACE REINF
6.000	0.020	0.060	0.001

DESIGN OF STEM SECTION AT 20.13 FT FROM TOP

AASHTO GROUP (SERVICE)	1	2	3	4	5	6	7	T
MOMENT	175.50	81.23	249.85	208.96	114.68	283.31	109.13	23.11
AXIAL FORCE	95.12	43.93	94.66	95.12	43.93	94.66	45.46	10.24
SHEAR	12.13	7.92	18.70	15.07	10.86	21.64	10.23	4.86

SECTION THICKNESS	SHEAR STRESS	ALLOWABLE SHEAR	BACK FACE REINF
6.000	0.026	0.060	0.282

DESIGN OF STEM SECTION AT 25.82 FT FROM TOP

AASHTO GROUP (SERVICE)	1	2	3	4	5	6	7	T
MOMENT	261.28	139.54	373.03	311.47	189.72	423.22	180.61	62.27
AXIAL FORCE	*****	49.05	99.78	*****	49.05	99.78	50.58	15.36
SHEAR	18.22	12.78	24.80	21.16	15.72	27.74	15.10	9.10

SECTION THICKNESS	SHEAR STRESS	ALLOWABLE SHEAR	BACK FACE REINF
6.000	0.033	0.060	1.257

DESIGN OF STEM SECTION AT 31.51 FT FROM TOP

AASHTO GROUP (SERVICE)	1	2	3	4	5	6	7	T
MOMENT	385.14	228.95	534.30	452.06	295.86	601.22	283.19	128.98
AXIAL FORCE	*****	54.17	*****	*****	54.17	*****	55.70	20.48
SHEAR	25.52	18.85	32.09	28.46	21.79	35.03	21.16	14.55

SECTION THICKNESS	SHEAR STRESS	ALLOWABLE SHEAR	BACK FACE REINF
6.000	0.042	0.060	1.906

SUMMARY OF STEEL DESIGN

FOOTING DESIGN

Top longitudinal reinforcement:

REBAR SPACING (in)	REBAR SIZE	ACTUAL As (sq in/ft)
3	5	1.240
6	5	0.620
8	5	0.465
9	5	0.413
12	5	0.310

Bottom longitudinal reinforcement:

REBAR SPACING (in)	REBAR SIZE	ACTUAL As (sq in/ft)
3	5	1.240
6	5	0.620
8	5	0.465
9	5	0.413
12	5	0.310

Top transverse reinforcement:

REBAR SPACING (in)	REBAR SIZE	ACTUAL As (sq in/ft)
3	10	5.080
6	** NO AVAILABLE DESIGN FOR THIS SPACING **	
8	** NO AVAILABLE DESIGN FOR THIS SPACING **	
9	** NO AVAILABLE DESIGN FOR THIS SPACING **	
12	** NO AVAILABLE DESIGN FOR THIS SPACING **	

Bottom transverse reinforcement:

REBAR SPACING (in)	REBAR SIZE	ACTUAL As (sq in/ft)
3	5	1.240
6	5	0.620
8	5	0.465
9	5	0.413
12	5	0.310

STEM DESIGN

Vertical reinforcement on back face:

REBAR SPACING (in)	REBAR SIZE	ACTUAL As (sq in/ft)
At Section #1, 4.38 feet from the top:		
3	4	0.800
6	4	0.400
8	4	0.300
9	4	0.267
12	4	0.200
At Section #2, 8.75 feet from the top:		
3	4	0.800
6	4	0.400
8	5	0.465
9	5	0.413
12	6	0.440
At Section #3, 14.44 feet from the top:		
3	4	0.800
6	4	0.400
8	4	0.300
9	4	0.267
12	4	0.200
At Section #4, 20.13 feet from the top:		
3	4	0.800
6	4	0.400
8	4	0.300
9	5	0.413
12	5	0.310
At Section #5, 25.82 feet from the top:		
3	5	1.240 *
6	8	1.580
8	9	1.500
9	9	1.333
12	10	1.270
At Section #6, 31.51 feet from the top:		
3	7	2.400
6	9	2.000
8	10	1.905 *
9	11	2.080
12	** NO AVAILABLE DESIGN FOR THIS SPACING **	

- INDICATES THAT AREA SELECTED IS LESS THAN REQUIRED BUT WITHIN TOLERANCE

NOTE: 2.40 x the backwall reinforcing per AREMA 8-5.3.1.c and to account for higher effective surcharge at the top of the backwall
REQUIRED: 0.317 in^2/ft * 2.40 = 0.76 in^2/ft
AREMA Minimum is 0.250 in^2/ft

Proposed: #6's @ 6" = 0.88 in^2/ft

```
          OPTIMUM REBAR DESIGN
          --------------------


FOOTING:


 Top longitudinal reinforcement:
     Spacing       Rebar

       12.             5
        9.             5
        6.             5
        8.             5
        3.             5
Bottom longitudinal reinforcement:
     Spacing       Rebar

       12.             5
        9.             5
        6.             5
        8.             5
        3.             5
  Top transverse reinforcement:
     Spacing       Rebar

        3.            10
 Bottom transverse reinforcement:
     Spacing       Rebar

       12.             5
        9.             5
        6.             5
        8.             5
        3.             5
```

Proposed Footing Reinforcing

Top Mat:
#5's @ 12" Longitudinally
#11's @ 6" Laterally (2" clear to top)
& #11's @ 12" Laterally 7" c/c down from the top mat

Bottom Mat:
#5's @ 12" Longitudinally
#5's # 12" Laterally

```
STEM:


  Here is the design of the vertical
reinforcement
  in the back face of the stem.   For this
design,
  two  complementary rebar spacings are used;
one
  for the bottom and one for the rest of the
stem.

Design #  1:
============
The theoretical cutoff for area of steel = 2.000
sq.in.
using a linear interpolation between design
sections
is  7.19 feet from the top of the footing.

Reqd. extension of reinf. per AASHTO 8.24.1.2.1 :
  1.  15 bar diameters  = 16.920 inches
  2.  effective depth   = 70.000 inches
  3.  1 ft. minimum
      USE               = 70.000 inches

Use # 9 bars at  6. in. up to a height of 13.02
ft.
Above this height use # 9 bars at 12. in.

Design #  2:
============
The theoretical cutoff for area of steel = 2.400
sq.in.
using a linear interpolation between design
sections
is  6.02 feet from the top of the footing.

Reqd. extension of reinf. per AASHTO 8.24.1.2.1 :
  1.  15 bar diameters  = 13.125 inches
  2.  effective depth   = 70.000 inches
  3.  1 ft. minimum
      USE               = 70.000 inches

Use # 7 bars at  3. in. up to a height of 11.86
ft.
Above this height use # 7 bars at  6. in.


STEEL DESIGNS LISTED FROM MOST DESIRABLE TO LEAST
OPTIMAL
```

Proposed Primary Backwall Reinforcing

Rear Mat Vertical Bars:
#6's @6" (continued into the backwall from the stem)

Proposed Primary Stem Reinforcing

Rear Mat Vertical Bars:
#9's # 6" hooked into foundation and extending 13'-10" above top of footing (8'-6" Effective after 5'-4" development)
(0.81 sq. in. required by interpolation at 23.0' from top)
(23' from the top is equal to the bottom wall section design point minus the effective #9 length)

#6's @6" lapping the footing dowel bars extending to the top of the backwall. The lap should be 50".

DESIGN CALCULATION COVER SHEET

Gannett Fleming
Engineers and Architects, P.C.
Excellence Delivered ***As Promised***

ISO 9001:2008 CERTIFIED

PROJECT: **ODOT/EMH&T: HAM-75-7.85**
BRIDGE NO: **HAM-75-0834**
SUBJECT: ***Analysis***
Abutment, Backwall, Stability
Abut5 Program
FILE NAME(s): *AB5_0834_Sp2.dat & AB5_0834.out*

ODOT PID NO: 77889
EMH&T JOB NO:
GF JOB NO: 54682
CALC NO.: **HAM075_0834_05_Forward**
REV NO.: **03**
SHEET: 1 OF 10

SUPERSEDES CALC NO: (Rev. 02)

CALCULATION DESCRIPTION:

This will analyze the proposed abutment utilizing previously calculated load, geometric, and soil input within the Abut5 program. The rear abutment will be analyzed, and the same design will be used for both abutments at Stage 2.

DESIGN BASIS OR REFERENCES:

NS Underpass Design Criteria
AREMA (2008) Chapter 8, Section 5
Calculation: HAM075_0834_04_Forward (Abutment Loads)
Calculation: HAM075_0834_01 (Elevation Data)
Existing PAVR Plans for bottom of footing elevation
Abut5 Users Manual (PennDOT)

MISCELLANEOUS NOTES:

Abut5 Calculates the abutment self-weight and earth loads automatically.

Loads input into Abut5 are be grouped according to AASHTO but are very similar to AREMA Load Cases.

No tension is allowed in piles while vertical surcharge load is applied.

Minimum tension will be allowed in piles without vertical surcharge load is applied, since the lateral component is still applied. Minimum tension will be allowed for seismic.

Stage 3: Update to the loads applied in Abut5 due to increased LL distribution, deck thickness increase and girder sections updated

EFD 7/17/14: Update to 14" pipe piles

RECORD OF ISSUES:

REV	DESCRIPTION	BY	DATE	VERIF'D	DATE
00	Stage 1 Calculation	CTM	10/08/13		
01	Stage 2 Calculation	VDK	06/06/14	CTM	06/16/14
02	Stage 2 Pipe Pile Update	EFD	07/17/14	VDT	07/17/14
03	Stage 3 Update	VDT	01/19/16	CTM	04/25/16

RECORD OF CHECK OF CURRENT CALCULATION VERSION

BY	DATE	CHKD	DATE	UPD.	DATE	VERIF'D	DATE
VDK	06/06/14	CTM	06/13/14	VDT	01/19/16	CTM	04/25/16

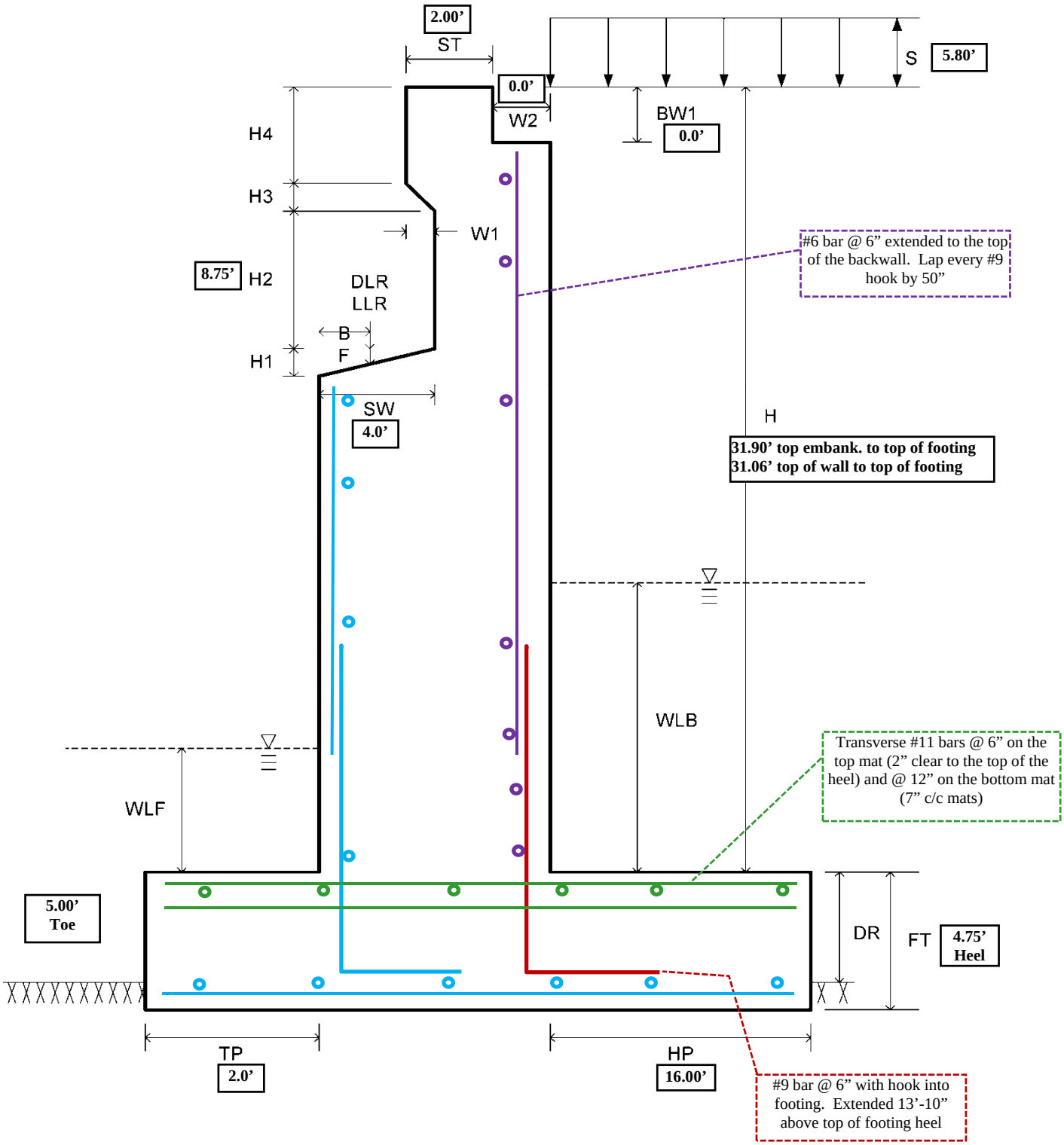

Figure 5.2.1 Input Dimensions - Abutment Type I

NOTE: Heights "H" are rounded up (approximately 6") in this analysis to ensure conservative design will still apply subject to any potential minor elevation changes during final detailing.

Reinforcing Note: All other bars shall be #5's at 12". 3" Clear to bottom of footing. 2" clear to all other surfaces. Vertical stem rebar should be outside of horizontal rebar. Transverse footing reba should be on the top/bottom of longitudinal rebar.

```
   ---------------------------------------------------------------------------
                                ECHO OF INPUT FILE
   ---------------------------------------------------------------------------
**PROJECT: ODOT/EMH&T: HAM-75-7.85, GF Job # 054682
*CALC: VDK, 6/3/2014
**NSRR Over HAM-75-0834 Forward abutment
**Separate design for RA and FA due to difference of spans.
**ASD Design as per AREMA Chapter 8, Part 5 and NS Standards
* ** Created by EngAsst **
* EngAsst Information: [Program=ABUT5] [Version=5.4.0.0]
* ** Data Records Start Here **
*Pressure as per Rankine Equation
SLA12140Y5 372     28620700    3190        0580     40004000400060   000   YYN  ! Criteria
310620002001600         00008750000000000000   0000    02190400      475        ! Dimensions
*Top Trans. Assumes 2 mats
0306080912YSSS000102000300020002750350065004000300                              ! Rebar
*NOTE: Seismic Not Considered for a Single Span as per AREMA
2512419500240034    0130060700210227                       053301000            ! Loading
013000175003501000                                                              ! Pile
023000350003501000                                                              ! Pile
033000350003500500                                                              ! Pile
04  0040000700                                                                  ! Pile
05  0050000700                                                                  ! Pile
```

```
                    LFD Abutment and Retaining Wall                  333067

PROGRAM P4354040                                          07/17/2014 07:49
VERSION 5.4.0.0          LAST UPDATED 05/05/2005        DOCUMENTATION 05/2005

INPUT: AB-834-F.dat

*PROJECT: ODOT/EMH&T: HAM-75-7.85, GF JOB # 054682
CALC: VDK, 6/3/2014
*NSRR OVER HAM-75-0834 FORWARD ABUTMENT


                            ANALYSIS OF
                     ABUTMENT WITH BACKWALL TYPE I

                      TYPE OF FOOTING : ON PILES

                                                                EQUIV FLUID
DESIGN                   FTG    PILE            PILE             PRESSURE
METHOD   A OR D   TYPE   TYPE     D   EMBEDDED  ROWS   R OR S     DRY   SAT
  SL       A       1      2     14.0     Y       5               37.2

                      ALLOW SOIL   WATER  TOP FTG   WATER    TOP WALL   LIVE
COEFF OF  BACKFILL  PRESS OR AXIAL LEVEL  TO TOP    LEVEL     TO TOP    LOAD
FRICTION    SLOPE     PILE CAPAC    BACK  EMBANK    FRONT    BACKFILL   SURCH
            28.6        207.00             31.90                        5.80

TOP FTG  F'C                                  LATERAL                     PILE
TO ROCK  BACK   F'C    F'C  REBAR   PILE  PILE  PILE      REBAR  OVR  80%   ROW
SURFACE  WALL   STEM   FTG  GRADE  BATTER  OPT  CAPAC  Kv  DES   STR  RULE  OPT
        4000.  4000.  4000.   60.                0.0        Y     Y    N

  TOP OF
(BACK)WALL                                          MAX
TO TOP OF     TOP      PROJECTION          MAX    FTG
 FOOTING   THICKNESS   TOE   HEEL  T OR H  PROJ  WIDTH   H1     H2    H3    H4
  31.06      2.00      2.00 16.00                       0.00   8.75  0.00  0.00

                           FRONT           HEIGHT
                           FACE   BRIDGE     OF
                           TO DL   SEAT   BACKWALL  BACK   FOOTING  PILE  FTG
 W1   W2   W3   BW1   BW2   REACT   WIDTH   BATTER  BATTER THICKNESS COST  COST
0.00 0.00       0.00         2.19    4.00                    4.75

     TRIAL
 REBAR SPACING  BAR   BW    STEM    FTG    MIN
 1  2  3  4  5  LOC  EXPOS  EXPOS  EXPOS   As
 3  6  8  9 12   Y     S      S      S    0.001

     STEM REBAR COVER           FOOTING REBAR COVER
 VERT  HORIZ   VERT  HORIZ    LONG  TRANS   LONG  TRANS
 2.00   3.00   2.00   2.75    3.50   6.50   4.00   3.00

                                         LONG
                      WIND   WIND        FORCE
 DL     LL    WIND    ON     ON   UPWARD  FROM   CENTR  TEMP
REACT  REACT  ON LL  SUPER   SUB   WIND    LL    FORCE  FORCE
27.05  44.78   0.24   0.34          1.35   6.07   0.22   2.44

                            BACKWALL            ALLOW
    PARAPET OR EXTERNAL     LIVE LOAD  SEISMIC   PILE
 HORZ   DIST   VERT   DIST   VERT   HORZ   LOAD   UPLIFT
                                            5.65   10.00
```

ROW NO	PILE BATTER	DISTANCE BETWEEN ROWS	PILE SPACING	PERCENT ROW BATTERED
1	3.0	1.75	3.50	100.0
2	3.0	3.50	3.50	100.0
3	3.0	3.50	3.50	50.0
4		4.00	7.00	
5		5.00	7.00	

14” OD x 0.5” wall thickness cast in place pipe piles with structural allowable of 239 Kips (after accounting for future degradation of 0.05”)

```
                    REINFORCEMENT SUMMARY
                    ---------------------
                     REBAR SPACINGS (in):
                              3.
                              6.
                              8.
                              9.
                             12.

          REBAR COVERS (in):   (C.G. OF BAR TO OUTER FACE)
                   STEM                      FOOTING
          BACK          FRONT          TOP         BOTTOM
       VERT  HORIZ   VERT  HORIZ  LONG   TRANS  LONG   TRANS
       2.00   3.00   2.00   2.75  3.50    6.50  4.00    3.00

                     BACK WALL -- SEVERE
       EXPOSURES:    STEM ------- SEVERE
                     FOOTING ---- SEVERE

       MINIMUM AREA OF STEEL PER FOOT: 0.001 SQUARE INCHES


***  NOTE  ***
 - THE REBARS IN THE BOTTOM OF THE FOOTING ARE BELOW THE TOP OF THE PILES.



                        PILE FOOTING ANALYSIS
                        ---------------------

***  NOTE  ***
 - SINCE Kv WAS NOT ENTERED,  0.0 WAS COMPUTED AND USED.

 - FOR THE TEMPORARY CONSTRUCTION LOADING CONDITION (GROUP T) - FILL HEIGHT
   TO ABUTMENT SEAT, LIVE LOAD SURCHARGE, BUOYANCY AND WIND ON SUBSTRUCTURE
   (IF APPLICABLE):
    > PILE CAPACITY HAS BEEN INCREASED BY A FACTOR OF 1.25.

 - FOR PILE ROWS WITH BOTH VERTICAL AND BATTERED PILES, PILE LOADS ARE
   FOR THE MAXIMUM CONDITION (AXIAL LOAD IN BATTERED PILES).


***  SEISMIC DESIGN - DESIGNER NOTES  ***
 1. BRIDGE BEARING SEAT LENGTH MUST BE CHECKED VERSUS THE MINIMUM REQUIRED
    BEARING SUPPORT LENGTHS AS DETERMINED BY SECTION 4.8, APPENDIX A, DM-4.
 2. VERTICAL REINFORCEMENT ON BACK FACE OF STEM MUST BE HOOKED INTO THE
    FOOTING.
 3. TOP REINFORCEMENT IN THE FOOTING, BOTH LONGITUDINAL AND TRANSVERSE,
    SHALL BE A MINIMUM OF #5's @ 12" SPACING.
 4. VERTICAL REINFORCEMENT, #4's @ 4' SPACING, ARE REQUIRED TO TIE THE
    TOP AND BOTTOM MATS OF REINFORCING IN THE FOOTING TOGETHER.
```

STABILITY ANALYSIS (SERVICE LOADS) - WITH VERTICAL COMPONENT OF LL SURCHARGE

AASHTO GROUP	BAL. SUM V	BAL. MOMENT	O.T. SUM H	O.T. MOMENT	FRONT ROW TO RESULT	PILE LOAD FRONT	PILE LOAD BACK	PILE LOAD ALLOW	LAT. RESIST	F.S. O.T.
1	182.41	1438.07	33.11	456.08	5.38	187.53	122.39	207.00	35.86	3.15
2	125.14	1166.82	25.32	314.42	6.81	92.08	143.11	258.75	44.83	3.71
3	182.00	1437.08	39.52	629.59	4.44	222.39	65.09	258.75	44.83	2.28
4	182.41	1438.07	35.55	522.11	5.02	201.05	100.54	258.75	44.83	2.75
5	125.14	1166.82	27.76	380.45	6.28	105.59	121.26	289.80	50.20	3.07
6	182.00	1437.08	41.96	695.62	4.07	235.90	43.23	289.80	50.20	2.07
7	126.49	1170.12	30.63	458.11	5.63	123.69	95.15	477.69	82.76	2.55
T	91.15	1009.62	20.50	218.62	8.68	32.25	160.54	258.75	44.83	4.62

NOTE: Max Pile Reaction under Primary Loads is 187 Kips. It is 222 kips when longitudinal live load is added.

STABILITY ANALYSIS (SERVICE LOADS) - WITHOUT VERTICAL COMPONENT OF LL SURCHARGE

AASHTO GROUP	BAL. SUM V	BAL. MOMENT	O.T. SUM H	O.T. MOMENT	FRONT ROW TO RESULT	PILE LOAD FRONT	PILE LOAD BACK	PILE LOAD ALLOW	LAT. RESIST	F.S. O.T.
1	171.27	1279.38	33.11	456.08	4.81	196.29	82.24	207.00	35.86	2.81
2	125.14	1166.82	25.32	314.42	6.81	92.08	143.11	258.75	44.83	3.71
3	170.86	1278.39	39.52	629.59	3.80	231.15	24.94	258.75	44.83	2.03
4	171.27	1279.38	35.55	522.11	4.42	209.81	60.39	258.75	44.83	2.45
5	125.14	1166.82	27.76	380.45	6.28	105.59	121.26	289.80	50.20	3.07
6	170.86	1278.39	41.96	695.62	3.41	244.67	3.08	289.80	50.20	1.84
7	126.49	1170.12	30.63	458.11	5.63	123.69	95.15	477.69	82.76	2.55
T	80.01	850.93	20.50	218.62	7.90	41.01	120.39	258.75	44.83	3.89

FOOTING ANALYSIS (SERVICE LOADS) - WITH VERTICAL COMPONENT OF LL SURCHARGE

AASHTO GROUP	TOE MOMENT	TOE SHEAR @	HEEL MOMENT	HEEL SHEAR @
1	11.57	0.00 D	370.72	1.62 F
2	4.96	0.00 D	271.96	1.91 F
3	13.99	0.00 D	471.40	15.65 F
4	12.51	0.00 D	409.04	6.93 F
5	5.89	0.00 D	310.28	7.22 F
6	14.92	0.00 D	509.72	20.96 F
7	7.15	0.00 D	355.44	13.18 F
T	0.81	0.00 D	199.00	0.18 F

FOOTING ANALYSIS (SERVICE LOADS) - WITHOUT VERTICAL COMPONENT OF LL SURCHARGE

AASHTO GROUP	TOE MOMENT	TOE SHEAR @	HEEL MOMENT	HEEL SHEAR @
1	12.18	0.00 D	357.23	3.44 F
2	4.96	0.00 D	271.96	1.91 F
3	14.59	0.00 D	457.90	17.47 F
4	13.11	0.00 D	395.55	8.74 F
5	5.89	0.00 D	310.28	7.22 F
6	15.53	0.00 D	496.22	22.78 F
7	7.15	0.00 D	355.44	13.18 F
T	1.42	0.00 D	185.51	1.99 F

FOOTING DESIGN - WITH AND WITHOUT VERTICAL COMPONENT OF LL SURCHARGE

FOOTING WIDTH	FOOTING THICKNESS	TOE PROJ	HEEL PROJ	EFFECTIVE DEPTH TOE	EFFECTIVE DEPTH HEEL
24.00	4.75	2.00	16.00	4.500	4.208

SHEAR STR TOE	ALLOWABLE SHEAR TOE	SHEAR STR HEEL	ALLOWABLE SHEAR HEEL	TRANS REINFORCEMENT TOE-BOT	TRANS REINFORCEMENT HEEL-TOP	LONGITUDINAL REINFORCEMENT
0.000	0.060	0.035	0.060	0.15	4.12	0.24

LONGITUDINAL MOMENT CALCULATIONS - WITH VERTICAL COMPONENT OF LL SURCHARGE
GROUP 1 GOVERNS

MAX UNIFORM LOAD (w) = 7.600 K/FT
MAX UNIFORM SERVICE LOAD (w) = 7.600 K/FT
MAX PILE SPACING = 7.00 FEET
MAX LONGITUDINAL MOMENT = 18.62 K-FT
MAX LONG. MOMENT (SERVICE) = 18.62 K-FT

NOTE: 4.12 Square inches of heel reinforcing is required at a centroid distance of 6.5" from the top. #11 bars @ 6" on the top mat and #11 bars at 12" on a mat 7" lower will result in adequate reinforcing (4.68 sq. in. @ centroid 5.07" down)

PILE PATTERN

ROW	BATTER	DISTANCE	SPACING	% BATTERED
1	3.0 ON 12	1.75	3.50	100.0
2	3.0 ON 12	5.25	3.50	100.0
3	3.0 ON 12	8.75	3.50	50.0
4	VERT	12.75	7.00	0.0
5	VERT	17.75	7.00	0.0

C.G. OF PILES 7.75 FT. FROM TOE I OF PILES PER FOOT 30.214
PILE DENSITY 1.1429 PILES PER FOOT

STEM ANALYSIS

DESIGN OF STEM SECTION AT 4.38 FT FROM TOP

AASHTO GROUP (SERVICE)	1	2	3	4	5	6	7
MOMENT	2.58	0.52	2.58	2.58	0.52	2.58	0.52
AXIAL FORCE	1.31	1.31	1.31	1.31	1.31	1.31	1.31
SHEAR	1.30	0.36	1.30	1.30	0.36	1.30	0.36

SECTION THICKNESS	SHEAR STRESS	ALLOWABLE SHEAR	BACK FACE REINF
2.000	0.005	0.060	0.041

DESIGN OF STEM SECTION AT 8.75 FT FROM TOP

AASHTO GROUP (SERVICE)	1	2	3	4	5	6	7
MOMENT	12.41	4.15	12.41	12.41	4.15	12.41	4.15
AXIAL FORCE	2.62	2.62	2.62	2.62	2.62	2.62	2.62
SHEAR	3.31	1.42	3.31	3.31	1.42	3.31	1.42

SECTION THICKNESS	SHEAR STRESS	ALLOWABLE SHEAR	BACK FACE REINF
2.000	0.013	0.060	**0.317**

NOTE: 2.40 x the backwall reinforcing per AREMA 8-5.3.1.c and to account for higher effective surcharge at the top of the backwall
REQUIRED: 0.317 in^2/ft * 2.40 = 0.76 in^2/ft
AREMA Minimum is 0.250 in^2/ft

Proposed: #6's @ 6" = 0.88 in^2/ft

DESIGN OF STEM SECTION AT 14.33 FT FROM TOP

AASHTO GROUP (SERVICE)	1	2	3	4	5	6	7	T
MOMENT	106.51	39.98	141.88	120.12	53.59	155.49	55.16	4.43
AXIAL FORCE	79.47	33.34	79.07	79.47	33.34	79.07	34.69	5.02
SHEAR	7.13	4.16	13.54	9.57	6.60	15.98	6.64	1.78

SECTION THICKNESS	SHEAR STRESS	ALLOWABLE SHEAR	BACK FACE REINF
6.000	0.019	0.060	0.001

DESIGN OF STEM SECTION AT 19.91 FT FROM TOP

AASHTO GROUP (SERVICE)	1	2	3	4	5	6	7	T
MOMENT	159.00	72.54	230.13	186.22	99.76	257.35	101.58	22.03
AXIAL FORCE	84.49	38.36	84.09	84.49	38.36	84.09	39.71	10.04
SHEAR	11.88	7.71	18.30	14.32	10.15	20.74	10.19	4.72

SECTION THICKNESS	SHEAR STRESS	ALLOWABLE SHEAR	BACK FACE REINF
6.000	0.025	0.060	0.279

DESIGN OF STEM SECTION AT 25.48 FT FROM TOP

AASHTO GROUP (SERVICE)	1	2	3	4	5	6	7	T
MOMENT	241.23	128.13	348.12	282.06	168.96	388.95	171.03	59.25
AXIAL FORCE	89.51	43.38	89.11	89.51	43.38	89.11	44.73	15.06
SHEAR	17.80	12.42	24.21	20.24	14.86	26.65	14.90	8.82

SECTION THICKNESS	SHEAR STRESS	ALLOWABLE SHEAR	BACK FACE REINF
6.000	0.032	0.060	1.187

DESIGN OF STEM SECTION AT 31.06 FT FROM TOP

AASHTO GROUP (SERVICE)	1	2	3	4	5	6	7	T
MOMENT	359.67	213.21	502.32	414.10	267.65	556.76	269.97	122.54
AXIAL FORCE	94.53	48.40	94.13	94.53	48.40	94.13	49.75	20.08
SHEAR	24.87	18.28	31.28	27.31	20.72	33.72	20.77	14.07

SECTION THICKNESS	SHEAR STRESS	ALLOWABLE SHEAR	BACK FACE REINF
6.000	0.040	0.060	1.791

SUMMARY OF STEEL DESIGN

FOOTING DESIGN

Top longitudinal reinforcement:

REBAR SPACING (in)	REBAR SIZE	ACTUAL As (sq in/ft)
3	5	1.240
6	5	0.620
8	5	0.465
9	5	0.413
12	5	0.310

Bottom longitudinal reinforcement:

REBAR SPACING (in)	REBAR SIZE	ACTUAL As (sq in/ft)
3	5	1.240
6	5	0.620
8	5	0.465
9	5	0.413
12	5	0.310

Top transverse reinforcement:

REBAR SPACING (in)	REBAR SIZE	ACTUAL As (sq in/ft)
3	10	5.080
6	** NO AVAILABLE DESIGN FOR THIS SPACING **	
8	** NO AVAILABLE DESIGN FOR THIS SPACING **	
9	** NO AVAILABLE DESIGN FOR THIS SPACING **	
12	** NO AVAILABLE DESIGN FOR THIS SPACING **	

Bottom transverse reinforcement:

REBAR SPACING (in)	REBAR SIZE	ACTUAL As (sq in/ft)
3	5	1.240
6	5	0.620
8	5	0.465
9	5	0.413
12	5	0.310

STEM DESIGN

Vertical reinforcement on back face:

REBAR SPACING (in)	REBAR SIZE	ACTUAL As (sq in/ft)
At Section #1, 4.38 feet from the top:		
3	4	0.800
6	4	0.400
8	4	0.300
9	4	0.267
12	4	0.200
At Section #2, 8.75 feet from the top:		
3	4	0.800
6	4	0.400
8	5	0.465
9	5	0.413
12	6	0.440
At Section #3, 14.33 feet from the top:		
3	4	0.800
6	4	0.400
8	4	0.300
9	4	0.267
12	4	0.200
At Section #4, 19.91 feet from the top:		
3	4	0.800
6	4	0.400
8	4	0.300
9	5	0.413
12	5	0.310
At Section #5, 25.48 feet from the top:		
3	5	1.240
6	7	1.200
8	8	1.185 *
9	9	1.333
12	10	1.270
At Section #6, 31.06 feet from the top:		
3	7	2.400
6	9	2.000
8	10	1.905
9	11	2.080
12	** NO AVAILABLE DESIGN FOR THIS SPACING **	

* - INDICATES THAT AREA SELECTED IS LESS THAN REQUIRED BUT WITHIN TOLERANCE

NOTE: 2.40 x the backwall reinforcing per AREMA 8-5.3.1.c and to account for higher effective surcharge at the top of the backwall
REQUIRED: 0.317 in^2/ft * 2.40 = 0.76 in^2/ft
AREMA Minimum is 0.250 in^2/ft

Proposed: #6's @ 6" = 0.88 in^2/ft

```
          OPTIMUM REBAR DESIGN
          --------------------


FOOTING:


 Top longitudinal reinforcement:
     Spacing       Rebar

       12.             5
        9.             5
        6.             5
        8.             5
        3.             5
Bottom longitudinal reinforcement:
     Spacing       Rebar

       12.             5
        9.             5
        6.             5
        8.             5
        3.             5
  Top transverse reinforcement:
     Spacing       Rebar

        3.            10
 Bottom transverse reinforcement:
     Spacing       Rebar

       12.             5
        9.             5
        6.             5
        8.             5
        3.             5
```

Proposed Footing Reinforcing

Top Mat:
#5's @ 12" Longitudinally
#11's @ 6" Laterally (2" clear to top)
& #11's @ 12" Laterally 7" c/c down from the top mat
Bottom Mat:
#5's @ 12" Longitudinally
#5's # 12" Laterally

```
STEM:

  Here is the design of the vertical reinforcement
  in the back face of the stem.   For this design,
  two  complementary rebar spacings are used;  one
  for the bottom and one for the rest of the stem.


Design #  1:
============
The theoretical cutoff for area of steel = 2.000 sq.in.
using a linear interpolation between design sections
is  6.91 feet from the top of the footing.

Reqd. extension of reinf. per AASHTO 8.24.1.2.1 :
  1.  15 bar diameters  = 16.920 inches
  2.  effective depth   = 70.000 inches
  3.  1 ft. minimum

      USE               = 70.000 inches


Use # 9 bars at  6. in. up to a height of 12.74
ft.
Above this height use # 9 bars at 12. in.


Design #  2:
============
The theoretical cutoff for area of steel = 2.400 sq.in.
using a linear interpolation between design sections
is  5.71 feet from the top of the footing.

Reqd. extension of reinf. per AASHTO 8.24.1.2.1 :
  1.  15 bar diameters  = 13.125 inches
  2.  effective depth   = 70.000 inches
  3.  1 ft. minimum

      USE               = 70.000 inches


Use # 7 bars at  3. in. up to a height of 11.54
ft.
Above this height use # 7 bars at  6. in.


STEEL DESIGNS LISTED FROM MOST DESIRABLE TO LEAST
OPTIMAL
```

Proposed Primary Backwall Reinforcing

Rear Mat Vertical Bars:
#6's @6" (continued into the backwall from the stem)

Proposed Primary Stem Reinforcing

Rear Mat Vertical Bars:
#9's # 6" hooked into foundation and extending 13'-10" above top of footing (8'-6" Effective after 5'-4" development)
(0.82 sq. in. required by interpolation at 23.0' from top)
(23' from the is equal to the bottom wall section design point minus the effective #9 length)

#6's @6" lapping the footing dowel bars extending to the top of the backwall. The lap should be 50".

DESIGN CALCULATION COVER SHEET

Gannett Fleming
Engineers and Architects, P.C.
Excellence Delivered ***As Promised***

ISO 9001:2008 CERTIFIED

PROJECT:	**ODOT/EMH&T: HAM-75-7.85**	*ODOT PID NO:*	*77889*
BRIDGE NO:	**HAM-75-0834**	*EMH&T JOB NO:*	
SUBJECT:	***Loads***	**GF JOB NO:**	**54682**
	Pier Loads for	CALC NO.:	**HAM075_0834_06**
	RCPier Program	REV NO.:	**01**
FILE NAME(s):	*HAM075_0834_06.xlsx*	**SHEET:**	**1 OF 4**

SUPERSEDES CALC NO: (Rev. 00)

CALCULATION DESCRIPTION:

This will calculate all loads applied to the pier for use in RC-PIER.

All horizontal loads will be broken into XZ directions for input into RCPier. Wind load calculations will be automated by RCPIer to allow correct overturning values to be recognized (uplift per AASHTO).

RCPier load cases and design factors will be modfied AASHTO Standard (ASD).

As per NS/STV comments, the abutments will be fixed, with the pier being expansion.

DESIGN BASIS OR REFERENCES:

NS Underpass Design Criteria
AREMA (2008) Chapter 8, Section 5
AREMA (2014) Chapter 15, Section 10
Calculation: HAM075_0834_03_Sp1
Calculation: HAM075_0834_03_Sp2

MISCELLANEOUS NOTES:

RCPier Calculates the pier self-weight, thermal loads & wind loads (super and sub) automatically.

Bearing stiffness calculations are completed with Abutment load calculations.

RECORD OF ISSUES:

REV	DESCRIPTION	BY	DATE	VERIF'D	DATE
00	Stage 1 Calculation	CTM	10/01/13		
01	Stage 2 Calculation	VDK	05/28/14		

RECORD OF CHECK OF CURRENT CALCULATION VERSION

BY	DATE	CHKD	DATE	UPD.	DATE	VERIF'D	DATE
VDK	05/28/14	VDT	07/08/14	VDK	07/10/14		

Gannett Fleming	GF JOB # 54682	CALC NO.: **HAM075_0834_06**	REV. NO.: **01**
		PROJECT: **ODOT/EMH&T: HAM-75-7.85**	

ODOT PID NO.: 77889		DESIGNED: *CTM*	DATE: *10/01/13*
BRIDGE NO: *HAM-75-0834*		UPDATED: *VDK*	DATE: *05/28/14*
SUBJECT: *Loads*		CHECKED *VDT*	DATE: *07/08/14*
Pier Loads for		UPDATED: *VDK*	DATE: *07/10/14*
RCPier Program		VERIFIED:	DATE:

Notes

- *RCPier will be used to auto-calculate wind loads (super & sub), thermal friction loads & seismic loads on bearings*
- *LL interpolated from AREMA Table 15-1-15 (Single Rail Loads)*
- *CF and LF loads (X & Z directions) are modified for skew.*
- *AREMA 8-5.3.1.f states that impact need not be considered for a wall-type pier or abutment.*
- *Wind and Long. Force calculations are different in the concrete portion of the code. However, since the girders were designed to the chapter 15 loads, the substructure will be designed to support those loads.*

AREMA Load Cases (AREMA Table 8-2-4)

Loads Considered

D = Dead Load
L = Live Load
I = Impact
CF = Centrifugal Force
E = Earth Pressure
W = Wind on Structure (45psf)
WL = Wind on Live (300 plf)
LF = Long. Force
F = Bearing Friction *(T in RCPier)*
EQ = Earthquake Load
OF = Other Forces *(R,S,T in RCPier)*
B = Buoyancy
SF = Stream Flow Pressure

AREMA Service Load Groups

Group	Items	O.S. Allowance
I	D + L + CF + E + B + SF + I	100%
II	D + E + B + SF + W	125%
III	D + L + CF + E+B+SF + 0.5W + WL + LF + F + I	125%
IV	D + L + CF + E + B + SF + OF + I	125%
V	D + E + B + SF + W + OF	140%
VI	D+L+CF+E+B+SF+ 0.5W + WL + LF + F+OF + I	140%
VII	D + L + CF + E + B + SF + ICE + I	140%
VIII	D + E + B + SF + W + ICE	150%

Interpolated Data from AREMA Table 15-1-15 (Single Rail Loads)

Span 1							
Span Length (ft)	Maximum Moment (ft*kips)	Maximum Moment Quarter Point (ft*kips)	Maximum Shears (Kips)			Maximum Pier Reaction (Kips)	
			At End	At Quarter Point	At Center		
100	6446.30	5060.50	300.00	173.12	84.00	474.24	
110.500	7905.3	6130.2	324.9	188.4	86.6	510.94	52.5%
120	9225.40	7098.00	347.35	202.19	88.92	544.14	

Span 2							
Span Length (ft)	Maximum Moment (ft*kips)	Maximum Moment Quarter Point (ft*kips)	Maximum Shears (Kips)			Maximum Pier Reaction (Kips)	
			At End	At Quarter Point	At Center		
90	5339.10	4158.00	274.46	157.47	82.22	437.15	
97.250	6141.8	4812.3	293.0	168.8	83.5	464.04	72.5%
100	6446.30	5060.50	300.00	173.12	84.00	474.24	

- *Single Rail Loads are distributed to 2 girders (Two rails on 4 girders)*

Gannett Fleming	GF JOB # 54682	CALC NO.: HAM075_0834_06	REV. NO.: 01
		PROJECT: ODOT/EMH&T: HAM-75-7.85	
ODOT PID NO.: 77889		DESIGNED: CTM	DATE: 10/01/13
BRIDGE NO: HAM-75-0834		UPDATED: VDK	DATE: 05/28/14
SUBJECT: Loads		CHECKED VDT	DATE: 07/08/14
Pier Loads for		UPDATED: VDK	DATE: 07/10/14
RCPier Program		VERIFIED:	DATE:

Pertinent Layout Data - Span 1 of 2

Trigonometry multipliers to make resolve loads into X & Z components

Skew Angle: 25.50 deg 0.45 rad

^^ Normal to the C/L of the girder ^^

Multiplier for Lateral Load (CF)

"X" Value (cos): 0.903

"Z" Value (sin): 0.431

Multiplier for Longitudinal Load (LF)

"X" Value (sin): 0.431

"Z" Value (cos): 0.903

Pertinent Reaction Data from calculation HAM075_0834_Span1_03 & RCP AutoCalculation

Span 1 Load Distribution 52.41%

^^ Span 1 Max Pier Reaction / Total Max Pier Reaction ^^

Max Factor 1.501

^^ Average Max Pier Reaction / Span 1 Max End Shear ^^

- Loads are imported from HAM075_0834_Span 1_03 (Max span, Span 1, controls)

Horizontal loads are divided among all the girders instead of LL girders

Misc. Reactions - Span 1

Worst Case Reactions - Standard AREMA Live Load

Girder Location	DL (-Y)	LL - Balanced (-Y)	LL - Unbalanced (-Y)	Derail - Balanced (-Y)	Derail - Unbalanced (-Y)
Bearing 1	123.56 kip				
Bearing 2	126.39 kip				
Bearing 3	126.39 kip	104.04 kip	132.30 kip		
Bearing 4	126.39 kip	104.04 kip	132.30 kip		
Bearing 5	126.39 kip	151.43 kip	192.56 kip	90.86 kip	115.54 kip
Bearing 6	126.39 kip	151.43 kip	192.56 kip	90.86 kip	115.54 kip
Bearing 7	126.39 kip			90.86 kip	115.54 kip
Bearing 8	123.56 kip			272.58 kip	346.61 kip

Total = 510.94 kip

Centrifugal Reactions - Span 1

Worst Case Reactions - Standard AREMA Live Load

Girder Location	CF - Balanced (-X)	CF - Balanced (-Y)	CF - Balanced (-Z)	CF - Unbalanced (-X)	CF - Unbalanced (-Y)	CF - Unbalanced (-Z)
Bearing 1	0.96 kip		0.46 kip	1.22 kip		0.58 kip
Bearing 2	0.96 kip		0.46 kip	1.22 kip		0.58 kip
Bearing 3	0.96 kip	-1.72 kip	0.46 kip	1.22 kip	-2.19 kip	0.58 kip
Bearing 4	0.96 kip	-1.72 kip	0.46 kip	1.22 kip	-2.19 kip	0.58 kip
Bearing 5	1.39 kip	2.51 kip	0.67 kip	1.77 kip	3.19 kip	0.85 kip
Bearing 6	1.39 kip	2.51 kip	0.67 kip	1.77 kip	3.19 kip	0.85 kip
Bearing 7	1.39 kip		0.67 kip	1.77 kip		0.85 kip
Bearing 8	1.39 kip		0.67 kip	1.77 kip		0.85 kip

Braking/Traction Reactions - Span 1

Worst Case Reactions - Standard AREMA Live Load

Girder Location	LF - Balanced (-X)	LF - Balanced (-Y)	LF - Balanced (-Z)	LF - Unbalanced (-X)	LF - Unbalanced (-Y)	LF - Unbalanced (-Z)
Bearing 1	4.38 kip		9.18 kip	5.57 kip		11.67 kip
Bearing 2	4.38 kip		9.18 kip	5.57 kip		11.67 kip
Bearing 3	4.38 kip	5.69 kip	9.18 kip	5.57 kip	7.23 kip	11.67 kip
Bearing 4	4.38 kip	5.69 kip	9.18 kip	5.57 kip	7.23 kip	11.67 kip
Bearing 5	5.40 kip	8.28 kip	11.32 kip	6.87 kip	10.53 kip	14.39 kip
Bearing 6	5.40 kip	8.28 kip	11.32 kip	6.87 kip	10.53 kip	14.39 kip
Bearing 7	5.40 kip		11.32 kip	6.87 kip		14.39 kip
Bearing 8	5.40 kip		11.32 kip	6.87 kip		14.39 kip

Gannett Fleming	GF JOB # 54682	CALC NO.: HAM075_0834_06	REV. NO.: 01
		PROJECT: ODOT/EMH&T: HAM-75-7.85	
ODOT PID NO.: 77889		DESIGNED: CTM	DATE: 10/01/13
BRIDGE NO: HAM-75-0834		UPDATED: VDK	DATE: 05/28/14
SUBJECT: Loads		CHECKED VDT	DATE: 07/08/14
Pier Loads for		UPDATED: VDK	DATE: 07/10/14
RCPier Program		VERIFIED:	DATE:

Pertinent Layout Data - Span 2 of 2

Trigonometry multipliers to make resolve loads into X & Z components

Skew Angle: 25.50 deg 0.45 rad

^^ Normal to the C/L of the girder ^^

Multiplier for Lateral Load (CF)

"X" Value (cos): 0.903

"Z" Value (sin): 0.431

Multiplier for Longitudinal Load (LF)

"X" Value (sin): 0.431

"Z" Value (cos): 0.903

Pertinent Reaction Data from calculation HAM075_0834_Span1_03 & RCP AutoCalculation

Span 2 Load Distribution 47.59%

^^ Span 2 End Shear / Total End Shear ^^

- Loads are imported from HAM075_0834_Span 2_03

Misc. Reactions - Span 2

Worst Case Reactions - Standard AREMA Live Load

Girder Location	DL (-Y)	LL - Balanced (-Y)	LL - Unbalanced (-Y)	Derail - Balanced (-Y)	Derail - Unbalanced (-Y)
Bearing 1	102.37 kip				
Bearing 2	104.88 kip				
Bearing 3	104.88 kip	94.49 kip			
Bearing 4	104.88 kip	94.49 kip			
Bearing 5	104.88 kip	137.53 kip		82.52 kip	
Bearing 6	104.88 kip	137.53 kip		82.52 kip	
Bearing 7	104.88 kip			82.52 kip	
Bearing 8	102.37 kip			247.56 kip	
	Total =	464.04 kip			

Centrifugal Reactions - Span 2

Worst Case Reactions - Standard AREMA Live Load

Girder Location	CF - Balanced (-X)	CF - Balanced (-Y)	CF - Balanced (-Z)	CF - Unbalanced (-X)	CF - Unbalanced (-Y)	CF - Unbalanced (-Z)
Bearing 1	0.87 kip		0.41 kip			
Bearing 2	0.87 kip		0.41 kip			
Bearing 3	0.87 kip	-1.56 kip	0.41 kip			
Bearing 4	0.87 kip	-1.56 kip	0.41 kip			
Bearing 5	1.27 kip	2.28 kip	0.60 kip			
Bearing 6	1.27 kip	2.28 kip	0.60 kip			
Bearing 7	1.27 kip		0.60 kip			
Bearing 8	1.27 kip		0.60 kip			

Braking/Traction Reactions - Span 2

Worst Case Reactions - Standard AREMA Live Load

Girder Location	LF - Balanced (-X)	LF - Balanced (-Y)	LF - Balanced (-Z)	LF - Unbalanced (-X)	LF - Unbalanced (-Y)	LF - Unbalanced (-Z)
Bearing 1	3.98 kip		8.34 kip			
Bearing 2	3.98 kip		8.34 kip			
Bearing 3	3.98 kip	5.17 kip	8.34 kip			
Bearing 4	3.98 kip	5.17 kip	8.34 kip			
Bearing 5	4.90 kip	7.52 kip	10.28 kip			
Bearing 6	4.90 kip	7.52 kip	10.28 kip			
Bearing 7	4.90 kip		10.28 kip			
Bearing 8	4.90 kip		10.28 kip			

DESIGN CALCULATION COVER SHEET

Gannett Fleming
Engineers and Architects, P.C.
Excellence Delivered ***As Promised***

ISO 9001:2008 CERTIFIED

PROJECT: **ODOT/EMH&T: HAM-75-7.85**
BRIDGE NO: **HAM-75-0834**
SUBJECT: ***Analysis***
Pier
FILE NAME(s): *HAM075_0834 Pier.rcp*

ODOT PID NO: *77889*
EMH&T JOB NO:
GF JOB NO: 54682
CALC NO.: **HAM075_0834_07**
REV NO.: **02**
SHEET: 1 OF 213

SUPERSEDES CALC NO: (Rev. 01)

CALCULATION DESCRIPTION:

This will analyze the proposed expansion pier utilizing loads calculated in HAM075_0834_06. Analysis will be per AREMA Working Stress Design.

DESIGN BASIS OR REFERENCES:

NS Underpass Design Criteria
AREMA (2008) Chapter 8, Section 5
Calculation: HAM075_0834_06 (Pier Loads)
Calculation: HAM075_0834_01 (Elevation Data)
Existing PAVR Plans for bottom of footing elevation
RCPier Users Manual

MISCELLANEOUS NOTES:

RCPier Calculates the abutment self-weight, Wind, and Thermal Loads.

Stage 3: Updated Loads due to increased LL distribution area, increased girder sections and increased deck thickness

RECORD OF ISSUES:

REV	DESCRIPTION	BY	DATE	VERIF'D	DATE
00	Stage 1 Calculation	CTM	10/07/13		
01	Stage 2 Calculation	VDK	05/28/14	VDT	07/09/14
02	Stage 3 Calculation	VDT	01/19/16	CTM	04/25/16

RECORD OF CHECK OF CURRENT CALCULATION VERSION

BY	DATE	CHKD	DATE	UPD.	DATE	VERIF'D	DATE
VDK	05/28/14	VDT	07/09/14	VDT	01/19/16	CTM	04/25/16

PROJECT DATA

PROJECT DATA

Project:	HAM075_0834 Railroad Bridge Pier
User Job No.:	054682
Designer:	VDK
Date:	5/28/2014
Checker:	VDT
Checked date:	07/08/2014
State:	OH
State Job No.:	PID: 77889
Structure type:	Pier.
Pier View:	Upstation.
Code:	AASHTO STANDARD (17th Edition 2002)
Comments:	Center, expansion pier of a two-span deck girder bridge carrying NSRR ove r I-75. No impact for Wall Type piers per AREMA 8-5.3.1.f LF (z-dir) = MIN [0.1(DL+LL) , Braking/Traction from HAM075_0834_03.xls] - Once 0.1(DL+LL) is exceeded, bearing slides Derail - rail on outside girder. 2nd rail load divided to next 3 girders. Wind, Thermal & Seismic Loads are Auto-Calculated. Design done as per updated composite loads, alignment changes and existin profile on date 5/23/14.

PIER GEOMETRY

Pier Info:

Pier View:	Upstation.
Pier Type:	Multi Column

Cap Shape

Cap Shape: Straight
Top Elevations: start = 23.00 ft end = 23.00 ft
Depth(Z) = 82.00 in Skew angle = 25.50 Reduction of I = 1.000
Length(X) = 34.50 ft Height(Y) = 60.00 in

Column Shape : Rectangular

Number of columns: 6

Column number 1

Location from the left edge of the cap(X): 2.88 ft
Elevations: bottom = 0.00 ft top = 20.50 ft Reduction of I = 1.000
Column Bottom is Fixed

Column Section Dimensions

Width(X) = 69.00 in Depth(Z) = 48.00 in

Column number 2

Location from the left edge of the cap(X): 8.63 ft
Elevations: bottom = 0.00 ft top = 20.50 ft Reduction of I = 1.000
Column Bottom is Fixed

Column Section Dimensions

Width(X) = 69.00 in Depth(Z) = 48.00 in

Column number 3

Location from the left edge of the cap(X): 14.38 ft
Elevations: bottom = 0.00 ft top = 20.50 ft Reduction of I = 1.000
Column Bottom is Fixed

Column Section Dimensions

Width(X) = 69.00 in Depth(Z) = 48.00 in

Column number 4

Location from the left edge of the cap(X): 20.13 ft
Elevations: bottom = 0.00 ft top = 20.50 ft Reduction of I = 1.000
Column Bottom is Fixed

Column Section Dimensions

Width(X) = 69.00 in Depth(Z) = 48.00 in

Column number 5

Location from the left edge of the cap(X): 25.88 ft
Elevations: bottom = 0.00 ft top = 20.50 ft Reduction of I = 1.000
Column Bottom is Fixed

Column Section Dimensions

Width(X) = 69.00 in Depth(Z) = 48.00 in

Column number 6

Location from the left edge of the cap(X): 31.63 ft
Elevations: bottom = 0.00 ft top = 20.50 ft Reduction of I = 1.000
Column Bottom is Fixed

Column Section Dimensions

Width(X) = 69.00 in Depth(Z) = 48.00 in

SUPERSTRUCTURE INFO

Superstructure info:

Total number of spans:	2
Span number rear to current pier:	1
Number of traffic lanes:	1
Barrier height :	36.00 in
Depth of slab :	12.75 in
Curb to curb distance:	29.000 ft

Beam info:

Height in	Section area in^2	Inertia (Ixx) in^4	Inertia (Iyy) in^4	Beam CG in
129.00	166.00	202741.00	2052.50	43.00

Span #	Span length ft	Bridge Width ft
1	110.500	31.000
2	97.250	31.000
		31.000

BEARING POINTS

Number of bearing lines: 2

First bearing line **Eccentricity = 1.58 ft**

Point	Distance ft
1	2.92
2	6.80
3	10.68
4	14.56
5	18.43
6	22.31
7	26.19
8	30.07

Second bearing line **Eccentricity = -1.58 ft**

Point	Distance ft
1	4.43
2	8.31
3	12.19
4	16.07
5	19.94
6	23.82
7	27.70
8	31.58

MATERIAL PROPERTIES

MATERIAL PROPERTIES

	Cap	Column	Footing
Concrete Type	normal	normal	normal
Concrete Strength (psi)	4000.00	4000.00	4000.00
Concrete Density (lb/ft3)	150.00	150.00	150.00
Concrete Modulus Ec (ksi)	3834.25	3834.25	3834.25
Steel Strength Fy (ksi)	60.00	60.00	60.00

DESIGN PARAMETERS

DESIGN PARAMETERS

AASHTO STANDARD Code

Strength Reduction factors for reinf. concrete

Flexure and tension	0.90
Shear and torsion (normal)	0.85
Shear and torsion (lightweight)	0.85
Axial compression (ties)	0.70
Axial compression (spiral)	0.75

Multi presence factors for live load

1 Lane	1.00
2 Lanes	1.00
3 Lanes	0.90
4 Lanes	0.75
5 Lanes	0.75
6 Lanes	0.75

	Crack control factor kip/ft	Clear cover in	Clear side cover in	Impact factors (user defined)
Cap	170.00	2.00	2.00	1.00
Column	170.00	2.00		1.00
Footing	130.00	3.00	3.00	1.00

Degree of fixity in foundations for Moment Magnify Method: Ga = 5.00

SEISMIC DESIGN PARAMETERS

Strength Reduction factors for reinf. Concrete Seismic Design

Flexure and tension	0.90
Shear and torsion (normal)	0.85
Shear and torsion (lightweight)	0.85
Axial compression (ties)	0.70
Axial compression (spiral)	0.75

Seismic Overstrength

Flexure and tension	1.30
Axial compression (ties)	1.30
Axial compression (spiral)	1.30

Response Modification Factor	1.00

Use core area for plastic hinging calculations.

Design Factors

Cap Design Factor	1.20
Footing Design Factor	1.20

Plastic Hinge Moment

Use actual computed Plastic Hinging Moment for each column in all combinations.

LOADS

Pier Info:

Pier View:	Upstation.

Load Cases: 37

Loadcase ID: D1 Name:

Multiplier = 1.000

Bearing loads

Line #	Bearing #	Dir	Load kips
1	1	Y	-123.56
1	2	Y	-126.39
1	3	Y	-126.39
1	4	Y	-126.39
1	5	Y	-126.39
1	6	Y	-126.39
1	7	Y	-126.39
1	8	Y	-123.56
2	1	Y	-102.37
2	2	Y	-104.88
2	3	Y	-104.88
2	4	Y	-104.88
2	5	Y	-104.88
2	6	Y	-104.88
2	7	Y	-104.88
2	8	Y	-102.37

Loadcase ID: (L+In)1 Name: Balanced-No Impact

Multiplier = 1.000

Bearing loads

Line #	Bearing #	Dir	Load kips
1	3	Y	-104.04
1	4	Y	-104.04
1	5	Y	-151.43
1	6	Y	-151.43
2	3	Y	-94.49
2	4	Y	-94.49
2	5	Y	-137.53
2	6	Y	-137.53

Loadcase ID: (L+In)2 Name: Unbalanced-No Impact

Multiplier = 1.000

Bearing loads

Line #	Bearing #	Dir	Load kips
1	3	Y	-132.30
1	4	Y	-132.30
1	5	Y	-192.56
1	6	Y	-192.56

Loadcase ID: CF1 Name: Balanced

Multiplier = 1.000

Bearing loads

Line #	Bearing #	Dir	Load kips
1	3	X	-0.96
1	3	Y	1.72
1	3	Z	-0.46
1	4	X	-0.96
1	4	Y	1.72
1	4	Z	-0.46
1	5	X	-1.39
1	5	Y	-2.51
1	5	Z	-0.67
1	6	X	-1.39
1	6	Y	-2.51
1	6	Z	-0.67
2	3	X	-0.87
2	3	Y	1.56
2	3	Z	-0.41
2	4	X	-0.87
2	4	Y	1.56
2	4	Z	-0.41
2	5	X	-1.27
2	5	Y	-2.28
2	5	Z	-0.60
2	6	X	-1.27
2	6	Y	-2.28
2	6	Z	-0.60
1	1	X	-0.96
1	1	Z	-0.46
1	2	X	-0.96
1	2	Z	-0.46
2	1	X	-0.87
2	1	Z	-0.41
2	2	X	-0.87
2	2	Z	-0.41
2	7	X	-1.27
2	7	Z	-0.60
2	8	X	-1.27
2	8	Z	-0.60
1	7	X	-1.39
1	7	Z	-0.67
1	8	X	-1.39
1	8	Z	-0.67

Loadcase ID: CF2 Name: Unbalanced

Multiplier = 1.000

Bearing loads

Line #	Bearing #	Dir	Load kips
1	3	X	-1.22
1	3	Y	2.19
1	3	Z	-0.58
1	4	X	-1.22
1	4	Y	2.19
1	4	Z	-0.58
1	5	X	-1.77
1	5	Y	-3.19
1	5	Z	-0.85
1	6	X	-1.77
1	6	Y	-3.19
1	6	Z	-0.85
2	3	X	0.00
2	3	Y	0.00
2	3	Z	0.00
2	4	X	0.00
2	4	Y	0.00
2	4	Z	0.00
2	5	X	0.00
2	5	Y	0.00
2	5	Z	0.00
2	6	X	0.00
2	6	Y	0.00
2	6	Z	0.00
1	1	X	-1.22
1	1	Z	-0.58
1	2	X	-1.22
1	2	Z	-0.58
1	7	X	-1.77
1	7	Z	-0.85
1	8	X	-1.77
1	8	Z	-0.85

Loadcase ID: (L+Ip)1 Name: Derail-Balanced

Multiplier = 1.000

Bearing loads

Line #	Bearing #	Dir	Load kips
1	5	Y	-90.86
1	6	Y	-90.86
1	7	Y	-90.86
1	8	Y	-272.58
2	5	Y	-82.52
2	6	Y	-82.52
2	7	Y	-82.52
2	8	Y	-247.56

Loadcase ID: (L+Ip)2 Name: Derail-Unbalanced

Multiplier = 1.000

Bearing loads

Line #	Bearing #	Dir	Load kips
1	5	Y	-115.54
1	6	Y	-115.54
1	7	Y	-115.54
1	8	Y	-346.61
2	5	Y	0.00
2	6	Y	0.00
2	7	Y	0.00
2	8	Y	0.00

Loadcase ID: LF1 Name: Balanced

Multiplier = 1.000

Bearing loads

Line #	Bearing #	Dir	Load kips
1	3	X	-4.38
1	3	Y	-5.69
1	3	Z	-9.18
1	4	X	-4.38
1	4	Y	-5.69
1	4	Z	-9.18
1	5	X	-5.40
1	5	Y	-8.28
1	5	Z	-11.32
1	6	X	-5.40
1	6	Y	-8.28
1	6	Z	-11.32
2	3	X	-3.98
2	3	Y	-5.17
2	3	Z	-8.34
2	4	X	-3.98
2	4	Y	-5.17
2	4	Z	-8.34
2	5	X	-4.90
2	5	Y	-7.52
2	5	Z	-10.28
2	6	X	-4.90
2	6	Y	-7.52
2	6	Z	-10.28
1	1	X	-4.38
1	1	Z	-9.18
1	2	X	-4.38
1	2	Z	-9.18
1	7	X	-5.40
1	7	Z	-11.32
1	8	X	-5.40
1	8	Z	-11.32
2	1	X	-3.98
2	1	Z	-8.34
2	2	X	-3.98
2	2	Z	-8.34
2	7	X	-4.90
2	7	Z	-10.28
2	8	X	-4.90
2	8	Z	-10.28

Loadcase ID: LF2 Name: Unbalanced

Multiplier = 1.000

Bearing loads

Line #	Bearing #	Dir	Load kips
1	3	X	-5.57
1	3	Y	-7.23
1	3	Z	-11.67
1	4	X	-5.57
1	4	Y	-7.23
1	4	Z	-11.67
1	5	X	-6.87
1	5	Y	-10.53
1	5	Z	-14.39
1	6	X	-6.87
1	6	Y	-10.53
1	6	Z	-14.39
2	3	X	0.00
2	3	Y	0.00
2	3	Z	0.00
2	4	X	0.00
2	4	Y	0.00
2	4	Z	0.00
2	5	X	0.00
2	5	Y	0.00
2	5	Z	0.00
2	6	X	0.00
2	6	Y	0.00
2	6	Z	0.00
1	1	X	-5.57
1	1	Z	-11.67
1	2	X	-5.57
1	2	Z	-11.67
1	7	X	-6.87
1	7	Z	-14.39
1	8	X	-6.87
1	8	Z	-14.39

Loadcase ID: E1 Name: 4.00' of cover

Multiplier = 1.000

Footing loads

Footing #	Type	Dir	Mag1	y1/L	Mag2	y2/L
1	UDL	Y	4.500 klf	0.00		1.00

Loadcase ID: W1 Name: Angle: 75

Multiplier = 1.000

Cap loads

Type	Dir	Arm ft	Mag1	x1/L	Mag2	x2/L
Force	X	0.00	-4.10 kips	0.50		
UDL	Z		0.12 klf	0.00		1.00

Column loads

Col #	Type	Dir	Mag1	y1/L	Mag2	y2/L
6	UDL	X	-0.191 klf	0.11		0.88
6	UDL	Z	0.200 klf	0.11		0.88
5	UDL	X	-0.191 klf	0.11		0.88
5	UDL	Z	0.200 klf	0.11		0.88
4	UDL	X	-0.191 klf	0.11		0.88
4	UDL	Z	0.200 klf	0.11		0.88
3	UDL	X	-0.191 klf	0.11		0.88
3	UDL	Z	0.200 klf	0.11		0.88
2	UDL	X	-0.191 klf	0.11		0.88
2	UDL	Z	0.200 klf	0.11		0.88
1	UDL	X	-0.191 klf	0.11		0.88
1	UDL	Z	0.200 klf	0.11		0.88

Bearing loads

Line #	Bearing #	Dir	Load kips
1	1	X	-1.93
1	1	Y	-3.94
1	1	Z	1.34
1	2	X	-1.93
1	2	Y	-0.00
1	2	Z	1.34
1	3	X	-1.93
1	3	Y	-0.00
1	3	Z	1.34
1	4	X	-1.93
1	4	Y	-0.00
1	4	Z	1.34
1	5	X	-1.93
1	5	Y	-0.00
1	5	Z	1.34
1	6	X	-1.93
1	6	Y	-0.00
1	6	Z	1.34
1	7	X	-1.93
1	7	Y	-0.00
1	7	Z	1.34
1	8	X	-1.93
1	8	Y	3.94
1	8	Z	1.34
2	1	X	-1.70
2	1	Y	-3.47
2	1	Z	1.18
2	2	X	-1.70
2	2	Y	-0.00
2	2	Z	1.18
2	3	X	-1.70
2	3	Y	-0.00
2	3	Z	1.18
2	4	X	-1.70
2	4	Y	-0.00
2	4	Z	1.18
2	5	X	-1.70
2	5	Y	-0.00
2	5	Z	1.18
2	6	X	-1.70
2	6	Y	-0.00
2	6	Z	1.18
2	7	X	-1.70
2	7	Y	-0.00
2	7	Z	1.18
2	8	X	-1.70
2	8	Y	3.47
2	8	Z	1.18

Auto generation details:

Generated Wind Load on Structure

Angle of wind = 75.00 deg Elevation above which wind load acts = 4.75 ft
Default wind pressure:

Wind pressure for superstructure: Wind pressure for substructure:
Transverse 11.000 psf Cap 40.000 psf
Longitudinal 22.000 psf Column 40.000 psf
Overturning not considered

Loadcase ID: W2 Name: Angle: 60

Multiplier = 1.000

Cap loads

Type	Dir	Arm ft	Mag1	x1/L	Mag2	x2/L
Force	X	0.00	-4.06 kips	0.50		
UDL	Z		0.07 klf	0.00		1.00

Column loads

Col #	Type	Dir	Mag1	y1/L	Mag2	y2/L
6	UDL	X	-0.219 klf	0.23		0.88
6	UDL	Z	0.133 klf	0.23		0.88
5	UDL	X	-0.219 klf	0.23		0.88
5	UDL	Z	0.133 klf	0.23		0.88
4	UDL	X	-0.219 klf	0.23		0.88
4	UDL	Z	0.133 klf	0.23		0.88
3	UDL	X	-0.219 klf	0.23		0.88
3	UDL	Z	0.133 klf	0.23		0.88
2	UDL	X	-0.219 klf	0.23		0.88
2	UDL	Z	0.133 klf	0.23		0.88
1	UDL	X	-0.219 klf	0.23		0.88
1	UDL	Z	0.133 klf	0.23		0.88

Bearing loads

Line #	Bearing #	Dir	Load kips
1	1	X	-2.30
1	1	Y	-4.68
1	1	Z	0.81
1	2	X	-2.30
1	2	Y	-0.00
1	2	Z	0.81
1	3	X	-2.30
1	3	Y	-0.00
1	3	Z	0.81
1	4	X	-2.30
1	4	Y	-0.00
1	4	Z	0.81
1	5	X	-2.30
1	5	Y	-0.00
1	5	Z	0.81
1	6	X	-2.30
1	6	Y	-0.00
1	6	Z	0.81
1	7	X	-2.30
1	7	Y	-0.00
1	7	Z	0.81
1	8	X	-2.30
1	8	Y	4.68
1	8	Z	0.81
2	1	X	-2.02
2	1	Y	-4.12
2	1	Z	0.71
2	2	X	-2.02
2	2	Y	-0.00
2	2	Z	0.71
2	3	X	-2.02
2	3	Y	-0.00
2	3	Z	0.71
2	4	X	-2.02
2	4	Y	-0.00
2	4	Z	0.71
2	5	X	-2.02
2	5	Y	-0.00
2	5	Z	0.71
2	6	X	-2.02
2	6	Y	-0.00
2	6	Z	0.71
2	7	X	-2.02
2	7	Y	-0.00
2	7	Z	0.71
2	8	X	-2.02
2	8	Y	4.12
2	8	Z	0.71

Auto generation details:

Generated Wind Load on Structure

Angle of wind = 60.00 deg Elevation above which wind load acts = 4.75 ft
Default wind pressure:

Wind pressure for superstructure: Wind pressure for substructure:
Transverse 17.000 psf Cap 40.000 psf
Longitudinal 19.000 psf Column 40.000 psf
Overturning not considered

Loadcase ID: W3 Name: Angle: 45

Multiplier = 1.000

Cap loads

Type	Dir	Arm ft	Mag1	x1/L	Mag2	x2/L
Force	X	0.00	-3.11 kips	0.50		
UDL	Z		0.03 klf	0.00		1.00

Column loads

Col #	Type	Dir	Mag1	y1/L	Mag2	y2/L
6	UDL	X	-0.209 klf	0.23		0.88
6	UDL	Z	0.061 klf	0.23		0.88
5	UDL	X	-0.209 klf	0.23		0.88
5	UDL	Z	0.061 klf	0.23		0.88
4	UDL	X	-0.209 klf	0.23		0.88
4	UDL	Z	0.061 klf	0.23		0.88
3	UDL	X	-0.209 klf	0.23		0.88
3	UDL	Z	0.061 klf	0.23		0.88
2	UDL	X	-0.209 klf	0.23		0.88
2	UDL	Z	0.061 klf	0.23		0.88
1	UDL	X	-0.209 klf	0.23		0.88
1	UDL	Z	0.061 klf	0.23		0.88

Bearing loads

Line #	Bearing #	Dir	Load kips
1	1	X	-3.50
1	1	Y	-7.13
1	1	Z	-0.18
1	2	X	-3.50
1	2	Y	-0.00
1	2	Z	-0.18
1	3	X	-3.50
1	3	Y	-0.00
1	3	Z	-0.18
1	4	X	-3.50
1	4	Y	-0.00
1	4	Z	-0.18
1	5	X	-3.50
1	5	Y	-0.00
1	5	Z	-0.18
1	6	X	-3.50
1	6	Y	-0.00
1	6	Z	-0.18
1	7	X	-3.50
1	7	Y	-0.00
1	7	Z	-0.18
1	8	X	-3.50
1	8	Y	7.13
1	8	Z	-0.18
2	1	X	-3.08
2	1	Y	-6.28
2	1	Z	-0.16
2	2	X	-3.08
2	2	Y	-0.00
2	2	Z	-0.16
2	3	X	-3.08
2	3	Y	-0.00
2	3	Z	-0.16
2	4	X	-3.08
2	4	Y	-0.00
2	4	Z	-0.16
2	5	X	-3.08
2	5	Y	-0.00
2	5	Z	-0.16
2	6	X	-3.08
2	6	Y	-0.00
2	6	Z	-0.16
2	7	X	-3.08
2	7	Y	-0.00
2	7	Z	-0.16
2	8	X	-3.08
2	8	Y	6.28
2	8	Z	-0.16

Auto generation details:

Generated Wind Load on Structure

Angle of wind = 45.00 deg Elevation above which wind load acts = 4.75 ft
Default wind pressure:

Wind pressure for superstructure: Wind pressure for substructure:
Transverse 33.000 psf Cap 40.000 psf
Longitudinal 16.000 psf Column 40.000 psf
Overturning not considered

Loadcase ID: W4 Name: Angle: 30

Multiplier = 1.000

Cap loads

Type	Dir	Arm ft	Mag1	x1/L	Mag2	x2/L
Force	X	0.00	-1.52 kips	0.50		
UDL	Z		0.00 klf	0.00		1.00

Column loads

Col #	Type	Dir	Mag1	y1/L	Mag2	y2/L
6	UDL	X	-0.165 klf	0.23		0.88
6	UDL	Z	0.003 klf	0.23		0.88
5	UDL	X	-0.165 klf	0.23		0.88
5	UDL	Z	0.003 klf	0.23		0.88
4	UDL	X	-0.165 klf	0.23		0.88
4	UDL	Z	0.003 klf	0.23		0.88
3	UDL	X	-0.165 klf	0.23		0.88
3	UDL	Z	0.003 klf	0.23		0.88
2	UDL	X	-0.165 klf	0.23		0.88
2	UDL	Z	0.003 klf	0.23		0.88
1	UDL	X	-0.165 klf	0.23		0.88
1	UDL	Z	0.003 klf	0.23		0.88

Bearing loads

Line #	Bearing #	Dir	Load kips
1	1	X	-3.99
1	1	Y	-8.12
1	1	Z	-0.88
1	2	X	-3.99
1	2	Y	-0.00
1	2	Z	-0.88
1	3	X	-3.99
1	3	Y	-0.00
1	3	Z	-0.88
1	4	X	-3.99
1	4	Y	-0.00
1	4	Z	-0.88
1	5	X	-3.99
1	5	Y	-0.00
1	5	Z	-0.88
1	6	X	-3.99
1	6	Y	-0.00
1	6	Z	-0.88
1	7	X	-3.99
1	7	Y	-0.00
1	7	Z	-0.88
1	8	X	-3.99
1	8	Y	8.12
1	8	Z	-0.88
2	1	X	-3.51
2	1	Y	-7.15
2	1	Z	-0.77
2	2	X	-3.51
2	2	Y	-0.00
2	2	Z	-0.77
2	3	X	-3.51
2	3	Y	-0.00
2	3	Z	-0.77
2	4	X	-3.51
2	4	Y	-0.00
2	4	Z	-0.77
2	5	X	-3.51
2	5	Y	-0.00
2	5	Z	-0.77
2	6	X	-3.51
2	6	Y	-0.00
2	6	Z	-0.77
2	7	X	-3.51
2	7	Y	-0.00
2	7	Z	-0.77
2	8	X	-3.51
2	8	Y	7.15
2	8	Z	-0.77

Auto generation details:

Generated Wind Load on Structure

Angle of wind = 30.00 deg Elevation above which wind load acts = 4.75 ft
Default wind pressure:

Wind pressure for superstructure: Wind pressure for substructure:
Transverse 41.000 psf Cap 40.000 psf
Longitudinal 12.000 psf Column 40.000 psf
Overturning not considered

Loadcase ID: W5 Name: Angle: 15

Multiplier = 1.000

Cap loads

Type	Dir	Arm ft	Mag1	x1/L	Mag2	x2/L
Force	X	0.00	-2.88 kips	0.50		
UDL	Z		-0.02 klf	0.00		1.00

Column loads

Col #	Type	Dir	Mag1	y1/L	Mag2	y2/L
6	UDL	X	-0.204 klf	0.23		0.88
6	UDL	Z	-0.050 klf	0.23		0.88
5	UDL	X	-0.204 klf	0.23		0.88
5	UDL	Z	-0.050 klf	0.23		0.88
4	UDL	X	-0.204 klf	0.23		0.88
4	UDL	Z	-0.050 klf	0.23		0.88
3	UDL	X	-0.204 klf	0.23		0.88
3	UDL	Z	-0.050 klf	0.23		0.88
2	UDL	X	-0.204 klf	0.23		0.88
2	UDL	Z	-0.050 klf	0.23		0.88
1	UDL	X	-0.204 klf	0.23		0.88
1	UDL	Z	-0.050 klf	0.23		0.88

Bearing loads

Line #	Bearing #	Dir	Load kips
1	1	X	-3.96
1	1	Y	-8.07
1	1	Z	-1.52
1	2	X	-3.96
1	2	Y	-0.00
1	2	Z	-1.52
1	3	X	-3.96
1	3	Y	-0.00
1	3	Z	-1.52
1	4	X	-3.96
1	4	Y	-0.00
1	4	Z	-1.52
1	5	X	-3.96
1	5	Y	-0.00
1	5	Z	-1.52
1	6	X	-3.96
1	6	Y	-0.00
1	6	Z	-1.52
1	7	X	-3.96
1	7	Y	-0.00
1	7	Z	-1.52
1	8	X	-3.96
1	8	Y	8.07
1	8	Z	-1.52
2	1	X	-3.49
2	1	Y	-7.11
2	1	Z	-1.34
2	2	X	-3.49
2	2	Y	-0.00
2	2	Z	-1.34
2	3	X	-3.49
2	3	Y	-0.00
2	3	Z	-1.34
2	4	X	-3.49
2	4	Y	-0.00
2	4	Z	-1.34
2	5	X	-3.49
2	5	Y	-0.00
2	5	Z	-1.34
2	6	X	-3.49
2	6	Y	-0.00
2	6	Z	-1.34
2	7	X	-3.49
2	7	Y	-0.00
2	7	Z	-1.34
2	8	X	-3.49
2	8	Y	7.11
2	8	Z	-1.34

Auto generation details:

Generated Wind Load on Structure

Angle of wind = 15.00 deg Elevation above which wind load acts = 4.75 ft
Default wind pressure:

Wind pressure for superstructure: Wind pressure for substructure:
Transverse 44.000 psf Cap 40.000 psf
Longitudinal 6.000 psf Column 40.000 psf
Overturning not considered

Loadcase ID: W6 Name: Angle: 0

Multiplier = 1.000

Cap loads

Type	Dir	Arm ft	Mag1	x1/L	Mag2	x2/L
Force	X	0.00	-3.96 kips	0.50		
UDL	Z		-0.06 klf	0.00		1.00

Column loads

Col #	Type	Dir	Mag1	y1/L	Mag2	y2/L
6	UDL	X	-0.220 klf	0.23		0.88
6	UDL	Z	-0.121 klf	0.23		0.88
5	UDL	X	-0.220 klf	0.23		0.88
5	UDL	Z	-0.121 klf	0.23		0.88
4	UDL	X	-0.220 klf	0.23		0.88
4	UDL	Z	-0.121 klf	0.23		0.88
3	UDL	X	-0.220 klf	0.23		0.88
3	UDL	Z	-0.121 klf	0.23		0.88
2	UDL	X	-0.220 klf	0.23		0.88
2	UDL	Z	-0.121 klf	0.23		0.88
1	UDL	X	-0.220 klf	0.23		0.88
1	UDL	Z	-0.121 klf	0.23		0.88

Bearing loads

Line #	Bearing #	Dir	Load kips
1	1	X	-4.19
1	1	Y	-14.04
1	1	Z	-2.30
1	2	X	-4.19
1	2	Y	4.28
1	2	Z	-2.30
1	3	X	-4.19
1	3	Y	4.28
1	3	Z	-2.30
1	4	X	-4.19
1	4	Y	4.28
1	4	Z	-2.30
1	5	X	-4.19
1	5	Y	4.28
1	5	Z	-2.30
1	6	X	-4.19
1	6	Y	4.28
1	6	Z	-2.30
1	7	X	-4.19
1	7	Y	4.28
1	7	Z	-2.30
1	8	X	-4.19
1	8	Y	22.60
1	8	Z	-2.30
2	1	X	-3.69
2	1	Y	-12.35
2	1	Z	-2.02
2	2	X	-3.69
2	2	Y	3.77
2	2	Z	-2.02
2	3	X	-3.69
2	3	Y	3.77
2	3	Z	-2.02
2	4	X	-3.69
2	4	Y	3.77
2	4	Z	-2.02
2	5	X	-3.69
2	5	Y	3.77
2	5	Z	-2.02
2	6	X	-3.69
2	6	Y	3.77
2	6	Z	-2.02
2	7	X	-3.69
2	7	Y	3.77
2	7	Z	-2.02
2	8	X	-3.69
2	8	Y	19.89
2	8	Z	-2.02

Auto generation details:

Generated Wind Load on Structure

Angle of wind = 0.00 deg Elevation above which wind load acts = 4.75 ft
Default wind pressure:

Wind pressure for superstructure: Wind pressure for substructure:
Transverse 50.000 psf Cap 40.000 psf
Longitudinal 0.000 psf Column 40.000 psf
Overturning 20.000 psf

Loadcase ID: W7 Name: Angle: -15

Multiplier = 1.000

Cap loads

Type	Dir	Arm ft	Mag1	x1/L	Mag2	x2/L
Force	X	0.00	-4.16 kips	0.50		
UDL	Z		-0.12 klf	0.00		1.00

Column loads

Col #	Type	Dir	Mag1	y1/L	Mag2	y2/L
6	UDL	X	-0.198 klf	0.23		0.88
6	UDL	Z	-0.190 klf	0.23		0.88
5	UDL	X	-0.198 klf	0.23		0.88
5	UDL	Z	-0.190 klf	0.23		0.88
4	UDL	X	-0.198 klf	0.23		0.88
4	UDL	Z	-0.190 klf	0.23		0.88
3	UDL	X	-0.198 klf	0.23		0.88
3	UDL	Z	-0.190 klf	0.23		0.88
2	UDL	X	-0.198 klf	0.23		0.88
2	UDL	Z	-0.190 klf	0.23		0.88
1	UDL	X	-0.198 klf	0.23		0.88
1	UDL	Z	-0.190 klf	0.23		0.88

Bearing loads

Line #	Bearing #	Dir	Load kips
1	1	X	-3.41
1	1	Y	-6.95
1	1	Z	-2.52
1	2	X	-3.41
1	2	Y	-0.00
1	2	Z	-2.52
1	3	X	-3.41
1	3	Y	-0.00
1	3	Z	-2.52
1	4	X	-3.41
1	4	Y	-0.00
1	4	Z	-2.52
1	5	X	-3.41
1	5	Y	-0.00
1	5	Z	-2.52
1	6	X	-3.41
1	6	Y	-0.00
1	6	Z	-2.52
1	7	X	-3.41
1	7	Y	-0.00
1	7	Z	-2.52
1	8	X	-3.41
1	8	Y	6.95
1	8	Z	-2.52
2	1	X	-3.00
2	1	Y	-6.12
2	1	Z	-2.22
2	2	X	-3.00
2	2	Y	-0.00
2	2	Z	-2.22
2	3	X	-3.00
2	3	Y	-0.00
2	3	Z	-2.22
2	4	X	-3.00
2	4	Y	-0.00
2	4	Z	-2.22
2	5	X	-3.00
2	5	Y	-0.00
2	5	Z	-2.22
2	6	X	-3.00
2	6	Y	-0.00
2	6	Z	-2.22
2	7	X	-3.00
2	7	Y	-0.00
2	7	Z	-2.22
2	8	X	-3.00
2	8	Y	6.12
2	8	Z	-2.22

Auto generation details:

Generated Wind Load on Structure

Angle of wind = -15.00 deg Elevation above which wind load acts = 4.75 ft
Default wind pressure:

Wind pressure for superstructure: Wind pressure for substructure:
Transverse 44.000 psf Cap 40.000 psf
Longitudinal 6.000 psf Column 40.000 psf
Overturning not considered

Loadcase ID: W8 Name: Angle: -30

Multiplier = 1.000

Cap loads

Type	Dir	Arm ft	Mag1	x1/L	Mag2	x2/L
Force	X	0.00	-3.43 kips	0.50		
UDL	Z		-0.16 klf	0.00		1.00

Column loads

Col #	Type	Dir	Mag1	y1/L	Mag2	y2/L
6	UDL	X	-0.145 klf	0.23		0.88
6	UDL	Z	-0.239 klf	0.23		0.88
5	UDL	X	-0.145 klf	0.23		0.88
5	UDL	Z	-0.239 klf	0.23		0.88
4	UDL	X	-0.145 klf	0.23		0.88
4	UDL	Z	-0.239 klf	0.23		0.88
3	UDL	X	-0.145 klf	0.23		0.88
3	UDL	Z	-0.239 klf	0.23		0.88
2	UDL	X	-0.145 klf	0.23		0.88
2	UDL	Z	-0.239 klf	0.23		0.88
1	UDL	X	-0.145 klf	0.23		0.88
1	UDL	Z	-0.239 klf	0.23		0.88

Bearing loads

Line #	Bearing #	Dir	Load kips
1	1	X	-2.88
1	1	Y	-5.88
1	1	Z	-2.89
1	2	X	-2.88
1	2	Y	-0.00
1	2	Z	-2.89
1	3	X	-2.88
1	3	Y	-0.00
1	3	Z	-2.89
1	4	X	-2.88
1	4	Y	-0.00
1	4	Z	-2.89
1	5	X	-2.88
1	5	Y	-0.00
1	5	Z	-2.89
1	6	X	-2.88
1	6	Y	-0.00
1	6	Z	-2.89
1	7	X	-2.88
1	7	Y	-0.00
1	7	Z	-2.89
1	8	X	-2.88
1	8	Y	5.88
1	8	Z	-2.89
2	1	X	-2.54
2	1	Y	-5.17
2	1	Z	-2.54
2	2	X	-2.54
2	2	Y	-0.00
2	2	Z	-2.54
2	3	X	-2.54
2	3	Y	-0.00
2	3	Z	-2.54
2	4	X	-2.54
2	4	Y	-0.00
2	4	Z	-2.54
2	5	X	-2.54
2	5	Y	-0.00
2	5	Z	-2.54
2	6	X	-2.54
2	6	Y	-0.00
2	6	Z	-2.54
2	7	X	-2.54
2	7	Y	-0.00
2	7	Z	-2.54
2	8	X	-2.54
2	8	Y	5.17
2	8	Z	-2.54

Auto generation details:

Generated Wind Load on Structure

Angle of wind = -30.00 deg Elevation above which wind load acts = 4.75 ft
Default wind pressure:

Wind pressure for superstructure: Wind pressure for substructure:
Transverse 41.000 psf Cap 40.000 psf
Longitudinal 12.000 psf Column 40.000 psf
Overturning not considered

Loadcase ID: W9 Name: Angle: -45

Multiplier = 1.000

Cap loads

Type	Dir	Arm ft	Mag1	x1/L	Mag2	x2/L
Force	X	0.00	-1.96 kips	0.50		
UDL	Z		-0.19 klf	0.00		1.00

Column loads

Col #	Type	Dir	Mag1	y1/L	Mag2	y2/L
6	UDL	X	-0.074 klf	0.23		0.88
6	UDL	Z	-0.255 klf	0.23		0.88
5	UDL	X	-0.074 klf	0.23		0.88
5	UDL	Z	-0.255 klf	0.23		0.88
4	UDL	X	-0.074 klf	0.23		0.88
4	UDL	Z	-0.255 klf	0.23		0.88
3	UDL	X	-0.074 klf	0.23		0.88
3	UDL	Z	-0.255 klf	0.23		0.88
2	UDL	X	-0.074 klf	0.23		0.88
2	UDL	Z	-0.255 klf	0.23		0.88
1	UDL	X	-0.074 klf	0.23		0.88
1	UDL	Z	-0.255 klf	0.23		0.88

Bearing loads

Line #	Bearing #	Dir	Load kips
1	1	X	-2.03
1	1	Y	-4.14
1	1	Z	-2.86
1	2	X	-2.03
1	2	Y	-0.00
1	2	Z	-2.86
1	3	X	-2.03
1	3	Y	-0.00
1	3	Z	-2.86
1	4	X	-2.03
1	4	Y	-0.00
1	4	Z	-2.86
1	5	X	-2.03
1	5	Y	-0.00
1	5	Z	-2.86
1	6	X	-2.03
1	6	Y	-0.00
1	6	Z	-2.86
1	7	X	-2.03
1	7	Y	-0.00
1	7	Z	-2.86
1	8	X	-2.03
1	8	Y	4.14
1	8	Z	-2.86
2	1	X	-1.79
2	1	Y	-3.64
2	1	Z	-2.51
2	2	X	-1.79
2	2	Y	-0.00
2	2	Z	-2.51
2	3	X	-1.79
2	3	Y	-0.00
2	3	Z	-2.51
2	4	X	-1.79
2	4	Y	-0.00
2	4	Z	-2.51
2	5	X	-1.79
2	5	Y	-0.00
2	5	Z	-2.51
2	6	X	-1.79
2	6	Y	-0.00
2	6	Z	-2.51
2	7	X	-1.79
2	7	Y	-0.00
2	7	Z	-2.51
2	8	X	-1.79
2	8	Y	3.64
2	8	Z	-2.51

Auto generation details:

Generated Wind Load on Structure

Angle of wind = -45.00 deg Elevation above which wind load acts = 4.75 ft
Default wind pressure:

Wind pressure for superstructure: Wind pressure for substructure:
Transverse 33.000 psf Cap 40.000 psf
Longitudinal 16.000 psf Column 40.000 psf
Overturning not considered

Loadcase ID: W10 Name: Angle: -60

Multiplier = 1.000

Cap loads

Type	Dir	Arm ft	Mag1	x1/L	Mag2	x2/L
Force	X	0.00	-0.15 kips	0.50		
UDL	Z		-0.20 klf	0.00		1.00

Column loads

Col #	Type	Dir	Mag1	y1/L	Mag2	y2/L
6	UDL	X	-0.005 klf	0.23		0.88
6	UDL	Z	-0.233 klf	0.23		0.88
5	UDL	X	-0.005 klf	0.23		0.88
5	UDL	Z	-0.233 klf	0.23		0.88
4	UDL	X	-0.005 klf	0.23		0.88
4	UDL	Z	-0.233 klf	0.23		0.88
3	UDL	X	-0.005 klf	0.23		0.88
3	UDL	Z	-0.233 klf	0.23		0.88
2	UDL	X	-0.005 klf	0.23		0.88
2	UDL	Z	-0.233 klf	0.23		0.88
1	UDL	X	-0.005 klf	0.23		0.88
1	UDL	Z	-0.233 klf	0.23		0.88

Bearing loads

Line #	Bearing #	Dir	Load kips
1	1	X	-0.55
1	1	Y	-1.12
1	1	Z	-2.37
1	2	X	-0.55
1	2	Y	-0.00
1	2	Z	-2.37
1	3	X	-0.55
1	3	Y	-0.00
1	3	Z	-2.37
1	4	X	-0.55
1	4	Y	-0.00
1	4	Z	-2.37
1	5	X	-0.55
1	5	Y	-0.00
1	5	Z	-2.37
1	6	X	-0.55
1	6	Y	-0.00
1	6	Z	-2.37
1	7	X	-0.55
1	7	Y	-0.00
1	7	Z	-2.37
1	8	X	-0.55
1	8	Y	1.12
1	8	Z	-2.37
2	1	X	-0.48
2	1	Y	-0.99
2	1	Z	-2.09
2	2	X	-0.48
2	2	Y	-0.00
2	2	Z	-2.09
2	3	X	-0.48
2	3	Y	-0.00
2	3	Z	-2.09
2	4	X	-0.48
2	4	Y	-0.00
2	4	Z	-2.09
2	5	X	-0.48
2	5	Y	-0.00
2	5	Z	-2.09
2	6	X	-0.48
2	6	Y	-0.00
2	6	Z	-2.09
2	7	X	-0.48
2	7	Y	-0.00
2	7	Z	-2.09
2	8	X	-0.48
2	8	Y	0.99
2	8	Z	-2.09

Auto generation details:

Generated Wind Load on Structure

Angle of wind = -60.00 deg Elevation above which wind load acts = 4.75 ft
Default wind pressure:

Wind pressure for superstructure: Wind pressure for substructure:
Transverse 17.000 psf Cap 40.000 psf
Longitudinal 19.000 psf Column 40.000 psf
Overturning not considered

Loadcase ID: W11 Name: Angle: -75

Multiplier = 1.000

Cap loads

Type	Dir	Arm ft	Mag1	x1/L	Mag2	x2/L
Force	X	0.00	1.67 kips	0.50		
UDL	Z		-0.20 klf	0.00		1.00

Column loads

Col #	Type	Dir	Mag1	y1/L	Mag2	y2/L
6	UDL	X	0.062 klf	0.23		0.88
6	UDL	Z	-0.254 klf	0.23		0.88
5	UDL	X	0.062 klf	0.23		0.88
5	UDL	Z	-0.254 klf	0.23		0.88
4	UDL	X	0.062 klf	0.23		0.88
4	UDL	Z	-0.254 klf	0.23		0.88
3	UDL	X	0.062 klf	0.23		0.88
3	UDL	Z	-0.254 klf	0.23		0.88
2	UDL	X	0.062 klf	0.23		0.88
2	UDL	Z	-0.254 klf	0.23		0.88
1	UDL	X	0.062 klf	0.23		0.88
1	UDL	Z	-0.254 klf	0.23		0.88

Bearing loads

Line #	Bearing #	Dir	Load kips
1	1	X	0.09
1	1	Y	0.18
1	1	Z	-2.35
1	2	X	0.09
1	2	Y	-0.00
1	2	Z	-2.35
1	3	X	0.09
1	3	Y	-0.00
1	3	Z	-2.35
1	4	X	0.09
1	4	Y	-0.00
1	4	Z	-2.35
1	5	X	0.09
1	5	Y	-0.00
1	5	Z	-2.35
1	6	X	0.09
1	6	Y	-0.00
1	6	Z	-2.35
1	7	X	0.09
1	7	Y	-0.00
1	7	Z	-2.35
1	8	X	0.09
1	8	Y	-0.18
1	8	Z	-2.35
2	1	X	0.08
2	1	Y	0.16
2	1	Z	-2.07
2	2	X	0.08
2	2	Y	-0.00
2	2	Z	-2.07
2	3	X	0.08
2	3	Y	-0.00
2	3	Z	-2.07
2	4	X	0.08
2	4	Y	-0.00
2	4	Z	-2.07
2	5	X	0.08
2	5	Y	-0.00
2	5	Z	-2.07
2	6	X	0.08
2	6	Y	-0.00
2	6	Z	-2.07
2	7	X	0.08
2	7	Y	-0.00
2	7	Z	-2.07
2	8	X	0.08
2	8	Y	-0.16
2	8	Z	-2.07

Auto generation details:

Generated Wind Load on Structure

Angle of wind = -75.00 deg Elevation above which wind load acts = 4.75 ft
Default wind pressure:

Wind pressure for superstructure: Wind pressure for substructure:
Transverse 11.000 psf Cap 40.000 psf
Longitudinal 22.000 psf Column 40.000 psf
Overturning not considered

Loadcase ID: WL1 Name: Angle: 75

Multiplier = 1.000

Bearing loads

Line #	Bearing #	Dir	Load kips
1	1	X	-0.22
1	1	Y	-1.01
1	1	Z	0.21
1	2	X	-0.22
1	2	Y	-0.00
1	2	Z	0.21
1	3	X	-0.22
1	3	Y	-0.00
1	3	Z	0.21
1	4	X	-0.22
1	4	Y	-0.00
1	4	Z	0.21
1	5	X	-0.22
1	5	Y	-0.00
1	5	Z	0.21
1	6	X	-0.22
1	6	Y	-0.00
1	6	Z	0.21
1	7	X	-0.22
1	7	Y	-0.00
1	7	Z	0.21
1	8	X	-0.22
1	8	Y	1.01
1	8	Z	0.21
2	1	X	-0.20
2	1	Y	-0.89
2	1	Z	0.18
2	2	X	-0.20
2	2	Y	-0.00
2	2	Z	0.18
2	3	X	-0.20
2	3	Y	-0.00
2	3	Z	0.18
2	4	X	-0.20
2	4	Y	-0.00
2	4	Z	0.18
2	5	X	-0.20
2	5	Y	-0.00
2	5	Z	0.18
2	6	X	-0.20
2	6	Y	-0.00
2	6	Z	0.18
2	7	X	-0.20
2	7	Y	-0.00
2	7	Z	0.18
2	8	X	-0.20
2	8	Y	0.89
2	8	Z	0.18

Auto generation details:

Generated Wind Load on Live Load

Angle of wind = 75.00 deg Live load length = 103.88 ft

Loadcase ID: WL2 Name: Angle: 60

Multiplier = 1.000

Bearing loads

Line #	Bearing #	Dir	Load kips
1	1	X	-0.33
1	1	Y	-1.50
1	1	Z	0.12
1	2	X	-0.33
1	2	Y	-0.00
1	2	Z	0.12
1	3	X	-0.33
1	3	Y	-0.00
1	3	Z	0.12
1	4	X	-0.33
1	4	Y	-0.00
1	4	Z	0.12
1	5	X	-0.33
1	5	Y	-0.00
1	5	Z	0.12
1	6	X	-0.33
1	6	Y	-0.00
1	6	Z	0.12
1	7	X	-0.33
1	7	Y	-0.00
1	7	Z	0.12
1	8	X	-0.33
1	8	Y	1.50
1	8	Z	0.12
2	1	X	-0.29
2	1	Y	-1.32
2	1	Z	0.10
2	2	X	-0.29
2	2	Y	-0.00
2	2	Z	0.10
2	3	X	-0.29
2	3	Y	-0.00
2	3	Z	0.10
2	4	X	-0.29
2	4	Y	-0.00
2	4	Z	0.10
2	5	X	-0.29
2	5	Y	-0.00
2	5	Z	0.10
2	6	X	-0.29
2	6	Y	-0.00
2	6	Z	0.10
2	7	X	-0.29
2	7	Y	-0.00
2	7	Z	0.10
2	8	X	-0.29
2	8	Y	1.32
2	8	Z	0.10

Auto generation details:

Generated Wind Load on Live Load

Angle of wind = 60.00 deg Live load length = 103.88 ft

Loadcase ID: WL3 Name: Angle: 45

Multiplier = 1.000

Bearing loads

Line #	Bearing #	Dir	Load kips
1	1	X	-0.51
1	1	Y	-2.29
1	1	Z	-0.03
1	2	X	-0.51
1	2	Y	-0.00
1	2	Z	-0.03
1	3	X	-0.51
1	3	Y	-0.00
1	3	Z	-0.03
1	4	X	-0.51
1	4	Y	-0.00
1	4	Z	-0.03
1	5	X	-0.51
1	5	Y	-0.00
1	5	Z	-0.03
1	6	X	-0.51
1	6	Y	-0.00
1	6	Z	-0.03
1	7	X	-0.51
1	7	Y	-0.00
1	7	Z	-0.03
1	8	X	-0.51
1	8	Y	2.29
1	8	Z	-0.03
2	1	X	-0.45
2	1	Y	-2.01
2	1	Z	-0.02
2	2	X	-0.45
2	2	Y	-0.00
2	2	Z	-0.02
2	3	X	-0.45
2	3	Y	-0.00
2	3	Z	-0.02
2	4	X	-0.45
2	4	Y	-0.00
2	4	Z	-0.02
2	5	X	-0.45
2	5	Y	-0.00
2	5	Z	-0.02
2	6	X	-0.45
2	6	Y	-0.00
2	6	Z	-0.02
2	7	X	-0.45
2	7	Y	-0.00
2	7	Z	-0.02
2	8	X	-0.45
2	8	Y	2.01
2	8	Z	-0.02

Auto generation details:

Generated Wind Load on Live Load

Angle of wind = 45.00 deg Live load length = 103.88 ft

Loadcase ID: WL4 Name: Angle: 30

Multiplier = 1.000

Bearing loads

Line #	Bearing #	Dir	Load kips
1	1	X	-0.58
1	1	Y	-2.60
1	1	Z	-0.13
1	2	X	-0.58
1	2	Y	-0.00
1	2	Z	-0.13
1	3	X	-0.58
1	3	Y	-0.00
1	3	Z	-0.13
1	4	X	-0.58
1	4	Y	-0.00
1	4	Z	-0.13
1	5	X	-0.58
1	5	Y	-0.00
1	5	Z	-0.13
1	6	X	-0.58
1	6	Y	-0.00
1	6	Z	-0.13
1	7	X	-0.58
1	7	Y	-0.00
1	7	Z	-0.13
1	8	X	-0.58
1	8	Y	2.60
1	8	Z	-0.13
2	1	X	-0.51
2	1	Y	-2.29
2	1	Z	-0.11
2	2	X	-0.51
2	2	Y	-0.00
2	2	Z	-0.11
2	3	X	-0.51
2	3	Y	-0.00
2	3	Z	-0.11
2	4	X	-0.51
2	4	Y	-0.00
2	4	Z	-0.11
2	5	X	-0.51
2	5	Y	-0.00
2	5	Z	-0.11
2	6	X	-0.51
2	6	Y	-0.00
2	6	Z	-0.11
2	7	X	-0.51
2	7	Y	-0.00
2	7	Z	-0.11
2	8	X	-0.51
2	8	Y	2.29
2	8	Z	-0.11

Auto generation details:

Generated Wind Load on Live Load

Angle of wind = 30.00 deg Live load length = 103.88 ft

Loadcase ID: WL5 Name: Angle: 15

Multiplier = 1.000

Bearing loads

Line #	Bearing #	Dir	Load kips
1	1	X	-0.57
1	1	Y	-2.59
1	1	Z	-0.22
1	2	X	-0.57
1	2	Y	-0.00
1	2	Z	-0.22
1	3	X	-0.57
1	3	Y	-0.00
1	3	Z	-0.22
1	4	X	-0.57
1	4	Y	-0.00
1	4	Z	-0.22
1	5	X	-0.57
1	5	Y	-0.00
1	5	Z	-0.22
1	6	X	-0.57
1	6	Y	-0.00
1	6	Z	-0.22
1	7	X	-0.57
1	7	Y	-0.00
1	7	Z	-0.22
1	8	X	-0.57
1	8	Y	2.59
1	8	Z	-0.22
2	1	X	-0.50
2	1	Y	-2.28
2	1	Z	-0.19
2	2	X	-0.50
2	2	Y	-0.00
2	2	Z	-0.19
2	3	X	-0.50
2	3	Y	-0.00
2	3	Z	-0.19
2	4	X	-0.50
2	4	Y	-0.00
2	4	Z	-0.19
2	5	X	-0.50
2	5	Y	-0.00
2	5	Z	-0.19
2	6	X	-0.50
2	6	Y	-0.00
2	6	Z	-0.19
2	7	X	-0.50
2	7	Y	-0.00
2	7	Z	-0.19
2	8	X	-0.50
2	8	Y	2.28
2	8	Z	-0.19

Auto generation details:

Generated Wind Load on Live Load

Angle of wind = 15.00 deg Live load length = 103.88 ft

Loadcase ID: WL6 Name: Angle: 0

Multiplier = 1.000

Bearing loads

Line #	Bearing #	Dir	Load kips
1	1	X	-0.61
1	1	Y	-2.74
1	1	Z	-0.33
1	2	X	-0.61
1	2	Y	-0.00
1	2	Z	-0.33
1	3	X	-0.61
1	3	Y	-0.00
1	3	Z	-0.33
1	4	X	-0.61
1	4	Y	-0.00
1	4	Z	-0.33
1	5	X	-0.61
1	5	Y	-0.00
1	5	Z	-0.33
1	6	X	-0.61
1	6	Y	-0.00
1	6	Z	-0.33
1	7	X	-0.61
1	7	Y	-0.00
1	7	Z	-0.33
1	8	X	-0.61
1	8	Y	2.74
1	8	Z	-0.33
2	1	X	-0.53
2	1	Y	-2.41
2	1	Z	-0.29
2	2	X	-0.53
2	2	Y	-0.00
2	2	Z	-0.29
2	3	X	-0.53
2	3	Y	-0.00
2	3	Z	-0.29
2	4	X	-0.53
2	4	Y	-0.00
2	4	Z	-0.29
2	5	X	-0.53
2	5	Y	-0.00
2	5	Z	-0.29
2	6	X	-0.53
2	6	Y	-0.00
2	6	Z	-0.29
2	7	X	-0.53
2	7	Y	-0.00
2	7	Z	-0.29
2	8	X	-0.53
2	8	Y	2.41
2	8	Z	-0.29

Auto generation details:

Generated Wind Load on Live Load

Angle of wind = 0.00 deg Live load length = 103.88 ft

Loadcase ID: WL7 Name: Angle: -15

Multiplier = 1.000

Bearing loads

Line #	Bearing #	Dir	Load kips
1	1	X	-0.49
1	1	Y	-2.23
1	1	Z	-0.36
1	2	X	-0.49
1	2	Y	-0.00
1	2	Z	-0.36
1	3	X	-0.49
1	3	Y	-0.00
1	3	Z	-0.36
1	4	X	-0.49
1	4	Y	-0.00
1	4	Z	-0.36
1	5	X	-0.49
1	5	Y	-0.00
1	5	Z	-0.36
1	6	X	-0.49
1	6	Y	-0.00
1	6	Z	-0.36
1	7	X	-0.49
1	7	Y	-0.00
1	7	Z	-0.36
1	8	X	-0.49
1	8	Y	2.23
1	8	Z	-0.36
2	1	X	-0.43
2	1	Y	-1.96
2	1	Z	-0.32
2	2	X	-0.43
2	2	Y	-0.00
2	2	Z	-0.32
2	3	X	-0.43
2	3	Y	-0.00
2	3	Z	-0.32
2	4	X	-0.43
2	4	Y	-0.00
2	4	Z	-0.32
2	5	X	-0.43
2	5	Y	-0.00
2	5	Z	-0.32
2	6	X	-0.43
2	6	Y	-0.00
2	6	Z	-0.32
2	7	X	-0.43
2	7	Y	-0.00
2	7	Z	-0.32
2	8	X	-0.43
2	8	Y	1.96
2	8	Z	-0.32

Auto generation details:

Generated Wind Load on Live Load

Angle of wind = -15.00 deg Live load length = 103.88 ft

Loadcase ID: WL8 Name: Angle: -30

Multiplier = 1.000

Bearing loads

Line #	Bearing #	Dir	Load kips
1	1	X	-0.42
1	1	Y	-1.88
1	1	Z	-0.42
1	2	X	-0.42
1	2	Y	-0.00
1	2	Z	-0.42
1	3	X	-0.42
1	3	Y	-0.00
1	3	Z	-0.42
1	4	X	-0.42
1	4	Y	-0.00
1	4	Z	-0.42
1	5	X	-0.42
1	5	Y	-0.00
1	5	Z	-0.42
1	6	X	-0.42
1	6	Y	-0.00
1	6	Z	-0.42
1	7	X	-0.42
1	7	Y	-0.00
1	7	Z	-0.42
1	8	X	-0.42
1	8	Y	1.88
1	8	Z	-0.42
2	1	X	-0.37
2	1	Y	-1.66
2	1	Z	-0.37
2	2	X	-0.37
2	2	Y	-0.00
2	2	Z	-0.37
2	3	X	-0.37
2	3	Y	-0.00
2	3	Z	-0.37
2	4	X	-0.37
2	4	Y	-0.00
2	4	Z	-0.37
2	5	X	-0.37
2	5	Y	-0.00
2	5	Z	-0.37
2	6	X	-0.37
2	6	Y	-0.00
2	6	Z	-0.37
2	7	X	-0.37
2	7	Y	-0.00
2	7	Z	-0.37
2	8	X	-0.37
2	8	Y	1.66
2	8	Z	-0.37

Auto generation details:

Generated Wind Load on Live Load

Angle of wind = -30.00 deg Live load length = 103.88 ft

Loadcase ID: WL9 Name: Angle: -45

Multiplier = 1.000

Bearing loads

Line #	Bearing #	Dir	Load kips
1	1	X	-0.29
1	1	Y	-1.33
1	1	Z	-0.41
1	2	X	-0.29
1	2	Y	-0.00
1	2	Z	-0.41
1	3	X	-0.29
1	3	Y	-0.00
1	3	Z	-0.41
1	4	X	-0.29
1	4	Y	-0.00
1	4	Z	-0.41
1	5	X	-0.29
1	5	Y	-0.00
1	5	Z	-0.41
1	6	X	-0.29
1	6	Y	-0.00
1	6	Z	-0.41
1	7	X	-0.29
1	7	Y	-0.00
1	7	Z	-0.41
1	8	X	-0.29
1	8	Y	1.33
1	8	Z	-0.41
2	1	X	-0.26
2	1	Y	-1.17
2	1	Z	-0.36
2	2	X	-0.26
2	2	Y	-0.00
2	2	Z	-0.36
2	3	X	-0.26
2	3	Y	-0.00
2	3	Z	-0.36
2	4	X	-0.26
2	4	Y	-0.00
2	4	Z	-0.36
2	5	X	-0.26
2	5	Y	-0.00
2	5	Z	-0.36
2	6	X	-0.26
2	6	Y	-0.00
2	6	Z	-0.36
2	7	X	-0.26
2	7	Y	-0.00
2	7	Z	-0.36
2	8	X	-0.26
2	8	Y	1.17
2	8	Z	-0.36

Auto generation details:

Generated Wind Load on Live Load

Angle of wind = -45.00 deg Live load length = 103.88 ft

Loadcase ID: WL10 Name: Angle: -60

Multiplier = 1.000

Bearing loads

Line #	Bearing #	Dir	Load kips
1	1	X	-0.08
1	1	Y	-0.36
1	1	Z	-0.34
1	2	X	-0.08
1	2	Y	-0.00
1	2	Z	-0.34
1	3	X	-0.08
1	3	Y	-0.00
1	3	Z	-0.34
1	4	X	-0.08
1	4	Y	-0.00
1	4	Z	-0.34
1	5	X	-0.08
1	5	Y	-0.00
1	5	Z	-0.34
1	6	X	-0.08
1	6	Y	-0.00
1	6	Z	-0.34
1	7	X	-0.08
1	7	Y	-0.00
1	7	Z	-0.34
1	8	X	-0.08
1	8	Y	0.36
1	8	Z	-0.34
2	1	X	-0.07
2	1	Y	-0.32
2	1	Z	-0.30
2	2	X	-0.07
2	2	Y	-0.00
2	2	Z	-0.30
2	3	X	-0.07
2	3	Y	-0.00
2	3	Z	-0.30
2	4	X	-0.07
2	4	Y	-0.00
2	4	Z	-0.30
2	5	X	-0.07
2	5	Y	-0.00
2	5	Z	-0.30
2	6	X	-0.07
2	6	Y	-0.00
2	6	Z	-0.30
2	7	X	-0.07
2	7	Y	-0.00
2	7	Z	-0.30
2	8	X	-0.07
2	8	Y	0.32
2	8	Z	-0.30

Auto generation details:

Generated Wind Load on Live Load

Angle of wind = -60.00 deg Live load length = 103.88 ft

Loadcase ID: WL11 Name: Angle: -75

Multiplier = 1.000

Bearing loads

Line #	Bearing #	Dir	Load kips
1	1	X	0.05
1	1	Y	0.25
1	1	Z	-0.30
1	2	X	0.05
1	2	Y	-0.00
1	2	Z	-0.30
1	3	X	0.05
1	3	Y	-0.00
1	3	Z	-0.30
1	4	X	0.05
1	4	Y	-0.00
1	4	Z	-0.30
1	5	X	0.05
1	5	Y	-0.00
1	5	Z	-0.30
1	6	X	0.05
1	6	Y	-0.00
1	6	Z	-0.30
1	7	X	0.05
1	7	Y	-0.00
1	7	Z	-0.30
1	8	X	0.05
1	8	Y	-0.25
1	8	Z	-0.30
2	1	X	0.05
2	1	Y	0.22
2	1	Z	-0.26
2	2	X	0.05
2	2	Y	-0.00
2	2	Z	-0.26
2	3	X	0.05
2	3	Y	-0.00
2	3	Z	-0.26
2	4	X	0.05
2	4	Y	-0.00
2	4	Z	-0.26
2	5	X	0.05
2	5	Y	-0.00
2	5	Z	-0.26
2	6	X	0.05
2	6	Y	-0.00
2	6	Z	-0.26
2	7	X	0.05
2	7	Y	-0.00
2	7	Z	-0.26
2	8	X	0.05
2	8	Y	-0.22
2	8	Z	-0.26

Auto generation details:

Generated Wind Load on Live Load

Angle of wind = -75.00 deg Live load length = 103.88 ft

Loadcase ID: T1 Name: Sliding

Multiplier = 1.000

Bearing loads

Line #	Bearing #	Dir	Load kips
1	1	X	5.10
1	1	Z	-9.30
1	2	X	5.10
1	2	Z	-9.30
1	3	X	5.10
1	3	Z	-9.30
1	4	X	5.10
1	4	Z	-9.30
1	5	X	5.10
1	5	Z	-9.30
1	6	X	5.10
1	6	Z	-9.30
1	7	X	5.10
1	7	Z	-9.30
1	8	X	5.10
1	8	Z	-9.30
2	1	X	5.10
2	1	Z	-9.30
2	2	X	5.10
2	2	Z	-9.30
2	3	X	5.10
2	3	Z	-9.30
2	4	X	5.10
2	4	Z	-9.30
2	5	X	5.10
2	5	Z	-9.30
2	6	X	5.10
2	6	Z	-9.30
2	7	X	5.10
2	7	Z	-9.30
2	8	X	5.10
2	8	Z	-9.30

Auto generation details:

Bearing type

Sliding Bearings
Direction of thermal force: +(Z)
Coefficient of Friction between sliding plates: 0.100000
Dead Load: 1697.02 kips

Loadcase ID: EQ1 Name:

Multiplier = 1.000

Bearing loads

Line #	Bearing #	Dir	Load kips
1	1	X	-17.49
1	1	Z	-2.97
1	2	X	-17.49
1	2	Z	-2.97
1	3	X	-17.49
1	3	Z	-2.97
1	4	X	-17.49
1	4	Z	-2.97
1	5	X	-17.49
1	5	Z	-2.97
1	6	X	-17.49
1	6	Z	-2.97
1	7	X	-17.49
1	7	Z	-2.97
1	8	X	-17.49
1	8	Z	-2.97
2	1	X	-17.49
2	1	Z	-2.97
2	2	X	-17.49
2	2	Z	-2.97
2	3	X	-17.49
2	3	Z	-2.97
2	4	X	-17.49
2	4	Z	-2.97
2	5	X	-17.49
2	5	Z	-2.97
2	6	X	-17.49
2	6	Z	-2.97
2	7	X	-17.49
2	7	Z	-2.97
2	8	X	-17.49
2	8	Z	-2.97

Auto generation details:

Generated Earthquake Load:

Bridge information

Importance classification: Essential Regular
Unit weight of superstructure = 15.25 kips/ft
Cross section area = 76.39 ft^2
Superstructure: Iy = 1655.06 ft^4 Ix = 78.22 ft^4
Total number of spans = 2 Span number rear to current pier = 1

Span data

Span number	Length ft
1	110.50
2	97.25

Pier - column data

Pier #	Ix ft^4	Iz ft^4	Area ft^2	Avg. height ft
1	184.00	380.22	138.00	21.00
2	184.00	380.22	138.00	21.00
3	184.00	380.22	138.00	21.00

Soil Profile Type:: II
Acceleration coeff. = 0.06
Seismic Zone: 4
Seismic forces - default

	X dir	Z dir
Case 1	1.00	0.30
Case 2	0.30	1.00

Loadcase ID: EQ2 Name:

Multiplier = 1.000

Bearing loads

Line #	Bearing #	Dir	Load kips
1	1	X	17.49
1	1	Z	-2.97
1	2	X	17.49
1	2	Z	-2.97
1	3	X	17.49
1	3	Z	-2.97
1	4	X	17.49
1	4	Z	-2.97
1	5	X	17.49
1	5	Z	-2.97
1	6	X	17.49
1	6	Z	-2.97
1	7	X	17.49
1	7	Z	-2.97
1	8	X	17.49
1	8	Z	-2.97
2	1	X	17.49
2	1	Z	-2.97
2	2	X	17.49
2	2	Z	-2.97
2	3	X	17.49
2	3	Z	-2.97
2	4	X	17.49
2	4	Z	-2.97
2	5	X	17.49
2	5	Z	-2.97
2	6	X	17.49
2	6	Z	-2.97
2	7	X	17.49
2	7	Z	-2.97
2	8	X	17.49
2	8	Z	-2.97

Auto generation details:

Generated Earthquake Load:

Bridge information

Importance classification: Essential Regular
Unit weight of superstructure = 15.25 kips/ft
Cross section area = 76.39 ft^2
Superstructure: Iy = 1655.06 ft^4 Ix = 78.22 ft^4
Total number of spans = 2 Span number rear to current pier = 1

Span data

Span number	Length ft
1	110.50
2	97.25

Pier - column data

Pier #	Ix ft^4	Iz ft^4	Area ft^2	Avg. height ft
1	184.00	380.22	138.00	21.00
2	184.00	380.22	138.00	21.00
3	184.00	380.22	138.00	21.00

Soil Profile Type:: II
Acceleration coeff. = 0.06
Seismic Zone: 4
Seismic forces - default

	X dir	Z dir
Case 1	1.00	0.30
Case 2	0.30	1.00

Loadcase ID: EQ3 Name:

Multiplier = 1.000

Bearing loads

Line #	Bearing #	Dir	Load kips
1	1	X	5.25
1	1	Z	9.90
1	2	X	5.25
1	2	Z	9.90
1	3	X	5.25
1	3	Z	9.90
1	4	X	5.25
1	4	Z	9.90
1	5	X	5.25
1	5	Z	9.90
1	6	X	5.25
1	6	Z	9.90
1	7	X	5.25
1	7	Z	9.90
1	8	X	5.25
1	8	Z	9.90
2	1	X	5.25
2	1	Z	9.90
2	2	X	5.25
2	2	Z	9.90
2	3	X	5.25
2	3	Z	9.90
2	4	X	5.25
2	4	Z	9.90
2	5	X	5.25
2	5	Z	9.90
2	6	X	5.25
2	6	Z	9.90
2	7	X	5.25
2	7	Z	9.90
2	8	X	5.25
2	8	Z	9.90

Auto generation details:

Generated Earthquake Load:

Bridge information

Importance classification: Essential Regular
Unit weight of superstructure = 15.25 kips/ft
Cross section area = 76.39 ft^2
Superstructure: Iy = 1655.06 ft^4 Ix = 78.22 ft^4
Total number of spans = 2 Span number rear to current pier = 1

Span data

Span number	Length ft
1	110.50
2	97.25

Pier - column data

Pier #	Ix ft^4	Iz ft^4	Area ft^2	Avg. height ft
1	184.00	380.22	138.00	21.00
2	184.00	380.22	138.00	21.00
3	184.00	380.22	138.00	21.00

Soil Profile Type:: II
Acceleration coeff. = 0.06
Seismic Zone: 4
Seismic forces - default

	X dir	Z dir
Case 1	1.00	0.30
Case 2	0.30	1.00

Loadcase ID: EQ4 Name:

Multiplier = 1.000

Bearing loads

Line #	Bearing #	Dir	Load kips
1	1	X	5.25
1	1	Z	-9.90
1	2	X	5.25
1	2	Z	-9.90
1	3	X	5.25
1	3	Z	-9.90
1	4	X	5.25
1	4	Z	-9.90
1	5	X	5.25
1	5	Z	-9.90
1	6	X	5.25
1	6	Z	-9.90
1	7	X	5.25
1	7	Z	-9.90
1	8	X	5.25
1	8	Z	-9.90
2	1	X	5.25
2	1	Z	-9.90
2	2	X	5.25
2	2	Z	-9.90
2	3	X	5.25
2	3	Z	-9.90
2	4	X	5.25
2	4	Z	-9.90
2	5	X	5.25
2	5	Z	-9.90
2	6	X	5.25
2	6	Z	-9.90
2	7	X	5.25
2	7	Z	-9.90
2	8	X	5.25
2	8	Z	-9.90

Auto generation details:

Generated Earthquake Load:

Bridge information

Importance classification: Essential Regular
Unit weight of superstructure = 15.25 kips/ft
Cross section area = 76.39 ft^2
Superstructure: Iy = 1655.06 ft^4 Ix = 78.22 ft^4
Total number of spans = 2 Span number rear to current pier = 1

Span data

Span number	Length ft
1	110.50
2	97.25

Pier - column data

Pier #	Ix ft^4	Iz ft^4	Area ft^2	Avg. height ft
1	184.00	380.22	138.00	21.00
2	184.00	380.22	138.00	21.00
3	184.00	380.22	138.00	21.00

Soil Profile Type:: II
Acceleration coeff. = 0.06
Seismic Zone: 4
Seismic forces - default

	X dir	Z dir
Case 1	1.00	0.30
Case 2	0.30	1.00

Selected load groups

AREMA Service I
AREMA Service II
AREMA Service III
AREMA Service IV
AREMA Service V
AREMA Service VI
AREMA Service VII
AREMA Service VIII
AREMA Svc VII EQ
AREMA Svc Derail
AREMA LFD 1
AREMA LFD 1A
AREMA LFD 2
AREMA LFD 3
AREMA LFD 4
AREMA LFD 5
AREMA LFD 6
AREMA LFD 7
AREMA LFD 8
AREMA LFD 9

♀

ANALYSIS RESULTS
==========

Global Coordinate System, Units: kip kft

LOAD CASES RESULTS FROM FRAME ANALYSIS:

Loadcase ID: SELF Name: Self Load of Structure

Memb	Node	Fx kip	Fy kip	Fz kip	Mx kft	My kft	Mz kft
1	1	-0.21	92.06	0.00	-0.00	0.00	1.42
1	2	0.21	-29.96	0.00	-0.00	0.00	2.93
2	3	-0.02	91.32	0.00	-0.00	0.00	0.09
2	4	0.02	-29.22	0.00	-0.00	0.00	0.24
3	5	0.01	91.33	0.00	-0.00	0.00	-0.06
3	6	-0.01	-29.23	0.00	-0.00	0.00	-0.11
4	7	-0.01	91.33	0.00	-0.00	0.00	0.06
4	8	0.01	-29.23	0.00	-0.00	0.00	0.11
5	9	0.02	91.32	0.00	-0.00	0.00	-0.09
5	10	-0.02	-29.22	0.00	-0.00	0.00	-0.24
6	11	0.21	92.06	0.00	-0.00	0.00	-1.42
6	12	-0.21	-29.96	0.00	-0.00	0.00	-2.93
7	13	0.00	0.00	0.00	0.00	0.00	0.00
7	2	0.00	14.73	0.00	0.00	0.00	-21.18
8	2	-0.21	15.22	0.00	0.00	0.00	18.25
8	14	0.21	-14.98	0.00	0.00	0.00	-17.53
9	14	-0.21	14.98	0.00	0.00	0.00	17.53
9	15	0.21	-7.24	0.00	0.00	0.00	-0.75
10	15	-0.21	7.24	0.00	0.00	0.00	0.75
10	16	0.21	4.89	0.00	0.00	0.00	2.02
11	16	-0.21	-4.89	0.00	0.00	0.00	-2.02
11	17	0.21	12.63	0.00	0.00	0.00	-11.21
12	17	-0.21	-12.63	0.00	0.00	0.00	11.21
12	4	0.21	14.24	0.00	0.00	0.00	-15.44
13	4	-0.23	14.97	0.00	0.00	0.00	15.20
13	18	0.23	-4.45	0.00	0.00	0.00	4.75
14	18	-0.23	4.45	0.00	0.00	0.00	-4.75
14	19	0.23	3.29	0.00	0.00	0.00	5.62
15	19	-0.23	-3.29	0.00	0.00	0.00	-5.62
15	6	0.23	14.49	0.00	0.00	0.00	-13.82
16	6	-0.22	14.73	0.00	0.00	0.00	13.93
16	20	0.22	-13.81	0.00	0.00	0.00	-11.35
17	20	-0.22	13.81	0.00	0.00	0.00	11.35
17	21	0.22	-6.07	0.00	0.00	0.00	3.66
18	21	-0.22	6.07	0.00	0.00	0.00	-3.66
18	22	0.22	6.07	0.00	0.00	0.00	3.66
19	22	-0.22	-6.07	0.00	0.00	0.00	-3.66
19	23	0.22	13.81	0.00	0.00	0.00	-11.35
20	23	-0.22	-13.81	0.00	0.00	0.00	11.35
20	8	0.22	14.73	0.00	0.00	0.00	-13.93
21	8	-0.23	14.49	0.00	0.00	0.00	13.82
21	24	0.23	-3.29	0.00	0.00	0.00	5.62
22	24	-0.23	3.29	0.00	0.00	0.00	-5.62
22	25	0.23	4.45	0.00	0.00	0.00	4.75
23	25	-0.23	-4.45	0.00	0.00	0.00	-4.75
23	10	0.23	14.97	0.00	0.00	0.00	-15.20
24	10	-0.21	14.24	0.00	0.00	0.00	15.44

24	26	0.21	-12.63	0.00	0.00	0.00	-11.21
25	26	-0.21	12.63	0.00	0.00	0.00	11.21
25	27	0.21	-4.89	0.00	0.00	0.00	2.02
26	27	-0.21	4.89	0.00	0.00	0.00	-2.02
26	28	0.21	7.24	0.00	0.00	0.00	-0.75
27	28	-0.21	-7.24	0.00	0.00	0.00	0.75
27	29	0.21	14.98	0.00	0.00	0.00	-17.53
28	29	-0.21	-14.98	0.00	0.00	0.00	17.53
28	12	0.21	15.22	0.00	0.00	0.00	-18.25
29	12	0.00	14.73	0.00	0.00	0.00	21.18
29	30	0.00	0.00	0.00	0.00	0.00	0.00

Loadcase ID: D1 Name:

Memb	Node	Fx kip	Fy kip	Fz kip	Mx kft	My kft	Mz kft
1	1	9.93	260.11	1.11	-45.06	-6.33	-67.02
1	2	-9.93	-260.11	-1.11	67.84	6.33	-136.64
2	3	5.12	320.48	0.10	-49.12	-6.59	-34.63
2	4	-5.12	-320.48	-0.10	51.15	6.59	-70.34
3	5	1.52	344.07	0.55	-43.07	-6.84	-10.77
3	6	-1.52	-344.07	-0.55	54.34	6.84	-20.33
4	7	-1.18	343.68	-0.29	-45.73	-6.96	6.81
4	8	1.18	-343.68	0.29	39.83	6.96	17.34
5	9	-5.08	318.29	-0.02	-40.87	-6.88	32.69
5	10	5.08	-318.29	0.02	40.38	6.88	71.45
6	11	-10.31	252.85	-1.45	-47.60	-6.67	67.93
6	12	10.31	-252.85	1.45	17.91	6.67	143.51
7	13	0.00	0.00	0.00	0.00	0.00	0.00
7	2	0.00	0.00	0.00	0.00	0.00	0.00
8	2	9.93	260.11	1.11	-67.84	-6.33	136.64
8	14	-9.93	-260.11	-1.11	67.84	6.28	-124.25
9	14	9.93	136.55	1.11	127.80	-6.28	124.25
9	15	-9.93	-136.55	-1.11	-127.80	4.60	82.01
10	15	9.93	34.18	1.11	-34.29	-4.60	-82.01
10	16	-9.93	-34.18	-1.11	34.29	1.97	162.93
11	16	9.93	-92.21	1.11	165.83	-1.97	-162.93
11	17	-9.93	92.21	-1.11	-165.83	0.29	23.66
12	17	9.93	-197.09	1.11	-0.23	-0.29	-23.66
12	4	-9.93	197.09	-1.11	0.23	-0.06	-38.26
13	4	15.06	123.39	1.21	-51.38	-6.53	108.60
13	18	-15.06	-123.39	-1.21	51.38	4.05	144.75
14	18	15.06	-3.00	1.21	148.74	-4.05	-144.75
14	19	-15.06	3.00	-1.21	-148.74	2.22	140.22
15	19	15.06	-107.88	1.21	-17.32	-2.22	-140.22
15	6	-15.06	107.88	-1.21	17.32	-0.43	-95.64
16	6	16.57	236.19	1.76	-71.67	-6.42	115.97
16	20	-16.57	-236.19	-1.76	71.67	6.10	-73.24
17	20	16.57	109.80	1.76	128.45	-6.10	73.24
17	21	-16.57	-109.80	-1.76	-128.45	3.44	92.61
18	21	16.57	4.92	1.76	-37.61	-3.44	-92.61
18	22	-16.57	-4.92	-1.76	37.61	-0.73	104.26
19	22	16.57	-121.47	1.76	162.51	0.73	-104.26
19	23	-16.57	121.47	-1.76	-162.51	-3.39	-79.21
20	23	16.57	-226.35	1.76	-3.55	3.39	79.21
20	8	-16.57	226.35	-1.76	3.55	-3.70	-120.16
21	8	15.39	117.34	1.47	-43.38	-3.25	102.81
21	24	-15.39	-117.34	-1.47	43.38	0.03	153.73
22	24	15.39	-9.05	1.47	156.74	-0.03	-153.73
22	25	-15.39	9.05	-1.47	-156.74	-2.19	140.06
23	25	15.39	-113.93	1.47	-9.32	2.19	-140.06

23	10	-15.39	113.93	-1.47	9.32	-5.21	-93.87
24	10	10.31	204.35	1.45	-49.70	-1.66	22.42
24	26	-10.31	-204.35	-1.45	49.70	1.21	41.78
25	26	10.31	77.96	1.45	150.42	-1.21	-41.78
25	27	-10.31	-77.96	-1.45	-150.42	-0.98	159.54
26	27	10.31	-26.92	1.45	-15.64	0.98	-159.54
26	28	-10.31	26.92	-1.45	15.64	-4.41	95.82
27	28	10.31	-150.48	1.45	179.99	4.41	-95.82
27	29	-10.31	150.48	-1.45	-179.99	-6.60	-131.46
28	29	10.31	-252.85	1.45	17.91	6.60	131.46
28	12	-10.31	252.85	-1.45	-17.91	-6.67	-143.51
29	12	0.00	0.00	0.00	0.00	0.00	0.00
29	30	0.00	0.00	0.00	0.00	0.00	0.00

Loadcase ID: (L+In)1 Name: Balanced-No Impact

No impact factor is included in the individual live load.

Memb	Node	Fx kip	Fy kip	Fz kip	Mx kft	My kft	Mz kft
1	1	11.50	27.59	-0.12	-17.65	-3.43	-75.01
1	2	-11.50	-27.59	0.12	15.14	3.43	-160.84
2	3	17.63	145.29	0.79	-9.87	-3.75	-117.47
2	4	-17.63	-145.29	-0.79	25.99	3.75	-244.02
3	5	11.64	271.55	1.07	-6.17	-4.24	-78.01
3	6	-11.64	-271.55	-1.07	28.10	4.24	-160.65
4	7	-5.95	301.76	-0.24	-13.16	-4.51	40.12
4	8	5.95	-301.76	0.24	8.26	4.51	81.81
5	9	-20.28	184.76	-1.01	-16.44	-4.39	136.28
5	10	20.28	-184.76	1.01	-4.24	4.39	279.43
6	11	-14.55	44.03	-0.49	-10.98	-4.16	96.42
6	12	14.55	-44.03	0.49	1.01	4.16	201.94
7	13	0.00	0.00	0.00	0.00	0.00	0.00
7	2	0.00	0.00	0.00	0.00	0.00	0.00
8	2	11.50	27.59	-0.12	-15.14	-3.43	160.84
8	14	-11.50	-27.59	0.12	15.14	3.44	-159.53
9	14	11.50	27.59	-0.12	-15.14	-3.44	159.53
9	15	-11.50	-27.59	0.12	15.14	3.62	-117.85
10	15	11.50	27.59	-0.12	-15.14	-3.62	117.85
10	16	-11.50	-27.59	0.12	15.14	3.91	-52.53
11	16	11.50	27.59	-0.12	-15.14	-3.91	52.53
11	17	-11.50	-27.59	0.12	15.14	4.10	-10.86
12	17	11.50	27.59	-0.12	-15.14	-4.10	10.86
12	4	-11.50	-27.59	0.12	15.14	4.14	-2.19
13	4	29.14	172.88	0.66	-41.14	-7.88	246.21
13	18	-29.14	-172.88	-0.66	41.14	6.52	108.74
14	18	29.14	68.84	0.66	123.59	-6.52	-108.74
14	19	-29.14	-68.84	-0.66	-123.59	5.51	212.72
15	19	29.14	-25.65	0.66	-26.02	-5.51	-212.72
15	6	-29.14	25.65	-0.66	26.02	4.06	156.64
16	6	40.78	245.90	1.73	-54.11	-8.30	4.01
16	20	-40.78	-245.90	-1.73	54.11	7.98	40.47
17	20	40.78	141.86	1.73	110.62	-7.98	-40.47
17	21	-40.78	-141.86	-1.73	-110.62	5.37	254.74
18	21	40.78	47.37	1.73	-38.99	-5.37	-254.74
18	22	-40.78	-47.37	-1.73	38.99	1.26	366.89
19	22	40.78	-104.06	1.73	200.77	-1.26	-366.89
19	23	-40.78	104.06	-1.73	-200.77	-1.36	209.72
20	23	40.78	-241.59	1.73	-16.98	1.36	-209.72
20	8	-40.78	241.59	-1.73	16.98	-1.67	166.01
21	8	34.83	60.17	1.50	-25.24	-2.84	-247.82
21	24	-34.83	-60.17	-1.50	25.24	-0.43	379.37
22	24	34.83	-91.26	1.50	214.52	0.43	-379.37

22	25	-34.83	91.26	-1.50	-214.52	-2.69	241.53
23	25	34.83	-228.79	1.50	-3.23	2.69	-241.53
23	10	-34.83	228.79	-1.50	3.23	-5.76	-228.22
24	10	14.55	-44.03	0.49	1.01	1.37	-51.22
24	26	-14.55	44.03	-0.49	-1.01	-1.52	37.38
25	26	14.55	-44.03	0.49	1.01	1.52	-37.38
25	27	-14.55	44.03	-0.49	-1.01	-2.25	-29.12
26	27	14.55	-44.03	0.49	1.01	2.25	29.12
26	28	-14.55	44.03	-0.49	-1.01	-3.41	-133.34
27	28	14.55	-44.03	0.49	1.01	3.41	133.34
27	29	-14.55	44.03	-0.49	-1.01	-4.14	-199.84
28	29	14.55	-44.03	0.49	1.01	4.14	199.84
28	12	-14.55	44.03	-0.49	-1.01	-4.16	-201.94
29	12	0.00	0.00	0.00	0.00	0.00	0.00
29	30	0.00	0.00	0.00	0.00	0.00	0.00

Loadcase ID: (L+In)2 Name: Unbalanced-No Impact

No impact factor is included in the individual live load.

Memb	Node	Fx kip	Fy kip	Fz kip	Mx kft	My kft	Mz kft
1	1	8.58	24.54	-3.52	-194.15	3.86	-56.65
1	2	-8.58	-24.54	3.52	121.90	-3.86	-119.29
2	3	12.27	108.73	-0.40	-174.42	3.34	-82.30
2	4	-12.27	-108.73	0.40	166.28	-3.34	-169.28
3	5	6.85	188.92	3.83	-146.65	1.33	-46.30
3	6	-6.85	-188.92	-3.83	225.10	-1.33	-94.11
4	7	-5.66	197.17	4.17	-144.25	-1.53	37.78
4	8	5.66	-197.17	-4.17	229.78	1.53	78.27
5	9	-13.33	109.43	-0.50	-175.01	-3.57	89.06
5	10	13.33	-109.43	0.50	164.69	3.57	184.18
6	11	-8.71	20.93	-3.57	-194.25	-4.08	57.08
6	12	8.71	-20.93	3.57	120.97	4.08	121.55
7	13	0.00	0.00	0.00	0.00	0.00	0.00
7	2	0.00	0.00	0.00	0.00	0.00	0.00
8	2	8.58	24.54	-3.52	-121.90	3.86	119.29
8	14	-8.58	-24.54	3.52	121.90	-3.69	-118.12
9	14	8.58	24.54	-3.52	-121.90	3.69	118.12
9	15	-8.58	-24.54	3.52	121.90	1.63	-81.06
10	15	8.58	24.54	-3.52	-121.90	-1.63	81.06
10	16	-8.58	-24.54	3.52	121.90	9.98	-22.97
11	16	8.58	24.54	-3.52	-121.90	-9.98	22.97
11	17	-8.58	-24.54	3.52	121.90	15.30	14.10
12	17	8.58	24.54	-3.52	-121.90	-15.30	-14.10
12	4	-8.58	-24.54	3.52	121.90	16.41	21.81
13	4	20.85	133.26	-3.92	-288.18	-13.07	147.47
13	18	-20.85	-133.26	3.92	288.18	21.12	126.14
14	18	20.85	0.96	-3.92	-78.71	-21.12	-126.14
14	19	-20.85	-0.96	3.92	78.71	27.04	127.60
15	19	20.85	0.96	-3.92	-78.71	-27.04	-127.60
15	6	-20.85	-0.96	3.92	78.71	35.62	129.71
16	6	27.70	189.88	-0.09	-303.81	-34.29	-35.60
16	20	-27.70	-189.88	0.09	303.81	34.31	69.95
17	20	27.70	57.58	-0.09	-94.33	-34.31	-69.95
17	21	-27.70	-57.58	0.09	94.33	34.45	156.92
18	21	27.70	57.58	-0.09	-94.33	-34.45	-156.92
18	22	-27.70	-57.58	0.09	94.33	34.67	293.24
19	22	27.70	-134.98	-0.09	210.55	-34.67	-293.24
19	23	-27.70	134.98	0.09	-210.55	34.81	89.36
20	23	27.70	-134.98	-0.09	210.55	-34.81	-89.36
20	8	-27.70	134.98	0.09	-210.55	34.83	64.94
21	8	22.04	62.19	4.08	-19.23	-36.36	-143.22

21	24	-22.04	-62.19	-4.08	19.23	27.44	279.20
22	24	22.04	-130.37	4.08	285.66	-27.44	-279.20
22	25	-22.04	130.37	-4.08	-285.66	21.28	82.30
23	25	22.04	-130.37	4.08	285.66	-21.28	-82.30
23	10	-22.04	130.37	-4.08	-285.66	12.91	-185.37
24	10	8.71	-20.93	3.57	120.97	-16.48	1.19
24	26	-8.71	20.93	-3.57	-120.97	15.35	-7.76
25	26	8.71	-20.93	3.57	120.97	-15.35	7.76
25	27	-8.71	20.93	-3.57	-120.97	9.95	-39.38
26	27	8.71	-20.93	3.57	120.97	-9.95	39.38
26	28	-8.71	20.93	-3.57	-120.97	1.49	-88.94
27	28	8.71	-20.93	3.57	120.97	-1.49	88.94
27	29	-8.71	20.93	-3.57	-120.97	-3.91	-120.56
28	29	8.71	-20.93	3.57	120.97	3.91	120.56
28	12	-8.71	20.93	-3.57	-120.97	-4.08	-121.55
29	12	0.00	0.00	0.00	0.00	0.00	0.00
29	30	0.00	0.00	0.00	0.00	0.00	0.00

Loadcase ID: CF1 Name: Balanced

Memb	Node	Fx kip	Fy kip	Fz kip	Mx kft	My kft	Mz kft
1	1	2.39	5.64	1.25	30.30	-1.29	-28.71
1	2	-2.39	-5.64	-1.25	-4.73	1.29	-20.20
2	3	3.04	0.18	1.34	31.51	-1.27	-33.19
2	4	-3.04	-0.18	-1.34	-4.01	1.27	-29.09
3	5	3.71	-0.15	1.43	32.65	-1.18	-37.81
3	6	-3.71	0.15	-1.43	-3.37	1.18	-38.20
4	7	3.63	2.39	1.48	33.47	-0.98	-37.36
4	8	-3.63	-2.39	-1.48	-3.18	0.98	-37.06
5	9	2.91	0.88	1.50	34.01	-0.72	-32.50
5	10	-2.91	-0.88	-1.50	-3.22	0.72	-27.10
6	11	2.29	-5.91	1.56	34.70	-0.54	-28.31
6	12	-2.29	5.91	-1.56	-2.66	0.54	-18.65
7	13	0.00	0.00	0.00	0.00	0.00	0.00
7	2	0.00	0.00	0.00	0.00	0.00	0.00
8	2	2.39	5.64	1.25	4.73	-1.29	20.20
8	14	-2.39	-5.64	-1.25	-4.73	1.23	-19.93
9	14	1.43	5.64	0.79	3.58	-1.23	22.33
9	15	-1.43	-5.64	-0.79	-3.58	0.04	-13.82
10	15	0.56	5.64	0.38	2.56	-0.04	15.99
10	16	-0.56	-5.64	-0.38	-2.56	-0.85	-2.65
11	16	-0.40	5.64	-0.08	1.41	0.85	5.05
11	17	0.40	-5.64	0.08	-1.41	-0.73	3.46
12	17	-1.27	5.64	-0.49	0.38	0.73	-1.29
12	4	1.27	-5.64	0.49	-0.38	-0.57	3.06
13	4	1.76	5.82	0.85	4.40	-0.70	26.04
13	18	-1.76	-5.82	-0.85	-4.40	-1.05	-14.09
14	18	0.80	7.54	0.39	0.52	1.05	16.49
14	19	-0.80	-7.54	-0.39	-0.52	-1.63	-5.11
15	19	-0.07	9.10	-0.02	1.97	1.63	7.29
15	6	0.07	-9.10	0.02	-1.97	-1.59	12.60
16	6	3.64	8.95	1.41	5.34	0.40	25.60
16	20	-3.64	-8.95	-1.41	-5.34	-0.66	-23.98
17	20	2.68	10.67	0.95	1.46	0.66	26.38
17	21	-2.68	-10.67	-0.95	-1.46	-2.09	-10.26
18	21	1.81	12.23	0.54	2.91	2.09	12.44
18	22	-1.81	-12.23	-0.54	-2.91	-3.36	16.51
19	22	0.42	9.72	-0.13	5.21	3.36	-13.04
19	23	-0.42	-9.72	0.13	-5.21	-3.16	27.72
20	23	-0.85	7.44	-0.73	0.10	3.16	-24.55

20	8	0.85	-7.44	0.73	-0.10	-3.03	25.89
21	8	2.78	9.83	0.74	3.28	2.04	11.17
21	24	-2.78	-9.83	-0.74	-3.28	-3.67	10.32
22	24	1.39	7.32	0.07	5.58	3.67	-6.84
22	25	-1.39	-7.32	-0.07	-5.58	-3.79	17.89
23	25	0.12	5.04	-0.53	0.47	3.79	-14.72
23	10	-0.12	-5.04	0.53	-0.47	-2.71	25.06
24	10	3.03	5.91	0.98	3.69	1.99	2.04
24	26	-3.03	-5.91	-0.98	-3.69	-2.30	-0.19
25	26	1.64	5.91	0.31	2.02	2.30	3.66
25	27	-1.64	-5.91	-0.31	-2.02	-2.76	5.27
26	27	0.37	5.91	-0.29	0.52	2.76	-2.09
26	28	-0.37	-5.91	0.29	-0.52	-2.07	16.09
27	28	-1.02	5.91	-0.96	-1.16	2.07	-12.61
27	29	1.02	-5.91	0.96	1.16	-0.61	21.54
28	29	-2.29	5.91	-1.56	-2.66	0.61	-18.37
28	12	2.29	-5.91	1.56	2.66	-0.54	18.65
29	12	0.00	0.00	0.00	0.00	0.00	0.00
29	30	0.00	0.00	0.00	0.00	0.00	0.00

Loadcase ID: CF2 Name: Unbalanced

Memb	Node	Fx kip	Fy kip	Fz kip	Mx kft	My kft	Mz kft
1	1	1.57	3.72	0.86	20.57	-0.33	-19.03
1	2	-1.57	-3.72	-0.86	-2.87	0.33	-13.19
2	3	2.05	0.06	0.88	20.80	-0.30	-22.27
2	4	-2.05	-0.06	-0.88	-2.85	0.30	-19.67
3	5	2.49	0.08	0.92	21.22	-0.22	-25.36
3	6	-2.49	-0.08	-0.92	-2.36	0.22	-25.78
4	7	2.38	1.71	1.05	22.15	-0.07	-24.62
4	8	-2.38	-1.71	-1.05	-0.68	0.07	-24.19
5	9	1.91	0.43	1.02	21.97	0.10	-21.45
5	10	-1.91	-0.43	-1.02	-1.02	-0.10	-17.74
6	11	1.55	-4.00	0.99	21.68	0.21	-19.00
6	12	-1.55	4.00	-0.99	-1.36	-0.21	-12.87
7	13	0.00	0.00	0.00	0.00	0.00	0.00
7	2	0.00	0.00	0.00	0.00	0.00	0.00
8	2	1.57	3.72	0.86	2.87	-0.33	13.19
8	14	-1.57	-3.72	-0.86	-2.87	0.28	-13.01
9	14	0.35	3.72	0.28	1.42	-0.28	16.06
9	15	-0.35	-3.72	-0.28	-1.42	-0.14	-10.45
10	15	0.35	3.72	0.28	1.42	0.14	10.45
10	16	-0.35	-3.72	-0.28	-1.42	-0.81	-1.64
11	16	-0.87	3.72	-0.30	-0.03	0.81	4.69
11	17	0.87	-3.72	0.30	0.03	-0.37	0.93
12	17	-0.87	3.72	-0.30	-0.03	0.37	-0.93
12	4	0.87	-3.72	0.30	0.03	-0.27	2.09
13	4	1.18	3.78	0.58	2.82	-0.02	17.58
13	18	-1.18	-3.78	-0.58	-2.82	-1.17	-9.81
14	18	-0.04	5.97	-0.00	-2.10	1.17	12.86
14	19	0.04	-5.97	0.00	2.10	-1.17	-3.84
15	19	-0.04	5.97	-0.00	-2.10	1.17	3.84
15	6	0.04	-5.97	0.00	2.10	-1.16	9.23
16	6	2.45	6.05	0.92	0.25	0.95	16.56
16	20	-2.45	-6.05	-0.92	-0.25	-1.11	-15.46
17	20	1.23	8.24	0.34	-4.66	1.11	18.51
17	21	-1.23	-8.24	-0.34	4.66	-1.62	-6.06
18	21	1.23	8.24	0.34	-4.66	1.62	6.06
18	22	-1.23	-8.24	-0.34	4.66	-2.43	13.46
19	22	-0.54	5.05	-0.51	-1.74	2.43	-9.04

19	23	0.54	-5.05	0.51	1.74	-1.66	16.67
20	23	-0.54	5.05	-0.51	-1.74	1.66	-16.67
20	8	0.54	-5.05	0.51	1.74	-1.56	17.59
21	8	1.84	6.76	0.54	-1.05	1.49	6.60
21	24	-1.84	-6.76	-0.54	1.05	-2.67	8.18
22	24	0.07	3.57	-0.31	1.87	2.67	-3.75
22	25	-0.07	-3.57	0.31	-1.87	-2.19	9.15
23	25	0.07	3.57	-0.31	1.87	2.19	-9.15
23	10	-0.07	-3.57	0.31	-1.87	-1.55	16.48
24	10	1.99	4.00	0.71	2.89	1.66	1.26
24	26	-1.99	-4.00	-0.71	-2.89	-1.88	-0.01
25	26	0.22	4.00	-0.14	0.76	1.88	4.43
25	27	-0.22	-4.00	0.14	-0.76	-1.66	1.61
26	27	0.22	4.00	-0.14	0.76	1.66	-1.61
26	28	-0.22	-4.00	0.14	-0.76	-1.33	11.07
27	28	-1.55	4.00	-0.99	-1.36	1.33	-6.64
27	29	1.55	-4.00	0.99	1.36	0.17	12.68
28	29	-1.55	4.00	-0.99	-1.36	-0.17	-12.68
28	12	1.55	-4.00	0.99	1.36	0.21	12.87
29	12	0.00	0.00	0.00	0.00	0.00	0.00
29	30	0.00	0.00	0.00	0.00	0.00	0.00

Loadcase ID: (L+Ip)1 Name: Derail-Balanced

Memb	Node	Fx kip	Fy kip	Fz kip	Mx kft	My kft	Mz kft
1	1	-6.42	-24.34	-0.42	-16.84	-0.13	82.55
1	2	6.42	24.34	0.42	8.16	0.13	49.11
2	3	-4.99	9.91	-0.16	-14.96	-0.25	73.11
2	4	4.99	-9.91	0.16	11.69	0.25	29.26
3	5	2.37	78.91	0.48	-10.41	-0.62	23.40
3	6	-2.37	-78.91	-0.48	20.26	0.62	-71.90
4	7	6.17	203.69	0.65	-8.83	-1.20	-2.10
4	8	-6.17	-203.69	-0.65	22.23	1.20	-124.28
5	9	5.87	332.60	1.04	-5.50	-1.78	0.08
5	10	-5.87	-332.60	-1.04	26.91	1.78	-120.36
6	11	-2.98	439.51	-1.60	-22.68	-1.99	60.40
6	12	2.98	-439.51	1.60	-10.03	1.99	0.73
7	13	0.00	0.00	0.00	0.00	0.00	0.00
7	2	0.00	0.00	0.00	0.00	0.00	0.00
8	2	-6.42	-24.34	-0.42	-8.16	-0.13	-49.11
8	14	6.42	24.34	0.42	8.16	0.15	47.95
9	14	-6.42	-24.34	-0.42	-8.16	-0.15	-47.95
9	15	6.42	24.34	0.42	8.16	0.79	11.20
10	15	-6.42	-24.34	-0.42	-8.16	-0.79	-11.20
10	16	6.42	24.34	0.42	8.16	1.80	-46.41
11	16	-6.42	-24.34	-0.42	-8.16	-1.80	46.41
11	17	6.42	24.34	0.42	8.16	2.44	-83.17
12	17	-6.42	-24.34	-0.42	-8.16	-2.44	83.17
12	4	6.42	24.34	0.42	8.16	2.57	-90.82
13	4	-11.42	-14.42	-0.58	-19.86	-2.81	61.55
13	18	11.42	14.42	0.58	19.86	4.01	-91.17
14	18	-11.42	-14.42	-0.58	-19.86	-4.01	91.17
14	19	11.42	14.42	0.58	19.86	4.89	-112.95
15	19	-11.42	-14.42	-0.58	-19.86	-4.89	112.95
15	6	11.42	14.42	0.58	19.86	6.17	-144.49
16	6	-9.05	64.49	-0.10	-40.12	-6.78	216.39
16	20	9.05	-64.49	0.10	40.12	6.80	-204.72
17	20	-9.05	64.49	-0.10	-40.12	-6.80	204.72
17	21	9.05	-64.49	0.10	40.12	6.95	-107.32
18	21	-9.05	64.49	-0.10	-40.12	-6.95	107.32

18	22	9.05	-64.49	0.10	40.12	7.20	45.34
19	22	-9.05	-26.37	-0.10	103.74	-7.20	-45.34
19	23	9.05	26.37	0.10	-103.74	7.35	5.51
20	23	-9.05	-108.89	-0.10	-26.92	-7.35	-5.51
20	8	9.05	108.89	0.10	26.92	7.37	-14.19
21	8	-2.89	94.80	0.55	-49.15	-8.57	138.47
21	24	2.89	-94.80	-0.55	49.15	7.37	68.79
22	24	-2.89	3.94	0.55	94.72	-7.37	-68.79
22	25	2.89	-3.94	-0.55	-94.72	6.53	74.73
23	25	-2.89	-78.58	0.55	-35.94	-6.53	-74.73
23	10	2.89	78.58	-0.55	35.94	5.40	-86.61
24	10	2.98	254.01	1.60	-62.85	-7.18	206.98
24	26	-2.98	-254.01	-1.60	62.85	6.68	-127.18
25	26	2.98	163.15	1.60	81.01	-6.68	127.18
25	27	-2.98	-163.15	-1.60	-81.01	4.27	119.25
26	27	2.98	80.63	1.60	-49.64	-4.27	-119.25
26	28	-2.98	-80.63	-1.60	49.64	0.49	310.14
27	28	2.98	-191.95	1.60	381.94	-0.49	-310.14
27	29	-2.98	191.95	-1.60	-381.94	-1.92	20.22
28	29	2.98	-439.51	1.60	-10.03	1.92	-20.22
28	12	-2.98	439.51	-1.60	10.03	-1.99	-0.73
29	12	0.00	0.00	0.00	0.00	0.00	0.00
29	30	0.00	0.00	0.00	0.00	0.00	0.00

Loadcase ID: (L+Ip)2 Name: Derail-Unbalanced

Memb	Node	Fx kip	Fy kip	Fz kip	Mx kft	My kft	Mz kft
1	1	-3.06	-14.36	-3.28	-168.89	30.60	42.38
1	2	3.06	14.36	3.28	101.68	-30.60	20.41
2	3	-1.58	10.43	-4.33	-189.95	32.35	32.43
2	4	1.58	-10.43	4.33	101.19	-32.35	0.03
3	5	3.71	62.39	-2.64	-193.13	34.18	-3.52
3	6	-3.71	-62.39	2.64	139.04	-34.18	-72.58
4	7	5.01	147.70	1.42	-180.70	34.60	-12.34
4	8	-5.01	-147.70	-1.42	209.75	-34.60	-90.36
5	9	3.17	225.44	4.56	-174.27	33.35	0.05
5	10	-3.17	-225.44	-4.56	267.83	-33.35	-64.97
6	11	-7.24	261.63	4.27	-190.67	31.74	70.81
6	12	7.24	-261.63	-4.27	278.12	-31.74	77.67
7	13	0.00	0.00	0.00	0.00	0.00	0.00
7	2	0.00	0.00	0.00	0.00	0.00	0.00
8	2	-3.06	-14.36	-3.28	-101.68	30.60	-20.41
8	14	3.06	14.36	3.28	101.68	-30.44	19.72
9	14	-3.06	-14.36	-3.28	-101.68	30.44	-19.72
9	15	3.06	14.36	3.28	101.68	-25.49	-1.96
10	15	-3.06	-14.36	-3.28	-101.68	25.49	1.96
10	16	3.06	14.36	3.28	101.68	-17.73	-35.95
11	16	-3.06	-14.36	-3.28	-101.68	17.73	35.95
11	17	3.06	14.36	3.28	101.68	-12.78	-57.63
12	17	-3.06	-14.36	-3.28	-101.68	12.78	57.63
12	4	3.06	14.36	3.28	101.68	-11.75	-62.14
13	4	-4.65	-3.93	-7.61	-202.87	44.09	62.12
13	18	4.65	3.93	7.61	202.87	-28.47	-70.18
14	18	-4.65	-3.93	-7.61	-202.87	28.47	70.18
14	19	4.65	3.93	7.61	202.87	-16.98	-76.10
15	19	-4.65	-3.93	-7.61	-202.87	16.98	76.10
15	6	4.65	3.93	7.61	202.87	-0.35	-84.69
16	6	-0.93	58.46	-10.25	-341.91	34.53	157.27
16	20	0.93	-58.46	10.25	341.91	-32.68	-146.69
17	20	-0.93	58.46	-10.25	-341.91	32.68	146.69

17	21	0.93	-58.46	10.25	341.91	-17.20	-58.39
18	21	-0.93	58.46	-10.25	-341.91	17.20	58.39
18	22	0.93	-58.46	10.25	341.91	7.06	80.00
19	22	-0.93	-57.08	-10.25	-158.98	-7.06	-80.00
19	23	0.93	57.08	10.25	158.98	22.54	-6.22
20	23	-0.93	-57.08	-10.25	-158.98	-22.54	6.22
20	8	0.93	57.08	10.25	158.98	24.39	-16.54
21	8	4.08	90.62	-8.83	-368.72	10.21	106.90
21	24	-4.08	-90.62	8.83	368.72	9.09	91.23
22	24	4.08	-24.92	-8.83	-185.79	-9.09	-91.23
22	25	-4.08	24.92	8.83	185.79	22.43	53.59
23	25	4.08	-24.92	-8.83	-185.79	-22.43	-53.59
23	10	-4.08	24.92	8.83	185.79	40.56	2.42
24	10	7.24	200.52	-4.27	-453.61	-7.21	62.55
24	26	-7.24	-200.52	4.27	453.61	8.55	0.45
25	26	7.24	84.98	-4.27	-270.68	-8.55	-0.45
25	27	-7.24	-84.98	4.27	270.68	14.99	128.80
26	27	7.24	84.98	-4.27	-270.68	-14.99	-128.80
26	28	-7.24	-84.98	4.27	270.68	25.09	329.98
27	28	7.24	-261.63	-4.27	278.12	-25.09	-329.98
27	29	-7.24	261.63	4.27	-278.12	31.54	-65.20
28	29	7.24	-261.63	-4.27	278.12	-31.54	65.20
28	12	-7.24	261.63	4.27	-278.12	31.74	-77.67
29	12	0.00	0.00	0.00	0.00	0.00	0.00
29	30	0.00	0.00	0.00	0.00	0.00	0.00

Loadcase ID: LF1 Name: Balanced

Memb	Node	Fx kip	Fy kip	Fz kip	Mx kft	My kft	Mz kft
1	1	10.95	28.19	24.19	572.33	-16.37	-126.58
1	2	-10.95	-28.19	-24.19	-76.41	16.37	-97.94
2	3	13.83	14.22	25.37	587.48	-15.39	-146.38
2	4	-13.83	-14.22	-25.37	-67.33	15.39	-137.22
3	5	14.81	15.85	26.16	599.20	-13.08	-153.26
3	6	-14.81	-15.85	-26.16	-62.91	13.08	-150.41
4	7	13.81	16.51	26.54	606.82	-9.27	-146.70
4	8	-13.81	-16.51	-26.54	-62.67	9.27	-136.42
5	9	11.73	3.93	26.87	612.18	-5.05	-132.73
5	10	-11.73	-3.93	-26.87	-61.38	5.05	-107.77
6	11	9.50	-25.39	27.34	616.97	-2.44	-117.52
6	12	-9.50	25.39	-27.34	-56.46	2.44	-77.18
7	13	0.00	0.00	0.00	0.00	0.00	0.00
7	2	0.00	0.00	0.00	0.00	0.00	0.00
8	2	10.95	28.19	24.19	76.41	-16.37	97.94
8	14	-10.95	-28.19	-24.19	-76.41	15.21	-96.59
9	14	6.57	28.19	15.01	53.46	-15.21	107.54
9	15	-6.57	-28.19	-15.01	-53.46	-7.46	-64.96
10	15	2.59	28.19	6.67	32.61	7.46	74.91
10	16	-2.59	-28.19	-6.67	-32.61	-23.25	-8.16
11	16	-1.79	28.19	-2.51	9.66	23.25	19.11
11	17	1.79	-28.19	2.51	-9.66	-19.47	23.47
12	17	-5.77	28.19	-10.85	-11.19	19.47	-13.52
12	4	5.77	-28.19	10.85	11.19	-16.06	22.38
13	4	8.07	42.41	14.52	56.13	0.66	114.84
13	18	-8.07	-42.41	-14.52	-56.13	-30.49	-27.76
14	18	3.69	36.72	5.34	42.19	30.49	38.71
14	19	-3.69	-36.72	-5.34	-42.19	-38.56	16.76
15	19	-0.29	31.55	-3.00	13.16	38.56	-6.81
15	6	0.29	-31.55	3.00	-13.16	-32.01	75.80
16	6	14.52	47.41	23.17	76.07	18.94	74.61

16	20	-14.52	-47.41	-23.17	-76.07	-23.13	-66.03
17	20	10.14	41.72	13.99	62.13	23.13	76.98
17	21	-10.14	-41.72	-13.99	-62.13	-44.25	-13.97
18	21	6.16	36.55	5.65	33.09	44.25	23.92
18	22	-6.16	-36.55	-5.65	-33.09	-57.61	62.61
19	22	0.76	28.27	-5.67	17.90	57.61	-49.11
19	23	-0.76	-28.27	5.67	-17.90	-49.04	91.81
20	23	-4.14	20.75	-15.95	-19.70	49.04	-79.56
20	8	4.14	-20.75	15.95	19.70	-46.16	83.31
21	8	9.67	37.26	10.59	42.97	36.88	53.11
21	24	-9.67	-37.26	-10.59	-42.97	-60.04	28.36
22	24	4.27	28.98	-0.73	27.78	60.04	-14.86
22	25	-4.27	-28.98	0.73	-27.78	-58.93	58.64
23	25	-0.63	21.46	-11.01	-9.83	58.93	-46.39
23	10	0.63	-21.46	11.01	9.83	-36.33	90.46
24	10	11.10	25.39	15.86	51.54	31.27	17.31
24	26	-11.10	-25.39	-15.86	-51.54	-36.25	-9.34
25	26	5.70	25.39	4.54	23.24	36.25	22.84
25	27	-5.70	-25.39	-4.54	-23.24	-43.11	15.51
26	27	0.80	25.39	-5.74	-2.46	43.11	-3.26
26	28	-0.80	-25.39	5.74	2.46	-29.51	63.37
27	28	-4.60	25.39	-17.06	-30.76	29.51	-49.87
27	29	4.60	-25.39	17.06	30.76	-3.74	88.22
28	29	-9.50	25.39	-27.34	-56.46	3.74	-75.97
28	12	9.50	-25.39	27.34	56.46	-2.44	77.18
29	12	0.00	0.00	0.00	0.00	0.00	0.00
29	30	0.00	0.00	0.00	0.00	0.00	0.00

Loadcase ID: LF2 Name: Unbalanced

Memb	Node	Fx kip	Fy kip	Fz kip	Mx kft	My kft	Mz kft
1	1	7.28	19.33	16.86	384.46	-4.54	-84.38
1	2	-7.28	-19.33	-16.86	-38.84	4.54	-64.79
2	3	9.28	10.05	17.40	390.02	-3.92	-98.09
2	4	-9.28	-10.05	-17.40	-33.40	3.92	-92.21
3	5	9.81	10.91	17.74	393.83	-2.42	-101.75
3	6	-9.81	-10.91	-17.74	-30.10	2.42	-99.26
4	7	9.13	10.64	17.80	394.73	0.20	-97.23
4	8	-9.13	-10.64	-17.80	-29.90	-0.20	-89.88
5	9	7.79	1.74	17.36	391.03	3.14	-88.21
5	10	-7.79	-1.74	-17.36	-35.05	-3.14	-71.51
6	11	6.48	-17.15	17.08	387.22	4.96	-79.17
6	12	-6.48	17.15	-17.08	-37.06	-4.96	-53.60
7	13	0.00	0.00	0.00	0.00	0.00	0.00
7	2	0.00	0.00	0.00	0.00	0.00	0.00
8	2	7.28	19.33	16.86	38.84	-4.54	64.79
8	14	-7.28	-19.33	-16.86	-38.84	3.74	-63.87
9	14	1.71	19.33	5.19	9.67	-3.74	77.80
9	15	-1.71	-19.33	-5.19	-9.67	-4.10	-48.60
10	15	1.71	19.33	5.19	9.67	4.10	48.60
10	16	-1.71	-19.33	-5.19	-9.67	-16.38	-2.84
11	16	-3.86	19.33	-6.48	-19.51	16.38	16.77
11	17	3.86	-19.33	6.48	19.51	-6.59	12.43
12	17	-3.86	19.33	-6.48	-19.51	6.59	-12.43
12	4	3.86	-19.33	6.48	19.51	-4.56	18.50
13	4	5.42	29.38	10.92	13.89	0.64	73.71
13	18	-5.42	-29.38	-10.92	-13.89	-23.05	-13.38
14	18	-0.15	22.15	-0.75	-3.83	23.05	27.30
14	19	0.15	-22.15	0.75	3.83	-21.91	6.16
15	19	-0.15	22.15	-0.75	-3.83	21.91	-6.16

15	6	0.15	-22.15	0.75	3.83	-20.26	54.59
16	6	9.65	33.06	16.99	26.27	17.84	44.67
16	20	-9.65	-33.06	-16.99	-26.27	-20.91	-38.69
17	20	4.08	25.83	5.32	8.54	20.91	52.61
17	21	-4.08	-25.83	-5.32	-8.54	-28.95	-13.59
18	21	4.08	25.83	5.32	8.54	28.95	13.59
18	22	-4.08	-25.83	-5.32	-8.54	-41.54	47.56
19	22	-2.79	15.30	-9.07	-10.76	41.54	-30.39
19	23	2.79	-15.30	9.07	10.76	-27.84	53.50
20	23	-2.79	15.30	-9.07	-10.76	27.84	-53.50
20	8	2.79	-15.30	9.07	10.76	-26.19	56.27
21	8	6.34	25.94	8.72	19.14	26.39	33.61
21	24	-6.34	-25.94	-8.72	-19.14	-45.47	23.11
22	24	-0.53	15.41	-5.67	-0.16	45.47	-5.94
22	25	0.53	-15.41	5.67	0.16	-36.91	29.22
23	25	-0.53	15.41	-5.67	-0.16	36.91	-29.22
23	10	0.53	-15.41	5.67	0.16	-25.28	60.86
24	10	7.26	17.15	11.70	34.89	28.41	10.65
24	26	-7.26	-17.15	-11.70	-34.89	-32.09	-5.26
25	26	0.39	17.15	-2.69	-1.09	32.09	22.44
25	27	-0.39	-17.15	2.69	1.09	-28.02	3.46
26	27	0.39	17.15	-2.69	-1.09	28.02	-3.46
26	28	-0.39	-17.15	2.69	1.09	-21.65	44.06
27	28	-6.48	17.15	-17.08	-37.06	21.65	-26.88
27	29	6.48	-17.15	17.08	37.06	4.14	52.79
28	29	-6.48	17.15	-17.08	-37.06	-4.14	-52.79
28	12	6.48	-17.15	17.08	37.06	4.96	53.60
29	12	0.00	0.00	0.00	0.00	0.00	0.00
29	30	0.00	0.00	0.00	0.00	0.00	0.00

Loadcase ID: E1 Name: 4.00' of cover

Memb	Node	Fx kip	Fy kip	Fz kip	Mx kft	My kft	Mz kft
1	1	-0.00	0.00	0.00	-0.00	0.00	0.00
1	2	-0.00	0.00	0.00	-0.00	0.00	0.00
2	3	-0.00	0.00	0.00	-0.00	0.00	0.00
2	4	-0.00	0.00	0.00	-0.00	0.00	0.00
3	5	-0.00	0.00	0.00	-0.00	0.00	0.00
3	6	-0.00	0.00	0.00	-0.00	0.00	0.00
4	7	-0.00	0.00	0.00	-0.00	0.00	0.00
4	8	-0.00	0.00	0.00	-0.00	0.00	0.00
5	9	-0.00	0.00	0.00	-0.00	0.00	0.00
5	10	-0.00	0.00	0.00	-0.00	0.00	0.00
6	11	-0.00	0.00	0.00	-0.00	0.00	0.00
6	12	-0.00	0.00	0.00	-0.00	0.00	0.00
7	13	0.00	0.00	0.00	0.00	0.00	0.00
7	2	0.00	0.00	0.00	0.00	0.00	0.00
8	2	0.00	0.00	0.00	0.00	0.00	0.00
8	14	0.00	0.00	0.00	0.00	0.00	0.00
9	14	0.00	0.00	0.00	0.00	0.00	0.00
9	15	0.00	0.00	0.00	0.00	0.00	0.00
10	15	0.00	0.00	0.00	0.00	0.00	0.00
10	16	0.00	0.00	0.00	0.00	0.00	0.00
11	16	0.00	0.00	0.00	0.00	0.00	0.00
11	17	0.00	0.00	0.00	0.00	0.00	0.00
12	17	0.00	0.00	0.00	0.00	0.00	0.00
12	4	0.00	0.00	0.00	0.00	0.00	0.00
13	4	0.00	0.00	0.00	0.00	0.00	0.00
13	18	0.00	0.00	0.00	0.00	0.00	0.00
14	18	0.00	0.00	0.00	0.00	0.00	0.00

14	19	0.00	0.00	0.00	0.00	0.00	0.00
15	19	0.00	0.00	0.00	0.00	0.00	0.00
15	6	0.00	0.00	0.00	0.00	0.00	0.00
16	6	0.00	0.00	0.00	0.00	0.00	0.00
16	20	0.00	0.00	0.00	0.00	0.00	0.00
17	20	0.00	0.00	0.00	0.00	0.00	0.00
17	21	0.00	0.00	0.00	0.00	0.00	0.00
18	21	0.00	0.00	0.00	0.00	0.00	0.00
18	22	0.00	0.00	0.00	0.00	0.00	0.00
19	22	0.00	0.00	0.00	0.00	0.00	0.00
19	23	0.00	0.00	0.00	0.00	0.00	0.00
20	23	0.00	0.00	0.00	0.00	0.00	0.00
20	8	0.00	0.00	0.00	0.00	0.00	0.00
21	8	0.00	0.00	0.00	0.00	0.00	0.00
21	24	0.00	0.00	0.00	0.00	0.00	0.00
22	24	0.00	0.00	0.00	0.00	0.00	0.00
22	25	0.00	0.00	0.00	0.00	0.00	0.00
23	25	0.00	0.00	0.00	0.00	0.00	0.00
23	10	0.00	0.00	0.00	0.00	0.00	0.00
24	10	0.00	0.00	0.00	0.00	0.00	0.00
24	26	0.00	0.00	0.00	0.00	0.00	0.00
25	26	0.00	0.00	0.00	0.00	0.00	0.00
25	27	0.00	0.00	0.00	0.00	0.00	0.00
26	27	0.00	0.00	0.00	0.00	0.00	0.00
26	28	0.00	0.00	0.00	0.00	0.00	0.00
27	28	0.00	0.00	0.00	0.00	0.00	0.00
27	29	0.00	0.00	0.00	0.00	0.00	0.00
28	29	0.00	0.00	0.00	0.00	0.00	0.00
28	12	0.00	0.00	0.00	0.00	0.00	0.00
29	12	0.00	0.00	0.00	0.00	0.00	0.00
29	30	0.00	0.00	0.00	0.00	0.00	0.00

Loadcase ID: W1 Name: Angle: 75

Memb	Node	Fx kip	Fy kip	Fz kip	Mx kft	My kft	Mz kft
1	1	7.44	18.66	-7.18	-123.35	0.71	-76.40
1	2	-4.41	-18.66	4.01	9.01	-0.71	-44.67
2	3	8.70	5.41	-7.26	-124.14	0.49	-85.03
2	4	-5.67	-5.41	4.09	8.25	-0.49	-61.86
3	5	9.54	0.76	-7.28	-124.40	0.09	-90.77
3	6	-6.50	-0.76	4.11	8.12	-0.09	-73.20
4	7	9.54	-0.79	-7.28	-124.33	-0.38	-90.77
4	8	-6.50	0.79	4.10	8.06	0.38	-73.21
5	9	8.70	-5.45	-7.25	-123.92	-0.78	-85.02
5	10	-5.66	5.45	4.08	8.10	0.78	-61.85
6	11	7.47	-18.59	-7.18	-122.99	-0.99	-76.55
6	12	-4.43	18.59	4.01	8.75	0.99	-45.01
7	13	0.00	0.00	0.00	0.00	0.00	0.00
7	2	0.00	0.00	-0.36	0.00	-0.51	0.00
8	2	4.41	18.66	-3.65	-9.01	1.22	44.67
8	14	-4.41	-18.66	3.65	9.01	-1.05	-43.78
9	14	2.47	14.72	-2.31	0.57	1.05	48.61
9	15	-2.47	-14.72	2.12	-0.57	2.30	-26.38
10	15	0.77	11.25	-0.95	-1.98	-2.30	30.63
10	16	-0.77	-11.25	0.65	1.98	4.19	-4.00
11	16	-1.16	11.25	0.69	1.37	-4.19	8.83
11	17	1.16	-11.25	-0.87	-1.37	3.02	8.17
12	17	-2.86	11.25	2.05	4.31	-3.02	-3.91
12	4	2.86	-11.25	-2.09	-4.31	2.37	7.45
13	4	2.81	16.66	-2.00	-3.94	-1.88	54.41

13	18	-2.81	-16.66	1.74	3.94	5.72	-20.19
14	18	0.87	16.66	-0.41	-0.59	-5.72	25.02
14	19	-0.87	-16.66	0.22	0.59	6.19	0.15
15	19	-0.83	16.66	0.96	2.35	-6.19	4.10
15	6	0.83	-16.66	-1.23	-2.35	3.80	32.33
16	6	5.67	17.42	-2.88	-5.77	-3.71	40.87
16	20	-5.67	-17.42	2.85	5.77	4.23	-37.72
17	20	3.74	17.42	-1.52	-2.43	-4.23	42.55
17	21	-3.74	-17.42	1.33	2.43	6.38	-16.24
18	21	2.04	17.42	-0.15	0.51	-6.38	20.49
18	22	2.06	-17.42	-0.14	-0.51	6.39	20.75
19	22	-3.99	17.42	1.48	3.86	-6.39	-15.92
19	23	3.99	-17.42	-1.67	-3.86	4.01	42.24
20	23	-5.69	17.42	2.84	6.80	-4.01	-37.98
20	8	5.69	-17.42	-2.87	-6.80	3.49	41.14
21	8	0.80	16.63	-1.24	-1.26	-3.87	32.08
21	24	-0.80	-16.63	0.97	1.26	6.28	4.28
22	24	-1.13	16.63	0.37	2.08	-6.28	0.55
22	25	1.13	-16.63	-0.56	-2.08	5.58	24.56
23	25	-2.83	16.63	1.74	5.02	-5.58	-20.31
23	10	2.83	-16.63	-1.99	-5.02	1.76	54.45
24	10	2.84	11.18	-2.09	-3.08	-2.54	7.40
24	26	-2.84	-11.18	2.05	3.08	3.19	-3.89
25	26	0.90	11.18	-0.72	0.27	-3.19	8.72
25	27	-0.90	-11.18	0.53	-0.27	4.13	8.16
26	27	-0.80	11.18	0.65	3.21	-4.13	-3.91
26	28	0.80	-11.18	-0.94	-3.21	2.25	30.38
27	28	-2.73	15.12	2.28	0.32	-2.25	-25.55
27	29	2.73	-15.12	-2.47	-0.32	-1.33	48.38
28	29	-4.43	18.59	3.64	8.75	1.33	-44.13
28	12	4.43	-18.59	-3.65	-8.75	-1.51	45.01
29	12	0.00	0.00	-0.36	0.00	0.51	0.00
29	30	0.00	0.00	0.00	0.00	0.00	0.00

Loadcase ID: W2 Name: Angle: 60

Memb	Node	Fx kip	Fy kip	Fz kip	Mx kft	My kft	Mz kft
1	1	8.07	21.84	-4.17	-74.98	0.38	-86.87
1	2	-5.13	-21.84	2.39	5.76	-0.38	-51.67
2	3	9.53	6.36	-4.24	-75.60	0.25	-96.89
2	4	-6.59	-6.36	2.46	4.96	-0.25	-71.62
3	5	10.50	0.89	-4.25	-75.73	0.01	-103.57
3	6	-7.56	-0.89	2.47	4.87	-0.01	-84.86
4	7	10.50	-0.94	-4.25	-75.68	-0.27	-103.57
4	8	-7.57	0.94	2.47	4.80	0.27	-84.87
5	9	9.53	-6.40	-4.25	-75.46	-0.50	-96.88
5	10	-6.59	6.40	2.46	4.73	0.50	-71.62
6	11	8.10	-21.76	-4.18	-74.76	-0.63	-87.05
6	12	-5.16	21.76	2.40	5.35	0.63	-52.08
7	13	0.00	0.00	0.00	0.00	0.00	0.00
7	2	0.00	0.00	-0.21	0.00	-0.30	0.00
8	2	5.13	21.84	-2.18	-5.76	0.68	51.67
8	14	-5.13	-21.84	2.18	5.76	-0.57	-50.63
9	14	2.83	17.16	-1.37	3.68	0.57	56.37
9	15	-2.83	-17.16	1.26	-3.68	1.42	-30.46
10	15	0.81	13.04	-0.55	-1.06	-1.42	35.51
10	16	-0.81	-13.04	0.38	1.06	2.52	-4.65
11	16	-1.48	13.04	0.43	0.97	-2.52	10.39
11	17	1.48	-13.04	-0.54	-0.97	1.79	9.30
12	17	-3.51	13.04	1.25	2.75	-1.79	-4.25

12	4	3.51	-13.04	-1.27	-2.75	1.39	8.35
13	4	3.09	19.40	-1.19	-2.21	-1.14	63.28
13	18	-3.09	-19.40	1.04	2.21	3.43	-23.45
14	18	0.79	19.40	-0.23	-0.18	-3.43	29.19
14	19	-0.79	-19.40	0.12	0.18	3.69	0.11
15	19	-1.23	19.40	0.59	1.60	-3.69	4.95
15	6	1.23	-19.40	-0.75	-1.60	2.22	37.47
16	6	6.33	20.29	-1.72	-3.27	-2.21	47.39
16	20	-6.33	-20.29	1.71	3.27	2.52	-43.72
17	20	4.04	20.29	-0.90	-1.24	-2.52	49.46
17	21	-4.04	-20.29	0.79	1.24	3.80	-18.81
18	21	2.02	20.29	-0.08	0.54	-3.80	23.86
18	22	2.04	-20.29	-0.09	-0.54	3.78	24.18
19	22	-4.34	20.29	0.90	2.56	-3.78	-18.43
19	23	4.34	-20.29	-1.01	-2.56	2.34	49.09
20	23	-6.36	20.29	1.72	4.35	-2.34	-44.03
20	8	6.36	-20.29	-1.74	-4.35	2.03	47.70
21	8	1.20	19.35	-0.73	-0.45	-2.29	37.16
21	24	-1.20	-19.35	0.58	0.45	3.73	5.15
22	24	-1.09	19.35	0.23	1.57	-3.73	0.59
22	25	1.09	-19.35	-0.34	-1.57	3.30	28.64
23	25	-3.12	19.35	1.05	3.36	-3.30	-23.59
23	10	3.12	-19.35	-1.20	-3.36	0.99	63.33
24	10	3.48	12.95	-1.26	-1.38	-1.49	8.29
24	26	-3.48	-12.95	1.24	1.38	1.88	-4.22
25	26	1.18	12.95	-0.43	0.65	-1.88	9.97
25	27	-1.18	-12.95	0.32	-0.65	2.45	9.60
26	27	-0.84	12.95	0.39	2.43	-2.45	-4.54
26	28	0.84	-12.95	-0.56	-2.43	1.33	35.20
27	28	-3.14	17.63	1.37	-2.95	-1.33	-29.46
27	29	3.14	-17.63	-1.48	2.95	-0.82	56.10
28	29	-5.16	21.76	2.19	5.35	0.82	-51.04
28	12	5.16	-21.76	-2.19	-5.35	-0.92	52.08
29	12	0.00	0.00	-0.21	0.00	0.30	0.00
29	30	0.00	0.00	0.00	0.00	0.00	0.00

Loadcase ID: W3 Name: Angle: 45

Memb	Node	Fx kip	Fy kip	Fz kip	Mx kft	My kft	Mz kft
1	1	10.28	31.36	-0.48	-2.04	-0.26	-114.45
1	2	-7.47	-31.36	-0.34	-0.21	0.26	-70.60
2	3	12.31	9.28	-0.54	-2.38	-0.22	-128.34
2	4	-9.50	-9.28	-0.28	-1.21	0.22	-98.32
3	5	13.69	1.34	-0.54	-2.26	-0.15	-137.76
3	6	-10.88	-1.34	-0.28	-1.23	0.15	-117.10
4	7	13.69	-1.40	-0.54	-2.25	-0.07	-137.76
4	8	-10.88	1.40	-0.28	-1.36	0.07	-117.11
5	9	12.31	-9.34	-0.56	-2.38	0.01	-128.32
5	10	-9.50	9.34	-0.26	-1.64	-0.01	-98.32
6	11	10.32	-31.23	-0.51	-2.07	0.06	-114.72
6	12	-7.52	31.23	-0.30	-0.98	-0.06	-71.22
7	13	0.00	0.00	0.00	0.00	0.00	0.00
7	2	0.00	0.00	-0.08	0.00	-0.11	0.00
8	2	7.47	31.36	0.42	0.21	-0.15	70.60
8	14	-7.47	-31.36	-0.42	-0.21	0.13	-69.11
9	14	3.97	24.23	0.24	11.06	-0.13	77.85
9	15	-3.97	-24.23	-0.28	-11.06	-0.27	-41.26
10	15	0.89	17.95	0.13	0.73	0.27	48.96
10	16	-0.89	-17.95	-0.19	-0.73	-0.65	-6.46
11	16	-2.61	17.95	0.01	0.29	0.65	15.21

11	17	2.61	-17.95	-0.05	-0.29	-0.70	11.91
12	17	-5.69	17.95	-0.10	-0.10	0.70	-4.21
12	4	5.69	-17.95	0.09	0.10	-0.67	9.85
13	4	3.82	27.23	0.19	1.11	0.45	88.47
13	18	-3.82	-27.23	-0.24	-1.11	-0.88	-32.56
14	18	0.32	27.23	0.06	0.67	0.88	41.31
14	19	-0.32	-27.23	-0.10	-0.67	-1.01	-0.18
15	19	-2.76	27.23	-0.05	0.28	1.01	7.88
15	6	2.76	-27.23	-0.01	-0.28	-0.96	51.65
16	6	8.11	28.57	0.29	1.51	0.81	65.44
16	20	-8.11	-28.57	-0.29	-1.51	-0.86	-60.27
17	20	4.61	28.57	0.12	1.07	0.86	69.02
17	21	-4.61	-28.57	-0.16	-1.07	-1.07	-25.88
18	21	1.54	28.57	0.00	0.69	1.07	33.57
18	22	1.58	-28.57	-0.06	-0.69	-1.15	34.05
19	22	-5.08	28.57	-0.11	0.25	1.15	-25.30
19	23	5.08	-28.57	0.07	-0.25	-1.01	68.45
20	23	-8.16	28.57	-0.23	-0.14	1.01	-60.75
20	8	8.16	-28.57	0.22	0.14	-0.97	65.92
21	8	2.72	27.16	0.05	1.21	0.90	51.19
21	24	-2.72	-27.16	-0.11	-1.21	-1.08	8.20
22	24	-0.78	27.16	-0.06	0.77	1.08	0.55
22	25	0.78	-27.16	0.02	-0.77	-1.01	40.48
23	25	-3.86	27.16	-0.18	0.38	1.01	-32.78
23	10	3.86	-27.16	0.13	-0.38	-0.70	88.55
24	10	5.64	17.82	0.13	2.03	0.71	9.77
24	26	-5.64	-17.82	-0.14	-2.03	-0.75	-4.17
25	26	2.14	17.82	-0.04	1.59	0.75	12.92
25	27	-2.14	-17.82	-0.00	-1.59	-0.73	14.00
26	27	-0.94	17.82	-0.15	1.20	0.73	-6.30
26	28	0.94	-17.82	0.09	-1.20	-0.44	48.49
27	28	-4.44	24.95	-0.27	-10.54	0.44	-39.74
27	29	4.44	-24.95	0.23	10.54	-0.07	77.43
28	29	-7.52	31.23	-0.38	-0.98	0.07	-69.73
28	12	7.52	-31.23	0.38	0.98	-0.05	71.22
29	12	0.00	0.00	-0.08	0.00	0.11	0.00
29	30	0.00	0.00	0.00	0.00	0.00	0.00

Loadcase ID: W4 Name: Angle: 30

Memb	Node	Fx kip	Fy kip	Fz kip	Mx kft	My kft	Mz kft
1	1	10.49	34.53	2.20	50.05	-0.70	-119.43
1	2	-8.28	-34.53	-2.25	-4.55	0.70	-75.35
2	3	12.68	10.31	2.14	49.96	-0.55	-134.41
2	4	-10.46	-10.31	-2.19	-5.59	0.55	-105.25
3	5	14.18	1.51	2.16	50.25	-0.26	-144.65
3	6	-11.97	-1.51	-2.21	-5.56	0.26	-125.77
4	7	14.18	-1.58	2.15	50.23	0.09	-144.65
4	8	-11.97	1.58	-2.20	-5.71	-0.09	-125.79
5	9	12.68	-10.38	2.11	49.86	0.39	-134.38
5	10	-10.46	10.38	-2.16	-6.13	-0.39	-105.25
6	11	10.54	-34.38	2.14	49.84	0.55	-119.74
6	12	-8.33	34.38	-2.19	-5.51	-0.55	-76.06
7	13	0.00	0.00	0.00	0.00	0.00	0.00
7	2	0.00	0.00	-0.00	0.00	-0.00	0.00
8	2	8.28	34.53	2.25	4.55	-0.70	75.35
8	14	-8.28	-34.53	-2.25	-4.55	0.59	-73.70
9	14	4.29	26.41	1.37	15.22	-0.59	83.67
9	15	-4.29	-26.41	-1.37	-15.22	-1.48	-43.78
10	15	0.78	19.26	0.60	1.96	1.48	52.55

10	16	-0.78	-19.26	-0.60	-1.96	-2.90	-6.97
11	16	-3.20	19.26	-0.28	-0.23	2.90	16.93
11	17	3.20	-19.26	0.28	0.23	-2.48	12.15
12	17	-6.71	19.26	-1.05	-2.17	2.48	-3.38
12	4	6.71	-19.26	1.05	2.17	-2.15	9.43
13	4	3.75	29.56	1.14	3.42	1.60	95.82
13	18	-3.75	-29.56	-1.14	-3.42	-3.94	-35.12
14	18	-0.23	29.56	0.26	1.22	3.94	45.08
14	19	0.23	-29.56	-0.26	-1.22	-4.34	-0.43
15	19	-3.74	29.56	-0.51	-0.71	4.34	9.20
15	6	3.74	-29.56	0.51	0.71	-3.22	55.44
16	6	8.23	31.07	1.70	4.85	2.97	70.32
16	20	-8.23	-31.07	-1.70	-4.85	-3.27	-64.70
17	20	4.24	31.07	0.82	2.65	3.27	74.67
17	21	-4.24	-31.07	-0.82	-2.65	-4.51	-27.74
18	21	0.73	31.07	0.05	0.72	4.51	36.51
18	22	0.78	-31.07	-0.05	-0.72	-4.63	37.05
19	22	-4.77	31.07	-0.83	-1.48	4.63	-27.09
19	23	4.77	-31.07	0.83	1.48	-3.38	74.02
20	23	-8.28	31.07	-1.60	-3.41	3.38	-65.25
20	8	8.28	-31.07	1.60	3.41	-3.09	70.87
21	8	3.69	29.49	0.60	2.29	3.17	54.92
21	24	-3.69	-29.49	-0.60	-2.29	-4.48	9.56
22	24	-0.30	29.49	-0.28	0.10	4.48	0.41
22	25	0.30	-29.49	0.28	-0.10	-4.06	44.13
23	25	-3.80	29.49	-1.05	-1.84	4.06	-35.36
23	10	3.80	-29.49	1.05	1.84	-1.90	95.91
24	10	6.66	19.11	1.11	4.29	2.28	9.34
24	26	-6.66	-19.11	-1.11	-4.29	-2.63	-3.34
25	26	2.68	19.11	0.23	2.09	2.63	13.30
25	27	-2.68	-19.11	-0.23	-2.09	-2.98	15.56
26	27	-0.83	19.11	-0.54	0.16	2.98	-6.79
26	28	0.83	-19.11	0.54	-0.16	-1.70	52.02
27	28	-4.82	27.23	-1.42	-14.90	1.70	-42.06
27	29	4.82	-27.23	1.42	14.90	0.44	83.19
28	29	-8.33	34.38	-2.19	-5.51	-0.44	-74.42
28	12	8.33	-34.38	2.19	5.51	0.55	76.06
29	12	0.00	0.00	-0.00	0.00	0.00	0.00
29	30	0.00	0.00	0.00	0.00	0.00	0.00

Loadcase ID: W5 Name: Angle: 15

Memb	Node	Fx kip	Fy kip	Fz kip	Mx kft	My kft	Mz kft
1	1	11.13	35.05	4.63	97.45	-1.08	-125.10
1	2	-8.39	-35.05	-3.96	-8.63	1.08	-77.98
2	3	13.38	10.40	4.60	97.64	-0.82	-140.51
2	4	-10.64	-10.40	-3.93	-9.57	0.82	-108.73
3	5	14.91	1.51	4.62	98.07	-0.33	-150.99
3	6	-12.17	-1.51	-3.95	-9.48	0.33	-129.65
4	7	14.91	-1.58	4.61	98.02	0.24	-150.99
4	8	-12.17	1.58	-3.94	-9.64	-0.24	-129.67
5	9	13.38	-10.48	4.56	97.44	0.74	-140.48
5	10	-10.64	10.48	-3.89	-10.14	-0.74	-108.73
6	11	11.18	-34.90	4.56	97.07	1.02	-125.41
6	12	-8.44	34.90	-3.89	-9.67	-1.02	-78.69
7	13	0.00	0.00	0.00	0.00	0.00	0.00
7	2	0.00	0.00	0.06	0.00	0.08	0.00
8	2	8.39	35.05	3.90	8.63	-1.17	77.98
8	14	-8.39	-35.05	-3.90	-8.63	0.98	-76.31
9	14	4.43	26.97	2.38	17.62	-0.98	86.22

9	15	-4.43	-26.97	-2.35	-17.62	-2.59	-45.48
10	15	0.94	19.87	1.01	3.03	2.59	54.19
10	16	-0.94	-19.87	-0.97	-3.03	-4.94	-7.16
11	16	-3.02	19.87	-0.55	-0.77	4.94	17.06
11	17	3.02	-19.87	0.58	0.77	-4.08	12.94
12	17	-6.50	19.87	-1.92	-4.12	4.08	-4.23
12	4	6.50	-19.87	1.93	4.12	-3.47	10.47
13	4	4.14	30.27	2.00	5.45	2.65	98.26
13	18	-4.14	-30.27	-1.96	-5.45	-6.71	-36.11
14	18	0.18	30.27	0.44	1.65	6.71	46.01
14	19	-0.18	-30.27	-0.41	-1.65	-7.34	-0.29
15	19	-3.31	30.27	-0.93	-1.69	7.34	9.00
15	6	3.31	-30.27	0.98	1.69	-5.26	57.18
16	6	8.86	31.78	2.97	7.79	4.92	72.47
16	20	-8.86	-31.78	-2.97	-7.79	-5.46	-66.72
17	20	4.90	31.78	1.45	3.99	5.46	76.63
17	21	-4.90	-31.78	-1.42	-3.99	-7.63	-28.63
18	21	1.42	31.78	0.08	0.65	7.63	37.34
18	22	1.47	-31.78	-0.03	-0.65	-7.76	37.88
19	22	-5.43	31.78	-1.49	-3.15	7.76	-27.98
19	23	5.43	-31.78	1.52	3.15	-5.50	75.98
20	23	-8.91	31.78	-2.85	-6.49	5.50	-67.26
20	8	8.91	-31.78	2.86	6.49	-4.98	73.01
21	8	3.26	30.20	1.08	3.15	5.22	56.66
21	24	-3.26	-30.20	-1.04	-3.15	-7.54	9.36
22	24	-0.70	30.20	-0.48	-0.65	7.54	0.54
22	25	0.70	-30.20	0.51	0.65	-6.79	45.07
23	25	-4.19	30.20	-1.85	-3.99	6.79	-36.35
23	10	4.19	-30.20	1.89	3.99	-2.95	98.35
24	10	6.45	19.72	2.00	6.15	3.70	10.38
24	26	-6.45	-19.72	-1.99	-6.15	-4.32	-4.18
25	26	2.49	19.72	0.47	2.35	4.32	14.08
25	27	-2.49	-19.72	-0.44	-2.35	-5.01	15.70
26	27	-0.99	19.72	-0.90	-0.99	5.01	-6.98
26	28	0.99	-19.72	0.95	0.99	-2.83	53.66
27	28	-4.95	27.79	-2.46	-17.58	2.83	-43.76
27	29	4.95	-27.79	2.50	17.58	0.92	85.74
28	29	-8.44	34.90	-3.83	-9.67	-0.92	-77.03
28	12	8.44	-34.90	3.83	9.67	1.10	78.69
29	12	0.00	0.00	0.06	0.00	-0.08	0.00
29	30	0.00	0.00	0.00	0.00	0.00	0.00

Loadcase ID: W6 Name: Angle: 0

Memb	Node	Fx kip	Fy kip	Fz kip	Mx kft	My kft	Mz kft
1	1	11.49	41.28	7.80	159.31	-1.53	-133.56
1	2	-8.54	-41.28	-6.18	-14.17	1.53	-74.97
2	3	14.02	5.82	7.72	159.38	-1.13	-150.82
2	4	-11.06	-5.82	-6.11	-15.84	1.13	-109.47
3	5	16.22	-9.07	7.75	159.89	-0.38	-165.86
3	6	-13.26	9.07	-6.13	-15.85	0.38	-139.58
4	7	16.30	-15.05	7.76	159.93	0.51	-166.42
4	8	-13.35	15.05	-6.14	-15.69	-0.51	-140.81
5	9	14.36	-28.30	7.65	158.81	1.28	-153.07
5	10	-11.41	28.30	-6.03	-16.71	-1.28	-114.27
6	11	12.28	-59.08	7.76	158.84	1.69	-138.79
6	12	-9.33	59.08	-6.14	-14.63	-1.69	-85.90
7	13	0.00	0.00	0.00	0.00	0.00	0.00
7	2	0.00	0.00	0.18	0.00	0.26	0.00
8	2	8.54	41.28	6.00	14.17	-1.79	74.97

8	14	-8.54	-41.28	-6.00	-14.17	1.51	-73.01
9	14	4.35	27.24	3.70	30.65	-1.51	83.48
9	15	-4.35	-27.24	-3.61	-30.65	-4.01	-42.33
10	15	0.66	14.89	1.58	6.04	4.01	51.54
10	16	-0.66	-14.89	-1.44	-6.04	-7.59	-16.29
11	16	-3.52	19.17	-0.86	-6.49	7.59	26.76
11	17	3.52	-19.17	0.96	6.49	-6.21	2.20
12	17	-7.21	22.94	-2.98	-5.58	6.21	7.01
12	4	7.21	-22.94	3.00	5.58	-5.27	0.19
13	4	3.85	28.76	3.11	10.27	4.14	109.28
13	18	-3.85	-28.76	-2.98	-10.27	-10.38	-50.23
14	18	-0.33	33.04	0.68	-2.25	10.38	60.70
14	19	0.33	-33.04	-0.58	2.25	-11.34	-10.80
15	19	-4.02	36.81	-1.44	-1.34	11.34	20.01
15	6	4.02	-36.81	1.58	1.34	-8.04	60.47
16	6	9.24	27.74	4.55	14.51	7.66	79.11
16	20	-9.24	-27.74	-4.54	-14.51	-8.49	-74.09
17	20	5.06	32.02	2.24	1.99	8.49	84.56
17	21	-5.06	-32.02	-2.15	-1.99	-11.80	-36.19
18	21	1.37	35.79	0.13	2.90	11.80	45.41
18	22	2.59	-35.79	0.02	-2.90	-11.93	39.33
19	22	-6.78	40.07	-2.32	-9.62	11.93	-28.86
19	23	6.78	-40.07	2.41	9.62	-8.35	89.38
20	23	-10.46	43.84	-4.44	-8.71	8.35	-80.17
20	8	10.46	-43.84	4.45	8.71	-7.55	88.10
21	8	2.89	28.80	1.69	6.97	8.06	52.71
21	24	-2.89	-28.80	-1.55	-6.97	-11.61	10.26
22	24	-1.30	33.08	-0.74	-5.55	11.61	0.21
22	25	1.30	-33.08	0.84	5.55	-10.41	49.75
23	25	-4.99	36.85	-2.86	-4.64	10.41	-40.54
23	10	4.99	-36.85	2.99	4.64	-4.41	116.19
24	10	6.42	8.54	3.04	12.08	5.69	-1.92
24	26	-6.42	-8.54	-3.02	-12.08	-6.64	4.61
25	26	2.23	12.82	0.73	-0.45	6.64	5.86
25	27	-2.23	-12.82	-0.63	0.45	-7.67	13.51
26	27	-1.45	16.59	-1.39	0.46	7.67	-4.29
26	28	1.45	-16.59	1.54	-0.46	-4.20	43.58
27	28	-5.64	39.19	-3.84	-41.06	4.20	-33.11
27	29	5.64	-39.19	3.93	41.06	1.67	92.30
28	29	-9.33	59.08	-5.95	-14.63	-1.67	-83.09
28	12	9.33	-59.08	5.96	14.63	1.95	85.90
29	12	0.00	0.00	0.18	0.00	-0.26	0.00
29	30	0.00	0.00	0.00	0.00	0.00	0.00

Loadcase ID: W7 Name: Angle: -15

Memb	Node	Fx kip	Fy kip	Fz kip	Mx kft	My kft	Mz kft
1	1	10.10	30.85	9.55	187.60	-1.65	-112.78
1	2	-7.44	-30.85	-7.00	-15.17	1.65	-70.00
2	3	12.11	9.10	9.55	188.27	-1.23	-126.54
2	4	-9.45	-9.10	-7.00	-15.79	1.23	-97.42
3	5	13.47	1.31	9.59	188.92	-0.43	-135.85
3	6	-10.81	-1.31	-7.04	-15.63	0.43	-115.94
4	7	13.47	-1.37	9.58	188.83	0.50	-135.85
4	8	-10.81	1.37	-7.03	-15.77	-0.50	-115.96
5	9	12.11	-9.17	9.51	187.92	1.31	-126.51
5	10	-9.45	9.17	-6.96	-16.37	-1.31	-97.42
6	11	10.15	-30.72	9.47	186.96	1.74	-113.04
6	12	-7.48	30.72	-6.92	-16.20	-1.74	-70.60
7	13	0.00	0.00	0.00	0.00	0.00	0.00

7	2	0.00	0.00	0.33	0.00	0.48	0.00
8	2	7.44	30.85	6.67	15.17	-2.13	70.00
8	14	-7.44	-30.85	-6.66	-15.17	1.81	-68.53
9	14	4.03	23.89	4.14	19.86	-1.81	77.05
9	15	-4.03	-23.89	-3.96	-19.86	-4.31	-40.96
10	15	1.03	17.78	1.74	4.62	4.31	48.46
10	16	-1.03	-17.78	-1.47	-4.62	-8.11	-6.38
11	16	-2.38	17.78	-1.06	-1.69	8.11	14.90
11	17	2.38	-17.78	1.23	1.69	-6.38	11.95
12	17	-5.38	17.78	-3.45	-7.24	6.38	-4.45
12	4	5.38	-17.78	3.49	7.24	-5.29	10.03
13	4	4.07	26.88	3.51	8.55	4.07	87.39
13	18	-4.07	-26.88	-3.28	-8.55	-11.04	-32.19
14	18	0.66	26.88	0.75	2.24	11.04	40.72
14	19	-0.66	-26.88	-0.58	-2.24	-12.05	-0.12
15	19	-2.34	26.88	-1.64	-3.32	12.05	7.62
15	6	2.34	-26.88	1.90	3.32	-8.18	51.16
16	6	8.47	28.19	5.15	12.31	7.74	64.79
16	20	-8.47	-28.19	-5.13	-12.31	-8.67	-59.69
17	20	5.06	28.19	2.60	6.00	8.67	68.21
17	21	-5.06	-28.19	-2.43	-6.00	-12.47	-25.63
18	21	2.06	28.19	0.21	0.45	12.47	33.13
18	22	2.10	-28.19	0.07	-0.45	-12.64	33.60
19	22	-5.51	28.19	-2.59	-5.87	12.64	-25.08
19	23	5.51	-28.19	2.77	5.87	-8.59	67.65
20	23	-8.51	28.19	-4.99	-11.42	8.59	-60.15
20	8	8.51	-28.19	5.01	11.42	-7.68	65.25
21	8	2.30	26.82	2.02	4.35	8.18	50.71
21	24	-2.30	-26.82	-1.77	-4.35	-12.33	7.93
22	24	-1.11	26.82	-0.75	-1.96	12.33	0.60
22	25	1.11	-26.82	0.93	1.96	-11.06	39.91
23	25	-4.11	26.82	-3.15	-7.52	11.06	-32.40
23	10	4.11	-26.82	3.39	7.52	-4.34	87.46
24	10	5.34	17.65	3.57	8.85	5.65	9.95
24	26	-5.34	-17.65	-3.53	-8.85	-6.77	-4.41
25	26	1.93	17.65	1.01	2.54	6.77	12.93
25	27	-1.93	-17.65	-0.83	-2.54	-8.16	13.73
26	27	-1.07	17.65	-1.39	-3.01	8.16	-6.23
26	28	1.07	-17.65	1.66	3.01	-4.55	48.01
27	28	-4.48	24.60	-4.19	-20.33	4.55	-39.49
27	29	4.48	-24.60	4.36	20.33	1.91	76.64
28	29	-7.48	30.72	-6.58	-16.20	-1.91	-69.14
28	12	7.48	-30.72	6.59	16.20	2.22	70.60
29	12	0.00	0.00	0.33	0.00	-0.48	0.00
29	30	0.00	0.00	0.00	0.00	0.00	0.00

Loadcase ID: W8 Name: Angle: -30

Memb	Node	Fx kip	Fy kip	Fz kip	Mx kft	My kft	Mz kft
1	1	8.24	25.87	11.39	221.67	-1.84	-92.85
1	2	-6.29	-25.87	-8.18	-17.62	1.84	-58.28
2	3	9.92	7.65	11.41	222.56	-1.36	-104.34
2	4	-7.97	-7.65	-8.20	-18.04	1.36	-81.17
3	5	11.06	1.10	11.45	223.28	-0.46	-112.14
3	6	-9.11	-1.10	-8.24	-17.84	0.46	-96.69
4	7	11.06	-1.16	11.44	223.16	0.60	-112.14
4	8	-9.11	1.16	-8.23	-17.97	-0.60	-96.71
5	9	9.92	-7.71	11.36	222.14	1.52	-104.32
5	10	-7.97	7.71	-8.15	-18.58	-1.52	-81.17
6	11	8.28	-25.76	11.30	220.94	2.01	-93.07

6	12	-6.33	25.76	-8.09	-18.58	-2.01	-58.80
7	13	0.00	0.00	0.00	0.00	0.00	0.00
7	2	0.00	0.00	0.47	0.00	0.68	0.00
8	2	6.29	25.87	7.71	17.62	-2.52	58.28
8	14	-6.29	-25.87	-7.70	-17.62	2.15	-57.05
9	14	3.41	19.99	4.81	19.71	-2.15	64.26
9	15	-3.41	-19.99	-4.56	-19.71	-4.93	-34.06
10	15	0.87	14.82	2.02	5.16	4.93	40.40
10	16	-0.87	-14.82	-1.63	-5.16	-9.25	-5.32
11	16	-2.01	14.82	-1.26	-2.06	9.25	12.53
11	17	2.01	-14.82	1.50	2.06	-7.16	9.85
12	17	-4.54	14.82	-4.05	-8.42	7.16	-3.51
12	4	4.54	-14.82	4.10	8.42	-5.88	8.17
13	4	3.43	22.47	4.10	9.62	4.52	73.01
13	18	-3.43	-22.47	-3.77	-9.62	-12.60	-26.87
14	18	0.54	22.47	0.88	2.40	12.60	34.07
14	19	-0.54	-22.47	-0.63	-2.40	-13.74	-0.13
15	19	-1.99	22.47	-1.91	-3.96	13.74	6.47
15	6	1.99	-22.47	2.27	3.96	-9.16	42.66
16	6	7.12	23.58	5.97	13.89	8.70	54.03
16	20	-7.12	-23.58	-5.94	-13.89	-9.78	-49.77
17	20	4.23	23.58	3.05	6.66	9.78	56.98
17	21	-4.23	-23.58	-2.81	-6.66	-14.21	-21.37
18	21	1.70	23.58	0.26	0.31	14.21	27.71
18	22	1.73	-23.58	0.12	-0.31	-14.37	28.10
19	22	-4.61	23.58	-3.01	-6.92	14.37	-20.90
19	23	4.61	-23.58	3.26	6.92	-9.64	56.50
20	23	-7.15	23.58	-5.80	-13.27	9.64	-50.16
20	8	7.15	-23.58	5.83	13.27	-8.58	54.43
21	8	1.96	22.42	2.40	4.70	9.19	42.28
21	24	-1.96	-22.42	-2.04	-4.70	-14.05	6.73
22	24	-0.92	22.42	-0.85	-2.53	14.05	0.47
22	25	0.92	-22.42	1.09	2.53	-12.58	33.39
23	25	-3.46	22.42	-3.64	-8.88	12.58	-27.05
23	10	3.46	-22.42	3.97	8.88	-4.77	73.07
24	10	4.51	14.71	4.18	9.69	6.29	8.10
24	26	-4.51	-14.71	-4.13	-9.69	-7.59	-3.48
25	26	1.63	14.71	1.24	2.47	7.59	10.69
25	27	-1.63	-14.71	-0.99	-2.47	-9.28	11.54
26	27	-0.91	14.71	-1.55	-3.89	9.28	-5.19
26	28	0.91	-14.71	1.94	3.89	-5.15	40.02
27	28	-3.79	20.59	-4.83	-20.41	5.15	-32.81
27	29	3.79	-20.59	5.07	20.41	2.32	63.91
28	29	-6.33	25.76	-7.62	-18.58	-2.32	-57.57
28	12	6.33	-25.76	7.62	18.58	2.69	58.80
29	12	0.00	0.00	0.47	0.00	-0.68	0.00
29	30	0.00	0.00	0.00	0.00	0.00	0.00

Loadcase ID: W9 Name: Angle: -45

Memb	Node	Fx kip	Fy kip	Fz kip	Mx kft	My kft	Mz kft
1	1	5.38	17.85	11.68	225.86	-1.78	-61.73
1	2	-4.39	-17.85	-8.26	-17.64	1.78	-39.50
2	3	6.53	5.31	11.72	226.82	-1.31	-69.56
2	4	-5.53	-5.31	-8.30	-17.81	1.31	-55.11
3	5	7.31	0.77	11.77	227.51	-0.42	-74.92
3	6	-6.31	-0.77	-8.34	-17.61	0.42	-65.77
4	7	7.31	-0.81	11.76	227.40	0.62	-74.92
4	8	-6.31	0.81	-8.33	-17.71	-0.62	-65.78
5	9	6.53	-5.35	11.68	226.41	1.52	-69.55

5	10	-5.53	5.35	-8.26	-18.24	-1.52	-55.11
6	11	5.41	-17.77	11.61	225.12	2.00	-61.89
6	12	-4.41	17.77	-8.19	-18.41	-2.00	-39.86
7	13	0.00	0.00	0.00	0.00	0.00	0.00
7	2	0.00	0.00	0.56	0.00	0.81	0.00
8	2	4.39	17.85	7.70	17.64	-2.59	39.50
8	14	-4.39	-17.85	-7.69	-17.64	2.22	-38.64
9	14	2.36	13.71	4.84	17.04	-2.22	43.72
9	15	-2.36	-13.71	-4.54	-17.04	-4.86	-23.01
10	15	0.57	10.07	2.03	5.00	4.86	27.47
10	16	-0.57	-10.07	-1.57	-5.00	-9.12	-3.63
11	16	-1.46	10.07	-1.29	-2.15	9.12	8.70
11	17	1.46	-10.07	1.59	2.15	-6.95	6.51
12	17	-3.24	10.07	-4.10	-8.43	6.95	-2.05
12	4	3.24	-10.07	4.16	8.43	-5.65	5.21
13	4	2.29	15.38	4.14	9.38	4.34	49.89
13	18	-2.29	-15.38	-3.74	-9.38	-12.43	-18.32
14	18	0.26	15.38	0.88	2.24	12.43	23.39
14	19	-0.26	-15.38	-0.59	-2.24	-13.54	-0.16
15	19	-1.53	15.38	-1.92	-4.04	13.54	4.62
15	6	1.53	-15.38	2.35	4.04	-8.87	29.01
16	6	4.78	16.15	5.99	13.56	8.45	36.76
16	20	-4.78	-16.15	-5.96	-13.56	-9.53	-33.84
17	20	2.75	16.15	3.10	6.42	9.53	38.91
17	21	-2.75	-16.15	-2.81	-6.42	-13.99	-14.52
18	21	0.97	16.15	0.29	0.14	13.99	18.98
18	22	0.99	-16.15	0.17	-0.14	-14.14	19.26
19	22	-3.02	16.15	-3.02	-7.00	14.14	-14.19
19	23	3.02	-16.15	3.32	7.00	-9.35	38.58
20	23	-4.81	16.15	-5.83	-13.29	9.35	-34.12
20	8	4.81	-16.15	5.87	13.29	-8.29	37.04
21	8	1.50	15.34	2.47	4.42	8.91	28.74
21	24	-1.50	-15.34	-2.04	-4.42	-13.84	4.80
22	24	-0.52	15.34	-0.82	-2.72	13.84	0.27
22	25	0.52	-15.34	1.11	2.72	-12.38	22.90
23	25	-2.31	15.34	-3.63	-9.01	12.38	-18.44
23	10	2.31	-15.34	4.03	9.01	-4.52	49.94
24	10	3.22	10.00	4.23	9.23	6.04	5.17
24	26	-3.22	-10.00	-4.17	-9.23	-7.36	-2.03
25	26	1.19	10.00	1.32	2.09	7.36	7.10
25	27	-1.19	-10.00	-1.02	-2.09	-9.13	8.00
26	27	-0.60	10.00	-1.49	-4.19	9.13	-3.54
26	28	0.60	-10.00	1.95	4.19	-5.05	27.20
27	28	-2.63	14.13	-4.81	-17.88	5.05	-22.13
27	29	2.63	-14.13	5.11	17.88	2.44	43.47
28	29	-4.41	17.77	-7.62	-18.41	-2.44	-39.01
28	12	4.41	-17.77	7.63	18.41	2.81	39.86
29	12	0.00	0.00	0.56	0.00	-0.81	0.00
29	30	0.00	0.00	0.00	0.00	0.00	0.00

Loadcase ID: W10 Name: Angle: -60

Memb	Node	Fx kip	Fy kip	Fz kip	Mx kft	My kft	Mz kft
1	1	1.21	4.61	10.20	195.38	-1.42	-14.57
1	2	-1.15	-4.61	-7.07	-14.94	1.42	-9.72
2	3	1.50	1.39	10.25	196.32	-1.03	-16.52
2	4	-1.43	-1.39	-7.12	-14.76	1.03	-13.63
3	5	1.70	0.21	10.29	196.86	-0.30	-17.88
3	6	-1.63	-0.21	-7.16	-14.58	0.30	-16.36
4	7	1.70	-0.22	10.28	196.76	0.55	-17.88

4	8	-1.63	0.22	-7.15	-14.62	-0.55	-16.36
5	9	1.50	-1.40	10.23	195.96	1.29	-16.52
5	10	-1.43	1.40	-7.09	-14.98	-1.29	-13.63
6	11	1.22	-4.59	10.15	194.77	1.68	-14.61
6	12	-1.15	4.59	-7.02	-15.34	-1.68	-9.82
7	13	0.00	0.00	0.00	0.00	0.00	0.00
7	2	0.00	0.00	0.58	0.00	0.83	0.00
8	2	1.15	4.61	6.49	14.94	-2.25	9.72
8	14	-1.15	-4.61	-6.48	-14.94	1.94	-9.50
9	14	0.60	3.49	4.11	10.79	-1.94	10.88
9	15	-0.60	-3.49	-3.81	-10.79	-4.03	-5.61
10	15	0.11	2.50	1.72	4.00	4.03	6.83
10	16	-0.11	-2.50	-1.24	-4.00	-7.54	-0.91
11	16	-0.44	2.50	-1.13	-1.93	7.54	2.29
11	17	0.44	-2.50	1.43	1.93	-5.60	1.49
12	17	-0.92	2.50	-3.52	-7.15	5.60	-0.28
12	4	0.92	-2.50	3.59	7.15	-4.48	1.06
13	4	0.51	3.89	3.54	7.61	3.45	12.57
13	18	-0.51	-3.89	-3.13	-7.61	-10.29	-4.58
14	18	-0.04	3.89	0.75	1.68	10.29	5.96
14	19	0.04	-3.89	-0.45	-1.68	-11.20	-0.09
15	19	-0.53	3.89	-1.64	-3.54	11.20	1.30
15	6	0.53	-3.89	2.08	3.54	-7.13	7.21
16	6	1.11	4.10	5.08	11.04	6.83	9.15
16	20	-1.11	-4.10	-5.04	-11.04	-7.74	-8.41
17	20	0.56	4.10	2.67	5.11	7.74	9.79
17	21	-0.56	-4.10	-2.37	-5.11	-11.55	-3.60
18	21	0.07	4.10	0.28	-0.11	11.55	4.81
18	22	0.08	-4.10	0.20	0.11	-11.65	4.89
19	22	-0.63	4.10	-2.57	-6.05	11.65	-3.51
19	23	0.63	-4.10	2.87	6.05	-7.54	9.70
20	23	-1.11	4.10	-4.96	-11.27	7.54	-8.48
20	8	1.11	-4.10	5.00	11.27	-6.64	9.23
21	8	0.52	3.88	2.15	3.35	7.19	7.14
21	24	-0.52	-3.88	-1.72	-3.35	-11.42	1.35
22	24	-0.03	3.88	-0.66	-2.58	11.42	0.03
22	25	0.03	-3.88	0.96	2.58	-10.20	5.83
23	25	-0.52	3.88	-3.05	-7.80	10.20	-4.62
23	10	0.52	-3.88	3.46	7.80	-3.52	12.58
24	10	0.92	2.48	3.63	7.18	4.80	1.05
24	26	-0.92	-2.48	-3.57	-7.18	-5.94	-0.27
25	26	0.37	2.48	1.20	1.25	5.94	1.65
25	27	-0.37	-2.48	-0.90	-1.25	-7.52	2.10
26	27	-0.12	2.48	-1.19	-3.97	7.52	-0.88
26	28	0.12	-2.48	1.67	3.97	-4.13	6.75
27	28	-0.67	3.60	-4.04	-11.68	4.13	-5.38
27	29	0.67	-3.60	4.34	11.68	2.20	10.82
28	29	-1.15	4.59	-6.43	-15.34	-2.20	-9.60
28	12	1.15	-4.59	6.44	15.34	2.51	9.82
29	12	0.00	0.00	0.58	0.00	-0.83	0.00
29	30	0.00	0.00	0.00	0.00	0.00	0.00

Loadcase ID: W11 Name: Angle: -75

Memb	Node	Fx kip	Fy kip	Fz kip	Mx kft	My kft	Mz kft
1	1	-1.21	-1.73	10.39	196.73	-1.38	11.41
1	2	0.38	1.73	-6.98	-14.95	1.38	5.75
2	3	-1.36	-0.44	10.46	197.72	-1.00	12.43
2	4	0.52	0.44	-7.05	-14.59	1.00	7.76
3	5	-1.44	-0.05	10.49	198.25	-0.28	13.05

3	6	0.61	0.05	-7.08	-14.40	0.28	8.92
4	7	-1.44	0.05	10.48	198.15	0.56	13.05
4	8	0.61	-0.05	-7.08	-14.42	-0.56	8.92
5	9	-1.36	0.44	10.43	197.37	1.29	12.43
5	10	0.52	-0.44	-7.02	-14.73	-1.29	7.76
6	11	-1.21	1.73	10.35	196.12	1.68	11.42
6	12	0.38	-1.73	-6.94	-15.21	-1.68	5.77
7	13	0.00	0.00	0.00	0.00	0.00	0.00
7	2	0.00	0.00	0.57	0.00	0.82	0.00
8	2	-0.38	-1.73	6.41	14.95	-2.20	-5.75
8	14	0.38	1.73	-6.40	-14.95	1.89	5.67
9	14	-0.29	-1.55	4.05	8.80	-1.89	-5.89
9	15	0.29	1.55	-3.75	-8.80	-4.00	3.55
10	15	-0.21	-1.39	1.69	3.88	4.00	-3.75
10	16	0.21	1.39	-1.22	-3.88	-7.44	0.47
11	16	-0.12	-1.39	-1.13	-1.99	7.44	-0.69
11	17	0.12	1.39	1.43	1.99	-5.51	-1.41
12	17	-0.04	-1.39	-3.49	-7.15	5.51	1.21
12	4	0.04	1.39	3.56	7.15	-4.41	-1.65
13	4	-0.56	-1.83	3.49	7.43	3.41	-6.11
13	18	0.56	1.83	-3.08	-7.43	-10.16	2.37
14	18	-0.47	-1.83	0.74	1.56	10.16	-2.59
14	19	0.47	1.83	-0.44	-1.56	-11.05	-0.17
15	19	-0.39	-1.83	-1.63	-3.60	11.05	-0.03
15	6	0.39	1.83	2.06	3.60	-7.01	-3.96
16	6	-1.00	-1.87	5.02	10.80	6.73	-4.96
16	20	1.00	1.87	-4.98	-10.80	-7.64	4.62
17	20	-0.91	-1.87	2.64	4.93	7.64	-4.84
17	21	0.91	1.87	-2.34	-4.93	-11.39	2.01
18	21	-0.83	-1.87	0.27	-0.24	11.39	-2.21
18	22	-0.84	1.87	0.20	0.24	-11.48	-2.22
19	22	0.93	-1.87	-2.55	-6.11	11.48	2.00
19	23	-0.93	1.87	2.85	6.11	-7.41	-4.83
20	23	1.00	-1.87	-4.91	-11.28	7.41	4.63
20	8	-1.00	1.87	4.95	11.28	-6.52	-4.97
21	8	0.39	-1.82	2.13	3.14	7.08	-3.95
21	24	-0.39	1.82	-1.70	-3.14	-11.26	-0.04
22	24	0.48	-1.82	-0.65	-2.73	11.26	-0.18
22	25	-0.48	1.82	0.95	2.73	-10.05	-2.57
23	25	0.56	-1.82	-3.02	-7.89	10.05	2.37
23	10	-0.56	1.82	3.42	7.89	-3.43	-6.12
24	10	0.04	-1.38	3.60	6.83	4.72	-1.64
24	26	-0.04	1.38	-3.54	-6.83	-5.84	1.21
25	26	0.13	-1.38	1.19	0.96	5.84	-1.43
25	27	-0.13	1.38	-0.89	-0.96	-7.41	-0.66
26	27	0.21	-1.38	-1.18	-4.21	7.41	0.46
26	28	-0.21	1.38	1.65	4.21	-4.07	-3.74
27	28	0.30	-1.57	-3.99	-9.79	4.07	3.51
27	29	-0.30	1.57	4.29	9.79	2.19	-5.88
28	29	0.38	-1.73	-6.36	-15.21	-2.19	5.68
28	12	-0.38	1.73	6.37	15.21	2.49	-5.77
29	12	0.00	0.00	0.57	0.00	-0.82	0.00
29	30	0.00	0.00	0.00	0.00	0.00	0.00

Loadcase ID: WL1 Name: Angle: 75

Memb	Node	Fx kip	Fy kip	Fz kip	Mx kft	My kft	Mz kft
1	1	0.45	2.59	-0.51	-11.89	0.11	-5.71
1	2	-0.45	-2.59	0.51	1.45	-0.11	-3.58
2	3	0.56	0.90	-0.52	-12.04	0.07	-6.46

2	4	-0.56	-0.90	0.52	1.27	-0.07	-5.08
3	5	0.67	0.16	-0.53	-12.07	0.01	-7.17
3	6	-0.67	-0.16	0.53	1.25	-0.01	-6.51
4	7	0.67	-0.17	-0.53	-12.06	-0.07	-7.17
4	8	-0.67	0.17	0.53	1.24	0.07	-6.51
5	9	0.56	-0.91	-0.53	-12.00	-0.13	-6.46
5	10	-0.56	0.91	0.53	1.23	0.13	-5.08
6	11	0.46	-2.57	-0.51	-11.83	-0.16	-5.75
6	12	-0.46	2.57	0.51	1.37	0.16	-3.66
7	13	0.00	0.00	0.00	0.00	0.00	0.00
7	2	0.00	0.00	0.00	0.00	0.00	0.00
8	2	0.45	2.59	-0.51	-1.45	0.11	3.58
8	14	-0.45	-2.59	0.51	1.45	-0.08	-3.46
9	14	0.23	1.57	-0.30	0.67	0.08	4.02
9	15	-0.23	-1.57	0.30	-0.67	0.37	-1.65
10	15	0.03	0.68	-0.12	-0.29	-0.37	2.14
10	16	-0.03	-0.68	0.12	0.29	0.65	-0.53
11	16	-0.19	0.68	0.09	0.23	-0.65	1.09
11	17	0.19	-0.68	-0.09	-0.23	0.52	-0.06
12	17	-0.39	0.68	0.27	0.69	-0.52	0.56
12	4	0.39	-0.68	-0.27	-0.69	0.43	-0.34
13	4	0.17	1.58	-0.25	-0.58	-0.36	5.42
13	18	-0.17	-1.58	0.25	0.58	0.88	-2.19
14	18	-0.05	1.58	-0.04	-0.06	-0.88	2.75
14	19	0.05	-1.58	0.04	0.06	0.95	-0.36
15	19	-0.25	1.58	0.14	0.39	-0.95	0.86
15	6	0.25	-1.58	-0.14	-0.39	0.65	2.59
16	6	0.42	1.74	-0.39	-0.86	-0.64	3.92
16	20	-0.42	-1.74	0.39	0.86	0.71	-3.61
17	20	0.19	1.74	-0.18	-0.34	-0.71	4.17
17	21	-0.19	-1.74	0.18	0.34	0.98	-1.54
18	21	-0.00	1.74	0.00	0.12	-0.98	2.04
18	22	0.00	-1.74	-0.00	-0.12	0.98	2.07
19	22	-0.23	1.74	0.21	0.64	-0.98	-1.51
19	23	0.23	-1.74	-0.21	-0.64	0.67	4.13
20	23	-0.42	1.74	0.39	1.10	-0.67	-3.64
20	8	0.42	-1.74	-0.39	-1.10	0.59	3.95
21	8	0.24	1.57	-0.14	-0.14	-0.66	2.56
21	24	-0.24	-1.57	0.14	0.14	0.96	0.87
22	24	0.02	1.57	0.07	0.38	-0.96	-0.31
22	25	-0.02	-1.57	-0.07	-0.38	0.85	2.68
23	25	-0.18	1.57	0.25	0.84	-0.85	-2.19
23	10	0.18	-1.57	-0.25	-0.84	0.33	5.41
24	10	0.38	0.66	-0.27	-0.39	-0.46	-0.33
24	26	-0.38	-0.66	0.27	0.39	0.54	0.53
25	26	0.16	0.66	-0.06	0.13	-0.54	0.03
25	27	-0.16	-0.66	0.06	-0.13	0.64	0.98
26	27	-0.04	0.66	0.12	0.59	-0.64	-0.48
26	28	0.04	-0.66	-0.12	-0.59	0.36	2.05
27	28	-0.26	1.68	0.33	-0.50	-0.36	-1.49
27	29	0.26	-1.68	-0.33	0.50	-0.14	4.03
28	29	-0.46	2.57	0.51	1.37	0.14	-3.53
28	12	0.46	-2.57	-0.51	-1.37	-0.16	3.66
29	12	0.00	0.00	0.00	0.00	0.00	0.00
29	30	0.00	0.00	0.00	0.00	0.00	0.00

Loadcase ID: WL2 Name: Angle: 60

Memb	Node	Fx kip	Fy kip	Fz kip	Mx kft	My kft	Mz kft
1	1	0.67	3.83	-0.28	-6.67	0.04	-8.46

1	2	-0.67	-3.83	0.28	0.94	-0.04	-5.30
2	3	0.83	1.33	-0.30	-6.81	0.02	-9.57
2	4	-0.83	-1.33	0.30	0.70	-0.02	-7.52
3	5	0.99	0.23	-0.30	-6.82	-0.01	-10.62
3	6	-0.99	-0.23	0.30	0.69	0.01	-9.64
4	7	0.99	-0.25	-0.30	-6.81	-0.05	-10.62
4	8	-0.99	0.25	0.30	0.66	0.05	-9.64
5	9	0.83	-1.34	-0.30	-6.78	-0.08	-9.57
5	10	-0.83	1.34	0.30	0.62	0.08	-7.53
6	11	0.68	-3.80	-0.28	-6.63	-0.10	-8.51
6	12	-0.68	3.80	0.28	0.79	0.10	-5.41
7	13	0.00	0.00	0.00	0.00	0.00	0.00
7	2	0.00	0.00	0.00	0.00	0.00	0.00
8	2	0.67	3.83	-0.28	-0.94	0.04	5.30
8	14	-0.67	-3.83	0.28	0.94	-0.03	-5.12
9	14	0.34	2.33	-0.16	1.73	0.03	5.95
9	15	-0.34	-2.33	0.16	-1.73	0.22	-2.44
10	15	0.05	1.01	-0.06	-0.10	-0.22	3.17
10	16	-0.05	-1.01	0.06	0.10	0.36	-0.78
11	16	-0.29	1.01	0.06	0.19	-0.36	1.61
11	17	0.29	-1.01	-0.06	-0.19	0.27	-0.09
12	17	-0.58	1.01	0.16	0.45	-0.27	0.82
12	4	0.58	-1.01	-0.16	-0.45	0.22	-0.51
13	4	0.26	2.33	-0.14	-0.26	-0.20	8.03
13	18	-0.26	-2.33	0.14	0.26	0.48	-3.24
14	18	-0.08	2.33	-0.02	0.04	-0.48	4.07
14	19	0.08	-2.33	0.02	-0.04	0.51	-0.54
15	19	-0.37	2.33	0.08	0.29	-0.51	1.27
15	6	0.37	-2.33	-0.08	-0.29	0.33	3.84
16	6	0.62	2.57	-0.22	-0.39	-0.34	5.80
16	20	-0.62	-2.57	0.22	0.39	0.38	-5.34
17	20	0.29	2.57	-0.10	-0.10	-0.38	6.17
17	21	-0.29	-2.57	0.10	0.10	0.53	-2.29
18	21	-0.00	2.57	0.00	0.16	-0.53	3.02
18	22	0.00	-2.57	-0.00	-0.16	0.52	3.07
19	22	-0.34	2.57	0.12	0.45	-0.52	-2.24
19	23	0.34	-2.57	-0.12	-0.45	0.33	6.12
20	23	-0.63	2.57	0.22	0.71	-0.33	-5.39
20	8	0.63	-2.57	-0.22	-0.71	0.29	5.85
21	8	0.36	2.32	-0.08	0.05	-0.34	3.78
21	24	-0.36	-2.32	0.08	-0.05	0.51	1.29
22	24	0.03	2.32	0.04	0.34	-0.51	-0.46
22	25	-0.03	-2.32	-0.04	-0.34	0.45	3.97
23	25	-0.26	2.32	0.15	0.60	-0.45	-3.24
23	10	0.26	-2.32	-0.15	-0.60	0.15	8.01
24	10	0.57	0.98	-0.16	-0.02	-0.23	-0.48
24	26	-0.57	-0.98	0.16	0.02	0.28	0.79
25	26	0.24	0.98	-0.04	0.27	-0.28	0.04
25	27	-0.24	-0.98	0.04	-0.27	0.34	1.45
26	27	-0.05	0.98	0.06	0.53	-0.34	-0.72
26	28	0.05	-0.98	-0.06	-0.53	0.19	3.04
27	28	-0.39	2.48	0.18	-1.55	-0.19	-2.21
27	29	0.39	-2.48	-0.18	1.55	-0.09	5.96
28	29	-0.68	3.80	0.28	0.79	0.09	-5.23
28	12	0.68	-3.80	-0.28	-0.79	-0.10	5.41
29	12	0.00	0.00	0.00	0.00	0.00	0.00
29	30	0.00	0.00	0.00	0.00	0.00	0.00

Loadcase ID: WL3 Name: Angle: 45

Memb	Node	Fx kip	Fy kip	Fz kip	Mx kft	My kft	Mz kft

1	1	1.02	5.83	0.08	1.54	-0.06	-12.89
1	2	-1.02	-5.83	-0.08	0.13	0.06	-8.08
2	3	1.27	2.02	0.06	1.42	-0.06	-14.58
2	4	-1.27	-2.02	-0.06	-0.19	0.06	-11.46
3	5	1.51	0.36	0.06	1.45	-0.05	-16.18
3	6	-1.51	-0.36	-0.06	-0.21	0.05	-14.68
4	7	1.51	-0.38	0.06	1.45	-0.03	-16.18
4	8	-1.51	0.38	-0.06	-0.24	0.03	-14.68
5	9	1.27	-2.04	0.05	1.42	-0.01	-14.58
5	10	-1.27	2.04	-0.05	-0.33	0.01	-11.47
6	11	1.03	-5.80	0.07	1.54	-0.01	-12.96
6	12	-1.03	5.80	-0.07	-0.11	0.01	-8.25
7	13	0.00	0.00	0.00	0.00	0.00	0.00
7	2	0.00	0.00	0.00	0.00	0.00	0.00
8	2	1.02	5.83	0.08	-0.13	-0.06	8.08
8	14	-1.02	-5.83	-0.08	0.13	0.06	-7.80
9	14	0.52	3.55	0.06	3.42	-0.06	9.07
9	15	-0.52	-3.55	-0.06	-3.42	-0.03	-3.71
10	15	0.07	1.53	0.03	0.18	0.03	4.83
10	16	-0.07	-1.53	-0.03	-0.18	-0.11	-1.19
11	16	-0.43	1.53	0.01	0.12	0.11	2.46
11	17	0.43	-1.53	-0.01	-0.12	-0.12	-0.14
12	17	-0.88	1.53	-0.01	0.06	0.12	1.26
12	4	0.88	-1.53	0.01	-0.06	-0.11	-0.77
13	4	0.39	3.56	0.05	0.26	0.06	12.23
13	18	-0.39	-3.56	-0.05	-0.26	-0.15	-4.93
14	18	-0.12	3.56	0.02	0.19	0.15	6.19
14	19	0.12	-3.56	-0.02	-0.19	-0.18	-0.82
15	19	-0.56	3.56	-0.00	0.14	0.18	1.94
15	6	0.56	-3.56	0.00	-0.14	-0.17	5.84
16	6	0.95	3.92	0.06	0.34	0.13	8.84
16	20	-0.95	-3.92	-0.06	-0.34	-0.14	-8.13
17	20	0.44	3.92	0.03	0.28	0.14	9.40
17	21	-0.44	-3.92	-0.03	-0.28	-0.19	-3.48
18	21	-0.01	3.92	0.01	0.22	0.19	4.60
18	22	0.01	-3.92	-0.01	-0.22	-0.21	4.67
19	22	-0.51	3.92	-0.02	0.16	0.21	-3.41
19	23	0.51	-3.92	0.02	-0.16	-0.19	9.32
20	23	-0.96	3.92	-0.04	0.10	0.19	-8.21
20	8	0.96	-3.92	0.04	-0.10	-0.18	8.92
21	8	0.55	3.54	0.02	0.35	0.15	5.77
21	24	-0.55	-3.54	-0.02	-0.35	-0.20	1.97
22	24	0.04	3.54	-0.00	0.28	0.20	-0.71
22	25	-0.04	-3.54	0.00	-0.28	-0.19	6.05
23	25	-0.40	3.54	-0.03	0.23	0.19	-4.94
23	10	0.40	-3.54	0.03	-0.23	-0.14	12.21
24	10	0.87	1.50	0.03	0.56	0.12	-0.74
24	26	-0.87	-1.50	-0.03	-0.56	-0.13	1.21
25	26	0.36	1.50	0.00	0.50	0.13	0.06
25	27	-0.36	-1.50	-0.00	-0.50	-0.13	2.20
26	27	-0.08	1.50	-0.02	0.44	0.13	-1.09
26	28	0.08	-1.50	0.02	-0.44	-0.08	4.63
27	28	-0.59	3.78	-0.05	-3.24	0.08	-3.37
27	29	0.59	-3.78	0.05	3.24	-0.01	9.08
28	29	-1.03	5.80	-0.07	-0.11	0.01	-7.97
28	12	1.03	-5.80	0.07	0.11	-0.01	8.25
29	12	0.00	0.00	0.00	0.00	0.00	0.00
29	30	0.00	0.00	0.00	0.00	0.00	0.00

Loadcase ID: WL4 Name: Angle: 30

report

Memb	Node	Fx kip	Fy kip	Fz kip	Mx kft	My kft	Mz kft
1	1	1.17	6.64	0.34	7.38	-0.13	-14.68
1	2	-1.17	-6.64	-0.34	-0.47	0.13	-9.20
2	3	1.45	2.30	0.31	7.28	-0.11	-16.60
2	4	-1.45	-2.30	-0.31	-0.83	0.11	-13.05
3	5	1.71	0.41	0.32	7.34	-0.06	-18.43
3	6	-1.71	-0.41	-0.32	-0.83	0.06	-16.72
4	7	1.71	-0.43	0.32	7.34	-0.01	-18.43
4	8	-1.71	0.43	-0.32	-0.88	0.01	-16.72
5	9	1.45	-2.33	0.31	7.27	0.04	-16.61
5	10	-1.45	2.33	-0.31	-0.99	-0.04	-13.06
6	11	1.18	-6.60	0.32	7.35	0.06	-14.77
6	12	-1.18	6.60	-0.32	-0.76	-0.06	-9.39
7	13	0.00	0.00	0.00	0.00	0.00	0.00
7	2	0.00	0.00	0.00	0.00	0.00	0.00
8	2	1.17	6.64	0.34	0.47	-0.13	9.20
8	14	-1.17	-6.64	-0.34	-0.47	0.11	-8.89
9	14	0.59	4.04	0.21	4.28	-0.11	10.33
9	15	-0.59	-4.04	-0.21	-4.28	-0.20	-4.23
10	15	0.08	1.75	0.10	0.37	0.20	5.50
10	16	-0.08	-1.75	-0.10	-0.37	-0.43	-1.36
11	16	-0.49	1.75	-0.03	0.05	0.43	2.80
11	17	0.49	-1.75	0.03	-0.05	-0.39	-0.16
12	17	-1.00	1.75	-0.14	-0.23	0.39	1.43
12	4	1.00	-1.75	0.14	0.23	-0.35	-0.88
13	4	0.44	4.05	0.17	0.60	0.24	13.93
13	18	-0.44	-4.05	-0.17	-0.60	-0.59	-5.62
14	18	-0.13	4.05	0.05	0.29	0.59	7.06
14	19	0.13	-4.05	-0.05	-0.29	-0.66	-0.94
15	19	-0.64	4.05	-0.07	0.01	0.66	2.20
15	6	0.64	-4.05	0.07	-0.01	-0.52	6.65
16	6	1.08	4.46	0.25	0.84	0.46	10.07
16	20	-1.08	-4.46	-0.25	-0.84	-0.50	-9.26
17	20	0.50	4.46	0.12	0.52	0.50	10.70
17	21	-0.50	-4.46	-0.12	-0.52	-0.69	-3.97
18	21	-0.01	4.46	0.01	0.24	0.69	5.24
18	22	0.01	-4.46	-0.01	-0.24	-0.72	5.32
19	22	-0.58	4.46	-0.11	-0.07	0.72	-3.88
19	23	0.58	-4.46	0.11	0.07	-0.55	10.62
20	23	-1.09	4.46	-0.23	-0.35	0.55	-9.35
20	8	1.09	-4.46	0.23	0.35	-0.51	10.15
21	8	0.62	4.03	0.09	0.53	0.50	6.57
21	24	-0.62	-4.03	-0.09	-0.53	-0.70	2.25
22	24	0.05	4.03	-0.04	0.21	0.70	-0.81
22	25	-0.05	-4.03	0.04	-0.21	-0.64	6.89
23	25	-0.46	4.03	-0.15	-0.07	0.64	-5.63
23	10	0.46	-4.03	0.15	0.07	-0.33	13.90
24	10	0.99	1.71	0.16	0.92	0.37	-0.84
24	26	-0.99	-1.71	-0.16	-0.92	-0.42	1.37
25	26	0.41	1.71	0.03	0.61	0.42	0.07
25	27	-0.41	-1.71	-0.03	-0.61	-0.46	2.51
26	27	-0.10	1.71	-0.08	0.33	0.46	-1.24
26	28	0.10	-1.71	0.08	-0.33	-0.27	5.28
27	28	-0.67	4.31	-0.21	-4.11	0.27	-3.84
27	29	0.67	-4.31	0.21	4.11	0.05	10.35
28	29	-1.18	6.60	-0.32	-0.76	-0.05	-9.08
28	12	1.18	-6.60	0.32	0.76	0.06	9.39
29	12	0.00	0.00	0.00	0.00	0.00	0.00
29	30	0.00	0.00	0.00	0.00	0.00	0.00

Loadcase ID: WL5 Name: Angle: 15

Memb	Node	Fx kip	Fy kip	Fz kip	Mx kft	My kft	Mz kft
1	1	1.16	6.60	0.57	12.69	-0.19	-14.59
1	2	-1.16	-6.60	-0.57	-1.07	0.19	-9.15
2	3	1.44	2.29	0.55	12.63	-0.15	-16.50
2	4	-1.44	-2.29	-0.55	-1.41	0.15	-12.97
3	5	1.70	0.41	0.55	12.71	-0.07	-18.32
3	6	-1.70	-0.41	-0.55	-1.40	0.07	-16.62
4	7	1.70	-0.43	0.55	12.71	0.01	-18.32
4	8	-1.70	0.43	-0.55	-1.45	-0.01	-16.62
5	9	1.44	-2.31	0.54	12.61	0.09	-16.50
5	10	-1.44	2.31	-0.54	-1.57	-0.09	-12.98
6	11	1.17	-6.56	0.55	12.64	0.13	-14.68
6	12	-1.17	6.56	-0.55	-1.37	-0.13	-9.34
7	13	0.00	0.00	0.00	0.00	0.00	0.00
7	2	0.00	0.00	0.00	0.00	0.00	0.00
8	2	1.16	6.60	0.57	1.07	-0.19	9.15
8	14	-1.16	-6.60	-0.57	-1.07	0.16	-8.83
9	14	0.59	4.01	0.35	4.61	-0.16	10.26
9	15	-0.59	-4.01	-0.35	-4.61	-0.37	-4.20
10	15	0.08	1.74	0.15	0.52	0.37	5.46
10	16	-0.08	-1.74	-0.15	-0.52	-0.73	-1.35
11	16	-0.49	1.74	-0.07	-0.02	0.73	2.78
11	17	0.49	-1.74	0.07	0.02	-0.63	-0.16
12	17	-1.00	1.74	-0.26	-0.51	0.63	1.42
12	4	1.00	-1.74	0.26	0.51	-0.55	-0.88
13	4	0.44	4.03	0.29	0.90	0.40	13.85
13	18	-0.44	-4.03	-0.29	-0.90	-0.99	-5.58
14	18	-0.13	4.03	0.07	0.35	0.99	7.01
14	19	0.13	-4.03	-0.07	-0.35	-1.10	-0.93
15	19	-0.63	4.03	-0.12	-0.13	1.10	2.19
15	6	0.63	-4.03	0.12	0.13	-0.83	6.61
16	6	1.07	4.43	0.43	1.27	0.75	10.01
16	20	-1.07	-4.43	-0.43	-1.27	-0.83	-9.21
17	20	0.50	4.43	0.21	0.72	0.83	10.64
17	21	-0.50	-4.43	-0.21	-0.72	-1.14	-3.94
18	21	-0.01	4.43	0.01	0.23	1.14	5.20
18	22	0.01	-4.43	-0.01	-0.23	-1.18	5.29
19	22	-0.58	4.43	-0.21	-0.31	1.18	-3.86
19	23	0.58	-4.43	0.21	0.31	-0.87	10.55
20	23	-1.08	4.43	-0.40	-0.80	0.87	-9.29
20	8	1.08	-4.43	0.40	0.80	-0.80	10.09
21	8	0.62	4.01	0.15	0.65	0.81	6.53
21	24	-0.62	-4.01	-0.15	-0.65	-1.14	2.23
22	24	0.05	4.01	-0.07	0.10	1.14	-0.80
22	25	-0.05	-4.01	0.07	-0.10	-1.03	6.85
23	25	-0.46	4.01	-0.26	-0.38	1.03	-5.59
23	10	0.46	-4.01	0.26	0.38	-0.50	13.82
24	10	0.98	1.69	0.28	1.19	0.59	-0.83
24	26	-0.98	-1.69	-0.28	-1.19	-0.67	1.37
25	26	0.41	1.69	0.06	0.64	0.67	0.07
25	27	-0.41	-1.69	-0.06	-0.64	-0.76	2.49
26	27	-0.09	1.69	-0.14	0.16	0.76	-1.23
26	28	0.09	-1.69	0.14	-0.16	-0.43	5.25
27	28	-0.67	4.28	-0.36	-4.49	0.43	-3.81
27	29	0.67	-4.28	0.36	4.49	0.11	10.28
28	29	-1.17	6.56	-0.55	-1.37	-0.11	-9.02
28	12	1.17	-6.56	0.55	1.37	0.13	9.34
29	12	0.00	0.00	0.00	0.00	0.00	0.00
29	30	0.00	0.00	0.00	0.00	0.00	0.00

Loadcase ID: WL6 Name: Angle: 0

Memb	Node	Fx kip	Fy kip	Fz kip	Mx kft	My kft	Mz kft
1	1	1.22	6.98	0.85	19.15	-0.26	-15.42
1	2	-1.22	-6.98	-0.85	-1.76	0.26	-9.67
2	3	1.52	2.42	0.83	19.13	-0.20	-17.45
2	4	-1.52	-2.42	-0.83	-2.11	0.20	-13.71
3	5	1.80	0.43	0.84	19.24	-0.09	-19.37
3	6	-1.80	-0.43	-0.84	-2.09	0.09	-17.57
4	7	1.80	-0.45	0.83	19.23	0.04	-19.36
4	8	-1.80	0.45	-0.83	-2.14	-0.04	-17.57
5	9	1.52	-2.44	0.82	19.09	0.15	-17.45
5	10	-1.52	2.44	-0.82	-2.29	-0.15	-13.73
6	11	1.24	-6.94	0.83	19.07	0.21	-15.52
6	12	-1.24	6.94	-0.83	-2.09	-0.21	-9.87
7	13	0.00	0.00	0.00	0.00	0.00	0.00
7	2	0.00	0.00	0.00	0.00	0.00	0.00
8	2	1.22	6.98	0.85	1.76	-0.26	9.67
8	14	-1.22	-6.98	-0.85	-1.76	0.22	-9.34
9	14	0.62	4.24	0.52	5.27	-0.22	10.85
9	15	-0.62	-4.24	-0.52	-5.27	-0.56	-4.44
10	15	0.09	1.84	0.22	0.72	0.56	5.77
10	16	-0.09	-1.84	-0.22	-0.72	-1.09	-1.43
11	16	-0.52	1.84	-0.11	-0.11	1.09	2.94
11	17	0.52	-1.84	0.11	0.11	-0.93	-0.17
12	17	-1.05	1.84	-0.40	-0.84	0.93	1.50
12	4	1.05	-1.84	0.40	0.84	-0.80	-0.93
13	4	0.47	4.26	0.43	1.27	0.60	14.64
13	18	-0.47	-4.26	-0.43	-1.27	-1.48	-5.90
14	18	-0.14	4.26	0.10	0.44	1.48	7.41
14	19	0.14	-4.26	-0.10	-0.44	-1.63	-0.98
15	19	-0.67	4.26	-0.19	-0.29	1.63	2.32
15	6	0.67	-4.26	0.19	0.29	-1.20	6.99
16	6	1.13	4.69	0.64	1.80	1.11	10.58
16	20	-1.13	-4.69	-0.64	-1.80	-1.23	-9.73
17	20	0.53	4.69	0.31	0.97	1.23	11.25
17	21	-0.53	-4.69	-0.31	-0.97	-1.70	-4.17
18	21	-0.01	4.69	0.02	0.24	1.70	5.50
18	22	0.01	-4.69	-0.02	-0.24	-1.74	5.59
19	22	-0.61	4.69	-0.32	-0.59	1.74	-4.08
19	23	0.61	-4.69	0.32	0.59	-1.26	11.16
20	23	-1.15	4.69	-0.61	-1.32	1.26	-9.82
20	8	1.15	-4.69	0.61	1.32	-1.15	10.67
21	8	0.66	4.24	0.23	0.82	1.19	6.90
21	24	-0.66	-4.24	-0.23	-0.82	-1.68	2.36
22	24	0.05	4.24	-0.11	-0.01	1.68	-0.85
22	25	-0.05	-4.24	0.11	0.01	-1.52	7.24
23	25	-0.48	4.24	-0.40	-0.74	1.52	-5.91
23	10	0.48	-4.24	0.40	0.74	-0.70	14.61
24	10	1.04	1.79	0.42	1.55	0.85	-0.88
24	26	-1.04	-1.79	-0.42	-1.55	-0.98	1.44
25	26	0.43	1.79	0.09	0.72	0.98	0.07
25	27	-0.43	-1.79	-0.09	-0.72	-1.12	2.64
26	27	-0.10	1.79	-0.20	-0.01	1.12	-1.30
26	28	0.10	-1.79	0.20	0.01	-0.64	5.55
27	28	-0.71	4.53	-0.54	-5.17	0.64	-4.03
27	29	0.71	-4.53	0.54	5.17	0.17	10.87
28	29	-1.24	6.94	-0.83	-2.09	-0.17	-9.54
28	12	1.24	-6.94	0.83	2.09	0.21	9.87

29	12	0.00	0.00	0.00	0.00	0.00	0.00
29	30	0.00	0.00	0.00	0.00	0.00	0.00

Loadcase ID: WL7 Name: Angle: -15

Memb	Node	Fx kip	Fy kip	Fz kip	Mx kft	My kft	Mz kft
1	1	1.00	5.68	0.93	21.01	-0.27	-12.56
1	2	-1.00	-5.68	-0.93	-2.04	0.27	-7.87
2	3	1.24	1.97	0.91	21.04	-0.20	-14.21
2	4	-1.24	-1.97	-0.91	-2.30	0.20	-11.17
3	5	1.47	0.35	0.92	21.15	-0.09	-15.77
3	6	-1.47	-0.35	-0.92	-2.28	0.09	-14.31
4	7	1.47	-0.37	0.92	21.14	0.05	-15.77
4	8	-1.47	0.37	-0.92	-2.33	-0.05	-14.31
5	9	1.24	-1.99	0.90	20.99	0.18	-14.21
5	10	-1.24	1.99	-0.90	-2.46	-0.18	-11.18
6	11	1.01	-5.65	0.91	20.92	0.24	-12.63
6	12	-1.01	5.65	-0.91	-2.32	-0.24	-8.04
7	13	0.00	0.00	0.00	0.00	0.00	0.00
7	2	0.00	0.00	0.00	0.00	0.00	0.00
8	2	1.00	5.68	0.93	2.04	-0.27	7.87
8	14	-1.00	-5.68	-0.93	-2.04	0.22	-7.60
9	14	0.50	3.45	0.56	4.65	-0.22	8.84
9	15	-0.50	-3.45	-0.56	-4.65	-0.62	-3.62
10	15	0.07	1.49	0.24	0.75	0.62	4.70
10	16	-0.07	-1.49	-0.24	-0.75	-1.19	-1.16
11	16	-0.42	1.49	-0.13	-0.17	1.19	2.40
11	17	0.42	-1.49	0.13	0.17	-1.00	-0.14
12	17	-0.86	1.49	-0.45	-0.97	1.00	1.22
12	4	0.86	-1.49	0.45	0.97	-0.86	-0.75
13	4	0.38	3.47	0.47	1.33	0.66	11.92
13	18	-0.38	-3.47	-0.47	-1.33	-1.62	-4.80
14	18	-0.11	3.47	0.10	0.42	1.62	6.04
14	19	0.11	-3.47	-0.10	-0.42	-1.77	-0.80
15	19	-0.55	3.47	-0.22	-0.38	1.77	1.89
15	6	0.55	-3.47	0.22	0.38	-1.29	5.69
16	6	0.92	3.81	0.70	1.90	1.21	8.61
16	20	-0.92	-3.81	-0.70	-1.90	-1.33	-7.92
17	20	0.43	3.81	0.34	0.99	1.33	9.16
17	21	-0.43	-3.81	-0.34	-0.99	-1.84	-3.39
18	21	-0.01	3.81	0.02	0.18	1.84	4.48
18	22	0.01	-3.81	-0.02	-0.18	-1.88	4.55
19	22	-0.50	3.81	-0.35	-0.73	1.88	-3.32
19	23	0.50	-3.81	0.35	0.73	-1.35	9.08
20	23	-0.93	3.81	-0.67	-1.53	1.35	-8.00
20	8	0.93	-3.81	0.67	1.53	-1.23	8.69
21	8	0.53	3.45	0.25	0.80	1.28	5.62
21	24	-0.53	-3.45	-0.25	-0.80	-1.82	1.92
22	24	0.04	3.45	-0.12	-0.12	1.82	-0.69
22	25	-0.04	-3.45	0.12	0.12	-1.64	5.90
23	25	-0.39	3.45	-0.44	-0.92	1.64	-4.81
23	10	0.39	-3.45	0.44	0.92	-0.74	11.89
24	10	0.85	1.46	0.46	1.54	0.91	-0.72
24	26	-0.85	-1.46	-0.46	-1.54	-1.06	1.18
25	26	0.35	1.46	0.10	0.63	1.06	0.06
25	27	-0.35	-1.46	-0.10	-0.63	-1.21	2.15
26	27	-0.08	1.46	-0.22	-0.18	1.21	-1.06
26	28	0.08	-1.46	0.22	0.18	-0.69	4.52
27	28	-0.57	3.69	-0.59	-4.62	0.69	-3.28
27	29	0.57	-3.69	0.59	4.62	0.20	8.85

28	29	-1.01	5.65	-0.91	-2.32	-0.20	-7.77
28	12	1.01	-5.65	0.91	2.32	0.24	8.04
29	12	0.00	0.00	0.00	0.00	0.00	0.00
29	30	0.00	0.00	0.00	0.00	0.00	0.00

Loadcase ID: WL8 Name: Angle: -30

Memb	Node	Fx kip	Fy kip	Fz kip	Mx kft	My kft	Mz kft
1	1	0.84	4.80	1.05	24.03	-0.29	-10.62
1	2	-0.84	-4.80	-1.05	-2.42	0.29	-6.66
2	3	1.05	1.67	1.05	24.10	-0.22	-12.01
2	4	-1.05	-1.67	-1.05	-2.62	0.22	-9.44
3	5	1.24	0.29	1.05	24.21	-0.09	-13.33
3	6	-1.24	-0.29	-1.05	-2.60	0.09	-12.10
4	7	1.24	-0.31	1.05	24.20	0.07	-13.33
4	8	-1.24	0.31	-1.05	-2.64	-0.07	-12.09
5	9	1.05	-1.68	1.04	24.04	0.21	-12.01
5	10	-1.05	1.68	-1.04	-2.76	-0.21	-9.45
6	11	0.85	-4.77	1.04	23.92	0.28	-10.68
6	12	-0.85	4.77	-1.04	-2.67	-0.28	-6.79
7	13	0.00	0.00	0.00	0.00	0.00	0.00
7	2	0.00	0.00	0.00	0.00	0.00	0.00
8	2	0.84	4.80	1.05	2.42	-0.29	6.66
8	14	-0.84	-4.80	-1.05	-2.42	0.24	-6.43
9	14	0.43	2.92	0.64	4.36	-0.24	7.47
9	15	-0.43	-2.92	-0.64	-4.36	-0.72	-3.06
10	15	0.06	1.26	0.27	0.81	0.72	3.97
10	16	-0.06	-1.26	-0.27	-0.81	-1.36	-0.98
11	16	-0.36	1.26	-0.15	-0.23	1.36	2.03
11	17	0.36	-1.26	0.15	0.23	-1.13	-0.12
12	17	-0.72	1.26	-0.52	-1.15	1.13	1.03
12	4	0.72	-1.26	0.52	1.15	-0.97	-0.64
13	4	0.32	2.93	0.53	1.47	0.75	10.08
13	18	-0.32	-2.93	-0.53	-1.47	-1.84	-4.06
14	18	-0.09	2.93	0.11	0.43	1.84	5.10
14	19	0.09	-2.93	-0.11	-0.43	-2.01	-0.68
15	19	-0.46	2.93	-0.25	-0.49	2.01	1.59
15	6	0.46	-2.93	0.25	0.49	-1.45	4.81
16	6	0.78	3.23	0.80	2.11	1.37	7.28
16	20	-0.78	-3.23	-0.80	-2.11	-1.51	-6.70
17	20	0.36	3.23	0.38	1.07	1.51	7.74
17	21	-0.36	-3.23	-0.38	-1.07	-2.09	-2.87
18	21	-0.01	3.23	0.01	0.15	2.09	3.79
18	22	0.01	-3.23	-0.01	-0.15	-2.12	3.85
19	22	-0.42	3.23	-0.40	-0.90	2.12	-2.81
19	23	0.42	-3.23	0.40	0.90	-1.51	7.68
20	23	-0.79	3.23	-0.77	-1.82	1.51	-6.76
20	8	0.79	-3.23	0.77	1.82	-1.37	7.34
21	8	0.45	2.92	0.28	0.82	1.45	4.75
21	24	-0.45	-2.92	-0.28	-0.82	-2.06	1.62
22	24	0.03	2.92	-0.14	-0.23	2.06	-0.58
22	25	-0.03	-2.92	0.14	0.23	-1.85	4.99
23	25	-0.33	2.92	-0.50	-1.14	1.85	-4.07
23	10	0.33	-2.92	0.50	1.14	-0.82	10.05
24	10	0.71	1.23	0.53	1.62	1.03	-0.61
24	26	-0.71	-1.23	-0.53	-1.62	-1.20	0.99
25	26	0.30	1.23	0.12	0.57	1.20	0.05
25	27	-0.30	-1.23	-0.12	-0.57	-1.37	1.82
26	27	-0.07	1.23	-0.25	-0.34	1.37	-0.90
26	28	0.07	-1.23	0.25	0.34	-0.78	3.82

27	28	-0.49	3.12	-0.67	-4.37	0.78	-2.78
27	29	0.49	-3.12	0.67	4.37	0.23	7.48
28	29	-0.85	4.77	-1.04	-2.67	-0.23	-6.57
28	12	0.85	-4.77	1.04	2.67	0.28	6.79
29	12	0.00	0.00	0.00	0.00	0.00	0.00
29	30	0.00	0.00	0.00	0.00	0.00	0.00

Loadcase ID: WL9 Name: Angle: -45

Memb	Node	Fx kip	Fy kip	Fz kip	Mx kft	My kft	Mz kft
1	1	0.59	3.38	1.04	23.74	-0.28	-7.47
1	2	-0.59	-3.38	-1.04	-2.46	0.28	-4.68
2	3	0.74	1.17	1.04	23.84	-0.21	-8.45
2	4	-0.74	-1.17	-1.04	-2.59	0.21	-6.64
3	5	0.87	0.21	1.04	23.95	-0.08	-9.38
3	6	-0.87	-0.21	-1.04	-2.56	0.08	-8.51
4	7	0.87	-0.22	1.04	23.93	0.08	-9.38
4	8	-0.87	0.22	-1.04	-2.59	-0.08	-8.51
5	9	0.74	-1.18	1.03	23.78	0.21	-8.45
5	10	-0.74	1.18	-1.03	-2.69	-0.21	-6.65
6	11	0.60	-3.36	1.02	23.63	0.29	-7.52
6	12	-0.60	3.36	-1.02	-2.65	-0.29	-4.78
7	13	0.00	0.00	0.00	0.00	0.00	0.00
7	2	0.00	0.00	0.00	0.00	0.00	0.00
8	2	0.59	3.38	1.04	2.46	-0.28	4.68
8	14	-0.59	-3.38	-1.04	-2.46	0.23	-4.52
9	14	0.30	2.06	0.62	3.53	-0.23	5.26
9	15	-0.30	-2.06	-0.62	-3.53	-0.72	-2.15
10	15	0.04	0.89	0.26	0.77	0.72	2.80
10	16	-0.04	-0.89	-0.26	-0.77	-1.33	-0.69
11	16	-0.25	0.89	-0.15	-0.26	1.33	1.43
11	17	0.25	-0.89	0.15	0.26	-1.11	-0.08
12	17	-0.51	0.89	-0.52	-1.17	1.11	0.73
12	4	0.51	-0.89	0.52	1.17	-0.94	-0.45
13	4	0.23	2.06	0.52	1.42	0.74	7.09
13	18	-0.23	-2.06	-0.52	-1.42	-1.81	-2.86
14	18	-0.07	2.06	0.11	0.38	1.81	3.59
14	19	0.07	-2.06	-0.11	-0.38	-1.97	-0.48
15	19	-0.32	2.06	-0.25	-0.53	1.97	1.12
15	6	0.32	-2.06	0.25	0.53	-1.41	3.39
16	6	0.55	2.27	0.79	2.03	1.34	5.13
16	20	-0.55	-2.27	-0.79	-2.03	-1.48	-4.71
17	20	0.25	2.27	0.38	1.00	1.48	5.45
17	21	-0.25	-2.27	-0.38	-1.00	-2.05	-2.02
18	21	-0.00	2.27	0.01	0.09	2.05	2.66
18	22	0.00	-2.27	-0.01	-0.09	-2.08	2.71
19	22	-0.30	2.27	-0.40	-0.94	2.08	-1.98
19	23	0.30	-2.27	0.40	0.94	-1.47	5.40
20	23	-0.56	2.27	-0.76	-1.85	1.47	-4.76
20	8	0.56	-2.27	0.76	1.85	-1.33	5.17
21	8	0.32	2.05	0.28	0.74	1.41	3.34
21	24	-0.32	-2.05	-0.28	-0.74	-2.02	1.14
22	24	0.02	2.05	-0.14	-0.30	2.02	-0.41
22	25	-0.02	-2.05	0.14	0.30	-1.81	3.51
23	25	-0.23	2.05	-0.50	-1.21	1.81	-2.86
23	10	0.23	-2.05	0.50	1.21	-0.79	7.08
24	10	0.50	0.87	0.53	1.49	1.00	-0.43
24	26	-0.50	-0.87	-0.53	-1.49	-1.17	0.70
25	26	0.21	0.87	0.12	0.45	1.17	0.03
25	27	-0.21	-0.87	-0.12	-0.45	-1.34	1.28

26	27	-0.05	0.87	-0.25	-0.46	1.34	-0.63
26	28	0.05	-0.87	0.25	0.46	-0.76	2.69
27	28	-0.34	2.19	-0.66	-3.59	0.76	-1.95
27	29	0.34	-2.19	0.66	3.59	0.24	5.27
28	29	-0.60	3.36	-1.02	-2.65	-0.24	-4.62
28	12	0.60	-3.36	1.02	2.65	0.29	4.78
29	12	0.00	0.00	0.00	0.00	0.00	0.00
29	30	0.00	0.00	0.00	0.00	0.00	0.00

Loadcase ID: WL10 Name: Angle: -60

Memb	Node	Fx kip	Fy kip	Fz kip	Mx kft	My kft	Mz kft
1	1	0.16	0.92	0.86	19.69	-0.22	-2.03
1	2	-0.16	-0.92	-0.86	-2.14	0.22	-1.27
2	3	0.20	0.32	0.86	19.82	-0.16	-2.29
2	4	-0.20	-0.32	-0.86	-2.14	0.16	-1.80
3	5	0.24	0.06	0.87	19.90	-0.05	-2.55
3	6	-0.24	-0.06	-0.87	-2.11	0.05	-2.31
4	7	0.24	-0.06	0.87	19.89	0.08	-2.55
4	8	-0.24	0.06	-0.87	-2.12	-0.08	-2.31
5	9	0.20	-0.32	0.86	19.77	0.19	-2.29
5	10	-0.20	0.32	-0.86	-2.18	-0.19	-1.81
6	11	0.16	-0.91	0.85	19.60	0.25	-2.04
6	12	-0.16	0.91	-0.85	-2.22	-0.25	-1.30
7	13	0.00	0.00	0.00	0.00	0.00	0.00
7	2	0.00	0.00	0.00	0.00	0.00	0.00
8	2	0.16	0.92	0.86	2.14	-0.22	1.27
8	14	-0.16	-0.92	-0.86	-2.14	0.17	-1.23
9	14	0.08	0.56	0.51	1.85	-0.17	1.43
9	15	-0.08	-0.56	-0.51	-1.85	-0.60	-0.58
10	15	0.01	0.24	0.21	0.59	0.60	0.76
10	16	-0.01	-0.24	-0.21	-0.59	-1.10	-0.19
11	16	-0.07	0.24	-0.13	-0.26	1.10	0.39
11	17	0.07	-0.24	0.13	0.26	-0.90	-0.02
12	17	-0.14	0.24	-0.43	-1.02	0.90	0.20
12	4	0.14	-0.24	0.43	1.02	-0.76	-0.12
13	4	0.06	0.56	0.43	1.12	0.61	1.93
13	18	-0.06	-0.56	-0.43	-1.12	-1.49	-0.78
14	18	-0.02	0.56	0.09	0.26	1.49	0.98
14	19	0.02	-0.56	-0.09	-0.26	-1.62	-0.13
15	19	-0.09	0.56	-0.22	-0.49	1.62	0.30
15	6	0.09	-0.56	0.22	0.49	-1.15	0.92
16	6	0.15	0.62	0.65	1.62	1.10	1.39
16	20	-0.15	-0.62	-0.65	-1.62	-1.21	-1.28
17	20	0.07	0.62	0.31	0.76	1.21	1.48
17	21	-0.07	-0.62	-0.31	-0.76	-1.68	-0.55
18	21	-0.00	0.62	0.01	0.00	1.68	0.72
18	22	0.00	-0.62	-0.01	-0.00	-1.70	0.74
19	22	-0.08	0.62	-0.34	-0.85	1.70	-0.54
19	23	0.08	-0.62	0.34	0.85	-1.19	1.47
20	23	-0.15	0.62	-0.64	-1.61	1.19	-1.29
20	8	0.15	-0.62	0.64	1.61	-1.07	1.40
21	8	0.09	0.56	0.23	0.51	1.15	0.91
21	24	-0.09	-0.56	-0.23	-0.51	-1.65	0.31
22	24	0.01	0.56	-0.11	-0.35	1.65	-0.11
22	25	-0.01	-0.56	0.11	0.35	-1.48	0.95
23	25	-0.06	0.56	-0.42	-1.10	1.48	-0.78
23	10	0.06	-0.56	0.42	1.10	-0.63	1.92
24	10	0.14	0.24	0.44	1.08	0.81	-0.12
24	26	-0.14	-0.24	-0.44	-1.08	-0.95	0.19

25	26	0.06	0.24	0.10	0.22	0.95	0.01
25	27	-0.06	-0.24	-0.10	-0.22	-1.10	0.35
26	27	-0.01	0.24	-0.20	-0.54	1.10	-0.17
26	28	0.01	-0.24	0.20	0.54	-0.62	0.73
27	28	-0.09	0.60	-0.55	-1.96	0.62	-0.53
27	29	0.09	-0.60	0.55	1.96	0.21	1.43
28	29	-0.16	0.91	-0.85	-2.22	-0.21	-1.25
28	12	0.16	-0.91	0.85	2.22	0.25	1.30
29	12	0.00	0.00	0.00	0.00	0.00	0.00
29	30	0.00	0.00	0.00	0.00	0.00	0.00

Loadcase ID: WL11 Name: Angle: -75

Memb	Node	Fx kip	Fy kip	Fz kip	Mx kft	My kft	Mz kft
1	1	-0.11	-0.63	0.75	17.25	-0.18	1.39
1	2	0.11	0.63	-0.75	-1.95	0.18	0.87
2	3	-0.14	-0.22	0.76	17.39	-0.13	1.58
2	4	0.14	0.22	-0.76	-1.86	0.13	1.24
3	5	-0.16	-0.04	0.76	17.46	-0.03	1.75
3	6	0.16	0.04	-0.76	-1.84	0.03	1.59
4	7	-0.16	0.04	0.76	17.45	0.08	1.75
4	8	0.16	-0.04	-0.76	-1.84	-0.08	1.59
5	9	-0.14	0.22	0.76	17.35	0.17	1.58
5	10	0.14	-0.22	-0.76	-1.87	-0.17	1.24
6	11	-0.11	0.63	0.74	17.17	0.22	1.40
6	12	0.11	-0.63	-0.74	-1.96	-0.22	0.89
7	13	0.00	0.00	0.00	0.00	0.00	0.00
7	2	0.00	0.00	0.00	0.00	0.00	0.00
8	2	-0.11	-0.63	0.75	1.95	-0.18	-0.87
8	14	0.11	0.63	-0.75	-1.95	0.14	0.84
9	14	-0.06	-0.38	0.45	0.80	-0.14	-0.98
9	15	0.06	0.38	-0.45	-0.80	-0.53	0.40
10	15	-0.01	-0.17	0.18	0.49	0.53	-0.52
10	16	0.01	0.17	-0.18	-0.49	-0.96	0.13
11	16	0.05	-0.17	-0.12	-0.27	0.96	-0.27
11	17	-0.05	0.17	0.12	0.27	-0.78	0.02
12	17	0.10	-0.17	-0.38	-0.93	0.78	-0.14
12	4	-0.10	0.17	0.38	0.93	-0.66	0.08
13	4	-0.04	-0.38	0.37	0.94	0.53	-1.32
13	18	0.04	0.38	-0.37	-0.94	-1.30	0.53
14	18	0.01	-0.38	0.07	0.19	1.30	-0.67
14	19	-0.01	0.38	-0.07	-0.19	-1.40	0.09
15	19	0.06	-0.38	-0.19	-0.48	1.40	-0.21
15	6	-0.06	0.38	0.19	0.48	-0.98	-0.63
16	6	-0.10	-0.42	0.57	1.36	0.95	-0.96
16	20	0.10	0.42	-0.57	-1.36	-1.05	0.88
17	20	-0.05	-0.42	0.27	0.61	1.05	-1.02
17	21	0.05	0.42	-0.27	-0.61	-1.46	0.38
18	21	0.00	-0.42	0.00	-0.05	1.46	-0.50
18	22	-0.00	0.42	-0.00	0.05	-1.47	-0.51
19	22	0.06	-0.42	-0.30	-0.80	1.47	0.37
19	23	-0.06	0.42	0.30	0.80	-1.02	-1.01
20	23	0.10	-0.42	-0.56	-1.47	1.02	0.89
20	8	-0.10	0.42	0.56	1.47	-0.92	-0.96
21	8	-0.06	-0.38	0.20	0.37	0.99	-0.62
21	24	0.06	0.38	-0.20	-0.37	-1.43	-0.21
22	24	-0.00	-0.38	-0.10	-0.38	1.43	0.08
22	25	0.00	0.38	0.10	0.38	-1.28	-0.65
23	25	0.04	-0.38	-0.37	-1.04	1.28	0.53
23	10	-0.04	0.38	0.37	1.04	-0.53	-1.32

24	10	-0.09	-0.16	0.39	0.82	0.70	0.08
24	26	0.09	0.16	-0.39	-0.82	-0.82	-0.13
25	26	-0.04	-0.16	0.09	0.07	0.82	-0.01
25	27	0.04	0.16	-0.09	-0.07	-0.95	-0.24
26	27	0.01	-0.16	-0.18	-0.59	0.95	0.12
26	28	-0.01	0.16	0.18	0.59	-0.53	-0.50
27	28	0.06	-0.41	-0.48	-0.95	0.53	0.36
27	29	-0.06	0.41	0.48	0.95	0.19	-0.98
28	29	0.11	-0.63	-0.74	-1.96	-0.19	0.86
28	12	-0.11	0.63	0.74	1.96	0.22	-0.89
29	12	0.00	0.00	0.00	0.00	0.00	0.00
29	30	0.00	0.00	0.00	0.00	0.00	0.00

Loadcase ID: T1 Name: Sliding

Memb	Node	Fx kip	Fy kip	Fz kip	Mx kft	My kft	Mz kft
1	1	-11.27	-29.79	24.52	566.16	-6.62	134.11
1	2	11.27	29.79	-24.52	-63.58	6.62	96.97
2	3	-14.06	-6.81	24.84	571.01	-4.91	153.18
2	4	14.06	6.81	-24.84	-61.75	4.91	135.02
3	5	-15.48	-0.54	25.03	573.83	-1.81	162.89
3	6	15.48	0.54	-25.03	-60.65	1.81	154.49
4	7	-15.48	0.54	25.03	573.83	1.81	162.89
4	8	15.48	-0.54	-25.03	-60.65	-1.81	154.49
5	9	-14.06	6.81	24.84	571.01	4.91	153.18
5	10	14.06	-6.81	-24.84	-61.75	-4.91	135.02
6	11	-11.27	29.79	24.52	566.16	6.62	134.11
6	12	11.27	-29.79	-24.52	-63.58	-6.62	96.97
7	13	0.00	0.00	0.00	0.00	0.00	0.00
7	2	0.00	0.00	0.00	0.00	0.00	0.00
8	2	-11.27	-29.79	24.52	63.58	-6.62	-96.97
8	14	11.27	29.79	-24.52	-63.58	5.45	95.55
9	14	-6.17	-29.79	15.22	40.33	-5.45	-108.30
9	15	6.17	29.79	-15.22	-40.33	-17.54	63.30
10	15	-1.07	-29.79	5.92	17.08	17.54	-76.06
10	16	1.07	29.79	-5.92	-17.08	-31.55	5.53
11	16	4.03	-29.79	-3.38	-6.16	31.55	-18.28
11	17	-4.03	29.79	3.38	6.16	-26.44	-26.72
12	17	9.13	-29.79	-12.68	-29.41	26.44	13.96
12	4	-9.13	29.79	12.68	29.41	-22.46	-23.32
13	4	-4.92	-36.60	12.16	32.34	17.54	-111.70
13	18	4.92	36.60	-12.16	-32.34	-42.51	36.56
14	18	0.18	-36.60	2.86	9.09	42.51	-49.31
14	19	-0.18	36.60	-2.86	-9.09	-46.84	-5.96
15	19	5.28	-36.60	-6.44	-14.16	46.84	-6.79
15	6	-5.28	36.60	6.44	14.16	-32.77	-73.23
16	6	-10.20	-37.14	18.60	46.49	30.96	-81.26
16	20	10.20	37.14	-18.60	-46.49	-34.33	74.54
17	20	-5.10	-37.14	9.30	23.25	34.33	-87.29
17	21	5.10	37.14	-9.30	-23.25	-48.37	31.20
18	21	0.00	-37.14	0.00	0.00	48.37	-43.96
18	22	0.00	37.14	0.00	0.00	-48.37	-43.96
19	22	5.10	-37.14	-9.30	-23.25	48.37	31.20
19	23	-5.10	37.14	9.30	23.25	-34.33	-87.29
20	23	10.20	-37.14	-18.60	-46.49	34.33	74.54
20	8	-10.20	37.14	18.60	46.49	-30.96	-81.26
21	8	-5.28	-36.60	6.44	14.16	32.77	-73.23
21	24	5.28	36.60	-6.44	-14.16	-46.84	-6.79
22	24	-0.18	-36.60	-2.86	-9.09	46.84	-5.96
22	25	0.18	36.60	2.86	9.09	-42.51	-49.31

23	25	4.92	-36.60	-12.16	-32.34	42.51	36.56
23	10	-4.92	36.60	12.16	32.34	-17.54	-111.70
24	10	-9.13	-29.79	12.68	29.41	22.46	-23.32
24	26	9.13	29.79	-12.68	-29.41	-26.44	13.96
25	26	-4.03	-29.79	3.38	6.16	26.44	-26.72
25	27	4.03	29.79	-3.38	-6.16	-31.55	-18.28
26	27	1.07	-29.79	-5.92	-17.08	31.55	5.53
26	28	-1.07	29.79	5.92	17.08	-17.54	-76.06
27	28	6.17	-29.79	-15.22	-40.33	17.54	63.30
27	29	-6.17	29.79	15.22	40.33	5.45	-108.30
28	29	11.27	-29.79	-24.52	-63.58	-5.45	95.55
28	12	-11.27	29.79	24.52	63.58	6.62	-96.97
29	12	0.00	0.00	0.00	0.00	0.00	0.00
29	30	0.00	0.00	0.00	0.00	0.00	0.00

Loadcase ID: EQ1 Name:

Memb	Node	Fx kip	Fy kip	Fz kip	Mx kft	My kft	Mz kft
1	1	38.64	102.12	7.83	180.87	-2.11	-459.67
1	2	-38.64	-102.12	-7.83	-20.31	2.11	-332.37
2	3	48.19	23.33	7.94	182.42	-1.57	-525.04
2	4	-48.19	-23.33	-7.94	-19.73	1.57	-462.80
3	5	53.07	1.85	8.00	183.32	-0.58	-558.33
3	6	-53.07	-1.85	-8.00	-19.38	0.58	-529.52
4	7	53.07	-1.85	8.00	183.32	0.58	-558.33
4	8	-53.07	1.85	-8.00	-19.38	-0.58	-529.52
5	9	48.19	-23.33	7.94	182.42	1.57	-525.04
5	10	-48.19	23.33	-7.94	-19.73	-1.57	-462.80
6	11	38.64	-102.12	7.83	180.87	2.11	-459.67
6	12	-38.64	102.12	-7.83	-20.31	-2.11	-332.37
7	13	0.00	0.00	0.00	0.00	0.00	0.00
7	2	0.00	0.00	0.00	0.00	0.00	0.00
8	2	38.64	102.12	7.83	20.31	-2.11	332.37
8	14	-38.64	-102.12	-7.83	-20.31	1.74	-327.51
9	14	21.15	102.12	4.86	12.88	-1.74	371.22
9	15	-21.15	-102.12	-4.86	-12.88	-5.60	-216.98
10	15	3.66	102.12	1.89	5.46	5.60	260.70
10	16	-3.66	-102.12	-1.89	-5.46	-10.08	-18.95
11	16	-13.82	102.12	-1.08	-1.97	10.08	62.67
11	17	13.82	-102.12	1.08	1.97	-8.45	91.57
12	17	-31.31	102.12	-4.05	-9.40	8.45	-47.85
12	4	31.31	-102.12	4.05	9.40	-7.17	79.94
13	4	16.88	125.44	3.89	10.33	5.60	382.87
13	18	-16.88	-125.44	-3.89	-10.33	-13.58	-125.31
14	18	-0.61	125.44	0.91	2.90	13.58	169.03
14	19	0.61	-125.44	-0.91	-2.90	-14.96	20.44
15	19	-18.09	125.44	-2.06	-4.52	14.96	23.27
15	6	18.09	-125.44	2.06	4.52	-10.47	250.99
16	6	34.97	127.29	5.94	14.85	9.89	278.53
16	20	-34.97	-127.29	-5.94	-14.85	-10.97	-255.50
17	20	17.49	127.29	2.97	7.43	10.97	299.21
17	21	-17.49	-127.29	-2.97	-7.43	-15.45	-106.95
18	21	0.00	127.29	0.00	0.00	15.45	150.67
18	22	0.00	-127.29	0.00	0.00	-15.45	150.67
19	22	-17.49	127.29	-2.97	-7.43	15.45	-106.95
19	23	17.49	-127.29	2.97	7.43	-10.97	299.21
20	23	-34.97	127.29	-5.94	-14.85	10.97	-255.50
20	8	34.97	-127.29	5.94	14.85	-9.89	278.53
21	8	18.09	125.44	2.06	4.52	10.47	250.99
21	24	-18.09	-125.44	-2.06	-4.52	-14.96	23.27

22	24	0.61	125.44	-0.91	-2.90	14.96	20.44
22	25	-0.61	-125.44	0.91	2.90	-13.58	169.03
23	25	-16.88	125.44	-3.89	-10.33	13.58	-125.31
23	10	16.88	-125.44	3.89	10.33	-5.60	382.87
24	10	31.31	102.12	4.05	9.40	7.17	79.94
24	26	-31.31	-102.12	-4.05	-9.40	-8.45	-47.85
25	26	13.82	102.12	1.08	1.97	8.45	91.57
25	27	-13.82	-102.12	-1.08	-1.97	-10.08	62.67
26	27	-3.66	102.12	-1.89	-5.46	10.08	-18.95
26	28	3.66	-102.12	1.89	5.46	-5.60	260.70
27	28	-21.15	102.12	-4.86	-12.88	5.60	-216.98
27	29	21.15	-102.12	4.86	12.88	1.74	371.22
28	29	-38.64	102.12	-7.83	-20.31	-1.74	-327.51
28	12	38.64	-102.12	7.83	20.31	2.11	332.37
29	12	0.00	0.00	0.00	0.00	0.00	0.00
29	30	0.00	0.00	0.00	0.00	0.00	0.00

Loadcase ID: EQ2 Name:

Memb	Node	Fx kip	Fy kip	Fz kip	Mx kft	My kft	Mz kft
1	1	-38.64	-102.12	7.83	180.87	-2.11	459.67
1	2	38.64	102.12	-7.83	-20.31	2.11	332.37
2	3	-48.19	-23.33	7.94	182.42	-1.57	525.04
2	4	48.19	23.33	-7.94	-19.73	1.57	462.80
3	5	-53.07	-1.85	8.00	183.32	-0.58	558.33
3	6	53.07	1.85	-8.00	-19.38	0.58	529.52
4	7	-53.07	1.85	8.00	183.32	0.58	558.33
4	8	53.07	-1.85	-8.00	-19.38	-0.58	529.52
5	9	-48.19	23.33	7.94	182.42	1.57	525.04
5	10	48.19	-23.33	-7.94	-19.73	-1.57	462.80
6	11	-38.64	102.12	7.83	180.87	2.11	459.67
6	12	38.64	-102.12	-7.83	-20.31	-2.11	332.37
7	13	0.00	0.00	0.00	0.00	0.00	0.00
7	2	0.00	0.00	0.00	0.00	0.00	0.00
8	2	-38.64	-102.12	7.83	20.31	-2.11	-332.37
8	14	38.64	102.12	-7.83	-20.31	1.74	327.51
9	14	-21.15	-102.12	4.86	12.88	-1.74	-371.22
9	15	21.15	102.12	-4.86	-12.88	-5.60	216.98
10	15	-3.66	-102.12	1.89	5.46	5.60	-260.70
10	16	3.66	102.12	-1.89	-5.46	-10.08	18.95
11	16	13.82	-102.12	-1.08	-1.97	10.08	-62.67
11	17	-13.82	102.12	1.08	1.97	-8.45	-91.57
12	17	31.31	-102.12	-4.05	-9.40	8.45	47.85
12	4	-31.31	102.12	4.05	9.40	-7.17	-79.94
13	4	-16.88	-125.44	3.89	10.33	5.60	-382.87
13	18	16.88	125.44	-3.89	-10.33	-13.58	125.31
14	18	0.61	-125.44	0.91	2.90	13.58	-169.03
14	19	-0.61	125.44	-0.91	-2.90	-14.96	-20.44
15	19	18.09	-125.44	-2.06	-4.52	14.96	-23.27
15	6	-18.09	125.44	2.06	4.52	-10.47	-250.99
16	6	-34.97	-127.29	5.94	14.85	9.89	-278.53
16	20	34.97	127.29	-5.94	-14.85	-10.97	255.50
17	20	-17.49	-127.29	2.97	7.43	10.97	-299.21
17	21	17.49	127.29	-2.97	-7.43	-15.45	106.95
18	21	0.00	-127.29	0.00	0.00	15.45	-150.67
18	22	0.00	127.29	0.00	0.00	-15.45	-150.67
19	22	17.49	-127.29	-2.97	-7.43	15.45	106.95
19	23	-17.49	127.29	2.97	7.43	-10.97	-299.21
20	23	34.97	-127.29	-5.94	-14.85	10.97	255.50
20	8	-34.97	127.29	5.94	14.85	-9.89	-278.53

21	8	-18.09	-125.44	2.06	4.52	10.47	-250.99
21	24	18.09	125.44	-2.06	-4.52	-14.96	-23.27
22	24	-0.61	-125.44	-0.91	-2.90	14.96	-20.44
22	25	0.61	125.44	0.91	2.90	-13.58	-169.03
23	25	16.88	-125.44	-3.89	-10.33	13.58	125.31
23	10	-16.88	125.44	3.89	10.33	-5.60	-382.87
24	10	-31.31	-102.12	4.05	9.40	7.17	-79.94
24	26	31.31	102.12	-4.05	-9.40	-8.45	47.85
25	26	-13.82	-102.12	1.08	1.97	8.45	-91.57
25	27	13.82	102.12	-1.08	-1.97	-10.08	-62.67
26	27	3.66	-102.12	-1.89	-5.46	10.08	18.95
26	28	-3.66	102.12	1.89	5.46	-5.60	-260.70
27	28	21.15	-102.12	-4.86	-12.88	5.60	216.98
27	29	-21.15	102.12	4.86	12.88	1.74	-371.22
28	29	38.64	-102.12	-7.83	-20.31	-1.74	327.51
28	12	-38.64	102.12	7.83	20.31	2.11	-332.37
29	12	0.00	0.00	0.00	0.00	0.00	0.00
29	30	0.00	0.00	0.00	0.00	0.00	0.00

Loadcase ID: EQ3 Name:

Memb	Node	Fx kip	Fy kip	Fz kip	Mx kft	My kft	Mz kft
1	1	-11.59	-30.64	-26.11	-602.90	7.05	137.90
1	2	11.59	30.64	26.11	67.71	-7.05	99.71
2	3	-14.46	-7.00	-26.45	-608.07	5.23	157.51
2	4	14.46	7.00	26.45	65.76	-5.23	138.84
3	5	-15.92	-0.55	-26.66	-611.08	1.92	167.50
3	6	15.92	0.55	26.66	64.59	-1.92	158.86
4	7	-15.92	0.55	-26.66	-611.08	-1.92	167.50
4	8	15.92	-0.55	26.66	64.59	1.92	158.86
5	9	-14.46	7.00	-26.45	-608.07	-5.23	157.51
5	10	14.46	-7.00	26.45	65.76	5.23	138.84
6	11	-11.59	30.64	-26.11	-602.90	-7.05	137.90
6	12	11.59	-30.64	26.11	67.71	7.05	99.71
7	13	0.00	0.00	0.00	0.00	0.00	0.00
7	2	0.00	0.00	0.00	0.00	0.00	0.00
8	2	-11.59	-30.64	-26.11	-67.71	7.05	-99.71
8	14	11.59	30.64	26.11	67.71	-5.80	98.25
9	14	-6.35	-30.64	-16.20	-42.95	5.80	-111.37
9	15	6.35	30.64	16.20	42.95	18.68	65.09
10	15	-1.10	-30.64	-6.30	-18.19	-18.68	-78.21
10	16	1.10	30.64	6.30	18.19	33.59	5.69
11	16	4.15	-30.64	3.60	6.56	-33.59	-18.80
11	17	-4.15	30.64	-3.60	-6.56	28.16	-27.47
12	17	9.39	-30.64	13.50	31.32	-28.16	14.36
12	4	-9.39	30.64	-13.50	-31.32	23.91	-23.98
13	4	-5.06	-37.63	-12.95	-34.44	-18.68	-114.86
13	18	5.06	37.63	12.95	34.44	45.27	37.59
14	18	0.18	-37.63	-3.05	-9.68	-45.27	-50.71
14	19	-0.18	37.63	3.05	9.68	49.88	-6.13
15	19	5.43	-37.63	6.85	15.07	-49.88	-6.98
15	6	-5.43	37.63	-6.85	-15.07	34.90	-75.30
16	6	-10.49	-38.19	-19.80	-49.51	-32.97	-83.56
16	20	10.49	38.19	19.80	49.51	36.56	76.65
17	20	-5.25	-38.19	-9.90	-24.76	-36.56	-89.76
17	21	5.25	38.19	9.90	24.76	51.51	32.09
18	21	0.00	-38.19	0.00	0.00	-51.51	-45.20
18	22	0.00	38.19	0.00	0.00	51.51	-45.20
19	22	5.25	-38.19	9.90	24.76	-51.51	32.09
19	23	-5.25	38.19	-9.90	-24.76	36.56	-89.76

20	23	10.49	-38.19	19.80	49.51	-36.56	76.65
20	8	-10.49	38.19	-19.80	-49.51	32.97	-83.56
21	8	-5.43	-37.63	-6.85	-15.07	-34.90	-75.30
21	24	5.43	37.63	6.85	15.07	49.88	-6.98
22	24	-0.18	-37.63	3.05	9.68	-49.88	-6.13
22	25	0.18	37.63	-3.05	-9.68	45.27	-50.71
23	25	5.06	-37.63	12.95	34.44	-45.27	37.59
23	10	-5.06	37.63	-12.95	-34.44	18.68	-114.86
24	10	-9.39	-30.64	-13.50	-31.32	-23.91	-23.98
24	26	9.39	30.64	13.50	31.32	28.16	14.36
25	26	-4.15	-30.64	-3.60	-6.56	-28.16	-27.47
25	27	4.15	30.64	3.60	6.56	33.59	-18.80
26	27	1.10	-30.64	6.30	18.19	-33.59	5.69
26	28	-1.10	30.64	-6.30	-18.19	18.68	-78.21
27	28	6.35	-30.64	16.20	42.95	-18.68	65.09
27	29	-6.35	30.64	-16.20	-42.95	-5.80	-111.37
28	29	11.59	-30.64	26.11	67.71	5.80	98.25
28	12	-11.59	30.64	-26.11	-67.71	-7.05	-99.71
29	12	0.00	0.00	0.00	0.00	0.00	0.00
29	30	0.00	0.00	0.00	0.00	0.00	0.00

Loadcase ID: EQ4 Name:

Memb	Node	Fx kip	Fy kip	Fz kip	Mx kft	My kft	Mz kft
1	1	-11.59	-30.64	26.11	602.90	-7.05	137.90
1	2	11.59	30.64	-26.11	-67.71	7.05	99.71
2	3	-14.46	-7.00	26.45	608.07	-5.23	157.51
2	4	14.46	7.00	-26.45	-65.76	5.23	138.84
3	5	-15.92	-0.55	26.66	611.08	-1.92	167.50
3	6	15.92	0.55	-26.66	-64.59	1.92	158.86
4	7	-15.92	0.55	26.66	611.08	1.92	167.50
4	8	15.92	-0.55	-26.66	-64.59	-1.92	158.86
5	9	-14.46	7.00	26.45	608.07	5.23	157.51
5	10	14.46	-7.00	-26.45	-65.76	-5.23	138.84
6	11	-11.59	30.64	26.11	602.90	7.05	137.90
6	12	11.59	-30.64	-26.11	-67.71	-7.05	99.71
7	13	0.00	0.00	0.00	0.00	0.00	0.00
7	2	0.00	0.00	0.00	0.00	0.00	0.00
8	2	-11.59	-30.64	26.11	67.71	-7.05	-99.71
8	14	11.59	30.64	-26.11	-67.71	5.80	98.25
9	14	-6.35	-30.64	16.20	42.95	-5.80	-111.37
9	15	6.35	30.64	-16.20	-42.95	-18.68	65.09
10	15	-1.10	-30.64	6.30	18.19	18.68	-78.21
10	16	1.10	30.64	-6.30	-18.19	-33.59	5.69
11	16	4.15	-30.64	-3.60	-6.56	33.59	-18.80
11	17	-4.15	30.64	3.60	6.56	-28.16	-27.47
12	17	9.39	-30.64	-13.50	-31.32	28.16	14.36
12	4	-9.39	30.64	13.50	31.32	-23.91	-23.98
13	4	-5.06	-37.63	12.95	34.44	18.68	-114.86
13	18	5.06	37.63	-12.95	-34.44	-45.27	37.59
14	18	0.18	-37.63	3.05	9.68	45.27	-50.71
14	19	-0.18	37.63	-3.05	-9.68	-49.88	-6.13
15	19	5.43	-37.63	-6.85	-15.07	49.88	-6.98
15	6	-5.43	37.63	6.85	15.07	-34.90	-75.30
16	6	-10.49	-38.19	19.80	49.51	32.97	-83.56
16	20	10.49	38.19	-19.80	-49.51	-36.56	76.65
17	20	-5.25	-38.19	9.90	24.76	36.56	-89.76
17	21	5.25	38.19	-9.90	-24.76	-51.51	32.09
18	21	0.00	-38.19	0.00	0.00	51.51	-45.20
18	22	0.00	38.19	0.00	0.00	-51.51	-45.20

19	22	5.25	-38.19	-9.90	-24.76	51.51	32.09
19	23	-5.25	38.19	9.90	24.76	-36.56	-89.76
20	23	10.49	-38.19	-19.80	-49.51	36.56	76.65
20	8	-10.49	38.19	19.80	49.51	-32.97	-83.56
21	8	-5.43	-37.63	6.85	15.07	34.90	-75.30
21	24	5.43	37.63	-6.85	-15.07	-49.88	-6.98
22	24	-0.18	-37.63	-3.05	-9.68	49.88	-6.13
22	25	0.18	37.63	3.05	9.68	-45.27	-50.71
23	25	5.06	-37.63	-12.95	-34.44	45.27	37.59
23	10	-5.06	37.63	12.95	34.44	-18.68	-114.86
24	10	-9.39	-30.64	13.50	31.32	23.91	-23.98
24	26	9.39	30.64	-13.50	-31.32	-28.16	14.36
25	26	-4.15	-30.64	3.60	6.56	28.16	-27.47
25	27	4.15	30.64	-3.60	-6.56	-33.59	-18.80
26	27	1.10	-30.64	-6.30	-18.19	33.59	5.69
26	28	-1.10	30.64	6.30	18.19	-18.68	-78.21
27	28	6.35	-30.64	-16.20	-42.95	18.68	65.09
27	29	-6.35	30.64	16.20	42.95	5.80	-111.37
28	29	11.59	-30.64	-26.11	-67.71	-5.80	98.25
28	12	-11.59	30.64	26.11	67.71	7.05	-99.71
29	12	0.00	0.00	0.00	0.00	0.00	0.00
29	30	0.00	0.00	0.00	0.00	0.00	0.00

COMBINATION OF LOADS FROM FRAME ANALYSIS (only controlling ones):

Combination No. 1
Group Id: AR Svc I Name: AREMA Service I

Memb	Node	Fx kip	Fy kip	Fz kip	Mx kft	My kft	Mz kft
1	1	23.61	385.40	2.24	-32.41	-11.05	-169.32
1	2	-23.61	-323.30	-2.24	78.25	11.05	-314.76
2	3	25.78	557.27	2.23	-27.47	-11.61	-185.20
2	4	-25.78	-495.17	-2.23	73.13	11.61	-343.21
3	5	16.88	706.80	3.05	-16.58	-12.27	-126.65
3	6	-16.88	-644.70	-3.05	79.07	12.27	-219.30
4	7	-3.50	739.16	0.95	-25.42	-12.45	9.62
4	8	3.50	-677.06	-0.95	44.91	12.45	62.20
5	9	-22.43	595.25	0.47	-23.29	-11.98	136.37
5	10	22.43	-533.15	-0.47	32.91	11.98	323.54
6	11	-22.37	383.02	-0.37	-23.88	-11.37	134.63
6	12	22.37	-320.92	0.37	16.26	11.37	323.88
7	13	0.00	0.00	0.00	0.00	0.00	0.00
7	2	0.00	14.73	0.00	0.00	0.00	-21.18
8	2	23.61	308.56	2.24	-78.25	-11.05	335.94
8	14	-23.61	-308.32	-2.24	78.25	10.95	-321.23
9	14	22.65	184.76	1.78	116.24	-10.95	323.63
9	15	-22.65	-177.02	-1.78	-116.24	8.26	-50.41
10	15	21.78	74.65	1.37	-46.87	-8.26	52.59
10	16	-21.78	-62.52	-1.37	46.87	5.03	109.77
11	16	20.82	-63.87	0.91	152.09	-5.03	-107.37
11	17	-20.82	71.61	-0.91	-152.09	3.66	5.05
12	17	19.95	-176.49	0.50	-14.99	-3.66	-2.87
12	4	-19.95	178.10	-0.50	14.99	3.50	-52.83
13	4	45.73	317.06	2.72	-88.12	-15.11	396.04
13	18	-45.73	-306.54	-2.72	88.12	9.52	244.14
14	18	44.77	77.83	2.26	272.85	-9.52	-241.74
14	19	-44.77	-70.09	-2.26	-272.85	6.10	353.46
15	19	43.90	-127.72	1.85	-41.37	-6.10	-351.28
15	6	-43.90	138.92	-1.85	41.37	2.05	59.78
16	6	60.77	505.78	4.90	-120.44	-14.32	159.51

16	20	-60.77	-504.85	-4.90	120.44	13.43	-68.09
17	20	59.81	276.14	4.44	240.53	-13.43	70.49
17	21	-59.81	-268.40	-4.44	-240.53	6.72	340.75
18	21	58.94	70.59	4.03	-73.69	-6.72	-338.57
18	22	-58.94	-58.46	-4.03	73.69	-2.83	491.32
19	22	57.55	-221.87	3.36	368.49	2.83	-487.85
19	23	-57.55	229.61	-3.36	-368.49	-7.90	146.88
20	23	56.28	-474.30	2.76	-20.44	7.90	-143.71
20	8	-56.28	475.23	-2.76	20.44	-8.40	57.81
21	8	52.78	201.83	3.71	-65.34	-4.05	-120.02
21	24	-52.78	-190.62	-3.71	65.34	-4.07	549.04
22	24	51.39	-89.71	3.04	376.84	4.07	-545.57
22	25	-51.39	97.45	-3.04	-376.84	-8.66	404.22
23	25	50.12	-342.14	2.44	-12.09	8.66	-401.05
23	10	-50.12	352.66	-2.44	12.09	-13.68	-312.22
24	10	27.69	180.48	2.91	-45.00	1.70	-11.32
24	26	-27.69	-178.87	-2.91	45.00	-2.61	67.77
25	26	26.30	52.48	2.24	153.44	2.61	-64.29
25	27	-26.30	-44.74	-2.24	-153.44	-6.00	137.72
26	27	25.03	-60.14	1.64	-14.12	6.00	-134.54
26	28	-25.03	72.27	-1.64	14.12	-9.88	-22.19
27	28	23.64	-195.83	0.97	179.84	9.88	25.66
27	29	-23.64	203.57	-0.97	-179.84	-11.35	-327.29
28	29	22.37	-305.94	0.37	16.26	11.35	330.47
28	12	-22.37	306.19	-0.37	-16.26	-11.37	-345.06
29	12	0.00	14.73	0.00	0.00	0.00	21.18
29	30	0.00	0.00	0.00	0.00	0.00	0.00

Combination No. 2
Group Id: AR Svc I Name: AREMA Service I

Memb	Node	Fx kip	Fy kip	Fz kip	Mx kft	My kft	Mz kft
1	1	19.88	380.43	-1.55	-218.63	-2.80	-141.29
1	2	-19.88	-318.33	1.55	186.87	2.80	-266.20
2	3	19.42	520.59	0.58	-202.74	-3.55	-139.10
2	4	-19.42	-458.49	-0.58	214.59	3.55	-259.05
3	5	10.87	624.40	5.30	-168.50	-5.74	-82.49
3	6	-10.87	-562.30	-5.30	277.09	5.74	-140.33
4	7	-4.47	633.89	4.93	-167.83	-8.55	20.03
4	8	4.47	-571.79	-4.93	268.92	8.55	71.54
5	9	-16.48	519.46	0.50	-193.90	-10.34	100.20
5	10	16.48	-457.36	-0.50	204.05	10.34	237.65
6	11	-17.26	361.84	-4.03	-220.17	-10.53	104.59
6	12	17.26	-299.74	4.03	137.52	10.53	249.27
7	13	0.00	0.00	0.00	0.00	0.00	0.00
7	2	0.00	14.73	0.00	0.00	0.00	-21.18
8	2	19.88	303.59	-1.55	-186.87	-2.80	287.38
8	14	-19.88	-303.35	1.55	186.87	2.87	-272.91
9	14	18.66	179.79	-2.13	7.32	-2.87	275.96
9	15	-18.66	-172.05	2.13	-7.32	6.09	-10.25
10	15	18.66	69.68	-2.13	-154.77	-6.09	10.25
10	16	-18.66	-57.55	2.13	154.77	11.13	140.34
11	16	17.44	-68.84	-2.71	43.90	-11.13	-137.29
11	17	-17.44	76.58	2.71	-43.90	15.22	27.46
12	17	17.44	-181.46	-2.71	-122.16	-15.22	-27.46
12	4	-17.44	183.07	2.71	122.16	16.08	-29.80
13	4	36.86	275.42	-2.13	-336.75	-19.63	288.84
13	18	-36.86	-264.89	2.13	336.75	24.00	265.83
14	18	35.64	8.39	-2.71	67.93	-24.00	-262.78
14	19	-35.64	-0.65	2.71	-67.93	28.10	269.61
15	19	35.64	-104.23	-2.71	-98.13	-28.10	-269.61

15	6	-35.64	115.43	2.71	98.13	34.03	29.47
16	6	46.51	446.86	2.59	-375.22	-39.76	110.86
16	20	-46.51	-445.94	-2.59	375.22	39.29	-30.10
17	20	45.29	189.44	2.01	29.45	-39.29	33.15
17	21	-45.29	-181.70	-2.01	-29.45	36.26	247.13
18	21	45.29	76.82	2.01	-136.61	-36.26	-247.13
18	22	-45.29	-64.68	-2.01	136.61	31.52	414.62
19	22	43.52	-257.46	1.16	371.32	-31.52	-410.19
19	23	-43.52	265.20	-1.16	-371.32	29.77	15.48
20	23	43.52	-370.08	1.16	205.26	-29.77	-15.48
20	8	-43.52	371.01	-1.16	-205.26	29.56	-51.56
21	8	39.05	200.79	6.09	-63.66	-38.12	-19.98
21	24	-39.05	-189.58	-6.09	63.66	24.81	446.74
22	24	37.28	-132.56	5.24	444.27	-24.81	-442.31
22	25	-37.28	140.30	-5.24	-444.27	16.90	236.25
23	25	37.28	-245.18	5.24	278.21	-16.90	-236.25
23	10	-37.28	255.70	-5.24	-278.21	6.15	-277.95
24	10	20.80	201.66	5.73	74.16	-16.48	40.30
24	26	-20.80	-200.05	-5.73	-74.16	14.68	22.80
25	26	19.03	73.66	4.88	272.15	-14.68	-18.38
25	27	-19.03	-65.92	-4.88	-272.15	7.31	123.79
26	27	19.03	-38.96	4.88	106.09	-7.31	-123.79
26	28	-19.03	51.09	-4.88	-106.09	-4.25	17.20
27	28	17.26	-174.65	4.03	299.60	4.25	-12.78
27	29	-17.26	182.39	-4.03	-299.60	-10.34	-256.87
28	29	17.26	-284.76	4.03	137.52	10.34	256.87
28	12	-17.26	285.01	-4.03	-137.52	-10.53	-270.45
29	12	0.00	14.73	0.00	0.00	0.00	21.18
29	30	0.00	0.00	0.00	0.00	0.00	0.00

Combination No. 145
Group Id: AR Svc III Name: AREMA Service III

Memb	Node	Fx kip	Fy kip	Fz kip	Mx kft	My kft	Mz kft
1	1	30.26	411.42	55.69	1204.88	-35.06	-244.00
1	2	-28.79	-349.32	-54.88	-70.58	35.06	-362.88
2	3	34.08	570.01	57.14	1229.84	-32.68	-271.26
2	4	-32.60	-507.91	-56.33	-65.97	32.68	-413.86
3	5	26.12	718.01	58.95	1255.64	-27.43	-219.32
3	6	-24.64	-655.91	-58.14	-54.52	27.43	-302.58
4	7	4.78	748.24	57.24	1254.43	-19.63	-76.76
4	8	-3.30	-686.14	-56.43	-88.40	19.63	-7.71
5	9	-16.06	589.38	56.83	1258.40	-11.33	62.84
5	10	17.54	-527.28	-56.02	-100.86	11.33	279.93
6	11	-16.76	350.94	56.19	1257.73	-6.14	66.30
6	12	18.24	-288.84	-55.38	-113.18	6.14	290.84
7	13	0.00	0.00	0.00	0.00	0.00	0.00
7	2	0.00	14.73	0.09	0.00	0.13	-21.18
8	2	28.79	334.59	54.79	70.58	-35.19	384.06
8	14	-28.79	-334.34	-54.79	-70.58	32.58	-368.12
9	14	25.85	201.03	34.37	230.62	-32.58	375.46
9	15	-25.85	-193.29	-34.32	-230.62	-19.30	-77.67
10	15	23.72	82.33	14.97	6.56	19.30	82.99
10	16	-23.72	-70.20	-14.90	-6.56	-54.66	97.56
11	16	20.79	-54.05	-5.52	152.23	54.66	-90.21
11	17	-20.79	61.79	5.57	-152.23	-46.28	2.73
12	17	18.66	-164.79	-24.92	-59.22	46.28	2.58
12	4	-18.66	166.40	24.93	59.22	-38.45	-54.60
13	4	51.27	341.52	31.39	6.75	5.77	468.46
13	18	-51.27	-331.00	-31.33	-6.75	-70.16	221.93
14	18	48.33	98.74	10.91	323.45	70.16	-214.58

14	19	-48.33	-91.00	-10.86	-323.45	-86.60	357.87
15	19	46.20	-110.10	-8.49	-43.34	86.60	-352.56
15	6	-46.20	121.31	8.56	43.34	-67.96	99.59
16	6	70.84	534.61	49.58	11.18	40.53	202.99
16	20	-70.84	-533.68	-49.58	-11.18	-49.50	-106.36
17	20	67.91	301.42	29.16	327.87	49.50	113.71
17	21	-67.91	-293.68	-29.11	-327.87	-93.50	335.72
18	21	65.78	92.58	9.76	-38.91	93.50	-330.41
18	22	-63.80	-80.45	-9.68	38.91	-116.51	535.23
19	22	59.41	-206.02	-13.09	357.74	116.51	-524.26
19	23	-59.41	213.76	13.13	-357.74	-96.71	207.24
20	23	55.97	-464.08	-34.62	-92.31	96.71	-198.63
20	8	-55.97	465.01	34.62	92.31	-90.45	114.59
21	8	59.27	221.13	21.81	-3.91	70.82	-106.88
21	24	-59.27	-209.92	-21.74	3.91	-118.43	578.10
22	24	54.89	-76.55	-1.03	392.74	118.43	-567.14
22	25	-54.89	84.29	1.08	-392.74	-116.84	445.67
23	25	51.44	-334.61	-22.56	-57.32	116.84	-437.06
23	10	-51.44	345.14	22.62	57.32	-70.45	-260.76
24	10	33.90	182.15	33.39	43.54	59.12	-19.17
24	26	-33.90	-180.54	-33.38	-43.54	-69.61	76.14
25	26	29.52	56.29	10.61	183.34	69.61	-65.17
25	27	-29.52	-48.55	-10.57	-183.34	-85.60	144.34
26	27	26.07	-54.45	-10.92	-33.44	85.60	-135.73
26	28	-26.07	66.58	10.99	33.44	-59.67	-7.54
27	28	21.68	-176.11	-33.76	83.05	59.67	18.51
27	29	-21.68	183.85	33.81	-83.05	-8.64	-290.35
28	29	18.24	-273.87	-55.29	-113.18	8.64	298.96
28	12	-18.24	274.11	55.29	113.18	-6.01	-312.02
29	12	0.00	14.73	0.09	0.00	-0.13	21.18
29	30	0.00	0.00	0.00	0.00	0.00	0.00

Combination No. 149
Group Id: AR Svc III Name: AREMA Service III

Memb	Node	Fx kip	Fy kip	Fz kip	Mx kft	My kft	Mz kft
1	1	28.64	403.71	57.48	1236.07	-35.21	-223.64
1	2	-27.66	-341.61	-55.88	-72.31	35.21	-354.54
2	3	32.03	570.93	58.98	1261.43	-32.79	-248.02
2	4	-31.06	-508.83	-57.37	-67.07	32.79	-399.71
3	5	23.54	723.10	60.81	1287.34	-27.47	-192.46
3	6	-22.56	-661.00	-59.20	-55.51	27.47	-281.14
4	7	2.16	755.18	59.08	1286.05	-19.58	-49.62
4	8	-1.18	-693.08	-57.48	-89.54	19.58	14.34
5	9	-18.28	599.68	58.68	1290.06	-11.21	87.22
5	10	19.26	-537.58	-57.08	-101.79	11.21	296.48
6	11	-18.76	367.60	57.97	1288.78	-5.98	89.16
6	12	19.74	-305.50	-56.36	-115.16	5.98	304.39
7	13	0.00	0.00	0.00	0.00	0.00	0.00
7	2	0.00	14.73	0.24	0.00	0.34	-21.18
8	2	27.66	326.88	55.65	72.31	-35.55	375.72
8	14	-27.66	-326.63	-55.64	-72.31	32.90	-360.14
9	14	25.38	197.40	34.93	225.14	-32.90	365.85
9	15	-25.38	-189.66	-34.80	-225.14	-19.76	-73.54
10	15	23.83	82.30	15.19	6.12	19.76	77.42
10	16	-23.83	-70.16	-15.00	-6.12	-55.49	103.04
11	16	21.54	-56.23	-5.72	154.45	55.49	-97.33
11	17	-21.54	63.97	5.84	-154.45	-46.75	6.56
12	17	19.99	-168.85	-25.46	-60.64	46.75	-2.68
12	4	-19.99	170.46	25.48	60.64	-38.75	-50.62
13	4	51.05	338.38	31.89	6.43	5.96	450.33

13	18	-51.05	-327.85	-31.72	-6.43	-71.26	233.61
14	18	48.77	93.45	11.01	325.77	71.26	-227.90
14	19	-48.77	-85.71	-10.88	-325.77	-87.80	363.20
15	19	47.22	-117.27	-8.73	-44.64	87.80	-359.33
15	6	-47.22	128.47	8.91	44.64	-68.52	90.68
16	6	69.78	532.52	50.29	10.87	41.05	190.46
16	20	-69.78	-531.60	-50.28	-10.87	-50.14	-94.20
17	20	67.50	297.20	29.56	330.21	50.14	99.91
17	21	-67.50	-289.46	-29.44	-330.21	-94.70	343.13
18	21	65.95	86.48	9.83	-40.21	94.70	-339.26
18	22	-64.23	-74.34	-9.63	40.21	-117.74	529.62
19	22	60.50	-214.27	-13.43	359.10	117.74	-520.28
19	23	-60.50	222.01	13.56	-359.10	-97.35	190.80
20	23	57.63	-474.22	-35.30	-94.59	97.35	-183.63
20	8	-57.63	475.14	35.31	94.59	-90.96	97.75
21	8	58.81	217.94	22.16	-5.05	71.38	-112.09
21	24	-58.81	-206.73	-21.98	5.05	-119.65	576.34
22	24	55.07	-81.88	-1.08	394.25	119.65	-567.01
22	25	-55.07	89.62	1.20	-394.25	-117.92	437.49
23	25	52.20	-341.83	-22.95	-59.44	117.92	-430.31
23	10	-52.20	352.35	23.12	59.44	-70.63	-282.32
24	10	32.95	185.23	33.96	42.35	59.42	-14.15
24	26	-32.95	-183.62	-33.94	-42.35	-70.09	72.09
25	26	29.21	57.23	10.87	184.80	70.09	-62.76
25	27	-29.21	-49.49	-10.75	-184.80	-86.41	143.35
26	27	26.34	-55.39	-11.00	-35.61	86.41	-136.18
26	28	-26.34	67.52	11.19	35.61	-60.15	-9.31
27	28	22.61	-185.41	-34.26	93.37	60.15	18.65
27	29	-22.61	193.15	34.38	-93.37	-8.31	-304.54
28	29	19.74	-290.53	-56.12	-115.16	8.31	311.72
28	12	-19.74	290.77	56.13	115.16	-5.64	-325.57
29	12	0.00	14.73	0.24	0.00	-0.34	21.18
29	30	0.00	0.00	0.00	0.00	0.00	0.00

Combination No. 189
Group Id: AR Svc III Name: AREMA Service III

Memb	Node	Fx kip	Fy kip	Fz kip	Mx kft	My kft	Mz kft
1	1	29.88	409.24	55.90	1209.76	-35.09	-239.19
1	2	-28.41	-347.14	-55.09	-71.24	35.09	-359.87
2	3	33.61	569.26	57.35	1234.81	-32.70	-265.82
2	4	-32.13	-507.16	-56.54	-66.49	32.70	-409.58
3	5	25.56	717.88	59.17	1260.62	-27.42	-213.28
3	6	-24.08	-655.78	-58.36	-55.02	27.42	-297.10
4	7	4.22	748.38	57.46	1259.40	-19.59	-70.73
4	8	-2.74	-686.28	-56.65	-88.89	19.59	-2.23
5	9	-16.54	590.14	57.05	1263.34	-11.27	68.28
5	10	18.01	-528.04	-56.24	-101.33	11.27	284.21
6	11	-17.15	353.11	56.40	1262.58	-6.06	71.14
6	12	18.62	-291.01	-55.59	-113.76	6.06	293.91
7	13	0.00	0.00	0.00	0.00	0.00	0.00
7	2	0.00	14.73	0.09	0.00	0.13	-21.18
8	2	28.41	332.41	55.00	71.24	-35.22	381.05
8	14	-28.41	-332.17	-55.00	-71.24	32.60	-365.21
9	14	25.66	199.70	34.49	229.71	-32.60	372.08
9	15	-25.66	-191.96	-34.44	-229.71	-19.46	-76.29
10	15	23.70	81.76	15.02	6.65	19.46	81.19
10	16	-23.70	-69.63	-14.94	-6.65	-54.92	98.00
11	16	20.95	-54.62	-5.56	152.11	54.92	-91.13
11	17	-20.95	62.36	5.61	-152.11	-46.48	2.78
12	17	18.99	-165.36	-25.04	-59.53	46.48	2.11

12	4	-18.99	166.97	25.05	59.53	-38.61	-54.31
13	4	51.12	340.19	31.49	6.96	5.91	463.90
13	18	-51.12	-329.67	-31.43	-6.96	-70.51	223.77
14	18	48.37	97.41	10.92	323.44	70.51	-216.89
14	19	-48.37	-89.67	-10.88	-323.44	-86.97	358.18
15	19	46.41	-111.43	-8.55	-43.53	86.97	-353.28
15	6	-46.41	122.63	8.62	43.53	-68.20	97.41
16	6	70.49	533.15	49.74	11.49	40.78	199.70
16	20	-70.49	-532.22	-49.74	-11.49	-49.78	-103.33
17	20	67.74	299.96	29.23	327.97	49.78	110.20
17	21	-67.74	-292.22	-29.18	-327.97	-93.89	337.02
18	21	65.78	91.12	9.76	-39.00	93.89	-332.13
18	22	-63.80	-78.99	-9.68	39.00	-116.90	533.49
19	22	59.61	-207.48	-13.17	357.44	116.90	-522.99
19	23	-59.61	215.22	13.22	-357.44	-96.96	203.76
20	23	56.33	-465.54	-34.78	-92.81	96.96	-195.57
20	8	-56.33	466.47	34.79	92.81	-90.67	111.26
21	8	59.07	219.81	21.86	-3.92	71.08	-109.03
21	24	-59.07	-208.60	-21.80	3.92	-118.81	577.37
22	24	54.87	-77.87	-1.06	392.52	118.81	-566.87
22	25	-54.87	85.61	1.11	-392.52	-117.17	443.41
23	25	51.59	-335.93	-22.67	-57.72	117.17	-435.22
23	10	-51.59	346.46	22.73	57.72	-70.57	-265.32
24	10	33.58	181.59	33.51	43.61	59.30	-18.89
24	26	-33.58	-179.98	-33.50	-43.61	-69.82	75.69
25	26	29.38	55.73	10.64	183.20	69.82	-65.19
25	27	-29.38	-47.99	-10.59	-183.20	-85.86	143.52
26	27	26.10	-55.01	-10.96	-33.77	85.86	-135.32
26	28	-26.10	67.14	11.04	33.77	-59.81	-9.26
27	28	21.90	-177.52	-33.89	83.85	59.81	19.76
27	29	-21.90	185.26	33.94	-83.85	-8.58	-293.74
28	29	18.62	-276.03	-55.50	-113.76	8.58	301.93
28	12	-18.62	276.27	55.50	113.76	-5.93	-315.09
29	12	0.00	14.73	0.09	0.00	-0.13	21.18
29	30	0.00	0.00	0.00	0.00	0.00	0.00

Combination No. 193
Group Id: AR Svc III Name: AREMA Service III

Memb	Node	Fx kip	Fy kip	Fz kip	Mx kft	My kft	Mz kft
1	1	28.26	401.54	57.69	1240.94	-35.25	-218.84
1	2	-27.28	-339.44	-56.09	-72.97	35.25	-351.52
2	3	31.56	570.18	59.19	1266.40	-32.81	-242.58
2	4	-30.58	-508.08	-57.59	-67.59	32.81	-395.44
3	5	22.98	722.96	61.02	1292.31	-27.46	-186.42
3	6	-22.00	-660.86	-59.42	-56.02	27.46	-275.66
4	7	1.59	755.32	59.30	1291.02	-19.55	-43.59
4	8	-0.62	-693.22	-57.70	-90.03	19.55	19.82
5	9	-18.76	600.44	58.90	1295.01	-11.15	92.66
5	10	19.73	-538.34	-57.29	-102.26	11.15	300.75
6	11	-19.15	369.77	58.17	1293.63	-5.91	94.00
6	12	20.12	-307.67	-56.57	-115.74	5.91	307.47
7	13	0.00	0.00	0.00	0.00	0.00	0.00
7	2	0.00	14.73	0.24	0.00	0.34	-21.18
8	2	27.28	324.70	55.85	72.97	-35.59	372.70
8	14	-27.28	-324.46	-55.85	-72.97	32.92	-357.23
9	14	25.19	196.08	35.05	224.23	-32.92	362.47
9	15	-25.19	-188.34	-34.92	-224.23	-19.92	-72.16
10	15	23.80	81.72	15.23	6.21	19.92	75.62
10	16	-23.80	-69.59	-15.04	-6.21	-55.75	103.49
11	16	21.71	-56.80	-5.76	154.32	55.75	-98.25

11	17	-21.71	64.54	5.88	-154.32	-46.96	6.61
12	17	20.32	-169.42	-25.57	-60.96	46.96	-3.15
12	4	-20.32	171.03	25.60	60.96	-38.92	-50.33
13	4	50.91	337.05	31.99	6.64	6.11	445.76
13	18	-50.91	-326.53	-31.82	-6.64	-71.62	235.45
14	18	48.81	92.13	11.02	325.77	71.62	-230.21
14	19	-48.81	-84.38	-10.90	-325.77	-88.17	363.51
15	19	47.43	-118.60	-8.79	-44.84	88.17	-360.05
15	6	-47.43	129.80	8.97	44.84	-68.76	88.50
16	6	69.43	531.06	50.45	11.18	41.30	187.16
16	20	-69.43	-530.14	-50.44	-11.18	-50.43	-91.17
17	20	67.33	295.74	29.64	330.31	50.43	96.41
17	21	-67.33	-288.00	-29.51	-330.31	-95.10	344.43
18	21	65.95	85.02	9.82	-40.30	95.10	-340.97
18	22	-64.23	-72.88	-9.63	40.30	-118.12	527.87
19	22	60.69	-215.73	-13.52	358.79	118.12	-519.01
19	23	-60.69	223.47	13.64	-358.79	-97.61	187.32
20	23	57.98	-475.68	-35.46	-95.09	97.61	-180.56
20	8	-57.98	476.60	35.48	95.09	-91.19	94.42
21	8	58.60	216.62	22.22	-5.06	71.64	-114.24
21	24	-58.60	-205.41	-22.04	5.06	-120.03	575.61
22	24	55.06	-83.20	-1.11	394.03	120.03	-566.74
22	25	-55.06	90.94	1.23	-394.03	-118.26	435.23
23	25	52.35	-343.15	-23.05	-59.84	118.26	-428.47
23	10	-52.35	353.67	23.22	59.84	-70.75	-286.87
24	10	32.62	184.67	34.07	42.42	59.60	-13.88
24	26	-32.62	-183.06	-34.05	-42.42	-70.30	71.64
25	26	29.08	56.67	10.90	184.66	70.30	-62.78
25	27	-29.08	-48.93	-10.77	-184.66	-86.66	142.53
26	27	26.37	-55.95	-11.04	-35.95	86.66	-135.77
26	28	-26.37	68.08	11.24	35.95	-60.29	-11.04
27	28	22.83	-186.82	-34.39	94.18	60.29	19.91
27	29	-22.83	194.56	34.51	-94.18	-8.25	-307.93
28	29	20.12	-292.69	-56.33	-115.74	8.25	314.69
28	12	-20.12	292.93	56.33	115.74	-5.57	-328.65
29	12	0.00	14.73	0.24	0.00	-0.34	21.18
29	30	0.00	0.00	0.00	0.00	0.00	0.00

Combination No. 195
Group Id: AR Svc III Name: AREMA Service III

Memb	Node	Fx kip	Fy kip	Fz kip	Mx kft	My kft	Mz kft
1	1	26.83	397.53	57.84	1243.03	-35.22	-203.27
1	2	-26.33	-335.43	-56.13	-72.97	35.22	-342.13
2	3	29.86	569.01	59.35	1268.53	-32.79	-225.19
2	4	-29.36	-506.91	-57.64	-67.48	32.79	-382.40
3	5	21.10	722.80	61.18	1294.43	-27.44	-167.81
3	6	-20.60	-660.70	-59.47	-55.90	27.44	-260.20
4	7	-0.28	755.49	59.46	1293.13	-19.54	-24.98
4	8	0.78	-693.39	-57.75	-89.90	19.54	35.28
5	9	-20.45	601.62	59.06	1297.14	-11.15	110.04
5	10	20.95	-539.52	-57.35	-102.09	11.15	313.79
6	11	-20.58	373.76	58.33	1295.73	-5.91	109.59
6	12	21.08	-311.66	-56.62	-115.65	5.91	316.94
7	13	0.00	0.00	0.00	0.00	0.00	0.00
7	2	0.00	14.73	0.28	0.00	0.40	-21.18
8	2	26.33	320.69	55.85	72.97	-35.62	363.31
8	14	-26.33	-320.45	-55.84	-72.97	32.96	-348.03
9	14	24.66	192.94	35.06	222.90	-32.96	352.20
9	15	-24.66	-185.20	-34.91	-222.90	-19.89	-66.63
10	15	23.65	79.35	15.24	6.13	19.89	69.15

10	16	-23.65	-67.22	-15.01	-6.13	-55.69	104.33
11	16	21.98	-59.17	-5.78	154.28	55.69	-100.16
11	17	-21.98	66.91	5.92	-154.28	-46.85	4.94
12	17	20.97	-171.79	-25.60	-60.96	46.85	-2.42
12	4	-20.97	173.40	25.63	60.96	-38.80	-51.81
13	4	50.34	333.50	32.01	6.52	6.01	434.21
13	18	-50.34	-322.98	-31.81	-6.52	-71.53	239.73
14	18	48.67	88.58	11.03	325.69	71.53	-235.55
14	19	-48.67	-80.84	-10.88	-325.69	-88.08	363.50
15	19	47.66	-122.14	-8.79	-44.88	88.08	-360.98
15	6	-47.66	133.35	9.01	44.88	-68.62	81.68
16	6	68.26	527.35	50.46	11.02	41.17	178.52
16	20	-68.26	-526.43	-50.44	-11.02	-50.30	-83.20
17	20	66.59	292.03	29.66	330.19	50.30	87.38
17	21	-66.59	-284.28	-29.51	-330.19	-94.99	347.86
18	21	65.58	81.30	9.84	-40.38	94.99	-345.34
18	22	-64.60	-69.17	-9.61	40.38	-118.01	523.45
19	22	61.48	-219.44	-13.53	358.75	118.01	-515.65
19	23	-61.48	227.18	13.67	-358.75	-97.46	178.36
20	23	59.16	-479.39	-35.48	-95.09	97.46	-172.54
20	8	-59.16	480.32	35.50	95.09	-91.04	85.73
21	8	58.38	213.08	22.25	-5.20	71.51	-121.01
21	24	-58.38	-201.87	-22.04	5.20	-119.92	574.64
22	24	55.26	-86.74	-1.10	393.93	119.92	-566.84
22	25	-55.26	94.48	1.24	-393.93	-118.16	429.99
23	25	52.93	-346.69	-23.05	-59.91	118.16	-424.17
23	10	-52.93	357.21	23.25	59.91	-70.63	-298.44
24	10	31.98	182.31	34.10	42.19	59.48	-15.35
24	26	-31.98	-180.70	-34.07	-42.19	-70.18	72.37
25	26	28.86	54.31	10.93	184.47	70.18	-64.57
25	27	-28.86	-46.57	-10.79	-184.47	-86.59	140.76
26	27	26.53	-58.31	-11.02	-36.10	86.59	-134.94
26	28	-26.53	70.44	11.25	36.10	-60.24	-17.45
27	28	23.41	-190.05	-34.38	95.44	60.24	25.25
27	29	-23.41	197.79	34.53	-95.44	-8.19	-318.15
28	29	21.08	-296.68	-56.33	-115.65	8.19	323.97
28	12	-21.08	296.93	56.34	115.65	-5.51	-338.12
29	12	0.00	14.73	0.28	0.00	-0.40	21.18
29	30	0.00	0.00	0.00	0.00	0.00	0.00

Combination No. 217
Group Id: AR Svc III Name: AREMA Service III

Memb	Node	Fx kip	Fy kip	Fz kip	Mx kft	My kft	Mz kft
1	1	26.58	396.10	57.82	1242.74	-35.20	-200.13
1	2	-26.08	-334.00	-56.11	-73.01	35.20	-340.16
2	3	29.55	568.51	59.34	1268.27	-32.77	-221.63
2	4	-29.05	-506.41	-57.63	-67.44	32.77	-379.61
3	5	20.73	722.71	61.17	1294.16	-27.43	-163.86
3	6	-20.24	-660.61	-59.46	-55.86	27.43	-256.62
4	7	-0.65	755.59	59.45	1292.87	-19.53	-21.03
4	8	1.15	-693.49	-57.74	-89.85	19.53	38.86
5	9	-20.76	602.12	59.05	1296.88	-11.15	113.60
5	10	21.26	-540.02	-57.34	-102.02	11.15	316.59
6	11	-20.84	375.18	58.32	1295.44	-5.91	112.76
6	12	21.34	-313.08	-56.60	-115.63	5.91	318.95
7	13	0.00	0.00	0.00	0.00	0.00	0.00
7	2	0.00	14.73	0.28	0.00	0.40	-21.18
8	2	26.08	319.27	55.83	73.01	-35.61	361.34
8	14	-26.08	-319.03	-55.83	-73.01	32.94	-346.12
9	14	24.53	192.07	35.05	222.07	-32.94	349.99

9	15	-24.53	-184.33	-34.90	-222.07	-19.88	-65.72
10	15	23.63	78.98	15.23	6.09	19.88	67.97
10	16	-23.63	-66.84	-15.00	-6.09	-55.66	104.63
11	16	22.09	-59.55	-5.78	154.25	55.66	-100.76
11	17	-22.09	67.29	5.93	-154.25	-46.82	4.97
12	17	21.19	-172.17	-25.60	-60.98	46.82	-2.72
12	4	-21.19	173.78	25.63	60.98	-38.78	-51.62
13	4	50.24	332.63	32.00	6.46	6.00	431.22
13	18	-50.24	-322.11	-31.80	-6.46	-71.50	240.93
14	18	48.69	87.71	11.02	325.64	71.50	-237.06
14	19	-48.69	-79.97	-10.88	-325.64	-88.04	363.70
15	19	47.80	-123.01	-8.79	-44.92	88.04	-361.45
15	6	-47.80	134.21	9.01	44.92	-68.58	80.25
16	6	68.03	526.40	50.45	10.94	41.15	176.37
16	20	-68.03	-525.47	-50.43	-10.94	-50.27	-81.22
17	20	66.48	291.07	29.65	330.12	50.27	85.08
17	21	-66.48	-283.33	-29.51	-330.12	-94.95	348.71
18	21	65.58	80.35	9.84	-40.44	94.95	-346.46
18	22	-64.60	-68.22	-9.61	40.44	-117.96	522.31
19	22	61.61	-220.39	-13.53	358.70	117.96	-514.82
19	23	-61.61	228.13	13.67	-358.70	-97.42	176.09
20	23	59.39	-480.34	-35.47	-95.13	97.42	-170.54
20	8	-59.39	481.27	35.49	95.13	-91.00	83.56
21	8	58.24	212.22	22.25	-5.28	71.47	-122.42
21	24	-58.24	-201.01	-22.03	5.28	-119.88	574.16
22	24	55.25	-87.60	-1.10	393.86	119.88	-566.67
22	25	-55.25	95.34	1.24	-393.86	-118.11	428.51
23	25	53.03	-347.55	-23.04	-59.97	118.11	-422.96
23	10	-53.03	358.07	23.24	59.97	-70.60	-301.42
24	10	31.77	181.95	34.10	42.05	59.45	-15.17
24	26	-31.77	-180.34	-34.07	-42.05	-70.16	72.08
25	26	28.77	53.95	10.93	184.35	70.16	-64.59
25	27	-28.77	-46.21	-10.79	-184.35	-86.56	140.22
26	27	26.55	-58.67	-11.01	-36.21	86.56	-134.68
26	28	-26.55	70.81	11.24	36.21	-60.22	-18.58
27	28	23.55	-190.97	-34.37	96.23	60.22	26.07
27	29	-23.55	198.71	34.52	-96.23	-8.19	-320.37
28	29	21.34	-298.10	-56.32	-115.63	8.19	325.92
28	12	-21.34	298.34	56.32	115.63	-5.51	-340.13
29	12	0.00	14.73	0.28	0.00	-0.40	21.18
29	30	0.00	0.00	0.00	0.00	0.00	0.00

Combination No. 221
Group Id: AR Svc III Name: AREMA Service III

Memb	Node	Fx kip	Fy kip	Fz kip	Mx kft	My kft	Mz kft
1	1	23.28	386.32	57.18	1228.18	-35.00	-163.56
1	2	-23.70	-324.22	-55.47	-71.67	35.00	-317.53
2	3	25.61	565.64	58.71	1253.72	-32.62	-180.64
2	4	-26.03	-503.54	-57.00	-65.83	32.62	-348.17
3	5	16.36	722.30	60.53	1279.53	-27.36	-119.88
3	6	-16.78	-660.20	-58.83	-54.25	27.36	-219.27
4	7	-5.02	756.02	58.81	1278.24	-19.56	22.95
4	8	4.61	-693.92	-57.11	-88.21	19.56	76.21
5	9	-24.70	605.01	58.42	1282.36	-11.26	154.59
5	10	24.29	-542.91	-56.72	-100.27	11.26	348.02
6	11	-24.15	384.92	57.68	1280.93	-6.07	149.41
6	12	23.73	-322.82	-55.98	-114.03	6.07	341.76
7	13	0.00	0.00	0.00	0.00	0.00	0.00
7	2	0.00	14.73	0.28	0.00	0.41	-21.18
8	2	23.70	309.48	55.19	71.67	-35.41	338.71

8	14	-23.70	-309.24	-55.18	-71.67	32.78	-323.97
9	14	23.21	184.44	34.66	217.95	-32.78	325.19
9	15	-23.21	-176.70	-34.51	-217.95	-19.45	-52.44
10	15	23.24	73.25	15.06	5.53	19.45	52.36
10	16	-23.24	-61.11	-14.83	-5.53	-54.83	106.67
11	16	22.76	-65.28	-5.70	154.33	54.83	-105.46
11	17	-22.76	73.02	5.85	-154.33	-46.11	1.01
12	17	22.79	-177.90	-25.29	-60.34	46.11	-1.10
12	4	-22.79	179.51	25.33	60.34	-38.16	-55.05
13	4	48.82	324.03	31.68	5.48	5.54	403.22
13	18	-48.82	-313.51	-31.47	-5.48	-70.37	251.27
14	18	48.33	79.11	10.95	325.30	70.37	-250.05
14	19	-48.33	-71.37	-10.80	-325.30	-86.79	363.69
15	19	48.36	-131.61	-8.65	-44.70	86.79	-363.78
15	6	-48.36	142.82	8.86	44.70	-67.65	63.77
16	6	65.14	517.38	49.96	9.56	40.29	155.51
16	20	-65.14	-516.46	-49.95	-9.56	-49.33	-61.99
17	20	64.65	282.06	29.42	329.37	49.33	63.21
17	21	-64.65	-274.32	-29.27	-329.37	-93.65	356.97
18	21	64.68	71.34	9.82	-40.62	93.65	-357.06
18	22	-65.52	-59.20	-9.59	40.62	-116.63	511.57
19	22	63.58	-229.41	-13.29	359.15	116.63	-506.73
19	23	-63.58	237.15	13.44	-359.15	-96.45	154.38
20	23	62.29	-489.36	-35.01	-94.12	96.45	-151.17
20	8	-62.29	490.28	35.03	94.12	-90.11	62.55
21	8	57.69	203.63	22.08	-5.92	70.56	-138.77
21	24	-57.69	-192.43	-21.86	5.92	-118.59	571.74
22	24	55.75	-96.18	-1.01	393.86	118.59	-566.90
22	25	-55.75	103.92	1.16	-393.86	-116.95	415.77
23	25	54.46	-356.13	-22.74	-59.41	116.95	-412.56
23	10	-54.46	366.66	22.94	59.41	-70.05	-329.45
24	10	30.18	176.26	33.78	40.85	58.79	-18.57
24	26	-30.18	-174.65	-33.75	-40.85	-69.40	73.69
25	26	28.24	48.26	10.87	183.78	69.40	-68.85
25	27	-28.24	-40.52	-10.72	-183.78	-85.70	135.90
26	27	26.95	-64.36	-10.85	-36.22	85.70	-132.68
26	28	-26.95	76.50	11.09	36.22	-59.73	-34.05
27	28	25.02	-198.82	-33.96	100.27	59.73	38.89
27	29	-25.02	206.56	34.11	-100.27	-8.32	-345.04
28	29	23.73	-307.85	-55.69	-114.03	8.32	348.26
28	12	-23.73	308.09	55.69	114.03	-5.66	-362.94
29	12	0.00	14.73	0.28	0.00	-0.41	21.18
29	30	0.00	0.00	0.00	0.00	0.00	0.00

Combination No. 265
Group Id: AR Svc III Name: AREMA Service III

Memb	Node	Fx kip	Fy kip	Fz kip	Mx kft	My kft	Mz kft
1	1	22.58	382.30	56.88	1221.69	-34.90	-154.69
1	2	-23.00	-320.20	-55.18	-71.16	34.90	-311.97
2	3	24.74	564.25	58.43	1247.27	-32.54	-170.61
2	4	-25.15	-502.15	-56.72	-65.10	32.54	-340.29
3	5	15.32	722.06	60.25	1273.05	-27.32	-108.75
3	6	-15.74	-659.96	-58.54	-53.53	27.32	-209.17
4	7	-6.06	756.28	58.53	1271.76	-19.56	34.09
4	8	5.64	-694.18	-56.83	-87.46	19.56	86.32
5	9	-25.58	606.42	58.15	1275.93	-11.31	164.62
5	10	25.16	-544.32	-56.45	-99.44	11.31	355.91
6	11	-24.86	388.91	57.40	1274.47	-6.13	158.33
6	12	24.44	-326.81	-55.70	-113.34	6.13	347.44
7	13	0.00	0.00	0.00	0.00	0.00	0.00

7	2	0.00	14.73	0.28	0.00	0.41	-21.18
8	2	23.00	305.47	54.90	71.16	-35.31	333.15
8	14	-23.00	-305.22	-54.89	-71.16	32.70	-318.60
9	14	22.86	182.00	34.48	215.23	-32.70	318.95
9	15	-22.86	-174.26	-34.33	-215.23	-19.27	-49.89
10	15	23.20	72.19	14.98	5.25	19.27	49.04
10	16	-23.20	-60.06	-14.75	-5.25	-54.45	107.49
11	16	23.06	-66.33	-5.67	154.33	54.45	-107.15
11	17	-23.06	74.07	5.82	-154.33	-45.78	1.11
12	17	23.40	-178.95	-25.16	-60.10	45.78	-1.96
12	4	-23.40	180.56	25.19	60.10	-37.87	-54.51
13	4	48.55	321.58	31.53	5.00	5.33	394.80
13	18	-48.55	-311.06	-31.33	-5.00	-69.86	254.66
14	18	48.41	76.66	10.91	325.10	69.86	-254.31
14	19	-48.41	-68.92	-10.76	-325.10	-86.22	364.26
15	19	48.75	-134.06	-8.58	-44.65	86.22	-365.11
15	6	-48.75	145.26	8.80	44.65	-67.22	59.75
16	6	64.49	514.69	49.74	8.88	39.90	149.42
16	20	-64.49	-513.76	-49.73	-8.88	-48.90	-56.39
17	20	64.35	279.36	29.31	328.98	48.90	56.74
17	21	-64.35	-271.62	-29.16	-328.98	-93.06	359.37
18	21	64.69	68.64	9.82	-40.77	93.06	-360.22
18	22	-65.52	-56.51	-9.58	40.77	-116.02	508.36
19	22	63.93	-232.10	-13.18	359.29	116.02	-504.39
19	23	-63.93	239.84	13.33	-359.29	-96.00	147.97
20	23	62.95	-492.05	-34.81	-93.74	96.00	-145.52
20	8	-62.95	492.98	34.83	93.74	-89.70	56.42
21	8	57.31	201.20	22.00	-6.28	70.14	-142.73
21	24	-57.31	-189.99	-21.78	6.28	-118.00	570.38
22	24	55.72	-98.62	-0.98	393.77	118.00	-566.41
22	25	-55.72	106.36	1.13	-393.77	-116.41	411.61
23	25	54.74	-358.57	-22.61	-59.25	116.41	-409.16
23	10	-54.74	369.09	22.81	59.25	-69.79	-337.84
24	10	29.58	175.23	33.64	40.19	58.48	-18.07
24	26	-29.58	-173.62	-33.61	-40.19	-69.05	72.86
25	26	27.99	47.23	10.84	183.40	69.05	-68.89
25	27	-27.99	-39.49	-10.69	-183.40	-85.31	134.38
26	27	27.01	-65.39	-10.78	-36.35	85.31	-131.93
26	28	-27.01	77.53	11.02	36.35	-59.50	-37.24
27	28	25.42	-201.42	-33.78	102.91	59.50	41.21
27	29	-25.42	209.17	33.93	-102.91	-8.37	-351.30
28	29	24.44	-311.83	-55.41	-113.34	8.37	353.75
28	12	-24.44	312.08	55.41	113.34	-5.73	-368.62
29	12	0.00	14.73	0.28	0.00	-0.41	21.18
29	30	0.00	0.00	0.00	0.00	0.00	0.00

Combination No. 529
Group Id: AR Svc III Name: AREMA Service III

Memb	Node	Fx kip	Fy kip	Fz kip	Mx kft	My kft	Mz kft
1	1	22.24	380.35	56.65	1216.33	-34.83	-150.37
1	2	-22.65	-318.25	-54.94	-70.67	34.83	-309.27
2	3	24.31	563.57	58.20	1241.92	-32.48	-165.72
2	4	-24.73	-501.47	-56.49	-64.51	32.48	-336.45
3	5	14.82	721.94	60.02	1267.66	-27.29	-103.33
3	6	-15.23	-659.84	-58.31	-52.95	27.29	-204.25
4	7	-6.56	756.40	58.30	1266.37	-19.57	39.51
4	8	6.15	-694.30	-56.59	-86.86	19.57	91.24
5	9	-26.00	607.10	57.92	1270.58	-11.35	169.51
5	10	25.59	-545.00	-56.22	-98.80	11.35	359.75
6	11	-25.20	390.85	57.17	1269.13	-6.19	162.67

6	12	24.79	-328.75	-55.47	-112.75	6.19	350.20
7	13	0.00	0.00	0.00	0.00	0.00	0.00
7	2	0.00	14.73	0.28	0.00	0.41	-21.18
8	2	22.65	303.51	54.66	70.67	-35.24	330.45
8	14	-22.65	-303.27	-54.65	-70.67	32.63	-315.99
9	14	22.68	180.82	34.33	213.75	-32.63	315.91
9	15	-22.68	-173.07	-34.18	-213.75	-19.11	-48.65
10	15	23.17	71.68	14.92	5.04	19.11	47.43
10	16	-23.17	-59.54	-14.68	-5.04	-54.15	107.90
11	16	23.20	-66.85	-5.64	154.36	54.15	-107.97
11	17	-23.20	74.59	5.79	-154.36	-45.52	1.16
12	17	23.69	-179.47	-25.05	-59.86	45.52	-2.38
12	4	-23.69	181.08	25.08	59.86	-37.65	-54.25
13	4	48.42	320.39	31.41	4.65	5.16	390.70
13	18	-48.42	-309.87	-31.21	-4.65	-69.44	256.31
14	18	48.45	75.47	10.88	324.98	69.44	-256.39
14	19	-48.45	-67.73	-10.74	-324.98	-85.77	364.54
15	19	48.94	-135.25	-8.53	-44.57	85.77	-365.76
15	6	-48.94	146.46	8.75	44.57	-66.88	57.79
16	6	64.17	513.38	49.56	8.38	39.59	146.46
16	20	-64.17	-512.45	-49.55	-8.38	-48.55	-53.67
17	20	64.20	278.05	29.23	328.71	48.55	53.59
17	21	-64.20	-270.31	-29.08	-328.71	-92.58	360.54
18	21	64.69	67.33	9.81	-40.84	92.58	-361.76
18	22	-65.52	-55.20	-9.58	40.84	-115.53	506.79
19	22	64.11	-233.41	-13.09	359.45	115.53	-503.24
19	23	-64.11	241.15	13.24	-359.45	-95.64	144.85
20	23	63.27	-493.36	-34.64	-93.37	95.64	-142.77
20	8	-63.27	494.29	34.66	93.37	-89.37	53.43
21	8	57.13	200.01	21.94	-6.51	69.80	-144.66
21	24	-57.13	-188.81	-21.72	6.51	-117.53	569.72
22	24	55.71	-99.80	-0.95	393.78	117.53	-566.17
22	25	-55.71	107.54	1.10	-393.78	-115.99	409.58
23	25	54.88	-359.75	-22.49	-59.04	115.99	-407.50
23	10	-54.88	370.28	22.70	59.04	-69.59	-341.93
24	10	29.29	174.73	33.52	39.76	58.24	-17.82
24	26	-29.29	-173.12	-33.49	-39.76	-68.77	72.46
25	26	27.87	46.73	10.82	183.20	68.77	-68.91
25	27	-27.87	-38.99	-10.67	-183.20	-85.00	133.64
26	27	27.04	-65.89	-10.73	-36.35	85.00	-131.56
26	28	-27.04	78.03	10.96	36.35	-59.33	-38.79
27	28	25.62	-202.69	-33.63	104.36	59.33	42.34
27	29	-25.62	210.43	33.78	-104.36	-8.42	-354.34
28	29	24.79	-313.78	-55.18	-112.75	8.42	356.42
28	12	-24.79	314.02	55.18	112.75	-5.79	-371.38
29	12	0.00	14.73	0.28	0.00	-0.41	21.18
29	30	0.00	0.00	0.00	0.00	0.00	0.00

Combination No. 751
Group Id: AR Svc III Name: AREMA Service III

Memb	Node	Fx kip	Fy kip	Fz kip	Mx kft	My kft	Mz kft
1	1	19.12	371.89	55.04	1179.64	-34.49	-117.88
1	2	-20.64	-309.79	-53.46	-67.69	34.49	-289.80
2	3	20.64	561.08	56.60	1205.13	-32.23	-129.42
2	4	-22.16	-498.98	-55.01	-61.34	32.23	-309.40
3	5	10.77	721.58	58.41	1230.73	-27.20	-64.46
3	6	-12.29	-659.48	-56.82	-49.81	27.20	-172.11
4	7	-10.61	756.77	56.69	1229.46	-19.66	78.37
4	8	9.09	-694.67	-55.11	-83.68	19.66	123.38
5	9	-29.68	609.61	56.33	1233.86	-11.60	205.80

5	10	28.16	-547.51	-54.75	-95.49	11.60	386.80
6	11	-28.33	399.28	55.59	1232.57	-6.53	195.24
6	12	26.81	-337.18	-54.00	-109.52	6.53	369.82
7	13	0.00	0.00	0.00	0.00	0.00	0.00
7	2	0.00	14.73	0.18	0.00	0.26	-21.18
8	2	20.64	295.05	53.28	67.69	-34.75	310.99
8	14	-20.64	-294.81	-53.28	-67.69	32.21	-296.93
9	14	21.59	174.23	33.46	209.07	-32.21	294.55
9	15	-21.59	-166.49	-33.37	-209.07	-18.26	-37.23
10	15	22.89	66.74	14.55	4.09	18.26	33.98
10	16	-22.89	-54.61	-14.40	-4.09	-52.52	109.66
11	16	23.84	-71.78	-5.42	154.67	52.52	-112.04
11	17	-23.84	79.52	5.51	-154.67	-44.27	-2.22
12	17	25.14	-184.40	-24.33	-58.44	44.27	-1.03
12	4	-25.14	186.01	24.35	58.44	-36.63	-57.16
13	4	47.30	312.97	30.66	2.90	4.40	366.56
13	18	-47.30	-302.45	-30.53	-2.90	-67.22	265.23
14	18	48.25	68.05	10.72	324.50	67.22	-267.61
14	19	-48.25	-60.31	-10.63	-324.50	-83.34	364.54
15	19	49.55	-142.67	-8.19	-43.94	83.34	-367.79
15	6	-49.55	153.88	8.33	43.94	-65.28	43.61
16	6	61.84	505.60	48.49	5.87	38.08	128.50
16	20	-61.84	-504.68	-48.48	-5.87	-46.85	-37.12
17	20	62.79	270.28	28.67	327.46	46.85	34.74
17	21	-62.79	-262.54	-28.57	-327.46	-90.07	367.65
18	21	64.09	59.56	9.75	-40.97	90.07	-370.90
18	22	-66.14	-47.42	-9.60	40.97	-112.99	497.53
19	22	65.64	-241.19	-12.56	360.58	112.99	-496.28
19	23	-65.64	248.93	12.65	-360.58	-93.94	126.14
20	23	65.62	-501.14	-33.60	-91.13	93.94	-126.09
20	8	-65.62	502.06	33.62	91.13	-87.86	35.35
21	8	56.53	192.61	21.49	-7.45	68.20	-158.73
21	24	-56.53	-181.40	-21.36	7.45	-115.04	567.60
22	24	56.03	-107.21	-0.81	394.10	115.04	-566.36
22	25	-56.03	114.95	0.90	-394.10	-113.75	398.59
23	25	56.01	-367.16	-21.85	-57.61	113.75	-398.53
23	10	-56.01	377.68	21.98	57.61	-68.76	-366.10
24	10	27.85	169.83	32.77	37.88	57.15	-20.70
24	26	-27.85	-168.22	-32.75	-37.88	-67.44	73.80
25	26	27.35	41.83	10.58	182.58	67.44	-72.56
25	27	-27.35	-34.09	-10.49	-182.58	-83.36	129.89
26	27	27.33	-70.79	-10.46	-35.85	83.36	-129.84
26	28	-27.33	82.93	10.61	35.85	-58.42	-52.11
27	28	26.83	-209.47	-32.77	109.10	58.42	53.36
27	29	-26.83	217.21	32.87	-109.10	-8.84	-375.59
28	29	26.81	-322.20	-53.82	-109.52	8.84	375.64
28	12	-26.81	322.45	53.82	109.52	-6.28	-391.00
29	12	0.00	14.73	0.18	0.00	-0.26	21.18
29	30	0.00	0.00	0.00	0.00	0.00	0.00

Combination No. 795
Group Id: AR Svc III Name: AREMA Service III

Memb	Node	Fx kip	Fy kip	Fz kip	Mx kft	My kft	Mz kft
1	1	18.55	368.64	54.45	1166.21	-34.33	-110.71
1	2	-20.07	-306.54	-52.87	-66.37	34.33	-285.31
2	3	19.93	559.96	56.01	1191.67	-32.10	-121.31
2	4	-21.45	-497.85	-54.43	-59.87	32.10	-303.02
3	5	9.93	721.38	57.82	1217.21	-27.15	-55.45
3	6	-11.45	-659.28	-56.23	-48.35	27.15	-163.94
4	7	-11.45	756.98	56.11	1215.95	-19.70	87.38

4	8	9.93	-694.88	-54.52	-82.20	19.70	131.55
5	9	-30.38	610.74	55.75	1220.44	-11.72	213.92
5	10	28.86	-548.64	-54.17	-93.93	11.72	393.19
6	11	-28.91	402.51	55.01	1219.20	-6.69	202.46
6	12	27.39	-340.41	-53.42	-108.04	6.69	374.42
7	13	0.00	0.00	0.00	0.00	0.00	0.00
7	2	0.00	14.73	0.18	0.00	0.26	-21.18
8	2	20.07	291.81	52.69	66.37	-34.58	306.49
8	14	-20.07	-291.56	-52.69	-66.37	32.07	-292.58
9	14	21.30	172.26	33.10	206.32	-32.07	289.50
9	15	-21.30	-164.52	-33.01	-206.32	-17.86	-35.17
10	15	22.85	65.89	14.40	3.62	17.86	31.30
10	16	-22.85	-53.76	-14.25	-3.62	-51.76	110.33
11	16	24.08	-72.63	-5.33	154.79	51.76	-113.41
11	17	-24.08	80.37	5.43	-154.79	-43.64	-2.14
12	17	25.63	-185.25	-24.04	-57.81	43.64	-1.73
12	4	-25.63	186.86	24.06	57.81	-36.08	-56.72
13	4	47.08	310.99	30.36	2.06	3.98	359.75
13	18	-47.08	-300.47	-30.24	-2.06	-66.19	267.97
14	18	48.31	66.07	10.65	324.24	66.19	-271.05
14	19	-48.31	-58.33	-10.56	-324.24	-82.21	365.00
15	19	49.86	-144.65	-8.05	-43.68	82.21	-368.87
15	6	-49.86	155.86	8.19	43.68	-64.46	40.35
16	6	61.31	503.43	48.04	4.67	37.31	123.58
16	20	-61.31	-502.50	-48.03	-4.67	-46.00	-32.59
17	20	62.54	268.10	28.45	326.85	46.00	29.51
17	21	-62.54	-260.36	-28.36	-326.85	-88.90	369.59
18	21	64.09	57.38	9.74	-41.08	88.90	-373.46
18	22	-66.14	-45.24	-9.60	41.08	-111.79	494.93
19	22	65.93	-243.37	-12.34	361.06	111.79	-494.39
19	23	-65.93	251.11	12.43	-361.06	-93.09	120.96
20	23	66.15	-503.32	-33.17	-90.14	93.09	-121.52
20	8	-66.15	504.24	33.19	90.14	-87.09	30.38
21	8	56.22	190.64	21.34	-7.94	67.39	-161.94
21	24	-56.22	-179.43	-21.20	7.94	-113.89	566.50
22	24	56.01	-109.18	-0.73	394.20	113.89	-565.96
22	25	-56.01	116.92	0.83	-394.20	-112.71	395.22
23	25	56.23	-369.13	-21.57	-57.00	112.71	-395.78
23	10	-56.23	379.65	21.70	57.00	-68.29	-372.90
24	10	27.37	168.99	32.47	36.93	56.57	-20.29
24	26	-27.37	-167.38	-32.45	-36.93	-66.77	73.13
25	26	27.15	40.99	10.52	182.22	66.77	-72.59
25	27	-27.15	-33.25	-10.42	-182.22	-82.59	128.66
26	27	27.38	-71.63	-10.32	-35.71	82.59	-129.23
26	28	-27.38	83.76	10.47	35.71	-57.98	-54.69
27	28	27.16	-211.57	-32.40	111.84	57.98	55.23
27	29	-27.16	219.32	32.49	-111.84	-8.97	-380.65
28	29	27.39	-325.43	-53.24	-108.04	8.97	380.08
28	12	-27.39	325.68	53.24	108.04	-6.43	-395.60
29	12	0.00	14.73	0.18	0.00	-0.26	21.18
29	30	0.00	0.00	0.00	0.00	0.00	0.00

Combination No. 827
Group Id: AR Svc III Name: AREMA Service III

Memb	Node	Fx kip	Fy kip	Fz kip	Mx kft	My kft	Mz kft
1	1	16.38	356.52	46.71	1019.05	-33.14	-80.33
1	2	-17.86	-294.42	-47.52	-54.18	33.14	-269.03
2	3	17.10	559.47	48.27	1044.05	-31.24	-86.38
2	4	-18.57	-497.37	-49.08	-47.19	31.24	-277.62
3	5	6.38	726.24	50.05	1069.18	-26.90	-15.66

3	6	-7.86	-664.14	-50.86	-35.73	26.90	-128.71
4	7	-15.04	764.16	48.33	1067.93	-20.16	127.45
4	8	13.57	-702.06	-49.14	-69.69	20.16	167.39
5	9	-33.39	622.46	48.05	1073.22	-12.80	249.97
5	10	31.91	-560.36	-48.86	-80.86	12.80	420.98
6	11	-31.46	423.56	47.29	1072.47	-8.11	235.38
6	12	29.98	-361.46	-48.10	-95.70	8.11	396.01
7	13	0.00	0.00	0.00	0.00	0.00	0.00
7	2	0.00	14.73	-0.09	0.00	-0.13	-21.18
8	2	17.86	279.68	47.61	54.18	-33.01	290.21
8	14	-17.86	-279.44	-47.61	-54.18	30.74	-276.89
9	14	20.29	165.50	29.94	190.42	-30.74	270.81
9	15	-20.29	-157.76	-29.99	-190.42	-14.53	-26.68
10	15	22.89	63.86	13.07	-0.57	14.53	20.17
10	16	-22.89	-51.73	-13.14	0.57	-45.55	116.64
11	16	25.32	-76.81	-4.52	158.78	45.55	-122.72
11	17	-25.32	84.55	4.48	-158.78	-38.75	0.86
12	17	27.93	-191.31	-21.40	-52.58	38.75	-7.37
12	4	-27.93	192.92	21.39	52.58	-32.03	-52.99
13	4	46.50	304.45	27.68	-5.39	0.79	330.61
13	18	-46.50	-293.93	-27.75	5.39	-57.70	283.68
14	18	48.93	57.39	10.09	324.98	57.70	-289.75
14	19	-48.93	-49.65	-10.13	-324.98	-72.97	370.59
15	19	51.53	-155.22	-6.79	-41.71	72.97	-377.09
15	6	-51.53	166.42	6.72	41.71	-58.19	25.47
16	6	59.39	497.72	44.14	-5.97	31.29	103.24
16	20	-59.39	-496.79	-44.14	5.97	-39.28	-13.28
17	20	61.82	260.25	26.48	324.39	39.28	7.20
17	21	-61.82	-252.51	-26.53	-324.39	-79.31	380.05
18	21	64.43	47.65	9.60	-42.29	79.31	-386.55
18	22	-66.41	-35.52	-9.68	42.29	-102.12	484.99
19	22	67.39	-255.24	-10.34	368.03	102.12	-487.45
19	23	-67.39	262.98	10.29	-368.03	-86.54	96.09
20	23	68.67	-517.07	-29.35	-81.92	86.54	-99.29
20	8	-68.67	518.00	29.34	81.92	-81.24	5.66
21	8	55.10	184.06	19.80	-12.24	61.07	-173.05
21	24	-55.10	-172.86	-19.87	12.24	-104.44	563.24
22	24	56.09	-117.89	-0.14	398.09	104.44	-565.70
22	25	-56.09	125.63	0.09	-398.09	-104.27	381.78
23	25	57.37	-379.73	-19.15	-51.87	104.27	-384.99
23	10	-57.37	390.25	19.09	51.87	-65.01	-405.46
24	10	25.46	170.11	29.77	28.99	52.21	-15.52
24	26	-25.46	-168.49	-29.78	-28.99	-61.57	68.71
25	26	26.44	39.96	9.77	182.46	61.57	-71.17
25	27	-26.44	-32.22	-9.82	-182.46	-76.36	125.68
26	27	27.72	-74.54	-9.24	-34.22	76.36	-128.89
26	28	-27.72	86.67	9.17	34.22	-54.57	-61.94
27	28	28.70	-224.14	-29.18	133.40	54.57	59.48
27	29	-28.70	231.88	29.13	-133.40	-10.53	-403.87
28	29	29.98	-346.48	-48.19	-95.70	10.53	400.67
28	12	-29.98	346.73	48.19	95.70	-8.24	-417.19
29	12	0.00	14.73	-0.09	0.00	0.13	21.18
29	30	0.00	0.00	0.00	0.00	0.00	0.00

Combination No. 871
Group Id: AR Svc III Name: AREMA Service III

Memb	Node	Fx kip	Fy kip	Fz kip	Mx kft	My kft	Mz kft
1	1	16.32	356.18	46.19	1007.28	-33.01	-79.59
1	2	-17.80	-294.08	-47.00	-52.89	33.01	-268.56
2	3	17.02	559.35	47.75	1032.19	-31.15	-85.54

2	4	-18.50	-497.25	-48.56	-45.92	31.15	-276.96
3	5	6.30	726.22	49.53	1057.27	-26.87	-14.73
3	6	-7.77	-664.12	-50.34	-34.47	26.87	-127.86
4	7	-15.13	764.18	47.81	1056.04	-20.21	128.38
4	8	13.65	-702.08	-48.62	-68.42	20.21	168.24
5	9	-33.46	622.57	47.53	1061.40	-12.91	250.81
5	10	31.99	-560.47	-48.34	-79.56	12.91	421.65
6	11	-31.52	423.90	46.78	1060.75	-8.25	236.13
6	12	30.04	-361.80	-47.59	-94.37	8.25	396.48
7	13	0.00	0.00	0.00	0.00	0.00	0.00
7	2	0.00	14.73	-0.09	0.00	-0.13	-21.18
8	2	17.80	279.35	47.09	52.89	-32.88	289.75
8	14	-17.80	-279.10	-47.10	-52.89	30.64	-276.44
9	14	20.26	165.30	29.64	189.43	-30.64	270.28
9	15	-20.26	-157.55	-29.69	-189.43	-14.17	-26.46
10	15	22.89	63.77	12.94	-0.92	14.17	19.89
10	16	-22.89	-51.64	-13.01	0.92	-44.89	116.71
11	16	25.35	-76.89	-4.44	158.94	44.89	-122.86
11	17	-25.35	84.64	4.40	-158.94	-38.21	0.87
12	17	27.98	-191.40	-21.14	-51.97	38.21	-7.44
12	4	-27.98	193.01	21.13	51.97	-31.57	-52.94
13	4	46.48	304.25	27.43	-6.05	0.43	329.90
13	18	-46.48	-293.72	-27.49	6.05	-56.81	283.96
14	18	48.94	57.18	10.03	324.83	56.81	-290.11
14	19	-48.94	-49.44	-10.08	-324.83	-72.00	370.64
15	19	51.57	-155.42	-6.66	-41.40	72.00	-377.20
15	6	-51.57	166.63	6.59	41.40	-57.51	25.14
16	6	59.34	497.49	43.75	-6.93	30.64	102.72
16	20	-59.34	-496.57	-43.75	6.93	-38.55	-12.81
17	20	61.80	260.03	26.29	323.95	38.55	6.65
17	21	-61.80	-252.29	-26.34	-323.95	-78.30	380.25
18	21	64.43	47.42	9.60	-42.28	78.30	-386.82
18	22	-66.41	-35.29	-9.67	42.28	-101.11	484.72
19	22	67.42	-255.46	-10.14	368.55	101.11	-487.25
19	23	-67.42	263.20	10.09	-368.55	-85.84	95.55
20	23	68.72	-517.30	-28.96	-80.95	85.84	-98.82
20	8	-68.72	518.22	28.96	80.95	-80.60	5.15
21	8	55.07	183.86	19.67	-12.53	60.39	-173.39
21	24	-55.07	-172.65	-19.73	12.53	-103.46	563.13
22	24	56.08	-118.10	-0.07	398.30	103.46	-565.66
22	25	-56.08	125.84	0.03	-398.30	-103.38	381.43
23	25	57.39	-379.93	-18.90	-51.20	103.38	-384.70
23	10	-57.39	390.46	18.84	51.20	-64.64	-406.17
24	10	25.41	170.02	29.51	28.36	51.73	-15.48
24	26	-25.41	-168.41	-29.52	-28.36	-61.00	68.64
25	26	26.42	39.88	9.71	182.35	61.00	-71.17
25	27	-26.42	-32.14	-9.76	-182.35	-75.70	125.56
26	27	27.72	-74.63	-9.12	-33.88	75.70	-128.82
26	28	-27.72	86.76	9.05	33.88	-54.20	-62.21
27	28	28.73	-224.36	-28.85	134.46	54.20	59.68
27	29	-28.73	232.10	28.81	-134.46	-10.66	-404.40
28	29	30.04	-346.82	-47.68	-94.37	10.66	401.13
28	12	-30.04	347.06	47.68	94.37	-8.38	-417.66
29	12	0.00	14.73	-0.09	0.00	0.13	21.18
29	30	0.00	0.00	0.00	0.00	0.00	0.00

Combination No. 1353
Group Id: AR Svc III Name: AREMA Service III

Memb	Node	Fx kip	Fy kip	Fz kip	Mx kft	My kft	Mz kft
1	1	-2.95	316.87	1.09	-68.16	-1.02	138.49

1	2	1.58	-254.77	-1.43	93.63	1.02	-90.53
2	3	-7.29	533.46	0.23	-73.63	-0.91	167.17
2	4	5.92	-471.36	-0.56	81.38	0.91	-30.32
3	5	-19.07	690.08	0.45	-71.74	-0.92	245.63
3	6	17.70	-627.98	-0.78	83.98	0.92	132.86
4	7	-38.45	723.52	-2.03	-88.18	-1.45	375.35
4	8	37.08	-661.42	1.70	49.60	1.45	400.38
5	9	-53.39	600.92	-3.02	-94.09	-2.24	475.07
5	10	52.02	-538.82	2.68	35.32	2.24	606.97
6	11	-47.49	448.72	-4.65	-104.17	-2.61	433.44
6	12	46.12	-386.62	4.32	11.88	2.61	527.50
7	13	0.00	0.00	0.00	0.00	0.00	0.00
7	2	0.00	14.73	-0.03	0.00	-0.04	-21.18
8	2	-1.58	240.03	1.46	-93.63	-0.98	111.71
8	14	1.58	-239.79	-1.46	93.63	0.91	-100.27
9	14	8.32	117.53	1.31	99.57	-0.91	75.53
9	15	-8.32	-109.79	-1.32	-99.57	-1.08	96.14
10	15	17.74	8.57	0.33	-63.19	1.08	-119.70
10	16	-17.74	3.57	-0.35	63.19	-1.89	125.61
11	16	27.63	-129.96	0.20	136.55	1.89	-150.35
11	17	-27.63	137.70	-0.22	-136.55	-2.20	-51.78
12	17	37.06	-242.58	-0.78	-31.99	2.20	28.23
12	4	-37.06	244.19	0.77	31.99	-1.96	-104.69
13	4	31.14	227.17	-0.21	-113.37	1.04	135.01
13	18	-31.14	-216.65	0.19	113.37	-0.64	320.62
14	18	41.03	-6.37	-0.34	239.36	0.64	-345.36
14	19	-41.03	14.11	0.32	-239.36	-0.14	329.89
15	19	50.46	-206.75	-1.32	-68.13	0.14	-353.45
15	6	-50.46	217.96	1.29	68.13	2.71	-110.84
16	6	32.75	410.03	-0.51	-152.11	-3.64	-22.01
16	20	-32.75	-409.10	0.51	152.11	3.73	96.11
17	20	42.65	186.08	-0.66	200.62	-3.73	-120.85
17	21	-42.65	-178.34	0.65	-200.62	4.71	396.07
18	21	52.07	-14.30	-1.64	-106.87	-4.71	-419.62
18	22	-53.51	26.43	1.61	106.87	8.56	371.41
19	22	64.00	-298.48	0.16	328.32	-8.56	-397.62
19	23	-64.00	306.22	-0.18	-328.32	8.30	-59.06
20	23	73.94	-543.39	0.94	-45.31	-8.30	34.20
20	8	-73.94	544.32	-0.94	45.31	8.13	-132.59
21	8	36.86	117.10	-0.76	-94.91	-9.59	-267.78
21	24	-36.86	-105.90	0.73	94.91	11.22	511.57
22	24	47.34	-166.15	1.04	340.29	-11.22	-537.79
22	25	-47.34	173.89	-1.06	-340.29	9.63	280.98
23	25	57.29	-411.06	1.82	-33.34	-9.63	-305.84
23	10	-57.29	421.59	-1.84	33.34	5.88	-548.95
24	10	5.26	117.23	-0.84	-68.66	-8.11	-58.02
24	26	-5.26	-115.62	0.84	68.66	8.38	94.60
25	26	15.75	-10.77	0.94	135.90	-8.38	-120.82
25	27	-15.75	18.51	-0.95	-135.90	6.95	98.71
26	27	25.69	-123.39	1.71	-28.26	-6.95	-123.56
26	28	-25.69	135.52	-1.74	28.26	2.87	-182.90
27	28	36.18	-260.38	3.51	173.88	-2.87	156.68
27	29	-36.18	268.12	-3.53	-173.88	-2.45	-555.82
28	29	46.12	-371.64	4.29	11.88	2.45	530.96
28	12	-46.12	371.88	-4.29	-11.88	-2.65	-548.68
29	12	0.00	14.73	-0.03	0.00	0.04	21.18
29	30	0.00	0.00	0.00	0.00	0.00	0.00

Combination No. 1837
Group Id: AR Svc III Name: AREMA Service III

Memb	Node	Fx	Fy	Fz	Mx	My	Mz
		kip	kip	kip	kft	kft	kft

1	1	-5.40	302.91	-0.60	-106.46	-0.50	169.34
1	2	4.03	-240.81	0.27	97.16	0.50	-71.19
2	3	-10.33	528.62	-1.43	-111.90	-0.51	202.07
2	4	8.96	-466.52	1.10	85.60	0.51	-2.89
3	5	-22.68	689.23	-1.23	-110.22	-0.74	284.37
3	6	21.31	-627.13	0.89	88.17	0.74	168.00
4	7	-42.06	724.42	-3.70	-126.64	-1.53	414.08
4	8	40.69	-662.32	3.36	53.89	1.53	435.52
5	9	-56.44	605.80	-4.66	-132.27	-2.54	509.97
5	10	55.07	-543.70	4.32	39.90	2.54	634.42
6	11	-49.96	462.59	-6.31	-142.30	-3.03	464.48
6	12	48.59	-400.49	5.97	16.06	3.03	547.24
7	13	0.00	0.00	0.00	0.00	0.00	0.00
7	2	0.00	14.73	-0.03	0.00	-0.04	-21.18
8	2	-4.03	226.07	-0.24	-97.16	-0.46	92.37
8	14	4.03	-225.83	0.24	97.16	0.47	-81.60
9	14	7.08	109.04	0.27	89.04	-0.47	53.83
9	15	-7.08	-101.30	-0.29	-89.04	0.05	105.03
10	15	17.57	4.89	-0.12	-64.63	-0.05	-131.25
10	16	-17.57	7.24	0.09	64.63	0.30	128.47
11	16	28.67	-133.63	0.42	136.77	-0.30	-156.24
11	17	-28.67	141.37	-0.43	-136.77	-0.35	-51.44
12	17	39.16	-246.25	0.03	-30.31	0.35	25.22
12	4	-39.16	247.86	-0.03	30.31	-0.36	-102.84
13	4	30.20	218.66	-1.07	-115.91	-0.16	105.72
13	18	-30.20	-208.14	1.05	115.91	2.33	332.42
14	18	41.31	-14.88	-0.53	238.49	-2.33	-360.19
14	19	-41.31	22.62	0.52	-238.49	3.12	331.86
15	19	51.80	-215.26	-0.93	-67.54	-3.12	-358.08
15	6	-51.80	226.47	0.90	67.54	5.12	-124.83
16	6	30.49	400.66	-1.79	-155.71	-5.86	-43.17
16	20	-30.49	-399.73	1.79	155.71	6.19	115.57
17	20	41.60	176.71	-1.28	198.68	-6.19	-143.34
17	21	-41.60	-168.97	1.26	-198.68	8.11	404.40
18	21	52.08	-23.67	-1.67	-107.35	-8.11	-430.62
18	22	-53.53	35.80	1.65	107.35	12.04	360.22
19	22	65.22	-307.85	0.80	329.50	-12.04	-389.47
19	23	-65.22	315.59	-0.81	-329.50	10.82	-81.37
20	23	76.23	-552.76	2.15	-42.66	-10.82	53.85
20	8	-76.23	553.69	-2.15	42.66	10.43	-153.93
21	8	35.54	108.63	-1.21	-96.55	-11.96	-281.58
21	24	-35.54	-97.43	1.19	96.55	14.58	506.85
22	24	47.24	-174.62	1.26	340.30	-14.58	-536.09
22	25	-47.24	182.36	-1.27	-340.30	12.67	266.49
23	25	58.25	-419.53	2.61	-31.86	-12.67	-294.01
23	10	-58.25	430.06	-2.64	31.86	7.28	-578.16
24	10	3.18	113.65	-1.69	-71.76	-9.82	-56.26
24	26	-3.18	-112.04	1.68	71.76	10.35	91.71
25	26	14.88	-14.35	0.76	134.46	-10.35	-120.96
25	27	-14.88	22.09	-0.78	-134.46	9.19	93.43
26	27	25.89	-126.97	2.12	-28.24	-9.19	-120.95
26	28	-25.89	139.11	-2.14	28.24	4.14	-193.99
27	28	37.59	-269.44	4.59	184.23	-4.14	164.75
27	29	-37.59	277.18	-4.60	-184.23	-2.79	-577.56
28	29	48.59	-385.51	5.94	16.06	2.79	550.04
28	12	-48.59	385.76	-5.94	-16.06	-3.08	-568.42
29	12	0.00	14.73	-0.03	0.00	0.04	21.18
29	30	0.00	0.00	0.00	0.00	0.00	0.00

Combination No. 1839
Group Id: AR Svc III Name: AREMA Service III

report

Memb	Node	Fx kip	Fy kip	Fz kip	Mx kft	My kft	Mz kft
1	1	-5.58	299.79	-2.19	-137.39	-0.28	173.57
1	2	4.10	-237.69	1.38	99.93	0.28	-72.69
2	3	-10.64	530.91	-3.00	-142.77	-0.36	207.22
2	4	9.17	-468.81	2.19	88.74	0.36	-2.52
3	5	-23.33	694.51	-2.79	-141.13	-0.72	291.80
3	6	21.85	-632.41	1.98	91.36	0.72	172.96
4	7	-42.75	731.16	-5.27	-157.60	-1.66	421.79
4	8	41.27	-669.06	4.46	56.91	1.66	441.09
5	9	-56.93	614.72	-6.20	-162.96	-2.81	516.26
5	10	55.45	-552.62	5.39	43.19	2.81	637.19
6	11	-50.51	474.68	-7.91	-173.19	-3.37	471.17
6	12	49.04	-412.58	7.10	18.54	3.37	550.85
7	13	0.00	0.00	0.00	0.00	0.00	0.00
7	2	0.00	14.73	-0.09	0.00	-0.13	-21.18
8	2	-4.10	222.96	-1.29	-99.93	-0.15	93.87
8	14	4.10	-222.71	1.29	99.93	0.21	-83.25
9	14	7.12	108.91	-0.38	82.52	-0.21	55.20
9	15	-7.12	-101.17	0.34	-82.52	0.76	103.45
10	15	17.70	7.38	-0.40	-66.14	-0.76	-129.92
10	16	-17.70	4.75	0.33	66.14	1.62	133.04
11	16	28.93	-133.28	0.57	139.63	-1.62	-161.09
11	17	-28.93	141.02	-0.62	-139.63	0.72	-46.07
12	17	39.51	-247.79	0.56	-29.58	-0.72	19.60
12	4	-39.51	249.40	-0.57	29.58	0.54	-97.70
13	4	30.34	219.42	-1.62	-118.32	-0.90	100.21
13	18	-30.34	-208.89	1.56	118.32	4.16	339.48
14	18	41.57	-16.27	-0.65	240.44	-4.16	-367.53
14	19	-41.57	24.01	0.61	-240.44	5.12	337.11
15	19	52.15	-218.53	-0.67	-67.72	-5.12	-363.58
15	6	-52.15	229.74	0.60	67.72	6.51	-126.47
16	6	30.30	402.68	-2.58	-159.07	-7.23	-46.49
16	20	-30.30	-401.75	2.58	159.07	7.70	119.26
17	20	41.52	176.59	-1.68	199.69	-7.70	-147.31
17	21	-41.52	-168.85	1.63	-199.69	10.20	408.18
18	21	52.11	-25.68	-1.69	-108.47	-10.20	-434.65
18	22	-54.09	37.81	1.62	108.47	14.12	359.50
19	22	65.90	-312.00	1.21	332.74	-14.12	-389.03
19	23	-65.90	319.74	-1.26	-332.74	12.25	-88.07
20	23	77.01	-558.80	2.94	-41.55	-12.25	60.30
20	8	-77.01	559.72	-2.95	41.55	11.72	-161.48
21	8	35.73	109.33	-1.51	-98.46	-13.38	-279.61
21	24	-35.73	-98.13	1.44	98.46	16.61	506.40
22	24	47.54	-176.06	1.39	342.75	-16.61	-535.93
22	25	-47.54	183.81	-1.44	-342.75	14.48	264.15
23	25	58.65	-422.86	3.12	-31.54	-14.48	-291.92
23	10	-58.65	433.38	-3.18	31.54	8.01	-587.08
24	10	3.20	119.24	-2.21	-74.72	-10.81	-50.11
24	26	-3.20	-117.63	2.20	74.72	11.51	87.32
25	26	15.01	-10.90	0.63	135.86	-11.51	-116.85
25	27	-15.01	18.65	-0.68	-135.86	10.51	94.53
26	27	26.12	-125.41	2.36	-28.97	-10.51	-122.30
26	28	-26.12	137.54	-2.44	28.97	4.83	-188.95
27	28	37.93	-275.14	5.27	195.97	-4.83	159.42
27	29	-37.93	282.88	-5.32	-195.97	-3.17	-580.84
28	29	49.04	-397.60	7.00	18.54	3.17	553.07
28	12	-49.04	397.85	-7.00	-18.54	-3.50	-572.03
29	12	0.00	14.73	-0.09	0.00	0.13	21.18
29	30	0.00	0.00	0.00	0.00	0.00	0.00

Combination No. 1840

Group Id: AR Svc III Name: AREMA Service III

Memb	Node	Fx kip	Fy kip	Fz kip	Mx kft	My kft	Mz kft
1	1	-5.64	303.69	1.36	-135.74	-3.85	159.41
1	2	4.16	-241.59	-2.17	170.98	3.85	-57.28
2	3	-12.45	498.40	3.33	-120.58	-3.78	205.02
2	4	10.97	-436.30	-4.14	196.27	3.78	36.63
3	5	-24.33	617.05	7.88	-87.68	-4.84	284.44
3	6	22.85	-554.95	-8.69	256.56	4.84	200.77
4	7	-39.03	631.76	7.46	-87.92	-7.24	382.73
4	8	37.55	-569.66	-8.27	248.16	7.24	403.88
5	9	-47.03	541.13	3.33	-112.42	-9.35	435.57
5	10	45.55	-479.03	-4.14	188.00	9.35	515.04
6	11	-42.39	445.26	-1.30	-139.72	-9.93	402.78
6	12	40.91	-383.16	0.49	120.41	9.93	452.66
7	13	0.00	0.00	0.00	0.00	0.00	0.00
7	2	0.00	14.73	-0.09	0.00	-0.13	-21.18
8	2	-4.16	226.85	2.26	-170.98	-3.72	78.46
8	14	4.16	-226.61	-2.26	170.98	3.61	-67.65
9	14	7.99	112.80	5.53	17.40	-3.61	37.27
9	15	-7.99	-105.06	-5.58	-17.40	-4.78	127.26
10	15	15.46	11.28	-2.42	-151.09	4.78	-145.96
10	16	-15.46	0.86	2.34	151.09	0.85	158.29
11	16	27.61	-129.39	0.93	60.60	-0.85	-188.67
11	17	-27.61	137.13	-0.98	-60.60	-0.59	-12.61
12	17	35.09	-243.89	-7.02	-128.43	0.59	-6.08
12	4	-35.09	245.50	7.01	128.43	1.61	-70.79
13	4	24.12	190.80	-2.87	-324.70	-5.39	34.16
13	18	-24.12	-180.28	2.80	324.70	11.21	346.78
14	18	36.27	-71.13	0.47	81.54	-11.21	-377.16
14	19	-36.27	78.88	-0.52	-81.54	10.47	263.87
15	19	43.75	-185.64	-7.48	-107.49	-10.47	-282.57
15	6	-43.75	196.84	7.41	107.49	26.74	-135.57
16	6	20.90	358.11	1.28	-364.05	-31.59	-65.20
16	20	-20.90	-357.18	-1.28	364.05	31.35	129.91
17	20	33.05	105.77	4.55	42.20	-31.35	-160.28
17	21	-33.05	-98.03	-4.60	-42.20	24.44	314.19
18	21	40.53	-8.74	-3.39	-146.84	-24.44	-332.89
18	22	-42.51	20.87	3.32	146.84	32.38	297.84
19	22	55.41	-334.62	2.40	364.24	-32.38	-330.10
19	23	-55.41	342.36	-2.45	-364.24	28.72	-181.17
20	23	62.88	-449.12	-5.54	175.21	-28.72	162.47
20	8	-62.88	450.05	5.54	-175.21	29.72	-243.81
21	8	25.33	119.61	2.73	-72.95	-36.96	-160.07
21	24	-25.33	-108.41	-2.80	72.95	30.92	409.34
22	24	38.23	-205.34	8.52	438.12	-30.92	-441.60
22	25	-38.23	213.08	-8.56	-438.12	18.02	125.60
23	25	45.71	-319.85	0.57	249.09	-18.02	-144.29
23	10	-45.71	330.37	-0.63	-249.09	16.78	-523.22
24	10	0.15	148.66	4.77	61.09	-26.13	8.17
24	26	-0.15	-147.05	-4.78	-61.09	24.63	38.28
25	26	13.06	18.52	10.50	278.90	-24.63	-70.53
25	27	-13.06	-10.78	-10.55	-278.90	8.74	92.65
26	27	20.53	-95.99	2.55	89.87	-8.74	-111.34
26	28	-20.53	108.12	-2.63	-89.87	2.60	-130.25
27	28	33.43	-245.72	8.35	322.04	-2.60	98.00
27	29	-33.43	253.46	-8.40	-322.04	-10.04	-474.98
28	29	40.91	-368.18	0.40	120.41	10.04	456.29
28	12	-40.91	368.42	-0.40	-120.41	-10.06	-473.84
29	12	0.00	14.73	-0.09	0.00	0.13	21.18
29	30	0.00	0.00	0.00	0.00	0.00	0.00

Combination No. 1968
Group Id: AR Svc V Name: AREMA Service V

Memb	Node	Fx kip	Fy kip	Fz kip	Mx kft	My kft	Mz kft
1	1	9.94	363.66	33.43	680.40	-14.48	-65.06
1	2	-6.99	-301.56	-31.81	-9.91	14.48	-111.72
2	3	5.06	410.81	32.67	681.27	-12.64	-32.18
2	4	-2.11	-348.71	-31.05	-26.44	12.64	-44.55
3	5	2.26	425.79	33.33	690.66	-9.03	-13.80
3	6	0.69	-363.69	-31.71	-22.16	9.03	-5.53
4	7	-0.36	420.51	32.50	688.03	-4.64	3.34
4	8	3.32	-358.41	-30.88	-36.51	4.64	31.14
5	9	-4.76	388.11	32.47	688.95	-0.68	32.70
5	10	7.72	-326.01	-30.85	-38.08	0.68	91.97
6	11	-9.10	315.61	30.83	677.39	1.64	61.82
6	12	12.05	-253.51	-29.21	-60.30	-1.64	151.65
7	13	0.00	0.00	0.00	0.00	0.00	0.00
7	2	0.00	14.73	0.18	0.00	0.26	-21.18
8	2	6.99	286.82	31.63	9.91	-14.74	132.90
8	14	-6.99	-286.58	-31.63	-9.91	13.23	-119.24
9	14	7.90	148.98	20.03	198.78	-13.23	116.95
9	15	-7.90	-141.24	-19.93	-198.78	-16.95	102.23
10	15	9.32	26.52	8.61	-11.17	16.95	-105.77
10	16	-9.32	-14.39	-8.46	11.17	-37.16	154.19
11	16	10.23	-107.72	-3.13	153.18	37.16	-156.48
11	17	-10.23	115.46	3.23	-153.18	-32.36	-12.07
12	17	11.65	-216.57	-14.55	-35.22	32.36	8.53
12	4	-11.65	218.18	14.57	35.22	-27.79	-76.82
13	4	13.76	130.53	16.48	-8.77	15.15	121.37
13	18	-13.76	-120.01	-16.35	8.77	-48.85	135.82
14	18	14.67	-2.10	4.75	155.57	48.85	-138.11
14	19	-14.67	9.84	-4.66	-155.57	-55.95	129.09
15	19	16.08	-110.95	-6.66	-32.82	55.95	-132.62
15	6	-16.08	122.16	6.80	32.82	-41.23	-122.22
16	6	15.39	241.53	24.91	-10.66	32.21	127.75
16	20	-15.39	-240.60	-24.90	10.66	-36.71	-84.14
17	20	16.31	118.50	13.30	153.68	36.71	81.86
17	21	-16.31	-110.76	-13.21	-153.68	-56.74	91.28
18	21	17.72	9.64	1.89	-34.71	56.74	-94.82
18	22	-13.76	2.49	-1.74	34.71	-61.03	103.29
19	22	14.68	-124.60	-9.86	129.64	61.03	-105.57
19	23	-14.68	132.34	9.95	-129.64	-46.07	-88.47
20	23	16.09	-233.45	-21.27	-58.76	46.07	84.93
20	8	-16.09	234.38	21.29	58.76	-42.22	-127.25
21	8	12.78	124.03	9.60	-22.25	37.58	96.11
21	24	-12.78	-112.83	-9.46	22.25	-58.41	162.82
22	24	13.69	-9.28	-2.13	142.10	58.41	-165.11
22	25	-13.69	17.02	2.23	-142.10	-55.12	145.24
23	25	15.11	-118.14	-13.55	-46.30	55.12	-148.78
23	10	-15.11	128.66	13.68	46.30	-27.16	-104.58
24	10	7.39	197.35	17.17	-8.22	26.48	12.61
24	26	-7.39	-195.74	-17.15	8.22	-31.87	49.14
25	26	8.30	73.63	5.56	156.13	31.87	-51.42
25	27	-8.30	-65.89	-5.46	-156.13	-40.19	156.79
26	27	9.72	-35.22	-5.86	-32.26	40.19	-160.33
26	28	-9.72	47.35	6.01	32.26	-26.15	62.59
27	28	10.63	-148.31	-17.61	98.60	26.15	-64.87
27	29	-10.63	156.06	17.70	-98.60	0.52	-164.99
28	29	12.05	-238.54	-29.02	-60.30	-0.52	161.45
28	12	-12.05	238.78	29.02	60.30	1.90	-172.83

29	12	0.00	14.73	0.18	0.00	-0.26	21.18
29	30	0.00	0.00	0.00	0.00	0.00	0.00

Combination No. 1971
Group Id: AR Svc V Name: AREMA Service V

Memb	Node	Fx kip	Fy kip	Fz kip	Mx kft	My kft	Mz kft
1	1	3.83	340.23	37.31	746.95	-14.73	6.78
1	2	-2.84	-278.13	-33.89	-13.38	14.73	-76.24
2	3	-2.43	410.30	36.66	748.71	-12.81	49.09
2	4	3.43	-348.20	-33.24	-28.41	12.81	9.82
3	5	-6.65	435.63	37.35	758.28	-9.07	77.14
3	6	7.65	-373.53	-33.93	-23.91	9.07	68.27
4	7	-9.36	434.74	36.50	755.50	-4.53	94.85
4	8	10.36	-372.64	-33.08	-38.53	4.53	106.16
5	9	-12.60	411.07	36.50	756.55	-0.44	116.23
5	10	13.59	-348.97	-33.08	-39.61	0.44	151.13
6	11	-15.97	356.93	34.68	743.68	1.95	138.73
6	12	16.96	-294.83	-31.26	-64.08	-1.95	197.70
7	13	0.00	0.00	0.00	0.00	0.00	0.00
7	2	0.00	14.73	0.56	0.00	0.81	-21.18
8	2	2.84	263.39	33.33	13.38	-15.53	97.42
8	14	-2.84	-263.15	-33.32	-13.38	13.94	-84.87
9	14	5.91	135.45	21.16	185.17	-13.94	77.19
9	15	-5.91	-127.71	-20.87	-185.17	-17.80	121.55
10	15	9.23	21.70	9.06	-12.21	17.80	-129.84
10	16	-9.23	-9.57	-8.60	12.21	-38.69	166.85
11	16	12.30	-116.82	-3.56	157.52	38.69	-174.53
11	17	-12.30	124.56	3.85	-157.52	-33.09	-7.76
12	17	15.61	-229.44	-15.67	-38.07	33.09	-0.53
12	4	-15.61	231.05	15.73	38.07	-28.16	-71.81
13	4	12.19	117.15	17.51	-9.66	15.35	61.99
13	18	-12.19	-106.63	-17.11	9.66	-50.90	167.74
14	18	15.26	-19.76	4.96	160.07	50.90	-175.42
14	19	-15.26	27.50	-4.66	-160.07	-58.16	139.73
15	19	18.58	-132.38	-7.15	-35.52	58.16	-148.02
15	6	-18.58	143.59	7.58	35.52	-42.06	-153.68
16	6	10.93	229.94	26.35	-11.61	32.99	85.41
16	20	-10.93	-229.02	-26.32	11.61	-37.76	-43.89
17	20	14.00	102.63	14.16	158.12	37.76	36.21
17	21	-14.00	-94.88	-13.87	-158.12	-58.92	112.95
18	21	17.32	-10.00	2.05	-37.47	58.92	-121.24
18	22	-15.36	22.13	-1.59	37.47	-63.24	83.22
19	22	18.43	-148.52	-10.56	132.26	63.24	-90.90
19	23	-18.43	156.26	10.86	-132.26	-47.06	-139.27
20	23	21.75	-261.14	-22.67	-63.34	47.06	130.98
20	8	-21.75	262.07	22.71	63.34	-42.96	-178.30
21	8	11.39	110.58	10.37	-24.81	38.43	72.14
21	24	-11.39	-99.37	-9.95	24.81	-60.64	157.37
22	24	14.46	-27.02	-2.21	144.92	60.64	-165.05
22	25	-14.46	34.76	2.50	-144.92	-57.09	118.39
23	25	17.78	-139.64	-14.32	-50.67	57.09	-126.68
23	10	-17.78	150.16	14.72	50.67	-27.28	-170.82
24	10	4.19	198.80	18.36	-11.06	26.84	19.70
24	26	-4.19	-197.19	-18.30	11.06	-32.60	42.50
25	26	7.26	70.80	6.15	158.67	32.60	-50.19
25	27	-7.26	-63.06	-5.85	-158.67	-41.66	151.28
26	27	10.57	-41.82	-5.96	-36.92	41.66	-159.57
26	28	-10.57	53.95	6.42	36.92	-27.00	46.21
27	28	13.65	-173.38	-18.58	121.78	27.00	-53.89
27	29	-13.65	181.12	18.87	-121.78	1.29	-213.82

28	29	16.96	-279.85	-30.69	-64.08	-1.29	205.53
28	12	-16.96	280.09	30.70	64.08	2.75	-218.88
29	12	0.00	14.73	0.56	0.00	-0.81	21.18
29	30	0.00	0.00	0.00	0.00	0.00	0.00

Combination No. 1973
Group Id: AR Svc V Name: AREMA Service V

Memb	Node	Fx kip	Fy kip	Fz kip	Mx kft	My kft	Mz kft
1	1	-2.76	320.65	36.02	717.82	-14.33	79.92
1	2	1.92	-258.55	-32.61	-10.70	14.33	-31.00
2	3	-10.31	404.56	35.40	719.61	-12.50	131.08
2	4	9.48	-342.46	-31.99	-25.18	12.50	72.68
3	5	-15.40	434.81	36.07	729.02	-8.93	165.10
3	6	14.57	-372.71	-32.67	-20.71	8.93	142.96
4	7	-18.11	435.60	35.23	726.25	-4.59	182.81
4	8	17.28	-373.50	-31.82	-35.24	4.59	180.86
5	9	-20.48	416.85	35.25	727.51	-0.67	198.20
5	10	19.65	-354.75	-31.84	-36.10	0.67	213.99
6	11	-22.58	376.42	33.41	714.67	1.62	212.04
6	12	21.75	-314.32	-30.01	-60.88	-1.62	243.32
7	13	0.00	0.00	0.00	0.00	0.00	0.00
7	2	0.00	14.73	0.57	0.00	0.82	-21.18
8	2	-1.92	243.81	32.04	10.70	-15.15	52.18
8	14	1.92	-243.57	-32.03	-10.70	13.62	-40.56
9	14	3.27	120.19	20.38	176.92	-13.62	27.59
9	15	-3.27	-112.45	-20.08	-176.92	-16.94	148.11
10	15	8.45	10.24	8.72	-13.32	16.94	-161.06
10	16	-8.45	1.89	-8.25	13.32	-37.02	170.95
11	16	13.64	-128.28	-3.40	157.68	37.02	-183.92
11	17	-13.64	136.02	3.70	-157.68	-31.66	-15.68
12	17	18.82	-240.90	-15.06	-36.79	31.66	2.73
12	4	-18.82	242.51	15.12	36.79	-26.92	-78.66
13	4	9.34	99.94	16.86	-11.61	14.42	5.98
13	18	-9.34	-89.42	-16.46	11.61	-48.63	188.42
14	18	14.53	-36.97	4.81	159.39	48.63	-201.40
14	19	-14.53	44.71	-4.51	-159.39	-55.66	139.72
15	19	19.71	-149.59	-6.85	-35.08	55.66	-152.67
15	6	-19.71	160.79	7.29	35.08	-40.20	-186.64
16	6	5.15	211.92	25.38	-14.38	31.28	43.69
16	20	-5.15	-210.99	-25.34	14.38	-35.86	-5.43
17	20	10.34	84.60	13.70	156.62	35.86	-7.55
17	21	-10.34	-76.86	-13.40	-156.62	-56.32	129.48
18	21	15.52	-28.02	2.03	-37.85	56.32	-142.43
18	22	-17.19	40.15	-1.56	37.85	-60.58	61.74
19	22	22.38	-166.54	-10.08	133.15	60.58	-74.72
19	23	-22.38	174.28	10.38	-133.15	-45.12	-182.68
20	23	27.56	-279.16	-21.75	-61.32	45.12	169.73
20	8	-27.56	280.09	21.78	61.32	-41.18	-220.32
21	8	10.28	93.41	10.04	-26.08	36.60	39.46
21	24	-10.28	-82.20	-9.60	26.08	-58.07	152.53
22	24	15.47	-44.19	-2.04	144.92	58.07	-165.50
22	25	-15.47	51.93	2.34	-144.92	-54.75	92.92
23	25	20.65	-156.81	-13.71	-49.56	54.75	-105.87
23	10	-20.65	167.33	14.11	49.56	-26.19	-226.88
24	10	1.01	187.42	17.73	-13.46	25.52	12.89
24	26	-1.01	-185.81	-17.66	13.46	-31.08	45.74
25	26	6.20	59.42	6.02	157.54	31.08	-58.72
25	27	-6.20	-51.68	-5.72	-157.54	-39.94	142.62
26	27	11.38	-53.20	-5.65	-36.93	39.94	-155.57
26	28	-11.38	65.33	6.12	36.93	-26.02	15.27

27	28	16.57	-189.07	-17.76	129.87	26.02	-28.25
27	29	-16.57	196.81	18.06	-129.87	1.04	-263.18
28	29	21.75	-299.35	-29.43	-60.88	-1.04	250.22
28	12	-21.75	299.59	29.44	60.88	2.44	-264.50
29	12	0.00	14.73	0.57	0.00	-0.82	21.18
29	30	0.00	0.00	0.00	0.00	0.00	0.00

Combination No. 1974
Group Id: AR Svc V Name: AREMA Service V

Memb	Node	Fx kip	Fy kip	Fz kip	Mx kft	My kft	Mz kft
1	1	-8.99	303.72	32.81	644.44	-13.65	144.90
1	2	5.96	-241.62	-29.64	-4.75	13.65	7.92
2	3	-17.66	399.58	32.20	646.03	-11.99	203.68
2	4	14.62	-337.48	-29.03	-18.84	11.99	126.78
3	5	-23.49	434.10	32.86	655.17	-8.74	242.83
3	6	20.45	-372.00	-29.69	-14.43	8.74	207.24
4	7	-26.20	436.35	32.02	652.43	-4.77	260.53
4	8	23.17	-374.25	-28.85	-28.89	4.77	245.15
5	9	-27.82	421.86	32.07	654.06	-1.18	270.79
5	10	24.79	-359.76	-28.90	-29.47	1.18	268.09
6	11	-28.84	393.28	30.25	641.55	0.94	277.17
6	12	25.80	-331.18	-27.07	-54.42	-0.94	282.57
7	13	0.00	0.00	0.00	0.00	0.00	0.00
7	2	0.00	14.73	0.36	0.00	0.51	-21.18
8	2	-5.96	226.89	29.28	4.75	-14.17	13.26
8	14	5.96	-226.64	-29.27	-4.75	12.77	-2.45
9	14	1.08	107.02	18.64	167.56	-12.77	-15.14
9	15	-1.08	-99.28	-18.45	-167.56	-15.24	170.94
10	15	7.88	0.38	7.98	-15.23	15.24	-187.94
10	16	-7.88	11.75	-7.68	15.23	-33.77	174.48
11	16	14.91	-138.14	-2.95	158.30	33.77	-192.06
11	17	-14.91	145.89	3.14	-158.30	-29.17	-22.44
12	17	21.72	-250.77	-13.62	-33.95	29.17	5.43
12	4	-21.72	252.38	13.66	33.95	-24.88	-84.47
13	4	7.10	85.11	15.37	-15.11	12.89	-42.31
13	18	-7.10	-74.58	-15.12	15.11	-44.19	206.25
14	18	14.13	-51.81	4.48	158.42	44.19	-223.83
14	19	-14.13	59.55	-4.29	-158.42	-50.81	139.74
15	19	20.93	-164.43	-6.18	-33.83	50.81	-156.74
15	6	-20.93	175.63	6.46	33.83	-36.99	-215.01
16	6	0.48	196.37	23.23	-19.40	28.25	7.77
16	20	-0.48	-195.44	-23.21	19.40	-32.46	27.67
17	20	7.51	69.05	12.57	154.12	32.46	-45.26
17	21	-7.51	-61.31	-12.39	-154.12	-51.31	143.71
18	21	14.31	-43.57	1.91	-38.12	51.31	-160.71
18	22	-18.41	55.70	-1.62	38.12	-55.49	43.21
19	22	25.45	-182.09	-9.02	135.40	55.49	-60.79
19	23	-25.45	189.83	9.21	-135.40	-41.72	-220.09
20	23	32.25	-294.71	-19.68	-56.85	41.72	203.08
20	8	-32.25	295.64	19.70	56.85	-38.16	-256.48
21	8	9.08	78.61	9.15	-27.96	33.39	11.33
21	24	-9.08	-67.40	-8.87	27.96	-53.09	148.29
22	24	16.12	-58.99	-1.76	145.57	53.09	-165.87
22	25	-16.12	66.73	1.95	-145.57	-50.29	70.93
23	25	22.92	-171.61	-12.43	-46.68	50.29	-87.93
23	10	-22.92	182.13	12.68	46.68	-24.52	-275.22
24	10	-1.87	177.63	16.22	-17.22	23.33	7.13
24	26	1.87	-176.02	-16.18	17.22	-28.42	48.42
25	26	5.17	49.63	5.55	156.31	28.42	-66.01
25	27	-5.17	-41.89	-5.36	-156.31	-36.66	135.12

26	27	11.97	-62.99	-5.12	-35.94	36.66	-152.12
26	28	-11.97	75.13	5.41	35.94	-24.20	-11.36
27	28	19.00	-202.63	-16.05	139.35	24.20	-6.22
27	29	-19.00	210.37	16.23	-139.35	0.18	-305.68
28	29	25.80	-316.20	-26.71	-54.42	-0.18	288.67
28	12	-25.80	316.45	26.72	54.42	1.46	-303.75
29	12	0.00	14.73	0.36	0.00	-0.51	21.18
29	30	0.00	0.00	0.00	0.00	0.00	0.00

Combination No. 2105
Group Id: AR Svc VI Name: AREMA Service VI

Memb	Node	Fx kip	Fy kip	Fz kip	Mx kft	My kft	Mz kft
1	1	30.26	411.42	55.69	1204.88	-35.06	-244.00
1	2	-28.79	-349.32	-54.88	-70.58	35.06	-362.88
2	3	34.08	570.01	57.14	1229.84	-32.68	-271.26
2	4	-32.60	-507.91	-56.33	-65.97	32.68	-413.86
3	5	26.12	718.01	58.95	1255.64	-27.43	-219.32
3	6	-24.64	-655.91	-58.14	-54.52	27.43	-302.58
4	7	4.78	748.24	57.24	1254.43	-19.63	-76.76
4	8	-3.30	-686.14	-56.43	-88.40	19.63	-7.71
5	9	-16.06	589.38	56.83	1258.40	-11.33	62.84
5	10	17.54	-527.28	-56.02	-100.86	11.33	279.93
6	11	-16.76	350.94	56.19	1257.73	-6.14	66.30
6	12	18.24	-288.84	-55.38	-113.18	6.14	290.84
7	13	0.00	0.00	0.00	0.00	0.00	0.00
7	2	0.00	14.73	0.09	0.00	0.13	-21.18
8	2	28.79	334.59	54.79	70.58	-35.19	384.06
8	14	-28.79	-334.34	-54.79	-70.58	32.58	-368.12
9	14	25.85	201.03	34.37	230.62	-32.58	375.46
9	15	-25.85	-193.29	-34.32	-230.62	-19.30	-77.67
10	15	23.72	82.33	14.97	6.56	19.30	82.99
10	16	-23.72	-70.20	-14.90	-6.56	-54.66	97.56
11	16	20.79	-54.05	-5.52	152.23	54.66	-90.21
11	17	-20.79	61.79	5.57	-152.23	-46.28	2.73
12	17	18.66	-164.79	-24.92	-59.22	46.28	2.58
12	4	-18.66	166.40	24.93	59.22	-38.45	-54.60
13	4	51.27	341.52	31.39	6.75	5.77	468.46
13	18	-51.27	-331.00	-31.33	-6.75	-70.16	221.93
14	18	48.33	98.74	10.91	323.45	70.16	-214.58
14	19	-48.33	-91.00	-10.86	-323.45	-86.60	357.87
15	19	46.20	-110.10	-8.49	-43.34	86.60	-352.56
15	6	-46.20	121.31	8.56	43.34	-67.96	99.59
16	6	70.84	534.61	49.58	11.18	40.53	202.99
16	20	-70.84	-533.68	-49.58	-11.18	-49.50	-106.36
17	20	67.91	301.42	29.16	327.87	49.50	113.71
17	21	-67.91	-293.68	-29.11	-327.87	-93.50	335.72
18	21	65.78	92.58	9.76	-38.91	93.50	-330.41
18	22	-63.80	-80.45	-9.68	38.91	-116.51	535.23
19	22	59.41	-206.02	-13.09	357.74	116.51	-524.26
19	23	-59.41	213.76	13.13	-357.74	-96.71	207.24
20	23	55.97	-464.08	-34.62	-92.31	96.71	-198.63
20	8	-55.97	465.01	34.62	92.31	-90.45	114.59
21	8	59.27	221.13	21.81	-3.91	70.82	-106.88
21	24	-59.27	-209.92	-21.74	3.91	-118.43	578.10
22	24	54.89	-76.55	-1.03	392.74	118.43	-567.14
22	25	-54.89	84.29	1.08	-392.74	-116.84	445.67
23	25	51.44	-334.61	-22.56	-57.32	116.84	-437.06
23	10	-51.44	345.14	22.62	57.32	-70.45	-260.76
24	10	33.90	182.15	33.39	43.54	59.12	-19.17
24	26	-33.90	-180.54	-33.38	-43.54	-69.61	76.14

25	26	29.52	56.29	10.61	183.34	69.61	-65.17
25	27	-29.52	-48.55	-10.57	-183.34	-85.60	144.34
26	27	26.07	-54.45	-10.92	-33.44	85.60	-135.73
26	28	-26.07	66.58	10.99	33.44	-59.67	-7.54
27	28	21.68	-176.11	-33.76	83.05	59.67	18.51
27	29	-21.68	183.85	33.81	-83.05	-8.64	-290.35
28	29	18.24	-273.87	-55.29	-113.18	8.64	298.96
28	12	-18.24	274.11	55.29	113.18	-6.01	-312.02
29	12	0.00	14.73	0.09	0.00	-0.13	21.18
29	30	0.00	0.00	0.00	0.00	0.00	0.00

Combination No. 2149
Group Id: AR Svc VI Name: AREMA Service VI

Memb	Node	Fx kip	Fy kip	Fz kip	Mx kft	My kft	Mz kft
1	1	29.88	409.24	55.90	1209.76	-35.09	-239.19
1	2	-28.41	-347.14	-55.09	-71.24	35.09	-359.87
2	3	33.61	569.26	57.35	1234.81	-32.70	-265.82
2	4	-32.13	-507.16	-56.54	-66.49	32.70	-409.58
3	5	25.56	717.88	59.17	1260.62	-27.42	-213.28
3	6	-24.08	-655.78	-58.36	-55.02	27.42	-297.10
4	7	4.22	748.38	57.46	1259.40	-19.59	-70.73
4	8	-2.74	-686.28	-56.65	-88.89	19.59	-2.23
5	9	-16.54	590.14	57.05	1263.34	-11.27	68.28
5	10	18.01	-528.04	-56.24	-101.33	11.27	284.21
6	11	-17.15	353.11	56.40	1262.58	-6.06	71.14
6	12	18.62	-291.01	-55.59	-113.76	6.06	293.91
7	13	0.00	0.00	0.00	0.00	0.00	0.00
7	2	0.00	14.73	0.09	0.00	0.13	-21.18
8	2	28.41	332.41	55.00	71.24	-35.22	381.05
8	14	-28.41	-332.17	-55.00	-71.24	32.60	-365.21
9	14	25.66	199.70	34.49	229.71	-32.60	372.08
9	15	-25.66	-191.96	-34.44	-229.71	-19.46	-76.29
10	15	23.70	81.76	15.02	6.65	19.46	81.19
10	16	-23.70	-69.63	-14.94	-6.65	-54.92	98.00
11	16	20.95	-54.62	-5.56	152.11	54.92	-91.13
11	17	-20.95	62.36	5.61	-152.11	-46.48	2.78
12	17	18.99	-165.36	-25.04	-59.53	46.48	2.11
12	4	-18.99	166.97	25.05	59.53	-38.61	-54.31
13	4	51.12	340.19	31.49	6.96	5.91	463.90
13	18	-51.12	-329.67	-31.43	-6.96	-70.51	223.77
14	18	48.37	97.41	10.92	323.44	70.51	-216.89
14	19	-48.37	-89.67	-10.88	-323.44	-86.97	358.18
15	19	46.41	-111.43	-8.55	-43.53	86.97	-353.28
15	6	-46.41	122.63	8.62	43.53	-68.20	97.41
16	6	70.49	533.15	49.74	11.49	40.78	199.70
16	20	-70.49	-532.22	-49.74	-11.49	-49.78	-103.33
17	20	67.74	299.96	29.23	327.97	49.78	110.20
17	21	-67.74	-292.22	-29.18	-327.97	-93.89	337.02
18	21	65.78	91.12	9.76	-39.00	93.89	-332.13
18	22	-63.80	-78.99	-9.68	39.00	-116.90	533.49
19	22	59.61	-207.48	-13.17	357.44	116.90	-522.99
19	23	-59.61	215.22	13.22	-357.44	-96.96	203.76
20	23	56.33	-465.54	-34.78	-92.81	96.96	-195.57
20	8	-56.33	466.47	34.79	92.81	-90.67	111.26
21	8	59.07	219.81	21.86	-3.92	71.08	-109.03
21	24	-59.07	-208.60	-21.80	3.92	-118.81	577.37
22	24	54.87	-77.87	-1.06	392.52	118.81	-566.87
22	25	-54.87	85.61	1.11	-392.52	-117.17	443.41
23	25	51.59	-335.93	-22.67	-57.72	117.17	-435.22
23	10	-51.59	346.46	22.73	57.72	-70.57	-265.32

24	10	33.58	181.59	33.51	43.61	59.30	-18.89
24	26	-33.58	-179.98	-33.50	-43.61	-69.82	75.69
25	26	29.38	55.73	10.64	183.20	69.82	-65.19
25	27	-29.38	-47.99	-10.59	-183.20	-85.86	143.52
26	27	26.10	-55.01	-10.96	-33.77	85.86	-135.32
26	28	-26.10	67.14	11.04	33.77	-59.81	-9.26
27	28	21.90	-177.52	-33.89	83.85	59.81	19.76
27	29	-21.90	185.26	33.94	-83.85	-8.58	-293.74
28	29	18.62	-276.03	-55.50	-113.76	8.58	301.93
28	12	-18.62	276.27	55.50	113.76	-5.93	-315.09
29	12	0.00	14.73	0.09	0.00	-0.13	21.18
29	30	0.00	0.00	0.00	0.00	0.00	0.00

Combination No. 2153
Group Id: AR Svc VI Name: AREMA Service VI

Memb	Node	Fx kip	Fy kip	Fz kip	Mx kft	My kft	Mz kft
1	1	28.26	401.54	57.69	1240.94	-35.25	-218.84
1	2	-27.28	-339.44	-56.09	-72.97	35.25	-351.52
2	3	31.56	570.18	59.19	1266.40	-32.81	-242.58
2	4	-30.58	-508.08	-57.59	-67.59	32.81	-395.44
3	5	22.98	722.96	61.02	1292.31	-27.46	-186.42
3	6	-22.00	-660.86	-59.42	-56.02	27.46	-275.66
4	7	1.59	755.32	59.30	1291.02	-19.55	-43.59
4	8	-0.62	-693.22	-57.70	-90.03	19.55	19.82
5	9	-18.76	600.44	58.90	1295.01	-11.15	92.66
5	10	19.73	-538.34	-57.29	-102.26	11.15	300.75
6	11	-19.15	369.77	58.17	1293.63	-5.91	94.00
6	12	20.12	-307.67	-56.57	-115.74	5.91	307.47
7	13	0.00	0.00	0.00	0.00	0.00	0.00
7	2	0.00	14.73	0.24	0.00	0.34	-21.18
8	2	27.28	324.70	55.85	72.97	-35.59	372.70
8	14	-27.28	-324.46	-55.85	-72.97	32.92	-357.23
9	14	25.19	196.08	35.05	224.23	-32.92	362.47
9	15	-25.19	-188.34	-34.92	-224.23	-19.92	-72.16
10	15	23.80	81.72	15.23	6.21	19.92	75.62
10	16	-23.80	-69.59	-15.04	-6.21	-55.75	103.49
11	16	21.71	-56.80	-5.76	154.32	55.75	-98.25
11	17	-21.71	64.54	5.88	-154.32	-46.96	6.61
12	17	20.32	-169.42	-25.57	-60.96	46.96	-3.15
12	4	-20.32	171.03	25.60	60.96	-38.92	-50.33
13	4	50.91	337.05	31.99	6.64	6.11	445.76
13	18	-50.91	-326.53	-31.82	-6.64	-71.62	235.45
14	18	48.81	92.13	11.02	325.77	71.62	-230.21
14	19	-48.81	-84.38	-10.90	-325.77	-88.17	363.51
15	19	47.43	-118.60	-8.79	-44.84	88.17	-360.05
15	6	-47.43	129.80	8.97	44.84	-68.76	88.50
16	6	69.43	531.06	50.45	11.18	41.30	187.16
16	20	-69.43	-530.14	-50.44	-11.18	-50.43	-91.17
17	20	67.33	295.74	29.64	330.31	50.43	96.41
17	21	-67.33	-288.00	-29.51	-330.31	-95.10	344.43
18	21	65.95	85.02	9.82	-40.30	95.10	-340.97
18	22	-64.23	-72.88	-9.63	40.30	-118.12	527.87
19	22	60.69	-215.73	-13.52	358.79	118.12	-519.01
19	23	-60.69	223.47	13.64	-358.79	-97.61	187.32
20	23	57.98	-475.68	-35.46	-95.09	97.61	-180.56
20	8	-57.98	476.60	35.48	95.09	-91.19	94.42
21	8	58.60	216.62	22.22	-5.06	71.64	-114.24
21	24	-58.60	-205.41	-22.04	5.06	-120.03	575.61
22	24	55.06	-83.20	-1.11	394.03	120.03	-566.74
22	25	-55.06	90.94	1.23	-394.03	-118.26	435.23

23	25	52.35	-343.15	-23.05	-59.84	118.26	-428.47
23	10	-52.35	353.67	23.22	59.84	-70.75	-286.87
24	10	32.62	184.67	34.07	42.42	59.60	-13.88
24	26	-32.62	-183.06	-34.05	-42.42	-70.30	71.64
25	26	29.08	56.67	10.90	184.66	70.30	-62.78
25	27	-29.08	-48.93	-10.77	-184.66	-86.66	142.53
26	27	26.37	-55.95	-11.04	-35.95	86.66	-135.77
26	28	-26.37	68.08	11.24	35.95	-60.29	-11.04
27	28	22.83	-186.82	-34.39	94.18	60.29	19.91
27	29	-22.83	194.56	34.51	-94.18	-8.25	-307.93
28	29	20.12	-292.69	-56.33	-115.74	8.25	314.69
28	12	-20.12	292.93	56.33	115.74	-5.57	-328.65
29	12	0.00	14.73	0.24	0.00	-0.34	21.18
29	30	0.00	0.00	0.00	0.00	0.00	0.00

Combination No. 2155
Group Id: AR Svc VI Name: AREMA Service VI

Memb	Node	Fx kip	Fy kip	Fz kip	Mx kft	My kft	Mz kft
1	1	26.83	397.53	57.84	1243.03	-35.22	-203.27
1	2	-26.33	-335.43	-56.13	-72.97	35.22	-342.13
2	3	29.86	569.01	59.35	1268.53	-32.79	-225.19
2	4	-29.36	-506.91	-57.64	-67.48	32.79	-382.40
3	5	21.10	722.80	61.18	1294.43	-27.44	-167.81
3	6	-20.60	-660.70	-59.47	-55.90	27.44	-260.20
4	7	-0.28	755.49	59.46	1293.13	-19.54	-24.98
4	8	0.78	-693.39	-57.75	-89.90	19.54	35.28
5	9	-20.45	601.62	59.06	1297.14	-11.15	110.04
5	10	20.95	-539.52	-57.35	-102.09	11.15	313.79
6	11	-20.58	373.76	58.33	1295.73	-5.91	109.59
6	12	21.08	-311.66	-56.62	-115.65	5.91	316.94
7	13	0.00	0.00	0.00	0.00	0.00	0.00
7	2	0.00	14.73	0.28	0.00	0.40	-21.18
8	2	26.33	320.69	55.85	72.97	-35.62	363.31
8	14	-26.33	-320.45	-55.84	-72.97	32.96	-348.03
9	14	24.66	192.94	35.06	222.90	-32.96	352.20
9	15	-24.66	-185.20	-34.91	-222.90	-19.89	-66.63
10	15	23.65	79.35	15.24	6.13	19.89	69.15
10	16	-23.65	-67.22	-15.01	-6.13	-55.69	104.33
11	16	21.98	-59.17	-5.78	154.28	55.69	-100.16
11	17	-21.98	66.91	5.92	-154.28	-46.85	4.94
12	17	20.97	-171.79	-25.60	-60.96	46.85	-2.42
12	4	-20.97	173.40	25.63	60.96	-38.80	-51.81
13	4	50.34	333.50	32.01	6.52	6.01	434.21
13	18	-50.34	-322.98	-31.81	-6.52	-71.53	239.73
14	18	48.67	88.58	11.03	325.69	71.53	-235.55
14	19	-48.67	-80.84	-10.88	-325.69	-88.08	363.50
15	19	47.66	-122.14	-8.79	-44.88	88.08	-360.98
15	6	-47.66	133.35	9.01	44.88	-68.62	81.68
16	6	68.26	527.35	50.46	11.02	41.17	178.52
16	20	-68.26	-526.43	-50.44	-11.02	-50.30	-83.20
17	20	66.59	292.03	29.66	330.19	50.30	87.38
17	21	-66.59	-284.28	-29.51	-330.19	-94.99	347.86
18	21	65.58	81.30	9.84	-40.38	94.99	-345.34
18	22	-64.60	-69.17	-9.61	40.38	-118.01	523.45
19	22	61.48	-219.44	-13.53	358.75	118.01	-515.65
19	23	-61.48	227.18	13.67	-358.75	-97.46	178.36
20	23	59.16	-479.39	-35.48	-95.09	97.46	-172.54
20	8	-59.16	480.32	35.50	95.09	-91.04	85.73
21	8	58.38	213.08	22.25	-5.20	71.51	-121.01
21	24	-58.38	-201.87	-22.04	5.20	-119.92	574.64

22	24	55.26	-86.74	-1.10	393.93	119.92	-566.84
22	25	-55.26	94.48	1.24	-393.93	-118.16	429.99
23	25	52.93	-346.69	-23.05	-59.91	118.16	-424.17
23	10	-52.93	357.21	23.25	59.91	-70.63	-298.44
24	10	31.98	182.31	34.10	42.19	59.48	-15.35
24	26	-31.98	-180.70	-34.07	-42.19	-70.18	72.37
25	26	28.86	54.31	10.93	184.47	70.18	-64.57
25	27	-28.86	-46.57	-10.79	-184.47	-86.59	140.76
26	27	26.53	-58.31	-11.02	-36.10	86.59	-134.94
26	28	-26.53	70.44	11.25	36.10	-60.24	-17.45
27	28	23.41	-190.05	-34.38	95.44	60.24	25.25
27	29	-23.41	197.79	34.53	-95.44	-8.19	-318.15
28	29	21.08	-296.68	-56.33	-115.65	8.19	323.97
28	12	-21.08	296.93	56.34	115.65	-5.51	-338.12
29	12	0.00	14.73	0.28	0.00	-0.40	21.18
29	30	0.00	0.00	0.00	0.00	0.00	0.00

Combination No. 2177
Group Id: AR Svc VI Name: AREMA Service VI

Memb	Node	Fx kip	Fy kip	Fz kip	Mx kft	My kft	Mz kft
1	1	26.58	396.10	57.82	1242.74	-35.20	-200.13
1	2	-26.08	-334.00	-56.11	-73.01	35.20	-340.16
2	3	29.55	568.51	59.34	1268.27	-32.77	-221.63
2	4	-29.05	-506.41	-57.63	-67.44	32.77	-379.61
3	5	20.73	722.71	61.17	1294.16	-27.43	-163.86
3	6	-20.24	-660.61	-59.46	-55.86	27.43	-256.62
4	7	-0.65	755.59	59.45	1292.87	-19.53	-21.03
4	8	1.15	-693.49	-57.74	-89.85	19.53	38.86
5	9	-20.76	602.12	59.05	1296.88	-11.15	113.60
5	10	21.26	-540.02	-57.34	-102.02	11.15	316.59
6	11	-20.84	375.18	58.32	1295.44	-5.91	112.76
6	12	21.34	-313.08	-56.60	-115.63	5.91	318.95
7	13	0.00	0.00	0.00	0.00	0.00	0.00
7	2	0.00	14.73	0.28	0.00	0.40	-21.18
8	2	26.08	319.27	55.83	73.01	-35.61	361.34
8	14	-26.08	-319.03	-55.83	-73.01	32.94	-346.12
9	14	24.53	192.07	35.05	222.07	-32.94	349.99
9	15	-24.53	-184.33	-34.90	-222.07	-19.88	-65.72
10	15	23.63	78.98	15.23	6.09	19.88	67.97
10	16	-23.63	-66.84	-15.00	-6.09	-55.66	104.63
11	16	22.09	-59.55	-5.78	154.25	55.66	-100.76
11	17	-22.09	67.29	5.93	-154.25	-46.82	4.97
12	17	21.19	-172.17	-25.60	-60.98	46.82	-2.72
12	4	-21.19	173.78	25.63	60.98	-38.78	-51.62
13	4	50.24	332.63	32.00	6.46	6.00	431.22
13	18	-50.24	-322.11	-31.80	-6.46	-71.50	240.93
14	18	48.69	87.71	11.02	325.64	71.50	-237.06
14	19	-48.69	-79.97	-10.88	-325.64	-88.04	363.70
15	19	47.80	-123.01	-8.79	-44.92	88.04	-361.45
15	6	-47.80	134.21	9.01	44.92	-68.58	80.25
16	6	68.03	526.40	50.45	10.94	41.15	176.37
16	20	-68.03	-525.47	-50.43	-10.94	-50.27	-81.22
17	20	66.48	291.07	29.65	330.12	50.27	85.08
17	21	-66.48	-283.33	-29.51	-330.12	-94.95	348.71
18	21	65.58	80.35	9.84	-40.44	94.95	-346.46
18	22	-64.60	-68.22	-9.61	40.44	-117.96	522.31
19	22	61.61	-220.39	-13.53	358.70	117.96	-514.82
19	23	-61.61	228.13	13.67	-358.70	-97.42	176.09
20	23	59.39	-480.34	-35.47	-95.13	97.42	-170.54
20	8	-59.39	481.27	35.49	95.13	-91.00	83.56

21	8	58.24	212.22	22.25	-5.28	71.47	-122.42
21	24	-58.24	-201.01	-22.03	5.28	-119.88	574.16
22	24	55.25	-87.60	-1.10	393.86	119.88	-566.67
22	25	-55.25	95.34	1.24	-393.86	-118.11	428.51
23	25	53.03	-347.55	-23.04	-59.97	118.11	-422.96
23	10	-53.03	358.07	23.24	59.97	-70.60	-301.42
24	10	31.77	181.95	34.10	42.05	59.45	-15.17
24	26	-31.77	-180.34	-34.07	-42.05	-70.16	72.08
25	26	28.77	53.95	10.93	184.35	70.16	-64.59
25	27	-28.77	-46.21	-10.79	-184.35	-86.56	140.22
26	27	26.55	-58.67	-11.01	-36.21	86.56	-134.68
26	28	-26.55	70.81	11.24	36.21	-60.22	-18.58
27	28	23.55	-190.97	-34.37	96.23	60.22	26.07
27	29	-23.55	198.71	34.52	-96.23	-8.19	-320.37
28	29	21.34	-298.10	-56.32	-115.63	8.19	325.92
28	12	-21.34	298.34	56.32	115.63	-5.51	-340.13
29	12	0.00	14.73	0.28	0.00	-0.40	21.18
29	30	0.00	0.00	0.00	0.00	0.00	0.00

Combination No. 2225
Group Id: AR Svc VI Name: AREMA Service VI

Memb	Node	Fx kip	Fy kip	Fz kip	Mx kft	My kft	Mz kft
1	1	22.58	382.30	56.88	1221.69	-34.90	-154.69
1	2	-23.00	-320.20	-55.18	-71.16	34.90	-311.97
2	3	24.74	564.25	58.43	1247.27	-32.54	-170.61
2	4	-25.15	-502.15	-56.72	-65.10	32.54	-340.29
3	5	15.32	722.06	60.25	1273.05	-27.32	-108.75
3	6	-15.74	-659.96	-58.54	-53.53	27.32	-209.17
4	7	-6.06	756.28	58.53	1271.76	-19.56	34.09
4	8	5.64	-694.18	-56.83	-87.46	19.56	86.32
5	9	-25.58	606.42	58.15	1275.93	-11.31	164.62
5	10	25.16	-544.32	-56.45	-99.44	11.31	355.91
6	11	-24.86	388.91	57.40	1274.47	-6.13	158.33
6	12	24.44	-326.81	-55.70	-113.34	6.13	347.44
7	13	0.00	0.00	0.00	0.00	0.00	0.00
7	2	0.00	14.73	0.28	0.00	0.41	-21.18
8	2	23.00	305.47	54.90	71.16	-35.31	333.15
8	14	-23.00	-305.22	-54.89	-71.16	32.70	-318.60
9	14	22.86	182.00	34.48	215.23	-32.70	318.95
9	15	-22.86	-174.26	-34.33	-215.23	-19.27	-49.89
10	15	23.20	72.19	14.98	5.25	19.27	49.04
10	16	-23.20	-60.06	-14.75	-5.25	-54.45	107.49
11	16	23.06	-66.33	-5.67	154.33	54.45	-107.15
11	17	-23.06	74.07	5.82	-154.33	-45.78	1.11
12	17	23.40	-178.95	-25.16	-60.10	45.78	-1.96
12	4	-23.40	180.56	25.19	60.10	-37.87	-54.51
13	4	48.55	321.58	31.53	5.00	5.33	394.80
13	18	-48.55	-311.06	-31.33	-5.00	-69.86	254.66
14	18	48.41	76.66	10.91	325.10	69.86	-254.31
14	19	-48.41	-68.92	-10.76	-325.10	-86.22	364.26
15	19	48.75	-134.06	-8.58	-44.65	86.22	-365.11
15	6	-48.75	145.26	8.80	44.65	-67.22	59.75
16	6	64.49	514.69	49.74	8.88	39.90	149.42
16	20	-64.49	-513.76	-49.73	-8.88	-48.90	-56.39
17	20	64.35	279.36	29.31	328.98	48.90	56.74
17	21	-64.35	-271.62	-29.16	-328.98	-93.06	359.37
18	21	64.69	68.64	9.82	-40.77	93.06	-360.22
18	22	-65.52	-56.51	-9.58	40.77	-116.02	508.36
19	22	63.93	-232.10	-13.18	359.29	116.02	-504.39
19	23	-63.93	239.84	13.33	-359.29	-96.00	147.97

20	23	62.95	-492.05	-34.81	-93.74	96.00	-145.52
20	8	-62.95	492.98	34.83	93.74	-89.70	56.42
21	8	57.31	201.20	22.00	-6.28	70.14	-142.73
21	24	-57.31	-189.99	-21.78	6.28	-118.00	570.38
22	24	55.72	-98.62	-0.98	393.77	118.00	-566.41
22	25	-55.72	106.36	1.13	-393.77	-116.41	411.61
23	25	54.74	-358.57	-22.61	-59.25	116.41	-409.16
23	10	-54.74	369.09	22.81	59.25	-69.79	-337.84
24	10	29.58	175.23	33.64	40.19	58.48	-18.07
24	26	-29.58	-173.62	-33.61	-40.19	-69.05	72.86
25	26	27.99	47.23	10.84	183.40	69.05	-68.89
25	27	-27.99	-39.49	-10.69	-183.40	-85.31	134.38
26	27	27.01	-65.39	-10.78	-36.35	85.31	-131.93
26	28	-27.01	77.53	11.02	36.35	-59.50	-37.24
27	28	25.42	-201.42	-33.78	102.91	59.50	41.21
27	29	-25.42	209.17	33.93	-102.91	-8.37	-351.30
28	29	24.44	-311.83	-55.41	-113.34	8.37	353.75
28	12	-24.44	312.08	55.41	113.34	-5.73	-368.62
29	12	0.00	14.73	0.28	0.00	-0.41	21.18
29	30	0.00	0.00	0.00	0.00	0.00	0.00

Combination No. 2489
Group Id: AR Svc VI Name: AREMA Service VI

Memb	Node	Fx kip	Fy kip	Fz kip	Mx kft	My kft	Mz kft
1	1	22.24	380.35	56.65	1216.33	-34.83	-150.37
1	2	-22.65	-318.25	-54.94	-70.67	34.83	-309.27
2	3	24.31	563.57	58.20	1241.92	-32.48	-165.72
2	4	-24.73	-501.47	-56.49	-64.51	32.48	-336.45
3	5	14.82	721.94	60.02	1267.66	-27.29	-103.33
3	6	-15.23	-659.84	-58.31	-52.95	27.29	-204.25
4	7	-6.56	756.40	58.30	1266.37	-19.57	39.51
4	8	6.15	-694.30	-56.59	-86.86	19.57	91.24
5	9	-26.00	607.10	57.92	1270.58	-11.35	169.51
5	10	25.59	-545.00	-56.22	-98.80	11.35	359.75
6	11	-25.20	390.85	57.17	1269.13	-6.19	162.67
6	12	24.79	-328.75	-55.47	-112.75	6.19	350.20
7	13	0.00	0.00	0.00	0.00	0.00	0.00
7	2	0.00	14.73	0.28	0.00	0.41	-21.18
8	2	22.65	303.51	54.66	70.67	-35.24	330.45
8	14	-22.65	-303.27	-54.65	-70.67	32.63	-315.99
9	14	22.68	180.82	34.33	213.75	-32.63	315.91
9	15	-22.68	-173.07	-34.18	-213.75	-19.11	-48.65
10	15	23.17	71.68	14.92	5.04	19.11	47.43
10	16	-23.17	-59.54	-14.68	-5.04	-54.15	107.90
11	16	23.20	-66.85	-5.64	154.36	54.15	-107.97
11	17	-23.20	74.59	5.79	-154.36	-45.52	1.16
12	17	23.69	-179.47	-25.05	-59.86	45.52	-2.38
12	4	-23.69	181.08	25.08	59.86	-37.65	-54.25
13	4	48.42	320.39	31.41	4.65	5.16	390.70
13	18	-48.42	-309.87	-31.21	-4.65	-69.44	256.31
14	18	48.45	75.47	10.88	324.98	69.44	-256.39
14	19	-48.45	-67.73	-10.74	-324.98	-85.77	364.54
15	19	48.94	-135.25	-8.53	-44.57	85.77	-365.76
15	6	-48.94	146.46	8.75	44.57	-66.88	57.79
16	6	64.17	513.38	49.56	8.38	39.59	146.46
16	20	-64.17	-512.45	-49.55	-8.38	-48.55	-53.67
17	20	64.20	278.05	29.23	328.71	48.55	53.59
17	21	-64.20	-270.31	-29.08	-328.71	-92.58	360.54
18	21	64.69	67.33	9.81	-40.84	92.58	-361.76
18	22	-65.52	-55.20	-9.58	40.84	-115.53	506.79

19	22	64.11	-233.41	-13.09	359.45	115.53	-503.24
19	23	-64.11	241.15	13.24	-359.45	-95.64	144.85
20	23	63.27	-493.36	-34.64	-93.37	95.64	-142.77
20	8	-63.27	494.29	34.66	93.37	-89.37	53.43
21	8	57.13	200.01	21.94	-6.51	69.80	-144.66
21	24	-57.13	-188.81	-21.72	6.51	-117.53	569.72
22	24	55.71	-99.80	-0.95	393.78	117.53	-566.17
22	25	-55.71	107.54	1.10	-393.78	-115.99	409.58
23	25	54.88	-359.75	-22.49	-59.04	115.99	-407.50
23	10	-54.88	370.28	22.70	59.04	-69.59	-341.93
24	10	29.29	174.73	33.52	39.76	58.24	-17.82
24	26	-29.29	-173.12	-33.49	-39.76	-68.77	72.46
25	26	27.87	46.73	10.82	183.20	68.77	-68.91
25	27	-27.87	-38.99	-10.67	-183.20	-85.00	133.64
26	27	27.04	-65.89	-10.73	-36.35	85.00	-131.56
26	28	-27.04	78.03	10.96	36.35	-59.33	-38.79
27	28	25.62	-202.69	-33.63	104.36	59.33	42.34
27	29	-25.62	210.43	33.78	-104.36	-8.42	-354.34
28	29	24.79	-313.78	-55.18	-112.75	8.42	356.42
28	12	-24.79	314.02	55.18	112.75	-5.79	-371.38
29	12	0.00	14.73	0.28	0.00	-0.41	21.18
29	30	0.00	0.00	0.00	0.00	0.00	0.00

Combination No. 3945
Group Id: AR Svc EQ Name: AREMA Svc VII EQ

Memb	Node	Fx kip	Fy kip	Fz kip	Mx kft	My kft	Mz kft
1	1	48.36	454.29	8.94	135.81	-8.45	-525.27
1	2	-48.36	-392.19	-8.94	47.53	8.45	-466.09
2	3	53.29	435.12	8.04	133.30	-8.16	-559.58
2	4	-53.29	-373.02	-8.04	31.42	8.16	-532.90
3	5	54.59	437.25	8.55	140.26	-7.42	-569.16
3	6	-54.59	-375.15	-8.55	34.97	7.42	-549.96
4	7	51.88	433.16	7.71	137.59	-6.38	-551.45
4	8	-51.88	-371.06	-7.71	20.45	6.38	-512.06
5	9	43.12	386.28	7.91	141.56	-5.31	-492.45
5	10	-43.12	-324.18	-7.91	20.65	5.31	-391.59
6	11	28.53	242.79	6.38	133.27	-4.55	-393.16
6	12	-28.53	-180.69	-6.38	-2.40	4.55	-191.79
7	13	0.00	0.00	0.00	0.00	0.00	0.00
7	2	0.00	14.73	0.00	0.00	0.00	-21.18
8	2	48.36	377.45	8.94	-47.53	-8.45	487.27
8	14	-48.36	-377.21	-8.94	47.53	8.02	-469.28
9	14	30.87	253.65	5.97	140.68	-8.02	513.00
9	15	-30.87	-245.91	-5.97	-140.68	-1.00	-135.73
10	15	13.39	143.54	3.00	-28.83	1.00	179.44
10	16	-13.39	-131.41	-3.00	28.83	-8.11	146.00
11	16	-4.10	5.02	0.03	163.86	8.11	-102.28
11	17	4.10	2.73	-0.03	-163.86	-8.16	104.01
12	17	-21.59	-107.61	-2.94	-9.63	8.16	-60.30
12	4	21.59	109.22	2.94	9.63	-7.23	26.24
13	4	31.71	263.81	5.10	-41.05	-0.93	506.66
13	18	-31.71	-253.29	-5.10	41.05	-9.53	24.18
14	18	14.22	126.90	2.13	151.64	9.53	19.54
14	19	-14.22	-119.16	-2.13	-151.64	-12.74	166.29
15	19	-3.27	14.28	-0.85	-21.85	12.74	-122.57
15	6	3.27	-3.07	0.85	21.85	-10.89	141.54
16	6	51.32	378.22	7.70	-56.81	3.47	408.43
16	20	-51.32	-377.29	-7.70	56.81	-4.87	-340.09
17	20	33.84	250.90	4.73	135.88	4.87	383.80
17	21	-33.84	-243.16	-4.73	-135.88	-12.01	-10.69

18	21	16.35	138.28	1.76	-37.61	12.01	54.40
18	22	-16.35	-126.15	-1.76	37.61	-16.18	258.59
19	22	-1.13	-0.24	-1.21	155.08	16.18	-214.87
19	23	1.13	7.98	1.21	-155.08	-14.35	208.66
20	23	-18.62	-112.86	-4.18	-18.41	14.35	-164.94
20	8	18.62	113.79	4.18	18.41	-13.60	144.44
21	8	33.26	257.27	3.53	-38.86	7.22	367.62
21	24	-33.26	-246.07	-3.53	38.86	-14.93	182.63
22	24	15.77	119.68	0.56	153.83	14.93	-138.92
22	25	-15.77	-111.94	-0.56	-153.83	-15.77	313.83
23	25	-1.71	7.06	-2.41	-19.65	15.77	-270.12
23	10	1.71	3.47	2.41	19.65	-10.82	273.80
24	10	41.41	320.72	5.50	-40.31	5.51	117.79
24	26	-41.41	-319.11	-5.50	40.31	-7.24	-17.29
25	26	23.92	192.72	2.53	152.38	7.24	61.00
25	27	-23.92	-184.97	-2.53	-152.38	-11.06	224.23
26	27	6.44	80.09	-0.44	-21.10	11.06	-180.52
26	28	-6.44	-67.96	0.44	21.10	-10.01	355.77
27	28	-11.05	-55.60	-3.41	167.11	10.01	-312.05
27	29	11.05	63.34	3.41	-167.11	-4.86	222.23
28	29	-28.53	-165.71	-6.38	-2.40	4.86	-178.51
28	12	28.53	165.95	6.38	2.40	-4.55	170.61
29	12	0.00	14.73	0.00	0.00	0.00	21.18
29	30	0.00	0.00	0.00	0.00	0.00	0.00

Combination No. 3946
Group Id: AR Svc EQ Name: AREMA Svc VII EQ

Memb	Node	Fx kip	Fy kip	Fz kip	Mx kft	My kft	Mz kft
1	1	-28.91	250.05	8.94	135.81	-8.45	394.07
1	2	28.91	-187.95	-8.94	47.53	8.45	198.66
2	3	-43.08	388.47	8.04	133.30	-8.16	490.51
2	4	43.08	-326.37	-8.04	31.42	8.16	392.71
3	5	-51.54	433.55	8.55	140.26	-7.42	547.49
3	6	51.54	-371.45	-8.55	34.97	7.42	509.08
4	7	-54.25	436.86	7.71	137.59	-6.38	565.20
4	8	54.25	-374.76	-7.71	20.45	6.38	546.98
5	9	-53.25	432.93	7.91	141.56	-5.31	557.64
5	10	53.25	-370.83	-7.91	20.65	5.31	534.01
6	11	-48.74	447.02	6.38	133.27	-4.55	526.18
6	12	48.74	-384.92	-6.38	-2.40	4.55	472.96
7	13	0.00	0.00	0.00	0.00	0.00	0.00
7	2	0.00	14.73	0.00	0.00	0.00	-21.18
8	2	-28.91	173.22	8.94	-47.53	-8.45	-177.48
8	14	28.91	-172.98	-8.94	47.53	8.02	185.73
9	14	-11.43	49.42	5.97	140.68	-8.02	-229.44
9	15	11.43	-41.67	-5.97	-140.68	-1.00	298.24
10	15	6.06	-60.70	3.00	-28.83	1.00	-341.95
10	16	-6.06	72.83	-3.00	28.83	-8.11	183.90
11	16	23.55	-199.22	0.03	163.86	8.11	-227.62
11	17	-23.55	206.96	-0.03	-163.86	-8.16	-79.13
12	17	41.03	-311.84	-2.94	-9.63	8.16	35.41
12	4	-41.03	313.45	2.94	9.63	-7.23	-133.63
13	4	-2.05	12.93	5.10	-41.05	-0.93	-259.07
13	18	2.05	-2.40	-5.10	41.05	-9.53	274.81
14	18	15.43	-123.99	2.13	151.64	9.53	-318.52
14	19	-15.43	131.73	-2.13	-151.64	-12.74	125.40
15	19	32.92	-236.61	-0.85	-21.85	12.74	-169.12
15	6	-32.92	247.81	0.85	21.85	-10.89	-360.45
16	6	-18.62	123.64	7.70	-56.81	3.47	-148.63
16	20	18.62	-122.71	-7.70	56.81	-4.87	170.91

17	20	-1.13	-3.68	4.73	135.88	4.87	-214.62
17	21	1.13	11.42	-4.73	-135.88	-12.01	203.22
18	21	16.35	-116.30	1.76	-37.61	12.01	-246.94
18	22	-16.35	128.43	-1.76	37.61	-16.18	-42.75
19	22	33.84	-254.82	-1.21	155.08	16.18	-0.97
19	23	-33.84	262.56	1.21	-155.08	-14.35	-389.77
20	23	51.32	-367.44	-4.18	-18.41	14.35	346.05
20	8	-51.32	368.37	4.18	18.41	-13.60	-412.61
21	8	-2.93	6.39	3.53	-38.86	7.22	-134.36
21	24	2.93	4.82	-3.53	38.86	-14.93	136.08
22	24	14.56	-131.21	0.56	153.83	14.93	-179.80
22	25	-14.56	138.95	-0.56	-153.83	-15.77	-24.23
23	25	32.04	-243.83	-2.41	-19.65	15.77	-19.49
23	10	-32.04	254.35	2.41	19.65	-10.82	-491.93
24	10	-21.21	116.48	5.50	-40.31	5.51	-42.08
24	26	21.21	-114.87	-5.50	40.31	-7.24	78.42
25	26	-3.72	-11.52	2.53	152.38	7.24	-122.14
25	27	3.72	19.26	-2.53	-152.38	-11.06	98.90
26	27	13.77	-124.14	-0.44	-21.10	11.06	-142.61
26	28	-13.77	136.27	0.44	21.10	-10.01	-165.63
27	28	31.25	-259.83	-3.41	167.11	10.01	121.91
27	29	-31.25	267.57	3.41	-167.11	-4.86	-520.21
28	29	48.74	-369.94	-6.38	-2.40	4.86	476.50
28	12	-48.74	370.19	6.38	2.40	-4.55	-494.14
29	12	0.00	14.73	0.00	0.00	0.00	21.18
29	30	0.00	0.00	0.00	0.00	0.00	0.00

Combination No. 3947
Group Id: AR Svc EQ Name: AREMA Svc VII EQ

Memb	Node	Fx kip	Fy kip	Fz kip	Mx kft	My kft	Mz kft
1	1	-1.87	321.54	-25.00	-647.96	0.71	72.30
1	2	1.87	-259.44	25.00	135.55	-0.71	-34.00
2	3	-9.35	404.80	-26.36	-657.19	-1.36	122.98
2	4	9.35	-342.70	26.36	116.91	1.36	68.74
3	5	-14.39	434.84	-26.11	-654.15	-4.92	156.66
3	6	14.39	-372.74	26.11	118.93	4.92	138.41
4	7	-17.11	435.57	-26.95	-656.82	-8.88	174.37
4	8	17.11	-373.47	26.95	104.41	8.88	176.31
5	9	-19.52	416.60	-26.48	-648.93	-12.11	190.11
5	10	19.52	-354.50	26.48	106.13	12.11	210.05
6	11	-21.69	375.54	-27.56	-650.51	-13.71	204.41
6	12	21.69	-313.44	27.56	85.61	13.71	240.30
7	13	0.00	0.00	0.00	0.00	0.00	0.00
7	2	0.00	14.73	0.00	0.00	0.00	-21.18
8	2	-1.87	244.70	-25.00	-135.55	0.71	55.18
8	14	1.87	-244.46	25.00	135.55	0.48	-43.53
9	14	3.38	120.90	-15.09	84.85	-0.48	30.41
9	15	-3.38	-113.16	15.09	-84.85	23.28	146.35
10	15	8.62	10.79	-5.19	-52.48	-23.28	-159.46
10	16	-8.62	1.35	5.19	52.48	35.56	170.64
11	16	13.87	-127.74	4.71	172.39	-35.56	-183.75
11	17	-13.87	135.48	-4.71	-172.39	28.45	-15.03
12	17	19.12	-240.36	14.61	31.09	-28.45	1.91
12	4	-19.12	241.97	-14.61	-31.09	23.86	-77.68
13	4	9.76	100.73	-11.74	-85.82	-25.22	8.94
13	18	-9.76	-90.21	11.74	85.82	49.32	187.09
14	18	15.01	-36.18	-1.84	139.05	-49.32	-200.20
14	19	-15.01	43.92	1.84	-139.05	52.10	139.71
15	19	20.25	-148.80	8.06	-2.25	-52.10	-152.83
15	6	-20.25	160.00	-8.06	2.25	34.47	-184.76

16	6	5.86	212.74	-18.04	-121.18	-39.39	46.34
16	20	-5.86	-211.81	18.04	121.18	42.66	-7.94
17	20	11.11	85.42	-8.14	103.69	-42.66	-5.17
17	21	-11.11	-77.68	8.14	-103.69	54.95	128.35
18	21	16.35	-27.20	1.76	-37.61	-54.95	-141.47
18	22	-16.35	39.33	-1.76	37.61	50.79	62.72
19	22	21.60	-165.72	11.66	187.26	-50.79	-75.83
19	23	-21.60	173.46	-11.66	-187.26	33.17	-180.32
20	23	26.84	-278.34	21.57	45.96	-33.17	167.21
20	8	-26.84	279.27	-21.57	-45.96	29.27	-217.64
21	8	9.74	94.20	-5.38	-58.45	-38.15	41.33
21	24	-9.74	-82.99	5.38	58.45	49.91	152.37
22	24	14.98	-43.40	4.52	166.42	-49.91	-165.49
22	25	-14.98	51.14	-4.52	-166.42	43.08	94.09
23	25	20.23	-156.02	14.42	25.12	-43.08	-107.21
23	10	-20.23	166.54	-14.42	-25.12	13.47	-223.92
24	10	0.71	187.96	-12.05	-81.02	-25.58	13.87
24	26	-0.71	-186.35	12.05	81.02	29.36	44.92
25	26	5.96	59.96	-2.15	143.85	-29.36	-58.04
25	27	-5.96	-52.22	2.15	-143.85	32.61	142.76
26	27	11.20	-52.66	7.75	2.55	-32.61	-155.88
26	28	-11.20	64.79	-7.75	-2.55	14.26	16.86
27	28	16.45	-188.35	17.65	222.94	-14.26	-29.97
27	29	-16.45	196.09	-17.65	-222.94	-12.40	-260.36
28	29	21.69	-298.46	27.56	85.61	12.40	247.24
28	12	-21.69	298.71	-27.56	-85.61	-13.71	-261.48
29	12	0.00	14.73	0.00	0.00	0.00	21.18
29	30	0.00	0.00	0.00	0.00	0.00	0.00

Combination No. 3949
Group Id: AR Svc EQ Name: AREMA Svc VII EQ

Memb	Node	Fx kip	Fy kip	Fz kip	Mx kft	My kft	Mz kft
1	1	-28.91	250.05	-6.72	-225.93	-4.22	394.07
1	2	28.91	-187.95	6.72	88.15	4.22	198.66
2	3	-43.08	388.47	-7.84	-231.54	-5.02	490.51
2	4	43.08	-326.37	7.84	70.88	5.02	392.71
3	5	-51.54	433.55	-7.45	-226.39	-6.27	547.49
3	6	51.54	-371.45	7.45	73.72	6.27	509.08
4	7	-54.25	436.86	-8.29	-229.06	-7.53	565.20
4	8	54.25	-374.76	8.29	59.20	7.53	546.98
5	9	-53.25	432.93	-7.96	-223.29	-8.44	557.64
5	10	53.25	-370.83	7.96	60.11	8.44	534.01
6	11	-48.74	447.02	-9.28	-228.47	-8.78	526.18
6	12	48.74	-384.92	9.28	38.22	8.78	472.96
7	13	0.00	0.00	0.00	0.00	0.00	0.00
7	2	0.00	14.73	0.00	0.00	0.00	-21.18
8	2	-28.91	173.22	-6.72	-88.15	-4.22	-177.48
8	14	28.91	-172.98	6.72	88.15	4.54	185.73
9	14	-11.43	49.42	-3.75	114.91	-4.54	-229.44
9	15	11.43	-41.67	3.75	-114.91	10.20	298.24
10	15	6.06	-60.70	-0.78	-39.75	-10.20	-341.95
10	16	-6.06	72.83	0.78	39.75	12.05	183.90
11	16	23.55	-199.22	2.19	167.80	-12.05	-227.62
11	17	-23.55	206.96	-2.19	-167.80	8.74	-79.13
12	17	41.03	-311.84	5.16	9.16	-8.74	35.41
12	4	-41.03	313.45	-5.16	-9.16	7.12	-133.63
13	4	-2.05	12.93	-2.68	-61.71	-12.14	-259.07
13	18	2.05	-2.40	2.68	61.71	17.63	274.81
14	18	15.43	-123.99	0.30	145.83	-17.63	-318.52
14	19	-15.43	131.73	-0.30	-145.83	17.18	125.40

15	19	32.92	-236.61	3.27	-12.80	-17.18	-169.12
15	6	-32.92	247.81	-3.27	12.80	10.04	-360.45
16	6	-18.62	123.64	-4.18	-86.52	-16.31	-148.63
16	20	18.62	-122.71	4.18	86.52	17.07	170.91
17	20	-1.13	-3.68	-1.21	121.02	-17.07	-214.62
17	21	1.13	11.42	1.21	-121.02	18.89	203.22
18	21	16.35	-116.30	1.76	-37.61	-18.89	-246.94
18	22	-16.35	128.43	-1.76	37.61	14.73	-42.75
19	22	33.84	-254.82	4.73	169.93	-14.73	-0.97
19	23	-33.84	262.56	-4.73	-169.93	7.58	-389.77
20	23	51.32	-367.44	7.70	11.30	-7.58	346.05
20	8	-51.32	368.37	-7.70	-11.30	6.19	-412.61
21	8	-2.93	6.39	-0.58	-47.90	-13.72	-134.36
21	24	2.93	4.82	0.58	47.90	15.00	136.08
22	24	14.56	-131.21	2.39	159.64	-15.00	-179.80
22	25	-14.56	138.95	-2.39	-159.64	11.39	-24.23
23	25	32.04	-243.83	5.36	1.01	-11.39	-19.49
23	10	-32.04	254.35	-5.36	-1.01	0.39	-491.93
24	10	-21.21	116.48	-2.60	-59.10	-8.84	-42.08
24	26	21.21	-114.87	2.60	59.10	9.65	78.42
25	26	-3.72	-11.52	0.37	148.45	-9.65	-122.14
25	27	3.72	19.26	-0.37	-148.45	9.10	98.90
26	27	13.77	-124.14	3.34	-10.19	-9.10	-142.61
26	28	-13.77	136.27	-3.34	10.19	1.19	-165.63
27	28	31.25	-259.83	6.31	192.88	-1.19	121.91
27	29	-31.25	267.57	-6.31	-192.88	-8.34	-520.21
28	29	48.74	-369.94	9.28	38.22	8.34	476.50
28	12	-48.74	370.19	-9.28	-38.22	-8.78	-494.14
29	12	0.00	14.73	0.00	0.00	0.00	21.18
29	30	0.00	0.00	0.00	0.00	0.00	0.00

Combination No. 3950
Group Id: AR Svc EQ Name: AREMA Svc VII EQ

Memb	Node	Fx kip	Fy kip	Fz kip	Mx kft	My kft	Mz kft
1	1	48.36	454.29	-6.72	-225.93	-4.22	-525.27
1	2	-48.36	-392.19	6.72	88.15	4.22	-466.09
2	3	53.29	435.12	-7.84	-231.54	-5.02	-559.58
2	4	-53.29	-373.02	7.84	70.88	5.02	-532.90
3	5	54.59	437.25	-7.45	-226.39	-6.27	-569.16
3	6	-54.59	-375.15	7.45	73.72	6.27	-549.96
4	7	51.88	433.16	-8.29	-229.06	-7.53	-551.45
4	8	-51.88	-371.06	8.29	59.20	7.53	-512.06
5	9	43.12	386.28	-7.96	-223.29	-8.44	-492.45
5	10	-43.12	-324.18	7.96	60.11	8.44	-391.59
6	11	28.53	242.79	-9.28	-228.47	-8.78	-393.16
6	12	-28.53	-180.69	9.28	38.22	8.78	-191.79
7	13	0.00	0.00	0.00	0.00	0.00	0.00
7	2	0.00	14.73	0.00	0.00	0.00	-21.18
8	2	48.36	377.45	-6.72	-88.15	-4.22	487.27
8	14	-48.36	-377.21	6.72	88.15	4.54	-469.28
9	14	30.87	253.65	-3.75	114.91	-4.54	513.00
9	15	-30.87	-245.91	3.75	-114.91	10.20	-135.73
10	15	13.39	143.54	-0.78	-39.75	-10.20	179.44
10	16	-13.39	-131.41	0.78	39.75	12.05	146.00
11	16	-4.10	5.02	2.19	167.80	-12.05	-102.28
11	17	4.10	2.73	-2.19	-167.80	8.74	104.01
12	17	-21.59	-107.61	5.16	9.16	-8.74	-60.30
12	4	21.59	109.22	-5.16	-9.16	7.12	26.24
13	4	31.71	263.81	-2.68	-61.71	-12.14	506.66
13	18	-31.71	-253.29	2.68	61.71	17.63	24.18

14	18	14.22	126.90	0.30	145.83	-17.63	19.54
14	19	-14.22	-119.16	-0.30	-145.83	17.18	166.29
15	19	-3.27	14.28	3.27	-12.80	-17.18	-122.57
15	6	3.27	-3.07	-3.27	12.80	10.04	141.54
16	6	51.32	378.22	-4.18	-86.52	-16.31	408.43
16	20	-51.32	-377.29	4.18	86.52	17.07	-340.09
17	20	33.84	250.90	-1.21	121.02	-17.07	383.80
17	21	-33.84	-243.16	1.21	-121.02	18.89	-10.69
18	21	16.35	138.28	1.76	-37.61	-18.89	54.40
18	22	-16.35	-126.15	-1.76	37.61	14.73	258.59
19	22	-1.13	-0.24	4.73	169.93	-14.73	-214.87
19	23	1.13	7.98	-4.73	-169.93	7.58	208.66
20	23	-18.62	-112.86	7.70	11.30	-7.58	-164.94
20	8	18.62	113.79	-7.70	-11.30	6.19	144.44
21	8	33.26	257.27	-0.58	-47.90	-13.72	367.62
21	24	-33.26	-246.07	0.58	47.90	15.00	182.63
22	24	15.77	119.68	2.39	159.64	-15.00	-138.92
22	25	-15.77	-111.94	-2.39	-159.64	11.39	313.83
23	25	-1.71	7.06	5.36	1.01	-11.39	-270.12
23	10	1.71	3.47	-5.36	-1.01	0.39	273.80
24	10	41.41	320.72	-2.60	-59.10	-8.84	117.79
24	26	-41.41	-319.11	2.60	59.10	9.65	-17.29
25	26	23.92	192.72	0.37	148.45	-9.65	61.00
25	27	-23.92	-184.97	-0.37	-148.45	9.10	224.23
26	27	6.44	80.09	3.34	-10.19	-9.10	-180.52
26	28	-6.44	-67.96	-3.34	10.19	1.19	355.77
27	28	-11.05	-55.60	6.31	192.88	-1.19	-312.05
27	29	11.05	63.34	-6.31	-192.88	-8.34	222.23
28	29	-28.53	-165.71	9.28	38.22	8.34	-178.51
28	12	28.53	165.95	-9.28	-38.22	-8.78	170.61
29	12	0.00	14.73	0.00	0.00	0.00	21.18
29	30	0.00	0.00	0.00	0.00	0.00	0.00

Combination No. 3951
Group Id: AR Svc EQ Name: AREMA Svc VII EQ

Memb	Node	Fx kip	Fy kip	Fz kip	Mx kft	My kft	Mz kft
1	1	21.31	382.81	27.22	557.84	-13.38	-203.50
1	2	-21.31	-320.71	-27.22	0.13	13.38	-233.43
2	3	19.56	418.80	26.55	558.95	-11.82	-192.05
2	4	-19.56	-356.70	-26.55	-14.61	11.82	-208.94
3	5	17.45	435.95	27.21	568.02	-8.77	-178.33
3	6	-17.45	-373.85	-27.21	-10.24	8.77	-179.30
4	7	14.73	434.46	26.37	565.35	-5.03	-160.63
4	8	-14.73	-372.36	-26.37	-24.76	5.03	-141.40
5	9	9.39	402.61	26.43	567.20	-1.64	-124.92
5	10	-9.39	-340.51	-26.43	-25.38	1.64	-67.63
6	11	1.49	314.27	24.66	555.30	0.38	-71.39
6	12	-1.49	-252.17	-24.66	-49.80	-0.38	40.87
7	13	0.00	0.00	0.00	0.00	0.00	0.00
7	2	0.00	14.73	0.00	0.00	0.00	-21.18
8	2	21.31	305.97	27.22	-0.13	-13.38	254.61
8	14	-21.31	-305.73	-27.22	0.13	12.08	-240.03
9	14	16.07	182.17	17.32	170.75	-12.08	253.14
9	15	-16.07	-174.43	-17.32	-170.75	-14.07	16.16
10	15	10.82	72.06	7.41	-16.09	14.07	-3.04
10	16	-10.82	-59.92	-7.41	16.09	-31.62	159.27
11	16	5.58	-66.47	-2.49	159.27	31.62	-146.15
11	17	-5.58	74.21	2.49	-159.27	-27.87	39.91
12	17	0.33	-179.09	-12.39	-31.55	27.87	-26.80
12	4	-0.33	180.70	12.39	31.55	-23.97	-29.72

13	4	19.89	176.00	14.16	-16.94	12.15	238.66
13	18	-19.89	-165.48	-14.16	16.94	-41.22	111.90
14	18	14.64	39.09	4.26	158.42	41.22	-98.79
14	19	-14.64	-31.35	-4.26	-158.42	-47.66	151.98
15	19	9.40	-73.53	-5.64	-32.40	47.66	-138.86
15	6	-9.40	84.74	5.64	32.40	-35.32	-34.16
16	6	26.84	289.11	21.57	-22.15	26.55	213.46
16	20	-26.84	-288.19	-21.57	22.15	-30.45	-161.24
17	20	21.60	161.80	11.66	153.21	30.45	174.35
17	21	-21.60	-154.06	-11.66	-153.21	-48.07	64.18
18	21	16.35	49.18	1.76	-37.61	48.07	-51.07
18	22	-16.35	-37.04	-1.76	37.61	-52.24	153.12
19	22	11.11	-89.35	-8.14	137.75	52.24	-140.01
19	23	-11.11	97.09	8.14	-137.75	-39.94	-0.79
20	23	5.86	-201.97	-18.04	-53.06	39.94	13.91
20	8	-5.86	202.89	18.04	53.06	-36.68	-50.53
21	8	20.59	169.46	8.33	-28.31	31.64	191.93
21	24	-20.59	-158.26	-8.33	28.31	-49.85	166.34
22	24	15.35	31.87	-1.58	147.05	49.85	-153.22
22	25	-15.35	-24.13	1.58	-147.05	-47.46	195.51
23	25	10.10	-80.75	-11.48	-43.76	47.46	-182.40
23	10	-10.10	91.28	11.48	43.76	-23.90	5.80
24	10	19.49	249.23	14.95	-18.38	22.25	61.84
24	26	-19.49	-247.62	-14.95	18.38	-26.95	16.21
25	26	14.25	121.23	5.05	156.98	26.95	-3.10
25	27	-14.25	-113.49	-5.05	-156.98	-34.58	180.37
26	27	9.00	8.61	-4.85	-33.84	34.58	-167.25
26	28	-9.00	3.52	4.85	33.84	-23.09	173.28
27	28	3.76	-127.08	-14.76	137.04	23.09	-160.16
27	29	-3.76	134.82	14.76	-137.04	-0.80	-37.63
28	29	-1.49	-237.19	-24.66	-49.80	0.80	50.74
28	12	1.49	237.44	24.66	49.80	0.38	-62.05
29	12	0.00	14.73	0.00	0.00	0.00	21.18
29	30	0.00	0.00	0.00	0.00	0.00	0.00

Combination No. 3952
Group Id: AR Svc EQ Name: AREMA Svc VII EQ

Memb	Node	Fx kip	Fy kip	Fz kip	Mx kft	My kft	Mz kft
1	1	21.31	382.81	-25.00	-647.96	0.71	-203.50
1	2	-21.31	-320.71	25.00	135.55	-0.71	-233.43
2	3	19.56	418.80	-26.36	-657.19	-1.36	-192.05
2	4	-19.56	-356.70	26.36	116.91	1.36	-208.94
3	5	17.45	435.95	-26.11	-654.15	-4.92	-178.33
3	6	-17.45	-373.85	26.11	118.93	4.92	-179.30
4	7	14.73	434.46	-26.95	-656.82	-8.88	-160.63
4	8	-14.73	-372.36	26.95	104.41	8.88	-141.40
5	9	9.39	402.61	-26.48	-648.93	-12.11	-124.92
5	10	-9.39	-340.51	26.48	106.13	12.11	-67.63
6	11	1.49	314.27	-27.56	-650.51	-13.71	-71.39
6	12	-1.49	-252.17	27.56	85.61	13.71	40.87
7	13	0.00	0.00	0.00	0.00	0.00	0.00
7	2	0.00	14.73	0.00	0.00	0.00	-21.18
8	2	21.31	305.97	-25.00	-135.55	0.71	254.61
8	14	-21.31	-305.73	25.00	135.55	0.48	-240.03
9	14	16.07	182.17	-15.09	84.85	-0.48	253.14
9	15	-16.07	-174.43	15.09	-84.85	23.28	16.16
10	15	10.82	72.06	-5.19	-52.48	-23.28	-3.04
10	16	-10.82	-59.92	5.19	52.48	35.56	159.27
11	16	5.58	-66.47	4.71	172.39	-35.56	-146.15
11	17	-5.58	74.21	-4.71	-172.39	28.45	39.91

12	17	0.33	-179.09	14.61	31.09	-28.45	-26.80
12	4	-0.33	180.70	-14.61	-31.09	23.86	-29.72
13	4	19.89	176.00	-11.74	-85.82	-25.22	238.66
13	18	-19.89	-165.48	11.74	85.82	49.32	111.90
14	18	14.64	39.09	-1.84	139.05	-49.32	-98.79
14	19	-14.64	-31.35	1.84	-139.05	52.10	151.98
15	19	9.40	-73.53	8.06	-2.25	-52.10	-138.86
15	6	-9.40	84.74	-8.06	2.25	34.47	-34.16
16	6	26.84	289.11	-18.04	-121.18	-39.39	213.46
16	20	-26.84	-288.19	18.04	121.18	42.66	-161.24
17	20	21.60	161.80	-8.14	103.69	-42.66	174.35
17	21	-21.60	-154.06	8.14	-103.69	54.95	64.18
18	21	16.35	49.18	1.76	-37.61	-54.95	-51.07
18	22	-16.35	-37.04	-1.76	37.61	50.79	153.12
19	22	11.11	-89.35	11.66	187.26	-50.79	-140.01
19	23	-11.11	97.09	-11.66	-187.26	33.17	-0.79
20	23	5.86	-201.97	21.57	45.96	-33.17	13.91
20	8	-5.86	202.89	-21.57	-45.96	29.27	-50.53
21	8	20.59	169.46	-5.38	-58.45	-38.15	191.93
21	24	-20.59	-158.26	5.38	58.45	49.91	166.34
22	24	15.35	31.87	4.52	166.42	-49.91	-153.22
22	25	-15.35	-24.13	-4.52	-166.42	43.08	195.51
23	25	10.10	-80.75	14.42	25.12	-43.08	-182.40
23	10	-10.10	91.28	-14.42	-25.12	13.47	5.80
24	10	19.49	249.23	-12.05	-81.02	-25.58	61.84
24	26	-19.49	-247.62	12.05	81.02	29.36	16.21
25	26	14.25	121.23	-2.15	143.85	-29.36	-3.10
25	27	-14.25	-113.49	2.15	-143.85	32.61	180.37
26	27	9.00	8.61	7.75	2.55	-32.61	-167.25
26	28	-9.00	3.52	-7.75	-2.55	14.26	173.28
27	28	3.76	-127.08	17.65	222.94	-14.26	-160.16
27	29	-3.76	134.82	-17.65	-222.94	-12.40	-37.63
28	29	-1.49	-237.19	27.56	85.61	12.40	50.74
28	12	1.49	237.44	-27.56	-85.61	-13.71	-62.05
29	12	0.00	14.73	0.00	0.00	0.00	21.18
29	30	0.00	0.00	0.00	0.00	0.00	0.00

Combination No. 3953
Group Id: AR Derail Name: AREMA Svc Derail

Memb	Node	Fx kip	Fy kip	Fz kip	Mx kft	My kft	Mz kft
1	1	3.30	327.84	0.69	-61.90	-6.47	16.95
1	2	-3.30	-265.74	-0.69	76.00	6.47	-84.60
2	3	0.11	421.71	-0.06	-64.08	-6.84	38.58
2	4	-0.11	-359.61	0.06	62.84	6.84	-40.83
3	5	3.89	514.31	1.03	-53.48	-7.46	12.57
3	6	-3.89	-452.21	-1.03	74.61	7.46	-92.34
4	7	4.98	638.70	0.37	-54.57	-8.16	4.77
4	8	-4.98	-576.60	-0.37	62.06	8.16	-106.82
5	9	0.80	742.20	1.02	-46.36	-8.65	32.67
5	10	-0.80	-680.10	-1.02	67.29	8.65	-49.15
6	11	-13.08	784.41	-3.04	-70.28	-8.66	126.91
6	12	13.08	-722.31	3.04	7.88	8.66	141.32
7	13	0.00	0.00	0.00	0.00	0.00	0.00
7	2	0.00	14.73	0.00	0.00	0.00	-21.18
8	2	3.30	251.00	0.69	-76.00	-6.47	105.78
8	14	-3.30	-250.76	-0.69	76.00	6.43	-93.83
9	14	3.30	127.20	0.69	119.63	-6.43	93.83
9	15	-3.30	-119.46	-0.69	-119.63	5.39	92.45
10	15	3.30	17.09	0.69	-42.45	-5.39	-92.45
10	16	-3.30	-4.95	-0.69	42.45	3.77	118.54

11	16	3.30	-121.44	0.69	157.67	-3.77	-118.54
11	17	-3.30	129.18	-0.69	-157.67	2.73	-70.73
12	17	3.30	-234.06	0.69	-8.39	-2.73	70.73
12	4	-3.30	235.67	-0.69	8.39	2.51	-144.51
13	4	3.41	123.94	0.63	-71.24	-9.35	185.35
13	18	-3.41	-113.42	-0.63	71.24	8.06	58.33
14	18	3.41	-12.97	0.63	128.88	-8.06	-58.33
14	19	-3.41	20.71	-0.63	-128.88	7.11	32.89
15	19	3.41	-125.59	0.63	-37.18	-7.11	-32.89
15	6	-3.41	136.79	-0.63	37.18	5.74	-253.95
16	6	7.30	315.41	1.66	-111.79	-13.20	346.29
16	20	-7.30	-314.49	-1.66	111.79	12.90	-289.31
17	20	7.30	188.10	1.66	88.33	-12.90	289.31
17	21	-7.30	-180.36	-1.66	-88.33	10.40	-11.05
18	21	7.30	75.48	1.66	-77.73	-10.40	11.05
18	22	-7.30	-63.34	-1.66	77.73	6.47	153.26
19	22	7.30	-153.91	1.66	266.25	-6.47	-153.26
19	23	-7.30	161.65	-1.66	-266.25	3.97	-85.04
20	23	7.30	-349.05	1.66	-30.47	-3.97	85.04
20	8	-7.30	349.97	-1.66	30.47	3.67	-148.28
21	8	12.28	226.63	2.02	-92.53	-11.82	255.10
21	24	-12.28	-215.42	-2.02	92.53	7.40	228.15
22	24	12.28	-1.83	2.02	251.45	-7.40	-228.15
22	25	-12.28	9.57	-2.02	-251.45	4.34	219.54
23	25	12.28	-196.97	2.02	-45.26	-4.34	-219.54
23	10	-12.28	207.49	-2.02	45.26	0.19	-195.68
24	10	13.08	472.61	3.04	-112.55	-8.84	244.83
24	26	-13.08	-471.00	-3.04	112.55	7.89	-96.61
25	26	13.08	253.75	3.04	231.43	-7.89	96.61
25	27	-13.08	-246.01	-3.04	-231.43	3.29	280.82
26	27	13.08	58.61	3.04	-65.29	-3.29	-280.82
26	28	-13.08	-46.48	-3.04	65.29	-3.92	405.21
27	28	13.08	-349.66	3.04	561.93	3.92	-405.21
27	29	-13.08	357.40	-3.04	-561.93	-8.52	-128.78
28	29	13.08	-707.33	3.04	7.88	8.52	128.78
28	12	-13.08	707.58	-3.04	-7.88	-8.66	-162.50
29	12	0.00	14.73	0.00	0.00	0.00	21.18
29	30	0.00	0.00	0.00	0.00	0.00	0.00

Combination No. 3954
Group Id: AR Derail Name: AREMA Svc Derail

Memb	Node	Fx kip	Fy kip	Fz kip	Mx kft	My kft	Mz kft
1	1	6.66	337.81	-2.17	-213.95	24.27	-23.22
1	2	-6.66	-275.71	2.17	169.52	-24.27	-113.31
2	3	3.52	422.23	-4.23	-239.07	25.76	-2.10
2	4	-3.52	-360.13	4.23	152.34	-25.76	-70.07
3	5	5.24	497.78	-2.09	-236.20	27.34	-14.36
3	6	-5.24	-435.68	2.09	193.39	-27.34	-93.03
4	7	3.82	582.71	1.13	-226.43	27.65	-5.47
4	8	-3.82	-520.61	-1.13	249.58	-27.65	-72.90
5	9	-1.90	635.05	4.54	-215.13	26.47	32.64
5	10	1.90	-572.95	-4.54	308.21	-26.47	6.24
6	11	-17.35	606.54	2.82	-238.27	25.07	137.32
6	12	17.35	-544.44	-2.82	296.03	-25.07	218.25
7	13	0.00	0.00	0.00	0.00	0.00	0.00
7	2	0.00	14.73	0.00	0.00	0.00	-21.18
8	2	6.66	260.98	-2.17	-169.52	24.27	134.49
8	14	-6.66	-260.74	2.17	169.52	-24.16	-122.06
9	14	6.66	137.18	-2.17	26.11	24.16	122.06
9	15	-6.66	-129.44	2.17	-26.11	-20.89	79.29

10	15	6.66	27.07	-2.17	-135.97	20.89	-79.29
10	16	-6.66	-14.93	2.17	135.97	-15.76	129.00
11	16	6.66	-111.46	-2.17	64.15	15.76	-129.00
11	17	-6.66	119.20	2.17	-64.15	-12.48	-45.19
12	17	6.66	-224.08	-2.17	-101.91	12.48	45.19
12	4	-6.66	225.69	2.17	101.91	-11.80	-115.84
13	4	10.18	134.44	-6.40	-254.25	37.56	185.91
13	18	-10.18	-123.92	6.40	254.25	-24.42	79.32
14	18	10.18	-2.47	-6.40	-54.14	24.42	-79.32
14	19	-10.18	10.21	6.40	54.14	-14.76	69.74
15	19	10.18	-115.09	-6.40	-220.20	14.76	-69.74
15	6	-10.18	126.30	6.40	220.20	-0.77	-194.15
16	6	15.42	309.39	-8.49	-413.58	28.11	287.17
16	20	-15.42	-308.46	8.49	413.58	-26.58	-231.28
17	20	15.42	182.07	-8.49	-213.46	26.58	231.28
17	21	-15.42	-174.33	8.49	213.46	-13.76	37.87
18	21	15.42	69.45	-8.49	-379.52	13.76	-37.87
18	22	-15.42	-57.32	8.49	379.52	6.33	187.92
19	22	15.42	-184.61	-8.49	3.53	-6.33	-187.92
19	23	-15.42	192.35	8.49	-3.53	19.15	-96.77
20	23	15.42	-297.23	-8.49	-162.53	-19.15	96.77
20	8	-15.42	298.16	8.49	162.53	20.69	-150.63
21	8	19.24	222.45	-7.36	-412.10	6.96	223.53
21	24	-19.24	-211.24	7.36	412.10	9.13	250.59
22	24	19.24	-30.69	-7.36	-29.05	-9.13	-250.59
22	25	-19.24	38.43	7.36	29.05	20.24	198.39
23	25	19.24	-143.31	-7.36	-195.11	-20.24	-198.39
23	10	-19.24	153.83	7.36	195.11	35.35	-106.65
24	10	17.35	419.12	-2.82	-503.32	-8.87	100.40
24	26	-17.35	-417.51	2.82	503.32	9.76	31.02
25	26	17.35	175.58	-2.82	-120.26	-9.76	-31.02
25	27	-17.35	-167.84	2.82	120.26	14.01	290.37
26	27	17.35	62.96	-2.82	-286.32	-14.01	-290.37
26	28	-17.35	-50.82	2.82	286.32	20.68	425.04
27	28	17.35	-419.35	-2.82	458.11	-20.68	-425.04
27	29	-17.35	427.09	2.82	-458.11	24.94	-214.19
28	29	17.35	-529.46	-2.82	296.03	-24.94	214.19
28	12	-17.35	529.70	2.82	-296.03	25.07	-239.43
29	12	0.00	14.73	0.00	0.00	0.00	21.18
29	30	0.00	0.00	0.00	0.00	0.00	0.00

Combination No. 3955
Group Id: AR LF-1 Name: AREMA LFD 1

Memb	Node	Fx kip	Fy kip	Fz kip	Mx kft	My kft	Mz kft
1	1	43.85	565.44	3.02	-61.92	-18.69	-307.41
1	2	-43.85	-478.50	-3.02	123.76	18.69	-591.53
2	3	52.63	916.46	3.86	-47.71	-19.76	-369.46
2	4	-52.63	-829.52	-3.86	126.76	19.76	-709.38
3	5	34.55	1244.24	5.27	-29.00	-21.15	-250.48
3	6	-34.55	-1157.30	-5.27	137.05	21.15	-457.71
4	7	-10.48	1317.87	1.11	-47.93	-21.66	51.10
4	8	10.48	-1230.93	-1.11	70.62	21.66	163.82
5	9	-50.43	1006.65	-0.29	-48.02	-20.90	318.75
5	10	50.43	-919.71	0.29	42.10	20.90	715.06
6	11	-44.96	577.53	-0.98	-43.74	-19.82	278.93
6	12	44.96	-490.59	0.98	23.71	19.82	642.85
7	13	0.00	0.00	0.00	0.00	0.00	0.00
7	2	0.00	20.63	0.00	0.00	0.00	-29.65
8	2	43.85	457.87	3.02	-123.76	-18.69	621.18
8	14	-43.85	-457.53	-3.02	123.76	18.55	-599.37

9	14	42.51	284.55	2.37	148.53	-18.55	602.73
9	15	-42.51	-273.71	-2.37	-148.53	14.97	-181.13
10	15	41.29	130.39	1.80	-79.83	-14.97	184.17
10	16	-41.29	-113.40	-1.80	79.83	10.71	104.40
11	16	39.94	-63.54	1.15	198.72	-10.71	-101.04
11	17	-39.94	74.38	-1.15	-198.72	8.97	-3.12
12	17	38.73	-221.21	0.58	-35.19	-8.97	6.17
12	4	-38.73	223.47	-0.58	35.19	8.79	-76.02
13	4	91.35	606.05	4.44	-161.96	-28.55	785.40
13	18	-91.35	-591.32	-4.44	161.96	19.44	443.80
14	18	90.01	173.54	3.79	497.92	-19.44	-440.44
14	19	-90.01	-162.70	-3.79	-497.92	13.71	694.37
15	19	88.79	-202.87	3.22	-82.32	-13.71	-691.33
15	6	-88.79	218.55	-3.22	82.32	6.67	230.63
16	6	123.34	938.74	8.49	-219.37	-27.83	227.08
16	20	-123.34	-937.45	-8.49	219.37	26.29	-57.37
17	20	121.99	519.66	7.85	440.51	-26.29	60.73
17	21	-121.99	-508.83	-7.85	-440.51	14.44	716.00
18	21	120.77	143.26	7.27	-139.74	-14.44	-712.95
18	22	-120.77	-126.27	-7.27	139.74	-2.77	1031.99
19	22	118.83	-408.23	6.33	704.21	2.77	-1027.13
19	23	-118.83	419.07	-6.33	-704.21	-12.34	402.35
20	23	117.05	-890.64	5.49	-44.54	12.34	-397.90
20	8	-117.05	891.93	-5.49	44.54	-13.33	236.66
21	8	106.57	339.00	6.60	-115.16	-8.33	-400.48
21	24	-106.57	-323.31	-6.60	115.16	-6.10	1124.51
22	24	104.62	-211.20	5.66	728.79	6.10	-1119.65
22	25	-104.62	222.03	-5.66	-728.79	-14.65	792.47
23	25	102.84	-693.60	4.82	-19.96	14.65	-788.02
23	10	-102.84	708.33	-4.82	19.96	-24.55	-651.18
24	10	52.41	211.38	4.53	-62.06	3.66	-63.89
24	26	-52.41	-209.12	-4.53	62.06	-5.08	129.94
25	26	50.47	32.18	3.60	215.76	5.08	-125.07
25	27	-50.47	-21.34	-3.60	-215.76	-10.51	165.49
26	27	48.69	-125.49	2.76	-18.82	10.51	-161.05
26	28	-48.69	142.48	-2.76	18.82	-17.03	-156.14
27	28	46.74	-315.46	1.82	252.73	17.03	161.00
27	29	-46.74	326.30	-1.82	-252.73	-19.78	-645.66
28	29	44.96	-469.62	0.98	23.71	19.78	650.11
28	12	-44.96	469.96	-0.98	-23.71	-19.82	-672.50
29	12	0.00	20.63	0.00	0.00	0.00	29.65
29	30	0.00	0.00	0.00	0.00	0.00	0.00

Combination No. 3956
Group Id: AR LF-1 Name: AREMA LFD 1

Memb	Node	Fx kip	Fy kip	Fz kip	Mx kft	My kft	Mz kft
1	1	35.88	555.62	-5.48	-488.20	-0.30	-250.94
1	2	-35.88	-468.68	5.48	375.95	0.30	-484.56
2	3	38.70	830.81	0.44	-447.44	-1.84	-271.94
2	4	-38.70	-743.87	-0.44	456.40	1.84	-521.45
3	5	21.64	1051.36	11.01	-373.45	-6.78	-158.92
3	6	-21.64	-964.42	-11.01	599.07	6.78	-284.74
4	7	-11.56	1072.40	10.82	-370.26	-13.41	63.49
4	8	11.56	-985.46	-10.82	592.02	13.41	173.58
5	9	-35.57	829.90	0.22	-435.62	-17.82	223.81
5	10	35.57	-742.96	-0.22	440.15	17.82	505.47
6	11	-32.34	526.21	-9.00	-490.45	-18.57	199.96
6	12	32.34	-439.27	9.00	305.99	18.57	462.99
7	13	0.00	0.00	0.00	0.00	0.00	0.00
7	2	0.00	20.63	0.00	0.00	0.00	-29.65

8	2	35.88	448.05	-5.48	-375.95	-0.30	514.22
8	14	-35.88	-447.71	5.48	375.95	0.56	-492.87
9	14	34.17	274.72	-6.29	-104.09	-0.56	497.14
9	15	-34.17	-263.89	6.29	104.09	10.06	-90.38
10	15	34.17	120.57	-6.29	-331.01	-10.06	90.38
10	16	-34.17	-103.58	6.29	331.01	24.94	174.94
11	16	32.46	-73.36	-7.10	-52.88	-24.94	-170.67
11	17	-32.46	84.20	7.10	52.88	35.67	51.67
12	17	32.46	-231.03	-7.10	-285.36	-35.67	-51.67
12	4	-32.46	233.29	7.10	285.36	37.90	-21.26
13	4	71.16	510.58	-6.66	-741.76	-39.73	542.71
13	18	-71.16	-495.85	6.66	741.76	53.41	490.48
14	18	69.46	12.66	-7.47	21.27	-53.41	-486.21
14	19	-69.46	-1.82	7.47	-21.27	64.70	497.14
15	19	69.46	-145.01	-7.47	-211.21	-64.70	-497.14
15	6	-69.46	160.70	7.47	211.21	81.04	162.93
16	6	91.10	803.72	3.53	-810.28	-87.83	121.81
16	20	-91.10	-802.42	-3.53	810.28	87.19	23.48
17	20	89.39	319.22	2.72	-47.25	-87.19	-19.21
17	21	-89.39	-308.38	-2.72	47.25	83.08	493.18
18	21	89.39	161.55	2.72	-279.74	-83.08	-493.18
18	22	-89.39	-144.57	-2.72	279.74	76.64	855.52
19	22	86.91	-487.05	1.53	717.35	-76.64	-849.33
19	23	-86.91	497.89	-1.53	-717.35	74.33	105.49
20	23	86.91	-644.72	1.53	484.87	-74.33	-105.49
20	8	-86.91	646.02	-1.53	-484.87	74.06	-11.26
21	8	75.35	339.44	12.35	-107.16	-87.47	-162.32
21	24	-75.35	-323.75	-12.35	107.16	60.47	887.32
22	24	72.87	-307.87	11.16	889.92	-60.47	-881.13
22	25	-72.87	318.70	-11.16	-889.92	43.62	407.94
23	25	72.87	-465.53	11.16	657.44	-43.62	-407.94
23	10	-72.87	480.27	-11.16	-657.44	20.71	-563.00
24	10	37.30	262.69	11.38	217.29	-38.53	57.53
24	26	-37.30	-260.44	-11.38	-217.29	34.96	24.64
25	26	34.82	83.49	10.19	494.48	-34.96	-18.45
25	27	-34.82	-72.65	-10.19	-494.48	19.57	136.37
26	27	34.82	-74.18	10.19	262.00	-19.57	-136.37
26	28	-34.82	91.16	-10.19	-262.00	-4.55	-59.34
27	28	32.34	-264.15	9.00	532.91	4.55	65.54
27	29	-32.34	274.99	-9.00	-532.91	-18.14	-472.70
28	29	32.34	-418.30	9.00	305.99	18.14	472.70
28	12	-32.34	418.65	-9.00	-305.99	-18.57	-492.64
29	12	0.00	20.63	0.00	0.00	0.00	29.65
29	30	0.00	0.00	0.00	0.00	0.00	0.00

Combination No. 3957
Group Id: AR LF-1A Name: AREMA LFD 1A

Memb	Node	Fx kip	Fy kip	Fz kip	Mx kft	My kft	Mz kft
1	1	42.50	693.72	4.03	-58.33	-19.90	-304.78
1	2	-42.50	-581.94	-4.03	140.85	19.90	-566.56
2	3	46.40	1003.08	4.01	-49.45	-20.89	-333.36
2	4	-46.40	-891.30	-4.01	131.63	20.89	-617.78
3	5	30.38	1272.24	5.49	-29.84	-22.08	-227.97
3	6	-30.38	-1160.46	-5.49	142.33	22.08	-394.73
4	7	-6.31	1330.48	1.71	-45.75	-22.41	17.32
4	8	6.31	-1218.70	-1.71	80.83	22.41	111.97
5	9	-40.38	1071.44	0.85	-41.92	-21.57	245.47
5	10	40.38	-959.66	-0.85	59.24	21.57	582.37
6	11	-40.26	689.44	-0.67	-42.99	-20.47	242.33
6	12	40.26	-577.66	0.67	29.26	20.47	582.98

7	13	0.00	0.00	0.00	0.00	0.00	0.00
7	2	0.00	26.52	0.00	0.00	0.00	-38.13
8	2	42.50	555.42	4.03	-140.85	-19.90	604.68
8	14	-42.50	-554.98	-4.03	140.85	19.70	-578.22
9	14	40.78	332.57	3.20	209.23	-19.70	582.54
9	15	-40.78	-318.63	-3.20	-209.23	14.88	-90.75
10	15	39.21	134.37	2.46	-84.37	-14.88	94.66
10	16	-39.21	-112.53	-2.46	84.37	9.05	197.58
11	16	37.48	-114.97	1.63	273.77	-9.05	-193.26
11	17	-37.48	128.91	-1.63	-273.77	6.59	9.08
12	17	35.92	-317.69	0.89	-26.98	-6.59	-5.17
12	4	-35.92	320.59	-0.89	26.98	6.31	-95.09
13	4	82.31	570.72	4.90	-158.62	-27.20	712.87
13	18	-82.31	-551.77	-4.90	158.62	17.13	439.46
14	18	80.58	140.10	4.07	491.13	-17.13	-435.14
14	19	-80.58	-126.16	-4.07	-491.13	10.98	636.22
15	19	79.02	-229.89	3.34	-74.47	-10.98	-632.31
15	6	-79.02	250.06	-3.34	74.47	3.69	107.61
16	6	109.39	910.40	8.82	-216.79	-25.77	287.12
16	20	-109.39	-908.73	-8.82	216.79	24.17	-122.57
17	20	107.67	497.05	8.00	432.96	-24.17	126.89
17	21	-107.67	-483.12	-8.00	-432.96	12.10	613.35
18	21	106.10	127.06	7.26	-132.64	-12.10	-609.43
18	22	-106.10	-105.22	-7.26	132.64	-5.09	884.38
19	22	103.60	-399.37	6.05	663.28	5.09	-878.13
19	23	-103.60	413.30	-6.05	-663.28	-14.23	264.39
20	23	101.31	-853.75	4.97	-36.78	14.23	-258.67
20	8	-101.31	855.42	-4.97	36.78	-15.12	104.07
21	8	95.01	363.29	6.68	-117.62	-7.29	-216.03
21	24	-95.01	-343.12	-6.68	117.62	-7.32	988.28
22	24	92.50	-161.48	5.48	678.31	7.32	-982.02
22	25	-92.50	175.41	-5.48	-678.31	-15.60	727.60
23	25	90.22	-615.85	4.40	-21.76	15.60	-721.89
23	10	-90.22	634.79	-4.40	21.76	-24.62	-562.00
24	10	49.83	324.87	5.24	-81.00	3.05	-20.37
24	26	-49.83	-321.97	-5.24	81.00	-4.70	121.98
25	26	47.33	94.47	4.04	276.19	4.70	-115.73
25	27	-47.33	-80.54	-4.04	-276.19	-10.80	247.89
26	27	45.05	-108.25	2.96	-25.41	10.80	-242.18
26	28	-45.05	130.09	-2.96	25.41	-17.79	-39.93
27	28	42.54	-352.49	1.75	323.72	17.79	46.19
27	29	-42.54	366.43	-1.75	-323.72	-20.44	-589.13
28	29	40.26	-550.69	0.67	29.26	20.44	594.84
28	12	-40.26	551.13	-0.67	-29.26	-20.47	-621.10
29	12	0.00	26.52	0.00	0.00	0.00	38.13
29	30	0.00	0.00	0.00	0.00	0.00	0.00

Combination No. 3958
Group Id: AR LF-1A Name: AREMA LFD 1A

Memb	Node	Fx kip	Fy kip	Fz kip	Mx kft	My kft	Mz kft
1	1	35.78	684.77	-2.79	-393.54	-5.04	-254.31
1	2	-35.78	-572.99	2.79	336.36	5.04	-479.15
2	3	34.96	937.06	1.04	-364.93	-6.39	-250.39
2	4	-34.96	-825.28	-1.04	386.26	6.39	-466.28
3	5	19.57	1123.91	9.53	-303.30	-10.32	-148.49
3	6	-19.57	-1012.13	-9.53	498.76	10.32	-252.60
4	7	-8.04	1141.01	8.88	-302.09	-15.40	36.06
4	8	8.04	-1029.23	-8.88	484.06	15.40	128.78
5	9	-29.66	935.04	0.89	-349.02	-18.61	180.36
5	10	29.66	-823.26	-0.89	367.29	18.61	427.77

6	11	-31.07	651.31	-7.26	-396.31	-18.96	188.26
6	12	31.07	-539.53	7.26	247.53	18.96	448.68
7	13	0.00	0.00	0.00	0.00	0.00	0.00
7	2	0.00	26.52	0.00	0.00	0.00	-38.13
8	2	35.78	546.47	-2.79	-336.36	-5.04	517.28
8	14	-35.78	-546.03	2.79	336.36	5.17	-491.24
9	14	33.58	323.62	-3.83	13.18	-5.17	496.73
9	15	-33.58	-309.69	3.83	-13.18	10.96	-18.45
10	15	33.58	125.42	-3.83	-278.58	-10.96	18.45
10	16	-33.58	-103.58	3.83	278.58	20.04	252.62
11	16	31.39	-123.92	-4.88	79.02	-20.04	-247.13
11	17	-31.39	137.85	4.88	-79.02	27.40	49.44
12	17	31.39	-326.64	-4.88	-219.88	-27.40	-49.44
12	4	-31.39	329.53	4.88	219.88	28.94	-53.64
13	4	66.35	495.75	-3.84	-606.14	-35.33	519.92
13	18	-66.35	-476.81	3.84	606.14	43.20	478.49
14	18	64.15	15.11	-4.88	122.27	-43.20	-473.00
14	19	-64.15	-1.17	4.88	-122.27	50.58	485.30
15	19	64.15	-187.61	-4.88	-176.64	-50.58	-485.30
15	6	-64.15	207.78	4.88	176.64	61.25	53.05
16	6	83.72	804.35	4.65	-675.40	-71.57	199.54
16	20	-83.72	-802.68	-4.65	675.40	70.73	-54.18
17	20	81.52	340.98	3.61	53.01	-70.73	59.67
17	21	-81.52	-327.05	-3.61	-53.01	65.28	444.84
18	21	81.52	138.27	3.61	-245.89	-65.28	-444.84
18	22	-81.52	-116.43	-3.61	245.89	56.73	746.31
19	22	78.33	-463.42	2.08	668.38	-56.73	-738.35
19	23	-78.33	477.36	-2.08	-668.38	53.59	27.86
20	23	78.33	-666.14	2.08	369.47	-53.59	-27.86
20	8	-78.33	667.81	-2.08	-369.47	53.21	-92.80
21	8	70.29	361.42	10.96	-114.59	-68.61	-35.97
21	24	-70.29	-341.25	-10.96	114.59	44.66	804.13
22	24	67.11	-238.61	9.43	799.68	-44.66	-796.16
22	25	-67.11	252.54	-9.43	-799.68	30.42	425.24
23	25	67.11	-441.32	9.43	500.77	-30.42	-425.24
23	10	-67.11	460.26	-9.43	-500.77	11.06	-500.31
24	10	37.44	362.99	10.32	133.48	-29.67	72.54
24	26	-37.44	-360.09	-10.32	-133.48	26.43	41.04
25	26	34.26	132.59	8.79	489.87	-26.43	-33.08
25	27	-34.26	-118.66	-8.79	-489.87	13.15	222.82
26	27	34.26	-70.13	8.79	190.96	-13.15	-222.82
26	28	-34.26	91.97	-8.79	-190.96	-7.65	30.96
27	28	31.07	-314.37	7.26	539.28	7.65	-23.00
27	29	-31.07	328.31	-7.26	-539.28	-18.61	-462.36
28	29	31.07	-512.57	7.26	247.53	18.61	462.36
28	12	-31.07	513.01	-7.26	-247.53	-18.96	-486.80
29	12	0.00	26.52	0.00	0.00	0.00	38.13
29	30	0.00	0.00	0.00	0.00	0.00	0.00

Combination No. 3963
Group Id: AR LF-2 Name: AREMA LFD 2

Memb	Node	Fx kip	Fy kip	Fz kip	Mx kft	My kft	Mz kft
1	1	29.19	542.11	8.04	73.35	-10.38	-266.99
1	2	-25.36	-455.17	-7.10	82.89	10.38	-296.38
2	3	25.88	591.09	6.57	67.92	-10.38	-245.06
2	4	-22.04	-504.15	-5.63	58.22	10.38	-250.35
3	5	23.01	611.67	7.24	77.00	-10.05	-226.56
3	6	-19.18	-524.73	-6.30	62.80	10.05	-210.14
4	7	19.22	606.80	6.05	73.21	-9.40	-201.77
4	8	-15.38	-519.86	-5.11	42.27	9.40	-157.10

5	9	11.64	558.78	6.35	79.20	-8.59	-151.05
5	10	-7.81	-471.84	-5.41	42.33	8.59	-52.52
6	11	1.51	434.01	4.36	69.26	-7.91	-82.46
6	12	2.33	-347.07	-3.42	11.54	7.91	86.65
7	13	0.00	0.00	0.00	0.00	0.00	0.00
7	2	0.00	20.63	0.08	0.00	0.12	-29.65
8	2	25.36	434.54	7.02	-82.89	-10.50	326.03
8	14	-25.36	-434.20	-7.02	82.89	10.17	-305.33
9	14	19.81	249.91	4.89	203.59	-10.17	319.19
9	15	-19.81	-239.07	-4.85	-203.59	2.81	50.09
10	15	14.93	85.80	2.98	-43.77	-2.81	-37.89
10	16	-14.93	-68.82	-2.91	43.77	-4.15	220.91
11	16	9.39	-108.13	0.78	231.08	4.15	-207.04
11	17	-9.39	118.97	-0.74	-231.08	-5.30	35.54
12	17	4.51	-265.80	-1.13	-6.08	5.30	-23.34
12	4	-4.51	268.05	1.14	6.08	-4.94	-60.52
13	4	26.55	236.09	4.49	-64.30	-5.44	310.88
13	18	-26.55	-221.36	-4.43	64.30	-3.72	158.74
14	18	21.00	44.42	2.30	210.54	3.72	-144.88
14	19	-21.00	-33.58	-2.26	-210.54	-7.17	203.78
15	19	16.12	-113.25	0.39	-26.62	7.17	-191.58
15	6	-16.12	128.94	-0.33	26.62	-7.95	-73.19
16	6	35.30	395.79	6.63	-89.42	-2.10	283.33
16	20	-35.30	-394.49	-6.62	89.42	0.90	-211.84
17	20	29.76	217.54	4.50	185.42	-0.90	225.70
17	21	-29.76	-206.71	-4.45	-185.42	-5.86	94.69
18	21	24.88	59.87	2.58	-51.74	5.86	-82.49
18	22	-20.84	-42.89	-2.51	51.74	-11.89	204.13
19	22	15.30	-134.06	0.39	223.10	11.89	-190.26
19	23	-15.30	144.90	-0.34	-223.10	-12.44	-20.41
20	23	10.42	-291.73	-1.53	-14.06	12.44	32.61
20	8	-10.42	293.03	1.54	14.06	-12.16	-85.50
21	8	25.80	226.84	3.58	-56.33	2.76	242.60
21	24	-25.80	-211.15	-3.52	56.33	-10.51	236.21
22	24	20.25	34.20	1.39	218.52	10.51	-222.34
22	25	-20.25	-23.37	-1.35	-218.52	-12.58	265.82
23	25	15.37	-123.47	-0.53	-18.64	12.58	-253.62
23	10	-15.37	138.20	0.59	18.64	-11.44	-15.00
24	10	23.18	333.64	4.82	-60.97	2.85	67.52
24	26	-23.18	-331.39	-4.81	60.97	-4.36	36.94
25	26	17.63	154.44	2.69	213.87	4.36	-23.08
25	27	-17.63	-143.61	-2.64	-213.87	-8.39	248.17
26	27	12.75	-3.23	0.77	-23.29	8.39	-235.97
26	28	-12.75	20.21	-0.70	23.29	-10.14	208.23
27	28	7.21	-181.89	-1.42	227.38	10.14	-194.36
27	29	-7.21	192.73	1.47	-227.38	-7.95	-88.55
28	29	2.33	-326.10	-3.34	11.54	7.95	100.75
28	12	-2.33	326.44	3.34	-11.54	-7.80	-116.30
29	12	0.00	20.63	0.08	0.00	-0.12	29.65
29	30	0.00	0.00	0.00	0.00	0.00	0.00

Combination No. 4088
Group Id: AR LF-3 Name: AREMA LFD 3

Memb	Node	Fx kip	Fy kip	Fz kip	Mx kft	My kft	Mz kft
1	1	57.90	613.33	41.43	850.92	-39.51	-523.43
1	2	-55.98	-526.39	-40.96	-5.93	39.51	-645.90
2	3	66.95	810.76	43.02	879.15	-38.66	-587.00
2	4	-65.03	-723.82	-42.55	-1.52	38.66	-767.91
3	5	57.33	1013.37	45.30	911.25	-35.84	-524.69
3	6	-55.41	-926.43	-44.83	13.05	35.84	-632.95

4	7	27.39	1056.20	42.89	909.50	-30.19	-324.71
4	8	-25.47	-969.26	-42.42	-34.61	30.19	-219.28
5	9	-3.49	828.09	42.61	919.38	-23.12	-117.66
5	10	5.41	-741.15	-42.14	-50.15	23.12	206.75
6	11	-8.46	466.54	42.11	924.97	-18.33	-85.55
6	12	10.37	-379.60	-41.64	-65.97	18.33	276.47
7	13	0.00	0.00	0.00	0.00	0.00	0.00
7	2	0.00	20.63	0.04	0.00	0.06	-29.65
8	2	55.98	505.77	40.92	5.93	-39.57	675.55
8	14	-55.98	-505.42	-40.92	-5.93	37.61	-651.45
9	14	44.88	322.96	25.89	257.28	-37.61	679.19
9	15	-44.88	-312.12	-25.87	-257.28	-1.48	-199.57
10	15	34.91	160.46	12.28	-16.85	1.48	224.52
10	16	-34.91	-143.47	-12.24	16.85	-30.50	135.23
11	16	23.81	-33.48	-2.78	225.76	30.50	-107.49
11	17	-23.81	44.31	2.80	-225.76	-26.28	48.74
12	17	13.83	-191.15	-16.40	-40.72	26.28	-23.80
12	4	-13.83	193.40	16.40	40.72	-21.13	-36.60
13	4	78.86	530.42	26.15	-39.19	-17.53	804.51
13	18	-78.86	-515.69	-26.12	39.19	-36.12	269.40
14	18	67.77	187.53	11.09	442.83	36.12	-241.66
14	19	-67.77	-176.69	-11.07	-442.83	-52.86	516.73
15	19	57.79	-107.48	-2.52	-41.10	52.86	-491.78
15	6	-57.79	123.17	2.55	41.10	-47.31	239.64
16	6	113.20	803.27	42.27	-54.14	11.47	393.31
16	20	-113.20	-801.97	-42.27	54.14	-19.12	-248.11
17	20	102.10	473.81	27.25	427.88	19.12	275.85
17	21	-102.10	-462.97	-27.22	-427.88	-60.26	431.62
18	21	92.13	178.80	13.63	-56.05	60.26	-406.68
18	22	-90.11	-161.81	-13.60	56.05	-92.48	809.85
19	22	76.98	-242.24	-4.72	537.92	92.48	-777.04
19	23	-76.98	253.08	4.74	-537.92	-85.34	402.97
20	23	65.16	-606.17	-21.32	-62.59	85.34	-373.41
20	8	-65.16	607.47	21.32	62.59	-81.48	263.62
21	8	90.63	361.79	21.10	-27.98	51.29	-44.35
21	24	-90.63	-346.10	-21.07	27.98	-97.38	818.23
22	24	77.51	-57.95	2.75	565.99	97.38	-785.41
22	25	-77.51	68.79	-2.73	-565.99	-101.52	689.70
23	25	65.68	-421.88	-13.85	-34.52	101.52	-660.14
23	10	-65.68	436.61	13.88	34.52	-73.06	-221.18
24	10	60.28	304.54	28.26	15.63	49.94	14.43
24	26	-60.28	-302.28	-28.26	-15.63	-58.82	80.89
25	26	47.15	125.34	9.95	250.01	58.82	-48.08
25	27	-47.15	-114.50	-9.92	-250.01	-73.82	229.20
26	27	35.32	-32.33	-6.65	-23.91	73.82	-199.64
26	28	-35.32	49.32	6.69	23.91	-58.03	102.99
27	28	22.20	-212.82	-25.00	189.18	58.03	-70.18
27	29	-22.20	223.66	25.02	-189.18	-20.25	-259.46
28	29	10.37	-358.63	-41.60	-65.97	20.25	289.02
28	12	-10.37	358.97	41.60	65.97	-18.27	-306.12
29	12	0.00	20.63	0.04	0.00	-0.06	29.65
29	30	0.00	0.00	0.00	0.00	0.00	0.00

Combination No. 4090
Group Id: AR LF-3 Name: AREMA LFD 3

Memb	Node	Fx kip	Fy kip	Fz kip	Mx kft	My kft	Mz kft
1	1	58.15	617.70	43.65	894.22	-39.82	-529.35
1	2	-56.08	-530.76	-42.51	-9.81	39.82	-643.79
2	3	67.39	807.55	45.21	922.37	-38.87	-594.21
2	4	-65.33	-720.61	-44.08	-5.92	38.87	-768.43

3	5	58.24	1005.97	47.49	954.53	-35.87	-535.09
3	6	-56.17	-919.03	-46.35	8.59	35.87	-639.89
4	7	28.37	1046.78	45.09	952.83	-30.00	-335.51
4	8	-26.30	-959.84	-43.96	-38.85	30.00	-227.07
5	9	-2.80	815.61	44.78	962.35	-22.74	-126.47
5	10	4.87	-728.67	-43.65	-54.75	22.74	202.87
6	11	-7.69	449.61	44.35	968.21	-17.85	-94.93
6	12	9.75	-362.67	-43.21	-69.45	17.85	271.42
7	13	0.00	0.00	0.00	0.00	0.00	0.00
7	2	0.00	20.63	0.13	0.00	0.18	-29.65
8	2	56.08	510.13	42.39	9.81	-40.00	673.44
8	14	-56.08	-509.79	-42.39	-9.81	37.98	-649.14
9	14	44.83	323.15	26.82	266.40	-37.98	677.27
9	15	-44.83	-312.31	-26.75	-266.40	-2.47	-197.37
10	15	34.71	156.97	12.67	-14.74	2.47	222.66
10	16	-34.71	-139.99	-12.57	14.74	-32.35	128.84
11	16	23.46	-33.96	-3.00	221.76	32.35	-100.70
11	17	-23.46	44.80	3.07	-221.76	-27.77	41.22
12	17	13.34	-188.99	-17.14	-41.74	27.77	-15.93
12	4	-13.34	191.25	17.15	41.74	-22.39	-43.80
13	4	78.67	529.36	26.92	-35.82	-16.49	812.23
13	18	-78.67	-514.63	-26.83	35.82	-38.70	259.52
14	18	67.41	189.47	11.26	440.09	38.70	-231.38
14	19	-67.41	-178.63	-11.20	-440.09	-55.66	509.37
15	19	57.29	-102.90	-2.88	-40.85	55.66	-484.08
15	6	-57.29	118.59	2.97	40.85	-49.26	241.94
16	6	113.47	800.44	43.38	-49.44	13.39	397.96
16	20	-113.47	-799.14	-43.37	49.44	-21.24	-253.26
17	20	102.21	473.98	27.80	426.48	21.24	281.40
17	21	-102.21	-463.14	-27.74	-426.48	-63.18	426.33
18	21	92.10	181.61	13.66	-54.47	63.18	-401.04
18	22	-89.32	-164.62	-13.56	54.47	-95.40	810.86
19	22	76.04	-236.43	-5.30	533.38	95.40	-777.65
19	23	-76.04	247.27	5.37	-533.38	-87.34	412.35
20	23	64.07	-597.73	-22.43	-64.15	87.34	-382.44
20	8	-64.07	599.02	22.43	64.15	-83.28	274.19
21	8	90.37	360.81	21.52	-25.30	53.27	-47.12
21	24	-90.37	-345.13	-21.43	25.30	-100.23	818.85
22	24	77.09	-55.93	2.57	562.56	100.23	-785.64
22	25	-77.09	66.77	-2.50	-562.56	-104.05	692.98
23	25	65.12	-417.22	-14.56	-34.97	104.05	-663.07
23	10	-65.12	431.96	14.65	34.97	-74.07	-208.69
24	10	60.25	296.71	29.00	19.78	51.33	5.82
24	26	-60.25	-294.46	-28.98	-19.78	-60.44	87.05
25	26	46.97	120.51	10.12	248.05	60.44	-53.83
25	27	-46.97	-109.67	-10.06	-248.05	-75.68	227.67
26	27	35.00	-34.52	-7.00	-22.90	75.68	-197.76
26	28	-35.00	51.51	7.10	22.90	-58.99	95.93
27	28	21.72	-204.84	-25.96	172.73	58.99	-62.72
27	29	-21.72	215.68	26.03	-172.73	-19.72	-254.86
28	29	9.75	-341.70	-43.09	-69.45	19.72	284.77
28	12	-9.75	342.04	43.09	69.45	-17.67	-301.07
29	12	0.00	20.63	0.13	0.00	-0.18	29.65
29	30	0.00	0.00	0.00	0.00	0.00	0.00

Combination No. 4212
Group Id: AR LF-4 Name: AREMA LFD 4

Memb	Node	Fx kip	Fy kip	Fz kip	Mx kft	My kft	Mz kft
1	1	17.28	497.85	37.45	747.25	-24.74	-49.30
1	2	-17.28	-410.91	-37.45	20.54	24.74	-304.90

2	3	16.40	770.65	37.90	760.95	-23.13	-44.82
2	4	-16.40	-683.71	-37.90	15.93	23.13	-291.46
3	5	1.95	988.77	39.31	780.16	-19.70	50.74
3	6	-1.95	-901.83	-39.31	25.79	19.70	-90.73
4	7	-26.58	1035.57	36.38	767.78	-14.90	241.52
4	8	26.58	-948.63	-36.38	-22.04	14.90	303.37
5	9	-51.09	842.87	35.44	766.80	-9.90	405.38
5	10	51.09	-755.93	-35.44	-40.37	9.90	641.99
6	11	-47.09	577.94	33.80	759.18	-6.66	376.23
6	12	47.09	-491.00	-33.80	-66.25	6.66	589.18
7	13	0.00	0.00	0.00	0.00	0.00	0.00
7	2	0.00	20.63	0.00	0.00	0.00	-29.65
8	2	17.28	390.28	37.45	-20.54	-24.74	334.55
8	14	-17.28	-389.94	-37.45	20.54	22.95	-315.96
9	14	23.08	216.95	23.79	219.20	-22.95	301.46
9	15	-23.08	-206.12	-23.79	-219.20	-12.98	18.04
10	15	29.00	62.80	10.20	-41.70	12.98	-32.85
10	16	-29.00	-45.81	-10.20	41.70	-37.12	161.42
11	16	34.80	-131.13	-3.46	204.30	37.12	-175.91
11	17	-34.80	141.97	3.46	-204.30	-31.89	-30.34
12	17	40.72	-288.80	-17.06	-62.16	31.89	15.53
12	4	-40.72	291.06	17.06	62.16	-26.53	-106.61
13	4	57.13	392.65	20.84	-78.09	3.41	398.07
13	18	-57.13	-377.92	-20.84	78.09	-46.19	392.99
14	18	62.93	57.73	7.18	394.72	46.19	-407.48
14	19	-62.93	-46.89	-7.18	-394.72	-57.03	486.49
15	19	68.85	-230.04	-6.41	-77.74	57.03	-501.30
15	6	-68.85	245.73	6.41	77.74	-43.01	-18.82
16	6	70.80	656.10	32.90	-103.52	23.31	109.55
16	20	-70.80	-654.80	-32.90	103.52	-29.26	9.03
17	20	76.60	334.61	19.24	369.29	29.26	-23.52
17	21	-76.60	-323.77	-19.24	-369.29	-58.31	520.73
18	21	82.52	46.83	5.64	-103.17	58.31	-535.54
18	22	-82.52	-29.85	-5.64	103.17	-71.68	626.31
19	22	87.72	-362.61	-8.31	483.34	71.68	-639.30
19	23	-87.72	373.45	8.31	-483.34	-59.12	83.42
20	23	93.08	-716.02	-22.17	-93.70	59.12	-96.83
20	8	-93.08	717.31	22.17	93.70	-55.11	-32.82
21	8	66.50	231.32	14.21	-71.66	40.21	-270.54
21	24	-66.50	-215.63	-14.21	71.66	-71.27	759.16
22	24	71.70	-176.83	0.25	514.84	71.27	-772.15
22	25	-71.70	187.67	-0.25	-514.84	-71.65	496.88
23	25	77.06	-530.23	-13.61	-62.20	71.65	-510.29
23	10	-77.06	544.96	13.61	62.20	-43.71	-593.49
24	10	25.97	210.97	21.83	-21.83	33.82	-48.49
24	26	-25.97	-208.71	-21.83	21.83	-40.67	114.42
25	26	31.17	31.77	7.87	223.44	40.67	-127.41
25	27	-31.17	-20.93	-7.87	-223.44	-52.56	167.21
26	27	36.53	-125.90	-5.99	-43.68	52.56	-180.62
26	28	-36.53	142.89	5.99	43.68	-38.39	-137.54
27	28	41.73	-315.87	-19.94	195.31	38.39	124.55
27	29	-41.73	326.71	19.94	-195.31	-8.27	-609.83
28	29	47.09	-470.03	-33.80	-66.25	8.27	596.42
28	12	-47.09	470.37	33.80	66.25	-6.66	-618.83
29	12	0.00	20.63	0.00	0.00	0.00	29.65
29	30	0.00	0.00	0.00	0.00	0.00	0.00

Combination No. 4224
Group Id: AR LF-5 Name: AREMA LFD 5

Memb	Node	Fx kip	Fy kip	Fz kip	Mx kft	My kft	Mz kft

1	1	-3.86	448.91	50.42	1004.95	-20.06	111.89
1	2	2.69	-361.97	-45.65	-14.97	20.06	-43.40
2	3	-14.44	566.38	49.55	1007.46	-17.50	183.51
2	4	13.27	-479.44	-44.78	-35.26	17.50	101.76
3	5	-21.56	608.74	50.50	1020.63	-12.50	231.14
3	6	20.39	-521.80	-45.73	-28.99	12.50	200.14
4	7	-25.36	609.84	49.32	1016.75	-6.42	255.93
4	8	24.19	-522.90	-44.55	-49.34	6.42	253.20
5	9	-28.67	583.59	49.35	1018.51	-0.94	277.49
5	10	27.50	-496.65	-44.58	-50.54	0.94	299.59
6	11	-31.62	526.99	46.78	1000.54	2.27	296.85
6	12	30.45	-440.05	-42.01	-85.23	-2.27	340.64
7	13	0.00	0.00	0.00	0.00	0.00	0.00
7	2	0.00	20.63	0.80	0.00	1.14	-29.65
8	2	-2.69	341.34	44.85	14.97	-21.21	73.05
8	14	2.69	-341.00	-44.84	-14.97	19.07	-56.79
9	14	4.57	168.27	28.53	247.69	-19.07	38.62
9	15	-4.57	-157.43	-28.12	-247.69	-23.71	207.35
10	15	11.83	14.34	12.20	-18.65	23.71	-225.48
10	16	-11.83	2.65	-11.55	18.65	-51.83	239.32
11	16	19.09	-179.59	-4.76	220.75	51.83	-257.49
11	17	-19.09	190.43	5.18	-220.75	-44.33	-21.95
12	17	26.35	-337.26	-21.09	-51.51	44.33	3.82
12	4	-26.35	339.52	21.17	51.51	-37.69	-110.13
13	4	13.08	139.92	23.61	-16.25	20.19	8.37
13	18	-13.08	-125.19	-23.04	16.25	-68.08	263.79
14	18	20.34	-51.75	6.73	223.15	68.08	-281.96
14	19	-20.34	62.59	-6.32	-223.15	-77.93	195.60
15	19	27.60	-209.42	-9.60	-49.12	77.93	-213.73
15	6	-27.60	225.11	10.20	49.12	-56.29	-261.30
16	6	7.20	296.68	35.53	-20.13	43.79	61.16
16	20	-7.20	-295.39	-35.48	20.13	-50.21	-7.60
17	20	14.47	118.44	19.17	219.27	50.21	-10.57
17	21	-14.47	-107.60	-18.75	-219.27	-78.85	181.28
18	21	21.72	-39.23	2.84	-52.99	78.85	-199.41
18	22	-24.06	56.21	-2.19	52.99	-84.81	86.44
19	22	31.33	-233.16	-14.12	186.41	84.81	-104.61
19	23	-31.33	244.00	14.54	-186.41	-63.17	-255.75
20	23	38.58	-390.83	-30.45	-85.85	63.17	237.62
20	8	-38.58	392.13	30.50	85.85	-57.65	-308.44
21	8	14.39	130.77	14.05	-36.52	51.23	55.24
21	24	-14.39	-115.09	-13.44	36.52	-81.29	213.54
22	24	21.66	-61.86	-2.86	202.88	81.29	-231.71
22	25	-21.66	72.70	3.28	-202.88	-76.65	130.09
23	25	28.91	-219.53	-19.19	-69.38	76.65	-148.22
23	10	-28.91	234.26	19.76	69.38	-36.67	-317.63
24	10	1.41	262.39	24.82	-18.84	35.73	18.05
24	26	-1.41	-260.14	-24.73	18.84	-43.51	64.03
25	26	8.68	83.19	8.42	220.56	43.51	-82.20
25	27	-8.68	-72.35	-8.01	-220.56	-55.92	199.67
26	27	15.93	-74.48	-7.91	-51.71	55.92	-217.80
26	28	-15.93	91.46	8.56	51.71	-36.42	21.38
27	28	23.20	-264.70	-24.87	181.82	36.42	-39.55
27	29	-23.20	275.54	25.29	-181.82	1.45	-368.45
28	29	30.45	-419.08	-41.20	-85.23	-1.45	350.31
28	12	-30.45	419.43	41.21	85.23	3.42	-370.30
29	12	0.00	20.63	0.80	0.00	-1.14	29.65
29	30	0.00	0.00	0.00	0.00	0.00	0.00

Combination No. 4345
Group Id: AR LF-6 Name: AREMA LFD 6

Memb	Node	Fx	Fy	Fz	Mx	My	Mz

				report			
		kip	kip	kip	kft	kft	kft
1	1	42.37	575.99	77.97	1686.84	-49.08	-341.60
1	2	-40.30	-489.05	-76.84	-98.82	49.08	-508.03
2	3	47.71	798.02	79.99	1721.78	-45.75	-379.76
2	4	-45.64	-711.08	-78.86	-92.36	45.75	-579.40
3	5	36.56	1005.22	82.53	1757.90	-38.40	-307.05
3	6	-34.50	-918.28	-81.40	-76.32	38.40	-423.61
4	7	6.69	1047.53	80.14	1756.20	-27.48	-107.47
4	8	-4.62	-960.59	-79.00	-123.76	27.48	-10.79
5	9	-22.49	825.14	79.56	1761.76	-15.86	87.98
5	10	24.55	-738.20	-78.42	-141.20	15.86	391.90
6	11	-23.47	491.32	78.67	1760.82	-8.59	92.83
6	12	25.53	-404.38	-77.54	-158.46	8.59	407.17
7	13	0.00	0.00	0.00	0.00	0.00	0.00
7	2	0.00	20.63	0.13	0.00	0.18	-29.65
8	2	40.30	468.42	76.71	98.82	-49.27	537.69
8	14	-40.30	-468.08	-76.71	-98.82	45.61	-515.37
9	14	36.19	281.44	48.12	322.86	-45.61	525.65
9	15	-36.19	-270.60	-48.05	-322.86	-27.02	-108.74
10	15	33.21	115.26	20.96	9.18	27.02	116.18
10	16	-33.21	-98.28	-20.86	-9.18	-76.52	136.58
11	16	29.10	-75.67	-7.73	213.13	76.52	-126.30
11	17	-29.10	86.51	7.80	-213.13	-64.79	3.82
12	17	26.13	-230.70	-34.89	-82.91	64.79	3.61
12	4	-26.13	232.96	34.91	82.91	-53.83	-76.44
13	4	71.77	478.13	43.95	9.45	8.07	655.85
13	18	-71.77	-463.39	-43.86	-9.45	-98.22	310.70
14	18	67.66	138.23	15.27	452.82	98.22	-300.42
14	19	-67.66	-127.39	-15.21	-452.82	-121.23	501.02
15	19	64.68	-154.14	-11.89	-60.67	121.23	-493.59
15	6	-64.68	169.83	11.98	60.67	-95.14	139.42
16	6	99.18	748.45	69.42	15.65	56.74	284.19
16	20	-99.18	-747.15	-69.41	-15.65	-69.30	-148.91
17	20	95.07	421.99	40.82	459.02	69.30	159.19
17	21	-95.07	-411.15	-40.75	-459.02	-130.90	470.01
18	21	92.10	129.62	13.66	-54.47	130.90	-462.58
18	22	-89.32	-112.63	-13.56	54.47	-163.12	749.32
19	22	83.18	-288.42	-18.32	500.84	163.12	-733.96
19	23	-83.18	299.26	18.39	-500.84	-135.39	290.14
20	23	78.36	-649.72	-48.46	-129.24	135.39	-278.08
20	8	-78.36	651.02	48.47	129.24	-126.63	160.42
21	8	82.98	309.58	30.53	-5.48	99.15	-149.63
21	24	-82.98	-293.89	-30.44	5.48	-165.80	809.35
22	24	76.84	-107.17	-1.44	549.83	165.80	-793.99
22	25	-76.84	118.00	1.51	-549.83	-163.57	623.94
23	25	72.02	-468.46	-31.58	-80.24	163.57	-611.88
23	10	-72.02	483.19	31.67	80.24	-98.63	-365.07
24	10	47.46	255.00	46.75	60.96	82.77	-26.83
24	26	-47.46	-252.75	-46.74	-60.96	-97.45	106.59
25	26	41.32	78.80	14.86	256.68	97.45	-91.24
25	27	-41.32	-67.96	-14.79	-256.68	-119.85	202.07
26	27	36.50	-76.23	-15.28	-46.81	119.85	-190.02
26	28	-36.50	93.22	15.39	46.81	-83.54	-10.55
27	28	30.36	-246.55	-47.27	116.27	83.54	25.91
27	29	-30.36	257.39	47.33	-116.27	-12.10	-406.49
28	29	25.53	-383.41	-77.41	-158.46	12.10	418.54
28	12	-25.53	383.75	77.41	158.46	-8.41	-436.82
29	12	0.00	20.63	0.13	0.00	-0.18	29.65
29	30	0.00	0.00	0.00	0.00	0.00	0.00

Combination No. 4349
Group Id: AR LF-6 Name: AREMA LFD 6

Memb	Node	Fx kip	Fy kip	Fz kip	Mx kft	My kft	Mz kft
1	1	40.09	565.20	80.48	1730.49	-49.30	-313.10
1	2	-38.73	-478.26	-78.23	-101.24	49.30	-496.35
2	3	44.84	799.31	82.57	1766.01	-45.91	-347.22
2	4	-43.48	-712.37	-80.32	-93.90	45.91	-559.59
3	5	32.95	1012.34	85.13	1802.27	-38.46	-269.45
3	6	-31.59	-925.40	-82.88	-77.71	38.46	-393.59
4	7	3.02	1057.25	82.72	1800.47	-27.41	-69.47
4	8	-1.65	-970.31	-80.47	-125.36	27.41	20.08
5	9	-25.60	839.55	82.15	1806.09	-15.70	122.11
5	10	26.96	-752.62	-79.91	-142.51	15.70	415.07
6	11	-26.27	514.65	81.15	1804.29	-8.37	124.83
6	12	27.63	-427.71	-78.91	-161.23	8.37	426.15
7	13	0.00	0.00	0.00	0.00	0.00	0.00
7	2	0.00	20.63	0.33	0.00	0.47	-29.65
8	2	38.73	457.63	77.90	101.24	-49.77	526.00
8	14	-38.73	-457.29	-77.90	-101.24	46.06	-504.20
9	14	35.53	276.36	48.90	315.20	-46.06	512.20
9	15	-35.53	-265.52	-48.72	-315.20	-27.66	-102.96
10	15	33.36	115.21	21.26	8.57	27.66	108.38
10	16	-33.36	-98.23	-20.99	-8.57	-77.68	144.26
11	16	30.16	-78.72	-8.01	216.23	77.68	-136.26
11	17	-30.16	89.56	8.18	-216.23	-65.46	9.18
12	17	27.99	-236.39	-35.64	-84.90	65.46	-3.75
12	4	-27.99	238.64	35.68	84.90	-54.25	-70.86
13	4	71.47	473.73	44.65	9.00	8.34	630.46
13	18	-71.47	-458.99	-44.41	-9.00	-99.77	327.06
14	18	68.27	130.83	15.41	456.08	99.77	-319.06
14	19	-68.27	-120.00	-15.24	-456.08	-122.91	508.49
15	19	66.10	-164.18	-12.22	-62.50	122.91	-503.06
15	6	-66.10	179.86	12.47	62.50	-95.92	126.96
16	6	97.69	745.53	70.41	15.21	57.47	266.64
16	20	-97.69	-744.24	-70.39	-15.21	-70.20	-131.88
17	20	94.49	416.08	41.39	462.29	70.20	139.88
17	21	-94.49	-405.24	-41.21	-462.29	-132.58	480.39
18	21	92.32	121.07	13.76	-56.29	132.58	-474.96
18	22	-89.92	-104.08	-13.49	56.29	-164.83	741.46
19	22	84.69	-299.97	-18.81	502.73	164.83	-728.39
19	23	-84.69	310.81	18.98	-502.73	-136.29	267.12
20	23	80.68	-663.90	-49.42	-132.43	136.29	-257.08
20	8	-80.68	665.20	49.44	132.43	-127.35	136.85
21	8	82.33	305.11	31.03	-7.07	99.94	-156.93
21	24	-82.33	-289.42	-30.78	7.07	-167.51	806.88
22	24	77.10	-114.63	-1.51	551.95	167.51	-793.81
22	25	-77.10	125.47	1.69	-551.95	-165.09	612.48
23	25	73.08	-478.56	-32.13	-83.22	165.09	-602.44
23	10	-73.08	493.29	32.36	83.22	-98.89	-395.25
24	10	46.13	259.32	47.55	59.29	83.19	-19.82
24	26	-46.13	-257.07	-47.51	-59.29	-98.12	100.93
25	26	40.90	80.12	15.22	258.72	98.12	-87.86
25	27	-40.90	-69.28	-15.04	-258.72	-120.98	200.69
26	27	36.88	-77.55	-15.40	-49.86	120.98	-190.65
26	28	-36.88	94.53	15.67	49.86	-84.21	-13.04
27	28	31.65	-259.57	-47.96	130.72	84.21	26.11
27	29	-31.65	270.41	48.13	-130.72	-11.64	-426.36
28	29	27.63	-406.74	-78.57	-161.23	11.64	436.41
28	12	-27.63	407.08	78.58	161.23	-7.90	-455.80
29	12	0.00	20.63	0.33	0.00	-0.47	29.65
29	30	0.00	0.00	0.00	0.00	0.00	0.00

Combination No. 4389
Group Id: AR LF-6 Name: AREMA LFD 6

Memb	Node	Fx kip	Fy kip	Fz kip	Mx kft	My kft	Mz kft
1	1	41.83	572.94	78.26	1693.66	-49.13	-334.87
1	2	-39.77	-486.00	-77.12	-99.74	49.13	-503.81
2	3	47.05	796.96	80.29	1728.73	-45.78	-372.15
2	4	-44.98	-710.02	-79.16	-93.09	45.78	-573.42
3	5	35.78	1005.03	82.84	1764.86	-38.39	-298.60
3	6	-33.71	-918.09	-81.71	-77.03	38.39	-415.95
4	7	5.91	1047.73	80.44	1763.16	-27.43	-99.02
4	8	-3.84	-960.79	-79.31	-124.45	27.43	-3.12
5	9	-23.15	826.20	79.86	1768.68	-15.78	95.60
5	10	25.22	-739.26	-78.73	-141.86	15.78	397.89
6	11	-24.01	494.35	78.96	1767.62	-8.49	99.60
6	12	26.07	-407.41	-77.83	-159.26	8.49	411.48
7	13	0.00	0.00	0.00	0.00	0.00	0.00
7	2	0.00	20.63	0.13	0.00	0.18	-29.65
8	2	39.77	465.37	77.00	99.74	-49.31	533.47
8	14	-39.77	-465.03	-77.00	-99.74	45.64	-511.29
9	14	35.92	279.59	48.29	321.59	-45.64	520.91
9	15	-35.92	-268.75	-48.22	-321.59	-27.24	-106.81
10	15	33.18	114.46	21.02	9.31	27.24	113.66
10	16	-33.18	-97.48	-20.92	-9.31	-76.89	137.21
11	16	29.33	-76.47	-7.79	212.96	76.89	-127.58
11	17	-29.33	87.31	7.86	-212.96	-65.07	3.90
12	17	26.59	-231.50	-35.05	-83.35	65.07	2.96
12	4	-26.59	233.76	35.07	83.35	-54.06	-76.04
13	4	71.57	476.27	44.09	9.74	8.28	649.46
13	18	-71.57	-461.54	-44.00	-9.74	-98.71	313.27
14	18	67.72	136.37	15.29	452.81	98.71	-303.65
14	19	-67.72	-125.54	-15.23	-452.81	-121.76	501.45
15	19	64.98	-156.00	-11.97	-60.94	121.76	-494.60
15	6	-64.98	171.69	12.07	60.94	-95.48	136.37
16	6	98.69	746.41	69.64	16.09	57.09	279.58
16	20	-98.69	-745.11	-69.63	-16.09	-69.69	-144.66
17	20	94.84	419.95	40.92	459.16	69.69	154.28
17	21	-94.84	-409.11	-40.86	-459.16	-131.45	471.83
18	21	92.10	127.57	13.66	-54.60	131.45	-464.98
18	22	-89.33	-110.59	-13.55	54.60	-163.66	746.88
19	22	83.45	-290.47	-18.44	500.41	163.66	-732.18
19	23	-83.45	301.31	18.51	-500.41	-135.75	285.27
20	23	78.86	-651.76	-48.69	-129.93	135.75	-273.80
20	8	-78.86	653.06	48.70	129.93	-126.94	155.77
21	8	82.70	307.73	30.61	-5.48	99.51	-152.64
21	24	-82.70	-292.04	-30.51	5.48	-166.33	808.32
22	24	76.82	-109.02	-1.48	549.53	166.33	-793.62
22	25	-76.82	119.85	1.55	-549.53	-164.04	620.78
23	25	72.23	-470.31	-31.73	-80.81	164.04	-609.30
23	10	-72.23	485.04	31.82	80.81	-98.80	-371.44
24	10	47.01	254.22	46.91	61.05	83.02	-26.45
24	26	-47.01	-251.97	-46.89	-61.05	-97.75	105.96
25	26	41.13	78.02	14.90	256.48	97.75	-91.27
25	27	-41.13	-67.18	-14.83	-256.48	-120.20	200.92
26	27	36.54	-77.01	-15.35	-47.28	120.20	-189.45
26	28	-36.54	94.00	15.46	47.28	-83.74	-12.97
27	28	30.66	-248.53	-47.45	117.39	83.74	27.67
27	29	-30.66	259.36	47.52	-117.39	-12.01	-411.23
28	29	26.07	-386.44	-77.70	-159.26	12.01	422.70
28	12	-26.07	386.78	77.70	159.26	-8.31	-441.13
29	12	0.00	20.63	0.13	0.00	-0.18	29.65

29	30	0.00	0.00	0.00	0.00	0.00	0.00

Combination No. 4393
Group Id: AR LF-6 Name: AREMA LFD 6

Memb	Node	Fx kip	Fy kip	Fz kip	Mx kft	My kft	Mz kft
1	1	39.56	562.15	80.77	1737.32	-49.35	-306.37
1	2	-38.20	-475.21	-78.52	-102.15	49.35	-492.13
2	3	44.18	798.25	82.87	1772.95	-45.94	-339.61
2	4	-42.82	-711.31	-80.63	-94.63	45.94	-553.61
3	5	32.17	1012.15	85.43	1809.23	-38.45	-260.99
3	6	-30.80	-925.21	-83.19	-78.42	38.45	-385.93
4	7	2.23	1057.45	83.02	1807.42	-27.36	-61.02
4	8	-0.87	-970.51	-80.78	-126.04	27.36	27.75
5	9	-26.26	840.62	82.46	1813.02	-15.62	129.72
5	10	27.62	-753.68	-80.21	-143.17	15.62	421.06
6	11	-26.81	517.67	81.44	1811.09	-8.27	131.60
6	12	28.17	-430.73	-79.20	-162.03	8.27	430.45
7	13	0.00	0.00	0.00	0.00	0.00	0.00
7	2	0.00	20.63	0.33	0.00	0.47	-29.65
8	2	38.20	454.59	78.19	102.15	-49.82	521.78
8	14	-38.20	-454.24	-78.19	-102.15	46.09	-500.12
9	14	35.26	274.51	49.06	313.93	-46.09	507.46
9	15	-35.26	-263.67	-48.89	-313.93	-27.88	-101.02
10	15	33.32	114.41	21.33	8.69	27.88	105.86
10	16	-33.32	-97.43	-21.06	-8.69	-78.05	144.88
11	16	30.39	-79.52	-8.06	216.05	78.05	-137.55
11	17	-30.39	90.36	8.24	-216.05	-65.74	9.25
12	17	28.45	-237.19	-35.80	-85.34	65.74	-4.41
12	4	-28.45	239.44	35.84	85.34	-54.49	-70.46
13	4	71.27	471.87	44.79	9.29	8.55	624.07
13	18	-71.27	-457.14	-44.55	-9.29	-100.27	329.63
14	18	68.33	128.98	15.43	456.07	100.27	-322.29
14	19	-68.33	-118.14	-15.26	-456.07	-123.44	508.92
15	19	66.40	-166.03	-12.30	-62.77	123.44	-504.07
15	6	-66.40	181.72	12.55	62.77	-96.27	123.91
16	6	97.20	743.49	70.63	15.65	57.82	262.02
16	20	-97.20	-742.19	-70.61	-15.65	-70.60	-127.63
17	20	94.26	414.03	41.49	462.43	70.60	134.97
17	21	-94.26	-403.19	-41.32	-462.43	-133.13	482.21
18	21	92.33	119.02	13.75	-56.42	133.13	-477.36
18	22	-89.93	-102.04	-13.48	56.42	-165.37	739.02
19	22	84.96	-302.02	-18.93	502.31	165.37	-726.61
19	23	-84.96	312.85	19.10	-502.31	-136.65	262.25
20	23	81.18	-665.95	-49.65	-133.12	136.65	-252.79
20	8	-81.18	667.25	49.67	133.12	-127.66	132.19
21	8	82.05	303.26	31.11	-7.08	100.30	-159.94
21	24	-82.05	-287.58	-30.86	7.08	-168.04	805.85
22	24	77.08	-116.48	-1.56	551.64	168.04	-793.44
22	25	-77.08	127.32	1.73	-551.64	-165.56	609.32
23	25	73.29	-480.41	-32.27	-83.78	165.56	-599.86
23	10	-73.29	495.14	32.51	83.78	-99.05	-401.62
24	10	45.67	258.54	47.70	59.38	83.44	-19.43
24	26	-45.67	-256.29	-47.67	-59.38	-98.42	100.30
25	26	40.71	79.34	15.26	258.52	98.42	-87.89
25	27	-40.71	-68.50	-15.08	-258.52	-121.33	199.54
26	27	36.92	-78.33	-15.46	-50.33	121.33	-190.08
26	28	-36.92	95.32	15.73	50.33	-84.40	-15.46
27	28	31.96	-261.55	-48.15	131.85	84.40	27.87
27	29	-31.96	272.39	48.32	-131.85	-11.55	-431.11
28	29	28.17	-409.76	-78.86	-162.03	11.55	440.57

28	12	-28.17	410.11	78.87	162.03	-7.79	-460.11
29	12	0.00	20.63	0.33	0.00	-0.47	29.65
29	30	0.00	0.00	0.00	0.00	0.00	0.00

Combination No. 4395
Group Id: AR LF-6 Name: AREMA LFD 6

Memb	Node	Fx kip	Fy kip	Fz kip	Mx kft	My kft	Mz kft
1	1	37.56	556.54	80.98	1740.25	-49.30	-284.58
1	2	-36.86	-469.60	-78.58	-102.16	49.30	-478.98
2	3	41.81	796.61	83.09	1775.94	-45.90	-315.27
2	4	-41.11	-709.67	-80.70	-94.47	45.90	-535.36
3	5	29.54	1011.92	85.65	1812.20	-38.42	-234.94
3	6	-28.84	-924.98	-83.26	-78.26	38.42	-364.28
4	7	-0.39	1057.69	83.24	1810.39	-27.35	-34.97
4	8	1.09	-970.75	-80.85	-125.86	27.35	49.40
5	9	-28.63	842.27	82.68	1816.00	-15.62	154.06
5	10	29.33	-755.33	-80.29	-142.93	15.62	439.30
6	11	-28.82	523.27	81.66	1814.02	-8.28	153.43
6	12	29.52	-436.33	-79.26	-161.91	8.28	443.71
7	13	0.00	0.00	0.00	0.00	0.00	0.00
7	2	0.00	20.63	0.39	0.00	0.56	-29.65
8	2	36.86	448.97	78.19	102.16	-49.87	508.63
8	14	-36.86	-448.63	-78.18	-102.16	46.14	-487.24
9	14	34.52	270.11	49.08	312.06	-46.14	493.08
9	15	-34.52	-259.28	-48.88	-312.06	-27.84	-93.28
10	15	33.11	111.09	21.33	8.58	27.84	96.81
10	16	-33.11	-94.10	-21.01	-8.58	-77.96	146.07
11	16	30.77	-82.84	-8.09	215.99	77.96	-140.23
11	17	-30.77	93.68	8.29	-215.99	-65.59	6.91
12	17	29.36	-240.51	-35.84	-85.35	65.59	-3.39
12	4	-29.36	242.77	35.88	85.35	-54.32	-72.53
13	4	70.47	466.90	44.82	9.12	8.42	607.89
13	18	-70.47	-452.17	-44.54	-9.12	-100.15	335.62
14	18	68.13	124.01	15.44	455.96	100.15	-329.77
14	19	-68.13	-113.17	-15.23	-455.96	-123.31	508.90
15	19	66.72	-171.00	-12.31	-62.84	123.31	-505.37
15	6	-66.72	186.68	12.61	62.84	-96.07	114.35
16	6	95.57	738.29	70.65	15.42	57.64	249.93
16	20	-95.57	-737.00	-70.62	-15.42	-70.42	-116.48
17	20	93.23	408.84	41.52	462.26	70.42	122.33
17	21	-93.23	-398.00	-41.32	-462.26	-132.98	487.00
18	21	91.82	113.83	13.77	-56.53	132.98	-483.47
18	22	-90.44	-96.84	-13.45	56.53	-165.21	732.83
19	22	86.08	-307.21	-18.94	502.24	165.21	-721.91
19	23	-86.08	318.05	19.14	-502.24	-136.45	249.71
20	23	82.82	-671.14	-49.67	-133.13	136.45	-241.56
20	8	-82.82	672.44	49.69	133.13	-127.46	120.02
21	8	81.73	298.31	31.15	-7.27	100.11	-169.42
21	24	-81.73	-282.62	-30.85	7.27	-167.89	804.50
22	24	77.36	-121.43	-1.54	551.51	167.89	-793.58
22	25	-77.36	132.27	1.74	-551.51	-165.42	601.98
23	25	74.10	-485.36	-32.27	-83.87	165.42	-593.84
23	10	-74.10	500.09	32.55	83.87	-98.88	-417.82
24	10	44.77	255.24	47.74	59.06	83.27	-21.49
24	26	-44.77	-252.98	-47.70	-59.06	-98.26	101.32
25	26	40.40	76.04	15.31	258.25	98.26	-90.40
25	27	-40.40	-65.20	-15.10	-258.25	-121.22	197.07
26	27	37.14	-81.63	-15.42	-50.54	121.22	-188.92
26	28	-37.14	98.62	15.75	50.54	-84.33	-24.43
27	28	32.77	-266.07	-48.13	133.62	84.33	35.35

27	29	-32.77	276.91	48.34	-133.62	-11.47	-445.41
28	29	29.52	-415.36	-78.87	-161.91	11.47	453.56
28	12	-29.52	415.70	78.87	161.91	-7.71	-473.37
29	12	0.00	20.63	0.39	0.00	-0.56	29.65
29	30	0.00	0.00	0.00	0.00	0.00	0.00

Combination No. 4417
Group Id: AR LF-6 Name: AREMA LFD 6

Memb	Node	Fx kip	Fy kip	Fz kip	Mx kft	My kft	Mz kft
1	1	37.21	554.55	80.95	1739.84	-49.28	-280.18
1	2	-36.51	-467.61	-78.56	-102.22	49.28	-476.22
2	3	41.37	795.92	83.08	1775.58	-45.88	-310.29
2	4	-40.67	-708.98	-80.68	-94.41	45.88	-531.45
3	5	29.03	1011.80	85.64	1811.83	-38.41	-229.41
3	6	-28.33	-924.86	-83.24	-78.20	38.41	-359.27
4	7	-0.91	1057.82	83.23	1810.01	-27.34	-29.44
4	8	1.60	-970.88	-80.83	-125.79	27.34	54.41
5	9	-29.07	842.97	82.67	1815.63	-15.61	159.04
5	10	29.77	-756.03	-80.27	-142.83	15.61	443.22
6	11	-29.17	525.25	81.64	1813.61	-8.27	157.86
6	12	29.87	-438.31	-79.25	-161.88	8.27	446.53
7	13	0.00	0.00	0.00	0.00	0.00	0.00
7	2	0.00	20.63	0.39	0.00	0.56	-29.65
8	2	36.51	446.98	78.17	102.22	-49.85	505.87
8	14	-36.51	-446.64	-78.16	-102.22	46.12	-484.57
9	14	34.35	268.90	49.07	310.90	-46.12	489.99
9	15	-34.35	-258.06	-48.86	-310.90	-27.83	-92.01
10	15	33.09	110.57	21.32	8.52	27.83	95.16
10	16	-33.09	-93.58	-21.00	-8.52	-77.93	146.48
11	16	30.92	-83.37	-8.09	215.95	77.93	-141.07
11	17	-30.92	94.20	8.30	-215.95	-65.55	6.96
12	17	29.66	-241.04	-35.84	-85.37	65.55	-3.81
12	4	-29.66	243.29	35.88	85.37	-54.29	-72.26
13	4	70.34	465.69	44.80	9.04	8.40	603.71
13	18	-70.34	-450.96	-44.52	-9.04	-100.11	337.30
14	18	68.17	122.80	15.43	455.90	100.11	-331.89
14	19	-68.17	-111.96	-15.23	-455.90	-123.26	509.18
15	19	66.91	-172.21	-12.31	-62.89	123.26	-506.03
15	6	-66.91	187.90	12.61	62.89	-96.01	112.35
16	6	95.24	736.96	70.63	15.32	57.61	246.91
16	20	-95.24	-735.66	-70.61	-15.32	-70.38	-113.71
17	20	93.08	407.50	41.51	462.17	70.38	119.12
17	21	-93.08	-396.66	-41.31	-462.17	-132.93	488.19
18	21	91.82	112.49	13.77	-56.61	132.93	-485.04
18	22	-90.45	-95.50	-13.45	56.61	-165.15	731.24
19	22	86.25	-308.55	-18.94	502.18	165.15	-720.75
19	23	-86.25	319.39	19.14	-502.18	-136.39	246.52
20	23	83.14	-672.48	-49.66	-133.18	136.39	-238.76
20	8	-83.14	673.78	49.69	133.18	-127.40	116.98
21	8	81.54	297.10	31.15	-7.39	100.06	-171.39
21	24	-81.54	-281.41	-30.85	7.39	-167.83	803.83
22	24	77.35	-122.64	-1.53	551.41	167.83	-793.34
22	25	-77.35	133.48	1.74	-551.41	-165.36	599.92
23	25	74.24	-486.57	-32.26	-83.96	165.36	-592.15
23	10	-74.24	501.30	32.54	83.96	-98.84	-421.99
24	10	44.47	254.73	47.73	58.88	83.23	-21.24
24	26	-44.47	-252.47	-47.69	-58.88	-98.22	100.91
25	26	40.28	75.53	15.31	258.08	98.22	-90.42
25	27	-40.28	-64.69	-15.10	-258.08	-121.18	196.31
26	27	37.17	-82.14	-15.42	-50.70	121.18	-188.55

26	28	-37.17	99.13	15.74	50.70	-84.31	-26.02
27	28	32.98	-267.36	-48.12	134.72	84.31	36.50
27	29	-32.98	278.20	48.33	-134.72	-11.47	-448.52
28	29	29.87	-417.34	-78.85	-161.88	11.47	456.28
28	12	-29.87	417.68	78.85	161.88	-7.71	-476.18
29	12	0.00	20.63	0.39	0.00	-0.56	29.65
29	30	0.00	0.00	0.00	0.00	0.00	0.00

Combination No. 4465
Group Id: AR LF-6 Name: AREMA LFD 6

Memb	Node	Fx kip	Fy kip	Fz kip	Mx kft	My kft	Mz kft
1	1	31.61	535.22	79.64	1710.37	-48.86	-216.57
1	2	-32.19	-448.28	-77.25	-99.63	48.86	-436.76
2	3	34.63	789.95	81.80	1746.18	-45.55	-238.85
2	4	-35.21	-703.01	-79.41	-91.14	45.55	-476.40
3	5	21.45	1010.88	84.35	1782.26	-38.25	-152.25
3	6	-22.03	-923.94	-81.96	-74.95	38.25	-292.84
4	7	-8.48	1058.79	81.94	1780.46	-27.38	47.72
4	8	7.90	-971.85	-79.56	-122.44	27.38	120.84
5	9	-35.81	848.99	81.41	1786.30	-15.83	230.47
5	10	35.23	-762.05	-79.02	-139.22	15.83	498.27
6	11	-34.80	544.48	80.36	1784.26	-8.59	221.66
6	12	34.22	-457.54	-77.98	-158.67	8.59	486.41
7	13	0.00	0.00	0.00	0.00	0.00	0.00
7	2	0.00	20.63	0.40	0.00	0.57	-29.65
8	2	32.19	427.66	76.85	99.63	-49.44	466.42
8	14	-32.19	-427.31	-76.85	-99.63	45.77	-446.04
9	14	32.00	254.80	48.27	301.32	-45.77	446.53
9	15	-32.00	-243.97	-48.06	-301.32	-26.97	-69.85
10	15	32.47	101.07	20.97	7.34	26.97	68.66
10	16	-32.47	-84.08	-20.65	-7.34	-76.23	150.49
11	16	32.28	-92.86	-7.93	216.06	76.23	-150.01
11	17	-32.28	103.70	8.14	-216.06	-64.09	1.56
12	17	32.75	-250.53	-35.23	-84.14	64.09	-2.74
12	4	-32.75	252.79	35.27	84.14	-53.02	-76.32
13	4	67.97	450.22	44.14	7.01	7.46	552.72
13	18	-67.97	-435.49	-43.86	-7.01	-97.80	356.53
14	18	67.77	107.33	15.28	455.14	97.80	-356.04
14	19	-67.77	-96.49	-15.07	-455.14	-120.71	509.96
15	19	68.25	-187.68	-12.02	-62.51	120.71	-511.15
15	6	-68.25	203.37	12.32	62.51	-94.11	83.65
16	6	90.28	720.57	69.64	12.44	55.86	209.19
16	20	-90.28	-719.27	-69.62	-12.44	-68.46	-78.95
17	20	90.09	391.11	41.04	460.58	68.46	79.44
17	21	-90.09	-380.27	-40.83	-460.58	-130.28	503.12
18	21	90.56	96.10	13.74	-57.08	130.28	-504.31
18	22	-91.73	-79.11	-13.41	57.08	-162.43	711.70
19	22	89.51	-324.94	-18.45	503.00	162.43	-706.14
19	23	-89.51	335.78	18.66	-503.00	-134.39	207.16
20	23	88.13	-688.87	-48.73	-131.23	134.39	-203.73
20	8	-88.13	690.17	48.76	131.23	-125.57	78.98
21	8	80.24	281.68	30.80	-8.79	98.19	-199.83
21	24	-80.24	-265.99	-30.50	8.79	-165.20	798.54
22	24	78.01	-138.06	-1.37	551.28	165.20	-792.98
22	25	-78.01	148.90	1.58	-551.28	-162.98	576.26
23	25	76.64	-502.00	-31.65	-82.95	162.98	-572.82
23	10	-76.64	516.73	31.93	82.95	-97.71	-472.98
24	10	41.41	245.32	47.09	56.27	81.88	-25.29
24	26	-41.41	-243.06	-47.05	-56.27	-96.66	102.01
25	26	39.19	66.12	15.18	256.76	96.66	-96.45

25	27	-39.19	-55.28	-14.97	-256.76	-119.43	188.13
26	27	37.81	-91.55	-15.10	-50.89	119.43	-184.70
26	28	-37.81	108.54	15.43	50.89	-83.31	-52.14
27	28	35.59	-281.99	-47.29	144.08	83.31	57.70
27	29	-35.59	292.83	47.50	-144.08	-11.71	-491.81
28	29	34.22	-436.57	-77.57	-158.67	11.71	495.25
28	12	-34.22	436.91	77.58	158.67	-8.02	-516.06
29	12	0.00	20.63	0.40	0.00	-0.57	29.65
29	30	0.00	0.00	0.00	0.00	0.00	0.00

Combination No. 4467
Group Id: AR LF-7 Name: AREMA LFD 7

Memb	Node	Fx kip	Fy kip	Fz kip	Mx kft	My kft	Mz kft
1	1	48.36	454.29	8.94	135.81	-8.45	-525.27
1	2	-48.36	-392.19	-8.94	47.53	8.45	-466.09
2	3	53.29	435.12	8.04	133.30	-8.16	-559.58
2	4	-53.29	-373.02	-8.04	31.42	8.16	-532.90
3	5	54.59	437.25	8.55	140.26	-7.42	-569.16
3	6	-54.59	-375.15	-8.55	34.97	7.42	-549.96
4	7	51.88	433.16	7.71	137.59	-6.38	-551.45
4	8	-51.88	-371.06	-7.71	20.45	6.38	-512.06
5	9	43.12	386.28	7.91	141.56	-5.31	-492.45
5	10	-43.12	-324.18	-7.91	20.65	5.31	-391.59
6	11	28.53	242.79	6.38	133.27	-4.55	-393.16
6	12	-28.53	-180.69	-6.38	-2.40	4.55	-191.79
7	13	0.00	0.00	0.00	0.00	0.00	0.00
7	2	0.00	14.73	0.00	0.00	0.00	-21.18
8	2	48.36	377.45	8.94	-47.53	-8.45	487.27
8	14	-48.36	-377.21	-8.94	47.53	8.02	-469.28
9	14	30.87	253.65	5.97	140.68	-8.02	513.00
9	15	-30.87	-245.91	-5.97	-140.68	-1.00	-135.73
10	15	13.39	143.54	3.00	-28.83	1.00	179.44
10	16	-13.39	-131.41	-3.00	28.83	-8.11	146.00
11	16	-4.10	5.02	0.03	163.86	8.11	-102.28
11	17	4.10	2.73	-0.03	-163.86	-8.16	104.01
12	17	-21.59	-107.61	-2.94	-9.63	8.16	-60.30
12	4	21.59	109.22	2.94	9.63	-7.23	26.24
13	4	31.71	263.81	5.10	-41.05	-0.93	506.66
13	18	-31.71	-253.29	-5.10	41.05	-9.53	24.18
14	18	14.22	126.90	2.13	151.64	9.53	19.54
14	19	-14.22	-119.16	-2.13	-151.64	-12.74	166.29
15	19	-3.27	14.28	-0.85	-21.85	12.74	-122.57
15	6	3.27	-3.07	0.85	21.85	-10.89	141.54
16	6	51.32	378.22	7.70	-56.81	3.47	408.43
16	20	-51.32	-377.29	-7.70	56.81	-4.87	-340.09
17	20	33.84	250.90	4.73	135.88	4.87	383.80
17	21	-33.84	-243.16	-4.73	-135.88	-12.01	-10.69
18	21	16.35	138.28	1.76	-37.61	12.01	54.40
18	22	-16.35	-126.15	-1.76	37.61	-16.18	258.59
19	22	-1.13	-0.24	-1.21	155.08	16.18	-214.87
19	23	1.13	7.98	1.21	-155.08	-14.35	208.66
20	23	-18.62	-112.86	-4.18	-18.41	14.35	-164.94
20	8	18.62	113.79	4.18	18.41	-13.60	144.44
21	8	33.26	257.27	3.53	-38.86	7.22	367.62
21	24	-33.26	-246.07	-3.53	38.86	-14.93	182.63
22	24	15.77	119.68	0.56	153.83	14.93	-138.92
22	25	-15.77	-111.94	-0.56	-153.83	-15.77	313.83
23	25	-1.71	7.06	-2.41	-19.65	15.77	-270.12
23	10	1.71	3.47	2.41	19.65	-10.82	273.80
24	10	41.41	320.72	5.50	-40.31	5.51	117.79

24	26	-41.41	-319.11	-5.50	40.31	-7.24	-17.29
25	26	23.92	192.72	2.53	152.38	7.24	61.00
25	27	-23.92	-184.97	-2.53	-152.38	-11.06	224.23
26	27	6.44	80.09	-0.44	-21.10	11.06	-180.52
26	28	-6.44	-67.96	0.44	21.10	-10.01	355.77
27	28	-11.05	-55.60	-3.41	167.11	10.01	-312.05
27	29	11.05	63.34	3.41	-167.11	-4.86	222.23
28	29	-28.53	-165.71	-6.38	-2.40	4.86	-178.51
28	12	28.53	165.95	6.38	2.40	-4.55	170.61
29	12	0.00	14.73	0.00	0.00	0.00	21.18
29	30	0.00	0.00	0.00	0.00	0.00	0.00

Combination No. 4468
Group Id: AR LF-7 Name: AREMA LFD 7

Memb	Node	Fx kip	Fy kip	Fz kip	Mx kft	My kft	Mz kft
1	1	-28.91	250.05	8.94	135.81	-8.45	394.07
1	2	28.91	-187.95	-8.94	47.53	8.45	198.66
2	3	-43.08	388.47	8.04	133.30	-8.16	490.51
2	4	43.08	-326.37	-8.04	31.42	8.16	392.71
3	5	-51.54	433.55	8.55	140.26	-7.42	547.49
3	6	51.54	-371.45	-8.55	34.97	7.42	509.08
4	7	-54.25	436.86	7.71	137.59	-6.38	565.20
4	8	54.25	-374.76	-7.71	20.45	6.38	546.98
5	9	-53.25	432.93	7.91	141.56	-5.31	557.64
5	10	53.25	-370.83	-7.91	20.65	5.31	534.01
6	11	-48.74	447.02	6.38	133.27	-4.55	526.18
6	12	48.74	-384.92	-6.38	-2.40	4.55	472.96
7	13	0.00	0.00	0.00	0.00	0.00	0.00
7	2	0.00	14.73	0.00	0.00	0.00	-21.18
8	2	-28.91	173.22	8.94	-47.53	-8.45	-177.48
8	14	28.91	-172.98	-8.94	47.53	8.02	185.73
9	14	-11.43	49.42	5.97	140.68	-8.02	-229.44
9	15	11.43	-41.67	-5.97	-140.68	-1.00	298.24
10	15	6.06	-60.70	3.00	-28.83	1.00	-341.95
10	16	-6.06	72.83	-3.00	28.83	-8.11	183.90
11	16	23.55	-199.22	0.03	163.86	8.11	-227.62
11	17	-23.55	206.96	-0.03	-163.86	-8.16	-79.13
12	17	41.03	-311.84	-2.94	-9.63	8.16	35.41
12	4	-41.03	313.45	2.94	9.63	-7.23	-133.63
13	4	-2.05	12.93	5.10	-41.05	-0.93	-259.07
13	18	2.05	-2.40	-5.10	41.05	-9.53	274.81
14	18	15.43	-123.99	2.13	151.64	9.53	-318.52
14	19	-15.43	131.73	-2.13	-151.64	-12.74	125.40
15	19	32.92	-236.61	-0.85	-21.85	12.74	-169.12
15	6	-32.92	247.81	0.85	21.85	-10.89	-360.45
16	6	-18.62	123.64	7.70	-56.81	3.47	-148.63
16	20	18.62	-122.71	-7.70	56.81	-4.87	170.91
17	20	-1.13	-3.68	4.73	135.88	4.87	-214.62
17	21	1.13	11.42	-4.73	-135.88	-12.01	203.22
18	21	16.35	-116.30	1.76	-37.61	12.01	-246.94
18	22	-16.35	128.43	-1.76	37.61	-16.18	-42.75
19	22	33.84	-254.82	-1.21	155.08	16.18	-0.97
19	23	-33.84	262.56	1.21	-155.08	-14.35	-389.77
20	23	51.32	-367.44	-4.18	-18.41	14.35	346.05
20	8	-51.32	368.37	4.18	18.41	-13.60	-412.61
21	8	-2.93	6.39	3.53	-38.86	7.22	-134.36
21	24	2.93	4.82	-3.53	38.86	-14.93	136.08
22	24	14.56	-131.21	0.56	153.83	14.93	-179.80
22	25	-14.56	138.95	-0.56	-153.83	-15.77	-24.23
23	25	32.04	-243.83	-2.41	-19.65	15.77	-19.49

23	10	-32.04	254.35	2.41	19.65	-10.82	-491.93
24	10	-21.21	116.48	5.50	-40.31	5.51	-42.08
24	26	21.21	-114.87	-5.50	40.31	-7.24	78.42
25	26	-3.72	-11.52	2.53	152.38	7.24	-122.14
25	27	3.72	19.26	-2.53	-152.38	-11.06	98.90
26	27	13.77	-124.14	-0.44	-21.10	11.06	-142.61
26	28	-13.77	136.27	0.44	21.10	-10.01	-165.63
27	28	31.25	-259.83	-3.41	167.11	10.01	121.91
27	29	-31.25	267.57	3.41	-167.11	-4.86	-520.21
28	29	48.74	-369.94	-6.38	-2.40	4.86	476.50
28	12	-48.74	370.19	6.38	2.40	-4.55	-494.14
29	12	0.00	14.73	0.00	0.00	0.00	21.18
29	30	0.00	0.00	0.00	0.00	0.00	0.00

Combination No. 4469
Group Id: AR LF-7 Name: AREMA LFD 7

Memb	Node	Fx kip	Fy kip	Fz kip	Mx kft	My kft	Mz kft
1	1	-1.87	321.54	-25.00	-647.96	0.71	72.30
1	2	1.87	-259.44	25.00	135.55	-0.71	-34.00
2	3	-9.35	404.80	-26.36	-657.19	-1.36	122.98
2	4	9.35	-342.70	26.36	116.91	1.36	68.74
3	5	-14.39	434.84	-26.11	-654.15	-4.92	156.66
3	6	14.39	-372.74	26.11	118.93	4.92	138.41
4	7	-17.11	435.57	-26.95	-656.82	-8.88	174.37
4	8	17.11	-373.47	26.95	104.41	8.88	176.31
5	9	-19.52	416.60	-26.48	-648.93	-12.11	190.11
5	10	19.52	-354.50	26.48	106.13	12.11	210.05
6	11	-21.69	375.54	-27.56	-650.51	-13.71	204.41
6	12	21.69	-313.44	27.56	85.61	13.71	240.30
7	13	0.00	0.00	0.00	0.00	0.00	0.00
7	2	0.00	14.73	0.00	0.00	0.00	-21.18
8	2	-1.87	244.70	-25.00	-135.55	0.71	55.18
8	14	1.87	-244.46	25.00	135.55	0.48	-43.53
9	14	3.38	120.90	-15.09	84.85	-0.48	30.41
9	15	-3.38	-113.16	15.09	-84.85	23.28	146.35
10	15	8.62	10.79	-5.19	-52.48	-23.28	-159.46
10	16	-8.62	1.35	5.19	52.48	35.56	170.64
11	16	13.87	-127.74	4.71	172.39	-35.56	-183.75
11	17	-13.87	135.48	-4.71	-172.39	28.45	-15.03
12	17	19.12	-240.36	14.61	31.09	-28.45	1.91
12	4	-19.12	241.97	-14.61	-31.09	23.86	-77.68
13	4	9.76	100.73	-11.74	-85.82	-25.22	8.94
13	18	-9.76	-90.21	11.74	85.82	49.32	187.09
14	18	15.01	-36.18	-1.84	139.05	-49.32	-200.20
14	19	-15.01	43.92	1.84	-139.05	52.10	139.71
15	19	20.25	-148.80	8.06	-2.25	-52.10	-152.83
15	6	-20.25	160.00	-8.06	2.25	34.47	-184.76
16	6	5.86	212.74	-18.04	-121.18	-39.39	46.34
16	20	-5.86	-211.81	18.04	121.18	42.66	-7.94
17	20	11.11	85.42	-8.14	103.69	-42.66	-5.17
17	21	-11.11	-77.68	8.14	-103.69	54.95	128.35
18	21	16.35	-27.20	1.76	-37.61	-54.95	-141.47
18	22	-16.35	39.33	-1.76	37.61	50.79	62.72
19	22	21.60	-165.72	11.66	187.26	-50.79	-75.83
19	23	-21.60	173.46	-11.66	-187.26	33.17	-180.32
20	23	26.84	-278.34	21.57	45.96	-33.17	167.21
20	8	-26.84	279.27	-21.57	-45.96	29.27	-217.64
21	8	9.74	94.20	-5.38	-58.45	-38.15	41.33
21	24	-9.74	-82.99	5.38	58.45	49.91	152.37
22	24	14.98	-43.40	4.52	166.42	-49.91	-165.49

22	25	-14.98	51.14	-4.52	-166.42	43.08	94.09
23	25	20.23	-156.02	14.42	25.12	-43.08	-107.21
23	10	-20.23	166.54	-14.42	-25.12	13.47	-223.92
24	10	0.71	187.96	-12.05	-81.02	-25.58	13.87
24	26	-0.71	-186.35	12.05	81.02	29.36	44.92
25	26	5.96	59.96	-2.15	143.85	-29.36	-58.04
25	27	-5.96	-52.22	2.15	-143.85	32.61	142.76
26	27	11.20	-52.66	7.75	2.55	-32.61	-155.88
26	28	-11.20	64.79	-7.75	-2.55	14.26	16.86
27	28	16.45	-188.35	17.65	222.94	-14.26	-29.97
27	29	-16.45	196.09	-17.65	-222.94	-12.40	-260.36
28	29	21.69	-298.46	27.56	85.61	12.40	247.24
28	12	-21.69	298.71	-27.56	-85.61	-13.71	-261.48
29	12	0.00	14.73	0.00	0.00	0.00	21.18
29	30	0.00	0.00	0.00	0.00	0.00	0.00

Combination No. 4470
Group Id: AR LF-7 Name: AREMA LFD 7

Memb	Node	Fx kip	Fy kip	Fz kip	Mx kft	My kft	Mz kft
1	1	-1.87	321.54	27.22	557.84	-13.38	72.30
1	2	1.87	-259.44	-27.22	0.13	13.38	-34.00
2	3	-9.35	404.80	26.55	558.95	-11.82	122.98
2	4	9.35	-342.70	-26.55	-14.61	11.82	68.74
3	5	-14.39	434.84	27.21	568.02	-8.77	156.66
3	6	14.39	-372.74	-27.21	-10.24	8.77	138.41
4	7	-17.11	435.57	26.37	565.35	-5.03	174.37
4	8	17.11	-373.47	-26.37	-24.76	5.03	176.31
5	9	-19.52	416.60	26.43	567.20	-1.64	190.11
5	10	19.52	-354.50	-26.43	-25.38	1.64	210.05
6	11	-21.69	375.54	24.66	555.30	0.38	204.41
6	12	21.69	-313.44	-24.66	-49.80	-0.38	240.30
7	13	0.00	0.00	0.00	0.00	0.00	0.00
7	2	0.00	14.73	0.00	0.00	0.00	-21.18
8	2	-1.87	244.70	27.22	-0.13	-13.38	55.18
8	14	1.87	-244.46	-27.22	0.13	12.08	-43.53
9	14	3.38	120.90	17.32	170.75	-12.08	30.41
9	15	-3.38	-113.16	-17.32	-170.75	-14.07	146.35
10	15	8.62	10.79	7.41	-16.09	14.07	-159.46
10	16	-8.62	1.35	-7.41	16.09	-31.62	170.64
11	16	13.87	-127.74	-2.49	159.27	31.62	-183.75
11	17	-13.87	135.48	2.49	-159.27	-27.87	-15.03
12	17	19.12	-240.36	-12.39	-31.55	27.87	1.91
12	4	-19.12	241.97	12.39	31.55	-23.97	-77.68
13	4	9.76	100.73	14.16	-16.94	12.15	8.94
13	18	-9.76	-90.21	-14.16	16.94	-41.22	187.09
14	18	15.01	-36.18	4.26	158.42	41.22	-200.20
14	19	-15.01	43.92	-4.26	-158.42	-47.66	139.71
15	19	20.25	-148.80	-5.64	-32.40	47.66	-152.83
15	6	-20.25	160.00	5.64	32.40	-35.32	-184.76
16	6	5.86	212.74	21.57	-22.15	26.55	46.34
16	20	-5.86	-211.81	-21.57	22.15	-30.45	-7.94
17	20	11.11	85.42	11.66	153.21	30.45	-5.17
17	21	-11.11	-77.68	-11.66	-153.21	-48.07	128.35
18	21	16.35	-27.20	1.76	-37.61	48.07	-141.47
18	22	-16.35	39.33	-1.76	37.61	-52.24	62.72
19	22	21.60	-165.72	-8.14	137.75	52.24	-75.83
19	23	-21.60	173.46	8.14	-137.75	-39.94	-180.32
20	23	26.84	-278.34	-18.04	-53.06	39.94	167.21
20	8	-26.84	279.27	18.04	53.06	-36.68	-217.64
21	8	9.74	94.20	8.33	-28.31	31.64	41.33

report

21	24	-9.74	-82.99	-8.33	28.31	-49.85	152.37
22	24	14.98	-43.40	-1.58	147.05	49.85	-165.49
22	25	-14.98	51.14	1.58	-147.05	-47.46	94.09
23	25	20.23	-156.02	-11.48	-43.76	47.46	-107.21
23	10	-20.23	166.54	11.48	43.76	-23.90	-223.92
24	10	0.71	187.96	14.95	-18.38	22.25	13.87
24	26	-0.71	-186.35	-14.95	18.38	-26.95	44.92
25	26	5.96	59.96	5.05	156.98	26.95	-58.04
25	27	-5.96	-52.22	-5.05	-156.98	-34.58	142.76
26	27	11.20	-52.66	-4.85	-33.84	34.58	-155.88
26	28	-11.20	64.79	4.85	33.84	-23.09	16.86
27	28	16.45	-188.35	-14.76	137.04	23.09	-29.97
27	29	-16.45	196.09	14.76	-137.04	-0.80	-260.36
28	29	21.69	-298.46	-24.66	-49.80	0.80	247.24
28	12	-21.69	298.71	24.66	49.80	0.38	-261.48
29	12	0.00	14.73	0.00	0.00	0.00	21.18
29	30	0.00	0.00	0.00	0.00	0.00	0.00

♀

CAP DESIGN
==========

Code: AASHTO STANDARD (17th Edition 2002) - Ultimate Strength Design
Units: US
Pier View : Upstation.

DESIGN PARAMETERS:
==========
f'c = 4000.0 psi
Fy flex = 60000.0 psi Fy shear = 60000.0 psi
phi flex = 0.90 phi shear = 0.85
Ec = 3834.3 ksi Es = 29000.0 ksi
crack control factor z = 170.00 kips / in
Concrete Type : Normal Weight.
Design : centerline of column.

CAP GEOMETRY:
==========
Straight Cap : Length(X) = 34.50 ft Depth(Z) = 82.00 in

Cap Section Properties:
==========

Sec.	Area ft ^2	Iz in ^4	Iy in ^4
1	34.17	1476000.00	2756840.00

MAIN REINFORCEMENT:
==========

	Bar size	Quantity	Bar dist. in	As total in^2	From ft	To ft	Hook
TOP							
	US#8[M25]	13	3.00	10.270	0.00	34.50	Both
90							
BOTTOM							
	US#6[M19]	13	3.00	5.720	0.00	34.50	Both

90

STIRRUPS:
==========

From ft	To ft	Stirrup Size	n legs	Spacing in	Aprv/s in^2 / ft	Bar Type
0.00	2.88	US#4[M13]	4	24.00	0.40	Stirrup
2.88	6.80	US#4[M13]	4	6.00	1.60	Stirrup
6.80	8.31	US#4[M13]	4	24.00	0.40	Stirrup
8.31	14.38	US#4[M13]	4	6.00	1.60	Stirrup
14.38	14.56	US#4[M13]	4	3.00	3.20	Stirrup
14.56	16.07	US#4[M13]	4	6.00	1.60	Stirrup
16.07	18.43	US#4[M13]	4	24.00	0.40	Stirrup
18.43	19.94	US#4[M13]	4	6.00	1.60	Stirrup
19.94	20.13	US#4[M13]	4	3.00	3.20	Stirrup
20.13	23.82	US#4[M13]	4	6.00	1.60	Stirrup
23.82	25.88	US#4[M13]	4	3.00	3.20	Stirrup
25.88	31.63	US#4[M13]	4	6.00	1.60	Stirrup
31.63	34.50	US#4[M13]	4	24.00	0.40	Stirrup

Clear Cover on Sides = 2.00 in

FLEXURE DESIGN:
==========

Span 1: From 0.00 ft To 2.88 ft

Loc ft	AbsLoc ft	H in	Mmax / Mmin kips-ft	pMn kips-ft	Comb	Asb-req in^2	Asb-prv in^2	Asb-eff in^2	Ast-req in^2	Ast-prv in^2	Ast-eff in^2
2.9	2.9	60	0.0	1475.2	0	0.00	5.72	5.72	0.00	10.27	10.27
			-38.1	-2585.9	3957	0.00	5.72	5.72	0.20	10.27	10.27

Span 2: From 2.88 ft To 8.63 ft

Loc	AbsLoc	H	Mmax	pMn	Comb	Asb-req	Asb-prv	Asb-eff	Ast-req	Ast-prv	Ast-eff

```
                                                  report
                    Mmin    pMn   Comb  Asb-req  Asb-prv  Asb-eff  Ast-req  Ast-prv
Ast-eff
  ft    ft   in  kips-ft  kips-ft        in^2     in^2     in^2     in^2     in^2
 in^2
-------------------------------------------------------------------------------------
----------
 0.0   2.9   60   177.5  1475.2  4468    0.69     5.72     5.72     0.00    10.27
10.27
                 -675.5 -2585.9  4088    0.00     5.72     5.72     2.65    10.27
10.27
 0.0   2.9   60   229.4  1475.2  4468    0.90     5.72     5.72     0.00    10.27
10.27
                 -679.2 -2585.9  4088    0.00     5.72     5.72     2.66    10.27
10.27
 1.6   4.4   60   342.0  1475.2  4468    1.34     5.72     5.72     0.00    10.27
10.27
                 -224.5 -2585.9  4088    0.00     5.72     5.72     0.88    10.27
10.27
 3.9   6.8   60   257.5  1475.2  4224    1.01     5.72     5.72     0.00    10.27
10.27
                    0.0 -2585.9     0    0.00     5.72     5.72     0.00    10.27
10.27
 5.4   8.3   60   104.0  1475.2  4467    0.45     5.72     5.72     0.00    10.27
10.27
                  -79.1 -2585.9  4468    0.00     5.72     5.72     0.41    10.27
10.27
 5.8   8.6   60    26.2  1475.2  4467    0.14     5.72     5.72     0.00    10.27
10.27
                 -133.6 -2585.9  4468    0.00     5.72     5.72     0.52    10.27
10.27
```

Span 3: From 8.63 ft To 14.38 ft

```
 Loc  AbsLoc  H    Mmax    pMn   Comb  Asb-req  Asb-prv  Asb-eff  Ast-req  Ast-prv
Ast-eff
                    Mmin    pMn   Comb  Asb-req  Asb-prv  Asb-eff  Ast-req  Ast-prv
Ast-eff
  ft    ft   in  kips-ft  kips-ft        in^2     in^2     in^2     in^2     in^2
 in^2
-------------------------------------------------------------------------------------
----------
 0.0   8.6   60   259.1  1475.2  4468    1.01     5.72     5.72     0.00    10.27
10.27
                 -812.2 -2585.9  4090    0.00     5.72     5.72     3.19    10.27
10.27
 2.1  10.7   60   490.5  1475.2  3956    1.92     5.72     5.72     0.00    10.27
10.27
                  -19.5 -2585.9  4467    0.00     5.72     5.72     0.10    10.27
10.27
 3.6  12.2   60   694.4  1475.2  3955    2.72     5.72     5.72     0.00    10.27
10.27
                    0.0 -2585.9     0    0.00     5.72     5.72     0.00    10.27
10.27
 5.8  14.4   60   241.9  1475.2  4090    0.94     5.72     5.72     0.00    10.27
10.27
                 -360.5 -2585.9  4468    0.00     5.72     5.72     1.41    10.27
10.27
```

Span 4: From 14.38 ft To 20.13 ft

```
 Loc  AbsLoc  H    Mmax    pMn   Comb  Asb-req  Asb-prv  Asb-eff  Ast-req  Ast-prv
```

Loc ft	AbsLoc ft	H in	Mmax / Mmin kips-ft	pMn / pMn kips-ft	Comb / Comb	Asb-req / Asb-req in^2	Asb-prv / Asb-prv in^2	Asb-eff / Asb-eff in^2	Ast-req / Ast-req in^2	Ast-prv / Ast-prv in^2	Ast-eff / Ast-eff in^2
0.0	14.4	60	148.6	1475.2	4468	0.58	5.72	5.72	0.00	10.27	10.27
			-408.4	-2585.9	4467	0.00	5.72	5.72	1.60	10.27	10.27
0.2	14.6	60	214.6	1475.2	4468	0.84	5.72	5.72	0.00	10.27	10.27
			-383.8	-2585.9	4467	0.00	5.72	5.72	1.50	10.27	10.27
1.7	16.1	60	716.0	1475.2	3955	2.81	5.72	5.72	0.00	10.27	10.27
			-54.4	-2585.9	4467	0.00	5.72	5.72	0.28	10.27	10.27
4.1	18.4	60	1032.0	1475.2	3955	4.05	5.72	5.72	0.00	10.27	10.27
			-42.7	-2585.9	4468	0.00	5.72	5.72	0.22	10.27	10.27
5.6	19.9	60	412.3	1475.2	4090	1.61	5.72	5.72	0.00	10.27	10.27
			-389.8	-2585.9	4468	0.00	5.72	5.72	1.52	10.27	10.27
5.8	20.1	60	274.2	1475.2	4090	1.07	5.72	5.72	0.00	10.27	10.27
			-412.6	-2585.9	4468	0.00	5.72	5.72	1.61	10.27	10.27

Span 5: From 20.13 ft To 25.88 ft

Loc ft	AbsLoc ft	H in	Mmax / Mmin kips-ft	pMn / pMn kips-ft	Comb / Comb	Asb-req / Asb-req in^2	Asb-prv / Asb-prv in^2	Asb-eff / Asb-eff in^2	Ast-req / Ast-req in^2	Ast-prv / Ast-prv in^2	Ast-eff / Ast-eff in^2
0.0	20.1	60	400.5	1475.2	3955	1.57	5.72	5.72	0.00	10.27	10.27
			-367.6	-2585.9	4467	0.00	5.72	5.72	1.44	10.27	10.27
2.2	22.3	60	1124.5	1475.2	3955	4.42	5.72	5.72	0.00	10.27	10.27
			0.0	-2585.9	0	0.00	5.72	5.72	0.00	10.27	10.27
3.7	23.8	60	792.5	1475.2	3955	3.11	5.72	5.72	0.00	10.27	10.27
			-24.2	-2585.9	4468	0.00	5.72	5.72	0.13	10.27	10.27
5.8	25.9	60	273.8	1475.2	4467	1.07	5.72	5.72	0.00	10.27	10.27
			-651.2	-2585.9	3955	0.00	5.72	5.72	2.55	10.27	10.27

Span 6: From 25.88 ft To 31.63 ft

```
                                                  report
 Loc  AbsLoc  H    Mmax    pMn   Comb  Asb-req  Asb-prv  Asb-eff  Ast-req  Ast-prv
Ast-eff
                   Mmin    pMn   Comb  Asb-req  Asb-prv  Asb-eff  Ast-req  Ast-prv
Ast-eff
  ft    ft   in  kips-ft  kips-ft        in^2     in^2     in^2     in^2     in^2
 in^2
-------------------------------------------------------------------------------------
----------
 0.0  25.9   60    63.9  1475.2  3955    0.33     5.72     5.72     0.00    10.27
10.27
                 -117.8 -2585.9  4467    0.00     5.72     5.72     0.46    10.27
10.27
 0.3  26.2   60   129.9  1475.2  3955    0.51     5.72     5.72     0.00    10.27
10.27
                  -61.0 -2585.9  4467    0.00     5.72     5.72     0.32    10.27
10.27
 1.8  27.7   60   248.2  1475.2  3963    0.97     5.72     5.72     0.00    10.27
10.27
                    0.0 -2585.9     0    0.00     5.72     5.72     0.00    10.27
10.27
 4.2  30.1   60   355.8  1475.2  4467    1.39     5.72     5.72     0.00    10.27
10.27
                 -165.6 -2585.9  4468    0.00     5.72     5.72     0.65    10.27
10.27
 5.7  31.6   60   222.2  1475.2  4467    0.87     5.72     5.72     0.00    10.27
10.27
                 -650.1 -2585.9  3955    0.00     5.72     5.72     2.55    10.27
10.27
 5.8  31.6   60   170.6  1475.2  4467    0.67     5.72     5.72     0.00    10.27
10.27
                 -672.5 -2585.9  3955    0.00     5.72     5.72     2.63    10.27
10.27
```

Span 7: From 31.63 ft To 34.50 ft

```
 Loc  AbsLoc  H    Mmax    pMn   Comb  Asb-req  Asb-prv  Asb-eff  Ast-req  Ast-prv
Ast-eff
                   Mmin    pMn   Comb  Asb-req  Asb-prv  Asb-eff  Ast-req  Ast-prv
Ast-eff
  ft    ft   in  kips-ft  kips-ft        in^2     in^2     in^2     in^2     in^2
 in^2
-------------------------------------------------------------------------------------
----------
 0.0  31.6   60     0.0  1475.2     0    0.00     5.72     5.72     0.00    10.27
10.27
                  -38.1 -2585.9  3957    0.00     5.72     5.72     0.20    10.27
10.27
```

SHEAR AND TORSION DESIGN:
==========

Span 1: From 0.00 ft To 2.88 ft

```
  Loc  AbsLoc Pos   Vu   Comb    Tu   Comb phi*Vn   T-lim   Avs/s 2Ats/s  Av/s
Aprv/s   Alt
   ft     ft       kips       kips-ft       kips   kips-ft  <--------- in^2/ft
-------->    in^2
-------------------------------------------------------------------------------------
------------
```

```
  2.88   2.88 L    26.5 3957     0.0    0   599.4    381.8   0.00   0.00   0.00
0.40     0.00
```

Span 2: From 2.88 ft To 8.63 ft

```
  Loc  AbsLoc Pos   Vu   Comb    Tu   Comb phi*Vn   T-lim   Avs/s 2Ats/s  Av/s
Aprv/s   Alt
   ft     ft       kips       kips-ft       kips   kips-ft  <--------- in^2/ft
-------->    in^2
--------------------------------------------------------------------------------
------------
  0.00   2.88 R   555.4 3957   376.0 3956   890.1    381.8   0.82   0.00   0.82
1.60     0.00
  0.05   2.92 L   555.0 3957   376.0 3956   890.1    381.8   0.82   0.00   0.82
1.60     0.00
               R   332.6 3957   322.9 4345   890.1    381.8   0.82   0.00   0.82
1.60     0.00
  1.56   4.43 L   318.6 3957   322.9 4345   890.1    381.8   0.82   0.00   0.82
1.60     0.00
               R   160.5 4088   331.0 3956   890.1    381.8   0.00   0.00   0.00
1.60     0.00
  3.93   6.80 L   143.5 4088   331.0 3956   890.1    381.8   0.00   0.00   0.00
1.60     0.00
               R   199.2 4468   273.8 3957   599.4    381.8   0.00   0.00   0.00
0.40     0.00
  5.44   8.31 L   207.0 4468   273.8 3957   599.4    381.8   0.00   0.00   0.00
0.40     0.00
               R   337.3 4224   285.4 3956   890.1    381.8   0.82   0.00   0.82
1.60     0.00
  5.75   8.63 L   339.5 4224   285.4 3956   890.1    381.8   0.82   0.00   0.82
1.60     0.00
```

Span 3: From 8.63 ft To 14.38 ft

```
  Loc  AbsLoc Pos   Vu   Comb    Tu   Comb phi*Vn   T-lim   Avs/s 2Ats/s  Av/s
Aprv/s   Alt
   ft     ft       kips       kips-ft       kips   kips-ft  <--------- in^2/ft
-------->    in^2
--------------------------------------------------------------------------------
------------
  0.00   8.63 R   606.1 3955   741.8 3956   820.6    381.8   0.43   0.57   1.00
1.60    17.05
  2.05  10.68 L   591.3 3955   741.8 3956   820.6    381.8   0.37   0.57   0.94
1.60    17.05
               R   189.5 4090   497.9 3955   843.5    381.8   0.43   0.39   0.82
1.60    17.05
  3.56  12.19 L   178.6 4090   497.9 3955   843.5    381.8   0.43   0.39   0.82
1.60    17.05
               R   236.6 4468   211.2 3956   890.1    381.8   0.00   0.00   0.00
1.60     0.00
  5.75  14.38 L   250.1 3957   211.2 3956   890.1    381.8   0.00   0.00   0.00
1.60     0.00
```

Span 4: From 14.38 ft To 20.13 ft

```
  Loc  AbsLoc Pos   Vu   Comb    Tu   Comb phi*Vn   T-lim   Avs/s 2Ats/s  Av/s
Aprv/s   Alt
   ft     ft       kips       kips-ft       kips   kips-ft  <--------- in^2/ft
-------->    in^2
--------------------------------------------------------------------------------
```

```
------------
  0.00  14.38 R   938.7 3955   810.3 3956  1201.8    381.8   1.80   0.63   2.43
3.20    17.05
  0.18  14.56 L   937.4 3955   810.3 3956  1201.8    381.8   1.80   0.63   2.42
3.20    17.05
              R   519.7 3955   462.4 4393   846.8    381.8   0.46   0.36   0.82
1.60    17.05
  1.69  16.07 L   508.8 3955   462.4 4393   846.8    381.8   0.46   0.36   0.82
1.60    17.05
              R   181.6 4090   279.7 3956   599.4    381.8   0.00   0.00   0.00
0.40     0.00
  4.06  18.43 L   164.6 4090   279.7 3956   599.4    381.8   0.00   0.00   0.00
0.40     0.00
              R   487.1 3956   717.3 3956   822.9    381.8   0.26   0.56   0.82
1.60**  17.05
  5.57  19.94 L   497.9 3956   717.3 3956   822.9    381.8   0.26   0.56   0.82
1.60    17.05
              R   890.6 3955   484.9 3956  1232.3    381.8   1.60   0.38   1.98
3.20    17.05
  5.75  20.13 L   891.9 3955   484.9 3956  1232.3    381.8   1.61   0.38   1.98
3.20    17.05
```

Span 5: From 20.13 ft To 25.88 ft

```
  Loc  AbsLoc Pos   Vu   Comb    Tu   Comb phi*Vn   T-lim   Avs/s 2Ats/s  Av/s
Aprv/s   Alt
   ft     ft       kips       kips-ft       kips   kips-ft  <--------- in^2/ft
-------->    in^2
-------------------------------------------------------------------------------
------------
  0.00  20.13 R   363.3 3957   117.6 3957   890.1    381.8   0.82   0.00   0.82
1.60     0.00
  2.19  22.31 L   346.1 4088   117.6 3957   890.1    381.8   0.82   0.00   0.82
1.60     0.00
              R   307.9 3956   889.9 3956   806.7    381.8   0.13   0.69   0.82
1.60    17.05
  3.70  23.82 L   318.7 3956   889.9 3956   806.7    381.8   0.13   0.69   0.82
1.60    17.05
              R   693.6 3955   657.4 3956  1216.1    381.8   0.79   0.51   1.30
3.20    17.05
  5.75  25.88 L   708.3 3955   657.4 3956  1216.1    381.8   0.85   0.51   1.36
3.20    17.05
```

Span 6: From 25.88 ft To 31.63 ft

```
  Loc  AbsLoc Pos   Vu   Comb    Tu   Comb phi*Vn   T-lim   Avs/s 2Ats/s  Av/s
Aprv/s   Alt
   ft     ft       kips       kips-ft       kips   kips-ft  <--------- in^2/ft
-------->    in^2
-------------------------------------------------------------------------------
------------
  0.00  25.88 R   363.0 3958   217.3 3956   890.1    381.8   0.82   0.00   0.82
1.60     0.00
  0.31  26.19 L   360.1 3958   217.3 3956   890.1    381.8   0.82   0.00   0.82
1.60     0.00
              R   192.7 4467   494.5 3956   843.8    381.8   0.44   0.38   0.82
1.60    17.05
  1.82  27.70 L   185.0 4467   494.5 3956   843.8    381.8   0.44   0.38   0.82
1.60    17.05
              R   125.9 4212   262.0 3956   890.1    381.8   0.00   0.00   0.00
1.60     0.00
```

```
                                        report
  4.19  30.07 L   142.9 4212   262.0 3956   890.1    381.8   0.00   0.00   0.00
1.60     0.00
              R   352.5 3957   539.3 3958   839.6    381.8   0.40   0.42   0.82
1.60    17.05
  5.70  31.58 L   366.4 3957   539.3 3958   839.6    381.8   0.40   0.42   0.82
1.60    17.05
              R   550.7 3957   306.0 3956   890.1    381.8   0.82   0.00   0.82
1.60     0.00
  5.75  31.63 L   551.1 3957   306.0 3956   890.1    381.8   0.82   0.00   0.82
1.60     0.00


                           Span 7: From 31.63  ft  To 34.50  ft

  Loc  AbsLoc Pos   Vu   Comb    Tu   Comb phi*Vn   T-lim   Avs/s 2Ats/s  Av/s
Aprv/s   Alt
   ft     ft       kips       kips-ft       kips   kips-ft  <--------- in^2/ft
-------->    in^2
-------------------------------------------------------------------------------------
------------
  0.00  31.63 R    26.5 3957     0.0    0   599.4    381.8   0.00   0.00   0.00
0.40     0.00


Note:
** Provided stirrup spacing is more than maximum allowed.

-  Pos is the design position. L suggests the calculation is done at immediate left
   of "Loc" and R suggests at immediate right of it.
-  T-lim is the limiting value of torsion for the concrete section. If actual
torsion
   is higher than this value, torsional steel has to be provided.
-  Avs/s is the required area of steel per unit length for shear force.
-  2Ats/s is the required area of steel per unit length for two legs of torsional
   reinforcement.
-  Av/s is the total required area of steel per unit length due to shear plus
torsion.
-  Aprvs/s is the total provided area of transverse steel reinforcement.
-  # Vu is greater tha phi*Vn.
-  Alt is the total longitudinal steel required due to torsion in addition to the
REQUIRED
   flexural steel.


CRACKING/FATIGUE CHECK:
=======================

                           Span 1: From 0.00   ft  To 2.88   ft

                      <------ Cracking ------>     <------ Fatigue ------>
 Loc    AbsLoc   H      fs-t  ratio fs-t  Comb     fs-t   ratio fs-t
                        fs-b  ratio fs-b  Comb     fs-b   ratio fs-b
  ft      ft     in     ksi                         ksi
-----------------------------------------------------------------------
  2.88    2.9   60.0    0.5       0.01      1       0.0       0.00
                        0.0       0.00      0       0.0       0.00


                           Span 2: From 2.88   ft  To 8.63   ft

                      <------ Cracking ------>     <------ Fatigue ------>
 Loc    AbsLoc   H      fs-t  ratio fs-t  Comb     fs-t   ratio fs-t
```

report

ft	ft	in	fs-b ksi	ratio fs-b	Comb	fs-b ksi	ratio fs-b
0.00	2.9	60.0	10.5	0.29	3945	3.7	0.16
			6.8	0.19	3946	2.7	0.11
0.05	2.9	60.0	11.1	0.31	3945	3.7	0.16
			8.8	0.24	3946	2.7	0.11
1.56	4.4	60.0	3.9	0.11	3945	2.6	0.11
			13.1	0.36	3946	1.1	0.05
3.93	6.8	60.0	0.0	0.00	0	1.1	0.05
			8.7	0.24	3946	0.0	0.00
5.44	8.3	60.0	1.7	0.05	3946	1.9	0.08
			4.0	0.11	3945	1.0	0.04
5.75	8.6	60.0	3.1	0.09	3953	2.1	0.09
			1.0	0.03	3945	1.3	0.06

Span 3: From 8.63 ft To 14.38 ft

Loc	AbsLoc	H	<------ Cracking ------> fs-t / fs-b	ratio fs-t / ratio fs-b	Comb / Comb	<------ Fatigue ------> fs-t / fs-b	ratio fs-t / ratio fs-b
ft	ft	in	ksi			ksi	
0.00	8.6	60.0	11.0	0.30	3945	5.3	0.23
			9.9	0.28	3946	0.0	0.00
2.05	10.7	60.0	0.4	0.01	3945	2.6	0.11
			14.5	0.40	1840	5.3	0.24
3.56	12.2	60.0	0.0	0.00	0	3.5	0.15
			14.5	0.40	871	8.8	0.40
5.75	14.4	60.0	7.8	0.22	3946	3.9	0.17
			5.4	0.15	3945	6.8	0.28

Span 4: From 14.38 ft To 20.13 ft

Loc	AbsLoc	H	<------ Cracking ------> fs-t / fs-b	ratio fs-t / ratio fs-b	Comb / Comb	<------ Fatigue ------> fs-t / fs-b	ratio fs-t / ratio fs-b
ft	ft	in	ksi			ksi	
0.00	14.4	60.0	8.8	0.25	3945	4.9	0.21
			5.7	0.16	3946	2.5	0.11
0.18	14.6	60.0	8.3	0.23	3945	4.8	0.21
			8.2	0.23	3946	3.8	0.16
1.69	16.1	60.0	1.2	0.03	3945	3.6	0.15
			16.7	0.46	1839	10.3	0.46
4.06	18.4	60.0	0.9	0.03	3946	0.0	0.00
			20.5	0.57	145	14.1	0.62
5.57	19.9	60.0	8.4	0.23	3946	1.2	0.05
			8.0	0.22	3945	8.1	0.33
5.75	20.1	60.0	8.9	0.25	3946	1.2	0.05
			5.5	0.15	3945	6.5	0.27

Span 5: From 20.13 ft To 25.88 ft

Loc	AbsLoc	H	<------ Cracking ------> fs-t / fs-b	ratio fs-t / ratio fs-b	Comb / Comb	<------ Fatigue ------> fs-t / fs-b	ratio fs-t / ratio fs-b
ft	ft	in	ksi			ksi	
0.00	20.1	60.0	8.0	0.22	3945	4.3	0.19

					report		
			10.8	0.30	1837	10.2	0.43
2.19	22.3	60.0	0.0	0.00	0	0.0	0.00
			22.2	0.62	145	14.6	0.66
3.70	23.8	60.0	0.5	0.01	3946	0.0	0.00
			17.1	0.48	145	9.3	0.42
5.75	25.9	60.0	12.7	0.35	1839	4.9	0.21
			10.5	0.29	3945	1.3	0.05

Span 6: From 25.88 ft To 31.63 ft

Loc	AbsLoc	H	<------ Cracking ------> fs-t / fs-b ksi	ratio fs-t / ratio fs-b	Comb / Comb	<------ Fatigue ------> fs-t / fs-b ksi	ratio fs-t / ratio fs-b
ft	ft	in					
0.00	25.9	60.0	5.3	0.15	3953	4.7	0.20
			2.2	0.06	1353	3.1	0.13
0.31	26.2	60.0	2.1	0.06	3953	2.9	0.12
			4.7	0.13	3946	2.1	0.09
1.82	27.7	60.0	0.0	0.00	0	1.5	0.06
			11.1	0.31	3954	5.2	0.24
4.19	30.1	60.0	4.2	0.12	1837	4.6	0.19
			16.3	0.45	3954	13.4	0.59
5.70	31.6	60.0	12.6	0.35	1839	4.4	0.19
			8.5	0.24	3945	1.8	0.08
5.75	31.6	60.0	12.4	0.34	1839	4.4	0.19
			6.5	0.18	3945	0.0	0.00

Span 7: From 31.63 ft To 34.50 ft

Loc	AbsLoc	H	<------ Cracking ------> fs-t / fs-b ksi	ratio fs-t / ratio fs-b	Comb / Comb	<------ Fatigue ------> fs-t / fs-b ksi	ratio fs-t / ratio fs-b
ft	ft	in					
0.00	31.6	60.0	0.5	0.01	1	0.0	0.00
			0.0	0.00	0	0.0	0.00

* Cracking / fatigue checking failed.

♀

COLUMN DESIGN

COLUMN DESIGN - Column: 1

Column Type: Rectangular 69.00 x 48.00 in

Code: AASHTO STANDARD (17th Edition 2002) - Factored Load Design
Units: US
Pier View : Upstation.
Design/Analysis Method: No Slenderness Considered.

Column Section Properties:

Sec.	Area	Ix	Iz

```
                                        report
           ft^2       in^4     in^4
-----------------------------------------------
  0     23.00      635904.00      1314036.00

DESIGN PARAMETERS:
==================
            f'c = 4000.0  psi     fy = 60000.0 psi
            phi flex = 0.90       phi axial = 0.70
            Ec =  3834.3 ksi      Es = 29000 ksi
            Concrete Type :  Normal Weight.

Reinforcement:
==============
Rebar Pattern: Rectangular
Rebar Orientation: Face Parallel

        Layer    Dir        Size      No. bars    Bar Dist.    From    To    Hook
                                                   in           ft      ft
-----------------------------------------------------------------------------------------
------------
          1     X         US#10[M32]           9         3.26       0.00   20.50
None
          1     Z         US#10[M32]           5         3.26       0.00   20.50
None

Note:
 Bar Dist refers to the distance between center of reinforcement and concrete
surface.

Layer    Size       Type    Pitch    From    To
                            in       ft      ft
-----------------------------------------------
1      US#5[M16]  Ties    12.00    0.00   20.50


Design values used - ( e-min effect included ).
===============================================
                      (global coordinates)
 Loc      Comb      Fx        Fy        Fz        Mx        My        Mz
  ft               kips      kips      kips    kips-ft   kips-ft   kips-ft
-----------------------------------------------------------------------
  0.00  3956       35.9     555.6      -5.5    -488.2      -0.3    -250.9
 20.50  3956      -35.9     468.7       5.5     376.0      -0.3    -484.6
  0.00  4395       37.6     556.5      81.0    1740.2     -49.3    -284.6
 20.50  4395      -36.9     469.6     -78.6    -102.2     -49.3    -479.0


Column Design
=============

 Bot/Top Elev.   Comb    Pu         Mux        Muz       pMn       Incl     pPn/Pu
pMn/Mu
  ft                     kips       kips-ft   kips-ft    kips-ft   deg

-----------------------------------------------------------------------------------------
---------
  0.00          4395    556.5     1740.2      284.6     3832.7       9.29    1.00
2.17
 20.50          3956    468.7      376.0      484.6     4681.2      52.19    1.00
7.63
Column Design
=============
```

Bot/Top Elev. ft	As_min in^2	As_max in^2	As_prov in^2
0.00	33.12	264.96	35.56
20.50	33.12	264.96	35.56

Note:
Min reinforcement = 1.0000 % of Ag.

COLUMN DESIGN
==========

COLUMN DESIGN - Column: 2

Column Type: Rectangular 69.00 x 48.00 in

Code: AASHTO STANDARD (17th Edition 2002) - Factored Load Design
Units: US
Pier View : Upstation.
Design/Analysis Method: No Slenderness Considered.

Column Section Properties:
==========

Sec.	Area ft^2	Ix in^4	Iz in^4
1	23.00	635904.00	1314036.00

DESIGN PARAMETERS:
==========
f'c = 4000.0 psi fy = 60000.0 psi
phi flex = 0.90 phi axial = 0.70
Ec = 3834.3 ksi Es = 29000 ksi
Concrete Type : Normal Weight.

Reinforcement:
==========
Rebar Pattern: Rectangular
Rebar Orientation: Face Parallel

Layer	Dir	Size	No. bars	Bar Dist. in	From ft	To ft	Hook
1	X	US#10[M32]	9	3.26	0.00	20.50	None
1	Z	US#10[M32]	5	3.26	0.00	20.50	None

Note:
Bar Dist refers to the distance between center of reinforcement and concrete surface.

Layer	Size	Type	Pitch in	From ft	To ft
1	US#5[M16]	Ties	12.00	0.00	20.50

Design values used - (e-min effect included).
==========

(global coordinates)

Loc ft	Comb	Fx kips	Fy kips	Fz kips	Mx kips-ft	My kips-ft	Mz kips-ft
0.00	3956	38.7	830.8	0.4	-447.4	-1.8	-271.9
20.50	3956	-38.7	743.9	-0.4	456.4	-1.8	-521.4
0.00	4393	44.2	798.2	82.9	1773.0	-45.9	-339.6
20.50	4393	-42.8	711.3	-80.6	-120.9	-45.9	-553.6

Column Design
==========

Bot/Top Elev. ft	Comb	Pu kips	Mux kips-ft	Muz kips-ft	pMn kips-ft	Incl deg	pPn/Pu	pMn/Mu
0.00	4393	798.2	1773.0	339.6	4001.1	10.84	1.00	2.22
20.50	3956	743.9	456.4	521.4	4712.2	48.81	1.00	6.80

Column Design
==========

Bot/Top Elev. ft	As_min in^2	As_max in^2	As_prov in^2
0.00	33.12	264.96	35.56
20.50	33.12	264.96	35.56

Note:
Min reinforcement = 1.0000 % of Ag.

COLUMN DESIGN
==========

COLUMN DESIGN - Column: 3

Column Type: Rectangular 69.00 x 48.00 in

Code: AASHTO STANDARD (17th Edition 2002) - Factored Load Design
Units: US
Pier View : Upstation.
Design/Analysis Method: No Slenderness Considered.

Column Section Properties:
==========

Sec.	Area ft^2	Ix in^4	Iz in^4
2	23.00	635904.00	1314036.00

DESIGN PARAMETERS:

report

==========

f'c = 4000.0 psi fy = 60000.0 psi
phi flex = 0.90 phi axial = 0.70
Ec = 3834.3 ksi Es = 29000 ksi
Concrete Type : Normal Weight.

Reinforcement:
==========
Rebar Pattern: Rectangular
Rebar Orientation: Face Parallel

Layer	Dir	Size	No. bars	Bar Dist. in	From ft	To ft	Hook
1	X	US#10[M32]	9	3.26	0.00	20.50	None
1	Z	US#10[M32]	5	3.26	0.00	20.50	None

Note:
Bar Dist refers to the distance between center of reinforcement and concrete surface.

Layer	Size	Type	Pitch in	From ft	To ft
1	US#5[M16]	Ties	12.00	0.00	20.50

Design values used - (e-min effect included).
==========

(global coordinates)

Loc ft	Comb	Fx kips	Fy kips	Fz kips	Mx kips-ft	My kips-ft	Mz kips-ft
0.00	3956	21.6	1051.4	11.0	-373.5	-6.8	-233.9
20.50	3956	-21.6	964.4	-11.0	599.1	-6.8	-284.7
0.00	4393	32.2	1012.2	85.4	1809.2	-38.4	-261.0
20.50	4393	-30.8	925.2	-83.2	-157.3	-38.4	-385.9

Column Design
==========

Bot/Top Elev. ft	Comb	Pu kips	Mux kips-ft	Muz kips-ft	pMn kips-ft	Incl deg	pPn/Pu	pMn/Mu
0.00	4393	1012.2	1809.2	261.0	4128.6	8.21	1.00	2.26
20.50	3956	964.4	599.1	284.7	4240.6	25.42	1.00	6.39

Column Design
==========

Bot/Top Elev. ft	As_min in^2	As_max in^2	As_prov in^2
0.00	33.12	264.96	35.56

report

20.50	33.12	264.96	35.56

Note:
Min reinforcement = 1.0000 % of Ag.

COLUMN DESIGN
==========

COLUMN DESIGN - Column: 4

Column Type: Rectangular 69.00 x 48.00 in

Code: AASHTO STANDARD (17th Edition 2002) - Factored Load Design
Units: US
Pier View : Upstation.
Design/Analysis Method: No Slenderness Considered.

Column Section Properties:
==========

Sec.	Area ft^2	Ix in^4	Iz in^4
3	23.00	635904.00	1314036.00

DESIGN PARAMETERS:
==========
f'c = 4000.0 psi fy = 60000.0 psi
phi flex = 0.90 phi axial = 0.70
Ec = 3834.3 ksi Es = 29000 ksi
Concrete Type : Normal Weight.

Reinforcement:
==========
Rebar Pattern: Rectangular
Rebar Orientation: Face Parallel

Layer	Dir	Size	No. bars	Bar Dist. in	From ft	To ft	Hook
1	X	US#10[M32]	9	3.26	0.00	20.50	None
1	Z	US#10[M32]	5	3.26	0.00	20.50	None

Note:
Bar Dist refers to the distance between center of reinforcement and concrete surface.

Layer	Size	Type	Pitch in	From ft	To ft
1	US#5[M16]	Ties	12.00	0.00	20.50

Design values used - (e-min effect included).
==========
(global coordinates)

report

Loc ft	Comb	Fx kips	Fy kips	Fz kips	Mx kips-ft	My kips-ft	Mz kips-ft
0.00	3956	-11.6	1072.4	10.8	-370.3	-13.4	238.6
20.50	3956	11.6	985.5	-10.8	592.0	-13.4	219.3
0.00	4395	-0.4	1057.7	83.2	1810.4	-27.4	-235.3
20.50	4395	1.1	970.8	-80.8	-165.0	-27.4	216.0

Column Design
==========

Bot/Top Elev. ft	Comb	Pu kips	Mux kips-ft	Muz kips-ft	pMn kips-ft	Incl deg	pPn/Pu	pMn/Mu
0.00	4395	1057.7	1810.4	235.3	4152.0	7.41	1.00	2.27
20.50	3956	985.5	592.0	219.3	4170.0	20.32	1.00	6.61

Column Design
==========

Bot/Top Elev. ft	As_min in^2	As_max in^2	As_prov in^2
0.00	33.12	264.96	35.56
20.50	33.12	264.96	35.56

Note:
Min reinforcement = 1.0000 % of Ag.

COLUMN DESIGN
==========

COLUMN DESIGN - Column: 5

Column Type: Rectangular 69.00 x 48.00 in

Code: AASHTO STANDARD (17th Edition 2002) - Factored Load Design
Units: US
Pier View : Upstation.
Design/Analysis Method: No Slenderness Considered.

Column Section Properties:
==========

Sec.	Area ft^2	Ix in^4	Iz in^4
4	23.00	635904.00	1314036.00

DESIGN PARAMETERS:
==========

f'c = 4000.0 psi fy = 60000.0 psi
phi flex = 0.90 phi axial = 0.70
Ec = 3834.3 ksi Es = 29000 ksi
Concrete Type : Normal Weight.

Reinforcement:
==========
Rebar Pattern: Rectangular
Rebar Orientation: Face Parallel

Layer	Dir	Size	No. bars	Bar Dist. in	From ft	To ft	Hook
1	X	US#10[M32]	9	3.26	0.00	20.50	None
1	Z	US#10[M32]	5	3.26	0.00	20.50	None

Note:
Bar Dist refers to the distance between center of reinforcement and concrete surface.

Layer	Size	Type	Pitch in	From ft	To ft
1	US#5[M16]	Ties	12.00	0.00	20.50

Design values used - (e-min effect included).
==========
(global coordinates)

Loc ft	Comb	Fx kips	Fy kips	Fz kips	Mx kips-ft	My kips-ft	Mz kips-ft
0.00	3956	-35.6	829.9	0.2	-435.6	-17.8	223.8
20.50	3956	35.6	743.0	-0.2	440.1	-17.8	505.5
0.00	4395	-28.6	842.3	82.7	1816.0	-15.6	187.4
20.50	4395	29.3	755.3	-80.3	-142.9	-15.6	439.3

Column Design
==========

Bot/Top Elev. ft	Comb	Pu kips	Mux kips-ft	Muz kips-ft	pMn kips-ft	Incl deg	pPn/Pu	pMn/Mu
0.00	4395	842.3	1816.0	187.4	4039.4	5.89	1.00	2.21
20.50	3956	743.0	440.1	505.5	4717.6	48.95	1.00	7.04

Column Design
==========

Bot/Top Elev. ft	As_min in^2	As_max in^2	As_prov in^2
0.00	33.12	264.96	35.56
20.50	33.12	264.96	35.56

Note:
Min reinforcement = 1.0000 % of Ag.

♀
COMBINED FOOTING DESIGN

Code: AASHTO STANDARD (17th Edition 2002) - Ultimate Strength Design
Units: US
Pier View : Upstation.

Geometry:
==========

Name : Footing
Shape : Rectangular, Type : Pile/Shaft Cap

Bf(X) = 39.00 ft, Hf(Z) = 13.00 ft, Thickness(Y) = 48.00 in

Ag = 507.00 ft^2, Ix = 754.00 ft^2, Iz = 6552.00 ft^2

Footing concentric.
Columns located on the footing:
Column No. 1 at x = 0.00 ft, Rectangular 69.00 in x 48.00 in
Column No. 2 at x = 5.75 ft, Rectangular 69.00 in x 48.00 in
Column No. 3 at x = 11.50 ft, Rectangular 69.00 in x 48.00 in
Column No. 4 at x = 17.25 ft, Rectangular 69.00 in x 48.00 in
Column No. 5 at x = 23.00 ft, Rectangular 69.00 in x 48.00 in
Column No. 6 at x = 28.75 ft, Rectangular 69.00 in x 48.00 in

Piles: Round Size: W = 12.00 in
Service Capacity: 148.00 kips
Factored Capacity: 296.00 kips
Lateral Resistance: 16.00 kips
Piles Section Properties: Area = 0.79 ft^2 Ix = 1017.88 in^4 Iz = 1017.88 in^4

Design Parameters:
==========

f'c = 4000.00 psi fy = 60000.00 psi
phi flex = 0.90 phi shear = 0.85
Ec = 3834.3 ksi Es = 29000.0 ksi
Crack control factor z = 1.00 kips/in
Concrete Type : Normal Weight.

Reinforcement Schedule:
==========:

Dir	Quantity	Size	Bar dist. in	As total in^2	From ft	To ft	Hook
X	14	US#8[M25]	7.50	11.06	0.00	39.00	None
X	14	US#5[M16]	44.00	4.34	0.00	39.00	None
Z	52	US#8[M25]	6.50	41.08	----	----	None
Z	52	US#5[M16]	45.00	16.12	----	----	None

Pile Reactions:
==========

Pile Reactions, Service (Without the reduction of overstress allowance):
==========

Pile	X in	Z in	Batter X degree	Batter Z degree	comb	Ovs	P, kips	Mxx, kft	Mzz, kft	kips
					|-------- Load Effect @ Footing Bot.--------| Pile Reac.					
1	18.0	-60.0	-14.0	0.0	3954	1.700	-3561.82	1369.06	-6067.39	42.75
					3947	1.500	-2868.59	4549.31	-2136.74	19.13
2	54.0	-60.0	0.0	0.0	3954	1.700	-3561.82	1369.06	-6067.39	45.53
					3947	1.500	-2868.59	4549.31	-2136.74	20.11
3	90.0	-60.0	0.0	0.0	3954	1.700	-3561.82	1369.06	-6067.39	48.31
					3947	1.500	-2868.59	4549.31	-2136.74	21.08
4	126.0	-60.0	0.0	0.0	3954	1.700	-3561.82	1369.06	-6067.39	51.08
					3947	1.500	-2868.59	4549.31	-2136.74	22.06
5	162.0	-60.0	0.0	0.0	3954	1.700	-3561.82	1369.06	-6067.39	53.86
					3947	1.500	-2868.59	4549.31	-2136.74	23.04
6	198.0	-60.0	0.0	0.0	3954	1.700	-3561.82	1369.06	-6067.39	56.64
					3947	1.500	-2868.59	4549.31	-2136.74	24.02
7	234.0	-60.0	0.0	0.0	3954	1.700	-3561.82	1369.06	-6067.39	59.42
					3947	1.500	-2868.59	4549.31	-2136.74	25.00
8	270.0	-60.0	0.0	0.0	3954	1.700	-3561.82	1369.06	-6067.39	62.20
					3952	1.500	-2868.59	4549.31	2395.69	23.90
9	306.0	-60.0	0.0	0.0	3954	1.700	-3561.82	1369.06	-6067.39	64.97
					3952	1.500	-2868.59	4549.31	2395.69	22.80
10	342.0	-60.0	0.0	0.0	3954	1.700	-3561.82	1369.06	-6067.39	67.75
					3952	1.500	-2868.59	4549.31	2395.69	21.71
11	378.0	-60.0	0.0	0.0	3954	1.700	-3561.82	1369.06	-6067.39	70.53
					3952	1.500	-2868.59	4549.31	2395.69	20.61
12	414.0	-60.0	0.0	0.0	3954	1.700	-3561.82	1369.06	-6067.39	73.31
					3952	1.500	-2868.59	4549.31	2395.69	19.51
13	450.0	-60.0	14.0	0.0	3954	1.700	-3561.82	1369.06	-6067.39	76.09
					3952	1.500	-2868.59	4549.31	2395.69	18.42
14	18.0	-24.0	-14.0	0.0	3954	1.700	-3561.82	1369.06	-6067.39	48.20
					3949	1.500	-2868.59	1554.81	-7424.57	30.64

```
 15   54.0  -24.0     0.0          0.0      3954    1.700   -3561.82    1369.06
-6067.39      50.97
                                             3949    1.500   -2868.59    1554.81
-7424.57      34.04
 16   90.0  -24.0     0.0          0.0      3954    1.700   -3561.82    1369.06
-6067.39      53.75
                                             3949    1.500   -2868.59    1554.81
-7424.57      37.44
 17  126.0  -24.0     0.0          0.0      3954    1.700   -3561.82    1369.06
-6067.39      56.53
                                             3947    1.500   -2868.59    4549.31
-2136.74      40.16
 18  162.0  -24.0     0.0          0.0      3954    1.700   -3561.82    1369.06
-6067.39      59.31
                                             3947    1.500   -2868.59    4549.31
-2136.74      41.14
 19  198.0  -24.0     0.0          0.0      3954    1.700   -3561.82    1369.06
-6067.39      62.09
                                             3947    1.500   -2868.59    4549.31
-2136.74      42.12
 20  234.0  -24.0     0.0          0.0      3954    1.700   -3561.82    1369.06
-6067.39      64.87
                                             3947    1.500   -2868.59    4549.31
-2136.74      43.10
 21  270.0  -24.0     0.0          0.0      3954    1.700   -3561.82    1369.06
-6067.39      67.64
                                             3952    1.500   -2868.59    4549.31
2395.69      42.00
 22  306.0  -24.0     0.0          0.0      3954    1.700   -3561.82    1369.06
-6067.39      70.42
                                             3952    1.500   -2868.59    4549.31
2395.69      40.90
 23  342.0  -24.0     0.0          0.0      3954    1.700   -3561.82    1369.06
-6067.39      73.20
                                             3952    1.500   -2868.59    4549.31
2395.69      39.81
 24  378.0  -24.0     0.0          0.0      3954    1.700   -3561.82    1369.06
-6067.39      75.98
                                             3950    1.500   -2868.59    1554.81
7683.52      36.97
 25  414.0  -24.0     0.0          0.0      3954    1.700   -3561.82    1369.06
-6067.39      78.76
                                             3950    1.500   -2868.59    1554.81
7683.52      33.45
 26  450.0  -24.0    14.0          0.0      3954    1.700   -3561.82    1369.06
-6067.39      81.53
                                             3950    1.500   -2868.59    1554.81
7683.52      29.93
 27   18.0   24.0   -14.0          0.0      3954    1.700   -3561.82    1369.06
-6067.39      55.46
                                             3946    1.500   -2868.59   -1011.91
-7424.57      32.08
 28   54.0   24.0     0.0          0.0      3954    1.700   -3561.82    1369.06
-6067.39      58.24
                                             1974    1.400   -2868.59   -4662.52
-3417.95      34.97
 29   90.0   24.0     0.0          0.0      3954    1.700   -3561.82    1369.06
-6067.39      61.02
                                             1974    1.400   -2868.59   -4662.52
-3417.95      36.54
 30  126.0   24.0     0.0          0.0      3954    1.700   -3561.82    1369.06
-6067.39      63.79
                                             1974    1.400   -2868.59   -4662.52
```

```
-3417.95      38.10
 31  162.0   24.0     0.0          0.0      3954    1.700   -3561.82    1369.06
-6067.39      66.57
                                             1973    1.400   -2868.59   -5180.40
-2237.83      39.37
 32  198.0   24.0     0.0          0.0      3954    1.700   -3561.82    1369.06
-6067.39      69.35
                                             1973    1.400   -2868.59   -5180.40
-2237.83      40.40
 33  234.0   24.0     0.0          0.0      3954    1.700   -3561.82    1369.06
-6067.39      72.13
                                             1971    1.400   -2868.59   -5385.70
-899.53      40.88
 34  270.0   24.0     0.0          0.0      3954    1.700   -3561.82    1369.06
-6067.39      74.91
                                             1968    1.400   -2804.19   -4887.64
926.96      40.54
 35  306.0   24.0     0.0          0.0      3954    1.700   -3561.82    1369.06
-6067.39      77.68
                                             1968    1.400   -2804.19   -4887.64
926.96      40.11
 36  342.0   24.0     0.0          0.0      3954    1.700   -3561.82    1369.06
-6067.39      80.46
                                             1968    1.400   -2804.19   -4887.64
926.96      39.69
 37  378.0   24.0     0.0          0.0      3954    1.700   -3561.82    1369.06
-6067.39      83.24
                                             3945    1.500   -2868.59   -1011.91
7683.52      38.41
 38  414.0   24.0     0.0          0.0      3954    1.700   -3561.82    1369.06
-6067.39      86.02
                                             3945    1.500   -2868.59   -1011.91
7683.52      34.89
 39  450.0   24.0    14.0          0.0      3954    1.700   -3561.82    1369.06
-6067.39      88.80
                                             3945    1.500   -2868.59   -1011.91
7683.52      31.37
 40   18.0   60.0   -14.0          0.0      3954    1.700   -3561.82    1369.06
-6067.39      60.91
                                              529    1.250   -3899.91   -8924.97
-563.49      14.27
 41   54.0   60.0     0.0          0.0      3954    1.700   -3561.82    1369.06
-6067.39      63.68
                                              265    1.250   -3899.91   -8962.74
-455.54      14.52
 42   90.0   60.0     0.0          0.0      3954    1.700   -3561.82    1369.06
-6067.39      66.46
                                              265    1.250   -3899.91   -8962.74
-455.54      14.73
 43  126.0   60.0     0.0          0.0      3954    1.700   -3561.82    1369.06
-6067.39      69.24
                                              265    1.250   -3899.91   -8962.74
-455.54      14.94
 44  162.0   60.0     0.0          0.0      3954    1.700   -3561.82    1369.06
-6067.39      72.02
                                              217    1.250   -3899.91   -9110.95
435.23      14.98
 45  198.0   60.0     0.0          0.0      3954    1.700   -3561.82    1369.06
-6067.39      74.80
                                              217    1.250   -3899.91   -9110.95
435.23      14.78
 46  234.0   60.0     0.0          0.0      3954    1.700   -3561.82    1369.06
-6067.39      77.58
```

```
                                                 195    1.250   -3899.91   -9112.87
513.84      14.57
 47  270.0   60.0     0.0         0.0      3954    1.700   -3561.82    1369.06
-6067.39      80.35
                                                 193    1.250   -3899.91   -9096.45
793.34      14.31
 48  306.0   60.0     0.0         0.0      3954    1.700   -3561.82    1369.06
-6067.39      83.13
                                                 193    1.250   -3899.91   -9096.45
793.34      13.95
 49  342.0   60.0     0.0         0.0      3954    1.700   -3561.82    1369.06
-6067.39      85.91
                                                 193    1.250   -3899.91   -9096.45
793.34      13.59
 50  378.0   60.0     0.0         0.0      3954    1.700   -3561.82    1369.06
-6067.39      88.69
                                                 189    1.250   -3867.71   -8863.83
1427.09      12.99
 51  414.0   60.0     0.0         0.0      3954    1.700   -3561.82    1369.06
-6067.39      91.47
                                                 145    1.250   -3867.71   -8829.10
1547.24      12.29
 52  450.0   60.0    14.0         0.0      3954    1.700   -3561.82    1369.06
-6067.39      94.24
                                                 145    1.250   -3867.71   -8829.10
1547.24      11.58


Pile Reactions, Factored:
=========================

Pile     X       Z   Batter X   Batter Z    |-------- Load Effect @ Footing
Bot.--------|         Pile Reac.
        in      in   degree     degree       comb   Ovs    P, kips    Mxx, kft
Mzz, kft   kips
-------------------------------------------------------------------------------------
------------------------
  1   18.0  -60.0  -14.0         0.0       4349     ---    -5459.88  -12686.40
1278.89     192.64
                                            4469     ---    -2868.59    4549.31
-2136.74      19.13
  2   54.0  -60.0    0.0         0.0       4349     ---    -5459.88  -12686.40
1278.89     192.05
                                            4469     ---    -2868.59    4549.31
-2136.74      20.11
  3   90.0  -60.0    0.0         0.0       4393     ---    -5459.88  -12735.02
1110.67     191.48
                                            4469     ---    -2868.59    4549.31
-2136.74      21.08
  4  126.0  -60.0    0.0         0.0       4393     ---    -5459.88  -12735.02
1110.67     190.97
                                            4469     ---    -2868.59    4549.31
-2136.74      22.06
  5  162.0  -60.0    0.0         0.0       4393     ---    -5459.88  -12735.02
1110.67     190.46
                                            4469     ---    -2868.59    4549.31
-2136.74      23.04
  6  198.0  -60.0    0.0         0.0       4393     ---    -5459.88  -12735.02
1110.67     189.96
                                            4469     ---    -2868.59    4549.31
-2136.74      24.02
  7  234.0  -60.0    0.0         0.0       4395     ---    -5459.88  -12758.01
719.38     189.60
```

```
                                                    4469     ---    -2868.59    4549.31
-2136.74      25.00
  8  270.0  -60.0    0.0          0.0       4417     ---    -5459.88  -12755.33
609.33     189.30
                                                    4469     ---    -2868.59    4549.31
-2136.74      25.98
  9  306.0  -60.0    0.0          0.0       4417     ---    -5459.88  -12755.33
609.33     189.02
                                                    4469     ---    -2868.59    4549.31
-2136.74      26.95
 10  342.0  -60.0    0.0          0.0       4465     ---    -5459.88  -12547.84
-637.76     189.08
                                                    4469     ---    -2868.59    4549.31
-2136.74      27.93
 11  378.0  -60.0    0.0          0.0       4465     ---    -5459.88  -12547.84
-637.76     189.37
                                                    4469     ---    -2868.59    4549.31
-2136.74      28.91
 12  414.0  -60.0    0.0          0.0       4465     ---    -5459.88  -12547.84
-637.76     189.67
                                                    4469     ---    -2868.59    4549.31
-2136.74      29.89
 13  450.0  -60.0   14.0          0.0       4465     ---    -5459.88  -12547.84
-637.76     189.96
                                                    4469     ---    -2868.59    4549.31
-2136.74      30.87
 14   18.0  -24.0  -14.0          0.0       4345     ---    -5414.80  -12360.74
2166.14     142.87
                                                    4469     ---    -2868.59    4549.31
-2136.74      37.23
 15   54.0  -24.0    0.0          0.0       4345     ---    -5414.80  -12360.74
2166.14     141.88
                                                    4469     ---    -2868.59    4549.31
-2136.74      38.21
 16   90.0  -24.0    0.0          0.0       4349     ---    -5459.88  -12686.40
1278.89     140.99
                                                    4469     ---    -2868.59    4549.31
-2136.74      39.18
 17  126.0  -24.0    0.0          0.0       4349     ---    -5459.88  -12686.40
1278.89     140.41
                                                    4469     ---    -2868.59    4549.31
-2136.74      40.16
 18  162.0  -24.0    0.0          0.0       4349     ---    -5459.88  -12686.40
1278.89     139.82
                                                    4469     ---    -2868.59    4549.31
-2136.74      41.14
 19  198.0  -24.0    0.0          0.0       4393     ---    -5459.88  -12735.02
1110.67     139.29
                                                    4469     ---    -2868.59    4549.31
-2136.74      42.12
 20  234.0  -24.0    0.0          0.0       4395     ---    -5459.88  -12758.01
719.38     138.84
                                                    4469     ---    -2868.59    4549.31
-2136.74      43.10
 21  270.0  -24.0    0.0          0.0       4421     ---    -5459.88  -12611.62
-327.48     138.60
                                                    4469     ---    -2868.59    4549.31
-2136.74      44.08
 22  306.0  -24.0    0.0          0.0       4465     ---    -5459.88  -12547.84
-637.76     138.87
                                                    4469     ---    -2868.59    4549.31
-2136.74      45.05
 23  342.0  -24.0    0.0          0.0       4465     ---    -5459.88  -12547.84
```

```
-637.76     139.16
                                                4469     ---    -2868.59    4549.31
-2136.74      46.03
 24  378.0  -24.0    0.0          0.0          4465     ---    -5459.88  -12547.84
-637.76     139.45
                                                4467     ---    -2868.59   -1011.91
7683.52      43.78
 25  414.0  -24.0    0.0          0.0          4465     ---    -5459.88  -12547.84
-637.76     139.74
                                                4467     ---    -2868.59   -1011.91
7683.52      40.26
 26  450.0  -24.0   14.0          0.0          4465     ---    -5459.88  -12547.84
-637.76     140.03
                                                4467     ---    -2868.59   -1011.91
7683.52      36.74
 27   18.0   24.0  -14.0          0.0          3957     ---    -6923.87     206.65
-205.20     133.14
                                                4468     ---    -2868.59   -1011.91
-7424.57      32.08
 28   54.0   24.0    0.0          0.0          3957     ---    -6923.87     206.65
-205.20     133.23
                                                4468     ---    -2868.59   -1011.91
-7424.57      35.48
 29   90.0   24.0    0.0          0.0          3957     ---    -6923.87     206.65
-205.20     133.32
                                                4468     ---    -2868.59   -1011.91
-7424.57      38.88
 30  126.0   24.0    0.0          0.0          3957     ---    -6923.87     206.65
-205.20     133.42
                                                4470     ---    -2868.59   -4006.42
-2136.74      41.60
 31  162.0   24.0    0.0          0.0          3957     ---    -6923.87     206.65
-205.20     133.51
                                                4470     ---    -2868.59   -4006.42
-2136.74      42.58
 32  198.0   24.0    0.0          0.0          3957     ---    -6923.87     206.65
-205.20     133.61
                                                4470     ---    -2868.59   -4006.42
-2136.74      43.56
 33  234.0   24.0    0.0          0.0          3957     ---    -6923.87     206.65
-205.20     133.70
                                                4470     ---    -2868.59   -4006.42
-2136.74      44.54
 34  270.0   24.0    0.0          0.0          3957     ---    -6923.87     206.65
-205.20     133.79
                                                4470     ---    -2868.59   -4006.42
-2136.74      45.52
 35  306.0   24.0    0.0          0.0          3957     ---    -6923.87     206.65
-205.20     133.89
                                                4467     ---    -2868.59   -1011.91
7683.52      45.44
 36  342.0   24.0    0.0          0.0          3957     ---    -6923.87     206.65
-205.20     133.98
                                                4467     ---    -2868.59   -1011.91
7683.52      41.93
 37  378.0   24.0    0.0          0.0          3957     ---    -6923.87     206.65
-205.20     134.08
                                                4467     ---    -2868.59   -1011.91
7683.52      38.41
 38  414.0   24.0    0.0          0.0          3957     ---    -6923.87     206.65
-205.20     134.17
                                                4467     ---    -2868.59   -1011.91
7683.52      34.89
```

```
 39  450.0   24.0   14.0          0.0        3957     ---    -6923.87     206.65
-205.20     134.26
                                                4467     ---    -2868.59   -1011.91
7683.52      31.37
 40   18.0   60.0  -14.0          0.0        3958     ---    -6336.56    2068.01
783.91     137.72
                                                4465     ---    -5459.88  -12547.84
-637.76      20.04
 41   54.0   60.0    0.0          0.0        3958     ---    -6336.56    2068.01
783.91     137.37
                                                4465     ---    -5459.88  -12547.84
-637.76      20.33
 42   90.0   60.0    0.0          0.0        3958     ---    -6336.56    2068.01
783.91     137.01
                                                4465     ---    -5459.88  -12547.84
-637.76      20.62
 43  126.0   60.0    0.0          0.0        3958     ---    -6336.56    2068.01
783.91     136.65
                                                4465     ---    -5459.88  -12547.84
-637.76      20.91
 44  162.0   60.0    0.0          0.0        3958     ---    -6336.56    2068.01
783.91     136.29
                                                4417     ---    -5459.88  -12755.33
609.33      20.97
 45  198.0   60.0    0.0          0.0        3958     ---    -6336.56    2068.01
783.91     135.93
                                                4417     ---    -5459.88  -12755.33
609.33      20.69
 46  234.0   60.0    0.0          0.0        3958     ---    -6336.56    2068.01
783.91     135.57
                                                4395     ---    -5459.88  -12758.01
719.38      20.40
 47  270.0   60.0    0.0          0.0        3958     ---    -6336.56    2068.01
783.91     135.21
                                                4393     ---    -5459.88  -12735.02
1110.67      20.04
 48  306.0   60.0    0.0          0.0        3958     ---    -6336.56    2068.01
783.91     134.85
                                                4393     ---    -5459.88  -12735.02
1110.67      19.53
 49  342.0   60.0    0.0          0.0        3957     ---    -6923.87     206.65
-205.20     134.80
                                                4393     ---    -5459.88  -12735.02
1110.67      19.02
 50  378.0   60.0    0.0          0.0        3957     ---    -6923.87     206.65
-205.20     134.90
                                                4389     ---    -5414.80  -12409.37
1997.92      18.18
 51  414.0   60.0    0.0          0.0        3957     ---    -6923.87     206.65
-205.20     134.99
                                                4345     ---    -5414.80  -12360.74
2166.14      17.20
 52  450.0   60.0   14.0          0.0        3957     ---    -6923.87     206.65
-205.20     135.09
                                                4345     ---    -5414.80  -12360.74
2166.14      16.21
```

Pile Reactions, Service (After the reduction of overstress allowance):
==========

```
Pile     X       Z   Batter X   Batter Z    |-------- Load Effect @ Footing
Bot.--------|         Pile Reac.
```

	in	in	degree	degree	comb	Ovs	P, kips	Mxx, kft	Mzz, kft	kips
1	18.0	-60.0	-14.0	0.0	149	1.250	-3899.91	-9061.71	913.49	110.08
					3947	1.500	-2868.59	4549.31	-2136.74	12.75
2	54.0	-60.0	0.0	0.0	149	1.250	-3899.91	-9061.71	913.49	109.74
					3947	1.500	-2868.59	4549.31	-2136.74	13.40
3	90.0	-60.0	0.0	0.0	193	1.250	-3899.91	-9096.45	793.34	109.42
					3947	1.500	-2868.59	4549.31	-2136.74	14.06
4	126.0	-60.0	0.0	0.0	193	1.250	-3899.91	-9096.45	793.34	109.13
					3947	1.500	-2868.59	4549.31	-2136.74	14.71
5	162.0	-60.0	0.0	0.0	193	1.250	-3899.91	-9096.45	793.34	108.84
					3947	1.500	-2868.59	4549.31	-2136.74	15.36
6	198.0	-60.0	0.0	0.0	193	1.250	-3899.91	-9096.45	793.34	108.55
					3947	1.500	-2868.59	4549.31	-2136.74	16.01
7	234.0	-60.0	0.0	0.0	195	1.250	-3899.91	-9112.87	513.84	108.34
					3947	1.500	-2868.59	4549.31	-2136.74	16.66
8	270.0	-60.0	0.0	0.0	217	1.250	-3899.91	-9110.95	435.23	108.17
					3952	1.500	-2868.59	4549.31	2395.69	15.93
9	306.0	-60.0	0.0	0.0	217	1.250	-3899.91	-9110.95	435.23	108.01
					3952	1.500	-2868.59	4549.31	2395.69	15.20
10	342.0	-60.0	0.0	0.0	265	1.250	-3899.91	-8962.74	-455.54	108.05
					3952	1.500	-2868.59	4549.31	2395.69	14.47
11	378.0	-60.0	0.0	0.0	265	1.250	-3899.91	-8962.74	-455.54	108.21
					3952	1.500	-2868.59	4549.31	2395.69	13.74
12	414.0	-60.0	0.0	0.0	265	1.250	-3899.91	-8962.74	-455.54	108.38
					3952	1.500	-2868.59	4549.31	2395.69	13.01
13	450.0	-60.0	14.0	0.0	529	1.250	-3899.91	-8924.97	-563.49	108.58
					3952	1.500	-2868.59	4549.31	2395.69	12.28
14	18.0	-24.0	-14.0	0.0	145	1.250	-3867.71	-8829.10	1547.24	81.64
					3949	1.500	-2868.59	1554.81	-7424.57	20.43
15	54.0	-24.0	0.0	0.0	145	1.250	-3867.71	-8829.10	1547.24	81.07
					3949	1.500	-2868.59	1554.81		

```
-7424.57      22.70
 16   90.0  -24.0     0.0          0.0       149    1.250   -3899.91   -9061.71
913.49      80.57
                                              3949    1.500   -2868.59    1554.81
-7424.57      24.96
 17  126.0  -24.0     0.0          0.0       149    1.250   -3899.91   -9061.71
913.49      80.23
                                              3947    1.500   -2868.59    4549.31
-2136.74      26.78
 18  162.0  -24.0     0.0          0.0       149    1.250   -3899.91   -9061.71
913.49      79.90
                                              3947    1.500   -2868.59    4549.31
-2136.74      27.43
 19  198.0  -24.0     0.0          0.0       193    1.250   -3899.91   -9096.45
793.34      79.59
                                              3947    1.500   -2868.59    4549.31
-2136.74      28.08
 20  234.0  -24.0     0.0          0.0       195    1.250   -3899.91   -9112.87
513.84      79.34
                                              3947    1.500   -2868.59    4549.31
-2136.74      28.73
 21  270.0  -24.0     0.0          0.0       221    1.250   -3899.91   -9008.30
-233.92      79.20
                                              3952    1.500   -2868.59    4549.31
2395.69      28.00
 22  306.0  -24.0     0.0          0.0       265    1.250   -3899.91   -8962.74
-455.54      79.35
                                              3952    1.500   -2868.59    4549.31
2395.69      27.27
 23  342.0  -24.0     0.0          0.0       751    1.250   -3899.91   -8666.03
-1153.55      79.66
                                              3952    1.500   -2868.59    4549.31
2395.69      26.54
 24  378.0  -24.0     0.0          0.0       795    1.250   -3899.91   -8571.30
-1332.87      80.14
                                              3950    1.500   -2868.59    1554.81
7683.52      24.65
 25  414.0  -24.0     0.0          0.0       795    1.250   -3899.91   -8571.30
-1332.87      80.63
                                              3950    1.500   -2868.59    1554.81
7683.52      22.30
 26  450.0  -24.0    14.0          0.0       827    1.250   -3932.11   -7500.64
-2206.54      81.26
                                              3950    1.500   -2868.59    1554.81
7683.52      19.96
 27   18.0   24.0   -14.0          0.0         1    1.000   -3846.59     114.81
-114.00      73.96
                                              3946    1.500   -2868.59   -1011.91
-7424.57      21.39
 28   54.0   24.0     0.0          0.0         1    1.000   -3846.59     114.81
-114.00      74.02
                                              3946    1.500   -2868.59   -1011.91
-7424.57      23.66
 29   90.0   24.0     0.0          0.0         1    1.000   -3846.59     114.81
-114.00      74.07
                                              3946    1.500   -2868.59   -1011.91
-7424.57      25.92
 30  126.0   24.0     0.0          0.0         1    1.000   -3846.59     114.81
-114.00      74.12
                                              1974    1.400   -2868.59   -4662.52
-3417.95      27.22
 31  162.0   24.0     0.0          0.0         1    1.000   -3846.59     114.81
-114.00      74.17
```

```
                                                    1973    1.400   -2868.59   -5180.40
-2237.83      28.12
 32  198.0   24.0     0.0         0.0         1    1.000   -3846.59     114.81
-114.00      74.23
                                                    1973    1.400   -2868.59   -5180.40
-2237.83      28.86
 33  234.0   24.0     0.0         0.0         1    1.000   -3846.59     114.81
-114.00      74.28
                                                    1971    1.400   -2868.59   -5385.70
-899.53      29.20
 34  270.0   24.0     0.0         0.0         1    1.000   -3846.59     114.81
-114.00      74.33
                                                    1968    1.400   -2804.19   -4887.64
926.96      28.96
 35  306.0   24.0     0.0         0.0         1    1.000   -3846.59     114.81
-114.00      74.38
                                                    3951    1.500   -2868.59   -4006.42
2395.69      28.23
 36  342.0   24.0     0.0         0.0         1    1.000   -3846.59     114.81
-114.00      74.43
                                                    3951    1.500   -2868.59   -4006.42
2395.69      27.50
 37  378.0   24.0     0.0         0.0         1    1.000   -3846.59     114.81
-114.00      74.49
                                                    3945    1.500   -2868.59   -1011.91
7683.52      25.61
 38  414.0   24.0     0.0         0.0         1    1.000   -3846.59     114.81
-114.00      74.54
                                                    3945    1.500   -2868.59   -1011.91
7683.52      23.26
 39  450.0   24.0    14.0         0.0      1839    1.250   -3825.47    1024.47
-6182.98      74.62
                                                    3945    1.500   -2868.59   -1011.91
7683.52      20.92
 40   18.0   60.0   -14.0         0.0         2    1.000   -3520.31    1148.89
435.51      76.51
                                                    2489    1.400   -3899.91   -8924.97
-563.49      10.19
 41   54.0   60.0     0.0         0.0         2    1.000   -3520.31    1148.89
435.51      76.31
                                                    2225    1.400   -3899.91   -8962.74
-455.54      10.37
 42   90.0   60.0     0.0         0.0         2    1.000   -3520.31    1148.89
435.51      76.11
                                                    2225    1.400   -3899.91   -8962.74
-455.54      10.52
 43  126.0   60.0     0.0         0.0         2    1.000   -3520.31    1148.89
435.51      75.92
                                                    2225    1.400   -3899.91   -8962.74
-455.54      10.67
 44  162.0   60.0     0.0         0.0         2    1.000   -3520.31    1148.89
435.51      75.72
                                                    2177    1.400   -3899.91   -9110.95
435.23      10.70
 45  198.0   60.0     0.0         0.0         2    1.000   -3520.31    1148.89
435.51      75.52
                                                    2177    1.400   -3899.91   -9110.95
435.23      10.56
 46  234.0   60.0     0.0         0.0         2    1.000   -3520.31    1148.89
435.51      75.32
                                                    2155    1.400   -3899.91   -9112.87
513.84      10.41
 47  270.0   60.0     0.0         0.0         2    1.000   -3520.31    1148.89
```

```
435.51      75.12
                                                2153    1.400   -3899.91   -9096.45
793.34      10.22
 48  306.0   60.0     0.0         0.0            2    1.000   -3520.31    1148.89
435.51      74.92
                                                2153    1.400   -3899.91   -9096.45
793.34       9.96
 49  342.0   60.0     0.0         0.0            1    1.000   -3846.59     114.81
-114.00      74.89
                                                2153    1.400   -3899.91   -9096.45
793.34       9.71
 50  378.0   60.0     0.0         0.0            1    1.000   -3846.59     114.81
-114.00      74.94
                                                2149    1.400   -3867.71   -8863.83
1427.09       9.28
 51  414.0   60.0     0.0         0.0         1839    1.250   -3825.47    1024.47
-6182.98      75.61
                                                2105    1.400   -3867.71   -8829.10
1547.24       8.78
 52  450.0   60.0    14.0         0.0         1839    1.250   -3825.47    1024.47
-6182.98      77.88
                                                2105    1.400   -3867.71   -8829.10
1547.24       8.27
```

Note:
   Load effects on pile are calculated at centroid of the bottom of the footing.
   Both the max. and min. pile reaction are reported for each individual pile.
   Positive pile reaction represents pile subject to compression load; negative pile reaction represents pile subject to uplift.
   Coordinate system of pile layout see Geometry Tab>Footing Pile>Edit Pile.

Pile Lateral Resistance Check X
==========

-Controlling load combination number	3946
-Lateral loads on all piles(kips)	279.779
-Batter angle(deg)	14
-Available lateral resistance due to batter(kips)	50.352
-Direct shear resistance of all piles(kips)	832.000
-Total pile lateral resistance(kips)	882.352
-Is the lateral resistance due to batter greater than lateral load on all piles?	NO
-Is the total pile lateral resistance greater than the lateral load on all piles?	YES

Pile Lateral Resistance Check Z
==========

-Controlling load combination number	4395
-Lateral loads on all piles(kips)	497.305
-Batter angle(deg)	0
-Available lateral resistance due to batter(kips)	0.000
-Direct shear resistance of all piles(kips)	832.000
-Total pile lateral resistance(kips)	832.000
-Is the lateral resistance due to batter greater than lateral load on all piles?	NO
-Is the total pile lateral resistance greater than the lateral load on all piles?	YES

Max. Pile Reaction Used in Design:
==========

Factored pile reaction = 192.64 kips Comb 4349

Service pile reaction = 137.60 kips Comb 149

Fatigue pile reaction = 48.13 kips Comb 3953

Flexure:
========

X direction

Loc	Mmax	Comb	Asb_req	Asb_prv	Asb_eff	Ast_req	Ast_prv	Ast_eff
	Mmin	Comb	Asb_req	Asb_prv	Asb_eff	Ast_req	Ast_prv	Ast_eff
ft	kft		in^2	in^2	in^2	in^2	in^2	in^2
-5.13	-0.0	4349	0.00	11.06	0.00	0.00	4.34	0.00
	-0.0	4349	0.00	11.06	0.00	0.00	4.34	0.00
-4.87	-0.0	4349	0.00	11.06	1.11	0.00	4.34	1.10
	-0.0	4349	0.00	11.06	1.75	0.00	4.34	0.62
-4.62	-0.0	4349	0.00	11.06	2.21	0.00	4.34	2.20
	-0.0	4349	0.00	11.06	3.50	0.00	4.34	1.24
-4.37	-0.0	4349	0.00	11.06	3.32	0.00	4.34	3.29
	-0.0	4349	0.00	11.06	5.25	0.00	4.34	1.86
-4.12	-0.0	4349	0.00	11.06	4.43	0.00	4.34	4.34
	-0.0	4349	0.00	11.06	6.99	0.00	4.34	2.48
-3.87	-0.0	4349	0.00	11.06	5.53	0.00	4.34	4.34
	-0.0	4349	0.00	11.06	8.74	0.00	4.34	3.10
-3.62	-0.0	4349	0.00	11.06	6.64	0.00	4.34	4.34
	-0.0	4349	0.00	11.06	10.49	0.00	4.34	3.72
-3.37	192.6	4349	1.06	11.06	7.75	0.00	4.34	4.34
	-0.0	4349	0.00	11.06	11.06	0.00	4.34	4.34
-3.12	385.3	4349	2.12	11.06	8.85	0.00	4.34	4.34
	-0.0	4349	0.00	11.06	11.06	0.00	4.34	4.34
-2.87	577.9	4349	3.19	11.06	9.96	0.00	4.34	4.34
	-0.0	4349	0.00	11.06	11.06	0.00	4.34	4.34
0.00	-0.0	4349	0.00	11.06	11.06	0.00	4.34	4.34
	-0.0	4349	0.00	11.06	11.06	0.00	4.34	4.34

0.58	-0.0	4349	0.00	11.06	11.06	0.00	4.34	4.34
	-0.0	4349	0.00	11.06	11.06	0.00	4.34	4.34
1.15	-0.0	4349	0.00	11.06	11.06	0.00	4.34	4.34
	-0.0	4349	0.00	11.06	11.06	0.00	4.34	4.34
1.73	-0.0	4349	0.00	11.06	11.06	0.00	4.34	4.34
	-0.0	4349	0.00	11.06	11.06	0.00	4.34	4.34
2.30	-0.0	4349	0.00	11.06	11.06	0.00	4.34	4.34
	-0.0	4349	0.00	11.06	11.06	0.00	4.34	4.34
2.88	-0.0	4349	0.00	11.06	11.06	0.00	4.34	4.34
	-0.0	4349	0.00	11.06	11.06	0.00	4.34	4.34
3.45	-0.0	4349	0.00	11.06	11.06	0.00	4.34	4.34
	-0.0	4349	0.00	11.06	11.06	0.00	4.34	4.34
4.03	-0.0	4349	0.00	11.06	11.06	0.00	4.34	4.34
	-0.0	4349	0.00	11.06	11.06	0.00	4.34	4.34
4.60	-0.0	4349	0.00	11.06	11.06	0.00	4.34	4.34
	-0.0	4349	0.00	11.06	11.06	0.00	4.34	4.34
5.18	-0.0	4349	0.00	11.06	11.06	0.00	4.34	4.34
	-0.0	4349	0.00	11.06	11.06	0.00	4.34	4.34
5.75	-0.0	4349	0.00	11.06	11.06	0.00	4.34	4.34
	-0.0	4349	0.00	11.06	11.06	0.00	4.34	4.34
6.32	-0.0	4349	0.00	11.06	11.06	0.00	4.34	4.34
	-0.0	4349	0.00	11.06	11.06	0.00	4.34	4.34
6.90	-0.0	4349	0.00	11.06	11.06	0.00	4.34	4.34
	-0.0	4349	0.00	11.06	11.06	0.00	4.34	4.34
7.47	-0.0	4349	0.00	11.06	11.06	0.00	4.34	4.34
	-0.0	4349	0.00	11.06	11.06	0.00	4.34	4.34
8.05	-0.0	4349	0.00	11.06	11.06	0.00	4.34	4.34
	-0.0	4349	0.00	11.06	11.06	0.00	4.34	4.34
8.62	-0.0	4349	0.00	11.06	11.06	0.00	4.34	4.34
	-0.0	4349	0.00	11.06	11.06	0.00	4.34	4.34
9.20	-0.0	4349	0.00	11.06	11.06	0.00	4.34	4.34

	-0.0	4349	0.00	11.06	11.06	0.00	4.34	4.34
9.77	-0.0	4349	0.00	11.06	11.06	0.00	4.34	4.34
	-0.0	4349	0.00	11.06	11.06	0.00	4.34	4.34
10.35	-0.0	4349	0.00	11.06	11.06	0.00	4.34	4.34
	-0.0	4349	0.00	11.06	11.06	0.00	4.34	4.34
10.92	-0.0	4349	0.00	11.06	11.06	0.00	4.34	4.34
	-0.0	4349	0.00	11.06	11.06	0.00	4.34	4.34
11.50	-0.0	4349	0.00	11.06	11.06	0.00	4.34	4.34
	-0.0	4349	0.00	11.06	11.06	0.00	4.34	4.34
12.08	-0.0	4349	0.00	11.06	11.06	0.00	4.34	4.34
	-0.0	4349	0.00	11.06	11.06	0.00	4.34	4.34
12.65	-0.0	4349	0.00	11.06	11.06	0.00	4.34	4.34
	-0.0	4349	0.00	11.06	11.06	0.00	4.34	4.34
13.22	-0.0	4349	0.00	11.06	11.06	0.00	4.34	4.34
	-0.0	4349	0.00	11.06	11.06	0.00	4.34	4.34
13.80	-0.0	4349	0.00	11.06	11.06	0.00	4.34	4.34
	-0.0	4349	0.00	11.06	11.06	0.00	4.34	4.34
14.37	-0.0	4349	0.00	11.06	11.06	0.00	4.34	4.34
	-0.0	4349	0.00	11.06	11.06	0.00	4.34	4.34
14.95	-0.0	4349	0.00	11.06	11.06	0.00	4.34	4.34
	-0.0	4349	0.00	11.06	11.06	0.00	4.34	4.34
15.52	-0.0	4349	0.00	11.06	11.06	0.00	4.34	4.34
	-0.0	4349	0.00	11.06	11.06	0.00	4.34	4.34
16.10	-0.0	4349	0.00	11.06	11.06	0.00	4.34	4.34
	-0.0	4349	0.00	11.06	11.06	0.00	4.34	4.34
16.67	-0.0	4349	0.00	11.06	11.06	0.00	4.34	4.34
	-0.0	4349	0.00	11.06	11.06	0.00	4.34	4.34
17.25	-0.0	4349	0.00	11.06	11.06	0.00	4.34	4.34
	-0.0	4349	0.00	11.06	11.06	0.00	4.34	4.34
17.83	-0.0	4349	0.00	11.06	11.06	0.00	4.34	4.34
	-0.0	4349	0.00	11.06	11.06	0.00	4.34	4.34
18.40	-0.0	4349	0.00	11.06	11.06	0.00	4.34	4.34

	-0.0	4349	0.00	11.06	11.06	0.00	4.34	4.34
18.97	-0.0	4349	0.00	11.06	11.06	0.00	4.34	4.34
	-0.0	4349	0.00	11.06	11.06	0.00	4.34	4.34
19.55	-0.0	4349	0.00	11.06	11.06	0.00	4.34	4.34
	-0.0	4349	0.00	11.06	11.06	0.00	4.34	4.34
20.12	-0.0	4349	0.00	11.06	11.06	0.00	4.34	4.34
	-0.0	4349	0.00	11.06	11.06	0.00	4.34	4.34
20.70	-0.0	4349	0.00	11.06	11.06	0.00	4.34	4.34
	-0.0	4349	0.00	11.06	11.06	0.00	4.34	4.34
21.27	-0.0	4349	0.00	11.06	11.06	0.00	4.34	4.34
	-0.0	4349	0.00	11.06	11.06	0.00	4.34	4.34
21.85	-0.0	4349	0.00	11.06	11.06	0.00	4.34	4.34
	-0.0	4349	0.00	11.06	11.06	0.00	4.34	4.34
22.42	-0.0	4349	0.00	11.06	11.06	0.00	4.34	4.34
	-0.0	4349	0.00	11.06	11.06	0.00	4.34	4.34
23.00	-0.0	4349	0.00	11.06	11.06	0.00	4.34	4.34
	-0.0	4349	0.00	11.06	11.06	0.00	4.34	4.34
23.58	-0.0	4349	0.00	11.06	11.06	0.00	4.34	4.34
	-0.0	4349	0.00	11.06	11.06	0.00	4.34	4.34
24.15	-0.0	4349	0.00	11.06	11.06	0.00	4.34	4.34
	-0.0	4349	0.00	11.06	11.06	0.00	4.34	4.34
24.72	-0.0	4349	0.00	11.06	11.06	0.00	4.34	4.34
	-0.0	4349	0.00	11.06	11.06	0.00	4.34	4.34
25.30	-0.0	4349	0.00	11.06	11.06	0.00	4.34	4.34
	-0.0	4349	0.00	11.06	11.06	0.00	4.34	4.34
25.87	-0.0	4349	0.00	11.06	11.06	0.00	4.34	4.34
	-0.0	4349	0.00	11.06	11.06	0.00	4.34	4.34
26.45	-0.0	4349	0.00	11.06	11.06	0.00	4.34	4.34
	-0.0	4349	0.00	11.06	11.06	0.00	4.34	4.34
27.02	-0.0	4349	0.00	11.06	11.06	0.00	4.34	4.34
	-0.0	4349	0.00	11.06	11.06	0.00	4.34	4.34

27.60	-0.0	4349	0.00	11.06	11.06	0.00	4.34	4.34
	-0.0	4349	0.00	11.06	11.06	0.00	4.34	4.34
28.17	-0.0	4349	0.00	11.06	11.06	0.00	4.34	4.34
	-0.0	4349	0.00	11.06	11.06	0.00	4.34	4.34
28.75	-0.0	4349	0.00	11.06	11.06	0.00	4.34	4.34
	-0.0	4349	0.00	11.06	11.06	0.00	4.34	4.34
31.63	577.9	4349	3.19	11.06	9.96	0.00	4.34	4.34
	-0.0	4349	0.00	11.06	11.06	0.00	4.34	4.34
31.88	385.3	4349	2.12	11.06	8.85	0.00	4.34	4.34
	-0.0	4349	0.00	11.06	11.06	0.00	4.34	4.34
32.13	192.6	4349	1.06	11.06	7.75	0.00	4.34	4.34
	-0.0	4349	0.00	11.06	11.06	0.00	4.34	4.34
32.38	-0.0	4349	0.00	11.06	6.64	0.00	4.34	4.34
	-0.0	4349	0.00	11.06	10.49	0.00	4.34	3.72
32.63	-0.0	4349	0.00	11.06	5.53	0.00	4.34	4.34
	-0.0	4349	0.00	11.06	8.74	0.00	4.34	3.10
32.88	-0.0	4349	0.00	11.06	4.43	0.00	4.34	4.34
	-0.0	4349	0.00	11.06	6.99	0.00	4.34	2.48
33.13	-0.0	4349	0.00	11.06	3.32	0.00	4.34	3.29
	-0.0	4349	0.00	11.06	5.25	0.00	4.34	1.86
33.38	-0.0	4349	0.00	11.06	2.21	0.00	4.34	2.20
	-0.0	4349	0.00	11.06	3.50	0.00	4.34	1.24
33.63	-0.0	4349	0.00	11.06	1.11	0.00	4.34	1.10
	-0.0	4349	0.00	11.06	1.75	0.00	4.34	0.62
33.88	-0.0	4349	0.00	11.06	0.00	0.00	4.34	0.00
	-0.0	4349	0.00	11.06	0.00	0.00	4.34	0.00

Z direction

Loc	Mmax	Comb	Asb_req	Asb_prv	Asb_eff	Ast_req	Ast_prv	Ast_eff
ft	kft		in^2	in^2	in^2	in^2	in^2	in^2
-2.00	7276.0	4349	39.68	41.08	41.08	0.00	16.12	16.12
2.00	7276.0	4349	39.68	41.08	41.08	0.00	16.12	16.12

Cracking/Fatigue
==========

X direction

Loc	Mmax	Comb	fs-t	ratio fs-t	Mmax	Comb	fs-t	ratio fs-t
	<---------- Cracking ---------->				<---------- Fatigue ---------->			
Loc	Mmin	Comb	fs-b	ratio fs-b	Mmin	Comb	fs-b	ratio fs-b
ft	kft		ksi		kft		ksi	
-5.13	-0.0	0	0.00	-0.00	-0.00	0	0.00	0.00
	-0.0	0	0.00	-0.00	-0.00	0	0.00	0.00
-4.87	-0.0	0	0.00	0.00	-0.00	0	0.00	0.00
	-0.0	0	-0.00	-0.00	-0.00	0	0.00	0.00
-4.62	-0.0	0	0.00	0.00	-0.00	0	0.00	0.00
	-0.0	0	-0.00	-0.00	-0.00	0	0.00	0.00
-4.37	-0.0	0	0.00	0.00	-0.00	0	0.00	0.00
	-0.0	0	-0.00	-0.00	-0.00	0	0.00	0.00
-4.12	-0.0	0	0.00	0.00	-0.00	0	0.00	0.00
	-0.0	0	-0.00	-0.00	-0.00	0	0.00	0.00
-3.87	-0.0	0	0.00	0.00	-0.00	0	0.00	0.00
	-0.0	0	-0.00	-0.00	-0.00	0	0.00	0.00
-3.62	-0.0	0	0.00	0.00	-0.00	0	0.00	0.00
	-0.0	0	-0.00	-0.00	-0.00	0	0.00	0.00
-3.37	-0.0	0	0.00	0.00	-0.00	0	0.00	0.00
	137.6	149	5.50	0.22	48.13	3953	1.92	0.08
-3.12	-0.0	0	0.00	0.00	-0.00	0	0.00	0.00
	275.2	149	9.66	0.39	96.27	3953	3.38	0.15
-2.87	-0.0	0	0.00	0.00	-0.00	0	0.00	0.00
	412.8	149	12.91	0.51	144.40	3953	4.52	0.21
0.00	-0.0	0	0.00	0.00	-0.00	0	0.00	0.00
	-0.0	0	-0.00	-0.00	-0.00	0	0.00	0.00
0.58	-0.0	0	0.00	0.00	-0.00	0	0.00	0.00
	-0.0	0	-0.00	-0.00	-0.00	0	0.00	0.00

1.15	-0.0	0	0.00	0.00	-0.00	0	0.00	0.00
	-0.0	0	-0.00	-0.00	-0.00	0	0.00	0.00
1.73	-0.0	0	0.00	0.00	-0.00	0	0.00	0.00
	-0.0	0	-0.00	-0.00	-0.00	0	0.00	0.00
2.30	-0.0	0	0.00	0.00	-0.00	0	0.00	0.00
	-0.0	0	-0.00	-0.00	-0.00	0	0.00	0.00
2.88	-0.0	0	0.00	0.00	-0.00	0	0.00	0.00
	-0.0	0	-0.00	-0.00	-0.00	0	0.00	0.00
3.45	-0.0	0	0.00	0.00	-0.00	0	0.00	0.00
	-0.0	0	-0.00	-0.00	-0.00	0	0.00	0.00
4.03	-0.0	0	0.00	0.00	-0.00	0	0.00	0.00
	-0.0	0	-0.00	-0.00	-0.00	0	0.00	0.00
4.60	-0.0	0	0.00	0.00	-0.00	0	0.00	0.00
	-0.0	0	-0.00	-0.00	-0.00	0	0.00	0.00
5.18	-0.0	0	0.00	0.00	-0.00	0	0.00	0.00
	-0.0	0	-0.00	-0.00	-0.00	0	0.00	0.00
5.75	-0.0	0	0.00	0.00	-0.00	0	0.00	0.00
	-0.0	0	-0.00	-0.00	-0.00	0	0.00	0.00
6.32	-0.0	0	0.00	0.00	-0.00	0	0.00	0.00
	-0.0	0	-0.00	-0.00	-0.00	0	0.00	0.00
6.90	-0.0	0	0.00	0.00	-0.00	0	0.00	0.00
	-0.0	0	-0.00	-0.00	-0.00	0	0.00	0.00
7.47	-0.0	0	0.00	0.00	-0.00	0	0.00	0.00
	-0.0	0	-0.00	-0.00	-0.00	0	0.00	0.00
8.05	-0.0	0	0.00	0.00	-0.00	0	0.00	0.00
	-0.0	0	-0.00	-0.00	-0.00	0	0.00	0.00
8.62	-0.0	0	0.00	0.00	-0.00	0	0.00	0.00
	-0.0	0	-0.00	-0.00	-0.00	0	0.00	0.00
9.20	-0.0	0	0.00	0.00	-0.00	0	0.00	0.00
	-0.0	0	-0.00	-0.00	-0.00	0	0.00	0.00
9.77	-0.0	0	0.00	0.00	-0.00	0	0.00	0.00

	-0.0	0	-0.00	-0.00	-0.00	0	0.00	0.00
10.35	-0.0	0	0.00	0.00	-0.00	0	0.00	0.00
	-0.0	0	-0.00	-0.00	-0.00	0	0.00	0.00
10.92	-0.0	0	0.00	0.00	-0.00	0	0.00	0.00
	-0.0	0	-0.00	-0.00	-0.00	0	0.00	0.00
11.50	-0.0	0	0.00	0.00	-0.00	0	0.00	0.00
	-0.0	0	-0.00	-0.00	-0.00	0	0.00	0.00
12.08	-0.0	0	0.00	0.00	-0.00	0	0.00	0.00
	-0.0	0	-0.00	-0.00	-0.00	0	0.00	0.00
12.65	-0.0	0	0.00	0.00	-0.00	0	0.00	0.00
	-0.0	0	-0.00	-0.00	-0.00	0	0.00	0.00
13.22	-0.0	0	0.00	0.00	-0.00	0	0.00	0.00
	-0.0	0	-0.00	-0.00	-0.00	0	0.00	0.00
13.80	-0.0	0	0.00	0.00	-0.00	0	0.00	0.00
	-0.0	0	-0.00	-0.00	-0.00	0	0.00	0.00
14.37	-0.0	0	0.00	0.00	-0.00	0	0.00	0.00
	-0.0	0	-0.00	-0.00	-0.00	0	0.00	0.00
14.95	-0.0	0	0.00	0.00	-0.00	0	0.00	0.00
	-0.0	0	-0.00	-0.00	-0.00	0	0.00	0.00
15.52	-0.0	0	0.00	0.00	-0.00	0	0.00	0.00
	-0.0	0	-0.00	-0.00	-0.00	0	0.00	0.00
16.10	-0.0	0	0.00	0.00	-0.00	0	0.00	0.00
	-0.0	0	-0.00	-0.00	-0.00	0	0.00	0.00
16.67	-0.0	0	0.00	0.00	-0.00	0	0.00	0.00
	-0.0	0	-0.00	-0.00	-0.00	0	0.00	0.00
17.25	-0.0	0	0.00	0.00	-0.00	0	0.00	0.00
	-0.0	0	-0.00	-0.00	-0.00	0	0.00	0.00
17.83	-0.0	0	0.00	0.00	-0.00	0	0.00	0.00
	-0.0	0	-0.00	-0.00	-0.00	0	0.00	0.00
18.40	-0.0	0	0.00	0.00	-0.00	0	0.00	0.00
	-0.0	0	-0.00	-0.00	-0.00	0	0.00	0.00
18.97	-0.0	0	0.00	0.00	-0.00	0	0.00	0.00

	-0.0	0	-0.00	-0.00	-0.00	0	0.00	0.00
19.55	-0.0	0	0.00	0.00	-0.00	0	0.00	0.00
	-0.0	0	-0.00	-0.00	-0.00	0	0.00	0.00
20.12	-0.0	0	0.00	0.00	-0.00	0	0.00	0.00
	-0.0	0	-0.00	-0.00	-0.00	0	0.00	0.00
20.70	-0.0	0	0.00	0.00	-0.00	0	0.00	0.00
	-0.0	0	-0.00	-0.00	-0.00	0	0.00	0.00
21.27	-0.0	0	0.00	0.00	-0.00	0	0.00	0.00
	-0.0	0	-0.00	-0.00	-0.00	0	0.00	0.00
21.85	-0.0	0	0.00	0.00	-0.00	0	0.00	0.00
	-0.0	0	-0.00	-0.00	-0.00	0	0.00	0.00
22.42	-0.0	0	0.00	0.00	-0.00	0	0.00	0.00
	-0.0	0	-0.00	-0.00	-0.00	0	0.00	0.00
23.00	-0.0	0	0.00	0.00	-0.00	0	0.00	0.00
	-0.0	0	-0.00	-0.00	-0.00	0	0.00	0.00
23.58	-0.0	0	0.00	0.00	-0.00	0	0.00	0.00
	-0.0	0	-0.00	-0.00	-0.00	0	0.00	0.00
24.15	-0.0	0	0.00	0.00	-0.00	0	0.00	0.00
	-0.0	0	-0.00	-0.00	-0.00	0	0.00	0.00
24.72	-0.0	0	0.00	0.00	-0.00	0	0.00	0.00
	-0.0	0	-0.00	-0.00	-0.00	0	0.00	0.00
25.30	-0.0	0	0.00	0.00	-0.00	0	0.00	0.00
	-0.0	0	-0.00	-0.00	-0.00	0	0.00	0.00
25.87	-0.0	0	0.00	0.00	-0.00	0	0.00	0.00
	-0.0	0	-0.00	-0.00	-0.00	0	0.00	0.00
26.45	-0.0	0	0.00	0.00	-0.00	0	0.00	0.00
	-0.0	0	-0.00	-0.00	-0.00	0	0.00	0.00
27.02	-0.0	0	0.00	0.00	-0.00	0	0.00	0.00
	-0.0	0	-0.00	-0.00	-0.00	0	0.00	0.00
27.60	-0.0	0	0.00	0.00	-0.00	0	0.00	0.00
	-0.0	0	-0.00	-0.00	-0.00	0	0.00	0.00

28.17	-0.0	0	0.00	0.00	-0.00	0	0.00	0.00
	-0.0	0	-0.00	-0.00	-0.00	0	0.00	0.00
28.75	-0.0	0	0.00	0.00	-0.00	0	0.00	0.00
	-0.0	0	-0.00	-0.00	-0.00	0	0.00	0.00
31.63	-0.0	0	0.00	0.00	-0.00	0	0.00	0.00
	412.8	149	12.91	0.51	144.40	3953	4.52	0.21
31.88	-0.0	0	0.00	0.00	-0.00	0	0.00	0.00
	275.2	149	9.66	0.39	96.27	3953	3.38	0.15
32.13	-0.0	0	0.00	0.00	-0.00	0	0.00	0.00
	137.6	149	5.50	0.22	48.13	3953	1.92	0.08
32.38	-0.0	0	0.00	0.00	-0.00	0	0.00	0.00
	-0.0	0	-0.00	-0.00	-0.00	0	0.00	0.00
32.63	-0.0	0	0.00	0.00	-0.00	0	0.00	0.00
	-0.0	0	-0.00	-0.00	-0.00	0	0.00	0.00
32.88	-0.0	0	0.00	0.00	-0.00	0	0.00	0.00
	-0.0	0	-0.00	-0.00	-0.00	0	0.00	0.00
33.13	-0.0	0	0.00	0.00	-0.00	0	0.00	0.00
	-0.0	0	-0.00	-0.00	-0.00	0	0.00	0.00
33.38	-0.0	0	0.00	0.00	-0.00	0	0.00	0.00
	-0.0	0	-0.00	-0.00	-0.00	0	0.00	0.00
33.63	-0.0	0	0.00	0.00	-0.00	0	0.00	0.00
	-0.0	0	-0.00	-0.00	-0.00	0	0.00	0.00
33.88	-0.0	0	0.00	-0.00	-0.00	0	0.00	0.00
	-0.0	0	0.00	-0.00	-0.00	0	0.00	0.00

Z direction

-2.00	5129.4	149	38.17	1.42 *	1640.25	3953	12.21	2.91 *
2.00	5129.4	149	38.17	1.42 *	1640.25	3953	12.21	2.91 *

Note:
* Cracking / fatigue ratio exceeds allowable.

One Way Shear :

report

==========

Col	Dist ft	Comb	d in	Vu kips	phi*Vc kips
X direction					
1	-33.88	----	------	Outside of Footing	
	33.88	4349	0.00	0.0	0.0
2	-5.13	4349	0.00	0.0	0.0
	33.88	4349	0.00	0.0	0.0
3	-5.13	4349	0.00	0.0	0.0
	33.88	4349	0.00	0.0	0.0
4	-5.13	4349	0.00	0.0	0.0
	33.88	4349	0.00	0.0	0.0
5	-5.13	4349	0.00	0.0	0.0
	33.88	4349	0.00	0.0	0.0
6	-5.13	4349	0.00	0.0	0.0
	0.63	----	------	Outside of Footing	
Z direction					
	-5.46	4349	41.50	0.0	2088.2
	5.46	4349	41.50	0.0	2088.2

Two Way Shear:

==========

#	Bo ft	Ao ft^2	Comb	Avg. d in	Vu kips	phi*Vc kips
Columns:						
1	33.33	68.68	4349	41.50	1463.4	3569.6
2	33.33	68.68	4349	41.50	-384.4	3569.6
3	33.33	68.68	4349	41.50	462.2	3569.6
4	33.33	68.68	4349	41.50	462.2	3569.6
5	33.33	68.68	4349	41.50	-384.4	3569.6
6	33.33	68.68	4349	41.50	1463.4	3569.6
Piles - max:						
15	14.01	15.61	4349	41.50	192.6	1499.9
Piles - min:						
1	4.75	9.91	4349	41.50	192.6	508.7

Note:
TWO WAY SHEAR IN FOOTING IS NOT DESIGNED AND STIRRUPS ARE NOT CONSIDERED.

♀

DESIGN CALCULATION COVER SHEET

Gannett Fleming
Engineers and Architects, P.C.
Excellence Delivered ***As Promised***

ISO 9001:2008 CERTIFIED

PROJECT:	**ODOT/EMH&T: HAM-75-7.85**	*ODOT PID NO:*	*77889*
BRIDGE NO:	**HAM-75-0834**	*EMH&T JOB NO:*	
SUBJECT:	***Loads***	**GF JOB NO:**	**54682**
	Retaining wall Loads for	CALC NO.:	**HAM075_0834_08**
	Abut5 Program	REV NO.:	**01**
FILE NAME(s):	*HAM075_0834_08.xlsx*	**SHEET:**	**1 OF 7**

SUPERSEDES CALC NO: 00 (Stage 2 Design)

CALCULATION DESCRIPTION:

This will calculate all loads applied to the wingwall on a per-foot basis for use in the Abut5 program. Two straight wing walls and Two caisson walls are proposed for Ham-75-0834 bridge. The wing wall located on the rear abutment does not have any live load surcharge, hence the north east wing wall located on the forward abutment is designed and same dimensions and reinforcement are used for both wingwalls. Three design points are considered one close to the edge of the abutment, one close to the middle of the retaining wall and a third located near the end of the wall.

DESIGN BASIS OR REFERENCES:

NS Underpass Design Criteria
AREMA (2008) Chapter 8, Section 5
AREMA (2008) Chapter 15, Section 10
Calculation: HAM075_0834_03 (Girder Loads and Reactions)
Calculation: HAM075_0834C_01 (Elevation Data)
Revised Stage 1 Plans (after addressing comments)

MISCELLANEOUS NOTES:

Abut5 Calculates the abutment self-weight and earth loads automatically.

STAGE 2: Coulomb's equation is used for equivilant pressure.

RECORD OF ISSUES:

REV	DESCRIPTION	BY	DATE	VERIF'D	DATE
00	Stage 1 Calculation	CTM	11/13/13		
01	Stage 2 Calculation	CTM	06/23/14	VDK	06/25/14

RECORD OF CHECK OF CURRENT CALCULATION VERSION

BY	DATE	CHKD	DATE	UPD.	DATE	VERIF'D	DATE
CTM	06/23/14	VDK	06/24/14	CTM	06/24/14	VDK	06/25/14

Gannett Fleming	GF JOB # 54682	CALC NO.: HAM075_0834_08	REV. NO.: 01
		PROJECT: ODOT/EMH&T: HAM-75-7.85	
ODOT PID NO.: 77889		DESIGNED: CTM	DATE: 11/13/13
BRIDGE NO: HAM-75-0834		UPDATED: CTM	DATE: 06/23/14
SUBJECT: Loads		CHECKED: VDK	DATE: 06/24/14
Retaining wall Loads for		UPDATED: CTM	DATE: 06/24/14
Forward Abutment (Worst Case)		VERIFIED: VDK	DATE: 06/25/14

Section 1: NE Wingwall, Design Point 1 (approx STA. 156+95) - 30ft High

A select granular backfill will be used behind the abutment. For the design of the wingwall, Backfill Type 1 of AREMA Table 8-5-1 (Section 8-5.2.5) is will be specified. Type 2 will be used to be conservative. Coulomb's theory for a vertical wall, the equivilant fluid pressure will be used

Distance from Top of Rail to Top of Wall:		3.00 ft		*Round up… must coincide with a bousenesque level.*
Distance from Fill Face of wall to CL Rail:		1000.00 ft		*Normal to the wall, this distance will be a CLT distance in bousensque*
Friction btwn backfill and stem concrete δ:		15.0 deg	0.2618 rad	*1/2 of internal friction angle (conservative)*
Angle of backfill β:	17.0 : 1	3.4 deg	0.0593 rad	*Enter 1000:1 for horz. slope (Top/wall to Bot/tie)*
Angle of Internal Friction ϕ:		30.0 deg	0.5236 rad	*AREMA Table 8-5-2*
Angle of Stem (Fill-Face) θ:	1 : 10.0	84.3 deg	1.4713 rad	*Angle from horizontal (less than 90 for a batter) (Enter 1:100 for a vertical face)*
AREMA Type 2 Soil Density		110.0 pcf		

	Coulomb	Rankine	(Equation from "All-In-One Civil Engineering PE")
K_a Numerator:	***0.831***	**0.831**	
K_a denominator Γ Term:	*2.503*	2.174	
K_a denominator Outside Term:	*0.926*	0.985	
K_a Denominator:	***2.318***	**2.142**	
Coefficient of Active Earth Pressure K_a:	***0.358***	**0.388**	*It should be noted, that the equivilant surcharge is meant to correctly model the moment in the stem. In general, this will overestimate the thrust (sliding). Therefore, as long as the analysis is OK for sliding, there is no need to be extra conservative.*
	For Comparison Only		
Equivalent Fluid Pressure Dry:	***39.4 psi***	**42.7 psi**	
Live Load Surcharge:	**2.6 ft**		*A minimum of 2.5' will be considered for construction loads*
Vertical Fluid Pressure (K_v):	***2.3 psi***	**2.5 psi**	*LRFD Equation 3.11.5.5-2*

Section 2:NE Wingwall, Design Point 2 (approx STA. 156+98) - 22.5ft High

A select granular backfill will be used behind the abutment. For the design of the wingwall, Backfill Type 1 of AREMA Table 8-5-1 (Section 8-5.2.5) is will be specified. Type 2 will be used to be conservative. Coulomb's theory for a vertical wall, the equivilant fluid pressure will be used

Distance from Top of Rail to Top of Wall:		11.00 ft		*Round up… must coincide with a bousenesque level.*
Distance from Fill Face of wall to CL Rail:		1000.00 ft		*Normal to the wall, this distance will be a CLT distance in bousensque*
Friction btwn backfill and stem concrete δ:		15.0 deg	0.2618 rad	*1/2 of internal friction angle (conservative)*
Angle of backfill β:	17.0 : 1	3.4 deg	0.0593 rad	*Enter 1000:1 for horz. slope (Top/wall to Bot/tie)*
Angle of Internal Friction ϕ:		30.0 deg	0.5236 rad	*AREMA Table 8-5-2*
Angle of Stem (Fill-Face) θ:	1 : 10.0	84.3 deg	1.4713 rad	*Angle from horizontal (less than 90 for a batter) (Enter 1:100 for a vertical face)*
AREMA Type 2 Soil Density		110.0 pcf		

	Coulomb	Rankine	(Equation from "All-In-One Civil Engineering PE")
K_a Numerator:	***0.831***	**0.831**	
K_a denominator Γ Term:	*2.503*	2.174	
K_a denominator Outside Term:	*0.926*	0.985	
K_a Denominator:	***2.318***	**2.142**	
Coefficient of Active Earth Pressure K_a:	***0.358***	**0.388**	*It should be noted, that the equivilant surcharge is meant to correctly model the moment in the stem. In general, this will overestimate the thrust (sliding). Therefore, as long as the analysis is OK for sliding, there is no need to be extra conservative.*
	For Comparison Only		
Equivalent Fluid Pressure Dry:	***39.4 psi***	**42.7 psi**	
Live Load Surcharge:	**2.5 ft**		*A minimum of 2.5' will be considered for construction loads*
Vertical Fluid Pressure (K_v):	***2.3 psi***	**2.5 psi**	*LRFD Equation 3.11.5.5-2*

Section 3: NE Wingwall, End Section (approx STA. 157+02) Unbattered - 13ft High

A select granular backfill will be used behind the abutment. For the design of the wingwall, Backfill Type 1 of AREMA Table 8-5-1 (Section 8-5.2.5) is will be specified. Type 2 will be used to be conservative. Coulomb's theory for a vertical wall, the equivilant fluid pressure will be used

Distance from Top of Rail to Top of Wall:	20.00 ft		*Round up… must coincide with a bousenesque level.*
Distance from Fill Face of wall to CL Rail:	1000.00 ft		*Normal to the wall, this distance will be a CLT distance in bousensque*
Friction btwn backfill and stem concrete δ:	15.0 deg	0.2618 rad	*1/2 of internal friction angle (conservative)*
Angle of backfill β: 17.0 : 1	3.4 deg	0.0593 rad	*Enter 1000:1 for horz. slope (Top/wall to Bot/tie)*
Angle of Internal Friction ϕ:	30.0 deg	0.5236 rad	*AREMA Table 8-5-2*
Angle of Stem (Fill-Face) θ: 1 : 100.0	90.0 deg	1.5708 rad	*Angle from horizontal (less than 90 for a batter) (Enter 1:100 for a vertical face)*
AREMA Type 2 Soil Density	110.0 pcf		
	Coulomb	*Rankine*	*(Equation from "All-In-One Civil Engineering PE")*
K_a Numerator:	***0.750***	**0.750**	
K_a denominator Γ Term:	*2.474*	2.171	
K_a denominator Outside Term:	*0.966*	1.000	
K_a Denominator:	***2.390***	**2.171**	
Coefficient of Active Earth Pressure K_a:	***0.314***	**0.345**	*It should be noted, that the equivilant surcharge is meant to correctly model the moment in the stem. In general, this will overestimate the thrust (sliding). Therefore, as long as the analysis is OK for sliding, there is no need to be extra conservative.*
	For Comparison Only		
Equivalent Fluid Pressure Dry:	***34.5 psi***	**38.0 psi**	
Live Load Surcharge:	**2.5 ft**		*A minimum of 2.5' will be considered for construction loads*
Vertical Fluid Pressure (K_v):	***2.1 psi***	**2.3 psi**	*LRFD Equation 3.11.5.5-2*

Gannett Fleming
Engineers and Architects, P.C.
Excellence Delivered ***As Promised***

Calc:	CTM	Date:	6/23/2014
Check:	VDK	Date:	6/24/2014
Update:	CTM	Date:	6/24/2014
Verified:	VDK	Date:	6/25/2014

Lateral Pressure from Parallel Strip Loading

4 Different wall distances/heights considered.

Calculations as per Norfolk Southern Design Standards

Min. Depth of Resulting Table (Hs_{min}):	1.00 ft	Centerline Track Distance 1, CLT_1:	1000.0 ft
Max Depth of Resulting Table (Hs_{max}):	41.00 ft	Centerline Track Distance 2, CLT_2:	1000.0 ft
Spacing of Max Axle Load:	5.0 ft	Centerline Track Distance 3, CLT_3:	32.0 ft
Max Axle Load:	100.0 kip	Centerline Track Distance 4, CLT_4:	#REF!
Width of Tie (TL):	8.5 ft	Applied Pressure (q):	2.35 ksf

Hs	**β** *(Radians)*				**α** *(Radians)*				*Active Pressure,* **Ps** *(psf)*			
	β_1	β_2	β_3	β_4	α_1	α_2	α_3	α_4	Ps_1	Ps_2	Ps_3	Ps_4
0.00 ft	0.0000	0.0000	0.0000	#REF!	1.5708	1.5708	1.5708	#REF!	0.00	0.00	0.00	#REF!
1.00 ft	0.0000	0.0000	0.0084	#REF!	1.5698	1.5698	1.5390	#REF!	0.03	0.03	25.26	#REF!
2.00 ft	0.0000	0.0000	0.0168	#REF!	1.5688	1.5688	1.5073	#REF!	0.05	0.05	50.22	#REF!
3.00 ft	0.0000	0.0000	0.0251	#REF!	1.5678	1.5678	1.4757	#REF!	0.08	0.08	74.57	#REF!
4.00 ft	0.0000	0.0000	0.0333	#REF!	1.5668	1.5668	1.4443	#REF!	0.10	0.10	98.04	#REF!
5.00 ft	0.0000	0.0000	0.0412	#REF!	1.5658	1.5658	1.4131	#REF!	0.13	0.13	120.37	#REF!
6.00 ft	0.0001	0.0001	0.0489	#REF!	1.5648	1.5648	1.3823	#REF!	0.15	0.15	141.35	#REF!
7.00 ft	0.0001	0.0001	0.0563	#REF!	1.5638	1.5638	1.3519	#REF!	0.18	0.18	160.79	#REF!
8.00 ft	0.0001	0.0001	0.0635	#REF!	1.5628	1.5628	1.3219	#REF!	0.20	0.20	178.55	#REF!
9.00 ft	0.0001	0.0001	0.0703	#REF!	1.5618	1.5618	1.2923	#REF!	0.23	0.23	194.52	#REF!
10.00 ft	0.0001	0.0001	0.0767	#REF!	1.5608	1.5608	1.2633	#REF!	0.25	0.25	208.66	#REF!
11.00 ft	0.0001	0.0001	0.0828	#REF!	1.5598	1.5598	1.2348	#REF!	0.28	0.28	220.92	#REF!
12.00 ft	0.0001	0.0001	0.0885	#REF!	1.5588	1.5588	1.2069	#REF!	0.31	0.31	231.33	#REF!
13.00 ft	0.0001	0.0001	0.0938	#REF!	1.5578	1.5578	1.1796	#REF!	0.33	0.33	239.93	#REF!
14.00 ft	0.0001	0.0001	0.0987	#REF!	1.5568	1.5568	1.1529	#REF!	0.36	0.36	246.79	#REF!
15.00 ft	0.0001	0.0001	0.1032	#REF!	1.5558	1.5558	1.1269	#REF!	0.38	0.38	251.99	#REF!
16.00 ft	0.0001	0.0001	0.1074	#REF!	1.5548	1.5548	1.1015	#REF!	0.41	0.41	255.65	#REF!
17.00 ft	0.0001	0.0001	0.1111	#REF!	1.5538	1.5538	1.0767	#REF!	0.43	0.43	257.87	#REF!
18.00 ft	0.0002	0.0002	0.1145	#REF!	1.5528	1.5528	1.0526	#REF!	0.46	0.46	258.78	#REF!
19.00 ft	0.0002	0.0002	0.1176	#REF!	1.5518	1.5518	1.0292	#REF!	0.48	0.48	258.51	#REF!
20.00 ft	0.0002	0.0002	0.1203	#REF!	1.5508	1.5508	1.0065	#REF!	0.51	0.51	257.18	#REF!
21.00 ft	0.0002	0.0002	0.1227	#REF!	1.5498	1.5498	0.9844	#REF!	0.53	0.53	254.93	#REF!
22.00 ft	0.0002	0.0002	0.1249	#REF!	1.5488	1.5488	0.9629	#REF!	0.56	0.56	251.86	#REF!
23.00 ft	0.0002	0.0002	0.1267	#REF!	1.5478	1.5478	0.9421	#REF!	0.59	0.59	248.10	#REF!
24.00 ft	0.0002	0.0002	0.1282	#REF!	1.5468	1.5468	0.9219	#REF!	0.61	0.61	243.75	#REF!
25.00 ft	0.0002	0.0002	0.1296	#REF!	1.5458	1.5458	0.9023	#REF!	0.64	0.64	238.90	#REF!
26.00 ft	0.0002	0.0002	0.1306	#REF!	1.5448	1.5448	0.8833	#REF!	0.66	0.66	233.66	#REF!
27.00 ft	0.0002	0.0002	0.1315	#REF!	1.5438	1.5438	0.8649	#REF!	0.69	0.69	228.09	#REF!
28.00 ft	0.0002	0.0002	0.1322	#REF!	1.5428	1.5428	0.8470	#REF!	0.71	0.71	222.28	#REF!
29.00 ft	0.0002	0.0002	0.1327	#REF!	1.5418	1.5418	0.8297	#REF!	0.74	0.74	216.29	#REF!
30.00 ft	0.0003	0.0003	0.1330	#REF!	1.5408	1.5408	0.8130	#REF!	0.76	0.76	210.17	#REF!
31.00 ft	0.0003	0.0003	0.1332	#REF!	1.5398	1.5398	0.7967	#REF!	0.79	0.79	203.99	#REF!
32.00 ft	0.0003	0.0003	0.1332	#REF!	1.5388	1.5388	0.7810	#REF!	0.81	0.81	197.77	#REF!
33.00 ft	0.0003	0.0003	0.1331	#REF!	1.5378	1.5378	0.7657	#REF!	0.84	0.84	191.57	#REF!
34.00 ft	0.0003	0.0003	0.1329	#REF!	1.5368	1.5368	0.7510	#REF!	0.86	0.86	185.40	#REF!
35.00 ft	0.0003	0.0003	0.1326	#REF!	1.5358	1.5358	0.7367	#REF!	0.89	0.89	179.31	#REF!

36.00 ft	0.0003	0.0003	0.1322	#REF!	1.5348	1.5348	0.7228	#REF!	0.91	0.91	173.31	#REF!
37.00 ft	0.0003	0.0003	0.1317	#REF!	1.5338	1.5338	0.7093	#REF!	0.94	0.94	167.41	#REF!
38.00 ft	0.0003	0.0003	0.1311	#REF!	1.5328	1.5328	0.6963	#REF!	0.96	0.96	161.65	#REF!
39.00 ft	0.0003	0.0003	0.1304	#REF!	1.5318	1.5318	0.6836	#REF!	0.99	0.99	156.02	#REF!
40.00 ft	0.0003	0.0003	0.1297	#REF!	1.5308	1.5308	0.6714	#REF!	1.02	1.02	150.53	#REF!
41.00 ft	0.0003	0.0003	0.1290	#REF!	1.5298	1.5298	0.6595	#REF!	1.04	1.04	145.20	#REF!

Note: The following two pages contain numerical and graphical representations of these loads over a selected area.

Gannett Fleming
Engineers and Architects, P.C.
Excellence Delivered ***As Promised***

Calc:	CTM	Date:	6/23/2014
Check:	VDK	Date:	6/24/2014
Update:	CTM	Date:	6/24/2014
Verified:	VDK	Date:	6/25/2014

Numerical Summary of Forces

To gain total forces, the area under the graph is required. The area under the graph for the considered depth is divided by the total considered depth to arrive at a uniformly applied lateral pressure on any surface in question. The total lateral force is the total area under the graph. Simpsons Rule is used to arrive at the total area under the graph (median value force over a height is used)

Select the Top and Bottom of wall depths for each CLT under consideration. The ZERO elevation is the PGL Elevation. The bottom of wall elevation is the **bottom of stem**.	CLT=1000.0 ft	CLT=1000.0 ft	CLT=32.0 ft	#REF!
Top of Wall (Min. Depth Considered):	3.00 ft	11.00 ft	6.00 ft	4.00 ft
Bottom of Wall (Max. Depth Considered):	33.00 ft	28.00 ft	22.00 ft	16.00 ft
Height Considered:	**30.00 ft**	**17.00 ft**	**16.00 ft**	**12.00 ft**
Top and Bottom Applied Lateral Pressure on limits of the wall				
	Values at CLT Distances			
Data Below is intended to give summary values that can be used in the design of walls and surfaces affected by the surcharge. A graphical output is on the next page	CLT=1000.0 ft	CLT=1000.0 ft	CLT=32.0 ft	#REF!
Top of Wall Pressure	.1 psf	.3 psf	141.4 psf	#REF!
Bottom of Wall Pressure	.8 psf	.7 psf	251.9 psf	#REF!
Maximum Applied Lateral Pressure on limits of the wall				
Maximum Applied Lateral Pressure	.8 psf	.7 psf	258.8 psf	#REF!
Total Applied Lateral Pressure on limits of the wall *(as an equivilant point load)*				
Total Lateral Load (Per foot)	0.01 klf	0.01 klf	3.74 klf	#REF!
Centroid of Total Lateral Load (Distance down from zero)	22.88 ft	20.63 ft	14.19 ft	#REF!
Total Applied Moment due to Surcharge *(assumes fixed at max depth)*	0.1 k-ft	0.1 k-ft	29.2 k-ft	#REF!
Uniformly Applied Lateral Pressure on limits of the wall (For Lateral Stability) *(Total Applied Lateral Pressure* ***Thrust Controls;*** *Total lateral moment is not correct)*				
Uniformly Applied Lateral Load	.5 psf	.5 psf	234.0 psf	#REF!
Moment due to Uniform Load *(assumes fixed at max depth)*	0.2 k-ft	0.1 k-ft	29.9 k-ft	#REF!
Difference in moment from that of the Total Point Load	48%	15%	2%	#REF!
Uniformly Applied Lateral Pressure on limits of the wall (For Moments/Deflections) *(Total Applied Lateral Pressure* ***Moment Controls;*** *Total lateral thrust is not correct)*				
Uniformly Applied Lateral Load	.3 psf	.4 psf	228.4 psf	#REF!
Moment due to Uniform Load *(assumes fixed at max depth)*	0.1 k-ft	0.1 k-ft	29.2 k-ft	#REF!
Difference in moment from that of the Total Point Load	0%	0%	0%	#REF!
Total of Uniformly Applied Lateral Load	0.01 klf	0.01 klf	3.65 klf	#REF!
Difference in Load from that of the Total Point Load	-33%	-13%	-2%	#REF!
Equvilant Live Load Surcharge (Assumes 110 PCF, AREMA Type 2)	0.0 ft	0.0 ft	2.1 ft	#REF!

A minimum of 2.5' of surcharge will be applied to the wingwalls, regardless of the pressure curve. Abut5 just simply takes the surcharge load (does not apply it through boussinesq.

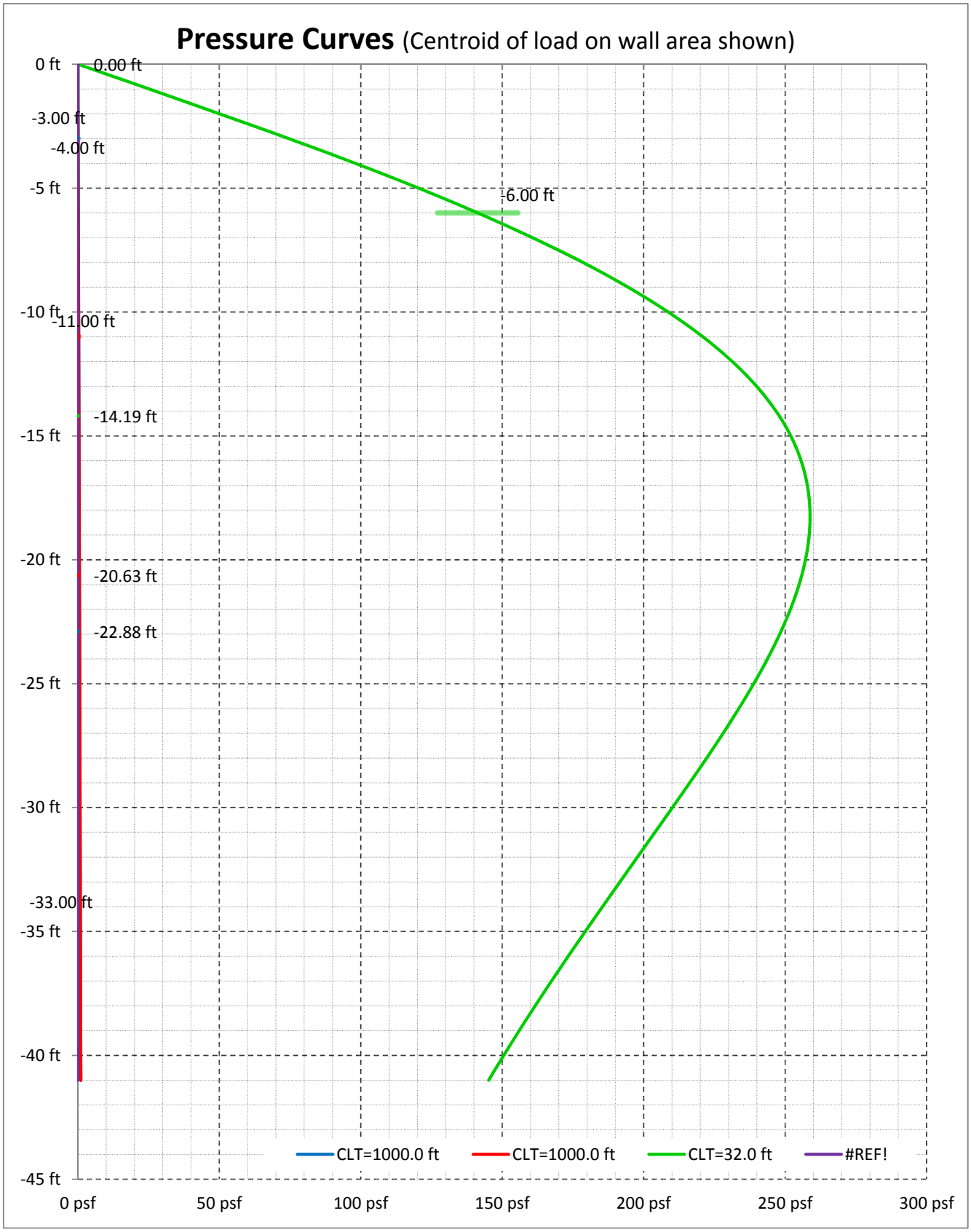
Pressure Curves (Centroid of load on wall area shown)
0 ft
-3.00 ft
-4.00 ft
-5 ft
-10 ft
-15 ft
-20 ft
-25 ft
-30 ft
-35 ft
-40 ft
-45 ft
0.00 ft
-6.00 ft
-11.00 ft
-14.19 ft
-20.63 ft
-22.88 ft
-33.00 ft
0 psf
50 psf
100 psf
150 psf
200 psf
250 psf
300 psf
CLT=1000.0 ft
CLT=1000.0 ft
CLT=32.0 ft
#REF!

DESIGN CALCULATION COVER SHEET

Gannett Fleming
Engineers and Architects, P.C.
Excellence Delivered ***As Promised***

ISO 9001:2008 CERTIFIED

PROJECT:	**ODOT/EMH&T: HAM-75-7.85**	*ODOT PID NO:*	*77889*
BRIDGE NO:	**HAM-75-0834**	*EMH&T JOB NO:*	
SUBJECT:	***Loads***	**GF JOB NO:**	**54682**
	Retaining wall Loads for	CALC NO.:	**HAM075_0834_08T**
	Abut5 Program	REV NO.:	**01**
FILE NAME(s):	*HAM075_0834_08T.xlsx*	**SHEET:**	**1 OF 3**

SUPERSEDES CALC NO: 00 (Stage 1 Design)

CALCULATION DESCRIPTION:

This will calculate all loads applied to the wingwall above the caisson wall on a per-foot basis for use in the Abut5 program. Two straight wing walls and Two caisson walls are proposed for Ham-75-0834 bridge. A worst case section is taken at each wingwall in question and the design is applied to the entire wingwall.

DESIGN BASIS OR REFERENCES:

NS Underpass Design Criteria
AREMA (2008) Chapter 8, Section 5
AREMA (2008) Chapter 15, Section 10
Calculation: HAM075_0834_03 (Girder Loads and Reactions)
Calculation: HAM075_0834C_01 (Elevation Data)
Revised Stage 1 Plans (after addressing comments)

MISCELLANEOUS NOTES:

Abut5 Calculates the abutment self-weight and earth loads automatically.

STAGE 2: Coulomb's equation is used for equivilant pressure.

RECORD OF ISSUES:

REV	DESCRIPTION	BY	DATE	VERIF'D	DATE
00	Stage 1 Calculation	CTM	11/13/13		
01	Stage 2 Calculation	CTM	06/23/14		

RECORD OF CHECK OF CURRENT CALCULATION VERSION

BY	DATE	CHKD	DATE	UPD.	DATE	VERIF'D	DATE
CTM	06/23/14	VDT	07/16/14	VDK	07/16/14		

Gannett Fleming	GF JOB # 54682	CALC NO.: **HAM075_0834_08T**	REV. NO.: **01**
		PROJECT: **ODOT/EMH&T: HAM-75-7.85**	
ODOT PID NO.: 77889		DESIGNED: *CTM*	DATE: *11/13/13*
BRIDGE NO: *HAM-75-0834*		UPDATED: *CTM*	DATE: *06/23/14*
SUBJECT: *Loads*		CHECKED: *VDT*	DATE: *07/16/14*
Retaining wall Loads for		UPDATED: *VDK*	DATE: *07/16/14*
Forward Abutment (Worst Case)		VERIFIED:	DATE:

Section 4: SE Wingwall, Top Section (approx STA. 154+64.232) Unbattered - 13.25ft High

A select granular backfill will be used behind the abutment. For the design of the wingwall, Backfill Type 1 of AREMA Table 8-5-1 (Section 8-5.2.5) is will be specified. Type 2 will be used to be conservative. Coulomb's theory for a vertical wall, the equivilant fluid pressure will be used

Distance from Top of Rail to Top of Wall:		4.00 ft		*Round up… must coincide with a bousenesque level.*
Distance from Fill Face of wall to CL Rail:		30.00 ft		*Normal to the wall, this distance will be a CLT distance in bousensque*
Friction btwn backfill and stem concrete δ:		15.0 deg	0.2618 rad	*1/2 of internal friction angle (conservative)*
Angle of backfill β:	8.9 : 1	6.4 deg	0.1117 rad	*Enter 1000:1 for horz. slope (Top/wall to Bot/tie)*
Angle of Internal Friction ϕ:		30.0 deg	0.5236 rad	*AREMA Table 8-5-2*
Angle of Stem (Fill-Face) θ:	1 : 100.0	90.0 deg	1.5708 rad	*Angle from horizontal (less than 90 for a batter) (Enter 1:100 for a vertical face)*
AREMA Type 2 Soil Density		110.0 pcf		

	Coulomb	*Rankine*	*(Equation from "All-In-One Civil Engineering PE")*
K_a Numerator:	***0.750***	**0.750**	
K_a denominator Γ Term:	*2.381*	2.099	
K_a denominator Outside Term:	*0.966*	1.000	
K_a Denominator:	***2.300***	**2.099**	
Coefficient of Active Earth Pressure K_a:	***0.326***	**0.357**	*It should be noted, that the equivilant surcharge is meant to correctly model the moment in the stem. In general, this will overestimate the thrust (sliding). Therefore, as long as the analysis is OK for sliding, there is no need to be extra conservative.*
	For Comparison Only		

Equivalent Fluid Pressure Dry:	***35.9 psi***	**39.3 psi**	
Live Load Surcharge:	**2.5 ft**		*A minimum of 2.5' will be considered for construction loads*
Vertical Fluid Pressure (K_v):	***4.0 psi***	**4.4 psi**	*LRFD Equation 3.11.5.5-2*

Gannett Fleming	GF JOB # 54682	CALC NO.: HAM075_0834_08T	REV. NO.: 01
		PROJECT: ODOT/EMH&T: HAM-75-7.85	
ODOT PID NO.: 77889		DESIGNED: CTM	DATE: 11/13/13
BRIDGE NO: HAM-75-0834		UPDATED: CTM	DATE: 06/23/14
SUBJECT: Loads		CHECKED: VDT	DATE: 07/16/14
Retaining wall Loads for		UPDATED: VDK	DATE: 07/16/14
Forward Abutment (Worst Case)		VERIFIED:	DATE:

Section5: SW Wingwall, Top Section (approx STA. 156+82.18) Unbattered -12.5ft High

A select granular backfill will be used behind the abutment. For the design of the wingwall, Backfill Type 1 of AREMA Table 8-5-1 (Section 8-5.2.5) is will be specified. Type 2 will be used to be conservative. Coulomb's theory for a vertical wall, the equivilant fluid pressure will be used

Distance from Top of Rail to Top of Wall:	3.00 ft		*Round up… must coincide with a bousenesque level.*
Distance from Fill Face of wall to CL Rail:	205.00 ft		*Normal to the wall, this distance will be a CLT distance in bousensque*
Friction btwn backfill and stem concrete δ:	15.0 deg	0.2618 rad	*1/2 of internal friction angle (conservative)*
Angle of backfill β: 50.0 : 1	1.1 deg	0.0192 rad	*Enter 1000:1 for horz. slope (Top/wall to Bot/tie)*
Angle of Internal Friction ϕ:	30.0 deg	0.5236 rad	*AREMA Table 8-5-2*
Angle of Stem (Fill-Face) θ: 1 : 100.0	90.0 deg	1.5708 rad	*Angle from horizontal (less than 90 for a batter) (Enter 1:100 for a vertical face)*
AREMA Type 2 Soil Density	110.0 pcf		
	Coulomb	*Rankine*	*(Equation from "All-In-One Civil Engineering PE")*
K_a Numerator:	***0.750***	**0.750**	
K_a denominator Γ Term:	*2.544*	2.225	
K_a denominator Outside Term:	*0.966*	1.000	
K_a Denominator:	***2.457***	**2.225**	
Coefficient of Active Earth Pressure K_a:	***0.305***	**0.337**	*It should be noted, that the equivilant surcharge is meant to correctly model the moment in the stem. In general, this will overestimate the thrust (sliding). Therefore, as long as the analysis is OK for sliding, there is no need to be extra conservative.*
	For Comparison Only		
Equivalent Fluid Pressure Dry:	***33.6 psi***	**37.1 psi**	
Live Load Surcharge:	**2.5 ft**		*A minimum of 2.5' will be considered for construction loads*
Vertical Fluid Pressure (K_v):	***0.6 psi***	**0.7 psi**	*LRFD Equation 3.11.5.5-2*

DESIGN CALCULATION COVER SHEET

Gannett Fleming
Engineers and Architects, P.C.
Excellence Delivered ***As Promised***

ISO 9001:2008 CERTIFIED

PROJECT:	**ODOT/EMH&T: HAM-75-7.85**	*ODOT PID NO:*	*77889*
BRIDGE NO:	**HAM-075-0834**	*EMH&T JOB NO:*	
SUBJECT:	***Loads***	**GF JOB NO:**	**54682**
	Wingwall Loads for	CALC NO.:	**HAM075_0834_08C**
	Caisson Design MathCad	REV NO.:	**00**
FILE NAME(s):	*HAM075_0834_08C.xlsx*	**SHEET:**	**1 OF 7**

SUPERSEDES CALC NO:

CALCULATION DESCRIPTION:

This will calculate all loads applied to the wingwall on a per-foot basis for use in the MathCAD Design.

DESIGN BASIS OR REFERENCES:

NS Underpass Design Criteria
AREMA (2013) Chapter 8, Section 5
AREMA (2014) Chapter 15, Section 10
Calculation: HAM075_0834_03 (Girder Loads and Reactions)
Calculation: HAM075_0834_01 (Elevation Data)

MISCELLANEOUS NOTES:

Caisson #4 is the 4th Caisson from the rear abutment stem.

RECORD OF ISSUES:

REV	DESCRIPTION	BY	DATE	VERIF'D	DATE
00	Stage 2 Calculation	VDT	07/01/14		

RECORD OF CHECK OF CURRENT CALCULATION VERSION

BY	DATE	CHKD	DATE	UPD.	DATE	VERIF'D	DATE
VDT	07/01/14	CTM	07/08/14	VDT	07/08/14		

Gannett Fleming	GF JOB # 54682	CALC NO.: HAM075_0834_08C	REV. NO.: 00
		PROJECT: ODOT/EMH&T: HAM-75-7.85	
ODOT PID NO.: 77889		DESIGNED: VDT	DATE: 07/01/14
BRIDGE NO: HAM-075-0834		CHECKED: CTM	DATE: 07/08/14
SUBJECT: Loads		BACKCHECKED: VDT	DATE: 07/08/14
Wingwall Loads for		UPDATED: VDT	DATE: 07/08/14
Permanent Caisson Wingwall		VERIFIED:	DATE:

Section 1: Final Design, Caisson 4, Exposed Face

A select granular backfill will be used behind the abutment. For the design of the wingwall, Backfill Type 1 of AREMA Table 8-5-1 (Section 8-5.2.5) will be specified. Type 2 will be used to be conservative. Coulomb's theory for a vertical wall, the equivilant fluid pressure will be used

Distance from Top of Rail to Top of Wall:		6.00 ft		*Round up… must coincide with a bousenesque level.*
Distance from Fill Face of wall to CL Rail:		31.00 ft		*Normal to the wall, this distance will be a CLT distance in bousensque*
Friction btwn backfill and stem concrete δ:		15.0 deg	0.2618 rad	*1/2 of internal friction angle (conservative)*
Angle of backfill β:	5.5 : 1	10.4 deg	0.1815 rad	*Enter 1000:1 for horz. slope (Top/wall to Bot/tie)*
Angle of Internal Friction ϕ:		30.0 deg	0.5236 rad	
Angle of Stem (Fill-Face) θ:	1 : 100.0	90.0 deg	1.5708 rad	*Angle from horizontal (less than 90 for a batter) (Enter 1:100 for a vertical face)*
AREMA Type 1/2 Soil Density		110.0 pcf		

	Coulomb	Rankine	(Equation from "All-In-One Civil Engineering PE")
K_a Numerator:	***0.750***	**0.750**	
K_a denominator Γ Term:	*2.249*	1.996	
K_a denominator Outside Term:	*0.966*	1.000	
K_a Denominator:	***2.172***	**1.996**	
Coefficient of Active Earth Pressure K_a:	***0.345***	**0.376**	*It should be noted, that the equivilant surcharge is meant to correctly model the moment in the stem. In general, this will overestimate the thrust (sliding). Therefore, as long as the analysis is OK for sliding, there is no need to be extra conservative.*
	For Comparison Only		
Equivalent Fluid Pressure Dry:	***38.0 psi***	**41.3 psi**	
Live Load Surcharge:		**2.5 ft**	*A minimum of 2.5' will be considered for construction loads*
Vertical Fluid Pressure (K_v):	***7.0 psi***	**7.6 psi**	*LRFD Equation 3.11.5.5-2*

Section 2: Final Design, Caisson 4, Buried Portion

A select granular backfill will be used behind the abutment. For the design of the wingwall, Backfill Type 1 of AREMA Table 8-5-1 (Section 8-5.2.5) will be specified. Type 2 will be used to be conservative. Coulomb's theory for a vertical wall, the equivilant fluid pressure will be used

Distance from Top of Rail to Top of Wall:		27.00 ft		*Round up… must coincide with a bousenesque level.*
Distance from Fill Face of wall to CL Rail:		31.00 ft		*Normal to the wall, this distance will be a CLT distance in bousensque*
Friction btwn backfill and stem concrete δ:		15.0 deg	0.2618 rad	*1/2 of internal friction angle (conservative)*
Angle of backfill β:	1.0 : 1	44.1 deg	0.7697 rad	*Enter 1000:1 for horz. slope (Top/wall to Bot/tie)*
Angle of Internal Friction ϕ:		30.0 deg	0.5236 rad	*AREMA Table 8-5-2 (Average of Type 1 & 2… Type 1 will be specified)*
Angle of Stem (Fill-Face) θ:	1 : 100.0	90.0 deg	1.5708 rad	*Angle from horizontal (less than 90 for a batter) (Enter 1:100 for a vertical face)*
AREMA Type 1/2 Soil Density		110.0 pcf		

	Coulomb	Rankine	(Equation from "All-In-One Civil Engineering PE")
K_a Numerator:	***0.750***	**0.750**	
K_a denominator Γ Term:	*#NUM!*	#NUM!	
K_a denominator Outside Term:	*0.966*	1.000	
K_a Denominator:	***#NUM!***	**#NUM!**	
Coefficient of Active Earth Pressure K_a:	***#NUM!***	**#NUM!**	
	For Comparison Only		
Equivalent Fluid Pressure Dry:	***#NUM!***	**#NUM!**	
Live Load Surcharge:		**2.5 ft**	*A minimum of 2.5' will be considered for construction loads*
Vertical Fluid Pressure (K_v):	***#NUM!***	**#NUM!**	*LRFD Equation 3.11.5.5-2*

Section 3: Final Design, Caisson 9, Exposed Face

A select granular backfill will be used behind the abutment. For the design of the wingwall, Backfill Type 1 of AREMA Table 8-5-1 (Section 8-5.2.5) will be specified. Type 2 will be used to be conservative. Coulomb's theory for a vertical wall, the equivilant fluid pressure will be used

Distance from Top of Rail to Top of Wall:	10.00 ft		*Round up… must coincide with a bousenesque level.*
Distance from Fill Face of wall to CL Rail:	33.00 ft		*Normal to the wall, this distance will be a CLT distance in bousensque*
Friction btwn backfill and stem concrete δ:	15.0 deg	0.2618 rad	*1/2 of internal friction angle (conservative)*
Angle of backfill β: 3.2 : 1	17.2 deg	0.3002 rad	*Enter 1000:1 for horz. slope (Top/wall to Bot/tie)*
Angle of Internal Friction ϕ:	30.0 deg	0.5236 rad	*AREMA Table 8-5-2*
Angle of Stem (Fill-Face) θ: 1 : 100.0	90.0 deg	1.5708 rad	*Angle from horizontal (less than 90 for a batter) (Enter 1:100 for a vertical face)*
AREMA Type 1/2 Soil Density	110.0 pcf		

	Coulomb	*Rankine*	*(Equation from "All-In-One Civil Engineering PE")*
K_a Numerator:	***0.750***	**0.750**	
K_a denominator Γ Term:	*1.994*	1.797	
K_a denominator Outside Term:	*0.966*	1.000	
K_a Denominator:	***1.926***	**1.797**	
Coefficient of Active Earth Pressure K_a:	***0.389***	**0.417**	
	For Comparison Only		
Equivalent Fluid Pressure Dry:	***42.8 psi***	**45.9 psi**	
Live Load Surcharge:	**2.5 ft**		*A minimum of 2.5' will be considered for construction loads*
Vertical Fluid Pressure (K_v):	***13.3 psi***	**14.2 psi**	*LRFD Equation 3.11.5.5-2*

Section 4: Final Design, Caisson 9, Buried Portion

A select granular backfill will be used behind the abutment. For the design of the wingwall, Backfill Type 1 of AREMA Table 8-5-1 (Section 8-5.2.5) is will be specified. Type 2 will be used to be conservative. Coulomb's theory for a vertical wall, the equivilant fluid pressure will be used

Distance from Top of Rail to Top of Wall:	22.00 ft		*Round up… must coincide with a bousenesque level.*
Distance from Fill Face of wall to CL Rail:	33.00 ft		*Normal to the wall, this distance will be a CLT distance in bousensque*
Friction btwn backfill and stem concrete δ:	15.5 deg	0.2705 rad	*1/2 of internal friction angle (conservative)*
Angle of backfill β: 1.4 : 1	36.0 deg	0.6283 rad	*Enter 1000:1 for horz. slope (Top/wall to Bot/tie)*
Angle of Internal Friction ϕ:	31.0 deg	0.5411 rad	*AREMA Table 8-5-2*
Angle of Stem (Fill-Face) θ: 1 : 100.0	90.0 deg	1.5708 rad	*Angle from horizontal (less than 90 for a batter) (Enter 1:100 for a vertical face)*
AREMA Type 1/2 Soil Density	110.0 pcf		

	Coulomb	*Rankine*	*(Equation from "All-In-One Civil Engineering PE")*
K_a Numerator:	***0.735***	**0.735**	
K_a denominator Γ Term:	*#NUM!*	#NUM!	
K_a denominator Outside Term:	*0.964*	1.000	
K_a Denominator:	***#NUM!***	**#NUM!**	
Coefficient of Active Earth Pressure K_a:	***#NUM!***	**#NUM!**	
	For Comparison Only		
Equivalent Fluid Pressure Dry:	***#NUM!***	**#NUM!**	
Live Load Surcharge:	**2.5 ft**		*A minimum of 2.5' will be considered for construction loads*
Vertical Fluid Pressure (K_v):	***#NUM!***	**#NUM!**	*LRFD Equation 3.11.5.5-2*

Gannett Fleming
Engineers and Architects, P.C.
Excellence Delivered ***As Promised***

Design:	EFD	Date:	4/15/2014
Update:	VDT	Date:	7/1/2014
Check:	CTM	Date:	7/8/2014
Verified:		Date:	

Lateral Pressure from Parallel Strip Loading

4 Different wall distances/heights considered.

Calculations as per Norfolk Southern Design Standards

Min. Depth of Resulting Table (Hs_{min}):	1.00 ft	Centerline Track Distance 1, CLT_1:	31.0 ft
Max Depth of Resulting Table (Hs_{max}):	41.00 ft	Centerline Track Distance 2, CLT_2:	31.0 ft
Spacing of Max Axle Load:	5.0 ft	Centerline Track Distance 3, CLT_3:	33.0 ft
Max Axle Load:	100.0 kip	Centerline Track Distance 4, CLT_4:	33.0 ft
Width of Tie (TL):	8.5 ft	Applied Pressure (q):	2.35 ksf

Hs	**β** *(Radians)*				**α** *(Radians)*				*Active Pressure,* **Ps** *(psf)*			
	β_1	β_2	β_3	β_4	α_1	α_2	α_3	α_4	Ps_1	Ps_2	Ps_3	Ps_4
0.00 ft	0.0000	0.0000	0.0000	0.0000	1.5708	1.5708	1.5708	1.5708	0.00	0.00	0.00	0.00
1.00 ft	0.0090	0.0090	0.0079	0.0079	1.5379	1.5379	1.5400	1.5400	26.95	26.95	23.73	23.73
2.00 ft	0.0180	0.0180	0.0158	0.0158	1.5051	1.5051	1.5092	1.5092	53.54	53.54	47.19	47.19
3.00 ft	0.0268	0.0268	0.0236	0.0236	1.4725	1.4725	1.4786	1.4786	79.45	79.45	70.12	70.12
4.00 ft	0.0354	0.0354	0.0313	0.0313	1.4401	1.4401	1.4482	1.4482	104.36	104.36	92.27	92.27
5.00 ft	0.0439	0.0439	0.0388	0.0388	1.4080	1.4080	1.4180	1.4180	127.98	127.98	113.42	113.42
6.00 ft	0.0521	0.0521	0.0460	0.0460	1.3762	1.3762	1.3881	1.3881	150.07	150.07	133.35	133.35
7.00 ft	0.0599	0.0599	0.0531	0.0531	1.3448	1.3448	1.3585	1.3585	170.43	170.43	151.92	151.92
8.00 ft	0.0674	0.0674	0.0598	0.0598	1.3139	1.3139	1.3293	1.3293	188.90	188.90	168.98	168.98
9.00 ft	0.0746	0.0746	0.0663	0.0663	1.2835	1.2835	1.3006	1.3006	205.39	205.39	184.44	184.44
10.00 ft	0.0813	0.0813	0.0725	0.0725	1.2537	1.2537	1.2723	1.2723	219.83	219.83	198.24	198.24
11.00 ft	0.0877	0.0877	0.0783	0.0783	1.2245	1.2245	1.2445	1.2445	232.22	232.22	210.34	210.34
12.00 ft	0.0936	0.0936	0.0838	0.0838	1.1959	1.1959	1.2173	1.2173	242.58	242.58	220.74	220.74
13.00 ft	0.0991	0.0991	0.0889	0.0889	1.1680	1.1680	1.1906	1.1906	250.97	250.97	229.48	229.48
14.00 ft	0.1041	0.1041	0.0937	0.0937	1.1407	1.1407	1.1645	1.1645	257.48	257.48	236.60	236.60
15.00 ft	0.1087	0.1087	0.0981	0.0981	1.1141	1.1141	1.1389	1.1389	262.21	262.21	242.18	242.18
16.00 ft	0.1130	0.1130	0.1021	0.1021	1.0882	1.0882	1.1140	1.1140	265.31	265.31	246.30	246.30
17.00 ft	0.1168	0.1168	0.1059	0.1059	1.0631	1.0631	1.0897	1.0897	266.90	266.90	249.06	249.06
18.00 ft	0.1202	0.1202	0.1092	0.1092	1.0386	1.0386	1.0660	1.0660	267.13	267.13	250.57	250.57
19.00 ft	0.1232	0.1232	0.1123	0.1123	1.0148	1.0148	1.0430	1.0430	266.14	266.14	250.94	250.94
20.00 ft	0.1259	0.1259	0.1151	0.1151	0.9918	0.9918	1.0205	1.0205	264.07	264.07	250.28	250.28
21.00 ft	0.1283	0.1283	0.1175	0.1175	0.9694	0.9694	0.9987	0.9987	261.07	261.07	248.70	248.70
22.00 ft	0.1303	0.1303	0.1197	0.1197	0.9477	0.9477	0.9775	0.9775	257.26	257.26	246.31	246.31
23.00 ft	0.1320	0.1320	0.1216	0.1216	0.9267	0.9267	0.9569	0.9569	252.77	252.77	243.22	243.22
24.00 ft	0.1335	0.1335	0.1232	0.1232	0.9063	0.9063	0.9368	0.9368	247.72	247.72	239.52	239.52
25.00 ft	0.1347	0.1347	0.1246	0.1246	0.8866	0.8866	0.9174	0.9174	242.21	242.21	235.31	235.31
26.00 ft	0.1357	0.1357	0.1258	0.1258	0.8675	0.8675	0.8985	0.8985	236.32	236.32	230.66	230.66
27.00 ft	0.1364	0.1364	0.1268	0.1268	0.8490	0.8490	0.8802	0.8802	230.16	230.16	225.67	225.67
28.00 ft	0.1370	0.1370	0.1276	0.1276	0.8310	0.8310	0.8624	0.8624	223.79	223.79	220.40	220.40
29.00 ft	0.1373	0.1373	0.1282	0.1282	0.8137	0.8137	0.8452	0.8452	217.28	217.28	214.91	214.91
30.00 ft	0.1375	0.1375	0.1287	0.1287	0.7969	0.7969	0.8285	0.8285	210.69	210.69	209.26	209.26
31.00 ft	0.1375	0.1375	0.1290	0.1290	0.7807	0.7807	0.8122	0.8122	204.07	204.07	203.51	203.51
32.00 ft	0.1374	0.1374	0.1291	0.1291	0.7650	0.7650	0.7965	0.7965	197.46	197.46	197.69	197.69
33.00 ft	0.1372	0.1372	0.1291	0.1291	0.7498	0.7498	0.7813	0.7813	190.90	190.90	191.85	191.85
34.00 ft	0.1368	0.1368	0.1291	0.1291	0.7350	0.7350	0.7665	0.7665	184.41	184.41	186.01	186.01
35.00 ft	0.1364	0.1364	0.1289	0.1289	0.7208	0.7208	0.7521	0.7521	178.03	178.03	180.21	180.21

36.00 ft	0.1358	0.1358	0.1286	0.1286	0.7070	0.7070	0.7382	0.7382	171.77	171.77	174.47	174.47
37.00 ft	0.1352	0.1352	0.1282	0.1282	0.6936	0.6936	0.7247	0.7247	165.66	165.66	168.82	168.82
38.00 ft	0.1345	0.1345	0.1277	0.1277	0.6806	0.6806	0.7116	0.7116	159.69	159.69	163.26	163.26
39.00 ft	0.1337	0.1337	0.1272	0.1272	0.6681	0.6681	0.6988	0.6988	153.89	153.89	157.82	157.82
40.00 ft	0.1329	0.1329	0.1266	0.1266	0.6559	0.6559	0.6865	0.6865	148.26	148.26	152.49	152.49
41.00 ft	0.1320	0.1320	0.1260	0.1260	0.6441	0.6441	0.6745	0.6745	142.80	142.80	147.30	147.30

Note: The following two pages contain numerical and graphical representations of these loads over a selected area.

Gannett Fleming
Engineers and Architects, P.C.
Excellence Delivered **As Promised**

Design:	EFD	Date:	4/15/2014
Update:	VDT	Date:	7/1/2014
Check:	CTM	Date:	7/8/2014
Verified:		Date:	

Numerical Summary of Forces

To gain total forces, the area under the graph is required. The area under the graph for the considered depth is divided by the total considered depth to arrive at a uniformly applied lateral pressure on any surface in question. The total lateral force is the total area under the graph. Simpsons Rule is used to arrive at the total area under the graph (median value force over a height is used)

Select the Top and Bottom of wall depths for each CLT under consideration. The ZERO elevation is the PGL Elevation. The bottom of wall elevation is the **bottom of stem**.	CLT=31.0 ft	CLT=31.0 ft	CLT=33.0 ft	CLT=33.0 ft
Top of Wall (Min. Depth Considered):	6.00 ft	27.00 ft	10.00 ft	22.00 ft
Bottom of Wall (Max. Depth Considered):	27.00 ft	41.00 ft	22.00 ft	41.00 ft
Height Considered:	**21.00 ft**	**14.00 ft**	**12.00 ft**	**19.00 ft**
Top and Bottom Applied Lateral Pressure on limits of the wall				
	Values at CLT Distances			
Data Below is intended to give summary values that can be used in the design of walls and surfaces affected by the surcharge. A graphical output is on the next page	CLT=31.0 ft	CLT=31.0 ft	CLT=33.0 ft	CLT=33.0 ft
Top of Wall Pressure	150.1 psf	230.2 psf	198.2 psf	246.3 psf
Bottom of Wall Pressure	230.2 psf	142.8 psf	246.3 psf	147.3 psf
Maximum Applied Lateral Pressure on limits of the wall				
Maximum Applied Lateral Pressure	267.1 psf	230.2 psf	250.9 psf	246.3 psf
Total Applied Lateral Pressure on limits of the wall *(as an equivilant point load)*				
Total Lateral Load (Per foot)	5.12 klf	2.71 klf	2.96 klf	3.92 klf
Centroid of Total Lateral Load (Distance down from zero)	16.43 ft	32.38 ft	15.57 ft	29.49 ft
Total Applied Moment due to Surcharge *(assumes fixed at max depth)*	54.1 k-ft	23.3 k-ft	19.0 k-ft	45.1 k-ft
Uniformly Applied Lateral Pressure on limits of the wall (For Lateral Stability) *(Total Applied Lateral Pressure **Thrust Controls;** Total lateral moment is not correct)*				
Uniformly Applied Lateral Load	243.9 psf	193.4 psf	246.4 psf	206.1 psf
Moment due to Uniform Load *(assumes fixed at max depth)*	53.8 k-ft	19.0 k-ft	17.7 k-ft	37.2 k-ft
Difference in moment from that of the Total Point Load	-1%	-19%	-7%	-17%
Uniformly Applied Lateral Pressure on limits of the wall (For Moments/Deflections) *(Total Applied Lateral Pressure **Moment Controls;** Total lateral thrust is not correct)*				
Uniformly Applied Lateral Load	245.5 psf	238.2 psf	264.1 psf	249.6 psf
Moment due to Uniform Load *(assumes fixed at max depth)*	54.1 k-ft	23.3 k-ft	19.0 k-ft	45.1 k-ft
Difference in moment from that of the Total Point Load	0%	0%	0%	0%
Total of Uniformly Applied Lateral Load	5.16 klf	3.34 klf	3.17 klf	4.74 klf
Difference in Load from that of the Total Point Load	1%	23%	7%	21%
Equivalent Live Load Surcharge (Assumes 110 PCF, AREMA Type 2)	2.2 ft	2.2 ft	2.4 ft	2.3 ft

A minimum of 2.5' of surcharge will be applied to the wingwalls, regardless of the pressure curve. Abut5 just simply takes the surcharge load (does not apply it through boussinesq.

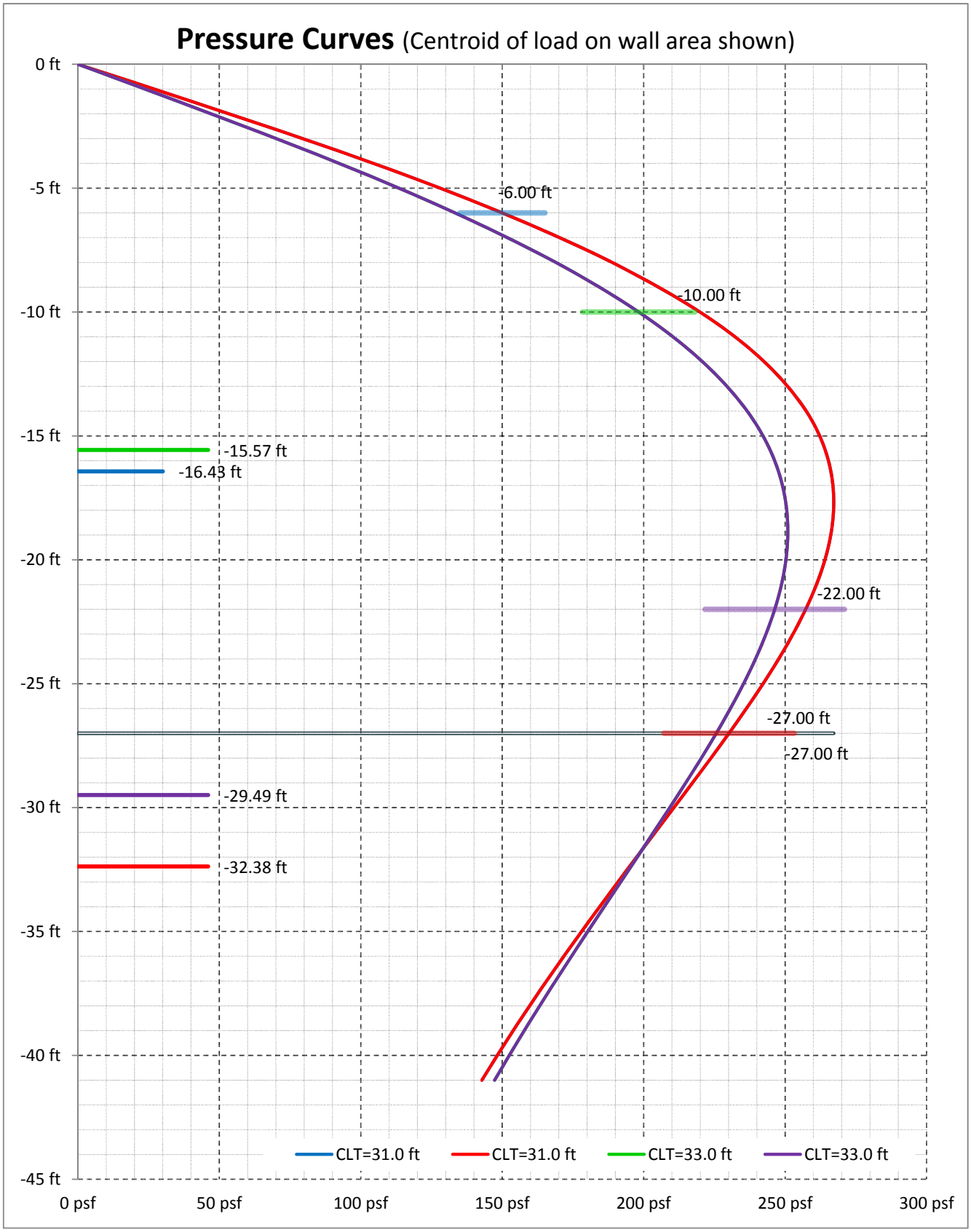
Pressure Curves (Centroid of load on wall area shown)
0 ft
-5 ft
-10 ft
-15 ft
-20 ft
-25 ft
-30 ft
-35 ft
-40 ft
-45 ft
0 psf
50 psf
100 psf
150 psf
200 psf
250 psf
300 psf
-6.00 ft
-10.00 ft
-15.57 ft
-16.43 ft
-22.00 ft
-27.00 ft
-27.00 ft
-29.49 ft
-32.38 ft
CLT=31.0 ft
CLT=31.0 ft
CLT=33.0 ft
CLT=33.0 ft

DESIGN CALCULATION COVER SHEET

Gannett Fleming
Engineers and Architects, P.C.
Excellence Delivered ***As Promised***

ISO 9001:2008 CERTIFIED

PROJECT:	**ODOT/EMH&T: HAM-75-7.85**	*ODOT PID NO:*	*77889*
BRIDGE NO:	**HAM-75-0834**	*EMH&T JOB NO:*	
SUBJECT:	***Analysis***	**GF JOB NO:**	**54682**
	Southeast Wingwall- Permanent	CALC NO.:	**HAM075_0834_09P**
	Mathcad Document	REV NO.:	**00**
FILE NAME(s):	*HAM075_0834_09P.xmcd*	**SHEET:**	**1 OF 8**

SUPERSEDES CALC NO:

CALCULATION DESCRIPTION:

This will analyze the proposed permanent southeast caisson wingwall (worst case). The design will also be applied to the southwest caisson wall to be conservative.

DESIGN BASIS OR REFERENCES:

NS Underpass Design Criteria
AREMA (2008) Chapter 8, Section 5
Input Load Calculation (HAM075_0834_08C)

MISCELLANEOUS NOTES:

RECORD OF ISSUES:

REV	DESCRIPTION	BY	DATE	VERIF'D	DATE
00	Stage 2 Calculation	VDT	07/01/14		

RECORD OF CHECK OF CURRENT CALCULATION VERSION

BY	DATE	CHKD	DATE	UPD.	DATE	VERIF'D	DATE
VDT	07/01/14	CTM	07/08/14	VDT	07/08/14		

Caisson Wall Design
(AREMA- ALLOWABLE STRESS DESIGN)

Design notes

- Variables with a box around them require review/user input.
- Code references are made using the following abbreviations:

  - AREMA - American Railway Engineering and Maintenance-of-Way Association
  - SEF - Structural Engineering Formulas (Ilya Mikhelson)
  - AISC - AISC Steel Construction Manual, Thirteenth Edition
  - GB6 - ODOT Office of Geotechnical Engineering: Bulletin 6
  - CERM - Civil Engineering Reference Manual

- General Design data and assumptions:
  1. Concrete caisson wall with reinforcing steel
  2. Calculation based on SEF 11.2 & Boussinesq Equation Spreadsheet for Live Load Surcharge Calculation
  3. Caisson #4 (Rear Abutment, 4th Caisson from Abut. Stem) is analyzed below and will be used for all other Caissons at HAM-75-0834

1) GENERAL INPUTS

1.1) Dimensions and Elevations

Retained Soil Elevation: $TopSoil := 551 \cdot ft$

Bottom of excavation elevation: $BotExc := 530 \cdot ft$

Bottom of Caisson Elevation: $Emb := 502 \cdot ft$

Retained height of soil: $H_{Ret} := TopSoil - BotExc$

$H_{Ret} = 21\,ft$

Effective Embedment below Excav.: $D_{emb} := BotExc - Emb - 1.5 \cdot Cais_{Dia}$

$D_{emb} = 22.75\,ft$ *Additional reduction term per AREMA 8-28.5.3.2 a*

Spacing: Center-Center of Caissons: $Cais_{Spa} := 3.5ft$

Caisson Diameter: $Cais_{Dia} := 42in$

Concrete Strength: $f_c := 4000psi$

Reinforcing Steel Used: $A_s := 16.0in^2$

16 - #9s

1.2) Soil Parameter inputs

$\beta := \operatorname{atan}\left(\frac{1}{5.5}\right)$ (Input - Take from Retaining Wall Loads spreadsheet)

Fill Angle: $\beta = 10.3 \cdot deg$

Wall Angle: $\theta := 90deg$

Earth Surcharge Load factor (ES): $ES := 1.0$

AREMA Allowable Stress, Passive resistance is reduced in subsequent pages

Passive Resistance Safety Factor: $\Phi_P := 0.66$

AREMA 8-28.5.1.2 Reduction

Table 8-5-1. Types of Backfill for Retaining Walls

Backfill Type	Backfill Description
1	Coarse-grained soil without admixture of fine soil particles, very free-draining (sand, gravel or broken stone).
2	Coarse-grained soil of low permeability due to admixture of particles of silt size.
3	Fine silty sand; granular materials with conspicuous clay content; or residual soil with stones.
4	Soft or very soft clay, organic silt; or soft silty clay.
5	Medium or stiff clay that may be placed in such a way that a negligible amount of water will enter the spaces between the chunks during floods or heavy rains.

c. Types 4 and 5 backfill shall be used only with the permission of the Engineer. In all cases the wall design shall be based on the type of backfill used.

Table 8-5-2. Properties of Backfill Materials

Type of Backfill	Unit Weight Lb. Per Cu. Ft.	Cohesion "c"	Angle of Internal Friction
1	105	0	33° 42′ (38° for broken stone)
2	110	0	30°
3	125	0	28°
4	100	0	0°
5	120	240	0°

Specify for Backfill Type 1, but use the average of Type 1 and Type 2 to be conservative

	Backfill	Embedment
Unit weight of soil:	$\gamma_{bk} := 110pcf$	$\gamma_{emb} := 125pcf$
Effective Angle of Internal Friction:	$\phi_{bk} := 31deg$	$\phi_{emb} := 31deg$
Friction Angle Between Fill & Wall:	$\delta_{bk} := 15.5deg$	$\delta_{emb} := 15.5deg$

assumed to be 1/2 of internal friction angle

Embedded soil parameters are from Geotechnical Report

1.3) Coefficient of active earth pressure: Coulomb Approach is utilized, AREMA 8-20.3.1

Backfill

$$\Gamma_{abk} := \left[1 + \left(\frac{\sin(\phi_{bk} + \delta_{bk})\cdot\sin(\phi_{bk} - \beta)}{\sin(\theta - \delta_{bk})\sin(\theta + \beta)}\right)^{0.5}\right]^2$$

$\Gamma_{abk} = 2.310$

$$K_{a.bk} := \frac{\sin(\theta + \phi_{bk})^2}{\Gamma_{abk}\cdot\left(\sin(\theta)^2\cdot\sin(\theta - \delta_{bk})\right)}$$

$K_{a.bk} = 0.330$

Embedment

$$\Gamma_{emb} := \left[1 + \left(\frac{\sin(\phi_{emb} + \delta_{emb})\cdot\sin(\phi_{emb})}{\sin(\theta - \delta_{emb})\sin(\theta)}\right)^{0.5}\right]^2$$

$\Gamma_{emb} = 2.633$

$$K_{a.emb} := \frac{\sin(\theta + \phi_{emb})^2}{\Gamma_{emb}\cdot\left(\sin(\theta)^2\cdot\sin(\theta - \delta_{emb})\right)}$$

$K_{a.emb} = 0.290$

1.4) Coefficient of passive earth pressure: Coulomb Approach is utilized, AREMA 8-20.3.4

Backfill

$$\Gamma_{pbk} := \left[1 - \left(\frac{\sin(\phi_{bk} + \delta_{bk})\cdot\sin(\phi_{bk} + \beta)}{\sin(\theta + \delta_{bk})\sin(\theta + \beta)}\right)^{0.5}\right]^2$$

$\Gamma_{pbk} = 0.084$

$$K_{p.bk} := \frac{\sin(\theta - \phi_{bk})^2\cdot\Phi_P}{\Gamma_{pbk}\cdot\left(\sin(\theta)^2\cdot\sin(\theta + \delta_{bk})\right)}$$

$K_{p.bk} = 6.010$

Embedment

$$\Gamma_{embp} := \left[1 - \left(\frac{\sin(\phi_{emb} + \delta_{emb})\cdot\sin(\phi_{emb})}{\sin(\theta + \delta_{emb})\sin(\theta)}\right)^{0.5}\right]^2$$

$\Gamma_{embp} = 0.142$

$$K_{p.emb} := \frac{\sin(\theta - \phi_{emb})^2\cdot\Phi_P}{\Gamma_{embp}\cdot\left(\sin(\theta)^2\cdot\sin(\theta + \delta_{emb})\right)}$$

$K_{p.emb} = 3.534$

1.5) Concrete Properties:

$$A_{cg} := \pi\left(\frac{Cais_{Dia}}{2}\right)^2 = 1385.44\cdot in^2 \qquad A_{ce} := \pi\left(\frac{Cais_{Dia}}{2} - 3in\right)^2 = 1017.88\cdot in^2$$

$$I_c := \frac{\pi}{4}\left(\frac{Cais_{Dia}}{2}\right)^4 = 152745.02\cdot in^4 \qquad S_x := \frac{\pi}{4}\left(\frac{Cais_{Dia}}{2}\right)^3 = 7273.57\cdot in^3$$

$$E_c := 57000\cdot\sqrt{f_c\cdot psi} = 3605\cdot ksi$$

1.6) Analysis Reference: SEF Figure 11.2 (2) - Cantilever Sheet Piling

2

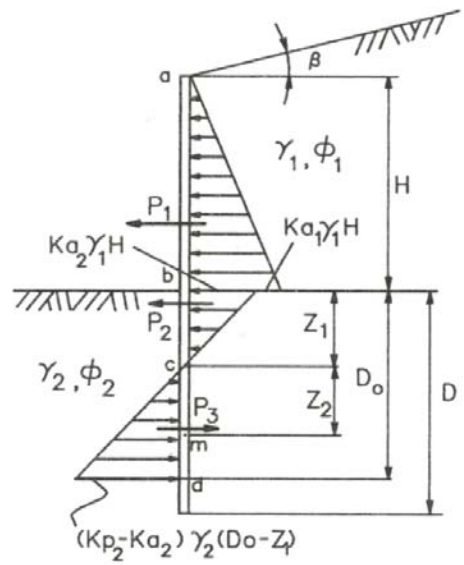

Earth pressure:

$$P_1 = 0.5K_a\gamma H^2\,, \qquad z_1 = \frac{K_a\gamma_1 H}{\left(K_{p_2}-K_{a_2}\right)\gamma_2}$$

$$P_2 = 0.5K_{a_2}\gamma_1 H\cdot z_1\,, \qquad z_2 = \sqrt{\frac{P_1+P_2}{0.5\left(K_{p_2}-K_{a_2}\right)\gamma_2}}$$

$$P_3 = 0.5\left(K_{p_2}-K_{a_2}\right)\gamma_2\left(D_0-z_1\right)^2$$

Equation to determine D_0: $\sum M_d = 0$

$$P_1\left(\frac{H}{3}+D_0\right)+P_2\left(D_0-\frac{z_1}{3}\right)-P_3\frac{1}{3}\left(D_0-z_1\right)=0$$

$D = (1.2 \text{ to } 1.4)D_0$ for factor of safety at 1.5 to 2.0

m = point of zero shear and maximum bending moment

Maximum bending moment

$$M_{max} = P_1\left(\frac{H}{3}+z_1+z_2\right)+P_2\left(\frac{2}{3}z_1+z_2\right) -0.5\left(K_p-K_a\right)\gamma z_2^2\cdot\left(\frac{z_2}{3}\right)$$

2) Caisson Wall Embedment Check

Earth pressure due to Active soil

$$P_1 := \left[0.5\left(\gamma_{bk}\cdot K_{a.bk}\cdot H_{Ret}^{\,2}\right)\right]\cdot Cais_{Spa}$$

$P_1 = 28.02\cdot kip$

Values form Ret. Wall Spreadsheet

Live load surcharge

$P_{LLS1} := 5.12\cdot klf\cdot Cais_{Spa}$ $\qquad$ $P_{LLS2} := 2.71\cdot klf$

$H_{LLS1} := 10.57\cdot ft$ $\qquad$ $H_{LLS2} := -5.38\cdot ft$

from bottom of exposed wall

Earth pressure due to Passive soil

z1 depth uses load and resistance factors; conservative for deflection (service) calculations

$$z_1 := \frac{\left[ES\cdot\left(K_{a.bk}\cdot\gamma_{bk}\cdot H_{Ret}\right)+\frac{P_{LLS1}}{H_{Ret}\cdot Cais_{Spa}}\right]\cdot Cais_{Spa}}{\left(K_{p.emb}-ES\cdot K_{a.emb}\right)\gamma_{emb}\cdot Cais_{Dia}-\frac{P_{LLS2}}{D_{emb}}} = 2.71\cdot ft$$

$$P_2 := \left(0.5\cdot K_{a.emb}\cdot\gamma_{bk}\cdot H_{Ret}\cdot z_1\right)\cdot Cais_{Dia} = 3.17\cdot kip$$

Passive Resistance

$$P_3 := \left[0.5\cdot\left(K_{p.emb}-K_{a.emb}\right)\cdot\gamma_{emb}\cdot\left(D_{emb}-z_1\right)^2\right]\cdot Cais_{Dia} = 285.09\cdot kip$$

Negative Moment mean that the passive (P3) force will tend to rotate the wall towards the filled material.
Positive moments indicate that there is insufficient resisting force.

$$M_D := ES\cdot P_1\cdot\left(D_{emb}+\frac{H_{Ret}}{3}\right)+ES\cdot P_2\cdot\left(D_{emb}-\frac{z_1}{3}\right)+ES\cdot P_{LLS1}\cdot\left(D_{emb}+H_{LLS1}\right)\ \cdots$$
$$+\ ES\cdot P_{LLS2}\cdot\left(D_{emb}+H_{LLS2}\right)\cdot Cais_{Dia}-P_3\cdot\frac{\left(D_{emb}-z_1\right)}{3}$$

$M_D = -239.95\ ft\cdot kip$

$EMBEDMENT_CHECK := if\left(M_D < 0\,,\text{"OK"}\,,\text{"INCREASE EMBEDMENT"}\right)$ $\quad$ $EMBEDMENT_CHECK = \text{"OK"}$

3) Caisson Wall Design (See graphic in section 1.6)

3.1) Required Section Modulus

Zero shear location = m = Point of Max Bending Moment:

$$z_2 := \left[\frac{ES\cdot\left(P_1 + P_2 + P_{LLS1}\right)}{0.5\left(K_{p.emb} - ES\cdot K_{a.emb}\right)\gamma_{emb}\cdot Cais_{Dia} - \frac{P_{LLS2}}{D_{emb}}}\right]^{0.5} \qquad z_2 = 9.118\,ft \qquad z_m := z_1 + z_2 \qquad z_m = 11.826\,ft$$

Moment at zero shear location

$$M_{m.fact} := \left[ES\cdot P_1\cdot\left(z_m + \frac{H_{Ret}}{3}\right) + ES\cdot P_2\cdot\left(\frac{2\cdot z_1}{3} + z_2\right)\right] \ldots + \left[ES\cdot P_{LLS1}\cdot\left(z_m + H_{LLS1}\right) \ldots + ES\cdot P_{LLS2}\cdot Cais_{Dia}\cdot\left(z_m + H_{LLS2}\right) - \left[0.5\left(K_{p.emb} - ES\cdot K_{a.emb}\right)\cdot\gamma_{emb}\cdot\left(z_2\right)^2\cdot\frac{z_2}{3}\right]\cdot Cais_{Dia}\right]$$

$M_{m.fact} = 845.21\,ft\cdot kip$

Required section modulus of steel pile section: $S_{x.req} := \frac{M_{m.fact}}{.40\cdot f_c}$ $\qquad S_{x.req} = 6339.09\cdot in^3$

$S_x = 7273.57\cdot in^3$

$SECTION_CHECK := if\left(S_x > S_{x.req}, \text{"OK"}, \text{"INCREASE SECTION"}\right)$ $\qquad SECTION_CHECK = \text{"OK"}$

3.2) Calculated Deflection (Unfactored)

Deflection will be calculated assuming the post is fixed at the zero shear (max moment) depth.

The deflections will be calculated by approximating the deflection by each equivalent point load (service) as follows:

Active Deflection $$\Delta_{p.1} := \frac{\left[P_1\cdot\left(z_m + \frac{H_{Ret}}{3}\right)^2\right]}{\left(6\cdot E_c\cdot I_c\right)}\cdot\left[3\cdot\left(z_m + H_{Ret}\right) - \left(z_m + \frac{H_{Ret}}{3}\right)\right] = 0.41\cdot in$$

Surcharge Deflection $$\Delta_{p.LLS} := \frac{\left[P_{LLS1}\cdot\left(z_m + H_{LLS1}\right)^2\right]}{\left(6\cdot E_c\cdot I_c\right)}\cdot\left[3\cdot\left(z_m + H_{Ret}\right) - \left(z_m + H_{LLS1}\right)\right] = 0.36\cdot in$$

Embedded Active Deflection $$\Delta_{p.2} := \frac{\left[P_2\cdot\left(\frac{2\cdot z_1}{3} + z_2\right)^2\right]}{\left(6\cdot E_c\cdot I_c\right)}\cdot\left[3\cdot\left(z_m + H_{Ret}\right) - \left(\frac{2\cdot z_1}{3} + z_2\right)\right] = 0.02\cdot in$$

Note: P.LLS2 will not be included in the surcharge deflection calculation. The surcharge load on the embedded portion of the caisson will be counter-acted by the passive resistance.

Deflection at the top of the post: $\Delta_{Top} := \Delta_{p.1} + \Delta_{p.LLS} + \Delta_{p.2}$ $\qquad \Delta_{Top} = 0.79\cdot in$

Deflection Ratio $\Delta_{Ratio} := \frac{H_{Ret}}{\Delta_{Top}}$ $\qquad \Delta_{Ratio} = 319.51$

4) Reinforcing Steel Design

4.1) Calculate Minimum Area of Flexural Steel (Unfactored):

The following values are calculated to find the required percentage of steel per chart in Civil Engineering Reference Manual

$A_g := A_{cg} = 1385.44 \cdot in^2$ $h := Cais_{Dia} = 42 \cdot in$ $P_n := 0$ No axial load, only lateral forces

AREMA requires min. flexural steel provides a design moment of 1.2 x cracking moment:

$f_r := 7.5 \cdot \sqrt{f_c \cdot psi} = 474.34 \cdot psi$ AREMA Ch.8 2.26.1a

$$M_{cr} := \frac{(f_r \cdot I_c)}{\left(\frac{Cais_{Dia}}{2}\right)} = 287.51\, ft \cdot kip$$ AREMA Ch.8 2.23.7c

Design for greater of the two:

$M_{eff} := \max(M_{m.fact}, 1.2 \cdot M_{cr}) = 845.21\, ft \cdot kip$

$$X_{axis} := \frac{M_{m.fact}}{A_g \cdot h} = 0.17\, ksi \qquad Y_{axis} := \frac{P_n}{A_g} = 0$$

Based on the chart, input value for ρ steel:

$\boxed{\rho_s := .01}$ $As_{min} := A_g \cdot \rho_s = 13.85 \cdot in^2$ CERM - Appendix 52.A, p. A-95

STEEL_CHK := if($As_{min} < A_s$, "OK" , "MORE STEEL REQ'D")

STEEL_CHK = "OK"

4.2) Calculate Shear Capacity (Unfactored):

The maximum shear will be at the ground line, or at the base of the exposed face of the wall

$V_{max} := P_1 + P_{LLS1} = 45.94 \cdot kip$

AREMA has a method to convert circular sections to square, use the less of their method and effective area calculated p.3

$b_w := Cais_{Dia}$ $d := .8 \cdot Cais_{Dia}$ $A_{arema} := b_w \cdot d = 1411.2 \cdot in^2$ AREMA - Ch.8 - 2.29.1a

$A_{eff} := \min(A_{arema}, A_{ce}) = 1017.88 \cdot in^2$

$$M_v := P_1 \cdot \left(\frac{H_{Ret}}{3}\right) + P_{LLS1} \cdot H_{LLS1} = 385.53\, ft \cdot kip$$

Max Shear assumed to be at the bottom of the exposed face of the wall, this calculates the Moment at that location

$$v_{c_all} := .9 \cdot \sqrt{f_c \cdot psi} + 1100\left(\frac{A_s}{A_{cg}}\right) \cdot \frac{(V_{max} \cdot 0.8 \cdot Cais_{Dia}) \cdot psi}{M_v} = 0.06\, ksi$$ AREMA - Ch.8 - 2.29.2b EQ 2-15

$V_{c_all} := v_{c_all} \cdot A_{ce} = 62.25 \cdot kip$

SHEAR_CHK := if($V_{max} < V_{c_all}$, "OK" , "VERIFY SHEAR REINFORCING IS ADEQUATE") SHEAR_CHK = "OK"

4.3) Calculate Shear Reinforcing (Unfactored):

The concrete is capable resisting all of the shear force, but since the applied force is more than half of the concrete allowable shear (close), minimum shear steel is required per AREMA, Chapter 8, Section 2.10.1 a

Minimum Required Shear Area: $A_{vmin} := \frac{\left[60 \cdot \left(Cais_{Dia}\right) \cdot 4in\right]}{60000} = 0.17 \cdot in^2$

AREMA - Ch.8 - 2.10.1b EQ 2-6

Assumed 4" spacing, Grade 60 reinforcing

Provide Minimum Steel (#4 spirals @ 4" pitch): $A_v := .2in^2$ *Area of #4 bars*

$SHEAR_STEEL_CHK := if\left(A_{vmin} < A_v, \text{"OK"}, \text{"NEED MORE STEEL"}\right)$

$SHEAR_STEEL_CHK = \text{"OK"}$

OPTIMUM REBAR DESIGN

FOOTING:

Top longitudinal reinforcement:

Spacing	Rebar
12.	5
9.	5
6.	5
8.	5
3.	5

Bottom longitudinal reinforcement:

Spacing	Rebar
12.	5
9.	5
6.	5
8.	5
3.	5

Top transverse reinforcement:

Spacing	Rebar
12.	5
9.	5
6.	5
8.	5
3.	5

Bottom transverse reinforcement:

Spacing	Rebar
12.	5
9.	5
6.	5
8.	5
3.	5

Proposed Footing Reinforcing

Top Mat:
Not designed using this sheet.
Bottom Mat:
Not designed using this sheet.

STEM:

Here is the design of the vertical reinforcement in the back face of the stem. For this design, the spacing and rebar size are the same for the entire height of the wall.

Vertical reinforcement on back of stem:

Spacing	Rebar
12.	9
9.	8
8.	8
6.	7
3.	5

STEEL DESIGNS LISTED FROM MOST DESIRABLE TO LEAST OPTIMAL

Proposed Primary Stem Reinforcing

Rear Mat Vertical Bars:
#7's @ 6" hooked into foundation and extending full height of wall above top of footing.

DESIGN CALCULATION COVER SHEET

Gannett Fleming
Engineers and Architects, P.C.
Excellence Delivered ***As Promised***

ISO 9001:2008 **CERTIFIED**

PROJECT: **ODOT/EMH&T: HAM-75-7.85**
BRIDGE NO: **HAM-75-0834**
SUBJECT: ***Analysis***
Wingwall Stability, Reinf, Found.
Abut5 Program
FILE NAME(s): *AB5_0834.dat & AB5_0834.out*

ODOT PID NO: 77889
EMH&T JOB NO:
GF JOB NO: 54682
CALC NO.: **HAM075_0834_09**
REV NO.: **00**
SHEET: 1 OF 22

SUPERSEDES CALC NO: N/A (Rev. 00)

CALCULATION DESCRIPTION:

This will analyze the proposed wingwalls on pile foundations utilizing previously calculated load, geometric, and soil input within the Abut5 program. The worst-case wingwall surcharge situation (Northeast) will be calculated and the same results will be used for the other wingwall (Northwest) that does not have rail live load surcharge.

EFD Markups include recognitiion that pile type/ capacity has changed since this analysis (overall design/results remain unchanged, the 12" pile was changed from an HP to a pipe)

Gannett Fleming Login edues
Calculated
By: Eric Dues, P.E., S.E.
Date: 07/17/2014 (Thu, am)
(Note Result) (Note Input)

DESIGN BASIS OR REFERENCES:

NS Underpass Design Criteria
AREMA (2008) Chapter 8, Section 5
Calculation: HAM075_0834_08 (Wingwall Loads)
Calculation: HAM075_0834_01 (Elevation Data)
Stage 2 Plans for bottom of footing elevations
Abut5 Users Manual (PennDOT)

Pipe Pile Capacity per AREMA Chapter 8, Section 4
(12" OD with assumed 0.05" degradation and 0.375" wall)

MISCELLANEOUS NOTES:

Abut5 Calculates the wall self-weight automatically.

Loads input into Abut5 are be grouped according to AASHTO but are very similar to AREMA Load Cases.
No tension is allowed in piles while vertical surcharge load is applied.

RECORD OF ISSUES:

REV	DESCRIPTION	BY	DATE	VERIF'D	DATE
00	Stage 2 Calculation	CTM	06/24/14	EFD	07/17/14

RECORD OF CHECK OF CURRENT CALCULATION VERSION

BY	DATE	CHKD	DATE	UPD.	DATE	VERIF'D	DATE
CTM	06/24/14	VDK	06/24/14	CTM	06/24/14	VDK	06/25/14

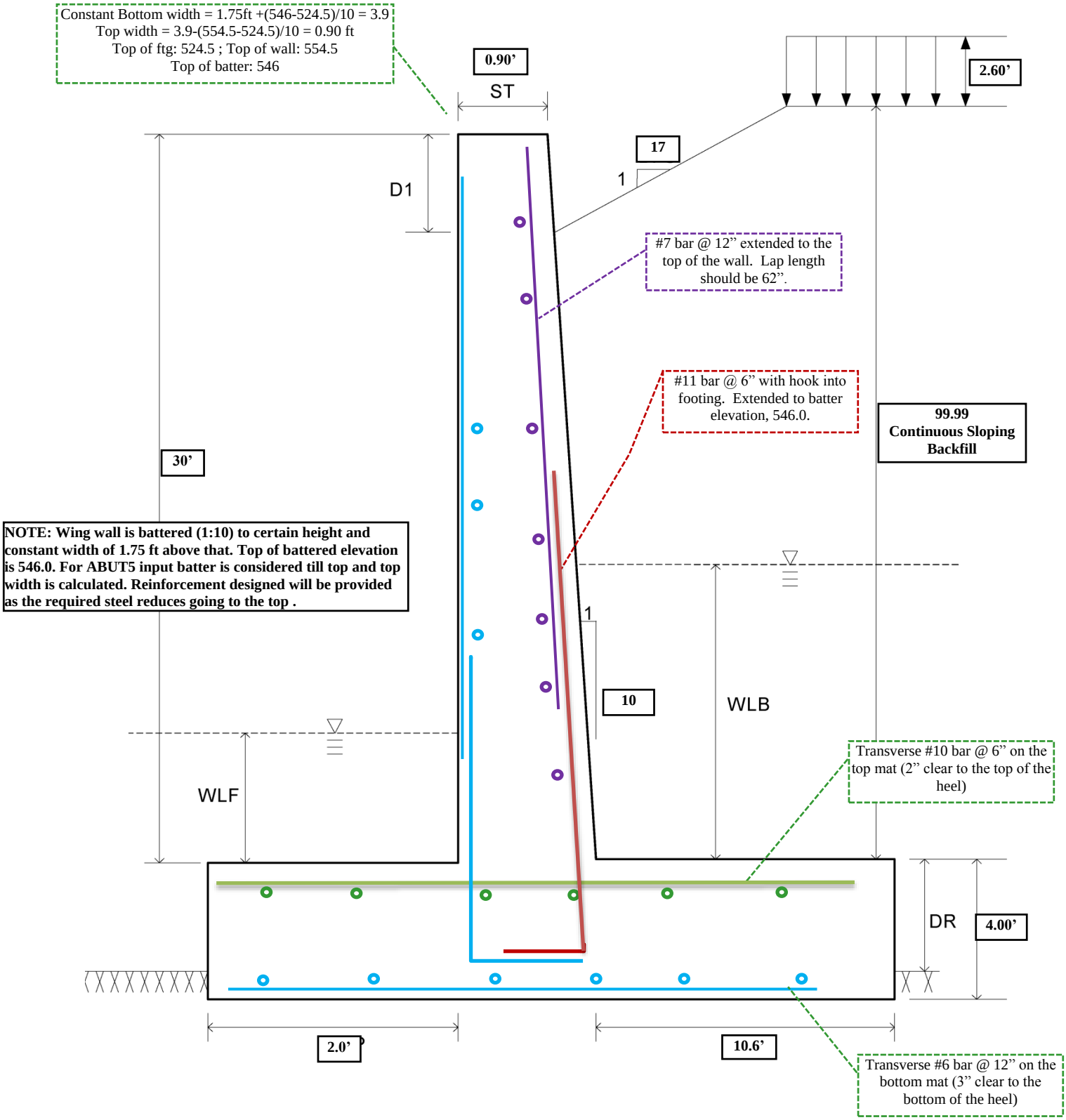

Reinforcing Note: All other bars shall be #5's at 12". 3" Clear to bottom of footing. 2" clear to all other surfaces. Vertical stem rebar should be outside of horizontal rebar. Transverse footing rebars should be on the top/bottom of longitudinal rebar.

```
                    LFD Abutment and Retaining Wall                  333067

PROGRAM P4354040                                          06/24/2014 15:28
VERSION 5.4.0.0          LAST UPDATED 05/05/2005       DOCUMENTATION 05/2005

INPUT: WW1_NE.dat

**PROJECT: ODOT/EMH&T: HAM-75-7.85, GF JOB # 054682
**NSRR OVER HAM-75-0834: NE WINGWALL - 30FT DESIGN HEIGHT
STATION 156+95
                            ANALYSIS OF
                          RETAINING WALL
                    TYPE OF FOOTING : ON PILES
                                                              EQUIV FLUID
DESIGN                   FTG    PILE            PILE            PRESSURE
METHOD   A OR D   TYPE   TYPE     D   EMBEDDED  ROWS   R OR S    DRY   SAT
  SL       A       3      2     12.0     Y       3              42.7

                    ALLOW SOIL   WATER  TOP FTG   WATER    TOP WALL   LIVE
COEFF OF  BACKFILL  PRESS OR AXIAL LEVEL  TO TOP    LEVEL     TO TOP    LOAD
FRICTION    SLOPE     PILE CAPAC    BACK  EMBANK    FRONT    BACKFILL   SURCH
            17.0        190.00            99.99                         2.60

TOP FTG  F'C                                   LATERAL                     PILE
TO ROCK  BACK   F'C    F'C  REBAR   PILE  PILE  PILE      REBAR  OVR  80%   ROW
SURFACE  WALL   STEM   FTG  GRADE  BATTER  OPT  CAPAC  Kv  DES   STR  RULE  OPT
        4000.  4000.  4000.   60.                0.1   2.5  Y     Y

  TOP OF
(BACK)WALL                                        MAX
TO TOP OF     TOP      PROJECTION          MAX    FTG
 FOOTING   THICKNESS   TOE   HEEL  T OR H  PROJ  WIDTH   H1     H2    H3    H4
  30.00      0.90      2.00 10.60

                           FRONT           HEIGHT
                           FACE   BRIDGE     OF
                           TO DL   SEAT   BACKWALL  BACK   FOOTING  PILE  FTG
 W1   W2   W3   BW1   BW2   REACT   WIDTH   BATTER  BATTER THICKNESS COST  COST
                                                     10.    4.00

     TRIAL
 REBAR SPACING  BAR   BW    STEM    FTG    MIN
 1  2  3  4  5  LOC  EXPOS  EXPOS  EXPOS   As
 3  6  8  9 12   Y     S      S      S

     STEM REBAR COVER           FOOTING REBAR COVER
 VERT  HORIZ   VERT  HORIZ    LONG  TRANS   LONG  TRANS
 2.00   3.00   2.00   3.00    3.00   2.00   4.00   3.00

                                          LONG
                     WIND   WIND          FORCE
 DL     LL    WIND    ON     ON   UPWARD  FROM   CENTR  TEMP
REACT  REACT  ON LL  SUPER   SUB   WIND    LL    FORCE  FORCE


                              BACKWALL            ALLOW
    PARAPET OR EXTERNAL       LIVE LOAD  SEISMIC   PILE
 HORZ   DIST   VERT   DIST   VERT   HORZ   LOAD   UPLIFT
                                                  19.00

             DISTANCE           PERCENT
ROW   PILE   BETWEEN    PILE      ROW
NO   BATTER    ROWS    SPACING  BATTERED
 1     3.0      1.50     3.00    100.0
 2     3.0      5.75     3.00    100.0
 3     0.0      4.00     3.00      0.0
```

Total Page 3/22

HP12x53 Piles with ODOT allowable 95T per pile
HP piles are chosen for their higher capacity and lower displacement. Lower displacement is desirable due to the proximity of underground utilities and residential foundations.

12" OD x 3/8" wall pipe pile (concrete pile) is now being used.
Max Capacity is 148 kips

Gannett Fleming Login edues
Calculated
By: Eric Dues, P.E., S.E.
Date: 07/17/2014 (Thu, am)
(Note Result) (Note Input)

```
                    REINFORCEMENT SUMMARY
                    ---------------------
                     REBAR SPACINGS (in):
                              3.
                              6.
                              8.
                              9.
                             12.

      REBAR COVERS (in):   (C.G. OF BAR TO OUTER FACE)
              STEM                        FOOTING
      BACK          FRONT          TOP          BOTTOM
  VERT  HORIZ   VERT  HORIZ  LONG   TRANS  LONG   TRANS
  2.00   3.00   2.00   3.00  3.00    2.00  4.00    3.00

                BACK WALL -- SEVERE
  EXPOSURES:    STEM ------- SEVERE
                FOOTING ---- SEVERE

  MINIMUM AREA OF STEEL PER FOOT: 0.125 SQUARE INCHES


***  NOTE  ***
 - THE REBARS IN THE BOTTOM OF THE FOOTING ARE BELOW THE TOP OF THE PILES.


                         PILE FOOTING ANALYSIS
                         ---------------------

***  NOTE  ***
 - FOR THE TEMPORARY CONSTRUCTION LOADING CONDITION (GROUP T) - FILL HEIGHT
   TO ABUTMENT SEAT, LIVE LOAD SURCHARGE, BUOYANCY AND WIND ON SUBSTRUCTURE
   (IF APPLICABLE):
    > PILE CAPACITY HAS BEEN INCREASED BY A FACTOR OF 1.25.

 - FOR PILE ROWS WITH BOTH VERTICAL AND BATTERED PILES, PILE LOADS ARE
   FOR THE MAXIMUM CONDITION (AXIAL LOAD IN BATTERED PILES).
```

Revised max capacity is 148 kips... OK

STABILITY ANALYSIS (SERVICE LOADS) - WITH VERTICAL COMPONENT OF LL SURCHARGE

AASHTO GROUP	SUM V	BAL. MOMENT	SUM H	O.T. MOMENT	FRONT ROW TO RESULT	PILE LOAD FRONT	PILE LOAD BACK	PILE LOAD ALLOW	LAT. RESIST	F.S. O.T.
1	**70.67**	**539.72**	**29.72**	**367.15**	**2.44**	**136.88**	**15.56**	**190.00**	**30.72**	**1.47**
2	**66.43**	**504.92**	**25.86**	**299.93**	**3.09**	**114.43**	**26.87**	**237.50**	**38.40**	**1.68**
3	70.67	539.72	29.72	367.15	2.44	136.88	15.56	237.50	38.40	1.47
4	70.67	539.72	29.72	367.15	2.44	136.88	15.56	237.50	38.40	1.47
5	66.43	504.92	25.86	299.93	3.09	114.43	26.87	266.00	43.01	1.68
6	70.67	539.72	29.72	367.15	2.44	136.88	15.56	266.00	43.01	1.47
T	70.02	532.89	29.72	367.15	2.37	137.36	13.91	237.50	38.40	1.45

NOTE: Max Pile Reaction under Primary Loads is 137 Kips. It is 115 Kips when longitudinal live load is added.

STABILITY ANALYSIS (SERVICE LOADS) - WITHOUT VERTICAL COMPONENT OF LL SURCHARGE

AASHTO GROUP	SUM V	BAL. MOMENT	SUM H	O.T. MOMENT	FRONT ROW TO RESULT	PILE LOAD FRONT	PILE LOAD BACK	PILE LOAD ALLOW	LAT. RESIST	F.S. O.T.
1	66.43	504.92	29.72	367.15	2.07	136.79	7.63	190.00	30.72	1.38
2	66.43	504.92	25.86	299.93	3.09	114.43	26.87	237.50	38.40	1.68
3	66.43	504.92	29.72	367.15	2.07	136.79	7.63	237.50	38.40	1.38
4	66.43	504.92	29.72	367.15	2.07	136.79	7.63	237.50	38.40	1.38
5	66.43	504.92	25.86	299.93	3.09	114.43	26.87	266.00	43.01	1.68
6	66.43	504.92	29.72	367.15	2.07	136.79	7.63	266.00	43.01	1.38
T	65.77	498.09	29.72	367.15	1.99	137.27	5.99	237.50	38.40	1.36

FOOTING ANALYSIS (SERVICE LOADS) - WITH VERTICAL COMPONENT OF LL SURCHARGE

AASHTO GROUP	TOE MOMENT	TOE SHEAR @	HEEL MOMENT	HEEL SHEAR @
1	20.93	0.00 D	205.21	22.43 F
2	17.30	0.00 D	168.52	16.11 F
3	20.93	0.00 D	205.21	22.43 F
4	20.93	0.00 D	205.21	22.43 F
5	17.30	0.00 D	168.52	16.11 F
6	20.93	0.00 D	205.21	22.43 F
T	21.01	0.00 D	208.49	23.24 F

FOOTING ANALYSIS (SERVICE LOADS) - WITHOUT VERTICAL COMPONENT OF LL SURCHARGE

AASHTO GROUP	TOE MOMENT	TOE SHEAR @	HEEL MOMENT	HEEL SHEAR @
1	20.92	0.00 D	203.94	23.34 F
2	17.30	0.00 D	168.52	16.11 F
3	20.92	0.00 D	203.94	23.34 F
4	20.92	0.00 D	203.94	23.34 F
5	17.30	0.00 D	168.52	16.11 F
6	20.92	0.00 D	203.94	23.34 F
T	20.99	0.00 D	207.22	24.15 F

FOOTING DESIGN - WITH AND WITHOUT VERTICAL COMPONENT OF LL SURCHARGE

FOOTING WIDTH	FOOTING THICKNESS	TOE PROJ	HEEL PROJ	EFFECTIVE DEPTH TOE	EFFECTIVE DEPTH HEEL
16.50	4.00	2.00	10.60	3.750	3.833

SHEAR STR TOE	ALLOWABLE SHEAR TOE	SHEAR STR HEEL	ALLOWABLE SHEAR HEEL	TRANS REINFORCEMENT TOE-BOT	TRANS REINFORCEMENT HEEL-TOP	LONGITUDINAL REINFORCEMENT
0.000	0.060	0.042	0.060	0.32	2.42	0.12

LONGITUDINAL MOMENT CALCULATIONS - WITH VERTICAL COMPONENT OF LL SURCHARGE
GROUP 1 GOVERNS

MAX UNIFORM LOAD (w) = 4.283 K/FT
MAX UNIFORM SERVICE LOAD (w) = 4.283 K/FT
MAX PILE SPACING = 3.00 FEET
MAX LONGITUDINAL MOMENT = 1.93 K-FT
MAX LONG. MOMENT (SERVICE) = 1.93 K-FT

PILE PATTERN

ROW	BATTER	DISTANCE	SPACING	% BATTERED
1	3.0 ON 12	1.50	3.00	100.0
2	3.0 ON 12	7.25	3.00	100.0
3	VERT	11.25	3.00	0.0

C.G. OF PILES 6.67 FT. FROM TOE I OF PILES PER FOOT 16.014
PILE DENSITY 1.0000 PILES PER FOOT

STEM ANALYSIS

DESIGN OF STEM SECTION AT 7.50 FT FROM TOP

AASHTO GROUP (SERVICE)	1	2	3	4	5	6	T
MOMENT	7.94	4.12	7.94	7.94	4.12	7.94	6.17
AXIAL FORCE	1.77	1.77	1.77	1.77	1.77	1.77	1.77
SHEAR	2.39	1.47	2.39	2.39	1.47	2.39	2.03

SECTION THICKNESS	SHEAR STRESS	ALLOWABLE SHEAR	BACK FACE REINF
1.650	0.011	0.060	0.258

DESIGN OF STEM SECTION AT 15.00 FT FROM TOP

AASHTO GROUP (SERVICE)	1	2	3	4	5	6	T
MOMENT	42.16	28.30	42.16	42.16	28.30	42.16	36.74
AXIAL FORCE	5.07	5.07	5.07	5.07	5.07	5.07	5.06
SHEAR	7.08	5.33	7.08	7.08	5.33	7.08	6.47

SECTION THICKNESS	SHEAR STRESS	ALLOWABLE SHEAR	BACK FACE REINF
2.400	0.022	0.060	0.734

DESIGN OF STEM SECTION AT 22.50 FT FROM TOP

AASHTO GROUP (SERVICE)	1	2	3	4	5	6	T
MOMENT	120.77	90.63	120.77	120.77	90.63	120.77	109.79
AXIAL FORCE	9.89	9.89	9.89	9.89	9.89	9.89	9.87
SHEAR	14.18	11.59	14.18	14.18	11.59	14.18	13.31

SECTION THICKNESS	SHEAR STRESS	ALLOWABLE SHEAR	BACK FACE REINF
3.150	0.033	0.060	1.633

DESIGN OF STEM SECTION AT 30.00 FT FROM TOP

AASHTO GROUP (SERVICE)	1	2	3	4	5	6	T
MOMENT	261.85	209.19	261.85	261.85	209.19	261.85	243.39
AXIAL FORCE	16.23	16.23	16.23	16.23	16.23	16.23	16.20
SHEAR	23.67	20.25	23.67	23.67	20.25	23.67	22.55

SECTION THICKNESS	SHEAR STRESS	ALLOWABLE SHEAR	BACK FACE REINF
3.900	0.044	0.060	2.900

SUMMARY OF STEEL DESIGN

FOOTING DESIGN

Top longitudinal reinforcement:

REBAR SPACING (in)	REBAR SIZE	ACTUAL As (sq in/ft)
3	5	1.240
6	5	0.620
8	5	0.465
9	5	0.413
12	5	0.310

Bottom longitudinal reinforcement:

REBAR SPACING (in)	REBAR SIZE	ACTUAL As (sq in/ft)
3	5	1.240
6	5	0.620
8	5	0.465
9	5	0.413
12	5	0.310

Top transverse reinforcement:

REBAR SPACING (in)	REBAR SIZE	ACTUAL As (sq in/ft)
3	7	2.400 *
6	10	2.540
8 ** NO AVAILABLE DESIGN FOR THIS SPACING **		
9 ** NO AVAILABLE DESIGN FOR THIS SPACING **		
12 ** NO AVAILABLE DESIGN FOR THIS SPACING **		

Bottom transverse reinforcement:

REBAR SPACING (in)	REBAR SIZE	ACTUAL As (sq in/ft)
3	5	1.240
6	5	0.620
8	5	0.465
9	5	0.413
12	6	0.440

*** - INDICATES THAT AREA SELECTED IS LESS THAN REQUIRED BUT WITHIN TOLERANCE**

STEM DESIGN

STEM DESIGN

Vertical reinforcement on back face:

At Section #3, 7.50 feet from the top:

REBAR SPACING (in)	REBAR SIZE	ACTUAL As (sq in/ft)
3	4	0.800
6	4	0.400
8	4	0.300
9	4	0.267
12	5	0.310

At Section #4, 15.00 feet from the top:

REBAR SPACING (in)	REBAR SIZE	ACTUAL As (sq in/ft)
3	4	0.800
6	6	0.880
8	7	0.900
9	7	0.800
12	8	0.790

At Section #5, 22.50 feet from the top:

REBAR SPACING (in)	REBAR SIZE	ACTUAL As (sq in/ft)
3	6	1.760
6	9	2.000
8	10	1.905
9	10	1.693
12 ** NO AVAILABLE DESIGN FOR THIS SPACING **		

At Section #6, 30.00 feet from the top:

REBAR SPACING (in)	REBAR SIZE	ACTUAL As (sq in/ft)
3	8	3.160
6	11	3.120
8 ** NO AVAILABLE DESIGN FOR THIS SPACING **		
9 ** NO AVAILABLE DESIGN FOR THIS SPACING **		
12 ** NO AVAILABLE DESIGN FOR THIS SPACING **		

```
          OPTIMUM REBAR DESIGN
          --------------------


FOOTING:


 Top longitudinal reinforcement:
     Spacing       Rebar

       12.             5
        9.             5
        6.             5
        8.             5
        3.             5
Bottom longitudinal reinforcement:
     Spacing       Rebar

       12.             5
        9.             5
        6.             5
        8.             5
        3.             5
  Top transverse reinforcement:
     Spacing       Rebar

        6.            10
        3.             7
 Bottom transverse reinforcement:
     Spacing       Rebar

       12.             6
        9.             5
        6.             5
        8.             5
        3.             5
```

Proposed Footing Reinforcing

Top Mat:
#5's @ 12" Longitudinally
#10's @ 6" Laterally
Bottom Mat:
#5's @ 12" Longitudinally
#6's @ 12" Laterally

```
STEM:

Here is the design of the vertical reinforcement
  in the back face of the stem.   For this
design,
  two  complementary rebar spacings are used;
one
  for the bottom and one for the rest of the
stem.

Design #  1:
============
The theoretical cutoff for area of steel = 3.120
sq.in.
using a linear interpolation between design
sections
is  8.11 feet from the top of the footing.

Reqd. extension of reinf. per AASHTO 8.24.1.2.1 :
  1.  15 bar diameters  = 21.150 inches
  2.  effective depth   = 44.800 inches
  3.  1 ft. minimum

      USE               = 44.800 inches

Use #11 bars at  6. in. up to a height of 11.84
ft.
Above this height use #11 bars at 12. in.

Design #  2:
============
The theoretical cutoff for area of steel = 3.160
sq.in.
using a linear interpolation between design
sections
is  7.94 feet from the top of the footing.

Reqd. extension of reinf. per AASHTO 8.24.1.2.1 :
  1.  15 bar diameters  = 15.000 inches
  2.  effective depth   = 44.800 inches
  3.  1 ft. minimum

      USE               = 44.800 inches

Use # 8 bars at  3. in. up to a height of 11.68
ft.
Above this height use # 8 bars at  6. in.

STEEL DESIGNS LISTED FROM MOST DESIRABLE TO LEAST
OPTIMAL
```

Proposed Primary Stem Reinforcing

Rear Mat Vertical Bars:
#11's @ 6" hooked into foundation and extending to top of batter (Elevation 546.0).

#7's @ 12" extend to the top of the wall and lap into the batter portion 62" (TO MATCH SECTION 3 REINFORCING).

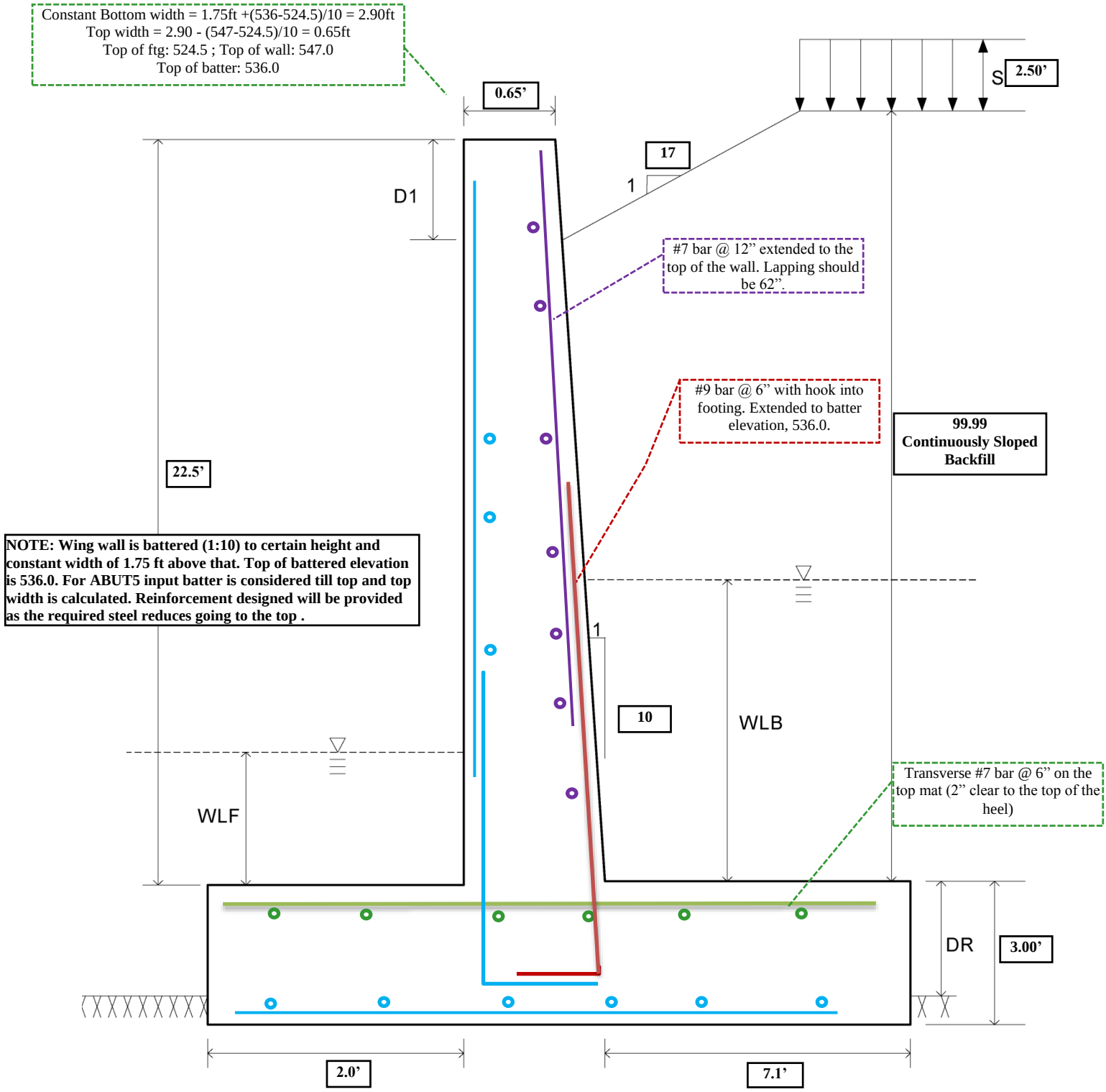

Reinforcing Note: All other bars shall be #5's at 12". 3" Clear to bottom of footing. 2" clear to all other surfaces. Vertical stem rebar should be outside of horizontal rebar. Transverse footing rebars should be on the top/bottom of longitudinal rebar.

```
                    LFD Abutment and Retaining Wall                  333067

PROGRAM P4354040                                          06/24/2014 15:10
VERSION 5.4.0.0          LAST UPDATED 05/05/2005       DOCUMENTATION 05/2005

INPUT: WW2_NE.dat

**PROJECT: ODOT/EMH&T: HAM-75-7.85, GF JOB # 054682
**NSRR OVER HAM-75-0834: NE WINGWALL - 22.5FT DESIGN HEIGHT
STATION 156+98


                            ANALYSIS OF
                           RETAINING WALL

                    TYPE OF FOOTING : ON PILES

                                                                EQUIV FLUID
DESIGN                   FTG    PILE            PILE             PRESSURE
METHOD   A OR D   TYPE   TYPE     D   EMBEDDED  ROWS   R OR S     DRY   SAT
  SL       A       3      2     12.0     Y       2               42.7

                     ALLOW SOIL   WATER  TOP FTG   WATER    TOP WALL   LIVE
COEFF OF  BACKFILL  PRESS OR AXIAL LEVEL  TO TOP    LEVEL     TO TOP    LOAD
FRICTION    SLOPE     PILE CAPAC    BACK  EMBANK    FRONT    BACKFILL   SURCH
            17.0        190.00             99.99                        2.50

TOP FTG  F'C                                  LATERAL                    PILE
TO ROCK  BACK   F'C    F'C  REBAR   PILE  PILE  PILE      REBAR  OVR  80%   ROW
SURFACE  WALL   STEM   FTG  GRADE  BATTER  OPT  CAPAC  Kv  DES   STR  RULE  OPT
        4000.  4000.  4000.   60.                0.1   2.5  Y     Y

  TOP OF
(BACK)WALL                                        MAX
TO TOP OF     TOP      PROJECTION          MAX    FTG
 FOOTING   THICKNESS   TOE   HEEL  T OR H  PROJ  WIDTH   H1     H2    H3    H4
  22.50      0.65      2.00  7.10

                           FRONT           HEIGHT
                           FACE   BRIDGE     OF
                           TO DL   SEAT   BACKWALL  BACK   FOOTING  PILE  FTG
 W1   W2   W3   BW1   BW2   REACT   WIDTH   BATTER  BATTER THICKNESS COST  COST
                                                     10.    3.00

     TRIAL
 REBAR SPACING  BAR   BW    STEM    FTG    MIN
 1  2  3  4  5  LOC  EXPOS  EXPOS  EXPOS   As
 3  6  8  9 12   Y     S      S      S

     STEM REBAR COVER           FOOTING REBAR COVER
 VERT  HORIZ   VERT  HORIZ    LONG  TRANS   LONG  TRANS
 2.00   3.00   2.00   3.00    3.00   2.00   4.00   3.00

                                          LONG
                      WIND   WIND         FORCE
 DL     LL    WIND    ON     ON   UPWARD  FROM   CENTR  TEMP
REACT  REACT  ON LL  SUPER   SUB   WIND    LL    FORCE  FORCE


                              BACKWALL            ALLOW
    PARAPET OR EXTERNAL       LIVE LOAD  SEISMIC   PILE
 HORZ   DIST   VERT   DIST   VERT   HORZ   LOAD   UPLIFT
                                                  19.00

             DISTANCE           PERCENT
ROW   PILE   BETWEEN    PILE      ROW
NO   BATTER    ROWS    SPACING  BATTERED
 1     3.0      1.50     3.00    100.0
 2     3.0      5.75     3.00     50.0
```

```
                    REINFORCEMENT SUMMARY
                    ---------------------
                     REBAR SPACINGS (in):
                              3.
                              6.
                              8.
                              9.
                             12.

        REBAR COVERS (in):   (C.G. OF BAR TO OUTER FACE)
                STEM                        FOOTING
        BACK            FRONT            TOP          BOTTOM
    VERT  HORIZ    VERT  HORIZ  LONG    TRANS  LONG    TRANS
    2.00   3.00    2.00   3.00  3.00     2.00  4.00     3.00

                   BACK WALL -- SEVERE
    EXPOSURES:     STEM ------- SEVERE
                   FOOTING ---- SEVERE

    MINIMUM AREA OF STEEL PER FOOT: 0.125 SQUARE INCHES
```

HP12x53 Piles with ODOT allowable 95T per pile
HP piles are chosen for their higher capacity and lower displacement. Lower displacement is desirable due to the proximity of underground utilities and residential foundations.

12" OD x 3/8" wall pipe pile (concrete pile) is now being used.
Max Capacity is 148 kips

Gannett Fleming Login edues
Calculated
By: Eric Dues, P.E., S.E.
Date: 07/17/2014 (Thu, am)
(Note Result) (Note Input)

```
*** NOTE ***
 - THE REBARS IN THE BOTTOM OF THE FOOTING ARE BELOW THE TOP OF THE PILES.


                         PILE FOOTING ANALYSIS
                         ---------------------

*** NOTE ***
 - FOR THE TEMPORARY CONSTRUCTION LOADING CONDITION (GROUP T) - FILL HEIGHT
   TO ABUTMENT SEAT, LIVE LOAD SURCHARGE, BUOYANCY AND WIND ON SUBSTRUCTURE
   (IF APPLICABLE):
    > PILE CAPACITY HAS BEEN INCREASED BY A FACTOR OF 1.25.

 - FOR PILE ROWS WITH BOTH VERTICAL AND BATTERED PILES, PILE LOADS ARE
   FOR THE MAXIMUM CONDITION (AXIAL LOAD IN BATTERED PILES).
```

Revised max capacity is 148 kips... OK

STABILITY ANALYSIS (SERVICE LOADS) - WITH VERTICAL COMPONENT OF LL SURCHARGE

AASHTO GROUP	SUM V	BAL. MOMENT	SUM H	O.T. MOMENT	FRONT ROW TO RESULT	PILE LOAD FRONT	PILE LOAD BACK	PILE LOAD ALLOW	LAT. RESIST	F.S. O.T.
1	**37.56**	**202.13**	**17.27**	**162.03**	**1.07**	**94.58**	**21.57**	**190.00**	**23.04**	**1.25**
2	**34.75**	**185.79**	**14.49**	**125.81**	**1.73**	**75.21**	**32.26**	**237.50**	**28.80**	**1.48**
3	37.56	202.13	17.27	162.03	1.07	94.58	21.57	237.50	28.80	1.25
4	37.56	202.13	17.27	162.03	1.07	94.58	21.57	237.50	28.80	1.25
5	34.75	185.79	14.49	125.81	1.73	75.21	32.26	266.00	32.26	1.48
6	37.56	202.13	17.27	162.03	1.07	94.58	21.57	266.00	32.26	1.25
T	37.25	199.85	17.27	162.03	1.02	94.85	20.34	237.50	28.80	1.23

NOTE: Max Pile Reaction under Primary Loads is 95 Kips. It is 76 Kips when longitudinal live load is added.

STABILITY ANALYSIS (SERVICE LOADS) - WITHOUT VERTICAL COMPONENT OF LL SURCHARGE

AASHTO GROUP	SUM V	BAL. MOMENT	SUM H	O.T. MOMENT	FRONT ROW TO RESULT	PILE LOAD FRONT	PILE LOAD BACK	PILE LOAD ALLOW	LAT. RESIST	F.S. O.T.
1	34.75	185.79	17.27	162.03	0.68	94.69	12.78	190.00	23.04	1.15
2	34.75	185.79	14.49	125.81	1.73	75.21	32.26	237.50	28.80	1.48
3	34.75	185.79	17.27	162.03	0.68	94.69	12.78	237.50	28.80	1.15
4	34.75	185.79	17.27	162.03	0.68	94.69	12.78	237.50	28.80	1.15
5	34.75	185.79	14.49	125.81	1.73	75.21	32.26	266.00	32.26	1.48
6	34.75	185.79	17.27	162.03	0.68	94.69	12.78	266.00	32.26	1.15
T	34.45	183.51	17.27	162.03	0.62	94.96	11.55	237.50	28.80	1.13

FOOTING ANALYSIS (SERVICE LOADS) - WITH VERTICAL COMPONENT OF LL SURCHARGE

AASHTO GROUP	TOE MOMENT	TOE SHEAR @	HEEL MOMENT	HEEL SHEAR @
1	14.39	0.00 D	73.34	18.03 F
2	11.26	0.00 D	57.65	12.44 F
3	14.39	0.00 D	73.34	18.03 F
4	14.39	0.00 D	73.34	18.03 F
5	11.26	0.00 D	57.65	12.44 F
6	14.39	0.00 D	73.34	18.03 F
T	14.44	0.00 D	74.27	18.42 F

FOOTING DESIGN - WITH AND WITHOUT VERTICAL COMPONENT OF LL SURCHARGE

FOOTING WIDTH	FOOTING THICKNESS	TOE PROJ	HEEL PROJ	EFFECTIVE DEPTH TOE	EFFECTIVE DEPTH HEEL
12.00	3.00	2.00	7.10	2.750	2.833

SHEAR STR TOE	ALLOWABLE SHEAR TOE	SHEAR STR HEEL	ALLOWABLE SHEAR HEEL	TRANS REINFORCEMENT TOE-BOT	TRANS REINFORCEMENT HEEL-TOP	LONGITUDINAL REINFORCEMENT
0.000	0.060	0.045	0.060	0.30	1.15	0.12

LONGITUDINAL MOMENT CALCULATIONS - WITH VERTICAL COMPONENT OF LL SURCHARGE
GROUP 1 GOVERNS

MAX UNIFORM LOAD (w) = 3.130 K/FT
MAX UNIFORM SERVICE LOAD (w) = 3.130 K/FT
MAX PILE SPACING = 3.00 FEET
MAX LONGITUDINAL MOMENT = 1.41 K-FT
MAX LONG. MOMENT (SERVICE) = 1.41 K-FT

PILE PATTERN

ROW	BATTER	DISTANCE	SPACING	% BATTERED
1	3.0 ON 12	1.50	3.00	100.0
2	3.0 ON 12	7.25	3.00	50.0

C.G. OF PILES 4.38 FT. FROM TOE I OF PILES PER FOOT 5.510
PILE DENSITY 0.6667 PILES PER FOOT

STEM ANALYSIS

DESIGN OF STEM SECTION AT 5.62 FT FROM TOP

AASHTO GROUP (SERVICE)	1	2	3	4	5	6	T
MOMENT	3.73	1.70	3.73	3.73	1.70	3.73	2.98
AXIAL FORCE	0.98	0.98	0.98	0.98	0.98	0.98	0.98
SHEAR	1.47	0.81	1.47	1.47	0.81	1.47	1.28

SECTION THICKNESS	SHEAR STRESS	ALLOWABLE SHEAR	BACK FACE REINF
1.212	0.010	0.060	0.176

DESIGN OF STEM SECTION AT 11.25 FT FROM TOP

AASHTO GROUP (SERVICE)	1	2	3	4	5	6	T
MOMENT	19.22	11.79	19.22	19.22	11.79	19.22	16.99
AXIAL FORCE	2.81	2.81	2.81	2.81	2.81	2.81	2.81
SHEAR	4.23	2.97	4.23	4.23	2.97	4.23	3.90

SECTION THICKNESS	SHEAR STRESS	ALLOWABLE SHEAR	BACK FACE REINF
1.775	0.018	0.060	0.505

DESIGN OF STEM SECTION AT 16.88 FT FROM TOP

AASHTO GROUP (SERVICE)	1	2	3	4	5	6	T
MOMENT	54.11	37.91	54.11	54.11	37.91	54.11	49.66
AXIAL FORCE	5.50	5.50	5.50	5.50	5.50	5.50	5.49
SHEAR	8.34	6.48	8.34	8.34	6.48	8.34	7.88

SECTION THICKNESS	SHEAR STRESS	ALLOWABLE SHEAR	BACK FACE REINF
2.337	0.027	0.060	1.007

DESIGN OF STEM SECTION AT 22.50 FT FROM TOP

AASHTO GROUP (SERVICE)	1	2	3	4	5	6	T
MOMENT	116.03	87.67	116.03	116.03	87.67	116.03	108.62
AXIAL FORCE	9.05	9.05	9.05	9.05	9.05	9.05	9.03
SHEAR	13.80	11.34	13.80	13.80	11.34	13.80	13.21

SECTION THICKNESS	SHEAR STRESS	ALLOWABLE SHEAR	BACK FACE REINF
2.900	0.035	0.060	1.749

SUMMARY OF STEEL DESIGN

FOOTING DESIGN

Top longitudinal reinforcement:

REBAR SPACING (in)	REBAR SIZE	ACTUAL As (sq in/ft)
3	5	1.240
6	5	0.620
8	5	0.465
9	5	0.413
12	5	0.310

Bottom longitudinal reinforcement:

REBAR SPACING (in)	REBAR SIZE	ACTUAL As (sq in/ft)
3	5	1.240
6	5	0.620
8	5	0.465
9	5	0.413
12	5	0.310

Top transverse reinforcement:

REBAR SPACING (in)	REBAR SIZE	ACTUAL As (sq in/ft)
3	5	1.240
6	7	1.200
8	8	1.185
9	9	1.333
12	10	1.270

Bottom transverse reinforcement:

REBAR SPACING (in)	REBAR SIZE	ACTUAL As (sq in/ft)
3	5	1.240
6	5	0.620
8	5	0.465
9	5	0.413
12	5	0.310

STEM DESIGN

Vertical reinforcement on back face:

REBAR SPACING (in)	REBAR SIZE	ACTUAL As (sq in/ft)
At Section #3, 5.62 feet from the top:		
3	4	0.800
6	4	0.400
8	4	0.300
9	4	0.267
12	4	0.200
At Section #4, 11.25 feet from the top:		
3	4	0.800
6	5	0.620
8	6	0.660
9	6	0.587
12	7	0.600
At Section #5, 16.88 feet from the top:		
3	5	1.240
6	7	1.200
8	8	1.185
9	8	1.053
12	9	1.000 *
At Section #6, 22.50 feet from the top:		
3	6	1.760
6	9	2.000
8	10	1.905
9	11	2.080
12 ** NO AVAILABLE DESIGN FOR THIS SPACING **		

* - INDICATES THAT AREA SELECTED IS LESS THAN REQUIRED BUT WITHIN TOLERANCE

OPTIMUM REBAR DESIGN

FOOTING:

```
 Top longitudinal reinforcement:
     Spacing       Rebar

       12.             5
        9.             5
        6.             5
        8.             5
        3.             5
Bottom longitudinal reinforcement:
     Spacing       Rebar

       12.             5
        9.             5
        6.             5
        8.             5
        3.             5
  Top transverse reinforcement:
     Spacing       Rebar

       12.            10
        6.             7
        8.             8
        3.             5
        9.             9
 Bottom transverse reinforcement:
     Spacing       Rebar

       12.             5
        9.             5
        6.             5
        8.             5
        3.             5
```

Proposed Footing Reinforcing

Top Mat:
#5's @ 12" Longitudinally
#7's @ 6" Laterally
Bottom Mat:
#5's @ 12" Longitudinally
#5's @ 12" Laterally

STEM:

```
  Here is the design of the vertical
reinforcement
  in the back face of the stem.   For this
design,
  two  complementary rebar spacings are used;
one
  for the bottom and one for the rest of the
stem.

Design #  1:
============
The theoretical cutoff for area of steel = 2.000
sq.in.
using a linear interpolation between design
sections
is  5.68 feet from the top of the footing.

Reqd. extension of reinf. per AASHTO 8.24.1.2.1 :
  1.  15 bar diameters  = 16.920 inches
  2.  effective depth   = 32.800 inches
  3.  1 ft. minimum

      USE               = 32.800 inches

Use # 9 bars at  6. in. up to a height of  8.41
ft.
Above this height use # 9 bars at 12. in.

Design #  2:
============
The theoretical cutoff for area of steel = 1.760
sq.in.
using a linear interpolation between design
sections
is  7.05 feet from the top of the footing.

Reqd. extension of reinf. per AASHTO 8.24.1.2.1 :
  1.  15 bar diameters  = 11.250 inches
  2.  effective depth   = 32.800 inches
  3.  1 ft. minimum

      USE               = 32.800 inches

Use # 6 bars at  3. in. up to a height of  9.78
ft.
Above this height use # 6 bars at  6. in.


STEEL DESIGNS LISTED FROM MOST DESIRABLE TO LEAST
OPTIMAL
```

Proposed Primary Stem Reinforcing

Rear Mat Vertical Bars:
#9's @ 6" hooked into foundation and extending to top of batter (Elevation 536.0).

#7's @ 12" extend to the top of the wall and lap into the batter portion 62" (TO MATCH SECTION 3 REINFORCING).

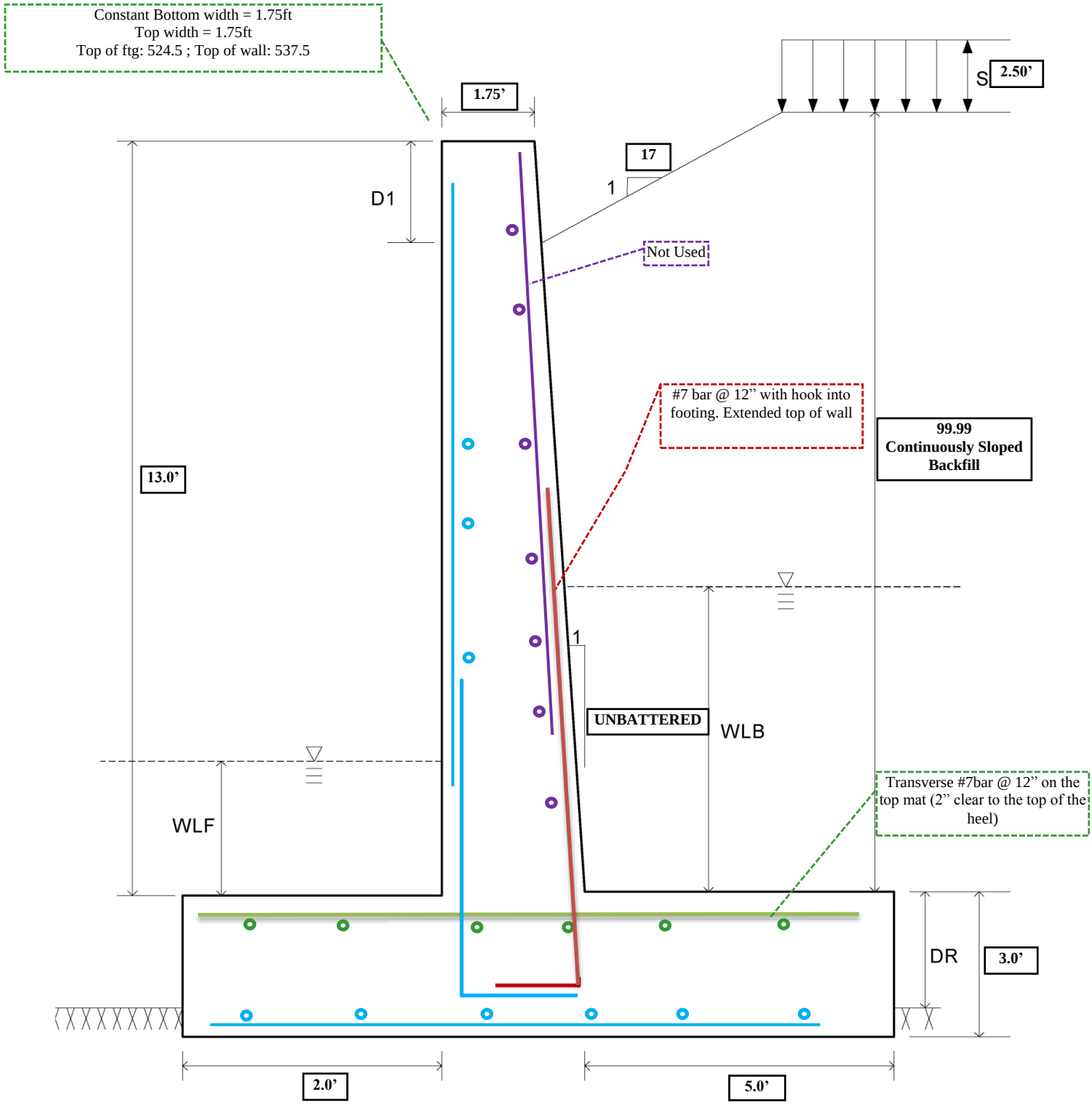

Reinforcing Note: All other bars shall be #5's at 12". 3" Clear to bottom of footing. 2" clear to all other surfaces. Vertical stem rebar should be outside of horizontal rebar. Transverse footing rebars should be on the top/bottom of longitudinal rebar.

```
                    LFD Abutment and Retaining Wall                  333067

PROGRAM P4354040                                          06/23/2014 16:07
VERSION 5.4.0.0          LAST UPDATED 05/05/2005       DOCUMENTATION 05/2005

INPUT: WW3_NE.dat

**PROJECT: ODOT/EMH&T: HAM-75-7.85, GF JOB # 054682
**NSRR OVER HAM-75-0834: NE WINGWALL AT END OF WALL; 13FT HEIGHT UNBATT
**ASD DESIGN AS PER AREMA CHAPTER 8, PART 5 AND NS STANDARDS


                            ANALYSIS OF
                           RETAINING WALL

                    TYPE OF FOOTING : ON PILES

                                                                EQUIV FLUID
DESIGN                   FTG    PILE            PILE              PRESSURE
METHOD   A OR D   TYPE   TYPE     D   EMBEDDED  ROWS   R OR S     DRY   SAT
  SL       A       3      2     12.0     Y       2               38.0

                     ALLOW SOIL   WATER  TOP FTG   WATER    TOP WALL   LIVE
COEFF OF  BACKFILL  PRESS OR AXIAL LEVEL  TO TOP    LEVEL     TO TOP    LOAD
FRICTION    SLOPE     PILE CAPAC    BACK  EMBANK    FRONT    BACKFILL   SURCH
            17.0        190.00             99.99                        3.00

TOP FTG  F'C                                   LATERAL                     PILE
TO ROCK  BACK   F'C    F'C  REBAR   PILE  PILE  PILE      REBAR  OVR  80%   ROW
SURFACE  WALL   STEM   FTG  GRADE  BATTER  OPT  CAPAC  Kv  DES   STR  RULE  OPT
        4000.  4000.  4000.   60.                0.1   2.3  Y     Y

  TOP OF
(BACK)WALL                                          MAX
TO TOP OF     TOP      PROJECTION          MAX    FTG
 FOOTING   THICKNESS   TOE   HEEL  T OR H  PROJ  WIDTH   H1     H2    H3    H4
  13.00      1.75      2.00  5.00

                           FRONT           HEIGHT
                           FACE   BRIDGE     OF
                           TO DL   SEAT   BACKWALL  BACK   FOOTING  PILE  FTG
 W1   W2   W3   BW1   BW2   REACT   WIDTH   BATTER  BATTER THICKNESS COST  COST
                                                          2.50

     TRIAL
 REBAR SPACING  BAR   BW    STEM    FTG    MIN
 1  2  3  4  5  LOC  EXPOS  EXPOS  EXPOS   As
 3  6  8  9 12   Y     S      S      S

     STEM REBAR COVER           FOOTING REBAR COVER
 VERT  HORIZ   VERT  HORIZ    LONG  TRANS   LONG  TRANS
 2.00   3.00   2.00   3.00    3.00   2.00   4.00   3.00

                                          LONG
                      WIND   WIND         FORCE
 DL     LL    WIND    ON     ON   UPWARD  FROM   CENTR  TEMP
REACT  REACT  ON LL  SUPER   SUB   WIND    LL    FORCE  FORCE


                              BACKWALL            ALLOW
    PARAPET OR EXTERNAL       LIVE LOAD  SEISMIC   PILE
 HORZ   DIST   VERT   DIST   VERT   HORZ   LOAD   UPLIFT
                                                  19.00

             DISTANCE           PERCENT
ROW   PILE   BETWEEN    PILE      ROW
NO   BATTER    ROWS    SPACING  BATTERED
 1     3.0      1.50     3.00    100.0
 2     0.0      5.75     6.00      0.0
```

```
                    REINFORCEMENT SUMMARY
                    ---------------------
                     REBAR SPACINGS (in):
                              3.
                              6.
                              8.
                              9.
                             12.

          REBAR COVERS (in):   (C.G. OF BAR TO OUTER FACE)
                  STEM                      FOOTING
          BACK          FRONT          TOP          BOTTOM
       VERT  HORIZ   VERT  HORIZ  LONG   TRANS  LONG   TRANS
       2.00   3.00   2.00   3.00  3.00    2.00  4.00    3.00

                     BACK WALL -- SEVERE
       EXPOSURES:    STEM ------- SEVERE
                     FOOTING ---- SEVERE

       MINIMUM AREA OF STEEL PER FOOT: 0.125 SQUARE INCHES
```

HP12x53 Piles with ODOT allowable 95T per pile
HP piles are chosen for their higher capacity and lower displacement. Lower displacement is desirable due to the proximity of underground utilities and residential foundations.

12" OD x 3/8" wall pipe pile (concrete pile) is now being used.
Max Capacity is 148 kips

Gannett Fleming Login edues
Calculated
By: Eric Dues, P.E., S.E.
Date: 07/17/2014 (Thu, am)
(Note Result) (Note Input)

```
***  NOTE  ***
 - THE REBARS IN THE BOTTOM OF THE FOOTING ARE BELOW THE TOP OF THE PILES.
```

PILE FOOTING ANALYSIS

```
***  NOTE  ***
 - FOR THE TEMPORARY CONSTRUCTION LOADING CONDITION (GROUP T) - FILL HEIGHT
   TO ABUTMENT SEAT, LIVE LOAD SURCHARGE, BUOYANCY AND WIND ON SUBSTRUCTURE
   (IF APPLICABLE):
    > PILE CAPACITY HAS BEEN INCREASED BY A FACTOR OF 1.25.

 - FOR PILE ROWS WITH BOTH VERTICAL AND BATTERED PILES, PILE LOADS ARE
   FOR THE MAXIMUM CONDITION (AXIAL LOAD IN BATTERED PILES).
```

Revised max capacity is 148 kips... OK

STABILITY ANALYSIS (SERVICE LOADS) - WITH VERTICAL COMPONENT OF LL SURCHARGE

AASHTO GROUP	SUM V	BAL. MOMENT	SUM H	O.T. MOMENT	FRONT ROW TO RESULT	PILE LOAD FRONT	PILE LOAD BACK	ALLOW	LAT. RESIST	F.S. O.T.
1	**17.04**	**62.89**	**6.59**	**40.01**	**1.34**	**40.40**	**23.88**	**190.00**	**15.36**	**1.57**
2	**15.54**	**55.77**	**5.04**	**27.40**	**1.83**	**32.81**	**29.60**	**237.50**	**19.20**	**2.04**
3	17.04	62.89	6.59	40.01	1.34	40.40	23.88	237.50	19.20	1.57
4	17.04	62.89	6.59	40.01	1.34	40.40	23.88	237.50	19.20	1.57
5	15.54	55.77	5.04	27.40	1.83	32.81	29.60	266.00	21.50	2.04
6	17.04	62.89	6.59	40.01	1.34	40.40	23.88	266.00	21.50	1.57
T	16.96	62.40	6.59	40.01	1.32	40.39	23.37	237.50	19.20	1.56

NOTE: Max Pile Reaction under Primary Loads is 41 Kips. It is 33 Kips when longitudinal live load is added.

STABILITY ANALYSIS (SERVICE LOADS) - WITHOUT VERTICAL COMPONENT OF LL SURCHARGE

AASHTO GROUP	SUM V	BAL. MOMENT	SUM H	O.T. MOMENT	FRONT ROW TO RESULT	PILE LOAD FRONT	PILE LOAD BACK	ALLOW	LAT. RESIST	F.S. O.T.
1	15.54	55.77	6.59	40.01	1.01	39.59	16.44	190.00	15.36	1.39
2	15.54	55.77	5.04	27.40	1.83	32.81	29.60	237.50	19.20	2.04
3	15.54	55.77	6.59	40.01	1.01	39.59	16.44	237.50	19.20	1.39
4	15.54	55.77	6.59	40.01	1.01	39.59	16.44	237.50	19.20	1.39
5	15.54	55.77	5.04	27.40	1.83	32.81	29.60	266.00	21.50	2.04
6	15.54	55.77	6.59	40.01	1.01	39.59	16.44	266.00	21.50	1.39
T	15.46	55.28	6.59	40.01	0.99	39.58	15.93	237.50	19.20	1.38

FOOTING ANALYSIS (SERVICE LOADS) - WITH VERTICAL COMPONENT OF LL SURCHARGE

AASHTO GROUP	TOE MOMENT	TOE SHEAR @	HEEL MOMENT	HEEL SHEAR @
1	5.63	0.00 D	15.79	7.77 F
2	4.40	0.00 D	8.70	5.31 F
3	5.63	0.00 D	15.79	7.77 F
4	5.63	0.00 D	15.79	7.77 F
5	4.40	0.00 D	8.70	5.31 F
6	5.63	0.00 D	15.79	7.77 F
T	5.63	0.00 D	16.09	7.85 F

FOOTING ANALYSIS (SERVICE LOADS) - WITHOUT VERTICAL COMPONENT OF LL SURCHARGE

AASHTO GROUP	TOE MOMENT	TOE SHEAR @	HEEL MOMENT	HEEL SHEAR @
1	5.50	0.00 D	16.38	7.51 F
2	4.40	0.00 D	8.70	5.31 F
3	5.50	0.00 D	16.38	7.51 F
4	5.50	0.00 D	16.38	7.51 F
5	4.40	0.00 D	8.70	5.31 F
6	5.50	0.00 D	16.38	7.51 F
T	5.50	0.00 D	16.68	7.59 F

FOOTING DESIGN - WITH AND WITHOUT VERTICAL COMPONENT OF LL SURCHARGE

FOOTING WIDTH	FOOTING THICKNESS	TOE PROJ	HEEL PROJ	EFFECTIVE DEPTH TOE	EFFECTIVE DEPTH HEEL
8.75	3.00	2.00	5.00	2.750	2.833

SHEAR STR TOE	ALLOWABLE SHEAR TOE	SHEAR STR HEEL	ALLOWABLE SHEAR HEEL	TRANS REINFORCEMENT TOE-BOT	TRANS REINFORCEMENT HEEL-TOP	LONGITUDINAL REINFORCEMENT
0.000	0.060	0.019	0.060	0.12	0.32	0.12

LONGITUDINAL MOMENT CALCULATIONS - WITH VERTICAL COMPONENT OF LL SURCHARGE
GROUP 1 GOVERNS

MAX UNIFORM LOAD (w) = 1.948 K/FT
MAX UNIFORM SERVICE LOAD (w) = 1.948 K/FT
MAX PILE SPACING = 6.00 FEET
MAX LONGITUDINAL MOMENT = 3.51 K-FT
MAX LONG. MOMENT (SERVICE) = 3.51 K-FT

PILE PATTERN

ROW	BATTER	DISTANCE	SPACING	% BATTERED
1	3.0 ON 12	1.50	3.00	100.0
2	VERT	7.25	6.00	0.0

C.G. OF PILES 3.42 FT. FROM TOE I OF PILES PER FOOT 3.674
PILE DENSITY 0.5000 PILES PER FOOT

STEM ANALYSIS

DESIGN OF STEM SECTION AT 3.25 FT FROM TOP

AASHTO GROUP (SERVICE)	1	2	3	4	5	6	T
MOMENT	0.88	0.28	0.88	0.88	0.28	0.88	0.72
AXIAL FORCE	0.85	0.85	0.85	0.85	0.85	0.85	0.85
SHEAR	0.58	0.24	0.58	0.58	0.24	0.58	0.51

SECTION THICKNESS	SHEAR STRESS	ALLOWABLE SHEAR	BACK FACE REINF
1.750	0.003	0.060	0.125

DESIGN OF STEM SECTION AT 6.50 FT FROM TOP

AASHTO GROUP (SERVICE)	1	2	3	4	5	6	T
MOMENT	4.18	1.99	4.18	4.18	1.99	4.18	3.75
AXIAL FORCE	1.71	1.71	1.71	1.71	1.71	1.71	1.71
SHEAR	1.52	0.88	1.52	1.52	0.88	1.52	1.42

SECTION THICKNESS	SHEAR STRESS	ALLOWABLE SHEAR	BACK FACE REINF
1.750	0.007	0.060	0.125

DESIGN OF STEM SECTION AT 9.75 FT FROM TOP

AASHTO GROUP (SERVICE)	1	2	3	4	5	6	T
MOMENT	11.21	6.42	11.21	11.21	6.42	11.21	10.39
AXIAL FORCE	2.56	2.56	2.56	2.56	2.56	2.56	2.56
SHEAR	2.87	1.92	2.87	2.87	1.92	2.87	2.73

SECTION THICKNESS	SHEAR STRESS	ALLOWABLE SHEAR	BACK FACE REINF
1.750	0.013	0.060	0.338

DESIGN OF STEM SECTION AT 13.00 FT FROM TOP

AASHTO GROUP (SERVICE)	1	2	3	4	5	6	T
MOMENT	23.28	14.88	23.28	23.28	14.88	23.28	21.94
AXIAL FORCE	3.41	3.41	3.41	3.41	3.41	3.41	3.41
SHEAR	4.62	3.36	4.62	4.62	3.36	4.62	4.45

SECTION THICKNESS	SHEAR STRESS	ALLOWABLE SHEAR	BACK FACE REINF
1.750	0.020	0.060	0.583

SUMMARY OF STEEL DESIGN

FOOTING DESIGN

Top longitudinal reinforcement:

REBAR SPACING (in)	REBAR SIZE	ACTUAL As (sq in/ft)
3	5	1.240
6	5	0.620
8	5	0.465
9	5	0.413
12	5	0.310

Bottom longitudinal reinforcement:

REBAR SPACING (in)	REBAR SIZE	ACTUAL As (sq in/ft)
3	5	1.240
6	5	0.620
8	5	0.465
9	5	0.413
12	5	0.310

Top transverse reinforcement:

REBAR SPACING (in)	REBAR SIZE	ACTUAL As (sq in/ft)
3	5	1.240
6	5	0.620
8	5	0.465
9	5	0.413
12	6	0.440

Bottom transverse reinforcement:

REBAR SPACING (in)	REBAR SIZE	ACTUAL As (sq in/ft)
3	5	1.240
6	5	0.620
8	5	0.465
9	5	0.413
12	5	0.310

STEM DESIGN

Vertical reinforcement on back face:

At Section #3, 3.25 feet from the top:

REBAR SPACING (in)	REBAR SIZE	ACTUAL As (sq in/ft)
3	4	0.800
6	4	0.400
8	4	0.300
9	4	0.267
12	4	0.200

At Section #4, 6.50 feet from the top:

REBAR SPACING (in)	REBAR SIZE	ACTUAL As (sq in/ft)
3	4	0.800
6	4	0.400
8	4	0.300
9	4	0.267
12	4	0.200

At Section #5, 9.75 feet from the top:

REBAR SPACING (in)	REBAR SIZE	ACTUAL As (sq in/ft)
3	4	0.800
6	4	0.400
8	5	0.465
9	5	0.413
12	6	0.440

At Section #6, 13.00 feet from the top:

REBAR SPACING (in)	REBAR SIZE	ACTUAL As (sq in/ft)
3	5	1.240
6	5	0.620
8	6	0.660
9	6	0.587
12	7	0.600

OPTIMUM REBAR DESIGN

FOOTING:

FOOTING:

Top longitudinal reinforcement:

Spacing	Rebar
12.	5
9.	5
6.	5
8.	5
3.	5

Bottom longitudinal reinforcement:

Spacing	Rebar
12.	5
9.	5
6.	5
8.	5
3.	5

Top transverse reinforcement:

Spacing	Rebar
12.	6
9.	5
6.	5
8.	5
3.	5

Bottom transverse reinforcement:

Spacing	Rebar
12.	5
9.	5
6.	5
8.	5
3.	5

STEM:

Here is the design of the vertical reinforcement in the back face of the stem. For this design, the spacing and rebar size are the same for the entire height of the wall.

Vertical reinforcement on back of stem:

Spacing	Rebar
12.	7
9.	6
6.	5
8.	6
3.	5

STEEL DESIGNS LISTED FROM MOST DESIRABLE TO LEAST OPTIMAL

Proposed Primary Stem Reinforcing

Rear Mat Vertical Bars:
#7's @ 12" hooked into foundation and extending to top of wall.

Proposed Footing Reinforcing

Top Mat:
#5's @ 12" Longitudinally
#7's @ 12" Laterally
Reinforcement increased to match the bar number in section 2 for ease of construction.

Bottom Mat:
#5's @ 12" Longitudinally
#5's @ 12" Laterally

DESIGN CALCULATION COVER SHEET

Gannett Fleming
Engineers and Architects, P.C.
Excellence Delivered ***As Promised***

ISO 9001:2008 CERTIFIED

PROJECT:	**ODOT/EMH&T: HAM-75-7.85**	*ODOT PID NO:*	*77889*
BRIDGE NO:	**HAM-75-0834**	*EMH&T JOB NO:*	
SUBJECT:	***Analysis***	**GF JOB NO:**	**54682**
	Caisson Wingwall	CALC NO.:	**HAM075_0834_09T**
	Abut5 Program	REV NO.:	**00**
FILE NAME(s):	*WW_Caisson.dat &*	**SHEET: 1 OF 8**	
	WW_Caisson.out		

SUPERSEDES CALC NO: N/A

CALCULATION DESCRIPTION:

This will analyze the proposed caisson wingwalls stem over the cap of the shafts. The caisson wall serves as permanent wing wall post construction. During the construction the same wall will be used for temporary shoring support. This design is only for the stem reinforcement.

DESIGN BASIS OR REFERENCES:

NS Underpass Design Criteria
AREMA (2008) Chapter 8, Section 5
Input Load Calculation (HAM075_0834S_08)

MISCELLANEOUS NOTES:

Abut5 Calculates the wingwall self-weight and earth loads automatically.

RECORD OF ISSUES:

REV	DESCRIPTION	BY	DATE	VERIF'D	DATE
00	Stage 2 Calculation	VDK	07/09/14		

RECORD OF CHECK OF CURRENT CALCULATION VERSION

BY	DATE	CHKD	DATE	UPD.	DATE	VERIF'D	DATE
VDK	07/09/14	VDT	07/16/14	VDK	07/16/14		

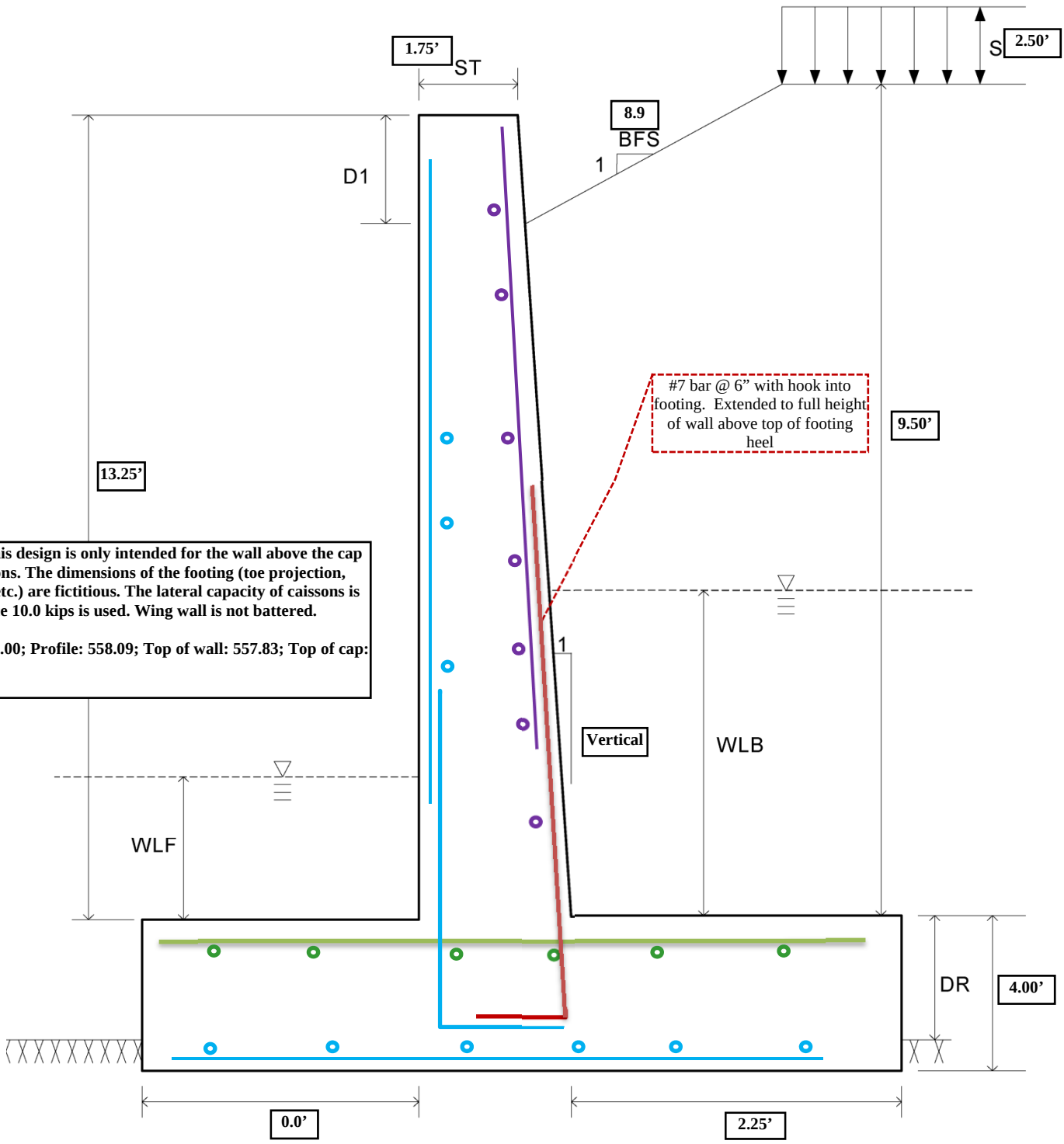

NOTE: This design is only intended for the wall above the cap over caissons. The dimensions of the footing (toe projection, thickness etc.) are fictitious. The lateral capacity of caissons is high. Hence 10.0 kips is used. Wing wall is not battered.

Earth: 554.00; Profile: 558.09; Top of wall: 557.83; Top of cap: 545.00

NOTE: Heights "H" are increased (approximately 6") in this analysis to ensure conservative design will still apply subject to any potential minor elevation changes during final detailing.

Reinforcing Note: All footing bars will be provided based on engineering judgment to account for the torsional moment in the cap. The bars calculated in this design for the footing are not used.

```
LFD Abutment and Retaining Wall                    333067

PROGRAM P4354040                                          06/03/2014 09:12
VERSION 5.4.0.0           LAST UPDATED 05/05/2005        DOCUMENTATION 05/2005

INPUT: WW_CAI1.dat

**PROJECT: ODOT/EMH&T: HAM-75-7.85, GF JOB # 054682
**NSRR OVER HAM-75-0834: CAISSON WINGWALL ADJACENT TO THE ABUTMENT AT TOP OF WALL
STATION 154+64.23


                            ANALYSIS OF
                           RETAINING WALL

                      TYPE OF FOOTING : ON PILES

                                                                  EQUIV FLUID
DESIGN                   FTG    PILE            PILE              PRESSURE
METHOD   A OR D   TYPE   TYPE     D   EMBEDDED  ROWS   R OR S     DRY   SAT
  SL       A       3      2     42.0             1               39.3

                      ALLOW SOIL   WATER  TOP FTG   WATER    TOP WALL   LIVE
COEFF OF  BACKFILL  PRESS OR AXIAL LEVEL  TO TOP    LEVEL     TO TOP    LOAD
FRICTION    SLOPE     PILE CAPAC    BACK  EMBANK    FRONT    BACKFILL   SURCH
             8.9        190.00             9.50                         2.50

TOP FTG  F'C                                  LATERAL                     PILE
TO ROCK  BACK   F'C    F'C  REBAR   PILE  PILE  PILE      REBAR  OVR  80%   ROW
SURFACE  WALL   STEM   FTG  GRADE  BATTER  OPT  CAPAC  Kv  DES   STR  RULE  OPT
        4000.  4000.  4000.   60.               99.0   4.4  Y     Y

  TOP OF
(BACK)WALL                                          MAX
TO TOP OF     TOP      PROJECTION          MAX    FTG
 FOOTING   THICKNESS   TOE   HEEL  T OR H  PROJ  WIDTH   H1     H2    H3    H4
  13.25      1.75      0.01  2.25

                           FRONT           HEIGHT
                           FACE   BRIDGE     OF
                           TO DL   SEAT   BACKWALL  BACK   FOOTING  PILE  FTG
 W1   W2   W3   BW1   BW2   REACT   WIDTH   BATTER  BATTER THICKNESS COST  COST
                                                          4.00

     TRIAL
 REBAR SPACING  BAR   BW    STEM    FTG    MIN
 1  2  3  4  5  LOC  EXPOS  EXPOS  EXPOS   As
 3  6  8  9 12   Y     S      S      S

     STEM REBAR COVER           FOOTING REBAR COVER
 VERT  HORIZ   VERT  HORIZ    LONG  TRANS   LONG  TRANS
 2.00   3.00   2.00   3.00    3.00   2.00   4.00   3.00

                                          LONG
                      WIND   WIND         FORCE
 DL     LL    WIND    ON     ON   UPWARD  FROM   CENTR  TEMP
REACT  REACT  ON LL  SUPER   SUB   WIND    LL    FORCE  FORCE


                            BACKWALL            ALLOW
    PARAPET OR EXTERNAL     LIVE LOAD  SEISMIC   PILE
 HORZ   DIST   VERT   DIST   VERT   HORZ   LOAD   UPLIFT
                                               999.00

             DISTANCE           PERCENT
ROW   PILE   BETWEEN    PILE      ROW
NO   BATTER    ROWS    SPACING  BATTERED
 1     0.0      0.25     3.50      0.0
```

42" Concrete Caissons with ODOT allowable 95T per pile (conservative)
Caissons are chosen for their use as temporary shoring and permanent wing wall post construction. Higher capacity and Lower displacement is desirable due to the proximity of underground utilities and profile grade.

```
                    REINFORCEMENT SUMMARY
                    ---------------------
                     REBAR SPACINGS (in):
                              3.
                              6.
                              8.
                              9.
                             12.

      REBAR COVERS (in):   (C.G. OF BAR TO OUTER FACE)
              STEM                      FOOTING
      BACK          FRONT          TOP         BOTTOM
  VERT  HORIZ   VERT  HORIZ  LONG   TRANS  LONG   TRANS
  2.00   3.00   2.00   3.00  3.00    2.00  4.00    3.00

                BACK WALL -- SEVERE
  EXPOSURES:    STEM ------- SEVERE
                FOOTING ---- SEVERE

  MINIMUM AREA OF STEEL PER FOOT: 0.125 SQUARE INCHES


***  NOTE  ***
 - THE REBARS IN THE BOTTOM OF THE FOOTING ARE BELOW THE TOP OF THE PILES.


                         PILE FOOTING ANALYSIS
                         ---------------------

***  NOTE  ***
 - FOR THE TEMPORARY CONSTRUCTION LOADING CONDITION (GROUP T) - FILL HEIGHT
   TO ABUTMENT SEAT, LIVE LOAD SURCHARGE, BUOYANCY AND WIND ON SUBSTRUCTURE
   (IF APPLICABLE):
    > PILE CAPACITY HAS BEEN INCREASED BY A FACTOR OF 1.25.

 - FOR PILE ROWS WITH BOTH VERTICAL AND BATTERED PILES, PILE LOADS ARE
   FOR THE MAXIMUM CONDITION (AXIAL LOAD IN BATTERED PILES).
```

STABILITY ANALYSIS (SERVICE LOADS) - WITH VERTICAL COMPONENT OF LL SURCHARGE

AASHTO GROUP	SUM V	BAL. MOMENT	SUM H	O.T. MOMENT	FRONT ROW TO RESULT	PILE LOAD FRONT	PILE LOAD BACK	PILE LOAD ALLOW	LAT. RESIST	F.S. O.T.
1	**10.57**	**19.14**	**4.91**	**25.07**	**-0.56**	**0.00**	**0.00**	**190.00**	**56.57**	**0.76**
2	**9.89**	**17.37**	**3.58**	**16.12**	**0.13**	**0.00**	**0.00**	**237.50**	**70.71**	**1.08**
3	10.57	19.14	4.91	25.07	-0.56	0.00	0.00	237.50	70.71	0.76
4	10.57	19.14	4.91	25.07	-0.56	0.00	0.00	237.50	70.71	0.76
5	9.89	17.37	3.58	16.12	0.13	0.00	0.00	266.00	79.20	1.08
6	10.57	19.14	4.91	25.07	-0.56	0.00	0.00	266.00	79.20	0.76
T	10.53	19.04	4.91	25.07	-0.57	0.00	0.00	237.50	70.71	0.76

NOTE: Max Pile Reaction under Primary Loads is negligible compared to capacity of 42" caissons. FS in Overturning need not be considered as the foundation is on caissons.

STABILITY ANALYSIS (SERVICE LOADS) - WITHOUT VERTICAL COMPONENT OF LL SURCHARGE

AASHTO GROUP	SUM V	BAL. MOMENT	SUM H	O.T. MOMENT	FRONT ROW TO RESULT	PILE LOAD FRONT	PILE LOAD BACK	PILE LOAD ALLOW	LAT. RESIST	F.S. O.T.
1	9.89	17.37	4.91	25.07	-0.78	0.00	0.00	190.00	56.57	0.69
2	9.89	17.37	3.58	16.12	0.13	0.00	0.00	237.50	70.71	1.08
3	9.89	17.37	4.91	25.07	-0.78	0.00	0.00	237.50	70.71	0.69
4	9.89	17.37	4.91	25.07	-0.78	0.00	0.00	237.50	70.71	0.69
5	9.89	17.37	3.58	16.12	0.13	0.00	0.00	266.00	79.20	1.08
6	9.89	17.37	4.91	25.07	-0.78	0.00	0.00	266.00	79.20	0.69
T	9.86	17.27	4.91	25.07	-0.79	0.00	0.00	237.50	70.71	0.69

FOOTING ANALYSIS (SERVICE LOADS) - WITH VERTICAL COMPONENT OF LL SURCHARGE

AASHTO GROUP	TOE MOMENT	TOE SHEAR @	HEEL MOMENT	HEEL SHEAR @
1	0.00	0.00 D	5.16	4.59 F
2	0.00	0.00 D	4.40	3.91 F
3	0.00	0.00 D	5.16	4.59 F
4	0.00	0.00 D	5.16	4.59 F
5	0.00	0.00 D	4.40	3.91 F
6	0.00	0.00 D	5.16	4.59 F
T	0.00	0.00 D	5.16	4.59 F

FOOTING ANALYSIS (SERVICE LOADS) - WITHOUT VERTICAL COMPONENT OF LL SURCHARGE

AASHTO GROUP	TOE MOMENT	TOE SHEAR @	HEEL MOMENT	HEEL SHEAR @
1	0.00	0.00 D	4.40	3.91 F
2	0.00	0.00 D	4.40	3.91 F
3	0.00	0.00 D	4.40	3.91 F
4	0.00	0.00 D	4.40	3.91 F
5	0.00	0.00 D	4.40	3.91 F
6	0.00	0.00 D	4.40	3.91 F
T	0.00	0.00 D	4.40	3.91 F

FOOTING DESIGN - WITH AND WITHOUT VERTICAL COMPONENT OF LL SURCHARGE

FOOTING WIDTH	FOOTING THICKNESS	TOE PROJ	HEEL PROJ	EFFECTIVE DEPTH TOE	EFFECTIVE DEPTH HEEL
4.00	4.00	0.00	2.25	3.750	3.833

SHEAR STR TOE	ALLOWABLE SHEAR TOE	SHEAR STR HEEL	ALLOWABLE SHEAR HEEL	TRANS REINFORCEMENT TOE-BOT	TRANS REINFORCEMENT HEEL-TOP	LONGITUDINAL REINFORCEMENT
0.000	0.060	0.008	0.060	0.12	0.31	0.12

LONGITUDINAL MOMENT CALCULATIONS - WITH VERTICAL COMPONENT OF LL SURCHARGE
GROUP 1 GOVERNS

MAX UNIFORM LOAD (w) = 2.641 K/FT
MAX UNIFORM SERVICE LOAD (w) = 2.641 K/FT
MAX PILE SPACING = 3.50 FEET
MAX LONGITUDINAL MOMENT = 1.62 K-FT
MAX LONG. MOMENT (SERVICE) = 1.62 K-FT

PILE PATTERN

ROW	BATTER	DISTANCE	SPACING	% BATTERED
1	VERT	0.25	3.50	0.0

C.G. OF PILES 0.25 FT. FROM TOE I OF PILES PER FOOT 0.000
PILE DENSITY 0.2857 PILES PER FOOT

STEM ANALYSIS

DESIGN OF STEM SECTION AT 3.31 FT FROM TOP

AASHTO GROUP (SERVICE)	1	2	3	4	5	6	T
MOMENT	0.78	0.24	0.78	0.78	0.24	0.78	4.76
AXIAL FORCE	0.87	0.87	0.87	0.87	0.87	0.87	0.87
SHEAR	0.54	0.22	0.54	0.54	0.22	0.54	1.67

SECTION THICKNESS	SHEAR STRESS	ALLOWABLE SHEAR	BACK FACE REINF
1.750	0.007	0.060	0.125

DESIGN OF STEM SECTION AT 6.62 FT FROM TOP

AASHTO GROUP (SERVICE)	1	2	3	4	5	6	T
MOMENT	4.06	1.90	4.06	4.06	1.90	4.06	12.60
AXIAL FORCE	1.74	1.74	1.74	1.74	1.74	1.74	1.74
SHEAR	1.51	0.86	1.51	1.51	0.86	1.51	3.13

SECTION THICKNESS	SHEAR STRESS	ALLOWABLE SHEAR	BACK FACE REINF
1.750	0.014	0.060	0.329

DESIGN OF STEM SECTION AT 9.94 FT FROM TOP

AASHTO GROUP (SERVICE)	1	2	3	4	5	6	T
MOMENT	11.28	6.43	11.28	11.28	6.43	11.28	26.00
AXIAL FORCE	2.61	2.61	2.61	2.61	2.61	2.61	2.61
SHEAR	2.92	1.94	2.92	2.92	1.94	2.92	5.03

SECTION THICKNESS	SHEAR STRESS	ALLOWABLE SHEAR	BACK FACE REINF
1.750	0.022	0.060	0.539

DESIGN OF STEM SECTION AT 13.25 FT FROM TOP

AASHTO GROUP (SERVICE)	1	2	3	4	5	6	T
MOMENT	23.86	15.24	23.86	23.86	15.24	23.86	46.38
AXIAL FORCE	3.48	3.48	3.48	3.48	3.48	3.48	3.48
SHEAR	4.75	3.45	4.75	4.75	3.45	4.75	7.35

SECTION THICKNESS	SHEAR STRESS	ALLOWABLE SHEAR	BACK FACE REINF
1.750	0.032	0.060	1.003

SUMMARY OF STEEL DESIGN

FOOTING DESIGN

Top longitudinal reinforcement:

REBAR SPACING (in)	REBAR SIZE	ACTUAL As (sq in/ft)
3	5	1.240
6	5	0.620
8	5	0.465
9	5	0.413
12	5	0.310

Bottom longitudinal reinforcement:

REBAR SPACING (in)	REBAR SIZE	ACTUAL As (sq in/ft)
3	5	1.240
6	5	0.620
8	5	0.465
9	5	0.413
12	5	0.310

Top transverse reinforcement:

REBAR SPACING (in)	REBAR SIZE	ACTUAL As (sq in/ft)
3	5	1.240
6	5	0.620
8	5	0.465
9	5	0.413
12	5	0.310

Bottom transverse reinforcement:

REBAR SPACING (in)	REBAR SIZE	ACTUAL As (sq in/ft)
3	5	1.240
6	5	0.620
8	5	0.465
9	5	0.413
12	5	0.310

STEM DESIGN

Vertical reinforcement on back face:

REBAR SPACING (in)	REBAR SIZE	ACTUAL As (sq in/ft)
At Section #3, 3.31 feet from the top:		
3	4	0.800
6	4	0.400
8	4	0.300
9	4	0.267
12	4	0.200
At Section #4, 6.62 feet from the top:		
3	4	0.800
6	4	0.400
8	5	0.465
9	5	0.413
12	6	0.440
At Section #5, 9.94 feet from the top:		
3	4	0.800
6	5	0.620
8	6	0.660
9	6	0.587
12	7	0.600
At Section #6, 13.25 feet from the top:		
3	5	1.240
6	7	1.200
8	8	1.185
9	8	1.053
12	9	1.000 *

* - INDICATES THAT AREA SELECTED IS LESS THAN REQUIRED BUT WITHIN TOLERANCE

OPTIMUM REBAR DESIGN

FOOTING:

Top longitudinal reinforcement:

Spacing	Rebar
12.	5
9.	5
6.	5
8.	5
3.	5

Bottom longitudinal reinforcement:

Spacing	Rebar
12.	5
9.	5
6.	5
8.	5
3.	5

Top transverse reinforcement:

Spacing	Rebar
12.	5
9.	5
6.	5
8.	5
3.	5

Bottom transverse reinforcement:

Spacing	Rebar
12.	5
9.	5
6.	5
8.	5
3.	5

Proposed Footing Reinforcing

Top Mat:
Not designed using this sheet.
Bottom Mat:
Not designed using this sheet.

STEM:

Here is the design of the vertical reinforcement in the back face of the stem. For this design, the spacing and rebar size are the same for the entire height of the wall.

Vertical reinforcement on back of stem:

Spacing	Rebar
12.	9
9.	8
8.	8
6.	7
3.	5

STEEL DESIGNS LISTED FROM MOST DESIRABLE TO LEAST OPTIMAL

Proposed Primary Stem Reinforcing

Rear Mat Vertical Bars:
#7's @ 6" hooked into foundation and extending full height of wall above top of footing.

DESIGN CALCULATION COVER SHEET

Gannett Fleming
Engineers and Architects, P.C.
Excellence Delivered ***As Promised***

ISO 9001:2008 CERTIFIED

PROJECT:	**ODOT/EMH&T: HAM-75-7.85**	*ODOT PID NO:*	*77889*
BRIDGE NO:	**HAM-75-0834**	*EMH&T JOB NO:*	
SUBJECT:	***Loads***	**GF JOB NO:**	**54682**
	Design for	CALC NO.:	**HAM075_0834_11**
	Expansion and Fixed bearings	REV NO.:	**01**
FILE NAME(s):	*HAM075_0834_11.xlsx*	**SHEET:**	**1 OF 11**

SUPERSEDES CALC NO: 00 (Stage 2 Design)

CALCULATION DESCRIPTION:

This will calculate all loads applied to the bearings per girder for use in design of fixed and expanion bearings.

Vertical Loads: The max girder reactions due to Dead load and Live load with impact is considered. Horizontal Loads: The horizontal girder loads due to centrifugal force, wind on live load, wind on susperstructure and nosing are considered in lateral direction and force due to braking is considered in longitudinal direction. Resultant of these forces is used to compute shear for the design of pintels and anchor bolts. Curved sole plate, Bronze sliding rocker plate and Masonry plate are designed for the expansion bearings. Fixed rocker sole plate and Masonry plate are designed for fixed bearings along with pintels. Anchor bolts are designed for fixed bearing and same will be used for expanion bearings.

DESIGN BASIS OR REFERENCES:

NS Underpass Design Criteria
AREMA (2013) Chapter 8, Section 5
AREMA (2014) Chapter 15, Section 5
Calculation: HAM075_0834_03 (Girder Loads and Reactions)
Revised Stage 1 Plans (after addressing comments)

MISCELLANEOUS NOTES:

8/12/14 EFD: Verified updates to effective lengths of masonry plates calculations.

Stage 3: Increased Span 2 fixed and expansion bearings to account for increased dead load and live load

RECORD OF ISSUES:

REV	DESCRIPTION	BY	DATE	VERIF'D	DATE
00	Stage 2 Calculation	VDK	06/06/14	EFD	08/12/14
01	Stage 3 Update	VDT	01/19/16	CTM	04/25/16

RECORD OF CHECK OF CURRENT CALCULATION VERSION

BY	DATE	CHKD	DATE	UPD.	DATE	VERIF'D	DATE
VDK	06/06/14	CTM	06/10/14	VDT	01/19/16	CTM	04/25/16

Gannett Fleming Engineers and Architects, P.C.
Excellence Delivered As Promised

Calculation	AREMA Sliding Bronze and Fixed Rocker Bearing Design (Steel Beam Bridge)
Description	*HAM-75-0834 SPAN 1*

GF Job No:	ODOT D8	Calculated	Checked	Updated	Verified	Reviewed
• 054682	• SFN: TBD	• VDK, 6/6/14	• CTM, 6/10/14	• VDK, 6/10/14 • VDT, 1/19/16	• CTM, 6/11/14 • CTM, 4/25/16	

REFERENCES

1. Norfolk Southern Standards - Norfolk
2. 2007 AREMA Manual for Railway Engineering - AREMA
3. ODOT BDM - BDM
4. AASHTO LRFD 6 - AA

REMARKS

1. To follow AREMA "Effective Length" notation, "Length" is measured transverse to girder
2. "Width" is measured parallel to girder

1.0 Inputs

1.1 Expansion bearing

Girder Input		Curved Sole Plate Input (Exp. Brg.)				Sliding Rocker plate Input (Exp. Brg.)				Masonry Plate Input (Exp. Brg.)			
Bot. Flange Thickness T_{BF} (in)	Bot. Flange Width B_{BF} (in)	Fy (Ksi)	Min. thickness of sole plate T_{SP}(in)	Width of sole plate W_{SP}(in)	Length of sole plate L_{SP}(in)	Max. thick. of bronze sliding plate T_{BR}(in)	Width of Bronze sliding plate W_{BR}(in)	Length of Bronze rocker L_{BR}(in)	Diameter of top curved surface D_{BR}(in)	F_c (Ksi)	Thickness of masonry plate T_{MP}(in)	Width of masonry plate W_{MP}(in)	Length of masonry plate L_{MP}(in)
3.0	18.0	36.0	3.00	12.0	23.5	1.000	9.0	22.0	36.0	4.0	4.00	19.00	33.5
										Norfolk H.4.2-1 (3.B)			

SETTING TEMP. (°F)	STEEL TEMPERATURE RANGE (°F)		α (ft/°F)	ΔT (°F) BDM S3.12.2		Expansion Length (ft)	ΔL-T Thermal Expansion	ΔL-A AREMA 15-5.1.2 c	ΔL(used) Max of ΔL-T & ΔL-A	Const. Tolerance AREMA 15-5.1.3 c	Anchor bolt (Fixed and Exp Brg.)		
	MIN.	MAX.		MIN.	MAX.						Diameter (in)	F_u Grade 105 Table 15-5-3	Penetration (in) AREMA 15-5.3.7c&e
60	-30	120	0.0000065	60	90	110.5	0.776 in	1.381 in	1.381 in	1.000 in	1.25	125.00 ksi	15.00

1.2 Fixed Bearing

Design of anchor bolts is performed for fixed brg and same size is used for both bearings

Fixed Rocker Sole Plate Input (Fixed Brg.)					Masonry Plate Input (Fixed Brg.)				Pintel Input (Fixed Brg.)			
Fy (Ksi)	Thickness of rocker sole plate T_{SP}(in)	Width of rocker sole plate W_{SP}(in)	Length of rocker sole plate L_{SP}(in)	Diameter of cylinder D_{SP}(in)	F_c (Ksi)	Thickness of masonry plate T_{MP}(in)	Width of masonry plate W_{MP}(in)	Length of masonry plate L_{MP}(in)	Class	$Diameter_{pin\ (in)}$	Fy (Ksi)	Penetration (in)
36.0	2.25	7.0	28.5	36.0	4.0	3.25	13.00	28.5	D	1.50	37.5	1.25
					Norfolk H.4.2-1 (3.B)				C, D, F or G		AREMA Table 15-5-2	

1.3 Loads

Total load (Max DL+LL w/I)		=	384.0	kips	Longitudinal force		=	32.8	kips
Weld Size	Sole Plate/Bottom Flange Conn.	=	0.3125	in	Allowable Weld Stress	F_v	=	12.6	kips
Lateral force		=	17.4	kips	WL+WS+CF+N loads				AREMA Table 15-1-13

Summary of Design checks

EXPANSION BEARING						
NS H.2-5.A.5	AREMA 15-5.3.5	AREMA 15-5.3.2.4	AREMA 15-5.3.4	AREMA 15-5.3.5	AREMA 15-5.3.5	Geometry
Steel Sole plate Thickness	Steel Sole Plate Line Stress	Welds	Bronze Rocker Bearing Stress	Masonry plate Thickness	Masonry plate brg. Stress	Masonry plate allow. expans.
% of Allow. = 33%	% of Allow. = 84%	% of Allow. = 57%	% of Allow. = 97%	% of Allow. = 37%	% of Allow. = 72%	% of Allow. = 95%
OK	OK	OK	OK	OK	OK	OK

FIXED BEARING				
AREMA 15-5.3.2.1	AREMA 15-5.3.5	AREMA 15-5.3.5	AREMA 15-5.3.2.4	AREMA 15-5.3.2.2
Pintel	Rocker Sole Plate	Masonry plate Stress	Welds	Anchor Bolt Shear
% of Allow. = 67%	% of Allow. = 82%	% of Allow. = 99%	% of Allow. = 84%	% of Allow. = 48%
OK	OK	OK	OK	OK

Gannett Fleming Engineers and Architects, P.C.
Excellence Delivered As Promised

Calculation	AREMA Sliding Bronze and Fixed Rocker Bearing Design (Steel Beam Bridge)
Description	HAM-75-0834 SPAN 1

GF Job No:	ODOT D8	Calculated	Checked	Updated	Verified	Reviewed
• 054682	• SFN: TBD	• VDK, 6/6/14	• CTM, 6/10/14	• VDK, 6/10/14 • VDT, 1/19/16	• CTM, 6/11/14 • CTM, 4/25/16	

2.0 Curved Sole Plate Design (Expansion Bearing.)

Thickness of Sole Plate	=	3.00 in	>	1.00 in	AREMA 15-5.3.5.d and NS H.2.3-5.A.5	OK
Effective Lengthh of Bearing Area	=	minimum of	22.00 in	Eff. Length of Bronze Rocker	AREMA 15-5.3.5.b	
			24.00 in	Eff. Length of Sole Plate (Flange Width + 1:1)		
	=	22.00 in				
Line Bearing Stress	=	17.46 kips/in				
Allowable Line Bearing Stress	=	20.70 kips/in			AREMA 15-5.2.1.c	

SOLE PLATE LINE BEARING STRESS CHECK: 17.46 kips/in < 20.70 kips/in **OK**

2.1 Curved Sole Plate to beam flange Weld Design (Expansion Bearing.)

Longitudinal Force		=	38.40 kips	= μ * load; μ = 0.1; Long. Force if fixed	AREMA 15-5.4.3.b
Allowable Shear Force	R_w	=	2.78 kips/in	=.707 * Fv * w	
Weld Length	L_w	=	24.00 in	= 2 * Sole Plate Width (Weld on each side of flange)	
Longitudinal Force in Welds	R_v	=	1.60 kips/in		

WELD STRESS CHECK: 1.60 kips/in < 2.78 kips/in **OK**

3.0 Curved Bronze sliding plate Design (Expansion Bearing)

Thickness of Bronze Rocker	=	1.00 in				
Effective Length of Bronze Rocker	=	minimum of	24.00 in	Eff. Length of Bronze Rocker	AREMA 15-5.3.4.1.d.(1 & 2)	
			22.00 in	Actual Length of Bronze Rocker		
	=	22.00 in				
Width of Bronze Rocker	=	9.00 in				
Effective Bearing Area		198.00 sq.in				
Bearing Stress	=	1.94 ksi				
Allowable Bearing Stress	=	2.00 ksi			AREMA 15-5.2.3	

BRONZE ROCKER LINE BEARING STRESS CHECK: 1.94 ksi < 2.00 ksi **OK**

Gannett Fleming Engineers and Architects, P.C.
Excellence Delivered As Promised

Calculation	AREMA Sliding Bronze and Fixed Rocker Bearing Design (Steel Beam Bridge)
Description	HAM-75-0834 SPAN 1

GF Job No:	ODOT D8	Calculated	Checked	Updated	Verified	Reviewed
• 054682	• SFN: TBD	• VDK, 6/6/14	• CTM, 6/10/14	• VDK, 6/10/14 • VDT, 1/19/16	• CTM, 6/11/14 • CTM, 4/25/16	

4.0 Masonry Plate Design (Expansion Bearing)

Thickness of Masonry Plate	=	4.00 in	>	1.50 in	AREMA 15-5.3.5.e	OK
Effective Length of Bearing Area	=	minimum of	30.00 in	Eff. Length of Bronze Rocker + 2*Masonry Plate Thickness	AREMA 15-5.3.5.b	
			33.50 in	Actual Length of Masonry Plate		
	=	30.00 in				
Effective Width of Bearing Area	=	minimum of	17.00 in	Eff. Width of Bronze Rocker + 2*Masonry Plate Thickness		
			19.00 in	Actual Width of Masonry Plate		
		17.00 in				
Effective Bearing Area	=	510.00 sq.in				
Bearing Stress	=	0.75 ksi				
Allowable Bearing Stress	=	1.05 ksi		Concrete Substructure will control	AREMA 8-2.26.c	
MASONRY PLATE BEARING STRESS CHECK:	0.75 ksi	<	1.05 ksi			OK

4.1 CHECK FOR THE WIDTH OF THE MASONRY PLATE

Anticipated longitudinal movement due to thermal expansion	=	1.38 in				
Allowance for construction tolerance	=	1.00 in				
Total anticipated longitudinal movement for expansion bearing	=	4.76 in				
Width available for Bronze Rocker to move on Masonry Plate	=	5.00 in				
CHECK FOR THE GENERAL WIDTH REQUIREMENT:	5.00 in	>	4.76 in		AREMA 15-5.1.2 & 5.1.3	OK

Gannett Fleming
Engineers and Architects, P.C.
Excellence Delivered As Promised

Calculation	AREMA Sliding Bronze and Fixed Rocker Bearing Design (Steel Beam Bridge)
Description	HAM-75-0834 SPAN 1

GF Job No:	ODOT D8	Calculated	Checked	Updated	Verified	Reviewed
• 054682	• SFN: TBD	• VDK, 6/6/14	• CTM, 6/10/14	• VDK, 6/10/14 • VDT, 1/19/16	• CTM, 6/11/14 • CTM, 4/25/16	

5.0 Rocker Sole Plate Design (Fixed Bearing)

Thickness of Rocker Sole Plate	=	2.25 in	>	1.00 in	AREMA 15-5.3.5.d and NS H-2-5.A.5	OK
Effective Length of Bearing Area	=	minimum of	22.50 in	Eff. Length of Sole Plate (Flange Width + 1:1)	AREMA 15-5.3.5.b	
			28.50 in	actual length of sole plate		
	=	22.50 in				
Line Bearing Stress	=	17.07 kips/in				
Allowable Line Bearing Stress	=	20.70 kips/in			AREMA 15-5.2.1.c	
SOLE PLATE LINE BEARING STRESS CHECK:	17.07 kips/in	<	20.70 kips/in			OK

5.1 Rocker Sole Plate Weld Design (Fixed Bearing)

Longitudinal Force		=	32.85 kips	=μ*load; Coeff. of friction = 0.1; Long. Force if fixed	AREMA 15-5.4.3.b
Allowable Shear Force	R_w	=	2.78 kips/in	=.707 * Fv * w	
Weld Length	L_w	=	14.00 in	= 2 * Sole Plate Width (Weld on each side of flange)	
Longitudinal Force in Welds	R_v	=	2.35 kips/in		
WELD STRESS CHECK:	2.35 kips/in	<	2.78 kips/in		OK

6.0 Pintel Design (Fixed Bearing)

Penetration into the connected elements	=	1.25 in	>	0.25 in	AREMA 15-1.12.1	OK
Shear force per pintel	=	18.59 kips		Two pintels per steel bearing; Resultant of Lateral and longitudinal force is used.		
Cross sectional area of pin in shear	=	1.767 sq. in.				
Shear stress on XS area of pintel	=	10.52 ksi				
Allowable shear force in pins	=	15.75 ksi		0.42Fy	AREMA Table 15-1-11	
PINTEL SHEAR STRESS CHECK	10.52 ksi	<	15.75 ksi			OK

Gannett Fleming
Engineers and Architects, P.C.
Excellence Delivered As Promised

Calculation	AREMA Sliding Bronze and Fixed Rocker Bearing Design (Steel Beam Bridge)
Description	HAM-75-0834 SPAN 1

GF Job No:	ODOT D8	Calculated	Checked	Updated	Verified	Reviewed
• 054682	• SFN: TBD	• VDK, 6/6/14	• CTM, 6/10/14	• VDK, 6/10/14 • VDT, 1/19/16	• CTM, 6/11/14 • CTM, 4/25/16	

7.0 Masonry Plate Design (Fixed Bearing)

Thickness of Masonry Plate	=	3.25 in	>	1.50 in	AREMA 15-5.3.5.e	OK
Effective Length of Bearing Area	=	minimum of	29.00 in	Eff. Length of Rocker Plate + 2*Masonry Plate Thickness	AREMA 15-5.3.5.b	
			28.50 in	Actual Length of Masonry Plate		
	=	28.50 in				
Effective Width of Bearing Area	=	minimum of	13.00 in	4x Thickness		
			13.00 in	Actual Width of Masonry Plate		
		13.00 in				
Effective Bearing Area	=	370.50 sq.in				
Bearing Stress	=	1.04 ksi				
Allowable Bearing Stress	=	1.05 ksi		Concrete Substructure will control	AREMA 8-2.26.c	
MASONRY PLATE BEARING STRESS CHECK:	1.04 ksi	<	1.05 ksi			OK

8.0 Anchor bolt Design (Fixed Bearing)

ASTM F 1554 standard bolts

Diameter of anchor bolt	=	1.25 in	>	1.25 in	AREMA 15-5.3.7b and e; NS H.2-3-5	OK
Shear force per anchor bolt	=	18.59 kips		Two anchor bolts per steel bearing; Resultant of Lateral and longitudinal force is used.		
Cross sectional area of bolt in shear	=	1.227 sq. in.				
Shear stress on XS area of bolt	=	15.15 ksi				
Allowable shear force in bolts	=	31.25 ksi		0.20Fu * 125% for load combination B1	AREMA 15-5.2.1 c	
ANCHOR BOLT SHEAR STRESS CHECK	15.15 ksi	<	31.25 ksi			OK

By inspection the seismic load per girder is less than the longitudinal force (considering the 50% overstress allowed in load combination E1)

Gannett Fleming Engineers and Architects, P.C.
Excellence Delivered As Promised

Calculation	**AREMA Sliding Bronze and Fixed Rocker Bearing Design (Steel Beam Bridge)**
Description	*HAM-75-0834 SPAN 2*

GF Job No:	ODOT D8	Calculated	Checked	Updated	Verified	Reviewed
• 054682	• SFN: TBD	• VDK, 6/6/14	• CTM. 6/10/14	• VDK, 6/10/14 • VDT, 1/19/16	• CTM, 6/11/14 • CTM, 4/25/16	

REFERENCES

1. Norfolk Southern Standards - Norfolk
2. 2007 AREMA Manual for Railway Engineering - AREMA
3. ODOT BDM - BDM
4. AASHTO LRFD 6 - AA

REMARKS

1. To follow AREMA "Effective Length" notation, "Length" is measured transverse to girder
2. "Width" is measured parallel to girder

Indicates VDT Update

1.0 Inputs

1.1 Expansion bearing

Girder Input		Curved Sole Plate Input (Exp. Brg.)				Sliding Rocker plate Input (Exp. Brg.)				Masonry Plate Input (Exp. Brg.)			
Bot. Flange Thickness T_{BF} (in)	Bot. Flange Width B_{BF} (in)	Fy (Ksi)	Min. thickness of sole plate T_{SP}(in)	Width of sole plate W_{SP}(in)	Length of sole plate L_{SP}(in)	Max. thick. of bronze sliding plate T_{BR}(in)	Width of Bronze sliding plate W_{BR}(in)	Length of Bronze rocker L_{BR}(in)	Diameter of top curved surface D_{BR}(in)	F_c (Ksi)	Thickness of masonry plate T_{MP}(in)	Width of masonry plate W_{MP}(in)	Length of masonry plate L_{MP}(in)
2.25	17.0	36.0	2.5	11.0	22.5	1.000	8.25	21.0	36.0	4.0	3.75	17.50	32.5
										Norfolk H.4.2-1 (3.B)			

SETTING TEMP. (°F)	STEEL TEMPERATURE RANGE (°F)		α (ft/°F)	ΔT (°F) BDM S3.12.2		Expansion Length (ft)	ΔL-T Thermal Expansion	ΔL-A AREMA 15-5.1.2 c	ΔL(used) Max of ΔL-T & ΔL-A	Const. Tolerance AREMA 15-5.1.3 c	Anchor bolt (Fixed and Exp Brg.)		
	MIN.	MAX.		MIN.	MAX.						Diameter (in)	F_u Grade 105 Table 15-5-3	Penetration (in) AREMA 15-5.3.7c&e
60	-30	120	0.0000065	60	90	97.25	0.683 in	1.216 in	1.216 in	1.000 in	1.25	125.00 ksi	15.00

1.2 Fixed Bearing

Design of anchor bolts is performed for fixed brg and same size is used for both bearings

Fixed Rocker Sole Plate Input (Fixed Brg.)					Masonry Plate Input (Fixed Brg.)				Pintel Input (Fixed Brg.)			
Fy (Ksi)	Thickness of rocker sole plate T_{SP}(in)	Width of rocker sole plate W_{SP}(in)	Length of rocker sole plate L_{SP}(in)	Diameter of cylinder D_{SP}(in)	F_c (Ksi)	Thickness of masonry plate T_{MP}(in)	Width of masonry plate W_{MP}(in)	Length of masonry plate L_{MP}(in)	Class	$Diameter_{pin\ (in)}$	Fy (Ksi)	Penetration (in)
36.0	2.0	7.0	27.5	36.0	4.0	3.25	12.00	27.5	D	1.50	37.5	1.25
					Norfolk H.4.2-1 (3.B)				C, D, F or G		AREMA Table 15-5-2	

1.3 Loads

Total load (Max DL+LL w/I)		=	339.5	kips	Longitudinal force		=	30.8	kips
Weld Size	Sole Plate/Bottom Flange Conn.	=	0.3125	in	Allowable Weld Stress	F_v	=	12.6	kips
Lateral force		=	15.8	kips	WL+WS+CF+N loads				AREMA Table 15-1-13

Summary of Design checks

EXPANSION BEARING

NS H.2-5.A.5	AREMA 15-5.3.5	AREMA 15-5.3.2.4	AREMA 15-5.3.4	AREMA 15-5.3.5	AREMA 15-5.3.5	Geometry
Steel Sole plate Thickness	Steel Sole Plate Line Stress	Welds	Bronze Rocker Bearing Stress	Masonry plate Thickness	Masonry plate brg. Stress	Masonry plate allow. expans.
% of Allow. = 40%	% of Allow. = 78%	% of Allow. = 55%	% of Allow. = 98%	% of Allow. = 40%	% of Allow. = 72%	% of Allow. = 96%
OK	OK	OK	OK	OK	OK	OK

FIXED BEARING

AREMA 15-5.3.2.1	AREMA 15-5.3.5	AREMA 15-5.3.5	AREMA 15-5.3.2.4	AREMA 15-5.3.2.2
Pintel	Rocker Sole Plate	Masonry plate Stress	Welds	Anchor Bolt Shear
% of Allow. = 62%	% of Allow. = 78%	% of Allow. = 98%	% of Allow. = 79%	% of Allow. = 45%
OK	OK	OK	OK	OK

Gannett Fleming Engineers and Architects, P.C.
Excellence Delivered As Promised

Calculation	AREMA Sliding Bronze and Fixed Rocker Bearing Design (Steel Beam Bridge)
Description	HAM-75-0834 SPAN 2

GF Job No:	ODOT D8	Calculated	Checked	Updated	Verified	Reviewed
• 054682	• SFN: TBD	• VDK, 6/6/14	• CTM. 6/10/14	• VDK, 6/10/14 • VDT, 1/19/16	• CTM, 6/11/14 • CTM, 4/25/16	

2.0 Curved Sole Plate Design (Expansion Bearing.)

Thickness of Sole Plate	=	2.50 in	>	1.00 in	AREMA 15-5.3.5.d and NS H.2.3-5.A.5	OK
Effective Lengthh of Bearing Area	=	minimum of	21.00 in	Eff. Length of Bronze Rocker	AREMA 15-5.3.5.b	
			22.00 in	Eff. Length of Sole Plate (Flange Width + 1:1)		
	=	21.00 in				
Line Bearing Stress	=	16.17 kips/in				
Allowable Line Bearing Stress	=	20.70 kips/in			AREMA 15-5.2.1.c	

SOLE PLATE LINE BEARING STRESS CHECK: 16.17 kips/in < 20.70 kips/in **OK**

2.1 Curved Sole Plate to beam flange Weld Design (Expansion Bearing.)

Longitudinal Force		=	33.95 kips	= μ * load; μ = 0.1; Long. Force if fixed	AREMA 15-5.4.3.b
Allowable Shear Force	R_w	=	2.78 kips/in	=.707 * Fv * w	
Weld Length	L_w	=	22.00 in	= 2 * Sole Plate Width (Weld on each side of flange)	
Longitudinal Force in Welds	R_v	=	1.54 kips/in		

WELD STRESS CHECK: 1.54 kips/in < 2.78 kips/in **OK**

3.0 Curved Bronze sliding plate Design (Expansion Bearing)

Thickness of Bronze Rocker	=	1.00 in			
Effective Length of Bronze Rocker	=	minimum of	21.75 in	Eff. Length of Bronze Rocker	AREMA 15-5.3.4.1.d.(1 & 2)
			21.00 in	Actual Length of Bronze Rocker	
	=	21.00 in			
Width of Bronze Rocker	=	8.25 in			
Effective Bearing Area		173.25 sq.in			
Bearing Stress	=	1.96 ksi			
Allowable Bearing Stress	=	2.00 ksi			AREMA 15-5.2.3

BRONZE ROCKER LINE BEARING STRESS CHECK: 1.96 ksi < 2.00 ksi **OK**

Gannett Fleming Engineers and Architects, P.C.
Excellence Delivered As Promised

Calculation	AREMA Sliding Bronze and Fixed Rocker Bearing Design (Steel Beam Bridge)
Description	HAM-75-0834 SPAN 2

GF Job No:	ODOT D8	Calculated	Checked	Updated	Verified	Reviewed
• 054682	• SFN: TBD	• VDK, 6/6/14	• CTM. 6/10/14	• VDK, 6/10/14 • VDT, 1/19/16	• CTM, 6/11/14 • CTM, 4/25/16	

4.0 Masonry Plate Design (Expansion Bearing)

Thickness of Masonry Plate	=	3.75 in	>	1.50 in	AREMA 15-5.3.5.e	OK
Effective Length of Bearing Area	=	minimum of	28.50 in	Eff. Length of Bronze Rocker + 2*Masonry Plate Thickness	AREMA 15-5.3.5.b	
			32.50 in	Actual Length of Masonry Plate		
	=	28.50 in				
Effective Width of Bearing Area	=	minimum of	15.75 in	Eff. Width of Bronze Rocker + 2*Masonry Plate Thickness		
			17.50 in	Actual Width of Masonry Plate		
		15.75 in				
Effective Bearing Area	=	448.88 sq.in				
Bearing Stress	=	0.76 ksi				
Allowable Bearing Stress	=	1.05 ksi		Concrete Substructure will control	AREMA 8-2.26.c	
MASONRY PLATE BEARING STRESS CHECK:	0.76 ksi	<	1.05 ksi			OK

4.1 CHECK FOR THE WIDTH OF THE MASONRY PLATE

Anticipated longitudinal movement due to thermal expansion	=	1.22 in				
Allowance for construction tolerance	=	1.00 in				
Total anticipated longitudinal movement for expansion bearing	=	4.43 in				
Width available for Bronze Rocker to move on Masonry Plate	=	4.63 in				
CHECK FOR THE GENERAL WIDTH REQUIREMENT:	4.63 in	>	4.43 in		AREMA 15-5.1.2 & 5.1.3	OK

Gannett Fleming Engineers and Architects, P.C.
Excellence Delivered As Promised

Calculation	AREMA Sliding Bronze and Fixed Rocker Bearing Design (Steel Beam Bridge)
Description	HAM-75-0834 SPAN 2

GF Job No:	ODOT D8	Calculated	Checked	Updated	Verified	Reviewed
• 054682	• SFN: TBD	• VDK, 6/6/14	• CTM. 6/10/14	• VDK, 6/10/14 • VDT, 1/19/16	• CTM, 6/11/14 • CTM, 4/25/16	

5.0 Rocker Sole Plate Design (Fixed Bearing)

Thickness of Rocker Sole Plate	=	2.00 in	>	1.00 in	AREMA 15-5.3.5.d and NS H-2-5.A.5	OK
Effective Length of Bearing Area	=	minimum of	21.00 in	Eff. Length of Sole Plate (Flange Width + 1:1)	AREMA 15-5.3.5.b	
			27.50 in	actual length of sole plate		
	=	21.00 in				
Line Bearing Stress	=	16.17 kips/in				
Allowable Line Bearing Stress	=	20.70 kips/in			AREMA 15-5.2.1.c	
SOLE PLATE LINE BEARING STRESS CHECK:	16.17 kips/in	<	20.70 kips/in			OK

5.1 Rocker Sole Plate Weld Design (Fixed Bearing)

Longitudinal Force		=	30.82 kips	=μ*load; Coeff. of friction = 0.1; Long. Force if fixed	AREMA 15-5.4.3.b
Allowable Shear Force	R_w	=	2.78 kips/in	=.707 * Fv * w	
Weld Length	L_w	=	14.00 in	= 2 * Sole Plate Width (Weld on each side of flange)	
Longitudinal Force in Welds	R_v	=	2.20 kips/in		
WELD STRESS CHECK:	2.20 kips/in	<	2.78 kips/in		OK

6.0 Pintel Design (Fixed Bearing)

Penetration into the connected elements	=	1.25 in	>	0.25 in	AREMA 15-1.12.1	OK
Shear force per pintel	=	17.32 kips		Two pintels per steel bearing; Resultant of Lateral and longitudinal force is used.		
Cross sectional area of pin in shear	=	1.767 sq. in.				
Shear stress on XS area of pintel	=	9.80 ksi				
Allowable shear force in pins	=	15.75 ksi		0.42Fy	AREMA Table 15-1-11	
PINTEL SHEAR STRESS CHECK	9.80 ksi	<	15.75 ksi			OK

Gannett Fleming Engineers and Architects, P.C.
Excellence Delivered As Promised

Calculation	AREMA Sliding Bronze and Fixed Rocker Bearing Design (Steel Beam Bridge)
Description	HAM-75-0834 SPAN 2

GF Job No:	ODOT D8	Calculated	Checked	Updated	Verified	Reviewed
• 054682	• SFN: TBD	• VDK, 6/6/14	• CTM. 6/10/14	• VDK, 6/10/14 • VDT, 1/19/16	• CTM, 6/11/14 • CTM, 4/25/16	

7.0 Masonry Plate Design (Fixed Bearing)

Thickness of Masonry Plate	=	3.25 in	>	1.50 in	AREMA 15-5.3.5.e	OK
Effective Length of Bearing Area	=	minimum of	27.50 in	Eff. Length of Rocker Plate + 2*Masonry plate Thickness	AREMA 15-5.3.5.b	
			27.50 in	Actual Length of Masonry Plate		
	=	27.50 in				
Effective Width of Bearing Area	=	minimum of	13.00 in	4x Thickness		
			12.00 in	Actual Width of Masonry Plate		
		12.00 in				
Effective Bearing Area	=	330.00 sq.in				
Bearing Stress	=	1.03 ksi				
Allowable Bearing Stress	=	1.05 ksi		Concrete Substructure will control	AREMA 8-2.26.c	
MASONRY PLATE BEARING STRESS CHECK:	1.03 ksi	<	1.05 ksi			OK

8.0 Anchor bolt Design (Fixed Bearing)

ASTM F 1554 standard bolts

Diameter of anchor bolt	=	1.25 in	>	1.25 in	AREMA 15-5.3.7b and e; NS H.2-3-5	OK
Shear force per anchor bolt	=	17.32 kips		Two anchor bolts per steel bearing; Resultant of Lateral and longitudinal force is used.		
Cross sectional area of bolt in shear	=	1.227 sq. in.				
Shear stress on XS area of bolt	=	14.11 ksi				
Allowable shear force in bolts	=	31.25 ksi		0.20Fu * 125% for load combination B1	AREMA 15-5.2.1 c	
ANCHOR BOLT SHEAR STRESS CHECK	14.11 ksi	<	31.25 ksi			OK

By inspection the seismic load per girder is less than the longitudinal force (considering the 50% overstress allowed in load combination E1)

DESIGN CALCULATION COVER SHEET

Gannett Fleming
Engineers and Architects, P.C.
Excellence Delivered ***As Promised***

ISO 9001:2008 CERTIFIED

PROJECT:	**ODOT/EMH&T: HAM-75-7.85**	*ODOT PID NO:*	*77889*
BRIDGE NO:	**HAM-75-0834**	*EMH&T JOB NO:*	
SUBJECT:	***Analysis***	**GF JOB NO:**	**54682**
	Girder Connection Details	CALC NO.:	**HAM075_0834_12_Sp1**
	MATHCAD	REV NO.:	**01**
FILE NAME(s):	*HAM075_0834_12_Sp1.xmcd*	**SHEET:**	**1 OF 30**

SUPERSEDES CALC NO: (Rev. 00)

CALCULATION DESCRIPTION:

This will analyze all of the steel connections to the girder, such as end and intermediate diaphragms, stiffners, and lower lateral bracing, both welded connections and bolted connections. The calculations will check every possible mode of failure.

DESIGN BASIS OR REFERENCES

NS Underpass Design Criteria
AREMA (2014) Chapter 15
HAM075_0834_03_Sp1
AISC Steel Construction Manual, Thirteenth Edition
BDM - ODOT Bridge Design Manual (2004) - Current Edition

MISCELLANEOUS NOTES:

Stage 3 Update: Increased stiffener vertical weld clip to ensure proper fatigue strength

RECORD OF ISSUES:

REV	DESCRIPTION	BY	DATE	VERIF'D	DATE
00	Stage 1 Calculation	VDT	05/29/14	VDK	06/23/14
01	Stage 3 Update	VDT	05/12/16	CTM	05/12/16

RECORD OF CHECK OF CURRENT CALCULATION VERSION

BY	DATE	CHKD	DATE	UPD.	DATE	VERIF'D	DATE
VDT	05/29/14	VDK	06/20/14	VDT	05/12/16	CTM	05/12/16

LOAD AND GEOMETRIC DATA

Design notes

- Variables with a box around them require review/user input.
- Code references are made using the following abbreviations:
  - AREMA -AREMA Chapter 15 - Current Edition
  - NS - Norfolk Southern Public Policy Manual - Current Edition
  - BDM - ODOT LFD Bridge Design Manual (2004) - Current Edition
  - AA - AASHTO LFD
  - AISC - AISC Steel Construction Manual, Thirteenth Edition

1.0 GEOMETRIC AND LOAD DATA

1.1 GIRDER AND SPAN DATA

Girder Flange width: $B_f := 18in$

Girder Flange thickness: $T_f := 3in$

Depth of web: $D_w := 80in$

Girder Moment of Inertia: $I_{x_pg} := 212718.9in^4$ Girder section properties spreadsheet

Girder Web thickness: $T_w := 0.875in$

SpanLength of the girder: $span := 110.5ft$

Skew angle of the bridge: $ang := 25.5deg$

Transverse Girder Spacing: $d_{girder} := 3.5ft$

Skewed girder spacing: $d_{skew} := d_{girder} \cdot \left(\frac{1}{\cos(ang)}\right) = 3.88\,ft$

1.2 END DIAPHRAGM AND JACKING STIFFENER DATA

1.2.1 SECTION 1: FULL SECTION

Flange width: $b_{f.ed} := 6 \cdot in$

Flange Thickness: $t_{f.ed} := 0.5 \cdot in$

Total depth of section: $d_{ed} := D_w - 9.5in = 70.5 \cdot in$

Height of web: $d_{w.ed} := d_{ed} - 2 \cdot t_{f.ed} = 69.5 \cdot in$

Thickness of Web: $t_{w.ed} := 0.5 \cdot in$

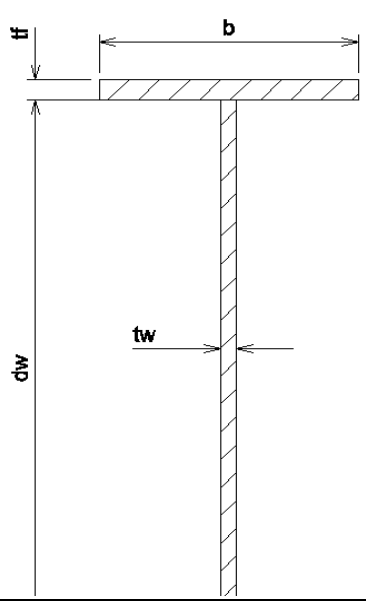

Area of the section: $A_{ed} := d_{w.ed} \cdot t_{w.ed} + b_{f.ed} \cdot \left(d_{ed} - d_{w.ed}\right) = 40.75 \cdot in^2$

Flange area: $A_{f.ed} := t_{f.ed} \cdot b_{f.ed} = 3 \cdot in^2$

Web area: $A_{w.ed} := d_{w.ed} \cdot t_{w.ed} = 34.75 \cdot in^2$

Mom. of Inertia: $I_{x.ed} := \frac{t_{w.ed} \cdot d_{w.ed}^3}{12} + \frac{b_{f.ed} \cdot \left(d_{ed}^3 - d_{w.ed}^3\right)}{12} = 21337.72 \cdot in^4$

Effective column height factor: $k := 0.75$ Table 15-1-11 Arema

Section Modulus: $S_{x.ed} := \frac{I_{x.ed}}{\left(\frac{d_{ed}}{2}\right)} = 605.33 \cdot in^3$

Radus of Gyration: $r_{x.ed} := \sqrt{\frac{I_{x.ed}}{A_{ed}}} = 22.88 \cdot in$

1.2.2 SECTION 2: SECTION AT ACCESS HOLE

FULL SECTION

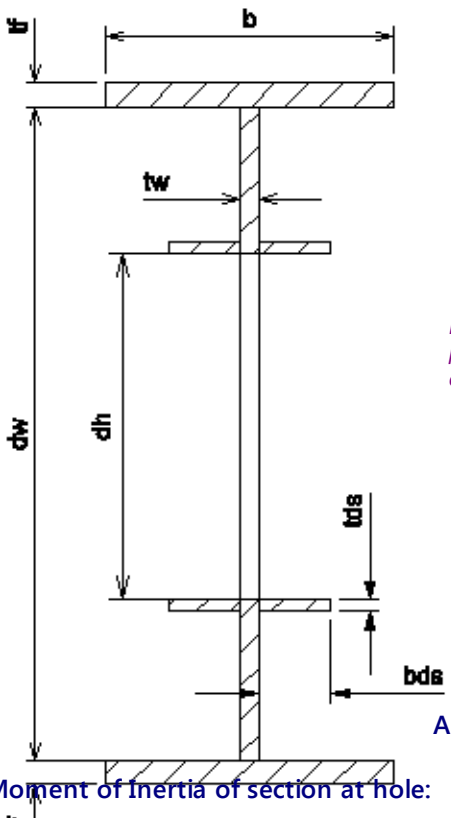

Width of flange: $b_{f.ed} = 6 \cdot in$

Thickness of flange: $t_{f.ed} = 0.5 \cdot in$

Height of web: $d_{w.ed} = 69.5 \cdot in$

Total depth of section: $d_{ed} = 70.5 \cdot in$

Thickness of Web: $t_{w.ed} = 0.5 \cdot in$

Depth of hole: $d_{h.ed} := 24 \cdot in$

Half-Width of horizontal stiffener $b_{ds.ed} := 0 \cdot in$

Thickness of horizontal stiffener: $t_{ds.ed} := 0 \cdot in$

Minimum dia of access hole: $Dia_{access} := 15in$

Clearance to access hole from jacking points: $clear_{access} := .75in$

Minimum 15 in access hole to be provided as per NS Appendix H 2.5. 0.75 in spacing is provided on either sides to the jacking stiffener. It is assumed that a single jack will be used under each diaphragm, but to be conservative jacking stiffners will be analyzed to accept the full load

Area of section at hole:

$$A_{h.ed} := d_{w.ed} \cdot t_{w.ed} + b_{f.ed} \cdot \left(d_{ed} - d_{w.ed}\right) - d_{h.ed} \cdot t_{w.ed} + 4 \cdot b_{ds.ed} \cdot t_{ds.ed} \ldots = 28.75 \cdot in^2$$

Area of flange: $A_{f.ed} = 3 \cdot in^2$

Area of web with hole: $A_{w_h.ed} := d_{w.ed} \cdot t_{w.ed} - d_{h.ed} \cdot t_{w.ed} = 22.75 \cdot in^2$

Moment of Inertia of section at hole:

$$I_{x_h.ed} := \frac{t_{w.ed} \cdot d_{w.ed}^3}{12} - \frac{t_{w.ed} \cdot d_{h.ed}^3}{12} + \frac{b_{f.ed} \cdot \left(d_{ed}^3 - d_{w.ed}^3\right)}{12} + \frac{2 \cdot b_{ds.ed} \cdot \left[\left(d_{h.ed} + 2 \cdot t_{ds.ed}\right)^3 - d_{h.ed}^3\right]}{12} \ldots = 20761.72 \cdot in^4$$

Section modulus: $S_{_h.ed} := \dfrac{I_{x_h.ed}}{\left(\dfrac{d_{ed}}{2}\right)} = 588.99 \cdot in^3$

Radius of gyration: $r_{x_h.ed} := \sqrt{\dfrac{I_{x_h.ed}}{A_{h.ed}}} = 26.87 \cdot in$

1.2.3 JACKING STIFFENER DATA

Stiffener thickness: $t_{js} := .75 \cdot in$

Width of weld clip: $d_{weld} := 1.25 \cdot in$

Height of weld clip: $h_{weld} := 1.25 \cdot in$

1.3 END BEARING STIFFENER DATA

Stiffener plate thickness: $t_{end_stiff} := 1.0in$

Horizontal Leg of corner clip: $l_{cc.h.ebs} := 1in$

Stiffener width: $b_{end_stiff} := 8in = 8 \cdot in$

Vertical Leg of corner clip: $l_{cc.v.ebs} := 2in$

Participating length of the web: $l_{web} := 25 \cdot t_{w.ed} = 12.5 \cdot in$ Arema 15-1.7.7. c

1.4 INTERMEDIATE STIFFENER AND INTERNAL DIAPHRAGM

1.4.1 STIFFENER SECTION PROPERTIES

Stiffener plate thickness: $t_{int_stiff} := .625in$

Horizontal Leg of corner clip: $l_{cc.h.ibs} := 1in$

Stiffener width: $b_{int_stiff} := 5in$

Vertical leg of corner clip: $l_{cc.v.ibs} := 8in$

Participating length of the web: $l_{int_web} := 25 \cdot T_w = 21.87 \cdot in$ Arema 15-1.7.7. c

Clear distance between stiffeners: $d_{int_stiff} := 72in$

Area of stiffener plate: $A_{int_stiff} := t_{int_stiff} \cdot b_{int_stiff} = 3.13 \cdot in^2$

Distance from centroid of plates to center of single plate: $d_{cent} := \left(T_w + b_{int_stiff}\right) \cdot 0.5 = 2.94 \cdot in$

Thickness of the stifffener connection plate: $t_{plate} := 0.5in$ NS Appendix H.2-4 B-3.b

1.4.2 DIAPHRAGM SECTION PROPERTIES

Width of flange: $b_{f_id} := 6 \cdot in$

Thickness of flange: $t_{f_id} := .5 \cdot in$

Height of web: $d_{w_id} := d_{w.ed} = 69.5 \cdot in$

Thickness of Web: $t_{w_id} := 0.5 \cdot in$

Total depth of section: $d_{id} := d_{w_id} + 2 \cdot t_{f_id} = 70.5 \cdot in$

Flange area: $A_{f_id} := t_{f_id} \cdot b_{f_id} = 3 \cdot in^2$

Web area: $A_{w_id} := d_{w_id} \cdot t_{w_id} = 34.75 \cdot in^2$

Area of the section: $A_{id} := d_{w_id} \cdot t_{w_id} + b_{f_id} \cdot \left(d_{id} - d_{w_id}\right) = 40.75 \cdot in^2$

Moment of Inertia of the section:

$$I_{x_id} := \frac{t_{w_id} \cdot d_{w_id}^3}{12} + \frac{b_{f_id} \cdot \left(d_{id}^3 - d_{w_id}^3\right)}{12} = 21337.72 \cdot in^4$$

Section Modulus: $S_{id} := \frac{I_{x_id}}{\left(\frac{d_{id}}{2}\right)} = 605.33 \cdot in^3$

Radus of Gyration: $r_{x_id} := \sqrt{\frac{I_{x_id}}{A_{id}}} = 22.88 \cdot in$

1.5 LATERAL BRACING

A steel WT 4 x 24 is used for the lateral bracing.

1.5.1 LATERAL BRACING MEMBER

Depth of lateral bracing: $D_{lat} := 4.25in$

Flange thickness: $T_{f.lat} := .685in$

Flange width: $B_{f.lat} := 8.11in$

Area of bracing: $A_{lat} := 7.05in^2$

Moment of inertia of the bracing: $I_{lat} := 6.85in^4$

Longitudinal spacing between bracing points: $Spa_{lat.l} := 12ft$

Dimensional parameters of the chosen angle are taken from AISC steel tables.

Lateral spacing between girders: $Spa_{lat.g} := d_{girder} = 3.5\,ft$

Length of the diagonal lateral brace: $Len_{lat} := \sqrt{Spa_{lat.l}^2 + Spa_{lat.g}^2} = 12.5\,ft$

Radius of gyration: $r_{lat} := \sqrt{\frac{I_{lat}}{A_{lat}}} = 0.99 \cdot in$

1.5.1 LATERAL BRACING CONNECTION

A 1/2" Gusset Plate will be used for the connection. Following inputs only used for checking block shear in plate.

Thickness of Gusset Plate: $Thk_{gus} := 0.5in$

Shear Length: $L_{shr.gus} := 4in$

Tension Length: $L_{ten.gus} := 4.25in$

The values given are thoroughly rounded down to compensate for any minor differences in the unique gusset plate connections. Values taken from CAD drawing in the basemap.

1.6 GIRDER LOADS

1.6.1 GIRDER REACTIONS

from girder design spreadsheet

Reaction due to dead load from span1: $R_{1T} := 118.63kip$

Reaction due to dead load from span2: $R_{2T} := 118.63kip$

Loads that act on the end bearing stiffener:

Maximum load on the stiffener from girder: $R_{max} := 372.8kip$ *Vertical forces due to DL+LL+I+CF+LF*

Fatigue load on the stiffener: $R_{sr} := 254.18kip$ *Vertical forces due to LL+I+CF+LF*

Loads that act on the Intermediate bearing stiffener:

Uniformly distributed load on the girder: $W_{load} := 6.078klf$ *Vertical forces due to DL+LL+I+CF+LF*

Concentrated derail load acting on the girder: $P_{derail} := 53.5kip$

Direct load acting on girder (vertical shear): $F_{v.pg} := 6.408klf$ *vertical load due to DL+LL+I+CF+LF+W*

Direct load is used in design of girder flange to web - full penetration groove weld.

Shear Stress in Girder: $R_{vg} := 6ksi$ Stress due to LL+I in Girder: $R_{LLI} := 14.95ksi$

From Girder Design Spreadsheet, Span 1 Tables Tab

1.6.2 LATERAL LOADS ON GIRDER

B1 Load combination with 125% overstress is considered for the lateral bracing design for Case 2.

There is no CWR force applicable for this particular bridge type and no lateral force due to LL+I+DL.

Table 4.5 "Design of Modern Steel Railway Bridges" by John Unsworth.

Lateral forces to be considered:

Lateral wind load on loaded bridge: $P_{lat.w} := 421.88plf + 300plf$ $P_{lat.w} = 0.72\,klf$ *wind on Superstructure+Live load*

Lateral force due to Nosing (Case 1): $P_{lat.N} := 25kip$

Total lateral load acting on each diagonal brace (Case 2): $P_{tot} := P_{lat.w} \cdot Spa_{lat.l} + P_{lat.N} = 33.66 \cdot kip$

2.0 MATERIAL DATA

2.1 PRIMARY GIRDER

STRUCTURAL STEEL: A709 GRADE 50S YIELD STRENGTH: $f_y := 50 \cdot ksi$ ULTIMATE STRENGTH: $f_u := 65 \cdot ksi$

Elastic modulus of steel: $E_s := 29000 \cdot ksi$ Unit weight of steel: $w_s := 490pcf$

$$ESFY := \sqrt{\frac{E_s}{f_y}} = 24.08 \qquad FYES := \frac{1}{ESFY} = 0.04$$

Number of Stress cycles is greater than 2,000,000 (for span lengths less than 100 ft) AREMA Table 15-1-7

Allowable Fatigue Stress: $F_f := 10ksi$ AREMA Table 15-1-10 Category C, Descr. 1.3

Allowable bearing stress: $F_{bear} := 0.83 \cdot f_y = 41.5\,ksi$ AREMA Table 15-1-11

2.2 BOLT AND WELD CONNECTIONS

2.2.1 BOLTS AND WELDS ALLOWABLE STRESSES

Allowable shear stress in A 325 bolts Table 15-1-11 Arema $S_{v.blt} := 17ksi$ *slip critical connection*

Allowable shear stress in fillet welds Table 15-1-13 Arema $S_{v.weld} := \min(19ksi, 0.35 \cdot f_y) = 17.5\,ksi$

Allowable shear stress in groove welds Table 15-1-13 Arema $S_{gr.weld} := 0.35 \cdot f_y = 17.5\,ksi$

Allowable Tension in A 325 bolts: Table 15-1-11 Arema $S_{p.blt.max} := 44000psi$

Acting on gross section as per AREMA Table 15-1-11 & Table 15-1-11a - Class A Standard Hole

2.2.2 BOLT CONNECTION PROPERTIES (1" bolts): *To be used on all Connections*

STRUCTURAL BOLTS: 1" DIAMETER A325 SC (CLASS B, STANDARD HOLES)
Appendix H.4.1-2 -4.1 NS Steel grade

$d_{b1} := 1 \cdot in$

Allowable shear force in A 325 bolts: $R_{v1} := S_{v.blt} \cdot \pi \cdot d_{b1}^2 \cdot 0.25$

$R_{v1} = 13.35 \cdot kip$ (single shear)

Gross area of bolt: $A_{blt.g1} := \frac{\pi \cdot d_{b1}^2}{4}$

$A_{blt.g1} = 0.79 \cdot in^2$

Diameter of bolt hole: $Hole_{dg1} := d_{b1} + 0.125in$ AREMA 15-1.5.8(e)

$Hole_{dg1} = 1.125 \cdot in$

Minimum bolt spacing: $spa_{min1} := 3.0 \cdot d_{b1} = 3 \cdot in$ AREMA 15-1.9.3 b

Minimum edge distance: $edge_{min1} := 1.75 \cdot d_{b1} = 1.75 \cdot in$ AREMA 15-1.9.4

2.2.3 END DIAPHRAGM TO BEARING STIFFENER CONNECTION

	Bolt Column 1 (Furthest from the Web):	Bolt Column 2
Total Number of Bolts in a Column:	$Bolts_{C1_ED} := 23$	$Bolts_{C2_ED} := 0$
Bolt Pitch:	$Pitch_{C1_ED} := 3 \cdot in$	$Pitch_{C2_ED} := Pitch_{C1_ED}$
Distance of First Bolt from Lowest Bolt (Stagger):	$BoltFirst_{C1_ED} := 0 \cdot in$	$BoltFirst_{C2_ED} := 0in$

Lateral Spacing of Bolt Column (C1 is the zero point... Set to ZERO if only one column) $Gage_{ED} := 0 \cdot in$

C/L of bolt to edge of diphragm web: $Db_{dwED} := 2in$

Edge distance of bolts (to top edge of web: $Edge_{dist.ED} := \left[d_{w_id} - \left[\left(Bolts_{C1_ED} - 1\right) \cdot Pitch_{C1_ED}\right]\right] \cdot 0.50 = 1.75 \cdot in$

$CHK_{bED} := if\left(Db_{dwED} \geq edge_{min1} \wedge Edge_{dist.ED} \geq edge_{min1}, \text{"OK"}, \text{"NO GOOD"}\right)$ $CHK_{bED} = \text{"OK"}$

2.2.4 GIRDER WEB TO INTERMEDIATE DIAPHRAGM WEB CONNECTION

	Bolt Column 1 (Furthest from the Web):	Bolt Column 2
Total Number of Bolts in a Column:	$Bolts_{C1_ID} := 23$	$Bolts_{C2_ID} := 0$
Bolt Pitch:	$Pitch_{C1_ID} := 3 \cdot in$	$Pitch_{C2_ID} := Pitch_{C1_ID}$
Distance of First Bolt from Lowest Bolt (Stagger):	$BoltFirst_{C1_ID} := 0 \cdot in$	$BoltFirst_{C2_ID} := 0in$

Lateral Spacing of Bolt Column (C1 is the zero point... Set to ZERO if only one column) $Gage_{ID} := 0 \cdot in$

C/L of bolt to edge of diaphragm web: $Db_{dwID} := 1.75 \cdot in$

Edge distance of bolts (to top edge of web): $Edge_{dist.ID} := \left[d_{w_id} - \left[\left(Bolts_{C1_ID} - 1\right) \cdot Pitch_{C1_ID}\right]\right] \cdot 0.50 = 1.75 \cdot in$

$CHK_{bID} := if\left(Db_{dwID} \geq edge_{min1} \wedge Edge_{dist.ID} \geq edge_{min1}, \text{"OK"}, \text{"NO GOOD"}\right)$

$CHK_{bID} = \text{"OK"}$

2.2.5 LATERAL BRACING TO STIFFENER CONNECTION PLATE

	Bolt Column 1 (Furthest from the Web):	Bolt Column 2
Total Number of Bolts in a Column:	$Bolts_{C1_lt} := 4$	$Bolts_{C2_lt} := 0 \cdot Bolts_{C1_lt}$
Bolt Pitch:	$Pitch_{C1_lt} := 3.0 \cdot in$	$Pitch_{C2_lt} := Pitch_{C1_lt}$
Distance of First Bolt from Lowest Bolt (Stagger):	$BoltFirst_{C1_lt} := 0 \cdot in$	$BoltFirst_{C2_lt} := 0in$

Lateral Spacing of Bolt Column (C1 is the zero point... Set to ZERO if only one column) $Gage_{lt} := 0 \cdot in$

Horizontal distance between centroid of bolts and Point Load: $e_{lt} := 0 \cdot in$ *To Diaphragm Stiffening Girder*

Edge distance of bolts: $Edge_{dist.lt} := 1.75in$

2.2.6 WELD CONNECTION PROPERTIES

WELDING ELECTRODES: E70XX
Appendix H.4.1-2 -4.c NS

STIFFENER WELD: 5/16" $t_{weld} := \frac{5}{16} \cdot in$

AASHTO TABLE 6.13.3.4.1 - as nothing is given in AREMA

assume all fillet weld connections use same size.

Allowable shear force on weld: $R_{weld} := S_{v.weld} \cdot t_{weld} \cdot 0.707 = 3.87 \cdot \frac{kip}{in}$

END DIAPHRAGM (JACKING)

(AREMA/NSRR Design: Prosser Avenue Bridge)

DETERMINE THE ADEQUACY OF THE END DIAPHRAGM DURING JACKING. JACKING WILL BE REQUIRED TO REPLACE THE BEARINGS. THE JACKING OPERATION WILL BE CONDUCTED UNDER FULL DEAD LOAD ONLY (NO LIVE LOAD).

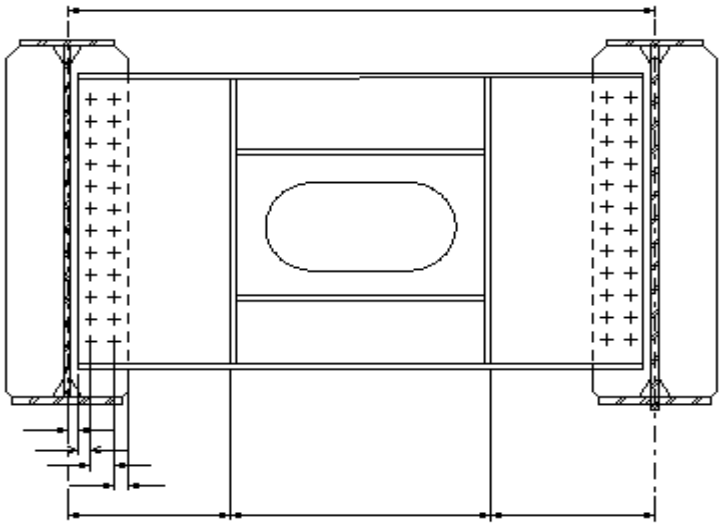

END DIAPHRAGM

3.0 DESIGN OF END DIAPHRAGM AND JACKING STIFFENER

3.1 LOAD CALCULATIONS FOR END DIAPHRAGM

assumed simply supported.

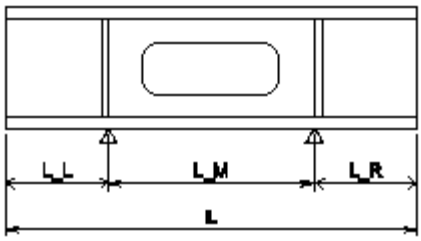

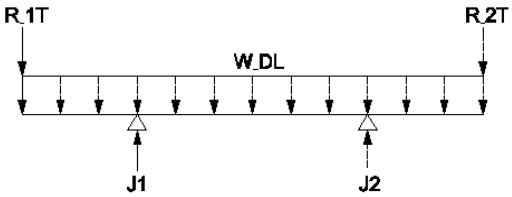

Distance between the jacking points: $L_M := Dia_{access} + 2clear_{access}$ $L_M = 16.5 \cdot in$

Distance from jacking stiffener to center of beam: $L_L := \left(d_{skew} - L_M\right) \cdot 0.5$ $L_L = 15.02 \cdot in$

Assuming the jacking points are symmetrical: $L_R := L_L$ $L_R = 15.02 \cdot in$

3.1.1. DEAD LOAD OF DIAPHRAGM:

Dead load of the diaphragm: $W_{DL} := A_{ed} \cdot w_s = 0.14\,klf$

weight due to hole section is not reduced for conservative purpose

Additional dead load: $W_{ADDL} := 0 \cdot W_{DL} = 0$

Additional dead load due to the connections is incorporated in the girder reactions.

Total dead load: $W_{DL_T} := W_{DL} + W_{ADDL} = 0.14\,klf$

3.1.2 DETERMINE THE FORCES ON THE DIAPHRAGM:

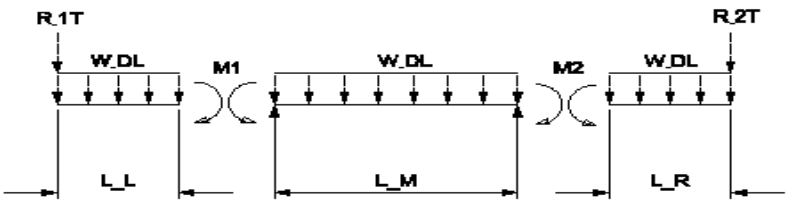

Moment at left jacking stiffener: $M_1 := R_{1T} \cdot L_L + W_{DL_T} \cdot L_L \cdot \frac{L_L}{2} = 148.56 \cdot ft \cdot kip$

Moment at right jacking stiffener: $M_2 := R_{2T} \cdot L_R + W_{DL_T} \cdot L_R \cdot \frac{L_R}{2} = 148.56 \cdot ft \cdot kip$

Reactions at the location of left and right Jacking stiffener respectively:

$$V_1 := \left(W_{DL_T} \cdot L_L + R_{1T} + W_{DL_T} \cdot \frac{L_M}{2}\right) + \frac{(M_1 - M_2)}{L_M} = 118.9 \cdot kip \qquad J_1 := V_1 = 118.9 \cdot kip$$

$$V_2 := \left(W_{DL_T} \cdot L_R + R_{2T} + W_{DL_T} \cdot \frac{L_M}{2}\right) - \frac{(M_1 - M_2)}{L_M} = 118.9 \cdot kip \qquad J_2 := V_2 = 118.9 \cdot kip$$

3.2 CHECK FOR ADEQUACY OF END DIAPHRAGM:

3.2.1 CHECK BENDING STRESS IN THE MEMBER: AREMA 15-1.4.1

Allowable Diagonal tension in webs of girders: $F_{b_T} := 0.55 \cdot f_y = 27.5 \cdot ksi$ Table 15-1-11 AREMA

COMPRESSION LIMIT: CONSIDER ONLY SECTION ABOVE HOLE

Moment of Inertia of the section:

$$I_C := \frac{t_{f.ed} \cdot b_{f.ed}^3}{12} + \frac{\frac{(d_{w.ed} - d_{h.ed})}{2} \cdot t_{w.ed}^3}{12} = 9.24 \cdot in^4$$

Area of the section:

$$A_C := t_{f.ed} \cdot b_{f.ed} + \frac{(d_{w.ed} - d_{h.ed})}{2} \cdot t_{w.ed} = 14.37 \cdot in^2$$

Radius of gyration:

$$r_C := \sqrt{\frac{I_C}{A_C}} = 0.8 \cdot in$$

Compression in extreme fibers of flexural members symmetrical about the principal axis

$$FC := \max\left[\frac{0.131 \cdot \pi \cdot E_s}{\frac{L_M \cdot d_{ed} \cdot \sqrt{1.3}}{A_{f.ed}}}, 0.55 \cdot f_y - \frac{0.55 \cdot f_y^2}{6.3 \cdot \pi^2 \cdot E_s} \cdot \left(\frac{L_M}{r_C}\right)^2\right] = 27.18 \cdot ksi$$

Table 15-1-11 AREMA

$$F_{b_C} := if\left(0.55 \cdot f_y < FC, 0.55 \cdot f_y, FC\right) = 27.18\ ksi$$

Bending Stress in Member:

$$f_b := \frac{\max(M_1, M_2)}{S_h.ed} = 3.03 \cdot ksi \qquad F_b := \min(F_{b_T}, F_{b_C}) = 27.18 \cdot ksi$$

$$CHK_b := if\left(f_b < F_b, \text{"OK"}, \text{"NO GOOD"}\right)$$

$CHK_b = \text{"OK"}$

3.2.2 CHECK SHEAR STRESS IN THE MEMBER: AREMA 15-1.4.1

Allowable Shear in webs of rolled beams: $F_v := 0.35 \cdot f_y = 17.5 \cdot ksi$ Table 15-1-11 Arema

Shear Stress in the section:

$$f_v := \frac{\max(V_1, V_2)}{A_{h.ed}} = 4.14 \cdot ksi$$

$$CHK_v := if\left(f_v < F_v, \text{"OK"}, \text{"NO GOOD"}\right)$$

$CHK_v = \text{"OK"}$

$$DIAPHRAGM := if\left(CHK_b = \text{"OK"} \wedge CHK_v = \text{"OK"}, \text{"OK"}, \text{"NO GOOD"}\right)$$

$DIAPHRAGM = \text{"OK"}$

3.3 CHECK THE REQUIRED WELD SIZE FOR THE WEB-FLANGE CONNECTION:

Allowable shear force for Weld in consideration: $R_{weld} = 3.87 \cdot \frac{kip}{in}$

First moment of flange area: $Q_{ed} := A_{f.ed} \cdot \frac{(d_{w.ed} + t_{f.ed})}{2} = 105 \cdot in^3$

Horizontal shear force acting on the weld: $r_w := \frac{\max(V_1, V_2) \cdot Q_{ed}}{2 \cdot I_{x_h.ed}} = 0.3 \cdot \frac{kip}{in}$

similar to shear between concrete slab and steel beam

$CHK_W := \text{if}(r_w < R_{weld}, \text{"OK"}, \text{"NO GOOD"})$ $CHK_W = \text{"OK"}$

NO LIVE LOAD ON JACKING, THEREFORE NO FATIGUE CHECK IS REQUIERED

3.4 CHECK THE JACKING STIFFENERS

AREMA 15-1.7.7

Flange thickness of diaphragm: $t_{f.ed} = 0.5 \cdot in$

Flange width of diaphragm: $b_{f.ed} = 6 \cdot in$

Web depth of diaphragm: $d_{w.ed} = 69.5 \cdot in$

Stiffener thickness: $t_{js} = 0.75 \cdot in$

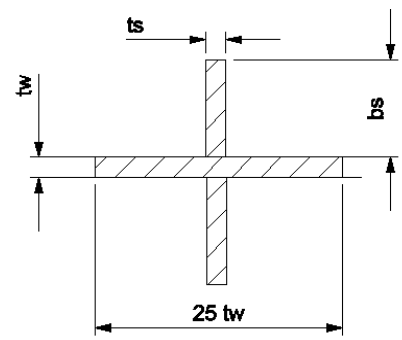

3.5 CHECK THE MINIMUM THICKNESS OF THE JACKING STIFFENER

Outstanding width: $l_s := 0.5(b_{f.ed} - t_{w.ed}) = 2.75 \cdot in$

Equal to the outstanding width of the end diaphragm section

Minimum thickness of stiffener: $t_{min} := \frac{l_s}{0.43ESFY} = 0.27 \cdot in$

AREMA 15.1.6.2 (a) (2)

$CHK_t := \text{if}(t_{js} > t_{min}, \text{"OK"}, \text{"NO GOOD"})$ $CHK_t = \text{"OK"}$

3.6 CHECK THE STRENGTH OF THE JACKING STIFFENER

Area of the column section: $A_c := 25 \cdot t_{w.ed} \cdot t_{w.ed} + 2 \cdot (l_s \cdot t_{js}) = 10.38 \cdot in^2$ AREMA 15.1.7.7 c

Moment of inertia of the section: $I_{y_s} := \frac{t_{js} \cdot (l_s + t_{w.ed} + l_s)^3}{12} = 13.5 \cdot in^4$

Radius of gyration: $r_{y_s} := \sqrt{\frac{I_{y_s}}{A_c}} = 1.14 \cdot in$

Stress in the member: $f_a := \frac{\max(J_1, J_2)}{A_c} = 11.46 \cdot ksi$

Slenderness of the member: $K_{js} := k \cdot \frac{d_{w.ed}}{r_{y_s}} = 45.7$

Lower limit of slenderness: $K_1 := \frac{0.629}{FYES} = 15.15$

Higher limit of slenderness: $K_2 := \frac{5.034}{FYES} = 121.23$

Allowable stress in the section:

$$F_a := \text{if}\left[K_{js} < K_1, 0.55 \cdot f_y, \text{if}\left[K_{js} > K_1 \wedge K_{js} < K_2, 0.6 \cdot f_y - \left(17500 \cdot \frac{f_y}{E_s}\right)^{\frac{3}{2}} \cdot K_{js} \cdot psi, \frac{0.514 \cdot \pi^2 \cdot E_s}{K_{js}^{\ 2}}\right]\right]$$

AREMA 15.1.4.1

$F_a = 22.43 \cdot ksi$

$CHK_a := \text{if}(f_a < F_a, \text{"OK"}, \text{"NO GOOD"})$ $CHK_a = \text{"OK"}$

3.7 CHECK THE BEARING STRESS ON THE BOTTOM FLANGE:

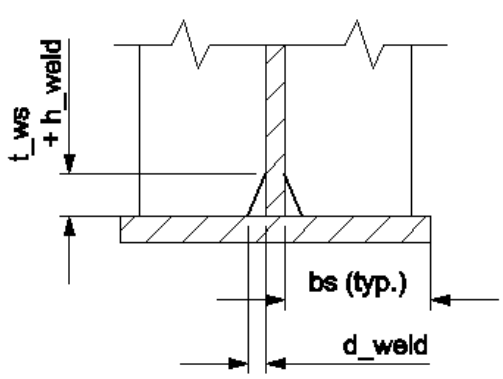

Stiffener weld thickness: $t_{weld} = 0.31 \cdot in$

Width of the stiffener: $l_s = 2.75 \cdot in$

Height of weld clip: $h_{weld} = 1.25 \cdot in$

Width of weld clip: $d_{weld} = 1.25 \cdot in$

Net width of stiffener: $b_{s_net} := l_s - d_{weld} = 1.5 \cdot in$

Area outside the corner clip of plate stiffener: $A_{b.js} := 2 \cdot b_{s_net} \cdot t_{js} = 2.25 \cdot in^2$

AREMA 15- 1.7.7 d

Bearing Stress in the member: $f_{b_f} := \frac{\max(J_1, J_2)}{A_{b.js}} = 52.84 \cdot ksi$

ALLOWABLE STRESS: $F_{bear} = 41.5\,ksi$ AREMA Table 15-1-11

$CHK_F := \text{if}(f_{b_f} < F_{bear}, \text{"OK"}, \text{"NO GOOD"})$ $CHK_F = \text{"NO GOOD"}$

Although this states no good, in the design we are using only one jacking stiffner, but in reality there will be two taking the load, so the bearing stress will effectively be cut in half. This would provide more than adequate capacity.

3.8 CHECK THE WELD OF THE STIFFENER TO THE WEB:

Length of the weld: $L_{w.ed} := d_{w.ed} - 2\left(h_{weld} + t_{weld}\right) = 66.38 \cdot in$

Shear force in the weld: $r_{w_s.ed} := \dfrac{\max\left(J_1, J_2\right)}{4 \cdot L_{w.ed}} = 0.45 \cdot \dfrac{kip}{in}$ *Both side weld*

Allowable shear force in weld: $R_{weld} = 3.87 \cdot \dfrac{kip}{in}$

$CHK_{w_s} := if\left(r_{w_s.ed} < R_{weld}, "OK", "NO\ GOOD"\right)$ $CHK_{w_s} = "OK"$

$STIFFENER := if\left(CHK_t = "OK" \wedge CHK_a = "OK" \wedge CHK_F = "OK" \wedge CHK_{w_s} = "OK", "OK", "NO\ GOOD"\right)$

$STIFFENER = "NO\ GOOD"$

3.9 CONNECTION OF END DIAPHRAGM TO BEARING STIFFENER

3.9.1 BOLT CONNECTION DETAILS

Neutral Axis of Rows (Y-Bar) From Bottom Most Bolt

$$Ybar_{ED} := \frac{\sum_{\Delta = Bolts_{C1_ED}-1}^{0} \left(BoltFirst_{C1_ED} + \Delta \cdot Pitch_{C1_ED}\right) \ldots + \sum_{\sigma = Bolts_{C2_ED}-1}^{0} \left(BoltFirst_{C2_ED} + \sigma \cdot Pitch_{C2_ED}\right)}{Bolts_{C1_ED} + Bolts_{C2_ED}}$$

$Ybar_{ED} = 32.87 \cdot in$

Sum of Y Squared

$$SumY2_{ED} := \sum_{\Delta = Bolts_{C1_ED}-1}^{0} \left(BoltFirst_{C1_ED} + \Delta \cdot Pitch_{C1_ED} - Ybar_{ED}\right)^2 \ldots + \sum_{\sigma = Bolts_{C2_ED}-1}^{0} \left(BoltFirst_{C2_ED} + \sigma \cdot Pitch_{C2_ED} - Ybar_{ED}\right)^2$$

$SumY2_{ED} = 11475.43 \cdot in^2$

Neutral Axis of Columns (X-Bar) From Column 1 Bolts

$$Xbar_{ED} := \frac{Bolts_{C2_ED} \cdot Gage_{ED}}{Bolts_{C1_ED} + Bolts_{C2_ED}}$$

$Xbar_{ED} = 0 \cdot in$

Sum of X Squared $SumX2_{ED} := Bolts_{C1_ED} \cdot Xbar_{ED}^2 + Bolts_{C2_ED} \cdot (Gage_{ED} - Xbar_{ED})^2$ $SumX2_{ED} = 0 \cdot in^2$

$$OffsetGage_{ED} := \sqrt{Gage_{ED}^2 + \min(Pitch_{C1_ED} - BoltFirst_{C1_ED}, Pitch_{C2_ED} - BoltFirst_{C2_ED})^2} = 3 \cdot in$$

$$BoltSpacing := if(BoltFirst_{C1_ED} = 0 \wedge BoltFirst_{C2_ED} = 0 \wedge Gage_{ED} \neq 0, Gage_{ED}, OffsetGage_{ED}) = 3 \cdot in$$

Polar moment of Inertia of bolt configuration: $J_{ED} := SumX2_{ED} + SumY2_{ED}$ $J_{ED} = 11475.43 \cdot in^2$

Total Height of Bolt Array:

$$Bolt_{Ht} := \max[(Bolts_{C1_ED} - 1) \cdot Pitch_{C1_ED} + BoltFirst_{C1_ED}, (Bolts_{C2_ED} - 1) \cdot Pitch_{C2_ED} + BoltFirst_{C2_ED}] = 66 \cdot in$$

Number of bolts: $n_{ED} := Bolts_{C1_ED} + Bolts_{C2_ED} = 23$

Vertical location of centroid of bolt configuration: $y_{ED} := Ybar_{ED} = 32.87 \cdot in$

Horizontal location of centroid of bolt configuration: $x_{ED} := Xbar_{ED} = 0 \cdot in$

MinimumSpacing of bolts: $spa_{ED} := BoltSpacing = 3 \cdot in$

3.9.2 CHECK THE BOLT CONFIGURATION

$CHK_{Spa} := if(spa_{ED} \geq spa_{min1}, "OK", "NO GOOD")$ $CHK_{Spa} = "OK"$

$CHK_{Edge} := if(Edge_{dist.ED} > edge_{min1}, "OK", "NO GOOD")$ $CHK_{Edge} = "OK"$

3.9.3 CHECK THE SHEAR IN THE BOLTS:

Number of bolts: $n_{ED} = 23$

Allowable Diaphragm Shear Stress: $\sigma_{a.v} := 0.35 \cdot f_y$ *REF: AREMA Table 15-1-11* $\sigma_{a.v} = 17.5 \cdot ksi$

Required Shear Capacity of the connection: AREMA 15-1.11.4 (c) $P_{d.bltVdgED} := d_{w_id} \cdot t_{w_id} \cdot \sigma_{a.v} \cdot 0.5$ $P_{d.bltVdgED} = 304.06 \cdot kip$

Case 1 **Vertical Shear/ Bolt:** AREMA 15-11.4 (c) $F_{d.bltVcfED} := \frac{P_{d.bltVdgED}}{n_{ED}} \cdot 1.0$ $F_{d.bltVcfED} = 13.22 \cdot kip$

Bolt Eccentricity: $e_{ED} := \left(L_L + L_M + L_R\right)\cdot 0.5 - \left(Db_{dwED} + Xbar_{ED}\right) = 21.27\cdot in$

Force acting on the bolt configuration: $V_{ED} := \max\left(R_{1T}, R_{2T}\right)\cdot\left(\frac{6}{5}\right)\cdot 0.5 = 71.18\cdot kip$

Moment acting on the bolt configuration: $M_{ED} := V_{ED}\cdot e_{ED} = 126.14\cdot kip\cdot ft$

Horizontal shear component due to reaction: $r_{vx} := 0$

Horizontal shear component due to moment: $r_{mx} := \frac{M_{ED}\cdot y_{ED}}{J_{ED}} = 4.34\cdot kip$

Vertical shear component due to reaction: $r_{vy} := \frac{V_{ED}}{n_{ED}} = 3.09\cdot kip$

Vertical shear component due to moment: $r_{my} := \frac{M_{ED}\cdot x_{ED}}{J_{ED}} = 0\cdot kip$

Case 2 **Shear force PER BOLT** $r_v := \sqrt{\left(r_{vx} + r_{mx}\right)^2 + \left(r_{vy} + r_{my}\right)^2} = 5.33\cdot kip$

$r_{vmax} := \max\left(r_v, F_{d.bltVcfED}\right) = 13.22\cdot kip$

Allowable Shear force PER BOLT: $R_{v1} = 13.35\cdot kip$

$CHK_{BOLT} := \text{if}\left(r_{vmax} < R_{v1}, \text{"OK"}, \text{"NO GOOD"}\right)$ $CHK_{BOLT} = \text{"OK"}$

End Bearing Stiffener

DETERMINE THE REQUIRED WIDTH AND THICKNESS OF THE END BEARING STIFFENER

4.0 DESIGN END BEARING STIFFENER

4.1 CHECK THE ADEQUACY OF END BEARING STIFFENER

4.1.1 CHECK STIFFENER DIMENSIONS

Loads computed in section 3.1 under end diaphragm are used for the design of end bearing stiffener.

Max Stiffener Width, Lesser of the Following:

$$b_{s.max1} := \frac{(B_f - T_w)}{2} = 8.56 \cdot in \qquad b_{s.max2} := 0.43 \cdot t_{end_stiff} \cdot \sqrt{\frac{E_s}{f_y}} = 10.36 \cdot in$$

Arema 15-1.6.2 a (2)

Minimum thickness of Bearing stiffener:

$$t_{min.ebs} := \frac{b_{s.max1}}{0.43ESFY} = 0.83 \cdot in$$

AREMA 15-1.6.2 (a) (2)

$$CHK_{t.ebs} := if(t_{end_stiff} > t_{min.ebs}, "OK", "NO\ GOOD") \qquad CHK_{t.ebs} = "OK"$$

$$b_{s.max} := min(b_{s.max1}, b_{s.max2}) \qquad b_{s.max} = 8.56 \cdot in$$

$$CHK_w := if(b_{end_stiff} \le b_{s.max}, "OK", "NO\ GOOD") \qquad CHK_w = "OK"$$

4.1.2 STRENGTH OF THE BEARING STIFFENER

Designing the stiffener as a column, Contributing Area:

$$A_{ebs_col} := (l_{web} \cdot T_w) + 2 \cdot (b_{end_stiff} \cdot t_{end_stiff}) = 26.94 \cdot in^2$$

Moment of inertia of the section:

$$I_{yy} := \frac{1}{12} \cdot t_{end_stiff} \cdot (b_{end_stiff} + T_w + b_{end_stiff})^3 = 400.45 \cdot in^4$$

Radius of gyration:

$$r_{ebs} := \sqrt{\frac{I_{yy}}{A_{ebs_col}}} = 3.86 \cdot in$$

Slenderness ratio:

$$K_{ebs} := \frac{k \cdot D_w}{r_{ebs}} = 15.56$$

Depth of web is the length of the stiffener.

Allowable stress for high slender members:

$$F_{a1} := \frac{0.514 \cdot \pi^2 \cdot E_s}{(K_{ebs})^2} = 607.51\ ksi$$

Table 15-1-11 Arema

Allowable stress for medium slender members: $F_{a2} := 0.60 \cdot f_y - \left(17500 \frac{f_y}{E_s}\right)^{\frac{3}{2}} \cdot K_{ebs} \cdot psi = 27.42\,ksi$

Allowable stress for thicker members: $F_{a3} := 0.55 \cdot f_y = 27.5\,ksi$

Allowable stress for the stiffener section: $F_{a_ebs} := if\left(K_{ebs} \ge \frac{5.034}{FYES}, F_{a1}, if\left(\frac{0.629}{FYES} < K_{ebs} < \frac{5.034}{FYES}, F_{a2}, if\left(K_{ebs} \le \frac{0.629}{FYES}, F_{a3}, "Error"\right)\right)\right)$

$F_{a_ebs} = 27.42 \cdot ksi$

Stress in the stiffener section: $f_{a_ebs} := \frac{R_{max}}{A_{ebs_col}} = 13.84 \cdot ksi$

$CHK_{sh.ebs} := if\left(f_{a_ebs} \le F_{a_ebs}, "OK", "NO\ GOOD"\right)$ $CHK_{sh.ebs} = "OK"$

4.1.3 BEARING STRESS ON THE BOTTOM FLANGE

Bearing stress caused by the stiffeners on the bottom flange is to be checked.

Allow 1" for corner clip for weld at the flange - web juncture.

Net width of the stiffener: $b_{ebs_net} := b_{end_stiff} - l_{cc.h.ebs} = 7 \cdot in$ *reducing width of clip*

Area in bearing due to 2 stiffeners: $A_{ebs} := 2 \cdot b_{ebs_net} \cdot t_{end_stiff} = 14 \cdot in^2$

Allowable bearing stress: $F_{bear} = 41.5\,ksi$ (AREMA 15-1-38)

Bearing stress in the stiffener: $f_{ebs} := \frac{R_{max}}{A_{ebs}} = 26.63 \cdot ksi$

$CHK_{bea.ebs} := if\left(f_{ebs} \le F_{bear}, "OK", "NO\ GOOD"\right)$ $CHK_{bea.ebs} = "OK"$

Check Plate Design

$PLATE := if\left(CHK_w = "OK" \wedge CHK_{t.ebs} = "OK" \wedge CHK_{sh.ebs} = "OK" \wedge CHK_{bea.ebs} = "OK", "OK", "NO\ GOOD"\right)$

$PLATE = "OK"$

4.1.4 WELD CONNECTION FOR END STIFFENERS

Allowable Shear force in weld: $R_{weld} = 3.87 \cdot \frac{kip}{in}$

Number of weld lines, $N_{ebs} := 2 \cdot 2 = 4$

Stress in weld: $f_{w_ebs} := \frac{R_{max}}{N_{ebs} \cdot \left(D_w - 2l_{cc.v.ebs}\right)} = 1.23 \cdot \frac{kip}{in}$

$WELD := if\left(f_{w_ebs} \le R_{weld}, "OK", "NO\ GOOD"\right)$ $WELD = "OK"$

For a redundant load path structure, the allowable weld stress for transverse stiffeners corresponds to stress category C'. Arema Table 15-1-9, Description 4.1

Number of Stress cycles is greater than 2,000,000 (for span lengths less than 100 ft) Arema Table 15-1-7

Allowable Fatigue Stress: $F_{fw} := 12ksi$ Arema Table 15-1-10

Area of the weld: $A_{weld} := N_{ebs} \cdot \left(D_w - 2l_{cc.v.ebs}\right) \cdot 0.707 \cdot t_{weld} = 67.17 \cdot in^2$

Fatigue stress in weld: $f_f := \frac{R_{sr}}{A_{weld}} = 3.78 \cdot ksi$

$FATIGUE := if\left(f_f \le F_{fw}, "OK", "NO\ GOOD"\right)$

$FATIGUE = "OK"$

Min weld for 1.125" plate = 5/16" (AWS Table 2.1)

Appendix H.2-4 4b NS- Bearing stiffeners shall be milled to bear.

Check Design

$DESIGN := if(PLATE = "OK" \wedge WELD = "OK" \wedge FATIGUE = "OK", "OK", "NO\ GOOD")$

$DESIGN = "OK"$

Intermediate Stiffener and Diaphragm

DETERMINE THE REQUIRED WIDTH AND THICKNESS OF THE INTERNAL DIAPHRAGM AND INTERMEDIATE BEARING STIFFENER. DESIGN THE BOLTED CONNECTION BETWEEN THE STIFFENER AND THE DIAPHRAGM.

5.0 DESIGN INTERMEDIATE STIFFENER AND DIAPHRAGM

5.1 LOAD CALCULATIONS

5.1.1 Normal loading condition

Load under the normal conditions is due to the differential deflection of the adjacent girders caused because of the bridge skew.
Total Dead Load + Live Load + Impact Deflection (Equivalent Uniform Load) is used to ensure conservative design.

Deflection at mid span due to the UDL: $Delta_{mid} := \frac{5 \cdot W_{load} \cdot span^4}{384 \cdot E_s \cdot I_{x_pg}} = 3.31 \cdot in$

For any position of the rail load on the bridge, there will be a distance between the corresponding points over the adjacent girders due to the skew angle of the bridge. This difference causes a differential deflection that creates load onto the diaphragm. Calculations are done about mid point for simplicity.

Distance between corresponding points over the adjacent girder: $dist := d_{girder} \cdot tan(ang) = 20.03 \cdot in$

Point of interest from the support is at a distance: $a := span \cdot 0.5 - dist = 53.58\ ft$

Deflection at the point of interest: $Delta_a := \left(\frac{W_{load} \cdot a^4 + W_{load} \cdot span^3 \cdot a}{24 \cdot E_s \cdot I_{x_pg}} \right) - \left(\frac{W_{load} \cdot span \cdot a^3}{12 \cdot E_s \cdot I_{x_pg}} \right) = 3.3 \cdot in$

Differential deflection: $Diff := Delta_{mid} - Delta_a = 0.0036 \cdot in$

Assuming the structural configuration of intermediate diaphragm connected to the girder as a cantilever, back calculating the concentrated load that can cause the above computed differential deflection to get the load.
Deflection at the cantilever due to concentrated load at tip of the beam is Pl^3/3EI , where P is the load and l is the span of the beam.

Equivalent load for the differential deflecion: $P := 3 \cdot \frac{E_s \cdot I_{x_id} \cdot Diff}{d_{girder}^3} = 90.72 \cdot kip$

End moments (assuming fixed-free cantilever condition): $M_{ser} := P \cdot d_{girder} = 317.51\ ft \cdot kip$

5.1.2 Derail Condition

"A single line of wheel loads (Q) equal to the design load per rail (Article 1.3.3) including full design impact is to be applied at an eccentricity of 5 feet from the centerline of track as shown in Figure 15-1-4, but no further than the edge of the deck or, for open decks, the bridge ties."

The entire load is assumed to act on a single girder for conservative purpose

NSRR standards allow 50% overstress in the derail load combination G

End moments (assuming fixed-free cantilever condition): $M_{derail} := P_{derail} \cdot d_{girder} = 187.25\ ft \cdot kip$

5.2 CHECK THE ADEQUACY OF INTERMEDIATE STIFFENER

5.2.1 CHECK INTERMEDIATE STIFFENER DIMENSIONS

Maximum depth of web without transverse stiffener: $D_{w_max} := 2.12 \cdot T_w \sqrt{\frac{E_s}{f_y}} = 44.67 \cdot in$ Arema 15-1.7.8 a

$CHK_{depth} := if(D_w > D_{w_max}, \text{"Stiffener req'd."}, \text{"Stiffener not req'd."})$ $CHK_{depth} = \text{"Stiffener req'd."}$

Maximum clear spacing between the stiffeners: $d_{int_stiff_max} := \min\left(96in, D_w, 1.95 \cdot t_{int_stiff} \cdot \sqrt{\frac{E_s}{R_{vg}}}\right) = 80 \cdot in$
Arema 15-1.7.8 a

$CHK_{dist} := if(d_{int_stiff} < d_{int_stiff_max}, \text{"OK."}, \text{"NO GOOD"})$ $CHK_{dist} = \text{"OK."}$

Minimum moment of inertia of the section: $I_{min} := 2.5 \cdot t_{int_stiff}^3 \cdot d_{int_stiff} \cdot \left(\frac{D_w^2}{d_{int_stiff_max}^2} - 0.7\right) = 13.18 \cdot in^4$
Arema 15-1.7.8 a

Moment of inertia of stiffeners: $I_{int_stiff} := 2\left(A_{int_stiff} \cdot d_{cent}^2 + t_{int_stiff} \cdot \frac{b_{int_stiff}^3}{12}\right) = 66.95 \cdot in^4$

$CHK_{inertia} := if(I_{min} < I_{int_stiff}, \text{"OK."}, \text{"NO GOOD"})$ $CHK_{inertia} = \text{"OK."}$

Minimum width of the stiffener plate: $b_{int_stiff_min} := 2in + \frac{D_w + 2 \cdot T_f}{30} = 4.87 \cdot in$
Arema 15-1.7.8 b

Maximum width of the stiffener plate: $b_{int_stiff_max} := 16 \cdot t_{int_stiff} = 10 \cdot in$

$CHK_{width} := if(b_{int_stiff_min} < b_{int_stiff} < b_{int_stiff_max}, \text{"OK"}, \text{"NO GOOD"})$ $CHK_{width} = \text{"OK"}$

5.2.2 STRENGTH OF THE INTERMEDIATE BEARING STIFFENER

Designing the stiffener as a column, Contributing Area: $A_{ibs} := (l_{int_web} \cdot T_w) + 2 \cdot (b_{int_stiff} \cdot t_{int_stiff}) = 25.39 \cdot in^2$
Arema 15-1.7.7 c

Moment of inertia of the considered section: $I_{yy_int} := \frac{1}{12} \cdot t_{int_stiff} \cdot (b_{int_stiff} + T_w + b_{int_stiff})^3 = 66.99 \cdot in^4$

Radius of gyration: $r_{int} := \sqrt{\frac{I_{yy_int}}{A_{ibs}}} = 1.62 \cdot in$

Slenderness ratio: $K_{ibs} := \frac{k \cdot (D_w - t_{plate})}{r_{int}} = 36.71$

Allowable stress for high slender members: $F_{a1.ibs} := \frac{0.514 \cdot \pi^2 \cdot E_s}{(K_{ibs})^2} = 109.17\,ksi$ Table 15-1-11 Arema

Allowable stress for medium slender members: $F_{a2.ibs} := 0.60 \cdot f_y - \left(17500 \frac{f_y}{E_s}\right)^{\frac{3}{2}} \cdot K_{ibs} \cdot psi = 23.92\,ksi$

Allowable stress for thicker members: $F_{a3.ibs} := 0.55 \cdot f_y = 27.5\,ksi$

Allowable stress for the stiffener section:

$$F_{a_ibs} := if\left(K_{ibs} \ge \frac{5.034}{FYES}, F_{a1.ibs}, if\left(\frac{0.629}{FYES} < K_{ibs} < \frac{5.034}{FYES}, F_{a2.ibs}, if\left(K_{ibs} \le \frac{0.629}{FYES}, F_{a3.ibs}, "Error"\right)\right)\right)$$

$F_{a_ibs} = 23.92 \cdot ksi$

Stress in the stiffener section: $f_{a_ibs} := \frac{P}{A_{ibs}} = 3.57 \cdot ksi$

$CHK_1 := if\left(f_{a_ibs} \le F_{a_ibs}, "OK", "NO\ GOOD"\right)$ $CHK_1 = "OK"$

5.3 WELD CONNECTION FOR INTERMEDIATE STIFFENERS

Allowable Shear force in weld: $R_{weld} = 3.87 \cdot \frac{kip}{in}$

Number of weld lines, $N_{ibs} := 2 \cdot 2 = 4$

Stress in weld: $f_{w_ibs} := \frac{P}{N_{ibs} \cdot (D_w - 2l_{cc.v.ibs} - t_{plate})} = 0.36 \cdot \frac{kip}{in}$

$f_{w_ibs.derail} := \frac{P_{derail}}{N_{ibs} \cdot (D_w - 2l_{cc.v.ibs} - t_{plate})} = 0.21 \cdot \frac{kip}{in}$

$WELD_{ibs} := if\left(f_{w_ibs} < R_{weld} \wedge f_{w_ibs.derail} < 1.5 \cdot R_{weld}, "OK", "NO\ GOOD"\right)$ $WELD_{ibs} = "OK"$

5.4 CHECK THE ADEQUACY OF INTERNAL DIAPHRAGM

5.4.1 DIAPHRAGM MOMENT CAPACITY

Flexural stress in serviceable condition: $\sigma_{b.ser} := \frac{M_{ser}}{S_{id}} = 6.29 \cdot ksi$

Flexural stress in derail condition: $\sigma_{b.derail} := \frac{M_{derail}}{S_{id}} = 3.71 \cdot ksi$

Allowable flexural stress: $\sigma_b := 0.55 \cdot f_y = 27.5 \cdot ksi$ Arema Table 15-1-11

$CHK_2 := if\left(\sigma_{b.ser} < \sigma_b \wedge \sigma_{b.derail} < 1.5 \cdot \sigma_b, "OK", "NO\ GOOD"\right)$ $CHK_2 = "OK"$

5.4.2 DIAPHRAGM SHEAR CAPACITY

Shear stress in serviceable condition: $\sigma_{v.ser} := \frac{P}{A_{w_id}} = 2.61 \cdot ksi$

Shear stress in derail condition: $\sigma_{v.derail} := \frac{P_{derail}}{A_{w_id}} = 1.54 \cdot ksi$

Allowable shear stress: $\sigma_v := 0.35 \cdot f_y = 17.5 \cdot ksi$ Arema Table 15-1-11

$CHK_3 := if\left(\sigma_{v.ser} < \sigma_v \wedge \sigma_{v.derail} < 1.5 \cdot \sigma_v, \text{"OK"}, \text{"NO GOOD"}\right)$ $CHK_3 = \text{"OK"}$

5.5 WEB BOLT SHEAR CAPACITY

(Shear Connection - Girder Web to Diaphragm Web Connection)

5.5.1 BOLT CONNECTION DETAILS

Neutral Axis of Rows (Y-Bar) From Bottom Most Bolt

$$Ybar_{ID} := \frac{\sum_{\Delta = Bolts_{C1_ID}-1}^{0} \left(BoltFirst_{C1_ID} + \Delta \cdot Pitch_{C1_ID}\right) \ldots + \sum_{\sigma = Bolts_{C2_ID}-1}^{0} \left(BoltFirst_{C2_ID} + \sigma \cdot Pitch_{C2_ID}\right)}{Bolts_{C1_ID} + Bolts_{C2_ID}}$$

$Ybar_{ID} = 32.87 \cdot in$

Sum of Y Squared

$$SumY2_{ID} := \sum_{\Delta = Bolts_{C1_ID}-1}^{0} \left(BoltFirst_{C1_ID} + \Delta \cdot Pitch_{C1_ID} - Ybar_{ID}\right)^2 \ldots + \sum_{\sigma = Bolts_{C2_ID}-1}^{0} \left(BoltFirst_{C2_ID} + \sigma \cdot Pitch_{C2_ID} - Ybar_{ID}\right)^2$$

$SumY2_{ID} = 11475.43 \cdot i$

Neutral Axis of Columns (X-Bar) From Column 1 Bolts

$$Xbar_{ID} := \frac{Bolts_{C2_ID} \cdot Gage_{ID}}{Bolts_{C1_ID} + Bolts_{C2_ID}}$$

$Xbar_{ID} = 0 \cdot in$

Sum of X Squared

$$SumX2_{ID} := Bolts_{C1_ID} \cdot Xbar_{ID}^2 + Bolts_{C2_ID} \cdot \left(Gage_{ID} - Xbar_{ID}\right)^2$$

$SumX2_{ID} = 0 \cdot in^2$

$$EccentricBolts := \sqrt{Gage_{ID}^2 + \min\left(Pitch_{C1_ID} - BoltFirst_{C1_ID}, Pitch_{C1_ID} - BoltFirst_{C2_ID}\right)^2} = 3 \cdot in$$

$$BoltSpacing_{ID} := if\left(BoltFirst_{C1_ID} = 0 \wedge BoltFirst_{C2_ID} = 0 \wedge Gage_{ID} \neq 0, Gage_{ID}, EccentricBolts\right) = 3 \cdot in$$

Polar moment of Inertia of bolt configuration: $J_{ID} := SumX2_{ID} + SumY2_{ID}$ $J_{ID} = 11475.43 \cdot in^2$

Total Height of Bolt Array:

$$Bolt_{Ht.Id} := \max\left[\left(Bolts_{C1_ID} - 1\right) \cdot Pitch_{C1_ID} + BoltFirst_{C1_ID}, \left(Bolts_{C2_ID} - 1\right) \cdot Pitch_{C2_ID} + BoltFirst_{C2_ID}\right] = 66 \cdot in$$

Number of bolts: $n_{ID} := Bolts_{C1_ID} + Bolts_{C2_ID} = 23$

Vertical location of centroid of bolt configuration: $y_{ID} := Ybar_{ID} = 32.87 \cdot in$

Horizontal location of centroid of bolt configuration: $x_{ID} := Xbar_{ID} = 0 \cdot in$

MinimumSpacing of bolts: $spa_{ID} := BoltSpacing_{ID} = 3 \cdot in$

$CHK_{Spa.ID} := if\left(spa_{ID} \geq spa_{min1}, \text{"OK"}, \text{"NO GOOD"}\right)$ $CHK_{Spa.ID} = \text{"OK"}$

$CHK_{Edge.ID} := if\left(Edge_{dist.ID} > edge_{min1}, \text{"OK"}, \text{"NO GOOD"}\right)$ $CHK_{Edge.ID} = \text{"OK"}$

5.5.2 DESIGN OF BOLT CONNECTION

Allowable Diaphragm Shear Stress: $\sigma_{a.v} := 0.35 \cdot f_y$ *REF: AREMA Table 15-1-11* $\sigma_{a.v} = 17.5 \cdot ksi$

Required Shear Capacity of the connection: AREMA 15-1.11.4 (c) $P_{d.bltVdg} := d_{w_id} \cdot t_{w_id} \cdot \sigma_{a.v} \cdot 0.5$ $P_{d.bltVdg} = 304.06 \cdot kip$

Vertical Shear/ Bolt: AREMA 15-11.4 (c) $F_{d.bltVcf} := \frac{P_{d.bltVdg}}{n_{ID}} \cdot 1.0$ $F_{d.bltVcf} = 13.22 \cdot kip$

Horizontal distance between centroid of bolts and centerline of girder web: $e_{ID} := 0.5B_f - Db_{dwID} - 0.5 \cdot Gage_{ID} = 7.25 \cdot in$ *0.5*thk of flange-edge distance-0.5*hor spacing of bolts*

Moment acting on the bolt configuration: $M_{blt.ser} := P \cdot e_{ID} = 54.81\ ft \cdot kip$ *Service condition*

Moment acting on the bolt configuration: $M_{blt.derail} := P_{derail} \cdot e_{ID} = 32.32\ ft \cdot kip$ *Derail condition*

Shear due to bending moment acting in the y direction on the bolt group

Force to bolt group at C/L of bolt pair-serviceable condition: $F_{blt.v.ser.y} := \frac{M_{blt.ser} \cdot x_{ID}}{J_{ID}}$ $F_{blt.v.ser.y} = 0 \cdot kip$

Force to bolt group at C/L of bolt pair- Derail condition: $F_{blt.v.derail.y} := \frac{M_{blt.derail} \cdot x_{ID}}{J_{ID}}$ $F_{blt.v.derail.y} = 0 \cdot kip$

Shear due to bending moment acting in the x direction on the bolt group

Force to bolt group at C/L of bolt pair-serviceable condition: $F_{blt.v.ser.x} := \frac{M_{blt.ser} \cdot y_{ID}}{J_{ID}}$ $F_{blt.v.ser.x} = 1.88 \cdot kip$

Force to bolt group at C/L of bolt pair- Derail condition: $F_{blt.v.derail.x} := \frac{M_{blt.derail} \cdot y_{ID}}{J_{ID}}$ $F_{blt.v.derail.x} = 1.11 \cdot kip$

Shear stress due to vertical shear acting in the y direction on the bolt group

Vertical design shear force per bolt-serviceable condition: $F_{d.bltV.ser} := \frac{P}{n_{ID}}$ $F_{d.bltV.ser} = 3.94 \cdot kip$

Vertical design shear force per bolt-Derail condition: $F_{d.bltV.derail} := \frac{P_{derail}}{n_{ID}}$ $F_{d.bltV.derail} = 2.33 \cdot kip$

Total Shear on a bolt: $F_{d.vT.ser} := \sqrt{F_{blt.v.ser.x}^2 + \left(F_{blt.v.ser.y} + F_{d.bltV.ser}\right)^2}$ $F_{d.vT.ser} = 4.37 \cdot kip$ *Service condition*

Total Shear on a bolt: $F_{d.vT.derail} := \sqrt{F_{blt.v.derail.x}^2 + \left(F_{blt.v.derail.y} + F_{d.bltV.derail}\right)^2}$

$F_{d.vT.derail} = 2.58 \cdot kip$ *Derail condition*

Shear Checks:

1/2 Diaphragm condition $CHK_4 := if\left(F_{d.bltVcf} \le R_{v1}, "OK", "NO\ GOOD"\right)$ $CHK_4 = "OK"$

Service condition $CHK_5 := if\left(F_{d.bltV.ser} \le R_{v1}, "OK", "NO\ GOOD"\right)$ $CHK_5 = "OK"$

Derail condition $CHK_6 := if\left(F_{d.bltV.derail} \le 1.5 \cdot R_{v1}, "OK", "NO\ GOOD"\right)$ $CHK_6 = "OK"$

5.6 - BLOCK SHEAR CAPACITY - STIFFENER WEB

This assumes a vertical force on stiffener equal to half the shear capacity of the diaphragm. Due to the bolts being in single shear, entire amount of that force will be carried to stiffener. It will be assumed that all bolts must shear through the entire web to fail; i.e. all bolt spacings + end space, each in single shear

C/L of bolt to edge of stiffener: $Db_s := Db_{dwID} + Gage_{ID}$ $\quad Db_s = 1.75 \cdot in$

Vertical force causing rupture: $F_{bs} := P_{d.bltVdg}$ $\quad F_{bs} = 304.06 \cdot kip$

Gross area subject to tension: $A_{gt} := Db_s \cdot t_{int_stiff}$ $\quad A_{gt} = 1.09 \cdot in^2$

$hc := if\left(Gage_{ID} = 0, 0.5, 1.5\right) = 0.5$

Net area subject to tension: $A_{Nt} := A_{gt} - hc \cdot \left(Hole_{dg1} \cdot t_{int_stiff}\right)$ $\quad A_{Nt} = 0.74 \cdot in^2$

Gross area subject to shear: $A_{gv} := \left[Bolt_{Ht.Id} + 0.5 \cdot \left(D_w - Bolt_{Ht.Id}\right)\right] \cdot t_{int_stiff}$ $\quad A_{gv} = 45.63 \cdot in^2$

Net area subject to shear: $A_{Nv} := A_{gv} - \left(\max\left(Bolts_{C1_ID}, Bolts_{C2_ID}\right) - 0.5\right) \cdot \left(Hole_{dg1} \cdot t_{int_stiff}\right)$ $\quad A_{Nv} = 29.8 \cdot in^2$

Maximum allowable force allowed for block shear

$P_1 := 0.30 \cdot f_u \cdot A_{Nv} + 0.50 \cdot f_u \cdot A_{Nt} = 605.31 \cdot kip$

$P_2 := 0.30 \cdot f_y \cdot A_{gv} + 0.50 \cdot f_u \cdot A_{Nt} = 708.5 \cdot kip$ $\quad$ AREMA 15-1.5.9 (e)

$P_{bs.a} := \min\left(P_1, P_2\right) = 605.31 \cdot kip$

Shear Stress Check: $CHK_7 := if\left(F_{bs} \le P_{bs.a}, \text{"OK"}, \text{"NO GOOD"}\right)$ $\quad CHK_7 = \text{"OK"}$

5.7 - BLOCK SHEAR CAPACITY- FAILURE OF DIAPHRAGM WEB AT CONNECTION

(Shear Connection - Girder Web to Diaphragm Web Connection)

This assumes a vertical force on the web equal to the shear capacity of the diaphragm. It will be assumed that all bolts must shear through the entire web and top flange to fail; i.e. all bolt spacings + spacing to the outside of the flange

Vertical force causing rupture: $F_{bs.dw} := P_{d.bltVdg}$ $\quad F_{bs.dw} = 304.06 \cdot kip$

Gross area subject to tension: $A_{gt.dw} := \left(Db_{dwID} + Gage_{ID}\right) \cdot t_{w_id}$ $\quad A_{gt.dw} = 0.87 \cdot in^2$

Net area subject to tension: $A_{Nt.dw} := A_{gt.dw} - hc \cdot \left(Hole_{dg1} \cdot t_{w_id}\right)$ $\quad A_{Nt.dw} = 0.59 \cdot in^2$

Gross area subject to shear: $A_{gv.dw} := \left[Bolt_{Ht.Id} + 0.5 \cdot \left(d_{w_id} - Bolt_{Ht.Id}\right)\right] \cdot t_{w_id}$

$A_{gv.dw} = 33.87 \cdot in^2$

Net area subject to shear: $A_{Nv.dw} := A_{gv.dw} - \left(\max\left(Bolts_{C1_ID}, Bolts_{C2_ID}\right) - 0.50\right) \cdot Hole_{dg1} \cdot t_{w_id} = 21.22 \cdot in^2$

Maximum allowable force allowed for block shear: Reference: AREMA 15-1.5.9 (e)

$$P_{dw1} := 0.30 \cdot f_u \cdot A_{Nv.dw} + 0.50 \cdot f_u \cdot A_{Nt.dw} = 433.06 \cdot kip$$

$$P_{dw2} := 0.30 \cdot f_y \cdot A_{gv.dw} + 0.50 \cdot f_u \cdot A_{Nt.dw} = 527.42 \cdot kip$$

$$Max_{P.dw} := \min\left(P_{dw1}, P_{dw2}\right) = 433.06 \cdot kip$$

Shear Stress Check: $CHK_8 := if\left(F_{bs.dw} \le Max_{P.dw}, \text{"OK"}, \text{"NO GOOD"}\right)$ $CHK_8 = \text{"OK"}$

5.8 - LOAD INDUCED FATIGUE ON GIRDER FLANGE

Max Allowable Stress in Flange: $\boxed{\sigma_{all.gf} := 16.0ksi}$ Reference: AREMA Table 15-1-9 Description 2.1

$$CHK_9 := if\left(R_{LLI} \le \sigma_{all.gf}, \text{"OK"}, \text{"NO GOOD"}\right)$$ $CHK_9 = \text{"OK"}$

Lateral Bracing and Connections

DETERMINE THE REQUIRED SECTION OF THE LATERAL BRACING AND THE BOLT CONNECTION DETAILS OF LOWER LATERAL BRACING TO THE STIFFENER CONNECTION PLATE.

6.0 DESIGN LOWER LATERAL BRACING

(LLB may not be required for spans with concrete decks and girders less than 72". See AREMA 15-1.11.2)

6.1 CHECK FOR ADEQUACY OF BRACING AND CONNECTION

6.1.1 CHECK FOR COMPRESSION

Slenderness ratio: $K_{lat} := \frac{k \cdot Len_{lat}}{r_{lat}} = 114.13$

Allowable stress for high slender members: $\sigma_{a1} := \frac{0.514 \cdot \pi^2 \cdot E_s}{\left(K_{lat}\right)^2} = 11.29\,ksi$ Table 15-1-11 Arema

Allowable stress for medium slender members: $\sigma_{a2} := 0.60 \cdot f_y - \left(17500 \cdot \frac{f_y}{E_s}\right)^{\frac{3}{2}} \cdot K_{lat}\,psi = 11.08\,ksi$

Allowable stress for thicker members: $\sigma_{a3} := 0.55 \cdot f_y = 27.5\,ksi$

Allowable stress for the stiffener section: $\sigma_{alo_lat} := if\left(K_{lat} \ge \frac{5.034}{FYES}, \sigma_{a1}, if\left(\frac{0.629}{FYES} < K_{lat} < \frac{5.034}{FYES}, \sigma_{a2}, if\left(K_{lat} \le \frac{0.629}{FYES}, \sigma_{a3}, \text{"Error"}\right)\right)\right)$

$$\sigma_{alo_lat} = 11.08 \cdot ksi$$

Axial Force in LLB (Case 1): $P_{lb1} := P_{lat.N} \cdot \left(\frac{Len_{lat}}{d_{girder}}\right) \cdot 0.5 = 44.64 \cdot kip$

Axial Force in LLB (Case 2): $P_{lb2} := P_{tot} \cdot \left(\frac{Len_{lat}}{d_{girder}}\right) \cdot 0.5 = 60.11 \cdot kip$

Stress in the lateral bracing member (Case 2): $\sigma_{bra1} := \frac{P_{lb1}}{A_{lat}} = 6.33\,ksi$

Stress in the lateral bracing member (Case 2): $\sigma_{bra2} := \frac{P_{lb2}}{A_{lat}} = 8.53 \cdot ksi$

$CHK_{stress} := if\left(\sigma_{bra1} < \sigma_{alo_lat} \wedge \sigma_{bra2} \le 1.25 \cdot \sigma_{alo_lat}, \text{"OK"}, \text{"NO GOOD"}\right)$ $CHK_{stress} = \text{"OK"}$

6.2 BOLTED CONNECTION OF LATERAL BRACING TO STIFFENER CONNECTION PLATE

Stiffener connection plate is the plate bolted to the tension flange of the primary girder for bearing of the intermediate stiffener. This would avoid the category C type fatigue failure specified in AREMA.

Number of bolts per connection: $n_{lt} := 4$

Shear stress per bolt: $\sigma_{v.lat1} := \frac{P_{lb1}}{A_{blt.g1} \cdot n_{lt}} = 14.21\,ksi$ $\sigma_{v.lat2} := \frac{P_{lb2}}{A_{blt.g1} \cdot n_{lt}} = 19.13\,ksi$

Since the lateral bracing is a WT member and bolts are symmetrical about the centerline of the WT section, no moment will be induced from the lateral force, and the previous calculated shear stress is the total shear stress per bolt.

$CHK_{blt.sh} := if\left(\sigma_{v.lat1} \le S_{v.blt} \wedge \sigma_{v.lat2} \le S_{v.blt} \cdot 1.25, \text{"OK"}, \text{"NO GOOD"}\right)$ $CHK_{blt.sh} = \text{"OK"}$

6.3 BLOCK SHEAR IN THE CONNECTING GUSSET PLATE:

Gross Area in Shear: $A_{gv.gus} := Thk_{gus} \cdot L_{shr.gus} = 2 \cdot in^2$

Gross Area in Tension: $A_{gt.gus} := Thk_{gus} \cdot L_{ten.gus} = 2.12 \cdot in^2$

Net Area in Shear: $A_{nv.gus} := A_{gv.gus} - Thk_{gus} \cdot 1.5 \cdot Hole_{dg1} = 1.16 \cdot in^2$

Net Area in Tension: $A_{nt.gus} := A_{gt.gus} - Thk_{gus} \cdot Hole_{dg1} = 1.56 \cdot in^2$

Actual Force in Connection (Case 1): $P_{lb1} = 44.64 \cdot kip$

Force in Connection (Case 2): $P_{lb2} = 60.11 \cdot kip$

$P_{gus1} := 0.30 \cdot f_u \cdot A_{nv.gus} + 0.50 \cdot f_u \cdot A_{nt.gus} = 73.33 \cdot kip$

Reference: AREMA 15-1.5.9 (e)

$P_{gus2} := 0.30 \cdot f_y \cdot A_{gv.gus} + 0.50 \cdot f_u \cdot A_{nt.gus} = 80.78 \cdot kip$

$Max_{P.gus} := \min\left(P_{gus1}, P_{gus2}\right) = 73.33 \cdot kip$

$CHK_{gus} := if\left(Max_{P.gus} > P_{lb1} \wedge Max_{P.gus} \cdot 1.25 > P_{lb2}, \text{"OK"}, \text{"NO GOOD"}\right)$ $CHK_{gus} = \text{"OK"}$

Primary Girder Flange to Web Weld Connection
(AREMA/NSRR Design: Prosser Avenue Bridge)

DETERMINE THE REQUIRED WELD PROPERTIES FOR THE FLANGE TO WEB OF THE PRIMARY DECK GIRDER.

Flange-to-web full penetration groove welds are designed to transmit horizontal shear due to the variation of the bending moment over the girder and the direct pressure due to applied distributed load

11.0 DESIGN OF WELD CONNECTION

NS Appendix H.2-4 B2 Full penetration groove welds

11.1 SECTION PROPERTIES AND LOADING

Material properties and weld electrodes are as defined in the above sections.

Thickness of weld: $t_{w_pg} := \min(T_w, T_f) = 0.88 \cdot in$

Allowable shear force on weld: $R_{w_pg} := S_{gr.weld} \cdot t_{w_pg} = 15.31 \cdot \frac{kip}{in}$

Shear force at section under consideration: $F_{h.pg} := R_{max} = 372.8 \cdot kip$

11.2 CHECK THE ADEQUACY OF THE WELD CONNECTION

First moment of flange area: $Q_{pg} := B_f \cdot T_f \cdot \frac{(D_w + T_f)}{2} = 2241 \cdot in^3$

Horizontal shear force acting on the weld: $r_{wh_pg} := \frac{F_{h.pg} \cdot Q_{pg}}{I_{x_pg}} = 3.93 \cdot \frac{kip}{in}$ *similar to shear between concrete slab and steel beam*

Vertical shear force acting on the weld: $r_{wv_pg} := F_{v.pg} = 0.53 \cdot \frac{kip}{in}$

Total shear force acting on the weld: $r_{w_pg} := \sqrt{r_{wh_pg}^2 + r_{wv_pg}^2} = 3.96 \cdot \frac{kip}{in}$

$CHK_{sh.pg} := \text{if}(r_{w_pg} < R_{w_pg}, \text{"OK"}, \text{"NO GOOD"})$ $CHK_{sh.pg} = \text{"OK"}$

For a redundant load path structure, the allowable weld stress for complete joint penetration groove weld of web to flange corresponds to category C failure. Arema Table 15-1-9 clause 5.3

Number of Stress cycles is greater than 2,000,000 (for span lengths less than 100 ft) Arema Table 15-1-7

Horizontal shear force acting on the weld due to fatigue: $R_{wf_pg} := \frac{R_{sr} \cdot Q_{pg}}{I_{x_pg}} = 2.68 \cdot \frac{kip}{in}$

Stress due to fatigue: $f_{f.pg} := \frac{R_{wf_pg}}{t_{w_pg}} = 3.06\,ksi$ *calculating the stress per unit inch of weld.*

$FATIGUE_{pg} := \text{if}(f_{f.pg} \le F_f, \text{"OK"}, \text{"NO GOOD"})$ $FATIGUE_{pg} = \text{"OK"}$

DESIGN CALCULATION COVER SHEET

Gannett Fleming
Engineers and Architects, P.C.
Excellence Delivered ***As Promised***

ISO 9001:2008 CERTIFIED

PROJECT:	**ODOT/EMH&T: HAM-75-7.85**	*ODOT PID NO:*	*77889*
BRIDGE NO:	**HAM-75-0834**	*EMH&T JOB NO:*	
SUBJECT:	***Analysis***	**GF JOB NO:**	**54682**
	Girder Connection Details	CALC NO.:	**HAM075_0834_12_Sp2**
	MATHCAD	REV NO.:	**01**
FILE NAME(s):	*HAM075_0834_12_Sp2.xmcd*	**SHEET:**	**1 OF 30**

SUPERSEDES CALC NO: N/A (Rev. 00)

CALCULATION DESCRIPTION:

This will analyze all of the steel connections to the girder, such as end and intermediate diaphragms, stiffners, and lower lateral bracing, both welded connections and bolted connections. The calculations will check every possible mode of failure.

DESIGN BASIS OR REFERENCES

NS Underpass Design Criteria
AREMA (2014) Chapter 15
HAM075_0834_03_Sp2
AISC Steel Construction Manual, Thirteenth Edition
BDM - ODOT Bridge Design Manual (2004) - Current Edition

MISCELLANEOUS NOTES:

RECORD OF ISSUES:

REV	DESCRIPTION	BY	DATE	VERIF'D	DATE
00	Stage 1 Calculation	VDT	05/29/14	VDK	06/23/14
01	Stage 3 Update	VDT	05/12/16	CTM	05/12/16

RECORD OF CHECK OF CURRENT CALCULATION VERSION

BY	DATE	CHKD	DATE	UPD.	DATE	VERIF'D	DATE
VDT	05/29/14	VDK	06/02/14	VDT	05/12/16	CTM	05/12/16

LOAD AND GEOMETRIC DATA

Design notes

- Variables with a box around them require review/user input.
- Code references are made using the following abbreviations:
  - AREMA -AREMA Chapter 15 - Current Edition
  - NS - Norfolk Southern Public Policy Manual - Current Edition
  - BDM - ODOT LFD Bridge Design Manual (2004) - Current Edition
  - AA - AASHTO LFD
  - AISC - AISC Steel Construction Manual, Thirteenth Edition

1.0 GEOMETRIC AND LOAD DATA

1.1 GIRDER AND SPAN DATA

Girder Flange width: $B_f := 17.0in$

Girder Flange thickness: $T_f := 2.25in$

Depth of web: $D_w := 81.5in$

Girder Moment of Inertia: $I_{x_pg} := 165508.7in^4$ Girder section properties spreadsheet

Girder Web thickness: $T_w := 0.875in$

SpanLength of the girder: $span := 97.25ft$

Skew angle of the bridge: $ang := 25.5deg$

Transverse Girder Spacing: $d_{girder} := 3.5ft$

Skewed girder spacing: $d_{skew} := d_{girder} \cdot \left(\frac{1}{\cos(ang)}\right) = 3.88\,ft$

1.2 END DIAPHRAGM AND JACKING STIFFENER DATA

1.2.1 SECTION 1: FULL SECTION

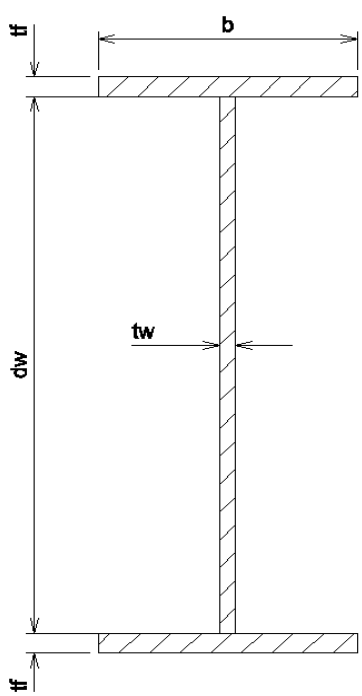

FULL SECTION

Flange width: $b_{f.ed} := 6 \cdot in$

Flange Thickness: $t_{f.ed} := 0.5 \cdot in$

Total depth of section: $d_{ed} := D_w - 11in = 70.5 \cdot in$

Height of web: $d_{w.ed} := d_{ed} - 2 \cdot t_{f.ed} = 69.5 \cdot in$

Thickness of Web: $t_{w.ed} := 0.5 \cdot in$

Area of the section: $A_{ed} := d_{w.ed} \cdot t_{w.ed} + b_{f.ed} \cdot \left(d_{ed} - d_{w.ed}\right) = 40.75 \cdot in^2$

Flange area: $A_{f.ed} := t_{f.ed} \cdot b_{f.ed} = 3 \cdot in^2$

Web area: $A_{w.ed} := d_{w.ed} \cdot t_{w.ed} = 34.75 \cdot in^2$

Mom. of Inertia: $I_{x.ed} := \frac{t_{w.ed} \cdot d_{w.ed}^3}{12} + \frac{b_{f.ed} \cdot \left(d_{ed}^3 - d_{w.ed}^3\right)}{12} = 21337.72 \cdot in^4$

Effective column height factor: $k := 0.75$ Table 15-1-11 Arema

Section Modulus: $S_{x.ed} := \frac{I_{x.ed}}{\left(\frac{d_{ed}}{2}\right)} = 605.33 \cdot in^3$

Radus of Gyration: $r_{x.ed} := \sqrt{\frac{I_{x.ed}}{A_{ed}}} = 22.88 \cdot in$

1.2.2 SECTION 2: SECTION AT ACCESS HOLE

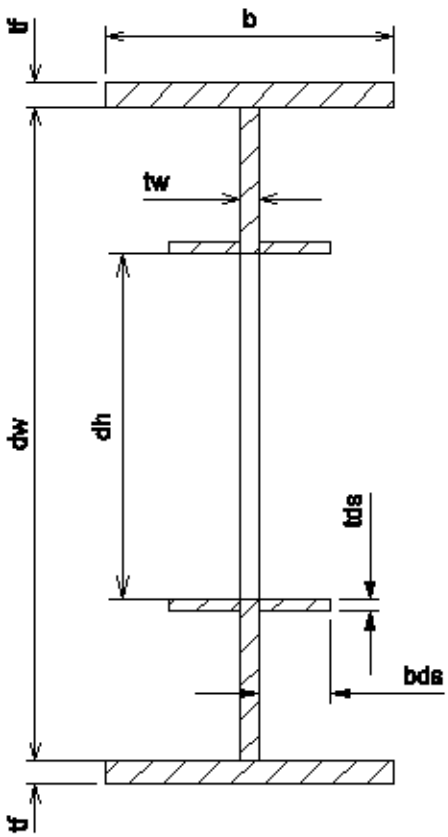

SECTION AT ACCESS HOLE

Width of flange: $b_{f.ed} = 6 \cdot in$

Thickness of flange: $t_{f.ed} = 0.5 \cdot in$

Height of web: $d_{w.ed} = 69.5 \cdot in$

Total depth of section: $d_{ed} = 70.5 \cdot in$

Thickness of Web: $t_{w.ed} = 0.5 \cdot in$

Depth of hole: $d_{h.ed} := 24 \cdot in$

Half-Width of horizontal stiffener $b_{ds.ed} := 0 \cdot in$

Thickness of horizontal stiffener: $t_{ds.ed} := 0 \cdot in$

Minimum dia of access hole: $Dia_{access} := 15in$

Clearance to access hole from jacking points: $clear_{access} := 0.75in$

Minimum 15 in access hole to be provided as per NS Appendix H 2.5. 0.75 in spacing is provided on either sides to the jacking stiffener. It is assumed that a single jack will be used under each diaphragm, but to be conservative jacking stiffners will be analyzed to accept the full load

Area of section at hole:

$$A_{h.ed} := d_{w.ed} \cdot t_{w.ed} + b_{f.ed} \cdot \left(d_{ed} - d_{w.ed}\right) - d_{h.ed} \cdot t_{w.ed} + 4 \cdot b_{ds.ed} \cdot t_{ds.ed} \ldots = 28.75 \cdot in^2$$

Area of flange: $A_{f.ed} = 3 \cdot in^2$

Area of web with hole: $A_{w_h.ed} := d_{w.ed} \cdot t_{w.ed} - d_{h.ed} \cdot t_{w.ed} = 22.75 \cdot in^2$

Moment of Inertia of section at hole:

$$I_{x_h.ed} := \frac{t_{w.ed} \cdot d_{w.ed}^3}{12} - \frac{t_{w.ed} \cdot d_{h.ed}^3}{12} + \frac{b_{f.ed} \cdot \left(d_{ed}^3 - d_{w.ed}^3\right)}{12} + \frac{2 \cdot b_{ds.ed} \cdot \left[\left(d_{h.ed} + 2 \cdot t_{ds.ed}\right)^3 - d_{h.ed}^3\right]}{12} \ldots = 20761.72 \cdot in^4$$

Section modulus: $S_{_h.ed} := \frac{I_{x_h.ed}}{\left(\frac{d_{ed}}{2}\right)} = 588.99 \cdot in^3$

Radius of gyration: $r_{x_h.ed} := \sqrt{\frac{I_{x_h.ed}}{A_{h.ed}}} = 26.87 \cdot in$

1.2.3 JACKING STIFFENER DATA

Stiffener thickness: $t_{js} := .75 \cdot in$

Width of weld clip: $d_{weld} := 1.25 \cdot in$

Height of weld clip: $h_{weld} := 1 \cdot in$

1.3 END BEARING STIFFENER DATA

Stiffener plate thickness: $t_{end_stiff} := 1.0in$

Horizontal Leg of corner clip: $l_{cc.h.ebs} := 1in$

Stiffener width: $b_{end_stiff} := (B_f - T_w) \cdot 0.5 = 8.06 \cdot in$

Vertical Leg of corner clip: $l_{cc.v.ebs} := 1in$

Participating length of the web: $l_{web} := 25 \cdot t_{w.ed} = 12.5 \cdot in$ Arema 15-1.7.7. c

1.4 INTERMEDIATE STIFFENER AND INTERNAL DIAPHRAGM

1.4.1 STIFFENER SECTION PROPERTIES

Stiffener plate thickness: $t_{int_stiff} := .625in$

Horizontal Leg of corner clip: $l_{cc.h.ibs} := 1in$

Stiffener width: $b_{int_stiff} := 5in$

Vertical leg of corner clip: $l_{cc.v.ibs} := 8in$

Participating length of the web: $l_{int_web} := 25 \cdot T_w = 21.87 \cdot in$ Arema 15-1.7.7. c

Clear distance between stiffeners: $d_{int_stiff} := 72in$

Area of stiffener plate: $A_{int_stiff} := t_{int_stiff} \cdot b_{int_stiff} = 3.13 \cdot in^2$

Distance from centroid of plates to center of single plate: $d_{cent} := (T_w + b_{int_stiff}) \cdot 0.5 = 2.94 \cdot in$

Thickness of the stifffener connection plate: $t_{plate} := 0.5in$ NS Appendix H.2-4 B-3.b

1.4.2 DIAPHRAGM SECTION PROPERTIES

Width of flange: $b_{f_id} := 6 \cdot in$

Thickness of flange: $t_{f_id} := .5 \cdot in$

Height of web: $d_{w_id} := d_{w.ed} = 69.5 \cdot in$

Thickness of Web: $t_{w_id} := 0.5 \cdot in$

Total depth of section: $d_{id} := d_{w_id} + 2 \cdot t_{f_id} = 70.5 \cdot in$

Flange area: $A_{f_id} := t_{f_id} \cdot b_{f_id} = 3 \cdot in^2$

Web area: $A_{w_id} := d_{w_id} \cdot t_{w_id} = 34.75 \cdot in^2$

Area of the section: $A_{id} := d_{w_id} \cdot t_{w_id} + b_{f_id} \cdot (d_{id} - d_{w_id}) = 40.75 \cdot in^2$

Moment of Inertia of the section:

$$I_{x_id} := \frac{t_{w_id} \cdot d_{w_id}^{3}}{12} + \frac{b_{f_id} \cdot \left(d_{id}^{3} - d_{w_id}^{3}\right)}{12} = 21337.72 \cdot in^{4}$$

Section Modulus: $S_{id} := \frac{I_{x_id}}{\left(\frac{d_{id}}{2}\right)} = 605.33 \cdot in^{3}$

Radus of Gyration: $r_{x_id} := \sqrt{\frac{I_{x_id}}{A_{id}}} = 22.88 \cdot in$

1.5 LATERAL BRACING

A steel WT 4x24 is used for the lateral bracing.

1.5.1 LATERAL BRACING MEMBER

Depth of lateral bracing: $D_{lat} := 4.25in$

Flange thickness: $T_{f.lat} := .685in$

Flange width: $B_{f.lat} := 8.11in$

Area of bracing: $A_{lat} := 7.05in^{2}$

Moment of inertia of the bracing: $I_{lat} := 6.85in^{4}$

Longitudinal spacing between bracing points: $Spa_{lat.l} := 12ft$

Dimensional parameters of the chosen angle are taken from AISC steel tables.

Lateral spacing between girders: $Spa_{lat.g} := d_{girder} = 3.5\,ft$

Length of the diagonal lateral brace: $Len_{lat} := \sqrt{Spa_{lat.l}^{2} + Spa_{lat.g}^{2}} = 12.5\,ft$

Radius of gyration: $r_{lat} := \sqrt{\frac{I_{lat}}{A_{lat}}} = 0.99 \cdot in$

1.5.1 LATERAL BRACING CONNECTION

A 1/2" Gusset Plate will be used for the connection. Following inputs only used for checking block shear in plate.

Thickness of Gusset Plate: $Thk_{gus} := 0.5in$

Shear Length: $L_{shr.gus} := 4in$

Tension Length: $L_{ten.gus} := 4.25in$

The values given are thoroughly rounded down to compensate for any minor differences in the unique gusset plate connections. Values taken from CAD drawing in the basemap.

1.6 GIRDER LOADS

1.6.1 GIRDER REACTIONS

from girder design spreadsheet

Reaction due to dead load from span1: $R_{1T} := 97.43kip$

Reaction due to dead load from span2: $R_{2T} := 97.43kip$

Loads that act on the end bearing stiffener:

Maximum load on the stiffener from girder: $R_{max} := 328.9kip$ *Vertical forces due to DL+LL+I+CF+LF*

Fatigue load on the stiffener: $R_{sr} := 231.47kip$ *Vertical forces due to LL+I+CF+LF*

Loads that act on the Intermediate bearing stiffener:

Uniformly distributed load on the girder: $W_{load} := 5.98klf$ *Vertical forces due to DL+LL+I+CF+LF*

Concentrated derail load acting on the girder: $P_{derail} := 54.0kip$

Direct load acting on girder (vertical shear): $F_{v.pg} := 6.31klf$ *vertical load due to DL+LL+I+CF+LF+W*

Direct load is used in design of girder flange to web - full penetration groove weld.

Shear Stress in Girder: $R_{vg} := 5.5ksi$ Stress due to LL+I in Girder: $R_{LLI} := 15.53ksi$

From Girder Design Spreadsheet, Span 1 Tables

1.6.2 LATERAL LOADS ON GIRDER

B1 Load combination with 125% overstress is considered for the lateral bracing design. Table 4.5 "Design of Modern Steel Railway Bridges" by John Unsworth.

There is no CWR force applicable for this particular bridge type and no lateral force due to LL+I+DL.

Lateral forces to be considered:

Lateral wind load on loaded bridge: $P_{lat.w} := 421.88plf + 300plf$ $P_{lat.w} = 0.72\,klf$ *wind on Superstructure+Live load*

Lateral force due to Nosing (Case 1): $P_{lat.N} := 25kip$

Total lateral load acting on each diagonal brace (Case 2): $P_{tot} := P_{lat.w} \cdot Spa_{lat.l} + P_{lat.N} = 33.66 \cdot kip$

2.0 MATERIAL DATA

2.1 PRIMARY GIRDER

STRUCTURAL STEEL: A709 GRADE 50S YIELD STRENGTH: $f_y := 50 \cdot ksi$ ULTIMATE STRENGTH: $f_u := 65 \cdot ksi$

Elastic modulus of steel: $E_s := 29000 \cdot ksi$ Unit weight of steel: $w_s := 490pcf$

$$ESFY := \sqrt{\frac{E_s}{f_y}} = 24.08 \qquad FYES := \frac{1}{ESFY} = 0.04$$

Number of Stress cycles is greater than 2,000,000 (for span lengths less than 100 ft) AREMA Table 15-1-7

Allowable Fatigue Stress: $F_f := 10ksi$ AREMA Table 15-1-10 Category C, Descr. 1.3

Allowable bearing stress: $F_{bear} := 0.83 \cdot f_y = 41.5\,ksi$ AREMA Table 15-1-11

2.2 BOLT AND WELD CONNECTIONS

2.2.1 BOLTS AND WELDS ALLOWABLE STRESSES

Allowable shear stress in A 325 bolts Table 15-1-11 Arema $S_{v.blt} := 17ksi$ *slip critical connection*

Allowable shear stress in fillet welds Table 15-1-13 Arema $S_{v.weld} := \min(19ksi, 0.35 \cdot f_y) = 17.5\,ksi$

Allowable shear stress in groove welds Table 15-1-13 Arema $S_{gr.weld} := 0.35 \cdot f_y = 17.5\,ksi$

Allowable Tension in A 325 bolts: Table 15-1-11 Arema $S_{p.blt.max} := 44000psi$

Acting on gross section as per AREMA Table 15-1-11 & Table 15-1-11a - Class A Standard Hole

2.2.2 BOLT CONNECTION PROPERTIES (1" bolts): *To be used on all Connections*

STRUCTURAL BOLTS: 1" DIAMETER A325 SC (CLASS B, STANDARD HOLES)
Appendix H.4.1-2 -4.1 NS Steel grade

$d_{b1} := 1.0 \cdot in$

Allowable shear force in A 325 bolts: $R_{v1} := S_{v.blt} \cdot \pi \cdot d_{b1}^{2} \cdot 0.25$

$R_{v1} = 13.35 \cdot kip$ (single shear)

Gross area of bolt: $A_{blt.g1} := \frac{\pi \cdot d_{b1}^{2}}{4}$

$A_{blt.g1} = 0.79 \cdot in^{2}$

Diameter of bolt hole: $Hole_{dg1} := d_{b1} + 0.125in$ AREMA 15-1.5.8(e)

$Hole_{dg1} = 1.125 \cdot in$

Minimum bolt spacing: $spa_{min1} := 3.0 \cdot d_{b1} = 3 \cdot in$ AREMA 15-1.9.3 b

Minimum edge distance: $edge_{min1} := 1.750 \cdot d_{b1} = 1.75 \cdot in$ AREMA 15-1.9.4

2.2.3 END DIAPHRAGM TO BEARING STIFFENER CONNECTION

	Bolt Column 1 (Furthest from the Web):	Bolt Column 2
Total Number of Bolts in a Column:	$Bolts_{C1_ED} := 23$	$Bolts_{C2_ED} := 0$
Bolt Pitch:	$Pitch_{C1_ED} := 3.0 \cdot in$	$Pitch_{C2_ED} := Pitch_{C1_ED}$
Distance of First Bolt from Lowest Bolt (Stagger):	$BoltFirst_{C1_ED} := 0 \cdot in$	$BoltFirst_{C2_ED} := 0in$

Lateral Spacing of Bolt Column (C1 is the zero point... Set to ZERO if only one column) $Gage_{ED} := 0 \cdot in$

C/L of bolt to edge of diphragm web: $Db_{dwED} := 1.75in$

Edge distance of bolts (to top edge of web:

$$Edge_{dist.ED} := Round\left[\left[d_{w_id} - \left[\left(Bolts_{C1_ED} - 1\right) \cdot Pitch_{C1_ED}\right]\right] \cdot 0.5, .01in\right] = 1.75 \cdot in$$

$$CHK_{bED} := if\left(Db_{dwED} \geq edge_{min1} \wedge Edge_{dist.ED} \geq edge_{min1}, \text{"OK"}, \text{"NO GOOD"}\right) \quad CHK_{bED} = \text{"OK"}$$

2.2.4 GIRDER WEB TO INTERMEDIATE DIAPHRAGM WEB CONNECTION

	Bolt Column 1 (Furthest from the Web):	Bolt Column 2
Total Number of Bolts in a Column:	$Bolts_{C1_ID} := 23$	$Bolts_{C2_ID} := 0$
Bolt Pitch:	$Pitch_{C1_ID} := 3 \cdot in$	$Pitch_{C2_ID} := Pitch_{C1_ID}$
Distance of First Bolt from Lowest Bolt (Stagger):	$BoltFirst_{C1_ID} := 0 \cdot in$	$BoltFirst_{C2_ID} := 0in$

Lateral Spacing of Bolt Column (C1 is the zero point... Set to ZERO if only one column) $Gage_{ID} := 0 \cdot in$

C/L of bolt to edge of diaphragm web: $Db_{dwID} := 1.75 \cdot in$

Edge distance of bolts (to top edge of web):

$$Edge_{dist.ID} := Round\left[\left[d_{w_id} - \left[\left(Bolts_{C1_ID} - 1\right) \cdot Pitch_{C1_ID}\right]\right] \cdot 0.50, .01in\right] = 1.75 \cdot in$$

$$CHK_{bID} := if\left(Db_{dwID} \geq edge_{min1} \wedge Edge_{dist.ID} \geq edge_{min1}, \text{"OK"}, \text{"NO GOOD"}\right)$$

$$CHK_{bID} = \text{"OK"}$$

2.2.5 LATERAL BRACING TO STIFFENER CONNECTION PLATE

	Bolt Column 1 (Furthest from the Web):	Bolt Column 2
Total Number of Bolts in a Column:	$Bolts_{C1_lt} := 4$	$Bolts_{C2_lt} := 0 \cdot Bolts_{C1_lt}$
Bolt Pitch:	$Pitch_{C1_lt} := 3.0 \cdot in$	$Pitch_{C2_lt} := Pitch_{C1_lt}$
Distance of First Bolt from Lowest Bolt (Stagger):	$BoltFirst_{C1_lt} := 0 \cdot in$	$BoltFirst_{C2_lt} := 0in$

Lateral Spacing of Bolt Column (C1 is the zero point... Set to ZERO if only one column) $Gage_{lt} := 0 \cdot in$

Horizontal distance between centroid of bolts and Point Load: $e_{lt} := 0 \cdot in$ *To Diaphragm Stiffening Girder*

Edge distance of bolts: $Edge_{dist.lt} := 1.75in$

Moment of Inertia: $J_{lat.blts} := 2 \cdot \left[\left(1 \cdot Pitch_{C1_lt}\right)^2\right] = 18 \cdot in^2$

2.2.6 WELD CONNECTION PROPERTIES

WELDING ELECTRODES: E70XX
Appendix H.4.1-2 -4.c NS

STIFFENER WELD: 5/16" $t_{weld} := \frac{5}{16} \cdot in$

AASHTO TABLE 6.13.3.4.1 - as nothing is given in AREMA

assume all fillet weld connections use same size.

Allowable shear force on weld: $R_{weld} := S_{v.weld} \cdot t_{weld} \cdot 0.707 = 3.87 \cdot \frac{kip}{in}$

END DIAPHRAGM (JACKING)

(AREMA/NSRR Design: Prosser Avenue Bridge)

DETERMINE THE ADEQUACY OF THE END DIAPHRAGM DURING JACKING. JACKING WILL BE REQUIRED TO REPLACE THE BEARINGS. THE JACKING OPERATION WILL BE CONDUCTED UNDER FULL DEAD LOAD ONLY (NO LIVE LOAD).

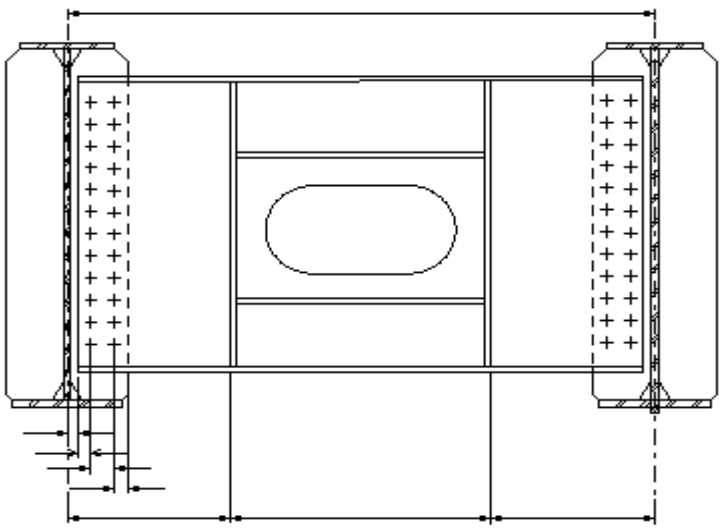

END DIAPHRAGM

3.0 DESIGN OF END DIAPHRAGM AND JACKING STIFFENER

3.1 LOAD CALCULATIONS FOR END DIAPHRAGM

assumed simply supported.

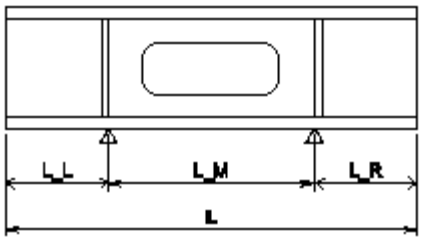

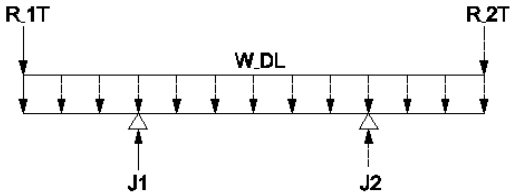

Distance between the jacking points: $L_M := Dia_{access} + 2clear_{access}$ $L_M = 16.5 \cdot in$

Distance from jacking stiffener to center of beam: $L_L := \left(d_{skew} - L_M\right) \cdot 0.5$ $L_L = 15.02 \cdot in$

Assuming the jacking points are symmetrical: $L_R := L_L$ $L_R = 15.02 \cdot in$

3.1.1. DEAD LOAD OF DIAPHRAGM:

Dead load of the diaphragm: $W_{DL} := A_{ed} \cdot w_s = 0.14\,klf$

weight due to hole section is not reduced for conservative purpose

Additional dead load: $W_{ADDL} := 0 \cdot W_{DL} = 0$

Additional dead load due to the connections is incorporated in the girder reactions.

Total dead load: $W_{DL_T} := W_{DL} + W_{ADDL} = 0.14\,klf$

3.1.2 DETERMINE THE FORCES ON THE DIAPHRAGM:

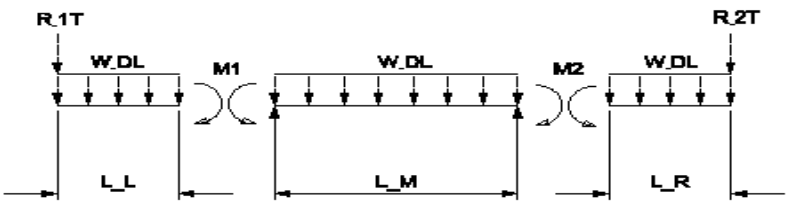

Moment at left jacking stiffener: $M_1 := R_{1T} \cdot L_L + W_{DL_T} \cdot L_L \cdot \frac{L_L}{2} = 122.03 \cdot ft \cdot kip$

Moment at right jacking stiffener: $M_2 := R_{2T} \cdot L_R + W_{DL_T} \cdot L_R \cdot \frac{L_R}{2} = 122.03 \cdot ft \cdot kip$

Reactions at the location of left and right Jacking stiffener respectively:

$$V_1 := \left(W_{DL_T} \cdot L_L + R_{1T} + W_{DL_T} \cdot \frac{L_M}{2}\right) + \frac{(M_1 - M_2)}{L_M} = 97.7 \cdot kip \qquad J_1 := V_1 = 97.7 \cdot kip$$

$$V_2 := \left(W_{DL_T} \cdot L_R + R_{2T} + W_{DL_T} \cdot \frac{L_M}{2}\right) - \frac{(M_1 - M_2)}{L_M} = 97.7 \cdot kip \qquad J_2 := V_2 = 97.7 \cdot kip$$

3.2 CHECK FOR ADEQUACY OF END DIAPHRAGM:

3.2.1 CHECK BENDING STRESS IN THE MEMBER: AREMA 15-1.4.1

Allowable Diagonal tension in webs of girders: $F_{b_T} := 0.55 \cdot f_y = 27.5 \cdot ksi$ Table 15-1-11 AREMA

COMPRESSION LIMIT: CONSIDER ONLY SECTION ABOVE HOLE

Moment of Inertia of the section:

$$I_C := \frac{t_{f.ed} \cdot b_{f.ed}^3}{12} + \frac{\frac{(d_{w.ed} - d_{h.ed})}{2} \cdot t_{w.ed}^3}{12} = 9.24 \cdot in^4$$

Area of the section:

$$A_C := t_{f.ed} \cdot b_{f.ed} + \frac{(d_{w.ed} - d_{h.ed})}{2} \cdot t_{w.ed} = 14.38 \cdot in^2$$

Radius of gyration:

$$r_C := \sqrt{\frac{I_C}{A_C}} = 0.8 \cdot in$$

Compression in extreme fibers of flexural members symmetrical about the principal axis

$$FC := \max\left[\frac{0.131 \cdot \pi \cdot E_s}{\frac{L_M \cdot d_{ed} \cdot \sqrt{1.3}}{A_{f.ed}}}, 0.55 \cdot f_y - \frac{0.55 \cdot f_y^2}{6.3 \cdot \pi^2 \cdot E_s} \cdot \left(\frac{L_M}{r_C}\right)^2\right] = 27.18 \cdot ksi$$

Table 15-1-11 AREMA

$$F_{b_C} := if\left(0.55 \cdot f_y < FC, 0.55 \cdot f_y, FC\right) = 27.18\ ksi$$

Bending Stress in Member:

$$f_b := \frac{\max(M_1, M_2)}{S_h.ed} = 2.49 \cdot ksi \qquad F_b := \min(F_{b_T}, F_{b_C}) = 27.18 \cdot ksi$$

$$CHK_b := if\left(f_b < F_b, \text{"OK"}, \text{"NO GOOD"}\right)$$

$CHK_b = \text{"OK"}$

3.2.2 CHECK SHEAR STRESS IN THE MEMBER: AREMA 15-1.4.1

Allowable Shear in webs of rolled beams: $F_v := 0.35 \cdot f_y = 17.5 \cdot ksi$ Table 15-1-11 Arema

Shear Stress in the section:

$$f_v := \frac{\max(V_1, V_2)}{A_{h.ed}} = 3.4 \cdot ksi$$

$$CHK_v := if\left(f_v < F_v, \text{"OK"}, \text{"NO GOOD"}\right)$$

$CHK_v = \text{"OK"}$

$$DIAPHRAGM := if\left(CHK_b = \text{"OK"} \wedge CHK_v = \text{"OK"}, \text{"OK"}, \text{"NO GOOD"}\right)$$

$DIAPHRAGM = \text{"OK"}$

3.3 CHECK THE REQUIRED WELD SIZE FOR THE WEB-FLANGE CONNECTION:

Allowable shear force for Weld in consideration: $R_{weld} = 3.87 \cdot \frac{kip}{in}$

First moment of flange area: $Q_{ed} := A_{f.ed} \cdot \frac{(d_{w.ed} + t_{f.ed})}{2} = 105 \cdot in^3$

Horizontal shear force acting on the weld: $r_w := \frac{\max(V_1, V_2) \cdot Q_{ed}}{2 \cdot I_{x_h.ed}} = 0.25 \cdot \frac{kip}{in}$ *similar to shear between concrete slab and steel beam*

$CHK_W := \text{if}(r_w < R_{weld}, \text{"OK"}, \text{"NO GOOD"})$ $CHK_W = \text{"OK"}$

NO LIVE LOAD ON JACKING, THEREFORE NO FATIGUE CHECK IS REQUIERED

3.4 CHECK THE JACKING STIFFENERS

AREMA 15-1.7.7

Flange thickness of diaphragm: $t_{f.ed} = 0.5 \cdot in$

Flange width of diaphragm: $b_{f.ed} = 6 \cdot in$

Web depth of diaphragm: $d_{w.ed} = 69.5 \cdot in$

Stiffener thickness: $t_{js} = 0.75 \cdot in$

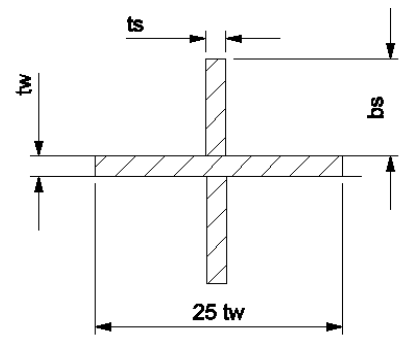

3.5 CHECK THE MINIMUM THICKNESS OF THE JACKING STIFFENER

Outstanding width: $l_s := 0.5(b_{f.ed} - t_{w.ed}) = 2.75 \cdot in$ *Equal to the outstanding width of the end diaphragm section*

Minimum thickness of stiffener: $t_{min} := \frac{l_s}{0.43ESFY} = 0.27 \cdot in$ AREMA 15.1.6.2 (a) (2)

$CHK_t := \text{if}(t_{js} > t_{min}, \text{"OK"}, \text{"NO GOOD"})$ $CHK_t = \text{"OK"}$

3.6 CHECK THE STRENGTH OF THE JACKING STIFFENER

Area of the column section: $A_c := 25 \cdot t_{w.ed} \cdot t_{w.ed} + 2 \cdot (l_s \cdot t_{js}) = 10.38 \cdot in^2$ AREMA 15.1.7.7 c

Moment of inertia of the section: $I_{y_s} := \frac{t_{js} \cdot (l_s + t_{w.ed} + l_s)^3}{12} = 13.5 \cdot in^4$

Radius of gyration: $r_{y_s} := \sqrt{\frac{I_{y_s}}{A_c}} = 1.14 \cdot in$

Stress in the member: $f_a := \frac{\max(J_1, J_2)}{A_c} = 9.42 \cdot ksi$

Slenderness of the member: $K_{js} := k \cdot \frac{d_{w.ed}}{r_{y_s}} = 45.7$

Lower limit of slenderness: $K_1 := \frac{0.629}{FYES} = 15.15$

Higher limit of slenderness: $K_2 := \frac{5.034}{FYES} = 121.23$

Allowable stress in the section:

$$F_a := \text{if}\left[K_{js} < K_1, 0.55 \cdot f_y, \text{if}\left[K_{js} > K_1 \wedge K_{js} < K_2, 0.6 \cdot f_y - \left(17500 \cdot \frac{f_y}{E_s}\right)^{\frac{3}{2}} \cdot K_{js} \cdot psi, \frac{0.514 \cdot \pi^2 \cdot E_s}{K_{js}^2}\right]\right]$$

AREMA 15.1.4.1

$F_a = 22.43 \cdot ksi$

$CHK_a := \text{if}(f_a < F_a, \text{"OK"}, \text{"NO GOOD"})$ $CHK_a = \text{"OK"}$

3.7 CHECK THE BEARING STRESS ON THE BOTTOM FLANGE:

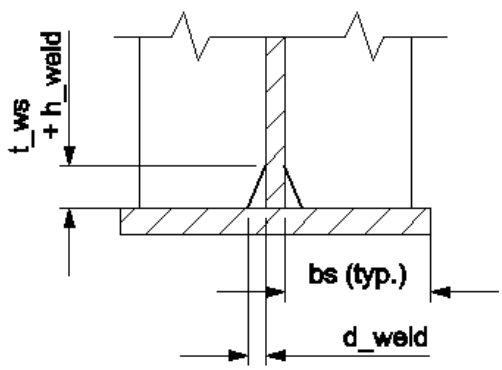

Stiffener weld thickness: $t_{weld} = 0.31 \cdot in$

Width of the stiffener: $l_s = 2.75 \cdot in$

Height of weld clip: $h_{weld} = 1 \cdot in$

Width of weld clip: $d_{weld} = 1.25 \cdot in$

Net width of stiffener: $b_{s_net} := l_s - d_{weld} = 1.5 \cdot in$

Area outside the corner clip of plate stiffener: $A_{b.js} := 2 \cdot b_{s_net} \cdot t_{js} = 2.25 \cdot in^2$

AREMA 15- 1.7.7 d

Bearing Stress in the member: $f_{b_f} := \frac{\max(J_1, J_2)}{A_{b.js}} = 43.42 \cdot ksi$

ALLOWABLE STRESS: $F_{bear} = 41.5\,ksi$

AREMA Table 15-1-11

$CHK_F := \text{if}(f_{b_f} < F_{bear}, \text{"OK"}, \text{"NO GOOD"})$ $CHK_F = \text{"NO GOOD"}$

Although this states no good, in the design we are using only one jacking stiffner, but in reality there will be two taking the load, so the bearing stress will effectively be cut in half. This would provide more than adequate capacity.

3.8 CHECK THE WELD OF THE STIFFENER TO THE WEB:

Length of the weld: $L_{w.ed} := d_{w.ed} - 2\left(h_{weld} + t_{weld}\right) = 66.88 \cdot in$

Shear force in the weld: $r_{w_s.ed} := \dfrac{\max\left(J_1, J_2\right)}{4 \cdot L_{w.ed}} = 0.37 \cdot \dfrac{kip}{in}$ *Both side weld*

Allowable shear force in weld: $R_{weld} = 3.87 \cdot \dfrac{kip}{in}$

$CHK_{w_s} := if\left(r_{w_s.ed} < R_{weld}, "OK", "NO\ GOOD"\right)$ $CHK_{w_s} = "OK"$

$STIFFENER := if\left(CHK_t = "OK" \wedge CHK_a = "OK" \wedge CHK_F = "OK" \wedge CHK_{w_s} = "OK", "OK", "NO\ GOOD"\right)$

$STIFFENER = "NO\ GOOD"$

3.9 CONNECTION OF END DIAPHRAGM TO BEARING STIFFENER

3.9.1 BOLT CONNECTION DETAILS

Neutral Axis of Rows (Y-Bar) From Bottom Most Bolt

$$Ybar_{ED} := \frac{\sum_{\Delta = Bolts_{C1_ED}-1}^{0} \left(BoltFirst_{C1_ED} + \Delta \cdot Pitch_{C1_ED}\right) \ldots + \sum_{\sigma = Bolts_{C2_ED}-1}^{0} \left(BoltFirst_{C2_ED} + \sigma \cdot Pitch_{C2_ED}\right)}{Bolts_{C1_ED} + Bolts_{C2_ED}}$$

$Ybar_{ED} = 32.87 \cdot in$

Sum of Y Squared

$$SumY2_{ED} := \sum_{\Delta = Bolts_{C1_ED}-1}^{0} \left(BoltFirst_{C1_ED} + \Delta \cdot Pitch_{C1_ED} - Ybar_{ED}\right)^2 \ldots + \sum_{\sigma = Bolts_{C2_ED}-1}^{0} \left(BoltFirst_{C2_ED} + \sigma \cdot Pitch_{C2_ED} - Ybar_{ED}\right)^2$$

$SumY2_{ED} = 11475.43 \cdot in^2$

Neutral Axis of Columns (X-Bar) From Column 1 Bolts

$$Xbar_{ED} := \frac{Bolts_{C2_ED} \cdot Gage_{ED}}{Bolts_{C1_ED} + Bolts_{C2_ED}}$$

$Xbar_{ED} = 0 \cdot in$

Sum of X Squared $SumX2_{ED} := Bolts_{C1_ED} \cdot Xbar_{ED}^2 + Bolts_{C2_ED} \cdot (Gage_{ED} - Xbar_{ED})^2$ $SumX2_{ED} = 0 \cdot in^2$

$$OffsetGage_{ED} := \sqrt{Gage_{ED}^2 + \min(Pitch_{C1_ED} - BoltFirst_{C1_ED}, Pitch_{C2_ED} - BoltFirst_{C2_ED})^2} = 3 \cdot in$$

$$BoltSpacing := if(BoltFirst_{C1_ED} = 0 \wedge BoltFirst_{C2_ED} = 0 \wedge Gage_{ED} \neq 0, Gage_{ED}, OffsetGage_{ED}) = 3 \cdot in$$

Polar moment of Inertia of bolt configuration: $J_{ED} := SumX2_{ED} + SumY2_{ED}$ $J_{ED} = 11475.43 \cdot in^2$

Total Height of Bolt Array:

$$Bolt_{Ht} := \max[(Bolts_{C1_ED} - 1) \cdot Pitch_{C1_ED} + BoltFirst_{C1_ED}, (Bolts_{C2_ED} - 1) \cdot Pitch_{C2_ED} + BoltFirst_{C2_ED}] = 66 \cdot in$$

Number of bolts: $n_{ED} := Bolts_{C1_ED} + Bolts_{C2_ED} = 23$

Vertical location of centroid of bolt configuration: $y_{ED} := Ybar_{ED} = 32.87 \cdot in$

Horizontal location of centroid of bolt configuration: $x_{ED} := Xbar_{ED} = 0 \cdot in$

MinimumSpacing of bolts: $spa_{ED} := BoltSpacing = 3 \cdot in$

3.9.2 CHECK THE BOLT CONFIGURATION

$CHK_{Spa} := if(spa_{ED} \geq spa_{min1}, "OK", "NO GOOD")$ $CHK_{Spa} = "OK"$

$CHK_{Edge} := if(Edge_{dist.ED} \geq edge_{min1}, "OK", "NO GOOD")$ $CHK_{Edge} = "OK"$

3.9.3 CHECK THE SHEAR IN THE BOLTS:

Number of bolts: $n_{ED} = 23$

Allowable Diaphragm Shear Stress: $\sigma_{a.v} := 0.35 \cdot f_y$ *REF: AREMA Table 15-1-11* $\sigma_{a.v} = 17.5 \cdot ksi$

Required Shear Capacity of the connection: AREMA 15-1.11.4 (c) $P_{d.bltVdgED} := d_{w_id} \cdot t_{w_id} \cdot \sigma_{a.v} \cdot 0.5$ $P_{d.bltVdgED} = 304.06 \cdot kip$

Case 1 **Vertical Shear/ Bolt:** AREMA 15-11.4 (c) $F_{d.bltVcfED} := \frac{P_{d.bltVdgED}}{n_{ED}} \cdot 1.0$ $F_{d.bltVcfED} = 13.22 \cdot kip$

Bolt Eccentricity: $e_{ED} := \left(L_L + L_M + L_R\right)\cdot 0.5 - \left(Db_{dwED} + Xbar_{ED}\right) = 21.52\cdot in$

Force acting on the bolt configuration: $V_{ED} := \max\left(R_{1T}, R_{2T}\right)\cdot\left(\frac{6}{5}\right)\cdot 0.5 = 58.46\cdot kip$

Moment acting on the bolt configuration: $M_{ED} := V_{ED}\cdot e_{ED} = 104.82\cdot kip\cdot ft$

Horizontal shear component due to reaction: $r_{vx} := 0$

Horizontal shear component due to moment: $r_{mx} := \frac{M_{ED}\cdot y_{ED}}{J_{ED}} = 3.6\cdot kip$

Vertical shear component due to reaction: $r_{vy} := \frac{V_{ED}}{n_{ED}} = 2.54\cdot kip$

Vertical shear component due to moment: $r_{my} := \frac{M_{ED}\cdot x_{ED}}{J_{ED}} = 0\cdot kip$

Case 2 **Shear force PER BOLT** $r_v := \sqrt{\left(r_{vx} + r_{mx}\right)^2 + \left(r_{vy} + r_{my}\right)^2} = 4.41\cdot kip$

$r_{vmax} := \max\left(r_v, F_{d.bltVcfED}\right) = 13.22\cdot kip$

Allowable Shear force PER BOLT: $R_{v1} = 13.35\cdot kip$

$CHK_{BOLT} := \text{if}\left(r_{vmax} < R_{v1}, \text{"OK"}, \text{"NO GOOD"}\right)$ $CHK_{BOLT} = \text{"OK"}$

End Bearing Stiffener

DETERMINE THE REQUIRED WIDTH AND THICKNESS OF THE END BEARING STIFFENER

4.0 DESIGN END BEARING STIFFENER

4.1 CHECK THE ADEQUACY OF END BEARING STIFFENER

4.1.1 CHECK STIFFENER DIMENSIONS

Loads computed in section 3.1 under end diaphragm are used for the design of end bearing stiffener.

Max Stiffener Width, Lesser of the Following:

$$b_{s.max1} := \frac{(B_f - T_w)}{2} = 8.06 \cdot in \qquad b_{s.max2} := 0.43 \cdot t_{end_stiff} \cdot \sqrt{\frac{E_s}{f_y}} = 10.36 \cdot in$$

Arema 15-1.6.2 a (2)

Minimum thickness of Bearing stiffener:

$$t_{min.ebs} := \frac{b_{s.max1}}{0.43ESFY} = 0.78 \cdot in$$

AREMA 15-1.6.2 (a) (2)

$$CHK_{t.ebs} := if(t_{end_stiff} > t_{min.ebs}, "OK", "NO\ GOOD") \qquad CHK_{t.ebs} = "OK"$$

$$b_{s.max} := min(b_{s.max1}, b_{s.max2}) \qquad b_{s.max} = 8.06 \cdot in$$

$$CHK_w := if(b_{end_stiff} \le b_{s.max}, "OK", "NO\ GOOD") \qquad CHK_w = "OK"$$

4.1.2 STRENGTH OF THE BEARING STIFFENER

Designing the stiffener as a column, Contributing Area:

$$A_{ebs_col} := (l_{web} \cdot T_w) + 2 \cdot (b_{end_stiff} \cdot t_{end_stiff}) = 27.06 \cdot in^2$$

Moment of inertia of the section:

$$I_{yy} := \frac{1}{12} \cdot t_{end_stiff} \cdot (b_{end_stiff} + T_w + b_{end_stiff})^3 = 409.42 \cdot in^4$$

Radius of gyration:

$$r_{ebs} := \sqrt{\frac{I_{yy}}{A_{ebs_col}}} = 3.89 \cdot in$$

Slenderness ratio:

$$K_{ebs} := \frac{k \cdot D_w}{r_{ebs}} = 15.72$$

Depth of web is the length of the stiffener.

Allowable stress for high slender members:

$$F_{a1} := \frac{0.514 \cdot \pi^2 \cdot E_s}{(K_{ebs})^2} = 595.69\ ksi$$

Table 15-1-11 Arema

Allowable stress for medium slender members: $F_{a2} := 0.60 \cdot f_y - \left(17500 \frac{f_y}{E_s}\right)^{\frac{3}{2}} \cdot K_{ebs} \cdot psi = 27.4\,ksi$

Allowable stress for thicker members: $F_{a3} := 0.55 \cdot f_y = 27.5\,ksi$

Allowable stress for the stiffener section: $F_{a_ebs} := if\left(K_{ebs} \ge \frac{5.034}{FYES}, F_{a1}, if\left(\frac{0.629}{FYES} < K_{ebs} < \frac{5.034}{FYES}, F_{a2}, if\left(K_{ebs} \le \frac{0.629}{FYES}, F_{a3}, \text{"Error"}\right)\right)\right)$

$F_{a_ebs} = 27.4 \cdot ksi$

Stress in the stiffener section: $f_{a_ebs} := \frac{R_{max}}{A_{ebs_col}} = 12.15 \cdot ksi$

$CHK_{sh.ebs} := if\left(f_{a_ebs} \le F_{a_ebs}, \text{"OK"}, \text{"NO GOOD"}\right)$ $CHK_{sh.ebs} = \text{"OK"}$

4.1.3 BEARING STRESS ON THE BOTTOM FLANGE

Bearing stress caused by the stiffeners on the bottom flange is to be checked.

Allow 1" for corner clip for weld at the flange - web juncture.

Net width of the stiffener: $b_{ebs_net} := b_{end_stiff} - l_{cc.h.ebs} = 7.06 \cdot in$ *reducing width of clip*

Area in bearing due to 2 stiffeners: $A_{ebs} := 2 \cdot b_{ebs_net} \cdot t_{end_stiff} = 14.12 \cdot in^2$

Allowable bearing stress: $F_{bear} = 41.5\,ksi$ (AREMA 15-1-38)

Bearing stress in the stiffener: $f_{ebs} := \frac{R_{max}}{A_{ebs}} = 23.28 \cdot ksi$

$CHK_{bea.ebs} := if\left(f_{ebs} \le F_{bear}, \text{"OK"}, \text{"NO GOOD"}\right)$ $CHK_{bea.ebs} = \text{"OK"}$

Check Plate Design

$PLATE := if\left(CHK_w = \text{"OK"} \wedge CHK_{t.ebs} = \text{"OK"} \wedge CHK_{sh.ebs} = \text{"OK"} \wedge CHK_{bea.ebs} = \text{"OK"}, \text{"OK"}, \text{"NO GOOD"}\right)$

$PLATE = \text{"OK"}$

4.1.4 WELD CONNECTION FOR END STIFFENERS

Allowable Shear force in weld: $R_{weld} = 3.87 \cdot \frac{kip}{in}$

Number of weld lines, $N_{ebs} := 2 \cdot 2 = 4$

Stress in weld: $f_{w_ebs} := \frac{R_{max}}{N_{ebs} \cdot \left(D_w - 2l_{cc.v.ebs}\right)} = 1.03 \cdot \frac{kip}{in}$

$WELD := if\left(f_{w_ebs} \le R_{weld}, \text{"OK"}, \text{"NO GOOD"}\right)$ $WELD = \text{"OK"}$

For a redundant load path structure, the allowable weld stress for transverse stiffeners corresponds to stress category C'. Arema Table 15-1-9, Description 4.1

Number of Stress cycles is greater than 2,000,000 (for span lengths less than 100 ft) Arema Table 15-1-7

Allowable Fatigue Stress: $F_{fw} := 12ksi$ Arema Table 15-1-10

Area of the weld: $A_{weld} := N_{ebs} \cdot \left(D_w - 2l_{cc.v.ebs}\right) \cdot 0.707 \cdot t_{weld} = 70.26 \cdot in^2$

Fatigue stress in weld: $f_f := \frac{R_{sr}}{A_{weld}} = 3.29 \cdot ksi$

$FATIGUE := if\left(f_f \le F_{fw}, "OK", "NO\ GOOD"\right)$

$FATIGUE = "OK"$

Min weld for 1.125" plate = 5/16" (AWS Table 2.1)

Appendix H.2-4 4b NS- Bearing stiffeners shall be milled to bear.

Check Design

$DESIGN := if(PLATE = "OK" \wedge WELD = "OK" \wedge FATIGUE = "OK", "OK", "NO\ GOOD")$

$DESIGN = "OK"$

Intermediate Stiffener and Diaphragm

DETERMINE THE REQUIRED WIDTH AND THICKNESS OF THE INTERNAL DIAPHRAGM AND INTERMEDIATE BEARING STIFFENER. DESIGN THE BOLTED CONNECTION BETWEEN THE STIFFENER AND THE DIAPHRAGM.

5.0 DESIGN INTERMEDIATE STIFFENER AND DIAPHRAGM

5.1 LOAD CALCULATIONS

5.1.1 Normal loading condition

Load under the normal conditions is due to the differential deflection of the adjacent girders caused because of the bridge skew.
Total Dead Load + Live Load + Impact Deflection (Equivalent Uniform Load) is used to ensure conservative design.

Deflection at mid span due to the UDL: $Delta_{mid} := \frac{5 \cdot W_{load} \cdot span^4}{384 \cdot E_s \cdot I_{x_pg}} = 2.51 \cdot in$

For any position of the rail load on the bridge, there will be a distance between the corresponding points over the adjacent girders due to the skew angle of the bridge. This difference causes a differential deflection that creates load onto the diaphragm. Calculations are done about mid point for simplicity.

Distance between corresponding points over the adjacent girder: $dist := d_{girder} \cdot tan(ang) = 20.03 \cdot in$

Point of interest from the support is at a distance: $a := span \cdot 0.5 - dist = 46.96\, ft$

Deflection at the point of interest: $Delta_a := \left(\frac{W_{load} \cdot a^4 + W_{load} \cdot span^3 \cdot a}{24 \cdot E_s \cdot I_{x_pg}} \right) - \left(\frac{W_{load} \cdot span \cdot a^3}{12 \cdot E_s \cdot I_{x_pg}} \right) = 2.5 \cdot in$

Differential deflection: $Diff := Delta_{mid} - Delta_a = 0.0035 \cdot in$

Assuming the structural configuration of intermediate diaphragm connected to the girder as a cantilever, back calculating the concentrated load that can cause the above computed differential deflection to get the load.
Deflection at the cantilever due to concentrated load at tip of the beam is Pl^3/3EI , where P is the load and l is the span of the beam.

Equivalent load for the differential deflecion: $P := 3 \cdot \frac{E_s \cdot I_{x_id} \cdot Diff}{d_{girder}^3} = 88.85 \cdot kip$

End moments (assuming fixed-free cantilever condition): $M_{ser} := P \cdot d_{girder} = 310.97\, ft \cdot kip$

5.1.2 Derail Condition

"A single line of wheel loads (Q) equal to the design load per rail (Article 1.3.3) including full design impact is to be applied at an eccentricity of 5 feet from the centerline of track as shown in Figure 15-1-4, but no further than the edge of the deck or, for open decks, the bridge ties."

The entire load is assumed to act on a single girder for conservative purpose

NSRR standards allow 50% overstress in the derail load combination G

End moments (assuming fixed-free cantilever condition): $M_{derail} := P_{derail} \cdot d_{girder} = 189\, ft \cdot kip$

5.2 CHECK THE ADEQUACY OF INTERMEDIATE STIFFENER

5.2.1 CHECK INTERMEDIATE STIFFENER DIMENSIONS

Maximum depth of web without transverse stiffener: $D_{w_max} := 2.12 \cdot T_w \sqrt{\frac{E_s}{f_y}} = 44.67 \cdot in$ Arema 15-1.7.8 a

$CHK_{depth} := if(D_w > D_{w_max}, \text{"Stiffener req'd."}, \text{"Stiffener not req'd."})$ $CHK_{depth} = \text{"Stiffener req'd."}$

Maximum clear spacing between the stiffeners: $d_{int_stiff_max} := \min\left(96in, D_w, 1.95 \cdot t_{int_stiff} \cdot \sqrt{\frac{E_s}{R_{vg}}}\right) = 81.5 \cdot in$
Arema 15-1.7.8 a

$CHK_{dist} := if(d_{int_stiff} < d_{int_stiff_max}, \text{"OK."}, \text{"NO GOOD"})$ $CHK_{dist} = \text{"OK."}$

Minimum moment of inertia of the section: $I_{min} := 2.5 \cdot t_{int_stiff}^3 \cdot d_{int_stiff} \cdot \left(\frac{D_w^2}{d_{int_stiff_max}^2} - 0.7\right) = 13.18 \cdot in^4$
Arema 15-1.7.8 a

Moment of inertia of stiffeners: $I_{int_stiff} := 2\left(A_{int_stiff} \cdot d_{cent}^2 + t_{int_stiff} \cdot \frac{b_{int_stiff}^3}{12}\right) = 66.95 \cdot in^4$

$CHK_{inertia} := if(I_{min} < I_{int_stiff}, \text{"OK."}, \text{"NO GOOD"})$ $CHK_{inertia} = \text{"OK."}$

Minimum width of the stiffener plate: $b_{int_stiff_min} := 2in + \frac{D_w + 2 \cdot T_f}{30} = 4.87 \cdot in$
Arema 15-1.7.8 b

Maximum width of the stiffener plate: $b_{int_stiff_max} := 16 \cdot t_{int_stiff} = 10 \cdot in$

$CHK_{width} := if(b_{int_stiff_min} < b_{int_stiff} < b_{int_stiff_max}, \text{"OK"}, \text{"NO GOOD"})$ $CHK_{width} = \text{"OK"}$

5.2.2 STRENGTH OF THE INTERMEDIATE BEARING STIFFENER

Designing the stiffener as a column, Contributing Area: $A_{ibs} := (l_{int_web} \cdot T_w) + 2 \cdot (b_{int_stiff} \cdot t_{int_stiff}) = 25.39 \cdot in^2$
Arema 15-1.7.7 c

Moment of inertia of the considered section: $I_{yy_int} := \frac{1}{12} \cdot t_{int_stiff} \cdot (b_{int_stiff} + T_w + b_{int_stiff})^3 = 66.99 \cdot in^4$

Radius of gyration: $r_{int} := \sqrt{\frac{I_{yy_int}}{A_{ibs}}} = 1.62 \cdot in$

Slenderness ratio: $K_{ibs} := \frac{k \cdot (D_w - t_{plate})}{r_{int}} = 37.4$

Allowable stress for high slender members: $F_{a1.ibs} := \frac{0.514 \cdot \pi^2 \cdot E_s}{(K_{ibs})^2} = 105.17\,ksi$ Table 15-1-11 Arema

Allowable stress for medium slender members: $F_{a2.ibs} := 0.60 \cdot f_y - \left(17500 \frac{f_y}{E_s}\right)^{\frac{3}{2}} \cdot K_{ibs} \cdot psi = 23.8\,ksi$

Allowable stress for thicker members: $F_{a3.ibs} := 0.55 \cdot f_y = 27.5\,ksi$

Allowable stress for the stiffener section:

$$F_{a_ibs} := if\left(K_{ibs} \ge \frac{5.034}{FYES}, F_{a1.ibs}, if\left(\frac{0.629}{FYES} < K_{ibs} < \frac{5.034}{FYES}, F_{a2.ibs}, if\left(K_{ibs} \le \frac{0.629}{FYES}, F_{a3.ibs}, "Error"\right)\right)\right)$$

$F_{a_ibs} = 23.8 \cdot ksi$

Stress in the stiffener section: $f_{a_ibs} := \frac{P}{A_{ibs}} = 3.5 \cdot ksi$

$CHK_1 := if\left(f_{a_ibs} \le F_{a_ibs}, "OK", "NO\ GOOD"\right)$ $CHK_1 = "OK"$

5.3 WELD CONNECTION FOR INTERMEDIATE STIFFENERS

Allowable Shear force in weld: $R_{weld} = 3.87 \cdot \frac{kip}{in}$

Number of weld lines, $N_{ibs} := 2 \cdot 2 = 4$

Stress in weld: $f_{w_ibs} := \frac{P}{N_{ibs} \cdot (D_w - 2l_{cc.v.ibs} - t_{plate})} = 0.34 \cdot \frac{kip}{in}$

$f_{w_ibs.derail} := \frac{P_{derail}}{N_{ibs} \cdot (D_w - 2l_{cc.v.ibs} - t_{plate})} = 0.21 \cdot \frac{kip}{in}$

$WELD_{ibs} := if\left(f_{w_ibs} < R_{weld} \wedge f_{w_ibs.derail} < 1.5 \cdot R_{weld}, "OK", "NO\ GOOD"\right)$ $WELD_{ibs} = "OK"$

5.4 CHECK THE ADEQUACY OF INTERNAL DIAPHRAGM

5.4.1 DIAPHRAGM MOMENT CAPACITY

Flexural stress in serviceable condition: $\sigma_{b.ser} := \frac{M_{ser}}{S_{id}} = 6.16 \cdot ksi$

Flexural stress in derail condition: $\sigma_{b.derail} := \frac{M_{derail}}{S_{id}} = 3.75 \cdot ksi$

Allowable flexural stress: $\sigma_b := 0.55 \cdot f_y = 27.5 \cdot ksi$ Arema Table 15-1-11

$CHK_2 := if\left(\sigma_{b.ser} < \sigma_b \wedge \sigma_{b.derail} < 1.5 \cdot \sigma_b, "OK", "NO\ GOOD"\right)$ $CHK_2 = "OK"$

5.4.2 DIAPHRAGM SHEAR CAPACITY

Shear stress in serviceable condition: $\sigma_{v.ser} := \frac{P}{A_{w_id}} = 2.56 \cdot ksi$

Shear stress in derail condition: $\sigma_{v.derail} := \frac{P_{derail}}{A_{w_id}} = 1.55 \cdot ksi$

Allowable shear stress: $\sigma_v := 0.35 \cdot f_y = 17.5 \cdot ksi$ Arema Table 15-1-11

$CHK_3 := if\left(\sigma_{v.ser} < \sigma_v \wedge \sigma_{v.derail} < 1.5 \cdot \sigma_v, \text{"OK"}, \text{"NO GOOD"}\right)$ $CHK_3 = \text{"OK"}$

5.5 WEB BOLT SHEAR CAPACITY

(Shear Connection - Girder Web to Diaphragm Web Connection)

5.5.1 BOLT CONNECTION DETAILS

Neutral Axis of Rows (Y-Bar) From Bottom Most Bolt

$$Ybar_{ID} := \frac{\sum_{\Delta = Bolts_{C1_ID}-1}^{0} \left(BoltFirst_{C1_ID} + \Delta \cdot Pitch_{C1_ID}\right) \ldots + \sum_{\sigma = Bolts_{C2_ID}-1}^{0} \left(BoltFirst_{C2_ID} + \sigma \cdot Pitch_{C2_ID}\right)}{Bolts_{C1_ID} + Bolts_{C2_ID}}$$

$Ybar_{ID} = 32.87 \cdot in$

Sum of Y Squared

$$SumY2_{ID} := \sum_{\Delta = Bolts_{C1_ID}-1}^{0} \left(BoltFirst_{C1_ID} + \Delta \cdot Pitch_{C1_ID} - Ybar_{ID}\right)^2 \ldots + \sum_{\sigma = Bolts_{C2_ID}-1}^{0} \left(BoltFirst_{C2_ID} + \sigma \cdot Pitch_{C2_ID} - Ybar_{ID}\right)^2$$

$SumY2_{ID} = 11475.43 \cdot in^2$

Neutral Axis of Columns (X-Bar) From Column 1 Bolts

$$Xbar_{ID} := \frac{Bolts_{C2_ID} \cdot Gage_{ID}}{Bolts_{C1_ID} + Bolts_{C2_ID}}$$

$Xbar_{ID} = 0 \cdot in$

Sum of X Squared

$$SumX2_{ID} := Bolts_{C1_ID} \cdot Xbar_{ID}^2 + Bolts_{C2_ID} \cdot \left(Gage_{ID} - Xbar_{ID}\right)^2$$

$SumX2_{ID} = 0 \cdot in^2$

$$EccentricBolts := \sqrt{Gage_{ID}^2 + \min\left(Pitch_{C1_ID} - BoltFirst_{C1_ID}, Pitch_{C1_ID} - BoltFirst_{C2_ID}\right)^2} = 3 \cdot in$$

$$BoltSpacing_{ID} := if\left(BoltFirst_{C1_ID} = 0 \wedge BoltFirst_{C2_ID} = 0 \wedge Gage_{ID} \neq 0, Gage_{ID}, EccentricBolts\right) = 3 \cdot in$$

Polar moment of Inertia of bolt configuration: $J_{ID} := SumX2_{ID} + SumY2_{ID}$ $J_{ID} = 11475.43 \cdot in^2$

Total Height of Bolt Array:

$$Bolt_{Ht.Id} := \max\left[\left(Bolts_{C1_ID} - 1\right)\cdot Pitch_{C1_ID} + BoltFirst_{C1_ID}, \left(Bolts_{C2_ID} - 1\right)\cdot Pitch_{C2_ID} + BoltFirst_{C2_ID}\right] = 66 \cdot in$$

Number of bolts: $n_{ID} := Bolts_{C1_ID} + Bolts_{C2_ID} = 23$

Vertical location of centroid of bolt configuration: $y_{ID} := Ybar_{ID} = 32.87 \cdot in$

Horizontal location of centroid of bolt configuration: $x_{ID} := Xbar_{ID} = 0 \cdot in$

MinimumSpacing of bolts: $spa_{ID} := BoltSpacing_{ID} = 3 \cdot in$

$CHK_{Spa.ID} := if\left(spa_{ID} \geq spa_{min1}, \text{"OK"}, \text{"NO GOOD"}\right)$ $CHK_{Spa.ID} = \text{"OK"}$

$CHK_{Edge.ID} := if\left(Edge_{dist.ID} \geq edge_{min1}, \text{"OK"}, \text{"NO GOOD"}\right)$ $CHK_{Edge.ID} = \text{"OK"}$

5.5.2 DESIGN OF BOLT CONNECTION

Allowable Diaphragm Shear Stress: $\sigma_{a.v} := 0.35 \cdot f_y$ *REF: AREMA Table 15-1-11* $\sigma_{a.v} = 17.5 \cdot ksi$

Required Shear Capacity of the connection: AREMA 15-1.11.4 (c) $P_{d.bltVdg} := d_{w_id} \cdot t_{w_id} \cdot \sigma_{a.v} \cdot 0.5$ $P_{d.bltVdg} = 304.06 \cdot kip$

Vertical Shear/ Bolt: AREMA 15-11.4 (c) $F_{d.bltVcf} := \frac{P_{d.bltVdg}}{n_{ID}} \cdot 1.0$ $F_{d.bltVcf} = 13.22 \cdot kip$

Horizontal distance between centroid of bolts and centerline of girder web: $e_{ID} := 0.5B_f - Db_{dwID} - 0.5 \cdot Gage_{ID} = 6.75 \cdot in$ *0.5*thk of flange-edge distance-0.5*hor spacing of bolts*

Moment acting on the bolt configuration: $M_{blt.ser} := P \cdot e_{ID} = 49.98\ ft \cdot kip$ *Service condition*

Moment acting on the bolt configuration: $M_{blt.derail} := P_{derail} \cdot e_{ID} = 30.37\ ft \cdot kip$ *Derail condition*

Shear due to bending moment acting in the y direction on the bolt group

Force to bolt group at C/L of bolt pair-serviceable condition: $F_{blt.v.ser.y} := \frac{M_{blt.ser} \cdot x_{ID}}{J_{ID}}$ $F_{blt.v.ser.y} = 0 \cdot kip$

Force to bolt group at C/L of bolt pair- Derail condition: $F_{blt.v.derail.y} := \frac{M_{blt.derail} \cdot x_{ID}}{J_{ID}}$ $F_{blt.v.derail.y} = 0 \cdot kip$

Shear due to bending moment acting in the x direction on the bolt group

Force to bolt group at C/L of bolt pair-serviceable condition: $F_{blt.v.ser.x} := \frac{M_{blt.ser} \cdot y_{ID}}{J_{ID}}$ $F_{blt.v.ser.x} = 1.72 \cdot kip$

Force to bolt group at C/L of bolt pair- Derail condition: $F_{blt.v.derail.x} := \frac{M_{blt.derail} \cdot y_{ID}}{J_{ID}}$ $F_{blt.v.derail.x} = 1.04 \cdot kip$

Shear stress due to vertical shear acting in the y direction on the bolt group

Vertical design shear force per bolt-serviceable condition: $F_{d.bltV.ser} := \frac{P}{n_{ID}}$ $F_{d.bltV.ser} = 3.86 \cdot kip$

Vertical design shear force per bolt-Derail condition: $F_{d.bltV.derail} := \frac{P_{derail}}{n_{ID}}$ $F_{d.bltV.derail} = 2.35 \cdot kip$

Total Shear on a bolt: $F_{d.vT.ser} := \sqrt{F_{blt.v.ser.x}^2 + \left(F_{blt.v.ser.y} + F_{d.bltV.ser}\right)^2}$ $F_{d.vT.ser} = 4.23 \cdot kip$ *Service condition*

Total Shear on a bolt: $F_{d.vT.derail} := \sqrt{F_{blt.v.derail.x}^2 + \left(F_{blt.v.derail.y} + F_{d.bltV.derail}\right)^2}$

$F_{d.vT.derail} = 2.57 \cdot kip$ *Derail condition*

Shear Checks:

1/2 Diaphragm condition $CHK_4 := \text{if}\left(F_{d.bltVcf} \le R_{v1}, \text{"OK"}, \text{"NO GOOD"}\right)$ $CHK_4 = \text{"OK"}$

Service condition $CHK_5 := \text{if}\left(F_{d.bltV.ser} \le R_{v1}, \text{"OK"}, \text{"NO GOOD"}\right)$ $CHK_5 = \text{"OK"}$

Derail condition $CHK_6 := \text{if}\left(F_{d.bltV.derail} \le 1.5 \cdot R_{v1}, \text{"OK"}, \text{"NO GOOD"}\right)$ $CHK_6 = \text{"OK"}$

5.6 - BLOCK SHEAR CAPACITY - STIFFENER WEB

This assumes a vertical force on stiffener equal to half the shear capacity of the diaphragm. Due to the bolts being in single shear, entire amount of that force will be carried to stiffener. It will be assumed that all bolts must shear through the entire web to fail; i.e. all bolt spacings + end space, each in single shear

C/L of bolt to edge of stiffener: $Db_s := Db_{dwID} + Gage_{ID}$ $\quad Db_s = 1.75 \cdot in$

Vertical force causing rupture: $F_{bs} := P_{d.bltVdg}$ $\quad F_{bs} = 304.06 \cdot kip$

Gross area subject to tension: $A_{gt} := Db_s \cdot t_{int_stiff}$ $\quad A_{gt} = 1.09 \cdot in^2$

$hc := if\left(Gage_{ID} = 0, 0.5, 1.5\right) = 0.5$

Net area subject to tension: $A_{Nt} := A_{gt} - hc \cdot \left(Hole_{dg1} \cdot t_{int_stiff}\right)$ $\quad A_{Nt} = 0.74 \cdot in^2$

Gross area subject to shear: $A_{gv} := \left[Bolt_{Ht.Id} + 0.5 \cdot \left(D_w - Bolt_{Ht.Id}\right)\right] \cdot t_{int_stiff}$ $\quad A_{gv} = 46.09 \cdot in^2$

Net area subject to shear: $A_{Nv} := A_{gv} - \left(\max\left(Bolts_{C1_ID}, Bolts_{C2_ID}\right) - 0.5\right) \cdot \left(Hole_{dg1} \cdot t_{int_stiff}\right)$ $\quad A_{Nv} = 30.27 \cdot in^2$

Maximum allowable force allowed for block shear

$P_1 := 0.30 \cdot f_u \cdot A_{Nv} + 0.50 \cdot f_u \cdot A_{Nt} = 614.45 \cdot kip$

$P_2 := 0.30 \cdot f_y \cdot A_{gv} + 0.50 \cdot f_u \cdot A_{Nt} = 715.53 \cdot kip$ $\quad$ **AREMA 15-1.5.9 (e)**

$P_{bs.a} := \min\left(P_1, P_2\right) = 614.45 \cdot kip$

Shear Stress Check: $CHK_7 := if\left(F_{bs} \le P_{bs.a}, \text{"OK"}, \text{"NO GOOD"}\right)$ $\quad CHK_7 = \text{"OK"}$

5.7 - BLOCK SHEAR CAPACITY- FAILURE OF DIAPHRAGM WEB AT CONNECTION

(Shear Connection - Girder Web to Diaphragm Web Connection)

This assumes a vertical force on the web equal to the shear capacity of the diaphragm. It will be assumed that all bolts must shear through the entire web and top flange to fail; i.e. all bolt spacings + spacing to the outside of the flange

Vertical force causing rupture: $F_{bs.dw} := P_{d.bltVdg}$ $\quad F_{bs.dw} = 304.06 \cdot kip$

Gross area subject to tension: $A_{gt.dw} := \left(Db_{dwID} + Gage_{ID}\right) \cdot t_{w_id}$ $\quad A_{gt.dw} = 0.87 \cdot in^2$

Net area subject to tension: $A_{Nt.dw} := A_{gt.dw} - hc \cdot \left(Hole_{dg1} \cdot t_{w_id}\right)$ $\quad A_{Nt.dw} = 0.59 \cdot in^2$

Gross area subject to shear: $A_{gv.dw} := \left[Bolt_{Ht.Id} + 0.5 \cdot \left(d_{w_id} - Bolt_{Ht.Id}\right)\right] \cdot t_{w_id}$

$A_{gv.dw} = 33.88 \cdot in^2$

Net area subject to shear: $A_{Nv.dw} := A_{gv.dw} - \left(\max\left(Bolts_{C1_ID}, Bolts_{C2_ID}\right) - 0.50\right) \cdot Hole_{dg1} \cdot t_{w_id} = 21.22 \cdot in^2$

Maximum allowable force allowed for block shear: Reference: AREMA 15-1.5.9 (e)

$P_{dw1} := 0.30 \cdot f_u \cdot A_{Nv.dw} + 0.50 \cdot f_u \cdot A_{Nt.dw} = 433.06 \cdot kip$

$P_{dw2} := 0.30 \cdot f_y \cdot A_{gv.dw} + 0.50 \cdot f_u \cdot A_{Nt.dw} = 527.42 \cdot kip$

$Max_{P.dw} := \min(P_{dw1}, P_{dw2}) = 433.06 \cdot kip$

Shear Stress Check: $CHK_8 := if(F_{bs.dw} \le Max_{P.dw}, "OK", "NO GOOD")$ $CHK_8 = "OK"$

5.8 - LOAD INDUCED FATIGUE ON GIRDER FLANGE

Max Allowable Stress in Flange: $\sigma_{all.gf} := 16.0ksi$ Reference: AREMA Table 15-1-9 Description 2.1

$CHK_9 := if(R_{LLI} \le \sigma_{all.gf}, "OK", "NO GOOD")$ $CHK_9 = "OK"$

Lateral Bracing and Connections

DETERMINE THE REQUIRED SECTION OF THE LATERAL BRACING AND THE BOLT CONNECTION DETAILS OF LOWER LATERAL BRACING TO THE STIFFENER CONNECTION PLATE.

6.0 DESIGN LOWER LATERAL BRACING

(LLB may not be required for spans with concrete decks and girders less than 72". See AREMA 15-1.11.2)

6.1 CHECK FOR ADEQUACY OF BRACING AND CONNECTION

6.1.1 CHECK FOR COMPRESSION

Slenderness ratio: $K_{lat} := \frac{k \cdot Len_{lat}}{r_{lat}} = 114.13$

Allowable stress for high slender members: $\sigma_{a1} := \frac{0.514 \cdot \pi^2 \cdot E_s}{(K_{lat})^2} = 11.29\,ksi$ Table 15-1-13 Arema

Allowable stress for medium slender members: $\sigma_{a2} := 0.60 \cdot f_y - \left(17500 \cdot \frac{f_y}{E_s}\right)^{\frac{3}{2}} \cdot K_{lat}\,psi = 11.08\,ksi$

Allowable stress for thicker members: $\sigma_{a3} := 0.55 \cdot f_y = 27.5\,ksi$

Allowable stress for the stiffener section: $\sigma_{alo_lat} := if\left(K_{lat} \ge \frac{5.034}{FYES}, \sigma_{a1}, if\left(\frac{0.629}{FYES} < K_{lat} < \frac{5.034}{FYES}, \sigma_{a2}, if\left(K_{lat} \le \frac{0.629}{FYES}, \sigma_{a3}, "Error"\right)\right)\right)$

$\sigma_{alo_lat} = 11.08 \cdot ksi$

Stress in the lateral bracing member (Case 1): $P_{lb1} := P_{lat.N} \cdot \left(\frac{Len_{lat}}{d_{girder}}\right) \cdot 0.5 = 44.64 \cdot kip$

Stress in the lateral bracing member (Case 1): $P_{lb2} := P_{tot} \cdot \left(\frac{Len_{lat}}{d_{girder}}\right) \cdot 0.5 = 60.11 \cdot kip$

Stress in the lateral bracing member (Case 1): $\sigma_{bra1} := \frac{P_{lb1}}{A_{lat}} = 6.33\,ksi$

Stress in the lateral bracing member (Case 2): $\sigma_{bra2} := \frac{P_{lb2}}{A_{lat}} = 8.53 \cdot ksi$

$CHK_{stress} := if\left(\sigma_{bra1} < \sigma_{alo_lat} \wedge \sigma_{bra2} \le 1.25 \cdot \sigma_{alo_lat}, \text{"OK"}, \text{"NO GOOD"}\right)$ $CHK_{stress} = \text{"OK"}$

6.2 BOLTED CONNECTION OF LATERAL BRACING TO STIFFENER CONNECTION PLATE

Stiffener connection plate is the plate bolted to the tension flange of the primary girder for bearing of the intermediate stiffener. This would avoid the category C type fatigue failure specified in AREMA.

Number of bolts per connection: $n_{lt} := Bolts_{C1_lt} = 4$

Shear stress per bolt (both cases_): $\sigma_{v.lat1} := \frac{P_{lb1}}{A_{blt.g1} \cdot n_{lt}} = 14.21\,ksi$ $\sigma_{v.lat2} := \frac{P_{lb2}}{A_{blt.g1} \cdot n_{lt}} = 19.13\,ksi$

Since the lateral bracing is a WT member and bolts are symmetrical about the centerline of the WT section, no moment will be induced from the lateral force, and the previous calculated shear stress is the total shear stress per bolt.

$CHK_{blt.sh} := if\left(\sigma_{v.lat1} \le S_{v.blt} \wedge \sigma_{v.lat2} \le 1.25 \cdot S_{v.blt}, \text{"OK"}, \text{"NO GOOD"}\right)$ $CHK_{blt.sh} = \text{"OK"}$

6.3 BLOCK SHEAR IN THE CONNECTING GUSSET PLATE:

Gross Area in Shear: $A_{gv.gus} := Thk_{gus} \cdot L_{shr.gus} = 2 \cdot in^2$

Actual Force in Connection (Case 1): $P_{lb1} = 44.64 \cdot kip$

Gross Area in Tension: $A_{gt.gus} := Thk_{gus} \cdot L_{ten.gus} = 2.12 \cdot in^2$

Force in Connection (Case 2): $P_{lb2} = 60.11 \cdot kip$

Net Area in Shear: $A_{nv.gus} := A_{gv.gus} - Thk_{gus} \cdot 1.5 \cdot Hole_{dg1} = 1.16 \cdot in^2$

Net Area in Tension: $A_{nt.gus} := A_{gt.gus} - Thk_{gus} \cdot Hole_{dg1} = 1.56 \cdot in^2$

$P_{gus1} := 0.30 \cdot f_u \cdot A_{nv.gus} + 0.50 \cdot f_u \cdot A_{nt.gus} = 73.33 \cdot kip$

Reference: AREMA 15-1.5.9 (e)

$P_{gus2} := 0.30 \cdot f_y \cdot A_{gv.gus} + 0.50 \cdot f_u \cdot A_{nt.gus} = 80.78 \cdot kip$

$Max_{P.gus} := \min\left(P_{gus1}, P_{gus2}\right) = 73.33 \cdot kip$

$CHK_{gus} := if\left(Max_{P.gus} > P_{lb1} \wedge Max_{P.gus} \cdot 1.25 > P_{lb2}, \text{"OK"}, \text{"NO GOOD"}\right)$ $CHK_{gus} = \text{"OK"}$

Primary Girder Flange to Web Weld Connection
(AREMA/NSRR Design: Prosser Avenue Bridge)

DETERMINE THE REQUIRED WELD PROPERTIES FOR THE FLANGE TO WEB OF THE PRIMARY DECK GIRDER.

Flange-to-web full penetration groove welds are designed to transmit horizontal shear due to the variation of the bending moment over the girder and the direct pressure due to applied distributed load

11.0 DESIGN OF WELD CONNECTION

NS Appendix H.2-4 B2 Full penetration groove welds

11.1 SECTION PROPERTIES AND LOADING

Material properties and weld electrodes are as defined in the above sections.

Thickness of weld: $t_{w_pg} := \min(T_w, T_f) = 0.88 \cdot in$

Allowable shear force on weld: $R_{w_pg} := S_{gr.weld} \cdot t_{w_pg} = 15.31 \cdot \frac{kip}{in}$

Shear force at section under consideration: $F_{h.pg} := R_{max} = 328.9 \cdot kip$

11.2 CHECK THE ADEQUACY OF THE WELD CONNECTION

First moment of flange area: $Q_{pg} := B_f \cdot T_f \cdot \frac{(D_w + T_f)}{2} = 1601.72 \cdot in^3$

Horizontal shear force acting on the weld: $r_{wh_pg} := \frac{F_{h.pg} \cdot Q_{pg}}{I_{x_pg}} = 3.18 \cdot \frac{kip}{in}$ *similar to shear between concrete slab and steel beam*

Vertical shear force acting on the weld: $r_{wv_pg} := F_{v.pg} = 0.53 \cdot \frac{kip}{in}$

Total shear force acting on the weld: $r_{w_pg} := \sqrt{r_{wh_pg}^2 + r_{wv_pg}^2} = 3.23 \cdot \frac{kip}{in}$

$CHK_{sh.pg} := \text{if}(r_{w_pg} < R_{w_pg}, \text{"OK"}, \text{"NO GOOD"})$ $CHK_{sh.pg} = \text{"OK"}$

For a redundant load path structure, the allowable weld stress for complete joint penetration groove weld of web to flange corresponds to category C failure. Arema Table 15-1-9 clause 5.3

Number of Stress cycles is greater than 2,000,000 (for span lengths less than 100 ft) Arema Table 15-1-7

Horizontal shear force acting on the weld due to fatigue: $R_{wf_pg} := \frac{R_{sr} \cdot Q_{pg}}{I_{x_pg}} = 2.24 \cdot \frac{kip}{in}$

Stress due to fatigue: $f_{f.pg} := \frac{R_{wf_pg}}{t_{w_pg}} = 2.56\,ksi$ *calculating the stress per unit inch of weld.*

$FATIGUE_{pg} := \text{if}(f_{f.pg} \le F_f, \text{"OK"}, \text{"NO GOOD"})$ $FATIGUE_{pg} = \text{"OK"}$

DESIGN CALCULATION COVER SHEET

Gannett Fleming
Engineers and Architects, P.C.
Excellence Delivered ***As Promised***

ISO 9001:2008 CERTIFIED

PROJECT:	**ODOT/EMH&T: HAM-75-7.85**	*ODOT PID NO:*	*77889*
BRIDGE NO:	**HAM-75-0834**	*EMH&T JOB NO:*	
SUBJECT:	***Analysis***	**GF JOB NO:**	**54682**
	Shear Stud design	CALC NO.:	**HAM075_0834_13_Sp1**
	MATHCAD	REV NO.:	**01**
FILE NAME(s):	*HAM075_0834_13 Studs_span1.xmcd*	**SHEET:**	**1 OF 8**

SUPERSEDES CALC NO: (Rev. 00)

CALCULATION DESCRIPTION:

This will analyze and design the shear stud connectors for composite action of the deck slab.

DESIGN BASIS OR REFERENCES:

NS Underpass Design Criteria
AREMA (2014) Chapter 15
HAM075_0834_03_Sp1
AISC Steel Construction Manual, Thirteenth Edition
BDM - ODOT Bridge Design Manual (2004) - Current Edition

MISCELLANEOUS NOTES:

Stage 3: Updated Loads due to increased LL distribution, increased girder sections, and increased deck thickness

RECORD OF ISSUES:

REV	DESCRIPTION	BY	DATE	VERIF'D	DATE
00	Stage 1 Calculation	VDK	06/03/14		
01	Stage 3 Update	VDT	01/19/16	CTM	04/25/16

RECORD OF CHECK OF CURRENT CALCULATION VERSION

BY	DATE	CHKD	DATE	UPD.	DATE	VERIF'D	DATE
VDK	06/03/14	VDT	06/04/14	VDT	01/19/16	CTM	04/25/16

SHEAR STUD CONNECTORS

(AREMA/NSRR Design: HAM-75-0834 Bridge Span 1)

Design notes

- Variables with a box around them require review/user input.
- Code references are made using the following abbreviations:
  - AREMA -AREMA Chapter 15 - Current Edition
  - NS - Norfolk Southern Public Policy Manual - Current Edition
  - BDM - ODOT LFD Bridge Design Manual (2004) - Current Edition
  - AA - AASHTO LFD
  - AISC - AISC Steel Construction Manual, Thirteenth Edition

Design the shear stud configuration for the girder. Check for the adequacy of the stud connectors.

1.0 INPUT DATA

1.1 GIRDER DATA

Girder Flange Width: $B_f := 18in$

Girder Web Thickness: $T_w := 0.875in$ HAM-75-0834_03_Sp1

Girder Flange Thickness: $T_f := 3in$

Depth of web: $D_w := 80in$

Web area: $A_w := T_w \cdot D_w = 70 \cdot in^2$

Flange area: $A_f := B_f \cdot T_f = 54 \cdot in^2$

Total area of girder: $A_g := A_w + 2 \cdot A_f = 178 \cdot in^2$

Span length (C/C Bearings): $Len := 110.5ft$

Lateral Spacing of the beams (C/C): $Spa := 3.5ft$

Thickness of the concrete slab: $thk := 9.5in$ *effective slab thickness is taken as slab thickness minus one inch.*

1.2 SHEAR CONNECTOR DATA

studs transverse spacing: $spa_{trans} := 6in$

Height of stud: $H_{stud} := thk - 2in = 7.5 \cdot in$ AREMA 15-1.7.9.3.d

Diameter of stud: $Dia_{stud} := 0.875in$

Nominal cross section area of the stud: $XS_{stud} := \pi \cdot 0.25 \cdot Dia_{stud}^2 = 0.6 \cdot in^2$

Number of studs per row: $N_{stud} := 3$

Height to diameter ratio: $Ratio := \frac{H_{stud}}{Dia_{stud}} = 8.57$ AREMA 15-1.7.9.3.3.a

$CHK_{HeightRatio} := if(Ratio > 4, "OK", "NO GOOD")$ $CHK_{HeightRatio} = "OK"$

1.3 LOADING DATA

Shear stud designs are verified at every tenth point along the beam length (L).

Rows $i := 1 .. 11$ **Columns** $j := 1 .. 2$ $ORIGIN := 1$ $V_{LL_MAX} := 271.35$ $V_{DL_MAX} := 48.8$

Unfactored shears and moments $V_{LL_MIN} := 60$ $V_{DL_MIN} := 10$

GIRDER DESIGN spreadsheet HAM075_0834_03_Sp1

$$X := \begin{pmatrix} 0 \\ 0.1\cdot Len \\ 0.2\cdot Len \\ 0.3\cdot Len \\ 0.4\cdot Len \\ 0.5\cdot Len \\ 0.6\cdot Len \\ 0.7\cdot Len \\ 0.8\cdot Len \\ 0.9\cdot Len \\ Len \end{pmatrix}$$

$$V_{LL_I} := \begin{pmatrix} \max(1.0\cdot V_{LL_MAX}, V_{LL_MIN}) & 0 \\ \max(0.8\cdot V_{LL_MAX}, V_{LL_MIN}) & 0 \\ \max(0.6\cdot V_{LL_MAX}, V_{LL_MIN}) & 0 \\ \max(0.4\cdot V_{LL_MAX}, V_{LL_MIN}) & 0 \\ \max(0.2\cdot V_{LL_MAX}, V_{LL_MIN}) & 0 \\ \max(0.00\cdot V_{LL_MAX}, V_{LL_MIN}) & 0 \\ \max(0.2\cdot V_{LL_MAX}, V_{LL_MIN}) & 0 \\ \max(0.4\cdot V_{LL_MAX}, V_{LL_MIN}) & 0 \\ \max(0.6\cdot V_{LL_MAX}, V_{LL_MIN}) & 0 \\ \max(0.8\cdot V_{LL_MAX}, V_{LL_MIN}) & 0 \\ \max(1.0\cdot V_{LL_MAX}, V_{LL_MIN}) & 0 \end{pmatrix} kip$$

$$V_{DL} := \begin{pmatrix} \max(1.0\cdot V_{DL_MAX}, V_{DL_MIN}) \\ \max(0.8\cdot V_{DL_MAX}, V_{DL_MIN}) \\ \max(0.6\cdot V_{DL_MAX}, V_{DL_MIN}) \\ \max(0.4\cdot V_{DL_MAX}, V_{DL_MIN}) \\ \max(0.2\cdot V_{DL_MAX}, V_{DL_MIN}) \\ \max(0.0\cdot V_{DL_MAX}, V_{DL_MIN}) \\ \max(0.2\cdot V_{DL_MAX}, V_{DL_MIN}) \\ \max(0.4\cdot V_{DL_MAX}, V_{DL_MIN}) \\ \max(0.6\cdot V_{DL_MAX}, V_{DL_MIN}) \\ \max(0.8\cdot V_{DL_MAX}, V_{DL_MIN}) \\ \max(1.0\cdot V_{DL_MAX}, V_{DL_MIN}) \end{pmatrix} kip$$

$V_{LL_I} =$

271.35	0
217.08	0
162.81	0
108.54	0
60	0
60	0
60	0
108.54	0
162.81	0
217.08	0
271.35	0

$\cdot kip$

$V_{DL} =$

48.8
39.04
29.28
19.52
10
10
10
19.52
29.28
39.04
48.8

$\cdot kip$

TOTAL DL = 126.39 kips
V.DL = 126.39 - 42.90 (steel) - 34.69 (Non-composite) = 48.8 kips

TOTAL LL = 192.56 + 65.07 + 3.19 + 10.53 = 271.35 kips
Min. (maximum) LL = 1/2 axle load + 50% Impact = 60 kips
Minimum LL = unloaded = 0 kips (No negative moment - simple span)

DL_MIN is the local dead load due to all components steel, composite and non composite dead load over a tributary area of girder spacing rounded to 5 kip.

Intermediate supports are not provided during the casting and curing of the concrete. Therefore, self weight is not considered in maximum shear force as described in AREMA 15-1.7.9.2.h

1.4 MATERIAL PROPERTIES

Concrete Strength: $f'_c := 4500 \cdot psi$

Concrete Unit Weight: $\gamma_c := 150 \cdot pcf$

Steel Beam Yield Strength: $F_{y_girder} := 50ksi$

Deck Rebar Yield Strength: $F_{y_rebar} := 60ksi$

Top Concrete Clear Cover: $cc_{top} := 2.0in$

AREMA Table 8-2.7

Bott. Concrete Clear Cover: $cc_{bot} := 1.50in$

Modulus of Elasticity - Girder: $E_s := 29000ksi$

Modulus of Elasticity - Concrete: $E_c := 57000 \cdot \sqrt{f'_c \cdot psi} = 3823.68\ ksi$

Modulus ratio for n: $n := round\left(\frac{E_s}{E_c}\right) = 8$

2.0 SHEAR STUD DESIGN

2.1 TRANSFORMED COMPOSITE SECTION PROPERTIES

Effective width of flange on either side of beam: $b_{eff} := \min(Spa \cdot 0.5, 0.125 \cdot Len, 6 \cdot thk) = 1.75\,ft$ AREMA 15-1.7.9.2 c

Total effective flange width: $B_{f.eff} := 2 \cdot b_{eff} = 3.5\,ft$

Transformed compressive concrete area: $A_{c.tra} := \frac{B_{f.eff} \cdot thk}{n} = 49.88 \cdot in^2$

Neutral axis of the composite section from bottom of beam:

$$y_{NA} := \frac{B_f \cdot T_f \cdot T_f \cdot 0.5 + D_w \cdot T_w \cdot (0.5 \cdot D_w + T_f) + B_f \cdot T_f \cdot (D_w + T_f \cdot 1.5) + A_{c.tra} \cdot (D_w + 2 \cdot T_f + 0.5 \cdot thk)}{2B_f \cdot T_f + D_w \cdot T_w + A_{c.tra}} \qquad y_{NA} = 53.45 \cdot in$$

MOI of bottom flange: $I_{bf} := \frac{(B_f \cdot T_f^3)}{12} + (T_f \cdot B_f) \cdot (y_{NA} - 0.5 \cdot T_f)^2 \qquad I_{bf} = 145781.68 \cdot in^4$

MOI of web section: $I_w := \left(\frac{T_w \cdot D_w^3}{12}\right) + (D_w \cdot T_w) \cdot (T_f + 0.5 \cdot D_w - y_{NA})^2 \qquad I_w = 44979.03 \cdot in^4$

MOI of top flange: $I_{tf} := \frac{(B_f \cdot T_f^3)}{12} + (T_f \cdot B_f) \cdot (D_w + 1.5 \cdot T_f - y_{NA})^2 \qquad I_{tf} = 52098.54 \cdot in^4$

MOI of transformed concrete: $I_{tc} := \frac{\left(\frac{B_{f.eff}}{n} \cdot thk^3\right)}{12} + A_{c.tra} \cdot (D_w + 2 \cdot T_f + 0.5 \cdot thk - y_{NA})^2 \qquad I_{tc} = 69761.81 \cdot in^4$

Total moment of inertia of composite section: $I_{comp} := I_{bf} + I_{tf} + I_w + I_{tc} \qquad I_{comp} = 312621.07 \cdot in^4$

Static moment of the transformed compressive concrete area about N.A. of composite section: $Q_{cc} := A_{c.tra} \cdot (D_w + 2 \cdot T_f + 0.5thk - y_{NA}) = 1860.29 \cdot in^3$

2.2 SPACING OF SHEAR STUDS

2.2.1 Fatigue

Number of Stress Cycles > 2,000,000 AREMA Table 15-1.7.3.1.b

Allowable horizontal fatigue shear force range: $S_{r.des.stud} := 7000psi \cdot XS_{stud} = 4.21 \cdot kip$

Range of Vertical shear due to unfactored live load and impact (Difference in the max and min shear envelopes excluding dead loads): $V_{r_i} := V_{LL_I_{i,1}} - V_{LL_I_{i,2}}$

Range of horizontal shear: $S_{r_i} := V_{r_i} \cdot \frac{Q_{cc}}{I_{comp}}$

Spacing of Shear Studs (Fatigue): $spa_{fatigue_i} := \frac{N_{stud} \cdot S_{r.des.stud}}{S_{r_i}}$

2.2.2 Strength

Strength of Individual Shear Connector: $S_{m.des.stud} := 20000psi \cdot XS_{stud} = 12.03 \cdot kip$

Maximum vertical shear due to live load and impact load combined with any portion of dead load superimposed on composite span: $V_{m_i} := V_{LL_I_{i,1}} + V_{DL_i}$

Maximum horizontal shear: $S_{m_i} := V_{m_i} \cdot \frac{Q_{cc}}{I_{comp}}$

Spacing of Shear Studs (Strength): $spa_{strength_i} := \frac{N_{stud} \cdot S_{m.des.stud}}{S_{m_i}}$

2.2.3 Check Spacing

Clear distance between beam flange and edge of shear connector:

$$Distance_{clear} := B_f \cdot 0.5 - spa_{trans} - Dia_{stud} \cdot 0.5 = 2.56 \cdot in$$

$$check_{trans} := if\left(Distance_{clear} > 1.5in \wedge spa_{trans} > 4 \cdot Dia_{stud}, "OK", "NO\ GOOD"\right)$$

AREMA 15-1.7.9.3.e and AA 6.10.10.1.3

$$check_{trans} = "OK"$$

Design Spacing of Shear Studs:

$$spa_{max_i} := 24 \cdot in$$

$$spa_{long_i} := if\left(spa_{strength_i} > spa_{fatigue_i}, spa_{fatigue_i}, spa_{strength_i}\right)$$

$$spa_{final_i} := min\left(spa_{max_i}, spa_{strength_i}, spa_{fatigue_i}\right)$$

AREMA 15-1.7.9.3.b

$$check_{long_i} := if\left(spa_{final_i} \le spa_{max_i} \wedge spa_{final_i} > 6 \cdot Dia_{stud}, "OK", "NO\ GOOD"\right)$$

$X_i =$	$spa_{fatigue_i} =$	$spa_{strength_i} =$	$spa_{long_i} =$	$spa_{final_i} =$	$check_{long_i} =$
0 ft	7.82 ·in	18.94 ·in	7.82 ·in	7.82 ·in	"OK" ·in
11.05	9.78	23.67	9.78	9.78	"OK"
22.1	13.03	31.56	13.03	13.03	"OK"
33.15	19.55	47.35	19.55	19.55	"OK"
44.2	35.37	86.62	35.37	24	"OK"
55.25	35.37	86.62	35.37	24	"OK"
66.3	35.37	86.62	35.37	24	"OK"
77.35	19.55	47.35	19.55	19.55	"OK"
88.4	13.03	31.56	13.03	13.03	"OK"
99.45	9.78	23.67	9.78	9.78	"OK"
110.5	7.82	18.94	7.82	7.82	"OK"

DESIGN CALCULATION COVER SHEET

Gannett Fleming
Engineers and Architects, P.C.
Excellence Delivered ***As Promised***

ISO 9001:2008 CERTIFIED

PROJECT:	**ODOT/EMH&T: HAM-75-7.85**	*ODOT PID NO:*	*77889*
BRIDGE NO:	**HAM-75-0834**	*EMH&T JOB NO:*	
SUBJECT:	***Analysis***	**GF JOB NO:**	**54682**
	Shear Stud design	CALC NO.:	**HAM075_0834_13_Sp2**
	MATHCAD	REV NO.:	**01**
FILE NAME(s):	*HAM075_0834_13_Sp2.xmcd*	**SHEET:**	**1 OF 8**

SUPERSEDES CALC NO: (Rev. 00)

CALCULATION DESCRIPTION:

This will analyze and design the shear stud connectors for composite action of the deck slab.

DESIGN BASIS OR REFERENCES:

NS Underpass Design Criteria
AREMA (2014) Chapter 15
HAM075_0834_03_Sp2
AISC Steel Construction Manual, Thirteenth Edition
BDM - ODOT Bridge Design Manual (2004) - Current Edition

MISCELLANEOUS NOTES:

Stage 3: Update to Loads due to increased LL distribution, increased girder sections, and increased deck thickness

RECORD OF ISSUES:

REV	DESCRIPTION	BY	DATE	VERIF'D	DATE
00	Stage 1 Calculation	VDK	06/03/14		
01	Stage 3 Update	VDT	01/19/16	CTM	04/25/16

RECORD OF CHECK OF CURRENT CALCULATION VERSION

BY	DATE	CHKD	DATE	UPD.	DATE	VERIF'D	DATE
VDK	06/03/14	VDT	06/04/14	VDT	01/19/16	CTM	04/25/16

SHEAR STUD CONNECTORS

(AREMA/NSRR Design: HAM-75-0834 Bridge Span 2)

Design notes

- Variables with a box around them require review/user input.
- Code references are made using the following abbreviations:
  - AREMA -AREMA Chapter 15 - Current Edition
  - NS - Norfolk Southern Public Policy Manual - Current Edition
  - BDM - ODOT LFD Bridge Design Manual (2004) - Current Edition
  - AA - AASHTO LFD
  - AISC - AISC Steel Construction Manual, Thirteenth Edition

Design the shear stud configuration for the girder. Check for the adequacy of the stud connectors.

1.0 INPUT DATA

1.1 GIRDER DATA

Girder Flange Width: $B_f := 17in$

Girder Web Thickness: $T_w := 0.875in$ HAM-75-0834_03_Sp2

Girder Flange Thickness: $T_f := 2.25in$

Depth of web: $D_w := 82in$

Web area: $A_w := T_w \cdot D_w = 71.75 \cdot in^2$

Flange area: $A_f := B_f \cdot T_f = 38.25 \cdot in^2$

Total area of girder: $A_g := A_w + 2 \cdot A_f = 148.25 \cdot in^2$

Span length (C/C Bearings): $Len := 97.25ft$

Lateral Spacing of the beams (C/C): $Spa := 3.5ft$

Thickness of the concrete slab: $thk := 9.5in$ *effective slab thickness is taken as slab thickness minus one inch.*

1.2 SHEAR CONNECTOR DATA

studs transverse spacing: $spa_{trans} := 4in$

Height of stud: $H_{stud} := thk - 2in = 7.5 \cdot in$ AREMA 15-1.7.9.3.d

Diameter of stud: $Dia_{stud} := 0.875in$

Nominal cross section area of the stud: $XS_{stud} := \pi \cdot 0.25 \cdot Dia_{stud}^2 = 0.6 \cdot in^2$

Number of studs per row: $N_{stud} := 3$

Height to diameter ratio: $Ratio := \frac{H_{stud}}{Dia_{stud}} = 8.57$ AREMA 15-1.7.9.3.3.a

$CHK_{HeightRatio} := if(Ratio > 4, "OK", "NO GOOD")$ $CHK_{HeightRatio} = "OK"$

1.3 LOADING DATA

Shear stud designs are verified at every tenth point along the beam length (L).

Rows $i := 1 .. 11$ **Columns** $j := 1 .. 2$ $ORIGIN := 1$ $V_{LL_MAX} := 247.09$ $V_{DL_MAX} := 43.1$

Unfactored shears and moments $V_{LL_MIN} := 60$ $V_{DL_MIN} := 10$

GIRDER DESIGN spreadsheet HAM075_0834_03_Sp2

$$X := \begin{pmatrix} 0 \\ 0.1\cdot Len \\ 0.2\cdot Len \\ 0.3\cdot Len \\ 0.4\cdot Len \\ 0.5\cdot Len \\ 0.6\cdot Len \\ 0.7\cdot Len \\ 0.8\cdot Len \\ 0.9\cdot Len \\ Len \end{pmatrix}$$

$$V_{LL_I} := \begin{pmatrix} \max(1.0\cdot V_{LL_MAX}, V_{LL_MIN}) & 0 \\ \max(0.8\cdot V_{LL_MAX}, V_{LL_MIN}) & 0 \\ \max(0.6\cdot V_{LL_MAX}, V_{LL_MIN}) & 0 \\ \max(0.4\cdot V_{LL_MAX}, V_{LL_MIN}) & 0 \\ \max(0.2\cdot V_{LL_MAX}, V_{LL_MIN}) & 0 \\ \max(0.00\cdot V_{LL_MAX}, V_{LL_MIN}) & 0 \\ \max(0.2\cdot V_{LL_MAX}, V_{LL_MIN}) & 0 \\ \max(0.4\cdot V_{LL_MAX}, V_{LL_MIN}) & 0 \\ \max(0.6\cdot V_{LL_MAX}, V_{LL_MIN}) & 0 \\ \max(0.8\cdot V_{LL_MAX}, V_{LL_MIN}) & 0 \\ \max(1.0\cdot V_{LL_MAX}, V_{LL_MIN}) & 0 \end{pmatrix} kip$$

$$V_{DL} := \begin{pmatrix} \max(1.0\cdot V_{DL_MAX}, V_{DL_MIN}) \\ \max(0.8\cdot V_{DL_MAX}, V_{DL_MIN}) \\ \max(0.6\cdot V_{DL_MAX}, V_{DL_MIN}) \\ \max(0.4\cdot V_{DL_MAX}, V_{DL_MIN}) \\ \max(0.2\cdot V_{DL_MAX}, V_{DL_MIN}) \\ \max(0.0\cdot V_{DL_MAX}, V_{DL_MIN}) \\ \max(0.2\cdot V_{DL_MAX}, V_{DL_MIN}) \\ \max(0.4\cdot V_{DL_MAX}, V_{DL_MIN}) \\ \max(0.6\cdot V_{DL_MAX}, V_{DL_MIN}) \\ \max(0.8\cdot V_{DL_MAX}, V_{DL_MIN}) \\ \max(1.0\cdot V_{DL_MAX}, V_{DL_MIN}) \end{pmatrix} kip$$

$V_{LL_I} =$

247.09	0
197.67	0
148.25	0
98.84	0
60	0
60	0
60	0
98.84	0
148.25	0
197.67	0
247.09	0

$\cdot kip$

$V_{DL} =$

43.1
34.48
25.86
17.24
10
10
10
17.24
25.86
34.48
43.1

$\cdot kip$

TOTAL DL = 104.88 kips
V.DL = 104.88 - 32.03 (steel) - 29.75 (Non-composite) = 43.1 kips

TOTAL LL = 173.66 + 60.98 + 2.87 + 9.58 = 247.09 kips
Min. (maximum) LL = 1/2 axle load + 50% Impact = 60 kips
Minimum LL = unloaded = 0 kips (No negative moment - simple span)

DL_MIN is the local dead load due to all components steel, composite and non composite dead load over a tributary area of girder spacing rounded to 5 kip.

Intermediate supports are not provided during the casting and curing of the concrete. Therefore, self weight is not considered in maximum shear force as described in AREMA 15-1.7.9.2.h

1.4 MATERIAL PROPERTIES

Concrete Strength: $f'_c := 4500 \cdot psi$

Concrete Unit Weight: $\gamma_c := 150 \cdot pcf$

Steel Beam Yield Strength: $F_{y_girder} := 50ksi$

Deck Rebar Yield Strength: $F_{y_rebar} := 60ksi$

Top Concrete Clear Cover: $cc_{top} := 2.0in$

AREMA Table 8-2-7

Bott. Concrete Clear Cover: $cc_{bot} := 1.50in$

Modulus of Elasticity - Girder: $E_s := 29000ksi$

Modulus of Elasticity - Concrete: $E_c := 57000 \cdot \sqrt{f'_c \cdot psi} = 3823.68\ ksi$

Modulus ratio for n: $n := round\left(\frac{E_s}{E_c}\right) = 8$

2.0 SHEAR STUD DESIGN

2.1 TRANSFORMED COMPOSITE SECTION PROPERTIES

Effective width of flange on either side of beam: $b_{eff} := \min(Spa \cdot 0.5, 0.125 \cdot Len, 6 \cdot thk) = 1.75\,ft$ AREMA 15-1.7.9.2 c

Total effective flange width: $B_{f.eff} := 2 \cdot b_{eff} = 3.5\,ft$

Transformed compressive concrete area: $A_{c.tra} := \frac{B_{f.eff} \cdot thk}{n} = 49.88 \cdot in^2$

Neutral axis of the composite section from bottom of beam:

$$y_{NA} := \frac{B_f \cdot T_f \cdot T_f \cdot 0.5 + D_w \cdot T_w \cdot (0.5 \cdot D_w + T_f) + B_f \cdot T_f \cdot (D_w + T_f \cdot 1.5) + A_{c.tra} \cdot (D_w + 2 \cdot T_f + 0.5 \cdot thk)}{2B_f \cdot T_f + D_w \cdot T_w + A_{c.tra}} \qquad y_{NA} = 55.33 \cdot in$$

MOI of bottom flange: $I_{bf} := \frac{(B_f \cdot T_f^3)}{12} + (T_f \cdot B_f) \cdot (y_{NA} - 0.5 \cdot T_f)^2 \qquad I_{bf} = 112415.2 \cdot in^4$

MOI of web section: $I_w := \left(\frac{T_w \cdot D_w^3}{12}\right) + (D_w \cdot T_w) \cdot (T_f + 0.5 \cdot D_w - y_{NA})^2 \qquad I_w = 50679.82 \cdot in^4$

MOI of top flange: $I_{tf} := \frac{(B_f \cdot T_f^3)}{12} + (T_f \cdot B_f) \cdot (D_w + 1.5 \cdot T_f - y_{NA})^2 \qquad I_{tf} = 34536.95 \cdot in^4$

MOI of transformed concrete: $I_{tc} := \frac{\left(\frac{B_{f.eff}}{n} \cdot thk^3\right)}{12} + A_{c.tra} \cdot (D_w + 2 \cdot T_f + 0.5 \cdot thk - y_{NA})^2 \qquad I_{tc} = 64714.39 \cdot in^4$

Total moment of inertia of composite section: $I_{comp} := I_{bf} + I_{tf} + I_w + I_{tc} \qquad I_{comp} = 262346.36 \cdot in^4$

Static moment of the transformed compressive concrete area about N.A. of composite section: $Q_{cc} := A_{c.tra} \cdot (D_w + 2 \cdot T_f + 0.5thk - y_{NA}) = 1791.35 \cdot in^3$

2.2 SPACING OF SHEAR STUDS

2.2.1 Fatigue

Number of Stress Cycles > 2,000,000 AREMA Table 15-1.7.3.1.b

Allowable horizontal fatigue shear force range: $S_{r.des.stud} := 7000psi \cdot XS_{stud} = 4.21 \cdot kip$

Range of Vertical shear due to unfactored live load and impact (Difference in the max and min shear envelopes excluding dead loads): $V_{r_i} := V_{LL_I_{i,1}} - V_{LL_I_{i,2}}$

Range of horizontal shear: $S_{r_i} := V_{r_i} \cdot \frac{Q_{cc}}{I_{comp}}$

Spacing of Shear Studs (Fatigue): $spa_{fatigue_i} := \frac{N_{stud} \cdot S_{r.des.stud}}{S_{r_i}}$

2.2.2 Strength

Strength of Individual Shear Connector: $S_{m.des.stud} := 20000psi \cdot XS_{stud} = 12.03 \cdot kip$

Maximum vertical shear due to live load and impact load combined with any portion of dead load superimposed on composite span: $V_{m_i} := V_{LL_I_{i,1}} + V_{DL_i}$

Maximum horizontal shear: $S_{m_i} := V_{m_i} \cdot \frac{Q_{cc}}{I_{comp}}$

Spacing of Shear Studs (Strength): $spa_{strength_i} := \frac{N_{stud} \cdot S_{m.des.stud}}{S_{m_i}}$

2.2.3 Check Spacing

Clear distance between beam flange and edge of shear connector:

$$Distance_{clear} := B_f \cdot 0.5 - spa_{trans} - Dia_{stud} \cdot 0.5 = 4.06 \cdot in$$

$$check_{trans} := if\left(Distance_{clear} > 1.5in \wedge spa_{trans} > 4 \cdot Dia_{stud}, "OK", "NO\ GOOD"\right)$$

AREMA 15-1.7.9.3.e and AA 6.10.10.1.3

$$check_{trans} = "OK"$$

Design Spacing of Shear Studs:

$$spa_{max_i} := 24 \cdot in$$

$$spa_{long_i} := if\left(spa_{strength_i} > spa_{fatigue_i}, spa_{fatigue_i}, spa_{strength_i}\right)$$

$$spa_{final_i} := min\left(spa_{max_i}, spa_{strength_i}, spa_{fatigue_i}\right)$$

AREMA 15-1.7.9.3.b

$$check_{long_i} := if\left(spa_{final_i} \le spa_{max_i} \wedge spa_{final_i} > 6 \cdot Dia_{stud}, "OK", "NO\ GOOD"\right)$$

$X_i =$		$spa_{fatigue_i} =$		$spa_{strength_i} =$		$spa_{long_i} =$		$spa_{final_i} =$		$check_{long_i} =$	
0	ft	7.48	·in	18.21	·in	7.48	·in	7.48	·in	"OK"	·in
9.72		9.36		22.76		9.36		9.36		"OK"	
19.45		12.47		30.35		12.47		12.47		"OK"	
29.18		18.71		45.52		18.71		18.71		"OK"	
38.9		30.82		75.48		30.82		24		"OK"	
48.63		30.82		75.48		30.82		24		"OK"	
58.35		30.82		75.48		30.82		24		"OK"	
68.07		18.71		45.52		18.71		18.71		"OK"	
77.8		12.47		30.35		12.47		12.47		"OK"	
87.53		9.36		22.76		9.36		9.36		"OK"	
97.25		7.48		18.21		7.48		7.48		"OK"	

DESIGN CALCULATION COVER SHEET

Gannett Fleming
Engineers and Architects, P.C.
Excellence Delivered ***As Promised***

ISO 9001:2008 CERTIFIED

PROJECT:	**ODOT/EMH&T: HAM-75-7.85**	*ODOT PID NO:*	*77889*
BRIDGE NO:	**HAM-75-0834**	*EMH&T JOB NO:*	
SUBJECT:	***Analysis***	**GF JOB NO:**	**54682**
	Concrete Deck	CALC NO.:	**HAM075_0834_14**
	MATHCAD	REV NO.:	**01**
FILE NAME(s):	*NSRR Standard Concrete Deck Design*	**SHEET: 1 OF 13**	

SUPERSEDES CALC NO: 00 (Stage 1)

CALCULATION DESCRIPTION:

This will analyze the concrete deck to be used on the bridge. The design looks at a 12" strip for the calculations and then applies this to the entire bridge.

DESIGN BASIS OR REFERENCE

NS Underpass Design Criteria
AREMA (2008) Chapter 8, Section 5
BDM-ODOT LFD Bridge Design Manual (2004) - Current Edition
AISC Steel Construction Manual, Thirteenth Edition
Stage 1 Plans and Comments

MISCELLANEOUS NOTES:

Minimum 8" ballast used for worst case lateral live load distribution

Maximum (9"+6" future wearing surface) ballast used for worst case dead load applied

Maximum projected overhang used for all designs(rounded up

Minimum top flange used for all designs

Stage 3: Update to Calcs results in 10.5" Deck thickness

RECORD OF ISSUES:

REV	DESCRIPTION	BY	DATE	VERIF'D	DATE
00	Stage 1 Calculation	VDK	03/26/14	EFD	07/30/14
01	Stage 3 Calculation	VDT	01/14/16	CTM	04/25/16

RECORD OF CHECK OF CURRENT CALCULATION VERSION

BY	DATE	CHKD	DATE	UPD.	DATE	VERIF'D	DATE
VDK	03/26/14	CTM/VDK	04/17/14	VDT	01/14/16	CTM	04/25/16

Reinforced Deck Slab Design

(AREMA/NSRR LFD Deck Design)

Design notes

- Variables with a box around them require review/user input.
- Code references are made using the following abbreviations:
  - AREMA -AREMA Chapter 8 - Current Edition
  - NS - Norfolk Southern Public Policy Manual - Current Edition
  - BDM - ODOT LFD Bridge Design Manual (2004) - Current Edition
  - AA - AASHTO LFD
  - AISC - AISC Steel Construction Manual, Thirteenth Edition

- General Design data and assumptions:
  - A 12" wide strip is designed
  - Minimum (8") ballast is used for a worst-case lateral live load distribution
  - Maximum (9" + 6" future) ballast is used for worst-case dead load applied
  - Maximum project overhang is used for all designs (rounded up)
  - Minimum top flange width (rounded down) is used for all designs
  - Norfolk Southern derailed loads are assumed

1.0 INPUT:

1.1 SECTION PROPERTIES:

Girder Spacing $Spa := 3.5 \cdot ft$ **Minimum Girder Flange Width** $b_f := 17 \cdot in$

Minimum Girder Flange Thickness $t_f := 2.25 \cdot in$ **Min. Gider Span:** $Sp := 97.25 \cdot ft$

Effective Deck Span Length $Len := Spa - 0.5 \cdot b_f$ $Len = 2.79 \cdot ft$ **AREMA 8-2.23.6.c(2)**

Clear Cover (AREMA Table 8-2.7) **Top of Slab:** $Ct := 2.0 \cdot in$ **Bottom of Slab:** $Cb := 1.0 \cdot in$ *cover to the flange... knowing an additional Tf is below that*

Thickness of Slab for Negative Bending $h_n := 10.5in$ *minimum deck thickness is considered for conservative purposes. In reality, at the negative bending section, the deck will always be thicker due to cross-slope*

Thickness of Slab for Positive Bending $h_p := h_n + t_f = 12.75 \cdot in$

Max. Deck Overhang $Ovh := 39 \cdot in$ **Parapet Width** $Parp_W := 12 \cdot in$ **Slab Design Width** $b := 12 \cdot in$

1.2 REINFORCING BAR PROPERTIES:

TRANSVERSE BARS: Bar 1 - Positive bending (BOTTOM); Bar 2 - Negative bending (TOP)
LONGITUDINAL BARS: Bar 3 (BOTTOM) and Bar 4 (TOP)

BAR 1:	#5 Bar	$d_{b1} := 0.625 \cdot in$	$A_{b1} := 0.31 \cdot in^2$	$S1 := 8 \cdot in$	$A_{s1} := A_{b1} \cdot \frac{b}{S1}$	$A_{s1} = 0.47 \cdot in^2$
BAR 2:	#5 Bar	$d_{b2} := .625 \cdot in$	$A_{b2} := 0.31 \cdot in^2$	$S2 := 8 \cdot in$	$A_{s2} := A_{b2} \cdot \frac{b}{S2}$	$A_{s2} = 0.47 \cdot in^2$
BAR 3:	#5 Bar	$d_{b3} := 0.625 \cdot in$	$A_{b3} := 0.31 \cdot in^2$	$S3 := 11 \cdot in$	$A_{s3} := A_{b3} \cdot \frac{b}{S3}$	$A_{s3} = 0.34 \cdot in^2$
BAR 4:	#5 Bar	$d_{b4} := 0.625 \cdot in$	$A_{b4} := 0.31 \cdot in^2$	$S4 := 11 \cdot in$	$A_{s4} := A_{b4} \cdot \frac{b}{S4}$	$A_{s4} = 0.34 \cdot in^2$

1.3 MATERIAL PROPERTIES:

CONCRETE: $f'_c := 4500 \cdot psi$ $\quad \varepsilon_c := 0.003$ $\quad w_{conc} := 150 \cdot \frac{lbf}{ft^3}$ $\quad f_r := 7.5 \cdot \sqrt{f'_c \, psi}$ $\quad E_c := 57000 \cdot \sqrt{f'_c \cdot psi}$

$$\beta_1 := if\left[f'_c \le 4000 \cdot psi, 0.85, 0.85 - 0.05 \cdot \left(\frac{f'_c - 4000 \cdot psi}{1000 \cdot psi}\right)\right] \quad \beta_1 := if\left(\beta_1 \le 0.65, 0.65, \beta_1\right) \quad \beta_1 = 0.83$$

REINFORCING STEEL: $f_y := 60000 \cdot psi$ $\quad E_s := 29000000 \cdot psi$ $\quad n := round\left(\frac{E_s}{E_c}\right)$ $\quad n = 8$

Resistance Factors **Flexure:** $\phi_f := 0.9$

Shear: $\phi_s := 0.85$ AREMA 8-2.52

2.0 LOADS AND FORCES

- *Loads are calculated over a 12" wide strip (transverse to the beams).*
- *Positive and Negative Moment is calculated assuming 3 spans (4 supports/girders) with uniform loading. This is conservative because generally, a railroad bridge will have more than 4 girders; meaning moments and shears are slightly reduced*
- *Negative moment for the exterior deck*

2.1 DEAD & LIVE LOADS APPLIED

Max Live Load Axle (E-80 @ 5'-0" Max Spa) $LL := 80kip$ AREMA Figure 8.2-1

Minimum Ballast $W_{Bal.Min} := 8in \cdot (120pcf) = 80 \cdot psf$ *(Superelevated)*

Maximum Ballast $W_{Bal.Max} := (9 + 6)in \cdot (120pcf) = 150 \cdot psf$ *(Non-Super + Future)* NS H-2.6.D.6

Concrete Deck $W_{Deck} := h_p \cdot (150pcf) = 159.37 \cdot psf$

Concrete Parapet & Handrail (overhang) $W_{Parp} := (Parp_W)(30in + 6in + 12in) \cdot w_{conc} = 600 \cdot plf$

Conservative height, it is assumed that the extra 6 inches of concrete height covers the weight of the handrail and fence and the extra 12" accounts for the deck under the parapet

Track $W_{track} := 200plf$ AREMA 8-2.2.3.b (2)

2.2 TRACK DISTRIBUTION, IMPACT FACTOR & CENTRIFUGAL FORCE

Track Distribution Width: $Dist_W := 8.5ft + 8in = 9.17\,ft$ AREMA 8-2.2.3.c (3)

Track Distribution Length: $Dist_L := \min\left(3.0ft + 8in + 2 \cdot \min\left(h_p - Cb, h_n - Ct\right), 5ft\right) = 5\,ft$

AREMA 8-2.2.3.c (2); Assumes worst-case effective slab depth

Typical E-80 Live Load Impact Factor: $LL_{Imp} := 1 + \frac{2.25}{\sqrt{\frac{Sp}{ft}}} = 1.23$

AREMA 8-2.2.3.d (1):
Span between 14' & 127'

NSRR DL over Derail Limits $DL_{DR.min} := [(7.5ft)\cdot(5ft)]\cdot\left(W_{Bal.Min} + W_{Deck}\right) \ldots = 9.98\cdot kip$

NS Appendix H.2.6.E.1 $\quad + (5ft)\cdot W_{track}$

NSRR E-80 Derail Impact: $LL_{Derail} := \frac{LL\cdot LL}{LL + DL_{DR.min}} = 71.13\cdot kip$

NS Appendix H.2.6.E.1

Note: A maximum overhang of 3'-3" and a 12" parapet width would mean that the 7'-6" wide derail load would always extend past the second beam in from the outside on a standard NSRR bridge. Due to this, the negative overhang moment will be calculated using the maximum allowable overhang and will assume it is a uniformly loaded beam on two supports (at 3.5' spacing) and a 3.25' overhang. The negative overhang moment will be multiplied by 0.75 to reflect the fact that a 25% overstress is allowed. The worst negative moment (interior under live load + impact or overhang under live load + derail load) will be used for the design of the top mat of steel consistently throughout the project.

Centrifugal Force (% of LL) $LL_{cent} := 0.00117\cdot 20^2\cdot 10 = 4.68$

AREMA 8-2.2.3.e (4)
(S = 20mph, D = 10)

2.3 DEAD LOADS & LIVE LOADS ON THE DESIGN WIDTH OF DECK

Uniform Dead Load $DL_{typ} := b\cdot\left[\left(W_{Bal.Max} + W_{Deck}\right) + \left(\frac{W_{track}}{Dist_W}\right)\right] = 331.19\cdot plf$

Interior Uniform LL+Impact $LL_{typ} := b\cdot\left(\frac{LL}{Dist_W\cdot Dist_L}\right)\cdot LL_{Imp} = 2143.7\cdot plf$

Interior Centrifugal Force $LL_{cf} := \frac{LL_{cent}}{100}\cdot LL_{typ} = 100.32\cdot plf$

Exterior Uniform LL+Derail $LL_{ext} := b\cdot\frac{LL + LL_{Derail}}{(5.0ft)\cdot(7.5ft)} = 4030.12\cdot plf$

NS 6.E Derail Area

2.4 DESIGN MOMENTS

Interior Max Positive DL $M_{int.DL.p} := 0.08\cdot DL_{typ}\cdot Len^2 = 206.49\cdot lbf\cdot ft$

Interior Max Negative DL $M_{int.DL.n} := 0.10\cdot DL_{typ}\cdot Len^2 = 258.11\cdot lbf\cdot ft$

Interior Max Positive LL+I $M_{int.LL.p} := 0.08\cdot LL_{typ}\cdot Len^2 = 1336.53\cdot lbf\cdot ft$

Interior Max Negative LL+I $M_{int.LL.n} := 0.10\cdot LL_{typ}\cdot Len^2 = 1670.67\cdot lbf\cdot ft$

Interior Max Positive CF $M_{int.CF.p} := 0.08\cdot LL_{cf}\cdot Len^2 = 62.55\cdot lbf\cdot ft$

Interior Max Negative CF $M_{int.CF.n} := 0.10\cdot LL_{cf}\cdot Len^2 = 78.19\cdot lbf\cdot ft$

Exterior Parapet Moment $M_{ext.parapet} := b \cdot \left[W_{Parp} \cdot \left(Ovh - 0.5 \cdot Parp_W - 0.25 \cdot b_f\right)\right] = 1437.5 \cdot lbf \cdot ft$ *at face of support*

Exterior Negative DL $M_{ext.DL.n} := 0.5 \cdot DL_{typ} \cdot \left(Ovh - Parp_W - 0.25 \cdot b_f\right)^2 + M_{ext.parapet} = 2032.68 \cdot lbf \cdot ft$

Exterior Negative LL $M_{ext.LL.n} := 0.5 \cdot LL_{ext} \cdot \left(Ovh - Parp_W - 0.25 \cdot b_f\right)^2 = 7242.5 \cdot lbf \cdot ft$

2.5 DESIGN SHEARS

Internal reduction for Shear at critical section 75% of "d" away from edge of flange (conservative)

$$Int_{VRed} := \frac{Len - 0.75\left(h_p - Cb - t_f\right)}{Len} = 0.7873$$

Reduction is to account for the fact that the maximum shear calculated below is for that of the girder edge of the flange. In actuality, the shear can be taken at a location "d" away from the support (edge of flange). In this case, to be conservative, the critical section shear will be calculated at a distance d/2 from the support.

External Reduction for Shear at critical section 75% of "d" away from edge of flange

$$Ext_{VRed} := \frac{Ovh - 0.25 \cdot b_f - 0.75\left(h_p - Cb - t_f\right)}{Ovh - 0.25 \cdot b_f} = 0.795$$

Interior DL $V_{int.DL} := 0.60 \cdot DL_{typ} \cdot Len \cdot Int_{VRed} = 436.76 \cdot lbf$

Interior LL+I $V_{int.LL} := 0.60 \cdot LL_{typ} \cdot Len \cdot Int_{VRed} = 2827 \cdot lbf$

Interior CF $V_{int.CF} := 0.60 \cdot LL_{cf} \cdot Len \cdot Int_{VRed} = 132.3 \cdot lbf$

Exterior DL $V_{ext.DL} := Ext_{VRed} \cdot \left[DL_{typ} \cdot \left(Ovh - Parp_W - 0.25 \cdot b_f\right) + \left(W_{Parp} \cdot b\right)\right] = 976.13 \cdot lbf$

Exterior LL $V_{ext.LL} := LL_{ext} \cdot \left(Ovh - Parp_W - 0.25 \cdot b_f\right) \cdot Ext_{VRed} = 6073.88 \cdot lbf$

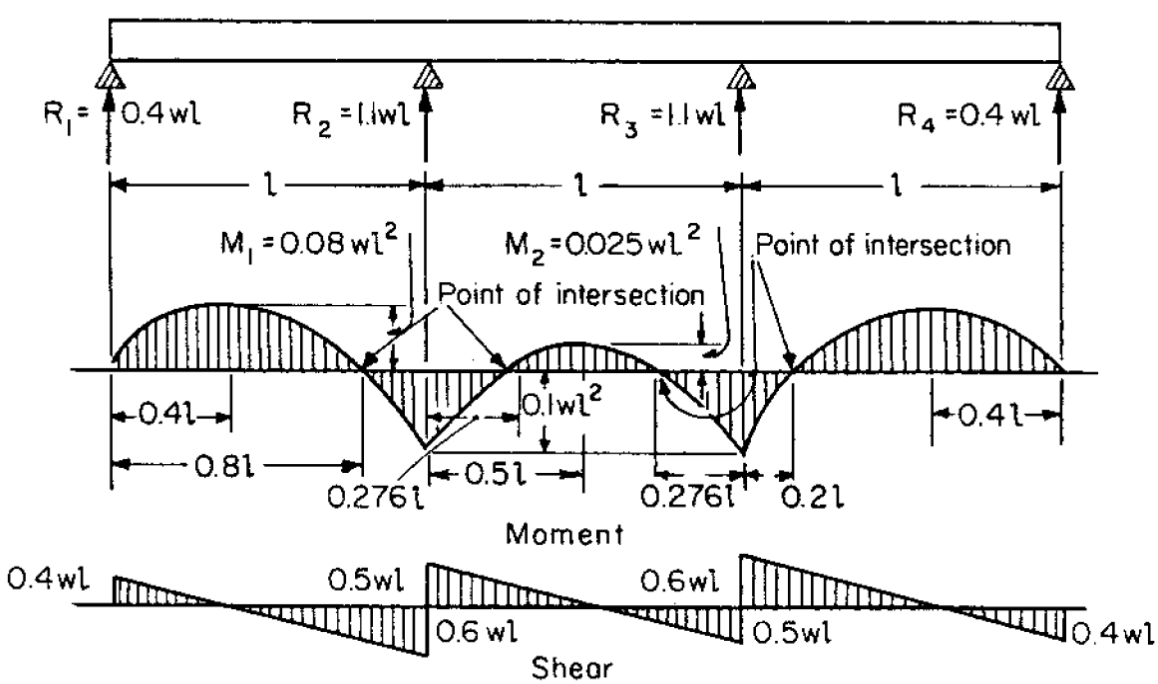

3.0 LOAD COMBINATIONS TO BE RESISTED

3.1 SERVICE MOMENTS (AREMA TABLE 8-2.4)

Interior Negative $M_{n.int} := M_{int.DL.n} + M_{int.LL.n} + M_{int.CF.n}$ $M_{n.int} = 2.01 \cdot kip \cdot ft$

Exterior Negative $M_{n.ext} := \left(M_{ext.DL.n} + M_{ext.LL.n}\right) \cdot 0.80$ $M_{n.ext} = 7.42 \cdot kip \cdot ft$

Multiplied by 0.80 to account for the fact that this derail load allows for a 25% overstress

Design Negative Moment: $M_n := \max\left(M_{n.int}, M_{n.ext}\right)$ $M_n = 7.42 \cdot kip \cdot ft$

Interior Positive $M_p := M_{int.DL.p} + M_{int.LL.p} + M_{int.CF.p}$ $M_p = 1.61 \cdot kip \cdot ft$

3.2 FACTORED (ULTIMATE) LOADS (AREMA TABLE 8-2.5)

Interior Negative $M_{un.int} := 1.4\left(M_{int.DL.n} + \frac{5}{3} \cdot M_{int.LL.n} + M_{int.CF.n}\right)$ $M_{un.int} = 4.37 \cdot kip \cdot ft$

Exterior Negative $M_{un.ext} := 1.4\left(M_{ext.DL.n} + \frac{5}{3} \cdot M_{ext.LL.n}\right) \cdot 0.80$ $M_{un.ext} = 15.80 \cdot kip \cdot ft$

Multiplied by 0.80 to account for the fact that this derail load allows for a 25% overstress

Design Negative Moment: $M_{un} := \max\left(M_{un.int}, M_{un.ext}\right)$ $M_{un} = 15.8 \cdot kip \cdot ft$

Interior Positive $M_{up} := 1.4\left(M_{int.DL.p} + \frac{5}{3} \cdot M_{int.LL.p} + M_{int.CF.p}\right)$ $M_{up} = 3.50 \cdot kip \cdot ft$

3.3 SERVICE SHEAR (AREMA TABLE 8-2.4)

Interior $V_{s.int} := V_{int.DL} + V_{int.LL} + V_{int.CF}$ $V_{s.int} = 3.4 \cdot kip$

Exterior $V_{s.ext} := \left(V_{ext.DL} + V_{ext.LL}\right) \cdot 0.80$ $V_{s.ext} = 5.64 \cdot kip$

Multiplied by 0.80 to account for the fact that this derail load allows for a 25% overstress

Design Shear $V_s := \max\left(V_{s.int}, V_{s.ext}\right)$ $V_s = 5.64 \cdot kip$

3.4 FACTORED (ULTIMATE) SHEAR (AREMA TABLE 8-2.5)

Interior $V_{u.int} := 1.4\left(V_{int.DL} + \frac{5}{3} \cdot V_{int.LL} + V_{int.CF}\right)$ $V_{u.int} = 7.39 \cdot kip$

Exterior $V_{u..ext} := 1.4\left(V_{ext.DL} + \frac{5}{3} \cdot V_{ext.LL}\right) \cdot 0.80$ $V_{u..ext} = 12.43 \cdot kip$

Multiplied by 0.80 to account for the fact that this derail load allows for a 25% overstress

Design Shear $V_u := \max\left(V_{u.int}, V_{u..ext}\right)$ $V_u = 12.43 \cdot kip$

4.0 CHECK ADEQUACY OF POSITIVE BENDING

Distance to tension steel from top fiber $d_p := h_p - Cb - t_f - 0.5 \cdot d_{b1}$ $d_p = 9.19 \cdot in$

Depth of concrete in compression *(assumed rectangular stress block)* $a_p := \frac{A_{s1} \cdot f_y}{0.85 \cdot f'_c \cdot b}$ $a_p = 0.61 \cdot in$

Design moment capacity $M_{rp} := \phi_f \cdot A_{s1} \cdot f_y \cdot \left(d_p - \frac{a_p}{2}\right)$ $M_{rp} = 18.59 \cdot kip \cdot ft$

Actual Moment $M_{up} = 3.50 \cdot kip \cdot ft$

$Chk_{bend_p} := if\left(M_{rp} \geq M_{up}, "OK", "NO\ GOOD"\right)$ $Chk_{bend_p} = "OK"$

4.1 CHECK THE MINIMUM REINFORCEMENT (AREMA SECTION 8-2.7)

Section Modulus $S_{x.p} := \frac{d_p^2}{6} \cdot b$ $S_{x.p} = 169 \cdot in^3$

Modulus of rupture $f_r = 503.12 \cdot psi$ $M_{rp} = 18.59\ ft \cdot kip$

Cracking moment $M_{cr} := f_r \cdot S_{x.p}$ $M_{cr} = 7.08 \cdot kip \cdot ft$

$Chk_{min_p} := if\left(M_{rp} \geq 1.2 \cdot M_{cr}, "OK", "NO\ GOOD"\right)$ $Chk_{min_p} = "OK"$

4.2 CHECK THE MAXIMUM REINFORCEMENT (AREMA SECTION 8-2.32)

Strain in bottom steel $\varepsilon_{sb} := \frac{f_y}{E_s}$ $\varepsilon_{sb} = 2.07 \times 10^{-3}$

Depth of neutral axis $c_b := \frac{\varepsilon_c \cdot d_p}{\left(\varepsilon_c + \varepsilon_{sb}\right)}$ $c_b = 5.44 \cdot in$

$a_b := c_b \cdot \beta_1$ $a_b = 4.49 \cdot in$

Balanced reinforcement ratio $\rho_b := \frac{a_b \cdot .85 \cdot f'_c}{d_p \cdot f_y}$ $\rho_b = 0.0311$

Provided reinforcement ratio $\rho := \frac{a_p \cdot .85 \cdot f'_c}{d_p \cdot f_y}$ $\rho = 0.0042$

$Chk_{max_p} := if\left(\rho \leq 0.75 \cdot \rho_b, "OK", "NO\ GOOD"\right)$ $Chk_{max_p} = "OK"$

4.3 CHECK THE SPACING OF THE REINFORCEMENT (AREMA SECTION 8-2.5)

Maximum spacing $s_{max.p} := \min(18 \cdot in, 1.5 \cdot h_p)$ $s_{max.p} = 18 \cdot in$

Minimum spacing $s_{min.p} := \max(1.5 \cdot in, 1.5 \cdot d_{b1})$ $s_{min.p} = 1.5 \cdot in$

$Chk_{Spacing_p} := \text{if}(S1 \le s_{max.p} \wedge S1 \ge s_{min.p}, \text{"OK"}, \text{"NO GOOD"})$ $Chk_{Spacing_p} = \text{"OK"}$

4.4 CHECK DISTRIBUTION OF FLEXURAL STEEL (AREMA SECTION 8-2.39)

$Z := 130 \cdot \frac{kip}{in}$ *Based on severe exposure conditions*

Thickness of concrete cover from extreme tension fiber to center of bar $d_{c.p} := \min\left(2in + \frac{d_{b1}}{2}, t_f + Cb + \frac{d_{b1}}{2}\right)$ $d_{c.p} = 2.31 \cdot in$

Effective tension area of concrete surrounding main bar $A_{s.p} := 2 \cdot d_{c.p} \cdot S1$ $A_{s.p} = 37 \cdot in^2$

Allowable stress in reinforcement steel $f_{s_allow.p} := \min\left(0.5 \cdot f_y, \frac{Z}{\sqrt[3]{d_{c.p} \cdot A_{s.p}}}\right)$ $f_{s_allow.p} = 29.5 \cdot ksi$

Reinforcement ratio $\rho_p := \frac{A_{s1}}{d_p \cdot b}$ $\rho_p = 0.0042$

Position of neutral axis $K_p := \sqrt{(\rho_p \cdot n)^2 + 2 \cdot \rho_p \cdot n} - \rho_p \cdot n$ $K_p = 0.23$

$K_p \cdot d_p = 2.1 \cdot in$

Distance from C.G. to extreme tension fiber $c_p := d_p - K_p \cdot d_p$ $c_p = 7.09 \cdot in$

Effective Moment of Inertia of section
Assumes zero compression reinforcement (Conservative)
$I_p := \frac{b \cdot (K_p \cdot d_p)^3}{3} + n \cdot A_{s1} \cdot c_p^2$ $I_p = 223.91 \cdot in^4$

Actual stress in reinforcement
at service load
$f_{s_act.p} := \frac{n \cdot M_p \cdot c_p}{I_p}$ $f_{s_act.p} = 4.88 \cdot ksi$

$Chk_{flex_p} := \text{if}(f_{s_act.p} \le f_{s_allow.p}, \text{"OK"}, \text{"NO GOOD"})$ $Chk_{flex_p} = \text{"OK"}$

4.5 CHECK OVERALL DESIGN FOR POSITIVE BENDING:

$Chk_{positive} := \text{if}(Chk_{bend_p} = \text{"OK"} \wedge Chk_{min_p} = \text{"OK"} \wedge Chk_{max_p} = \text{"OK"} \wedge Chk_{flex_p} = \text{"OK"}, \text{"OK"}, \text{"NO GOOD"})$

$Chk_{positive} = \text{"OK"}$

5.0 DETERMINE THE MOMENT CAPACITY OF THE SLAB IN NEGATIVE BENDING

Distance to tension steel from bottom fiber $d_n := h_n - Ct - 0.5 \cdot d_{b2}$ $d_n = 8.19 \cdot in$

Depth of concrete in compression
(assumed rectangular stress block)
$a_n := \frac{A_{s2} \cdot f_y}{0.85 \cdot f'_c \cdot b}$ $a_n = 0.61 \cdot in$

Design moment capacity $M_{rn} := \phi_f \cdot A_{s2} \cdot f_y \cdot \left(d_n - \frac{a_n}{2}\right)$ $M_{rn} = 16.5 \cdot kip \cdot ft$

Actual Moment $M_{un} = 15.8 \cdot kip \cdot ft$

$Chk_{bend_n} := if\left(M_{rn} \geq M_{un}, "OK", "NO\ GOOD"\right)$ $Chk_{bend_n} = "OK"$

5.1 CHECK THE MINIMUM REINFORCEMENT (AREMA SECTION 8-2.7)

Section Modulus $S_{x.n} := \frac{d_n^{\ 2}}{6} \cdot b$ $S_{x.n} = 134 \cdot in^3$

Modulus of rupture $f_r = 503.12 \cdot psi$ $M_{rn} = 16.5\ ft \cdot kip$

Cracking moment $M_{cr.n} := f_r \cdot S_{x.n}$ $M_{cr.n} = 5.62 \cdot kip \cdot ft$

$Chk_{min_n} := if\left(M_{rn} \geq 1.2 \cdot M_{cr.n}, "OK", "NO\ GOOD"\right)$ $Chk_{min_n} = "OK"$

5.2 CHECK THE MAXIMUM REINFORCEMENT (AREMA SECTION 8-2.32)

Strain in the steel reinforcement $\varepsilon_{sb} = 2.07 \times 10^{-3}$

Strain in the concrete $\varepsilon_c = 3 \times 10^{-3}$

Depth of neutral axis $c_{b.n} := \frac{\varepsilon_c \cdot d_n}{\left(\varepsilon_c + \varepsilon_{sb}\right)}$ $c_{b.n} = 4.85 \cdot in$

$a_{b.n} := c_{b.n} \cdot \beta_1$ $a_{b.n} = 4 \cdot in$

Balanced reinforcement ratio $\rho_{b.n} := \frac{a_{b.n} \cdot .85 \cdot f'_c}{d_n \cdot f_y}$ $\rho_{b.n} = 0.0311$

Provided reinforcement ratio $\rho_n := \frac{a_n \cdot .85 \cdot f'_c}{d_n \cdot f_y}$ $\rho_n = 0.0047$

$Chk_{max_n} := if\left(\rho_n \leq 0.75 \cdot \rho_{b.n}, "OK", "NO\ GOOD"\right)$ $Chk_{max_n} = "OK"$

5.3 CHECK THE SPACING OF THE REINFORCEMENT (AREMA SECTION 8-2.5)

Maximum Spacing $s_{max.n} := \min(18 \cdot in, 1.5 \cdot h_n)$ $s_{max.n} = 15.75 \cdot in$

Minimum Spacing $s_{min.n} := \max(1.5 \cdot in, 1.5 \cdot d_{b2})$ $s_{min.n} = 1.5 \cdot in$

$Chk_{Spacing_n} := \text{if}(S1 \le s_{max.n} \wedge S1 \ge s_{min.n}, \text{"OK"}, \text{"NO GOOD"})$ $Chk_{Spacing_n} = \text{"OK"}$

5.4 CHECK DISTRIBUTION OF FLEXURAL STEEL (AREMA SECTION 8-2.39)

$Z := 130 \cdot \frac{kip}{in}$ *Based on severe exposure conditions*

Thickness of concrete cover from extreme tension fiber to center of bar $d_{c.n} := \min\left(2in + \frac{d_{b2}}{2}, Ct + \frac{d_{b2}}{2}\right)$ $d_{c.n} = 2.31 \cdot in$

Effective tension area of concrete surrounding main bar $A_{s.n} := 2 \cdot d_{c.n} \cdot S2$ $A_{s.n} = 37 \cdot in^2$

Allowable stress in reinforcement steel $f_{s_allow.n} := \min\left(0.5 \cdot f_y, \frac{Z}{\sqrt[3]{d_{c.n} \cdot A_{s.n}}}\right)$ $f_{s_allow.n} = 29.5 \cdot ksi$

Reinforcement ratio $\rho_n := \frac{A_{s2}}{d_n \cdot b}$ $\rho_p = 0.0042$

Position of neutral axis $K_n := \sqrt{(\rho_n \cdot n)^2 + 2 \cdot \rho_n \cdot n} - \rho_n \cdot n$ $K_n = 0.24$

$K_n \cdot d_n = 1.96 \cdot in$

Distance from C.G. to extreme tension fiber $c_n := d_n - K_n \cdot d_n$ $c_n = 6.22 \cdot in$

Effective Moment of Inertia of section
Assumes zero compression reinforcement (Conservative)
$I_n := \frac{b \cdot (K_n \cdot d_n)^3}{3} + n \cdot A_{s2} \cdot c_n^2$ $I_n = 174.39 \cdot in^4$

Actual stress in reinforcement
at service load
$f_{s_act.n} := \frac{n \cdot M_n \cdot c_n}{I_n}$ $f_{s_act.n} = 25.42 \cdot ksi$

$Chk_{flex_n} := \text{if}(f_{s_act.n} \le f_{s_allow.n}, \text{"OK"}, \text{"NO GOOD"})$ $Chk_{flex_n} = \text{"OK"}$

5.5 CHECK OVERALL DESIGN FOR NEGATIVE BENDING:

$Chk_{negative} := \text{if}(Chk_{bend_n} = \text{"OK"} \wedge Chk_{min_n} = \text{"OK"} \wedge Chk_{max_n} = \text{"OK"} \wedge Chk_{flex_n} = \text{"OK"}, \text{"OK"}, \text{"NO GOOD"})$

$Chk_{negative} = \text{"OK"}$

6.0 DETERMINE THE REQUIRED LONGITUDINAL (DISTRIBUTION) REINFORCEMENT AND SPACING:

6.1 CHECK REQUIRED DISTRIBUTION REINFORCEMENT PER AASHTO 9.7.3.2:

$$A_{Distrib} := \min\left(\frac{67}{100}, \frac{220 \cdot in}{\sqrt{Len \cdot in}}\right) \cdot A_{s1}$$

$$A_{Distrib} = 0.31 \cdot in^2$$

$$Chk_{AASHTO} := if\left(A_{s3} \geq A_{Distrib} \wedge A_{s4} \geq A_{Distrib}, \text{"OK"}, \text{"NO GOOD"}\right)$$

$$Chk_{AASHTO} = \text{"OK"}$$

6.2 CHECK REQUIRED SHIRINKAGE & TEMPERATURE REINFORCEMENT PER AREMA SECTION 8-2.12:

$$A_{ShrnkTemp} := 0.25 \cdot in^2$$

$$Chk_{A_AREMA} := if\left(A_{s3} \geq A_{ShrnkTemp} \wedge A_{s4} \geq A_{ShrnkTemp}, \text{"OK"}, \text{"NO GOOD"}\right)$$

$$Chk_{A_AREMA} = \text{"OK"}$$

$$S_{ShrnkTemp} := \min\left(18 \cdot in, 3 \cdot h_n\right)$$

$$S_{ShrnkTemp} = 18 \cdot in$$

$$Chk_{S_AREMA} := if\left(S3 \leq S_{ShrnkTemp} \wedge S4 \leq S_{ShrnkTemp}, \text{"OK"}, \text{"NO GOOD"}\right)$$

$$Chk_{S_AREMA} = \text{"OK"}$$

$$Chk_{Distrib} := if\left(Chk_{AASHTO} = \text{"OK"} \wedge Chk_{A_AREMA} = \text{"OK"} \wedge Chk_{S_AREMA} = \text{"OK"}, \text{"OK"}, \text{"NO GOOD"}\right)$$

$$Chk_{Distrib} = \text{"OK"}$$

7.0 CHECK SHEAR CAPACITY:

7.1 DETERMINE SHEAR CAPACITY OF THE SLAB (AREMA SECTION (8-2.35)

In most designs with average overhangs, the negative moment section will control the shear capacity at the overhang under the NSRR derail condition.

$\lambda := 1$ *(Normal Weight Concrete)*

Shear stress carried by concrete shall not exceed

$V_{c.max} := 2 \cdot \lambda \sqrt{f'_c \cdot psi}$ $\qquad V_{c.max} = 134.16 \cdot psi$

Ratio of reinforcement

$\rho_v := \frac{A_{s2}}{b \cdot d_p} = 0.0042$ $\qquad d_p = 9.19 \cdot in$

Shear stress that can be carried by concrete sections subject to shear & flexure only

$V_{c.max.alt} := 1.9 \cdot \lambda \sqrt{f'_c \cdot psi} + 2500psi \cdot \rho_v \cdot \min\left(1, \frac{V_u \cdot d_p}{M_{un}}\right)$

$V_u = 12.43 \cdot kip$ $\qquad V_{c.max.alt} = 133.81 \cdot psi$

Factored Shear stress

$V_{u.max} := \frac{V_u}{\phi_s \cdot b \cdot d_p}$ $\qquad V_{u.max} = 132.65 \cdot psi$

$Chk_{Vc} := \text{if}\left(\max\left(V_{c.max.alt}, V_{c.max}\right) \geq V_{u.max}, \text{"OK"}, \text{"NO GOOD"}\right)$ $\qquad Chk_{Vc} = \text{"OK"}$

NO SHEAR REINFORCEMENT REQUIRED IN SLABS PER AREMA CHAPTER 8 SECTION 2.10.1.a

7.2 CHECK PUNCHING SHEAR

As there is no reference of Rail contact area in AREMA,
Train wheel estimated as 6" x 12" contact area.

$A_{pll} := 6 \cdot in$ $\qquad A_{perp} := 12 \cdot in$ $\qquad V_{ps} := 60kip$

(1/2 of Rail Axle Load)

$AREA := A_{pll} \cdot A_{perp}$ $\qquad AREA = 72 \cdot in^2$

$D := h_p - Cb - .5 \cdot d_{b1}$ $\qquad D = 11.44 \cdot in$

Critical Area Located D/2 from Contact Area
AREMA 8-2.35.6 a

$CA_{pll} := A_{pll} + D$ $\qquad CA_{pll} = 17.44 \cdot in$

$CA_{perp} := A_{perp} + D$ $\qquad CA_{perp} = 23.44 \cdot in$

Ratio of long side to short side $\beta_c := \frac{CA_{perp}}{CA_{pll}}$ $\beta_c = 1.34$

Interior Reaction Area $\alpha_s := 40$

Perimeter of the critical section $b_o := 2(CA_{pll} + CA_{perp})$ $b_o = 6.81 \cdot ft$

Allowable shear force

$$V_{ps_c} := \min\left[4 \cdot \lambda \sqrt{f'_c \cdot psi} \cdot b_o \cdot D, \left(2 + \frac{4}{\beta_c}\right) \cdot \lambda \sqrt{f'_c \cdot psi} \cdot b_o \cdot D, \left(2 + \frac{\alpha_s \cdot D}{b_o}\right) \cdot \lambda \sqrt{f'_c \cdot psi} \cdot b_o \cdot D\right] \qquad V_{ps_c} = 250.89 \cdot kip$$

$$Chk_{V_ps} := \text{if}\left(V_{ps} \le \phi_s \cdot V_{ps_c}, \text{"OK"}, \text{"NO GOOD"}\right) \qquad Chk_{V_ps} = \text{"OK"}$$

7.3 CHECK OVERALL DESIGN FOR SHEAR

$$Chk_V := \text{if}\left(Chk_{Vc} = \text{"OK"} \wedge Chk_{V_ps} = \text{"OK"}, \text{"OK"}, \text{"NO GOOD"}\right) \qquad Chk_V = \text{"OK"}$$

8.0 CHECK FULL DESIGN:

$$DESIGN := \text{if}\left(Chk_{positive} = \text{"OK"} \wedge Chk_{negative} = \text{"OK"} \wedge Chk_{Distrib} = \text{"OK"} \wedge Chk_V = \text{"OK"}, \text{"OK"}, \text{"NO GOOD"}\right)$$

$$DESIGN = \text{"OK"}$$

Gannett Fleming Engineers and Architects, P.C. — Excellence Delivered As Promised	Calculation	Stage 3 Quantities: Norfolk Southern Railroad Bridge
	Description	HAM-075-0834, NSRR over IR-75 (Single Track Deck Girder)

GF Job No:	Bridge SFN	Calculated	Checked	Updated	Verified	Level 2 Review
• 054682	• XXXXXXX	• SNH, 11/5/14	• CTM, 11/12/14	• VDT, 06/04/15 • VDT, 01/19/16	• SNH, 06/08/15 • CTM, 4/25/16	•

This calculation will use ODOT Bid Elements. Reinforcing values are from the reinforcing tables at Stage 3 (previously from ratios). Framing is normal to the chord for each span, with end diaphragms being placed along the skew angle at bearing locations.

INPUT: Superstructure

General Data

Minimum Deck Thickness:	10.500 in	Curb Thickness:	1.000 ft
Deck Cross Slope:	1.72%	Curb Height:	2.000 ft
Typical C/C Drains:	21.000 ft	Total Number of Girder Lines:	8 girder(s)
		Girder Spacing, Cent-Cent:	3.500 ft
Diaphragm Total Depth:	70.500 in		
Diaphragm Web Thickness:	0.500 in	Diaphragm Flange Thickness:	0.500 in
Diaphragm Drain Hole Area:	178.54 SqIn	Diaphragm Flange Width:	6.000 in
End Diaphragm Hole Area:	311.7 SqIn	No. of Lines of Diaphragms with Holes:	2 lines
LLB Member Weight (WT4x24):	24.00 plf	Bays containing LLB:	4 bays
LLB Paint Perimeter:	24.7 in		
CIP Deck Reinforcing Ratio:	270 lb/cy	Abutment & W.W. Reinforcing Ratio:	120 lb/cy
Pier Cap Reinforcing Ratio:	200 lb/cy	Footing Reinforcing Ratio:	140 lb/cy
Abutment Backwall Reinforcing Ratio:	300 lb/cy	Parapet/Curb Reinforcing Ratio:	170 lb/cy

Span #1 Specific Data

Design Girder (Chord) Length:	110.500 ft	C/C Bearing	Total Concrete Deck Length:	113.703 ft	Parallel to Chord
Length of Girder Overhangs (Total):	2.667 ft	1'-4" Each End	Deck Width, Out-Out:	31.000 ft	Normal to Chord
			Span #1 Skew:	25.500 deg	0.44506 rad
Intermediate Stiffener Thickness:	0.625 in		Girder Total Depth:	86.000 in	
Intermediate Stiffener Width:	5.000 in		Girder Flange Width:	18.000 in	
Intermediate Stiffener Spacing:	6.000 ft		Girder Flange Thickness:	3.000 in	
BearingStiffener Thickness:	1.000 in		Girder Web Thickness:	0.875 in	
Bearing Stiffener Width:	8.000 in		Typical Stiffener Clip	1.250 in	
Typical Diaphragm Spacing:	12.00 ft	NSRR Max is 12'	Girder Paint Perimeter	218.3 in	Excl. Top Flng

Span #2 Specific Data

Design Girder (Chord) Length:	97.250 ft	C/C Bearing	Total Concrete Deck Length:	100.406 ft	Parallel to Chord
Length of Girder Overhangs (Total):	2.667 ft	1'-4" Each End	Deck Width, Out-Out:	31.000 ft	Normal to Chord
			Span #2 Skew:	25.500 deg	0.44506 rad
Intermediate Stiffener Thickness:	0.625 in		Girder Total Depth:	86.000 in	
Intermediate Stiffener Width:	5.000 in		Girder Flange Width:	17.000 in	
Intermediate Stiffener Spacing:	6.000 ft		Girder Flange Thickness:	2.250 in	
Bearing Stiffener Thickness:	1.000 in		Girder Web Thickness:	0.875 in	
Bearing Stiffener Width:	8.000 in		Typical Stiffener Clip	1.250 in	
Typical Diaphragm Spacing:	12.00 ft	NSRR Max is 12'	Girder Paint Perimeter	216.8 si/ft	Excl. Top Flng

Gannett Fleming Engineers and Architects, P.C.
Excellence Delivered As Promised

Calculation	Stage 3 Quantities: Norfolk Southern Railroad Bridge
Description	HAM-075-0834, NSRR over IR-75 (Single Track Deck Girder)

GF Job No:	Bridge SFN	Calculated	Checked	Updated	Verified	Level 2 Review
• 054682	• XXXXXXX	• SNH, 11/5/14	• CTM, 11/12/14	• VDT, 06/04/15 • VDT, 01/19/16	• SNH, 06/08/15 • CTM, 4/25/16	•

This calculation will use ODOT Bid Elements. Reinforcing values are from the reinforcing tables at Stage 3 (previously from ratios). Framing is normal to the chord for each span, with end diaphragms being placed along the skew angle at bearing locations.

INPUT: Substructure

Rear (East) Abutment

Bottom of Abutment Footing Elevation:	519.50		Footing Length:	50.000 ft	2' Past Stem to CJ
Top of Stem Elevation:	547.33	Bearing	Footing Width:	25.000 ft	
Top of Backwall Shoulder Elevation:	558.00		Footing Toe Width:	3.000 ft	
Median Top of Backwall Elevation:	556.08	Betwn Curbs	Footing Toe Thickness:	5.250 ft	
12" Pile Tip Elevation:	440.50	446.50 WW EL	Pile Embedment into Footing:	2.000 ft	
14" Pile Tip Elevation:	440.50		Footing Heel Thickness	5.000 ft	
Finished Ground Elevation:	531.40	Top of Barrier	Backwall Length (Along Skew):	32.130 ft	Betwn Curbs
Stem Thickness:	6.000 ft		Stem Length:	44.500 ft	Total
Backwall Thickness:	2.000 ft		Backwall Extension Plan Area:	33.46 SqFt	
Pile Row #1 Batter:	4.0 on 1	103.08%	Pile Row #2 Batter:	4.0 on 1	103.08%
Pile Row #1 Piles:	14 ea		Pile Row #2 Piles:	14 ea	
Pile Row #3 Batter:	4.0 on 1	103.08%	Pile Row #4 Batter:	Vertical	100.00%
Pile Row #3 Piles:	14 ea	4 Vert	Pile Row #4 Piles:	8 ea	
Pile Row #5 Batter:	Vertical	100.00%	Prebore Depth Elevation	502.00	
Pile Row #5 Piles:	8 ea				

Rear Wingwall Data (Facing the front face of abutment)

Left Wingwall			Right Wingwall		
Total Wingwall Length:	66.000 ft		Total Wingwall Length:	56.802 ft	
Wingwall Shoulder Length:	0.000 ft		Wingwall Shoulder Length:	0.000 ft	
Wingwall Shoulder Elevation:	558.00		Wingwall Shoulder Elevation:	558.00	
Wingwall Lowest Elevation:	529.00		Wingwall Lowest Elevation:	546.00	
Footing Thickness	3.250 ft	Varies	Footing Thickness	4.000 ft	
Average Battered Wingwall Thickness:	2.658 ft	Ave. if Battered	Average Battered Wingwall Thickness:	1.750 ft	Ave. if Battered
Wingwall Footing Length #1:	61.000 ft		Wingwall Footing Length #1:	54.869 ft	
Wingwall Footing Width #1:	16.500 ft		Wingwall Footing Width #1:	4.000 ft	
Wingwall Footing Length #2:	61.000 ft		Wingwall Footing Length #2:	54.869 ft	
Wingwall Footing Width #2:	8.750 ft		Wingwall Footing Width #2:	4.000 ft	
Battered Piles - Average Batter:	4.0 on 1	103.08%			
Battered Piles - Total Number:	31 batt		No. Caissons	15 each	
Vertical Piles - Total Number:	11 Vert				

Gannett Fleming Engineers and Architects, P.C.
Excellence Delivered As Promised

Calculation	Stage 3 Quantities: Norfolk Southern Railroad Bridge
Description	HAM-075-0834, NSRR over IR-75 (Single Track Deck Girder)

GF Job No:	Bridge SFN	Calculated	Checked	Updated	Verified	Level 2 Review
• 054682	• XXXXXXX	• SNH, 11/5/14	• CTM, 11/12/14	• VDT, 06/04/15 • VDT, 01/19/16	• SNH, 06/08/15 • CTM, 4/25/16	•

This calculation will use ODOT Bid Elements. Reinforcing values are from the reinforcing tables at Stage 3 (previously from ratios). Framing is normal to the chord for each span, with end diaphragms being placed along the skew angle at bearing locations.

Forward (West) Abutment

Bottom of Footing Elevation:	519.50		Footing Length:	47.000 ft	2' Past Stem to CJ
Top of Stem Elevation:	546.64	Bearing	Footing Width:	24.000 ft	
Top of Backwall Shoulder Elevation:	557.27		Footing Toe Width:	3.000 ft	
Median Top of Backwall Elevation:	555.35	Betwn Curbs	Footing Toe Thickness:	5.000 ft	
12" Pile Tip Elevation:	459.50		Pile Embedment into Footing:	2.000 ft	
14" Pile Tip Elevation:	459.50		Footing Heel Thickness	4.750 ft	
Finished Ground Elevation:	532.30	Top of Barrier	Backwall Length (Along Skew):	32.130 ft	Betwn Curbs
Stem Thickness:	6.000 ft		Stem Length:	42.000 ft	Total
Backwall Thickness:	2.000 ft		Backwall Extension Plan Area:	14.72 SqFt	
Pile Row #1 Batter:	4.0 on 1	103.08%	Pile Row #2 Batter:	4.0 on 1	103.08%
Pile Row #1 Piles:	13 ea		Pile Row #2 Piles:	13 ea	
Pile Row #3 Batter:	4.0 on 1	103.08%	Pile Row #4 Batter:	Vertical	100.00%
Pile Row #3 Piles:	13 ea	4 Vert	Pile Row #4 Piles:	7 ea	
Pile Row #5 Batter:	Vertical	100.00%			
Pile Row #5 Piles:	7 ea				

Forward Wingwall Data (Facing the front face of abutment)

Left Wingwall		Right Wingwall		
Total Wingwall Length:	51.573 ft	Total Wingwall Length:	50.000 ft	
Wingwall Shoulder Length:	0.000 ft	Wingwall Shoulder Length:	0.000 ft	
Wingwall Shoulder Elevation:	557.27	Wingwall Shoulder Elevation:	557.27	
Wingwall Lowest Elevation:	545.50	Wingwall Lowest Elevation:	528.50	
Wingwall Thickness:	1.750 ft	Average Battered Wingwall Thickness:	2.663 ft	Ave. if Battered
Wingwall Footing Length #1:	49.213 ft	Wingwall Footing Length #1:	45.500 ft	
Wingwall Footing Width #1:	4.000 ft	Wingwall Footing Width #1:	16.500 ft	
Wingwall Footing Length #2:	49.213 ft	Wingwall Footing Length #2:	45.500 ft	
Wingwall Footing Width #2:	4.000 ft	Wingwall Footing Width #2:	8.750 ft	
		Battered Piles - Average Batter:	4.0 on 1	103.08%
No. Caissons	13 each	Battered Piles - Total Number:	23 batt	
		Vertical Piles - Total Number:	8 Vert	

Pier

Bottom of Footing Elevation:	520.50		Footing Length:	39.000 ft	
Lowest Top of Cap Elevation:	547.46	Negate Steps	Footing Width:	13.000 ft	
Pile Tip Elevation:	472.50		Footing Thickness:	4.000 ft	
Finished Ground Elevation:	532.30	Top of Barrier	Pile Embedment into Footing:	2.000 ft	
Cap Length:	34.500 ft				
Cap Height:	4.417 ft		Wall Thickness:	4.000 ft	
Cap Width:	6.833 ft		Wall Length:	34.50 ft	
Pile Row #1 Batter:	Vertical	100.00%	Pile Row #2 Batter:	Vertical	100.00%
Pile Row #1 Piles:	13 ea	2 @ 1:4	Pile Row #2 Piles:	13 ea	2 @ 1:4
Pile Row #3 Batter:	Vertical	100.00%	Pile Row #4 Batter:	Vertical	100.00%
Pile Row #3 Piles:	13 ea	2 @ 1:4	Pile Row #4 Piles:	13 ea	2 @ 1:4

Gannett Fleming Engineers and Architects, P.C.
Excellence Delivered As Promised

Calculation	Stage 3 Quantities: Norfolk Southern Railroad Bridge
Description	HAM-075-0834, NSRR over IR-75 (Single Track Deck Girder)

GF Job No:	Bridge SFN	Calculated	Checked	Updated	Verified	Level 2 Review
• 054682	• XXXXXXX	• SNH, 11/5/14	• CTM, 11/12/14	• VDT, 06/04/15 • VDT, 01/19/16	• SNH, 06/08/15 • CTM, 4/25/16	•

This calculation will use ODOT Bid Elements. Reinforcing values are from the reinforcing tables at Stage 3 (previously from ratios). Framing is normal to the chord for each span, with end diaphragms being placed along the skew angle at bearing locations.

Quantities

202E 11003	**STRUCTURE REMOVED, OVER 20 FOOT SPAN, AS PER PLAN**						**(LS) =**		0
Super and Sub Removed	**(Assume $200,000)**								
203E 65000	**SPECIAL - SETTLEMENT PLATFORM**						**EA =**	**2.0**	0
	(Assumes one per side)								
204E 20001	**EMBANKMENT, AS PER PLAN**						**CY =**	**6,074.0**	0
	(2596.0 + 1414.0 + 756.3 + 1307.7)								
	From Track Plan Sections								
503E 11101	**COFFERDAMS AND EXCAVATION BRACING, AS PER PLAN**						**(LS) =**		0
	(Assume $20,000)								
503E 21101	**UNCLASSIFIED EXCAVATION, AS PER PLAN**						**(CY) =**	**2,665.0**	*(CHECK UNIT OF MEASURE)*
Rear Abutment North Plan:	2,258.0 sf	X	10.5 ft			/	27	=	**878 cy**
	CADD AREA		*Ave. depth below EX Grade*						
Rear Abutment South Plan:	119.9 sf	X	2.0 ft			/	27	=	**9 cy**
	CADD AREA		*Ave. depth below EX Grade*						
FWD Abutment North Plan:	1,932.3 sf	X	21.5 ft			/	27	=	**1539 cy**
	CADD AREA		*Ave. depth below EX Grade*						
FWD Abutment North Cut Behind:	174.3 sf	X	3.0 ft			/	27	=	**19 cy**
	CADD AREA		*Ave. depth below EX Grade*						
Pier Plan:	41.0 ft	X	15.0 ft	X	9.5 ft	/	27	=	**216 cy**
	Length		*Width*		*Ave. depth below EX Grade*				
505E 11100	**PILE DRIVING EQUIPMENT MOBILIZATION**						**(LS) =**		0
Super and Sub Removed	**(Assume $10,000, This is a small part of a much larger mobilization)**								
507E 00501	**12" CAST-IN-PLACE REINFORCED CONCRETE PILES, DRIVEN, AS PER PLAN**						**(FT) =**	**7,975**	0
Rear Abut, Left WW Battered, Left	80.00 ft			X	31 piles			=	**2,480 lf**
	Estimated Length								
Rear Abut, Left WW Vertical, Left	80.0 ft			X	11 piles			=	**880 lf**
	Estimated Length								
Fwd Abut, Right WW Battered, Left	65.00 ft			X	23 piles			=	**1,495 lf**
	Estimated Length								
Fwd Abut, Right WW Vertical, Left	65.0 ft			X	8 piles			=	**520 lf**
	Estimated Length								
Pier, 4:1 Batter	50.00 ft			X	8 piles			=	**400 lf**
	Estimated Length								
Pier, Vertical	50.0 ft			X	44 piles			=	**2,200 lf**
	Estimated Length								
507E 00551	**12" CAST-IN-PLACE REINFORCED CONCRETE PILES, FURNISHED, AS PER PLAN**						**(FT) =**	**8,600**	0
5' Additional Per Pile	7,975 ft	+	125 piles	X	5 ft/pile			=	**8,600 lf**
	Driven Length		*Total Piles*						
507E 00601	**14" CAST-IN-PLACE REINFORCED CONCRETE PILES, DRIVEN, AS PER PLAN**						**(FT) =**	**8,085**	0
Rear Abutment, 4:1 Batter	80.00 ft			X	38 piles			=	**3,040 lf**
	Estimated Length								
Rear Abutment, Vertical	80.0 ft			X	20 piles			=	**1,600 lf**
	Estimated Length								
Forward Abutment, 4:1 Batter	65.00 ft			X	35 piles			=	**2,275 lf**
	Estimated Length								
Forward Abutment, Vertical	65.0 ft			X	18 piles			=	**1,170 lf**
	Estimated Length								
507E 00651	**14" CAST-IN-PLACE REINFORCED CONCRETE PILES, FURNISHED, AS PER PLAN**						**(FT) =**	**8,640**	0
5' Additional Per Pile	8,085 ft	+	111 piles	X	5 ft/pile			=	**8,640 lf**
	Driven Length		*Total Piles*						

Gannett Fleming Engineers and Architects, P.C.
Excellence Delivered As Promised

Calculation	Stage 3 Quantities: Norfolk Southern Railroad Bridge
Description	HAM-075-0834, NSRR over IR-75 (Single Track Deck Girder)

GF Job No:	Bridge SFN	Calculated	Checked	Updated	Verified	Level 2 Review
• 054682	• XXXXXXX	• SNH, 11/5/14	• CTM, 11/12/14	• VDT, 06/04/15 • VDT, 01/19/16	• SNH, 06/08/15 • CTM, 4/25/16	•

This calculation will use ODOT Bid Elements. Reinforcing values are from the reinforcing tables at Stage 3 (previously from ratios). Framing is normal to the chord for each span, with end diaphragms being placed along the skew angle at bearing locations.

509E 10000	EPOXY COATED REINFORCING STEEL	(LB) =	204,280	()
		Abutment =	20,110 lb	
		Wingwall =	13,238 lb	
		Pier =	6,891 lb	
		Superstructure =	53,818 lb	
		Footing =	110,221 lb	

511E 34447	CLASS QC2 CONCRETE WITH QC/QA, BRIDGE DECK, AS PER PLAN	(CY) =	264	(CHECK UNIT OF MEASURE)
Span 1, Typical Deck	113.70 ft (Length) X 31.00 ft (Width) X 0.88 ft (Thickness)	/ (27 cf/cy)) =	114.2 CU YD	
Span 1, Between Flanges	113.70 ft (Length) X 0.5000 sf (XS Area Between) X 7 bays (Bays)	/ (27 cf/cy)) =	14.7 CU YD	
Span 1, Overhangs	113.70 ft (Length) X 0.6250 sf (XS Outside) X 2 faces (Faces)	/ (27 cf/cy)) =	5.3 CU YD	
Span 1, Cross-Slope	113.70 ft (Length) X 0.4531 sf (XS of Slope) X 4 Slope (# Typical Slopes)	/ (27 cf/cy)) =	7.6 CU YD	
Span 2, Typical Deck	100.41 ft (Length) X 31.00 ft (Width) X 0.88 ft (Thickness)	/ (27 cf/cy)) =	100.9 CU YD	
Span 2, Between Flanges	100.41 ft (Length) X 0.3906 sf (XS Area Between) X 7 bays (Bays)	/ (27 cf/cy)) =	10.2 CU YD	
Span 2, Overhangs	100.41 ft (Length) X 0.4766 sf (XS Outside) X 2 faces (Faces)	/ (27 cf/cy)) =	3.5 CU YD	
Span 2, Cross-Slope	100.41 ft (Length) X 0.4531 sf (XS of Slope) X 4 Slope (# Typical Slopes)	/ (27 cf/cy)) =	6.7 CU YD	

511E 34451	CLASS QC2 CONCRETE WITH QC/QA, BRIDGE DECK (PARAPET), AS PER PLAN	(CY) =	32	(CHECK UNIT OF MEASURE)
Span 1, Curb	113.70 ft (Length) X 2 X 1.00 ft (Thickness of Curb) X 2.00 ft (Height of Curb)	/ (27 cf/cy)) = (Assumed equal at both edges)	16.8 CU YD	
Span 2, Curb	100.41 ft (Length) X 2 X 1.00 ft (Thickness of Curb) X 2.00 ft (Height of Curb)	/ (27 cf/cy)) = (Assumed equal at both edges)	14.9 CU YD	

511E 40513	CLASS QC1 CONCRETE WITH QC/QA, PIER ABOVE FOOTINGS, AS PER PLAN	(CY) =	131	(WALLS)
Pier Wall, Flat Face	34.50 ft (Length) X 4.00 ft (Thickness) X 18.54 ft (Height)	/ (27 cf/cy)) =	94.8 CU YD	
Pier Cap	34.50 ft (Length) X 6.83 ft (Width) X 4.42 ft (Height)	/ (27 cf/cy)) =	38.6 CU YD	
Pier Cap, Chamfer	34.50 ft (Length) X 1.42 ft (Width) X -1.42 ft (Height)	/ (27 cf/cy)) =	-2.6 CU YD	

511E 45513	CLASS QC1 CONCRETE WITH QC/QA, ABUTMENT, AS PER PLAN	(CY) =	85	(MISC. NEW CONSTRUCTION)
Rear, Backwall Between Curbs	32.13 ft (Length) X 8.75 ft (Height) X 2.00 ft (Thickness)	/ (27 cf/cy)) =	20.8 CU YD	
Rear, Bkwl Shoulders & Cheekwalls	36.7 sf (Plan Area) X 10.67 ft (Height)	/ (27 cf/cy)) =	14.5 CU YD	
Rear, Bckwall Ext. above Stem	33.46 sf (Plan Area) X 8.75 ft (Height)	/ (27 cf/cy)) =	10.8 CU YD	
FWD, Backwall Between Curbs	32.13 ft (Length) X 8.71 ft (Height) X 2.00 ft (Thickness)	/ (27 cf/cy)) =	20.7 CU YD	
FWD, Bkwl Shoulders & Cheekwalls	31.7 sf (Plan Area) X 10.63 ft (Height)	/ (27 cf/cy)) =	12.5 CU YD	
FWD, Bckwall Ext. above Stem	14.72 sf (Plan Area) X 8.71 ft (Height)	/ (27 cf/cy)) =	4.7 CU YD	

Gannett Fleming Engineers and Architects, P.C.
Excellence Delivered As Promised

Calculation	Stage 3 Quantities: Norfolk Southern Railroad Bridge
Description	*HAM-075-0834, NSRR over IR-75 (Single Track Deck Girder)*

GF Job No:	Bridge SFN	Calculated	Checked	Updated	Verified	Level 2 Review
• 054682	• XXXXXXX	• SNH, 11/5/14	• CTM, 11/12/14	• VDT, 06/04/15 • VDT, 01/19/16	• SNH, 06/08/15 • CTM, 4/25/16	•

This calculation will use ODOT Bid Elements. Reinforcing values are from the reinforcing tables at Stage 3 (previously from ratios). Framing is normal to the chord for each span, with end diaphragms being placed along the skew angle at bearing locations.

511E 45603	**CLASS QC4 MASS CONCRETE, SUBSTRUCTURE WITH QC/QA, AS PER PLAN**								**(CY) = 476**	0
Rear, Typical Stem	44.50 ft *Total Length*	X	22.83 ft *Height*		X	6.00 ft *Thickness*	/	(27 cf/cy)) =		**225.8** *CU YD*
Rear, Bckwall Ext. below Stem	33.46 sf *Plan Area*	X	22.83 ft *Height*			/	(27 cf/cy))	=		**28.3** *CU YD*
FWD, Typical Stem	42.00 ft *Total Length*	X	22.39 ft *Height*		X	6.00 ft *Thickness*	/	(27 cf/cy)) =		**209.0** *CU YD*
FWD, Bckwall Ext. below Stem	14.72 sf *Plan Area*	X	22.39 ft *Height*			/	(27 cf/cy))	=		**12.2** *CU YD*
511E 46013	**CLASS QC1 CONCRETE WITH QC/QA, AS PER PLAN**								**(CY) = 224**	*(RET WALL/WINGWALL, ABVE FOOTN)*
Rear Wingwall, Left, Unbattered (	342.0 sf *Area*	X	1.75 ft *Ave Thickness*					)/(27 cf/cy) =		**22.2** *CU YD*
Rear Wingwall, Left, Battered (	758.0 sf *Area*	X	2.66 ft *Ave Thickness*					)/(27 cf/cy) =		**74.6** *CU YD*
Rear Wingwall, Right (	56.8 sf *Square Area*	X	1.75 ft *Ave Thickness*	+	340.8 sf *Triangular Area*	X	1.75 ft *Thickenss*	)/(27 cf/cy) =		**25.8** *CU YD*
Forward Wingwall, Left (	25.8 sf *Square Area*	X	1.75 ft *Ave Thickness*	+	303.5 sf *Triangular Area*	X	1.75 ft *Thickenss*	)/(27 cf/cy) =		**21.3** *CU YD*
Fwd Wingwall, Right, Unbattered (	343.0 sf *Area*	X	1.75 ft *Ave Thickness*					)/(27 cf/cy) =		**22.2** *CU YD*
Fwd Wingwall, Right, Battered (	579.0 sf *Area*	X	2.66 ft *Ave Thickness*					)/(27 cf/cy) =		**57.1** *CU YD*
511E 46513	**CLASS QC1 CONCRETE WITH QC/QA, FOOTING, AS PER PLAN**								**(CY) = 312**	0
Pier	39.00 ft *Length*	X	13.00 ft *Width*		X	4.00 ft *Thickness*	/	(27 cf/cy)) =		**75.1** *CU YD*
Rear Abut., Left Wingwall (	1,006.50 sf *Max Plan Area*	+	533.75 sf *Min Plan Area*		)/2 X	3.65 ft *Ave Thickness*	/	(27 cf/cy)) =		**104.1** *CU YD*
Rear Abut., Right Wingwall (	219.48 sf *Max Plan Area*	+	219.48 sf *Min Plan Area*		)/2 X	4.00 ft *Thickness*	/	(27 cf/cy)) =		**32.5** *CU YD*
Forward Abut., Left Wingwall (	196.85 sf *Max Plan Area*	+	196.85 sf *Min Plan Area*		)/2 X	4.00 ft *Thickness*	/	(27 cf/cy)) =		**29.2** *CU YD*
Forward Abut., Right Wingwall (	750.75 sf *Max Plan Area*	+	398.13 sf *Min Plan Area*		)/2 X	3.33 ft *Ave Thickness*	/	(27 cf/cy)) =		**70.8** *CU YD*
511E 53016	**CLASS QC4 CONCRETE, MISC.: FOOTING MASS CONCRETE WITH QC/QA**								**(CY) = 433**	0
Rear Abutment, Toe	50.00 ft *Length*	X	3.00 ft *Width*		X	5.25 ft *Thickness*	/	(27 cf/cy)) =		**29.2** *CU YD*
Rear Abutment, Heal	50.00 ft *Length*	X	22.00 ft *Width*		X	5.00 ft *Thickness*	/	(27 cf/cy)) =		**203.7** *CU YD*
Forward Abutment, Toe	47.00 ft *Length*	X	3.00 ft *Width*		X	5.00 ft *Thickness*	/	(27 cf/cy)) =		**26.1** *CU YD*
Forward Abutment, Heal	47.00 ft *Length*	X	21.00 ft *Width*		X	4.75 ft *Thickness*	/	(27 cf/cy)) =		**173.6** *CU YD*
511E 71200	**CONCRETE, MISC.: FACING OF CANTILEVER WALLS**								**(SF) = 822**	0
Rear Abutment	436.6 sf *Right*							=		**436.6 sf**
Forward Abutment	385.2 sf *Left*							=		**385.2 sf**

Gannett Fleming Engineers and Architects, P.C.
Excellence Delivered As Promised

Calculation	Stage 3 Quantities: Norfolk Southern Railroad Bridge
Description	*HAM-075-0834, NSRR over IR-75 (Single Track Deck Girder)*

GF Job No:	Bridge SFN	Calculated	Checked	Updated	Verified	Level 2 Review
•054682	•XXXXXXX	•SNH, 11/5/14	•CTM, 11/12/14	• VDT, 06/04/15 • VDT, 01/19/16	• SNH, 06/08/15 • CTM, 4/25/16	•

This calculation will use ODOT Bid Elements. Reinforcing values are from the reinforcing tables at Stage 3 (previously from ratios). Framing is normal to the chord for each span, with end diaphragms being placed along the skew angle at bearing locations.

512E 10100	**SEALING OF CONCRETE SURFACES (EPOXY-URETHANE)**							**(SY) =**	**1,088**	*0*
Rear Abutment at Deck	28.7 ft *Height (includes seat)*	**X**	32.1 ft *Length*					**/(9 sf/sy)=**	**102.4 SqYd**	
Rear Abutment at Shoulder	30.6 ft *Height*	**X**	12.4 ft *Length*					**/(9 sf/sy)=**	**42.1 SqYd**	
Rear Abutment, Left Wing	(162.2 sf *Shoulder + Top + 6" Behind*	**+**	0.0 sf *Sq. Area under Taper*		**+**	877.8 sf *Tapered Area*	)	**/(9 sf/sy)=**	**115.6 SqYd**	
Rear Abutment, Right Wing	(130.6 sf *Shoulder + Top + 6" Behind*	**+**	867.9 sf *Cadd Area*	)				**/(9 sf/sy)=**	**110.9 SqYd**	
Forward Abutment at Deck	27.1 ft *Height (includes seat)*	**X**	32.1 ft *Length*					**/(9 sf/sy)=**	**96.6 SqYd**	
Forward Abutment at Shoulder	29.0 ft *Height*	**X**	9.9 ft *Length*					**/(9 sf/sy)=**	**31.8 SqYd**	
Forward Abutment, Left Wing	(119.0 sf *Shoulder + Top + 6" Behind*	**+**	774.2 sf *Cadd Area*	)				**/(9 sf/sy)=**	**99.2 SqYd**	
Forward Abutment, Right Wing	(129.8 sf *Shoulder + Top + 6" Behind*	**+**	0.0 sf *Sq. Area under Taper*		**+**	624.3 sf *Tapered Area*	)	**/(9 sf/sy)=**	**83.8 SqYd**	
Pier Wall Face & Cap, Flat Face	31.5 ft *Perimeter*	**X**	34.5 ft *Length*					**/(9 sf/sy)=**	**120.7 SqYd**	
Pier Wall Sides	73.4 ft *Cadd Area*	**X**	**2 Sides**					**/(9 sf/sy)=**	**16.3 SqYd**	
Curb and Deck Underside	428.2 ft *Total Length*	**X**	5.6 ft *Perimeter*					**/(9 sf/sy)=**	**268.1 SqYd**	
512E 10001	**SEALING OF CONCRETE SURFACES, AS PER PLAN**							**(SY) =**	**820**	*(PERMANENT GRAFFITI PROTECTION)*
Rear Abutment	370.9 SqYd							**=**	**370.9 SqYd**	
Forward Abutment	311.4 SqYd							**=**	**311.4 SqYd**	
Pier	137.0 SqYd							**=**	**137.0 SqYd**	
512E 44451	**TYPE E WATERPROOFING, AS PER PLAN**							**(SY) =**	**738**	*(CHECK UNIT OF MEASURE)*
Span 1	(29.0 ft *Deck Width*	**+**	2.0 ft *Up the Curb*	)	**X**	113.7 ft *Length*	**/(9 sf/sy)**	**=**	**391.6 SqYd**	
Span 2	(29.0 ft *Deck Width*	**+**	2.0 ft *Up the Curb*	)	**X**	100.4 ft *Length*	**/(9 sf/sy)**	**=**	**345.8 SqYd**	
512E 56202	**SPECIAL - ASPHALTIC PANEL**							**(SY) =**	**738**	*0*
Span 1	(29.0 ft *Deck Width*	**+**	2.0 ft *6" Below top of curb*	)	**X**	113.7 ft *Length*	**/(9 sf/sy)**	**=**	**391.6 SqYd**	
Span 2	(29.0 ft *Deck Width*	**+**	2.0 ft *6" Below top of curb*	)	**X**	100.4 ft *Length*	**/(9 sf/sy)**	**=**	**345.8 SqYd**	
512E 67400	**SPECIAL - WATERPROOFING, MISC.: DAMPPROOFING OF RAILROAD STRUCTURES**							**(SF) =**	**5,373**	*0*
Rear Abutment Backwall	32.1 ft *Length*	**X**	31.6 ft *Height*					**=**	**1,014.7 sf**	
Rear Abutment Shoulder	12.4 ft *Length*	**X**	33.5 ft *Height*					**=**	**414.4 sf**	
Rear Abutment, Left Wing	66.0 ft *Length*	**X**	18.5 ft *Ave Height*					**=**	**1,221.0 sf**	
Rear Abutment, Right Wing	54.9 ft *Length*	**X**	5.0 ft *Ave Height*					**=**	**274.3 sf**	
Forward Abutment Backwall	32.1 ft *Length*	**X**	31.1 ft *Height*					**=**	**999.2 sf**	
Forward Abutment Shoulder	9.9 ft *Length*	**X**	33.0 ft *Height*					**=**	**325.9 sf**	
Forward Abutment, Left Wing	49.2 ft *Length*	**X**	4.4 ft *Ave Height*					**=**	**215.8 sf**	
Forward Abutment, Right Wing	50.0 ft *Length*	**X**	18.1 ft *Ave Height*					**=**	**906.8 sf**	

Gannett Fleming Engineers and Architects, P.C.
Excellence Delivered As Promised

Calculation	Stage 3 Quantities: Norfolk Southern Railroad Bridge
Description	HAM-075-0834, NSRR over IR-75 (Single Track Deck Girder)

GF Job No:	Bridge SFN	Calculated	Checked	Updated	Verified	Level 2 Review
• 054682	• XXXXXXX	• SNH, 11/5/14	• CTM, 11/12/14	• VDT, 06/04/15 • VDT, 01/19/16	• SNH, 06/08/15 • CTM, 4/25/16	•

This calculation will use ODOT Bid Elements. Reinforcing values are from the reinforcing tables at Stage 3 (previously from ratios). Framing is normal to the chord for each span, with end diaphragms being placed along the skew angle at bearing locations.

513E 10221 STRUCTURAL STEEL MEMBERS, LEVEL 1, AS PER PLAN (LB) = 94,050 *(CHECK UNIT OF MEASURE)*

Diaphragm Flanges, Int.	28.0 in *Typical Length*	X (2 X	3.0 sq.in *Sectional Area*	) /	(1728 ci/cf)	0.0972 cf/ea			
Diaphragm Flanges, End, Span 1	28.0 in *Typical Length*	X (2 X	3.0 sq.in *Sectional Area*	) /	(1728 ci/cf)	0.0972 cf/ea			
Diaphragm Flanges, End, Span 2	28.0 in *Typical Length*	X (2 X	3.0 sq.in *Sectional Area*	) /	(1728 ci/cf)	0.0972 cf/ea			
Diaphragm Web, No Hole, Int.	2,650 sq.in *Elevation Area*	X	0.5 in *Thickness*	) /	(1728 ci/cf)	0.7667 cf/ea			
Diaphragm Web, With Drain Hole, Int.	2,471 sq.in *Elevation Area*	X	0.5 in *Thickness*	) /	(1728 ci/cf)	0.7150 cf/ea			
End Diaphragm Web, With Hole, Sp 1	2,440 sq.in *Elevation Area*	X	0.5 in *Thickness*	) /	(1728 ci/cf)	0.7062 cf/ea			
End Diaphragm Web, With Hole, Sp 2	2,440 sq.in *Elevation Area*	X	0.5 in *Thickness*	) /	(1728 ci/cf)	0.7062 cf/ea			
End Diaphragm Bent Connection Plate	626 sq.in *Elevation Area*	X (2 X	0.0 in *Thickness*	) /	(1728 ci/cf)	0.0000 cf/ea			
Weight, Diaph, No Holes, Span #1	0.864 cf/ea *Volume/Each*	X	10/bay *#/Bay, Excludes End*	X	5.125 bays *Girder Faces (None on Exterior)*	X 490 lb/CF	=	21,695.0	*Pounds*
Weight, Diaph, No Holes, Span #2	0.864 cf/ea *Volume/Each*	X	8/bay *#/Bay, Excludes End*	X	5.5 bays *Girder Faces (None on Exterior)*	X 490 lb/CF	=	18,626.0	*Pounds*
Weight, Diaph, Drain Holes, Span #1	0.812 cf/ea *Volume/Each*	X	9/bay *#/Bay, Excludes End*	X	2 bays *Girder Faces (None on Exterior)*	X 490 lb/CF	=	7,164.1	*Pounds*
Weight, Diaph, Drain Holes, Span #2	0.812 cf/ea *Volume/Each*	X	7/bay *#/Bay, Excludes End*	X	2 bays *Girder Faces (None on Exterior)*	X 490 lb/CF	=	5,572.1	*Pounds*
Int Diaph Conn Plate B/Flange, Span #1	0.008 cf/ea *Volume/Each*	X	20/bay *#/Bay, Excludes End*	X	7 bays *Girder Faces (None on Exterior)*	X 490 lb/CF	=	555.8	*Pounds*
Int Diaph Conn Plate B/Flange, Span #2	0.008 cf/ea *Volume/Each*	X	16/bay *#/Bay, Excludes End*	X	7 bays *Girder Faces (None on Exterior)*	X 490 lb/CF	=	444.6	*Pounds*
Weight, End Diaph, Holes, Span #1	0.803 cf/ea *Volume/Each*	X	2/bay *#/Bay*	X	7 bays *Girder Faces (None on Exterior)*	X 490 lb/CF	=	5,609.6	*Pounds*
Weight, End Diaph, Holes, Span #2	0.803 cf/ea *Volume/Each*	X	2/bay *#/Bay*	X	8 bays *Girder Faces (None on Exterior)*	X 490 lb/CF	=	5,904.9	*Pounds*
Span 1, Total LLB Weight	4 bays	X	113.37 ft *Total Length from CADD*	X	24.00 plf *Member Weight*		=	10,883.5	*Pounds*
Span 2, Total LLB Weight	4 bays	X	102.60 ft *Total Length from CADD*	X	24.00 plf		=	9,849.6	*Pounds*
Jacking Stiffener	0.083 cf/ea *Volume/Each*	X	16/bay *#/Bay, Excludes End*	X	7 bays *Girder Faces (None on Exterior)*	X 490 lb/CF	=	4,552.5	*Pounds*
LLB Gusset Plates	0.078 cf/ea *Volume/Each*	X	21 conn/bay *LLB Connections*	X	4 bays *Bays with LLB*	X 490 lb/CF	=	3,189.9	*Pounds*

Gannett Fleming Engineers and Architects, P.C.
Excellence Delivered As Promised

Calculation	Stage 3 Quantities: Norfolk Southern Railroad Bridge
Description	HAM-075-0834, NSRR over IR-75 (Single Track Deck Girder)

GF Job No:	Bridge SFN	Calculated	Checked	Updated	Verified	Level 2 Review
• 054682	• XXXXXXX	• SNH, 11/5/14	• CTM, 11/12/14	• VDT, 06/04/15 • VDT, 01/19/16	• SNH, 06/08/15 • CTM, 4/25/16	•

This calculation will use ODOT Bid Elements. Reinforcing values are from the reinforcing tables at Stage 3 (previously from ratios). Framing is normal to the chord for each span, with end diaphragms being placed along the skew angle at bearing locations.

513E 10321	STRUCTURAL STEEL MEMBERS, LEVEL 6, AS PER PLAN							(LB) = 1,001,135	(CHECK UNIT OF MEASURE)
Span 1, Girder Volume	(70.0 sq.in Web Area	+ 2 X	54.0 sq.in Flange Area	) /	(144 si/sf)	1.2361 sf/ Ft			
Span 1, Total Girder Weight	113.2 ft Length	X	1.24 sf/Ft Girder Weight	X	8 girder(s) Number Girders	X 490 lb/CF	=	548,355.4	Pounds
Span 1, Int. Stiff. Volume	(398.4 si Elevation Area	X	0.625 in Thickness	) /	(1728 ci/cf)	0.1441 cf/ea			
Span 1, Int. Stiff. Weight	0.144 cf/ea Volume/Each	X	8.25 lines #/Face (Removes Brg & Jacking)	X	16 faces Girder Faces (None on Exterior)	X 490 lb/CF	=	9,321.1	Pounds
n 1, Int Diaph Conn Plate Volume	(398.4 si Elevation Area	X	0.625 in Thickness	) /	(1728 ci/cf)	0.1441 cf/ea			
an 1, Int Diaph Conne Plate Weight	0.144 cf/ea Volume/Each	X	10 lines #/Face (Removes Brg & Jacking)	X	16 faces Girder Faces (None on Exterior)	X 490 lb/CF	=	11,298.3	Pounds
Span 1, Brg. Stiff. Volume	(638.4 si Elevation Area	X	1.000 in Thickness	) /	(1728 ci/cf)	0.3695 cf/ea			
Span 1, Brg. Stiff. Weight	0.369 cf/ea Volume/Each	X	2/Face #/Face (2 per end)	X	16 faces Both faces of all girders	X 490 lb/CF	=	5,793.2	Pounds
Span 2, Girder Volume	(71.3 sq.in Web Area	+ 2 x	38.3 sq.in Flange Area	) /	(144 si/sf)	1.0265 sf/ Ft			
Span 2, Total Girder Weight	99.9 ft Length	X	1.03 sf/Ft Girder Weight	X	8 girder(s) Number Girders	X 490 lb/CF	=	402,043.2	Pounds
Span 2, Int. Stiff. Volume	(405.9 si Elevation Area	X	0.625 in Thickness	) /	(1728 ci/cf)	0.1468 cf/ea			
Span 2, Int. Stiff. Weight	0.147 cf/ea Volume/Each	X	7.625 lines #/Face (Removes Brg & Jacking)	X	16 faces Girder Faces (None on Exterior)	X 490 lb/CF	=	8,777.1	Pounds
an 2, Int Diaph Conn Plate Volume	(405.9 si Elevation Area	X	0.625 in Thickness	) /	(1728 ci/cf)	0.1468 cf/ea			
an 2, Int Diaph Conne Plate Weight	0.147 cf/ea Volume/Each	X	8.375 lines #/Face (Removes Brg & Jacking)	X	16 faces Girder Faces (None on Exterior)	X 490 lb/CF	=	9,640.4	Pounds
Span 2, Brg. Stiff. Volume	(650.4 si Elevation Area	X	1.000 in Thickness	) /	(1728 ci/cf)	0.3764 cf/ea			
Span 2, Brg. Stiff. Weight	0.376 cf/ea Volume/Each	X	2/Face #/Face (2 per end)	X	16 faces Both faces of all girders	X 490 lb/CF	=	5,902.1	Pounds

513E 20000	WELDED STUD SHEAR CONNECTORS			(EACH) = 4,824	0
Studs, Span 1	309 Studs/Girder	X	8 gird Girders	=	2,472
Studs, Span 2	294 Studs/Girder	X	8 gird Girders	=	2,352

Gannett Fleming Engineers and Architects, P.C.
Excellence Delivered As Promised

Calculation	Stage 3 Quantities: Norfolk Southern Railroad Bridge
Description	HAM-075-0834, NSRR over IR-75 (Single Track Deck Girder)

GF Job No:	Bridge SFN	Calculated	Checked	Updated	Verified	Level 2 Review
• 054682	• XXXXXXX	• SNH, 11/5/14	• CTM, 11/12/14	• VDT, 06/04/15 • VDT, 01/19/16	• SNH, 06/08/15 • CTM, 4/25/16	•

This calculation will use ODOT Bid Elements. Reinforcing values are from the reinforcing tables at Stage 3 (previously from ratios). Framing is normal to the chord for each span, with end diaphragms being placed along the skew angle at bearing locations.

514E 80020	**SPECIAL - SHOP PAINTING AND FIELD TOUCH-UP OF STRUCTURAL STEEL**								**(SF) =**	**40,550**	0
Span 1, Girder Painting	113.2 ft Length	X	8 gird Girders	X	(	218 in Perimeter	/	(12 in/ft)) =		**16,465.8**	Sq. Ft.
Span 2, Girder Painting	99.9 ft Length	X	8 gird Girders	X	(	217 in Perimeter	/	(12 in/ft)) =		**14,438.0**	Sq. Ft.
Span 1, End Diaphragms	2 /bay Ends	X	7 bays Bays	X	(	8601 in Average Surface Area	/	(144 si/sf)) =		**851.1**	Sq. Ft.
Span 2, End Diaphragms	2 /bay Ends	X	8 bays Bays	X	(	8721 in Average Surface Area	/	(144 si/sf)) =		**908.5**	Sq. Ft.
Span 1, Int Diaphragms, No Drain	10 /bay Ends	X	5.1 bays Bays	X	(	6425 in Surface Area	/	(144 si/sf)) =		**2,286.5**	Sq. Ft.
Span 1, Int Diaphragms, No Drain	8 /bay Ends	X	5.5 bays Bays	X	(	6440 in Surface Area	/	(144 si/sf)) =		**1,967.7**	Sq. Ft.
Span 1, Int Diaphragms, With Drain	9 /bay Ends	X	2 bays Bays	X	(	6068 in Surface Area	/	(144 si/sf)) =		**758.4**	Sq. Ft.
Span 2, Int Diaphragms, With Drain	7 /bay Ends	X	2 bays Bays	X	(	6251 in Surface Area	/	(144 si/sf)) =		**607.7**	Sq. Ft.
Span 1, LLB Members			113.4 ft Length	X	(	25 in Perimeter	/	(12 in/ft)) =		**233.5**	Sq. Ft.
Span 2, LLB Members			102.6 ft Length	X	(	25 in Perimeter	/	(12 in/ft)) =		**211.4**	Sq. Ft.
Span 1, Int Stiffeners	8.25 lines #/Face (Removes Brg & Jacking)	X	16 faces	X	(	847 in Ave. Surface Area, 2 sideS	/	(144 si/sf)) =		**776.3**	Sq. Ft.
Span 2, Int Stiffeners	7.63 lines #/Face (Removes Brg & Jacking)	X	16 faces	X	(	863 in Ave. Surface Area, 2 sideS	/	(144 si/sf)) =		**731.0**	Sq. Ft.
LLB Gusset Plates	######### Connections/Bay	X	4 bays No. Bays	X		1.86 sf Ave. Surface Area, 2 sideS	X	2 =		**312.5**	Sq. Ft.
516E 10501	**STRUCTURAL EXPANSION JOINT INCLUDING ELASTOMERIC COMPRESSION SEAL, AS PER PLAN**								**(FT) =**	**64**	0
Joint	32.13 ft Rear	+	32.13 ft Forward							**64.3**	Feet
516E 13600	**1" PREFORMED EXPANSION JOINT FILLER**								**(SF) =**	**294**	0
Rear Abutment	89.0 sf Left	+	58.6 sf Right					=		**147.7**	Sq Ft
Forward Abutment	57.8 sf Left	+	87.9 sf Right					=		**145.7**	Sq Ft
516E 46201	**BEARING DEVICE, ROCKER, AS PER PLAN**								**(EACH) =**	**16**	0
	16 each									**16.0**	Each
516E 46900	**BEARING DEVICE, MISC.: SELF-LUBRICATING CYLINDRICAL BEARING (EXP)**								**(EACH) =**	**16**	0
	16 each									**16.0**	Each
517E 75001	**RAILING, ALUMINUM, AS PER PLAN**								**(FT) =**	**260**	0
NSRR Railing	(142.5 ft Rear	+	117.0 ft Forward	)				=		**259.5**	Feet
517E 76300	**RAILING, MISC.: NSRR ALUMINUM RAILING WITH VANDAL PROTECTION FENCE**								**(FT) =**	**429**	(ADD SUPPLEMENTAL DESCRIPTION)
NSRR Railing	(113.7 ft Length	+	100.4 ft Sides	)	X	2 Sides		=		**428.2**	Feet

Gannett Fleming Engineers and Architects, P.C.
Excellence Delivered As Promised

Calculation	Stage 3 Quantities: Norfolk Southern Railroad Bridge
Description	*HAM-075-0834, NSRR over IR-75 (Single Track Deck Girder)*

GF Job No:	Bridge SFN	Calculated	Checked	Updated	Verified	Level 2 Review
• 054682	• XXXXXXX	• SNH, 11/5/14	• CTM, 11/12/14	• VDT, 06/04/15 • VDT, 01/19/16	• SNH, 06/08/15 • CTM, 4/25/16	•

This calculation will use ODOT Bid Elements. Reinforcing values are from the reinforcing tables at Stage 3 (previously from ratios). Framing is normal to the chord for each span, with end diaphragms being placed along the skew angle at bearing locations.

518E 21200	**POROUS BACKFILL WITH FILTER FABRIC**						**(CY) = 549**	*(CHECK UNIT OF MEASURE)*
Rear Abutment, Backwall	32.1 ft *Length*	X	31.1 ft *Height*	X	2.0 ft *Thickness*	/ (27 cf/cy)) =		**74.0** *CU YD*
Rear Abutment, Shoulder	12.4 ft *Length*	X	32.5 ft *Height*	X	2.0 ft *Thickness*	/ (27 cf/cy)) =		**29.8** *CU YD*
Rear Abutment, Left WW	66.0 ft *Length*	X	18.0 ft *Ave. Height*	X	2.0 ft *Thickness*	/ (27 cf/cy)) =		**88.0** *CU YD*
Rear Abutment, Right WW	54.9 ft *Length*	X	25.5 ft *Ave. Height*	X	2.0 ft *Thickness*	/ (27 cf/cy)) =		**103.6** *CU YD*
Forward Abutment, Stem	32.1 ft *Length*	X	30.6 ft *Height*	X	2.0 ft *Thickness*	/ (27 cf/cy)) =		**72.8** *CU YD*
Rear Abutment, Shoulder	9.9 ft *Length*	X	32.0 ft *Height*	X	2.0 ft *Thickness*	/ (27 cf/cy)) =		**23.4** *CU YD*
Forward Abutment, Left WW	49.2 ft *Length*	X	26.1 ft *Ave. Height*	X	2.0 ft *Thickness*	/ (27 cf/cy)) =		**95.3** *CU YD*
Forward Abutment, Right WW	50.0 ft *Length*	X	16.6 ft *Ave. Height*	X	2.0 ft *Thickness*	/ (27 cf/cy)) =		**61.6** *CU YD*
518E 42201	**8" PERFORATED CORRUGATED STEEL PIPE, 707.01, AS PER PLAN**						**(FT) = 266**	*0*
Length (No perf. 5' from ends)	143.0 ft *Rear Abutment*	+	123.0 ft *Forward Abutment*		=			**266.0** *Feet*
518E 42301	**8" NON-PERFORATED CORRUGATED STEEL PIPE, INCLUDING SPECIALS, 707.01, AS PER PLAN**						**(FT) = 60**	*0*
Length (End 5')	30.0 ft *Rear Abutment*	+	30.0 ft *Forward Abutment*					**60.0** *Feet*
518E 63300	**STRUCTURE DRAINAGE, MISC.: SUPERSTRUCTURE DRAINAGE SYSTEM**						**(LS) =**	*0*
Superstructure Drainage	**(Assume $30,000)**							
523E 20000	**DYNAMIC LOAD TESTING**						**(EACH) = 6**	*0*
See Specifications:	**(Spec requires a minimum of two piles, this number is for two piles per substructure)**							**6.0** *Each*
523E 20500	**RESTRIKE**						**(EACH) = 6**	*0*
See Specifications:	**(Spec requires a minimum of two piles, this number is for two piles per substructure)**							**6.0** *Each*
	Length		*Height*		*Thickness*			
524E 94803	**DRILLED SHAFTS, 42" DIAMETER, ABOVE BEDROCK, AS PER PLAN**						**(FT) = 1,092**	*0*
Rear Abutment	15 *Shafts*	X	39.0 ft *Average Length*				=	**585.0** *Feet*
Forward Abutment	13 *Shafts*	X	39.0 ft *Average Length*				=	**507.0** *Feet*
524E 95100	**DRILLED SHAFTS, MISC.: CSL TESTING**						**(EACH) = 15**	*0*
Rear Abutment	8 *Rear*	+	7 *Forward*				=	**15** *Each*
530E 00200	**SPECIAL - STRUCTURE, MISC.: SURVEY AND MONITORING OF TRACK AND TEMPORARY SHORING**						**(LS) = 1**	*0*
	(Assume $25,000)							
530E 13000	**SPECIAL - FORM LINER**						**(SF) = 6,153**	*0*
Rear Abutment Stem	44.5 ft *Length*	X	22.6 ft *Height*	+	32.0 sf *Cheekwall*		=	**1,037** *Sq Ft*
Rear Wingwall, Left	66.0 ft *Length*	X	18.8 ft *Height*				=	**1,238** *Sq Ft*
Rear Wingwall, Right	1,070.8 sf *CADD AREA*						=	**1,071** *Sq Ft*
Forward Abutment, Stem	42.0 ft *Length*	X	22.1 ft *Height*	+	31.9 sf *Cheekwall*		=	**962** *Sq Ft*
Forward Abutment, Left	926.4 sf *CADD AREA*						=	**926** *Sq Ft*
Froward Abutment, Right	50.0 ft *Length*	X	18.4 ft *Height*				=	**919** *Sq Ft*
611E 01907	**8" CONDUIT, TYPE B, DUCTILE IRON PIPE ANSI CLASS 52, MECHANICAL JOINTS AND FITTINGS, AS PER PLAN**						**(FT) = 90**	*(FOR SANITARY)*
Lateral Tie at Abutments	10.0 ft *Rear Abutment Tie*	+	80.0 ft *Forward Abutment Tie*		**(Assumes a drain line in the outer bays)**		=	**90.0** *Each*

Similar to H-Piles, Pipe Piles are also designed to transfer structural loads through the foundation to soils below. Where H-Piles are typically classified as poi
effi
sub
wit
gre

Pip
wit
and
exc
alo

L.B
DS
We
size
req
pro
coa
complete pipe pile solutions.

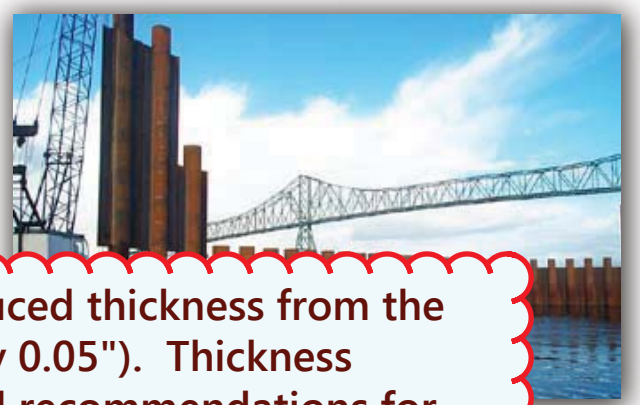

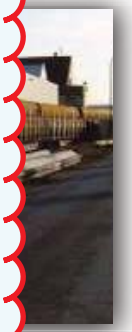

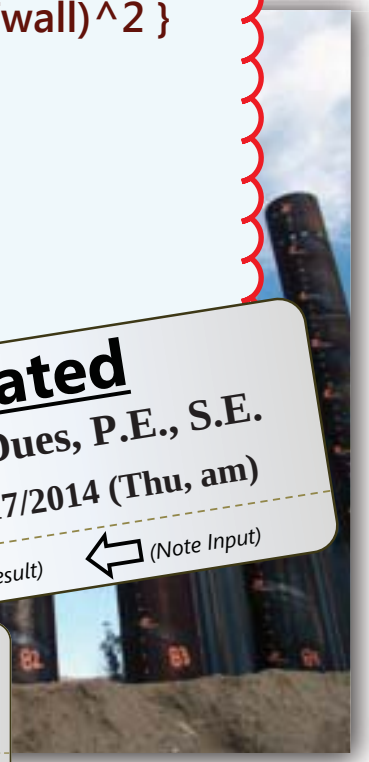

Calculations will assume 0.05" of reduced thickness from the outside of the pile (O.D. is reduced by 0.05"). Thickness reduction is from SkylineSteel manual recommendations for 100 years.

.

3/8" and 7/16" minimum pile wall thicknesses are being specified.

.

12.6ksi allowable stress per AREMA 8-4.4.4.6(b)

.

Capacity = 12.6 * Pi/4 * { (OD-2*0.05)^2 - (OD - 2*Twall)^2 }

.

12" Capacity (0.375" wall): 148 kips
14" Capacity (0.437" wall): 207 kips
16" Capacity (0.437" wall): 237 kips

Gannett Fleming Login edues
Calculated
By: Eric Dues, P.E., S.E.
Date: 07/17/2014 (Thu, am)
(Note Result) (Note Input)

Gannett Fleming Login vtraini
Check
By: Vincent Traini
Date: 07/17/2014 (Thu, am)
(Agree) (Disagree) (Discuss)

14" Capacity of 0.5" wall = 239 kips

Gannett Fleming Login vtraini
Update
By: Vincent Traini
Date: 01/19/2016 (Tue, am)
(Agree) (Disagree) (Discuss)

LBFoster Piling

Electric Resistance Weld

3/8" wall

7/16" wall

ERW	Wall Thickness (in.)							
Outside Diameter (in.) / lbs / ft	0.219	0.250	0.312	0.375	0.438	0.500	0.625	0.750
8.625	19.68	22.38	27.73	33.07	38.33	43.43		
10.75	24.65	28.06	34.81	41.59	48.28	54.79		
12	27.58	31.40	38.98	46.60	54.14	61.47	76.00	
12.75	29.34	33.41	41.48	49.61	57.65	65.48	81.01	
14	32.26	36.75	45.65	54.62	63.50	72.16	89.36	
16	36.95	42.09	52.32	62.64	72.86	82.85	102.72	
18	41.63	47.44	58.99	70.65	82.23	93.54	116.09	
20		52.78	65.66	78.67	91.59	104.23	129.45	
24		63.47	79.01	94.71	110.32	125.61	156.17	186.41

ERW is able to be produced to pipe specifications: A252, A500, A53 and API 5L

Pipe can be produced to the above specifications utilizing other grades of steel (A36, A572, A588 etc.)

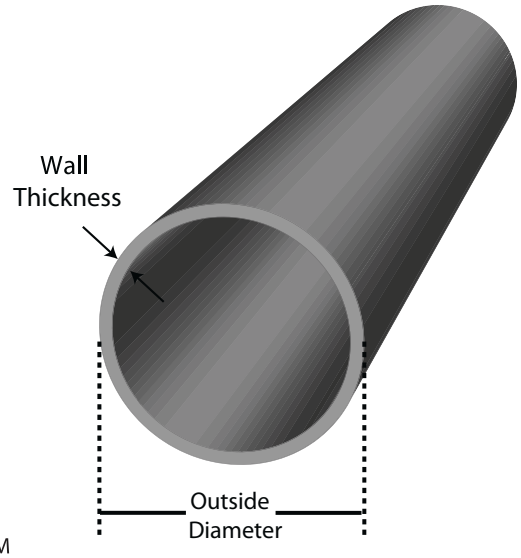

Pipe Weight Calculation:

LB / FT = (OD-WT) WT × 10.69

OD = Outside Diameter
WT = Wall Thickness

TRU12™
TRUE 12" PIPE PILING

(800) 848-6249
www.lbfoster.com

skylinesteel
a NUCOR company

Pipe

we are driving through undisturbed natural soils

Loss of Thickness Due to Corrosion for Piles in Soil with or without Groundwater

Required design working life	5 Years	25 Years	50 Years	75 Years	100 Years
	in / mm				
Undisturbed natural soils (sand, clay, schist, ...)	0.000 0.00	0.012 0.30	0.024 0.60	0.035 0.90	0.047 1.20
Polluted natural soils and industrial grounds	0.006 0.15	0.030 0.75	0.059 1.50	0.089 2.25	0.118 3.00
Aggressive natural soils (swamp, marsh, peat, ...)	0.008 0.20	0.039 1.00	0.069 1.75	0.098 2.50	0.128 3.25
Non-compacted and non-aggressive fills (clay, schist, sand, silt, ...)	0.007 0.18	0.028 0.70	0.047 1.20	0.067 1.70	0.087 2.20
Non-compacted and aggressive fills (ashes, slag, ...)	0.020 0.50	0.079 2.00	0.128 3.25	0.177 4.50	0.226 5.75

Notes:
1. Corrosion rates in compacted fills are lower than those in non-compacted ones. In compacted fills, the figures in the table should be divided by two.
2. The values given are only for guidance. Local conditions should be considered because they may affect the actual corrosion rate, which can be lower or higher than the average value given in the table.
3. The values given for 5 and 25 years are based on measurements, whereas the other values are extrapolated.

Loss of Thickness Due to Corrosion for Piles in Fresh Water or in Sea Water

Required design working life	5 Years	25 Years	50 Years	75 Years	100 Years
	in / mm				
Common fresh water (river, ship canal, ...) in the zone of high attack (water line)	0.006 0.15	0.022 0.55	0.035 0.90	0.045 1.15	0.055 1.40
Very polluted fresh water (sewage, industrial effluent, ...) in the zone of high attack (water line)	0.012 0.30	0.051 1.30	0.091 2.30	0.130 3.30	0.169 4.30
Sea water in temperate climate in the zone of high attack (low water and splash zones)	0.022 0.55	0.074 1.90	0.148 3.75	0.220 5.60	0.295 7.50
Sea water in temperate climate in the zone of permanent immersion or in the intertidal zone	0.010 0.25	0.035 0.90	0.069 1.75	0.102 2.60	0.138 3.50

Notes:
1. The highest corrosion rate is usually found at the splash zone or at the low water level in tidal waters. However, in most cases, the highest stresses are in the permanent immersion zone.
2. The values given are only for guidance. Local conditions should be considered because they may affect the actual corrosion rate, which can be lower or higher than the average value given in the table.
3. The values given for 5 and 25 years are based on measurements, whereas the other values are extrapolated.