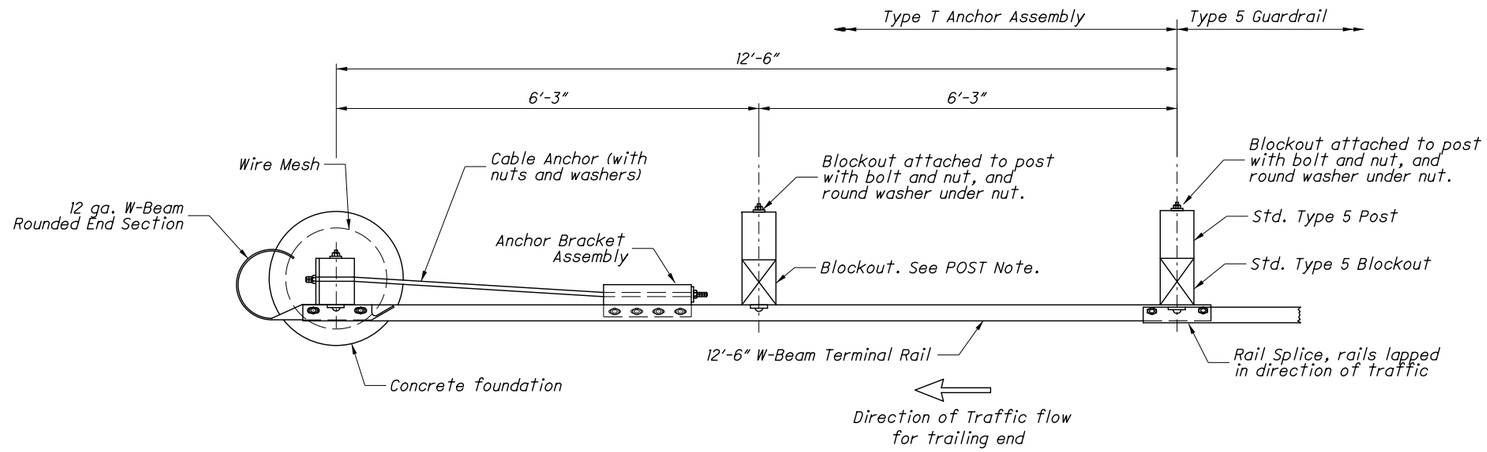

PLAN

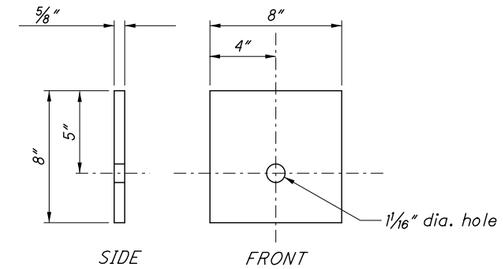

BEARING PLATE DETAIL

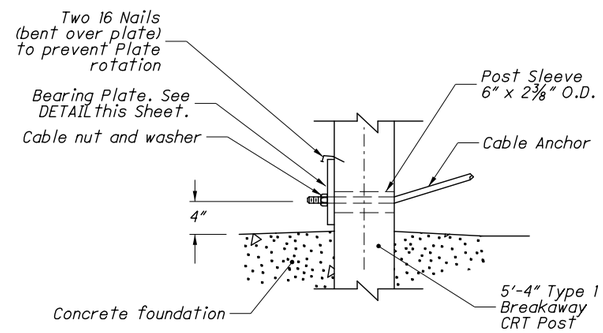

DETAIL C

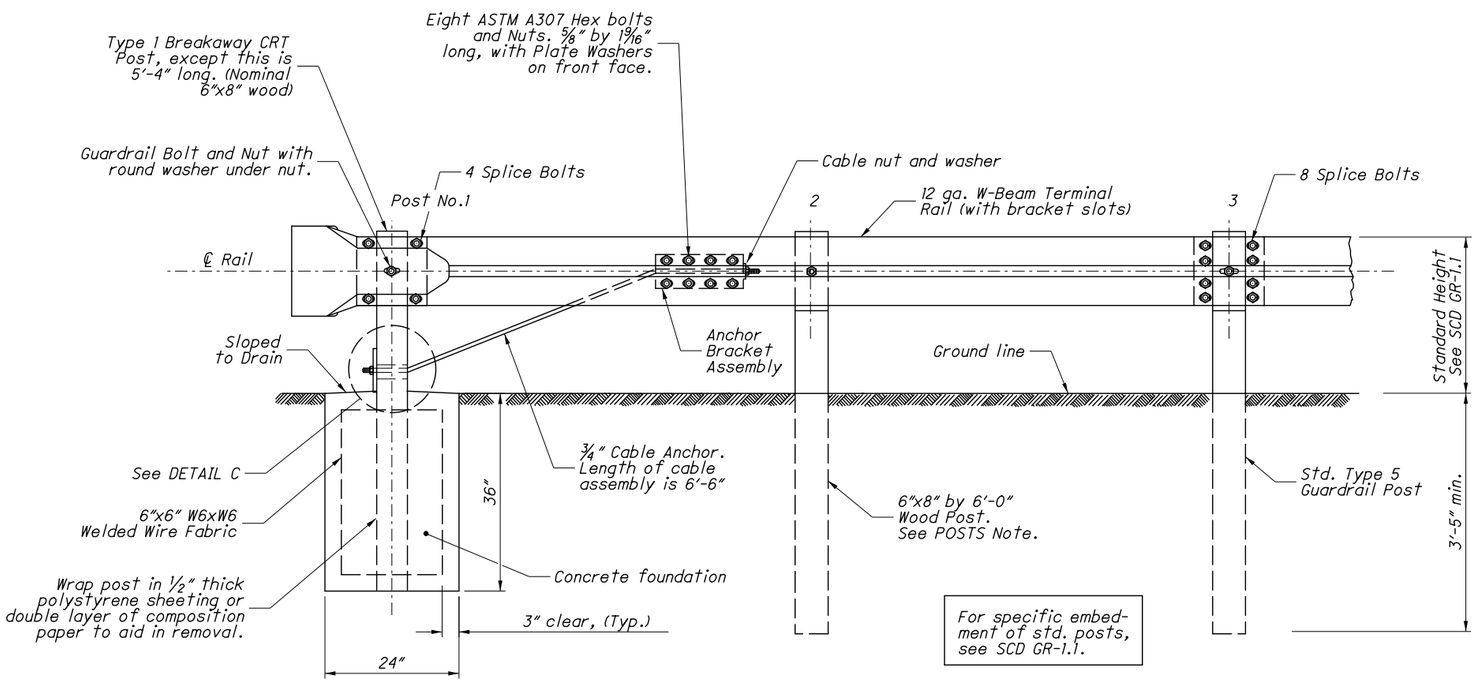

See SCD GR-1.1 for Type 1 Breakaway CRT Post, Steel Ground Tube, Post Sleeve, Cable Anchor and Bracket Assembly details.

ELEVATION - CONCRETE FOOTER

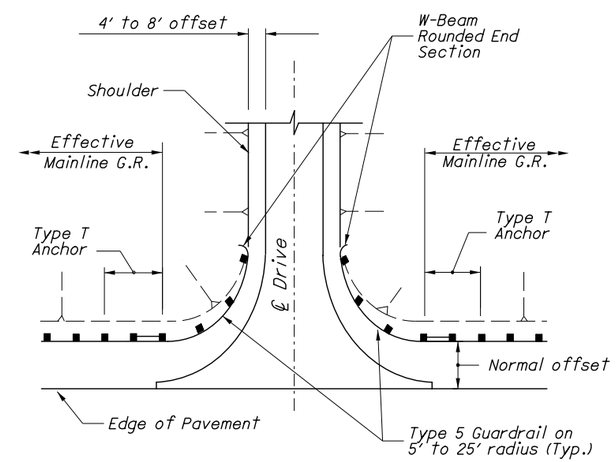

DRIVEWAY OPENING

OFFICE OF ROADWAY ENGINEERING

DESIGNED | REVIEWED

REVISION DATE | CHECKED

PIS NUMBER

PLAN INSERT SHEET

TYPE T ANCHOR ASSEMBLY (Foundation Tube Option)

PIS GR-4.2

2 / 2

31 / 31