LAK - SR-608-0.00
090380 PID - 83351
Dist 12 7/15/2009

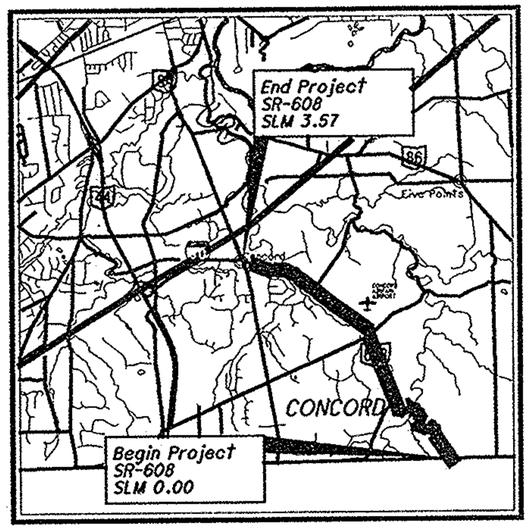

LOCATION MAP

LATITUDE: 41°39'38" LONGITUDE: 81°11'46"

SCALE IN MILES

0 1 2 3 4

N

PORTION TO BE IMPROVED
INTERSTATE HIGHWAY
STATE & FEDERAL ROUTES
COUNTY & TOWNSHIP ROADS
OTHER ROADS

STATE OF OHIO
DEPARTMENT OF TRANSPORTATION

LAK-608-0.00

Concord Township
Lake County

INDEX OF SHEETS:

Title Sheet	1
Typical Sections	2
General Notes	3-6
General Summary	7
Pavement Subsummary	8
Plan Sheet & Guardrail Subsummary	9
Guardrail Details	10
Pavement Details	11

PROJECT DESCRIPTION

This project consists of shoulder repairs and an asphalt concrete overlay from SLM 0.00 to SLM 0.33 and SLM 1.01 to SLM 3.57 and a verglimit overlay from SLM 0.33 to SLM 1.01 to SR-608 in Concord Township, Lake County.

PROJECT EARTH DISTURBED AREA: N/A (Maintenance Project)
ESTIMATED CONTRACTOR EARTH DISTRUBED AREA: N/A (Maintenance Project)
NOTICE OF INTENT EARTH DISTURBED AREA: N/A (Maintenance Project)

2008 SPECIFICATIONS

THE STANDARD SPECIFICATIONS OF THE STATE OF OHIO, DEPARTMENT OF TRANSPORTATION, INCLUDING CHANGES AND SUPPLEMENTAL SPECIFICATIONS LISTED IN THE PROPOSAL SHALL GOVERN THIS IMPROVEMENT.

*I HEREBY APPROVED THESE PLANS AND DECLARE THAT THE MAKING OF THIS IMPROVEMENT WILL NOT REQUIRE THE CLOSING TO TRAFFIC OF THE HIGHWAY AND THAT PROVISIONS FOR THE MAINTENANCE AND SAFETY OF TRAFFIC WILL BE AS SET FORTH ON THE PLANS AND ESTIMATES.

DESIGN FUNCTIONAL CLASSIFICATION:
Rural Major Collector
NHS PROJECT ..... N/A

DESIGN EXCEPTIONS

UNDERGROUND UTILITIES
CONTACT BOTH SERVICES
CALL TWO WORKING DAYS
BEFORE YOU DIG
CALL:
1-800-362-2764
(TOLL FREE)
OHIO UTILITIES PROTECTION SERVICE
NON-MEMBERS
MUST BE CALLED DIRECTLY
OIL & GAS PRODUCERS PROTECTIVE SERVICE CALL: 1-800-925-0988

PLAN PREPARED BY:
ODOT District 12 Production
5500 Transportation Blvd.
Garfield Heights, OH 44125

STATE OF OHIO
ERIC M. KALLIO
E-59990
REGISTERED
PROFESSIONAL ENGINEER
ERIC M. KALLIO
SIGNED: E. M. Kallio
DATE: 4-16-09

STANDARD CONSTRUCTION DRAWINGS

BP-3.1	10/19/07	MT-35.10	4/20/01	TC-61.10	1/19/01		
		MT-97.10	9/5/06	TC-73.10	1/19/01		
		MT-97.11	9/5/06				
GR-1.1	7/16/04	MT-99.20	1/16/09				
GR-2.1	1/16/04	MT-105.10	1/16/09				
GR-3.1	1/19/07						
GR-3.4	1/20/06						
GR-4.1	4/18/03						
GR-4.2	1/19/07						
GR-5.1	4/18/03						
GR-5.3	1/16/04						

SUPPLEMENTAL SPECIFICATIONS

800-2008	4/17/09
832	5/5/09
859	4/18/08

SPECIAL PROVISIONS

APPROVED: Brad H. Fenn PE
DATE: 4/16/09 DISTRICT DEPUTY DIRECTOR

APPROVED: Jolene M. Molitoris
DATE: 5-13-09 DIRECTOR, DEPARTMENT OF TRANSPORTATION

FEDERAL PROJECT NO. 100% State
PID NO. 83351
CONSTRUCTION PROJECT NO.
RAILROAD INVOLVEMENT None
LAK-608-0.00
1/11

I:\PROJECTS\PID83351\roadway\sheets\83351GT001.dgn 16-APR-2009 9:18AM ekallio

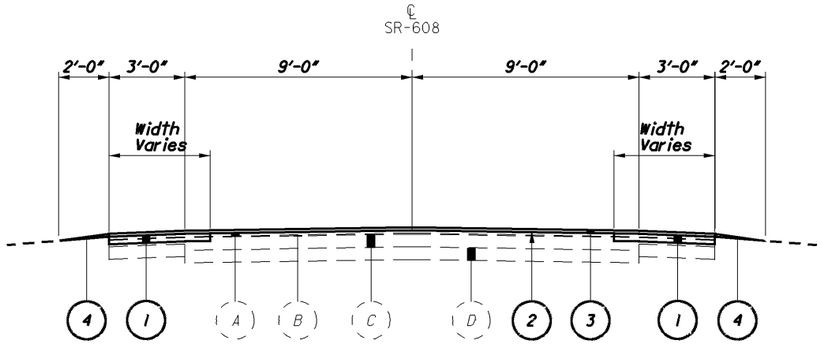

SLM 0.00 - SLM 0.33
SLM 1.01 - SLM 2.95
SLM 3.13 - SLM 3.57

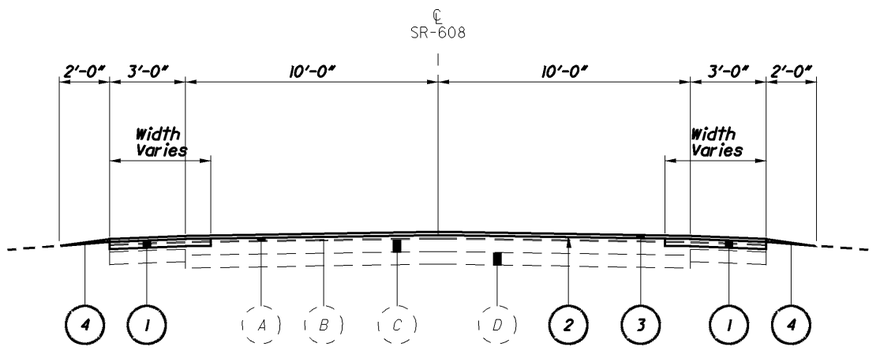

SLM 2.95 - SLM 3.13

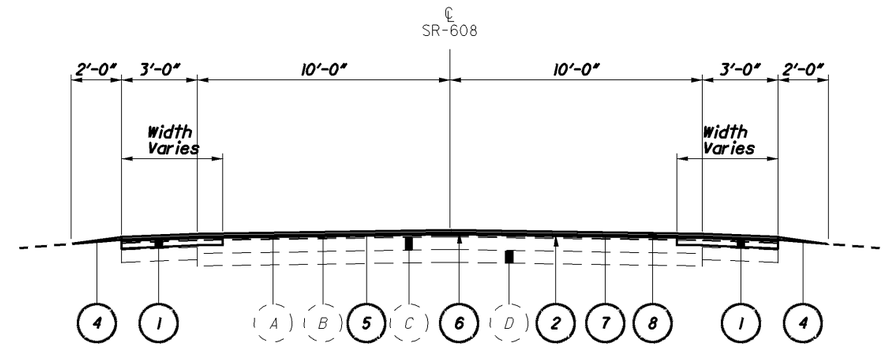

SLM 0.33 - SLM 0.60
SLM 0.60 - SLM 0.81
SLM 0.81 - SLM 1.01

Existing Legend

(A) 1 ¼" Asphalt Concrete Surface Course

(B) ½"± Asphalt Concrete Leveling Course

(C) Asphalt Concrete

(D) Stabilized Aggregate Base

Proposed Legend

(1) Item 253 - Pavement Repair, As Per Plan, By Type

(2) Item 407 - Tack Coat

(3) Item 448 - Asphalt Concrete Surface Course, Type 1, PG70-22M, As Per Plan, 1-1/2"

(4) Item 617 - Compacted Aggregate, As Per Plan

(5) Item 254 - Pavement Planing, Asphalt Concrete, 1/2"

(6) Item 407 - Tack Coat For Intermediate Course

(7) Item 448 - Aspalt Concrete Intermediate Course, Type 1, PG64-22, As Per Plan, 3/4"

(8) Item 859 - Asphalt Concrete With Verglimit, As Per Plan, 1-1/4"

TYPICAL SECTIONS

LAK-608-0.00

I:\PROJECTS\PID83351\roadway\sheets\83351GY001.dgn 16-APR-2009 8:31AM ekallio

General

Project Description

This project consists of shoulder repairs and an asphalt concrete overlay from SLM 0.00 to SLM 0.33 and SLM 1.01 to SLM 3.57 and a verglimit overlay from SLM 0.33 to SLM 1.01 to SR-608 in Concord Township, Lake County.

Right of Way

All work shall be performed within the existing right of way or easements.

Existing Typical Sections

Existing typical sections have been taken from the records and are believed to represent the existing pavement, but the State of Ohio does not guarantee the accuracy of the same.

For further information in regard to the existing typical sections, the Contractor shall refer to the previous construction plans.

These plans may be reviewed at the following location:

Ohio Department of Transportation
District 12 Office
5500 Transportation Boulevard
Garfield Heights, Ohio 44125

Contingency Quantities

The Contractor shall not order materials or perform work for items designated by plan note to be used "as directed by the Engineer" unless authorized by the Engineer. The actual work locations and quantities used for such items shall be incorporated into the final change order governing completion of this project.

Equipment and Material Storage

In order to provide for the safety of the traveling public the Contractor's attention is directed to 614.03. In addition the following provisions shall apply:

1. Any removed items shall not be stored on the right of way for more than thirty (30) days.
2. The storage of equipment, materials, and vehicles within the highway right of way will be permitted. The number of areas and exact locations shall be approved by the Engineer.
3. All disturbed areas shall be returned to their original condition at no expense to the state.

Work Limits

The work limits shown on these plans are for physical construction only. Provide the installation and operation of all temporary traffic control and temporary traffic control devices required by these plans whether inside or outside these work limits.

Utilities

There are no underground utilities shown on this plan. The nature of the work required by this project will not affect any known underground utilities that exist under or adjacent to the work area.

Staging Areas

There are no specific areas given in the plans for the Contractor to use as a staging area(s). If the Contractor wants to use an area(s) for staging, regardless if it falls within the project limits or not, the Contractor is to contact Jill Powers at 216-584-2195 at District 12 in order to apply for a permit per Section 107.02 of the CMS.

If a permit is granted, all conditions of the permit shall be met in addition to the requirements of 104.04 of the CMS, at no additional cost to the State. If the Project Engineer deems that all the conditions of the permit were not met, then 10% of the Contract bid amount for mobilization shall be withheld until all the conditions of the permit are satisfied.

Construction Traffic

All construction traffic shall use acceptable truck routes to access the construction area. Use of local residential streets is strictly prohibited unless allowed in writing by the local enforcement authority.

Contractor's Equipment - Operation and Storage

Vehicles and equipment shall always move with, and not across or against the flow of traffic. Vehicles and other equipment shall not park or stop except within designated work areas; and shall not enter and leave work areas in a manner which will be hazardous to, or interfere with the normal traffic flow. Personal vehicles will not be permitted to park within the Right-of-Way except in specific areas designated by the Engineer.

Equipment, vehicles and materials shall not be stored or parked within 30 feet of the traveled way unless 6 feet behind PCB or guardrail.

All work vehicles and equipment that enters the work zone more than once a day must be equipped with at least one flashing, rotating, or oscillating amber light that is visible in all directions of traffic for at least one quarter of a mile, day or night.

Roadway

Item 606 – Anchor Assembly, Type E-98

This item shall consist of furnishing and installing either of the following guardrail end terminals, or an approved equal as listed on Roadway Engineering's web page at www.dot.state.oh.us/drrc/ under Roadside Safety Devices for approved guardrail end treatments:

1) The ET-2000 (1997) manufactured by Trinity Industry, 1170 N. State Street, Girard, Ohio 44420 (Telephone: 330-545-4373).

The length of the ET-2000 (1997) system is considered to be 50'-0" [15.24 m] inclusive of two 25'-0" [7.62 m] long rail elements. Installation shall be at the locations specified in the plans, in accordance with the manufacturer's specifications as detailed on the following pre-approved shop drawings:

DWG. #	Drawing Name	DWG./REV. Date	ODOT Approval Date
SS373	ET-PLUS-50'-0" with 25' or 12'-6" Panels, 7 SYT Posts & 1 HBA Post Plan, Elevation & Sections	1/20/09	1/23/09
SS142	ET-2000 Plus 50'-0" Plan, Elevation, & Section 25'-0" Rail, Sleeve w/PL Posts 1-4	4/12/00	7/31/00
SS141	ET-2000 Plus Plan, Elevation, & Section 25'-0" Rail, HBA Posts 1-4	2/29/00	7/31/00
SS158	ET-2000 Plus 50'-0" with 12'-6" Panels & HBA Posts 1-4 Plan, Elevation, & Section	5/22/00	7/31/00

2) The SKT-350 manufactured by Road Systems, Inc., 2516 Mallory Lane, Stow, Ohio 44224 (Telephone: 330-346-0721)

The length of the SKT-350 system is considered to be 50'-0" [15.24 m] inclusive of four 12'-6" [7.62 m] long rail elements. Installation shall be at the locations specified in the plans, in accordance with the manufacturer's specifications as detailed on the following pre-approved shop drawings:

DWG. #	Drawing Name	DWG./REV. Date	ODOT Approval Date
SKT-4M	Sequential Kinking Terminal (SKT-350) Assembly with 4 Foundation Tubes	12/11/97	3/6/98
SKT Hinge CRT	Sequential Kinking Terminal SKT Assembly, Hinge CRT System	4/30/06	5/23/06
SKT-SP-S-375	SKT Terminal, 27-3/4" Top of Rail, Single Anchor, 7 Post System	3/04/09	3/30/09

The face of the Type E-98 impact head shall be covered with a sheet of Type G reflective sheeting, per CMS 730.19, approximately 18" x 18" [450 mm x 450 mm], or 12" [300 mm] x 18" [450 mm] if applied to a rectangular ET-2000 "Plus" extruder head.

Refer to the manufacturer's instruction regarding the installation of, and the grading around, the foundation tubes and ground strut. The top of any foundation tubes should be an appropriate depth below the level line in order to maintain the finished guardrail height of 27-3/4-inches [706 mm] from the edge of the shoulder.

On-site grading is required if the top of the foundation tubes or top of the ground strut does project more than 4-inches [100 mm] above the ground line.

Payment for the above work shall be made at the unit price bid for Item 606, Anchor Assembly, Type E-98, Each, and shall include all labor, tools, equipment and materials necessary to construct a complete and functional anchor assembly system, including all related transitions, reflective sheeting, hardware, grading, embankment, and excavation not separately specified, as required by the manufacturer.

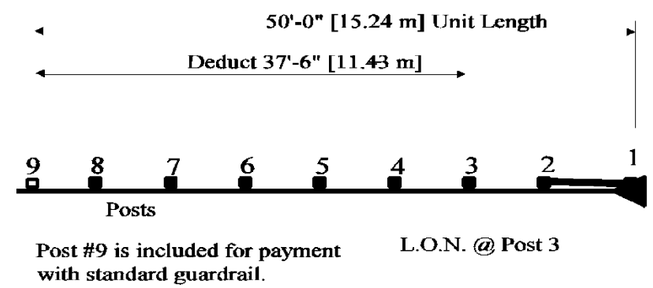

Item 202 – Guardrail Removed, As Per Plan

This item shall include both standard and barrier type rails and thrie beam rails including all anchor assemblies and terminal assemblies.

All rail sections including thrie beam and bridge terminal assembly rail sections shall be salvaged by the Contractor. Along with these rail sections, all Type E-98 anchor assemblies, Type A anchor assemblies, Type T anchor assemblies, and Nested Type 5 guardrail shall be salvaged.

All salvaged rail sections and anchor assemblies shall be transported by the Contractor to:

ODOT Painesville Yard
10 Blackbrook Rd.
Painesville, OH 44077
Phone: (440) 354-2191
Fax: (440) 357-6227
Attn: Tom Sabo or Bill Brunnett

The Yard shall be contacted at least 24 hours prior to delivery.

Item 202 – Anchor Assembly Removed, Type A

This item shall include the removal of the existing type a, anchor assembly including all posts, hardware, rail elements, and concrete anchors. All items removed shall become the property of the contractor and shall be properly disposed of.

The existing concrete anchor and concrete at posts shall be removed entirely. All holes remaining after removal shall be filled with granular material or excess material resulting from guardrail construction. All fill material shall be thoroughly compacted and leveled, as directed by the engineer.

Payment for all of the above shall be included in the unit bid price for Item 202, Anchor Assembly Removed, Type A.

Item 209 – Linear Grading, As Per Plan
Item 448 – Asphalt Concrete Intermediate Course, Type 1, PG64-22, Under Guardrail, As Per Plan

This operation shall include removal of the existing asphalt under guardail, placing 1 ½" of granular material, and preparation of the graded shoulder using Item 209, Linear Grading, As Per Plan and paving under the guardrail using Item 448 Asphalt Concrete Intermediate Course, Type 1, PG64-22, Under Guardrail, As Per Plan.

Item 209, Linear Grading, As Per Plan shall consist of excavating topsoil and/or existing asphalt under guardrail, placing granular material and applying herbicide as specified in the plans and in accordance with the following:

All collected debris and topsoil, including rhizomes, roots, and other vegetative plant material shall be removed and disposed of as specified in 105.17.

The removed material shall be replaced with compactable granular material conforming to 703.16 placed to grade as detailed on the typical section or as approved by the Engineer.

Herbicide shall be EPA approved for paving under guardrail. It shall be applied to the prepared area after final leveling and grading has been completed. The application shall be just prior to paving and shall strictly adhere to the manufacturer's instructions.

Each successful bidder must be licensed by the Ohio Department of Agriculture as a commercial applicator and all persons involved in the actual spraying shall be licensed as commercial operators in the appropriate spray category.

Herbicide label, material safety data sheet and copy of applicators licenses shall be submitted to the Engineer for verification prior to commencing work.

All equipment, materials, and labor required to perform the work outlined above shall be included for payment under Item 209 – Linear Grading, As Per Plan.

Paving under guardrail shall consist of placing Item 448 to the depth specified using the following methods:

Method A:
1) Set guardrail posts
2) Place Item 448

Method B:
1) Place Item 448
2) Bore asphalt at post locations (may be omitted If steel posts are used)
3) Set guardrail posts
4) Patch around posts. The materials used for patching shall be asphalt concrete approved by the Engineer. Patched areas shall be compacted using either hand or mechanical methods. Finished surfaces shall be smooth and sloped to drain away from the posts.

All equipment, materials and labor required to perform the work outlined above, with the exception of setting guardrail posts, shall be included for payment under Item 448 Asphalt Concrete Intermediate Course, Type 1, Under Guardrail, PG64-22, As Per Plan.

I:\PROJECTS\PID83351\roadway\sheets\83351GN002.dgn 16-APR-2009 8:43AM ekallio

Drainage

Item 604 – Monument Box Adjusted to Grade, As Per Plan

All monument boxes shall be adjusted to the finished roadway elevation by the Contractor. The time between adjusting the monument boxes and resurfacing shall be kept to an absolute minimum. No adjusting rings shall be permitted. When performing this work, the pavement shall be sawcut prior to removal and hook bolts shall be used where practical to connect existing pavement to new concrete. The following quantities have been carried to the General Summary:

Item 604 Monument Box Adjusted to Grade, As Per Plan……**8 Each**

Item 605 – Aggregate Drains

This item shall be used as directed by the Engineer to provide aggregate drains where the subgrade or subbase was replaced due to failure or pumping.

The following is an estimated quantity to be used as directed by the Engineer to place aggregate drains.

Item 605 Aggregate Drains…… **100 Foot**

Pavement

Item 448 – Asphalt Concrete Intermediate Course, Type 1, PG64-22, As Per Plan

For this item, a third roller is required for mainline paving operations. The roller shall conform to the requirements of 401.13.

Item 253 - Pavement Repair, As Per Plan A
Item 253 - Pavement Repair, As Per Plan B

Perform these repairs prior to resurfacing SR-608 in Lake County.

Remove existing asphalt, reinforced concrete, and/or bituminous aggregate base (at some previous repairs) to a minimum depth of 5" below the surface of existing pavement or to the top of existing subbase, whichever is less.

Place asphalt concrete in accordance with the provisions of 252.04, except that 2 or more lifts are required.

For "As Per Plan A" repairs: make repairs at least 2' wide but less than or equal to 4' wide. The Engineer will determine the length of repair.

For "As Per Plan B" repairs: repairs will be greater than 4' wide. The Engineer will determine the length of repair.

If, after removal of existing pavement, the Engineer determines that the subbase or subgrade has failed or is pumping, he shall direct the Contractor to excavate 6" of the unsuitable material and replace it with 6" of compacted aggregate. Quantities of Item 203 Excavation and Item 304 Aggregate Base have been provided to repair failed subbase or subgrade areas.

The repairs shall be completed in one day (i.e. no old asphalt shall be milled or removed and opened to traffic without the proposed asphalt in place).

The department will pay for accepted quantities on a square area basis, based on field measurements at each repair.

Item 448 Asphalt Concrete Intermediate Course, Type 2, PG64-22 shall be used as the asphalt concrete for this item.

The following quantities are carried to the general summary to accomplish these items of work.

Item 253 – Pavement Repair, As Per Plan A……**6,000 Sq. Yd.**
Item 253 – Pavement Repair, As Per Plan B……**500 Sq. Yd.**
Item 203 – Excavation……**360 Cu. Yd.**
Item 304 – Aggregate Base……**360 Cu. Yd.**

Item 448 – Asphalt Concrete Surface Course, Type 1, PG70-22M, As Per Plan

In addition, the course aggregate for this item shall be limited to a blend of air cooled blast furnace slag (ACBFS) or Trap Rock from Ontario and limestone. The Contractor shall use a minimum of 50% of ACBFS or Trap Rock from Ontario with limestone comprising the remaining percentage.

For this item, a third roller is required for mainline paving operations. The roller shall conform to the requirements of 401.13.

Item 617 - Compacted Aggregate, As Per Plan

This item shall be used along the shoulders. Materials shall be limited to recycled asphalt grindings.

The actual depth used will vary depending upon existing conditions. For estimating purposes, an average depth of ¾" inch will be used.

Item 859 – Asphalt Concrete with Verglimit, As Per Plan

The coarse aggregate for this item shall be limited to either air-cooled blast furnace slag (ACBFS) or Trap Rock from Ontario.

The asphalt binder used shall be PG70-22M.

In addition to the requirements of Supplemental Specification 859, Asphalt Concrete with Verglimit may be mixed in a drum plant. The drum plant must have a mid-entry RAP belt that allows for the bags of Verglimit to be dumped into the drum away from the flame, but before the asphalt cement injection.

In addition, the Contractor shall provide the District Testing Engineer with written documentation updating his/her quality control plan to describe in detail the process for timing the bag feed into the drum. The written document shall also include a list of the worker(s) trained and responsible for adding the Verglimit into the drum during the production process.

The contact information for the Verglimit® material supplier is as follows:

Attn: Cam Kamula
Infrastructure Limited
Tel: 905-520-2115
Fax: 905-648-8404
Email: ckamula@aol.com
International website: www.verglimit.eu

Traffic Control

Item 621 – Raised Pavement Marker (RPM)

For estimating purposes, the RPM quantity has been calculated at 20' spacing through the curves from SLM 0.35 to SLM 1.00, and 80' spacing elsewhere. The Contractor shall space the RPMs per Standard Construction Drawings TC-65.10 and TC-65.11.

The following is an estimated quantity to be used as directed by the Engineer to place proposed raised pavement markers.

Item 621 RPM……**390 Each**

Item 621 – Raised Pavement Marker Removed

The following is an estimated quantity to be used as directed by the Engineer to remove existing raised pavement marker castings.

Item 621 Raised Pavement Marker Removed……**390 Each**

Item 646 – Epoxy Pavement Marking

The Contractor must lay out all center lines using the most recent copy of the center line log. Copies of the center line log may be obtained from the District 12 Roadway Services Department.

The following estimated quantity is carried to the General Summary in order to place pavement markings within the limits of this project:

Item 646 Edge Line……**7.14 Mile**
Item 646 Center Line……**3.57 Mile**
Item 646 Stop Line……**115 Feet**

I:\PROJECTS\PID83351\roadway\sheets\83351GN003.dgn 16-APR-2009 8:44AM ekdilio

Maintenance of Traffic

Item 614 Maintaining Traffic

Generally the Contractor shall conduct his operations as to complete the proposed improvement with a minimum of hazard, delay and inconvenience to the motorists using the highway affected by the work done under this contract. In addition to the construction and material specifications, the following specific provisions are mandatory.

I. Notification

Since functional traffic control is a major concern on this project, it is essential that the motoring public be adequately forewarned of future lane closures and traffic constrictions. Therefore, the Contractor shall submit a written schedule to the Engineer, responsible law enforcement agencies, and the ODOT Public Information Office (216-584-2007) indicating the locations and dates of the lane closures at least 3 days prior to the implementation of any such closures.

II. Work Hours

Night work is NOT permitted due to the residential nature of the surrounding areas.

III. Lane Closure, Planing and Paving Restrictions

1. Maintain a minimum of one 11' lane using flaggers.

IV. Maintenance of Traffic Systems

A. When Required

Whenever any part of the traveled surface is being worked upon or is otherwise not suitable for safe and convenient use by vehicles, traffic control devices sufficient to protect such areas to assure the safe and convenient passage of vehicular traffic shall be installed and maintained. Such traffic control devices and the manner in which they are used shall be consistent with these plans and the Ohio Manual of Uniform Traffic Control Devices for Streets and Highways, hereinafter referred to as the OMUTCD. The traffic control device system shall constitute the minimum provisions for traffic control for each particular situation. Whenever the Engineer deems it necessary especially where a grade, curve, or merge conditions exists, he may direct that additional or alternative devices be used.

B. Conditions

During all parts of this project, flaggers, signing, barricades, flashing arrows, etc. shall be located as indicated in the OMUTCD or as shown in the Standard Construction Drawings. Two-way traffic shall be maintained at all times.

C. Advance Warning Signs

All advance warning signs for any condition which restricts traffic shall be erected before any such restriction is put into effect. All such signs shall be covered or removed from the view of traffic whenever they are not applicable.

D. Flashing Arrow Requirement

Whenever any part of the traveled surface is closed, the motorists shall be warned and directed by the Contractor through the use of one flashing arrow for each lane closed. Additionally, the provisions set forth in the OMUTCD and the applicable Standard Construction Drawings shall be met.

E. Flaggers and Law Enforcement Officers

The Contractor shall furnish additional flaggers as directed by the Engineer. Law Enforcement Officers (LEO's) shall be required for traffic direction only under the following circumstances: (1) if signals are non-operational, or (2) if traffic must move against signal phasing.

F. Protection of Public

Personal cars shall not be parked within the R/W.

G. Failure to Comply

If there is any failure to comply with provisions for traffic control set out in these plans and notes, or with the provisions of the OMUTCD, the highway in the vicinity of the work area shall not be considered in a condition for the safe and convenient use by the traveling public. Any failure to keep the highway, in the vicinity of the work area, in a condition for the safe and convenient use by the traveling public shall be considered a breach of this contract. Work shall be suspended until the Contractor complies with the provisions of the aforementioned items.

V. Maintenance of Traffic Materials

A. Signs

Sign dimensions and specifications, including letter sizes shall be as provided in the OMUTCD, or in design drawings provided by the Department of Transportation. The signs shall be subject to approval of the Engineer prior to the start of the project.

B. Sign Supports

Sign supports shall be of sufficient size and height as to support the signs at the appropriate height. Supports shall be adequate in mass and stability to prevent the signs from being blown over by wind or vehicular generated air turbulence.

C. Flashing Arrows

Whenever any part of the traveled surface is closed, the motorist shall be warned and diverted by the Contractor through the use of one flashing arrow barricade for each lane closed. The Contractor shall refer to Standard Construction Drawing MT-35.10 and the provisions set forth in the OMUTCD for all information regarding furnishing, maintaining, and use of flashing arrow barricades. Payment for the above shall be included in the lump sum bid for Item 614 Maintaining Traffic.

D. Drums

Drums shall be in accordance with pertinent sections of the OMUTCD. All costs for installing, maintaining and subsequent removal of said drums shall be included in the lump sum bid price for Item 614 Maintaining Traffic.

E. Cones

Cones shall be located as shown in the OMUTCD and the Standard Construction Drawings.

F. Flashers

Flashers shall be 12 volt battery-operated models with 7 inch diameter yellow lenses illuminated by rapid intermittent flashers of short duration and shall be placed on all signs at all times as required by the OMUTCD and the Standard Construction Drawings.

VI. Payment

Payment for providing, erecting, maintaining and removing temporary maintenance of traffic control devices shall be made under the lump sum price bid for Item 614 Maintaining Traffic.

Lanes Open During Holidays or Special Events

No work shall be performed and all existing lanes shall be open to traffic during the following designated holidays or events:

Christmas	Fourth of July
New Years	Labor Day
Memorial Day	Thanksgiving

The period of time that the lanes are to be open depends on the day of the week on which the holiday or event falls. The following schedule shall be used to determine this period:

Day of the Week	Times All Lanes Must Be Open to Traffic
Sunday	12:00 Noon Friday through 12:00 Noon Monday
Monday	12:00 Noon Friday through 12:00 Noon Tuesday
Tuesday	12:00 Noon Monday through 12:00 Noon Wednesday
Wednesday	12:00 Noon Tuesday through 12:00 Noon Thursday
Thursday	12:00 Noon Wednesday through 12:00 Noon Monday
Friday	12:00 Noon Thursday through 12:00 Noon Monday
Saturday	12:00 Noon Friday through 12:00 Noon Monday

No extensions of time shall be granted for delays in material deliveries, unless such delays are industry-wide, or for labor strikes, unless such strikes are area-wide. Should the Contractor fail to meet any of these requirements, the Contractor shall be assessed liquidated damages in accordance with CMS 108.07.

Suspension of Work

If the Contractor fails to comply with the provisions for traffic control as set forth in these plans or with provisions of the OMUTCD, the Engineer shall suspend work until the Contractor complies with the necessary requirements.

Alternate Methods

If the Contractor so elects, he may submit alternate methods for the maintenance of traffic, provided the intent of the provisions is followed and no additional inconvenience to the traveling public results there from. No alternate plan shall be placed into effect until approval has been granted in writing, by the Director.

Maintenance of Traffic Control Zones

The Contractor shall be responsible to maintain the signs, drums and temporary pavement markings at the locations detailed in the plans or specified in the Standard Drawings. When the Contractor is notified of deficiencies he shall correct the deficiencies as soon as possible, preferably within 12 hours and no later than 24 hours.

Work Zone Pavement Markings

The following estimated quantities shall be used to place work zone pavement markings prior to placing the permanent markings:

Item 614 – Work Zone Center Line, Class I, 642 Paint……**3.57 Mile**
Item 614 – Work Zone Edge Line, Class I, 642 Paint……**7.14 Mile**
Item 614 - Work Zone Stop Line, Class I, 642 Paint……**115 Feet**

I:\PROJECTS\PID83351\roadway\sheets\83351GN004.dgn 16-APR-2009 8:44AM ekallio

SHEET NUMBER												ITEM	ITEM EXT.	GRAND TOTAL	UNIT	DESCRIPTION	SEE SHEET NO.
				5	6		8	9									
																ROADWAY	
								78				202	32000	78	FT	CURB REMOVED	
								1587.5				202	38000	1587.5	FT	GUARDRAIL REMOVED	
								381.25				202	38001	381.25	FT	GUARDRAIL REMOVED, AS PER PLAN	4
								13				202	42000	13	EACH	ANCHOR ASSEMBLY REMOVED, TYPE A	
				360								203	10000	360	CU YD	EXCAVATION	
								28				209	60201	28	STATION	LINEAR GRADING, AS PER PLAN	4
								1593.75				606	13030	1593.75	EACH	GUARDRAIL, TYPE 5, USING 9 FOOT POSTS	
								12				606	22010	12	EACH	ANCHOR ASSEMBLY, TYPE E-98	
								3				606	25000	3	EACH	ANCHOR ASSEMBLY, TYPE A	
								2				606	26500	2	EACH	ANCHOR ASSEMBLY, TYPE T	
								3				606	35000	3	EACH	BRIDGE TERMINAL ASSEMBLY, TYPE 1	
								4				606	35140	4	EACH	BRIDGE TERMINAL ASSEMBLY, TYPE 4	
								60				609	24510	60	FT	CURB, TYPE 4-C	
								3				622	90200	3	EACH	BARRIER, MISC.: CONCRETE BARRIER END SECTION	10
																EROSION CONTROL	
												832	30000	1000	EACH	EROSION CONTROL	
																DRAINAGE	
				8								604	39501	8	EACH	MONUMENT BOX ADJUSTED TO GRADE, AS PER PLAN	5
				100								605	31100	100	FT	AGGREGATE DRAINS	
																PAVEMENT	
				6000								253	01001	6000	SQ YD	PAVEMENT REPAIR, AS PER PLAN A	5
				500								253	01001	500	SQ YD	PAVEMENT REPAIR, AS PER PLAN B	5
							10842					254	01000	10842	SQ YD	PAVEMENT PLANING, ASPHALT CONCRETE	
				360								304	20000	360	CU YD	AGGREGATE BASE	
							5198					407	10000	5198	GALLON	TACK COAT	
							496					407	14000	496	GALLON	TACK COAT FOR INTERMEDIATE COURSE	
							207					448	46021	207	CU YD	ASPHALT CONCRETE INTERMEDIATE COURSE, TYPE 1, PG64-22, AS PER PLAN	5
								47				448	46061	47	CU YD	ASPHALT CONCRETE INTERMEDIATE COURSE, TYPE 1, UNDER GUARDRAIL, PG64-22, AS PER PLAN	4
							1709					448	46905	1709	CU YD	ASPHALT CONCRETE SURFACE COURSE, TYPE 1, PG70-22M, AS PER PLAN	5
							29					448	48020	29	CU YD	ASPHALT CONCRETE SURFACE COURSE, TYPE 1, PG64-22 (DRIVEWAYS)	
							171					617	10101	171	CU YD	COMPACTED AGGREGATE, AS PER PLAN	5
							344					859	10001	344	CU YD	ASPHALT CONCRETE WITH VERGLIMIT, AS PER PLAN	5
																TRAFFIC CONTROL	
								12				620	00500	12	EACH	DELINEATOR, POST MOUNTED	
				390								621	00100	390	EACH	RPM	
				390								621	54000	390	EACH	RAISED PAVEMENT MARKER REMOVED	
								51				626	00100	51	EACH	BARRIER REFLECTOR	
				7.14								646	10000	7.14	MILE	EDGE LINE	
				3.57								646	10200	3.57	MILE	CENTER LINE	
				115								646	10400	115	FT	STOP LINE	
																MAINTENANCE OF TRAFFIC	
								3				614	12338	3	EACH	WORK ZONE IMPACT ATTENUATOR (BIDIRECTIONAL)	
								9				614	13300	9	EACH	BARRIER REFLECTOR, TYPE B	
								9				614	13360	9	EACH	OBJECT MARKER, TWO WAY	
					3.57							614	21100	3.57	MILE	WORK ZONE CENTER LINE, CLASS I, 642 PAINT	
					7.14							614	22100	7.14	MILE	WORK ZONE EDGE LINE, CLASS I, 642 PAINT	
					115							614	26200	115	FT	WORK ZONE STOP LINE, CLASS I, 642 PAINT	
								360				622	40020	360	FT	PORTABLE CONCRETE BARRIER, 32"	
												614	11000	LUMP		MAINTAINING TRAFFIC	
												624	10000	LUMP		MOBILIZATION	

CALCULATED KDH
CHECKED LDH

GENERAL SUMMARY

LAK-608-0.00

I:\PROJECTS\PID83351\roadway\sheets\83351GG001.dgn 16-APR-2009 8:45AM ekallio

LOCATION	STATION TO STATION		LENGTH, L	LENGTH, L	PAVEMENT WIDTH, W	SURFACE AREA, A = L x W/9	PLANIMETERED AREAS	254 PAVEMENT PLANING, ASPHALT CONCRETE, 0" TO 1-1/2"	254 PAVEMENT PLANING, ASPHALT CONCRETE, 1/2"	407 TACK COAT @ 0.10 GAL./SQ.YD.	407 TACK COAT FOR INTERMEDIATE COURSE @ 0.05 GAL./SQ.YD.		448 1-1/2" ASPHALT CONCRETE SURFACE COURSE, TYPE 1, PG70-22M, AS PER PLAN	448 ASPHALT CONCRETE SURFACE COURSE, TYPE 1, PG64-22, (DRIVEWAYS)	448 3/4" ASPHALT CONCRETE INTERMEDIATE COURSE, TYPE 1, PG64-22, AS PER PLAN		859 1-1/4" ASPHALT CONCRETE WITH VERGLIMIT, AS PER PLAN		617 COMPACTED AGGREGATE, AS PER PLAN, 3/4" AVG.
	FROM	TO	MILE	FEET	FEET	SQ. YD.	SQ. YD.	SQ. YD.	SQ. YD.	GAL.	GAL.		CU. YD.	CU. YD.	CU. YD.		CU. YD.		CU. YD.
SR-608	SLM 0.00	SLM 0.33	0.33	1742	24	4646		61		465			194						16
	SLM 0.33	SLM 0.60	0.27	1426	26	4118			4118	412	206				86		143		13
	SLM 0.60	SLM 0.75	0.15	792	26	2288			2288	229	114				48		79		7
	SLM 0.78	SLM 0.81	0.03	158	26	458			458	46	23				10		16		1
	SLM 0.81	SLM 1.01	0.20	1056	26	3051			3051	305	153				64		106		10
	SLM 1.01	SLM 2.95	1.94	10243	24	27315				2732			1138						95
	SLM 2.95	SLM 3.13	0.18	950	26	2746				275			114						9
	SLM 3.13	SLM 3.34	0.21	1109	24	2957		61		296			123						10
	SLM 3.38	SLM 3.57	0.19	1003	24	2675		122		268			111						9
	INTERSECTIONS																		
	Winchell Rd.						90	90		9			4						
	Girdled Rd. West Approach						110	110		11			5						
	Girdled Rd. East Approach						92	92		9			4						
	Williams Rd.						98	98		10			4						
	Nancy Ann Dr.						114	114		11			5						
	Alexander DRd.						97	97		10			4						
	Far Hills Dr.						82	82		8			3						
	DRIVEWAYS			5		1035				104				29					
								927	9915										
	TOTALS TO SHEET GENERAL SUMMARY							10842		5198	496		1709	29	207		344		171

CALCULATED KDH
CHECKED LDH

PAVEMENT SUBSUMMARY

LAK-608-0.00

I:\PROJECTS\PID83351\roadway\sheets\83351GS001.dgn 16-APR-2009 8:46AM ekallio

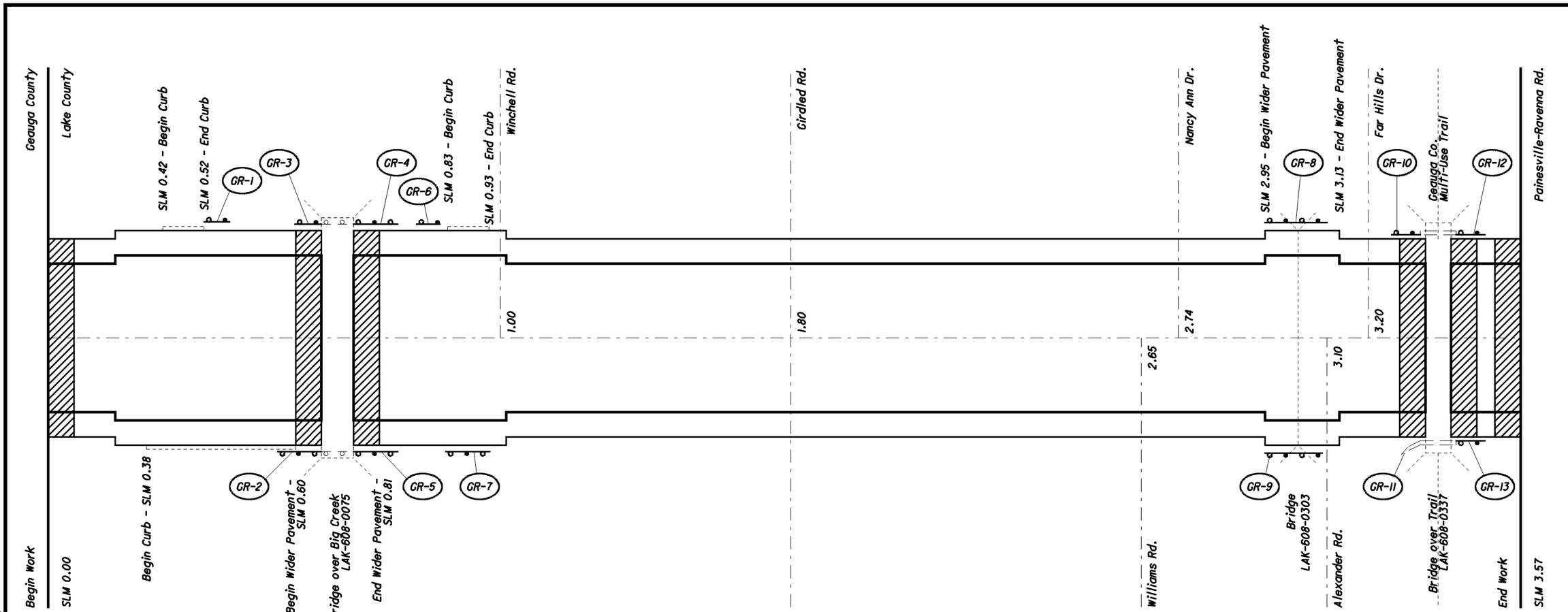

REF NO.	SIDE	SLM TO SLM		LENGTH	202 Curb Removed	202 Guardrail Removed	202 Guardrail Removed, As Per Plan	202 Anchor Assembly Removed, Type A	209 Linear Grading, As Per Plan	448 Asphalt Concrete Intermediate Course, Type 1, Under Guardrail, PG64-22, As Per Plan (1 1/2" Thick, 4' Width)	606 Guardrail, Type 5, Using 9 Foot Posts	606 Anchor Assembly, Type E-98	606 Anchor Assembly, Type A	606 Anchor Assembly, Type T	606 Bridge Terminal Assembly, Type 1	606 Bridge Terminal Assembly, Type 4	609 Curb, Type 4C	620 Delineator, Post Mounted	622 Barrier, Misc.: Concrete Barrier End Section	626 Barrier Reflector	614 Work Zone Impact Attenuator, (Bidirectional)	614 Barrier Reflector, Type B	614 Object Marker, Two Way	622 Portable concrete Barrier, 32"	NOTES
				FEET	Foot	Foot	Foot	Each	Station	Cu Yd	Foot	Each	Each	Each	Each	Each	Foot	Each	Each	Each	Each	Each	Each	Foot	
GR-1	Lt.	0.51	0.54	137.5		87.5		2	2	3	62.5	1	1					1		4					Type A A.A. in slope, at North end
GR-2	Rt.	0.73	0.75	100			100		1	2	87.5			1		1				3					Type 5 Guardrail on 5' Radius at Driveway
GR-3	Lt.	0.74	0.75	31.25			31.25		1	1	18.75			1		1				3					Type 5 Guardrail on 5' Radius at Driveway
GR-4	Lt.	0.77	0.80	150			150		2	3	100	1				1		1		4					
GR-5	Rt.	0.77	0.80	100			100		1	2	50	1				1		1		3					
GR-6	Lt.	0.83	0.93	512.5		425		2	5	9	462.5		2							10					Extend Guardrail 37.5' North
GR-7	Rt.	0.94	0.99	375		325		2	4	7	275	2						2		8					
GR-8	Lt.	2.98	3.02	250		200		2	3	5	150	2						2		3					
GR-9	Rt.	2.98	3.01	175		125		2	2	4	75	2						2		3					
GR-10	Lt.	3.33	3.35	125	26	100		1	2	3	62.5	1			1		20	1	1	3	1	3	3	120	
GR-11	Rt.	3.35	3.36	57							NO WORK														Existing Concrete Barrier on Retaining Wall
GR-12	Lt.	3.40	3.42	125	26	100		1	2	3	62.5	1			1		20	1	1	3	1	3	3	120	
GR-13	Rt.	3.40	3.44	250	26	225		1	3	5	187.5	1			1		20	1	1	4	1	3	3	120	
TOTALS TO GEN. SUM.					78	1587.5	381.25	13	28	47	1593.75	12	3	2	3	4	60	12	3	51	3	9	9	360	

GENERAL PLAN & GUARDRAIL SUBSUMMARY
SR-608, SLM 0.00 to SLM 3.57

CALCULATED KDH
CHECKED LDH

Not to Scale

LAK-608-0.00

9
11

I:\PROJECTS\PID8351\roadway\sheets\8351GP001.dgn 16-APR-2009 8:46AM ekallio

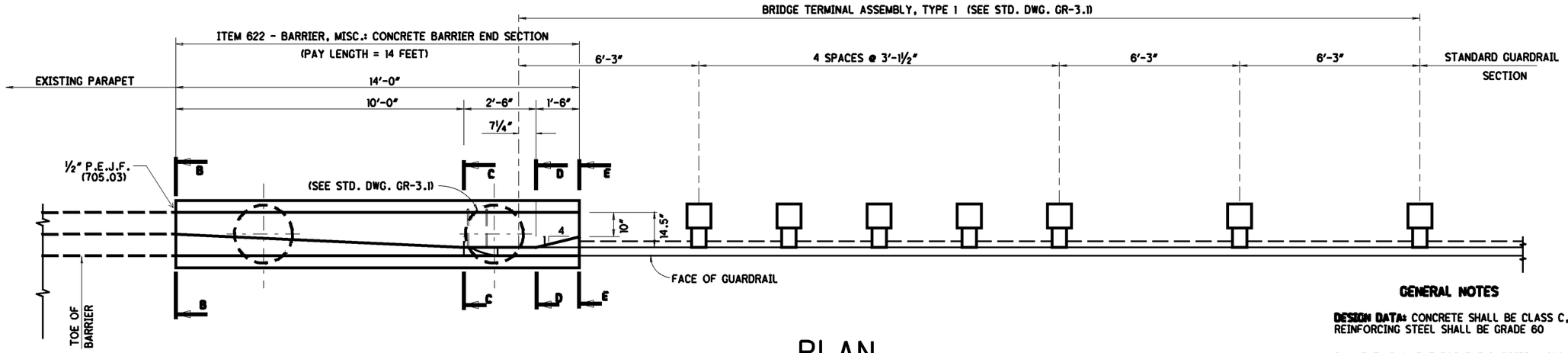

PLAN

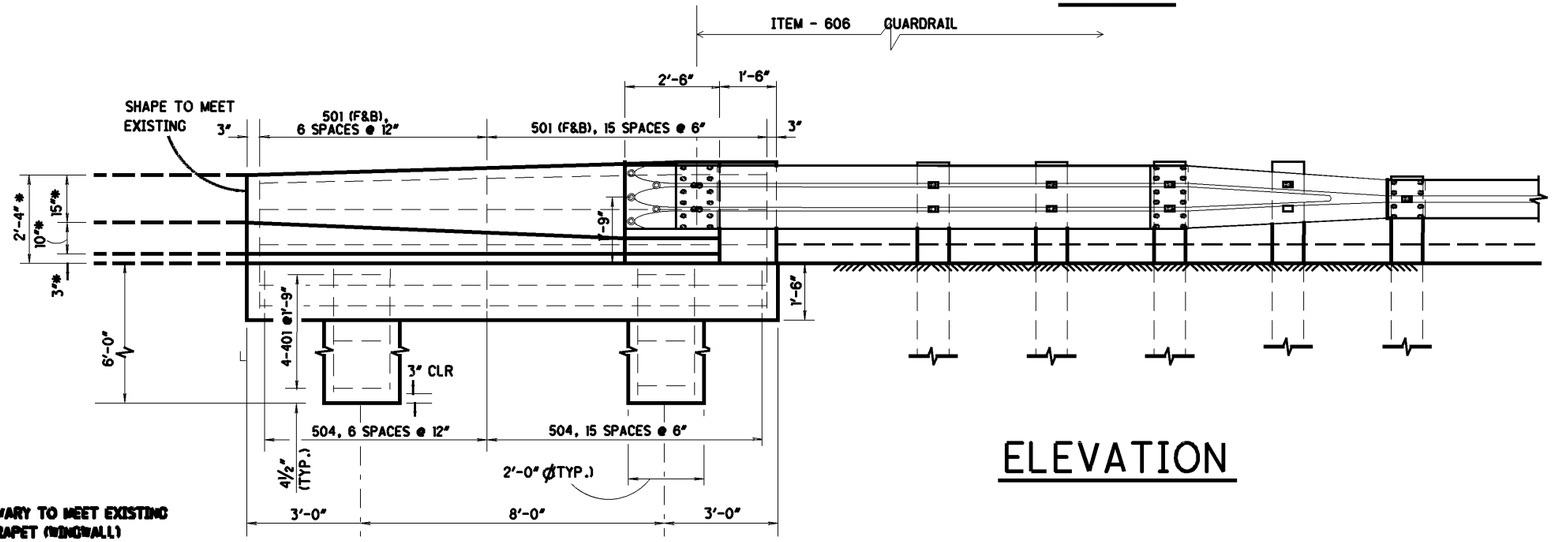

* VARY TO MEET EXISTING PARAPET (WINGWALL)

ELEVATION

GENERAL NOTES

DESIGN DATA: CONCRETE SHALL BE CLASS C, REINFORCING STEEL SHALL BE GRADE 60

PAYMENT: PAYMENT FOR THE BARRIER, MISC: CONCRETE BARRIER END SECTION SHALL BE AT THE UNIT BID PRICE FOR ITEM 622 - BARRIER, MISC.: CONCRETE BARRIER END SECTION, EACH, AND SHALL INCLUDE ALL MATERIALS, LABOR, AND REINFORCING STEEL REQUIRED TO CONSTRUCT THE BARRIER END AS SHOWN.

ALL COSTS FOR EXCAVATION AND EMBANKMENT SHALL BE PAID FOR SEPARATELY UNDER LINEAR GRADING.

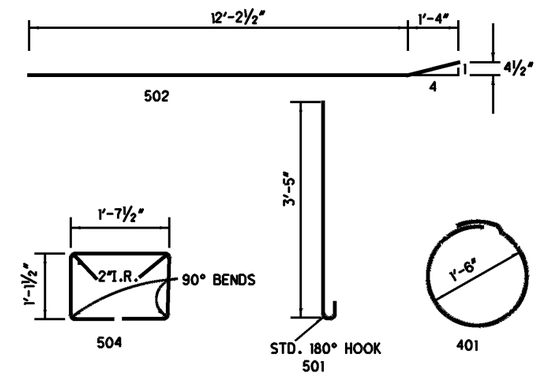

BENDING DIAGRAMS

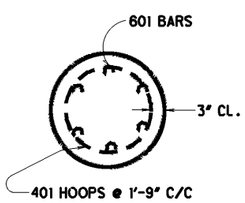

SECTION F-F

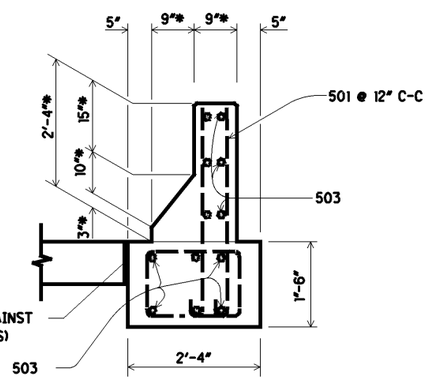

SECTION B - B

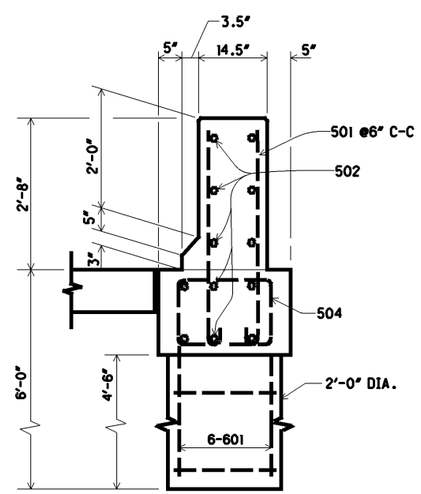

SECTION C - C

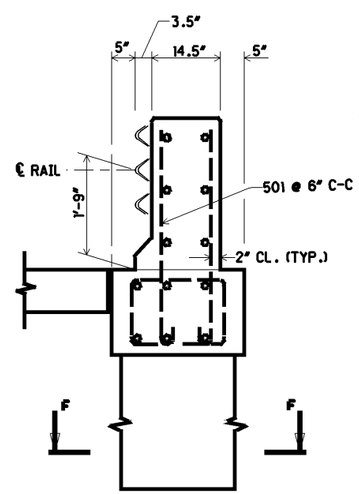

SECTION D - D

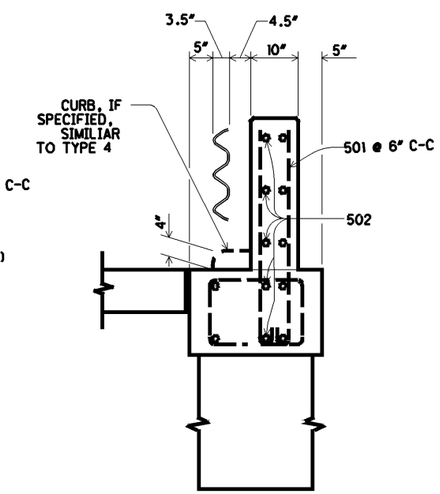

SECTION E - E

REINFORCING BAR LIST

MARK	NO.	LENGTH	TYPE
401	8	6'-0"	BT.
501	44	4'-0"	BT.
502	5	13'-7"	BT.
503	7	13'-7"	STR.
504	22	5'-0½"	BT.
601	12	5'-6"	STR.

ALL REINFORCING BARS SHALL BE EPOXY COATED

MARCH 12, 1991

STATE OF OHIO
DEPARTMENT OF TRANSPORTATION
DISTRICT 12 LOCATION & DESIGN

32"/32" GUARDRAIL/BARRIER TRANSITION WITH TAPERED TOP (WITH OR WITHOUT CURBS)

DESIGNED	TRACED	CHECKED	REVIEWED	REVISED
LDH	JAG	ENF		EMK 3/13/09
DATE	DATE	DATE	DATE	

GUARDRAIL/BARRIER DETAILS

LAK-608-0.00

10
11

I:\PROJECTS\PID8351\roadway\sheets\83351GR001.dgn 16-APR-2009 8:48AM ekallio

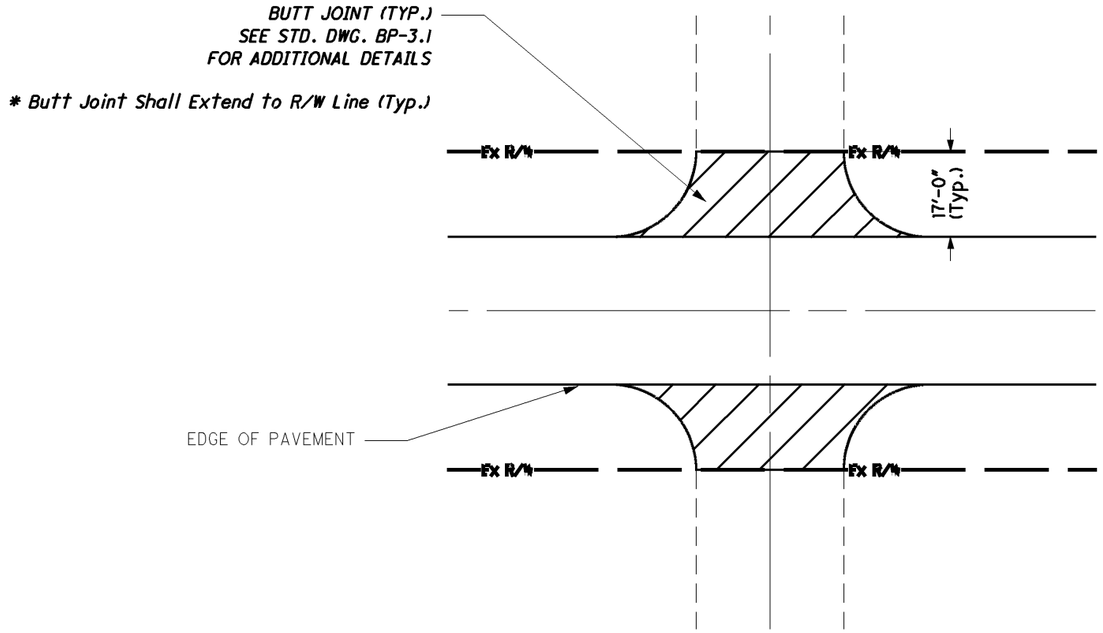

TYPICAL ASPHALT INTERSECTION DETAIL

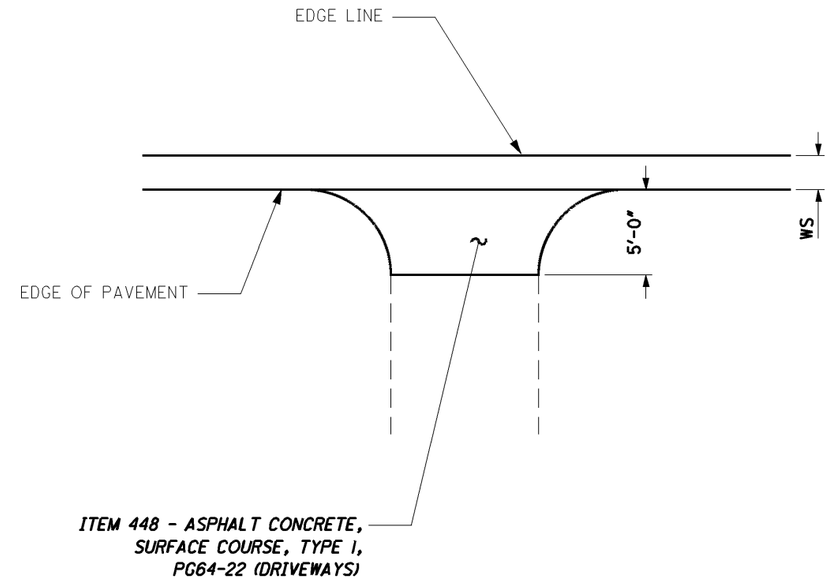

DRIVEWAY APRON DETAIL

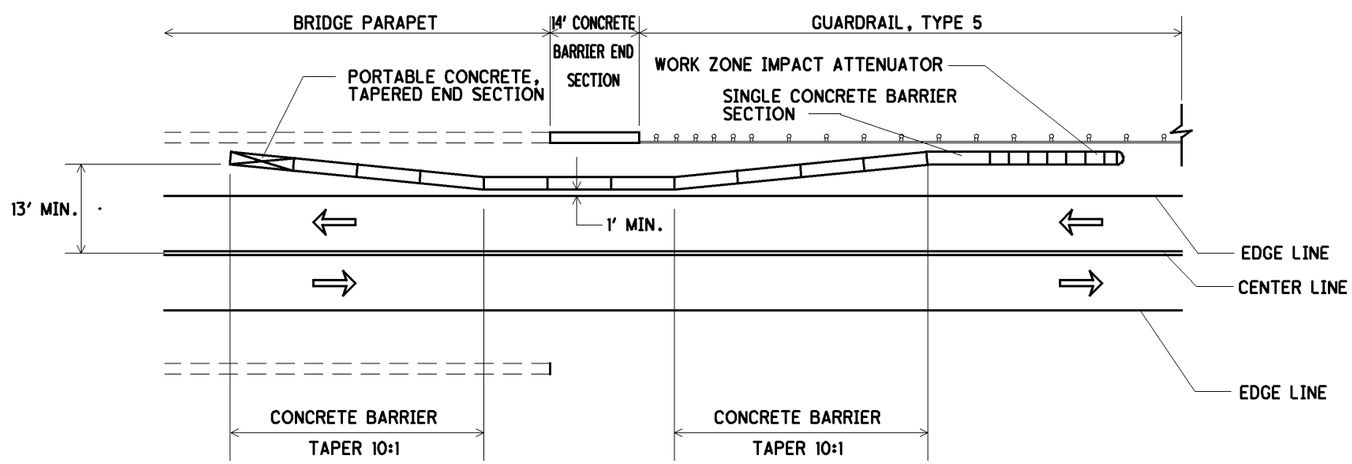

PORTABLE CONCRETE BARRIER DETAIL

CALCULATED KDH
CHECKED LDH

Miscellaneous Details
Portable Concrete Barrier, Intersections & Driveway Aprons

GEA-608-0.00

11
11

I:\PROJECTS\PID83351\roadway\sheets\83351GA001.dgn 16-APR-2009 8:48AM ekallio