GEA - -306-13.45/VAR
140108 PID - 91128
Dist 12 2/18/2014
Contract Proposal Available @ www.contracts.dot.state.oh.us/home

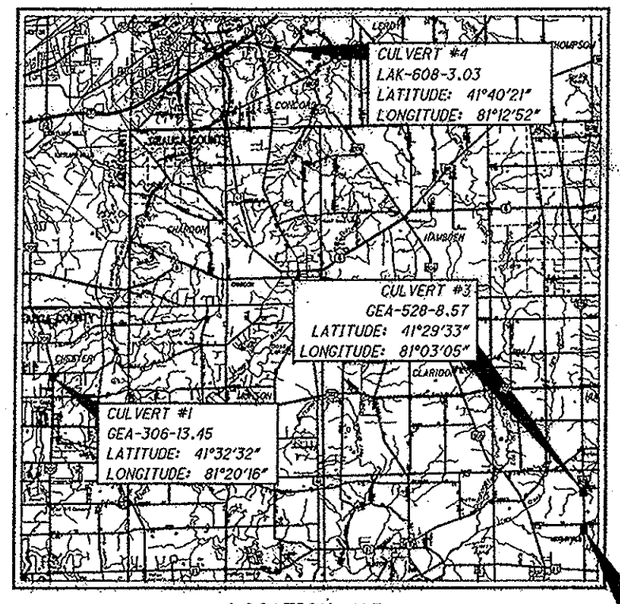

LOCATION MAP

SCALE IN MILES
0 2 4 6 8

N

PORTION TO BE IMPROVED
INTERSTATE HIGHWAY
FEDERAL ROUTES
STATE ROUTES
COUNTY & TOWNSHIP ROADS
OTHER ROADS

STATE OF OHIO

DEPARTMENT OF TRANSPORTATION

GEA-306-13.45/VAR

CHESTER TOWNSHIP
MIDDLEFIELD TOWNSHIP
CONCORD TOWNSHIP
GEAUGA COUNTY
LAKE COUNTY

PROJECT DESCRIPTION

THIS PROJECT CONSISTS OF REPLACING ONE BRIDGE AND THREE ROADWAY CULVERTS. THE BRIDGE REPLACEMENT WILL BE LOCATED ON SR 608 IN LAKE COUNTY. THE THREE CULVERT REPLACEMENTS ARE LOCATED IN GEAUGA COUNTY ON SR 528 AND SR 306. THIS WORK SHALL ALSO INCLUDE HEADWALL INSTALLATION, PAVEMENT RESTORATION AND MINOR GUARDRAIL REPLACEMENT.

PROJECT EARTH DISTURBED AREA: N/A (MAINTENANCE PROJECT)
ESTIMATED CONTRACTOR EARTH DISTURBED AREA: N/A (MAINTENANCE PROJECT)
NOTICE OF INTENT EARTH DISTURBED AREA: N/A (MAINTENANCE PROJECT)

INDEX OF SHEETS:

TITLE SHEET	1
BENCHMARKS AND REFERENCES	2
LOCATION PLAN	3
TYPICAL SECTIONS	4-7
GENERAL NOTES	8-10
MAINTENANCE OF TRAFFIC	11-19
GENERAL SUMMARY	20-22
SUBSUMMARIES	23-26
PLAN AND PROFILE	27-28
CULVERT DETAILS (GEA-306-13.45)	29-30
CULVERT DETAILS (GEA-528-7.49)	31-37
CULVERT DETAILS (GEA-528-8.57)	38-43
CULVERT DETAILS (LAK-608-3.03)	44-49
PLAN INSERT SHEETS	50-60
SOIL PROFILES	

2013 SPECIFICATIONS

THE STANDARD SPECIFICATIONS OF THE STATE OF OHIO, DEPARTMENT OF TRANSPORTATION, INCLUDING CHANGES AND SUPPLEMENTAL SPECIFICATIONS LISTED IN THE PROPOSAL SHALL GOVERN THIS IMPROVEMENT.

* I HEREBY APPROVE THESE PLANS AND DECLARE THAT THE MAKING OF THIS IMPROVEMENT WILL REQUIRE THE CLOSING TO TRAFFIC OF THE HIGHWAY AND THAT DETOURS WILL BE PROVIDED AS INDICATED ON SHEET 14 AND SHEET 19.

DESIGN DESIGNATION

SEE SHEET 3

UNDERGROUND UTILITIES
CONTACT BOTH SERVICES
CALL TWO WORKING DAYS
BEFORE YOU DIG
CALL
1-800-362-2764
(TOLL FREE)
OHIO UTILITIES PROTECTION SERVICE
NON-MEMBERS
MUST BE CALLED DIRECTLY
OIL & GAS PRODUCERS UNDERGROUND
PROTECTION SERVICE CALL: 1-800-925-0988

PLAN PREPARED BY:

LJB Inc. • 6151 Wilson Mills Road • Suite 200
Highland Heights, Ohio 44143
(440) 683-4500 tel • (440) 683-4505 fax • LJBInc.com

©2013 LJB Inc. All rights reserved. No part of this drawing may be used, reproduced, or modified in any manner without the prior written authorization of LJB Inc. Any such unauthorized use or reproduction of or modification to this drawing is done at the user's own risk and the user agrees to indemnify, defend and hold harmless LJB Inc. from and against any and all claims, liability, and expenses, including, but not limited to, reasonable attorney's fees, arising from such use, reproduction or modification.

ENGINEERS SEAL:
FOR CULVERT PLANS
GEA-528-7.49
& GEA-528-8.57
STATE OF OHIO — DANIEL W. SPRINGER 69027 — REGISTERED PROFESSIONAL ENGINEER
SIGNED:
DATE: 11-4-13

ENGINEERS SEAL:
FOR GEA-306-13.45
& LAK-608-3.03
STATE OF OHIO — CHRISTOPHER W. PRETO 64222 — REGISTERED PROFESSIONAL ENGINEER
SIGNED: Chris Preto
DATE: 11-4-13

ENGINEERS SEAL:
FOR PLANS EXCEPT CULVERT
GEA-528-7.49
& GEA-528-8.57
STATE OF OHIO — GABRIEL KAISSAR BITAR E-58261 — REGISTERED PROFESSIONAL ENGINEER
SIGNED: Gabriel Bitar
DATE: 11-4-2013

STANDARD CONSTRUCTION DRAWINGS					SUPPLEMENTAL SPECIFICATIONS		SPECIAL PROVISIONS
BP-3.1	4/20/12	MT-96.11	7/19/13		800	10/18/13	Waterway Permits Conditions 12/23/13
BP-4.1	7/19/13	MT-96.20	7/19/13		832	10/18/13	
		MT-96.26	7/19/13		902	12/31/12	
HW-1.1	1/18/13	MT-97.10	7/19/13				
		MT-101.60	7/20/12				
DM-1.1	1/18/13	MT-101.70	4/15/11				
DM-1.2	1/18/13	MT-105.10	7/20/12				
DM-1.4	1/18/13						
		TC-41.20	10/18/13				
RM-4.2	10/15/10	TC-41.30	10/18/13				
		TC-42.20	10/18/13				
		TC-52.10	10/18/13				
		TC-52.20	1/18/13				
		TC-61.30	4/20/12				
		TC-65.11	4/20/12				
		TC-73.10	4/20/12				

APPROVED: Myron S. Ell
DATE 11-18-13 DISTRICT DEPUTY DIRECTOR

APPROVED: Jerry Wray Jr.
DATE 12/30/13 DIRECTOR, DEPARTMENT OF TRANSPORTATION

FEDERAL PROJECT NO. E 111 414
PID NO. 91128
CONSTRUCTION PROJECT NO.
RAILROAD INVOLVEMENT NONE
GEA-306-13.45/VAR
1/60

Q:\ODOT_D12\0107585A.00 - VAR-0

BENCHMARKS (GEA-528-7.49 & GEA-528-8.57)

BM "A", EL=1108.78
A MINE SPIKE SET IN POWER POLE #866669 LOCATED ON THE EAST SIDE OF STATE ROUTE 528 APPROXIMATELY 250 FEET SOUTH OF PETERS ROAD.

BM "B", EL=1115.07
A MINE SPIKE SET IN TELEPHONE POLE #190729 LOCATED ON THE WEST SIDE OF STATE ROUTE 528 APPROXIMATELY 750 FEET SOUTH OF PETERS ROAD.

BM "C", EL=1123.62
A MINE SPIKE SET IN POWER POLE #565368 LOCATED ON THE WEST SIDE OF STATE ROUTE 528 APPROXIMATELY 1150 FEET SOUTH OF NAUVOO ROAD.

BM "D", EL=1125.53
A MINE SPIKE SET IN A POWER POLE (NO POLE NUMBER) LOCATED ON THE WEST SIDE OF STATE ROUTE 528 APPROXIMATELY 600 FEET SOUTH OF NAUVOO ROAD.

SURVEY CONTROL POINTS						
POINT	NORTHING	EASTING	STATION	OFFSET	ELEVATION	DESCRIPTION
SV1	668868.43	2365511.00	119+54.65	40.85' LT	1109.43	PIN SET
SV2	668270.46	2365586.85	113+55.44	24.48' RT	1116.05	PIN SET
SV3	663230.19	2365606.44	63+15.61	44.50' LT	1122.57	PIN SET
SV4	662609.33	2365685.63	56+93.45	23.77' RT	1125.45	PIN SET

SEE PLAN SHEETS 29 AND 44 FOR STATIONING AND BENCHMARK INFORMATION FOR GEA-306-13.45 AND LAK-608-03.03.

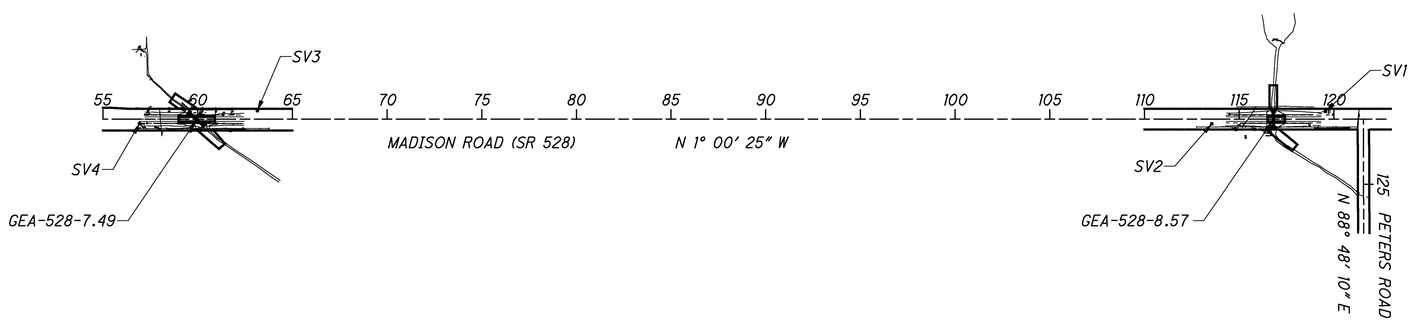

HORIZONTAL SCALE IN FEET
0 200 400 800

BENCHMARKS AND REFERENCES

GEA-306-13.45/VAR

Q:\ODOT_D12\0107585A.00 - VAR-D12 GES FY13 FY14\17181-1 GEA-306-1345 PID91128\91128\roadway\sheets\91128GB001.dgn 10/14/2013 3:00:27 PM darmstrong

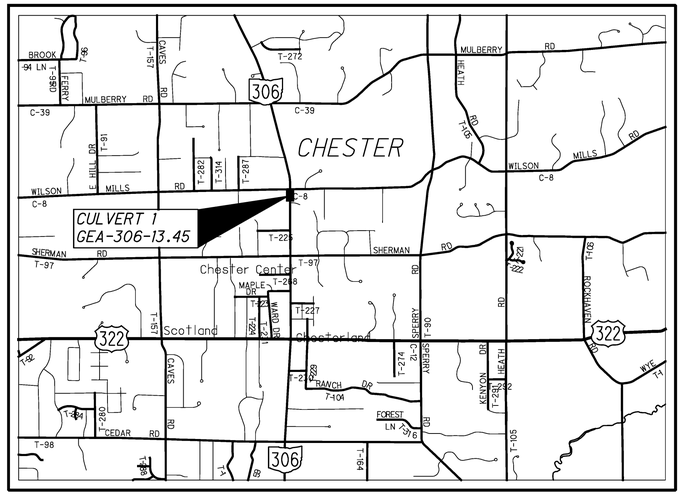

DESIGN DESIGNATION GEA-306-13.45

CURRENT ADT (2010) 8110
TRUCKS (24 HOUR B&C) 240
DESIGN SPEED ..... 50 MPH
LEGAL SPEED ..... 45 MPH
DESIGN FUNCTIONAL CLASSIFICATION:
PRINCIPAL ARTERIAL (URBAN)

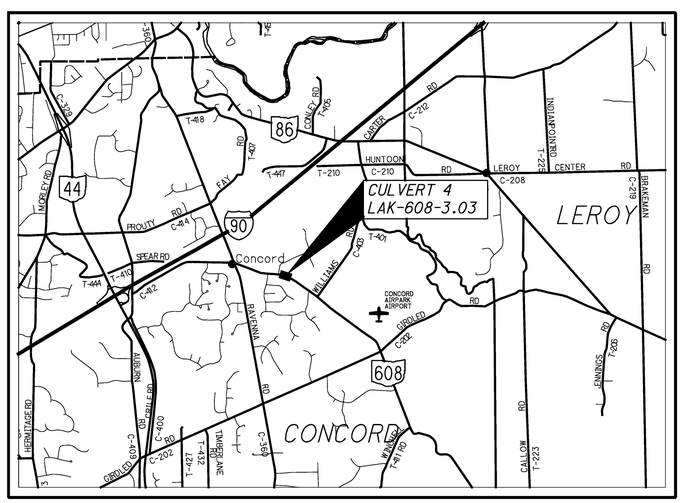

DESIGN DESIGNATION LAK-608-3.03

CURRENT ADT (2011) 2660
TRUCKS (24 HOUR B&C) 100
DESIGN SPEED ..... 40 MPH
LEGAL SPEED ..... 35 MPH
DESIGN FUNCTIONAL CLASSIFICATION:
MAJOR COLLECTOR (URBAN)

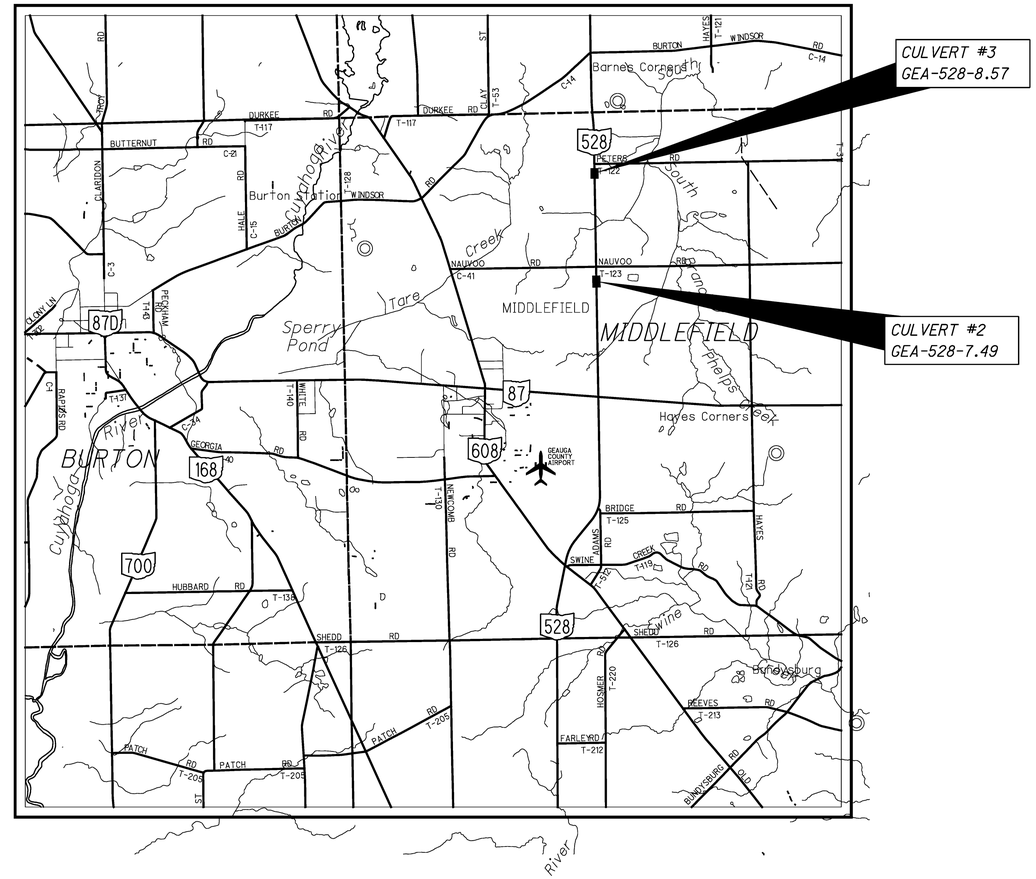

DESIGN DESIGNATION (GEA-528-7.49 & GEA-528-8.57)

CURRENT ADT (2013) 6560
DESIGN YEAR ADT (20) ..... N/A
DESIGN HOURLY VOLUME (20) ..... N/A
DIRECTIONAL DISTRIBUTION ..... N/A
TRUCKS (24 HOUR B&C) ..... N/A
DESIGN SPEED ..... 60 MPH
LEGAL SPEED ..... 55 MPH
DESIGN FUNCTIONAL CLASSIFICATION:
RURAL MAJOR COLLECTOR
NHS PROJECT ..... NO

DESIGN EXCEPTIONS

NONE REQUIRED

N

SCALE IN MILES

0 1 2 3 4

CALCULATED SJT
CHECKED RMS

LOCATION PLAN

GEA-306-13.45/VAR

P:\CLE\ODOT\Projects\287366 - GEA-306-13.45\GEA\91128\roadway\sheets\91128GB001.dgn 10/17/2013 1:26:14 PM TYN61470

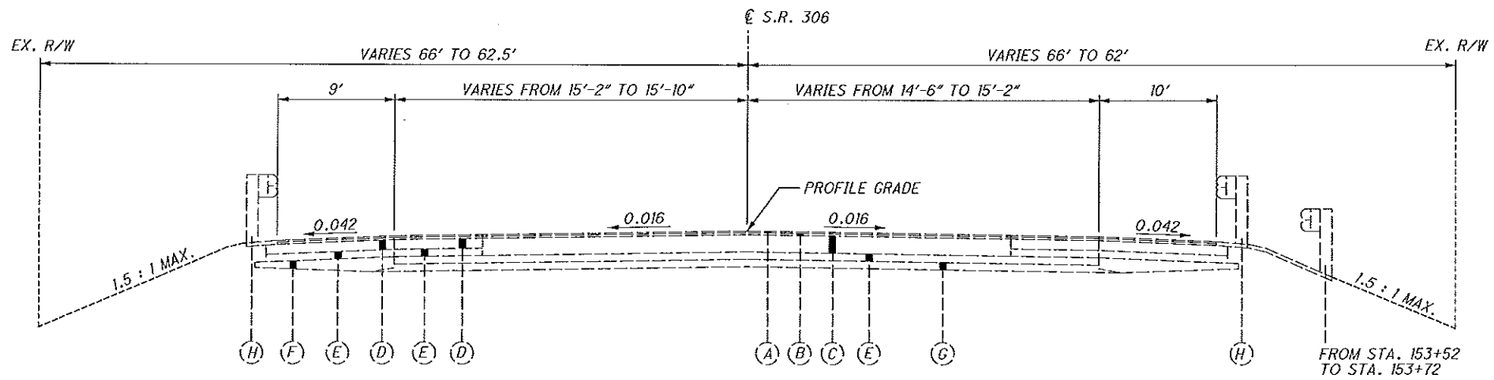

NORMAL SECTION (SR 306)

GEA-306-13.45

EXISTING LEGEND

- (A) - 1-1/4" ASPHALT CONCRETE
- (B) - 1-3/4" ASPHALT CONCRETE
- (C) - VARIABLE THICKNESS, 14" MAX., BITUMINOUS
- (D) - 8" BITUMINOUS AGGREGATE BASE
- (E) - 6" AGGREGATE BASE
- (F) - AGGREGATE BASE VARIABLE DEPTH
- (G) - 6" AGGREGATE SUBBASE
- (H) - GUARDRAIL

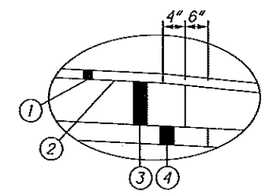

DETAIL A

EDGE COURSE BUILDUP

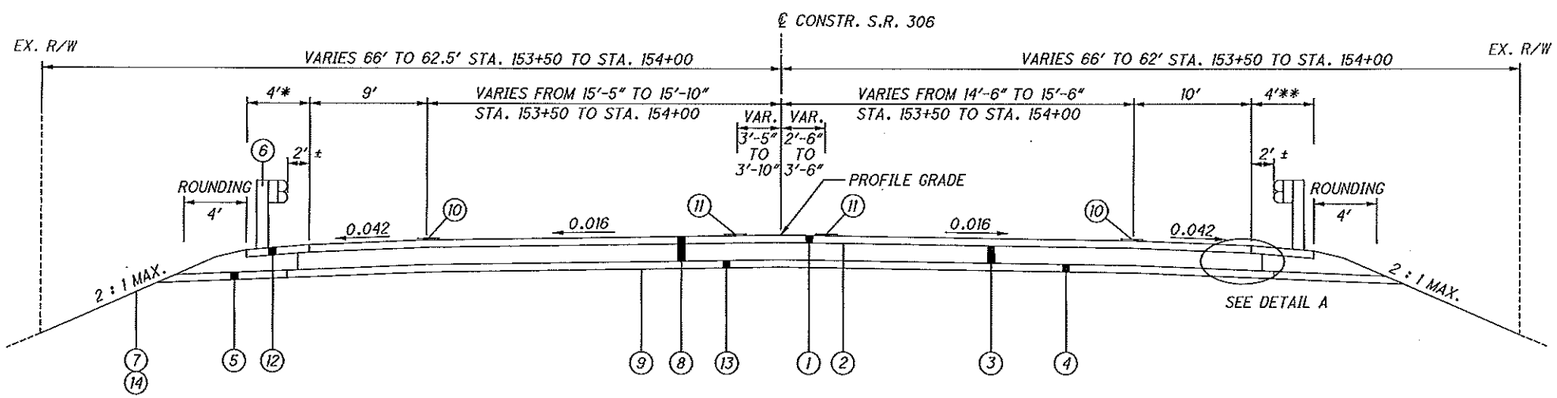

FULL DEPTH REPLACEMENT SECTION (SR 306)

GEA-306-13.45

STA. 153+50 TO STA. 154+00 = 50.00'

PROPOSED LEGEND

1. ITEM 448 - 3" ASPHALT CONCRETE SURFACE COURSE, TYPE 1, PG70-22M, AS PER PLAN
2. ITEM 407 - TACK COAT (0.075 GAL./SQ YD)
3. ITEM 301 - 12" ASPHALT CONCRETE BASE
4. ITEM 304 - 6" AGGREGATE BASE
5. ITEM 605 - AGGREGATE DRAINS (50' SPACING)
6. ITEM 606 - GUARDRAIL, TYPE 5
7. ITEM 659 - SEEDING AND MULCHING
8. ITEM 202 - PAVEMENT REMOVED
9. ITEM 204 - SUBGRADE COMPACTION
10. ITEM 642 - EDGE LINE (WHITE)
11. ITEM 642 - CENTER LINE (SOLID DOUBLE YELLOW)
12. ITEM 448 - 3" ASPHALT CONCRETE INTERMEDIATE COURSE, TYPE 1, UNDER GUARDRAIL, PG64-22, AS PER PLAN
13. ITEM 203 - EXCAVATION
14. ITEM 209 - LINEAR GRADING, AS PER PLAN

* 4' OF PAVEMENT UNDER GUARDRAIL TO BE REPLACED TO STA. 154+12.50

** 4' OF PAVEMENT UNDER GUARDRAIL TO BE REPLACED TO STA. 154+60.22

NOTE: SURFACE COURSE TO BE PLACED IN TWO 1.5" LIFTS

CALCULATED SJT
CHECKED RMS

TYPICAL SECTIONS - SR 306

GEA-306-13.45/VAR

P:\CLE\ODOT\Projects\287366 - GEA-306-13.45\GEA\91128\roadway\sheets\91128GY001.dgn 10/17/2013 1:45:26 PM TYN61470

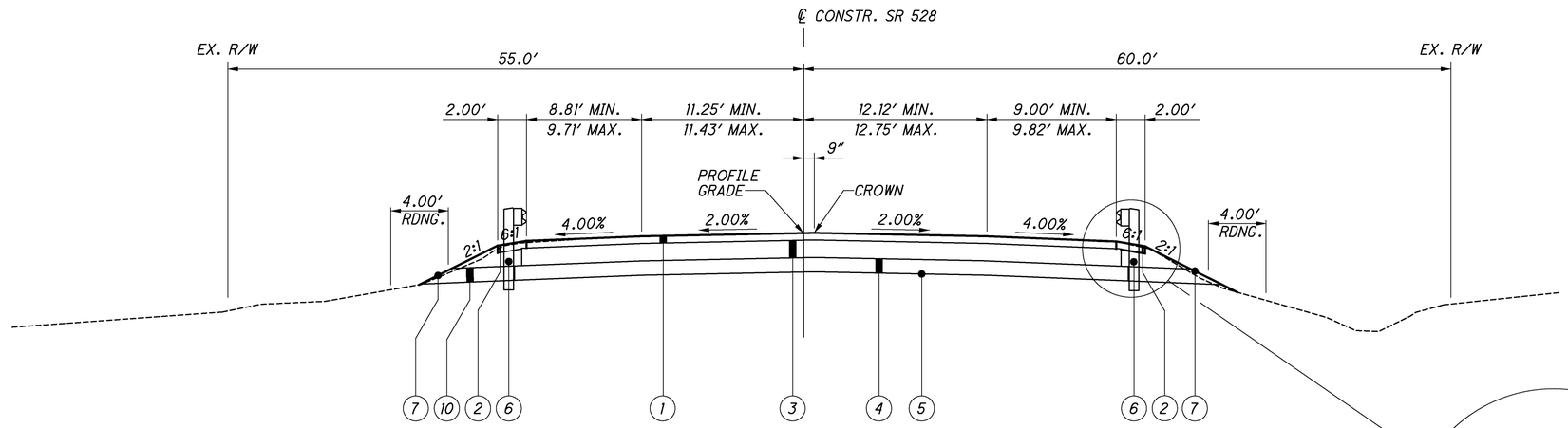

NORMAL SECTION (GEA-528-0749)

STA. 59+00.00 TO STA. 60+90.00

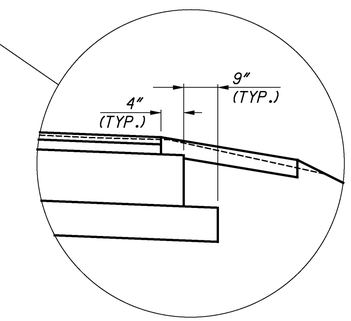

STEP DETAIL

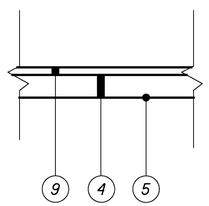

DRIVEWAY APRON

STA. 60+24.57, LT.

DRIVEWAY QUANTITIES HAVE BEEN CARRIED TO GENERAL SUMMARY

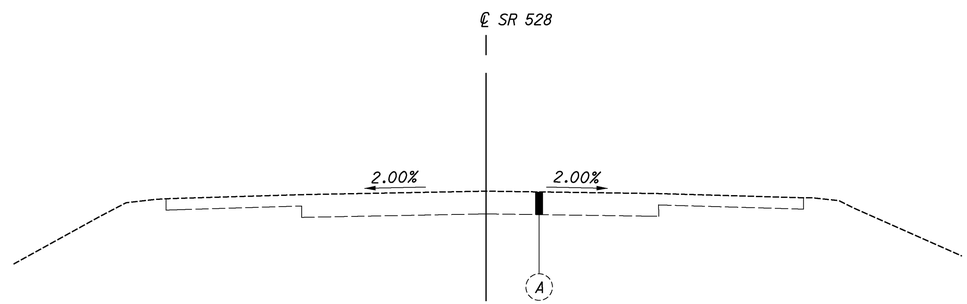

ADJOINING PAVEMENT SECTIONS

STA. 59+00.00
STA. 60+90.00

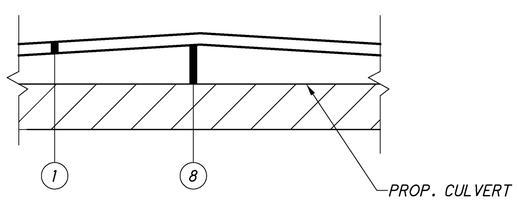

PAVEMENT OVER GEA-528-0749 CULVERT

LEGEND

1. ITEM 448 - 3″ ASPHALT CONCRETE SURFACE COURSE, TYPE 1, PG 70-22M, AS PER PLAN
2. ITEM 448 - 3″ ASPHALT CONCRETE INTERMEDIATE COURSE, TYPE 1, PG 64-22, UNDER GUARDRAIL AS PER PLAN
3. ITEM 301 - 9″ ASPHALT CONCRETE BASE, PG 64-22
4. ITEM 304 - 6″ AGGREGATE BASE
5. ITEM 204 - SUBGRADE COMPACTION
6. ITEM 606 - GUARDRAIL, TYPE MGS
7. ITEM 659 - SEEDING AND MULCHING
8. ITEM 301 - VARIES (10″ - 16″) ASPHALT CONCRETE BASE, PG 64-22
9. ITEM 448 - 2″ ASPHALT CONCRETE SURFACE COURSE, TYPE 1, PG 64-22 (DRIVEWAYS)
10. ITEM 605 - AGGREGATE DRAINS (50′ SPACING)

A. EXISTING ASPHALT PAVEMENT (10″ ±)

NOTE: SURFACE COURSE TO BE PLACED IN TWO 1.5″ LIFTS

CALCULATED DMA
CHECKED GKB

TYPICAL SECTIONS - SR 528

GEA-306-13.45/VAR

Q:\ODOT_D12\0107585A.00 - VAR-D12 GES FY13 FY14\17181-1 GEA-306-1345 PID91128\91128\roadway\sheets\91128GY001.dgn 10/14/2013 3:00:29 PM darmstrong

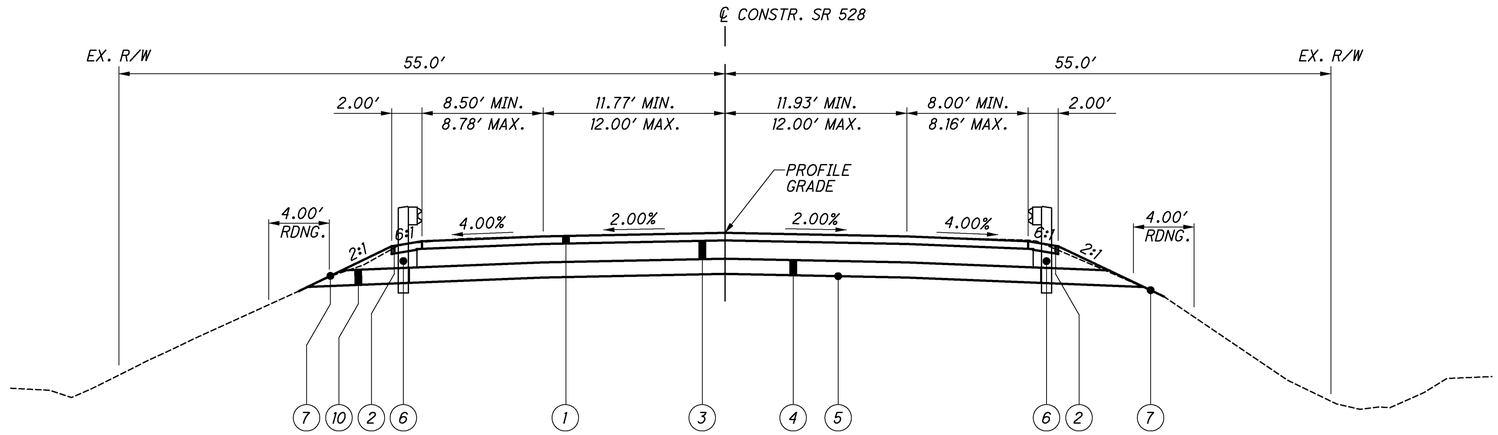

NORMAL SECTION (GEA-528-0857)

STA. 116+50.00 TO STA. 117+40.00

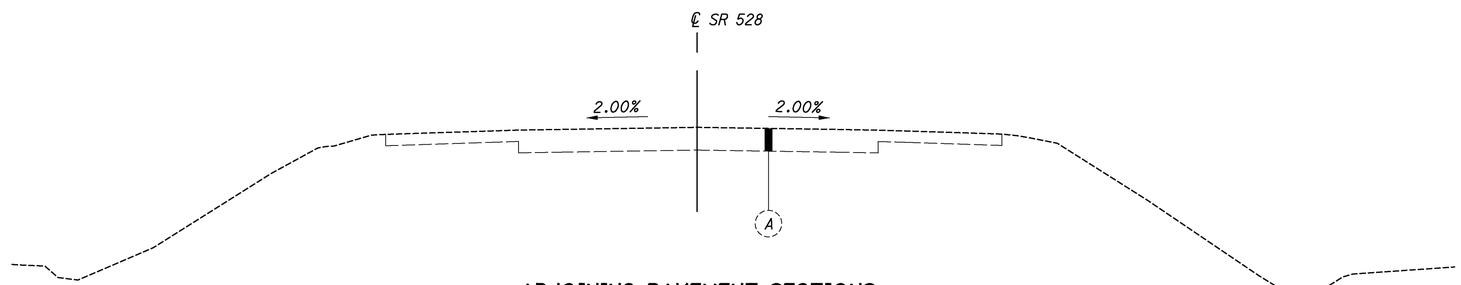

ADJOINING PAVEMENT SECTIONS

STA. 116+50.00
STA. 117+40.00

FOR LEGEND SEE SHEET 5

CALCULATED DMA
CHECKED GKB

TYPICAL SECTIONS - SR 528

GEA-306-13.45/VAR

Q:\ODOT_D12\0107585A.00 - VAR-D12 GES FY13 FY14\17181-1 GEA-306-1345 PID91128\91128\roadway\sheets\91128GY002.dgn 10/14/2013 3:00:30 PM darmstrong

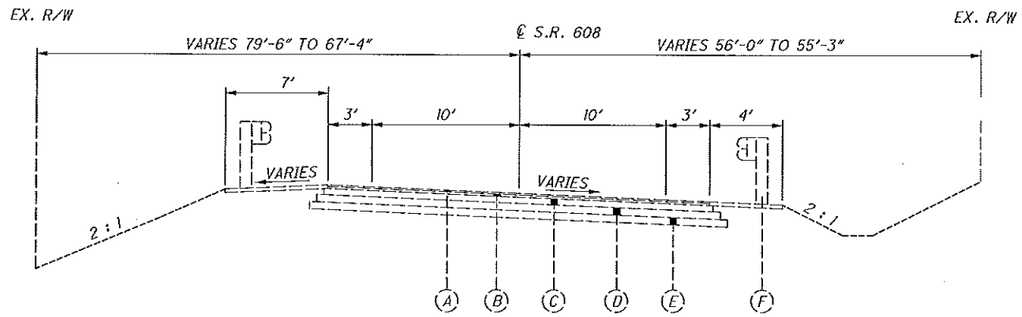

SUPERELEVATED SECTION (SR 608)

LAK-608-3.03

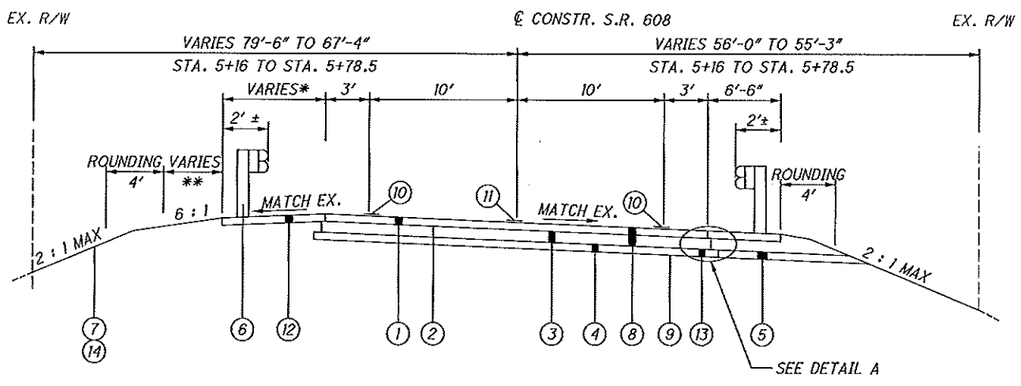

FULL DEPTH SECTION (SR 608)

LAK-608-3.03

STA. 5+16 TO STA. 5+78.5 = 62.5'

* PAVEMENT UNDER GUARDRAIL TO BE REPLACED STARTING AT STA 5+04.5
STA 5+04.5 TO STA 5+36 - 9'-0"
STA 5+36 TO STA 5+51 - 9'-0" TO 8'-6"
STA 5+51 TO STA 5+78.5 - 8'-6"

** STA 5+16 TO STA 5+46 - 12'-0" TO 0'-0"
STA 5+46 TO STA 5+78.5 - 0'-0"

EXISTING LEGEND

- (A) - 1" ASPHALT CONCRETE SURFACE COURSE
- (B) - 1-1/2" ASPHALT CONCRETE LEVELING COURSE
- (C) - 5" ASPHALT CONCRETE BASE COURSE
- (D) - 6" AGGREGATE BASE COURSE
- (E) - 6" SUBBASE
- (F) - GUARDRAIL

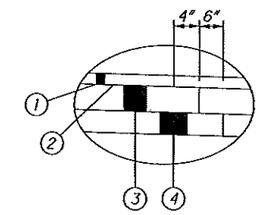

DETAIL A

EDGE COURSE BUILDUP

PROPOSED LEGEND

1. ITEM 448 - 3" ASPHALT CONCRETE SURFACE COURSE, TYPE 1, PG70-22M, AS PER PLAN
2. ITEM 407 - TACK COAT (0.075 GAL/SQ YD)
3. ITEM 301 - 9" ASPHALT CONCRETE BASE
4. ITEM 304 - 6" AGGREGATE BASE
5. ITEM 605 - AGGREGATE DRAINS (25' SPACING)
6. ITEM 606 - GUARDRAIL, TYPE 5 - OR - GUARDRAIL, TYPE 5, 25' LONG-SPAN (SEE PLAN SHEET 44 FOR LOCATION)
7. ITEM 659 - SEEDING AND MULCHING
8. ITEM 202 - PAVEMENT REMOVED
9. ITEM 204 - SUBGRADE COMPACTION
10. ITEM 642 - EDGE LINE (WHITE)
11. ITEM 642 - CENTER LINE (SOLID DOUBLE YELLOW)
12. ITEM 448 - 3" ASPHALT CONCRETE INTERMEDIATE COURSE, TYPE 1, UNDER GUARDRAIL, PG64-22, AS PER PLAN
13. ITEM 203 - EXCAVATION
14. ITEM 209 - LINEAR GRADING, AS PER PLAN

NOTE: SURFACE COURSE TO BE PLACED IN TWO 1.5" LIFTS

CALCULATED SJT
CHECKED RMS

TYPICAL SECTIONS - SR 608

GEA-306-13.45/VAR

P:\CLE\ODOT\Projects\287366 - GEA-306-13.45\GEA\91128\roadway\sheets\91128GY051.dgn 10/17/2013 1:42:11 PM TYN61470

ROUNDING

THE ROUNDING AT SLOPE BREAKPOINTS SHOWN ON THE TYPICAL SECTIONS APPLIES TO ALL CROSS-SECTIONS EVEN THOUGH OTHERWISE SHOWN.

UTILITIES

LISTED BELOW ARE ALL UTILITIES LOCATED WITHIN THE PROJECT CONSTRUCTION LIMITS TOGETHER WITH THEIR RESPECTIVE OWNERS:

GAS (ALL CULVERTS):
DOMINION EAST OHIO
320 SPRINGSIDE DRIVE SUITE 320
FAIRLAWN, OHIO 44333
ATTN: MARY LONG
PHONE: (330) 664-2409

ELECTRIC (ALL CULVERTS):
THE ILLUMINATING COMPANY
6896 MILLER ROAD
BRECKSVILLE, OH 44141
ATTN: MARK ROBINSON
PHONE: (440) 717-6845
FAX: (440) 546-8780

GAS (SR 528 CULVERTS):
BRAINARD GAS CORP.
4369 BRAINARD RD.
ORANGE VILLAGE, OH 44022

COMMUNICATIONS (SR 528 CULVERTS):
WINDSTREAM
50 EXECUTIVE PARKWAY
HUDSON, OH 44236
(888) 559-3166

GAS (SR 608 CULVERT):
COBRA PIPELINE (SR 608)
3511 LOST NATION RD, SUITE 213
WILLOUGHBY, OH 44094
ATTN: JOE BRAZIER
PHONE: (440) 255-1945

TELEPHONE (SR 306 CULVERT):
AT&T
13630 LORAIN AVE. - 2ND FLOOR
CLEVELAND, OHIO 44111
ATTN: JAMES JANIS
PHONE: (216) 476-6142
FAX: (216) 476-6013

WATER (SR 608 CULVERT):
CITY OF PAINESVILLE (SR 608)
WATER DEPARTMENT
9565 HEADLANDS RD
MENTOR, OHIO 44060
ATTN: BRUCE HOOK
PHONE: (440) 392-9565

CABLE (SR 306 & SR 608 CULVERTS):
TIME WARNER (SR 306, 608)
7820 DIVISION DRIVE
MENTOR, OHIO 44060
SUPERVISOR: CHARLES SULLIVAN
PHONE: (440) 974-3401, EXT. 125
FIELD ENGINEER: LARRY BOCK
PHONE: (440) 974-3401, EXT. 123
FAX: (440) 974-3201

THE LOCATION OF THE UNDERGROUND UTILITIES SHOWN ON THE PLANS ARE AS OBTAINED FROM THE OWNERS AS REQUIRED BY SECTION 153.64 O.R.C.

ENVIRONMENTAL COMMITMENTS

IN ORDER TO AVOID IMPACTS TO THE INDIANA BAT HABITAT, TREES CAN ONLY BE CUT BETWEEN SEPTEMBER 30TH AND APRIL 1ST.

DISTRICT TO SUBMIT PERMIT DETERMINATION PACKAGE TO OES TO OBTAIN THE REQUIRED PERMIT FOR THE PROJECT.

CONSTRUCTION NOISE

ACTIVITIES AND LAND USE ADJACENT TO THIS PROJECT MAY BE AFFECTED BY CONSTRUCTION NOISE. IN ORDER TO MINIMIZE ANY ADVERSE CONSTRUCTION NOISE IMPACTS, DO NOT OPERATE POWER-OPERATED CONSTRUCTION-TYPE DEVICES BETWEEN THE HOURS OF 9 PM AND 7 AM. IN ADDITION, DO NOT OPERATE AT ANY TIME ANY DEVICE IN SUCH A MANNER THAT THE NOISE CREATED SUBSTANTIALLY EXCEEDS THE NOISE CUSTOMARILY AND NECESSARILY ATTENDANT TO THE REASONABLE AND EFFICIENT PERFORMANCE OF SUCH EQUIPMENT.

WORK LIMITS

THE WORK LIMITS SHOWN ON THESE PLANS ARE FOR PHYSICAL CONSTRUCTION ONLY. PROVIDE THE INSTALLATION AND OPERATION OF ALL WORK ZONE TRAFFIC CONTROL AND WORK ZONE TRAFFIC CONTROL DEVICES REQUIRED BY THESE PLANS WHETHER INSIDE OR OUTSIDE THESE WORK LIMITS.

CLEARING AND GRUBBING

REMOVE ALL TREES AND STUMPS SPECIFICALLY MARKED FOR REMOVAL WITHIN THE CONSTRUCTION LIMITS UNDER THE LUMP SUM BID FOR ITEM 201, CLEARING AND GRUBBING. THE FOLLOWING IS AN APPROXIMATE ESTIMATE OF THE NUMBER OF TREES AND STUMPS TO BE REMOVED.

SIZES	NO. TREES	NO. STUMPS	TOTAL
15"	1		1

PART WIDTH CONSTRUCTION (SR 528 CULVERTS)

BECAUSE OF THE NECESSITY TO BUILD THIS PROJECT UNDER TRAFFIC AND TO CONSTRUCT THE FULL PAVEMENT WIDTH IN STAGES, EXERCISE CARE TO PREVENT THE CONSTRUCTION OF A BUTT JOINT IN THE BASE COURSES. LAP LONGITUDINAL JOINTS AS SHOWN ON STANDARD CONSTRUCTION DRAWING BP-3.1.

CONTINGENCY QUANTITIES

THE CONTRACTOR SHALL NOT ORDER MATERIALS OR PERFORM WORK FOR ITEMS DESIGNATED BY PLAN NOTE TO BE USED "AS DIRECTED BY THE ENGINEER" UNLESS AUTHORIZED BY THE ENGINEER. THE ACTUAL WORK LOCATIONS AND QUANTITIES USED FOR SUCH ITEMS SHALL BE INCORPORATED INTO THE FINAL CHANGE ORDER GOVERNING THE COMPLETION OF THIS PROJECT.

STREAM CHANNEL EXCAVATION

THE CONTRACTOR SHALL TAKE ALL PRECAUTIONS NECESSARY TO PREVENT ANY INCIDENTAL HAULING OF MATERIAL FROM THE STREAM CHANNEL. THIS PERTAINS TO ANY EXCAVATION OPERATIONS (I.E. CHANNEL CLEANOUT, EXCAVATION FOR ROCK CHANNEL PROTECTION AND REMOVAL OF ANY TEMPORARY FILL ASSOCIATED WITH CONSTRUCTION OPPERATIONS).

EXISTING TYPICAL SECTIONS

EXISTING TYPICAL SECTIONS HAVE BEEN TAKEN FROM THE RECORDS AND ARE BELIEVED TO REPRESENT THE EXISTING PAVEMENT BUT THE STATE OF OHIO DOES NOT GUARANTEE THE ACCURACY OF THE SAME.
FOR FURTHER INFORMATION IN REGARD TO THE EXISTING TYPICAL SECTIONS, THE CONTRACTOR SHALL REFER TO THE PREVIOUS CONSTRUCTION PLANS.

THESE PLANS MAY BE REVIEWED AT THE FOLLOWING LOCATION:
OHIO DEPARTMENT OF TRANSPORTATION
DISTRICT 12 OFFICE
5500 TRANSPORTATION BLVD
GARFIELD HEIGHTS, OHIO 44125

DOMINION EAST OHIO FACILITIES

IT IS THE CONTRACTOR'S RESPONSIBILITY TO MAINTAIN THE LATERAL AND SUBJACENT SUPPORT OF DOMINION'S PIPELINE(S), IN COMPLIANCE TO 29 CFR, PART 1926, SUBPART P, (SAFE EXCAVATION & SHORING). ONE-FOOT MINIMUM VERTICAL AND HORIZONTAL CLEARANCE MUST BE MAINTAINED BETWEEN DOMINION EAST OHIO'S (DEO) EXISTING PIPELINE(S) AND ALL OTHER IMPROVEMENTS. EXTREME CARE SHOULD BE TAKEN NOT TO HARM ANY DEO FACILITY (PIPELINES, ETC.) OR APPURTENANCE (PIPE COATING, TRACER WIRE, CATHODIC PROTECTION TEST STATION WIRES & DEVICES, VALVE BOXES, ETC.). DEO FACILITIES MUST BE PROTECTED WITH A TARP DURING BRIDGE CONSTRUCTION. THE CONTRACTOR WILL BE RESPONSIBLE AND LIABLE FOR ENSURING THAT ALL DEO EXISTING FACILITIES, ABOVE AND BELOW GROUND, REMAIN UNDAMAGED, ACCESSIBLE AND IN WORKING ORDER. THE CROSSING OF DEO'S PIPELINE WITH ANOTHER STEEL FACILITY MAY CREATE A POTENTIAL CORROSION ISSUE FOR THE PROPOSED FACILITY AND THE EXISTING DEO FACILITY. PLEASE CONTACT DOMINION'S CORROSION DEPARTMENT: DAVE CUTLIP (330-266-2121), RICK MCDONALD (330-266-2122), OR AL HUMRICHOUSER (330-478-3757).

CONNECTION BETWEEN EXISTING AND PROPOSED GUARDRAIL

WHEN IT IS NECESSARY TO SPLICE PROPOSED GUARDRAIL TO EXISTING GUARDRAIL, ONLY THE EXISTING GUARDRAIL SHALL BE CUT, DRILLED, OR PUNCHED. THE CONNECTION SHALL BE MADE USING A "W-BEAM RAIL SPLICE" AS SHOWN IN AASHTO M 180. PAYMENT SHALL BE INCLUDED IN THE CONTRACT PRICE FOR THE RESPECTIVE GUARDRAIL ITEMS.

ITEM 202, PIPE REMOVED OVER 24", AS PER PLAN

ITEM 202, PIPE REMOVED 24" AND UNDER, AS PER PLAN

IN ADDITION TO THE REMOVAL OF THE EXISTING CONDUIT, THIS ITEM SHALL INCLUDE REMOVAL OF THE PAVEMENT AND PAVED SHOULDERS WITHIN THE LIMITS SHOWN ON THE PLANS. ALL WORK SHALL BE IN ACCORDANCE WITH SECTION 202 OF THE CMS. THE CONTRACTOR SHALL REMOVE AND SALVAGE ALL SANDSTONE BLOCK FROM THE CULVERT LOCATED AT GEA-306-13.45 AS DETERMINED BY THE ENGINEER TO BE DELIVERED TO ODOT'S PAINESVILLE GARAGE LOCATED AT 10 BLACKBROOK ROAD, PAINESVILLE OH, 44077. CONTACT DAVE PAPONETTI AT 216-312-0207 APPROXIMATELY ONE WEEK PRIOR TO DELIVERY. PAYMENT FOR ABOVE WORK SHALL BE INCLUDED IN THE CONTRACT BID PRICE ITEM 202-PIPE REMOVED OVER 24 , AS PER PLAN.

Q:\ODOT_D12\0107585A.00 - VAR-D12 GES FY13 FY14\17181-1 GEA-306-1345 PID91128\91128\roadway\sheets\91128GN001.dgn 10/14/2013 3:00:32 PM darmstrong

SURVEYING PARAMETERS (GEA-528-0749, GEA-528-0857)

PRIMARY PROJECT CONTROL MONUMENTS GOVERN ALL POSITIONING ON ODOT PROJECTS. SEE SHEET 2 FOR A TABLE CONTAINING PROJECT CONTROL INFORMATION.
USE THE FOLLOWING PROJECT CONTROL, VERTICAL POSITIONING, AND HORIZONTAL POSITIONING PARAMETERS FOR ALL SURVEYING:
PROJECT CONTROL
POSITIONING METHOD: ODOT VRS
MONUMENT TYPE: B
VERTICAL POSITIONING
ORTHOMETRIC HEIGHT DATUM: NAVD88
GEOID: GEOID12
HORIZONTAL POSITIONING
REFERENCE FRAME: NAD83(CORS96)
ELLIPSOID: GRS80
MAP PROJECTION: LAMBERT CONFORMAL CONIC
COORDINATE SYSTEM: OHIO STATE PLANE - NORTH ZONE
COMBINED SCALE FACTOR: 0.99991637
PROJECT ADJUSTMENT FACTOR: 1.00008364
ORIGIN OF COORDINATE
SYSTEM: 0,0
USE THE POSITIONING METHODS AND MONUMENT TYPE USED IN THE ORIGINAL SURVEY TO RESTORE ALL MONUMENTS RELATED TO PRIMARY PROJECT CONTROL THAT ARE DAMAGED OR DESTROYED BY CONSTRUCTION ACTIVITIES. RESTORE THE DAMAGED OR DESTROYED MONUMENTS IN ACCORDANCE WITH SUPPLEMENTAL SPECIFICATION 823.
UNITS ARE IN U.S. SURVEY FEET.

CROSSINGS AND CONNECTIONS TO EXISTING PIPES AND UTILITIES

WHERE PLANS PROVIDE FOR A PROPOSED CONDUIT TO BE CONNECTED TO, OR CROSS OVER OR UNDER AN EXISTING SEWER OR UNDERGROUND UTILITY, THE CONTRACTOR SHALL LOCATE THE EXISTING PIPES OR UTILITIES BOTH AS TO LINE AND GRADE BEFORE STARTING TO LAY THE PROPOSED CONDUIT.

IF IT IS DETERMINED THAT THE ELEVATION OF THE EXISTING CONDUIT, OR EXISTING APPURTENANCE TO BE CONNECTED, DIFFERS FROM THE PLAN ELEVATION OR RESULTS IN A CHANGE IN THE PLAN CONDUIT SLOPE, THE ENGINEER SHALL BE NOTIFIED BEFORE STARTING CONSTRUCTION OF ANY PORTION OF THE PROPOSED CONDUIT WHICH WILL BE AFFECTED BY THE VARIANCE IN THE EXISTING ELEVATIONS.

IF IT IS DETERMINED THAT THE PROPOSED CONDUIT WILL INTERSECT AN EXISTING SEWER OR UNDERGROUND UTILITY IF CONSTRUCTED AS SHOWN ON THE PLAN, THE ENGINEER SHALL BE NOTIFIED BEFORE STARTING CONSTRUCTION OF ANY PORTION OF THE PROPOSED CONDUIT WHICH WOULD BE AFFECTED BY THE INTERFERENCE WITH AN EXISTING FACILITY.

PAYMENT FOR ALL THE OPERATIONS DESCRIBED ABOVE SHALL BE INCLUDED IN THE CONTRACT PRICE FOR THE PERTINENT 611 CONDUIT ITEM.

DRIVEWAY ACCESS

INGRESS AND EGRESS TO ALL RESIDENTIAL AND COMMERCIAL DRIVEWAYS WITHIN THE PROJECT AREA SHALL BE MAINTAINED THROUGHOUT THE LIFE OF THE PROJECT, UNLESS OTHERWISE NOTED.

SURVEYING PARAMETERS (GEA-306-13.45, LAK-608-03.03)

PRIMARY PROJECT CONTROL MONUMENTS GOVERN ALL POSITIONING ON ODOT PROJECTS. SEE THIS SHEET OF THE PLANS FOR A TABLE CONTAINING PROJECT CONTROL INFORMATION.
USE THE FOLLOWING PROJECT CONTROL, VERTICAL POSITIONING, AND HORIZONTAL POSITIONING PARAMETERS FOR ALL SURVEYING:
PROJECT CONTROL
POSITIONING METHOD: ODOT VRS
MONUMENT TYPE: B
VERTICAL POSITIONING
ORTHOMETRIC HEIGHT DATUM: NAVD 88
GEOID: GEOID03
HORIZONTAL POSITIONING
REFERENCE FRAME: 2002.0 EPOCH
ELLIPSOID: GRS 80
MAP PROJECTION: LAMBERT CONFORMAL CONIC
COORDINATE SYSTEM: OHIO STATE PLANE NORTH ZONE
COMBINED SCALE FACTOR: NOT REQUIRED
ORIGIN OF COORDINATE SYSTEM: NAD 83 (CORS 96)
USE THE POSITIONING METHODS AND MONUMENT TYPE USED IN THE ORIGINAL SURVEY TO RESTORE ALL MONUMENTS RELATED TO PRIMARY PROJECT CONTROL THAT ARE DAMAGED OR
DESTROYED BY CONSTRUCTION ACTIVITIES. RESTORE THE DAMAGED OR DESTROYED MONUMENTS IN ACCORDANCE WITH SUPPLEMENTAL SPECIFICATION 823.
UNITS ARE IN U.S. SURVEY FEET. USE THE FOLLOWING CONVERSION FACTOR: 1 METER = 3.280833333 U.S. SURVEY FEET.

ITEM 659, SEEDING AND MULCHING

THE BELOW QUANTITIES ARE FOR INFORMATIONAL PURPOSES. SEE SHEET 24 FOR THE CALCULATED QUANTITIES THAT HAVE BEEN CARRIED TO THE GENERAL SUMMARY AND ARE PROVIDED TO PROMOTE GROWTH AND CARE OF THE PERMANENT SEEDED AREAS.

GEA-528-07.49
659, SEEDING AND MULCHING 1264 SQ. YD.
659, TOPSOIL 141 CU. YD.
659, COMMERCIAL FERTILIZER 0.18 TON
659, LIME 0.27 ACRES
659, WATER 8 M. GAL.

GEA-306-13.45
659, SEEDING AND MULCHING 376 SQ. YD.
659, TOPSOIL 42 CU. YD.
659, COMMERCIAL FERTILIZER 0.05 TON
659, LIME 0.08 ACRES
659, WATER 3 M. GAL.

GEA-528-08.57
659, SEEDING AND MULCHING 740 SQ. YD.
659, TOPSOIL 83 CU. YD.
659, COMMERCIAL FERTILIZER 0.11 TON
659, LIME 0.16 ACRES
659, WATER 5 M. GAL.

LAK-608-03.03
659, SEEDING AND MULCHING 237 SQ. YD.
659, TOPSOIL 27 CU. YD.
659, COMMERCIAL FERTILIZER 0.03 TON
659, LIME 0.05 ACRES
659, WATER 2 M. GAL.

SEEDING AND MULCHING SHALL BE APPLIED TO ALL AREAS OF EXPOSED SOIL BETWEEN THE RIGHT-OF-WAY LINES, AND WITHIN THE CONSTRUCTION LIMITS FOR AREAS OUTSIDE THE RIGHT-OF-WAY LINES COVERED BY WORK AGREEMENT OR SLOPE EASEMENT. QUANTITY CALCULATIONS FOR SEEDING AND MULCHING ARE BASED ON THESE LIMITS.

ITEM 448 ASPHALT CONCRETE SURFACE COURSE, TYPE 1, PG 70-22M, AS PER PLAN

THE COARSE VIRGIN AGGREGATE FOR THIS ITEM SHALL CONSIST OF A BLEND OF 60% MIN. AIR COOLED BLAST FURNACE SLAG (ACBFS) OR TRAP ROCK FROM ONTARIO WITH LIMESTONE COMPRISING THE REMAINING PERCENTAGE.

THE MAXIMUM PERMISSIBLE LIFT THICKNESS FOR THIS ITEM IS 1.5 INCHES.
ASPHALT CONCRETE SURFACE COURSE SEALING REQUIREMENTS

IN ADDITION TO THE GUTTER SEALING REQUIREMENTS SPECIFIED ON SCD BP-3.1 AND IN 401.15, AFTER COMPLETION OF THE SURFACE COURSE, THE CONTRACTOR SHALL SEAL, WITH A CERTIFIED PG BINDER, THE FOLLOWING LOCATIONS:

- ALL CASTINGS INCLUDING BUT NOT LIMITED TO MONUMENTS, MANHOLES, WATER VALVES, CATCH BASINS, CURB INLETS.
- BUTT JOINTS AND FEATHER JOINTS INCLUDING BRIDGE APPROACHES.
- FORWARD JOINT FOR DRIVEWAY ASPHALT AND TRAILING JOINT WHEN BUTTING TO EXISTING ASPHALT DRIVE.
- PERIMETER OF ALL PAVEMENT REPAIRS OR OTHER ASPHALT INLAYS WHEN PAVEMENT REPAIRS/INLAYS ARE NOT OVERLAID WITH AN ASPHALT CONCRETE SURFACE COURSE.
- ALL COLD TRANSVERSE CONSTRUCTION JOINTS PER 401.17.
- ALL COLD LONGITUDINAL JOINTS BETWEEN PAVED SHOULDERS AND GUARDRAIL ASPHALT.

THE MATERIAL USED SHALL BE A CERTIFIED 702.01 PG BINDER. THE WIDTH OF THE SEALER SHALL BE 2 INCHES.

ANY ADDITIONAL COSTS ASSOCIATED WITH THE WORK IDENTIFIED IN THIS NOTE SHALL BE INCLUDED IN THE APPROPRIATE ASPHALT CONCRETE SURFACE COURSE ITEM OF WORK.

ITEM 619, FIELD OFFICE

A TYPE A FIELD OFFICE IS REQUIRED FOR THIS PROJECT. THE FOLLOWING ESTIMATED QUANTITY HAS BEEN CARRIED TO THE GENERAL SUMMARY.

ITEM 619 FIELD OFFICE, TYPE A - 2 MONTHS

COOPERATION BETWEEN CONTRACTORS

THE CONTRACTOR SHALL COOPERATE AND COORDINATE HIS OPERATIONS WITH THE CONTRACTORS ON OTHER PROJECTS THAT MAY BE IN FORCE DURING THE LIFE OF THE CONTRACT. NO WAIVER OF ANY PROVISIONS OF 105.08 OF THE CMS IS INTENDED.

FLOOD HAZARD AREA DEVELOPMENT PERMIT APPLICATION

LAK-608-0303 IS IN A FLOOD HAZARD AREA AND IS SUBJECT TO THE LAKE COUNTY FLOOD REGULATIONS. THE CONTRACTOR IS REQUIRED TO SUBMIT A SPECIAL FLOOD HAZARD AREA DEVELOPMENT PERMIT APPLICATION BEFORE CONSTRUCTION BEGINS ON LAK-608-0303. THE PERMIT APPLICATION IS AVAILABLE FROM GEORGE HADDEN, LAKE COUNTY FLOOD PLAIN COORDINATOR, AT 440-350-2770 OR EMAIL George.Hadden@lakecountyohio.gov.

Q:\ODOT_D12\0107585A.00 - VAR-D12 GES FY13 FY14\17181-1 GEA-306-1345 PID91128\91128\roadway\sheets\91128GN002.dgn 10/14/2013 3:00:35 PM darmstrong

ITEM 606, ANCHOR ASSEMBLY, TYPE E

THIS ITEM SHALL CONSIST OF FURNISHING AND INSTALLING ANY OF THE GUARDRAIL END TERMINALS FOR TYPE 5 GUARDRAIL AS LISTED ON ROADWAY ENGINEERING'S WEB PAGE UNDER ROADSIDE SAFETY DEVICES FOR APPROVED GUARDRAIL END TREATMENTS. INSTALLATION SHALL BE AT THE LOCATIONS SPECIFIED IN THE PLANS, IN ACCORDANCE WITH THE MANUFACTURER'S SPECIFICATIONS.

THE FACE OF THE TYPE E IMPACT HEAD SHALL BE COVERED WITH A SHEET OF TYPE G REFLECTIVE SHEETING, PER CMS 730.19.

REFER TO THE MANUFACTURER'S INSTRUCTIONS REGARDING THE INSTALLATION OF, AND THE GRADING AROUND THE FOUNDATION TUBES AND GROUND STRUT. THE TOP OF ANY FOUNDATION TUBE SHOULD BE LESS THAN 4 INCHES ABOVE THE GROUND. THE PLACEMENT OF THE FOUNDATION TUBES SHOULD BE AN APPROPRIATE DEPTH BELOW THE LEVEL LINE IN ORDER TO MAINTAIN THE FINISHED GUARDRAIL HEIGHT OF 27.75 INCHES FROM THE EDGE OF THE SHOULDER.

ON-SITE GRADING IS REQUIRED IF THE TOP OF THE FOUNDATION TUBES OR TOP OF THE GROUND STRUT DOES PROJECT MORE THAN 4 INCHES ABOVE THE GROUND LINE.

PAYMENT FOR THE ABOVE WORK SHALL BE MADE AT THE UNIT PRICE BID FOR ITEM 606, ANCHOR ASSEMBLY, TYPE E, EACH, AND SHALL INCLUDE ALL LABOR, TOOLS, EQUIPMENT AND MATERIALS NECESSARY TO CONSTRUCT A COMPLETE AND FUNCTIONAL ANCHOR ASSEMBLY SYSTEM, INCLUDING ALL RELATED TRANSITIONS, REFLECTIVE SHEETING, HARDWARE, GRADING, EMBANKMENT AND EXCAVATION NOT SEPARATELY SPECIFIED, AS REQUIRED BY THE MANUFACTURER.

GUARDRAIL REPLACEMENT

NO HAZARD SHALL BE LEFT UNPROTECTED EXCEPT FOR THE ACTUAL TIME NECESSARY TO REMOVE THE EXISTING GUARDRAIL, PREPARE THE SITE AND INSTALL NEW GUARDRAIL IN A CONTINUOUS OPERATION. THE REMOVAL OF ALL GUARDRAIL SHALL, AT ALL TIMES, BE AS DIRECTED BY THE ENGINEER. NO GUARDRAIL SHALL BE REMOVED UNTIL THE PREPLACEMENT MATERIAL IS ONSITE AND READY FOR INSTALLATION. FAILURE TO COMPLY WITH THE REQUIREMENT SHALL BE DEEMED SUFFICIENT CAUSE TO ORDER WORK SUSPENDED UNTIL SUCH TIME AS THE ENGINEER IS ASSURED OF COMPLIANCE.

ITEM 203 EXCAVATION AND EMBANKMENT

THE FOLLOWING QUANTITIES HAVE BEEN CARRIED TO THE GENERAL SUMMARY:
ITEM 203, EXCAVATION - 14 CU YD (GEA-306-13.45)
ITEM 203, EXCAVATION - 126 CU YD (GEA-528-07.49)
ITEM 203, EXCAVATION - 52 CU YD (GEA-528-08.57)
ITEM 203, EXCAVATION - 1 CU YD (LAK-608-3.03)
ITEM 203, EMBANKMENT - 73 CU YD (GEA-306-13.45)
ITEM 203, EMBANKMENT - 6 CU YD (GEA-528-07.49)
ITEM 203, EMBANKMENT, AS PER PLAN - 135 CU YD (LAK-608-3.03)

REVIEW OF DRAINAGE FACILITIES

BEFORE ANY WORK IS STARTED ON THE PROJECT AND AGAIN BEFORE FINAL ACCEPTANCE BY THE STATE, REPRESENTATIVES OF THE STATE AND THE CONTRACTOR, ALONG WITH LOCAL REPRESENTATIVES, SHALL MAKE AN INSPECTION OF ALL EXISTING SEWERS WHICH ARE TO REMAIN IN SERVICE AND WHICH MAY BE AFFECTED BY THE WORK. THE CONDITION OF THE EXISTING CONDUITS AND THEIR APPURTENANCE SHALL BE DETERMINED FROM FIELD OBSERVATIONS. RECORDS OF THE INSPECTION SHALL BE KEPT IN WRITING BY THE STATE.

ALL NEW CONDUITS, INLETS, CATCH BASINS, AND MANHOLES CONSTRUCTED AS A PART OF THE PROJECT SHALL BE FREE OF ALL FOREIGN MATTER AND IN A CLEAN CONDITION BEFORE THE PROJECT WILL BE ACCEPTED BY THE STATE.

ALL EXISTING SEWERS INSPECTED INITIALLY BY THE ABOVE MENTIONED PARTIES SHALL BE MAINTAINED AND LEFT IN A CONDITION REASONABLY COMPARABLE TO THAT DETERMINED BY THE ORIGINAL INSPECTION. ANY CHANGE IN THE CONDITION RESULTING FROM THE CONTRACTOR'S OPERATIONS SHALL BE CORRECTED BY THE CONTRACTOR TO THE SATISFACTION OF THE ENGINEER.

PAYMENT FOR ALL OPERATIONS DESCRIBED ABOVE SHALL BE INCLUDED IN THE CONTRACT PRICE FOR THE PERTINENT 611 CONDUIT ITEMS.

AIRWAY/HIGHWAY CLEARANCE FOR AIRPORTS AND HELIPORTS

THIS PROJECT HAS BEEN IDENTIFIED AS BEING WITHIN THE INFLUENCE AREA OF A PUBLIC USE AIRPORT OR HELIPORT. NO TEMPORARY STRUCTURES OR CONSTRUCTION EQUIPMENT AT MAXIMUM OPERATING HEIGHT SHALL EXCEED A HEIGHT OF 152 FT. IF ANY TEMPORARY STRUCTURES OR CONSTRUCTION EQUIPMENT WILL EXCEED THIS HEIGHT, FURTHER COORDINATION WITH THE FEDERAL AVIATION ADMINISTRATION (FAA), AND ODOT OFFICE OF AVIATION, WILL BE NECESSARY PRIOR TO ERECTING SUCH TEMPORARY STRUCTURES OR OPERATING SUCH EQUIPMENT ON THE PROJECT. THE CONTRACTOR WILL BE REQUIRED TO SUBMIT FORM 7460-1 TO THE FAA. A COPY OF THE SUBMISSION AND TWO COPIES OF FORM 7460-1 SHALL BE FORWARDED TO THE ODOT OFFICE OF AVIATION.

NO TEMPORARY STRUCTURES OR CONSTRUCTION EQUIPMENT SHALL EXCEED THE PERMISSIBLE HEIGHT, UNTIL A COPY OF THE FAA APPROVAL AND ODOT OFFICE OF AVIATION PERMIT HAS BEEN FURNISHED TO THE PROJECT ENGINEER.

Express Processing Center
The Federal Aviation Administration
Southwest Regional
Air Traffic Airspace Branch ASW-520
2601 Meachan Blvd.
Fort Worth, TX 76137-4298

Ohio Department of Transportation
Office Office of Aviation
2829 West Dublin-Granville Road
Columbus, Ohio 43235
614-387-2346

PROPOSED CULVERTS

AFTER ALL PROPOSED CULVERTS HAVE BEEN CONSTRUCTED AND ACCEPTED, AND PRIOR TO THE COMPLETION OF THE PROJECT, THE PROJECT ENGINEER SHALL CONTACT THE DISTRICT ROADWAY SERVICES ENGINEER , LOU MINCEK (TEL. 216-584-2221) TO SCHEDULE AN INSPECTION OF ALL NEWLY CONSTRUCTED CULVERTS.

THIS INSPECTION IS BASED ON THE STATE S CULVERT MANAGEMENT MANUAL S REQUIREMENTS. THE INSPECTION WILL BE PERFORMED BY EITHER MANNED ENTRY OR REMOTE TRACTOR CAMERA, DEPENDING UPON THE SIZE OF THE PIPE.

PAVING UNDER GUARDRAIL

THIS OPERATION SHALL INCLUDE PREPARATION OF THE GRADED SHOULDER USING ITEM 209, LINEAR GRADING, AS PER PLAN AND PAVING UNDER THE GUARDRAIL USING 448 ASPHALT CONCRETE INTERMEDIATE COURSE, TYPE 1, PG 64-22, UNDER GUARDRAIL, AS PER PLAN.

ITEM 209, LINEAR GRADING, AS PER PLAN SHALL CONSIST OF EXCAVATING TOPSOIL, and PLACING GRANULAR MATERIAL. ALL COLLECTED DEBRIS AND TOPSOIL, INCLUDING RHIZOMES, ROOTS AND OTHER VEGETATIVE PLANT MATERIAL SHALL BE REMOVED AND DISPOSED OF AS SPECIFIED IN 105.17.

THE REMOVED MATERIAL SHALL BE REPLACED WITH COMPACTABLE GRANULAR MATERIAL CONFORMING TO 703.16 PLACED TO GRADE AS DETAILED ON THE TYPICAL SECTION OR AS APPROVED BY THE ENGINEER.

ALL EQUIPMENT, MATERIALS AND LABOR REQUIRED TO PERFORM THE WORK OUTLINED ABOVE SHALL BE INCLUDED FOR PAYMENT UNDER ITEM 209, LINEAR GRADING, AS PER PLAN.

PAVING UNDER GUARDRAIL SHALL CONSIST OF PLACING ITEM 448 TO THE DEPTH SPECIFIED USING ONE OF THE FOLLOWING METHODS:

METHOD A:
1. SET GUARDRAIL POSTS
2. PLACE ITEM 448

METHOD B:
1. PLACE ITEM 448
2. BORE ASPHALT AT POST LOCATIONS (MAY BE OMITTED IF STEEL POSTS ARE USED)
3. SET GUARDRAIL POSTS
4. PATCH AROUND POSTS. THE MATERIALS USED FOR PATCHING SHALL BE AN ASPHALT CONCRETE APPROVED BY THE ENGINEER. PATCHED AREAS SHALL BE COMPACTED USING EITHER HAND OR MECHANICAL METHODS. FINISHED SURFACES SHALL BE SMOOTH AND SLOPED TO DRAIN AWAY FROM THE POSTS.

ALL EQUIPMENT, MATERIALS AND LABOR REQUIRED TO PERFORM THE WORK OUTLINED ABOVE, WITH THE EXCEPTION OF SETTING GUARDRAIL POSTS, SHALL BE INCLUDED FOR PAYMENT UNDER ITEM 448, ASPHALT CONCRETE, INTERMEDIATE COURSE, TYPE 1, PG 64-22, UNDER GUARDRAIL, AS PER PLAN.

EQUIPMENT AND MATERIAL STORAGE

IN ORDER TO PROVIDE FOR THE SAFETY OF THE TRAVELING PUBLIC, THE CONTRACTOR'S ATTENTION IS DIRECTED TO 614.03. IN ADDITION, THE FOLLOWING PROVISIONS SHALL APPLY:

1. ANY REMOVED ITEMS SHALL NOT BE STORED ON THE RIGHT OF WAY FOR MORE THAN THIRTY (30) DAYS.
2. THE STORAGE OF EQUIPMENT, MATERIALS AND VEHICLES WITHIN THE HIGHWAY RIGHT OF WAY WILL BE PERMITTED. THE NUMBER OF AREAS AND EXACT LOCATIONS SHALL BE APPROVED BY THE ENGINEER.
3. ALL DISTURBED AREAS SHALL BE RETURNED TO THEIR ORIGINAL CONDITION AT NO EXPENSE TO THE STATE.

Q:\ODOT_D12\0107585A.00 - VAR-D12 GES FY13 FY14\17181-1 GEA-306-1345 PID91128\91128\roadway\sheets\91128GN003.dgn 10/14/2013 3:00:37 PM darmstrong

ITEM 614 - MAINTAINING TRAFFIC (GEA-528-0749, GEA-528-0857)

A MINIMUM OF ONE 10-FOOT LANE OF TRAFFIC SHALL BE MAINTAINED AT ALL TIMES BY USE OF THE EXISTING PAVEMENT, THE COMPLETED PAVEMENT, AND ITEM 615 PAVEMENT FOR MAINTAINING TRAFFIC.

LENGTH AND DURATION OF LANE CLOSURES AND RESTRICTIONS SHALL BE AT THE APPROVAL OF THE ENGINEER. IT IS THE INTENT TO MINIMIZE THE IMPACT TO THE TRAVELING PUBLIC. LANE CLOSURES OR RESTRICTIONS OVER SEGMENTS OF THE PROJECT IN WHICH NO WORK IS ANTICIPATED WITHIN A REASONABLE TIME FRAME, AS DETERMINED BY THE ENGINEER, SHALL NOT BE PERMITTED. THE LEVEL OF UTILIZATION OF MAINTENANCE OF TRAFFIC DEVICES SHALL BE COMMENSURATE WITH THE WORK IN PROGRESS.

THE WORK ZONE SIGNAL CONTROL REQUIRED FOR THIS PROJECT AND SHOWN ON SHEETS 15-18 AND SCDS MT- 96.11, 96.20 AND 96.26 SHALL BE FULLY TRAFFIC-ACTUATED AND OPERATE IN A MANNER SIMILAR TO THAT DESCRIBED IN SECTION 733.02 OF THE CONSTRUCTION AND MATERIAL SPECIFICATIONS. THE INITIAL CONTROLLER TIMING SHALL BE AS FOLLOWS:

	PHASE *			
	1 (ALL RED) DUMMY PHASE	2 MAINLINE (DIRECTION)[1]	3 (ALL RED) DUMMY PHASE	4 MAINLINE (DIRECTION)[1]
MIN. GREEN	T_{IC1}-6 +/-	10	T_{IC3} -6 +/-	10
EXTENSION	N/A	4	N/A	4
MAX. GREEN	T_{IC1}-5 +/-	30	T_{IC3} -5 +/-	30
YELLOW	3	3.5	3	3.5
ALL RED	2	2	2	2
RECALL	MAX.	MIN.	MAX.	MIN.

* PHASES SHOWN ON SCD MT-96.20 FOR ACTUATED CONTROL. ADD MORE PHASES AS NEEDED TO ACCOMMODATE SIDE STREETS, DRIVEWAYS, ETC.

+/- PROVIDE TIMING FOR THE SIGNAL LOCATION UNDER CONSIDERATION.

T_{IC1} IS THE DESIRED INTERNAL CLEARANCE TIME FOR PHASE 1. T_{IC3} IS THE DESIRED INTERNAL CLEARANCE FOR PHASE 3. USUALLY, T_{IC1} = T_{IC3}

1 INDICATE DIRECTION OF GREEN.

THE CONTRACTOR SHALL ALSO DESIGN, FURNISH, INSTALL AND MAINTAIN A TRAFFIC DETECTOR ON EACH TRAFFIC APPROACH WHICH WILL RELIABLY DETECT ALL LEGAL TRAFFIC APPROACHING (BUT NOT LEAVING) THE SIGNAL AS IT PASSES OR WAITS IN THE DESIGNATED DETECTOR ZONE SHOWN IN THE PLANS. DETECTOR DESIGNS WHICH DO NOT PROVIDE RELIABLE DETECTION, FREE FROM FALSE CALLS, SHALL BE IMMEDIATELY REPLACED BY THE CONTRACTOR.

THE FOLLOWING ESTIMATED QUANTITIES HAVE BEEN INCLUDED IN THE GENERAL SUMMARY FOR USE AS DETERMINED BY THE ENGINEER FOR THE MAINTENANCE OF TRAFFIC.

ITEM 616, WATER 2 M. GAL.

ALL WORK AND TRAFFIC CONTROL DEVICES SHALL BE IN ACCORDANCE WITH CMS 614 AND OTHER APPLICABLE PORTIONS OF THE SPECIFICATIONS, AS WELL AS THE OHIO MANUAL OF UNIFORM TRAFFIC CONTROL DEVICES.

PAYMENT FOR ALL LABOR, EQUIPMENT AND MATERIALS SHALL BE INCLUDED IN THE LUMP SUM CONTRACT PRICE FOR ITEM 614, MAINTAINING TRAFFIC, UNLESS SEPARATELY ITEMIZED IN THE PLAN.

ITEM 615, PAVEMENT FOR MAINTAINING TRAFFIC, CLASS B, AS PER PLAN (GEA-528-0749, GEA-528-0857)

EMBANKMENT AND EXCAVATION NECESSARY TO CONSTRUCT AND REMOVE THE WORK ZONE PAVEMENT TO THE LIMITS INDICATED ON THE PHASING PLANS SHALL BE INCLUDED IN THE UNIT PRICE BID OF ITEM 615, PAVEMENT FOR MAINTAINING TRAFFIC, CLASS B, AS PER PLAN.
THE FOLLOWING ESTIMATED QUANTITY HAS BEEN INCLUDED IN THE GENERAL SUMMARY.

ITEM 615, PAVEMENT FOR MAINTAINING TRAFFIC, CLASS B, AS PER PLAN 1753 SQ. YD.

ITEM 614, BARRIER REFLECTORS AND/OR OBJECT MARKERS (GEA-528-0749, GEA-528-0857)

BARRIER REFLECTORS AND/OR OBJECT MARKERS SHALL BE INSTALLED ON ALL PORTABLE BARRIER (PB) USED FOR TRAFFIC CONTROL. BARRIER REFLECTORS, OBJECT MARKERS AND THEIR INSTALLATION SHALL CONFORM TO CMS 626, EXCEPT THAT THE SPACING SHALL BE 50 FEET. AN ESTIMATED QUANTITY OF 30 EACH OF ITEM 614 BARRIER REFLECTOR, TYPE B2 AND 16 EACH OF ITEM 614 OBJECT MARKER, ONE-WAY HAVE BEEN PROVIDED AND CARRIED TO THE GENERAL SUMMARY.

ITEM 614 MAINTAINING TRAFFIC (NOTIFICATION)

THE CONTRACTOR SHALL NOTIFY THE GEAUGA COUNTY ENGINEER, LAKE COUNTY ENGINEER, THE GEAUGA COUNTY SHERIFF'S OFFICE, LAKE COUNTY SHERIFF'S OFFICE AND THE OHIO DEPARTMENT OF TRANSPORTATION DISTRICT 12 PUBLIC INFORMATION OFFICE BY EMAIL AT "D12.PUBLICINFORMATION@DOT.STATE.OH.US" OR BY FAX AT 216-584-3524 NOT LESS THAN TWENTY-FOUR (24) HOURS PRIOR TO A SCHEDULED DISRUPTION OF TRAFFIC.

ITEM 614, MAINTAINING TRAFFIC (GEA-306-13.45, LAK-608-03.03)

THE CONTRACTOR SHALL CLOSE SR 306 AND SR 608 TO ALL TRAFFIC AS PER SCD MT-101.60 AND AS SHOWN ON SHEET 14 AND SHEET 19.

NOTICE OF CLOSURE SIGNS, AS DETAILED IN THESE PLANS, SHALL BE ERECTED BY THE CONTRACTOR AT LEAST TWO WEEKS IN ADVANCE OF THE SCHEDULED ROAD CLOSURE. THE SIGNS SHALL BE ERECTED ON THE RIGHT-HAND SIDE OF THE ROAD FACING TRAFFIC. THEY SHALL BE PLACED SO AS NOT TO INTERFERE WITH THE VISIBILITY OF ANY OTHER TRAFFIC CONTROL SIGNS. THEY SHOULD BE ERECTED AT THE POINT OF CLOSURE.

THE CONTRACTOR SHALL PROVIDE, ERECT AND MAINTAIN STANDARD 48 X 30 INCH ROAD CLOSED SIGNS, SIGN SUPPORTS, BARRICADES AND LIGHTS, AS DETAILED IN SCD MT-101.60 AND IN THESE PLANS DURING PERIODS IN WHICH THE AFFECTED ROADS ARE CLOSED TO TRAFFIC.

THE CONTRACTOR SHALL PROVIDE, ERECT AND MAINTAIN DETOUR SIGNS AND SIGN SUPPORTS AS DETAILED IN THE OHIO MANUAL OF UNIFORM TRAFFIC CONTROL DEVICES AND AS SHOWN ON THE DETOUR MAPS, SHEET 14 AND SHEET 19.

ALL WORK AND TRAFFIC CONTROL DEVICES SHALL BE IN ACCORDANCE WITH CMS 614 AND OTHER APPLICABLE PORTIONS OF THE SPECIFICATIONS, AS WELL AS THE OHIO MANUAL OF UNIFORM TRAFFIC CONTROL DEVICES.
PAYMENT FOR ALL LABOR, EQUIPMENT AND MATERIALS SHALL BE INCLUDED IN THE LUMP SUM CONTRACT PRICE FOR ITEM 614, MAINTAINING TRAFFIC, UNLESS SEPARATELY ITEMIZED IN THE PLAN.

DUST CONTROL (ALL CULVERTS)

THE CONTRACTOR SHALL FURNISH AND APPLY WATER FOR DUST CONTROL AS DIRECTED BY THE ENGINEER. THE FOLLOWING ESTIMATED QUANTITIES HAVE BEEN INCLUDED FOR DUST CONTROL PURPOSES:

ITEM 616, WATER - 2 M. GAL
ITEM 616, CALCIUM CHLORIDE - 2 TON

CALCULATED DMA
CHECKED GKB

MAINTENANCE OF TRAFFIC GENERAL NOTES

GEA-306-13.45/VAR

Q:\ODOT_D12\0107585A.00 - VAR-D12 GES FY13 FY14\17181-1 GEA-306-1345 PID91128\91128\mot\sheets\91128MN001.dgn 10/14/2013 3:00:39 PM darmstrong

DESIGNATED LOCAL DETOUR ROUTE (GEA-306-13.45)

IN ADDITION TO THE OFFICIAL, SIGNED DETOUR ROUTE, A LOCAL ROUTE HAS BEEN DETERMINED TO BE THE SECONDARY, UNSIGNED DETOUR ROUTE OR "DESIGNATED LOCAL DETOUR ROUTE." THIS ROUTE IS SHOWN ON SHEET NO. 14. DURING THE TIME THAT TRAFFIC IS DETOURED, THE CONTRACTOR SHALL MAINTAIN THIS ROUTE IN A CONDITION WHICH IS REASONABLY SMOOTH AND FREE FROM HOLES, RUTS, RIDGES, BUMPS, DUST AND STANDING WATER. ONCE THE DETOUR IS REMOVED AND TRAFFIC RETURNED TO ITS NORMAL PATTERN, THE DESIGNATED LOCAL DETOUR ROUTE SHALL BE RESTORED TO A CONDITION THAT IS EQUIVALENT TO THAT WHICH EXISTED PRIOR TO ITS USE FOR THIS PURPOSE. ALL SUCH WORK SHALL BE PERFORMED WHEN AND AS DETERMINED BY THE ENGINEER.

THE FOLLOWING ESTIMATED QUANTITIES ARE PROVIDED FOR USE AS DETERMINED BY THE ENGINEER TO MAINTAIN AND SUBSEQUENTLY RESTORE THE DESIGNATED LOCAL DETOUR ROUTE.

ITEM 448, ASPHALT CONCRETE SURFACE COURSE, TYPE 1, PG 64-22	9 CU. YD.
ITEM 407, TACK COAT	19 GAL.
ITEM 614, ASPHALT CONCRETE FOR MAINTAINING TRAFFIC	17 CU. YD.
ITEM 642, CENTER LINE	2.75 MILE

WORK ZONE MARKINGS AND SIGNS (GEA-528-0749, GEA-528-0857)

THE FOLLOWING ESTIMATED QUANTITIES HAVE BEEN CARRIED TO THE GENERAL SUMMARY FOR USE AT LOCATIONS IDENTIFIED BY THE ENGINEER FOR WORK ZONE PAVEMENT MARKINGS AND SIGNS PER THE REQUIREMENTS OF CMS 614.04 AND 614.11. PAYMENT FOR WORK ZONE SIGNS SHALL BE INCLUDED IN THE LUMP SUM CONTRACT PRICE FOR ITEM 614, MAINTAINING TRAFFIC.

ITEM 614, WORK ZONE CENTER LINE, CLASS I	0.06 MILE
ITEM 614, WORK ZONE EDGE LINE, CLASS I	0.96 MILE
ITEM 614, WORK ZONE STOP LINE, CLASS I	24 FEET

ITEM 614, LIGHTING (GEA-528-0749, GEA-528-0857)

LIGHTING SHALL BE PROVIDED AT EACH END OF THE LANE CLOSURE FOR THE CLOSING OF ONE LANE OF A TWO-LANE HIGHWAY.
LIGHTING SHALL BE BY CONVENTIONAL METHODS, WITH LUMINAIRE ARMS ATTACHED TO THE SIGNAL SUPPORTS. AREA ILLUMINATION SHALL BE PROVIDED BY USING 150 WATT MINIMUM HIGH PRESSURE SODIUM LUMINARIES OR 250 WATT MINIMUM MERCURY LUMINARIES.
THE MINIMUM HEIGHT OF THE LUMINAIRE SHALL BE 27 FT FROM THE GROUND SURFACE.
PAYMENT FOR LIGHTING SHALL INCLUDE DELIVERY, ERECTION, MAINTENANCE AND REMOVAL AS CALLED FOR IN THE PLANS. PAYMENT SHALL BE PER EACH.

ITEM 614 WORK ZONE LIGHTING SYSTEM	2 EACH

ITEM 614, WORK ZONE IMPACT ATTENUATOR FOR HAZARDS OVER 24" AND LESS THAN 36" WIDE (UNIDIRECTIONAL OR BIDIRECTIONAL) (GEA-528-0749, GEA-528-0857)

THIS ITEM SHALL CONSIST OF FURNISHING AND INSTALLING A NON-GATING IMPACT ATTENUATOR. FURNISH AN IMPACT ATTENUATOR FROM THE OFFICE OF ROADWAY ENGINEERING APPROVED LIST FOR WORK ZONE IMPACT ATTENUATORS.

INSTALLATION SHALL BE AT THE LOCATIONS SPECIFIED IN THE PLANS, IN ACCORDANCE WITH THE MANUFACTURER S SPECIFICATIONS.

THE CONTRACTOR SHALL REPAIR OR REPLACE A DAMAGED UNIT WITHIN 24 HOURS OF A DAMAGING IMPACT. WHEN BIDIRECTIONAL DESIGNS ARE SPECIFIED, THE CONTRACTOR SHALL SUPPLY APPROPRIATE TRANSITIONS.

PAYMENT FOR THE ABOVE WORK SHALL BE MADE AT THE UNIT PRICE BID AND SHALL INCLUDE ALL LABOR, TOOLS, EQUIPMENT AND MATERIALS NECESSARY TO CONSTRUCT AND MAINTAIN A COMPLETE AND FUNCTIONAL IMPACT ATTENUATOR SYSTEM, INCLUDING ALL RELATED BACKUPS, TRANSITIONS, LEVELING PADS, HARDWARE AND GRADING, NOT SEPARATELY SPECIFIED, AS REQUIRED BY THE MANUFACTURER.

ITEM 614, MAINTAINING TRAFFIC (TIME LIMITATION ON A DETOUR) (GEA-306-13.45)

A MINIMUM OF ONE 10-FOOT LANE OF TRAFFIC IN EACH DIRECTION SHALL BE MAINTAINED AT ALL TIMES, EXCEPT FOR A PERIOD NOT TO EXCEED 21 CONSECUTIVE CALENDAR DAYS, WHEN THROUGH TRAFFIC MAY BE DETOURED AS SHOWN ON SHEET 14. A DISINCENTIVE SHALL BE ASSESSED IN THE AMOUNT OF $10,000 PER DAY FOR EACH CALENDAR DAY THE ROADWAY REMAINS CLOSED TO TRAFFIC BEYOND THE SPECIFIED LIMIT.

PLEASE NOTE THAT ROADWAY CLOSURE IS NOT PERMITTED AFTER AUGUST 26, 2014 AND TO THE END OF CONSTRUCTION SEASON OCTOBER 31, 2014.

ITEM 614, MAINTAINING TRAFFIC (TIME LIMITATION ON A DETOUR) (LAK-608-03.03)

A MINIMUM OF ONE 10-FOOT LANE OF TRAFFIC IN EACH DIRECTION SHALL BE MAINTAINED AT ALL TIMES, EXCEPT FOR A PERIOD NOT TO EXCEED 21 CONSECUTIVE CALENDAR DAYS, WHEN THROUGH TRAFFIC MAY BE DETOURED AS SHOWN ON SHEET 19. A DISINCENTIVE SHALL BE ASSESSED IN THE AMOUNT OF $1,000 PER DAY FOR EACH CALENDAR DAY THE ROADWAY REMAINS CLOSED TO TRAFFIC BEYOND THE SPECIFIED LIMIT.

PLEASE NOTE THAT ROADWAY CLOSURE IS NOT PERMITTED AFTER AUGUST 26, 2014 AND TO THE END OF CONSTRUCTION SEASON OCTOBER 31, 2014.

ITEM 614, MAINTAINING TRAFFIC (LANES OPEN DURING HOLIDAYS OR SPECIAL EVENTS

NO WORK SHALL BE PERFORMED AND ALL EXISTING LANES SHALL BE OPEN TO TRAFFIC DURING THE FOLLOWING DESIGNATED HOLIDAYS OR EVENTS:

CHRISTMAS	FOURTH OF JULY
NEW YEARS	LABOR DAY
MEMORIAL DAY	THANKSGIVING
	(OTHER HOLIDAY OR EVENT)

THE PERIOD OF TIME THAT THE LANES ARE TO BE OPEN DEPENDS ON THE DAY OF THE WEEK ON WHICH THE HOLIDAY OR EVENT FALLS. THE FOLLOWING SCHEDULE SHALL BE USED TO DETERMINE THIS PERIOD:

DAY OF HOLIDAY OR EVENT	TIME ALL LANES MUST BE OPEN TO TRAFFIC
SUNDAY	12:00N FRIDAY THROUGH (6:00 AM OR 12:00N) MONDAY
MONDAY	12:00N FRIDAY THROUGH (6:00 AM OR 12:00N) TUESDAY
TUESDAY	12:00N MONDAY THROUGH (6:00 AM OR 12:00N) WEDNESDAY
WEDNESDAY	12:00N TUESDAY THROUGH (6:00 AM OR 12:00N) THURSDAY
THURSDAY	12:00N WEDNESDAY THROUGH (6:00 AM OR 12:00N) FRIDAY
THURSDAY (THANKSGIVING ONLY)	12:00N WEDNESDAY THROUGH (6:00 AM OR 12:00N) MONDAY
FRIDAY	12:00N THURSDAY THROUGH (6:00 AM OR 12:00N) MONDAY
SATURDAY	12:00N FRIDAY THROUGH (6:00 AM OR 12:00N) MONDAY

NO EXTENSIONS OF TIME SHALL BE GRANTED FOR DELAYS IN MATERIAL DELIVERIES, UNLESS SUCH DELAYS ARE INDUSTRY-WIDE, OR FOR LABOR STRIKES, UNLESS SUCH STRIKES ARE AREA-WIDE.

SHOULD THE CONTRACTOR FAIL TO MEET ANY OF THESE REQUIREMENTS, THE CONTRACTOR SHALL BE ASSESSED A DISINCENTIVE IN THE AMOUNT OF $50 FOR EACH MINUTE THE ABOVE DESCRIBED LANE CLOSURE RESTRICTIONS ARE VIOLATED.

ITEM 614, EARTHWORK FOR MAINTAINING TRAFFIC

THE FOLLOWING QUANTITIES HAVE BEEN INCLUDED IN THE PLAN FOR INFORMATION ONLY.

EXCAVATION FOR MAINTAINING TRAFFIC	100 CU. YD.
EMBANKMENT FOR MAINTAINING TRAFFIC	100 CU. YD.

WHEN UNDERCUTS ARE NECESSARY FOR MAINLINE PAVEMENT OR EMBANKMENT CONSTRUCTION, EVALUATE THE NEED FOR TEMPORARY ROAD UNDERCUTS IF WITHIN A CLOSE PROXIMITY TO THE MAINLINE UNDERCUTS. A GEOTECHNICAL EVALUATION SHOULD BE CONSIDERED TO DETERMINE IF THE EXISTING SOIL CONDITIONS ARE ADEQUATE TO SUPPORT THE TEMPORARY ROAD. ADDITIONAL SOIL BORINGS ALONG THE TEMPORARY ROAD ARE NOT NORMALLY REQUIRED.

CALCULATED DMA CHECKED GKB

MAINTENANCE OF TRAFFIC GENERAL NOTES

GEA-306-13.45/VAR

Q:\ODOT_D12\0107585A.00 - VAR-D12 GES FY13 FY14\17181-1 GEA-306-1345 PID91128\91128\mot\sheets\91128MN002.dgn 10/14/2013 3:00:41 PM darmstrong

MAINTENANCE OF TRAFFIC PHASING PLAN (GEA-528-0749, GEA-528-0857)

BEFORE COMMENCEMENT OF EACH PHASE, REMOVE CONFLICTING PAVEMENT MARKINGS. MAINTAIN A MINIMUM OF 1-10 FOOT LANE THROUGH PROJECT SITE AT ALL TIMES. MAINTAIN ACCESS TO RESIDENTIAL DRIVES AT ALL TIMES. EXCEPTION OF DRIVE AT STA. 60+24, LT. FOR GEA-528-0749 (CLOSED DURING BOTH PHASES).

PRE-CONSTRUCTION PHASE: SHOWN IN PHASE 1

CONSTRUCT ITEM 615, PAVEMENT FOR MAINTAINING TRAFFIC, CLASS B, AS PER PLAN ALONG THE WEST AND EAST SIDE SHOULDER OF MADISON ROAD (SR 528) IN THE LOCATIONS SHOWN ON PHASE ONE MOT PLANS. MAINTAIN TRAFFIC UTILIZING FLAGGERS WHEN NEEDED.

PHASE 1:

CLOSE NORTHBOUND PORTION OF THE ROADWAY IN THE VICINITY OF THE CULVERT AND INSTALL TEMPORARY TRAFFIC SIGNAL AND MOT SIGNAGE PER STANDARD CONSTRUCTION DRAWING MT-96.11. NOTE THE LOCATIONS OF SIGNAL POLES ON PHASE ONE OF MOT PLANS. SOME POLES ARE SHIFTED FROM STANDARD LOCATION TO ALLOW DRIVEWAYS THE ABILITY TO SEE THE SIGNAL HEADS.

SHIFT SOUTHBOUND TRAFFIC TO SOUTHBOUND WORK ZONE PAVEMENT AND EXISTING PAVEMENT. NORTHBOUND AND SOUTHBOUND TRAFFIC TO BE REGULATED BY SIGNAL.

EXCAVATE EXISTING TWIN METAL PIPE ARCH CULVERTS TO LIMITS SHOWN AND INSTALL TEMPORARY SHEETING. CONTRACTOR IS RESPONSIBLE FOR MAINTAINING POSITIVE DRAINAGE THROUGH THE CULVERT DURING CONSTRUCTION. CONSTRUCT THE PROPOSED STRUCTURE TO THE LIMITS SHOWN IN THIS PHASE.

FOR GEA-528-0749 SKEWED CULVERT INSTALLATION, SEE DETAIL ON PHASE ONE MOT PLANS FOR MINIMUM SIZING.

PLACE FULL DEPTH PAVEMENT BUILD-UP, WITH THE EXCEPTION OF THE SURFACE COURSE, WITHIN THE NORTHBOUND SIDE LIMITS AND INSTALL GUARDRAIL AS SHOWN IN PHASE ONE.

PHASE 2A: (NOT SHOWN)

CLOSE SOUTHBOUND PORTION OF THE ROADWAY IN THE VICINITY OF THE CULVERT, SHIFT NORTHBOUND TRAFFIC TO THE NEWLY CONSTRUCTED PAVEMENT AS SHOWN ON PHASE TWO OF MOT PLANS. REMOVE TEMPORARY PAVEMENT MARKINGS AND ADD NEW TEMPORARY PAVEMENT MARKINGS WHERE SHOWN ON PHASE TWO. NORTHBOUND AND SOUTHBOUND TRAFFIC TO BE REGULATED BY FLAGGERS.

CONSTRUCT THE SOUTHBOUND PAVEMENT FROM STA. 60+15 TO STATION 60+90 AND THE DRIVEWAY AT 60+24 LEFT BETWEEN THE HOURS OF 8:00 AM AND 8:00 PM OF A WEEKEND DAY UTILIZING FLAGGERS FOR MAINTAINING TRAFFIC.

PHASE 2B:

EXCAVATE THE REMAINING SECTION OF EXISTING TWIN METAL PIPE ARCH CULVERTS AND CONSTRUCT THE REMAINING SECTION OF THE STRUCTURE TO THE LIMITS SHOWN IN THIS PHASE.

EXCAVATE THE REMAINING FULL DEPTH PAVEMENT TO LIMITS SHOWN.

CONSTRUCT FULL DEPTH PAVEMENT BUILD-UP, WITH THE EXCEPTION OF THE SURFACE COURSE, WITHIN THE SOUTHBOUND SIDE LIMITS AND INSTALL GUARDRAIL AS SHOWN IN PHASE TWO.

PHASE 3: NOT SHOWN

PLACE THE SURFACE COURSE AND FINAL PAVEMENT MARKINGS PER TC-73.10.

DESIGNATED LOCAL DETOUR ROUTE (LAK-608-3.03)

A LOCAL ROUTE HAS BEEN DETERMINED TO BE THE OFFICIAL, SIGNED DETOUR ROUTE OR "DESIGNATED LOCAL DETOUR ROUTE." THIS ROUTE IS SHOWN ON SHEET NO. 19. DURING THE TIME THAT TRAFFIC IS DETOURED, THE CONTRACTOR SHALL MAINTAIN THIS ROUTE IN A CONDITION WHICH IS REASONABLY SMOOTH AND FREE FROM HOLES, RUTS, RIDGES, BUMPS, DUST AND STANDING WATER. ONCE THE DETOUR IS REMOVED AND TRAFFIC RETURNED TO ITS NORMAL PATTERN, THE DESIGNATED LOCAL DETOUR ROUTE SHALL BE RESTORED TO A CONDITION THAT IS EQUIVALENT TO THAT WHICH EXISTED PRIOR TO ITS USE FOR THIS PURPOSE. ALL SUCH WORK SHALL BE PERFORMED WHEN AND AS DETERMINED BY THE ENGINEER.

THE FOLLOWING ESTIMATED QUANTITIES ARE PROVIDED FOR USE AS DETERMINED BY THE ENGINEER TO MAINTAIN AND SUBSEQUENTLY RESTORE THE DESIGNATED LOCAL DETOUR ROUTE.

ITEM 448, ASPHALT CONCRETE SURFACE COURSE, TYPE 1, PG 64-22 6 CU. YD.
ITEM 407, TACK COAT 12 GAL.
ITEM 614, ASPHALT CONCRETE FOR MAINTAINING TRAFFIC 12 CU. YD.
ITEM 642, CENTER LINE 2.69 MILE

CALCULATED DMA
CHECKED GKB

MAINTENANCE OF TRAFFIC GENERAL NOTES

GEA-306-13.45/VAR

Q:\ODOT_D12\0107585A.00 - VAR-D12 GES FY13 FY14\17181-1 GEA-306-1345 PID91128\91128\rmot\sheets\91128MN003.dgn 10/14/2013 3:00:43 PM darmstrong

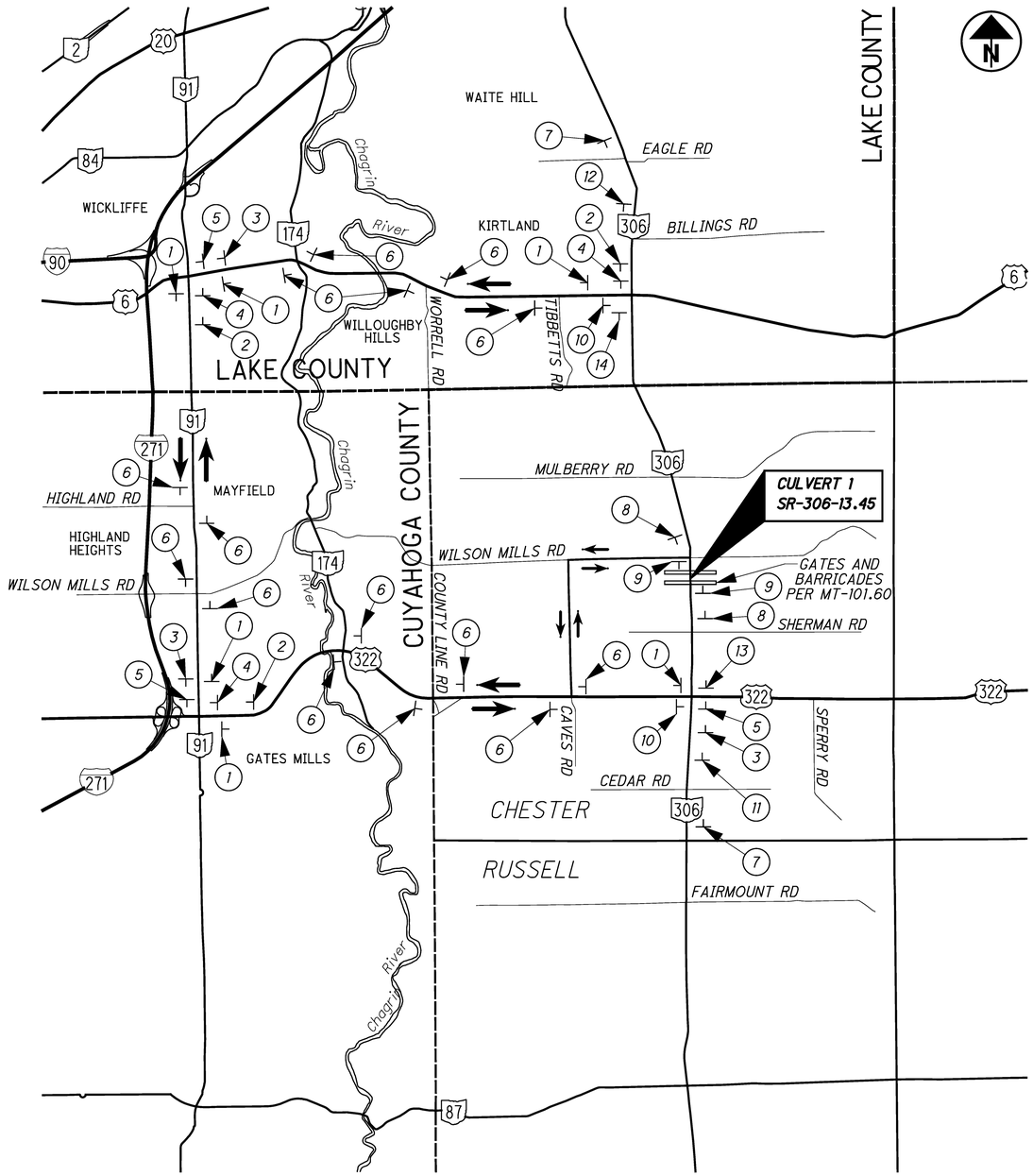

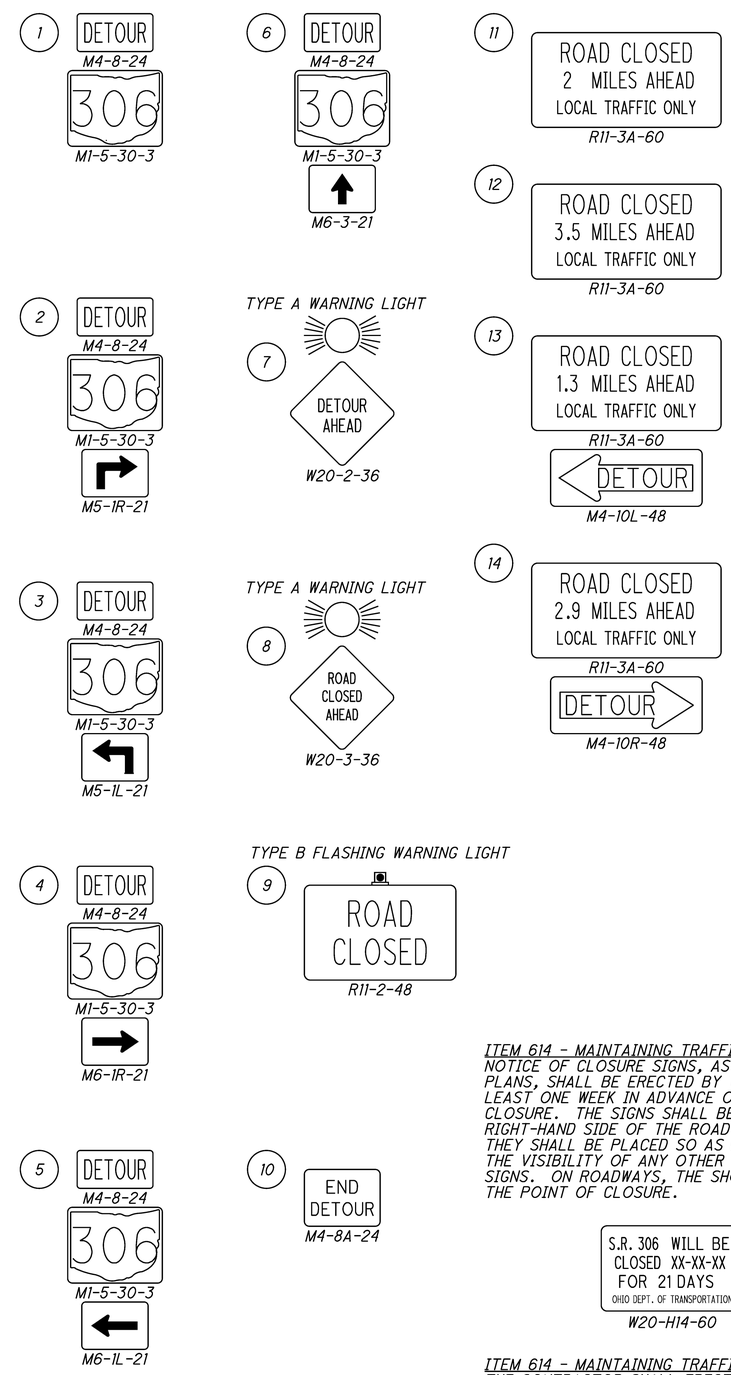

ITEM 614 - MAINTAINING TRAFFIC (NOTICE OF CLOSURE)
NOTICE OF CLOSURE SIGNS, AS DETAILED IN THESE PLANS, SHALL BE ERECTED BY THE CONTRACTOR AT LEAST ONE WEEK IN ADVANCE OF THE SCHEDULED ROAD CLOSURE. THE SIGNS SHALL BE ERECTED ON THE RIGHT-HAND SIDE OF THE ROAD FACING TRAFFIC. THEY SHALL BE PLACED SO AS NOT TO INTERFERE WITH THE VISIBILITY OF ANY OTHER TRAFFIC CONTROL SIGNS. ON ROADWAYS, THE SHOULD BE ERECTED AT THE POINT OF CLOSURE.

S.R. 306 WILL BE CLOSED XX-XX-XX FOR 21 DAYS
OHIO DEPT. OF TRANSPORTATION
W20-H14-60

ITEM 614 - MAINTAINING TRAFFIC
THE CONTRACTOR SHALL ERECT, MAINTAIN AND REMOVE THE DETOUR. PAYMENT FOR ALL MATERIAL, LABOR, AND EQUIPMENT TO PERFORM THIS WORK SHALL BE INCLUDED IN THE LUMP SUM BID FOR ITEM 614-DETOUR SIGNING.

CALCULATED SJT
CHECKED RMS

MAINTENANCE OF TRAFFIC DETOUR MAP - GEA-306-13.45

GEA-306-13.45/VAR

P:\CLE\ODOT\Projects\287366 - GEA-306-13.45\GEA\91128\roadway\sheets\91128MD001.dgn 10/17/2013 1:44:13 PM TYN61470

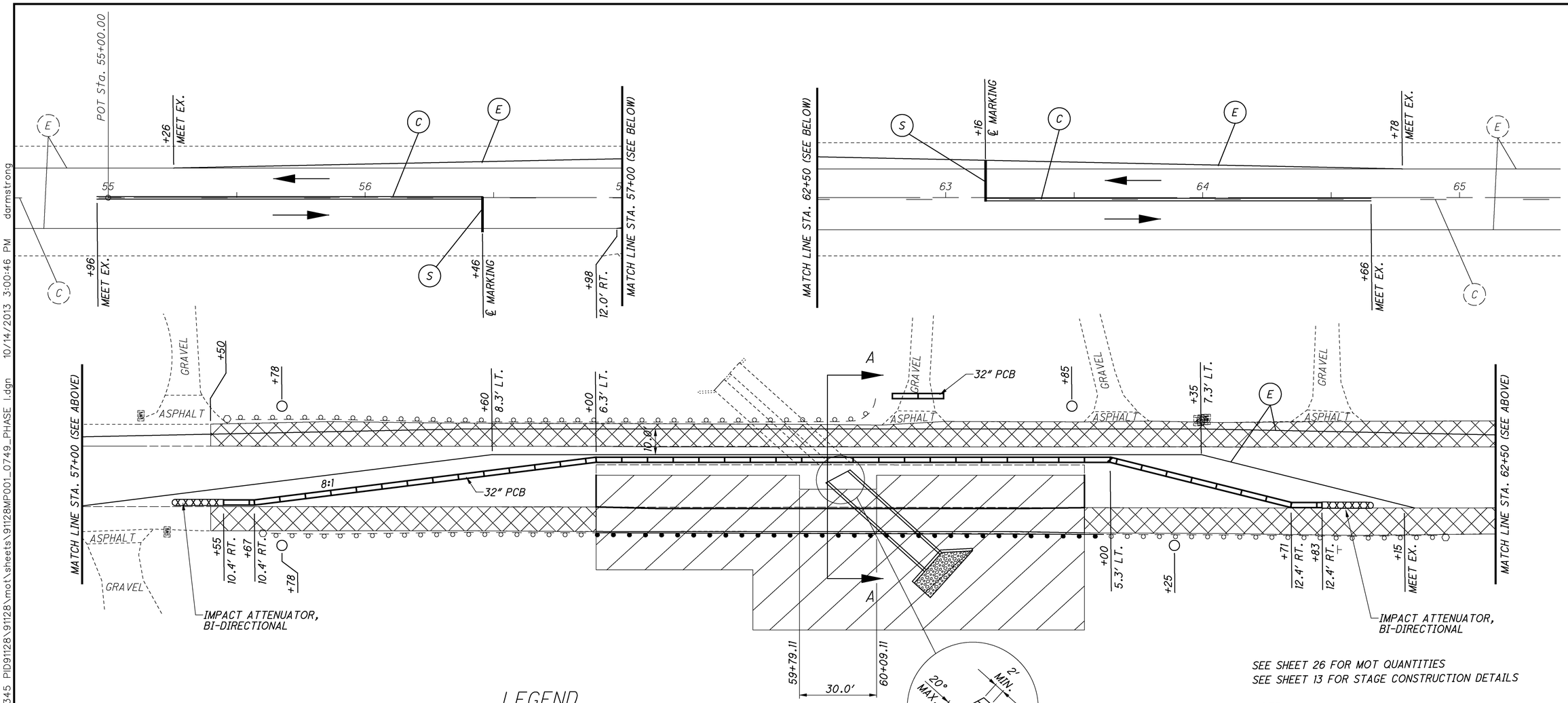

SKEWED CULVERT SECTION DETAIL

SEE SHEET 26 FOR MOT QUANTITIES
SEE SHEET 13 FOR STAGE CONSTRUCTION DETAILS

NOTE:
FOR PLACEMENT OF ADVANCE WARNING SIGNS SEE STANDARD CONSTRUCTION DRAWING MT-96.11.

LEGEND

- 32" PORTABLE CONCRETE BARRIER
- IMPACT ATTENUATOR, BI-DIRECTIONAL
- AREA TO BE CONSTRUCTED
- ITEM 615, PAVEMENT FOR MAINTAINING TRAFFIC, CLASS B, AS PER PLAN
- EXISTING MARKINGS
- (C) CENTER LINE, DOUBLE YELLOW
- (E) EDGE LINE, WHITE
- (S) STOP LINE

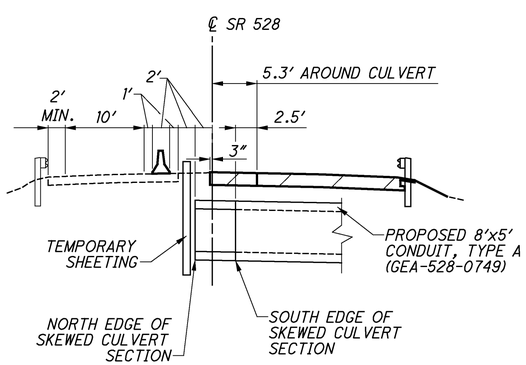

SECTION A-A (GEA-528-0749) PHASE I

STA. 59+90.00

PHASE 2: MADISON ROAD (SR 528), SOUTHBOUND		
17.0 sec.	4.0 sec.	15.0 sec.
1	2	1

RECALL PHASE

PHASE 1: MADISON ROAD (SR 528), NORTHBOUND		
17.0 sec.	4.0 sec.	15.0 sec.
1	2	1

ACTUATED PHASE

HORIZONTAL SCALE IN FEET 0 10 20 40

MAINTENANCE OF TRAFFIC - PHASE 1
GEA-528-0749 - STA. 55+00 TO STA. 65+50

GEA-306-13.45/VAR

Q:\ODOT_D12\0107585A.00 - VAR-D12 GES FY13 FY14\17181-1 GEA-306-1345 PID91128\91128\mot\sheets\91128MP001_0749_PHASE I.dgn 10/14/2013 3:00:46 PM darmstrong

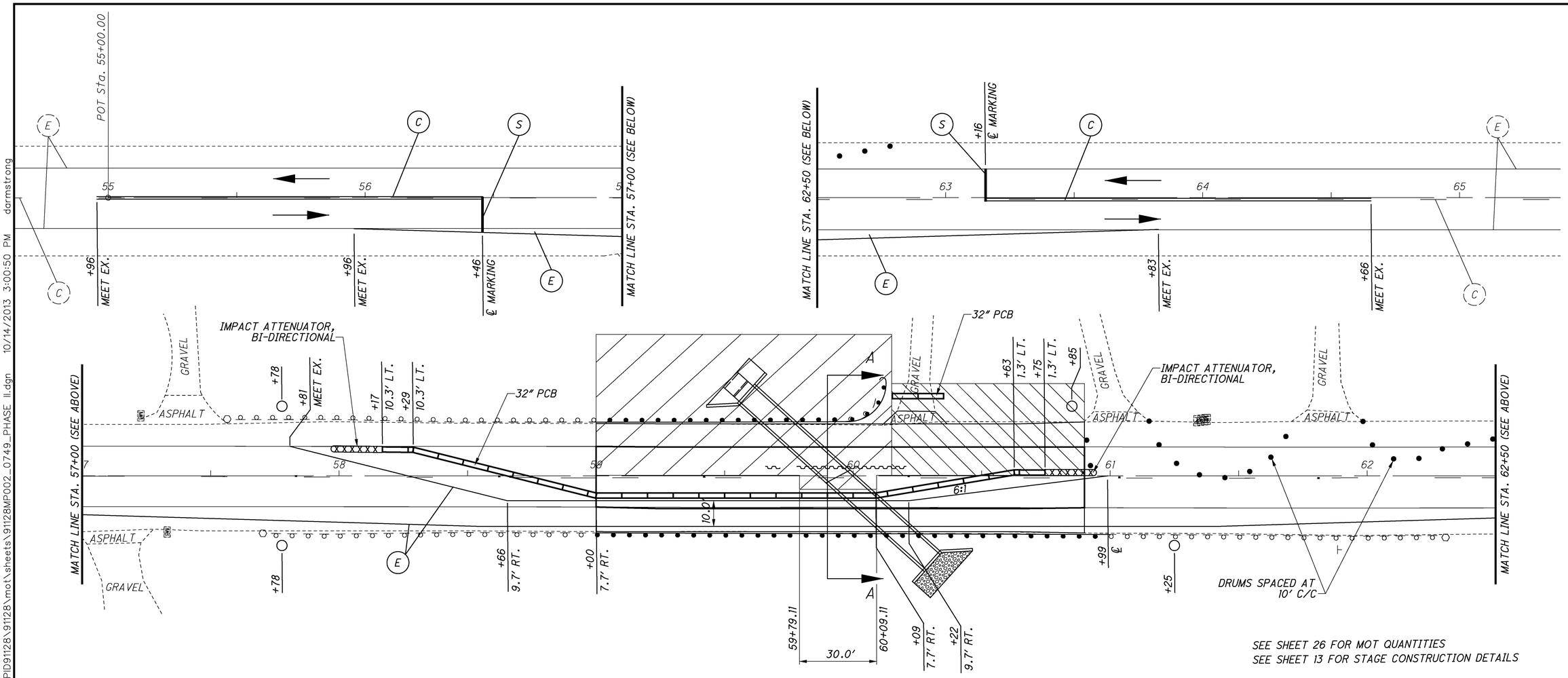

SEE SHEET 26 FOR MOT QUANTITIES
SEE SHEET 13 FOR STAGE CONSTRUCTION DETAILS

NOTE:
FOR PLACEMENT OF ADVANCE WARNING SIGNS SEE STANDARD CONSTRUCTION DRAWING MT-96.11.

FOR LEGEND SEE SHEET 15

CONSTRUCTION PHASE 2A

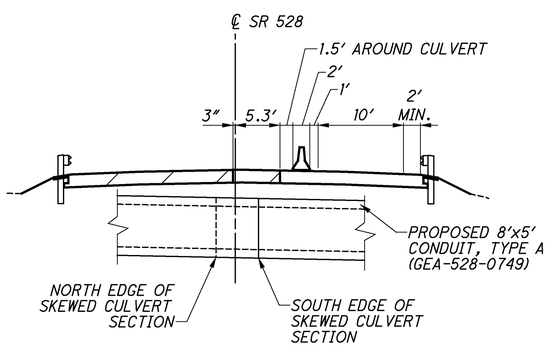

SECTION A-A (GEA-528-0749) PHASE II

STA. 59+90.00

PHASE 2: MADISON ROAD (SR 528), SOUTHBOUND		
17.0 sec.	4.0 sec.	15.0 sec.
1	2	1

RECALL PHASE

PHASE 1: MADISON ROAD (SR 528), NORTHBOUND		
17.0 sec.	4.0 sec.	15.0 sec.
1	2	1

ACTUATED PHASE

HORIZONTAL SCALE IN FEET 0 10 20 40

MAINTENANCE OF TRAFFIC - PHASE 2B
GEA-528-0749 - STA. 55+00 TO STA. 65+50

GEA-306-13.45/ VAR

Q:\ODOT_D12\0107585A.00 - VAR-D12 GES FY13 FY14\17181-1 GEA-306-1345 PID91128\91128\mot\sheets\91128MP002_0749_PHASE II.dgn 10/14/2013 3:00:50 PM darmstrong

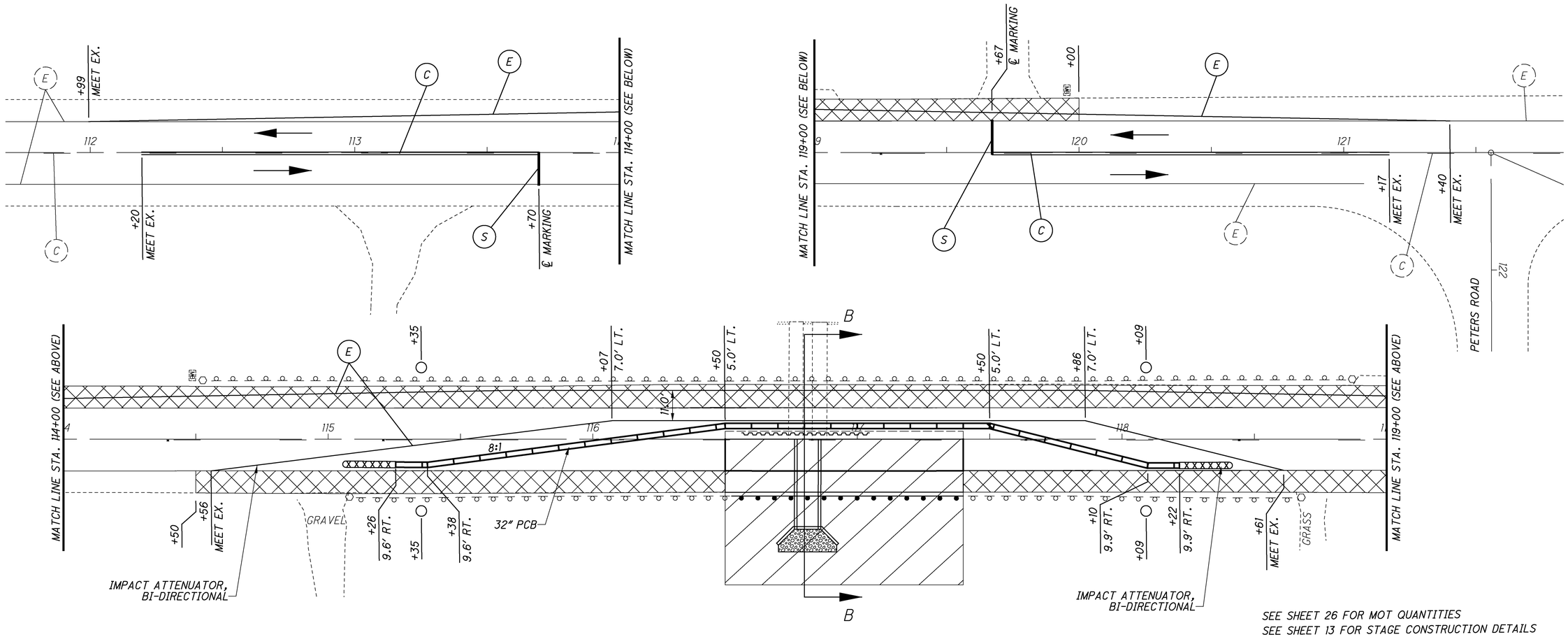

SEE SHEET 26 FOR MOT QUANTITIES
SEE SHEET 13 FOR STAGE CONSTRUCTION DETAILS

NOTE:
FOR PLACEMENT OF ADVANCE WARNING SIGNS SEE STANDARD CONSTRUCTION DRAWING MT-96.11.

FOR LEGEND SEE SHEET 15

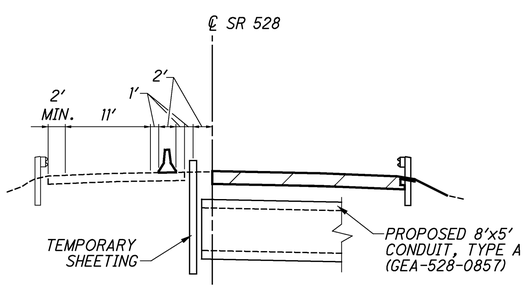

SECTION B-B (GEA-528-0857) PHASE I

STA. 116+80.00

PHASE 2: MADISON ROAD (SR 528), SOUTHBOUND		
17.0 sec.	4.0 sec.	15.0 sec.
1	2	1

RECALL PHASE

PHASE 1: MADISON ROAD (SR 528), NORTHBOUND		
17.0 sec.	4.0 sec.	15.0 sec.
1	2	1

ACTUATED PHASE

HORIZONTAL SCALE IN FEET 0 10 20 40

MAINTENANCE OF TRAFFIC - PHASE 1
GEA-528-0857 - STA. 112+00 TO STA. 121+50

GEA-306-13.45/ VAR

Q:\ODOT_D12\0107585A.00 - VAR-D12 GES FY13 FY14\17181-1 GEA-306-1345 PID91128\91128\mot\sheets\91128MP003_0857_PHASE I.dgn 10/14/2013 3:00:53 PM darmstrong

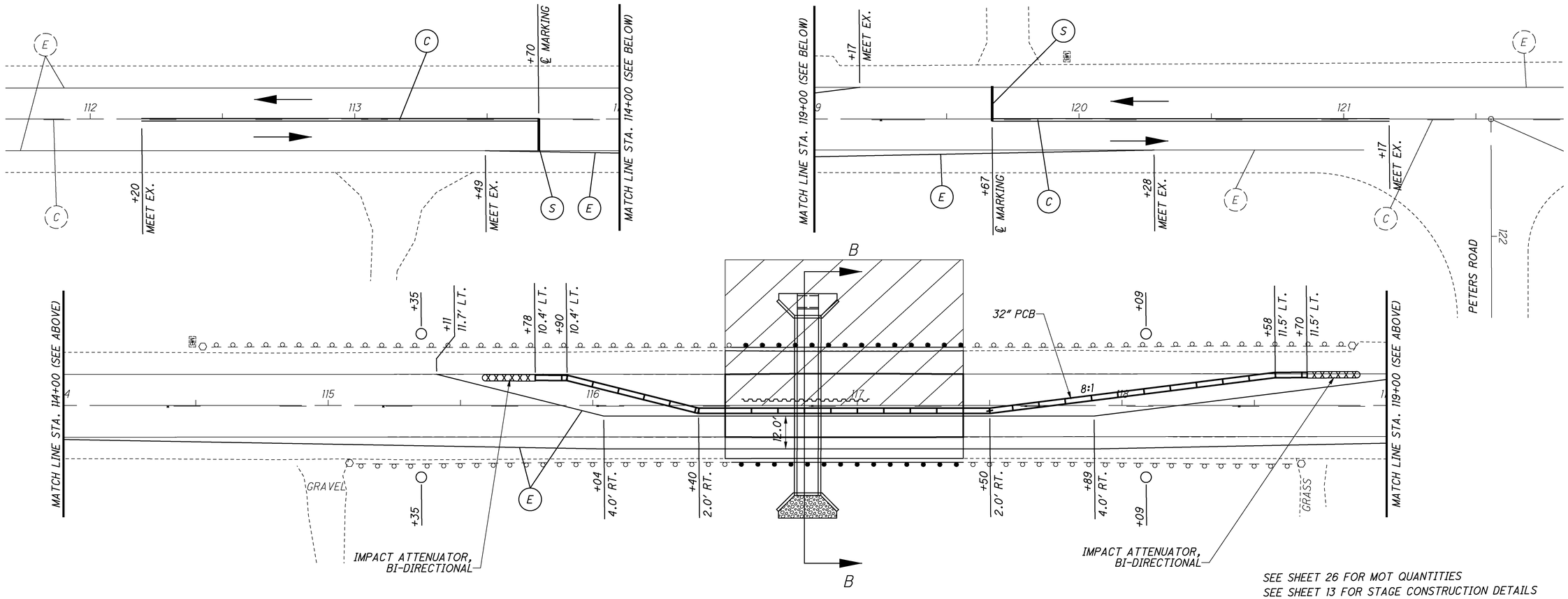

SEE SHEET 26 FOR MOT QUANTITIES
SEE SHEET 13 FOR STAGE CONSTRUCTION DETAILS

NOTE:
FOR PLACEMENT OF ADVANCE WARNING SIGNS SEE STANDARD CONSTRUCTION DRAWING MT-96.11.

FOR LEGEND SEE SHEET 15

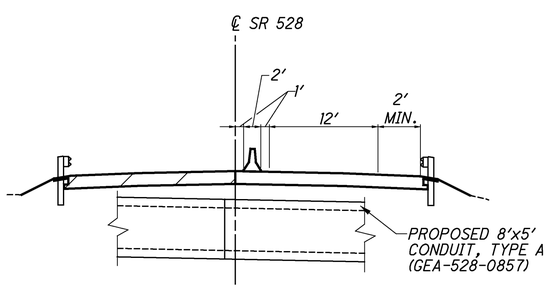

SECTION B-B (GEA-528-0857) PHASE II

STA. 116+80.00

PHASE 2: MADISON ROAD (SR 528), SOUTHBOUND		
17.0 sec.	4.0 sec.	15.0 sec.
1	2	1

RECALL PHASE

PHASE 1: MADISON ROAD (SR 528), NORTHBOUND		
17.0 sec.	4.0 sec.	15.0 sec.
1	2	1

ACTUATED PHASE

HORIZONTAL SCALE IN FEET 0 10 20 40

MAINTENANCE OF TRAFFIC - PHASE 2B
GEA-528-0857 - STA. 112+00 TO STA. 121+50

GEA-306-13.45/VAR

Q:\ODOT_D12\0107585A.00 - VAR-D12 GES FY13 FY14\17181-1 GEA-306-1345 PID91128\91128\mot\sheets\91128MP004_0857_PHASE II.dgn 10/14/2013 3:00:57 PM darmstrong

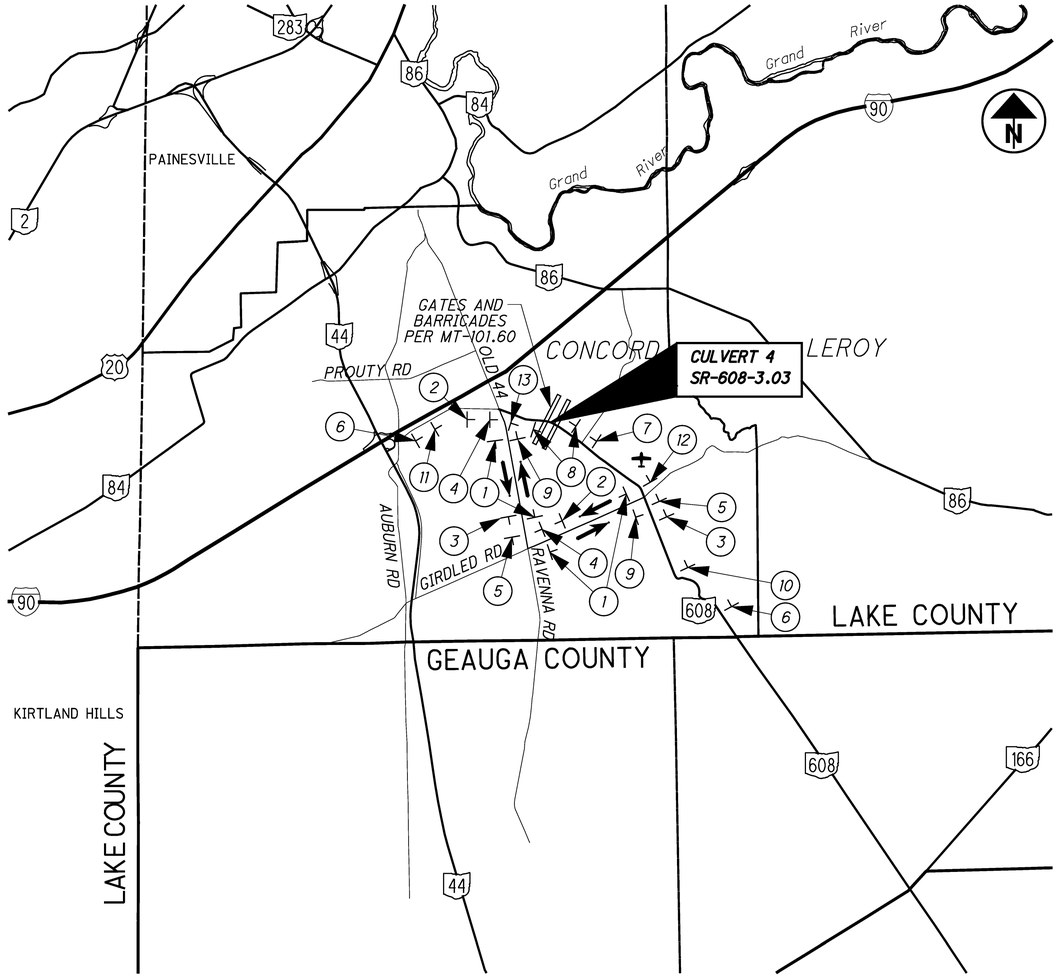

(1) DETOUR
M4-8-24
608
M1-5-30-3

(2) DETOUR
M4-8-24
608
M1-5-30-3
M5-1R-21

(3) DETOUR
M4-8-24
608
M1-5-30-3
M5-1L-21

(4) DETOUR
M4-8-24
608
M1-5-30-3
M6-1R-21

(5) DETOUR
M4-8-24
608
M1-5-30-3
M6-1L-21

(6) TYPE A WARNING LIGHT
DETOUR AHEAD
W20-2-36

(7) TYPE A WARNING LIGHT
ROAD CLOSED AHEAD
W20-3-36

(8) TYPE B FLASHING WARNING LIGHT
ROAD CLOSED
R11-2-48

(9) END DETOUR
M4-8A-24

(10) ROAD CLOSED
2 MILES AHEAD
LOCAL TRAFFIC ONLY
R11-3A-60

(11) ROAD CLOSED
1.2 MILES AHEAD
LOCAL TRAFFIC ONLY
R11-3A-60

(12) ROAD CLOSED
1.2 MILES AHEAD
LOCAL TRAFFIC ONLY
R11-3A-60
DETOUR
M4-10L-48

(13) ROAD CLOSED
0.5 MILES AHEAD
LOCAL TRAFFIC ONLY
R11-3A-60
DETOUR
M4-10R-48

ITEM 614 - MAINTAINING TRAFFIC (NOTICE OF CLOSURE)
NOTICE OF CLOSURE SIGNS, AS DETAILED IN THESE PLANS, SHALL BE ERECTED BY THE CONTRACTOR AT LEAST ONE WEEK IN ADVANCE OF THE SCHEDULED ROAD CLOSURE. THE SIGNS SHALL BE ERECTED ON THE RIGHT-HAND SIDE OF THE ROAD FACING TRAFFIC. THEY SHALL BE PLACED SO AS NOT TO INTERFERE WITH THE VISIBILITY OF ANY OTHER TRAFFIC CONTROL SIGNS. ON ROADWAYS, THE SHOULD BE ERECTED AT THE POINT OF CLOSURE.

S.R. 608 WILL BE
CLOSED XX-XX-XX
FOR 21 DAYS
OHIO DEPT. OF TRANSPORTATION
W20-H14-60

ITEM 614 - MAINTAINING TRAFFIC
THE CONTRACTOR SHALL ERECT, MAINTAIN AND REMOVE THE DETOUR. PAYMENT FOR ALL MATERIAL, LABOR, AND EQUIPMENT TO PERFORM THIS WORK SHALL BE INCLUDED IN THE LUMP SUM BID FOR ITEM 614-DETOUR SIGNING.

CALCULATED SJT
CHECKED RMS

MAINTENANCE OF TRAFFIC
DETOUR MAP - LAK-608-3.03

GEA-306-13.45/VAR

P:\CLE\ODOT\Projects\287366 - GEA-306-13.45\GEA\91128\roadway\sheets\91128MD051.dgn 10/17/2013 1:44:41 PM TYN61470

SHEET NUMBER										PARTICIPATION			ITEM	ITEM EXT.	GRAND TOTAL	UNIT	DESCRIPTION	SEE SHEET NO.
			10	23	24	29	30	44		01/NHS/OT	02/STR/BR	03/S>2/BR						
																	ROADWAY	
										LUMP	LUMP	LUMP	201	11000	LUMP		CLEARING AND GRUBBING	8
						4				4			202	20010	4	EACH	HEADWALL REMOVED	
				11							11		202	23010	11	SQ YD	PAVEMENT REMOVED, ASPHALT	
						97				97			202	35101	97	FT	PIPE REMOVED, 24" AND UNDER, AS PER PLAN	8
				408		207				207	408		202	35201	615	FT	PIPE REMOVED, OVER 24", AS PER PLAN	8
				489			188	88		188	489	88	202	38000	765	FT	GUARDRAIL REMOVED	
								1				1	202	42010	1	EACH	ANCHOR ASSEMBLY REMOVED, TYPE E	
							1			1			202	42040	1	EACH	ANCHOR ASSEMBLY REMOVED, TYPE T	
						13.2				13.2			202	98300	13.2	SQ YD	REMOVAL MISC: CONCRETE RIPRAP	
			193							14	178	1	203	10000	193	CU YD	EXCAVATION	
			79							73	6		203	20000	79	CU YD	EMBANKMENT	
			135									135	203	20001	135	CU YD	EMBANKMENT, AS PER PLAN	47
					1779					285	1300	194	204	10000	1779	SQ YD	SUBGRADE COMPACTION	
						15		13		15		13	209	10000	28	FT	DITCH CLEANOUT	
					9					2	5	2	209	60201	9	STATION	LINEAR GRADING, AS PER PLAN	10
				412.5			150	63		150	412.5	63	606	13000	625.5	FT	GUARDRAIL, TYPE 5	
				75							75		606	17290	75	FT	GUARDRAIL, TYPE 5, LONG-SPAN (18'-9" SPAN)	
								25				25	606	17300	25	FT	GUARDRAIL, TYPE 5, 25' LONG-SPAN	
				1			1			1	1		606	20050	2	EACH	ROUNDED END SECTION	
								1				1	606	26100	1	EACH	ANCHOR ASSEMBLY, TYPE E	
				1			1			1	1		606	26500	2	EACH	ANCHOR ASSEMBLY, TYPE T	
								1				1	690	50350	1	EACH	SPECIAL - MAILBOX REMOVED AND RESET	
																	EROSION CONTROL	
						17				17			601	11000	17	SQ YD	RIPRAP USING 6" REINFORCED CONCRETE SLAB	
						23.2				23.2			601	32010	23.2	CU YD	ROCK CHANNEL PROTECTION, TYPE A WITH AGGREGATE FILTER	
					293					42	224	27	659	00300	293	CU YD	TOPSOIL	
					2617					376	2004	237	659	10000	2617	SQ YD	SEEDING AND MULCHING	
					0.37					0.05	0.29	0.03	659	20000	0.37	TON	COMMERCIAL FERTILIZER	
					0.56					0.08	0.43	0.05	659	31000	0.56	ACRE	LIME	
					18					3	13	2	659	35000	18	M GAL	WATER	
										4000	8000	4000	832	30000	16000	EACH	EROSION CONTROL	

CALCULATED DMA
CHECKED JWB

GENERAL SUMMARY

GEA-306-13.45/VAR

Q:\ODOT_D12\0107585A.00 - VAR-D12 GES FY13 FY14\17181-1 GEA-306-1345 PID91128\91128\roadway\sheets\91128GG001.dgn 10/28/2013 8:07:11 AM darmstrong

SHEET NUMBER										PARTICIPATION			ITEM	ITEM EXT.	GRAND TOTAL	UNIT	DESCRIPTION	SEE SHEET NO.
		23	24	25	29	30	44	45		01/NHS/OT	02/STR/BR	03/S>2/BR						
																	DRAINAGE	
					40.4					40.4			602	20000	40.4	CU YD	CONCRETE MASONRY	
		39			12		20			12	39	20	605	31100	71	FT	AGGREGATE DRAINS	
					72					72			611	00510	72	FT	6" CONDUIT, TYPE F FOR UNDERDRAIN OUTLETS	
					95					95			611	26001	95	FT	72" CONDUIT, TYPE A, AS PER PLAN	29
					1					1			611	99710	1	EACH	PRECAST REINFORCED CONCRETE OUTLET	
																	PAVEMENT	
			318							100	166	52	252	01500	318	FT	FULL DEPTH PAVEMENT SAWING	
			477							94	336	47	301	46000	477	CU YD	ASPHALT CONCRETE BASE, PG 64-22	
			298							48	217	33	304	20000	298	CU YD	AGGREGATE BASE	
			70							42		28	407	10000	70	GALLON	TACK COAT	
			30							8	10	12	448	46061	30	CU YD	ASPHALT CONCRETE INTERMEDIATE COURSE, TYPE 1, UNDER GUARDRAIL, PG 64-22, AS PER PLAN	10
			147							23	108	16	448	46905	147	CU YD	ASPHALT CONCRETE SURFACE COURSE, TYPE 1, PG 70-22M, AS PER PLAN	9
			1								1		448	48020	1	CU YD	ASPHALT CONCRETE SURFACE COURSE, TYPE 1, PG 64-22 (DRIVEWAYS)	
			405							138	193	74	613	41200	405	CU YD	LOW STRENGTH MORTAR BACKFILL	
																	TRAFFIC CONTROL	
				3							3		621	10000	3	EACH	RPM, LOW PROFILE, YELLOW/YELLOW	
		11				3	2			3	11	2	626	00100	16	EACH	BARRIER REFLECTOR	
								9.3				9.3	630	02100	9.3	FT	GROUND MOUNTED SUPPORT, NO. 2 POST	
								43.5				43.5	630	03100	43.5	FT	GROUND MOUNTED SUPPORT, NO. 3 POST	
								1				1	630	08600	1	EACH	SIGN POST REFLECTOR	
								13.3				13.3	630	80100	13.3	SQ FT	SIGN, FLAT SHEET	
								3				3	630	84900	3	EACH	REMOVAL OF GROUND MOUNTED SIGN AND DISPOSAL	
								2				2	630	85100	2	EACH	REMOVAL OF GROUND MOUNTED SIGN AND REERECTION	
								4				4	630	86002	4	EACH	REMOVAL OF GROUND MOUNTED POST SUPPORT AND DISPOSAL	
				0.12		0.02	0.04			0.02	0.12	0.04	642	00100	0.18	MILE	EDGE LINE 4", TYPE 1	
				0.06		0.02	0.02			0.02	0.06	0.02	642	00300	0.1	MILE	CENTER LINE, TYPE 1	
						38				38			642	00700	38	FT	TRANSVERSE / DIAGONAL LINE, TYPE 1	
																	RETAINING WALLS	
						LUMP	LUMP			LUMP		LUMP	503	11100	LUMP		COFFERDAMS AND EXCAVATION BRACING	
																	STRUCTURES (UNDER 20')	
																	GEA-528-0749	33
																	GEA-528-0857	40
																	LAK-608-0303	48

CALCULATED DMA
CHECKED JWB

GENERAL SUMMARY

GEA-306-13.45/VAR

Q:\ODOT_D12\0107585A.00 - VAR-D12 GES FY13 FY14\17181-1 GEA-306-1345 PID91128\91128\roadway\sheets\91128GG002.dgn 10/28/2013 8:07:13 AM darmstrong

SHEET NUMBER										PARTICIPATION			ITEM	ITEM EXT.	GRAND TOTAL	UNIT	DESCRIPTION	SEE SHEET NO.
		9	11	12	13	14	19	26		01/NHS/OT	02/STR/BR	03/S>2/BR						
																	MAINTENANCE OF TRAFFIC	
				19	12					19		12	407	10000	31	GAL	TACK COAT	
				9	6					9		6	448	47020	15	CU YD	ASPHALT CONCRETE SURFACE COURSE, TYPE 1, PG64-22	
								2			2		SPECIAL	614E11300	2	EACH	WORK ZONE TRAFFIC SIGNAL	
								8			8		614	12338	8	EACH	WORK ZONE IMPACT ATTENUATOR (BIDIRECTIONAL)	12
						LUMP	LUMP			LUMP		LUMP	614	12420	LUMP		DETOUR SIGNING	
				2							2		614	12740	2	EACH	WORK ZONE LIGHTING SYSTEM	12
				17	12					17		12	614	13000	29	CU YD	ASPHALT CONCRETE FOR MAINTAINING TRAFFIC	
								30			30		614	13302	30	EACH	BARRIER REFLECTOR, TYPE B2	
								16			16		614	13350	16	EACH	OBJECT MARKER, ONE-WAY	
								0.06			0.06		614	21000	0.06	MILE	WORK ZONE CENTER LINE, CLASS I	12
								0.95			0.95		614	22000	0.95	MILE	WORK ZONE EDGE LINE, CLASS I	12
								24			24		614	26000	24	FT	WORK ZONE STOP LINE, CLASS I	12
								1753			1753		615	25001	1753	SQ YD	PAVEMENT FOR MAINTAINING TRAFFIC, CLASS B, AS PER PLAN	11
			2										616	10000	2	M GAL	WATER	
			2										616	20000	2	TON	CALCIUM CHLORIDE	
								1306			1306		622	41000	1306	FT	PORTABLE BARRIER, 32"	
				2.75	2.69					2.75		2.69	642	00300	5.44	MILE	CENTER LINE, TYPE 1	
													614	11000	LUMP		MAINTAINING TRAFFIC	
		2											619	16000	2	MONTH	FIELD OFFICE, TYPE A	
													623	10000	LUMP		CONSTRUCTION LAYOUT STAKES	
													624	10000	LUMP		MOBILIZATION	

CALCULATED DMA
CHECKED JWB

GENERAL SUMMARY

GEA-306-13.45/VAR

Q:\ODOT_D12\0107585A.00 - VAR-D12 GES FY13 FY14\17181-1 GEA-306-1345 PID91128\91128\roadway\sheets\91128GG003.dgn 10/28/2013 8:07:15 AM darmstrong

REF. NO.	SHEET NO.	STATION TO STATION		SIDE	202 PAVEMENT REMOVED, ASPHALT (SQ YD)	202 GUARDRAIL REMOVED (FT)	202 PIPE REMOVED, OVER 24", AS PER PLAN (FT)		605 AGGREGATE DRAINS (FT)		606 GUARDRAIL, TYPE 5 (FT)	606 GUARDRAIL, TYPE 5, LONG-SPAN (18'-9" SPAN) (FT)	606 ROUNDED END SECTION (EACH)	606 ANCHOR ASSEMBLY, TYPE T (EACH)		626 BARRIER REFLECTOR (EACH)				
		ROADWAY (GEA-528)																		
R-1	27	59+00	60+09	LT		114														
R-2	27	59+00	61+00	RT		200														
R-3	27	59+45.96	60+42.72	LT & RT			235													
R-4	27	60+11	60+36	LT	11															
R-5	28	116+52.50	117+40	LT		87.5														
R-6	28	116+52.50	117+40	RT		87.5														
R-7	28	116+73.69	117+88.65	RT			173													
G-1	27	59+00	60+12.81	LT							75	37.5	1	1		3				
G-2	27	59+00	61+00	RT							162.5	37.5				4				
G-3	28	116+52.50	117+40	LT							87.5					2				
G-4	28	116+52.50	117+40	RT							87.5					2				
AD-1	27	59+25		LT					5											
AD-2	27	59+50		RT					4											
AD-3	27	60+00		RT					4											
AD-4	27	60+50		LT					5											
AD-5	27	60+75		RT					4											
AD-6	28	116+60		LT					4.5											
AD-7	28	116+85		RT					4											
AD-8	28	117+10		LT					4.5											
AD-9	28	117+35		RT					4											
TOTALS CARRIED TO GENERAL SUMMARY					11	489	408		39		412.5	75	1	1		11				

CALCULATED DMA
CHECKED JWB

SUBSUMMARY

GEA-306-13.45/VAR

Q:\ODOT_D12\0107585A.00 - VAR-D12 GES FY13 FY14\17181-1 GEA-306-1345 PID91128\91128\roadway\sheets\91128GS001.dgn 10/14/2013 3:01:05 PM darmstrong

REF. NO.	SHEET NO.	STATION	TO STATION	SIDE	LENGTH L (ft)	AVERAGE WIDTH W (ft)	SURFACE AREA A (sf) A=LxW	CAD MEASURED AREAS (sf)	204 SUBGRADE COMPACTION	209 LINEAR GRADING, AS PER PLAN	252 FULL DEPTH PAVEMENT SAWING	301 VARIES 10"-16" ASPHALT CONCRETE BASE, PG 64-22	301 12" ASPHALT CONCRETE BASE, PG 64-22	301 9" ASPHALT CONCRETE BASE, PG 64-22	304 AGGREGATE BASE (6")	407 TACK COAT @ 0.075 GAL/SY	448 ASPHALT CONCRETE INTERMEDIATE COURSE, TYPE 1, UNDER GUARDRAIL, PG 64-22, AS PER PLAN	448 ASPHALT CONCRETE SURFACE COURSE, TYPE 1, PG 70-22M, AS PER PLAN	448 ASPHALT CONCRETE SURFACE COURSE, TYPE 1, PG 64-22 (DRIVEWAYS)	613 LOW STRENGTH MORTAR BACKFILL	659 TOPSOIL	659 SEEDING AND MULCHING	659 COMMERCIAL FERTILIZER	659 LIME	659 WATER
									SQ YD	STATION	FT	CU YD	CU YD	CU YD	CU YD	GALLON	CU YD	CU YD	CU YD	CU YD	CU YD	SQ YD	TON	ACRES	M GAL
SR-306		153+50.00	154+00.00	LT & RT	50	51.29	2565		285						48										
		153+50.00	154+00.00	LT & RT	50	50.29	2515						94												
		153+50.00	154+00.00	LT & RT	50	49.63	2481				100					42		23							
		153+50.00	154+00.00	LT	50	4	200			1							2								
		153+50.00	154+00.00	RT	50	4	200			1							2								
		154+00.00	154+12.50	LT	13	4	52										1								
		154+00.00	154+60.22	RT	66	4	264										3								
		153+66.00	153+89.00	LT & RT	53	8.5	451													138					
		153+38.00	154+12.50	LT & RT	-	-	-	3,387													42	376	0.05	0.08	3
SR-528-0749		59+00.00	59+63.88	LT & RT	-	-	-	3,663.4	428	1	43			103	71		4	34							
		59+54.28	60+35.14	LT & RT	98	12	1,176													37					
		59+63.88	60+25.47	LT & RT	-	-	-	627.7				25						6							
		60+11.81	60+36.51	LT	-	-	-	96.5	11	1					2				1						
		60+25.47	60+90.00	LT & RT	-	-	-	3,704.5	433	1	43			105	72		2	34							
		59+00.00	60+90.00	LT & RT	-	-	-	11,376.0													141	1264	0.18	0.27	8
SR-528-0857		116+50.00	117+40.00	LT & RT	90	40.67	3,660.3		428	2	81			103	71		4	34							
		116+50.00	117+40.00	LT & RT	-	-	-	6660													83	740	0.11	0.16	5
		116+75.18	116+87.29	LT & RT	68	12	816													156					
SR-608		05+16.00	05+78.50	LT & RT	63	27.67	1,743.2		194						33										
		05+16.00	05+78.50	LT & RT	63	26.67	1680.2							47											
		05+16.00	05+78.50	LT & RT	63	26	1638				52					28		16							
		05+04.50	05+36.00	LT	32	9	288			1							3								
		05+36.00	05+51.00	LT	15	8.75	131.3										2								
		05+51.00	05+78.50	LT	28	8.5	238										3								
		05+16.00	05+78.50	RT	63	6.5	409.5			1							4								
		05+36.00	05+60.00	LT & RT	28	18.5	518													74					
		05+16.00	05+78.50	LT & RT	-	-	-	2137													27	237	0.03	0.05	2
TOTALS CARRIED TO GENERAL SUMMARY									1,779	9	318	477			298	70	30	147	1	405	293	2,617	0.37	0.56	18

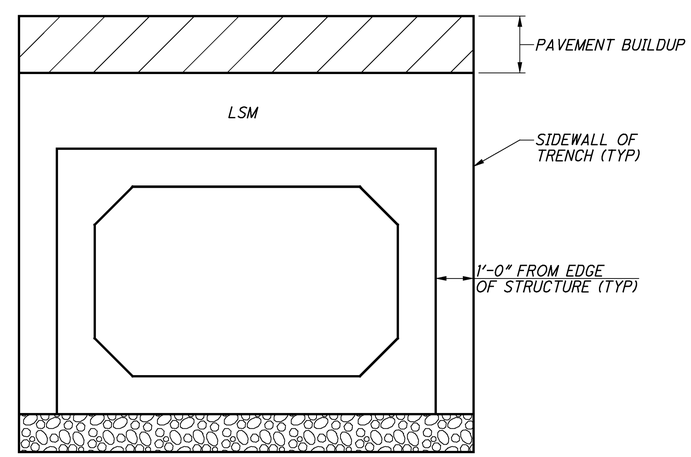

LOW STRENGTH MORTAR DETAIL
(BOX CULVERT SHOWN, OTHER PIPE CULVERTS SIMILAR)

CALCULATED DMA
CHECKED JWB

SUBSUMMARY

GEA-306-13.45/VAR

Q:\ODOT_D12\0107585A.00 - VAR-D12 GES FY13 FY14\17181-1 GEA-306-1345 PID91128\91128\roadway\sheets\91128GS002.dgn 10/14/2013 3:01:07 PM darmstrong

REF. NO.	SHEET NO.	STATION TO STATION		SIDE	621 RPM, LOW PROFILE, YELLOW/YELLOW		642 EDGE LINE, 4", TYPE 1 (WHITE)	642 CENTER LINE, 4", TYPE 1 (DASHED)
					EACH		MILE	MILE
		TRAFFIC CONTROL (GEA-528)						
CL-1	27	59+00	60+90	℄	2			0.04
CL-2	28	116+50	117+40	℄	1			0.02
EL-1	27	59+00	60+90	LT			0.04	
EL-2	27	59+00	60+90	RT			0.04	
EL-3	28	116+50	117+40	LT			0.02	
EL-4	28	116+50	117+40	RT			0.02	
TOTALS CARRIED TO GENERAL SUMMARY					3		0.12	0.06

CALCULATED DMA
CHECKED JWB

SUBSUMMARY

GEA-306-13.45/VAR

Q:\ODOT_D12\0107585A.00 - VAR-D12 GES FY13 FY14\17181-1 GEA-306-1345 PID91128\91128\roadway\sheets\91128GS003.dgn 10/14/2013 3:01:09 PM darmstrong

REF. NO.	SHEET NO.	STATION TO STATION		SIDE	614 SPECIAL - WORK ZONE TRAFFIC SIGNAL	614 WORK ZONE IMPACT ATTENUATOR (BIDIRECTIONAL)	614 BARRIER REFLECTOR, TYPE B2	614 OBJECT MARKER, ONE-WAY	614 WORK ZONE CENTER LINE, CLASS I	614 WORK ZONE EDGE LINE, CLASS I	614 WORK ZONE STOP LINE, CLASS I		615 PAVEMENT FOR MAINTAINING TRAFFIC, CLASS B, AS PER PLAN		622 PORTABLE CONCRETE BARRIER, 32"				
					EACH	EACH	EACH	EACH	MILE	MILE	FT		SQ. YD.		FT				
		PRE-CONSTRUCTION PHASE																	
	15	57+50	62+50	LT									520						
	15	57+50	59+00	RT									157						
	15	60+90	62+50	RT									182						
	17	114+00	120+00	LT									562						
	17	114+50	116+20	RT									187						
	17	117+40	119+00	RT									145						
		PHASE 1																	
	15	54+96	56+46	℄					0.03		12								
	15	55+26	64+78	LT						0.18									
	15	56+98	62+19	LT & RT						0.1									
	15	57+45	61+83	LT & RT	1	2	8	4							431				
	15	60+15	60+35	LT											20				
	17	111+99	121+40	LT						0.18									
	17	112+20	113+70	℄					0.03		12								
	17	114+56	118+61	LT & RT						0.08									
	17	114+81	118+22	LT & RT	1	2	7	4							300				
		PHASE 2B																	
	16	55+96	63+83	RT						0.15									
	16	57+81	60+99	LT & RT						0.06									
	16	58+27	60+74	LT & RT		2	8	4							261				
	18	113+49	120+28	RT						0.13									
	18	115+41	119+17	LT & RT						0.07									
	18	115+48	118+70	LT & RT		2	7	4							294				
TOTALS CARRIED TO GENERAL SUMMARY					2	8	30	16	0.06	0.95	24		1753		1306				

CALCULATED DMA
CHECKED JWB

SUBSUMMARY

GEA-306-13.45/VAR

Q:\ODOT_D12\0107585A.00 - VAR-D12 GES FY13 FY14\17181-1 GEA-306-1345 PID91128\91128\roadway\sheets\91128GS004.dgn 10/14/2013 3:01:10 PM darmstrong

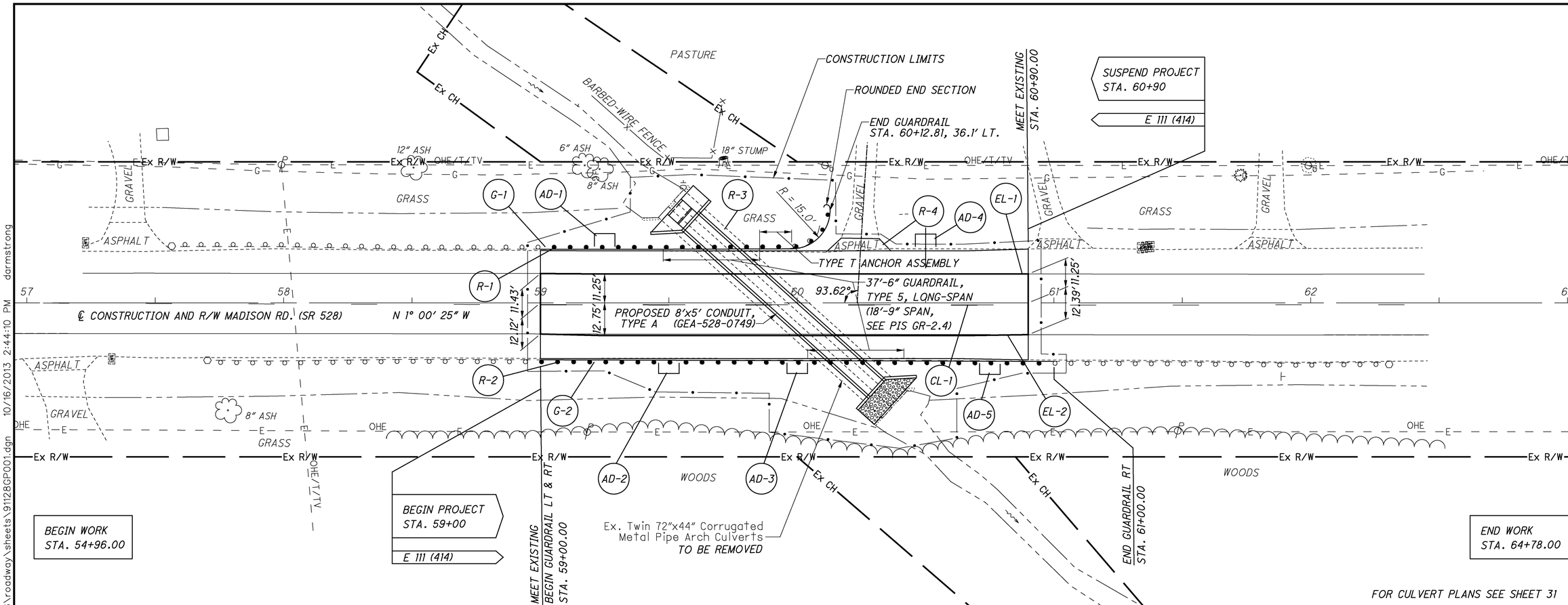

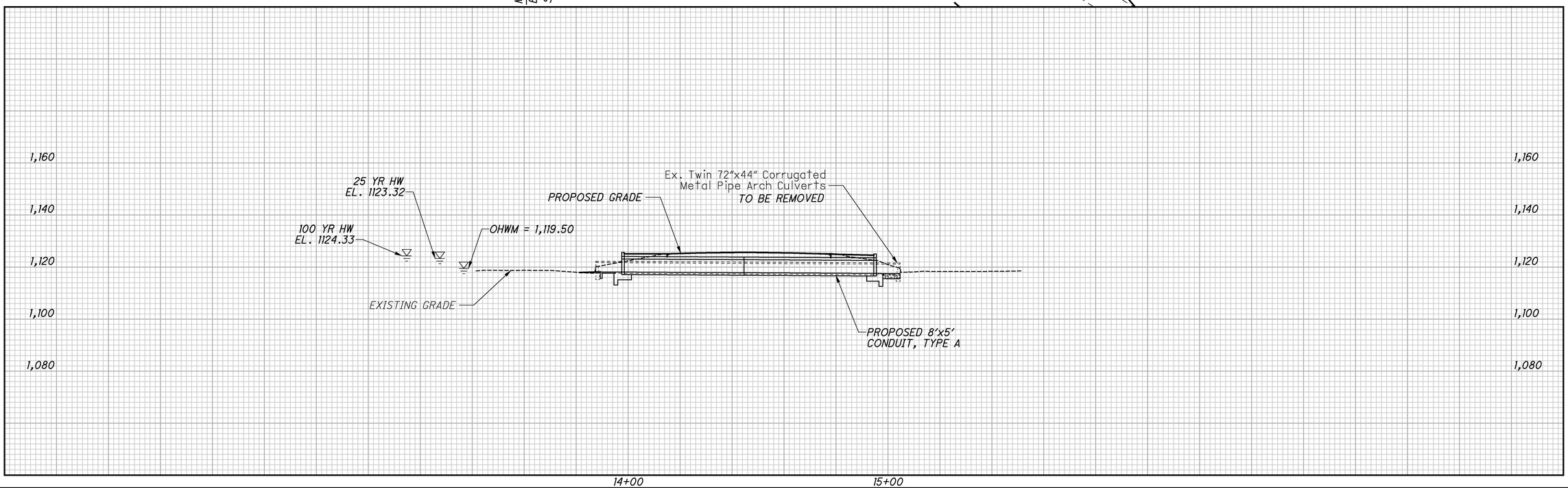

HORIZONTAL SCALE IN FEET
0 10 20 40

CALCULATED DMA
CHECKED GKB

PLAN AND PROFILE
CULVERT #2 - GEA-528-07.49

GEA-306-13.45/VAR

Q:\ODOT_D12\0107585A.00 - VAR-D12 GES FY13 FY14\17181-1 GEA-306-1345 PID91128\91128\roadway\sheets\91128GP001.dgn 10/16/2013 2:44:10 PM darmstrong

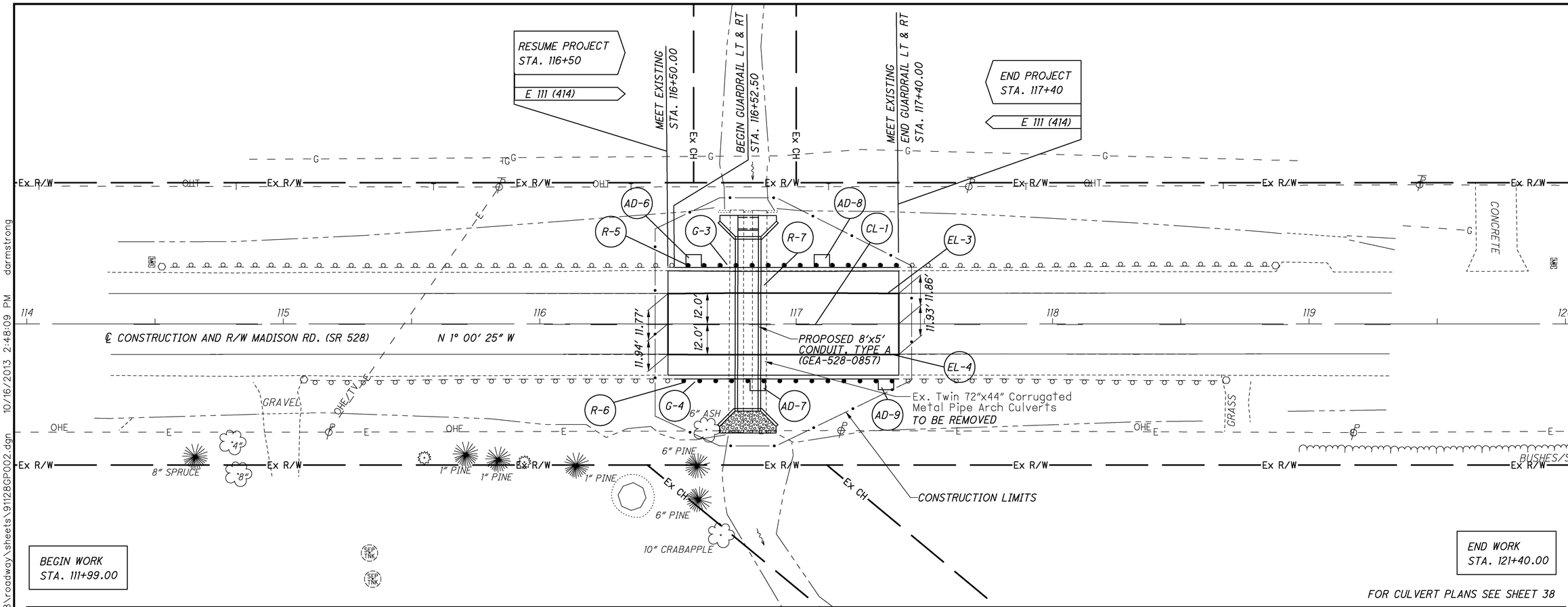

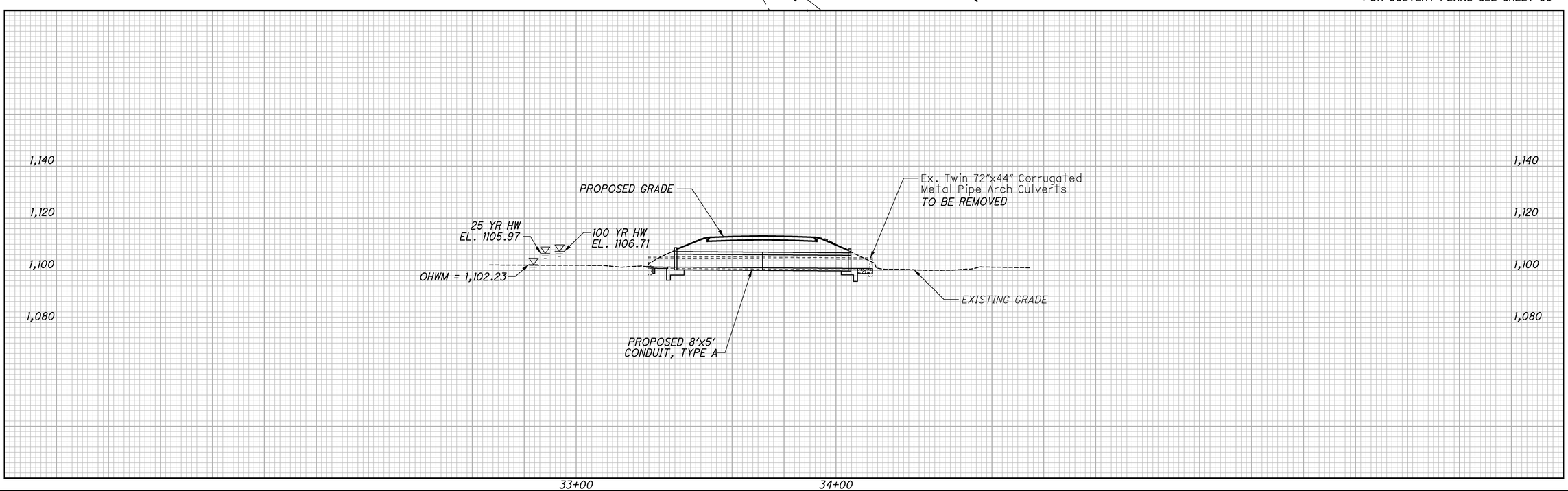

HORIZONTAL SCALE IN FEET
0 10 20 40

CALCULATED DMA
CHECKED GKB

PLAN AND PROFILE
CULVERT #3 - GEA-528-08.57

GEA-306-13.45/VAR

Q:\ODOT_D12\0107585A.00 - VAR-D12 GES FY13 FY14\17181-1 GEA-306-1345 PID91128\roadway\sheets\91128GP002.dgn 10/16/2013 2:48:09 PM darmstrong

EXISTING STRUCTURE

TYPE : TWIN 48" CMP

SKEW: 0° 0' 0" RT

ALIGNMENT: TANGENT

PROPOSED STRUCTURE

TYPE : 72" CIRCULAR CMP

SKEW: 15° 0' 0" RT

ALIGNMENT: TANGENT

CULVERT FILE NUMBER: 283061345

HYDRAULIC DESIGN DATA

DRAINAGE AREA: 396.8 ACRES
Q(25): 254 CFS
HW(25): 1152.4 FT
V(25): 14.22 FT/S
Q(100): 351 CFS
HW(100): 1155.1 FT
V(100): 15.04 FT/S

BENCHMARK #1
PK NAIL SET
STA. 154+21.48, 21.59' RT
ELEV. 1,157.98'

LEGEND

ROCK CHANNEL PROTECTION, TYPE A

AGGREGATE FILTER

EXISTING CONCRETE

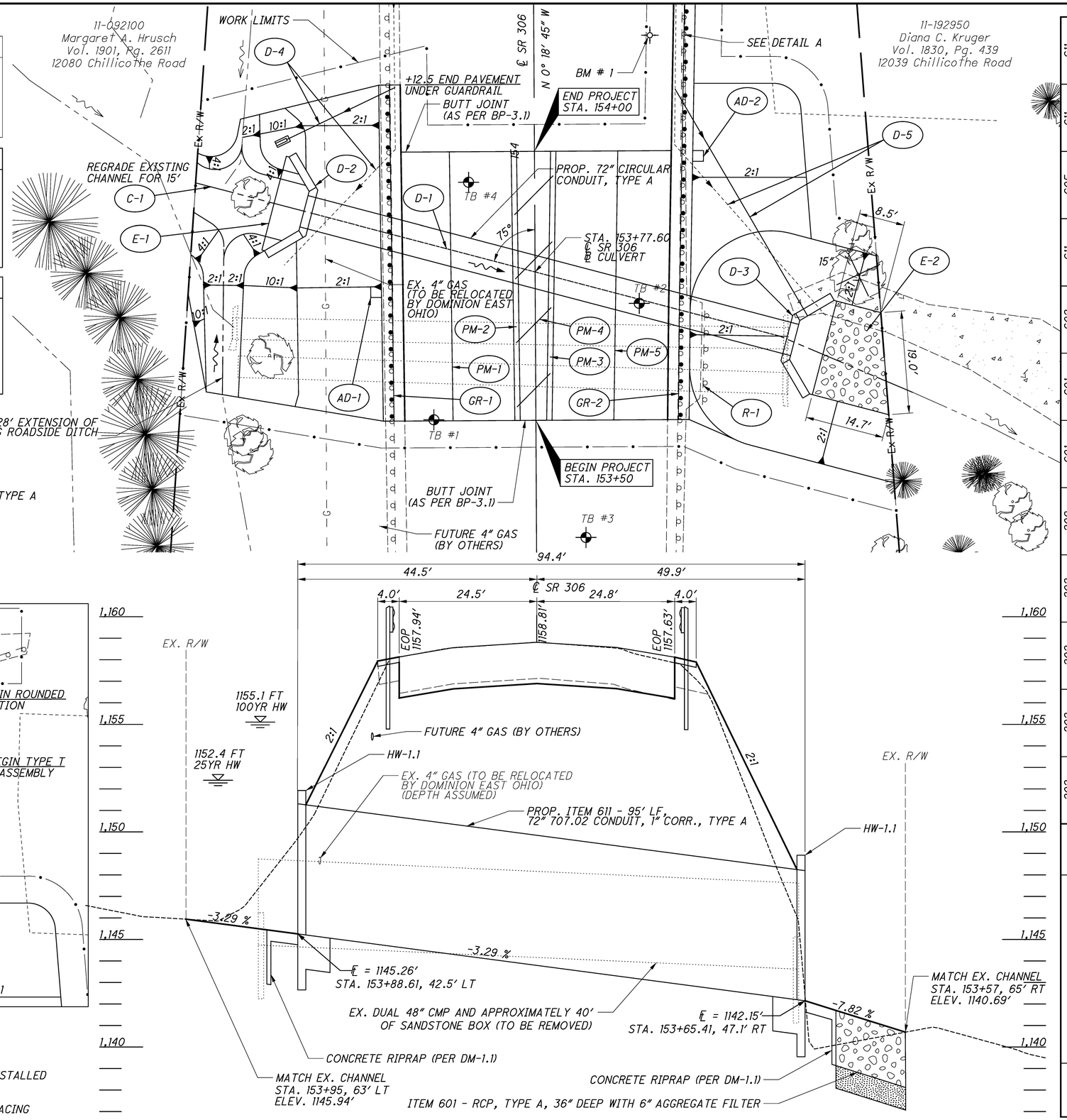

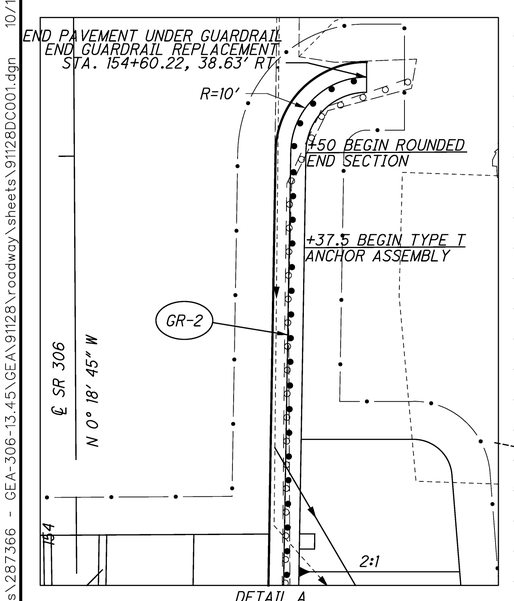

NOTES:

1. PROPOSED UNDERDRAIN (D-5) TO BE INSTALLED WITH OUTLET AT TOP OF HEADWALL

2. MATCH EXISTING TRANSVERSE LINE SPACING

REF NO.	STATION FROM	STATION TO	SIDE	202 HEADWALL REMOVED	202 PIPE REMOVED, 24" AND UNDER, AS PER PLAN	202 PIPE REMOVED, OVER 24", AS PER PLAN	202 REMOVAL MISC: CONCRETE RIPRAP	209 DITCH CLEANOUT	601 RIPRAP USING 6" REINFORCED CONCRETE SLAB	601 RCP, TYPE A W/AGGREGATE FILTER	602 CONCRETE MASONRY	611 PRECAST REINFORCED CONCRETE OUTLET	605 AGGREGATE DRAINS	611 6" CONDUIT, TYPE F FOR UNDERDRAIN OUTLETS	611 72" 707.02 CONDUIT, 1" CORR., TYPE A
				EACH	FT	FT	SQ YD	FT	SQ YD	CU YD	CU YD	EACH	FT	FT	FT
AD-1	153+74	153+74	LT										6		
AD-2	153+99	153+99	RT										6		
C-1	153+90	153+95	LT					15							95
D-1	153+54	153+92	BOTH			207									
D-2	153+58	154+00	LT	2							20.2				
D-3	153+52	153+74	RT	2							20.2				
D-4	154+01	154+12	LT		44							1		23	
D-5	153+69	154+12	RT		53									49	
E-1	153+81	154+00	LT						8.5	23.2					
E-2	153+43	153+78	RT				13.2		8.5						
TOTALS CARRIED TO GENERAL SUMMARY				4	97	207	13.2	15	17	23.2	40.4	1	12	72	95

HORIZONTAL SCALE IN FEET 0 5 10 20

CALCULATED SJT
CHECKED RMS

CULVERT DETAIL
CULVERT #1 - GEA-306-13.45

GEA-306-13.45/VAR

P:\CLE\ODOT\Projects\287366 - GEA-306-13.45\GEA\91128\roadway\sheets\91128DC001.dgn 10/17/2013 2:07:32 PM TYN61470

REF NO.	SHEET NO.	STATION FROM	STATION TO	SIDE	202 GUARDRAIL REMOVED	202 ANCHOR ASSEMBLY REMOVED, TYPE T	503 COFFERDAMS AND EXCAVATION BRACING	606 GUARDRAIL, TYPE 5	606 ROUNDED END SECTION	606 ANCHOR ASSEMBLY, TYPE T	626 BARRIER REFLECTOR	642 EDGE LINE, 4", TYPE 1 (WHITE)	642 CENTER LINE, TYPE 1 (SOLID DOUBLE YELLOW)	642 TRANSVERSE / DIAGONAL LINE, TYPE 1 (YELLOW)
					FT	EACH	LUMP	FT	EACH	EACH	EACH	MILE	MILE	FT
GR-1	29	153+50.00	154+12.50	LT	62.5			62.5			1			
GR-2	29	153+50.00	154+60.22	RT	106	1		87.5	1	1	2			
R-1	29	153+52.00	153+72.00	RT	19									
PM-1	29	153+50	154+00	LT								0.01		
PM-2	29	153+50	154+00	LT									0.01	
PM-3	29	153+50	154+00	BOTH										38
PM-4	29	153+50	154+00	RT									0.01	
PM-5	29	153+50	154+00	RT								0.01		
TOTALS CARRIED TO GENERAL SUMMARY					188	1	LUMP	150	1	1	3	0.02	0.02	38

CALCULATED SJT
CHECKED RMS

ESTIMATED QUANTITIES - GEA-306-13.45

GEA-306-13.45/VAR

P:\CLE\ODOT\Projects\287366 - GEA-306-13.45\GEA\91128\roadway\sheets\91128DS001.dgn 10/17/2013 1:47:48 PM TYN61470

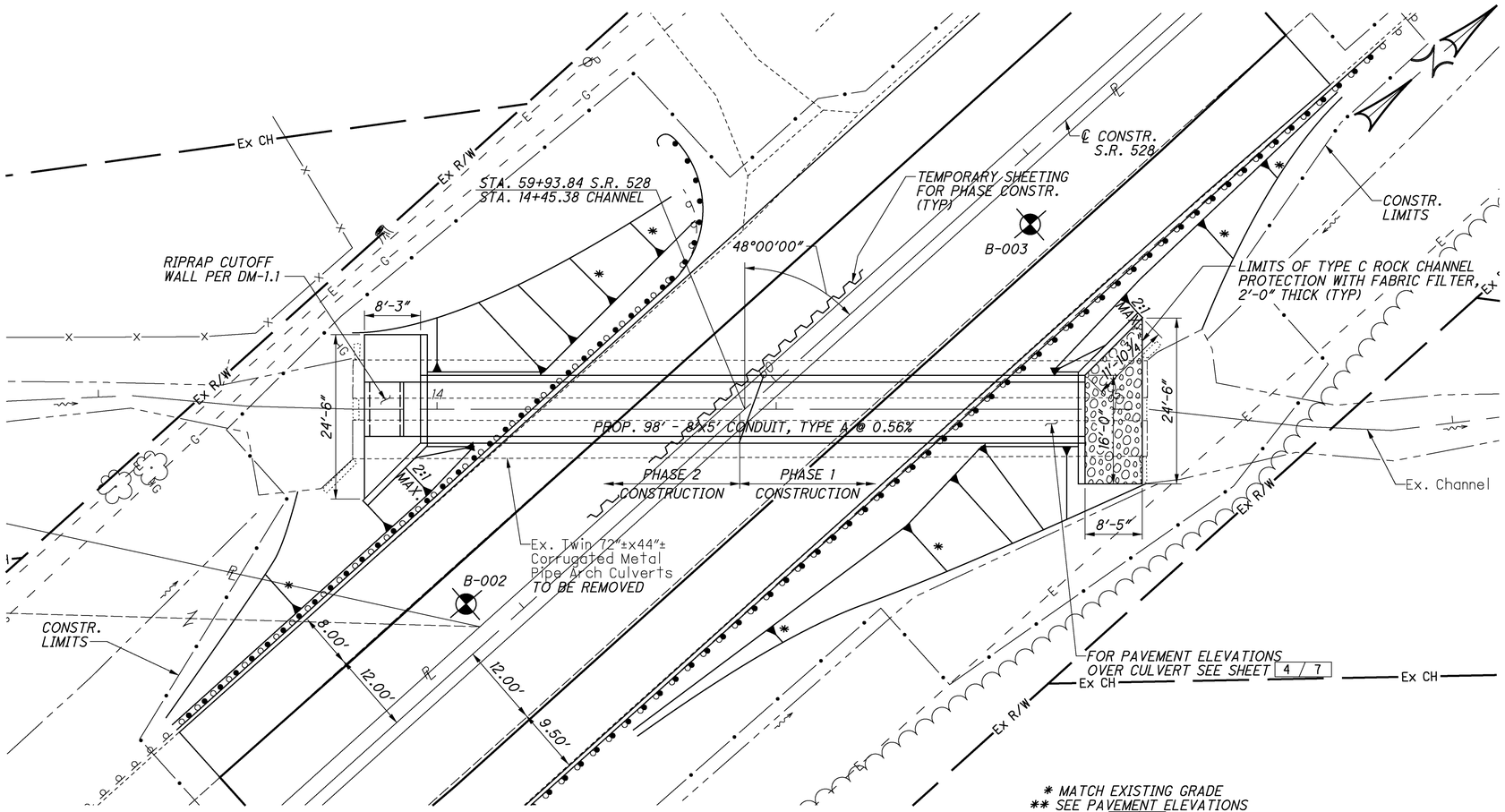

* MATCH EXISTING GRADE
** SEE PAVEMENT ELEVATIONS SHEET 4 / 7.

PLAN

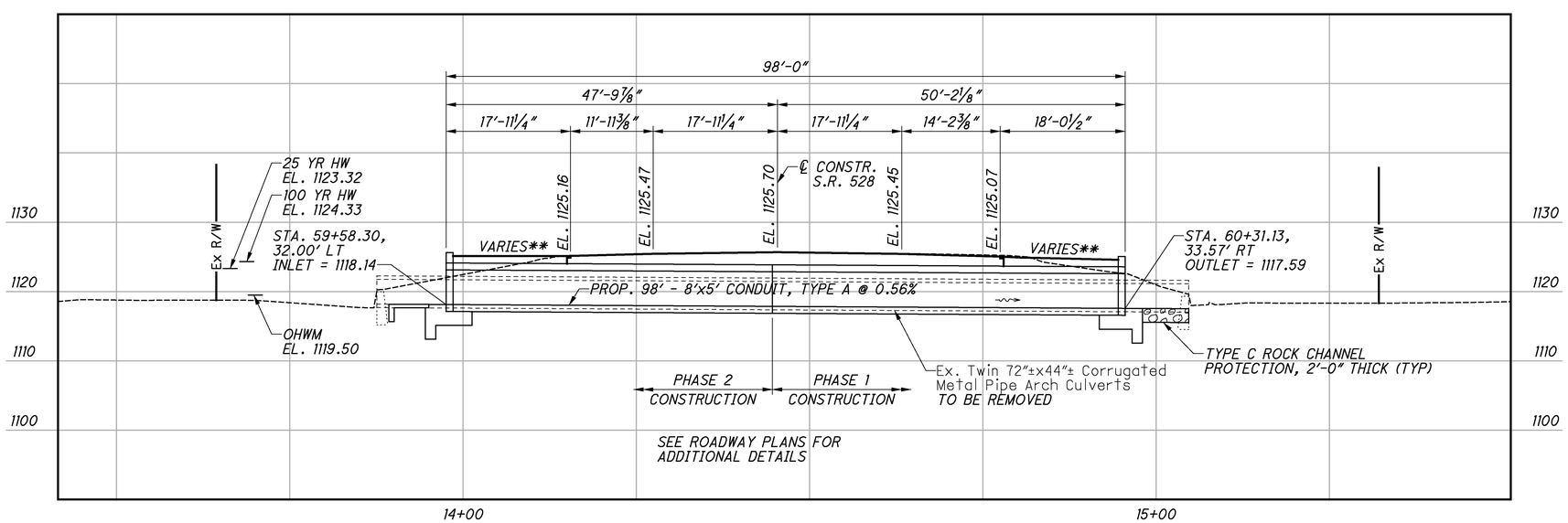

PROFILE ALONG ℄ CHANNEL

BENCHMARK DATA

PIN SET, STA. 56+93.45, OFFSET 23.80' RT, ELEV. 1125.45
PIN SET, STA. 63+15.61, OFFSET 44.50' LT, ELEV. 1122.57

FOR ADDITIONAL BENCHMARK INFORMATION. SEE ROADWAY PLAN SHEET 2/60

NOTES

1. EARTHWORK LIMITS SHOWN ARE APPROXIMATE. ACTUAL SLOPES SHALL CONFORM TO PLAN CROSS SECTIONS.
2. THE MAXIMUM SKEW OF THE PRECAST CONCRETE BOX SECTIONS AT THE PHASE CONSTRUCTION JOINT SHALL BE LIMITED TO 20 DEGREES.
3. THE SKEWED PRECAST CONCRETE BOX SECTIONS AT THE PHASE CONSTRUCTION JOINT SHALL HAVE A TONGUE AND GROOVE CONNECTION.

LEGEND

✦ BORING LOCATION

HYDRAULIC DATA

DRAINAGE AREA = 0.83 SQ. MILES
Q (25) = 238 CFS V (25) = 1.45 FT/S
Q (100) = 320 CFS V (100) = 1.56 FT/S
STRUCTURE RUNS FULL AT THE 25 YEAR DESIGN HW, BUT DOES NOT OVERTOP THE ROADWAY.

EXISTING STRUCTURE

TYPE: TWIN 72"±x44"± CORRUGATED METAL PIPE ARCH CULVERTS
SPANS: 6'-0"±, 6'-0"±
ROADWAY: 41'-6" TO EDGE OF PAVEMENT
LOADING: UNKNOWN
SKEW: 48°00'00"± RIGHT FORWARD
APPROACH SLABS: NONE
ALIGNMENT: TANGENT
CROWN: NORMAL
STRUCTURE FILE NUMBER: 2801906
DATE BUILT: 1963
DISPOSITION: TO BE REPLACED

PROPOSED STRUCTURE

TYPE: 8'x5' PRECAST CONCRETE BOX CULVERT WITH CAST-IN-PLACE CONCRETE HEADWALLS AND WINGWALLS
SPAN: 8'-0"
ROADWAY: 41'-6" TO EDGE OF PAVEMENT
LOADING: HL-93
SKEW: 48°00'00" RIGHT FORWARD
APPROACH SLABS: NONE
ALIGNMENT: TANGENT
CROWN: 0.0156 FT/FT
CULVERT FILE NUMBER: 285280749
COORDINATES: LATITUDE 41°28'37" N
LONGITUDE 81°03'05" W

DESIGN AGENCY
LJB Inc. • 2500 Newmark Drive
Miamisburg, OH 45342
(937) 259-5000 tel • (937) 259-5100 fax • LJBinc.com

DESIGNED	DRAWN	REVIEWED	DATE
AMT	MNM	DWW	6-13
CHECKED	REVISED	CULVERT FILE NUMBER	
DWS		285280749	

GEAUGA COUNTY
STA. 59+86.37
STA. 60+01.32

SITE PLAN
CULVERT #2 - GEA-528-0749
S.R. 528 OVER UNNAMED CREEK

GEA-306-13.45
PID No. 91128

Q:\ODOT_D12\0107585A.00 - VAR-D12 GES FY13 FY14\17181-1 GEA-306-1345 PID91128\91128\structures\GEA-528-0749\sheets\528_0749sp001.dgn 10/14/2013 10:14:17 AM sdillinger

GENERAL NOTES

DESIGN SPECIFICATIONS
THIS STRUCTURE CONFORMS TO THE "LRFD BRIDGE DESIGN SPECIFICATIONS" ADOPTED BY THE AMERICAN ASSOCIATION OF STATE HIGHWAY AND TRANSPORTATION OFFICIALS 2012 AND THE ODOT BRIDGE DESIGN MANUAL, 2007.

DESIGN DATA
CONCRETE, CLASS QC1, SUBSTRUCTURE - COMPRESSIVE STRENGTH 4 K.S.I.
REINFORCING STEEL - ASTM A615 OR A996
GRADE 60, MINIMUM YIELD STRENGTH 60 K.S.I. (ALL REINFORCING SHALL BE EPOXY COATED)
PRECAST STRUCTURE: FOR BOX AND PIPE CULVERTS, SEE CMS SECTION 611.

OPERATIONAL IMPORTANCE
A LOAD MODIFIER OF 1.0 HAS BEEN ASSUMED FOR THE DESIGN OF THIS STRUCTURE IN ACCORDANCE WITH THE AASHTO LRFD BRIDGE DESIGN SPECIFICATIONS, ARTICLE 1.3.5 AND THE ODOT BRIDGE DESIGN MANUAL, 2007.

FOUNDATION BEARING RESISTANCE
THE HEADWALL AND WINGWALL FOOTINGS, AS DESIGNED, PRODUCE A MAXIMUM SERVICE LOAD PRESSURE OF 1.32 K.S.F. AND A MAXIMUM STRENGTH LOAD PRESSURE OF 1.89 K.S.F. THE FACTORED BEARING RESISTANCE IS 2.45 K.S.F.

REINFORCING STEEL COVER
THE MINIMUM CONCRETE COVER OVER REINFORCING STEEL IS 2" UNLESS OTHERWISE NOTED.

FORESLOPE WALL ANCHOR DOWELS
ANCHOR PER CMS 510 WITH NONSHRINK, NONMETALLIC GROUT CONFORMING TO CMS 705.20 AND TO A DEPTH OF 9 INCHES. PAYMENT FOR DOWEL HOLES, GROUT AND INSTALLATION SHALL BE INCLUDED WITH ITEM 511.

AS AN ALTERNATIVE TO RESIN BONDING, THREADED INSERTS OR NONPROTRUDING MECHANICAL CONNECTORS CAST INTO THE CULVERT BY THE MANUFACTURER MAY BE USED PROVIDED THEY CAN RESIST AN ULTIMATE PULL-OUT STRENGTH OF 12 KIPS AND MAINTAIN A MINIMUM COVER OF 3 INCHES AT THE BOTTOM OF THE CULVERT SLAB. MECHANICAL CONNECTORS MUST PROVIDE AN "L-SHAPED" BAR INSIDE THE CULVERT WITH A MINIMUM HORIZONTAL LENGTH OF 12 INCHES. PAYMENT FOR INSERTS OR MECHANICAL CONNECTORS SHALL BE INCLUDED WITH ITEM 611.

PREFORMED EXPANSION JOINT FILLER
PREFORMED EXPANSION JOINT FILLER (PEJF) CONFORMING TO CMS 705.03, 1 INCH THICK, SHALL BE PLACED ABOVE THE FOOTING BETWEEN THE SIDES OF THE BOX CULVERT AND THE ENDS OF THE WINGWALLS. PAYMENT FOR MATERIALS AND INSTALLATION SHALL BE INCLUDED WITH ITEM 516 - 1" PREFORMED EXPANSION JOINT FILLER.

BASIS OF PAYMENT
ALL LABOR, EQUIPMENT AND INCIDENTALS REQUIRED TO CONSTRUCT THE FOOTING, CUTOFF WALL, WINGWALLS AND FORESLOPE WALL SHALL BE INCLUDED WITH THE APPROPRIATE CONCRETE ITEM 511. PAYMENT FOR REINFORCING STEEL SHALL BE INCLUDED WITH ITEM 509 - EPOXY COATED REINFORCING STEEL.

POROUS BACKFILL WITH FILTER FABRIC
POROUS BACKFILL WITH FILTER FABRIC 1'-6" THICK SHALL BE PLACED BEHIND THE WINGWALLS ONLY AND SHALL EXTEND AT LEAST 6" BELOW THE BOTTOM OF THE WEEPHOLES TO 1'-0" BELOW THE EMBANKMENT SURFACE. GEOTEXTILE FABRIC SHALL BE PLACED BETWEEN THE POROUS BACKFILL AND REPLACED EXCAVATION ADJACENT TO THE STRUCTURE. IT SHALL TURN UNDER THE BOTTOM OF THE POROUS BACKFILL AND RETURN 6" ABOVE THE TOP ELEVATION OF THE WEEPHOLE.

WEEPHOLES SHALL BE PLACED 6" TO 12" ABOVE THE NORMAL WATER ELEVATION OR GROUND LINE AND SHALL HAVE A MAXIMUM SPACING OF 10'-0". A MINIMUM OF ONE WEEPHOLE SHALL BE PROVIDED PER WINGWALL.

ITEM 503, UNCLASSIFIED EXCAVATION, AS PER PLAN
UNCLASSIFIED EXCAVATION SHALL BE IN ACCORDANCE WITH 503 EXCEPT THAT THE BACKFILL MATERIAL SHALL BE 203 MATERIAL PLACED IN 6 INCH LIFTS.

BACKFILL LIMITATION
THE BACKFILL BEHIND THE WINGWALLS SHALL NOT BE PLACED HIGHER THAN THE ELEVATION OF THE SOIL ABOVE THE TOE. WHEN THE SOIL ABOVE THE TOE IS AT ITS FINISHED ELEVATION, THE REMAINDER OF THE BACKFILL MAY BE PLACED.

ITEM 503, COFFERDAMS AND EXCAVATION BRACING, AS PER PLAN
THE TEMPORARY SHEETING SHALL BE ASTM A328 AND SHALL HAVE A MINIMUM SECTION MODULUS OF 36 IN^3. THE TEMPORARY SHEETING SHALL BE DRIVEN TO A MINIMUM EMBEDMENT OF 22 FEET FOR A SUPPORTED FILL HEIGHT OF 13.25 FEET. THE DESIGN ABOVE FOR TEMPORARY SUPPORT OF EXCAVATION IS ONE REPRESENTATIVE DESIGN THAT MAY BE USED TO CONSTRUCT THE PROJECT. THE CONTRACTOR MAY CONSTRUCT THE DESIGN ABOVE OR PREPARE AN ALTERNATE DESIGN TO SUPPORT THE SIDES OF EXCAVATIONS. IF CONSTRUCTING AN ALTERNATE DESIGN FOR TEMPORARY SUPPORT OF EXCAVATION, PREPARE AND PROVIDE PLANS IN ACCORDANCE WITH C&MS 501.05. THE DEPARTMENT WILL PAY FOR THE TEMPORARY SUPPORT OF EXCAVATION AT THE CONTRACT LUMP SUM PRICE FOR COFFERDAMS AND EXCAVATION BRACING. NO ADDITIONAL PAYMENT WILL BE MADE FOR PROVIDING AN ALTERNATE DESIGN.

WATERPROOFING
TYPE 2 WATERPROOFING, PER CMS 512.08 AND 711.25, SHALL EXTEND VERTICALLY DOWN THE ENTIRE SIDES OF THE PRECAST CULVERT SECTIONS FOR ALL PORTIONS OF THE CULVERT WHICH SHALL BE IN CONTACT WITH THE BACKFILL OR PAVEMENT. PAYMENT FOR THE MEMBRANE WATERPROOFING SHALL BE AT THE CONTRACT PRICE BID PER SQUARE YARD FOR ITEM 512 - TYPE 3 WATERPROOFING.

TYPE 3 WATERPROOFING, PER CMS 512.08 AND 711.29 SHALL BE APPLIED TO THE TOP SURFACE OF THE PRECAST CULVERT SECTIONS AND SHALL EXTEND ONE FOOT VERTICALLY DOWN THE SIDES FOR ALL PORTIONS OF THE CULVERT WHICH SHALL BE IN CONTACT WITH THE BACKFILL. PAYMENT FOR THE MEMBRANE WATERPROOFING SHALL BE AT THE CONTRACT PRICE BID PER SQUARE YARD FOR ITEM 512 - TYPE 2 WATERPROOFING.

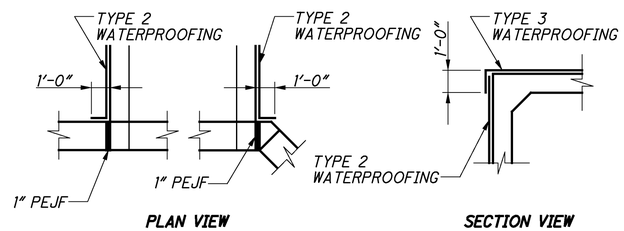

WATERPROOFING DETAILS

SEALING OF FORESLOPE WALL AND WINGWALLS
ALL EXPOSED FORESLOPE WALL AND WINGWALL CONCRETE SHALL BE SEALED WITH EPOXY-URETHANE SEALER. THE LIMITS SHALL BE AS SHOWN IN THE DIAGRAMS BELOW. PAYMENT FOR THE EPOXY-URETHANE SEALER SHALL BE PER ITEM 512 - SEALING OF CONCRETE SURFACES.

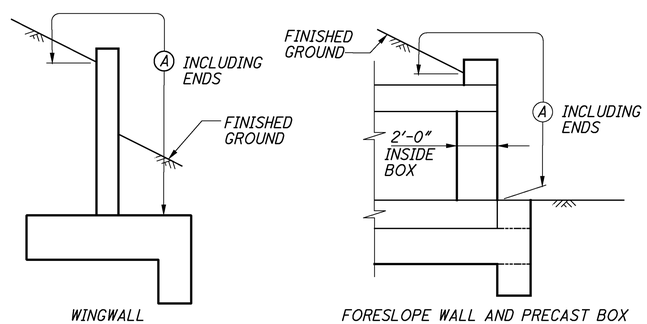

LIMITS OF ITEM 512-SEALING CONCRETE SURFACES

(A) - SEAL ENTIRE CONCRETE SURFACE AREA

PRECAST CONCRETE
AT THE OPTION OF THE CONTRACTOR, PRECAST HEADWALLS MAY BE FURNISHED PER ITEM 602.03 PRECAST STRUCTURES, PROVIDED THEY ARE SIZED TO MEET THE SOIL LOADING AND RESISTANCE PARAMETERS, AND MEET OR EXCEED THE MATERIAL STRENGTHS AND WALL LIMITS AS SHOWN AND SPECIFIED. FULL COMPENSATION FOR THE PRECAST SUBSTITUTION IS THE VOLUME OF CONCRETE AND THE WEIGHT OF THE REINFORCING STEEL FOR THE CORRESPONDING CAST-IN-PLACE STRUCTURE.

MAINTENANCE OF TRAFFIC
FOR MAINTENANCE OF TRAFFIC DETAILS, SEE ROADWAY PLANS.

Q:\ODOT_D12\0107585A.00 - VAR-D12 GES FY13 FY14\17181-1 GEA-306-1345 PID91128\91128\structures\GEA-528-0749\sheets\528_0749gn001.dgn 10/14/2013 10:16:40 AM sdillinger

DESIGN AGENCY
LJB Inc. • 2500 Newmark Drive
Miamisburg, OH 45342
(937) 259-5000 tel • (937) 259-5100 fax • LJBinc.com

DESIGNED	DRAWN	REVIEWED	DATE
AMT	MNM	DWW	6-13
CHECKED	REVISED	CULVERT FILE NUMBER	
DWS		285280749	

GENERAL NOTES
CULVERT #2 - GEA-528-0749
S.R. 528 OVER UNNAMED CREEK

GEA-306-13.45
PID No. 91128

ESTIMATED QUANTITIES

FUNDING: 02/STR/BR	ITEM	ITEM EXTENSION	TOTAL	UNIT	DESCRIPTION	PHASE 1	PHASE 2	GENERAL	AS PER PLAN SHEET NUMBER
LUMP	503	11101	LUMP		COFFERDAMS AND EXCAVATION BRACING, AS PER PLAN			LUMP	2 / 7
LUMP	503	21301	LUMP		UNCLASSIFIED EXCAVATION, AS PER PLAN			LUMP	2 / 7
4550	509	10000	4550	POUND	EPOXY COATED REINFORCING STEEL	2276	2274		
50	511	46210	50	CU YD	CLASS QC1 CONCRETE	25	25		
2	511	46610	2	CU YD	CLASS QC1 CONCRETE, HEADWALL	1	1		
68	512	10100	68	SQ YD	SEALING OF CONCRETE SURFACES (EPOXY-URETHANE)	34	34		
156	512	33000	156	SQ YD	TYPE 2 WATERPROOFING	81	75		
134	512	33010	134	SQ YD	TYPE 3 WATERPROOFING	70	64		
34	516	13600	34	SQ FT	1" PREFORMED EXPANSION JOINT FILLER	17	17		
LUMP	518	21230	LUMP		POROUS BACKFILL WITH FILTER FABRIC			LUMP	
17	601	11000	17	SQ YD	RIPRAP USING 6" REINFORCED CONCRETE SLAB		17		
15	601	32204	15	CU YD	ROCK CHANNEL PROTECTION, TYPE C WITH FABRIC FILTER	15			
98	611	94900	98	FT	8' x 5' CONDUIT, TYPE A, 706.05	51	47		

QUANTITIES COMPUTED BY: AMT
QUANTITIES CHECKED BY: AMM

DESIGN AGENCY
LJB Inc. • 2500 Newmark Drive
Miamisburg, OH 45342
(937) 259-5000 tel • (937) 259-5100 fax • LJBInc.com

DESIGNED	DRAWN	REVIEWED	DATE
AMT	MNM	DWW	6-13
CHECKED	REVISED	CULVERT FILE NUMBER	
AMM		285280749	

ESTIMATED QUANTITIES
CULVERT #2 - GEA-528-0749
S.R. 528 OVER UNNAMED CREEK

GEA-306-13.45
PID No. 91128

Q:\ODOT_D12\0107585A.00 - VAR-D12 GES FY13 FY14\17181-1 GEA-306-1345 PID91128\91128\WORKFILES\temp folder for final deliverables\91128\structures\GEA-528-0749\sheets\528_0749eq001.dgn 10/28/201

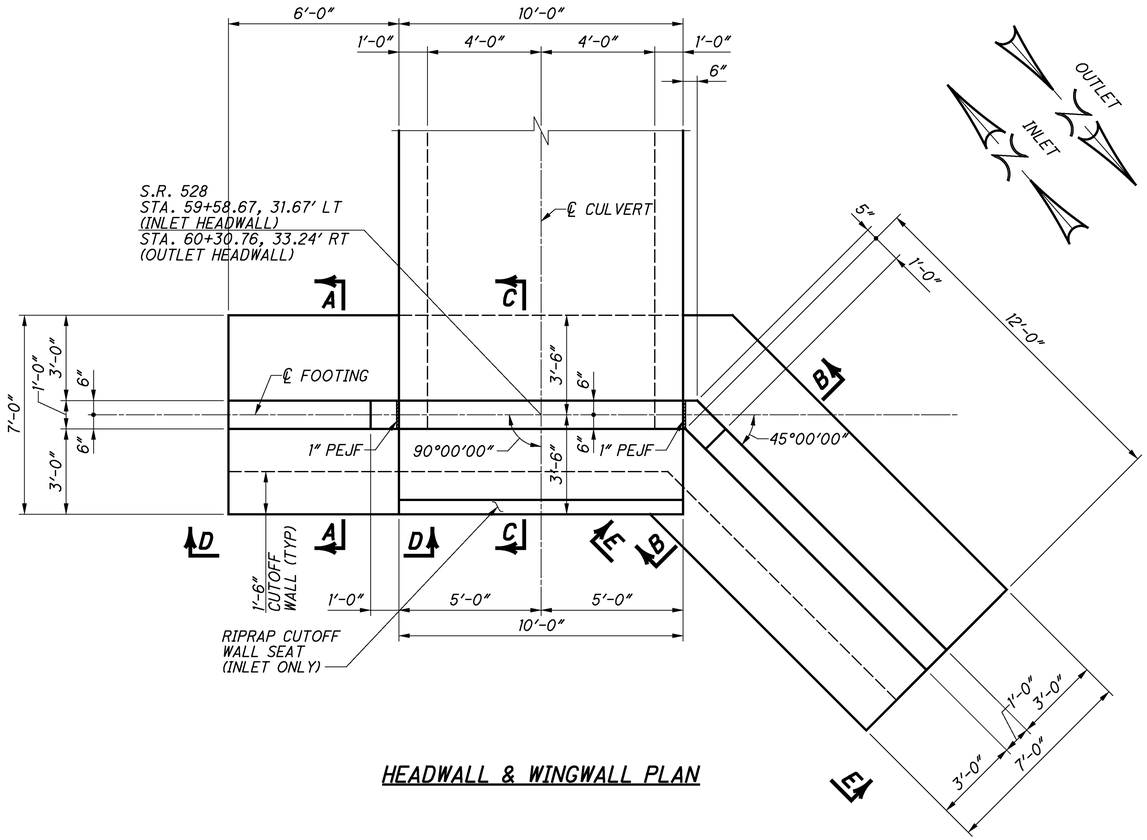

HEADWALL & WINGWALL PLAN

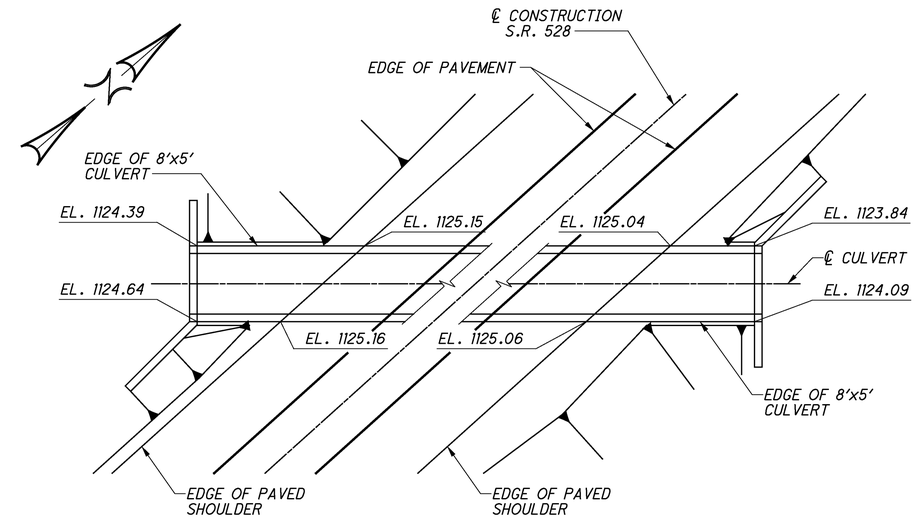

PAVEMENT ELEVATION PLAN

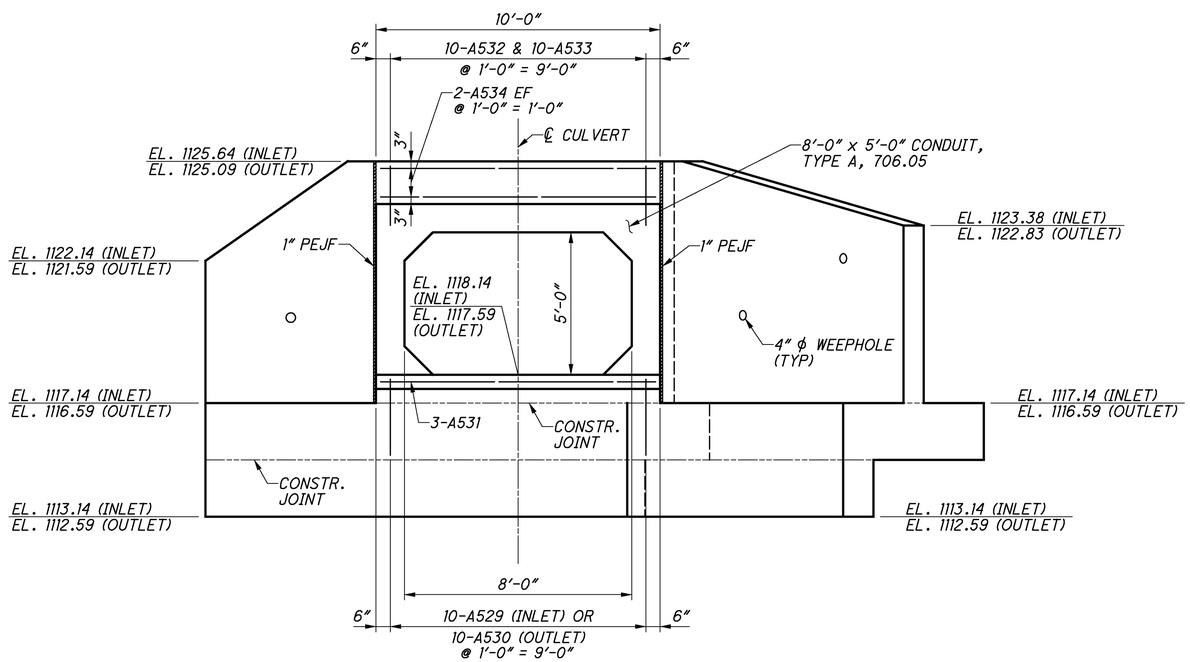

ELEVATION

LEGEND

PEJF = PREFORMED EXPANSION JOINT FILLER
EF = EACH FACE

NOTES:

1. FOR GENERAL NOTES, SEE SHEET 2 / 7.
2. FOR REINFORCING STEEL LIST, SEE SHEET 7 / 7.
3. FOR SECTIONS C-C THRU E-E, SEE SHEET 5 / 7.
4. FOR SECTIONS A-A AND B-B, SEE SHEET 6 / 7.

DESIGN AGENCY
LJB Inc. • 2500 Newmark Drive
Miamisburg, OH 45342
(937) 259-5000 tel • (937) 259-5100 fax • LJBinc.com

DESIGNED	DRAWN	REVIEWED	DATE
AMT	MNM	DWW	6-13
CHECKED	REVISED	CULVERT FILE NUMBER	
DWS		285280749	

HEADWALL AND WINGWALL PLAN AND ELEVATION

CULVERT #2 - GEA-528-0749
S.R. 528 OVER UNNAMED CREEK

GEA-306-13.45
PID No. 91128

Q:\ODOT_D12\0107585A.00 - VAR-D12 GES FY13 FY14\17181-1 GEA-306-1345 PID91128\91128\structures\GEA-528-0749\sheets\528_0749sd001.dgn 10/14/2013 10:18:30 AM sdillinger

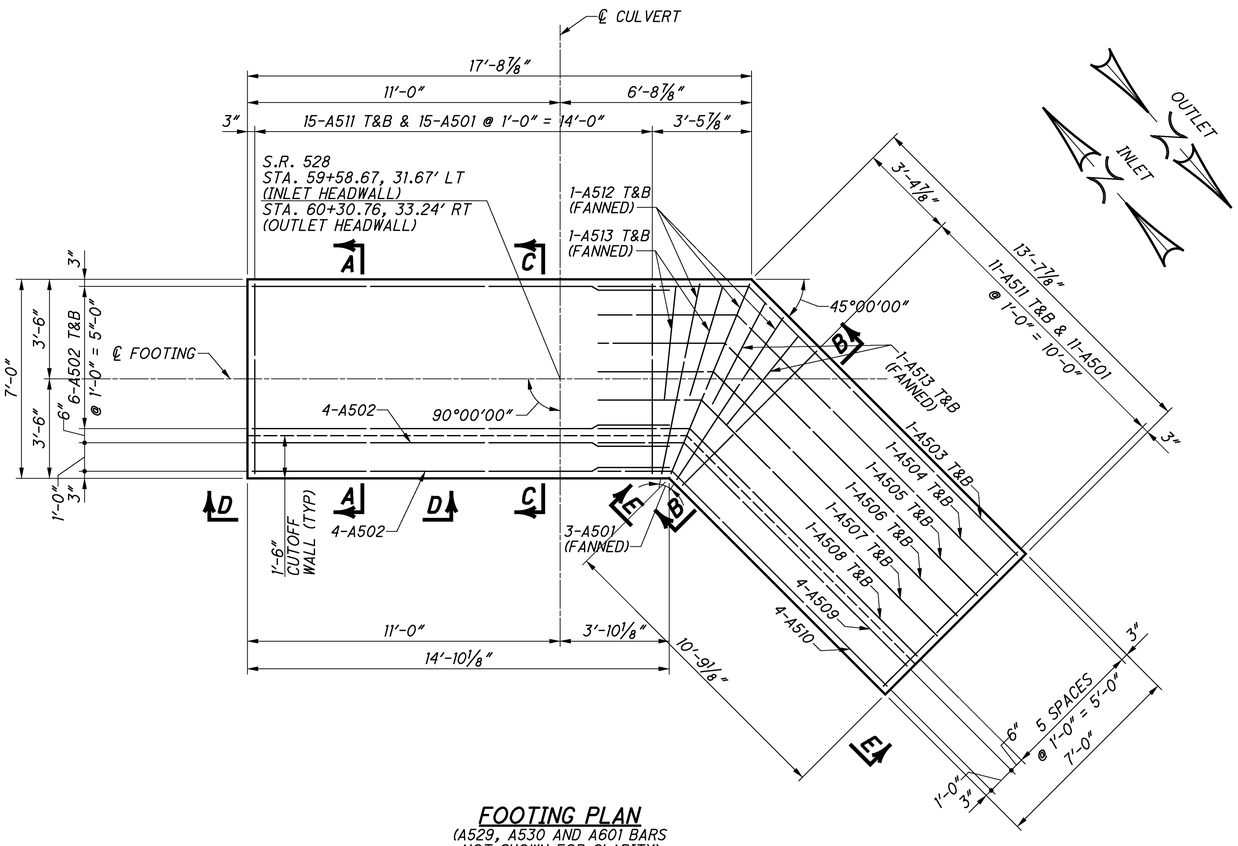

FOOTING PLAN

(A529, A530 AND A601 BARS NOT SHOWN FOR CLARITY)

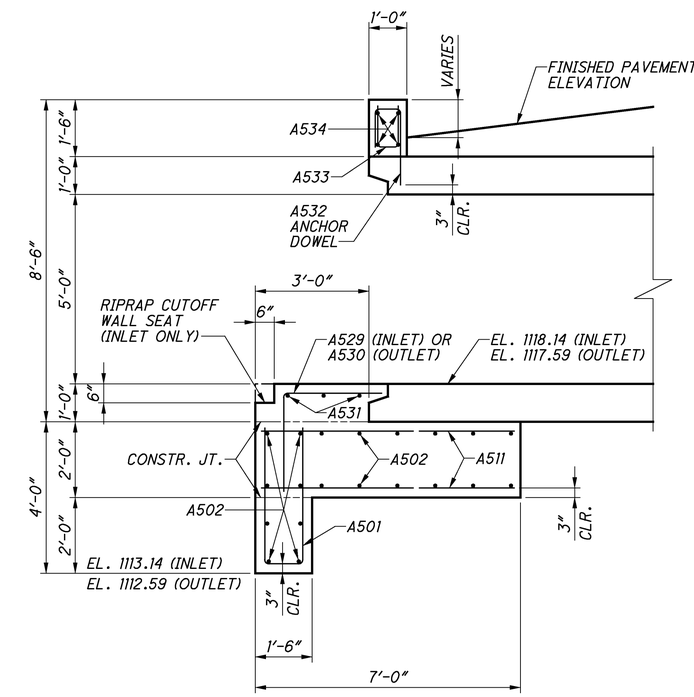

SECTION C-C

(CULVERT INLET BEVEL SHOWN)

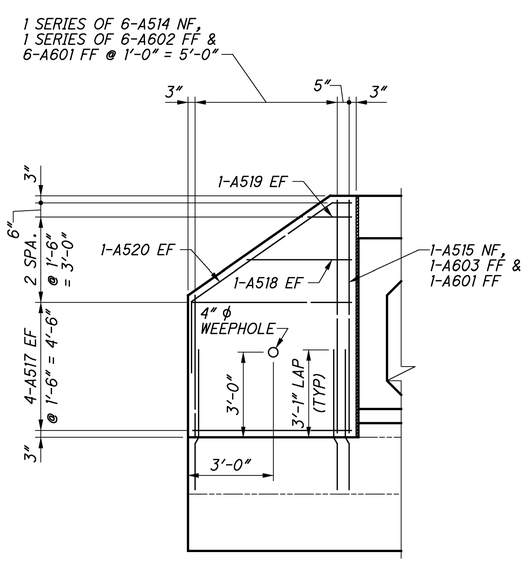

WINGWALL VIEW D-D

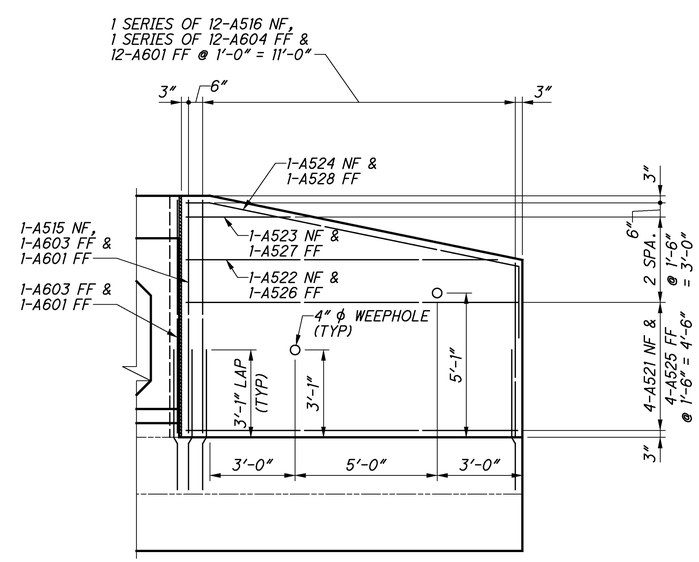

WINGWALL VIEW E-E

LEGEND

PEJF = PREFORMED EXPANSION JOINT FILLER
T = TOP
B = BOTTOM
EF = EACH FACE
FF = FAR FACE
NF = NEAR FACE

NOTES:

1. FOR GENERAL NOTES, SEE SHEET 2 / 7.
2. FOR REINFORCING STEEL LIST, SEE SHEET 7 / 7.
3. THE REQUIRED LAP LENGTH FOR #5 BARS IS 2'-6".

DESIGN AGENCY
LJB Inc. • 2500 Newmark Drive
Miamisburg, OH 45342
(937) 259-5000 tel • (937) 259-5100 fax • LJBinc.com

DESIGNED	DRAWN	REVIEWED	DATE
AMT	MNM	DWW	6-13
CHECKED	REVISED	CULVERT FILE NUMBER	
DWS		285280749	

FOOTING PLAN, WINGWALL VIEWS AND SECTION DETAILS

CULVERT #2 - GEA-528-0749
S.R. 528 OVER UNNAMED CREEK

GEA-306-13.45
PID No. 91128

Q:\ODOT_D12\0107585A.00 - VAR-D12 GES FY13 FY14\17181-1 GEA-306-1345 PID91128\structures\GEA-528-0749\sheets\528_0749sd002.dgn 10/14/2013 10:19:16 AM sdillinger

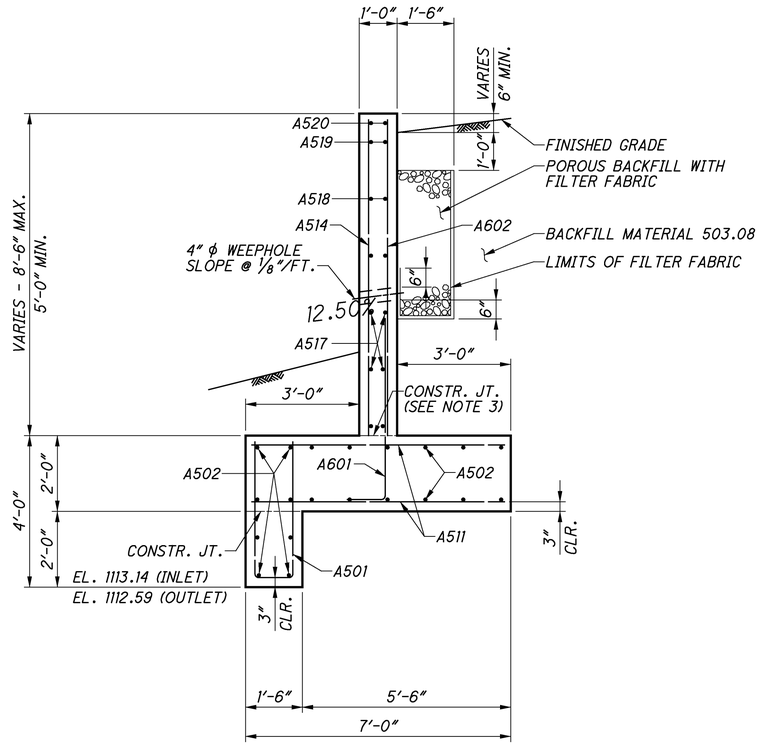

SECTION A-A

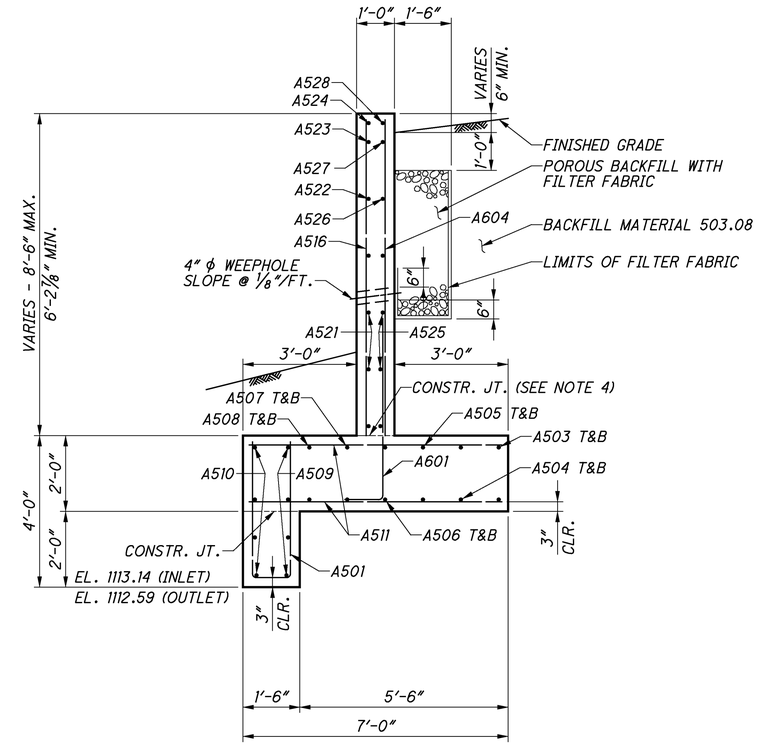

SECTION B-B

NOTES:

1. FOR GENERAL NOTES, SEE SHEET 2 / 7.
2. FOR REINFORCING STEEL LIST, SEE SHEET 7 / 7.
3. THE INTERFACE BETWEEN THE TOP OF FOOTING AND BASE OF WINGWALL STEM SHALL BE INTENTIONALLY ROUGHENED TO A FULL AMPLITUDE OF APPROXIMATELY 1/4" BY MEANS OF A SERRATED TROWEL.

DESIGN AGENCY
LJB Inc. • 2500 Newmark Drive
Miamisburg, OH 45342
(937) 259-5000 tel • (937) 259-5100 fax • LJBInc.com

DESIGNED	DRAWN	REVIEWED	DATE
AMT	MNM	DWW	6-13
CHECKED	REVISED	CULVERT FILE NUMBER	
DWS		285280749	

SECTION DETAILS

CULVERT #2 - GEA-528-0749
S.R. 528 OVER UNNAMED CREEK

GEA-306-13.45
PID No. 91128

Q:\ODOT_D12\0107585A.00 - VAR-D12 GES FY13 FY14\17181-1 GEA-306-1345 PID9128\9128\structures\GEA-528-0749\sheets\528_0749sd003.dgn 10/14/2013 10:20:25 AM sdillinger

HEADWALL AND WINGWALL REINFORCING STEEL LIST

MARK	NUMBER PHASE 1 OUTLET	NUMBER PHASE 2 INLET	NUMBER TOTAL	LENGTH	WEIGHT PHASE 1 OUTLET	WEIGHT PHASE 2 INLET	TYPE	A	B	C	D	E	F	G	H	K	O	R
A501	29	29	58	7′-9″	234	234	8			3′-6″	1′-0″	3′-6″						
A502	20	20	40	14′-7″	304	304	STR.											
A503	2	2	4	18′-7″	39	39	9			13′-4″	5′-3″				3′-9″	3′-9″	17′-1″	
A504	2	2	4	17′-9″	37	37	9			12′-11″	4′-10″				3′-5½″	3′-5½″	16′-4½″	
A505	2	2	4	16′-11″	35	35	9			12′-6″	4′-5″				3′-2″	3′-2″	15′-8″	
A506	2	2	4	16′-1″	34	34	9			12′-1″	4′-0″				2′-10¼″	2′-10¼″	14′-11¼″	
A507	2	2	4	15′-3″	32	32	9			11′-8″	3′-7″				2′-7″	2′-7″	14′-3″	
A508	2	2	4	14′-5″	30	30	9			11′-3″	3′-2″				2′-3½″	2′-3½″	13′-6½″	
A509	4	4	8	14′-1″	59	59	9			11′-1″	3′-0″				2′-1½″	2′-1½″	13′-2½″	
A510	4	4	8	13′-3″	55	55	9			10′-8″	2′-7″				1′-10″	1′-10″	12′-6″	
A511	52	52	104	6′-6″	353	353	STR.											
A512	6	6	12	7′-0″	44	44	STR.											
A513	8	8	16	4′-1″	34	34	STR.											
A514	1 SER.	1 SER.	2 SER.	VAR. 5′-0″	42	42	STR.											
	OF 6	OF 6	OF 6	TO 8′-4″														
	= 6	= 6	= 12	INCR. 8″														
A515	2	2	4	8′-4″	17	17	STR.											
A516	1 SER.	1 SER.	2 SER.	VAR. 6′-1″	90	90	STR.											
	OF 12	OF 12	OF 12	TO 8′-4″														
	= 12	= 12	= 24	INCR. 2½″														
A517	8	8	16	5′-7″	47	47	STR.											
A518	2	2	4	3′-8″	8	8	STR.											
A519	2	2	4	1′-6″	3	3	STR.											
A520	2	2	4	8′-11″	19	19	25		2′-6″	5′-10″	0′-8″	1′-5¼″	2′-0½″		0′-4½″	0′-6½″	7′-9¾″	
A521	4	4	8	11′-8″	49	49	STR.											
A522	1	1	2	10′-11″	23	23	STR.											
A523	1	1	2	3′-7″	4	4	STR.											
A524	1	1	2	14′-0″	15	15	25		2′-6″	10′-10″	0′-9″	0′-6″	2′-5½″		0′-1¾″	0′-8¾″	12′-0¾″	
A525	4	4	8	12′-1″	50	50	STR.											
A526	1	1	2	11′-4″	12	12	STR.											
A527	1	1	2	4′-0″	4	4	STR.											
A528	1	1	2	14′-5″	15	15	25		2′-6″	10′-10″	1′-2″	0′-6″	2′-5½″		0′-2¾″	1′-1¾″	12′-5¾″	
A529		10	10	4′-7″		48	10		2′-6″	2′-3″								
A530	10		10	4′-10″	50		10		2′-6″	2′-6″								
A531	3	3	6	9′-8″	30	30	STR.											
A532	10	10	20	3′-5″	36	36	8			1′-0″	0′-8″	2′-0″						
A533	10	10	20	2′-5″	25	25	8			1′-0″	0′-8″	1′-0″						
A534	4	4	8	9′-8″	40	40	STR.											
A601	21	21	42	5′-8″	179	179	2	10″	4′-10″									
A602	1 SER.	1 SER.	2 SER.	VAR. 5′-0″	60	60	STR.											
	OF 6	OF 6	OF 6	TO 8′-4″														
	= 6	= 6	= 12	INCR. 8″														
A603	3	3	6	8′-4″	38	38	STR.											
A604	1 SER.	1 SER.	2 SER.	VAR. 6′-1″	130	130	STR.											
	OF 12	OF 12	OF 12	TO 8′-4″														
	= 12	= 12	= 24	INCR. 2½″														
				TOTAL =	2276	2274												

BENDING DIAGRAMS

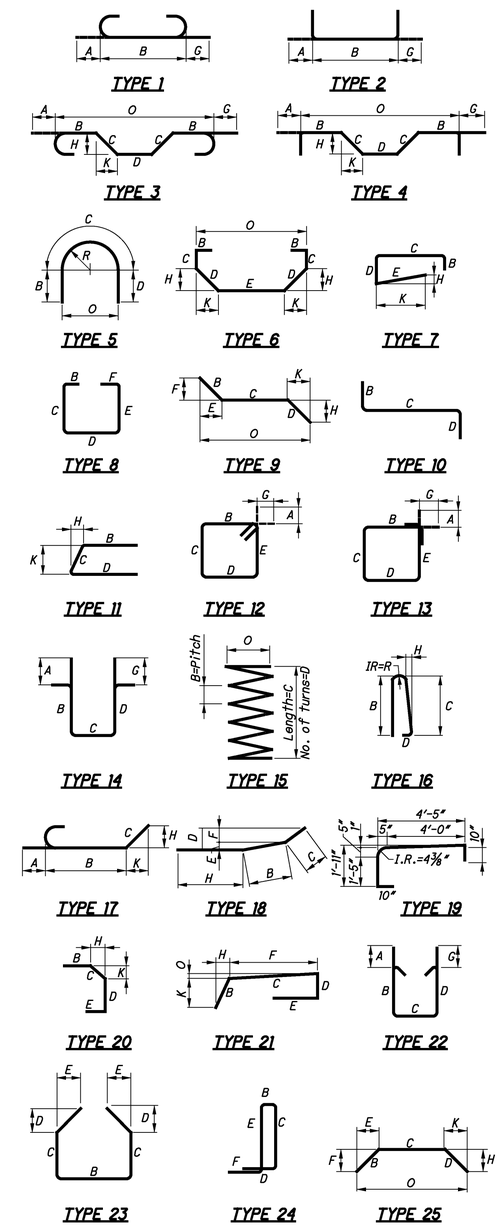

NOTES:

1. ALL REINFORCING STEEL BARS SHALL BE EPOXY COATED.
2. ALL DIMENSIONS ARE OUT TO OUT OF BAR.
3. DIMENSIONS "A" AND "G" ARE STANDARD BEND DIMENSIONS. REFER TO SECTION 509.05 OF THE CMS.
4. RADIUS DIMENSION "R" IS TO THE OUTSIDE OF THE BAR.
5. THE BAR SIZE NUMBER IS SPECIFIED ON THE PLANS IN THE BAR MARK COLUMN. THE FIRST DIGIT WHERE THREE DIGITS ARE USED, AND THE FIRST TWO DIGITS WHERE FOUR ARE USED, INDICATES THE BAR SIZE NUMBER.

DESIGN AGENCY
LJB Inc. • 2500 Newmark Drive
Miamisburg, OH 45342
(937) 259-5000 tel • (937) 259-5100 fax • LJBInc.com

DESIGNED	DRAWN	REVIEWED	DATE
AMT	MNM	DWW	6-13
CHECKED	REVISED	CULVERT FILE NUMBER	
MNM		285280749	

REINFORCING STEEL LIST
CULVERT #2 - GEA-528-0749
S.R. 528 OVER UNNAMED CREEK

GEA-306-13.45
PID No. 91128

Q:\ODOT_D12\0107585A.00 - VAR-D12 GES FY13 FY14\17181-1 GEA-306-1345 PID91128\structures\GEA-528-0749\sheets\528_0749r1001.dgn 10/14/2013 10:17:26 AM sdillinger

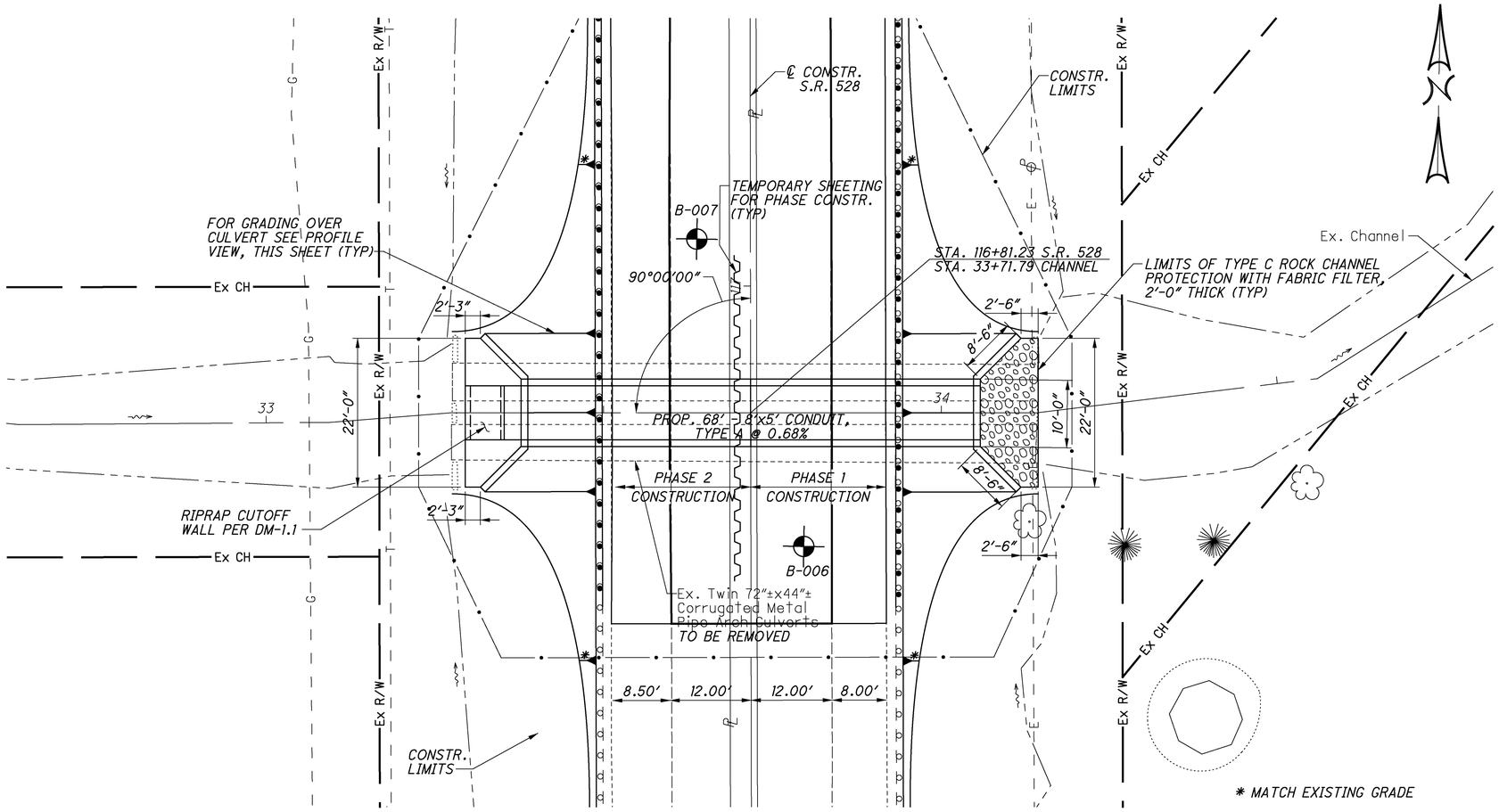

PLAN

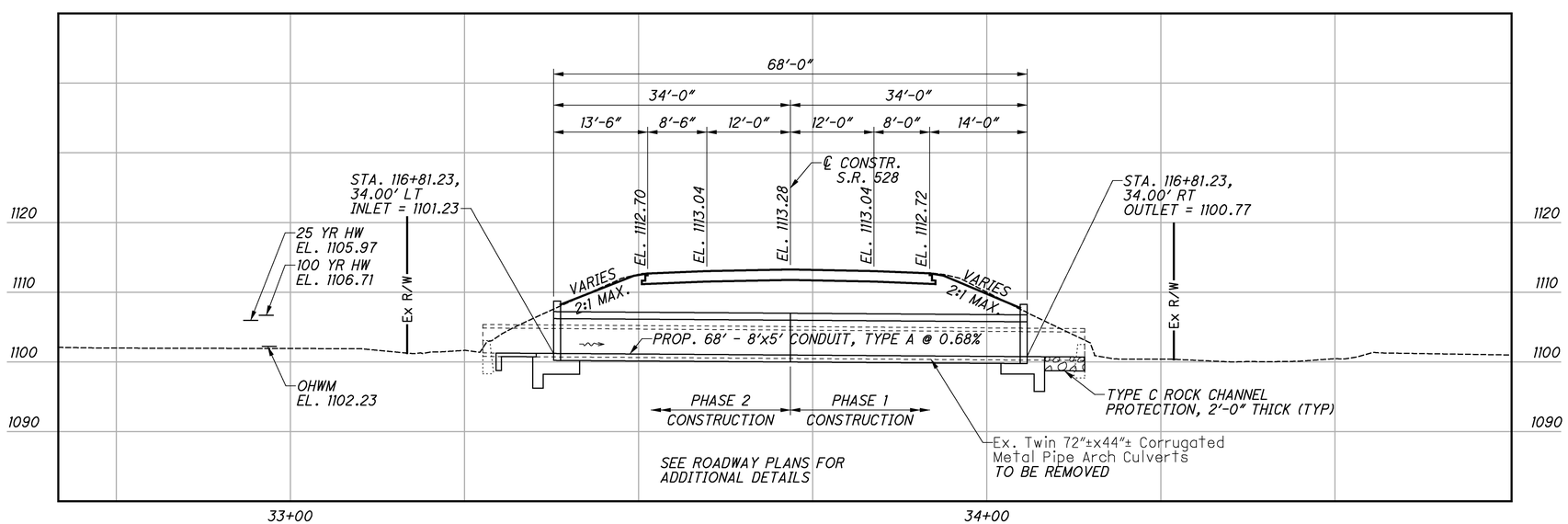

PROFILE ALONG ℄ CHANNEL

BENCHMARK DATA

PIN SET, STA. 113+55.44, OFFSET 24.50' RT, ELEV. 1116.05
PIN SET, STA. 119+54.65, OFFSET 40.80' LT, ELEV. 1109.43

FOR ADDITIONAL BENCHMARK INFORMATION. SEE ROADWAY PLAN SHEET 2/60

NOTES

EARTHWORK LIMITS SHOWN ARE APPROXIMATE. ACTUAL SLOPES SHALL CONFORM TO PLAN CROSS SECTIONS.

LEGEND

BORING LOCATION

HYDRAULIC DATA

DRAINAGE AREA = 0.93 SQ. MILES
Q (25) = 227 CFS V (25) = 0.77 FT/S
Q (100) = 282 CFS V (100) = 0.71 FT/S
STRUCTURE CLEARS THE 25 YEAR DESIGN HW BY 0.26 FEET.

EXISTING STRUCTURE

TYPE: TWIN 72"±x44"± CORRUGATED METAL ARCH PIPE CULVERTS
SPANS: 6'-0"±, 6'-0"±
ROADWAY: 40'-0"± TO EDGE OF PAVEMENT
LOADING: UNKNOWN
SKEW: 90°00'00"±
APPROACH SLABS: NONE
ALIGNMENT: TANGENT
CROWN: NORMAL
STRUCTURE FILE NUMBER: 2801957
DATE BUILT: 1963
DISPOSITION: TO BE REPLACED

PROPOSED STRUCTURE

TYPE: 8'x5' PRECAST CONCRETE BOX CULVERT WITH CAST-IN-PLACE CONCRETE HEADWALLS AND WINGWALLS
SPAN: 8'-0"
ROADWAY: 40'-0" TO EDGE OF PAVEMENT
LOADING: HL-93
SKEW: 90°00'00"
APPROACH SLABS: NONE
ALIGNMENT: TANGENT
CROWN: 0.0156 FT/FT
CULVERT FILE NUMBER: 285280857
COORDINATES: LATITUDE 41°29'33" N
LONGITUDE 81°03'05" W

DESIGN AGENCY
LJB Inc. - 2500 Newmark Drive
Miamisburg, OH 45342
(937) 259-5000 tel • (937) 259-5100 fax • LJBInc.com

DESIGNED	DRAWN	REVIEWED	DATE
DWS	MNM	DWW	6-13
CHECKED	REVISED	CULVERT FILE NUMBER	
AMT		285280857	

GEAUGA COUNTY
STA. 116+76.23
STA. 116+86.23

SITE PLAN
CULVERT #3 - GEA-528-0857
S.R. 528 OVER UNNAMED CREEK

GEA-306-13.45
PID No. 91128

Q:\ODOT_D12\0107585A.00 - VAR-D12 GES FY13 FY14\17181-1 GEA-306-1345 PID91128\91128\structures\GEA-528-0857\sheets\528_0857sp001.dgn 10/14/2013 10:22:08 AM sdillinger

GENERAL NOTES

DESIGN SPECIFICATIONS
THIS STRUCTURE CONFORMS TO THE "LRFD BRIDGE DESIGN SPECIFICATIONS" ADOPTED BY THE AMERICAN ASSOCIATION OF STATE HIGHWAY AND TRANSPORTATION OFFICIALS 2012 AND THE ODOT BRIDGE DESIGN MANUAL, 2007.

DESIGN DATA
CONCRETE, CLASS QC1, SUBSTRUCTURE - COMPRESSIVE STRENGTH 4 K.S.I.
REINFORCING STEEL - ASTM A615 OR A996
GRADE 60, MINIMUM YIELD STRENGTH 60 K.S.I. (ALL REINFORCING SHALL BE EPOXY COATED)
PRECAST STRUCTURE: FOR BOX AND PIPE CULVERTS, SEE CMS SECTION 611.

OPERATIONAL IMPORTANCE
A LOAD MODIFIER OF 1.0 HAS BEEN ASSUMED FOR THE DESIGN OF THIS STRUCTURE IN ACCORDANCE WITH THE AASHTO LRFD BRIDGE DESIGN SPECIFICATIONS, ARTICLE 1.3.5 AND THE ODOT BRIDGE DESIGN MANUAL, 2007.

FOUNDATION BEARING RESISTANCE
THE HEADWALL AND WINGWALL FOOTINGS, AS DESIGNED, PRODUCE A MAXIMUM SERVICE LOAD PRESSURE OF 1.42 K.S.F. AND A MAXIMUM STRENGTH LOAD PRESSURE OF 2.05 K.S.F. THE FACTORED BEARING RESISTANCE IS 2.45 K.S.F.

REINFORCING STEEL COVER
THE MINIMUM CONCRETE COVER OVER REINFORCING STEEL IS 2" UNLESS OTHERWISE NOTED.

FORESLOPE WALL ANCHOR DOWELS
ANCHOR PER CMS 510 WITH NONSHRINK, NONMETALLIC GROUT CONFORMING TO CMS 705.20 AND TO A DEPTH OF 9 INCHES. PAYMENT FOR DOWEL HOLES, GROUT AND INSTALLATION SHALL BE INCLUDED WITH ITEM 511.

AS AN ALTERNATIVE TO RESIN BONDING, THREADED INSERTS OR NONPROTRUDING MECHANICAL CONNECTORS CAST INTO THE CULVERT BY THE MANUFACTURER MAY BE USED PROVIDED THEY CAN RESIST AN ULTIMATE PULL-OUT STRENGTH OF 12 KIPS AND MAINTAIN A MINIMUM COVER OF 3 INCHES AT THE BOTTOM OF THE CULVERT SLAB. MECHANICAL CONNECTORS MUST PROVIDE AN "L-SHAPED" BAR INSIDE THE CULVERT WITH A MINIMUM HORIZONTAL LENGTH OF 12 INCHES. PAYMENT FOR INSERTS OR MECHANICAL CONNECTORS SHALL BE INCLUDED WITH ITEM 611.

PREFORMED EXPANSION JOINT FILLER
PREFORMED EXPANSION JOINT FILLER (PEJF) CONFORMING TO CMS 705.03, 1 INCH THICK, SHALL BE PLACED ABOVE THE FOOTING BETWEEN THE SIDES OF THE BOX CULVERT AND THE ENDS OF THE WINGWALLS. PAYMENT FOR MATERIALS AND INSTALLATION SHALL BE INCLUDED WITH ITEM 516 - 1" PREFORMED EXPANSION JOINT FILLER.

BASIS OF PAYMENT
ALL LABOR, EQUIPMENT AND INCIDENTALS REQUIRED TO CONSTRUCT THE FOOTING, CUTOFF WALL, WINGWALLS AND FORESLOPE WALL SHALL BE INCLUDED WITH THE APPROPRIATE CONCRETE ITEM 511. PAYMENT FOR REINFORCING STEEL SHALL BE INCLUDED WITH ITEM 509 - EPOXY COATED REINFORCING STEEL.

POROUS BACKFILL WITH FILTER FABRIC
POROUS BACKFILL WITH FILTER FABRIC 1'-6" THICK SHALL BE PLACED BEHIND THE WINGWALLS ONLY AND SHALL EXTEND AT LEAST 6" BELOW THE BOTTOM OF THE WEEPHOLES TO 1'-0" BELOW THE EMBANKMENT SURFACE. GEOTEXTILE FABRIC SHALL BE PLACED BETWEEN THE POROUS BACKFILL AND REPLACED EXCAVATION ADJACENT TO THE STRUCTURE. IT SHALL TURN UNDER THE BOTTOM OF THE POROUS BACKFILL AND RETURN 6" ABOVE THE TOP ELEVATION OF THE WEEPHOLE.

WEEPHOLES SHALL BE PLACED 6" TO 12" ABOVE THE NORMAL WATER ELEVATION OR GROUND LINE AND SHALL HAVE A MAXIMUM SPACING OF 10'-0". A MINIMUM OF ONE WEEPHOLE SHALL BE PROVIDED PER WINGWALL.

ITEM 503, UNCLASSIFIED EXCAVATION, AS PER PLAN
UNCLASSIFIED EXCAVATION SHALL BE IN ACCORDANCE WITH 503 EXCEPT THAT THE BACKFILL MATERIAL SHALL BE 203 MATERIAL PLACED IN 6 INCH LIFTS.

BACKFILL LIMITATION
THE BACKFILL BEHIND THE WINGWALLS SHALL NOT BE PLACED HIGHER THAN THE ELEVATION OF THE SOIL ABOVE THE TOE. WHEN THE SOIL ABOVE THE TOE IS AT ITS FINISHED ELEVATION, THE REMAINDER OF THE BACKFILL MAY BE PLACED.

ITEM 503, COFFERDAMS AND EXCAVATION BRACING, AS PER PLAN
THE TEMPORARY SHEETING SHALL BE ASTM A328 AND SHALL HAVE A MINIMUM SECTION MODULUS OF 36 IN^3. THE TEMPORARY SHEETING SHALL BE DRIVEN TO A MINIMUM EMBEDMENT OF 22 FEET FOR A SUPPORTED FILL HEIGHT OF 13.25 FEET. THE DESIGN ABOVE FOR TEMPORARY SUPPORT OF EXCAVATION IS ONE REPRESENTATIVE DESIGN THAT MAY BE USED TO CONSTRUCT THE PROJECT. THE CONTRACTOR MAY CONSTRUCT THE DESIGN ABOVE OR PREPARE AN ALTERNATE DESIGN TO SUPPORT THE SIDES OF EXCAVATIONS. IF CONSTRUCTING AN ALTERNATE DESIGN FOR TEMPORARY SUPPORT OF EXCAVATION, PREPARE AND PROVIDE PLANS IN ACCORDANCE WITH C&MS 501.05. THE DEPARTMENT WILL PAY FOR THE TEMPORARY SUPPORT OF EXCAVATION AT THE CONTRACT LUMP SUM PRICE FOR COFFERDAMS AND EXCAVATION BRACING. NO ADDITIONAL PAYMENT WILL BE MADE FOR PROVIDING AN ALTERNATE DESIGN.

WATERPROOFING
TYPE 2 WATERPROOFING, PER CMS 512.08 AND 711.25, SHALL EXTEND VERTICALLY DOWN THE ENTIRE SIDES OF THE PRECAST CULVERT SECTIONS FOR ALL PORTIONS OF THE CULVERT WHICH SHALL BE IN CONTACT WITH THE BACKFILL. PAYMENT FOR THE MEMBRANE WATERPROOFING SHALL BE AT THE CONTRACT PRICE BID PER SQUARE YARD FOR ITEM 512 - TYPE 2 WATERPROOFING.

TYPE 2 WATERPROOFING, PER CMS 512.08 AND 711.25 SHALL BE APPLIED TO THE TOP SURFACE OF THE PRECAST CULVERT SECTIONS AND SHALL EXTEND ONE FOOT VERTICALLY DOWN THE SIDES FOR ALL PORTIONS OF THE CULVERT WHICH SHALL BE IN CONTACT WITH THE BACKFILL. PAYMENT FOR THE MEMBRANE WATERPROOFING SHALL BE AT THE CONTRACT PRICE BID PER SQUARE YARD FOR ITEM 512 - TYPE 2 WATERPROOFING.

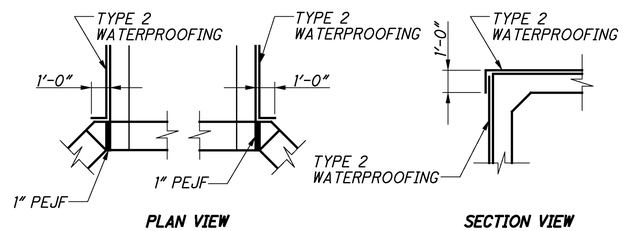

WATERPROOFING DETAILS

SEALING OF FORESLOPE WALL AND WINGWALLS
ALL EXPOSED FORESLOPE WALL AND WINGWALL CONCRETE SHALL BE SEALED WITH EPOXY-URETHANE SEALER. THE LIMITS SHALL BE AS SHOWN IN THE DIAGRAMS BELOW. PAYMENT FOR THE EPOXY-URETHANE SEALER SHALL BE PER ITEM 512 - SEALING OF CONCRETE SURFACES.

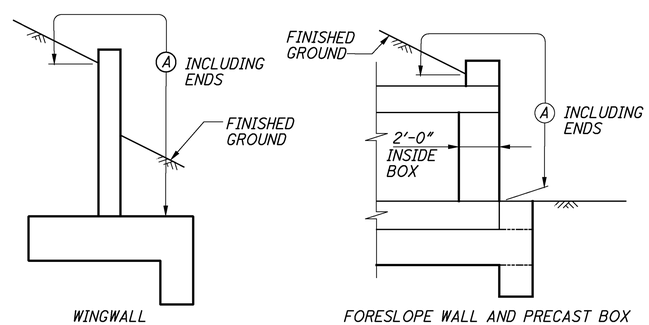

LIMITS OF ITEM 512-SEALING CONCRETE SURFACES

(A) - SEAL ENTIRE CONCRETE SURFACE AREA

PRECAST CONCRETE
AT THE OPTION OF THE CONTRACTOR, PRECAST HEADWALLS MAY BE FURNISHED PER ITEM 602.03 PRECAST STRUCTURES, PROVIDED THEY ARE SIZED TO MEET THE SOIL LOADING AND RESISTANCE PARAMETERS, AND MEET OR EXCEED THE MATERIAL STRENGTHS AND WALL LIMITS AS SHOWN AND SPECIFIED. FULL COMPENSATION FOR THE PRECAST SUBSTITUTION IS THE VOLUME OF CONCRETE AND THE WEIGHT OF THE REINFORCING STEEL FOR THE CORRESPONDING CAST-IN-PLACE STRUCTURE.

MAINTENANCE OF TRAFFIC
FOR MAINTENANCE OF TRAFFIC DETAILS, SEE ROADWAY PLANS.

DESIGN AGENCY
LJB Inc. • 2500 Newmark Drive
Miamisburg, OH 45342
(937) 259-5000 tel • (937) 259-5100 fax • LJBinc.com

DESIGNED	DRAWN	REVIEWED	DATE
AMT	MNM	DWW	6-13
CHECKED	REVISED	CULVERT FILE NUMBER	
DWS		285280857	

GENERAL NOTES
CULVERT #3 - GEA-528-0857
S.R. 528 OVER UNNAMED CREEK

GEA-306-13.45
PID No. 91128

Q:\ODOT_D12\0107585A.00 - VAR-D12 GES FY13 FY14\17181-1 GEA-306-1345 PID91128\91128\structures\GEA-528-0857\sheets\528_0857gn001.dgn 10/14/2013 10:26:08 AM sdillinger

ESTIMATED QUANTITIES

FUNDING: 02/STR/BR	ITEM	ITEM EXTENSION	TOTAL	UNIT	DESCRIPTION	PHASE 1	PHASE 2	GENERAL	AS PER PLAN SHEET NUMBER
LUMP	503	11101	LUMP		COFFERDAMS AND EXCAVATION BRACING, AS PER PLAN			LUMP	2 / 6
LUMP	503	21301	LUMP		UNCLASSIFIED EXCAVATION, AS PER PLAN			LUMP	2 / 6
4646	509	10000	4646	POUND	EPOXY COATED REINFORCING STEEL	2322	2324		
48	511	46210	48	CU YD	CLASS QC1 CONCRETE	24	24		
2	511	46610	2	CU YD	CLASS QC1 CONCRETE, HEADWALL	1	1		
64	512	10100	64	SQ YD	SEALING OF CONCRETE SURFACES (EPOXY-URETHANE)	32	32		
204	512	33000	204	SQ YD	TYPE 2 WATERPROOFING	102	102		
34	516	13600	34	SQ FT	1" PREFORMED EXPANSION JOINT FILLER	17	17		
LUMP	518	21230	LUMP		POROUS BACKFILL WITH FILTER FABRIC			LUMP	
14	601	11000	14	SQ YD	RIPRAP USING 6" REINFORCED CONCRETE SLAB		14		
12	601	32204	12	CU YD	ROCK CHANNEL PROTECTION, TYPE C WITH FABRIC FILTER	12			
68	611	94900	68	FT	8' x 5' CONDUIT, TYPE A, 706.05	34	34		

QUANTITIES COMPUTED BY: AMT
QUANTITIES CHECKED BY: AMM

DESIGN AGENCY
LJB Inc. • 2500 Newmark Drive
Miamisburg, OH 45342
(937) 259-5000 tel • (937) 259-5100 fax • LJBInc.com

DESIGNED	DRAWN	REVIEWED	DATE
AMT	MNM	DWW	6-13
CHECKED	REVISED	CULVERT FILE NUMBER	
DWS		285280857	

ESTIMATED QUANTITIES
CULVERT #3 - GEA-528-0857
S.R. 528 OVER UNNAMED CREEK

GEA-306-13.45
PID No. 91128

Q:\ODOT_D12\0107585A.00 - VAR-D12 GES FY13 FY14\17181-1 GEA-306-1345 PID91128\91128\WORKFILES\temp folder for final deliverables\91128\structures\GEA-528-0857\sheets\528_0857eq001.dgn 10/28/201

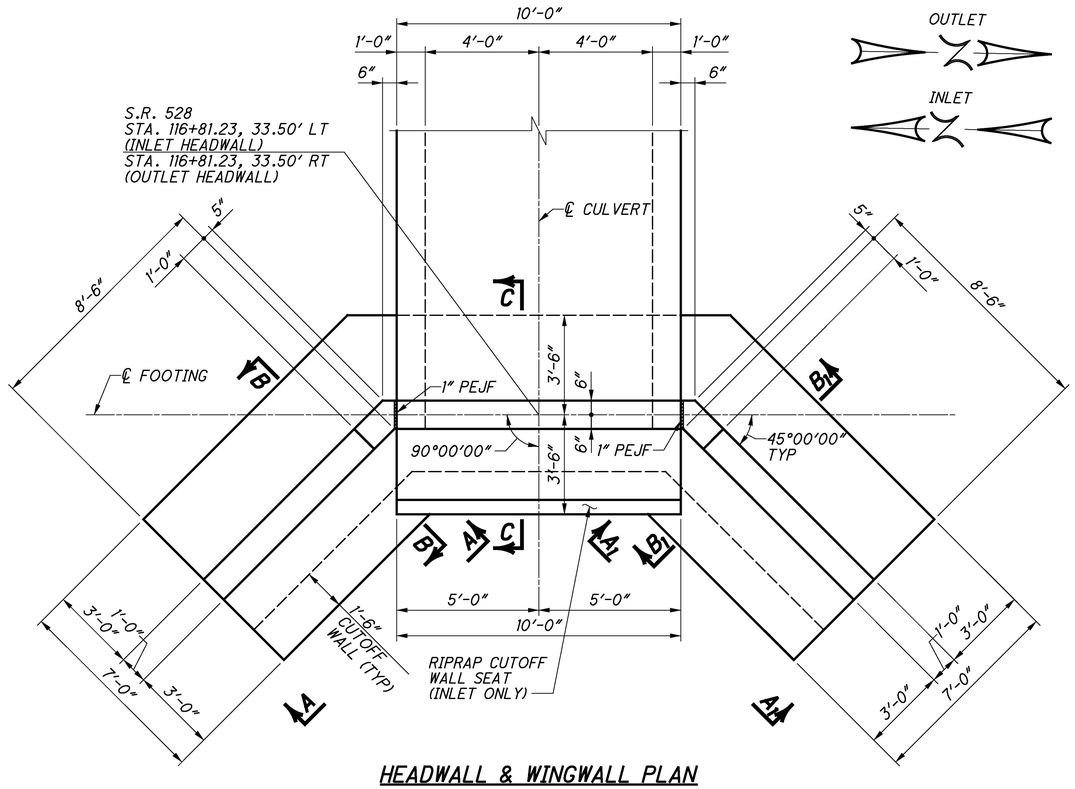

HEADWALL & WINGWALL PLAN

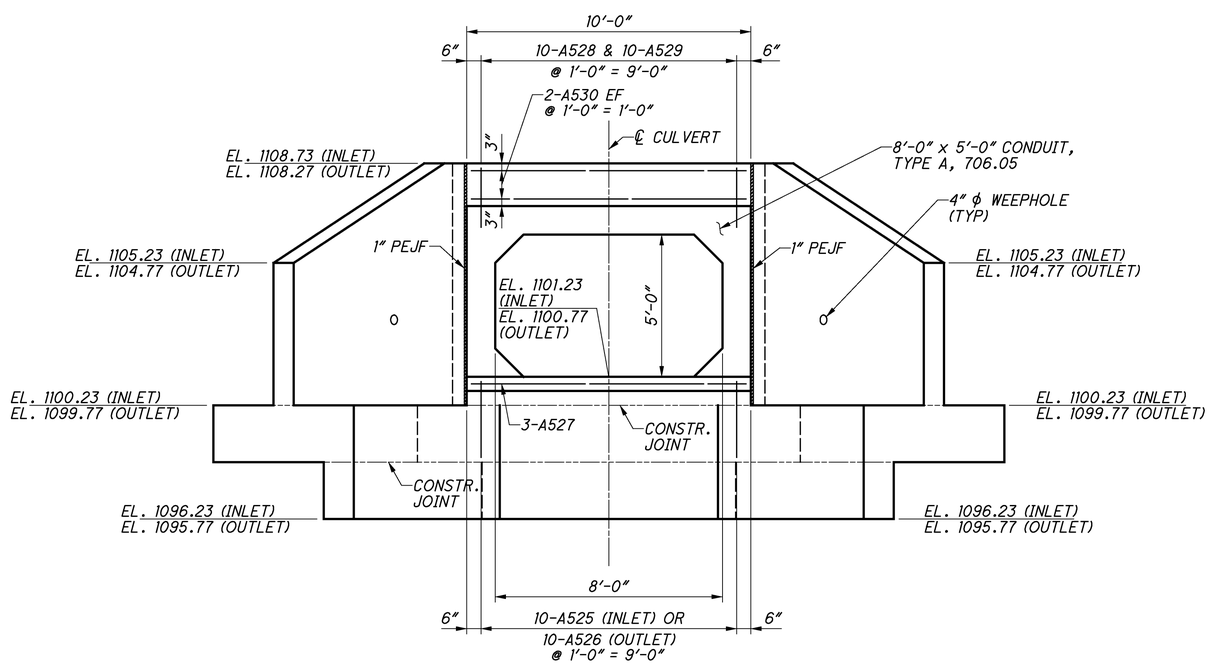

ELEVATION

LEGEND

PEJF = PREFORMED EXPANSION JOINT FILLER
EF = EACH FACE

NOTES:

1. FOR GENERAL NOTES, SEE SHEET 2 / 6.
2. FOR REINFORCING STEEL LIST, SEE SHEET 6 / 6.
3. FOR SECTIONS A-A THRU C-C, SEE SHEET 5 / 6.

DESIGN AGENCY
LJB Inc. • 2500 Newmark Drive
Miamisburg, OH 45342
(937) 259-5000 tel • (937) 259-5100 fax • LJBinc.com

DESIGNED	DRAWN	REVIEWED	DATE
AMT	MNM	DWW	6-13
CHECKED	REVISED	CULVERT FILE NUMBER	
DWS		285280857	

HEADWALL AND WINGWALL PLAN AND ELEVATION

CULVERT #3 - GEA-528-0857
S.R. 528 OVER UNNAMED CREEK

GEA-306-13.45
PID No. 91128

Q:\ODOT_D12\0107585A.00 - VAR-D12 GES FY13 FY14\17181-1 GEA-306-1345 PID91128\91128\structures\GEA-528-0857\sheets\528_0857sd001.dgn 10/14/2013 10:28:56 AM sdillinger

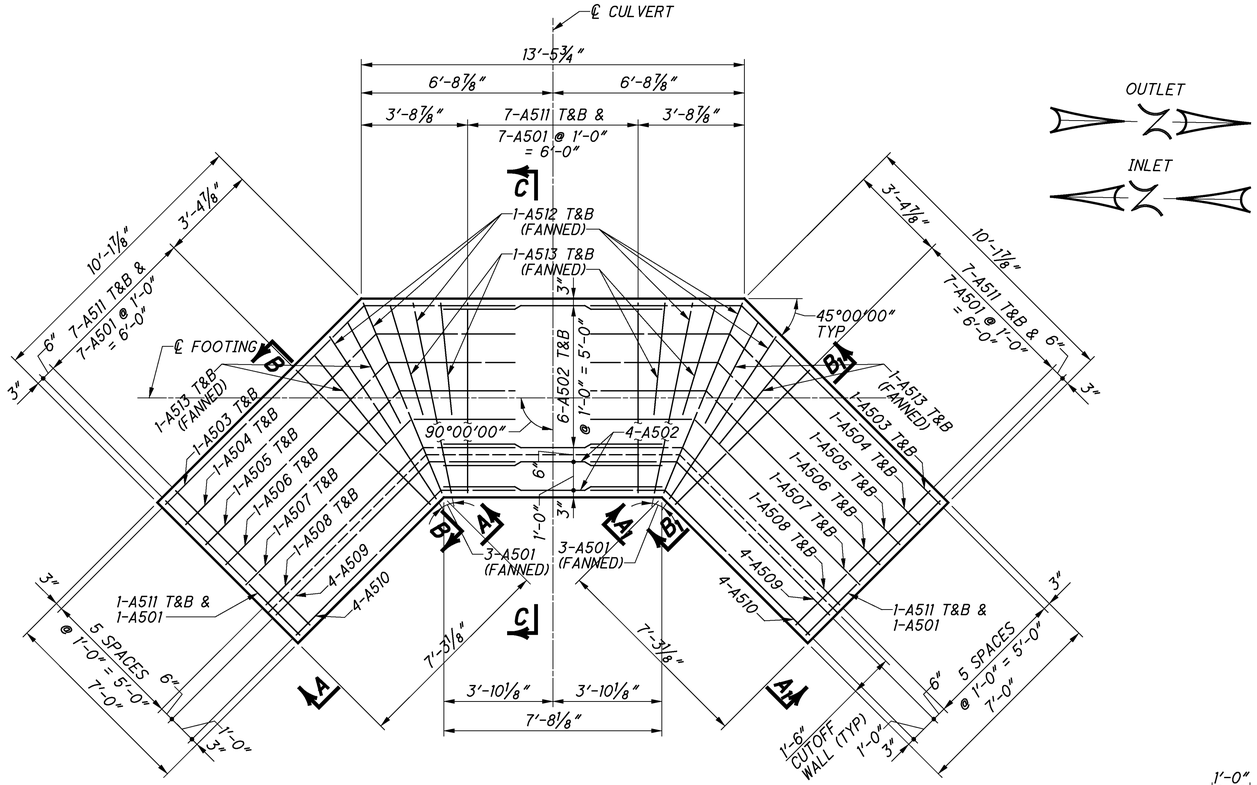

FOOTING PLAN

(A526, A527 AND A601 BARS NOT SHOWN FOR CLARITY)

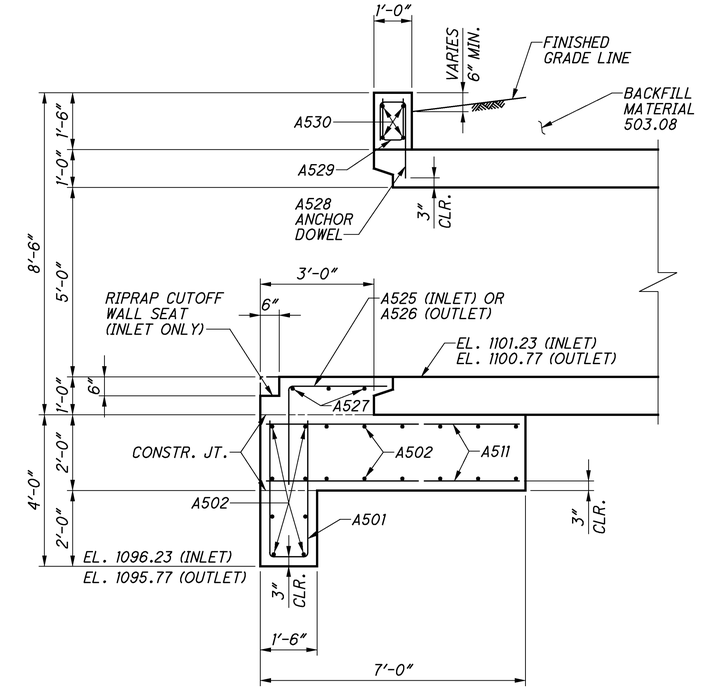

SECTION C-C

(CULVERT INLET BEVEL SHOWN)

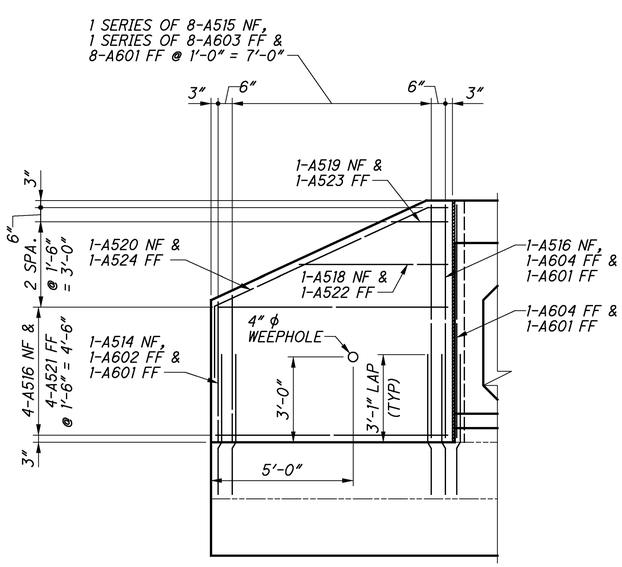

WINGWALL VIEW A-A

(VIEW A_1-A_1 SIMILAR)

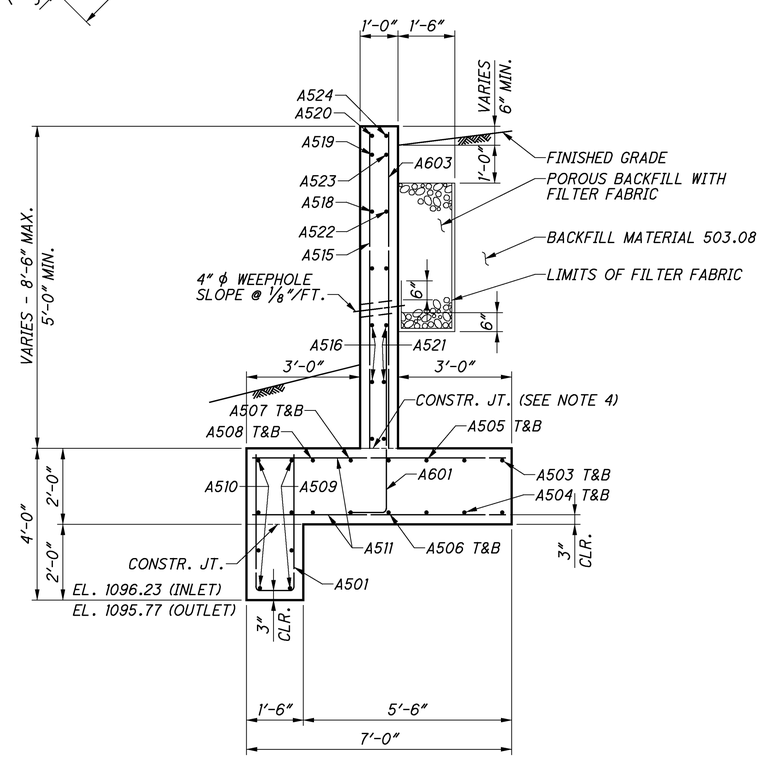

SECTION B-B

(SECTION B_1-B_1 SIMILAR)

LEGEND

PEJF = PREFORMED EXPANSION JOINT FILLER
T = TOP
B = BOTTOM
EF = EACH FACE
FF = FAR FACE
NF = NEAR FACE

NOTES:

1. FOR GENERAL NOTES, SEE SHEET 2 / 6.
2. FOR REINFORCING STEEL LIST, SEE SHEET 6 / 6.
3. THE REQUIRED LAP LENGTH FOR #5 BARS IS 2'-6".
4. THE INTERFACE BETWEEN THE TOP OF FOOTING AND BASE OF WINGWALL STEM SHALL BE INTENTIONALLY ROUGHENED TO A FULL AMPLITUDE OF APPROXIMATELY ¼" BY MEANS OF A SERRATED TROWEL.

DESIGN AGENCY
LJB Inc. • 2500 Newmark Drive
Miamisburg, OH 45342
(937) 259-5000 tel • (937) 259-5100 fax • LJBinc.com

DESIGNED	DRAWN	REVIEWED	DATE
AMT	MNM	DWW	6-13
CHECKED	REVISED	CULVERT FILE NUMBER	
DWS		285280857	

FOOTING PLAN, WINGWALL VIEWS AND SECTION DETAILS

CULVERT #3 - GEA-528-0857
S.R. 528 OVER UNNAMED CREEK

GEA-306-13.45
PID No. 91128

Q:\ODOT_D12\0107585A.00 - VAR-D12 GES FY13 FY14\17181-1 GEA-306-1345 PID91128\91128\structures\GEA-528-0857\sheets\528_0857sd002.dgn 10/14/2013 10:29:40 AM sdillinger

HEADWALL AND WINGWALL REINFORCING STEEL LIST

MARK	NUMBER PHASE 1 OUTLET	NUMBER PHASE 2 INLET	NUMBER TOTAL	LENGTH	WEIGHT PHASE 1 OUTLET	WEIGHT PHASE 2 INLET	TYPE	A	B	C	D	E	F	G	H	K	O	R
A501	29	29	58	7′-9″	234	234	8			3′-6″	1′-0″	3′-6″						
A502	20	20	40	7′-8″	160	160	STR.											
A503	4	4	8	15′-1″	63	63	9			9′-10″	5′-3″				3′-9″	3′-9″	13′-7″	
A504	4	4	8	14′-3″	59	59	9			9′-5″	4′-10″				3′-5½″	3′-5½″	12′-10½″	
A505	4	4	8	13′-5″	56	56	9			9′-0″	4′-5″				3′-2″	3′-2″	12′-2″	
A506	4	4	8	12′-7″	52	52	9			8′-7″	4′-0″				2′-10½″	2′-10½″	11′-5½″	
A507	4	4	8	11′-9″	49	49	9			8′-2″	3′-7″				2′-7″	2′-7″	10′-9″	
A508	4	4	8	10′-11″	46	46	9			7′-9″	3′-2″				2′-3½″	2′-3½″	10′-0½″	
A509	8	8	16	10′-7″	88	88	9			7′-7″	3′-0″				2′-1½″	2′-1½″	9′-8½″	
A510	8	8	16	9′-9″	81	81	9			7′-2″	2′-7″				1′-10″	1′-10″	9′-0″	
A511	46	46	92	6′-6″	312	312	STR.											
A512	12	12	24	7′-0″	88	88	STR.											
A513	16	16	32	4′-1″	68	68	STR.											
A514	2	2	4	5′-0″	10	10	STR.											
A515	2 SER.	2 SER.	4 SER.	VAR. 5′-0″	111	111	STR.											
	OF 8	OF 8	OF 8	TO 8′-4″														
	= 16	= 16	= 32	INCR. 5¾″														
A516	10	10	20	8′-4″	87	87	STR.											
A517	NOT	USED																
A518	2	2	4	5′-2″	27	27	STR.											
A519	2	2	4	2′-0″	4	4	STR.											
A520	2	2	4	11′-2″	23	23	25		2′-6″	8′-1″	0′-8″	1′-1″	2′-3″		0′-4″	0′-8″	9′-10″	
A521	8	8	16	8′-7″	72	72	STR.											
A522	2	2	4	5′-7″	12	12	STR.											
A523	2	2	4	2′-5″	5	5	STR.											
A524	2	2	4	11′-7″	24	24	25		2′-6″	8′-1″	1′-1″	1′-1″	2′-3″		0′-6″	1′-0″	10′-2″	
A525	10		10	4′-7″	48		10		2′-6″	2′-3″								
A526		10	10	4′-10″		50	10		2′-6″	2′-6″								
A527	3	3	6	9′-8″	30	30	STR.											
A528	10	10	20	3′-5″	36	36	8			1′-0″	0′-8″	2′-0″						
A529	10	10	20	2′-5″	25	25	8			1′-0″	0′-8″	1′-0″						
A530	4	4	8	9′-8″	40	40	STR.											
A601	22	22	44	5′-8″	187	187	2	10″	4′-10″									
A602	2	2	4	5′-0″	15	15	STR.											
A603	2 SER.	2 SER.	4 SER.	VAR. 5′-0″	160	160	STR.											
	OF 8	OF 8	OF 8	TO 8′-4″														
	= 16	= 16	= 32	INCR. 5¾″														
A604	4	4	8	8′-4″	50	50	STR.											
				TOTAL =	2322	2324												

BENDING DIAGRAMS

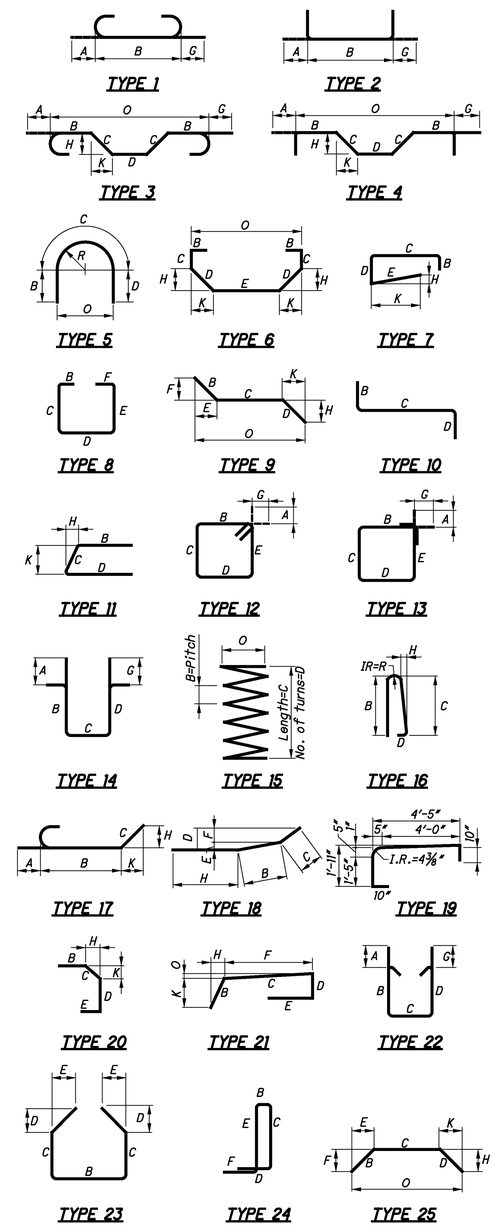

NOTES:

1. ALL REINFORCING STEEL BARS SHALL BE EPOXY COATED.
2. ALL DIMENSIONS ARE OUT TO OUT OF BAR.
3. DIMENSIONS "A" AND "G" ARE STANDARD BEND DIMENSIONS. REFER TO SECTION 509.05 OF THE CMS.
4. RADIUS DIMENSION "R" IS TO THE OUTSIDE OF THE BAR.
5. THE BAR SIZE NUMBER IS SPECIFIED ON THE PLANS IN THE BAR MARK COLUMN. THE FIRST DIGIT WHERE THREE DIGITS ARE USED, AND THE FIRST TWO DIGITS WHERE FOUR ARE USED, INDICATES THE BAR SIZE NUMBER.

DESIGN AGENCY
LJB Inc. • 2500 Newmark Drive
Miamisburg, OH 45342
(937) 259-5000 tel • (937) 259-5100 fax • LJBinc.com

DESIGNED	DRAWN	REVIEWED	DATE
AMT	MNM	DWW	6-13
CHECKED	REVISED	CULVERT FILE NUMBER	
MNM		285280857	

REINFORCING STEEL LIST
CULVERT #3 - GEA-528-0857
S.R. 528 OVER UNNAMED CREEK

GEA-306-13.45
PID No. 91128

Q:\ODOT_D12\0107585A.00 - VAR-D12 GES FY13 FY14\17181-1 GEA-306-1345 PID91128\91128\structures\GEA-528-0857\sheets\528_0857H001.dgn 10/14/2013 10:27:01 AM sdillinger

EXISTING STRUCTURE

TYPE : 14' x 7.25' CMP ARCH

SKEW: 8° 4' 23" RT

ALIGNMENT: 4°00'00" RT

PROPOSED STRUCTURE

TYPE : 14' x 7.25' CMP ARCH

SKEW: 8° 4' 23" RT

ALIGNMENT: 4°00'00" RT

STRUCTURE FILE NUMBER: 4306279

HYDRAULIC DESIGN DATA

DRAINAGE AREA: 2419.2 ACRES
Q(25): 856 CFS
HW(25): 814.3 FT
V(25): 13.2 FT/S
Q(100): 1160 CFS
HW(100): 815.8 FT
V(100): 14.5 FT/S

LEGEND

ROCK CHANNEL PROTECTION, TYPE A

EXISTING CONCRETE

BENCHMARK #1
NAIL IN POLE
STA. 7+07.47, 33.15' RT
ELEV. 817.17

CURVE #1
P.I. Sta. 4+99.92
Δ = 32° 08' 56" (RT)
Dc = 4° 00' 00"
R = 1,432.36'
Ls = 150.00'
θs = 3° 00' 00"
LT = 100.01'
ST = 50.01'
x = 149.96'
y = 2.62'
k = 74.99'
p = 0.65'
Δc = 26° 08' 56" (RT)
Lc = 653.71'
Ts = 487.92'
Es = 58.96'
C = 648.05'
C1 = C2 = 149.98'
C.B.1 = S 86° 17' 06" E
C.B. = S 71° 12' 38" E
C.B.2 = N 56° 08' 10" W

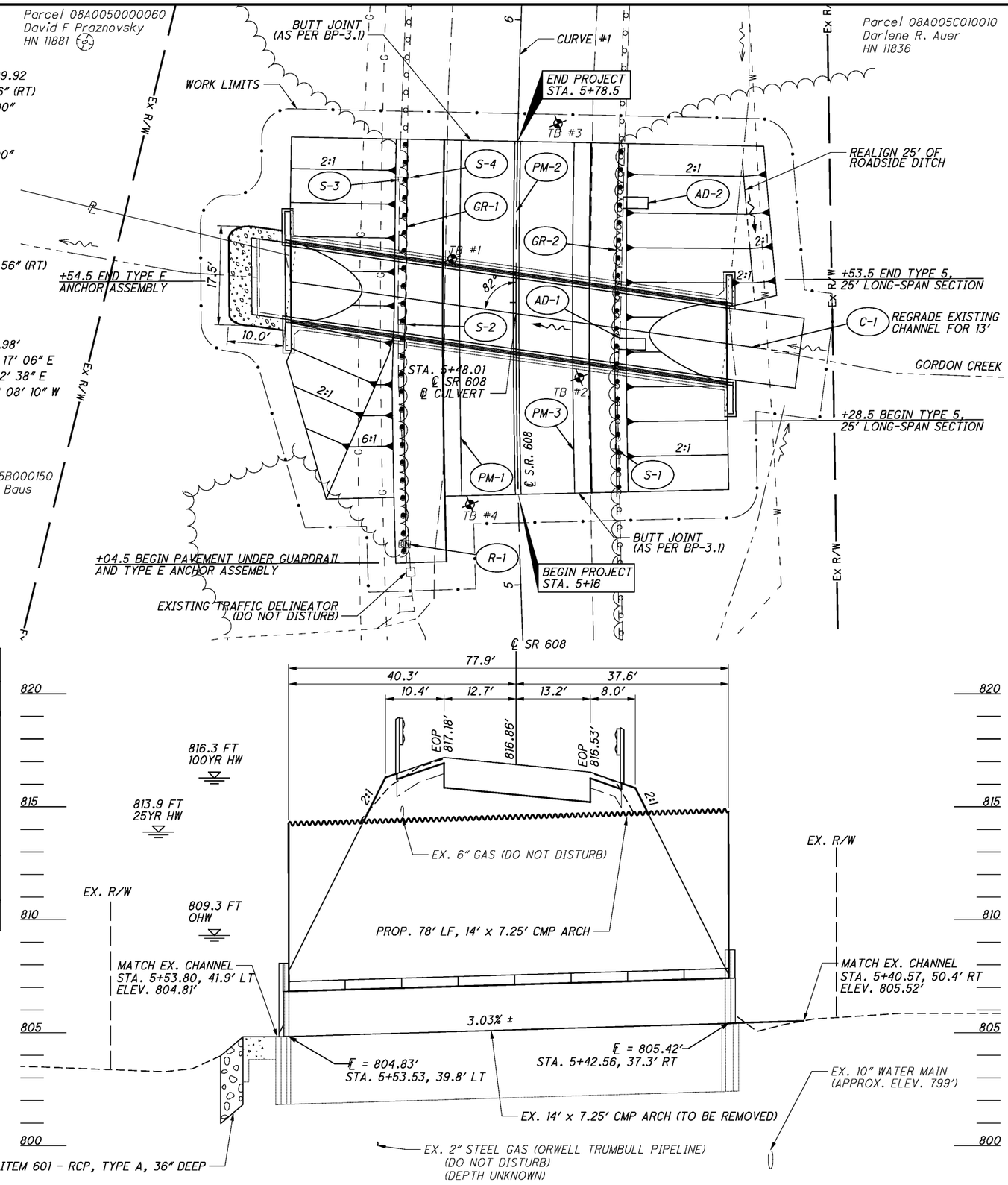

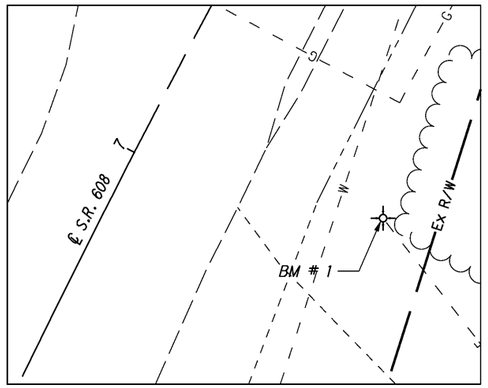

S-2 W2-2R-30 STA. 05+46

S-4 3 D10-H8-12 STA. 05+72

S-1 S-3 GORDON CREEK I-3-18 GRAND RIVER WATERSHED SPECIAL STA. 05+24 STA. 05+72

NOTES

1. FOR SIGNING QUANTITIES SEE SHEET 45

REF NO.	STATION FROM	STATION TO	SIDE	202 GUARDRAIL REMOVED (FT)	202 ANCHOR ASSEMBLY REMOVED, TYPE E (EACH)	209 DITCH CLEANOUT (FT)	503 COFFERDAMS AND EXCAVATION BRACING (LUMP)	605 AGGREGATE DRAINS (FT)	606 GUARDRAIL, TYPE 5 (FT)	606 GUARDRAIL, TYPE 5, 25' LONG-SPAN (FT)	606 ANCHOR ASSEMBLY, TYPE E (EACH)	626 BARRIER REFLECTOR (EACH)	642 EDGE LINE, 4", TYPE 1 (WHITE) (MILE)	642 CENTER LINE, TYPE 1 (SOLID DOUBLE YELLOW) (MILE)	SPECIAL MAILBOX REMOVED & RESET (EACH)
AD-1	05+43.00	05+43.00	RT					10							
AD-2	05+68.00	05+68.00	RT					10							
C-1	05+43.00	05+43.00	RT			13									
GR-1	05+06.00	05+78.50	LT	25	1				25		1	1			
GR-2	05+16.00	05+78.50	RT	63					37.5	25	1	1			
PM-1	05+16.00	05+78.50	LT										0.02	0.02	
PM-2	05+16.00	05+78.50	CL										0.02		
PM-3	05+16.00	05+78.50	RT												1
R-1	05+08.00	05+08.00	LT												
TOTALS CARRIED TO GENERAL SUMMARY				88	1	13	LUMP	20	63	25	1	2	0.04	0.02	1

HORIZONTAL SCALE IN FEET 0 5 10 20

CALCULATED SJT CHECKED RMS

CULVERT DETAIL
CULVERT #4 - LAK-608-3.03

GEA-306-13.45/VAR

P:\CLE\ODOT\Projects\287366 - GEA-306-13.45\GEA\91128\roadway\sheets\91128DC051.dgn 12/6/2013 9:06:14 AM PRE47802

REF NO.	SHEET NO.	STATION FROM	STATION TO	SIDE	CODE	SIZE (INCHES)	630 GROUND MOUNTED SUPPORT, NO. 2 POST FT	630 GROUND MOUNTED SUPPORT, NO. 3 POST FT	630 SIGN POST REFLECTOR EACH	630 SIGN, FLAT SHEET SQ FT	630 REMOVAL OF GROUND MOUNTED SIGN AND DISPOSAL EACH	630 REMOVAL OF GROUND MOUNTED SIGN AND REERECTION EACH	630 REMOVAL OF GROUND MOUNTED POST SUPPORT AND DISPOSAL EACH
S-1	44	05+24	05+24	RT	I-3-18	18 X 24		14.7		3	1	1	1
S-2	44	05+46	05+46	LT	W2-2R-30	30 X 30		13.9	1	6.25	1		1
S-3	44	05+72	05+72	LT	I-3-18	18 X 24		14.9		3		1	1
S-4	44	05+72	05+72	LT	D10-H8	12 X 12	9.3			1	1		1
TOTALS CARRIED TO GENERAL SUMMARY							9.3	43.5	1	13.3	3	2	4

CALCULATED SJT
CHECKED RMS

ESTIMATED QUANTITIES - LAK-608-3.03

GEA-306-13.45/VAR

P:\CLE\ODOT\Projects\287366 - GEA-306-13.45\GEA\91128\roadway\sheets\91128DS051.dgn 10/17/2013 1:48:23 PM TYN61470

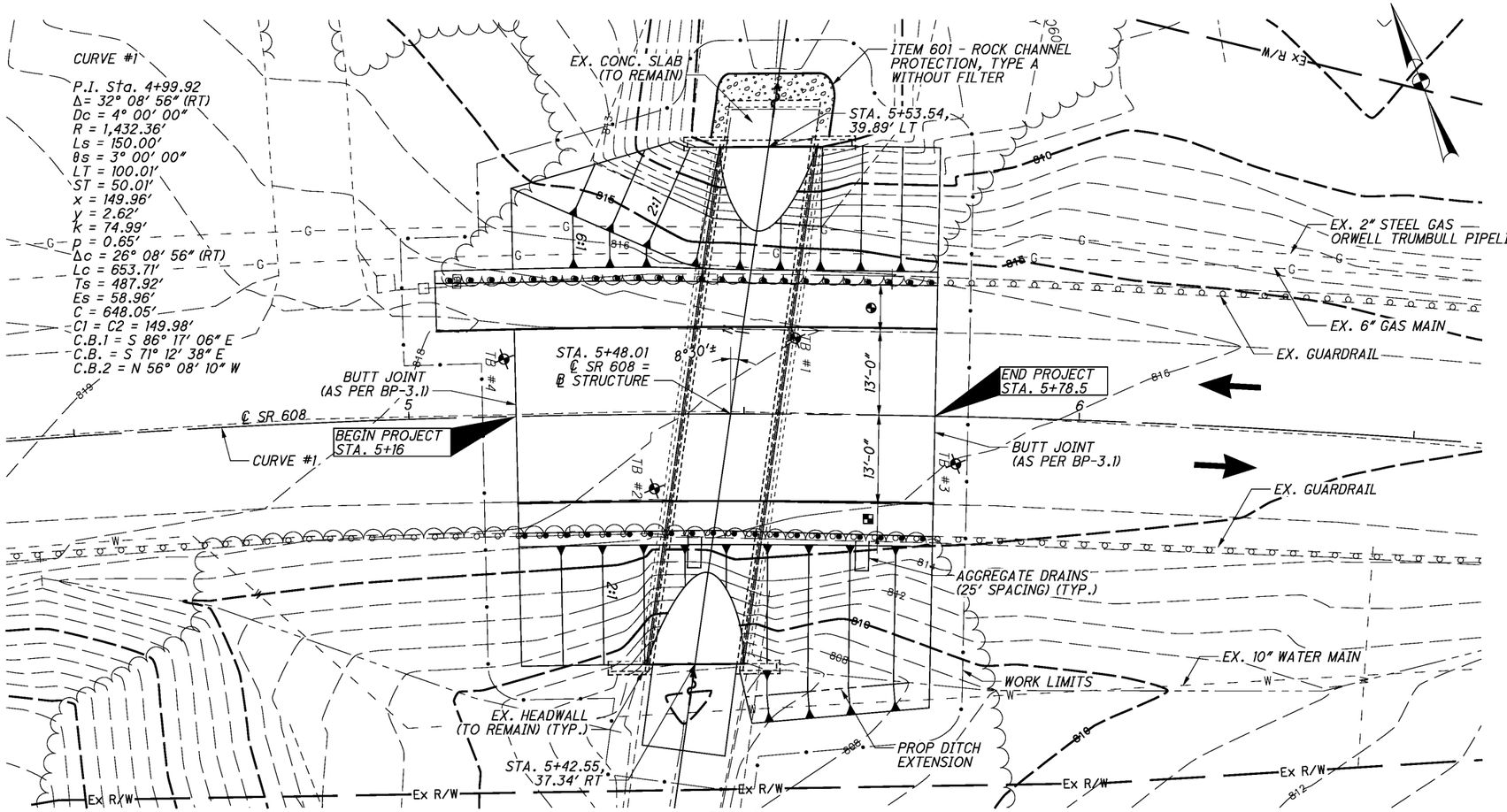

PLAN

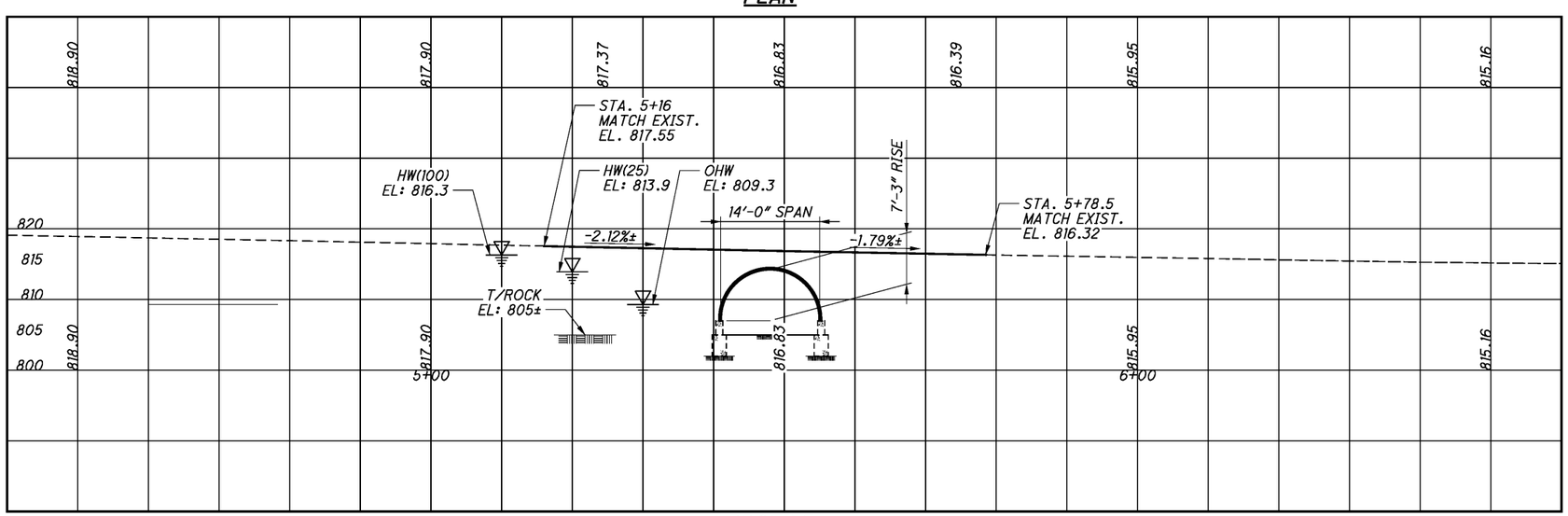

PROFILE

BENCHMARK DATA

BM #1 STA.	7+07.47,	33.15',	RT,	ELEV. 817.17
BM #2 STA.	,	,	,	ELEV.
BM #3 STA.	,	,	,	ELEV.
BM #4 STA.	,	,	,	ELEV.

FOR ADDITIONAL BENCHMARK INFORMATION SEE ROADWAY PLAN SHEET 44/49.

NOTES

EARTHWORK LIMITS SHOWN ARE APPROXIMATE.

DESIGN TRAFFIC:
2011 ADT: 2,660 2031 ADT:
2011 ADTT: 100 2031 ADTT:
DISTRIBUTION: 50%/50% (NB/SB)

NOTE 1:
EXISTING STRUCTURAL PLATE CORRUGATED METAL ARCH TO BE REMOVED (ITEM 202 - PORTIONS OF STRUCTURE REMOVED) AND REPLACED WITH ITEM 522 - STRUCTURAL PLATE CORRUGATED METAL STRUCTURE, AS PER PLAN.

LEGEND

- BORING LOCATION
- ROCK CHANNEL PROTECTION
- STA. 5+04.5 TO STA 5+78.5 - 9.0' TO 8.5'
- STA 5+16 TO STA 5+78.5 - 6.5'

HYDRAULIC DATA

DRAINAGE AREA: 3.78 SQ. MILES
OHW EL: 809.3

HW (100) EL: 816.3 HW (25) EL: 813.9
Q (100): 1,160 CFS Q (25): 856 CFS
V (100): 14.5 FPS V (25): 13.2 FPS

PAVEMENT CLEARS THE 25 YEAR DESIGN H.W. BY 1.1 FEET.

EXISTING STRUCTURE

TYPE: CORRUGATED METAL PLATE ARCH ON REINFORCED CONCRETE KNEE WALLS ON SPREAD FOOTINGS ON ROCK.
SPANS: 14'-0" F/F SPAN, 7'-3" RISE.
COVER: 2'-0"± MIN., 2'-6"± MAX.
ROADWAY WIDTH: 37'± F/F RAIL, 26'± RDWY.
SKEW: 8°30'00" L.F.
LOADING: H-15
DATE BUILT: 1961
SFN: 4306279
WEARING SURFACE: N.A.
APPROACH SLAB: N.A.
DISPOSITION: TO BE REMOVED AND REPLACED IN-KIND.

PROPOSED STRUCTURE

PROPOSED WORK: REPLACE STRUCTURAL PLATE CORRUGATED METAL ARCH IN KIND, AND REHABILITATE EXISTING KNEE WALLS.
TYPE: CORRUGATED METAL PLATE ARCH ON REINFORCED CONCRETE KNEE WALLS ON SPREAD FOOTINGS ON ROCK.
SPANS: 14'-0" F/F ARCH, 7'-3" RISE.
COVER: 2'-0"± MIN., 2'-6"± MAX.
ROADWAY WIDTH: 37'± F/F RAIL, 26' RDWY.
LOADING: HL-93 DESIGN TRUCK/TANDEM AND 60 PSF FWS
SKEW: 8°30'00"± L.F.
WEARING SURFACE: N.A.
APPROACH SLAB: N.A.
ALIGNMENT: Δ=32°08'56"(RT), Dc=4°00'00"
CROWN: 0.025± FT/FT (MATCH EXISTING)
COORDINATES: LATITUDE: 41°40'21.4"N
LONGITUDE: 81°12'51.5"W

DESIGN AGENCY
HATCH MOTT MacDONALD
18013 CLEVELAND PKWY.
SUITE 100
CLEVELAND, OH 44135

DRAWN	REVIEWED	DATE
MAR	CWP	06/05/13
DESIGNED	REVISED	STRUCTURE FILE NUMBER
MAR		4306279
CHECKED		
KWB		

LAKE COUNTY
STA. 5+42.56
STA. 5+53.53

SITE PLAN
BRIDGE NO. LAK 608-0303
SR 608 OVER GORDON CREEK

GEA-306-13.45/VAR
PID No. 91128

P:\CLE\ODOT\Projects\287366 - GEA-306-13.45\GEA\91128\structures\LAK608_0303C\sheets\608_0303CSP051.dgn 12/6/2013 9:04:58 AM PRE47802

STRUCTURE NOTES

INDEX OF STRUCTURAL SHEETS:

1. SITE PLAN
2. STRUCTURE NOTES
3. QUANTITIES & MISCELLANEOUS DETAILS 1
4. MISCELLANEOUS DETAILS 2

STANDARD DRAWINGS AND SUPPLEMENTAL SPECIFICATIONS:

REFER TO THE FOLLOWING SUPPLEMENTAL PECIFICATION(S):

1011 DATED 07/30/2004
1015 DATED 12/31/2012
1078 DATED 12/31/2012

DESIGN SPECIFICATIONS:

THIS STRUCTURE CONFORMS TO THE "LRFD BRIDGE DESIGN SPECIFICATIONS" ADOPTED BY THE AMERICAN ASSOCIATION OF STATE HIGHWAY AND TRANSPORTATION OFFICIALS, 2012, INCLUDING THE 2013 INTERIM SPECIFICATIONS, AND THE ODOT BRIDGE DESIGN MANUAL, 2007.

REDUNDANCY:

THE FOLLOWING ITEM(S) WERE CONSIDERED NON-REDUNDANT FOR DESIGN AND INCLUDE A LOAD MODIFIER EQUAL TO 1.05 IN ACCORDANCE WITH THE AASHTO LRFD BRIDGE DESIGN SPECIFICATIONS, ARTICLE 1.3.4:

STRUCTURAL PLATE CORRUGATED METAL ARCH.

OPERATIONAL IMPORTANCE:

A LOAD MODIFIER OF 1.00 HAS BEEN ASSUMED FOR THE DESIGN OF THIS STRUCTURE IN ACCORDANCE WITH THE AASHTO LRFD BRIDGE DESIGN SPECIFICATIONS, ARTICLE 1.3.5 AND THE ODOT BRIDGE DESIGN MANUAL, 2007.

DESIGN LOADING:

HL-93

FUTURE WEARING SURFACE (FWS) OF 0.060 KIPS/FT^2.

DESIGN DATA:

CONCRETE CLASS QC2 -
COMPRESSIVE STRENGTH 4,500 PSI

REINFORCING STEEL -
ASTM A615 OR A996, GRADE 60,
MINIMUM YIELD STRENGTH 60,000 PSI

ALL REINFORCING STEEL SHALL BE EPOXY COATED PER C&MS 709.00.

STEEL MEMBERS –
ASTM A791, TYPE 38, 6"X2" CORRUGATIONS (AASHTO M 167)
MINIMUM YIELD STRENGTH 33,000 PSI

ANCHOR RODS –
ASTM F1554, GR 36, WITH MATCHING NUTS AND WASHERS
MINIMUM YIELD STRENGTH 36,000 PSI

FOUNDATION BEARING RESISTANCE:

ABUTMENT FOOTINGS, AS DESIGNED, PRODUCE A MAXIMUM SERVICE LOAD PRESSURE OF 4.2 KIPS PER SQUARE FOOT AND A MAXIMUM STRENGTH LOAD PRESSURE OF 6.1 KIPS PER SQUARE FOOT. THE FACTORED BEARING RESISTANCE IS 13 KIPS PER SQUARE FOOT.

MAINTENANCE OF TRAFFIC:

TRAFFIC IS TO BE DETOURED DURING CONSTRUCTION. SEE THE MAINTENANCE OF TRAFFIC PLANS FOR DETAILS.

UTILITY LINES:

THE UTILITY(IES) SHALL BEAR ALL EXPENSE INVOLVED IN RELOCATING (INSTALLING) THE AFFECTED UTILITY LINES. THE CONTRACTOR AND UTILITY(IES) ARE TO COOPERATE BY ARRANGING THEIR WORK IN SUCH A MANNER THAT INCONVENIENCE TO EITHER WILL BE HELD TO A MINIMUM.

EXISTING STRUCTURE VERIFICATION:

DETAILS AND DIMENSIONS SHOWN ON THESE PLANS PERTAINING TO THE EXISTING STRUCTURE HAVE BEEN OBTAINED FROM PLANS OF THE EXISTING STRUCTURE AND FROM FIELD OBSERVATIONS AND MEASUREMENTS. CONSEQUENTLY, THEY ARE INDICATIVE OF THE EXISTING STRUCTURE AND THE PROPOSED WORK BUT THEY SHALL BE CONSIDERED TENTATIVE AND APPROXIMATE. THE CONTRACTOR IS REFERRED TO CMS SECTIONS 102.05, AND 105.02.

BASE CONTRACT BID PRICES UPON A RECOGNITION OF THE UNCERTAINTIES DESCRIBED ABOVE AND UPON A PREBID EXAMINATION OF THE EXISTING STRUCTURE. HOWEVER, THE DEPARTMENT WILL PAY FOR ALL PROJECT WORK BASED UPON ACTUAL DETAILS AND DIMENSIONS THAT HAVE BEEN VERIFIED IN THE FIELD.

ITEM 202, PORTIONS OF STRUCTURE REMOVED, AS PER PLAN:

THIS ITEM SHALL INCLUDE THE ELEMENTS INDICATED IN THE PLANS AND GENERAL NOTES AND THAT ARE NOT SEPARATELY LISTED FOR PAYMENT, EXCEPT FOR WEARING COURSE REMOVAL. ITEMS TO BE REMOVED INCLUDE ALL EXISTING MATERIALS BEING REPLACED BY NEW CONSTRUCTION AND MISCELLANEOUS ITEMS THAT ARE NOT SHOWN TO BE INCORPORATED INTO THE FINAL CONSTRUCTION AND ARE DIRECTED TO BE REMOVED BY THE ENGINEER. THE USE OF EXPLOSIVES, HEADACHE BALLS AND/OR HOE-RAMS WILL NOT BE PERMITTED. THE METHOD OF REMOVAL AND THE WEIGHT OF HAMMER SHALL BE APPROVED BY THE ENGINEER. PERFORM ALL WORK IN A MANNER THAT WILL NOT CUT, ELONGATE OR DAMAGE THE EXISTING REINFORCING STEEL TO BE PRESERVED. CHIPPING HAMMERS SHALL NOT BE HEAVIER THAN THE NOMINAL 90-POUND CLASS. PNEUMATIC HAMMERS SHALL NOT BE PLACED IN DIRECT CONTACT WITH REINFORCING STEEL THAT IS TO BE RETAINED IN THE REBUILT STRUCTURE. SUBMIT CONSTRUCTION PLANS ACCORDING TO CMS 501.05.

MEASUREMENT & PAYMENT:

THE DEPARTMENT WILL MEASURE THE QUANTITY OF REMOVALS ON A LUMP SUM BASIS. THE DEPARTMENT WILL PAY FOR THE ACCEPTED QUANTITIES OF REMOVALS AT THE CONTRACT PRICE FOR ITEM 202, PORTIONS OF STRUCTURE REMOVED, AS PER PLAN.

ITEM 203 EMBANKMENT, AS PER PLAN:

PLACE AND COMPACT EMBANKMENT MATERIAL IN 6 INCH LIFTS FOR THE CONSTRUCTION OF THE APPROACH EMBANKMENT.

ITEM 509 REINFORCING STEEL, REPLACEMENT OF EXISTING REINFORCING STEEL, AS PER PLAN:

REPLACE ALL EXISTING REINFORCING BARS DEEMED BY THE ENGINEER TO BE UNUSABLE BECAUSE OF CORROSION. THE DEPARTMENT WILL MEASURE THE REPLACEMENT REINFORCING STEEL BY THE NUMBER OF POUNDS ACCEPTED IN PLACE.

REPLACE ALL EXISTING REINFORCING STEEL BARS WHICH ARE TO BE INCORPORATED INTO THE NEW WORK AND ARE DEEMED BY THE ENGINEER TO BE MADE UNUSABLE BY CONCRETE REMOVAL OPERATIONS WITH NEW EPOXY COATED REINFORCING STEEL OF THE SAME SIZE AT NO COST TO THE DEPARTMENT.

ITEM 513 - STRUCTURAL STEEL MEMBERS, LEVEL UF, AS PER PLAN:

THIS SHALL INCLUDE NEW STEEL BENT PLATE, ANCHOR RODS AND THEIR NUTS AND WASHERS. OTHER STEEL COMPONENTS ARE INCLUDED WITH ITEM 522 – STRUCTURAL PLATE CORRUGATED METAL STRUCTURE.

NEW STEEL SHALL BE GALVANIZED, AND SHALL NOT BE PAINTED. GALVANIZE ALL STEEL COMPONENTS, INCLUDING PLATE, RODS, NUTS, ETC. PER C&MS 711.02.

MEASUREMENT AND PAYMENT FOR THIS WORK SHALL BE INCLUDED WITH THE PRICE BID PER UNIT FOR ITEM 513 - STRUCTURAL STEEL MEMBERS, LEVEL UF, AS PER PLAN.

ITEM 519 - PATCHING CONCRETE STRUCTURE, AS PER PLAN:

PRIOR TO THE SURFACE CLEANING SPECIFIED IN 519.04 AND WITHIN 24 HOURS OF PLACING PATCHING MATERIAL, BLAST CLEAN ALL SURFACES TO BE PATCHED INCLUDING THE EXPOSED REINFORCING STEEL. ACCEPTABLE METHODS INCLUDE HIGH-PRESSURE WATER BLASTING WITH OR WITHOUT ABRASIVES IN THE WATER, ABRASIVE BLASTING WITH CONTAINMENT, OR VACUUM ABRASIVE BLASTING.

DESIGN AGENCY
HATCH MOTT MacDONALD
18013 CLEVELAND PKWY.
SUITE 100
CLEVELAND, OH 44135

DESIGNED MAR | DRAWN MAR | REVIEWED CWP | DATE 06/05/13
CHECKED KWB | REVISED | STRUCTURE FILE NUMBER 4306279

STRUCTURE NOTES
BRIDGE NO. LAK-606-0303
SR 608 OVER GORDON CREEK

GEA-306-13.45/VAR
PID No. 91128

P:\CLE\ODOT\Projects\287366 - GEA-306-13.45\GEA\91128\structures\LAK608_0303C\sheets\608_0303CGN051.dgn 10/17/2013 1:49:52 PM TYN61470

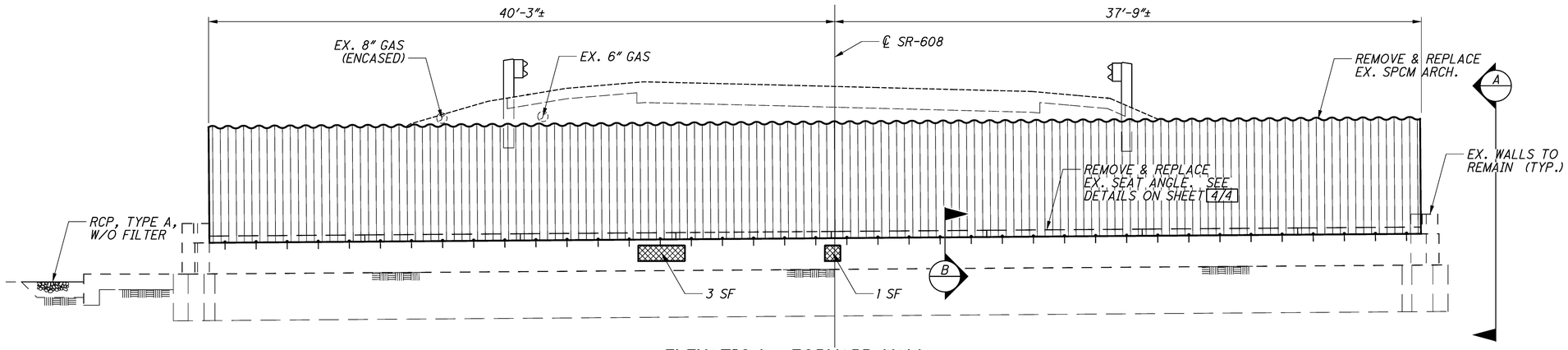

ELEVATION - FORWARD WALL

SEE SHEET 4/4 FOR SECTION B-B
REAR WALL SIMILAR EXCEPT FOR REPAIRS

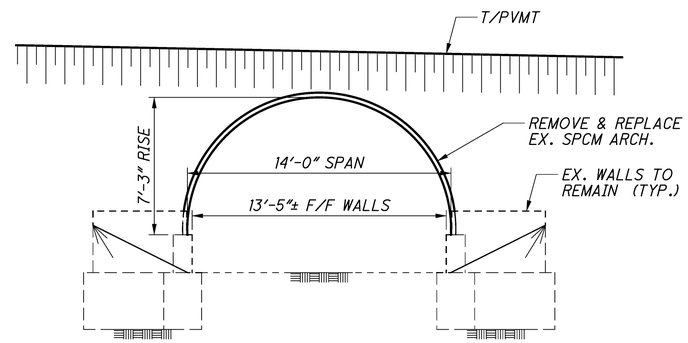

VIEW A-A

ESTIMATED STRUCTURAL QUANTITIES

FUNDING: 03/S>2/BR	ITEM	EXT.	TOTAL	UNIT	DESCRIPTION	ABUT.	SUPER.	GEN.
LUMP	202	11201	LUMP		PORTIONS OF STRUCTURE REMOVED, AS PER PLAN			LUMP
20	509	10001	20	POUND	EPOXY COATED REINFORCING STEEL, AS PER PLAN *			20
80	510	10000	80	EACH	DOWEL HOLES WITH NONSHRINK, NONMETALLIC GROUT	80		
1,410	513	10201	1,410	POUND	STRUCTURAL STEEL MEMBERS, LEVEL UF, AS PER PLAN	1,410		
14	519	11101	14	SQ FT	PATCHING CONCRETE STRUCTURE, AS PER PLAN *	4		10
78	522	12201	78	FT	STRUCTURAL PLATE CORRUGATED METAL STRUCTURE, AS PER PLAN (6"x2" CORRUGATIONS, 5 GAGE)		78	
11	601	34000	11	CU YD	ROCK CHANNEL PROTECTION, TYPE A WITHOUT FILTER	11		

* INCLUDES CONTINGENCY QUANTITY TO BE USED THE THE DIRECTION OF THE ENGINEER.

LEGEND:

▩ - LIMITS OF ITEM 519 - PATCHING CONCRETE STRUCTURE, AS PER PLAN

EX. - EXISTING
F/F - FACE TO FACE
RCP - ROCK CHANNEL PROTECTION
SPCM - STRUCTURAL PLATE CORRUGATED METAL
T/PVMT - TOP OF PAVEMENT
TYP. - TYPICAL
W/O - WITHOUT

DESIGN AGENCY
HATCH MOTT MacDONALD
18013 CLEVELAND PKWY.
SUITE 100
CLEVELAND, OH 44135

DESIGNED	DRAWN	REVIEWED	DATE
MAR	MAR	CWP	06/05/13
CHECKED	REVISED	STRUCTURE FILE NUMBER	
KWB		4306279	

QUANTITIES & MISC. DETAILS 1
BRIDGE NO. LAK-608-0303
SR 608 OVER GORDON CREEK

GEA-306-13.45/VAR
PID No. 91128

P:\CLE\ODOT\Projects\287366 - GEA-306-13.45\GEA\91128\structures\LAK608_0303C\sheets\608_0303CMD051.dgn 10/28/2013 10:58:52 AM TYN61470

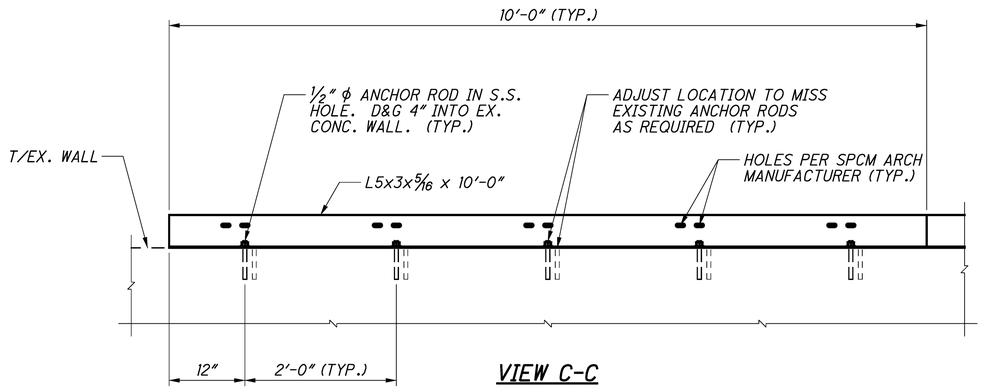

VIEW C-C
SEAT ANGLE

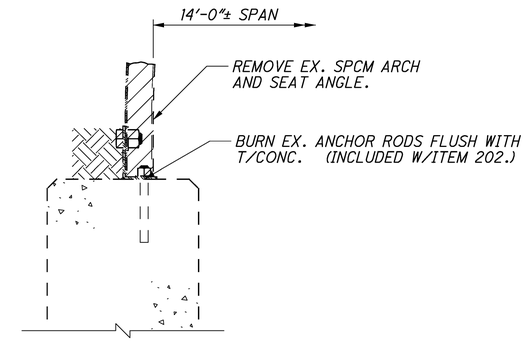

SECTION B-B
SEE SHEET 3/4 FOR LOCATION
EXISTING SHOWING REMOVALS

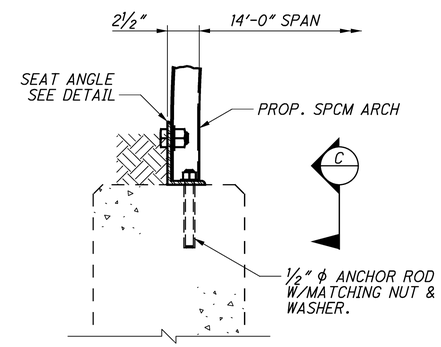

SECTION B-B
SEE SHEET 3/4 FOR LOCATION
PROPOSED

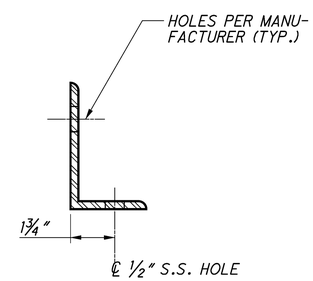

DETAIL
SEAT ANGLE

LEGEND:

CONC. - CONCRETE
D&G - DRILL AND GROUT
EX. - EXISTING
PROP. - PROPOSED
SPCM - STRUCTURAL PLATE CORRUGATED METAL
S.S. - SHORT SLOTTED
TYP. - TYPICAL
T/ - TOP OF
W/ - WITH

DESIGN AGENCY
HATCH MOTT MacDONALD
18013 CLEVELAND PKWY.
SUITE 100
CLEVELAND, OH 44135

DESIGNED	DRAWN	REVIEWED	DATE
MAR	MAR	CWP	06/05/13
CHECKED	REVISED	STRUCTURE FILE NUMBER	
KWB		4306279	

MISCELLANEOUS DETAILS 2
BRIDGE NO. LAK-608-0303
SR 608 OVER GORDON CREEK

GEA-306-13.45/VAR
PID No. 91128

P:\CLE\ODOT\Projects\287366 - GEA-306-13.45\GEA\91128\structures\LAK608_0303C\sheets\608_0303CMD052.dgn 10/17/2013 1:51:42 PM TYN61470

NOTES

GENERAL: Components shown on this drawing are used in a variety of guardrail systems. See individual guardrail drawing for specific applications.

See CMS 606 for guardrail specifications not covered on these drawings.

Refer to AASHTO M 180 for dimensional details of W-Beam and Thrie-Beam rail elements, related buffer and end sections, beam splices, post and splice bolts, nuts, and Type 1 W-Beam to Thrie-Beam Transition sections.

RAIL ELEMENTS: W-Beam Rail has an effective length of 12'-6" unless otherwise specified, with ¾" x 2½" post bolt slots on 6'-3" centers regardless of post spacing. Field punch or drill bolt holes or slots for irregularly spaced posts as specified in CMS 606.04.

RAIL SPLICES: Lap splices between two rail elements or between a rail and terminal connector in the direction of traffic. Lap the buffer or flared end sections in the direction of traffic.

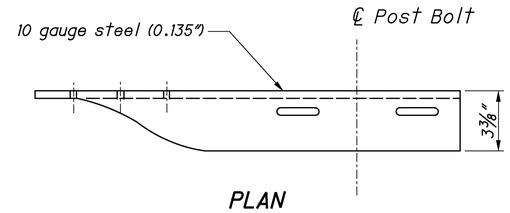

PLAN

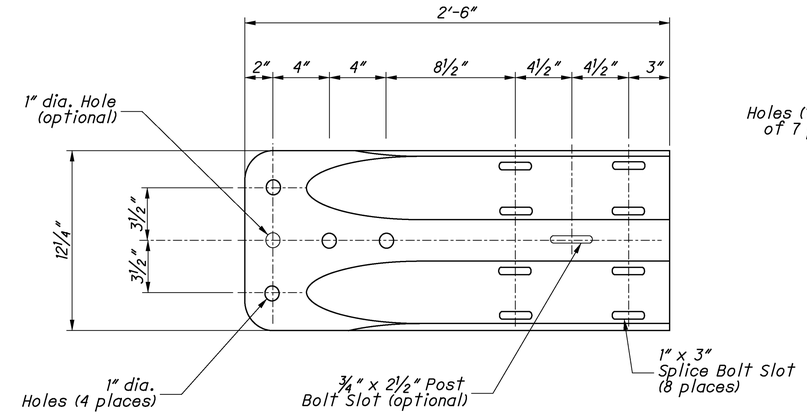

ELEVATION

W-BEAM TERMINAL CONNECTOR

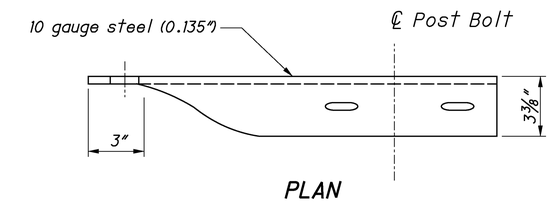

PLAN

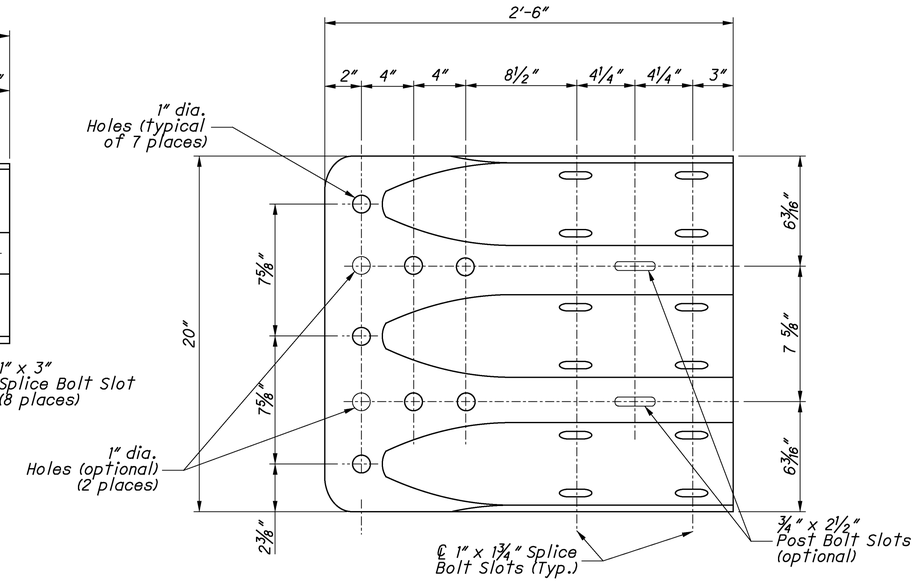

ELEVATION

THRIE-BEAM TERMINAL CONNECTOR

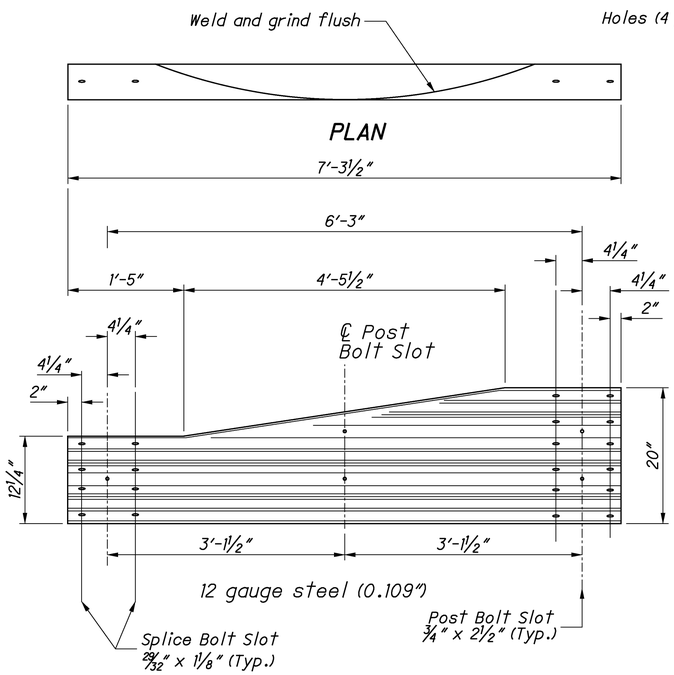

ELEVATION

TYPE 2 TRANSITION SECTION

(Asymmetric W to Thrie-Beam)

For details of Type 1 Transition Section (Symmetric), refer to AASHTO M 180, Figure 4.

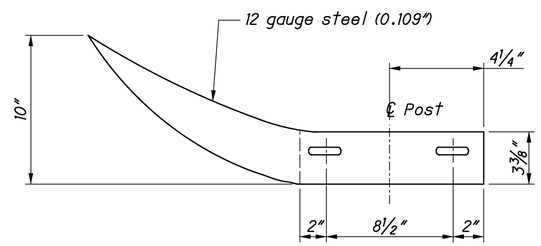

PLAN

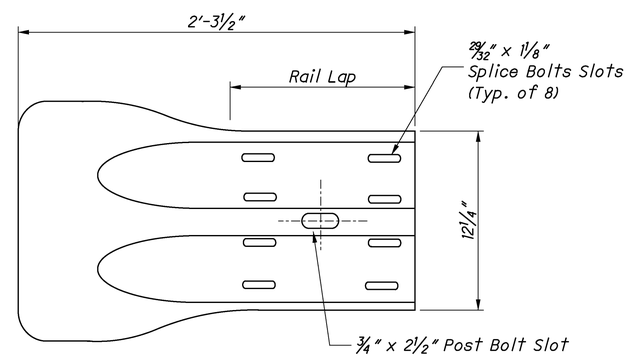

ELEVATION

W-BEAM FLARED END SECTION

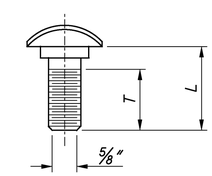

GUARDRAIL BOLT (For Post and Splice Bolts)		
L	**T min.**	**Bolt Use**
18" (Standard Rail)	4"	Type 5: WP/WB, PB
26" (Barrier Rail)		
10"	4"	Type 5: SP/WB, PB
1¼"	1⅛"	Splice Bolt

WP = Wood Post WB = Wood Blockout
SP = Steel Post PB = Plastic Blockout

Longer Bolt may be needed for round Wood Post larger than 8" dia.

OFFICE OF ROADWAY ENGINEERING

DESIGNED | REVIEWED | REVISION DATE | CHECKED | PIS NUMBER

PLAN INSERT SHEET

GUARDRAIL DETAILS (Rail Components)

PIS GR-1.1

1 / 3

50 / 60

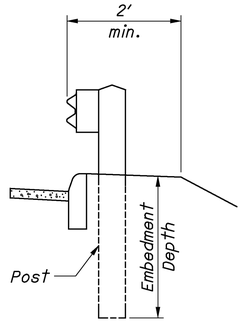

DETAIL A

See POST EMBEDMENT DEPTH Note

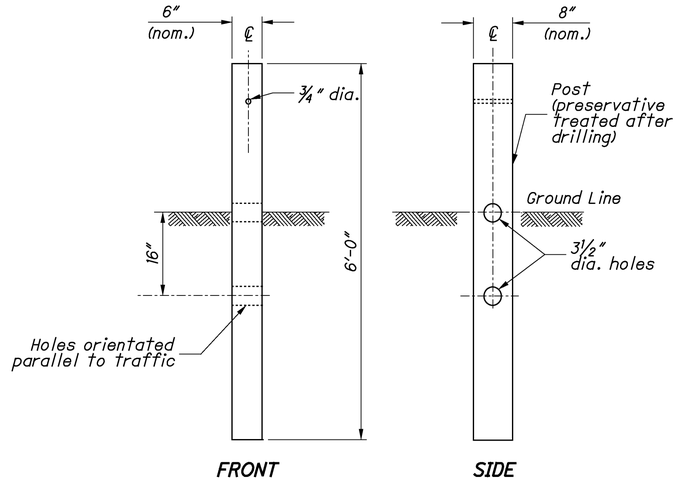

TYPE 1 BREAKAWAY CRT POST

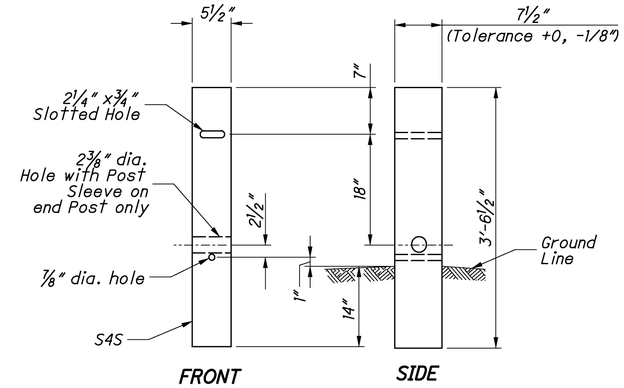

TYPE 2 BREAKAWAY CRT POST

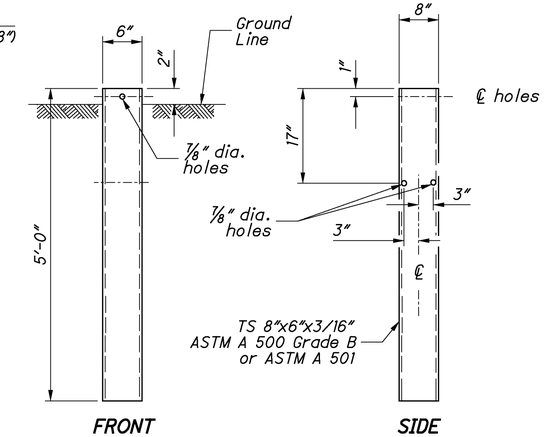

STEEL GROUND TUBE

NOTES

GUARDRAIL HEIGHT: For initial installation, construct the guardrail within ± 1″ of the standard height, h, or **29″** to the top of W-Beam rail. (See MEASURING GUARDRAIL HEIGHT Detail.)

When subsequent projects, such as resurfacings, affect the height of existing guardrail, the finished height is to be within ±2.5″ of the standard height.

POST EMBEDMENT DEPTH: Standard embedment is 3′-5″ min. Where less than 2′ of graded shoulder width (10:1 or flatter) exists, measured from the face of the guardrail (see DETAIL "A"), use longer posts so that a minimum of 5′-5″ embedment depth is provided. Payment for the longer posts will be made at the unit price bid for **ITEM 606 - GUARDRAIL POST, 9′, Each.**

SPECIAL POST MOUNTINGS: Install posts located over a drainage inlet or structure as shown in the FOOTING ANCHOR Detail, or anchor per the details shown on **SCD GR-2.2.**

Install posts located over a footing with a cover of less than 2′-6″ with a footing anchor as detailed here. (A plate, as detailed on SECTION B-B of **SCD GR-2.2**, may be used as an alternative attachment method.) Where the cover is between 2′-6″ and 3′-5″, the footing anchor may be omitted and the post encased instead with 4″ (min.) of concrete.

Do not drive posts located over a culvert with less than 4′-3″ of cover; instead set in drilled or dug holes. Where the available post embedment depth is less than 3′-5″, encase the post with a minimum of 4″ concrete.

All costs associated with special post mountings are included in the unit price bid of Item 606 Guardrail of the type specified in the plans.

ANCHORS: Holes and grouting shall comply with CMS 510. Use either cement or non-shrink, nonmetallic grout.

Expansion shield anchors as specified in CMS 712.01 may be substituted except where concrete deterioration has occurred, as determined by the Engineer. Where self-drilling anchors are used, drill the holes with the expansion shield (not by a drill bit) and install the shield flush with the concrete surface.

PROTECTIVE COATING: In lieu of the complying with CMS 710.06, coat expansion shields, anchors and concrete insert anchor assemblies embedded in concrete in accordance with ASTM A 153 or be of stainless steel. Any bolts screwed into these devices shall meet CMS 710.06. (See sheet 3 for Concrete Insert Anchor Assembly Detail.)

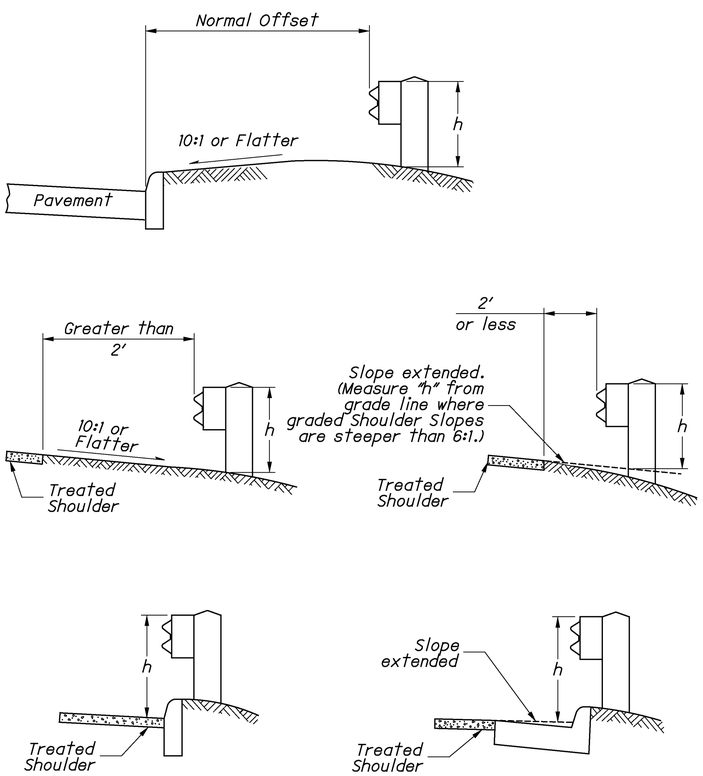

h = Standard Height (See GUARDRAIL HEIGHT Note)

MEASURING GUARDRAIL HEIGHT

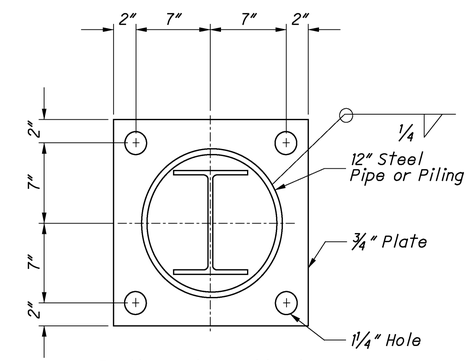

Footing Anchor and hardware need not be galvanized

SECTION A-A

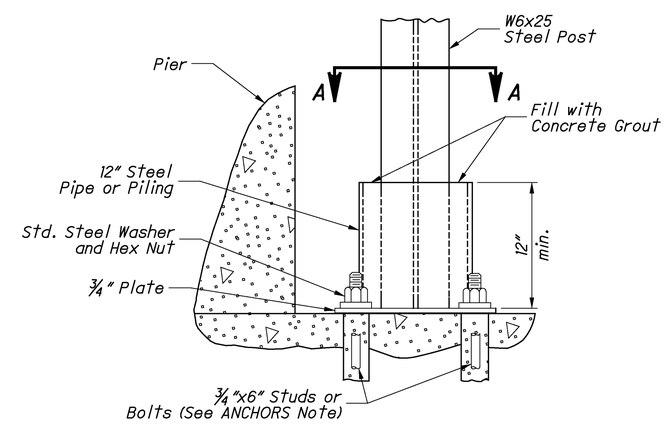

ELEVATION
FOOTING ANCHOR

See SPECIAL POST MOUNTINGS Note.

OFFICE OF ROADWAY ENGINEERING

DESIGNED | REVIEWED | CHECKED | REVISION DATE | PIS NUMBER

PLAN INSERT SHEET

GUARDRAIL DETAILS (Rail Components)

PIS GR-1.1

2 / 3

51 / 60

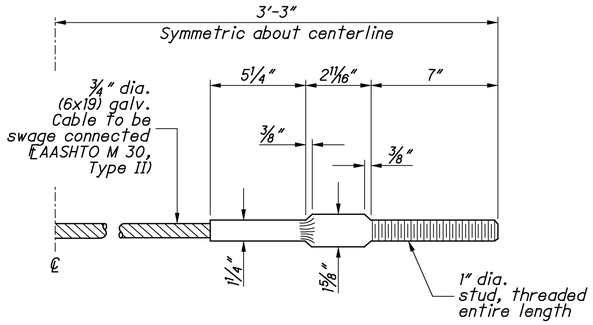

STANDARD SWAGED FITTING AND STUD

CABLE ANCHOR

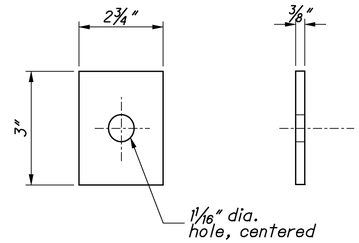

END PLATE

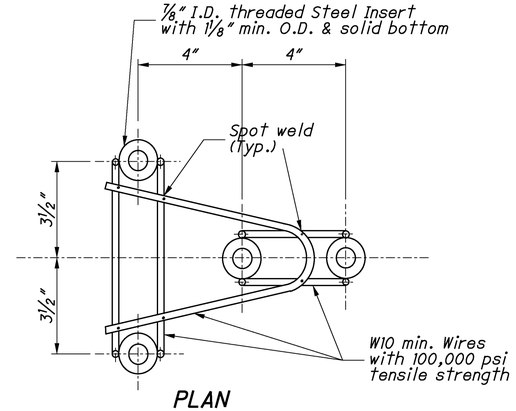

PLAN

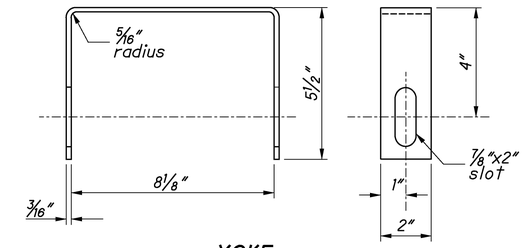

YOKE

Two required in Assembly

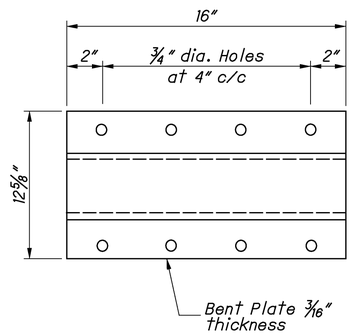

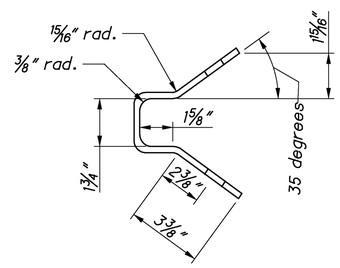

ANCHOR BRACKET

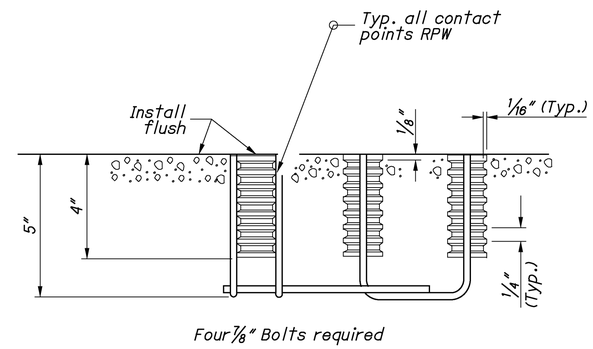

Four ⅞" Bolts required

ELEVATION

CONCRETE INSERT ANCHOR ASSEMBLY (W-BEAM ONLY)

See ANCHORS and PROTECTIVE COATINGS Notes on Sheet 2

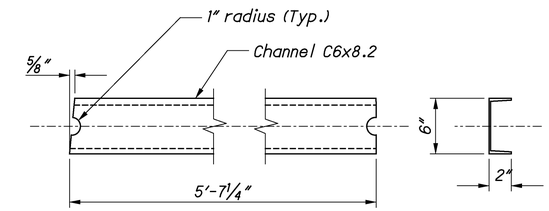

STRUT

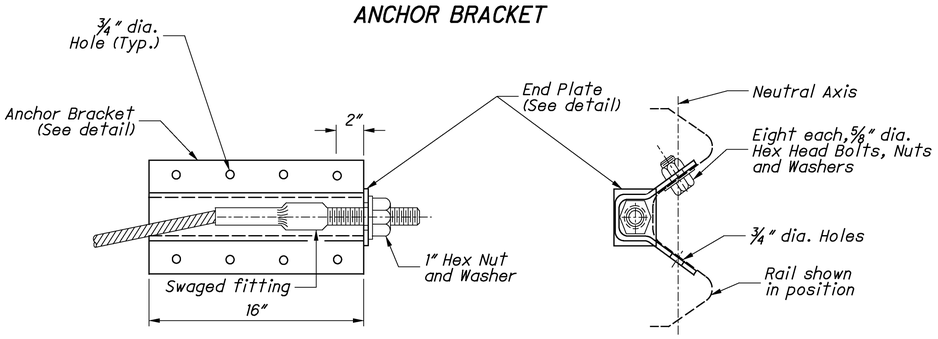

ANCHOR BRACKET ASSEMBLY DETAILS

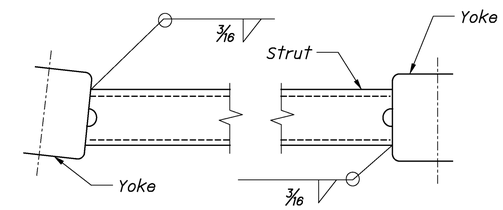

Channel legs shown down. For opposite hand, install Channel legs up.

STRUT AND YOKE ASSEMBLY

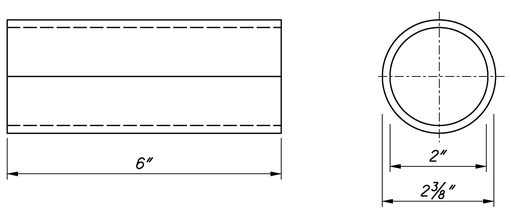

POST SLEEVE

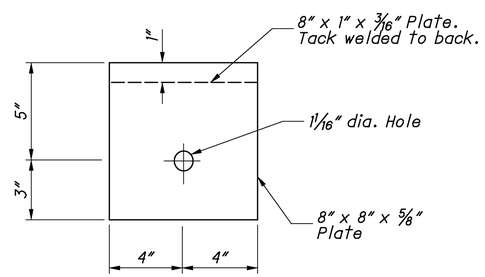

BEARING PLATE

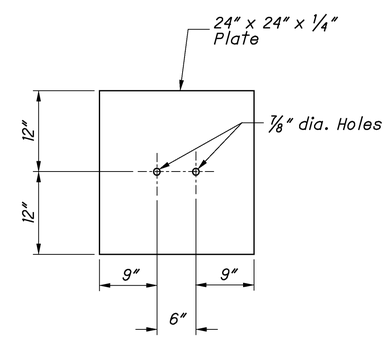

SOIL PLATE

OFFICE OF ROADWAY ENGINEERING

DESIGNED | REVIEWED | CHECKED | REVISION DATE | PIS NUMBER

PLAN INSERT SHEET

GUARDRAIL DETAILS (Rail Components)

PIS GR-1.1

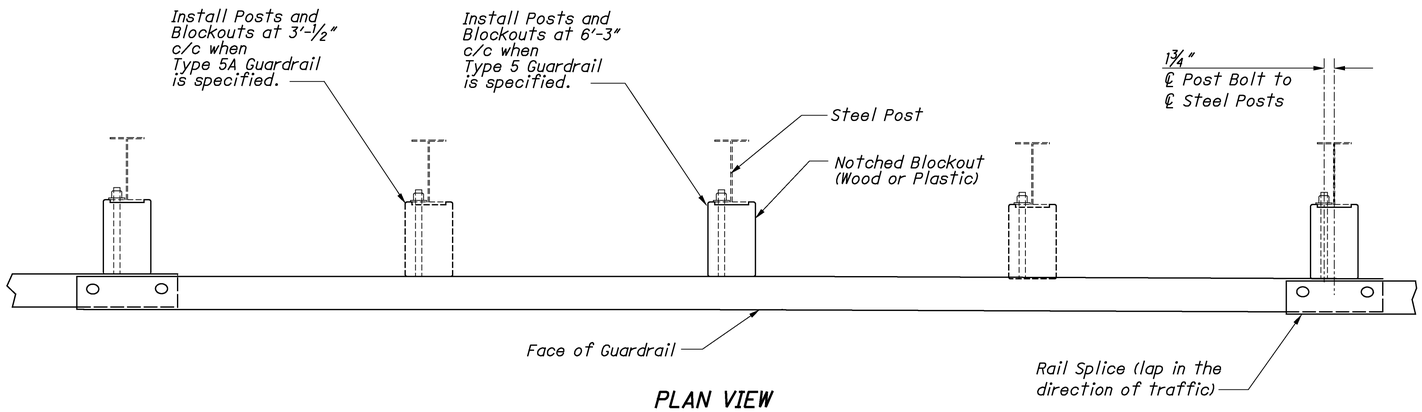

PLAN VIEW

(Steel Posts shown)

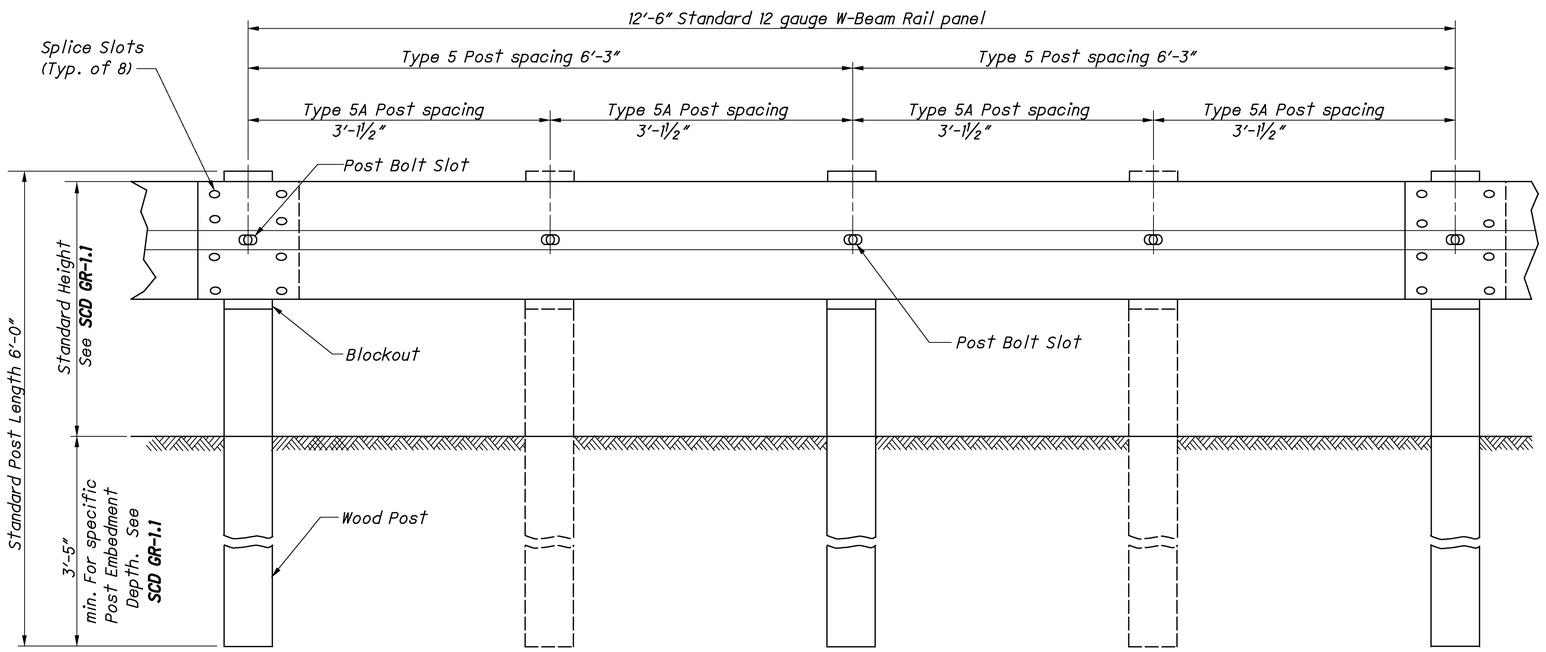

ELEVATION

(Wood Posts shown)

NOTES

RAIL: Use W-Beam rail meeting AASHTO M 180 Type II Class A, as specified in CMS 606.

POSTS: Posts may be constructed of wood or steel. Wood posts may be round or 6"x8" square-sawed.

Use round wood posts on runs of single-sided rail. The round posts shall be 8"±1 in diameter at the top and not more than 3" larger at the butt with a uniform taper.

Fabricated wood posts with square ends. Posts shall be pressure-treated as per CMS 710.14. Bore bolt holes and, if required, trim the tops of posts after the posts are set.

Steel posts are to be W6x9 or W6x8.5 galvanized steel. Use the same type of post throughout the length of the project unless otherwise specified in the plans or permitted by the Engineer.

All posts are 6'-0" long unless specified otherwise in the Contract Document. Posts may be set in drilled holes or may be driven to grade.

WELDED BEAM POSTS: Welded beam guardrail posts may be used for Item 606, Guardrail, provided the web and flange sizes are as shown here. Welding of the web to the flanges must comply with ASTM A 769, Class 1, using Grade 36 steel [250 MPa yield point] with the following exceptions:

Sec. 7.2 Test reports of tensile properties for each lot shall accompany each shipment.

Sec. 12 Beams that have imperfections repaired by welding shall not be accepted for use in Item 606.

Sec. 13 Random samples shall be tested by the Department from materials delivered to the project site, or other locations designated by the Laboratory.

ALTERNATE POSTS: Engineered guardrail posts having met NCHRP 350 criteria, and listed on the **Office of Materials Management's** Approved List are permitted as an equal alternate when installed according to the Manufacturer's instructions and within the limitations shown on the Approved List.

BLOCKOUTS: Blockout dimensions are dependent on post used. Wood Blockouts are to be pressure treated as specified in CMS 710.14. Bore bolt holes. Approved alternate blockouts may be used in lieu of the wood blockouts shown. The approved list is maintained by the **Office of Roadway Engineering.**

WASHERS: Install appropriate sized standard galvanized steel washers on the nut side of bolts installed on wood posts.

DELINEATION: For barrier reflectors, see CMS 626.

MISCELLANEOUS: For other guardrail details, see **SCD GR-1.1.**

STEEL BEAM POSTS (English)				
Size	**Beam depth**	**Flange width**	**Flange thickness**	**Web thickness**
Rolled W6x8.5	5.8"	3.94"	0.193"	0.170"
Rolled W6x9	5.9"	3.94"	0.215"	0.170"
Welded 6x8.5	6.0"	3.94"	0.193"	0.170"
Welded 6x9	6.0"	3.94"	0.215"	0.170"

OFFICE OF ROADWAY ENGINEERING

DESIGNED | REVIEWED | REVISION DATE | CHECKED | PIS NUMBER

PLAN INSERT SHEET

GUARDRAIL TYPE 5 & 5A

PIS GR-2.1

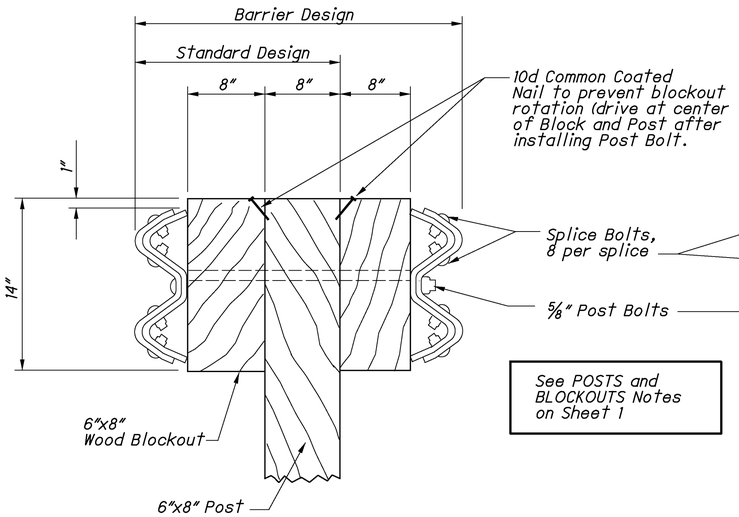

SQUARE WOOD POST

See POSTS and BLOCKOUTS Notes on Sheet 1

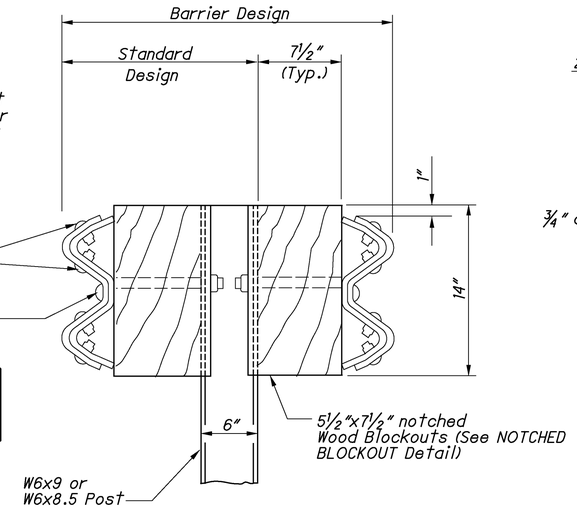

STEEL POST

See POSTS Note, Sheet 1

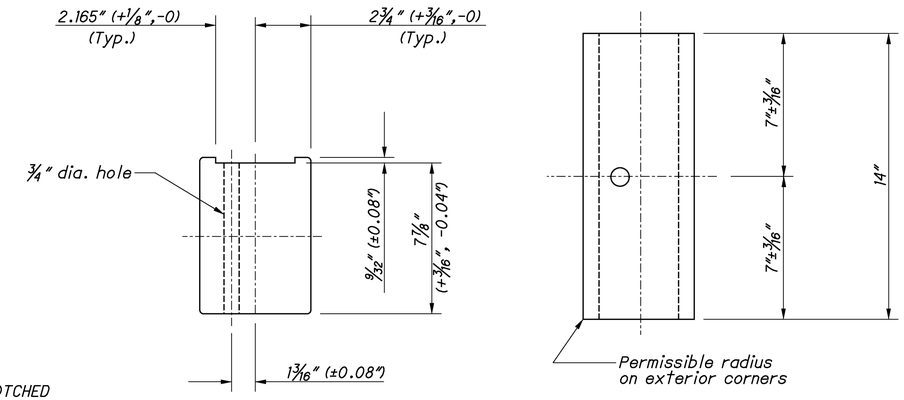

PLAN

ELEVATION

NOTCHED BLOCKOUTS FOR STEEL POSTS

See BLOCKOUTS Note on Sheet 1

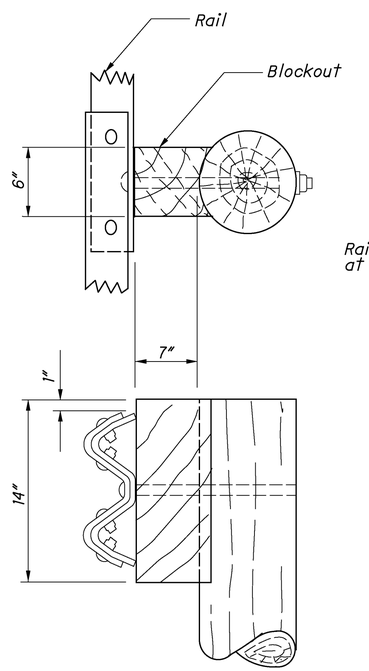

Method 1
Routed Blockout

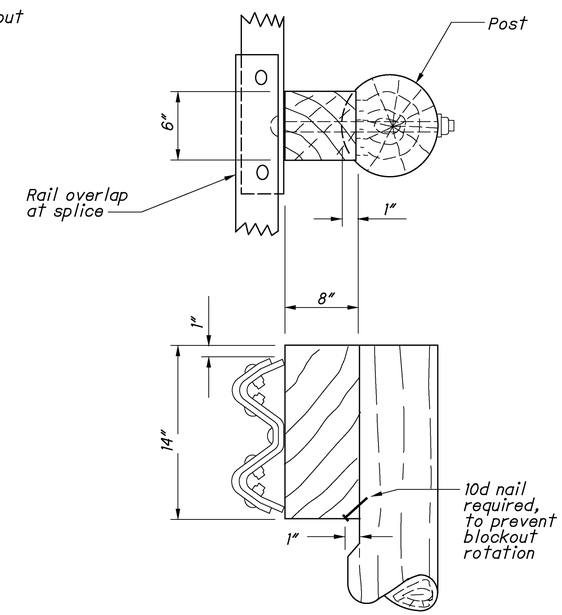

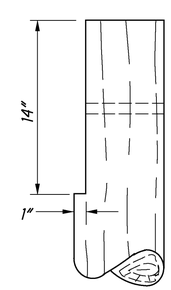

Toenail not required if post is cut as shown

Method 2
Notched Post

Alternate methods of placing the Blockouts on round Posts may be submitted for consideration and approved by the Engineer.

ROUND WOOD POSTS

Single Sided runs only (Standard Design)

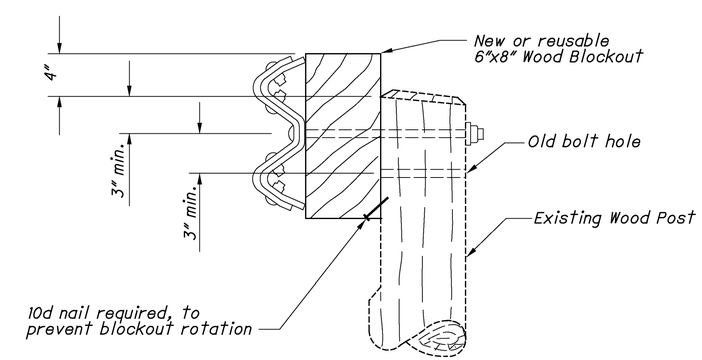

WOOD POSTS WITH WOOD BLOCK RAISING EXISTING GUARDRAIL HEIGHT

OFFICE OF ROADWAY ENGINEERING

DESIGNED | REVIEWED | REVISION DATE | CHECKED | PIS NUMBER

PLAN INSERT SHEET

GUARDRAIL TYPE 5 & 5A

PIS GR-2.1

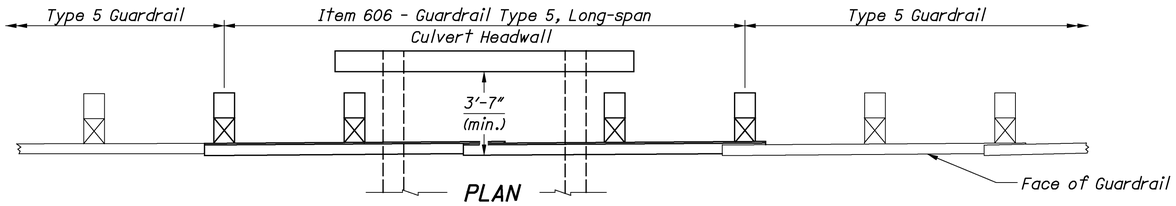

PLAN

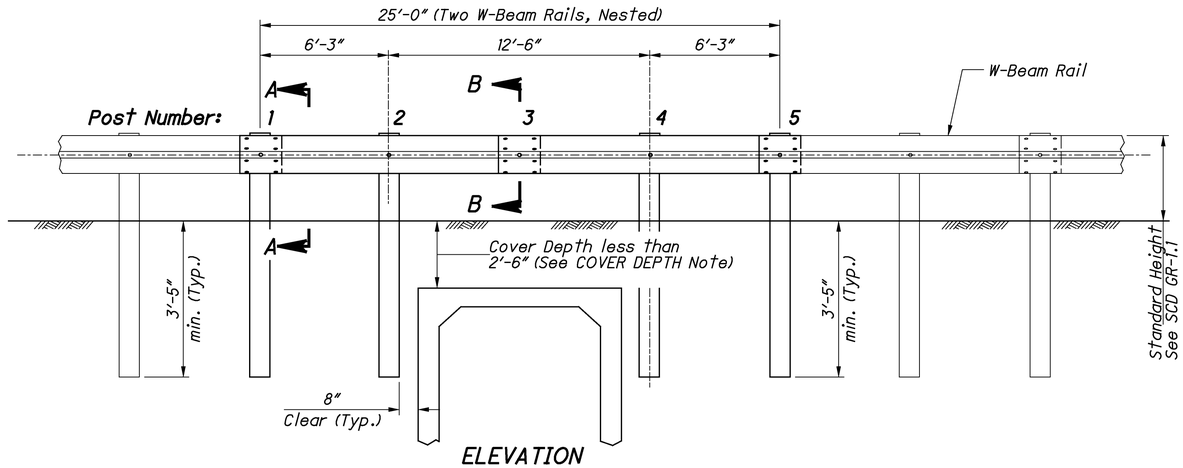

ELEVATION
12'-6" GUARDRAIL SPAN

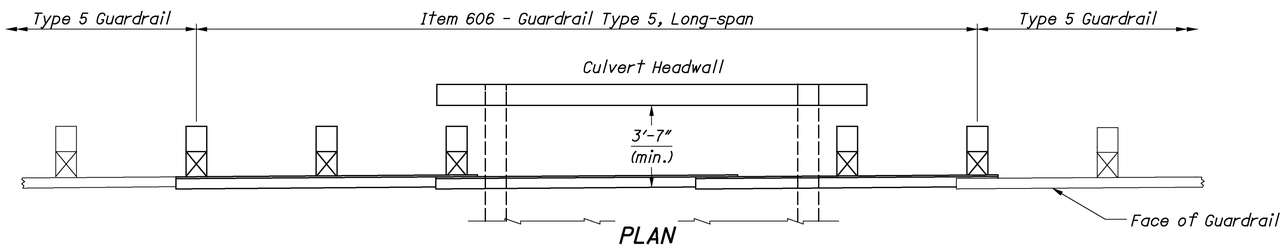

PLAN

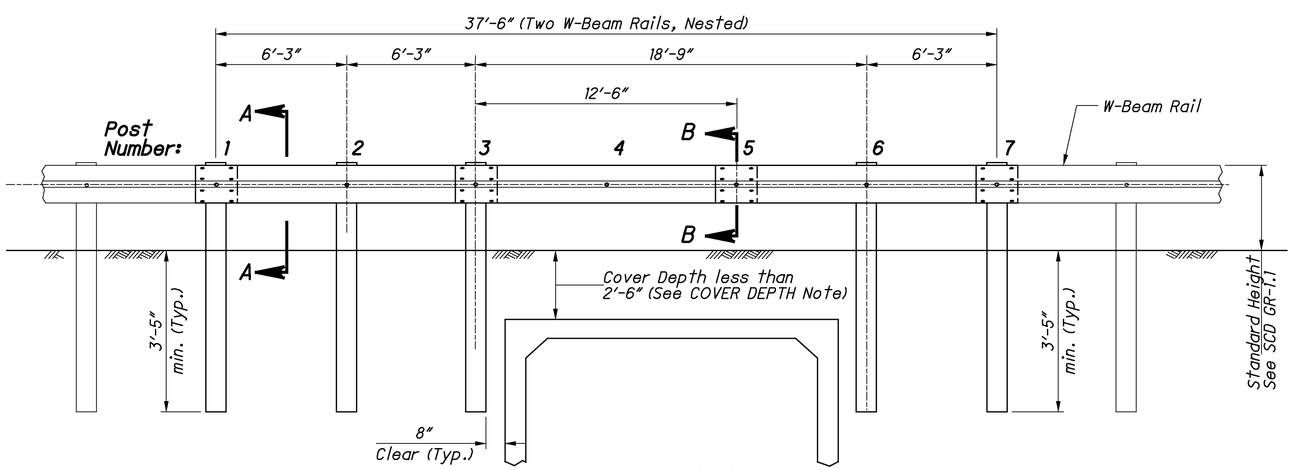

ELEVATION
18'-9" GUARDRAIL SPAN

NOTES

APPLICATION: *This drawing covers two span lengths, 12'-6" to 18'-9".* ***Do not use on the NHS.*** *(See* ***SCD GR-2.3*** *for NCHRP 350 Test Level 3 design.)*

12'-6" SPAN: *The post to be eliminated must be at a rail splice location, as shown at Post No. 3. If conditions are such that the post to be eliminated would occur at a non-splice location, then the 18'-9" span design should be used, eliminating Post No. 4.*

18'-9" SPAN: *The posts to be eliminated may be at Post No. 4 and No. 5 (as shown) or at Post No. 3 and No. 4.*

COVER DEPTH: *This depth is measured at the locations of the missing posts. For cover depths greater than or equal to 2'-6", see* ***SCD GR-2.2.***

FLARED ENDS: *Install these systems with either one or both ends flared away from the traveled way. For locations where a guardrail flare will be used, the minimum recommended length of tangent section adjacent to the unsupported length is 25'. Taper rates should be as shown on* ***SCD GR-5.1.***

MATERIALS: *All posts, blockouts, rails, and hardware shall comply with Item 606, Guardrail Type 5 as detailed on* ***SCD GR-2.1.*** *For other details not shown, see* ***SCD GR-1.1.***

PAYMENT: ***Item 606 - Guardrail, Type 5, Long-span*** *is paid for in Feet for the length specified in the plans and includes the double rail elements, blockouts, posts, and the other hardware, materials and labor required to construct the guardrail as shown.*

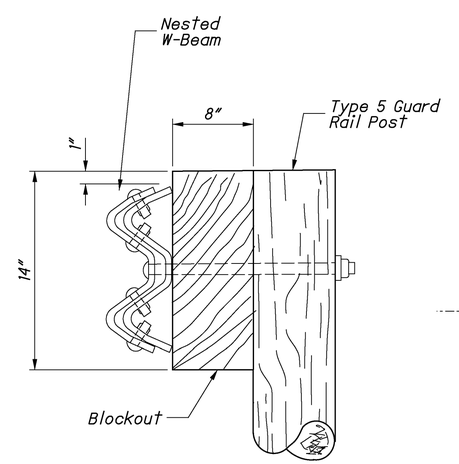

SECTION A-A

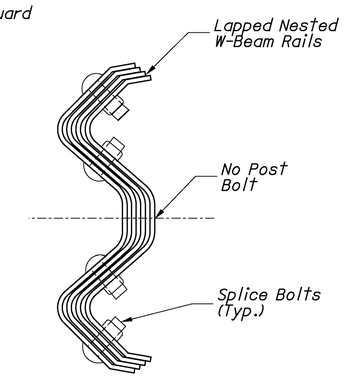

RAIL SPLICE
SECTION B-B

OFFICE OF ROADWAY ENGINEERING

DESIGNED | REVIEWED | REVISION DATE | CHECKED | PIS NUMBER

PLAN INSERT SHEET

LONG-SPAN GUARDRAIL ACROSS CULVERT

PIS GR-2.4

1 / 1

55 / 60

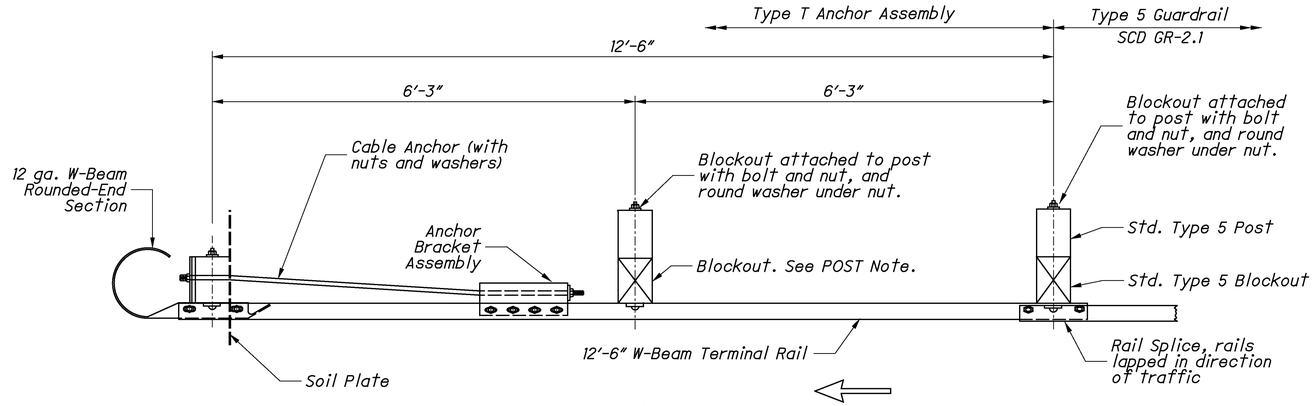

PLAN

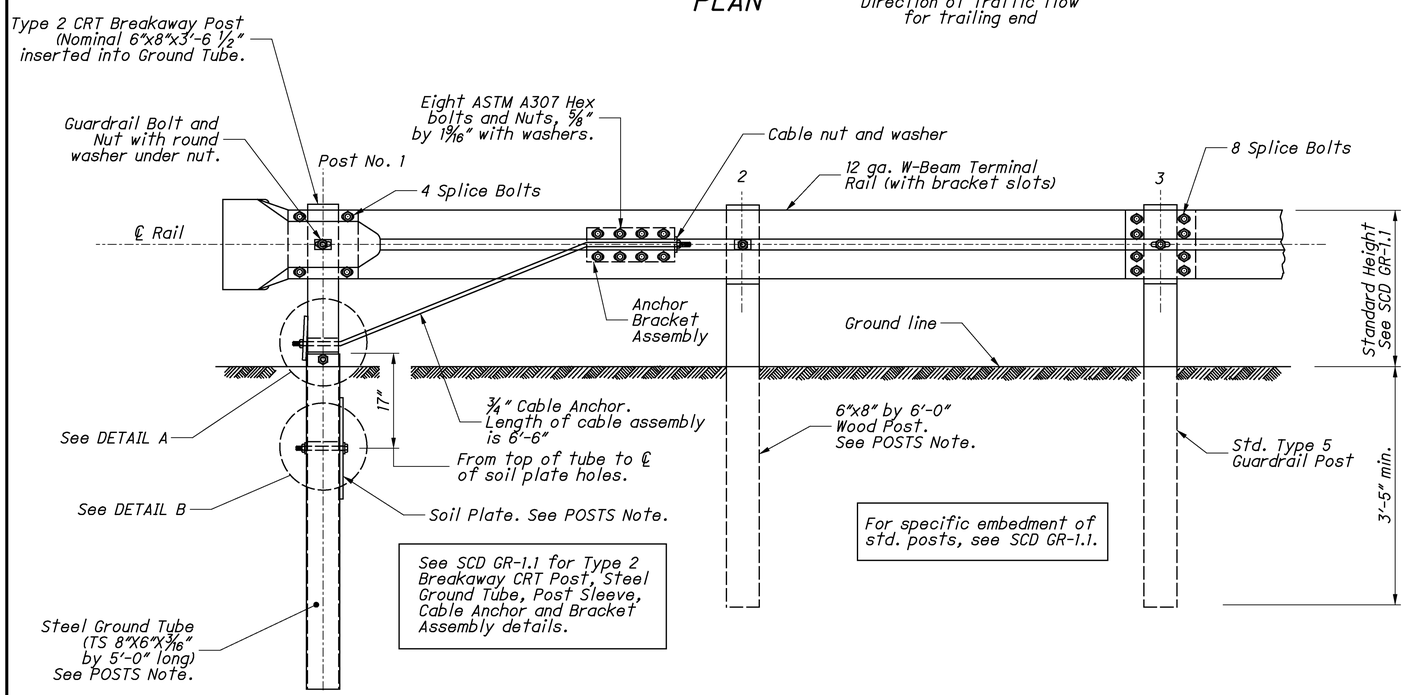

ELEVATION - FOUNDATION TUBE

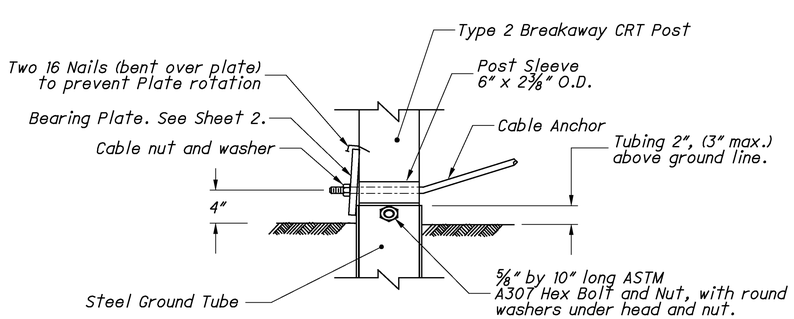

DETAIL A

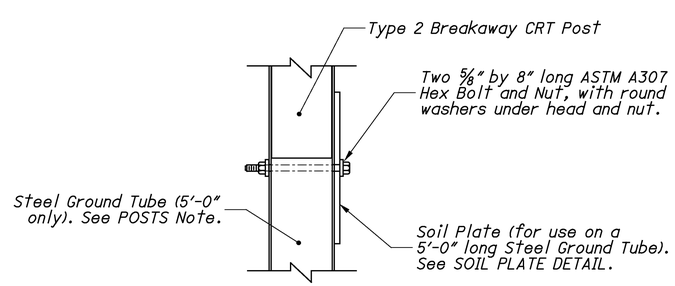

DETAIL B

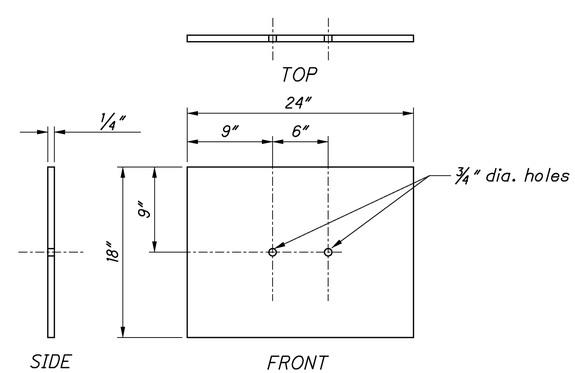

SOIL PLATE DETAIL

NOTES

APPLICATION: Use Type T Anchor Assemblies on the trailing end of guardrail runs, located outside of the clear zone of opposing traffic. The assembly is 12'-6" long, none of which can be considered the Length of Need for the guardrail run.

For termination requirements at driveways, see DRIVEWAY OPENING Detail on Sheet 2. For side road approaches and Terminals at Structures, see Location & Design Manual, Volume 1, Figure 603-3.

ANCHORING OPTIONS: Contractor may choose either the foundation tube (shown on this Sheet) or the concrete footing option (Sheet 2) to construct this anchor assembly.

If the foundation tube option is chosen, the contractor will take proper care to insure that the Soil Plate fasteners are not broken during the driving process.

Concrete footings may be cast-in-place or precast. Compact fill after placing precast unit.

MATERIALS: See **SCD GR-1.1** for parts used on this anchor, including the CRT Breakaway Posts, Steel Ground Tube, Post Sleeve, Cable Anchor and Bracket Assembly.

Bearing Plate and Soil Plate is ASTM A709 Grade 36. Steel Ground Tube shall be ASTM A500, Grade B, and meet CMS 707.10. All angles, channels and plates shall meet CMS 711.01. All structural steel shall be galvanized as specified in CMS 711.02. All bolt washers indicated are standard galvanized steel of the appropriate size.

Concrete shall be class C.

Components on this anchor that are not detailed on SCD GR-1.1 include: 1) 12'-6" W-Beam Terminal Rail (standard part RWM14a), and 2) W-Beam Rounded End Section (RWE03a). For complete details and specifications, see part descriptions in the **AASHTO/AGC/ARTBA Standardized Hardware Guide.**

POSTS: Post No. 1 may be an 8'-0" long Steel Ground Tube without a Soil Plate in lieu of the 5'-0" tube with Soil Plate.

Post No. 2 can be W6x9 (or W6x8.5) with notched wood blockouts or a standard Type 5 post and blockout. Recycled plastic blockouts are permitted.

PAYMENT: All labor and materials, including the W-Beam Rounded End Section and the W-Beam Terminal Rail for the 12'-6" anchor assembly shall be included in the unit price bid for

Item 606 - Anchor Assembly, Type T, Each.

OFFICE OF ROADWAY ENGINEERING

DESIGNED | REVIEWED | REVISION DATE | CHECKED | PIS NUMBER

PLAN INSERT SHEET

TYPE T ANCHOR ASSEMBLY (Foundation Tube Option)

PIS GR-4.2

1 / 2

56 / 60

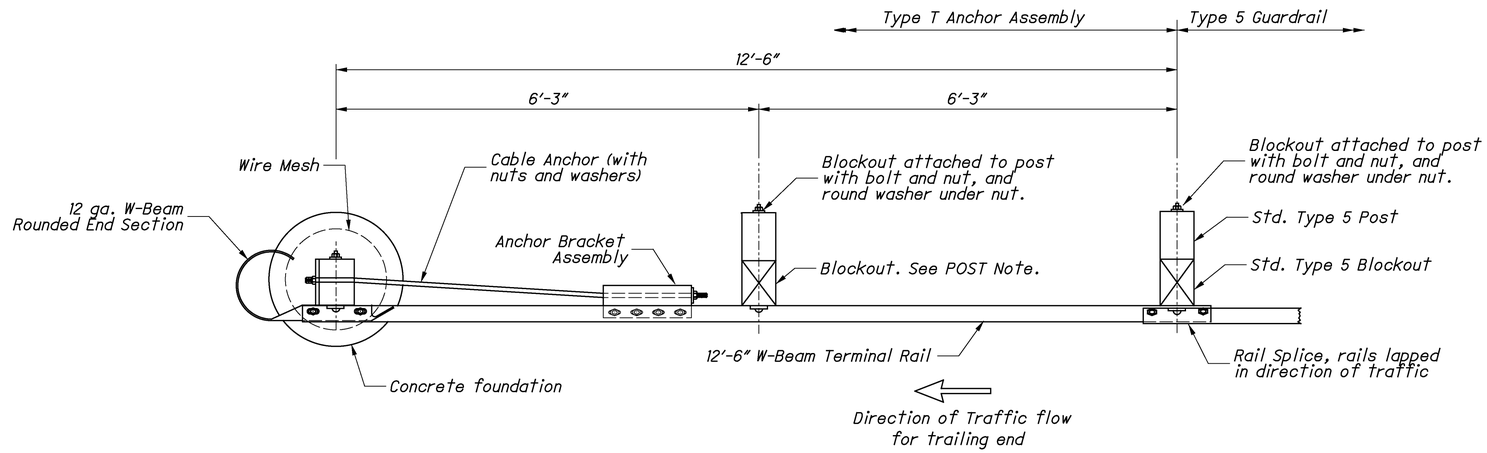

PLAN

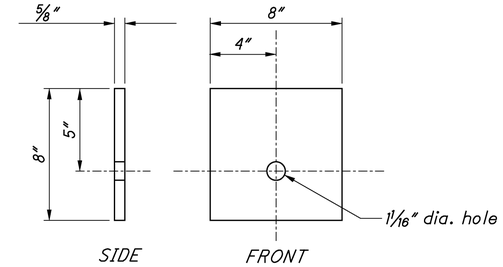

BEARING PLATE DETAIL

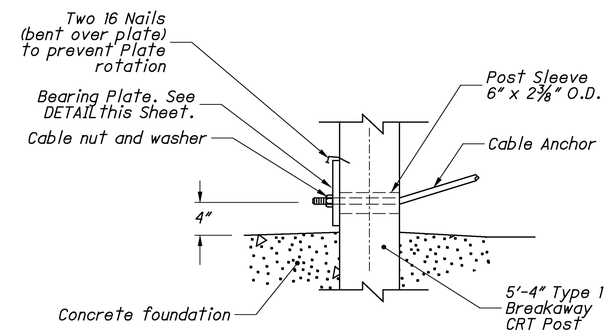

DETAIL C

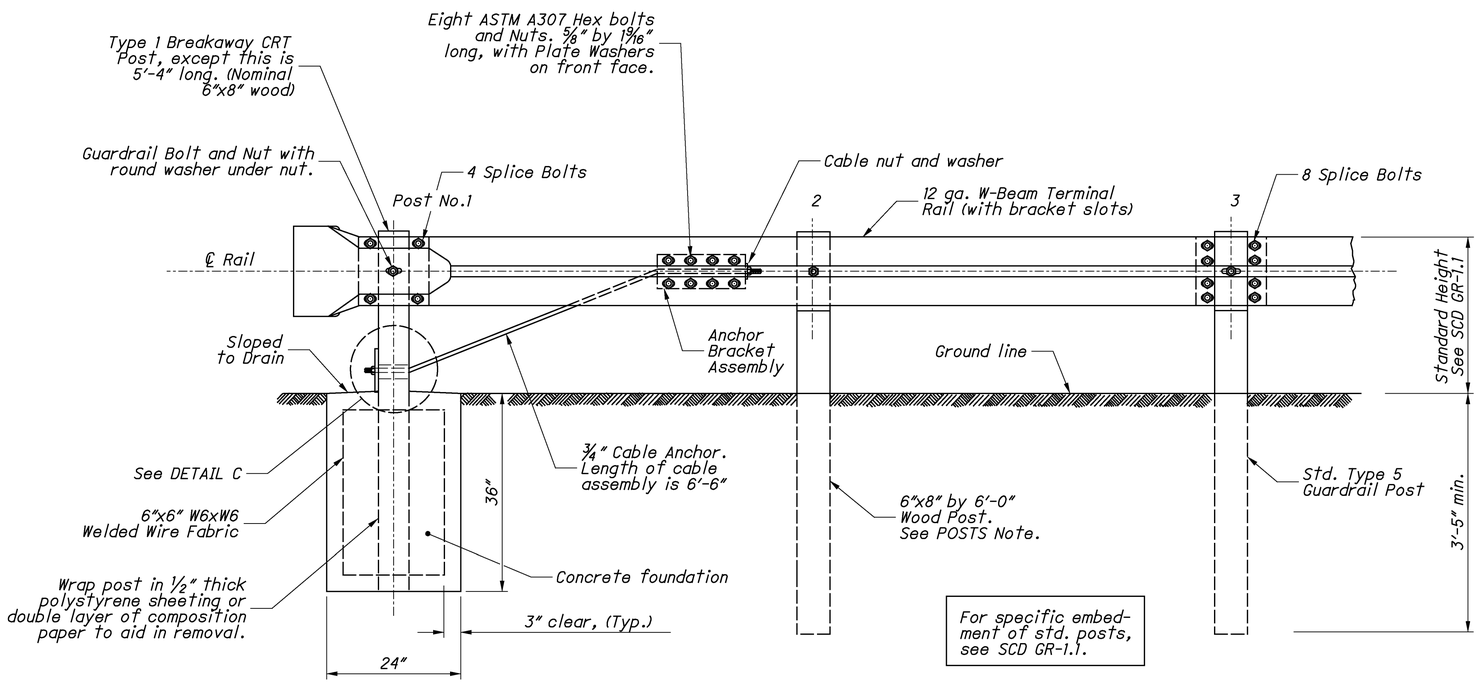

See SCD GR-1.1 for Type 1 Breakaway CRT Post, Steel Ground Tube, Post Sleeve, Cable Anchor and Bracket Assembly details.

ELEVATION - CONCRETE FOOTER

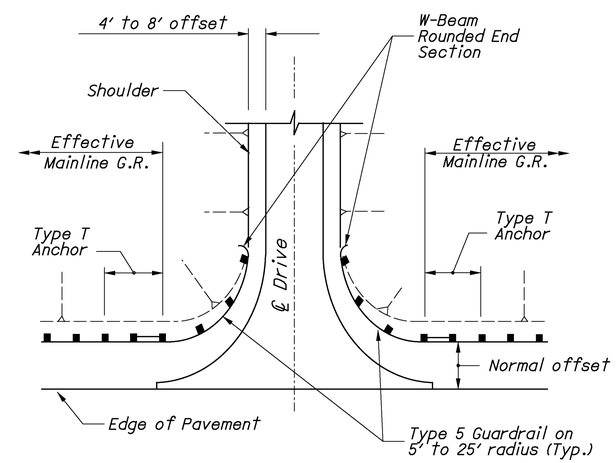

DRIVEWAY OPENING

OFFICE OF ROADWAY ENGINEERING

DESIGNED | REVIEWED | REVISION DATE | CHECKED | PIS NUMBER

PLAN INSERT SHEET

TYPE T ANCHOR ASSEMBLY (Foundation Tube Option)

PIS GR-4.2

2 / 2

57 / 60

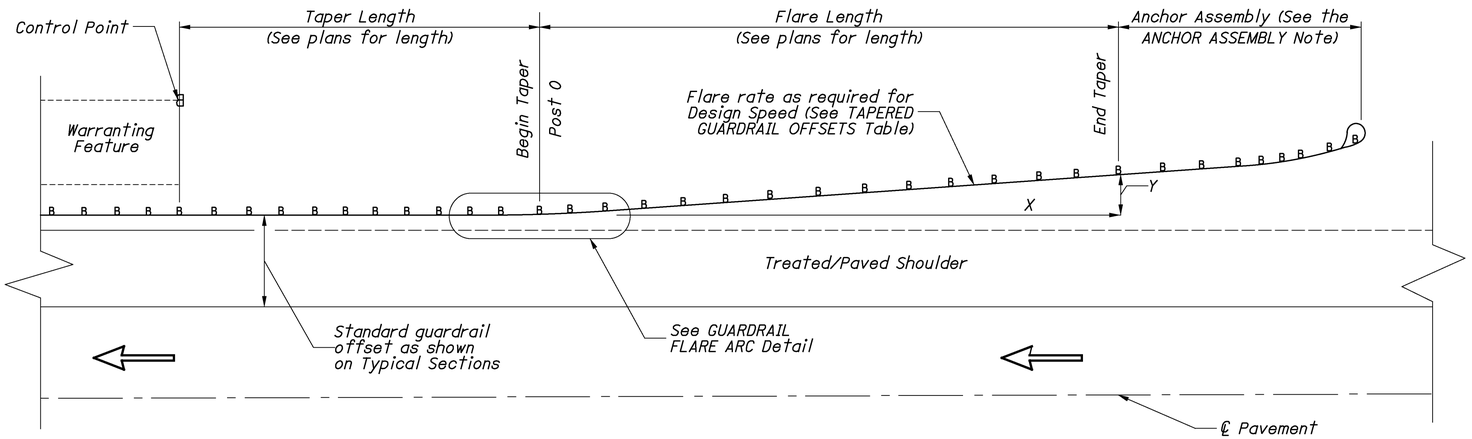

STANDARD GUARDRAIL FLARE

(Plan View)

NOTES

STANDARD GUARDRAIL FLARE: Construct the flare shown here when indicated in the construction plans and in conujunction with **SCD GR-5.2.**

FLARE RATES AND OFFSET SPEEDS: Use the Design Speed shown on the plans to determine flare rates and offsets. Where a Design Speed is not shown or availale, ust eh legal posted speed limit.

ANCHOR ASSEMBLY: Use a Type B Anchor Assembly with standard guardrail flares unless otherwise specified. The Type A can be used, with restrictions. **Location and Design Manuel, Volume 1, Section 603.**

CONTROL POINT: The point shown designates the extent of the hazard being protected and is shown for design use only.

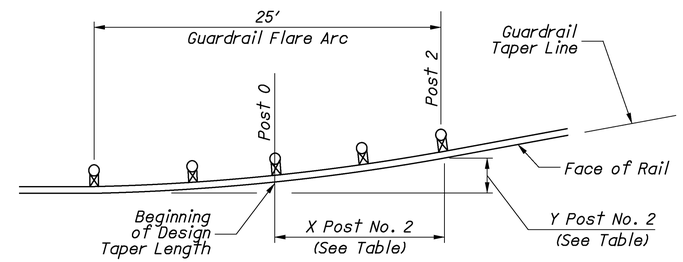

GUARDRAIL FLARE ARC DETAIL

TAPERED GUARDRAIL OFFSETS (Feet)

Post No.	Flare Length	45 MPH or less 10:1 Taper		50 MPH 11:1 Taper		55 MPH 12:1 Taper		60 MPH 13:1 Taper		65 MPH 14:1 Taper		70 MPH 15:1 Taper	
		X	Y	X	Y	X	Y	X	Y	X	Y	X	Y
0	25	0	0.3	0	0.3	0	0.3	0	0.2	0	0.2	0	0.2
2		12.4	1.3	12.5	1.1	12.5	1.0	12.5	1.0	12.5	0.9	12.5	0.8
4		24.9	2.5	24.9	2.3	24.9	2.1	24.9	1.9	24.9	1.8	24.9	1.7
6	50	37.3	3.7	37.3	3.4	37.4	3.1	37.4	2.9	37.4	2.7	37.4	2.5
8		49.8	5.0	49.8	4.5	49.8	4.1	49.9	3.8	49.9	3.6	49.9	3.3
10	75	62.2	6.2	62.2	5.7	62.3	5.2	62.3	4.8	62.3	4.5	62.4	4.2
12		74.6	7.5	74.7	6.8	74.7	6.2	74.8	5.7	74.8	5.3	74.8	5.0
14	100	87.1	8.7	87.1	7.9	87.2	7.3	87.2	6.7	87.3	6.2	87.3	5.8
16		99.5	9.9	99.6	9.1	99.7	8.3	99.7	7.7	99.7	7.1	99.8	6.7
18	125	111.9	11.2	112.0	10.2	112.1	9.3	112.2	8.6	112.2	8.0	112.3	7.5
20		124.4	12.4	124.5	11.3	124.6	10.4	124.7	9.5	124.7	8.9	124.7	8.3
22	150	136.8	13.7	136.9	12.5	137.0	11.4	137.1	10.5	137.1	9.8	137.2	9.1
24		149.3	14.9	149.4	13.6	149.5	12.5	149.6	11.5	149.6	10.7	149.7	10.0
26	175	161.7	16.2	161.8	14.7	161.9	13.5	162,0	12.5	162.1	11.6	162.1	10.8
28		174.1	17.4	174.3	15.8	174.4	14.5	174.5	13.4	174.6	12.5	174.6	11.6
30	200	186.6	18.7	186.7	17.0	186.9	15.6	186.9	14.4	187.9	13.4	187.1	12.5
32		199.0	19.9	199.2	18.1	199.3	16.6	199.4	15.3	199.5	14.3	199.6	13.3

All "X" dimensions shown are from the ceterline of Post 0 to the centerline of the indicated post along the standard guardrail offset line extended.

All "Y" dimensions shown are from the standard guardrail offset line extended to the face of rail at the post indicated.

OFFICE OF ROADWAY ENGINEERING

DESIGNED | REVIEWED | REVISION DATE | CHECKED | PIS NUMBER

PLAN INSERT SHEET

FLARE DETAILS

GUARDRAIL

PIS GR-5.1

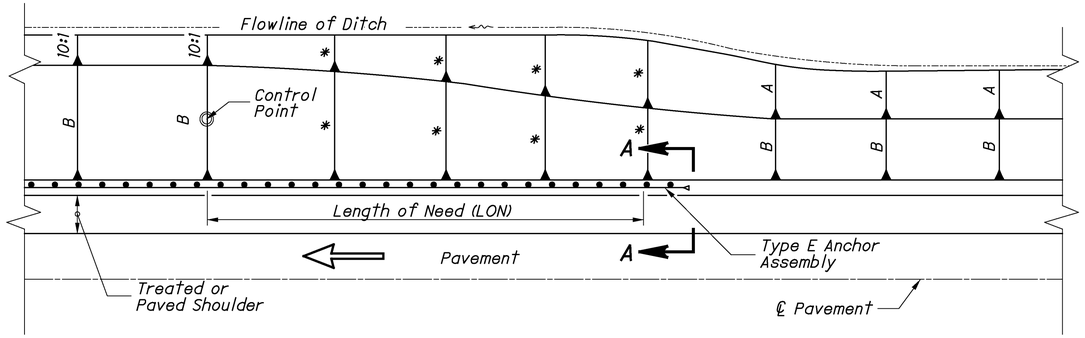

FILL TO FILL

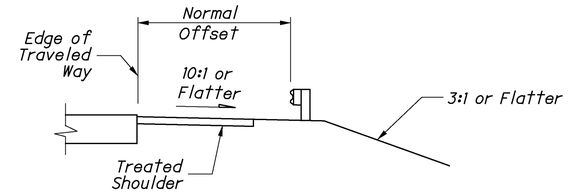

SECTION A-A

* 3:1 or Flatter

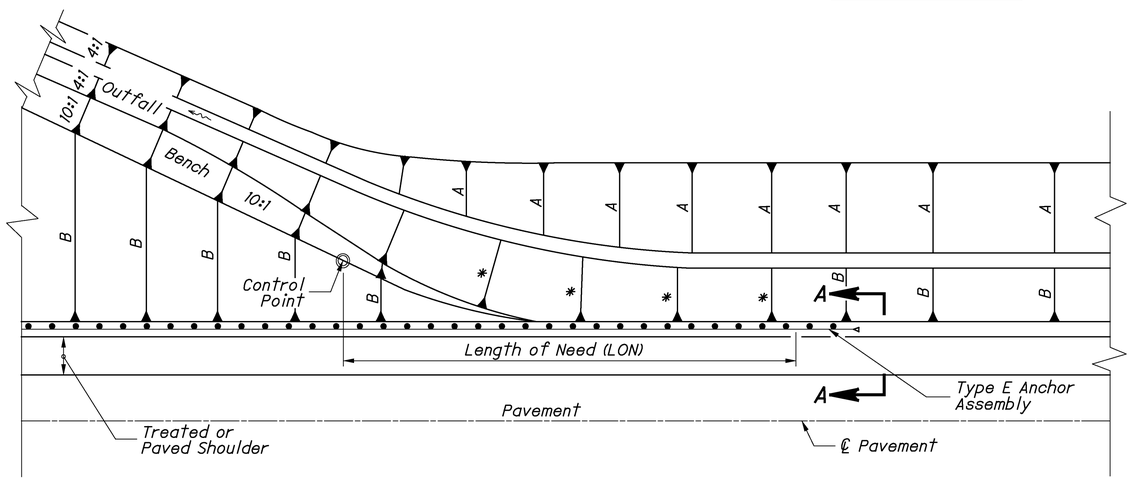

CUT TO FILL

NOTES

APPLICATION: Utilitize details shown here only where approach foreslopes are steeper than 6:1, but not steeper than 3:1.

SLOPES: Slopes designated by * shall be 3:1 or flatter. Slopes labeled "A" and "B" shall be constructed as specified in the plans.

"LON" DISTANCE: The Length of Need, LON, represents the distance from the control point to the beginning of the end treatment. The control point shown designates the extent of the hazard being shielded and is shown for design use only. See **Location & Design Manual, Volume 1,** Section 602.

GUARDRAIL END TERMINALS: Terminals utilized for the situations shown here shall be Type E Anchor Assemblies unless otherwise specified in the plans.

OBSTRUCTION INSTALLATION: Use this installation for one-directional roadways only.

OFFSET DESIGN: The design shown may be specified on the plans where it is deemed detrimental to lose effective shoulder width due to the dimensions of the Type E Anchor Assembly. The Type E which represents the final 50' of guardrail is to be offset an additional 9" from the normal guardrail offset by tapering within the 12'-6" shown below. The graded shoulder width shall be increased 9" and tapered back to the normal width to 10' as shown.

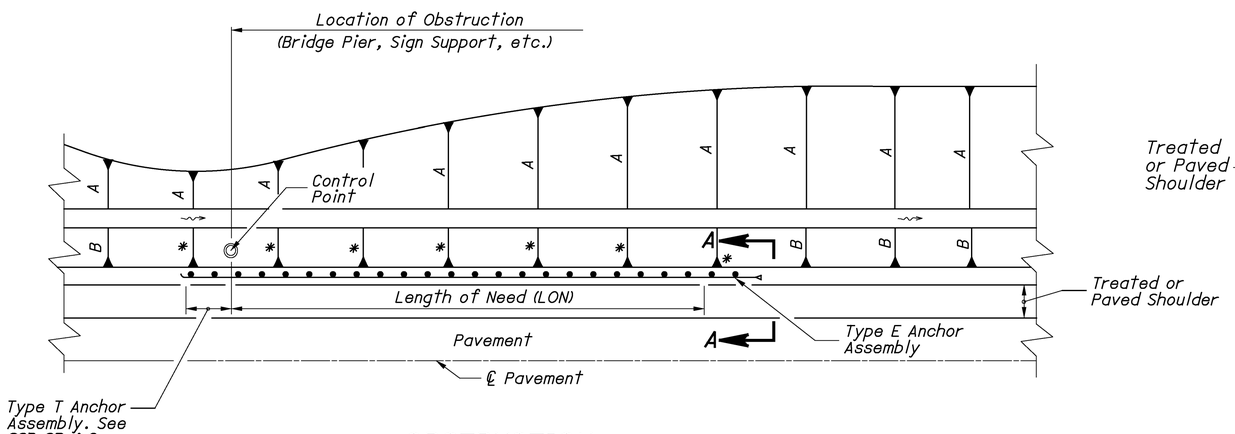

OBSTRUCTION

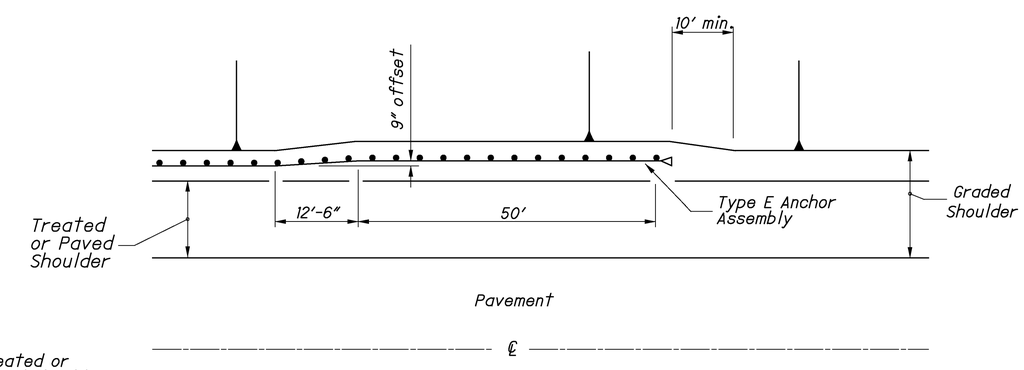

OFFSET DESIGN
(Plan View)

OFFICE OF ROADWAY ENGINEERING

DESIGNED | REVIEWED | REVISION DATE | CHECKED | PIS NUMBER

PLAN INSERT SHEET

INTRODUCTION OF GUARDRAIL RUNS Foreslope steeper than 6:1

PIS GR-5.3

1/1

59/60

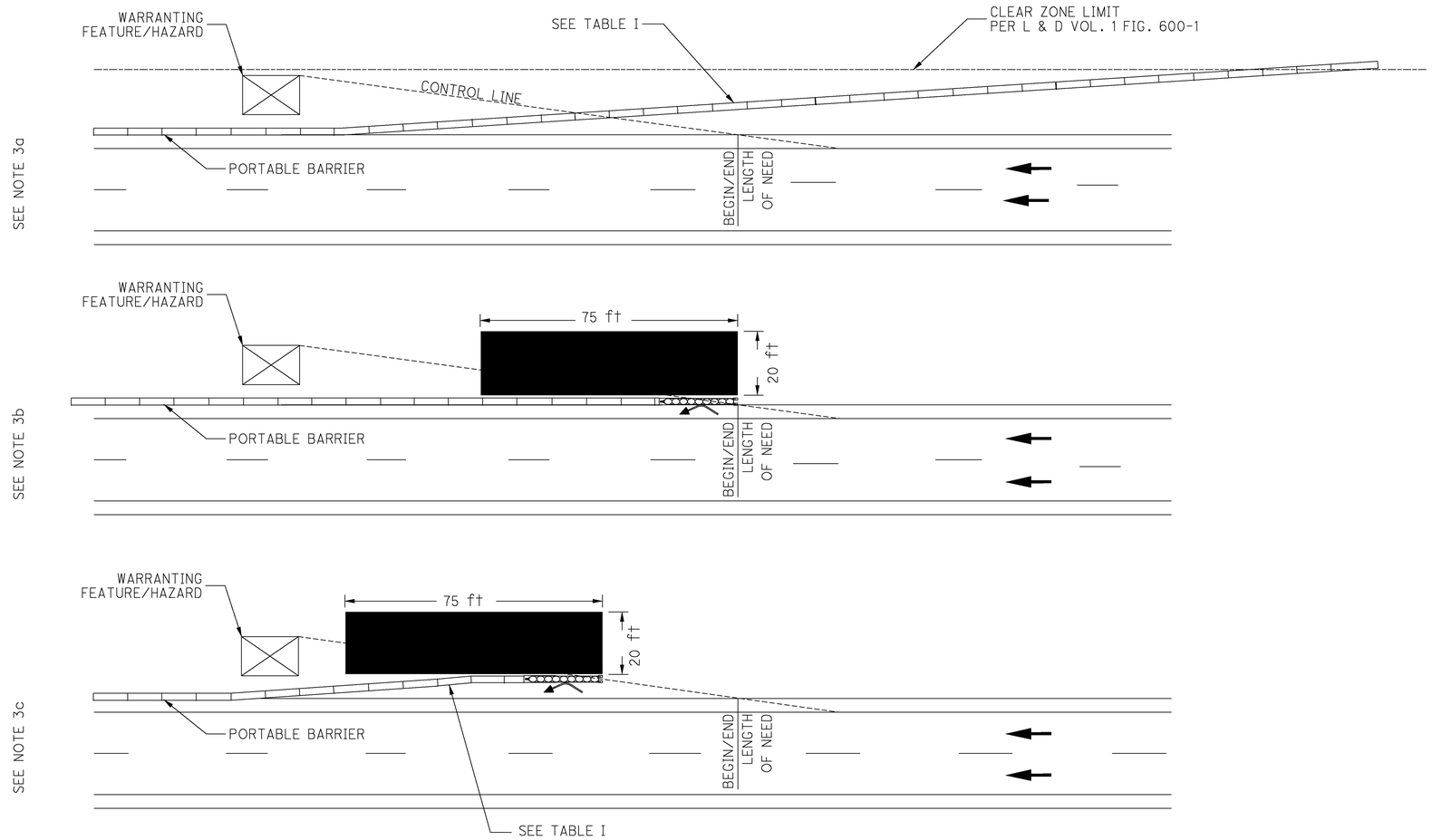

TABLE I

SPEED LIMIT (MPH)	PB FLARE RATE MINIMUM
25	8:1
30	8:1
35	10:1
40	11:1
45	13:1
50	14:1
55	16:1
60	17:1
65	19:1

NOTES

1. Attenuators shall be installed per the manufacturers' specifications.

2. Recovery area shall have slopes 3:1 or flatter and be free of workers, hazards, equipment, drop-offs, and material storage.

3. The Contractor shall select one of the three acceptable options for terminating portable barrier:

   a) Terminate flared section of portable barrier outside clear zone with tapered end only where cross slopes are 10:1 or flatter.

   b) Terminate portable barrier with an impact attenuator. A non-gating attenuator may be included in the length of need measurement.

   c) Flare a section of portable barrier to the length of need control line and terminate with an impact attenuator. A non-gating impact attenuator may be included in the flared section of portable barrier.

4. The Contractor shall submit documentation to the Engineer, 2 weeks prior to implementation, for acceptance when:

   a) Deviating from the three acceptable options for terminating portable barrier.

      Documentation shall explain any deviations and verify that the recovery area fulfills the manufacturers' specifications and Note 2.

   b) Using a gating impact attenuator in lieu of a non-gating impact attenuator.

      The gating impact attenuator length shall not be included as part of the length of need or recovery area requirements. Additional portable barrier will need to be added. The additional cost for the additional barrier required for a gating impact attenuator shall be included in the cost of the gating impact attenuator.

      Documentation shall verify that the extended recovery area fulfills the manufacturers' specifications and Note 2.

5. Gating impact attenuators shall not be used in gore locations or within the clear zone between bi-directional traffic.

LEGEND

RECOVERY AREA

PORTABLE BARRIER

NON-GATING IMPACT ATTENUATOR

DIRECTION OF TRAVEL

OFFICE OF TRAFFIC ENGINEERING

DESIGNED MER | REVIEWED

REVISION DATE 07/20/12 | CHECKED LAM

PIS NUMBER 2010175

PLAN INSERT SHEET

IMPACT ATTENUATOR PLACEMENT

PROJECT DESCRIPTION:
THE PROPOSED PROJECT WILL INCLUDE THE CULVERT REPLACEMENT AT GEA-306-13.45 IN CHESTER TOWNSHIP, GEAUGA COUNTY, OHIO.

HISTORIC RECORDS:
NO HISTORIC BORING RECORDS WERE FOUND FOR THIS PROJECT.

GEOLOGY
GEAUGA COUNTY IS PART OF THE APPALACHIAN PLATEAU OF OHIO, WHICH INCLUDES THE GLACIATED PART OF NORTHEASTERN OHIO. THIS COUNTY WAS ONCE COVERED BY SEVERAL GLACIERS. THE GLACIAL DRIFT RANGES FROM A FEW FEET TO LESS THAN 100 FEET IN THICKNESS. THIS MANTLE OF GLACIAL DRIFT OVERLIES SANDSTONE AND SHALE BEDROCK. THE SOILS IN THE VICINITY OF THE SITE ARE LOCATED IN THE WADSWORTH-RITTMAN ASSOCIATION. THE WADSWORTH-RITTMAN ASSOCIATION IS DEEP, NEARLY LEVEL TO VERY STEEP, POORLY DRAINED TO MODERATELY WELL DRAINED SOILS THAT FORMED IN MEDIUM TEXTURED GLACIAL TILL.

RECONNAISSANCE
NUMEROUS SITE VISITS WERE MADE BEFORE AND DURING FIELD DRILLING OPERATIONS. THE FIELD DRILLING OPERATIONS WERE PERFORMED BETWEEN NOVEMBER 29, 2012 AND DECEMBER 3, 2012. THE EXISTING PAVEMENT ALONG SR-306 WAS OBSERVED TO BE IN FAIR TO GOOD CONDITION. THE SURROUNDING AREA IS DESCRIBED AS MIX OF RESIDENTIAL AND COMMERCIAL DEVELOPMENT.

SURFACE EXPLORATION
THE SCOPE OF THE EXPLORATION AND ANALYSIS INCLUDED A RECONNAISSANCE OF THE PROJECT SITE, DRILLING 4 TEST BORINGS TO DEPTHS OF APPROXIMATELY 7.5 TO 33.8 FEET BELOW THE EXISTING PAVEMENT GRADES, A LABORATORY TESTING PROGRAM, AND AN ENGINEERING ANALYSIS AND EVALUATION OF THE SUBSURFACE MATERIALS. THE NUMBER AND LOCATION OF THE TEST BORINGS WERE SELECTED BY THE REPRESENTATIVES OF ODOT DISTRICT-12 AND FIELD LOCATED BY THE REPRESENTATIVES OF PSI PRIOR TO THE FIELD DRILLING OPERATIONS.

THE BORINGS WERE DRILLED WITH A TRUCK MOUNTED ROTARY DRILL RIG, USING 3.25-INCH I.D. HOLLOW STEM AUGERS TO ADVANCE THE HOLES THROUGH SOIL. DISTURBED SOIL SAMPLES WERE OBTAINED IN ACCORDANCE WITH THE STANDARD PENETRATION TEST (AASHTO T206) AT CONTINUOUS SAMPLING FOR THE FULL DEPTHS OF THE BORINGS. THE HAMMER SYSTEM USED WAS LAST CALIBRATED ON OCTOBER 25, 2011, AND THE AVERAGE DRILL ROD ENERGY RATIO (ER) ARE 60.8% FOR D-50 TRUCK MOUNTED.

EXPLORATION FINDINGS
THE TEST BORINGS DISCLOSED PREDOMINANTLY COHESSIVE AND (A-4a AND A-4b) NEAR SURFACE SOILS. THE AREA'S BOTTOMMOST FORMATION CONSISTED OF WEAK TO MODERATELY STRONG, GRAY, WEATHERED SHALE ROCK FORMATION. NO FREE WATER WAS OBSERVED AT THE TEST BORING LOCATIONS DURING THE FIELD DRILLING OPERATIONS.

SPECIFICATIONS
THIS GEOTECHNICAL EXPLORATION WAS PERFORMED IN ACCORDANCE WITH THE STATE OF OHIO, DEPARTMENT OF TRANSPORTATION, OFFICE OF GEOTECHNICAL ENGINEERING, SPECIFICATIONS FOR GEOTECHNICAL EXPLORATIONS, DATED JULY 2011.

AVAILABLE INFORMATION
ALL AVAILABLE SOIL INFORMATION THAT CAN BE CONVENIENTLY SHOWN ON THE SOIL PROFILE SHEETS HAS BEEN SO REPORTED. ADDITIONAL SUBSURFACE EXPLORATIONS MAY HAVE BEEN MADE TO STUDY SOME SPECIAL ASPECT OF THE PROJECT. COPIES OF THIS DATA, IF ANY, MAY BE INSPECTED IN THE DISTRICT DEPUTY DIRECTOR'S OFFICE, THE OFFICE OF GEOTECHNICAL ENGINEERING AT 1600 WEST BROAD STREET OR THE OFFICE OF STRUCTURAL ENGINEERING AT 1980 WEST BROAD STREET, COLUMBUS, OHIO.

LEGEND

DESCRIPTION	ODOT CLASS	CLASSIFIED MECH.	CLASSIFIED VISUAL
GRAVEL AND/OR STONE FRAGMENTS WITH SAND	A-1-b (0)	1	0
GRAVEL AND/OR STONE FRAGMENTS WITH SAND AND SILT	A-2-4 (0)	1	0
SANDY SILT	A-4a (5)	17	16
SILT	A-4b (7)	1	0
	TOTAL	20	16
WEATHERED SHALE	VISUAL		
PAVEMENT OR BASE = X = APPROXIMATE THICKNESS	VISUAL		

BORING LOCATION - PLAN VIEW.

DRIVE SAMPLE AND/OR ROCK CORE BORING PLOTTED TO VERTICAL SCALE ONLY. HORIZONTAL BAR INDICATES A CHANGE IN STRATIGRAPHY.

WC INDICATES WATER CONTENT IN PERCENT.

N_{60} INDICATES STANDARD PENETRATION RESISTANCE NORMALIZED TO 60% DRILL ROD ENERGY RATIO.

W— INDICATES FREE WATER ELEVATION.

▼— INDICATES STATIC WATER ELEVATION.

● INDICATES A PLASTIC MATERIAL WITH A MOISTURE CONTENT EQUAL TO OR GREATER THAN THE LIQUID LIMIT MINUS 3.

SS INDICATES A SPLIT SPOON SAMPLE.

NP INDICATES A NON-PLASTIC SAMPLE.

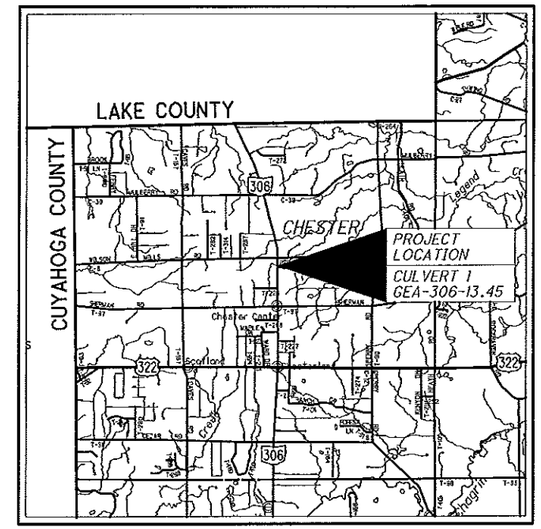

LOCATION MAP
SCALE IN MILES
0 1 2 3 4

PARTICLE SIZE DEFINITIONS

BOULDERS	12"	COBBLES	3"	GRAVEL	2.0 mm (No. 10 SIEVE)	COARSE SAND	0.42 mm (No. 40 SIEVE)	FINE SAND	0.074 mm (No. 200 SIEVE)	SILT	0.005 mm	CLAY

SUMMARY OF SOIL TEST DATA
GEA-306-13.45

STATION & OFFSET	FROM TO	SAMPLE ID	% REC	% GR	% CS	% FS	% SILT	% CLAY	LL	PL	PI	% WC	ODOT CLASS
B-001-0-12	01.10 - 01.40	SS-1A	100	36	29	17	18		NP	NP	NP	14	A-1-b (0)
STA. 153+50, 19' LT.	01.40 - 02.60	SS-1B	72	7	12	11	39	31	29	19	10	17	A-4a (7)
	02.60 - 04.10	SS-2	100	6	10	9	41	34	30	23	7	16	A-4a (8)
	04.10 - 05.60	SS-3	67				SAME AS SS-2					21	A-4a (V)
	05.60 - 07.10	SS-4	89				SAME AS SS-2					12	A-4a (V)
B-002-0-12	01.10 - 01.40	SS-1A	100	26	26	20	28		NP	NP	NP	17	A-2-4 (0)
STA. 153+72, 20' RT.	01.40 - 02.60	SS-1B	60	5	13	11	46	25	29	22	7	18	A-4a (7)
	02.60 - 04.10	SS-2	67	6	10	12	41	31	NP	NP	NP	16	A-4a (7)
	04.10 - 05.60	SS-3	89				SAME AS SS-2					16	A-4a (V)
	05.60 - 07.10	SS-4	100				SAME AS SS-2					15	A-4a (V)
B-003-0-12	01.70 - 02.50	SS-1A	100				SLAG BASE						
STA. 153+28, 9' RT.	02.50 - 03.20	SS-1B	56	12	10	13	40	25	36	30	6	18	A-4a (6)
	03.20 - 04.70	SS-2	39	8	10	13	37	32	37	30	7	21	A-4a (7)
	04.70 - 06.20	SS-3	67				SAME AS SS-2					18	A-4a (V)
	06.20 - 07.70	SS-4	50				SAME AS SS-2					14	A-4a (V)
B-004-0-12	01.50 - 02.50	SS-1A	100				SLAG BASE						
STA. 153+94, 12' LT.	02.50 - 03.00	SS-1B	16	7	10	12	38	33	39	32	7	19	A-4a (7)
	03.00 - 04.50	SS-2	50	10	12	10	37	31	34	28	6	22	A-4a (7)
	04.50 - 06.00	SS-3	44				SAME AS SS-2					19	A-4a (V)
	06.00 - 07.50	SS-4	100				SAME AS SS-2					16	A-4a (V)

RECON. - EO/ST 11/20/2012 TO 12/3/2012
DRILLING - DR 11/29/2012 TO 12/3/2012
DRAWN - HRJ 1/25/2013 TO 1/29/2013
REVIEWED - AV 1/29/2013

DESIGN AGENCY
HATCH MOTT MacDONALD
18015 CLEVELAND PKWY.
SUITE 200
CLEVELAND, OH 44135

PID NO. 91128

SUBSURFACE EXPLORATION
GEA-306-13.45 CULVERT #1

GEA-306-13.45/VAR

P:\CLE\ODOT\Projects\287366 - GEA-306-13.45\GEA\91128\geotechnical\docs\GEA 306\91128ZC001.dgn 10/17/2013 1:54:50 PM TYN61470

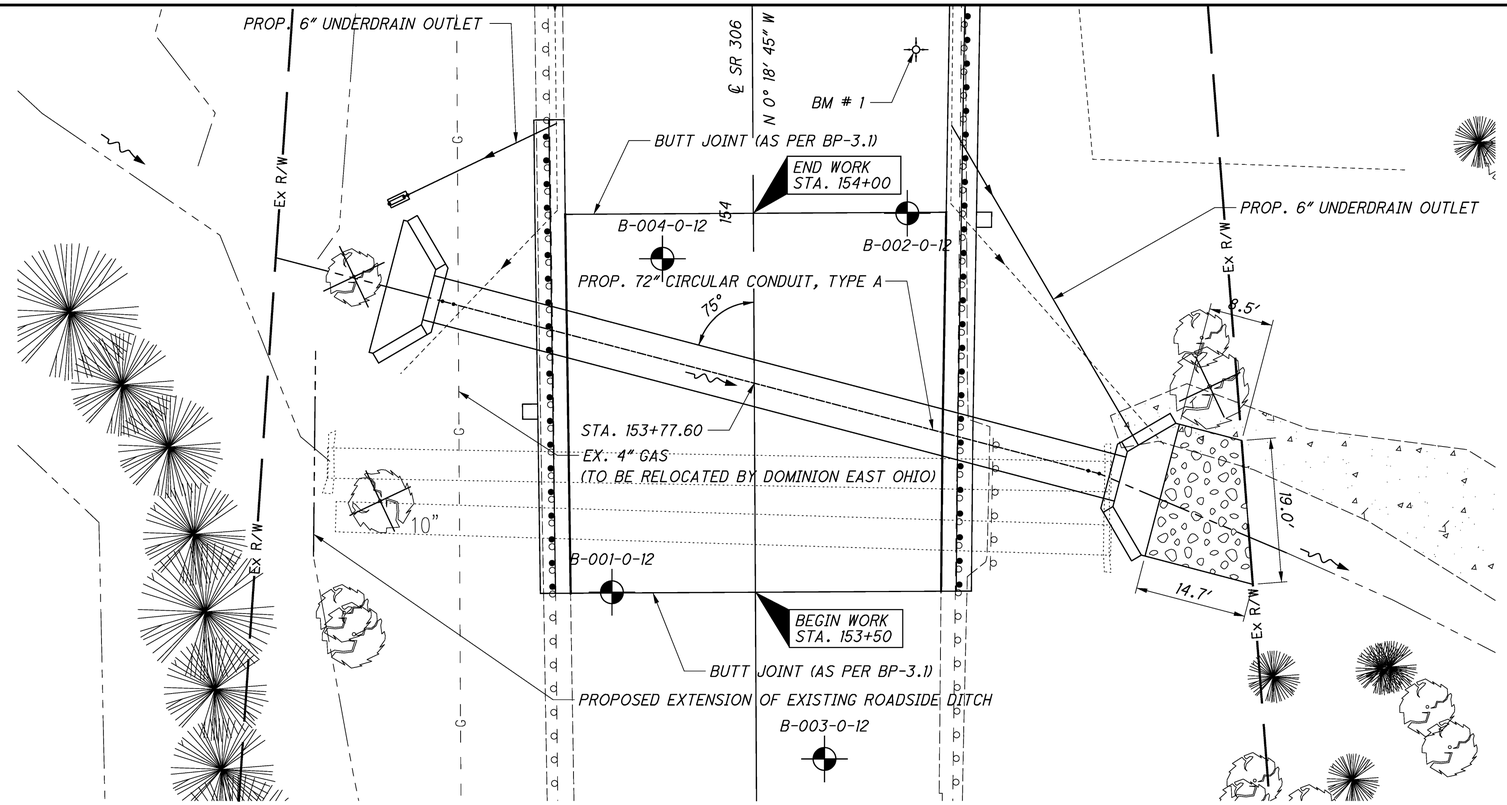

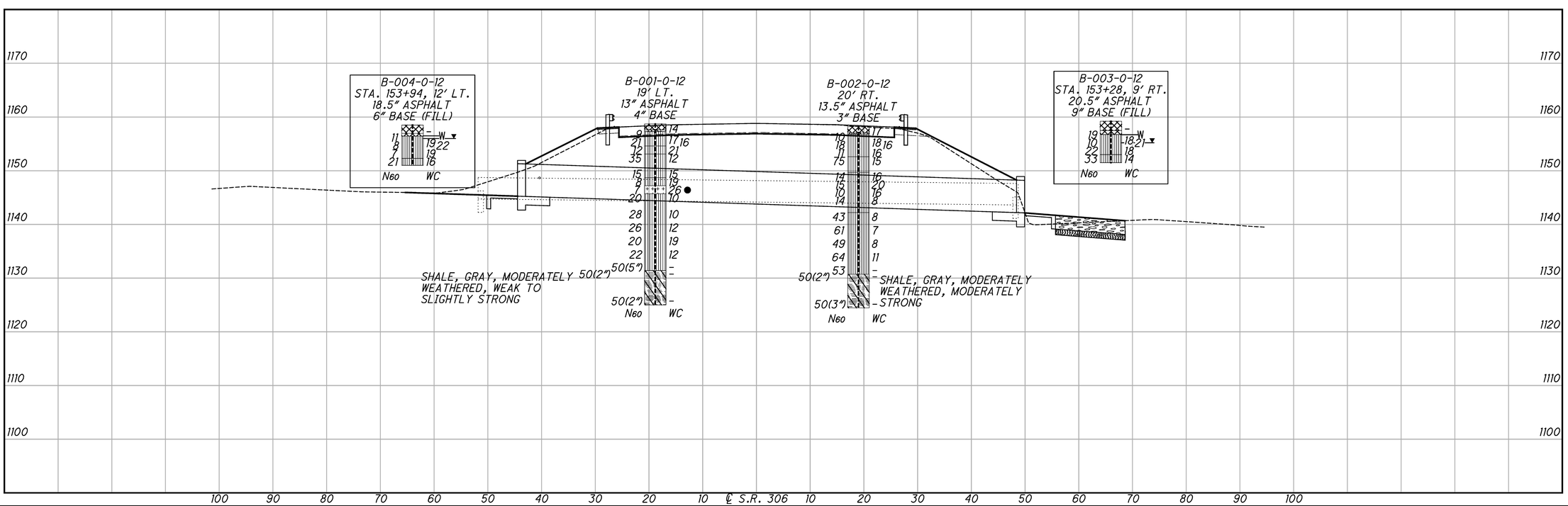

HORIZONTAL SCALE IN FEET 0 5 10 20

DRAWN HRJ
CHECKED AV

SUBSURFACE EXPLORATION
CULVERT #1 - GEA-306-13.45

GEA-306-13.45/VAR

2/4

P:\CLE\ODOT\Projects\287366 - GEA-306-13.45\GEA\91128\geotechnical\docs\GEA_306\911282P001.dgn 10/17/2013 1:59:08 PM TYN61470

PROJECT: GEA-306-13.45 (0142-697-1)	DRILLING FIRM / OPERATOR: PSI / D. RAMSEY	DRILL RIG: D-50	STATION / OFFSET: 153+50, 19 LT
TYPE: CULVERT REPLACEMENT	SAMPLING FIRM / LOGGER: PSI / E.O.	HAMMER: DIEDRICH AUTOMATIC	ALIGNMENT: GEA-306
PID: 91128 BR ID: GEA-306-13.45	DRILLING METHOD: 3.25" HSA	CALIBRATION DATE: 10/25/11	ELEVATION: 1158.7 (MSL) EOB: 33.7 ft.
START: 11/29/12 END: 11/29/12	SAMPLING METHOD: SPT	ENERGY RATIO (%): 60.8	LAT / LONG: Not Recorded

EXPLORATION ID B-001-0-12

PAGE 1 OF 1

MATERIAL DESCRIPTION AND NOTES	ELEV. 1158.7	DEPTHS	SPT/ RQD	N60	REC (%)	SAMPLE ID	HP (tsf)	GRADATION (%) GR	CS	FS	SI	CL	ATTERBERG LL	PL	PI	WC	ODOT CLASS (GI)	BACK FILL
13" ASPHALT	1157.6																	
4" SAND AND GRAVEL BASE	1157.3						–	36	29	17	– 18 –		NP	NP	NP	14	A-1-b (0)	
STIFF TO VERY STIFF, BROWN, SANDY SILT, TRACE CLAY, TRACE GRAVEL, TRACE ROCK FRAGMENTS, DAMP (FILL)		1	6 4 5	9	78	SS-1	–	7	12	11	39	31	29	19	10	17	A-4a (7)	
		2																
		3	9 10 11	21	100	SS-2	4.00	6	10	9	41	34	30	23	7	16	A-4a (8)	
	1154.6	4																
STIFF, GRAY, SANDY SILT, SOME CALY, TRACE GRAVEL, TRACE ORGANICS, MOIST (FILL)		5	4 5 7	12	67	SS-3	0.75	–	–	–	–	–	–	–	–	21	A-4a (V)	
	1153.1																	
STIFF TO HARD, BROWN AND GRAY, SANDY SILT, LITTLE CLAY, LITTLE GRAVEL, TRACE ORGANICS, TRACE WOOD, TRACE ASPHALT, LITTLE TO TRACE ROCK FRAGMENTS, MOIST (FILL)		6	4 16 19	35	89	SS-4	–	–	–	–	–	–	–	–	–	12	A-4a (V)	
		7																
		8																
		9	5 8 7	15	100	SS-5	–	26	15	18	32	9	29	27	2	15	A-4a (1)	
	1148.7	10																
MEDIUM STIFF, BROWN AND GRAY, SANDY SILT, LITTLE CLAY, TRACE GRAVEL, MOIST		11	4 4 4	8	67	SS-6	1.25	7	9	12	44	28	29	21	8	19	A-4a (7)	
	1147.2																	
MEDIUM STIFF, BROWN AND GRAY, SILT, SOME CLAY, LITTLE SAND, LITTLE GRAVEL, MOIST		12	3 3 4	7	100	SS-7	2.00	14	8	6	53	19	26	23	3	26	A-4b (7)	
	1145.7	13																
VERY STIFF TO HARD, BROWN TO GRAY, SANDY SILT, SOME CLAY, TRACE GRAVEL, TRACE ROCK FRAGMENTS, DAMP		14	6 6 14	20	100	SS-8	–	5	15	20	42	18	21	19	2	10	A-4a (5)	
		15																
		16																
		17	8 12 16	28	89	SS-9	–	6	12	11	47	24	25	19	6	10	A-4a (7)	
		18																
		19	17 12 14	26	100	SS-10	4.00	–	–	–	–	–	–	–	–	12	A-4a (V)	
		20																
		21																
		22	8 10 10	20	100	SS-11	3.50	–	–	–	–	–	–	–	–	19	A-4a (V)	
		23																
		24	8 9 13	22	100	SS-12	4.00	–	–	–	–	–	–	–	–	12	A-4a (V)	
		25																
		26																
	1131.4	27	10 12 50/5"	–	100	SS-13	–	–	–	–	–	–	–	–	–	–	A-4a (V)	
SHALE, GRAY, MODERATELY WEATHERED, WEAK TO SLIGHTLY STRONG.		28																
			50/2"	–	100	SS-14	–	–	–	–	–	–	–	–	–	–	Rock (V)	
		29																
		30																
		31																
		32																
		33																
	1125.0	EOB	50/2"	–	100	SS-15	–	–	–	–	–	–	–	–	–	–	Rock (V)	

NOTES: NONE

ABANDONMENT METHODS, MATERIALS, QUANTITIES: NOT RECORDED

STANDARD ODOT SOIL BORING LOG (11 X 17) - OH DOT.GDT - 1/25/13 08:16 - L:\ODOT LOGS\0142-697-1.GPJ

3/4

GEA-306-13.45/VAR

SUBSURFACE EXPLORATION
BORING LOG B-001-0-12

DRAWN HRJ
CHECKED AV

PROJECT: GEA-306-13.45 (0142-697-1)	DRILLING FIRM / OPERATOR: PSI / D. RAMSEY	DRILL RIG: D-50	STATION / OFFSET: 153+72, 20 RT
TYPE: CULVERT REPLACEMENT	SAMPLING FIRM / LOGGER: PSI / E.O.	HAMMER: DIEDRICH AUTOMATIC	ALIGNMENT: GEA-306
PID: 91128 BR ID: GEA-306-13.45	DRILLING METHOD: 3.25" HSA	CALIBRATION DATE: 10/25/11	ELEVATION: 1158.2 (MSL) EOB: 33.8 ft.
START: 11/29/12 END: 11/29/12	SAMPLING METHOD: SPT	ENERGY RATIO (%): 60.8	LAT / LONG: Not Recorded

EXPLORATION ID B-002-0-12

PAGE 1 OF 1

MATERIAL DESCRIPTION AND NOTES	ELEV. 1158.2	DEPTHS	SPT/ RQD	N60	REC (%)	SAMPLE ID	HP (tsf)	GRADATION (%) GR	CS	FS	SI	CL	ATTERBERG LL	PL	PI	WC	ODOT CLASS (GI)	BACK FILL
13 1/2" ASPHALT	1157.1																	
3" SAND AND GRAVEL BASE	1156.8						–	26	26	20	– 28	–	NP	NP	NP	17	A-2-4 (0)	
STIFF TO VERY STIFF, BROWN, SANDY SILT, SOME CLAY, TRACE GRAVEL, TRACE ROCK FRAGMENTS, MOIST (FILL)		1	5 5 5	10	67	SS-1	–	5	13	11	46	25	29	22	7	18	A-4a (7)	
		2	11 10 8	18	67	SS-2	–	6	10	12	41	31	NP	NP	NP	16	A-4a (7)	
		3	3 5 6	11	89	SS-3	4.00	–	–	–	–	–	–	–	–	16	A-4a (V)	
	1152.6	4																
STIFF TO HARD, BROWN AND GRAY, SANDY SILT, SOME CLAY, TRACE GRAVEL, LITTLE TO TRACE ASPHALT, TRACE ROCK FRAGMENTS, MOIST (FILL)		5	2 30 44	75	100	SS-4	–	–	–	–	–	–	–	–	–	15	A-4a (V)	
	1149.7	6																
STIFF TO VERY STIFF, BROWN, SANDY SILT, SOME TO TRACE CLAY, TRACE TO LITTLE GRAVEL, TRACE ROCK FRAGMENTS, MOIST TO DAMP		7	7 6 8	14	100	SS-5	–	0	17	19	41	23	NP	NP	NP	16	A-4a (6)	
		8	9 6 9	15	17	SS-6	–	9	19	20	38	14	NP	NP	NP	20	A-4a (3)	
		9	2 2 8	10	100	SS-7	–	20	23	19	31	7	NP	NP	NP	16	A-4a (1)	
		10	9 5 9	14	100	SS-8	–	15	11	20	35	19	NP	NP	NP	8	A-4a (4)	
	1142.2	11																
HARD, GRAY, SANDY SILT, LITTLE CLAY, LITTLE GRAVEL, TRACE ROCK FRAGMENTS, DRY (TILL)		12	18 21 21	43	100	SS-9	–	14	15	19	38	14	19	16	3	8	A-4a (3)	
		13	27 24 36	61	100	SS-10	1.00	–	–	–	–	–	–	–	–	7	A-4a (V)	
		14	23 21 27	49	100	SS-11	–	–	–	–	–	–	–	–	–	8	A-4a (V)	
		15	15 29 34	64	50	SS-12	4.00	–	–	–	–	–	–	–	–	11	A-4a (V)	
		16	24 23 29	53	100	SS-13	4.00	–	–	–	–	–	–	–	–	–	A-4a (V)	
	1130.7	17																
SHALE, GRAY, MODERATELY WEATHERED, MODERATELY STRONG.		18	50/2"	–	100	SS-14	4.00	–	–	–	–	–	–	–	–	–	Rock (V)	
	1124.5	19	50/3"	–	100	SS-15	–	–	–	–	–	–	–	–	–	–	Rock (V)	
		EOB																

NOTES: NONE

ABANDONMENT METHODS, MATERIALS, QUANTITIES: NOT RECORDED

STANDARD ODOT SOIL BORING LOG (11 X 17) - GM 007.GDT - 1/25/13 08:15 - L:\ODOT LOGS\0142-697-1.GPJ

4/4	GEA-306-13.45/VAR	SUBSURFACE EXPLORATION BORING LOG B-002-0-12	DRAWN HRJ CHECKED AV

PROJECT DESCRIPTION:
THE PROPOSED PROJECT WILL INCLUDE THE CULVERT REPLACEMENT LAK-608-3.03 IN CONCORD TOWNSHIP, LAKE COUNTY, OHIO.

HISTORIC RECORDS:
NO HISTORIC BORING RECORDS WERE FOUND FOR THIS PROJECT.

GEOLOGY
LAKE COUNTY LIES WITHIN TWO PHYSIOGRAPHIC PROVINCES: THE EASTERN LAKES SECTION OF THE CENTRAL LOWLAND PROVINCE, AND THE SOUTHERN NEW YORK SECTION OF THE APPALACHIAN PLATEAU PROVINCE. THE MAJORITY OF THE GLACIAL MATERIALS AT THE SURFACE IN OHIO WERE DEPOSITED BY THE WISCONSINAN GLACIERS. BEDROCK UNDERLYING THE GLACIAL DEPOSITS OF LAKE COUNTY WAS DEPOSITED DURING PENNSYLVANIAN, MISSISSIPPIAN AND DEVONIAN PERIODS. NORTH OF THE PORTAGE ESCARPMENT THE BEDROCK IS PRIMARILY DENSE SHALES AND THIN, HARD SANDSTONES. BEDROCK IN THIS REGION BELONGS TO THE CLEVELAND CHAGRIN, AND HURON MEMBERS OF THE OHIO SHALE (DEVONIAN SYSTEM).

RECONNAISSANCE
NUMEROUS SITE VISITS WERE MADE BEFORE AND DURING FIELD DRILLING OPERATIONS. THE FIELD DRILLING OPERATIONS WERE PERFORMED ON NOVEMBER 26, 2012. THE EXISTING PAVEMENT ALONG THE SR-608 WAS OBSERVED TO BE IN FAIR TO GOOD CONDITION. THE SURROUNDING AREA IS DESCRIBED AS MIX OF RESIDENTIAL AND COMMERCIAL DEVELOPMENT.

SURFACE EXPLORATION
THE SCOPE OF THE EXPLORATION AND ANALYSIS INCLUDED A RECONNAISSANCE OF THE PROJECT SITE, DRILLING 4 TEST BORINGS TO DEPTHS OF APPROXIMATELY 7.5 TO 18.6 FEET BELOW THE EXISTING PAVEMENT GRADES, A LABORATORY TESTING PROGRAM, AND AN ENGINEERING ANALYSIS AND EVALUATION OF THE SUBSURFACE MATERIALS. THE NUMBER AND LOCATION OF THE TEST BORINGS WERE SELECTED BY THE REPRESENTATIVES OF ODOT DISTRICT-12 AND FIELD LOCATED BY THE REPRESENTATIVES OF PSI PRIOR TO THE FIELD DRILLING OPERATIONS.

THE BORINGS WERE DRILLED WITH A TRUCK MOUNTED ROTARY DRILL RIG, USING 3.25-INCH I.D. HOLLOW STEM AUGERS TO ADVANCE THE HOLES THROUGH SOIL. DISTURBED SOIL SAMPLES WERE OBTAINED IN ACCORDANCE WITH THE STANDARD PENETRATION TEST (AASHTO T206) AT CONTINUOUS SAMPLING FOR THE FULL DEPTHS OF THE BORINGS. THE HAMMER SYSTEM USED WAS LAST CALIBRATED ON OCTOBER 25, 2011, AND THE AVERAGE DRILL ROD ENERGY RATIO (ER) ARE 60.8% FOR D-50 TRUCK MOUNTED.

EXPLORATION FINDINGS
THE TEST BORINGS DISCLOSED PREDOMINANTLY COHESSIVE SOILS (A-4a, A-4b AND A-6a) NEAR SURFACE SOILS. THE AREA'S BOTTOMMOST FORMATION CONSISTED OF WEAK TO STRONG, GRAY, WEATHERED SHALE ROCK FORMATION. NO FREE WATER WAS OBSERVED AT THE TEST BORING LOCATIONS DURING THE FIELD DRILLING OPERATIONS.

SPECIFICATIONS
THIS GEOTECHNICAL EXPLORATION WAS PERFORMED IN ACCORDANCE WITH THE STATE OF OHIO, DEPARTMENT OF TRANSPORTATION, OFFICE OF GEOTECHNICAL ENGINEERING, SPECIFICATIONS FOR GEOTECHNICAL EXPLORATIONS, DATED JULY 2011.

AVAILABLE INFORMATION
ALL AVAILABLE SOIL INFORMATION THAT CAN BE CONVENIENTLY SHOWN ON THE SOIL PROFILE SHEETS HAS BEEN SO REPORTED. ADDITIONAL SUBSURFACE EXPLORATIONS MAY HAVE BEEN MADE TO STUDY SOME SPECIAL ASPECT OF THE PROJECT. COPIES OF THIS DATA, IF ANY, MAY BE INSPECTED IN THE DISTRICT DEPUTY DIRECTOR'S OFFICE, THE OFFICE OF GEOTECHNICAL ENGINEERING AT 1600 WEST BROAD STREET OR THE OFFICE OF STRUCTURAL ENGINEERING AT 1980 WEST BROAD STREET, COLUMBUS, OHIO.

LEGEND

DESCRIPTION	ODOT CLASS	CLASSIFIED MECH.	CLASSIFIED VISUAL
GRAVEL AND/OR STONE FRAGMENTS	A-1-a (0)	2	0
GRAVEL AND/OR STONE FRAGMENTS WITH SILT AND SAND	A-1-b (0)	2	0
SANDY SILT	A-4a (7)	6	1
SILT	A-4b (8)	1	2
SILT AND CLAY	A-6a (9)	7	4
	TOTAL	18	7
WEATHERED SHALE	VISUAL		
PAVEMENT OR BASE = X = APPROXIMATE THICKNESS	VISUAL		

BORING LOCATION - PLAN VIEW.

DRIVE SAMPLE AND/OR ROCK CORE BORING PLOTTED TO VERTICAL SCALE ONLY. HORIZONTAL BAR INDICATES A CHANGE IN STRATIGRAPHY.

WC INDICATES WATER CONTENT IN PERCENT.

N_{60} INDICATES STANDARD PENETRATION RESISTANCE NORMALIZED TO 60% DRILL ROD ENERGY RATIO.

INDICATES FREE WATER ELEVATION.

INDICATES STATIC WATER ELEVATION.

SS INDICATES A SPLIT SPOON SAMPLE.

NP INDICATES A NON-PLASTIC SAMPLE.

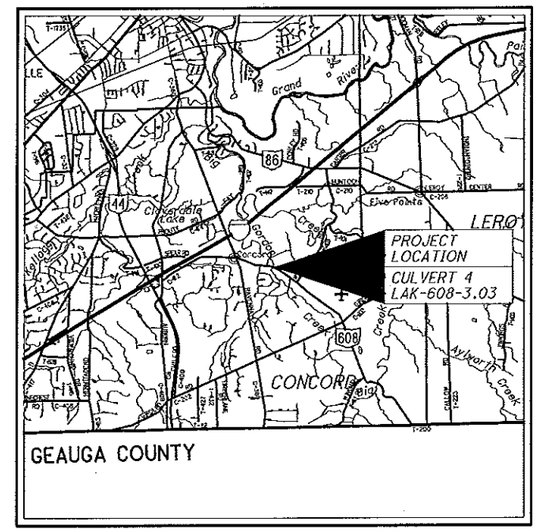

LOCATION MAP
SCALE IN MILES
0 1 2 3 4
N

PARTICLE SIZE DEFINITIONS

BOULDERS	COBBLES	GRAVEL	COARSE SAND	FINE SAND	SILT	CLAY
12"	3"	2.0 mm (No. 10 SIEVE)	0.42 mm (No. 40 SIEVE)	0.074 mm (No. 200 SIEVE)	0.005 mm	

SUMMARY OF SOIL TEST DATA
LAK-608-3.03

STATION & OFFSET	FROM TO	SAMPLE ID	% REC	% GR	% CS	% FS	% SILT	% CLAY	LL	PL	PI	% WC	ODOT CLASS
B-001-0-12 STA. 5+58, 11' LT.	00.60 - 01.30	SS-1A	100	56	32	5	7		NP	NP	NP	10	A-1-a (0)
	01.30 - 02.10	SS-1B	23	8	8	6	44	34	34	23	11	21	A-6a (8)
	02.10 - 03.60	SS-2	56	8	8	6	48	30	32	21	11	21	A-6a (8)
	03.60 - 05.10	SS-3	22				SAME AS SS-2					19	A-6a (V)
	05.10 - 06.60	SS-4	72				SAME AS SS-2					21	A-6a (V)
B-002-0-12 STA. 5+37, 11' RT.	00.70 - 01.30	SS-1A	100	50	36	9	5		NP	NP	NP	10	A-1-a (0)
	01.30 - 02.20	SS-1B	22	5	3	5	45	42	33	23	10	15	A-4a (8)
	02.20 - 03.70	SS-2	39	4	3	5	46	42	32	25	7	20	A-4a (8)
	03.70 - 05.20	SS-3	39		SILT AND CLAY LITTLE SAND TRACE GRAVEL							20	A-6a (V)
	05.20 - 06.70	SS-4	89				SAME AS SS-2					18	A-6a (V)
B-003-0-12 STA. 5+82, 7' RT.	01.50 - 02.10	SS-1A	100	40	43	10	7		NP	NP	NP	11	A-1-b (0)
	02.10 - 03.00	SS-1B	45	6	8	6	49	31	34	24	10	18	A-4a (8)
	03.00 - 04.50	SS-2	78	3	3	2	53	39	32	22	10	18	A-4b (8)
	04.50 - 06.00	SS-3	78				SAME AS SS-2					23	A-4b (V)
	06.00 - 07.50	SS-4	67				SAME AS SS-2					16	A-4b (V)
B-004-0-12 STA. 5+14, 9' LT.	01.40 - 02.10	SS-1A	100	46	39	11	4		NP	NP	NP	10	A-1-b (0)
	02.10 - 02.90	SS-1B	31	4	4	5	48	39	37	24	13	19	A-6a (9)
	02.90 - 04.40	SS-2	44	4	9	9	39	39	36	24	12	19	A-6a (9)
	04.40 - 05.90	SS-3	56	11	66	4	46	33	35	26	9	17	A-4a (8)
	05.90 - 07.40	SS-4	56				SAME AS SS-3					18	A-4a (V)

RECON. - EO/ST 11/20/2012 TO 11/26/2012
DRILLING - DR 11/26/2012
DRAWN - HRJ 1/25/2013 TO 1/29/2013
REVIEWED - AV 1/29/2013

DESIGN AGENCY
HATCH MOTT MacDONALD
SUITE 200 CLEVELAND PKWY.
CLEVELAND, OH 44135

PID NO. 91128

SUBSURFACE EXPLORATION
LAK-608-3.03 CULVERT #4

GEA-306-13.45/VAR

P:\CLE\ODOT\Projects\287366 - GEA-306-13.45\GEA\91128\geotechnical\docs\LAK 608\911282C001.dgn 10/17/2013 2:02:59 PM TYN61470

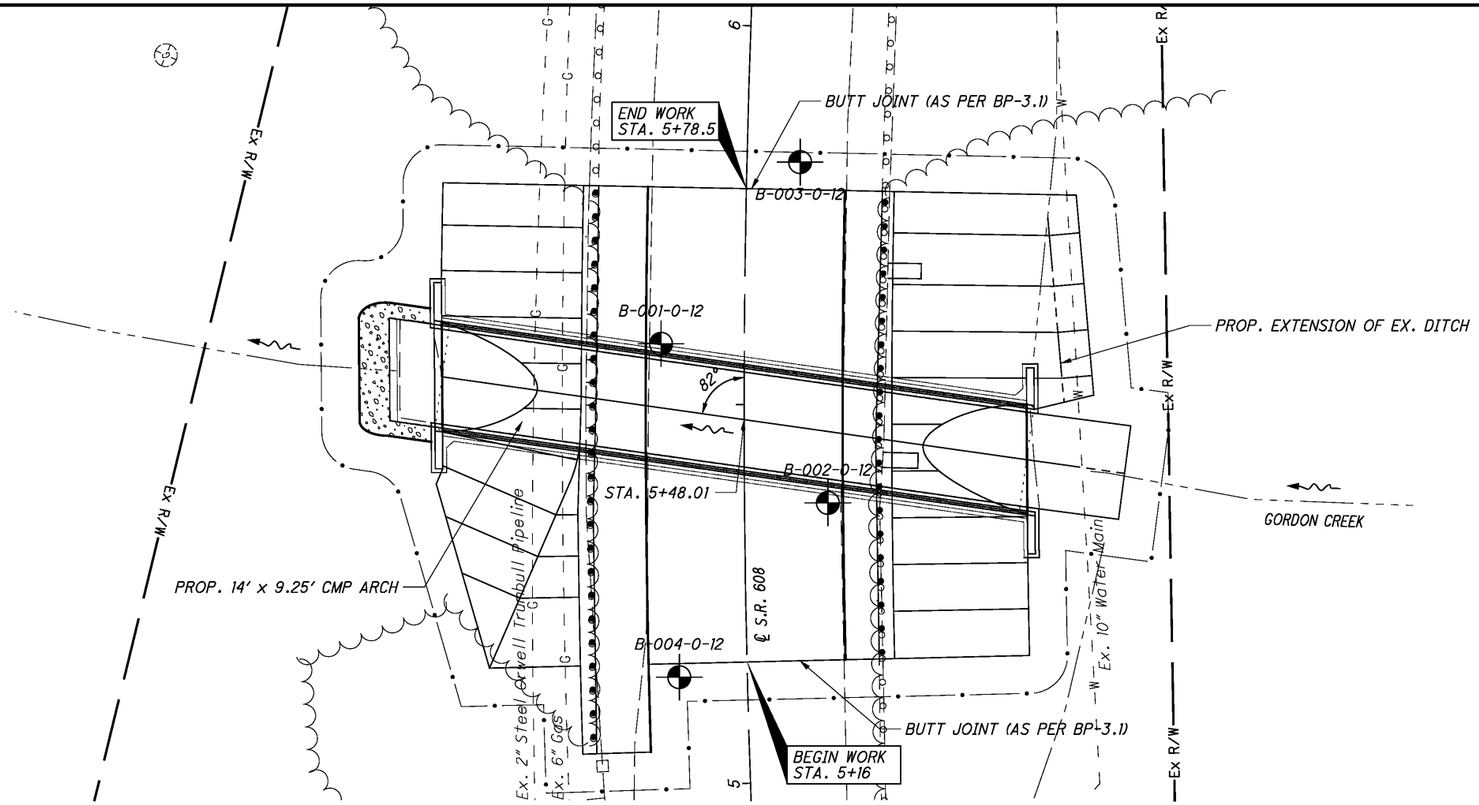

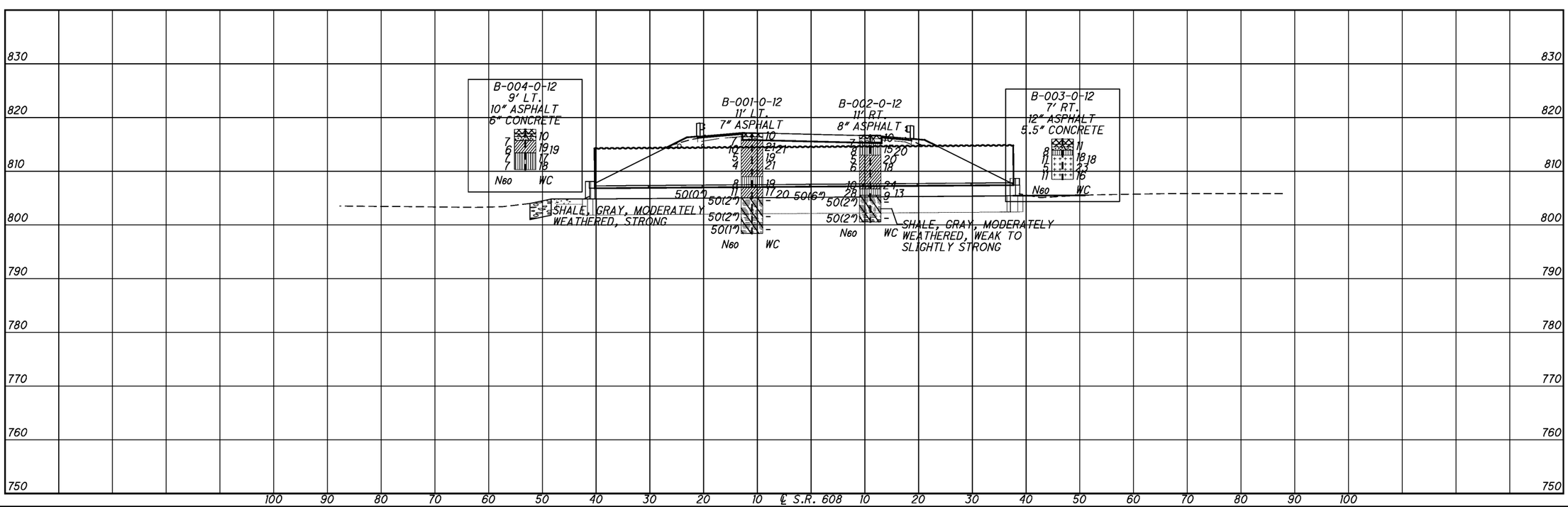

HORIZONTAL SCALE IN FEET 0 5 10 20

DRAWN HRJ CHECKED AV

SUBSURFACE EXPLORATION
CULVERT #4 - LAK-608-3.03

GEA-306-13.45/VAR

2/4

P:\CLE\ODOT\Projects\287366 - GEA-306-13.45\GEA\91128\geotechnical\docs\LAK 608\911282P051.dgn 12/6/2013 9:09:40 AM PRE47802

PROJECT: LAK-608-3.03 (0142-697-2)	DRILLING FIRM / OPERATOR: PSI / D. RAMSEY	DRILL RIG: D-50	STATION / OFFSET: 5+58, 11 LT
TYPE: CULVERT REPLACEMENT	SAMPLING FIRM / LOGGER: PSI / A.C.	HAMMER: DIEDRICH AUTOMATIC	ALIGNMENT: LAKE 608
PID: 91128 BR ID: LAK-608-3.03	DRILLING METHOD: 3.25" HSA	CALIBRATION DATE: 10/25/11	ELEVATION: 817.0 (MSL) EOB: 18.6 ft.
START: 11/26/12 END: 11/26/12	SAMPLING METHOD: SPT	ENERGY RATIO (%): 60.8	LAT / LONG: Not Recorded

EXPLORATION ID B-001-0-12

PAGE 1 OF 1

MATERIAL DESCRIPTION AND NOTES	ELEV. 817.0	DEPTHS	SPT/RQD	N60	REC (%)	SAMPLE ID	HP (tsf)	GR	CS	FS	SI	CL	LL	PL	PI	WC	ODOT CLASS (GI)	BACK FILL
7" ASPHALT	816.4																	
LOOSE, BROWN, GRAVEL AND STONE FRAGMENTS, SOME SLAG	815.7																	
MEDIUM STIFF TO STIFF, BROWN, SILT AND CLAY, LITTLE SAND, LITTLE GRAVEL, MOIST (FILL)		1	3 3 4	7	61	SS-1	-	56	32	5	-	7 -	NP	NP	NP	10	A-1-a (0)	
							-	8	8	6	44	34	34	23	11	21	A-6a (8)	
		2																
		3	6 5 5	10	56	SS-2	-	8	8	6	48	30	32	21	11	21	A-6a (8)	
		4	2 3 2	5	22	SS-3	-	-	-	-	-	-	-	-	-	19	A-6a (V)	
		5																
		6	2 1 3	4	72	SS-4	-	-	-	-	-	-	-	-	-	21	A-6a (V)	
		7																
	809.0	8																
STIFF, BROWN, SANDY SILT, SOME TO LITTLE CLAY, LITTLE GRAVEL, TRACE ORGANICS, MOIST (FILL)		9	3 4 4	8	89	SS-5	-	10	6	18	43	23	29	26	3	19	A-4a (6)	
	807.0	10																
STIFF, BROWN, SILT AND CLAY, LITTLE SAND, TRACE GRAVEL, SOME WOOD FRAGEMENTS, MOIST (FILL)		11	3 4 7	11	78	SS-6	-	3	4	5	56	32	40	27	13	17	A-6a (9)	
	805.0	12	6 50/0"	-	100	SS-7	-	6	7	5	44	38	38	24	14	20	A-6a (10)	
SHALE, GRAY, MODERATELY WEATHERED, STRONG.		13	50/2"	-	100	SS-8	-	-	-	-	-	-	-	-	-	-	Rock (V)	
		14																
		15																
		16	50/2"	-	100	SS-9	-	-	-	-	-	-	-	-	-	-	Rock (V)	
		17																
	798.4	18	EOB	50/1"	-	100	SS-10	-	-	-	-	-	-	-	-	-	Rock (V)	

NOTES: NONE

ABANDONMENT METHODS, MATERIALS, QUANTITIES: PLACED 12 IN. ASPHALT PATCH; SOIL MIXED WITH 18.5 CF AUGER CUTTINGS

STANDARD ODOT SOIL BORING LOG (11 X 17) - GH 001.GDT - 1/25/13 08:28 - L:\ODOT LOGS\0142 CLEVELAND GEO\0142-697-2.GPJ

SUBSURFACE EXPLORATION
BORING LOG B-001-0-12

DRAWN HRJ
CHECKED AV

PROJECT: LAK-608-3.03 (0142-697-2)	DRILLING FIRM / OPERATOR: PSI / D. RAMSEY	DRILL RIG: D-50	STATION / OFFSET: 5+37, 11 RT
TYPE: CULVERT REPLACEMENT	SAMPLING FIRM / LOGGER: PSI / A.C.	HAMMER: DIEDRICH AUTOMATIC	ALIGNMENT: LAKE 608
PID: 91128 BR ID: LAK-608-3.03	DRILLING METHOD: 3.25" HSA	CALIBRATION DATE: 10/25/11	ELEVATION: 816.7 (MSL) EOB: 16.2 ft.
START: 11/26/12 END: 11/26/12	SAMPLING METHOD: SPT	ENERGY RATIO (%): 60.8	LAT / LONG: Not Recorded

EXPLORATION ID B-002-0-12

PAGE 1 OF 1

MATERIAL DESCRIPTION AND NOTES	ELEV. 816.7	DEPTHS	SPT/RQD	N60	REC (%)	SAMPLE ID	HP (tsf)	GR	CS	FS	SI	CL	LL	PL	PI	WC	ODOT CLASS (GI)	BACK FILL
8" ASPHALT	816.0																	
LOOSE, BROWN, GRAVEL AND STONE FRAGMENTS, SOME SLAG	815.4		8 4 3	7	53	SS-1	-	50	36	9	-	5 -	NP	NP	NP	10	A-1-a (0)	
MEDIUM STIFF, GRAY, SANDY SILT, SOME CLAY, TRACE GRAVEL, SOME SLAG, MOIST (FILL)		1					-	5	3	5	45	42	33	23	10	15	A-4a (8)	
		2	3 3 5	8	39	SS-2	-	4	3	5	46	42	32	25	7	20	A-4a (8)	
	813.0	3																
MEDIUM STIFF TO STIFF, BROWN, SILT AND CLAY, LITTLE SAND, LITTLE SHALE, TRACE, ORGANICS, MOIST (FILL)		4	4 3 2	5	39	SS-3	-	-	-	-	-	-	-	-	-	20	A-6a (V)	
		5																
		6	2 3 3	6	89	SS-4	-	-	-	-	-	-	-	-	-	18	A-6a (V)	
		7																
		8																
		9	4 4 6	10	100	SS-5	-	5	4	6	47	38	36	24	12	24	A-6a (9)	
	806.7																	
STIFF, BROWN, SANDY SILT, SOME CLAY, TRACE GRAVEL, TRACE ORGANICS, MOIST (FILL)		10																
		11	4 6 22	28	100	SS-6	-	20	8	6	39	27	31	26	5	13	A-4a (6)	
	805.5																	
SHALE, GRAY, MODERATELY WEATHERED, WEAK TO SLIGHTLY STRONG.		12	50	-	67	SS-7	-	-	-	-	-	-	-	-	-	9	Rock (V)	
		13	50/2"	-	100	SS-8	-	-	-	-	-	-	-	-	-	-	Rock (V)	
		14																
		15																
	800.5	16 EOB	50/2"	-	100	SS-9	-	-	-	-	-	-	-	-	-	-	Rock (V)	

NOTES: NONE

ABANDONMENT METHODS, MATERIALS, QUANTITIES: NOT RECORDED

STANDARD ODOT SOIL BORING LOG (11 X 17) - OH DOT.GDT - 1/25/13 08:29 - L:\ODOT LOGS\0142 CLEVELAND GCD\0142-697-2.GPJ

4/4	GEA-306-13.45/VAR	SUBSURFACE EXPLORATION BORING LOG B-002-0-12	DRAWN HRJ CHECKED AV

SPECIAL PROVISIONS

WATERWAY PERMITS CONDITIONS

C-R-S: GEA-306-13.45/VAR

PID: 91128

Date: 12-23-2013

1. Waterway Permit Time Restrictions:

Complete all work in streams and wetlands depicted in the plans, Special Provisions, and/or working drawings for temporary fill by 10-23-2014. **This project will require USACE Section 404 reauthorization if stream impacts are not completed by October 23, 2014; the expiration of the RGP. Please coordinate with ODOT-Office of Environmental Services Waterway Permits Unit (614-466-7100) a minimum of 90 days prior to 10/23/2014 for permit reauthorization.**

For work on streams and wetlands, the Department will consider the Contractor's submission of an extension to the waterway permit end date based on project constraints. In order to be considered, the Contractor must submit a justification to the Engineer at least two months prior to the waterway permit end date.

The Engineer will submit the request for a time extension to ODOT- Office of Environmental Services- Waterway Permits Unit (614-466-7100) for consideration and coordination with the USACE and/or Ohio EPA.

2. Deviations from Permitted Construction Activities

No deviation from the requirements for work in streams and wetlands depicted in the plans, Special Provisions, and/or working drawings may be made unless a modification has been submitted to ODOT and approved by the appropriate agencies (i.e., USACE, Ohio EPA, USCG, ODNR, and USFWS).

For emergency situations resulting in unanticipated impacts to streams or wetlands, provide notification (verbal or written) to the Engineer as soon as possible following discovery of the situation. Written notification to the Engineer and notification to the ODOT- Office of Environmental Services- Waterway Permits Unit must be made within 24 hours.

For non-emergency situations, notify the Engineer in writing for submission to the ODOT- Office of Environmental Services- Waterway Permits Unit (614-466-7100) for consideration and coordination with the appropriate agencies. Notification must be made at least two months prior to planned non-permitted activities. Consideration of the requested deviation is at the discretion of the Director and must be coordinated with the appropriate regulatory agencies.

3. In-Stream Work Restrictions

Work in the following sensitive stream(s) is further restricted as follows:

Stream Name/Description	Location	Work restriction dates (No in-stream work permitted)
Unnamed Tributary to East Branch Chagrin River	153+77.60	4/15 – 6/30
Gordon (Jordan) Creek	5+48.01	4/15 – 6/30
Unnamed Tributary to South Branch Phelps Creek	66+50	None
Unnamed Tributary to South Branch Phelps Creek	116+80	None

In-stream work has been defined as the placement and/or removal of fill materials (temporary or permanent) below ordinary high water of a stream. Examples of "fill" include (but are not limited to) bridge piers, abutments, culverts, rock channel protection, scour protection, and temporary work pads.

Fills (such as temporary work pads) placed within a stream identified in the above table outside of the work restriction dates can continue to be worked from during the work restriction dates, but cannot be expanded, removed, or otherwise modified (below ordinary high water) until once again outside of the work restriction dates.

The Engineer will submit the request for a time extension to ODOT, Office of Environmental Services, Waterway Permits Unit (614-466-7100) for consideration and coordination with the USACE and/or Ohio EPA.

4. Materials:

Materials utilized in or adjacent to streams and wetlands on this project for temporary or permanent fill or bank protection shall consist of suitable material free from toxic contaminants in other than trace quantities. Broken asphalt, exposed rebar, or any steel components are specifically excluded.

Cadmium, chromium, arsenate (CCA), creosote, and other pressure treated lumber shall not be used in structures that are placed in streams and wetlands.

5. Cultural Resources

If archeological sites or human remains are discovered, cease all work in the immediate area and notify the Engineer who will immediately contact the Office of Environmental Services – Cultural Resource Section (614-466-7100) and the Ohio Historic Preservation Office.

In the event of human remains are discovered the Engineer shall also contact the Geauga County Sheriff's Office (440-279-2009) or Lake County Sheriff's Office (440-350-5500).

6. Water Resource Demarcation:

A total of 0.01 acres of Wetland GEA-528-8.57 W (located to the west of Sta. 116+80) is authorized to be impacted on this project. The remaining areas of GEA-528-8.57 W are not to be disturbed and require demarcation. All streams, wetlands, lakes, and ponds indicated on the plans shall be demarcated in the field as per SS 832 prior to site disturbance. The fence shall remain in place and be maintained throughout the construction process. Following the completion of the project, the fence and posts shall be removed.

7. Spill containment:

Provide and Maintain an Oil Spill Kit with a minimum capacity of 65 gallons. The Spill Kit shall contain:

- 6 - 3 in. X 8 ft. Oil only socks
- 4 - 18 in. X18 in. Oil only pillows
- 2 - 5 in. X 10ft. Booms
- 50 - 16in. X 20 in. Oil only pads
- 10- Disposable Bags
- 1- 65 Gallon drum with lid
- 25 pounds of Granular Oil Absorbent

The Oil Spill Kit shall be located within 150 feet of any equipment working in a stream or wetland. The oil Spill Kit shall be maintained for the life of the contract. Any materials utilized during the project will be replaced within 48 hours.

All costs associated with furnishing and maintaining the above referenced spill containment kit is incidental to work.

Special Provisions: GEA-306-13.45/VAR, PID: 91128

8. Blasting:

State law requires notification to the Ohio Department of Natural Resources should blasting be required within or near stream channels (See ORC 1533.58 & CMS 107.09).

Notify Engineer, in writing, for submission to ODOT Office of Environmental Services – Waterway Permits Unit (614-466-7100) for coordination with the Ohio Department of Natural Resources.

9. Waterway Permits:

USACE Permit #: LRH-2013-00952-CHA is authorized for GEA-306-13.45 and LRH-2013-00953-GRA is authorized for LAK-608-3.03 under the criteria of Nationwide Permit (NWP) #3 (Maintenance). Regional General Permit (RGP), Section B (Maintenance) and Section C (Temporary Construction, Access, and Dewatering) are authorized for GEA-528-7.49 and GEA-528-8.57. A copy of these permits shall be kept at the work site at all times and made available to all contractors and subcontractors.

The Permit is effective starting: 12-23-2013 . The Nationwide Permits expires: 03-18-2017 . The Regional General Permit expires: 10-23-2014 . **This project will require USACE Section 404 reauthorization if stream impacts are not completed by October 23, 2014; the expiration of the RGP. Please coordinate with ODOT-Office of Environmental Services Waterway Permits Unit (614-466-7100) a minimum of 90 days prior to 10/23/2014 for permit reauthorization.**

10. Bridge Inspection:

Prior to the removal of bridge structures, the underside must be carefully examined for the presence of birds and bats. Should any birds or bats be found roosting on the underside of the bridge, the Contractor is required to notify the Engineer for coordination with ODOT – Office of Environmental Services (614-466-7100).

11. Project Inspection:

Inspection of Work may include inspection by representatives of other government agencies or railroad corporations that pay a portion of the cost of the Work or regulate the Work through State and Federal law. Comments from the representatives of these agencies shall be directed to the Engineer. Please forward a copy to ODOT Office of Environmental Services. Waterway Permits Unit (614-466-7100).

12. Construction Completion Certification:

Upon Completion of the work, notify the Engineer. The US Army Corps of Engineers Construction Completion Certification must be completed and signed by the Engineer then forwarded to the:

U.S. Corps of Engineers
DSCC
Building 10, Section 10
3990 East Broad Street
Columbus, Ohio 43218

Forward a copy of the certification to ODOT Office of Environmental Services. Waterway Permits Unit.

13. Temporary Access Fills (Stream and River Crossings and Fills)

Definitions:

Hydraulic Opening
The cross sectional area allowing an unimpeded discharge equal to twice the highest monthly flow without producing a rise in the backwater above the Ordinary High Water Mark (OHWM)*.

Standard Temporary Discharge
The hydraulic opening providing a capacity for a discharge equal to twice the *highest monthly flow* without producing a rise in the backwater above the OHWM shall be known as the Standard Temporary Discharge. The U.S. Geologic Service publication "Techniques for estimating Selected Streamflow Characteristics of Rural Unregulated Streams in Ohio" provides equations that estimate monthly flow for Ohio Waterways These flows are also available in a web application by USGS StreamStats, (http//water.usgs.gov/osw/streamstat/ohi.html).

Average Monthly Flow
The average monthly flow represents the estimated "normal" flow.

Temporary Access Fills (TAFs)
In Streams and Rivers may include, but are not limited to, causeways, cofferdams (as described by other items of work), access pads, temporary bridges, etc. The Contractor will make every attempt minimize disturbance to water bodies, stream banks, stream beds, and approach sections during the construction, maintenance, and removal of the TAFs. Fording of streams and rivers is prohibited.
Construct TAFs in such a manner that will maintain flows, minimize upstream flooding, and avoid overtopping the TAF on a regular basis. ***TAFs shall be designed and constructed so that the hydraulic opening provides capacity for a discharge equal to twice the highest monthly flow without producing a rise in the backwater above the Ordinary High Water Mark (OHWM)*.***

Requirements
21 calendar days prior to the initiation of any in-stream work, provide the Engineer with working drawings that include:

- Plan view drawing (200 scale or less) showing the location of all jurisdictional temporary fill proposed for use on the project
- Scaled Cross section and profile drawing showing the OHWM and the proposed compliant hydraulic opening.
- A description of the installation and staging of all temporary jurisdictional fill over the life of the contract.
- A description of the removal of all jurisdictional temporary fill and restoration of the channel and all areas impacted by the jurisdictional temporary fill.
- A schedule outlining the timing of the placement and removal of all TAF.
- Have an Ohio Registered Engineer prepare, sign, seal and date the working drawings. Have a second Ohio Registered Engineer check, sign, seal and date the working drawings. The preparer and checker are two different Engineers. Include the following statement on the working drawings: "These working drawings were prepared in compliance with the terms of the Permit and all contract documents."
- Include supporting hydraulic calculations developed by the engineer(s) who sealed the working drawings.
- Do not begin in-stream work until the Engineer has accepted the working drawings.

Special Provisions: GEA-306-13.45/VAR, PID: 91128

If the OHWM is not shown on the plans, the Department will establish the OHWM based on the definition of OHWM (as defined in SS 832) or the peak discharge from the 2 year event, using the method described in the most current version of the Department's Location and Design Manual Volume II.
If the Contractor proposes a TAF which does not provide for the Standard Temporary Discharge (discharge equal to twice the highest monthly flow without producing a rise in the backwater), the Contractor is required to coordinate the request for the contractor's proposed TAF with the Engineer and the ODOT Office of Environmental Services (OES). The Department makes no guarantee to grant the request. The contractor's proposed TAF request will be coordinated by OES with the U.S. Army Corps of Engineers and the Ohio Environmental Protection Agency, as appropriate.

In addition to the requirements described in SS 832, supply the Engineer/OES with the following:

1. A plan and Profile showing the temporary access fill(s) with the OHWM.
2. Cross section showing the hydraulic opening and the anticipated discharge flow.
3. A restoration plan for the area affected by the temporary access fill(s).
4. A schedule outlining the timing of the placement and removal of the temporary access fill(s)

The time frame allowed for the coordination of the contractor's proposed TAF will be a minimum of 60 days. Installation of any jurisdictional fill without a 404 Permit authorized by the USACE is strictly prohibited. All direct coordination with the USACE and/or OEPA will be performed through OES.

Temporary Access Fills Construction and Payment
Begin planning and installing causeways and access fills as early in construction as possible to avoid conflicts with 404/401 permits or other environmental commitments that have been included in the construction plans.

Temporary Access Fills (TAFs) in Streams and Rivers may include, but are not limited to, causeways, cofferdams, access pads, temporary bridges, etc. Make every attempt minimize disturbance to water bodies, stream banks, stream beds, and approach sections during the construction, maintenance, and removal of the TAFs. Make every attempt to minimize disturbance to water bodies during construction, maintenance and removal of the causeway and access fills. Construct the causeway and access fills as narrow as practical. Install in-stream conduits parallel to the stream banks. Make the causeway and access fills in shallow areas rather than deep pools where possible. Minimize clearing, grubbing, and excavation of stream banks, bed, and approach sections. Construct the causeway and access fills as to not erode stream banks or allow sediment deposits in the channel.

Prior to the initiation of any in-stream work, establish a monument upstream of proposed temporary crossing or temporary construction access fill to visually monitor the water elevation in the waterway where the fill is permitted. Maintain the monument throughout the project. Provide a visual mark on the monument that identifies the elevation 1 foot above the OHWM. If the OHWM is not shown on the plans, the Department will establish the OHWM based on the definition of OHWM (SS 832.02) or the peak discharge from the 2 year event, using the method described in the most current version of the Department's Location and Design Manual Volume II.

Ensure that the monument can be read from the bank of the waterway. Have this elevation set and certified by an Ohio Registered Surveyor.

Temporary access fills placed by the contractor above the OHWM are not subject to the 404/401 permit constraints. All costs associated with furnishing and maintaining the above referenced monument is incidental to the work.

Should the water elevation of the waterway, exceed the elevation 1 foot above OHWM, the Department will compensate the Contractor for repair of any resulting damage to the permitted temporary access fill up to the elevation of 1 foot above the OHWM, except as noted. Follow the requirements in Item 502 for Structures for Maintaining Traffic and in Item 503 for Cofferdams and any modifications to these items as shown in the plans. The Department will not pay for repair and maintenance of temporary access structures that are related to the construction access fill.

Should the water elevation of the waterway exceed the elevation shown on the monument, the Department will recognize this event as an excusable, non-compensable delay in accordance with Section 108.06 of the Construction & Materials Specifications.

Construct the causeway and fills, not including cofferdams and temporary bridges, to a water elevation at least 1 foot (0.3 m) above the OHWM., If more than one-third the width of the stream is filled, then use culvert pipes to allow the movement of aquatic life. Ensure that any ponding of water behind the causeway and access fills will not damage property or threaten human health and safety.

The following minimum requirements apply to TAFs where culverts are used:

- Furnish culverts on the existing stream bottom.
- Avoid a drop in water elevation at the downstream end of the culvert.
- Furnish a sufficient number of culverts in addition to stream openings to providing a discharge equal to twice the highest monthly flow without producing a rise in the backwater above the OHWM.
- Furnish culverts with a minimum diameter of 18 inches (0.5 m).

For all fill and surface material placed in the channel, around the culverts, or on the surface of the causeway and access fills furnish clean, non-erodible, nontoxic dumped rock fill, Type B, C, or D, as specified in C&MS 703.19.B. Extend rock fill up the slope from original stream bank for 50 feet (10 m) to catch and remove erodible material from equipment.

When the work requiring the TAFs is complete all portions of the TAF (including all rock and culverts) will be removed in its entirety. The material will not be disposed in other waters of the US or isolated wetland. The stream bottom affected by the causeway and access fills will be restored to its pre-construction elevations. The TAF will not be paid as a separate item but will be included by the Contractor as part of the total project cost.

Unless specific Temporary Access Fill compensation is included in the plans, all environmental protection and control associated with the 404/401 permit activities, including but not limited to Temporary Access Fills, are incidental to the work within the boundaries of the 404/401 permit or as otherwise identified in the 404/401 permit application.

14. Excavation Activities:

Excavated material will be placed at the upland site and disposed of in such a manner that sediment and runoff to streams is controlled and minimized. If any changes to the proposed work are deemed necessary, you must notify and coordinate with the Office of Environmental Services - Waterway Permits Unit (614-466-7100).

Special Provisions: GEA-306-13.45/VAR, PID: 91128

15. Demolition Debris:

Demolition into Unnamed Tributary to East Branch Chagrin River, Gordon (Jordan) Creek, and/or Unnamed Tributary to South Branch Phelps Creek is not authorized for this project, and such debris is considered a fill activity by the USACE and Ohio EPA. If any demolition debris inadvertently falls into Unnamed Tributary to East Branch Chagrin River, Gordon (Jordan) Creek, and/or Unnamed Tributary to South Branch Phelps Creek, it must be removed within 72 hours. If removal of debris material cannot be achieved within 72 hours, please contact ODOT- Office of Environmental Services- Waterway Permits Unit at 614-466-7100. Bridge demolition debris must be disposed of in an upland location and not placed in a water of the U.S. or isolated wetland.

U.S. Army Corps of Engineers
Huntington District

Permit Number: 2013-00952-CHA

Name of Permittee: Ohio Department of Transportation

Date of Issuance: 19 December 2013

Upon completion of the activity authorized by this permit and any mitigation required by the permit, sign this certification and return it to the following address:

U.S. Army Corps of Engineers
Huntington District
Ohio Regulatory Transportation Office
Building 10 / Section 10
PO Box 3990
Columbus, Ohio 43218-3990

Please note that your permitted activity is subject to a compliance inspection by an U.S. Army Corps of Engineers representative. If you fail to comply with this permit you are subject to permit suspension, modification, or revocation.

I hereby certify that the work authorized by the above-referenced permit has been completed in accordance with the terms and conditions of the said permit, and required mitigation was completed in accordance with the permit conditions.

_____ _____
Signature of Permittee Date

U.S. Army Corps of Engineers
Huntington District

Permit Number: 2013-00953-GRA

Name of Permittee: Ohio Department of Transportation

Date of Issuance: 19 December 2013

Upon completion of the activity authorized by this permit and any mitigation required by the permit, sign this certification and return it to the following address:

U.S. Army Corps of Engineers
Huntington District
Ohio Regulatory Transportation Office
Building 10 / Section 10
PO Box 3990
Columbus, Ohio 43218-3990

Please note that your permitted activity is subject to a compliance inspection by an U.S. Army Corps of Engineers representative. If you fail to comply with this permit you are subject to permit suspension, modification, or revocation.

I hereby certify that the work authorized by the above-referenced permit has been completed in accordance with the terms and conditions of the said permit, and required mitigation was completed in accordance with the permit conditions.

_____ _____
Signature of Permittee Date