11-11

STATE OF OHIO
DEPARTMENT OF TRANSPORTATION

LAK – 608 – 0.75	OHIO
	FHWA REGION 5
BRF – 93D(17)	FEDERAL PROJECT

1/45

MICROFILMED
FEB 13 1997

P.I.D. 8022

LAK – 608 – 0.75

CONCORD TOWNSHIP
LAKE COUNTY

DESIGN DESIGNATION

Current Year 1994	1918
Design Year 2014 A.D.T.	3070
D.H.V.	270
D	60%
T	3%
V	55 M.P.H.
LEGAL SPEED	55 M.P.H.

FUNCTIONAL CLASSIFICATION – RURAL COLLECTOR

DESIGN EXCEPTIONS	APPROVAL DATE
STOPPING SIGHT DISTANCE	MARCH 24, 1993
HORIZONTAL ALIGNMENT	MARCH 24, 1993
SUPERELEVATION	JANUARY 11, 1994

CONVENTIONAL SIGNS

County Line
Township Line
Section Line
Corporation Line
Fence Line (existing) —X— (proposed) —x—
Center Line
Trees Stumps (to be removed)
Utility Poles: Telephone, Power, Light

Limited Access (only) —LA—
Right of Way (only) —RW—
Limited Access & Right of Way —LA & RW—
Existing Right of Way —R/W—
Property Line (in existing fence)
Railroad or
Guardrail (exist) (prop)
Manholes (exist) (adjst) (prop)
Catch Basins (exist) (adjst) (prop)

INDEX OF SHEETS

TITLE SHEET 1
TYPICAL SECTIONS 2–3
GENERAL NOTES 4–5,5A
CALCULATIONS AND SUB–SUMMARIES 6
GENERAL SUMMARY 7–8
PLAN AND PROFILE 9–10
CROSS SECTIONS 11–18
DRIVEWAY PROFILES AND DETAILS 19–20
MAINTENANCE OF TRAFFIC 21–28
STRUCTURE DETAILS 29–45

LINE DATA

BEGIN PROJECT	STA. 20+00.00	
END PROJECT	STA. 23+86.35	
LENGTH OF PROJECT		386.35 L.F. or 0.073 MILES
ADD FOR WORK		
STA. 18+55.00 TO STA. 20+00.00	145.00 L.F.	
STA. 23+86.35 TO STA. 24+50.00	63.65 L.F.	
LENGTH OF WORK		208.65 L.F. or 0.04 MILES
TOTAL		595.00 L.F. or 0.113 MILES

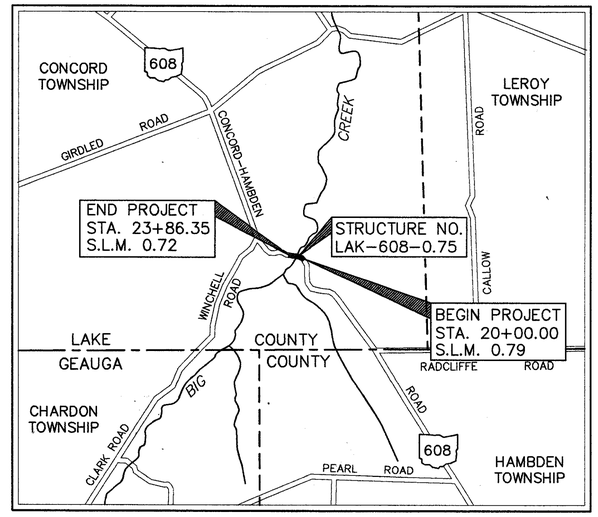

LOCATION MAP

SCALE IN FEET
0 1000 2000 3000 4000 5000

Portion to be improved
State & Federal Routes 608
Other Roads

SCALES

Plan 0 20 40
Profile: Horizontal 0 20 40, Vertical 0 5 10
Cross Section: Horizontal 0 5 10, Vertical 0 5 10

UNDERGROUND UTILITIES
TWO WORKING DAYS
BEFORE YOU DIG
CALL 800–362–2764 (TOLL FREE)
OHIO UTILITIES PROTECTION SERVICE
NON–MEMBERS MUST BE CALLED DIRECT

1995 SPECIFICATIONS

The standard specifications of the State of Ohio, Department of Transportation, including changes and supplemental specifications listed in the proposal shall govern this improvement.

I hereby approve these plans and declare that the making of this improvement will not require the closing to traffic of the highway and that provisions for the maintenance and safety of traffic will be as set forth on the plans and estimates.

Approved Bryan J. Hodulin
Date 3-16-94 District Deputy Director of Transportation

Approved B.D. Hahlamni/dEH
Date 4-7-94 Engineer, Bureau of Bridges and Structural Design

Approved
Date Deputy Director of Design

Approved James Wray
Date 6-14-94 Director, Department of Transportation

SUPPLEMENTAL SPECIFICATIONS	
802 ✓ 4–13–90	
820 ✓ 3–18–92	
849 ✓ 12–24–85	
910 ✓ 5-20-91	
931 ✓ 3–18–92	
942 ✓ 3–18–92	
944 ✓ 3–18–92	
949 ✓ 9–26–86	

SUPPLEMENTAL PRINTS OF STANDARD CONSTRUCTION DRAWINGS

BP–3.1 ✓ 2–21–92	MC–1 ✓ 6–13–69	PCB–91 ✓ 4–24–92	TC-41.10 ✓ 8-29-84	
BP–4.1 ✓ 2–21–92	MC–4 ✓ 7–26–76		TC-41.20 16-21-94	
	MC–8 ✓ 6–12–75		TC-52.10 ✓ 4-3-79	
GR–1.1 ✓ 5– 6–91	MC–9.2 ✓ 5–6–91	TC–65.10 ✓ 2–1–90	TC-52.20 ✓ 4-3-79	
GR–1.2 ✓ 10–30–92	MC–11 ✓ 8–1–78			
GR–1.3 ✓ 2–21–92		AS–1–81 ✓ 11–27–81		
GR–2.1 ✓ 5– 6–91	MT–96.11 ✓ 9–9–88			
GR–3.4 ✓ 5– 6–91	MT–96.20 ✓ 9–9–88	EXJ–3–82 ✓ 8–1–84		
	MT–96.25 ✓ 9–9–88	EXJ–4–87 ✓ 1–5–89		
GR–4.2 ✓ 5– 6–91	MT–99.10 ✓ 11–14–86			
GR-5.3 ✓ 10-30-92	MT–105.10 ✓ 7–1–92	DBR–2–73 ✓ 4–10–73		
	MT–105.11 ✓ 7–1–92			

Rev. 7-18-95

STRUCTURE PLANS REVIEWED BY:
Burgess & Niple, Limited
Engineers and Architects

Plan Prepared By:
CT Consultants, Inc.
Engineers · Architects · Planners
Willoughby · Mentor · Columbus · Lorain · North Canton · Youngstown

STATE OF OHIO JOHN E. ALEXANDROU E-43788 REGISTERED PROFESSIONAL ENGINEER
SEAL

(000105)

Project: LAK - 608 - 0.75 PID 8022
Date of Letting 8-30 1995, Contract No. 505

John E. Alexandrou
REGISTERED ENGINEER No. 43788

DEPARTMENT OF TRANSPORTATION
FEDERAL HIGHWAY ADMINISTRATION

APPROVED:

DIVISION ADMINISTRATOR DATE

CALC. BY ____ DATE ____	LAK – 608 – 0.75	OHIO
CHKD. BY ____ DATE ____		FHWA REGION 5

2 / 45

TYPICAL SECTIONS

TYPE 404

0 4 8
SCALE IN FEET

DISTANCE VARIES NOTE

a. STA. 19+77.50 – STA. 20+00.00 2.00' – 2.25'
STA. 23+86.35 – STA. 24+23.11 3.85' – 2.00'

b. STA. 19+77.50 – STA. 20+00.00 5.3' – 5.3'
STA. 23+86.35 – STA. 24+23.11 3.02' – 4.09'

c. STA. 19+77.50 – STA. 20+00.00 2.00' – 2.25'
STA. 23+86.35 – STA. 24+23.11 3.85' – 2.00'

d. STA. 20+00.00 – STA. 21+35.49 2.25' – 0.75'
STA. 22+85.35 – STA. 23+86.35 3.70' – 3.85'

e. STA. 20+00.00 – STA. 21+35.49 5.3' – 2.00'
STA. 22+85.35 – STA. 23+86.35 2.00' – 3.02'

f. STA. 20+00.00 – STA. 21+35.49 2.25' – 5.66'
STA. 22+85.35 – STA. 23+86.35 3.10' – 3.85'

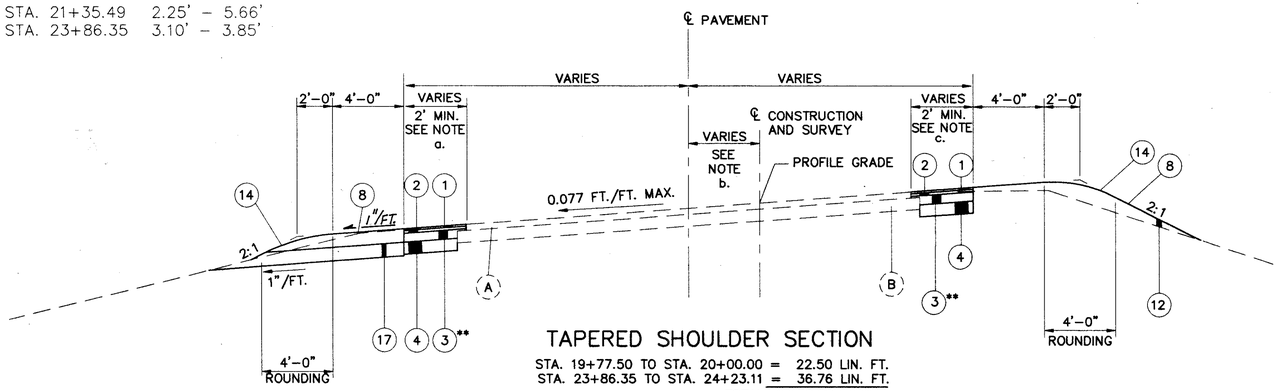

TAPERED SHOULDER SECTION

STA. 19+77.50 TO STA. 20+00.00 = 22.50 LIN. FT.
STA. 23+86.35 TO STA. 24+23.11 = 36.76 LIN. FT.
TOTAL = 59.26 LIN. FT.

** ITEM 301 – 6" BITUMINOUS AGGREGATE BASE, AC–20

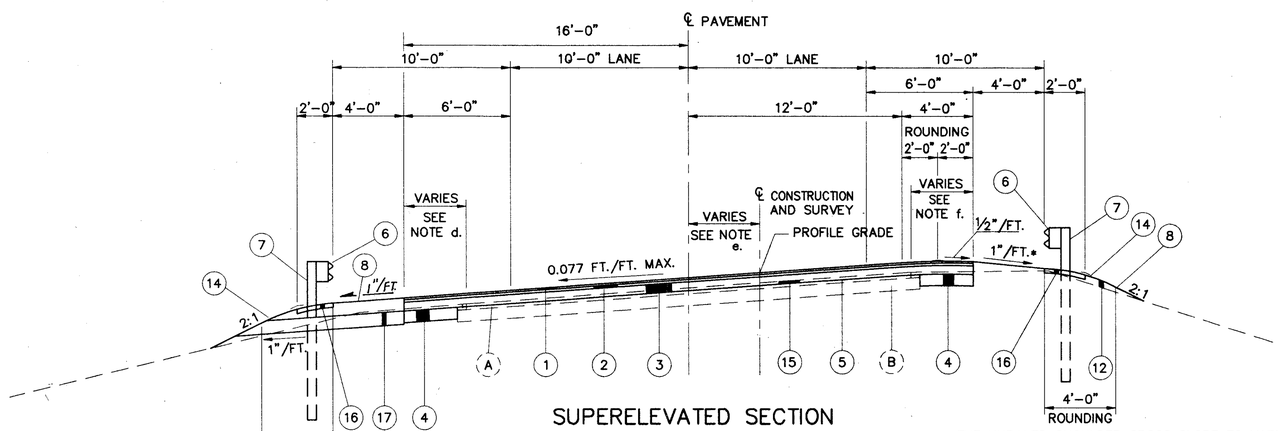

SUPERELEVATED SECTION

STA. 20+00.00 TO STA. 21+35.58 = 135.49 LIN. FT.
STA. 22+85.26 TO STA. 23+86.35 = 101.00 LIN. FT.
TOTAL = 236.49 LIN. FT.

* THE UNPAVED SHOULDER CROSS SLOPE TO VARY FROM THE EXISTING CROSS SLOPE OF THE TAPPERED SHOULDER SECTION TO 1"/FT. FROM STA. 20+00.00 TO STA. 20+50.00

* THE UNPAVED SHOULDER CROSS SLOPE TO VARY FROM 1"/FT. TO THE EXISTING CROSS SLOPE OF THE TAPPERED SHOULDER SECTION FROM STA. 23+36.35 TO STA. 23+86.35

LEGEND

1. ITEM 404 – 1¼" ASPHALT CONCRETE, AC–20
2. ITEM 402 – 1¾" ASPHALT CONCRETE, AC–20
3. ITEM 301 – 3" TO 6" BITUMINOUS AGGREGATE BASE, AC–20
4. ITEM 304 – 8" AGGREGATE BASE (SEE PROPOSAL NOTE)
5. ITEM 407 – TACK COAT
6. ITEM 606 – GUARDRAIL, TYPE 5
7. ITEM 606 – GUARDRAIL POST, 9' LONG
8. ITEM 659 – SEEDING AND MULCHING
9. ITEM 611 – REINFORCED CONCRETE APPROACH SLAB (t=12")
10. ITEM 310 – 9" SUBBASE, TYPE I, GRADING A (SEE PROPOSAL NOTE)
11. ITEM 202 – APPROACH SLAB REMOVED
12. ITEM 203 – EMBANKMENT
13. ITEM 203 – SUBGRADE COMPACTION
14. ITEM 203 – LINEAR GRADING
15. ITEM 254 – PAVEMENT PLANING, BITUMINOUS, 3" THICKNESS
16. ITEM 404 – ASPHALT CONCRETE, AC–20, UNDER GUARDRAIL
17. ITEM 605 – AGGREGATE DRAIN

(A) EXISTING ASPHALT SURFACE COURSE
(B) EXISTING 8" AGGREGATE BASE COURSE
(C) EXISTING 12" REINFORCED CONCRETE APPROACH SLAB
(D) EXISTING GUARDRAIL

TYPICAL SECTIONS

TYPE 404

0 4 8
SCALE IN FEET

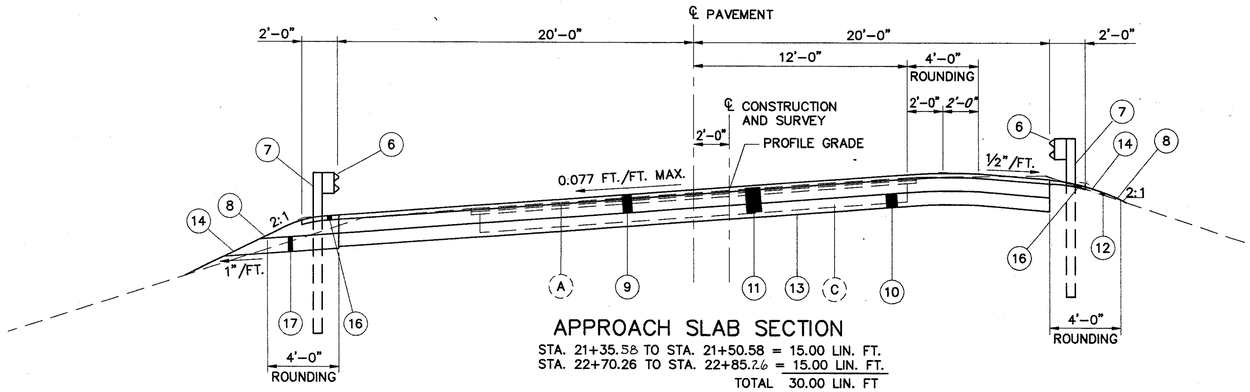

APPROACH SLAB SECTION

STA. 21+35.58 TO STA. 21+50.58 = 15.00 LIN. FT.
STA. 22+70.26 TO STA. 22+85.26 = 15.00 LIN. FT.
TOTAL 30.00 LIN. FT

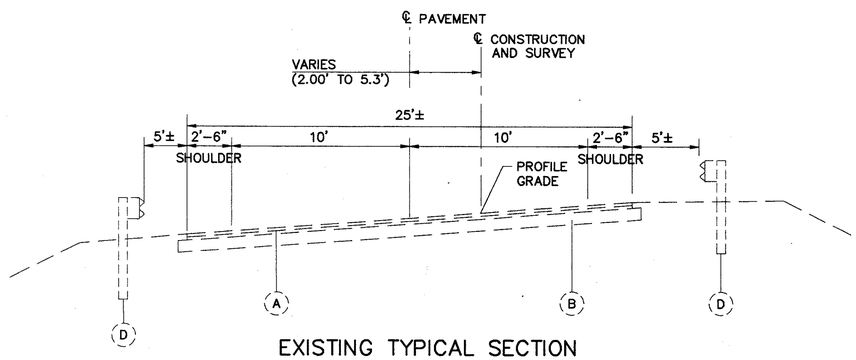

EXISTING TYPICAL SECTION

STA. 19+77.50 TO STA. 21+50.58 = 173.08 LIN. FT.
STA. 22+70.26 TO STA. 24+23.11 = 152.85 LIN. FT.

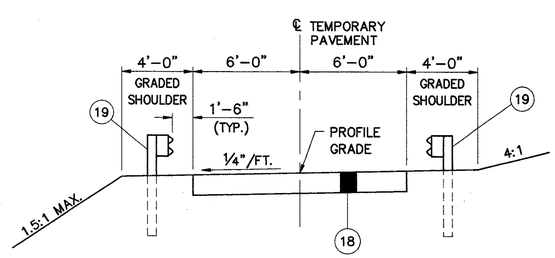

TEMPORARY DRIVEWAY ACCESS SECTION

STA. 0+00.00 TO STA. 2+20.00 = 220.00 LIN. FT.
STA. 10+00.00 TO STA. 12+39.38 = 239.38 LIN. FT.

LEGEND

1. ITEM 404 – 1¼" ASPHALT CONCRETE, AC–20
2. ITEM 402 – 1¾" ASPHALT CONCRETE, AC–20
3. ITEM 301 – 3" TO 6" BITUMINOUS AGGREGATE BASE, AC–20
4. ITEM 304 – 8" AGGREGATE BASE (SEE PROPOSAL NOTE)
5. ITEM 407 – TACK COAT
6. ITEM 606 – GUARDRAIL, TYPE 5
7. ITEM 606 – GUARDRAIL POST, 9' LONG
8. ITEM 659 – SEEDING AND MULCHING
9. ITEM 611 – REINFORCED CONCRETE APPROACH SLAB (t=12")
10. ITEM 310 – 9" SUBBASE, TYPE I, GRADING A (SEE PROPOSAL NOTE)
11. ITEM 202 – APPROACH SLAB REMOVED
12. ITEM 203 – EMBANKMENT
13. ITEM 203 – SUBGRADE COMPACTION
14. ITEM 203 – LINEAR GRADING
15. ITEM 254 – PAVEMENT PLANING, BITUMINOUS, 3" THICKNESS
16. ITEM 404 – ASPHALT CONCRETE, AC–20, UNDER GUARDRAIL
17. ITEM 605 – AGGREGATE DRAIN
18. ITEM 615 – TEMPORARY PAVEMENT, CLASS A
19. TEMPORARY GUARDRAIL

- (A) EXISTING ASPHALT SURFACE COURSE
- (B) EXISTING 8" AGGREGATE BASE COURSE
- (C) EXISTING 12" REINFORCED CONCRETE APPROACH SLAB
- (D) EXISTING GUARDRAIL

GENERAL NOTES

GENERAL

ROUNDING OF CORNERS SHOWN ON CROSS-SECTIONS

THE ROUNDING AT SLOPE BREAKPOINTS SHOWN ON THE TYPICAL SECTIONS APPLY TO ALL CROSS-SECTIONS EVEN THOUGH OTHERWISE SHOWN ON THESE PLANS.

UTILITIES

LISTED BELOW ARE ALL UTILITIES LOCATED WITHIN THE PROJECT CONSTRUCTION LIMITS TOGETHER WITH THEIR RESPECTIVE OWNERS:

CLEVELAND ELECTRIC ILLUMINATING CO.
55 PUBLIC SQUARE P.O. BOX 5000
CLEVELAND, OHIO 44101
ATTN: GLEN YOUNG
TIM DENZLER
PHONE: (216) 479-3452

THE LOCATION OF THE UNDERGROUND UTILITIES SHOWN ON THE PLANS ARE AS OBTAINED FROM THE OWNERS AS REQUIRED BY SECTION 153.64 O.R.C.

CONTINGENCY QUANTITIES

THE CONTRACTOR SHALL NOT ORDER MATERIALS OR PERFORM WORK FOR ITEMS DESIGNATED BY PLAN NOTE TO BE USED "AS DIRECTED BY THE ENGINEER" UNLESS AUTHORIZED BY THE ENGINEER. THE ACTUAL WORK LOCATIONS AND QUANTITIES USED FOR SUCH ITEMS SHALL BE INCORPORATED INTO THE FINAL CHANGE ORDER GOVERNING COMPLETION OF THIS PROJECT.

ELEVATION DATUM

ALL ELEVATIONS REFER TO U.S.G.S. DATUM.

ROADWAY

REMOVAL OF TREES AND STUMPS.

ALL TREES AND STUMPS SPECIFICALLY MARKED FOR REMOVAL WITHIN THE CONSTRUCTION LIMITS SHALL BE REMOVED UNDER THE LUMP SUM BID ITEM 201. CLEARING AND GRUBBING. THE FOLLOWING IS APPROXIMATE ESTIMATE OF THE NUMBER OF TREES AND STUMPS TO BE REMOVED:

SIZES	NO. TREES	NO. STUMPS	TOTAL
NONE			

GUARDRAIL REPLACEMENT

NO HAZARD SHALL BE LEFT UNPROTECTED EXCEPT FOR THE ACTUAL TIME NECESSARY TO REMOVE, GRADE AND REINSTALL GUARDRAIL IN A CONTINUOUS OPERATION. THE REMOVAL OF ALL GUARDRAIL SHALL AT ALL TIMES BE AS DIRECTED BY THE ENGINEER. NO GUARDRAIL SHALL BE REMOVED UNTIL THE PLACEMENT OF THE MATERIAL IS ON SITE, READY FOR INSTALLATION. FAILURE TO COMPLY WITH THIS REQUIREMENT SHALL BE DEEMED SUFFICIENT CAUSE TO ORDER WORK SUSPENDED ON THE PROJECT UNTIL SUCH TIME THAT THE ENGINEER IS ASSURED OF SAID COMPLIANCE.

PAVING UNDER GUARDRAIL - SEE NOTE ON SHEET 5A

PAVEMENT

ITEM 407 – TACK COAT

THE RATE OF APPLICATION OF 407 TACK COAT SHALL BE SUBJECT TO ADJUSTMENTS, AS DIRECTED BY THE ENGINEER. PLAN QUANTITIES INDICATE AN AVERAGE APPLICATION RATE OF 0.10 GALLONS PER SQUARE YARD OF TACK COAT FOR ESTIMATING PURPOSES ONLY.

EROSION CONTROL

SEEDING

SEEDING AND MULCHING SHALL BE APPLIED TO ALL AREAS OF EXPOSED SOIL BETWEEN THE RIGHT-OF-WAY LINES, AND WITHIN THE CONSTRUCTION LIMITS FOR AREAS OUTSIDE THE RIGHT-OF-WAY LINES COVERED BY WORK AGREEMENT OR SLOPE EASEMENT. QUANTITY CALCULATIONS FOR ITEM 659, SEEDING AND MULCHING, ARE BASED ON THESE LIMITS.

THE FOLLOWING ESTIMATED QUANTITY HAS BEEN CARRIED TO THE GENERAL SUMMARY:

659, SEEDING AND MULCHING	3496 SQ.YD.

WATERING PERMANENT SEEDED AREAS

THE FOLLOWING ESTIMATED QUANTITIES ARE TO BE USED AS DIRECTED BY THE ENGINEER TO PROMOTE GROWTH AND TO CARE FOR THE PERMANENT SEEDED AREAS PER 659.09:

659 WATER	8 M-GAL.

TEMPORARY SOIL EROSION AND SEDIMENT CONTROL

THE FOLLOWING ESTIMATED QUANTITIES ARE TO BE USED AS DIRECTED BY THE ENGINEER FOR TEMPORARY EROSION AND SEDIMENT CONTROL MEASURES:

207 STRAW OR HAY BALES	150 EACH
207 TEMPORARY SEEDING AND MULCHING	240 SQ.YD.
207 TEMPORARY BENCHES, DAMS, AND SEDIMENT BASINS	60 CU.YD.
207 FILTER FABRIC FENCE	1500 LIN.FT.
659 REPAIR SEEDING AND MULCHING	174.8 SQ.YDS.
659 WATER	1 M-GAL.
659 COMMERCIAL FERTILIZER	0.02 TONS

THESE QUANTITIES HAVE BEEN INCLUDED IN THE GENERAL SUMMARY.

EROSION CONTROL

ITEM 601 IS PROVIDED IN THE PLANS FOR EROSION CONTROL. ROCK OF A STABLE NATURE SHALL NOT BE REMOVED IN ORDER TO PLACE THIS ITEM, AND TURF OF A STABLE NATURE SHALL NOT BE REMOVED IN ORDER TO PLACE 659. THE ENGINEER SHALL CHECK AND NON-PERFORM QUANTITIES OR ADJUST LOCATIONS AND QUANTITIES FOR THIS ITEM WHERE INDICATED BY FIELD CONDITIONS DURING CONSTRUCTION. IN ADDITION, THIS ITEM SHALL MEET REQUIREMENT OF 108.04.

DRAINAGE

SANITARY FLOW INTO HIGHWAY DRAINAGE SYSTEMS

PLAN MAKES NO PROVISION FOR CONNECTING, NOR SHALL THE ENGINEER OR CONTRACTOR CONNECT, ANY EXISTING OR NEW DRAINAGE INTO THE HIGHWAY DRAINAGE SYSTEM WHEN SUCH DRAINS CARRY FLOW FROM ANY PLUMBING FIXTURES, INCLUDING FLOOR DRAINS AND SINK DRAINS, OR DRAINS FROM LIVESTOCK LOTS OR BARNS.

EXISTING PIPE CARRYING FLOW, WHICH COMES FROM THE CATEGORY OUTLINED ABOVE, SHALL BE PLUGGED WITH CLASS C CONCRETE AT THE RIGHT-OF-WAY LINE. PAYMENT FOR SAID PLUGGING SHALL BE INCLUDED IN THE UNIT PRICE BID FOR ITEM 203 EXCAVATION NOT INCLUDING EMBANKMENT CONSTRUCTION.

TREATED SANITARY FLOW INTO HIGHWAY DRAINAGE SYSTEMS

TREATED SANITARY FLOW MAY BE DISCHARGED INTO THE HIGHWAY DRAINAGE SYSTEM PROVIDED THE OWNER HAS SECURED THE APPROVAL OF THE LOCAL HEALTH AUTHORITIES AND HAS ACQUIRED FROM THE OHIO DEPARTMENT OF TRANSPORTATION, THE OFFICIAL PERMIT TO HAVE THE CONNECTION MADE.

IN EACH CASE WHERE A PERMIT HAS BEEN ISSUED FOR A SANITARY CONNECTION TO BE MADE INTO A HIGHWAY DRAINAGE CONDUIT, IT SHALL BE PROVIDED WITH AN INSPECTION WELL, IN ACCORDANCE WITH THE DETAIL SHOWN ON STANDARD DRAWING MC-8.

THE FOLLOWING ESTIMATED QUANTITIES HAVE BEEN INCLUDED IN THE GENERAL SUMMARY, FOR USE AS DIRECTED BY THE ENGINEER, IN MAKING THE ABOVE DESCRIBED CONNECTIONS:

604	INSPECTION WELLS	1 EACH
603	6" CONDUIT, TYPE C	100 LIN.FT.

NECESSARY BENDS OR BRANCHES SHALL BE INCLUDED FOR PAYMENT IN THE PERTINENT CONDUIT ITEM.

NONE OF THE ABOVE MATERIALS SHALL BE ORDERED BY THE CONTRACTOR UNTIL AUTHORIZED BY THE ENGINEER.

FARM DRAINS

ALL FARM DRAINS, WHICH ARE ENCOUNTERED DURING CONSTRUCTION, SHALL BE PROVIDED WITH UNOBSTRUCTED OUTLETS.
EXISTING COLLECTORS WHICH ARE LOCATED BELOW THE ROADWAY DITCH ELEVATIONS, AND WHICH CROSS THE ROADWAY, SHALL BE REPLACED WITHIN THE CONSTRUCTION LIMITS BY ITEM 603 CONDUIT, TYPE B, ONE (1) COMMERCIAL SIZE LARGER THAN THE EXISTING CONDUIT.

EXISTING COLLECTORS AND ISOLATED FARM DRAINS, WHICH ARE ENCOUNTERED ABOVE THE ELEVATION OF THE ROADWAY DITCHES, SHALL BE OUTLETTED INTO THE ROADWAY DITCH BY ITEM 603, TYPE F CONDUIT. THE OPTIMUM OUTLET ELEVATION SHALL BE ONE FOOT ABOVE THE FLOWLINE ELEVATION OF THE DITCH. LATERAL FIELD TILES WHICH CROSS THE ROADWAY SHALL BE INTERCEPTED BY ITEM 603, TYPE E CONDUIT, AND CARRIED IN A LONGITUDINAL DIRECTION TO AN ADEQUATE OUTLET OR ROADWAY CROSSING.

THE LOCATION, TYPE, SIZE, AND GRADE OF REQUIRED REPLACEMENTS SHALL BE DETERMINED BY THE ENGINEER AND PAYMENT SHALL BE MADE ON FINAL MEASUREMENTS.

THE FOLLOWING ESTIMATED QUANTITIES HAVE BEEN INCLUDED IN THE GENERAL SUMMARY FOR THE WORK NOTED ABOVE:

603	12" CONDUIT, TYPE D	84 LIN.FT.
603	6" CONDUIT, TYPE E	100 LIN.FT.
603	6" CONDUIT, TYPE F	100 LIN.FT.
601	ROCK CHANNEL PROTECTION TYPE C WITH FILTER	5 CU.YDS.

NECESSARY BENDS OR BRANCHES SHALL BE INCLUDED FOR PAYMENT IN THE PERTINENT CONDUIT ITEM.

NONE OF THE ABOVE MATERIALS SHALL BE ORDERED BY THE CONTRACTOR UNTIL AUTHORIZED BY THE ENGINEER.

SPRING DRAINS

THE FOLLOWING QUANTITIES HAVE BEEN ESTIMATED FOR USE AS DIRECTED BY THE ENGINEER FOR DRAINING ANY SPRINGS ENCOUNTERED DURING CONSTRUCTION. THE FOLLOWING TYPES OF PIPES MAY BE USED: 707.17; ASTM D3034 SDR 35, SS 931 OR SS 944 PERFORATED PER 707.15. SPRING DRAINS SHALL BE CONSTRUCTED AS SHOWN ON STANDARD CONSTRUCTION DRAWINGS MC-1 AND PAID FOR AT THE CONTRACT PRICE FOR:

605 6" UNCLASSIFIED PIPE UNDERDRAIN, FOR SPRINGS	100 LIN.FT.
605 AGGREGATE DRAIN, FOR SPRINGS	100 LIN. FT.

THE CONTRACTOR SHALL NOT ORDER MATERIALS FOR "SPRING DRAINS" UNTIL AUTHORIZED BY THE ENGINEER, AND IN THE EVENT NO SPRINGS ARE ENCOUNTERED, THE ITEM SHALL BE NONPERFORMED.

CLEARING AND EXCAVATING OF RIVER CHANNEL

THIS ITEM SHALL INCLUDE REMOVING DEBRIS AND EXISTING EARTH FROM THE RIVER CHANNEL AS INDICATED IN THE PLANS, SEE SHEET 9. DUE TO CONSTANTLY CHANGING FIELD CONDITIONS, CLEARING AND EXCAVATING SHALL BE DONE TO THE SATISFACTION OF THE ENGINEER. NO DEBRIS SHALL BE LEFT REMAINING IN THE RIVER CHANNEL AT THE COMPLETION OF THE PROJECT.

ALL COSTS FOR CLEARING AND EXCAVATING OF THE RIVER CHANNEL SHALL BE INCLUDED IN ITEM 203 – EXCAVATION NOT INCLUDING EMBANKMENT CONSTRUCTION.

THE FOLLOWING ESTIMATED EXCAVATION QUANTITY ARE BASED ON THE CONDITIONS AT THE TIME OF SURVEY AND HAS BEEN INCLUDED IN THE GENERAL SUMMARY.

ITEM 203 EXCAVATION NOT INCL. EMB. CONSTRUCTION .... 472.0 CU.YDS.

SOILS

THE CONTRACTOR SHALL REVIEW THE SOILS INFORMATION CAREFULLY AND BE AWARE THAT SOFT, WET MATERIALS ARE PRESENT AT THE PROJECT SITE. THE USE OF LIGHTER CONSTRUCTION EQUIPMENT MAY BE REQUIRED WHERE EXISTING PAVEMENT IS SUPPORTED ON THESE SOFT MATERIALS.

GENERAL NOTES

TRAFFIC CONTROL

NOTICE OF CLOSURE SIGNS

THESE SIGNS SHALL BE ERECTED BY THE CONTRACTOR AT LEAST ONE WEEK IN ADVANCE OF THE SCHEDULED ROAD CLOSURE. THE SIGNS SHALL BE ERECTED ON THE RIGHT HAND SIDE OF THE ROAD FACING TRAFFIC. THEY SHALL BE LOCATED IN THE FIELD SO AS TO NOT INTERFERE WITH ANY PERMANENT SIGNS AND SHOULD BE ERECTED AT THE POINT OF CLOSURE.

PAYMENT FOR THIS WORK SHALL BE INCLUDED IN THE LUMP SUM BID FOR ITEM 614 MAINTAINING TRAFFIC AND SHALL INCLUDE FURNISHING, ERECTING, MAINTAINING AND REMOVING THE SIGNS INCLUDING SUPPORTS.

PAVEMENT MARKINGS

ALL PAVEMENT MARKINGS SHALL BE APPLIED IN ACCORDANCE WITH ITEM 642 OF THE STATE OF OHIO, DEPARTMENT OF TRANSPORTATION CONSTRUCTION AND MATERIAL SPECIFICATIONS. THE FOLLOWING QUANTITIES HAVE BEEN INCLUDED IN THE GENERAL SUMMARY FOR THE ABOVE MENTIONED WORK.

642 EDGE LINE, TYPE 2 (WHITE)	0.38 MILE
642 CENTER LINE, TYPE 2 (YELLOW)	0.19 MILE

THE CENTER LINE AND EDGE LINE SHALL BEGIN AT STATION 17+00 AND END AT STATION 26+86.

TEMPORARY PAVEMENT MARKINGS

THE ROAD SHALL NOT BE OPENED UNTIL EITHER THE PERMANENT OR THE TEMPORARY PAVEMENT MARKINGS ARE IN PLACE. THE FOLLOWING TEMPORARY PAVEMENT MARKINGS SHALL BE PROVIDED AS DIRECTED BY THE ENGINEER:

614 TEMPORARY CENTER LINE, CLASS I	0.19 MILE

THIS QUANTITY HAS BEEN CARRIED TO THE GENERAL SUMMARY.

DRIVEWAY ACCESS

THE CONTRACTOR SHALL MAINTAIN SAFE AND SATISFACTORY ACCESS TO EXISTING DRIVEWAYS WITHIN THE WORK LIMITS AT ALL TIMES DURING CONSTRUCTION BY USING EXISTING PAVEMENT, PROPOSED PAVEMENT OR TEMPORARY ROADWAY. THE CONTRACTOR SHALL FURNISH AND MAINTAIN ALL NECESSARY SAFEGUARDS SUCH AS BARRICADES, BARRIERS AND OTHER SUCH TRAFFIC CONTROL DEVICES SO AS TO AVOID DAMAGE AND/OR INJURY TO VEHICLES AND PERSONS USING THE ROADWAY DURING CONSTRUCTION FOR DRIVEWAY ACCESS.

THE FOLLOWING ESTIMATED QUANTITIES HAVE BEEN INCLUDED IN THE GENERAL SUMMARY TO BE USED AS DIRECTED BY THE ENGINEER FOR MAINTAINING DRIVEWAY ACCESS:

410 TRAFFIC COMPACTED SURFACE A OR B	100 CU.YDS.
616 CALCIUM CHLORIDE	5 TONS
616 WATER	50 M–GAL.

SEPARATE PAYMENT SHALL BE MADE FOR ITEMS 410 AND 616 NOTED ABOVE. ALL OTHER WORK REQUIRED FOR TRAFFIC MAINTENANCE SHALL BE INCLUDED WITH PAYMENT FOR ITEM 614 MAINTAINING TRAFFIC.

BARRIER REFLECTORS

THIS ITEM OF WORK SHALL CONSIST OF FURNISHING AND INSTALLING BARRIER REFLECTORS ON THE GUARDRAIL INSTALLATIONS. THE LOCATION, COLOR, SPACING AND TYPE SHALL BE IN ACCORDANCE WITH SUPPLEMENTAL SPECIFICATION 802.

PAYMENT FOR EACH BARRIER REFLECTOR INSTALLED SHALL BE AT THE CONTRACT PRICE FOR ITEM 802, EACH, BARRIER REFLECTOR, TYPE A.

THE FOLLOWING ESTIMATED QUANTITY HAS BEEN PROVIDED IN THE GENERAL SUMMARY FOR BARRIER REFLECTORS.

802 BARRIER REFLECTOR, TYPE A	14 EACH

ITEM SPECIAL – MAILBOX SUPPORT

THIS WORK SHALL CONSIST OF FURNISHING AND ERECTING MAILBOX SUPPORTS AND ANY ASSOCIATED MOUNTING HARDWARE IN ACCORDANCE WITH PLAN DETAILS, AND ATTACHING AN OWNER–SUPPLIED MAILBOX AT LOCATIONS SPECIFIED IN THE PLAN, OR OTHERWISE ESTABLISHED BY THE ENGINEER.

WOOD POSTS SHALL BE NOMINAL 4" X 4" SQUARE OR 4–1/2" DIAMETER ROUND, AND CONFORM TO 710.14.

STEEL POSTS SHALL BE NOMINAL PIPE SIZE 2" I.D., AND CONFORM TO AASHTO M 181.

HARDWARE (PLATES, SCREWS, BOLTS, ETC.) SHALL BE COMMERCIAL–GRADE GALVANIZED STEEL.

POSTS SHALL BE SET PER THE FIRST PARAGRAPH OF 606.03, AND SHALL IN NO INSTANCE BE ENCASED IN CONCRETE.

SUPPORT HARDWARE SHALL ACCOMMODATE EITHER A SINGLE OR A DOUBLE MAILBOX INSTALLATION, AND NO MORE THAN TWO (2) BOXES MAY BE MOUNTED ON A SINGLE POST.

THE MAILBOX SHALL BE SECURELY AND NEATLY ATTACHED BY THE CONTRACTOR TO THE NEW SUPPORT. THE CONTRACTOR SHALL FURNISH ALL NECESSARY ATTACHMENT HARDWARE (NUTS, BOLTS, PLATES, SPACERS, AND WASHERS) AS NECESSARY TO ACCOMMODATE THE COMPLETE INSTALLATION.

IN THE ABSENCE OF A NEW BOX SUPPLIED BY THE OWNER, THE CONTRACTOR SHALL SALVAGE THE EXISTING BOX AND PLACE IT ON THE NEW SUPPORT. DUE CARE SHALL BE EXERCISED IN SUCH AN OPERATION, AND THE CONTRACTOR SHALL BE RESPONSIBLE FOR REPAIRING OR REPLACING ANY BOX DAMAGED BY IMPROPER HANDLING ON HIS PART, AS JUDGED AND DIRECTED BY THE ENGINEER.

THE CONTRACTOR SHALL BE RESPONSIBLE FOR COORDINATING WITH THE LOCAL POST MASTER REGARDING THE TIMING OF THE MOVEMENT OF ANY MAILBOX TO A NEW LOCATION.

PAYMENT UNDER THIS ITEM SHALL BE LIMITED TO FINAL PERMANENT INSTALLATIONS. TEMPORARY INSTALLATIONS SHALL BE IN ACCORDANCE WITH 107.12. HOWEVER, THE SAME MATERIAL AND SIZE LIMITATIONS AS FOR PERMANENT INSTALLATIONS SHALL APPLY.

MAILBOX SUPPORTS, COMPLETE IN PLACE, WILL BE PAID FOR AT THE CONTRACT UNIT PRICE PER EACH, FOR ITEM SPECIAL MAILBOX SUPPORT, SINGLE..... 4 EACH.

MAINTAINING TRAFFIC

ITEM 614 MAINTAINING TRAFFIC

THE CONTRACTOR SHALL MAINTAIN TRAFFIC AT ALL TIMES IN ACCORDANCE WITH THE REQUIREMENTS OF SPEC. 614.

TWO WAY/ONE LANE TRAFFIC SHALL BE MAINTAINED AT ALL TIMES BY USE OF TEMPORARY SIGNALS, EXISTING PAVEMENT, COMPLETED PAVEMENT AND ITEM 615 TEMPORARY PAVEMENT. THE LIMITS AND DURATION OF USE OF TEMPORARY ROADWAYS SHALL BE HELD TO AN ABSOLUTE MINIMUM, AND IN ALL CASES, SHALL BE SUBJECT TO THE APPROVAL OF THE ENGINEER. FOR MAINTENANCE OF TRAFFIC PLAN SEE SHEETS 21 THRU 28.

THE FOLLOWING ESTIMATED QUANTITIES HAVE BEEN INCLUDED IN THE GENERAL SUMMARY TO BE USED AS DIRECTED BY THE ENGINEER FOR MAINTAINING TRAFFIC:

404 – BITUMINOUS CONCRETE FOR MAINTAINING TRAFFIC	5 CU.YDS.
410 – TRAFFIC COMPACTED SURFACE TYPE A OR B	50 CU.YDS.
616 – CALCIUM CHLORIDE	1 TON
616 – WATER	10 M–GAL.

ITEM 622 PORTABLE CONCRETE BARRIER

IT IS ANTICIPATED THAT THE SAME BARRIERS WILL BE USED IN VARIOUS PHASES OF CONSTRUCTION. MOVEMENT OF THE CONCRETE BARRIER BETWEEN PHASES SHALL BE ACCOMPLISHED IN ONE WORKING DAY. FLAGGERS SHALL BE UTILIZED FOR PROTECTION VEHICULAR TRAFFIC UNTIL MOVEMENT OF THE BARRIER IS COMPLETE

[redacted]

SEE SHEETS 23–24 FOR ADDITIONAL DETAILS.

ITEM 614 BARRIER REFLECTORS

REFLECTORS AND THEIR MOUNTING SHALL CONFORM TO SUPPLEMENTAL SPECIFICATION 802 EXCEPT THAT SPACING SHALL BE AT 25' CENTERS.

PAYMENT FOR EACH BARRIER REFLECTOR INSTALLED SHALL BE MADE AT THE CONTRACT PRICE FOR ITEM 614, EACH, BARRIER REFLECTOR, TYPE B2.

CHANNEL EMBANKMENTS

PORTIONS OF THE EXISTING CHANNEL SHALL BE FILLED AND SLOPED TO DRAIN AS SHOWN IN THIS PLANS . IN CHANNEL EMBANKMENT AREAS WHICH WILL NOT SUPPORT ANY PORTION OF THE NEW ROAD BED OR STRUCTURAL EMBANKMENTS, THE CONTRACTOR MAY UTILIZE EMBANKMENT METHODS MEETING FOLLOWING REQUIREMENTS:

AREAS WHERE CHANNEL EMBANKMENTS ARE TO BE PLACED SHALL BE CLEARED OF WEEDS AND BRUSH. THE REQUIREMENTS FOR MOISTURE, DENSITY CONTROL, BENCHING AND SUTABLE MATERIALS SHALL BE WAIVED. IN LIEU OF THE REQUIREMENTS OF ITEM 203, THE DEPTH OF LAYERS IN WHICH THE EMBANKMENTS ARE TO BE PLACED, AND THEIR COMPACTION, SHALL CONFORM WITH ACCEPTABLE CONSTRUCTION PRACTICES AS DETERMINED BY THE ENGINEER.

PAYMENT FOR ALL OF THE ABOVE SHALL BE INCLUDED IN THE CONTRACT PRICE FOR ITEM 203, EMBANKMENT.

SEQUENCE

PHASE I

TWO–WAY ONE LANE TRAFFIC SHALL BE MAINTAINED ON THE EASTBOUND LANE OF S.R. 608 BY USE OF THE EXISTING ROADWAY AND TEMPORARY ROADWAY AND BY TEMPORARY TRAFFIC SIGNALS WHILE CONSTRUCTION IS BEING COMPLETED ON THE WESTBOUND LANE.

BEFORE STARTING ANY BRIDGE CONSTRUCTION WHICH REQUIRES CLOSING EXISTING PAVEMENT TO TRAFFIC, ALL PORTABLE CONCRETE BARRIERS, SIGNALS, SIGNS, LIGHTS, TEMPORARY PAVEMENT AND MARKINGS REQUIRED FOR PHASE I SHALL BE FURNISHED AND ERECTED BY THE CONTRACTOR. FLAGGERS SHALL BE UTILIZED FOR PROTECTION OF VEHICULAR TRAFFIC UNTIL ERECTION OF THE TEMPORARY CONCRETE BARRIERS, SIGNS, LIGHTS, AND TEMPORARY PAVEMENT AND MARKINGS ARE COMPLETED.

WHEN THE ABOVE REQUIREMENTS HAVE BEEN SATISFIED, THE EASTBOUND LANE OF THE EXISTING BRIDGE SHALL BE OPENED FOR TRAFFIC AND CONSTRUCTION OF THE WESTBOUND PORTION OF THE BRIDGE AND APPROACH SLABS SHALL PROCEED IN ACCORDANCE WITH THE SEQUENCE SHOWN ON THIS SHEET AND SHEETS 21–28 .

CONSTRUCT ALL BITUMINOUS TEMPORARY PAVEMENT REQUIRED FOR PHASE II AND COMPLETE PERMANENT EARTHWORK AND GUARDRAIL CONSTRUCTION ALONG THE WESTBOUND LANE, INCLUDING THE DRAINAGE WORK.

PHASE II

TWO–WAY ONE LANE TRAFFIC SHALL BE MAINTAINED IN THE WESTBOUND LANE OF S.R. 608 BY USE OF THE COMPLETED PAVEMENT AND TEMPORARY PAVEMENT AND BY TEMPORARY TRAFFIC SIGNALS WHILE CONSTRUCTION IS BEING COMPLETED ON THE EASTBOUND LANES.

RELOCATE THE PORTABLE CONCRETE BARRIERS, SIGNALS, SIGNS, LIGHTS AND TEMPORARY PAVEMENT MARKINGS AS REQUIRED FOR PHASE II.

MOVEMENT OF THE PORTABLE CONCRETE BARRIERS, SIGNALS, SIGNS, LIGHTS, AND TEMPORARY PAVEMENT MARKINGS BETWEEN PHASES SHALL BE ACCOMPLISHED IN ONE WORKING DAY. FLAGGERS SHALL BE UTILIZED FOR THE PROTECTION OF VEHICULAR TRAFFIC UNTIL RELOCATION OF THE TEMPORARY CONCRETE BARRIERS, SIGNALS, SIGNS, LIGHTS, AND TEMPORARY PAVEMENT MARKINGS ARE COMPLETE.

THE COMPLETED PORTION OF THE NEW BRIDGE, APPROACH SLABS AND TEMPORARY PAVEMENT SHALL BE OPENED TO TRAFFIC AND CONSTRUCTION OF THE REMAINING PORTION OF THE BRIDGE AND APPROACH SLABS SHALL PROCEED.

REMOVE ALL TEMPORARY PAVEMENT AND TEMPORARY ROADS, RECONSTRUCT GRADES AND COMPLETE ALL REMAINING CONSTRUCTION.

GENERAL NOTES

SR 608 SIGNALIZED LANE CLOSURE

12-INCH YELLOW FLASHING SIGNAL HEADS.

ON EACH OW-152-48 "PREPARE TO STOP" SIGN, (4 TOTAL) 2- 12" FLASHING YELLOW SIGNAL HEADS SHALL BE ATTACHED IN A VERTICAL ALIGNMENT. THE SIGN SUPPORTS SHALL BE MODIFIED TO SUPPORT THE 12" SIGNAL HEADS. THE 12 " FLASHING SIGNAL HEADS SHALL MEET THE SPECIFICATIONS IN SECTION 6E-5, GENERAL DESIGN AND OPERATION OF BEACONS, OF THE OHIO MANUAL OF UNIFORM TRAFFIC CONTROL DEVICES FOR STREETS AND HIGHWAYS. THE "PREPARE TO STOP" SIGNS SHALL BE ILLUMINATED AT NIGHT AND MUST HAVE AN AUTOMATIC DIMMING DEVICE. THE UNITS MAY BE SOLAR POWERED OR POWERED FROM AN ELECTRICAL POWER DROP. THE CONTRACTOR IS RESPONSIBLE FOR ALL COSTS TO BRING POWER TO THE 12" FLASHING SIGNAL HEADS.

ALL CONSTRUCTION SIGNS SHALL BE LOCATED AS DIRECTED BY THE ENGINEER.

PAVING UNDER GUARDRAIL

THIS OPERATION SHALL INCLUDE PREPARATION OF THE GRADED SHOULDER USING 203, LINEAR GRADING, AND PAVING UNDER THE GUARDRAIL USING 404, ASPHALT CONCRETE INTERMEDIATE COURSE, TYPE 1 (UNDER GUARDRAIL).

ITEM 203, LINEAR GRADING, SHALL CONSIST OF EXCAVATING TOPSOIL, PLACING GRANULAR MATERIAL AND APPLYING HERBICIDE AS SPECIFIED IN THE PLANS AND IN ACCORDANCE WITH THE FOLLOWING:

ALL COLLECTED DEBRIS AND TOPSOIL, INCLUDING RHIZOMES, ROOTS AND OTHER VEGETATIVE PLANT MATERIAL SHALL BE REMOVED AND DISPOSED OF AS SPECIFIED IN 203.05.

THE REMOVED MATERIAL SHALL BE REPLACED WITH COMPACTABLE GRANULAR MATERIAL CONFORMING TO 203.02 PLACED TO GRADE AS DETAILED ON THE TYPICAL SECTION OR AS APPROVED BY THE ENGINEER.

HERBICIDE SHALL BE TREFLAN E.C., SPIKE OR AN APPROVED EQUAL AND SHALL BE APPLIED TO THE PREPARED AREA AFTER FINAL LEVELING AND GRADING HAS BEEN COMPLETED. THE APPLICATION SHALL BE JUST PRIOR TO PAVING AND SHALL STRICTLY ADHERE TO THE MANUFACTURER'S INSTRUCTIONS.

ONLY PROPERLY LICENSED PERSONNEL SHALL APPLY HERBICIDES AS REQUIRED BY THE OHIO REVISED CODE.

ALL EQUIPMENT, MATERIALS AND LABOR REQUIRED TO PERFORM THE WORK OUTLINED ABOVE SHALL BE INCLUDED FOR PAYMENT UNDER ITEM 203, LINEAR GRADING.

PAVING UNDER GUARDRAIL SHALL CONSIST OF PLACING ITEM 404 TO THE DEPTH SPECIFIED USING ONE OF THE FOLLOWING METHODS:

METHOD A:
1. SET GUARDRAIL
2. PLACE ITEM 404

METHOD B:
1. PLACE ITEM 404
2. BORE ASPHALT AT POST LOCATIONS (MAY BE OMITTED IF STEEL POSTS ARE USED)
3. SET GUARDRAIL POSTS
4. PATCH AROUND POSTS. THE MATERIALS USED FOR PATCHING SHALL BE BITUMINOUS CONCRETE APPROVED BY THE ENGINEER. PATCHED AREAS SHALL BE COMPACTED USING EITHER HAND OR MECHANICAL METHODS. FINISHED SURFACES SHALL BE SMOOTH AND SLOPED TO DRAIN AWAY FROM THE POSTS.

PAVING UNDER GUARDRAIL (CONT.)

ALL EQUIPMENT, MATERIALS AND LABOR REQUIRED TO PERFORM THE WORK OUTLINED ABOVE, WITH THE EXCEPTION OF SETTING GUARDRAIL POSTS, SHALL BE INCLUDED FOR PAYMENT UNDER ITEM 404, ASPHALT CONCRETE, AC-20 [redacted] (UNDER GUARDRAIL).

ITEM 606 ANCHOR ASSEMBLY, TYPE E

THIS ITEM SHALL CONSIST OF FURNISHING AND INSTALLING AN ET-2000, OPTION "C" GUARDRAIL END TERMINAL AS MANUFACTURED BY SYRO STEEL COMPANY, 1170 N. STATE STREET, GIRARD, OHIO 44420 (TELEPHONE: 216-545-4373).

THE ANCHOR ASSEMBLY SHALL BE PLACED IN ACCORDANCE WITH THE MANUFACTURER'S CURRENT SPECIFICATIONS AND AT THE LOCATIONS SHOWN IN THE PLANS.

PAYMENT FOR THE ABOVE WORK SHALL BE MADE AT THE CONTRACT PRICE FOR 606, EACH, ANCHOR ASSEMBLY, TYPE E. PAYMENT SHALL INCLUDE ALL LABOR, TOOLS, EQUIPMENT AND MATERIALS NECESSARY TO CONSTRUCT THE 25' LONG ANCHOR ASSEMBLY, INCLUDING ALL RELATED HARDWARE, NOT SEPARATELY SPECIFIED, AS REQUIRED BY THE MANUFACTURER TO INSTALL A COMPLETE AND FUNCTIONAL ANCHOR ASSEMBLY. THIS ITEM SHALL ALSO INCLUDE PAYMENT OVER AND ABOVE THE COST OF STANDARD TYPE 5 GUARDRAIL FOR INSTALLING TYPE 1 BREAKAWAY POSTS PER STANDARD CONSTRUCTION DRAWING GR-1.3 AT THE FOLLOWING LOCATIONS: 1) AT THE POINT WHERE THE ANCHOR ASSEMBLY AND THE GUARDRAIL RUN MEET; AND 2) AT THE NEXT THREE (3) POST LOCATIONS INTO THE GUARDRAIL RUN.

PLOT SUBMITTED:10-MAR-1994 13:03
08022GNA.dgn
PLOTTED BY: lennon
PLOTTED FROM: /usr/odot/pid08022/08022gna.dg

CALCULATIONS AND SUB-SUMMARIES

PAVEMENT REMOVED

STATION TO STATION	LENGTH FEET	AVE. WIDTH FEET	PAVEMENT AREA SQ.YDS.	202 APPROACH SLAB REMOVED SQ.YDS.
STA. 21+45.80 TO STA. 21+60.80	15.00	24.00	39.60	39.6
STA. 22+59.88 TO STA. 22+74.88	15.00	24.00	39.30	39.3
TOTALS				78.9

DRIVEWAY

REF.	LOCATION	LENGTH LIN.FT.	WIDTH LIN.FT.	DRIVEWAY AREA * SQ.FT.	SIDE SIDE	203 6" EXCAVATION CU.YD.	203 8" EXCAVATION CU.YD.	304 6" AGGREGATE BASE CU.YD.	404 2" ASPHALT CONCRETE, CU.YD.	408 BITUMINOUS PRIME COAT, 0.4 GALLON PER SQ. YD. GALLON
DR–1	STA. 19+30	69.2	9.0	701.0	RT.		17.3	13.0	4.4	31.2
DR–2	STA. 19+94	53.7	11.0	744.1	RT.	13.8		13.8		
DR–3	STA. 20+34	50.9	10.0	558.8	RT.		13.8	10.4	3.5	24.8
DR–4	STA. 21+07	33.2	12.0	446.4	LT.	8.3		8.3		
DR–5	STA. 23+05	21.5	12.0	294.3	LT.	5.5		5.5		
TOTALS						27.6	31.1	51	7.9	56
						59		51	8	56

PAVEMENT

STATION TO STATION	LENGTH FEET	AVE. WIDTH FEET	PAVEMENT AREA SQ.YDS.	203 SUBGRADE COMPACTION SQ.YDS.	254 PAVEMENT PLANING, BITUMINOUS SQ.YDS.	301 BITUMINOUS AGGREGATE BASE, AC–20 CU.YDS.	304 AGGREGATE BASE CU.YDS.	310 SUBBASE, TYPE I, GRADING A CU.YDS.	402 ASPHALT CONCRETE, AC–20 CU.YDS.	404 ASPHALT CONCRETE, AC–20 CU.YDS.	404 ASPHALT CONCRETE, AC–20 (UNDER GUARDRAILS) CU.YDS.	407 TACK COAT GAL.	611 REINFORCED CONCRETE APPROACH SLAB, (T=12") SQ.YDS.
STA. 19+77.50 TO STA. 20+00.00	22.50	1.63	4.10			0.5	0.9		0.2	0.1			
STA. 19+77.50 TO STA. 20+00.00	22.50	1.63	4.10			0.5	0.9		0.2	0.1			
STA. 20+00.00 TO STA. 21+35.49	135.50	25.00	376.40		376.4							37.4	
STA. 20+00.00 TO STA. 21+35.49	135.50	32.00	481.80			59.8			23.2	16.6			
STA. 20+00.00 TO STA. 21+35.49	135.50	3.63	54.60				12.2						
STA. 20+00.00 TO STA. 21+35.49	135.50	3.96	59.60				13.3						
STA. 21+34.49 TO STA. 21+49.58	15.00	40.00	66.67	66.7				16.8					67.1
STA. 22+71.26 TO STA. 22+86.35	15.00	40.00	66.67	66.7				16.8					67.1
STA. 22+86.35 TO STA. 23+86.35	101.00	25.00	280.60		280.6							27.8	
STA. 22+86.35 TO STA. 23+86.35	101.00	32.00	359.10			44.5			17.3	12.3			
STA. 22+86.35 TO STA. 23+86.35	101.00	2.51	28.20				6.2						
STA. 22+86.35 TO STA. 23+86.35	101.00	3.48	39.10				8.6						
STA. 23+86.35 TO STA. 24+23.11	36.76	2.43	9.90			1.2	2.2		0.5	0.3			
STA. 23+86.35 TO STA. 24+23.11	36.76	2.43	9.90			1.2	2.2		0.5	0.3			
STA. 20+47.13, 18'RT. TO STA. 21+50.58, 18'RT.	95.00	2.00	21.11								0.7		
STA. 21+16.76, 30'LT. TO STA. 21+50.58, 22'LT.	20.00	2.00	4.44								0.2		
STA. 22+61.13, 18'RT. TO STA. 23+92.00, 17'RT.	110.00	2.00	24.44								0.8		
STA. 22+61.13, 22'LT. TO STA. 22+95.28, 30'LT.	10.00	2.00	2.22								0.1		
STA. 23+15.20, 27'LT. TO STA. 24+03.75, 23'LT.	90.00	2.00	20.00								0.7		
TOTALS				133.4	657.0	107.7	46.5	33.6	41.9	29.7	2.5	65.2	134.2

DRAINAGE

REF.	LOCATION	SIDE	AREA * SQ.FT.	601 ROCK CHANNEL PROTECTION, TYPE A GROUTED CU.YD.
D–1	STA. 21+50.58 TO STA. 21+65.58	LT./RT.	1736.4	192.9
D–2	STA. 22+54.26 TO STA. 22+70.26	LT./RT.	1841.4	204.6
			TOTALS	397.5

* AREA FROM COMPUTER CALCULATION

ROADWAY

REF.	LOCATION	202 GUARDRAIL REMOVED LIN.FT.	202 ANCHOR ASSEMBLY REMOVED EACH	202 BRIDGE TERMINAL ASSEMBLY REMOVED EACH	604 MONUMENT BOX ADJUSTED TO GRADE EACH	606 GUARDRAIL, TYPE 5 LIN.FT.	606 GUARDRAIL POST, 9 FEET EACH	606 ANCHOR ASSEMBLY, TYPE E EACH	606 ANCHOR ASSEMBLY, TYPE T EACH	606 BRIDGE TERMINAL ASSEMBLY, TYPE 4 EACH
R–1	STA. 20+47.13, 18'RT. TO STA. 21+50.58, 18'RT.	75.0	1	1		81.25	23		1	1
R–2	STA. 21+16.76, 30'LT. TO STA. 21+50.58, 22'LT.	25.0	1	1		12.5	10		1	1
R–3	STA. 22+61.13, 18'RT. TO STA. 23+92.00, 17'RT.	87.5	1	1		75.0	23	1		1
R–4	STA. 22+61.13, 22'LT. TO STA. 22+95.28, 30'LT.		1	1			8		1	1
R–5	STA. 23+15.20, 27'LT. TO STA. 24+03.75, 23'LT.	50.0	1			56.25	16	1	1	
R–6	STA. 23+21.46 ON CENTER LINE				1					
	TOTALS	237.5	5	4	1	225.0	80	2	4	4

AGGREGATE DRAINS

REF.	LOCATION	605 AGGREGATE DRAINS LIN.FT.
UD–1	STA. 19+75.00, 18'LT TO 28'LT.	10.0
UD–2	STA. 20+00.00, 18'LT TO 28'LT.	10.0
UD–3	STA. 20+25.00, 18'LT TO 28'LT.	10.0
UD–4	STA. 20+50.00, 18'LT TO 28'LT.	10.0
UD–5	STA. 25+75.00, 18'LT TO 28'LT.	10.0
UD–6	STA. 20+96.00, 18'LT TO 28'LT.	10.0
UD–7	STA. 21+25.00, 18'LT TO 28'LT.	10.0
UD–8	STA. 21+50.00, 18'LT. TO 24'LT.	6.0
UD–9	STA. 21+70.26, 18'LT TO 24'LT.	6.0
UD–10	STA. 23+00.00, 18'LT TO 28'LT.	10.0
UD–11	STA. 23+25.00, 18'LT TO 28'LT.	10.0
UD–12	STA. 23+50.00, 18'LT TO 28'LT.	10.0
UD–13	STA. 23+75.00, 18'LT TO 28'LT.	10.0
UD–14	STA. 24+00.00, 18'LT TO 28'LT.	10.0
UD–15	STA. 24+24.00, 18'LT TO 28'LT.	10.0
	TOTALS	142.0

ALL QUANTITIES HAVE BEEN INCLUDED IN THE GENERAL SUMMARY.

ITEM 203 – LINEAR GRADING
FROM STA. 19+77.50 TO STA. 21+50.58 =173.08 LIN.FT.
FROM STA. 22+70.26 TO STA. 24+23.11 = 152.85 LIN.FT.
TOTAL = (173.06 + 152.85) x 2 / 5280 = 0.12 MILE

ITEM 659 – WATER
120 GALLONS/1,000 S.F. OF PERMANENT SEEDING AND MULCHING
AREA FROM ITEM 659 – SEEDING AND MULCHING = 3496.3 SQ. YDS.
3496.3 x 9 / 1,000 x 240 GALLONS ÷ 1,000 = 7.55 M. GAL.
= 8 M. GAL. *(TO GENERAL NOTES)*

ITEM 659 – COMMERCIAL FERTILIZER
20 LBS. / 1,000 S.F. OF PERMANENT SEEDING AND MULCHING
AREA FROM ITEM 659 – SEEDING AND MULCHING = 3496.3 SQ. YDS.
3496.3 x 9 / 1,000 x 20 LBS. ÷ 2,000 LBS./TON = 0.31 TONS

ITEM 659 – AGRICULTURAL LIMING
100 LBS. / 1,000 S.F. OF PERMANENT SEEDING AND MULCHING
AREA FROM ITEM 659 – SEEDING AND MULCHING = 3496.3 SQ. YDS.
3496.3 x 9 / 1,000 x 100 LBS. ÷ 2,000 LBS./TON = 1.57 TONS

ITEM 203 – EXCAVATION
EXCAVATION BETWEEN EXISTING AND PROPOSED ABUTMENTS AND IN FRONT OF EXISTING ABUTMENTS = 391 CU. YD.

GENERAL SUMMARY

SHEET NUMBER 4	SHEET NUMBER 5	SHEET NUMBER 6	SHEET NUMBER 10	ITEM	ITEM EXT.	GRAND TOTAL	UNIT	DESCRIPTION	AS PER PLAN DESIGNATION
								ROADWAY	
				201	11000	LUMP		CLEARING AND GRUBBING	
		79		202	22900	79	SQ.YD.	APPROACH SLAB REMOVED	
		238		202	38000	238	LIN.FT.	GUARDRAIL REMOVED	
		5		202	42206	5	EACH	ANCHOR ASSEMBLY REMOVED	
		4		202	47000	4	EACH	BRIDGE TERMINAL ASSEMBLY REMOVED	
472		450	89	203	12000	1011	CU.YD.	EXCAVATION NOT INCLUDING EMBANKMENT CONSTRUCTION	
			314	203	20000	314	CU.YD.	EMBANKMENT	
		0.12		203	60500	0.12	MILE	LINEAR GRADING	
		134		203	50000	134	SQ.YD.	SUBGRADE COMPACTION	
		1		604	39500	1	EACH	MONUMENT BOX ADJUSTED TO GRADE	
		225.0		606	13000	225.0	LIN.FT.	GUARDRAIL, TYPE 5	
		80		606	18500	80	EACH	GUARDRAIL POST, 9 FEET	
		2		606	26100	2	EACH	ANCHOR ASSEMBLY, TYPE E	
		4		606	26500	4	EACH	ANCHOR ASSEMBLY, TYPE T	
		4		606	35140	4	EACH	BRIDGE TERMINAL ASSEMBLY, TYPE 4	
	4			SPEC.	69050100	4	EACH	MAILBOX SUPPORT SYSTEM, SINGLE	
								EROSION CONTROL	
240				207	10000	240	SQ.YD.	TEMPORARY SEEDING AND MULCHING	
1500				207	30000	1500	LIN.FT.	FILTER FABRIC FENCE	
60				207	50000	60	CU.YD.	TEMPORARY BENCHES, DAMS AND SEDIMENT BASINS	
150				207	70000	150	EACH	STRAW OR HAY BALES	
5.0				601	32200	5	CU.YD.	ROCK CHANNEL PROTECTION, TYPE C WITH FILTER	
		398		601	35000	398	CU.YD.	* ROCK CHANNEL PROTECTION, TYPE A, GROUTED	
								* ROCK CHANNEL PROTECTION, MISC.:	
			3496	659	10000	3496	SQ.YD.	SEEDING AND MULCHING	
175				659	14000	175	SQ.YD.	REPAIR SEEDING AND MULCHING	
0.02		0.31		659	20000	0.33	TONS	COMMERCIAL FERTILIZER	
		1.57		659	30000	1.57	TONS	AGRICULTURAL LIMING	
9				659	35000	9	M.GAL.	WATER	
								DRAINAGE	
100.0				603	01100	100	LIN.FT.	6" CONDUIT, TYPE C	
100.0				603	01400	100	LIN.FT.	6" CONDUIT, TYPE E	
100.0				603	01500	100	LIN.FT.	6" CONDUIT, TYPE F	
84.0				603	04900	84	LIN.FT.	12" CONDUIT, TYPE D	
1				604	37000	1	EACH	INSPECTION WELL	
100.0				605	13402	100	LIN.FT.	6" UNCLASSIFIED PIPE UNDERDRAIN, FOR SPRINGS	SHEET 4
		142.0		605	31100	142	LIN.FT.	AGGREGATE DRAIN	
100.0				605	32200	100	LIN.FT.	AGGREGATE DRAIN FOR SPRINGS	
								PAVEMENT	
		657		254	01000	657	SQ.YD.	PAVEMENT PLANING, BITUMINOUS	
		108		301	10002	108	CU.YD.	BITUMINOUS AGGREGATE BASE, AC–20	
		98		304	20000	98	CU.YD.	AGGREGATE BASE (SEE PROPOSAL NOTE)	
		34		310	12000	34	CU.YD.	SUBBASE, TYPE I, GRADING A (SEE PROPOSAL NOTE)	
		42		402	20000	42	CU.YD.	ASPHALT CONCRETE, AC–20	
		30		404	20000	30	CU.YD.	ASPHALT CONCRETE, AC–20	
		8		404	25000	8	CU.YD.	ASPHALT CONCRETE, AC–20 (DRIVEWAYS)	
		3		404	30000	3	CU.YD.	ASPHALT CONCRETE, AC–20, UNDER GUARDRAIL	
		65		407	10000	65	GAL.	TACK COAT	
		56		408	10000	56	GAL.	BITUMINOUS PRIME COAT	
		134		611	10000	134	SQ.YD.	REINFORCED CONCRETE APPROACH SLAB (T=12")	

GENERAL SUMMARY

CALC. BY R.I.P. DATE 10-93	LAK – 608 – 0.75	OHIO	8
CHKD. BY D.J.W. DATE 10-93		FHWA REGION 5	45

SHEET NUMBER																				ITEM	ITEM EXT.	GRAND TOTAL	UNIT	DESCRIPTION	AS PER PLAN DESIGNATION
										5						22		23							
																								MAINTENANCE OF TRAFFIC	
										5										404	35000	5	CU.YD.	BITUMINOUS CONCRETE FOR MAINTAINING TRAFFIC	
										150										410	12000	150	CU.YD.	TRAFFIC COMPACTED SURFACE, TYPE A OR B	
																		836		614	12800	836	EACH	TEMPORARY RAISED PAVEMENT MARKER	
																48				614	13302	48	EACH	BARRIER REFLECTOR, TYPE B2	
																96				614	13350	96	EACH	OBJECT MARKER	
																0.06				614	21300	0.06	MILE	TEMPORARY CENTER LINE, CLASS I, 740.05, TYPE C	
																0.05				614	22300	0.05	MILE	TEMPORARY EDGE LINE, CLASS I, 740.05, TYPE C	
																51				614	26600	51	LIN. FT.	TEMPORARY STOP LINE, CLASS I, 740.05, TYPE C	
										0.19										614	21000	0.19	MILE	TEMPORARY CENTERLINE, CLASS I	
																LUMP				615	10000	LUMP		TEMPORARY ROAD	
																839				615	20000	839	SQ. YD.	TEMPORARY PAVEMENT, CLASS A	
										60										616	10000	60	M. GAL.	WATER	
										6										616	20000	6	TON	CALCIUM CHLORIDE	
																860				622	40020	860	LIN. FT.	PORTABLE CONCRETE BARRIER, 32"	
																280				622	40040	280	LIN. FT.	PORTABLE CONCRETE BARRIER, 32", BRIDGE MOUNTED	
																								TRAFFIC CONTROL	
										0.19										642	00302	0.19	MILE	CENTER LINE, TYPE 2	
										0.38										642	00102	0.38	MILE	EDGE LINE, TYPE 2	
										14										802	00100	14	EACH	BARRIER REFLECTOR, TYPE A	
																								STRUCTURE OVER 20' SPAN	
																								BRIDGE LAK – 608 – 0.75	
																								(FOR QUANTITIES SEE SHEET NO. 32 OF 45)	
																				614	11000	LUMP		MAINTAINING TRAFFIC	
																				619	15010	LUMP		FIELD OFFICE, TYPE B	
																				623	10000	LUMP		CONSTRUCTION LAYOUT STAKES	
																				624	10000	LUMP		MOBILIZATION	
																				Special	6192501 0	LUMP		COMPUTER EQUIPMENT FOR TYPE B OR C OFFICE	

Rev. 7-18-95

CALC. BY		LAK – 608 – 0.75	OHIO	9
CHKD. BY			FHWA REGION 5	45
DATE				

BEGIN WORK
STA. 18+55.00

BEGIN PROJECT
STA. 20+00.00
S.L.M. 0.72
BRF-93D(17)

℄ SURVEY CURVE DATA
P.C. STA. 14+49.24
P.T. STA. 23+21.46
R=636.62'
Δ=78° 30'
A=872.22'
C=805.59'
T=520.14'
D=9°
E=185.47'

BENCHMARK: TOP OF PIN W/RED REFERENCE CAP
STA. 19+50, 12'RT., ELEV. 903.31

END PROJECT
STA. 23+86.35
S.L.M. 0.79
BRF-93D(17)

END WORK
STA. 24+50.00

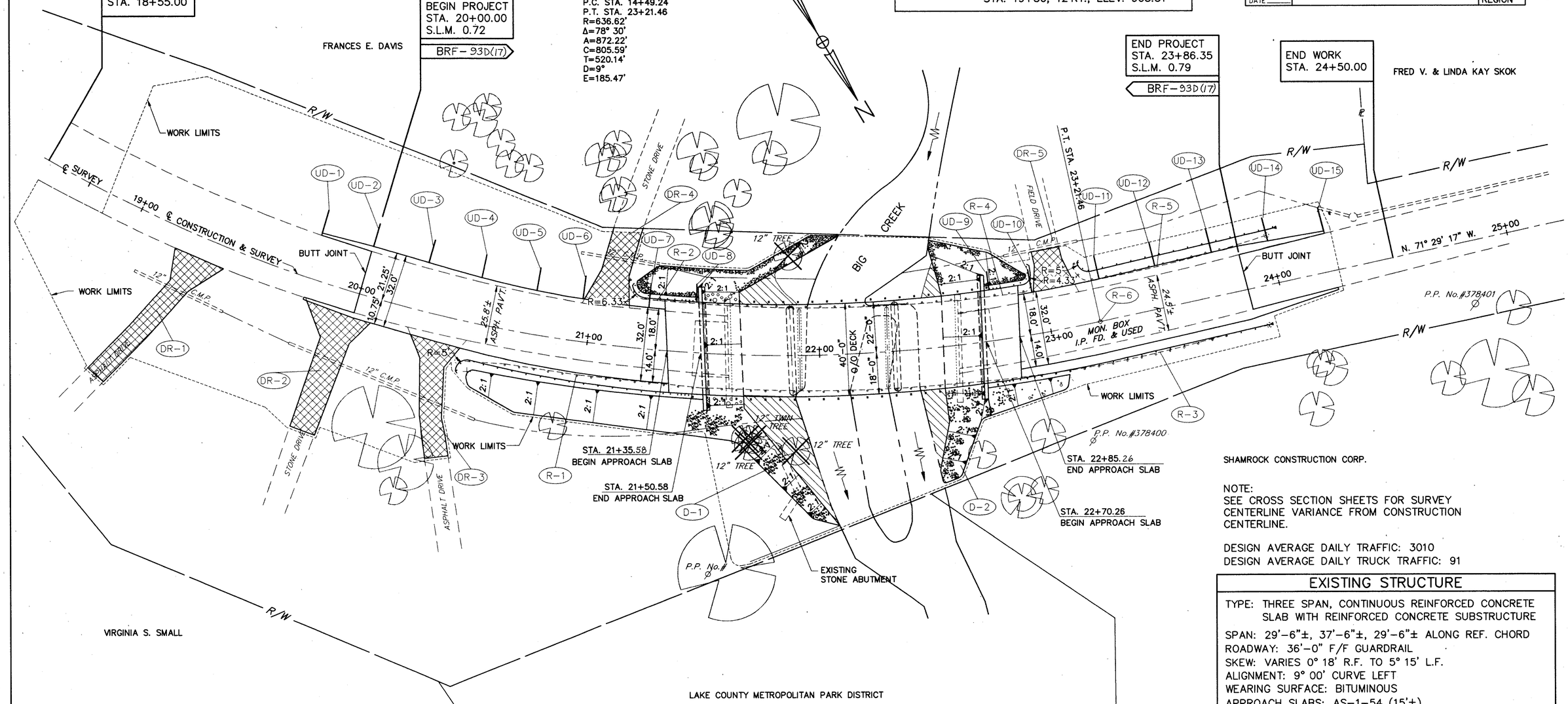

NOTE:
SEE CROSS SECTION SHEETS FOR SURVEY CENTERLINE VARIANCE FROM CONSTRUCTION CENTERLINE.

DESIGN AVERAGE DAILY TRAFFIC: 3010
DESIGN AVERAGE DAILY TRUCK TRAFFIC: 91

EXISTING STRUCTURE

TYPE: THREE SPAN, CONTINUOUS REINFORCED CONCRETE SLAB WITH REINFORCED CONCRETE SUBSTRUCTURE
SPAN: 29'-6"±, 37'-6"±, 29'-6"± ALONG REF. CHORD
ROADWAY: 36'-0" F/F GUARDRAIL
SKEW: VARIES 0° 18' R.F. TO 5° 15' L.F.
ALIGNMENT: 9° 00' CURVE LEFT
WEARING SURFACE: BITUMINOUS
APPROACH SLABS: AS-1-54 (15'±)
STRUCTURE FILE NUMBER: 4306244

PROPOSED STRUCTURE

TYPE: THREE SPAN, CONTINUOUS REINFORCED CONCRETE SLAB, SPILL-THRU STUB ABUTMENTS AND CONCRETE PIER CAPS ON DRILLED SHAFTS.
SPAN: 36'-7½", 45'-0", 36'-7½" C/C BEARINGS ALONG REFERENCE CHORD
ROADWAY: 40'-0" F/F GUARDRAIL
LOADING: HS20-44 AND THE ALTERNATE MILITARY LOADING
WEARING SURFACE: MONOLITHIC CONCRETE
APPROACH SLABS: AS-1-81 (15' LONG)
SKEW: 0°
SUPERELEVATION: 0.077 FT. PER FT.
ALIGNMENT: 9° 00' CURVE LEFT

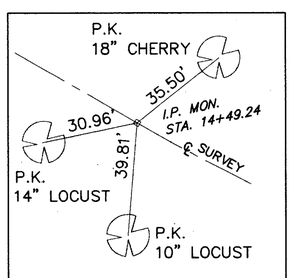

P.O.T. P.C. STA. 14+49.24

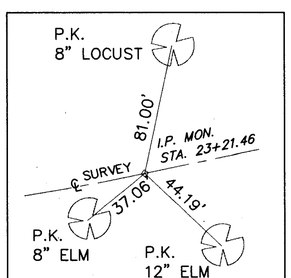

P.O.T. P.T. STA. 23+21.46

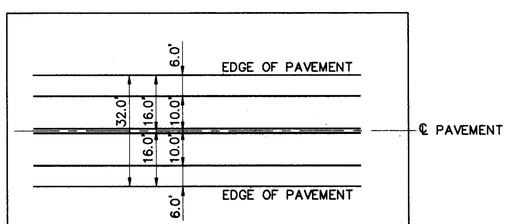

PAVEMENT MARKING DETAIL

DEBRIS REMOVED

DRIVEWAY REPLACEMENT, SEE SHEETS 19-20.

FOR PROFILE SEE SHEET 10.
FOR CROSS SECTIONS SEE SHEETS 11-18.
FOR TYPICAL SECTIONS SEE SHEETS 2-3.
FOR MAINTENANCEOF TRAFFIC DETAILS SEE SHEETS 21-28.
FOR BRIDGE DETAILS SEE SHEETS 29-45.
FOR QUANTITY TABLES SEE SHEET 6.

PLAN – STA. 19+00 TO STA. 25+00

CALC. BY ____ DATE ____	LAK – 608 – 0.75	OHIO	10
CHKD. BY ____ DATE ____		FHWA REGION 5	45

SUPERELEVATION TABLE

	STATION	LEFT EDGE SHOULDER	LEFT EDGE PAVEMENT	℄ PAVEMENT	℄ SURVEY & CONSTRUCTION PROPOSED PROFILE GRADE	RIGHT EDGE PAVEMENT	RIGHT EDGE SHOULDER
MEET EXISTING	20+00	898.20	898.52	899.75	900.16	900.74	900.42
	20+25	896.81	897.13	898.36	898.71	899.35	899.03
	20+50	895.66	895.98	897.21	897.51	898.20	897.88
	20+75	894.77	895.09	896.32	896.56	897.31	896.99
	21+00	894.14	894.46	895.69	895.87	896.68	896.36
	21+25	893.60	893.92	895.15	895.31	896.14	895.82
	21+34.49	893.39		894.94	895.09	895.93	895.61
BEGIN APPROACH SLAB	21+35.49	893.37		894.92	895.07	895.91	895.59
END APPROACH SLAB	21+50.58	893.08		894.63	894.78	895.46	

SUPERELEVATION TABLE

	STATION	LEFT EDGE SHOULDER	LEFT EDGE PAVEMENT	℄ PAVEMENT	℄ SURVEY & CONSTRUCTION PROPOSED PROFILE GRADE	RIGHT EDGE PAVEMENT	RIGHT EDGE SHOULDER
BEGIN APPROACH SLAB	22+70.26	893.40		894.95	895.10	895.78	
	22+75	893.51		895.06	895.21	895.89	
END APPROACH SLAB	22+85.35	893.76		895.31	895.46	896.30	895.98
	22+86.35	893.78		895.33	895.48	896.32	896.00
	23+00	894.12	894.44	895.67	895.86	896.66	896.34
	23+25	894.98	895.30	896.53	896.71	897.52	897.20
	23+50	896.02	896.34	897.57	897.75	898.56	898.24
	23+75	897.21	897.53	898.76	898.98	899.75	899.43
MEET EXISTING	23+86.35	897.82	898.14	899.37	899.60	900.36	900.04

FOR PLAN SEE SHEET 9.
FOR CROSS SECTIONS SEE SHEETS 11–18.
FOR TYPICAL SECTIONS SEE SHEETS 2–3.
FOR MAINTENANCEOF TRAFFIC DETAILS SEE SHEETS 21–28.
FOR BRIDGE DETAILS SEE SHEETS 29–45.

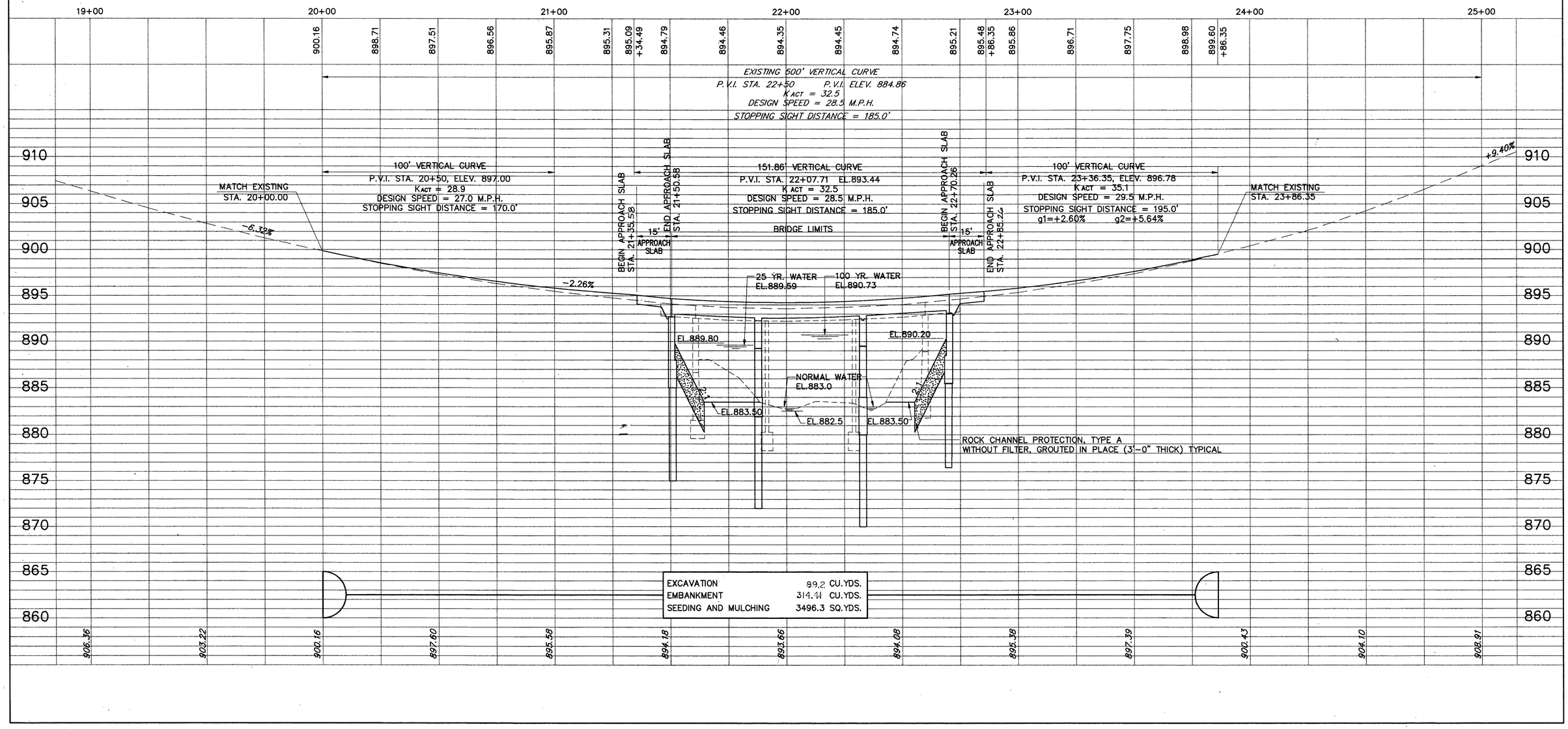

EXCAVATION	89.2 CU.YDS.
EMBANKMENT	314.41 CU.YDS.
SEEDING AND MULCHING	3496.3 SQ.YDS.

PROFILE – STA. 19+00 TO STA. 25+00

CALC. BY R.I.P. DATE 10-93	LAK – 608 – 0.75	OHIO
CHKD. BY D.J.W. DATE 10-93		FHWA REGION 5

NOTE: TEMPORARY ROAD CROSS-SECTIONS FOR INFORMATION ONLY

AREA FOR TEMPORARY PAVEMENT

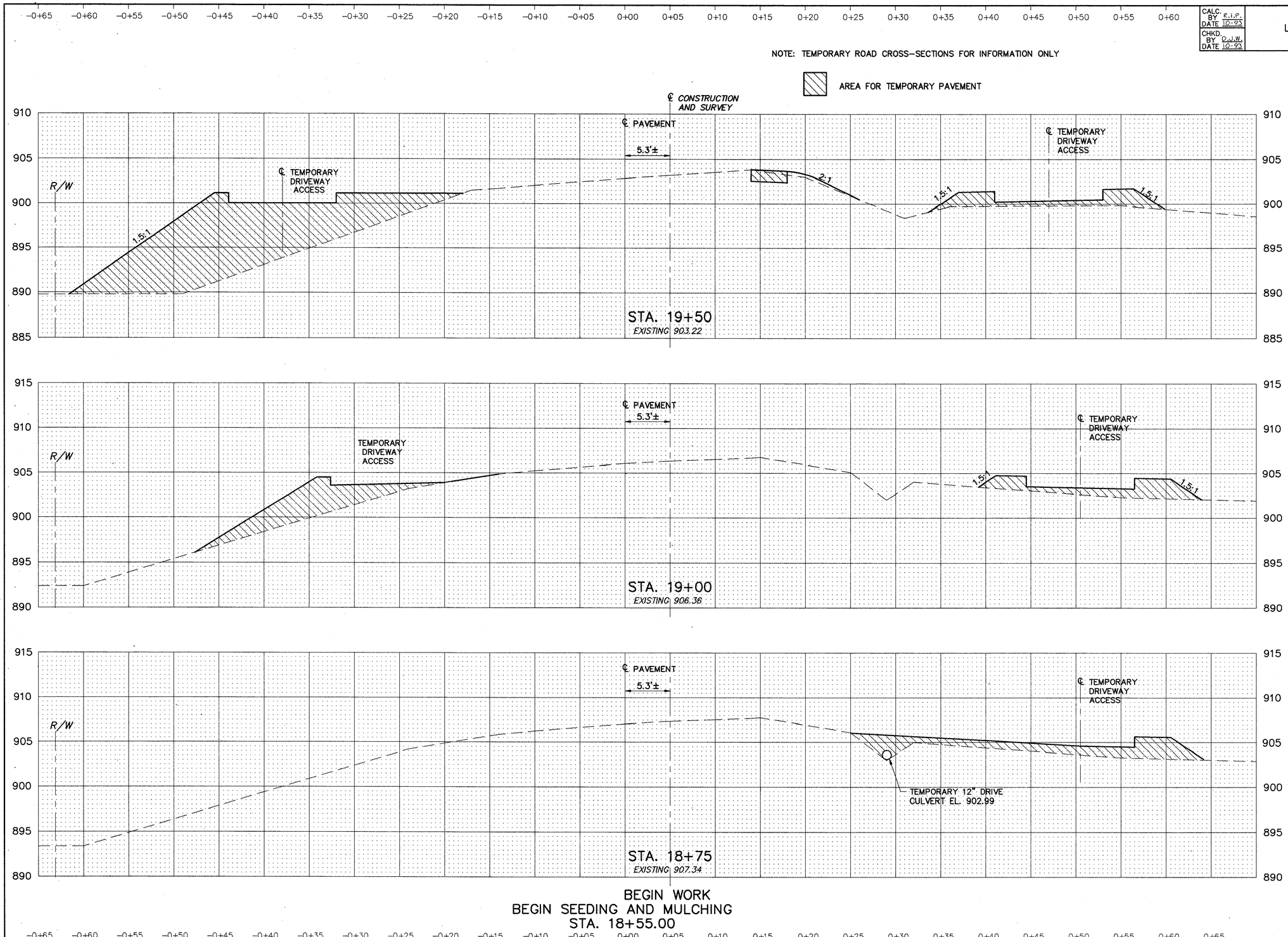

BEGIN WORK
BEGIN SEEDING AND MULCHING
STA. 18+55.00

SEEDING		END AREA		VOLUME	
END WIDTH	SQ. YDS.	CUT	FILL	CUT	FILL
101.0		0.0	2.9		
	572.2			0.0	2.7
105.0		0.0	0.0		
	525.0			0.0	0.0
105.0		0.0	0.0		
	0.0			0.0	0.0

CROSS SECTIONS STA. 18+75 TO STA. 19+50

CALC. BY R.I.P. DATE 10-93	LAK – 608 – 0.75	OHIO
CHKD. BY D.J.W. DATE 10-93		FHWA REGION 5

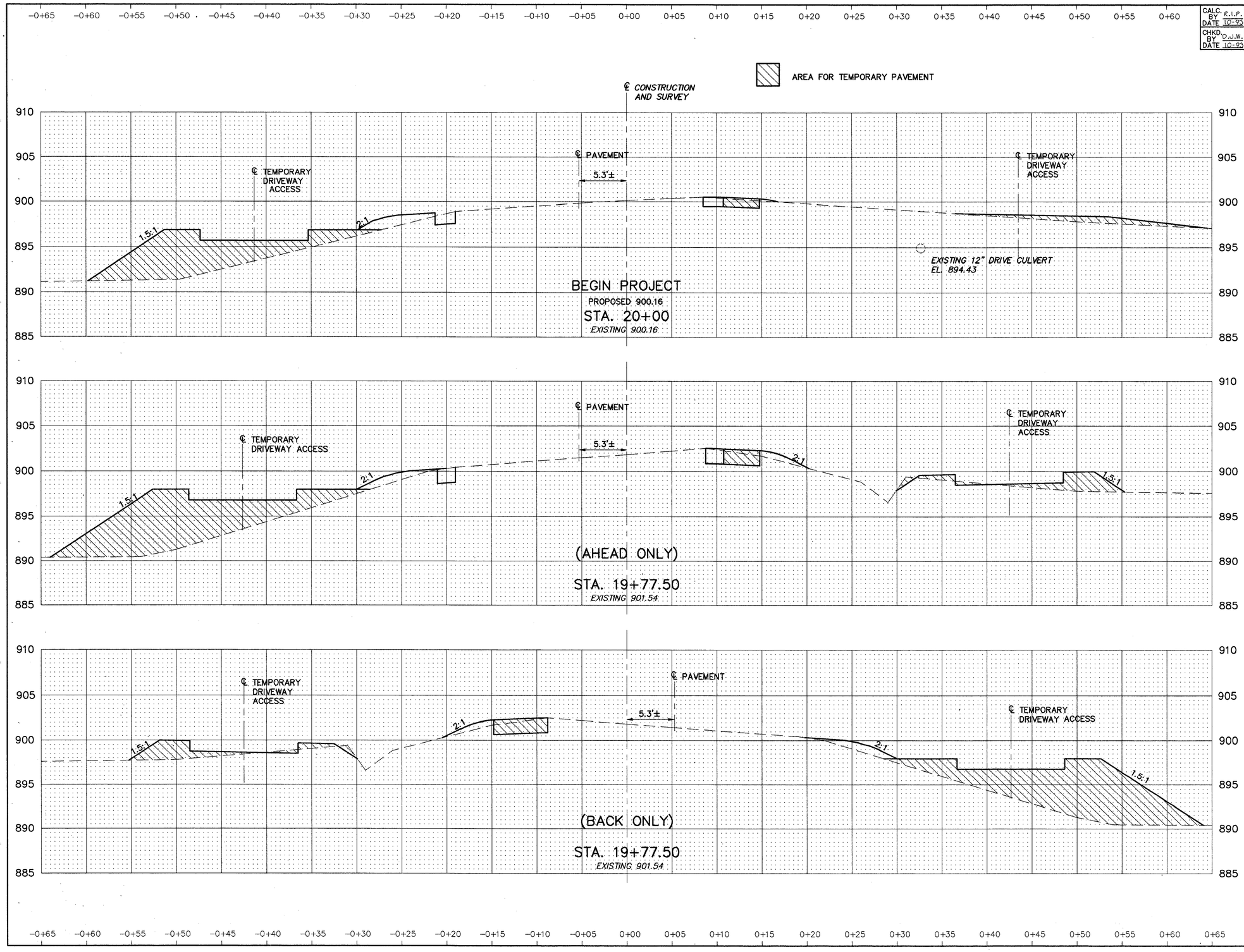

SEEDING		END AREA		VOLUME	
END WIDTH	SQ. YDS.	CUT	FILL	CUT	FILL
100.0		4.9	10.7		
	255.0			3.0	9.71
104.0		2.3	12.6		
	0.0			0.0	0.0
104.0		0.0	9.4		
	256.3			0.0	11.4

CROSS SECTIONS STA. 19+77.50 TO STA. 20+00

CALC. BY R.I.P. DATE 10-93	LAK – 608 – 0.75	OHIO
CHKD. BY D.J.W. DATE 10-93		FHWA REGION 5

13
45

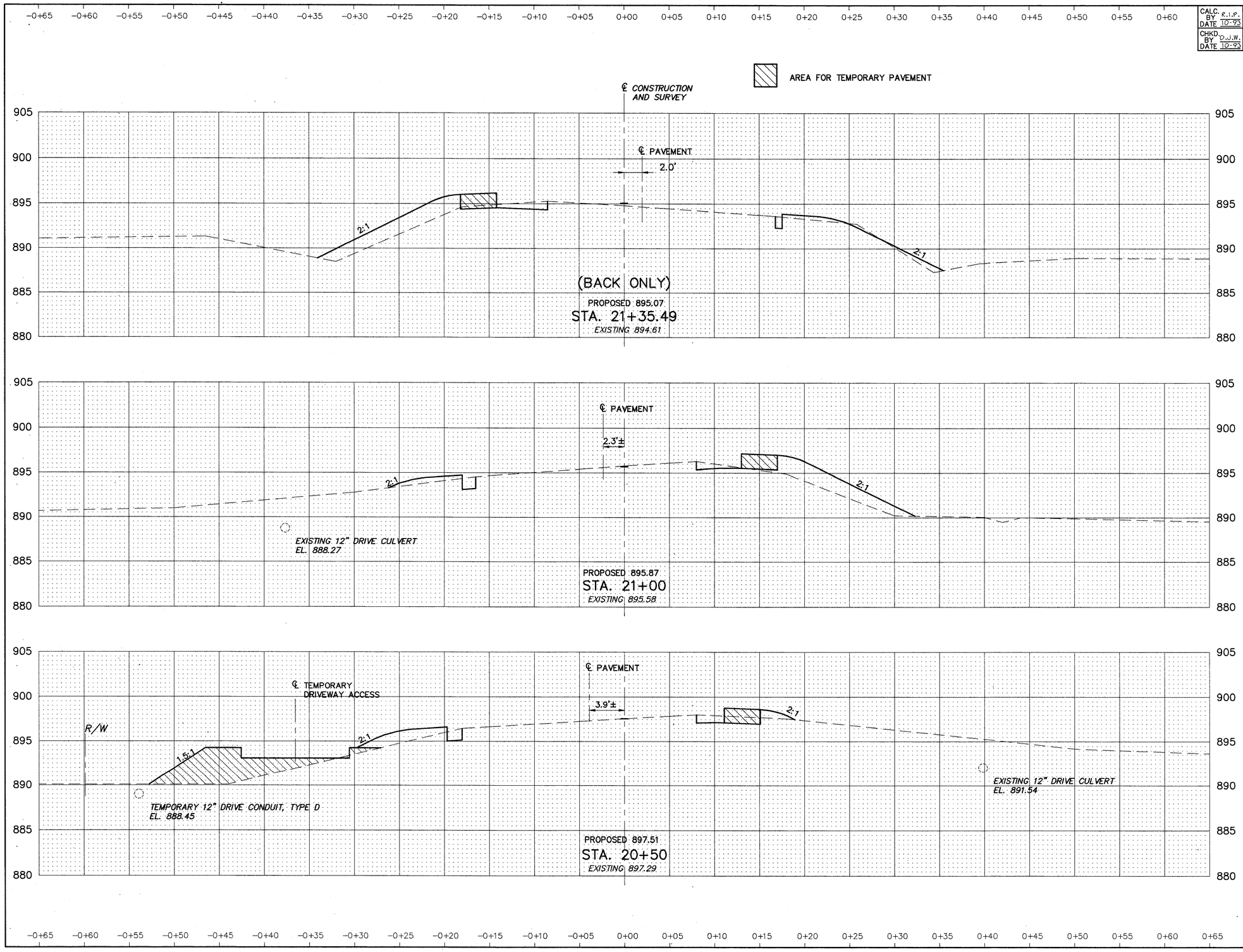

SEEDING		END AREA		VOLUME	
END WIDTH	SQ. YDS.	CUT	FILL	CUT	FILL
59.0		5.6	36.3		
	206.9			6.3	45.7
49.0		4.2	35.2		
	294.4			8.2	48.9
57.0		4.6	17.7		
	397.2			8.8	26.3

CROSS SECTIONS STA. 20+50 TO STA. 21+35.49

CALC. BY R.I.P. DATE 10-93	LAK – 608 – 0.75	OHIO	14 / 45
CHKD. BY D.J.W. DATE 10-93		FHWA REGION 5	

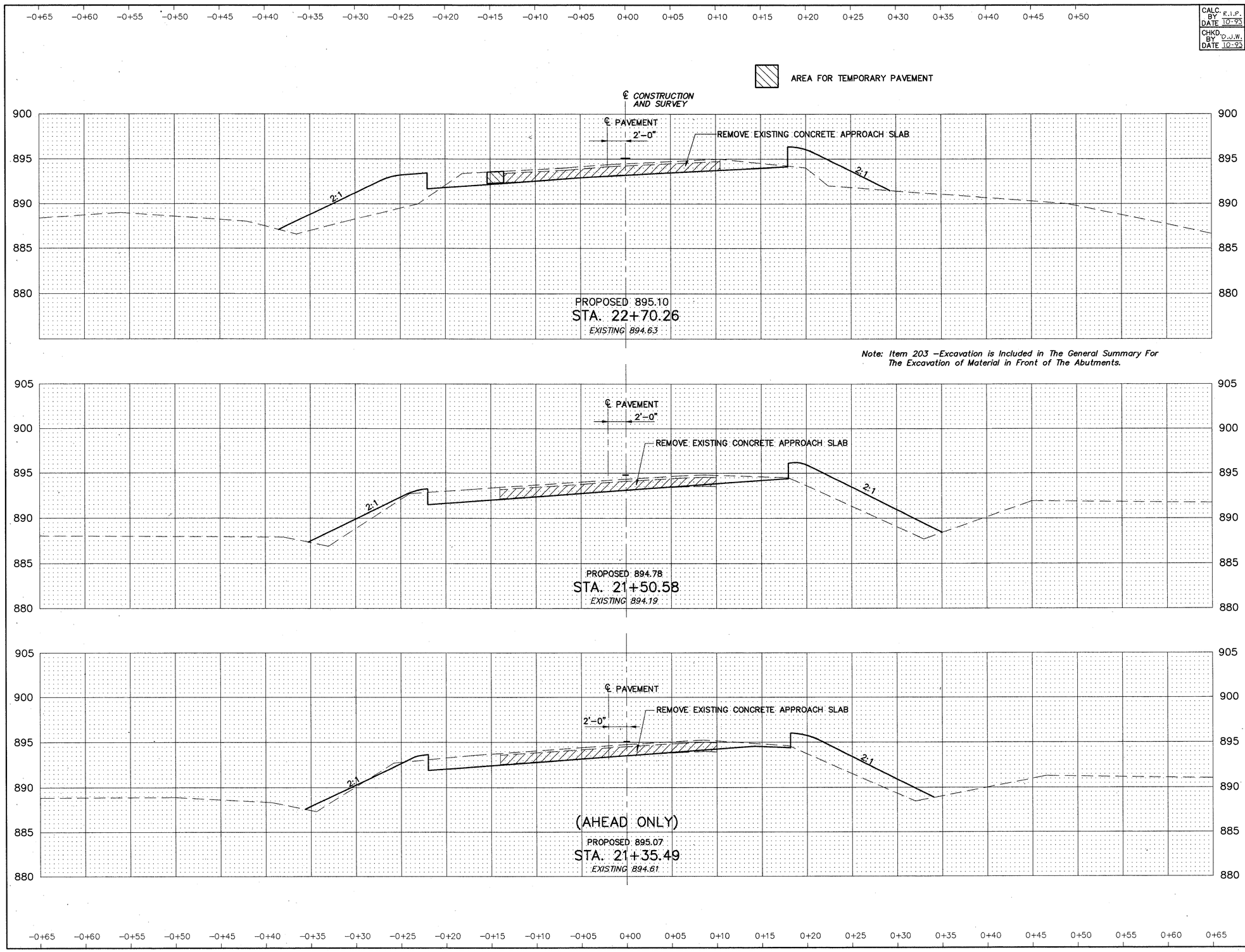

SEEDING		END AREA		VOLUME	
END WIDTH	SQ. YDS.	CUT	FILL	CUT	FILL
54.0		13.1	64.7		
	0.0			10.2	39.0
50.0		14.9	42.2		
	91.4			8.2	20.3
59.0		14.6	30.5		
	0.0			0.0	0.0

CROSS SECTIONS STA. 21+35.49 TO STA. 22+70.26

CALC. BY R.I.P. DATE 10-93	LAK – 608 – 0.75	OHIO
CHKD. BY D.J.W. DATE 10-93		FHWA REGION 5

15/45

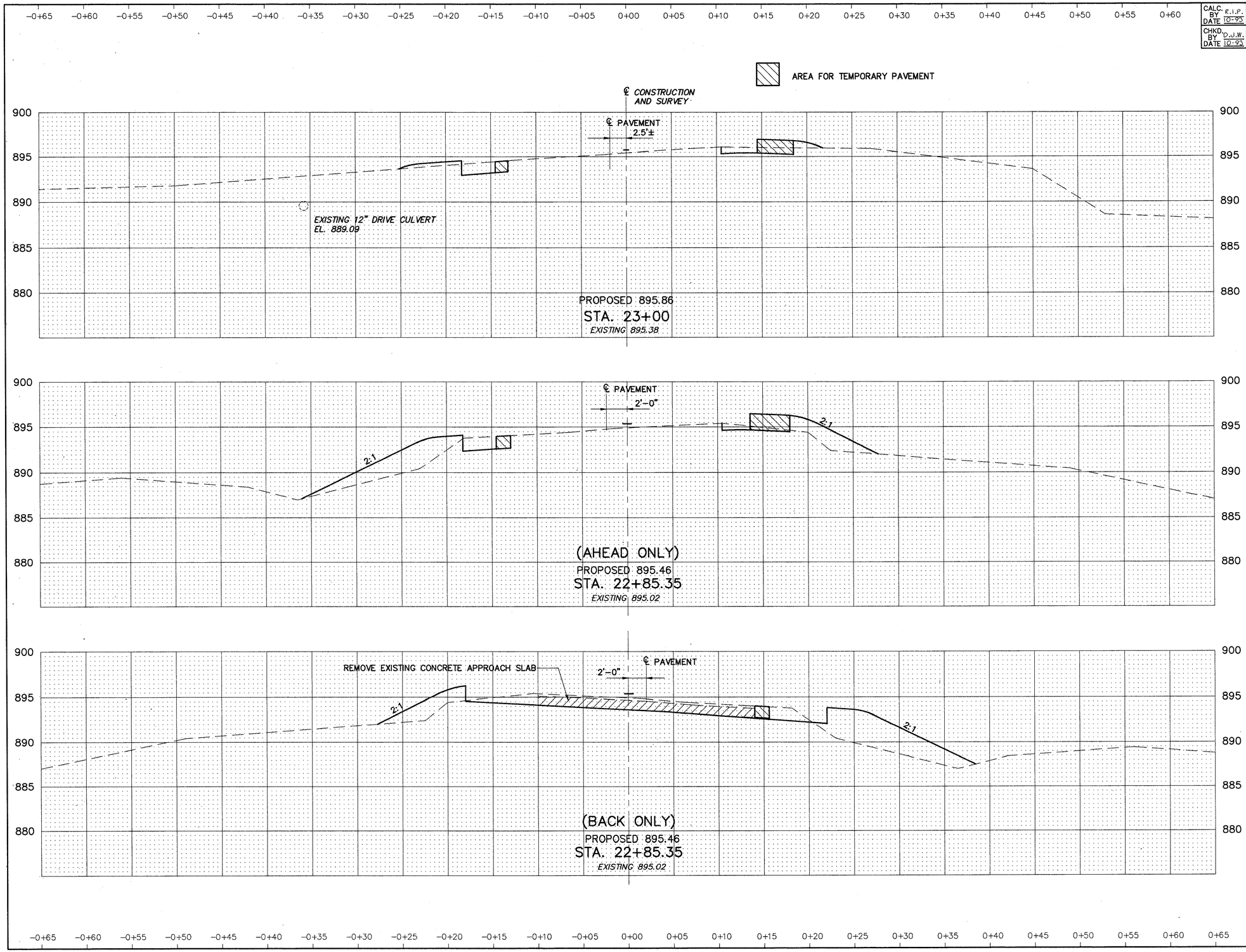

SEEDING		END AREA		VOLUME	
END WIDTH	SQ. YDS.	CUT	FILL	CUT	FILL
40.0		9.1	7.4		
	81.1			4.6	14.2
67.0		9.2	48.9		
	0.0			0.0	0.0
67.0		13.1	64.7		
	101.4			7.3	36.2

CROSS SECTIONS STA. 22+85.35 TO STA. 23+00

CALC. BY	R.I.P.
DATE	10-93
CHKD. BY	D.J.W.
DATE	10-93

LAK – 608 – 0.75

OHIO

FHWA REGION 5

16
45

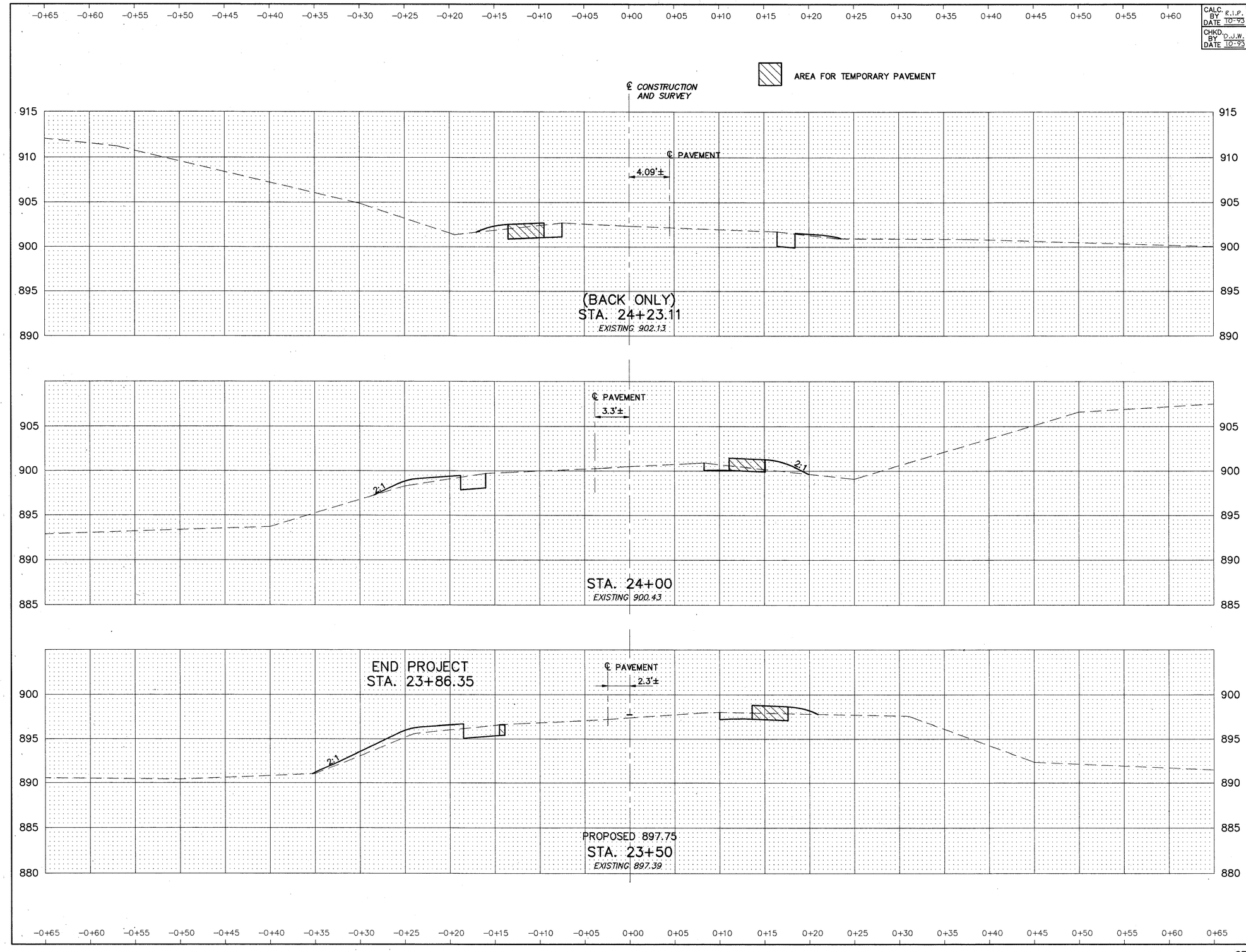

SEEDING		END AREA		VOLUME	
END WIDTH	SQ. YDS.	CUT	FILL	CUT	FILL
37.0		3.1	3.0		
	102.7			3.9	6.1
43.0		6.1	11.3		
	244.4			13.0	23.3
45.0		7.9	13.9		
	236.1			15.7	19.7

CROSS SECTIONS STA. 23+50 TO STA. 24+23.11

CALC. BY R.I.P. DATE 10-93	LAK – 608 – 0.75	OHIO
CHKD. BY D.J.W. DATE 10-93		FHWA REGION 5

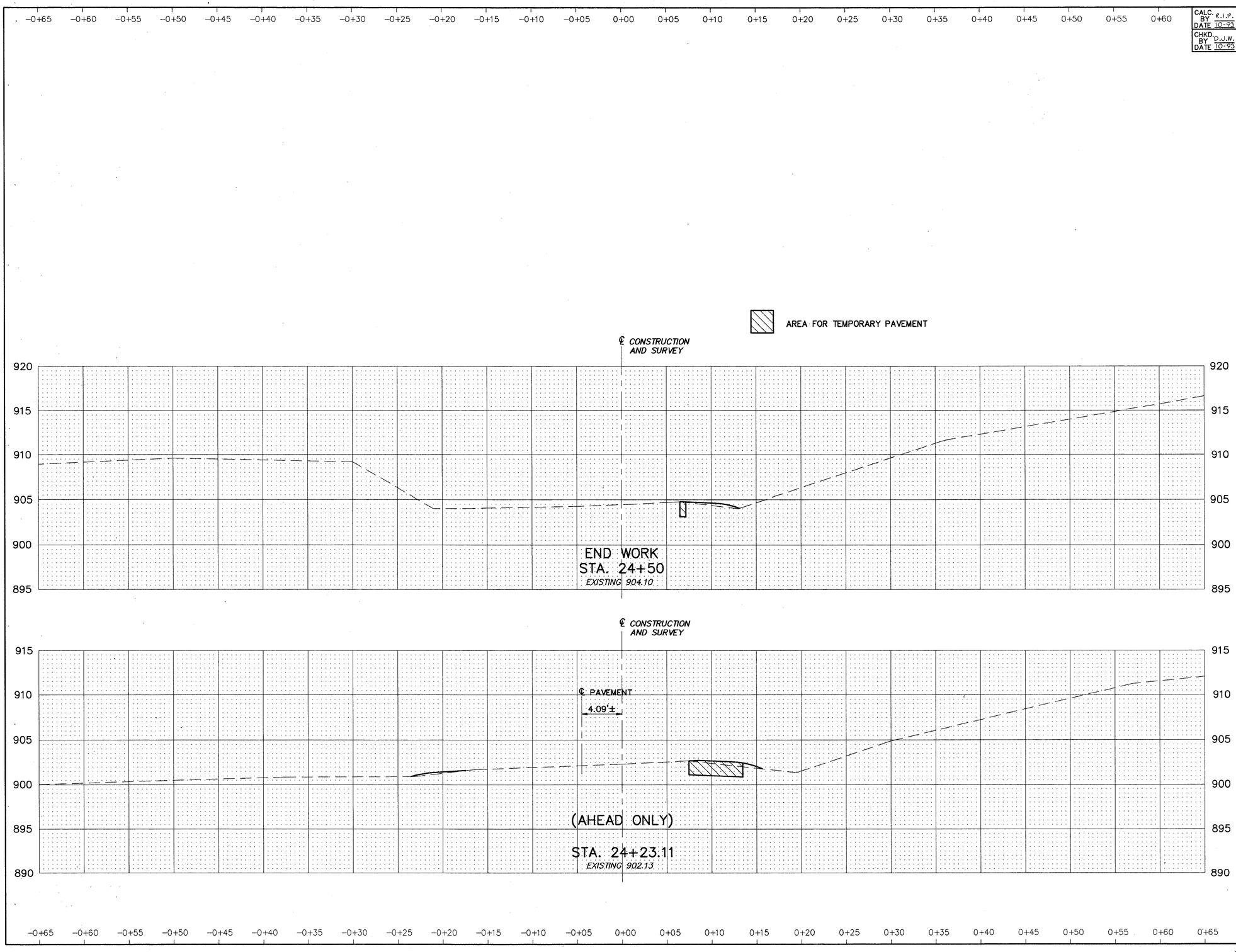

SEEDING		END AREA		VOLUME	
END WIDTH	SQ. YDS.	CUT	FILL	CUT	FILL
18.0		0.0	5.2		
	82.2			0.0	6.1
37.0		0.0	7.1		
	0.0			0.0	0.0

CROSS SECTIONS STA. 24+23.11 TO STA. 24+50

CALC. BY R.I.P. DATE 10-93	LAK – 608 – 0.75	OHIO	18 / 45
CHKD. BY D.J.W. DATE 10-93		FHWA REGION 5	

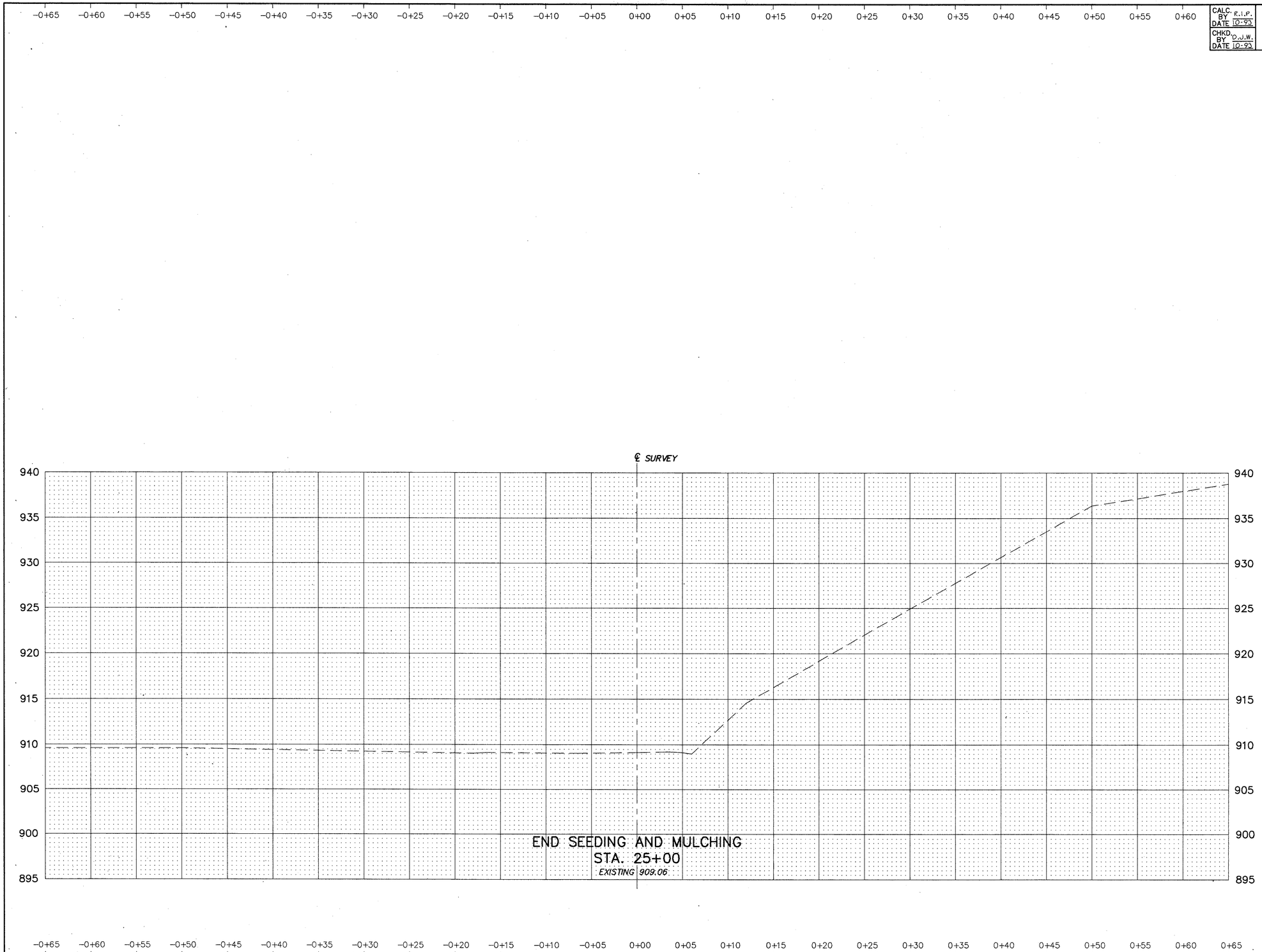

SEEDING		END AREA		VOLUME	
END WIDTH	SQ. YDS.	CUT	FILL	CUT	FILL
	0.0			0.0	0.0
0.0		0.0	0.0		
	50.0			0.0	4.8

CROSS SECTION STA. 25+00

CALC. BY ____ DATE ____	LAK – 608 – 0.75	OHIO
CHKD. BY ____ DATE ____		FHWA REGION 5

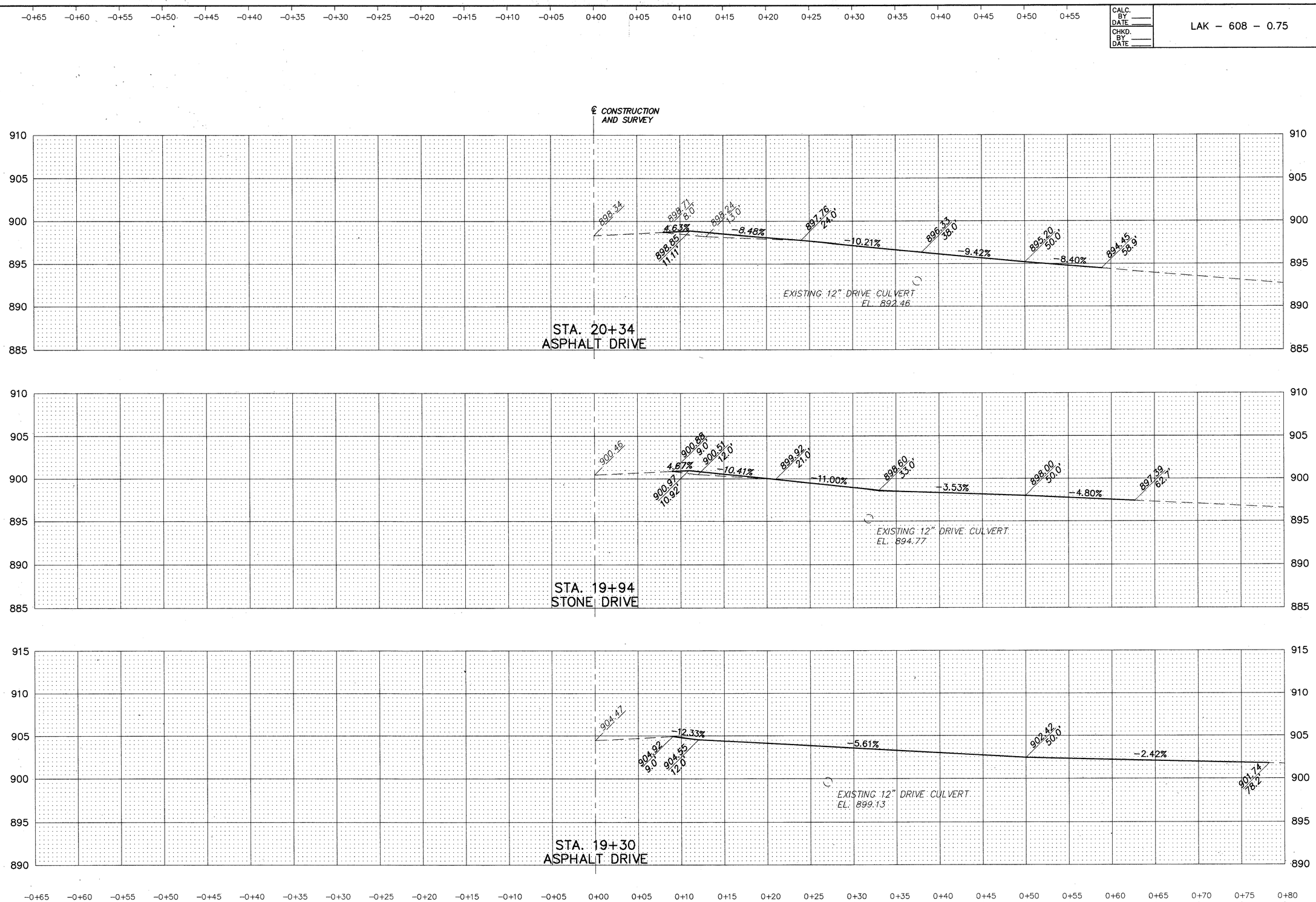

DRIVEWAY PROFILES STA. 19+30 TO STA. 20+34

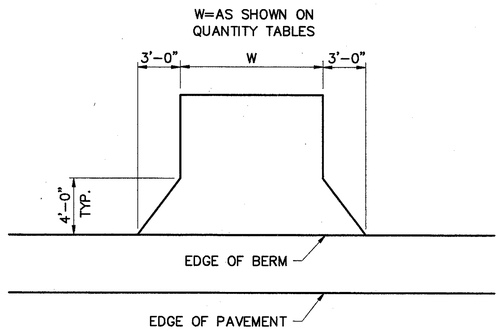

RESIDENTIAL DRIVE PLAN

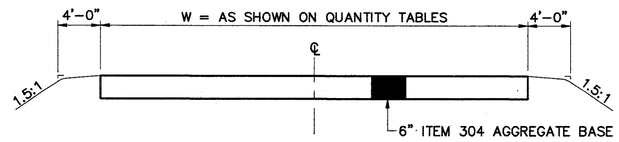

STONE DRIVE
TYPICAL SECTION

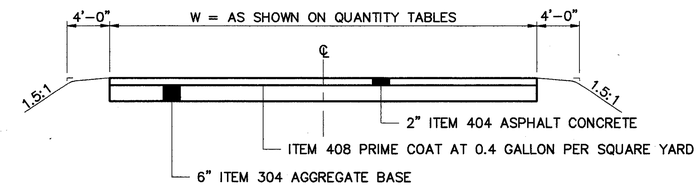

RESIDENTIAL ASPHALT DRIVE
TYPICAL SECTION

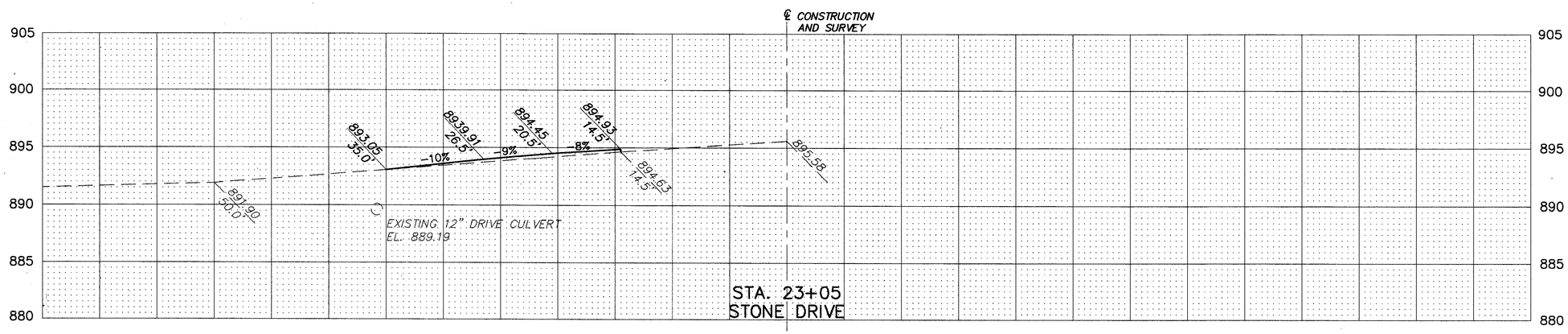

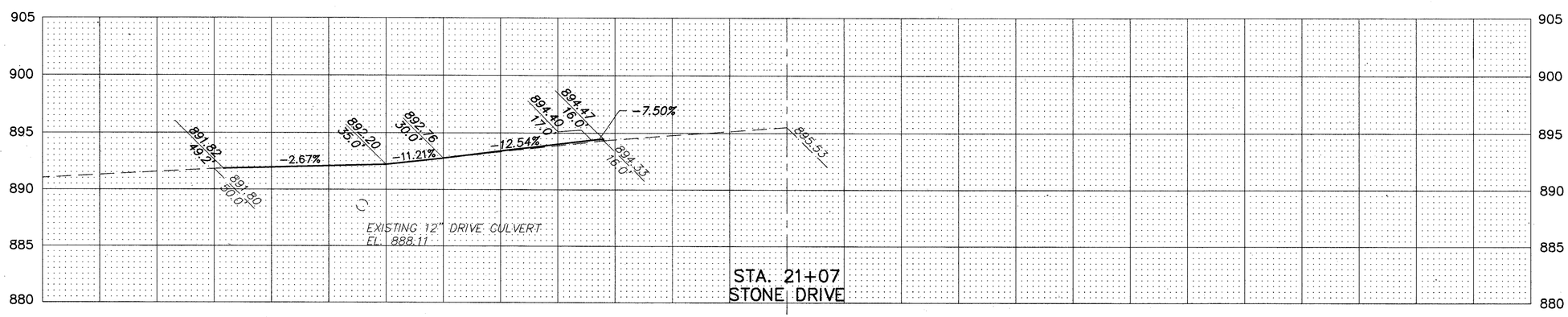

DRIVEWAY PROFILES STA. 21+07 TO STA. 23+05/DETAILS

PART WIDTH CONSTRUCTION DETAILS

CALC. BY ____ DATE ____	LAK – 608 – 0.75	OHIO	21/45
CHKD. BY ____ DATE ____		FHWA REGION 5	

TYPE 404

0 4 8
SCALE IN FEET

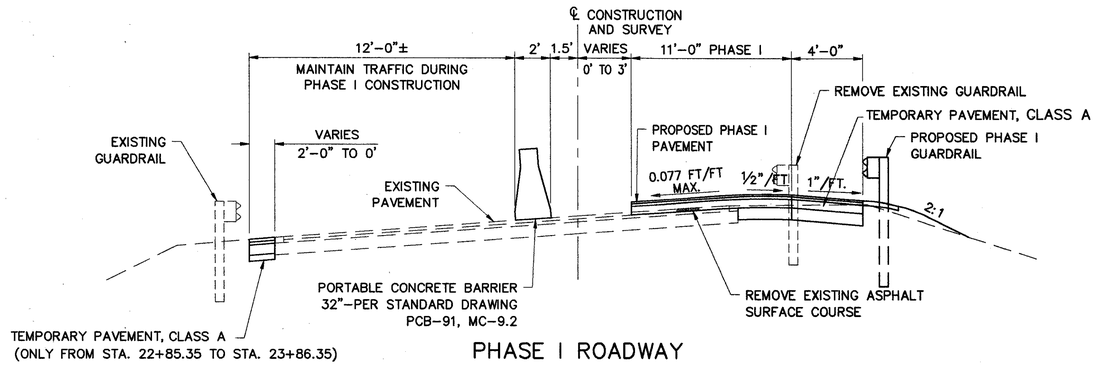

PHASE I ROADWAY

STA. 20+00.00 TO STA. 21+35.49 = 135.49 LIN. FT.
STA. 22+85.35 TO STA. 23+86.35 = 101.00 LIN. FT.

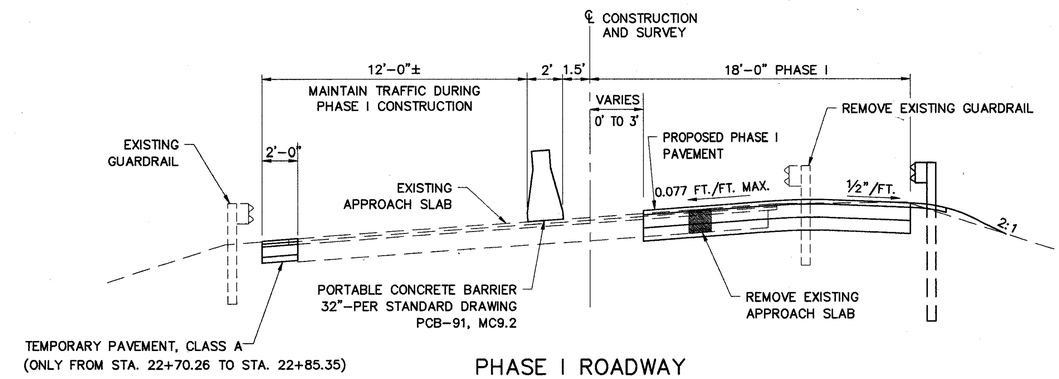

PHASE I ROADWAY

STA. 21+35.49 TO STA. 21+50.58 = 15.09 LIN. FT.
STA. 22+70.26 TO STA. 22+85.35 = 15.09 LIN. FT.

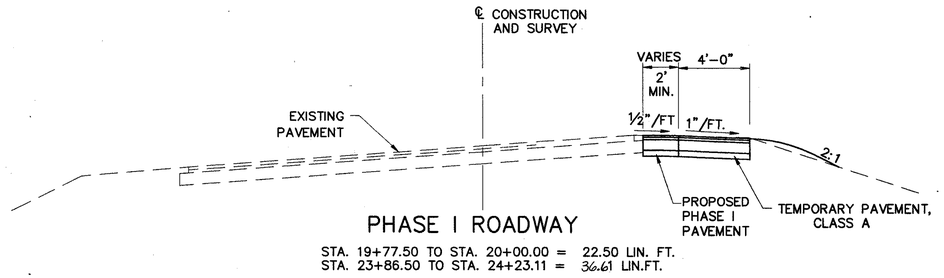

PHASE I ROADWAY

STA. 19+77.50 TO STA. 20+00.00 = 22.50 LIN. FT.
STA. 23+86.50 TO STA. 24+23.11 = 36.61 LIN.FT.

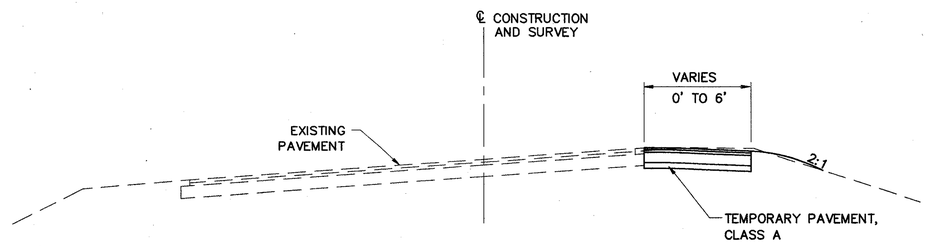

PHASE I ROADWAY

STA. 19+00.00 TO STA. 19+77.50 = 77.50 LIN. FT.
STA. 24+23.11 TO STA. 24+55.00 = 31.89 LIN.FT.

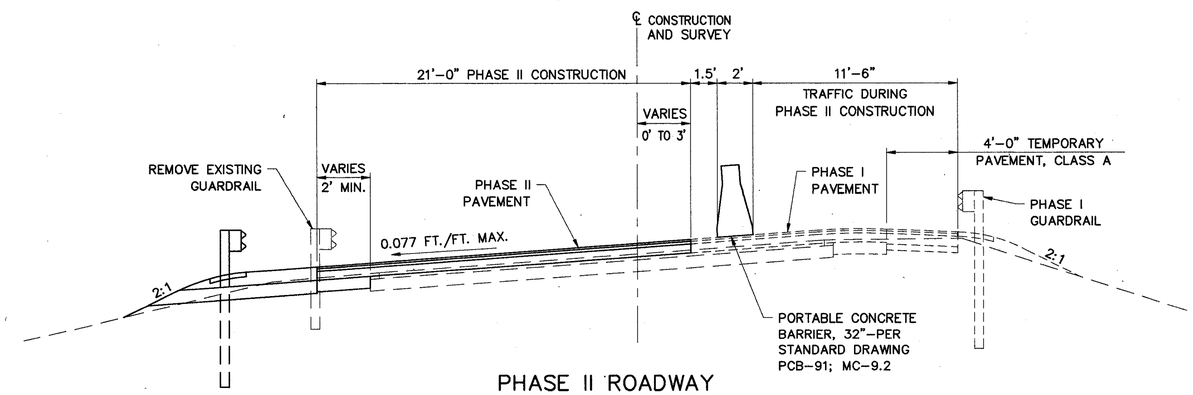

PHASE II ROADWAY

STA. 20+00.00 TO STA. 21+35.49 = 135.49 LIN. FT.
STA. 22+85.35 TO STA. 23+86.35 = 101.00 LIN. FT.
TOTAL = 236.49 LIN. FT.

MAINTENANCE OF TRAFFIC SUB–SUMMARY

WORK ZONE PAVEMENT MARKINGS SUB–SUMMARY			614	614	614
			TEMPORARY 4" DOUBLE YELLOW CENTER LINE CLASS I 740.05 TYPE C	TEMPORARY 4" EDGE LINE, WHITE, CLASS I 740.05 TYPE C	TEMPORARY STOP LINE, CLASS I, 740.05 TYPE C
PHASE	SIDE	STATION TO STATION	MILES	MILES	LIN. FT.
1 & 2	LT.	STA. 17+00 TO STA. 18+50	.03		
1 & 2	LT.	STA. 25+36 TO STA. 26+86	.03		
1	LT./RT.	STA. 19+00 TO STA. 20+00		.02	
1 & 2	LT./RT.	STA. 18+50			15
1 & 2	LT./RT.	STA. 25+36			12
2	LT./RT.	STA. 23+86 TO STA. 24+86		.02	
2	LT./RT.	STA. 19+19 TO STA. 19+67		.01	
1 & 2	LT./RT.	S.R. 608 STA. 19+00 (STA.10+25)			12
1 & 2	LT./RT.	S.R. 608 STA. 18+75 (STA. 0+25)			12
		TOTAL	.06	.05	51

PORTABLE CONCRETE BARRIER			614	614	622	622
			OBJECT MARKER	BARRIER REFLECTOR, TYPE B2	PORTABLE CONCRETE BARRIER, 32"	PORTABLE CONCRETE BARRIER, 32", BRIDGE MOUNTED, UNANCHORED
PHASE	SIDE	STATION TO STATION	EACH	EACH	LIN. FT.	LIN. FT.
1	LT./RT.	STA. 19+00 TO STA. 21+43	22	11	240	
1	LT.	STA. 21+43 TO STA. 22+75	10	5		130
1	LT./RT.	STA. 22+75 TO STA. 24+73	16	8	200	
2	LT./RT.	STA. 19+20 TO STA. 21+37	20	10	220	
2	RT.	STA. 21+37 TO STA. 22+86	12	6		150
2	LT./RT.	STA. 22+86 TO STA. 24+83	16	8	200	
		TOTALS	96	48	860	280

TEMPORARY PAVEMENT SUB–SUMMARY					615	615
					TEMPORARY PAVEMENT, CLASS A	TEMPORARY ROADS
PHASE	SIDE	STATION TO STATION	LENGTH	AVERAGE WIDTH	SQ. YD.	LUMP SUM
1	RIGHT	S.R. 608 STA. 18+75 (STA. 0+00 TO 2+09.85)	209.85'	12.0'	271.0 *	
1	LEFT	STA. 22+61 TO STA. 23+88	127.0'	1.0'	127.0	
2	LEFT	S.R. 608 STA. 19+47 (STA. 10+00 TO 12+39.38)	239.38'	12.0'	275.3 *	
2	RIGHT	STA. 19+00 TO STA. 21+35.49	135.5'	4.0'	98.3 *	
2	RIGHT	STA. 22+85.35 TO STA. 24+55	169.65'	4.0'	67.3 *	
		TOTALS			838.9	LUMP

* AREA CALCULATED BY COMPUTER

THESE QUANTITIES HAVE BEEN INCLUDED IN THE GENERAL SUMMARY.

614 TEMPORARY RAISED PAVEMENT MARKERS

CALC. BY ____ DATE ____	LAK – 608 – 0.75	OHIO
CHKD. BY ____ DATE ____		FHWA REGION 5

THIS ITEM OF WORK SHALL CONSIST OF FURNISHING, INSTALLING, MAINTAINING, AND SUBSEQUENTLY REMOVING TEMPORARY RAISED PAVEMENT MARKERS (TRPM'S). THE TRPM'S SHALL BE YELLOW OR WHITE, AS DESCRIBED IN THE PLAN.

MATERIAL

ALL UNITS SHALL BE OF SUFFICIENT STRENGTH AND PROPERLY SHAPED SO AS NOT TO BE DISLODGED OR BROKEN, OR THE REFLECTOR DISLODGED OR BROKEN, OR THE REFLECTOR DISLODGED OR DAMAGED BY IMPACTS FROM VEHICLES TIRES, INCLUDING THOSE OF HIGH PRESSURE TRUCK TIRES LOADED TO 4500 POUNDS.

RETROREFLECTORS SHALL BE PROVIDED IN ONE OR TWO DIRECTIONS ON EACH UNIT AS REQUIRED BY THE USAGE AND SHALL RETURN WHITE OR YELLOW LIGHT AS IS APPROPRIATED FOR THE APPLICATION.

THE REFLECTOR SHALL HAVE AN EFFECTIVE AREA OF 0.35 SQUARE INCH FOR TYPE A OR 3.0 SQUARE INCH FOR TYPE B. ITS BRIGHTNESS OR SPECIFIC INTENSITY (WHEN TESTED AT 0.2 DEGREE ANGLE OF OBSERVATION AND THE FOLLOWING ANGLES OF INCIDENCE) SHALL MEET OR EXCEED THE FOLLOWING:

SPECIFIC INTENSITY

INCIDENCE ANGLE (DEGREES)	TYPE A WHITE	TYPE A YELLOW
0	1.0	0.6
20	0.4	0.24
45	–	–

	TYPE B WHITE	TYPE B YELLOW
0	3.0	1.8
20	1.2	0.72
45	0.3	0.2

ANGLE OF INCIDENCE FORMED BY A RAY FROM LIGHT SOURCE TO THE MARKER AND THE NORMAL TO THE LEADING EDGE OF THE MARKER FACE (ALSO HORIZONTAL ENTRANCE ANGLE).

ANGLE OF OBSERVATION FORMED BY A RAY OF LIGHT SOURCE TO THE MARKER AND THE RETURNED RAY FROM THE MARKER TO THE MEASURING RECEPTOR.

SPECIFIC INTENSITY IS THE MEAN CANDLEPOWER OF THE REFLECTED LIGHT (AT GIVEN INCIDENCE AND DIVERGENCE ANGLES) FOR EACH FOOT-CANDLE AT THE REFLECTOR (ON A PLANE PERPENDICULAR TO THE INCIDENT LIGHT).

TYPE A UNITS ARE INTENDED TO PROVIDE HIGH VISIBILITY BOTH AT NIGHT AND DURING DAYLIGHT. THEIR DAY TIME VISIBILITY SHALL BE ASSURED BY SIZE, SHAPE AND COLOR AS FOLLOWS:

1) THE UNITS SHALL BE A HIGH VISIBILITY YELLOW OR WHITE COLOR WHICH WILL NOT DEGRADE SUBSTANTIALLY DUE TO TRAFFIC WEAR AND WHICH WILL MATCH THE COLOR OF THE REFLECTOR.

2) WHEN VIEWED FROM ABOVE, THE UNITS SHALL HAVE A VISIBLE AREA OF NOT LESS THAN 14 SQUARE INCHES.

3) WHEN VIEWED FROM THE FRONT, PARALLEL TO THE PAVEMENT, AS FROM APPROACHING TRAFFIC, THE UNIT HAVE A WIDTH OF APPROXIMATELY 4 INCHES AND A VISIBLE AREA OF NOT LESS THAN 1.5 SQUARE INCHES.

TYPE B UNITS ARE INTENDED TO PROVIDE HIGH VISIBILITY AT NIGHT BY RETROREFLECTING AUTOMOTIVE HEADLIGHT BACK TO THE DRIVER.

INSTALLATION: THEY SHALL BE ATTACHED TO CLEAN, DRY PAVEMENT BY A BUTYLADHESIVE PAD, A BITUMINOUS ADHESIVE OR OTHER CONSTRUCTION GRADE ADHESIVES (SUCH AS FRANKLIN PANEL AND METAL ADHESIVE) SUITABLE TO ANCHOR THE UNIT UNDER THE ABOVE CONDITIONS. WHEN IT IS NECESSARY TO ATTACH UNITS TO NEW CONCRETE WITH CURING COMPOUND REMAINING, THE CURING COMPOUND MEMBRANE SHALL BE REMOVED BY SANDBLASTING OR OTHER MECHANICAL CLEANING METHOD. THEY SHALL BE INSTALLED IN ACCORDANCE WITH THE MANUFACTURER'S RECOMMENDATIONS.

THE CONTRACTOR SHALL IMMEDIATELY REPLACE, AT HIS COST, ANY UNITS WHICH FAIL (BROKEN HOUSING, HOUSING WORN TO THE EXTENT THAT DAYTIME VISIBILITY IS SIGNIFICANTLY DIMINISHED OR OF AN UNACCEPTABLE COLOR, DETACHED OR BROKEN REFLECTOR, HOUSING DETACHED FROM ADHESIVE).

TRPM'S ARE LIKELY TO BE REMOVED BY SNOW PLOWING OPERATIONS, THUS THEY ARE NOT CONSIDERED SUITABLE FOR USE DURING THE PERIOD FROM OCTOBER 15 UNTIL APRIL 30. THE CONTRACTOR IS ADVISED TO SCHEDULE HIS WORK AND/OR THE USE OF THESE DEVICES TO AVOID THIS PERIOD. SHOULD THE CONTRACTOR CHOOSE TO USE TRPM'S DURING THIS PERIOD AND THEY ARE SUBSEQUENTLY REMOVED OR DESTROYED BY SNOW AND ICE CONTROL ACTIVITIES, THE CONTRACTOR SHALL IMMEDIATELY, AT HIS COST, PROVIDE A SUBSTITUTE TRAFFIC GUIDANCE SYSTEM EFFECTIVE DURING LIGHT AND DARK AND WHICH IS ACCEPTABLE TO THE ENGINEER.

THE UNITS SHALL BE PLACED ACCURATELY TO DEPICT STRAIGHT OR UNIFORMLY CURVING LINES. WHEN USED TO SUPPLEMENT TEMPORARY PAVEMENT MARKINGS, THEY MAY BE PLACED ON OR IMMEDIATELY ADJACENT TO THE PAVEMENT MARKING. LOCATIONS SHALL BE ADJUSTED UP TO ONE FOOT LONGITUDINALLY OR SIX INCHES LATERALLY TO AVOID PLACEMENT ON JOINTS, CRACKED OR DETERIORATED PAVEMENT. THEY SHALL NOT BE PLACED DIRECTLY ON PAVEMENT MARKINGS IF THIS WILL DETRACT FROM THEIR ABILITY TO REMAIN ATTACHED TO THE PAVEMENT.

APPLICATION

1) WHEN REQUIRED TO SUPPLEMENT PAVEMENT MARKING, THEY SHALL BE PLACED AS FOLLOWS:

LINE	TYPE	SPACING
EDGE LINE	A OR B	20' C/C
LANE LINE	A OR B	40' C/C
CENTER LINE (SINGLE/BROKEN)	A OR B	40' C/C
CENTER LINE (DOUBLE/SOLID)	A OR B	2 UNITS SIDE BY SIDE 4 INCHES APART 20' C/C
CHANNELIZING LINE (INCLUDES EXIT GORE NOSE)	A OR B	10' C/C

2) WHEN USED TO SIMULATE (REPLACE) PAVEMENT MARKING THEY SHALL BE PLACED AS FOLLOWS:

LANE	TYPE	SPACING
EDGE LINE	A	5' C/C
LANE LINE	A	4@3.33' C/C 30' GAP (40' CYCLE)
CENTER LINE (DOUBLE/SOLID)	A	2 UNITS SIDE BY SIDE 5' C/C
CENTER LINE (SINGLE/BROKEN)	A	4@3.33' C/C 30' GAP (40' CYCLE)
CHANNELIZING LINE (INCLUDES EXIT GORE NOSE)	A	5' C/C
EDGE LINE (TWO COLOR) (WHITE/YELLOW)	A	BACK TO BACK 5' C/C

YELLOW TPRM'S USED TO SEPARATE OPPOSITE FLOWS OF TRAFFIC (CENTER LINES) SHALL INCLUDE REFLECTIONS FOR BOTH DIRECTIONS. ALL OTHER YELLOW TRPM'S AND WHITE TRPM'S SHALL PROVIDE RETROREFLECTIVITY FOR ONE DIRECTION.

REMOVAL

REMOVAL SHALL BE ACCOMPLISHED IN A MANNER THAT LITTLE OR NONE OF THE ADHESIVE REMAINS ON THE PAVEMENT AND PERMANENT PAVEMENT SURFACES SHALL NOT BE SCARRED, BROKEN OR ROUGHENED SIGNIFICANTLY.

PAYMENT

BASIS OF PAYMENT SHALL BE AT THE CONTRACT UNIT PRICE PER EACH TRPM AND SHALL INCLUDE ALL LABOR, EQUIPMENT, HARDWARE AND INCIDENTALS REQUIRED TO PERFORM THE WORK. IT SHALL ALSO INCLUDE REPLACEMENT AT NO ADDITIONAL COST OF ALL TRPM'S WHICH, IN THE JUDGEMENT OF THE ENGINEER, FAIL FOR ANY REASON, EXCEPT DUE TO THE FAILURE OF THE PAVEMENT TO WHICH THEY ARE ATTACHED.

ITEM	UNIT	DESCRIPTION
614	EACH	TEMPORARY RAISED PAVEMENT MARKERS

	STATIONING (FROM–TO) (SIDE)	SPACING (FEET C/C)	TYPE A W	TYPE A Y	TYPE A Y/Y	TYPE B W	TYPE B Y	TYPE B Y/Y	REMARKS
PHASE I	STA. 18+50 – STA. 24+25, LT.	5' C/C	115	115					EDGE LINE
	STA. 24+25 – STA. 25+35, LT.	5' C/C	22						" "
	STA. 20+00 – STA. 24+25, RT.	5' C/C	85	85					" "
PHASE II	STA. 18+50 – STA. 20+00, RT.	5' C/C	30						" "
	STA. 20+00 – STA. 25+35, RT.	5' C/C	107	107					" "
	STA. 20+00 – STA. 24+25, LT.	5' C/C	85	85					" "
	SUB–TOTALS		444	392					
	TOTALS		836						

THESE QUANTITIES HAVE BEEN INCLUDED IN THE GENERAL SUMMARY.

MAINTENANCE OF TRAFFIC PHASE I

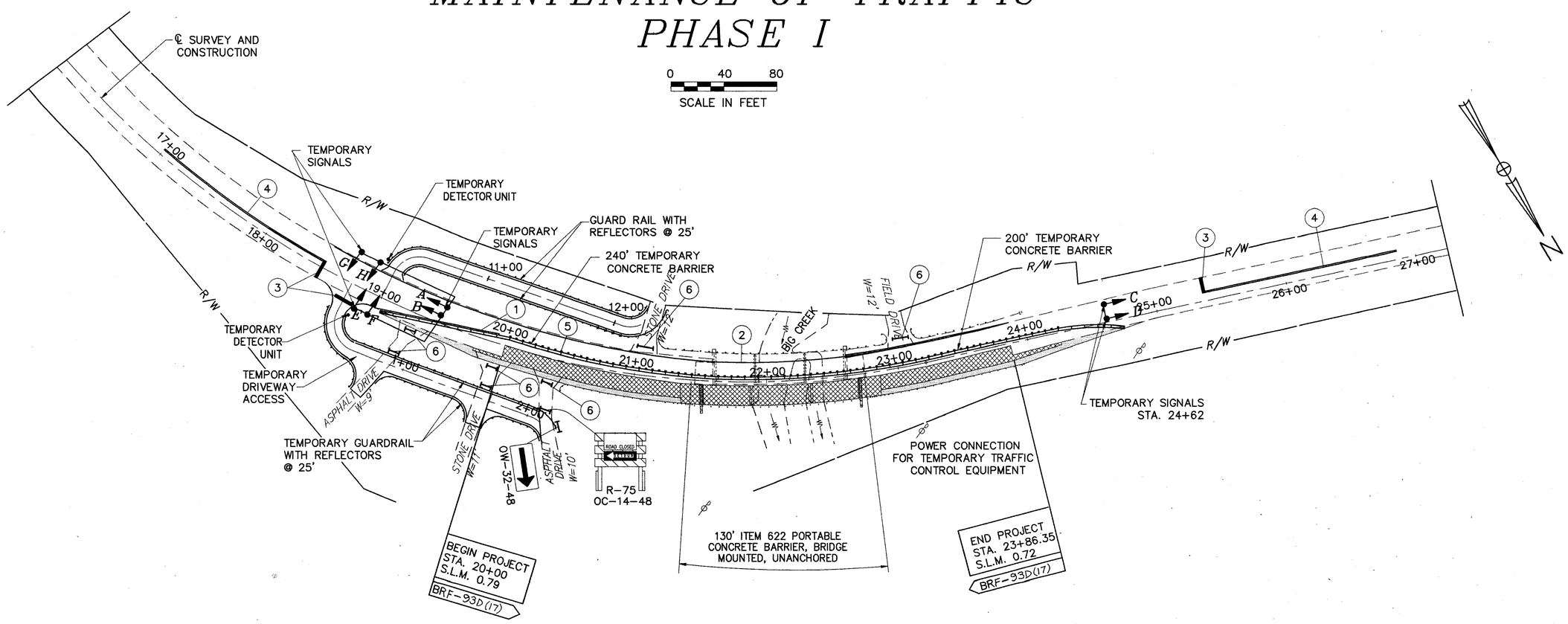

LEGEND

1. TEMPORARY EDGE LINE (WHITE)
2. TEMPORARY EDGE LINE W/TEMPORARY RAISED PAVEMENT MARKERS (2-WAY WHITE, YELLOW)
3. TEMPORARY STOP LINE
4. TEMPORARY CENTER LINE (DOUBLE, YELLOW, SOLID) W/TEMPORARY RAISED PAVEMENT MARKERS (1-WAY, YELLOW)
5. TEMPORARY RAISED PAVEMENT MARKERS (2-WAY WHITE, YELLOW)
6. ROAD CLOSED

TEMPORARY PAVEMENT

WORK AREA

ADVANCED WARNING SIGNS				
CODE	SIZE	LEGEND	STATION	SIDE
OW-128-36	36" x 36"	ROAD CONSTRUCTION AHEAD & TYPE A LIGHT	9+00	L & R
OW-143-24	24" X 24"	25 MPH		
OW-152-48	36" x 36"	PREPARE TO STOP & TYPE A LIGHT	11+00	L & R
OW-143-24	24" X 24"	25 MPH		
OW-121-36	36" x 36"	ONE LANE ROAD AHEAD & TYPE A LIGHT	13+00	L & R
OW-143-24	24" X 24"	25 MPH		
OW-47-36	36" x 36"	SIGNAL AHEAD	15+00	L & R
OC-8-60	60" x 24"	END CONSTRUCTION	15+00	L
OW-166-36	36" x 36"	WATCH FOR STOPPED TRAFFIC & TYPE A LIGHT	17+00	L & R
OW-143-24	24" X 24"	25 MPH		
R-3L-24	24" X 36"	STOP HERE ON RED & WAIT FOR GREEN	18+50	R
X-3	9" X 15"	REFLECTOR	19+25	L
OW-32-48	48" X 24"	ARROW	20+00	R
X-3	9" X 15"	REFLECTOR	24+62	L
R-3L-24	24" X 36"	STOP HERE ON RED & WAIT FOR GREEN	25+36	L
OW-47-36	36" x 36"	SIGNAL AHEAD	28+86	L & R
OC-8-60	60" x 24"	END CONSTRUCTION	28+86	R
OW-121-36	36" x 36"	ONE LANE ROAD AHEAD & TYPE A LIGHT	30+86	L & R
OW-143-24	24" X 24"	25 MPH		
OW-128-36	36" x 36"	ROAD CONSTRUCTION AHEAD & TYPE A LIGHT	34+86	L & R
OW-143-24	24" X 24"	25 MPH		
OW-152-48	36" x 36"	PREPARE TO STOP & TYPE A LIGHT	32+86	L & R
OW-143-24	24" X 24"	25 MPH		

NOTES:

1. SEE DRAWING 209620C AND 209611C (SHEETS 27 & 28 OF 45) AND DRAWING MT-96.11 FOR SIGNING, PAVEMENT MARKING, SIGNALS, ADDITIONAL DETAILS AND DIMENSIONS.
2. ALL TEMPORARY SIGNALS SHALL BE OVERHEAD.
3. ALL SIGNAL CONTROLLERS SHALL BE ACTUATED.
4. THE TEMPORARY DETECTOR UNIT SHALL BE :
   1) A MAGNETIC SENSOR ATTACHED TO A LIGHT WOOD POST AT ROADSIDE IF ONLY A SINGLE APPROACH LANE.
   2) LOOPS OR MAGNETOMETERS IMBEDDED IN OR FASTENED TO THE DRIVE SURFACE (IMBEDMENT SHALL NOT BE USED FOR CONCRETE OR ASPHALT UNLESS THE SURFACE IS TO BE SURFACED OVER LATER AS PART OF THE WORK).
   3) SONIC DETECTORS MOUNTED ON A SUITABLE SUPPORT BESIDE OR OVER THE ROAD.

CALC. BY ____ DATE ____	LAK – 608 – 0.75	OHIO
CHKD. BY ____ DATE ____		FHWA REGION 5

MAINTENANCE OF TRAFFIC PHASE II

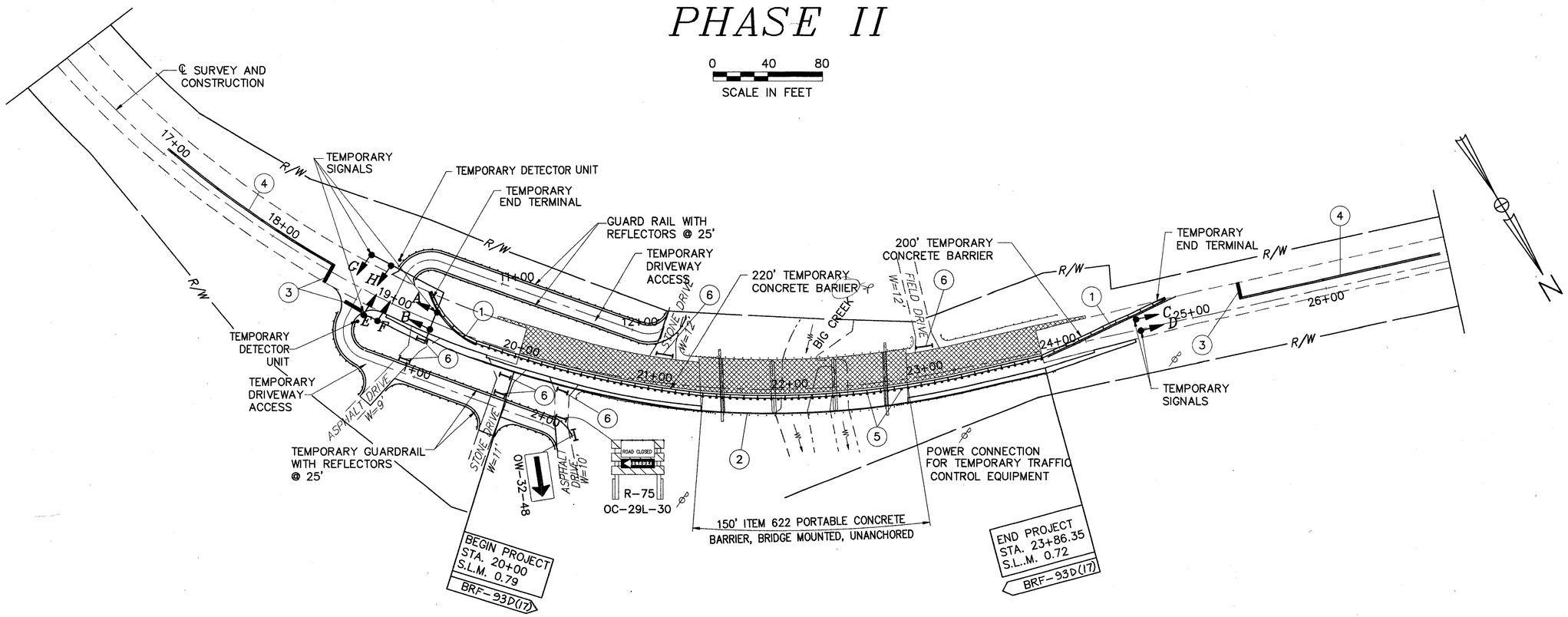

LEGEND

1. TEMPORARY EDGE LINE (WHITE)
2. TEMPORARY EDGE LINE W/TEMPORARY RAISED PAVEMENT MARKERS (2-WAY WHITE, YELLOW)
3. TEMPORARY STOP LINE
4. TEMPORARY CENTER LINE (DOUBLE, YELLOW, SOLID) W/TEMPORARY RAISED PAVEMENT MARKERS (1-WAY, YELLOW)
5. TEMPORARY RAISED PAVEMENT MARKERS (2-WAY WHITE, YELLOW)
6. ROAD CLOSED

TEMPORARY PAVEMENT

WORK AREA

ADVANCED WARNING SIGNS				
CODE	SIZE	LEGEND	STATION	SIDE
OW-128-36	36" x 36"	ROAD CONSTRUCTION AHEAD & TYPE A LIGHT	9+00	L & R
OW-143-24	24" X 24"	25 MPH		
OW-152-48	36" x 36"	PREPARE TO STOP & TYPE A LIGHT	11+00	L & R
OW-143-24	24" X 24"	25 MPH		
OW-121-36	36" x 36"	ONE LANE ROAD AHEAD & TYPE A LIGHT	13+00	L & R
OW-143-24	24" X 24"	25 MPH		
OW-47-36	36" x 36"	SIGNAL AHEAD	15+00	L & R
OC-8-60	60" x 24"	END CONSTRUCTION	15+00	L
OW-166-36	36" x 36"	WATCH FOR STOPPED TRAFFIC & TYPE A LIGHT	17+00	L & R
OW-143-24	24" X 24"	25 MPH		
R-3L-24	24" X 36"	STOP HERE ON RED & WAIT FOR GREEN	18+50	R
X-3	9" X 15"	REFLECTOR	19+25	L
OW-32-48	48" X 24"	ARROW	20+00	R
X-3	9" X 15"	REFLECTOR	24+62	L
R-3L-24	24" X 36"	STOP HERE ON RED & WAIT FOR GREEN	25+36	L
OW-47-36	36" x 36"	SIGNAL AHEAD	28+86	L & R
OC-8-60	60" x 24"	END CONSTRUCTION	28+86	R
OW-121-36	36" x 36"	ONE LANE ROAD AHEAD & TYPE A LIGHT	30+86	L & R
OW-143-24	24" X 24"	25 MPH		
OW-128-36	36" x 36"	ROAD CONSTRUCTION AHEAD & TYPE A LIGHT	34+86	L & R
OW-143-24	24" X 24"	25 MPH		
OW-152-48	36" x 36"	PREPARE TO STOP & TYPE A LIGHT	32+86	L & R
OW-143-24	24" X 24"	25 MPH		

NOTES:

1. SEE DRAWING 209620C AND 209611C (SHEETS 27 & 28 OF 45) AND DRAWING MT-96.11 FOR SIGNING, PAVEMENT MARKING, SIGNALS, ADDITIONAL DETAILS AND DIMENSIONS.
2. ALL TEMPORARY SIGNALS SHALL BE OVERHEAD.
3. ALL SIGNAL CONTROLLERS SHALL BE ACTUATED.
4. THE TEMPORARY DETECTOR UNIT SHALL BE :
   1) A MAGNETIC SENSOR ATTACHED TO A LIGHT WOOD POST AT ROADSIDE IF ONLY A SINGLE APPROACH LANE.
   2) LOOPS OR MAGNETOMETERS IMBEDDED IN OR FASTENED TO THE DRIVE SURFACE (IMBEDMENT SHALL NOT BE USED FOR CONCRETE OR ASPHALT UNLESS THE SURFACE IS TO BE SURFACED OVER LATER AS PART OF THE WORK).
   3) SONIC DETECTORS MOUNTED ON A SUITABLE SUPPORT BESIDE OR OVER THE ROAD.

CALC. BY ____ DATE ____	LAK – 608 – 0.75	OHIO
CHKD. BY ____ DATE ____		FHWA REGION 5

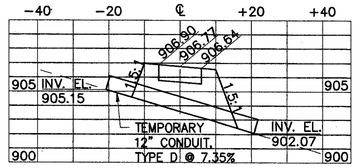

TEMPORARY DRIVE CULVERT
CROSS SECTION

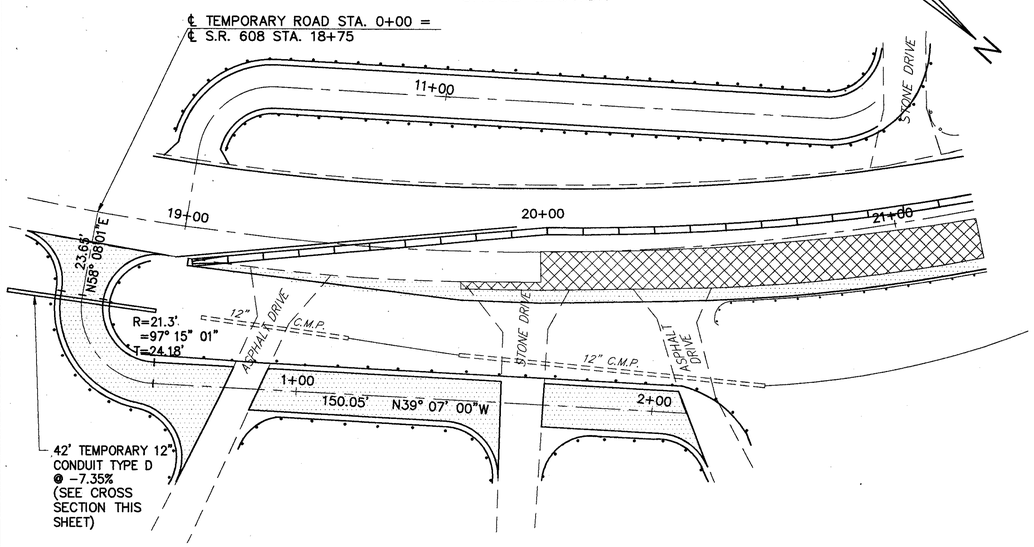

PLAN – PHASE I AND PHASE II

WORK AREA

TEMPORARY DRIVEWAY ACCESS

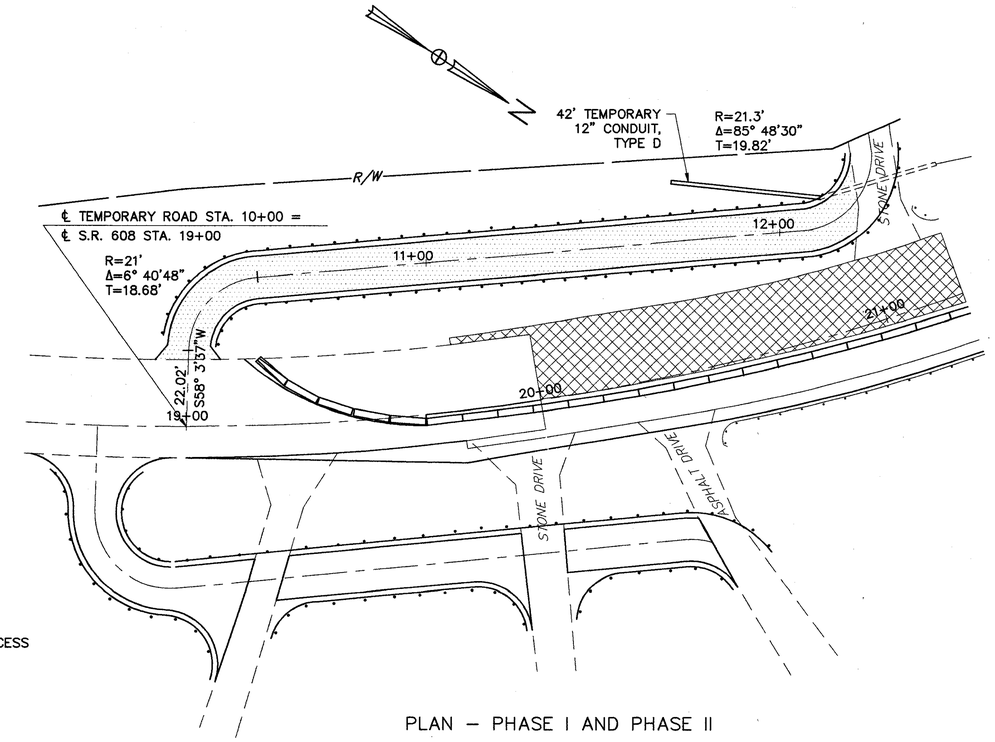

PLAN – PHASE I AND PHASE II

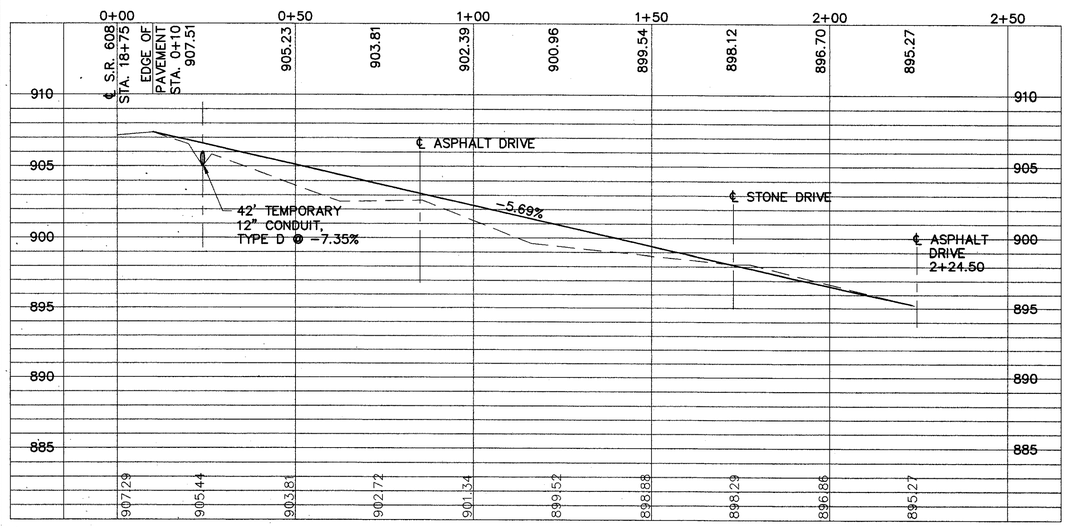

PROFILE

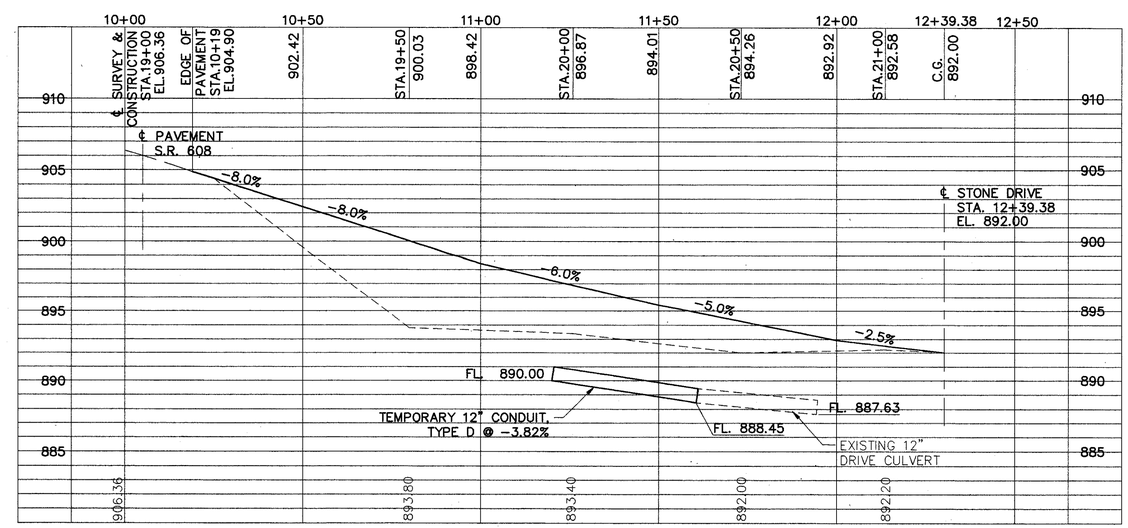

PROFILE

TEMPORARY DRIVEWAY ACCESS PLAN AND PROFILES

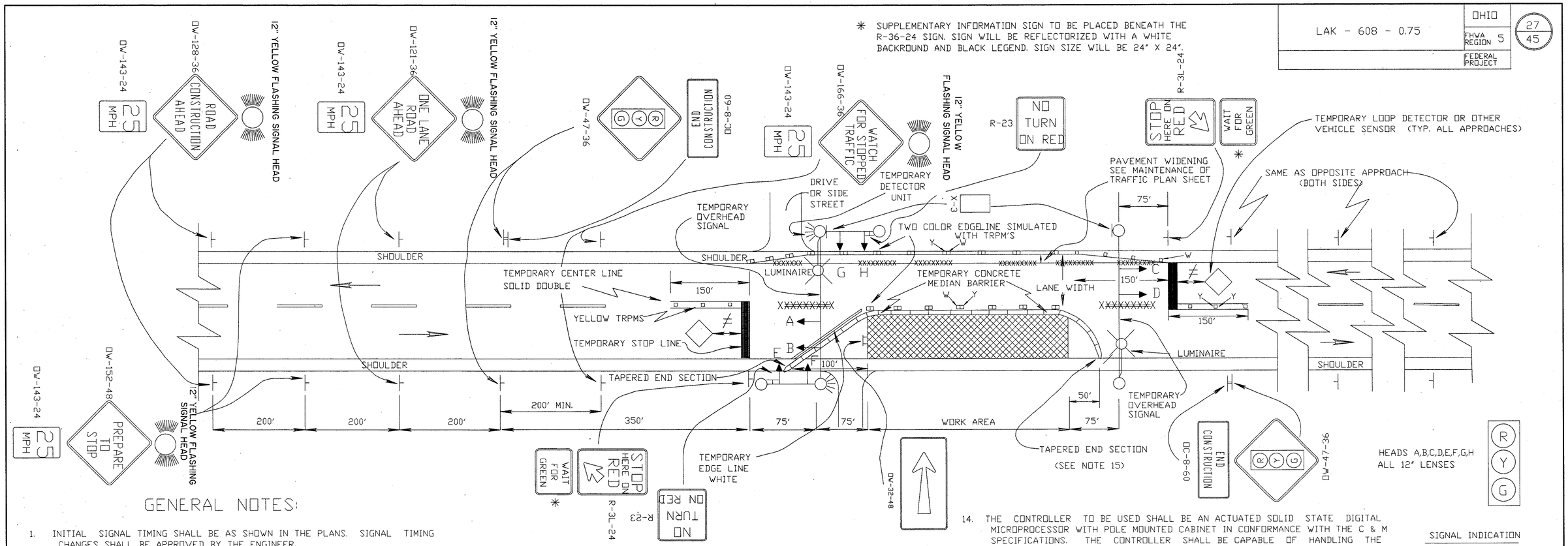

GENERAL NOTES:

1. INITIAL SIGNAL TIMING SHALL BE AS SHOWN IN THE PLANS. SIGNAL TIMING CHANGES SHALL BE APPROVED BY THE ENGINEER.

2. SIGNALS SHALL BE INSTALLED AND OPERATED IN ACCORDANCE WITH THE REQUIREMENTS OF PART 6 OF THE OHIO MANUAL OF UNIFORM TRAFFIC CONTROL DEVICES.

3. ADEQUATE AREA ILLUMINATION TO CLEARLY IDENTIFY BOTH ENDS OF THE WORK AREA AT NIGHT SHALL BE PROVIDED BY USING 150 WATT MINIMUM HIGH PRESSURE SODIUM LUMINAIRES. LUMINAIRES SHALL BE LOCATED ADJACENT TO THE SIGNAL LOCATIONS AS SHOWN ABOVE. THE MOUNTING HEIGHT FOR LUMINAIRES SHALL BE A MINIMUM OF 27 FEET ABOVE THE PAVEMENT AND MOUNTED ON A SUPPORT OF ADEQUATE STRENGTH TO PROVIDE A SATISFACTORY INSTALLATION. THE LUMINAIRE ARM SHALL BE OF SUFFICIENT LENGTH TO EXTEND TO THE EDGE OF THE PAVEMENT. POLES SHALL BE ERECTED A MINIMUM OF 5.5 FEET FROM BEHIND FACE OF GUARDRAIL WHERE EXISTING, OR 12 FEET FROM THE EDGE OF PAVEMENT. WHERE POSSIBLE LOCATE BEHIND DITCH.

4. TEMPORARY CENTER LINE: SOLID, DOUBLE, SHALL BE INSTALLED AND MAINTAINED AS SHOWN. 12" STOP LINES SHALL ALSO BE INSTALLED. TEMPORARY RAISED PAVEMENT MARKERS, (TRPM'S) TO SIMULATE A TWO COLOR EDGE LINE SHALL BE PROVIDED. EXISTING CONFLICTING PAVEMENT MARKINGS OR RAISED PAVEMENT MARKER REFLECTORS BETWEEN THE WORK AREA AND THE STOP LINES OR WITHIN THE ONE WAY LANE WIDTH SHALL BE REMOVED. AFTER COMPLETION OF THE WORK. TEMPORARY MARKINGS AND TRPM'S SHALL BE REMOVED IN ACCORDANCE WITH 641.10 AND THE ORIGINAL MARKINGS AND RAISED PAVEMENT MARKER REFLECTORS SHALL BE RESTORED.

5. PORTABLE CONCRETE BARRIERS SHALL BE DELINEATED IN ACCORDANCE WITH PROPOSAL NOTE [redacted] EXCEPT SPACING IN TAPERS SHALL BE 10 FEET.

6. THE SPACING BETWEEN PROPOSED SIGNS SHOULD BE ADJUSTED TO NOT CONFLICT WITH AND TO PROVIDE A MINIMUM OF 200 FEET CLEARANCE TO EXISTING SIGNS.

7. THE HORIZONTAL OR VERTICAL ALIGNMENT OF THE ROADWAY MAY REQUIRE ADJUSTMENTS IN THE LOCATION OF THE ADVANCE WARNING SIGNS OR THE SIGNAL HEADS. TREE OR BRUSH TRIMMING TO PROVIDE ADEQUATE SIGHT DISTANCE TO SIGN AND SIGNALS SHALL BE PROVIDED AS DIRECTED BY THE ENGINEER. THE DISTANCES SHOWN FOR ADVANCE WARNING SIGN SPACINGS ARE MINIMUM.

8. WHEN SIGNALS ARE NOT IN USE THEY MUST BE REMOVED OR BAGGED.

9. THE CONTRACTOR SHALL BE RESPONSIBLE FOR THE 24 HOUR PER DAY MAINTENANCE OF THE ONE LANE ROAD TRAFFIC SIGNALS. THE DAY AND NIGHT TELEPHONE NUMBERS OF THE CONTRACTOR'S SIGNAL MAINTENANCE ORGANIZATION MUST BE SUPPLIED TO THE LOCAL POLICE AGENCIES AND ODOT. THE ELAPSED TIME BETWEEN THE SIGNAL PROBLEM CALL AND SERVICEMAN'S ARRIVAL AT THE PROJECT SITE SHALL NOT EXCEED THREE HOURS. SIGNAL INSTALLATION AND MAINTENANCE SHALL BE PERFORMED ONLY BY A QUALIFIED SIGNAL MAINTENANCE ORGANIZATION.

10. SIGNAL AND CLOSURE INSTALLATIONS SHALL BE MADE DURING DAYLIGHT ON MONDAY THROUGH THURSDAY.

11. IMMEDIATELY UPON AWARDING OF CONTRACT, THE CONTRACTOR SHALL MAKE APPLICATION OR ARRANGEMENTS WITH THE LOCAL POWER COMPANY FOR A POWER FEED TO THE TEMPORARY SIGNAL. THE CONTRACTOR, AT HIS COST, SHALL BE REQUIRED TO PROVIDE A SEPARATE POWER SERVICE CONNECTION POINT TO THE LOCAL POWER COMPANY TO PROVIDE AND MAINTAIN ELECTRIC POWER TO HIS CONSTRUCTION SIGNAL.

12. SIGNAL WIRING OTHER THAN OVERHEAD AND UNDERGROUND MUST BE APPROVED BY THE ENGINEER. ALL WIRING ATTACHED TO A POLE SHALL BE PROTECTED BY THE APPROPRIATE SIZE CONDUIT. ALL SPLICES SHALL BE MADE BY APPROVED SPLICE KITS INSTALLED IN PULL BOXES OR APPROVED ENCLOSURES.

13. ALL TRAFFIC SIGNAL AND LIGHTING EQUIPMENT USED IN THIS INSTALLATION, SUCH AS SIGNAL OR LIGHTING CABLE, SIGNAL HEADS, LUMINAIRES, SIGNAL CONTROLLER, FLASHERS, LOAD SWITCHES, CONFLICT MONITOR AND OTHER CONTROLLER ACCESSORIES SHALL BE IN CONFORMANCE WITH SPECIFICATION ITEMS 625, 632, 633, 713, 732, AND 733. HOWEVER, THE PERFORMANCE TESTS OF 625.22E AND 632.27(6); THE WORKING DRAWING REQUIREMENTS OF 625.04, 632.03 AND 633.03; THE WIRING DIAGRAM AND SERVICE MANUAL REQUIREMENTS OF 633.04; AND THE TESTING AND PREQUALIFICATION REQUIREMENT OF 633.05 ARE WAIVED. USED EQUIPMENT MEETING CURRENT O.D.O.T. SPECIFICATIONS IS ACCEPTABLE.

14. THE CONTROLLER TO BE USED SHALL BE AN ACTUATED SOLID STATE DIGITAL MICROPROCESSOR WITH POLE MOUNTED CABINET IN CONFORMANCE WITH THE C & M SPECIFICATIONS. THE CONTROLLER SHALL BE CAPABLE OF HANDLING THE OPERATION SHOWN ON THE PHASING AND TIMING DIAGRAM. IF THE SIGNAL IS CHANGED TO FLASHING OPERATION, RED SHALL BE FLASHED TO ALL APPROACHES ON ALL SIGNAL HEADS.

15. DURING WORKING HOURS ONLY, A LENGTH OF BARRIER SUFFICIENT TO PROVIDE A 10' ACCESS ON THE SHOULDER AND PART OF THE ROADWAY MAY BE REMOVED FOR ACCESS. A SIMILAR BARRIER REMOVAL AT THE OPPOSITE END OF THE WORK AREA MAY ALSO BE PERMITTED ONLY WHEN NECESSARY.

16. THE TEMPORARY DETECTOR UNITS SHALL BE; (1) A MAGNETIC SENSOR ATTACHED TO A LIGHT WOOD POST AT ROADSIDE IF ONLY A SINGLE APPROACH LANE, (2) LOOPS OR MAGNETOMETERS IMBEDDED IN OR FASTENED TO THE DRIVE SURFACE (IMBEDMENT SHALL NOT BE USED FOR CONCRETE OR ASPHALT CONCRETE UNLESS THE SURFACE IS TO BE SURFACED OVER LATER AS PART OF THE WORK) OR (3) SONIC DETECTORS, MOUNTED ON A SUITABLE SUPPORT BESIDE OR OVER THE ROAD.

17. PAYMENT ALL WORK AND TRAFFIC CONTROL DEVICES SHALL BE IN ACCORDANCE WITH 614 AND OTHER APPLICABLE PORTIONS OF THE C & M SPECIFICATIONS AS WELL AS IN ACCORDANCE WITH PART 7 OF OMUTCD. THE TEMPORARY SIGNAL INSTALLATION IS TO BE COMPLETE AND OPERATIONAL AS PER THE PHASING DIAGRAM AND DETAILED SHEETS FOR PHASE I AND PHASE II. PAYMENT FOR ALL LABOR, EQUIPMENT AND MATERIALS TO PROVIDE THIS METHOD OF TRAFFIC CONTROL SHALL BE INCLUDED IN THE LUMP SUM BID FOR 614 MAINTAINING TRAFFIC, UNLESS SEPARATELY ITEMIZED IN THE PLAN.

xxxxxxxxx —— EXISTING MARKINGS REMOVED
W —— TRPM, WHITE, 1-WAY
Y —— TRPM, YELLOW, 1-WAY
Y —— Y —— TRPM, YELLOW, 2-WAY
Y —— W —— TWO TRPM'S BACK TO BACK

REVISED BY: O.D.O.T. DISTRICT 12 PLANNING & DESIGN DATE: 8-4-93

209611 C

DATE 09/09/88

ACTUATED SIGNALIZED CLOSING
1 LANE OF A 2 LANE
HIGHWAY WITH TCMB'S (FOUR PHASE)

PLAN INSERT SHEET

OHIO

DESIGNED	DRAWN	CHECKED	REVIEWED	REVISED
DATE	DATE	DATE	DATE	SHEET

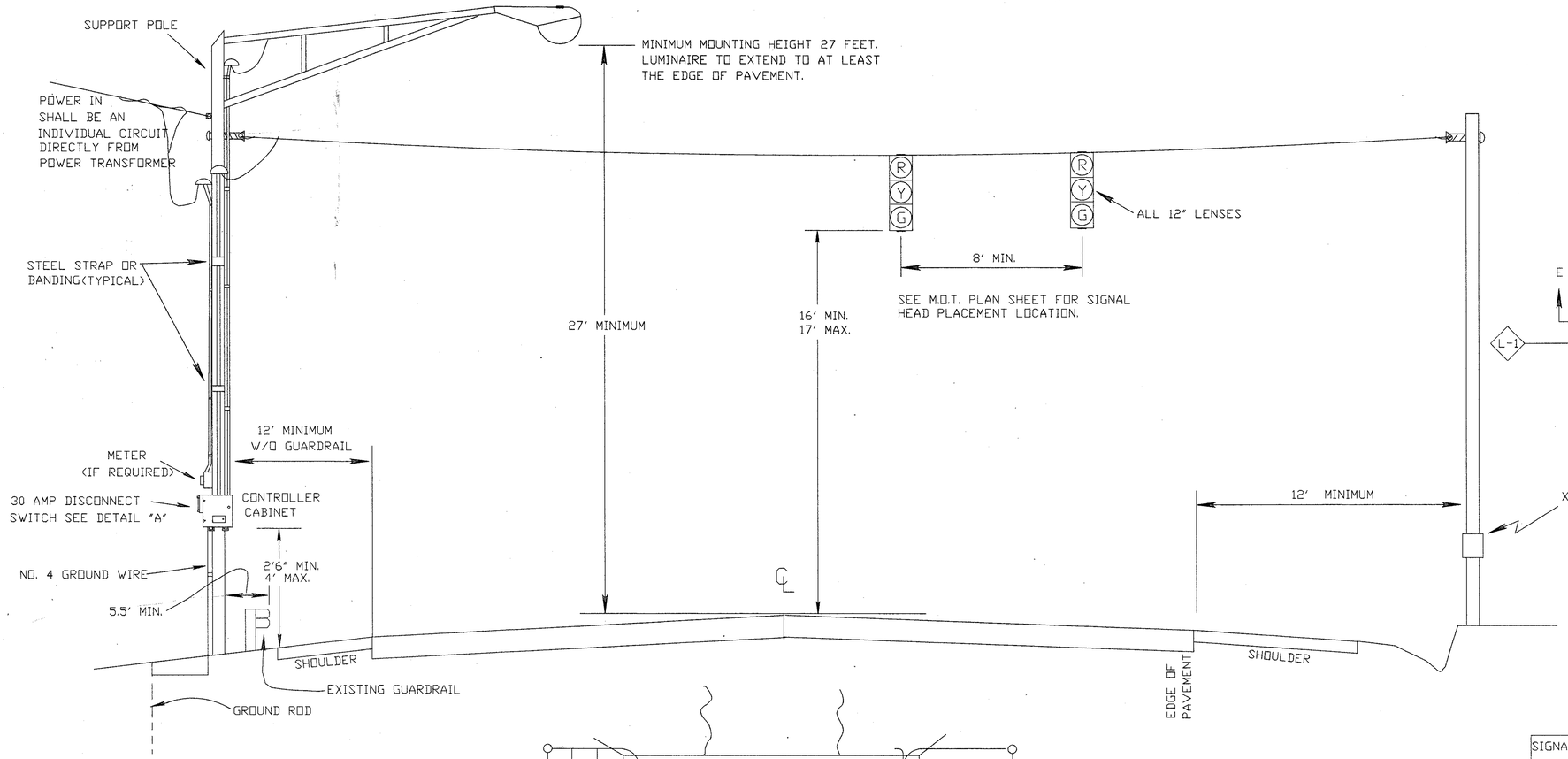

NOTE: 5/C SIGNAL CABLE MAY BE USED IN LIEU OF 4/C DEPENDING ON AVAILIBILTY

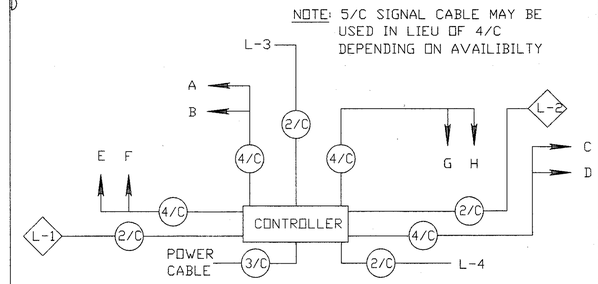

WIRING DIAGRAM

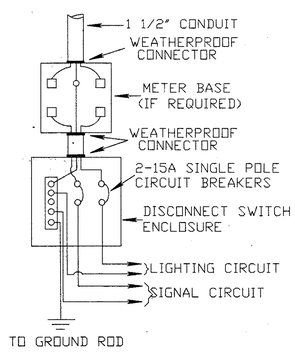

DETAIL "A"

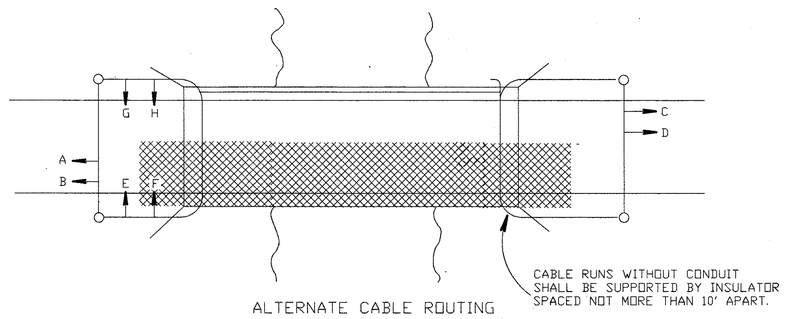

ALTERNATE CABLE ROUTING

SIGNAL DISPLAY CHART

SIGNAL	Ø1	Ø2				Ø3				Ø4				Ø5	Ø6			
HEAD	CLEAR	R/W	CLEAR	R	R/W	CLEAR	R	R/W	CLEAR	R	R/W	CLEAR	R	CLEAR	R/W	CLEAR	R	FLASH
A	R	G	Y	R	R	R	R	R	R	R	R	R	R	R	R	R	R	R
B	R	G	Y	R	R	R	R	R	R	R	R	R	R	R	R	R	R	R
C	R	R	R	R	R	R	R	R	R	R	R	R	R	R	G	Y	R	R
D	R	R	R	R	R	R	R	R	R	R	R	R	R	R	G	Y	R	R
E	R	R	R	R	G	Y	R	R	R	R	R	R	R	R	R	R	R	R
F	R	R	R	R	G	Y	R	R	R	R	R	R	R	R	R	R	R	R
G	R	R	R	R	R	R	R	G	Y	R	R	R	R	R	R	R	R	R
H	R	R	R	R	R	R	R	G	Y	R	R	R	R	R	R	R	R	R

SIGNAL PHASING

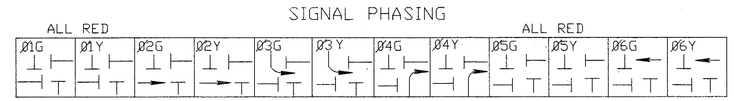

SIGNAL TIMING CHART

INTERVAL	PHASE 1	2	3	4	5	6
MIN. GREEN						
EXTENSION						
GAP						
MAX. GREEN		15.0	10.0	10.0		11.0
YELLOW		4.0	3.0	3.0		4.0
ALL RED	20.0				20.0	
MEMORY						
RECALL	OFF	ON	OFF	OFF	OFF	OFF

Ø2, Ø3, Ø4, AND Ø6 GREEN SHALL BE ACTUATED BY DETECTORS AS SHOWN ON SHT. 25/45. Ø1 & Ø5 ARE DUMMY PHASES TO TIME ALL RED INTERVAL. TIMING INITIALIZES ON PHASE ONE.

REVISED BY: O.D.O.T. DISTRICT 12 PLANNING & DESIGN DATE: 8-4-93

209620 C

DATE 09/09/88

DETAILS FOR ACTUATED SIGNALIZED CLOSING 1 LANE OF A 2 LANE HIGHWAY (4 PHASE)

PLAN INSERT SHEET

OHIO

DESIGNED	DRAWN	CHECKED	REVIEWED	REVISED
DATE	DATE	DATE	DATE	SHEET /

CALC. BY ____ DATE ____	LAK – 608 – 0.75	OHIO	29 / 45
CHKD. BY ____ DATE ____		FHWA REGION 5	

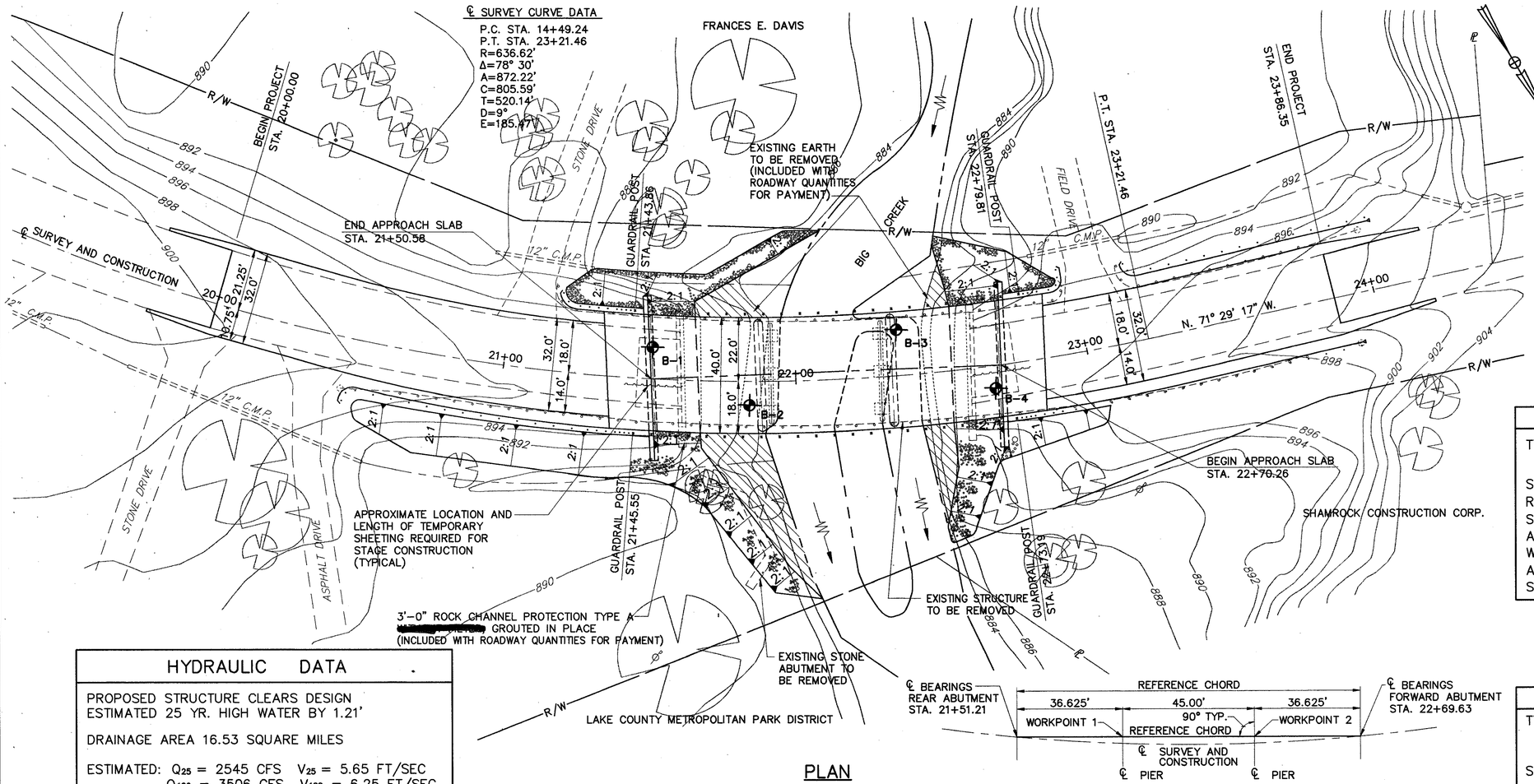

PLAN

REFERENCE CHORD DIAGRAM

BENCHMARK: TOP OF PIN W/RED REFERENCE CAP STA. 19+50, 12'RT., ELEV. 903.31

NOTE: EARTHWORK LIMITS SHOWN ARE APPROXIMATE. ACTUAL SLOPES SHALL CONFORM TO PLAN CROSS-SECTIONS.

DESIGN AVERAGE DAILY TRAFFIC: 3010 (2012)
DESIGN AVERAGE DAILY TRUCK TRAFFIC: 90 (2012)

EXISTING STRUCTURE

TYPE: THREE SPAN, CONTINUOUS REINFORCED CONCRETE SLAB WITH REINFORCED CONCRETE SUBSTRUCTURE
SPAN: 29'-6"±, 37'-6"±, 29'-6"± ALONG REF. CHORD
ROADWAY: 36'-0" F/F GUARDRAIL
SKEW: VARIES 0° 18' R.F. TO 5° 15' L.F.
ALIGNMENT: 9° 00' CURVE LEFT
WEARING SURFACE: BITUMINOUS CONCRETE
APPROACH SLABS: AS-1-54 (15'±)
STRUCTURE FILE NUMBER: 4306244

HYDRAULIC DATA

PROPOSED STRUCTURE CLEARS DESIGN ESTIMATED 25 YR. HIGH WATER BY 1.21'

DRAINAGE AREA 16.53 SQUARE MILES

ESTIMATED: Q_{25} = 2545 CFS V_{25} = 5.65 FT/SEC
Q_{100} = 3506 CFS V_{100} = 6.25 FT/SEC

PROPOSED STRUCTURE

TYPE: THREE SPAN, CONTINUOUS REINFORCED CONCRETE SLAB, SPILL-THRU STUB ABUTMENTS AND CONCRETE PIER CAPS ON DRILLED SHAFTS.
SPAN: 36'-7½", 45'-0", 36'-7½" C/C BEARINGS ALONG REFERENCE CHORD
ROADWAY: 40'-0" F/F GUARDRAIL
LOADING: HS20-44 AND THE ALTERNATE MILITARY LOADING
WEARING SURFACE: MONOLITHIC CONCRETE
APPROACH SLABS: AS-1-81 (15' LONG)
SKEW: 0°
SUPERELEVATION: 0.077 FT. PER FT.
ALIGNMENT: 9° 00' CURVE LEFT

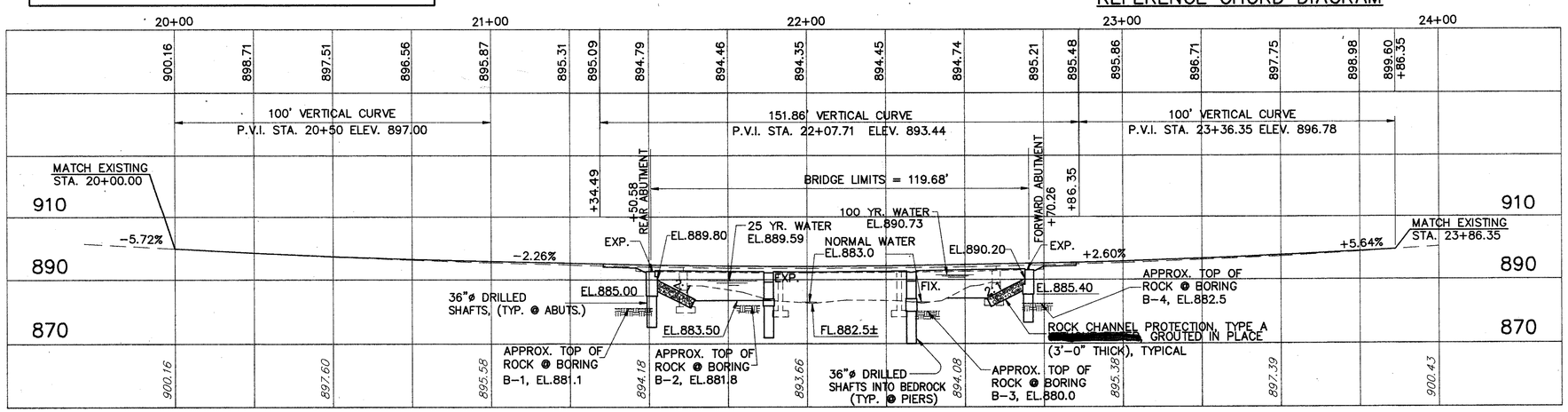

PROFILE ALONG ℄ SURVEY AND CONSTRUCTION

REVIEWED BY BURGESS & NIPLE, LTD.
R.M.K. 02/22/94

CT Consultants, Inc.
Engineers · Architects · Planners
Willoughby · Mentor · Columbus · North Canton · Youngstown

1 / 17

SITE PLAN
BRIDGE NO. LAK – 608 – 0075
OVER BIG CREEK

LAKE COUNTY
STA. 21+50.58
STA. 22+70.26

PRESENT TOPOGRAPHY		PROPOSED WORK			
SURVEYED	DRAWN	DESIGNED	DRAWN	CHECKED	REVIEWED
R.J.B.	R.L.B.	J.E.A.	R.L.B.	D.J.W.	J.P.R.

CALC. BY	LAK – 608 – 0.75	OHIO	30/45
CHKD. BY		FHWA REGION 5	

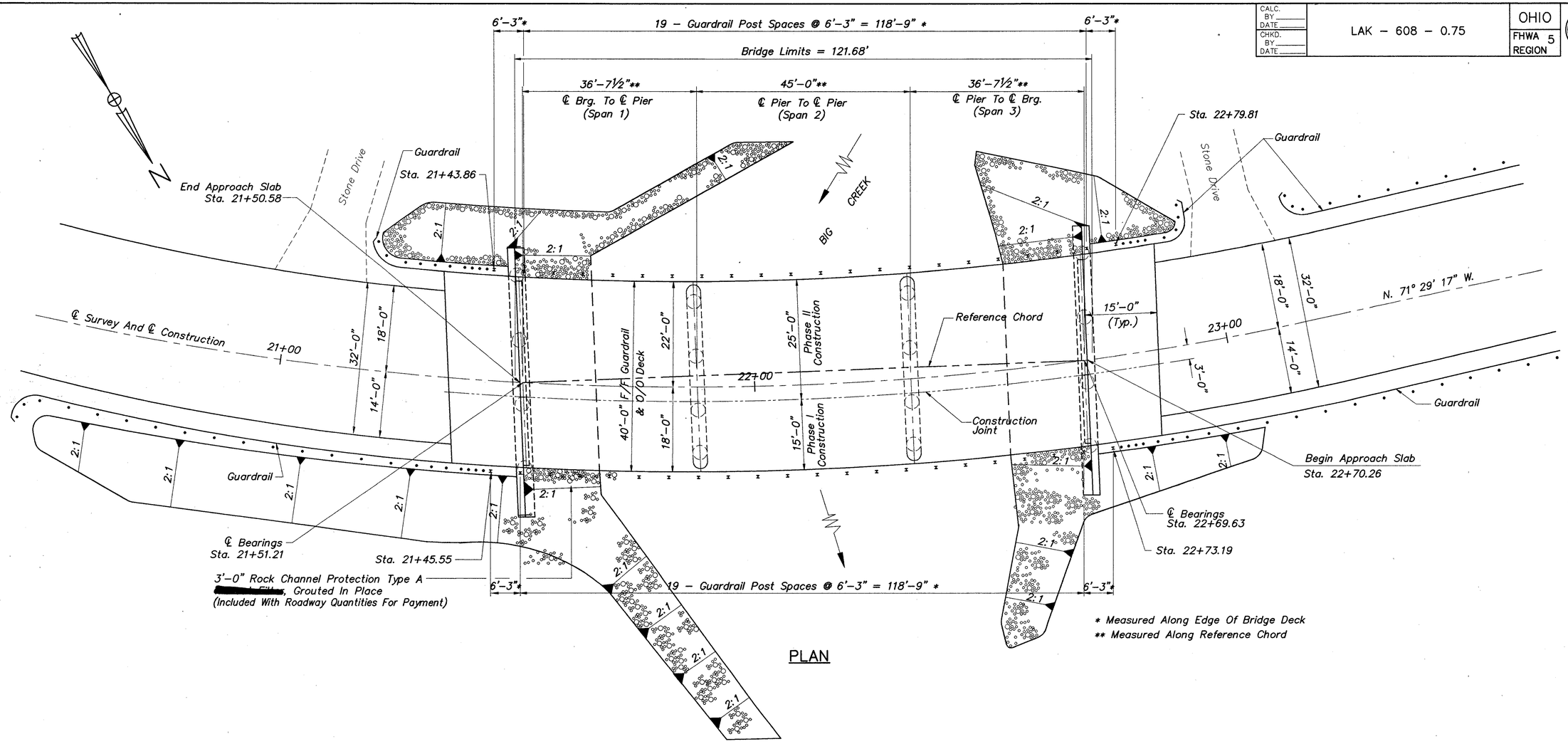

PLAN

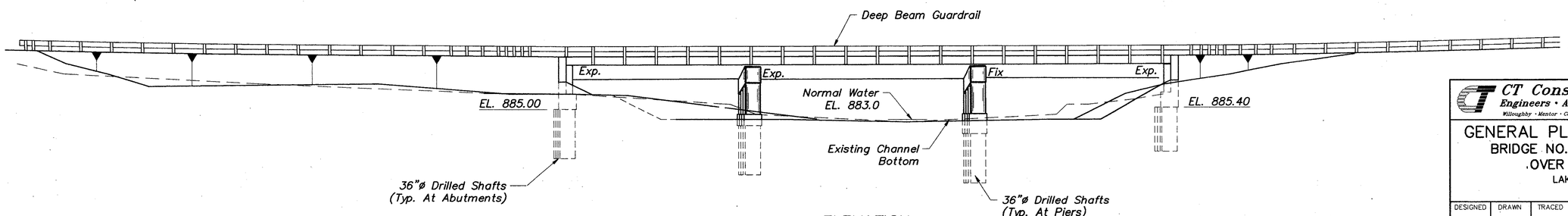

ELEVATION

CT Consultants, Inc.
Engineers • Architects • Planners
Willoughby • Mentor • Columbus • North Canton • Canfield

2/17

GENERAL PLAN & ELEVATION
BRIDGE NO. LAK–608–0075
OVER BIG CREEK
LAKE COUNTY

DESIGNED	DRAWN	TRACED	CHECKED	REVIEWED	DATE	REVISED
R.J.P.	R.I.P.	R.I.P.	J.P.R.	J.E.A.	5-29-93	

REFERENCE SHALL BE MADE TO STANDARD DRAWINGS

AS–1–81	DATED	11/27/81
EXJ–3–82	DATED	8/1/84
EXJ–4–87	DATED	1/5/89
PCB–91	DATED	4/24/92
DBR–2–73	DATED	4/10/73

AND TO SUPPLEMENTAL SPECIFICATIONS

820	DATED	3/18/92
849	DATED	12/24/85
944	DATED	3/18/92
949	DATED	9/26/86

DESIGN SPECIFICATIONS

THIS STRUCTURE CONFORMS TO "STANDARD SPECIFICATIONS FOR HIGHWAY BRIDGES" ADOPTED BY THE AMERICAN ASSOCIATION OF STATE HIGHWAY AND TRANSPORTATION OFFICIALS, 1992, AND THE OHIO SUPPLEMENT TO THESE SPECIFICATIONS.

DESIGN DATA

DESIGN LOADING – HS20–44 AND THE ALTERNATE MILITARY LOADING.

HIGH PERFORMANCE CONCRETE SUBSTRUCTURE – UNIT STRESS 1,333 PSI SUBSTRUCTURE.

HIGH PERFORMANCE CONCRETE SUPERSTRUCTURE – UNIT STRESS 1,500 PSI SUPERSTRUCTURE. (SUPERSTRUCTURE DESIGN BASED ON UNIT STRESS OF 1333 PSI)

REINFORCING STEEL – ASTM A615, A616 OR A617
GRADE 60 UNIT STRESS 24,000 PSI

SPIRAL REINFORCEMENT MAY BE PLAIN BARS, ASTM A82 OR A615.

DECK PROTECTION METHOD – EPOXY COATED REINFORCING STEEL, TOP AND BOTTOM MAT.
SEALING OF CONCRETE SURFACES.

REMOVAL OF EXISTING STRUCTURES

WHEN NO LONGER NEEDED TO MAINTAIN TRAFFIC, THE EXISTING STRUCTURE SHALL BE REMOVED. SUITABLE WASTE MASONRY MAY BE PLACED AS BANK PROTECTION AS DIRECTED BY THE ENGINEER.

ITEM 202 – PORTIONS OF STRUCTURES REMOVED

THIS ITEM SHALL CONSIST OF REMOVING THE EXISTING STONE ABUTMENT AS LOCATED ON THE SITE PLAN, SHEET 1/17.

EMBANKMENT CONSTRUCTION

THE EMBANKMENTS SHALL BE CONSTRUCTED TO THE LEVEL OF SUBGRADE. EXCAVATION MAY THEN BE MADE FOR ABUTMENT AND SHAFTS DRILLED.

MONOLITHIC WEARING SURFACE

MONOLITHIC WEARING SURFACE IS ASSUMED, FOR DESIGN PURPOSES, TO BE 1" THICK.

UTILITY LINES

ALL EXPENSE INVOLVED IN RELOCATING (INSTALLING) ANY AFFECTED UTILITY LINES SHALL BE BORNE BY THE OWNER(S). THE CONTRACTOR AND OWNER(S) ARE REQUESTED TO COOPERATE BY ARRANGING THEIR WORK IN SUCH A MANNER THAT INCONVENIENCE TO EITHER WILL BE HELD TO A MINIMUM.

COFFERDAMS, CRIBS, AND SHEETING, AS PER PLAN:

TEMPORARY SHORING SHALL BE USED TO ACCOMPLISH THE PROPOSED CONSTRUCTION IN STAGES. THE DESIGN OF THE TEMPORARY SHORING SHALL BE THE RESPONSIBILITY OF THE CONTRACTOR, BE DESIGNED BY A REGISTERED PROFESSIONAL ENGINEER, AND CONFORM WITH 501.05.
FOR APPROVAL, FIVE COPIES OF THE DRAWINGS SHALL BE SUBMITTED TO THE DIRECTOR AND CONCURRENTLY, ONE COPY TO THE BUREAU OF BRIDGES AND STRUCTURAL DESIGN.
CONSTRUCTION OF THE SHORING SHALL NOT BEGIN UNTIL AFTER WRITTEN APPROVAL HAS BEEN RECEIVED FROM THE DIRECTOR.
PORTIONS OF THE TEMPORARY SHORING COMPOSED OF STEEL OR CONCRETE MAY BE LEFT IN PLACE AT THE DISCRETION OF THE ENGINEER.
PORTIONS COMPOSED OF OTHER MATERIALS SHALL BE REMOVED PRIOR TO COMPLETION OF THE WORK.

MECHANICAL CONNECTORS

AN APPROVED TYPE OF MECHANICAL CONNECTOR FOR REINFORCING BARS SHALL BE PROVIDED. INSTALLATION OF CONNECTORS SHALL CONFORM WITH MANUFACTURER'S RECOMMENDED PROCEDURES. IF A DOWEL BAR SPLICE TYPE OF CONNECTOR IS IS FURNISHED, THE MINIMUM DOWEL BAR LENGTH TO BE FURNISHED WITH THE CONNECTOR SHALL BE AS GIVEN BY THE DIMENSION "L" SHOWN ON PLANS.

CONNECTORS AND DOWEL BARS USED WITH EPOXY COATED BARS SHALL BE EPOXY COATED. COATING FOR BOTH CONNECTORS AND BARS SHALL CONFORM TO THE SAME SPECIFICATIONS. COATINGS WHICH HAVE BEEN DAMAGED OR WHICH OTHERWISE DO NOT MEET SPECIFICATIONS WITH RESPECT TO COLOR, CONTINUITY, AND UNIFORMITY MAY BE REPAIRED AS DIRECTED BY THE ENGINEER OR THEY SHALL BE REPLACED WITH MATERIAL WHICH MEETS THE SPECIFICATIONS.

CONNECTORS AND DOWEL BARS SHALL CONFORM WITH ITEM 509 AND BE INCLUDED IN THE BID PRICE PER POUND FOR ITEM 509.

SPIRAL REINFORCING BARS

THE "LENGTH" SHOWN IN THE STEEL LIST FOR THE SPIRAL BARS IS THE LENGTH OF THE SPIRAL ALONG THE AXIS OF THE SPIRAL. FOUR STEEL CHANNEL, TEE OR ANGLE SPACERS, WEIGHING APPROXIMATELY 0.80 POUNDS PER LINEAR FOOT OF SPACER, SHALL BE PROVIDED FOR EACH SPIRAL UNIT. THEY SHALL BE EQUALLY SPACED ALONG THE PERIPHERY OF THE COILS. THE NUMBER OF POUNDS OF THESE SPACERS, BASED ON 3.20 PER LINEAR FOOT WILL BE PAID FOR AS REINFORCING STEEL AND IS INCLUDED IN THE TABULATED QUANTITIES OF SPIRAL BARS.

STRUCTURAL EXPANSION JOINTS INCLUDING ELASTOMERIC COMPRESSION SEALS

DECK JOINT MATERIALS: STEEL FOR DECK JOINTS THAT IS TO BE FULLY ENCASED IN CONCRETE MAY BE UNPAINTED ASTM A36 OR A588. ALL OTHER STEEL PORTIONS OF THE JOINTS SHALL BE ASTM A588. STEEL SHALL BE ABRASIVELY CLEANED IN THE SHOP PRIOR TO FINAL ASSEMBLY. SHOP PAINTING IS NOT REQUIRED.

DECK JOINT PAINTING: AFTER CLEANING IN THE FIELD AS DIRECTED, AND PREFERABLY AFTER INSTALLATION OF JOINT SEALS, ALL UPPER EXPLOSED STEEL SURFACES EXCLUDING ROADWAY SURFACES IN TRAVELED LANES SHALL BE PAINTED WITH A SYSTEM OZEU PRIME, INTERMEDIATE, AND FINISH COAT OF THE PAINT AS DESCRIBED IN THE PROPOSAL. COST FOR FIELD CLEANING AND PAINTING SHALL BE INCLUDED IN THE PRICE BID PER LINEAL FOOT FOR THE DECK EXPANSION JOINTS.

ITEM 508 – FALSEWORK: CONTRACTOR IS CAUTIONED THAT THE PROJECT SITE HAS A HISTORY OF TRAPPING RIVER DEBRIS AT THE BRIDGE DURING HIGH WATER FLOWS. THE CONTRACTOR MUST ACCOUNT FOR THIS DEBRIS LOAD IN HIS FALSEWORK DESIGN. THE FALSEWORK MUST BE PLACED SUCH THAT IT DOES NOT CAUSE THE ENTIRE WATERWAY TO BE PLUGGED.

ITEM SPECIAL – SEALING OF CONCRETE SURFACES

SPECIFIED CONCRETE SURFACES SHALL BE SEALED USING A CONCRETE SEALER. SEE PROPOSAL NOTE FOR SURFACE PREPARATION REQUIREMENTS, APPLICATION RATES, MATERIAL REQUIREMENTS AND APPLICATION PROCEDURES. THE LIQUID SEALANT SHALL BE APPLIED TO THE DECK EDGES FOR THE FULL LENGTH OF THE SURFACES SHOWN ON SHEET 15/17, TO THE ABUTMENTS AS SHOWN ON SHEET 11/17 AND TO PIERS AS SHOWN ON SHEETS 12/17 AND 13/17.

ELASTOMERIC BEARINGS

ELASTOMERIC BEARINGS SHALL COMPLY WITH 516 AND ARTICLES 18.2.5 THROUGH 18.2.8 OF SECTION 18, BEARING DEVICES, DIVISION II, CONSTRUCTION, OF THE AASHTO "STANDARD SPECIFICATIONS FOR HIGHWAY BRIDGES". BEARINGS SHALL BE GRADE 3, 50–DUROMETER ELASTOMER, AND SHALL BE SUBJECTED TO THE LOAD TESTING REQUIREMENTS CORRESPONDING TO DESIGN METHOD A. TESTING SHALL BE INCLUDED IN THE PRICE BID FOR THE BEARINGS.

ITEM 614 – MAINTAINING TRAFFIC

[redacted] SEE SHEET 5/17 FOR DETAILS. SEE ROADWAY QUANTITIES FOR PAYMENT.

ITEM 518 – 6" PERFORATED CORRUGATED PLASTIC PIPE, AS PER PLAN:

CORRUGATED PIPE USED IN ABUTMENT DRAINAGE SHALL BE 6 INCH DIAMETER, PLASTIC CORRUGATED AS PER SUPPLEMENTAL SPECIFICATION 944, AASHTO M294,TYPE SP.

ITEM 518 – 6" NON–PERFORATED CORRUGATED PLASTIC PIPE, INCLUDING SPECIALS, AS PER PLAN:

CORRUGATED PIPE USED IN ABUTMENT DRAINAGE SHALL BE 6 INCH DIAMETER, PLASTIC CORRUGATED AS PER SUPPLEMENTAL SPECIFICATION 944, AASHTO M294,TYPE S. THIS ITEM SHALL INCLUDE ALL ELBOWS, TEES AND CAPS REQUIRED TO COMPLETE THE ABUTMENT DRAINAGE SYSTEM.

CALC. BY: J.P.R. CHECKED BY J.E.A.
DATE: 9/17/93 DATE: 9/24/93

ESTIMATED QUANTITIES

ITEM	ITEM EXT.	TOTAL	UNIT	DESCRIPTION	GENERAL	ABUT.	PIER	SUPER.	AS PER PLAN REFERENCE SHEET NO.
202	11002	Lump	Sum	Structure Removed, Over 20 Foot Span	Lump				
202	11200	Lump	Sum	Portions Of Structure Removed	Lump				
503	11101	Lump	Sum	Cofferdams, Cribs And Sheeting, As Per Plan	Lump				3/17
503	21100	132	Cu. Yd.	Unclassified Excavation		132			
SPECIAL	50794702	28	Lin.Ft.	Drilled Shafts, 36" Diameter, Above Bedrock		28			
SPECIAL	50794704	128	Lin.Ft.	Drilled Shafts, 36" Diameter, Into Bedrock		48	80		
SPECIAL	50794802	25	Lin.Ft.	Drilled Shafts, 42" Diameter, Above Bedrock			25		
509	15830	75,696	Pound	Epoxy Coated Reinforcing Steel, Grade 60		8,458	4,423	62,815	
SPECIAL	51148000	298	Cu. Yd.	High Performance Concrete Superstructure (Deck) (Mix Design 3) (See Proposal Note)				298	
SPECIAL	51148040	130	Cu. Yd.	High Performance Concrete Substructure (See Proposal Note)		93	37		
SPECIAL	51149000	Lump	Sum.	High Performance Concrete Trial Mix (See Proposal Note)	Lump				
512	44400	6	Sq. Yd.	Type B Waterproofing		6			
SPECIAL	51267500	78	Sq. Yd.	Sealing Of Concrete Surfaces (See Proposal Note)				78	
SPECIAL	51267510	79	Sq. Yd.	Sealing Of Concrete Surfaces (Epoxy Urethane) (See Proposal Note)		61	18		
516	10500	81	Lin.Ft.	Structural Expansion Joint Including Elastomeric Compression Seal (See Proposal Note)				81	
516	43100	16	Each	Elastomeric Bearing With Internal Laminates Only (Neoprene), 8" x 9" x 1¼" (See Proposal Note)				16	
516	43100	8	Each	Elastomeric Bearing With Internal Laminates Only (Neoprene), 11" x 11" x 1¼" (See Proposal Note)				8	
517	72300	262.5	Lin.Ft.	Railing (Deep Beam Rail With Steel Tubular Backup And Type 2 Steel Posts And Anchor Bolts) (See Proposal Note)				262.5	
518	21200	36	Cu. Yd.	Porous Backfill With Filter Fabric		36			
518	40001	113	Lin.Ft.	6" Perforated Corrugated Plastic Pipe, As Per Plan		113			3/17
518	40011	36	Lin.Ft.	6" Non–Perforated Corrugated Plastic Pipe, Including Specials, As Per Plan		36			3/17
SPECIAL	51822300	240	Lin.Ft.	Steel Drip Strip				240	

Item 622 – Portable Concrete Barrier, 32", Bridge Mounted (Unanchored) Is Carried In The Roadway Plans.

REVISED ODOT
BGW 3-94

CT Consultants, Inc.
Engineers • Architects • Planners
Willoughby • Mentor • Columbus • North Canton • Canfield

4 /17

ESTIMATED QUANTITIES
BRIDGE NO. LAK–608–0075
OVER BIG CREEK
LAKE COUNTY

DESIGNED	DRAWN	TRACED	CHECKED	REVIEWED DATE	REVISED
J.P.R.	R.I.P.	R.I.P.	R.L.B.	J.E.A. 5-29-93	

CALC. BY ____ DATE ____	LAK – 608 – 0.75	OHIO
CHKD. BY ____ DATE ____		FHWA REGION 5

33/45

PART WIDTH CONSTRUCTION DETAILS

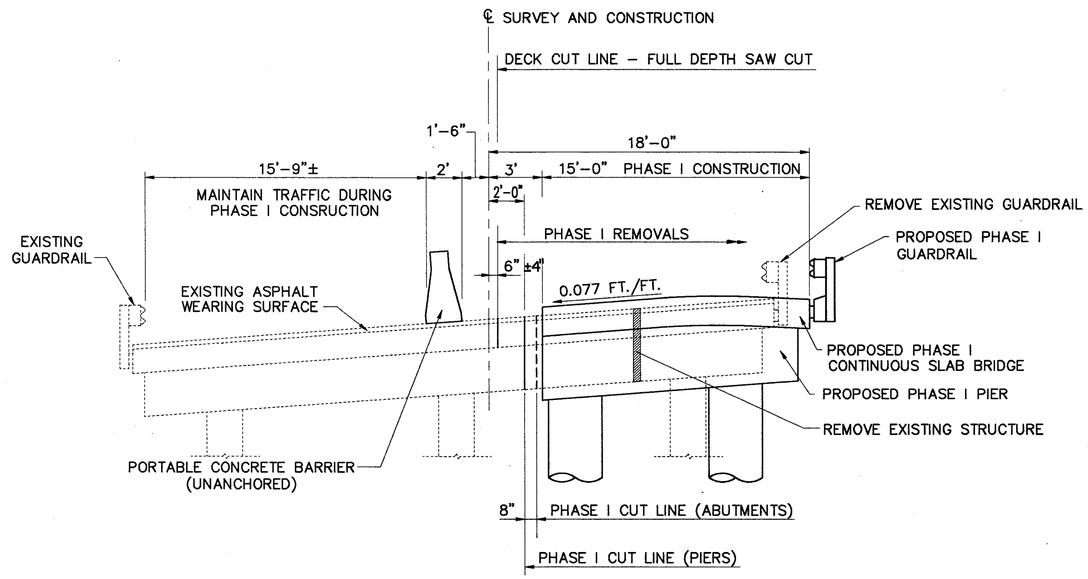

PHASE I

ALL DIMENSIONS ARE RADIAL DIMENSIONS

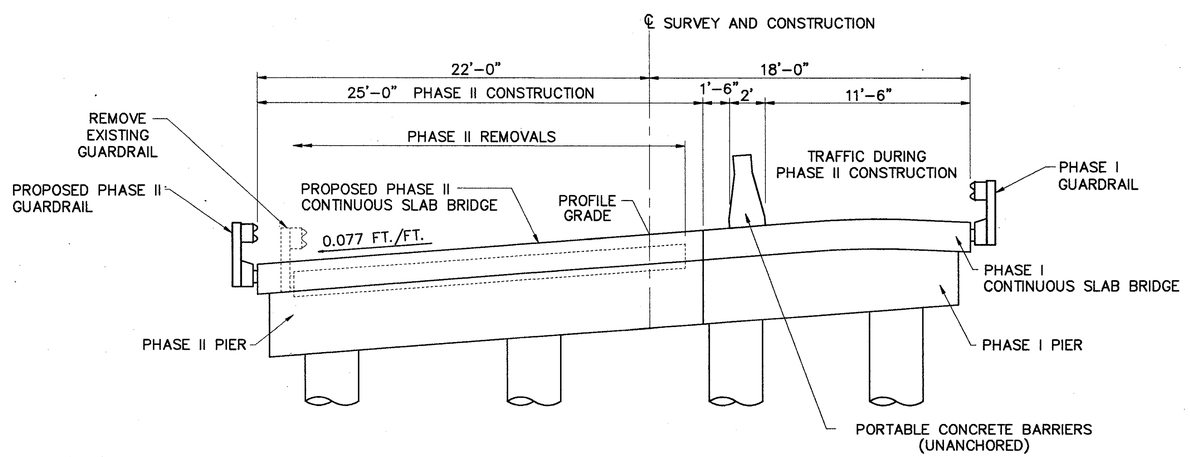

PHASE II

ALL DIMENSIONS ARE RADIAL DIMENSIONS

REFER TO PLAN DETAILS FOR LOCATION & DIMENSIONS OF PHASE I AND PHASE II CONSTRUCTION. THE BRIDGE AND APPROACH SLABS SHALL BE CONSTRUCTED IN ACCORDANCE WITH THE FOLLOWING SEQUENCE OF OPERATIONS:

1. INSTALL PHASE I PORTABLE CONCRETE BARRIER, AND CUT (FULL DEPTH SAWCUT) DECK ALONG CUT LINE.
2. REMOVE PORTION OF EXISTING SUPERSTRUCTURE, ABUTMENTS AND PIERS TO THE LIMITS SHOWN UNDER PHASE I ON THIS SHEET.
3. CONSTRUCT THE PROPOSED ABUTMENTS AND PIERS TO THE LIMITS SHOWN UNDER PHASE I ON SHEETS.
4. CONSTRUCT THAT PORTION OF THE SUPERSTRUCTURE (INCLUDING PERMANENT GUARDRAIL) TO THE LIMITS SHOWN UNDER PHASE I ON THESE PLANS. SUPERSTRUCTURE FORMWORK SHALL REMAIN IN PLACE UNTIL PHASE II DECK FORMWORK IS REMOVED.
5. CONSTRUCT THAT PORTION OF THE APPROACH SLAB SHOWN UNDER PHASE I ON THE GENERAL PLAN.
6. INSTALL THE PORTABLE CONCRETE BARRIER AT THE PHASE II LOCATION AS SHOWN ON THE GENERAL PLAN AND THIS SHEET.
7. REMOVE THE REMAINING PORTIONS OF THE EXISTING SUPERSTRUCTURE, ABUTMENTS AND PIERS.
8. CONSTRUCT THE PHASE II PORTION OF THE PROPOSED ABUTMENTS AND PIERS.
9. CONSTRUCT THAT PORTION OF THE SUPERSTRUCTURE (INCLUDING PERMANENT GUARDRAIL) TO THE LIMITS SHOWN UNDER PHASE II.
10. CONSTRUCT THE PHASE II PORTION OF THE APPROACH SLABS.

NOTES:
1. REFER ALSO TO THE MAINTENANCE OF TRAFFIC SHEET IN THE ROADWAY PLANS.
2. FOR PORTABLE CONCRETE BARRIER DETAILS, SEE PCB–91.

CT Consultants, Inc.
Engineers • Architects • Planners
Willoughby • Mentor • Columbus • North Canton • Youngstown

5/17

PHASE CONSTRUCTION DETAILS
BRIDGE NO. LAK–608–0075
OVER BIG CREEK
LAKE COUNTY

DESIGNED	DRAWN	TRACED	CHECKED	REVIEWED DATE	REVISED
J.E.A.	P.A.L.	J.E.A.	D.J.W.	J.P.R. 5-29-93	

DESCRIPTION

THIS ITEM SHALL CONSIST OF FURNISHING AND INSTALLING DRILLED SHAFTS OF THE TYPE AND SIZE SPECIFIED IN THE PLANS. THE CONTRACTOR SHALL FURNISH ALL LABOR, MATERIAL AND APPURTENANCES REQUIRED TO COMPLETE THE WORK AS SPECIFIED. THE LENGTH(S) OF THE DRILLED SHAFTS SHOWN IN THESE PLANS HAS BEEN ESTIMATED FROM AVAILABLE SUBSURFACE INFORMATION. THE CONTRACTOR IS EXPECTED TO FURNISH THE PROPOSED DRILLED SHAFTS AS PER THESE PLAN REQUIREMENTS, WITH THE UNDERSTANDING THAT THE ACTUAL LENGTH REQUIRED BASED ON CONDITIONS ENCOUNTERED DURING CONSTRUCTION, MAY DIFFER FROM THE ESTIMATED LENGTH SHOWN IN THE PLANS.

THE LIMITS OF EACH DRILLED SHAFT SHALL BE DEFINED AT THE TOP BY THE PLAN ELEVATION AND AT THE BOTTOM BY THE ELEVATION OF THE BOTTOM OF THE BEDROCK SOCKET AS APPROVED BY THE ENGINEER.

A CASING WILL BE NECESSARY FOR THE CONSTRUCTION OF EACH PIER DRILLED SHAFT AND THE CASING SHALL BE LEFT IN PLACE. A CASING MAY BE NECESSARY FOR THE CONSTRUCTION OF EACH ABUTMENT DRILLED SHAFT. ABUTMENT DRILLED SHAFT CASINGS MAY BE REMOVED PROVIDED ALL PLAN REQUIREMENTS ARE SATISFIED.

CONTRACTOR QUALIFICATION

THE CONTRACTOR SHALL SUBMIT INFORMATION TO THE ENGINEER TO DOCUMENT THAT HIS PERSONNEL ARE EXPERIENCED IN THE CONSTRUCTION OF DRILLED SHAFTS OF THE TYPE AND SIZE SPECIFIED ON THE PLANS. THIS INFORMATION SHALL BE SUBMITTED AT THE PRECONSTRUCTION CONFERENCE. THE PROJECT ENGINEER IS REQUESTED TO INFORM BUREAU OF BRIDGES, ATTENTION: FOUNDATION ENGINEER (TELEPHONE 614–466–2399) OF THE DATES WHEN THE CONTRACTOR WILL BE CONSTRUCTING THE DRILLED SHAFTS.

CASING

THE CASINGS SHALL BE MADE OF STEEL, SHALL BE WATERTIGHT AND SHALL BE OF AMPLE STRENGTH TO WITHSTAND HANDLING STRESSES AND EXTERNAL SUBSURFACE PRESSURES. THE CASINGS SHALL BE SEATED INTO THE BEDROCK, THUS ATTEMPTING TO SEAL OUT INCOMING WATER. THE CASING LENGTH SHALL BE AS NECESSARY TO CONSTRUCT EACH DRILLED SHAFT.

THE DIAMETER OF THE FURNISHED CASING(S) SHALL BE LARGE ENOUGH TO ALLOW THE CONSTRUCTION OF A BEDROCK SOCKET WITH A DIAMETER EQUAL TO OR GREATER THAN THE PLAN DIAMETER.

EXCAVATION

WHEN OBJECTS SUCH AS LARGE BOULDERS ARE ENCOUNTERED, THEY SHALL BE REMOVED. BLASTING METHODS MAY BE USED, AND WHEN USED, SHALL BE CONDUCTED SO AS TO AVOID DISTURBANCE TO THE BEDROCK FORMATION BELOW AND OUTSIDE THE LIMITS OF THE PROPOSED DRILLED SHAFT EXCAVATIONS. THE DRILLED SHAFTS SHALL PENETRATE INTO BEDROCK TO A DEPTH THAT PROVIDES A BEDROCK SOCKET LENGTH THAT IS NOT LESS THAN THE BEDROCK SOCKET LENGTH SHOWN IN THE PLANS. WHEN A CASING WHICH EXTENDS DOWN TO BEDROCK IS USED, THE BEDROCK SOCKET SHALL BE MEASURED FROM THE BOTTOM OF THE CASING TO THE BOTTOM OF THE DRILLED BEDROCK EXCAVATION. WHEN THE ENGINEER IS ASSURED THAT A PORTION OF THE METAL CASING IS EMBEDDED IN BEDROCK, UPON THE ENGINEER'S CONCURRENCE, THE EMBEDDED DISTANCE MAY BE INCLUDED AS PART OF THE BEDROCK SOCKET.

DEWATERING

THE CONTRACTOR SHALL BE RESPONSIBLE FOR CONTROLLING ANY INCOMING WATER TO THE EXTENT THAT THE SHAFT EXCAVATION IS MAINTAINED DRY ENOUGH FOR PERFORMANCE OF THE REQUIRED INSPECTION OPERATION. THE PREFERRED METHOD OF CONSTRUCTION IS TO PLACE THE CONCRETE IN A CLEAN, DRY EXCAVATION. THE CONTRACTOR IS EXPECTED TO MAKE A REASONABLE ATTEMPT TO SEAL WATER OUT OF THE DRILLED SHAFT EXCAVATION.

BOTTOM CLEANOUT

THE BOTTOM OF THE DRILLED SHAFT EXCAVATION SHALL BE AS CLEAN AS IS PRACTICABLE (NO MORE THAN ONE INCH OF LOOSE MATERIAL ON THE BOTTOM) PRIOR TO CONCRETE PLACEMENT. DRILLING SPOILS THAT ADHERE TO THE VERTICAL SIDES OF THE BEDROCK SOCKETS ARE TO BE REMOVED.

APPROVAL BEFORE CONCRETE PLACEMENT

THE CONTRACTOR SHALL SUBMIT TO THE PROJECT ENGINEER FOR APPROVAL A WRITTEN PLAN OF STEPS AND PROCEDURES HE PROPOSES TO FOLLOW WHEN PLACING AND MONITORING THE CONCRETE PLACEMENT. CONCRETE SHALL NOT BE PLACED IN ANY DRILLED SHAFT EXCAVATION WITHOUT PRIOR APPROVAL FROM THE ENGINEER. THE DRILLED SHAFT EXCAVATION SHALL BE INSPECTED IMMEDIATELY BEFORE THE CONCRETE IS PLACED. A LIGHT POWERFUL ENOUGH TO THOROUGHLY INSPECT THE SIDES, BOTTOM AND REINFORCING STEEL CAGE OF THE DRILLED SHAFT IS REQUIRED. CONCRETE SHALL NOT BE PLACED DURING INCLEMENT WEATHER CONDITIONS WHICH PREVENT A THOROUGH INSPECTION.

CONCRETE PLACEMENT

THE CONCRETE FOR THE DRILLED SHAFT SHALL BE PLACED AS PER 511 EXCEPT AS MODIFIED BY THE PLANS. THE CONCRETE PLACEMENT OPERATION SHALL BE CONTINUOUS FROM START TO FINISH. IF THE DRILLED SHAFT HAS A BEDROCK SOCKET, THE CONCRETE FOR THE BEDROCK SOCKET SHALL BE PLACED AGAINST THE IN–SITU BEDROCK. THE CONCRETE FOR THE DRILLED SHAFT SHALL BE PLACED PROMPTLY AFTER THE FINAL INSPECTION OF THE SHAFT, IF PRACTICABLE. THE CONCRETE SHALL BE PLACED IN A CLEAN, DRY EXCAVATION. CARE SHALL BE TAKEN TO ENSURE THAT CONCRETE IS NOT BEING PLACED IN MOVING WATER. THE CONCRETE CAN BE PLACED IN A DRY DRILLED SHAFT EXCAVATION BY THE FREE FALL METHOD PROVIDED THE CONCRETE FALLS TO ITS FINAL POSITION THROUGH AIR WITHOUT STRIKING THE SIDES OF THE HOLE, THE REINFORCING STEEL CAGE OR ANY OTHER OBSTRUCTION. THE FREE FALL METHOD ALLOWS THE CONCRETE TO BE DROPPED FROM THE TOP THROUGH A CENTERING CHUTE TO THE CONCRETE'S FINAL POSITION.

IF THE ENGINEER DETERMINES THAT DEWATERING IS NOT PRACTICABLE, THE CONTRACTOR WILL BE GIVEN PERMISSION TO PLACE THE CONCRETE UNDER WATER. THE DRILLED SHAFT EXCAVATION SHALL BE FILLED WITH WATER TO SUCH A DEPTH THAT ALL WATER MOTION HAS CEASED. THE CONCRETE SHALL THEN BE PLACED BY MEANS OF A CONCRETE PUMP. THE CONCRETE PUMP PIPE SHALL HAVE A DIAMETER THAT IS NOT LESS THAN 4 INCHES. THE CONCRETE PUMP EQUIPMENT SHALL BE SO ARRANGED THAT NO VIBRATIONS RESULT WHICH MIGHT DAMAGE FRESH CONCRETE. PIPES CARRYING CONCRETE FROM THE PUMP TO THE SHAFT SHOULD BE ARRANGED WITH A MINIMUM NUMBER OF BENDS. THE PIPE USED TO CONVEY THE CONCRETE TO THE BOTTOM OF THE DRILLED SHAFT EXCAVATION SHALL BE ANCHORED TO THE STEEL CASING TO PREVENT THE PIPE FROM UNDULATING DURING THE INITIAL PLACEMENT OF THE CONCRETE.

THE PUMPING EQUIPMENT SHALL BE SUITABLE IN KIND AND ADEQUATE IN CAPACITY FOR THE WORK REQUIRED. THE USE OF ALUMINUM PIPE AS A CONVEYANCE FOR THE CONCRETE WILL NOT BE PERMITTED. AN ADEQUATE QUANTITY OF GROUT, MORTAR OR CONCRETE WITH COARSE AGGREGATE OMITTED SHALL BE PUMPED THROUGH THE EQUIPMENT AHEAD OF THE SPECIFICATION CONCRETE TO PROVIDE LUBRICATION TO THE PUMPING SYSTEM. THE CONCRETE USED FOR LUBRICATION SHALL NOT BE PLACED IN THE SHAFT. THE LUBRICATION PROCESS WILL NOT BE REPEATED AS LONG AS THE PUMPING OPERATIONS ARE CONTINUOUS. THE OPERATION OF THE PUMP SHALL BE SUCH THAT A CONTINUOUS STREAM OF CONCRETE, WITHOUT AIR POCKETS, IS PRODUCED. IN ORDER TO PREVENT THE CONTAMINATION OF THE CONCRETE PLACED INITIALLY AT THE BOTTOM OF THE SHAFT, THE OUTLET END OF THE PUMPING PIPE SHALL BE SEALED WITH A DIAPHRAGM OR PLUG THAT IS FLUSHED OUT WHEN THE HYDROSTATIC PRESSURE FROM THE COLUMN OF CONCRETE EXCEEDS THAT OF THE WATER IN THE SHAFT. THE INITIAL RATE OF CONCRETE PLACEMENT MUST BE CAREFULLY CONTROLLED SO AS NOT TO LIFT OF DISPLACE THE CAGE OF REINFORCING STEEL. THE CONVEYING SYSTEM SHALL BE WATERTIGHT AND THE OUTLET END SHALL ALWAYS REMAIN WELL BELOW THE TOP OF THE FRESHLY PLACED CONCRETE. THE PREFERRED CONCRETE PLACEMENT PROCEDURE IS TO MAINTAIN THE OUTLET END OF THE PUMPING SYSTEM AT APPROXIMATELY 10 FEET BELOW THE TOP OF THE FRESH CONCRETE. WHEN THE CONCRETE REACHES THE TOP OF THE DRILLED SHAFT COLUMN, ALL LAITANCE SHALL BE REMOVED.

TOLERANCES

THE CONTRACTOR SHALL LOCATE AND CONSTRUCT THE TOP CENTER OF THE PIER DRILLED SHAFTS WITHIN A ONE–INCH RADIUS OF THE POSITION INDICATED BY THE PLANS. THE PIER SHAFTS ARE TO BE INSTALLED VERTICALLY AND MUST BE WITHIN 1.0 PERCENT OF PLUMB FOR THE TOTAL LENGTH OF THE DRILLED SHAFT.

THE TOP CENTER OF THE ABUTMENT DRILLED SHAFTS SHALL BE LOCATED WITHIN A 3–INCH RADIUS OF THE POSITION INDICATED BY THE PLANS. THE ABUTMENT VERTICAL DRILLED SHAFTS ARE TO BE INSTALLED WITHIN 2.0 PERCENT OF PLUMB FOR THE TOTAL LENGTH OF THE DRILLED SHAFT.

CONCRETE

CONCRETE FOR ALL DRILLED SHAFTS SHALL BE CLASS S CONCRETE AND SHALL BE IN ACCORDANCE WITH ITEM 511 EXCEPT AS MODIFIED AND SUPPLEMENTED HEREIN. THE REQUIRED SLUMP IS SIX (6) INCHES, PLUS OR MINUS ONE–HALF (1/2) INCH. THE MAXIMUM WATER TO CEMENT RATIO SHALL BE 0.50. FOR CONCRETE PLACED UNDER WATER, THE REQUIREMENTS OF ADDING 10 PERCENT MORE CEMENT TO THE CONCRETE MIX SHALL BE WAIVED. THE MAXIMUM COARSE AGGREGATE SIZE SHALL BE LIMITED TO 3/8 INCH. THE TOP 7 TO 9 FEET OF CONCRETE IN THE DRILLED SHAFTS ARE REQUIRED TO BE VIBRATED. ONLY A MINIMAL VIBRATORY EFFORT IS NECESSARY. SPECIAL CARE SHALL BE TAKEN NOT TO OVER–VIBRATE THE DRILLED SHAFT CONCRETE. NOTE: IF THE CASING IS REMOVED USING A VIBRATORY HAMMER, NO OTHER VIBRATORY EFFORT IS NEEDED.

IF THE CASINGS FOR THE DRILLED SHAFTS ARE TO BE WITHDRAWN, THE CONCRETE SHALL NOT BE VIBRATED UNTIL THE CASING IS COMPLETELY REMOVED AND THE SHAFT TOP IS FORMED TO THE PLAN CROSS–SECTION. CARE SHALL BE TAKEN WHEN REMOVING THE CASING SO THAT THE REINFORCING STEEL CAGE IS NOT DEFORMED BY THE FORCE OF THE DOWNWARD FLOWING CONCRETE. THE CONTRACTOR SHALL FURNISH A PRECONSTRUCTED TOP FORM FOR USE IN ACCURATELY CONFINING THE CONCRETE AT THE TOP OF THE DRILLED SHAFT WHEN THE CASING IS REMOVED. THE TOP FORM SHALL BE NOT LESS THAN THREE FEET LONG.

REINFORCING STEEL

REINFORCING STEEL SHALL MEET THE REQUIREMENTS OF 509. THE REINFORCING STEEL SHALL BE GRADE 60. THE SPIRAL REINFORCING STEEL MAY BE PLAIN BARS ASTM A82 OR A615. THE REINFORCING STEEL CAGE SHALL BE COMPLETELY ASSEMBLED PRIOR TO PLACEMENT AND THE LENGTH SHALL BE AS NECESSARY TO CONSTRUCT EACH DRILLED SHAFT. SEE PLAN SHEETS FOR DETAILS OF REINFORCING STEEL. NOTE THAT THE LENGTHS PROVIDED IN THE REINFORCING STEEL LIST ARE ESTIMATED LENGTHS. THE REINFORCING STEEL SHOULD BE PLACED AT PLAN LOCATION. ALL REINFORCING STEEL SHALL BE EPOXY COATED.

SPACERS

CONCRETE SPACERS OR OTHER APPROVED NONCORROSIVE SPACING DEVICES SHALL BE USED AT SUFFICIENT INTERVALS (NEAR THE BOTTOM AND AT INTERVALS NOT EXCEEDING 10 FEET) TO INSURE CONCENTRIC SPACING FOR THE ENTIRE CAGE LENGTH. SPACERS SHALL BE CONSTRUCTED OF APPROVED MATERIAL EQUAL IN QUALITY AND DURABILITY TO THE CONCRETE SPECIFIED FOR THE SHAFT. THE SPACERS SHALL HAVE ADEQUATE DIMENSIONS TO INSURE A MINIMUM 3–INCH CLEAR SPACE BETWEEN THE OUTSIDE OF THE REINFORCING CAGE AND THE SIDE OF THE EXCAVATED HOLE. CYLINDRICAL CONCRETE FEET (BOTTOM SUPPORTS) SHALL BE PROVIDED TO ENSURE THAT THE BOTTOM OF THE CAGE IS MAINTAINED AT THE PROPER DISTANCE ABOVE THE BASE.

INSPECTION

THE CONTRACTOR SHALL PROVIDE AND MAINTAIN SUITABLE MEANS FOR ACCESS AND SAFE DESCENT INTO ALL DRILLED SHAFT EXCAVATIONS THAT ARE PROTECTED BY A CASING AND HAVE A DIAMETER THAT IS LARGE ENOUGH TO ALLOW A PERSON TO SAFELY ENTER AND PERFORM THE REQUIRED INSPECTION. ACCESS MAY BE PROVIDED BY A POSITIVE FORWARD AND REVERSE HYDRAULIC WINCH OR POWER–UP AND POWER–DOWN HOIST ON A CRANE. THE METHOD CHOSEN FOR ENTERING OR LEAVING THE SHAFT SHALL BE CONVENIENT, SAFE AND NOT UNCOMFORTABLE FOR THE USER. THE CONTRACTOR SHALL ALSO PROVIDE PROTECTIVE CLOTHING FOR THOSE MAKING AN INSPECTION OF THE SHAFT.

AN INSPECTION RECORD CHART HAS BEEN INCLUDED WITH THE PLANS OR SHEET 8 OF 17 AND SHOULD BE COMPLETED BY THE ENGINEER. MEASUREMENTS SHOULD BE OBTAINED PRIOR TO PLACING CONCRETE. THE CONTRACTOR SHOULD PROVIDE ALL NECESSARY EQUIPMENT NEEDED TO OBTAIN MEASUREMENTS FOR COMPLETING THE CHART. THE CONTRACTOR SHALL ASSIST THE ENGINEER IN OBTAINING THESE MEASUREMENTS. WHEN THE INSPECTION RECORD CHART IS COMPLETED, THE PROJECT ENGINEER SHOULD SUBMIT A COPY TO THE BUREAU OF BRIDGES, ATTENTION: FOUNDATION ENGINEER.

SAFETY PROVISIONS

THE CONTRACTOR SHALL HAVE AT THE JOB SITE ALL EQUIPMENT AND MATERIALS NEEDED TO PROVIDE SAFE CONSTRUCTION AND INSPECTION OF THE DRILLED SHAFTS AS REQUIRED BY CITY, STATE AND FEDERAL SAFETY REQUIREMENTS.

SAFETY PROVISIONS SHALL INCLUDE, BUT NOT BE LIMITED TO, THE REQUIREMENTS SPECIFIED BY THE PLANS, SPECIAL PROVISIONS AND PROPOSAL.

THE CONTRACTOR SHALL PROVIDE CONTINUOUS SURVEILLANCE OF ALL PERSONS IN THE DRILLED SHAFT EXCAVATIONS, AT ALL TIMES, WHEN A PERSON IS IN THE DRILLED SHAFT EXCAVATION. PROVISIONS SHALL BE MADE FOR PUMPING FRESH AIR TO SAID PERSON. ALL LIGHTING SHALL BE WITH ELECTRICAL LIGHTS. MECHANICAL EQUIPMENT USED INSIDE THE SHAFTS SHALL BE OPERATED BY AIR OR ELECTRICITY. THE USE OF GASOLINE ENGINES OR OTHER TYPES OF EQUIPMENT PRODUCING FUMES THAT MAY ENTER THE EXCAVATION WILL NOT BE PERMITTED. THE CONTRACTOR SHALL PROVIDE GAS DETECTION AND OXYGEN ANALYZERS, AND SHALL TEST THE DRILLED SHAFT EXCAVATION ATMOSPHERE QUALITATIVELY THROUGHOUT THE COLUMN'S ENTIRE LENGTH AND ASSURE THAT THE QUANTITIES OF GASES AND OXYGEN PRESENT ARE IN SAFE AMOUNT AND SAFE PROPORTION PRIOR TO PERMITTING ANY PERSON TO ENTER THE SHAFT.

METHOD OF MEASUREMENT

THE TOTAL PAY LENGTH OF EACH DRILLED SHAFT SHALL BE THE COMPLETED AND ACCEPTED LENGTH MEASURED ALONG THE AXIS OF THE DRILLED SHAFT FROM THE BOTTOM OF THE BEDROCK SOCKET TO THE PROPOSED TOP ELEVATION, AS PER PLAN. THE REINFORCING STEEL THAT PROJECTS FROM THE DRILLED SHAFT INTO THE PIER COLUMN OR THE ABUTMENT FOOTING AS SPECIFIED BY THE PLANS IS INCLUDED WITH THE DRILLED SHAFT FOR PAYMENT, BUT SHALL NOT BE INCLUDED IN THE MEASURED LENGTH OF THE DRILLED SHAFT.

THE TOTAL LENGTH OF EACH DRILLED SHAFT SHALL BE DIVIDED INTO TWO SEGMENTS. THE LENGTH OF THE LOWER SEGMENT IS THE LENGTH OF THE BEDROCK SOCKET AND THE LENGTH OF THE UPPER SEGMENT IS THE LENGTH OF THE DRILLED SHAFT ABOVE THE BEDROCK SOCKET.

BASIS OF PAYMENT

PAYMENT FOR FURNISHING AND INSTALLING DRILLED SHAFTS WILL BE MADE AT THE CONTRACT UNIT PRICE PER LINEAR FOOT OF ACCEPTED SHAFT LENGTH AS PER ITEM SPECIAL – "36–INCH DIAMETER DRILLED SHAFTS ABOVE THE BEDROCK SOCKET" AND ITEM SPECIAL – "36–INCH DIAMETER DRILLED SHAFTS IN BEDROCK" OR ITEM SPECIAL – "42–INCH DIAMETER DRILLED SHAFTS ABOVE THE BEDROCK SOCKET" WHICH SHALL INCLUDE ALL LABOR, MATERIALS AND EQUIPMENT NECESSARY TO COMPLETE THE ITEMS AS SPECIFIED.

DESIGN PARAMETERS

THE DESIGN LOAD TO BE SUPPORTED BY THE DRILLED SHAFTS ARE 63 TONS AT THE ABUTMENT AND 101 TONS AT THE PIER, WHICH ARE ASSUMED TO BE RESISTED BY SHAFT ADHESION WITHIN A PORTION OF THE BEDROCK SOCKET AND ALSO BY SHAFT END BEARING PRESSURE. THE ALLOWABLE BEDROCK SOCKET ADHESION IS ONE TON PER SQUARE FOOT WHICH IS ASSUMED TO ACT ALONG THE BOTTOM 4 FEET OF THE BEDROCK SOCKET AT THE ABUTMENT AND 8 FEET OF THE BEDROCK SOCKET AT THE PIER. THE ALLOWABLE DESIGN END BEARING PRESSURE IS 10 TONS PER SQUARE FOOT.

CALC. BY ____ DATE ____	LAK – 608 – 0.75	OHIO
CHKD. BY ____ DATE ____		FHWA REGION 5

36/45

INSPECTION RECORD FOR DRILLED SHAFTS

PROJECT NO. _____

GENERAL CONTRACTOR _____

DRILLING CONTRACTOR _____

PROJECT ENGINEER _____

TYPE & MODEL OF DRILLING MACHINERY _____

MAX. CONTINUOUS TORQUE _____ FT.–LB.

CROWD (MAX. CONTINUOUS DOWNWARD FORCE) _____ LBS.

TYPE OF CONCRETE PUMP _____

HOSE DIAMETER _____ INCHES

CAPACITY _____ CU. FT./MIN.

COST PER LINEAL FOOT _____

ABOVE THE BEDROCK SOCKET _____

IN BEDROCK SOCKET _____

TYPE OF ROCK Gray Shale

SUBSTRUCTURE UNIT		DATE AND TIME OF DRILLING		APPROX. ELEVATION OF TOP OF OVER BURDEN	LENGTH OF DRILLED SHAFTS ABOVE THE BEDROCK SOCKET				OBSTRUCTIONS ENCOUNTERED			LENGTH OF DRILLED SHAFTS IN BEDROCK SOCKET			STEEL CASING			REINFORCING STEEL				CONCRETE					TOLERANCES			PLAN SHAFT DIAMETER (INCH)	CONSTRUCTED SHAFT DIAMETER (INCH)
																		VERTICAL		SPIRAL							DEVIATION FROM PLUMB		DEVIATION OF COLUMN TOP CENTER FROM PLAN LOCATION HORIZONTALLY (INCH)		
PIER OR ABUT.	SHAFT NO.	STARTED (DATE / TIME)	FINISHED (DATE / TIME)		THROUGH AIR (FEET)	THROUGH WATER (FEET)	THROUGH OVER BURDEN (FEET)	PAY LENGTH (FEET)	NUMBER	SIZE (INCH)	ELAPSED TIME FOR REMOVAL (HR.)	APPROX. ELEVATION OF TOP OF BEDROCK	ELEV. OF BOTT. OF BEDROCK SOCKET	LENGTH OF BEDROCK SOCKET (FEET)	LENGTH (FEET)	CASING GAUGE	WAS CASING LEFT IN PLACE ?	BAR SIZE NO.	NO. OF REBARS	BAR SIZE NO.	PITCH (INCH)	SLUMP TEST RESULT (INCH)	CYLINDER STRENGTH f'c (P.S.I.)	AIR TEMP. (F)	TIME NEEDED TO PLACE CONCRETE (HR.)	QUANTITY (CU.YD.)	N–S (INCH)	E–W (INCH)			

WHEN INSPECTION RECORD IS COMPLETED SUBMIT A COPY TO BUREAU OF BRIDGES ATTN: FOUNDATION ENGINEER

PROJECT ENGINEER COMMENTS

CONSIDER COMMENTING ON :

1. LOCATION AND EXTENT OF CAVITIES
2. PROCEDURES FOR CONTROLING WATER
3. WERE UNEXPECTED SUBSURFACE CONDITIONS ENCOUNTERED
4. ANY SUGGESTIONS FOR IMPROVING THE PLANS

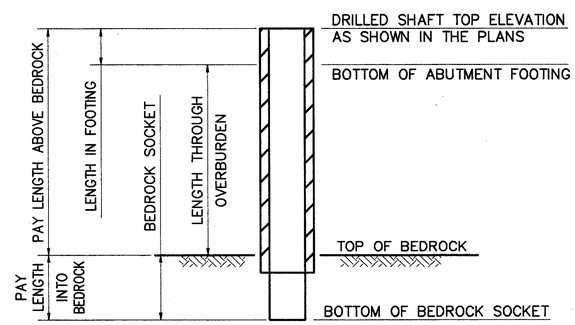

ABUTMENTS

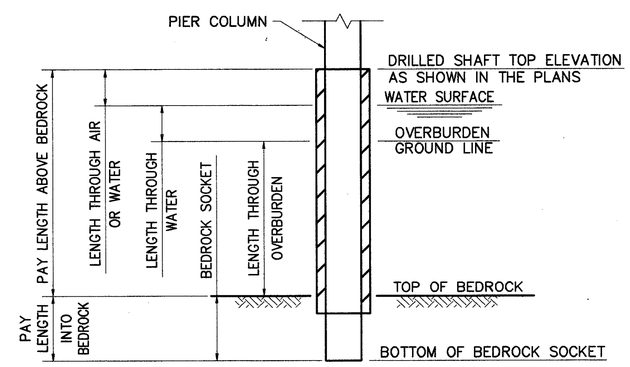

PIERS

THIS SHEET IS TO BE USED ONLY FOR RECORDING "AS BUILT" INFORMATION

CT Consultants, Inc.
Engineers • Architects • Planners
Willoughby • Mentor • North Canton • Steubenville • Lorain

8/17

DRILLED SHAFTS
INSPECTION RECORD
BRIDGE NO. LAK–608–0075
OVER BIG CREEK
LAKE COUNTY

DESIGNED	DRAWN	TRACED	CHECKED	REVIEWED DATE	REVISED
ODOT	R.L.B.	R.L.B.	J.P.R.	JCA 5/29/93	

CALC. BY ____ DATE ____	LAK – 608 – 0.75	OHIO FHWA REGION 5	37/45
CHKD. BY ____ DATE ____			

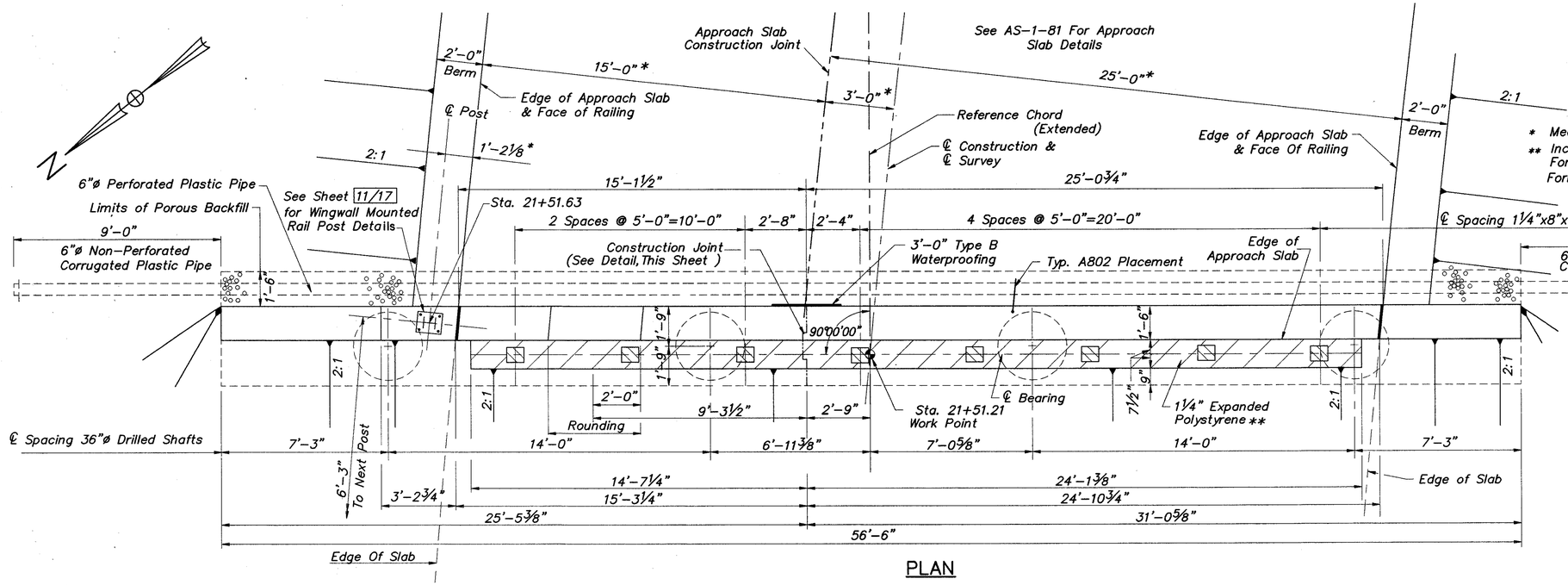

PLAN

* Measured Radially

** Included With The Superstructure Concrete For Payment. To Be Removed After Deck Formwork Is Stripped.

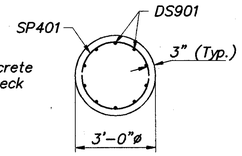

SECTION C–C

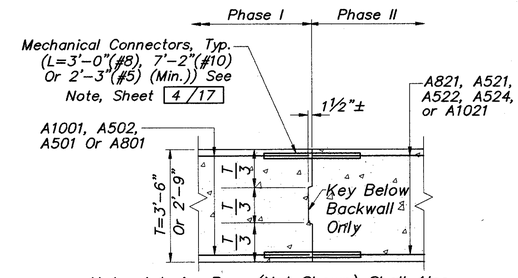

Note: Interior Bars (Not Shown) Shall Also Be Mechanically Connected.

PLAN–ABUTMENT CONSTRUCTION JOINT DETAIL

Rear Abutment Joint As Shown
(Forward Abutment Joint Opposite Hand)

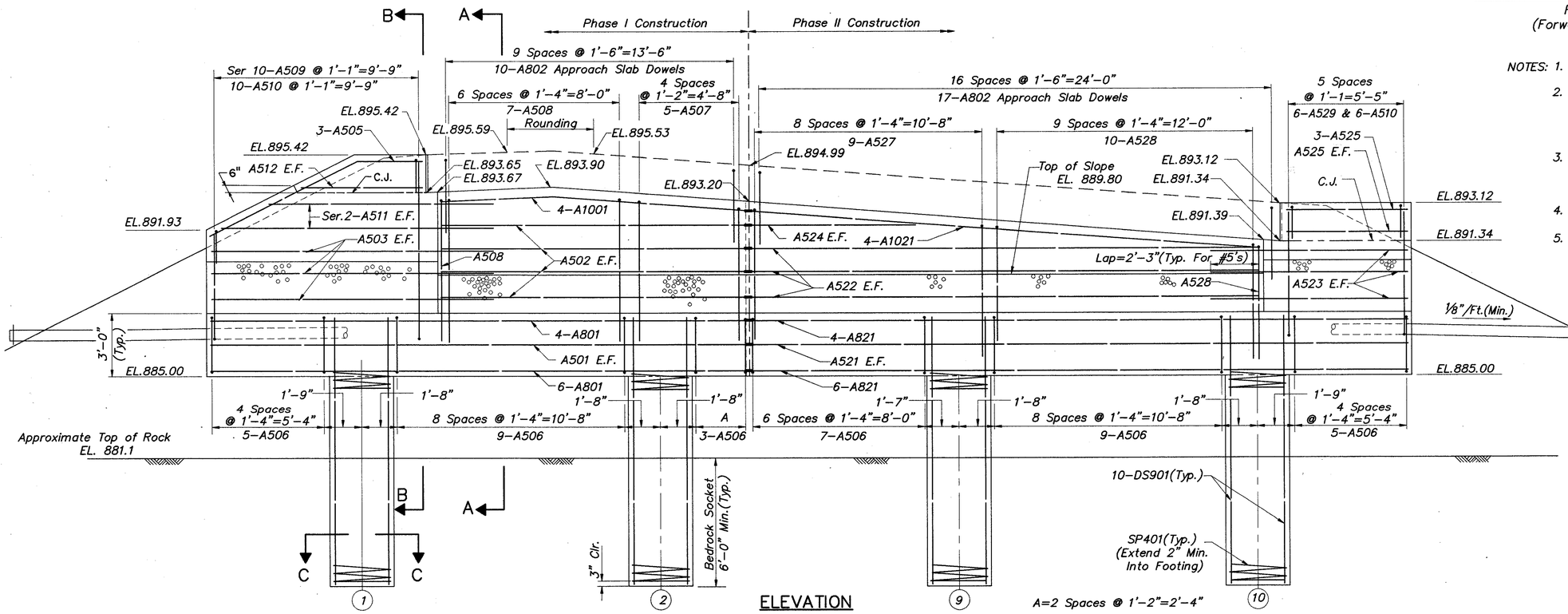

ELEVATION

NOTES:

1. See Sheet 11/17 For Sections A–A & B–B.
2. Porous Backfill, 1'-6" Thick, Shall Extend Up To The Plane Of The Subgrade, To 1'-0" Below The Embankment Surface, And Laterally To The Ends Of The Wingwalls.
3. Backwall And Wingwall Concrete Above The Level Of The Bridge Seat Shall Not Be Placed Until After The Deck Slab Has Been Placed.
4. Required Bar Laps: As Noted.
5. Notation: E.F.–Each Face; F.F.–Far Face; C.J.–Construction Joint; Typ.–Typical; Min.–Minimum; EL.–Elevation; Clr.–Clear.

CT Consultants, Inc.
Engineers • Architects • Planners
Willoughby • Mentor • Columbus • North Canton • Canfield

9/17

REAR ABUTMENT
PLAN & ELEVATION
BRIDGE NO. LAK–608–0075
OVER BIG CREEK
LAKE COUNTY

DESIGNED	DRAWN	TRACED	CHECKED	REVIEWED	DATE	REVISED
R.L.B.	R.I.P.	R.I.P.	J.P.R.	J.E.A.	5-29-93	

CALC. BY	LAK – 608 – 0.75	OHIO	38/45
CHKD. BY		FHWA REGION 5	
DATE			

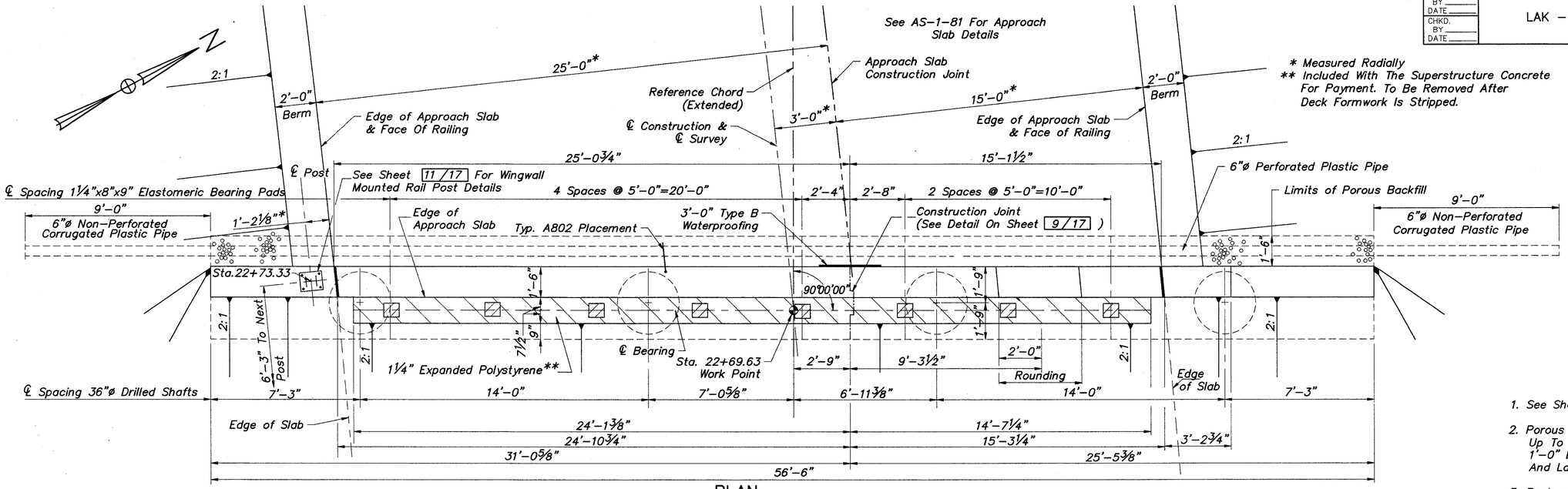

PLAN

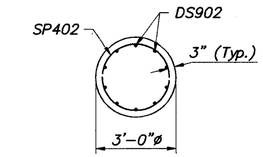

SECTION D–D

Notes:

1. See Sheet 11/17 For Sections A–A & B–B.
2. Porous Backfill, 1'–6" Thick, Shall Extend Up To The Plane Of The Subgrade, To 1'–0" Below The Embankment Surface, And Laterally To The Ends Of The Wingwalls.
3. Backwall And Wingwall Concrete Above The Level Of The Bridge Seat Shall Not Be Placed Until After The Deck Slab Has Been Placed.
4. Required Bar Laps: As Noted.
5. Notation: E.F.–Each Face; F.F.–Far Face; C.J.–Construction Joint; Typ.–Typical; Min.–Minimum; EL.–Elevation; Clr.–Clear.

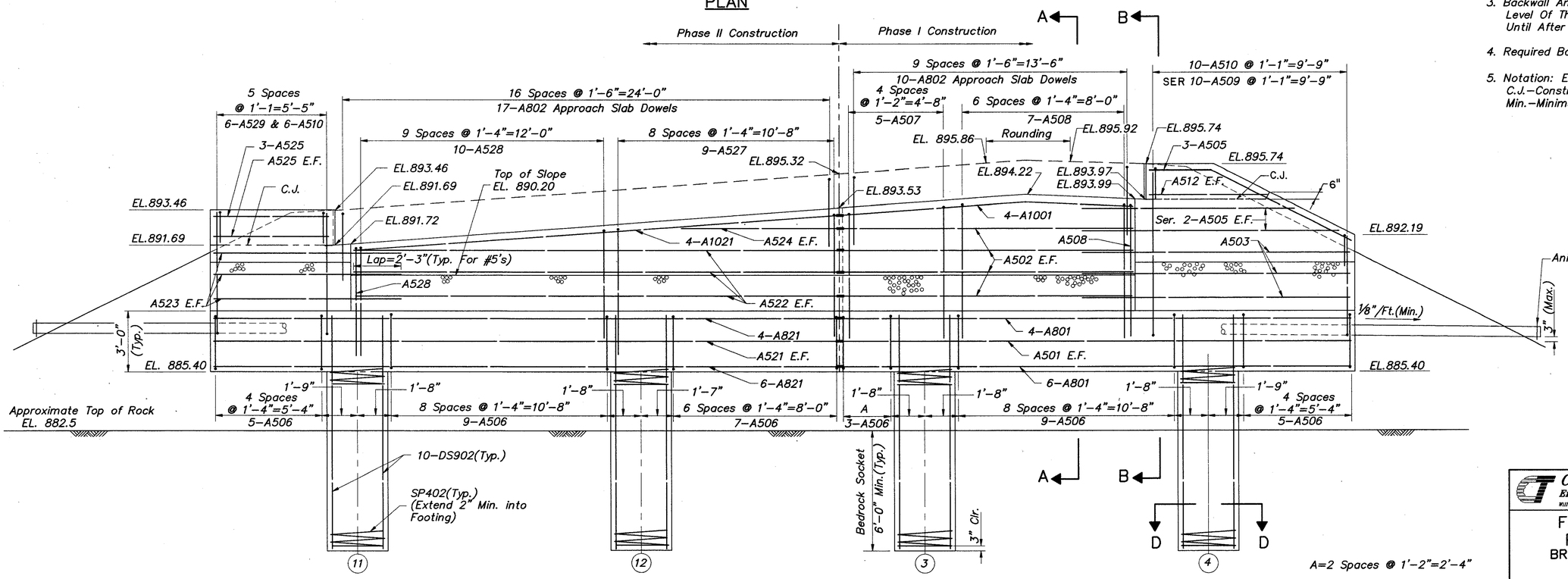

ELEVATION

CT Consultants, Inc.
Engineers • Architects • Planners
Willoughby • Mentor • Columbus • North Canton • Canfield

10/17

FORWARD ABUTMENT
PLAN & ELEVATION
BRIDGE NO. LAK–608–0075
OVER BIG CREEK
LAKE COUNTY

DESIGNED	DRAWN	TRACED	CHECKED	REVIEWED DATE	REVISED
R.L.B.	R.I.P.	R.I.P.	J.P.R.	J.E.A. 5-29-93	

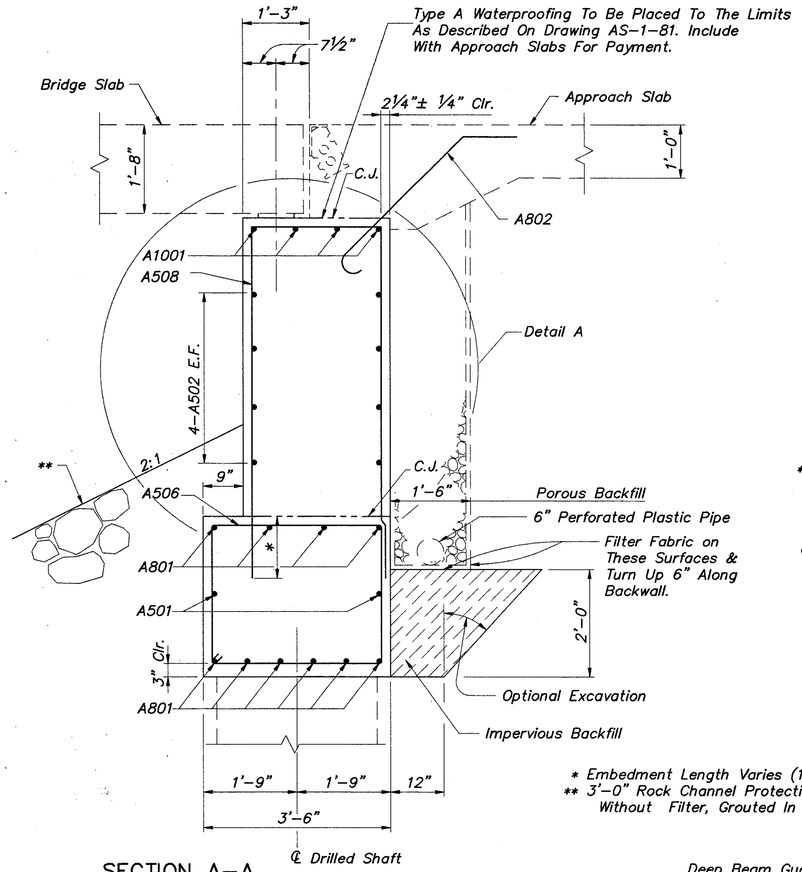

SECTION A–A

* Embedment Length Varies (1'–2" Min.).
** 3'–0" Rock Channel Protection, Type A Without Filter, Grouted In Place

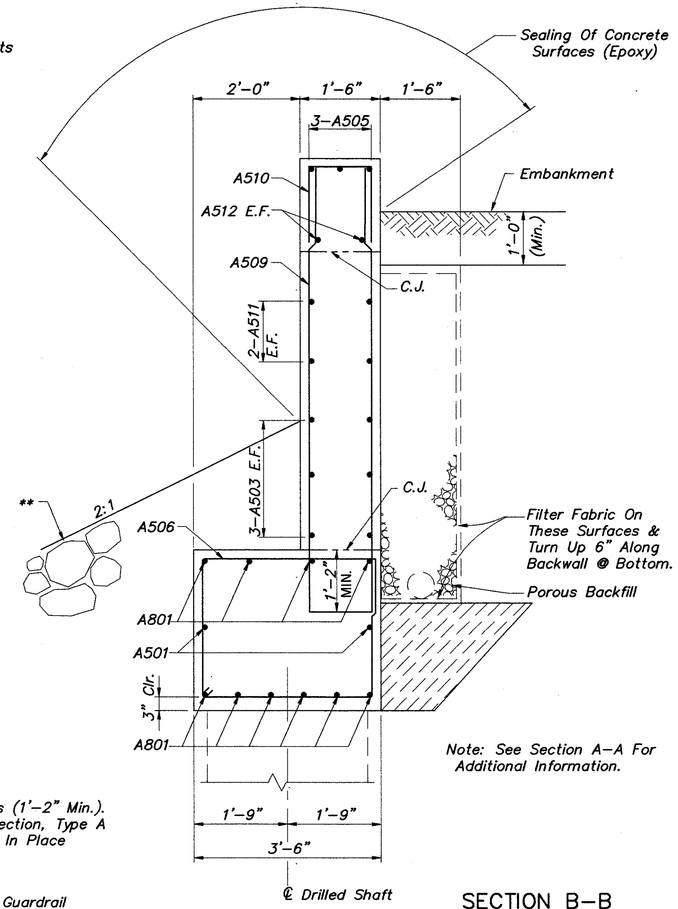

Note: See Section A–A For Additional Information.

SECTION B–B

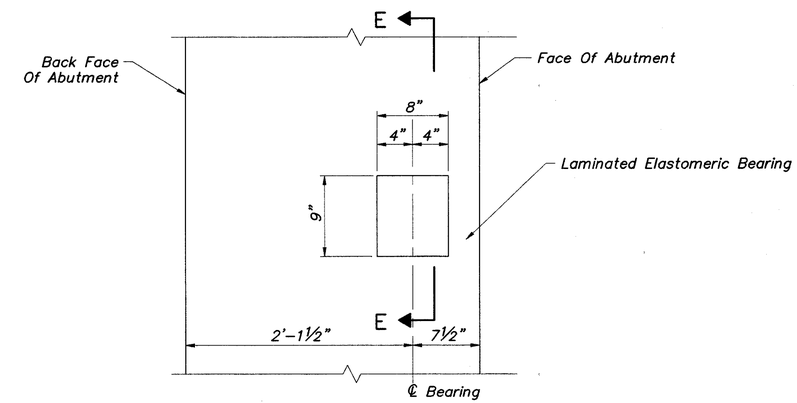

LAMINATED ELASTOMERIC BEARING PAD ORIENTATION

Rear Abutment – As Shown
Forward Abutment – Opposite Hand

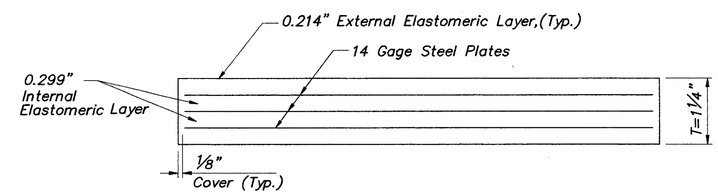

Note: AASHTO Design Method A (14.4.1, 15th Edition) Was Used For The Bearing Pad Design. Elastomer Shall Be 50 Durometer, Grade 3.

SECTION E–E

Bearing Reaction:

Dead Load = 22.0 k
Live Load = 12.6 k
Maximum Design Load = 34.6 k

Notation: E.F.– Each Face; Clr.– Clear; Typ.– Typical.

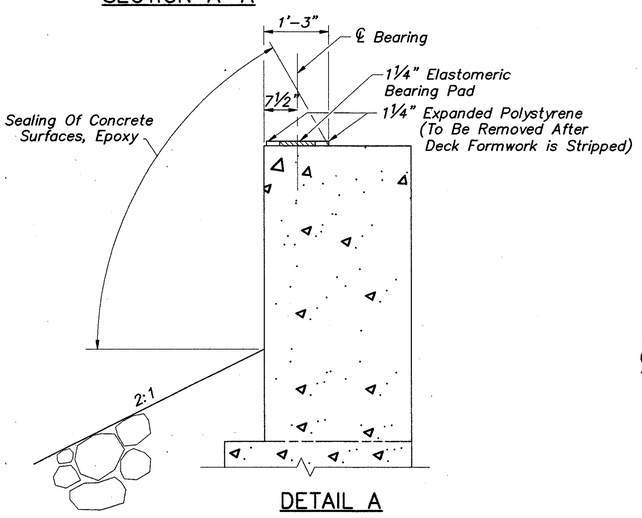

DETAIL A

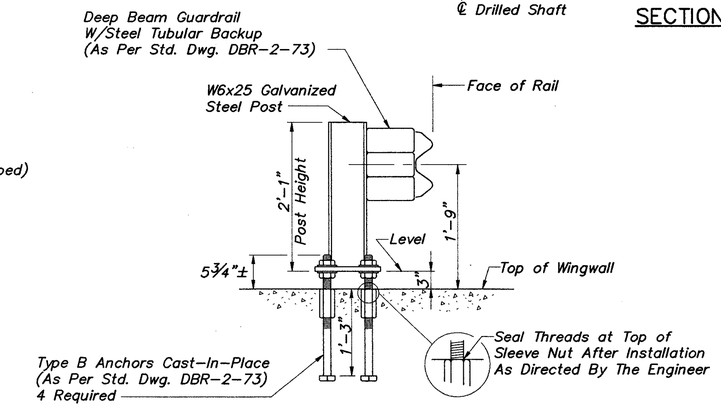

WINGWALL MOUNTED RAILPOST

Steel Plates, Anchors, Nuts And Washers Shall Be Galvanized As Per 711.02. Cost of the Backwall Mounted Posts, Base Plates, Connections And Anchorage Shall Be Included With Item 517, Railing For Payment.

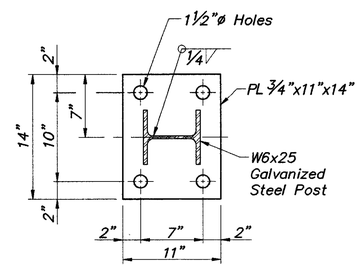

GUARDRAIL POST BASE PLATE

See Plan on Sheets 9/17 And 10/17 For Location And Orientation. (2 Required)

CT Consultants, Inc.
Engineers • Architects • Planners
Willoughby • Mentor • Columbus • North Canton • Canfield

11/17

ABUTMENT DETAILS
BRIDGE NO. LAK–608–0075
OVER BIG CREEK
LAKE COUNTY

DESIGNED	DRAWN	TRACED	CHECKED	REVIEWED	DATE	REVISED
R.L.B.	R.I.P.	R.I.P.	J.P.R.	J.E.A.	5-29-93	

CALC. BY	LAK – 608 – 0.75	OHIO	40/45
CHKD. BY		FHWA REGION 5	
DATE			

* Measured Radially
** Included With The Superstructure Concrete For Payment.

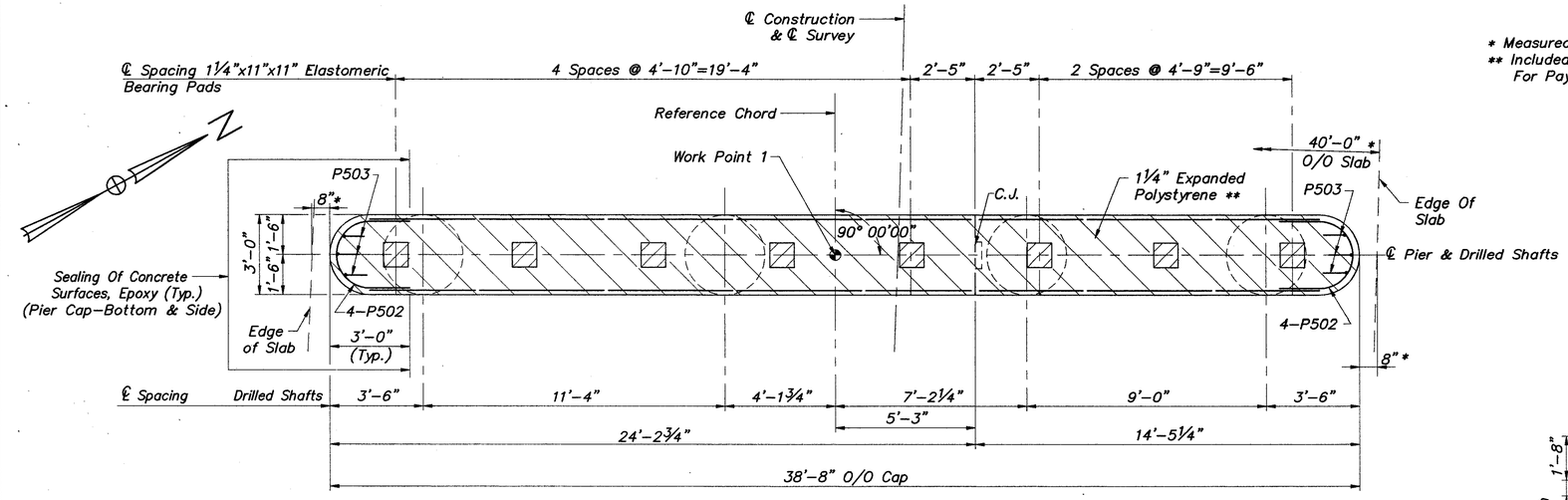

PIER 1 PLAN

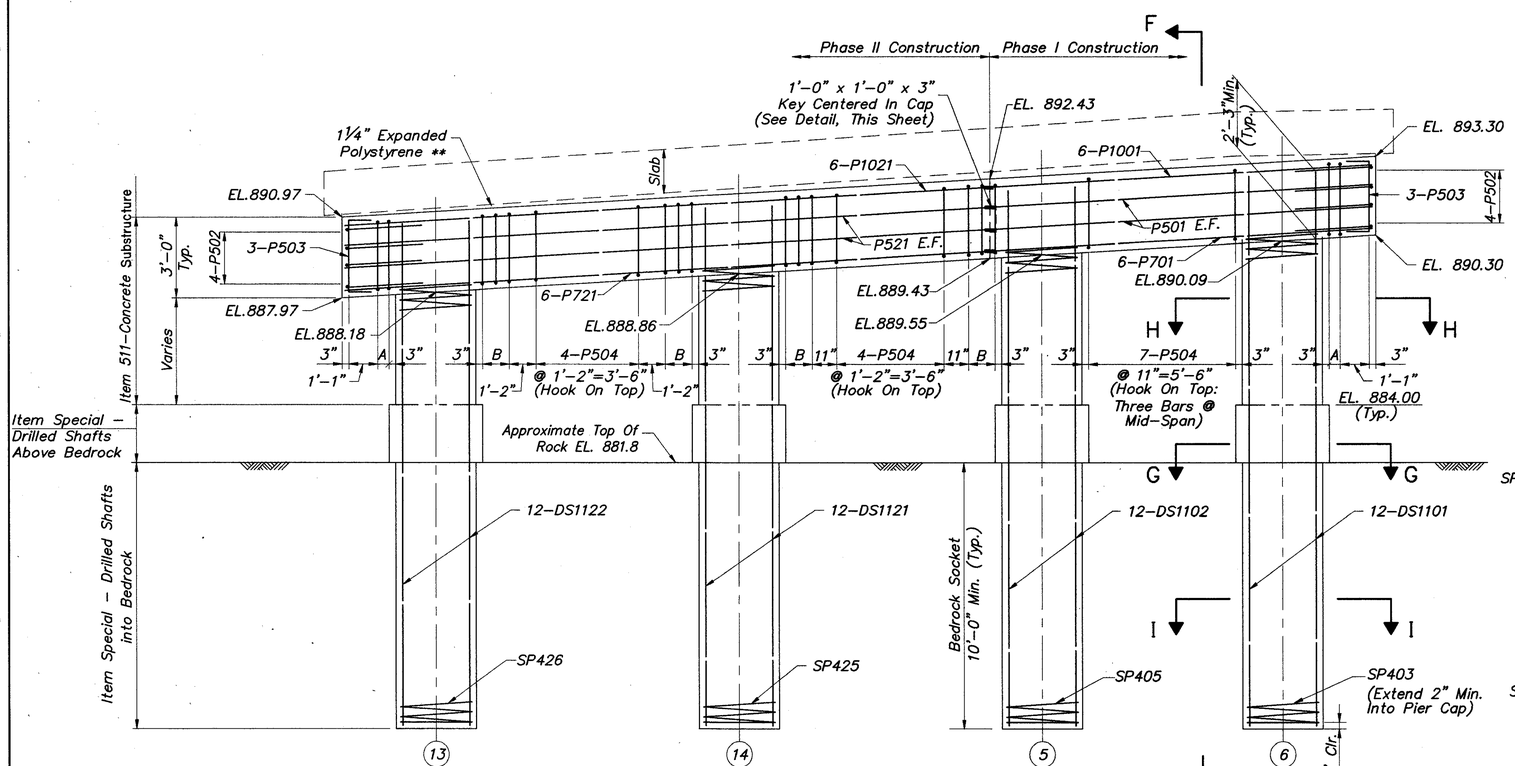

A=2–P504 @ 5"=5" (Hook On Bottom)
B=3–P504 @ 6"=1'–0" (Hook On Bottom)

PIER 1 ELEVATION

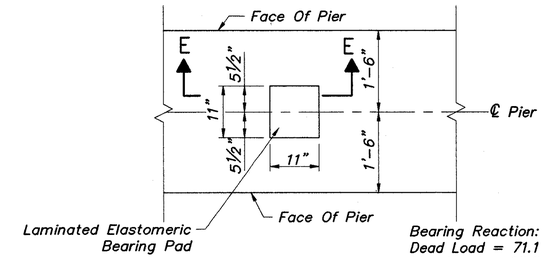

Bearing Reaction:
Dead Load = 71.1 k
Live Load = 16.6 k
Maximum Design Load = 87.7 k

Note: For Section E–E, See Sheet 11/17

LAMINATED ELASTOMERIC BEARING PAD ORIENTATION

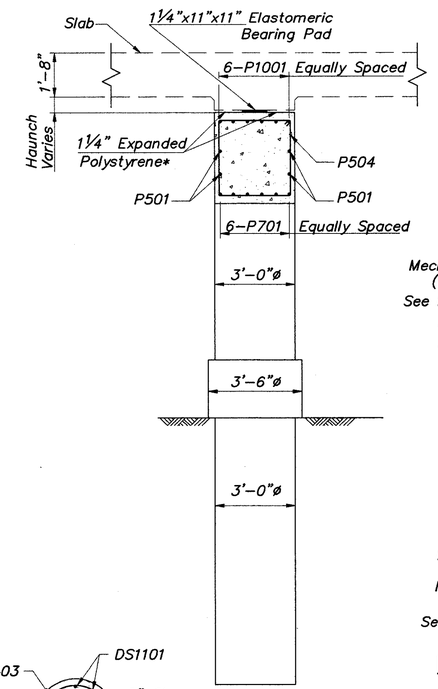

SECTION F–F

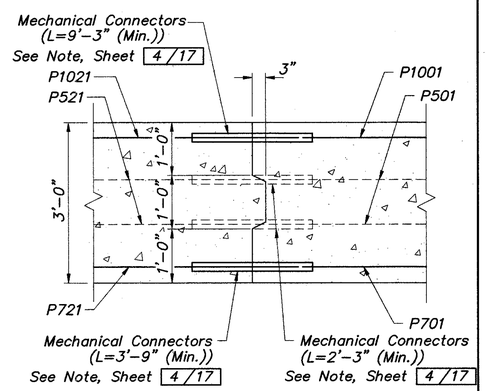

PIER CAP CONSTRUCTION JOINT DETAIL
(Section Shown)

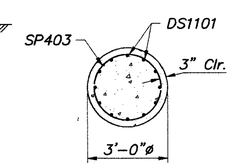

SECTION I–I

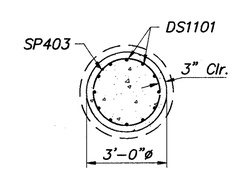

SECTION H–H

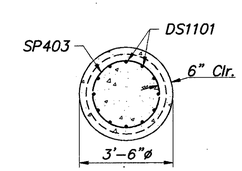

SECTION G–G

Notes:

1. Notation: E.F.–Each Face; Ser.–Series; C.J.–Construction Joint; Typ.–Typical; Min.–Minimum; EL.–Elevation; Clr.–Clear.

CT Consultants, Inc.
Engineers • Architects • Planners
Willoughby • Mentor • Columbus • North Canton • Canfield

12/17

PIER 1 PLAN & ELEVATION
BRIDGE NO. LAK–608–0075
OVER BIG CREEK
LAKE COUNTY

DESIGNED	DRAWN	TRACED	CHECKED	REVIEWED DATE	REVISED
R.L.B.	R.I.P.	R.I.P.	J.P.R.	J.E.A. 5-29-93	

CALC. BY	LAK – 608 – 0.75	OHIO	41/45
CHKD. BY		FHWA REGION 5	
DATE			

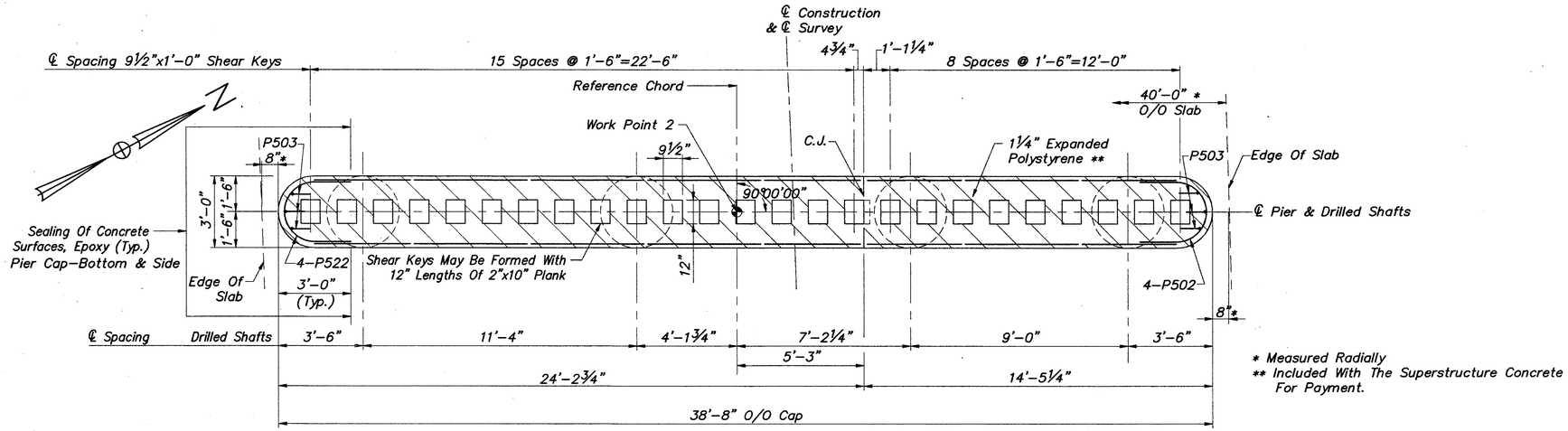

* Measured Radially
** Included With The Superstructure Concrete For Payment.

PIER 2 PLAN

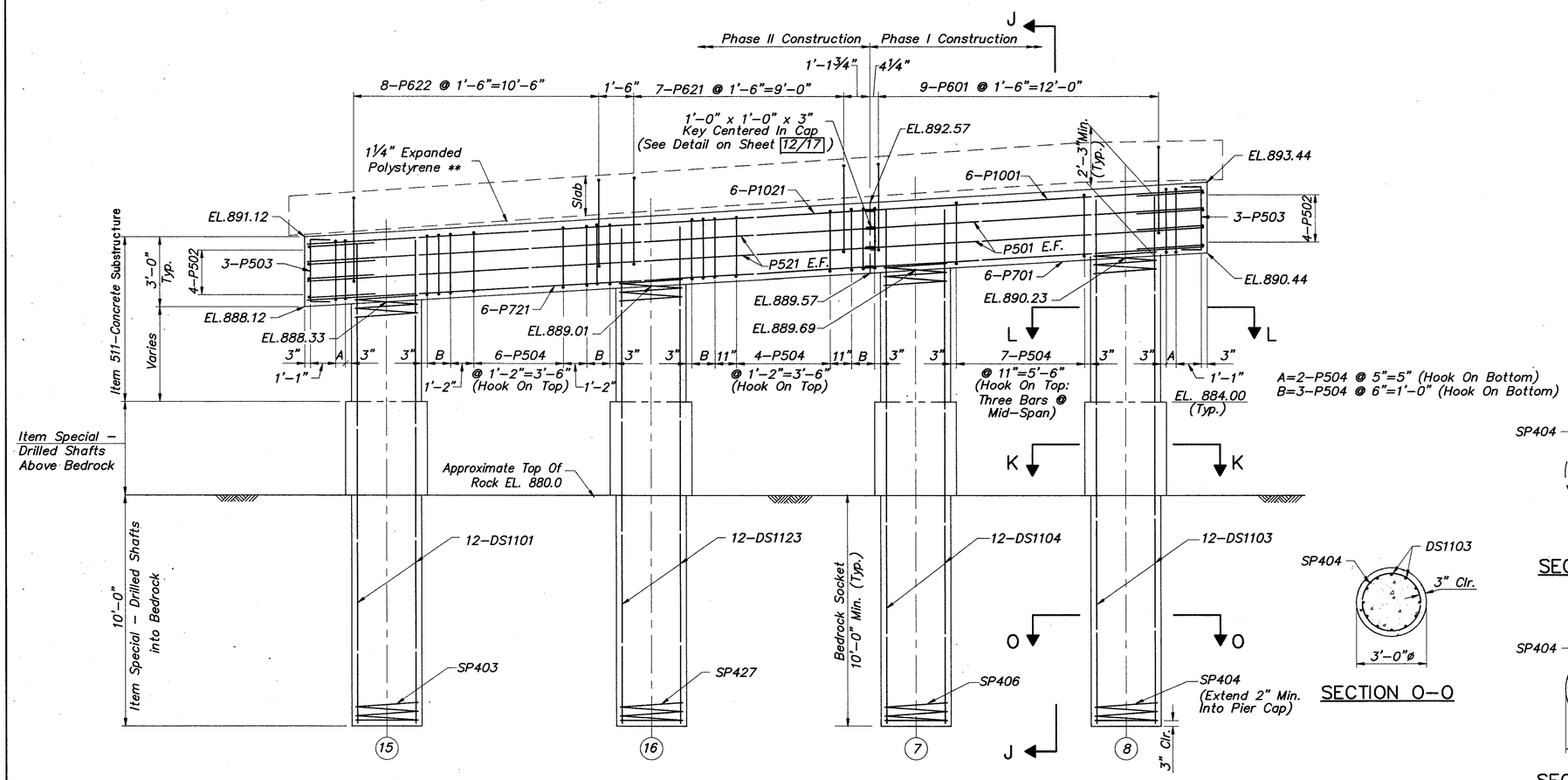

PIER 2 ELEVATION

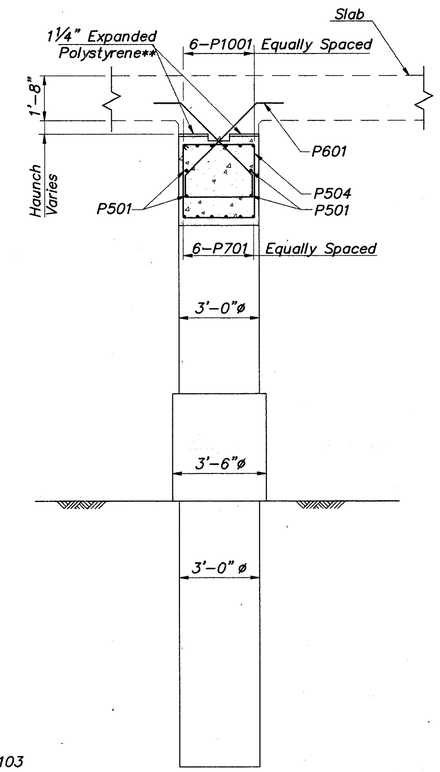

SECTION J–J

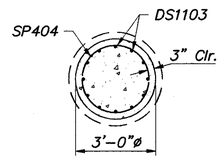

SECTION L–L

SECTION O–O

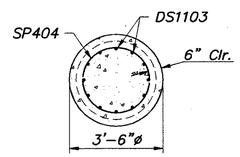

SECTION K–K

Notes:

1. Notation: E.F.–Each Face; Ser.–Series; C.J.–Construction Joint; Typ.–Typical; Min.–Minimum; EL.–Elevation; Clr.–Clear

CT Consultants, Inc.
Engineers • Architects • Planners
Willoughby • Mentor • Columbus • North Canton • Canfield

13/17

PIER 2 PLAN & ELEVATION
BRIDGE NO. LAK–608–0075
OVER BIG CREEK
LAKE COUNTY

DESIGNED	DRAWN	TRACED	CHECKED	REVIEWED DATE	REVISED
R.L.B.	R.I.P.	R.I.P.	J.P.R.	J.E.A. 5-29-93	

CALC. BY	LAK – 608 – 0.75	OHIO	42/45
CHKD. BY		FHWA REGION 5	
DATE			

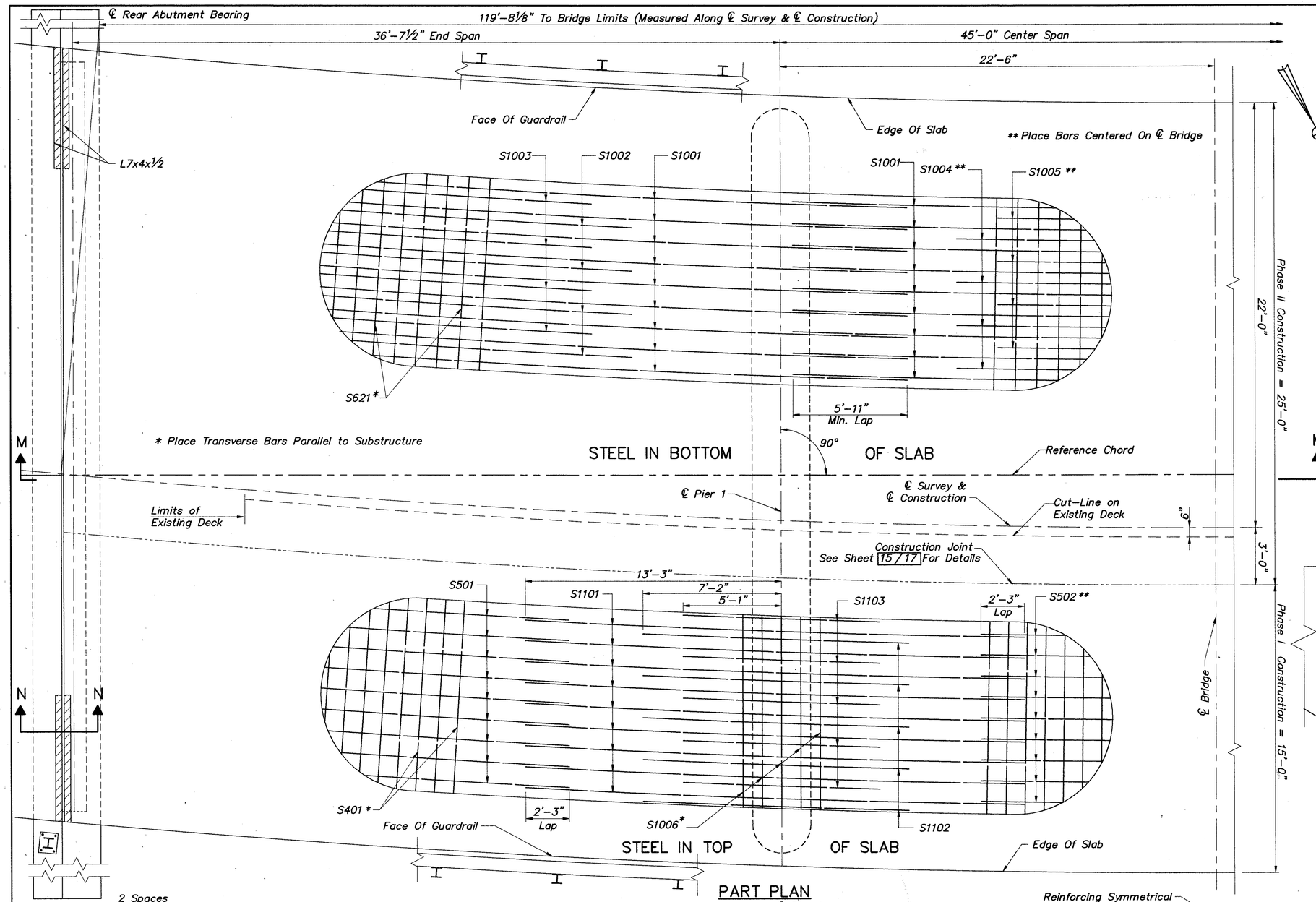

PART PLAN

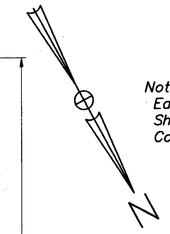

Note: The Joint Seal For Each Bridge Deck Joint Shall Be Furnished In One Continuous Piece.

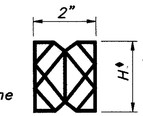

♦ See Manufacturer's Catalog For Seal Actually Chosen For Use.

COMPRESSION SEAL DETAIL

D.S. Brown's CV2000, Watson Bowman & Acme's WJ–200, Or An Approved Alternate.

	Temp.	30° F	40° F	50° F	60° F	70° F	80° F	90° F
"A"	Rear Abut.	1 9/16"	1½"	1 7/16"	1⅜"	1 5/16"	1¼"	1¼"
	Fwd. Abut.	1 5/16"	1 5/16"	1¼"	1¼"	1¼"	1¼"	1¼"

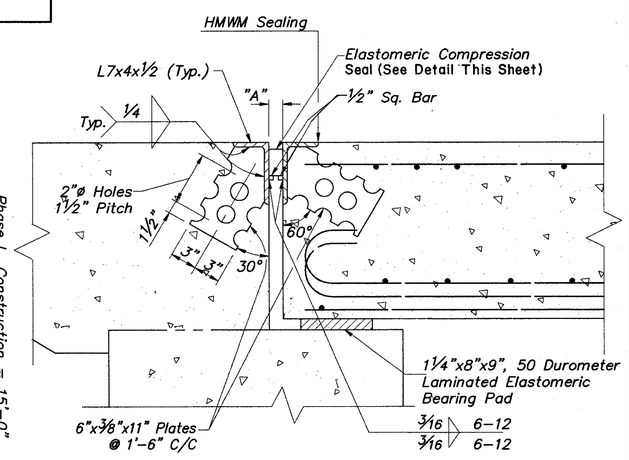

SECTION N–N

Notes:

1. For Transverse Section Of Slab, See Sheet 15/17.
2. For Expansion Joint Butt Splice Details, See Sheet 15/17.

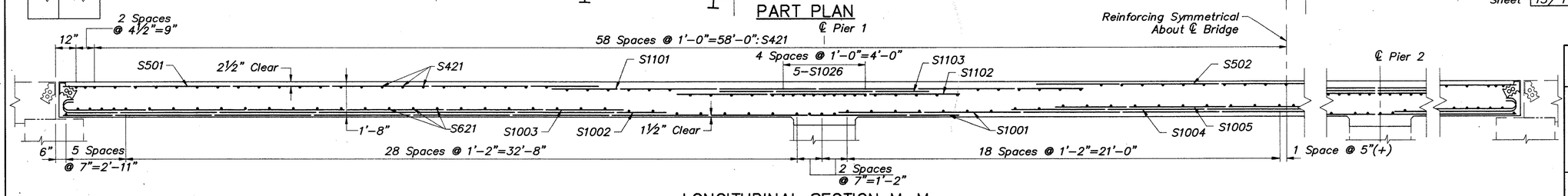

LONGITUDINAL SECTION M–M

CT Consultants, Inc.
Engineers • Architects • Planners
Willoughby • Mentor • Columbus • North Canton • Canfield

14/17

SUPERSTRUCTURE DETAILS
BRIDGE NO. LAK–608–0075
OVER BIG CREEK
LAKE COUNTY

DESIGNED	DRAWN	TRACED	CHECKED	REVIEWED DATE	REVISED
R.L.B.	R.I.P.	R.I.P.	J.P.R.	J.E.A. 5-29-93	

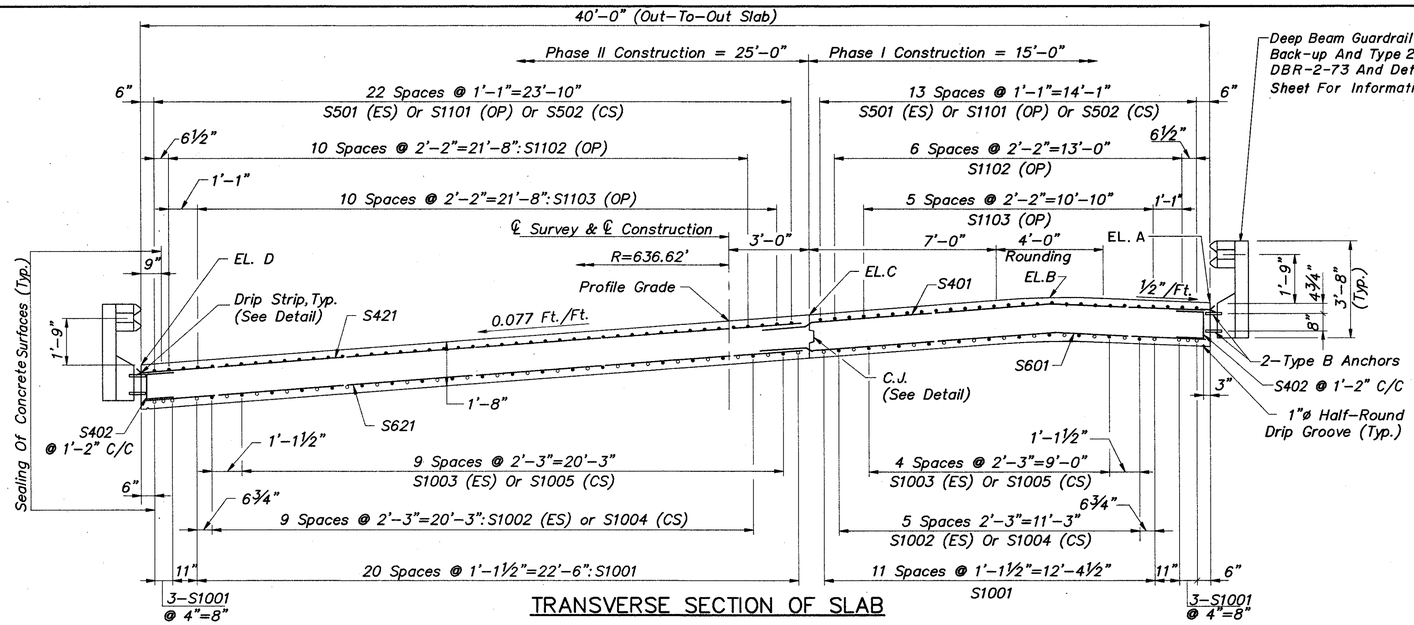

TRANSVERSE SECTION OF SLAB

Deep Beam Guardrail With Tubular Back-up And Type 2 Post. (See DBR-2-73 And Details On This Sheet For Information.)

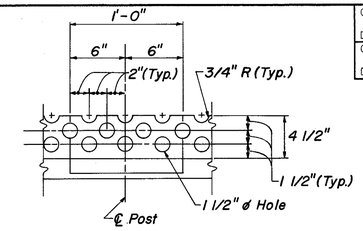

DRIP STRIP PLAN

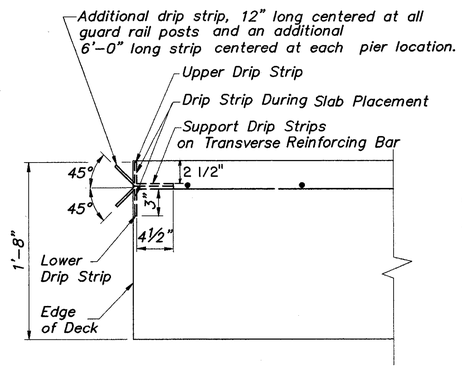

DRIP STRIP DETAIL, SECTION A–A

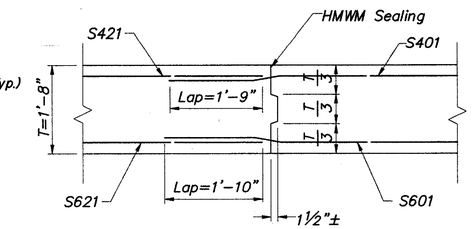

DECK CONSTRUCTION JOINT DETAIL

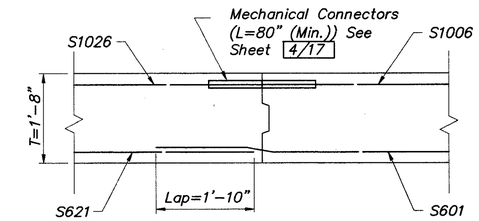

DECK CONSTRUCTION JOINT DETAIL (Over Piers)

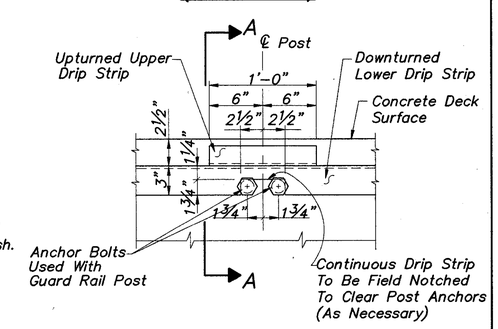

DRIP STRIP DETAIL

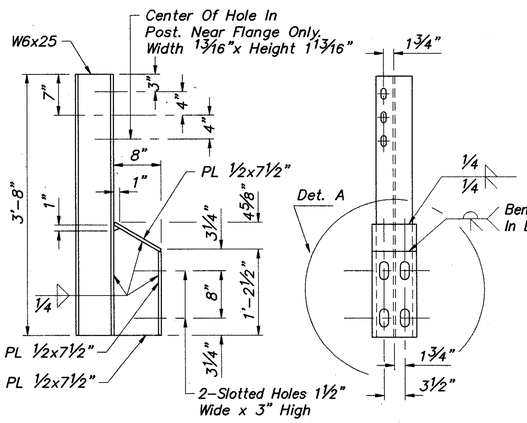

TYPE 2 POST DETAIL

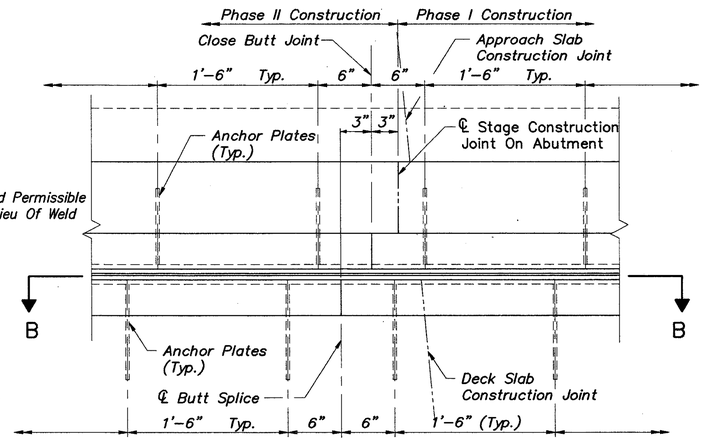

PLAN AT END DAM SPLICE

STAINLESS STEEL DRIP STRIP: Prior to the Concrete Deck Placement A Bend Drip Strip shall be Installed Along the Edges of the Deck By Anchoring To The Top Layer of Reinforcing Steel and being Butted, With A 90 Degree Bend, Against The Formwork. An Additional 1'–0" Long Drip Strip shall also be Installed Centered on Each Post. An Additional 6' Long Drip Strip Shall Be Installed Centered on Each Pier.

The Strips shall be Placed the Full Length of the Deck, Ending at the Abutments. Where Splices are Required the Individual Pieces shall be butted Together. Stainless Steel Shall Be 22 gauge ASTM A167, Type 304, Mill Finish.

The Final Pay Quantity shall be Actual Overall Length of the Drip Strip. All Laps and Additional Strips at Posts and Piers shall not be Measured for Payment.

Payment shall be at the Contract Price Bid for Item Special, Linear Feet, Steel Drip Strip, which shall Include All Materials, Labor, Tools, and Incidentals Necessary To Complete The Item.

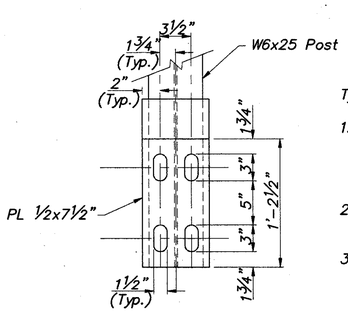

DETAIL "A"

Type 2 Post Notes:

1. All Dimensions For Shapes And Plates Shown On This Drawing Supersedes Those Shown On Standard Drawing DBR–2–73, Dated 4–10–73.
2. Structural Steel Shapes And Plates Shall Conform To ASTM A36.
3. Galvanizing: All Shapes And Plates Shall Be Galvanized In Accordance With 711.02.

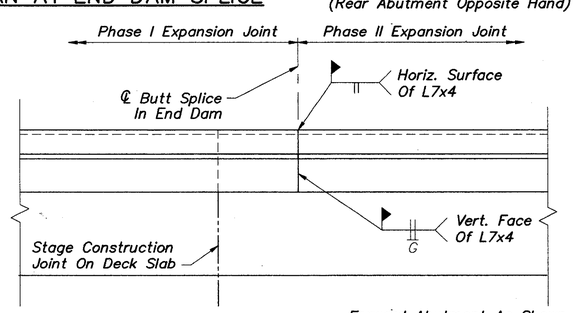

ELEVATION B–B

SCREED ELEVATIONS

Elevation Line	Span 1			Span 2		Span 3	
	℄ Brg. Rear Abut.	½	Pier 1	½	Pier 2	½	℄ Brg. Fwd. Abut.
"A"	895.41	895.22	895.04	895.10	895.18	895.47	895.73
"B"	895.67	895.48	895.30	895.35	895.44	895.72	895.99
"C"	894.99	894.79	894.61	894.66	894.75	895.04	895.32
"D"	893.11	892.89	892.69	892.74	892.84	893.14	893.45

SCREED ELEVATIONS Given Are For The Top Surface Of The Concrete Deck Prior To Concrete Placement. Allowances Have Been Made For Anticipated Deflections Due To The Weight Of The Concrete Deck. Center–span Elevations Shall Be Adjusted Upward Appropriate Amounts To Compensate For Anticipated Falsework Deflections. Forms For The Bottom Surface Of The Slab Shall Be Constructed Parallel To And Constant Distance (Slab Thickness) Below Adjusted Screed Elevations.

Notes:

1. All Transverse Dimensions For The Slab Are Measured Radially.
2. For Deck Part Plan And Longitudinal Section, See Sheet 14/17.
3. For Additional Expansion Joint Information, See EXJ–3–82.
4. Notation: ES–(At) End Spans; OP–Over Piers; CS–(At) Center Span; C.J.–Construction Joint; Typ.–Typical; EL.–Elevation; R–Radius

CT Consultants, Inc.
Engineers • Architects • Planners
Willoughby • Mentor • Columbus • North Canton • Canfield

15/17

SUPERSTRUCTURE DETAILS
BRIDGE NO. LAK–608–0075
OVER BIG CREEK
LAKE COUNTY

DESIGNED	DRAWN	TRACED	CHECKED	REVIEWED	DATE	REVISED
R.L.B.	R.I.P.	R.I.P.	J.P.R.	J.E.A.	5-29-93	

REINFORCING STEEL BAR SCHEDULE

MARK	NUMBER REAR	NUMBER FORWARD	NUMBER TOTAL	LENGTH	WEIGHT	TYPE	A	B	C	D	H	INC.	NUMBER PHASE1	NUMBER PHASEII
ABUTMENTS DRILLED SHAFT REINFORCEMENT**														
SP401	4		4	9'–10"	764	51	2'–6"	4½"					2	2
SP402		4	4	8'–10"	696	51	2'–6"	4½"					2	2
DS901	40		40	12'–6"	1,700	STR							20	20
DS902		40	40	11'–6"	1,564	STR							20	20
ABUTMENTS														
A501*	2	2	4	25'–2"	105	STR							4	
A502*	8	8	16	14'–3"	238	STR							16	
A503	10	10	20	13'–1"	273	STR							20	
A505	3	3	6	10'–9"	67	9	7'–9"	3'–1"			24		6	
A506	38	38	76	11'–11"	945	10	2'–7"	3'–2"					34	42
A507	5	5	10	15'–4"	160	6	2'–5"	6'–7"	6'–7"				10	
A508	8	8	16	16'–0"	267	6	2'–5"	6'–11"	6'–11"				16	
A509	1–Ser. of 10	1–Ser. of 10	2–Ser. of 10	10'–11" 20'–7"	329	6	1'–2"	5'–0" 9'–10"	5'–0" 9'–10"			1'–1"	2 Ser. of 10	
A510	16	16	32	3'–11"	131	6	1'–2"	1'–6"	1'–6"				20	12
A511	2–Ser. of 2	2–Ser. of 2	4–Ser. of 2	10'–3" 12'–4"	94	STR						2'–1"	4 Ser. of 2	
A512	2	2	4	5'–3"	22	STR							4	12
A521*	2	2	4	30'–9"	128	STR								4
A522*	6	6	12	23'–9"	297	STR								12
A523	6	6	12	9'–2"	115	STR								12
A524*	2	2	4	7'–6"	31	STR								4
A525	5	5	10	5'–8"	59	STR								10
A527	9	9	18	14'–6"	272	6	2'–5"	6'–2"	6'–2"					18
A528	11	11	22	12'–10"	294	6	2'–5"	5'–4"	5'–4"					22
A529	6	6	12	13'–1"	164	6	1'–2"	6'–1"	6'–1"					12
A801*	10	10	20	25'–2"	1,344	STR							20	
A802	27	27	54	5'–9"	829	8	12"	3'–4"					20	34
A821*	10	10	20	30'–9"	985	STR								20
A1001*	4	4	8	14'–3"	491	9	9'–2"	5'–1"			100		8	
A1021*	4	4	8	23'–9"	818	STR								8
ABUTMENTS TOTAL WEIGHT = 8,458														

MARK	NUMBER REAR	NUMBER FORWARD	NUMBER TOTAL	LENGTH	WEIGHT	TYPE	A	B	C	D	H	INC.	NUMBER PHASE1	NUMBER PHASEII
SUPERSTRUCTURE														
S401			121	16'–7"	1,340	STR							121	
S402			204	3'–0"	409	6	1'–2"	12"	12"				102	102
S421			121	24'–10"	2,007	STR								121
S501			74	26'–1"	2,013	STR							28	46
S502			37	24'–5"	942	STR							14	23
S601			112	16'–8"	2,804	STR							112	
S621			112	24'–10"	4,177	STR								112
S1001			117	43'–7"	21,942	STR							45	72
S1002			32	29'–4"	4,039	2	27'–11"						12	20
S1003			30	27'–3"	3,518	2	25'–10"						10	20
S1004			16	26'–9"	1,842	STR							6	10
S1005			15	22'–6"	1,452	STR							5	10
S1006*			10	14'–10"	638	STR							10	
S1026*			10	24'–10"	1,068	STR								10
S1101			74	25'–10"	10,157	STR							28	46
S1102			36	13'–9"	2,630	STR							14	22
S1103			34	10'–2"	1,837	STR							12	22
SUPERSTRUCTURE TOTAL WEIGHT = 62,815														

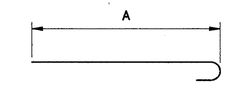

TYPE 2

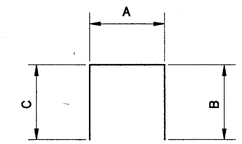

TYPE 6

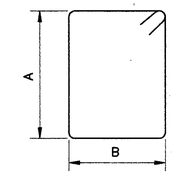

TYPE 10

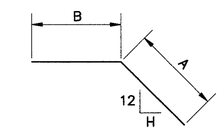

TYPE 9

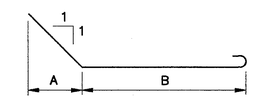

TYPE 8

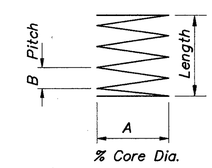

TYPE 51

* Bars Have Mechanical Connector Splices.
** Included With Item Special – "Drilled Shafts" for Payment.

Bar Size is Indicated in the Bar Mark. The First Digit Where Three Digits are used, and the First Digits Where Four are Used, Indicate the Bar Size Number. For Example, A700 is a No. 7 and A1014 is a No. 10 Size. Bar Dimensions Shown are Out to Out Unless Otherwise Indicated. R Indicates Inside Radius, Unless Otherwise Noted. "Std." Written in Place of a Dimension Indicates a Standard Bend at the End of the Bar.

All Reinforcing Steel to be Epoxy Coated

CT Consultants, Inc.
Engineers • Architects • Planners
Willoughby • Mentor • Columbus • North Canton • Youngstown
16/17

REINFORCING SCHEDULE

BRIDGE NO. LAK–608–0075
OVER BIG CREEK
LAKE COUNTY

DESIGNED	DRAWN	TRACED	CHECKED	REVIEWED DATE	REVISED
R.L.B.	R.I.P.	R.I.P.	J.P.R.	J.E.A. 5–29–93	

REINFORCING STEEL BAR SCHEDULE

MARK	NUMBER REAR	NUMBER FORWARD	NUMBER TOTAL	LENGTH	WEIGHT	TYPE	A	B	C	D	H	INC.	NUMBER PHASE I	NUMBER PHASE II
PIERS DRILLED SHAFT REINFORCEMENT**														
SP403	1	1	2	18'–4"	688	51	2'–6"	4½"					1	1
SP404		1	1	20'–3"	378	51	2'–6"	4½"					1	
SP405	1		1	17'–9"	333	51	2'–6"	4½"					1	
SP406		1	1	19'–9"	369	51	2'–6"	4½"					1	
SP425	1		1	17'–1"	321	51	2'–6"	4½"						1
SP426	1		1	16'–5"	309	51	2'–6"	4½"						1
SP427		1	1	19'–0"	356	51	2'–6"	4½"						1
DS1101	12	12	24	20'–9"	2,646	STR							12	12
DS1102	12		12	20'–2"	1,286	STR							12	
DS1103		12	12	22'–8"	1,445	STR							12	
DS1104		12	12	22'–2"	1,413	STR							12	
DS1121	12		12	19'–6"	1,243	STR								12
DS1122	12		12	18'–10"	1,201	STR								12
DS1123		12	12	21'–5"	1,366	STR								12
				PIERS										
P501*	4	4	8	13'–1"	109	STR							8	
P502	8	8	16	7'–3"	121	45	1'–3"	1'–7"	2'–8"	1'–7"			8	8
P503	6	6	12	4'–1"	51	6	2'–8"	10"	10"				6	6
P504	31	31	62	11'–2"	722	10	2'–8"	2'–8"					20	42
P521*	4	4	8	22'–11"	191	STR								8
P601		9	9	13'–10"	187	75	2'–8"	12"	2'–8"	12"	12"		9	
P621		7	7	13'–6"	142	75	2'–8"	10"	2'–8"	12"	12"			7
P622		8	8	13'–2"	158	75	2'–8"	8"	2'–8"	12"	12"			8
P701*	6	6	12	13'–1"	321	STR							12	
P721*	6	6	12	22'–11"	562	STR								12
P1001*	6	6	12	13'–1"	675	STR							12	
P1021*	6	6	12	22'–11"	1,184	STR								12
		PIERS TOTAL WEIGHT = 4,423												

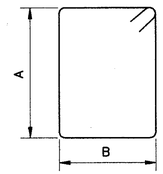

TYPE 10

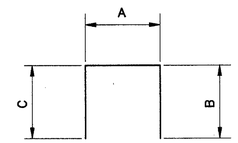

TYPE 6

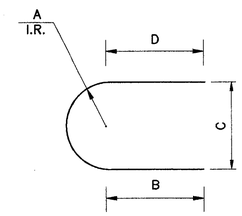

TYPE 45

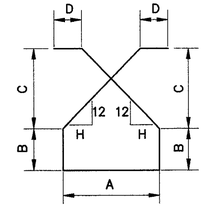

TYPE 75

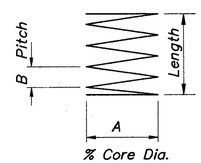

TYPE 51

* Bars Have Mechanical Connector Splices.
** Included With Item Special – "Drilled Shafts" for Payment.

Bar Size is Indicated in the Bar Mark. The First Digit Where Three Digits are used, and the First Digits Where Four are Used, Indicate the Bar Size Number. For Example, A700 is a No. 7 and A1014 is a No. 10 Size. Bar Dimensions Shown are Out to Out Unless Otherwise Indicated. R Indicates Inside Radius, Unless Otherwise Noted. "Std." Written in Place of a Dimension Indicates a Standard Bend at the End of the Bar.

All Reinforcing Steel to be Epoxy Coated

CT Consultants, Inc.
Engineers • Architects • Planners
Willoughby • Mentor • Columbus • North Canton • Youngstown

17/17

REINFORCING SCHEDULE

BRIDGE NO. LAK–608–0075
OVER BIG CREEK
LAKE COUNTY

DESIGNED	DRAWN	TRACED	CHECKED	REVIEWED	DATE	REVISED
R.L.B.	R.I.P.	R.I.P.	J.P.R.	J.E.A.	5–29–93	