H-12

FED. RD. DIVISION	STATE	PROJECT	
2	OHIO	STATE	

1/10

LAKE COUNTY
LAK-608-2.95

SEP 20 1963
GROUND PHOTOLAB

STATE OF OHIO
DEPARTMENT OF HIGHWAYS
LAK-608-2.95
LAKE COUNTY
CONCORD TOWNSHIP

CONVENTIONAL SIGNS

Center Line
Corporation Line
Existing R/W
Proposed R/W
Slope Easement
Property Line
Fence Line
Power Pole
Telephone Pole
Trees and Stumps to be Removed
Existing Retaining Wall
Existing Guard Rail
Proposed Guard Rail

INDEX OF SHEETS

Title Sheets	1
Typical Section	2
General Notes & Quantities	3
Plan & Profile	4
Cross Section	5-7
Site Plan of Culvert & Quantities	8
Culvert Details	9
Right of Way	10

LINE DATA

Begin Project Sta. 9+65.79
End Project Sta. 0+12.07
Net Length of Project = 953.72 L.F. = 0.180 Mi.
Begin Work Sta. 11+00.00
Station Equation Sta. 0+00.00 = Sta. 100+00.00
End Work Sta. 99+00.00
Total Length of Work = 1200.00 L.F. = 0.227 Mi.

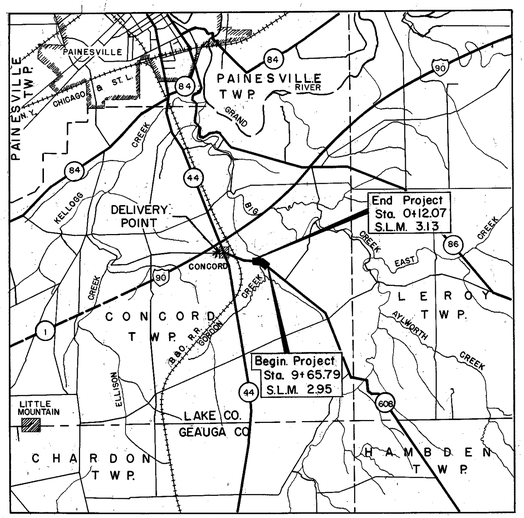

*DELIVERY POINT B.&O. R.R. AT CONCORD

AVERAGE HAUL-0.4 MI.

SCALE: 1" = 1 MI. 0 0.5 1 Mi.

LOCATION MAP

PORTION TO BE IMPROVED
STATE HIGHWAYS
OTHER HIGHWAYS

SCALE

PLAN AND PROFILE	HOR. 1" = 40' VERT. 1" = 5'
CROSS SECTIONS	1" = 5'

STANDARD DRAWINGS

NUMBER	DATE	NUMBER	DATE
DR-1	1-3-55		
G-7.07	6-1-56		
I-15 No. 2A	8-17-60		
I-15 No. 1	5-21-59		
L-3	4-1-50		
RI-1	7-15-58		
I-1,2,3,4&5	4-24-58		
L-1	4-1-50		
L-3-A	4-1-50		
T-35	1-2-56		
SP-53	11-25-58		

SUPPLEMENTAL SPECIFICATIONS

NUMBER	DATE	NUMBER	DATE

1959 SPECIFICATIONS

The Standard Specifications of the State of Ohio, Department of Highways, including changes and supplemental specifications listed in the proposal, shall govern this improvement.

The Right of Way for this improvement will be provided by the State of Ohio.

I hereby approve these plans and declare that the making of this improvement will not require the closing of the highway to traffic [illegible] and that provisions for maintenance and safety of traffic will be as set forth on the plans and estimates.

Approved Wm B. Henry
Date 9-29-60 Division Deputy Director

Approved Guy E. Weaver
Date 2-7-61 Deputy Director of Planning & Programming

Approved D. F. Overman
Date 12-5-60 Engineer of Bridges

Approved [illegible]
Date 12-7-60 Engineer of Location & Design

Approved C. W. McCaughey
Date 12-7-60 Deputy Director of Design & Construction

Approved [illegible]
Date 2-8-61 First Assistant Director

Approved E. L. Preston
Date 2-8-61 Director of Highways

FILE NUMBER	LAKE COUNTY	LAK-608-2.95
	DATE OF LETTING	
	CONTRACT NUMBER	

00205
(000101)

SEP 20 1963
GROUND PHOTOLAB

PLANS PREPARED BY
ALDEN E. STILSON & ASSOCIATES, Limited
CONSULTING ENGINEERS
75 PUBLIC SQUARE
CLEVELAND, OHIO
FOR
STATE OF OHIO

FEB 3 1961

FED. RD. DIVISION	STATE	PROJECT	
2	OHIO		

2/10

LAKE COUNTY
LAK-608-2.95

TYPICAL SECTIONS
TYPE T-35 on B-19
SCALE $\frac{3}{8}$" = 1'-0"

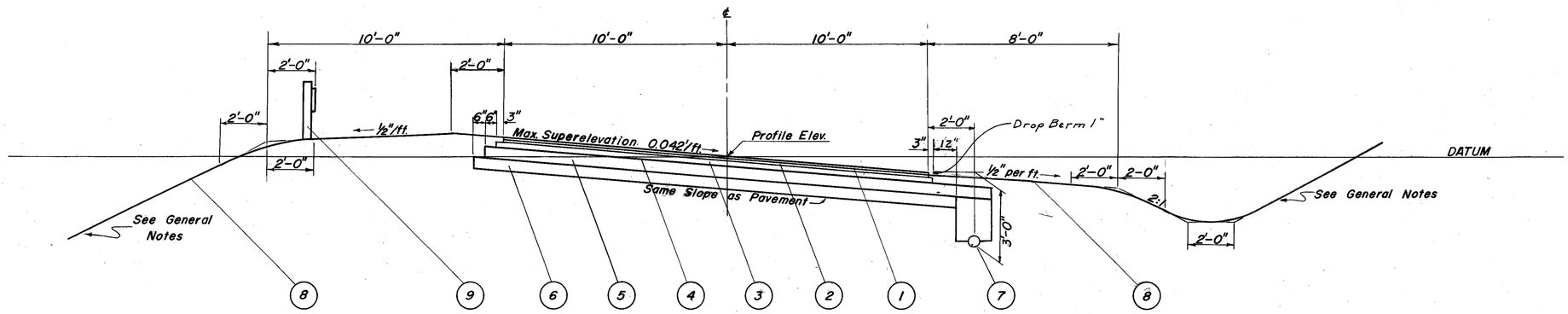

SUPERELEVATED SECTION
Sta. 0+12.07 To Sta. 9+65.79

1	* T-35	1" Asphaltic Concrete Surface Course (85-100), Type "C"
2	* B-35	1½" Asphaltic Concrete Leveling Course (85-100)
3	* B-35	3" Asphaltic Concrete Base Course (85-100)
4	T-30	Bituminous Prime Coat, Sec. M-5.7, RT-2 or RT-3 applied at the rate of 0.40 gal. per sq. yd.
5	B-19	6" Aggregate Base Course
6	I-22	6" Subbase Grading "A" or "B", as per plan
7	I-4	6" Underdrains
8	L-9	Seeding & Protecting
9	I-15	Guard Rail

GENERAL NOTES

1. Fills less than 10ft., 4:1 Slopes without Guard Rail
2. Fills greater than 10ft., 2:1 Slopes with Guard Rail
3. Cuts less than 10ft., 4:1 Slopes
4. Cuts greater than 10ft, 2:1 Slopes
5. Shoulders with Guard Rail shall be 10 ft.
   Shoulders without Guard Rail shall be 8ft.
6. Limit of Seeding & Protecting - 10 ft. beyond the work limits or to the Right-of-Way line when it is less

* T- Thicknesses shown are "designed" thicknesses as described in Section T-35.01 and B-35.01

FEB 3 1961

GENERAL NOTES & SUMMARY

GENERAL

FIELD OFFICE

THE CONTRACTOR SHALL PROVIDE A SUITABLE FIELD OFFICE IN ACCORDANCE WITH SEC. S-0.01(b) HAVING A MINIMUM FLOOR-SPACE OF 150 SQUARE FEET. THE CONTRACTOR SHALL HAVE A TELEPHONE INSTALLED AND MAINTAINED DURING CONSTRUCTION OF THE PROJECT.

UTILITY ADJUSTMENT

THE CONTRACTOR SHALL NOTIFY AT LEAST 48 HOURS BEFORE BREAKING GROUND ALL PUBLIC SERVICE CORPORATIONS HAVING WIRES, POLES, PIPE, CONDUITS, MANHOLES, OR OTHER STRUCTURES THAT MAY BE AFFECTED BY THIS OPERATION INCLUDING ALL STRUCTURES THAT ARE AFFECTED AND NOT SHOWN ON THESE PLANS. ANY AND ALL WORK REQUIRED FOR PUBLIC OR PRIVATE UTILITIES WILL BE DONE BY AND AT THE EXPENSE OF THEIR RESPECTIVE OWNERS, UNLESS OTHERWISE NOTED ON THESE PLANS.

UTILITY OWNERSHIP

THE CLEVELAND ELECTRIC ILLUMINATING CO. — CLEVELAND, O.
THE OHIO BELL TELEPHONE CO. — CLEVELAND, O.

REPLACEMENT

THE CONTRACTOR SHALL REPLACE AT HIS OWN EXPENSE ANY ITEM NOT SPECIFICALLY LISTED FOR REMOVAL THAT IS DAMAGED OR DESTROYED BY HIS OPERATIONS.

ELEVATION DATUM

ALL ELEVATIONS ARE BASED ON U.S.G.S. DATUM.

ESTIMATED QUANTITIES

SPECIFIC LOCATIONS AND USAGE OF ESTIMATED QUANTITIES SET UP IN THESE PLANS TO BE USED "AS DIRECTED BY THE ENGINEER" SHALL BE MADE A MATTER OF RECORD BY INCORPORATION INTO THE FINAL CHANGE ORDER GOVERNING COMPLETION OF THIS PROJECT.

ROADWAY

AGRICULTURAL LIMING MATERIALS

THE LOCATION AND NEED FOR AGRICULTURAL LIMING MATERIALS WILL BE DETERMINED BY LABORATORY TESTS, AFTER ROUGH GRADING OPERATIONS HAVE BEEN PERFORMED. QUANTITIES OF AGRICULTURAL LIMING MATERIAL AS SHOWN ON THE PLANS ARE SUFFICIENT FOR THE ENTIRE PROJECT, BUT WILL BE NON-PERFORMED FOR THE AREAS WHERE TESTS SHOW THAT THE LIMING MATERIAL IS NOT NEEDED.

FERTILIZER

FERTILIZER (12-12-12) SHALL BE USED IN CONNECTION WITH ALL SEEDING, AND SODDING AND SHALL BE APPLIED AT THE RATE OF TWENTY (20) POUNDS PER ONE THOUSAND (1000) SQUARE FEET.

REMOVAL OF TREES AND STUMPS

The size and number of trees and stumps shown below for removal are as nearly correct as available information permits. The State will not be responsible for any variations found during construction. The lump sum bid for Item E-9, Removal of Trees and Stumps, shall constitute full payment for this Item and no additional compensation will be allowed. All trees and stumps within the limits of construction shall be removed unless otherwise directed by the Engineer. Trees to be removed will be conspicuously marked by the Engineer.

	Trees	stumps
12" – 18"	20	0
18" – 24"	2	0
over 24"	3	1

SEEDING AND PROTECTING

Quantities for seeding are calculated for the soil areas as noted on Sheet No. 2, however the area to be seeded will be adjusted at the time of construction to the soil areas between the work limits and payment will be made on final measurment.

A Lump Sum Quantity has been provided to seed the soil area disturbed for the maintenance of traffic on the North side of the roadway.

SUBBASE GRADING

I-22 Subbase Grading "A" or "B", as per plan, Material for this item shall meet the requirements for I-22 grading "A" or "B" except that for both gradings the percent passing the No. 200 sieve shall not exceed ten.

Construction Procedures & Traffic Maintenance

Estimated quantities of Items T-10 & M-10 have been provided in the General Summary and shall be applied on the North side of the relocated roadway between the approximate limits of Sta. 99+00 to Sta. 3+50, and Sta. 6+00 to Sta. 11+00, or at locations specified by the Engineer in order that two-way traffic on a 16' minimum width shall be maintained. These estimated quantities shall be applied where directed and in the amounts specified by the Engineer. Payment for construction, maintenance, and subsequent removal of same shall be included in the lump sum bid for "Maintaining Traffic."

Part width base construction will be permitted between Sta. 0+12.07 and Sta. 1+50 if so directed by the engineer.

Maintenance of two-way traffic as described above shall be consistant with the requirements of the General Note on Sheet #8.

PAVEMENT

REMOVAL AND DISPOSAL OF EXISTING PAVEMENT, WALKS, ETC.

OUTSIDE NORMAL CONSTRUCTION LIMITS, AFTER THE EXISTING PAVEMENT HAS BEEN REMOVED THE OLD ROADWAY SHALL BE PLOWED, HARROWED AND DRAGGED TO A SMOOTH GRADE, THE OLD DITCHES FILLED AND THE ENTIRE AREA LEFT IN A NEAT CONDITION. COST OF THIS WORK SHALL BE INCLUDED IN THE UNIT PRICE BID FOR ITEM E-8, PAVEMENT REMOVAL. AFTER SHAPING TO DRAIN, THE ENTIRE AREA SHALL BE SEEDED. THE AREA FOR SEEDING HAS BEEN CALCULATED AND IS INCLUDED IN ITEM L-9, SEEDING AND PROTECTING, FOR PAYMENT.

THE COST OF REMOVAL AND DISPOSAL OF ALL CONCRETE, STONE, BRICK OR MACADAM PAVEMENTS, SIDEWALKS, STEPS, BASEMENT OR GARAGE FLOORS, FOUNDATION WALLS, RETAINING WALLS, DRIVEWAYS AND APRONS, AND ANY OTHER MISCELLANEOUS STRUCTURES AND OBSTRUCTIONS WITHIN THE CONSTRUCTION LIMITS SHALL BE INCLUDED IN THE UNIT PRICE BID FOR ITEM E-1, ROADWAY EXCAVATION UNLESS OTHERWISE NOTED ON THE PLANS.

WHEN EMBANKMENT MATERIAL IS TO BE SUPERIMPOSED UPON SUCH MATERIAL AND THE DEPTH OF THE EMBANKMENT EXCLUSIVE OF NEW PAVEMENT EXCEEDS THREE (3) FEET, THE MATERIAL SHALL BE BROKEN UP INTO PORTIONS WHOSE AREAS DO NOT EXCEED ONE (1) SQUARE FOOT BUT NEED NOT BE REMOVED. IF THE DEPTH OF THE EMBANKMENT IS NOT IN EXCESS OF THREE (3) FEET, THE MATERIAL SHALL BE ENTIRELY REMOVED, DISPOSED OF AND PAID FOR AS STATED ABOVE.

SUPERELEVATION

SUPERELEVATED CURVES SHALL BE BUILT WITHOUT CROWN. THE CROWN SHALL BE WORKED OUT OF THE PAVEMENT ON THAT PORTION INDICATED ON THE PAVEMENT EDGE TRANSITION TABLE ON SHEET 4.

BERMS AND SLOPES

BERMS AND SLOPES SHALL BE FINISHED IN ACCORDANCE WITH THE TYPICAL SECTIONS, EXCEPT WHERE OTHERWISE SHOWN IN THE CROSS SECTIONS. WHILE THE CROSS-SECTIONS AS DRAWN SHOW STRAIGHT LINES AND ANGLES, IN CONSTRUCTION ALL CORNERS SHALL BE ROUNDED AS SHOWN ON THE TYPICAL SECTIONS.

DRAINAGE

PIPE REMOVAL

WHERE PIPE IS MARKED FOR REMOVAL, AND HEADWALLS, CATCH BASINS, MANHOLES OR ENCASEMENTS ARE INVOLVED AND SUCH ITEMS ARE NOT SEPARATELY MARKED FOR PAYMENT, THE COST OF REMOVAL AND DISPOSAL OF HEADWALLS, CATCH BASINS, MANHOLES OR ENCASEMENTS SHALL BE INCLUDED IN THE UNIT PRICE BID FOR E-12 PIPE REMOVED.

SUBGRADE COMPACTION

The subgrade for drives and mail box turnouts paved with B-19 and T-35 material shall be compacted for a depth of six (6) inches to the density requirements shown in table III, Item E-1. Payment for subgrade compaction, as specified above, shall be included in the unit price bid for Item E-1, Roadway Excavation.

Sheet No.	Ref. No.	Station to Station	B-19 Aggregate Base Course	B-35 1½" Asphaltic Concrete Leveling Course	B-35 3" Asphaltic Concrete Base Course	I-22 6" Subbase	T-30 Bituminous Prime Coat	T-35 Asphaltic Concrete Surface Course	E-1 Compacted Subgrade	E-1 Roadway Excavation	E-1 Embankment	L-9 Seeding & Protection
			Cu. Yds.	Cu. Yds.	Cu. Yds.	Cu. Yds.	Gal.	Cu. Yds	Sq. Yds.	Cu. Yds.	Cu. Yds.	Sq. Yds.
4		0+00 to 9+89	388	90	185	406	991	60	2436	5408	2345	7188
4	1-A	1+11	4				11	1.5			5	
4	2-A	2+09	5				15	2.0			35	
4	3-A	2+79	4				11	1.5			15	
4	4-A	7+63	5				15	2.0			15	
4	5-A	8+87	3				8	1.0			5	
		99+00 to 11+00										1135
		Totals	443	90	185	406	991	68	2436	5408	2420	8343

E-11 Water

Embankment	2420 C.Y.
I-22	406 C.Y.
B-19	409 C.Y.
Total	3235 C.Y.

3235 × 5 M Gal. ÷ 1000 = 16.2 M Gal

L-9 Fertilizer

L-9 Seeding 8343 S.Y.

$8343 \times \frac{20}{1000} \times \frac{9}{2000} = 0.75$ Ton Fertilizer

$8343 \times \frac{100}{1000} \times \frac{9}{2000} = 3.75$ Ton Liming Materials

Sheet No.	Ref. No.	Sta. To Sta	E-12 Remove Exist. Pipe 15" & Under	I-15 Remove Exist. Guard Rail	E-8 Removal of Exist. Pavement
			Lin. Ft.	Lin. Ft.	Sq. Yd.
4	1R		20		
4	2R		28	130	
4	3R		14		
4		3+90 to 5+50			344
Totals			62	130	344

Sheet No.	Station From	Station To	I-4 6" Underdrain	I-4 8" Outlet Pipe	I-5 45° Bend
			Lin. Ft.	Lin. Ft.	Each
4				50 *	2*
4	0+00	5+00	500		
4	5+82	9+89	407		
Totals			907	50 *	2 *

* Quantities carried from Sheet No. 4

GENERAL SUMMARY

	ITEM	QUANTITY	UNIT	DESCRIPTION
ROADWAY	E-9	Lump	Lump	Removal of Trees and Stumps
	T-10	500	Cu. Yd.	Traffic Compacted Surface Course for Maintaining Traffic
	M-10	10	Tons	Calcium Chloride Furnished and Applied for Maintaining Traffic
	E-8	344	Sq. Yd.	Removal of Existing Pavement, as per plan
	E-1	2436	Sq. Yd.	Compacted Subgrade
	E-1	5408	Cu. Yd.	Roadway Excavation, Method "A", as per plan
	E-1	2420	Cu. Yd.	Embankment, Method "A"
	E-11	16	M. Gal.	Water
	E-12	62	Lin. Ft.	Pipe Removed, under 15"
	I-8	4	Each	Monument Assemblies, Standard
	I-15	100	Lin. Ft.	Guard Rail, Steel Beam Standard Type (Deep), as per plan
	I-15	130	Lin. Ft.	Guard Rail, Removed & Disposed of
	L-9	8343	Sq. Yd.	Seeding & Protecting
	L-9	0.75	Ton	Commercial Fertilizer (12-12-12)
	L-9	3.75	Ton	Agricultural Liming Materials, as per plan
PAVEMENT	B-19	443	Cu. Yd.	Aggregate Base Course
	B-35	90	Cu. Yd.	Asphaltic Concrete Leveling Course (85-100)
	T-30	991	Gal.	Bituminous Prime Coat - Sec M-5.7, Rt-2 or Rt-3
	I-22	406	Cu. Yd.	Subbase, Grading "A" or "B", as per plan
	T-35	68	Cu. Yd.	Asphaltic Concrete Surface Course (85-100), Type "C"
	B-35	185	Cu. Yd.	Asphaltic Concrete Base Course (85-100)
DRAINAGE	I-1	108	Lin. Ft.	12" Pipe for Driveways Sec M-6.4 (a)
	I-4	907	Lin. Ft.	6" Underdrains
	I-4	50	Lin. Ft.	8" Pipe Outlets for Underdrains, Sec M 6.4 (a)
	I-5	2	Each	6" Pipe Specials for Underdrains
				Drainage Cont'd on Sh. 8
		Lump	Lump	Construction Layout Stakes

LAKE COUNTY
LAK-608 - 2.95

B.M. 899728 815.752
R.R. Spike in S.S. of C.E.I. Pole
Sta. 7+91 - 33' Lt.

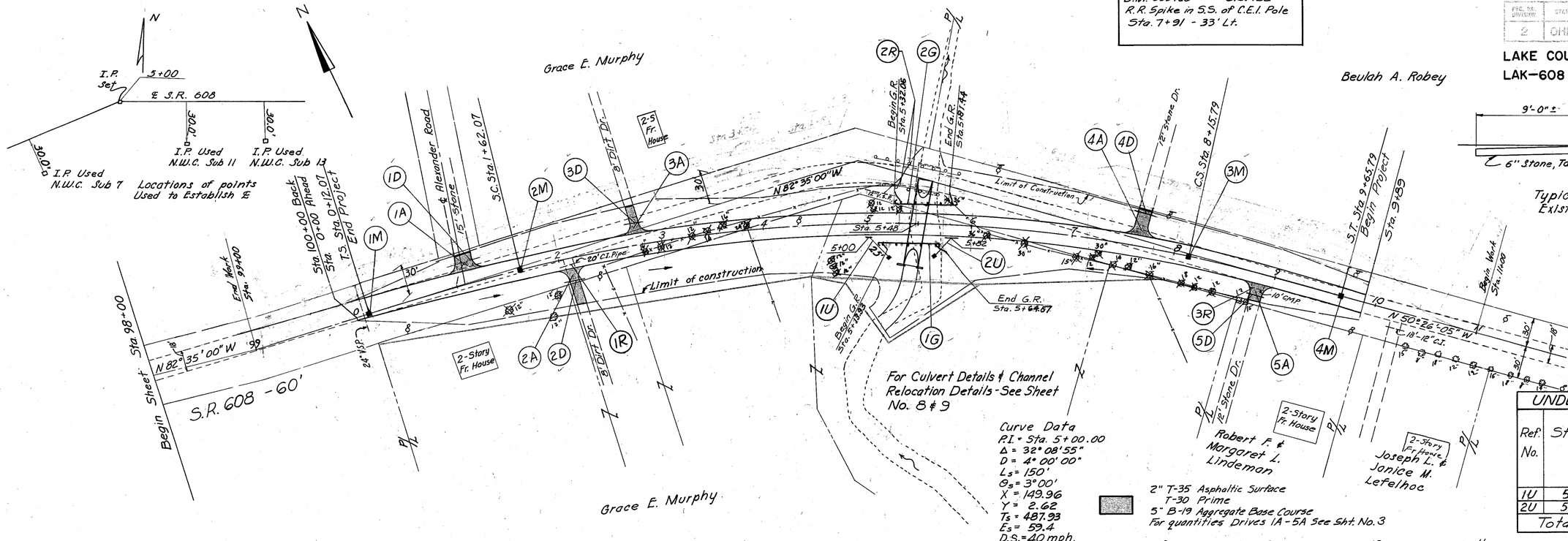

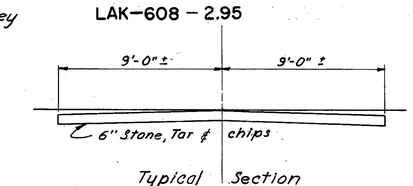

Typical Section
Exist Rt. 608 Pav't

UNDERDRAIN OUTLETS			
		I-4	I-5
Ref. No.	Station	8" Outlet Pipe	45° Bends
		Lin. Ft.	Each
1U	5+00	25	1
2U	5+82	25	1
Totals		50	2

GUARD RAIL			
			I-15
Ref. No.	Station		Steel Beam Type (Deep)
	From	To	Lin. ft.
1G	5+13.93	5+64.57	50
2G	5+32.06	5+81.44	50
Totals			100 *

MONUMENT BOXES		
		I-8
Ref. No.	Station	Monument Assemblies
		Each
1M	0+12.07	1
2M	1+62.07	1
3M	8+15.79	1
4M	9+65.79	1
Totals		4*

*=Quantities Carried Directly to General Summary

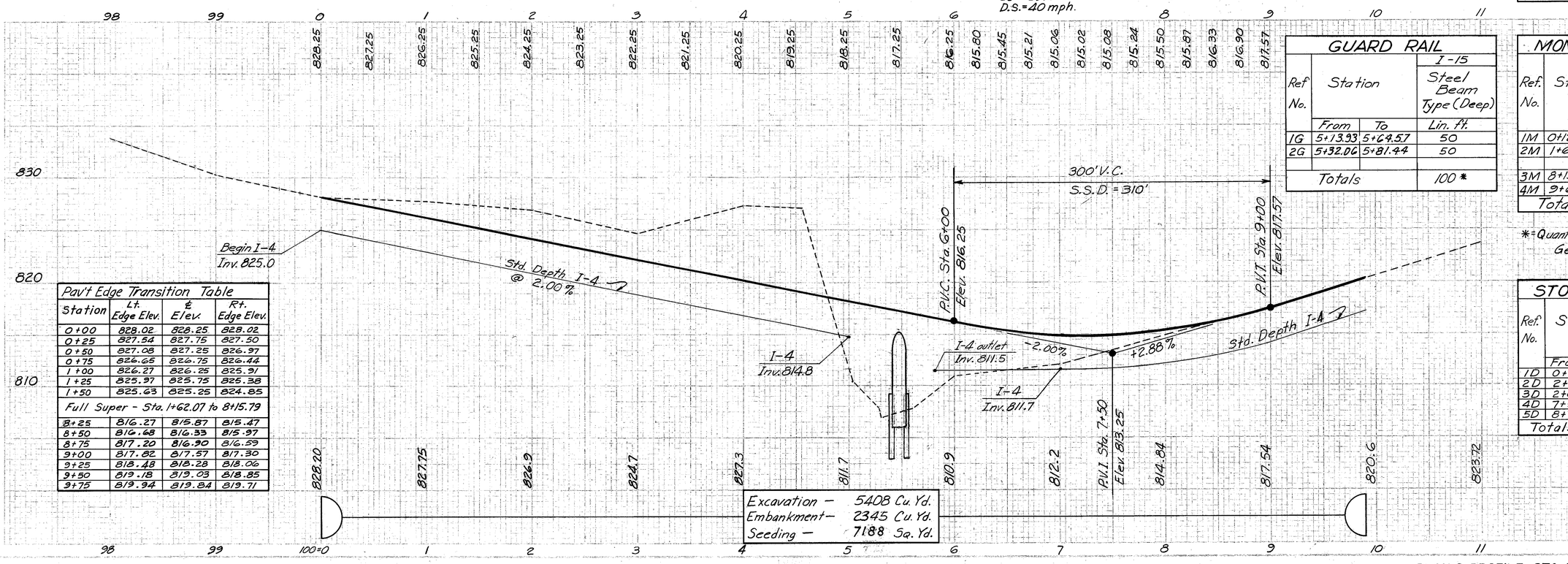

Pav't Edge Transition Table			
Station	Lt. Edge Elev.	℄ Elev.	Rt. Edge Elev.
0+00	828.02	828.25	828.02
0+25	827.54	827.75	827.50
0+50	827.08	827.25	826.97
0+75	826.65	826.75	826.44
1+00	826.27	826.25	825.91
1+25	825.97	825.75	825.38
1+50	825.63	825.25	824.85
Full Super - Sta. 1+62.07 to 8+15.79			
8+25	816.27	815.87	815.47
8+50	816.68	816.33	815.97
8+75	817.20	816.90	816.59
9+00	817.82	817.57	817.30
9+25	818.48	818.23	818.06
9+50	819.18	819.03	818.85
9+75	819.94	819.84	819.71

STORM SEWER			
			I-1
Ref. No.	Stations		C.M. Pipe for Driveways
	From	To	Lin. ft.
1D	0+96	1+28	32
2D	2+02	2+20	18
3D	2+66	2+84	18
4D	7+54	7+78	24
5D	8+78	8+94	16
Totals			108*

Excavation —	5408 Cu. Yd.
Embankment —	2345 Cu. Yd.
Seeding —	7188 Sq. Yd.

FEB 3 1961

PLAN & PROFILE STA. 98+00 TO STA. 13+00

FED. RD. DIV.	STATE	PROJECT		
2	OHIO			

5/10

LAKE COUNTY

LAK-608 - 2.95

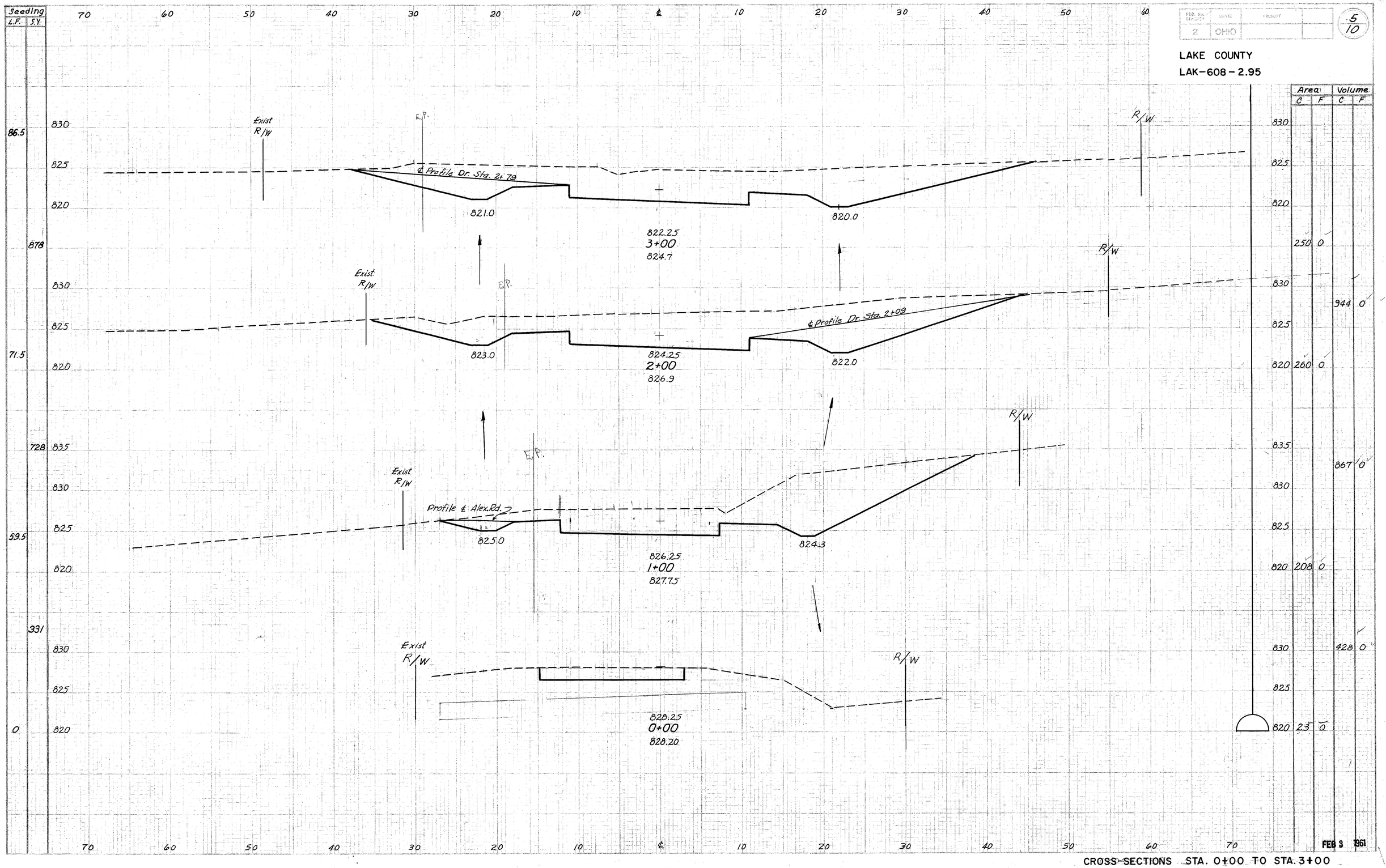

CROSS-SECTIONS STA. 0+00 TO STA. 3+00

FEB 3 1961

ROLLED 8/14/60 BJ

FED. RD. DIVISION	STATE	PROJECT	
2	OHIO		

6/10

LAKE COUNTY
LAK-608-2.95

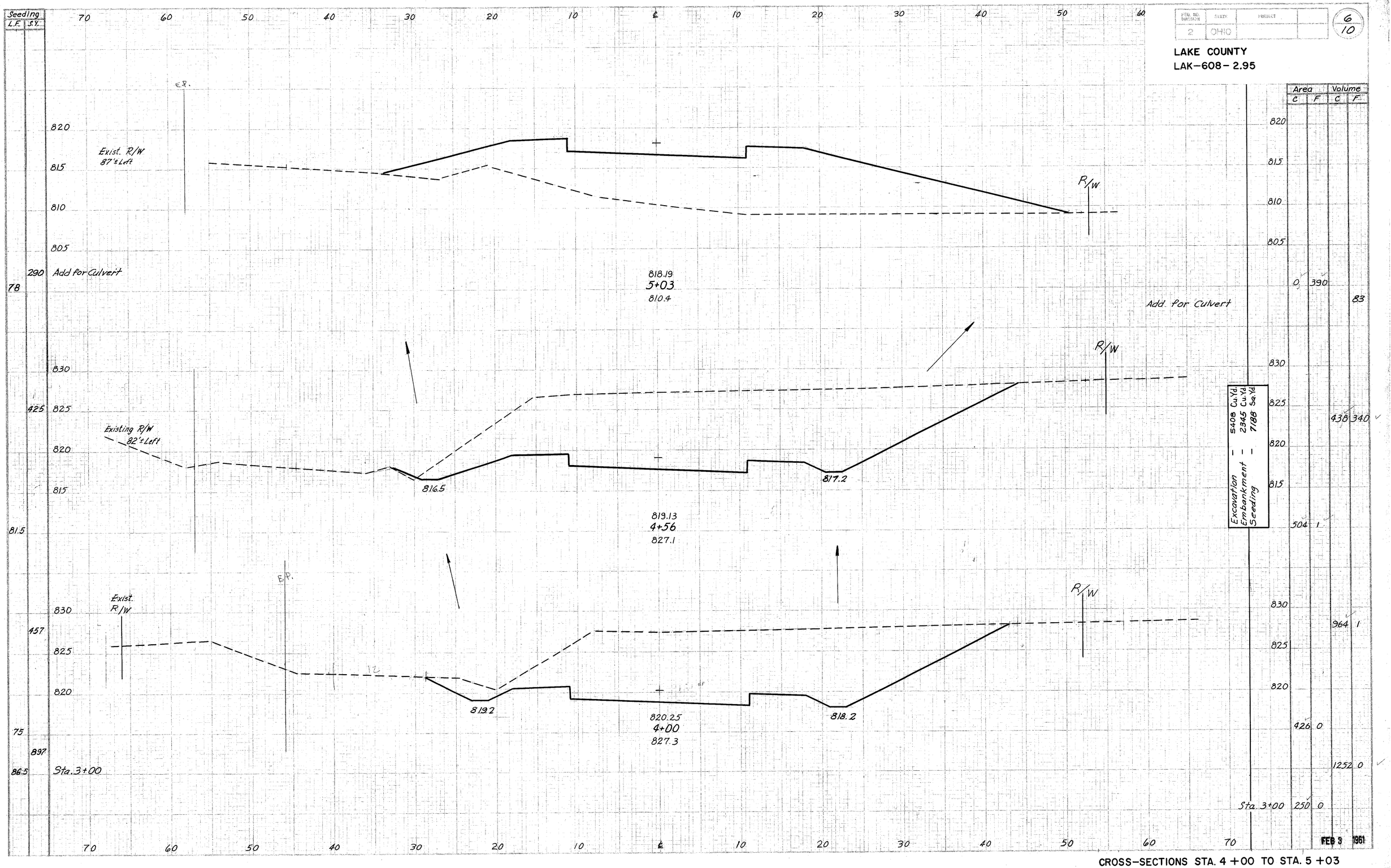

CROSS-SECTIONS STA. 4 +00 TO STA. 5 +03

FED. RD. DIVISION	STATE	PROJECT		
2	OHIO			

7/10

LAKE COUNTY

LAK-608-2.95

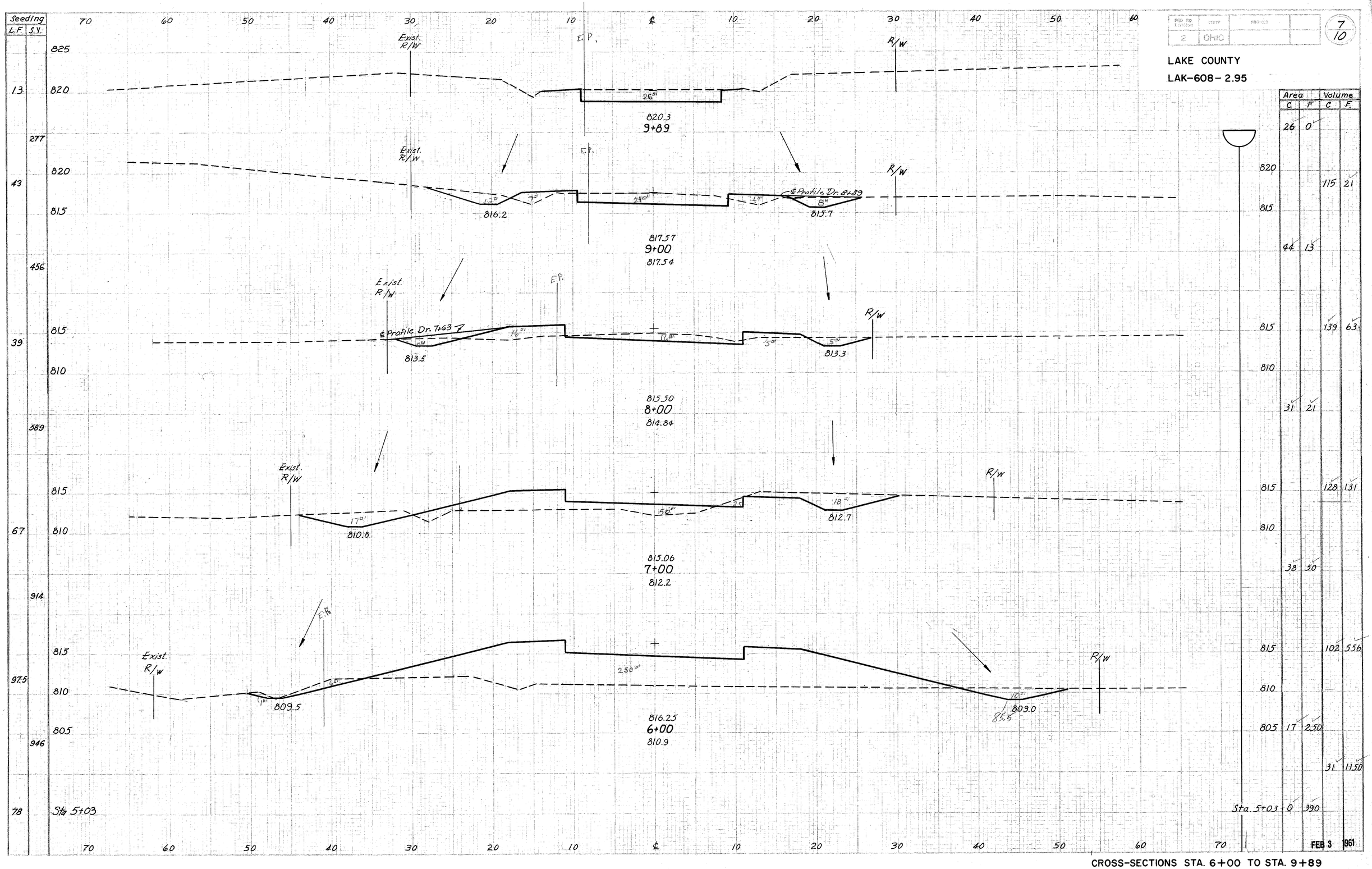

CROSS-SECTIONS STA. 6+00 TO STA. 9+89

FEB 3 1961

ROLLED 1/14/60 R.W.

V.H.K. CHK.

FED. RD. DIVISION	STATE	PROJECT	TYPE FUNDS
2	OHIO		

8/10

LAKE COUNTY
LAK-608-2.95

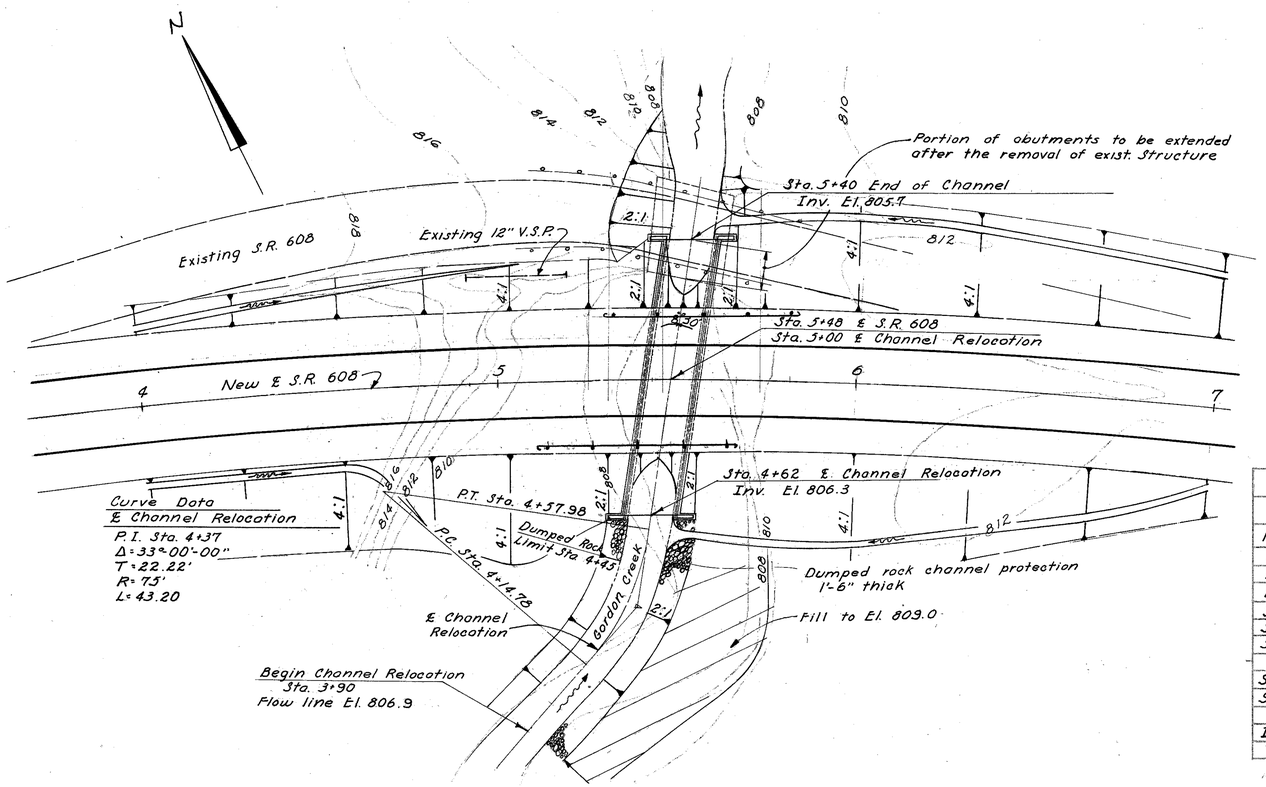

PLAN

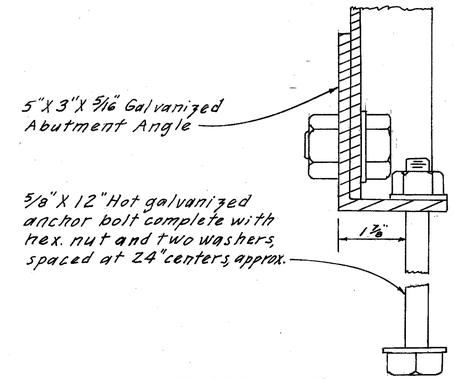

ALTERNATE
"Section D-D"

GENERAL SUMMARY			
DRAINAGE (Cont'd)			
ITEM	TOTAL	UNIT	DESCRIPTION
E-2	11	cu. yds.	Unclassified Excavation
E-2	54	cu. yds.	Shale Excavation
E-3	48	cu. yds	Channel Excavation
S-1	54	cu. yds.	Class "E" Concrete, abutments
S-1	10	cu. yds.	Class "E" Concrete, apron
S-4	2,367	lbs.	Reinforcing Steel
S-24	Lump	sum	Removal of Existing Structure
S-28	78	lin. ft.	14'-0" x 7'-3" Sectional Corrugated Metal
			Arch Structure, Sec. M-C.4(G) 5 gage
I-10	25	cu. yds.	Dumped Rock Channel Protection

EXISTING STRUCTURE
Type : Stone Arch
Span : 11'-6"
Rise : 6'-9"
Loading : H-15
Skew : None

PROPOSED STRUCTURE
Type : Sectional Corrugated Arch
Span : 14'-0"
Rise : 7'-3"
Height of Cover : 2'-6" max., 1'-6" min.
Loading : H-15
Skew : 8°-30' Lt. Forward

Curve Data
℄ S.R. 608
P.I. Sta. 5+00.00
Δ=32°-08'-55"
D= 4°-00'-00"
L_s=150
θ_s=3°-00'
x=149.96 y=2.62
T_s=487.93
E_s=59.4

Flow Line Grade =0.8%

P.V.I. Sta. 7+50
300' V.C.
El. 813.25
Corr. 1.83
P.G. El. 813.08
G_1=-2.00% G_2=+2.88%

Waterway Opening = 107 sq. ft.
Drainage Area. = 2.640 Acres
Frequency = 10 years
Q = 920 cfs.

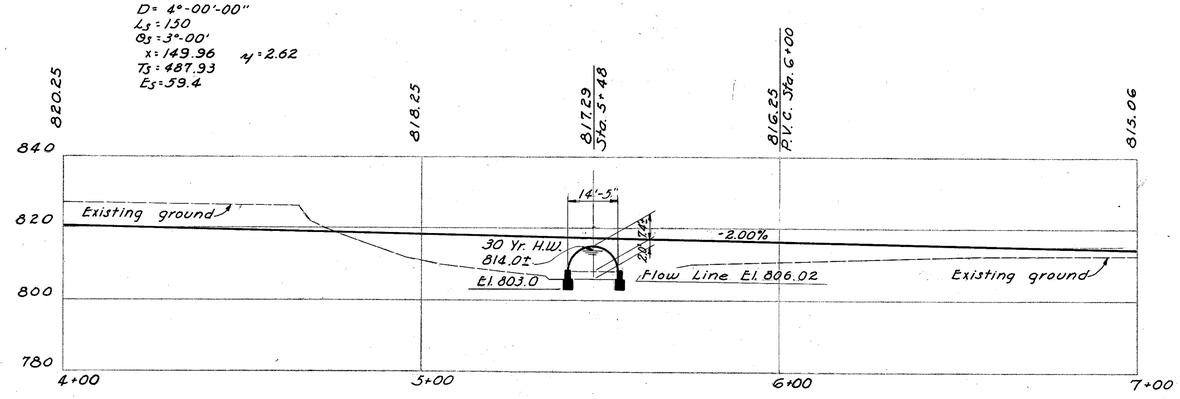

PROFILE ON ℄ S.R. 608

GENERAL NOTE

Construction Procedure : The proposed arch shall be constructed in two stages to facilitate the maintenance of traffic. The first stage consists of the construction of the proposed arch to the existing stone arch and the construction of the embankment and pavement on relocated S.R. 608. Temporary slopes of 1:1 shall be constructed in the first stage north of the proposed pavement in the vicinity of the existing stone arch. After relocated S.R. 608 is opened to traffic the final stage shall be constructed. The final stage includes the removal of the existing stone arch, the extension of the proposed arch and the completion of the proposed slopes as shown on the site plan.

ALDEN E. STILSON & ASSOCIATES, LIMITED
CONSULTING ENGINEERS
COLUMBUS, OHIO

SITE PLAN

Bridge No. LAK-608-0303
S.R. 608 over GORDON CREEK

LAKE COUNTY STA. 5+48+00

DESIGNED	DRAWN	TRACED	CHECKED	REVIEWED	DATE	REVISED
R.C.	R.C.	E.M.	J.V.C.		FEB 3 1961	

FED. RD. DIVISION	STATE	PROJECT	TYPE FUNDS
2	OHIO		

9/10

LAKE COUNTY
LAK - 608 - 2.95

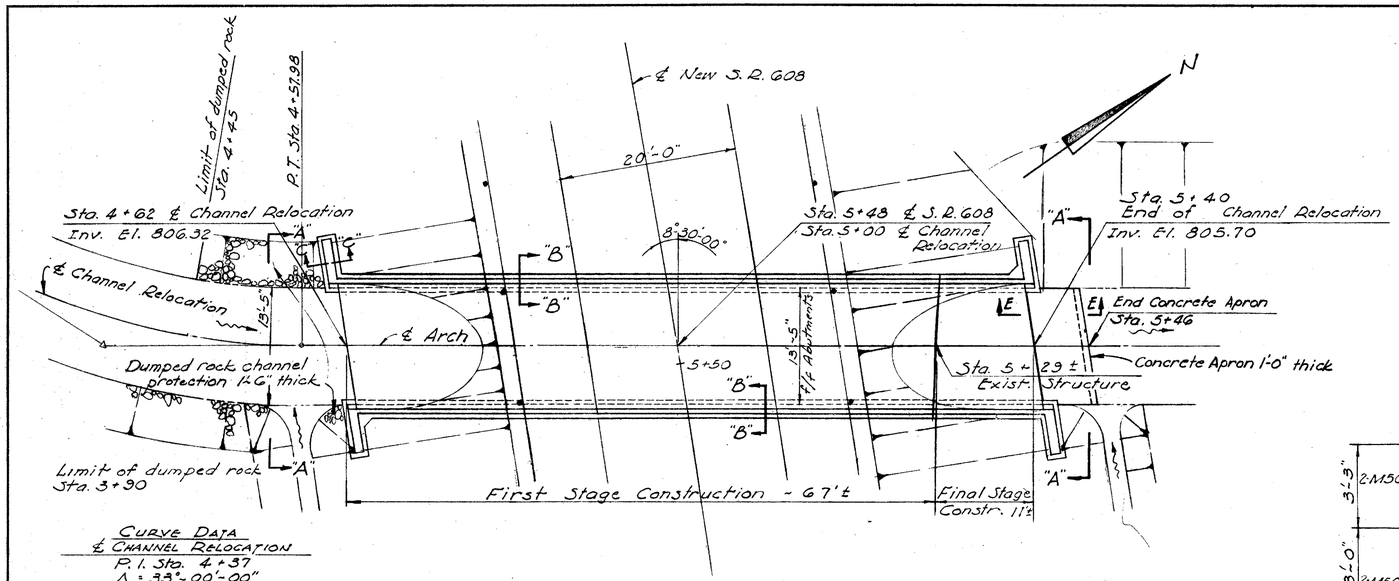

CURVE DATA
℄ CHANNEL RELOCATION
P.I. Sta. 4+37
Δ = 33°-00'-00"
T = 22.22'
R = 75'
L = 43.20'

PLAN OF SECTIONAL CORRUGATED ARCH

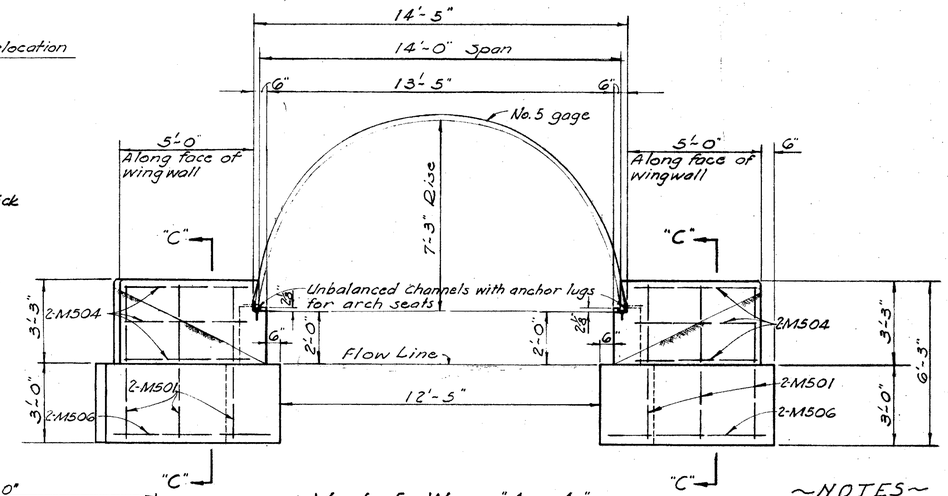

VIEW "A-A"

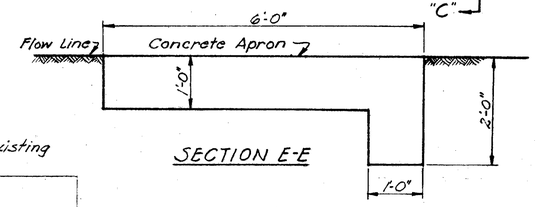

SECTION E-E

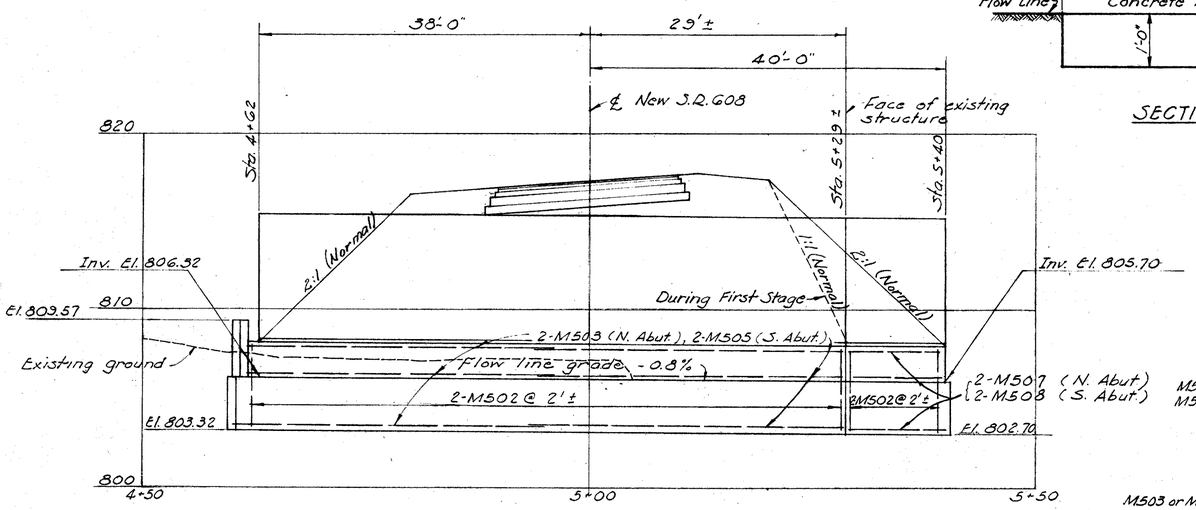

PROFILE ON ℄ SECTIONAL CORRUGATED ARCH

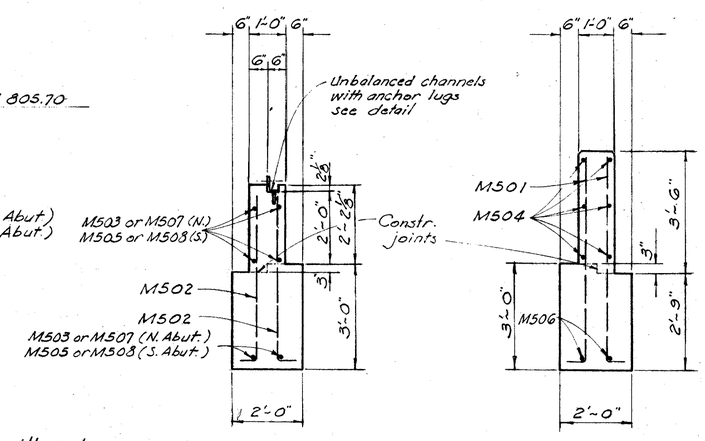

SECTION "B-B"

SECTION "C-C"

NOTE:-
Footings shall extend a minimum of 3 feet into firm shale, or to the elevation shown, whichever is lower.

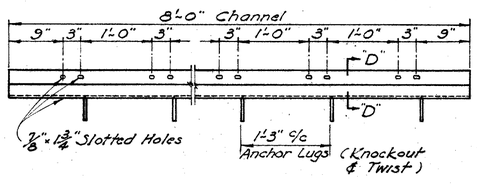

DETAIL OF BOLT HOLES & ANCHOR LUG SPACING

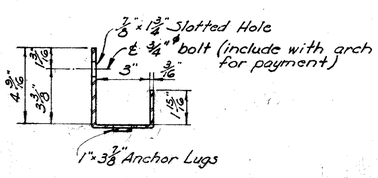

SECTION "D-D"

UNBALANCED CHANNEL DETAILS

~NOTES~

All notes and references to unbalanced channel shall also apply to alternate design as shown on Sheet 8.

The Sectional Arch plates shall be No. 5 gage, and shall have a pitch of 6" ± 1/4", and a depth of 2" ± 1/8". The radius on the inside of the corrugations shall be at least 1 1/16". Plates shall be assembled with 3/4" high-strength bolts meeting the requirements of ASTM A-325. Longitudinal seams shall be bolted with 4 bolts per foot of seam except as otherwise provided herein. All plates and bolts shall be galvanized.

All concrete shall be Class "E". Payment for unbalanced Channels with anchor lugs for arch plate seats shall be included in the unit price bid for Item S-28. Unbalanced channels shall be galvanized as provided in Sec. M-7.4(d).

Any depressions or holes more than 2" deep in the bottom of the stream, within the culvert, after the flow line excavation has been completed shall be filled with concrete. This concrete is included with Item S-1, Concrete Aprons.

Unclassified excavation quantity includes the excavation necessary for the construction of the Concrete Apron and cut-off wall.

REINFORCING STEEL LIST

Mark	No.	Length	Weight	Type	A	B	C	Shape
M501	164	6-2	1,055	1	5-10	0-6		Bt.
M502	24	4-11	123	1	4-7	0-6		Bt.
M503	12	35-10	448					St.
M504	24	4-8	117					St.
M505	12	34-3	429					St.
M506	8	6-2	51					St.
M507	6	10-0	63					St.
M508	6	13-0	81					St.

Type 1

ALDEN E. STILSON & ASSOCIATES, LIMITED
CONSULTING ENGINEERS
COLUMBUS, OHIO

SECTIONAL CORRUGATED ARCH DETAILS
BRIDGE Nº LAK-608-0303
S.R. 608 over GORDON CREEK

LAKE COUNTY Sta 5+48.00

DESIGNED	DRAWN	TRACED	CHECKED	REVIEWED	DATE	REVISED
R.C.	R.C.		S.V.C.		FEB 3 1961	

CONCORD TOWNSHIP
TOWNSHIP 10 - RANGE 8

FED. RD. DIVISION	STATE	PROJECT	
2	OHIO		

10/10

LAKE COUNTY

LAK-608-2.95

Note: From Sta. 8+15.79 to Sta. 9+65.79. Simple Curve subsitituted for transition for purposes of R/W description only. All coordinates shown within limits of simple curve are on radial lines to simple curve.

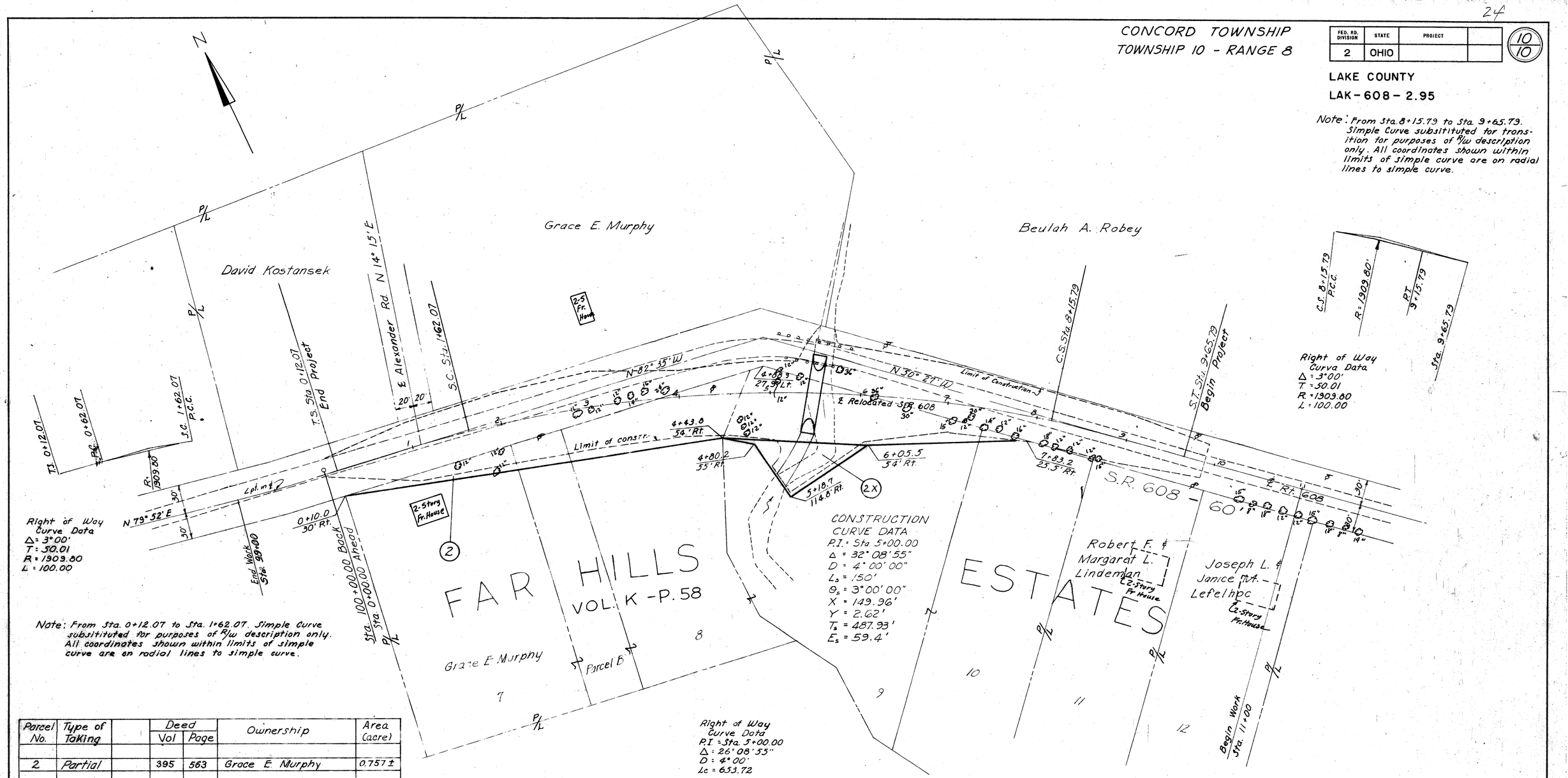

Note: From Sta. 0+12.07 to Sta. 1+62.07. Simple Curve subsitituted for purposes of R/W description only. All coordinates shown within limits of simple curve are on radial lines to simple curve.

Parcel No.	Type of Taking		Deed Vol	Deed Page	Ownership	Area (acre)
2	Partial		395	563	Grace E. Murphy	0.757±
2X	Partial		395	563	Grace E. Murphy	0.090±

LEGEND
Parcel No. 1 - Standard Highway Easement

Date of Revision No. 3 1-20-61
Date of Revision No. 2 10-20-60
Date of Revision No. 1 9-21-60
Date of Completion: 9-16-60
Scale: 1" = 50'

FEB 3 1961

RIGHT OF WAY PLAN