GH

STATE OF OHIO
DEPARTMENT OF TRANSPORTATION

MICROFILMED SEP 4 1991

LAKE COUNTY	OHIO	1 / 17
LAK-20-29.76	FHWA REGION 5	
FR-69 (61)	FEDERAL PROJECT	

PLAN NO. BR-55-84

LAK-20-29.76
MADISON TOWNSHIP
LAKE COUNTY

MINOR BRIDGE REHABILITATION

1983 SPECIFICATIONS

The standard specifications of the State of Ohio, Department of Transportation, including changes and supplemental specifications listed in the proposal shall govern this improvement.

I hereby approve these plans and declare that the making of this improvement will not require the closing to traffic of the highway and that provisions for the maintenance and safety of traffic will be as set forth on the plan and estimates.

MICROFILMED OCT 3 1986

DESIGN DESIGNATION

CURRENT A.D.T. (1984)	=10,300
DESIGN YEAR (2004)	=14,400
D.H.V.	=1,440
D.	=50%
T.	=5%
V.	= 50 mph

CONVENTIONAL SIGNS

County Line
Township Line
Section Line
Corporation Line or
Fence Line (existing) (proposed)
Center Line
Trees, Stumps, (to be removed)
Utility Poles: Telephone, Power, Light.

Limited Access (only) LA
Right of Way (only) RW
Limited Access & Right of Way LA & RW
Existing Right of Way
Property Line (in existing fence)
Railroad or
Guardrail (existing) (proposed)

INDEX OF SHEETS

TITLE SHEET	1
GENERAL NOTES	2-4
RAISED PAVEMENT MARKER NOTES	5
GENERAL PLAN AND ELEVATION	6
STRUCTURES OVER 20' SPAN	
STRUCTURE NOTES AND ESTIMATED QUANTITIES	7-9
REINFORCING STEEL LIST	9
EAST ABUTMENT DETAILS	10
WEST ABUTMENT DETAILS	11
SUPERSTRUCTURE DETAILS	12-14
CHANNEL DETAILS	15
MAINTENANCE OF TRAFFIC	16,17

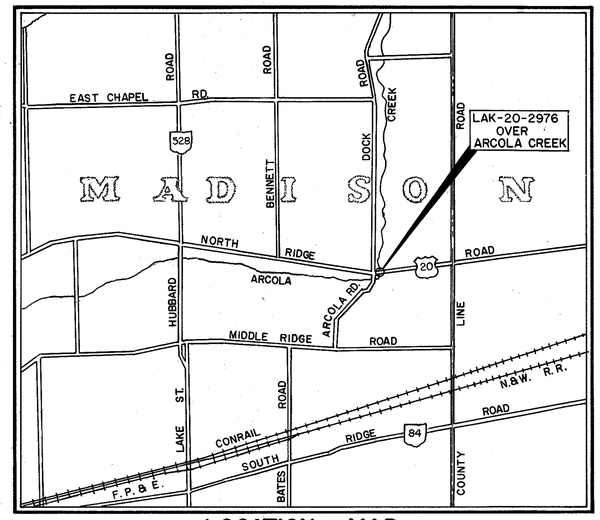

LOCATION MAP

SCALE IN MILES 0 1 2

Portion to be improved
State & Federal Routes
Other Roads

LINE DATA

PROJECT LENGTH = 0.00 LIN. FT. OR 0.00 MI.
BEGIN WORK STA. 657+92
END WORK STA. 659+08
NET LENGTH OF WORK = 116 LIN. FT. OR .022 MI.

SCALES

Plan 0 8 16
Profile: Horizontal, Vertical
Cross Section: Horizontal, Vertical

48 HOURS BEFORE YOU DIG Call ... 800-362-2764 TOLL FREE OHIO UTILITIES PROTECTION SERVICE NON-MEMBERS MUST BE CALLED DIRECTLY

SUPPLEMENTAL SPECIFICATIONS		
803	5-27-83	
853	6-26-78	
861	9-9-83	
956	6-26-78	
961	9-9-83	

SUPPLEMENTAL PRINTS OF STANDARD CONSTRUCTION DRAWINGS					
BP-7	12-6-76				
BP-5	7-16-81				
BP-11	1-30-84				
GR-1	2-5-82				
GR-3	2-5-82				
GR-2B	2-5-82				
MC-9A	5-1-81				
DBR-2-73	4-10-73				
TC-35.10	10-5-77				

Approved Martin A. Gallo
Date 7/2/84 District Deputy Director of Transportation

Approved Walter J. Jestings 10.H.S.
Date 8-21-84 Engineer, Bureau of Bridges and Structures

Approved James R. Longenecker
Date 8-23-84 Chief Engineer, Operations

Approved Warren J. Smith
Date 8-23-84 Director, Department of Transportation

000803

DEPARTMENT OF TRANSPORTATION
FEDERAL HIGHWAY ADMINISTRATION

APPROVED:

DIVISION ADMINISTRATOR DATE

Plan Prepared By:
DISTRICT 12

SEAL

Project:
Date of Letting 19__, Contract No.

LD0300 Rev. 11-1-78

GENERAL NOTES

LIMITATION OF OPERATIONS

THE CONTRACTOR'S ACTIVITIES AND WORK SCHEDULE SHALL BE CONSTRAINED BY THE FOLLOWING SPECIAL LIMITATIONS:

NO LANE CLOSURES SHALL BE IMPLEMENTED OR IN PLACE DURING THE PERIOD BEGINNING NOVEMBER 15TH AND ENDING MARCH 15TH.

ITEM 614 - MAINTAINING TRAFFIC

GENERALLY, THE CONTRACTOR SHALL CONDUCT HIS OPERATIONS AS TO MAKE THE PROPOSED REPAIRS WITH A MINIMUM OF HAZARD, DELAY AND INCONVENIENCE TO THE MOTORIST USING THE HIGHWAY AFFECTED BY THE WORK DONE UNDER THIS CONTRACT; FURTHERMORE, THE FOLLOWING SPECIFIC PROVISIONS ARE MANDATORY.

I. NOTIFICATION

SINCE FUNCTIONAL TRAFFIC MAINTENANCE IS A MAJOR CONCERN OF THIS PROJECT IT IS ESSENTIAL THAT THE MOTORING PUBLIC BE ADEQUATELY FORWARNED OF FUTURE LANE CLOSURES AND TRAFFIC CONSTRICTIONS. THEREFORE, THE CONTRACTOR SHALL SUBMIT A SCHEDULE TO THE OHIO DEPARTMENT OF TRANSPORTATION INDICATING THE LOCATION AND DATE OF EACH LANE CLOSURE AT LEAST TWO WEEKS PRIOR TO THE IMPLEMENTATION OF ANY SUCH CLOSURES.

II. MAINTENANCE OF TRAFFIC SYSTEMS

A. MINIMUM PROVISIONS

THE CONTRACTOR SHALL FURNISH AND MAINTAIN ALL NECESSARY TRAFFIC CONTROL DEVICES AS REQUIRED BY THE PLANS AND SPECIFICATIONS AND THE OHIO MANUAL OF UNIFORM TRAFFIC CONTROL DEVICES FOR STREETS AND HIGHWAYS, HEREINAFTER REFERRED TO AS THE "MANUAL". TWO-WAY TRAFFIC ON ONE 13-FOOT MINIMUM LANE SHALL BE MAINTAINED AT ALL TIMES. TEMPORARY SIGNALS AS SHOWN IN THE MAINTENANCE OF TRAFFIC PLANS SHALL BE USED IN LIEU OF FLAGMEN. THE TRAFFIC CONTROL SYSTEMS IN THE "MANUAL" AND THESE PLANS CONSTITUTE THE MINIMUM PROVISIONS FOR MAINTAINING TRAFFIC. WHENEVER THE ENGINEER DEEMS ADDITIONAL OR ALTERNATIVE DEVICES NECESSARY, HE MAY DIRECT THAT THEY BE USED.

B. ADVANCE WARNING SIGNS

ALL ADVANCE WARNING SIGNS FOR ANY TRAFFIC RESTRICTION SHALL BE ERECTED BEFORE SUCH RESTRICTION IS PUT INTO EFFECT. ALL SIGNS SHALL BE COVERED OR REMOVED FROM THE VIEW OF TRAFFIC WHENEVER THEY ARE NOT APPLICABLE.

C. CONDITIONS

A MINIMUM 13-FOOT LANE SHALL BE MAINTAINED DURING BRIDGE WORK AS SHOWN IN THE MAINTENANCE OF TRAFFIC PLANS.

D. FLASHING ARROW REQUIREMENT

FLASHING ARROWS WILL BE REQUIRED AS SHOWN ON THE MAINTENANCE OF TRAFFIC PLANS.

E. FAILURE TO COMPLY

IF THERE IS ANY FAILURE TO COMPLY WITH THE PROVISIONS FOR TRAFFIC MAINTENANCE SET OUT IN THE PLANS, NOTES OR "MANUAL", THE HIGHWAY IN THE VICINITY OF THE WORK AREA SHALL NOT BE CONSIDERED IN A CONDITION FOR THE SAFE AND CONVENIENT USE BY THE TRAVELING PUBLIC, WHICH SHALL BE CONSIDERED A BREACH OF THIS CONTRACT. WORK SHALL BE SUSPENDED UNTIL THE CONTRACTOR COMPLIES WITH THE PROVISIONS OF THE AFOREMENTIONED ITEMS.

III. MAINTENANCE OF TRAFFIC MATERIAL

A. SIGNS

SIGN DIMENSIONS AND SPECIFICATIONS, INCLUDING LETTER SIZE, SHALL BE AS PROVIDED IN THE "MANUAL", OR IN SIGN DESIGN DRAWINGS PROVIDED BY THE DEPARTMENT OF TRANSPORTATION. THE SIGNS SHALL BE SUBJECT TO APPROVAL OF THE ENGINEER PRIOR TO THE START OF THE PROJECT.

B. SIGN SUPPORTS

SIGN SUPPORTS SHALL BE SUFFICIENT SIZE AND HEIGHT AS TO SUPPORT THE SIGNS AT THE HEIGHT INDICATED IN THE "MANUAL". SUPPORTS SHALL ALSO BE ADEQUATE IN MASS AND STABILITY TO PREVENT THE SIGNS FROM BEING BLOWN OVER BY WIND OR VEHICULAR GENERATED AIR TURBULENCE.

C. CONES

STANDARD RUBBER OR PLASTIC CONES SHALL BE USED. CONES SHALL BE AT LEAST 36" HIGH AND SHALL BE PREDOMINANTLY ORANGE IN COLOR. ALL CONES SHALL HAVE WEIGHTED BASES.

D. DRUMS

DRUMS SHALL CONFORM TO THE PERTINENT SECTIONS OF THE "MANUAL". ALL COSTS FOR INSTALLATION, MAINTENANCE AND SUBSEQUENT REMOVAL OF SAID DRUMS SHALL BE INCLUDED IN THE LUMP SUM PRICE BID FOR ITEM 614 - MAINTAINING TRAFFIC.

E. FLASHING ARROWS

THE ELECTRIC FLASHING ARROWS SHALL BE TYPE A AS SHOWN ON STANDARD DRAWING TC-35.10. PAYMENT FOR FLASHING ARROWS SHALL BE INCLUDED UNDER ITEM 614 - MAINTAINING TRAFFIC.

IV SIGNALIZED CLOSING

A. DRUMS SHALL BE PLACED AS SHOWN ON THE MAINTENANCE OF TRAFFIC PLANS.

B. SIGNALS SHALL BE INSTALLED AND OPERATED IN ACCORDANCE WITH THE REQUIREMENTS OF PART 6 OF THE OHIO MANUAL OF UNIFORM TRAFFIC CONTROL DEVICES.

C. ADEQUATE AREA ILLUMINATION TO CLEARLY IDENTIFY THE WORK AREA AT NIGHT SHALL BE PROVIDED BY USING A 150 WATT MINIMUM HIGH PRESSURE SODIUM LUMINAIRE OR 250 WATT MINIMUM MERCURY LUMINAIRE. THE LUMINAIRE SHALL BE LOCATED ADJACENT TO ONE SIGNAL AS SHOWN IN THE MAINTENANCE OF TRAFFIC PLANS. THE MOUNTING HEIGHT FOR THE TEMPORARY LUMINAIRE SHALL BE A MINIMUM OF 27 FEET ABOVE THE PAVEMENT AND THE OVERHEAD CONDUCTOR CLEARANCE SHALL BE 20 FEET ABOVE THE PAVEMENT.

D. TEMPORARY NO PASSING LINES AND STOP LINES SHALL BE INSTALLED. REMOVABLE PAVEMENT MARKINGS MAY BE USED. EXISTING CONFLICTING PAVEMENT MARKINGS BETWEEN THE WORK AREA AND STOP LINE SHALL BE REMOVED. AFTER COMPLETION OF WORK, TEMPORARY MARKINGS SHALL BE REMOVED IN ACCORDANCE WITH 621.134.

E. THE TYPE "A" FLASHING BARRICADE WARNING LIGHTS SHALL BE MOUNTED ON DESIGNATED ADVANCE WARNING SIGNS AT ALL TIMES.

F. TYPE "C" STEADY BURNING BARRICADE WARNING LIGHTS SHALL BE MOUNTED ON ALL DRUMS.

G. CONTRACTOR MUST SUBMIT A SIGNAL PHASING DIAGRAM AND TIMING CHART ONE WEEK PRIOR TO SIGNAL OPERATION FOR APPROVAL BY THE ENGINEER.

H. WHEN SIGNALS ARE NOT IN USE THEY MUST BE REMOVED OR BAGGED.

I. THE CONTRACTOR SHALL BE RESPONSIBLE FOR THE 24-HOUR PER DAY MAINTENANCE OF THE ONE LANE ROAD TRAFFIC SIGNALS. THE CONTRACTOR SHALL CORRECT ALL OUTAGES OR MALFUNCTIONS AS QUICKLY AS POSSIBLE. A DAY AND NIGHT TELEPHONE NUMBER WITH CONTRACTORS' CONTACT PERSON MUST BE SUPPLIED TO THE LOCAL POLICE AGENCIES AND O.D.O.T. THE ELAPSED TIME BETWEEN THE SIGNAL PROBLEM CALL AND SERVICEMAN'S ARRIVAL AT THE PROJECT SITE SHALL NOT EXCEED 60 MINUTES. SIGNAL INSTALLATION AND MAINTENANCE SHALL BE PERFORMED ONLY BY A QUALIFIED SIGNAL MAINTENANCE ORGANIZATION.

J. SIGNAL AND CLOSURE INSTALLATIONS SHALL BE MADE ONLY DURING DAYLIGHT ON MONDAY THROUGH THURSDAY.

K. THE CONTRACTOR SHALL BE REQUIRED TO PROVIDE A SEPARATE POWER SERVICE CONNECTION POINT TO THE LOCAL POWER COMPANY TO PROVIDE ELECTRICAL POWER TO HIS CONSTRUCTION SIGNAL

L. SIGNAL WIRING OTHER THAN OVERHEAD AND UNDERGROUND MUST BE APPROVED BY THE ENGINEER. THE ALTERNATE WIRING MUST BE PROTECTED BY CONDUIT COUPLED TOGETHER OR BY DUCT. ALL SPLICES SHALL BE MADE BY APPROVED SPLICE KITS INSTALLED IN PULL BOXES OR APPROVED ENCLOSURES.

M. ALL TRAFFIC SIGNALS AND EQUIPMENT USED IN THIS SIGNAL INSTALLATION, SUCH AS A SIGNAL CABLE AND SIGNAL HEADS, SHALL BE IN CONFORMANCE WITH SPECIFICATIONS 632 AND 732. HOWEVER, THE PERFORMANCE TEST PROVISION NOTED IN SPECIFICATION 632.27, PARAGRAPH 6 AND THE WORKING DRAWING REQUIREMENTS OF 632.03 ARE WAIVED. THE CONTROLLER, FLASHERS, LOAD SWITCHES, CONFLICT MONITOR AND OTHER CONTROLLER ACCESSORIES SHALL COMPLY WITH SUPPLEMENTAL SPECIFICATIONS 861 AND 961, EXCEPT THAT THE REQUIREMENTS OF 861.03 AND 861.05 ARE WAIVED. USED EQUIPMENT MEETING CURRENT ODOT SPECIFICATIONS IS ACCEPTABLE.
CONFLICT MONITORS SHALL BE FURNISHED AT ALL LOCATIONS UNLESS AN ELECTRO-MECHANICAL PRETIMED CONTROLLER CAM SHAFT IS PROVIDED. WHEN THE SIGNAL IS CHANGED TO A FLASH CONDITION EITHER MANUALLY OR AUTOMATICALLY, RED SHALL BE FLASHED TO BOTH APPROACHES.

V. PAYMENT

PAYMENT FOR PROVIDING, ERECTING, MAINTAINING AND REMOVING TEMPORARY TRAFFIC CONTROL DEVICES AND SIGNALS SHALL BE INCLUDED IN THE LUMP SUM PRICE BID FOR THE ITEM 614 - MAINTAINING TRAFFIC.

RIGHT OF WAY

ALL WORK WILL BE PERFORMED WITHIN THE EXISTING RIGHT-OF-WAY.

MICROFIL
OCT 3 1986

CONTINGENCY QUANTITIES

THE CONTRACTOR SHALL NOT ORDER MATERIALS OF PERFORM WORK FOR PLAN ITEMS SET UP TO BE USED "AS DIRECTED BY THE ENGINEER" UNLESS AUTHORIZED BY THE ENGINEER.

ITEM 202 - BRIDGE TERMINAL ASSEMBLY REMOVED

THIS ITEM SHALL CONSIST OF REMOVING THE COMPLETE BRIDGE TERMINAL ASSEMBLY CONSISTING OF THE RAIL, POSTS AND ENCASEMENTS AND THE FILLING OF THE RESULTING HOLES SO AS TO PROVIDE A STABLE, EVEN SHOULDER FOR NEW GUARDRAIL CONSTRUCTION.

ITEM 404 - ASPHALT CONCRETE AC-20

THE FOLLOWING QUANTITY HAS BEEN INCLUDED IN THE GENERAL SUMMARY TO BE USED AS DIRECTED BY THE ENGINEER TO FEATHER EXISTING APPROACH ASPHALT PAVEMENT TO THE NEW ASPHALT ON THE APPROACH SLABS. SEE ITEM SPECIAL - PAVEMENT PLANING, BITUMINOUS, WITHOUT HEAT.

ITEM 404 - ASPHALT CONCRETE AC-20 . . . . . 7 CUBIC YARDS

ITEM 606 - GUARDRAIL REBUILT, TYPE 5, AS PER PLAN.

THE GUARDRAIL SHALL BE COMPLETELY INSTALLED ON THE NORTH SIDE DURING PHASE 1 PRIOR TO THE IMPLEMENTATION OF PHASE 2 AND ON THE SOUTH SIDE DURING PHASE 2 PRIOR TO OPENING THE ROAD TO TRAFFIC. THE REMOVAL OF ALL GUARDRAIL SHALL AT ALL TIMES BE AS DIRECTED BY THE ENGINEER. INCLUDED IN THIS ITEM SHALL BE THE COST OF CUTTING THE EXISTING GUARDRAIL AND PLACING NEW GUARDRAIL POSTS AT THE LOCATIONS SHOWN IN THE PLANS. THE LOCATIONS OF GUARDRAIL RUNS, AS SHOWN IN THESE PLANS, ARE SUBJECT TO ADJUSTMENT PRIOR TO FINAL ACCEPTANCE. THE ENGINEER SHALL BE SATISFIED THAT ALL INSTALLATIONS WILL AFFORD MAXIMUM PROTECTION FOR TRAFFIC.

MICROFIL
OCT 8 1986

GENERAL NOTES

ITEM 606 - BRIDGE TERMINAL ASSEMBLY, STD TYPE B MODIFIED AS PER PLAN

PAYMENT FOR THIS ITEM SHALL INCLUDE THE COST OF THE ADDITIONAL ENCASED STEEL POST AS SHOWN ON SHEET 6 .

ITEM 619 - FIELD OFFICE

THE CONTRACTOR SHALL PROVIDE A SUITABLE FIELD OFFICE HAVING A MINIMUM OF 150 SQ. FT. OF FLOOR SPACE. PAYMENT SHALL BE AT THE LUMP SUM PRICE BID FOR ITEM 619, FIELD OFFICE.

ITEM 622 - TEMPORARY CONCRETE BARRIER

THE TEMPORARY BARRIER SHALL BE PIN-CONNECTED AND HAVE TAPERED END TERMINALS. THE BARRIER SHALL BE PLACED AS SHOWN IN THESE PLANS BEFORE ANY REMOVAL OPERATIONS BEGIN. THE BARRIER SECTIONS WILL REMAIN THE PROPERTY OF THE CONTRACTOR AND BE REMOVED FROM THE SITE BY HIM AT THE COMPLETION OF THE PROJECT. MEASUREMENT SHALL BE BASED UPON THE LENGTH OF BARRIER INSTALLED UNDER EACH MAINTENANCE OF TRAFFIC PHASE.

ITEM SPECIAL - CHANNEL CLEANOUT

THIS WORK SHALL BE DONE IN ACCORDANCE WITH ITEM 203 OF THE CMS. ALL REMOVAL SHALL CONFORM TO THE LINES, GRADES, AND ELEVATIONS SHOWN ON THE PLANS. PAYMENT WILL BE MADE AT THE CONTRACT BID PRICE FOR ITEM SPECIAL - LUMP SUM - CHANNEL CLEANOUT.

UTILITIES

THE LOCATIONS OF THE UNDERGROUND UTILITIES SHOWN ON THE PLANS ARE AS OBTAINED FROM THE OWNERS OF THE UTILITY AS REQUIRED BY SECTION 153.64 ORC.

AT LEAST TWO WORKING DAYS PRIOR TO COMMENCING CONSTRUCTION OPERATIONS IN AN AREA WHICH MAY INVOLVE UNDERGROUND UTILITIES, THE CONTRACTOR SHALL NOTIFY THE PROJECT ENGINEER, THE REGISTERED UTILITY PROTECTION SERVICE AND THE OWNERS OF THE UNDERGROUND UTILITIES SHOWN IN THE PLANS.

THE OWNER OF THE UNDERGROUND UTILITY FACILITY SHALL, WITHIN FORTY-EIGHT HOURS, EXCLUDING SATURDAYS, SUNDAYS AND LEGAL HOLIDAYS, AFTER NOTICE IS RECEIVED, STAKE, MARK OR OTHERWISE DESIGNATE THE LOCATION OF THE UNDERGROUND UTILITIES IN THE CONSTRUCTION AREA IN SUCH A MANNER AS TO INDICATE THE COURSE TOGETHER WITH APPROXIMATE DEPTH AT WHICH IT WAS INSTALLED. THE MARKING OR LOCATION SHALL BE COORDINATED TO STAY APPROXIMATELY TWO DAYS AHEAD OF THE PLANNED CONSTRUCTION.

THE FOLLOWING UNDERGROUND UTILITIES AND OWNERS ARE LOCATED WITHIN THE WORK LIMITS OF THIS PROJECT:

EAST OHIO GAS COMPANY
1010 WEST 30TH STREET
ASHTABULA, OHIO 44004
PHONE: (216) 992-6008

OHIO BELL TELEPHONE COMPANY
820 W. SUPERIOR AVENUE ROOM 215
CLEVELAND, OHIO 44114
PHONE: (216) 822-6241

THE WESTERN RESERVE TELEPHONE COMPANY
4616 PARK AVENUE
ASHTABULA, OHIO 44004
PHONE: (216) 352-9361

THE FOLLOWING AERIAL UTILITIES ARE LOCATED WITHIN THE WORK LIMITS OF THE PROJECT. THE CONTRACTOR SHALL ALSO NOTIFY THESE UTILITY COMPANIES AT LEAST 48 HOURS PRIOR TO COMMENCING CONSTRUCTION OPERATIONS.

CLEVELAND ELECTRIC ILLUMINATING COMPANY
2210 SOUTH RIDGE ROAD
ASHTABULA, OHIO 44004
PHONE: (216) 998-5151

THE WESTERN RESERVE TELEPHONE COMPANY
4616 PARK AVENUE
ASHTABULA, OHIO 44004
PHONE: (216) 352-9361

RAISED PAVEMENT MARKER TREATMENT

RAISED PAVEMENT MARKER (RETRO-REFLECTORS AND CASTINGS) REMOVAL FROM THE BRIDGE DECK SHALL BE PAID FOR UNDER ITEM 202 - WEARING COURSE REMOVED. THESE RAISED PAVEMENT MARKERS SHALL NOT BE REPLACED.

RAISED PAVEMENT MARKER PRIMSMATIC RETRO-REFLECTORS WHICH CONFLICT WITH THE MAINTENANCE OF TRAFFIC SCHEMES WITHIN THE EXISTING PAVEMENT MARKING REMOVAL LIMITS SHALL BE REMOVED AND REPLACED ACCORDING TO THE NOTES ON SHEET 5 . THE FOLLOWING ESTIMATED QUANTITY IS INCLUDED IN THE GENERAL SUMMARY TO BE USED AS DIRECTED BY THE ENGINEER TO PERFORM THIS WORK ON ALL PARTS OF THIS PROJECT.

ITEM SPECIAL - PRISMATIC RETRO-REFLECTOR REPLACED 116 EACH

ITEM SPECIAL - PAVEMENT PLANING, BITUMINOUS, WITHOUT HEAT

THE FOLLOWING ESTIMATED QUANTITY HAS BEEN INCLUDED IN THE GENERAL SUMMARY TO BE USED AS DIRECTED BY THE ENGINEER TO REMOVE EXISTING ASPHALT CONCRETE ON THE APPROACH PAVEMENT AS REQUIRED TO PROVIDE A SMOOTH TRANSITION. SEE NOTE ON SHEET 2 ITEM 404 ASPHALT CONCRETE AC-20.

ITEM SPECIAL- PAVEMENT PLANING, BITUMINOUS, WITHOUT HEAT 245 SQ.YDS.

ITEM 407 - TACK COAT

THE FOLLOWING ESTIMATED QUANTITY HAS BEEN INCLUDED IN THE GENERAL SUMMARY TO BE USED AS DIRECTED BY THE ENGINEER ON THE APPROACH PAVEMENT.

ITEM 407 - TACK COAT 25 GALLONS

GENERAL NOTES

FHWA REGION	STATE	PROJECT	
5	OHIO		

LAKE COUNTY
LAK-20-29.76

PLAN NO. BR-55-84

ITEM 614 - TEMPORARY PAVEMENT MARKINGS

GENERAL

THE CONTRACTOR SHALL FURNISH, INSTALL, MAINTAIN AND WHEN NECESSARY, REMOVE TEMPORARY RETROREFLECTIVE PAVEMENT MARKINGS ON EXISTING, RECONSTRUCTED, RESURFACED OR TEMPORARY ROADS WITHIN THE WORK LIMITS, IN ACCORDANCE WITH THE FOLLOWING REQUIREMENTS.

THE MARKINGS SHALL BE MAINTAINED IN GOOD CONDITION DURING THE REQUIRED SERVICE PERIOD TO PROVIDE DAY AND NIGHT VISIBILITY. THE MARKINGS SHALL BE REPAIRED OR REPLACED AS DIRECTED BY THE ENGINEER TO MAINTAIN REQUIRED VISIBILITY AND/OR REFLECTIVITY AT NO ADDITIONAL COST TO THE STATE.

MATERIALS

UNLESS OTHERWISE INDICATED ON THE PLANS, TEMPORARY PAVEMENT MARKINGS MAY BE OF PAINT, PAVEMENT MARKING TAPE OR REMOVABLE PAVEMENT MARKING TAPE (TYPE R TAPE).

A. PAINT
PAINT SHALL COMPLY WITH 708.14 AND SHALL BE APPLIED IN ACCORDANCE WITH 621 EXCEPT AS MODIFIED HEREIN.

B. PAVEMENT MARKING TAPE
FLEXIBLE RETROREFLECTIVE PREFORMED PRESSURE SENSITIVE TAPE SHALL HAVE STRAIGHT EDGES AND BE FREE OF CRACKS. THE TAPE SHALL CONSIST OF PIGMENT AND FILLERS WITH SUFFICIENT BINDER AND PLASTICIZER TO RETAIN GLASS BEADS HAVING A REFRACTIVE INDEX MEETING THE MINIMUM REFLECTIVE INTENSITY STANDARD STATED IN THE MANUFACTURERS INFORMATION. THE TAPE SHALL BE FLEXOLITE "WET REFLECTIVE", 3M "SCOTCHLANE" OR AN APPROVED EQUAL.

THE GLASS BEADS SHALL BE DISTRIBUTED UNIFORMLY THROUGHOUT THE TAPE WITH SUFFICIENT SURFACE BEADS TO PROVIDE OPTIMUM REFLECTORIZATION AT ALL TIMES.

PAVEMENT MARKING TAPE SHALL COMPLY WITH THE COLOR REQUIREMENTS OF 708.14

THE TAPE SHALL HAVE A PRECOATED ADHESIVE LAYER FOR PAVEMENT APPLICATION WITHOUT THE USE OF HEAT, SOLVENTS OR ADDITONAL ADHESIVES. THE ADHESIVE SHALL BE SUFFICIENT TO RETAIN COMPLETE MARKINGS ON THE PAVEMENT SURFACE THROUGHOUT THE USEFUL LIFE OF THE MARKINGS.

IN ADDITION TO THE FOREGOING, ALL TEMPERATURE APPLICATION REQUIREMENTS AND OTHER APPLICABLE MANUFACTURERS MATERIAL AND APPLICATION INSTRUCTIONS SHALL BE FOLLOWED.

WHEN APPROVED BY THE ENGINEER THE CONTRACTOR MAY USE REMOVABLE PAVEMENT MARKING TAPE (TYPE R TAPE), IN LIEU OF THAT DESCRIBED ABOVE, TO FACILITATE REMOVAL OF MARKINGS.

C. REMOVABLE PAVEMENT MARKING TAPE (TYPE R TAPE)
THE MARKING MATERIAL SHALL BE A MIXTURE OF POLYMERIC MATERIALS, PIGMENTS, REINFORCING MEDIUM TO FACILITATE REMOVAL, GLASS BEADS THROUGHOUT THE PIGMENTED PORTION AND A RETROREFLECTIVE LAYER OF GLASS BEADS BONDED TO THE TOP SURFACE.

THE TAPE SHALL BE PROTECTED WITH A PRESSURE SENSITIVE ADHESIVE CAPABLE OF TEMPORARILY BONDING TO ASPHALT CONCRETE OR PORTLAND CEMENT CONCRETE PAVEMENT AT AN AMBIENT TEMPERATURE OF NOT LESS THAN 50°F AND RISING, AT A PAVEMENT TEMPERATURE OF NOT LESS THAN 50°F NOR MORE THAN 150°F, WITHOUT THE USE OF HEAT, SOLVENTS AND ADDITIONAL ADHESIVES OR ACTIVATORS.

MATERIALS SHALL CONFORM TO THE COLOR REQUIREMENTS OF 708.14.

THE TAPE SHALL BE REMOVABLE FROM ASPHALT AND PORTLAND CEMENT CONCRETE INTACT OR IN LARGE PIECES AT TEMPERATURES ABOVE 40°F WITHOUT USE OF HEAT, SOLVENTS, GRINDING OR SANDBLASTING REMOVAL SHALL NOT RESULT IN DAMAGE TO OR OBJECTIONABLE STAINING OF THE PAVEMENT.

GLASS BEADS SHALL BE PROVIDED IN A PROPER SIZE, QUANTITY AND DISTRIBUTION TO ASSURE OPTIMUM RETROREFLECTIVITY AS THE FILM WEARS. THE FOLLOWING INITIAL AVERAGE REFLECTIVE VALUES AT 86.0° ENTRANCE ANGLE AS MEASURED IN ACCORDANCE WITH THE TESTING PROCEDURES OF FEDERAL TEST METHOD 370 SHALL BE CERTIFIED:

	WHITE		YELLOW	
OBSERVATION ANGLE	0.2	0.5	0.2	0.5
SPECIFIC LUMINANCE (MCD/FT^2)/FC	1770	1270	1310	810

THE TAPE SHALL BE 3-M COMPANY'S "STAMARK, DETOUR GRADE (SERIES 5710, 5711, 6270, 6211)" OR AN APPROVED EQUAL.

THE CONTRACTOR SHALL FURNISH TO THE ENGINEER CERTIFICATION THAT THE MATERIAL SUPPLIED MEETS THE PROPERTIES SPECIFIED HEREIN.

LAYOUT

THE TEMPORARY MARKINGS SHALL BE ACCURATELY LAID OUT IN CONFORMANCE WITH 621.051 AND SHALL BE LOCATED IN A TRUE LINE ON THE CENTER LINE, LANE LINE, EDGE LINE OR CHANNELIZING LINE WHERE PERMANENT MARKINGS WOULD LIE UNLESS OTHERWISE SPECIFIED IN THE PLANS.

PLACEMENT

TEMPORARY MARKINGS SHALL BE PLACED IN ACCORDANCE WITH LAYOUTS ON SHEETS 16 & 17 AND THE FOLLOWING REQUIREMENTS, UNLESS OTHERWISE SPECIFIED IN THE PLANS.

TEMPORARY MARKINGS SHALL BE COMPLETE AND IN PLACE ON ALL PAVEMENT PRIOR TO EXPOSING IT TO TRAFFIC. WHEN TEMPORARY MARKINGS ARE NO LONGER NEEDED, THEY SHALL BE REMOVED BY THE CONTRACTOR IN ACCORDANCE WITH 621.134 AND NECESSARY PAVEMENT MARKINGS INSTALLED BEFORE THE FLOW OF TRAFFIC IS CHANGED TO THE NEXT PHASE OR RETURNED TO ITS NORMAL CHANNEL.

WHERE PERMANENT PAVEMENT MARKINGS ARE CALLED FOR IN THE PLANS, THE CONTRACTOR SHALL FURNISH AND PLACE THE PERMANENT MARKINGS WITHIN 30 CALENDAR DAYS FOLLOWING COMPLETION OF ALL SURFACE COURSES IN A SINGLE ROADWAY OR PRIOR TO THE END OF THE CONSTRUCTION SEASON, WHICHEVER COMES FIRST. PERMANENT MARKINGS SHALL NOT BE PLACED OVER ANY TAPE MARKINGS.

A. CLASS I MARKINGS
CLASS I MARKINGS SHALL BE AS DEFINED IN 621, EXCEPT AS FOLLOWS:

1) LANE LINES SHALL BE 4-INCHES IN WIDTH.
2) TRANSVERSE LINES SHALL BE 8-INCHES IN WIDTH.
3) STOP LINES SHALL BE 12-INCHES IN WIDTH.
4) CROSS WALK LINES SHALL BE 8-INCHES IN WIDTH.

GORE MARKINGS SHALL CONSIST OF TWO CHANNELIZING LINES PLACED AT THE THEORETICAL OR TEMPORARY GORE OF RAMPS AND DIVERGING OR CONVERGING ROADWAYS.

THE PAINT APPLICATION RATE SHALL BE NOT LESS THAN 16 GALLONS PER MILE FOR SOLID 4-INCH LINES, 24 GALLONS PER MILE FOR SOLID 6-INCH LINES, 48 GALLONS PER MILE FOR SOLID 12-INCH LINES AND 4 GALLONS PER MILE FOR 4-INCH DASHED LINES.

B. CLASS II MARKINGS
CENTER LINES SHALL CONSIST OF SINGLE, YELLOW 12-INCH BY 4-INCH DASHES SPACED AT A MAXIMUM OF 40-FOOT INTERVALS.

LANE LINES SHALL CONSIST OF WHITE 12-INCH BY 4-INCH DASHES SPACED AT A MAXIMUM OF 40-FOOT INTERVALS.

CHANNELIZING LINES SHALL CONSIST OF WHITE 12-INCH BY 4-INCH DASHES SPACED AT A MAXIMUM OF 20-FOOT INTERVALS.

GORE MARKINGS SHALL BE TWO CONTINUOUS, WHITE 50-FOOT BY 4-INCH LINES PLACED AT THE THEORETICAL GORE OF AN EXIT RAMP OR DIVERGING ROADWAYS.

THE PAINT APPLICATION RATE SHALL BE NOT LESS THAN 16 GALLONS PER MILE FOR GORE MARKINGS, 0.8 GALLONS PER MILE FOR CHANNELIZING LINE AND 0.4 GALLONS PER MILE FOR LANE LINE AND CENTER LINE.

CONFLICTING MARKINGS

THE CONTRACTOR SHALL, PRIOR TO PLACING TEMPORARY MARKINGS, REMOVE ALL EXISTING CONFLICTING MARKINGS VISIBLE TO THE TRAVELING PUBLIC DURING DAYLIGHT OR NIGHTTIME HOURS IN ACCORDANCE WITH 621.134. THE COST FOR REMOVAL OF CONFLICTING MARKINGS SHALL BE INCIDENTAL TO THE VARIOUS PAY ITEMS.

METHOD OF MEASUREMENT

TEMPORARY PAVEMENT MARKINGS WILL BE MEASURED COMPLETE IN PLACE, BY CLASS AND MATERIAL IN THE UNITS DESIGNATED. DASHED LINE QUANTITIES WILL BE THE LENGTH OF THE COMPLETED STRIPE INCLUDING GAPS, INTERSECTIONS AND OTHER SECTIONS OF PAVEMENT NOT NORMALLY MARKED IN ACCORDANCE WITH 621.15.

TEMPORARY PAVEMENT MARKINGS WILL INCLUDE THE LAYOUT, APPLICATION AND REMOVAL OF THE MARKINGS WHEN REQUIRED.

BASIS OF PAYMENT

PAYMENT FOR ACCEPTED QUANTITIES COMPLETE IN PLACE WILL BE MADE AT THE CONTRACT UNIT PRICE. PAYMENT SHALL BE FULL COMPENSATION FOR ALL MATERIALS, LABOR, INCIDENTALS AND EQUIPMENT FOR PLACEMENT, MAINTENANCE AND NECESSARY REMOVAL OF THE MARKINGS.

ITEM	UNIT	DESCRIPTION
614	MILES	TEMPORARY LANE LINES, CLASS II, (PAINT, TAPE OR TYPE R TAPE)
614	MILES	TEMPORARY CENTER LINES, CLASS II, (PAINT, TAPE OR TYPE R TAPE)
614	MILES/LIN FT	TEMPORARY CHANNELIZING LINES, CLASS ____, (PAINT, TAPE OR TYPE R TAPE)
614	MILES	TEMPORARY EDGE LINES, CLASS I, (PAINT, TAPE OR TYPE R TAPE)
614	LIN. FT.	TEMPORARY GORE MARKING, CLASS II, (PAINT, TAPE OR TYPE R TAPE)
614	LIN. FT.	TEMPORARY STOP LINES, CLASS I, (PAINT, TAPE OR TYPE R TAPE)
614	LIN. FT.	TEMPORARY CROSSWALK LINES, CLASS I, (PAINT, TAPE OR TYPE R TAPE)
614	EACH	TEMPORARY LANE ARROWS, CLASS I, (PAINT, TAPE OR TYPE R TAPE)
614	EACH	TEMPORARY WORD "ONLY" ON PAVEMENT, 72-INCH, CLASS I, (PAINT, OR TYPE R TAPE)
614	LIN. FT.	TEMPORARY TRANSVERSE LINES, CLASS I, (PAINT, TAPE OR TYPE R TAPE)

MAY 13, 1982

DESCRIPTION OF WORK

1. The work shall consist of furnishing and placing plowable raised pavement markers (hereafter referred to as RPMs) in accordance with the lines, symbols, and dimensions shown on the plans or as described herein on highway sections where the RPM's have never been installed to date.

2. The replacement of damaged or missing RPM's within existing marker installations in accordance with the lines, symbols and dimensions shown on the plans or as described herein. This work includes furnishing replacement RPM's.

3. The replacement of damaged or missing prismatic retro-reflectors on highway sections with existing marker installations where casting remains intact in accordance with the lines, symbols and dimensions shown on the plans or as described herein. This work includes furnishing replacement prismatic retro-reflectors.

The Contractor shall furnish all material, services, labor and equipment necessary for the required pavement preparation and pavement marker placement for each item described herein.

MATERIALS

The RPM shall consist of two components. One component is a casting; the other component is a prismatic retro-reflector. Both components of the RPM used for this project shall be Stimsonite Model 96 as manufactured by the Amerace Corporation, Niles, Illinois, or an approved functional equivalent. The RPM casting is an iron casting, snow plowable in two opposing directions, designed to be equipped with a replaceable prismatic retro-reflector. Prismatic retro-reflectors shall retro-reflect in one direction only (one way) or in two opposing directions (two-way).

The adhesive used to bond the RPM to the pavement shall be a two-component standard set epoxy available from Poly-Carb, Inc. or General Adhesives and Chemical Company or an approved functional equivalent made with the following formulation.

Component A	Parts by Weight
Epoxy Resin (Epon 828 or equal)	100.00
Titanium Dioxide	7.68
#13 Talc U	36.64

Component B	Parts by Weight
N-Aminoethyl piperazine (Jefferson or equal)	25.10
Nonyl Phenol	50.03
Talc (Fiberine C-400, Sierra or equal)	69.28
Molacco Black	0.23

The adhesive used by the Contractor to bond the prismatic retro-reflector to castings shall be MACCO, LN-602 (Liquid Nails), a waterproof synthetic rubber and resin based adhesive, manufactured by SCM Glidden-Durkee, Division of SCM Corporation, Macco Adhesives Group, Wickliffe, Ohio 44092 or an approved functional equivalent.

TESTING AND CERTIFICATION

RPMs and prismatic retro-reflectors shall be furnished and placed by the Contractor. The Contractor shall furnish to the Engineer, certified Test Data of the material's physical characteristics and Certification that the materials were manufactured and assembled in accordance with applicable State specifications. The results of all factory quality control inspection of the prismatic retro-reflector to casting bond shall be included in the physical characteristics data.

The epoxy adhesive shall be furnished by the Contractor. The Contractor shall furnish to the Engineer a Certificate of Analysis containing the Certified Formulation and Certified Test Data to be obtained in the following manner:

The Certified Formulation shall be, for each of the Component Parts, the actual percent by weight, the name of the producer and brand name of the material, and the producer's code number. A certified formulation will be required annuallu for each Component Part A and B. Certified Test Data for the properties of the Component Parts, Components A (Epoxy) and B (Hardener), and the Cured System shall be obtained in accordance with the Methods of Test of AASHTO M237-73. The respective properties of the Component Parts to be tested are noted in Sections 2.3.1 to 2.3.3 and 2.3.5 to 2.3.7. The properties of both Components A and B to be tested are noted in Section 3.1. The properties of the Cured System to be tested are listed in Table 7. Certified Test Data for the Component Parts may be obtained by the respective manufacturers. Certified Test Data for Components A and B and the Cured System may be obtained by either the Epoxy Adhesive producer or an independent test laboratory.

For sampling purposes a batch shall consist of a single charge of all Components into a mixing chamber.

A certified formulation will be required for each batch of Component Parts A and B. Certified Test Data will be required for each 1,000 gallons or fraction thereof of material. Batches of less than 1,000 gallons shall be combined in proportion to their size in order to form a composite sample representative of no more than 1,250 gallons. This composite sample shall be thoroughly mixed and shall serve to represent the material to be tested. The Contractor shall also furnish the Engineer a 1 pint sample of each Component Part from the initial batch of epoxy adhesive to be used on the project and from any subsequent batches when required by the Engineer.

PAVEMENT PREPARATION

The Contractor shall clean and prepare the pavement to which the RPM casting is to be bonded, to the satisfaction of the Engineer, such that at the time of RPM installation the pavement shall be free of dirt, dust, oil, grease, moisture, curing compound, loose or unsound layers or any other material which would interfere with proper bonding of the RPM to the pavement. Sand blasting shall be used when directed by the Engineer.

INSTALLATION AND REPLACEMENT OF RPMs

At the time of installation, or replacement the RPM casting shall be free of dirt, dust, oil, grease, rust, moisture or any foreign matter which will impair adhesion to the pavement. It shall be the Contractor's responsibility to clean each contaminated casting by sand blasting or other acceptable procedure to remove all such foreign matter prior to installation. Before beginning RPM casting installation or replacement, the Contractor shall accurately and adequately lay out, by reference points, the location of all RPMs, to assure their proper placement.

RPMs shall not be placed on pavement surfaces that show visible evidence of cracking, checking, spalling, or failure of underlying base material.

If an RPM falls within a distance equal to ten percent of typical longitudinal spacing of a bridge enddam, the marker shall be relocated onto the approach slab.

RPMs shall not be placed on active signal detector loops and detector lead-in cables.

RPMs shall not be placed directly over pavement markings except where the markings deviate visibly from their correct alignment, and then only with the approval of the Engineer.

If during the pre-installation layout operation, it is determined that a RPM would be placed at a point with one of the aforementioned conditions or at a pavement construction joint or within an intersection of a driveway or public street as the result of typical marker spacing, the affected marker shall be relocated longitudinally a sufficient distance to a point approved by the Engineer. The distance the RPM may be relocated shall not excced 10% of the typical RPM spacing. Where it would be necessary to relocate the marker a distance greater than 10% of the typical marker spacing, the affected RPM shall not be installed.

When replacing RPM's at a location within an existing pattern of RPM's a new location shall be cut into the pavement one foot away from the damaged or missing casting. The old locations of the damaged or missing castings are not suitable for new castings.

The pavement surface temperature at the time of application shall be not less than 50°F. The ambient air temperature shall be not less than 50°F. No RPMs shall be installed if the pavement surface is not dry.

The Contractor shall keep traffic off newly installed or replaced RPMs for the minimum period specified in the following table.

Ambient Air Temperature °F	Minimum Period (Minutes) Protected from Traffic
100	15
90	20
80	25
70	30
60	35
50 (no application below 50°F)	45

During periods of high ambient relative humidity, epoxy may require slightly longer drying time than indicated above.

RPMs shall be installed by inserting the two keels on the casting into parallel slots cut into the pavement. Within 7 days after the slots are cut into the pavement, the RPM castings shall be installed.

The epoxy adhesive shall be mixed by combining Component Parts A (Epoxy) and B (Hardener) in a ratio of 1:1 by volume. The epoxy adhesive requires that the mixing operation and placing of the RPMs be done rapidly. Any mixed batch that becomes so viscous that it cannot be readily extruded from under the RPM with light pressure shall not be used. The epoxy adhesive shall be maintained at 60°F to 80°F before mixing. Any heating of the epoxy adhesive shall be by the application of indirect heat. The epoxy adhesive shall not be heated above 120°F.

Before applying the epoxy adhesive, the slots shall be brushed or blown clean of loose material and shall be dry. The cleaned slots shall be filled with epoxy adhesive. Sufficient epoxy shall be placed in and between the slots to insure that all voids beneath and around the casting are filled so as to create a watertight seal around the casting. The keels of the casting shall be hand placed into the slots in such a manner as to assure that the tips of the RPM's snowplow deflecting surfaces are below the pavement surface and that the four lugs on the keels of the casting are in contact with the pavement.

The Contractor may attach the prismatic retro-reflectors to new castings, which do not include a prismatic retro-reflector already factory attached by Amerace Corporation, at any time prior to the insertion of the casting into the pavement slots. Otherwise, the prismatic retro-reflector shall not be attached to a new casting until after the epoxy adhesive in the pavement slots has properly hardened. In either operation, the following prismatic retro-reflector attachment procedure shall be used. The RPM casting shall be free of dirt, dust, oil, grease, rust, moisture or any foreign matter (including damaged reflectors or parts thereof) which will impair adhesion of the prismatic retro-reflector to the casting. Sandblasting or another procedure acceptable to the Engineer shall be utilized to free the casting of foreign matter. The recessed attachment area shall be coated with LN-602 (Liquid Nails) adhesive. The backing paper shall then be peeled from the butyl adhesive bottom of the prismatic retro-reflector and the prismatic retro-reflector shall be inserted into the recessed attachment area and pressed into place until a small amount of adhesive will squeeze out on both sides and a firm bond has been made with the casting. The Contractor shall press the prismatic retro-reflector into place by the application of a 100 pound load or by a procedure acceptable to the Engineer. Adhesive material shall not be permitted on the reflective surface of the prismatic retro-reflector. The pavement surface temperature and the ambient air temperature shall be between 40°F and 90°F at the time of application of the prismatic retro-reflector. The Contractor shall not attach the prismatic retro-reflector to the casting when rain is imminent.

REPLACEMENT OF RETRO-REFLECTORS

Damaged or missing retro-reflectors within the existing marker installations where the casting remains intact shall be replaced with the reflector type shown on the details in the plan. Damaged reflectors include those that are loose or have been broken, chipped, cracked or have otherwise lost their retro-reflective properties as determined by the Engineer.

The location of existing RPM's that require the replacement of damaged or missing retro-reflectors shall be determined by the Engineer.

Some existing castings have remnants of the old retro-reflector or contain retro-reflectors that are not serviceable due to cracking, discoloration, etc. If the casting is specified by the Plan or Engineer to have the retro-reflector replaced, the work shall include removing the old portion of the retro-reflector. The attachment procedure of prismatic retro-reflectors that are replacing damaged or missing prismatic retro-reflectors within existing marker installations shall be performed as described in "Installation and Replacement of RPMs".

CHANNELIZING LINES

RPMs which are used in channelizing line applications shall have one-way prismatic retro-reflectors facing traffic which shall be white in color to match the channelizing line color. RPMs shall be placed so that the near edge of the marker casting is no more than 1 inch from the near edge of the channelizing line. Placement of the RPMs and RPM spacing shall be as shown on the details in this plan.

LANE LINES

RPMs which are used in lane line applications shall have two-way prismatic retro-reflectors, crystal white facing traffic and red facing the opposite direction. RPMs shall be placed between and in line with the dashes of the lane line. Placement of the RPMs and RPM spacing shall be as shown on the details in this plan.

EDGE LINES

RPMs which are used in edge line applications shall have prismatic retro-reflectors which match the edge line color (white facing traffic for right edge lines; yellow facing traffic for the left edge lines). RPMs shall be placed so that the near edge of the marker casting is no more than 1 inch from the near edge of the edge line.

The number of retro-reflective faces required, the placement of RPMs and the RPM spacing shall be as shown on the details in this plan.

CENTER LINES

RPMs which are used in centerline applications shall have two-way prismatic retro-reflectors, which shall be yellow to match the centerline color. RPMs shall be placed between the lines of double line centerline and between and in line with the dashes on single line centerline. Placement of the RPMs and RPM spacing shall be as shown on the details in this plan.

METHOD OF MEASUREMENT

The number of RPMs installed or replaced will be the actual number, furnished, complete, in place, and accepted, in the units designated, including layout, premarking, surface preparation, and the furnishing and application of all required epoxy adhesive.

The number of prismatic retro-reflectors replaced will be the actual number furnished, complete, in place, and accepted in the units designated, including existing casting preparation and application of all required adhesive.

BASIS OF PAYMENT

Payment for accepted quantities in place will be made at the contract unit price for:

ITEM	UNIT	DESCRIPTION
Special	Each	Raised Pavement Marker
Special	Each	Raised Pavement Marker Replaced
Special	Each	Prismatic Retro-reflector Replaced

Payment shall be full compensation for all materials, labor, incidentals, and equipment for placement of the RPMs and Prismatic Retro-reflectors.

AUGUST 13, 1979
Revised MARCH 30, 1981
Revised MAY 26, 1981

RAISED PAVEMENT MARKER NOTES

FHWA REGION	STATE	PROJECT	
5	OHIO		

6 / 17

LAKE COUNTY
LAK-20-29.76

PLAN NO. BR-55-84

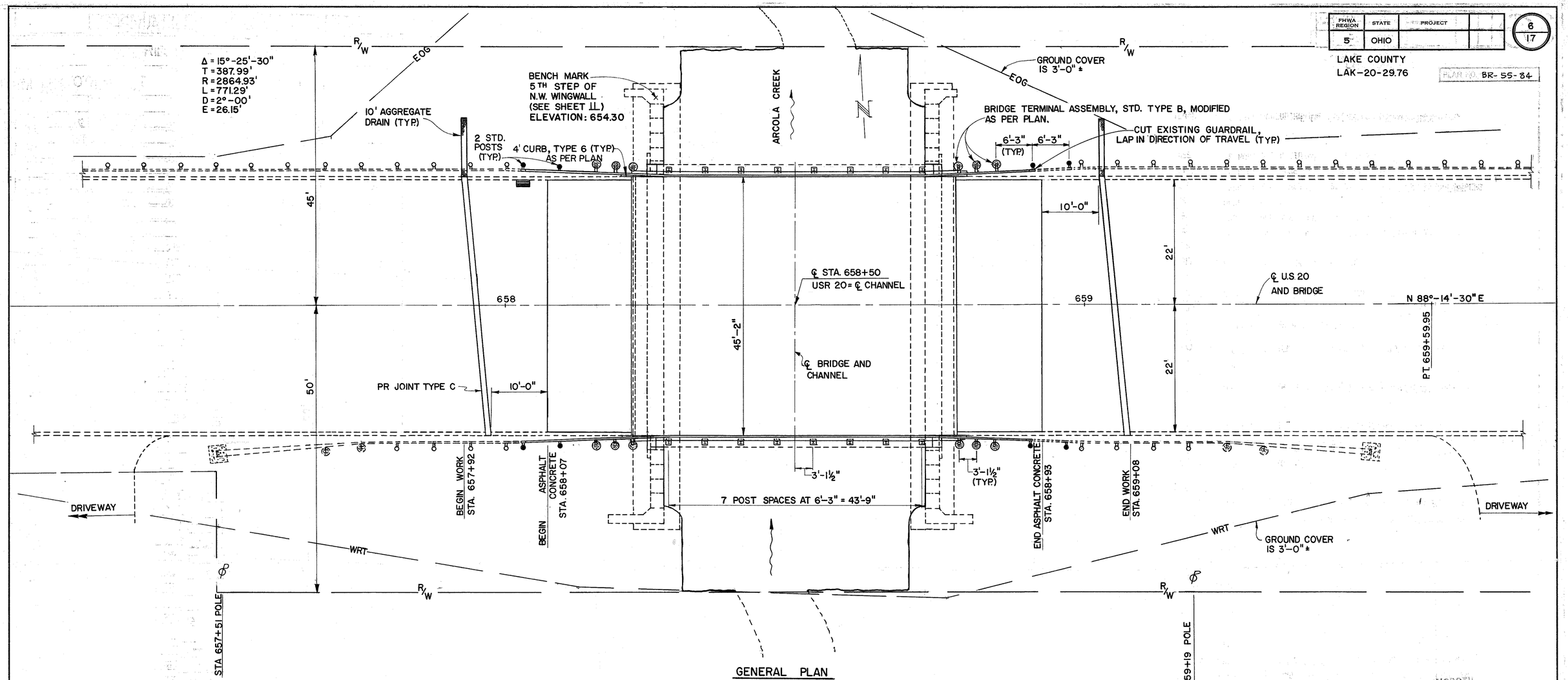

GENERAL PLAN

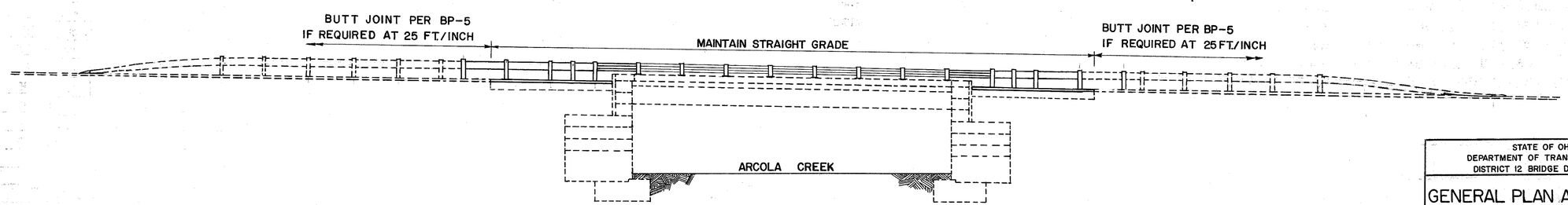

ELEVATION

MICROFIL
OCT 8 1986

STATE OF OHIO
DEPARTMENT OF TRANSPORTATION
DISTRICT 12 BRIDGE DEPARTMENT

1 / 10

GENERAL PLAN AND ELEVATION

BRIDGE LAK-20-2976

OVER ARCOLA CREEK

DESIGNED	DRAWN	TRACED	CHECKED	REVIEWED	DATE	REVISED
EJA	PJM	PJM	OWL	GWM	7-2-84	

ESTIMATED QUANTITIES

BRIDGE LAK-20-2976

ITEM	TOTAL	UNIT	DESCRIPTION
			ROADWAY
202	432	SQ. YDS	WEARING COURSE REMOVED
202	LUMP	LUMP	PORTIONS OF STRUCTURE REMOVED
202	74	LIN. FT.	GUARDRAIL REMOVED FOR RE-USE OR STORAGE
202	4	EACH	BRIDGE TERMINAL ASSEMBLY, TYPE B, REMOVED
606	4	EACH	BRIDGE TERMINAL ASSEMBLY STD., TYPE B, MODIFIED AS PER PLAN
606	74	LIN. FT.	GUARDRAIL REBUILT, TYPE 5, AS PER PLAN
			PAVEMENT
404	34	CU. YDS.	ASPHALT CONCRETE, AC-20
407	50	GAL.	TACK COAT
622	400	LIN. FT.	TEMPORARY CONCRETE BARRIER
SPECIAL	245	SQ. YDS.	PAVEMENT PLANING BITUMINOUS, WITHOUT HEAT
			MAINTENANCE OF TRAFFIC
614	0.769	MILES	TEMPORARY EDGE LINES, CLASS I (TAPE)
614	44	LIN. FT.	TEMPORARY STOP LINES, CLASS I (TAPE)
614	4	EACH	TEMPORARY LANE ARROWS, CLASS I (TAPE)
614	0.898	MILES	TEMPORARY LANE LINES, CLASS II
614	0.449	MILES	TEMPORARY CENTER LINES, CLASS II
SPECIAL	116	EACH	PRISMATIC RETRO-REFLECTOR REPLACED
			STRUCTURES
503	LUMP	LUMP	COFFERDAMS, CRIBS AND SHEETING
503	LUMP	LUMP	UNCLASSIFIED EXCAVATION
509	3399	POUND	REINFORCING STEEL
509	200	POUND	REINFORCING STEEL, AS PER PLAN
509	279	POUND	DOWEL BAR SUBSTITUTION
510	172	EACH	DOWEL HOLES, AS PER PLAN
511	28	CU. YDS.	CLASS S CONCRETE, AS PER PLAN
512	301	SQ. YDS.	TYPE D WATERPROOFING
516	187	SQ. FT.	1/2" PREFORMED EXPANSION JOINT FILLER
517	49	LIN. FT.	RAILING (DEEP BEAM RAIL WITH TUBULAR BACKUP AND 1' - 6 1/2" STEEL
			POSTS AND BOLTS), AS PER PLAN
517	49	LIN. FT.	RAILING (DEEP BEAM RAIL WITH TUBULAR BACKUP AND 1' - 9" STEEL POSTS
			AND BOLTS), AS PER PLAN
518	27	CU. YDS.	POROUS BACKFILL
605	20	LIN. FT.	AGGREGATE DRAINS
609	16	LIN. FT.	CURB, TYPE 6, AS PER PLAN
SPECIAL	89	LIN. FT.	PRESSURE RELIEF JOINTS, STANDARD TYPE C
SPECIAL	12	LIN. FT.	○ 6" x 3" IMPREGNATED FOAM JOINT SEAL
SPECIAL	181	LIN. FT.	○ 2" x 2" IMPREGNATED FOAM JOINT SEAL
SPECIAL	60	SQ. FT.	STEEL DRIP STRIP
SPECIAL	300	SQ. FT.	PATCHING CONCRETE STRUCTURE WITH SUPERIOR BONDING MATERIALS
SPECIAL ✳	2325	SQ. FT.	SEALING OF CONCRETE SURFACES (EPOXY)
SPECIAL	LUMP	LUMP	CHANNEL CLEANOUT
SPECIAL ✳	231	SQ. YDS.	SUPER PLASTICIZED DENSE CONCRETE OVERLAY (3 3/4" THICK)
SPECIAL ✳	7	CU. YDS.	SUPER PLASTICIZED DENSE CONCRETE OVERLAY (VARIABLE THICKNESS)
SPECIAL ✳	3	CU. YDS.	FULL DEPTH REPAIR
			GENERAL
614	LUMP	LUMP	MAINTAINING TRAFFIC
619	LUMP	LUMP	FIELD OFFICE
623	LUMP	LUMP	CONSTRUCTION LAYOUT STAKES
624	LUMP	LUMP	MOBILIZATION

✳ SEE PROPOSAL NOTE

PROPOSED WORK

1. REPLACE BACKWALLS AND PORTIONS OF APPROACH SLABS WITH INTEGRAL ABUTMENTS.
2. REPAIR THE DECK, WATERPROOF AND OVERLAY WITH ASPHALT.
3. PATCH DETERIORATED CONCRETE SURFACES WITH SUPERIOR BONDING MATERIALS.
4. EPOXY SEAL ALL CONCRETE SURFACES EXPOSED TO DE-ICING CHEMICALS.
5. REPLACE BRIDGE RAIL.
6. CLEANOUT STREAM CHANNEL.
7. INSTALL PRESSURE RELIEF JOINTS.

STANDARD DRAWINGS

BP-11 DATED 1-30-84
GR-1 DATED 2-5-82
GR-3 DATED 2-5-82

SUPPLEMENTAL SPECIFICATIONS

803 DATED 5-27-83

853 DATED 6-26-78
861 DATED 9-9-83
956 DATED 6-26-78
961 DATED 9-9-83

DESIGN SPECIFICATIONS

THE REPAIR OF THIS STRUCTURE CONFORMS TO "STANDARD SPECIFICATIONS FOR HIGHWAY BRIDGES" ADOPTED BY THE AMERICAN ASSOCIATION OF HIGHWAY OFFICIALS, 1977, INCLUDING THE 1978, 1979, 1980, 1981, 1982 AND 1983 INTERIM SPECIFICATIONS AND THE OHIO SUPPLEMENT TO THESE SPECIFICATIONS.

DESIGN DATA

EXISTING STRUCTURE DESIGN LOADING OF H-15-33 IS UNCHANGED.
REINFORCING STEEL - ASTM A615, A616, A617; GRADE 40 - UNIT STRESS 20,000 PSI.
CLASS S CONCRETE - UNIT STRESS 1500 PSI (SUPERSTRUCTURE).
DECK PROTECTION METHOD - MEMBRANE WATERPROOFING AND ASPHALT CONCRETE OVERLAY.

EXISTING STRUCTURE VERIFICATION

DETAILS AND DIMENSIONS SHOWN ON THESE PLANS PERTAINING TO THE EXISTING STRUCTURE HAVE BEEN OBTAINED FROM PLANS OF THE EXISTING STRUCTURE AND/OR FROM FIELD OBSERVATIONS AND MEASUREMENTS. CONSEQUENTLY, THEY ARE INDICATIVE OF THE EXISTING STRUCTURE AND THE PROPOSED WORK, BUT THEY SHALL BE CONSIDERED TENTATIVE AND APPROXIMATE. THE CONTRACTOR IS REFERRED TO CMS SECTIONS 102.05 AND 105.02.

CONTRACT BID PRICES SHALL BE BASED UPON A RECOGNITION OF THE UNCERTAINTIES DESCRIBED ABOVE AND UPON A PREBID EXAMINATION OF THE EXISTING STRUCTURE BY THE CONTRACTOR. HOWEVER, ALL PROJECT WORK SHALL BE BASED UPON ACTUAL DETAILS AND DIMENSIONS WHICH HAVE BEEN VERIFIED BY THE CONTRACTOR IN THE FIELD. PLANS OF THE EXISTING STRUCTURE INCLUDING STANDARD DRAWINGS AS-35, B-45-35, BD-35 and BSK-35 ARE AVAILABLE FOR EXAMINATION AT THE ODOT DISTRICT 12 OFFICE IN GARFIELD HEIGHTS, OHIO.

○ *Will-Seal may require different foam seal sizes to facilitate installation, Consult with manufacturer for proper seal sizes to produce a water tight joint.*

SEQUENCE OF OPERATIONS

I. IMPLEMENT PHASE I MAINTENANCE OF TRAFFIC INCLUDING THE INSTALLATION OF THE TEMPORARY CONCRETE BARRIER.

II. PERFORM CONSTRUCTION PHASE I WORK ON THE NORTH SIDE IN THE FOLLOWING ORDER:
   A. REMOVE THE ASPHALT WEARING COURSE FROM THE DECK, AND APPROACH SLABS.
   B. REMOVE THE BRIDGE RAIL, BRIDGE TERMINAL ASSEMBLIES, GUARDRAIL, BACKWALLS, SCUPPERS AND SEPARATE CONCRETE WEARING COURSE.
   C. BUILD BACKWALLS, PORTIONS OF APPROACH SLABS, AND PATCH THE DECK.
   D. PREPARE THE DECK AND PLACE THE SUPERPLASTICIZED DENSE CONCRETE OVERLAY.
   E. INSTALL ALL JOINT SEALS.
   F. PATCH CONCRETE SURFACES WITH SUPERIOR BONDING MATERIALS.
   G. EPOXY SEAL CONCRETE SURFACES.
   H. INSTALL BRIDGE RAIL, BRIDGE TERMINAL ASSEMBLIES, AND GUARDRAIL.
   I. PLACE WATERPROOFING.
   J. PLACE 404 ASPHALT CONCRETE ON THE BRIDGE AND APPROACH SLABS.

III. REMOVE THE PHASE I MAINTENANCE OF TRAFFIC SYSTEM AND IMPLEMENT PHASE II INCLUDING RELOCATING THE TEMPORARY CONCRETE BARRIER.

IV. PERFORM CONSTRUCTION PHASE II WORK ON THE SOUTH SIDE IN THE SAME ORDER AS CONSTRUCTION PHASE I.

V. PERFORM ITEMS OF WORK NOT SPECIFICALLY ORDERED AS APPROPRIATE THROUGHOUT THE CONSTRUCTION OPERATIONS.

VI. PLACE PAVEMENT MARKINGS AND OPEN THE HIGHWAY TO TRAFFIC.

ITEM 202 - PORTIONS OF STRUCTURES REMOVED

WORK TO BE PAID FOR UNDER THIS ITEM SHALL INCLUDE THE REMOVAL OF STRUCTURAL COMPONENTS AS DETAILED IN THE PLANS. THESE REMOVALS ARE INCLUDED IN BUT NOT NECESSARILY LIMITED TO THE FOLLOWING LIST:

1. PORTIONS OF APPROACH SLAB INCLUDING CURBS (34 S.Y.).
2. BACKWALLS (15 C.Y.).
3. 3" DEEP SAW CUT IN APPROACH SLABS (90 L.F.).
4. UNSOUND DIAPHRAGM CONCRETE.
5. 3-1/2" SEPARATE CONCRETE WEARING SURFACE INCLUDING CURBS (241 S.Y.).
6. SCUPPERS (4 EA.).
7. CONCRETE BRIDGE RAILING (97 L.F.).

REMOVAL OF THE CONCRETE DIAPHRAGMS SHALL INCLUDE ALL LOOSE, SOFT, HONEY-COMBED AND DISINTEGRATED CONCRETE PLUS ONE-FOURTH INCH DEPTH OF SOUND CONCRETE. ALL WORK SHALL BE DONE IN SUCH A MANNER AS TO NOT DAMAGE OR SHATTER THE CONCRETE THAT IS TO REMAIN AND TO PREVENT THE REINFORCING STEEL THAT IS TO REMAIN FROM BEING CUT, ELONGATED, OR DAMAGED IN ANY WAY. ONLY PNEUMATIC OR HAND TOOLS THAT WILL GIVE RESULTS SATISFACTORY TO THE ENGINEER SHALL BE USED IN THE REMOVAL OF THE DISINTEGRATED CONCRETE AND IN PREPARING AND SHAPING THE AREA TO BE REPAIRED. EXTREME CARE SHOULD BE TAKEN WHEN REMOVING UNSOUND CONCRETE SO AS TO NOT DAMAGE THE T-BEAM. ANY EXISTING REINFORCING BARS WHICH ARE TO BE INCORPORATED INTO THE NEW WORK AND WHICH ARE MADE UNUSABLE BY THE CONTRACTOR'S CONCRETE REMOVAL OPERATIONS SHALL BE REPLACED WITH NEW STEEL AT HIS COST.

MICROFIL
OCT 8 1986

Rev. 9-13-84 RLE

STATE OF OHIO
DEPARTMENT OF TRANSPORTATION
DISTRICT 12 BRIDGE DEPARTMENT

2 / 10

STRUCTURE NOTES AND ESTIMATED QUANTITIES

BRIDGE LAK-20-2976
OVER ARCOLA CREEK

DESIGNED	DRAWN	TRACED	CHECKED	REVIEWED	DATE	REVISED
EJA	PJM	PJM	DWL	GWM	7-2-84	

ITEM 509 - REINFORCING STEEL, AS PER PLAN

SHALL BE USED AS DIRECTED BY THE ENGINEER TO REPLACE REINFORCING STEEL WHICH IS BENT, ELONGATED, MISSING, OR EXTREMELY CORRODED. BARS SHALL BE THE SAME SIZE AS THE ORIGINAL BARS AND SHALL BE PLACED AS NEAR AS POSSIBLE TO THEIR ORIGINAL LOCATION. BARS SHALL BE LAPPED ACCORDING TO SEC. 509.08. PAYMENT FOR THIS ITEM SHALL INCLUDE THE COST OF ALL MATERIALS AND LABOR NECESSARY TO COMPLETE THE ABOVE WORK, INCLUDING REMOVAL OF THE EXISTING STEEL. THE FOLLOWING ESTIMATED QUANTITY IS INCLUDED IN THE GENERAL SUMMARY TO PERFORM THIS WORK.

ITEM 509 - REINFORCING STEEL, AS PER PLAN . . . . . 200 POUNDS

ITEM 510 - DOWEL HOLES, AS PER PLAN

THIS WORK SHALL CONFORM TO SS-853 AND SS-956.

ITEM 511 - CLASS S CONCRETE, SUPERSTRUCTURE, AS PER PLAN

THIS ITEM SHALL CONSIST OF FURNISHING AND PLACING PORTLAND CEMENT CONCRETE IN ACCORDANCE WITH 511 WITH THE FOLLOWING ADDITIONS:

1. ALL CONCRETE SURFACES THAT WILL BE IN CONTACT WITH CLASS S CONCRETE SHALL BE THOROUGHLY SANDBLASTED AND AIR CLEANED.
2. BEFORE THE PLACEMENT OF CONCRETE, ALL OF THE EXISTING CONCRETE SURFACES MENTIONED ABOVE SHALL BE COATED WITH A TWO-COMPONENT EPOXY BONDING AGENT. THE BONDING AGENT SHALL CONFORM TO AASHTO M-235-73I, CLASS III. BONDING MATERIAL SHALL BE MIXED AND PLACED PER MANUFACTURER'S RECOMMENDATIONS.

ITEM SPECIAL - STEEL DRIP STRIP

AFTER THE CONCRETE SURFACES HAVE BEEN SEALED A BENT DRIP STRIP SHALL BE INSTALLED ALONG THE EDGES OF THE DECK AS SHOWN. THE DRIP STRIPS SHALL BE EMBEDDED IN A 1/8" x 5" LAYER OF HYPALON SEALANT. THE STRIPS SHALL BE FASTENED AT 0'-9" C/C MAXIMUM WITH NO. 10 GALVANIZED SCREWS AND EXPANSION ANCHORS, SUBJECT TO THE APPROVAL OF THE ENGINEER. THE STRIPS SHALL BE PLACED THE FULL LENGTH OF THE DECK, ENDING AT THE FACE OF THE ABUTMENT WINGWALL. WHERE SPLICES ARE REQUIRED A 3-IN. (MIN) LAP SHALL BE USED WITH A FASTENER THROUGH THE LAP. STEEL FOR GALVANIZED STRIPS SHALL BE 8" x 0.105" AND SHALL MEET THE REQUIREMENTS OF ASTM A568. GALVANIZING SHALL BE IN ACCORDANCE WITH 711.02. STAINLESS STEEL SHALL BE 20 GAUGE ASTM A167, TYPE 304, MILL FINISH. PAYMENT SHALL BE AT THE CONTRACT PRICE BID FOR ITEM SPECIAL - SQ. FT. - STEEL DRIP STRIP, WHICH SHALL INCLUDE ALL MATERIALS, LABOR, TOOLS AND INCIDENTALS NECESSARY TO COMPLETE ITEM. SEALANT SHALL MEET GOVERNMENT SPECIFICATION TT-S-0023C, TYPE II.

ITEM SPECIAL - SEALING OF CONCRETE SURFACES (EPOXY)

AN EPOXY SEALER SHALL BE APPLIED TO THE EXPOSED CONCRETE SURFACES OF THE BRIDGE AS LISTED BELOW. SEE THE PROPOSAL FOR SEALER MATERIAL AND SURFACE PREPARATION REQUIREMENTS, APPLICATION RATES, AND PROCEDURES.

1. BRIDGE CURBS AND DECK EDGES
2. ABUTMENTS INCLUDING ENCASEMENTS, BRIDGE SEATS AND WINGWALLS
3. DIAPHRAGMS (ALL FACES)
4. OUTSIDE AND BOTTOM FACES OF EXTERIOR T-BEAMS

ITEM SPECIAL - SUPERPLASTICIZED DENSE CONCRETE OVERLAY (3 3/4 INCHES THICK)

THIS ITEM SHALL BE IDENTICAL TO ITEM SPECIAL - SUPERPLASTICIZED DENSE CONCRETE OVERLAY (1 3/4 INCHES THICK) EXCEPT THAT ALL REFERENCE TO SDC OVERLAY (1 3/4 INCHES THICK) SHALL BE CONSIDERED TO READ SDC OVERLAY (3 3/4 INCHES THICK). SEE NOTE IN PROPOSAL.

ITEM SPECIAL - IMPREGNATED FOAM JOINT SEAL (IFJS)

I. DESCRIPTION: THIS WORK SHALL CONSIST OF SEALING OPEN JOINTS ON BRIDGES USING IMPREGNATED FOAM IN ACCORDANCE WITH THESE SPECIFICATIONS, IN REASONABLY CLOSE CONFORMITY WITH THE PLANS AND MANUFACTURER'S SPECIFICATIONS AND RECOMMENDATIONS AND AS DIRECTED BY THE ENGINEER.

II. MATERIAL: THE MATERIAL SHALL BE A PRECOMPRESSED SELF-ADHESIVE IMPREGNATED FOAM JOINT SEALANT SUCH AS EMSEAL PCSA, PERMABAND 8100 OR WILL-SEAL (TYPE 250). EMSEAL U.S.A., IS LOCATED AT 344 MILL RD. IN STAMFORD, CT. 06903 AND HAS A TELEPHONE NUMBER OF (203) 322-3828. PERMABAND IS AVAILABLE FROM PERMAQUIK (CANADA) LTD WHICH IS LOCATED AT 3043 UNIVERSAL DRIVE IN MISSISSAUGA, ONTARIO L4X2E2; TELEPHONE (416) 625-9444. WILL-SEAL (TYPE 250) IS AVAILABLE FROM ILLBRUCK/USA INC. WHICH IS LOCATED AT 3800 WASHINGTON AVE. NORTH IN MINNEAPOLIS, MINNESOTA 55412; TELEPHONE (612) 521-3555.

ALL MATERIALS SHALL BE STORED AND INCORPORATED IN THE WORK AS RECOMMENDED BY THE MANUFACTURER. A MANUFACTURER'S REPRESENTATIVE SHALL BE PRESENT AT THE JOB SITE UNTIL SUCH TIME AS HE AND THE ENGINEER ARE SURE THAT THE CONTRACTOR IS QUALIFIED IN ALL ASPECTS OF JOINT SEALING.

III. SURFACE PREPARATION: THE FACES TO WHICH THE SEAL MUST ADHERE SHALL BE SANDBLASTED CLEAN AND BE FREE OF FOREIGN MATERIAL SUCH AS DIRT, DUST, GREASE, FORM OIL, RELEASE AGENTS AND ANY OTHER MATERIAL DETRIMENTAL TO ADHESION OF THE SEALANT.

IV. APPLICATION: JOINTS SEALS SHALL BE INSTALLED ONLY WHEN THE SURFACES ARE DRY AND THE SURFACE TEMPERATURE IS ABOVE 50°F. THE CONCRETE SURFACES SHALL BE PRIMED AS RECOMMENDED BY THE MANUFACTURER. THE FOAM SEAL SHALL BE REMOVED FROM THE PACKAGING AND ITS NARROW EDGE INSERTED INTO THE JOINT OPENING. THE DEPTH FACE WITH THE SELF-ADHESIVE BACKING SHALL BE PRESSED AGAINST ONE SIDE OF THE JOINT SO THAT FOAM IS HELD IN PLACE WHILE IT RECOVERS.

AT TEMPERATURES ABOVE 70°F, ALL MATERIALS WILL RECOVER IN A FEW HOURS. AT TEMPERATURES BELOW 70°F THE RECOVERY OF BITUMEN IMPREGNATED MATERIALS SHALL BE ACCELERATED BY HEATING THE MATERIAL WITH AN OPEN FLAME, GAS BURNER, INFRA-RED LAMP OR HOT-AIR BLOWER.

A CONTINUOUS LENGTH OF JOINT SEAL SHALL BE ACHIEVED BY JOINING INDIVIDUAL STRIPS ONLY BY MEANS OF SCARFED JOINTS CUT AT 45° OR LESS RELATIVE TO THE SIDES OF THE JOINT. THE SCARFED ENDS MUST BE PUSHED WELL PAST ONE ANOTHER. THE SEAL SHALL NOT BE PULLED OR STRETCHED SO THAT GAPS BETWEEN SUCCESSIVE LENGTHS ARE PREVENTED.

V. METHOD OF MEASUREMENT: FOOTAGE UNDER THIS ITEM SHALL BE THE LINEAR FEET OF IMPREGNATED FOAM SEAL INSTALLED IN THE OPEN JOINTS THAT ARE COMPLETE, IN PLACE AND ACCEPTED.

VI. BASIS OF PAYMENT: THE ACCEPTED QUANTITIES OF SEALED JOINTS SHALL BE PAID FOR AT THE CONTRACT UNIT PRICE PER LINEAR FOOT, WHICH PRICE AND PAYMENT SHALL BE FULL COMPENSATION FOR PREPARING THE SURFACES, FURNISHING AND PLACING ALL MATERIALS AND ALL LABOR AND EQUIPMENT NECESSARY TO COMPLETE THE JOINT SEAL ACCORDING TO SPECIFICATIONS. PAYMENT WILL BE MADE UNDER ONE OF THE FOLLOWING:

ITEM	UNIT	DESCRIPTION
SPECIAL	LINEAR FOOT	6" x 3" IMPREGNATED FOAM JOINT SEAL
SPECIAL	LINEAR FOOT	2" x 2" IMPREGNATED FOAM JOINT SEAL

ITEM SPECIAL - PATCHING CONCRETE STRUCTURES WITH SUPERIOR BONDING MATERIALS

A. DESCRIPTION: THIS ITEM CONSISTS OF THE REMOVAL OF ALL LOOSE AND DISINTEGRATED CONCRETE, PREPARATION OF THE SURFACE, AND THE FORMING, MIXING, PLACING, FINISHING AND CURING OF THE PATCHES AS DIRECTED BY THE ENGINEER. THIS WORK SHALL BE PERFORMED UPON THE FOLLOWING EXPOSED CONCRETE BRIDGE COMPONENTS IN ACCORDANCE WITH THESE SPECIFICATIONS, IN REASONABLY CLOSE CONFORMITY WITH THE PLANS AND THE MANUFACTURER'S SPECIFICATIONS AND RECOMMENDATIONS.

1. DECK EDGES
2. ABUTMENTS AND WINGWALLS
3. T-BEAMS
4. FACES OF DIAPHRAGM

MICROFIL
OCT 3 1986

B. MATERIALS: THE PATCHING MATERIAL SHALL BE HORN 240 CONCRETE, FAST CRETE, BOSTIK 276, SET 45, SIKATOP 122 AND 123, THERMAL-CHEM PRODUCT NO. 304 or POLY CARB MARK 193.4 OR 194. THE MATERIAL SHALL BE TINTED TO CURE TO THE COLOR OF THE EXISTING CONCRETE. ALL MATERIALS SHALL BE STORED AND INCORPORATED IN THE WORK AS RECOMMENDED BY THE MANUFACTURER. A MANUFACTURER'S REPRESENTATIVE SHALL BE PRESENT AT THE JOB SITE UNTIL SUCH TIME AS HE AND THE ENGINEER ARE SURE THAT THE CONTRACTOR IS QUALIFIED IN ALL ASPECTS OF PATCHING CONCRETE STRUCTURES WITH THE SELECTED MATERIAL.

C. REMOVAL OF CONCRETE: THE ENGINEER SHALL SOUND THE STRUCTURE AND OUTLINE THE AREAS TO BE REMOVED. ALL LOOSE, SOFT, HONEY-COMBED, AND DISINTEGRATED CONCRETE PLUS ONE-FOURTH INCH DEPTH OF SOUND CONCRETE SHALL BE REMOVED. WHERE THE BOND BETWEEN THE CONCRETE AND A REINFORCING BAR HAS BEEN DESTROYED, OR WHERE MORE THAN ONE-HALF OF THE PERIPHERY OF SUCH A BAR HAS BEEN EXPOSED, THE ADJACENT CONCRETE SHALL BE REMOVED TO A DEPTH THAT WILL PROVIDE A MINIMUM THREE-FOURTH INCH CLEARANCE AROUND THE BAR EXCEPT WHERE OTHER REINFORCING BARS MAKE THIS IMPRACTICAL. AFTER COMPLETION OF THE SECONDARY REMOVAL OPERATION, THE ENGINEER WILL RESOUND THE AREAS TO INSURE THAT ONLY SOLID CONCRETE REMAINS. ALL WORK SHALL BE DONE IN A MANNER THAT WILL NOT DAMAGE OR SHATTER THE CONCRETE THAT IS TO REMAIN AND WILL NOT CUT, ELONGATE OR DAMAGE THE REINFORCING STEEL IN ANY WAY. CONCRETE MAY BE REMOVED BY CHIPPING OR HAND DRESSING. CHIPPING HAMMERS SHALL NOT BE HEAVIER THAN THE NOMINAL 35 POUND CLASS. WHERE EXISTING REINFORCING BARS WOULD BE LESS THAN ONE INCH FROM THE PROPOSED FINISHED SURFACE OF CONCRETE, THEY SHALL, IF PRACTICAL, BE DRIVEN BACK INTO RECESSES CUT IN THE MASONRY TO OBTAIN THAT COVERAGE UNLESS OTHERWISE APPROVED BY THE ENGINEER.

D. SURFACE PREPARATION: CLEANING SHALL PRECEDE APPLICATION OF THE PATCHING MATERIAL OR ERECTION OF THE FORMS BY NOT MORE THAN 24 HOURS. THE SURFACE TO BE PATCHED AND THE EXPOSED REINFORCING STEEL SHALL BE THOROUGHLY CLEANED BY SANDBLASTING FOLLOWED BY AN AIR BLAST. IT MAY BE NECESSARY TO USE HAND TOOLS TO REMOVE SCALE FROM THE REINFORCING STEEL. SURFACE SHALL BE MADE FREE OF SPALLS, LAITANCE AND ALL TRACES OF FOREIGN MATERIAL. IF NECESSARY, DETERGENT CLEANING SHALL PRECEDE BLAST CLEANING TO INSURE THE REMOVAL OF CONTAMINANTS DETRIMENTAL TO ACHIEVING AN ADEQUATE BOND. FOR PATCHES WHICH DO NOT USE WATER AS THE ACTIVATOR, THE PREPARED SURFACE SHALL BE DRY. FOR PATCHES WHICH REQUIRE WATER AS THE ACTIVATOR, THE PREPARED SURFACE SHALL BE LEFT IN THE CONDITION AS RECOMMENDED BY THE MANUFACTURER. ANY ADDITIONAL SURFACE PREPARATION SHALL BE IN ACCORDANCE WITH THE MANUFACTURER'S RECOMMENDATIONS FOR THE PATCHING MATERIAL WHICH IS USED. ALL UNCHIPPED SURFACES THAT WILL RECEIVE NEW MATERIAL SHALL BE MECHANICALLY ROUGHENED.

E. FORMS: IF REQUIRED TO RESTORE VERTICAL SURFACES IN AN ACCEPTABLE MANNER, FORMS SHALL BE ERECTED FLUSH WITH THE FACES OF REPAIR AREAS TO INSURE THAT THE MATERIAL DOES NOT ESCAPE FROM THE PATCH AREA.

STRUCTURE REPAIR NOTES

BRIDGE LAK-20-2976
OVER ARCOLA CREEK

DESIGNED	DRAWN	TRACED	CHECKED	REVIEWED	DATE	REVISED
EJA	PJM	PJM	DWL	GWM	7-2-84	

MICROFIL
OCT 3 1986

F. PATCHING: THE MIXING, PROPORTIONING, PLACING AND CURING PROCEDURES AND THE TOOLS, EQUIPMENT, LABOR AND MATERIALS USED SHALL BE ACCORDING TO THE MANUFACTURER'S SPECIFICATIONS AND RECOMMENDATIONS EXCEPT THAT NO AGGREGATE SHALL BE ADDED TO THE MAGNESIUM PHOSPHATE MATERIALS. WHEN FORMS ARE USED MATERIAL SHALL BE PLACED THROUGH AT LEAST ONE HOLE AT THE HIGHEST POINT OF THE AREA TO BE PATCHED. THE FORMS SHALL BE TAPPED TO VIBRATE THE MATERIAL AND INSURE THAT IT REACHES THE LOWEST REGIONS OF THE PATCH AREA. THE SURFACE OF THE REPAIR AREA SHALL BE FLUSH WITH THE SURROUNDING AREA.

G. CURING: PATCHES SHALL BE CURED IN ACCORDANCE WITH THE MANUFACTURER'S RECOMMENDATIONS.

H. METHOD OF MEASUREMENT: THE QUANTITY SHALL BE THE ACTUAL AREA IN SQUARE FEET OF THE EXPOSED SURFACE OF ALL COMPLETED PATCHES, IRRESPECTIVE OF DEPTH OR THICKNESS OF THE PATCH COMPLETE, IN PLACE AND ACCEPTED. IF THE PATCH INCLUDES CORNERS OR EDGES OF MEMBERS ALL OF THE EXPOSED SURFACES SHALL BE INCLUDED, OR IF A PATCH EXTENDS COMPLETELY THROUGH A MEMBER BOTH EXPOSED SURFACES SHALL BE INCLUDED.

I. BASIS OF PAYMENT: PAYMENT WILL BE MADE AT CONTRACT PRICE BID FOR:

ITEM	UNIT	DESCRIPTION
SPECIAL	SQ. FT.	PATCHING CONCRETE STRUCTURES WITH SUPERIOR BONDING MATERIALS

REINFORCING STEEL LIST

MARK	TOTAL	LENGTH	WEIGHT	TYPE	A	B	C	D	E
SUPERSTRUCTURE									
S 501	54	4'-10"	272	1	1'-11"	1'-3"	1'-11"		
S 502	54	5'-10"	329	1	3'-2"	11"	2'-0"		
S 503	32	22'-2"	740	STR.					
S 504	8	6'-1"	51	3	1'-10"	10"	1'-0"	2'-2"	1'-2"
S 505	4	8'-8"	36	1	4'-0"	11"	4'-0"		
S 601	24	23'-3"	838	STR.					
S 602	8	24'-5"	293	STR.					
S 603	4	23'-11"	144	STR.					
S 801	54	4'-10"	696	2	1'-4"	3'-8"			
			3399						
#6X29" DOWEL-IN	16	2'-5"	40	STR.					
#6X29" DB-SAE	16	2'-5"	58	STR.					
#6X34" DOWEL-IN	18	2'-10"	77	STR.					
#7X34" DB-SAE	18	2'-10"	104	STR.					
			279						

BAR SIZE IS INDICATED IN THE BAR MARK. THE FIRST DIGIT OF THE BAR MARK INDICATES THE BAR SIZE NUMBER. FOR EXAMPLE, A700 IS A NO. 7 SIZE BAR.

BAR DIMENSIONS SHOWN ARE OUT TO OUT, UNLESS OTHERWISE NOTED.

"STR." INDICATES A STRAIGHT BAR.

THE DOWEL BAR SUBSTITUTION SHALL BE THE DB-SAE SPLICER SYSTEM AS MANUFACTURED BY THE RICHMOND SCREW ANCHOR CO., INC.; 7214 BURNS STREET; RICHLAND HILLS; FORT WORTH; TEXAS 76118; TELEPHONE (817)-284-4981. WEIGHT OF THESE SPLICER SYSTEMS HAS BEEN INCLUDED ITEM 509-DOWEL-BAR SUBSTITUTION FOR PAYMENT.

REFER TO CMS SECTIONS 106.03, 700, 709.01 THROUGH 709.05, AND 709.08. SUFFICIENT ADDITIONAL REINFORCING STEEL SHALL BE PROVIDED FOR SAMPLING. RANDOM SAMPLES SHALL BE REPLACED IN THE STRUCTURES BY THE ADDITIONAL STEEL, SPLICED IN ACCORDANCE WITH 509.08.

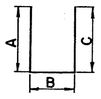

TYPE 1

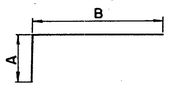

TYPE 2

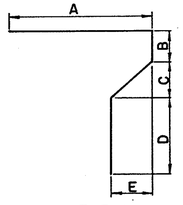

TYPE 3

STATE OF OHIO
DEPARTMENT OF TRANSPORTATION
DISTRICT 12 BRIDGE DEPARTMENT

4 / 10

STRUCTURE REPAIR NOTES AND REINFORCING STEEL LIST

BRIDGE LAK-20-2976
OVER ARCOLA CREEK

DESIGNED	DRAWN	TRACED	CHECKED	REVIEWED	DATE	REVISED
EJA	PJM	PJM	DWL	GWM	7-2-84	

HILLS CO.

FHWA REGION	STATE	PROJECT	
5	OHIO		

10 / 17

LAKE COUNTY
LAK-20-29.76

PLAN NO. BR-55-84

MICROFIL
OCT 8 1986

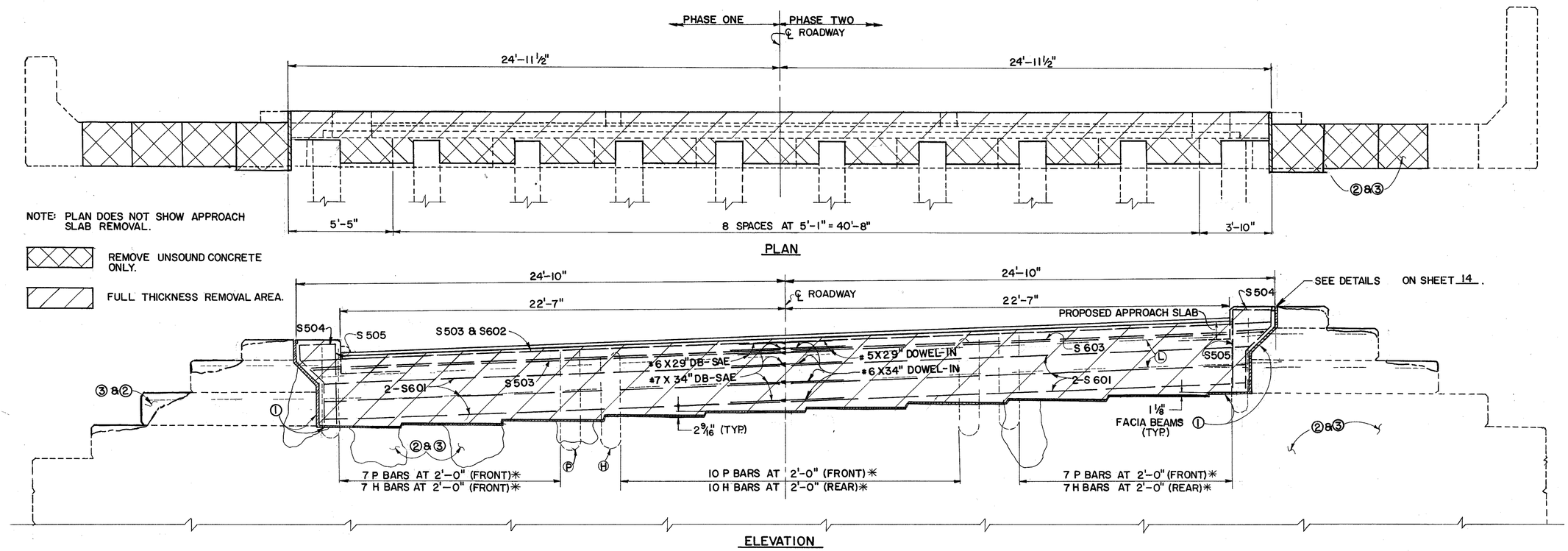

NOTE: PLAN DOES NOT SHOW APPROACH SLAB REMOVAL.

REMOVE UNSOUND CONCRETE ONLY.

FULL THICKNESS REMOVAL AREA.

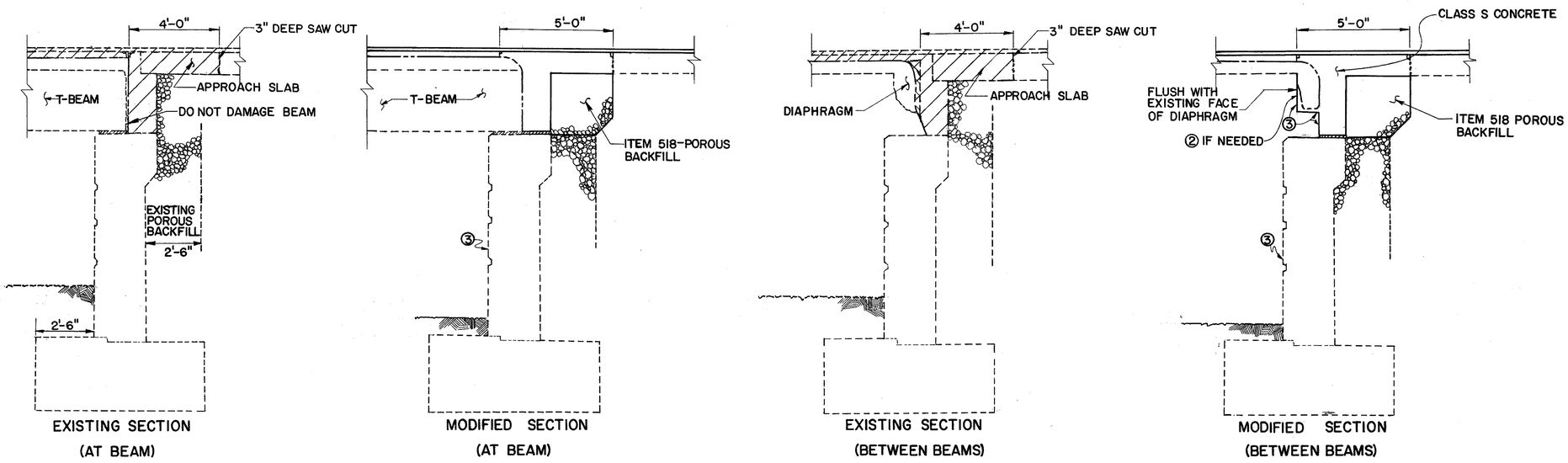

NOTES:

① ITEM 516 – ½" PREFORMED EXPANSION JOINT FILLER.
② ITEM SPECIAL – PATCHING CONCRETE STRUCTURES WITH SUPERIOR BONDING MATERIALS.
③ ITEM SPECIAL – SEALING OF CONCRETE SURFACES. (EPOXY)
✳ REINFORCING BARS TO BE CUT AT BRIDGE SEAT.

STATE OF OHIO
DEPARTMENT OF TRANSPORTATION
DISTRICT 12 BRIDGE DEPARTMENT

5 / 10

EAST ABUTMENT DETAILS

BRIDGE LAK-20-2976
OVER ARCOLA CREEK

DESIGNED	DRAWN	TRACED	CHECKED	REVIEWED	DATE	REVISED
EJA	PJM	PJM	DWL	GWM	7-2-84	

FHWA REGION	STATE	PROJECT	
5	OHIO		

11 / 17

LAKE COUNTY
LAK-20-29.76

PLAN NO. BR-55-84

MICROFIL
OCT 3 1986

NOTE: PLAN DOES NOT SHOW APPROACH SLAB REMOVAL.

REMOVE UNSOUND CONCRETE ONLY.

FULL THICKNESS REMOVAL AREA.

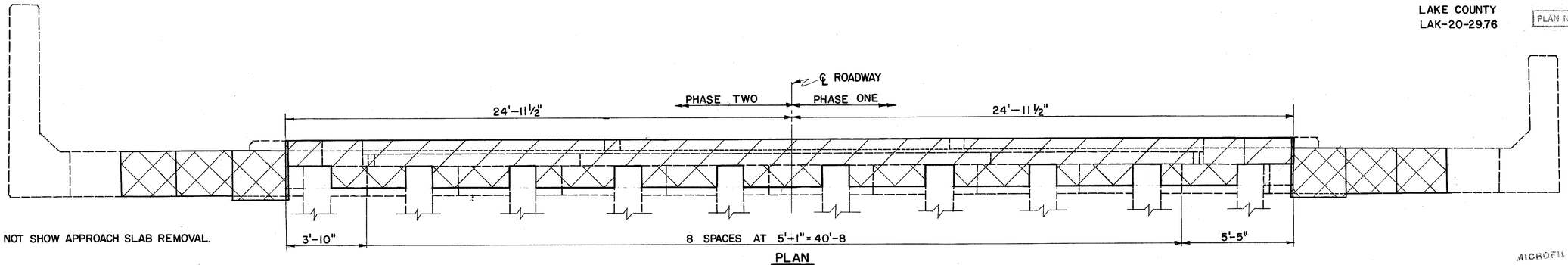

PLAN

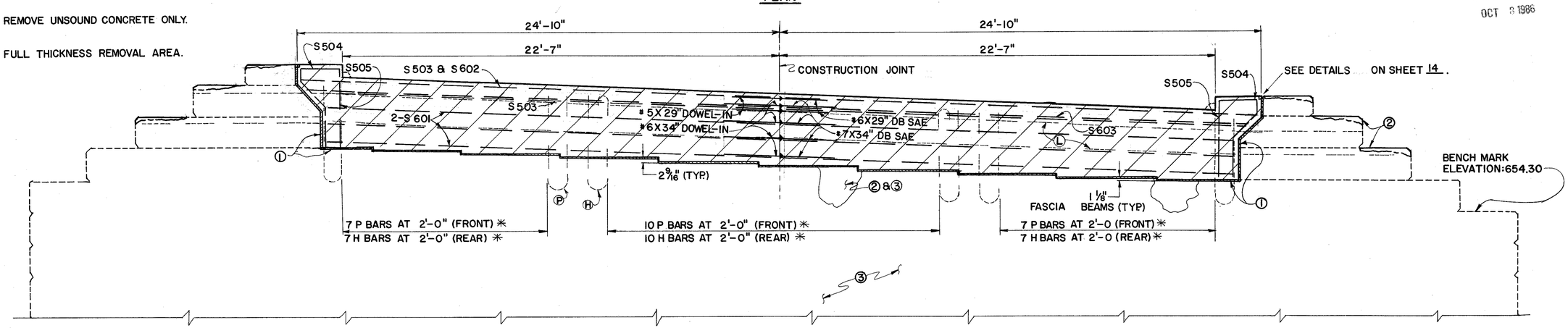

ELEVATION

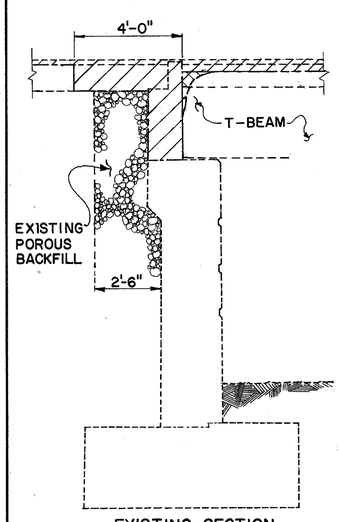

EXISTING SECTION
(AT BEAM)

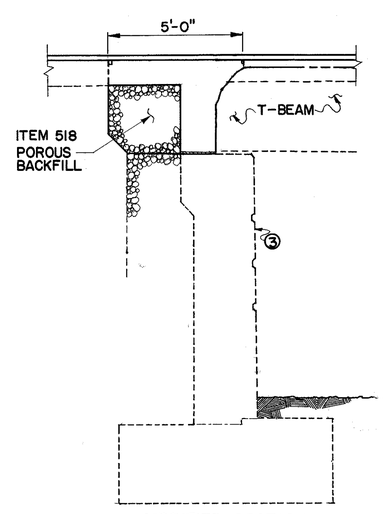

MODIFIED SECTION
(AT BEAM)

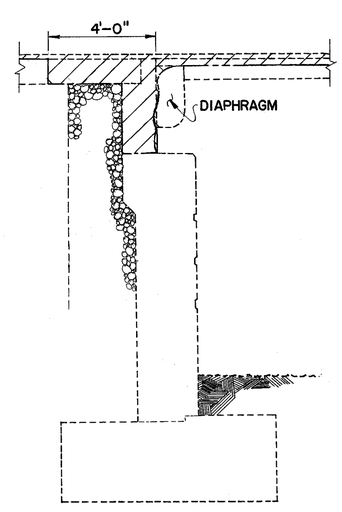

EXISTING SECTION
(BETWEEN BEAMS)

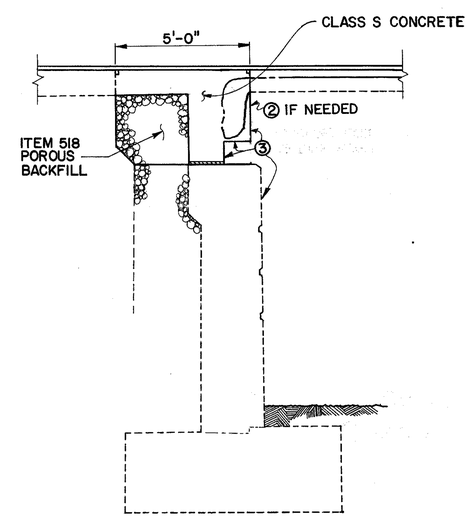

MODIFIED SECTION
(BETWEEN BEAMS)

NOTES:
1. ITEM 516 – ½" PREFORMED EXPANSION JOINT FILLER.
2. ITEM SPECIAL – PATCHING CONCRETE STRUCTURES WITH SUPERIOR BONDING MATERIALS.
3. ITEM SPECIAL – SEALING OF CONCRETE SURFACES (EPOXY).

✳ REINFORCING BARS TO BE CUT AT BRIDGE SEAT.

STATE OF OHIO
DEPARTMENT OF TRANSPORTATION
DISTRICT 12 BRIDGE DEPARTMENT

6 / 10

WEST ABUTMENT DETAILS

BRIDGE LAK-20-2976
OVER ARCOLA CREEK

DESIGNED	DRAWN	TRACED	CHECKED	REVIEWED	DATE	REVISED
EJA	PJM	PJM	DWL	GWM	7-2-84	

FHWA REGION	STATE	PROJECT	
5	OHIO		

12 / 17

MICROFILM OCT 3 1986

LAKE COUNTY
LAK-20-29.76

PLAN NO. BR-55-84

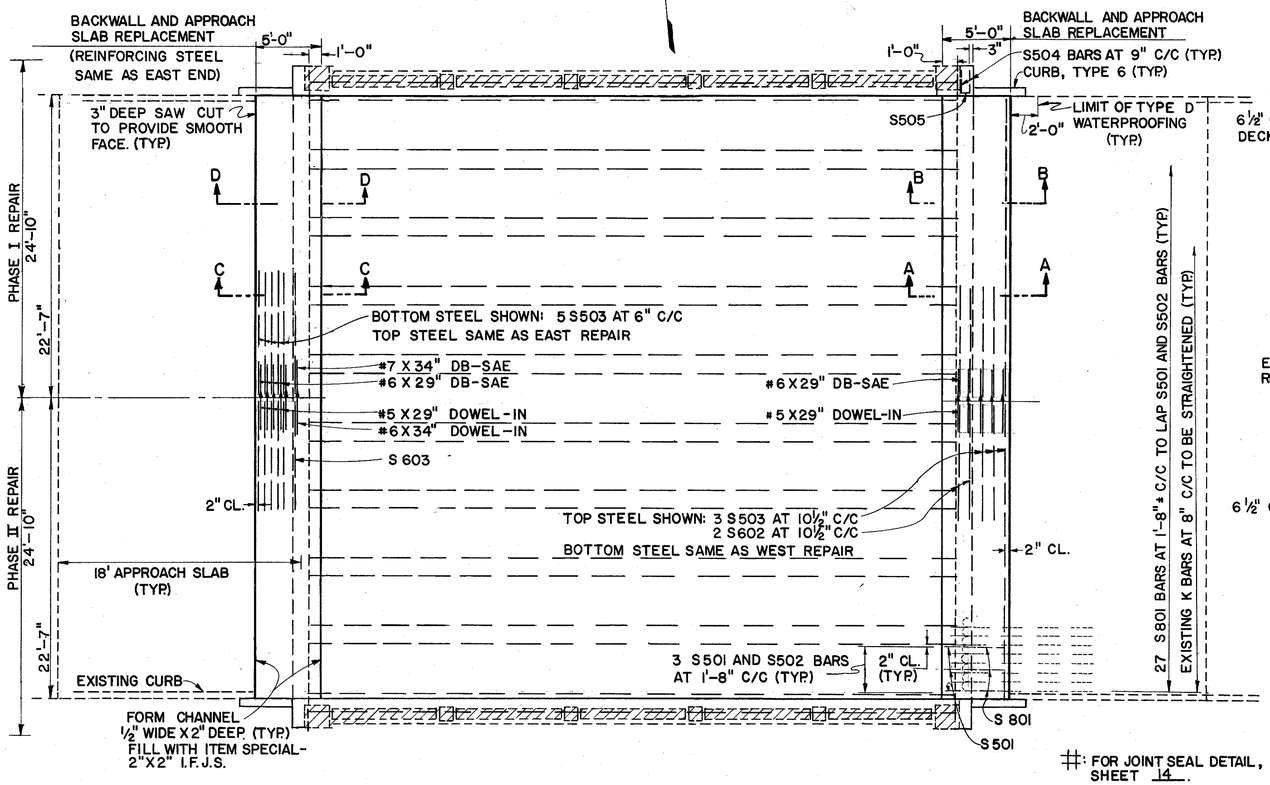

#: FOR JOINT SEAL DETAIL, SEE SHEET 14.

SUPERSTRUCTURE PLAN

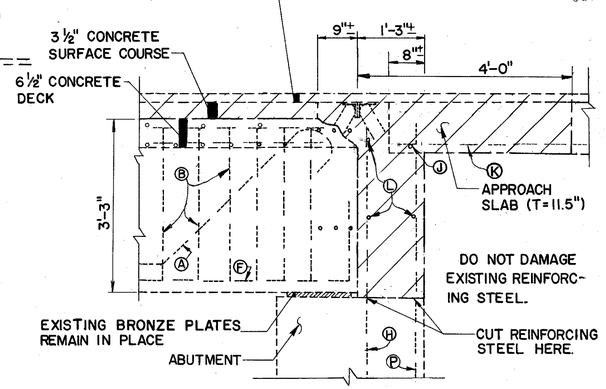

EXISTING SECTION A-A

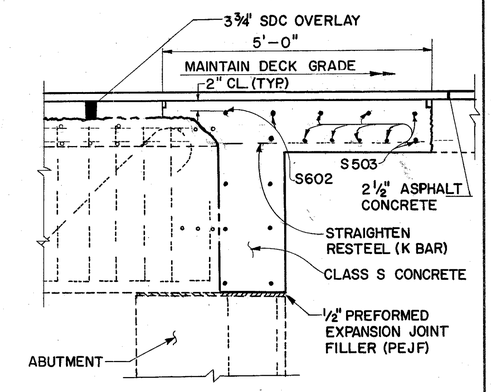

MODIFIED SECTION A-A

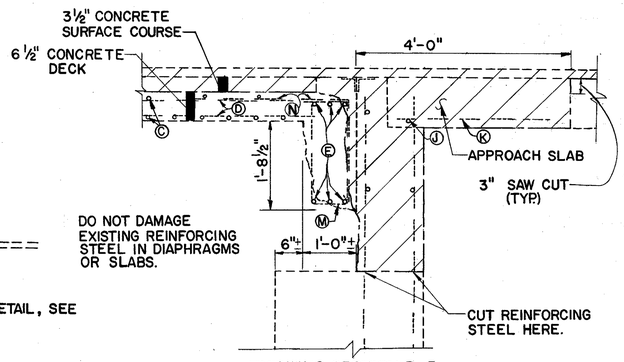

EXISTING SECTION B-B

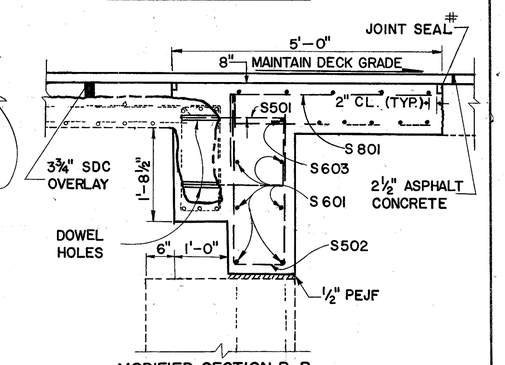

MODIFIED SECTION B-B

EAST ABUTMENT
(EXPANSION END)

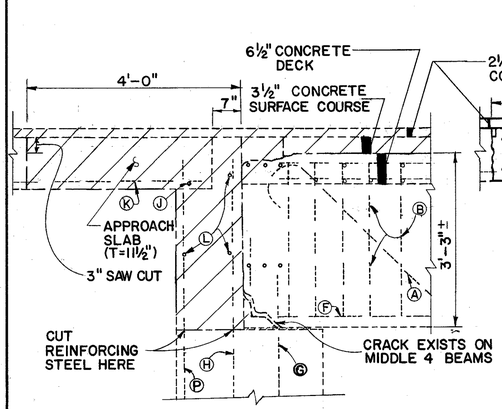

EXISTING SECTION C-C

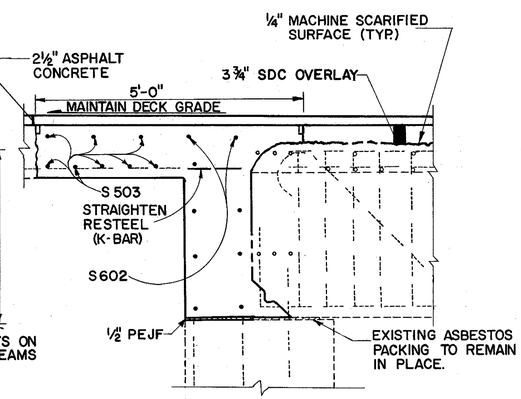

MODIFIED SECTION C-C

WEST ABUTMENT
(FIXED END)

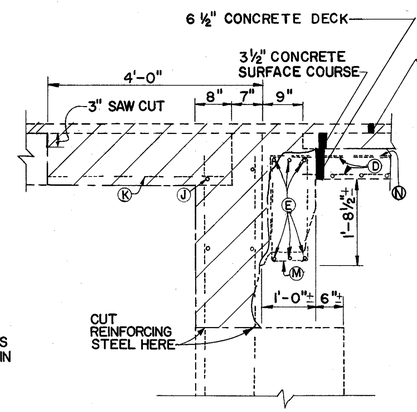

EXISTING SECTION D-D

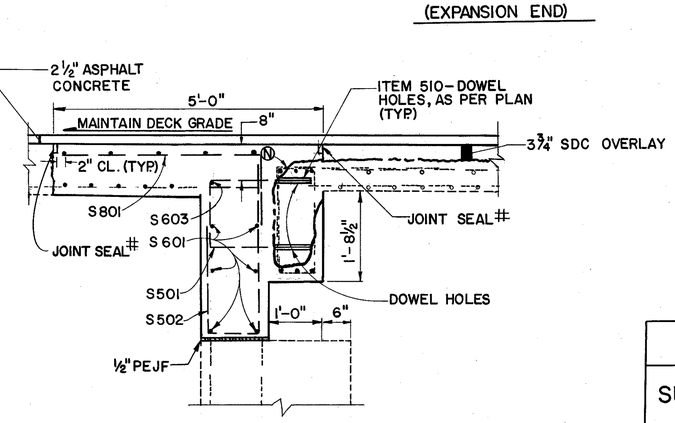

MODIFIED SECTION D-D

EXISTING RE-STEEL			
BAR LETTER	BAR SIZE	BAR LETTER	BAR SIZE
A	#10	H	#6
B	#4	J	#4
C	#5	K	#8
D	#4	L	#4
E	#5	M	#4
F	#10	N	#4
G	#4	P	#6

STATE OF OHIO
DEPARTMENT OF TRANSPORTATION
DISTRICT 12 BRIDGE DEPARTMENT

7/10

SUPERSTRUCTURE DETAILS

BRIDGE LAK-20-2976

OVER ARCOLA CREEK

DESIGNED	DRAWN	TRACED	CHECKED	REVIEWED	DATE	REVISED
EJA	PJM	PJM	DWL	GWM	7-2-84	

FHWA REGION	STATE	PROJECT	
5	OHIO		

13 / 17

LAKE COUNTY
LAK-20-29.76

PLAN NO. BR-55-84

FOR ADDITIONAL DECK DETAILS SEE STD. DRWG. B-45-35, BD-35, AND BSK-35.

MICROFILM
OCT 8 1986

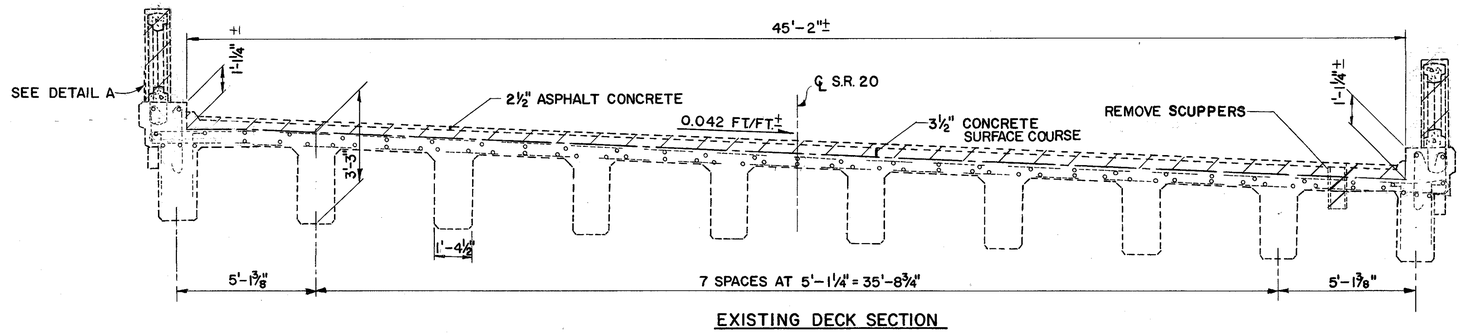

EXISTING DECK SECTION
FACING WEST

PORTION TO BE REMOVED

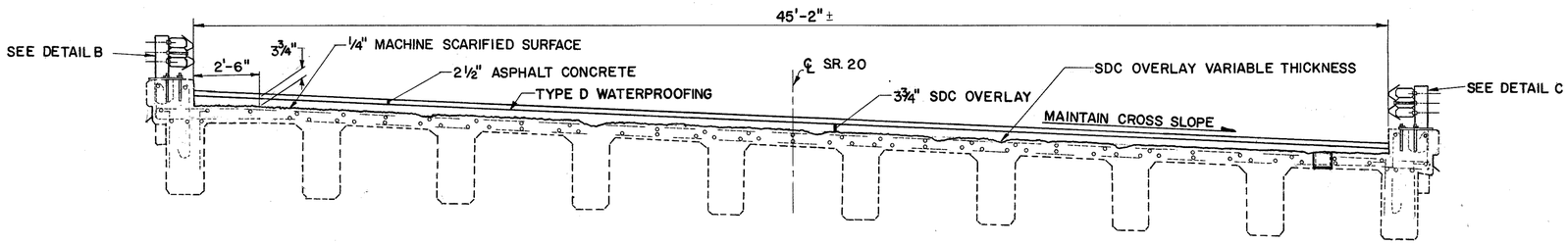

MODIFIED DECK SECTION
FACING WEST

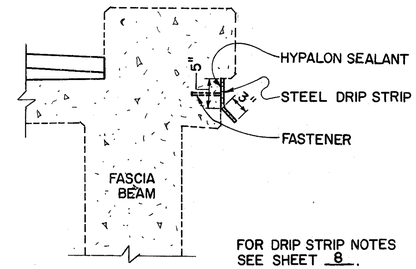

FOR DRIP STRIP NOTES SEE SHEET 8.

DRIP STRIP DETAIL

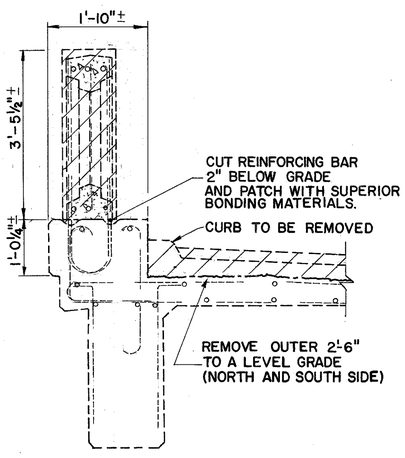

DETAIL A
(TYP.)

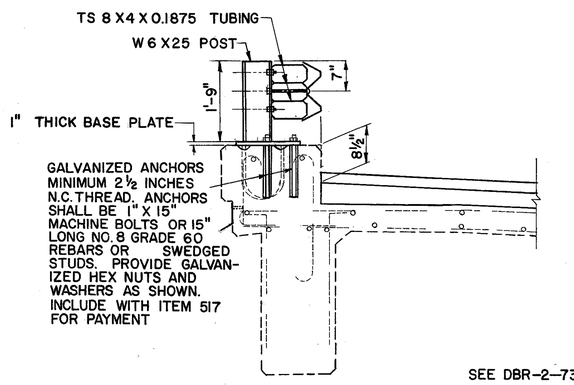

DETAIL B
(SOUTH BRIDGE RAIL)

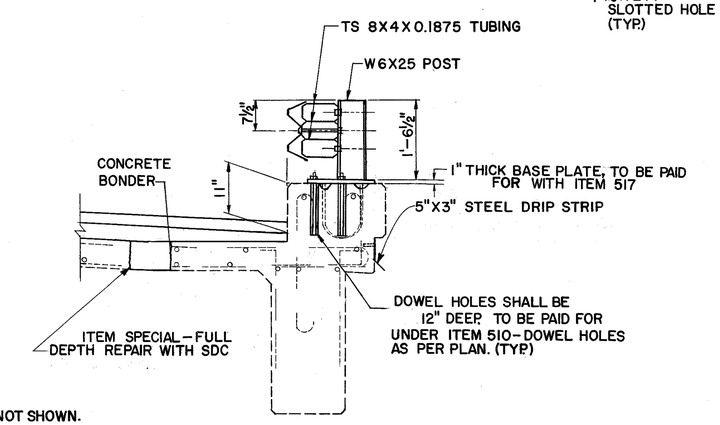

DETAIL C
(NORTH BRIDGE RAIL)

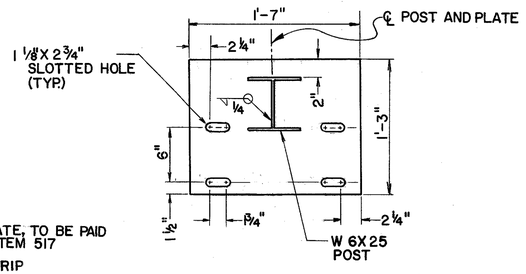

BASE PLATE

SEE DBR-2-73 FOR DETAILS NOT SHOWN.

STATE OF OHIO
DEPARTMENT OF TRANSPORTATION
DISTRICT 12 BRIDGE DEPARTMENT

8 / 10

SUPERSTRUCTURE DETAILS

BRIDGE LAK-20-2976
OVER ARCOLA CREEK

DESIGNED	DRAWN	TRACED	CHECKED	REVIEWED	DATE	REVISED
EJA	PJM	PJM	DWL	GWM	7-2-84	

FHWA REGION	STATE	PROJECT	
5	OHIO		

14 / 17

LAKE COUNTY
LAK-20-29.76

PLAN NO. BR-55-84

MICROFIL
OCT 8 1986

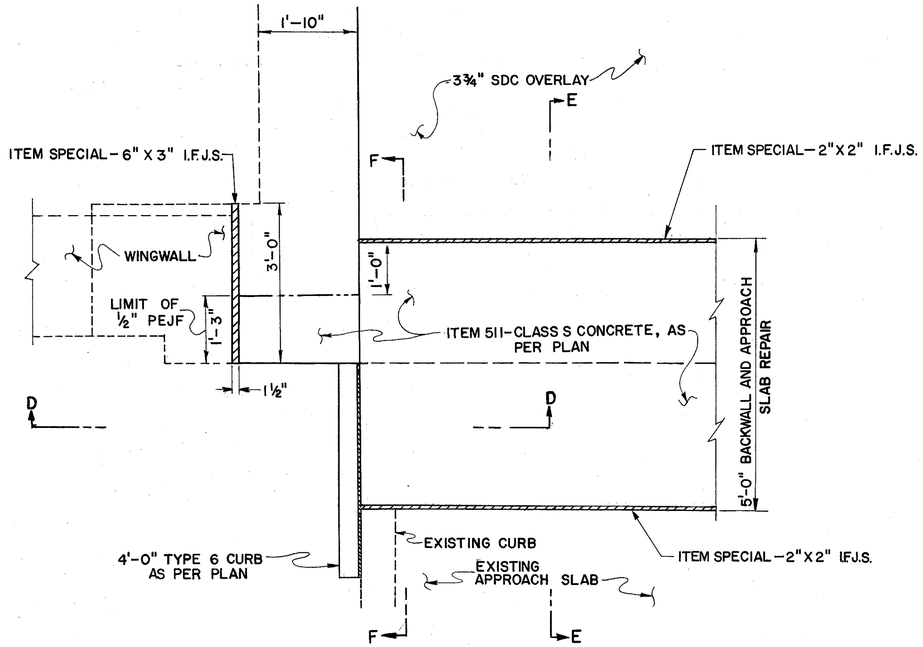

PART PLAN

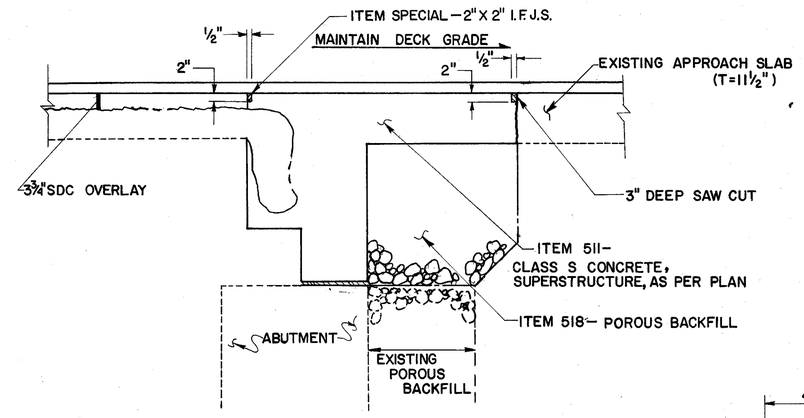

SECTION E-E

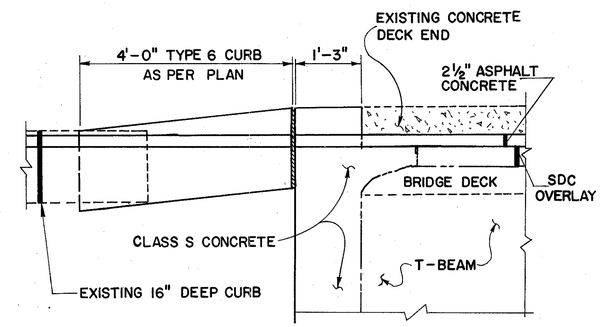

VIEW F-F

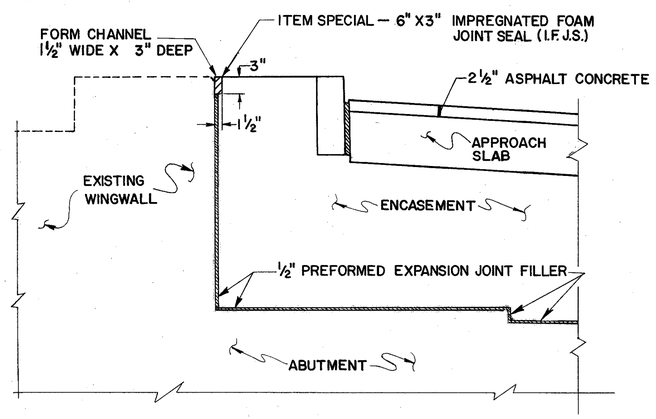

SECTION D-D

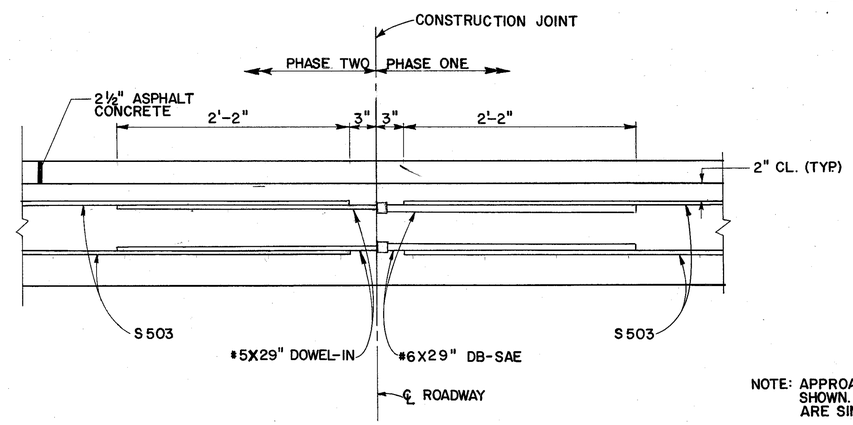

APPROACH SLAB SPLICE DETAIL

NOTE: APPROACH SLAB SPLICE SHOWN. ENCASEMENT SPLICES ARE SIMILAR.

STATE OF OHIO
DEPARTMENT OF TRANSPORTATION
DISTRICT 12 BRIDGE DEPARTMENT

9 / 10

SUPERSTRUCTURE DETAILS

BRIDGE LAK-20-2976

OVER ARCOLA CREEK

DESIGNED	DRAWN	TRACED	CHECKED	REVIEWED	DATE	REVISED
EJA	PJM	PJM	DWL	GWM	7-2-84	

FHWA REGION	STATE	PROJECT	
5	OHIO		

15 / 17

LAKE COUNTY
LAK-20-29.76

PLAN NO. BR-55-84

MICROFIL
OCT 8 1986

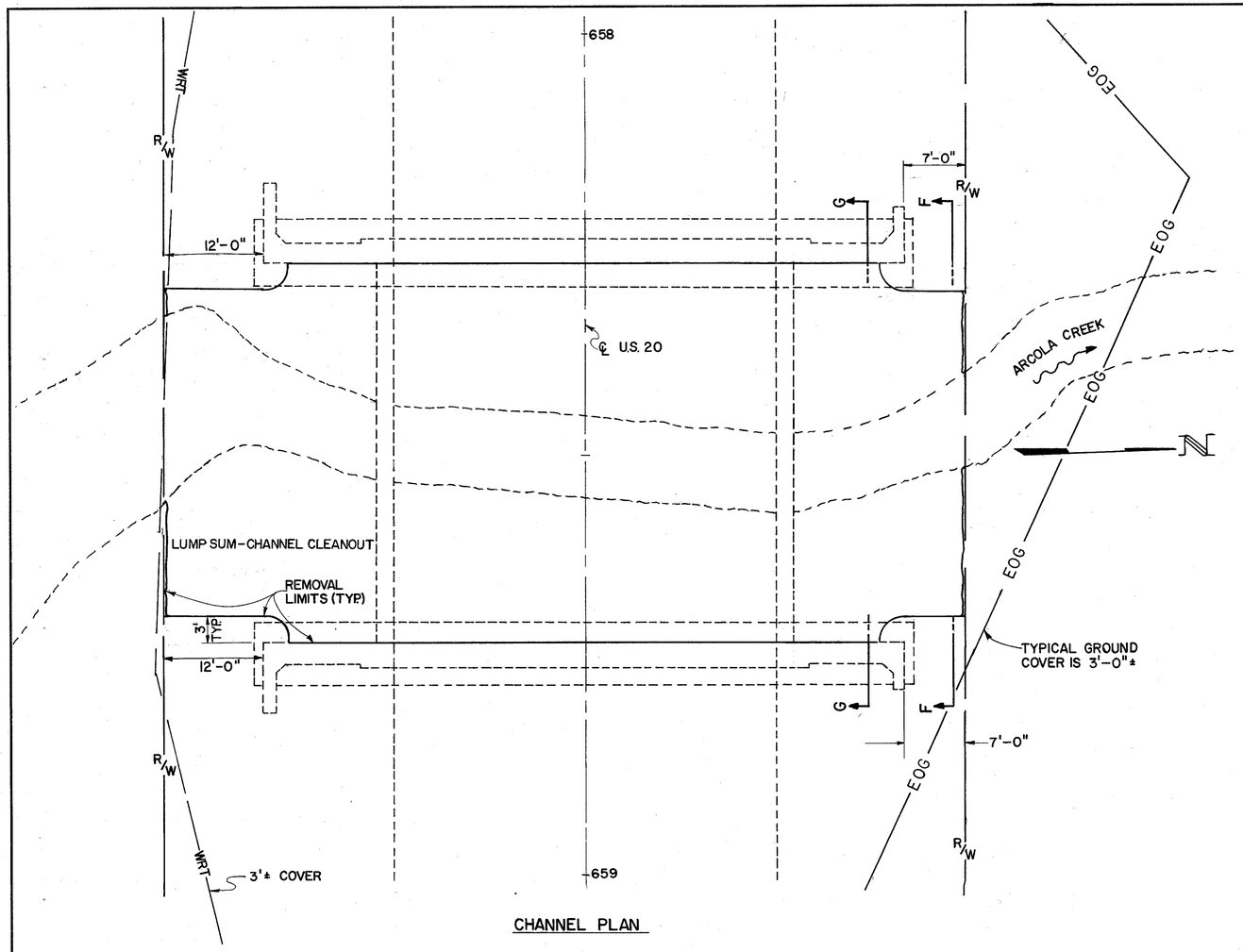

CHANNEL PLAN

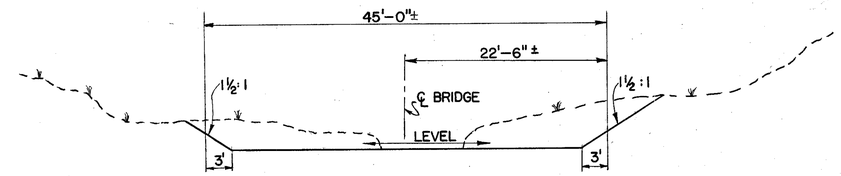

TYPICAL SECTION F-F
(OUTSIDE OF ABUTMENTS)

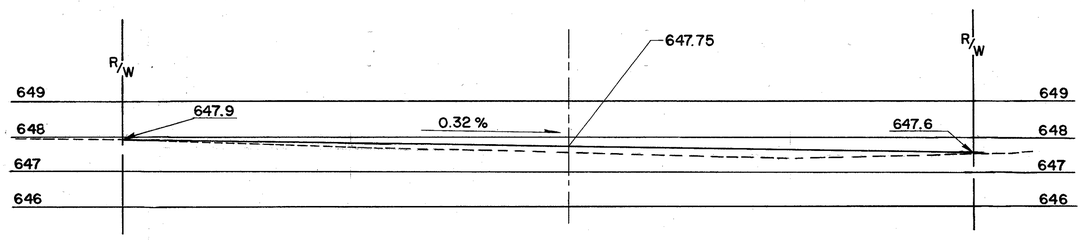

CHANNEL PROFILE

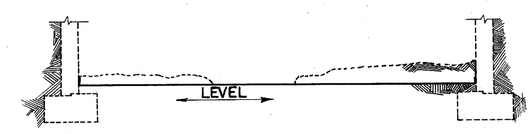

TYPICAL SECTION G-G
(BETWEEN ABUTMENTS)

STATE OF OHIO
DEPARTMENT OF TRANSPORTATION
DISTRICT 12 BRIDGE DEPARTMENT

10 / 10

CHANNEL DETAILS

BRIDGE LAK-20-2976
OVER ARCOLA CREEK

DESIGNED	DRAWN	TRACED	CHECKED	REVIEWED	DATE	REVISED
EJA	PJM	PJM	DWL	GWM	7-2-84	

FHWA REGION	STATE	PROJECT	
5	OHIO		

16
17

LAKE COUNTY
LAK-20-29.76

PLAN NO. BR-55-84

MAINTENANCE OF TRAFFIC

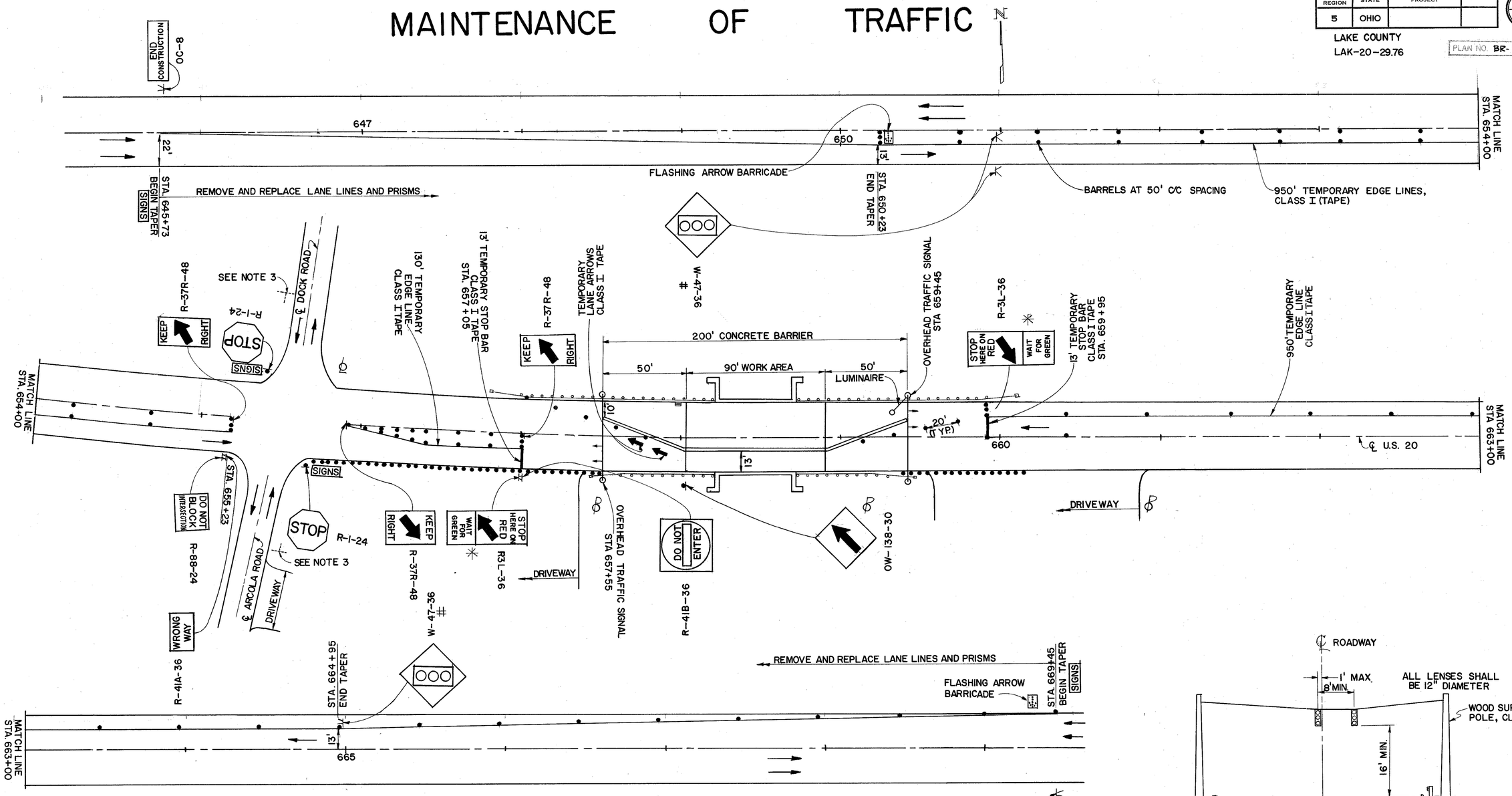

NOTES:

1. FOR SIGNALIZED CLOSING NOTES SEE SHEET 2.
2. FOR ADVANCE WARNING SIGNS SEE SHEET 17.
3. TEMPORARILY RELOCATE AND MAINTAIN EXISTING STOP SIGNS ON BARRELS AND POSTS FURNISHED BY THE CONTRACTOR AS SHOWN IN THE PLANS. THE CONTRACTOR SHALL REINSTALL THE STOP SIGNS TO THE ORIGINAL POSTS WHEN ALL WORK HAS BEEN COMPLETED.

✳ SUPPLEMENTARY INFORMATION SIGN TO BE PLACED BENEATH THE R-3L-36 SIGN WILL BE REFLECTORIZED WITH A WHITE BACKGROUND AND BLACK LEGEND. SIGN SIZE WILL BE 24" X 24".

SIGNS ADVANCE WARNING SIGNS TO BE MEASURED FROM THIS POINT

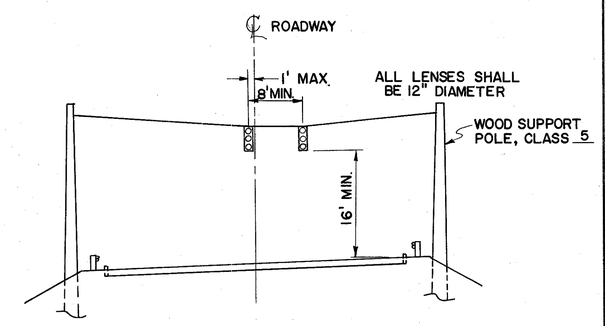

PLACEMENT OF TEMPORARY SIGNALS

PHASE I
MAINTENANCE OF TRAFFIC

MAINTENANCE OF TRAFFIC

FHWA REGION	STATE	PROJECT	
5	OHIO		

17 / 17

LAKE COUNTY
LAK-20-29.76

PLAN NO. BR-55-84

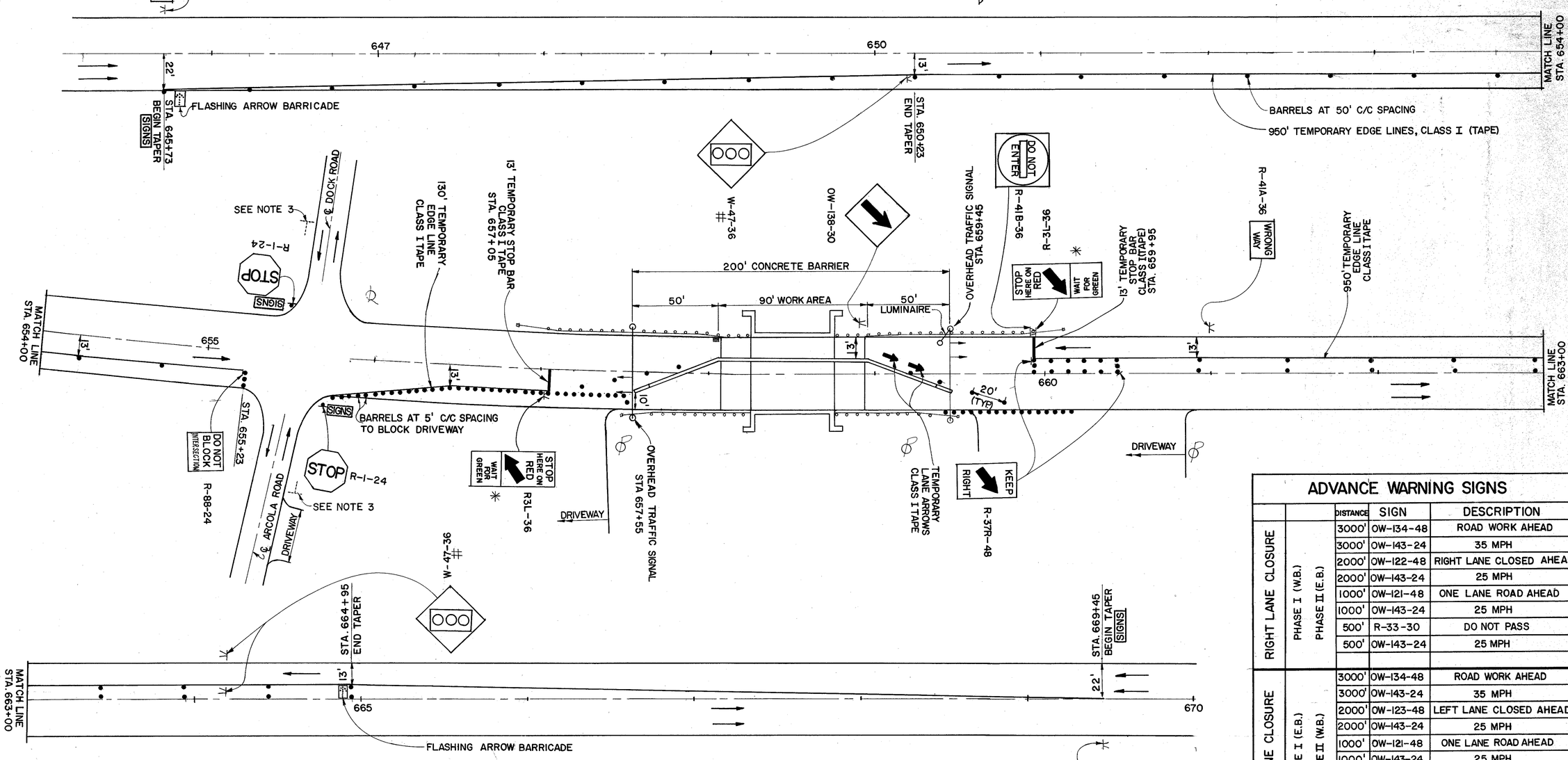

NOTES:
1. FOR OVERHEAD SIGNAL DETAIL SEE SHEET 16.
2. FOR SIGNALIZED CLOSING NOTES SEE SHEET 2.
3. TEMPORARILY RELOCATE AND MAINTAIN EXISTING STOP SIGNS ON BARRELS AND POSTS FURNISHED BY THE CONTRACTOR AS SHOWN IN THE PLANS. THE CONTRACTOR SHALL REINSTALL THE STOP SIGNS TO THE ORIGINAL POSTS WHEN ALL WORK HAS BEEN COMPLETED.

✳ SUPPLEMENTARY INFORMATION SIGN TO BE PLACED BENEATH THE R-3L-36 SIGN WILL BE REFLECTORIZED WITH A WHITE BACKGROUND AND BLACK LEGEND. SIGN SIZE WILL BE 24" X 24".

TYPE "A" FLASHING BARRICADE WARNING LIGHTS SHALL BE MOUNTED ON DESIGNATED WARNING SIGNS AT ALL TIMES

SIGNS ADVANCE WARNING SIGNS TO BE MEASURED FROM THIS POINT.

ADVANCE WARNING SIGNS

		DISTANCE	SIGN	DESCRIPTION	SIDE	
RIGHT LANE CLOSURE	PHASE I (W.B.) PHASE II (E.B.)	3000'	OW-134-48	ROAD WORK AHEAD	R	#
		3000'	OW-143-24	35 MPH	R	
		2000'	OW-122-48	RIGHT LANE CLOSED AHEAD	R	#
		2000'	OW-143-24	25 MPH	R	
		1000'	OW-121-48	ONE LANE ROAD AHEAD	R	#
		1000'	OW-143-24	25 MPH	R	
		500'	R-33-30	DO NOT PASS	R	#
		500'	OW-143-24	25 MPH	R	
LEFT LANE CLOSURE	PHASE I (E.B.) PHASE II (W.B.)	3000'	OW-134-48	ROAD WORK AHEAD	R	#
		3000'	OW-143-24	35 MPH	R	
		2000'	OW-123-48	LEFT LANE CLOSED AHEAD	R	#
		2000'	OW-143-24	25 MPH	R	
		1000'	OW-121-48	ONE LANE ROAD AHEAD	R	#
		1000'	OW-143-24	25 MPH	R	
		500'	R-33-30	DO NOT PASS	R	#
		500'	OW-143-24	25 MPH	R	
ARCOLA RD. DOCK RD.	PHASE I & II	300'	OW-143-48	ROAD WORK AHEAD	R	#

PHASE II
MAINTENANCE OF TRAFFIC