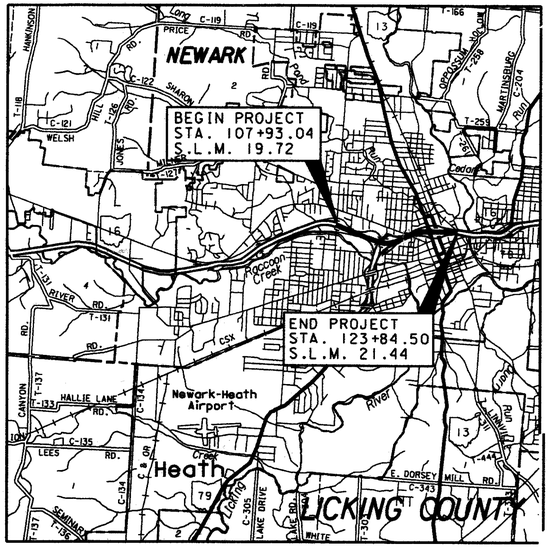

LOCATION MAP

SCALE IN MILES

0 1 2 3 4

PORTION TO BE IMPROVED
STATE & FEDERAL ROUTES
OTHER ROADS

STATE OF OHIO
DEPARTMENT OF TRANSPORTATION
LIC-16-19.72
(PART 1)
CITY OF NEWARK
NEWARK TOWNSHIP
LICKING COUNTY

(FOR PART 2, SEE LIC-16-21.44/LIC-79-12.19)

LATITUDE: 40°03'45"
LONGITUDE: 82°27'30" TO 82°24'00"
USGS QUAD NAME: NEWARK, OHIO
USGS QUAD # 485-2-SW

INDEX OF SHEETS:

TITLE SHEET — 1
SCHEMATICS — 2-3, 3A
TYPICAL SECTIONS — 4-14, 6A, 12A
GENERAL NOTES — 15-23
MAINTENANCE OF TRAFFIC — 24-60
CONCRETE BARRIER ELEVATIONS — 61
GENERAL SUMMARIES — 62-67
PAVEMENT CALCULATIONS — 68-80
GUARDRAIL SUB-SUMMARY — 81
PLAN AND PROFILE SHEETS — 82-99, 99A
CROSS SECTIONS — 100-141, 141A,
RAMP PLAN AND PROFILE SHEETS — 141B
AND CROSS SECTIONS — 142-193
MT. VERNON ROAD — 194
PAVEMENT DETAIL SHEETS — 195-229, 212A, 212B
UNDERDRAIN DETAIL SHEETS — 230-264
DRAINAGE QUANTITY SHEETS — 265-272, 272A
TRAFFIC CONTROL SHEETS — 273-362, 290A, 315A, 335A, 362A & 362B
LIGHTING DETAILS AND QUANTITIES — 363-401, 390A
STRUCTURES 20' & OVER — 402-547, 405A & 405B

(SHEETS NOT USED 57, 58, 59, 60 AND 309)

DESIGN DESIGNATION

CURRENT ADT (1999) — 28,930
DESIGN YEAR ADT (2019) — 37,610
DESIGN HOURLY VOLUME (2019) — 4,520
DIRECTIONAL DISTRIBUTION — 50% - 50%
TRUCKS (24 HOUR B&C) — 6%
DESIGN SPEED — 55 M.P.H.
LEGAL SPEED — 55 M.P.H.
DESIGN FUNCTIONAL CLASSIFICATION - PRIMARY ARTERIAL (URBAN)

DESIGN EXCEPTIONS

SHOULDER WIDTH	APPROVED: 3-09-95
GRADED/CURBED SHOULDER WIDTH	APPROVED: 3-09-95
BRIDGE WIDTH	APPROVED: 3-09-95
HORIZONTAL CLEARANCE	APPROVED: 3-09-95

PROJECT DESCRIPTION

S.L.M. 19.72 TO S.L.M. 21.44
REMOVE EXISTING CONCRETE PAVEMENT. REPLACE WITH 15¼" ASPHALT CONCRETE ON 6" SUBBASE AND COMPLETE ALL RELATED WORK. REPLACE BRIDGE PARAPETS AND REPAIR BRIDGE DECKS.

LIMITED ACCESS

THIS IMPROVEMENT IS ESPECIALLY DESIGNED FOR THROUGH TRAFFIC AND HAS BEEN DECLARED A LIMITED ACCESS HIGHWAY OR FREEWAY BY ACTION OF THE DIRECTOR IN ACCORDANCE WITH THE PROVISIONS OF SECTION 5511.02 OF THE REVISED CODE OF OHIO.

1997 SPECIFICATIONS

THE STANDARD SPECIFICATIONS OF THE STATE OF OHIO, DEPARTMENT OF TRANSPORTATION, INCLUDING CHANGES AND SUPPLEMENTAL SPECIFICATIONS LISTED IN THE PROPOSAL SHALL GOVERN THIS IMPROVEMENT.

I HEREBY APPROVE THESE PLANS AND DECLARE THAT THE MAKING OF THIS IMPROVEMENT WILL NOT REQUIRE THE CLOSING TO TRAFFIC OF THE HIGHWAY EXCEPT AS NOTED ON SHEETS 24 - 56 AND THAT PROVISIONS FOR THE MAINTENANCE AND SAFETY OF TRAFFIC WILL BE AS SET FORTH ON THE PLANS AND ESTIMATES.

PRIMA FACIE SPEED LIMIT

UNDER AUTHORITY OF SECTION 4511.21, DIVISION (I) OF THE REVISED CODE OF OHIO, THE REVISED PRIMA FACIE SPEED LIMITS AS INDICATED HEREIN ARE DETERMINED TO BE REASONABLE AND SAFE, AND ARE HEREBY ESTABLISHED FOR THE DURATION OF THIS PROJECT. THE PRIMA FACIE SPEED LIMIT OR LIMITS HEREBY ESTABLISHED SHALL BECOME EFFECTIVE WHEN APPROPRIATE SIGNS GIVING NOTICE THEREOF ARE ERECTED.

APPROVED Michael D. Colafare
DATE 3/3/99 DISTRICT DEPUTY DIRECTOR

APPROVED Gordon Proctor
DATE 3-5-99 DIRECTOR, DEPARTMENT OF TRANSPORTATION

PLAN PREPARED BY:
OHIO DEPARTMENT OF TRANSPORTATION DISTRICT 5

ENGINEER'S SEAL

ROADWAY	STRUCTURE
STATE OF OHIO — DAN McNEELY — 24359 — REGISTERED PROFESSIONAL ENGINEER	STATE OF OHIO — Curtis L. Zigan E-58440 — REGISTERED PROFESSIONAL ENGINEER; Curtis L. Zigan 3-1-99

STANDARD CONSTRUCTION DRAWINGS (PART 1 & 2)

												SUPPLEMENTAL SPECIFICATIONS		SPECIAL PROVISIONS
BP-2.1	10-28-94	GR-4.1	5-6-91	HL-30.33	5-1-87	MH-1	12-18-84	TC-18.26	5-31-79	TC-65.10	7-7-95	806	9-9-97	
BP-2.2	10-28-94	GR-4.2	5-6-91	HL-50.11	5-1-87	MT-95.81	2-23-90	TC-21.10	9-1-92	TC-65.11	7-7-95	815	5-30-96	
BP-2.3	2-21-92	GR-4.3M	10-21-97	HL-50.21	5-1-87	MT-95.30	10-10-88	TC-21.20	9-1-92	TC-71.10	9-10-91	842	1-6-99	
BP-2.5	2-21-92	GR-4.4M	11-30-94	HL-60.11	5-1-87	MT-95.31	10-10-88	TC-21.40	9-1-92	TC-72.20	2-26-82	844	1-6-99	
BP-3.1	2-21-92	GR-5.1	10-30-92	HL-60.12	5-1-87	MT-96.10	9-9-88	TC-22.10	9-1-92	TC-82.10	8-29-84	846	9-9-97	
BP-5.1	10-28-94	GR-5.2	10-30-92	HL-60.31	5-1-87	MT-96.20	9-9-88	TC-22.20	9-1-92			848	6-30-98	
BP-7.1	10-30-92	GR-5.3	10-30-92			MT-96.25	9-9-88	TC-31.21	9-1-92	AS-1-81	11-27-81	910	7-28-98	
CB-2-2A & B	5-1-79	GR-8.1	1-31-94	HW-4A	4-1-80	MT-98.12	6-24-93	TC-32.10	9-1-92	EXJ-4-87	12-4-97	927	6-14-95	
CB-2-3 & 2-4	5-1-79	HL-10.11	5-1-87	HW-4B	4-1-80	MT-98.13	6-24-93	TC-32.11	9-1-92			949	6-14-95	
CB-3	5-1-79	HL-10.12	5-1-87			MT-98.14	6-24-93	TC-35.10	8-29-84	BR-1	12-15-94	954	9-9-97	
CB-3A	5-1-79	HL-10.13	5-1-87	I-2A	12-18-84	MT-98.15	6-24-93	TC-41.10	8-29-84	BR-1M	1-6-99	877	4-13-99	
CB-4	11-10-83	HL-20.11	5-1-87	I-3A & B	4-1-80	MT-98.16	6-24-93	TC-41.20	6-21-94	CSB-2-56	2-2-59	899	10-21-98	
CB-5	11-10-83	HL-20.13	5-1-87	DM-4.3	4-29-99	MT-99.10	11-14-86	TC-41.50	6-21-94	GSD-1-96	2-12-97			
DM-1.1M	10-21-97	HL-20.14	5-1-87	MC-4	7-26-76	MT-99.20	4-29-88	TC-42.10	8-19-77	RB-1-55	2-2-59			
GR-1.1	5-6-91	HL-20.15	5-1-87	MC-5	6-12-75	MT-101.60	7-1-92	TC-42.20	3-26-79	PCB-91	4-24-92			
GR-1.2	10-30-92	HL-30.11	5-1-87	MC-6	1-30-84	MT-105.10	7-1-92	TC-51.11	9-30-94	VPF-1-90	2-1-92			
GR-1.3	2-21-92	HL-30.21	5-1-87	MC-9.2	5-6-91	MT-105.11	7-1-92	TC-52.10	4-3-79	SD-1-69	6-12-69			
GR-2.1	5-6-91	HL-30.22	5-1-87	MC-9.3	10-30-92			TC-52.20	4-3-79	PCB-DD	4-24-92			
GR-3.1	5-6-91	HL-30.31	5-1-87	MC-9.4	10-30-92	TC-7.65	3-1-79	TC-61.10	4-5-82					
GR-3.2	5-6-91	HL-30.32	5-1-87	DM-4.4	4-29-99	TC-12.30	1-20-84							

UNDERGROUND UTILITIES
TWO WORKING DAYS
BEFORE YOU DIG
CALL 1-800-362-2764 (TOLL FREE)
OHIO UTILITIES PROTECTION SERVICE
NON-MEMBERS
MUST BE CALLED DIRECTLY

FEDERAL PROJECT NO. TE21-G990(388) TE21-G990(536)
PID NO. 15290
CONSTRUCTION PROJECT NO.
RAILROAD INVOLVEMENT: CSX TRANSPORTATION INC. RAILROAD

LIC-16-19.72

DESIGNED BY: D. McNEELY, A. LANIER, J. CLARK, J. S. R. GOSSETT, S. BOWERS, B. BOSCH, R. DODSON, C. ZIGAN
L016170I.DGN 2/19/99

LIC-16-19.72
996010
DIST 05
PID# 15290
08/13/99

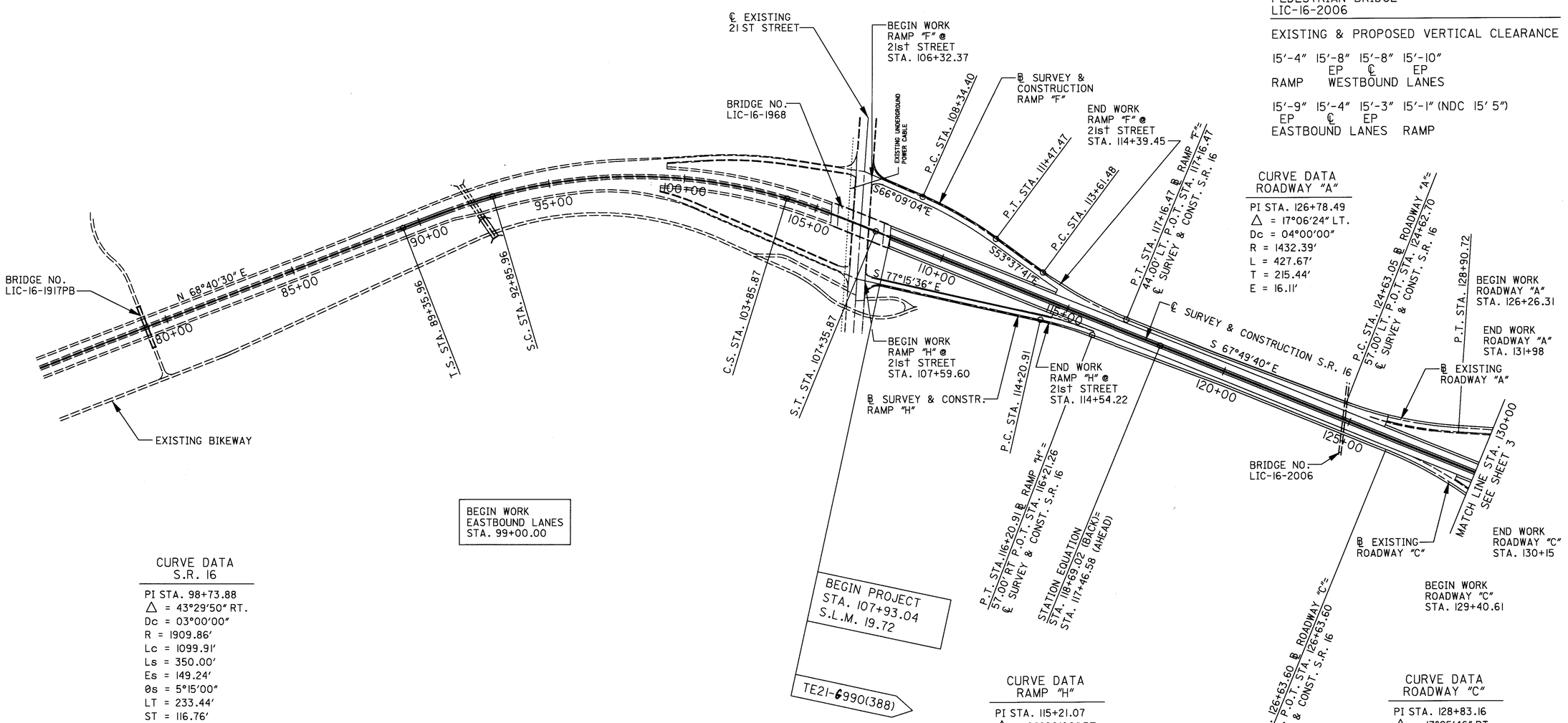

CURVE DATA
RAMP "F"

PI STA. 109+91.56	PI STA. 115+39.89
△ = 12°31'23" RT.	△ = 14°11'59" LT.
Dc = 04°00'00"	Dc = 04°00'00"
R = 1432.39'	R = 1432.39'
L = 313.08'	L = 354.99'
T = 157.17'	T = 178.41'
E = 8.60'	E = 11.07'
SUPERELEVATION = .041 FT./FT. MAX.	SUPERELEVATION = .054 FT./FT. MAX.

PEDESTRIAN BRIDGE
LIC-16-2006

EXISTING & PROPOSED VERTICAL CLEARANCE

15'-4" 15'-8" 15'-8" 15'-10"
EP ℄ EP
RAMP WESTBOUND LANES

15'-9" 15'-4" 15'-3" 15'-1" (NDC 15' 5")
EP ℄ EP
EASTBOUND LANES RAMP

CURVE DATA
ROADWAY "A"

PI STA. 126+78.49
△ = 17°06'24" LT.
Dc = 04°00'00"
R = 1432.39'
L = 427.67'
T = 215.44'
E = 16.11'

CURVE DATA
S.R. 16

PI STA. 98+73.88
△ = 43°29'50" RT.
Dc = 03°00'00"
R = 1909.86'
Lc = 1099.91'
Ls = 350.00'
Es = 149.24'
θs = 5°15'00"
LT = 233.44'
ST = 116.76'
SUPERELEVATION =
.067 FT./FT. MAX.

CURVE DATA
RAMP "H"

PI STA. 115+21.07
△ = 08°00'00" RT.
Dc = 04°00'00"
R = 1432.39'
L = 200.00'
T = 100.16'
E = 3.50'
SUPERELEVATION =
.045 FT./FT. MAX.

CURVE DATA
ROADWAY "C"

PI STA. 128+83.16
△ = 17°25'46" RT.
Dc = 04°00'00"
R = 1432.39'
L = 435.74'
T = 219.56'
E = 16.73'

HORIZONTAL SCALE IN FEET
0 200 400

CALCULATED D.J.M. 3-15-95
CHECKED A.A.L. 3-16-95

SCHEMATIC PLAN

LIC-16-19.72

L01617A2.DGN 2/17/99

CURVE DATA
S.R. 16

PI STA. 141+22.54
△ = 43°50'10" LT.
Dc = 03°00'00"
R = 1909.86'
Lc = 1111.20'
Ls = 350.00'
Ts = 944.48'
Es = 151.68'
θs = 5°15'
LT = 233.44'
ST = 116.26'
SUPERELEVATION =
.070 FT./FT. MAX.

CURVE DATA
RAMP "BB"
11th STREET

PI STA. 147+76.90
△ = 19°50'16" LT.
Dc = 08°00'00"
R = 716.20'
L = 247.97'
T = 125.24'
E = 10.87'
SUPERELEVATION =
.064 FT./FT. MAX.

LIC-16-2099
WESTBOUND/EASTBOUND

EXISTING & PROPOSED
VERTICAL CLEARANCE
16'-6" 16'-1" 16'-0"
EP ℄ EP
WESTBOUND
15'-8" 15'-2" 15'-0" (NDC 15' 5")
EP ℄ EP
EASTBOUND

LIC-16-2038
WESTBOUND/EASTBOUND

EXISTING HORIZONTAL CLEARANCE
FACE/FACE CURB
WESTBOUND
8'-0" (OUTSIDE) & 6'-6" (MEDIAN)
EASTBOUND
6' -6" (MEDIAN) & 8'-0" (OUTSIDE)

PROPOSED HORIZONTAL CLEARANCE
FACE/FACE CURB
WESTBOUND
8'-3" (OUTSIDE) (NDC 12') & 6'-9" (MEDIAN)
EASTBOUND
6'-9" (MEDIAN) & 8'-3" (OUTSIDE) (NDC 12')

LIC-79-1389 RT
EASTBOUND

EXISTING HORIZONTAL CLEARANCE
FACE/FACE CURB
EASTBOUND
8'-0" (OUTSIDE) & 5'-0" (INSIDE)

PROPOSED HORIZONTAL CLEARANCE
FACE/FACE CURB
EASTBOUND
8'-3" (OUTSIDE) (NDC 12') & 5'-3" (INSIDE)

CURVE DATA
ROADWAY "B"

PI STA. 145+77.56
△ = 13°41'10" LT.
Dc = 04°00'00"
R = 1432.39'
L = 342.16'
T = 171.90'
E = 10.28'

PI STA. 155+97.81
△ = 05°13'50" LT.
Dc = 01°00'00"
R = 5729.58'
L = 523.06'
T = 261.71'
E = 5.97'

CURVE DATA
RAMP "A" @
MOUNT VERNON ROAD

PI STA. 170+09.01
△ = 05°30'00" LT.
Dc = 01°30'00"
R = 3819.72'
L = 366.67'
T = 183.47'
E = 4.40'
SUPERELEVATION =
.018 FT./FT. MAX.

CURVE DATA
S.R. 16

PI STA. 178+79.86
△ = 05°10'09" LT.
Dc = 01°00'00"
R = 5729.58'
L = 516.92'
T = 258.63'
E = 5.83'
SUPERELEVATION =
.025 FT./FT. MAX.

CURVE DATA
RAMP "B" @
HUDSON AVENUE

PI STA. 179+82.04
△ = 20°47'05" RT.
Dc = 17°41'02"
R = 324.00'
L = 117.54'
T = 59.42'
E = 5.40'
SUPERELEVATION =
.033 FT./FT. MAX.

CURVE DATA
RAMP "B" @
HUDSON AVENUE

PI STA. 184+46.09
△ = 10°00'00" LT.
Dc = 05°00'00"
R = 1145.92'
L = 200.00'
T = 100.26'
E = 4.38'
SUPERELEVATION =
.054 FT./FT. MAX.

CURVE DATA
RAMP "B" @
HUDSON AVENUE

PI STA. 187+81.35
△ = 11°44'04" LT.
Dc = 02°30'00"
R = 2291.83'
L = 469.38'
T = 235.51'
E = 12.07'
SUPERELEVATION =
.042 FT./FT. MAX.

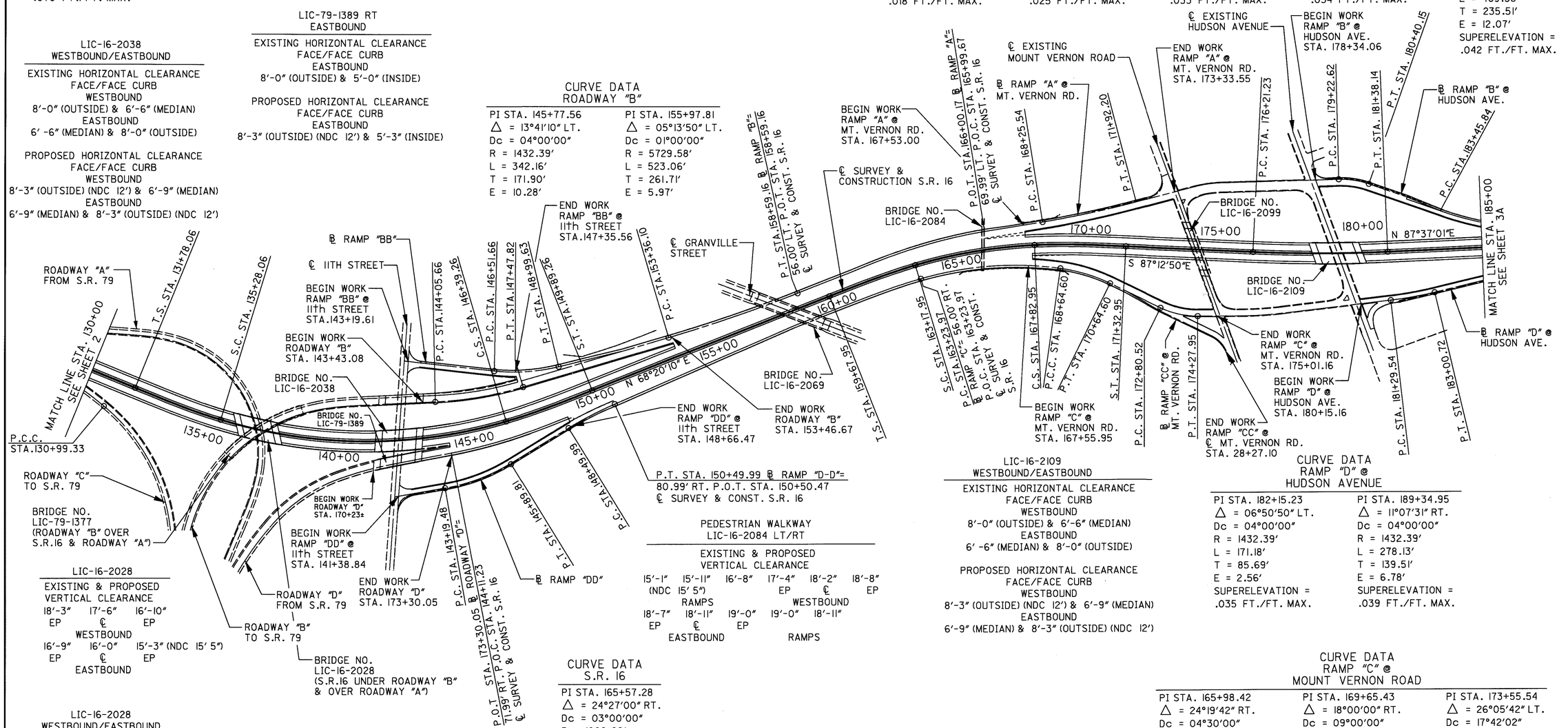

PEDESTRIAN WALKWAY
LIC-16-2084 LT/RT

EXISTING & PROPOSED
VERTICAL CLEARANCE
15'-1" 15'-11" 16'-8" 17'-4" 18'-2" 18'-8"
(NDC 15' 5") RAMPS WESTBOUND EP ℄ EP
18'-7" 18'-11" 19'-0" 19'-0" 18'-11"
EP ℄ EP EASTBOUND RAMPS

LIC-16-2109
WESTBOUND/EASTBOUND

EXISTING HORIZONTAL CLEARANCE
FACE/FACE CURB
WESTBOUND
8'-0" (OUTSIDE) & 6'-6" (MEDIAN)
EASTBOUND
6' -6" (MEDIAN) & 8'-0" (OUTSIDE)

PROPOSED HORIZONTAL CLEARANCE
FACE/FACE CURB
WESTBOUND
8'-3" (OUTSIDE) (NDC 12') & 6'-9" (MEDIAN)
EASTBOUND
6'-9" (MEDIAN) & 8'-3" (OUTSIDE) (NDC 12')

CURVE DATA
RAMP "D" @
HUDSON AVENUE

PI STA. 182+15.23
△ = 06°50'50" LT.
Dc = 04°00'00"
R = 1432.39'
L = 171.18'
T = 85.69'
E = 2.56'
SUPERELEVATION =
.035 FT./FT. MAX.

PI STA. 189+34.95
△ = 11°07'31" RT.
Dc = 04°00'00"
R = 1432.39'
L = 278.13'
T = 139.51'
E = 6.78'
SUPERELEVATION =
.039 FT./FT. MAX.

LIC-16-2028

EXISTING & PROPOSED
VERTICAL CLEARANCE
18'-3" 17'-6" 16'-10"
EP ℄ EP
WESTBOUND
16'-9" 16'-0" 15'-3" (NDC 15' 5")
EP ℄ EP
EASTBOUND

LIC-16-2028
WESTBOUND/EASTBOUND

EXISTING HORIZONTAL CLEARANCE
FACE/FACE CURB
WESTBOUND
8'-0" (OUTSIDE) & 5'-3" (MEDIAN)
EASTBOUND
5' -3" (MEDIAN) & 8'-0" (OUTSIDE)

PROPOSED HORIZONTAL CLEARANCE
FACE/FACE CURB
WESTBOUND
8'-3" (OUTSIDE) (NDC 12') & 5'-0" (MEDIAN)
EASTBOUND
5'-0" (MEDIAN) & 8'-3" (OUTSIDE) (NDC 12')

CURVE DATA
RAMP "DD"
11th STREET

PI STA. 144+56.27
△ = 21°37'35" LT.
Dc = 08°00'00"
R = 716.20'
L = 270.33'
T = 136.79'
E = 12.95'
SUPERELEVATION =
.056 FT./FT. MAX.

PI STA. 149+50.15
△ = 08°00'00" RT.
Dc = 04°00'00"
R = 1432.39'
L = 200.00'
T = 100.16'
E = 3.50'
SUPERELEVATION =
.033 FT./FT. MAX.

CURVE DATA
S.R. 16

PI STA. 165+57.28
△ = 24°27'00" RT.
Dc = 03°00'00"
R = 1909.86'
Lc = 465.00'
Ls = 350.00'
Ts = 589.33'
Es = 47.05'
θs = 5°15'
LT = 233.44'
ST = 116.76'
SUPERELEVATION =
.070 FT./FT. MAX.

CURVE DATA
RAMP "C" @
MOUNT VERNON ROAD

PI STA. 165+98.42
△ = 24°19'42" RT.
Dc = 04°30'00"
R = 1273.24'
L = 540.63'
T = 274.45'
E = 29.24'
SUPERELEVATION =
.073 FT./FT. MAX.

PI STA. 169+65.43
△ = 18°00'00" RT.
Dc = 09°00'00"
R = 636.62'
L = 200.00'
T = 100.83'
E = 7.94'
SUPERELEVATION =
.080 FT./FT. MAX.

PI STA. 173+55.54
△ = 26°05'42" LT.
Dc = 17°42'02"
R = 323.70'
L = 147.43'
T = 75.01'
E = 8.58'
SUPERELEVATION =
.045 FT./FT. MAX.

HORIZONTAL SCALE IN FEET
0 200 400

CALCULATED D.M. 3-16-95
CHECKED A.A.L. 3-16-95

SCHEMATIC PLAN

LIC-16-19.72

L0161TB2.DGN 2/17/99

LIC-16-2131
EXISTING HORIZONTAL CLEARANCE
TOE/TOE OF CURB
WESTBOUND (36'-10")
9'-1" (OUTSIDE) AND 3'-9" (MEDIAN)
EASTBOUND (42'-10")
15'-1" (OUTSIDE) AND 3'-9" (MEDIAN)

PROPOSED HORIZONTAL CLEARANCE
TOTAL WIDTH 85'-8" (INC. 2'-6" MEDIAN BARRIER)
TOE/TOE OF CURB
WESTBOUND (37'-1")
9'-4" (OUTSIDE) AND 3'-9" (MEDIAN)
EASTBOUND (42-10")
15'-4" (OUTSIDE) AND 3'-9" (MEDIAN)

LIC-16-2141
EXISTING HORIZONTAL CLEARANCE
TOE/TOE OF CURB
WESTBOUND (36'-10")
9'-1" (OUTSIDE) AND 3'-9" (MEDIAN)
EASTBOUND (36'-10")
9'-1" (OUTSIDE) AND 3'-9" (MEDIAN)

PROPOSED HORIZONTAL CLEARANCE
TOTAL WIDTH 79'-8" (INC. 2'-6" MEDIAN BARRIER)
TOE/TOE OF CURB
WESTBOUND (37'-1")
9'-4" (OUTSIDE) AND 3'-9" (MEDIAN)
EASTBOUND (37-1")
9'-4" (OUTSIDE) AND 3'-9" (MEDIAN)

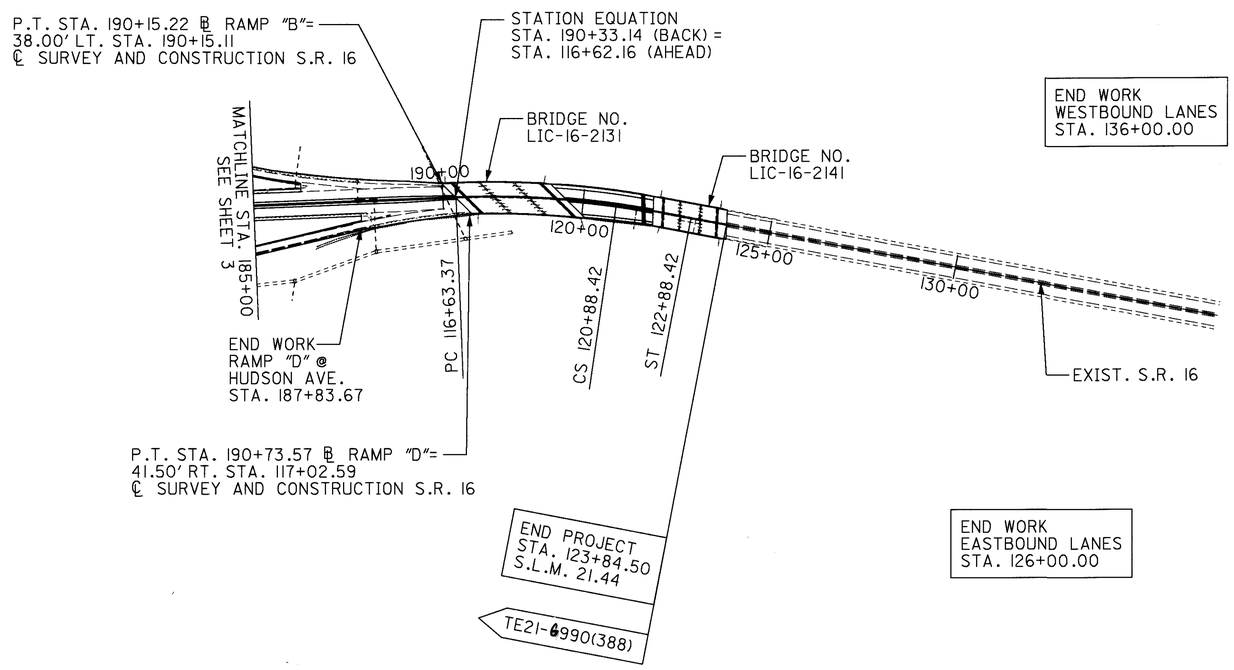

CURVE DATA S.R. 16

P.I. STA. 119+30.22
Δ = 13°07'39" RT.
Dc = 2°30'00"
R = 2,291.83'
Ls = 200.00'
θs = 2°30'00"
LT = 133.35'
ST = 99.99'
Lc = 425.10'
Ts = 360.58'
Es = 9.89
emax. - 0.0417

0 200 400
HORIZONTAL
SCALE IN FEET

CALCULATED D.M. 3-15-95
CHECKED A.L.L. 3-16-95

SCHEMATIC PLAN

LIC-16-19.72

3A
547

L0161TC2.DGN 2/17/99

TYPICAL SECTIONS

EXISTING PAVEMENT

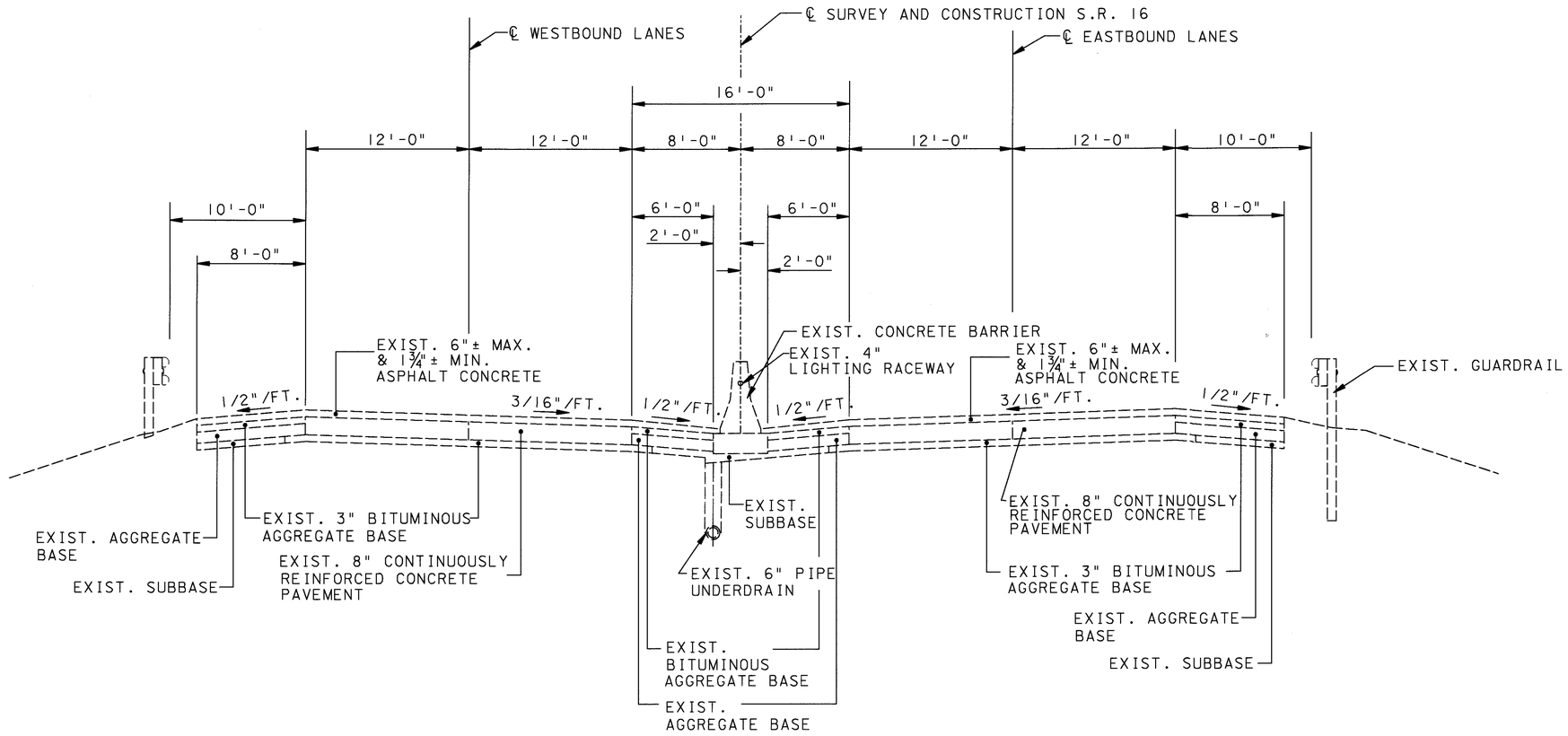

NORMAL SECTION

WESTBOUND LANES
SECTION APPLIES:
STA. 107+86.75 TO STA. 112+00.00 = 413.25 LIN. FT

EASTBOUND LANES
SECTION APPLIES:
STA. 107+99.33 TO STA. 112+00.00 = 400.67 LIN. FT

CALCULATED D.M. 3-13-95
CHECKED A.L.L. 3-16-95

EXISTING TYPICAL SECTION

LIC-16-19.72

L0162003.DWG 5/31/95 (1=5)

TYPICAL SECTIONS
EXISTING PAVEMENT

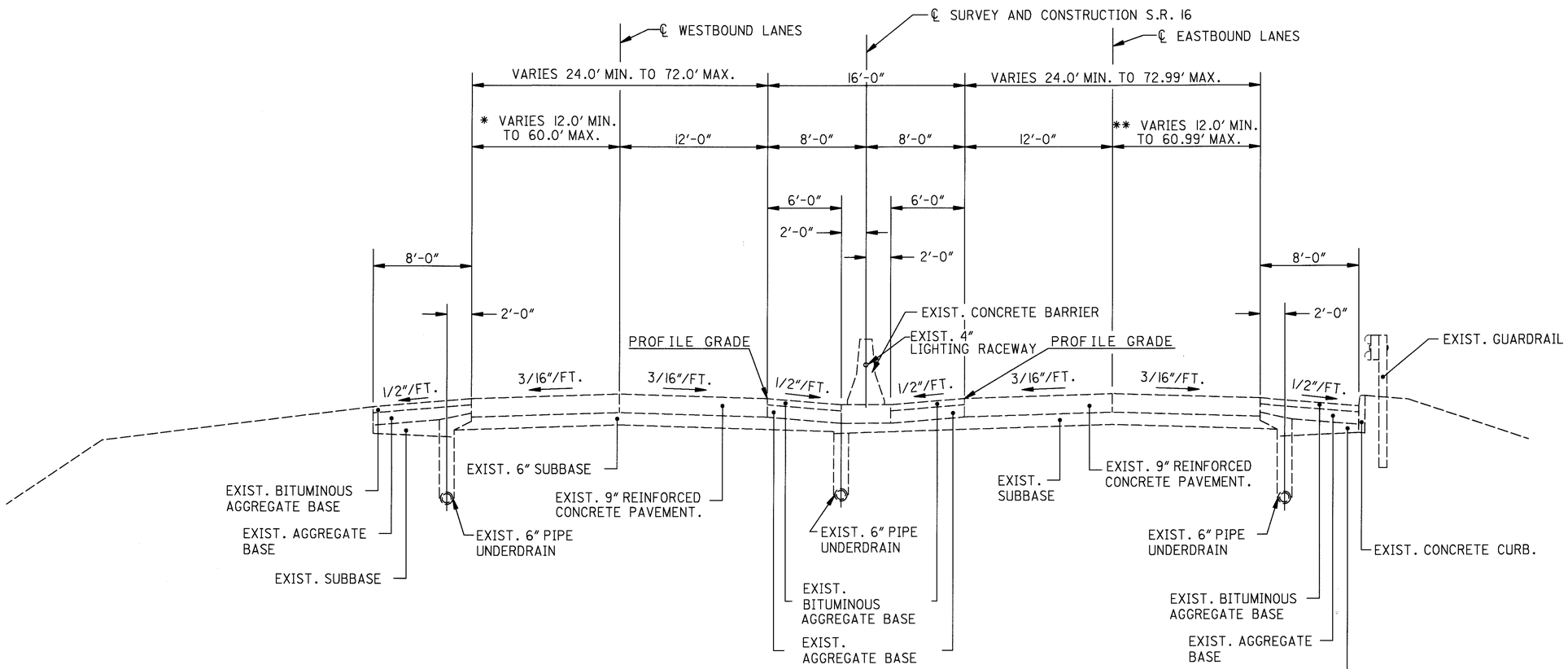

NORMAL SECTION

* NOTE: (WESTBOUND LANES)

VARIES FROM 50.7′ STA. 114+41.19 TO 24′ STA. 117+16.47.
24′ STA. 117+16.47 TO STA. 119+42.70.
VARIES FROM 24′ STA. 119+42.70 TO 37′ STA. 124+62.70.
VARIES FROM 60′ STA. 153+33.64 TO 36′ STA. 158+59.16.
36′ STA. 158+59.16 TO STA. 158+75.0.
VARIES FROM 47′ STA. 186+44 TO 12′ STA. 190+33.14.

** NOTE: (EASTBOUND LANES)

VARIES FROM 37′ STA. 116+21.26 TO 24′ STA. 120+18.82.
24′ STA. 120+18.82 TO STA. 126+63.60.
VARIES FROM 24′ STA. 126+63.60 TO 51′ STA. 129+41.96.
VARIES FROM 60.99′ STA. 150+50.47 TO 36′ STA. 158+00.47.
36′ STA. 158+00.47 TO STA. 158+62.45.
VARIES FROM 37′ STA. 188+63.0 TO 25.06′ STA. 190+33.14.

WESTBOUND LANES
STATION TO STATION

STA. 112+00 TO STA. 118+69.02(BACK) = 669.02 LIN. FT.
STA. 117+46.58(AHEAD) TO STA. 131+00 = 1353.42 LIN. FT.
STA. 150+75 TO STA. 158+75 = 800.00 LIN. FT.
STA. 172+25 TO STA. 174+50 = 225.00 LIN. FT.
STA. 183+00 TO STA. 190+33.14 = 733.14 LIN. FT.
TOTAL 3780.58 LIN. FT.

STATION EQUATION STA. 118+69.02 (BACK)=
STA. 117+46.58 (AHEAD)

EASTBOUND LANES
STATION TO STATION

STA. 112+00 TO STA. 118+69.02(BACK) = 669.02 LIN. FT.
STA. 117+46.58(AHEAD) TO STA. 131+00 = 1353.42 LIN. FT.
STA. 150+75 TO STA. 158+75 = 800.00 LIN. FT.
STA. 172+25 TO STA. 174+50 = 225.00 LIN. FT.
STA. 183+00 TO STA. 190+33.14 = 733.14 LIN. FT.
TOTAL 3780.58 LIN. FT.

CALCULATED D.M. 3-13-95
CHECKED A.L.L. 3-16-95

EXISTING TYPICAL SECTION

LIC-16-19.72

L0162003.DGN 5-31-95

TYPICAL SECTIONS

EXISTING PAVEMENT

NOTE:
DETAILS SHOWN FOR CURVE RT.
DETAILS ARE REVERSE FOR CURVE LT.

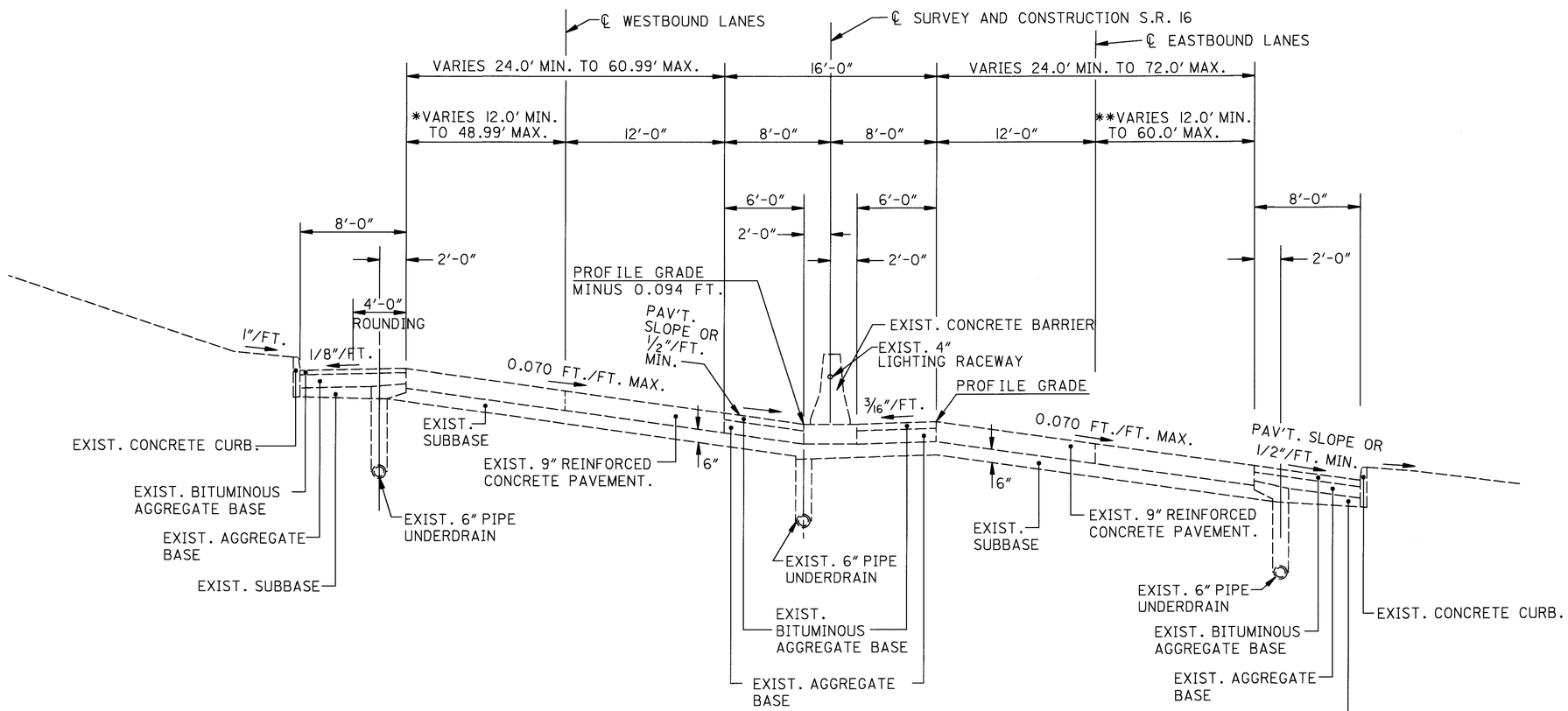

SUPERELEVATED SECTION

* NOTE: (WESTBOUND LANES)
36' STA. 158+75.0 TO STA.160+79.67.
VARIES FROM 36' STA. 160+79.67 TO 48.99' STA.165+99.67.

** NOTE: (EASTBOUND LANES)
VARIES FROM 51.99' STA.144+11.23 TO 36' STA.150+50.47.
VARIES FROM 60.99' STA.150+50.47 TO 59.48' STA.150+94.76.
36' STA.158+62.45 TO STA.163+23.97.
VARIES FROM 36' STA.163+23.97 TO 60' STA.167+82.95.

WESTBOUND LANES
STATION TO STATION

STA. 131+00 TO STA. 135+81.22 = 481.22 LIN. FT.
STA. 137+51.69 TO STA. 141+32.98 = 381.29 LIN. FT.
STA. 143+14.53 TO STA. 150+75 = 760.47 LIN. FT.
STA. 158+75 TO STA. 172+25 = 1350.00 LIN. FT.
STA. 174+50 TO STA. 178+42.37 = 392.37 LIN. FT.
STA. 180+34.47 TO STA. 183+00 = 265.53 LIN. FT.
TOTAL 3630.88 LIN. FT.

BRIDGE LIMITS (Include Approach Slabs).

STA.135+81.22 TO STA.137+51.69 = 170.47 LIN.FT.
STA.141+32.98 TO STA.143+14.53 = 181.55 LIN.FT.
STA.178+42.37 TO STA.180+34.47 = 192.10 LIN.FT.
TOTAL 544.12 LIN.FT.

EASTBOUND LANES
STATION TO STATION

STA. 131+00 TO STA. 135+98.28 = 498.28 LIN. FT.
STA. 137+68.75 TO STA. 141+27.20 = 358.45 LIN. FT.
STA. 143+08.75 TO STA. 150+75 = 766.25 LIN. FT.
STA. 158+75 TO STA. 172+25 = 1350.00 LIN. FT.
STA. 174+50 TO STA. 178+56.59 = 406.59 LIN. FT.
STA. 180+48.69 TO STA. 183+00 = 251.31 LIN. FT.
TOTAL 3630.88 LIN. FT.

BRIDGE LIMITS (Include Approach Slabs).

STA.135+98.28 TO STA.137+68.75 = 170.47 LIN.FT.
STA.141+27.20 TO STA.143+08.75 = 181.55 LIN.FT.
STA.178+56.59 TO STA.180+48.69 = 192.10 LIN.FT.
TOTAL 544.12 LIN.FT.

CALCULATED D.M. 3-13-95
CHECKED A.L.L. 3-16-95

EXISTING TYPICAL SECTION

LIC-16-19.72

L01620A3.DWG 5/31/95 (1=5)

TYPICAL SECTIONS
EXISTING PAVEMENT

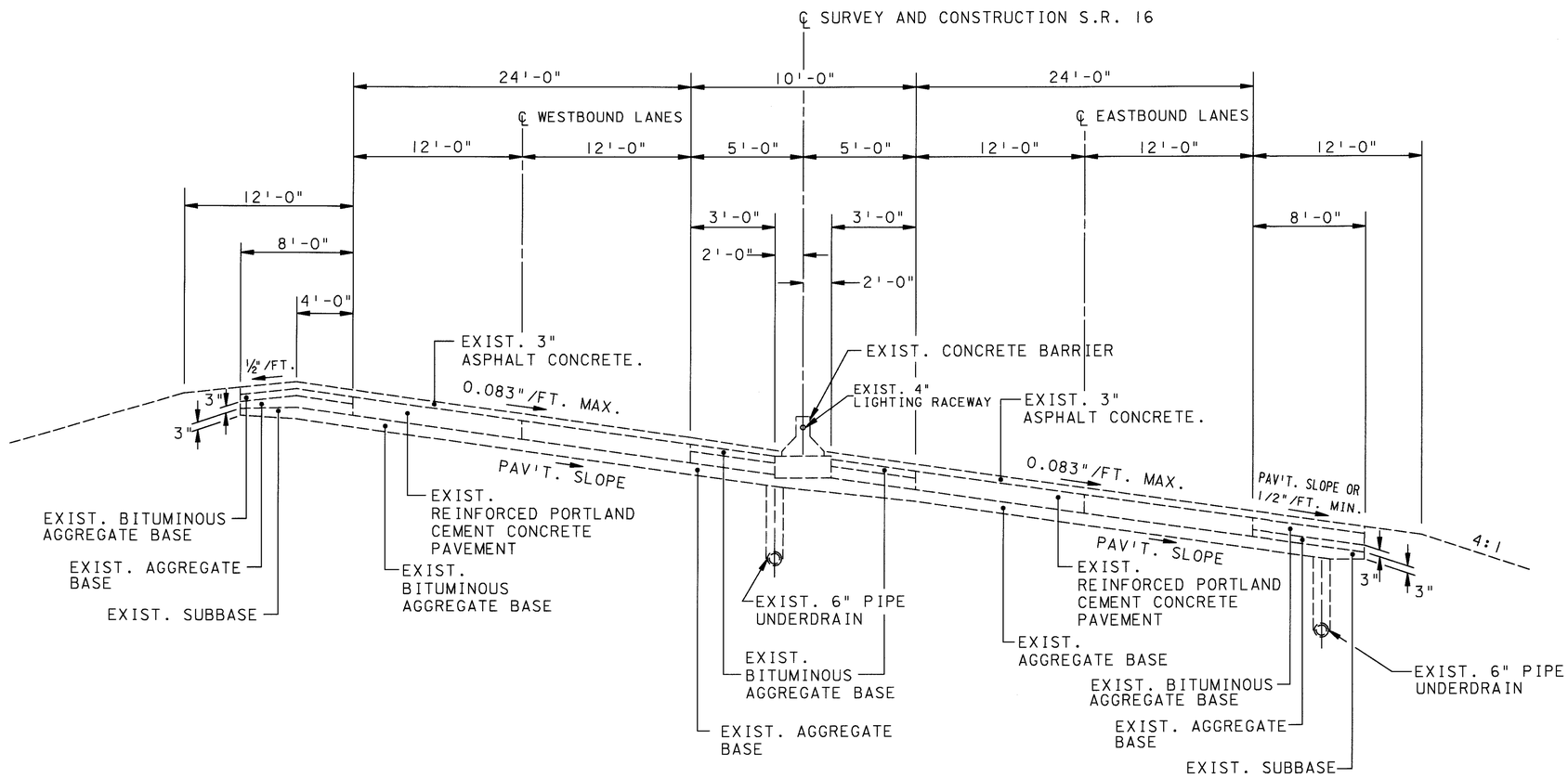

SUPERELEVATED SECTION

SECTION APPLIES:

STA. 119+31.60 TO STA. 122+11.99 = 280.39 LIN.FT.
TOTAL 280.39 LIN.FT.

BRIDGE LIMITS (Include Approach Slabs).

STA. 116+86.63 TO STA. 119+31.60 = 244.97 LIN.FT.
STA. 122+11.99 TO STA. 123+59.50 = 147.51 LIN.FT.
TOTAL 392.48 LIN.FT.

CALCULATED J.H.C.
CHECKED J.L.S.

EXISTING TYPICAL SECTIONS

LIC-16-19.72

6A
547

L016EXIST.DGN 2/8/99

TYPICAL SECTIONS

EXISTING RAMP PAVEMENT

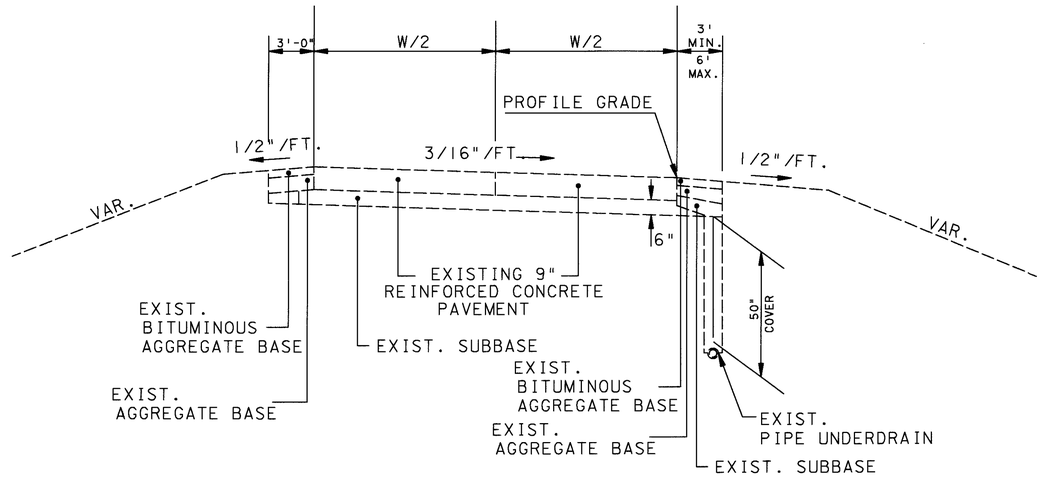

NORMAL RAMP SECTION

W = 16'-0" - RAMP "H" STA. 108+19.43 TO STA. 113+25.00 = 505.57 LIN. FT.
W = 16'-0" - RAMP "BB" @ ROADWAY "B" STA. 143+67.55 TO STA. 145+75.00 = 207.45 LIN. FT.
W = 24'-0" MAX. & 16'-0" MIN. - RAMP "B" @ HUDSON AVE. STA. 181+95.83 TO STA. 183+45.84 = 150.01 LIN. FT.
W = 16'-0" - RAMP "D" @ HUDSON AVE. STA. 184+25.00 TO STA. 187+00.00 = 275.00 LIN. FT.

TOTAL 1,138.03 LIN. FT.

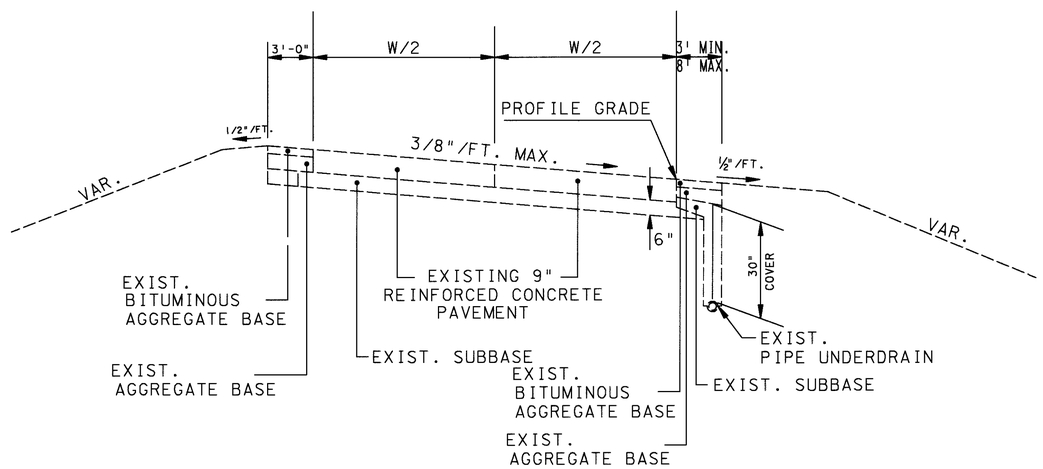

SUPERELEVATED RAMP SECTION

W = VARIES, SEE PLAN SHEET RAMP "F" @ 21st. ST. STA. 106+32.37 TO STA. 106+81.21 = 48.84 LIN.FT.
W = 16'-0" - RAMP "F" @ 21st. ST. STA. 106+81.21 TO STA. 113+89.23 = 708.02 LIN.FT. SUPER @ .042 FT./FT. CURVE RT.
W = 16'-0" - RAMP "F" @ 21st. ST. STA. 113+89.23 TO STA. 114+39.45 = 50.22 LIN.FT. SUPER @ .042 FT./FT. CURVE LT.

W = VARIES, SEE PLAN SHEET RAMP "H" @ 21st. ST. STA. 107+59.60 TO STA. 108+19.43 = 59.83 LIN. FT.
W = 16'-0" - RAMP "H" @ 21st. ST. STA. 113+25.00 TO STA. 114+54.22 = 129.22 LIN.FT. SUPER @ .042 FT./FT. CURVE RT.

W = VARIES, SEE PLAN SHEET RAMP "D-D" STA. 141+38.84 TO STA. 141+95.98 = 57.14 LIN. FT.
W = 16'-0" - RAMP "DD" STA. 141+95.98 TO STA. 147+50.00 = 554.02 LIN.FT. SUPER @ .083 FT./FT. CURVE LT.
W = 16'-0" - RAMP "DD" STA 147+50.00 TO STA. 148+66.47 = 116.47 LIN. FT.

W = VARIES, SEE PLAN SHEET RAMP "B-B" STA. 143+19.61 TO STA. 143+67.55 = 47.94 LIN. FT.
W = 16'-0" - RAMP "BB" STA. 143+75.00 TO STA. 147+35.56 = 160.56 LIN.FT. SUPER @ .057 FT./FT. CURVE LT.

W = 24'-0" - RAMP "A" @ MT. VERNON RD. STA. 167+53.00 TO STA. 172+46.59 = 493.59 LIN.FT. SUPER @ .018 FT./FT. CURVE LT.
W = VARIES, SEE PLAN SHEET RAMP "A" @ MT. VERNON RD. STA. 172+46.59 TO STA. 173+33.55 = 86.96 LIN.FT.

W = 24'-0" - RAMP "C" @ MT. VERNON RD. STA. 167+55.95 TO STA. 171+30.53 = 374.58 LIN. FT. SUPER @ .073 FT./FT. CURVE RT.
W = 50' MAX. & 24' MIN., SEE PLAN SHEET RAMP "C" @ MT. VERNON RD. STA. 171+30.53 TO STA. 173+75.49 = 244.96 LIN.FT. SUPER @ .073 FT./FT. CURVE LT.
W = 24'-0" - RAMP "C" @ MT. VERNON RD. STA. 173+75.49 TO STA. 174+82.28 = 106.79 LIN.FT. SUPER @ .073 FT./FT. CURVE LT.
W = VARIES, SEE PLAN SHEET RAMP "C" @ MT. VERNON RD. STA. 174+82.28 TO STA. 175+01.16 = 18.88 LIN.FT.

W = 20'-0" - RAMP "CC" @ MT. VERNON RD. STA. 173+75.29 TO STA. 175+38.64 = 163.35 LIN.FT. SUPER @ .016 FT./FT. CURVE RT.
W = 20' MAX. & 10' MIN., SEE PLAN SHEET RAMP "CC" @ MT. VERNON RD. STA. 175+38.64 TO STA. 28+27.10 MT. VERNON RD. = 60.20 LIN.FT.

W = VARIES, SEE PLAN SHEET RAMP "B" @ HUDSON AVE. STA. 178+34.06 TO STA. 178+73.14 = 39.08 LIN.FT.
W = 24'-0" - RAMP "B" @ HUDSON AVE. STA. 178+73.14 TO STA. 181+95.83 = 322.69 LIN. FT. SUPER @ .042 FT./FT. CURVE RT.
W= VARIES, SEE PLAN SHEET RAMP "B" @ HUDSON AVE. STA. 183+45.84 TO STA. 186+26.92 = 281.08 LIN. FT. SUPER @ .054 FT./FT. CURVE LT.

W = VARIES, SEE PLAN SHEET RAMP "D" @ HUDSON AVE. STA. 180+15.16 TO STA. 181+61.35 = 146.19 LIN. FT.
W = 16'-0" - RAMP "D" @ HUDSON AVE. STA. 181+61.35 TO STA. 184+25.00 = 263.65 LIN. FT. SUPER @ .039 FT./FT. CURVE LT.
W = 16'-0" - RAMP "D" @ HUDSON AVE. STA. 187+00.00 TO STA. 187+83.57 = 83.57 LIN. FT. SUPER @ .039 FT./FT. CURVE RT.

TOTAL 4,617.83 LIN. FT.

CALCULATED D.M. 3-13-95
CHECKED A.L.L. 3-16-95

EXISTING TYPICAL SECTION

LIC-16-19.72

L01620B3.DGN 05/31/95

TYPICAL SECTIONS

EXISTING PAVEMENT

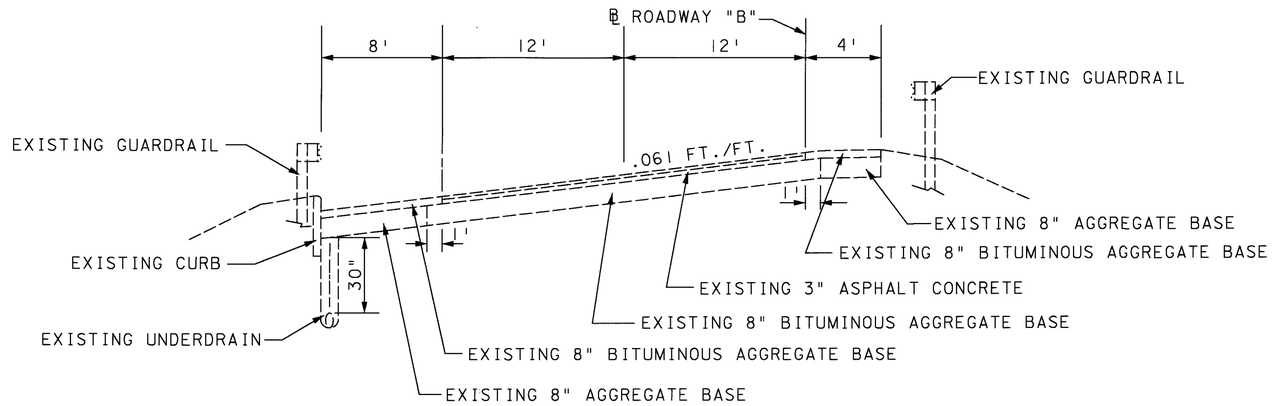

ROADWAY "B"

STA. 143+58.29 TO STA. 146+47.82= 289.53 LIN. FT.

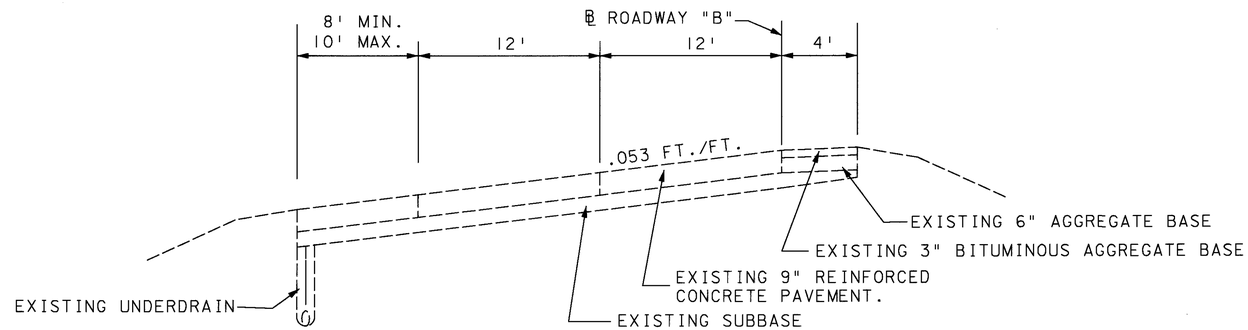

ROADWAY "B"

STA. 146+47.82 TO STA. 147+47.82= 100.00 LIN. FT.

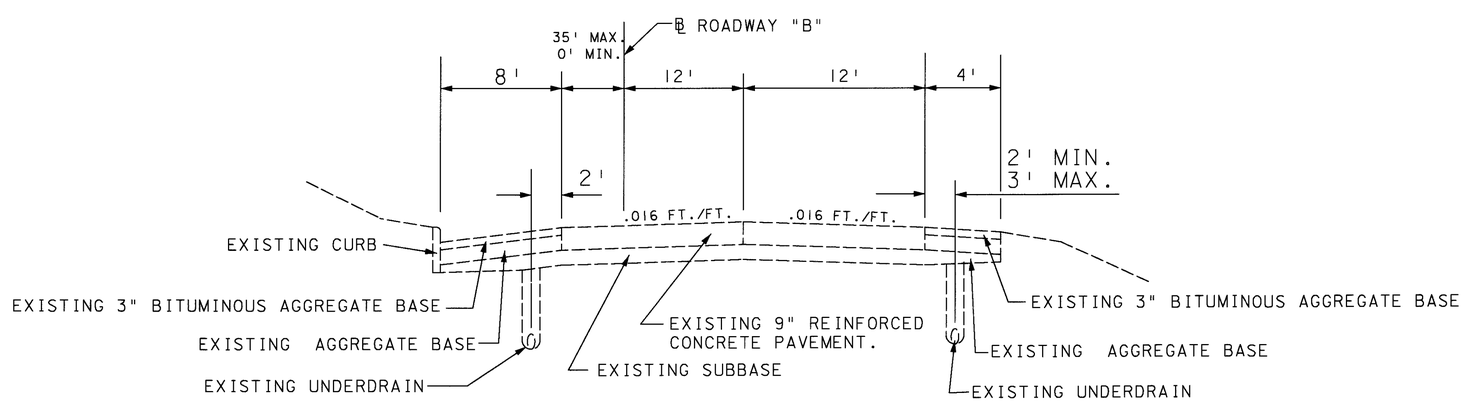

ROADWAY "B"

STA. 147+47.82 TO STA. 153+46.67= 598.85 LIN. FT.

TOTAL 988.38 LIN. FT.

CALCULATED D.M. 3-13-95
CHECKED A.L.L. 3-16-95

EXISTING TYPICAL SECTION

LIC-16-19.72

LO1620X3.DWG 9/09/94 (1=5)

TYPICAL SECTIONS

PROPOSED PAVEMENT

*** NOTE:
8' MIN. & 12' MAX.
STA. 150+00 TO STA. 153+44.64.

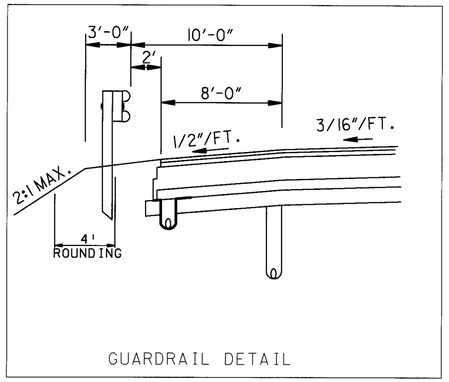

GUARDRAIL DETAIL

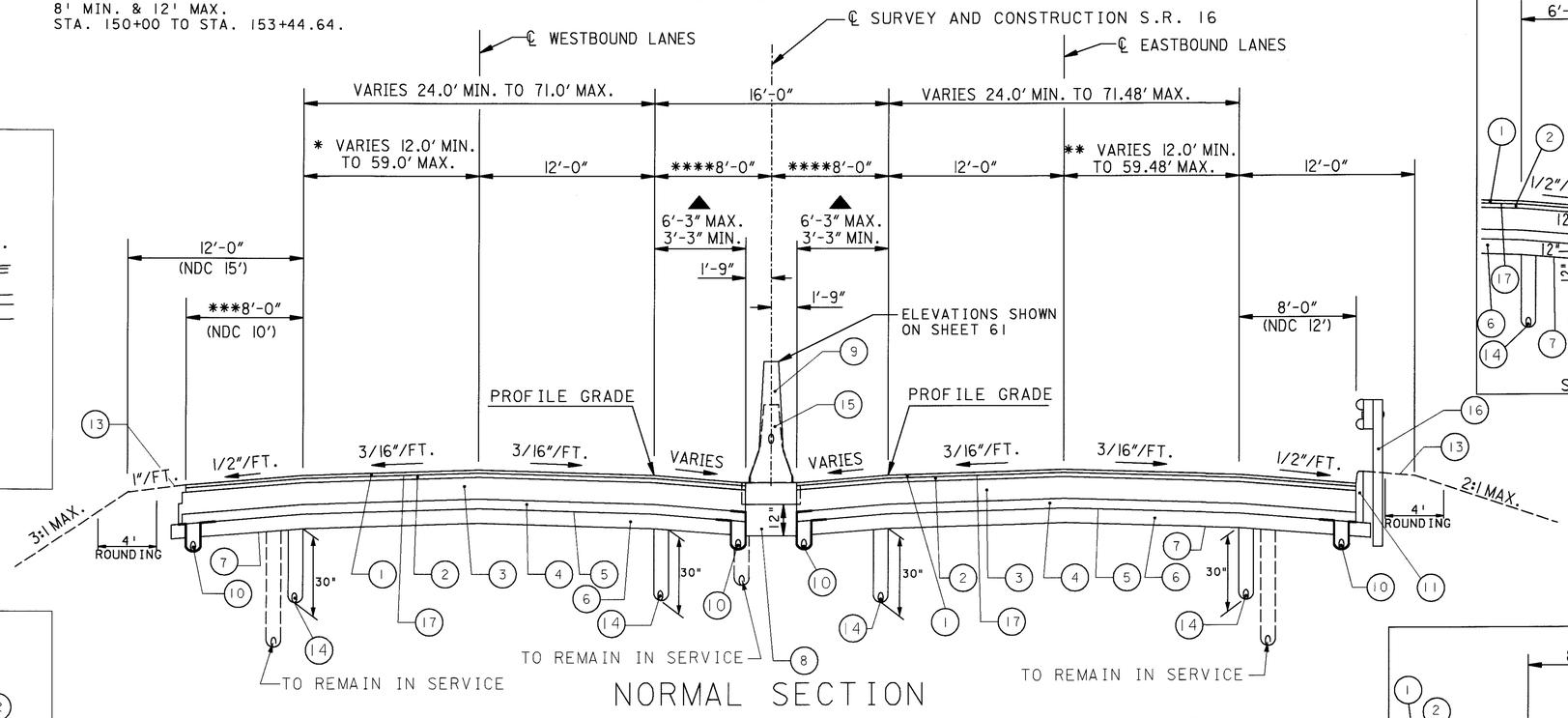

NORMAL SECTION

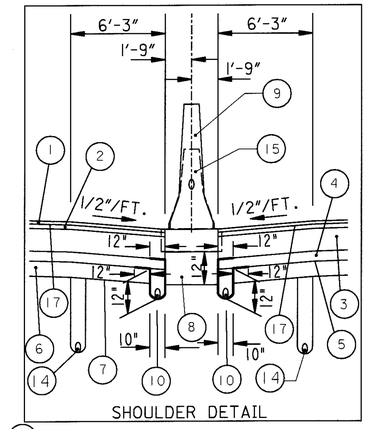

SHOULDER DETAIL

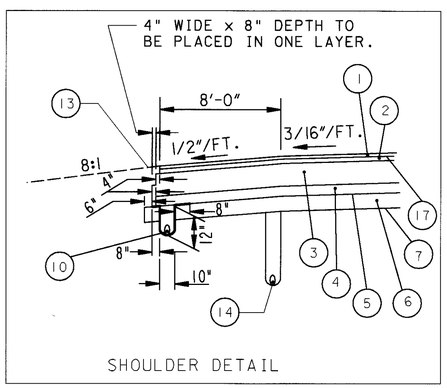

SHOULDER DETAIL

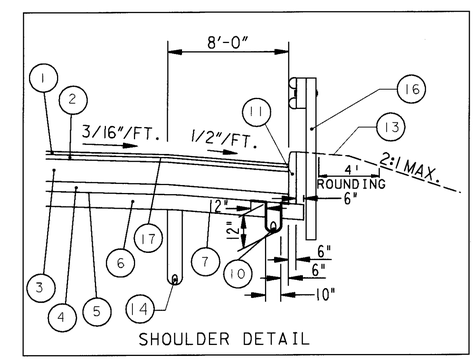

SHOULDER DETAIL

* NOTE: (WESTBOUND LANES)

VARIES FROM 51' STA.114+38.08 TO 24' STA.117+16.47.
24' STA.117+16.47 TO STA.119+42.70.
VARIES FROM 24' STA.119+42.70 TO 37' STA.124+62.70.
VARIES FROM 59' STA.153+44.64 TO 36' STA.158+59.16.
36' STA.158+59.16 TO STA.158+75.0.
VARIES FROM 51' STA.186+26.14 TO 12' STA.190+33.14.

**** VARIES FROM 8' STA. 189+00 TO 5' STA. 190+20

WESTBOUND LANES
SECTION APPLIES:

STA. 107+86.75 TO STA. 118+69.02(BACK) = 1082.27 LIN. FT.
STA. 117+46.58(AHEAD) TO STA. 130+72.55 = 1325.97 LIN. FT.
STA. 150+94.76 TO STA. 158+62.45 = 767.69 LIN. FT.
STA. 172+38.45 TO STA. 174+58.68 = 220.23 LIN. FT.
STA. 183+00.70 TO STA. 190+33.14 = 732.44 LIN. FT.
TOTAL 4,128.60 LIN. FT.

BRIDGE LIMITS (INCLUDING APPROACH SLABS)
STA. 105+53.25 TO STA. 107+86.75 = 233.50 LIN. FT.

STATION EQUATION STA. 118+69.02 (BACK)=
STA. 117+46.58 (AHEAD)

** NOTE: (EASTBOUND LANES)

VARIES FROM 51' STA.114+52.97 TO 24' STA.120+18.82.
24' STA.120+18.82 TO 24' STA.126+63.60.
VARIES FROM 24' STA.126+63.60 TO 51' STA.129+41.96.
VARIES FROM 59.48' STA.150+94.76 TO 36' STA.158+00.47.
36' STA.158+00.47 TO 36' STA.158+62.45.
VARIES FROM 51' STA.187+82.45 TO 25.06' STA.190+33.14.

**** VARIES FROM 8' STA. 189+00 TO 5' STA. 190+20
▲ VARIES FROM 6'-3" @ STA. 189+00 TO 3'-3" @ STA. 190+20

EASTBOUND LANES
SECTION APPLIES:

STA. 107+99.33 TO STA. 118+69.02(BACK) = 1,069.69 LIN. FT.
STA. 117+46.58(AHEAD) TO STA. 130+72.55 = 1325.97 LIN. FT.
STA. 150+94.76 TO STA. 158+62.45 = 767.69 LIN. FT.
STA. 172+38.45 TO STA. 174+58.68 = 220.23 LIN. FT.
STA. 183+00.70 TO STA. 190+33.14 = 732.44 LIN. FT.
TOTAL 4,116.02 LIN. FT.

BRIDGE LIMITS (INCLUDING APPROACH SLABS)
STA. 105+65.83 TO STA. 107+99.33 = 233.50 LIN. FT.

LEGEND

MARK	ITEM	DESCRIPTION
1	446	1½" ASPHALT CONCRETE SURFACE COURSE, TYPE 1H
2	446	1¾" ASPHALT CONCRETE INTERMEDIATE COURSE, TYPE 2, PG 64-28
3	302	8" BITUMINOUS AGGREGATE BASE, PG 64-22
4	855	4" ASPHALT TREATED FREE DRAINING BASE
5	408	BITUMINOUS PRIME COAT @ 0.40 GAL./S.Y. (SEE SHEET 16)
6	304	6" AGGREGATE BASE
7	203	SUBGRADE COMPACTION
8	304	12" AGGREGATE BASE
9	622	CONCRETE BARRIER, TYPE B-50
10	605	4" SHALLOW PIPE UNDERDRAIN WITH FABRIC WRAP, AS PER PLAN (SEE SHEET 17)
11	609	CURB, TYPE 6, AS PER PLAN (SEE SHEET 16)
12	203	EMBANKMENT
13	659	SEEDING AND MULCHING
14	605	4" SHALLOW PIPE UNDERDRAIN
15	202	CONCRETE BARRIER REMOVED
16	606	GUARDRAIL, TYPE 5
17	407	TACK COAT FOR INTERMEDIATE COURSE

NDC = NORMAL DESIGN CRITERIA

CALCULATED D.M. 3-13-95
CHECKED A.L.L. 3-16-95

PROPOSED TYPICAL SECTION

LIC-16-19.72

L01620F3.DGN 2/17/99

TYPICAL SECTIONS

PROPOSED PAVEMENT

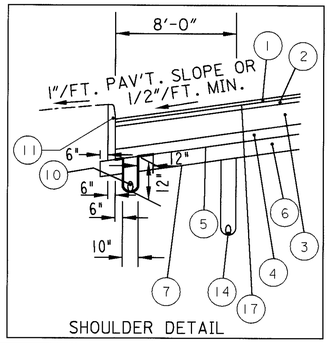

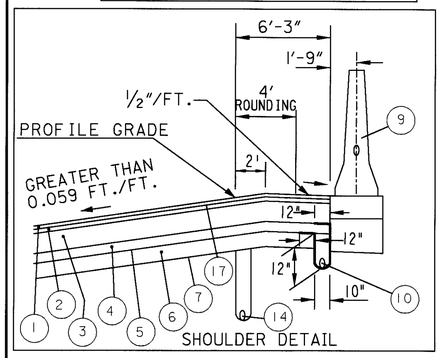

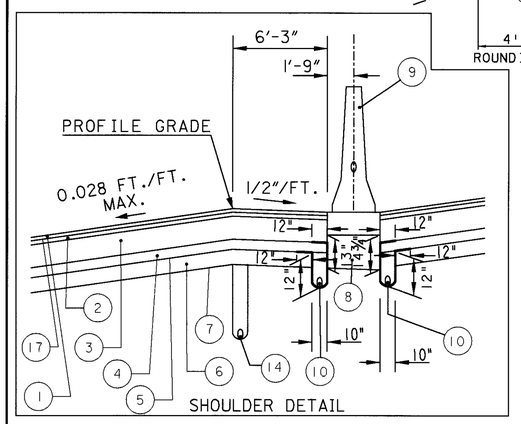

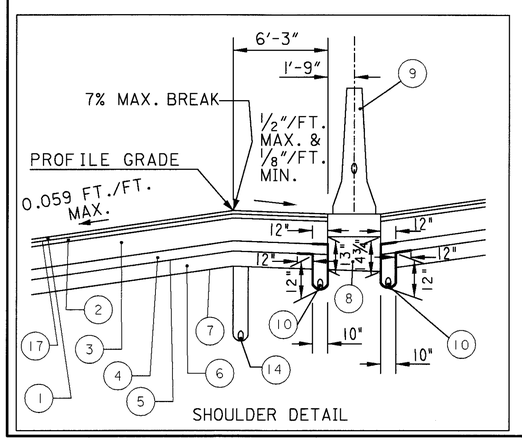

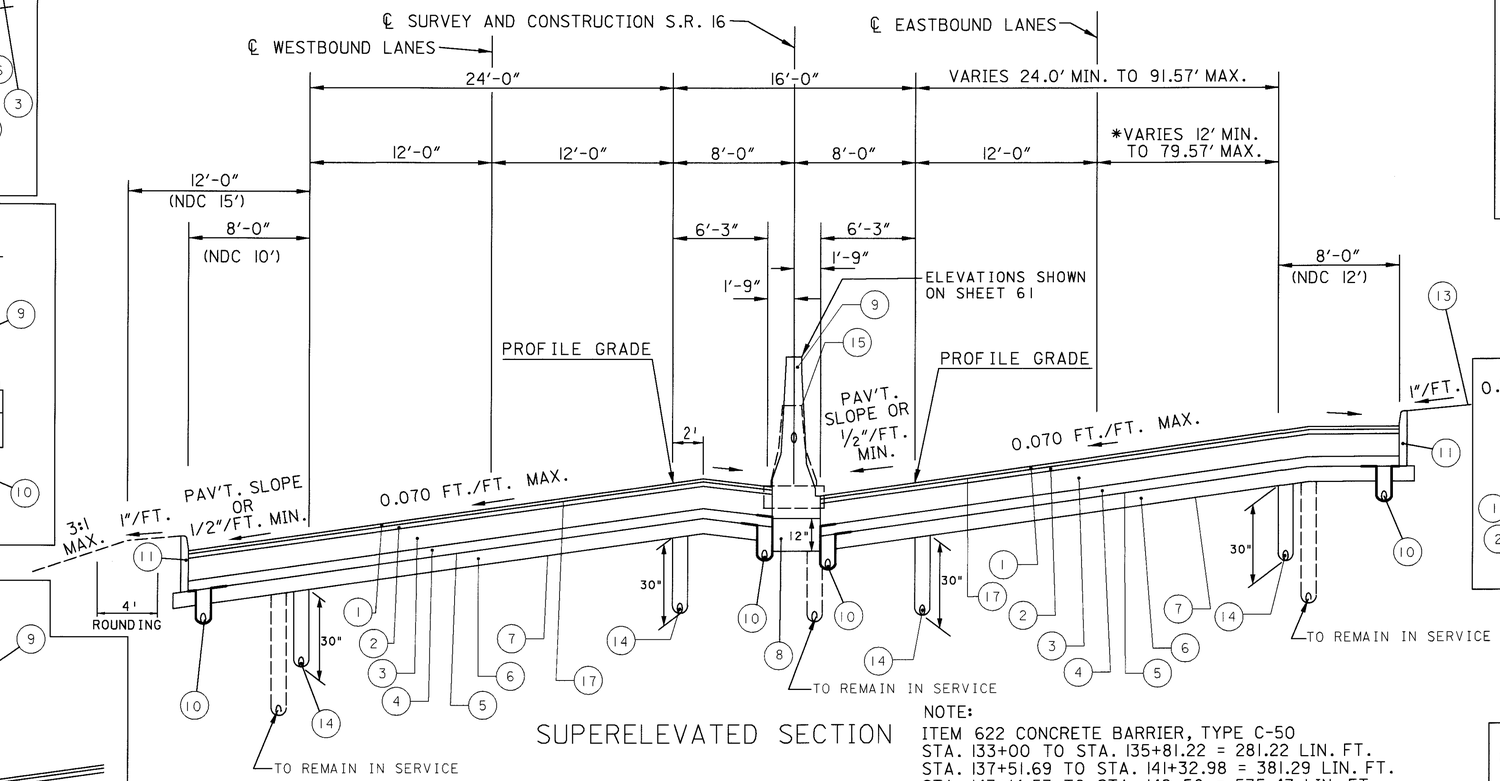

SUPERELEVATED SECTION

NOTE:
ITEM 622 CONCRETE BARRIER, TYPE C-50
STA. 133+00 TO STA. 135+81.22 = 281.22 LIN. FT.
STA. 137+51.69 TO STA. 141+32.98 = 381.29 LIN. FT.
STA. 143+14.53 TO STA. 148+50 = 535.47 LIN. FT.
TOTAL 1,197.98 LIN. FT.

BRIDGE LIMITS (Include Approach Slabs).
STA.135+81.22 TO STA.137+51.69 = 170.47 LIN.FT.
STA.141+32.98 TO STA.143+14.53 = 181.55 LIN.FT.
TOTAL 352.02 LIN.FT.

* NOTE (EASTBOUND LANES)
VARIES FROM 51.99' STA. 144+09.21 TO 52.57' STA. 148+65.44.
VARIES FROM 79.57' STA. 148+65.44 TO 59.48' STA. 150+94.76.

WESTBOUND LANES SECTION APPLIES:
STA. 130+72.55 TO STA. 135+81.22 = 508.67 LIN. FT.
STA. 137+51.69 TO STA. 141+32.98 = 381.29 LIN. FT.
STA. 143+14.53 TO STA. 150+94.76 = 780.23 LIN. FT.
TOTAL 1,670.19 LIN. FT.

EASTBOUND LANES SECTION APPLIES:
STA. 130+72.55 TO STA. 135+98.28 = 525.73 LIN. FT.
STA. 137+68.75 TO STA. 141+27.20 = 358.45 LIN. FT.
STA. 143+08.75 TO STA. 150+94.76 = 786.01 LIN. FT.
TOTAL 1,670.19 LIN. FT.

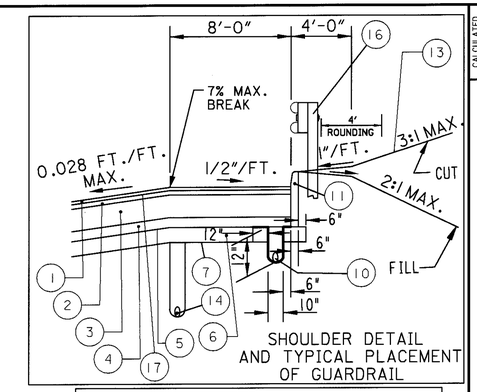

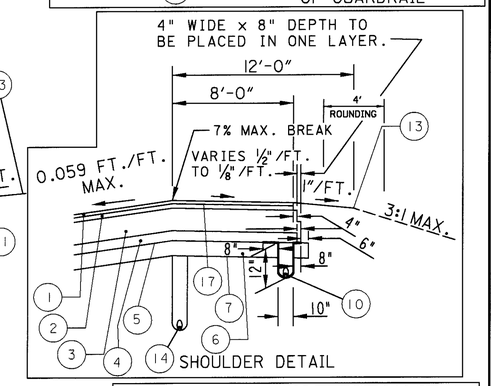

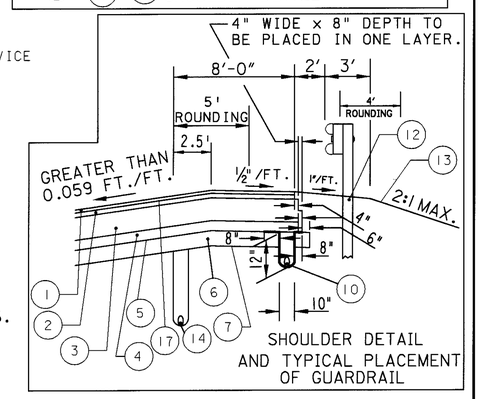

BRIDGE LIMITS (Include Approach Slabs).
STA.135+98.28 TO STA.137+68.75 = 170.47 LIN.FT.
STA.141+27.20 TO STA.143+08.75 = 181.55 LIN.FT.
TOTAL 352.02 LIN.FT.

LEGEND

MARK	ITEM	DESCRIPTION
1	446	1½" ASPHALT CONCRETE SURFACE COURSE, TYPE 1H
2	446	1¾" ASPHALT CONCRETE INTERMEDIATE COURSE, TYPE 2, PG 64-28
3	302	8" BITUMINOUS AGGREGATE BASE, PG 64-22
4	855	4" ASPHALT TREATED FREE DRAINING
5	408	BITUMINOUS PRIME COAT @ 0.40 GAL./S.Y. (SEE SHEET 16)
6	304	6" AGGREGATE BASE
7	203	SUBGRADE COMPACTION
8	304	12" AGGREGATE BASE
9	622	CONCRETE BARRIER, TYPE B-50 OR TYPE C-50
10	605	4" SHALLOW PIPE UNDERDRAIN WITH FABRIC WRAP, AS PER PLAN (SEE SHEET 17)
11	609	CURB, TYPE 6, AS PER PLAN (SEE SHEET 16)
12	203	EMBANKMENT
13	659	SEEDING AND MULCHING
14	605	4" SHALLOW PIPE UNDERDRAIN
15	202	CONCRETE BARRIER REMOVED
16	606	GUARDRAIL, TYPE 5
17	407	TACK COAT FOR INTERMEDIATE COURSE

NDC = NORMAL DESIGN CRITERIA

CALCULATED D.M. 3-13-95
CHECKED A.L.L. 3-16-95

PROPOSED TYPICAL SECTION

LIC-16-19.72

L0162023.DGN 2/18/99

TYPICAL SECTIONS

PROPOSED PAVEMENT

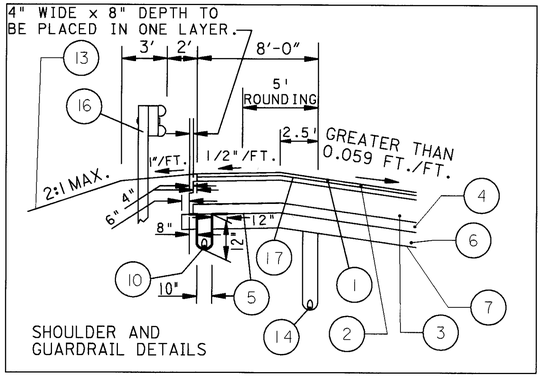

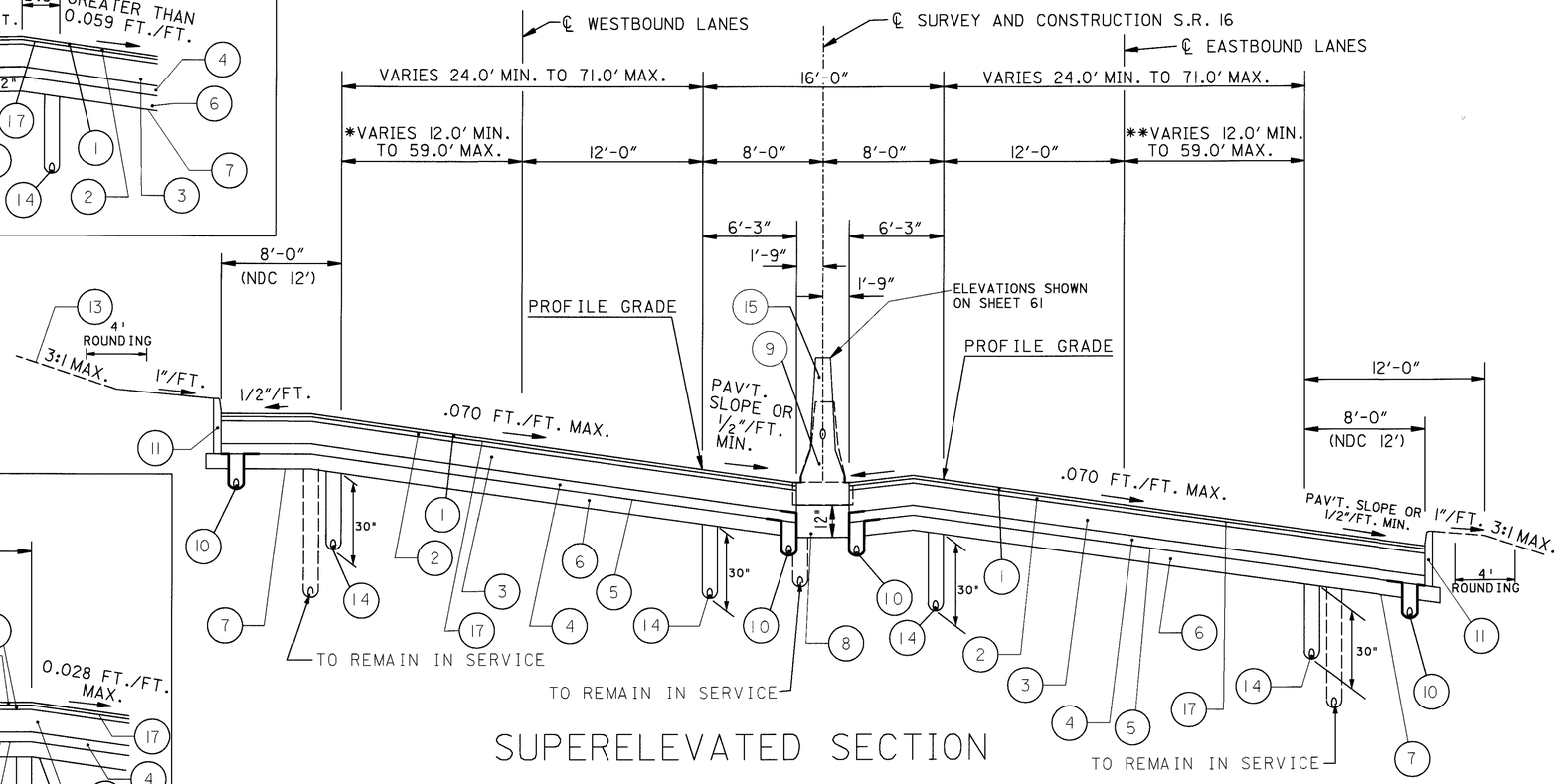

SUPERELEVATED SECTION

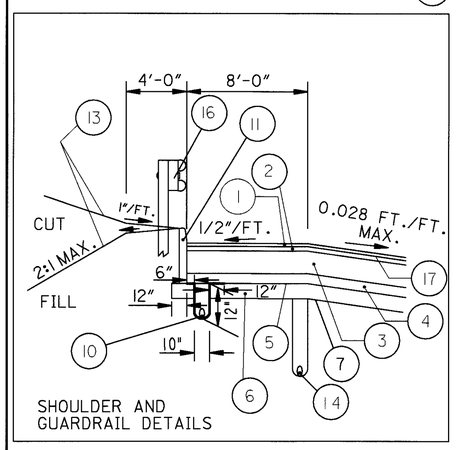

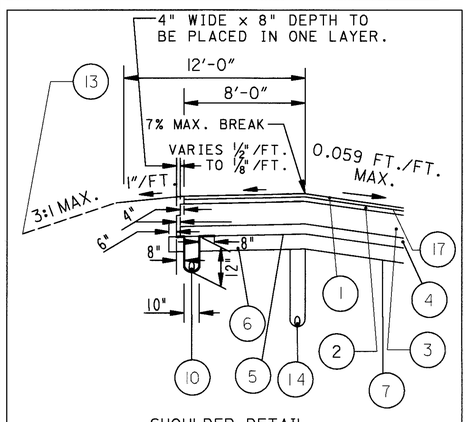

NOTE:
ITEM 622 CONCRETE BARRIER, TYPE C-50
STA. 161+00 TO STA. 170+75 = 975.00 LIN. FT.

* NOTE (WESTBOUND LANES)
36' STA. 158+75 TO STA. 160+79.67.
VARIES FROM 36' STA. 160+79.67 TO 59' STA. 167+48.81.

** NOTE (EASTBOUND LANES)
36' STA. 158+62.45 TO STA. 163+23.97.
VARIES FROM 36' STA. 163+23.97 TO 59' STA. 167+72.61.

WESTBOUND LANES
SECTION APPLIES:

STA. 158+62.45 TO STA. 172+38.45 = 1376.00 LIN. FT.

EASTBOUND LANES
SECTION APPLIES:

STA. 158+62.45 TO STA. 172+38.45 = 1376.00 LIN. FT.

LEGEND

MARK	ITEM	DESCRIPTION
1	446	1 1/2" ASPHALT CONCRETE SURFACE COURSE, TYPE 1H
2	446	1 3/4" ASPHALT CONCRETE INTERMEDIATE COURSE, TYPE 2, PG 64-28
3	302	8" BITUMINOUS AGGREGATE BASE, PG 64-22
4	855	4" ASPHALT TREATED FREE DRAINING BASE
5	408	BITUMINOUS PRIME COAT @ 0.40 GAL./S.Y. (SEE NOTE SHEET 16)
6	304	6" AGGREGATE BASE
7	203	SUBGRADE COMPACTION
8	304	12" AGGREGATE BASE
9	622	CONCRETE BARRIER, TYPE B-50 OR TYPE C-50
10	605	4" SHALLOW PIPE UNDERDRAIN WITH FABRIC WRAP, AS PER PLAN (SEE SHEET 17)
11	609	CURB, TYPE 6, AS PER PLAN (SEE SHEET 16)
12	203	EMBANKMENT
13	659	SEEDING AND MULCHING
14	605	4" SHALLOW PIPE UNDERDRAIN
15	202	CONCRETE BARRIER REMOVED
16	606	GUARDRAIL, TYPE 5
17	407	TACK COAT FOR INTERMEDIATE COURSE

NDC = NORMAL DESIGN CRITERIA

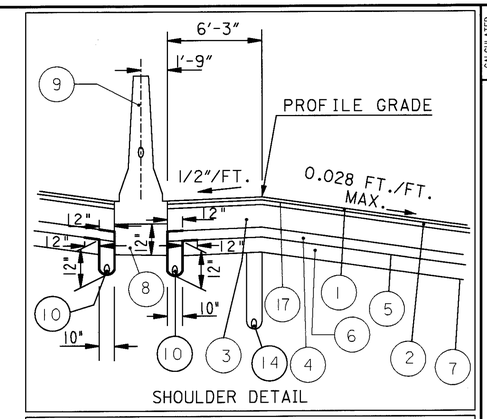

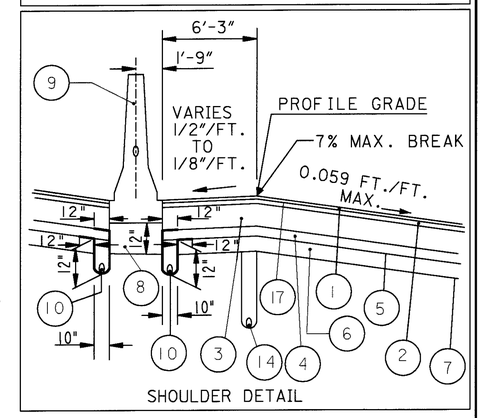

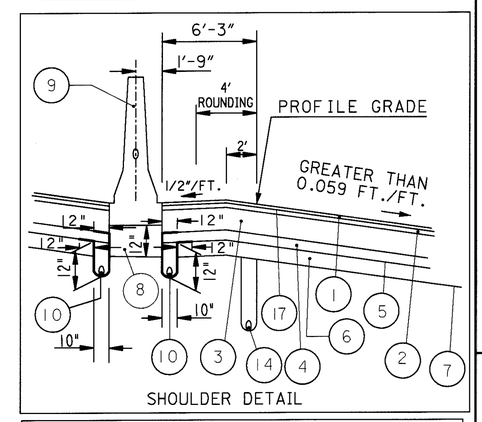

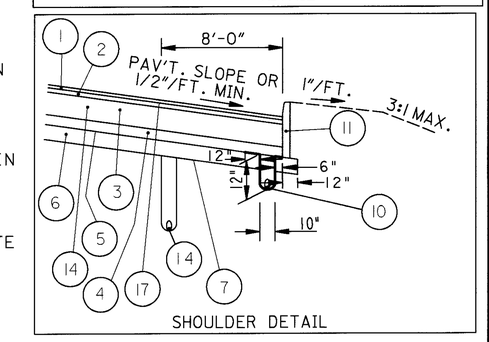

PROPOSED TYPICAL SECTION

LIC-16-19.72

CALCULATED D.M. 3-13-95
CHECKED A.L.L. 3-16-95

L016203.DGN 2/17/99

TYPICAL SECTIONS

PROPOSED PAVEMENT

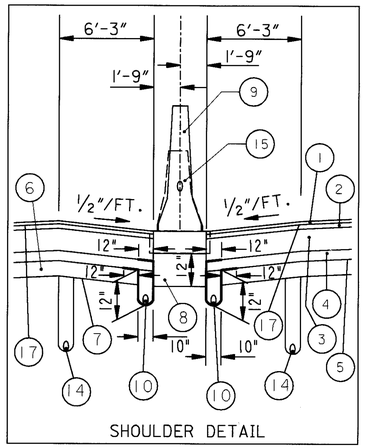

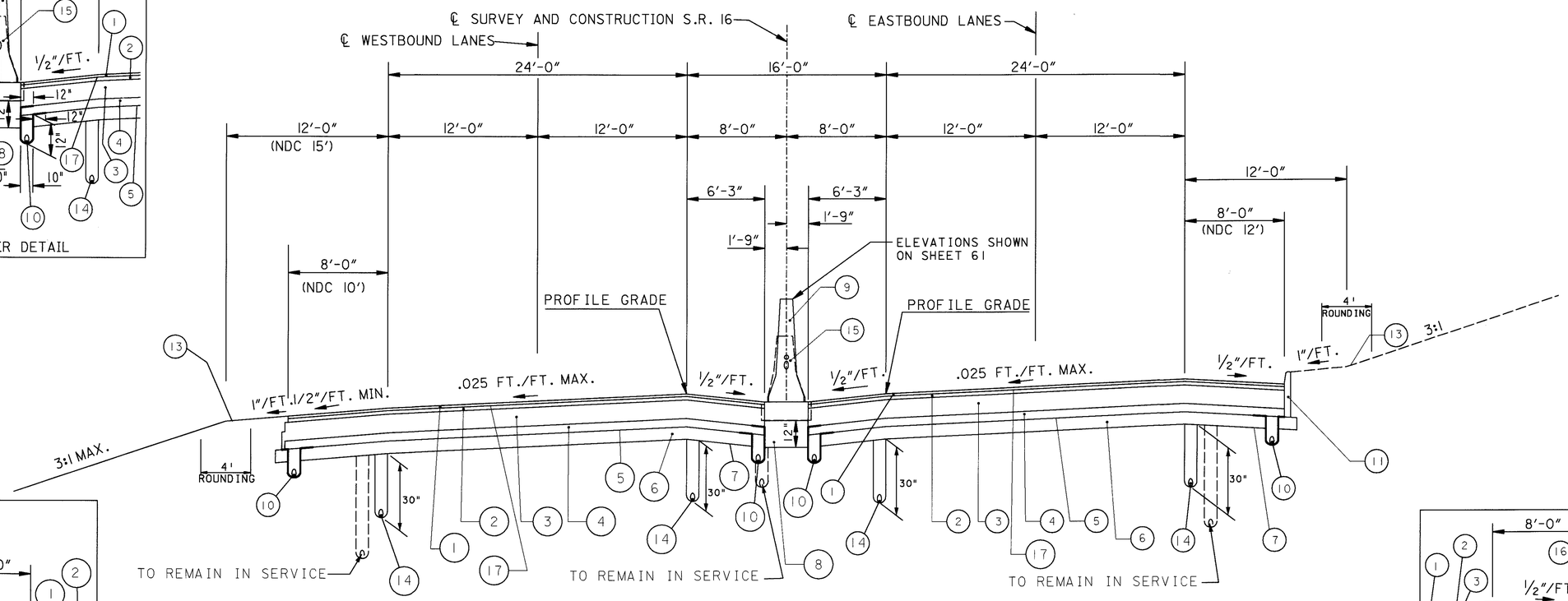

SUPERELEVATED SECTION

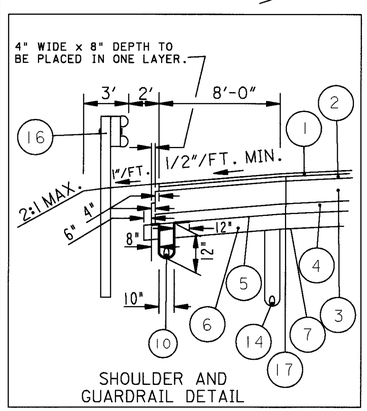

WESTBOUND LANES
SECTION APPLIES:

STA. 174+58.68 TO STA. 178+42.37 = 383.69 LIN. FT.
STA. 180+34.47 TO STA. 183+00.70 = 266.23 LIN. FT.
TOTAL 649.92 LIN. FT.

BRIDGE LIMITS (Include Approach Slabs).
STA.178+42.37 TO STA.180+34.47 = 192.10 LIN.FT.

EASTBOUND LANES
SECTION APPLIES:

STA. 174+58.68 TO STA. 178+56.59 = 397.91 LIN. FT.
STA. 180+48.69 TO STA. 183+00.70 = 252.01 LIN. FT.
TOTAL 649.92 LIN. FT.

BRIDGE LIMITS (Include Approach Slabs).
STA.178+56.59 TO STA.180+48.69 = 192.10 LIN.FT.

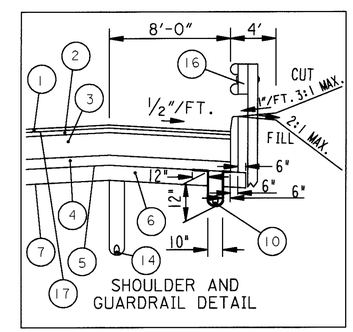

LEGEND

MARK	ITEM	DESCRIPTION
1	446	1½" ASPHALT CONCRETE SURFACE COURSE, TYPE 1H
2	446	1¾" ASPHALT CONCRETE INTERMEDIATE COURSE, TYPE 2, PG 64-28
3	302	8" BITUMINOUS AGGREGATE BASE, PG 64-22
4	855	4" ASPHALT TREATED FREE DRAINING BASE
5	408	BITUMINOUS PRIME COAT @ 0.40 GAL./S.Y. (SEE SHEET 16)
6	304	6" AGGREGATE BASE
7	203	SUBGRADE COMPACTION
8	304	12" AGGREGATE BASE
9	622	CONCRETE BARRIER, TYPE B-50
10	605	4" SHALLOW PIPE UNDERDRAIN WITH FABRIC WRAP, AS PER PLAN. (SEE SHEET 17)
11	609	CURB, TYPE 6, AS PER PLAN (SEE SHEET 16)
12	203	EMBANKMENT
13	659	SEEDING AND MULCHING
14	605	4" SHALLOW PIPE UNDERDRAIN
15	202	CONCRETE BARRIER REMOVED
16	606	GUARDRAIL, TYPE 5
17	407	TACK COAT FOR INTERMEDIATE COURSE

NDC = NORMAL DESIGN CRITERIA

CALCULATED D.M. 3-13-95
CHECKED A.L. 3-16-95

PROPOSED TYPICAL SECTION

LIC-16-19.72

L0162OM3.DGN 2/17/99

TYPICAL SECTIONS

PROPOSED PAVEMENT

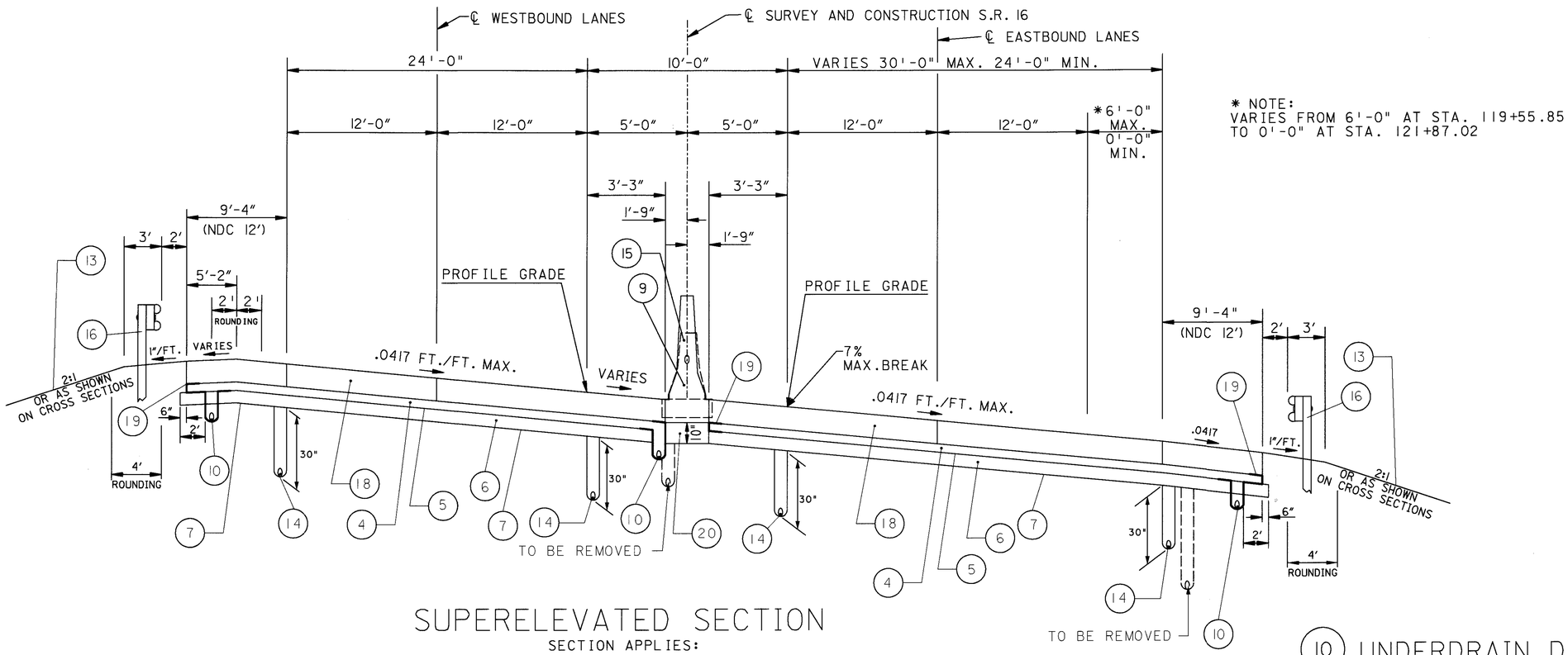

* NOTE:
VARIES FROM 6'-0" AT STA. 119+55.85 TO 0'-0" AT STA. 121+87.02

SUPERELEVATED SECTION

SECTION APPLIES:

STA. 119+55.84 TO STA.121+87.02 = 231.18 LIN.FT.

TOTAL 231.18 LIN.FT.

BRIDGE LIMITS INCLUDING APPROACH SLABS

STA. 116+62.31 TO STA. 119+55.84 = 293.53 LIN.FT.
STA. 121+87.02 TO STA. 123+84.50 = 197.48 LIN.FT.

TOTAL 491.01 LIN.FT.

LEGEND

MARK	ITEM	DESCRIPTION
1	446	1 1/2" ASPHALT CONCRETE SURFACE COURSE, TYPE 1H
2	446	1 3/4" ASPHALT CONCRETE INTERMEDIATE COURSE, TYPE 2, PG 64-28
3	302	8" BITUMINOUS AGGREGATE BASE, PG 64-22
4	855	4" ASPHALT TREATED FREE DRAINING BASE
5	408	BITUMINOUS PRIME COAT @ 0.40 GAL./S.Y. (SEE SHEET 16)
6	304	6" AGGREGATE BASE
7	203	SUBGRADE COMPACTION
8	304	12" AGGREGATE BASE
9	622	CONCRETE BARRIER, TYPE B-50 OR TYPE C-50
10	605	4" SHALLOW PIPE UNDERDRAIN WITH FABRIC WRAP, AS PER PLAN (SEE SHEET 17)
11	609	CURB, TYPE 6, AS PER PLAN (SEE SHEET 16)
12	203	EMBANKMENT
13	659	SEEDING AND MULCHING
14	605	4" SHALLOW PIPE UNDERDRAIN
15	202	CONCRETE BARRIER REMOVED
16	606	GUARDRAIL, TYPE 5
17	407	TACK COAT FOR INTERMEDIATE COURSE
18	452	11" PLAIN CONCRETE PAVEMENT
19	SPECIAL	GEOTEXTILE FABRIC, TYPE D (SEE SHEET 18)
20	304	10" AGGREGATE BASE

NDC = NORMAL DESIGN CRITERIA

10 UNDERDRAIN DETAILS

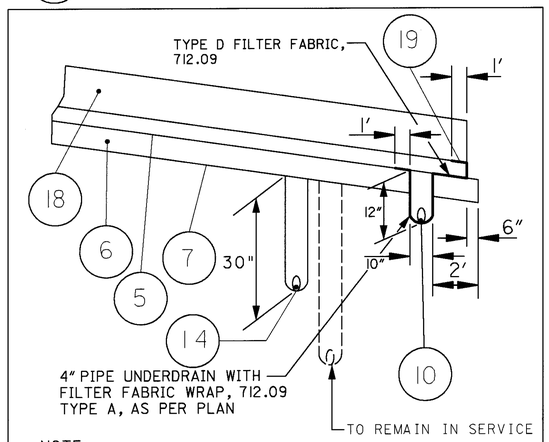

NOTE:
ITEM 408 BITUMINOUS PRIME COAT NOT TO BE PLACED IN THE AREA OF THE ITEM 605 4" SHALLOW PIPE UNDERDRAIN WITH FABRIC WRAP, AS PER PLAN.

CALCULATED D.M. 3-13-95
CHECKED A.L.L. 3-16-95

PROPOSED TYPICAL SECTION

LIC-16-19.72

12A
547

L016PROP.DGN 2/17/99

TYPICAL SECTIONS

PROPOSED RAMP PAVEMENT

NOTE:
DETAILS SHOWN FOR THE EASTBOUND RAMPS.
DETAILS ARE REVERSE FOR THE WESTBOUND RAMPS.

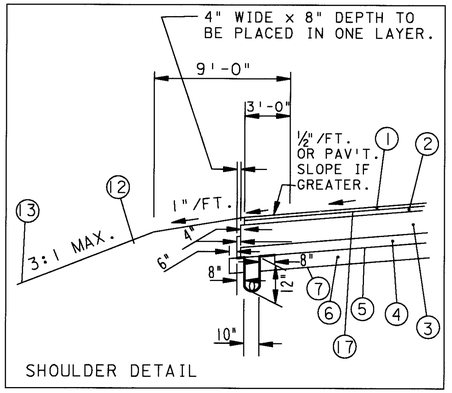

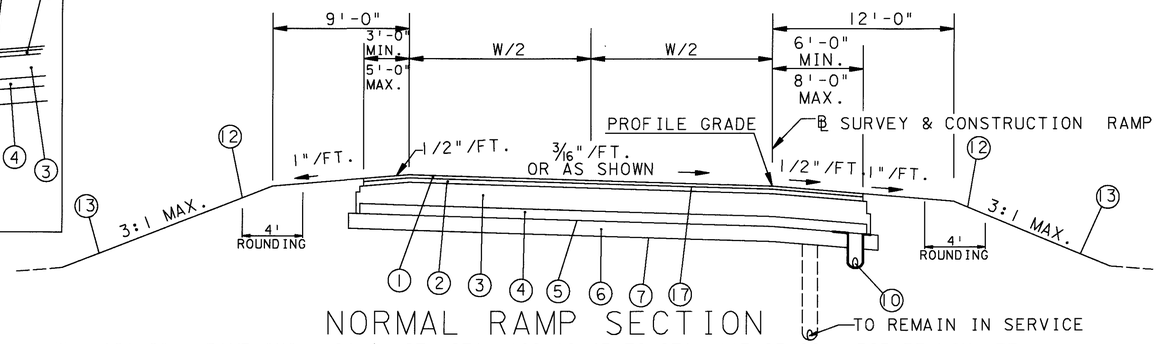

NORMAL RAMP SECTION

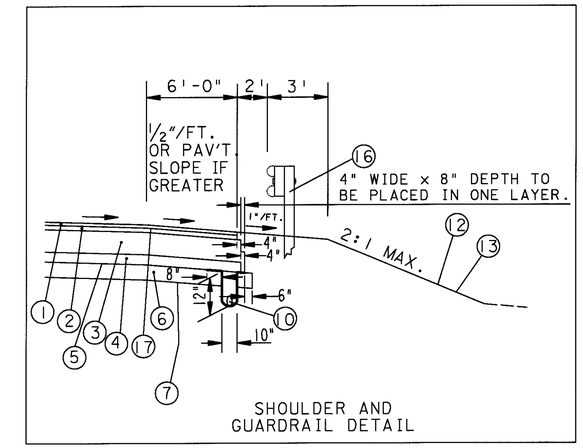

W = 16'-0" - RAMP "H" @ 21st. ST. STA. 108+19.43 TO STA. 113+25.00 = 505.57 LIN. FT.
W = 16'-0" - RAMP "BB" @ ROADWAY "B" STA. 143+67.55 TO STA. 145+75.00 = 207.45 LIN. FT.
W = VARIES 24' MAX. TO 16' MIN. RAMP "B" @ HUDSON AVE. STA. 181+95.83 TO STA. 183+45.84 = 150.01 LIN. FT.
W = 16'-0" - RAMP "D" @ HUDSON AVE. STA. 184+25.00 TO STA. 187+00.00 = 275.00 LIN. FT.
W = 24'-0" - ROADWAY "D" FROM S.R. 79 STA. 172+11.82 TO STA. 173+30.05 = 118.23 LIN. FT.
TOTAL 1,256.26 LIN. FT.

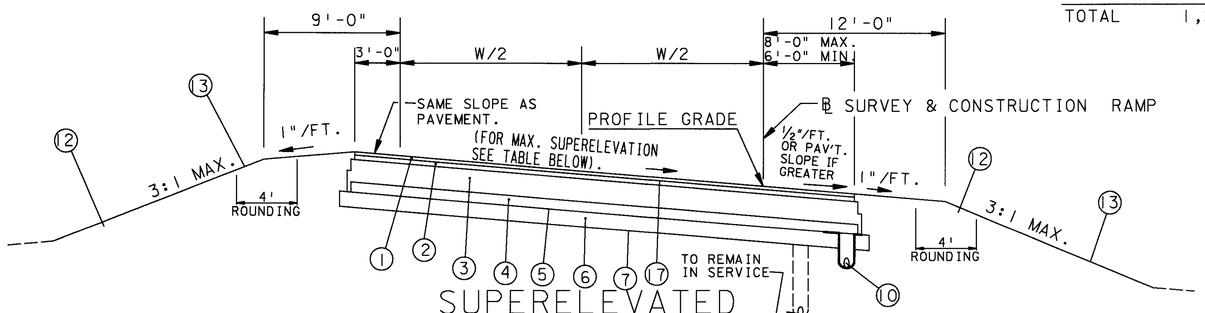

SUPERELEVATED RAMP SECTION
(CURVE RT. EASTBOUND LANES)
(CURVE LT. WESTBOUND LANES)

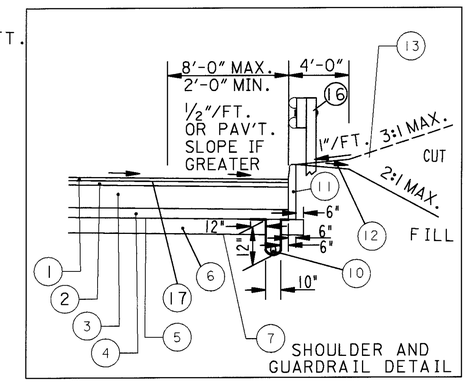

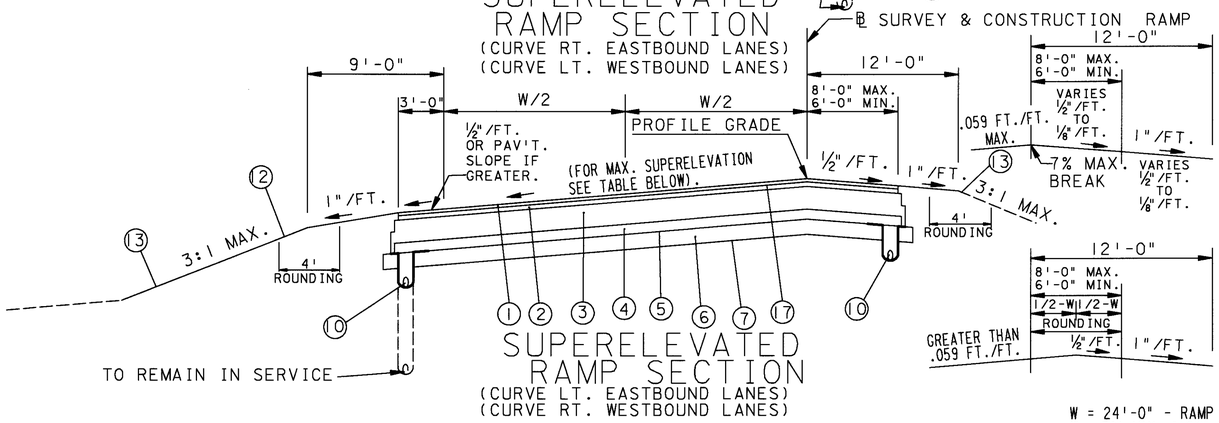

SUPERELEVATED RAMP SECTION
(CURVE LT. EASTBOUND LANES)
(CURVE RT. WESTBOUND LANES)

LEGEND

MARK	ITEM	DESCRIPTION
1	446	1½" ASPHALT CONCRETE SURFACE COURSE, TYPE 1H
2	446	1¾" ASPHALT CONCRETE INTERMEDIATE COURSE, TYPE 2, PG 64-28
3	302	8" BITUMINOUS AGGREGATE BASE, PG 64-22
4	855	4" ASPHALT TREATED FREE DRAINING BASE
5	408	BITUMINOUS PRIME COAT @ 0.40 GAL./S.Y. (SEE NOTE SHEET 16)
6	304	6" AGGREGATE BASE.
7	203	SUBGRADE COMPACTION.
10	605	4" SHALLOW PIPE UNDERDRAIN WITH FABRIC WRAP, AS PER PLAN.(SEE SHEET 17)
11	609	CURB, TYPE 6, AS PER PLAN. (SEE SHEET 16)
12	203	EMBANKMENT.
13	659	SEEDING AND MULCHING.
16	606	GUARDRAIL, TYPE 5.
17	407	TACK COAT FOR INTERMEDIATE COURSE

W = VARIES, SEE PLAN SHEET RAMP "F" @ 21st. ST. STA. 106+32.37 TO STA. 106+81.21 = 48.84 LIN.FT.
W = 20'-0" MAX. & 16'-0" MIN. - RAMP "F" @ 21st. ST. STA. 106+81.21 TO STA. 112+75.00 = 593.79 LIN.FT. SUPER @ .041 FT./FT. CURVE RT.
W = 16'-0" - RAMP "F" @ 21st. ST. STA. 112+75.00 TO STA. 114+39.45 = 164.45 LIN.FT. SUPER @ .054 FT./FT. CURVE LT.

W = VARIES, SEE PLAN SHEET RAMP "H" @ 21st. ST. STA. 107+59.60 TO STA. 108+19.43 = 59.83 LIN. FT.
W = 16'-0" - RAMP "H" @ 21st. ST. STA. 113+25.00 TO STA. 114+54.22 = 129.22 LIN.FT. SUPER @ .045 FT./FT. CURVE RT.

W = VARIES, SEE PLAN SHEET RAMP "D-D" STA. 141+38.84 TO STA. 141+95.98 = 57.14 LIN. FT.
W = 16'-0" - RAMP "D-D" STA. 141+95.98 TO STA. 147+50.00 = 554.02 LIN.FT. SUPER @ .056 FT./FT. CURVE LT.
W = 16'-0" - RAMP "D-D" STA. 147+50.00 TO STA. 148+66.47 = 116.47 LIN.FT. SUPER @ .033 FT./FT. CURVE RT.

W = VARIES, SEE PLAN SHEET RAMP "B-B" STA. 143+19.61 TO STA. 143+67.55 = 47.94 LIN. FT.
W = 16'-0" - RAMP "B-B" STA. 145+75.00 TO STA. 147+35.56 = 160.56 LIN.FT. SUPER @ .064 FT./FT. CURVE LT.

W = 24'-0" - RAMP "A" @ MT. VERNON RD. STA. 167+53.00 TO STA. 172+46.59 = 493.59 LIN.FT. SUPER @ .018 FT./FT. CURVE LT.
W = VARIES, SEE PLAN SHEET RAMP "A" @ MT. VERNON RD. STA. 172+46.59 TO STA. 173+33.55 = 86.96 LIN.FT.

W = 24'-0" - RAMP "C" @ MT. VERNON RD. STA. 167+55.95 TO STA. 171+30.53 = 374.58 LIN. FT. SUPER @ .080 FT./FT. CURVE RT.
W = 50' MAX. & 24' MIN., SEE PLAN SHEET RAMP "C" @ MT. VERNON RD. STA. 171+30.53 TO STA. 173+75.49 = 244.96 LIN.FT. SUPER @ .045 FT./FT. CURVE LT.
W = 24'-0" - RAMP "C" @ MT. VERNON RD. STA. 173+75.49 TO STA. 174+82.28 = 106.79 LIN.FT. SUPER @ .039 FT./FT. CURVE LT.
W = VARIES, SEE PLAN SHEET RAMP "C" @ MT. VERNON RD. STA. 174+82.28 TO STA. 175+01.16 = 18.88 LIN.FT.

W = 20'-0" - RAMP "CC" @ MT. VERNON RD. STA. 173+75.29 TO STA. 175+38.64 = 163.35 LIN.FT. SUPER @ .016 FT./FT. CURVE RT.
W = 20' MAX. & 12' MIN., SEE PLAN SHEET RAMP "CC" @ MT. VERNON RD. STA. 175+38.64 TO STA. 28+27.10 MT. VERNON RD. = 60.20 LIN.FT.

W = VARIES, SEE PLAN SHEET RAMP "B" @ HUDSON AVE. STA. 178+34.06 TO STA. 178+73.14 = 39.08 LIN.FT.
W = 24'-0" - RAMP "B" @ HUDSON AVE. STA. 178+73.14 TO STA. 181+95.83 = 322.69 LIN. FT. SUPER @ .033 FT./FT. CURVE RT.
W = 16'-0" - RAMP "B" @ HUDSON AVE. STA. 183+45.84 TO STA. 186+26.92 = 281.08 LIN. FT. SUPER @ .054 FT./FT. CURVE LT.

W = VARIES, SEE PLAN SHEET RAMP "D" @ HUDSON AVE. STA. 180+15.16 TO STA. 181+61.35 = 146.19 LIN. FT.
W = 19.37' AVE. RAMP "D" @ HUDSON AVE. STA. 181+61.35 TO STA. 183+00.72 = 139.37 LIN. FT. SUPER @ .035 FT./FT. CURVE LT.
W = 16'-0" - RAMP "D" @ HUDSON AVE. STA. 183+00.72 TO STA. 184+25.00 = 124.28 LIN. FT. SUPER @ .016 FT./FT. CURVE LT.
W = 16'-0" - RAMP "D" @ HUDSON AVE. STA. 187+00.00 TO STA. 187+83.57 = 83.57 LIN. FT. SUPER @ .030 FT./FT. CURVE RT.
TOTAL 4,617.83 LIN. FT.

CALCULATED D.M. 3-13-95
CHECKED A.L.L. 3-16-95

PROPOSED TYPICAL SECTION

LIC-16-19.72

L01620H3.DGN 2/17/99

TYPICAL SECTIONS

PROPOSED PAVEMENT

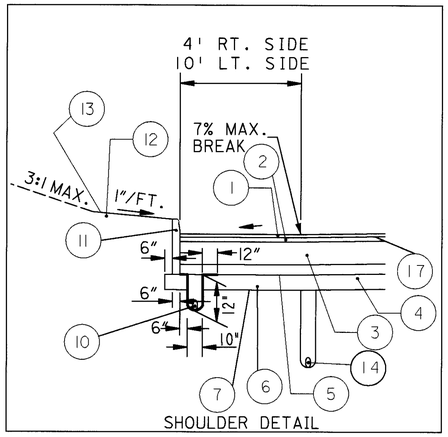

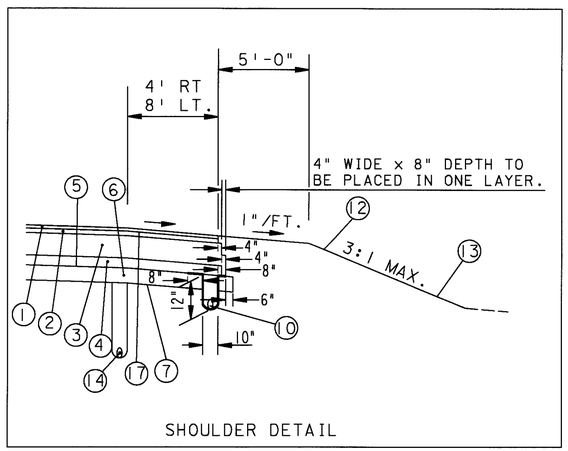

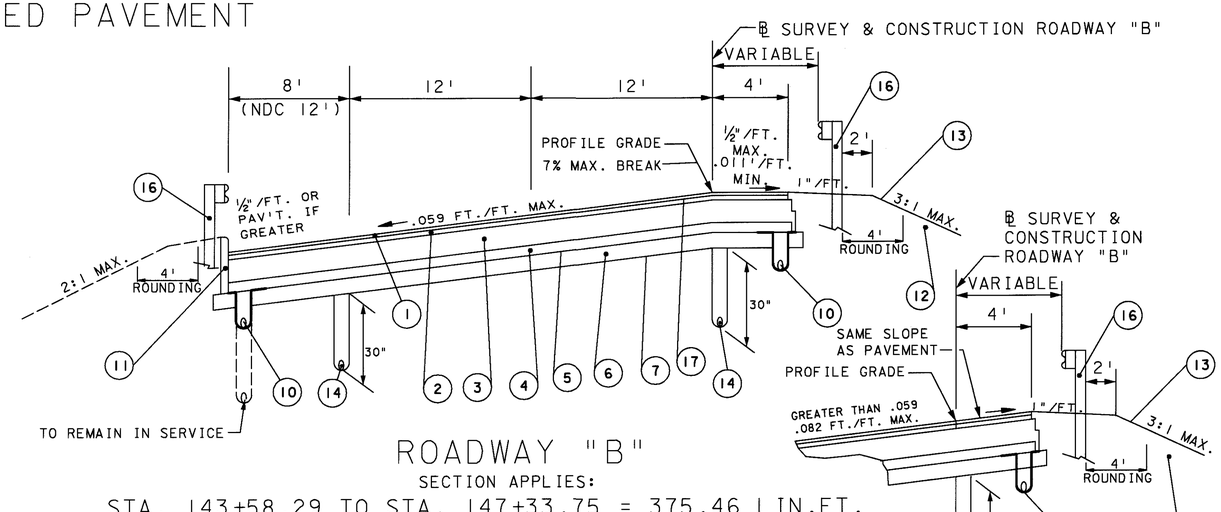

ROADWAY "B"

SECTION APPLIES:

STA. 143+58.29 TO STA. 147+33.75 = 375.46 LIN.FT.

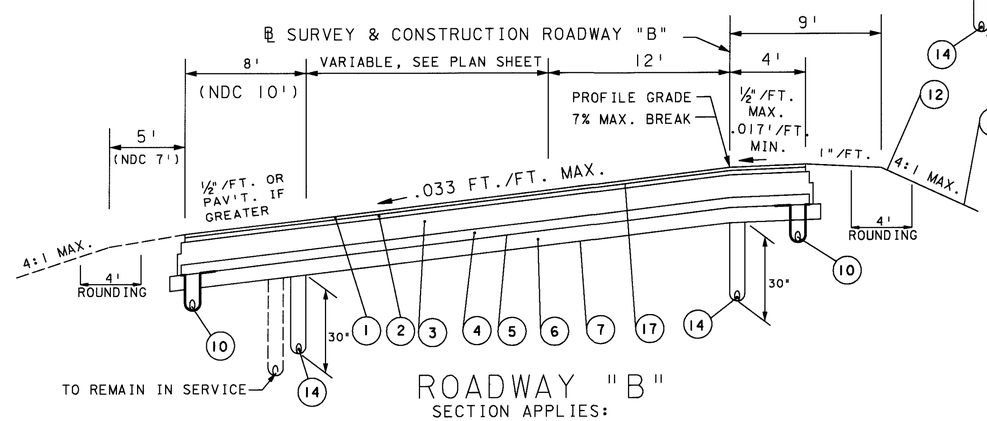

ROADWAY "B"

SECTION APPLIES:

STA. 147+33.75 TO STA. 147+47.82 = 14.07 LIN.FT.

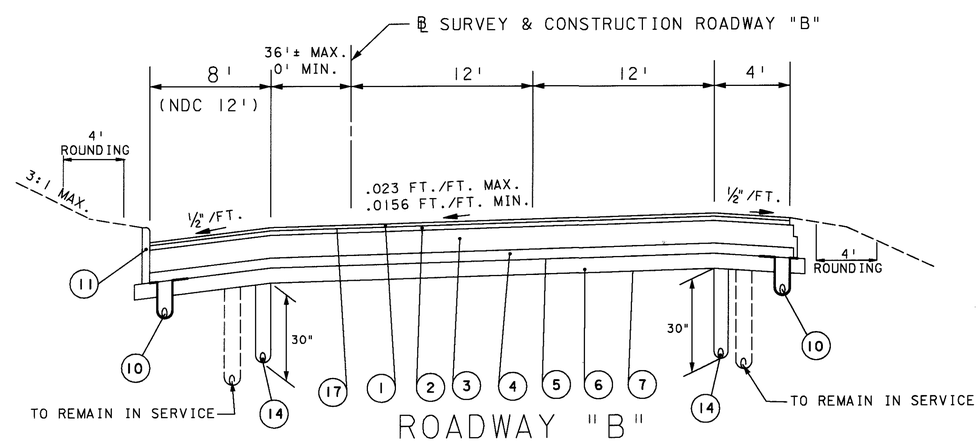

ROADWAY "B"

SECTION APPLIES:

STA. 147+47.82 TO STA. 153+46.67 = 598.85 LIN.FT.

TOTAL ROADWAY "B" 988.38 LIN.FT.

LEGEND

MARK	ITEM	DESCRIPTION
1	446	1½" ASPHALT CONCRETE SURFACE COURSE, TYPE 1H
2	446	1¾" ASPHALT CONCRETE INTERMEDIATE COURSE, TYPE 2, PG 64-28
3	302	8" BITUMINOUS AGGREGATE BASE, PG 64-22
4	855	4"ASPHALT TREATED FREE DRAINING BASE
5	408	BITUMINOUS PRIME COAT @ 0.40 GAL./S.Y. (SEE SHEET 16)
6	304	6" AGGREGATE BASE
7	203	SUBGRADE COMPACTION
10	605	4" SHALLOW PIPE UNDERDRAIN WITH FABRIC WRAP, AS PER PLAN (SEE SHEET 17)
11	609	CURB, TYPE 6, AS PER PLAN (SEE SHEET 16)
12	203	EMBANKMENT
13	659	SEEDING AND MULCHING
14	605	4" SHALLOW PIPE UNDERDRAIN
16	606	GUARDRAIL, TYPE 5
17	407	TACK COAT FOR INTERMEDIATE COURSE

NDC = NORMAL DESIGN CRITERIA

CALCULATED D.M. 3-13-95
CHECKED A.L.L. 3-16-95

PROPOSED TYPICAL SECTION

LIC-16-19.72

L016201Y3.DGN 2/17/99

GENERAL NOTES

OPPORTUNITY TO PARTNER

THE CONTRACTOR ON THIS PROJECT IS INVITED TO ENTER INTO A COOPERATIVE PARTNERSHIP AGREEMENT WITH THE DEPARTMENT. THE OBJECTIVE OF THIS AGREEMENT IS THE TIMELY COMPLETION OF THE WORK AND A QUALITY PRODUCT THAT WILL BE A SOURCE OF PRIDE TO BOTH THE DEPARTMENT AND THE CONTRACTOR. THE "PARTNERING AGREEMENT" WILL NOT AFFECT THE TERMS AND CONDITIONS OF THE CONTRACT. IT IS A DOCUMENT WHICH IS SOLELY INTENDED TO ESTABLISH AN ENVIRONMENT OF COOPERATION BETWEEN THE PARTIES. PARTICIPATION IN "PARTNERING" IS VOLUNTARY AND NOT A REQUIREMENT OF THE CONTRACT.

EXAMINATION OF PROJECT

THE EXISTING THICKNESS SHOWN IN THE TYPICAL SECTIONS AND DETAILS ARE NOMINAL ONLY AND MAY VARY.
IT SHALL BE THE CONTRACTOR'S RESPONSIBILITY TO EXAMINE THE PROJECT SITE AND VERIFY THE ACTUAL PAVEMENT THICKNESS PRIOR TO SUBMITTING HIS BID PROPOSAL AS PER SECTION 102.05 OF THE CONSTRUCTION AND MATERIALS SPECIFICATIONS. THE CONTRACTOR SHALL PROVIDE HIS OWN TRAFFIC CONTROL IN ACCORDANCE WITH ALL REQUIREMENTS OF O.M.U.T.C.D. AND SHALL NOTIFY THE DISTRICT ROADWAY SERVICES MANAGER AT LEAST FIVE WORKING DAYS IN ADVANCE OF SETTING UP TRAFFIC CONTROL FOR THE PURPOSE OF EXAMINING THE PAVEMENT AS STATED ABOVE.

CONSTRUCTION PLAN

REFERENCE IS HEREBY MADE TO THE FOLLOWING DESIGNATED PLAN FOR FORMER CONSTRUCTION PROJECTS, PORTIONS OF WHICH COVER AREAS INCLUDED IN THIS PROPOSED IMPROVEMENT.

LIC-16-18.11 LIC-16-17.94
LIC-16-20.04

COPIES OF THESE PLANS ARE ON FILE EITHER AT THE DISTRICT 5 OFFICE OF THE OHIO DEPARTMENT OF TRANSPORTATION OR AT THE OFFICE OF THE ADMINISTRATOR OF CONTRACT SALES COLUMBUS, OHIO.

CONTINGENCY QUANTITIES

THE CONTRACTOR SHALL NOT ORDER MATERIALS OR PERFORM WORK FOR ITEMS DESIGNATED BY PLAN NOTE TO BE USED "AS DIRECTED BY THE ENGINEER" UNLESS AUTHORIZED BY THE ENGINEER. THE ACTUAL WORK LOCATIONS AND QUANTITIES USED FOR SUCH ITEMS SHALL BE INCORPORATED INTO THE FINAL CHANGE ORDER GOVERNING COMPLETION OF THIS PROJECT.

ELEVATION DATUM

ALL ELEVATIONS ARE BASED ON U.S.G.S. DATUM.

WORK LIMITS

THE WORK LIMITS SHOWN ON THESE PLANS ARE FOR PHYSICAL CONSTRUCTION ONLY. THE INSTALLATION AND OPERATION OF ALL TEMPORARY TRAFFIC CONTROL DEVICES REQUIRED BY THESE PLANS SHALL BE PROVIDED BY THE CONTRACTOR WHETHER INSIDE OR OUTSIDE THESE WORK LIMITS.

UNDERGROUND UTILITIES

THE LOCATION OF THE UNDERGROUND UTILITIES SHOWN ON THE PLANS ARE AS OBTAINED FROM THE OWNERS AS REQUIRED BY SECTION 153.64 O.R.C.

UTILITIES

LISTED BELOW ARE ALL UTILITIES LOCATED WITHIN THE PROJECT CONSTRUCTION LIMITS TOGETHER WITH THEIR RESPECTIVE OWNERS:

TELEPHONE

ALLTEL OHIO, INC.
66 N. 4TH. STREET
NEWARK, OH 43055
(740) 349-8827

ELECTRIC

OHIO POWER
215 NORTH FRONT STREET
COLUMBUS, OHIO 43215-2291
(614) 464-7911

GAS

COLUMBIA GAS OF OHIO, INC.
204 HIGHLAND AVE.
P.O. BOX 250
CAMBRIDGE, OH 43725
(740) 432-8226

CABLE TELEVISION

DIMENSION CABLE
111 NORTH 11TH STREET
P.O. BOX 680
NEWARK, OH 43055
(740) 345-4329

GAS

NATIONAL GAS & OIL CORP.
1500 GRANVILLE ROAD
P.O. DRAWER AF
NEWARK, OHIO 43058-0693
(740) 348-1247

UNSUITABLE SUBGRADE

DUE TO POOR SOILS IN THE AREA OF THE PAVEMENT AND/OR SHOULDER REPLACEMENT AN ESTIMATED QUANTITY OF ITEM 203 EXCAVATION AND ITEM 203 EMBANKMENT USING GRANULAR MATERIAL AS PER 203.02 HAS BEEN INCLUDED IN THE GENERAL SUMMARY TO BE USED AS DIRECTED BY THE PROJECT ENGINEER.

THE STATE OF OHIO RESERVES THE RIGHT TO NON-PERFORM 100% OF THESE ITEMS.

ITEM 203 EXCAVATION, NOT INCLUDING EMBANKMENT CONSTRUCTION	10,000 CU.YD.
ITEM 203 EMBANKMENT USING GRANULAR MATERIAL	10,000 CU.YD.

ITEM 203 PROOF ROLLING

THE FOLLOWING CONTINGENCY QUANTITY HAS BEEN INCLUDED IN THE GENERAL SUMMARY, TO BE USED AS DIRECTED BY THE PROJECT ENGINEER, TO PERFORM THE WORK AS DESCRIBED PER ITEM 203.14.

ITEM 203 PROOF ROLLING 40 HOUR

ITEM SPECIAL PRESSURE RELIEF JOINT, TYPE A

ITEM 605 6" SHALLOW PIPE UNDERDRAIN, 707.33, 707.42 OR 707.45 SHALL BE USED IN LIEU OF ITEM 605 6" SHALLOW PIPE UNDERDRAIN, 707.01 OR 707.21 AS SHOWN ON STANDARD DRAWING BP-2.3.

ITEM 604 REFERENCE MONUMENTS

MONUMENTS SHALL BE CONSTRUCTED IN ACCORDANCE WITH DETAILS AND LOCATIONS AS SHOWN ON SHEET NO. 23.

CONNECTION BETWEEN EXISTING AND PROPOSED GUARDRAIL

WHEN IT IS NECESSARY TO SPLICE PROPOSED GUARDRAIL TO EXISTING GUARDRAIL, ONLY THE EXISTING GUARDRAIL SHALL BE CUT, DRILLED OR PUNCHED. THE CONNECTION SHALL BE MADE USING A "W-BEAM RAIL SPLICE" AS SHOWN ON STANDARD CONSTRUCTION DRAWING GR-1.1. PAYMENT SHALL BE INCLUDED IN THE CONTRACT PRICE FOR THE RESPECTIVE GUARDRAIL ITEMS.

CROSSINGS AND CONNECTIONS TO EXISTING PIPES AND UTILITIES

WHERE PLANS PROVIDE FOR A PROPOSED CONDUIT TO BE CONNECTED TO, OR CROSS OVER OR UNDER AN EXISTING SEWER OR UNDERGROUND UTILITY, THE CONTRACTOR SHALL LOCATE THE EXISTING PIPES OR UTILITIES BOTH AS TO LINE AND GRADE BEFORE STARTING TO LAY THE PROPOSED CONDUIT.

IF IT IS DETERMINED THAT THE ELEVATION OF THE EXISTING CONDUIT, OR EXISTING APPURTENANCE TO BE CONNECTED, DIFFERS FROM THE PLAN ELEVATION OR RESULTS IN A CHANGE IN THE PLAN CONDUIT SLOPE, THE ENGINEER SHALL BE NOTIFIED BEFORE STARTING CONSTRUCTION OF ANY PORTION OF THE PROPOSED CONDUIT WHICH WILL BE AFFECTED BY THE VARIANCE IN THE EXISTING ELEVATIONS.

IF IT IS DETERMINED THAT THE PROPOSED CONDUIT WILL INTERSECT AN EXISTING SEWER OR UNDERGROUND UTILITY IF CONSTRUCTED AS SHOWN ON THE PLAN, THE ENGINEER SHALL BE NOTIFIED BEFORE STARTING CONSTRUCTION OF ANY PORTION OF THE PROPOSED CONDUIT WHICH WOULD BE AFFECTED BY THE INTERFERENCE WITH AN EXISTING FACILITY.

PAYMENT FOR ALL THE OPERATIONS DESCRIBED ABOVE SHALL BE INCLUDED IN THE CONTRACT PRICE FOR THE PERTINENT 603 CONDUIT ITEM.

GENERAL NOTES

ITEM 659, SEEDING AND MULCHING

SEEDING AND MULCHING SHALL BE APPLIED TO ALL AREAS OF EXPOSED SOIL WITHIN THE CONSTRUCTION LIMITS. QUANTITY CALCULATIONS FOR ITEM 659, SEEDING AND MULCHING, ARE BASED ON THESE LIMITS PLUS 10 FEET

THE FOLLOWING ESTIMATED QUANTITY HAS BEEN CARRIED TO THE GENERAL SUMMARY:

ITEM	659 AGRICULTURAL LIMING	27 TON
ITEM	659 COMMERCIAL FERTILIZER	6 TON *

*ADD 3 TONS FOR SECOND APPLICATION FOR TWO CONSECUTIVE SEASONS AS PER 659.08.

REVIEW OF DRAINAGE FACILITIES

BEFORE ANY WORK IS STARTED ON THE PROJECT AND AGAIN BEFORE FINAL ACCEPTANCE BY THE STATE, REPRESENTATIVES SHALL MAKE AN INSPECTION OF ALL EXISTING SEWERS WHICH ARE TO REMAIN IN SERVICE AND WHICH MAY BE AFFECTED BY THE WORK. THE CONDITION OF THE EXISTING CONDUITS AND THEIR APPURTENANCES SHALL BE DETERMINED FROM FIELD OBSERVATIONS. RECORDS OF THE INSPECTION SHALL BE KEPT IN WRITING BY THE STATE.

ALL NEW CONDUITS, INLETS, CATCH BASINS, AND MANHOLES CONSTRUCTED AS A PART OF THE PROJECT SHALL BE FREE OF ALL FOREIGN MATTER AND IN A CLEAN CONDITION BEFORE THE PROJECT WILL BE ACCEPTED BY THE STATE.

ALL EXISTING SEWERS INSPECTED INITIALLY BY THE ABOVE MENTIONED PARTIES SHALL BE MAINTAINED AND LEFT IN A CONDITION REASONABLY COMPARABLE TO THAT DETERMINED BY THE ORIGINAL INSPECTION. ANY CHANGE IN THE CONDITION RESULTING FROM THE CONTRACTOR'S OPERATIONS SHALL BE CORRECTED BY THE CONTRACTOR TO THE SATISFACTION OF THE ENGINEER.

PAYMENT FOR ALL OPERATIONS DESCRIBED ABOVE SHALL BE INCLUDED IN THE CONTRACT PRICE FOR THE PERTINENT 603 CONDUIT ITEMS.

ITEM 609 CURB, TYPE 6, AS PER PLAN

IN LIEU OF THE 18" CURB HEIGHT SHOWN ON STANDARD DRAWING BP-5.1 TYPE 6 CURB, THE CURB SHALL BE 21" HIGH. THE CURB FACE HEIGHT SHALL REMAIN 6". ALL OTHER REQUIREMENTS OF ITEM 608 AND STANDARD DRAWING BP-5.1 SHALL APPLY.

ITEM 609 COMBINATION CURB AND GUTTER, TYPE 2, AS PER PLAN

IN LIEU OF THE 2'-0" GUTTER WIDTH SHOWN ON STANDARD DRAWING BP-5.1 COMBINATION CURB AND GUTTER, TYPE 2, THE GUTTER WIDTH SHALL VARY 2'-0" TO 3'-6". HOOK BOLTS SHALL BE REQUIRED. ALL OTHER REQUIREMENTS OF ITEM 609 & STANDARD DRAWING BP-5.1 SHALL APPLY.

ADDITIONAL TACK COAT

IN ADDITION TO THE REQUIREMENTS OF 407.05 & 401.12, A TACK COAT SHALL BE APPLIED AS DESCRIBED ABOVE ON ITEM 446 ASPHALT CONCRETE INTERMEDIATE COURSE, TYPE 2, PG 64-28 AHEAD OF THE PAVING OPERATION FOR THE ITEM 446 ASPHALT CONCRETE SURFACE COURSE, TYPE 1H.

THE FOLLOWING QUANTITY HAS BEEN INCLUDED IN THE GENERAL SUMMARY TO PERFORM THE WORK AS DESCRIBED ABOVE.

ITEM 407 TACK COAT	6,000 GALLONS

WATERING AND MOWING PERMANENT SEEDED AREAS

THE FOLLOWING ESTIMATED QUANTITIES ARE TO BE USED AS DIRECTED BY THE ENGINEER TO PROMOTE GROWTH AND TO CARE FOR PERMANENT SEEDED AREAS AS PER 659.09:

ITEM	659 WATER	130 M.GAL.
ITEM	659 MOWING	135 M.SQ. FT.

CURBING ON APPROACH SLABS

THE SHAPE OF THE CURBING ON APPROACH SLABS SHALL BE TRANSITIONED, FROM THE STANDARD SECTION ON THE APPROACHES TO THE SECTION USED ON THE BRIDGE, WITHIN THE LIMITS OF THE APPROACH SLAB, OR AS SHOWN ON THE BRIDGE DETAILS.

ITEM 407, TACK COAT FOR INTERMEDIATE COURSE

THE RATE OF APPLICATION OF THE 407 TACK COAT FOR INTERMEDIATE COURSE SHALL BE SUBJECT TO ADJUSTMENT AS DIRECTED BY THE ENGINEER. THE PLAN QUANTITY INDICATES AN AVERAGE APPLICATION RATE OF 0.050 GALLONS PER SQUARE YARD OF TACK COAT FOR ESTIMATING PURPOSES ONLY.

ITEM 606 - ANCHOR ASSEMBLY, TYPE B-98

THIS ITEM SHALL CONSIST OF FURNISHING AND INSTALLING AN SRT-350 GUARDRAIL END TERMINAL AS MANUFACTURED BY:

SYRO INC.
1170 N, STATE STREET
GIRARD, OHIO 44420
TELEPHONE: 330-545-4373

THE LENGTH OF THE SRT-350 SYSTEM IS CONSIDERED TO BE 37.50 FEET, INCLUSIVE OF THREE 12.50 FEET LONG RAIL ELEMENTS. INSTALLATION SHALL BE AT THE LOCATIONS SPECIFIED IN THE PLANS, IN ACCORDANCE WITH THE MANUFACTURER'S SPECIFICATIONS AS DETAILED ON THE FOLLOWING PRE-APPROVED SHOP DRAWINGS:

DWG. NO.	DRAWING NAME	DWG./REV. DATE	ODOT APPROVAL DATE
SS425M	SLOTTED RAIL TERMINAL SRT-350 POST LAYOUT AND ERECTION DETAILS (12.5, 9 POST)	6/21/97	3/6/98

GRADING SHALL BE IN ACCORDANCE WITH STANDARD CONSTRUCTION DRAWING GR-4.3M.

PAYMENT FOR THE ABOVE WORK SHALL BE MADE AT THE UNIT PRICE BID FOR ITEM 606, ANCHOR ASSEMBLY, TYPE B-98. EACH, AND SHALL INCLUDE ALL LABOR, TOOLS, EQUIPMENT AND MATERIALS NECESSARY TO CONSTRUCT A COMPLETE AND FUNCTIONAL ANCHOR ASSEMBLY SYSTEM, INCLUDING ALL RELATED HARDWARE AND GRADING, NOT SEPARATELY SPECIFIED, AS REQUIRED BY THE MANUFACTURER.

ITEM 606, ANCHOR ASSEMBLY, TYPE E-98

THIS ITEM SHALL CONSIST OF FURNISHING AND INSTALLING EITHER OF THE FOLLOWING GUARDRAIL END TERMINALS.

1). THE ET-2000 (1997) MANUFACTURED BY SYRO, INC., 1170 N. STATE STREET, GIRARD, OHIO 44420 (TELEPHONE: 330-545-4373).

THE LENGTH OF THE ET-2000 (1997) SYSTEM IS CONSIDERED TO BE 50' INCLUSIVE OF TWO 25' LONG RAIL ELEMENTS. INSTALLATION SHALL BE AT THE LOCATIONS SPECIFIED IN THE PLANS, IN ACCORDANCE WITH THE MANUFACTURER'S SPECIFICATIONS AS DETAILED ON THE FOLLOWING PRE-APPROVED SHOP DRAWINGS:

DRWG. #	DRAWING NAME	DRWG./REV. DATE	ODOT APPROVAL DATE
SS265	ET-2000 (1997) PLAN, ELEVATION & SECTIONS	6/20/97	3/6/98

2) THE SKT-350 MANUFACTURED BY ROAD SYSTEMS, INC., 7631 NEW CASTLE DRIVE, FRANKFORT, IL 60423 (TELEPHONE: 815-464-5917)

THE LENGTH OF THE ET-2000 (1997) SYSTEM IS CONSIDERED TO BE 50' INCLUSIVE OF TWO 25' LONG RAIL ELEMENTS. INSTALLATION SHALL BE AT THE LOCATIONS SPECIFIED IN THE PLANS, IN ACCORDANCE WITH THE MANUFACTURER'S SPECIFICATIONS AS DETAILED ON THE FOLLOWING PRE-APPROVED SHOP DRAWINGS:

DRWG. #	DRAWING NAME	DRWG./REV. DATE	ODOT APPROVAL DATE
SKT-4	SEQUENTIAL KINKING TERMINAL (SKT-350) ASSEMBLY WITH 4 FOUNDATION TUBES	12/11/97	3/6/98

A TYPE C DELINEATOR SHALL BE INSTALLED AT THE HEAD OF ALL TYPE E-98 UNITS LOCATED ON THE RIGHT SIDE OF THROUGH ROADWAY. A TYPE D DELINEATOR SHALL BE INSTALLED AT THE HEAD OF ALL TYPE E 98 UNITS LOCATED ON THE LEFT SIDE OF THE THROUGH ROADWAY. DELINEATORS SHALL COMPLY WITH STANDARD TRAFFIC DRAWING TC-61.10.

PAYMENT FOR THE ABOVE WORK SHALL BE MADE AT THE UNIT PRICE BID FOR ITEM 606, ANCHOR ASSEMBLY, TYPE E-98 EACH AND SHALL INCLUDE ALL LABOR, TOOLS EQUIPMENT AND MATERIALS NECESSARY TO CONSTRUCT A COMPLETE AND FUNCTIONAL ANCHOR ASSEMBLY SYSTEM, INCLUDING ALL RELATED TRANSITIONS, DELINEATORS, HARDWARE AND GRADING, NOT SEPARATELY SPECIFIED, AS REQUIRED BY THE MANUFACTURER.

CENTERLINE REFERENCE POINTS

THE CONTRACTOR WILL BE GIVEN A LIST OF REFERENCE POINTS AT THE PROJECT PRE-CONSTRUCTION MEETING.

CLEARING AND GRUBBING

ALTHOUGH THERE ARE NO TREES AND/OR STUMPS SPECIFICALLY MARKED FOR REMOVAL WITHIN THE LIMITS OF THIS PROJECT, A LUMP SUM QUANTITY HAS BEEN INCLUDED IN THE GENERAL SUMMARY FOR ITEM 201 CLEARING AND GRUBBING. ALL PROVISIONS AS SET FORTH IN THE SPECIFICATIONS UNDER THIS ITEM SHALL BE INCLUDED IN THE LUMP SUM PRICE BID FOR ITEM 201 CLEARING AND GRUBBING.

ITEM 408 BITUMINOUS PRIME COAT

ITEM 408 BITUMINOUS PRIME COAT SHALL NOT BE PLACED OVER THE PROPOSED UNDERDRAINS OR PROPOSED FILTER FABRIC AT ANY OF THE LOCATIONS SHOWN ON THE PROPOSED TYPICAL SECTIONS.

GENERAL NOTES

ITEM 601 PAVED GUTTER, TYPE 1-2, AS PER PLAN

THE REQUIREMENTS OF ITEM 601 SHALL GOVERN THE CONSTRUCTION OF THE PAVED GUTTER, EXCEPT THAT THE PAVED GUTTER SHALL BE CAST IN PLACE CONCRETE. BRICK OR STONE WILL NOT BE PERMITTED.

ITEM 605 4" SHALLOW PIPE UNDERDRAIN WITH FABRIC WRAP, AS PER PLAN
ITEM 605 4" UNCLASSIFIED PIPE UNDERDRAIN WITH FABRIC WRAP, AS PER PLAN

ITEM 605 SHALL GOVERN THE INSTALLATION OF THE 4" SHALLOW AND UNCLASSIFIED PIPE UNDERDRAIN EXCEPT AS FOLLOWS:

THE FILTER FABRIC SHALL BE 712.09, TYPE A AND THE PIPE UNDERDRAINS SHALL BE WRAPPED AS SHOWN ON THE TYPICAL SECTIONS, SHEETS

THE UNDERDRAIN TRENCH SHALL BE 10" WIDE IN LIEU OF 12".

TEMPORARY SOIL EROSION AND SEDIMENT CONTROL

THE FOLLOWING ESTIMATED QUANTITIES ARE TO BE USED AS **PLACED** BY THE **CONTRACTOR WITH THE ENGINEERS CONCURRENCE FOR TEMPORARY EROSION AND SEDIMENT CONTROL MEASURES:**

877	TEMPORARY PERIMETER, DITCH CHECK OR INLET PROTECTION FILTER FABRIC FENCE	*3125 LIN. FT.*
877	TEMPORARY SEEDING AND MULCHING	12000 SQ. YD.
659	REPAIR SEEDING AND MULCHING	3000 SQ. YD.
601	ROCK CHANNEL PROTECTION, TYPE C WITH FILTER	10 CU. YD.
659	COMMERCIAL FERTILIZER	3 TON
659	WATER	30 M. GAL.

ROUNDING

THE ROUNDING AT SLOPE BREAKPOINTS SHOWN ON THE TYPICAL SECTIONS APPLY TO ALL CROSS SECTIONS EVEN THOUGH OTHERWISE SHOWN.

ITEM 604 CATCH BASIN NO. 4, 5 WITH B GRATE, AS PER PLAN

NOTE:

THIS DETAIL SHALL BE USED FOR NO.4,5, CATCH BASINS, AS PER PLAN. FOR DETAILS NOT SHOWN SEE STD. DRAWINGS. CB 4 & 5 .

PROVIDE A CUT-OFF WALL FOR THE FULL WIDTH OF THE APRON ALONG THE UPSTREAM SIDE ONLY. TWO CUT-OFF WALLS WILL BE REQUIRED FOR CATCH BASINS IN SAGS.

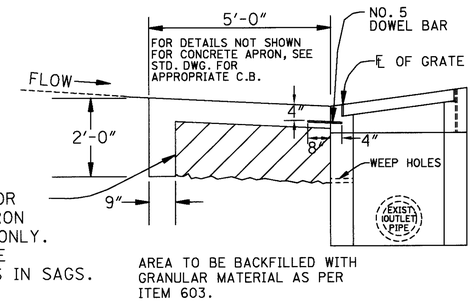

THE REQUIREMENTS OF ITEM 604 SHALL GOVERN THE REPLACEMENT OF THE EXISTING CATCH BASIN. THE WORK SHALL INCLUDE THE REMOVAL AND DISPOSAL OF THE EXISTING CATCH BASIN AND ITS SUBSEQUENT REPLACEMENT. THE CONCRETE APRON SHALL BE REPLACED AND BACK-FILLED AS SHOWN HERE AND IN THE STANDARD DRAWING FOR THE PERTINENT CATCH BASIN.

BAR LOCATION DETAIL FOR NO. 4 & 5 C.B.

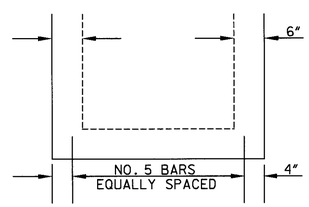

THE NUMBER OF BARS NEEDED ALONG EACH SIDE OF A NO. 4 CATCH BASIN WITH A CONCRETE APRON IS 7. FOR NO. 5 CATCH BASIN, THE NUMBER OF BARS NEEDED ALONG EACH SIDE WITH A CONCRETE APRON IS 4.

CATCH BASIN	TOTAL BARS FOR A	
	Std. Apron	Sag Apron
4	7	14
5	12	16

THE FURNISHING AND PLACING OF STEEL FOR THE 5/8" X 12" DOWEL BARS SHALL BE PER 509 REINFORCING STEEL. THE DOWEL BARS SHALL BE EPOXY COATED PER 509.10. THE DOWEL BARS SHALL BE INSTALLED PER 510 OR CAST INTO THE BASIN. BOLT IN INSERTS MAY BE USED. THE CATCH BASIN SHALL BE PRECAST OR CAST-IN-PLACE CONCRETE. BRICK OR CONCRETE BLOCK WILL NOT BE PERMITTED. THE 6" CONCRETE APRON SHALL BE REINFORCED PER 601.04(3).

PAYMENT FOR THE ABOVE WORK SHALL BE INCLUDED IN THE UNIT BID PRICE FOR ITEM 604 CATCH BASIN, NO. 4, AND NO. 5 WITH B GRATE, AS PER PLAN AND SHALL CONSTITUTE FULL COMPENSATION FOR FURNISHING ALL MATERIAL, LABOR, TOOLS, AND EQUIPMENT INCIDENTAL TO COMPLETE THIS ITEM FOR WORK.

EROSION CONTROL

ITEMS 601 AND 660 ARE PROVIDED IN THE PLANS FOR EROSION CONTROL. ROCK OR TURF OF A STABLE NATURE SHALL NOT BE REMOVED IN ORDER TO PLACE ANY OF THESE ITEMS. THE ENGINEER SHALL CHECK AND NON-PERFORM QUANTITIES OR ADJUST LOCATIONS AND QUANTITIES OF THESE ITEMS WHERE INDICATED BY FIELD CONDITIONS DURING CONSTRUCTION. IN ADDITION, THESE ITEMS SHALL MEET THE REQUIREMENTS OF 108.04.

ITEM 605 - 4" UNCLASSIFIED PIPE UNDERDRAIN, 707.33, 707.41, 707.42 OR 707.45 PERFORATED AS PER 707.15, AS PER PLAN A

THE UNDERDRAIN AS SHOWN BELOW SHALL BE WRAPPED WITH TYPE A FABRIC FILTER, 712.09. THE TRENCH SHALL BE 10" IN LIEU OF 12".
ALL MATERIALS, LABOR, TOOLS OR INCIDENTALS NEEDED TO COMPLETE THE ABOVE WORK SHALL BE INCLUDED IN THE UNIT BID PRICE FOR ITEM 605 - 4" UNCLASSIFIED PIPE UNDERDRAIN, 707.33, 707.41, 707.42 OR 707.45 PERFORATED AS PER 707.15, AS PER PLAN A.

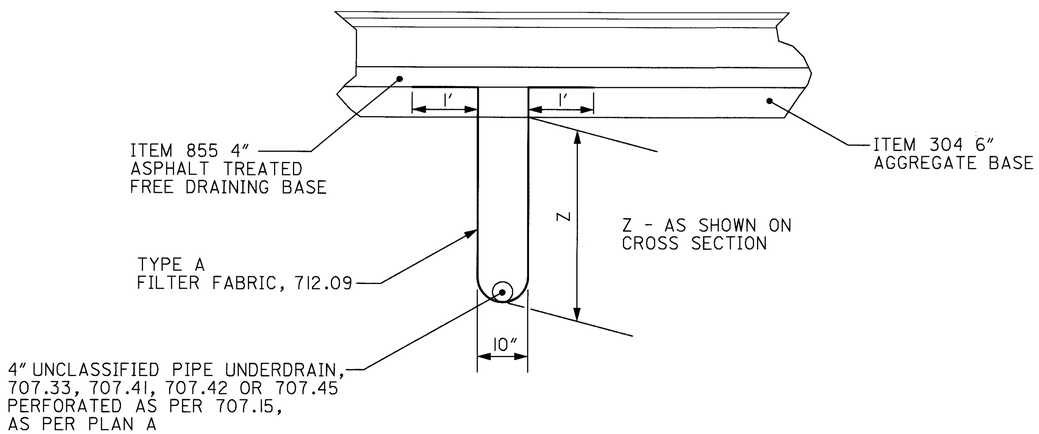

ITEM SPECIAL GEOTEXTILE FABRIC, TYPE D

THIS ITEM SHALL INCLUDE ALL MATERIAL AND HARDWARE AS REQUIRED BY THE MANUFACTURER TO CONSTRUCT A GEOTEXTILE FABRIC, TYPE D

PAYMENT FOR THE ABOVE WORK SHALL BE MADE AT THE UNIT BID PRICE FOR SQ.YD. THIS PRICE SHALL BE CONSIDERED FULL PAYMENT FOR FURNISHING, INSTALLING AT THE SPECIFIED LOCATIONS, INCLUDING ALL LABOR, TOOLS, EQUIPMENT AND MATERIALS NECESSARY TO COMPLETE THIS ITEM IN PLACE.

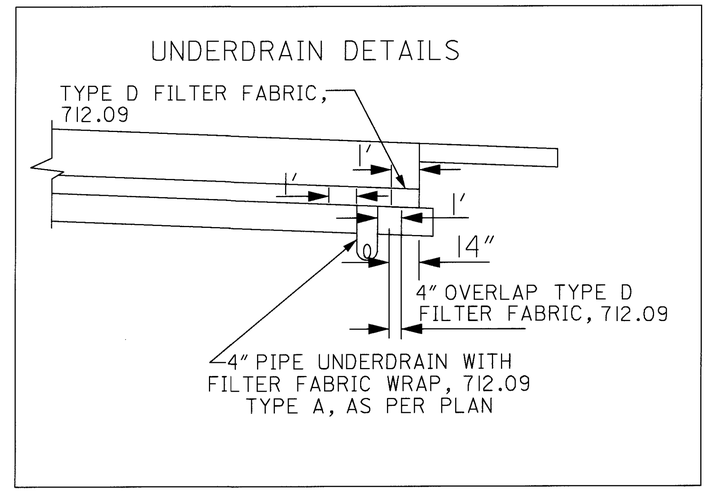

CALCULATED A.L.L. 10/17/94
CHECKED D.J.A. 10/17/94

GENERAL NOTES

LIC-16-19.72

L016I9F4.DGN 5/31/94

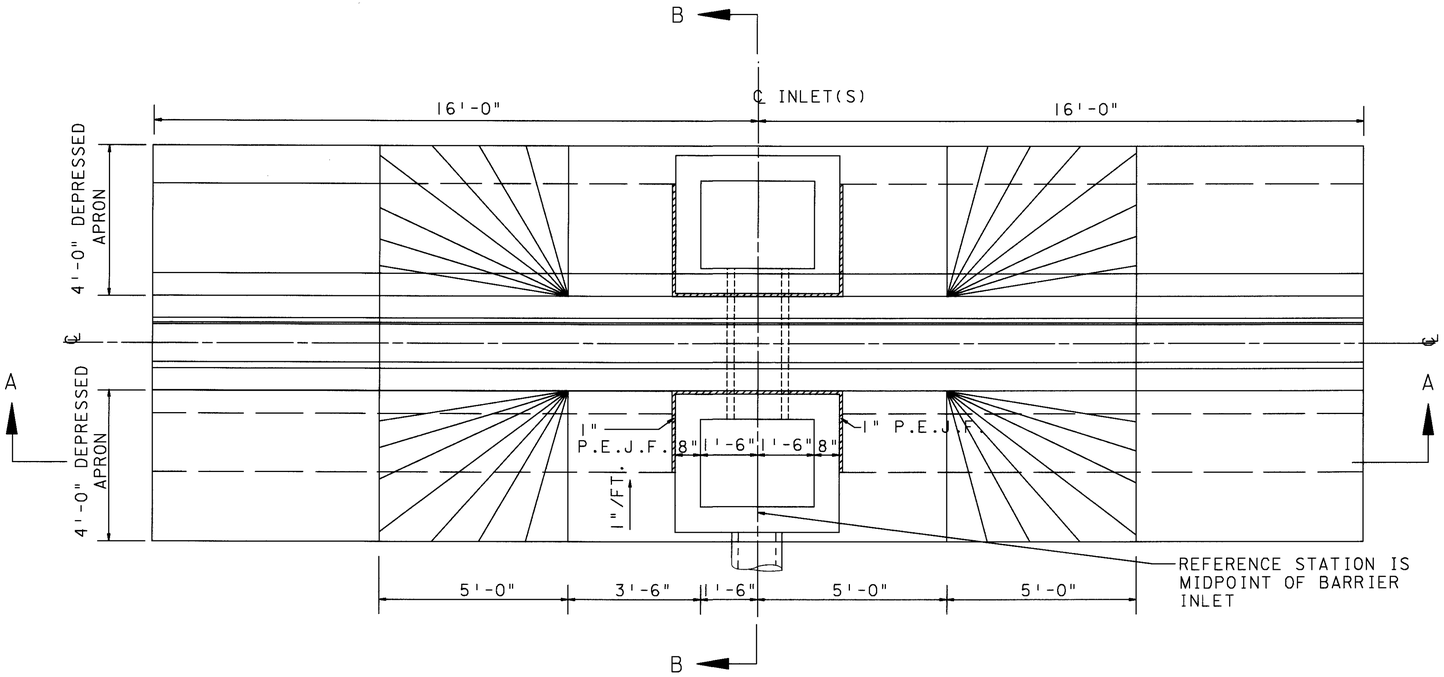

PLAN VIEW ITEM 604 INLET-3B50, AS PER PLAN B AND TYPE C-50 BARRIER

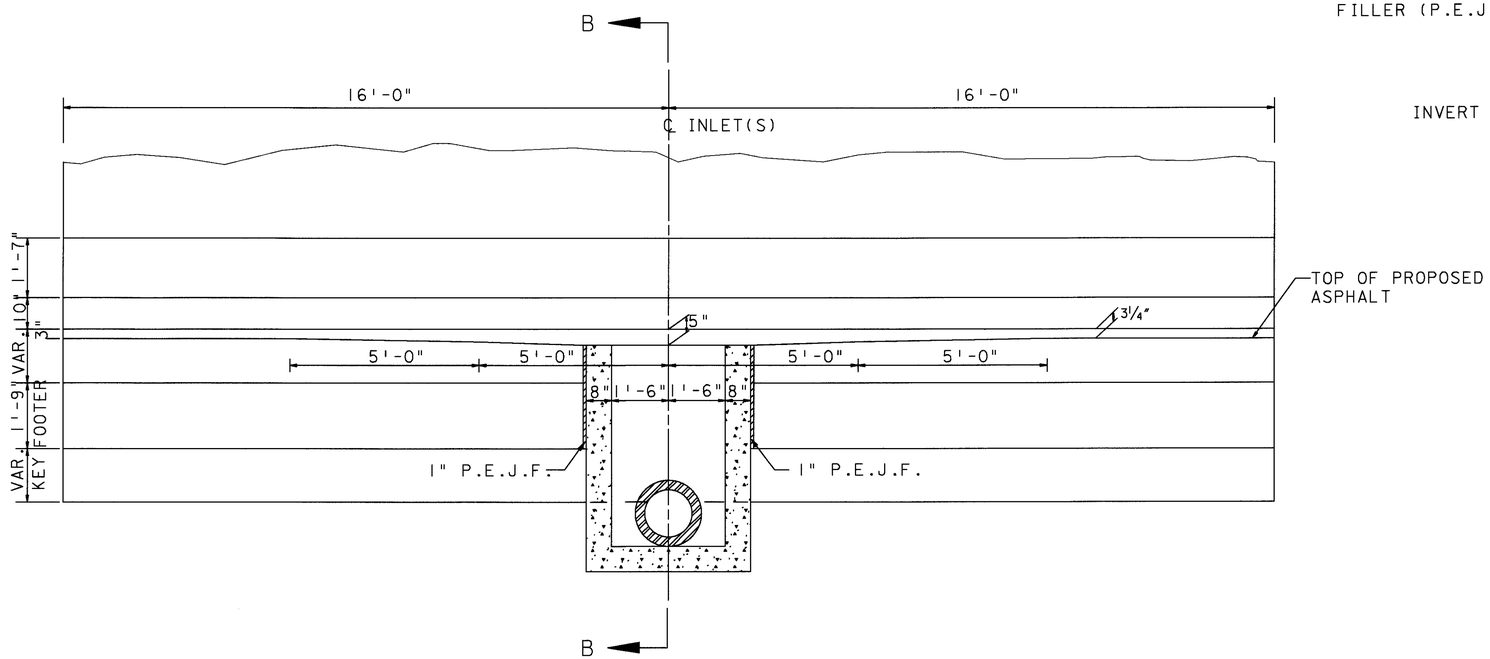

ELEVATION A-A

ITEM 604 INLET-3B50, AS PER PLAN B AND TYPE C-50 BARRIER

ITEM 604 INLET-3B50, AS PER PLAN B

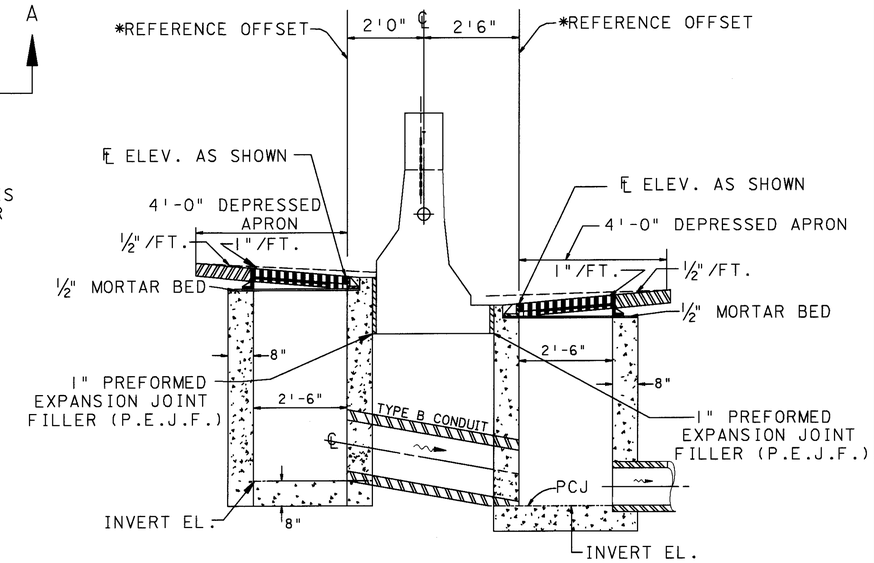

SECTION B-B

ITEM 604 INLET-3B50, AS PER PLAN B (DETAILS AT TYPE C-50 BARRIER)

CALCULATED A.L.L. 10/11/94
CHECKED D.M. 10/17/94

LIC-16-19.72

19
547

L01619E4.DGN 3/17/94

SIGNING GENERAL NOTES

BREAKAWAY BEAM CONNECTION:

BREAKAWAY BEAM CONNECTIONS CALLED FOR IN THESE PLANS SHALL BE PER THE ALTERNATE AS PROVIDED FOR ON STANDARD DRAWING TC-41.10.

FABRICATION OF SIGNS:

IN ACCORDANCE WITH THE REQUIREMENT OF ITEM 630.03 OF THE PROPOSED ACTIONS RELEVANT TO CONSTRUCTION AND MATERIAL SPECIFICATIONS, THE CONTRACTOR SHALL SUBMIT PRIOR TO FABRICATION EIGHT SETS OF SIGN LEGEND WORKING DRAWINGS, WHICH SHALL BE IN ACCORDANCE WITH ALL REQUIREMENTS, TO THE OHIO DEPARTMENT OF TRANSPORTATION, DISTRICT FIVE CONSTRUCTION ENGINEER, 9600 JACKSONTOWN ROAD, JACKSONTOWN, OHIO, 43030, FOR APPROVAL.

LAYOUT OF WORK:

PRIOR TO REMOVING OR ERECTING SIGN SUPPORTS, THE CONTRACTOR SHALL FIELD LAYOUT AND IDENTIFY, BY TYPE OF WORK, SIGNS AND SIGN SUPPORTS TO BE ERECTED OR REMOVED. THIS LAYOUT MAY BE ACCOMPLISHED BY STAKING OR BY PLACING CLEARLY DISCERNIBLE PAINTED MARKINGS ON THE EDGE OF PAVEMENT OR BY OTHER METHODS APPROVED BY THE ENGINEER. IN NO CASE SHALL THE CONTRACTOR PLACE ANY PERMANENT MARKINGS ON ANY EXISTING SIGN OR SIGN SUPPORT. COST FOR THIS WORK SHALL BE INCLUDED IN THE LUMP SUM PRICE BID FOR ITEM 623, CONSTRUCTION LAYOUT STAKES.

ITEM 630 OVERHEAD SIGN SUPPORT, TYPE 7.65, DESIGN NO. 6, 70.6' SPAN, AS PER PLAN:

CONTRACTOR SHALL FIELD EXAMINE AND MEASURE EXISTING FOUNDATION ON RETAINING WALL AT STA 165+00, AND USE EXISTING FOUNDATION AND ANCHOR BOLT CIRCLE CONFIGURATION. SEE DETAIL.

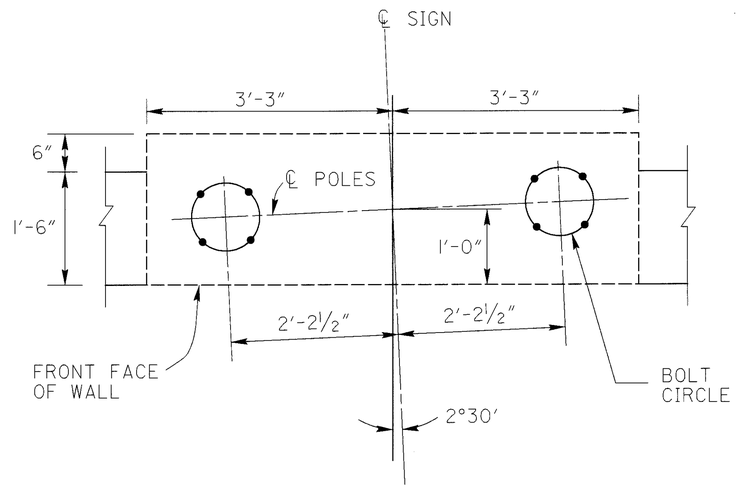

MATERIALS SUPPLIED BY THE DEPARTMENT

ALL MATERIALS ARE TO BE CONTRACTOR FURNISHED, EXCEPT THAT THE DEPARTMENT SHALL SUPPLY RTM MATERIALS IN THE QUANTITIES SHOWN HEREIN TO THE CONTRACTOR. PAY ITEMS FOR THE DEPARTMENT SUPPLIED MATERIALS SHALL BE INDICATED AS "INSTALLATION ONLY". THE QUANTITY AND TYPE OF DEPARTMENT SUPPLIED MATERIALS ARE SHOWN ON SHEET 16 OF THIS PLAN.

THE CONTRACTOR SHALL PICK UP THE DEPARTMENT SUPPLIED RPM MATERIALS AT THE DIRECTION OF THE PROJECT ENGINEER.

FOR SOME PROJECTS HAVING QUANTITIES OF LESS THAN 20 RPMs THE CONTRACTOR MAY PICK UP RPM MATERIALS AT THE DISTRICT OFFICES. QUANTITIES OVER 20 RPMs WILL BE PICKED UP AT THE RECYCLER'S WHAREHOUSE OR AS ARRANGED WITH THE DISTRICT. THE CONTRACTOR SHALL PICK UP DEPARTMENT SUPPLIED RPM MATERIALS AT THE SPECIFIED LOCATIONS FOR TRANSPORT TO THE WORK SITE OR TO THE CONTRACTOR'S STORAGE FACILITY. THE RECYCLED RAISED PAVEMENT MARKER AUTHORIZATION FORM IS TO BE SIGNED BY THE DISTRICT CONSTRUCTION ENGINEER PRIOR TO THE PICK UP OF THE RPMs. THE CONTRACTOR SHALL NOTIFY THE DISTRICT AND/OR THE PARTIES LISTED ON THE AUTHORIZATION FORM IN WRITING AT LEAST FIVE (5) CALENDAR DAYS PRIOR TO THE PICK UP OF THE DEPARTMENT SUPPLIED MATERIALS. THE CONTRACTOR SHALL STORE THE RPMs WITHOUT DAMAGE OR CONTAMINATION WITH FOREIGN MATTER. A DEDUCTION IN THE AMOUNT OF THE ACTUAL COST TO THE DEPARTMENT SHALL BE MADE FOR MATERIALS DAMAGED BY THE CONTRACTOR OR FOR CASTING RECEIVED BY THE CONTRACTOR WHICH WERE NOT INSTALLED AND WERE NOT RETURNED TO THE DEPARTMENT.

LOADING OF MATERIALS SUPPLIED BY THE DEPARTMENT AT THE RECYCLER'S WAREHOUSE

TRUCKS SHALL HAVE A LOADING HEIGHT OF 48 INCHES AND BE ABLE TO BACK UP FLUSH TO THE LOADING DOCK. TRUCKS SHALL NOT HAVE ANY OBSTRUCTIONS OR PROTRUSIONS THAT PREVENT THE LOADING BY A STANDARD FORKLIFT OR LIFT TRUCK.

SEMI TRUCKS OR 20 FOOT COMMERCIAL TRUCKS ARE THE MOST APPROPRIATE TRUCKS FOR LOADS IN EXCESS OF 4 PALLETS (ONE PALLET = 21 BOXES = 2100 LBS.). STAKE BODY TRUCKS ARE APPROPRIATE TO LOAD LESS THAN 4 PALLETS, PROVIDED THE TRUCK IS RATED FOR THE LOAD AND THE LOAD CAN BE SAFELY SECURED FOR TRANSPORT BY CHAINING OR STRAPPING DOWN AS NEEDED.

PICKUP TRUCKS ARE APPROPRIATE FOR LOADS OF APPROXIMATELY ONE PALLET, PROVIDED THE PICKUP TRUCK IS RATED FOR THE LOAD AND THE LOAD CAN BE SAFELY SECURED FOR TRANSPORT.

DUMP TRUCKS, TILT BED TRUCKS AND NON COMMERCIAL MOVING VANS WILL NOT BE LOADED BY THE RECYCLER'S WAREHOUSE.

THE WAREHOUSE SUPERVISOR WILL REFUSE TO LOAD ANY TRUCK THAT IS UNSAFE TO LOAD OR UNSUITABLE FOR THE LOAD BEING PLACED ON THE TRUCK.

RETURN OF NON-PERFORMED RAISED PAVEMENT MARKER MATERIALS SUPPLIED BY THE DEPARTMENT

RAISED PAVEMENT MARKER MATERIALS SUPPLIED BY THE DEPARTMENT, THAT ARE NON-PERFORMED, SHALL BE CAREFULLY REPACK OR PACKED IN THE BOXES IN THE SAME STYLE AND QUANTITY AS ORIGINALLY RECEIVED FROM THE DEPARTMENT. CASTING STYLES SHALL NOT BE MIXED WITHIN ANY ONE CONTAINER.

THE CONTRACTOR SHALL CLEARLY MARK ON THE OUTSIDE OF EACH CONTAINER THE COLOR OF THE PRISMATIC RETRO-REFLECTOR, THE STYLE OF CASTING. BOXES SHALL BE PLACED ON SKIDS OR PALLETS IN THE SAME STYLE (LOW PROFILE OR CONVENTIONAL, REFLECTORIZED OR NON REFLECTORIZED) AND NO MORE THAN 420 RPMs (OR 21 BOXES) ON ONE SKID.

ONLY USE THE BOXES SUPPLIED BY THE RAISED PAVEMENT MARKER RECYCLER. BOXES MUST BE MARKED WITH THE RECYCLER'S PART OR CATALOG NUMBER AND THE PROJECT NUMBER. THE RECYCLER'S CATALOG OR PART NUMBERS MAY BE OBTAINED FROM THE OFFICE OF TRAFFIC ENGINEERING IN COLUMBUS, OHIO OR FROM THE RECYCLER. BOXES NOT MARKED WITH THE PROPER RECYCLER'S CATALOG OR PART NUMBERS, AND THE DEPARTMENT'S PROJECT NUMBER WILL NOT BE ACCEPTED AT THE RECYCLER'S WAREHOUSE. NON PERFORMED MATERIALS WILL BE RETURNED TO THE LOCATION AS SPECIFIED BY THE DISTRICT CONSTRUCTION ENGINEER WITHIN 30 DAYS OF THE COMPLETION OF THE PROJECT.

THE ABOVE WORK INCLUDING ALL LABOR, EQUIPMENT AND MATERIAL NEEDED TO PERFORM THE WORK, SHALL BE CONSIDERED INCIDENTAL TO THE RESPECTIVE PAY ITEM.

IF THE DEPARTMENT HAS TO REPACKAGE THE RPMs CORRECTLY, THE CONTRACTOR WILL BE ASSESSED THE ACTUAL COST FOR REPACKING THE MATERIALS BY THE DEPARTMENT'S FORCES.

LIGHTING GENERAL NOTES

ITEM 202 LIGHT POLE REMOVED FOR STORAGE, AS PER PLAN

THIS ITEM OF WORK SHALL CONSIST OF REMOVING AN EXISTING LIGHT POLE INCLUDING THE BRACKET ARM. THE POLE AND BRACKET ARM SHALL BE SEPARATED AND STORED ON THE PROJECT SITE FOR REUSE. REMOVAL OF EXISTING LUMINAIRE SHALL BE PAID FOR SEPARATELY. PAYMENT WILL BE MADE AT THE UNIT BID PRICE FOR EACH ITEM 202 LIGHT POLE REMOVED FOR STORAGE, AS PER PLAN.

ITEM 202 LUMINAIRE REMOVED FOR STORAGE, AS PER PLAN

THIS ITEM OF WORK SHALL CONSIST OF REMOVING AN EXISTING LUMINAIRE FROM ITS MOUNTING FOR STORAGE ON THE PROJECT SITE FOR REUSE.
RELAMPING TO BE PAID FOR SEPARATELY UNDER ITEM 625
REERECTING EXISTING LUMINAIRE, AS PER PLAN.
PAYMENT WILL BE AT THE UNIT BID PRICE FOR EACH ITEM 202 LUMINAIRE REMOVED FOR STORAGE, AS PER PLAN.

ITEM 625 LIGHTING MISC.:
EXISTING LUMINAIRE REFURBISHED

THIS ITEM OF WORK SHALL CONSIST OF REFURBISHING AN EXISTING LUMINAIRE IN PLACE, BY CLEANING, RELAMPING AND REPLACING DEFECTIVE COMPONENTS SO THAT THE LUMINAIRE IS THEN SUITABLE FOR CONTINUED SERVICE. IN ADDITION THE LUMINAIRE AIMING AND SOCKET SETTING SHALL BE CHECKED AND ADJUSTED IF NECESSARY.
PAYMENT WILL BE MADE FOR EACH ITEM 625 LIGHTING MISC.: EXISTING LUMINAIRE REFURBISHED AND SHALL BE FULL COMPENSATION FOR ALL MATERIALS, LABOR AND INCIDENTALS NECESSARY TO COMPLETE THIS WORK.

ITEM 625 REERECT EXISTING LIGHT POLE, AS PER PLAN

THIS ITEM OF WORK SHALL CONSIST OF THE REERECTION OF AN EXISTING LIGHT POLE RETURNED TO THE PROJECT FROM STORAGE. THE POLE SHALL BE WASHED AND RESTORED TO WORKING ORDER BEFORE REERECTION, WHICH SHALL INCLUDE PROVIDING AND INSTALLING AT-A BASE DOOR AND OR HAND HOLE COVER ON THOSE POLES FOUND NOT TO CURRENTLY HAVE ONE. RELAMPING, CONNECTOR KITS, GROUND ROD, AND FOUNDATION SHALL BE PAID SEPARATELY. ANCHOR BOLTS SHALL BE INCIDENTAL TO THIS ITEM.

REERECTION OF EXISTING LIGHT POLES IN AREAS OF GUARDRAIL, AS CALLED FOR IN THE PLANS, SHALL BE PROVIDED AN AT-A BASE, PAID FOR SEPARATELY, AT THOSE LOCATIONS WHICH CURRENTLY DO NOT HAVE AT-A BASES.

PAYMENT SHALL BE MADE FOR EACH ITEM 625 REERECT EXISTING LIGHT POLE, AS PER PLAN.

ITEM 625 REERECT EXISTING LUMINAIRE, AS PER PLAN

THIS ITEM OF WORK SHALL CONSIST OF REERECTING AS PER 625.07, OF AN EXISTING LUMINAIRE RETURNED TO THE PROJECT SITE FROM STORAGE. PRIOR TO REERECTION, THE LUMINAIRE SHALL BE CLEANED, RELAMPED AND RESTORED TO GOOD WORKING ORDER.

RELAMPING TO BE INCLUDED FOR PAYMENT UNDER THIS ITEM.

PAYMENT SHALL BE MADE AT THE UNIT BID PRICE FOR EACH ITEM 625 REERECT EXISTING LUMINAIRE, AS PER PLAN.

ITEM 202 DISCONNECT EXISTING CIRCUIT

THIS ITEM OF WORK SHALL CONSIST OF DISCONNECTING EXISTING CIRCUITS(S) IN AN EXISTING LIGHT POLE OR SIGN PULL BOX.

DISCONNECTIONS SHALL CONSIST OF REMOVING THE ENDS OF CABLES OF CIRCUITS(S) TO BE REPLACED. THOSE ENDS OF CONNECTOR OR SPLICING KITS FROM WHICH THE ABANDONED CABLES ARE REMOVED SHALL BE RECONNECTED TO PROPOSED CIRCUITS.

PAYMENT WILL BE MADE AT THE UNIT PRICE BID FOR ITEM 202 DISCONNECT EXISTING CIRCUIT WHICH SHALL BE FULL COMPENSATION FOR ALL LABOR, MATERIALS, AND INCIDENTALS REQUIRED FOR COMPLETING THE WORK IN A SATISFACTORY WORKMANLIKE MANNER. CONNECTOR AND SPLICING KITS FOR RECONNECTION SHALL BE PAID FOR SEPARATELY.

ITEM 603 UNDERDRAINS FOR PULL BOXES

REFERENCE IS MADE TO STANDARD DRAWINGS FOR DETAILS OF DRAINING PULL BOXES. UNDERDRAINS FOR PULL BOXES SHALL BE USED AS DIRECTED BY THE ENGINEER AND SHALL BE PROVIDED WHERE THE LENGTH REQUIRED FOR A SATISFACTORY OUTLET DOES NOT EXCEED APPROXIMATELY 20 FEET.

AN ESTIMATED QUANTITY OF ITEM 603, 4" CONDUIT TYPE E IS INCLUDED AT EACH PULL BOX FOR THIS PURPOSE.

ITEM 202 PULL BOX REMOVED

THIS ITEM SHALL INCLUDE ALL LABOR, EQUIPMENT AND ALL OTHER INCIDENTALS NECESSARY TO REMOVE AN EXISTING PULL BOX.
CARE SHALL BE EXERCISED AS NOT TO DAMAGE THE EXISTING ELECTRICAL CONDUIT WHEN REMOVING AN EXISTING PULL BOX.
THE PULL BOX AND ITS COVER SHALL BECOME THE PROPERTY OF THE CONTRACTOR AND SHALL BE DISPOSED OF BY HIM.

ITEM 625 MEDIAN LIGHT POLE FOUNDATION, 10' DEEP

THE PROPOSED MEDIAN LIGHT POLE FOUNDATIONS, 10' DEEP SHALL BE CONSTRUCTED AND THE LIGHT POLE ANCHOR BOLTS SHALL BE INSTALLED AS TO CONFORM WITH STANDARD CONSTRUCTION DRAWING HL-20.13

ITEM 625 MEDIAN LIGHT POLE FOUNDATION, 10' DEEP, AS PER PLAN

IN LIEU OF STANDARD DRAWING HL-20.13 THE PROPOSED TOP OF THE FOUNDATION SHALL VARY FROM THE NORMAL 12" DIMENSION AS SHOWN, AND SHALL CONFORM TO THE PROPOSED CONCRETE MEDIAN BARRIER TRANSITION AS SHOWN IN THE PLANS.

ITEM 202 LIGHT POLE FOUNDATION REMOVED, AS PER PLAN

THIS ITEM OF WORK SHALL CONSIST OF REMOVING A LIGHT POLE FOUNDATION. ANY PORTION OF THE EXISTING FOUNDATION WHICH INTERFERES WITH THE PROPOSED CONSTRUCTION SHALL BE REMOVED. IN ADDITION THE FOUNDATION SHALL BE REMOVED TO A MINIMUM OF ONE FOOT BELOW FINISHED SUBGRADE OR GROUND SURFACE.

THE RESULTANT DEPRESSION SHALL BE BACKFILLED WITH COMPACTED SOIL AND THE DISTURBED AREA SHALL BE RESTORED TO NORMAL CONDITIONS TO THE SATISFACTION OF THE ENGINEER. IN ADDITION, WHERE A NEW FOUNDATION IS TO BE LOCATED WITHIN A TEN FOOT RADIUS OF A REMOVED FOUNDATION, THE RESULTANT OPENING LEFT BY A REMOVED LIGHT POLE FOUNDATION SHALL BE BACKFILLED AND COMPACTED AS THOUGH IT WERE SUBGRADE FOR A ROADWAY.

PAYMENT WILL BE MADE AT THE UNIT PRICE BID FOR EACH ITEM 202 LIGHT POLE FOUNDATION REMOVED, AS PER PLAN WHICH SHALL BE FULL COMPENSATION FOR ALL LABOR, MATERIALS, AND INCIDENTALS REQUIRED TO COMPLETE THE REMOVAL OF THE FOUNDATION SATISFACTORILY IN A WORKMANLIKE MANNER.

ITEM 625 NO. 10 AWG POLE AND BRACKET CABLE

A CONTINGENCY QUANTITY OF ITEM 625 POLE AND BRACKET CABLE HAS BEEN CARRIED TO THE GENERAL SUMMARY FOR REWIRING THE MEDIAN LIGHT POLES AS DIRECTED BY THE PROJECT ENGINEER.

ITEM 625 NO. 10 AWG. POLE AND BRACKET CABLE 950 LIN.FT.

ITEM 625 LIGHTING MISC.: "C" BRACKET

ITEM 625 LIGHTING MISC.: "C" BRACKET SHALL BE AS SHOWN IN THE DETAIL BELOW. THE BRACKET SHALL BE HOLOPHANE NO. ARM-160-Y-500, STEEL PIPE, HOT DIP GALVANIZED.

PAYMENT WILL BE MADE AT THE UNIT PRICE BID FOR EACH ITEM 625 LIGHTING MISC.: "C" BRACKET WHICH SHALL BE FULL COMPENSATION FOR ALL LABOR, MATERIALS, AND ANY OTHER INCIDENTALS REQUIRED TO INSTALL THE BRACKET SATISFACTORILY IN A WORKMANLIKE MANNER.

(LOCATION FOR INSTALLATION SHALL BE STA. 139+50, PPOP. POLE NO. C12, SEE SHEET 372)

THE FOLLOWING QUANTITY HAS BEEN CARRIED TO THE GENERAL SUMMARY.

ITEM 625 LIGHTING MISC.: "C" BRACKET 1 EACH

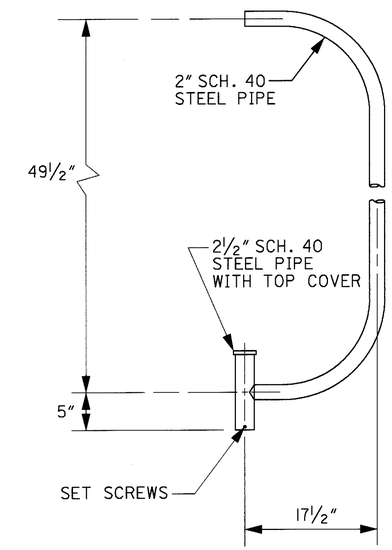

"C" BRACKET DETAIL

CALCULATED J.C. 3/13/95
CHECKED M.M. 3/16/95

LIGHTING GENERAL NOTES

LIC-16-19.72

L16LNT1.DGN 5/31/95

LIGHTING GENERAL NOTES

RECONNECTION OF OVERHEAD SIGNS TO NEW LIGHTING CIRCUITS

THE EXISTING LIGHTED SIGNS SHALL BE RECONNECTED TO THE NEW LIGHTING CIRCUITS. PAYMENT FOR THIS WORK WILL BE UNDER THE FOLLOWING ITEMS:

DISCONNECTION OF THE SIGN FROM THE EXISTING CIRCUIT SHALL BE PAID BY ITEM 625 SPECIAL - "DISCONNECT EXISTING CIRCUIT".

REMOVAL OF THE EXISTING PULL BOX SHALL BE PAID BY ITEM 202 - "PULL BOX REMOVED".

REPLACEMENT OF A NEW PULL BOX AT THE SAME LOCATION SHALL BE PAID UNDER ITEM 625 - "PULL BOX, 18", 713.08".

RECONNECTION OF THE SIGNS TO THE NEW LIGHTING CIRCUIT SHALL BE PROVIDED BY ITEM 625 - "CABLE SPLICE KITS" (2 PER PULL BOX).

ITEM 625 LIGHTING MISC.: RECONDITION EXISTING LIGHT POLE IN PLACE

THIS ITEM SHALL PROVIDE AND INCLUDE THE INSTALLATION OF HAND HOLE COVERS, AT-A TRANSFORMER BASE DOORS AND THE CLEANING OUT OF EXISTING TRANSFORMER BASES OF DEBRIS. ALL OF THE ABOVE WORK SHALL CONFORM TO STANDARD DRAWINGS HL-10.12 AND HL-10.13, AND AS DIRECTED BY THE PROJECT ENGINEER.

HAND HOLE COVERS AND AT-A BASE DOORS SHALL BE PROVIDED AND INSTALLED ONLY ON THOSE POLES CURRENTLY FOUND NOT TO HAVE ONE OR BOTH OF THE ITEMS.

THIS ITEM SHALL INCLUDE ALL LABOR, HARDWARE AND ALL OTHER INCIDENTALS NECESSARY TO PERFORM THE WORK AS DESCRIBED ABOVE.

THE FOLLOWING ESTIMATED QUANTITY HAS BEEN CARRIED TO THE GENERAL SUMMARY.

ITEM 625 LIGHTING MISC.: RECONDITION EXISTING LIGHT POLE IN PLACE 69 EACH

ITEM 625 LUMINAIRE, LOW MAST ASYMMETRIC TYPE I, 400 WATT HIGH PRESSURE SODIUM, 713.21, 480 VOLT, AS PER PLAN

THE LUMINAIRE ARRAY AND ASSOCIATED ILLUMINATION TEST AREAS SPECIFIED IN SECTION 713.21 OF THE CONSTRUCTION AND MATERIAL SPECIFICATIONS ARE HEREBY WAIVED FOR THIS PROJECT. INSTEAD, THE LUMINARIES FOR LOW MAST LIGHTING SHALL MEET THE FOLLOWING REQUIREMENTS:

ASYMMETRIC, TYPE I LUMINAIRE, LOW MAST SHALL BE HOLOPHANE "HMST" TEST #36801 OR #36802, SO AS TO PROVIDE DESIGNED INTENSITY AND UNIFORMITY AS THE EXISTING LUMINARIES ON THE PROJECT.

PAYMENT WILL BE MADE AT THE UNIT BID PRICE FOR EACH ITEM 625 LUMINAIRE, LOW MAST ASYMMETRIC TYPE I, 400 WATT HIGH PRESSURE SODIUM, 713.21, 480 VOLT, AS PER PLAN.

ITEM 625 CONDUIT CLEANED AND CABLES REMOVED

THIS ITEM SHALL CONSIST OF LOCATING AND CLEANING AN EXISTING CONDUIT OF ALL EXISTING CABLES, MUD AND DEBRIS TO THE SATISFACTION OF THE ENGINEER BEFORE DISTRIBUTION CABLE IS PULLED THROUGH THE CONDUIT. DRAIN OUTLETS SHALL BE FREE OF ALL OBSTRUCTIONS.

THIS ITEM SHALL INCLUDE CUTTING AND REAMING ANY BURRS AND INSTALLING BUSHINGS OR COUPLINGS TO PROVIDE A FREE RACEWAY FOR PULLING DISTRIBUTION CABLE THROUGH THE CONDUIT.

AT LOCATIONS WHERE LIGHT POLE FOUNDATIONS ARE TO BE REMOVED, CONDUIT SHOULD BE CUT PRIOR TO FOUNDATION REMOVAL TO PREVENT DAMAGE TO THE CONDUIT.

MATERIAL REMOVED SHALL BECOME THE PROPERTY OF THE CONTRACTOR AND SHALL BE DISPOSED OF OFF OF THE PROJECT SITE. DISTURBED AREAS SHALL BE PROPERLY RESTORED.

PAYMENT WILL BE MADE FOR EACH LINEAR FOOT OF ITEM 625 - "CONDUIT CLEANED AND CABLES REMOVED" AND SHALL BE FULL COMPENSATION FOR ALL LABOR, MATERIALS, AND INCIDENTALS REQUIRED TO COMPLETE THE WORK IN A SATISFACTORY MANNER.

ITEM 625 LIGHTING MISC.: REFURBISH POWER SERVICE, AS PER PLAN

THIS ITEM OF WORK SHALL CONSIST OF THE REMOVAL OF THOSE PORTIONS OF AN EXISTING POWER SERVICE NOT BEING REUSED AND THE INSTALLATION OF A NEW POWER SERVICE AS PER 625.18. ALL EXISTING LIGHTING CIRCUITS AND CONNECTIONS SHALL BE REMOVED FROM THE EXISTING PULL BOX TO THE DISCONNECT SWITCH. IN THE CASE WHERE EXISTING CONDUIT IS TO BE REUSED, THE CONDUIT SHALL BE CLEANED OF ALL MUD AND DEBRIS. THE ENCLOSURE AND RELATED COMPONENTS OF THE POWER SERVICE SHALL BE CLEANED OF ALL MUD, DEBRIS, AND EXISTING FUSES. THE EXISTING CONTROL TRANSFORMER, PHOTOCELL, AND CONTACTOR COIL SHALL BE REMOVED AND REPLACED WITH A NEW LINE VOLTAGE CONTACT COIL AND PHOTOCELL SO THAT RESULTANT CONTROL WIRING TO BE AS PER STANDARD DRAWINGS AND AS DETAILED IN THE PLAN. THE GROUND AREA AROUND THE POWER SERVICE SHALL HAVE ALL DEBRIS REMOVED AND THE GRASS TRIMMED. ALL MATERIALS REMOVED SHALL BECOME THE PROPERTY OF THE CONTRACTOR AND SHALL BE REMOVED FROM THE PROJECT SITE.

PAYMENT WILL BE MADE AT THE UNIT BID PRICE FOR EACH ITEM 625 REFURBISH POWER SERVICE, AS PER PLAN AND SHALL BE FULL COMPENSATION FOR ALL LABOR, MATERIALS, AND INCIDENTALS REQUIRED TO COMPLETE THE INSTALLATION IN A SATISFACTORY WORKMANLIKE MANNER.

THE FOLLOWING ESTIMATED QUANTITY HAS BEEN CARRIED TO THE GENERAL SUMMARY.

ITEM 625 LIGHTING MISC.: REFURBISH POWER SERVICE, AS PER PLAN 4 EACH

ITEM 625 HIGH VOLTAGE TEST

A LUMP SUM FOR PERFORMING THE HIGH VOLTAGE TEST REQUIRED BY THE ODOT CONSTRUCTION AND MATERIALS SPECIFICATIONS. HAS BEEN INCLUDED IN THE GENERAL SUMMARY.
VOLTAGE TEST SHALL BE PERFORMED ONLY ON THE NEW PORTIONS OF OF A CIRCUIT BEFORE IT IS CONNECTED TO AN EXISTING CIRCUIT.

THE FOLLOWING ESTIMATED QUANTITY HAS BEEN CARRIED TO THE GENERAL SUMMARY.

ITEM 625 HIGH VOLTAGE TEST LUMP

POWER SERVICE

THE POWER SUPPLYING AGENCY FOR THIS PROJECT IS:

OHIO POWER COMPANY
65 EAST MAIN STREET
NEWARK, OHIO 43055

EXISTING POWER SERVICE IS 480 VOLT, SINGLE PHASE, 2 WIRE, GROUNDED NEUTRAL.

ELECTRICAL ENERGY FROM EXISTING POWER SERVICES SHALL CONTINUE TO BE CHARGED TO THE MAINTAINING AGENCY. THE CONTRACTOR SHALL PAY ELECTRICAL ENERGY CHARGES FOR NEW POWER SERVICES ESTABLISHED BY THIS PROJECT.

ITEM 625 LIGHTING MISC.: RELABEL EXISTING LIGHT POLE

THIS ITEM OF WORK SHALL CONSIST OF REMOVING OLD DECALS FROM EXISTING LIGHT POLES BEING REUSED, AND INSTALLING NEW DECALS AS REQUIRED BY PLANS.

PAYMENT WILL BE MADE AT THE UNIT PRICE BID FOR EACH "ITEM 625 - LIGHTING MISC.: RELABEL EXISTING LIGHT POLE", WHICH SHALL BE FULL COMPENSATION FOR ALL LABOR, MATERIALS, AND INCIDENTALS REQUIRED TO COMPLETE THIS ITEM OF WORK IN A SATISFACTORY WORKMANLIKE MANNER.

ITEM SPECIAL: MAINTAIN EXISTING LIGHTING
ITEM SPECIAL: REPLACEMENT OF EXISTING LIGHTING UNIT

EXISTING ROADWAYS WHICH ARE TO REMAIN OPEN TO TRAFFIC DURING CONSTRUCTION OF THIS PROJECT AND WHICH ARE LIGHTED SHALL HAVE THE LIGHTING MAINTAINED AS DESCRIBED HEREIN.

BEFORE ANY WORK IS STARTED IN THE IMMEDIATE VICINITY OF ANY EXISTING LIGHTING CIRCUITS, REPRESENTATIVES OF THE STATE, THE MAINTAINING AGENCY, AND THE CONTRACTOR SHALL MAKE A VISUAL INSPECTION OF THE EXISTING ROADWAY LIGHTING CIRCUITS TO BE MAINTAINED. DURING THE INSPECTION, A WRITTEN RECORD OF THE CONDITION OF THE EXISTING LIGHTING SHALL BE MADE BY THE STATE'S REPRESENTATIVE. THIS WRITTEN REPORT SHALL NOTE INDIVIDUAL LUMINARIES WHICH ARE NOT IN WORKING ORDER, INDIVIDUAL POLES WHICH ARE NOT STANDING, AND INDIVIDUAL CIRCUITS WHICH ARE NOT IN WORKING ORDER. THE COMPLETED REPORT SHALL BE SIGNED BY THE REPRESENTATIVES OF THE STATE, THE MAINTAINING AGENCY.

IF, AS A RESULT OF THIS INSPECTION, IT IS DETERMINED THAT THE CONDITION OF THE EXISTING SYSTEM IS BELOW THAT REQUIRED FOR THE SAFETY OF THE TRAVELING PUBLIC, THEN THE MAINTAINING AGENCY SHALL MAKE REPAIRS IF NECESSARY TO RETURN THE SYSTEM TO AN ACCEPTABLE CONDITION. FOLLOWING THESE REPAIRS, THE SYSTEM SHALL AGAIN BE INSPECTED AND A REPORT MADE AND SIGNED AS OUTLINED HEREIN.

WHEN THE EXISTING SYSTEM IS IN AN ACCEPTABLE CONDITION, IT SHALL BE TURNED OVER TO THE CONTRACTOR WHO SHALL THEN BE REQUIRED TO MAINTAIN THE EXISTING LIGHTING TO THE CONDITION OUTLINED IN THIS REPORT WITH THE EXCEPTION OF KNOCKDOWNS DUE TO TRAFFIC ACCIDENTS.

REPLACEMENT OF KNOCKED DOWN UNITS SHALL BE DONE ONLY WHEN THE ENGINEER HAS DETERMINED THAT THE REPLACEMENT OF THE KNOCKED DOWN UNIT IS NECESSARY AND SHALL BE PAID SEPARATELY ON A UNIT BASIS.

BETTERMENTS SHALL BE COVERED IN ITEMS OF WORK PERTAINING TO THE CONSTRUCTION OF THE PERMANENT IMPROVEMENTS.

THE CONTRACTOR SHALL BE REQUIRED TO REMOVE THE EXISTING LIGHTING IN THE AREA OF THE MEDIAN CONCRETE BARRIER. THE CONTRACTOR SHALL BE RESPONSIBLE FOR ADEQUATE TEMPORARY LIGHTING OF THAT PORTION OF THE EXISTING ROADWAY AFFECTED BY THE REMOVAL OF THE EXISTING LIGHTING.

IN THE AREAS OF THE RAMPS THE CONTRACTOR MAY ELECT TO REMOVE THE EXISTING LIGHTING BEFORE THE NEW LIGHTING IS OPERATIONAL, THE CONTRACTOR SHALL THEN BE RESPONSIBLE FOR ADEQUATE TEMPORARY LIGHTING OF THAT PORTION OF THE EXISTING ROADWAY AFFECTED BY THE REMOVAL OF THE EXISTING LIGHTING.

PRIOR TO INSTALLING SUCH LIGHTING, THE CONTRACTOR SHALL PREPARE AND SUBMIT FOUR (4) SETS OF THE TEMPORARY LIGHTING PLAN TO THE DIRECTOR FOR REVIEW AND APPROVAL.

THIS PLAN SHALL SHOW LOCATION OF POLES, LENGTH OF BRACKET ARMS, STYLE OF LUMINARIES, MOUNTING HEIGHT, WIRING METHODS, AND OTHER PERTINENT INFORMATION. THE TEMPORARY LIGHTING SHALL PROVIDE AN AVERAGE INITIAL INTENSITY OF 1.2 FOOTCANDLES WITH AN AVERAGE TO MINIMUM UNIFORMITY NOT TO EXCEED 4:1. MOUNTING HEIGHT FOR TEMPORARY LUMINARIES SHALL NOT BE LESS THAN 27 FEET AND MINIMUM OVERHEAD CONDUCTOR CLEARANCE SHALL BE 20 FEET. TEMPORARY OVERHEAD CONSTRUCTION SHALL NOT BE LESS THAN GRADE "A" FOR STRENGTH REQUIREMENTS AS DEFINED BY THE NATIONAL ELECTRIC SAFETY CODE. WOOD POLES WITH OVERHEAD WIRING MAY BE USED. HOWEVER, TEMPORARY LIGHTING SHALL MEET FEDERAL AND STATE SAFETY CRITERIA. IF BREAKAWAY POLES ARE USED TO MEET THESE CRITERIA, THEN UNDERGROUND WIRING SHALL BE USED. RECONDITIONED OR USED MATERIALS MAY BE FURNISHED FOR TEMPORARY LIGHTING.

ALL MATERIALS NECESSARY TO COMPLETE THE TEMPORARY LIGHTING SHALL BE FURNISHED AND INSTALLED BY THE CONTRACTOR. WHEN NO LONGER NEEDED, THE TEMPORARY LIGHTING INSTALLATION SHALL BE REMOVED AND PROPERLY DISPOSED OF BY THE CONTRACTOR.

THE MAINTAINING AGENCY WILL PAY FOR ELECTRICAL ENERGY CONSUMED BY EXISTING POWER SERVICES AND BY PROPOSED PERMANENT POWER SERVICES AFTER ACCEPTANCE. THE CONTRACTOR WILL PAY FOR ELECTRICAL ENERGY, INSTALLATION, REMOVAL, AND MAINTENANCE OF ANY TEMPORARY POWER SERVICES.

THE LUMP SUM PRICE BID FOR ITEM SPECIAL "REPLACEMENT OF EXISTING LIGHTING UNIT" SHALL BE FULL PAYMENT FOR THE REPLACEMENT OF AN EXISTING LIGHTING UNIT WHICH HAS BEEN KNOCKED DOWN AFTER THE AFOREMENTIONED INSPECTION AND SHALL INCLUDE ALL LABOR, EQUIPMENT, MATERIALS AND INCIDENTALS NECESSARY TO PROVIDE A REPLACEMENT FOR SUCH UNIT.

THE FOLLOWING QUANTITIES HAVE BEEN CARRIED TO THE GENERAL SUMMARY TO PERFORM THE WORK AS DESCRIBED ABOVE.

ITEM SPECIAL MAINTAIN EXISTING LIGHTING LUMP
ITEM SPECIAL REPLACEMENT OF EXISTING LIGHTING UNIT 5 EACH

ITEM 604 REFERENCE MONUMENT, AS PER PLAN

THIS ITEM SHALL CONSIST OF FURNISHING AND PLACING THE 4" STEEL ROD SHOWN IN THIS DETAIL AT THE EXACT LOCATIONS INDICATED ON THIS SHEET.

DRILLING OF THE HOLES AND PLACING OF STEEL ROD SHALL BE IN ACCORDANCE WITH ITEM 510 DOWEL HOLES. THE UNIT PRICE BID FOR EACH ITEM 604, REFERENCE MONUMENT, AS PER PLAN, SHALL INCLUDE ALL LABOR, TOOLS, DOWEL HOLES, MATERIALS AND INCIDENTALS NECESSARY TO FURNISH AND PLACE THE STEEL ROD AT THE INDICATED LOCATIONS.

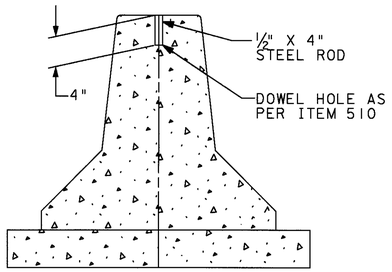

A LIST OF REFERENCE POINTS SHALL BE GIVEN TO THE CONTRACTOR AT THE PRECONSTRUCTION MEETING.

STATION	LOCATION	ITEM 604 REFERENCE MONUMENT, AS PER PLAN EACH
P.O.T. STA. 113+00.00	℄	1
P.O.T. STA. 118+69.02(BK.)= P.O.T. STA. 117+46.58(AH.)	℄	1
P.O.T. STA. 123+00.00	℄	1
P.O.T. STA. 129+00.00	℄	1
S.C. STA. 135+28.05	℄	1
P.O.C. STA. 141+00.00	℄	1
C.S. STA. 146+39.26	℄	1
S.T. STA. 149+89.26	℄	1
P.O.T. STA. 155+00.00	℄	1
T.S. STA. 159+67.95	℄	1
S.C. STA. 163+17.95	℄	1
C.S. STA. 167+82.95	℄	1
S.T. STA. 171+32.95	℄	1
P.C. STA. 176+21.23	℄	1
P.T. STA. 181+38.15	℄	1
P.O.T. STA. 185+00.00	℄	1
P.O.T. STA. 190+25.00	℄	1
TOTALS		17

TOTALS CARRIED TO GENERAL SUMMARY.

ITEM 620 DELINEATOR BY TYPE, POST MOUNTED

THE CONTRACTOR SHALL FURNISH AND INSTALL POST MOUNTED DELINEATORS MANUFACTURED BY:

CARSONITE INTERNATIONAL
30 E. COLUMBUS ST.
OH SALES OFFICE
COLUMBUS, OHIO 43206
614-221-5987

OR APPROVED EQUAL

OF THE DESIGNS HEREIN.

DESIGN 2 POST MOUNTED DELINEATORS SHALL BE MANUFACTURED FROM FIBERGLASS WITH A T CROSS-SECTION. THE POST SHALL BE 72 INCHES LONG AND SHALL BE DRIVEN TO AN INSTALLATION DEPTH OF 18 INCHES INTO THE GROUND.

DESIGN 4 POST MOUNTED DELINEATORS SHALL BE BOOSTER POSTS 27 INCHES IN LENGTH, MANUFACTURED OF FIBERGLASS, WITH A T CROSS-SECTION. DESIGN 4 POST MOUNTED DELINEATORS SHALL BE INSTALLED ON THE FRONT OF WOODEN GUARDRAIL BLOCKOUTS FACING APPROACHING TRAFFIC. THE DESIGN 4 POST MOUNTED DELINEATOR SHALL BE ATTACHED BY HAMMERING INTO THE BLOCKOUT EITHER TWO 1/8 INCH DIAMETER BY 1.25 INCH LONG, ZINC COATED LAG SCREWS WITH ZINC COATED 3/16 INCH FLAT WASHER OR TWO 1/8 INCH DIAMETER BY 1.25 INCH LONG, ZINC COATED INDENTED HEX WASHER-HEAD LAG SCREWS. ZINC COATED INDENTED HEX WASHER-HEAD LAG SCREWS MAY BE OBTAINED FROM:

TENNESSEE BOLT AND SCREW COMPANY
MEMPHIS TENN.
901-452-7491

-OR-

MID STATE BOLT AND NUT COMPANY
COLUMBUS OH
614-253-8631

EIGHT WEEKS SHOULD BE ALLOWED FOR DELIVERY FROM THESE FASTENER SUPPLIERS. THE LAG SCREWS AND WASHERS SHALL BE FURNISHED BY THE CONTRACTOR.

BRACKET MOUNTED DELINEATORS SHALL BE MANUFACTURED FROM FIBERGLASS WITH A T CROSS-SECTION. THE POST SHALL BE 16" LONG AND SHALL BE ATTACHED TO THE PROPOSED BRIDGE PARAPET AS PER STANDARD DRAWING TC-61.10.

THE POST MOUNTED DELINEATORS SHALL BE FURNISHED WITH REFLECTORS ATTACHED. THE REFLECTORS SHALL CONSIST OF 3 INCH WIDE BY 6 INCH LONG REFLECTIVE SHEETING CONFORMING TO 730.19 ADHERED TO THE POST. THE REFLECTOR COLORS SHALL BE COLORLESS OR YELLOW AS SPECIFIED BY TYPE IN CONFORMANCE WITH 620.01.

INSTALLATION: DELINEATORS SHALL BE INSTALLED FACING TRAFFIC.
THE PROTECTIVE PAPER COVERING THE FACE OF THE POST MOUNTED REFLECTORS SHALL NOT BE REMOVED UNTIL AFTER INSTALLATION. POSTS SHALL BE INSTALLED SO THAT THE FACE OF THE REFLECTOR IS 90 DEGREES TO THE CENTERLINE FACING APPROACHING TRAFFIC AND TO SUCH A DEPTH THAT THE TOPS OF THE INSTALLED REFLECTORS SHALL BE 48 INCHES PLUS OR MINUS 1 INCH ABOVE THE ELEVATION OF THE ADJACENT EDGE OF PAVEMENT. POSTS SHALL BE ERECTED VERTICALLY AND SHALL NOT BE MORE THAN 1/4 INCH PER FOOT OUT OF PLUMB POSITION IN ANY DIRECTION. DELINEATOR POSTS SHALL BE INSTALLED BY DRIVING USING ONLY MANUAL TECHNIQUES.

IF SOIL CONDITIONS WOULD CAUSE THE POST TO BE OUT OF PLUMB, THE CONTRACTOR MAY DRIVE A PILOT SHAFT BEFORE INSTALLATION.

POSTS INSTALLATION METHODS AND EQUIPMENT SHALL COMPLY WITH THE POST MANUFACTURE'S RECOMMENDATIONS ON FILE WITH THE DIRECTOR UNLESS PRIOR WRITTEN APPROVAL OF ALTERNATE TECHNIQUES ARE OBTAINED FROM THE DIRECTOR .

DELINEATORS TO BE MOUNTED AS BOOSTER POSTS ON THE FRONT OF WOODEN GUARDRAIL BLOCKOUTS SHALL BE ATTACHED BY HAMMERING INTO THE BLOCKOUT EITHER TWO 1/8 INCH DIAMETER BY 1 1/4 INCH LONG, ZINC COATED LAG SCREWS WITH ZINC COATED 3/16 INCH FLAT WASHERS OR TWO 1/8 INCH DIAMETER BY 1 1/4 INCH LONG, ZINC COATED INDENTED HEX WASHER-HEAD LAG SCREWS.

DELINEATOR POSTS PLACED IN CONCRETE MEDIANS MAY BE INSTALLED BY PLACING THEM IN 4 INCH SLEEVES OR CORE DRILLED HOLES. THE HOLES SHALL BE FILLED WITH ASPHALTIC CONCRETE AFTER THE POST IS IN PROPER POSITION.

LAYOUT: THE CONTRACTOR SHALL LAYOUT ALL DELINEATOR LOCATIONS TO ASSURE THEIR PROPER PLACEMENT. THE LAYOUT SHALL BE APPROVED BY THE ENGINEER BEFORE INSTALLATION OPERATIONS ARE STARTED. THE LAYOUT SHALL BE INCIDENTAL TO THE INSTALLATION OPERATIONS.

THIS WORK SHALL CONSIST OF LOCATING AND MARKING ON THE ROADWAY THE FOLLOWING DELINEATOR FEATURES AS DETERMINED FROM THE LOCATION INFORMATION IN THE PLANS OR FROM SCHEMATICS OF HORIZONTAL CURVES AND RAMPS PROVIDED IN THE PLANS.

1) BEGINNING OF EACH RUN WITH CONSTANT SPACING OF DELINEATORS SPECIFYING DELINEATOR TYPE, COLOR, SIDE OF ROAD AND SPACING.
2) END OF EACH RUN WITH CONSTANT SPACING.
3) BEGINNING OF EACH RUN WITH VARIABLE SPACING SPECIFYING DELINEATOR TYPE, COLOR, SIDE OF ROAD AND SPACING.
4) END OF EACH RUN WITH VARIABLE SPACING.

THE FOLLOWING QUANTITIES HAVE BEEN CARRIED TO THE GENERAL SUMMARY FOR THE ABOVE PURPOSE.

ITEM 620 DELINEATOR, TYPE C, DESIGN 2, POST MOUNTED	24	EACH
ITEM 620 DELINEATOR, TYPE C, DESIGN 4, POST MOUNTED	5	EACH
ITEM 620 DELINEATOR, TYPE D, DESIGN 2, POST MOUNTED	7	EACH

NOTE: FOR LOCATIONS OF DELINEATORS SEE SHEETS 291-307.

SEE STANDARD DRAWING TC-61.10

LOCATION	ITEM 620 DELINEATOR, TYPE C, DESIGN 2, POST MOUNTED EACH	DELINEATOR, TYPE C, DESIGN 4, POST MOUNTED EACH	DELINEATOR, TYPE D, DESIGN 2, POST MOUNTED EACH
RAMP "H" @ 21st. ST.	3	1	
RAMP "F" @ 21st. ST.	4		
RAMP "BB" @ 11th. ST.	2		2
RAMP "DD" @ 11th. ST.	5		
RAMP "C" @ MT. VERNON RD.	3		5
RAMP "A" @ MT. VERNON RD.	1	1	
RAMP "D" @ HUDSON AVE.	3		
RAMP "B" @ HUDSON AVE.	3	3	
TOTALS	24	5	7

CALCULATED J.S. 3/17/95
CHECKED D.M. 3/17/95

ITEM 604 REFERENCE MONUMENT
ITEM 620 DELINEATOR BY TYPE, POST MOUNTED

LIC-16-19.72

L16DELIN.DGN 05/01/95

ITEM 614 PORTABLE CHANGEABLE MESSAGE SIGN, AS PER PLAN

THE CONTRACTOR SHALL FURNISH, INSTALL, MAINTAIN AND REMOVE, WHEN NO LONGER NEEDED. A CHANGEABLE MESSAGE SIGN, ON SITE, FOR THE DURATION OF THE PROJECT. THE SIGN SHALL BE OF A TYPE SHOWN ON A LIST OF APPROVED PCMS UNITS MAINTAINED BY THE DIRECTOR. THE LIST CURRENTLY CONTAINS CLASS III AND II UNITS WITHIN MINIMUM LEGIBILITY DISTANCES OF 650' AND 850' RESPECTIVELY.

EACH SIGN SHALL BE TRAILER MOUNTED AND EQUIPPED WITH A FUNCTIONAL DIMMING MECHANISM TO DIM THE SIGN DURING DARKNESS AND A TAMPER AND VANDAL PROOF ENCLOSURE. EACH SIGN SHALL BE PROVIDED WITH APPROPRIATE TRAINING AND OPERATION INSTRUCTIONS TO ENABLE ON-SITE PERSONNEL TO OPERATE AND TROUBLE-SHOOT THE UNIT. THE SIGN SHALL ALSO BE CAPABLE OF BEING POWERED BY AN ELECTRICAL SERVICE DROP FROM A LOCAL UTILITY COMPANY.

THE PROBABLE LOCATIONS AND WORK LIMITS FOR THOSE LOCATIONS ARE SHOW ON SHEETS 34 & 35 OF THE PLAN. PLACEMENT, OPERATION, MAINTENANCE AND ALL ACTIVATION OF THE SIGNS BY THE CONTRACTOR SHALL BE AS DIRECTED BY THE PROJECT ENGINEER. THE PCMS SHALL BE LOCATED IN A HIGHLY VISIBLE POSITION YET PROTECTED FROM TRAFFIC. THE CONTRACTOR SHALL, AT THE DIRECTION OF THE PROJECT ENGINEER, RELOCATE THE PCMS TO IMPROVE VISIBILITY OR ACCOMMODATE CHANGED CONDITIONS. WHEN NOT IN USE, THE PCMS WILL BE OFF, FACING AWAY FROM ALL TRAFFIC AND SHALL DISPLAY ONE OR MORE HIGH INTENSITY YELLOW REFLECTIVE SHEETING SURFACES OF A 9-INCH BY 15-INCH MINIMUM SIZE FACING TRAFFIC.

THE ENGINEER SHALL BE PROVIDED ACCESS TO EACH SIGN UNIT AND SHALL BE PROVIDED WITH APPROPRIATE TRAINING AND OPERATION INSTRUCTIONS TO ENABLE ODOT PERSONNEL TO OPERATE AND TROUBLE-SHOOT THE UNIT AND TO REVISE MESSAGES IF NECESSARY.

ALL MESSAGES TO BE DISPLAYED ON THE SIGN WILL BE PROVIDED BY THE ENGINEER. A LIST OF ALL REQUIRED PREPROGRAMMED MESSAGES WILL BE GIVEN TO THE CONTRACTOR AT THE PROJECT PRECONSTRUCTION CONFERENCE. THE SIGN SHALL HAVE THE CAPABILITY TO STORE UP TO 99 MESSAGES. MESSAGE MEMORY OR PREPROGRAMMED DISPLAYS SHALL NOT BE LOST AS A RESULT OF POWER FAILURES TO THE ONBOARD COMPUTER. THE SIGN LEGEND SHALL BE CAPABLE OF BEING CHANGED IN THE FIELD. THREE-LINE PRESENTATION FORMATS WITH UP TO SIX MESSAGE PHASES SHALL BE SUPPORTED, BUT NORMALLY, NOT MORE THAN TWO-MESSAGE PHASES SHOULD BE EMPLOYED, ALTHOUGH THREE-PHASES MAY BE USED IN UNUSUAL CONDITIONS. THE PCMS FORMAT SHALL PERMIT THE COMPLETE MESSAGE FOR EACH PHASE TO BE READ AT LEAST ONCE.

THE PCMS SHALL CONTAIN AN ACCURATE CLOCK AND PROGRAMMING LOGIC WHICH WILL ALLOW THE SIGN TO BE ACTIVATED, DEACTIVATED OR MESSAGES CHANGED AUTOMATICALLY AT DIFFERENT TIMES OF THE DAY FOR DIFFERENT DAYS OF THE WEEK.

THE PCMS UNIT SHALL BE MAINTAINED IN GOOD WORKING ORDER BY THE CONTRACTOR IN ACCORDANCE WITH THE PROVISIONS OF 614.03 (C) THE CONTRACTOR SHALL, PRIOR TO ACTIVATING THE UNIT, MAKE ARRANGEMENTS WITH AN AUTHORIZED SERVICE AGENT FOR THE PCMS TO ASSURE PROMPT SERVICE IN THE EVENT OF FAILURE. ANY FAILURE SHALL NOT RESULT IN THE SIGN BEING OUT OF SERVICE FOR MORE THAN 12 HOURS INCLUDING WEEKENDS. FAILURE TO COMPLY MAY RESULT IN AN ORDER TO STOP WORK AND OPEN ALL TRAFFIC LANES AND/OR IN THE DEPARTMENT TAKING APPROPRIATE ACTION TO SAFELY CONTROL TRAFFIC AND THE ENTIRE COST TO CONTROL TRAFFIC ACCRUED BY THE DEPARTMENT WILL BE DEDUCTED FROM MONEYS DUE, OR TO BECOME DUE TO THE CONTRACTOR ON HIS CONTRACT.

THE CONTRACTOR SHALL BE RESPONSIBLE FOR 24 HOURS PER DAY OPERATION AND MAINTENANCE OF THESE SIGNS ON THE PROJECT FOR THE DURATION OF THE PHASES WHEN THE PLAN REQUIRES THEIR USE.

THE REQUIREMENT TO FURNISH, INSTALL, MAINTAIN, AND REMOVE A PCMS UNIT ON THIS PROJECT SHALL NOT IN ANY WAY RELIEVE THE CONTRACTOR OF HIS RESPONSIBILITIES AS OUTLINED IN 104.04.

PAYMENT FOR THE ABOVE DESCRIBED ITEM SHALL BE AT THE CONTRACT UNIT PRICE BID PER SIGN-MONTH FOR EACH ITEM 614 PORTABLE CHANGEABLE MESSAGE SIGN, AS PER PLAN AND SHALL INCLUDE ALL LABOR, MATERIALS, EQUIPMENT, FUELS, LUBRICATING OILS, SOFTWARE, HARDWARE, AND INCIDENTALS TO PERFORM THE ABOVE DESCRIBED WORK.

THIS PROJECT SHALL REQUIRE 6 (SIX) ITEM 614 PORTABLE CHANGEABLE MESSAGE SIGNS, AS PER PLAN.

THE FOLLOWING QUANTITIES HAVE BEEN INCLUDED IN THE GENERAL SUMMARY TO PERFORM THE WORK AS DESCRIBED ABOVE.

ITEM 614 PORTABLE CHANGEABLE MESSAGE SIGN, AS PER PLAN	96 SIGN-MONTH
ITEM 614 PORTABLE CHANGEABLE MESSAGE SIGN, AS PER PLAN (REPLACEMENT)	16 SIGN-MONTH

QUANTITIES FOR MAINTAINING TRAFFIC

A QUANTITY OF ITEM 614 BITUMINOUS CONCRETE, FOR MAINTAINING TRAFFIC HAS BEEN INCLUDED IN THE PLANS TO REPAIR PAVEMENT OR BERM DAMAGED WHEN MAINTAINING TRAFFIC. THIS ITEM SHALL ALSO BE USED TO CONSTRUCT TEMPORARY FEATHERS AT LOCATIONS DESIGNATED BY THE PROJECT ENGINEER. IT SHALL BE THE CONTRACTOR'S RESPONSIBLITY TO MAINTAIN THE PAVEMENT AND SHOULDER FOR THE ENTIRE LENGTH OF THE PROJECT FROM APRIL 15 TO NOVEMBER 15.

THE COST OF REMOVALS, MATERIAL, LABOR, EQUIPMENT AND TRAFFIC CONTROL TO COMPLETE THIS WORK SHALL BE INCLUDED IN THE CONTRACT PRICE FOR ITEM 614 BITUMINOUS CONCRETE FOR MAINTAINING TRAFFIC.

THE FOLLOWING QUANTITIES ARE INCLUDED IN THE GENERAL SUMMARY TO BE USED AS DIRECTED BY THE PROJECT ENGINEER TO REPLACE EXISTING PAVED SHOULDERS DAMAGED WHEN MAINTAINING TRAFFIC.

ITEM 614 BITUMINOUS CONCRETE FOR MAINTAINING TRAFFIC	100 CU. YD.
ITEM 203 EXCAVATION NOT INCLUDING EMBANKMENT CONSTRUCTION	100 CU. YD.
ITEM 301 BITUMINOUS AGGREGATE BASE, PG 64-22	100 CU. YD.

DUST CONTROL

THE CONTRACTOR SHALL FURNISH AND APPLY WATER AND CALCIUM CHLORIDE FOR DUST CONTROL AS DIRECTED BY THE ENGINEER. THE FOLLOWING CONTINGENCY QUANTITIES HAVE BEEN INCLUDED FOR DUST CONTROL PURPOSES:

ITEM 616 WATER	300 M. GAL.
ITEM 616 CALCIUM CHLORIDE	30 TON

ITEM 614, LAW ENFORCEMENT OFFICER WITH PATROL CAR

IN ADDITION TO THE REQUIREMENTS OF 614 AND THE LATEST EDITION OF THE OHIO MANUAL OF UNIFORM TRAFFIC CONTROL DEVICES (OMUTCD), A UNIFORMED LAW ENFORCEMENT OFFICER AND OFFICIAL PATROL CAR WITH WORKING TOP MOUNTED EMERGENCY FLASHING LIGHTS SHALL BE PROVIDED FOR CONTROLLING TRAFFIC FOR THE FOLLOWING TASKS:

FOR LANE CLOSURES: DURING INITIAL SET-UP PERIODS, TEAR DOWN PERIODS, SUBSTANTIAL SHIFTS OF A CLOSURE POINT OR WHEN NEW LANE CLOSURE ARRANGEMENTS ARE INITIATED.

LAW ENFORCEMENT OFFICERS (L.E.O.'S) SHOULD NOT BE USED WHERE THE OMUTCD INTENDS THAT FLAGGERS BE USED. THE LEO'S ARE CONSIDERED TO BE EMPLOYED BY THE CONTRACTOR AND THE CONTRACTOR SHALL BE RESPONSIBLE FOR THEIR ACTIONS. ALTHOUGH THEY ARE EMPLOYED BY THE CONTRACTOR, THE PROJECT ENGINEER SHALL HAVE CONTROL OVER THEIR PLACEMENT. THE OFFICIAL PATROL CAR SHALL BE A PUBLIC SAFETY VEHICLE AS REQUIRED BY THE OHIO REVISED CODE.

THE CONTRACTOR SHALL MAKE ARRANGEMENTS FOR THESE SERVICES WITH: THE OHIO HIGHWAY PATROL, 660 EAST MAIN STREET, COLUMBUS, OHIO, TELEPHONE: (614) 466-2660 OR NEWARK CITY POLICE, 40 WEST MAIN STREET, NEWARK, OHIO 43055 TELEPHONE: (740) 349-6723.

LAW ENFORCEMENT OFFICERS WITH PATROL CAR REQUIRED BY THE TRAFFIC MAINTENANCE TASKS ABOVE SHALL BE PAID FOR ON A UNIT PRICE (HOURLY) BASIS UNDER ITEM 614 LAW ENFORCEMENT OFFICER WITH PATROL CAR. THE FOLLOWING ESTIMATED QUANTITIES HAVE BEEN CARRIED TO THE GENERAL SUMMARY:

ITEM 614 LAW ENFORCEMENT OFFICER WITH PATROL CAR 250 HOURS

THE HOURS PAID SHALL INCLUDE MINIMUM SHOW-UP TIME REQUIRED BY THE LAW ENFORCEMENT AGENCY INVOLVED.

IF THE CONTRACTOR WISHES TO UTILIZE LEO'S FOR FLAGGING AND TRAFFIC CONTROL OTHER THAN FOR THAT REQUIRED IN THESE PLANS, HE MAY DO SO AT HIS OWN EXPENSE. PAYMENT FOR THE EXCESS ABOVE THE CONTRACT REQUIREMENTS WILL BE INCLUDED UNDER ITEM 614 MAINTAINING TRAFFIC.

ITEM SPECIAL, REPLACEMENT SIGN

FLAT SHEET SIGNS FURNISHED BY THE CONTRACTOR IN ACCORDANCE WITH THE REQUIREMENTS OF THE PLANS, SPECIFICATIONS AND PROPOSAL WHICH BECOME DAMAGED BY TRAFFIC FOR REASONS BEYOND THE CONTROL OF THE CONTRACTOR SHALL BE REPLACED IN KIND WHEN ORDERED BY THE PROJECT ENGINEER. REPLACEMENT SIGNS SHALL BE NEW. OTHER MATERIALS MAY BE IN USED BUT GOOD CONDITION SUBJECT TO APPROVAL BY THE PROJECT ENGINEER.

PAYMENT FOR THE NEW SIGNS SHALL BE MADE AT THE CONTRACT PRICE PER SQUARE FOOT FOR ITEM SPECIAL, REPLACEMENT SIGN, AND SHALL INCLUDE THE COST OF REMOVING AND DISPOSING OF DAMAGED SIGNS, HARDWARE AND SUPPORTS, AND PROVIDING THE NECESSARY REPLACEMENT HARDWARE, SUPPORTS, ETC.

AN ESTIMATED QUANTITY OF 160 SQUARE FEET ITEM SPECIAL REPLACEMENT SIGN HAS BEEN PROVIDED IN THE GENERAL SUMMARY.

COVERING OF SIGNS

WHERE THE PLANS CALL FOR A PERMANENT SIGN TO BE COVERED, THE CONTRACTOR SHALL DO SO IN SUCH A MANNER AS TO AVOID DAMAGING THE PERMANENT SIGN WHEN THE COVER IS REMOVED. THE COVER SHALL BE TOTALLY OPAQUE. THE USE OF ADHESIVE TAPE APPLIED DIRECTLY TO A SIGN FACE IS STRICTLY PROHIBITED.

ITEM SPECIAL, REPLACEMENT DRUM

DRUMS FURNISHED BY THE CONTRACTOR IN ACCORDANCE WITH THE REQUIREMENTS OF THE PLANS, SPECIFICATIONS AND PROPOSAL WHICH BECOME DAMAGED BY TRAFFIC FOR REASONS BEYOND THE CONTROL OF THE CONTRACTOR SHALL BE REPLACED IN KIND WHEN ORDERED BY THE PROJECT ENGINEER. REPLACEMENT DRUMS SHALL BE NEW.

PAYMENT FOR THE NEW DRUMS SHALL BE MADE AT THE CONTRACT PRICE PER EACH FOR ITEM SPECIAL, REPLACEMENT DRUM, AND SHALL INCLUDE THE COST OF REMOVING AND DISPOSING OF THE DAMAGED DRUM, AND PROVIDING AND MAINTAINING THE REPLACEMENT DRUM IN ACCORDANCE WITH THE CONTRACT REQUIREMENTS FOR THE ORIGINAL DRUM.

AN ESTIMATED QUANTITY OF 50 EACH ITEM SPECIAL REPLACEMENT DRUM HAS BEEN PROVIDED IN THE GENERAL SUMMARY.

ITEM 614 TEMPORARY PAVEMENT MARKINGS:

THE FOLLOWING QUANTITIES HAVE BEEN INCLUDED IN THE GENERAL SUMMARY TO BE USED AS DIRECTED BY THE ENGINEER TO MAINTAIN TRAFFIC DURING PHASES 1 & 2.

ITEM 614 TEMPORARY LANE LINE, CLASS II		6.799 MILE	
ITEM 614 TEMPORARY CENTER LINE, CLASS I		0.120 MILE	
ITEM 614 TEMPORARY EDGE LINE, CLASS I (YELLOW)	12.753 MILE =		29.467 MILE
ITEM 614 TEMPORARY EDGE LINE, CLASS I (WHITE)	16.714 MILE =		
ITEM 614 TEMPORARY CHANNELIZING LINE, CLASS I		5,786 LIN. FT.	
ITEM 614 TEMPORARY STOP LINE, CLASS I		231 LIN. FT.	
ITEM 614 TEMPORARY EDGE LINE, CLASS I, 740.05 TYPE C (YELLOW)		1.548 MILE =	3.618 MILE
ITEM 614 TEMPORARY EDGE LINE, CLASS I, 740.05 TYPE C (WHITE)		2.070 MILE =	
ITEM 614 TEMPORARY LANE LINE, CLASS II, 740.05 TYPE C		1.035 MILE	
ITEM 614 TEMPORARY CROSSWALK LINE, CLASS I		1,081 LIN. FT.	

NOTIFICATION OF ROAD CLOSURE
OR RESTRICTION
IN ORDER FOR ODOT TO PROPERLY PERMIT OVERSIZE LOADS, PREPARE PROPER SIGNING WHEN REQUIRED, AND FURTHER TO NOTIFY THE GENERAL MOTORING PUBLIC, THE CONTRACTOR SHALL NOTIFY (IN WRITING) THE DISTRICT 5 HIGHWAY MANAGEMENT ADMINISTRATOR WITH COPIES FOR THE DISTRICT 5 ROADWAY SERVICES MANAGER AND PROJECT ENGINEER NOT LESS THAN 21 DAYS BEFORE ACTIVATING SUCH CLOSURE OR LANE RESTRICTION.

SEND NOTIFICATION TO: DISTRICT 5 HIGHWAY MANAGEMENT ADMINISTRATOR
P.O. BOX 306
JACKSONTOWN, OHIO 43030
PHONE: (740) 323-4400

ITEM 301 BITUMINOUS AGGREGATE BASE, PG 64-22

THE FOLLOWING QUANTITIES HAS BEEN CARRIED TO THE GENERAL SUMMARY TO BE USED TO RECONSTRUCT THE EXISTING BERMS DURING STEP 1 CONSTRUCTION.

ITEM 301 BITUMINOUS AGGREGATE BASE, PG 64-22 1,385 CU.YD.

ITEM 203 EXCAVATION NOT INCLUDING EMBANKMENT CONSTRUCTION

THE FOLLOWING QUANTITIES HAS BEEN CARRIED TO THE GENERAL SUMMARY TO BE USED TO RECONSTRUCT THE EXISTING BERMS DURING STEP 1 CONSTRUCTION.

ITEM 203 EXCAVATION NOT INCLUDING EMBANKMENT CONSTRUCTION 1,385 CU.YD.

ITEM 642 TRAFFIC PAINT

THE FOLLOWING QUANTITIES HAVE BEEN INCLUDED IN THE GENERAL SUMMARY TO BE USED AS DIRECTED BY THE ENGINEER FOR TRAFFIC CONTROL FOR 2 (TWO) CONSECUTIVE SEASONS, AS DESCRIBED UNDER ITEM 614 MAINTAINING TRAFFIC.

ITEM 642 LANE LINE, TYPE 2		5.74 MILE	
ITEM 642 CENTER LINE, TYPE 2		0.120 MILE	
ITEM 642 EDGE LINE (YELLOW) TYPE 2	5.452 MILE =		10.85 MILE
ITEM 642 EDGE LINE (WHITE) TYPE 2	5.399 MILE =		
ITEM 642 CHANNELIZING LINE, TYPE 2		5,786 LIN. FT.	
ITEM 642 STOP LINE, TYPE 2		231 LIN. FT.	
ITEM 642 CROSSWALK LINE, TYPE 2		1,081 LIN. FT.	
ITEM 642 LANE ARROW, TYPE 2		17 EACH	
ITEM 642 WORD ON PAVEMENT, 72", TYPE 2		5 EACH	

ITEM SPECIAL BLACK OUT TAPE

ITEM SPECIAL BLACK OUT TAPE SHALL BE INSTALLED IN THE AREAS OF EXISTING CONFLICTING PAVEMENT MARKINGS DURING THE MAINTENANCE OF TRAFFIC AT THE LOCATIONS INDICATED IN THE PLAN. THIS TAPE SHALL BE INSTALLED TEMPORARILY AND MAINTAINED AS DIRECTED BY THE PROJECT ENGINEER AND REMOVED WHEN NO LONGER NEEDED FOR THE MAINTENANCE OF TRAFFIC.

THE FOLLOWING ESTIMATED QUANTITY HAS BEEN INCLUDED IN THE GENERAL SUMMARY FOR USE AS DIRECTED BY THE PROJECT ENGINEER FOR THE MAINTENANCE OF TRAFFIC.

ITEM SPECIAL BLACK OUT TAPE 1,000 LIN.FT.

ITEM 614 WORK ZONE SPEED LIMIT SIGN

THE CONTRACTOR SHALL FURNISH, INSTALL, MAINTAIN, COVER DURING SUSPENSION OF WORK, AND SUBSEQUENTLY REMOVE WORK ZONE SPEED LIMIT SIGNS AND SUPPORTS (R-10-48) (55 MPH) WITHIN THE WORK LIMITS IN ACCORDANCE WITH THE FOLLOWING REQUIREMENTS.

THE CONTRACTOR SHALL COVER OR REMOVE ANY EXISTING SPEED LIMIT OR MINIMUM SPEED SIGNS WITHIN THE REDUCED SPEED ZONE. THESE SIGNS SHALL BE RESTORED DURING SUSPENSION OR TERMINATION OF THE REDUCED SPEED LIMIT. THE EXPENSE OF COVERING OR REMOVAL AND RESTORATION OF EXISTING SPEED LIMIT OR MINIMUM SPEED SIGNS SHALL BE INCLUDED IN THE PAY ITEM FOR THE WORK ZONE SPEED LIMIT SIGNS.

THE WORK ZONE SPEED LIMIT SIGNS MAY BE ERECTED OR UNCOVERED NO MORE THAN 4 HOURS BEFORE THE ACTUAL START OF WORK. THE SIGNS SHALL BE REMOVED OR COVERED NO LATER THAN 4 HOURS FOLLOWING RESTORATION OF ALL LANES TO TRAFFIC WITH NO RESTRICTIONS, OR SOONER AS DIRECTED BY THE ENGINEER.

THE CONTRACTOR SHALL ERECT A WORK ZONE SPEED LIMIT SIGN IN ADVANCE OF ANY LANE RESTRICTION EXPECTED TO LAST AT LEAST 30 DAYS, OR AS DIRECTED BY THE ENGINEER. THE SIGN SHALL BE MOUNTED ON BOTH SIDES OF DIVIDED HIGHWAYS, 500 FEET IN ADVANCE OF THE LANE REDUCTION TAPER. THE SIGN SHALL BE MOUNTED ON THE RIGHT SIDE, 250 FEET IN ADVANCE OF THE LANE REDUCTION TAPER ON UNDIVIDED HIGHWAYS. THE SIGN SHALL BE REPEATED, ON THE SIDE NEAREST TRAFFIC, EVERY 1 MILE FOR 55 MPH ZONES AND EVERY 1/2 MILE FOR 45 MPH ZONES. THESE SIGNS SHALL ALSO BE ERECTED IMMEDIATELY AFTER EACH OPEN ENTRANCE RAMP WITHIN THE ZONE. A SIGN TO INDICATE THE RESUMPTION OF THE STATUTORY SPEED LIMIT SHALL BE ERECTED AT THE END OF ANY REDUCED SPEED ZONE. THIS SIGN SHALL BE AN R-8A.

THE CONTRACTOR MAY USE SIGNS AND SUPPORTS IN USED BUT GOOD CONDITION PROVIDED THE SIGNS MEET CURRENT ODOT SPECIFICATIONS. SIGN FACES SHALL BE REFLECTORIZED WITH TYPE G SHEETING COMPLYING WITH THE REQUIREMENTS OF 730.19 AND U.S. DEPARTMENT OF TRANSPORTATION SUPPLEMENTAL SPECIFICATION FOR TYPE III-C SHEETING, FP-85. WORK ZONE SPEED LIMIT SIGNS SHALL BE MOUNTED ON TWO (2) ITEM 630 GROUND MOUNTED SUPPORTS, NO. 3 POSTS.

WORK ZONE SPEED LIMIT SIGNS AND SUPPORTS WILL BE MEASURED AS THE NUMBER OF SIGN INSTALLATIONS, INCLUDING THE SIGNS AND NECESSARY SUPPORTS. IF A SIGN AND SUPPORT COMBINATION IS REMOVED AND REERECTED AT ANOTHER LOCATION WITHIN THE PROJECT DUE TO CHANGES IN THE SPEED ZONE DIRECTED BY THE ENGINEER, IT SHALL BE CONSIDERED ANOTHER UNIT.

PAYMENT FOR ACCEPTED QUANTITIES, COMPLETE IN PLACE, WILL BE MADE AT THE CONTRACT UNIT PRICE. PAYMENT SHALL BE FULL COMPENSATION FOR ALL MATERIALS, LABOR, INCIDENTALS AND EQUIPMENT FOR FURNISHING, ERECTING, MAINTAINING, COVERING DURING SUSPENSION OF WORK, AND REMOVING THE SIGNS AND SUPPORTS.

ITEM 614, WORK ZONE SPEED LIMIT SIGN 64 EACH

ITEM 614 DOUBLED FINES IN WORK ZONE SIGN

THE SIGNS POSTED SHALL BE DUAL MOUNTED, THE FIRST SIGNS SHALL BE PLACED BETWEEN THE "ROAD CONSTRUCTION AHEAD" (OW-128) SIGN AND THE NEXT SIGN IN THE SEQUENCE. SIGNS SHALL BE ERECTED ON EACH ENTRANCE RAMP AND EVERY TWO MILES THROUGH THE CONSTRUCTION WORK LIMITS.

THE SIGNS SHALL BE FURNISHED, ERECTED AND MAINTAINED IN GOOD CONDITION AND/OR REPLACED AS NECESSARY AND SUBSEQUENTLY REMOVED BY THE CONTRACTOR. SIGNS SHALL BE MOUNTED AT THE APPROPRIATE OFFSETS AND ELEVATIONS AS PRESCRIBED BY THE OHIO MANUAL OF UNIFORM TRAFFIC CONTROL DEVICES. THEY SHALL BE MAINTAINED ON SUPPORTS MEETING CURRENT SAFETY CRITERIA.

THE SIGNS SHALL BE COVERED OR REMOVED WHEN THE CONSTRUCTION ZONE IS DISCONTINUED FOR 30 DAYS OR MORE.

DOUBLED FINES IN WORK ZONES SIGNS AND SUPPORTS WILL BE MEASURED AS THE NUMBER OF SIGN INSTALLATIONS, INCLUDING THE SIGN AND NECESSARY SUPPORTS. IF A SIGN AND SUPPORT COMBINATION IS REMOVED AND REERECTED AT ANOTHER LOCATION AS DIRECTED BY THE ENGINEER, IT SHALL BE CONSIDERED ANOTHER UNIT.

PAYMENT FOR ACCEPTED QUANTITIES, COMPLETE, IN PLACE WILL BE MADE AT THE CONTRACT UNIT PRICE. PAYMENT SHALL BE FULL COMPENSATION FOR ALL MATERIALS, LABOR, INCIDENTALS AND EQUIPMENT FOR FURNISHING, ERECTION, MAINTENANCE, COVERING DURING SUSPENSION OF WORK AND REMOVAL OF THE SIGN AND SUPPORT.

THE FOLLOWING QUANTITY HAS BEEN CARRIED TO THE GENERAL SUMMARY TO PERFORM THE WORK AS DESCRIBED ABOVE.

ITEM 614 DOUBLED FINES IN WORK ZONE SIGN 16 EACH

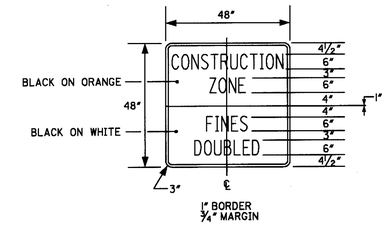

CALCULATED BB
CHECKED TD

MAINTENANCE OF TRAFFIC GENERAL NOTES

LIC-16-19.72

L016MTB8.DGN 05/31/95

SEQUENCE OF OPERATIONS

PART II: EXCEPT FOR THE BRIDGE PAINTING, ALL WORK FOR PART I SHALL BE COMPLETED BY OCTOBER 15, 2000. THIS IS TO BE CONSIDERED AN INTERIM COMPLETION DATE WITH LIQUIDATED DAMAGES AS SET FORTH IN CONSTRUCTION AND MATERIAL SPECIFICATIONS, 108.07.

PHASE I, PART I
(CONSTRUCTION FROM 6/5/00 TO 8/19/00)

PEDESTRIAN OVERPASS STRUCTURES:

FOR PEARL ST. AND HULL ST. PEDESTRIAN OVERPASSES, NO WORK WHICH COULD DISRUPT THE NORMAL FLOW OF PEDESTRIAN TRAFFIC SHALL BE PERFORMED BEFORE 6/5/00 OR AFTER 8/19/00. WORK ON THE PEDESTRIAN OVERPASS STRUCTURES MAY BE EXTENDED BEYOND 8/19/00 AS LONG AS IT DOES NOT AFFECT PEDESTRIAN TRAFFIC ON THE BRIDGES.

OVERPASS STRUCTURES:

NOTE: AFTER ALL NECESSARY TRAFFIC CONTROL DEVICES HAVE BEEN INSTALLED AND TRAFFIC MOVED TO THE TRAFFIC LANE, WORK ON THE STRUCTURES IN THE CLOSED LANE MAY BE CONSTRUCTED AT THE OPTION OF THE CONTRACTOR.

BEFORE ANY WORK IS PERFORMED THAT WOULD ENDANGER PEDESTRIANS USING THE SIDEWALKS ON BRIDGE NO.'S LIC-16-2069 & LIC-13-0988 THE CONTRACTOR WILL ERECT PERTINENT SIGNS AND BARRICADES AS SHOWN STAND. CONST. DWG. MT-101.60 TO PROHIBIT PEDESTRIANS FROM USING THE EXISTING SIDEWALK.
AFTER THE RENOVATION OF THE PARAPET AND RELATED WORK THAT WOULD ENDANGER THE PEDESTRIAN TRAFFIC IS COMPLETED THE CONTRACTOR WILL RESTORE PEDESTRIAN MOVEMENT TO THE SIDEWALK.
THE CONTRACTOR WILL BE RESPONSIBLE FOR THE SAFETY OF THE PEDESTRIAN AT ALL TIMES WHEN WORK IS BEING PERFORMED ON THE BRIDGES.
(1) INSTALL NECESSARY TRAFFIC CONTROL DEVICES AND MAINTAIN ONE LANE OF TRAFFIC AS SHOWN ON SHEETS 39 - 43.
(2) RECONSTRUCT DESIGNATED 8' BERMS WITH 8" OF ITEM 301 BITUMINOUS AGGREGATE BASE, PG 64-22.
(3) ADJUST TRAFFIC CONTROL DEVICES FOR THE NEXT STEP OF OPERATIONS.

NOTE TO CONTRACTOR: ONLY THE AMOUNT OF BERM WHICH CAN BE REPLACED IN 1 DAY MAY BE REMOVED AND THIS WORK MAY BE DONE ALONG WITH PHASE 1 AND 2'S STEP 1 CONSTRUCTION, WITH THE APPROVAL OF THE PROJECT ENGINEER.

PHASE 2, PART I
(CONSTRUCTION FROM 4/3/00 TO 11/15/00)

UPON APPROVAL OF THE ENGINEER, THE CONTRACTOR SHALL BE ALLOWED TO START WORK ON BRIDGE NO. LIC-16-2131 AND BRIDGE NO. LIC-16-2141 ON 3/6/00, WEATHER ALLOWING.

STEP 1:

(1) INSTALL NECESSARY TRAFFIC CONTROL DEVICES INCLUDING TEMPORARY LIGHTING, CLOSE PASSING LANE AND MEDIAN SHOULDER AND MAINTAIN ONE LANE OF TRAFFIC AS SHOWN ON SHEETS 44 - 48.
(2) CONSTRUCT PROPOSED PASSING LANE AND MEDIAN SHOULDER PAVEMENTS, MEDIAN BARRIER, LIGHTING AND COMPLETE ALL OTHER RELATED WORK AS PER TYPICAL SECTIONS AND OTHER DETAILS EXCLUDING ITEM 446 ASPHALT CONCRETE SURFACE COURSE, TYPE 1H.
(3) ADJUST TRAFFIC CONTROL DEVICES FOR THE NEXT STEP OF WORK.

STEP 2:

(1) INSTALL NECESSARY TRAFFIC CONTROL DEVICES, CLOSE DRIVING LANE AND OUTSIDE SHOULDER AND MAINTAIN ONE LANE OF TRAFFIC AS SHOWN ON SHEETS 49 - 56.
(2) REMOVE EXISTING ASPHALT AND CONCRETE FROM WORK AREA AS DEFINED ON THE M.O.T. TYPICAL.
(3) CONSTRUCT PROPOSED PAVEMENT AND COMPLETE ALL OTHER RELATED WORK AS PER TYPICAL SECTIONS AND OTHER DETAIL SHEETS EXCLUDING ITEM 446 ASPHALT CONCRETE SURFACE COURSE, TYPE 1H.
(4) ADJUST TRAFFIC CONTROL DEVICES FOR NEXT STEP OF WORK.
(5) NIGHT CLOSURE FOR JACKING & SHORING AND PLACING ASPHALT TAPERS ON BR. NO.'S LIC-16-2131/2141 SHALL BEGIN NO SOONER THAN 8:00 P.M. AND TRAFFIC SHALL BE OPEN NO LATER THAN 5:30 A.M. THE FOLLOWING MORNING.
THE CONTRACTOR SHALL CLOSE ONE DIRECTION OF TRAFFIC (EAST-BOUND OR WESTBOUND) AND WORK ON A MINIMUM OF ONE ABUTMENT (EAST OR WEST) PER BRIDGE PER NIGHT UNLESS AUTHORIZED BY THE PROJECT ENGINEER AND/OR DISTRICT AREA ENGINEER.
LANE CLOSURES BEFORE THE ALLOWABLE TIME AND/OR FAILURE TO RE-OPEN ALL LANES TO TRAFFIC AS DESIGNATED IN THE PLANS SHALL RESULT IN A LIQUIDATION OF DAMAGES CLAIM PAYABLE TO THE OHIO DEPARTMENT OF TRANSPORTATION AT A RATE OF $2,000.00 PER HOUR UNTIL THE CONDITION IS CORRECTED FOR EACH INFRACTION. EACH INFRACTION OF A PARTIAL HOUR SHALL BE ROUNDED UP TO THE NEXT HOUR.

THE DURATION FOR JACKING & SHORING AND PLACING ASPHALT TAPERS SHALL BE NO MORE THAN EIGHT NIGHT CLOSURES (ONE PER ABUTMENT PER NIGHT) MINIMUM WHICH CONSTITUTES THE FOLLOWING):
BR. NO. LIC-16-2131
EASTBOUND (REAR AND FORWARD ABUTMENTS - 2 TOTAL
WESTBOUND (REAR AND FORWARD ABUTMENTS - 2 TOTAL
BR. NO. LIC-16-2141
EASTBOUND (REAR AND FORWARD ABUTMENTS - 2 TOTAL
WESTBOUND (REAR AND FORWARD ABUTMENTS - 2 TOTAL
THE CONTRACTOR SHALL NOTIFY THE DISTRICT 5 HIGHWAY MANAGEMENT ADMINISTRATOR WITH COPIES FOR THE DISTRICT CONSTRUCTION ENGINEER, DISTRICT 5 ROADWAY SERVICE MANAGER, AREA ENGINEER, PERMIT TECHNICIAN AND THE NEWARK CITY ENGINEER NOT LESS THAN 21 DAYS BEFORE ACTIVATING SUCH CLOSURE.

SEND NOTIFICATION TO BOTH:

CHRISTOPHER ENGLE
DISTRICT 5 HIGHWAY MANAGEMENT ADMINISTRATOR
P.O. BOX 306
JACKSONTOWN, OHIO 43030
(740) (323-4400/323-5240

BRIAN MOOREHEAD
NEWARK CITY ENGINEER
40 WEST MAIN STREET
NEWARK, OHIO 43055
(740) (349-6616)

THE CONTRACTOR SHALL INFORM KEVIN JONES, DISTRICT 5 PUBLIC INFORMATION OFFICER (323-4400) WHO WILL THEN INFORM THE PUBLIC VIA NEWARK ADVOCATE PAPER, WCLT, WHTH RADIO STATIONS, ETC.) 2 WEEKS IN ADVANCE (MINIMUM) THAT THERE WILL BE A CLOSURE OF ALL LANES. THE INFORMATION GIVEN WILL CONSIST OF :
(1) LOCATION OF CLOSURE
(2) ESTIMATED DELAY
(3) ALTERNATE ROUTE
(4) PURPOSE OF CLOSURE
ALL F.C.C. RULES AND REGULATIONS SHALL BE COMPLIED WITH.
PORTABLE CHANGEABLE MESSAGE SIGNS AND OTHER SIGNS SHALL BE ERECTED 2 WEEKS IN ADVANCE AT DESIGNATED LOCATIONS TO GUIDE THE TRAVELING PUBLIC. AT LEAST ONE LAW ENFORCEMENT OFFICER SHALL BE PROVIDED AT THE POINT OF CLOSURE.
SEE DETOUR MAP BELOW FOR ALTERNATE ROUTE DURING CLOSURE.
THE ABOVE WORK SHALL BE INCLUDED IN THEIR PERTINENT PAY ITEMS.

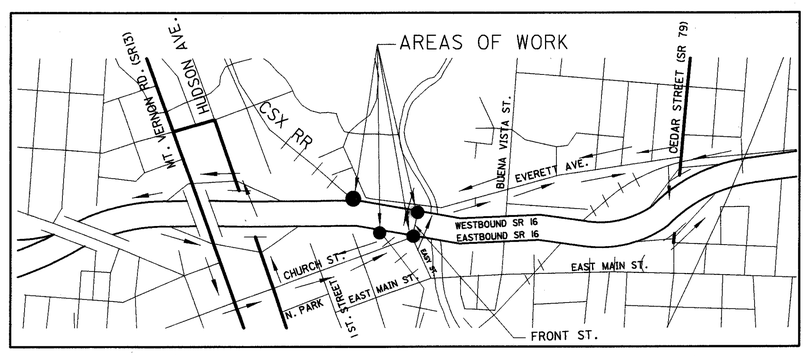

DETOUR MAP

RAMP CONSTRUCTION - STEP 3

RAMPS F,H, ROADWAYS A AND C:

(1) INSTALL NECESSARY TRAFFIC CONTROL DEVICES TO CLOSE RAMPS OR ROADWAYS. (2) REMOVE EXISTING ASPHALT AND CONCRETE PAVEMENT AND CONSTRUCT PROPOSED PAVEMENT AND ALL OTHER RELATED WORK AS PER TYPICAL SECTIONS AND OTHER DETAIL SHEETS, EXCLUDING ITEM 446 ASPHALT CONCRETE SURFACE COURSE, TYPE 1H.
(3) ADJUST TRAFFIC CONTROL DEVICES FOR NEXT STEP OF CONSTRUCTION.

RAMP CONSTRUCTION

RAMPS BB,DD,A,B,C,D AND ROADWAY D:

(1) INSTALL NECESSARY TRAFFIC CONTROL DEVICES TO CLOSE RAMPS OR ROADWAYS.
(2) REMOVE EXISTING ASPHALT AND CONCRETE PAVEMENT AND CONSTRUCT PROPOSED PAVEMENT AND ALL OTHER RELATED WORK AS PER TYPICAL SECTIONS AND OTHER DETAIL SHEETS, EXCLUDING ITEM 446 ASPHALT CONCRETE SURFACE COURSE, TYPE 1H.
(3) ADJUST TRAFFIC CONTROL DEVICES FOR NEXT STEP OF CONSTRUCTION.

NOTE: RAMPS F, H, ROADWAYS A AND C SHALL BE OPENED TO TRAFFIC PRIOR TO THE CLOSING OF RAMPS BB, DD, A, B, C, D AND ROADWAY D

ROADWAY B:
(1) INSTALL NECESSARY TRAFFIC CONTROL DEVICES TO CLOSE DRIVING LANE AND OUTSIDE SHOULDER PLUS RAMP "BB" WHEN NEEDED.
(2) REMOVE EXISTING ASPHALT AND CONCRETE PAVEMENT AND CONSTRUCT PROPOSED PAVEMENT AND ALL OTHER RELATED WORK AS PER TYPICAL SECTIONS AND OTHER DETAIL SHEETS EXCLUDING ITEM 446 ASPHALT CONCRETE SURFACE COURSE, TYPE 1H.
(3) ADJUST TRAFFIC CONTROL DEVICES TO CLOSE PASSING LANE AND MEDIAN SHOULDER AND OPEN DRIVING LANE AND OUTSIDE SHOULDER FOR TRAFFIC.
(4) REMOVE EXISTING ASPHALT AND CONCRETE PAVEMENT AND CONSTRUCT PROPOSED PAVEMENT AND ALL OTHER RELATED WORK AS PER TYPICAL SECTIONS AND OTHER DETAIL SHEETS EXCLUDING ITEM 446 ASPHALT CONCRETE SURFACE COURSE, TYPE 1H.
(5) ADJUST TRAFFIC CONTROL DEVICES FOR NEXT STEP OF CONSTRUCTION.

NOTE TO CONTRACTOR: PHASE 1 AND PHASE 2 WILL NOT BE CONSTRUCTED AT THE SAME TIME; IN PHASE 2 ROADWAY "B" WILL HAVE AT LEAST ONE 11' MINIMUM LANE OF TRAFFIC MAINTAINED AT ALL TIMES.

PHASE 3

(1) INSTALL NECESSARY TRAFFIC CONTROL DEVICES, CLOSE PASSING LANE AND MEDIAN SHOULDERS.
(2) CONSTRUCT FINAL 1½" ITEM 446 ASPHALT CONCRETE, TYPE 1H AND ALL OTHER RELATED WORK AS SHOWN ON TYPICAL SECTIONS AND OTHER RELATED DETAIL SHEETS.
(3) ADJUST TRAFFIC CONTROL DEVICES, CLOSE DRIVING LANE AND OUTSIDE SHOULDER.
(4) CONSTRUCT FINAL 1½" ITEM 446 ASPHALT CONCRETE, TYPE 1H AND ALL OTHER RELATED WORK AS PER TYPICAL SECTIONS AND OTHER RELATED DETAIL SHEETS.
(5) ADJUST TRAFFIC CONTROL DEVICES AND CONSTRUCT FINAL PAVEMENT STRIPING AS SHOWN ON SHEETS 273 TO 309.

GENERAL:

IT IS THE INTENT OF THIS SEQUENCE OF OPERATIONS TO PROVIDE A SAFE WORK AREA FOR THE CONTRACTOR WHILE ALSO MAINTAINING TRAFFIC IN A MANNER WHICH IS SAFE FOR THE TRAVELING PUBLIC.
THE CONTRACTOR SHALL COMPLETE ALL WORK AS DESCRIBED IN THE SEQUENCE OF OPERATIONS FOR EACH PHASE OF CONSTRUCTION, BEFORE STARTING ON THE NEXT PHASE OF CONSTRUCTION.
THE CONTRACTOR SHALL NOT BE ALLOWED TO START WORK ON ANY PHASE OF CONSTRUCTION UNTIL APPROVAL HAS BEEN GRANTED BY THE PROJECT ENGINEER.
ALTERNATE METHODS:

IF THE CONTRACTOR SO ELECTS, HE MAY SUBMIT ALTERNATE METHODS FOR THE MAINTENANCE OF TRAFFIC, PROVIDED THE INTENT OF THE ABOVE PROVISIONS ARE FOLLOWED AND NO ADDITIONAL INCONVENIENCE TO THE TRAVELING PUBLIC RESULTS THEREFROM. NO ALTERNATE PLAN SHALL BE PLACED INTO EFFECT UNTIL APPROVAL HAS BEEN GRANTED, IN WRITING, BY THE DIRECTOR.

IF THE BRIDGE PAINTING FOR THE FOLLOWING 5 STRUCTURES (LIC-16-2006, 2069, 2084, 2131 AND 2141) CANNOT BE COMPLETED BY OCTOBER 15, 2000, THE CONTRACTOR MAY PAINT THE BRIDGES BETWEEN APRIL 15, 2001 AND JUNE 30, 2001, PROVIDING THAT PAINTING SHALL BE DONE AT NIGHT BETWEEN THE HOURS OF 8:00 P.M. AND 6:00 A.M. MAINTENANCE OF TRAFFIC FOR THIS EXTENSION PERIOD SHALL BE INCLUDED IN ITEM 614 MAINTAINING TRAFFIC WHICH SHALL INCLUDE ALL PERTINENT ITEMS FOR NIGHT TIME CLOSURE AND PAINTING OF THE STRUCTURES. THE CONTRACTOR MAY PAINT DURING DAYTIME HOURS PROVIDING THAT ALL LANES OF TRAFFIC ON S.R. 16 SHALL NOT BE DISTURBED. ALL MAINTENANCE OF TRAFFIC SHALL BE APPROVED BY THE DISTRICT CONSTRUCTION ENGINEER PRIOR TO THE START OF PAINTING. PROJECT COMPLETION DATE IS JUNE 30, 2001.

ITEM 614 MAINTAINING TRAFFIC

TRAFFIC SHALL BE MAINTAINED AS PER THE DETAIL SHEETS AND SPECIFICATIONS AND AS OUTLINED IN THE CONSTRUCTION AND MAINTENANCE OPERATIONS SECTIONS OF THE OHIO MANUAL OF UNIFORM TRAFFIC CONTROL DEVICES FOR STREETS AND HIGHWAYS. LATEST REVISION. IN ADDITION, THE FOLLOWING REQUIREMENTS SHALL APPLY:

THE CONTRACTOR SHALL SUBMIT, IN WRITING A SCHEDULE OF OPERATIONS TO THE DISTRICT DEPUTY DIRECTOR AND RECEIVE APPROVAL BEFORE WORK IS STARTED ON THE PROJECT.

BEFORE WORK BEGINS, THE CONTRACTOR SHALL SUBMIT TO THE ENGINEER THE NAMES AND TELEPHONE NUMBERS OF A PERSON OR PERSONS WHO CAN BE CONTACTED 24 HOURS A DAY BY THE OHIO DEPARTMENT OF TRANSPORTATION AND ALL INTERESTED POLICE AGENCIES. THIS PERSON OR PERSONS SHALL BE RESPONSIBLE FOR REPLACING NECESSARY TRAFFIC CONTROL DEVICES IMMEDIATELY, AS PER 614.03 (C).

THE CONTRACTOR SHALL ARRANGE HIS OPERATIONS SO THAT NO WORK ,EXCEPT AS NOTED, THAT COULD DISRUPT THE NORMAL FLOW OF TRAFFIC SHALL BE PERFORMED ON THE PROJECT FROM NOVEMBER 15 TO APRIL 15. DURING THIS TIME TRAFFIC SHALL BE RETURNED TO BOTH NORTHBOUND AND SOUTHBOUND LANES AND ALL TEMPORARY TRAFFIC CONTROL SHALL BE REMOVED. PERMANENT MARKINGS SHALL BE PUT IN PLACE. A QUANTITY HAS BEEN INCLUDED ON SHEET 25 FOR PLACING PERMANENT PAVEMENT MARKINGS.

ALL EXISTING LANES, RAMPS AND OVERPASSES SHALL BE OPEN TO TRAFFIC BETWEEN NOVEMBER 15 AND APRIL 15. NOVEMBER 15 SHALL BE CONSIDERED TO CONSTITUTE AN INTERIM COMPLETION DATE AND LIQUIDATED DAMAGES SHALL BE ASSESSED IN ACCORDANCE WITH SECTION 108.07 OF THE CONSTRUCTION AND MATERIALS SPECIFICATIONS FOR EACH CALENDAR DAY THAT ALL LANES ARE NOT OPEN AND AVAILABLE TO TRAFFIC.

THE WORK LIMITS SHOWN ON THESE PLANS ARE FOR THE PHYSICAL CONSTRUCTION ONLY. THE INSTALLATION AND OPERATION OF ALL REQUIRED TRAFFIC CONTROL DEVICES SHALL BE PROVIDED BY THE CONTRACTOR WHETHER INSIDE OR OUTSIDE THESE WORK LIMITS.

A MINIMUM OF ONE LANE OF TRAFFIC IN EACH DIRECTION SHALL BE MAINTAINED AT ALL TIMES. THE LENGTH AND DURATION OF RESTRICTED TRAFFIC ZONES SHALL BE KEPT TO A MINIMUM, CONSISTENT WITH THE SPECIFICATION REQUIREMENTS FOR PROTECTION OF COMPLETED COURSES AND AS OUTLINED IN THE SEQUENCE OF OPERATIONS.

IN ADDITION TO MAINTAINING TRAFFIC AS DESCRIBED ABOVE, THE CONTRACTOR SHALL MAINTAIN ALL LANES OF TRAFFIC UNTIL AFTER THE EASTER HOLIDAY.

NO EXTENSIONS OF TIME SHALL BE GRANTED FOR DELAYS IN MATERIAL DELIVERIES, UNLESS SUCH DELAYS ARE INDUSTRY-WIDE, OR FOR LABOR STRIKES, UNLESS SUCH STRIKES ARE AREA-WIDE.

SHOULD THE CONTRACTOR FAIL TO MEET ANY OF THESE REQUIREMENTS, THE CONTRACTOR SHALL BE ASSESSED LIQUIDATED DAMAGES IN ACCORDANCE WITH 108.07 OF THE CONSTRUCTION AND MATERIAL SPECIFICATIONS.

DRUMS FOR CLOSING ANY LANES TO TRAFFIC SHALL BE PROPERLY REFLECTORIZED PLASTIC DRUMS AND WEIGHTED.

ALL WORK SHALL BE COMPLETED ON THE CLOSED LANE, OR LANES AS DESCRIBED IN THE SEQUENCE OF OPERATIONS, BEFORE IT IS OPENED TO TRAFFIC UNLESS OTHERWISE DIRECTED BY THE ENGINEER.

THE CONTRACTOR SHALL BE RESPONSIBLE FOR ALL TRAFFIC CONTROL DEVICES TO CLOSE THE VARIOUS RAMPS.

RAMP CLOSURES:

RAMP CLOSURE DETOURS SHALL BE AS SHOWN.
THE CONTRACTOR SHALL BE RESPONSIBLE FOR ALL TRAFFIC CONTROL DEVICES TO CLOSE THE VARIOUS RAMPS, SEE SHEETS 33 - 36. THE STATE WILL BE RESPONSIBLE FOR THE DETOUR SIGNING OF ALL STATE ROUTES AND THE CITY OF NEWARK WILL BE RESPONSIBLE FOR ALL DETOUR SIGNING OF THE CITY STREETS.

AFTER WORK ON THE RAMPS HAS BEEN COMPLETED AND TRAFFIC RETURNED TO ITS ORIGINAL PATTERN THE CONTRACTOR SHALL REMOVE ALL TEMPORARY TRAFFIC CONTROL DEVICES. THE CONTRACTOR SHALL ARRANGE THE RAMP CLOSURES AS PER SEQUENCE OF OPERATIONS. DURING THE TIME OF THE RAMP CLOSURE THE CONTRACTOR SHALL COMPLETE ALL WORK AS DESCRIBED IN THE PLANS. UNTIL THE DETOURS ARE PLACED INTO EFFECT, TRAFFIC SHALL BE MAINTAINED AT ALL TIMES. THE CONTRACTOR SHALL GIVE WRITTEN NOTICE TO THE DISTRICT 5 CONSTRUCTION ENGINEER WITH COPIES FOR THE DISTRICT TRAFFIC ENGINEER AND PROJECT ENGINEER NOT LESS THAN 21 DAYS BEFORE ACTIVATING SUCH CLOSURES.

THE CONTRACTOR SHALL DESIGNATE AN INDIVIDUAL, OTHER THAN THE SUPERINTENDENT, AND SUBJECT TO THE APPROVAL OF THE ENGINEER, TO INSPECT ALL TRAFFIC CONTROL DEVICES IN THE WORK ZONE AT THE BEGINNING AND AT THE END OF EACH WORK DAY. DAILY, A WRITTEN RECORD OF THE REVIEW SHALL BE GIVEN TO THE PROJECT ENGINEER AND SHALL INCLUDE A RECORD OF DEFICIENCIES. A MINIMUM OF TWO REVIEWS EACH WEEK SHALL BE PERFORMED ON A SATURDAY OR SUNDAY NIGHT.

THE FOLLOWING ITEMS SHALL BE INCLUDED IN EACH REVIEW: TRAFFIC CONTROL DEVICE CONDITION, PLACEMENT, VISIBILITY, TRAFFIC FLOW CONDITIONS, INCIDENTS, CONGESTION POINTS, DELAYS, INTERACTION OF WORK VEHICLES AND TRAFFIC, EVIDENCE OF ACCIDENTS, PROPER STORAGE OF MATERIALS AND EQUIPMENT, CONFORMANCE WITH THE TRAFFIC CONTROL PLAN, ADEQUACY OF THE TRAFFIC CONTROL PLAN, CONFLICTING OR NON-CONFORMING PAVEMENT MARKINGS.

THE DESIGNATED INDIVIDUAL OR A QUALIFIED REPRESENTATIVE SHALL ALSO BE AVAILABLE ON AN AROUND-THE-CLOCK BASIS TO REPAIR AND/OR REPLACE DAMAGED OR MISSING TRAFFIC CONTROL DEVICES. THESE INDIVIDUALS' NAMES AND PHONE NUMBERS SHALL BE GIVEN TO THE PROJECT ENGINEER AT THE PRE-CONSTRUCTION MEETING.

THE TRAFFIC CONTROL INSPECTOR SHALL BE INCLUDED IN THE LUMP SUM BID FOR ITEM 614 MAINTAINING TRAFFIC.

THE CONTRACTOR SHALL ARRANGE HIS OPERATIONS SO AS TO PREVENT ANY INTERFERENCE TO THE CONTINUOUS FLOW OF TRAFFIC. ALL VEHICLES, EQUIPMENT, WORKERS AND THEIR ACTIVITIES ARE RESTRICTED AT ALL TIMES TO ONE SIDE OF THE PAVEMENT UNLESS OTHERWISE APPROVED BY THE ENGINEER.

FOR SAFETY PURPOSES NO EQUIPMENT OR MATERIAL SHALL BE PARKED OR STORED WITHIN THIRTY (30) FEET FROM THE EDGE OF THE PAVEMENT OF THE TRAVELING LANES.

TEMPORARY FEATHERS, USING ITEM 614 WILL BE REQUIRED AT APPROACHES, BRIDGES, END OF RUNS OR AT OTHER POINTS DESIGNATED BY THE ENGINEER. THEY SHALL BE INSTALLED ACCORDING TO BP-3.1 AND REMOVED WHEN NO LONGER REQUIRED. THE COST OF THESE SHALL BE INCLUDED IN ITEM 614 BITUMINOUS CONCRETE FOR MAINTAINING TRAFFIC, SEE SHEET 24.

TEMPORARY ACCESS OPENINGS IN THE PORTABLE CONCRETE BARRIER FOR CONSTRUCTION PURPOSES SHALL BE PERMITTED. ALL OPENINGS SHALL BE AT THE DIRECTION OF THE PROJECT ENGINEER. A MAXIMUM OF THREE (3) PER EASTBOUND AND WESTBOUND LANES SHALL BE PERMITTED. ALL EXTRA WORK AND MATERIALS TO CONSTRUCT THE OPENINGS SHALL BE INCLUDED WITH ITEM 614 MAINTAINING TRAFFIC.
A QUANTITY OF SIX (6) IMPACT ATTENUATORS HAVE BEEN INCLUDED ON SHEET 32 TO BE USED AT THE TEMPORARY CONSTRUCTION OPENINGS. THE COST OF THESE IMPACT ATTENUATORS SHALL INCLUDE ALL COSTS INVOLVED WITH MOVING THE ATTENUATORS TO DIFFERENT LOCATIONS.

IN ADDITION TO ALL THE SIGNS INCLUDING SUPPORTS AS PER STANDARD DRAWINGS AND THE O.M.U.T.C.D. THE SIGNS SHOWN ON SHEETS 39 TO 57 SHALL BE FURNISHED, INSTALLED, MAINTAINED, ADJUSTED, AND SUBSEQUENTLY REMOVED BY THE CONTRACTOR.

TRAFFIC SHALL NOT BE EXPOSED TO PAVEMENT DROP-OFFS WITHOUT APPROPRIATE CHANNELIZING DEVICES. (SEE SHEET 28)

ANY CONFLICTING SIGNS WHETHER INSIDE OR OUTSIDE THE WORK LIMITS SHALL BE REMOVED OR COVERED AND TEMPORARY SIGNS ERECTED WHEN APPLICABLE BY THE CONTRACTOR.

FOR DETAILS OF COVERING EXISTING SIGNS SEE GENERAL NOTE "COVERING OF SIGNS" SEE SHEET 25.

THE ENGINEER SHALL RECORD INSTALLATION AND REMOVAL OF PROPOSED SIGNS, COVERED OR REMOVED AND UNCOVERED OR RE-ERECTED SIGNS IN THE PROJECT DIARY.

ALL TEMPORARY OR PERMANENT PAVEMENT MARKINGS SHALL BE IN PLACE BEFORE ANY PAVEMENT IS OPENED TO TRAFFIC.

PAYMENT FOR ALL OF THE ABOVE SHALL BE INCLUDED IN THE LUMP SUM BID FOR ITEM 614 MAINTAINING TRAFFIC.

THE FOLLOWING QUANTITY HAS BEEN INCLUDED IN THE GENERAL SUMMARY:

ITEM 614 MAINTAINING TRAFFIC	LUMP

NOTE: FOR ADDITIONAL NOTES SEE SHEETS 24 & 25.

GENERAL NOTES

1. It is intended that this drawing be used for treatment of drop-offs that develop during construction operations, and that are not otherwise provided for in the construction plans. Where the plans do not provide specific items for labor, equipment, or materials to implement the drop-off treatments specified hereon, they shall be included for payment in the lump sum bid for Item 614 - Maintaining Traffic.
2. While the need for certain advisory signing is noted hereon, it is not intended that this be indicative of all signing that may be required to advise or warn motorists, and all requirements of the Ohio Manual of Uniform Traffic Control Devices (OMUTCD) must be fulfilled.
3. In urban or otherwise heavily developed areas where pedestrians and/or bicyclists may be present in significant numbers, additional signing and protective measures other than those shown hereon may be required.
4. The drop-off treatment selected for use at any given location shall be as appropriate for the prevailing conditions at the site.
5. Where concrete barrier is specified, it shall be in accordance with Standard Construction Drawing MC-9.2 and Item 622.
6. When drums are specified for a dropoff condition, a minimum number of four drums shall be used. Spacing shall be as indicated in the plans or as specified in the OMUTCD.
7. When OW-151 (Low Shoulder) signs or OW-171 (Uneven Lanes) and OWP-171 signs are required, they shall be placed 750′ in advance of the condition, on all intersecting entrance ramps within the limits of the condition and immediately beyond all intersecting roadways within the limits of the condition. When the dropoff condition extends more than one-half mile, additional signs should be erected at intervals of one mile or less.
8. For locations, such as at ramps, lane shifts, lane closures, etc., where traffic is required to negotiate any difference in elevation between pavements, a 3:1 slope treatment similar to the Optional Wedge Treatment shall be provided.
9. Portable concrete barrier shall be placed on the same level as the traffic surface and shall not encroach on lane width(s) designated as the minimum required for traffic use. Where drums are used, and their presence would reduce traveled lane widths to less than 10′, drums may be placed on the opposite level from that of traffic provided the dropoff depth does not exceed 5″ and approval is granted by the Project Engineer.
10. Pavement Repairs (or similar work):
    a. Lengths greater than 60 feet - utilize appropriate treatment from Condition I.
    b. Lengths of 60 feet or less - repairs shall be effected in accordance with 255.08. Drums may be used as a separator adjacent to the traveled lane.

OPTIONAL WEDGE TREATMENT
(MILLING OR RESURFACING)

1. This treatment may be used when permitted for Condition I only.
2. OW-171 and OWP-171 signs required.

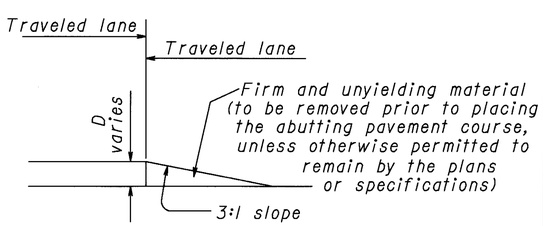

CONDITION I
DROPOFFS BETWEEN TRAVELED LANES

1. These treatments are to be used for resurfacing, pavement planing, excavation, etc. between or within traveled lanes.

D (In.)	Treatment
≤1½	Erect OW-171 and OWP-171 signs.
>1½-3	1) Lane closure utilizing drums* as shown below OR 2) Optional Wedge Treatment
>3-5	Lane closure utilizing drums as shown below.
>5	Lane closure utilizing portable concrete barrier as shown below.

*Cones may be used for daytime only conditions.

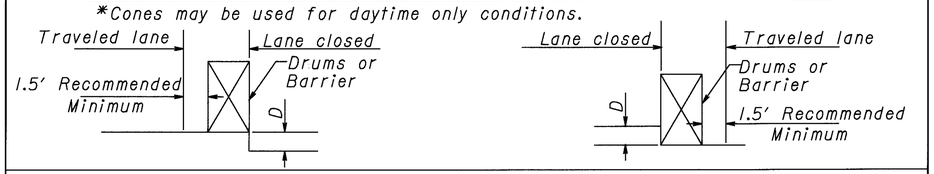

CONDITION II
DROPOFFS WITHIN GRADED SHOULDER AREA

1. The treatments indicated below are for use in conjunction with resurfacing, planing, or excavations within the graded shoulder area.
2. The graded shoulder area is that flat or gradually sloping area between the edge of a normally traveled lane and the more steeply sloping ditch foreslope or embankment slope. Its surface may be soil or turf, and/or it may be inclusive of a "treated" area (improved with aggregates, asphaltic materials, or concrete). For the purposes herein, its maximum width shall be considered to be twelve (12) feet.

D (In.)	Treatment
≤1½	1) If edgelines are present, no treatment necessary OR 2) Erect OW-171 and OWP-171 signs.
>1½-5	1) If min. lane width* requirements can be met, maintain lanes utilizing drums as shown below OR 2) If min. lane width* requirements cannot be met, close adjacent lane utilizing drums OR 3) Optional Shoulder Treatment.
>5-12 Daylight only	If min. lane width* requirements can be met, maintain lanes utilizing drums as shown below.
>5-24	1) If min. lane width* requirements can be met, maintain lanes utilizing portable concrete barrier as shown below. OR 2) If min. lane width* requirements cannot be met, close adjacent lane utilizing drums.
>24	Lane closure utilizing portable concrete barrier as shown below.

*Minimum lane widths shall be 10′ unless otherwise specified in the plans.

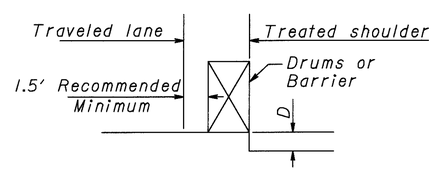

OPTIONAL SHOULDER TREATMENT

1. This treatment may not be used within a bituminous shoulder where a hot longitudinal joint per 401.15 is required.
2. OW-151 signs required.

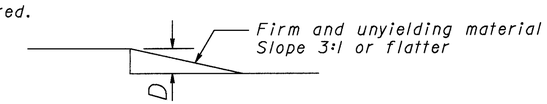

CONDITION III
DROPOFFS BEYOND GRADED SHOULDER OR BACK OF CURB

1. See Note 2 under Condition II.
2. Use Chart A or B below, as applicable.

CHART A

USE FOR:
1. Uncurbed Facilities.
2. Curbed Facilities, where:
   a. Curbs are less than 6″ in height.
   b. Curbs are 6″ or greater in height and the legal speed is greater than 40 mph.

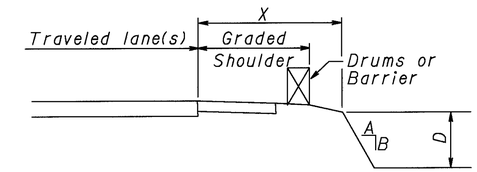

X (Ft.)	D (In.)	A/B	Treatment Required	
			Day	Night
0-4	Any	Any	(a)	(a)
4-30	Any	3:1 or Flatter	None	None
4-12	≤3	Steeper than 3:1	None	None
4-12	>3-≤12	Steeper than 3:1	Drums	Drums
4-12	>12	Steeper than 3:1	Drums	Barrier
>12-20	≤12	Steeper than 3:1	None	None
>12-20	>12-≤24	Steeper than 3:1	Drums	Drums
>12-20	>24	Steeper than 3:1	Drums	Barrier
>20-30	≤24	Steeper than 3:1	None	Drums
>20-30	>24	Steeper than 3:1	Drums	Barrier
>30	Any	Any	None	None

(a) Use treatment specified under Condition II.

CHART B

USE FOR: Curbed facilities, where the curb is 6″ or greater in height and the legal speed is 40 mph or less.

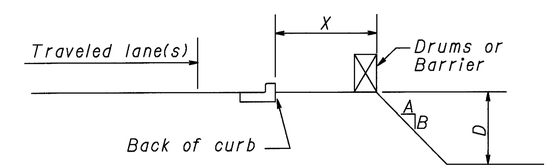

X (Ft.)	D (In.)	A/B	Treatment Required	
			Day	Night
0-10	<12	Any	None	Drums
0-10	>12	Any	Drums	Drums
>10	Any	Any	None	None

STATE OF OHIO
DEPARTMENT OF TRANSPORTATION
BUREAU OF LOCATION AND DESIGN

DROPOFFS IN WORK ZONES

DESIGNED	DRAWN	TRACED	CHECKED	REVIEWED	DATE	REVISED

CALCULATED | CHECKED

DROPOFFS IN WORK ZONES

LIC-16-19.72

L16191SA.DGN 1/12/99

614 TEMPORARY RAISED PAVEMENT MARKER

THIS ITEM OF WORK SHALL CONSIST OF FURNISHING, INSTALLING, MAINTAINING, AND SUBSEQUENTLY REMOVING TEMPORARY RAISED PAVEMENT MARKERS (TRPM'S). THE TRPM'S SHALL BE YELLOW OR WHITE, AS DESCRIBED IN THE PLAN.

MATERIAL
ALL UNITS SHALL BE OF SUFFICIENT STRENGTH AND PROPERLY SHAPED SO AS NOT TO BE DISLODGED OR BROKEN, OR THE REFLECTOR DISLODGED OR BROKEN, OR THE REFLECTOR DISLODGED OR DAMAGED BY IMPACTS FROM VEHICLES TIRES, INCLUDING THOSE OF HIGH PRESSURE TRUCK TIRES LOADED TO 4500 POUNDS.

RETROREFLECTORS SHALL BE PROVIDED IN ONE OR TWO DIRECTIONS ON EACH UNIT AS REQUIRED BY THE USAGE AND SHALL RETURN WHITE OR YELLOW LIGHT AS IS APPROPRIATED FOR THE APPLICATION.

THE REFLECTOR SHALL HAVE AN EFFECTIVE AREA OF 0.35 SQUARE INCH FOR TYPE A OR 3.0 SQUARE INCH FOR TYPE B. ITS BRIGHTNESS OR SPECIFIC INTENSITY (WHEN TESTED AT 0.2 DEGREE ANGLE OF OBSERVATION AND THE FOLLOWING ANGLES OF INCIDENCE) SHALL MEET OR EXCEED THE FOLLOWING:

SPECIFIC INTENSITY

INCIDENCE ANGLE (DEGREES)	TYPE A WHITE	TYPE A YELLOW
0	1.0	0.6
20	0.4	0.24
45	-	-

	TYPE B WHITE	TYPE B YELLOW
0	3.0	1.8
20	1.2	0.72
45	0.3	0.2

ANGLE OF INCIDENCE FORMED BY A RAY FROM LIGHT SOURCE TO THE MARKER AND THE NORMAL TO THE LEADING EDGE OF THE MARKER FACE (ALSO HORIZONTAL ENTRANCE ANGLE).

ANGLE OF OBSERVATION FORMED BY A RAY FROM LIGHT SOURCE TO THE MARKER AND THE RETURNED RAY FROM THE MARKER TO THE MEASURING RECEPTOR.

SPECIFIC INTENSITY IS THE MEAN CANDLEPOWER OF THE REFLECTED LIGHT (AT GIVEN INCIDENCE AND DIVERGENCE ANGLES) FOR EACH FOOT-CANDLE AT THE REFLECTOR (ON A PLANE PERPENDICULAR TO THE INCIDENT LIGHT).

TYPE A UNITS ARE INTENDED TO PROVIDE HIGH VISIBILITY BOTH AT NIGHT AND DURING DAYLIGHT. THEIR DAY TIME VISIBILITY SHALL BE ASSURED BY SIZE, SHAPE AND COLOR AS FOLLOWS:

1) THE UNITS SHALL BE A HIGH VISIBILITY YELLOW OR WHITE COLOR WHICH WILL NOT DEGRADE SUBSTANTIALLY DUE TO TRAFFIC WEAR AND WHICH WILL MATCH THE COLOR OF THE REFLECTOR.

2) WHEN VIEWED FROM ABOVE, THE UNITS SHALL HAVE A VISIBLE AREA OF NOT LESS THAN 14 SQUARE INCHES.

3) WHEN VIEWED FROM THE FRONT, PARALLEL TO THE PAVEMENT, AS FROM APPROACHING TRAFFIC, THE UNIT SHALL HAVE A WIDTH OF APPROXIMATELY 4 INCHES AND A VISIBLE AREA OF NOT LESS THAN 1.5 SQUARE INCHES.

TYPE B UNITS ARE INTENDED TO PROVIDE HIGH VISIBILITY AT NIGHT BY RETRO-REFLECTING AUTOMOTIVE HEADLIGHT BACK TO THE DRIVER.

INSTALLATION: THEY SHALL BE ATTACHED TO CLEAN, DRY PAVEMENT BY A BUTYL ADHESIVE PAD, A BITUMINOUS ADHESIVE OR OTHER CONSTRUCTION GRADE ADHESIVES (SUCH AS FRANKLIN PANEL AND METAL ADHESIVE) SUITABLE TO ANCHOR THE UNIT UNDER THE ABOVE CONDITIONS. WHEN IT IS NECESSARY TO ATTACH UNITS TO NEW CONCRETE WITH CURING COMPOUND REMAINING, THE CURING COMPOUND MEMBRANE SHALL BE REMOVED BY SANDBLASTING OR OTHER MECHANICAL CLEANING METHOD. THEY SHALL BE INSTALLED IN ACCORDANCE WITH THE MANUFACTURER'S RECOMMENDATIONS.

THE CONTRACTOR SHALL IMMEDIATELY REPLACE, AT HIS COST, ANY UNITS WHICH FAIL (BROKEN HOUSING, HOUSING WORN TO THE EXTENT THAT DAYTIME VISIBILITY IS SIGNIFICANTLY DIMINISHED OR OF AN UNACCEPTABLE COLOR, DETACHED OR BROKEN REFLECTOR, HOUSING DETACHED FROM ADHESIVE).

TRPM'S ARE LIKELY TO BE REMOVED BY SNOW PLOWING OPERATIONS, THUS THEY ARE NOT CONSIDERED SUITABLE FOR USE DURING THE PERIOD FROM OCTOBER 15 UNTIL APRIL 30. THE CONTRACTOR IS ADVISED TO SCHEDULE HIS WORK AND/OR THE USE OF THESE DEVICES TO AVOID THIS PERIOD. SHOULD THE CONTRACTOR CHOOSE TO USE TRPM'S DURING THIS PERIOD AND THEY ARE SUBSEQUENTLY REMOVED OR DESTROYED BY SNOW AND ICE CONTROL ACTIVITIES, THE CONTRACTOR SHALL IMMEDIATELY, AT HIS COST, PROVIDE A SUBSTITUTE TRAFFIC GUIDANCE SYSTEM EFFECTIVE DURING LIGHT AND DARK AND WHICH IS ACCEPTABLE TO THE ENGINEER.

THE UNITS SHALL BE PLACED ACCURATELY TO DEPICT STRAIGHT OR UNIFORMLY CURVING LINES. WHEN USED TO SUPPLEMENT TEMPORARY PAVEMENT MARKINGS, THEY MAY BE PLACED ON OR IMMEDIATELY ADJACENT TO THE PAVEMENT MARKING. LOCATIONS SHALL BE ADJUSTED UP TO ONE FOOT LONGITUDINALLY OR SIX INCHES LATERALLY TO AVOID PLACEMENT ON JOINTS, CRACKED OR DETERIORATED PAVEMENT. THEY SHALL NOT BE PLACED DIRECTLY ON PAVEMENT MARKINGS IF THIS WILL DETRACT FROM THEIR ABILITY TO REMAIN ATTACHED TO THE PAVEMENT.

APPLICATION
1) WHEN REQUIRED TO SUPPLEMENT PAVEMENT MARKING; THEY SHALL BE PLACED AS FOLLOWS:

LINE	TYPE	SPACING
EDGE LINE	A OR B	20' C/C
LANE LINE	A OR B	40' C/C*
CENTER LINE (SINGLE/BROKEN)	A OR B	40' C/C *
CENTER LINE (DOUBLE/SOLID)	A OR B	2 UNITS SIDE BY SIDE 4 INCHES APART 20' C/C
CHANNELIZING LINE (INCLUDES EXIT GORE NOSE)	A OR B	10' C/C

* CENTERED IN GAP

2) WHEN USED TO SIMULATE (REPLACE) PAVEMENT MARKING THEY SHALL BE PLACED AS FOLLOWS:

LINE	TYPE	SPACING
EDGE LINE	A	5' C/C
LANE LINE	A	4@3.33' C/C 30' GAP (40' CYCLE)
CENTER LINE (DOUBLE SOLID)	A	2 UNITS SIDE BY SIDE 5' C/C
CENTER LINE (SINGLE BROKEN)	A	4@3.33' C/C 30' GAP (40' CYCLE)
CHANNELIZING LINE (INCLUDES EXIT GORE NOSE)	A	5' C/C
EDGE LINE (TWO COLOR) (WHITE/YELLOW)	A	BACK TO BACK 5' C/C

YELLOW TRPM'S USED TO SEPARATE OPPOSITE FLOWS OF TRAFFIC (CENTER LINES) SHALL INCLUDE REFLECTIONS FOR BOTH DIRECTIONS. ALL OTHER YELLOW TRPM'S AND WHITE TRPM'S SHALL PROVIDE RETROREFLECTIVITY FOR ONE DIRECTION.

REMOVAL
REMOVAL SHALL BE ACCOMPLISHED IN A MANNER THAT LITTLE OR NONE OF THE ADHESIVE REMAINS ON THE PAVEMENT AND PERMANENT PAVEMENT SURFACES SHALL NOT BE SCARRED, BROKEN OR ROUGHENED SIGNIFICANTLY.

PAYMENT
BASIS OF PAYMENT SHALL BE AT THE CONTRACT UNIT PRICE PER EACH TRPM AND SHALL INCLUDE ALL LABOR, EQUIPMENT, HARDWARE AND INCIDENTALS REQUIRED TO PERFORM THE WORK. IT SHALL ALSO INCLUDE REPLACEMENT AT NO ADDITIONAL COST OF ALL TRPM'S WHICH, IN THE JUDGMENT OF THE ENGINEER, FAIL FOR ANY REASON, EXCEPT DUE TO FAILURE OF THE PAVEMENT TO WHICH THEY ARE ATTACHED.

ITEM	UNIT	DESCRIPTION
614	EACH	TEMPORARY RAISED PAVEMENT MARKER

THE FOLLOWING QUANTITY HAS BEEN INCLUDED IN THE GENERAL SUMMARY FOR THE ABOVE PURPOSE

ITEM 614 TEMPORARY RAISED PAVEMENT MARKER 769 EACH

LOCATION	SPACING C/C	TYPE A Y	TYPE A W
PHASE 1			
STA. 99+00 TO STA. 107+95	5'		181
PHASE 2			
STEP 1			
STA. 99+00 TO STA. 107+95	5'	181	
STEP 2			
STA. 99+00 TO STA. 107+95	5'		181
MT. VERNON RD. BRIDGE			
STEP 1			
STA. 22+00 TO STA. 25+29	5'	49	67
STEP 2			
STA. 22+00 TO STA. 25+29	5'	61	49
SUB-TOTALS		291	478
TOTAL		769	

CALCULATED BB CHECKED TD

MAINTENANCE OF TRAFFIC GENERAL NOTES

LIC-16-19.72

ITEM 614 BARRIER REFLECTOR & OBJECT MARKER

TABLE 1

LOCATION (EASTBOUND LANES)	SPACING	TYPE A W	TYPE A Y	TYPE B W	TYPE B Y	OBJECT MARKER
PHASE 1						
EXISTING MEDIAN BARRIER	25′				409	409
PHASE 2						
STEP 1						
21-GR, LIC-16-2028, 23-GR, LIC-16-2038	50′	18				
26-GR	50′	13				
27-GR	50′	2				
29-GR, EX. RETAINING WALL @ RAMP C, MT. VERNON RD.	50′	12				
33-GR	50′	5				
35-GR, LIC-16-2109, 36-GR	50′	15				
STA. 106+10 - STA. 126+00(AH.)	25′				381	381
STEP 2						
PROPOSED MEDIAN BARRIER					377	377
STA. 106+10 - STA. 144+60				183		183
STEP 4						
STA. 141+90(BK.) - STA. 124+50(AH.)				214		214
SUB-TOTALS (CARRIED TO TABLE 2)		65		397	1,167	1,564

Y = YELLOW
W = WHITE

TABLE 2

LOCATION (WESTBOUND LANES)	SPACING	TYPE A W	TYPE A Y	TYPE B W	TYPE B Y	OBJECT MARKER
PHASE 1						
EXISTING MEDIAN BARRIER	25′				337	337
PHASE 2						
STEP 1						
16-GR, LIC-16-1968, 18-GR	50′	28				
19-GR	50′	13				
22-GR, LIC-16-2028, 24-GR, LIC-16-2038, 25-GR	50′	21				
28-GR	50′	2				
30-GR	50′	4				
34-GR	50′	5				
37-GR	50′	9				
39-GR(STA. 186+07.48± - STA. 190+07.48±)	50′	9				
STA. 107+30(BK.) - STA. 126+00(AH.)	25′			376		376
STEP 2						
PROPOSED MEDIAN BARRIER					377	377
STA. 107+30 - STA. 146+50				163		163
STEP 4						
STA. 140+60(BK.) - STA. 126+00(AH.)				238		238
MT. VERNON RD. - LIC-16-2099						
STEP 1						
STA. 22+00.74± - STA. 25+29.20±	10′/25′			20		20
STEP 2						
STA. 22+45.73 - STA. 25+29.20±	10′/25′				16	16
SUB-TOTALS (TABLE 2)		91		797	730	1,527
SUB-TOTALS (CARRIED FROM TABLE 2)		65		397	1,167	1,564
TOTALS		156		3,091		3,091

THE FOLLOWING QUANTITIES HAVE BEEN CARRIED TO THE GENERAL SUMMARY.

ITEM 614 BARRIER REFLECTOR, TYPE A	156 EACH
ITEM 614 BARRIER REFLECTOR, TYPE B	3,091 EACH
ITEM 614 OBJECT MARKER	3,091 EACH

ITEM 614 BARRIER REFLECTOR AND ITEM 614 OBJECT MARKER

THESE REFLECTORS & OBJECT MARKERS AND THEIR MOUNTING SHALL CONFORM TO ITEM 626, EXCEPT THAT SPACING SHALL BE AS SHOWN IN THE TABLES.

CALCULATED B.B. CHECKED T.D.

MAINTENANCE OF TRAFFIC GENERAL NOTES

LIC-16-19.72

L016MT18.DGN 2/11/99

ITEM 622 PORTABLE CONCRETE BARRIER, 32″
ITEM 622 PORTABLE CONCRETE BARRIER, 32″, BRIDGE MOUNTED

ITEM 622 PORTABLE CONCRETE BARRIER, 32″.

THE CONTRACTOR SHALL INSTALL A PORTABLE CONCRETE BARRIER, 32″ AS PER STANDARD DRAWING MC-9.2
ITEM 622 PORTABLE CONCRETE BARRIER, 32″ HAS BEEN PROVIDED FOR MAINTAINING TRAFFIC AS SHOWN ON MAINTENANCE OF TRAFFIC SHEETS.
FLAGGERS SHALL BE USED FOR PROTECTION OF VEHICULAR TRAFFIC UNTIL MOVEMENT OF THE BARRIER IS COMPLETED AND TRAFFIC IS MAINTAINED.
AFTER THE PROJECT HAS BEEN COMPLETED THE PORTABLE CONCRETE BARRIER SHALL BECOME THE PROPERTY OF THE CONTRACTOR AND SHALL BE REMOVED BY HIM.
THE FOLLOWING ESTIMATED QUANTITY HAS BEEN CARRIED TO THE GENERAL SUMMARY FOR THE ABOVE PURPOSE.

ITEM 622 PORTABLE CONCRETE BARRIER, 32″ 37,830 LIN.FT.

ITEM 622 PORTABLE CONCRETE BARRIER, 32″, BRIDGE MOUNTED

THE CONTRACTOR SHALL INSTALL THE BARRIER AS DETAILED ON STD. DWG. PCB-91
THE QUANTITY SHALL ALSO INCLUDE REMOVING AND RE-USING THE BARRIER. AFTER THE PROJECT HAS BEEN COMPLETED THE BARRIER SHALL BECOME THE PROPERTY OF THE CONTRACTOR AND REMOVED BY HIM. ANCHORING OF PORTABLE CONCRETE BARRIER LOCATED ON THE BRIDGE SHALL NOT BE REQUIRED. CONNECTIONS OF THE PARAPETS SHALL BE DONE BY USING 1¼″ DIAMETER HIGH STRENGTH BOLTS.

FLAGGERS SHALL BE UTILIZED FOR PROTECTION OF VEHICULAR TRAFFIC UNTIL THE MOVEMENT OF THE BARRIER IS COMPLETE AND TRAFFIC IS MAINTAINED.
PAYMENT FOR BOLTS, NUTS, WASHERS, LABOR, MATERIALS AND INCIDENTALS SHALL BE INCLUDED IN ITEM 622 PORTABLE CONCRETE BARRIER, 32″, BRIDGE MOUNTED.

ITEM 622 PORTABLE CONCRETE BARRIER, 32″, BRIDGE MOUNTED 3,900 LIN.FT.

BRIDGE DECK SURFACE PREPARATION:

THE PROCEDURE WHICH MUST BE FOLLOWED WHEN INSTALLING ALL PORTABLE PRECAST CONCRETE BARRIERS, ON OHIO BRIDGE DECKS, IS GIVEN BELOW.

A. THE BRIDGE DECK SURFACE AREA ON WHICH THE PRECAST CONCRETE BARRIERS WILL REST SHALL BE CLEARED OF ALL LOOSE SAND, GRAVEL, DIRT AND DEBRIS.
B. ANY IRREGULARITIES IN THE BRIDGE DECK AREA, UNLESS JUDGED BY THE ENGINEER TO BE INCONSEQUENTIAL, SHALL BE LEVELED WITH GROUT AND/OR ASPHALT.
C. ASPHALT ROLL ROOFING SHALL BE PLACED ON THOSE BRIDGE DECK AREAS AS JUDGED BY THE ENGINEER, TO HAVE A SURFACE ROUGHNESS WHICH WOULD INHIBIT FRICTION CONTACT BETWEEN BARRIER SEGMENTS AND THE DECK.
LIMIT THE SLACK IN JOINTS BETWEEN SEGMENTS TO A MAXIMUM OF 3 DEGREES BY SHIMMING AND/OR GROUTING THE JOINT.

THE ABOVE WORK SHALL BE INCLUDED FOR PAYMENT IN ITEM 622 PORTABLE CONCRETE BARRIER, 32″, BRIDGE MOUNTED.

LOCATION	ITEM 622	
	PORTABLE CONCRETE BARRIER, 32″	PORTABLE CONCRETE BARRIER, 32″, BRIDGE MOUNTED
	LIN. FT.	LIN. FT.
PHASE 2		
STEP 1		
EASTBOUND LANES		
STA. 106+10 - STA. 126+00(AH.)	9,500	
LIC-16-2028		180
LIC-16-2038		190
LIC-16-2109		200
WESTBOUND LANES		
STA. 107+30 - STA. 124+50(AH.)	9,230	
LIC-16-2028		180
LIC-16-2038		190
LIC-16-2109		200
SUB-TOTALS (PHASE 2, STEP 1)	18,730	1,140
STEP 2		
EASTBOUND LANES		
STA. 106+10 - STA. 144+60	3,980	
LIC-16-2028		180
LIC-16-2038		190
LIC-16-2109		200
WESTBOUND LANES		
STA. 107+30 - STA. 146+50	4,050	
LIC-16-2028		180
LIC-16-2038		190
LIC-16-2109		200
SUB-TOTALS (PHASE 2, STEP 2)	8,030	1,140
STEP 4		
EASTBOUND LANES		
STA. 141+90(BK.) - STA. 124+50(AH.)	5,320	
LIC-16-2028		180
LIC-16-2038		190
LIC-16-2109		200
WESTBOUND LANES		
STA. 143+60(BK.) - STA. 126+00(AH.)	5,610	
LIC-16-2028		180
LIC-16-2038		190
LIC-16-2109		200
SUB-TOTALS (PHASE 2, STEP 4)	10,930	1,140
MT. VERNON RD. - LIC-16-2099		
STEP 1		
STA. 22+00.74± - STA. 25+29.20±	90	240
STEP 2		
STA. 22+45.73± - STA. 25+29.20±	50	240
SUB-TOTALS (MT. VERNON RD.)	140	480
SUB-TOTALS (PHASE 2, STEP 1)	18,730	1,140
SUB-TOTALS (PHASE 2, STEP 2)	8,030	1,140
SUB-TOTALS (PHASE 2, STEP 4)	10,930	1,140
SUB-TOTALS (MT. VERNON RD.)	140	480
TOTALS CARRIED TO GENERAL SUMMARY	37,830	3,900

* NOTE: ITEM 622 PORTABLE CONCRETE BARRIER LOCATIONS MAY BE ADJUSTED AT THE TIME OF INSTALLATION AS DIRECTED BY THE PROJECT ENGINEER.

CALCULATED TAG CHECKED BB

MAINTENANCE OF TRAFFIC GENERAL NOTES

LIC-16-19.72

LOI6MTF8.DGN 2/11/99

ATTENUATOR DETAILS

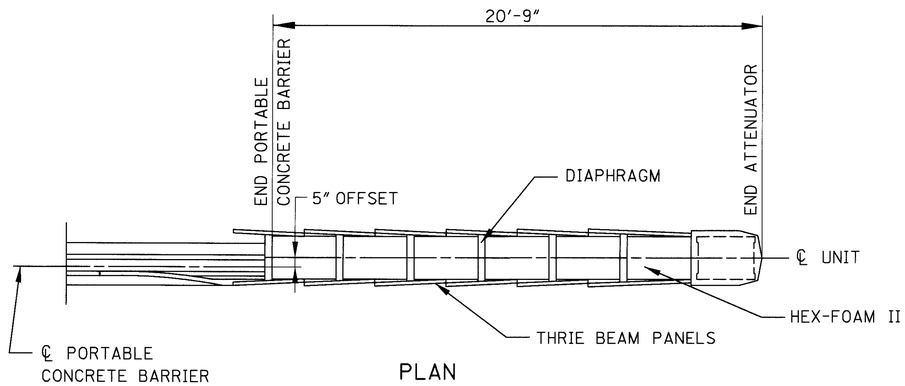

PLAN

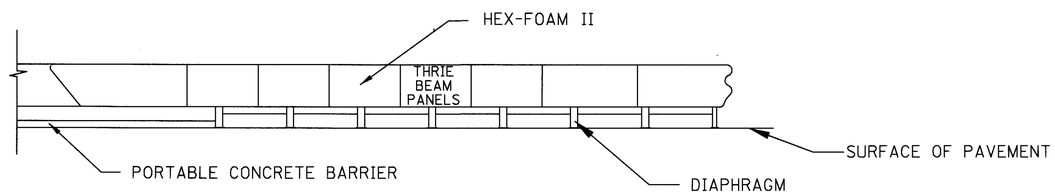

ELEVATION

ITEM 614 - TEMPORARY IMPACT ATTENUATOR (G.R.E.A.T. TYPE)

THIS WORK SHALL CONSIST OF FURNISHING IMPACT ATTENUATORS AS REQUIRED IN THE PLANS. THIS ITEM SHALL INCLUDE ALL RELATED HARDWARE, NOT SEPARATELY SPECIFIED, AS REQUIRED BY THE MANUFACTURER TO CONSTRUCT COMPLETE AND FUNCTIONAL G.R.E.A.T. IMPACT ATTENUATOR SYSTEMS. THE ATTENUATORS SHALL BE PLACED IN ACCORDANCE WITH THE MANUFACTURER'S SPECIFICATIONS AND AT THE LOCATIONS SHOWN ON THE PLANS. THE IMPACT ATTENUATOR SHALL BE MANUFACTURED BY THE ENERGY ABSORPTION SYSTEMS, INC., ONE EAST WACKER DRIVE, CHICAGO, ILLINOIS 60601: TELEPHONE (312) 467-6750.

THE NOSE COVER OF THE ATTENUATOR SHALL MEET THE REQUIREMENTS OF STANDARD DRAWING MT-95.81

THE CONTRACTOR SHALL BE RESPONSIBLE FOR INSPECTING, REPAIRING AND OTHERWISE RESTORING THE IMPACT ATTENUATOR IN ACCORDANCE WITH THE MANUFACTURER'S MAINTENANCE INSTRUCTIONS WHILE IT IS IN USE ON THE PROJECT. SUCH REPAIRS SHALL BE PERFORMED WITHIN 24 HOURS OF THE INCIDENT WHICH CAUSED DAMAGE TO THE PROJECT. IN ADDITION TO ANY EXTRA UNITS SUPPLIED FOR THIS PROJECT, THE CONTRACTOR SHALL BE RESPONSIBLE FOR SUPPLYING ALL NECESSARY MATERIALS, LABOR AND EQUIPMENT REQUIRED TO PERFORM THE ABOVE DESCRIBED RESTORATION OF THE ATTENUATOR.

AN ESTIMATED QUANTITY AS LISTED BELOW SHALL BE USED AS DIRECTED BY THE ENGINEER FOR USE IN THE ABOVE MENTIONED RESTORATION ONLY WHEN IT IS DECIDED THAT MINOR OR MAJOR REPAIRS CANNOT BE PERFORMED IN A SAFE AND TIMELY MANOR.

ITEM 614 - TEMPORARY IMPACT ATTENUATOR, G.R.E.A.T. TYPE (REPLACEMENT), MODEL NO. 200200NF6GCZ 1 EACH

FOR LOCATION OF THE ATTENUATORS SEE PLAN SHEET 54. THESE PERMANENTLY LOCATED ATTENUATORS SHALL BE BID PER EACH PER THE FOLLOWING PAY ITEM DESCRIPTION:

ITEM 614- REMOVE AND REPLACE IMPACT ATTENUATOR, (G.R.E.A.T. TYPE), MODEL NO. 200200NF6GCZ 1 EACH

PAYMENT FOR THE ABOVE WORK SHALL BE MADE AT THE UNIT PRICE BID FOR EACH, ITEM 614, TEMPORARY IMPACT ATTENUATOR (G.R.E.A.T. TYPE) AND SHALL BE CONSIDERED FULL PAYMENT FOR FURNISHING, INSTALLING AT THE SPECIFIED LOCATIONS, RESTORATION AFTER EACH VEHICLE IMPACT, INCLUDING ALL LABOR, TOOLS, EQUIPMENT AND MISCELLANEOUS HARDWARE AND MATERIALS NECESSARY TO COMPLETE THESE ITEMS OF WORK.

THE ABOVE QUANTITIES HAVE BEEN INCLUDED IN THE GENERAL SUMMARY FOR PAYMENT.

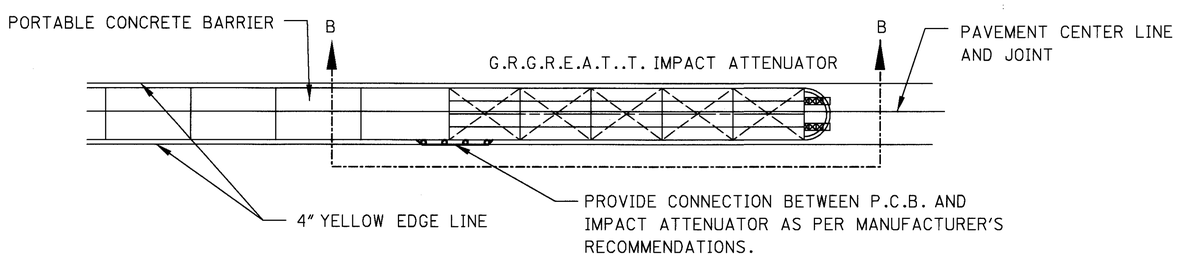

DETAIL B

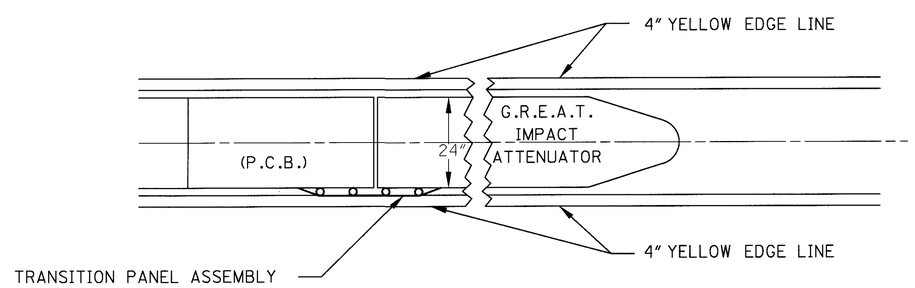

DETAIL B-B

CALCULATED B.B. 3/13/95
CHECKED T.D. 3/16/95

ATTENUATOR DETAILS

LIC-16-19.72

IMPACT.DGN 2/12/99

PHASE 2

STEP 2

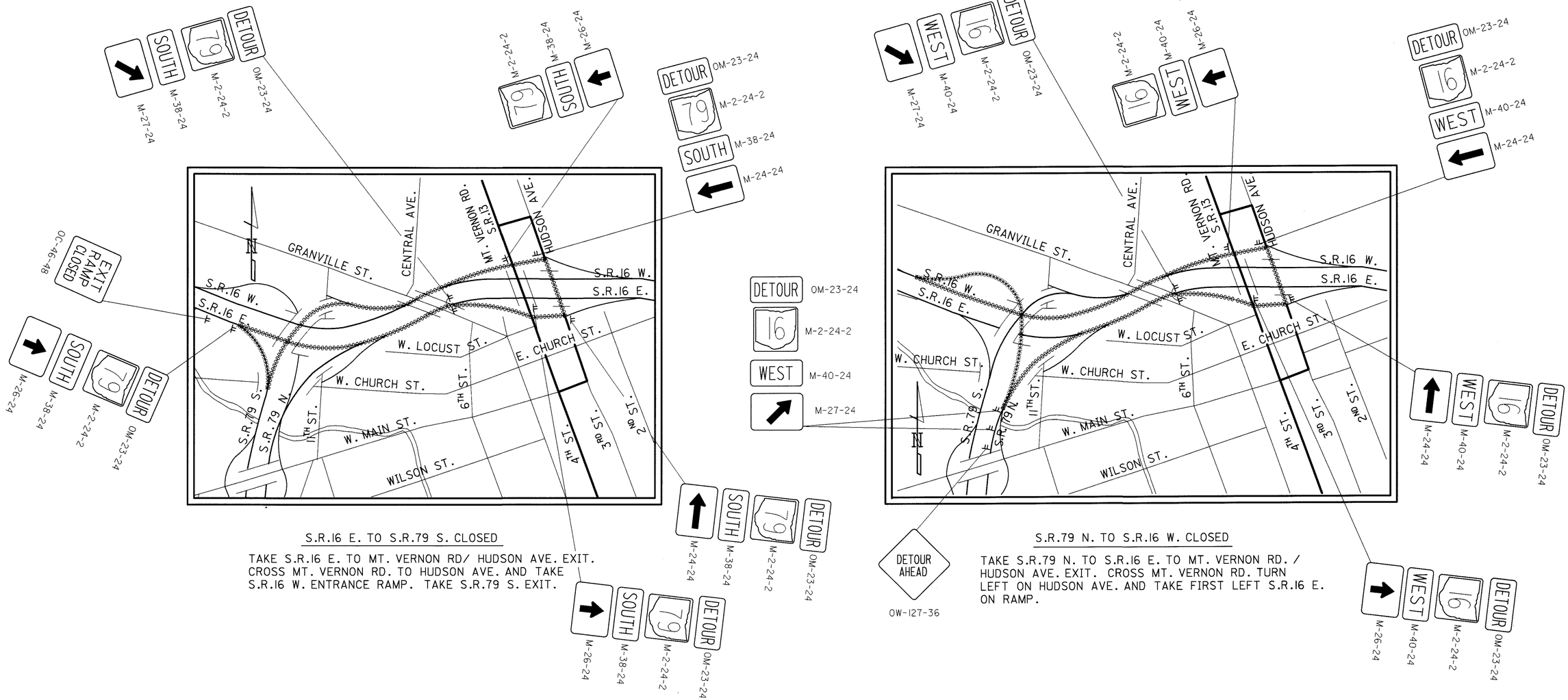

S.R.16 E. TO S.R.79 S. CLOSED

TAKE S.R.16 E. TO MT. VERNON RD/ HUDSON AVE. EXIT. CROSS MT. VERNON RD. TO HUDSON AVE. AND TAKE S.R.16 W. ENTRANCE RAMP. TAKE S.R.79 S. EXIT.

S.R.79 N. TO S.R.16 W. CLOSED

TAKE S.R.79 N. TO S.R.16 E. TO MT. VERNON RD. / HUDSON AVE. EXIT. CROSS MT. VERNON RD. TURN LEFT ON HUDSON AVE. AND TAKE FIRST LEFT S.R.16 E. ON RAMP.

NOTE:
IN ADDITION TO ALL THE STANDARD SIGNS AS PER STANDARD DRAWINGS AND O.M.U.T.C.D., THE SIGNS SHOWN THIS SHEET SHALL BE FURNISHED, INSTALLED, MAINTAINED, ADJUSTED AND SUBSEQUENTLY REMOVED BY THE CONTRACTOR. THE COST FOR ALL THE ABOVE TO BE INCLUDED WITH MAINTAINING TRAFFIC.

RAMPS TO BE CLOSED.

DETOUR ROUTES FOR CLOSED RAMPS.

ALL OVERHEAD SIGNS WHICH CONFLICT WITH THE DETOURS SHOWN ON THIS SHEET SHALL BE COVERED FOR THE DURATION OF THE DETOUR AND UNCOVERED WHEN DETOUR IS REMOVED.

CALCULATED TG
CHECKED BB

MAINTENANCE OF TRAFFIC DETOURS

LIC-16-19.72

L016DET1.DGN 2/8/99

PHASE 2

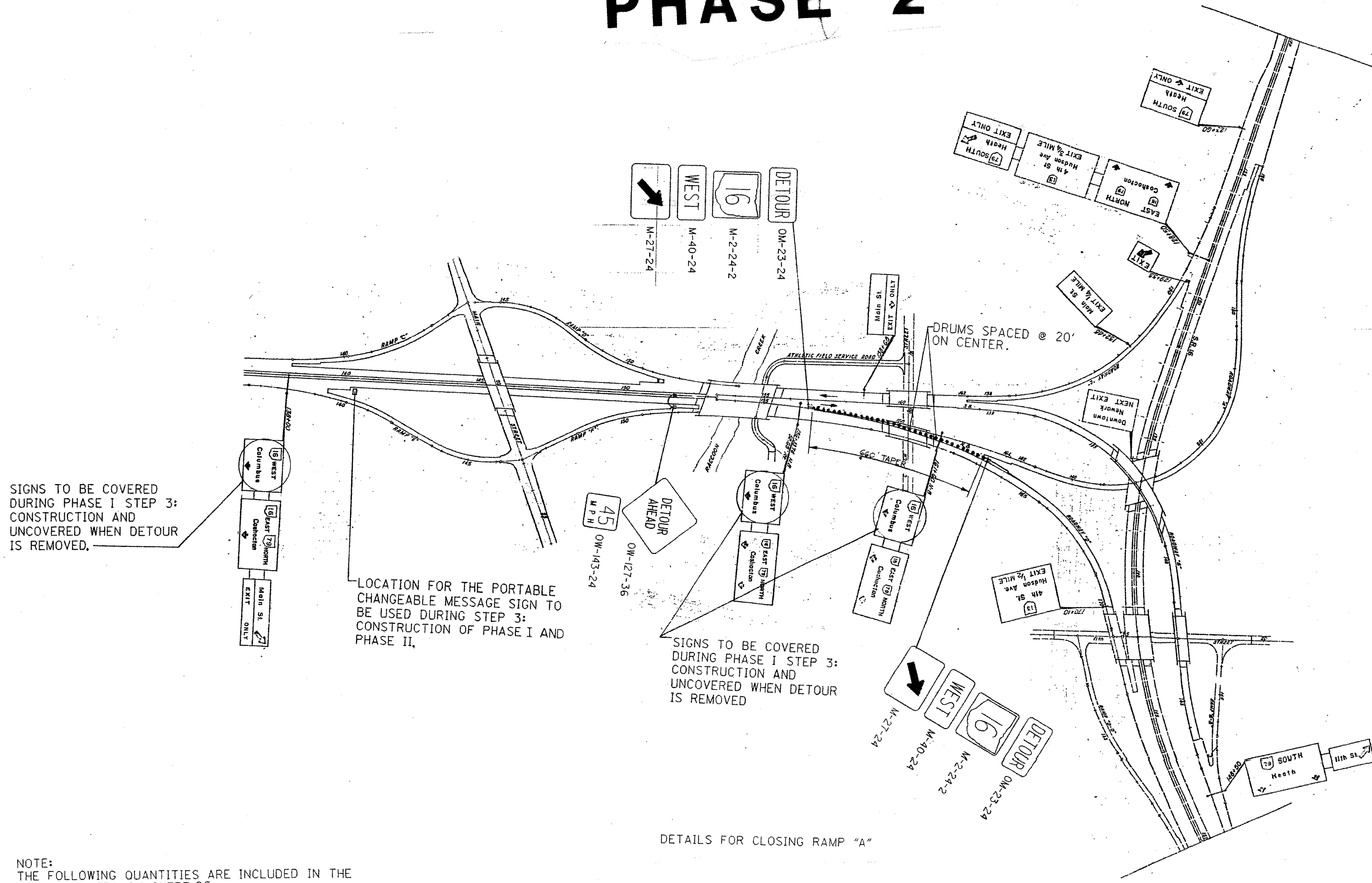

DETAILS FOR CLOSING RAMP "A"

NOTE:
THE FOLLOWING QUANTITIES ARE INCLUDED IN THE GENERAL NOTES ON SHEET 25.

ITEM 614 TEMPORARY EDGE LINE, CLASS I (YELLOW) 0.125 MILE
ITEM 642 REMOVAL OF PAVEMENT MARKINGS 660 LIN.FT.

5-31-95

CALCULATED BB CHECKED TD

MAINTENANCE OF TRAFFIC

LIC-16-19.72

PHASE 2

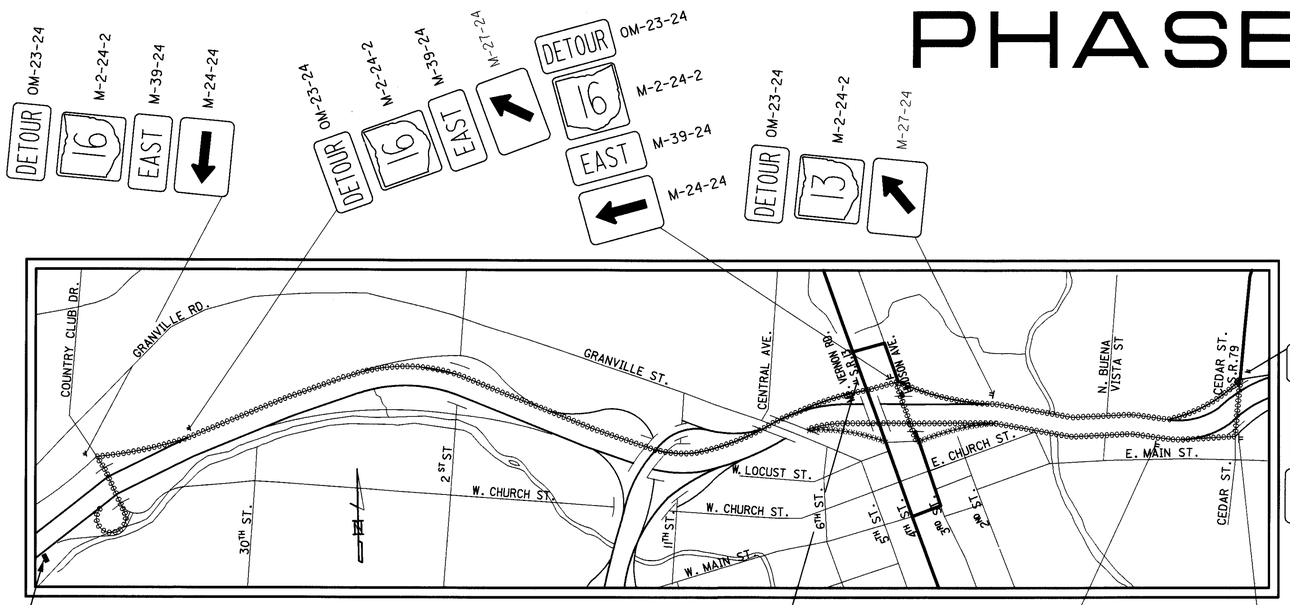

CLOSE MT. VERNON RD./ HUDSON AVE. EXIT RAMP FROM S.R.16 EAST.

TAKE S.R.16 EAST TO CEDAR ST./ S.R.79 EXIT. TURN LEFT AND TAKE ENTRANCE RAMP TO S.R.16 WEST TO HUDSON AVE./ MT. VERNON RD. EXIT RAMP.

PORTABLE CHANGEABLE MESSAGE SIGN FOR ALL STEPS OF CONSTRUCTION

CLOSE RAMP FROM HUDSON AVE. TO S.R.16 EAST.

TAKE HUDSON AVE. TO ENTRANCE RAMP FOR S.R.16 WEST. TAKE S.R.16 WEST TO COUNTRY CLUB DR. EXIT, TURN LEFT AND TAKE ENTRANCE RAMP TO S.R.16 EAST.

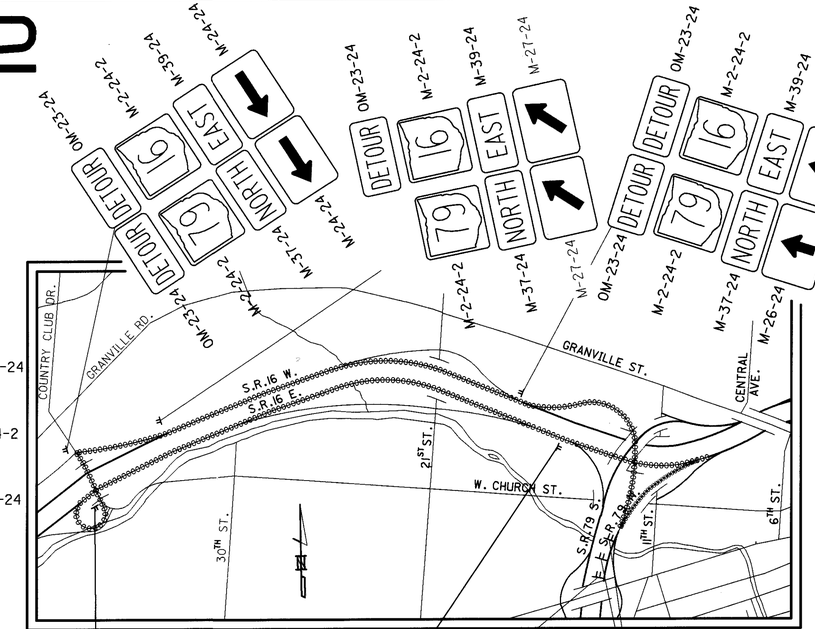

CLOSE S.R.79 N. TO S.R.16 E.

TAKE S.R.79 N. TO S.R.16 W. TO COUNTRY CLUB DR. EXIT, THEN S.R.16 E.

DETOUR AHEAD

OW-127-36

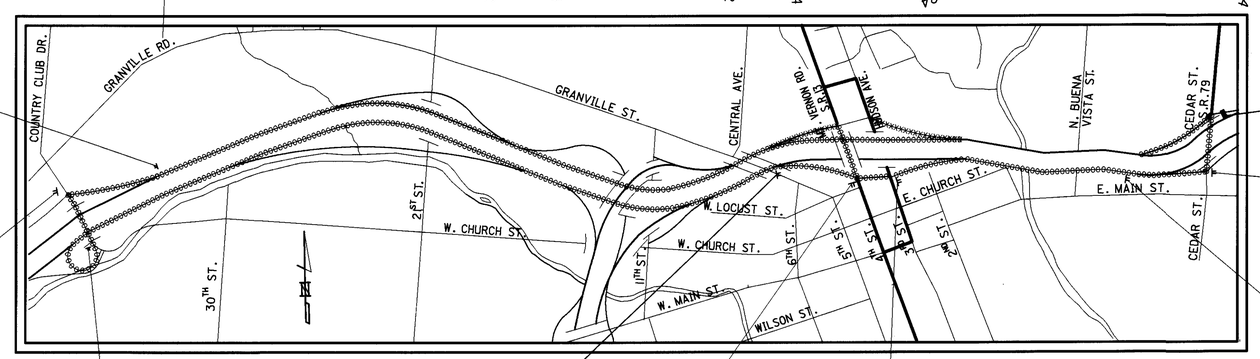

PORTABLE CHANGEABLE MESSAGE SIGN FOR ALL STEPS OF CONSTRUCTION

CLOSE HUDSON AVE./ MT. VERNON RD. EXIT RAMP FROM S.R.16 WEST.

TAKE S.R.16 WEST TO COUNTRY CLUB DR. EXIT, TURN LEFT TAKE S.R.16 EAST TO MT. VERNON RD./ HUDSON AVE. EXIT.

CLOSE ON RAMP FROM MT. VERNON ROAD TO S.R.16 WEST.

TAKE HUDSON AVE. ON RAMP TO S.R.16 EAST TO CEDAR ST./ S.R.79 EXIT. TURN LEFT AND TAKE S.R.16 WEST ON RAMP.

~~~~~~~~~~ RAMPS TO BE CLOSED.

~~~~~~~~~~ DETOUR ROUTES FOR CLOSED RAMPS.

NOTE:
IN ADDITION TO ALL THE STANDARD SIGNS AS PER STANDARD DRAWINGS AND O.M.U.T.C.D., THE SIGNS SHOWN ON THIS SHEET SHALL BE FURNISHED, INSTALLED, MAINTAINED, ADJUSTED AND SUBSEQUENTLY REMOVED BY THE CONTRACTOR. THE COST FOR ALL THE ABOVE TO BE INCLUDED WITH MAINTAINING TRAFFIC.

ALL OVERHEAD SIGNS WHICH CONFLICT WITH THE DETOURS SHOWN ON THIS SHEET SHALL BE COVERED FOR THE DURATION OF THE DETOUR AND UNCOVERED WHEN DETOUR IS REMOVED.

CALCULATED TG
CHECKED BB

MAINTENANCE OF TRAFFIC DETOURS

LIC-16-19.72

L016DET2.DGN 05/03/95

PHASE 2

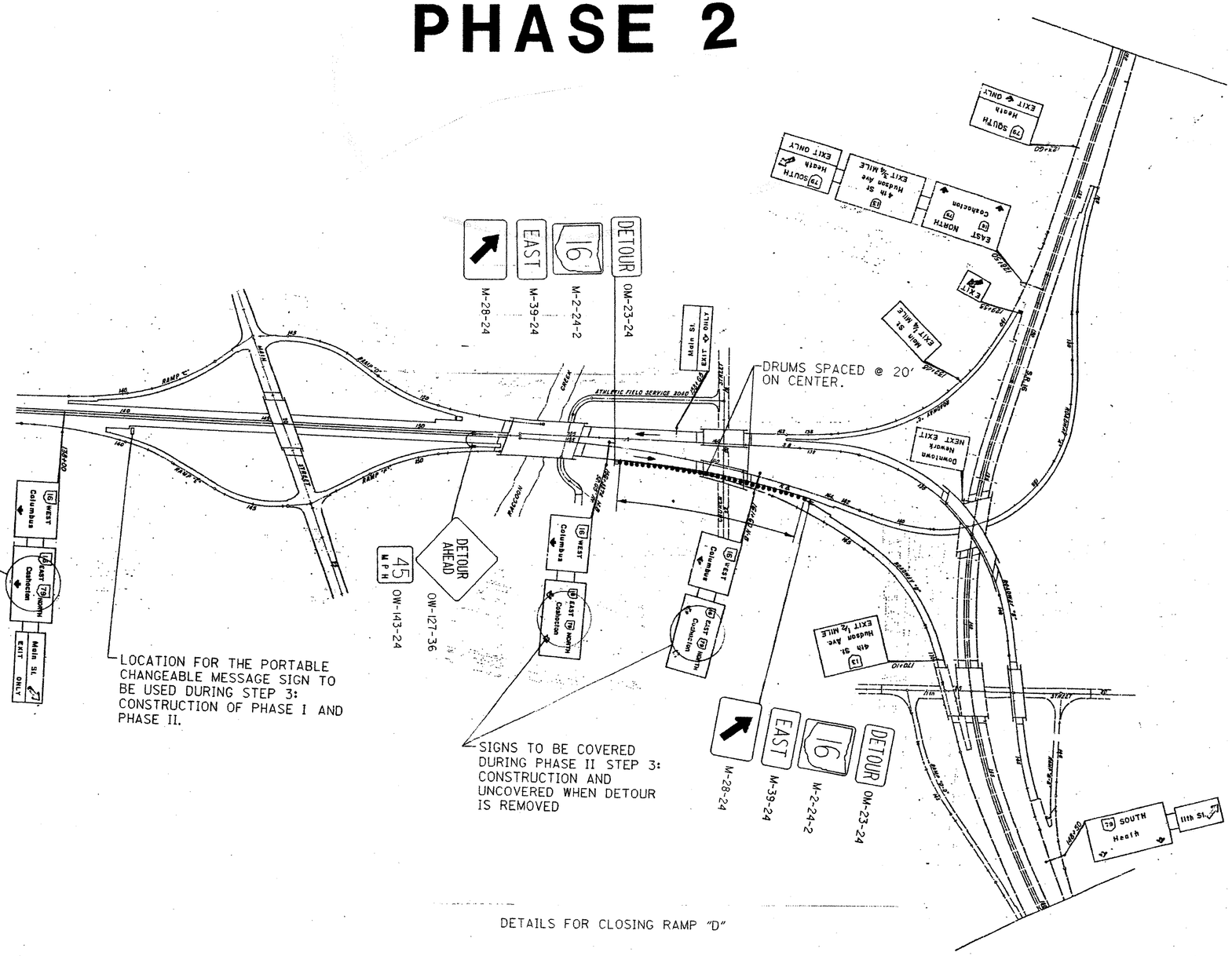

NOTE:
THE FOLLOWING QUANTITIES ARE INCLUDED IN THE GENERAL NOTES ON SHEET 25.

ITEM 614 TEMPORARY EDGE LINE, CLASS I (WHITE) 0.125 MILE
ITEM 642 REMOVAL OF PAVEMENT MARKINGS 660 LIN.FT.

5-31-95

ENGINEER BB
CHECKED

MAINTENANCE OF TRAFFIC

LIC-16-19.72

PHASES 1

STEP 1

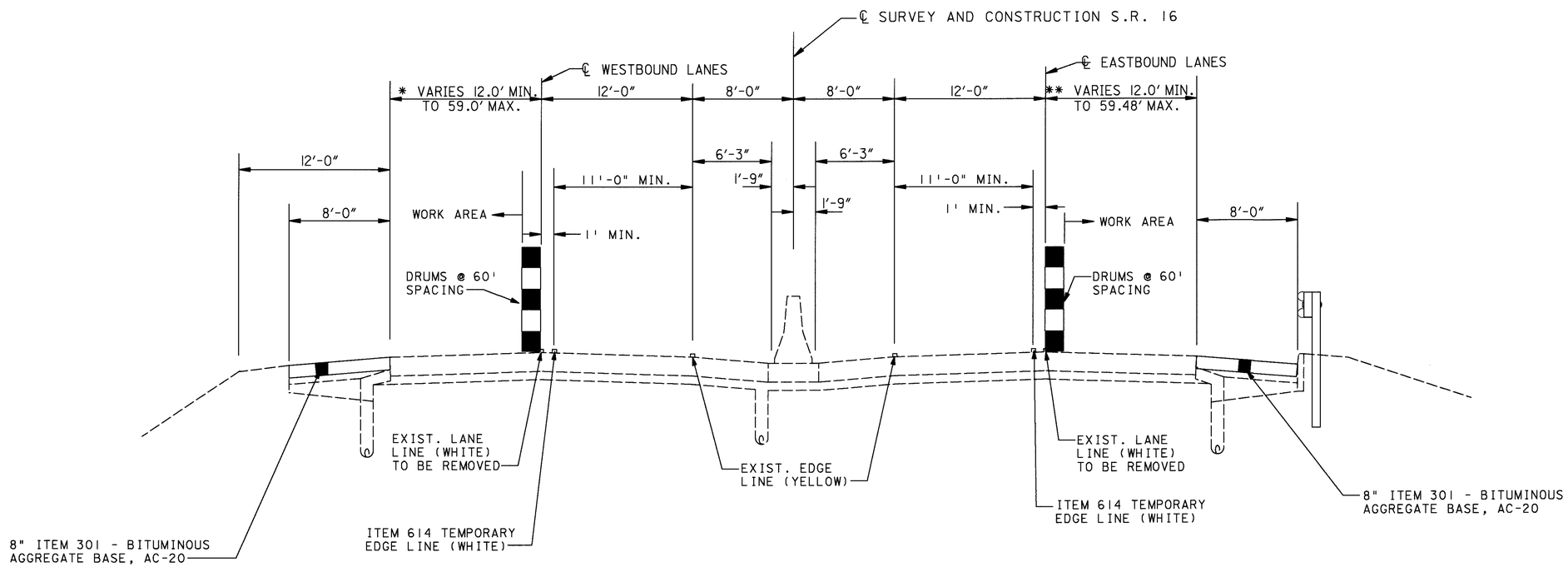

CALCULATED B.B.
CHECKED T.D.

M.O.T. TYPICAL SECTION PHASES 1 & 2

LIC-16-19.72

L016TAMT.DGN 05/31/95

PHASE 2

STEP 1

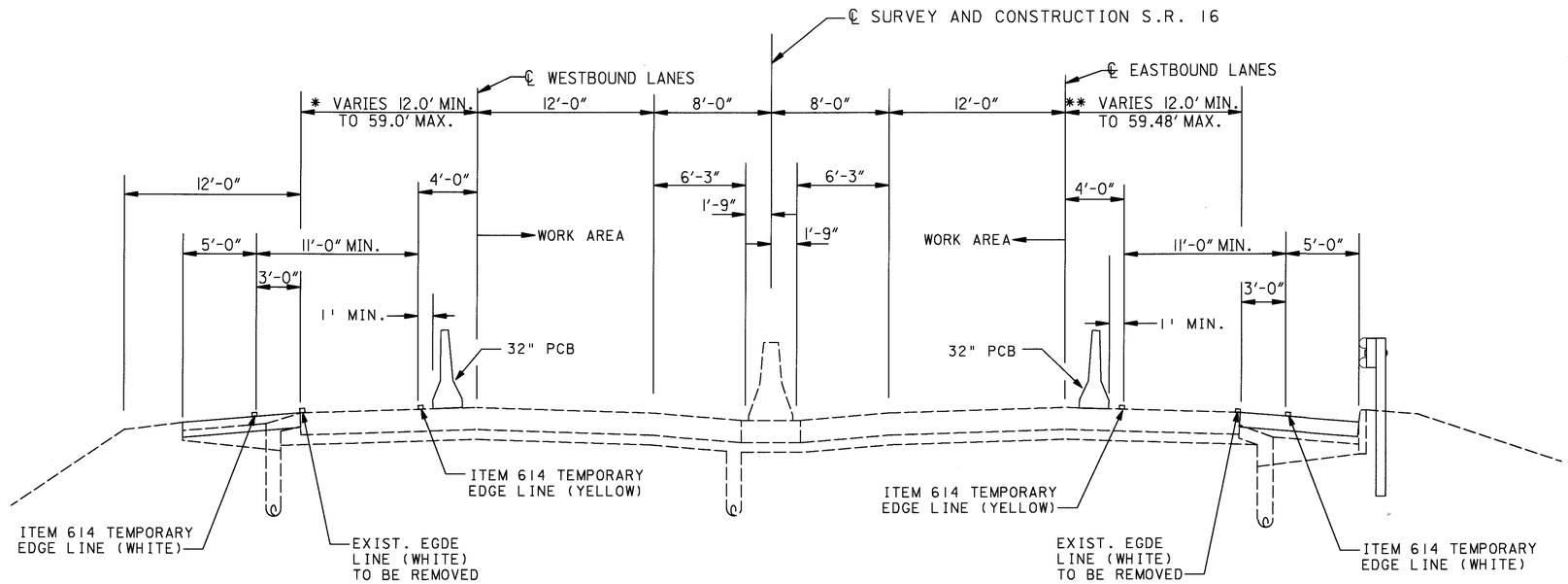

STEP 2

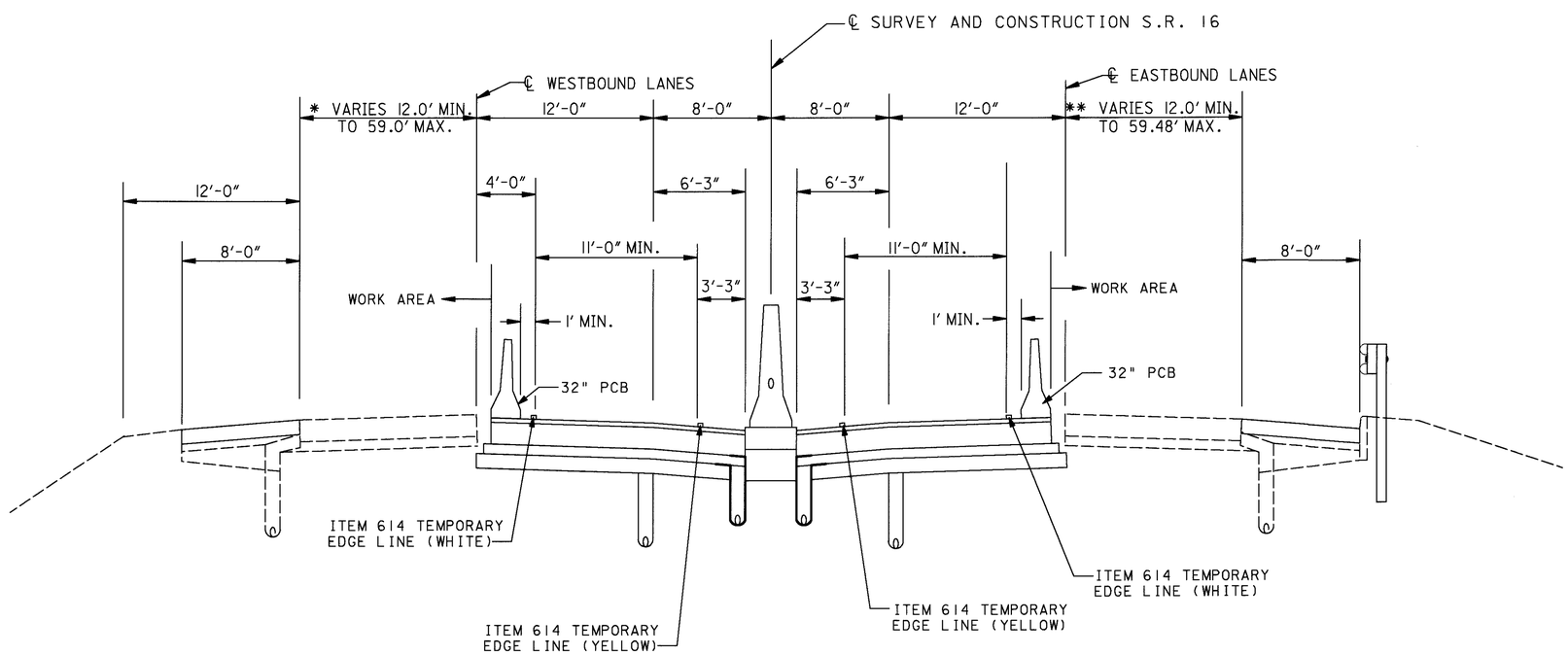

CALCULATED B.B.
CHECKED T.D.

M.O.T. TYPICAL SECTION
PHASES 1 & 2 - FULL DEPTH REPLACEMENT

LIC-16-19.72

L016TBMT.DGN 05/31/95

PHASE I

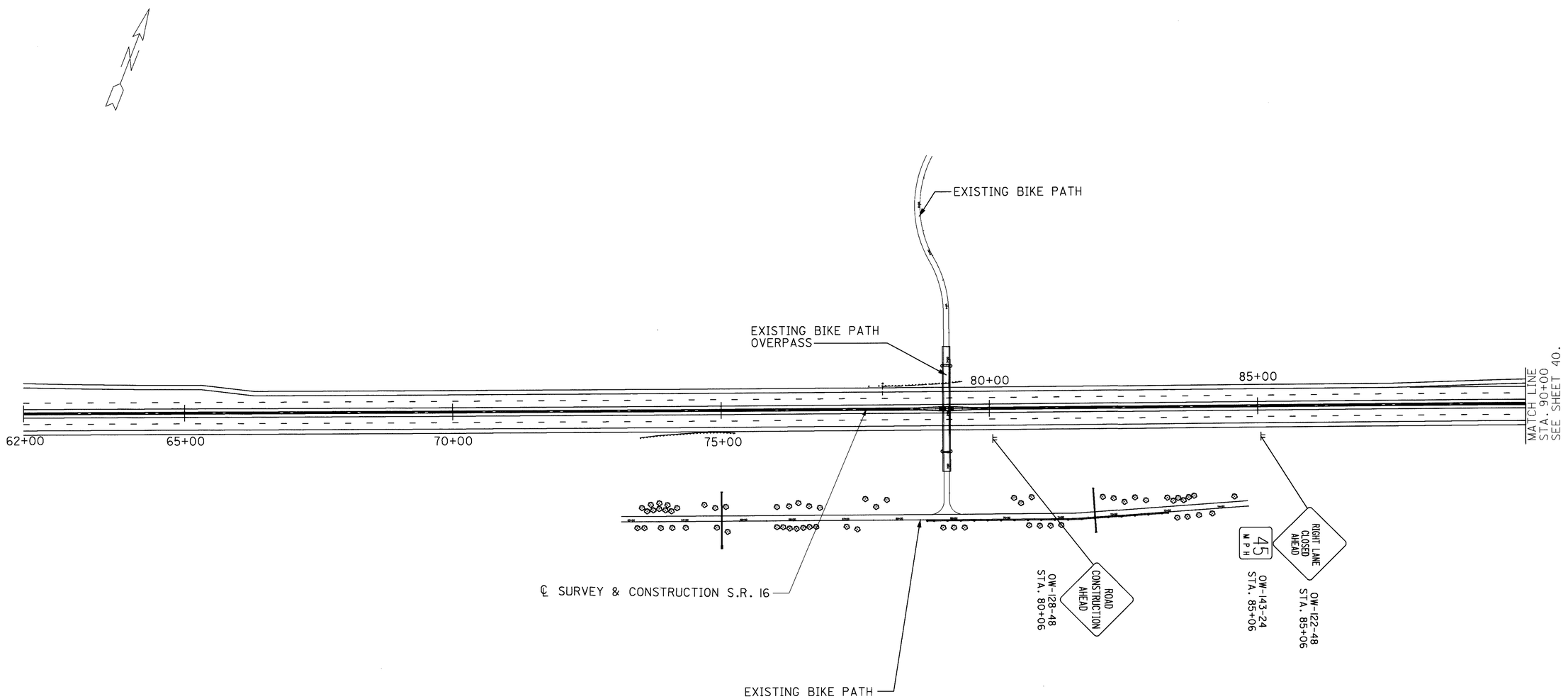

STEP I CONSTRUCTION

HORIZONTAL SCALE IN FEET
0 100 200

CALCULATED B.B.
CHECKED T.D.

MAINTENANCE OF TRAFFIC STA. 62+00 TO STA. 90+00

LIC-16-19.72

L016IBMT.DGN 05/31/95

PHASE I

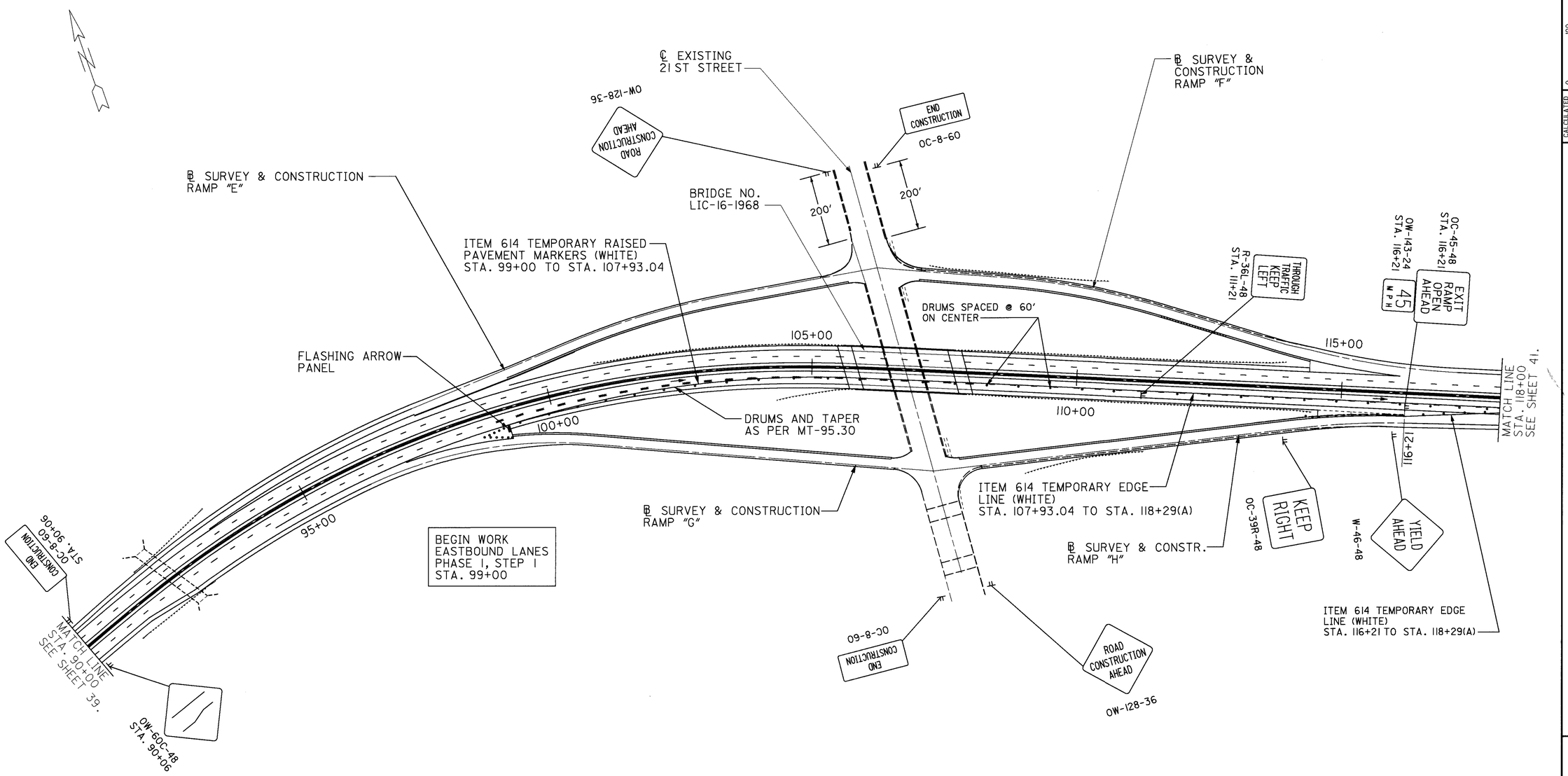

NOTE:
xxxx - DENOTES EXISTING PAVEMENT MARKINGS TO BE COVERED WITH ITEM SPECIAL, BLACK OUT TAPE (SEE GENERAL NOTE SHEET 25)

STEP I CONSTRUCTION

RECONSTRUCT EXISTING 8' BERMS WITH 8" OF ITEM 301

HORIZONTAL SCALE IN FEET 0 100 200

CALCULATED B.B.
CHECKED T.D.

MAINTENANCE OF TRAFFIC STA. 90+00 TO STA. 118+00

LIC-16-19.72

L016ICMT.DGN 2/12/99

PHASE I

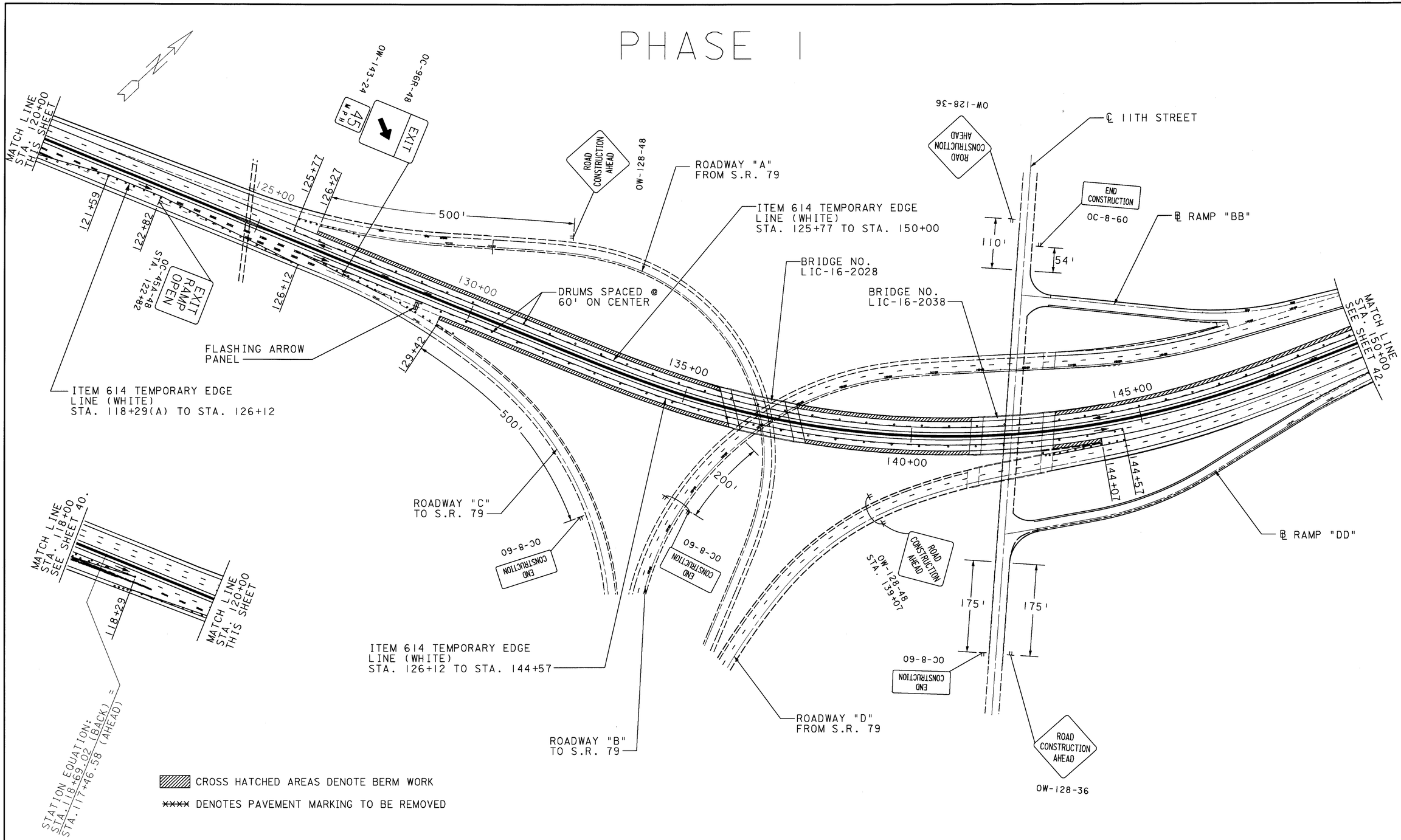

STEP I CONSTRUCTION

RECONSTRUCT EXISTING 8' BERMS WITH 8" OF ITEM 301

L0161DMT.DGN 2/12/99

CALCULATED B.B.
CHECKED T.D.

0 100 200 HORIZONTAL SCALE IN FEET

MAINTENANCE OF TRAFFIC STA. 118+00 TO STA. 150+00

LIC-16-19.72

PHASE I

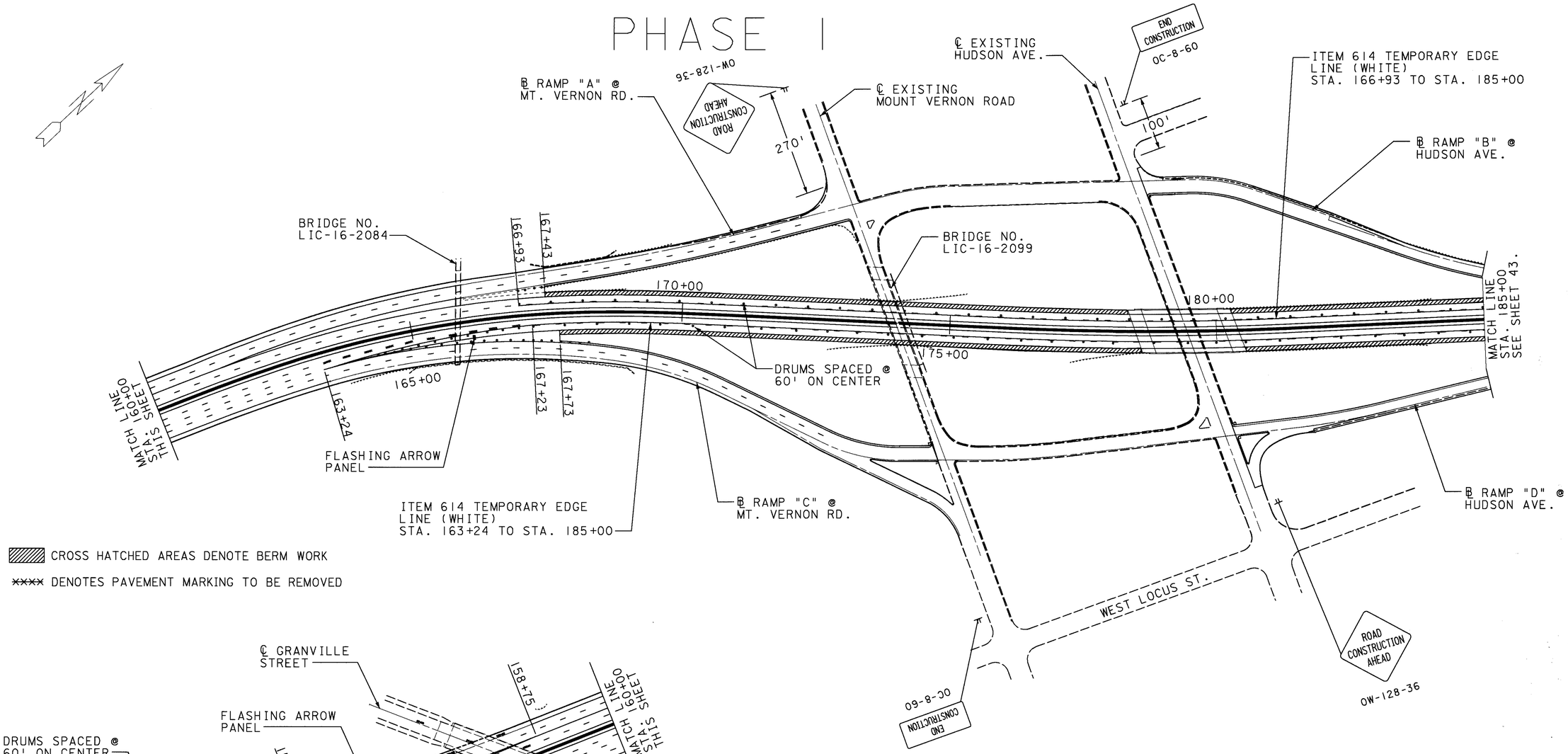

CROSS HATCHED AREAS DENOTE BERM WORK

~~XXXX~~ DENOTES PAVEMENT MARKING TO BE REMOVED

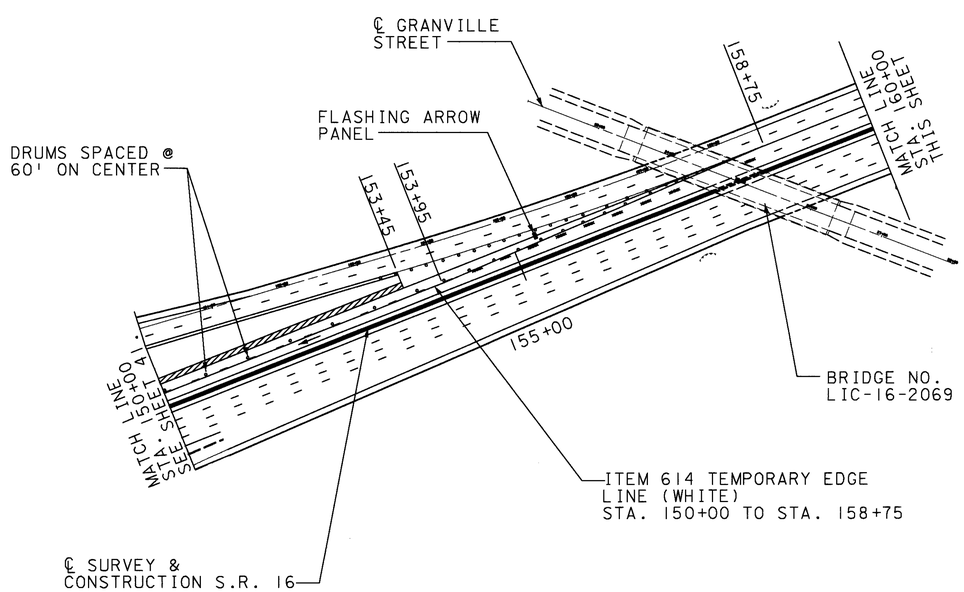

STEP I CONSTRUCTION

RECONSTRUCT EXISTING 8' BERMS WITH 8" OF ITEM 301

HORIZONTAL SCALE IN FEET 0 100 200

CALCULATED B.B.
CHECKED T.D.

MAINTENANCE OF TRAFFIC STA. 150+00 TO STA. 185+00

LIC-16-19.72

L0161EMT.DGN 2/12/99

PHASE I

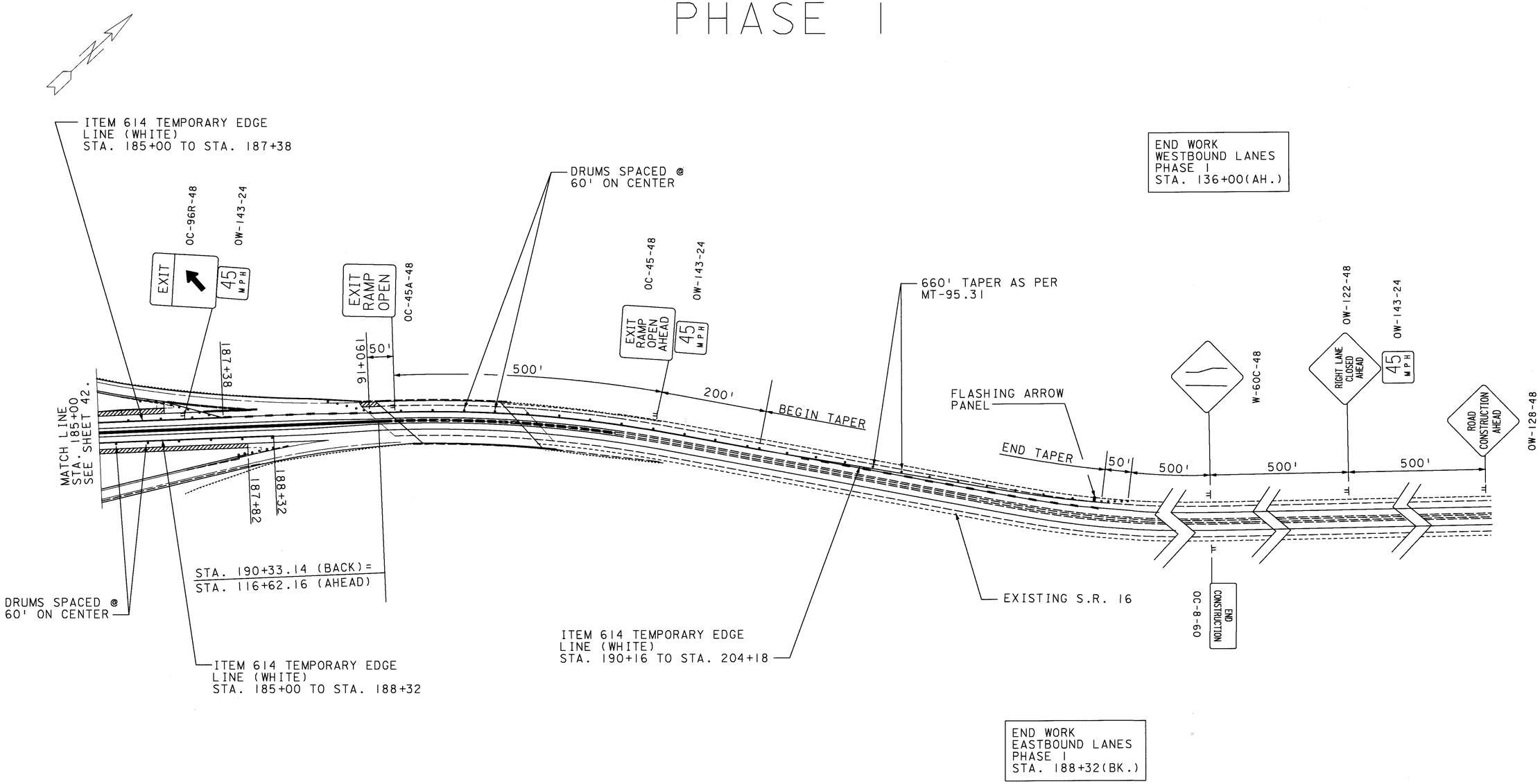

STEP I CONSTRUCTION

RECONSTRUCT EXISTING 8' BERMS WITH 8" OF ITEM 301

HORIZONTAL SCALE IN FEET 0 100 200

CALCULATED BB

CHECKED TD

MAINTENANCE OF TRAFFIC STA. 185+00 TO STA. 190+33.14

LIC-16-19.72

L016IFMT.DGN 2/12/99

PHASE 2

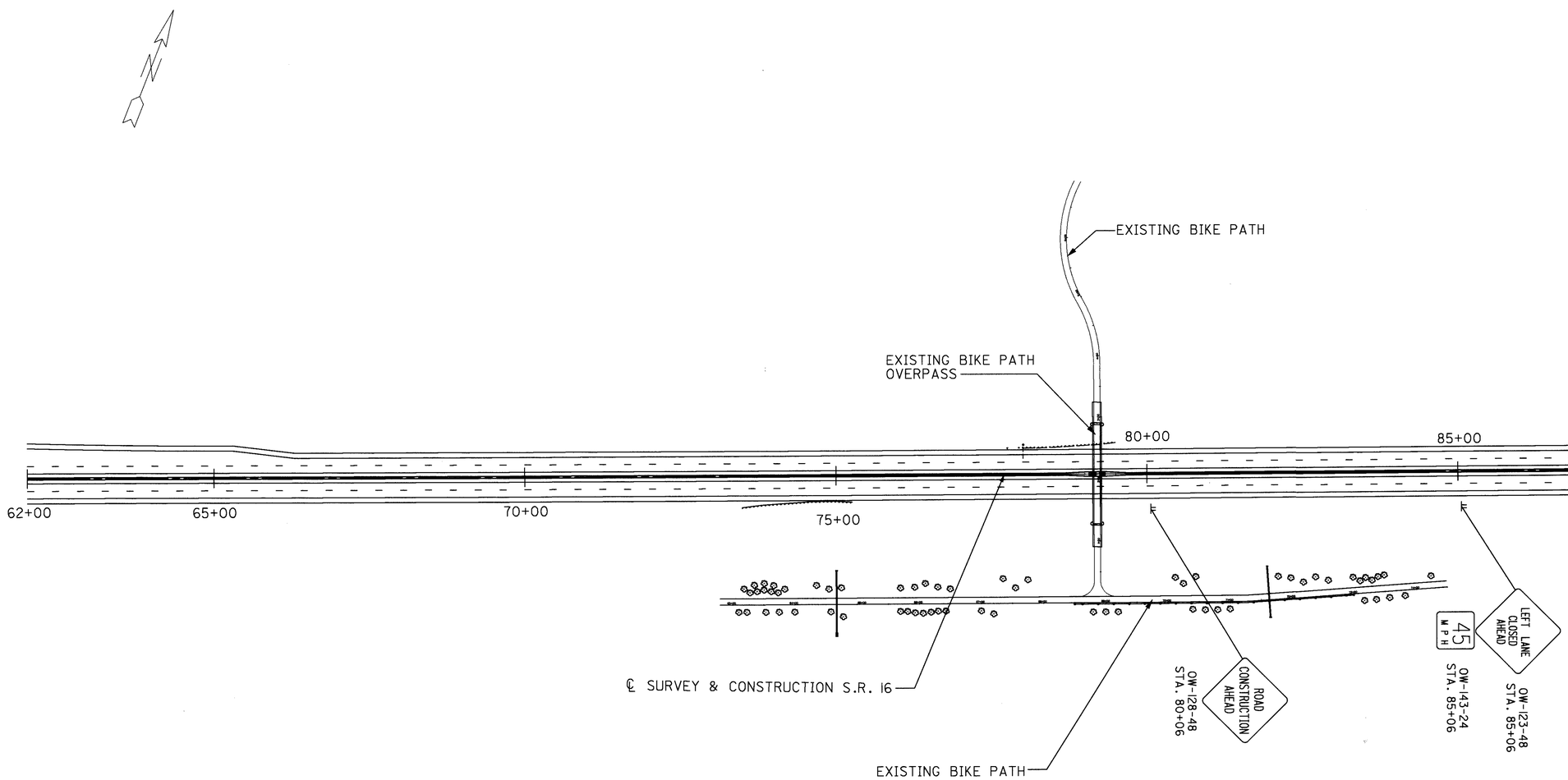

STEP 1 CONSTRUCTION

HORIZONTAL SCALE IN FEET
0 100 200

CALCULATED BB
CHECKED TD

MAINTENANCE OF TRAFFIC STA. 62+00 TO STA. 90+00

LIC-16-19.72

L016IMT.DGN 2/12/99

PHASE 2

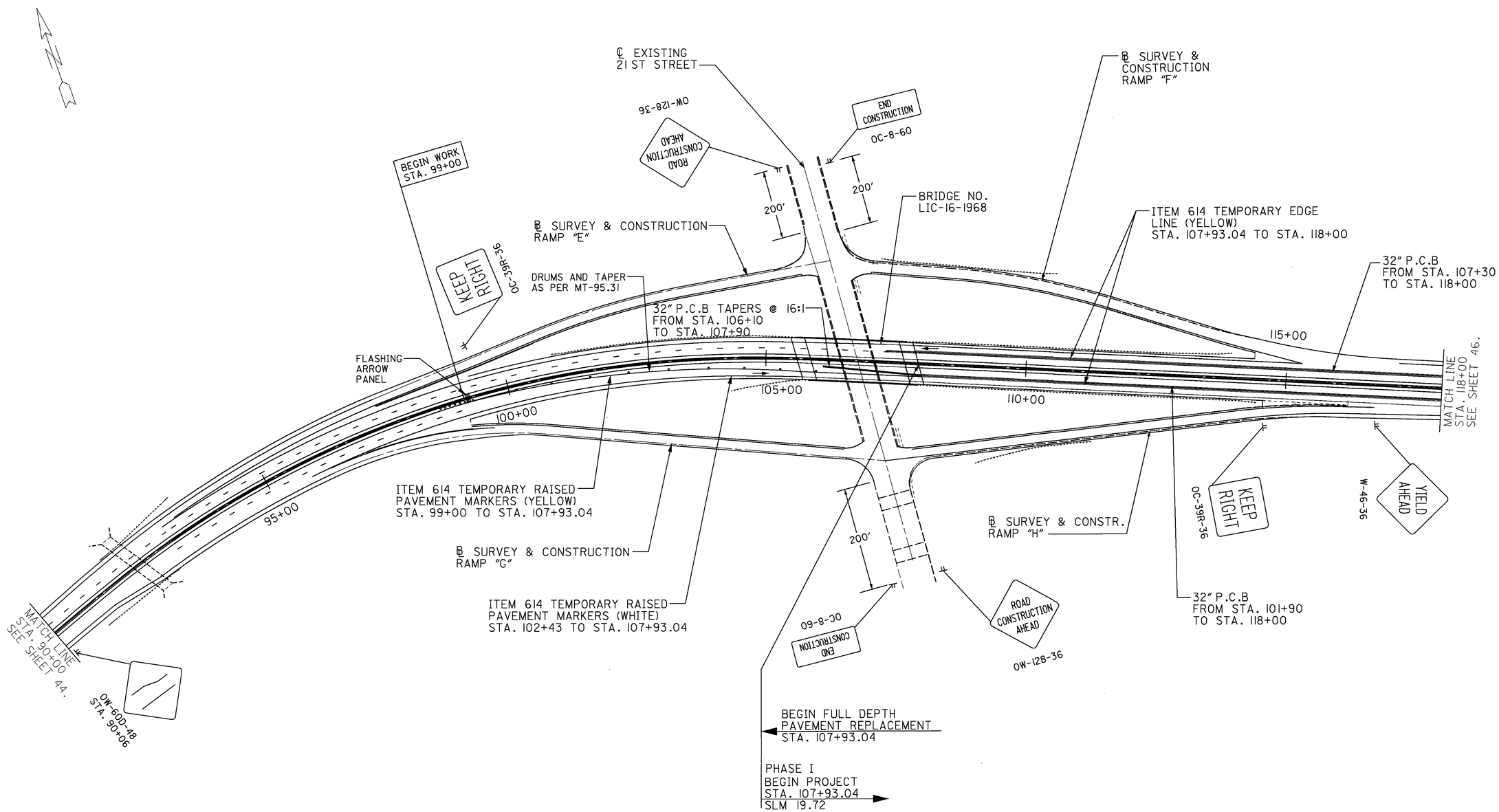

STEP 1 CONSTRUCTION

REMOVE 32" EXISTING CONCRETE BARRIER WITH LIGHTING AND INSTALL PROP. 50" CONCRETE BARRIER WITH LIGHTING. ALSO RECONSTRUCT THE EXISTING ASPHALT & CONCRETE INSIDE BERM AND PASSING LANE WITH PROPOSED ASPHALT BUILDUP.

HORIZONTAL SCALE IN FEET 0 100 200

CALCULATED BB
CHECKED TD

MAINTENANCE OF TRAFFIC STA. 90+00 TO STA. 118+00

LIC-16-19.72

L016IJMT.DGN 2/12/99

PHASE 2

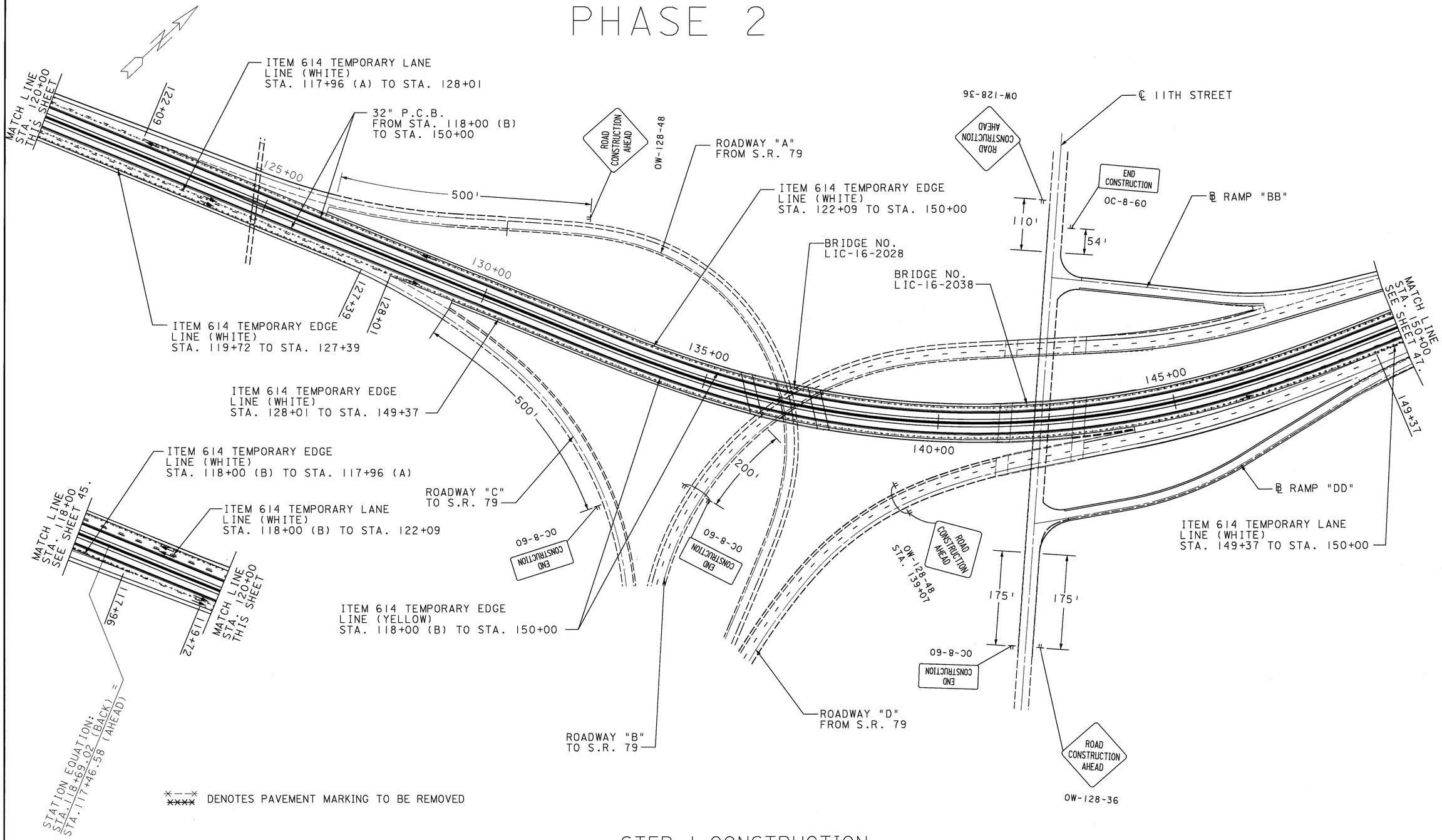

STEP 1 CONSTRUCTION

REMOVE 32" EXISTING CONCRETE BARRIER WITH LIGHTING AND INSTALL PROP. 50" CONCRETE BARRIER WITH LIGHTING. ALSO RECONSTRUCT THE EXISTING ASPHALT & CONCRETE INSIDE BERM AND PASSING LANE WITH PROPOSED ASPHALT BUILDUP.

HORIZONTAL SCALE IN FEET 0 100 200

CALCULATED BB
CHECKED TD

MAINTENANCE OF TRAFFIC STA. 118+00 TO STA. 150+00

LIC-16-19.72

L016IKMT.DGN 2/12/99

PHASE 2

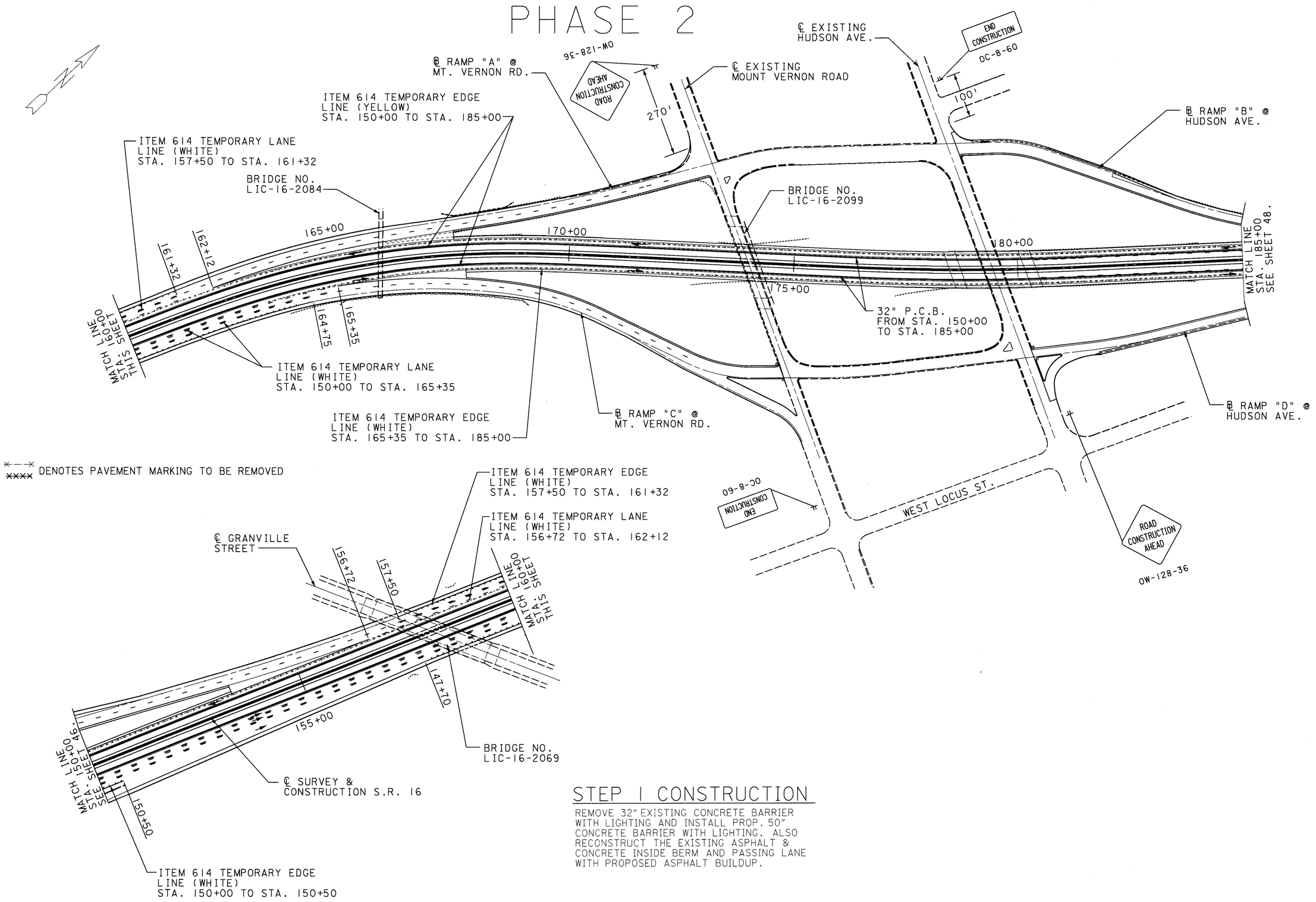

STEP 1 CONSTRUCTION

REMOVE 32" EXISTING CONCRETE BARRIER WITH LIGHTING AND INSTALL PROP. 50" CONCRETE BARRIER WITH LIGHTING. ALSO RECONSTRUCT THE EXISTING ASPHALT & CONCRETE INSIDE BERM AND PASSING LANE WITH PROPOSED ASPHALT BUILDUP.

HORIZONTAL SCALE IN FEET 0 100 200

CALCULATED BB
CHECKED TD

MAINTENANCE OF TRAFFIC STA. 150+00 TO STA. 185+00

LIC-16-19.72

L016ILMT.DGN 2/12/99

PHASE 2

NOTE:
FOR ADDITIONAL DETAILS, SEE STANDARD CONSTRUCTION DRAWING MT-95.31.

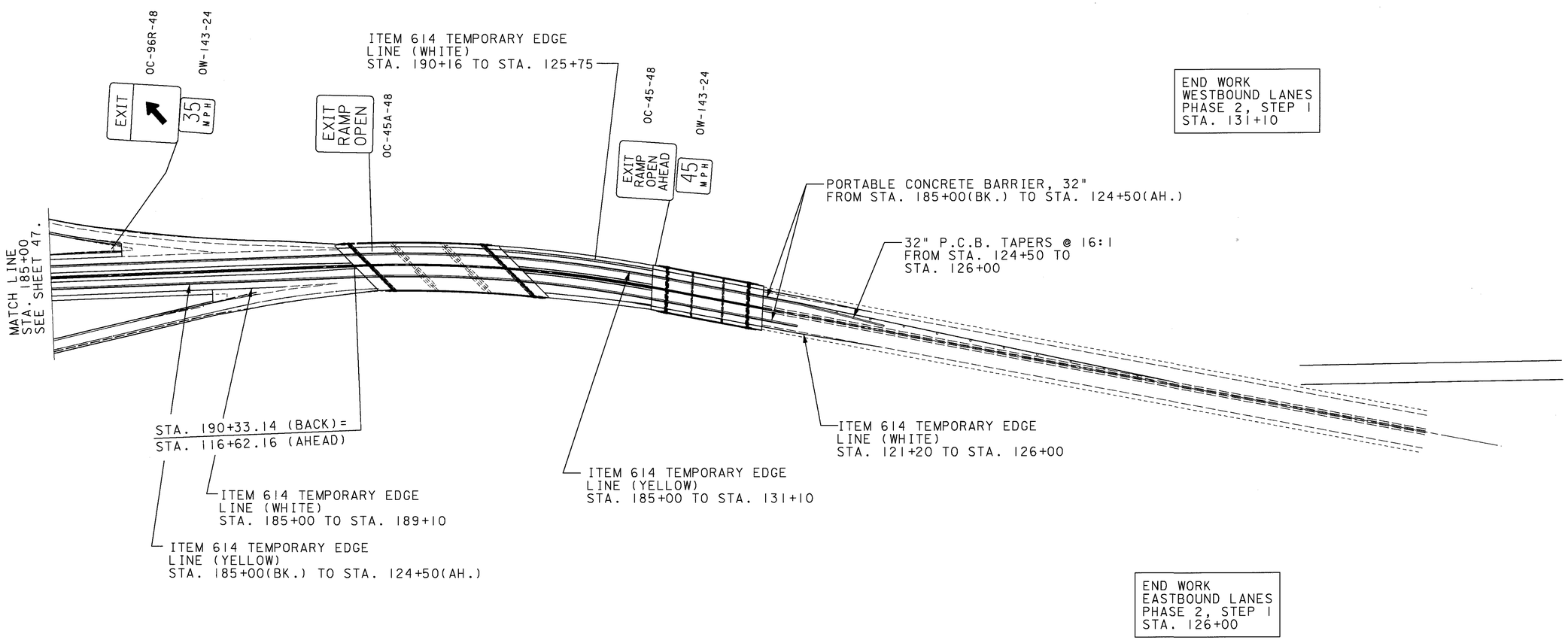

STEP 1 CONSTRUCTION

REMOVE 32" EXISTING CONCRETE BARRIER WITH LIGHTING AND INSTALL PROP. 50" CONCRETE BARRIER WITH LIGHTING. ALSO RECONSTRUCT THE EXISTING PAVEMENT BETWEEN THE TWO BRIDGES AS PER TYPICAL SECTIONS.

HORIZONTAL SCALE IN FEET 0 100 200

CALCULATED BB
CHECKED TD

MAINTENANCE OF TRAFFIC STA. 185+00 TO STA. 190+33.14

LIC-16-19.72

L016IMMT.DGN 2/12/99

PHASE 2

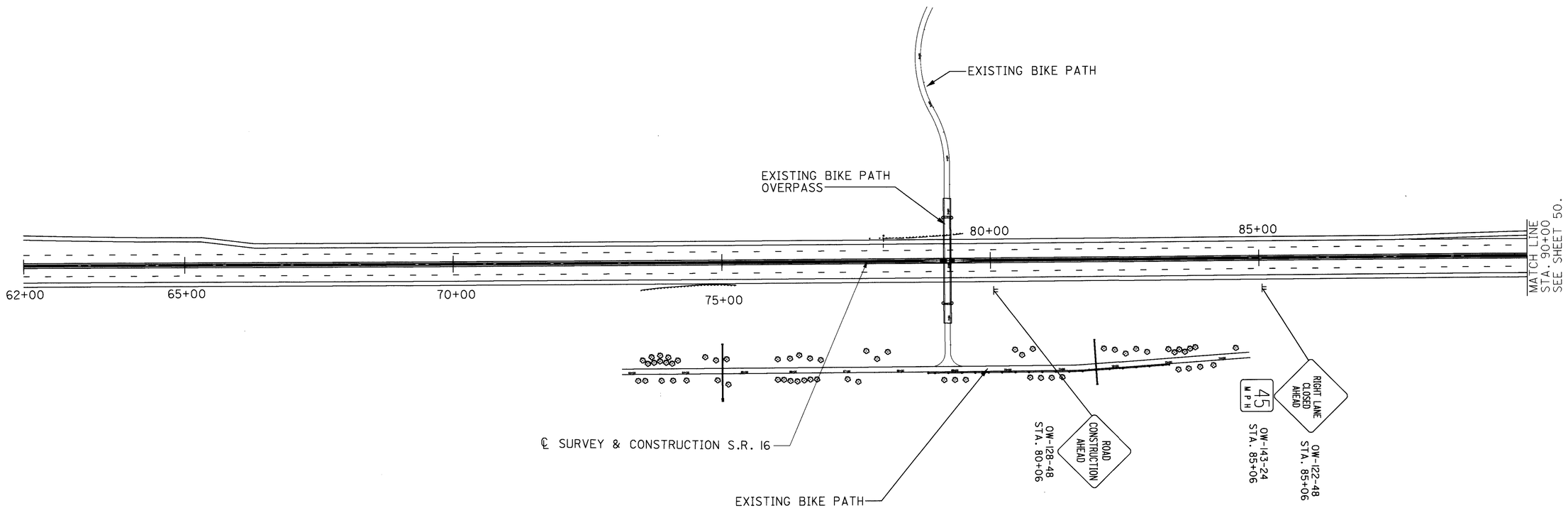

STEP 2 CONSTRUCTION

HORIZONTAL SCALE IN FEET
0 100 200

CALCULATED BB
CHECKED TD

MAINTENANCE OF TRAFFIC STA. 62+00 TO STA. 90+00

LIC-16-19.72

L016PMT.DGN 2/12/99

PHASE 2

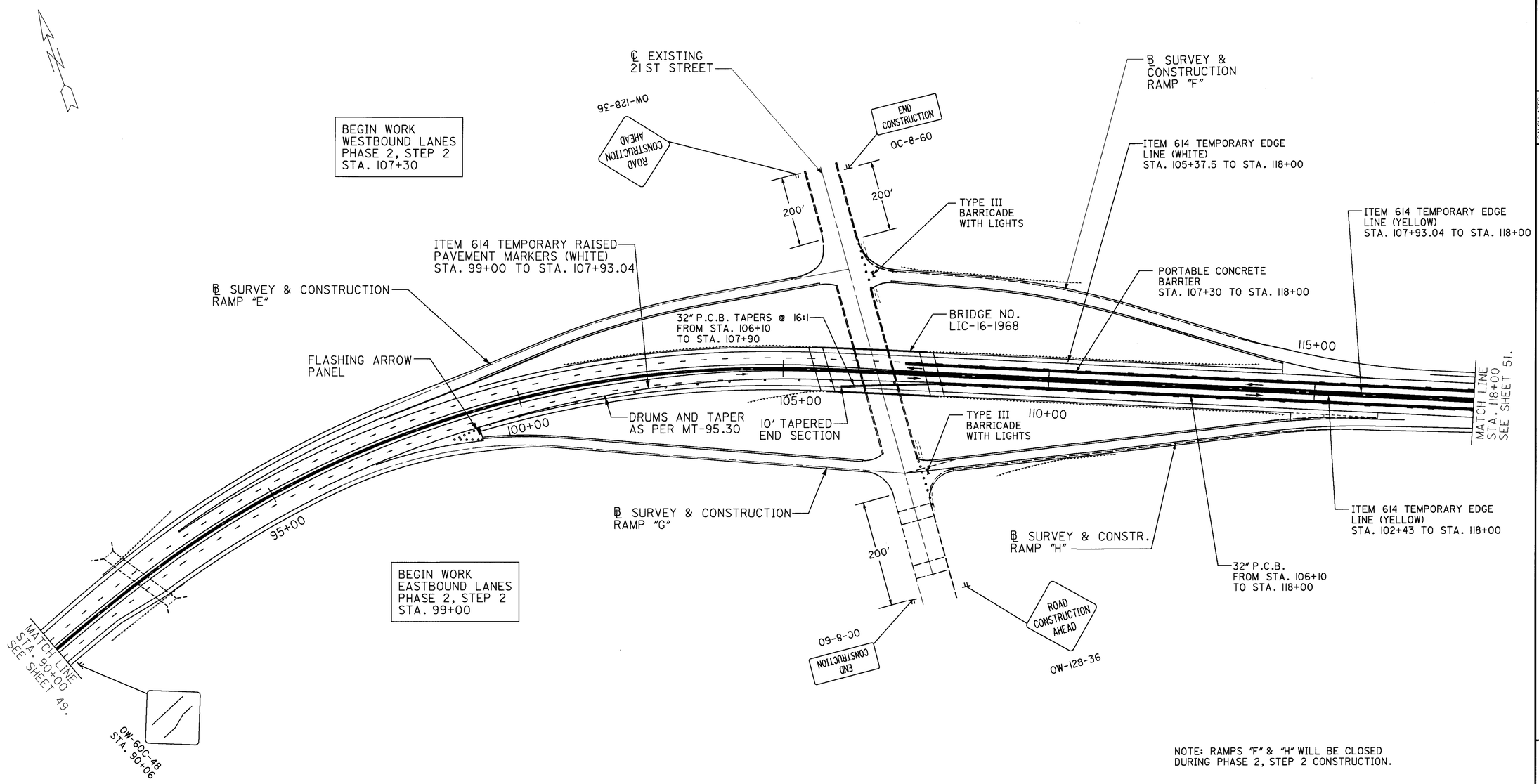

NOTE: RAMPS "F" & "H" WILL BE CLOSED DURING PHASE 2, STEP 2 CONSTRUCTION.

NOTE: THE TYPE III BARRICADES WITH LIGHTS ALSO INCLUDES AN R-75-48 (ROAD CLOSED) SIGN.

STEP 2 CONSTRUCTION

RECONSTRUCT EXISTING ASPHALT & CONCRETE ROADWAY WITH PROPOSED BUILDUP. ALSO RECONSTRUCT RAMPS AS DENOTED IN PLANS.

HORIZONTAL SCALE IN FEET
0 100 200

CALCULATED BB
CHECKED TD

MAINTENANCE OF TRAFFIC
STA. 90+00 TO STA. 118+00

LIC-16-19.72

L016IQMT.DGN 2/12/99

PHASE 2

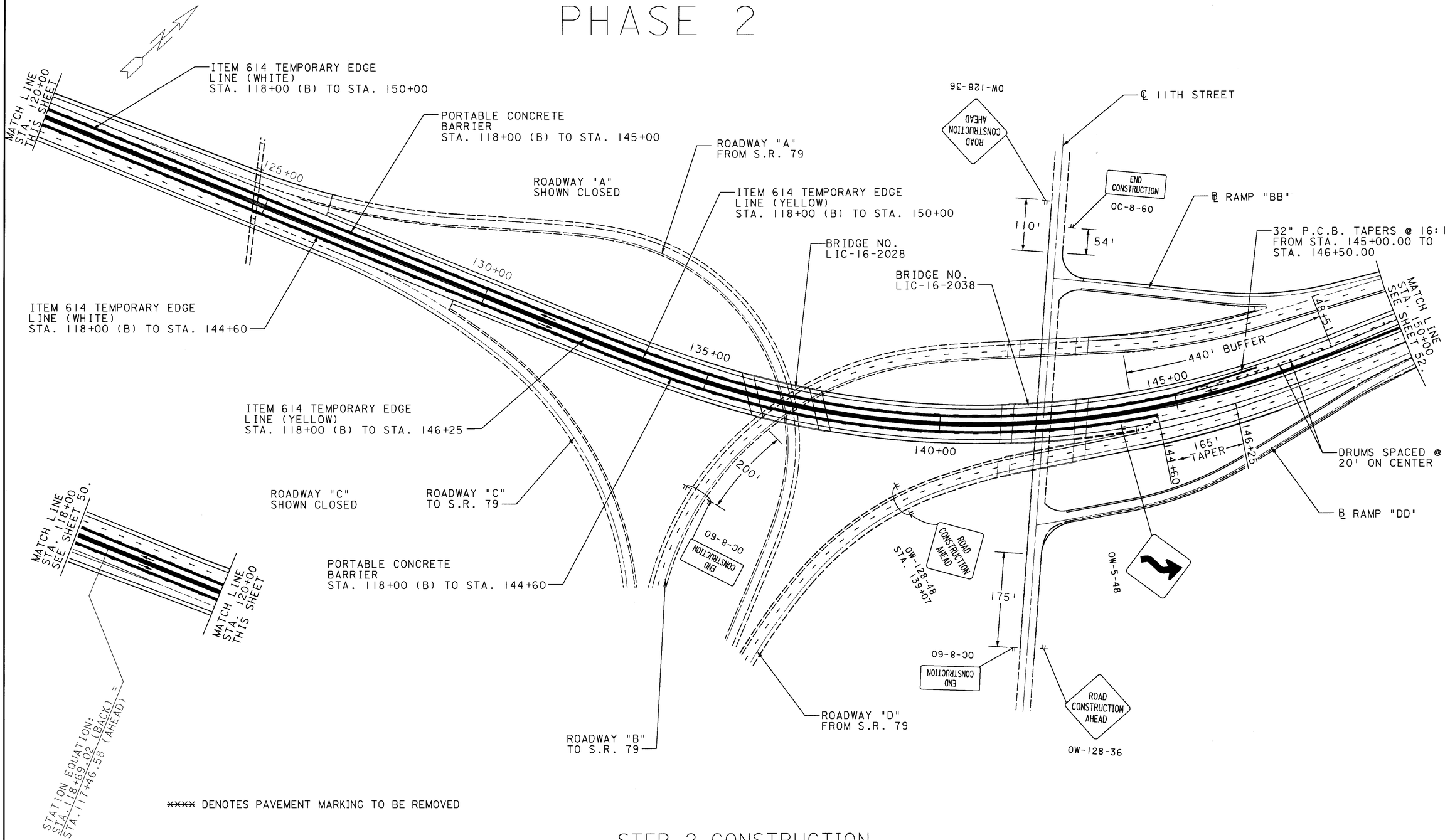

**** DENOTES PAVEMENT MARKING TO BE REMOVED

STEP 2 CONSTRUCTION

RECONSTRUCT EXISTING ASPHALT & CONCRETE ROADWAY WITH PROPOSED BUILDUP. ALSO RECONSTRUCT RAMPS AS DENOTED IN PLANS.

NOTE: FOR MORE INFORMATION WHEN ROADWAYS A & C ARE TO BE CLOSED, SEE SHEET 33.

HORIZONTAL SCALE IN FEET 0 100 200

CALCULATED BB
CHECKED TD

MAINTENANCE OF TRAFFIC STA. 118+00 TO STA. 150+00

LIC-16-19.72

L016IRMT.DGN 2/12/99

PHASE 2

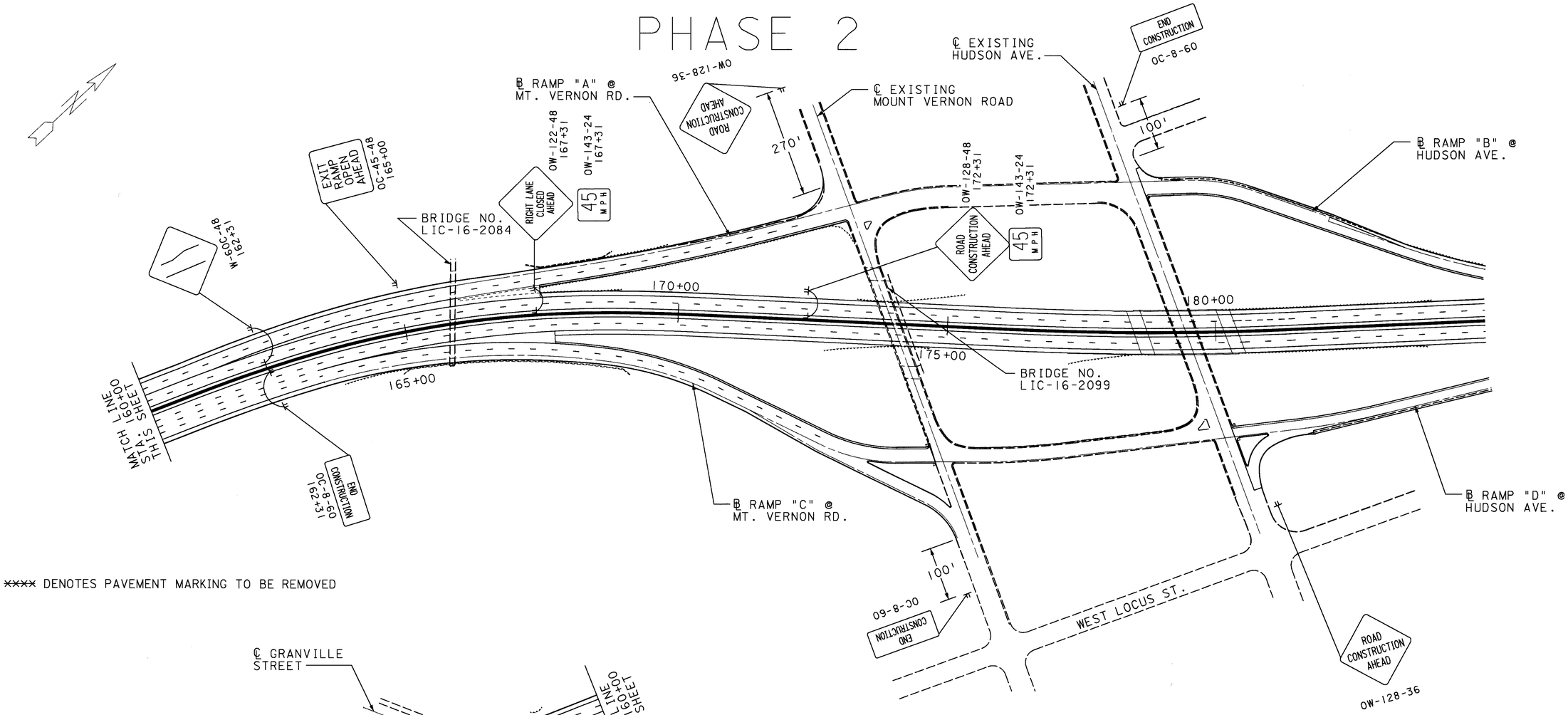

**** DENOTES PAVEMENT MARKING TO BE REMOVED

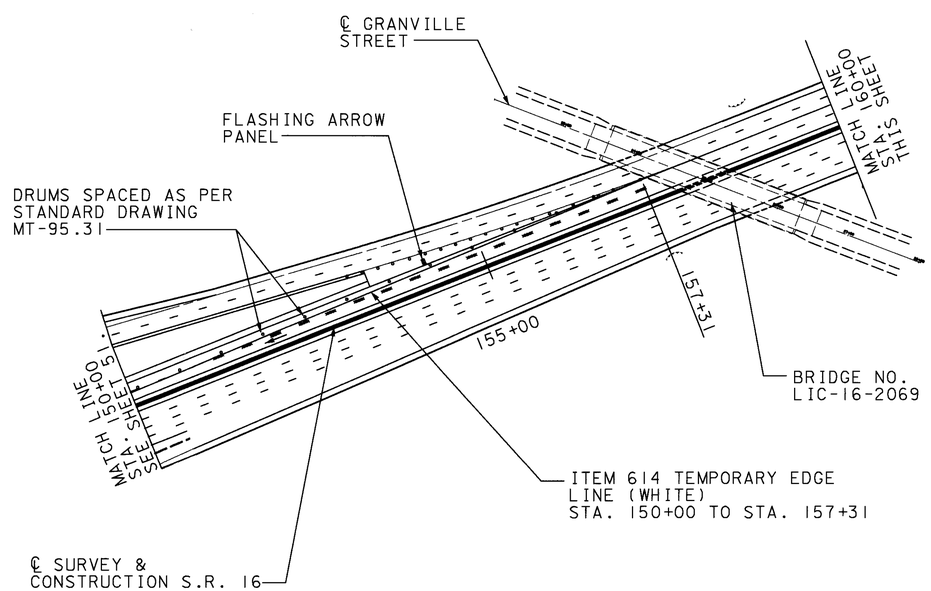

STEP 2 CONSTRUCTION

RECONSTRUCT EXISTING ASPHALT & CONCRETE ROADWAY WITH PROPOSED BUILDUP. ALSO RECONSTRUCT RAMPS AS DENOTED IN PLANS.

HORIZONTAL SCALE IN FEET
0 100 200

CALCULATED BB
CHECKED TD

MAINTENANCE OF TRAFFIC
STA. 150+00 TO STA. 185+00

LIC-16-19.72

L016ISMT.DGN 2/12/99

PHASE 2

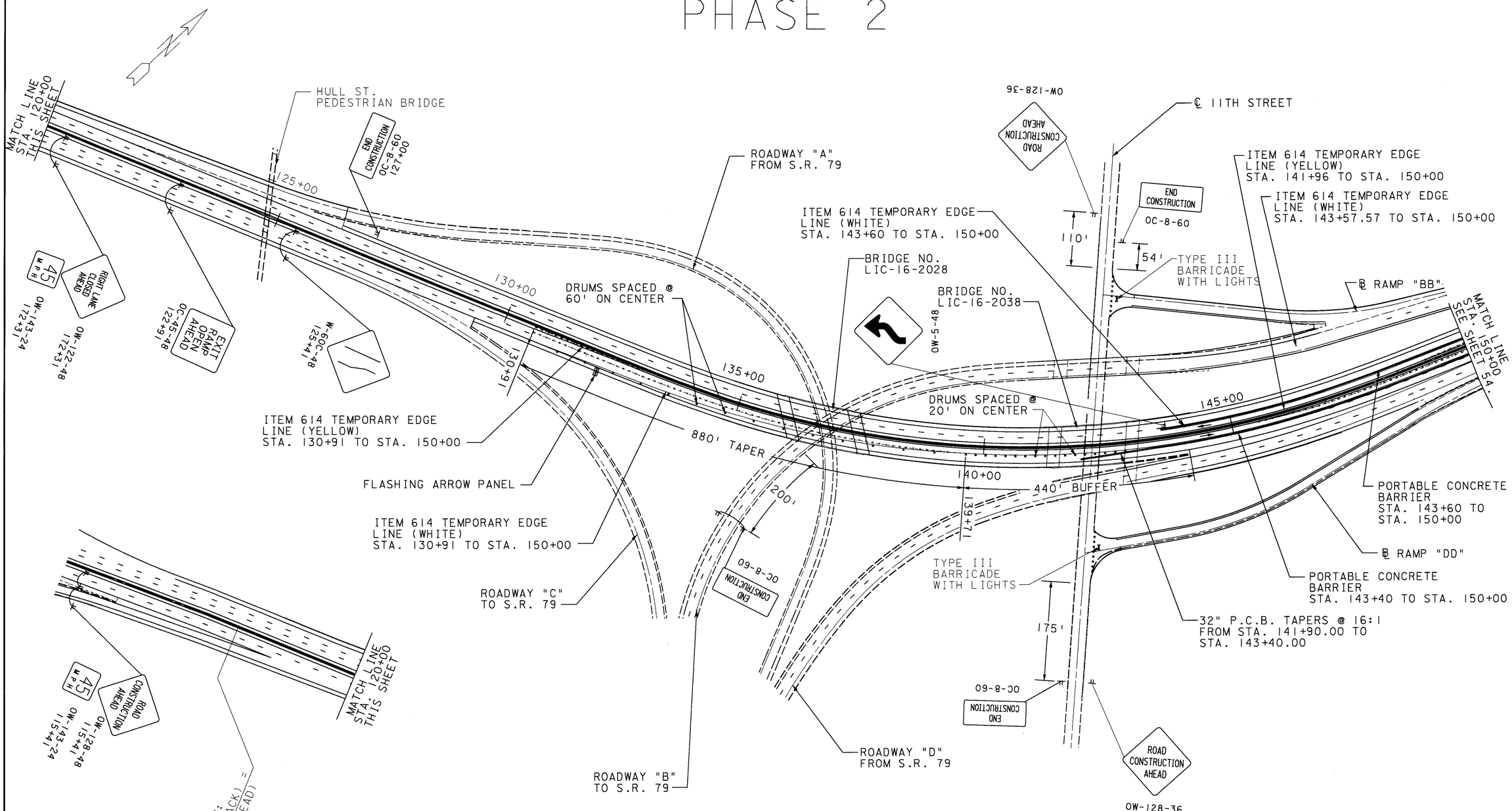

NOTE: THE TYPE III BARRICADES WITH LIGHTS ALSO INCLUDES AN R-75-48 (ROAD CLOSED) SIGN.

NOTE: ROADWAY "D" WILL BE CLOSED THIS STEP SEE SHEET 26.

✕—✕ DENOTES PAVEMENT MARKING TO BE REMOVED

STEP 2 CONSTRUCTION

RECONSTRUCT EXISTING ASPHALT & CONCRETE ROADWAY WITH PROPOSED BUILDUP. ALSO RECONSTRUCT RAMPS AS DENOTED IN PLANS.

HORIZONTAL SCALE IN FEET 0 100 200

CALCULATED BB CHECKED TD

MAINTENANCE OF TRAFFIC STA. 118+00 TO STA. 150+00

LIC-16-19.72

L016IUMT.DGN 2/12/99

PHASE 2

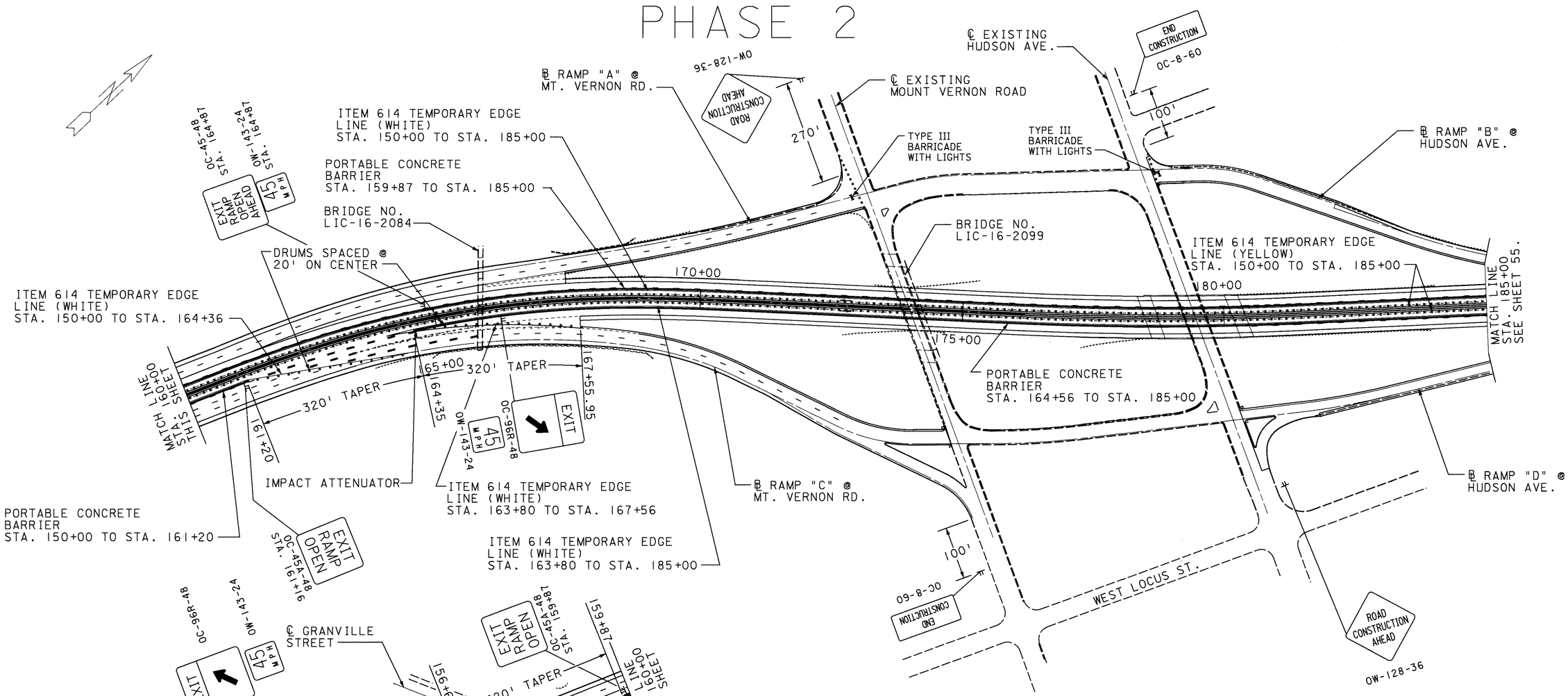

STEP 2 CONSTRUCTION

RECONSTRUCT EXISTING ASPHALT & CONCRETE ROADWAY WITH PROPOSED BUILDUP. ALSO RECONSTRUCT RAMPS AS DENOTED IN PLANS.

NOTE: (1) AT NO TIME WILL RAMPS A, B, C & D BE CLOSED AT THE SAME TIME TO TRAFFIC. REFER TO SEQUENCE OF OPERATIONS SHEET 26 FOR MORE DETAILS.

(2) RAMPS A & B ARE SHOWN CLOSED WITH RAMPS C & D OPEN TO TRAFFIC.

(3) FOR MT. VERNON RD. BRIDGES M.O.T. DETAILS, SEE SHEET 56.

(4) FOR IMPACT ATTENUATOR DETAILS SEE SHEET 32

×××× DENOTES PAVEMENT MARKING TO BE REMOVED

NOTE: THE TYPE III BARRICADES WITH LIGHTS ALSO INCLUDES AN R-75-48 (ROAD CLOSED) SIGN.

HORIZONTAL SCALE IN FEET 0 100 200

CALCULATED BB
CHECKED TD

MAINTENANCE OF TRAFFIC STA. 150+00 TO STA. 185+00

LIC-16-19.72

L0161VMT.DGN 2/12/99

PHASE 2

NOTE:
FOR ADDITIONAL DETAILS, SEE STANDARD CONSTRUCTION DRAWING MT-95.32.

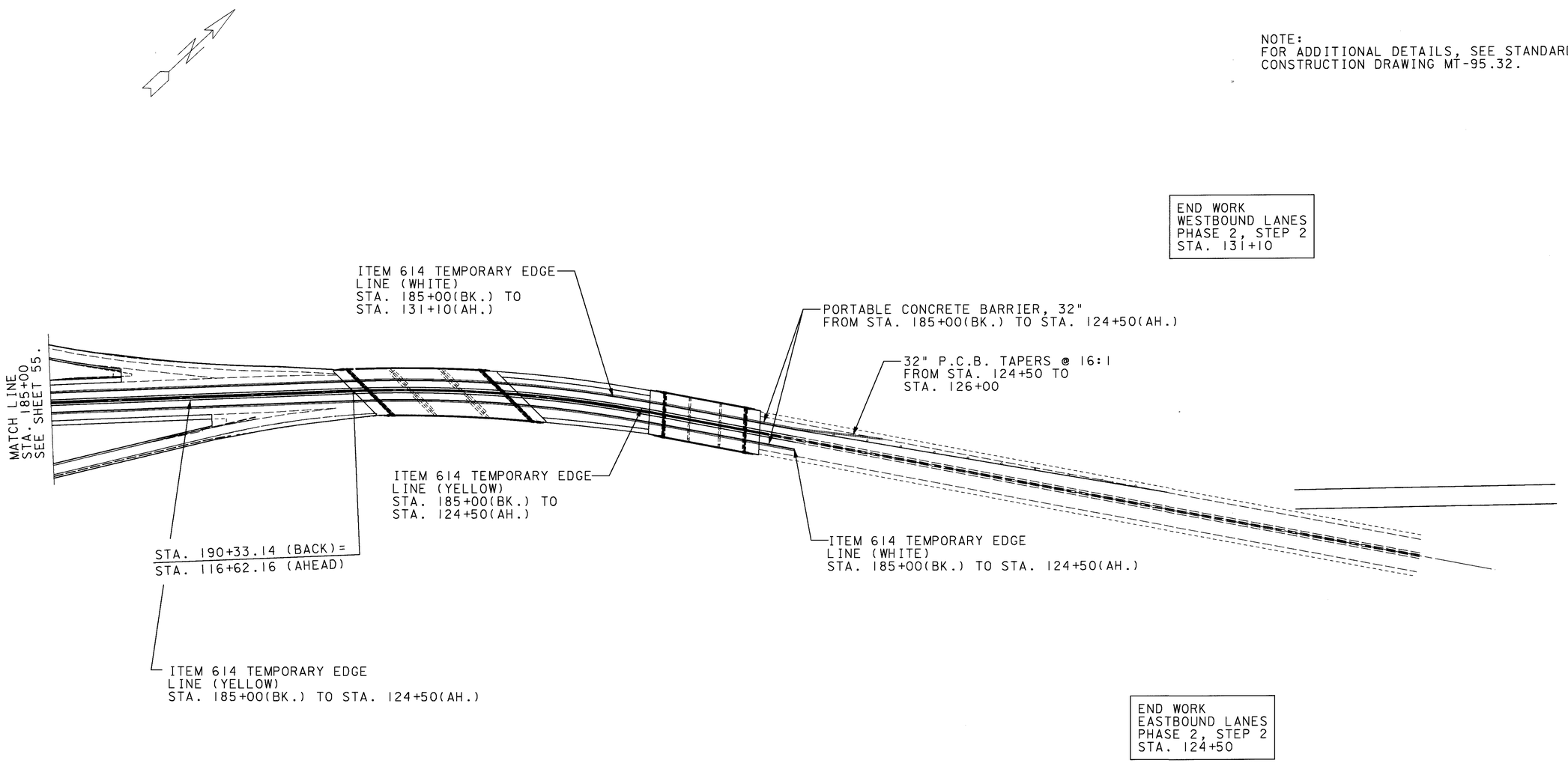

STEP 2 CONSTRUCTION

RECONSTRUCT THE OUTSIDE OF THE EXISTING PAVEMENT AND THE OUTSIDE OF THE TWO BRIDGES AS PER TYPICAL SECTIONS.

HORIZONTAL SCALE IN FEET 0 100 200

CALCULATED BB
CHECKED TD

MAINTENANCE OF TRAFFIC
STA. 185+00 TO STA. 190+33.14

LIC-16-19.72

L0161WMT.DGN 2/12/99

STEP 1

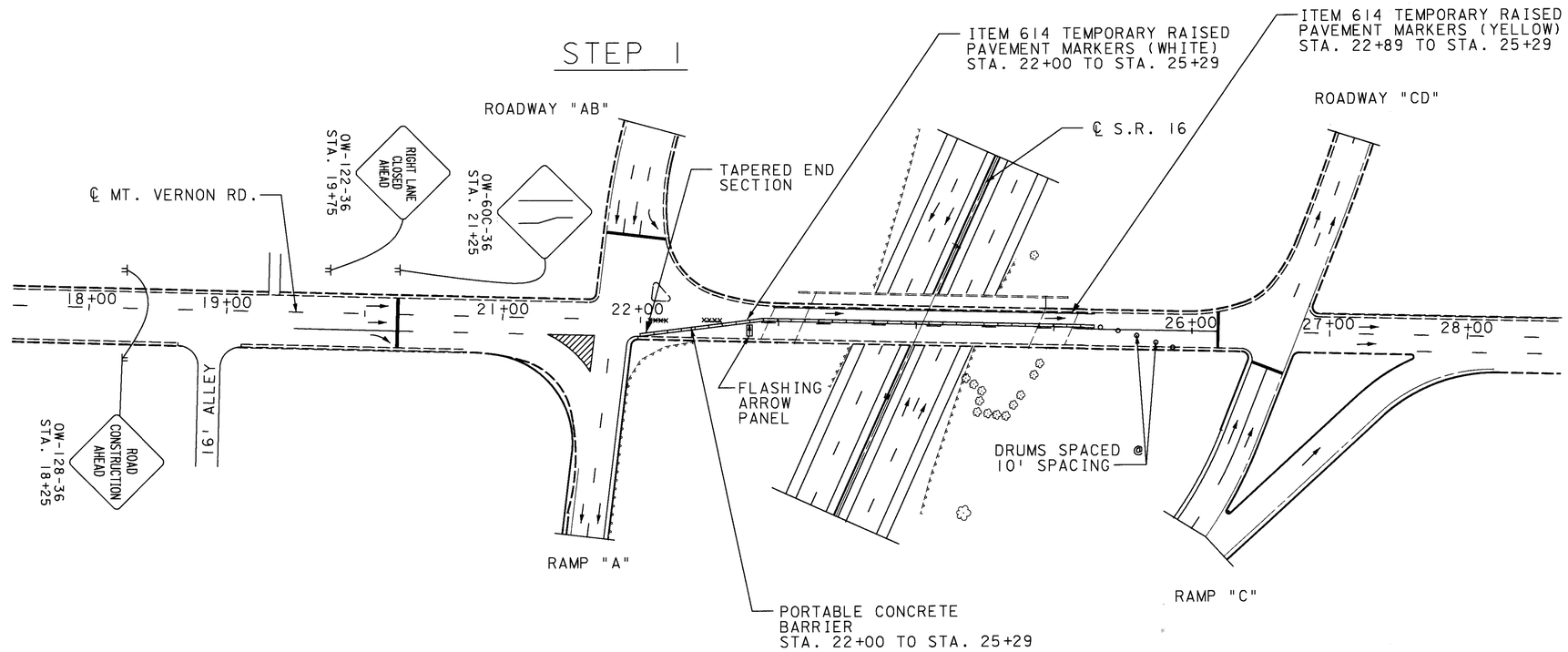

STEP 2

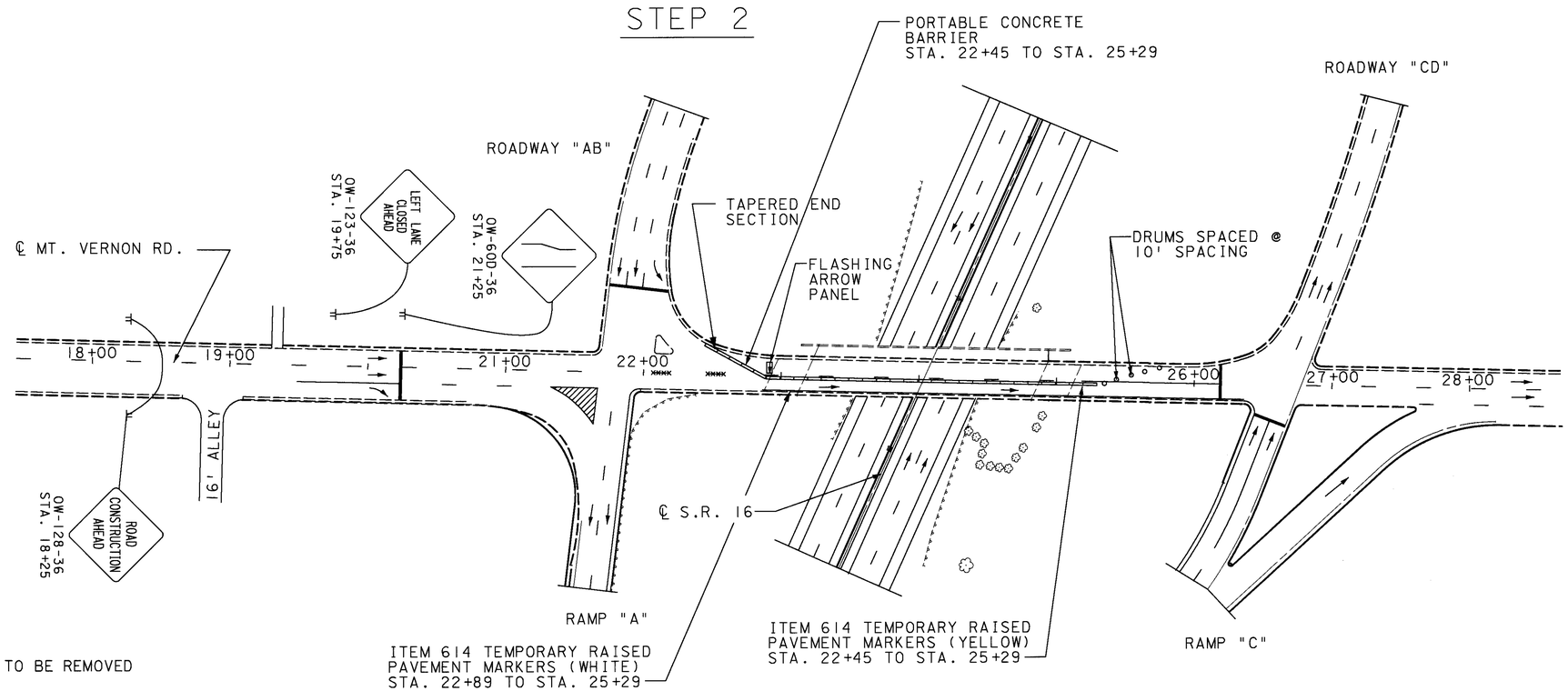

xxxx DENOTES PAVEMENT MARKING TO BE REMOVED

HORIZONTAL SCALE IN FEET 0 50 100

CALCULATED BB CHECKED TD

MAINTENANCE OF TRAFFIC MT. VERNON RD.

LIC-16-19.72

L016XMT.DGN 2/12/99

CONCRETE BARRIER (FULL DEPTH)

℄ SURVEY AND CONSTRUCTION (S.R. 16)	ELEV.	℄ SURVEY AND CONSTRUCTION (S.R. 16)	ELEV.	℄ SURVEY AND CONSTRUCTION (S.R. 16)	ELEV.	℄ SURVEY AND CONSTRUCTION (S.R. 16)	ELEV.	℄ SURVEY AND CONSTRUCTION (S.R. 16)	ELEV.	℄ SURVEY AND CONSTRUCTION (S.R. 16)	ELEV.	℄ SURVEY AND CONSTRUCTION (S.R. 16)	ELEV.	℄ SURVEY AND CONSTRUCTION (S.R. 16)	ELEV.	℄ SURVEY AND CONSTRUCTION (S.R. 16)	ELEV.	℄ SURVEY AND CONSTRUCTION (S.R. 16)	ELEV.	℄ SURVEY AND CONSTRUCTION (S.R. 16)	ELEV.
107+93.04	EXISTING	116+00	850.08	122+00	846.24	130+00	853.28	138+00	860.26	146+00	852.19	154+00	840.77	162+00	833.32	170+00	831.69	178+00	847.25	186+00	853.49
108+00	861.48	+25	849.70	+25	846.46	+25	853.50	+25	860.36	+25	851.84	+25	840.42	+25	833.47	+25	831.49	+25	847.99	+25	853.37
+25	861.30	+50	849.32	+50	846.68	+50	853.72	+50	860.41	+50	851.49	+50	840.07	+50	833.60	+50	831.29	+50		+50	853.25
+50	861.09	+75	848.94	+75	846.90	+75	853.94	+75	860.42	+75	851.13	+75	839.72	+75	833.73	+75	831.15	+75		+75	852.99
+75	860.82	117+00	848.56	123+00	847.12	131+00	854.16	139+00	860.41	147+00	850.77	155+00	839.37	163+00	833.84	171+00	831.06	179+00		187+00	852.85
109+00	860.53	+25	848.18	+25	847.34	+25	854.38	+25	860.36	+25	850.38	+25	839.02	+25	833.93	+25	831.03	+25		+25	852.67
+25	860.22	+50	847.80	+50	847.56	+50	854.60	+50	860.28	+50	849.99	+50	838.67	+50	834.06	+50	831.07	+50		+50	852.78
+50	859.90	+75	847.42	+75	847.78	+75	854.82	+75	860.16	+75	849.61	+75	838.32	+75	834.17	+75	831.16	+75		+75	852.67
+75	859.56	118+00	847.04	124+00	848.00	132+00	855.04	140+00	860.02	148+00	849.23	156+00	837.97	164+00	834.27	172+00	831.31	180+00		188+00	852.55
110+00	859.20	+25	846.66	+25	848.22	+25	855.26	+25	859.84	+25	848.85	+25	837.62	+25	834.37	+25	831.52	+25		+25	852.42
+25	858.82	+50	846.30	+50	848.44	+50	855.48	+50	859.64	+50	848.47	+50	837.27	+50	834.44	+50	831.79	+50		+50	852.39
+50	858.44			+75	848.66	+75	855.70	+75	859.38	+75	848.12	+75	836.92	+75	834.50	+75	832.12	+75	853.26	+75	852.46
+75	858.06	STATION EQUATION: STA. 118+69.02 (BACK) = STA. 117+46.58 (AHEAD)		125+00	848.88	133+00	855.92	141+00	859.07	149+00	847.77	157+00	836.57	165+00	834.54	173+00	832.51	181+00	853.52	189+00	852.64
111+00	857.68			+25	849.10	+25	856.17	+25		+25	847.42	+25	836.22	+25	834.56	+25	832.96	+25	853.79	+25	852.92
+25	857.30	117+50	846.01	+50	849.32	+50	856.40	+50		+50	847.07	+50	835.87	+50	834.58	+50	833.47	+50	854.06	+50	853.31
+50	856.92	+75	845.72	+75	849.54	+75	856.65	+75		+75	846.72	+75	835.52	+75	834.58	+75	834.03	+75	854.28	+75	853.80
+75	856.54	118+00	845.46	126+00	849.76	134+00	856.90	142+00		150+00	846.37	158+00	835.17	166+00	834.53	174+00	834.66	182+00	854.48	190+00	854.39
112+00	856.16	+25	845.25	+25	849.98	+25	857.15	+25		+25	846.02	+25	834.83	+25	834.45	+25	835.35	+25	854.64		
+25	855.78	+50	845.07	+50	850.20	+50	857.40	+50		+50	845.67	+50	834.53	+50	834.37	+50	836.09	+50	854.76		
+50	855.40	+75	844.93	+75	850.42	+75	857.62	+75		+75	845.32	+75	834.26	+75	834.27	+75	836.89	+75	854.85	190+33.14	TAPER TO BRIDGE
+75	855.02	119+00	844.83	127+00	840.64	135+00	857.85	143+00		151+00	844.97	159+00	834.00	167+00	834.16	175+00	837.69	183+00	854.91		
113+00	854.64	+25	844.76	+25	850.86	+25	858.09	+25		+25	844.62	+25	833.78	+25	834.02	+25	838.49	+25	854.93		
+25	854.26	+50	844.74	+50	851.08	+50	858.28	+50	855.57	+50	844.27	+50	833.58	+50	833.87	+50	839.29	+50	854.91	120+00	855.34
+50	853.88	+75	844.75	+75	851.30	+75		+75	855.25	+75	843.92	+75	833.42	+75	833.70	+75	840.09	+75	854.86	+25	854.78
+75	853.50	120+00	844.79	128+00	851.52	136+00		144+00	854.92	152+00	843.57	160+00	833.28	168+00	833.50	176+00	840.89	184+00	854.78	+50	854.15
114+00	853.12	+25	844.88	+25	851.74	+25		+25	854.58	+25	843.22	+25	833.17	+25	833.29	+25	841.69	+25	854.66	+75	853.43
+25	852.74	+50	845.00	+50	851.96	+50		+50	854.26	+50	842.87	+50	833.09	+50	833.07	+50	842.49	+50	854.51	121+00	852.67
+50	852.36	+75	845.16	+75	852.18	+75		+75	853.94	+75	842.52	+75	833.04	+75	832.84	+75	843.29	+75	854.34	+25	851.76
+75	851.98	121+00	845.36	129+00	852.40	137+00		145+00	853.59	153+00	842.17	161+00	833.02	169+00	832.60	177+00	844.09	185+00	854.17	+50	850.81
115+00	851.60	+25	845.58	+25	852.62	+25		+25	853.24	+25	841.82	+25	833.04	+25	832.37	+25	844.89	+25	854.00		
+25	851.22	+50	845.80	+50	852.84	+50		+50	852.89	+50	841.47	+50	833.09	+50	832.14	+50	845.69	+50	853.83		
+50	850.84	+75	846.02	+75	853.06	+75		+75	852.54	+75	841.12	+75	833.20	+75	831.91	+75	846.47	+75	853.66		TAPER TO BRIDGE
+75	850.46																				

TAPER TO BRIDGE

TAPER TO BRIDGE

TAPER TO BRIDGE

TAPER TO BRIDGE

CALCULATED D.M. 3-13-95
CHECKED A.L.L. 3-16-95

CONCRETE BARRIER (FULL DEPTH)

LIC-16-19.72

L16PRBAR.DGN 5/31/95

GENERAL SUMMARY

SHEET NUMBER 15	16	17	23	24	25	80	81	141B	147	154	157	164		170	176	181	187	193		265	266		272	405	ITEM	ITEM EXT.	GRAND TOTAL	UNIT	DESCRIPTION
																													ROADWAY
	LUMP																								201	11000	LUMP		CLEARING AND GRUBBING
																								1735	202	22900	1,735	SQ.YD.	APPROACH SLAB REMOVED
						79100																			202	23000	79,100	SQ.YD.	PAVEMENT REMOVED
						1395																		815	202	30000	2,210	SQ.FT.	WALK REMOVED
																								250	202	30500	250	LIN.FT.	CONCRETE MEDIAN REMOVED
						272																			202	30600	272	SQ.YD.	CONCRETE MEDIAN REMOVED
						7622																			202	30700	7,622	LIN.FT.	CONCRETE BARRIER REMOVED
						13717																			202	32000	13,717	LIN.FT.	CURB REMOVED
						266																			202	32500	266	LIN.FT.	CURB AND GUTTER REMOVED
																					241				202	32700	241	SQ.YD.	GUTTER REMOVED
																								191	202	32800	191	SQ.YD.	CONCRETE SLOPE PROTECTION REMOVED
																				421			932		202	35100	1353	LIN.FT.	PIPE REMOVED, 24" AND UNDER
							9698																	50	202	38000	9,748	LIN.FT.	GUARDRAIL REMOVED
																				5	1				202	58100	6	EACH	CATCH BASIN REMOVED
																				1					202	58500	1	EACH	CATCH BASIN ABANDONED
10000				100	1385	271		39189	424	1383	569	2184		830	1692	1060	1290	1239						1496	203	12000	63,112	CU.YD.	EXCAVATION, NOT INCLUDING EMBANKMENT CONSTRUCTION
						1590		486	1229	32	38	68		1021	72	35	65	106						987	203	20000	5,729	CU.YD.	EMBANKMENT
10000																									203	21000	10,000	CU.YD.	EMBANKMENT USING GRANULAR MATERIAL
40																									203	45000	40	HOUR	PROOF ROLLING
						116653																		2301	203	50000	118,954	SQ.YD.	SUBGRADE COMPACTION
			17																						604	40501	17	EACH	REFERENCE MONUMENT, AS PER PLAN (SEE SHEET 23)
							9125																	50	606	13000	9,175	LIN.FT.	GUARDRAIL, TYPE 5
							50																		606	13050	50	LIN.FT.	GUARDRAIL, TYPE 5A
							9																		606	22000	9	EACH	ANCHOR ASSEMBLY, TYPE B-98 (SEE SHEET 16)
							5																		606	22010	5	EACH	ANCHOR ASSEMBLY, TYPE E-98 (SEE SHEET 16)
							1																		606	25000	1	EACH	ANCHOR ASSEMBLY, TYPE A
							8																		606	26500	8	EACH	ANCHOR ASSEMBLY, TYPE T
							19																	2	606	35000	21	EACH	BRIDGE TERMINAL ASSEMBLY, TYPE 1
							11																		606	35100	11	EACH	BRIDGE TERMINAL ASSEMBLY, TYPE 2
						5469																			622	23404	5,469	LIN.FT.	CONCRETE BARRIER, TYPE B-50
						2153																			622	23504	2,153	LIN.FT.	CONCRETE BARRIER, TYPE C-50
							145																		622	24000	145	LIN.FT.	CONCRETE BARRIER, TYPE D
																													EROSION CONTROL
		12000																							877	10000	12,000	SQ.YD.	TEMPORARY SEEDING AND MULCHING
		3125																							877	30000	3125	LIN.FT.	TEMPORARY PERIMETER, DITCH CHECK OR INLET PROTECTION FILTER FABRIC FENCE
																					285			274	601	20000	559	SQ.YD.	CRUSHED AGGREGATE SLOPE PROTECTION
																								191	601	21000	191	CU.YD.	CONCRETE SLOPE PROTECTION
		10																		6	9				601	32200	25	CU.YD.	ROCK CHANNEL PROTECTION, TYPE C WITH FILTER
																					241				601	37501	241	LIN.FT.	PAVED GUTTER, TYPE 1-2, AS PER PLAN (SEE SHEET 17)
								30100	4025	3626	1570	3993		4451	3506	2243	3284	3200							659	10000	59,998	SQ.YD.	SEEDING AND MULCHING
		3000																							659	14000	3,000	SQ.YD.	REPAIR SEEDING AND MULCHING
	9	3																							659	20000	12	TON	COMMERCIAL FERTILIZER
	27																								659	30000	27	TON	AGRICULTURAL LIMING
	130	30																							659	35000	160	M.GAL.	WATER
	135																								659	40000	135	M.SQ.FT.	MOWING
																					73				660	25000	73	SQ.YD.	SODDING STAKED

CALCULATED D.M. 9-1-94
CHECKED A.L. 10-1-94

GENERAL SUMMARY

LIC-16-19.72

L16190GF.DGN 2/16/99

GENERAL SUMMARY

SHEET NUMBER 265	266	272	362A	401	405A	ITEM	ITEM EXT.	GRAND TOTAL	UNIT	DESCRIPTION
										DRAINAGE
1.82						602	20000	1.82	CU.YD.	CONCRETE MASONRY
		1504				603	00100	1504	LIN.FT.	4" CONDUIT, TYPE B, 707.33, 707.42 OR 707.45
			100	1380		603	00400	1,480	LIN.FT.	4" CONDUIT, TYPE E
		550				603	00406	550	LIN.FT.	4" CONDUIT, TYPE F
					30	603	00407	30	LIN.FT.	4" CONDUIT, TYPE F, AS PER PLAN (SEE SHEET 402)
		600				603	00900	600	LIN.FT.	6" CONDUIT, TYPE B, 707.33, 707.42 OR 707.45
		560				603	01500	560	LIN.FT.	6" CONDUIT, TYPE F
168	30	6				603	04400	204	LIN.FT.	12" CONDUIT, TYPE B, 706.01 OR 706.02
308	81					603	04400	389	LIN.FT.	12" CONDUIT, TYPE B
184	11					603	04600	195	LIN.FT.	12" CONDUIT, TYPE C
	18					603	04600	18	LIN.FT.	12" CONDUIT, TYPE C, 706.01 OR 706.02
135	10					603	05200	145	LIN.FT.	12" CONDUIT, TYPE F, 707.05
	57					603	05900	57	LIN.FT.	15" CONDUIT, TYPE B
48	6					603	05900	54	LIN.FT.	15" CONDUIT, TYPE B, 706.01 OR 706.02
51		15				603	06100	66	LIN.FT.	15" CONDUIT, TYPE C
36	30					603	07400	66	LIN.FT.	18" CONDUIT, TYPE B, 706.01 OR 706.02
74						603	07400	74	LIN.FT.	18" CONDUIT, TYPE B
8	159					603	07600	167	LIN.FT.	18" CONDUIT, TYPE C
6						603	07600	6	LIN.FT.	18" CONDUIT, TYPE C, 706.01 OR 706.02
50						603	08900	50	LIN.FT.	21" CONDUIT, TYPE B
	6					603	08900	6	LIN.FT.	21" CONDUIT, TYPE B,706.01 OR 706.02
97						603	10400	97	LIN.FT.	24" CONDUIT, TYPE B
42	6					603	10400	48	LIN.FT.	24" CONDUIT, TYPE B, 706.01 OR 706.02
28						603	10600	28	LIN.FT.	24" CONDUIT, TYPE C
6	24					603	10600	30	LIN.FT.	24" CONDUIT, TYPE C, 706.01 OR 706.02
12						603	11900	12	LIN.FT.	27" CONDUIT, TYPE B, 706.01 OR 706.02
24						603	16400	24	LIN.FT.	36" CONDUIT, TYPE B, 706.01 OR 706.02
5						604	00400	5	EACH	CATCH BASIN, NO. 3,
4	10					604	00800	14	EACH	CATCH BASIN, NO. 3A
1						604	01201	1	EACH	CATCH BASIN, NO. 4, AS PER PLAN (SEE SHEET 17)
6	6					604	01701	12	EACH	CATCH BASIN, NO. 5, WITH B GRATE, AS PER PLAN (SEE SHEET 17)
2	1					604	04100	3	EACH	CATCH BASIN, NO. 2-2A
	1					604	04500	1	EACH	CATCH BASIN, NO. 2-2B
1						604	04900	1	EACH	CATCH BASIN, NO. 2-3
15						604	14602	15	EACH	INLET NO. 3B50
7						604	14603	7	EACH	INLET NO. 3B50, AS PER PLAN B (SEE SHEET 19)
4		1				604	17500	5	EACH	INLET NO. 2-A-6
1						604	17900	1	EACH	INLET NO. 2-A-8
4						604	18300	4	EACH	INLET NO. 2-A-10
2	1					604	18700	3	EACH	INLET NO. 2-A-12
2						604	31500	2	EACH	MANHOLE NO.3
		23			8	604	36600	31	EACH	PRECAST REINFORCED CONCRETE OUTLET
		18571				605	05100	18,571	LIN. FT.	4" SHALLOW PIPE UNDERDRAIN
		34950				605	05111	34,950	LIN. FT.	4" SHALLOW PIPE UNDERDRAIN WITH FABRIC WRAP, AS PER PLAN (SEE SHEET 17)
		2496				605	05200	2,496	LIN. FT.	4" UNCLASSIFIED PIPE UNDERDRAIN
		99				605	05201	99	LIN. FT.	4" UNCLASSIFIED PIPE UNDERDRAIN, 707.33, 707.41, 707.42 OR 707.45 PERFORATED AS PER 707.15, AS PER PLAN A (SEE SHEET 18)
		6517				605	05211	6,517	LIN. FT.	4" UNCLASSIFIED PIPE UNDERDRAIN WITH FABRIC WRAP, AS PER PLAN (SEE SHEET 17)
		100				605	13300	100	LIN. FT.	6" UNCLASSIFIED PIPE UNDERDRAIN

CALCULATED D.M. 5-7-94
CHECKED 6-1-94

GENERAL SUMMARY

LIC-16-19.72

L161906C.DGN 5/30/95

GENERAL SUMMARY

SHEET NUMBER 16	24	25	80	405A	407	ITEM	ITEM EXT.	GRAND TOTAL	UNIT	DESCRIPTION
										PAVEMENT
	100	1385				301	46000	1,485	CU.YD.	BITUMINOUS AGGREGATE BASE, PG 64-22
			24994			302	46000	24,994	CU.YD.	BITUMINOUS AGGREGATE BASE, PG 64-22
			20413	404		304	20000	20,817	CU.YD.	AGGREGATE BASE
			49			305	13000	49	SQ.YD.	9" CONCRETE BASE
6000						407	10000	6,000	GAL.	TACK COAT
			5571			407	14000	5,571	GAL.	TACK COAT FOR INTERMEDIATE COURSE
			45406			408	10000	45,406	GAL.	BITUMINOUS PRIME COAT
			5406			446	46040	5,406	CU.YD.	ASPHALT CONCRETE INTERMEDIATE COURSE, TYPE 2, PG 64-28
			4633			446	50000	4,633	CU.YD.	ASPHALT CONCRETE SURFACE COURSE, TYPE IH
			1924			452	14100	1,924	SQ.YD.	11" PLAIN CONCRETE PAVEMENT
			1489	815	320	608	10000	2,624	SQ.FT.	4" CONCRETE WALK
			13			608	50000	13	EACH	CURB RAMP, TYPE 1
			7			608	51000	7	EACH	CURB RAMP, TYPE 2
			47			609	12000	47	LIN.FT.	COMBINATION CURB AND GUTTER, TYPE 2
			208			609	12001	208	LIN.FT.	COMBINATION CURB AND GUTTER, TYPE 2, AS PER PLAN (SEE SHEET 16)
			12131			609	26001	12131	LIN.FT.	CURB, TYPE 6, AS PER PLAN (SEE SHEET 16)
				2518		611	25001	2,518	SQ.YD.	REINFORCED CONCRETE APPROACH SLAB (T=15"), AS PER PLAN (SEE SHEET 402)
			113			612	42000	113	SQ.YD.	CONCRETE MEDIAN
			113654			855	10000	113,654	SQ.YD.	4" ASPHALT TREATED FREE DRAINING BASE
			75			SPECIAL	45130000	75	LIN.FT.	PRESSURE RELIEF JOINT, TYPE A (SEE SHEET 15)
			193			SPECIAL	69012010	193	SQ.YD.	GEOTEXTILE FABRIC, TYPE D (SEE SHEET 18)

CALCULATED D.M. 5-1-94
CHECKED A.J. 10-1-94

GENERAL SUMMARY

LIC-16-19.72

L161906D.DGN 5/30/95

GENERAL SUMMARY

CALCULATED D. M. 3/17/95
CHECKED A. L. L. 3/17/95

SHEET NUMBER 21	22	23	81	316		355	356	358	362A	401			ITEM	ITEM EXT.	GRAND TOTAL	UNIT	DESCRIPTION
																	LIGHTING
										76			202	75300	76	EACH	PULL BOX REMOVED (SEE SHEET 21)
										63			202	75403	63	EACH	LIGHT POLE REMOVED FOR STORAGE, AS PER PLAN (SEE SHEET 21)
										60			202	75501	60	EACH	LIGHT POLE FOUNDATION REMOVED, AS PER PLAN (SEE SHEET 21)
										63			202	75505	63	EACH	LUMINAIRE REMOVED FOR STORAGE, AS PER PLAN (SEE SHEET 21)
										81			202	75800	81	EACH	DISCONNECT EXISTING CIRCUIT (SEE SHEET 21)
										138			625	00500	138	EACH	CONNECTOR KIT, TYPE II
										138			625	00600	138	EACH	CONNECTOR KIT, TYPE III
										14			625	01004	14	EACH	CONNECTOR KIT, TYPE VII B
										136			625	01500	136	EACH	CABLE SPLICING KIT
										13			625	02500	13	EACH	TRANSFORMER BASE, TYPE AT-A
										8			625	06300	8	EACH	LIGHT POLE, DESIGN AT12B41.7
										1			625	10500	1	EACH	LIGHT POLE, MISC. MEDIAN MOUNT LOW MAST, DESIGN A0N40
										32			625	14200	32	EACH	LIGHT POLE FOUNDATION, 24" x 10' DEEP
										33			625	14306	33	EACH	MEDIAN LIGHT POLE FOUNDATION, 10' DEEP
										3			625	14307	3	EACH	MEDIAN LIGHT POLE FOUNDATION, 10' DEEP, AS PER PLAN (SEE SHEET 21)
										21246			625	23200	21,246	LIN.FT.	NO.4 AWG. 5000 VOLT DISTRIBUTION CABLE
										3676			625	23300	3,676	LIN.FT.	NO.2 AWG. 5000 VOLT DISTRIBUTION CABLE
950										1148			625	23400	2,098	LIN.FT.	NO.10 AWG. POLE AND BRACKET CABLE
										16714			625	24100	16,714	LIN.FT.	1 1/2" DUCT CABLE WITH TWO NO.4 AWG 5000 VOLT CABLES
									50				625	25400	50	LIN.FT.	CONDUIT, 2", 713.04
									50	14			625	25500	64	LIN.FT.	CONDUIT, 3", 713.04
									94				625	25900	94	LIN.FT.	CONDUIT JACKED OR DRILLED UNDER PAVEMENT, 3"
										2671			625	25910	2,671	LIN.FT.	CONDUIT CLEANED AND CABLES REMOVED (SEE SHEET 22)
										8			625	26250	8	EACH	LUMINAIRE, CONVENTIONAL STYLE B, TYPE II, 200 WATT HIGH PRESSURE SODIUM, 713.11, 480 VOLT
										1			625	26270	1	EACH	LUMINAIRE, LOW MAST, ASYMMETRIC TYPE 1, 400 WATT HIGH PRESSURE SODIUM, 713.21, 480 VOLT, AS PER PLAN (SEE SHEET 22)
									50	15480			625	29002	15,530	LIN.FT.	TRENCH, 24" DEEP
										76			625	30700	76	EACH	PULL BOX, 713.08, 18"
									3				625	30706	3	EACH	PULL BOX, 713.08, 24"
										10			625	31500	10	EACH	MEDIAN PULL BOX
								21	1	89			625	32000	111	EACH	GROUND ROD
										63			625	35001	63	EACH	REERECT EXISTING LIGHT POLE, AS PER PLAN (SEE SHEET 21)
										63			625	35101	63	EACH	REERECT EXISTING LUMINAIRE, AS PER PLAN (SEE SHEET 21)
	LUMP												625	38000	LUMP		HIGH VOLTAGE TEST
	LUMP												SPECIAL	62540000	LUMP		MAINTAIN EXISTING LIGHTING (SEE SHEET 22)
	5												SPECIAL	62540010	5	EACH	REPLACEMENT OF EXISTING LIGHTING UNIT (SEE SHEET 22)
										96			625	98000	96	EACH	LIGHTING MISC.: RELABEL EXISTING LIGHT POLE (SEE SHEET 21)
										65			625	98000	65	EACH	LIGHTING MISC.: EXISTING LUMINAIRE REFURBISHED (SEE SHEET 21)
	69												625	98000	69	EACH	LIGHTING MISC.: RECONDITION EXISTING LIGHT POLE IN PLACE (SEE SHEET 22)
	4												625	98000	4	EACH	LIGHTING MISC.: REFURBISH POWER SERVICE, AS PER PLAN (SEE SHEET 22)
1													625	98000	1	EACH	LIGHTING MISC.: "C" BRACKET (SEE SHEET 21)
																	TRAFFIC CONTROL
		24											620	10500	24	EACH	DELINEATOR, TYPE C, DESIGN 2, POST MOUNTED (SEE SHEET 23)
		5											620	10700	5	EACH	DELINEATOR, TYPE C, DESIGN 4, POST MOUNTED (SEE SHEET 23)
		7											620	15500	7	EACH	DELINEATOR, TYPE D, DESIGN 2, POST MOUNTED (SEE SHEET 23)
				575									621	00200	575	EACH	RAISED PAVEMENT MARKER, INSTALLATION ONLY
			118										626	00100	118	EACH	BARRIER REFLECTOR, TYPE A
			227										626	00200	227	EACH	BARRIER REFLECTOR, TYPE B
						394							630	02100	394	LIN.FT.	GROUND-MOUNTED SUPPORT, NO. 2 POST
						135							630	03100	135	LIN.FT.	GROUND-MOUNTED SUPPORT, NO. 3 POST
						240							630	04100	240	LIN.FT.	GROUND-MOUNTED SUPPORT, NO. 4 POST
						266							630	06400	266	LIN.FT.	GROUND-MOUNTED SUPPORT, S4X7.7 BEAM
						80							630	08004	80	LIN.FT.	ONE WAY SUPPORT, NO. 3 POST
						14							630	09000	14	EACH	BREAKAWAY BEAM CONNECTION
							2						630	20500	2	EACH	OVERHEAD SIGN SUPPORT, TYPE 12.30, DESIGN 5, 22' ARM
							2						630	20800	2	EACH	OVERHEAD SIGN SUPPORT, TYPE 12.30, DESIGN 8, 28' ARM
						16							630	84500	16	EACH	GROUND MOUNTED BEAM SUPPORT FOUNDATION
						38							630	84510	38	EACH	RIGID OVERHEAD SIGN SUPPORT FOUNDATION

GENERAL SUMMARY

LIC-16-19.72

L6191906A.DGN 2/16/99

GENERAL SUMMARY

SHEET NUMBER														ITEM	ITEM EXT.	GRAND TOTAL	UNIT	DESCRIPTION
					25	317	355	356	358	362A								
																		TRAFFIC CONTROL
								5						630	35500	5	EACH	OVERHEAD SIGN SUPPORT, TYPE 7.65, DESIGN 6
								1						630	35501	1	EACH	OVERHEAD SIGN SUPPORT, TYPE 7.65, DESIGN 6, AS PER PLAN (SEE SHEET 20)
								3						630	45500	3	EACH	OVERHEAD SIGN SUPPORT, TYPE 7.65, DESIGN 8
								3						630	77200	3	EACH	OVERPASS STRUCTURE MOUNTED SIGN SUPPORT, TYPE TC-18.26, DESIGN 2
								1						630	77700	1	EACH	OVERPASS STRUCTURE MOUNTED SIGN SUPPORT, TYPE TC-18.26, DESIGN 7
							2							630	79500	2	EACH	SIGN SUPPORT ASSEMBLY POLE MOUNTED
							4							630	80100	4	SQ. FT.	SIGN, FLAT SHEET
							4							630	80102	4	SQ. FT.	SIGN, FLAT SHEET, TYPE G
							1							630	82000	1	EACH	SIGN BACKING ASSEMBLY
							60							630	85100	60	EACH	REMOVAL OF GROUND MOUNTED SIGN AND REERECTION
							51							630	86002	51	EACH	REMOVAL OF GROUND MOUNTED POST SUPPORT AND DISPOSAL
							16							630	86102	16	EACH	REMOVAL OF GROUND MOUNTED BEAM SUPPORT AND DISPOSAL
							28							630	87100	28	EACH	REMOVAL OF OVERHEAD MOUNTED SIGN AND REERECTION
								4						630	89808	4	EACH	REMOVAL OF OVERHEAD SIGN SUPPORT AND DISPOSAL, TYPE TC-18.26
							3							630	89902	3	EACH	REMOVAL OF MISCELLANEOUS TRAFFIC CONTROL ITEM, SIGN SUPPORT ASSEMBLY, POLE MOUNTED AND DISPOSAL
								7						630	89902	7	EACH	REMOVAL OF MISCELLANEOUS TRAFFIC CONTROL ITEM, OVERHEAD SIGN SUPPORT AND DISPOSAL, TYPE TC-7.4
								2						630	89902	2	EACH	REMOVAL OF MISCELLANEOUS TRAFFIC CONTROL ITEM, OVERHEAD SIGN SUPPORT AND DISPOSAL, TYPE TC-7.5
								4						630	89902	4	EACH	REMOVAL OF MISCELLANEOUS TRAFFIC CONTROL ITEM, OVERHEAD SIGN SUPPORT AND DISPOSAL, TYPE TC-12.24
									26					631	84000	26	EACH	SIGN SERVICE
									37					631	84300	37	EACH	SIGN WIRED
									7					631	84400	7	EACH	SIGN WIRED, OVERPASS STRUCTURE MOUNTED
									76					631	94100	76	EACH	REMOVAL OF LUMINAIRE AND REERECTION
									1					631	94304	1	EACH	REMOVAL OF DISCONNECT SWITCH AND DISPOSAL
									22					631	94306	22	EACH	REMOVAL OF DISCONNECT SWITCH AND REERECTION
									1					631	94408	1	EACH	REMOVAL OF SIGN WIRING AND DISPOSAL
										8				632	26500	8	EACH	DETECTOR LOOP
										100				632	62810	100	LIN. FT.	INTERCONNECT CABLE, MISC.: COAX CABLE (RG58 TYPE) LEADIN CABLE FOR PIEZOCABLE SENSOR
										122				632	65200	122	LIN. FT.	LOOP DETECTOR LEAD IN CABLE
										8				632	90400	8	EACH	SIGNALIZATION MISC.: PIEZOCABLE AXLE SENSOR, CLASS I (11 FEET IN LENGTH)
										1				633	65001	1	EACH	CABINET, WITHOUT CONTROLLER, AS PER PLAN PREWIRED, PAD MOUNT, TYPE "M"
										1				633	70000	1	CU.YD.	CONCRETE FOR CABINET FOUNDATION
										9				633	70500	9	SQ.FT.	CONTROLLER WORK PAD
										1				633	99000	1	EACH	CONTROLLER ITEM, MISC.: SOLAR PANEL
					10.85									642	00102	10.85	MILE	EDGE LINE, TYPE 2
					5.74									642	00202	5.74	MILE	LANE LINE, TYPE 2
					0.12									642	00302	0.12	MILE	CENTER LINE, TYPE 2
					5786	312								642	00402	6,098	LIN. FT.	CHANNELIZING LINE, TYPE 2
					231									642	00502	231	LIN. FT.	STOP LINE, TYPE 2
					1081									642	00602	1,081	LIN. FT.	CROSSWALK LINE, TYPE 2
						1249								642	00802	1,249	LIN. FT.	CURB MARKING, TYPE 2
					17									642	01302	17	EACH	LANE ARROW, TYPE 2
					5									642	01402	5	EACH	WORD ON PAVEMENT, 72", TYPE 2
						133								642	30000	133	LIN. FT.	REMOVAL OF PAVEMENT MARKING
						8.63								644	00100	8.63	MILE	EDGE LINE
						5.17								644	00200	5.17	MILE	LANE LINE
						5431								644	00400	5,431	LIN. FT.	CHANNELIZING LINE
						234								644	00500	234	LIN. FT.	STOP LINE
						946								644	00600	946	LIN. FT.	CROSSWALK LINE
						1439								644	00700	1,439	LIN. FT.	TRANSVERSE LINE
						15								644	01300	15	EACH	LANE ARROW
						5								644	01400	5	EACH	WORD ON PAVEMENT, 72"
						1.28								828	10000	1.28	MILE	EDGE LINE
						0.64								828	10100	0.64	MILE	LANE LINE

CALCULATED D.M. 3-13-95
CHECKED A.L.L. 3-16-95

GENERAL SUMMARY

LIC-16-19.72

L16190GH.DGN 2/16/99

GENERAL SUMMARY

SHEET NUMBER 24	25	27	29	30	31	32	ITEM	ITEM EXT.	GRAND TOTAL	UNIT	DESCRIPTION
											MAINTENANCE OF TRAFFIC
250							614	11100	250	HOUR	LAW ENFORCEMENT OFFICER WITH PATROL CAR (SEE SHEET 24)
						1	614	12350	1	EACH	TEMPORARY IMPACT ATTENUATOR (G.R.E.A.T. TYPE)(SEE SHEET 32)
						1	614	12360	1	EACH	TEMPORARY IMPACT ATTENUATOR REPLACEMENT (G.R.E.A.T. TYPE)(SEE SHEET 32)
						1	614	12370	1	EACH	REMOVE AND REPLACE IMPACT ATTENUATOR (G.R.E.A.T. TYPE)(SEE SHEET 32)
	160						SPECIAL	61412500	160	SQ. FT.	REPLACEMENT SIGN (SEE SHEET 25)
100							614	13000	100	CU. YD.	BITUMINOUS CONCRETE FOR MAINTAINING TRAFFIC (SEE SHEET 24)
	50						SPECIAL	61412600	50	EACH	REPLACEMENT DRUM (SEE SHEET 25)
	64						614	12470	64	EACH	WORK ZONE SPEED LIMIT SIGN (SEE SHEET 25)
	16						614	12480	16	EACH	DOUBLED FINES IN WORK ZONE SIGN (SEE SHEET 25)
			769				614	12800	769	EACH	TEMPORARY RAISED PAVEMENT MARKER
				156			614	13200	156	EACH	BARRIER REFLECTOR, TYPE A
				3,091			614	13300	3,091	EACH	BARRIER REFLECTOR, TYPE B
				3,091			614	13350	3,091	EACH	OBJECT MARKER
96							614	18601	96	SIGN MONTH	PORTABLE CHANGEABLE MESSAGE SIGN, AS PER PLAN (SEE SHEET 24)
16							614	18601	16	SIGN MONTH	PORTABLE CHANGEABLE MESSAGE SIGN, AS PER PLAN (REPLACEMENT)(SEE SHEET 24)
	6.80						614	20400	6.80	MILE	TEMPORARY LANE LINE, CLASS II
	1.04						614	20700	1.04	MILE	TEMPORARY LANE LINE, CLASS II, 740.06, TYPE II
	0.12						614	21000	0.12	MILE	TEMPORARY CENTER LINE, CLASS I
	29.47						614	22000	29.47	MILE	TEMPORARY EDGE LINE, CLASS I
	3.62						614	22300	3.62	MILE	TEMPORARY EDGE LINE, CLASS I, 740.06, TYPE II
	5786						614	23000	5,786	LIN. FT.	TEMPORARY CHANNELIZING LINE, CLASS I
	231						614	26000	231	LIN. FT.	TEMPORARY STOP LINE, CLASS I
	1081						614	27000	1,081	LIN. FT.	TEMPORARY CROSSWALK LINE, CLASS I
300							616	10000	300	M.GAL.	WATER
30							616	20000	30	TON	CALCIUM CHLORIDE
					37,830		622	40020	37,830	LIN. FT.	PORTABLE CONCRETE BARRIER, 32"
					3,900		622	40040	3,900	LIN. FT.	PORTABLE CONCRETE BARRIER, 32", BRIDGE MOUNTED
	1000						SPECIAL	69098100	1,000	LIN. FT.	MISC.: BLACK OUT TAPE (SEE SHEET 25)
											FOR STRUCTURES 20' AND OVER (SEE SHEETS 402 - 547)
		LUMP					614	11000	LUMP		MAINTAINING TRAFFIC
							623	10000	LUMP		CONSTRUCTION LAYOUT STAKES
							624	10000	LUMP		MOBILIZATION
							806	16020	16	MONTH	FIELD OFFICE, TYPE C

CALCULATED J.H.C. CHECKED J.L.S.

GENERAL SUMMARY

LIC-16-19.72

L161906I.DGN 5/30/95

PAVEMENT CALCULATIONS

(1) AREA TAKEN FROM COMPUTER

STATION TO STATION	WIDTH PAV'T. (FEET)	LIN. FEET	PAVEMENT AREA SQ. YD.	202 PAVEMENT REMOVED SQ. YD.	202 CURB REMOVED LIN. FT.	203 EXCAVATION NOT INCLUDING EMBANKMENT CONSTRUCTION CU. YD.	203 SUBGRADE COMPACTION SQ. YD.	302 8" BITUMINOUS AGGREGATE BASE, PG 64-22 CU. YD.	304 6" AGGREGATE BASE CU. YD.	408 BITUMINOUS PRIME COAT @ 0.4 GAL./S.Y. GAL.	446 1 3/4" ASPHALT CONCRETE INTERMEDIATE COURSE, TYPE 2, PG 64-28 CU. YD.	446 1½" ASPHALT CONCRETE SURFACE COURSE, TYPE 1H CU. YD.	855 4" ASPHALT TREATED FREE DRAINING BASE SQ. YD.	407 TACK COAT FOR INTEREMEDIATE COURSE @ 0.050 GAL./S.Y. GAL.	452 11" PLAIN CONCRETE PAVEMENT SQ. YD.	SPECIAL PRESSURE RELIEF JOINT, TYPE A LIN.FT.
EASTBOUND LANES																
105+65.83 - 107+99.33	BRIDGE LIMITS (FOR DETAILS AND QUANTITIES SEE BRIDGE DETAIL SHEETS)															
107+99.33 - 114+52.97	24	653.64	1743.0	1743.0			1743.0	387.3	290.5	697.2	84.7	72.6	1743.0	87.2		
114+52.97 - 116+20.91	56 AVG.	167.94	(1) 1008.2	(2) 709.5	168	(3) 70	1008.2	224.0	168.0	403.3	49.0	42.0	1008.2	50.4		
116+20.91 - 118+69.02 (BACK)	45.9 AVG.	248.11	1265.4	1265.4			1265.4	281.2	210.9	506.2	61.5	52.7	1265.4	63.3		
117+46.58 (AHEAD) - 120+18.82	39.4 AVG.	272.24	1191.8	1191.8			1191.8	264.8	198.6	476.7	57.9	49.7	1191.8	59.6		
120+18.82 - 126+63.60	36	644.78	2579.1	2579.1			2579.1	573.1	429.8	1031.6	125.4	107.5	2579.1	129.0		
126+63.60 - 129+41.95	49.5 AVG.	278.35	(1) 1397.2	1397.2			1397.2	310.5	232.9	558.9	67.9	57.5	1397.2	69.9		
129+41.95 - 135+98.28	24	656.33	1750.2	1750.2			1750.2	388.9	291.7	700.1	85.1	72.9	1750.2	87.5		
135+98.28 - 137+68.75	BRIDGE LIMITS (FOR DETAILS AND QUANTITIES SEE BRIDGE DETAIL SHEETS)															
137+68.75 - 141+27.20	24	358.45	955.9	955.9			955.9	212.4	159.3	382.4	46.5	39.8	955.9	47.8		
141+27.20 - 143+08.75	BRIDGE LIMITS (FOR DETAILS AND QUANTITIES SEE BRIDGE DETAIL SHEETS)															
143+08.75 - 144+11.23	24	102.48	273.3	273.3			273.3	60.7	45.5	109.3	13.3	11.4	273.3	13.7		
144+11.23 - 148+65.44	58.25 AVG.	454.21	2939.7	2939.7			2939.7	653.3	489.9	1175.9	142.9	122.5	2939.7	147.0		
148+65.44 - 150+50.47	82.25 AVG.	185.03	(1) 1657.5	(4) 1328.6	185	(5) 77	1657.5	368.3	276.2	663.0	80.6	69.1	1657.5	82.9		
150+50.47 - 158+00.47	60.5 AVG.	750.0	5041.7	5041.7			5041.7	1120.4	840.3	2016.7	245.1	210.1	5041.7	252.1		
158+00.47 - 163+23.97	48	523.5	2792.0	2792.0			2792.0	620.4	465.3	1116.8	135.7	116.3	2792.0	139.6		
163+23.97 - 167+72.61	59.5 AVG.	448.64	(1) 2752.9	(6) 2768.4			2752.9	611.8	458.8	1101.2	133.8	114.7	2752.9	137.6		
167+72.61 - 178+56.59	24	1083.98	2890.6	2890.2			2890.2	642.3	481.7	1156.1	140.5	120.4	2890.2	144.5		
178+56.59 - 180+48.69	BRIDGE LIMITS (FOR DETAILS AND QUANTITIES SEE BRIDGE DETAIL SHEETS)															
180+48.69 - 187+82.45	24	733.76	1956.7	1956.7			1956.7	434.8	326.1	782.7	95.1	81.5	1956.7	97.8		
187+82.45 - 190+33.14(BACK)																
116+62.16 (AHEAD) - 116+86.20	49.86 AVE.	274.73	(1) 1378.5	(7) 1254.5	78	(8) 29	1378.5	306.3	229.7	551.4	67.0	57.4	1378.5	68.9		
116+62.31 - 119+55.84	BRIDGE LIMITS (FOR DETAILS AND QUANTITIES SEE BRIDGE DETAIL SHEETS)															
119+55.84 - 121+87.02	27.0 AVG.	231.18	693.5	693.5			693.5		(9) 111.9	(10) 273.0			(11) 682.4		(11) 682.4	25.0
TOTALS				33530.7	431	176	34266.8	7460.5	5707.1	13702.5	1632	1398.1	34255.7	1678.8	682.4	25.0

TOTALS CARRIED TO SHEET 80.

(2) DEDUCT 168' X 16' AVG / 9 = 298.7 SQ.YD.

(3) 168' X 15' AVG X .75' / 27 = 70 CU.YD.

(4) DEDUCT 185' X 16' AVG / 9 = 328.9 SQ.YD.

(5) 185' X 15' AVG X .75' / 27 = 77 CU.YD.

(6) 9' X 15.5' / 9 = 15.5 SQ.YD.

(7) DEDUCT 77' X 14.5' / 9 = 124 SQ.YD.

(8) 77' X 13.5' X .75' / 27 = 29 CU.YD.

(9) DEDUCT FOR PRESSURE RELIEF JOINT, TYPE A 25' x 8' (FOR JOINT) x 0.5' ÷ 27 = 3.7 CU.YD.

(10) DEDUCT FOR PRESSURE RELIEF JOINT, TYPE A 25' x 8' (FOR JOINT) ÷ 9 x 0.40 = 4.4 GAL.

(11) DEDUCT FOR PRESSURE RELIEF JOINT, TYPE A 25' x 8' (FOR JOINT) ÷ 9 = 11.1 SQ.YD.

CALCULATED D.M 3-13-95
CHECKED J.S. 3-16-95

PAVEMENT CALCULATIONS

LIC-16-19.72

PCALCA06.DGN 3/21/95

PAVEMENT CALCULATIONS

① AREA TAKEN FROM COMPUTER

② DEDUCT 48.82'X2'/9=10.8 S.Y.

STATION TO STATION	WIDTH PAV'T. (FEET)	LIN. FEET	PAVEMENT AREA SQ. YD.	202 PAVEMENT REMOVED SQ. YD.	202 CURB REMOVED LIN. FT.	203 SUBGRADE COMPACTION SQ. YD.	302 8" BITUMINOUS AGGREGATE BASE, PG 64-22 CU. YD.	304 6" AGGREGATE BASE CU. YD.	408 BITUMINOUS PRIME COAT @0.4 GAL./S.Y. GAL.	855 4" ASPHALT TREATED FREE DRAINING BASE SQ. YD.	609 CURB, TYPE 6, AS PER PLAN LIN. FT.	446 1 3/4" ASPHALT CONCRETE INTERMEDIATE COURSE, TYPE 2, PG 64-28 CU. YD.	446 1½" ASPHALT CONCRETE SURFACE COURSE, TYPE 1H CU. YD.	407 TACK COAT FOR INTERMEDIATE COURSE @ 0.050 GAL./S.Y. GAL.	202 WALK REMOVED SQ. FT.	608 4" CONCRETE WALK SQ. FT.	608 CURB RAMP, TYPE 1 EACH	608 CURB RAMP, TYPE 2 EACH	202 CURB AND GUTTER REMOVED LIN. FT.	609 COMBINATION CURB AND GUTTER, TYPE 2 LIN. FT.
RAMP "H"																				
20+89.43(21st. ST.)-21+05.60±		16.17									16.2									
107+59.60-108+19.43	VAR.		① 246.4	① 221.5	90	246.4	54.8	41.1	98.6	246.4		12.0	10.3	12.3	249	220	2	1		
108+19.43-114+54.22	16	634.79	1128.5	1128.5		1128.5	250.8	188.1	451.4	1128.5		54.9	47.0	56.4						
RAMP "DD"																				
141+38.84-141+95.98	VAR.		① 266.8	① 230.8	110	266.8	59.3	44.5	106.7	266.8	151	13.0	11.1	13.3	135	92	2			
141+95.98-148+66.47	16	670.49	1192.0	1192.0		1192.0	264.9	198.7	476.8	1192.0		57.9	49.7	59.6						
RAMP "C" @ MOUNT VERNON RD.																				
167+55.95-171+30.53	24	374.58	998.9	998.9		998.9	222.0	166.5	399.6	998.9		48.6	41.6	49.9						
171+30.53-172+80.53	30 AVG.	150.0	500.0	500.0		500.0	111.1	83.3	200.0	500.0		24.3	20.8	25.0						
172+80.53-174+82.28	24	201.75	538.0	538.0		538.0	119.6	89.7	215.2	538.0		26.2	22.4	26.9						
174+82.28-175+01.16	VAR.		① 50.8	50.8	30	50.8	11.3	8.5	20.3	50.8	30	2.5	2.1	2.5						
RAMP "CC"																				
172+80.53-173+75.29	VAR.		① 174.8	174.8	5.7	174.8	38.8	29.1	69.9	174.8	5.7	8.5	7.3	8.7						
173+75.29-175+03.56	20	128.27	285.0	285.0		285.0	63.3	47.5	114.0	285.0	128.3	13.9	11.9	14.3						
175+03.56-28+27.1 MT.VERNON RD.	VAR.		① 204.3	204.3	50	204.3	45.4	34.0	81.7	204.3	50	9.9	8.5	10.2						
RAMP "D" @ HUDSON AVE.																				
180+15.16-181+61.35	VAR.		① 656.0	656.0	361	656.0	145.8	109.3	262.4	② 645.2	361	31.9	27.3	32.8	243	452	2	2		
181+61.35-183+00.72	11.37AVG.	139.37	176.1	176.1		176.1	39.1	29.3	70.4	176.1		8.6	7.3	8.8						
183+00.72-187+83.57	16	482.85	858.4	858.4		858.4	190.8	143.1	343.4	858.4		41.7	35.8	42.9						
ROADWAY "D" FROM S.R. 79																				
172+15.04-173+30.05	115.01	24	306.7	306.7		306.7	68.2	51.1	122.7	306.7		14.9	12.8	15.3						
SERVICE RD. "CD" @ MT. VERNON RD.															135.5	135.5	1	1	20.5	20.5
TOTALS				7521.8	662.9	7582.7	1685.2	1263.8	3033.1	7571.9	742.2	368.8	315.9	378.9	762.5	899.5	7	4	20.5	20.5

TOTALS CARRIED TO SHEET 80.

CALCULATED D.M 3-13-95
CHECKED J.S. 3-16-95

PAVEMENT CALCULATIONS

LIC-16-19.72

PCALCA08.DGN 3/21/95

PAVEMENT CALCULATIONS

(1) AREA TAKEN FROM COMPUTER

STATION TO STATION	WIDTH PAV'T. (FEET)	LIN. FEET	PAVEMENT AREA SQ. YD.	202 PAVEMENT REMOVED SQ. YD.	202 CURB REMOVED LIN. FT.	202 CONCRETE MEDIAN REMOVED SQ. YD.	203 EXCAVATION NOT INCLUDING EMBANKMENT CONSTRUCTION CU. YD.	203 SUBGRADE COMPACTION SQ. YD.	302 8" BITUMINOUS AGGREGATE BASE, PG 64-22 CU. YD.	304 6" AGGREGATE BASE CU. YD.	408 BITUMINOUS PRIME COAT @0.4 GAL./S.Y. GAL.	446 1 3/4" ASPHALT CONCRETE INTERMEDIATE COURSE, TYPE 2, PG 64-28 CU. YD.	446 1½" ASPHALT CONCRETE SURFACE COURSE, TYPE 1H CU. YD.	855 4" ASPHALT TREATED FREE DRAINING BASE SQ. YD.	407 TACK COAT FOR INTERMEDIATE COURSE @ 0.050 GAL./S.Y. GAL.	203 EMBANKMENT CU. YD.	452 11" PLAIN CONCRETE PAVEMENT SQ. YD.	SPECIAL PRESSURE RELIEF JOINT, TYPE A LIN.FT.
WESTBOUND LANES																		
105+53.25 - 107+86.75	BRIDGE LIMITS (FOR DETAILS AND QUANTITIES SEE BRIDGE DETAIL SHEETS)																	
107+86.75 - 114+38.08	24	651.33	1736.9	1736.9				1736.9	386.0	289.5	694.8	84.4	72.4	1736.9	86.8			
114+38.08 - 117+16.47	49.5 AVG	278.39	(1) 1397.0	1397.0				1397.0	310.4	232.8	558.8	67.9	58.2	1397.0	69.9			
117+16.47 - 118+69.02 (BACK)	36	152.55	610.2	610.2				610.2	135.6	101.7	244.1	29.7	25.4	610.2	30.5			
117+46.58 (AHEAD) - 119+42.70	36	196.12	784.5	784.5				784.5	174.3	130.7	313.8	38.1	32.7	784.5	39.2			
119+42.70 - 124+62.70	42.5 AVG	520.0	2455.6	2455.6				2455.6	545.7	409.3	982.2	119.4	102.3	2455.6	122.8			
124+62.70 - 126+26.93	56 AVG	164.23	(1) 989.9	(2) 933.9	235		(3) 12	989.9	220.0	165.0	396.0	48.1	41.2	989.9	49.5	(10) 4		
126+26.93 - 135+81.22	24	954.29	2544.8	2544.8				2544.8	565.5	424.1	1017.9	123.7	106.0	2544.8	127.2			
135+81.22 - 137+51.69	BRIDGE LIMITS (FOR DETAILS AND QUANTITIES SEE BRIDGE DETAIL SHEETS)																	
137+51.69 - 141+32.98	24	381.29	1016.8	1016.8				1016.8	226.0	169.5	406.7	49.4	42.4	1016.8	50.8			
141+32.98 - 143+14.53	BRIDGE LIMITS (FOR DETAILS AND QUANTITIES SEE BRIDGE DETAIL SHEETS)																	
143+14.53 - 153+44.64	24	1030.11	2747.0	(4) 2775.0				2747.0	610.4	457.8	1098.8	133.5	114.5	2747.0	137.4			
153+44.64 - 158+58.59	59.5 AVG	513.95	(1) 3198.1	3198.1				3198.1	710.7	533.0	1279.2	155.5	133.3	3198.1	160.0			
158+58.59 - 160+79.67	48	221.08	1179.1	1179.1				1179.1	262.0	196.5	471.6	57.3	49.1	1179.1	59.0			
160+79.67 - 165+99.67	55 AVG	520.0	3177.8	3177.8				3177.8	706.2	529.6	1271.1	154.5	132.4	3177.8	158.9			
165+99.67 - 167+48.81	66.5 AVG	149.14	(1) 1107.9	(5) 843.4	22	(7) 98	(6) 66	1107.9	246.2	184.6	443.2	53.9	46.2	1107.9	55.4			
167+48.81 - 178+42.37	24	1093.56	2916.2	2916.2				2916.2	648.0	486.0	1166.5	141.8	121.5	2916.2	145.8			
178+42.37 - 180+34.47	BRIDGE LIMITS (FOR DETAILS AND QUANTITIES SEE BRIDGE DETAIL SHEETS)																	
180+34.47 - 186+26.14	24	591.67	1577.8	1577.8				1577.8	350.6	263.0	631.1	76.7	65.7	1577.8	78.9			
186+26.14 - 190+15.30	47.71 AVG	389.16	(1) 1784.1	(8) 1772.1	19		(9) 3	1784.1	396.5	297.3	713.6	86.7	74.3	1784.1	89.2			
116+62.31 - 119+55.84	BRIDGE LIMITS (FOR DETAILS AND QUANTITIES SEE BRIDGE DETAIL SHEETS)																	
119+55.84 - 121+87.02	24	231.18	616.5	616.5				616.5		(11) 99.2	(12) 242.2			(13) 605.6			(13) 605.6	24.5
TOTALS				29535.7	276	98	81	29840.2	6494.1	4969.6	11931.0	1420.6	1217.6	29829.3	1461.3	4	605.6	24.5

TOTALS CARRIED TO SHEET 80.

(2) DEDUCT 63' X 8' AVG / 9 = 56 SQ.YD.

(3) 63' X 7' AVG X .75' / 27 = 12 CU.YD.

(4) ADD 11' X 23' / 9 = 28 SQ.YD.

(5) DEDUCT 148.8' X 16' / 9 = 264.5 SQ.YD.

(6) 148.8' X 16' X .75' / 27 = 66 CU.YD.

(7) 135' X 6.5' / 9 = 98 SQ.YD.

(8) DEDUCT 18' X 6' AVG / 9 =12 SQ.YD.

(9) 18' X 6' AVG X .75' / 27 = 3 CU.YD.

(10) 172' X .5 X 1' ÷ 27 = 4 CU.YD.

(11) DEDUCT FOR PRESSURE RELIEF JOINT,TYPE A 24.5' x 8' (FOR JOINT) x 0.5' ÷ 27 = 3.6 CU.YD.

(12) DEDUCT FOR PRESSURE RELIEF JOINT,TYPE A 24.5' x 8' (FOR JOINT) ÷ 9 x 0.40 = 4.4 GAL.

(13) DEDUCT FOR PRESSURE RELIEF JOINT,TYPE A 24.5' x 8' (FOR JOINT) ÷ 9 = 10.9 SQ.YD.

CALCULATED D.M 3-13-95
CHECKED J.S. 3-16-95

PAVEMENT CALCULATIONS

LIC-16-19.72

PCALCA07.DGN 3/21/95

PAVEMENT CALCULATIONS

① AREA TAKEN FROM COMPUTER

STATION TO STATION	WIDTH PAV'T. (FEET)	LIN. FEET	PAVEMENT AREA SQ. YD.	202 PAVEMENT REMOVED SQ. YD.	202 CURB REMOVED LIN. FT.	203 SUBGRADE COMPACTION SQ. YD.	302 8" BITUMINOUS AGGREGATE BASE, PG 64-22 CU. YD.	304 6" AGGREGATE BASE CU. YD.	408 BITUMINOUS PRIME COAT @0.4 GAL./S.Y. GAL.	855 4" ASPHALT TREATED FREE DRAINING BASE SQ. YD.	609 CURB, TYPE 6, AS PER PLAN LIN. FT.	202 CONCRETE MEDIAN REMOVED SQ. YD.	446 1 3/4" ASPHALT CONCRETE INTERMEDIATE COURSE, TYPE 2, PG 64-28 CU. YD.	446 1½" ASPHALT CONCRETE SURFACE COURSE, TYPE 1H CU. YD.	407 TACK COAT FOR INTERMEDIATE COURSE @ 0.050 GAL./S.Y. GAL.		202 WALK REMOVED SQ. FT.	608 4" CONCRETE WALK SQ. FT.	608 CURB RAMP, TYPE 1 EACH	608 CURB RAMP, TYPE 2 EACH	202 CURB AND GUTTER REMOVED LIN.FT.	609 COMBINATION CURB AND GUTTER, TYPE 2 LIN.FT.	305 9" CONCRETE BASE SQ.YD.
RAMP "F"																							
106+32.37-106+81.21	VAR.	48.84	① 231.5	① 182.7	140	231.5	51.4	38.6	92.6	231.5	129		11.3	9.6	11.6		240.9	204.9	2	1			
106+81.21-107+49.4	20	68.19.	151.5	① 123.9		151.5	33.7	25.2	60.6	151.5			7.4	6.3	7.6								
107+49.4-108+34.4	18 AVG.	85.0	170.0	① 151.1		170.0	37.8	28.3	68.0	170.0			8.3	7.1	8.5								
108+34.4-114+39.45	16	605.05	1075.6	1075.6		1075.6	239.0	179.3	430.2	1075.6			52.3	44.8	53.8								
RAMP "BB"																							
143+19.61-143+67.55	VAR.	47.94	① 225.4	225.4	130	225.4	50.1	37.6	90.2	225.4	130		11.0	9.4	11.3		113	114	2				
143+67.55-147+35.56	16	368.01	654.2	654.2		654.2	145.4	109.0	261.7	654.2			31.8	27.3	32.7								
ROADWAY "B"																							
143+59.78-147+33.75	24	373.97	997.3	② 229.1		997.3	221.6	166.2	398.9	997.3			48.5	41.6	49.9								
147+33.75-148+99.63	VAR.	165.88	① 853.2	① 843.4		853.2	189.6	142.2	341.3	853.2		17	41.5	35.5	42.7								
148+99.63-151+50	30 AVG.	250.37	834.6	834.6		834.6	185.5	139.1	333.8	834.6			40.6	34.8	41.7								
151+50-153+46.67	24	196.67	524.5	524.5		524.5	116.6	87.4	209.8	524.5			25.5	21.9	26.2								
RAMP "A" @ MOUNT VERNON RD.																							
167+53.0-172+46.59	24	493.59	1316.2	1316.2		1316.2	292.5	219.4	526.5	1316.2			64.0	54.8	65.8								
172+46.59-173+33.55	VAR.	86.96	① 528.3	① 499.7	195	528.3	117.4	88.0	211.3	528.3	191		25.7	22.0	26.4								
RAMP "B" @ HUDSON AVE.																							
178+34.06-178+73.14	VAR.	39.08	① 160.2	① 156.9	53	160.2	35.6	26.7	64.1	160.2	53		7.8	6.7	8.0		139	131	1	1			
178+73.14-181+95.83	24	322.69	860.5	860.5		860.5	191.2	143.4	344.2	860.5			41.8	35.9	43.0								
181+95.83-183+45.84	20 AVG.	150.01	333.4	333.4		333.4	74.1	55.6	133.4	333.4			16.2	13.9	16.7								
183+45.84-186+26.92	16	281.08	499.7	499.7		499.7	111.0	83.3	199.9	499.7			24.3	20.8	25.0								
SERVICE ROAD "AB" @ MT. VERNON RD.												49					139.6	139.6	1	1	26.4	26.4	49
TOTALS				8510.9	518	9416.1	2092.5	1569.3	3766.5	9416.1	503	66	458.0	392.4	470.9		632.5	589.5	6	3	26.4	26.4	49

TOTALS CARRIED TO SHEET 80.

② 85.93' X 24' / 9=229.1 S.Y.

CALCULATED D.M 3-13-95
CHECKED J.S. 3-16-95

PAVEMENT CALCULATIONS

LIC-16-19.72

P:CALCA@%.DGN 5/30/95

SHOULDER CALCULATIONS

⑩ AREA TAKEN FROM COMPUTER.

STATION TO STATION	LT. SIDE WIDTH BERM (FEET)	LT. SIDE LIN. FEET	RT. SIDE WIDTH BERM (FEET)	RT. SIDE LIN. FEET	SHOULDER AREA SQ. YD.	202 CURB REMOVED LIN. FT.	203 EMBANKMENT CU. YD.	203 SUBGRADE COMPACTION SQ. YD.	302 8" BITUMINOUS AGGREGATE BASE, PG 64-22 CU. YD.	304 6" AGGREGATE BASE LX(WB+1.1667)X .5+27= CU. YD.	408 BITUMINOUS PRIME COAT @ 0.4 GAL./S.Y. GAL.	446 1 3/4" ASPHALT CONCRETE INTERMEDIATE COURSE, TYPE 2, PG 64-28 CU. YD.	446 1½" ASPHALT CONCRETE SURFACE COURSE, TYPE 1H CU. YD.	855 4" ASPHALT TREATED FREE DRAINING BASE SQ. YD.	407 TACK COAT FOR INTERMEDIATE COURSE @ 0.050 GAL./S.Y. GAL.	609 CURB, TYPE 6, AS PER PLAN LIN. FT.	203 EXCAVATION NOT INCLUDING EMBANKMENT CONSTRUCTION 4" CU. YD.	612 CONCRETE MEDIAN (SEE STAND. DRWG. MC-6) SQ. YD.	452 11" PLAIN CONCRETE PAVEMENT SQ. YD.	SPECIAL PRESSURE RELIEF JOINT, TYPE A LIN. FT.	SPECIAL GEOTEXTILE FABRIC, TYPE D Lx2.50'÷9= SQ. YD.
EASTBOUND LANES																					
108+04.36 - 114+52.97			8	648.61	576.5		⑤ 46.4	576.5	④138.8	110.1	③ 240.2	28.0	24.0	②600.6	28.8						
RAMP "H" 114+54.22-115+04.22			7 AVG	50.0	38.9		⑤ 3.6	38.9	④ 9.5	7.6	③ 16.3	1.9	1.6	② 40.7	1.9						
RAMP "H" 115+04.22-116+20.91			8	116.69	103.7		⑤ 8.3	103.7	④ 25.0	19.8	③ 43.2	5.0	4.3	② 108.0	5.2						
116+21.26 - 118+69.02 (BACK)			8	247.76	220.2		⑤ 17.7	220.2	④ 53.0	42.1	③ 91.8	10.7	9.2	②229.4	11.0						
117+46.58 (AHEAD) - 126+63.60			8	917.02	815.1		⑤ 65.6	815.1	④196.3	155.7	③ 339.6	39.6	34.0	②849.1	40.8						
RAMP "C" 126+63.60-129+40.61			8	277.01	246.2		⑤ 19.8	246.2	④ 59.2	47.0	③ 102.6	12.0	10.3	②256.5	12.3						
129+41.95 - 134+76.00			8	534.05	474.7		⑤ 38.2	474.7	④114.3	90.7	③ 197.8	23.1	19.8	② 494.5	23.7						
134+76.00 - 136+05.10			8	129.10	114.8	129.1	⑥ 4.2	⑦ 121.9	25.5	① 21.5	45.9	5.6	4.8	114.8	5.7	129.1					
136+05.10 - 137+75.57		BRIDGE	LIMITS	(FOR BRIDGE DETAILS AND QUANTITIES SEE BRIDGE DETAIL SHEETS)																	
137+75.57 - 141+24.89			8	349.32	310.5	⑧ 342	⑥ 11.3	⑦ 329.9	69.0	① 58.2	124.2	15.1	12.9	310.5	15.5	⑧342.0					
141+24.89 - 143+06.44		BRIDGE	LIMITS	(FOR BRIDGE DETAILS AND QUANTITIES SEE BRIDGE DETAIL SHEETS)																	
143+06.44 - 144+11.23			8	104.79	93.1			93.1	20.7	⑨ 15.5	37.2	4.5	3.9	93.1	4.7						
144+11.23 - 147+08.25			8	297.02	264.0	⑧293.0	⑥ 9.6	⑦ 280.5	58.7	① 49.5	105.6	12.8	11.0	264.0	13.2	⑧293.0					
147+08.25 - 148+65.44			8	157.19	139.7		⑤ 11.2	139.7	④ 33.6	26.7	③ 58.2	6.8	5.8	②145.5	7.0	10					
RAMP "DD" 148+66.47-149+16.47			7 AVG	50.0	38.9		⑤ 3.6	38.9	④ 9.5	7.6	③ 16.3	1.9	1.6	40.7	1.9						
RAMP "DD" 149+16.47-150+49.99			8	133.52	118.7		⑤ 9.5	118.7	④ 28.5	22.7	③ 49.5	5.8	4.9	②123.6	5.9						
150+50.47 - 163+23.97			8	1273.50	1132.0	⑧1237.3	⑥ 41.3	⑦1202.8	251.6	①212.3	452.8	55.0	47.2	1132.0	56.6	⑧1237.3					
RAMP "C" 163+23.97-167+55.95			8	431.98	384.0	432	⑥ 14.0	⑦ 408.0	85.3	① 72.0	153.6	18.7	16.0	384.0	19.2	432					
167+72.61 - 177+28.00			8	955.39	849.2		⑤ 68.3	849.2	④204.4	162.2	③ 353.8	41.2	35.4	② 884.6	42.5						
164+92.23 - 168+85.78					⑩ 92.2												11	92.2			
177+28.00 - 178+60.86			8	132.86	118.1	133	⑥ 4.3	⑦ 125.5	26.2	① 22.1	47.2	5.7	4.9	118.1	5.9	133					
178+60.86 - 180+52.96		BRIDGE	LIMITS	(FOR BRIDGE DETAILS AND QUANTITIES SEE BRIDGE DETAIL SHEETS)																	
180+52.96 - 184+00.00			8	347.04	308.5	347	⑥ 11.2	⑦ 327.8	68.6	① 57.8	123.4	15.0	12.9	308.5	15.4	347					
184+00.00 - 187+82.45			8	382.45	340.0		⑤ 27.3	340.0	④ 81.9	64.9	③ 141.6	16.5	14.2	② 354.1	17.0						
RAMP "D" 187+83.57-188+33.57			7 AVG	50.0	38.9	⑧ 9.5	⑥ 1.6	⑦ 41.7	8.6	① 7.4	15.6	1.9	1.6	38.9	1.9	⑧ 19.5					
188+33.57 - 189+50.00			8	116.43	103.5	116.3	⑥ 3.8	⑦ 109.9	23.0	① 19.4	41.4	5.0	4.3	103.4	5.2	116.3					
189+50.00 - 190+33.14 (BACK)			5.5 AVG	167.33	102.3	⑧ 136.8	⑥ 5.4	⑦111.6	22.7	① 20.1	40.9	5.0	4.3	102.3	5.1	⑧136.8					
116+62.31 - 119+55.84		BRIDGE	LIMITS	(FOR BRIDGE DETAILS AND QUANTITIES SEE BRIDGE DETAIL SHEETS)																	
120+01.88 - 121+51.88																150.0					
119+55.84 - 121+87.02			9.33'	231.18	239.7			239.7		⑩⑫ 40.7	⑪⑬ 54.8			⑭ 235.6					⑭ 235.6	9.33	64.2
TOTALS						3176.0	426.2	7354.2	1613.9	1353.6	2893.5	336.8	288.9	7236.8	346.4	3346.0	11	92.2	235.6	9.33	64.2

TOTALS CARRIED TO SHEET 80.

① LX(WB+1') X .5 ÷ 27=

② LX(WB+.3333) ÷ 9=

③ LX(WB+.3333) ÷ 9 X .4=

④ (LX[WB+.5]X.6667÷27) + (L X .3333 X .3333÷27)=

⑤ (LX.3333X.25÷27) + (LX.6667X.5833÷27) + (LX1.1667X1.25÷27)=

⑥ LX.5X1.75÷27=

⑦ LX(WB+.5)÷9

⑧ DEDUCTED CATCH BASINS

⑨ S.Y. X .1667 =

⑩ LX(WB+.5') X .5 ÷ 27=

⑪ LX(WB-3.833') ÷ 9 X .4=

⑫ DEDUCT FOR PRESSURE RELIEF JOINT, TYPE A 9.33' x 8' (FOR JOINT) x 0.5' ÷ 27 = 1.4 CU.YD.

⑬ DEDUCT FOR PRESSURE RELIEF JOINT, TYPE A 9.33' x 8' (FOR JOINT) ÷ 9 x 0.40 = 1.7 GAL.

⑭ DEDUCT FOR PRESSURE RELIEF JOINT, TYPE A 9.33' x 8' (FOR JOINT) ÷ 9 = 4.1 SQ.YD.

CALCULATED D.M 3-13-95 CHECKED J.S. 3-16-95

SHOULDER CALCULATIONS

LIC-16-19.72

BCALC105.DGN 5/30/95

SHOULDER CALCULATIONS

⑧ AREA TAKEN FROM COMPUTER

STATION TO STATION	LT. SIDE WIDTH BERM (FEET)	LT. SIDE LIN. FEET	RT. SIDE WIDTH BERM (FEET)	RT. SIDE LIN. FEET	SHOULDER AREA SQ. YD.	202 CURB REMOVED LIN. FT.	202 CONCRETE MEDIAN, REMOVED SQ. YD.	203 EMBANKMENT CU. YD.	203 SUBGRADE COMPACTION SQ. YD.	302 8" BITUMINOUS AGGREGATE BASE, PG 64-22 CU. YD.	304 6" AGGREGATE BASE LX(WB+1.6667) X.5/27 CU. YD.	408 BITUMINOUS PRIME COAT @ 0.4 GAL./S.Y. GAL.	446 1 3/4" ASPHALT CONCRETE INTERMEDIATE COURSE, TYPE 2, PG 64-28 CU. YD.	446 1½" ASPHALT CONCRETE SURFACE COURSE, TYPE 1H CU. YD.	855 4" ASPHALT TREATED FREE DRAINING BASE SQ. YD.	407 TACK COAT FOR INTERMEDIATE COURSE @ 0.050 GAL./S.Y. GAL.	609 CURB, TYPE 6, AS PER PLAN LIN. FT.
RAMP "H"																	
108+19.43-114+54.22			6	634.79	423.2			⑤ 45.4	423.2	④ 104.5	84.2	③ 178.7	20.6	17.6	② 446.7	21.2	
107+79.20-114+54.22	3	675.02			225.0	114		⑤ 48.3	225.0	④ 61.1	52.1	③ 100.0	10.9	9.4	② 250.0	11.3	
ROADWAY "D" FROM S.R. 79																	
172+10.75-173+30.05			8	119.3	106.0	120		⑥ 3.9	⑦ 112.7	23.6	① 19.9	42.4	5.2	4.4	106.0	5.3	120
172+18.26-173+30.05	5	111.79			62.1	134			62.1	13.8	⑨ 10.3	24.8	3.0	2.6	62.1	3.1	
EXTRA AREA					⑧ 88.7		81.3		88.7	19.7	⑨ 14.8	35.5	4.3	3.7	88.7	4.4	
RAMP "DD"																	
141+95.98-148+66.47			6	670.49	447.0			⑤ 47.9	447.0	④ 110.4	89.0	③ 188.7	21.7	18.6	② 471.8	22.4	
141+91.82-148+66.47	3	674.65			224.9	158		⑤ 48.2	224.9	④ 61.1	52.1	③ 99.9	10.9	9.4	② 249.9	11.2	
RAMP "C" @ MOUNT VERNON RD.																	
167+55.95-168+05.95			7 AVG.	50.0	38.9	50		⑥ 1.6	⑦ 41.7	8.6	① 7.4	15.6	1.9	1.6	38.9	1.9	50
168+05.95-172+80.53			6	474.58	316.4	⑩ 300		⑥ 15.4	⑦ 342.8	70.3	① 61.5	126.6	15.4	13.2	316.4	15.8	⑩ 300
RAMP "CC"																	
172+80.53-175+06.92			6	226.39	150.9	226.4		⑥ 7.3	⑦ 163.5	33.5	① 29.3	60.4	7.3	6.3	150.9	7.5	226.4
175+06.92-28+27.10 MT. VERNON RD.			4 AVG.	92	40.9	92		⑥ 3.0	⑦ 46.0	9.1	① 8.5	16.4	2.0	1.7	40.9	2.0	92
RAMP "C" @ MOUNT VERNON RD.																	
167+55.95-174+27.95	3	672.0			224.0			⑤ 48.1	224.0	④ 60.8	51.9	③ 99.6	10.9	9.3	② 248.9	11.2	
174+27.95-174+82.28	3	54.33			18.1	54.3		⑥ 1.8	⑦ 21.7	4.0	① 4.0	7.2	0.9	0.8	18.1	0.9	54.3
173+75.49-174+96.48			2	120.99	26.9	⑩ 115.5		⑥ 3.9	⑦ 33.6	6.0	① 6.7	10.8	1.3	1.1	26.9	1.3	⑩ 115.5
RAMP "D" @ HUDSON AVE.																	
181+61.35-187+83.57			6	622.22	414.8			⑤ 44.5	414.8	④ 102.4	82.6	③ 175.1	20.2	17.3	② 437.9	20.7	
180+16.82-181+29.54	3	112.72			37.6	⑩ 107.2		⑥ 3.7	⑦ 43.8	8.4	① 8.3	15.0	1.8	1.6	37.6	1.9	⑩ 107.2
181+29.54-187+83.57	3	654.03			218.0			⑤ 46.8	218.0	④ 59.2	50.5	③ 96.9	10.6	9.1	② 242.2	10.9	
TOTALS						1471.4	81.3	369.8	3133.5	756.5	633.1	1293.6	148.9	127.7	3233.9	153.0	1065.4

① LX(WB+1')X.5/27=
② LX(WB+.3333)/9=
③ LX(WB+.3333)/9X.4=
④ (LX[WB+.5]X.6667/27)+(LX.3333X.3333/27)=
⑤ (LX.3333X.25/27)+(LX.6667X.5833/27)+(LX1.1667X1.25/27)=
⑥ LX.5X1.75/27=
⑦ LX(WB+.5)/9=
⑨ S.Y.X.1667=
⑩ DEDUCTED CATCH BASINS

TOTALS CARRIED TO SHEET 80.

CALCULATED D.M 3-13-95
CHECKED J.S. 3-16-95

SHOULDER CALCULATIONS

LIC-16-19.72

BCALC111.DGN 5/30/95

SHOULDER CALCULATIONS

STATION TO STATION	LT. SIDE WIDTH BERM (FEET)	LT. SIDE LIN. FEET	RT. SIDE WIDTH BERM (FEET)	RT. SIDE LIN. FEET	SHOULDER AREA SQ. YD.	203 SUBGRADE COMPACTION SQ. YD.	302 8" BITUMINOUS AGGREGATE BASE, PG 64-22 CU. YD.	304 6" AGGREGATE BASE CU. YD.	408 BITUMINOUS PRIME COAT @ 0.4 GAL./S.Y. GAL.	446 1 3/4" ASPHALT CONCRETE INTERMEDIATE COURSE, TYPE 2, PG 64-28 CU. YD.	446 1½" ASPHALT CONCRETE SURFACE COURSE, TYPE 1H CU. YD.	855 4" ASPHALT TREATED FREE DRAINING BASE SQ. YD.	407 TACK COAT FOR INTERMEDIATE COURSE @ 0.050 GAL./S.Y. GAL.
EASTBOUND LANES													
107+94.57 - 115+55.00	6.25	760.43			528.1	528.1	117.4	88.0	211.2	25.7	22.0	528.1	26.4
115+55.00 - 115+95.00	5.75 AVG	40.0			25.6	25.6	5.7	4.3	10.2	1.2	1.1	25.6	1.3
115+95.00 - 116+05.00	5.25	10.0			5.8	5.8	1.3	1.0	2.3	0.3	0.2	5.8	0.3
116+05.00 - 116+45.00	5.75 AVG	40.0			25.6	25.6	5.7	4.3	10.2	1.2	1.1	25.6	1.3
116+45.00 - 118+69.02 (BACK)	6.25	224.02			155.6	155.6	34.6	25.9	62.2	7.6	6.5	155.6	7.8
117+46.58 (AHEAD) - 124+31.35	6.25	684.77			475.5	475.5	105.7	79.2	190.2	23.1	19.8	475.5	23.8
124+31.35 - 124+71.35	5.5	40.0			24.4	24.4	5.4	4.1	9.8	1.2	1.0	24.4	1.2
124+71.35 - 124+84.35	4.75	13.0			6.9	6.9	1.5	1.1	2.8	0.3	0.3	6.9	0.3
124+84.35 - 125+24.35	5.5	40.0			24.4	24.4	5.4	4.1	9.8	1.2	1.0	24.4	1.2
125+24.35 - 127+45.00	6.25	220.65			153.2	153.2	34.0	25.5	61.3	7.4	6.4	153.2	7.7
127+45.00 - 127+85.00	5.75 AVG	40.0			25.6	25.6	5.7	4.3	10.2	1.2	1.1	25.6	1.3
127+85.00 - 127+95.00	5.25	10.0			5.8	5.8	1.3	1.0	2.3	0.3	0.2	5.8	0.3
127+95.00 - 128+35.00	5.75 AVG	40.0			25.6	25.6	5.7	4.3	10.2	1.2	1.1	25.6	1.3
128+35.00 - 135+48.33	6.25	713.33			495.4	495.4	110.1	82.6	198.2	24.1	20.6	495.4	24.8
135+48.33 - 135+88.33	5.25 AVG	40.0			23.3	23.3	5.2	3.9	9.3	1.1	1.0	23.3	11.7
135+88.33 - 137+61.64		BRIDGE LIMITS (FOR DETAILS AND QUANTITIES SEE BRIDGE DETAIL SHEETS)											
137+61.64 - 138+01.64	5.25 AVG	40.0			23.3	23.3	5.2	3.9	9.3	1.1	1.0	23.3	1.2
138+01.64 - 141+30.09	6.25	328.45			228.1	228.1	50.7	38.0	91.2	11.1	9.5	228.1	11.4
141+30.09 - 143+11.64		BRIDGE LIMITS (FOR DETAILS AND QUANTITIES SEE BRIDGE DETAIL SHEETS)											
143+11.64 - 157+30.70	6.25	1419.06			985.5	985.5	219.0	164.2	394.2	47.9	41.1	985.5	49.3
157+30.70 - 157+70.70	5.25 AVG	40.0			23.3	23.3	5.2	3.9	9.3	1.1	1.0	23.3	1.2
157+70.70 - 158+47.20	4.25	76.5			36.1	36.1	8.0	6.0	14.4	1.8	1.5	36.1	1.8
158+47.20 - 158+87.20	5.25 AVG	40.0			23.3	23.3	5.2	3.9	9.3	1.1	1.0	23.3	1.2
158+87.20 - 164+55.00	6.25	567.8			394.3	394.3	87.6	65.7	157.7	19.2	16.4	394.3	19.7
164+55.00 - 164+95.00	5.75 AVG	40.0			25.6	25.6	5.7	4.3	10.2	1.2	1.1	25.6	1.3
				TOTALS		3740.3	831.3	623.5	1495.8	181.6	156.0	3740.3	197.8

TOTALS CARRIED TO SHEET 80.

CALCULATED D.M 3-13-95
CHECKED J.S. 3-16-95

SHOULDER CALCULATIONS

LIC-16-19.72

BCALC106.DGN 5/30/95

SHOULDER CALCULATIONS

STATION TO STATION	LT. SIDE WIDTH BERM (FEET)	LT. SIDE LIN. FEET	RT. SIDE WIDTH BERM (FEET)	RT. SIDE LIN. FEET	SHOULDER AREA SQ. YD.	203 SUBGRADE COMPACTION SQ. YD.	302 8" BITUMINOUS AGGREGATE BASE, PG 64-22 CU. YD.	304 6" AGGREGATE BASE CU. YD.	408 BITUMINOUS PRIME COAT @ 0.4 GAL./S.Y. GAL.	446 1 3/4" ASPHALT CONCRETE INTERMEDIATE COURSE, TYPE 2, PG 64-28 CU. YD.	446 1½" ASPHALT CONCRETE SURFACE COURSE, TYPE 1H CU. YD.	855 4" ASPHALT TREATED FREE DRAINING BASE SQ. YD.	407 TACK COAT FOR INTERMEDIATE COURSE @ 0.050 GAL./S.Y. GAL.	452 11" PLAIN CONCRETE PAVEMENT SQ. YD.	SPECIAL PRESSURE RELIEF JOINT, TYPE A LIN.FT.	SPECIAL GEOTEXTILE FABRIC, TYPE D Lx2.50'÷9= SQ. YD.
EASTBOUND LANES																
164+95.00 - 165+05.00	5.25	10.0			5.8	5.8	1.3	1.0	2.3	0.3	0.2	5.8	0.3			
165+05.00 - 165+77.14	5.0 AVG	72.14			40.1	40.1	8.9	6.7	16.0	1.9	1.7	40.1	2.0			
165+77.14 - 165+90.14	4.75	13.0			6.9	6.9	1.5	1.1	2.8	0.3	0.3	6.9	0.3			
165+90.14 - 166+30.14	5.5 AVG	40.0			24.4	24.4	5.4	4.1	9.8	1.2	1.0	24.4	1.2			
166+30.14 - 173+41.00	6.25	710.86			493.7	493.7	109.7	82.3	197.5	24.0	20.6	493.7	24.7			
173+41.00 - 173+81.00	5.5 AVG	40.0			24.4	24.4	5.4	4.1	9.8	1.2	1.0	24.4	1.2			
173+81.00 - 174+30.00	4.75	49			25.9	25.9	5.8	4.3	10.4	1.3	1.1	25.9	1.3			
174+30.00 - 174+70.00	5.5 AVG	40.0			24.4	24.4	5.4	4.1	9.8	1.2	1.0	24.4	1.2			
174+70.00 - 178+49.48	6.25	379.48			263.5	263.5	58.6	43.9	105.4	12.8	11.0	263.5	13.2			
178+49.48 - 180+41.58		BRIDGE	LIMITS (FOR BRIDGE DETAILS AND QUANTITIES SEE BRIDGE DETAIL SHEETS)													
180+41.58 - 186+65.00	6.25	623.42			432.9	432.9	96.2	72.1	173.2	21.0	18.0	432.9	21.6			
186+65.00 - 187+05.00	5.75 AVG	40.0			25.6	25.6	5.7	4.3	10.2	1.2	1.1	25.6	1.3			
187+05.00 - 187+15.00	5.25	10.0			5.8	5.8	1.3	1.0	2.3	0.3	0.2	5.8	0.3			
187+15.00 - 187+55.00	5.75 AVG	40.0			25.6	25.6	5.7	4.3	10.2	1.2	1.1	25.6	1.3			
187+55.00 - 189+00.00	6.25	145.0			100.7	100.7	22.4	16.8	40.3	4.9	4.2	100.7	5.0			
189+00.00 - 190+33.14	4.75 AVG	133.14			70.3	70.3	15.6	11.7	28.1	3.4	2.9	70.3	3.5			
116+62.31 - 119+55.84		BRIDGE	LIMITS (FOR BRIDGE DETAILS AND QUANTITIES SEE BRIDGE DETAIL SHEETS)													
119+55.84 - 121+87.02	3.25	231.18			83.5	83.5		(2) 13.4	(1)(3) 32.8			(4) 82.1		(4) 82.1	3.25	64.2
				TOTALS		1653.5	348.9	275.2	660.9	76.2	65.4	1652.1	78.4	82.1	3.25	64.2

TOTALS CARRIED TO SHEET 80.

(1) L x (WB - 1.833') ÷ 9 x .4 =

(2) DEDUCT FOR PRESSURE RELIEF JOINT, TYPE A
3.25' x 8' (FOR JOINT) x 0.5' ÷ 27 = 0.5 CU.YD.

(3) DEDUCT FOR PRESSURE RELIEF JOINT, TYPE A
3.25' x 4' (FOR JOINT) ÷ 9 x 0.40 = 0.6 GAL.

(4) DEDUCT FOR PRESSURE RELIEF JOINT, TYPE A
3.25' x 4' (FOR JOINT) ÷ 9 = 1.4 SQ.YD.

CALCULATED D.M 3-13-95
CHECKED J.S. 3-16-95

SHOULDER CALCULATIONS

LIC-16-19.72

BCALC107.DGN 5/30/95

SHOULDER CALCULATIONS

STATION TO STATION	LT. SIDE WIDTH BERM (FEET)	LT. SIDE LIN. FEET	RT. SIDE WIDTH BERM (FEET)	RT. SIDE LIN. FEET	SHOULDER AREA SQ. YD.	203 SUBGRADE COMPACTION SQ. YD.	302 8" BITUMINOUS AGGREGATE BASE, PG 64-22 CU. YD.	304 6" AGGREGATE BASE CU. YD.	408 BITUMINOUS PRIME COAT @ 0.4 GAL./S.Y. GAL.	446 1 3/4" ASPHALT CONCRETE INTERMEDIATE COURSE, TYPE 2, PG 64-28 CU. YD.	446 1½" ASPHALT CONCRETE SURFACE COURSE, TYPE 1H CU. YD.	855 4" ASPHALT TREATED FREE DRAINING BASE SQ. YD.	407 TACK COAT FOR INTERMEDIATE COURSE @ 0.050 GAL./S.Y. GAL.
WESTBOUND LANES													
107+81.72 - 115+55.00			6.25	773.28	537.0	537.0	119.3	89.5	214.8	26.1	22.4	537.0	26.9
115+55.00 - 115+95.00			5.75 AVG	40.0	25.6	25.6	5.7	4.3	10.2	1.2	1.1	25.6	1.3
115+95.00 - 116+05.00			5.25	10.0	5.8	5.8	1.3	1.0	2.3	0.3	0.2	5.8	0.3
116+05.00 - 116+45.00			5.75 AVG	40.0	25.6	25.6	5.7	4.3	10.2	1.2	1.1	25.6	1.3
116+45.00 - 118+69.02 (BACK)			6.25	224.02	155.6	155.6	34.6	25.9	62.2	7.6	6.5	155.6	7.8
117+46.58 (AHEAD) - 124+31.35			6.25	684.77	475.5	475.5	105.7	79.2	190.2	23.1	19.8	475.5	23.8
124+31.35 - 124+71.35			5.5	40.0	24.4	24.4	5.4	4.1	9.8	1.2	1.0	24.4	1.2
124+71.35 - 124+84.35			4.75	13.0	6.9	6.9	1.5	1.1	2.8	0.3	0.3	6.9	0.3
124+84.35 - 125+24.35			5.5	40.0	24.4	24.4	5.4	4.1	9.8	1.2	1.0	24.4	1.2
125+24.35 - 127+45.00			6.25	220.65	153.2	153.2	34.0	25.5	61.3	7.4	6.4	153.2	7.7
127+45.00 - 127+85.00			5.75 AVG	40.0	25.6	25.6	5.7	4.3	10.2	1.2	1.1	25.6	1.3
127+85.00 - 127+95.00			5.25	10.0	5.8	5.8	1.3	1.0	2.3	0.3	0.2	5.8	0.3
127+95.00 - 128+35.00			5.75 AVG	40.0	25.6	25.6	5.7	4.3	10.2	1.2	1.1	25.6	1.3
128+35.00 - 135+48.33			6.25	713.33	495.4	495.4	110.1	82.6	198.2	24.1	20.6	495.4	24.8
135+48.33 - 135+88.33			5.25 AVG	40.0	23.3	23.3	5.2	3.9	9.3	1.1	1.0	23.3	1.2
135+88.33 - 137+61.64		BRIDGE LIMITS (FOR DETAILS AND QUANTITIES SEE BRIDGE DETAIL SHEETS)											
137+61.64 - 138+01.64			5.25 AVG	40.0	23.3	23.3	5.2	3.9	9.3	1.1	1.0	23.3	1.2
138+01.64 - 141+30.09			6.25	328.45	228.1	228.1	50.7	38.0	91.2	11.1	9.5	228.1	11.4
141+30.09 - 143+11.64		BRIDGE LIMITS (FOR DETAILS AND QUANTITIES SEE BRIDGE DETAIL SHEETS)											
143+11.64 - 157+30.70			6.25	1419.06	985.5	985.5	219.0	164.2	394.2	47.9	41.1	985.5	49.3
157+30.70 - 157+70.70			5.25 AVG	40.0	23.3	23.3	5.2	3.9	9.3	1.1	1.0	23.3	1.2
157+70.70 - 158+47.20			4.25	76.5	36.1	36.1	8.0	6.0	14.4	1.8	1.5	36.1	1.8
158+47.20 - 158+87.20			5.25 AVG	40.0	23.3	23.3	5.2	3.9	9.3	1.1	1.0	23.3	1.2
158+87.20 - 164+55.00			6.25	567.8	394.3	394.3	87.6	65.7	157.7	19.2	16.4	394.3	19.7
164+55.00 - 164+95.00			5.75 AVG	40.0	25.6	25.6	5.7	4.3	10.2	1.2	1.1	25.6	1.3
				TOTALS		3749.2	833.2	625.0	1499.4	182.0	156.4	3749.2	187.8

TOTALS CARRIED TO SHEET 80.

CALCULATED D.M 3-13-95
CHECKED J.S. 3-16-95

SHOULDER CALCULATIONS

LIC-16-19.72

BCALC109.DGN 5/30/95

SHOULDER CALCULATIONS

STATION TO STATION	LT. SIDE WIDTH BERM (FEET)	LT. SIDE LIN. FEET	RT. SIDE WIDTH BERM (FEET)	RT. SIDE LIN. FEET	SHOULDER AREA SQ. YD.	202 CONCRETE BARRIER, REMOVED LIN. FT.	203 SUBGRADE COMPACTION SQ. YD.	302 8" BITUMINOUS AGGREGATE BASE, PG 64-22 CU. YD.	304 6" AGGREGATE BASE CU. YD.	408 BITUMINOUS PRIME COAT @ 0.4 GAL./S.Y. GAL.	446 1 3/4" ASPHALT CONCRETE INTERMEDIATE COURSE, TYPE 2, PG 64-28 CU. YD.	446 1½" ASPHALT CONCRETE SURFACE COURSE, TYPE 1H CU. YD.	855 4" ASPHALT TREATED FREE DRAINING BASE SQ. YD.	407 TACK COAT FOR INTERMEDIATE COURSE @ 0.050 GAL./S.Y. GAL.	622 CONCRETE BARRIER, TYPE B-50 LIN. FT.	622 CONCRETE BARRIER, TYPE C-50 LIN. FT.	452 11" PLAIN CONCRETE PAVEMENT SQ. YD.	SPECIAL PRESSURE RELIEF JOINT, TYPE A LIN. FT.
WESTBOUND LANES																		
164+95.00 - 165+05.00			5.25	10.0	5.8		5.8	1.3	1.0	2.3	0.3	0.2	5.8	0.3				
165+05.00 - 165+77.14			5.0 AVG	72.14	40.1		40.1	8.9	6.7	16.0	1.9	1.7	40.1	2.0				
165+77.14 - 165+90.14			4.75	13.0	6.9		6.9	1.5	1.1	2.8	0.3	0.3	6.9	0.3				
165+90.14 - 166+30.14			5.5 AVG	40.0	24.4		24.4	5.4	4.1	9.8	1.2	1.0	24.4	1.2				
166+30.14 - 173+41.00			6.25	710.86	493.7		493.7	109.7	82.3	197.5	24.0	20.6	493.7	24.7				
173+41.00 - 173+81.00			5.5 AVG	40.0	24.4		24.4	5.4	4.1	9.8	1.2	1.0	24.4	1.2				
173+81.00 - 174+30.00			4.75	49	25.9		25.9	5.8	4.3	10.4	1.3	1.1	25.9	1.3				
174+30.00 - 174+70.00			5.5 AVG	40.0	24.4		24.4	5.4	4.1	9.8	1.2	1.0	24.4	1.2				
174+70.00 - 178+49.48			6.25	379.48	263.5		263.5	58.6	43.9	105.4	12.8	11.0	263.5	13.2				
178+49.48 - 180+41.58		BRIDGE	LIMITS (FOR BRIDGE DETAILS AND QUANTITIES SEE BRIDGE DETAIL SHEETS)															
180+41.58 - 186+65.00			6.25	623.42	432.9		432.9	96.2	72.1	173.2	21.0	18.0	432.9	21.6				
186+65.00 - 187+05.00			5.75 AVG	40.0	25.6		25.6	5.7	4.3	10.2	1.2	1.1	25.6	1.3				
187+05.00 - 187+15.00			5.25	10.0	5.8		5.8	1.3	1.0	2.3	0.3	0.2	5.8	0.3				
187+15.00 - 187+55.00			5.75 AVG	40.0	25.6		25.6	5.7	4.3	10.2	1.2	1.1	25.6	1.3				
187+55.00 - 189+00.00			6.25	145.0	100.7		100.7	22.4	16.8	40.3	4.9	4.2	100.7	5.0				
189+00.00 - 190+33.14			4.75 AVG	133.14	70.3		70.3	15.6	11.7	28.1	3.4	2.9	70.3	3.5				
107+93.04 - 118+69.02 (BACK) 117+46.58 (AHEAD) - 133+00.00							⑥ 959.5		⑦ 319.8						① 2467.4			
133+00.00 - 148+50.00							⑥ 460.8		⑦ 153.6							② 1186		
148+50.00 - 161+00.00							⑥ 447.2		⑦ 149.1						③ 1150.0			
161+00.00 - 170+75.00							⑥ 376.0		⑦ 125.4							④ 967.0		
170+75.00 - 190+33.14							⑥ 630.8		⑦ 210.3						⑤ 1622.0			
107+93.04 - 118+69.02 (BACK) 117+46.58 (AHEAD) - 190+33.14						⑧ 7392.4												
116+62.31 - 119+55.84		BRIDGE	LIMITS (FOR BRIDGE DETAILS AND QUANTITIES SEE BRIDGE DETAIL SHEETS)															
119+55.84 - 121+87.02			3.25'	231.18	83.5	⑨ 229.2	83.5		⑫⑬ 38.2	⑩⑭ 14.0			⑮ 82.1		⑪ 229.2		⑮ 82.1	3.25
TOTALS						7621.6	4527.8	348.9	1258.2	642.1	76.2	65.4	1652.1	78.4	5468.6	2153	82.1	3.25

TOTALS CARRIED TO SHEET 80.

① DEDUCT
SIGNS = 2X10'=20 LIN FT.
LIGHT POLES = 11X2'=22 LIN.FT.
CATCH BASIN = 6X20'=120 LIN.FT.
TOTAL = 162 LIN.FT.

② DEDUCT
BRIDGES = 352.02 LIN.FT.
LIGHT POLES = 6X2' = 12 LIN.FT.
TOTAL=364.02 LIN.FT.

③ DEDUCT
SIGNS = 3X10'= 30 LIN.FT.
LIGHT POLES = 5X2' = 10 LIN.FT.
CATCH BASINS = 3X20' = 60 LIN.FT.
TOTAL 100 LIN.FT.

④ DEDUCT
LIGHT POLES = 4X2' = 8 LIN.FT.
TOTAL 8 LIN.FT.

⑤ DEDUCT
SIGNS = 1X10' = 10 LIN.FT.
BRIDGE = 192.1 LIN.FT.
LIGHT POLES = 7X2' = 14 LIN.FT.
CATCH BASINS = 6X20' = 120 LIN.FT.
TOTAL = 336.1 LIN.FT.

⑥ LIN.FT. OF ITEM 622 CONCRETE BARRIER, TYPE B-50 OR TYPE C-50 X 3.5' ÷ 9 =

⑦ LIN.FT. OF ITEM 622 CONCRETE BARRIER, TYPE B-50 OR TYPE C-50 X 3.5' X1' ÷ 27 =

⑧ DEDUCT
BRIDGES = 544.12 LIN.FT.
LIGHT POLES = 33 X 2' = 66 LIN.FT.
CATCH BASINS = 18X20' = 360 LIN.FT.
TOTAL = 970.12 LIN.FT.

⑨ DEDUCT
LIGHT POLE = 1 x 2' = 2 LIN.FT.

⑩ L x (WB - 1.833') ÷ 9 x .4 =

⑪ DEDUCT
LIGHT POLE = 1 x 2' = 2 LIN.FT.

⑫ ADDITIONAL:
LIN.FT. OF ITEM 622 CONCRETE BARRIER, TYPE B-50 OR TYPE C-50 X 3.5' X0.833' ÷ 27 =

⑬ DEDUCT FOR PRESSURE RELIEF JOINT, TYPE A
3.25' x 8'-0" (FOR JOINT) x 0.5' ÷ 27 = 0.5 CU.YD.

⑭ DEDUCT FRO PRESSURE RELIEF JOINT, TYPE A
3.25' x 4.0' (FOR JOINT) ÷ 9 x 0.40 = 0.6 GAL.

⑮ DEDUCT FOR PRESSURE RELIEF JOINT, TYPE A
3.25' x 4.0' (FOR JOINT) ÷ 9 = 1.4 SQ.YD.

CALCULATED D.M 3-13-95
CHECKED J.S. 3-16-95

SHOULDER CALCULATIONS

LIC-16-19.72

BCALC110.DGN 5/30/95

SHOULDER CALCULATIONS

STATION TO STATION	LT. SIDE WIDTH BERM (FEET)	LT. SIDE LIN. FEET	RT. SIDE WIDTH BERM (FEET)	RT. SIDE LIN. FEET	SHOULDER AREA SQ. YD.	202 CURB REMOVED LIN. FT.	202 CONCRETE MEDIAN, REMOVED SQ. YD.	203 EMBANKMENT CU. YD.	203 SUBGRADE COMPACTION SQ. YD.	302 8" BITUMINOUS AGGREGATE BASE, PG 64-22 CU. YD.	304 AGGREGATE BASE LX(WB+1.1667)X .5÷27= CU. YD.	408 BITUMINOUS PRIME COAT @ 0.4 GAL./S.Y. GAL.	446 1 3/4" ASPHALT CONCRETE INTERMEDIATE COURSE, TYPE 2, PG 64-28 CU. YD.	446 1½" ASPHALT CONCRETE SURFACE COURSE, TYPE 1H CU. YD.	855 4" ASPHALT TREATED FREE DRAINING BASE SQ. YD.	407 TACK COAT FOR INTERMEDIATE COURSE @ 0.050 GAL./S.Y. GAL.	609 CURB, TYPE 6, AS PER PLAN LIN. FT.	452 11" PLAIN CONCRETE PAVEMENT SQ. YD.	SPECIAL PRESSURE RELIEF JOINT, TYPE A LIN. FT.	SPECIAL GEOTEXTILE FABRIC, TYPE D Lx2.50'÷9= SQ. YD.
WESTBOUND LANES																				
107+81.72 - 114+38.08	8	656.36			583.4			⑤ 46.9	583.4	④ 140.5	111.4	③ 243.1	28.4	24.3	② 607.7	29.2				
RAMP "F" 114+39.45-117+16.47	8	277.02			246.2			⑤ 19.8	246.2	④ 59.2	47.0	③ 102.6	12.0	10.3	② 256.5	12.3				
117+16.47 - 118+69.02 (BACK)	8	152.55			135.6			⑤ 10.9	135.6	④ 32.6	25.9	③ 56.5	6.6	5.6	② 141.2	6.8				
117+46.58 (AHEAD) - 118+25.00	8	78.42			69.7			⑤ 5.6	69.7	④ 16.8	13.3	③ 29.0	3.4	2.9	② 72.6	3.5				
118+25.00 - 124+62.70	8	637.7			566.8	⑧616.0		⑥ 20.7	⑦602.3	126.0	① 106.3	226.7	27.6	23.6	566.8	28.3	⑧ 616.0			
ROADWAY"A"124+63.05 126+26.31	8	163.26			145.1	⑧ 154.0		⑥ 5.3	⑦ 154.2	32.2	① 27.2	58.0	7.1	6.0	145.1	7.3	⑧ 154.0			
126+26.93 - 134+50.00	8	823.07			731.6			⑤ 58.9	731.6	④ 176.2	139.7	③ 304.8	35.6	30.5	② 762.1	36.6				
134+50.00 135+74.40	8	124.4			110.6	124.4		⑥ 4.0	⑦ 117.5	24.5	① 20.7	44.2	5.4	4.6	110.6	5.5	124.4			
135+74.40 - 137+44.87	BRIDGE LIMITS (FOR DETAILS AND QUANTITIES SEE BRIDGE DETAIL SHEETS)																			
137+44.87 - 141+35.29	8	390.42			347.0	⑧ 383.1		⑥ 12.7	⑦ 368.7	77.1	① 65.1	138.8	16.9	14.5	347.0	17.4	⑧ 383.1			
141+35.29 - 143+16.84	BRIDGE LIMITS (FOR DETAILS AND QUANTITIES SEE BRIDGE DETAIL SHEETS)																			
143+16.84 - 144+75.00	8	158.16			140.6	158.2		⑥ 5.1	⑦ 149.4	31.2	① 26.4	56.2	6.8	5.9	140.6	7.0	158.2			
144+75.00 - 150+00.00	8	525.0			466.7			⑤ 37.5	466.7	④ 112.4	89.1	③ 194.4	22.7	19.4	② 486.1	23.3				
150+00.00 - 151+00.00	10AVG	100.0			111.1			⑤ 7.2	111.1	④ 26.3	20.7	③ 45.9	5.4	4.6	② 114.8	5.6				
151+00.00 - 153+44.64	12	244.64			326.2			⑤ 17.5	326.2	④ 76.5	59.7	③ 134.1	15.9	13.6	② 335.2	16.3				
ROADWAY "B" 153+46.67 158+59.16	8	512.49			455.5	⑧499.2		⑥ 16.6	⑦484.0	101.2	① 85.4	182.2	22.1	19.0	455.5	22.8	⑧ 499.2			
158+58.59 - 165+99.67	8	741.08			658.7	⑧714.3		⑥ 24.0	⑦ 699.9	146.4	① 123.5	263.5	32.0	27.4	658.7	32.9	⑧ 714.3			
RAMP "A" 166+00.17 - 167+03.00	8	102.83			91.4	⑧ 97.3		⑥ 3.3	⑦ 97.1	20.3	① 17.1	36.6	4.4	3.8	91.4	4.6	⑧ 97.3			
RAMP "A" 167+03.00 - 167+53.00	7 AVG	50.0			38.9	50.0		⑥ 1.6	⑦ 41.7	8.6	① 7.4	15.6	1.9	1.6	38.9	1.9	50.0			
167+48.81 - 170+75.00	8	326.19			289.9	326.2		⑥ 10.6	⑦ 308.1	64.4	① 54.4	116.0	14.1	12.1	289.9	14.5	326.2			
170+75.00 - 178+38.10	8	763.1			678.3			⑤ 54.6	678.3	④ 163.3	129.5	③ 282.6	33.0	28.3	② 706.6	33.9				
178+38.10 - 180+30.20	BRIDGE LIMITS (FOR DETAILS AND QUANTITIES SEE BRIDGE DETAIL SHEETS)																			
180+30.20 - 185+00.00	8	469.8			417.6	469.8		⑥ 15.2	⑦ 443.7	92.8	① 78.3	167.0	20.3	17.4	417.6	20.9	469.8			
185+00.00 - 186+26.14	8	126.14			112.1			⑤ 9.0	112.1	④ 27.0	21.4	③ 46.7	5.4	4.7	② 116.8	5.6				
RAMP "B" 186+26.92 - 189+00.00	8	273.08			242.7	⑧267.5	26.7	⑥ 8.8	⑦257.9	53.9	① 45.5	97.1	11.8	10.1	242.7	12.1	⑧267.5			
RAMP "B" 189+00.00 - 190+15.22	5.5 AVG	115.22			70.4	115.2		⑥ 3.7	⑦ 76.8	15.6	① 13.9	28.2	3.4	2.9	70.4	3.5	115.2			
190+15.11 - 190+33.14	3	18.03			6.0	18.0		⑥ 0.6	⑦ 7.0	1.3	① 1.3	2.4	0.3	0.2	6.0	0.3	18.0			
116+62.31 - 119+55.84	BRIDGE LIMITS (FOR DETAILS AND QUANTITIES SEE BRIDGE DETAIL SHEETS)																			
119+55.84 - 121+87.02	9.33	231.18			239.7				239.7		⑨⑪ 40.7	⑩⑫ 54.8			⑬ 235.6			⑬ 235.6	9.33	64.2
TOTALS						3993.2	26.7	400.1	7508.9	1626.3	1370.9	2927.0	342.5	293.3	7416.4	352.1	3993.2	235.6	9.33	64.2

TOTALS CARRIED TO SHEET 80.

① LX(WB+1') X .5 ÷ 27=

② LX(WB+.3333) ÷ 9=

③ LX(WB+.3333) ÷ 9 X .4=

④ (LX[WB+.5]X.6667÷27) + (L X .3333 X .3333÷27)=

⑤ (LX.3333X.25÷27) + (LX.6667X.5833÷27) + (LX1.1667X1.25÷27)=

⑥ LX.5X1.75÷27=

⑦ LX(WB+.5)÷9

⑧ DEDUCTED CATCH BASINS

⑨ LX(WB+.5) x .5 ÷ 27 =

⑩ L x (WB - 3.833') ÷ 9 x .4 =

⑪ DEDUCT FOR PRESSURE RELIEF JOINT, TYPE A 9.33' x 8' (FOR JOINT) x 0.5' ÷ 27 = 1.4 CU.YD.

⑫ DEDUCT FOR PRESSURE RELIEF JOINT, TYPE A 9.33' x 4' (FOR JOINT) ÷ 9 x 0.40 = 1.7 GAL.

⑬ DEDUCT FOR PRESSURE RELIEF JOINT, TYPE A 9.33' x 4' (FOR JOINT) ÷ 9 = 4.1 SQ.YD.

CALCULATED D.M 3-15-95 CHECKED J.S. 3-16-95

SHOULDER CALCULATIONS

LIC-16-19.72

BCALC108.DGN 5/30/95

SHOULDER CALCULATIONS

⑨ AREA TAKEN FROM COMPUTER

STATION TO STATION	LT. SIDE WIDTH BERM (FEET)	LT. SIDE LIN. FEET	RT. SIDE WIDTH BERM (FEET)	RT. SIDE LIN. FEET	SHOULDER AREA SQ. YD.	202 CURB REMOVED LIN. FT.	203 EMBANKMENT CU. YD.	203 SUBGRADE COMPACTION SQ. YD.	302 8" BITUMINOUS AGGREGATE BASE, PG 64-22 CU. YD.	304 AGGREGATE BASE LX(WB+1.1667)X.5+27= CU. YD.	408 BITUMINOUS PRIME COAT @ 0.4 GAL./S.Y. GAL.	446 1 3/4" ASPHALT CONCRETE INTERMEDIATE COURSE, TYPE 2, PG 64-28 CU. YD.	446 1½" ASPHALT CONCRETE SURFACE COURSE, TYPE 1H CU. YD.	855 4" ASPHALT TREATED FREE DRAINING BASE SQ. YD.	407 TACK COAT FOR INTERMEDIATE COURSE @ 0.050 GAL./S.Y. GAL.		609 CURB, TYPE 6, AS PER PLAN LIN. FT.	609 CURB AND GUTTER, TYPE 2, AS PER PLAN LIN. FT.	202 CURB AND GUTTER REMOVED LIN. FT.	203 EXCAVATION NOT INCLUDING EMBANKMENT CONSTRUCTION CU. YD.	612 CONCRETE MEDIAN (SEE STD. DWG. MC-6) SQ. YD.
RAMP "F"																					
106+81.21 - 113+89.45	6	708.24			472.2		⑤ 50.6	472.2	④ 116.6	94.0	③ 199.4	23.0	19.7	② 498.4	23.6						
113+89.45 - 114+39.45	7 AVG	50.0			38.9		⑤ 3.6	38.9	④ 9.5	7.6	③ 16.3	1.9	1.6	② 40.7	1.9						
106+80.53 - 114+39.45			3	758.92	253.0		⑤ 54.3	253.0	④ 68.7	58.6	③ 112.4	12.3	10.5	② 281.1	12.7						
RAMP "BB"																					
143+65.16 - 147+35.56			3	370.4	123.5	80	⑤ 26.5	123.5	④ 33.5	28.6	③ 54.9	6.0	5.1	② 137.2	6.2						
143+67.55 - 146+85.56	6	318.01			212.0	318	⑥ 10.3	⑦ 229.7	47.1	① 41.2	84.8	10.3	8.8	212.0	10.6		318				
146+85.56 - 147+35.56	7 AVG	50.0			38.9	50	⑥ 1.6	⑦ 41.7	8.6	① 7.4	15.6	1.9	1.6	38.9	1.9		50				
ROADWAY "B"																					
143+58.29 - 143+80.00			4	21.71	9.6	22	⑥ 0.7	⑦ 10.9	2.1	① 2.0	3.8	0.5	0.4	9.6	0.5		22				
143+80.00 - 153+46.67			4	966.67	429.6	119	⑤ 69.1	429.6	④ 111.4	92.5	③ 186.2	20.9	17.9	② 465.4	21.5						
143+62.17 - 144+50.00	8	87.83			78.1	87.8	⑥ 2.8	⑦ 83.0	17.4	① 14.6	31.2	3.8	3.3	78.1	3.9		87.8				
144+50.00 - 147+33.75	8	283.75			252.2	284	⑤ 20.3	252.2	④ 60.7	48.2	③ 105.1	12.3	10.5	② 262.7	12.6						
147+35.56 - 153+46.67	8	611.11			543.2	⑧ 573.2	⑥ 19.8	⑦ 577.2	120.7	① 101.9	217.3	26.4	22.6	543.2	27.2		⑧ 573.2				
RAMP "A" @ MOUNT VERNON RD.																					
167+53.00 - 171+92.20			3	439.2	146.4	154	⑤ 31.4	146.4	④ 39.8	33.9	③ 65.1	7.1	6.1	② 162.7	7.3						
167+59.53-168+74.19																					20.1
171+92.20 - 173+29.56			3	137.36	45.8	137.4	⑥ 4.5	⑦ 53.4	10.2	① 10.2	18.3	2.2	1.9	45.8	2.3		137.4				
167+53.00 - 172+46.59	6	493.59			329.1	493.6	⑥ 16.0	⑦ 356.5	73.1	① 64.0	131.6	16.0	13.7	329.1	16.5		493.6				
					⑨ 20.1															3	
RAMP "B" @ HUDSON AVE.																					
178+49.47 - 178+94.80			3	45.33	15.1	45.3	1.5	⑦ 17.6	3.4	① 3.4	6.0	0.7	0.6	15.1	0.8		45.3				
178+94.80 - 186+26.92			3	732.12	244.0	70	⑤ 52.3	244.0	④ 66.3	56.5	③ 108.5	11.9	10.2	② 271.2	12.2						
178+73.14 - 185+76.92	6	703.78			469.2	703.8	⑥ 22.8	⑦ 508.3	104.3	① 91.2	187.7	22.8	19.5	469.2	23.5		703.8				
185+76.92 - 186+26.92	7 AVG	50.0			38.9	50	⑥ 1.6	⑦ 41.7	8.6	① 7.4	15.6	1.9	1.6	38.9	1.9		50				
MOUNT VERNON ROAD																					
21+98.34 - 22+87.05				88.71														⑧ 83.2	89		
25+07.14 - 26+36.55				129.41														⑧ 123.9	130		
TOTALS						3188.1	389.7	3879.8	902.0	763.2	1559.8	181.9	155.6	3899.3	187.1		2481.1	207.1	219	3	20.1

TOTALS CARRIED TO SHEET 80.

① LX(WB+1') X .5' ÷ 27=

② LX(WB+.3333')÷9=

③ LX(WB+.3333')÷9 X .4=

④ (LX[WB+.5']X.6667'÷27) + (L X .3333' X .3333'÷27)=

⑤ (LX.3333X.25'÷27) + (LX.6667'X.5833'÷27) + (LX1.1667'X1.25'÷27)=

⑥ LX.5'X1.75'÷27=

⑦ LX(WB+.5')÷9

⑧ DEDUCTED CATCH BASINS

CALCULATED D.M 3-13-95
CHECKED J.S. 3-16-95

SHOULDER CALCULATIONS

LIC-16-19.72

BCALC112.DGN 5/30/95

PAVEMENT AND SHOULDER SUB-SUMMARY

SHEET NUMBER 68	69	70	71	72	73	74	75	76	77	78	79	ITEM	TOTAL	UNIT	DESCRIPTION
33530.7	7521.8	29535.7	8510.9									202	79099.1	SQ. YD.	PAVEMENT REMOVED
	762.5		632.5									202	1395.0	SQ. FT.	WALK REMOVED
		98	66		81.3					26.7		202	272.0	SQ. YD.	CONCRETE MEDIAN REMOVED
									7621.6			202	7621.6	LIN. FT.	CONCRETE BARRIER REMOVED
431	662.9	276	518	3176.0	1471.4					3993.2	3188.1	202	13716.6	LIN. FT.	CURB REMOVED
	20.5		26.4								219	202	265.9	LIN. FT.	CURB AND GUTTER REMOVED
176		81		11							3	203	271	CU. YD.	EXCAVATION NOT INCLUDING EMBANKMENT CONSTRUCTION
		4		426.2	369.8					400.1	389.7	203	1589.8	CU. YD.	EMBANKMENT
34266.8	7582.7	29840.2	9416.1	7354.2	3133.5	3740.3	1653.5	3749.2	4527.8	7508.9	3879.8	203	116653.0	SQ. YD.	SUBGRADE COMPACTION
7460.5	1685.2	6494.1	2092.5	1613.9	756.5	831.3	348.9	833.2	348.9	1626.3	902	302	24993.3	CU. YD.	BITUMINOUS AGGREGATE BASE, PG 64-22
5707.1	1263.8	4969.6	1569.3	1353.6	633.1	623.5	275.2	625	1258.2	1370.9	763.2	304	20412.5	CU. YD.	AGGREGATE BASE
			49									305	49	SQ. YD.	9" CONCRETE BASE
1678.8	378.9	1461.3	470.9	346.4	153.0	197.8	78.4	187.8	78.4	352.1	187.1	407	5570.9	GAL.	TACK COAT FOR INTERMEDIATE COURSE
13702.5	3033.1	11931.0	3766.5	2893.5	1293.6	1495.8	660.9	1499.4	642.1	2927.0	1559.8	408	45405.2	GAL.	BITUMINOUS PRIME COAT
1632	368.8	1420.6	458.0	336.8	148.9	181.6	76.2	182	76.2	342.5	181.9	446	5405.5	CU. YD.	ASPHALT CONCRETE, INTERMEDIATE COURSE, TYPE 2, PG 64-28
1398.1	315.9	1217.6	392.4	288.9	127.7	156.0	65.4	156.4	65.4	293.3	155.6	446	4632.7	CU. YD.	ASPHALT CONCRETE, SURFACE COURSE, TYPE IH
682.4		605.6		235.6			82.1		82.1	235.6		452	1923.4	SQ. YD.	11" PLAIN CONCRETE PAVEMENT
25.0		24.5		9.33			3.25		3.25	9.33		SPECIAL	74.66	LIN. FT.	PRESSURE RELIEF JOINT, TYPE A
				64.2			64.2			64.2		SPECIAL	192.6	SQ. YD.	GEOTEXTILE FABRIC, TYPE D (SEE GENERAL NOTE)
	899.5		589.5									608	1489.0	SQ. FT.	4" CONCRETE WALK
	7		6									608	13	EACH	CURB RAMP, TYPE 1
	4		3									608	7	EACH	CURB RAMP, TYPE 2
	20.5		26.4									609	46.9	LIN. FT.	COMBINATION CURB AND GUTTER, TYPE 2
											207.1	609	207.1	LIN. FT.	COMBINATION CURB AND GUTTER, TYPE 2, AS PER PLAN, (SEE GENERAL NOTE)
	742.2		503	3346.0	1065.4					3993.2	2481.1	609	12130.9	LIN. FT.	CURB, TYPE 6, AS PER PLAN, (SEE GENERAL NOTE)
				92.2							20.1	612	112.3	SQ. YD.	CONCRETE MEDIAN
									5468.6			622	5468.6	LIN. FT.	CONCRETE BARRIER, TYPE B-50
									2153			622	2153.0	LIN. FT.	CONCRETE BARRIER, TYPE C-50
34255.7	7571.9	29829.3	9416.1	7236.8	3233.9	3740.3	1652.1	3749.2	1652.1	7416.4	3899.3	855	113653.1	SQ. YD.	4" ASPHALT TREATED FREE DRAINING BASE

TOTALS CARRIED TO GENERAL SUMMARY

CALCULATED D.M. 3-13-95
CHECKED J.L. 3-16-95

PAVEMENT AND SHOULDER SUB-SUMMARY

LIC-16-19.72

L619015.DGN 5/30/95

GUARDRAIL POST HOLES:

ALL HOLES REMAINING AFTER REMOVAL OF GUARDRAIL POSTS SHALL BE FILLED WITH GRANULAR MATERIAL, EXCESS MATERIAL RESULTING FROM GUARDRAIL RECONSTRUCTION. FILL MATERIAL CONTAINING SOD SHALL NOT BE USED. ALL FILL MATERIAL SHALL BE APPROVED BY THE ENGINEER.
MATERIAL PLACED IN THE HOLES SHALL BE THOROUGHLY COMPACTED AND LEVELED OFF AS DIRECTED BY THE ENGINEER. PAYMENT FOR THE ABOVE SHALL BE INCLUDED IN THE UNIT PRICE BID FOR THE APPLICABLE GUARDRAIL ITEM.

GUARDRAIL TAPERS:

ALL GUARDRAIL TAPERS SHALL BE PLACED AT 12:1.

NOTE: 3-GR
EXTREME CARE SHALL BE USED
WHEN DRILLING GUARDRAIL POSTS
OVER THE EXISTING 24" CONDUIT

EXISTING STATION TO STATION ℄ SURVEY & CONSTRUCTION		SIDE	MARK	202 GUARDRAIL REMOVED	606 GUARDRAIL TYPE 5A SEE STAND. DRWG. GR-2.1	606 GUARDRAIL TYPE 5 SEE STAND. DRWG. GR-2.1	606 ANCHOR ASSEMBLY TYPE B-98 SEE STAND. DRWG. GR-4.3M SEE GENERAL NOTE SHEET 16	606 BRIDGE TERMINAL ASSEMBLY TYPE I SEE STAND DRWG. GR-3.1	606 BRIDGE TERMINAL ASSEMBLY TYPE 2 SEE STAND DRWG. GR-3.2	606 ANCHOR ASSEMBLY TYPE A SEE STAND. DRWG. GR-4.2	606 ANCHOR ASSEMBLY TYPE T SEE STAND. DRWG. GR-4.2	606 ANCHOR ASSEMBLY TYPE E-98 SEE GENERAL NOTE SHEET 16	622 CONCRETE BARRIER TYPE D SEE STAND. DRWG. MC-9.3	626 BARRIER REFLECTOR TYPE A 100' SPACING		626 BARRIER REFLECTOR TYPE B 100' SPACING		SEE SHEET	PROPOSED STATION TO STATION (Same as existing except as noted)		
														WHITE	YELLOW	WHITE	YELLOW			
FROM	TO			LIN.FT.	LIN.FT.	LIN.FT.	EACH	EACH	EACH	EACH	EACH	EACH	LIN.FT.	EACH	EACH	EACH	EACH		FROM	TO
107+92.08	113+92.08	RT.	1-GR	600		587.5			1		1			6				82&83	107+92.08	113+92.08
107+64.98	113+89.98	LT.	2-GR	625		575		1				1		7				82&83	107+64.98	113+89.98
120+42	126+29	LT.	3-GR	587.5	50	462.5					1	1		6				85&86	120+50	126+25
122+00	129+37.5 ROADWAY C	RT.	4-GR	737.5		737.5	1							8				85&86	121+87.5	ROADWAY C 129+37.5
134+76	136+22	RT.	5-GR	150		300	1	1						2		6 2		87&88	133+09.20	136+21.70
135+04	135+81	LT.	6-GR	75														88		
137+64	141+39	RT.	7-GR	375		375		1	1					3		7 3		88&89	137+66.07	141+37.69
137+30	141+47	LT.	8-GR	425		425		1	1					3		8 2		88&89	137+28.27	141+48.60
143+07	144+62	LT.	9-GR	162.5		325	1	1						4		9 2		89&90	143+04.05	146+41.55
171+98 ROADWAY D	148+77	RT.	10-GR	600		512.5			1		1			6				89&90	ROADWAY D 171+97.63	148+03.81
157+22	157+45	RT.	11-GR	25														92		
158+74	158+98	LT.	12-GR	25														92		
163+72	164+92.23	RT.	13-GR	125		162.5		1				1		3		10 4		93	162+79.73	164+92.23
167+49	168+98	LT.	14-GR	150														94		
168+74.19 RAMP A	170+00 RAMP A	LT.	15-GR	125		125		1				1		2		1 2		177	RAMP A 168+74.19	RAMP A 170+49.19
167+50 RAMP A	23+00 MT. VERNON RD.	RT.	16-GR	662.5		462.5		1			1			2	6			177&178	RAMP A 168+83.95	MT. VERNON 22+98.05 RD.
172+75	174+75	RT.	17-GR	200		587.5	1	2	1				80	6		1		95&96	171+94.87	178+74.87
173+32	175+32	LT.	18-GR	200		175	1	1					65	3		1		95&96	173+60	176+12.5
177+30	178+77	RT.	19-GR	150														96		
180+43	183+92	RT.	20-GR	350		337.5			1		1			5		2 2		97	180+44.88	183+94.88
180+15	184+03	LT.	21-GR	387.5		337.5		1				1		5		3 2		97	180+16.18	184+03.68
186+50 RAMP D	117+17.89	RT.	22-GR	437.5		440.0	1	1						6				98&99	RAMP D 186+51.37	117+32.93
182+67.5 RAMP B	190+07.48	LT.	23-GR	737.5		862.5			1		1			10				98&99 188&189	RAMP B 181+32.71	190+07.71
MT. VERNON RD. 22+26.5	MT. VERNON RD. 23+14	LT.	24-GR	87.5		25		1		1					1		4 3	178	MT. VERNON RD. 22+66.53	MT. VERNON RD. 23+16.53
107+00 RAMP F	110+37.5 RAMP F	LT.	25-GR	337.5														148		
109+00 RAMP H	111+25 RAMP H	RT.	26-GR	225		225	1				1			4				142	RAMP H 108+75	RAMP H 111+25
143+43.08 ROADWAY B	145+45 ROADWAY B	RT.	27-GR	200		187.5	1	1							3			158	ROADWAY B 143+43.08	ROADWAY B 145+43.08
143+47.34 ROADWAY B	146+30 ROADWAY B	LT.	28-GR	287.5		262.5	1	1						4				158	ROADWAY B 143+47.34	ROADWAY B 146+22.34
24+92 MT. VERNON RD.	25+42 MT. VERNON RD.	RT.	29-GR	50		37.5			1		1			2		5 1		194	MT. VERNON RD. 24+93.07	MT. VERNON RD. 25+43.07
	SEE SHEET 441		30-GR																SEE SHEET 441	
	SEE SHEET 441		31-GR																SEE SHEET 441	
120+01.88	122+04.88	RT.	32-GR	203		203		1	1					3		6 4		99&99A	120+01.88	122+04.88
118+98.31	121+92.66	LT.	33-GR	294.4		294.4		1	1					4		7 4		99&99A	118+98.31	121+92.66
123+78.76	124+28.76	RT.	34-GR	50		50		1						2		8 3		99A	123+78.76	124+28.76
123+66.61	124+16.61	LT.	35-GR	50		50			1					2		9 3		99A	123+66.61	124+16.61
																	10 94			
																	11 94			
SUBTOTAL														108	10	36	191			
TOTALS CARRIED TO GENERAL SUMMARY				9,697.4	50	9,124.9	9	19	11	1	8	5	145	118		227				

1. EXISTING RETAINING WALL @ RAMP A
2. E.B. BRIDGE PARAPET LIC-16-2109
3. W.B. BRIDGE PARAPET LIC-16-2109
4. BRIDGE PARAPET MT. VERNON RD.
5. BRIDGE PARAPET MT. VERNON RD.
6. E.B. BRIDGE PARAPET LIC-16-2131
7. W.B. BRIDGE PARAPET LIC-16-2131
8. E.B. BRIDGE PARAPET LIC-16-2141
9. W.B. BRIDGE PARAPET LIC-16-2141
10. E.B. MEDIAN BARRIER
11. W.B. MEDIAN BARRIER

6. E.B. BRIDGE PARAPET LIC-16-2028
7. E.B. BRIDGE PARAPET LIC-16-2038
8. W.B. BRIDGE PARAPET LIC-16-2028
9. W.B. BRIDGE PARAPET LIC-16-2038
10. EXISTING RETAINING WALL @ RAMP C @ MT. VERNON RD.

CALCULATED A.L.L. 10/11/94
CHECKED D.M. 10/17/94

GUARDRAIL SUB-SUMMARY

LIC-16-19,72

L161953B.DGN 2/16/99

NOTE:
THRIE TERMINAL CONNECTOR ON 2-GR MAY BE SALVAGED IF APPROVED BY THE PROJECT ENGINEER.

FOR LIGHTING QUANTITIES AND DETAILS SEE SHEETS 363-401
FOR PAVEMENT CALCULATIONS SEE SHEETS 68-80
FOR GUARDRAIL QUANTITIES SEE SHEET 81
FOR SIGNING DETAILS AND QUANTITIES SEE SHEETS 318-362
FOR UNDERDRAIN DETAILS SEE SHEETS 230-272

3 TO REMAIN IN SERVICE

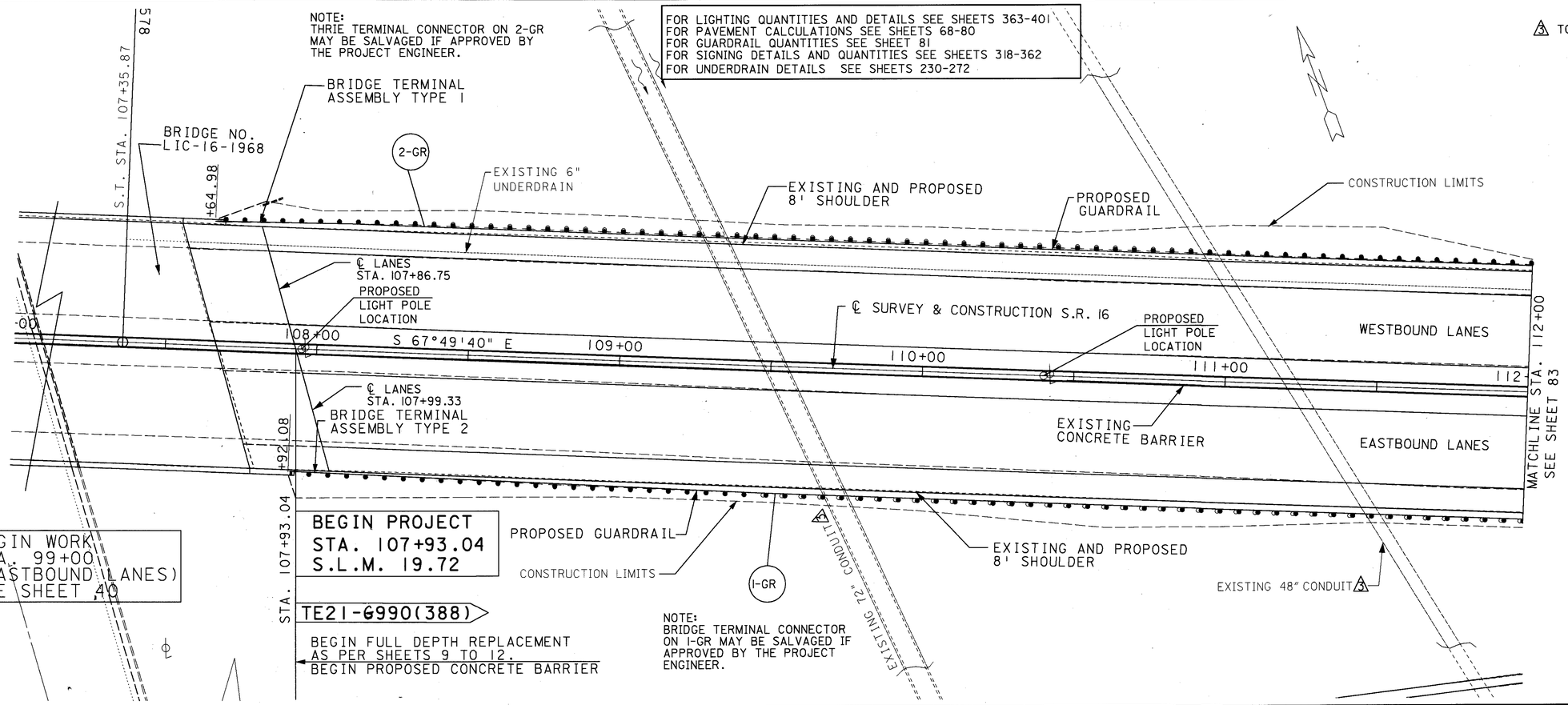

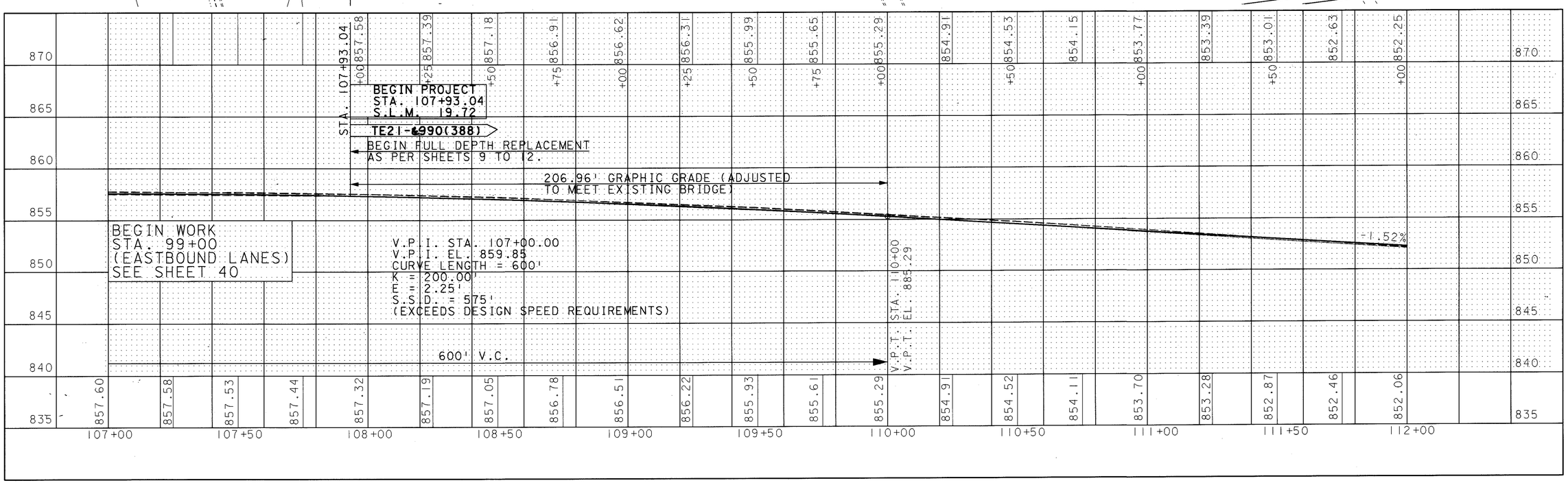

HORIZONTAL SCALE IN FEET
0 10 20 40

CALCULATED D.M. 3-13-95
CHECKED A.E.L. 3-16-95

PLAN AND PROFILE SHEET
STA. 107+00 TO STA. 112+00

LIC-16-19.72

RCP02159.DGN 6/1/95

FOR LIGHTING QUANTITIES AND DETAILS SEE SHEETS 363-401
FOR PAVEMENT CALCULATIONS SEE SHEETS 68-80
FOR GUARDRAIL QUANTITIES SEE SHEET 81
FOR SIGNING DETAILS AND QUANTITIES SEE SHEETS 318-362
FOR UNDERDRAIN DETAILS SEE SHEETS 230-272
FOR STORM SEWER QUANTITIES SEE SHEETS 265 & 266
FOR RAMP "F" DETAILS AND QUANTITIES SEE SHEETS 148-154
FOR RAMP "H" DETAILS AND QUANTITIES SEE SHEETS 142-147

1 6 L.F. EX. CONDUIT TO BE REMOVED AS PER ITEM 603.01
2 TO BE REMOVED AS PER ITEM 604.04
3 TO REMAIN IN SERVICE

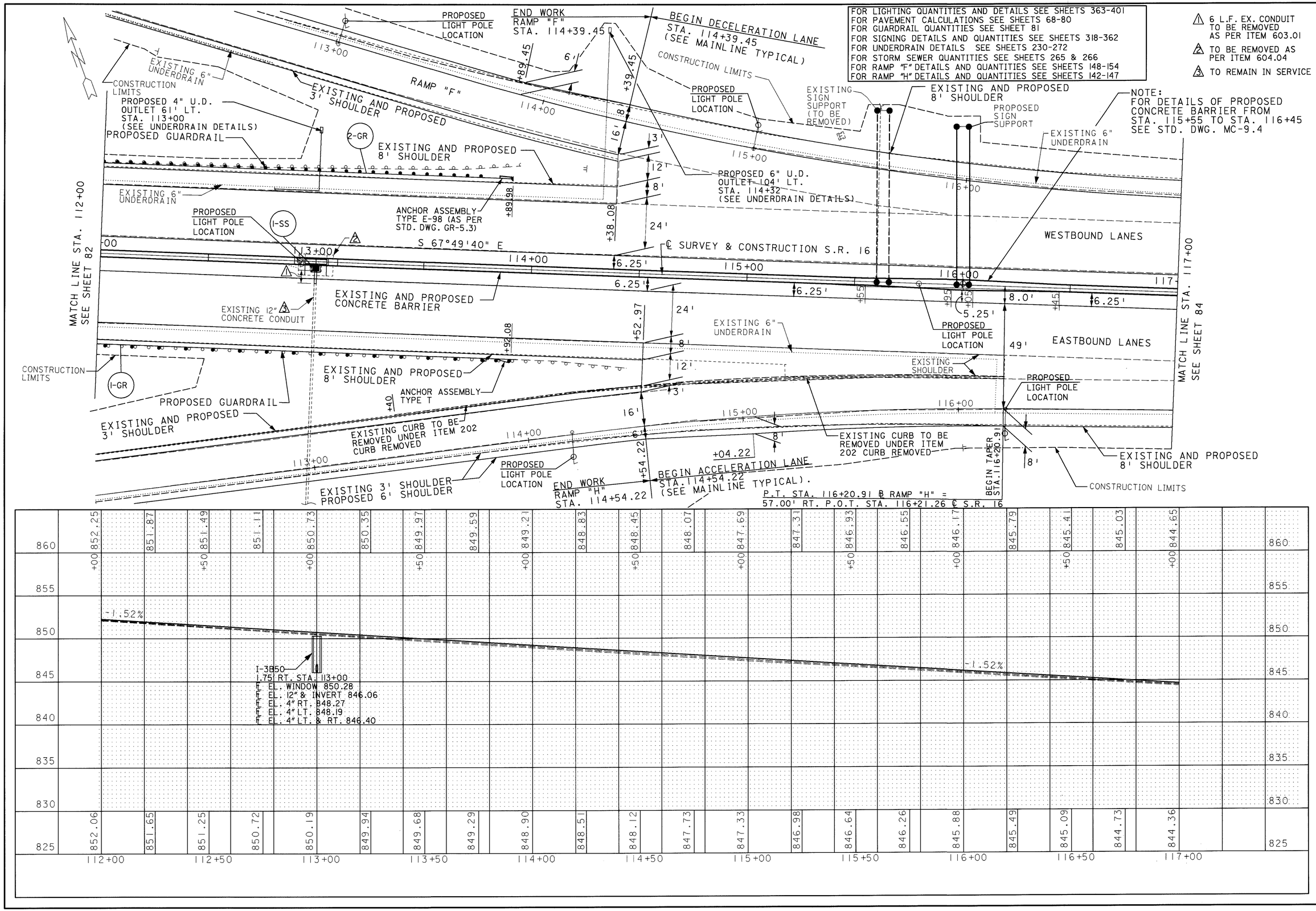

HORIZONTAL SCALE IN FEET 0 10 20 40

CALCULATED D.M. 3-13-95
CHECKED A.L.L. 3-16-95

PLAN AND PROFILE SHEET STA. 112+00 TO STA. 117+00

LIC-16-19.72

RCP03159.DGN 3/8/95

FOR LIGHTING QUANTITIES AND DETAILS SEE SHEETS 363-401
FOR PAVEMENT CALCULATIONS SEE SHEETS 68-80
FOR GUARDRAIL QUANTITIES SEE SHEET 81
FOR SIGNING DETAILS AND QUANTITIES SEE SHEETS 318-362
FOR UNDERDRAIN DETAILS SEE SHEETS 230-272
FOR STORM SEWER QUANTITIES SEE SHEETS 265 & 266

1 6 L.F. EX. CONDUIT TO BE REMOVED AS PER ITEM 603.01
2 TO BE REMOVED AS PER ITEM 604.04
3 TO REMAIN IN SERVICE

P.T. STA. 117+16.47 ℄ RAMP "F" =
44.00' LT. P.O.T. STA. 117+16.47 ℄ S.R. 16

PROPOSED LIGHT POLE LOCATION
EXISTING 6" UNDERDRAIN
EXISTING AND PROPOSED 8' SHOULDER
CONSTRUCTION LIMITS
EXISTING CURB TO BE REMOVED UNDER ITEM 202.
EXISTING FENCE
BEGIN TAPER STA. 119+42.70
PROPOSED ITEM 609 CURB, TYPE 6, AS PER PLAN STA. 118+25 ℄ S.R.16 TO STA. 126+26.31 ℄ ROADWAY A.
EXISTING CONCRETE APRON TO BE REMOVED AS PER ITEM 604.04
PROPOSED CONCRETE APRON TO BE CONSTRUCTED AS PER GENERAL NOTE.
EXISTING 24" CONDUIT
NOTE: PROPOSED ITEM 609 CURB, TYPE 6 AS PER PLAN TO BE TAPERED FROM 0" TO 6" IN 10'.
WESTBOUND LANES
EASTBOUND LANES
℄ SURVEY & CONSTRUCTION S.R. 16
S 67°49'40" E
EXISTING 18" CONCRETE CONDUIT
EXISTING 12" CONCRETE CONDUIT
EXISTING 36" CONCRETE CONDUIT
EXISTING 15" CONCRETE CONDUIT
EXISTING 21" CONCRETE CONDUIT
EXISTING AND PROPOSED CONCRETE BARRIER
MATCH LINE STA. 117+00 SEE SHEET 83
MATCH LINE STA. 120+50 SEE SHEET 85
STATION EQUATION: STA.118+69.02 (BACK) = STA.117+46.58 (AHEAD)
EXISTING AND PROPOSED 8' SHOULDER.
PROPOSED 6" U.D. OUTLET 85.5' RT. STA.118+18 (SEE UNDERDRAIN DETAILS).
PROPOSED 6" U.D. OUTLET 83.5' RT. STA.119+21 (SEE UNDERDRAIN DETAILS).
PROPOSED 6" U.D. OUTLET 79.5' RT. STA.119+77 (SEE UNDERDRAIN DETAILS).
END TAPER STA. 120+18.82
2-SS, 3-SS, 4-SS, 3-GR

B.M. #12 1" REBAR
ELEV. 834.101
143.07' RT. STA. 117+17.78

VPC STA=118+25.00 EL=842.75
-1.52%
400' V.C.
+0.88%
VPI STA. 119+02.56
VPI EL. 839.71
CURVE LEN 400'
K=166.61'
E=1.20'
SSD 1046'
(EXCEEDS DESIGN SPEED REQUIREMENTS)

C.B. NO. 2-2-A
65.0' LT. STA. 118+45
EL. GRATE 840.10
EL. 15" & INVERT 837.10

C.B. NO. 3-A
52.0' LT. STA. 118+45
EL. GRATE 840.51
EL. 15" 835.80
EL. 18" & INVERT 835.41
EL. 4" LT. 838.40
EL. 6" LT. 836.44

I-3B50
1.75' LT. STA. 118+45
EL. WINDOW 840.72
EL. 18" 835.07
EL. 21" & INVERT 834.82
EL. 4" LT. & RT. 838.66
EL. 4" LT. & RT. 836.90

EL. 21" 834.30
91.0' RT. STA. 118+45

C.B. NO. 3
52.2' LT. STA. 119+50
EL. GRATE 840.14
EL. 12" & INVERT 835.64
EL. 4" LT. (2) 837.96
EL. 6" LT. (2) 835.96

I-3B50
1.75' LT. STA. 119+50
EL. WINDOW 840.36
EL. 12" 835.35
EL. 15" & INVERT 835.10
EL. 4" LT. & RT. 838.23
EL. 4" LT. & RT. 838.03
EL. 4" LT. & RT. 836.52
EL. 4" LT. & RT. 836.47

EL. 15" 834.65
85.5' RT. STA. 119+50

C.B. NO. 4, AS PER PLAN
82.0' LT. STA. 120+27
EL. GRATE 843.75
EL. 24" & INVERT 838.75

C.B. NO. 3
54.1' LT. STA. 120+27
EL. GRATE 840.49
EL. 24" 836.29
EL. 36" & INVERT 834.76
EL. 4" LT. 838.12
EL. 6" LT. 834.76

I-3B50
1.75' LT. STA. 120+27
EL. WINDOW 840.51
EL. 36" & INVERT 834.54
EL. 4" LT. & RT. 838.42
EL. 4" LT. & RT. 836.66

EXISTING 24" CONDUIT (TO REMAIN IN SERVICE)
24" X 6' CONDUIT, TYPE B, 706.01 OR 706.02
EL. 36" 834.22
81.0' RT. STA. 120+27

HORIZONTAL SCALE IN FEET 0 10 20 40

CALCULATED D.M. 3-13-95
CHECKED A.L.L. 3-16-95

PLAN AND PROFILE SHEET
STA. 117+00 TO STA. 120+50

LIC-16-19.72

RCP04159.DGN 3/8/95

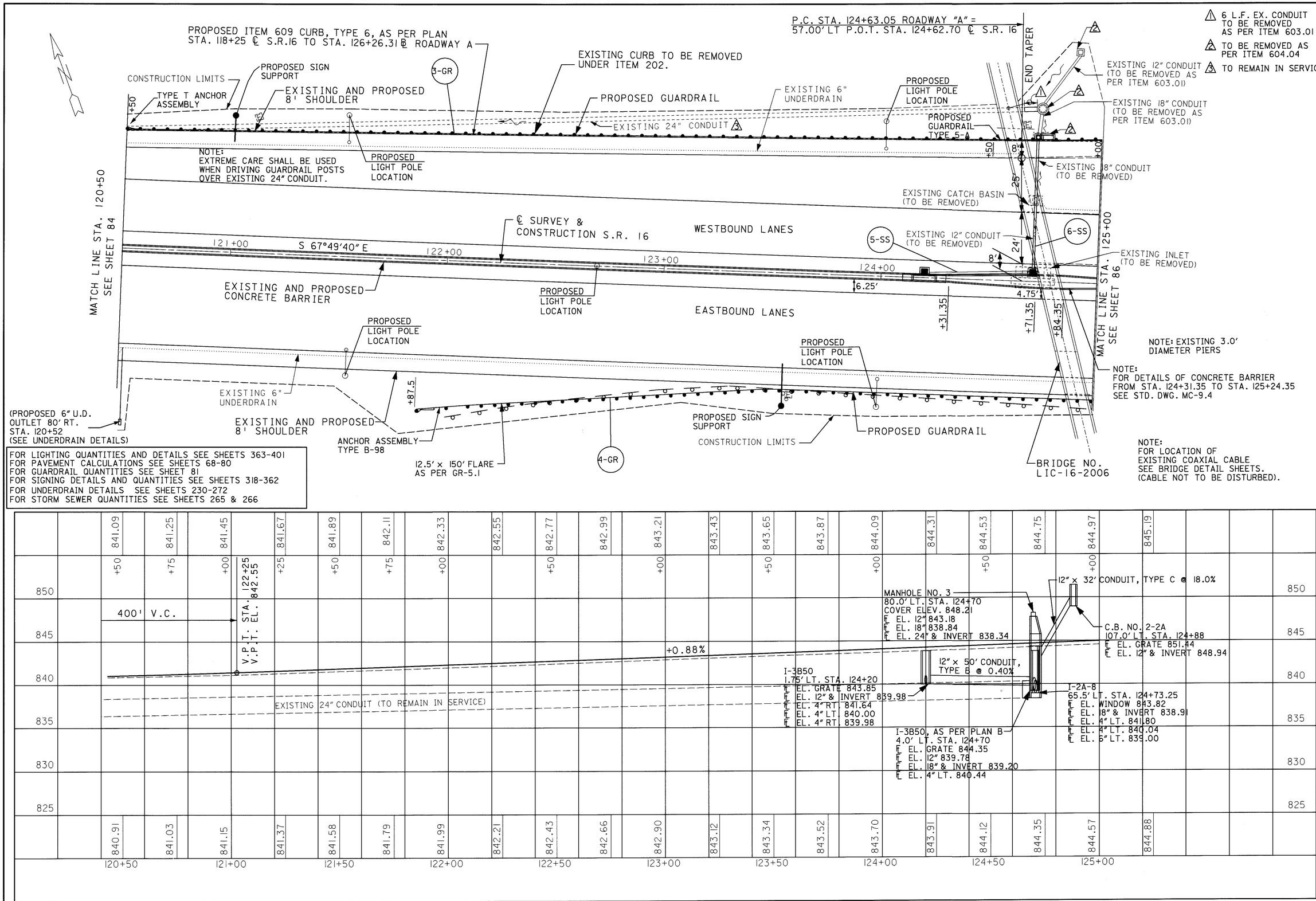

CALCULATED D.M. 3-13-95
CHECKED A.L.L. 3-16-95

PLAN AND PROFILE SHEET
STA. 120+50 TO STA. 125+00

LIC-16-19.72

RCP05159.DGN 3/8/95

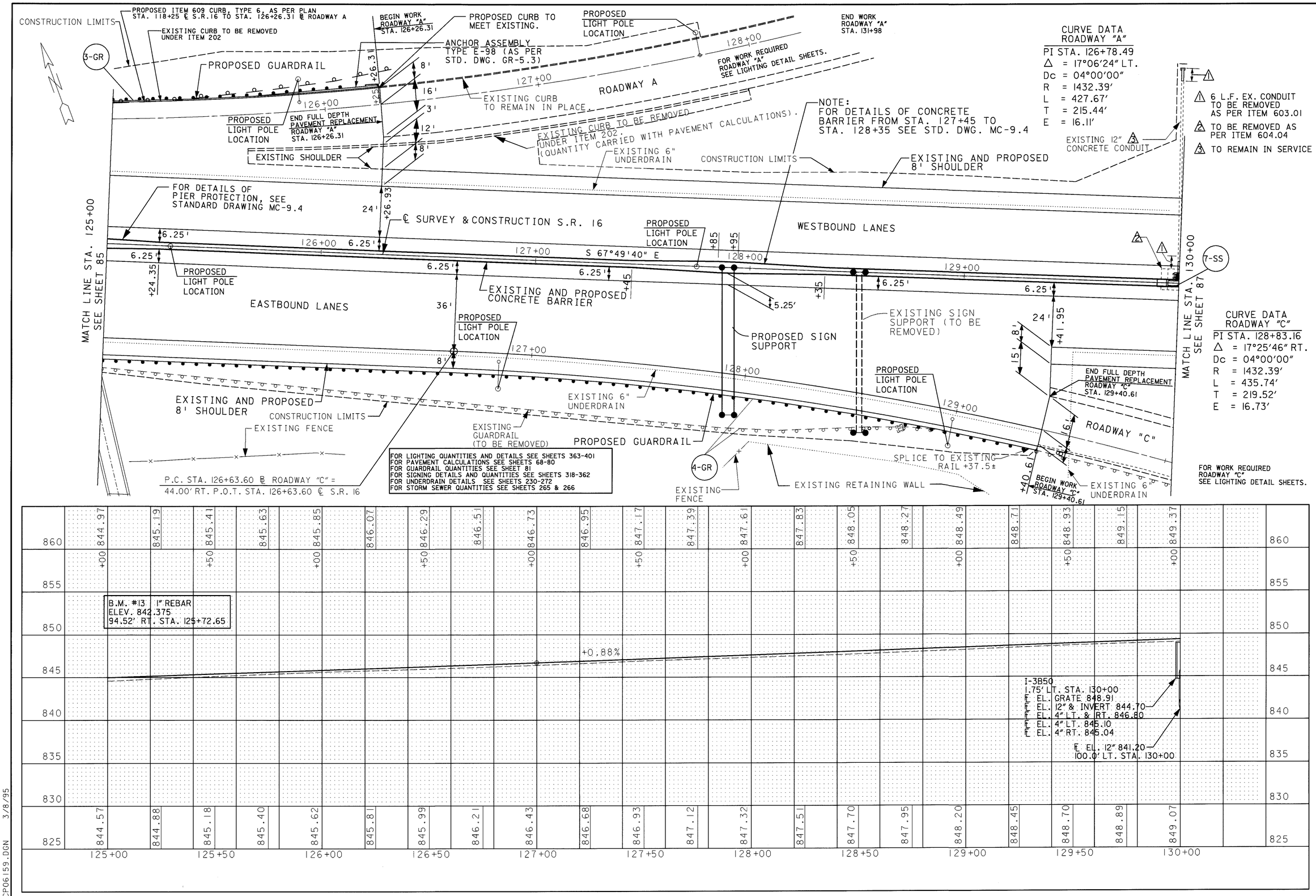

CALCULATED D.M. 3-13-95
CHECKED A.L.L. 3-16-95

PLAN AND PROFILE SHEET STA. 125+00 TO STA. 130+00

LIC-16-19.72

RCP06159.DGN 3/8/95

CURVE DATA
S.R. 16
P.I. STA. 141+22.54
Δ = 43°50'10" LT
Dc = 03°00'00"
R = 1909.86'
Ls = 350.00'
Lc = 1111.20'
Ts = 944.48'
θ = 05°15'00"
LT = 233.44'
ST = 116.26'
Es = 151.68'

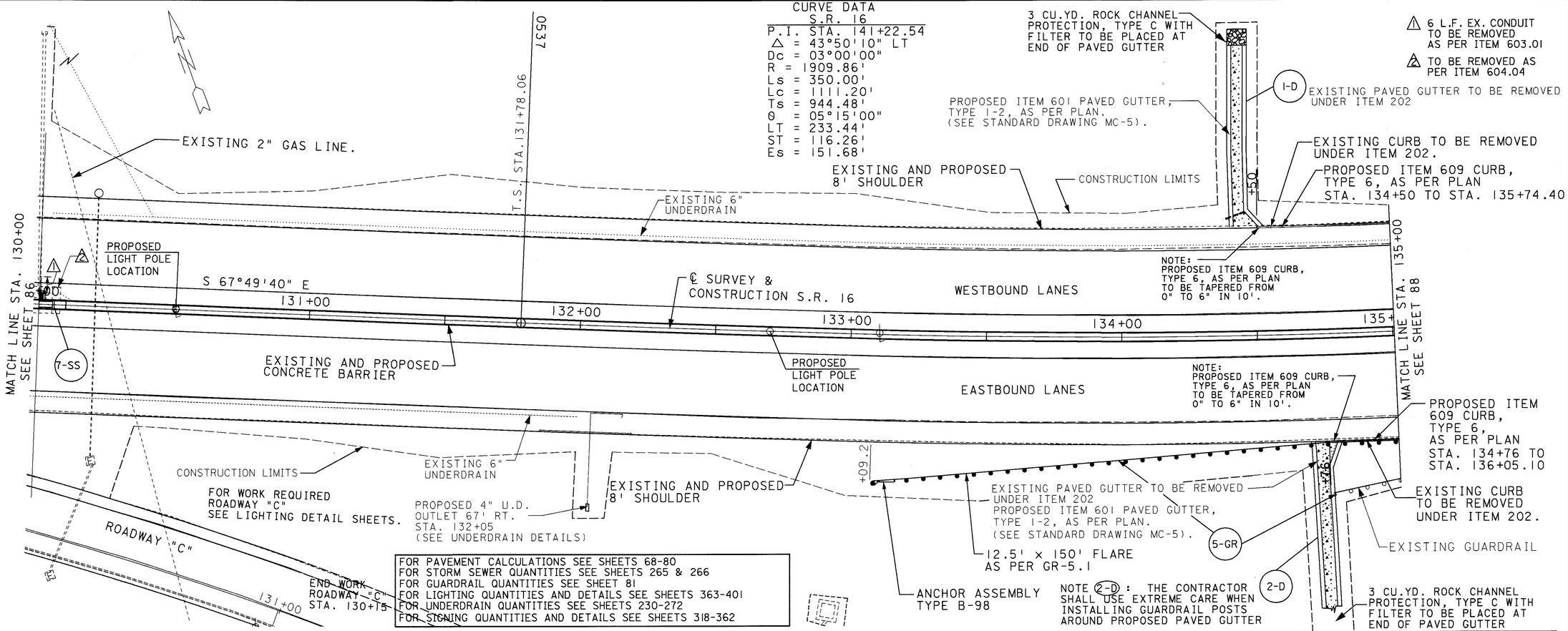

FOR PAVEMENT CALCULATIONS SEE SHEETS 68-80
FOR STORM SEWER QUANTITIES SEE SHEETS 265 & 266
FOR GUARDRAIL QUANTITIES SEE SHEET 81
FOR LIGHTING QUANTITIES AND DETAILS SEE SHEETS 363-401
FOR UNDERDRAIN QUANTITIES SEE SHEETS 230-272
FOR SIGNING QUANTITIES AND DETAILS SEE SHEETS 318-362

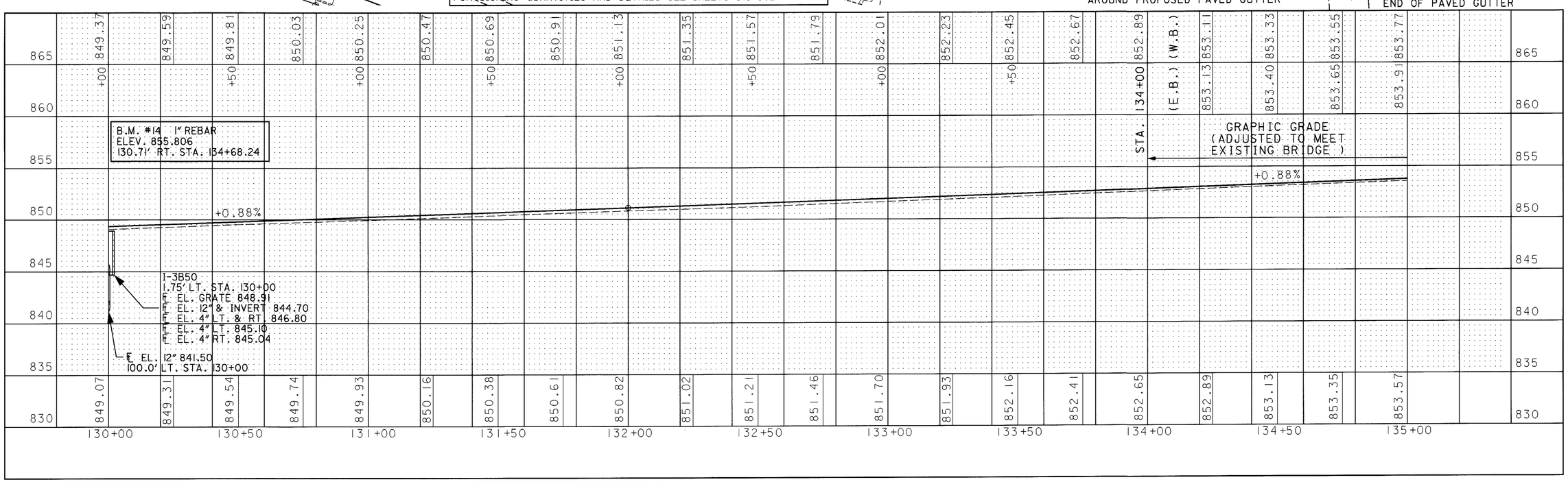

HORIZONTAL SCALE IN FEET 0 10 20 40

CALCULATED D.M. 3-13-95
CHECKED A.L.L. 3-16-95

PLAN AND PROFILE SHEET STA. 130+00 TO STA. 135+00

LIC-16-19.72

RCP07159.DGN 3/8/95

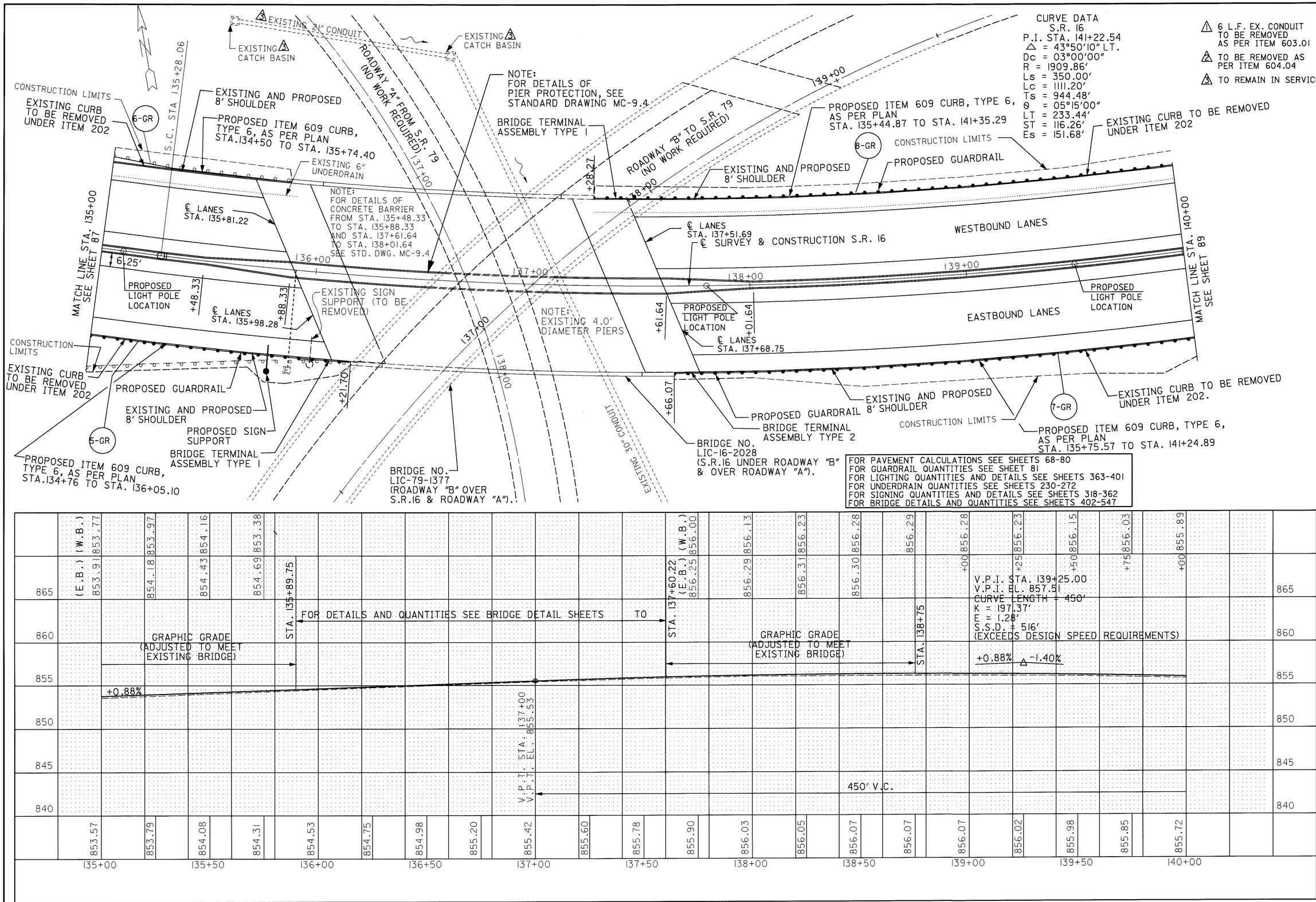

PLAN AND PROFILE SHEET
STA. 135+00 TO STA. 140+00

LIC-16-19.72

RCP08159.DGN 3/8/95

CURVE DATA
S.R. 16
P.I. STA. 141+22.54
Δ = 43°50'10" LT.
Dc = 03°00'00"
R = 1909.86'
Ls = 350.00'
Lc = 1111.20'
θ = 05°15'00"
LT = 233.44'
ST = 116.26'
Es = 151.68'
Ts = 944.48'

FOR PAVEMENT CALCULATIONS SEE SHEETS 68-80
FOR STORM SEWER QUANTITIES SEE SHEETS 265 & 266
FOR GUARDRAIL QUANTITIES SEE SHEET 81
FOR LIGHTING QUANTITIES AND DETAILS SEE SHEETS 363-401
FOR UNDERDRAIN QUANTITIES SEE SHEETS 230-272
FOR SIGNING QUANTITIES AND DETAILS SEE SHEETS 318-362
FOR BRIDGE DETAILS AND QUANTITIES SEE SHEETS 402-547

1 6 L.F. EX. CONDUIT TO BE REMOVED AS PER ITEM 603.01
2 TO BE REMOVED AS PER ITEM 604.04
3 TO REMAIN IN SERVICE

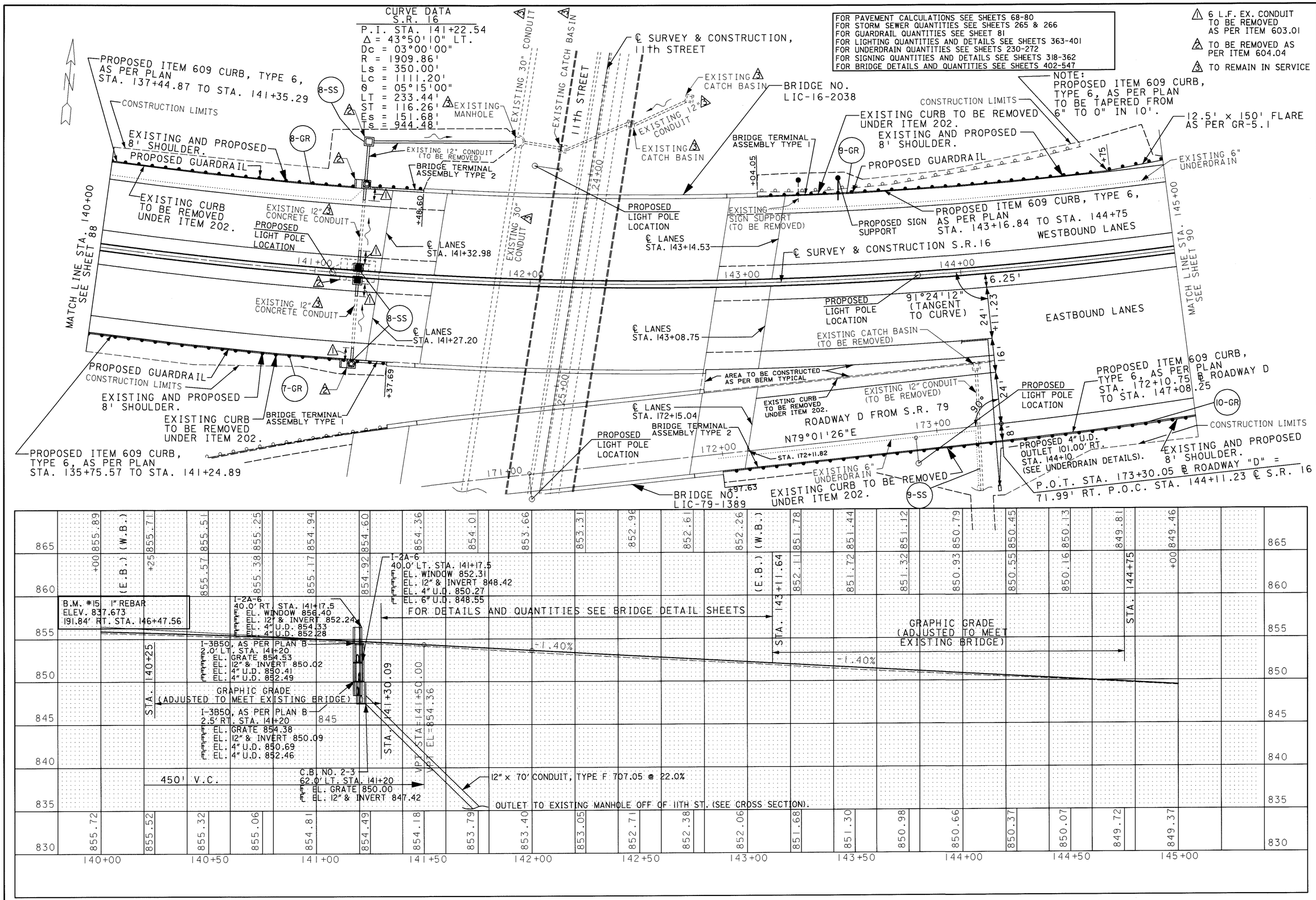

HORIZONTAL SCALE IN FEET 0 10 20 40

CALCULATED D.M. 3-13-95
CHECKED A.L.L. 3-16-95

PLAN AND PROFILE SHEET
STA. 140+00 TO STA. 145+00

LIC-16-19.72

RCP09159.DGN 3/3/95

CURVE DATA
S.R. 16

P.I. STA. 141+22.54
Δ = 43°50'10" LT.
Dc = 03°00'00"
R = 1909.86'
Ls = 350.00'
Lc = 1111.20'
θ = 05°15'00"
LT = 233.44'
ST = 116.26'
Es = 151.68'
Ts = 944.48'

FOR PAVEMENT CALCULATIONS SEE SHEETS 68-80
FOR STORM SEWER QUANTITIES SEE SHEETS 265 & 266
FOR GUARDRAIL QUANTITIES SEE SHEET 81
FOR LIGHTING QUANTITIES AND DETAILS SEE SHEETS 363-401
FOR UNDERDRAIN QUANTITIES SEE SHEETS 230-272
FOR SIGNING QUANTITIES AND DETAILS SEE SHEETS 318-362
FOR ROADWAY "B" QUANTITIES AND DETAILS SEE SHEETS 158-164
FOR RAMP "DD" QUANTITIES AND DETAILS SEE SHEETS 165-170

1 6 L.F. EX. CONDUIT TO BE REMOVED AS PER ITEM 603.01
2 TO BE REMOVED AS PER ITEM 604.04
3 TO REMAIN IN SERVICE

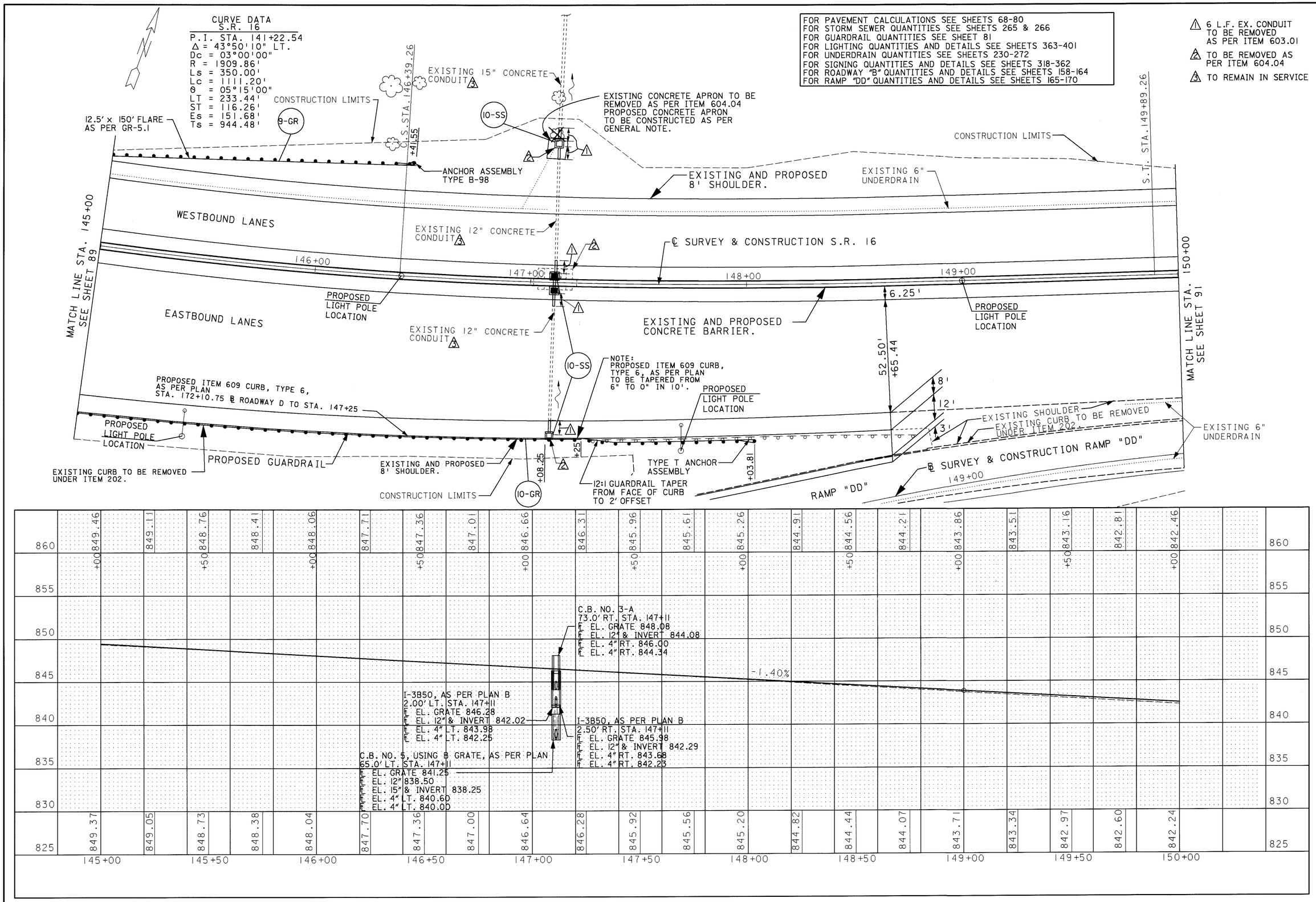

HORIZONTAL SCALE IN FEET
0 10 20 40

CALCULATED D.M. 3-13-95
CHECKED A.L.L. 3-16-95

PLAN AND PROFILE SHEET
STA. 145+00 TO STA. 150+00

LIC-16-19.72

RCP10159.DGN 6/1/95

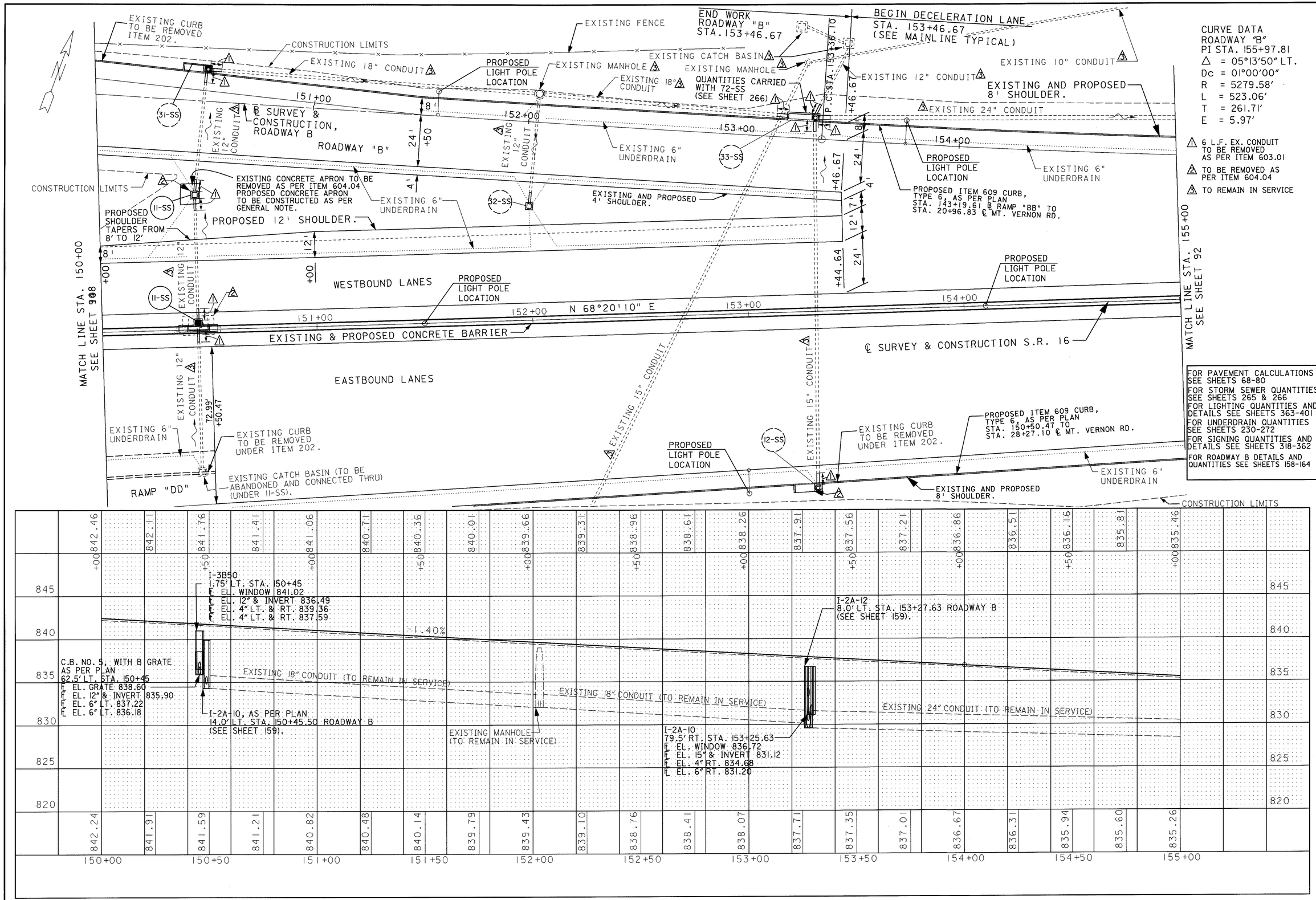

PLAN AND PROFILE SHEET STA. 150+00 TO STA. 155+00

LIC-16-19.72

RCP11159.DGN 6/1/95

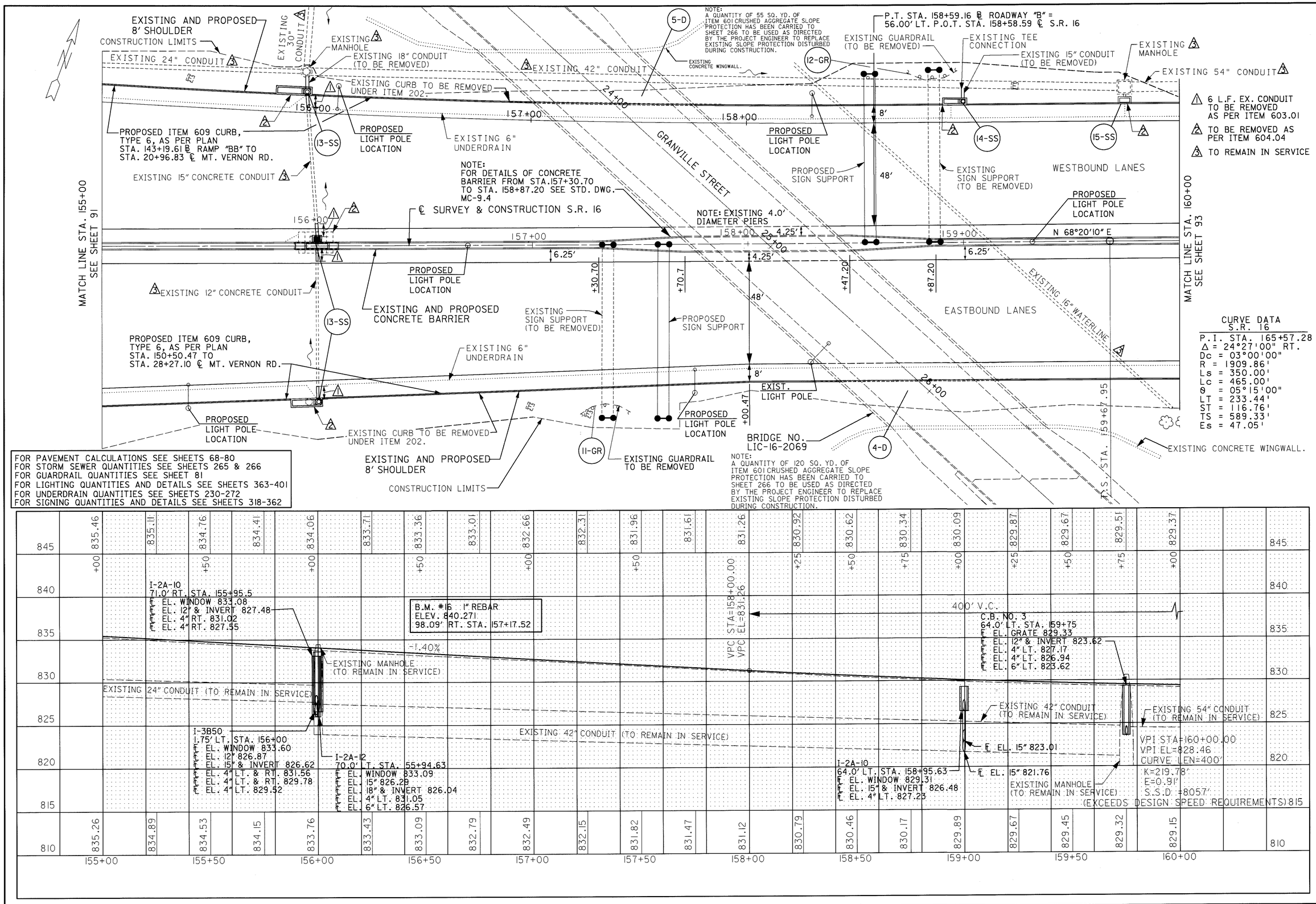

CALCULATED D.M. 3-13-95
CHECKED A.L.L. 3-16-95

PLAN AND PROFILE SHEET STA. 155+00 TO STA. 160+00

LIC-16-19.72

RCP12159.DGN 3/8/95

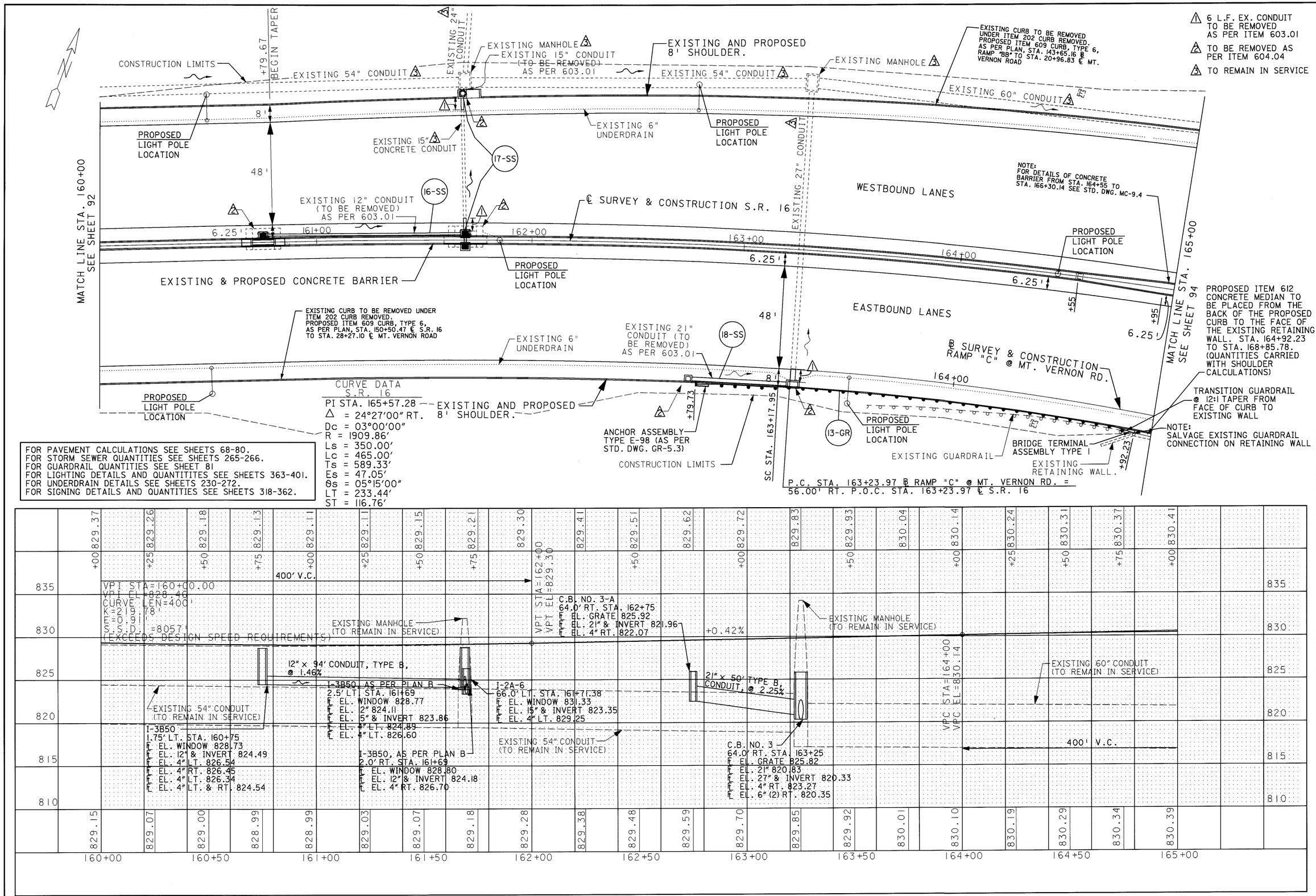

PLAN AND PROFILE SHEET
STA. 160+00 TO STA. 165+00

LIC-16-19.72

RCP13159.DGN 6/1/95

P.O.T. STA. 166+00.17 ℄ RAMP "A" @ MT. VERNON RD. = 69.99' LT. P.O.S. STA. 165+99.67 ℄ S.R. 16

EXISTING 24" CONDUIT △3
EXISTING MANHOLE △3
END ACCELERATION LANE STA. 167+53.00 (SEE MAINLINE TYPICAL).
BEGIN WORK STA. 167+53.00 RAMP "A" @ MT. VERNON RD.
NOTE: SALVAGE EXISTING CONNECTION ON RETAINING WALL.
19-SS
15-GR
16-GR
14-GR
PROPOSED LIGHT POLE LOCATION
EXISTING 60" CONDUIT △3
EXISTING CATCH BASIN (TO BE REMOVED)
EX. 12" CONDUIT (TO BE REMOVED).
EXISTING 12" CONDUIT (TO BE REMOVED UNDER 58-SS).
EXISTING 66" CONDUIT △3
EXISTING SHOULDER
EXISTING CATCH BASIN (TO BE REMOVED UNDER 58-SS).
EXISTING CONCRETE MEDIAN
EXISTING CURB TO BE REMOVED UNDER ITEM 202 CURB REMOVED. PROPOSED ITEM 609 CURB, TYPE 6, AS PER PLAN, STA. 143+65.16 ℄ RAMP "BB" TO STA. 20+96.83 ℄ MT. VERNON RD.
PROPOSED ITEM 612 CONCRETE MEDIAN TO BE PLACED FROM THE BACK OF THE PROPOSED CURB TO THE FACE OF THE EXISTING RETAINING WALL. STA. 167+59.53 TO STA. 168+74.19. (QUANTITIES CARRIED WITH SHOULDER CALCULATIONS)
RAMP "A" @ MT. VERNON RD.
EXISTING OVERHEAD SIGN (TO BE REMOVED)
EXISTING CURB TO BE REMOVED UNDER ITEM 202 CURB REMOVED
ANCHOR ASSEMBLY, TYPE T
CONSTRUCTION LIMITS
EXISTING 6" UNDERDRAIN
NOTE: PROPOSED CURB, TYPE 6 AS PER PLAN TO BE TAPERED FROM 0" TO 6" IN 10'.
WESTBOUND LANES
NOTE: EXISTING 3.0' DIAMETER PIERS
℄ SURVEY & CONSTRUCTION, S.R. 16
EXISTING & PROPOSED CONCRETE BARRIER
C.S. STA. 167+82.95
EASTBOUND LANES
EXISTING CURB TO BE REMOVED UNDER ITEM 202 CURB REMOVED. PROPOSED ITEM 609 CURB, TYPE 6, AS PER PLAN, STA. 150+50.47 ℄ S.R. 16 TO STA. 28+27.10 ℄ MT. VERNON RD.
NOTE: FOR DETAILS OF CONCRETE BARRIER FROM STA. 164+55 TO STA. 166+30.14 SEE STD. DWG MC-9.4
PEARL STREET
PROPOSED ITEM 612 CONCRETE MEDIAN TO BE PLACED FROM THE BACK OF THE PROPOSED CURB TO THE FACE OF THE EXISTING RETAINING WALL. STA. 164+92.23 TO STA. 168+85.78. (QUANTITIES CARRIED WITH SHOULDER CALCULATIONS)
EXISTING MANHOLE △3
EXISTING 6" UNDERDRAIN
PROPOSED LIGHT POLE LOCATION
℄ SURVEY & CONSTRUCTION, RAMP "C" @ MT. VERNON RD.
EXISTING 72" CONDUIT △3
EXISTING 18" CONDUIT △3
PROPOSED OVERHEAD SIGN
BRIDGE NO. LIC-16-2084
EXISTING RETAINING WALL
39-SS
40-SS
41-SS
RAMP "C" @ MT. VERNON RD.
END DECELERATION LANE STA. 167+55.95 (SEE MAINLINE TYPICAL)
BEGIN WORK RAMP "C" @ MT. VERNON RD. STA. 167+55.95
MATCH LINE STA. 165+00 SEE SHEET 93
MATCH LINE STA. 170+00 SEE SHEET 95

CURVE DATA S.R. 16
P.I. STA. 165+57.28
Δ = 24°27'00" RT.
Dc = 03°00'00"
R = 1909.86'
Ls = 350.00'
Lc = 1111.20'
θ = 05°15'00"
LT = 233.44'
ST = 116.76'
TS = 589.33'
Es = 47.05'

NOTE: PROPOSED CONCRETE BARRIER TRANSITIONS FROM 36" TO 48" FROM STA. 165+05 TO STA. 165+77.14 TRANSITION WILL BE FROM SIGN SUPPORT TRANSITION TO BRIDGE PIER TRANSITION AS PER STD. DWG. MC-9.4

△1 6 L.F. EX. CONDUIT TO BE REMOVED AS PER ITEM 603.01
△2 TO BE REMOVED AS PER ITEM 604.04
△3 TO REMAIN IN SERVICE

EXISTING CURB TO BE REMOVED UNDER ITEM 202 CURB REMOVED. PROPOSED ITEM 609 CURB, TYPE 6, AS PER PLAN, STA. 167+48.81 TO STA. 170+75 ℄ S.R. 16

FOR PAVEMENT CALCULATIONS SEE SHEETS 68-80.
FOR STORM SEWER QUANTITIES SEE SHEETS 265-266.
FOR GUARDRAIL QUANTITIES SEE SHEET 81.
FOR RAMP "A" DETAILS AND QUANTITIES SEE SHEETS 177-181.
FOR RAMP "C" DETAILS AND QUANTITIES SEE SHEETS 171-176.
FOR LIGHTING QUANTITIES AND DETAILS SEE SHEETS 363-401.
FOR UNDERDRAIN DETAILS SEE SHEETS 230-272.
FOR SIGNING DETAILS AND QUANTITIES SEE SHEETS 318-362.

HORIZONTAL SCALE IN FEET 0 10 20 40

CALCULATED D.M. 3-13-95
CHECKED A.L.L. 3-16-95

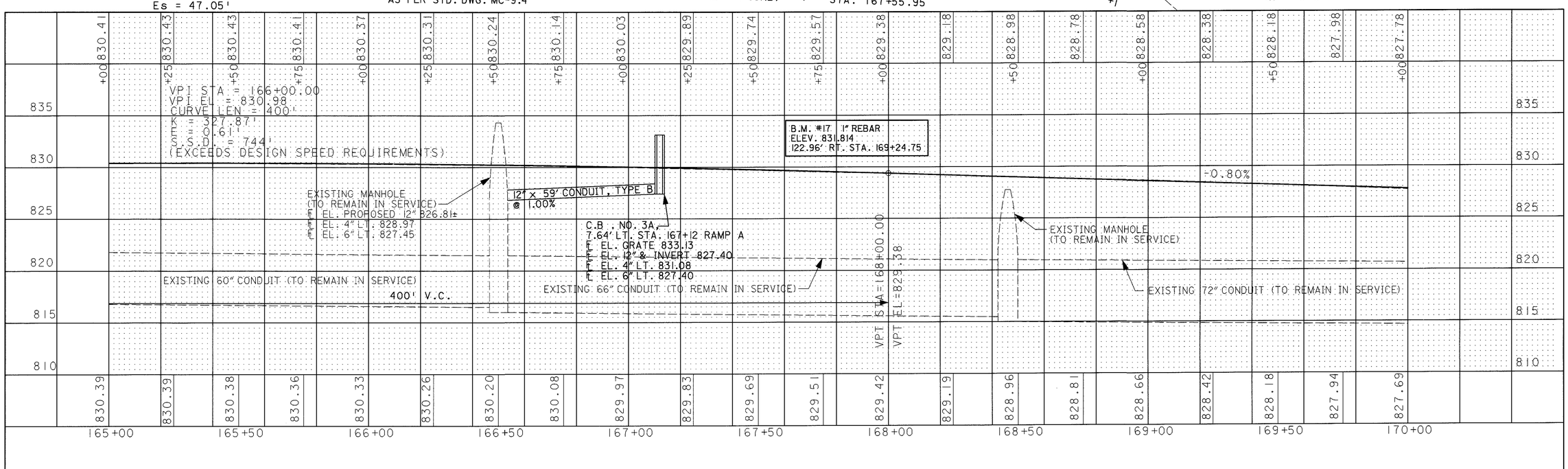

PLAN AND PROFILE SHEET STA. 165+00 TO STA. 170+00

LIC-16-19.72

RCP14159.DGN 6/1/95

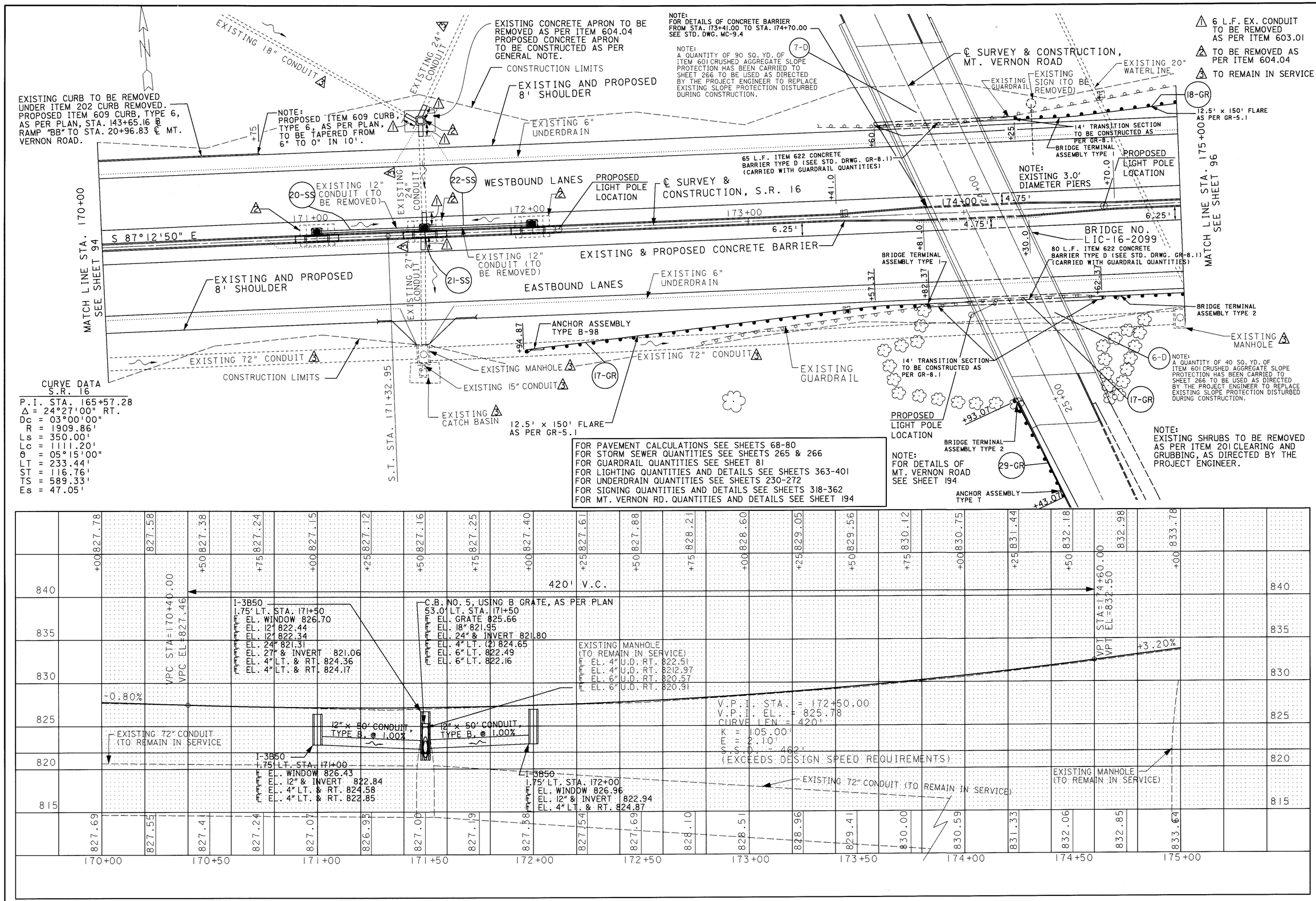

CALCULATED D.M. 3-15-95
CHECKED A.L.L. 3-16-95

PLAN AND PROFILE SHEET
STA. 170+00 TO STA. 175+00

LIC-16-19.72

RCP15159.DGN 6/1/95

CURVE DATA
S.R. 16

PI STA=178+79.86
△ = 5°10'09" LT.
Dc= 1°00'00"
T=258.63'
R=5729.58'
L=516.92'
E=5.83'

△1 6 L.F. EX. CONDUIT TO BE REMOVED AS PER ITEM 603.01
△2 TO BE REMOVED AS PER ITEM 604.04
△3 TO REMAIN IN SERVICE

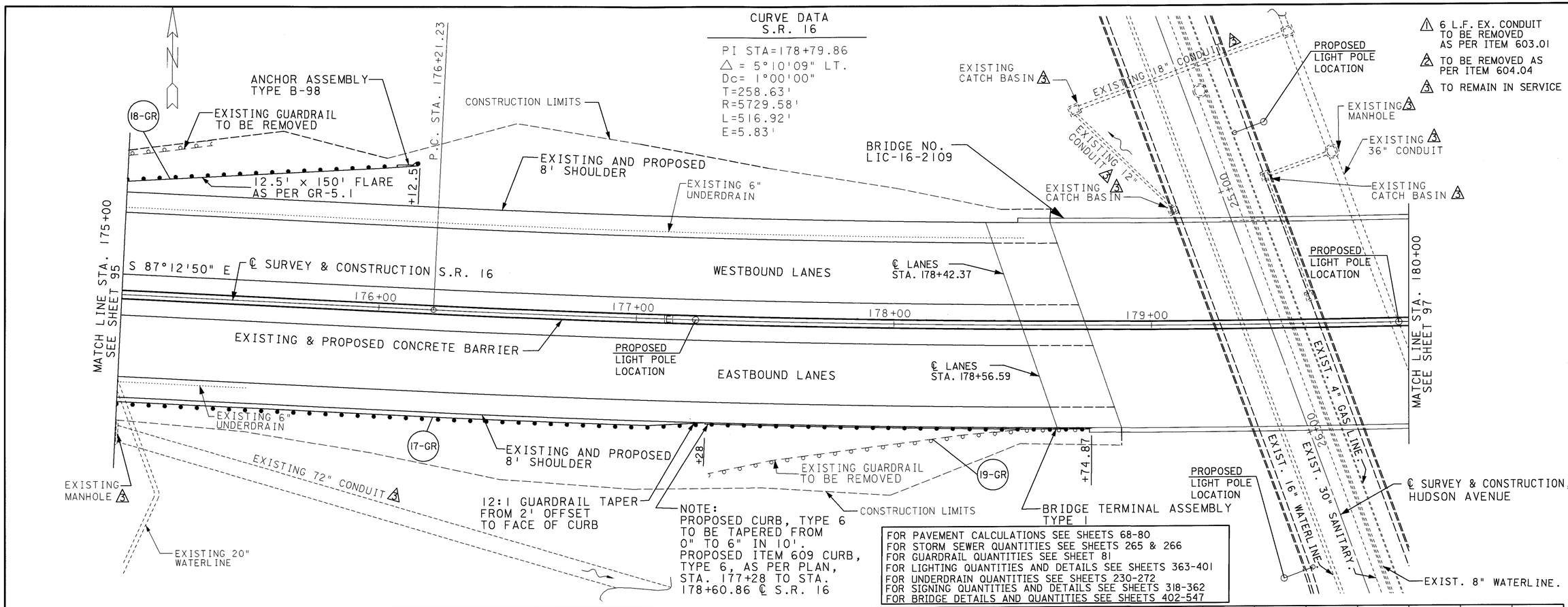

FOR PAVEMENT CALCULATIONS SEE SHEET 68-80
FOR STORM SEWER QUANTITIES SEE SHEETS 265 & 266
FOR GUARDRAIL QUANTITIES SEE SHEET 81
FOR LIGHTING QUANTITIES AND DETAILS SEE SHEETS 363-401
FOR UNDERDRAIN QUANTITIES SEE SHEETS 230-272
FOR SIGNING QUANTITIES AND DETAILS SEE SHEETS 318-362
FOR BRIDGE DETAILS AND QUANTITIES SEE SHEETS 402-547

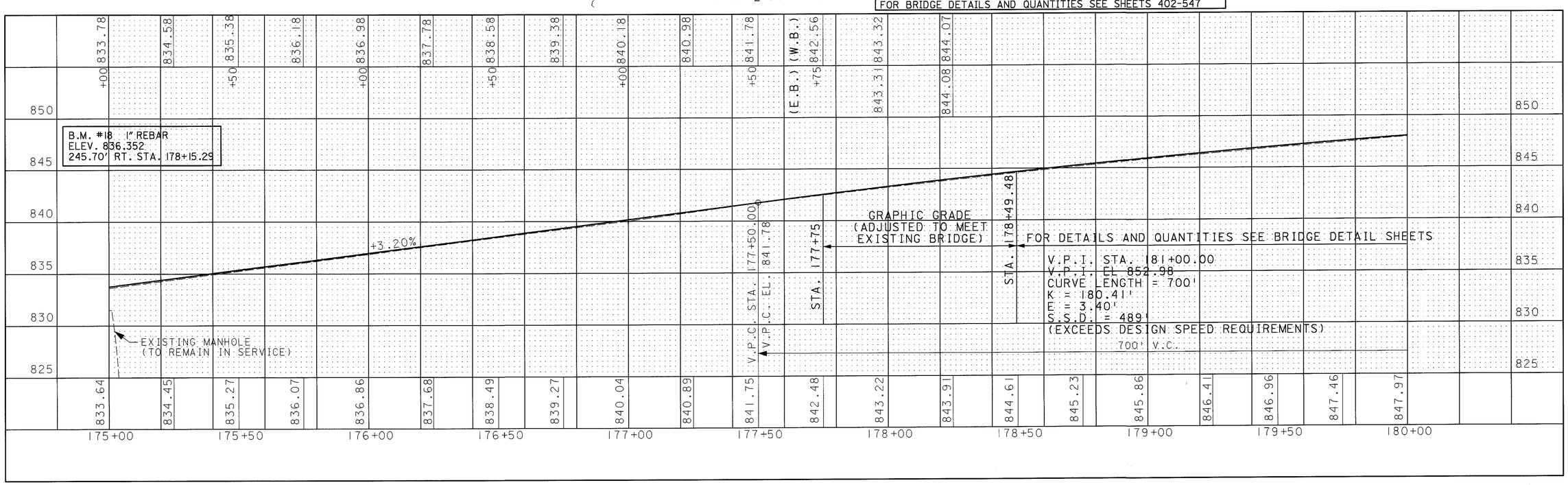

HORIZONTAL SCALE IN FEET 0 10 20 40

CALCULATED D.M. 3-13-95
CHECKED A.L.L. 3-16-95

PLAN AND PROFILE SHEET
STA. 175+00 TO STA. 180+00

LIC-16-19.72

RCP16159.DGN 3/9/95

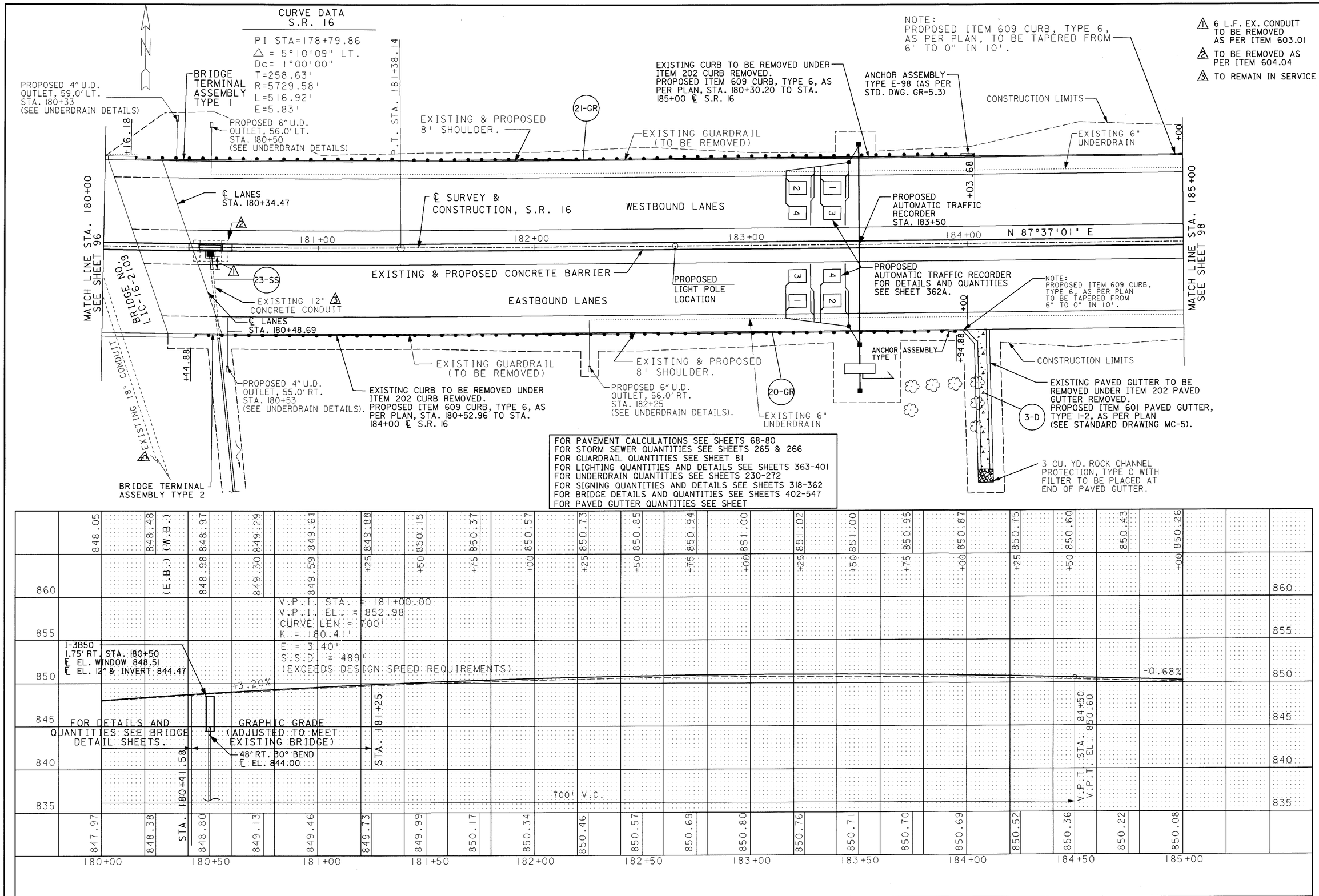

PLAN AND PROFILE SHEET
STA. 180+00 TO STA. 185+00

LIC-16-19.72

RCP17159.DGN 6/1/95

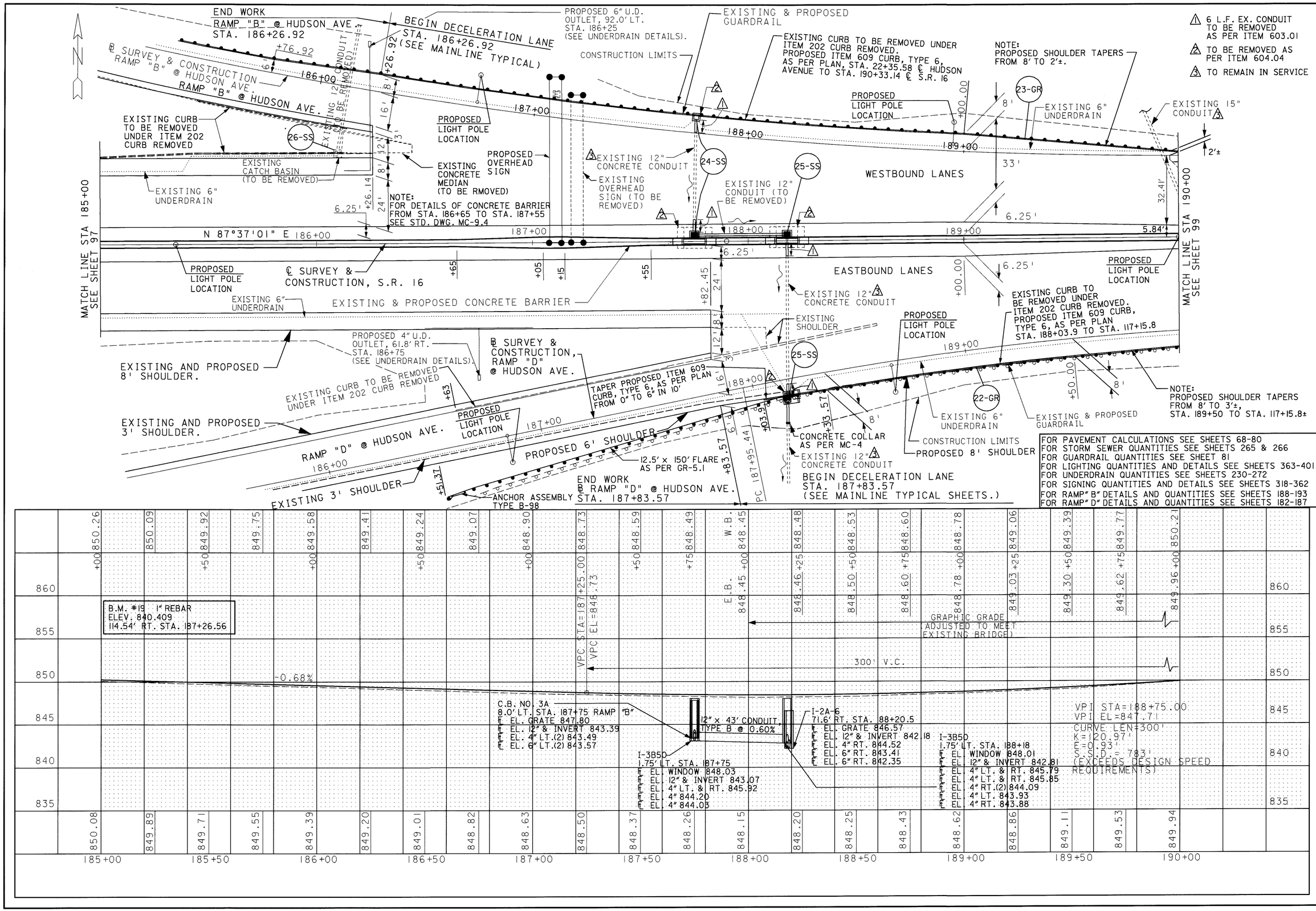
END WORK
RAMP "B" @ HUDSON AVE.
STA. 186+26.92
BEGIN DECELERATION LANE
STA. 186+26.92
(SEE MAINLINE TYPICAL)
PROPOSED 6" U.D. OUTLET, 92.0' LT. STA. 186+25 (SEE UNDERDRAIN DETAILS).
EXISTING & PROPOSED GUARDRAIL
EXISTING CURB TO BE REMOVED UNDER ITEM 202 CURB REMOVED. PROPOSED ITEM 609 CURB, TYPE 6, AS PER PLAN, STA. 22+35.58 ℄ HUDSON AVENUE TO STA. 190+33.14 ℄ S.R. 16
NOTE: PROPOSED SHOULDER TAPERS FROM 8' TO 2'±.
6 L.F. EX. CONDUIT TO BE REMOVED AS PER ITEM 603.01
TO BE REMOVED AS PER ITEM 604.04
TO REMAIN IN SERVICE
HORIZONTAL SCALE IN FEET
CALCULATED D.M. 3-13-95
CHECKED A.L.L. 3-16-95
PLAN AND PROFILE SHEET
STA. 185+00 TO STA. 190+00
LIC-16-19.72
98/547
℄ SURVEY & CONSTRUCTION RAMP "B" @ HUDSON AVE.
RAMP "B" @ HUDSON AVE.
EXISTING 12" CONDUIT (TO BE REMOVED)
EXISTING CURB TO BE REMOVED UNDER ITEM 202 CURB REMOVED
EXISTING CATCH BASIN (TO BE REMOVED)
EXISTING 6" UNDERDRAIN
PROPOSED LIGHT POLE LOCATION
PROPOSED OVERHEAD SIGN
EXISTING CONCRETE MEDIAN (TO BE RMOVED)
EXISTING 12" CONCRETE CONDUIT
EXISTING OVERHEAD SIGN (TO BE REMOVED)
EXISTING 12" CONDUIT (TO BE REMOVED)
NOTE: FOR DETAILS OF CONCRETE BARRIER FROM STA. 186+65 TO STA. 187+55 SEE STD. DWG. MC-9.4
WESTBOUND LANES
EXISTING 15" CONDUIT
N 87°37'01" E 186+00
MATCH LINE STA 185+00 SEE SHEET 97
MATCH LINE STA 190+00 SEE SHEET 99
℄ SURVEY & CONSTRUCTION, S.R. 16
EXISTING & PROPOSED CONCRETE BARRIER
EASTBOUND LANES
EXISTING CURB TO BE REMOVED UNDER ITEM 202 CURB REMOVED. PROPOSED ITEM 609 CURB, TYPE 6, AS PER PLAN STA. 188+03.9 TO STA. 117+15.8
EXISTING SHOULDER
PROPOSED 4" U.D. OUTLET, 61.8' RT. STA. 186+75 (SEE UNDERDRAIN DETAILS)
℄ SURVEY & CONSTRUCTION, RAMP "D" @ HUDSON AVE.
EXISTING AND PROPOSED 8' SHOULDER.
EXISTING CURB TO BE REMOVED UNDER ITEM 202 CURB REMOVED
TAPER PROPOSED ITEM 609 CURB, TYPE 6, AS PER PLAN FROM 0" TO 6" IN 10'
EXISTING AND PROPOSED 3' SHOULDER.
RAMP "D" @ HUDSON AVE.
PROPOSED 6' SHOULDER
12.5' x 150' FLARE AS PER GR-5.1
EXISTING 3' SHOULDER
ANCHOR ASSEMBLY TYPE B-98
END WORK ℄ RAMP "D" @ HUDSON AVE. STA. 187+83.57
CONCRETE COLLAR AS PER MC-4
BEGIN DECELERATION LANE STA. 187+83.57 (SEE MAINLINE TYPICAL SHEETS.)
CONSTRUCTION LIMITS
PROPOSED 8' SHOULDER
EXISTING & PROPOSED GUARDRAIL
NOTE: PROPOSED SHOULDER TAPERS FROM 8' TO 3'±, STA. 189+50 TO STA. 117+15.8±
FOR PAVEMENT CALCULATIONS SEE SHEETS 68-80
FOR STORM SEWER QUANTITIES SEE SHEETS 265 & 266
FOR GUARDRAIL QUANTITIES SEE SHEET 81
FOR LIGHTING QUANTITIES AND DETAILS SEE SHEETS 363-401
FOR UNDERDRAIN QUANTITIES SEE SHEETS 230-272
FOR SIGNING QUANTITIES AND DETAILS SEE SHEETS 318-362
FOR RAMP" B" DETAILS AND QUANTITIES SEE SHEETS 188-193
FOR RAMP" D" DETAILS AND QUANTITIES SEE SHEETS 182-187
B.M. #19 1" REBAR ELEV. 840.409 114.54' RT. STA. 187+26.56
VPC STA=187+25.00 EL=848.73
E.B. W.B.
GRAPHIC GRADE ADJUSTED TO MEET EXISTING BRIDGE)
300' V.C.
-0.68%
C.B. NO. 3A 8.0' LT. STA. 187+75 RAMP "B" EL. GRATE 847.80 EL. 12" & INVERT 843.39 EL. 4" LT.(2) 843.49 EL. 6" LT.(2) 843.57
12" x 43' CONDUIT, TYPE B @ 0.60%
I-3B50 1.75' LT. STA. 187+75 EL. WINDOW 848.03 EL. 12" & INVERT 843.07 EL. 4" LT. & RT. 845.92 EL. 4" 844.20 EL. 4" 844.03
I-2A-6 71.6' RT. STA. 88+20.5 EL. GRATE 846.57 EL. 12" & INVERT 842.18 EL. 4" RT. 844.52 EL. 6" RT. 843.41 EL. 6" RT. 842.35
I-3B50 1.75' LT. STA. 188+18 EL. WINDOW 848.01 EL. 12" & INVERT 842.81 EL. 4" LT. & RT. 845.79 EL. 4" LT. & RT. 845.85 EL. 4" RT.(2) 844.09 EL. 4" LT. 843.93 EL. 4" RT. 843.88
VPI STA=188+75.00 VPI EL=847.71 CURVE LEN=300' K=120.97' E=0.93' S.S.D.=783' (EXCEEDS DESIGN SPEED REQUIREMENTS)
185+00 185+50 186+00 186+50 187+00 187+50 188+00 188+50 189+00 189+50 190+00
RCP18159.DGN 6/1/95

FOR PAVEMENT CALCULATIONS SEE SHEETS 68-80
FOR GUARDRAIL QUANTITIES SEE SHEET 81
FOR UNDERDRAIN QUANTITIES SEE SHEETS 267-272A
FOR SIGNING QUANTITIES AND DETAILS SEE SHEETS 318-362
FOR LIGHTING QUANTITIES AND DETAILS SEE SHEETS 363-401
FOR BRIDGE DETAILS AND QUANTITIES SEE SHEETS 402-547

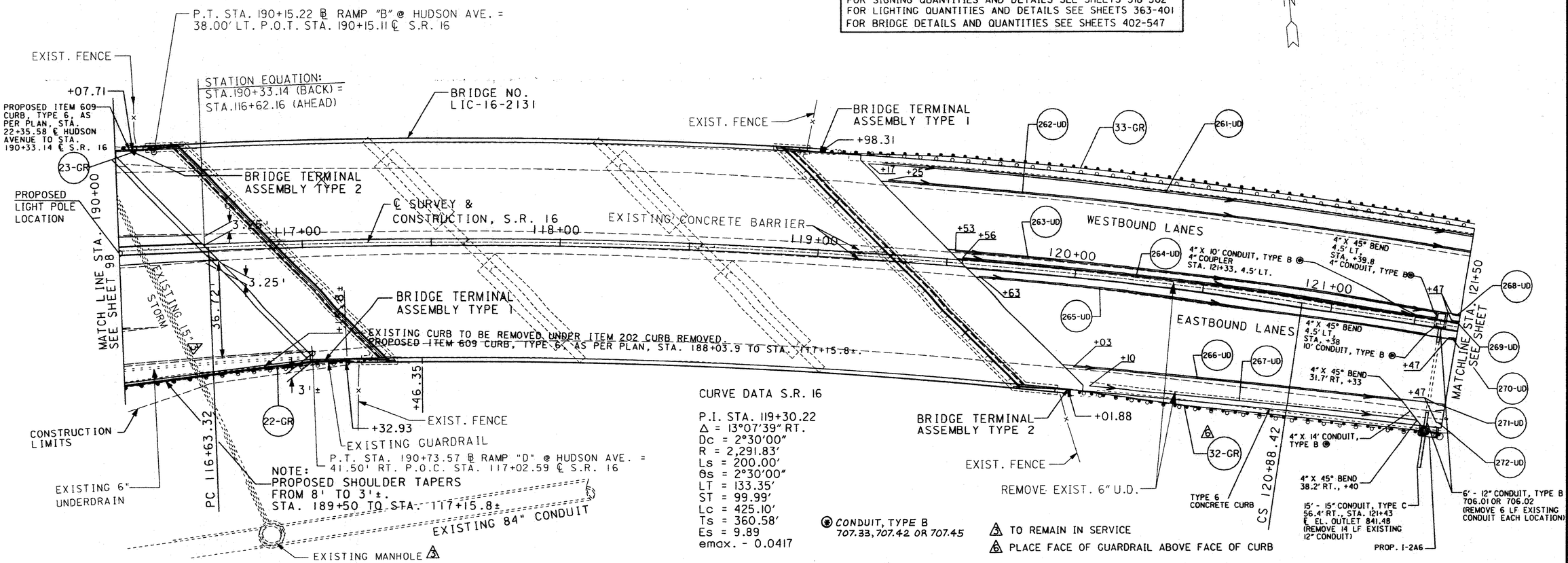

CURVE DATA S.R. 16

P.I. STA. 119+30.22
Δ = 13°07'39" RT.
Dc = 2°30'00"
R = 2,291.83'
Ls = 200.00'
θs = 2°30'00"
LT = 133.35'
ST = 99.99'
Lc = 425.10'
Ts = 360.58'
Es = 9.89
emax. - 0.0417

(*) CONDUIT, TYPE B 707.33, 707.42 OR 707.45

(3) TO REMAIN IN SERVICE
(6) PLACE FACE OF GUARDRAIL ABOVE FACE OF CURB

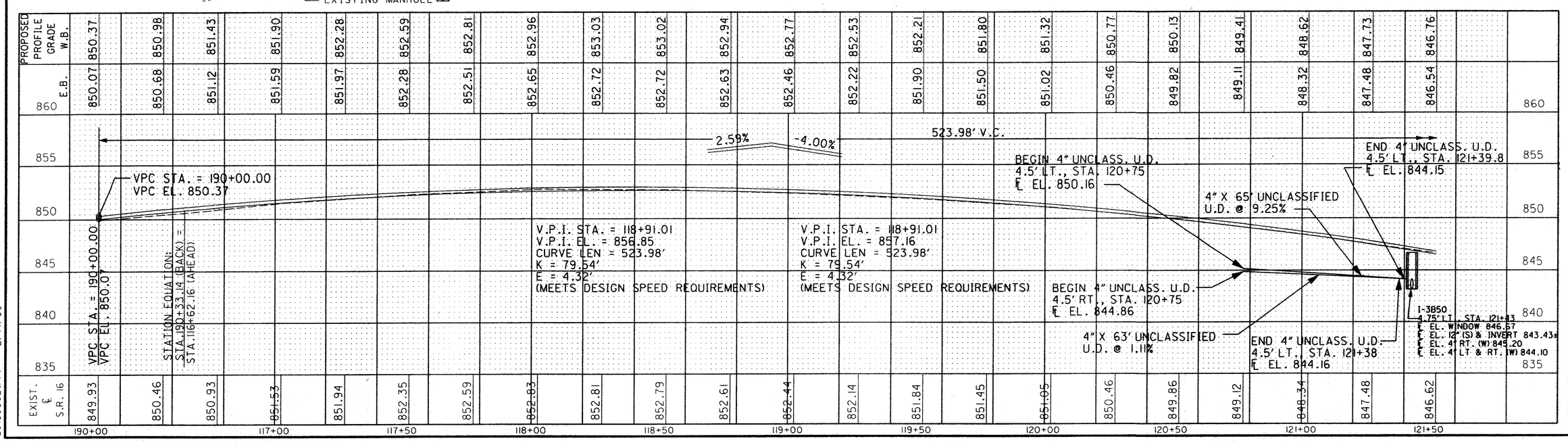

HORIZONTAL SCALE IN FEET 0 20 40

CALCULATED
CHECKED

PLAN AND PROFILE
STA. 190+00(BK.) TO STA. 121+50(AH.)

LIC-16-19.72

L0160002.PPP 2/14/99

FOR PAVEMENT CALCULATIONS SEE SHEETS 68-80
FOR GUARDRAIL QUANTITIES SEE SHEET 81
FOR UNDERDRAIN QUANTITIES SEE SHEETS 267-272A
FOR SIGNING QUANTITIES AND DETAILS SEE SHEETS 318-362
FOR LIGHTING QUANTITIES AND DETAILS SEE SHEETS 363-401
FOR BRIDGE DETAILS AND QUANTITIES SEE SHEETS 402-547

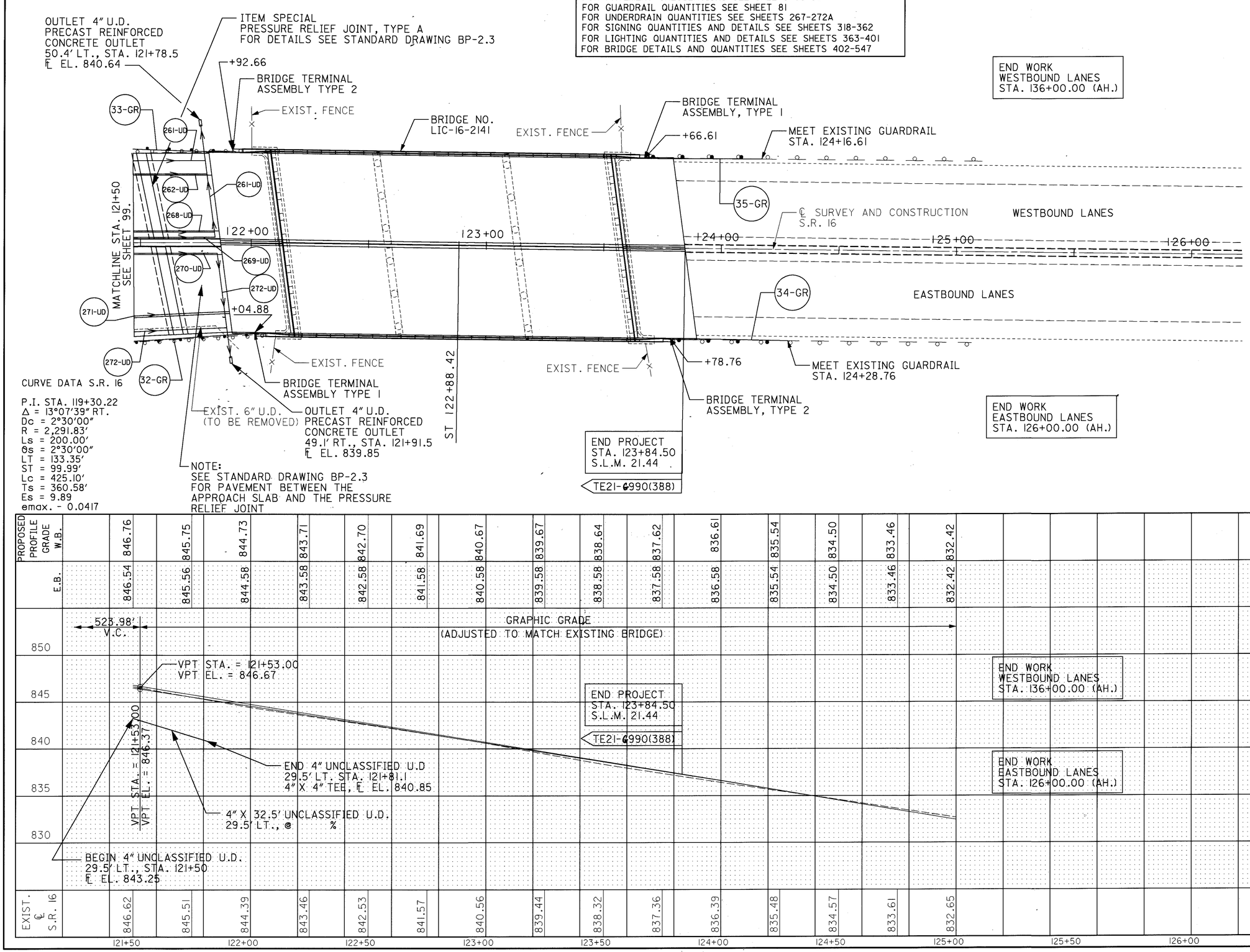

CURVE DATA S.R. 16

P.I. STA. 119+30.22
Δ = 13°07'39" RT.
Dc = 2°30'00"
R = 2,291.83'
Ls = 200.00'
θs = 2°30'00"
LT = 133.35'
ST = 99.99'
Lc = 425.10'
Ts = 360.58'
Es = 9.89
emax. - 0.0417

HORIZONTAL SCALE IN FEET 0 20 40

CALCULATED

CHECKED

PLAN AND PROFILE
STA. 121+50 TO STA. 123+59.50

LIC-16-19.72

L0160003.PPP 2/15/99

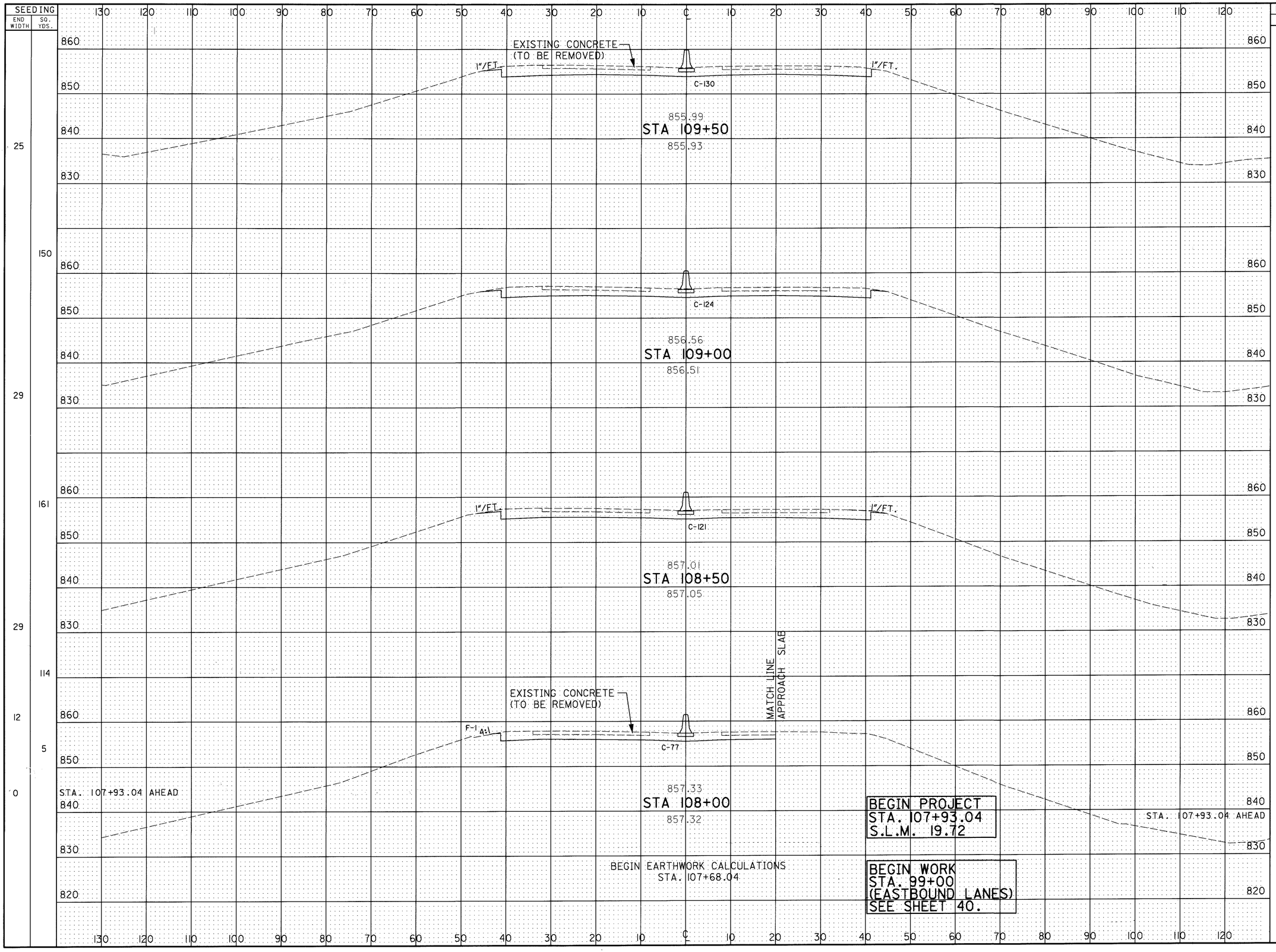
SEEDING
END WIDTH
SQ. YDS.
25
150
29
161
29
114
12
5
0
EXISTING CONCRETE (TO BE REMOVED)
1"/FT.
C-130
855.99
STA 109+50
855.93
C-124
856.56
STA 109+00
856.51
C-121
857.01
STA 108+50
857.05
MATCH LINE
APPROACH SLAB
EXISTING CONCRETE (TO BE REMOVED)
F-1 4:1
C-77
857.33
STA 108+00
857.32
STA. 107+93.04 AHEAD
BEGIN EARTHWORK CALCULATIONS
STA. 107+68.04
BEGIN PROJECT
STA. 107+93.04
S.L.M. 19.72
BEGIN WORK
STA. 99+00
(EASTBOUND LANES)
SEE SHEET 40.
END AREA
CUT
FILL
VOLUME
CUT
FILL
130 0
124 0
121 0
77 1
77 0
235 0
227 0
183 0
20 1
CALCULATED J.G. 3/13/95
CHECKED J.L.J. 3/16/95
CROSS SECTION SHEET
STA. 108+00 TO STA. 109+50
LIC-16-19.72
100
547
RC004159.DGN 6/1/95

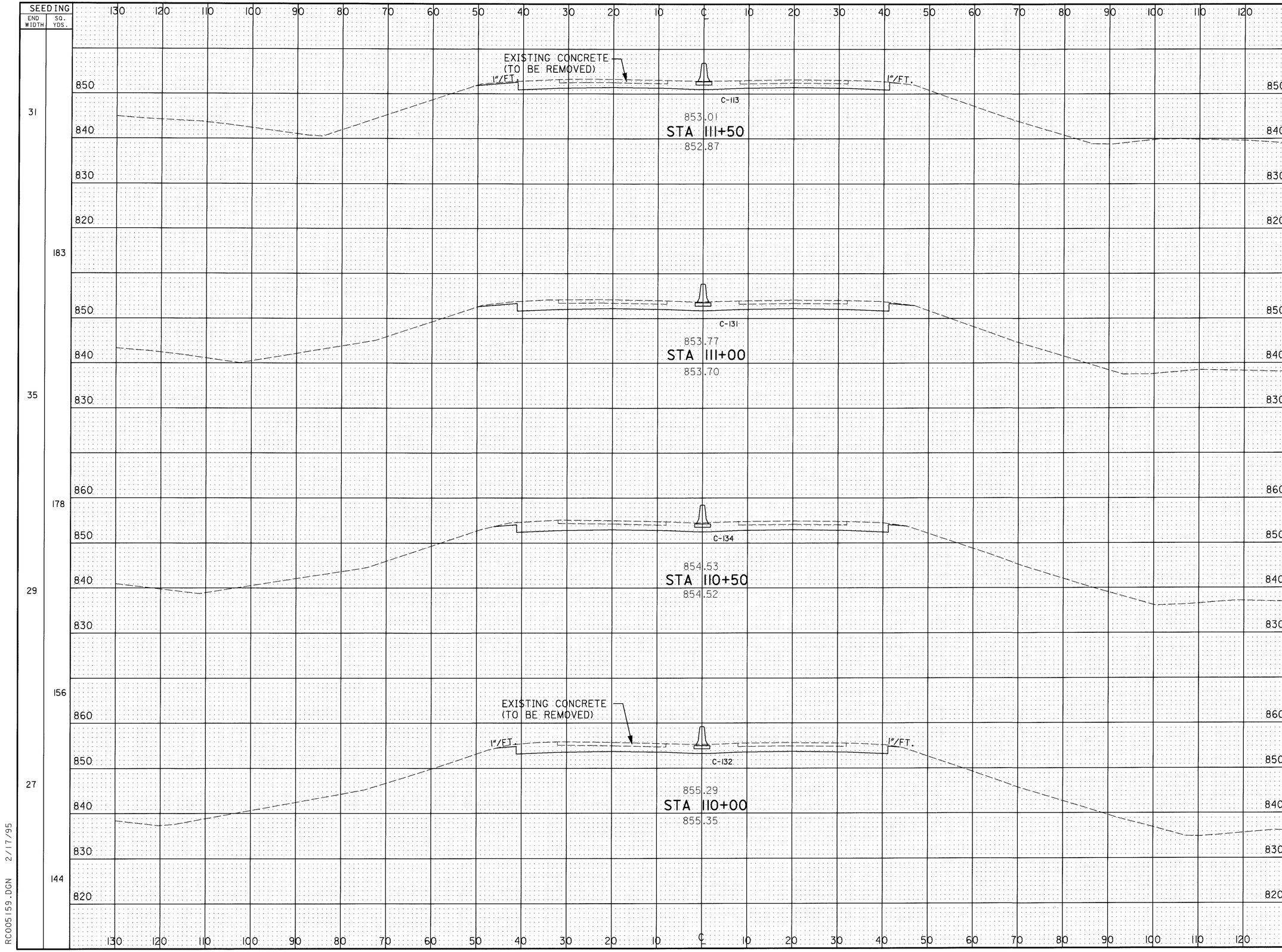

END AREA CUT	END AREA FILL	VOLUME CUT	VOLUME FILL
113	0		
		226	0
131	0		
		245	0
134	0		
		246	0
132	0		
		243	0

CALCULATED J.G. 3/15/95
CHECKED J.L. 3/16/95

CROSS SECTION SHEET
STA. 110+00 TO STA. 111+50

LIC-16-19.72

RC005159.DGN 2/17/95

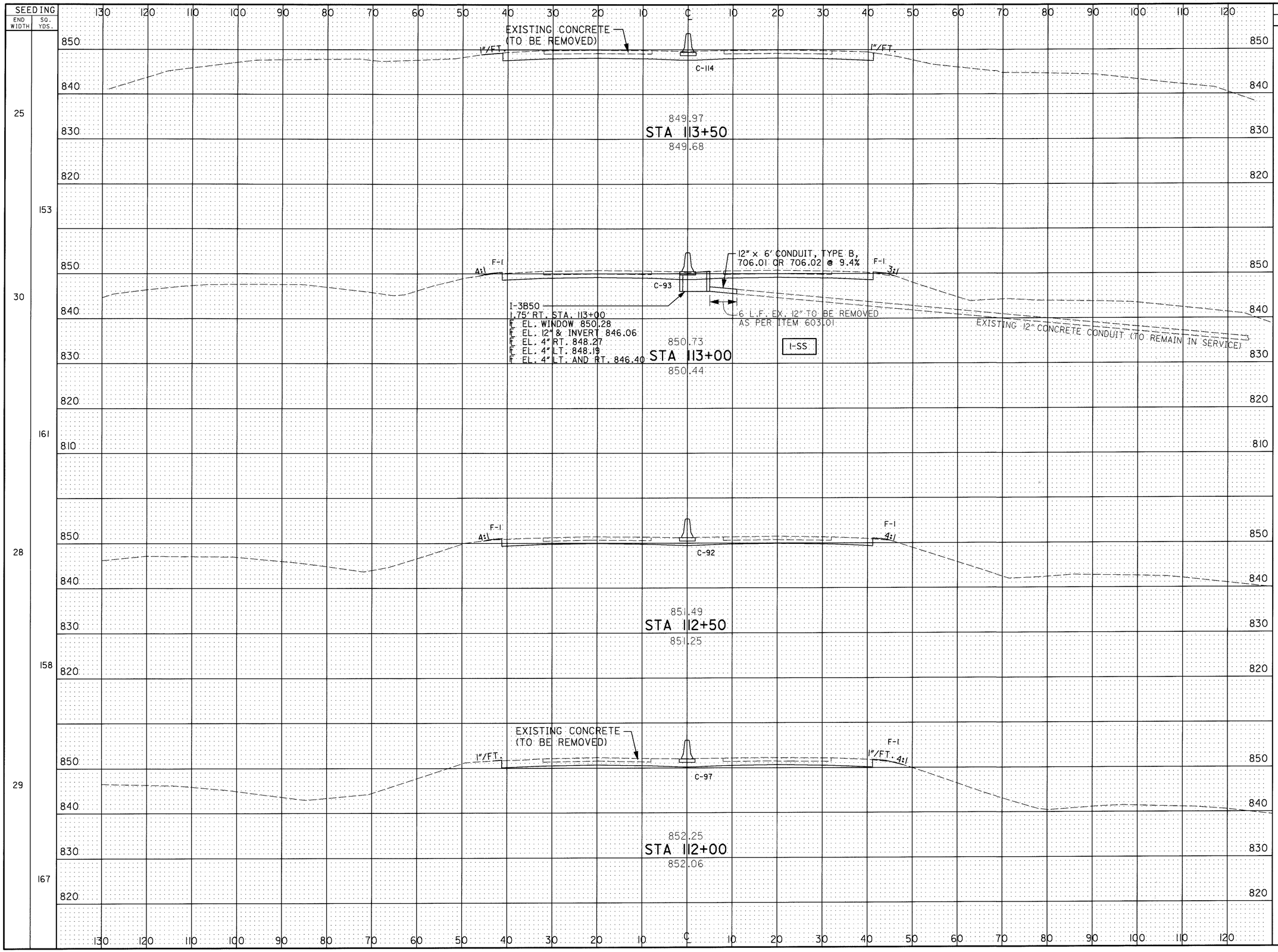
EXISTING CONCRETE (TO BE REMOVED)
1"/FT.
C-114
849.97
STA 113+50
849.68
12" x 6' CONDUIT, TYPE B, 706.01 OR 706.02 @ 9.4%
F-1
4:1
3:1
C-93
I-3B50
1.75' RT. STA. 113+00
℄ EL. WINDOW 850.28
℄ EL. 12" & INVERT 846.06
℄ EL. 4" RT. 848.27
℄ EL. 4" LT. 848.19
℄ EL. 4" LT. AND RT. 846.40
6 L.F. EX. 12" TO BE REMOVED AS PER ITEM 603.01
I-SS
850.73
STA 113+00
850.44
EXISTING 12" CONCRETE CONDUIT (TO REMAIN IN SERVICE)
C-92
851.49
STA 112+50
851.25
C-97
852.25
STA 112+00
852.06
SEEDING
END WIDTH
SQ. YDS.
25
153
30
161
28
158
29
167
END AREA
CUT
FILL
114
0
93
2
92
2
97
1
VOLUME
CUT
FILL
192
2
171
4
175
3
194
1
CALCULATED J.G. 3/13/95
CHECKED J.L.L. 3/16/95
CROSS SECTION SHEET
STA. 112+00 TO STA. 113+50
LIC-16-19.72
102
547
RC006159.DGN 4/27/95

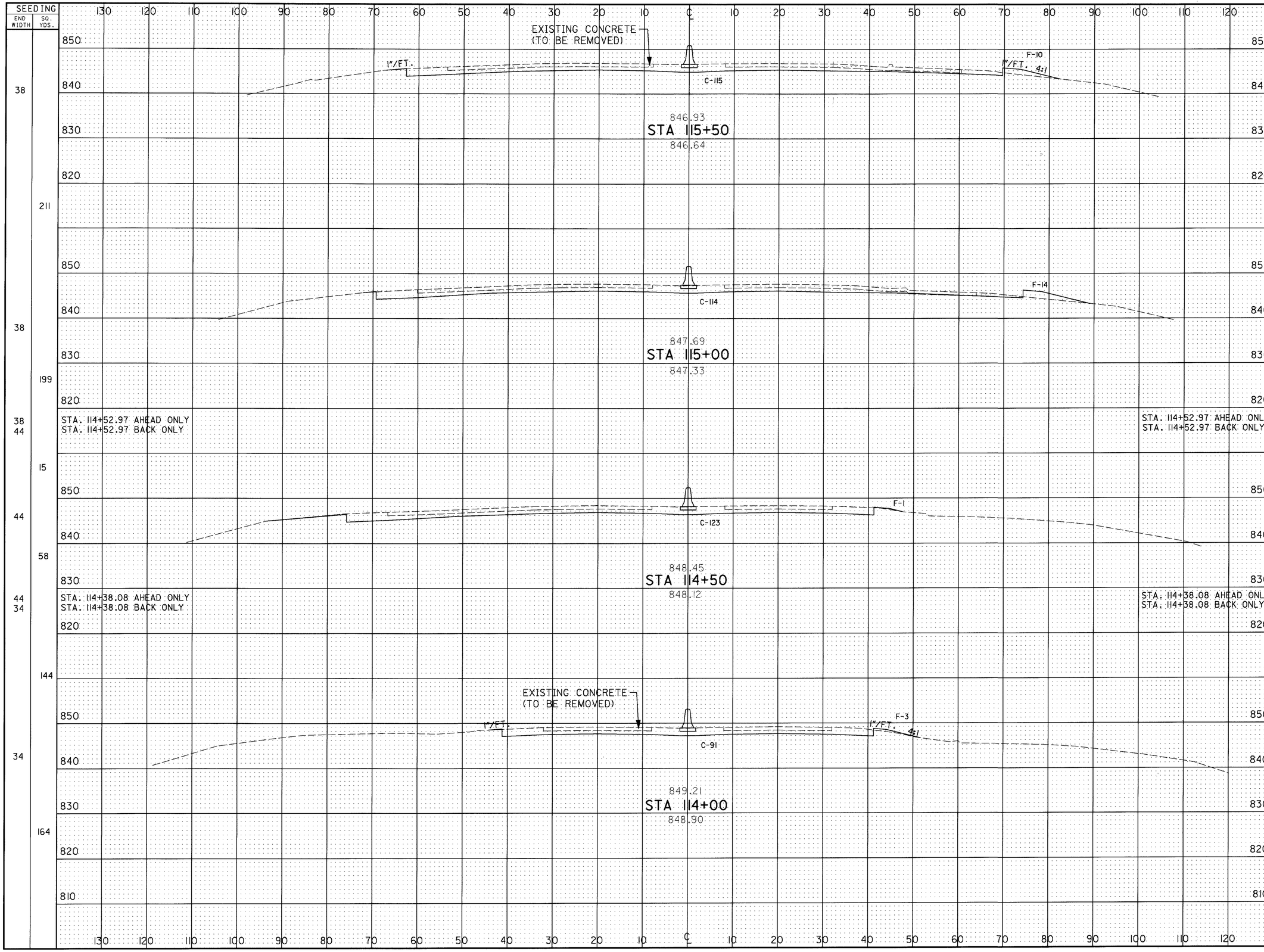

CROSS SECTION SHEET
STA. 114+00 TO STA. 115+50

LIC-16-19.72

103
547

RC007159.DGN 2/17/95

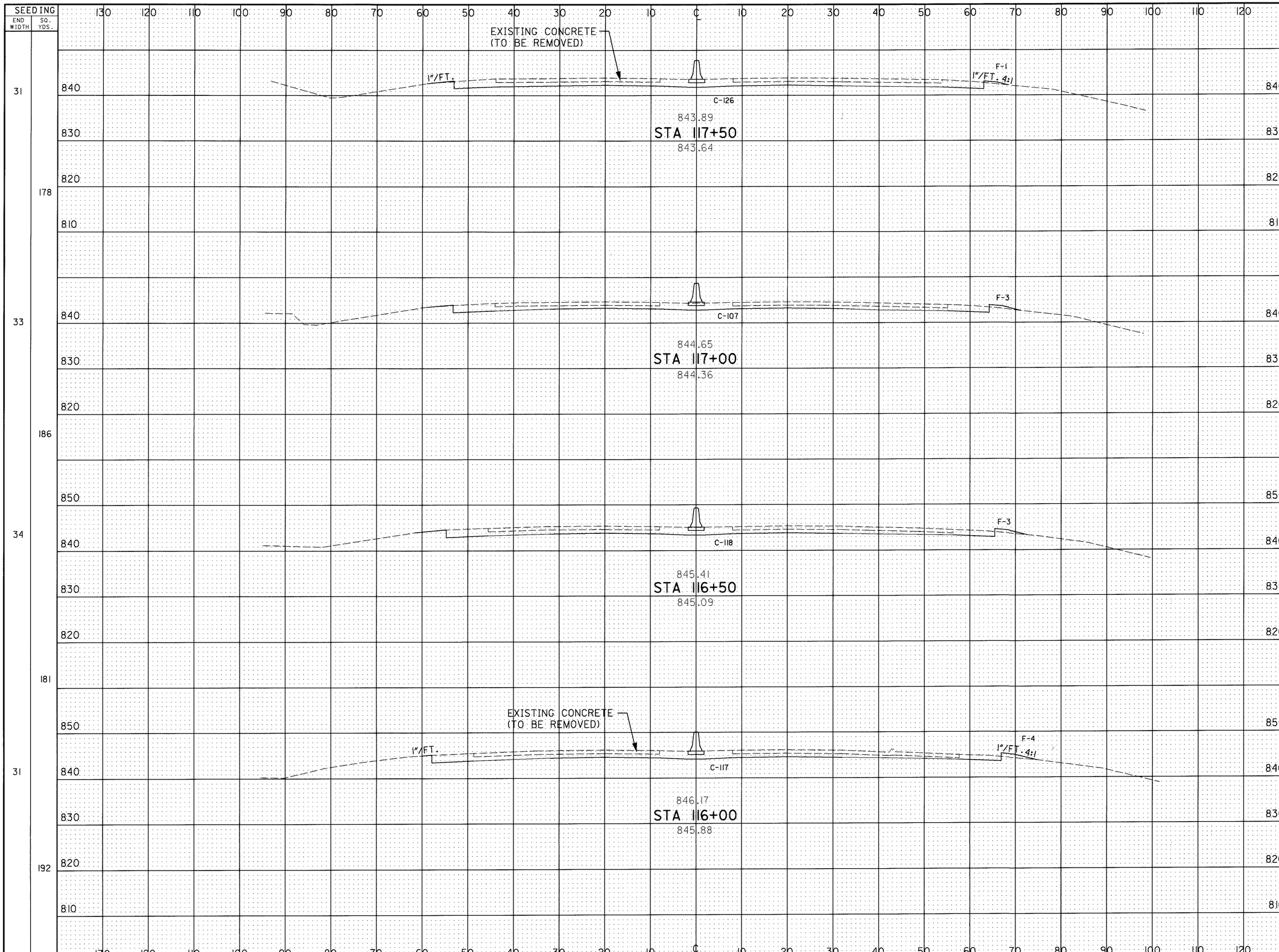

CALCULATED J.G. 3/13/95
CHECKED A.L.J. 3/16/95

CROSS SECTION SHEET
STA. 116+00 TO STA. 117+50

LIC-16-19.72

RC008159.DGN 2/17/95

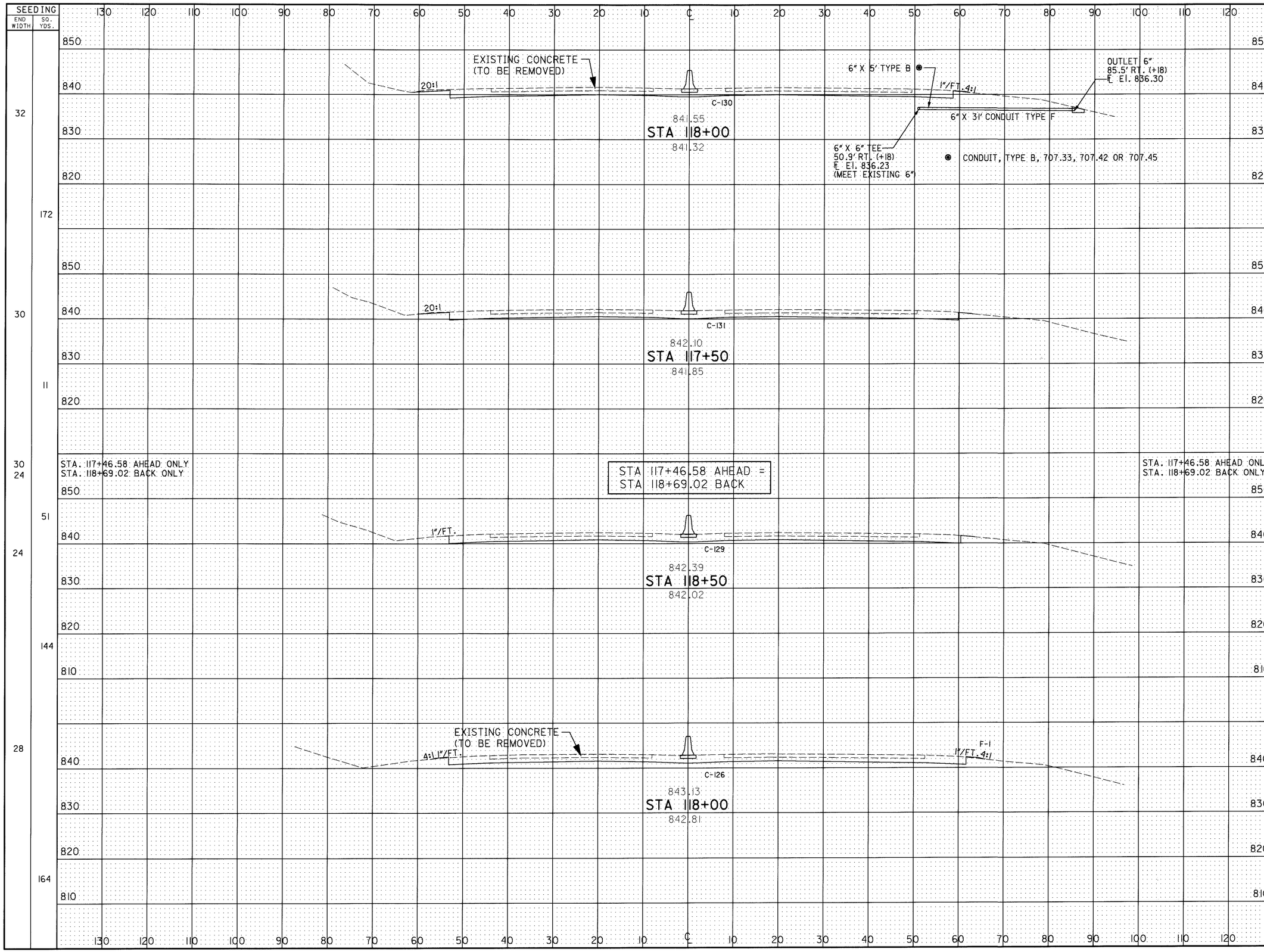

SEEDING END WIDTH	SEEDING SQ. YDS.	END AREA CUT	END AREA FILL	VOLUME CUT	VOLUME FILL
32		130	0		
	172			242	0
30		131	0		
	11			17	0
30		131	0		
24		129	0		
	51			91	0
24		129	0		
	144			236	1
28		126	1		
	164			233	2

CALCULATED J.G. 3/15/95
CHECKED J.L.L. 3/16/95

CROSS SECTION SHEET
STA. 118+00 TO STA. 118+00

LIC-16-19.72

RC009159.DGN 2/17/95

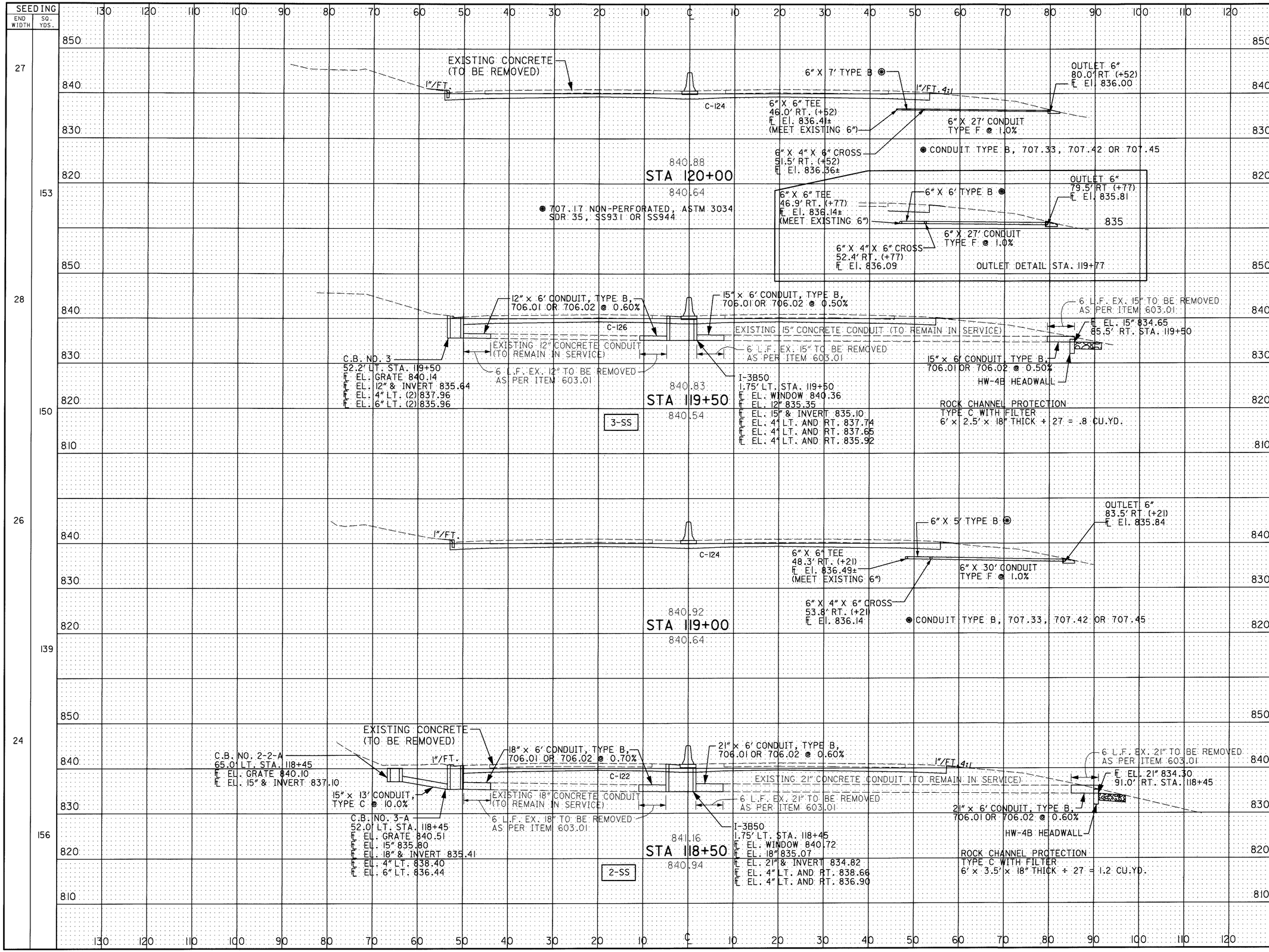

END AREA CUT	END AREA FILL	VOLUME CUT	VOLUME FILL
124	0		
		231	0
126	0		
		231	0
124	0		
		228	0
122	0		
		233	0

CALCULATED J.G. 3/15/95
CHECKED A.L. 3/16/95

CROSS SECTION SHEET STA. 118+50 TO STA. 120+00

LIC-16-19.72

RC010159.DGN 2/17/95

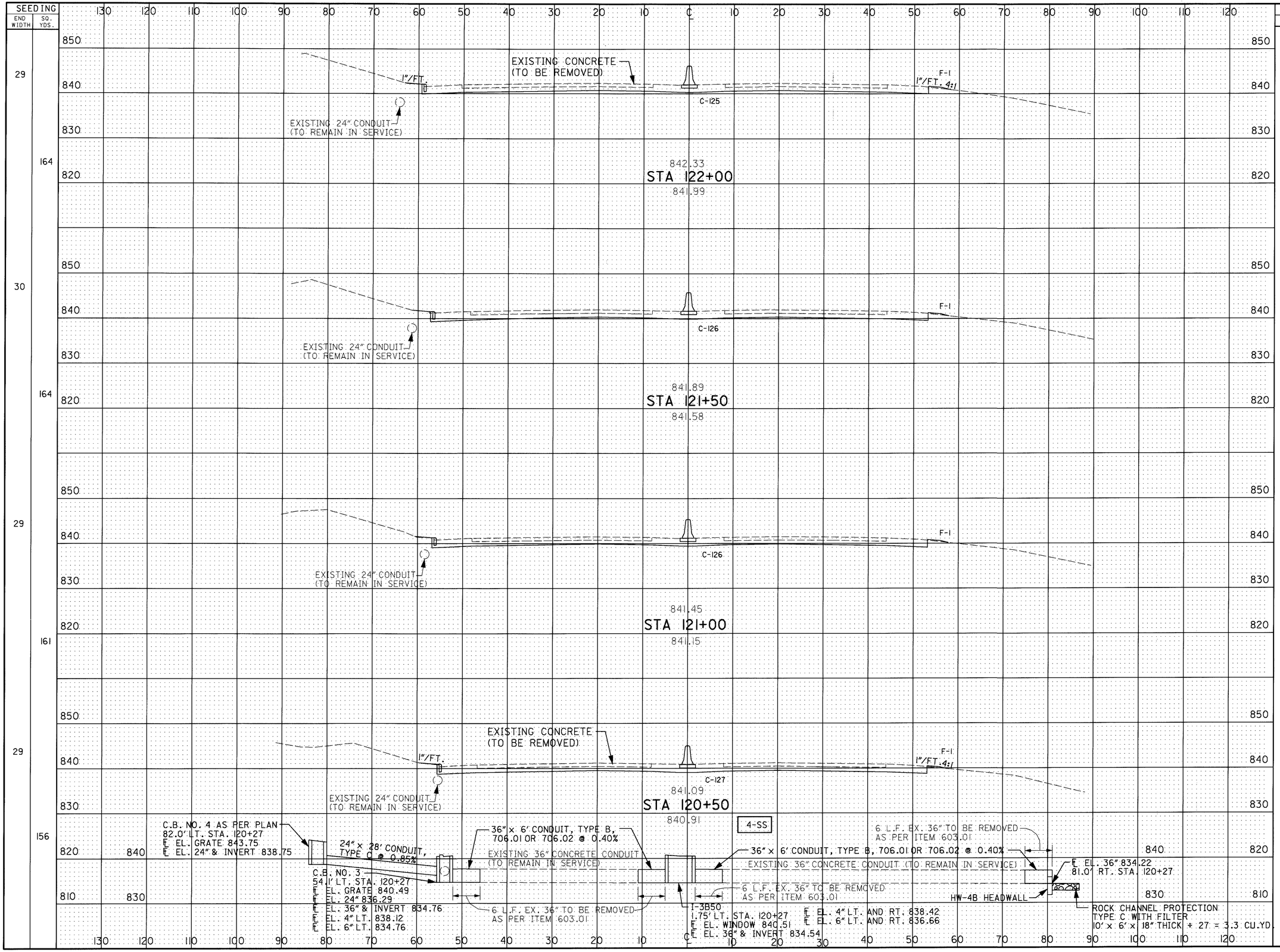

END AREA CUT	END AREA FILL	VOLUME CUT	VOLUME FILL
125	1	232	2
126	1	233	2
126	1	234	2
127	1	232	1

CALCULATED J.G. 3/13/95
CHECKED A.L. 3/16/95

CROSS SECTION SHEET
STA. 120+50 TO STA. 122+00

LIC-16-19.72

107
547

RC011159.DGN 2/17/95

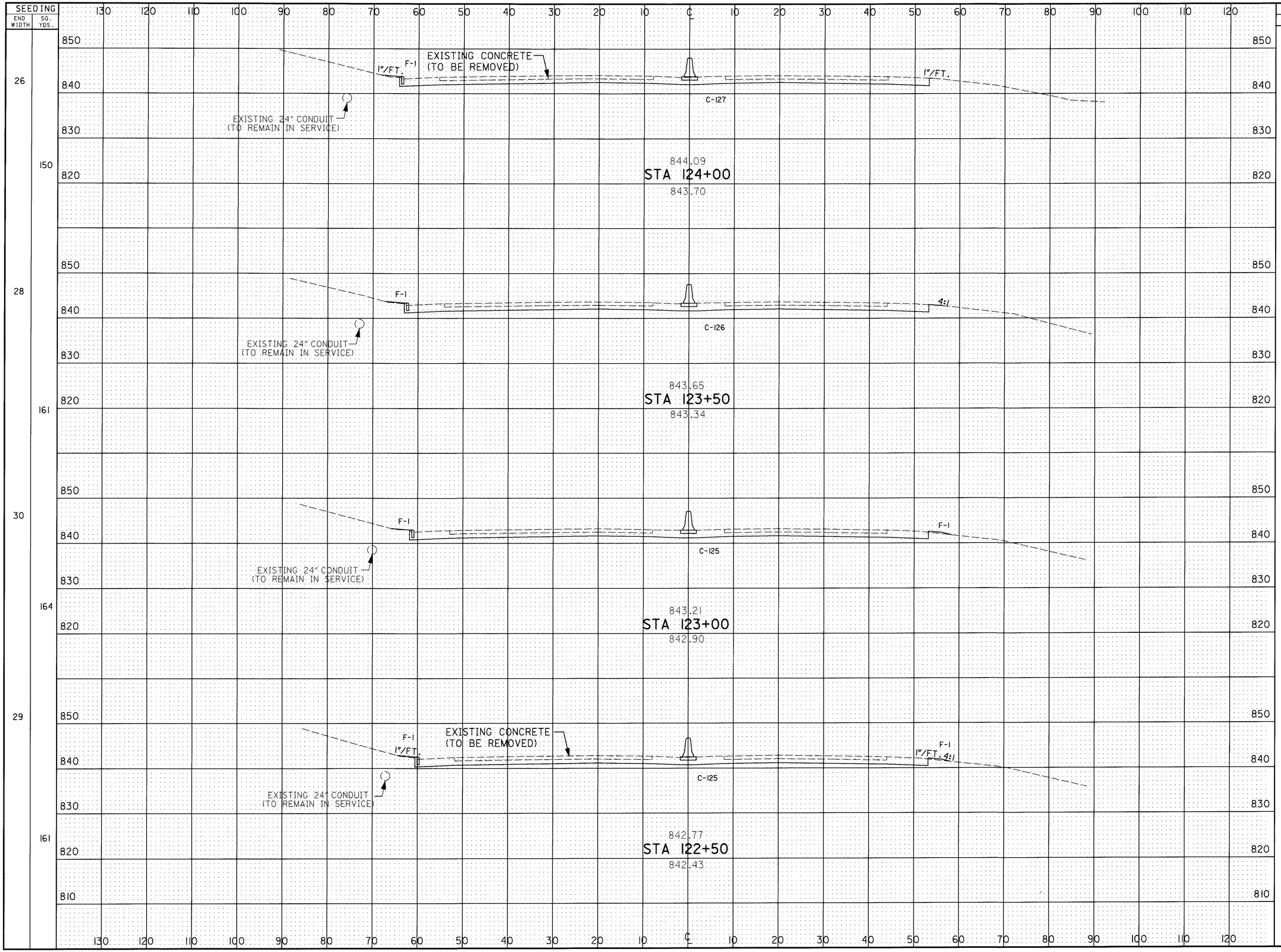
SEEDING
END WIDTH
SQ. YDS.
26
150
28
161
30
164
29
161
EXISTING CONCRETE (TO BE REMOVED)
1"/FT.
F-1
C-127
EXISTING 24" CONDUIT (TO REMAIN IN SERVICE)
844.09
STA 124+00
843.70
4:1
C-126
843.65
STA 123+50
843.34
C-125
843.21
STA 123+00
842.90
842.77
STA 122+50
842.43
END AREA
CUT
FILL
VOLUME
127 1
234 2
126 1
232 3
125 2
231 4
125 2
231 3
CALCULATED
CHECKED
CROSS SECTION SHEET
STA. 122+50 TO STA. 124+00
LIC-16-19.72
108
547
RC012159.DGN 2/17/95

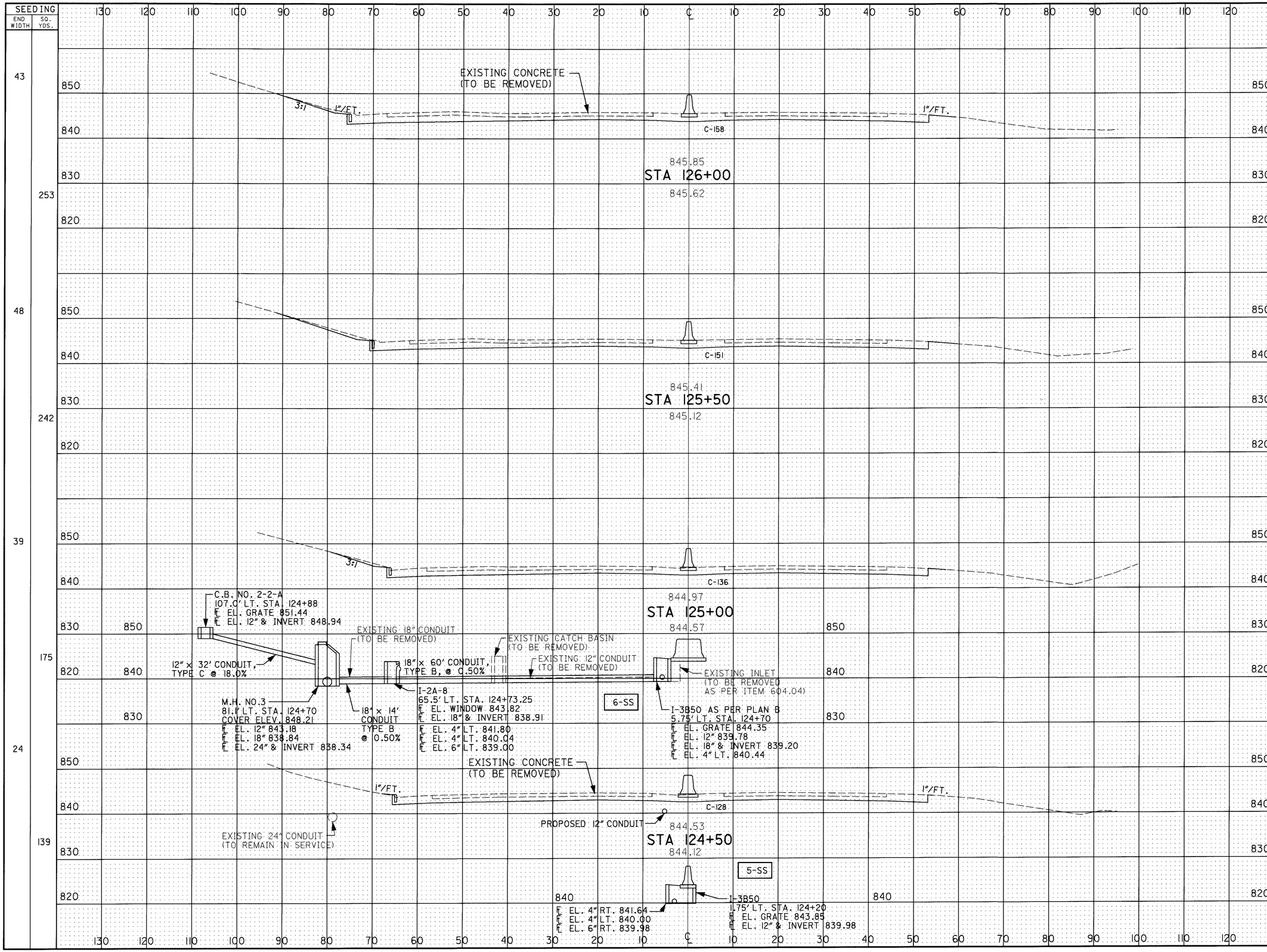

END AREA CUT	END AREA FILL	VOLUME CUT	VOLUME FILL
158	0		
		286	0
151	0		
		266	0
136	0		
		244	0
128	0		
		236	1

CALCULATED J.G. 3/13/95
CHECKED A.L.L. 3/16/95

CROSS SECTION SHEET
STA. 124+50 TO STA. 126+00

LIC-16-19.65

RC013159.DGN 2/17/95

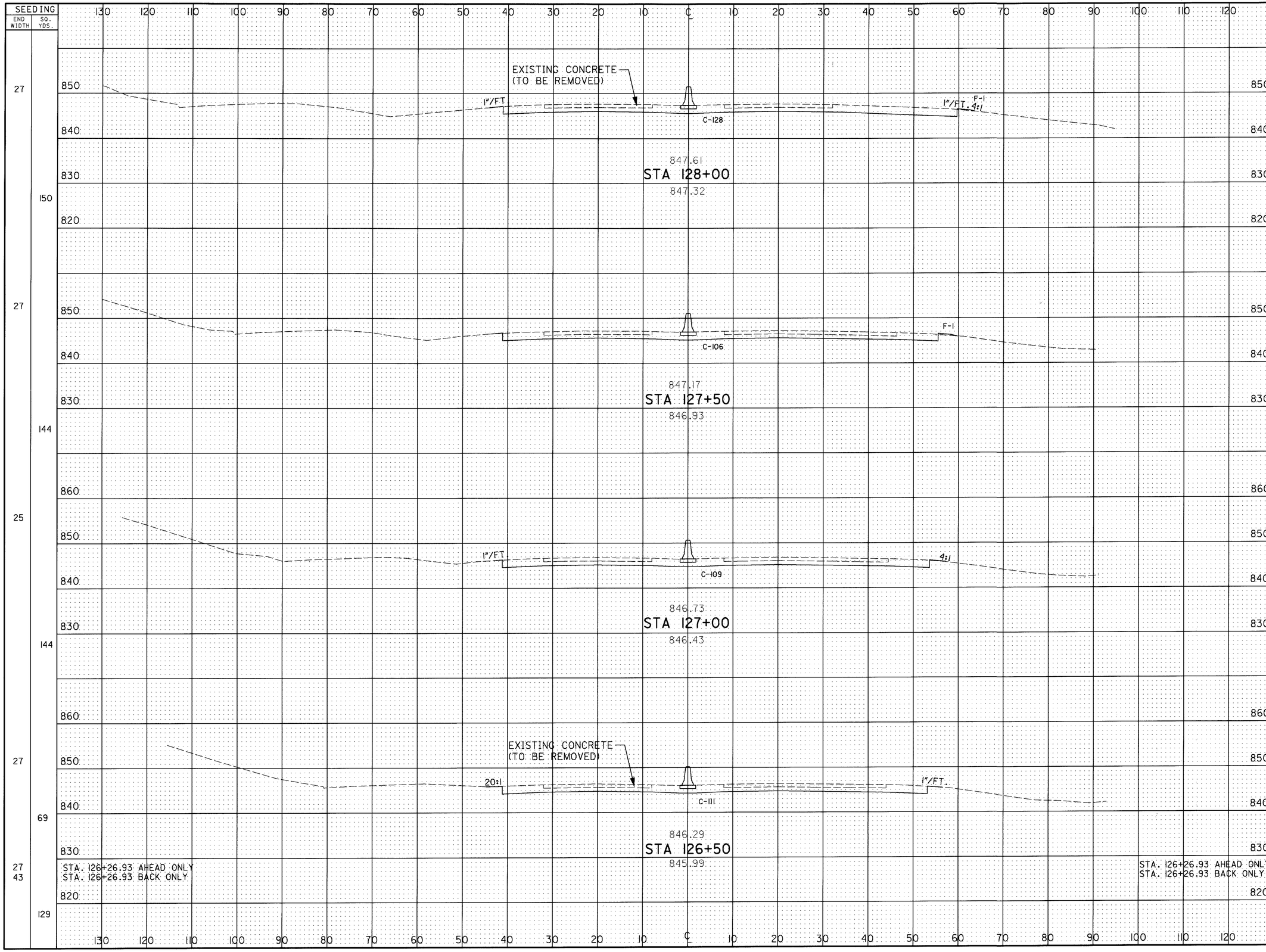

END AREA CUT	END AREA FILL	VOLUME CUT	VOLUME FILL
128	1		
106	1	217	2
109	0	199	1
111	0	204	0
111	0	95	0
158	0	158	0

CALCULATED J.G. 3/13/95
CHECKED J.L.L. 3/16/95

CROSS SECTION SHEET
STA. 126+50 TO STA. 128+00

LIC-16-19.72

110
547

RC014159.DGN 2/17/95

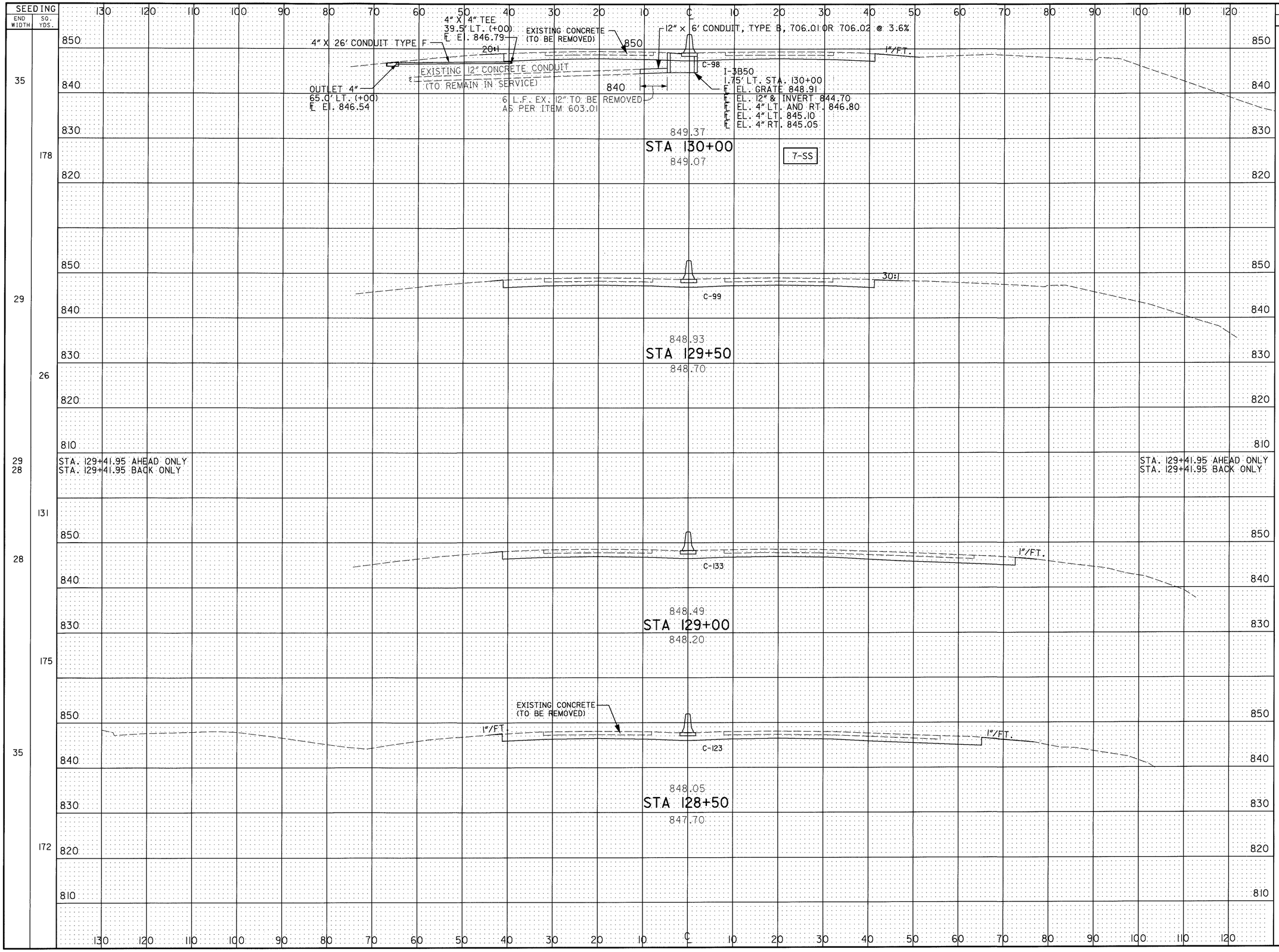

END AREA CUT	END AREA FILL	VOLUME CUT	VOLUME FILL
98	0		
		182	0
99	0		
		30	0
99	0		
133	0		
		207	0
133	0		
		237	0
123	0		
		232	1

CALCULATED J.G. 3/15/95
CHECKED A.L.L. 3/16/95

CROSS SECTION SHEET
STA. 128+50 TO STA. 130+00

LIC-16-19.72

RC015159.DGN 2/17/95

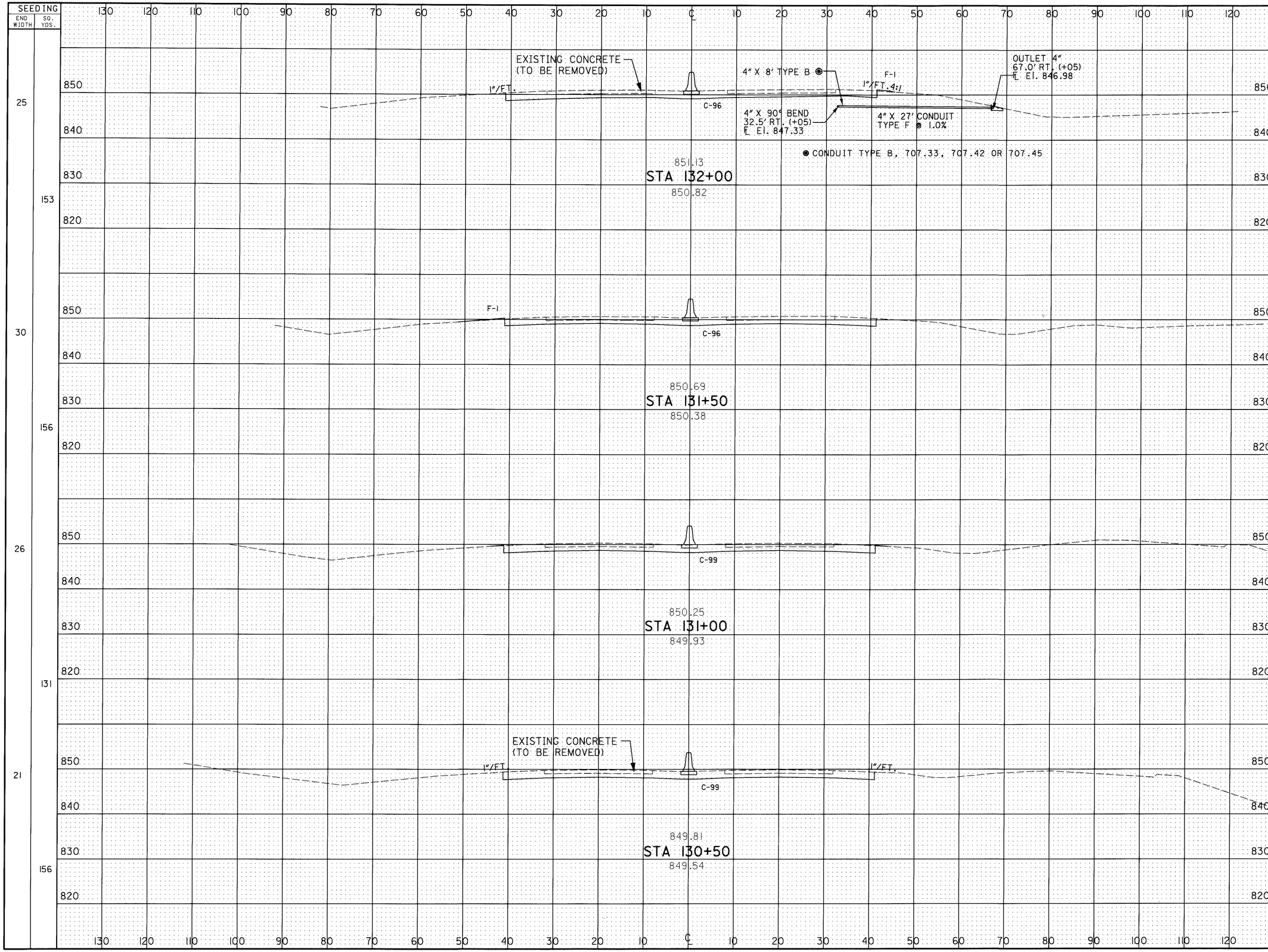

CALCULATED J.G. 3/15/95

CHECKED A.L.L. 3/16/95

CROSS SECTION SHEET
STA. 130+50 TO STA. 132+00

LIC-16-19.72

RC016159.DGN 2/17/95

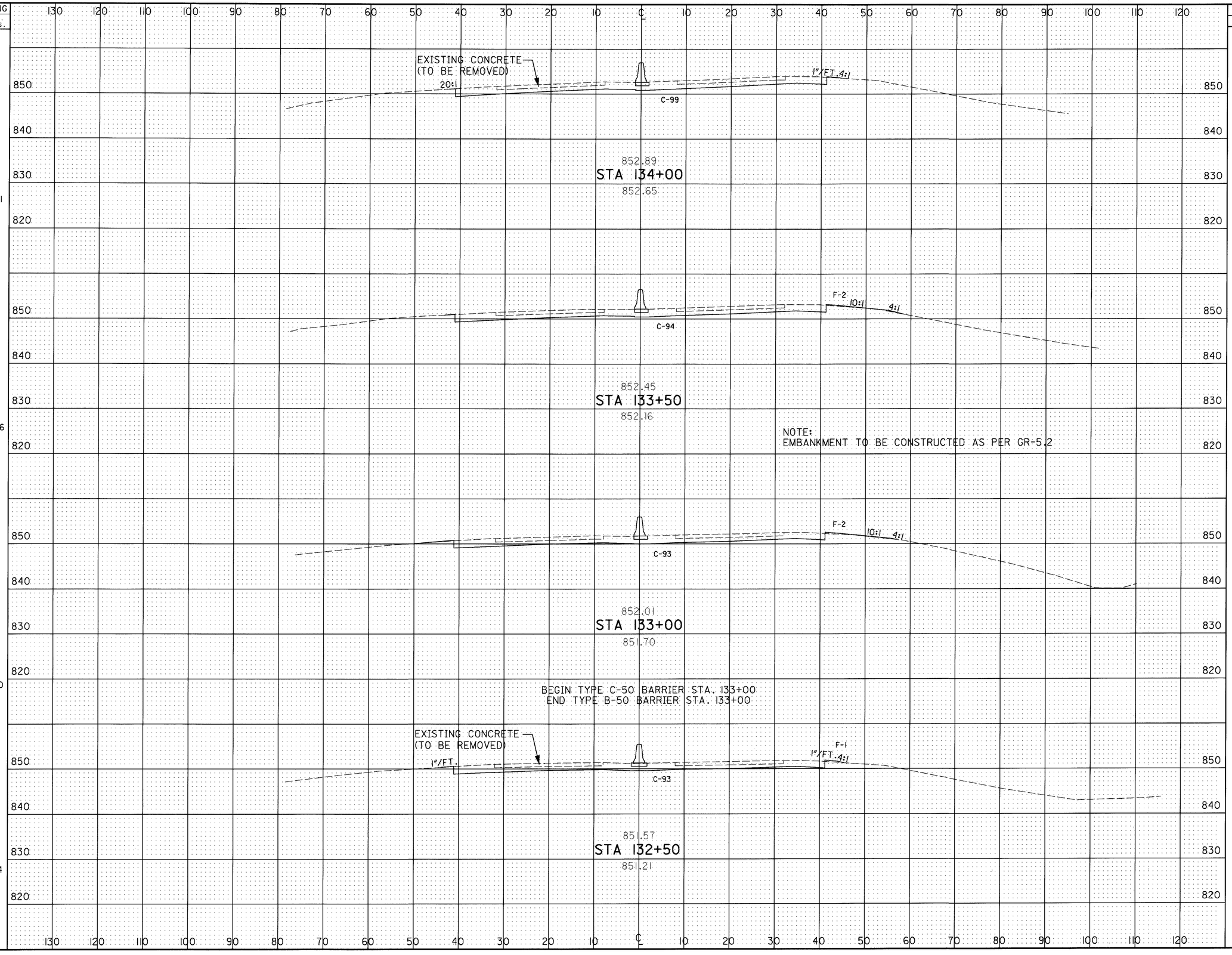

SEEDING END WIDTH	SEEDING SQ. YDS.	END AREA CUT	END AREA FILL	VOLUME CUT	VOLUME FILL
25	181	99	0	179	2
40	236	94	2	173	4
45	200	93	2	172	3
27	144	93	1	175	2

CALCULATED J.G. 3/15/95
CHECKED A.L.L. 3/16/95

CROSS SECTION SHEET
STA. 132+50 TO STA. 134+00

LIC-16-19.72

RC017159.DGN 2/17/95

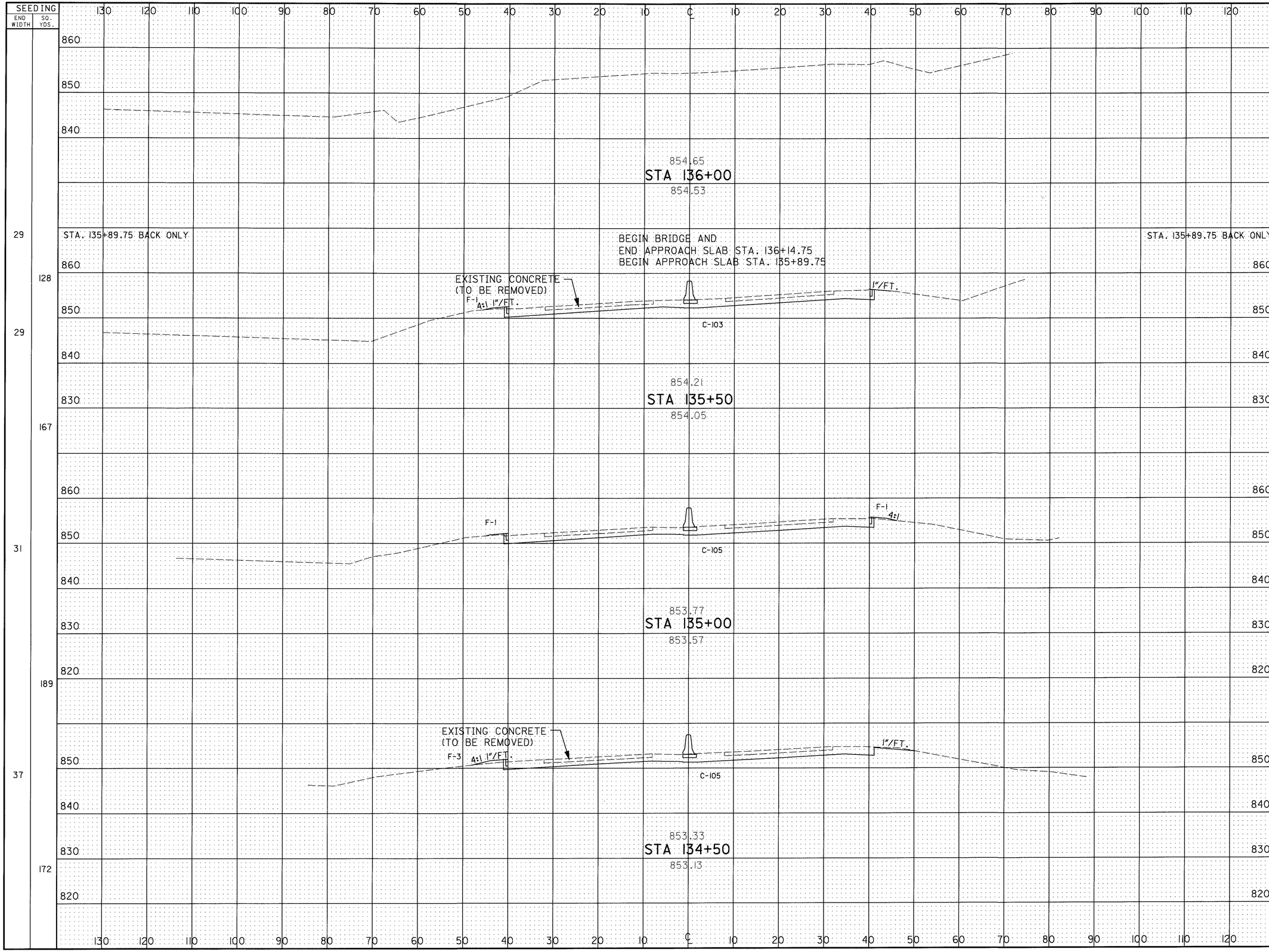
SEEDING
END WIDTH
SQ. YDS.
29
128
29
167
31
189
37
172
854.65
STA 136+00
854.53
STA. 135+89.75 BACK ONLY
BEGIN BRIDGE AND
END APPROACH SLAB STA. 136+14.75
BEGIN APPROACH SLAB STA. 135+89.75
EXISTING CONCRETE
(TO BE REMOVED)
F-1
4:1 1"/FT.
1"/FT.
C-103
854.21
STA 135+50
854.05
F-1
4:1
C-105
853.77
STA 135+00
853.57
EXISTING CONCRETE
(TO BE REMOVED)
F-3
4:1 1"/FT.
1"/FT.
C-105
853.33
STA 134+50
853.13
END AREA
CUT
FILL
VOLUME
CUT
FILL
103
0
152
1
103
1
193
3
105
2
194
5
105
3
189
3
CALCULATED
CHECKED
CROSS SECTION SHEET
STA. 134+50 TO STA. 136+00
LIC-16-19.72
114
547
RC018159.DGN 2/17/95

SEEDING END WIDTH	SEEDING SQ. YDS.
23	
	38
23	

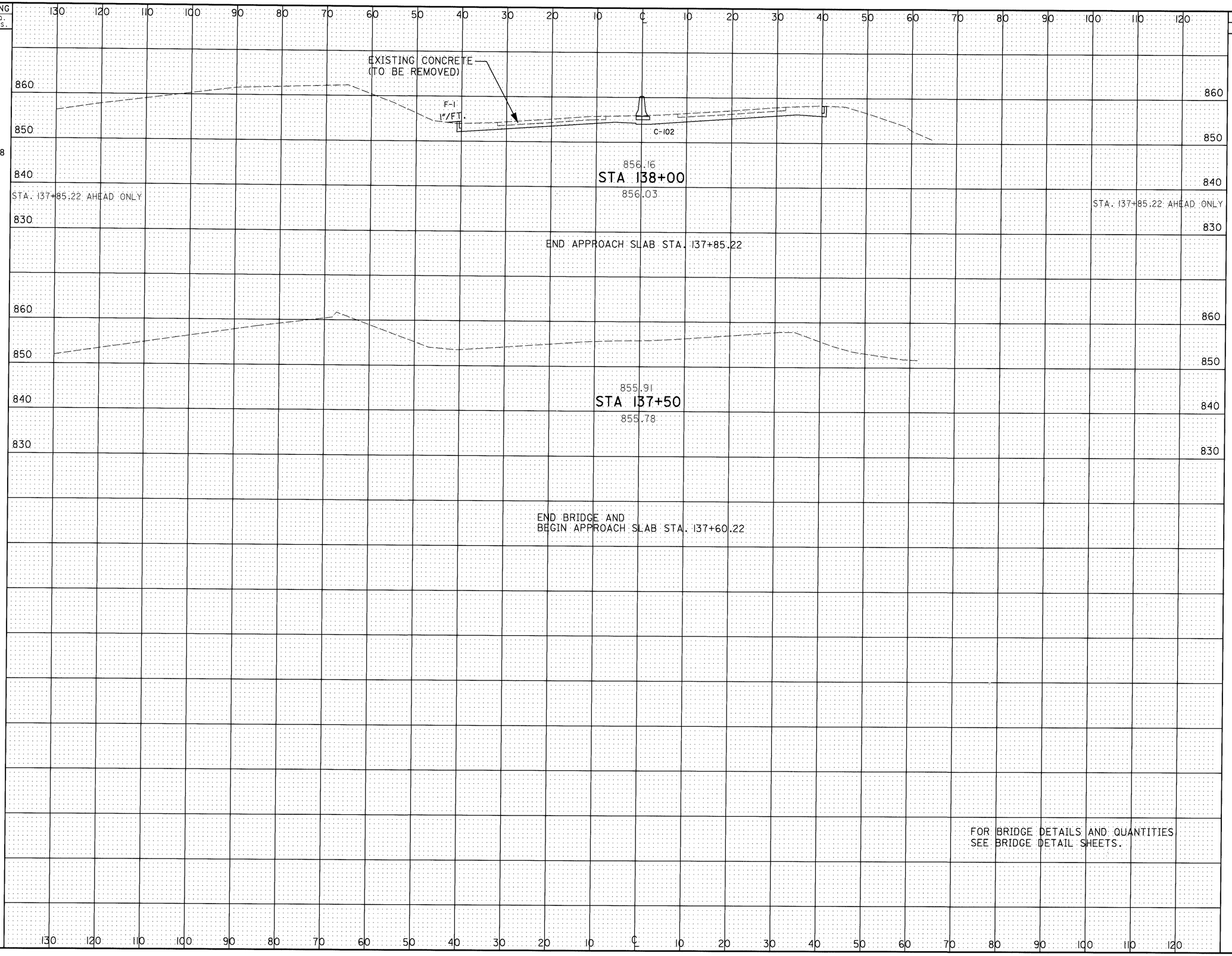

END AREA CUT	END AREA FILL	VOLUME CUT	VOLUME FILL
102	1		
		56	1
102	0		

CALCULATED

CHECKED

CROSS SECTION SHEET
STA. 136+50 TO STA. 138+00

LIC-16-19.72

RC019159.DGN 2/17/95

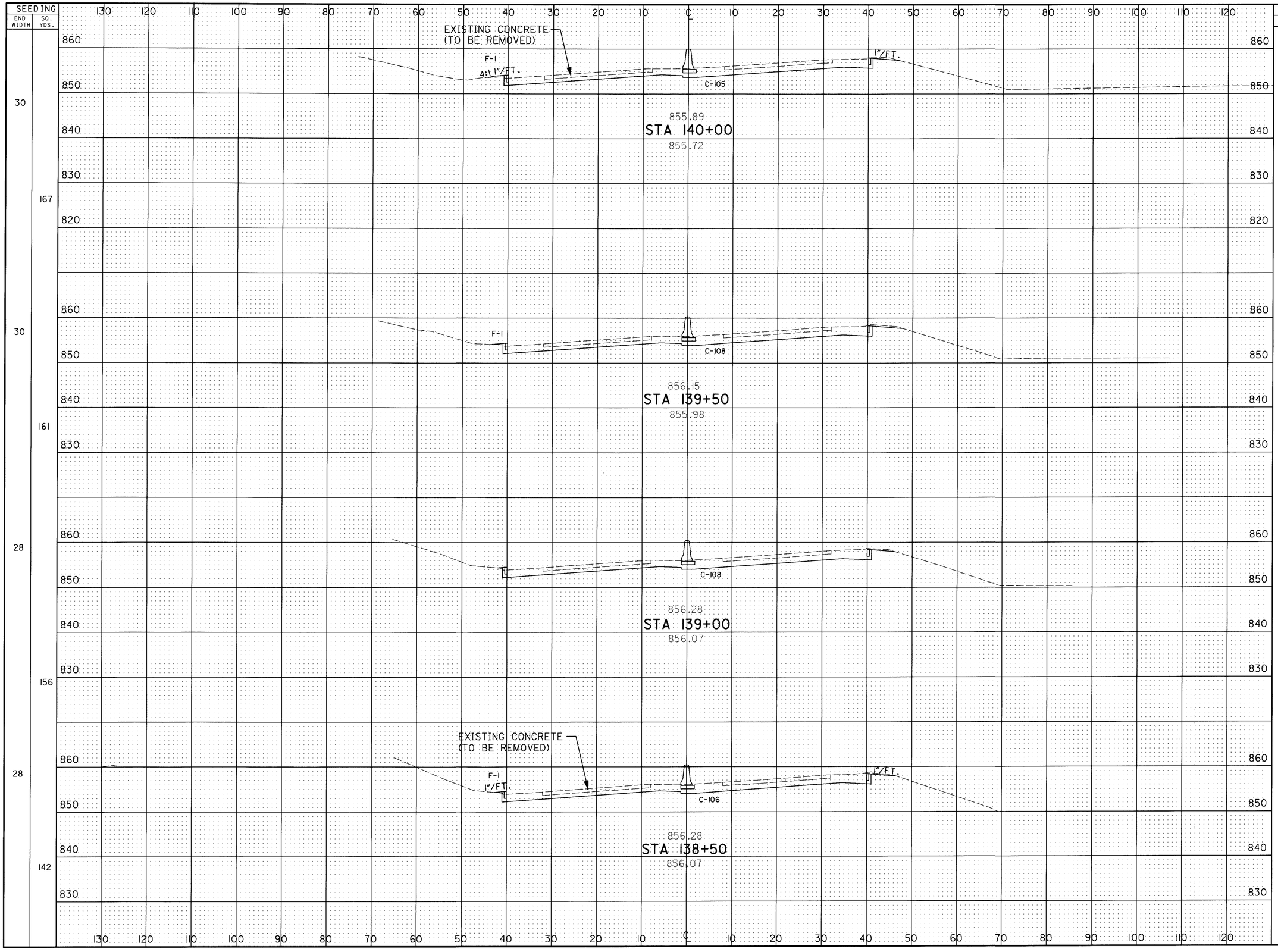
SEEDING
END WIDTH
SQ. YDS.
EXISTING CONCRETE (TO BE REMOVED)
F-1
A:1 1"/FT.
1"/FT.
C-105
855.89
STA 140+00
855.72
C-108
856.15
STA 139+50
855.98
C-108
856.28
STA 139+00
856.07
EXISTING CONCRETE (TO BE REMOVED)
F-1
1"/FT.
1"/FT.
C-106
856.28
STA 138+50
856.07
30
167
30
161
28
156
28
142
END AREA
CUT
FILL
105
1
108
1
108
0
106
1
VOLUME
CUT
FILL
197
2
200
1
198
1
193
2
CALCULATED J.G. 3/13/95
CHECKED A.L.L. 3/16/95
CROSS SECTION SHEET
STA. 138+50 TO STA. 140+00
LIC-16-19.72
116
547
RC020159.DGN 2/17/95

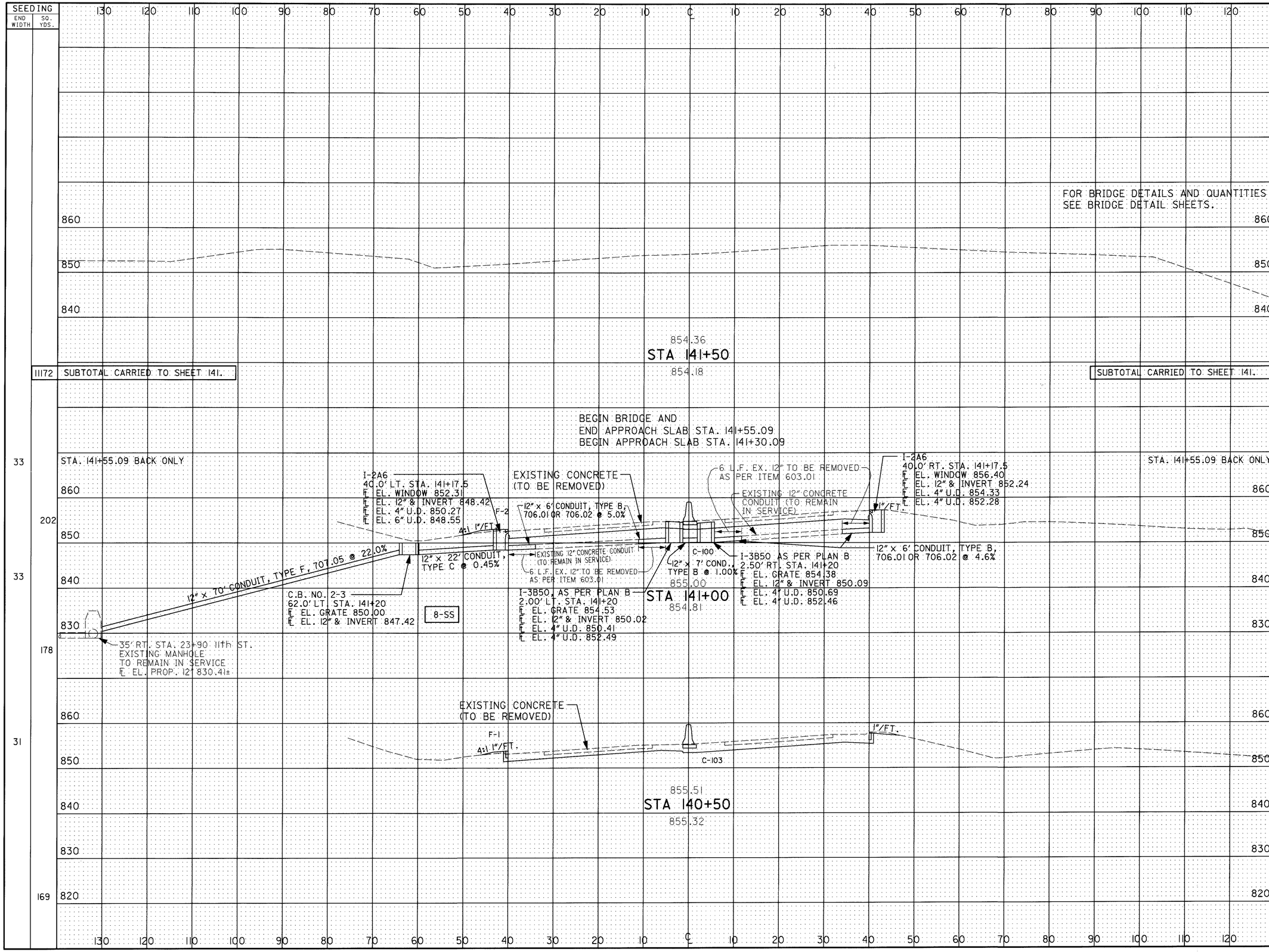

END AREA CUT	END AREA FILL	VOLUME CUT	VOLUME FILL
		14174	166
100	2		
		204	4
100	2		
		188	3
103	1		
		193	2

CALCULATED J.G. 3/13/95
CHECKED A.L.L. 3/16/95

CROSS SECTION SHEET
STA. 140+50 TO STA. 142+00

LIC-16-19.72

RC021159.DGN 4/3/95

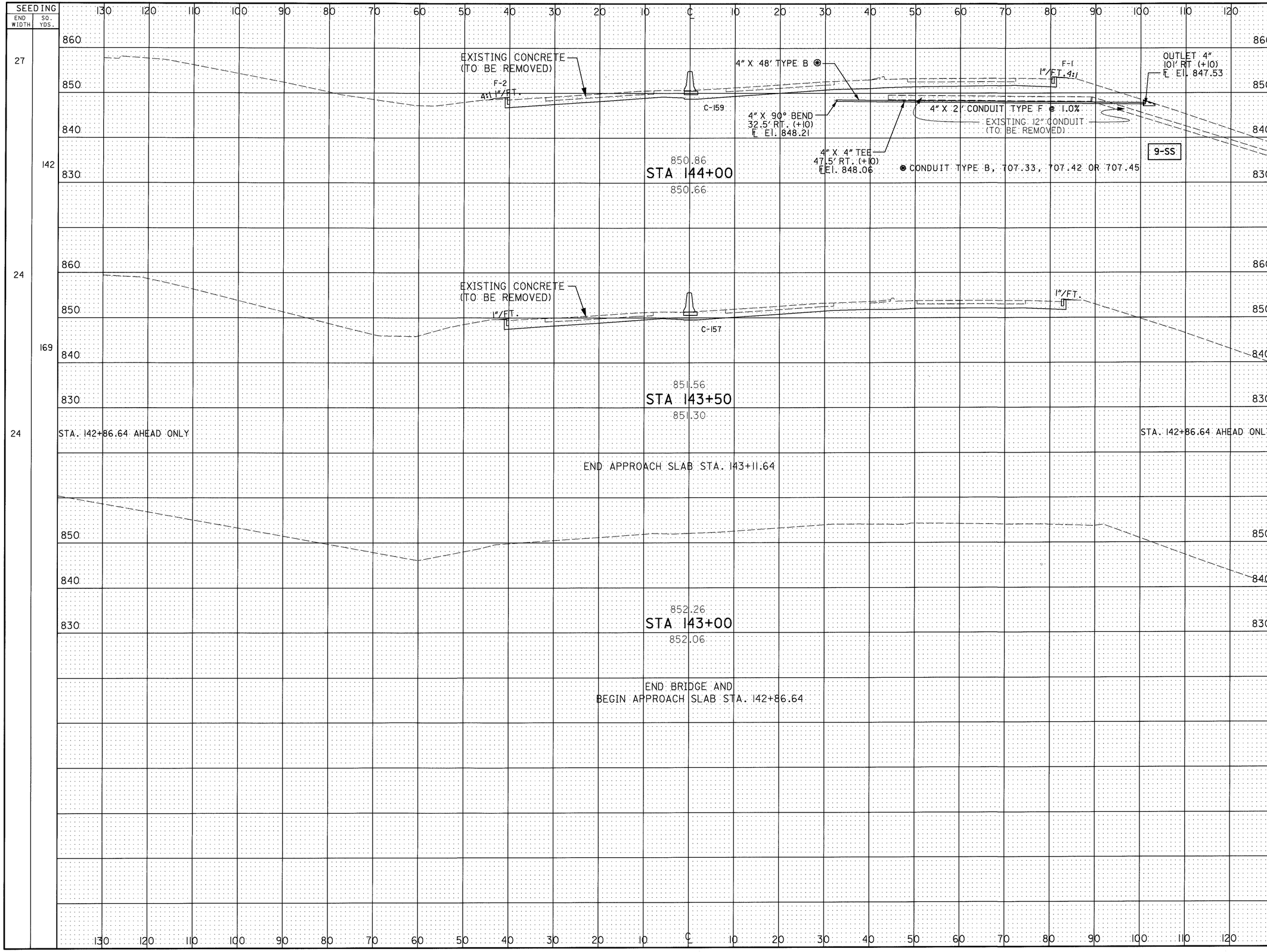

CALCULATED JG 3/13/95
CHECKED ALL 3/16/95

CROSS SECTION SHEET
STA. 142+50 TO STA. 144+00

LIC-16-19.72

118/547

RC022159.DGN 3/16/95

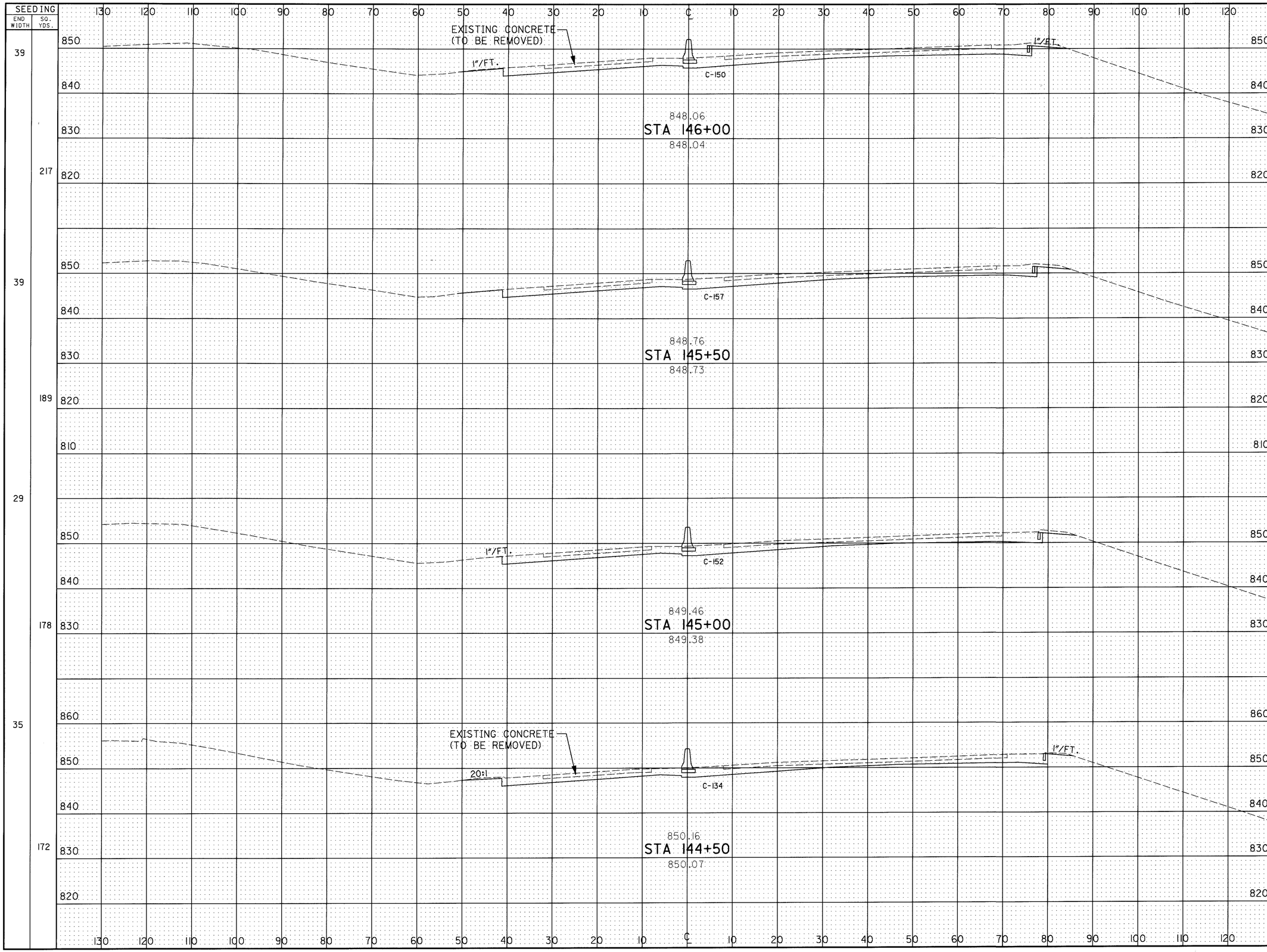

CALCULATED J.G. 3/15/95
CHECKED A.L.L. 3/16/95

CROSS SECTION SHEET
STA. 144+50 TO STA. 146+00

LIC-16-19.72

119
547

RC023159.DGN 3/16/95

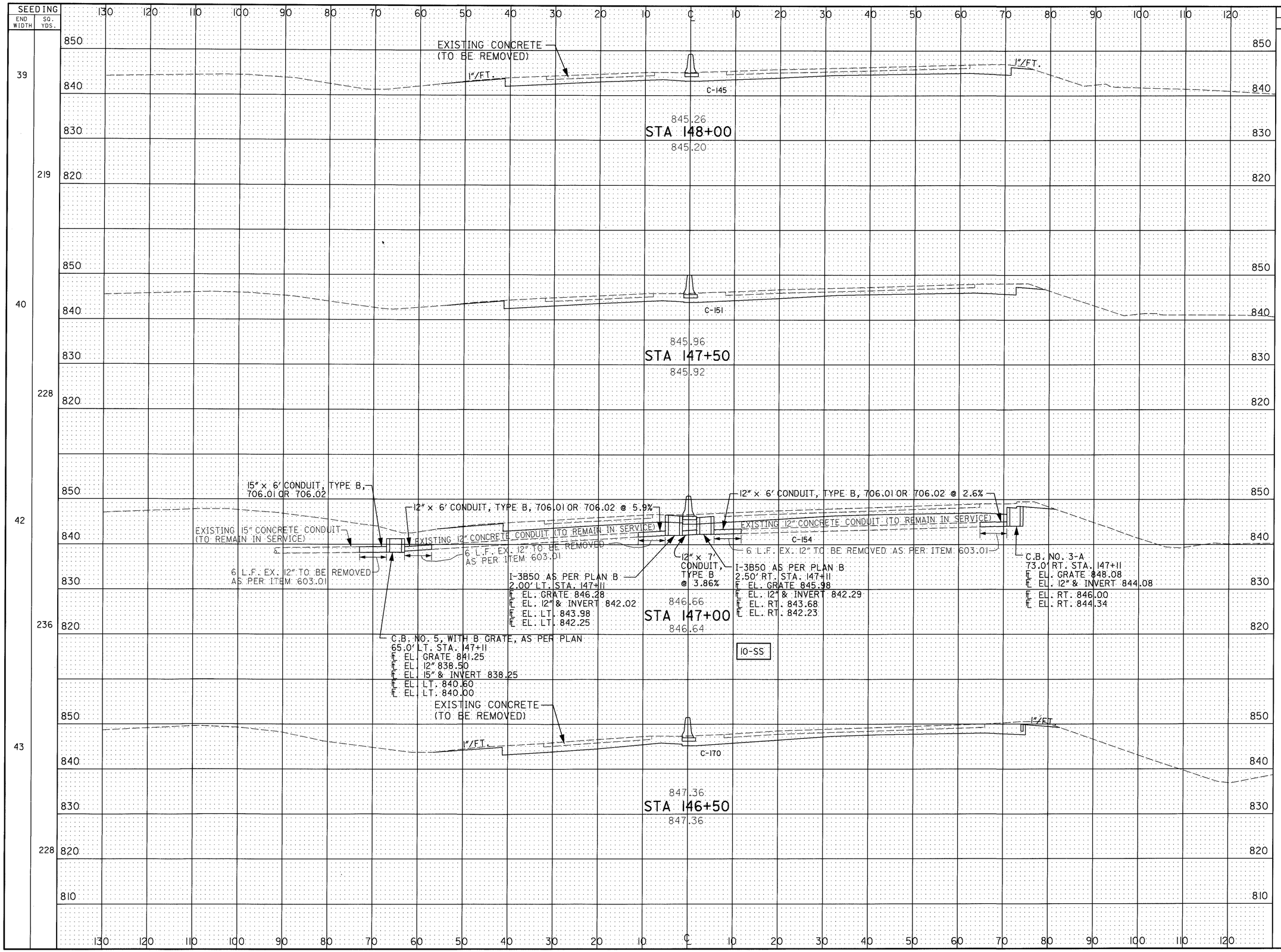

CROSS SECTION SHEET
STA. 146+50 TO STA. 148+00

LIC-16-19.72

120
547

RC024159.DGN 2/17/95

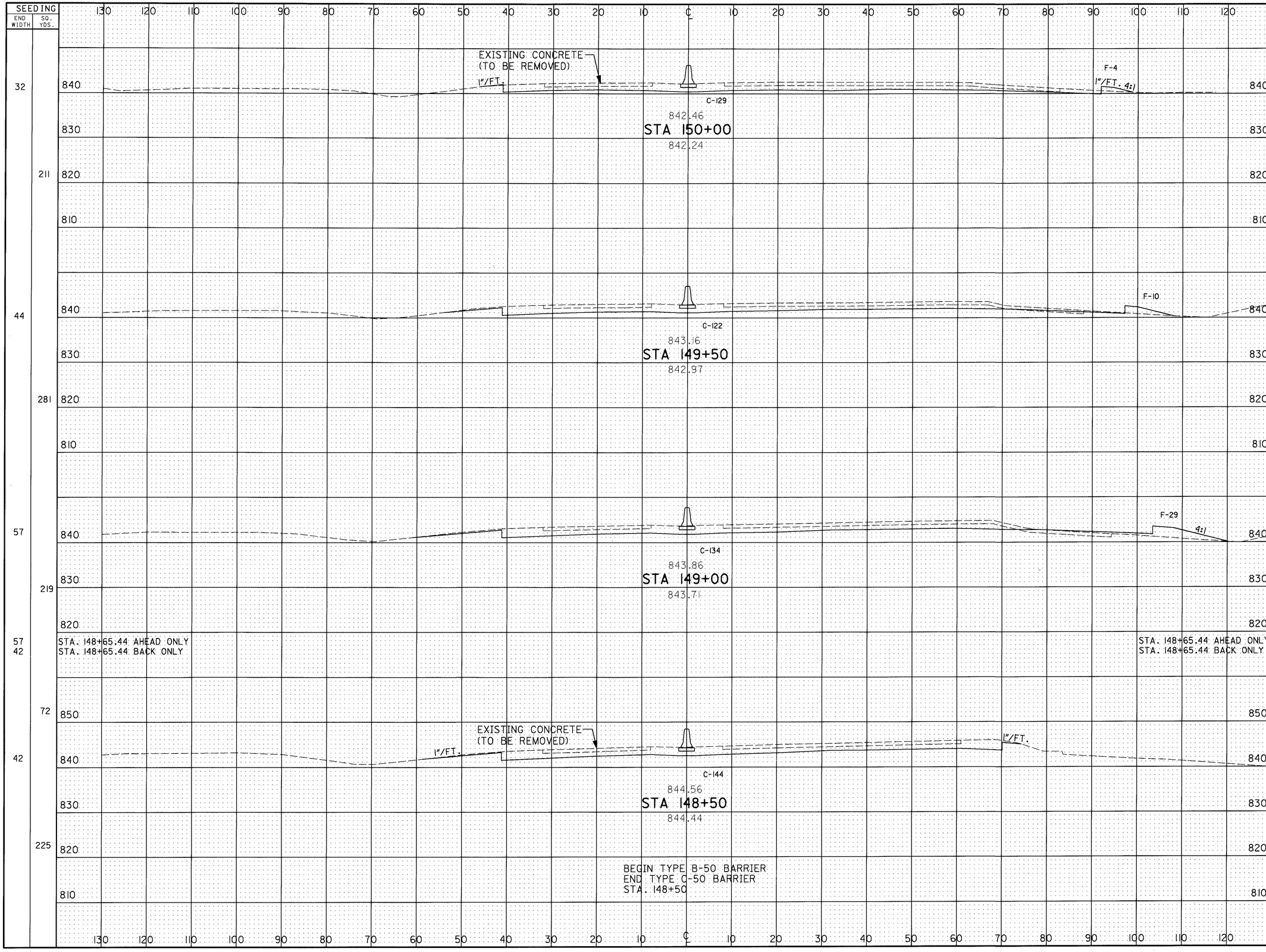

CALCULATED J.G. 3/13/95
CHECKED A.L.L. 3/16/95

CROSS SECTION SHEET
STA. 148+50 TO STA. 150+00

LIC-16-19.72

121
547

RC025159.DGN 2/17/95

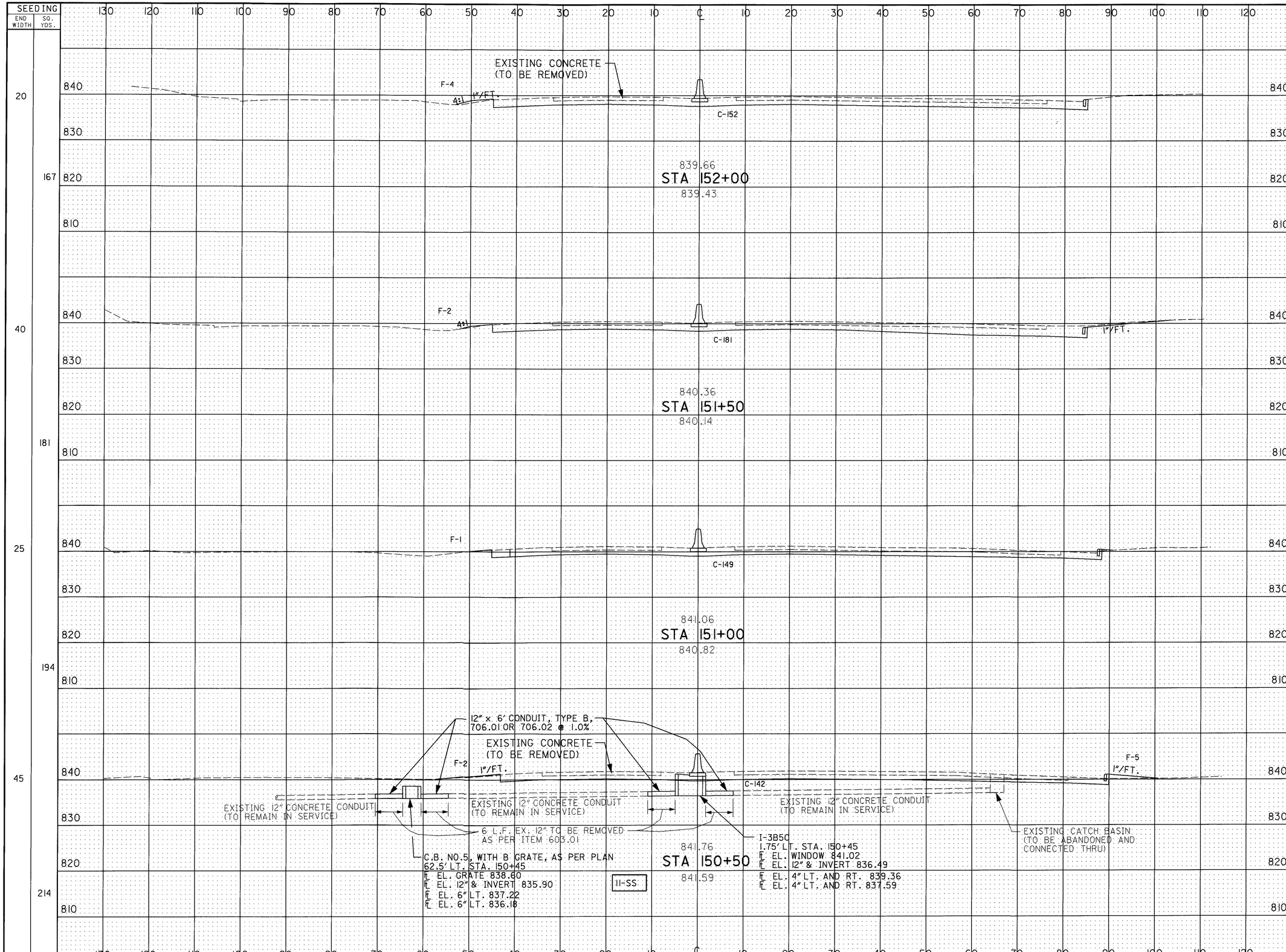

END WIDTH	SQ. YDS.
20	167
40	181
25	194
45	214

END AREA CUT	END AREA FILL	VOLUME CUT	VOLUME FILL
152	4		
		308	6
181	2		
		305	3
149	1		
		269	7
142	7		
		251	10

CALCULATED J.G. 3/13/95
CHECKED A.L.L. 3/16/95

CROSS SECTION SHEET
STA. 150+50 TO STA. 152+00

LIC-16-19.72

RC026159.DGN 3/08/95

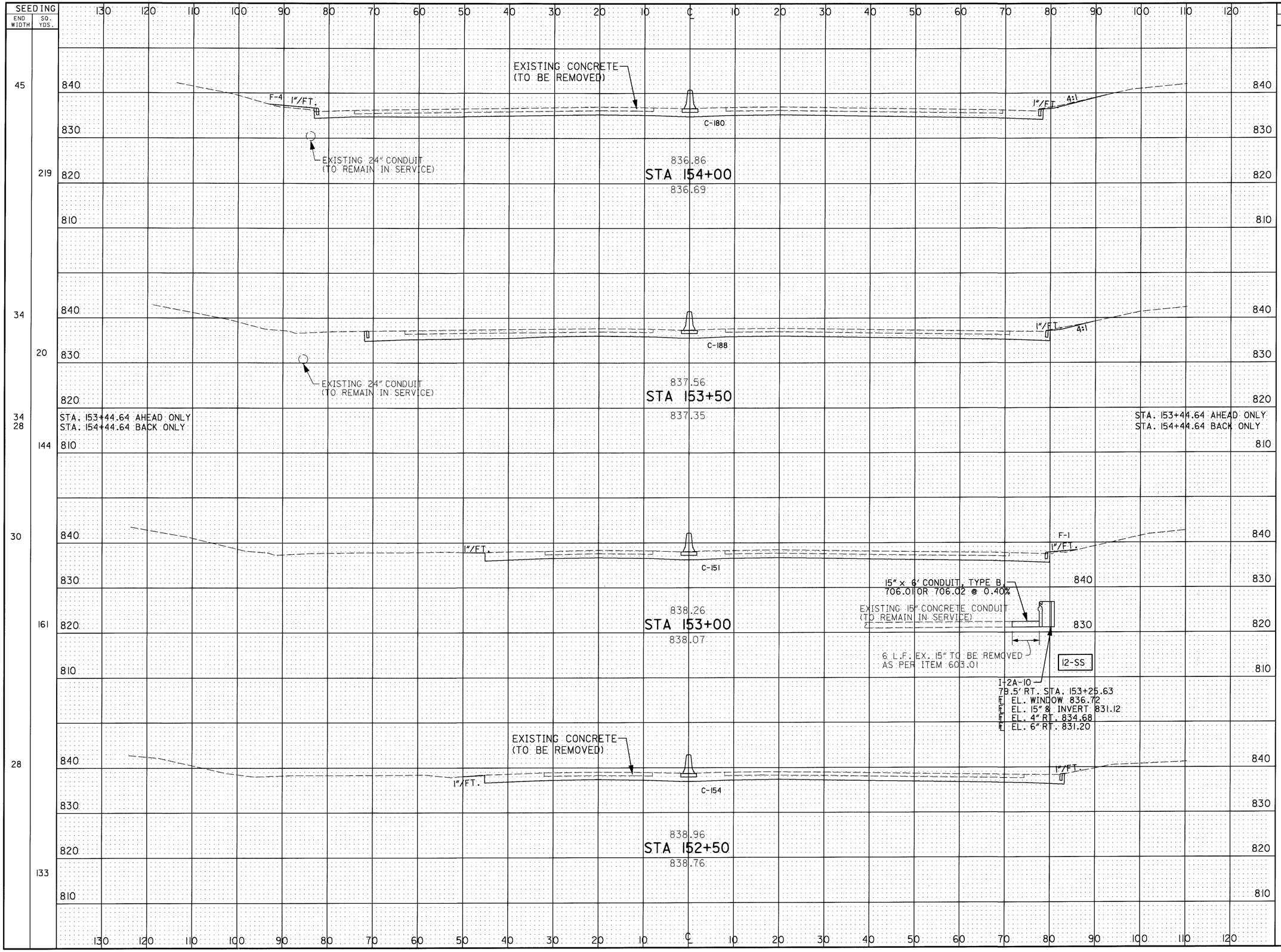
SEEDING
END WIDTH
SQ. YDS.
EXISTING CONCRETE (TO BE REMOVED)
F-4
1"/FT.
C-180
EXISTING 24" CONDUIT (TO REMAIN IN SERVICE)
836.86
STA 154+00
836.69
C-188
837.56
STA 153+50
837.35
STA. 153+44.64 AHEAD ONLY
STA. 154+44.64 BACK ONLY
F-1
C-151
15" x 6' CONDUIT, TYPE B
706.01 OR 706.02 @ 0.40%
EXISTING 15" CONCRETE CONDUIT (TO REMAIN IN SERVICE)
6 L.F. EX. 15" TO BE REMOVED AS PER ITEM 603.01
12-SS
I-2A-10
78.5' RT. STA. 153+25.63
℄ EL. WINDOW 836.72
℄ EL. 15" & INVERT 831.12
℄ EL. 4" RT. 834.68
℄ EL. 6" RT. 831.20
C-154
838.26
STA 153+00
838.07
838.96
STA 152+50
838.76
END AREA
CUT
FILL
VOLUME
CUT
FILL
CALCULATED J.C. 3/15/95
CHECKED A.L.L. 3/16/95
CROSS SECTION SHEET
STA. 152+50 TO STA. 154+00
LIC-16-19.72
123
547
RC027159.DGN 3/16/95

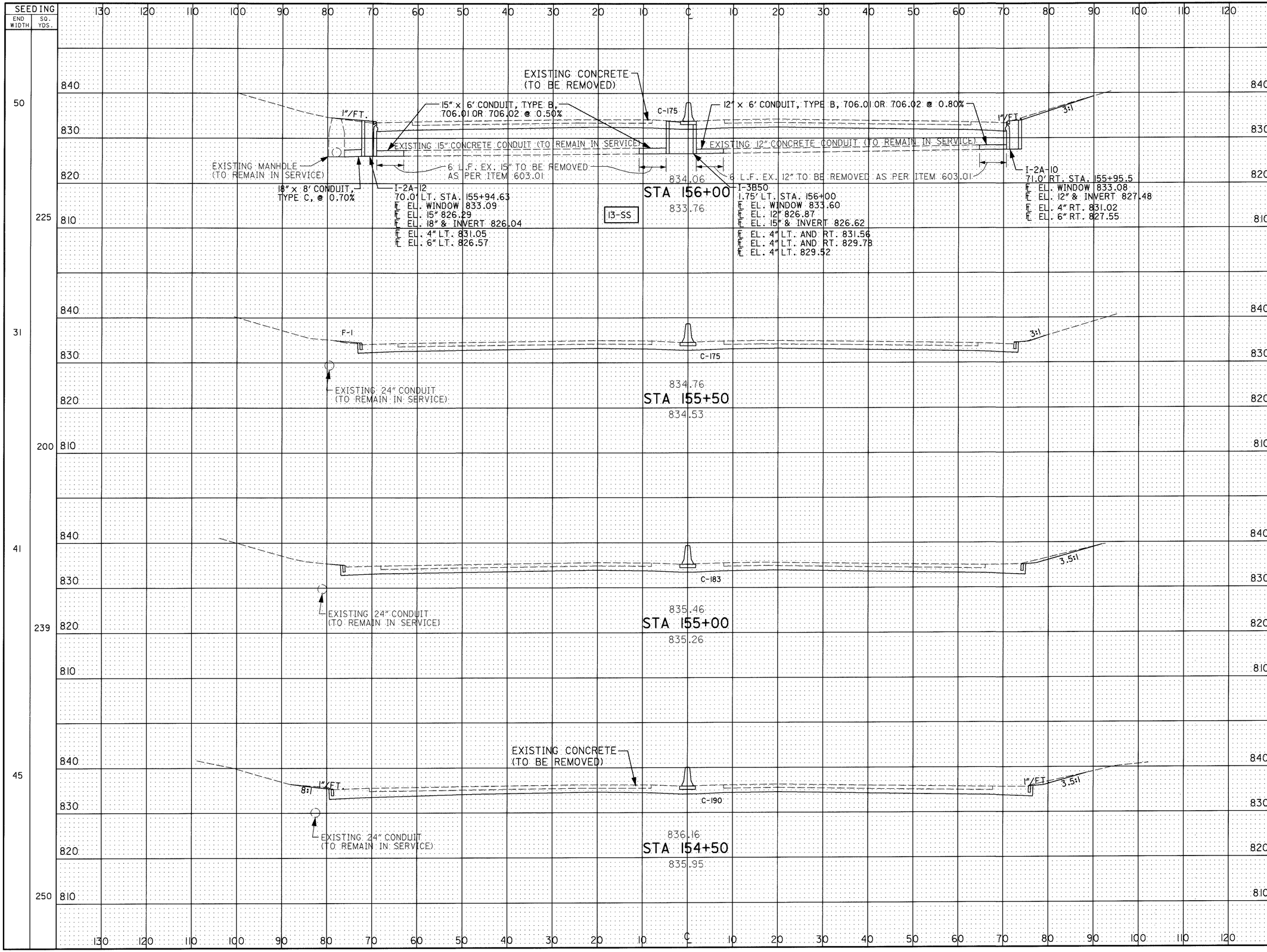
SEEDING
END WIDTH
SQ. YDS.
EXISTING CONCRETE (TO BE REMOVED)
15" x 6' CONDUIT, TYPE B, 706.01 OR 706.02 @ 0.50%
12" x 6' CONDUIT, TYPE B, 706.01 OR 706.02 @ 0.80%
C-175
1"/FT.
3:1
EXISTING 15" CONCRETE CONDUIT (TO REMAIN IN SERVICE)
EXISTING 12" CONCRETE CONDUIT (TO REMAIN IN SERVICE)
EXISTING MANHOLE (TO REMAIN IN SERVICE)
6 L.F. EX. 15" TO BE REMOVED AS PER ITEM 603.01
6 L.F. EX. 12" TO BE REMOVED AS PER ITEM 603.01
18" x 8' CONDUIT, TYPE C, @ 0.70%
I-2A-12
70.0' LT. STA. 155+94.63
℄ EL. WINDOW 833.09
℄ EL. 15" 826.29
℄ EL. 18" & INVERT 826.04
℄ EL. 4" LT. 831.05
℄ EL. 6" LT. 826.57
13-SS
834.06
STA 156+00
833.76
I-3B50
1.75' LT. STA. 156+00
℄ EL. WINDOW 833.60
℄ EL. 12" 826.87
℄ EL. 15" & INVERT 826.62
℄ EL. 4" LT. AND RT. 831.56
℄ EL. 4" LT. AND RT. 829.78
℄ EL. 4" LT. 829.52
I-2A-10
71.0' RT. STA. 155+95.5
℄ EL. WINDOW 833.08
℄ EL. 12" & INVERT 827.48
℄ EL. 4" RT. 831.02
℄ EL. 6" RT. 827.55
F-1
C-175
EXISTING 24" CONDUIT (TO REMAIN IN SERVICE)
834.76
STA 155+50
834.53
C-183
835.46
STA 155+00
835.26
8:1
C-190
836.16
STA 154+50
835.95
END AREA
CUT
FILL
VOLUME
CUT
FILL
50 225 175 0 324 1
31 200 175 1 331 1
41 239 183 0 345 0
45 250 190 0 343 4
CALCULATED J.G. 3/15/95
CHECKED A.L.J. 3/16/95
CROSS SECTION SHEET
STA. 154+50 TO STA. 156+00
LIC-16-19.72
124
547
RC028159.DGN 2/17/95

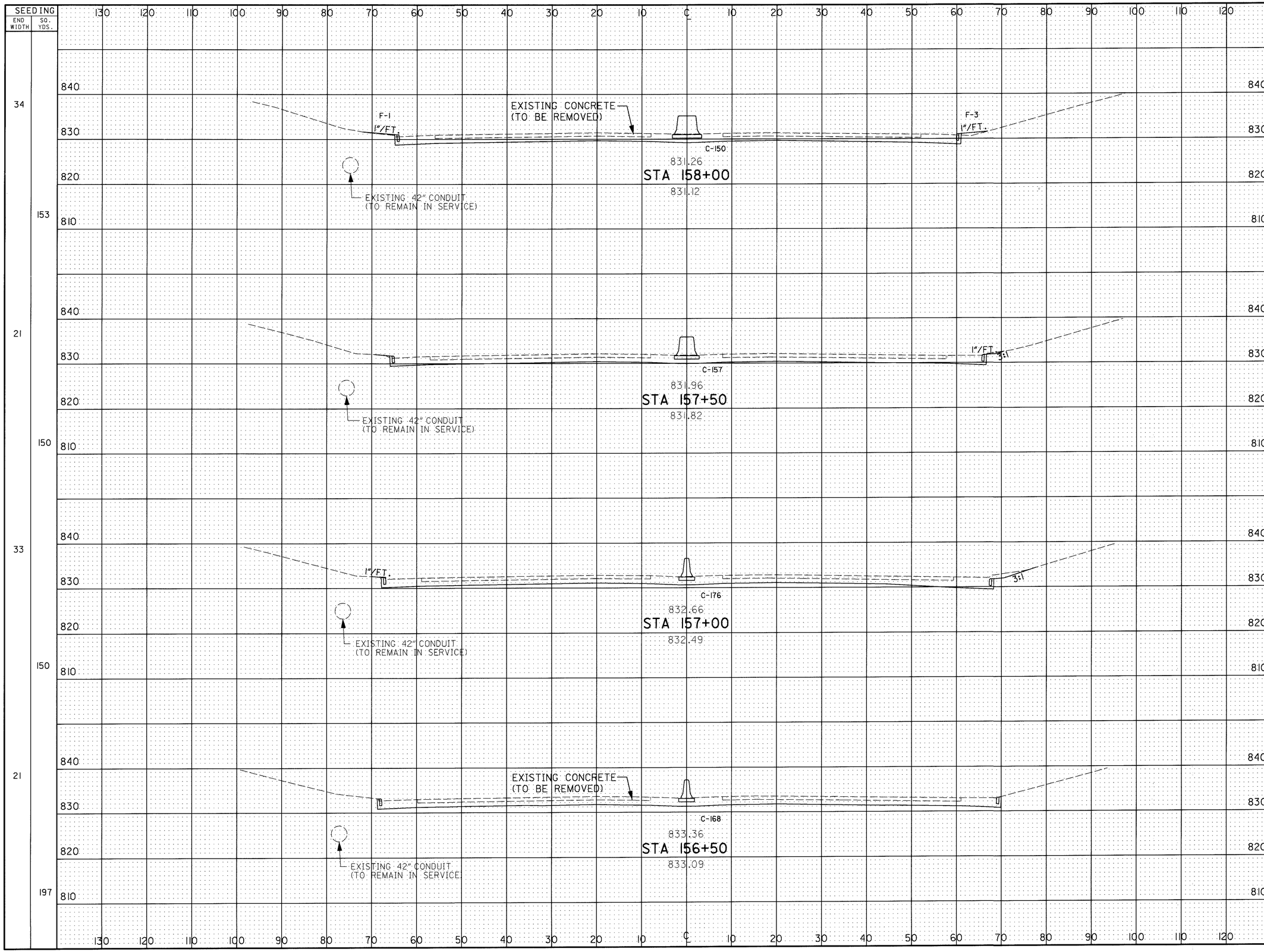
SEEDING
END WIDTH
SQ. YDS.
34
153
21
150
33
150
21
197
F-1
1"/FT.
EXISTING CONCRETE
(TO BE REMOVED)
F-3
1"/FT.
C-150
831.26
STA 158+00
831.12
EXISTING 42" CONDUIT
(TO REMAIN IN SERVICE)
1"/FT.
C-157
831.96
STA 157+50
831.82
EXISTING 42" CONDUIT
(TO REMAIN IN SERVICE)
1"/FT.
3:1
C-176
832.66
STA 157+00
832.49
EXISTING 42" CONDUIT
(TO REMAIN IN SERVICE)
EXISTING CONCRETE
(TO BE REMOVED)
C-168
833.36
STA 156+50
833.09
EXISTING 42" CONDUIT
(TO REMAIN IN SERVICE)
840
830
820
810
END AREA
CUT
FILL
150
4
157
0
176
0
168
0
VOLUME
CUT
FILL
284
4
308
0
319
0
318
0
CALCULATED
J.G.
3/13/95
CHECKED
A.L.L.
3/16/95
CROSS SECTION SHEET
STA. 156+50 TO STA. 158+00
LIC-16-19.72
125
547
RC029159.DGN 2/17/95

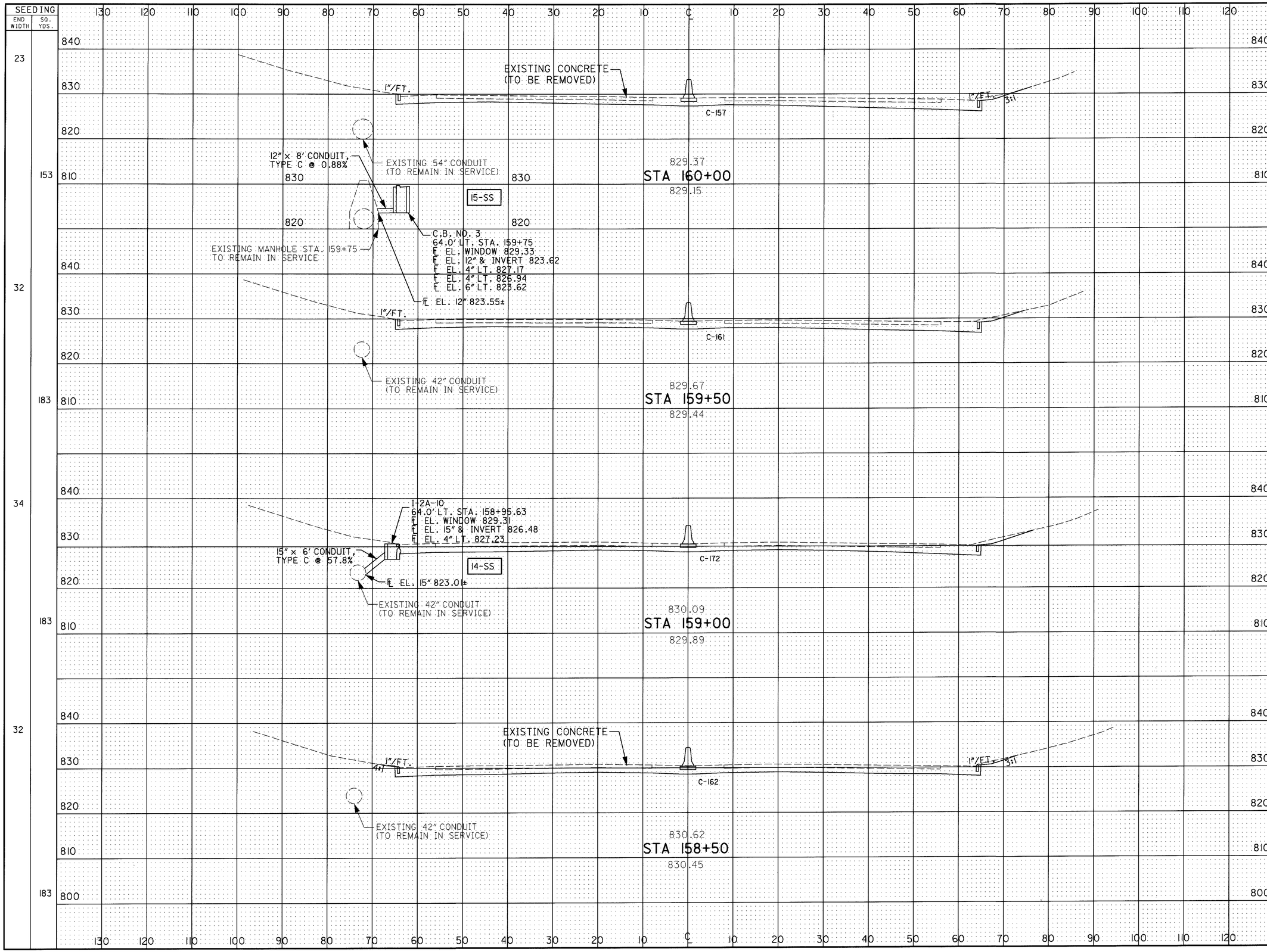

END AREA CUT	END AREA FILL	VOLUME CUT	VOLUME FILL
157	0		
		294	0
161	0		
		308	0
172	0		
		309	0
162	0		
		289	4

CALCULATED J.G. 3/13/95
CHECKED A.L.L. 3/16/95

CROSS SECTION SHEET
STA. 158+50 TO STA. 160+00

LIC-16-19.72

RC030159.DGN 2/17/95

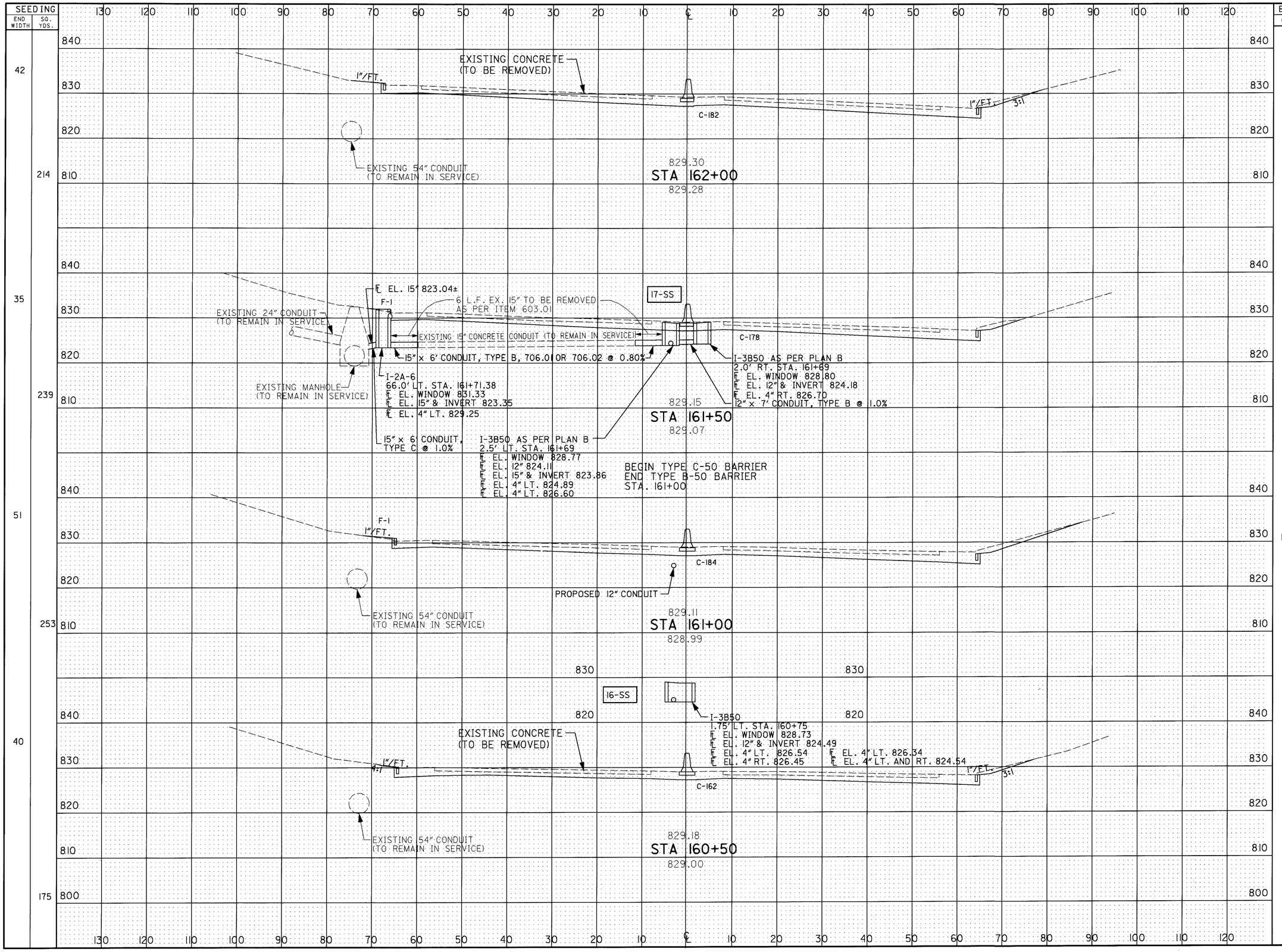
SEEDING
END WIDTH
SQ. YDS.
42
214
35
239
51
253
40
175
EXISTING CONCRETE (TO BE REMOVED)
1"/FT.
C-182
3:1
EXISTING 54" CONDUIT (TO REMAIN IN SERVICE)
829.30
STA 162+00
829.28
EL. 15" 823.04±
6 L.F. EX. 15" TO BE REMOVED AS PER ITEM 603.01
17-SS
F-1
EXISTING 24" CONDUIT (TO REMAIN IN SERVICE)
EXISTING 15" CONCRETE CONDUIT (TO REMAIN IN SERVICE)
C-178
15" x 6' CONDUIT, TYPE B, 706.01 OR 706.02 @ 0.80%
I-3B50 AS PER PLAN B
2.0' RT. STA. 161+69
EL. WINDOW 828.80
EL. 12" & INVERT 824.18
EL. 4" RT. 826.70
12" x 7' CONDUIT, TYPE B @ 1.0%
EXISTING MANHOLE (TO REMAIN IN SERVICE)
I-2A-6
66.0' LT. STA. 161+71.38
EL. WINDOW 831.33
EL. 15" & INVERT 823.35
EL. 4" LT. 829.25
829.15
STA 161+50
829.07
15" x 6' CONDUIT, TYPE C @ 1.0%
I-3B50 AS PER PLAN B
2.5' LT. STA. 161+69
EL. WINDOW 828.77
EL. 12" 824.11
EL. 15" & INVERT 823.86
EL. 4" LT. 824.89
EL. 4" LT. 826.60
BEGIN TYPE C-50 BARRIER
END TYPE B-50 BARRIER
STA. 161+00
F-1
1"/FT.
C-184
PROPOSED 12" CONDUIT
EXISTING 54" CONDUIT (TO REMAIN IN SERVICE)
829.11
STA 161+00
828.99
16-SS
I-3B50
1.75' LT. STA. 160+75
EL. WINDOW 828.73
EL. 12" & INVERT 824.49
EL. 4" LT. 826.54
EL. 4" RT. 826.45
EL. 4" LT. 826.34
EL. 4" LT. AND RT. 824.54
EXISTING CONCRETE (TO BE REMOVED)
4:1
C-162
EXISTING 54" CONDUIT (TO REMAIN IN SERVICE)
829.18
STA 160+50
829.00
END AREA
CUT
FILL
182
0
178
1
184
1
162
0
VOLUME
CUT
FILL
333
1
335
2
320
1
295
0
CALCULATED J.G. 3/15/95
CHECKED A.L.L. 3/16/95
CROSS SECTION SHEET
STA. 160+50 TO STA. 162+00
LIC-16-19.72
127
547
RC031159.DGN 3/16/95

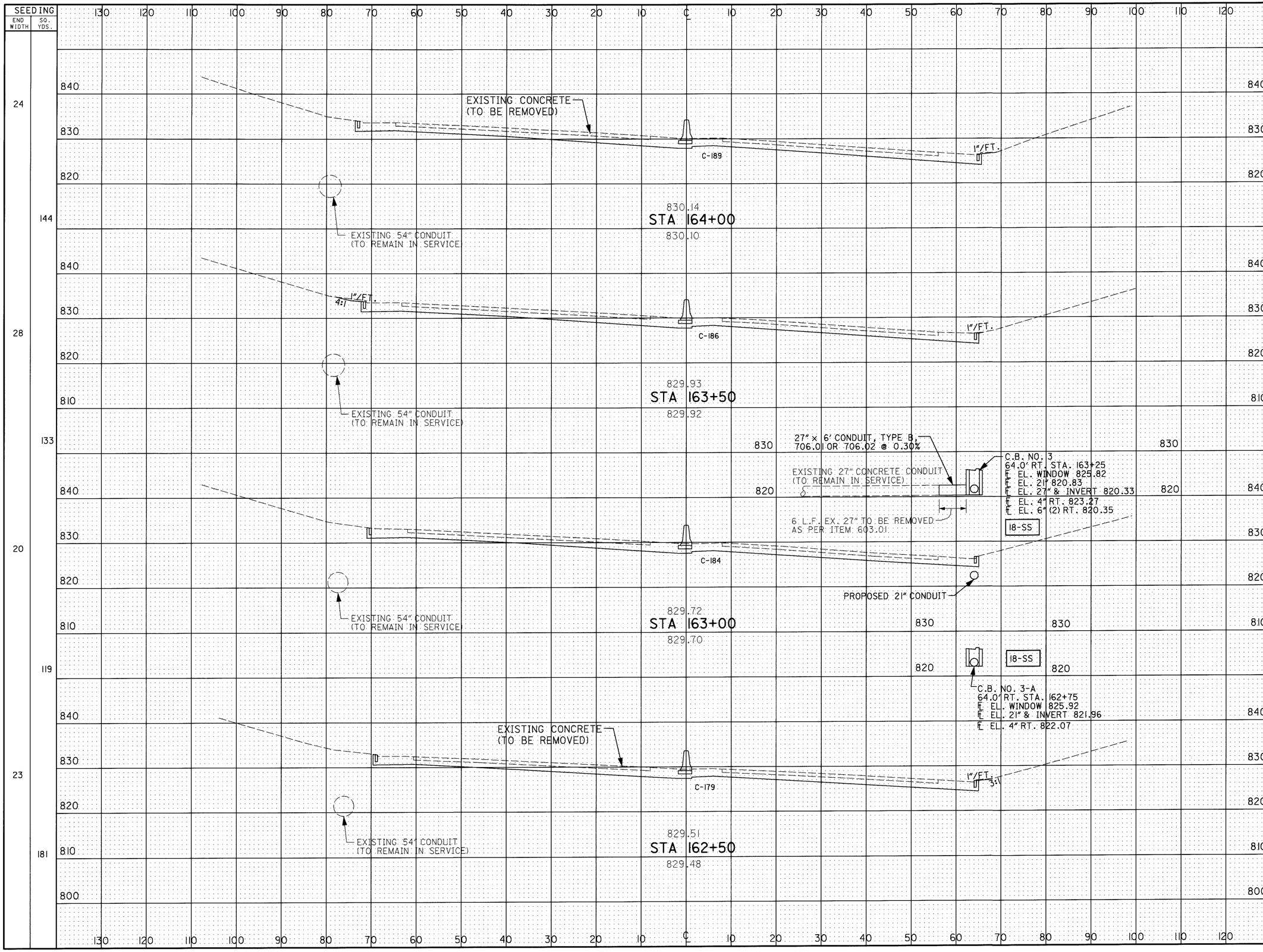
SEEDING
END WIDTH
SQ. YDS.
24
144
28
133
20
119
23
181
EXISTING CONCRETE (TO BE REMOVED)
C-189
1"/FT.
830.14
STA 164+00
830.10
EXISTING 54" CONDUIT (TO REMAIN IN SERVICE)
4:1
C-186
829.93
STA 163+50
829.92
27" x 6' CONDUIT, TYPE B, 706.01 OR 706.02 @ 0.30%
C.B. NO. 3
64.0' RT. STA. 163+25
℄ EL. WINDOW 825.82
℄ EL. 21" 820.83
℄ EL. 27" & INVERT 820.33
℄ EL. 4" RT. 823.27
℄ EL. 6" (2) RT. 820.35
EXISTING 27" CONCRETE CONDUIT (TO REMAIN IN SERVICE)
6 L.F. EX. 27" TO BE REMOVED AS PER ITEM 603.01
18-SS
C-184
PROPOSED 21" CONDUIT
829.72
STA 163+00
829.70
C.B. NO. 3-A
64.0' RT. STA. 162+75
℄ EL. WINDOW 825.92
℄ EL. 21" & INVERT 821.96
℄ EL. 4" RT. 822.07
C-179
3:1
829.51
STA 162+50
829.48
END AREA
CUT
FILL
VOLUME
CUT
FILL
189 0
347 0
186 0
343 0
184 0
336 0
179 0
334 0
CALCULATED
CHECKED
CROSS SECTION SHEET
STA. 162+50 TO STA. 164+00
LIC-16-19.72
128
547
RC032159.DGN 2/17/95

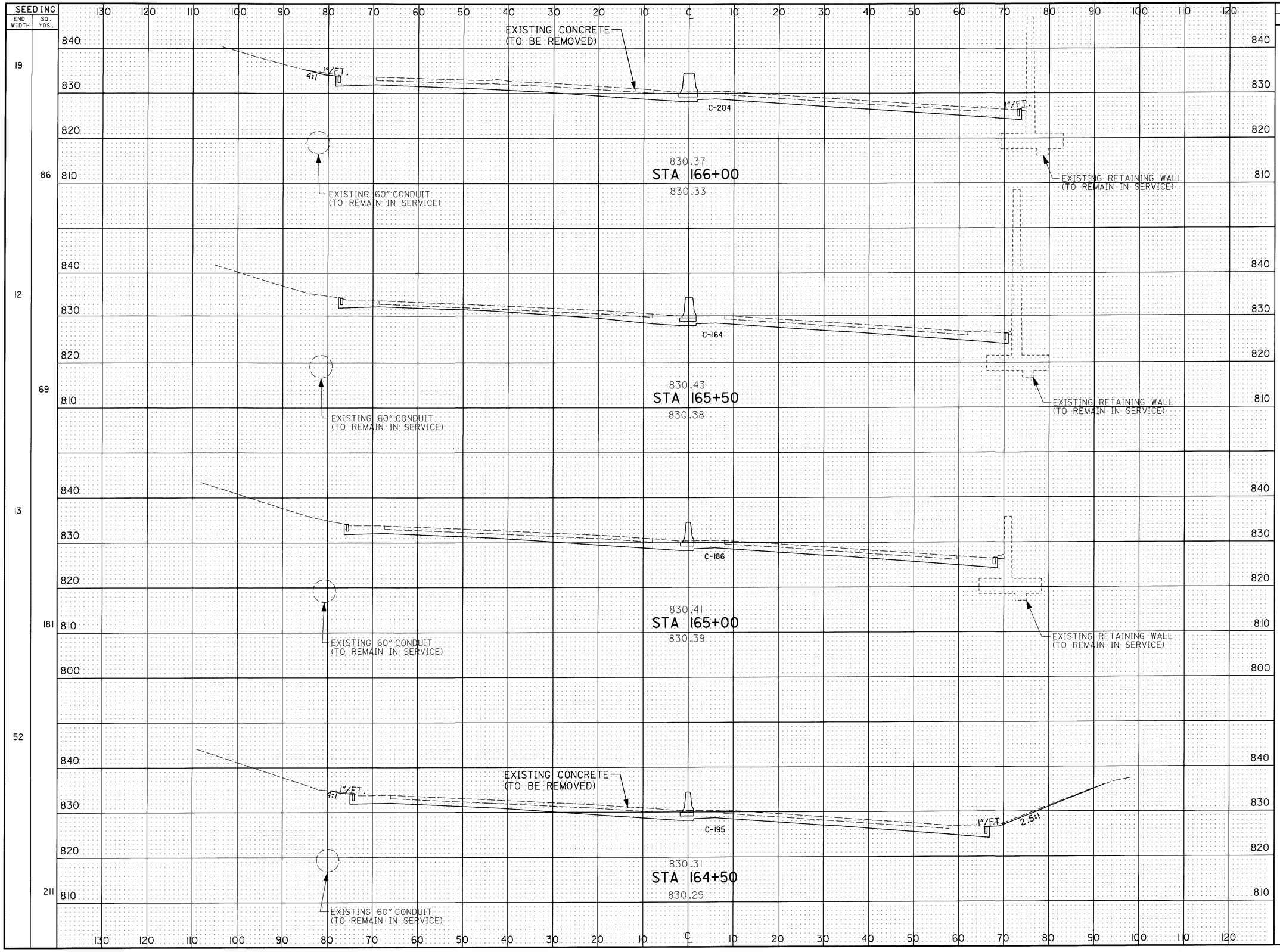
EXISTING CONCRETE (TO BE REMOVED)
1"/FT.
4:1
C-204
830.37
STA 166+00
830.33
EXISTING 60" CONDUIT (TO REMAIN IN SERVICE)
EXISTING RETAINING WALL (TO REMAIN IN SERVICE)
C-164
830.43
STA 165+50
830.38
C-186
830.41
STA 165+00
830.39
C-195
2.5:1
830.31
STA 164+50
830.29
SEEDING
END WIDTH
SQ. YDS.
19
86
12
69
13
181
52
211
END AREA
CUT
FILL
204
0
164
0
186
0
195
0
VOLUME
341
0
324
0
353
0
356
0
CALCULATED J.G. 3/13/95
CHECKED A.L.L. 3/16/95
CROSS SECTION SHEET
STA. 164+50 TO STA. 166+00
LIC-16-19.72
129
547
RC033159.DGN 2/17/95

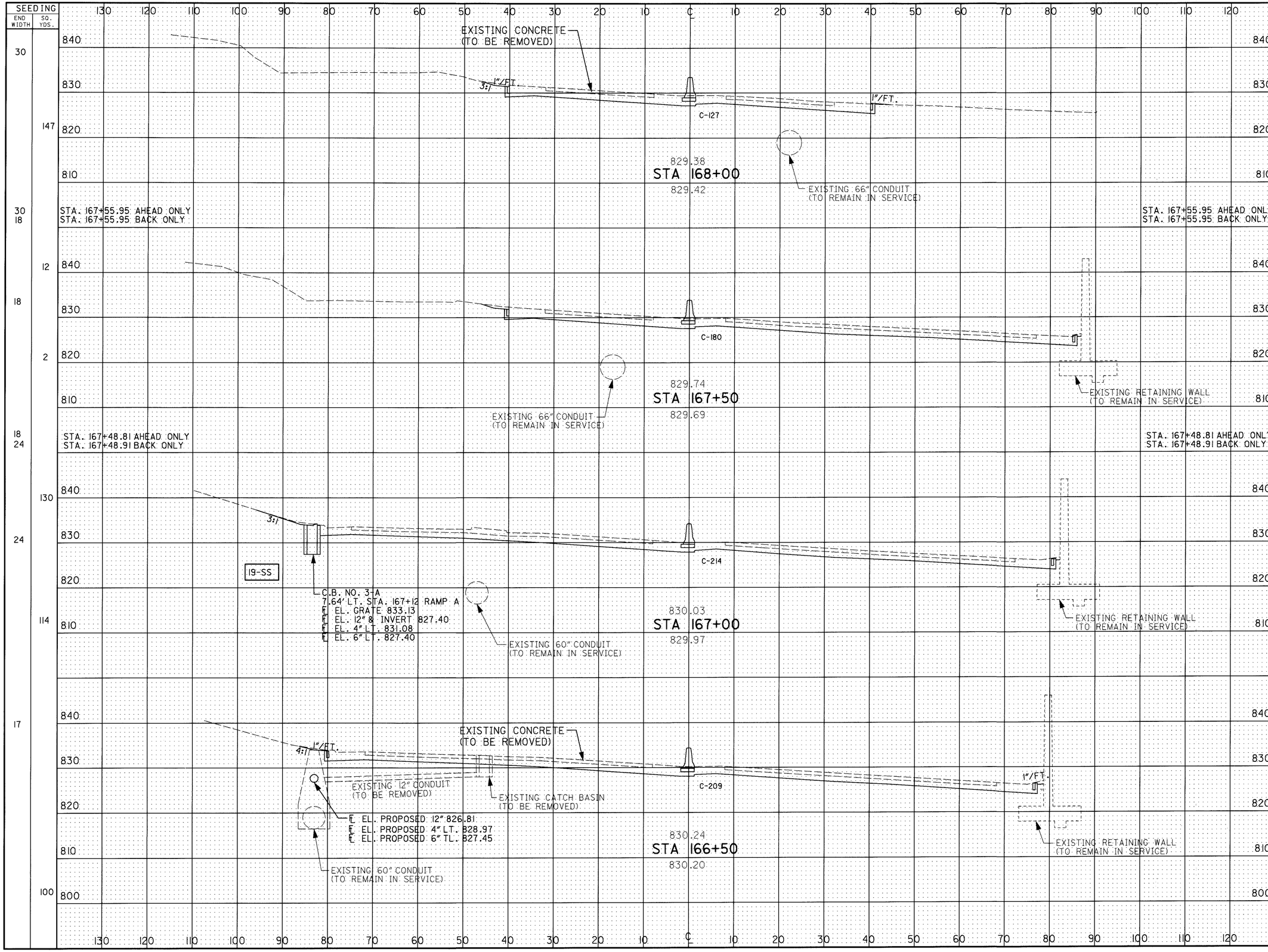
SEEDING
END WIDTH
SQ. YDS.
EXISTING CONCRETE (TO BE REMOVED)
3:1
1"/FT.
C-127
829.38
STA 168+00
829.42
EXISTING 66" CONDUIT (TO REMAIN IN SERVICE)
STA. 167+55.95 AHEAD ONLY
STA. 167+55.95 BACK ONLY
C-180
829.74
STA 167+50
829.69
EXISTING RETAINING WALL (TO REMAIN IN SERVICE)
EXISTING 66" CONDUIT (TO REMAIN IN SERVICE)
STA. 167+48.81 AHEAD ONLY
STA. 167+48.91 BACK ONLY
C-214
19-SS
C.B. NO. 3-A
7.64' LT. STA. 167+12 RAMP A
EL. GRATE 833.13
EL. 12" & INVERT 827.40
EL. 4" LT. 831.08
EL. 6" LT. 827.40
830.03
STA 167+00
829.97
EXISTING 60" CONDUIT (TO REMAIN IN SERVICE)
4:1
C-209
EXISTING 12" CONDUIT (TO BE REMOVED)
EXISTING CATCH BASIN (TO BE REMOVED)
EL. PROPOSED 12" 826.81
EL. PROPOSED 4" LT. 828.97
EL. PROPOSED 6" TL. 827.45
830.24
STA 166+50
830.20
EXISTING 60" CONDUIT (TO REMAIN IN SERVICE)
END AREA
CUT
FILL
VOLUME
CUT
FILL
CALCULATED J.D. 3/13/95
CHECKED A.L.L. 3/16/95
CROSS SECTION SHEET
STA. 166+50 TO STA. 168+00
LIC-16-19.72
130
547
RC034159.DGN 2/17/95

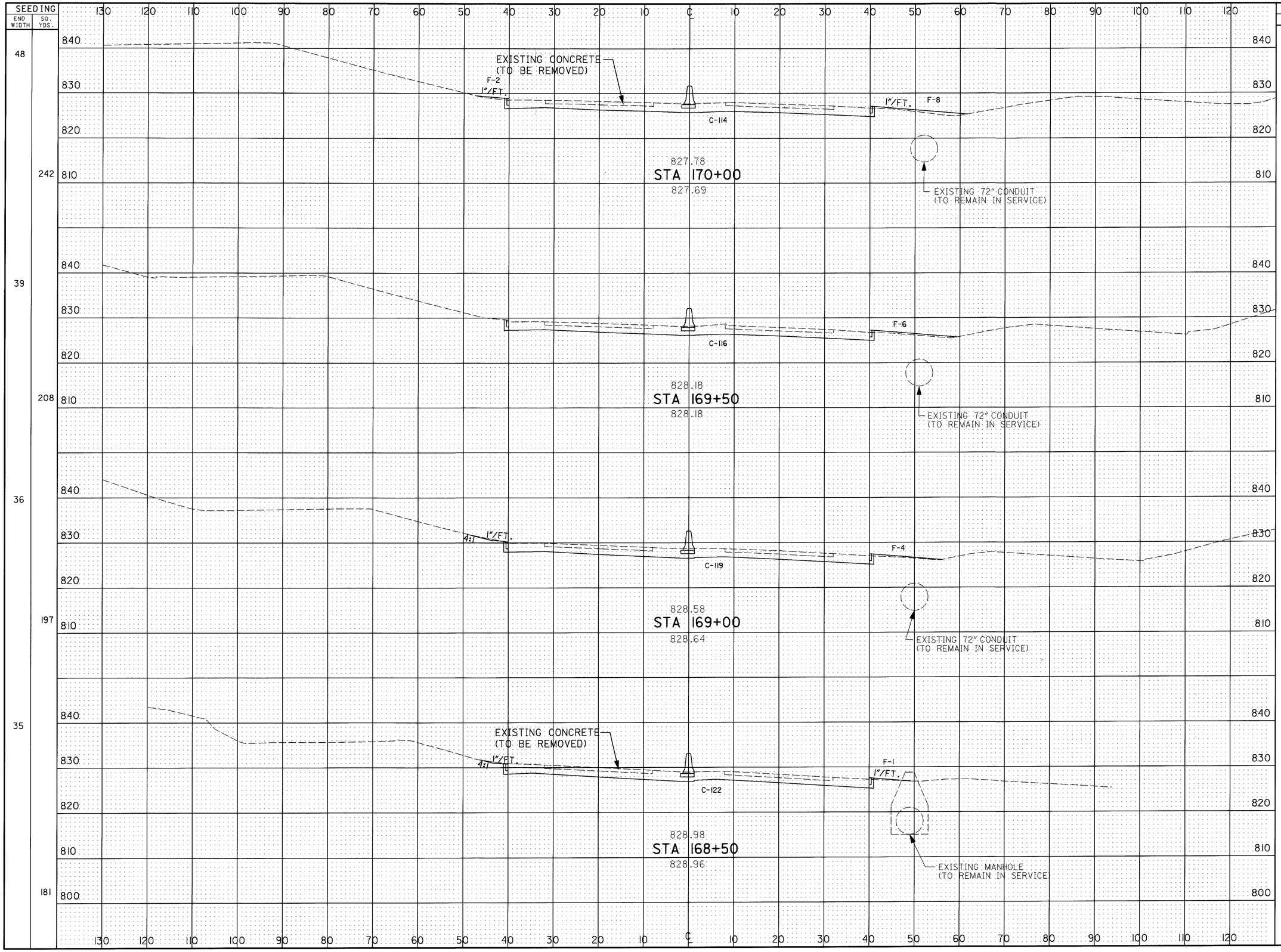
SEEDING
END WIDTH
SQ. YDS.
48
242
39
208
36
197
35
181
EXISTING CONCRETE (TO BE REMOVED)
F-2
1"/FT.
C-114
827.78
STA 170+00
827.69
EXISTING 72" CONDUIT (TO REMAIN IN SERVICE)
F-8
F-6
C-116
828.18
STA 169+50
828.18
4:1
C-119
828.58
STA 169+00
828.64
F-4
C-122
828.98
STA 168+50
828.96
F-1
EXISTING MANHOLE (TO REMAIN IN SERVICE)
END AREA
CUT
FILL
114
10
116
6
119
4
122
1
VOLUME
213
15
218
9
223
5
231
1
CALCULATED
CHECKED
CROSS SECTION SHEET
STA. 168+50 TO STA. 170+00
LIC-16-19.72
131
547
RC035159.DGN 2/17/95

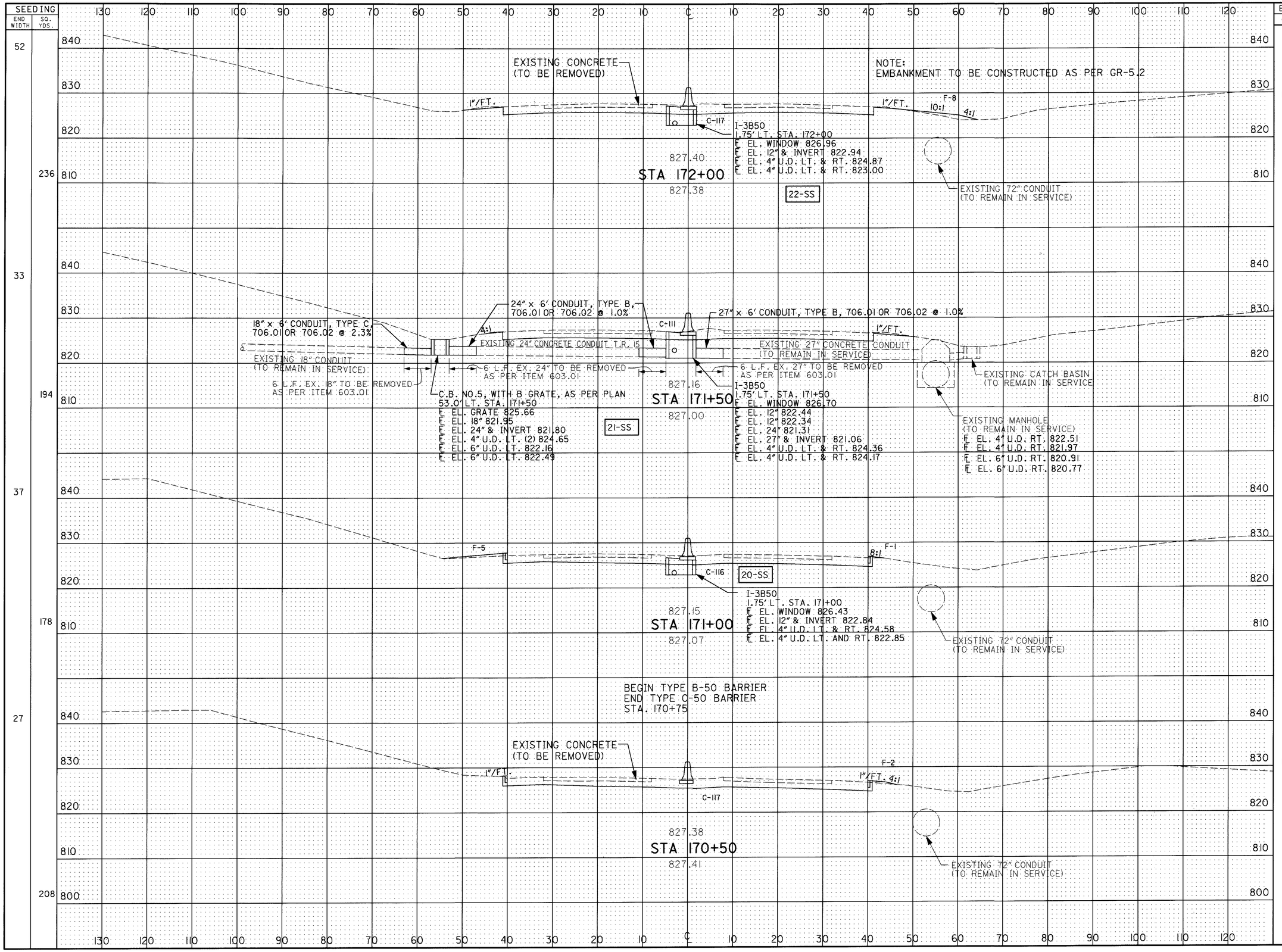

END AREA CUT	END AREA FILL	VOLUME CUT	VOLUME FILL
117	8		
		211	7
111	0		
		210	6
116	6		
		216	7
117	2		
		214	11

CALCULATED J.G. 3/13/95
CHECKED A.L.L. 3/16/95

CROSS SECTION SHEET
STA. 170+50 TO STA. 172+00

LIC-16-19.72

RC036159.DGN 2/17/95

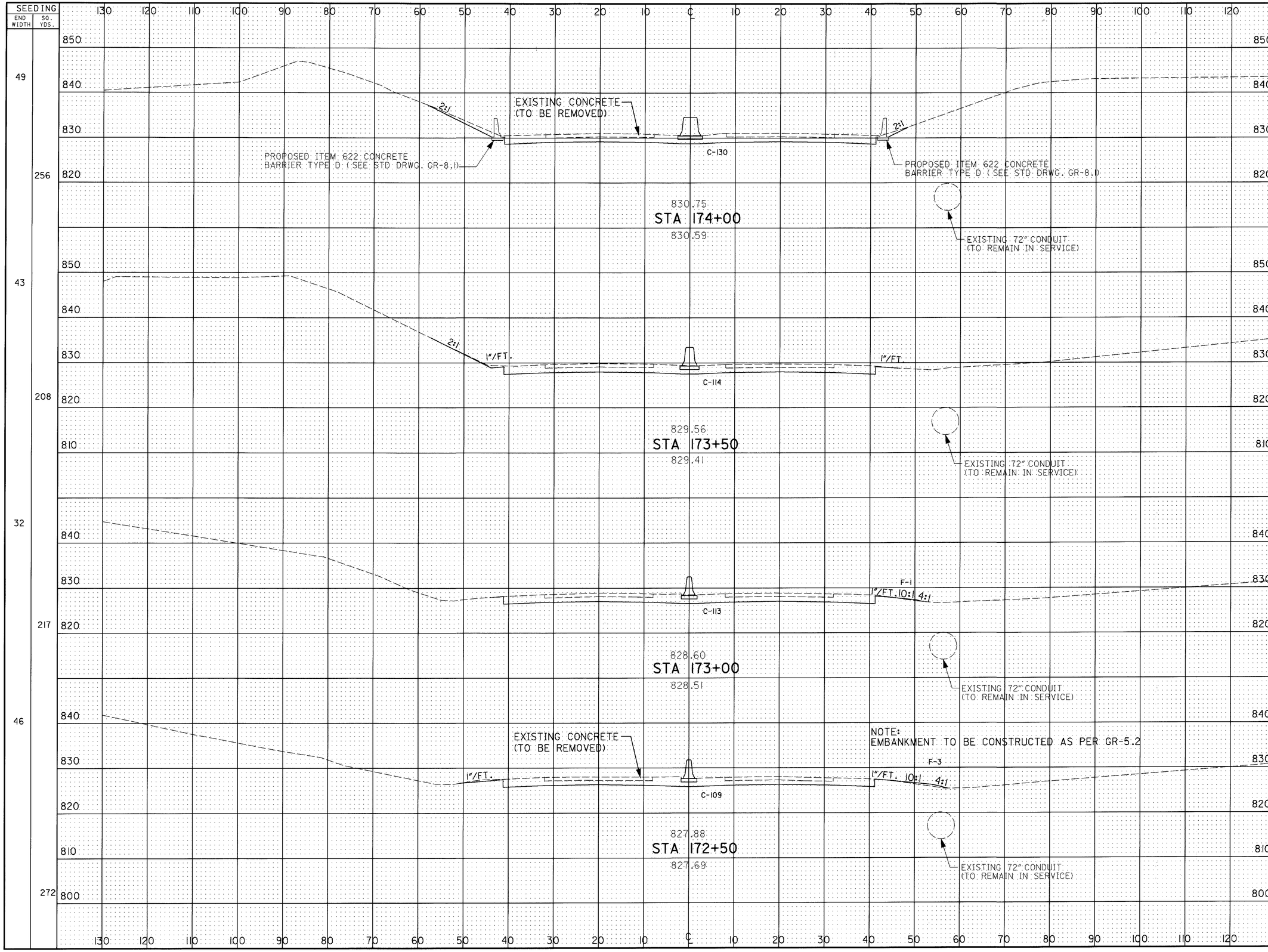
SEEDING
END WIDTH
SQ. YDS.
49
256
43
208
32
217
46
272
850
840
830
820
810
800
EXISTING CONCRETE (TO BE REMOVED)
PROPOSED ITEM 622 CONCRETE BARRIER TYPE D (SEE STD DRWG. GR-8.1)
2:1
C-130
830.75
STA 174+00
830.59
EXISTING 72" CONDUIT (TO REMAIN IN SERVICE)
1"/FT.
C-114
829.56
STA 173+50
829.41
F-1
1"/FT. 10:1 4:1
C-113
828.60
STA 173+00
828.51
NOTE:
EMBANKMENT TO BE CONSTRUCTED AS PER GR-5.2
F-3
C-109
827.88
STA 172+50
827.69
END AREA
CUT
FILL
VOLUME
CUT
FILL
130 0
226 0
114 0
210 1
113 1
206 4
109 3
209 10
CALCULATED J.G. 3/13/95
CHECKED A.L.L. 3/16/95
CROSS SECTION SHEET
STA. 172+50 TO STA. 174+00
LIC-16-19.72
133
547
RC037159.DGN 2/17/95

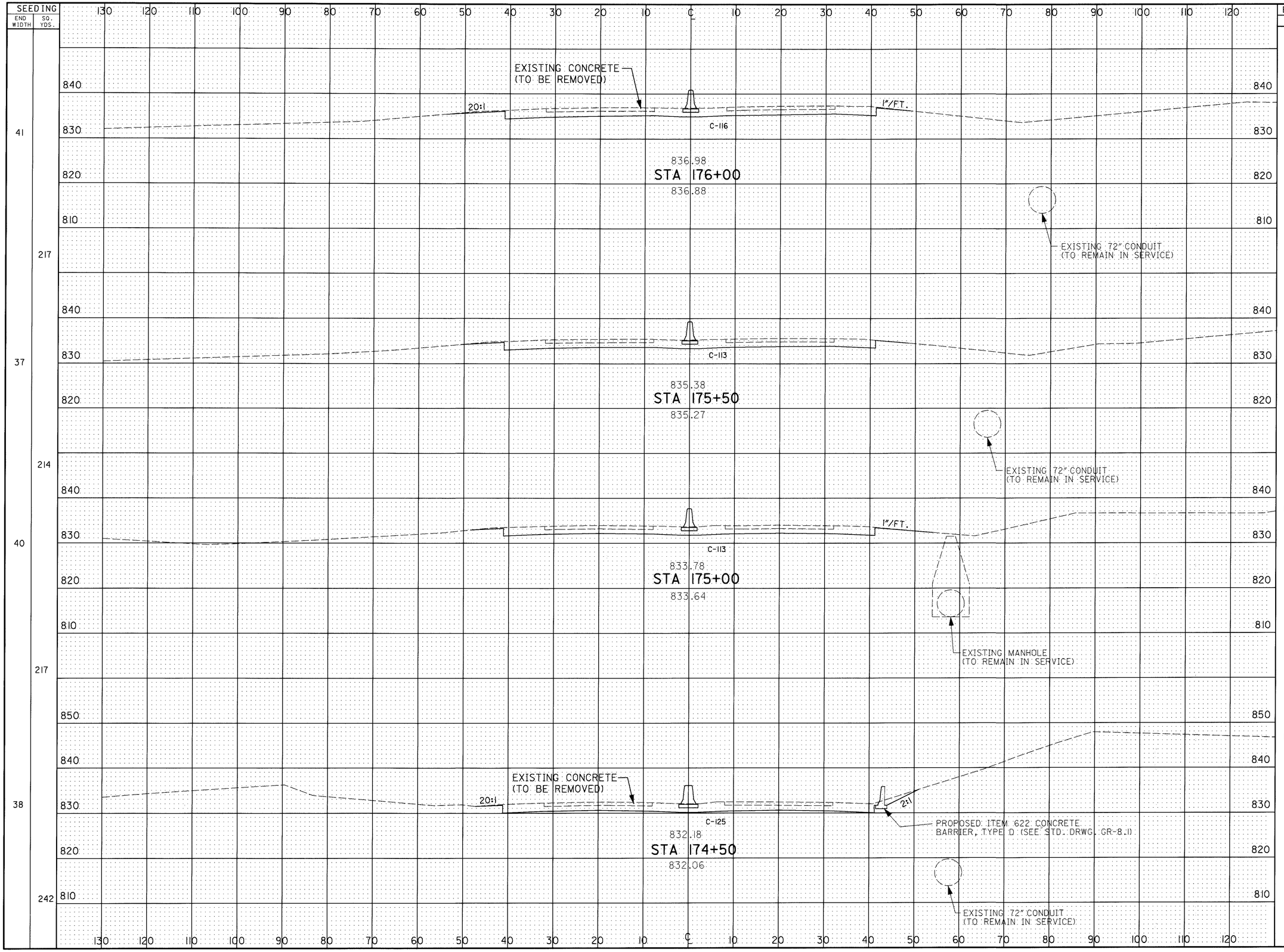

CALCULATED J.C. 3/20/95
CHECKED A.L.L. 3/16/95

CROSS SECTION SHEET
STA. 174+50 TO STA. 176+00

LIC-16-19.72

134/547

RC038159.DGN 2/17/95

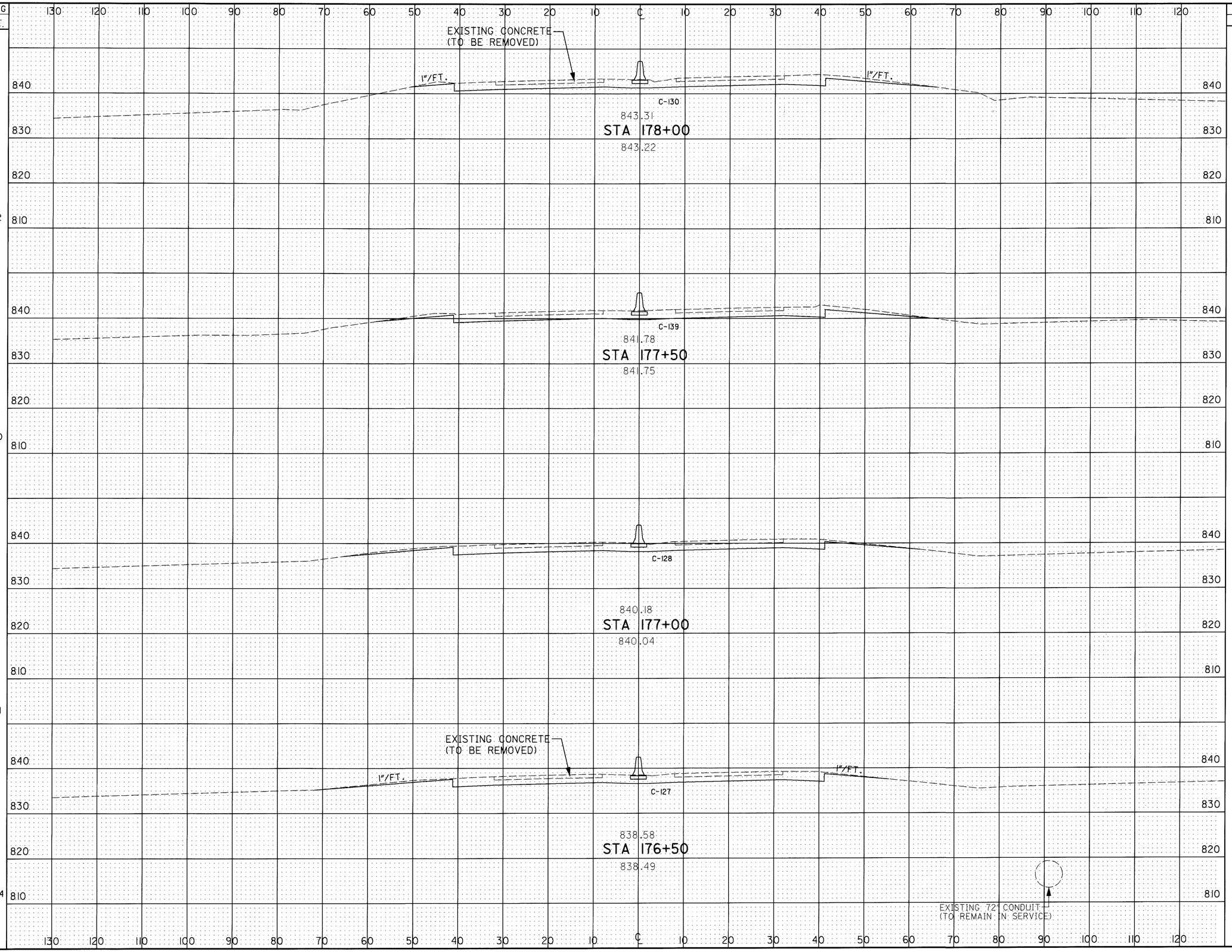

SEEDING END WIDTH	SEEDING SQ. YDS.	END AREA CUT	END AREA FILL	VOLUME CUT	VOLUME FILL
55	322	130	0	249	0
61	350	139	0	247	0
65	361	128	0	236	0
65	294	127	0	225	0

CALCULATED J.G. 3/13/95
CHECKED A.L.L. 3/16/95

CROSS SECTION SHEET
STA. 176+50 TO STA. 178+00

LIC-16-19.72

RC039159.DGN 2/17/95

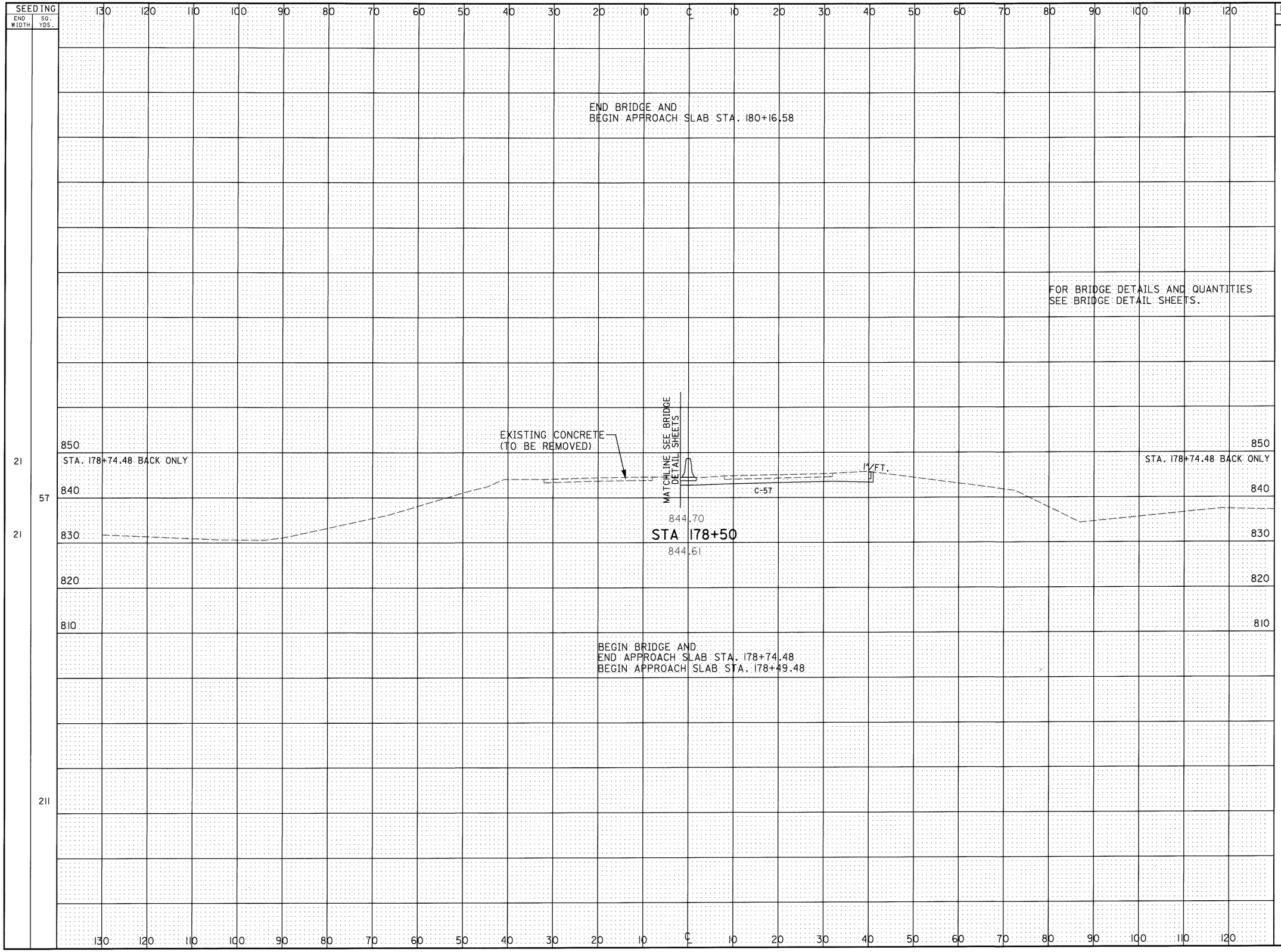

CALCULATED J.C. 3/16/95
CHECKED A.L.L. 3/16/95

CROSS SECTION SHEET
STA. 178+50 TO STA. 180+00

LIC-16-19.72

136
547

RC040159.DGN 3/16/95

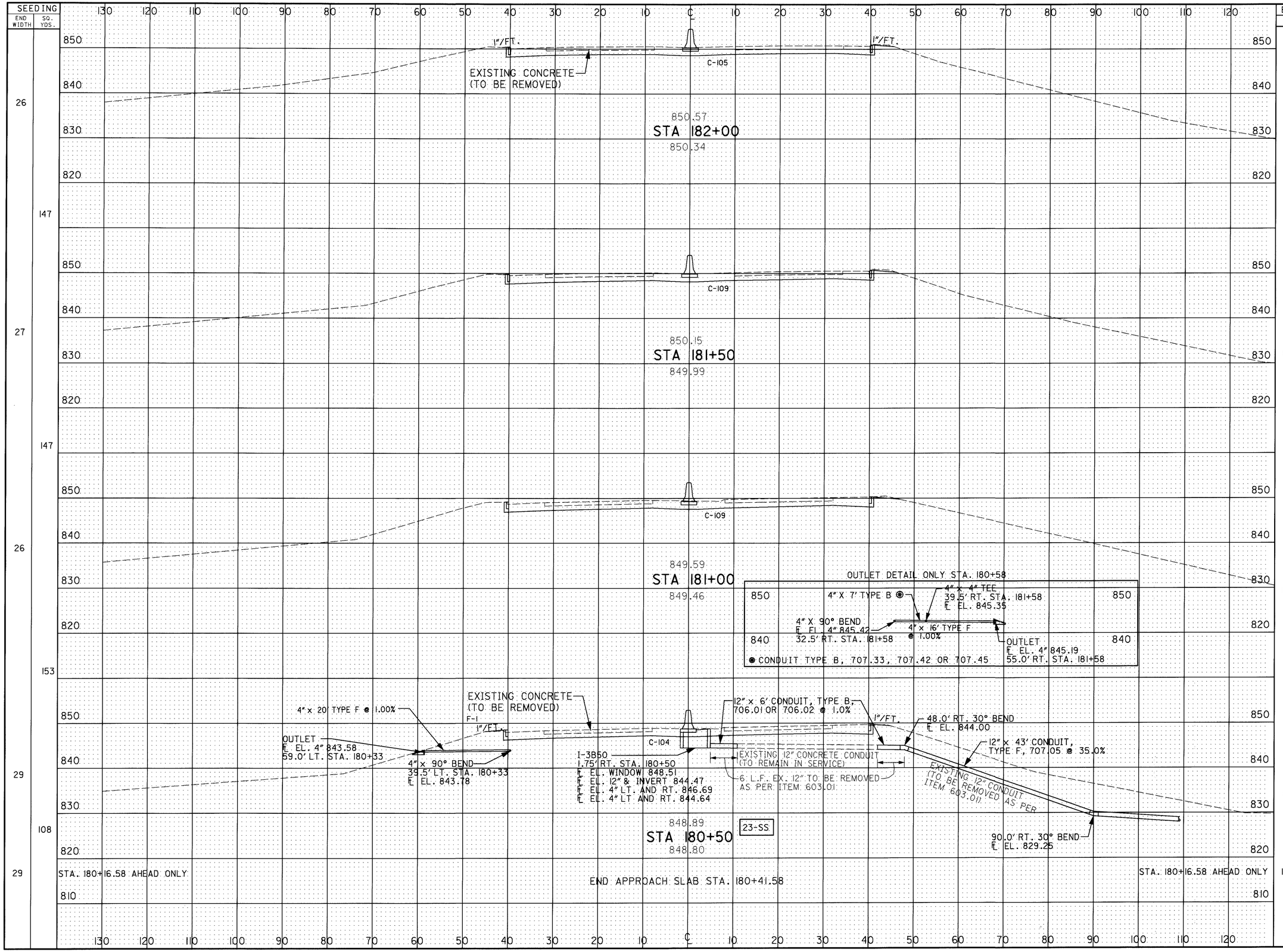

END AREA CUT	END AREA FILL	VOLUME CUT	VOLUME FILL
105	0		
		198	0
109	0		
		202	0
109	0		
		197	1
104	1		
		129	1
104	1		

CALCULATED JJC 3/16/95
CHECKED AJL 3/16/95

CROSS SECTION SHEET
STA. 180+50 TO STA. 182+00

LIC-16-19.72

RC041159.DGN 3/16/95

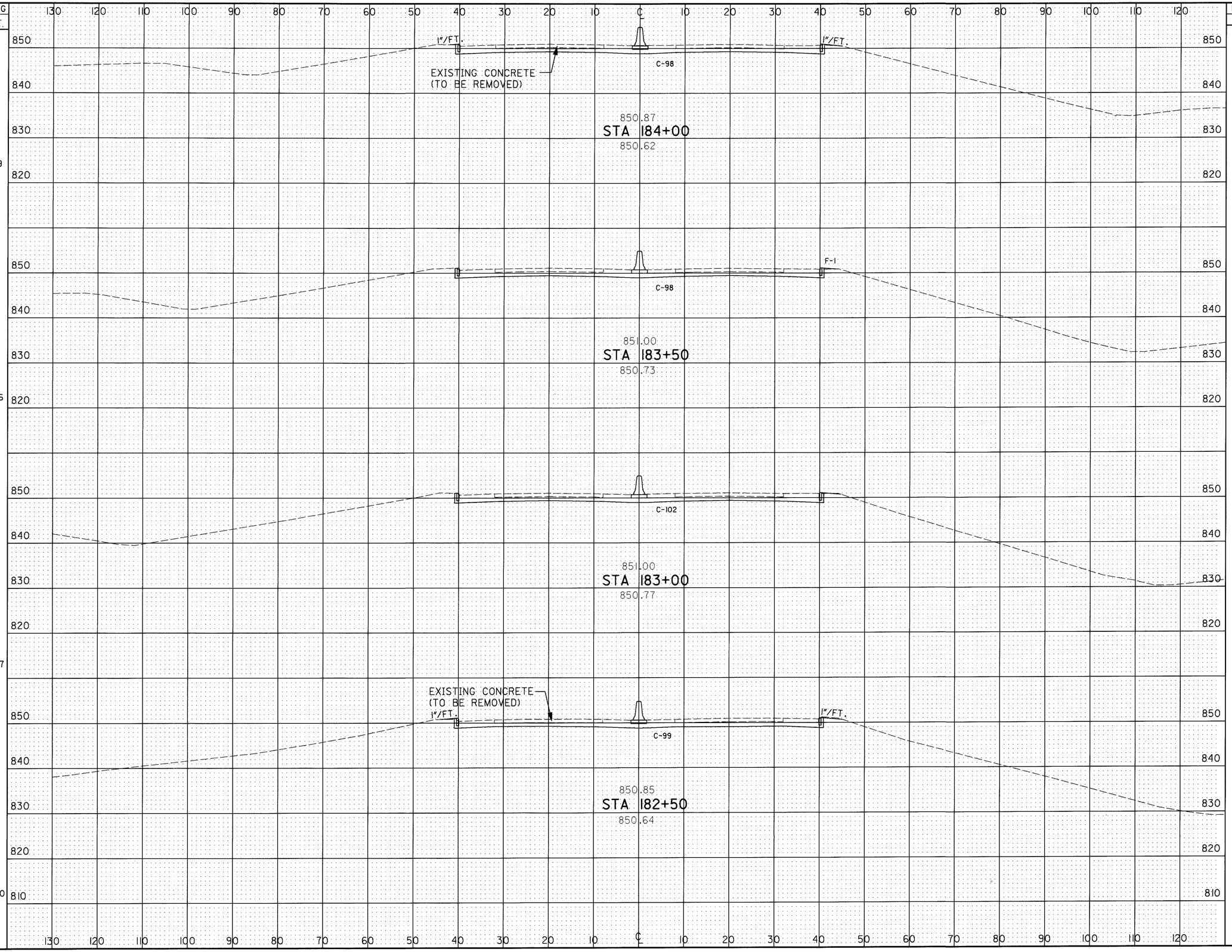

CALCULATED J.G. 3/13/95
CHECKED A.L.L. 3/16/95

CROSS SECTION SHEET
STA. 182+50 TO STA. 184+00

LIC-16-19.72

RC042159.DGN 2/17/95

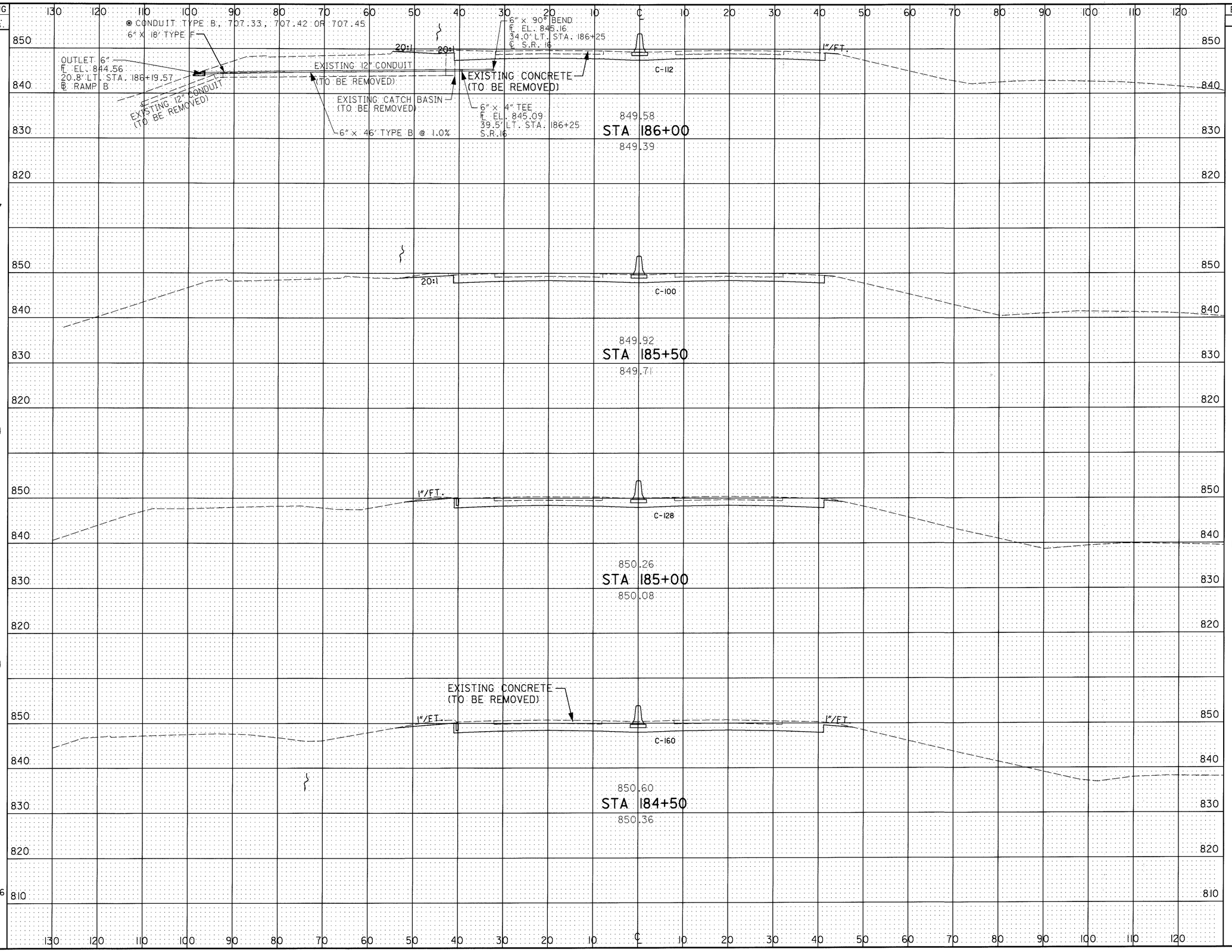

END AREA CUT	END AREA FILL	VOLUME CUT	VOLUME FILL
112	0		
		196	0
100	0		
		211	0
128	0		
		267	0
160	0		
		239	0

CALCULATED J.S. 3/16/95
CHECKED A.L.L. 3/16/95

CROSS SECTION SHEET
STA. 184+50 TO STA. 186+00

LIC-16-19.72

RC043159.DGN 2/17/95

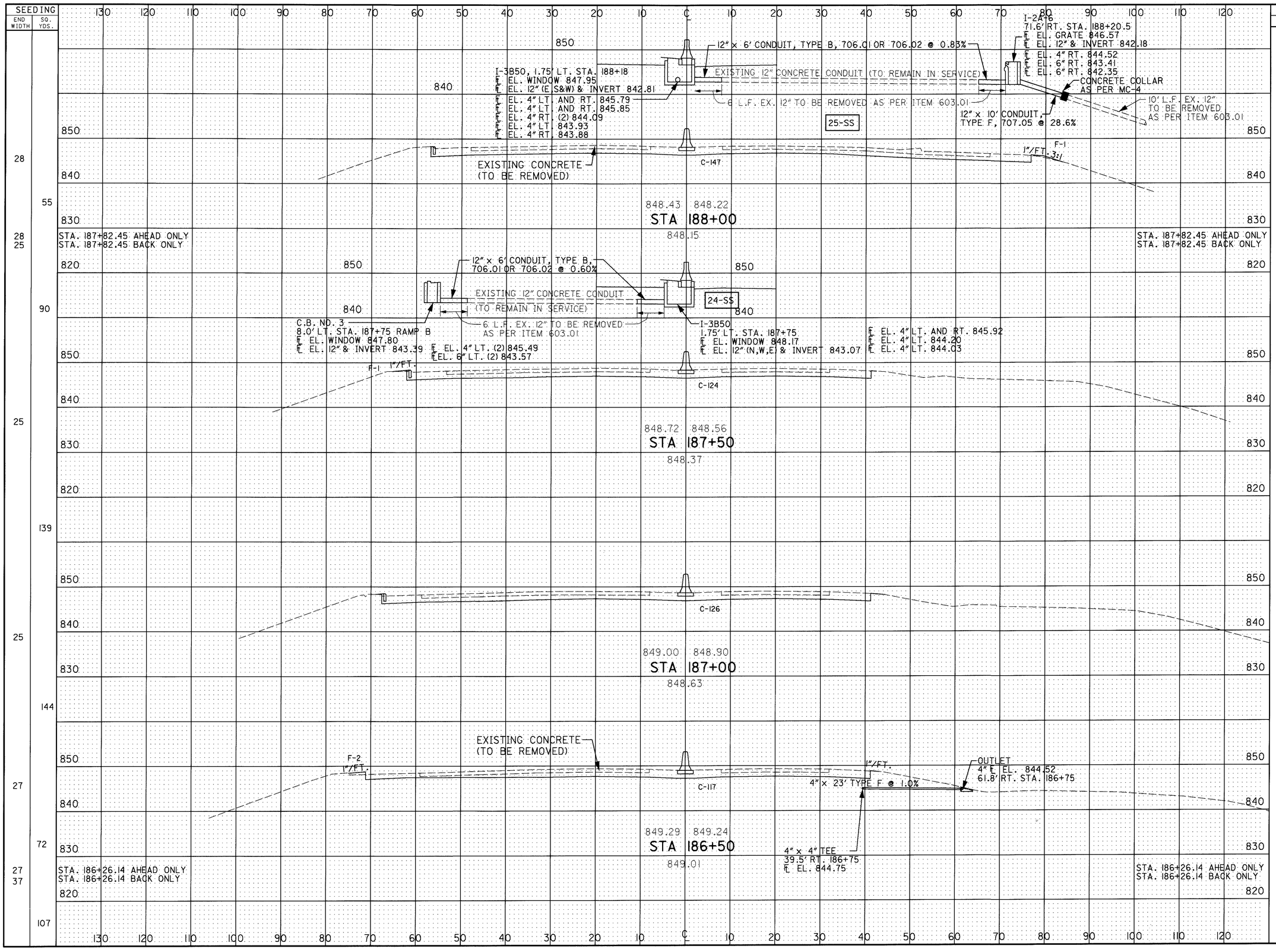

CALCULATED J.G. 3/6/95
CHECKED A.L.L. 3/6/95

CROSS SECTION SHEET
STA. 186+50 TO STA. 188+00

LIC-16-19.72

140/547

RC044159.DGN 2/17/95

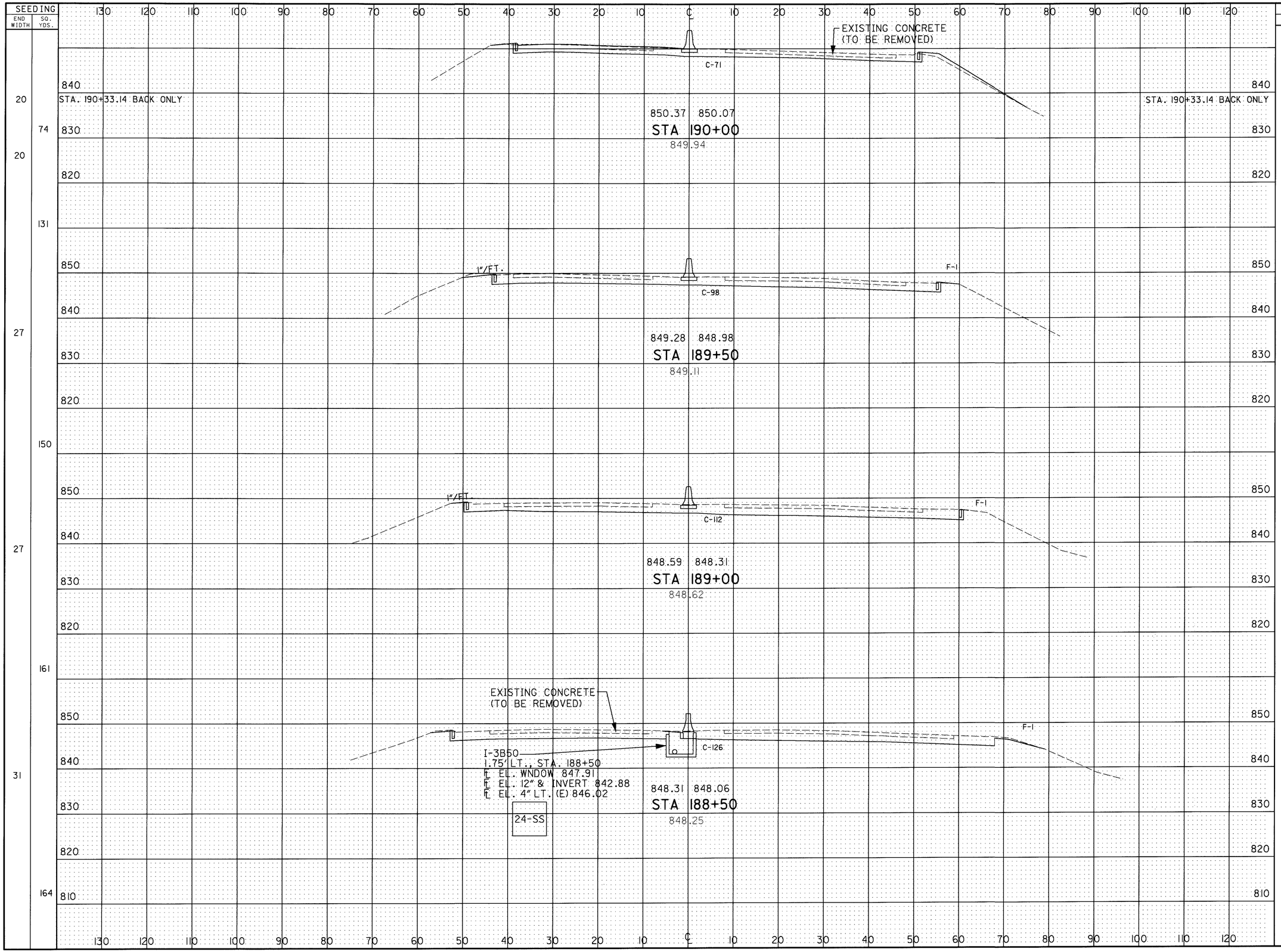
SEEDING
END WIDTH
SQ. YDS.
EXISTING CONCRETE (TO BE REMOVED)
C-71
STA. 190+33.14 BACK ONLY
850.37 850.07
STA 190+00
849.94
1"/FT.
F-1
C-98
849.28 848.98
STA 189+50
849.11
C-112
848.59 848.31
STA 189+00
848.62
EXISTING CONCRETE (TO BE REMOVED)
C-126
I-3B50
1.75' LT., STA. 188+50
EL. WNDOW 847.91
EL. 12" & INVERT 842.88
EL. 4" LT. (E) 846.02
24-SS
848.31 848.06
STA 188+50
848.25
END AREA
CUT
FILL
VOLUME
CUT
FILL
CALCULATED
CHECKED
CROSS SECTION SHEET
STA. 188+50 TO STA. 190+00
LIC-16-19.72
141
547
RC045159.DGN 3/16/95

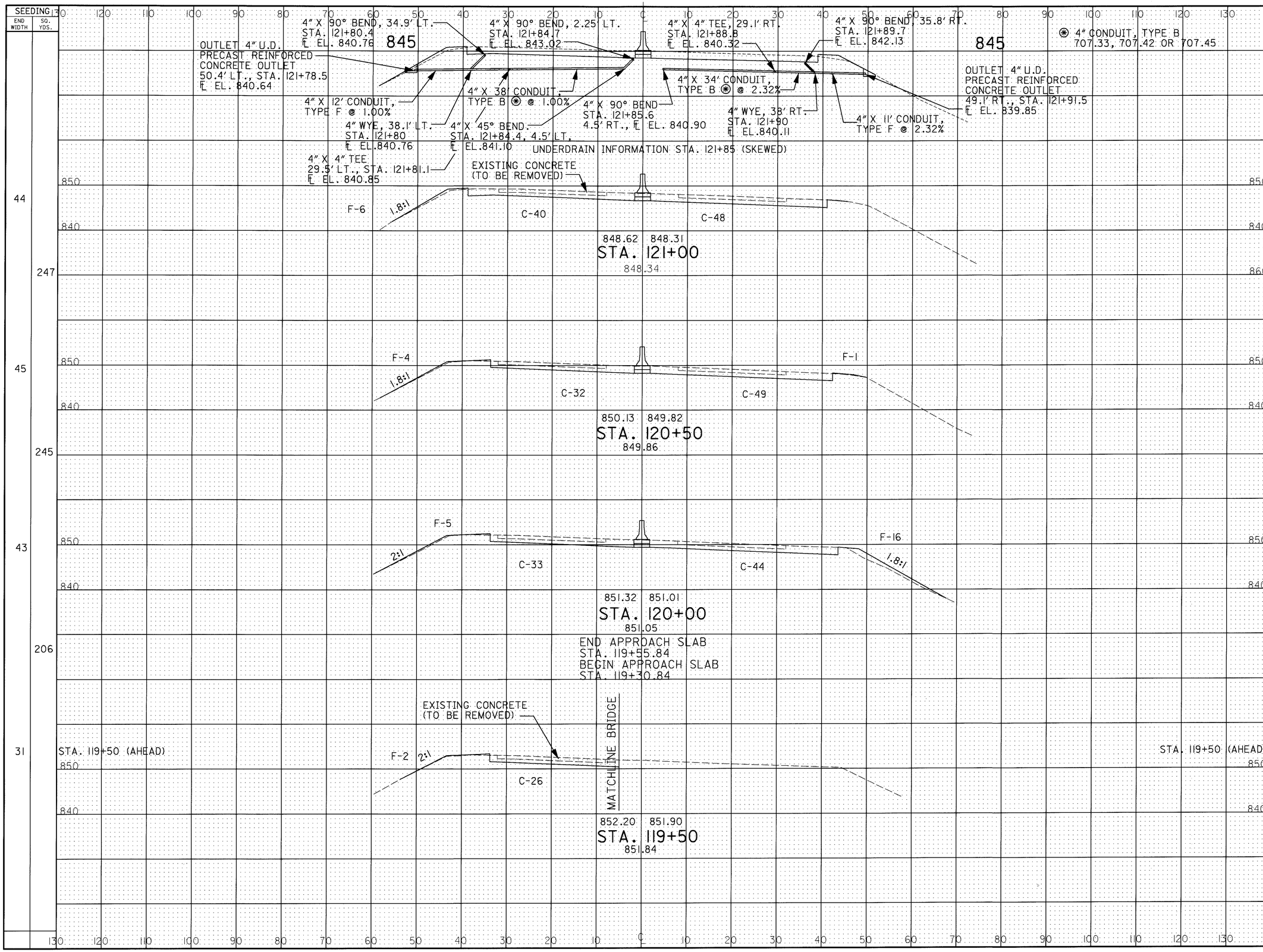

CROSS SECTIONS
STA. 119+00 TO STA. 120+50

LIC-16-19.65

141-A
547

RC00T001.DGN 2/11/98

SEEDING END WIDTH	SEEDING SQ. YDS.		END AREA CUT	END AREA FILL	VOLUME CUT	VOLUME FILL
	30100	TOTAL CARRIED TO GENERAL SUMMARY SHT. 62			39189	486
	11172	SUBTOTAL CARRIED FROM SHT. 117			14174	166
	18928	SUBTOTAL			25015	320
52		STA. 121+87.02 (BACK)	82	8		
	214				112	11
52			82	8		
	534				220	17

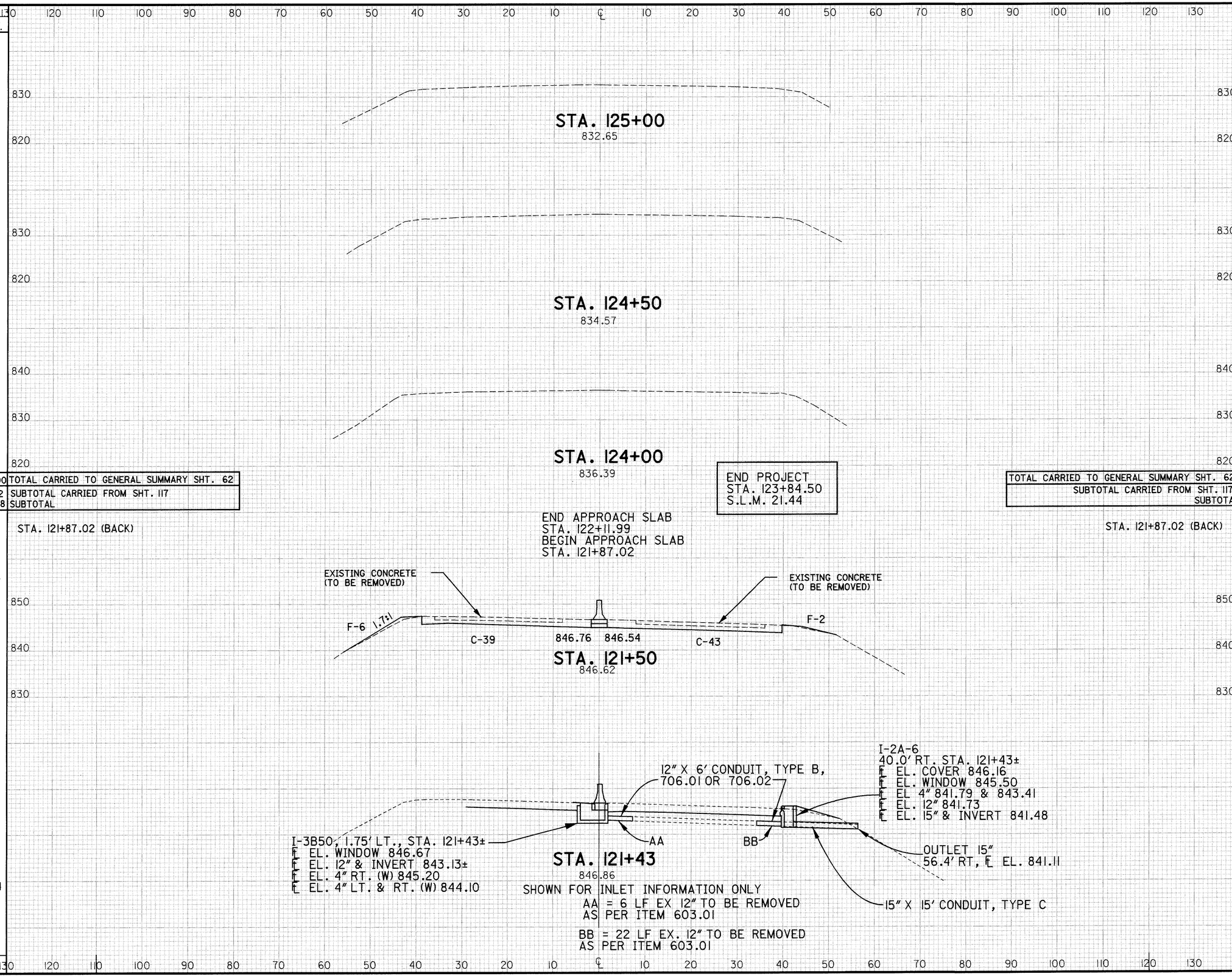

CALCULATED

CHECKED

CROSS SECTIONS
STA. 121+00 T STA. 122+50

LIC-16-19.65

141-B
547

RC009001.DGN 2/12/99

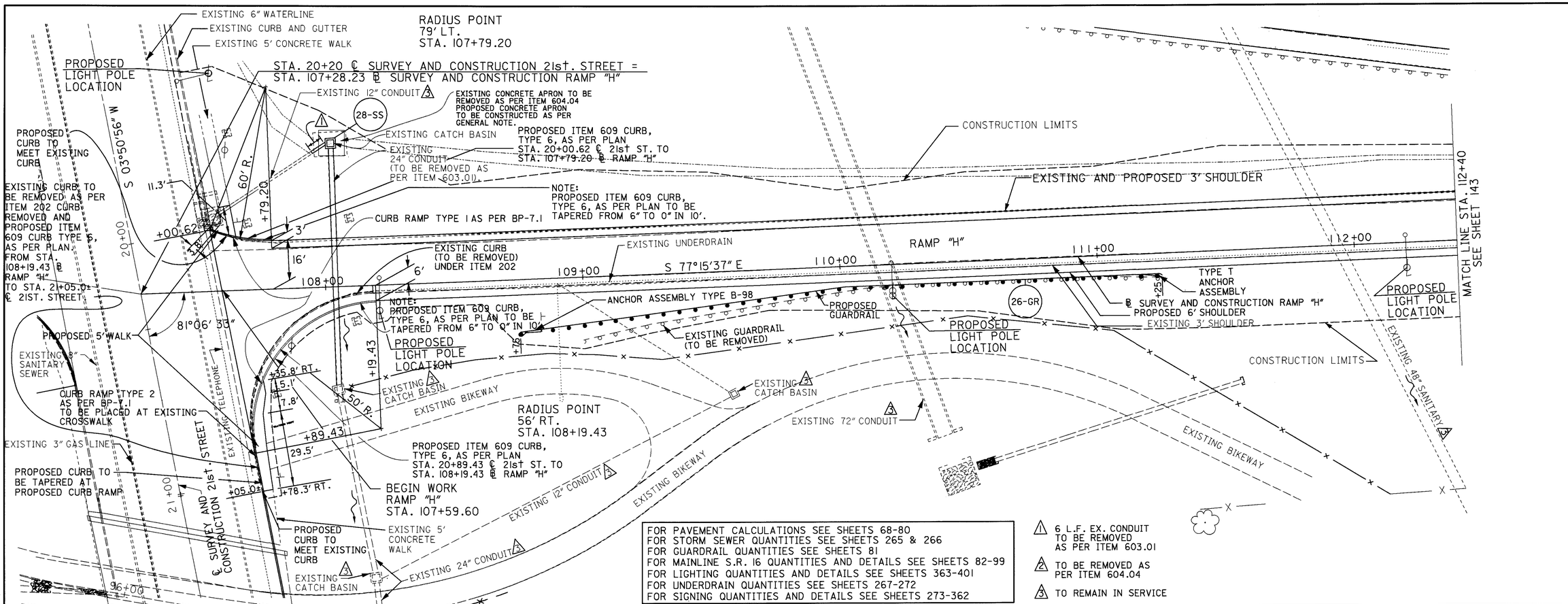

FOR PAVEMENT CALCULATIONS SEE SHEETS 68-80
FOR STORM SEWER QUANTITIES SEE SHEETS 265 & 266
FOR GUARDRAIL QUANTITIES SEE SHEETS 81
FOR MAINLINE S.R. 16 QUANTITIES AND DETAILS SEE SHEETS 82-99
FOR LIGHTING QUANTITIES AND DETAILS SEE SHEETS 363-401
FOR UNDERDRAIN QUANTITIES SEE SHEETS 267-272
FOR SIGNING QUANTITIES AND DETAILS SEE SHEETS 273-362

1 6 L.F. EX. CONDUIT TO BE REMOVED AS PER ITEM 603.01
2 TO BE REMOVED AS PER ITEM 604.04
3 TO REMAIN IN SERVICE

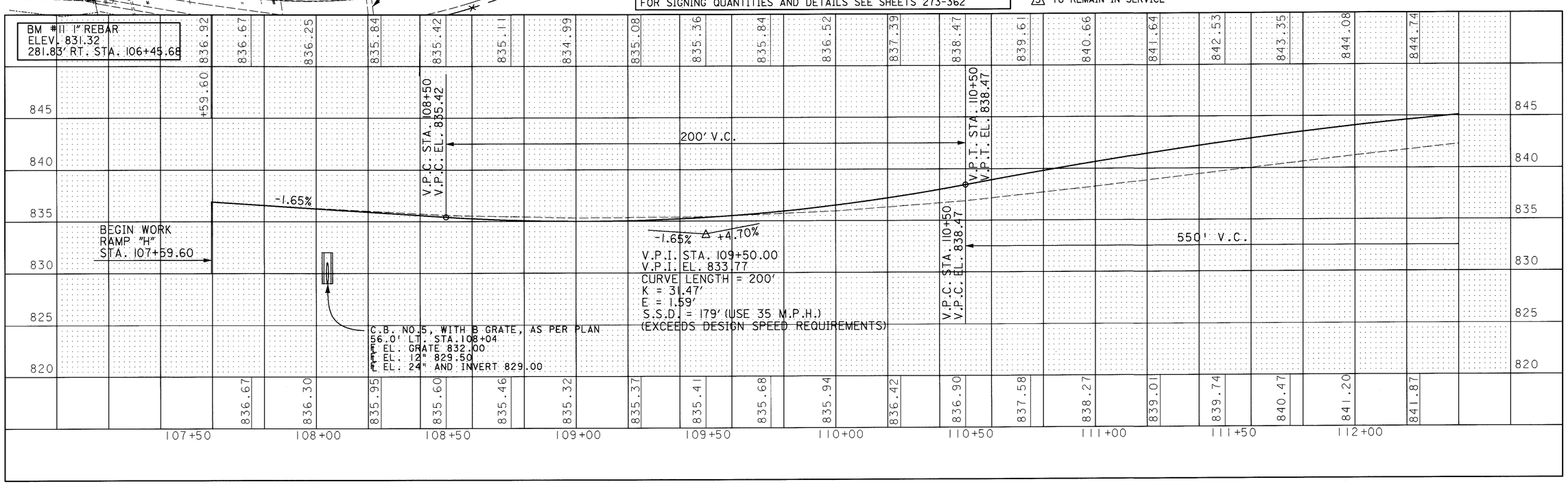

HORIZONTAL SCALE IN FEET 0 10 20 40

CALCULATED
CHECKED

PLAN AND PROFILE SHEET RAMP "H"
STA. 107+59.60 TO STA. 112+40

LIC-16-19.72

RCP01172.DGN 5/08/95

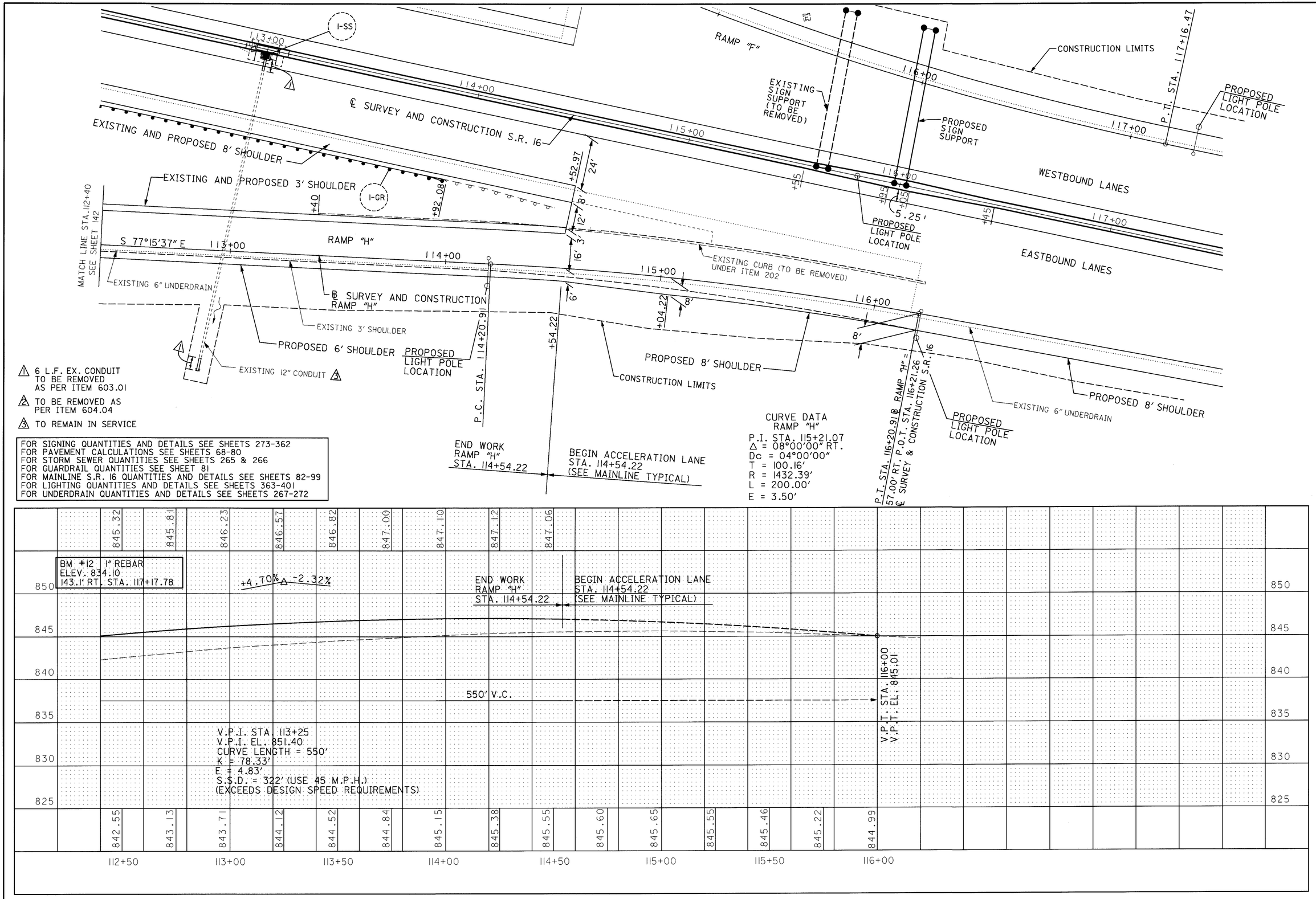

FOR SIGNING QUANTITIES AND DETAILS SEE SHEETS 273-362
FOR PAVEMENT CALCULATIONS SEE SHEETS 68-80
FOR STORM SEWER QUANTITIES SEE SHEETS 265 & 266
FOR GUARDRAIL QUANTITIES SEE SHEET 81
FOR MAINLINE S.R. 16 QUANTITIES AND DETAILS SEE SHEETS 82-99
FOR LIGHTING QUANTITIES AND DETAILS SEE SHEETS 363-401
FOR UNDERDRAIN QUANTITIES AND DETAILS SEE SHEETS 267-272

HORIZONTAL SCALE IN FEET 0 10 20 40

CALCULATED

CHECKED

PLAN AND PROFILE SHEET RAMP "H"
STA. 112+40 TO STA. 116+21.24

LIC-16-19.72

RCP02172.DGN 5/08/95

SEEDING END WIDTH	SEEDING SQ. YDS.	END AREA CUT	END AREA FILL	VOLUME CUT	VOLUME FILL
43		52	0		
	233			88	0
41		43	0		
	328			83	1
77	346	47	1	70	1
77		47	1		

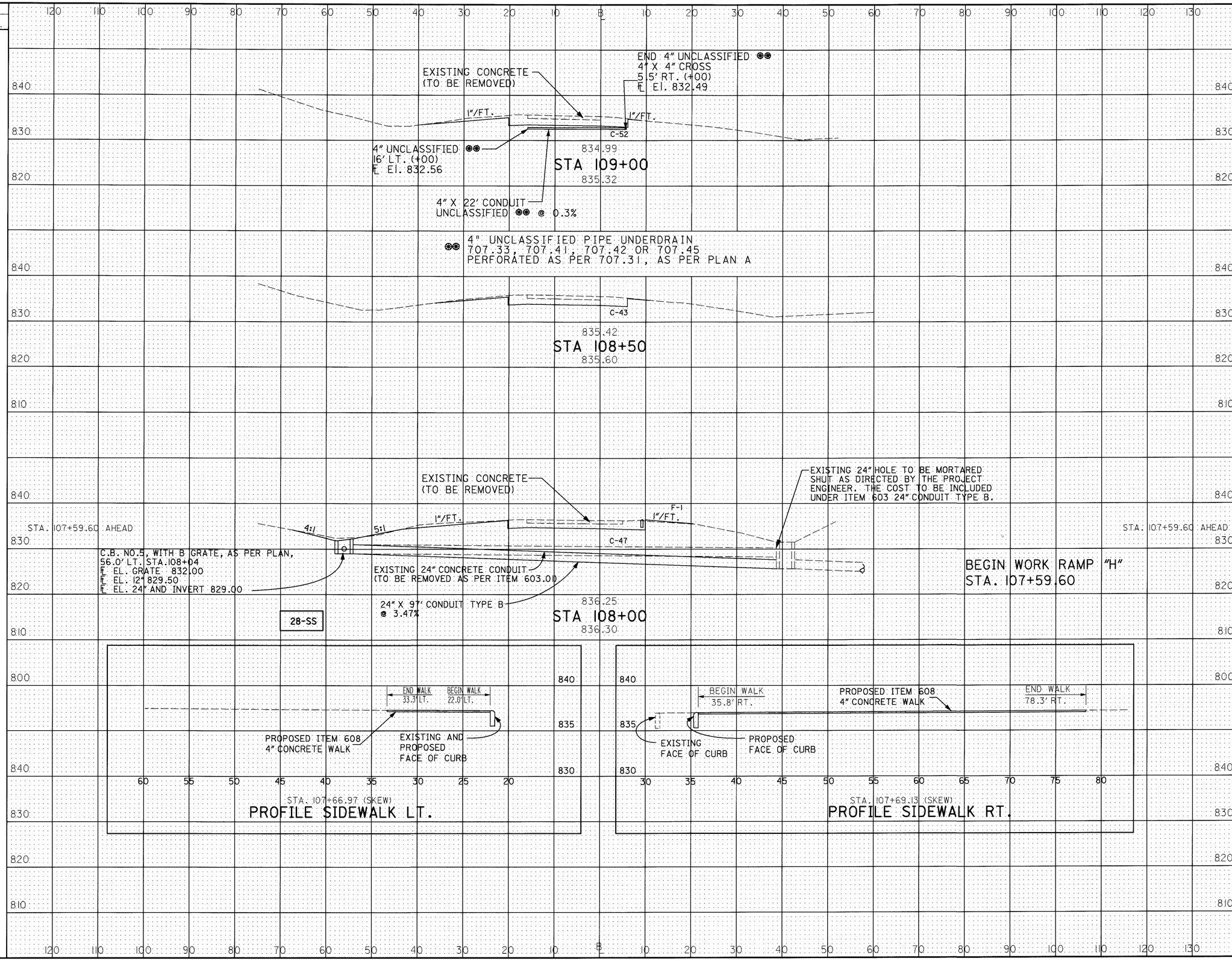

CALCULATED J.G. 3-13-95
CHECKED A.L.L. 3-16-95

CROSS SECTION SHEET RAMP "H"
STA. 107+50 TO STA. 109+00

LIC-16-19.72

RC001172.DGN 6/1/95

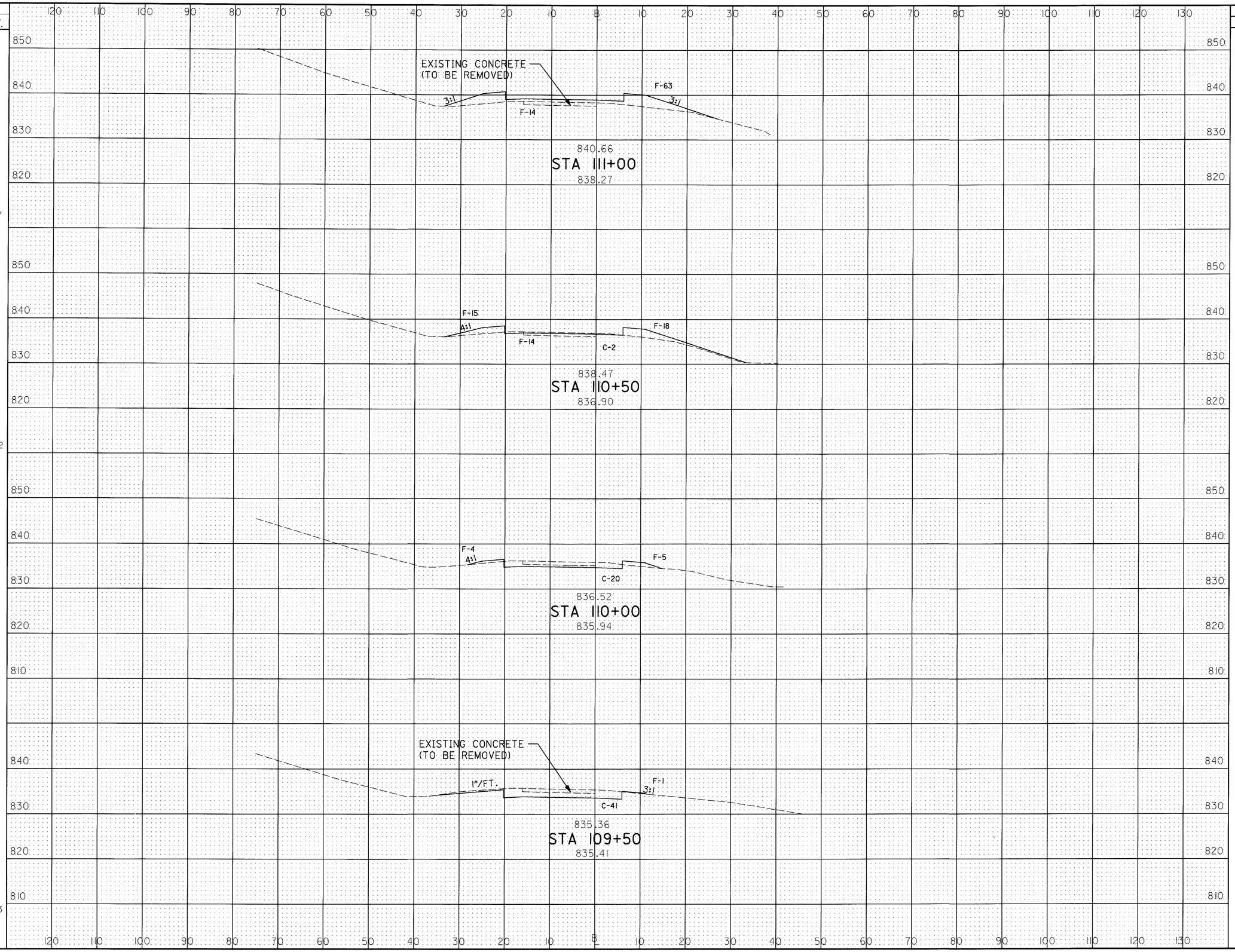

SEEDING END WIDTH	SEEDING SQ. YDS.	END AREA CUT	END AREA FILL	VOLUME CUT	VOLUME FILL
53		0	77		
	317			2	115
61		2	47		
	272			20	52
37		20	9		
	217			56	9
41		41	1		
	233			86	1

CALCULATED A.L.L. 3-15-95

CHECKED A.L.L. 3-16-95

CROSS SECTION SHEET RAMP "H"
STA. 109+50 TO STA. 111+00

LIC-16-19.72

RC002172.DGN 2/9/95

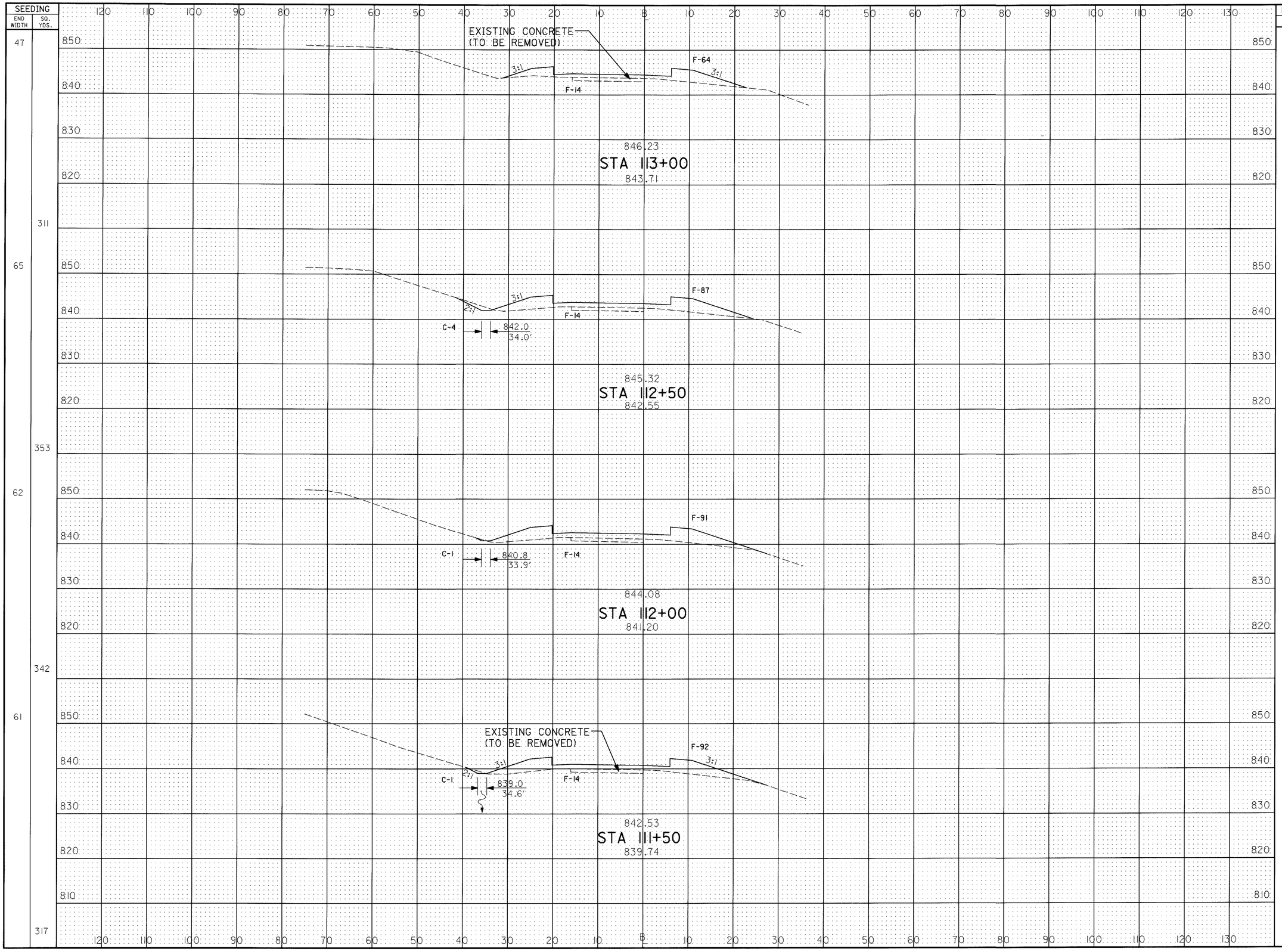

SEEDING END WIDTH	SEEDING SQ. YDS.	END AREA CUT	END AREA FILL	VOLUME CUT	VOLUME FILL
47		0	78		
	311			4	166
65		4	101		
	353			5	191
62		1	105		
	342			2	195
61		1	106		
	317			1	169

CALCULATED J.C. 3-13-95

CHECKED A.L.L. 3-16-95

CROSS SECTION SHEET RAMP "H"
STA. 111+50 TO STA. 113+00

LIC-16-19.72

RC003172.DGN 2/9/95

SEEDING END WIDTH	SEEDING SQ. YDS.		END AREA CUT	END AREA FILL	VOLUME CUT	VOLUME FILL
	4025	TOTAL CARRIED TO SHEET 62.			424	1229
37	17	STA. 114+54.22 BACK	6	30	1	5
37			6	30		
45	228		0	57	6	81
46	253		0	64	0	112
	258				0	131

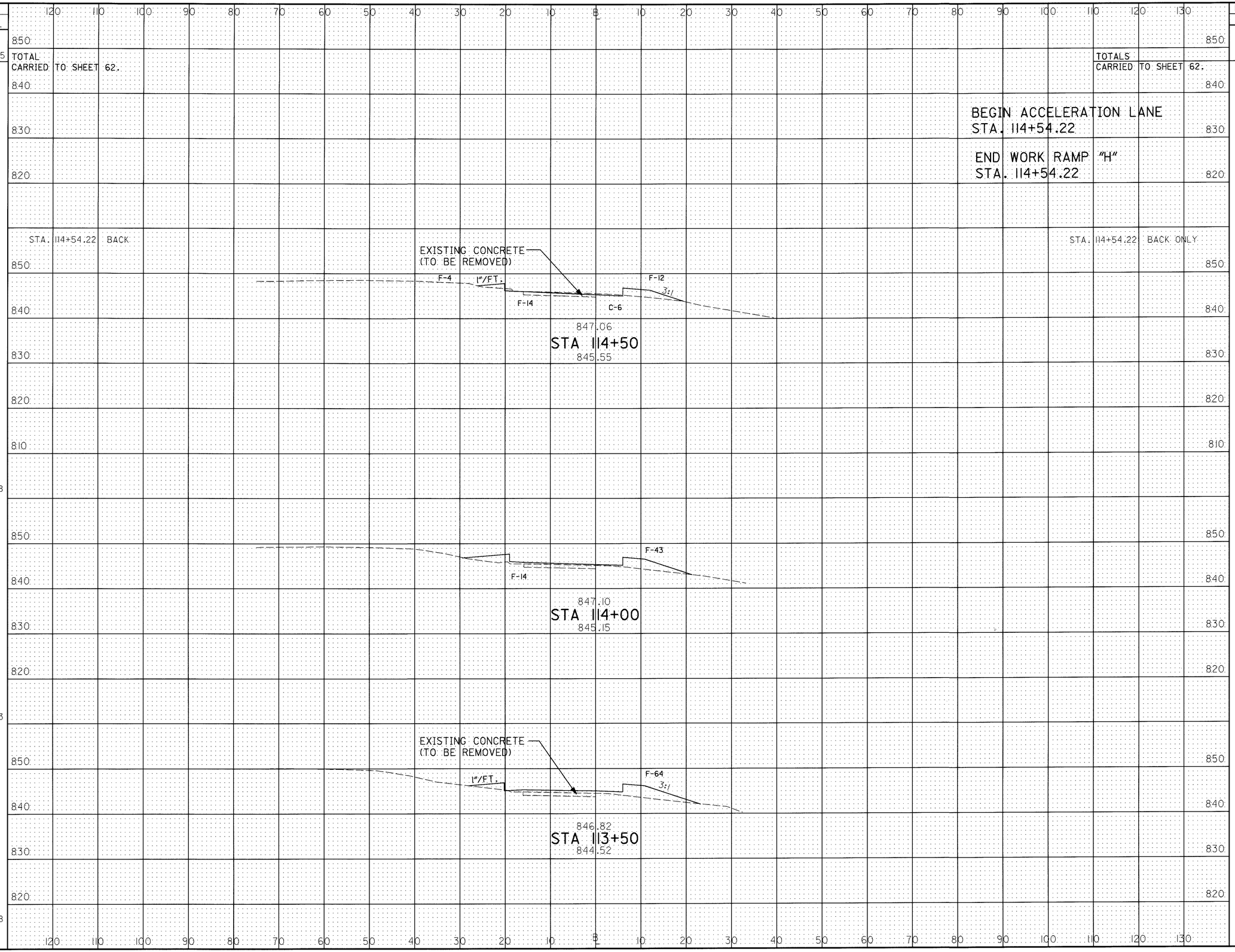

CALCULATED J.G. 3-13-95
CHECKED A.L.L. 3-16-95

CROSS SECTION SHEET RAMP "H"
STA. 113+50 TO STA. 115+00

LIC-16-19.72

147/547

RC004172.DGN 2/9/95

FOR PAVEMENT CALCULATIONS SEE SHEETS 68-80
FOR STORM SEWER QUANTITIES SEE SHEETS 265-266
FOR GUARDRAIL QUANTITIES SEE SHEET 81
FOR LIGHTING QUANTITIES AND DETAILS SEE SHEETS 363-401
FOR UNDERDRAIN QUANTITIES AND DETAILS SEE SHEETS 267-272
FOR SIGNING QUANTITIES AND DETAILS SEE SHEETS 273-362

1 6 L.F. EX. CONDUIT TO BE REMOVED AS PER ITEM 603.01
2 TO BE REMOVED AS PER ITEM 604.04
3 TO REMAIN IN SERVICE

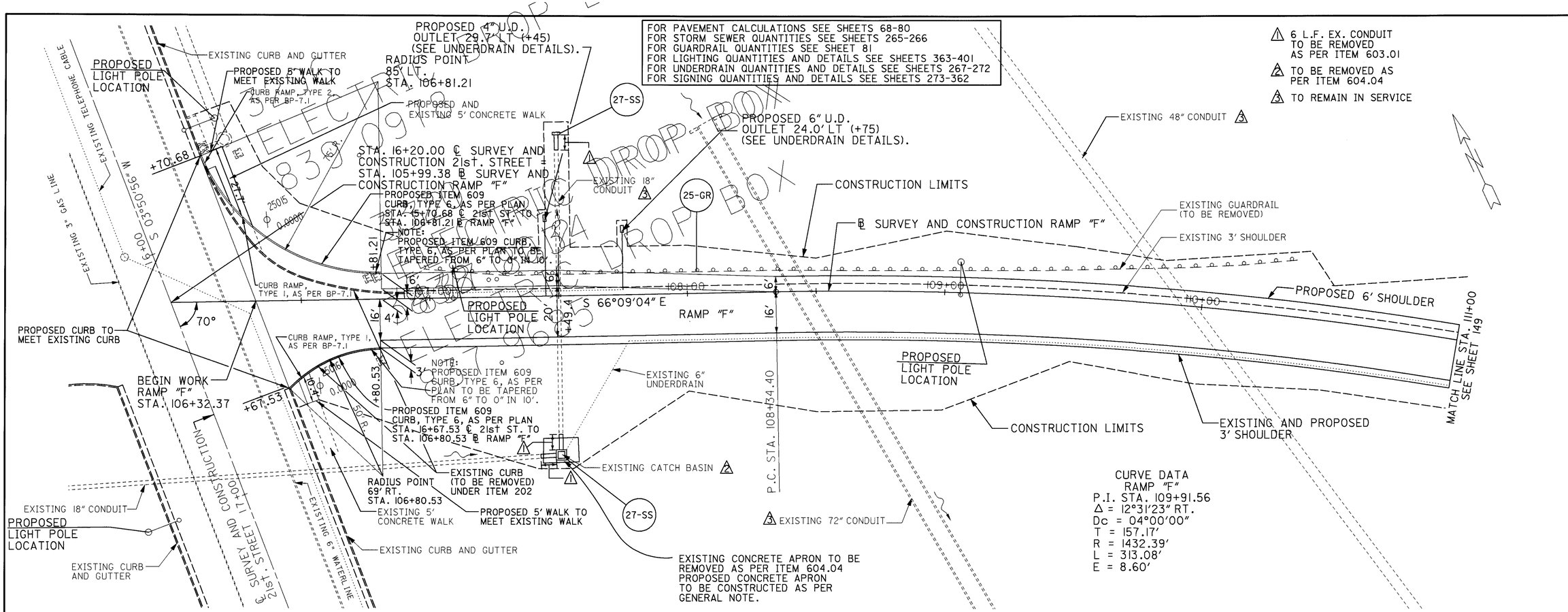

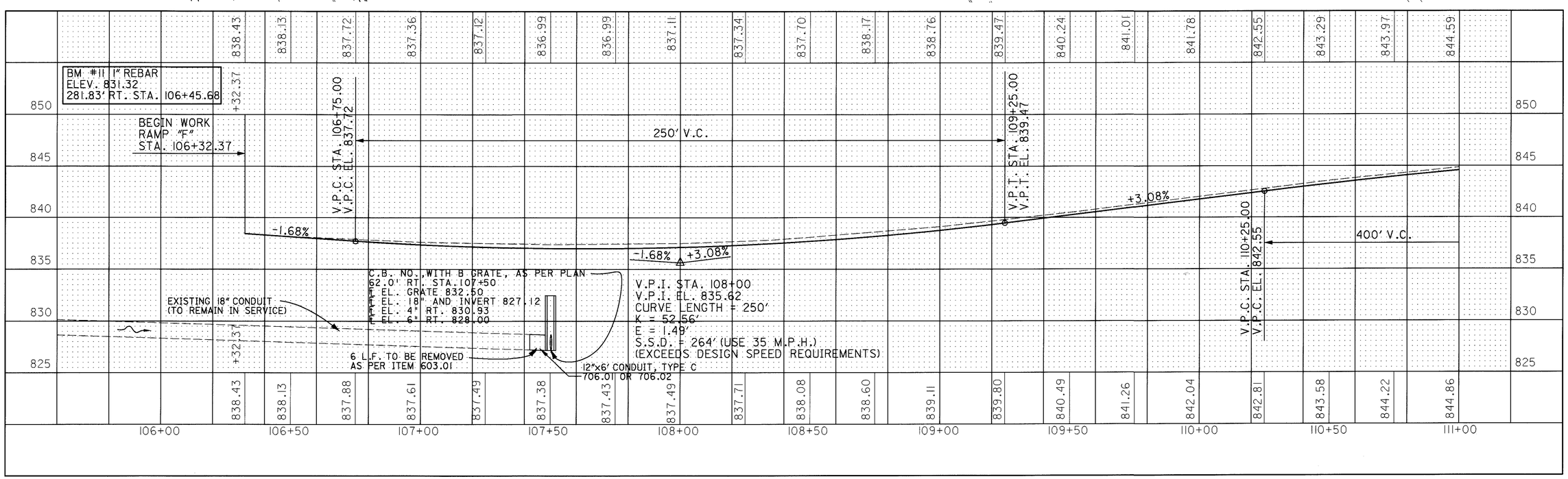

PLAN AND PROFILE SHEET RAMP "F"
STA. 106+32.37 TO STA. 111+00

CALCULATED
CHECKED

LIC-16-19.72

RCP01170.DGN 5/08/95

1. 6 L.F. EX. CONDUIT TO BE REMOVED AS PER ITEM 603.01
2. TO BE REMOVED AS PER ITEM 604.04
3. TO REMAIN IN SERVICE

FOR PAVEMENT CALCULATIONS SEE SHEETS 68-80
FOR STORM SEWER QUANTITIES SEE SHEETS 265-266
FOR GUARDRAIL QUANTITIES SEE SHEET 81
FOR MAINLINE S.R. 16 QUANTITIES AND DETAILS SEE SHEETS 82-99
FOR LIGHTING QUANTITIES AND DETAILS SEE SHEETS 363-401
FOR UNDERDRAIN QUANTITIES AND DETAILS SEE SHEETS 267-272
FOR SIGNING QUANTITIES AND DETAILS SEE SHEETS 273-362

CURVE DATA
RAMP "F"
P.I. STA. 115+39.89
Δ = 14°11'59" LT.
Dc = 4°00'00"
T = 178.41'
R = 1432.39'
L = 354.99'
E = 11.07'

NOTE:
FOR ADDITIONAL DETAILS OF RAMP "F", SEE SHEET 141

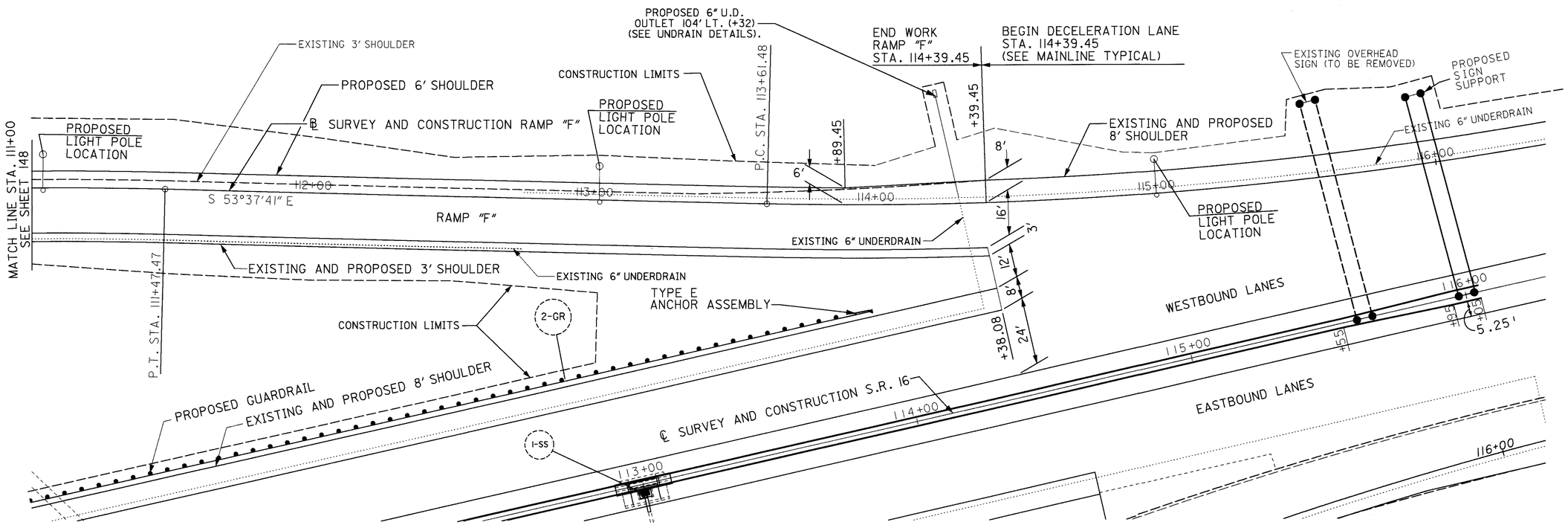

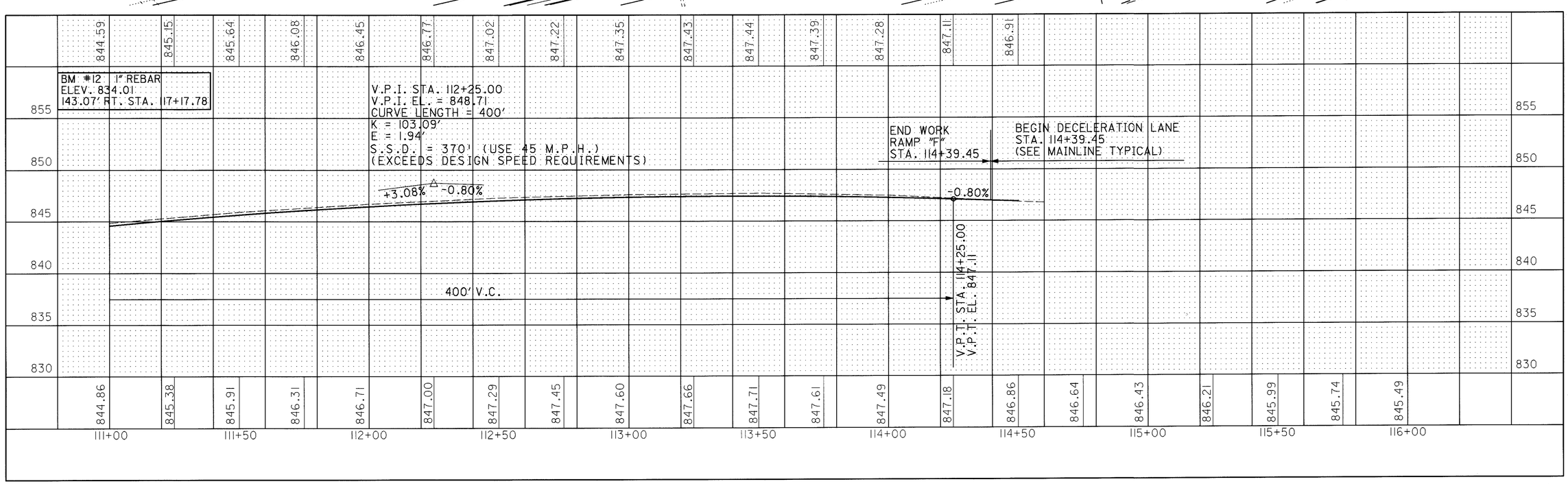

HORIZONTAL SCALE IN FEET 0 10 20 40

CALCULATED
CHECKED

PLAN AND PROFILE SHEET RAMP "F"
STA. 111+00 TO STA. 114+39.40

LIC-16-19.72

RCP0270.DGN 6/1/95

SEEDING END WIDTH	SEEDING SQ. YDS.	END AREA CUT	END AREA FILL	VOLUME CUT	VOLUME FILL
48		50	0		
	300			102	0
60		60	0		
				137	0
43		88	0		
	286				
43	84	88	0	57	0

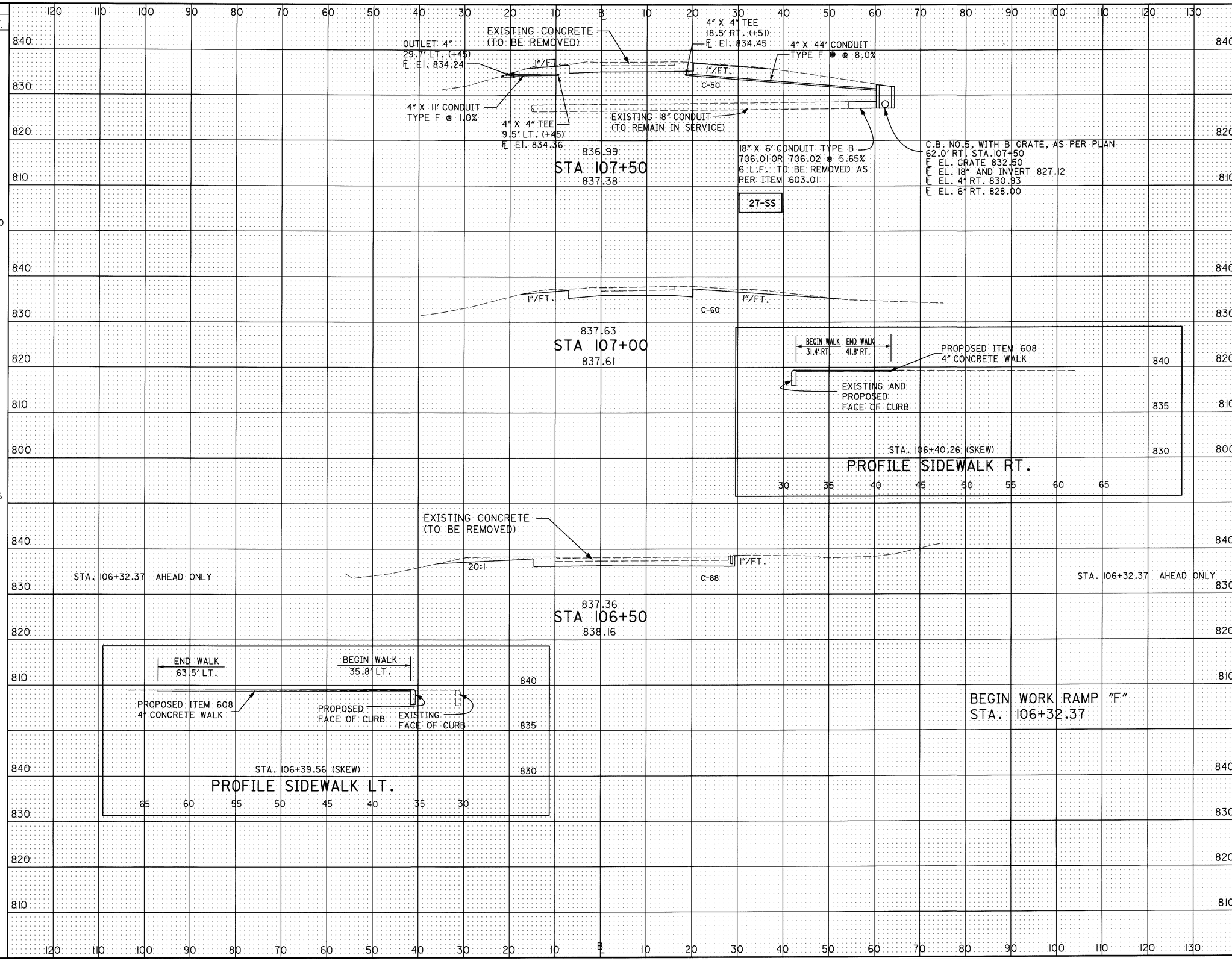

CALCULATED J.C.A. 3-15-95
CHECKED A.L.L. 3-16-95

CROSS SECTION SHEET RAMP "F" STA. 106+00 TO STA. 107+50

LIC-16-19.72

RC00170.DGN 4/28/95

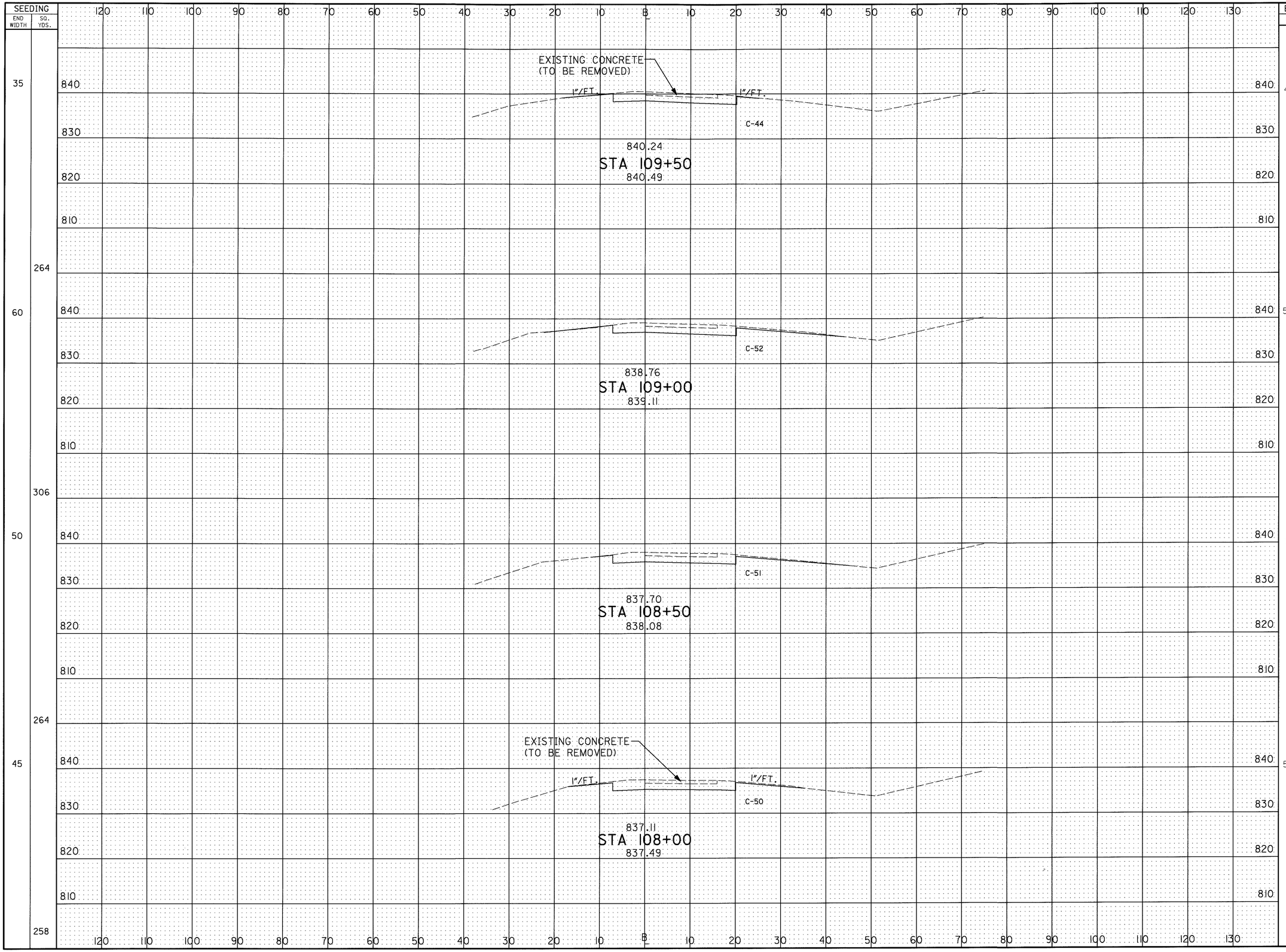

CALCULATED A.L.A.L. 3-13-95
CHECKED A.L.L. 3-16-95

CROSS SECTION SHEET RAMP "F"
STA. 108+00 TO STA. 109+50

LIC-16-19.72

RC002170.DGN 2/9/95

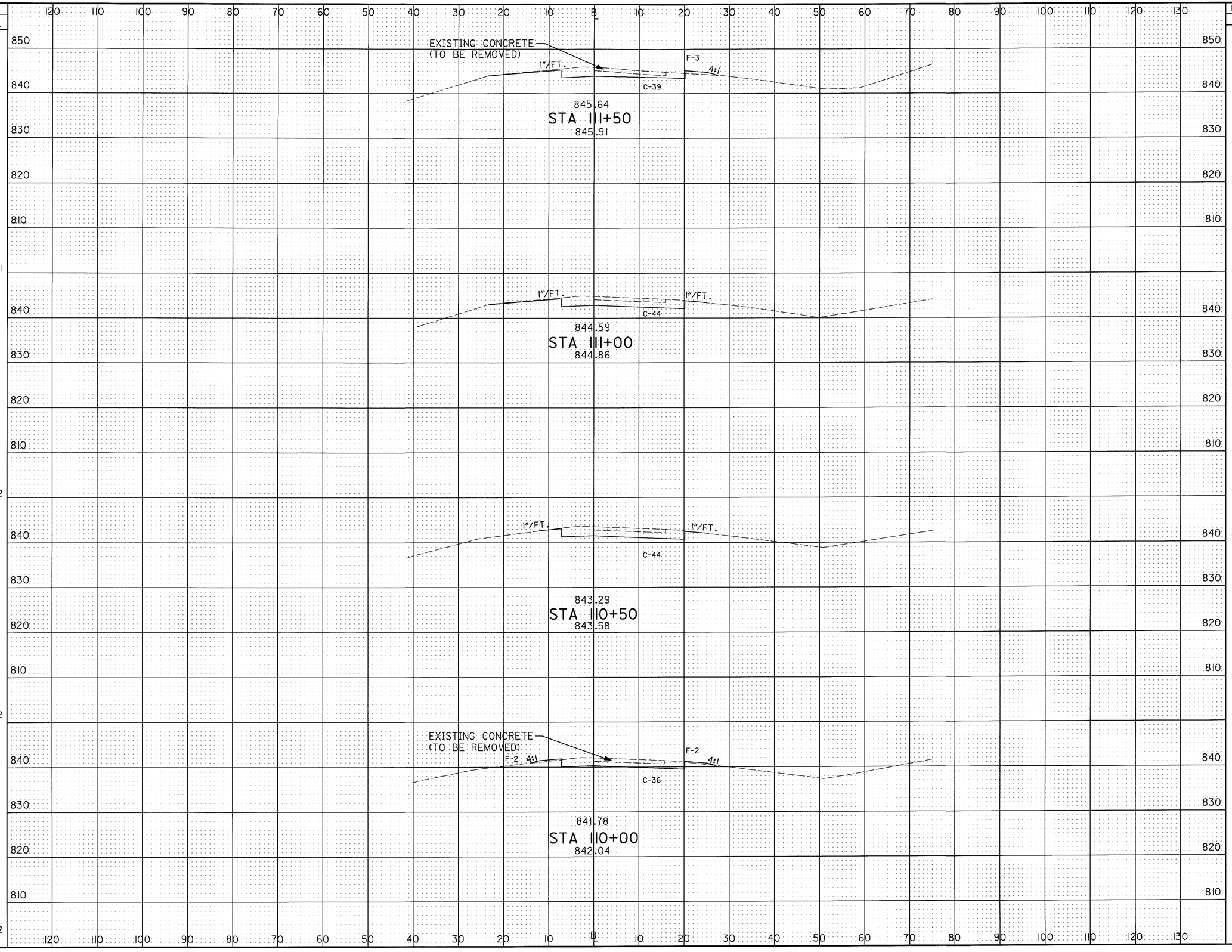

SEEDING END WIDTH	SEEDING SQ. YDS.	END AREA CUT	END AREA FILL	VOLUME CUT	VOLUME FILL
42		39	3		
	231			77	3
41		44	0		
	192			81	0
28		44	0		
	172			74	4
34		36	4		
	192			74	4

CALCULATED J.G. 3-13-95
CHECKED A.L.L. 3-16-95

CROSS SECTION SHEET RAMP "F"
STA. 110+00 TO STA. 111+50

LIC-16-19.72

RC003170.DGN 2/9/95

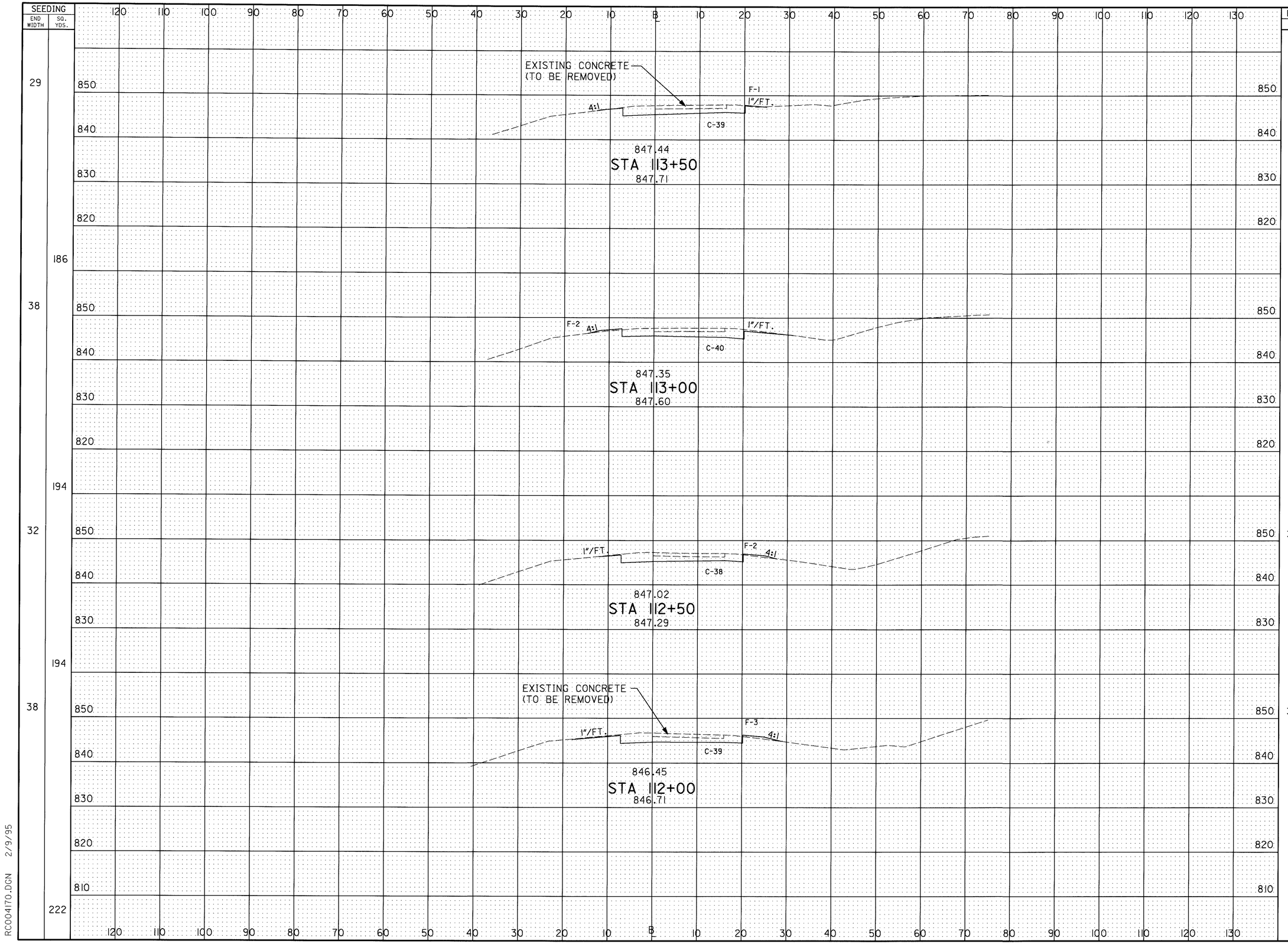
SEEDING
END WIDTH
SQ. YDS.
EXISTING CONCRETE (TO BE REMOVED)
F-1
1"/FT.
4:1
C-39
847.44
STA 113+50
847.71
F-2
C-40
847.35
STA 113+00
847.60
C-38
847.02
STA 112+50
847.29
F-3
C-39
846.45
STA 112+00
846.71
END AREA
CUT
FILL
VOLUME
CUT
FILL
CALCULATED J.G. 3-16-95
CHECKED A.L.L. 3-16-95
CROSS SECTION SHEET RAMP "F"
SSTA. 112+00 TO STA. 113+50
LIC-16-19.72
153
547
RC0041T0.DGN 2/9/95

SEEDING END WIDTH	SEEDING SQ. YDS.	END AREA CUT	END AREA FILL	VOLUME CUT	VOLUME FILL
	3626			1383	32
28	123	36	1	53	1
28	158	36	1	69	2

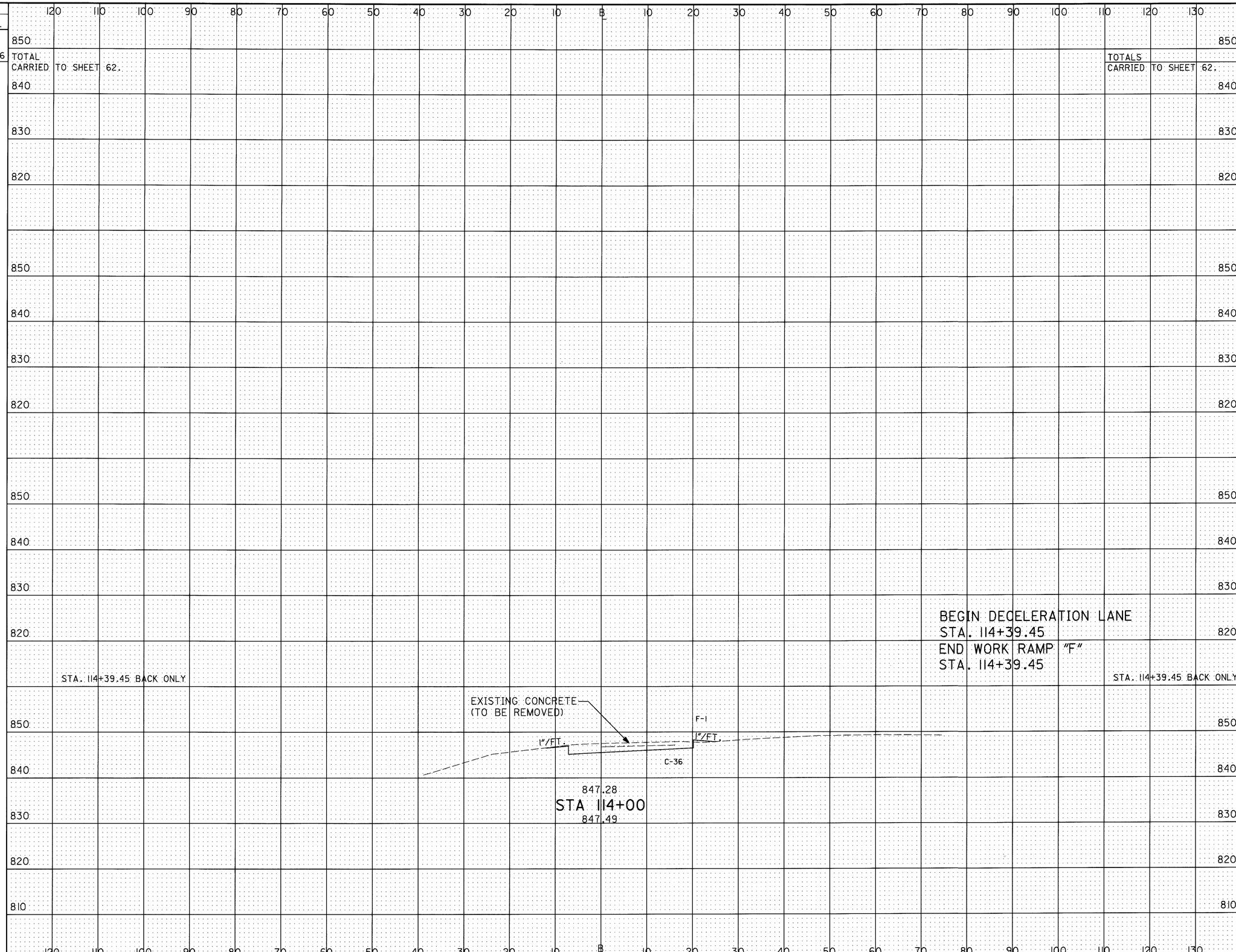

CALCULATED J.L.A. 3-13-95
CHECKED A.L.L. 3-16-95

CROSS SECTION SHEET RAMP "F"
STA. 114+00 TO STA. 115+50

LIC-16-19.72

RC005170.DGN 2/9/95

FOR PAVEMENT CALCULATIONS SEE SHEETS 68-80
FOR STORM SEWER QUANTITIES SEE SHEETS 265-266
FOR GUARDRAIL QUANTITIES SEE SHEET 81
FOR MAINLINE S.R. 16 QUANTITIES AND DETAILS SEE SHEETS 82-99
FOR LIGHTING QUANTITIES AND DETAILS SEE SHEETS 363-401
FOR UNDERDRAIN QUANTITIES AND DETAILS SEE SHEETS 267-272
FOR SIGNING QUANTITIES AND DETAILS SEE SHEETS 273-362

1 6 L.F. EX. CONDUIT TO BE REMOVED AS PER ITEM 603.01
2 TO BE REMOVED AS PER ITEM 604.04
3 TO REMAIN IN SERVICE

CURVE DATA
RAMP "B-B"
P.I. STA. 147+76.90
Δ = 19°50'16" LT.
Dc = 8°00'00"
T = 125.24'
R = 716.20'
L = 247.97'
E = 10.87'

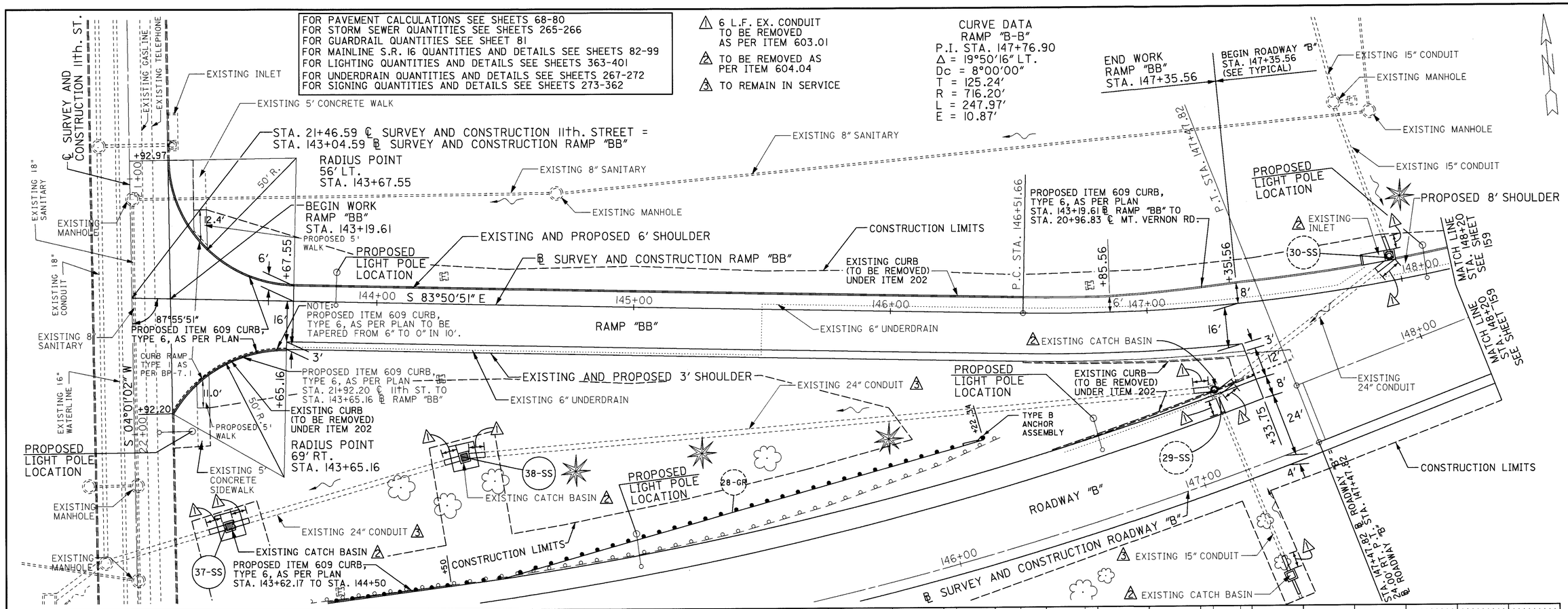

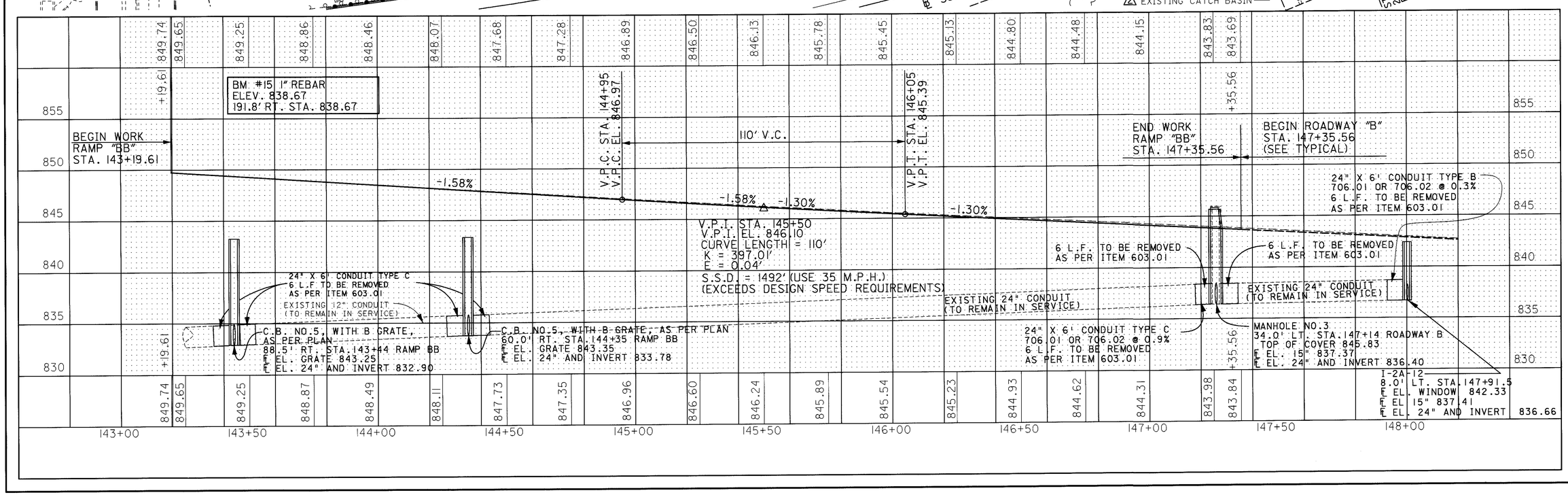

HORIZONTAL SCALE IN FEET 0 10 20 40

CALCULATED
CHECKED

PLAN AND PROFILE SHEET RAMP "BB"
STA. 143+19.61 TO STA. 148+20

LIC-16-19.72

RCP0181.DGN 6/1/95

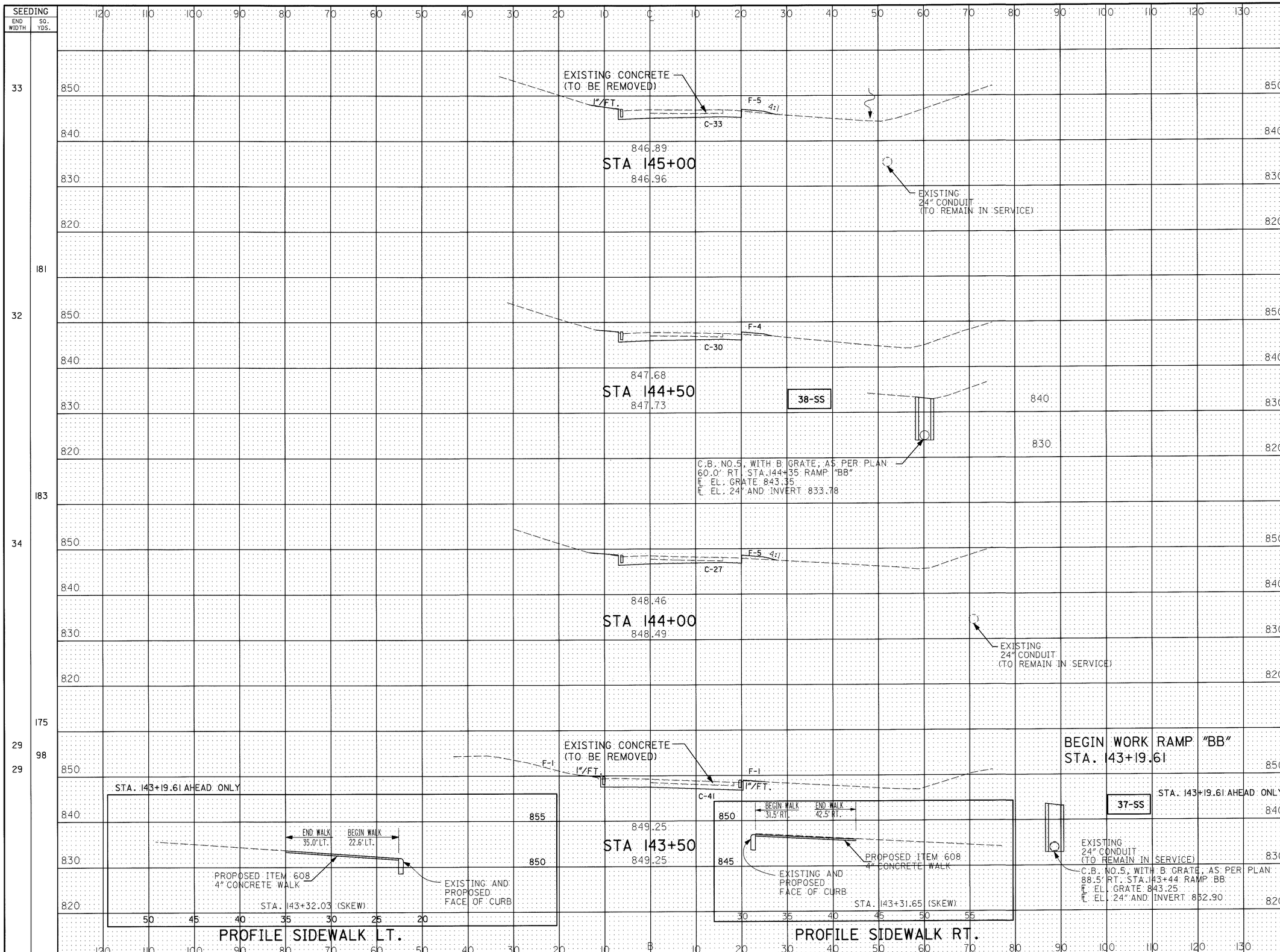

END AREA CUT	END AREA FILL	VOLUME CUT	VOLUME FILL
33	5		
		58	8
30	4		
		53	8
27	5		
		63	6
41	2		
		46	2
41	2		

CALCULATED J.G. 3-13-95
CHECKED A.L.L. 3-16-95

CROSS SECTION SHEET RAMP "BB"
STA. 143+50 TO STA. 145+00

LIC-16-19.72

RC00118I.DGN 4/28/95

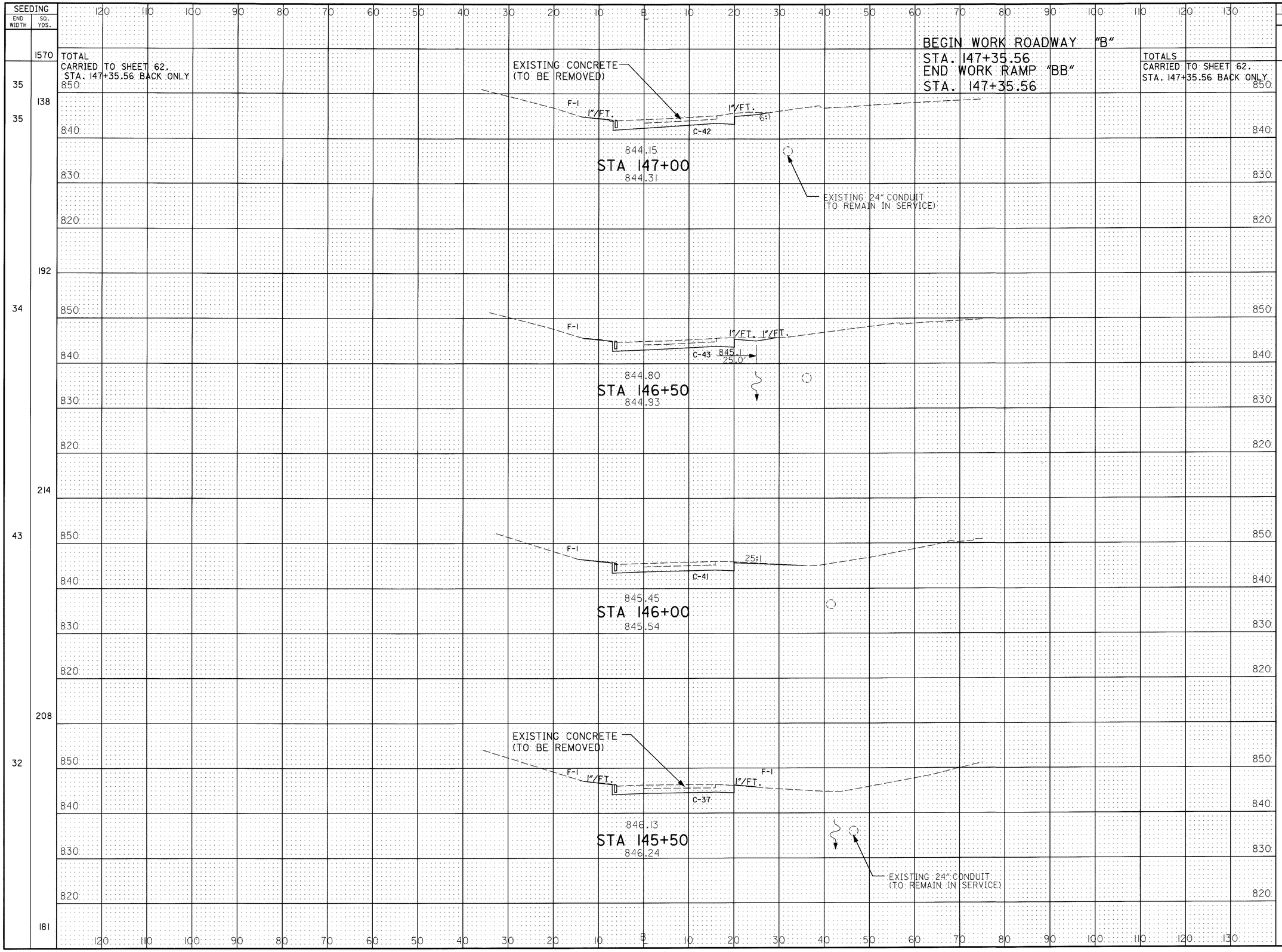
SEEDING
END WIDTH
SQ. YDS.
1570
138
192
214
208
181
35
35
34
43
32
TOTAL
CARRIED TO SHEET 62.
STA. 147+35.56 BACK ONLY
BEGIN WORK ROADWAY "B"
STA. 147+35.56
END WORK RAMP "BB"
STA. 147+35.56
TOTALS
CARRIED TO SHEET 62.
STA. 147+35.56 BACK ONLY
EXISTING CONCRETE
(TO BE REMOVED)
F-1
1"/FT.
C-42
6:1
844.15
STA 147+00
844.31
EXISTING 24" CONDUIT
(TO REMAIN IN SERVICE)
C-43
845.1
25.0'
844.80
STA 146+50
844.93
C-41
25:1
845.45
STA 146+00
845.54
C-37
846.13
STA 145+50
846.24
850
840
830
820
END AREA
CUT
FILL
VOLUME
CUT
FILL
569
38
42
1
55
1
42
1
79
2
43
1
78
2
41
1
72
3
37
2
65
6
CALCULATED
A.L.L.
3-13-95
CHECKED
A.L.L.
3-16-95
CROSS SECTION SHEET RAMP "BB"
STA. 145+50 TO STA. 147+00
LIC-16-19.72
157
547
RC002181.DGN 2/9/95

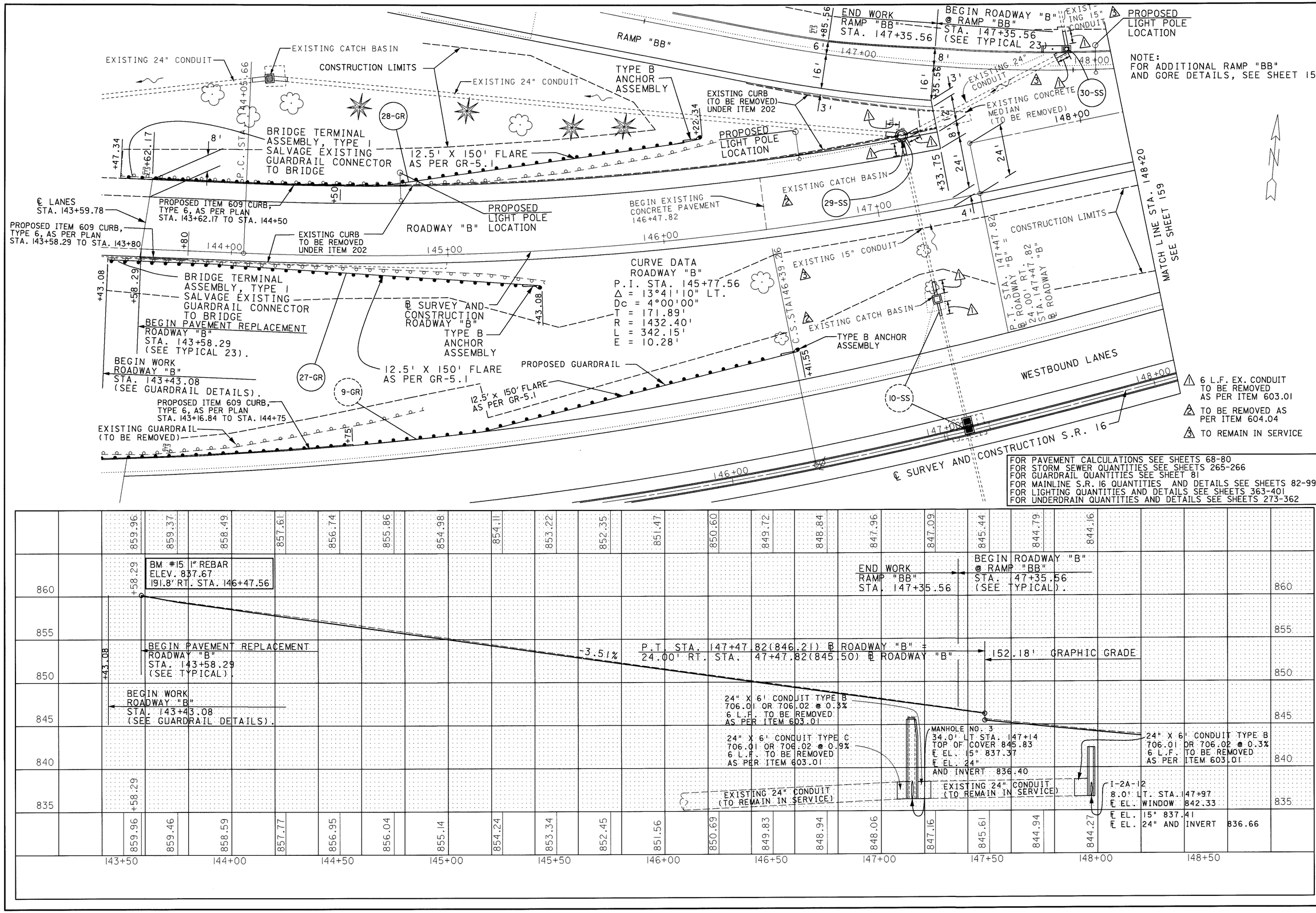

PLAN AND PROFILE SHEET ROADWAY "B" STA. 143+58.29 TO STA. 148+20

HORIZONTAL SCALE IN FEET 0 10 20 40

CALCULATED

CHECKED

LIC-16-19.72

RCP01178.DGN 6/1/95

FOR PAVEMENT CALCULATIONS SEE SHEETS 68-80
FOR STORM SEWER QUANTITIES SEE SHEETS 265-266
FOR GUARDRAIL QUANTITIES SEE SHEET 81
FOR MAINLINE S.R.16 QUANTITIES AND DETAILS SEE SHEETS 82-99
FOR LIGHTING QUANTITIES AND DETAILS SEE SHEETS 363-401
FOR UNDERDRAIN QUANTITIES AND DETAILS SEE SHEETS 267-272
FOR SIGNING QUANTITIES AND DETAILS SEE SHEETS 273-362

1 6 L.F. EX. CONDUIT TO BE REMOVED AS PER ITEM 603.01
2 TO BE REMOVED AS PER ITEM 604.04
3 TO REMAIN IN SERVICE

NOTE:
FOR ADDITIONAL DETAILS OF ROADWAY "B" SEE SHEETS 149 & 150

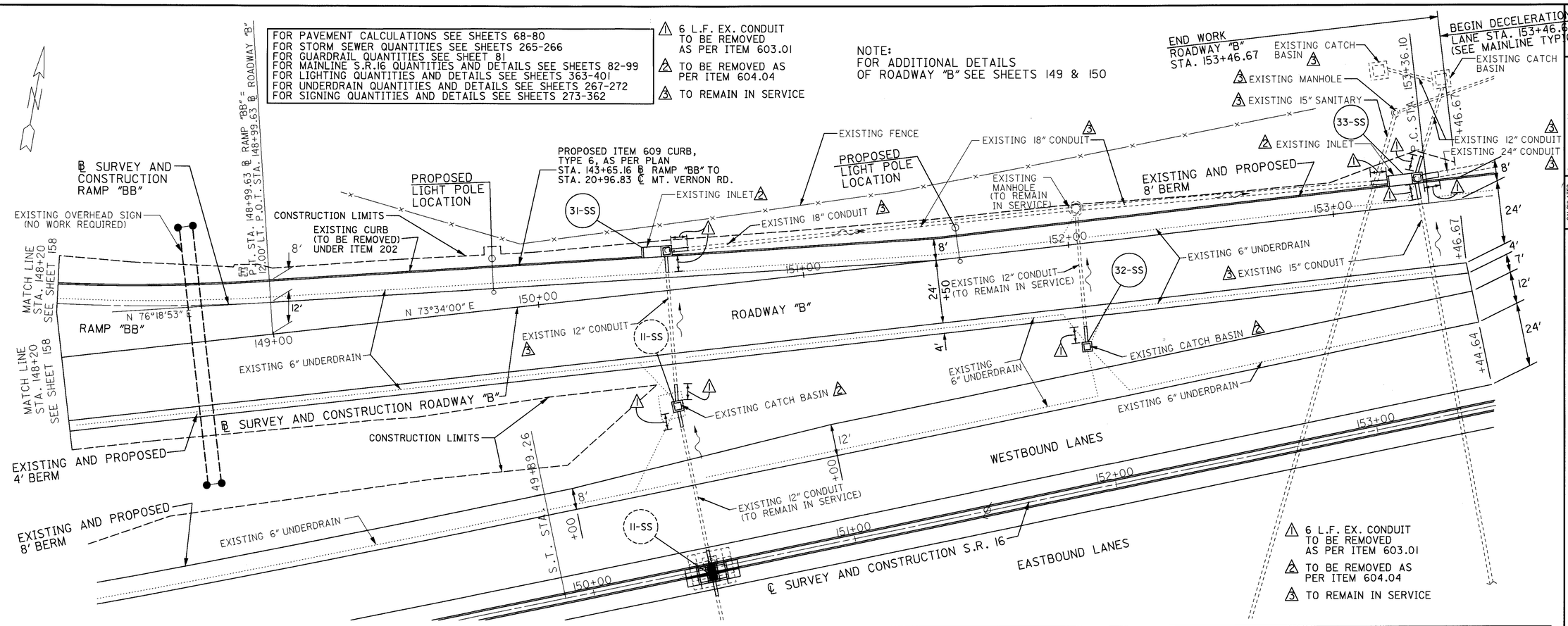

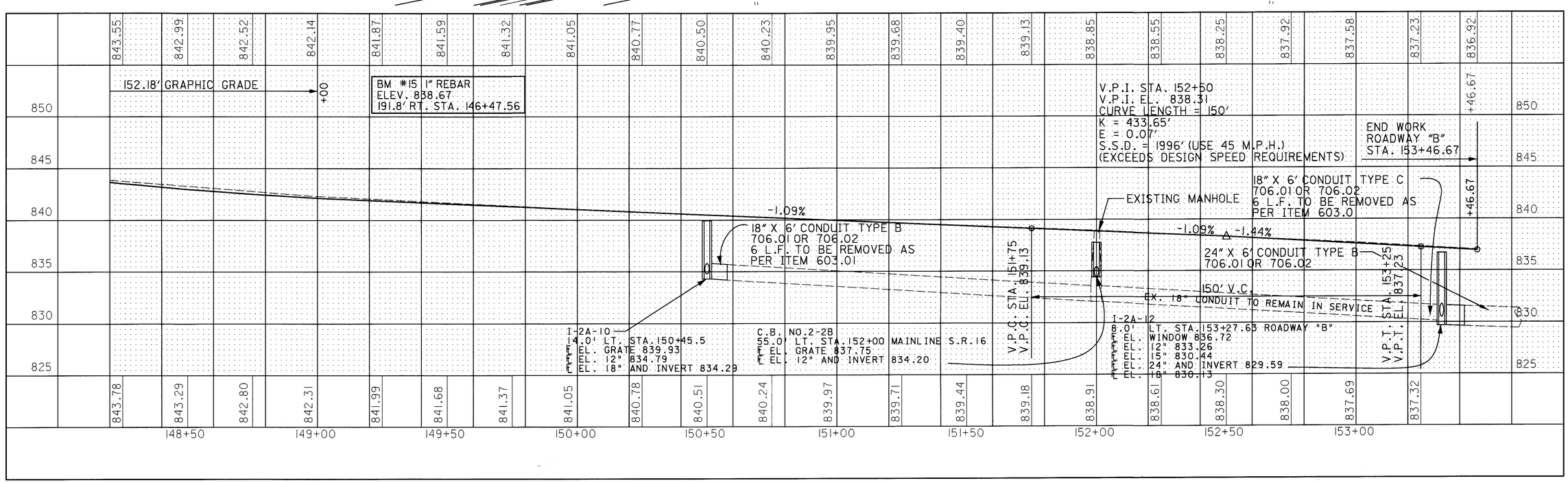

PLAN AND PROFILE SHEET ROADWAY "B"
STA. 148+20 TO STA. 153+36.10

HORIZONTAL SCALE IN FEET 0 10 20 40

CALCULATED
CHECKED

LIC-16-19.72

RCP0218I.DGN 5/08/95

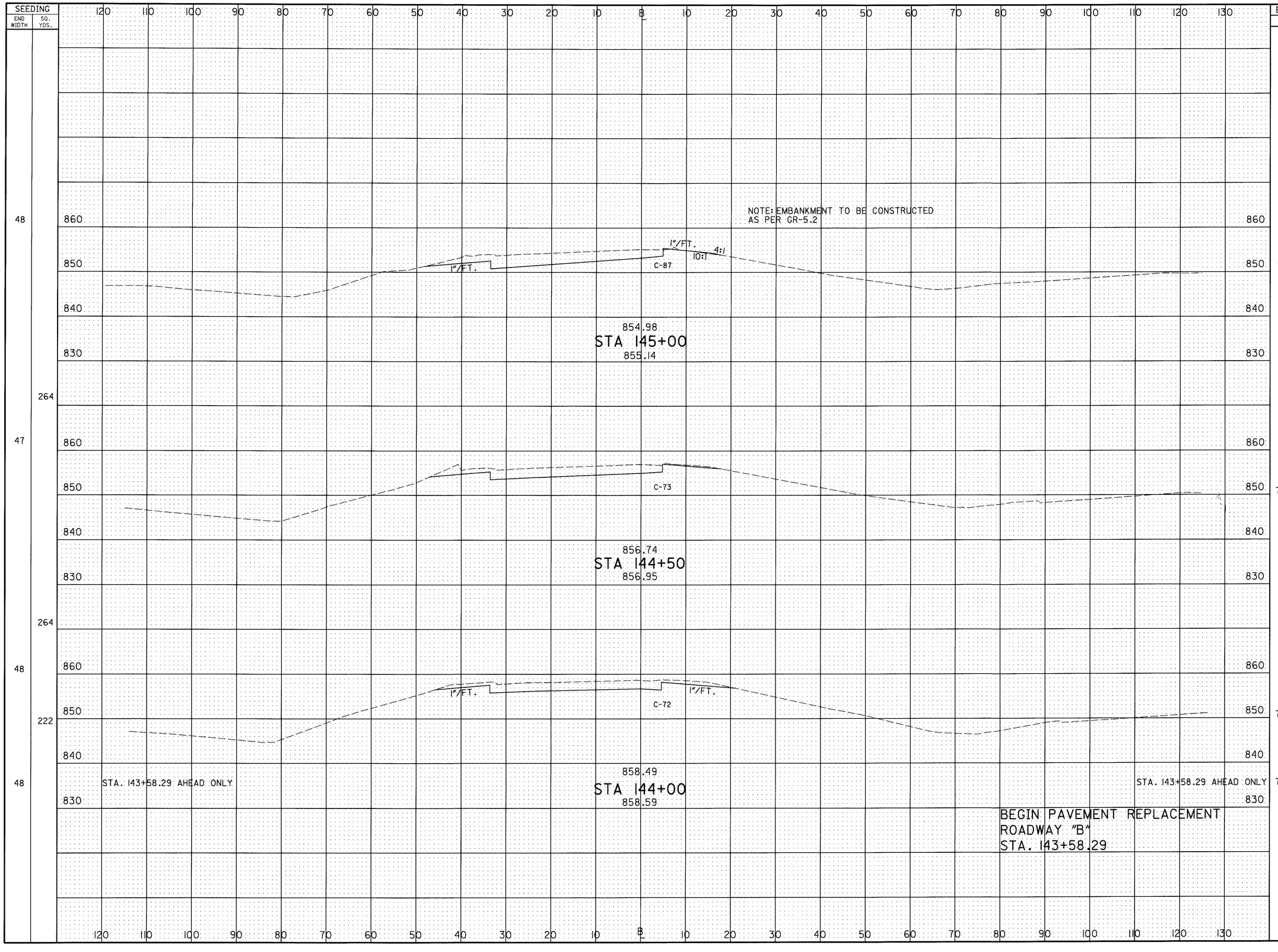

END AREA CUT	END AREA FILL	VOLUME CUT	VOLUME FILL
87	0		
		148	0
73	0		
		134	0
72	0		
		111	0
72	0		

CALCULATED J.G. 3-13-95
CHECKED A.L.L. 3-16-95

CROSS SECTIONS ROADWAY "B"
STA. 144+00 TO STA. 145+00

LIC-16-19.72

160
547

RC00178.DGN 2/17/95

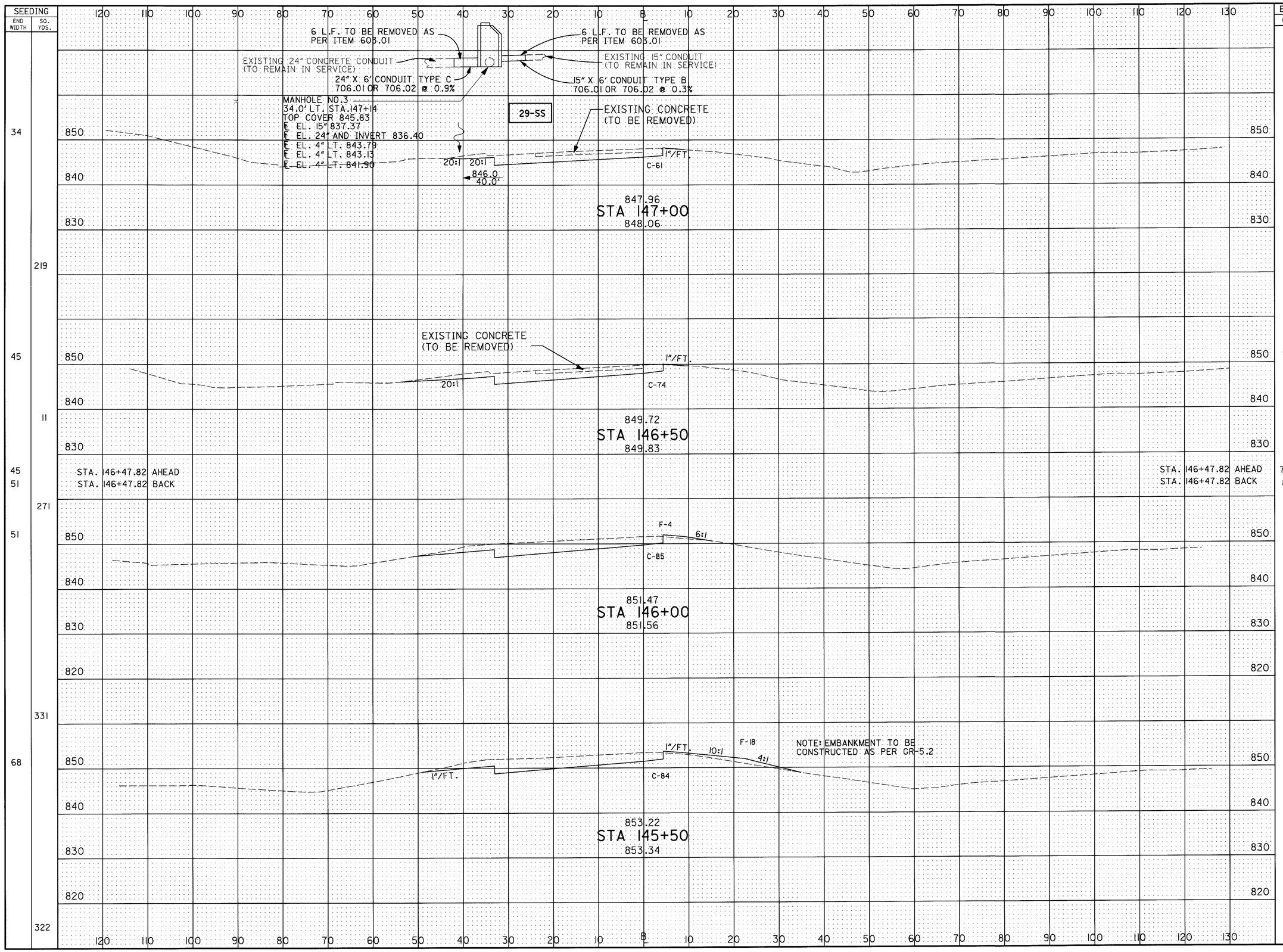
SEEDING
END WIDTH
SQ. YDS.
6 L.F. TO BE REMOVED AS PER ITEM 603.01
EXISTING 24" CONCRETE CONDUIT (TO REMAIN IN SERVICE)
24" X 6' CONDUIT TYPE C 706.01 OR 706.02 @ 0.9%
MANHOLE NO.3
34.0' LT. STA.147+14
TOP COVER 845.83
℄ EL. 15" 837.37
℄ EL. 24" AND INVERT 836.40
℄ EL. 4" LT. 843.79
℄ EL. 4" LT. 843.13
℄ EL. 4" LT. 841.90
29-SS
6 L.F. TO BE REMOVED AS PER ITEM 603.01
EXISTING 15" CONDUIT (TO REMAIN IN SERVICE)
15" X 6' CONDUIT TYPE B 706.01 OR 706.02 @ 0.3%
EXISTING CONCRETE (TO BE REMOVED)
20:1
846.0
40.0'
1"/FT.
C-61
847.96
STA 147+00
848.06
EXISTING CONCRETE (TO BE REMOVED)
1"/FT.
20:1
C-74
849.72
STA 146+50
849.83
STA. 146+47.82 AHEAD
STA. 146+47.82 BACK
F-4
6:1
C-85
851.47
STA 146+00
851.56
1"/FT.
10:1
F-18
4:1
1"/FT.
C-84
NOTE: EMBANKMENT TO BE CONSTRUCTED AS PER GR-5.2
853.22
STA 145+50
853.34
END AREA
CUT
FILL
VOLUME
CUT
FILL
CALCULATED J.G. 3-13-95
CHECKED A.L.L. 3-16-95
CROSS SECTIONS ROADWAY "B"
STA. 145+50 TO STA. 147+00
LIC-16-19.72
161
547
RC002178.DGN 6/1/95

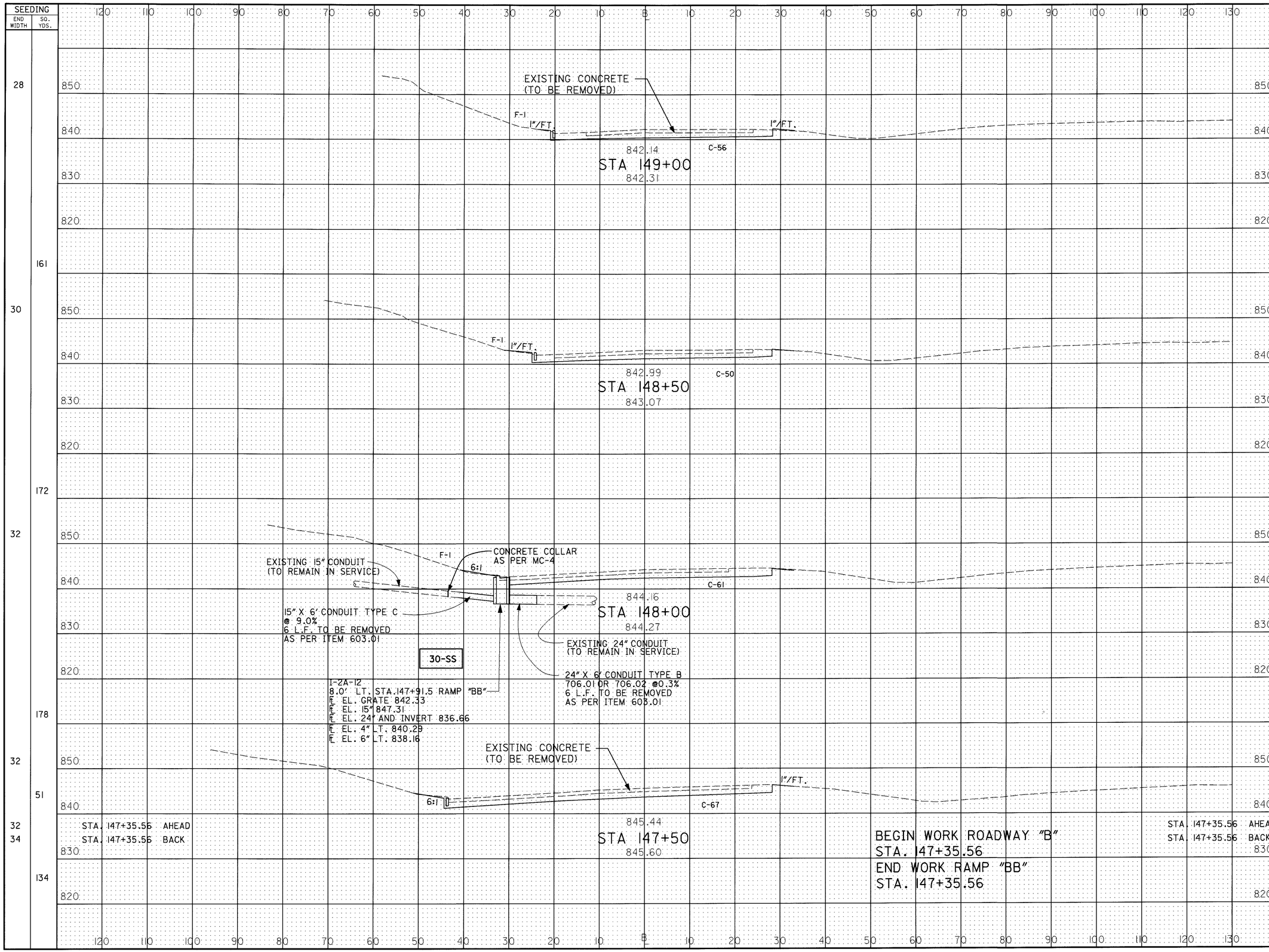

CALCULATED J.A.A. 3-13-95
CHECKED A.L.L. 3-16-95

CROSS SECTION SHEET ROADWAY "B" STA. 147+50 TO STA. 149+00

LIC-16-19.72

RC00179.DGN 3/03/95

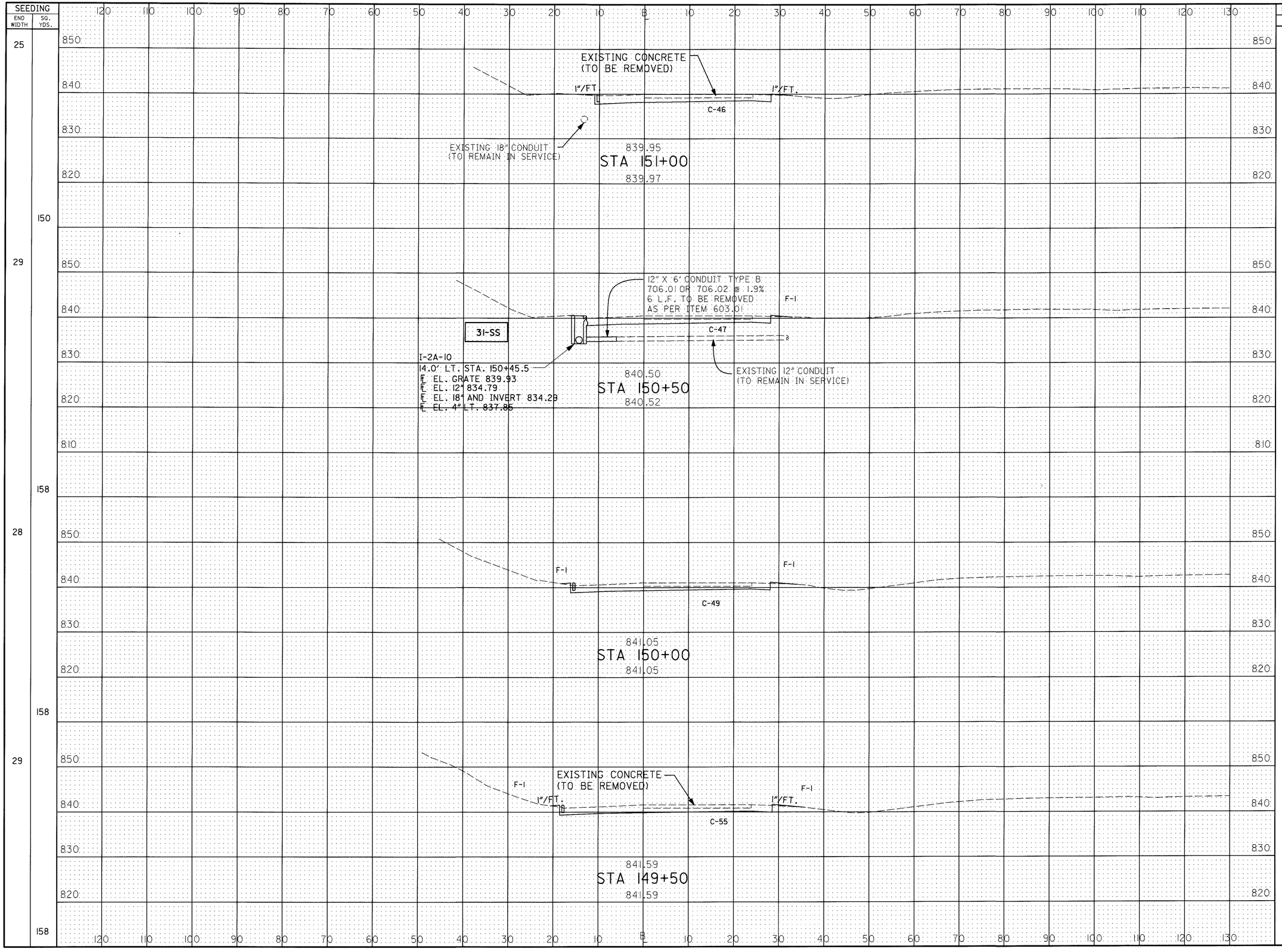

END AREA CUT	END AREA FILL	VOLUME CUT	VOLUME FILL
46	0		
47	1	86	1
49	2	89	3
55	2	96	4
		103	3

CALCULATED J.A.A. 3-13-95
CHECKED A.L.L. 3-16-95

CROSS SECTION SHEET ROADWAY "B"
STA. 149+50 TO STA. 151+00

LIC-16-19.72

RC002179.DGN 4/28/95

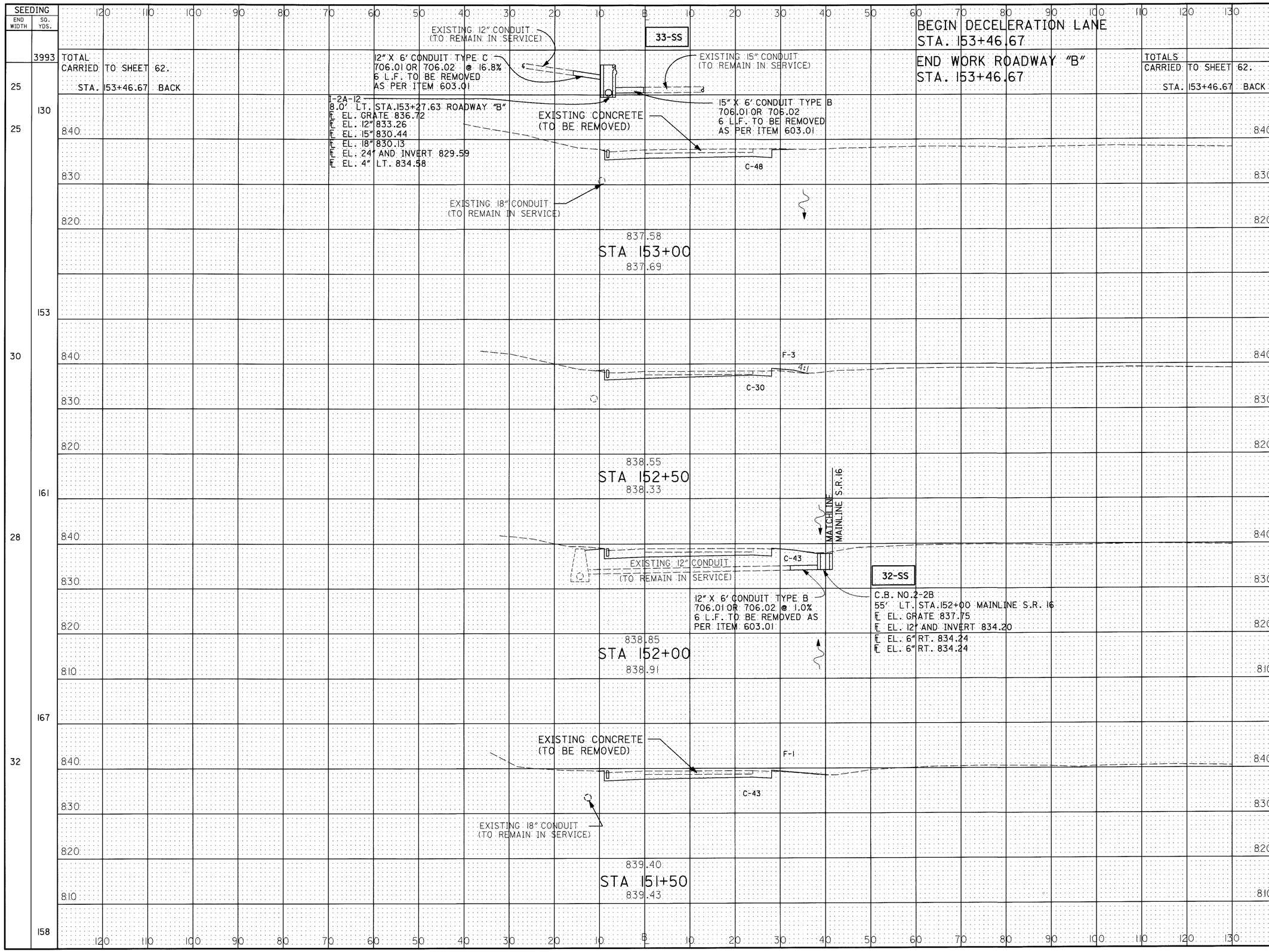

CALCULATED J.G. 3-13-95

CHECKED A.L.L. 3-16-95

CROSS SECTION SHEET ROADWAY "B"
STA. 151+50 TO STA. 153+00

LIC-16-19.72

RC00317B.DGN 3/03/95

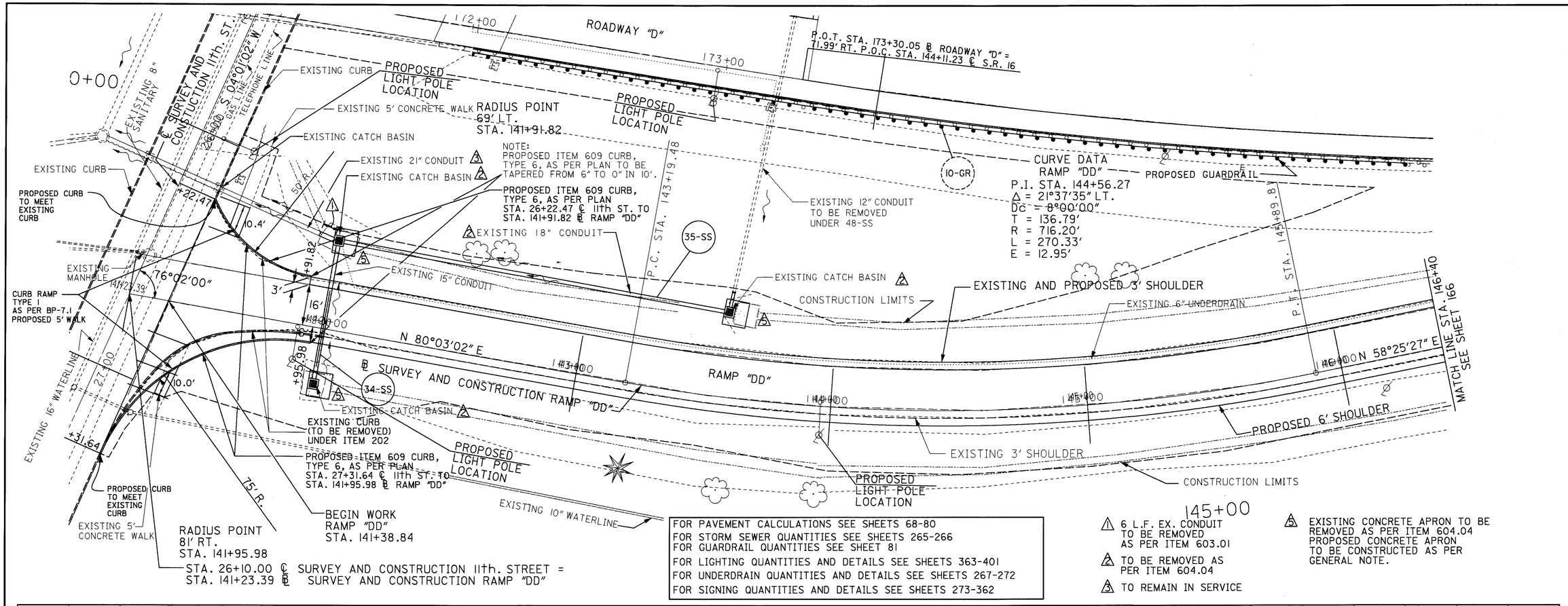

FOR PAVEMENT CALCULATIONS SEE SHEETS 68-80
FOR STORM SEWER QUANTITIES SEE SHEETS 265-266
FOR GUARDRAIL QUANTITIES SEE SHEET 81
FOR LIGHTING QUANTITIES AND DETAILS SEE SHEETS 363-401
FOR UNDERDRAIN QUANTITIES AND DETAILS SEE SHEETS 267-272
FOR SIGNING QUANTITIES AND DETAILS SEE SHEETS 273-362

1 6 L.F. EX. CONDUIT TO BE REMOVED AS PER ITEM 603.01

2 TO BE REMOVED AS PER ITEM 604.04

3 TO REMAIN IN SERVICE

4 EXISTING CONCRETE APRON TO BE REMOVED AS PER ITEM 604.04 PROPOSED CONCRETE APRON TO BE CONSTRUCTED AS PER GENERAL NOTE.

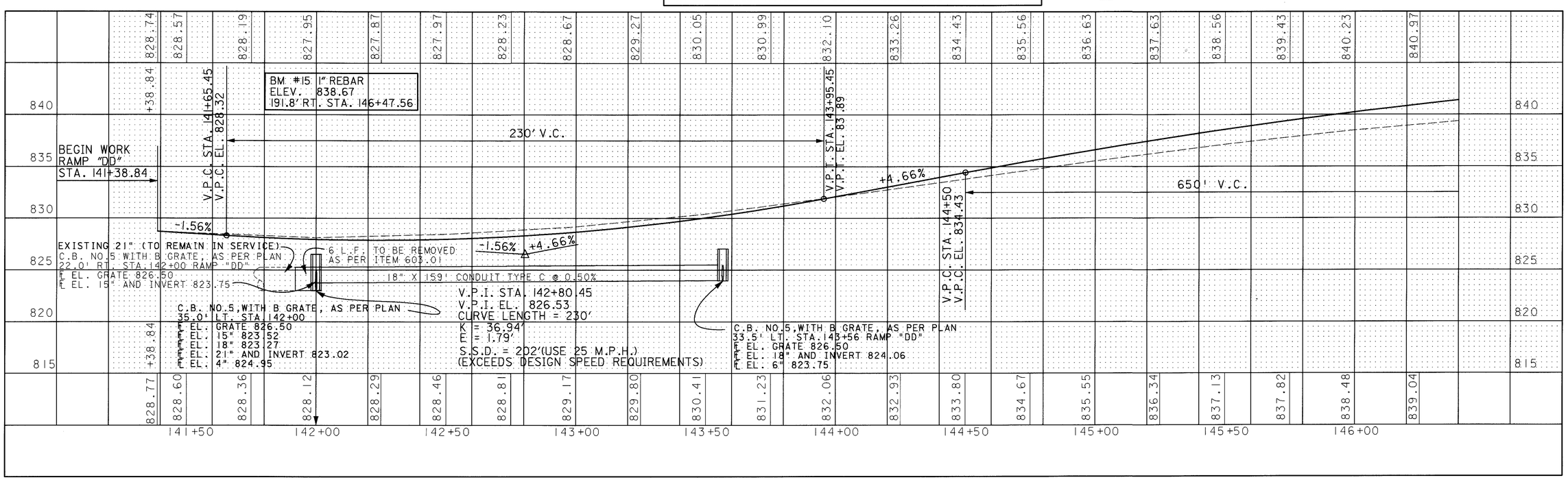

HORIZONTAL SCALE IN FEET 0 10 20 40

CALCULATED

CHECKED

PLAN AND PROFILE SHEET "RAMP DD"
STA. 141+38.84 TO STA. 146+40

LIC-16-19.72

RCP0182.DGN 6/1/95

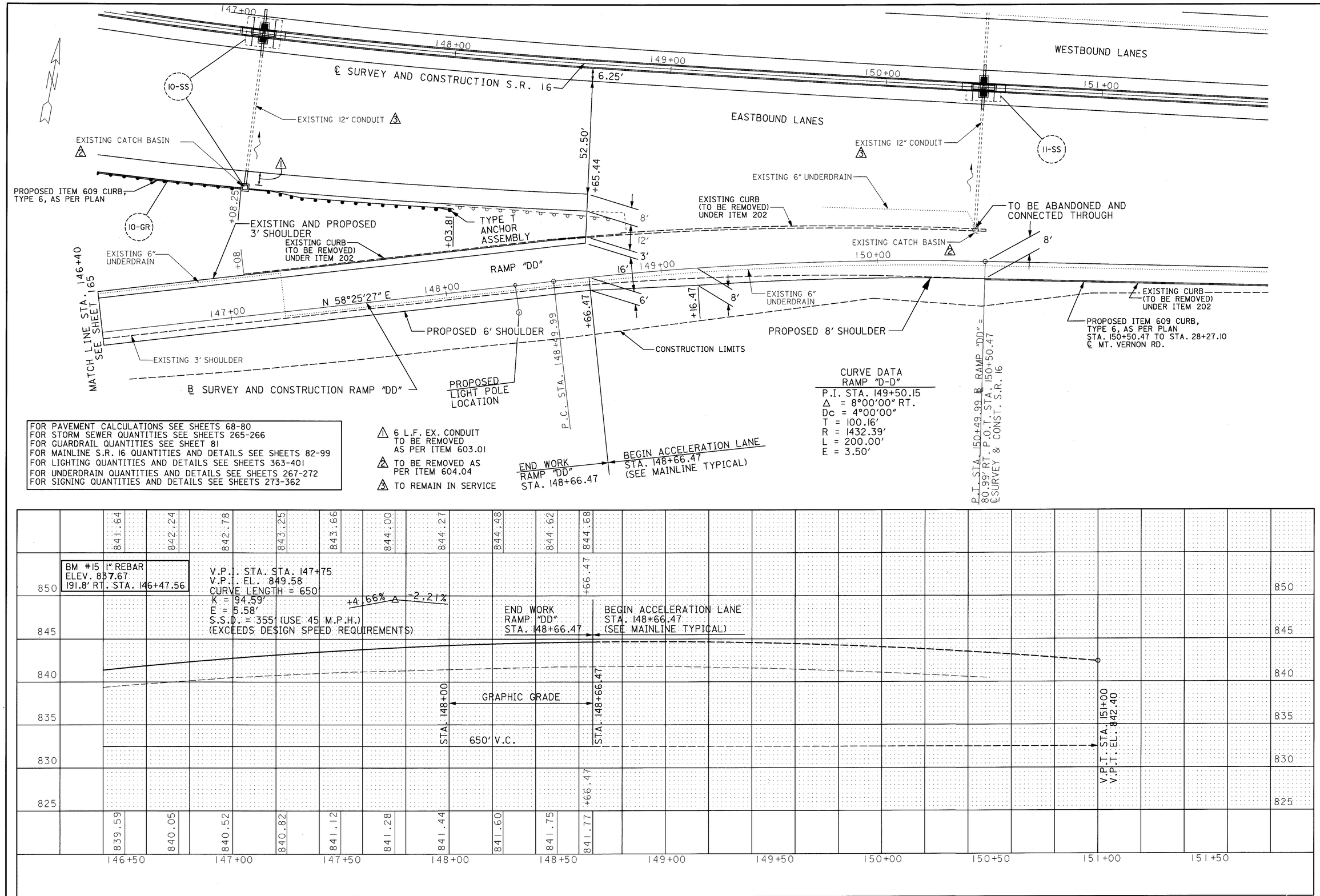

PLAN AND PROFILE SHEET RAMP "DD"
STA. 146+40 TO STA. 151+50

LIC-16-19.72

RCP02I82.DGN 04/28/95

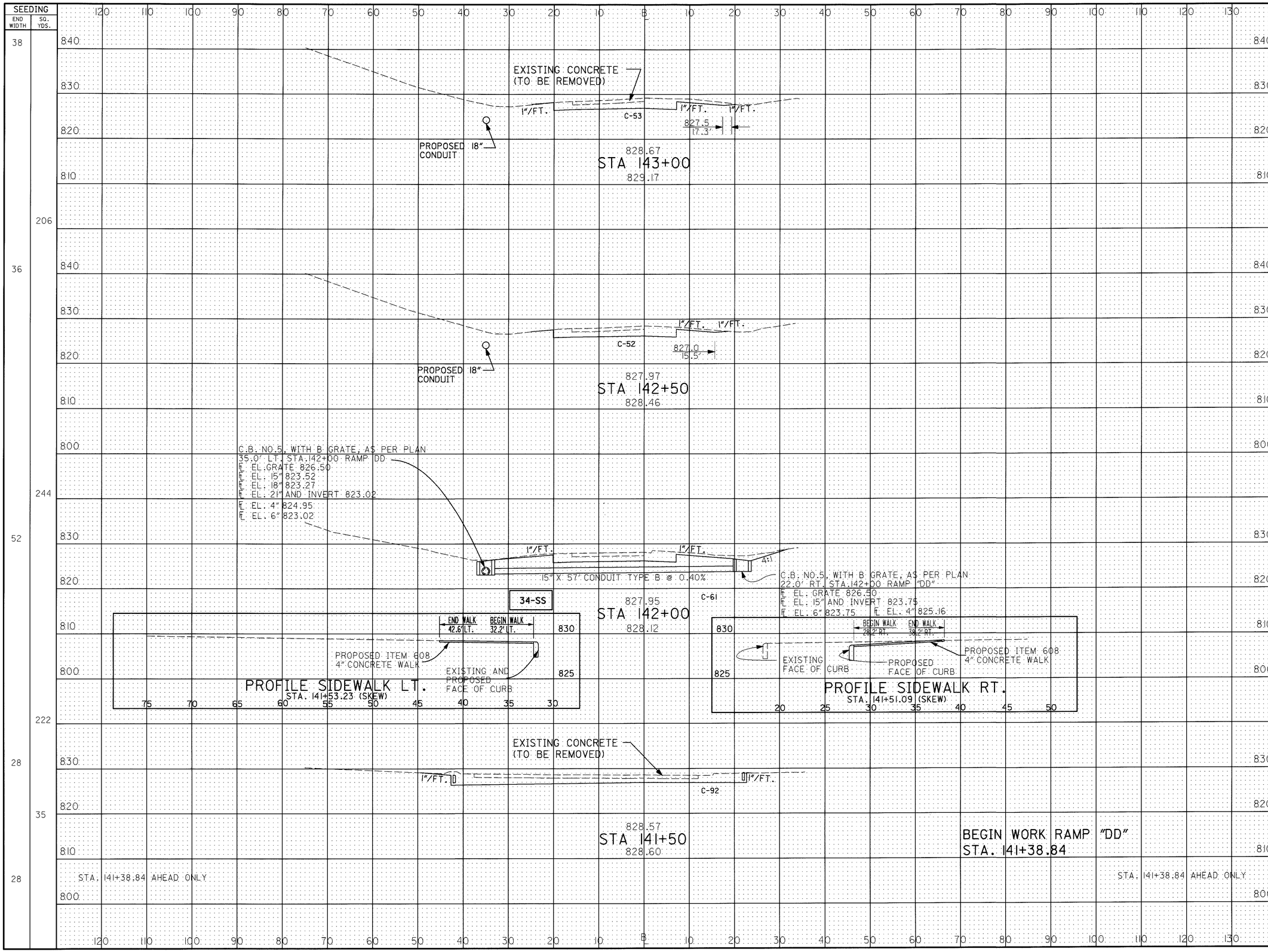

CALCULATED J.T.S. 3-13-95
CHECKED A.L.L. 3-16-95

CROSS SECTION SHEET RAMP "DD" STA. 141+50 TO STA. 143+00

LIC-16-19.72

167
547

RC00182.DGN 4/28/95

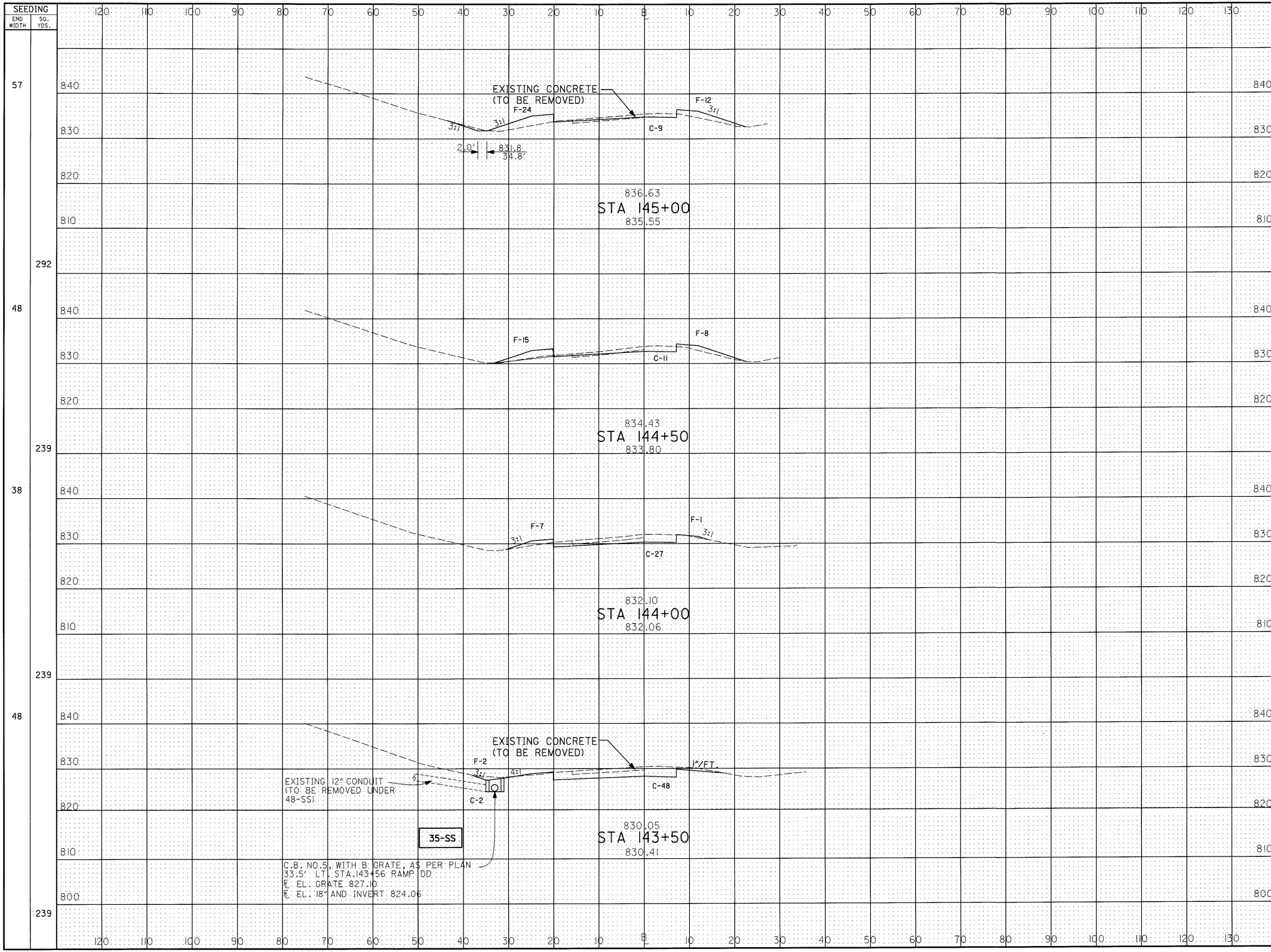
SEEDING
END WIDTH
SQ. YDS.
EXISTING CONCRETE (TO BE REMOVED)
F-24
F-12
C-9
3:1
2.0'
831.8
34.8'
836.63
STA 145+00
835.55
F-15
F-8
C-11
834.43
STA 144+50
833.80
F-7
F-1
C-27
832.10
STA 144+00
832.06
F-2
4:1
1"/FT.
C-48
EXISTING 12" CONDUIT (TO BE REMOVED UNDER 48-SS)
C-2
35-SS
830.05
STA 143+50
830.41
C.B. NO.5, WITH B GRATE, AS PER PLAN
33.5' LT. STA.143+56 RAMP DD
℄ EL. GRATE 827.10
℄ EL. 18" AND INVERT 824.06
END AREA
CUT
FILL
VOLUME
CUT
FILL
9 36
11 23
27 8
50 2
19 55
35 29
71 9
95 2
CALCULATED A.L.L. 3-15-95
CHECKED A.L.L. 3-16-95
CROSS SECTION SHEET RAMP "DD"
SSTA. 143+50 TO STA. 145+00
LIC-16-19.72
168
547
RC002182.DGN 4/28/95

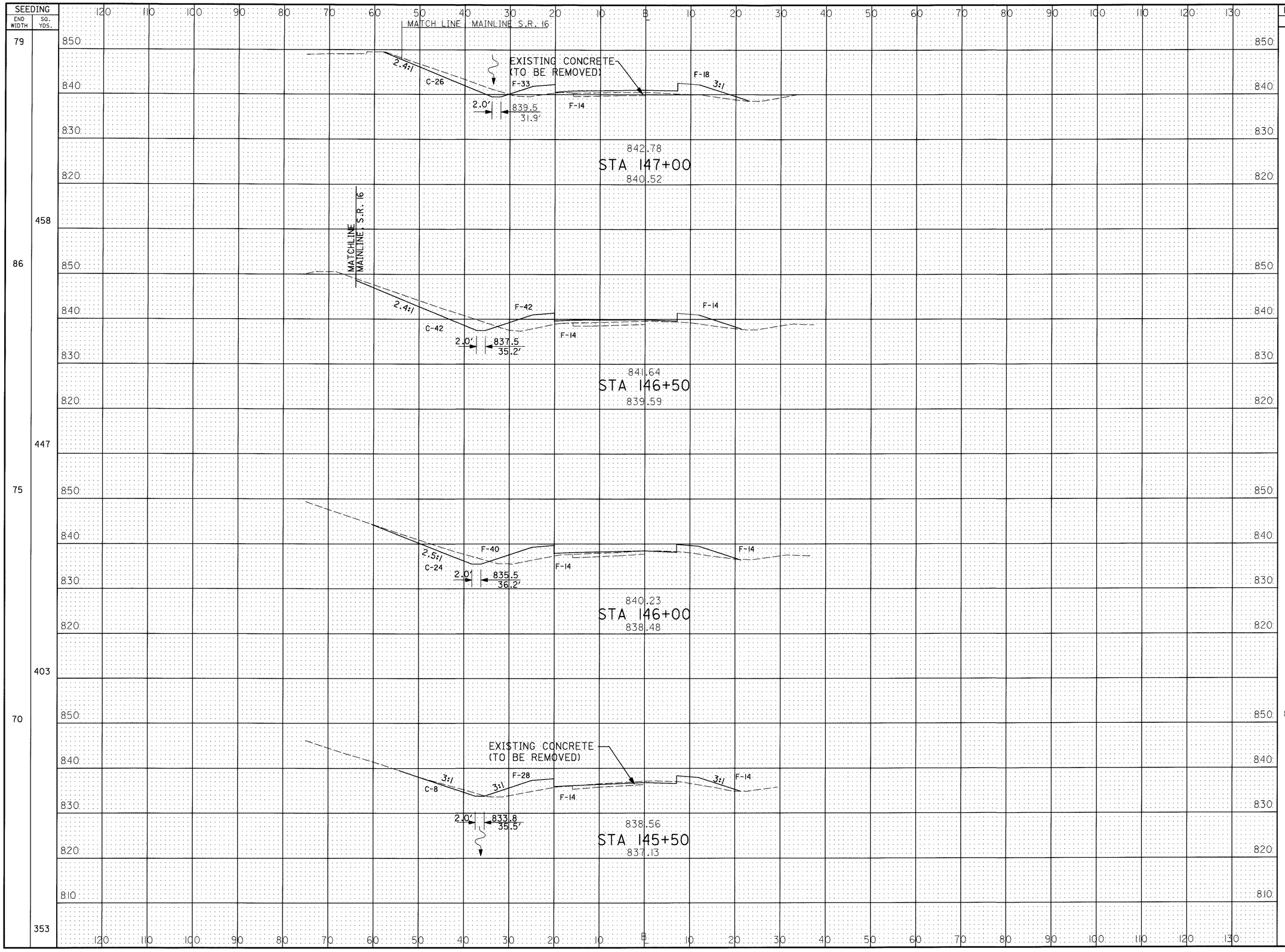

SEEDING END WIDTH	SEEDING SQ. YDS.	END AREA CUT	END AREA FILL	VOLUME CUT	VOLUME FILL
79		26	65		
	458			63	125
86		42	70		
	447			61	128
75		24	68		
	403			30	115
70		8	56		
	353			16	85

CALCULATED J.A.G. 3-10-95
CHECKED A.L.L. 3-16-95

CROSS SECTION SHEET RAMP "DD" STA. 145+50 TO STA. 147+00

LIC-16-19.72

RC003182.DGN 2/9/95

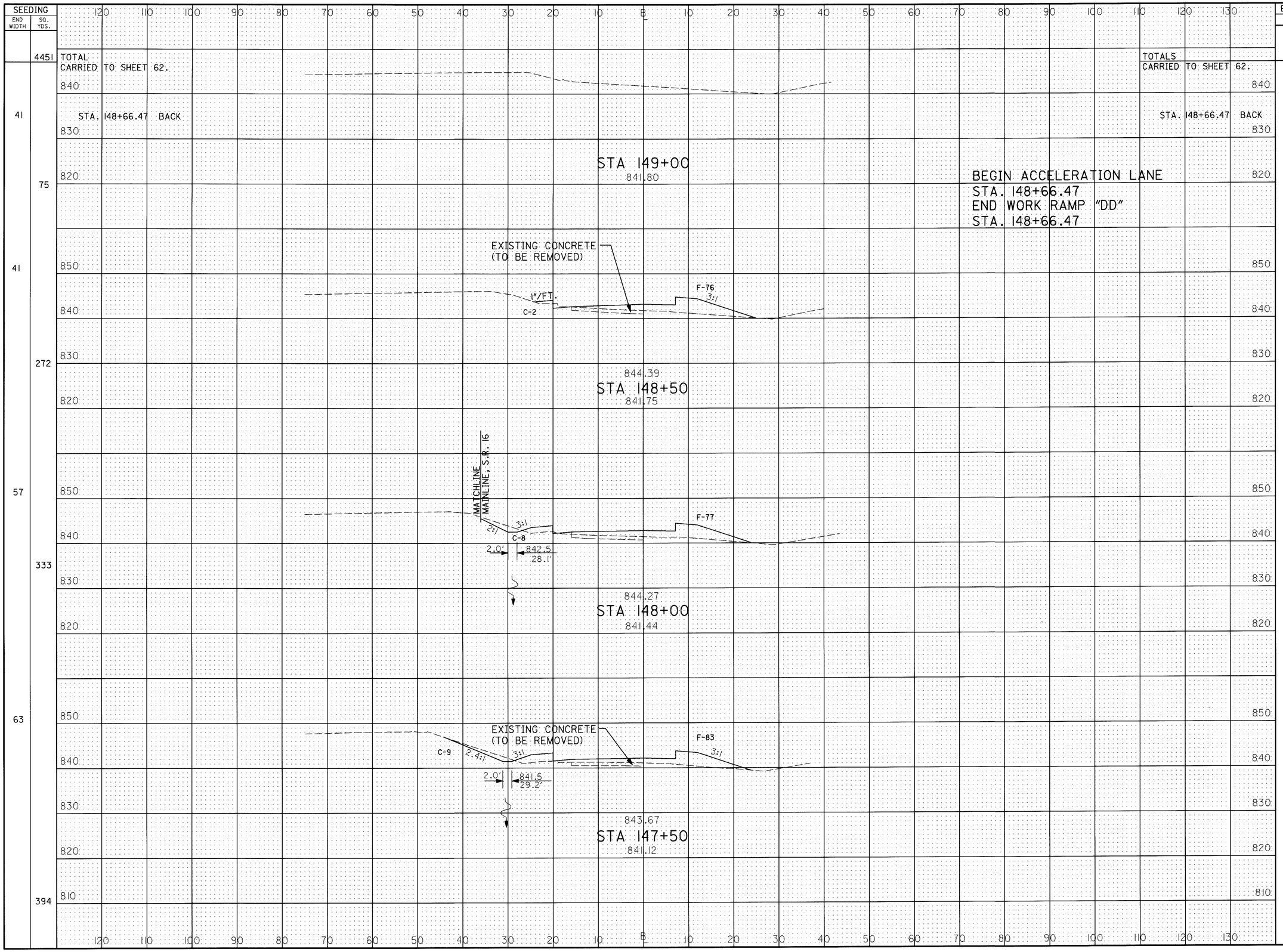
SEEDING
END WIDTH
SQ. YDS.
4451
TOTAL
CARRIED TO SHEET 62.
TOTALS
CARRIED TO SHEET 62.
STA. 148+66.47 BACK
STA. 148+66.47 BACK
STA 149+00
841.80
BEGIN ACCELERATION LANE
STA. 148+66.47
END WORK RAMP "DD"
STA. 148+66.47
EXISTING CONCRETE
(TO BE REMOVED)
1"/FT.
C-2
F-76
3:1
844.39
STA 148+50
841.75
MATCHLINE
MAINLINE, S.R. 16
3:1
2:1
C-8
F-77
2.0'
842.5
28.1'
844.27
STA 148+00
841.44
EXISTING CONCRETE
(TO BE REMOVED)
C-9
2.4:1
3:1
F-83
3:1
2.0'
841.5
29.2'
843.67
STA 147+50
841.12
END AREA
CUT
FILL
VOLUME
CUT
FILL
830
1021
2
76
1
46
2
76
9
142
8
77
16
148
9
83
32
137
CALCULATED
A.L.L.
3-13-95
CHECKED
A.L.L.
3-16-95
CROSS SECTION SHEET RAMP "DD"
STA. 147+50 TO STA. 149+00
LIC-16-19.72
170
547
RC004182.DGN 3/3/95

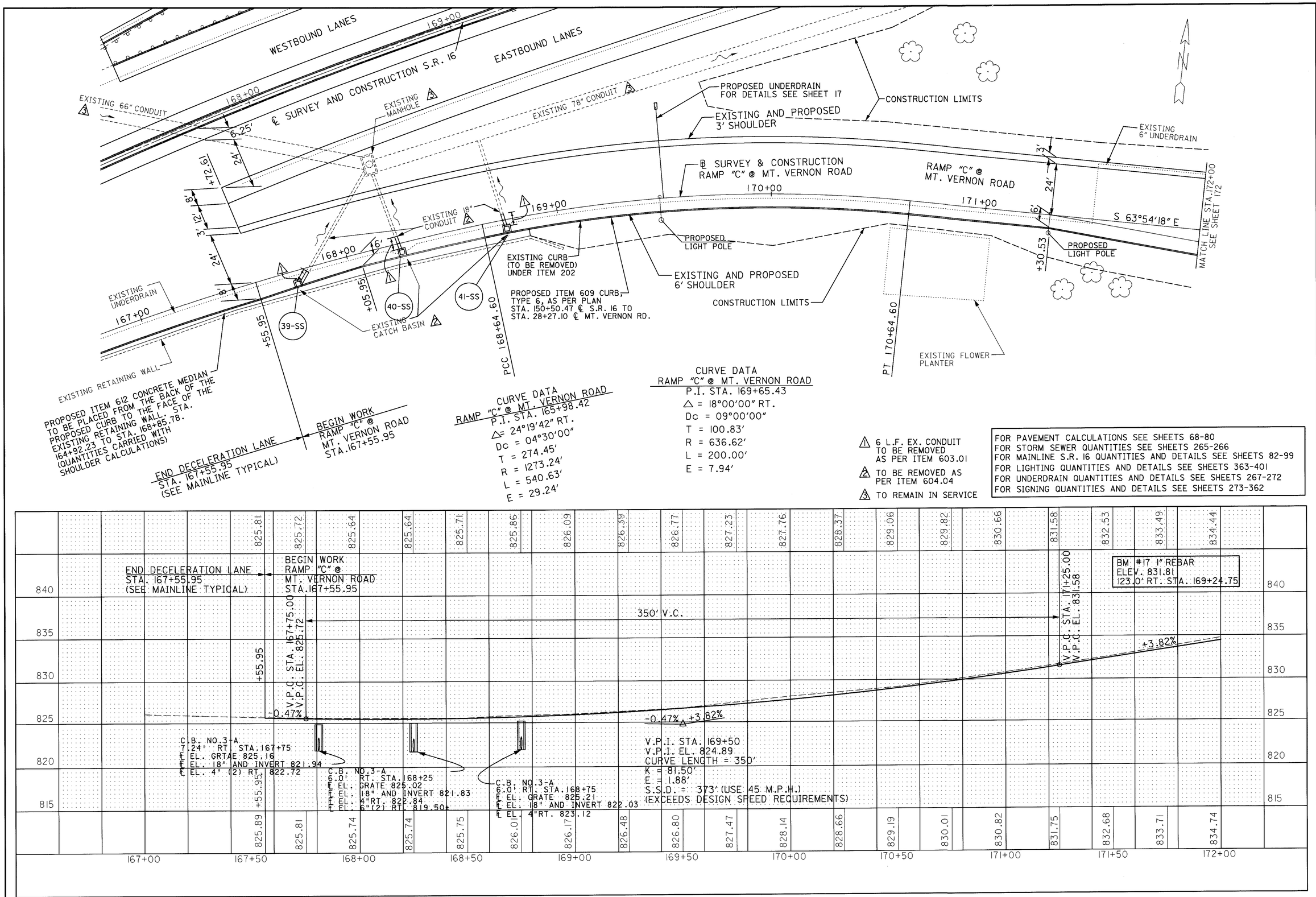

PLAN AND PROFILE SHEET RAMP "C" AT MT. VERNON ROAD STA. 166+80 TO STA. 172+00

LIC-16-19.72

RCP01184.DGN 05/08/95

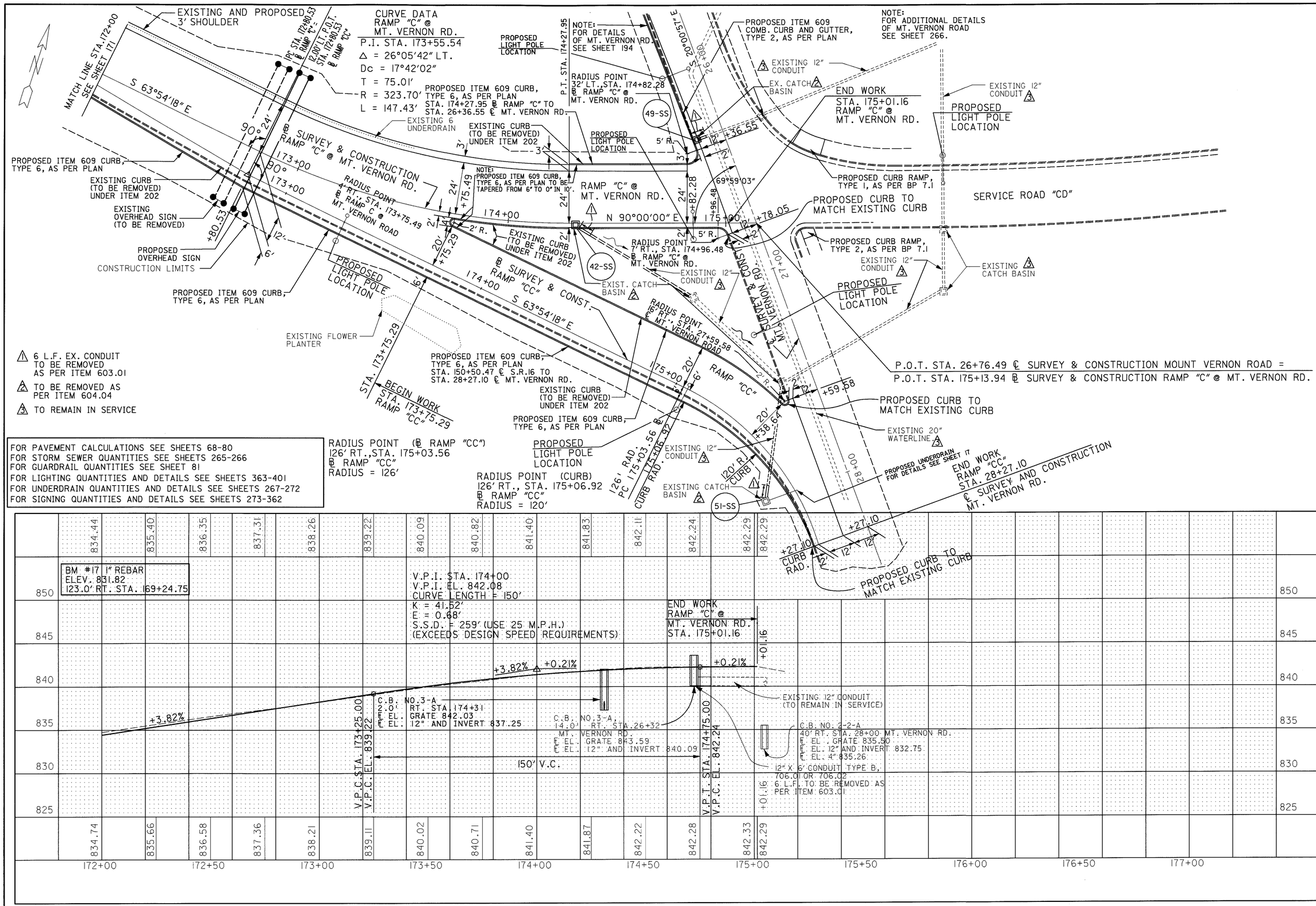
CURVE DATA
RAMP "C" @
MT. VERNON RD.
P.I. STA. 173+55.54
Δ = 26°05'42" LT.
Dc = 17°42'02"
T = 75.01'
R = 323.70'
L = 147.43'
EXISTING AND PROPOSED 3' SHOULDER
MATCH LINE STA. 172+00 SEE SHEET 171
S 63°54'18" E
PC STA. 172+80.53 ℄ RAMP "C"
PT STA. 172+80.53 ℄ RAMP "C"
PROPOSED ITEM 609 CURB, TYPE 6, AS PER PLAN STA. 174+27.95 ℄ RAMP "C" TO STA. 26+36.55 ℄ MT. VERNON RD.
EXISTING 6 UNDERDRAIN
EXISTING CURB (TO BE REMOVED) UNDER ITEM 202
PROPOSED LIGHT POLE LOCATION
NOTE: FOR DETAILS OF MT. VERNON RD. SEE SHEET 194
P.T. STA. 174+27.95
RADIUS POINT 32' LT., STA. 174+82.28 ℄ RAMP "C" @ MT. VERNON RD.
49-SS
PROPOSED ITEM 609 COMB. CURB AND GUTTER, TYPE 2, AS PER PLAN
NOTE: FOR ADDITIONAL DETAILS OF MT. VERNON ROAD SEE SHEET 266.
EXISTING 12" CONDUIT
EX. CATCH BASIN
END WORK STA. 175+01.16 RAMP "C" @ MT. VERNON RD.
EXISTING 12" CONDUIT
PROPOSED LIGHT POLE LOCATION
PROPOSED ITEM 609 CURB, TYPE 6, AS PER PLAN
EXISTING CURB (TO BE REMOVED) UNDER ITEM 202
EXISTING OVERHEAD SIGN (TO BE REMOVED)
PROPOSED OVERHEAD SIGN
CONSTRUCTION LIMITS
℄ SURVEY & CONSTRUCTION RAMP "C" @ MT. VERNON RD.
90° 24'
90°
173+00
174+00
175+00
RADIUS POINT 4' RT., STA. 173+75.49 ℄ RAMP "C" @ MT. VERNON ROAD
NOTE: PROPOSED ITEM 609 CURB, TYPE 6, AS PER PLAN TO BE TAPERED FROM 6" TO 0" IN 10'.
RAMP "C" @ MT. VERNON RD.
N 90°00'00" E
69°59'03"
PROPOSED CURB RAMP, TYPE 1, AS PER BP 7.1
PROPOSED CURB TO MATCH EXISTING CURB
SERVICE ROAD "CD"
RADIUS POINT 7' RT., STA. 174+96.48 ℄ RAMP "C" @ MT. VERNON RD.
42-SS
EXISTING CURB (TO BE REMOVED) UNDER ITEM 202
EXIST. CATCH BASIN
EXISTING 12" CONDUIT
PROPOSED CURB RAMP, TYPE 2, AS PER BP 7.1
EXISTING 12" CONDUIT
EXISTING CATCH BASIN
PROPOSED LIGHT POLE LOCATION
℄ SURVEY & CONSTRUCTION MT. VERNON ROAD
EXISTING FLOWER PLANTER
℄ SURVEY & CONST. RAMP "CC"
S 63°54'18" E
RADIUS POINT 62' RT., STA. 27+59.58 ℄ MT. VERNON ROAD
P.O.T. STA. 26+76.49 ℄ SURVEY & CONSTRUCTION MOUNT VERNON ROAD =
P.O.T. STA. 175+13.94 ℄ SURVEY & CONSTRUCTION RAMP "C" @ MT. VERNON RD.
6 L.F. EX. CONDUIT TO BE REMOVED AS PER ITEM 603.01
TO BE REMOVED AS PER ITEM 604.04
TO REMAIN IN SERVICE
STA. 173+75.29 BEGIN WORK RAMP "CC"
PROPOSED ITEM 609 CURB, TYPE 6, AS PER PLAN STA. 150+50.47 ℄ S.R.16 TO STA. 28+27.10 ℄ MT. VERNON RD.
EXISTING CURB (TO BE REMOVED) UNDER ITEM 202
PROPOSED ITEM 609 CURB, TYPE 6, AS PER PLAN
PROPOSED LIGHT POLE LOCATION
RAMP "CC"
PROPOSED CURB TO MATCH EXISTING CURB
EXISTING 20" WATERLINE
EXISTING 12" CONDUIT
FOR PAVEMENT CALCULATIONS SEE SHEETS 68-80
FOR STORM SEWER QUANTITIES SEE SHEETS 265-266
FOR GUARDRAIL QUANTITIES SEE SHEET 81
FOR LIGHTING QUANTITIES AND DETAILS SEE SHEETS 363-401
FOR UNDERDRAIN QUANTITIES AND DETAILS SEE SHEETS 267-272
FOR SIGNING QUANTITIES AND DETAILS SEE SHEETS 273-362
RADIUS POINT (℄ RAMP "CC") 126' RT., STA. 175+03.56 ℄ RAMP "CC" RADIUS = 126'
RADIUS POINT (CURB) 126' RT., STA. 175+06.92 ℄ RAMP "CC" RADIUS = 120'
126' RAD. PC 175+03.56
CURB RAD. 175+06.92
120' R. CURB
EXISTING CATCH BASIN
51-SS
PROPOSED UNDERDRAIN FOR DETAILS SEE SHEET 17
END WORK RAMP "CC" STA. 28+27.10 ℄ SURVEY AND CONSTRUCTION MT. VERNON RD.
CURB RAD.
PROPOSED CURB TO MATCH EXISTING CURB
BM #17 1" REBAR ELEV. 831.82 123.0' RT. STA. 169+24.75
V.P.I. STA. 174+00
V.P.I. EL. 842.08
CURVE LENGTH = 150'
K = 41.52'
E = 0.68'
S.S.D. = 259' (USE 25 M.P.H.)
(EXCEEDS DESIGN SPEED REQUIREMENTS)
END WORK RAMP "C" @ MT. VERNON RD. STA. 175+01.16
+3.82%
+0.21%
EXISTING 12" CONDUIT (TO REMAIN IN SERVICE)
C.B. NO. 3-A 2.0' RT. STA. 174+31 TOP EL. GRATE 842.03 INV. EL. 12" AND INVERT 837.25
C.B. NO. 3-A 14.0' RT. STA. 26+32 MT. VERNON RD. TOP EL. GRATE 843.59 INV. EL. 12" AND INVERT 840.09
C.B. NO. 2-2-A 40' RT. STA. 28+00 MT. VERNON RD. TOP EL. GRATE 835.50 INV. EL. 12" AND INVERT 832.75 INV. EL. 4" 835.26
12" X 6' CONDUIT TYPE B, 706.01 OR 706.02 6 L.F. TO BE REMOVED AS PER ITEM 603.01
V.P.C. STA. 173+25.00 V.P.C. EL. 839.22
150' V.C.
V.P.T. STA. 174+75.00 V.P.C. EL. 842.24
834.44 835.40 836.35 837.31 838.26 839.22 840.09 840.82 841.40 841.83 842.11 842.24 842.29 842.29
834.74 835.66 836.58 837.36 838.21 839.11 840.02 840.71 841.40 841.87 842.22 842.28 842.33 842.29
850 845 840 835 830 825
172+00 172+50 173+00 173+50 174+00 174+50 175+00 175+50 176+00 176+50 177+00
HORIZONTAL SCALE IN FEET
0 10 20 40
CALCULATED
CHECKED
PLAN AND PROFILE SHEET RAMP "C" AT MT. VERNON ROAD
STA. 172+00 TO STA. 175+01.39
LIC-16-19.72
172/547
RCP02184.DGN 05/08/95

SEEDING END WIDTH	SEEDING SQ. YDS.	END AREA CUT	END AREA FILL	VOLUME CUT	VOLUME FILL
42		46	8		
				80	12
31	203	40	5		
				71	6
26	158	37	1		
				60	2
26	127	37	1		

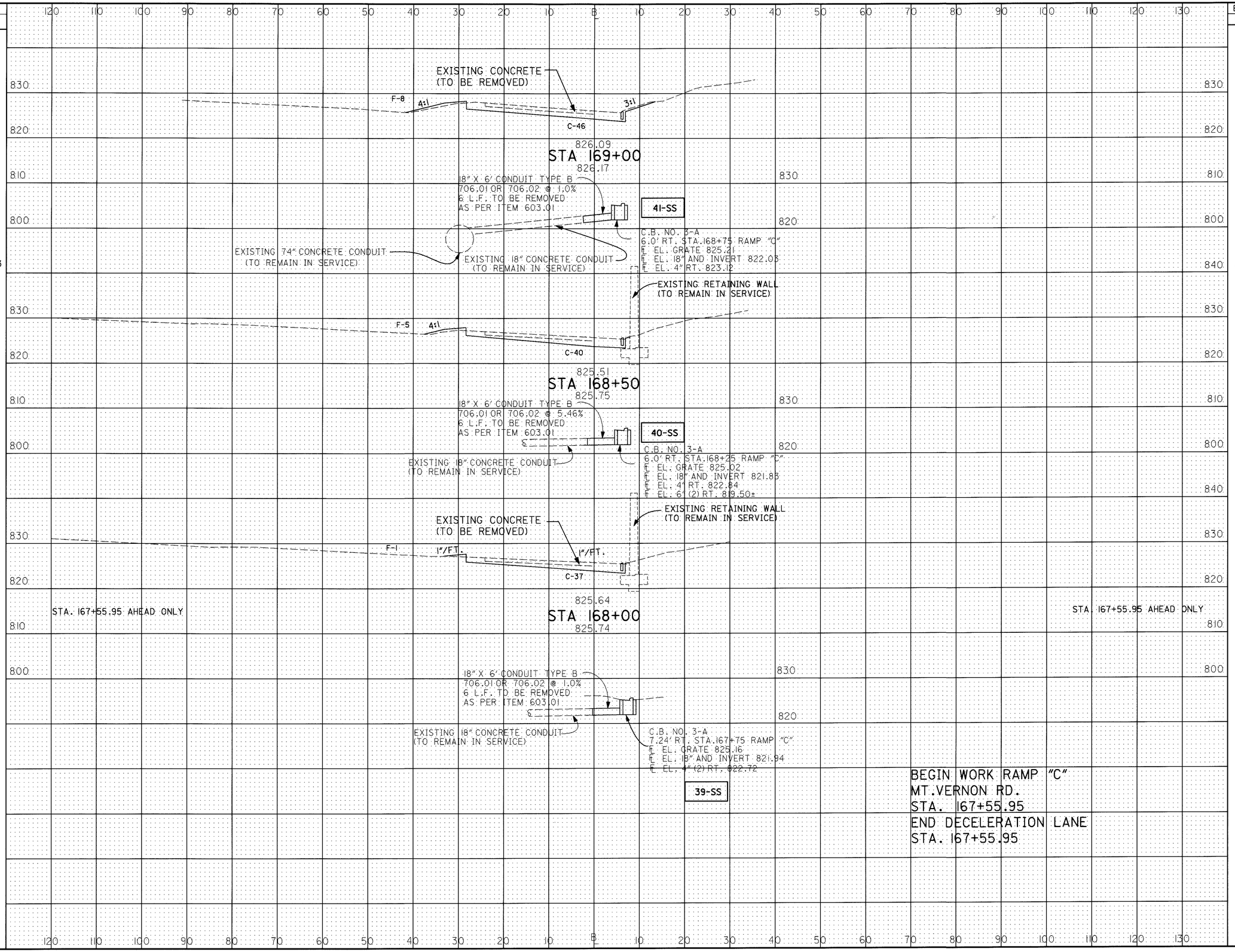

CALCULATED A.G. 3-13-95
CHECKED A.L.L. 3-16-95

CROSS SECTION SHEET RAMP "C" AT MT. VERNON RD. STA. 167+50 TO STA. 169+00

LIC-16-19.72

RC003184.DGN 4/28/95

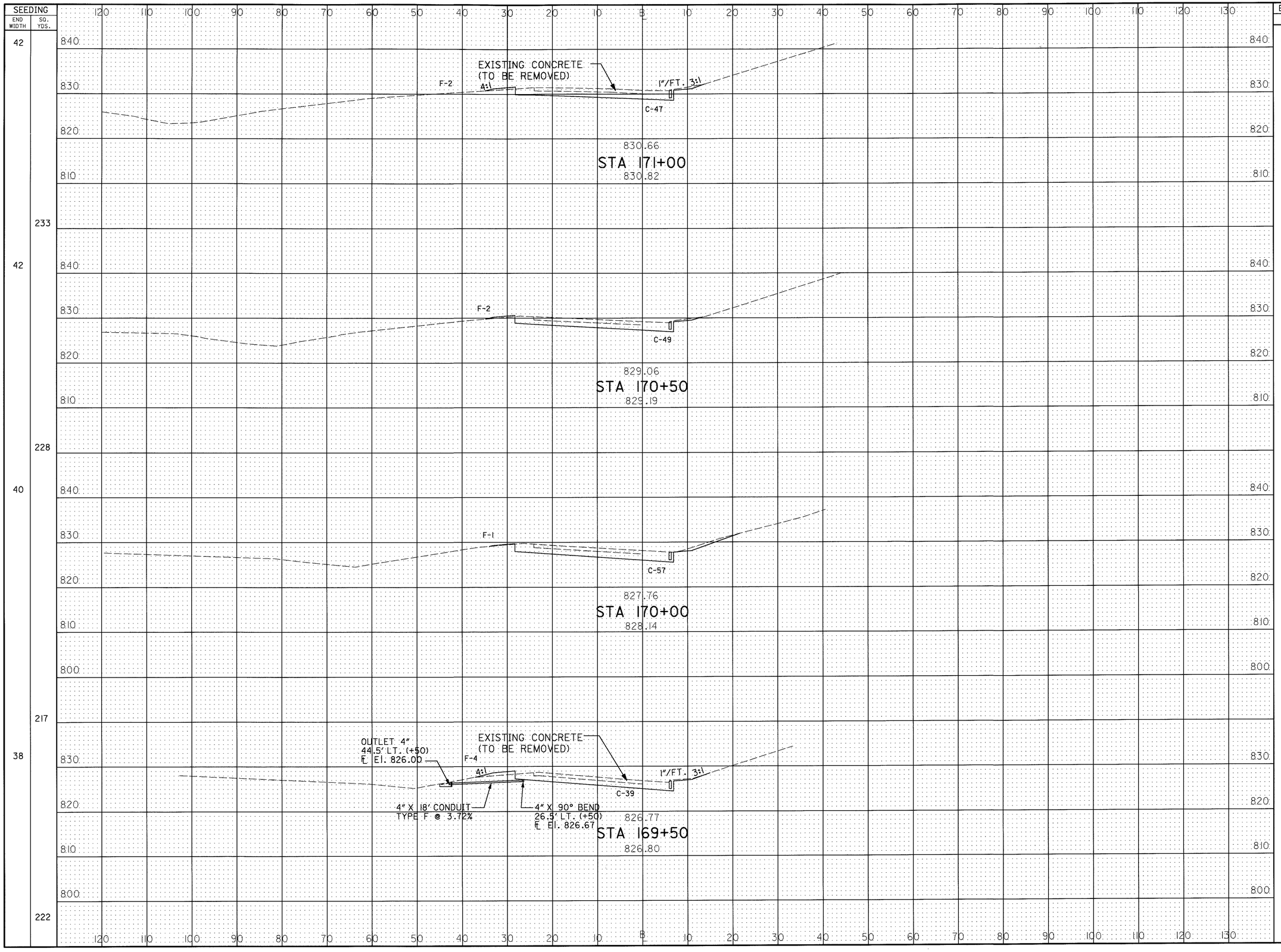

SEEDING END WIDTH	SEEDING SQ. YDS.	END AREA CUT	END AREA FILL	VOLUME CUT	VOLUME FILL
42		47	2		
	233			89	4
42		49	2		
	228			98	3
40		57	1		
	217			89	5
38		39	4		
	222			79	11

CALCULATED J.L.L. 3-13-95
CHECKED A.L.L. 3-16-95

CROSS SECTION SHEET RAMP "C" AT MT. VERNON RD.
STA. 169+50 TO STA. 171+00

LIC-16-19.72

RC004184.DGN 3/03/95

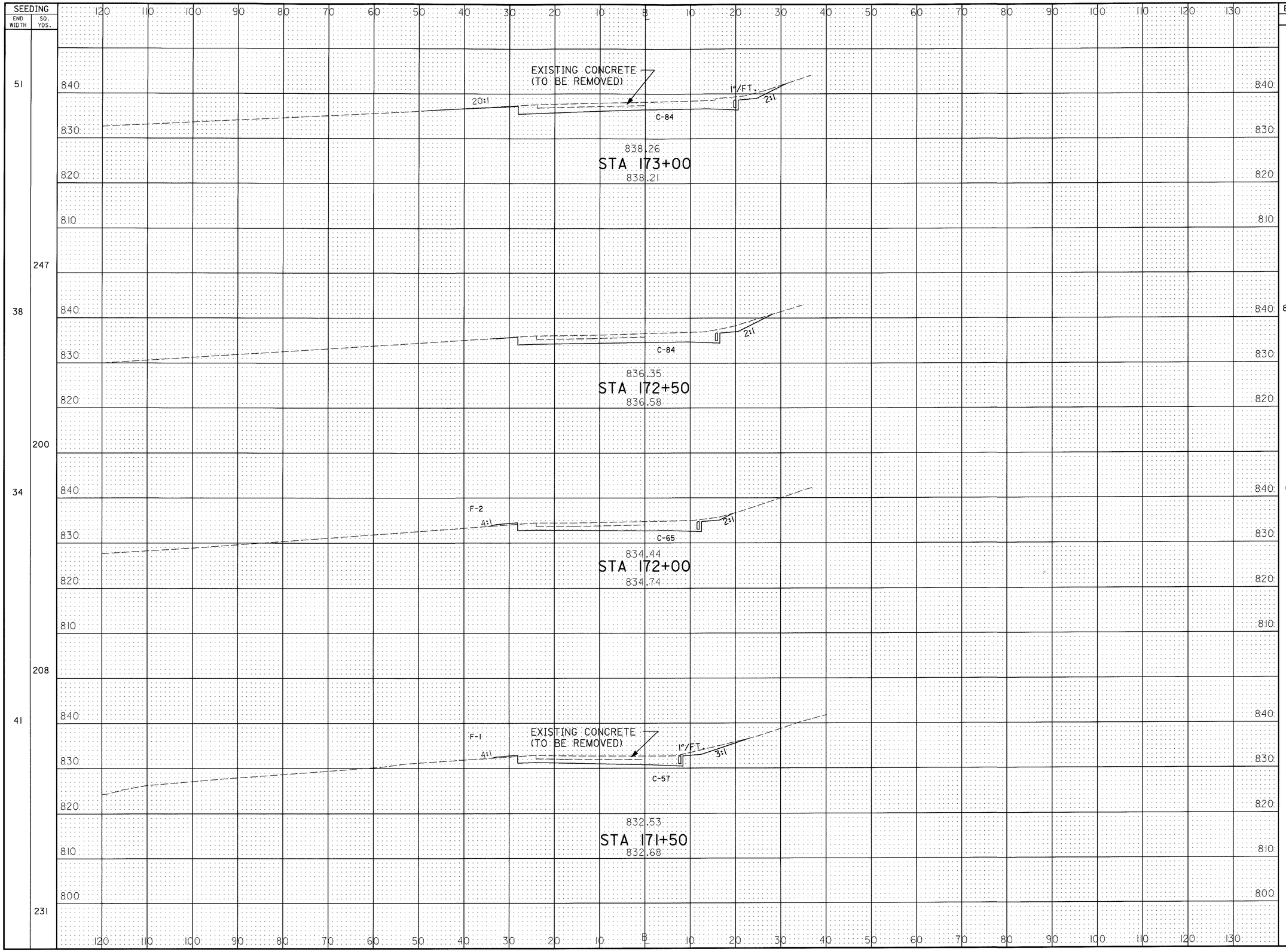

CALCULATED A.L.L. 3-13-95

CHECKED A.L.L. 3-16-95

CROSS SECTION SHEET RAMP "C" AT MT. VERNON RD.
STA. 171+50 TO STA. 173+00

LIC-16-19.72

175
547

RC005184.DGN 2/10/95

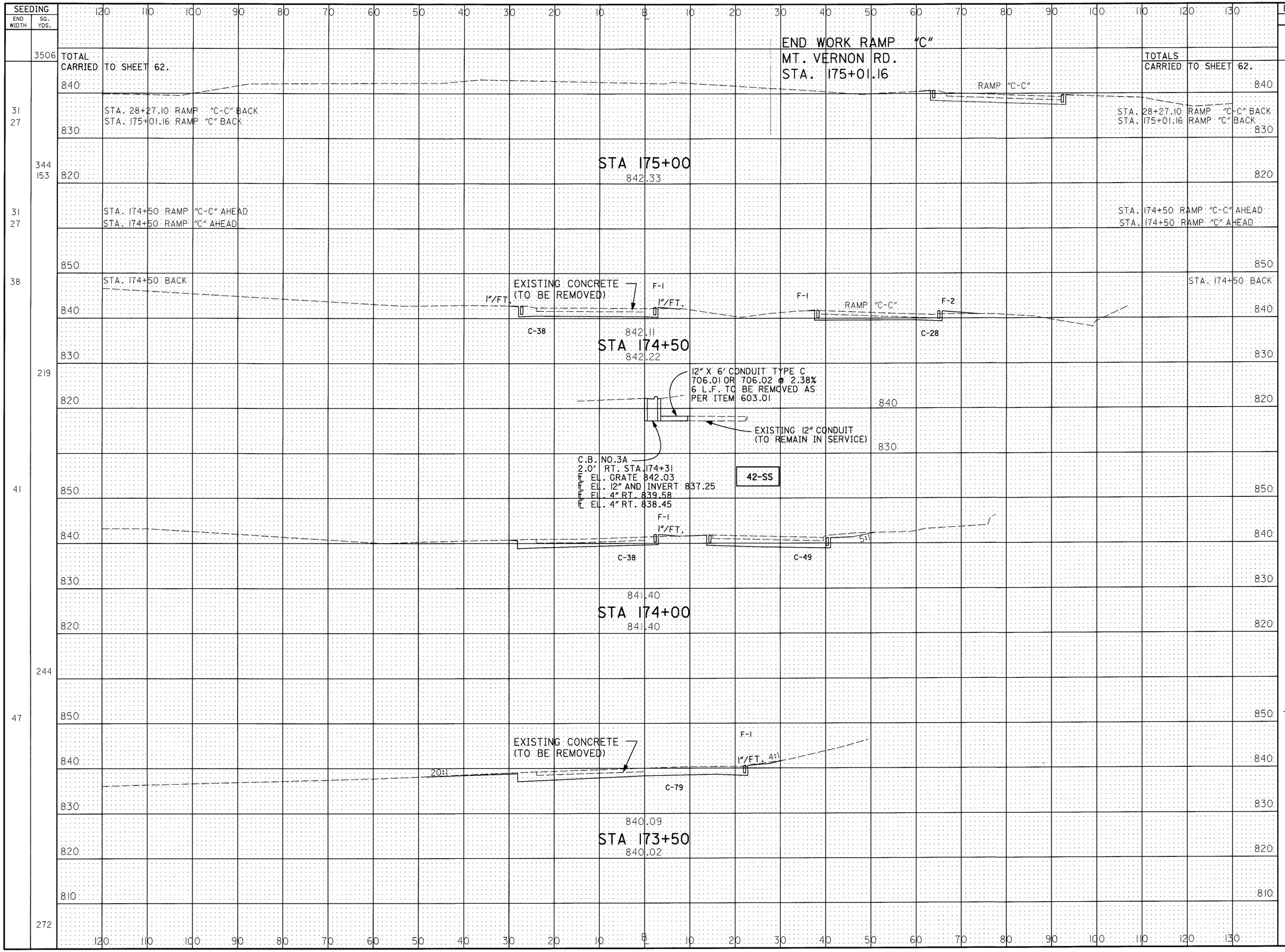

SEEDING END WIDTH	SEEDING SQ. YDS.	END AREA CUT	END AREA FILL	VOLUME CUT	VOLUME FILL
	3506			1692	72
31 / 27	344 / 153	28 / 38	3 / 1	104 / 72	11 / 2
31 / 27		28 / 38	3 / 1		
38	219	66	4	142	5
41	244	87	1	154	2
47	272	79	1	151	1

CALCULATED A.L.L. 3-13-95
CHECKED A.L.L. 3-16-95

CROSS SECTION SHEET RAMP "C" AT MT. VERNON RD. STA. 173+50 TO STA. 175+00

LIC-16-19.72

RC006184.DGN 4/28/95

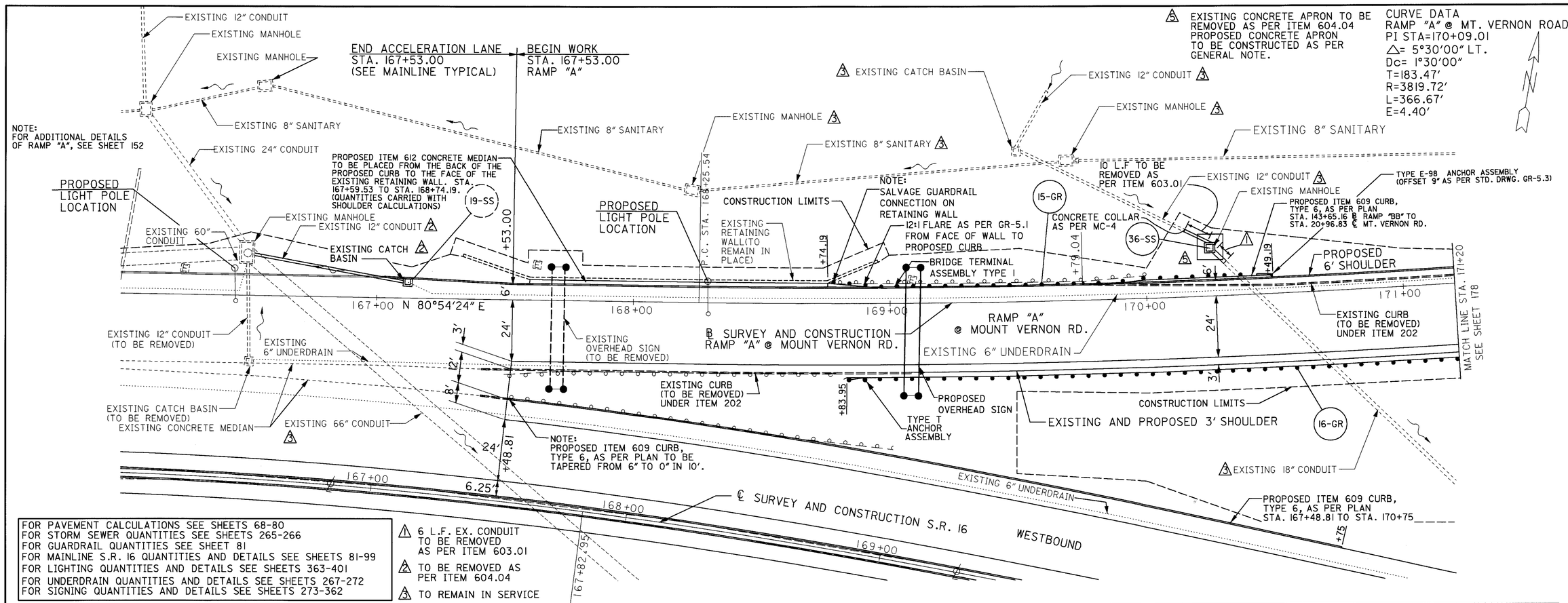

FOR PAVEMENT CALCULATIONS SEE SHEETS 68-80
FOR STORM SEWER QUANTITIES SEE SHEETS 265-266
FOR GUARDRAIL QUANTITIES SEE SHEET 81
FOR MAINLINE S.R. 16 QUANTITIES AND DETAILS SEE SHEETS 81-99
FOR LIGHTING QUANTITIES AND DETAILS SEE SHEETS 363-401
FOR UNDERDRAIN QUANTITIES AND DETAILS SEE SHEETS 267-272
FOR SIGNING QUANTITIES AND DETAILS SEE SHEETS 273-362

1 6 L.F. EX. CONDUIT TO BE REMOVED AS PER ITEM 603.01
2 TO BE REMOVED AS PER ITEM 604.04
3 TO REMAIN IN SERVICE

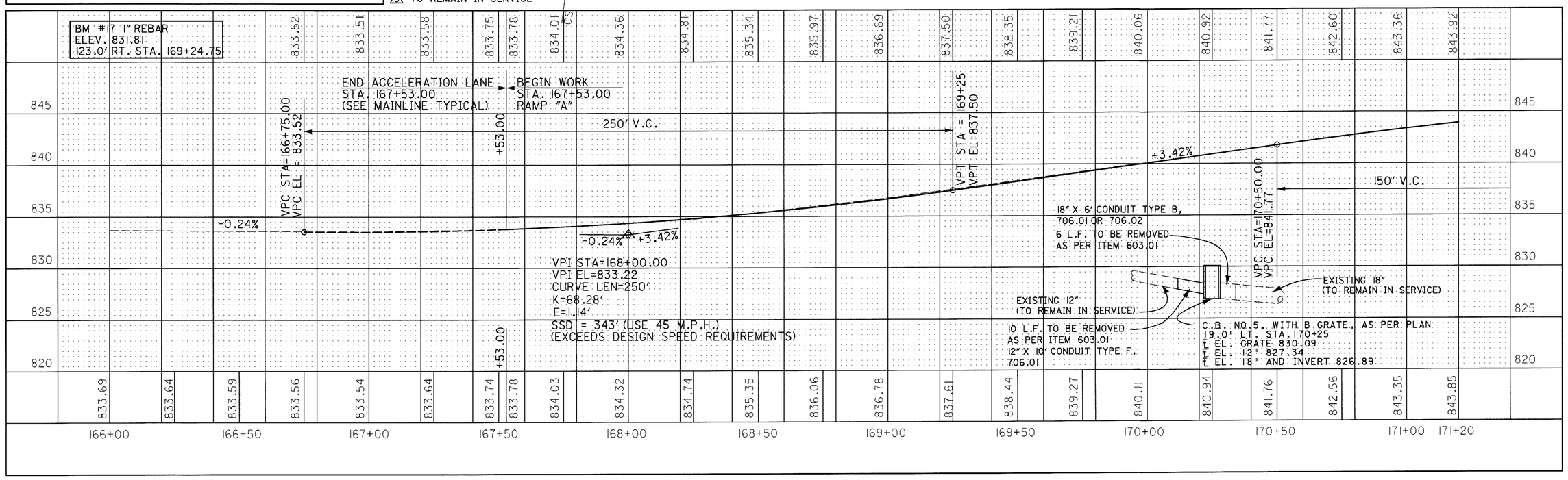

CALCULATED
CHECKED

PLAN AND PROFILE SHEET RAMP "A" AT MT. VERNON ROAD
STA. 166+00 TO STA. 171+20

LIC-16-19.72

RCP01183.DGN 05/08/95

CURVE DATA
RAMP "A"
P.I. STA. 170+09.01
△ =05°30'00" LT.
Dc= 01°30'00"
R= 3819.72'
L= 366.67'
T= 183.47'
E= 4.40'

EXISTING CATCH BASIN 3
EXISTING 15" CONDUIT 3
RADIUS POINT
71' LT.
STA. 172+46.59
+96.83
21+00
EXISTING CURB
EXISTING 24" CONDUIT 3
END WORK
STA. 173+33.55
RAMP "A" @
MT. VERNON ROAD
EXISTING 8" SANITARY
EXISTING MANHOLE 3
PROPOSED ITEM 609 CURB, TYPE 6, AS PER PLAN
STA. 143+19.61 ℄ RAMP "BB" TO
STA. 20+96.83 ℄ MT. VERNON RD.
65' R.
EXISTING CURB (TO BE REMOVED) UNDER ITEM 202
EXISTING 8" SANITARY
EXISTING 12" CONDUIT 3
EXISTING CATCH BASIN 3
EXIST. CATCH BASIN 3
84°34'38"
175+00
174+00
EXISTING CATCH BASIN
SERVICE ROAD "AB"
CONSTRUCTION LIMITS
PROPOSED LIGHT POLE LOCATION
PROPOSED 6' SHOULDER
P.I. STA. 171+92.20
+46.59
6'
N 75°24'24" E
173+00
EXISTING 12" CONDUIT 3
+29.56
PROPOSED LIGHT POLE LOCATION
PROPOSED CURB RAMP TYPE 1, AS PER BP 7.1
EXISTING 3' SHOULDER
MATCH LINE STA. 171+20 SEE SHEET 117
172+00
RAMP "A"
24'
NOTE: GUARDRAIL POSTS TO BE ADJUSTED NOT TO DAMAGE THE CONDUIT.
+98.34
FOR DETAILS OF CONCRETE MEDIAN WORK, SEE SHEET 194.
PROPOSED LIGHT POLE LOCATION
℄ SURVEY & CONSTRUCTION RAMP "A" @ MT. VERNON ROAD
3'
3'
EXISTING CURB (TO BE REMOVED) UNDER ITEM 202
TYPE 1 ANCHOR ASSEMBLY
EXISTING CATCH BASIN 3
PROPOSED ITEM 609 COMBINATION CURB AND GUTTER, TYPE 2, AS PER PLAN
PROPOSED CURB RAMP TYPE 1, AS PER BP 7.1
+92.20
48-SS
EXISTING AND PROPOSED 3' SHOULDER
16-GR
+32.9455
PROPOSED ITEM 609 CURB, TYPE 6, AS PER PLAN
STA. 171+92.20 ℄ RAMP "A" TO
STA. 21+98.34 ℄ MT. VERNON RD.
RADIUS POINT
29' RT.
STA. 173+29.56
MT. VERNON RD.
S 20°00'57" E
P.O.T. STA. 21+68.00 ℄ SURVEY & CONSTRUCTION MOUNT VERNON ROAD =
P.O.T. STA. 173+45.76 ℄ SURVEY & CONSTRUCTION RAMP "A" @ MT. VERNON ROAD
CONSTRUCTION LIMITS
+66.53
CONSTRUCTION LIMITS
NOTE: PROPOSED ITEM 609 CURB, TYPE 6, AS PER PLAN TO BE TAPERED FROM 6" TO 0" IN 10'.
PROPOSED LIGHT POLE LOCATION
TYPE 1 ANCHOR ASSEMBLY
24-GR
NOTE: FOR ADDITIONAL DETAILS OF MT. VERNON ROAD SEE SHEET 194
+87.05
+98.05
EXISTING 20" WATERLINE 3
BRIDGE TERMINAL ASSEMBLY TYPE 1
23+00
℄ SURVEY & CONSTRUCTION
BRIDGE TERMINAL ASSEMBLY TYPE 1
+16.53
EXISTING 24" CONDUIT 3

1 6 L.F. EX. CONDUIT TO BE REMOVED AS PER ITEM 603.01
2 TO BE REMOVED AS PER ITEM 604.04
3 TO REMAIN IN SERVICE

FOR PAVEMENT CALCULATIONS SEE SHEETS 97-118
FOR STORM SEWER QUANTITIES SEE SHEETS 370 & 371
FOR GUARDRAIL QUANTITIES SEE SHEETS 119 & 120
FOR LIGHTING QUANTITIES AND DETAILS SEE SHEETS 537-608
FOR UNDERDRAIN QUANTITIES AND DETAILS SEE SHEETS 302-369
FOR SIGNING QUANTITIES AND DETAILS SEE SHEETS 455-536

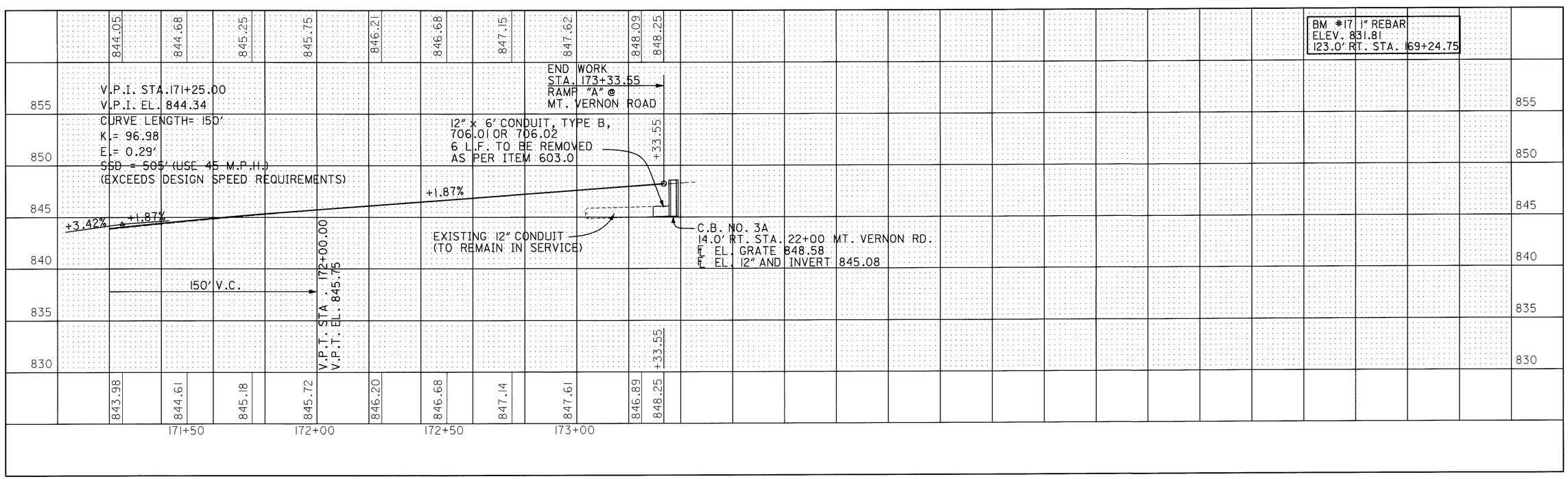

HORIZONTAL SCALE IN FEET
0 10 20 40

CALCULATED
CHECKED

PLAN AND PROFILE SHEET RAMP "A" AT MT. VERNON ROAD
STA. 171+20 TO STA. 173+33.55

LIC-16-19.72

RCP02183.DGN 04/28/95

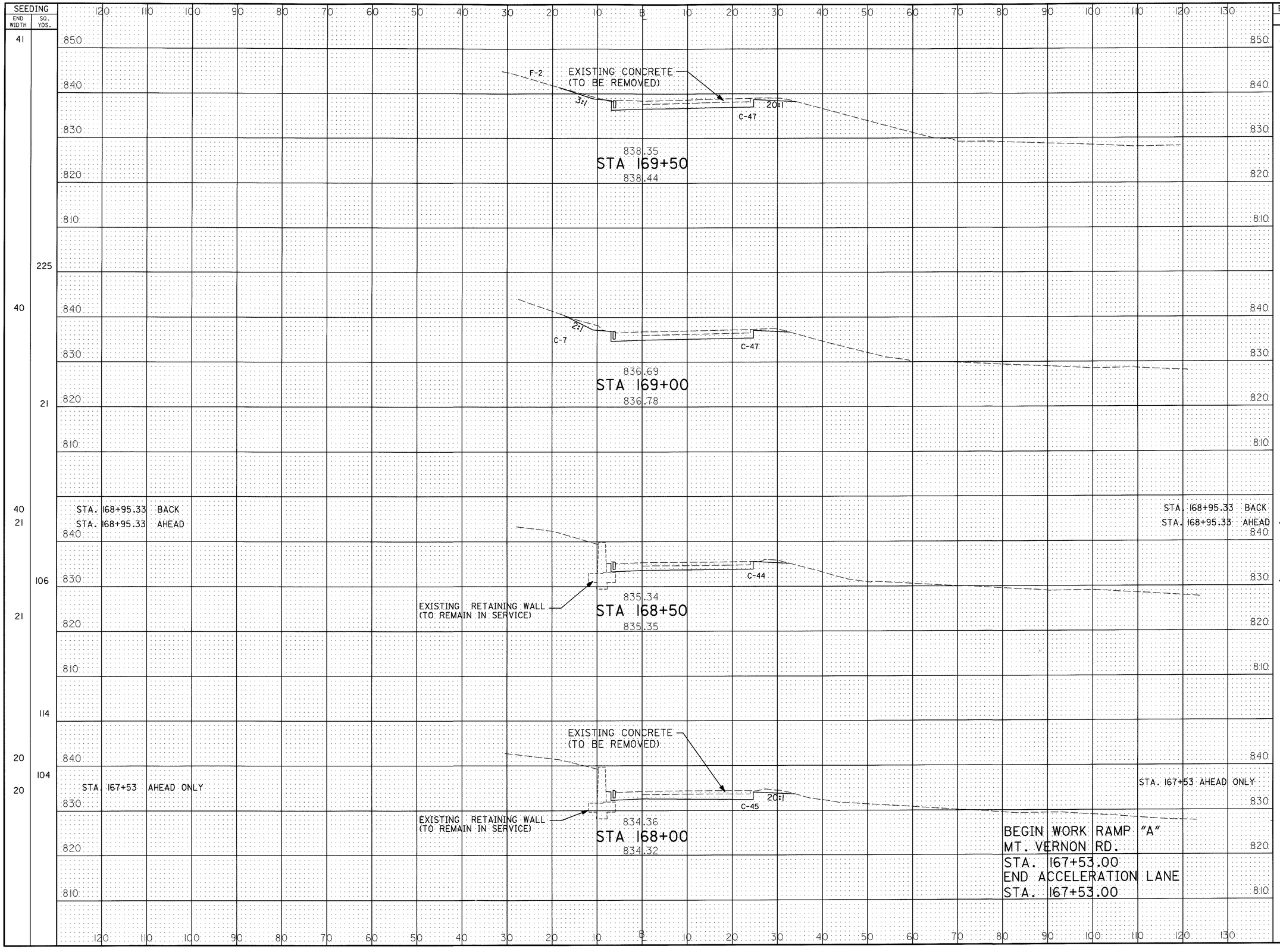

CALCULATED A.L.L. 3-13-95
CHECKED A.L.L. 3-16-95

CROSS SECTION SHEET RAMP "A" AT MT. VERNON RD.
STA. 168+00 TO STA. 169+50

LIC-16-19.72

RC001183.DGN 4/28/95

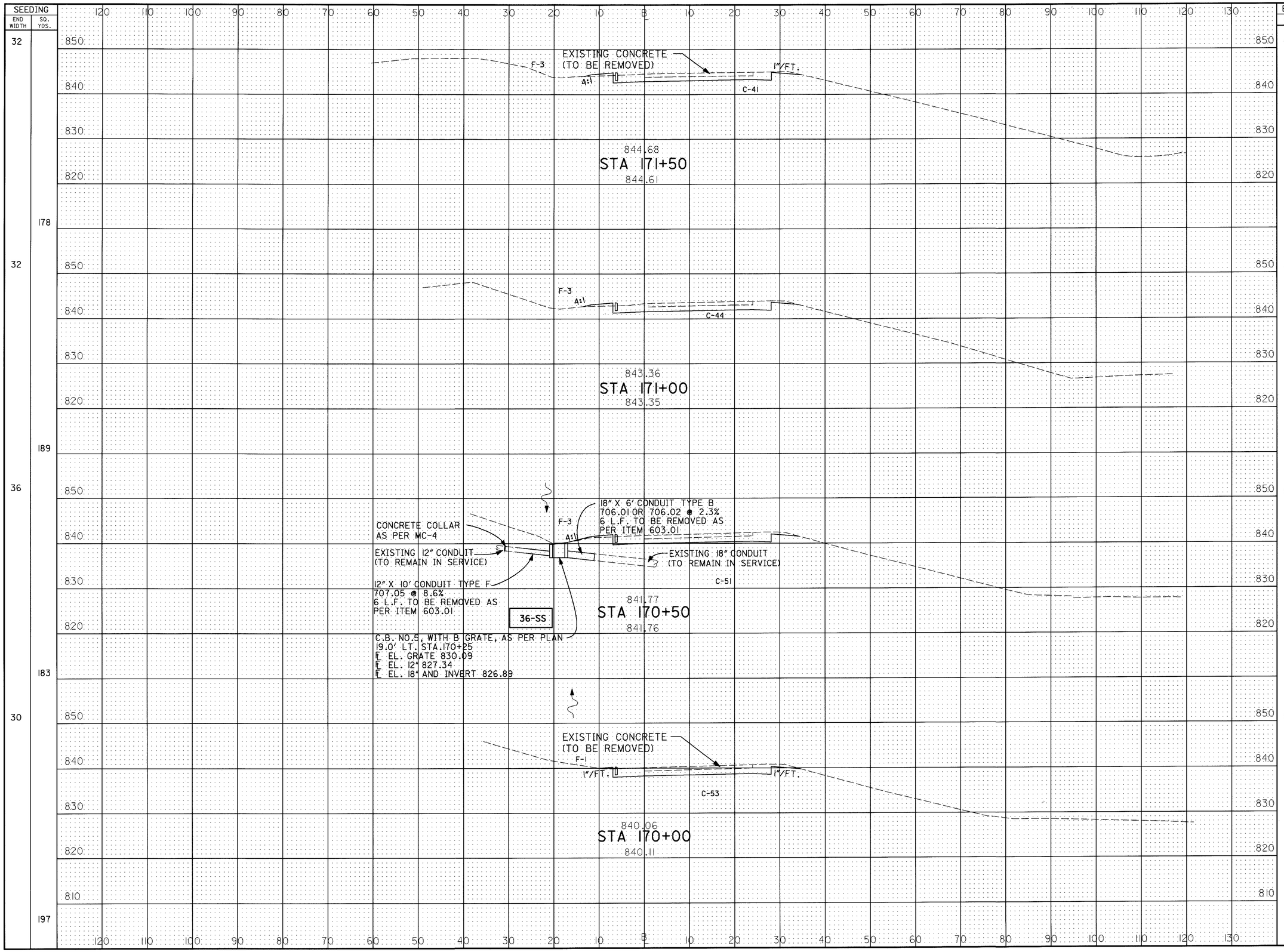

		END AREA CUT	END AREA FILL	VOLUME CUT	VOLUME FILL
32	178	41	3	79	6
32	189	44	3	88	6
36	183	51	3	96	4
30	197	53	1	93	3

CALCULATED A.L.L. 3-13-95
CHECKED A.L.L. 3-16-95

CROSS SECTION SHEET RAMP "A" AT MT. VERNON RD.
STA. 170+00 TO STA. 171+50

LIC-16-19.72

SEEDING END WIDTH	SEEDING SQ. YDS.		END AREA CUT	END AREA FILL	VOLUME CUT	VOLUME FILL
	2243	TOTAL CARRIED TO SHEET 62.			1060	35
57	212	STA. 173+33.55 BACK	76	3	94	4
57			76	3		
43	278		46	0	113	3
41	233		43	2	82	2
	203				78	5

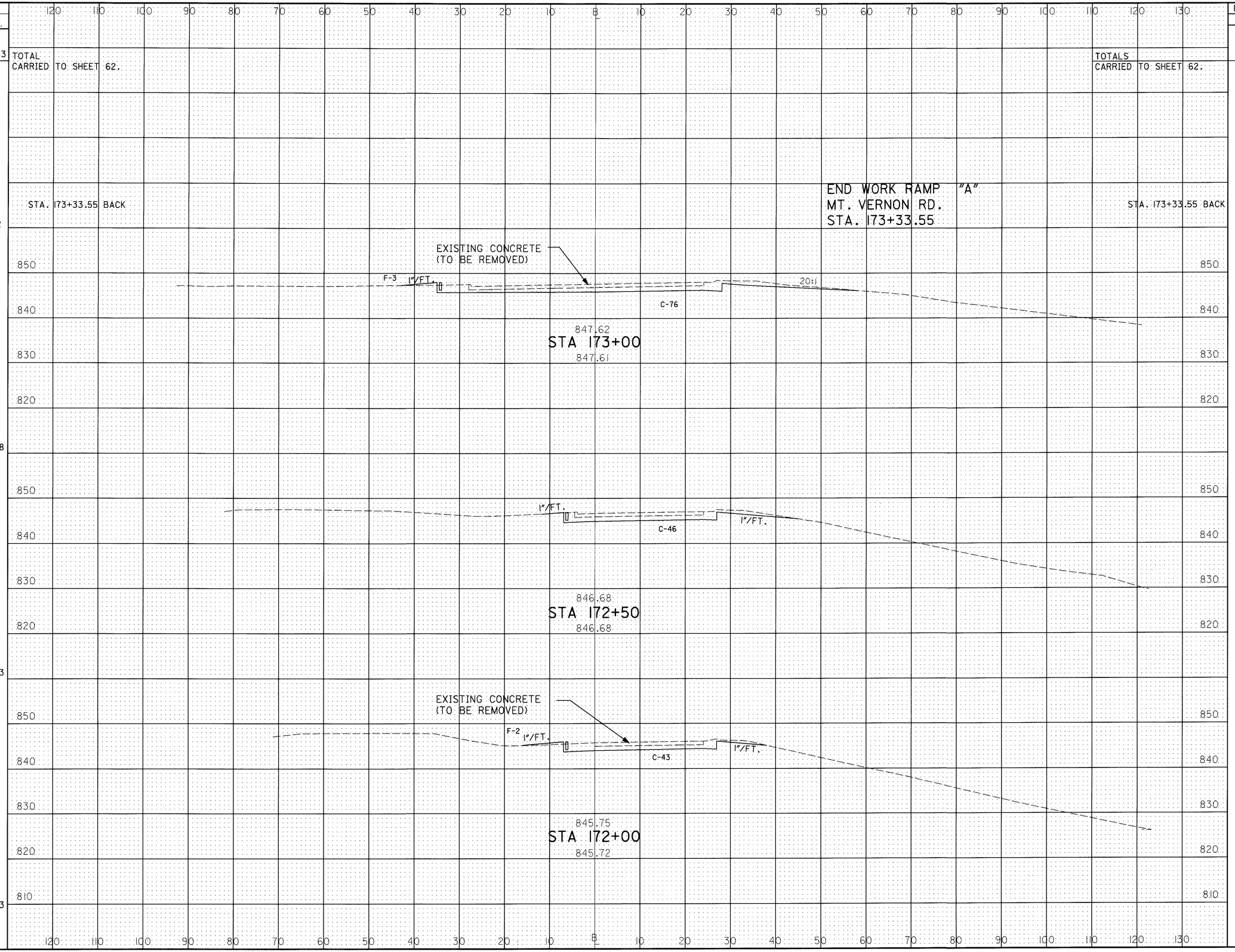

CALCULATED A.L.L. 3-13-95
CHECKED A.L.L. 3-16-95

CROSS SECTION SHEET RAMP "A" AT MT. VERNON RD. STA. 172+00 TO STA. 173+00

LIC-16-19.72

RC003183.DGN 2/7/95

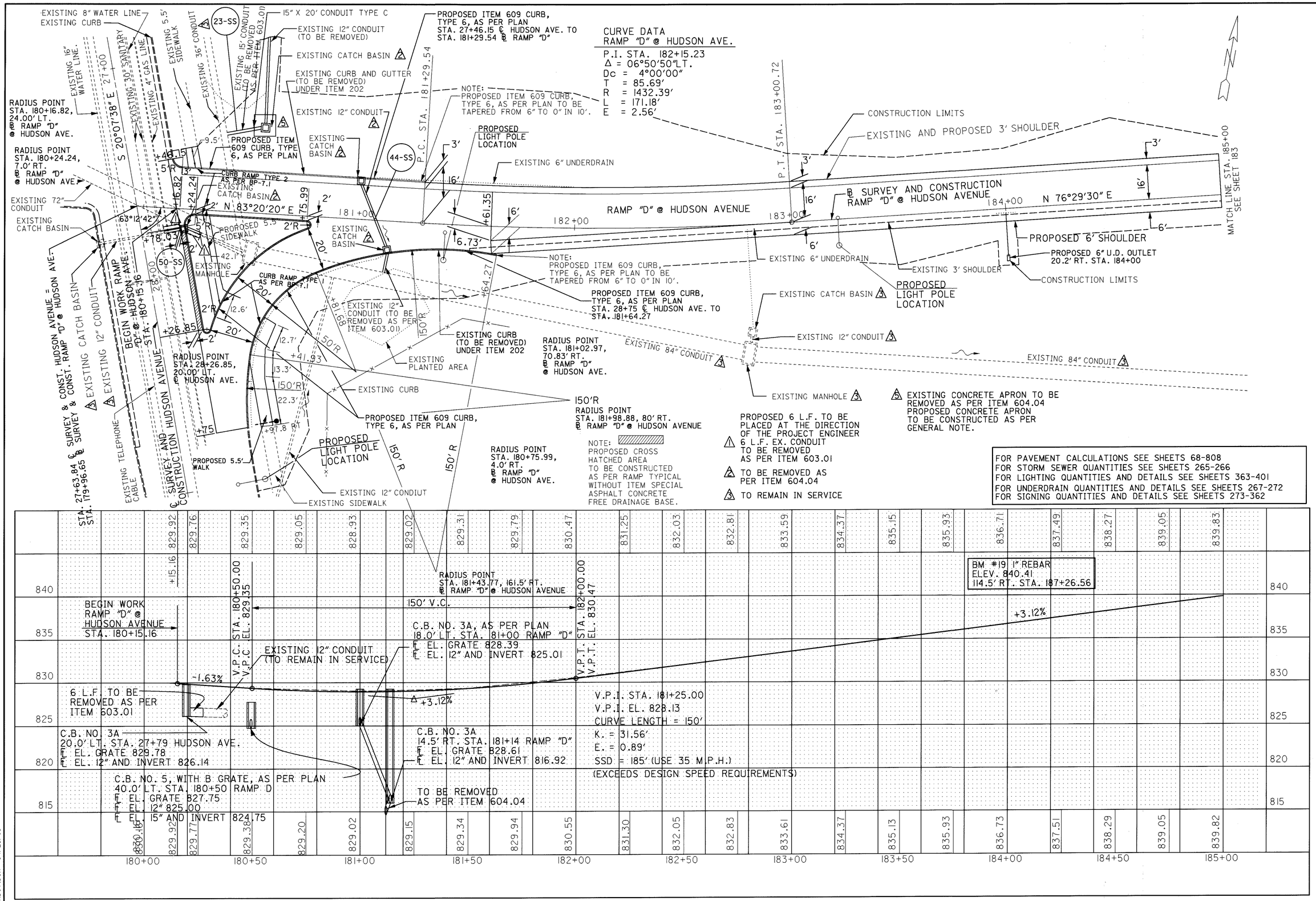

HORIZONTAL SCALE IN FEET 0 10 20 40

CALCULATED

CHECKED

PLAN AND PROFILE SHEET RAMP "D" AT HUDSON AVENUE STA. 180+00 TO STA. 185+00

LIC-16-19.72

L16RD07.DGN 04/28/95

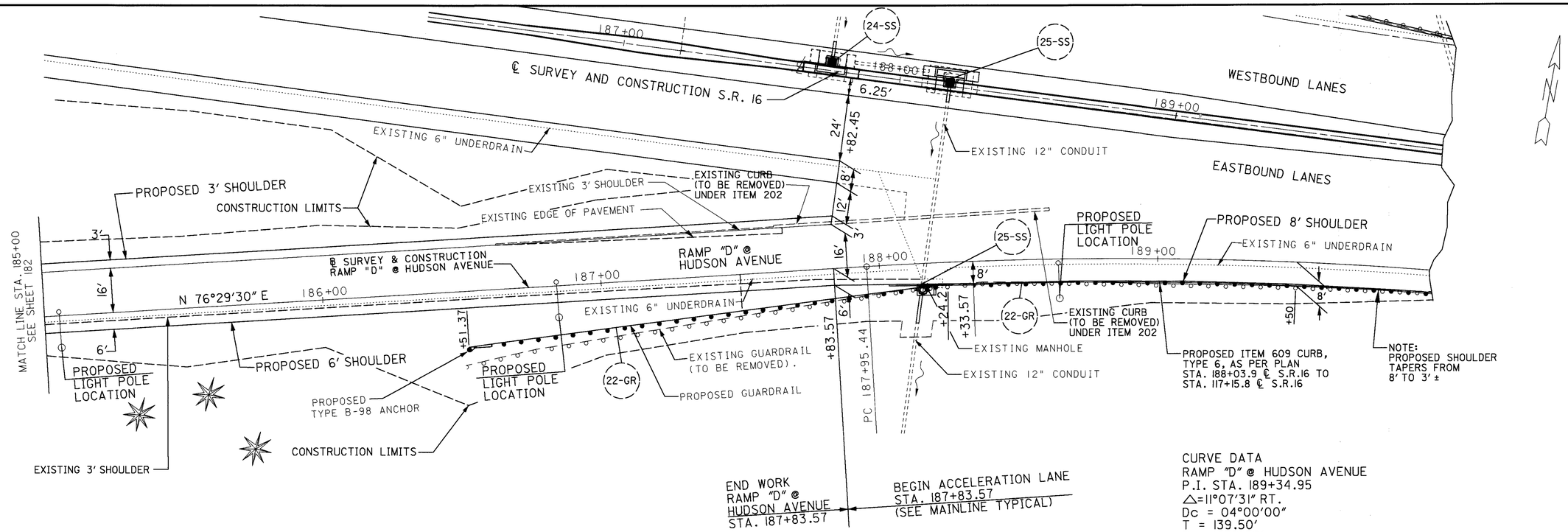

CURVE DATA
RAMP "D" @ HUDSON AVENUE
P.I. STA. 189+34.95
△=11°07'31" RT.
Dc = 04°00'00"
T = 139.50'
R = 1432.39'
L = 278.13'
E = 6.78'

FOR PAVEMENT CALCULATIONS SEE SHEETS 68-80
FOR STORM SEWER QUANTITIES SEE SHEETS 265-266
FOR GUARDRAIL QUANTITIES SEE SHEETS 81
FOR LIGHTING QUANTITIES AND DETAILS SEE SHEETS 363-401
FOR UNDERDRAIN QUANTITIES AND DETAILS SEE SHEETS 267-272

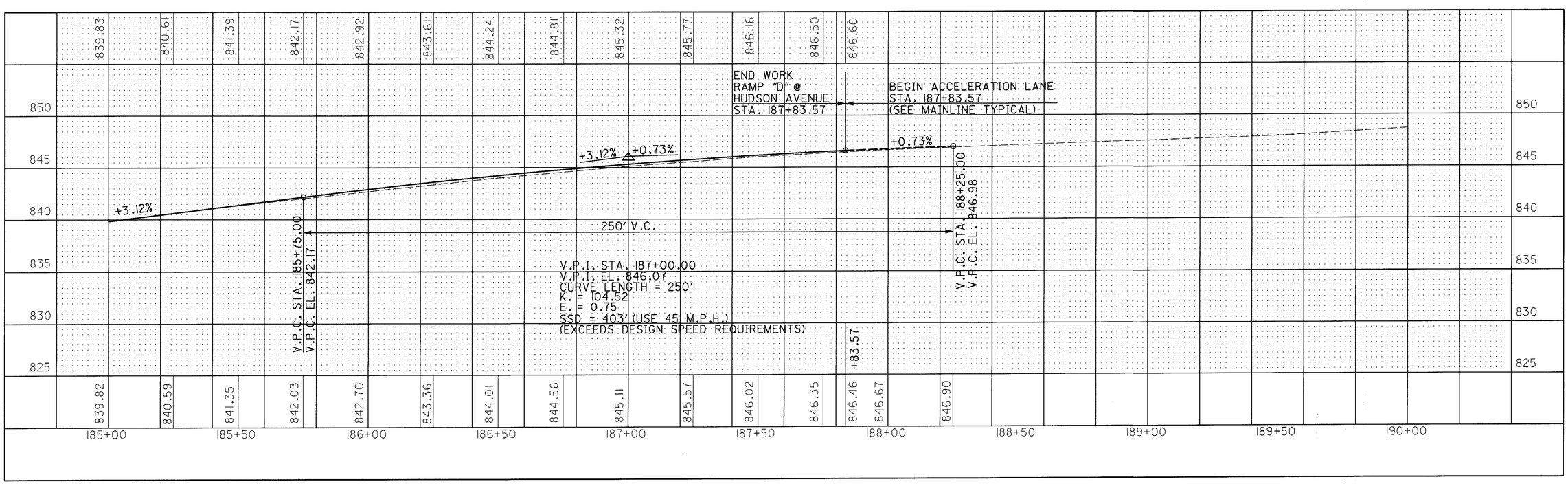

HORIZONTAL SCALE IN FEET 0 10 20 40

CALCULATED
CHECKED

PLAN AND PROFILE SHEET RAMP "D" AT HUDSON AVENUE
STA. 185+00 TO STA. 190+00

LIC-16-19.72

L16RDA7.DGN 05/08/95

SEEDING END WIDTH	SEEDING SQ. YDS.
29	
	136
20	
	67
28	
	107
49	
	190
49	

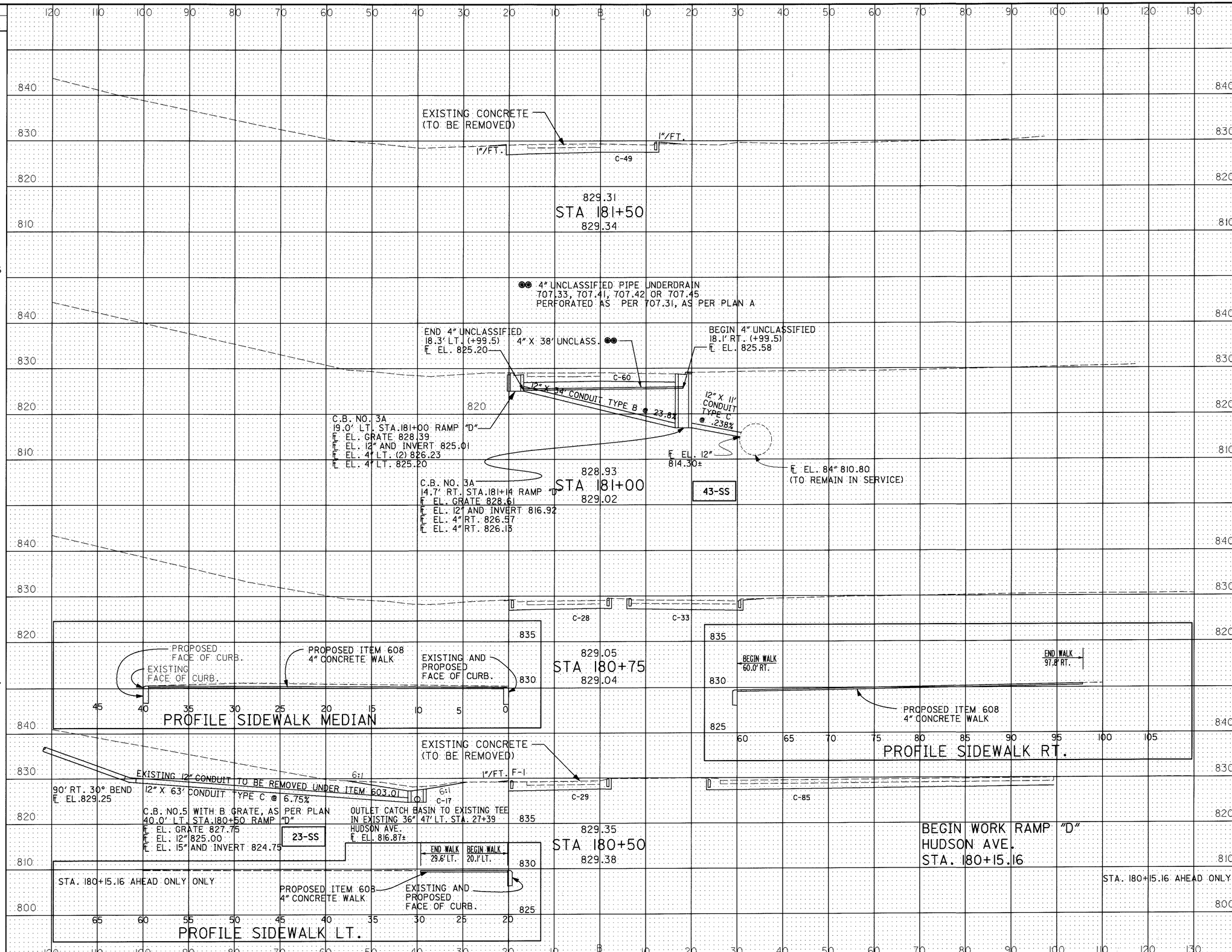

END AREA CUT	END AREA FILL	VOLUME CUT	VOLUME FILL
49	0		
		101	0
60	0		
		56	0
61	0		
		89	1
131	1		
		169	1
131	1		

CALCULATED J.J.G. 3-13-95
CHECKED A.L.L. 3-16-95

CROSS SECTIONS RAMP "D" AT HUDSON AVE. STA. 180+50 TO STA. 181+50

LIC-16-19.72

RC001188.DGN 4/28/95

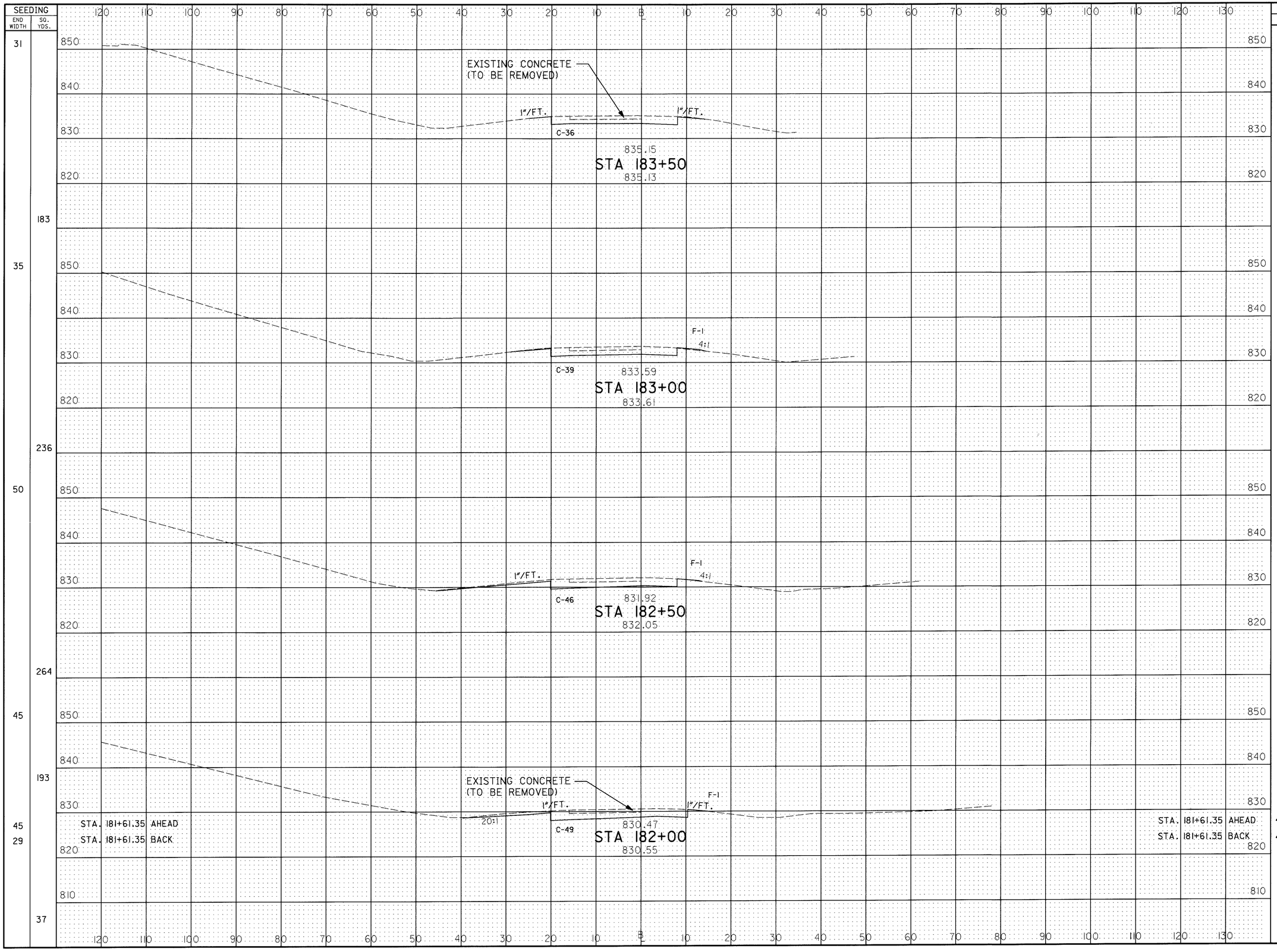
SEEDING
END WIDTH
SQ. YDS.
EXISTING CONCRETE (TO BE REMOVED)
1"/FT.
C-36
835.15
STA 183+50
835.13
F-1
4:1
C-39
833.59
STA 183+00
833.61
C-46
831.92
STA 182+50
832.05
20:1
C-49
830.47
STA 182+00
830.55
STA. 181+61.35 AHEAD
STA. 181+61.35 BACK
END AREA
CUT
FILL
VOLUME
CUT
FILL
CALCULATED J.A. 3-13-95
CHECKED A.L.L. 3-16-95
CROSS SECTION SHEET RAMP "D" AT HUDSON AVE.
STA. 182+00 TO STA. 183+50
LIC-16-19.72
185
547
RC002188.DGN 2/9/95

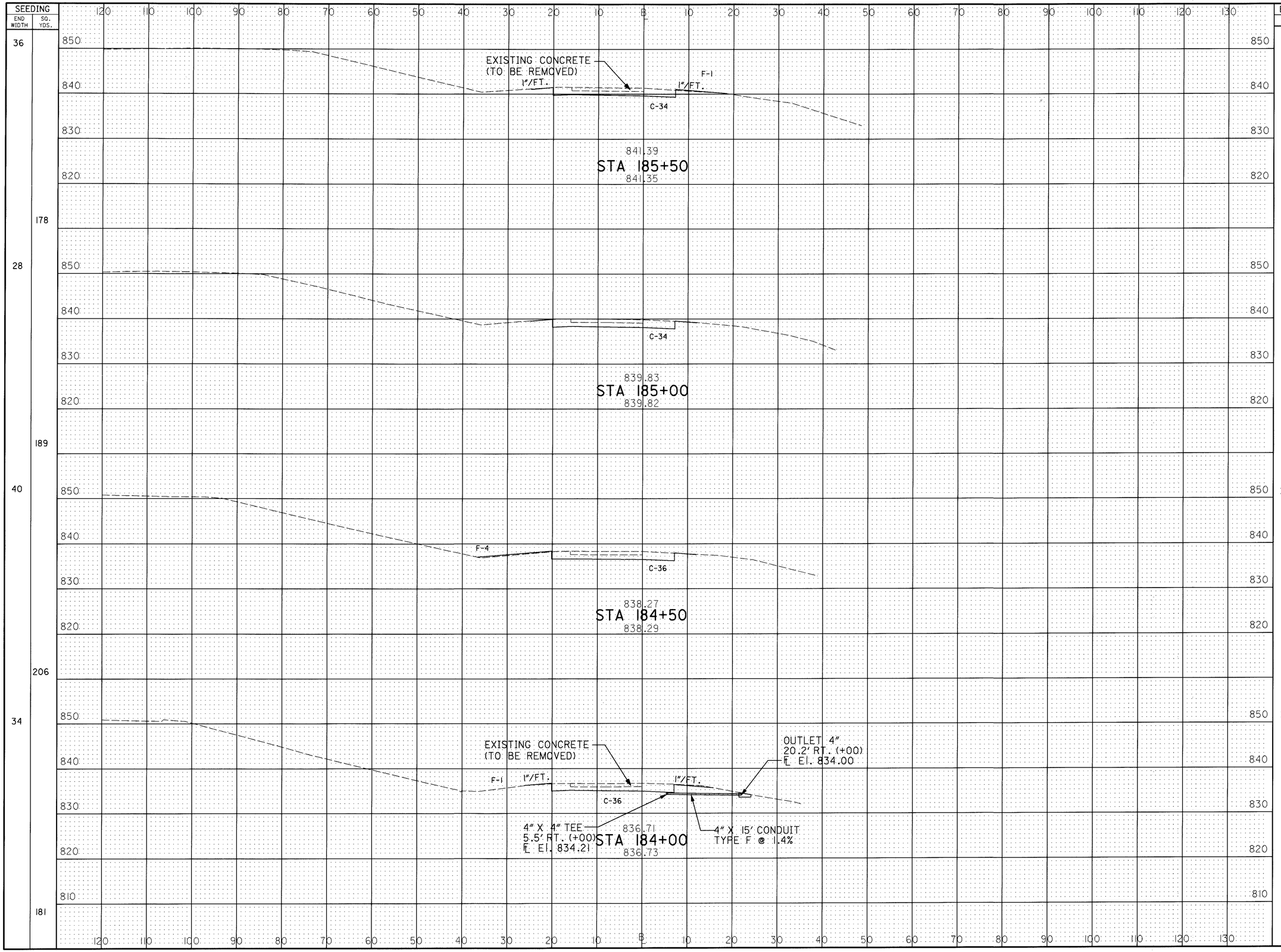

CALCULATED A.L.L. 3-13-95
CHECKED A.L.L. 3-16-95

CROSS SECTION SHEET RAMP "D" AT HUDSON AVE. STA. 184+00 TO STA. 185+50

LIC-16-19.72

RC003188.DGN 2/23/95

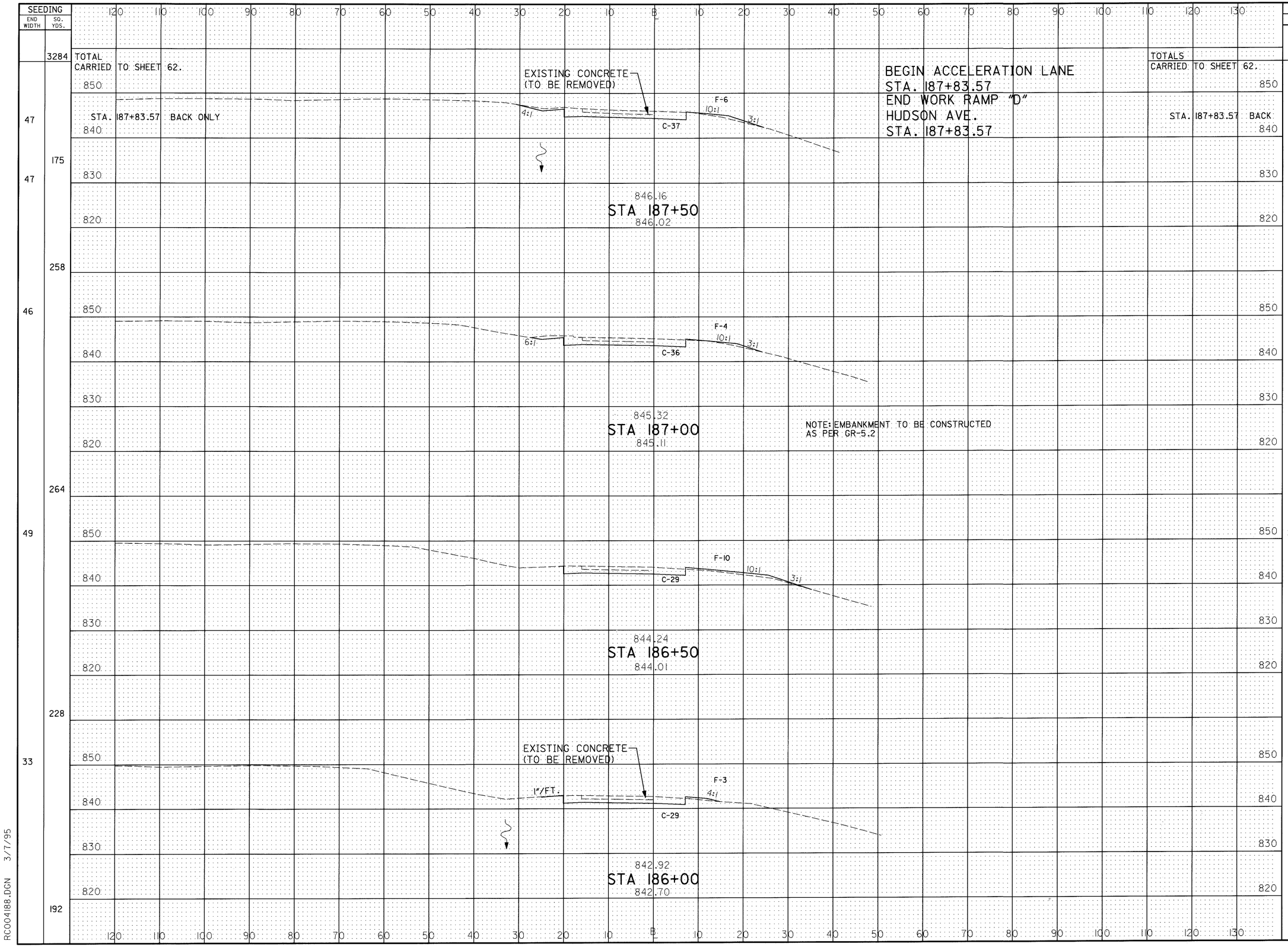

CALCULATED A.L.L. 3-13-95
CHECKED A.L.L. 3-16-95

CROSS SECTION SHEET RAMP "D" AT HUDSON AVE.
STA. 186+00 TO STA. 187+50

LIC-16-19.72

187
547

RC004188.DGN 3/7/95

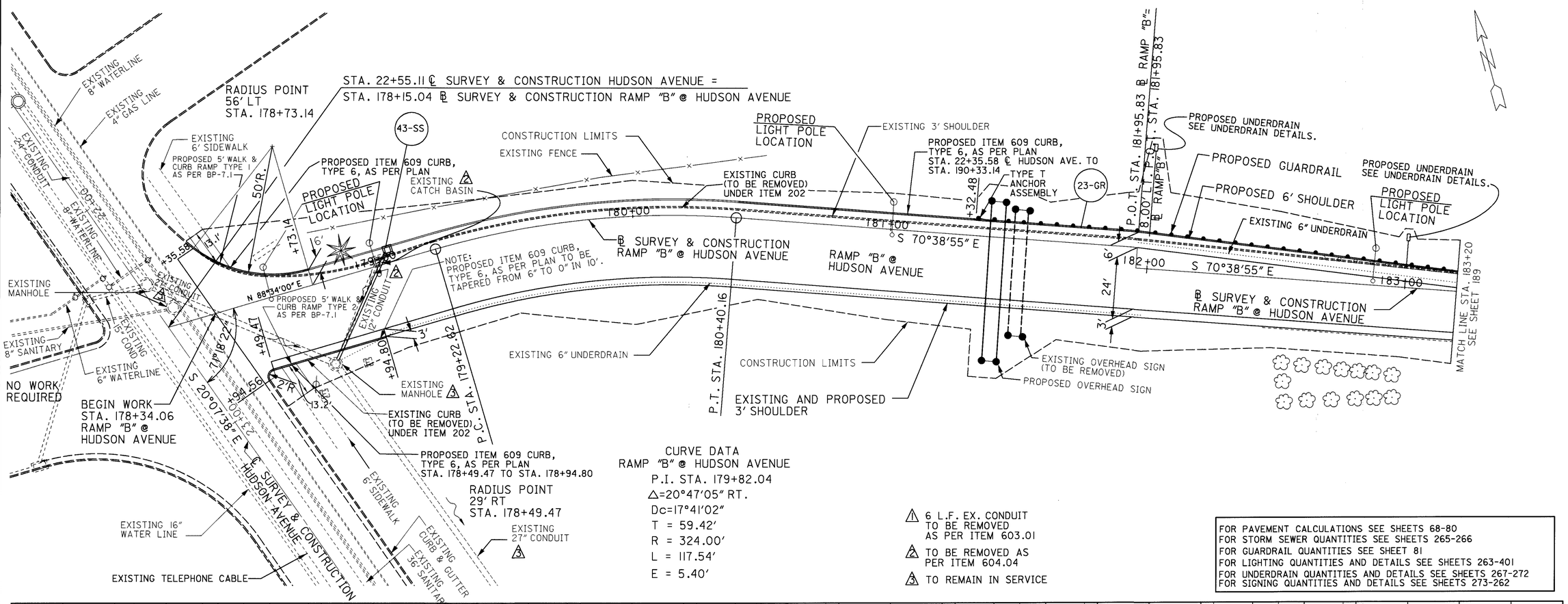

CURVE DATA
RAMP "B" @ HUDSON AVENUE
P.I. STA. 179+82.04
Δ=20°47'05" RT.
Dc=17°41'02"
T = 59.42'
R = 324.00'
L = 117.54'
E = 5.40'

1 6 L.F. EX. CONDUIT TO BE REMOVED AS PER ITEM 603.01
2 TO BE REMOVED AS PER ITEM 604.04
3 TO REMAIN IN SERVICE

FOR PAVEMENT CALCULATIONS SEE SHEETS 68-80
FOR STORM SEWER QUANTITIES SEE SHEETS 265-266
FOR GUARDRAIL QUANTITIES SEE SHEET 81
FOR LIGHTING QUANTITIES AND DETAILS SEE SHEETS 263-401
FOR UNDERDRAIN QUANTITIES AND DETAILS SEE SHEETS 267-272
FOR SIGNING QUANTITIES AND DETAILS SEE SHEETS 273-262

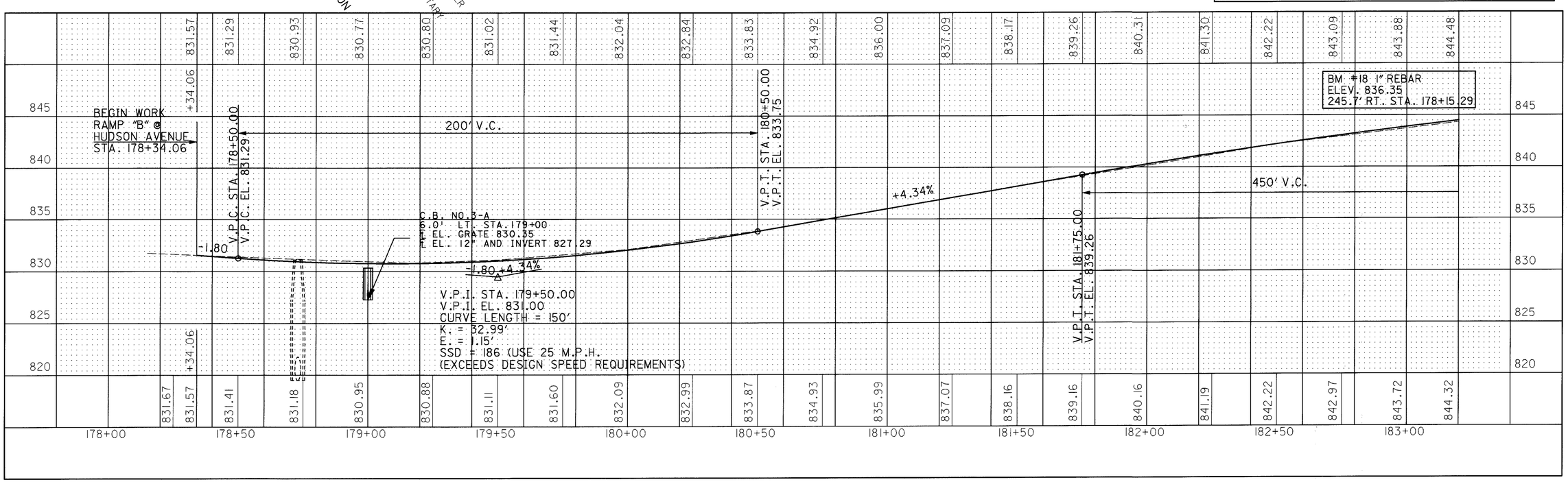

L16RB07.DGN 6/1/95

CALCULATED
CHECKED

PLAN AND PROFILE SHEET RAMP "B" AT HUDSON AVENUE
STA. 178+00 TO STA. 183+20

LIC-16-19.72

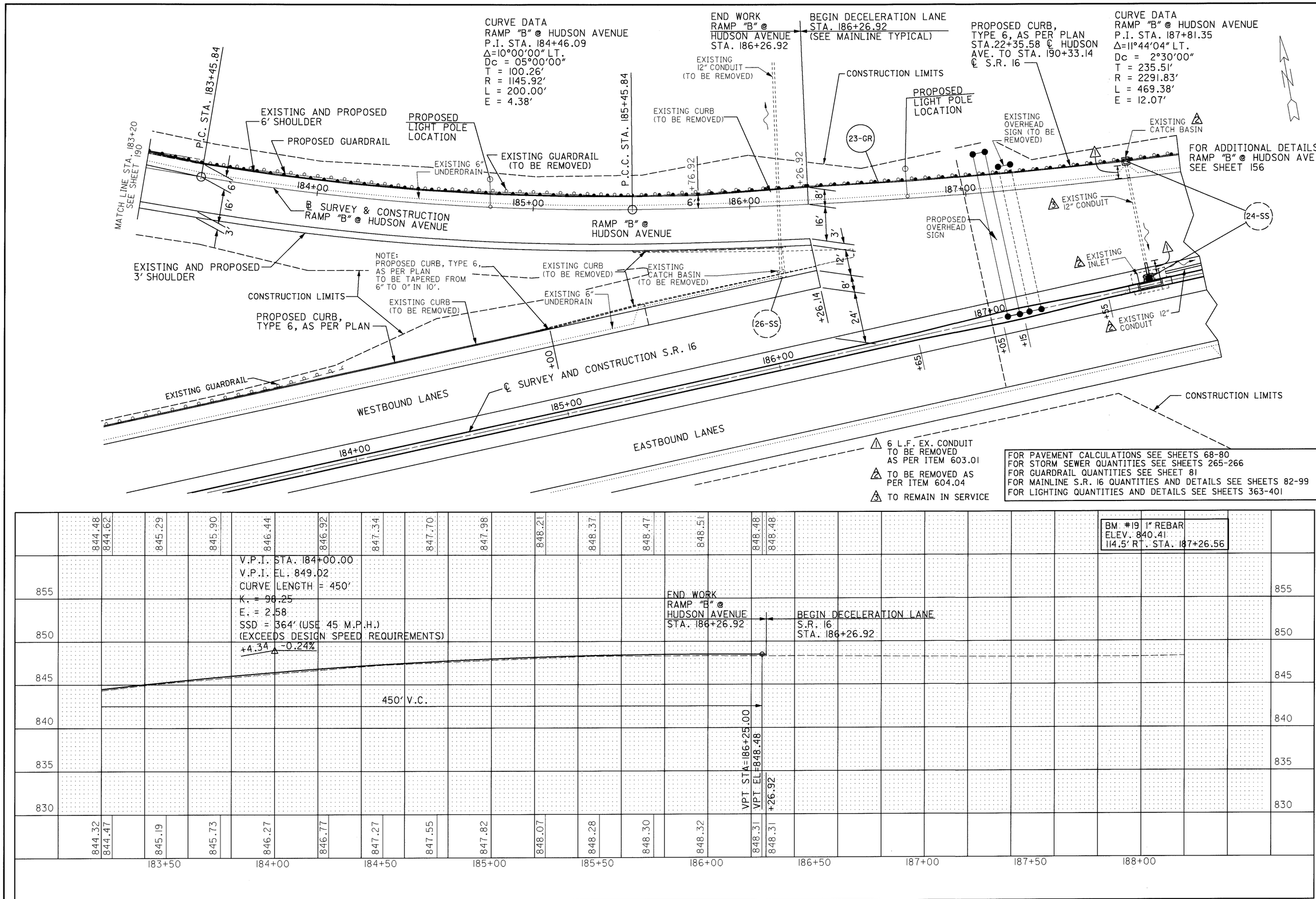

PLAN AND PROFILE SHEET RAMP "B" AT HUDSON AVENUE
STA. 183+20 TO STA. 188+00

CALCULATED

CHECKED

LIC-16-19.72

L16RBA7.DGN 6/1/95

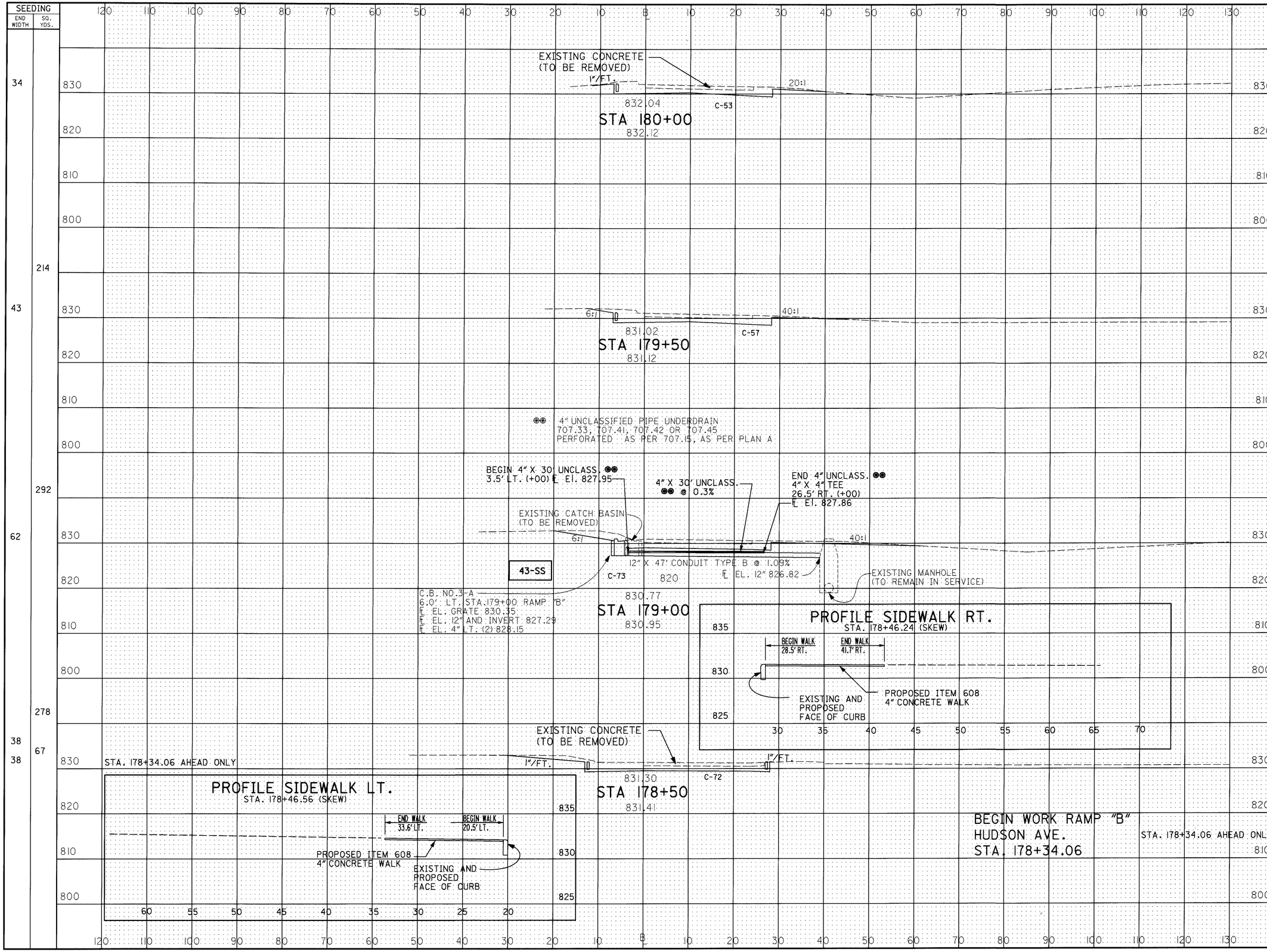

END WIDTH	SQ. YDS.	END AREA CUT	END AREA FILL	VOLUME CUT	VOLUME FILL
34		53	0		
	214			102	0
43		57	0		
62	292	73	0	120	0
	278			134	0
38 / 38	67	72	0	43	0
		72	0		

CALCULATED A.L.L. 3-13-95
CHECKED A.L.L. 3-16-95

CROSS SECTION SHEET RAMP "B" AT HUDSON AVE. STA. 178+50 TO STA. 180+00

LIC-16-19.72

190
547

RC001187.DGN 4/28/95

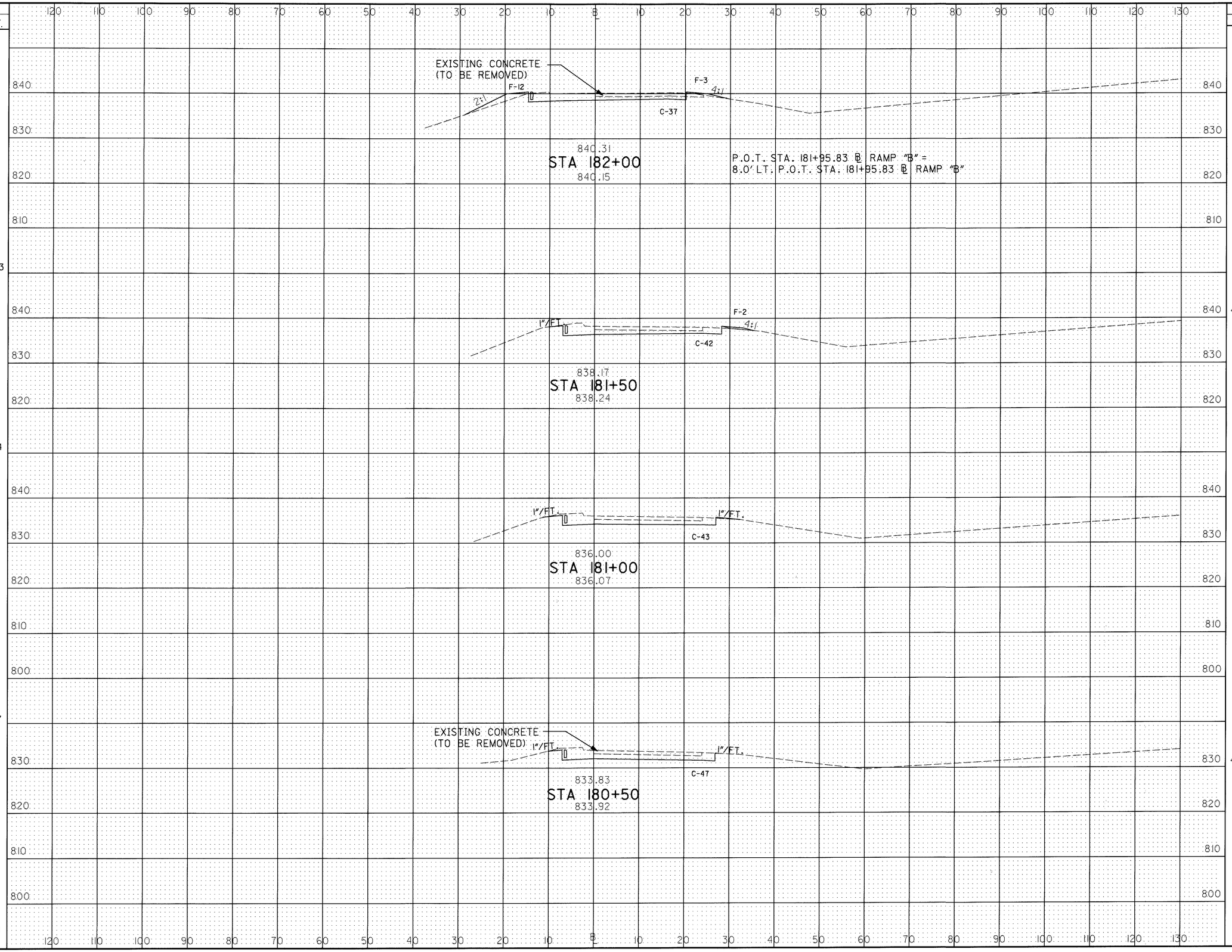

SEEDING END WIDTH	SEEDING SQ. YDS.	END AREA CUT	END AREA FILL	VOLUME CUT	VOLUME FILL
43		37	15		
	203			73	16
30		42	2		
	164			79	2
29		43	0		
	147			83	0
24		47	0		
	161			93	0

CALCULATED A.L.L. 3-13-95
CHECKED A.L.L. 3-16-95

CROSS SECTION SHEET RAMP "B" AT HUDSON AVE.
STA. 180+50 TO STA. 182+00

LIC-16-19.72

RC002187.DGN 2/9/95

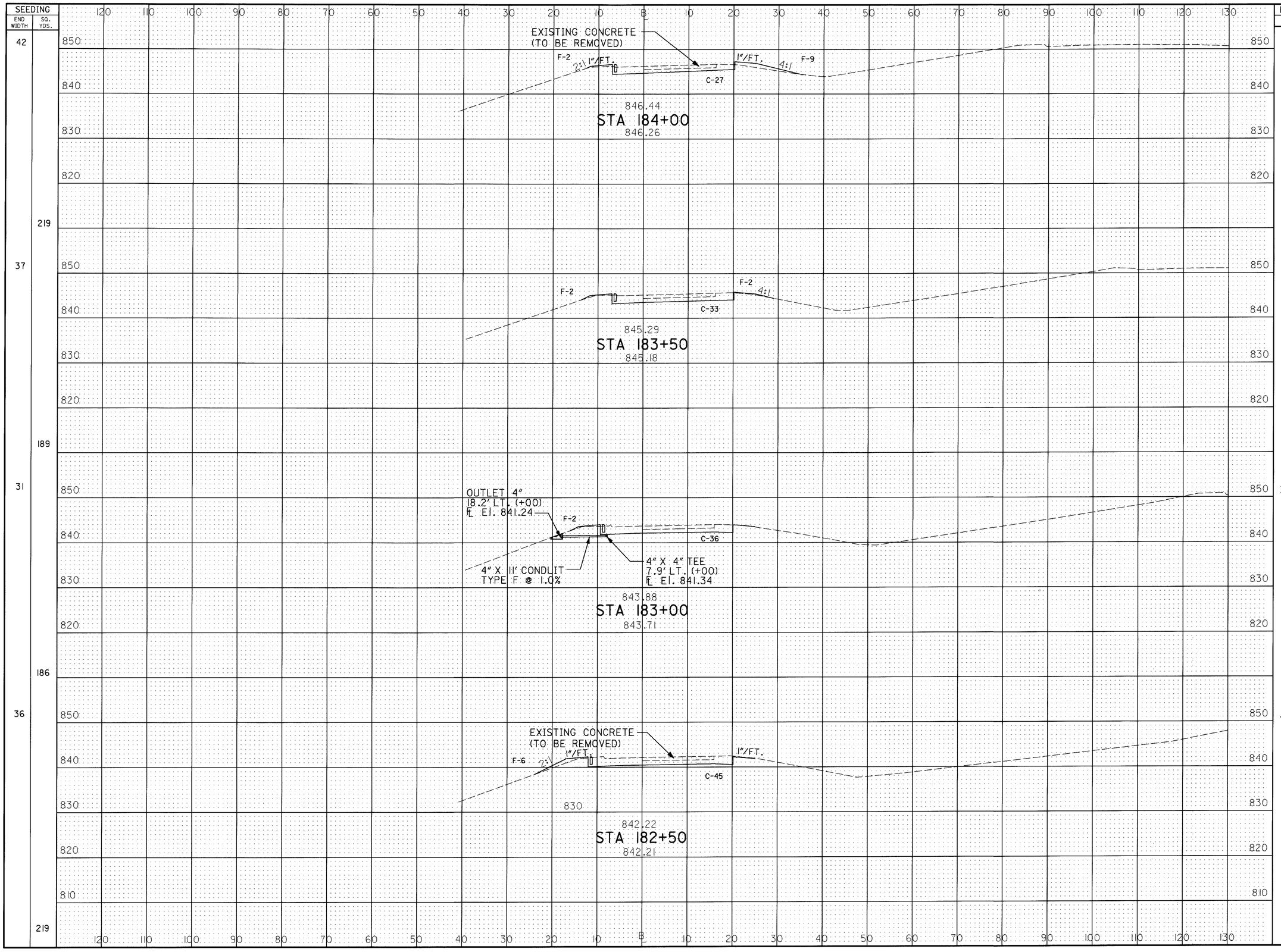

SEEDING END WIDTH	SEEDING SQ. YDS.	END AREA CUT	END AREA FILL	VOLUME CUT	VOLUME FILL
42		27	11		
	219			56	14
37		33	4		
	189			64	6
31		36	2		
	186			75	7
36		45	6		
	219			76	19

CALCULATED J.G. 3-14-95
CHECKED A.L.L. 3-16-95

CROSS SECTION SHEET RAMP "B" AT HUDSON AVE.
STA. 182+50 TO STA. 184+00

LIC-16-19.72

RC003187.DGN 3/07/95

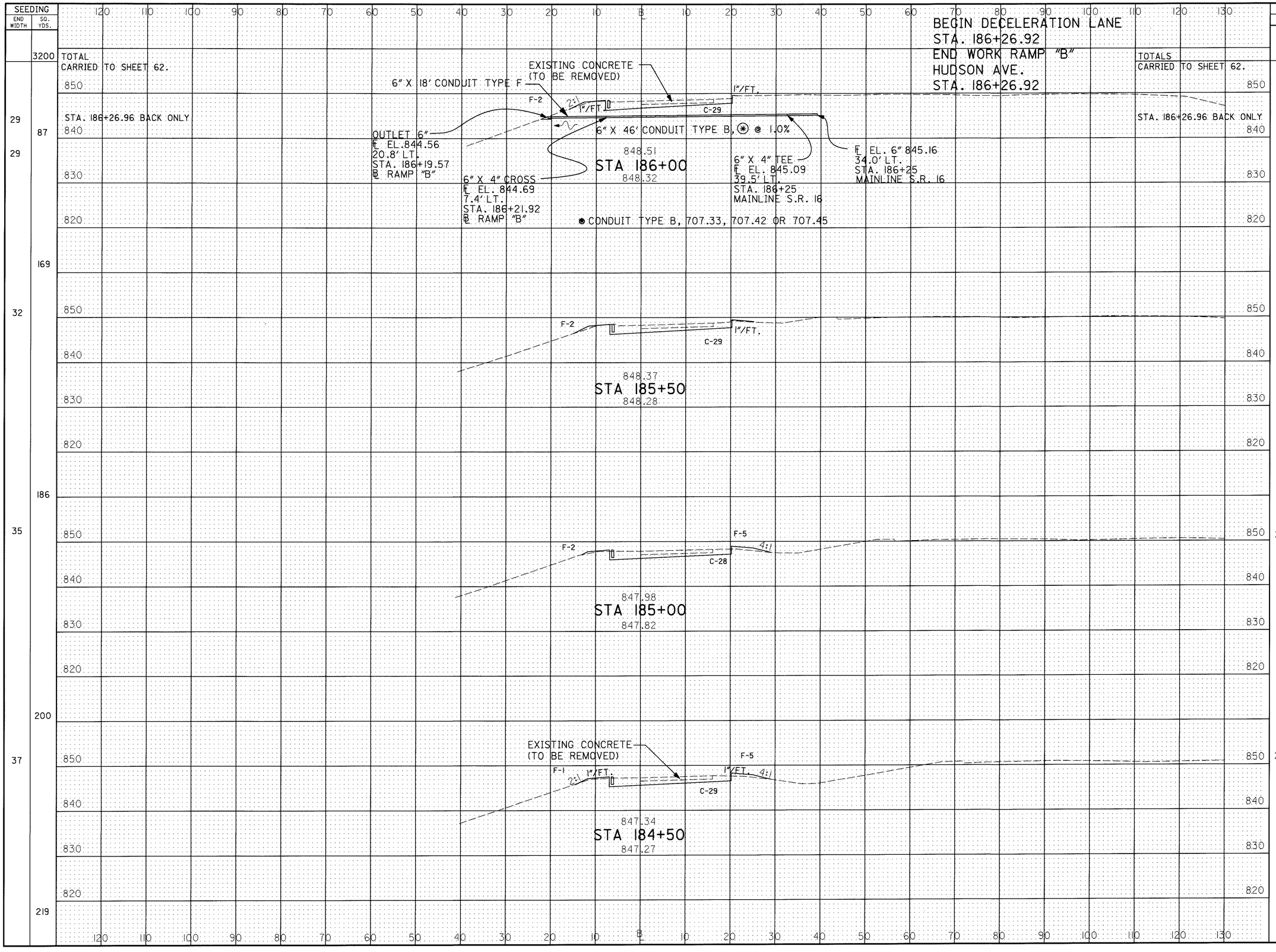
SEEDING
END WIDTH
SQ. YDS.
3200
TOTAL
CARRIED TO SHEET 62.
BEGIN DECELERATION LANE
STA. 186+26.92
END WORK RAMP "B"
HUDSON AVE.
STA. 186+26.92
TOTALS
CARRIED TO SHEET 62.
EXISTING CONCRETE
(TO BE REMOVED)
6" X 18' CONDUIT TYPE F
1"/FT.
F-2
2:1
C-29
STA. 186+26.96 BACK ONLY
6" X 46' CONDUIT TYPE B, ⊛ @ 1.0%
OUTLET 6"
℄ EL.844.56
20.8' LT.
STA. 186+19.57
℄ RAMP "B"
848.51
STA 186+00
848.32
6" X 4" TEE
℄ EL. 845.09
39.5' LT.
STA. 186+25
MAINLINE S.R. 16
℄ EL. 6" 845.16
34.0' LT.
STA. 186+25
MAINLINE S.R. 16
6" X 4" CROSS
℄ EL. 844.69
7.4' LT.
STA. 186+21.92
℄ RAMP "B"
⊛ CONDUIT TYPE B, 707.33, 707.42 OR 707.45
87
169
186
200
219
848.37
STA 185+50
848.28
F-5
4:1
C-28
847.98
STA 185+00
847.82
847.34
STA 184+50
847.27
F-1
END AREA
CUT
FILL
VOLUME
CUT
FILL
1239
106
29
2
29
2
29
2
29
2
54
4
53
8
28
7
53
12
29
6
52
16
CALCULATED J.L.G. 3-13-95
CHECKED A.L.L. 3-16-95
CROSS SECTION SHEET RAMP "B" AT HUDSON AVE.
STA. 184+50 TO STA. 186+00
LIC-16-19.72
193
547
RC004187.DGN 2/9/95

△1 6 LIN. FT. OF EXISTING CONDUIT TO BE REMOVED AS PER ITEM 603.01

△2 TO BE REMOVED AS PER ITEM 604.04

REMOVE THE EXISTING CONCRETE MEDIAN TO THE BOTTOM OF THE EXISTING CONCRETE PAVEMENT, UNDER ITEM 202 CONCRETE MEDIAN REMOVED. REPLACE WITH 9" OF PROPOSED ITEM 305 CONCRETE BASE. QUANTITIES CARRIED TO SHEET 71.

EXISTING CURB AND GUTTER TO BE REMOVED UNDER ITEM 202 CURB AND GUTTER REMOVED. PROPOSED ITEM 609 COMBINATION CURB AND GUTTER, TYPE 2, TO MEET EXISTING

EXISTING CURB AND GUTTER TO BE REMOVED UNDER ITEM 202 CURB AND GUTTER REMOVED. PROPOSED ITEM 609 COMBINATION CURB AND GUTTER, TYPE 2, TO MEET EXISTING

PROPOSED CURBS TO BE TAPERED AT PROPOSED CURB RAMPS AS PER BP-7.1

PROPOSED CURB RAMP, TYPE 2, AS PER BP-7.1

ADJUSTED TO MEET EXISTING

SERVICE ROAD "AB"

PROPOSED CURB RAMP, TYPE 1, AS PER BP-7.1, TO BE PLACED AT EXISTING CROSSWALK

EXISTING JOINT

EXISTING JOINT

20.4 ±

TYPE A ANCHOR ASSEMBLY

+66.53

24-GR

+16.53

EXISTING 20" WATERLINE

℄ SURVEY AND CONSTRUCTION MT. VERNON RD.

EXISTING 72" CONDUIT

PROPOSED CURBS TO BE TAPERED AT PROPOSED CURB RAMPS AS PER BP-7.1

EXISTING CURB AND GUTTER TO BE REMOVED UNDER ITEM 202 CURB AND GUTTER REMOVED. PROPOSED ITEM 609 COMBINATION CURB AND GUTTER, TYPE 2 TO MEET EXISTING

PROPOSED CURB RAMP, TYPE 1, AS PER BP-7.1, TO BE PLACED AT EXISTING CROSSWALK

SERVICE ROAD "CD"

EXISTING 12" CONDUIT

EXISTING CATCH BASIN

PROPOSED CURB RAMP, TYPE 2, AS PER BP-7.1

EXISTING 12" CONDUIT

48-SS

22+00

23+00

24+00

25+00

26+00

2'

12'

3.5'

A

A

3.5'

12'

B

B

2'

△1

EXISTING 12" CONDUIT

10'R

+87.05

+98.05

BRIDGE TERMINAL ASSEMBLY, TYPE 1

BRIDGE TERMINAL ASSEMBLY, TYPE 2

+93.07

+07.14

29-GR

+43.07

EXISTING CATCH BASIN △2

+36.55

175+00

EXISTING CATCH BASIN △2

PROPOSED ITEM 609 COMBINATION CURB AND GUTTER, TYPE 2, AS PER PLAN

+98.34

173+00

RAMP "A" @ MT. VERNON RD.

16-GR

+92.20

TYPE T ANCHOR ASSEMBLY

49-SS

PROPOSED ITEM 609 COMBINATION CURB AND GUTTER, TYPE 2, AS PER PLAN

RAMP "C" @ MT. VERNON RD.

174+00

RAMP "CC"

174+00

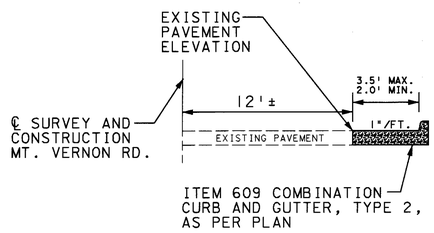

SECTION A-A STA. 21+98.34 TO STA. 22+87.05 ℄ MT. VERNON RD.
SECTION B-B STA. 25+07.14 TO STA. 26+36.55 ℄ MT. VERNON RD.

NOTE:
FOR DETAILS NOT SHOWN IN SECTION A-A AND SECTION B-B, SEE STANDARD CONSTRUCTION DRAWING BP-5.1.

0 10 20 40
HORIZONTAL SCALE IN FEET

CALCULATED

CHECKED

PLAN SHEET AT MT. VERNON RD. STA. 21+00 TO STA. 27+00

LIC-16-19.72

CURTIS.DGN 6/1/95

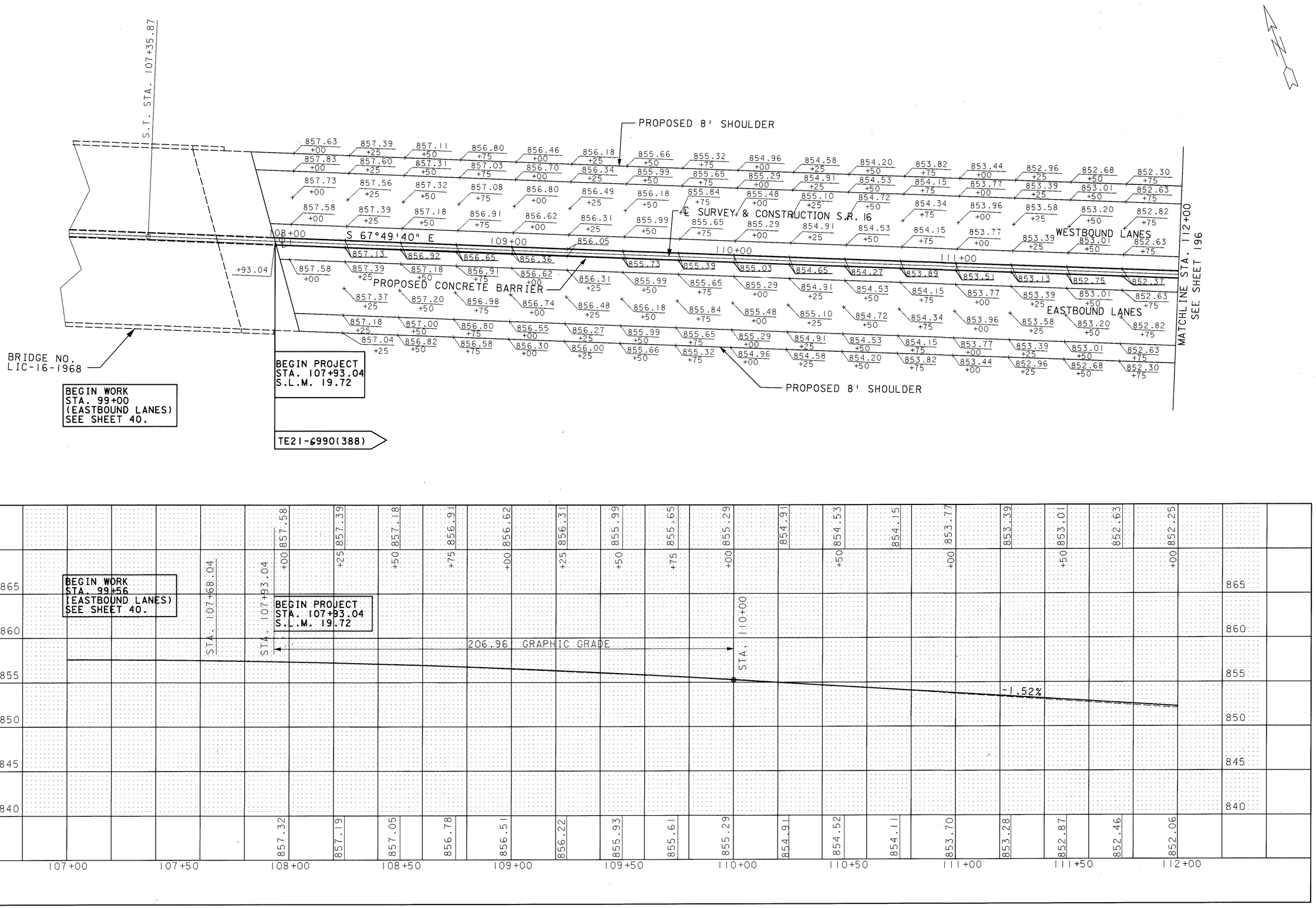

HORIZONTAL SCALE IN FEET 0 10 20 40

CALCULATED D.M.H. 3-13-95
CHECKED A.L.L. 3-16-95

PAVEMENT DETAIL SHEET
STA. 107+00 TO STA. 112+00

LIC-16-19.72

L2102159 DGN 6/1/95

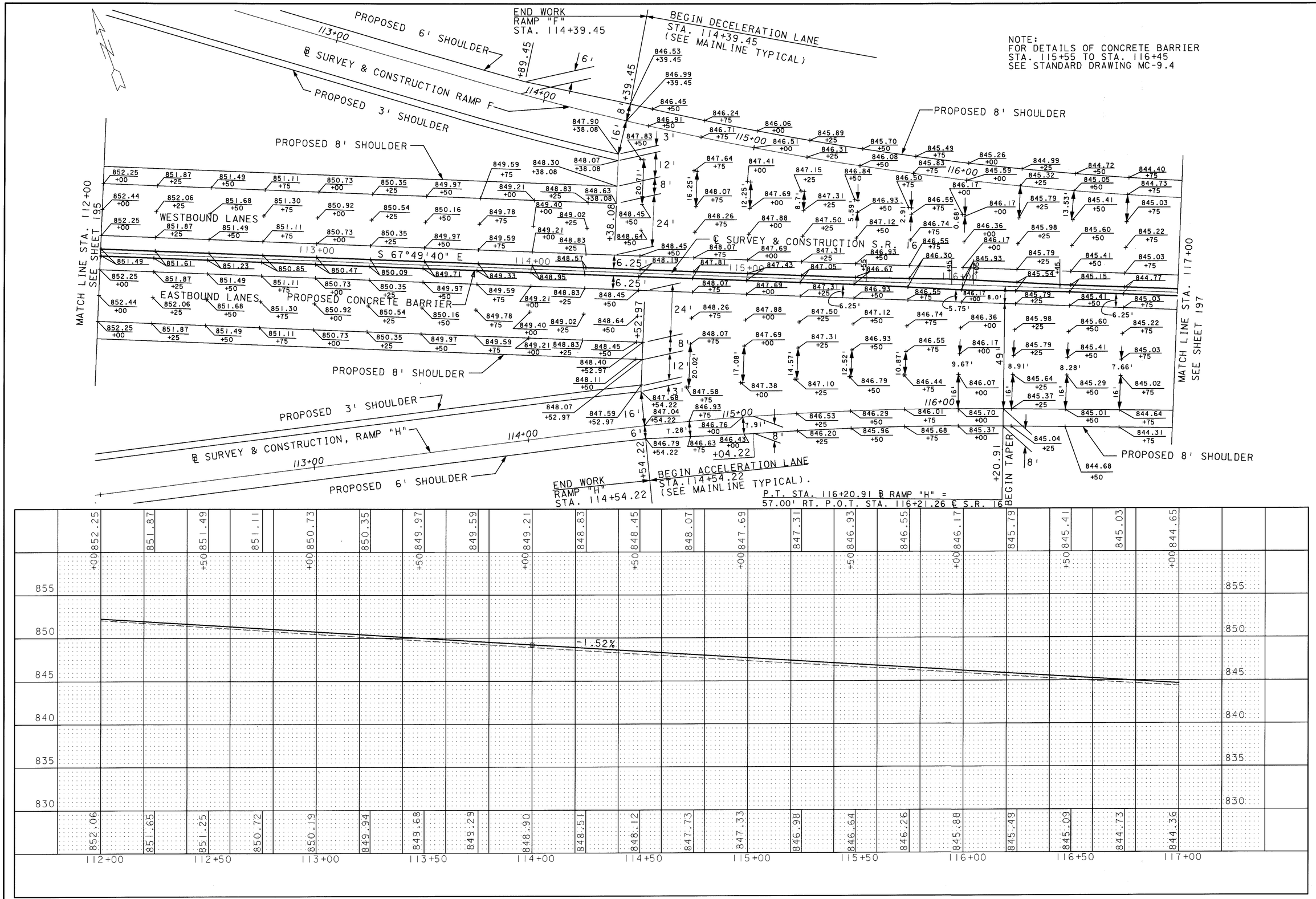

HORIZONTAL SCALE IN FEET

CALCULATED D.M.S. 3-15-95
CHECKED A.L.L. 3-16-95

PAVEMENT DETAIL SHEET
STA. 112+00 TO STA. 117+00

LIC-16-19.72

L2103159.DGN 2/28/95

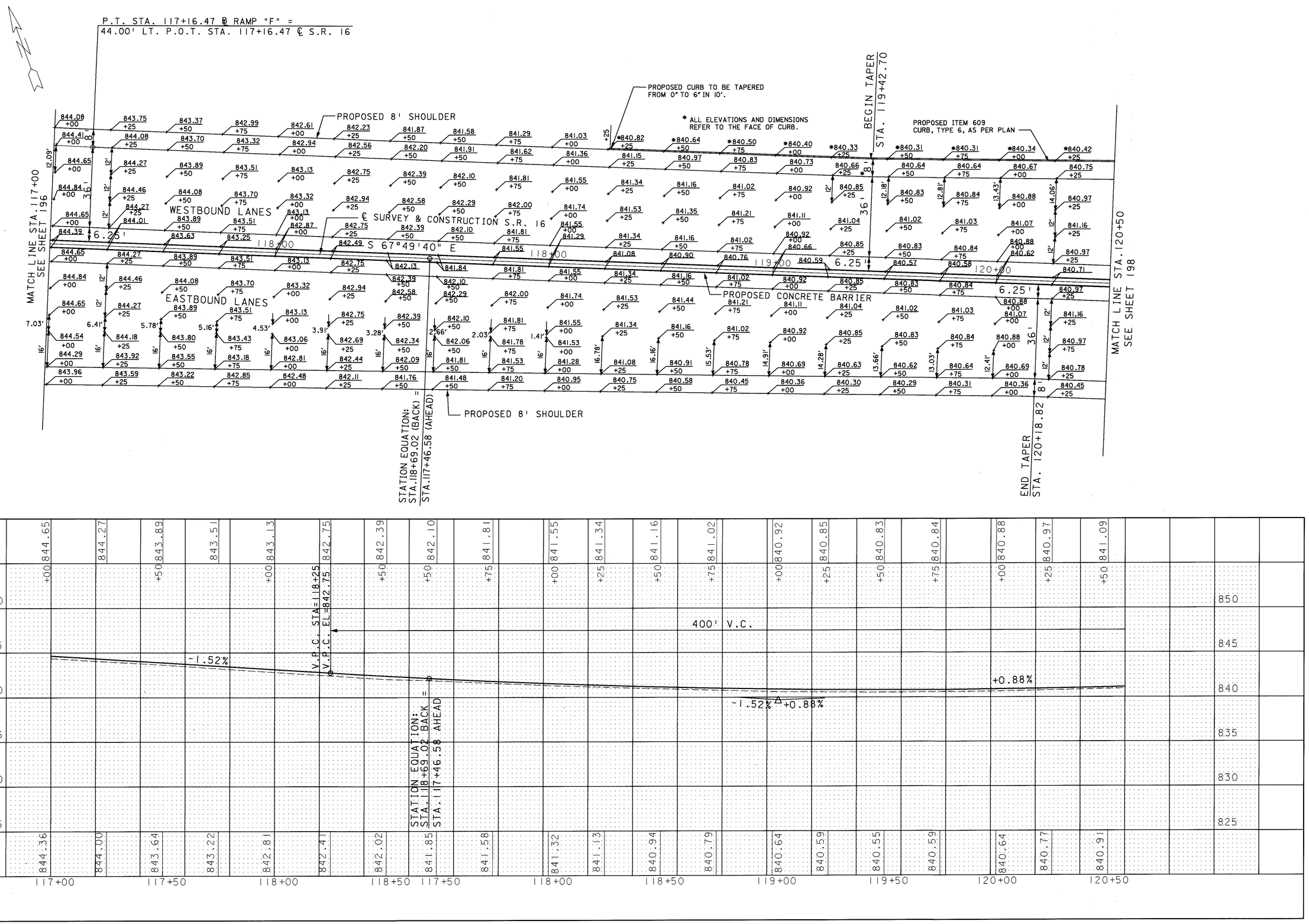

CALCULATED R.M. 3-15-95
CHECKED A.L.L. 3-16-95

0 10 20 40
HORIZONTAL SCALE IN FEET

PAVEMENT DETAIL SHEET
STA. 117+00 TO STA. 120+50

LIC-16-19.72

L2104159.DGN 2/28/95

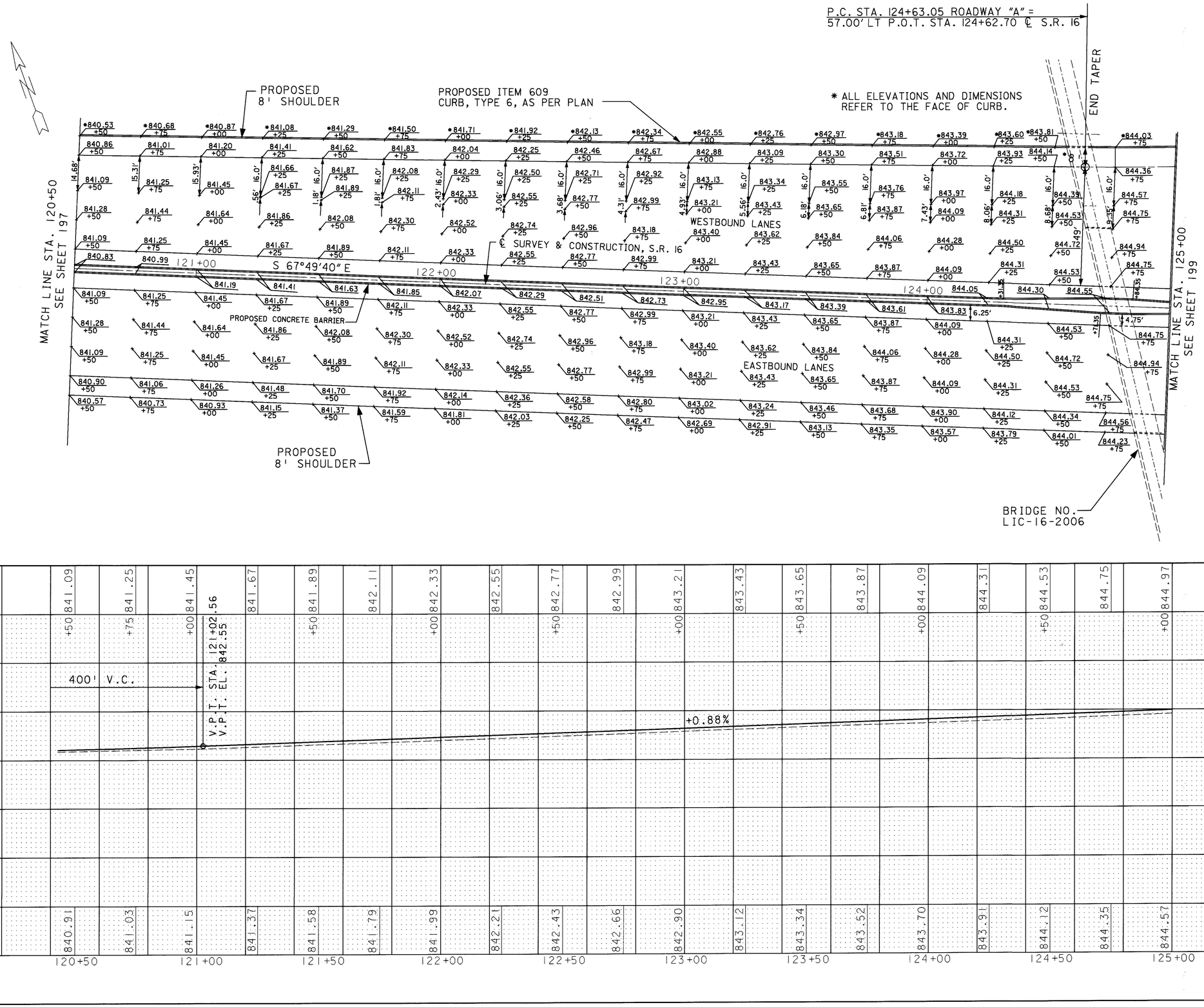

NOTE:
FOR DETAILS OF CONCRETE BARRIER FROM STA. 124+31.35 TO STA. 125+24.35 SEE STANDARD DRAWING MC-9.4

0 10 20 40
HORIZONTAL SCALE IN FEET

CALCULATED D.M.L. 3-15-95
CHECKED A.L.L. 3-16-95

PAVEMENT DETAIL SHEET
STA. 120+50 TO STA. 125+00

LIC-16-19.72

L2105159.DGN 2/28/95

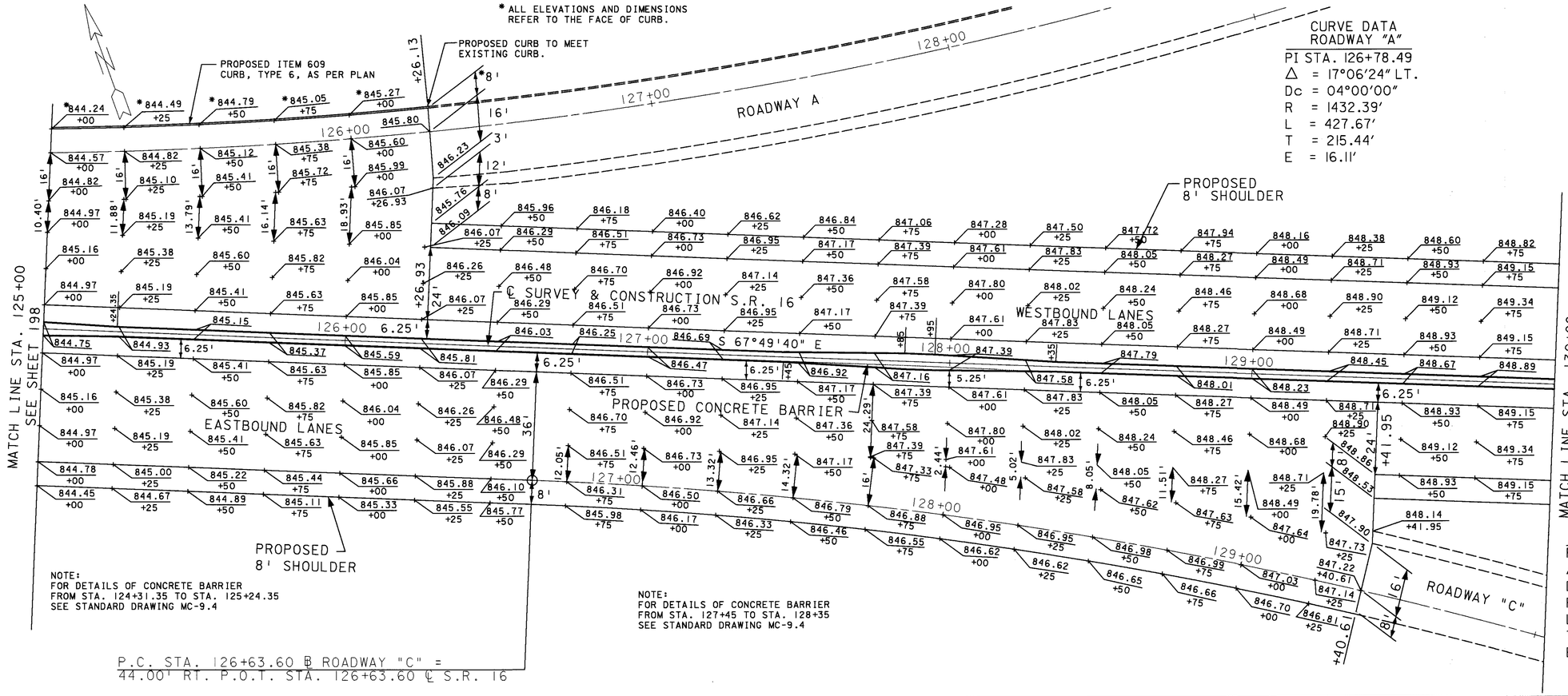

CURVE DATA
ROADWAY "A"

PI STA. 126+78.49
Δ = 17°06'24" LT.
Dc = 04°00'00"
R = 1432.39'
L = 427.67'
T = 215.44'
E = 16.11'

CURVE DATA
ROADWAY "C"

PI STA. 128+83.16
Δ = 17°25'46" RT.
Dc = 04°00'00"
R = 1432.39'
L = 435.74'
T = 219.52'
E = 16.73'

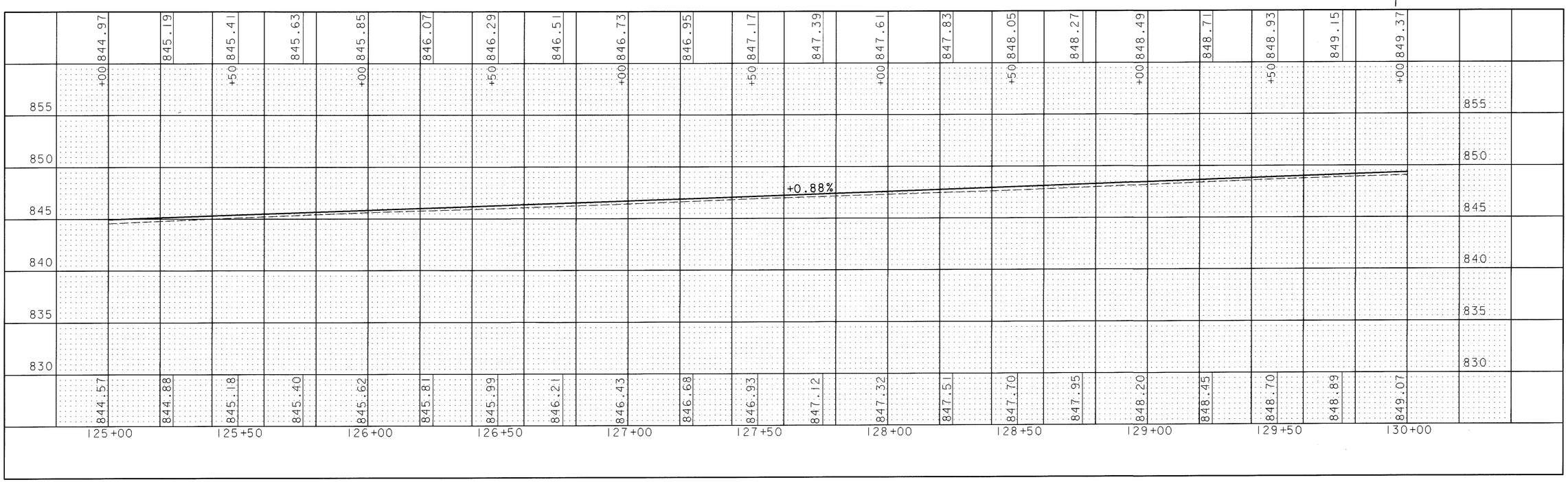

HORIZONTAL SCALE IN FEET 0 10 20 40

CALCULATED D.L.A. 3-15-95
CHECKED A.L.L. 3-16-95

PAVEMENT DETAIL SHEET
STA. 125+00 TO STA. 130+00

LIC-16-19.72

L2106159.DGN 2/28/95

CURVE DATA
S.R. 16

P.I. STA. 141+22.54
△ = 43°50'10" LT
Dc = 03°00'00"
R = 1909.86'
Ls = 350.00'
Lc = 1111.20'
Ts = 944.48'
Q = 05°15'00"
LT = 233.44'
ST = 116.26'
Es = 151.68'

* ALL ELEVATIONS AND DIMENSIONS REFER TO THE FACE OF THE CURB

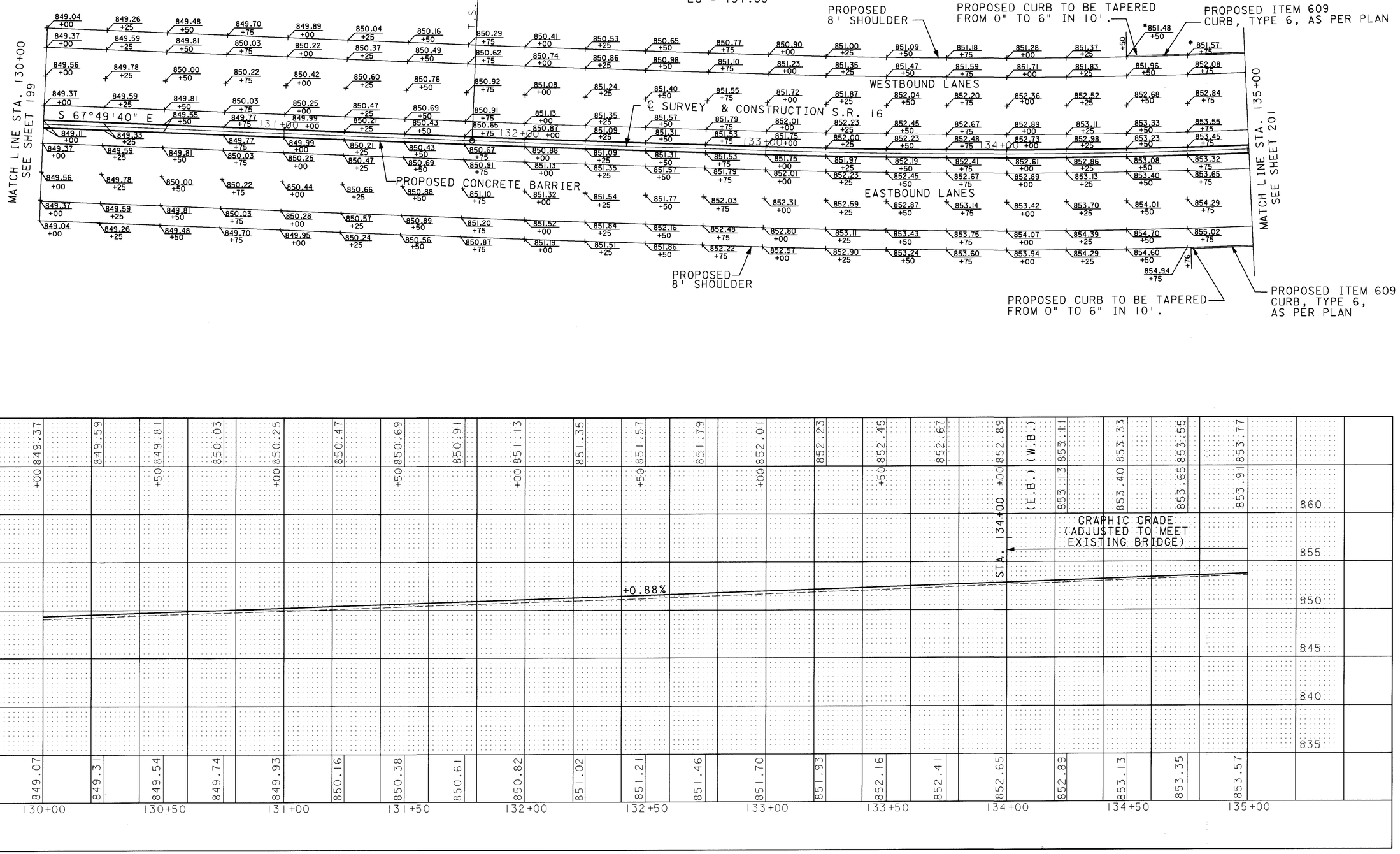

HORIZONTAL SCALE IN FEET 0 10 20 40

CALCULATED D.M.W. 3-13-95
CHECKED A.L.L. 3-16-95

PAVEMENT DETAIL SHEET
STA. 130+00 TO STA. 135+00

LIC-16-19.72

L2107159.DGN 2-28-95

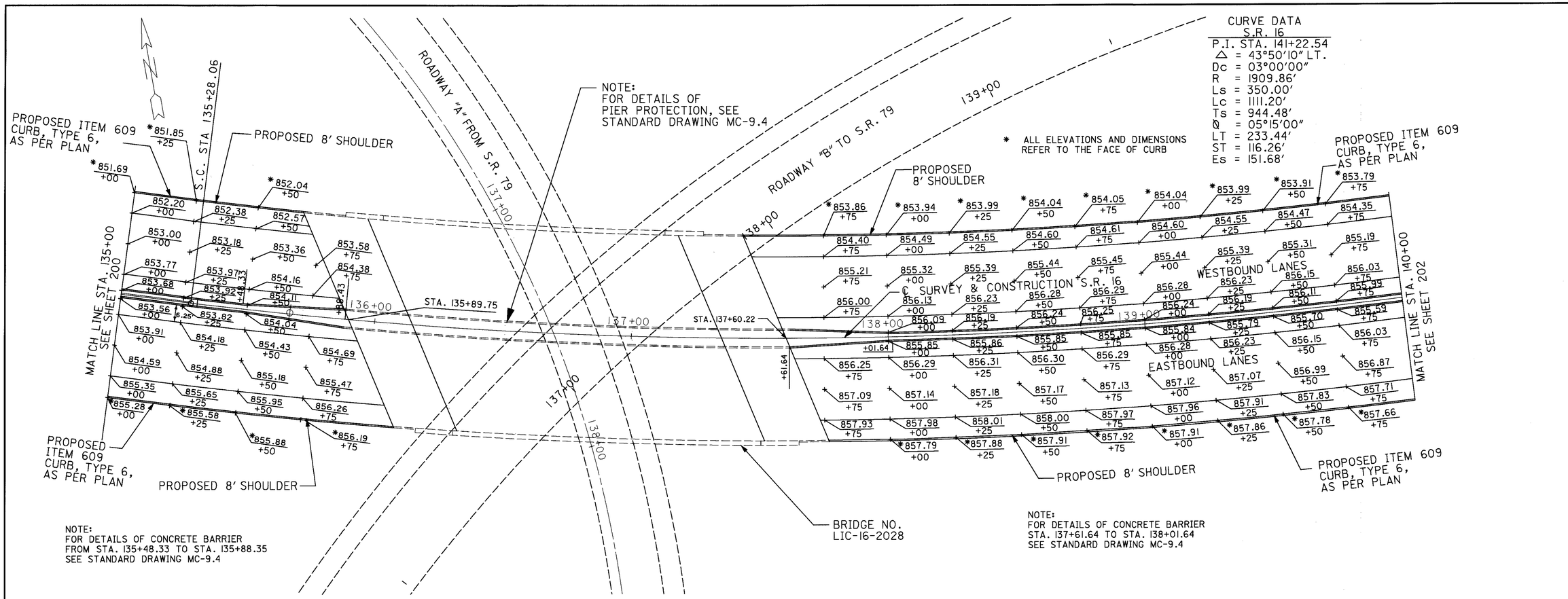

PAVEMENT DETAIL SHEET
STA. 135+00 TO STA. 140+00

HORIZONTAL SCALE IN FEET 0 10 20 40

CALCULATED D.M.W. 3-13-95
CHECKED A.L.L. 3-16-95

LIC-16-19.72

L2108159.DGN 2/28/95

CURVE DATA
S.R. 16

P.I. STA. 141+22.54
Δ = 43°50'10" LT.
Dc = 03°00'00"
R = 1909.86'
Ls = 350.00'
Lc = 1111.20'
Ø = 05°15'00"
LT = 233.44'
ST = 116.26'
Es = 151.68'
Ts = 944.48'

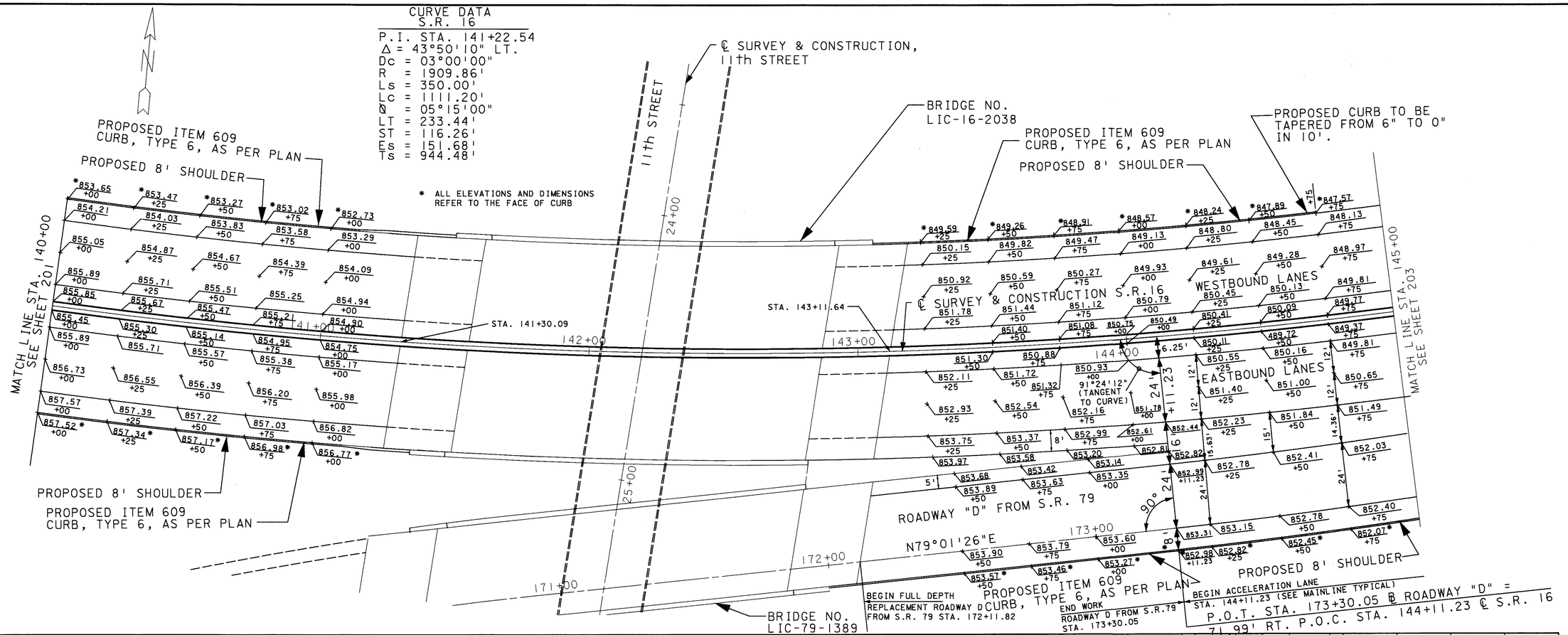

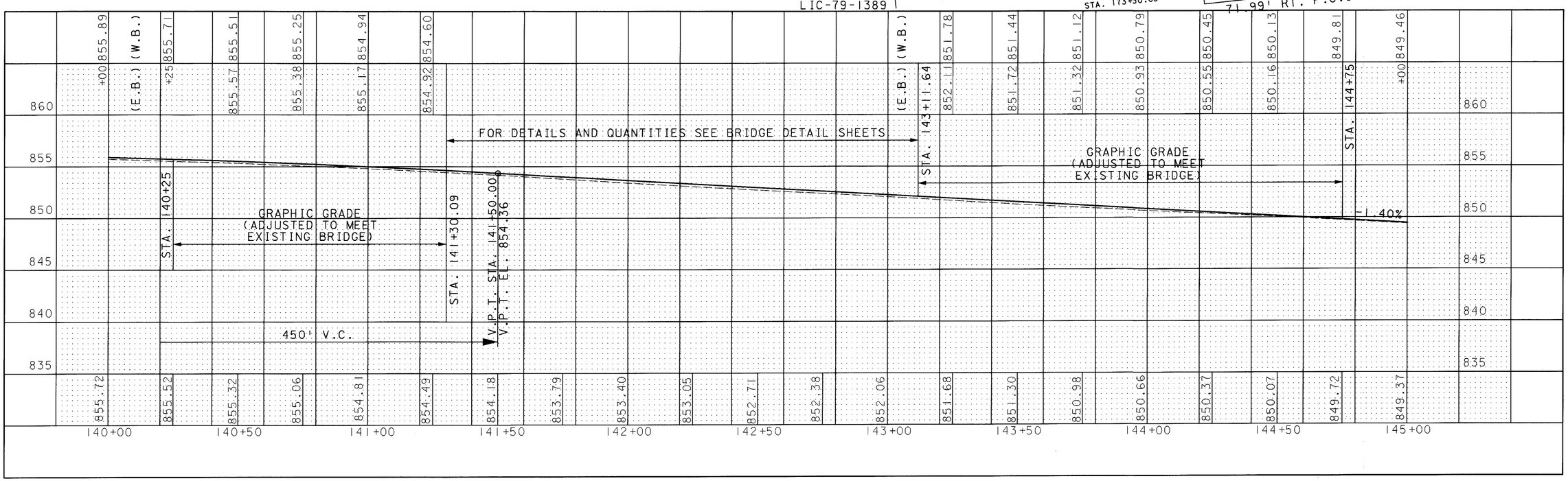

HORIZONTAL SCALE IN FEET 0 10 20 40

CALCULATED D.M.J. 3-13-95
CHECKED A.L.L. 3-16-95

PAVEMENT DETAIL SHEET
STA. 140+00 TO STA. 145+00

LIC-16-19.72

L2109159.DGN 02/28/95

CURVE DATA
S.R. 16

P.I. STA. 141+22.54
Δ = 43°50'10" LT.
R = 1909.86'
Dc = 03°00'00"
Ls = 350.00'
Lc = 1111.20'
Q = 05°15'00"
LT = 233.44'
ST = 116.26'
Es = 151.68'
Ts = 944.48'

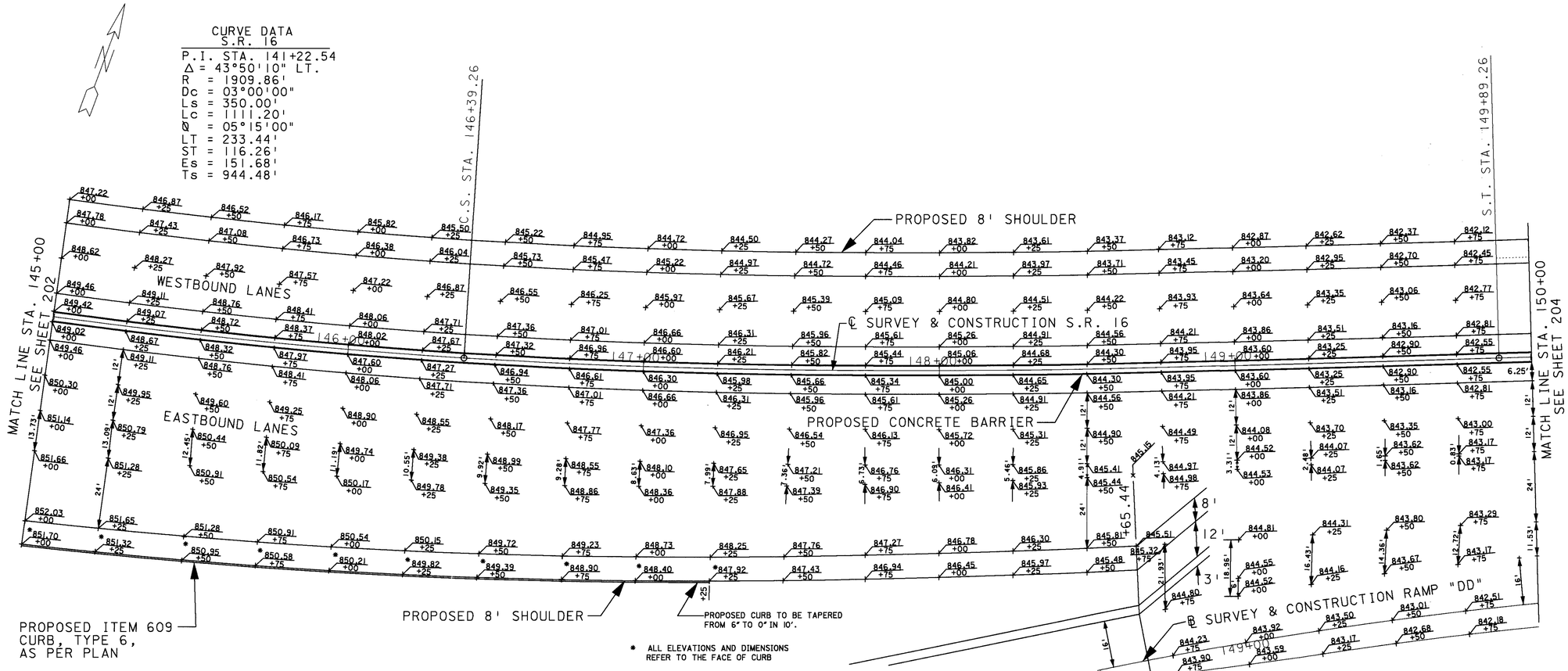

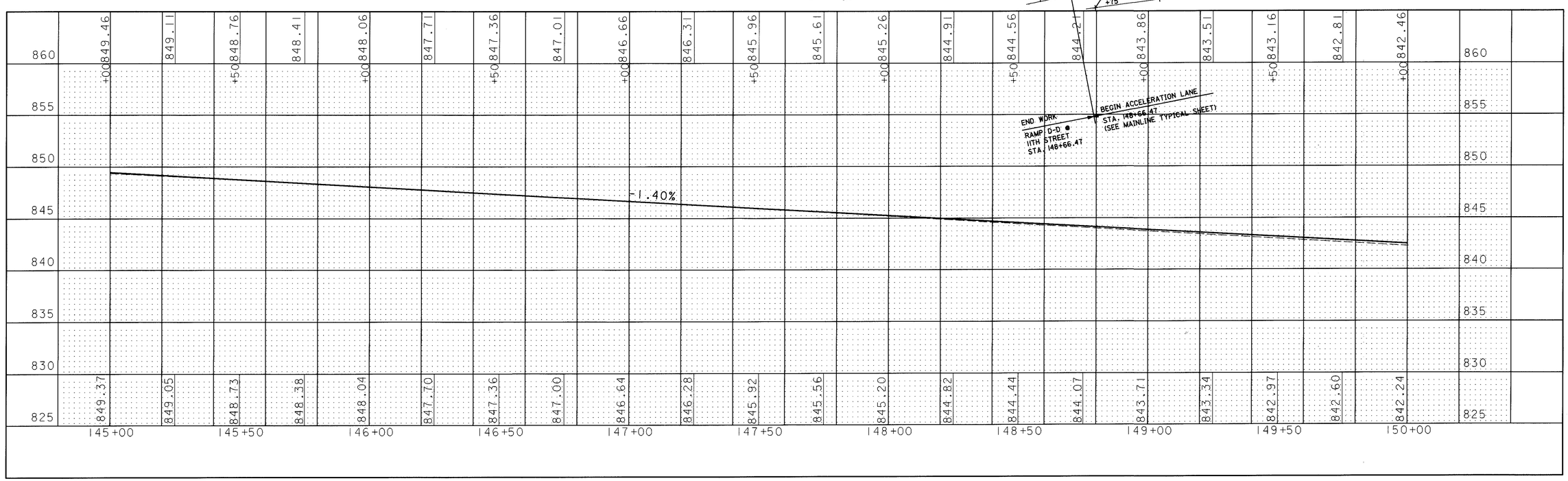

CALCULATED O.M. 3-13-95
CHECKED A.L.L. 3-16-95

HORIZONTAL SCALE IN FEET
0 10 20 40

PAVEMENT DETAIL SHEET
STA. 145+00 TO STA. 150+00

LIC-16-19.72

L2110159.DGN 02/28/95

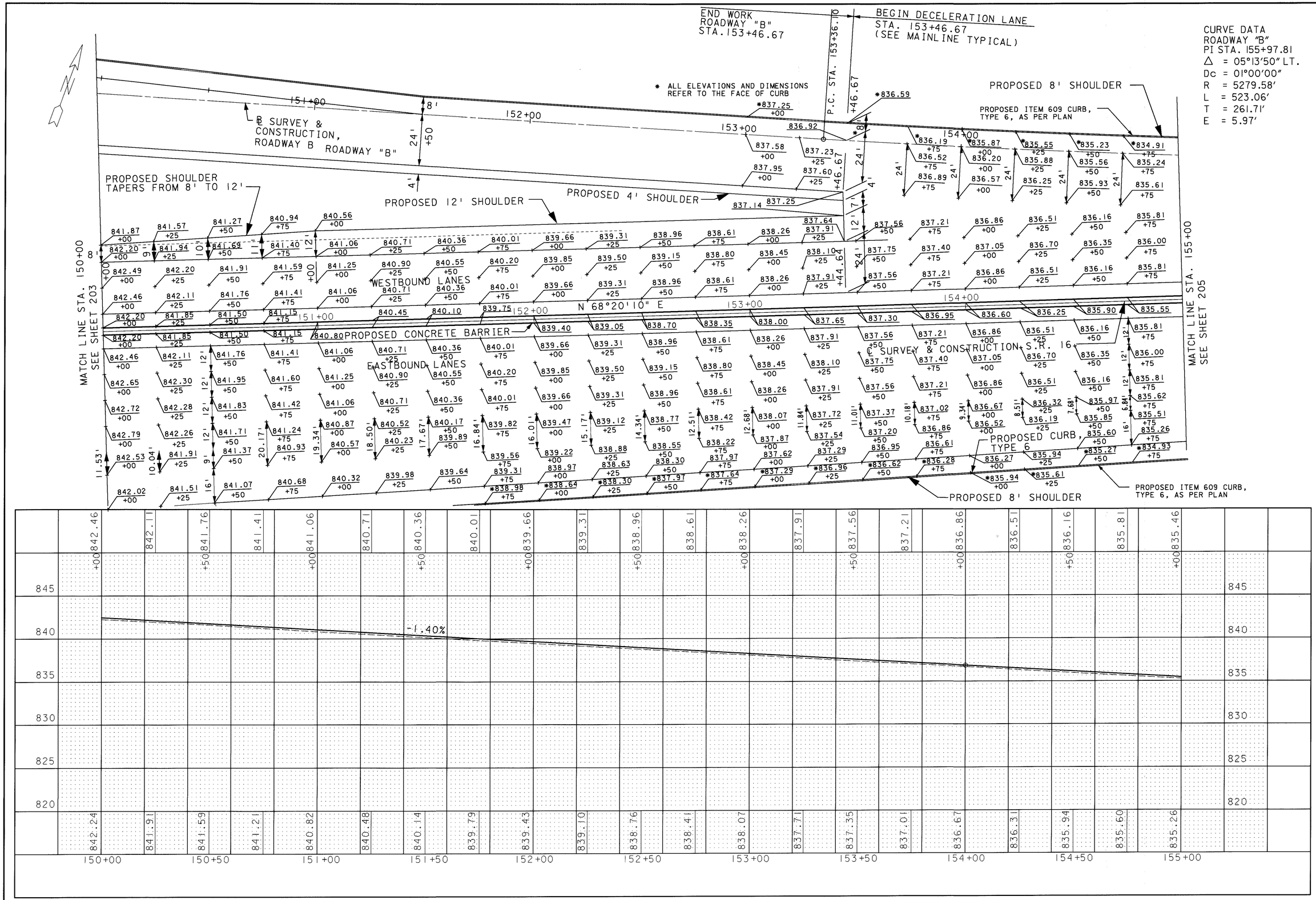

HORIZONTAL SCALE IN FEET 0 10 20 40

CALCULATED J.M. 3-13-95
CHECKED A.L.L. 3-16-95

PAVEMENT DETAIL SHEETS
STA. 150+00 TO STA. 155+00

LIC-16-19.72

L2111159.DGN 02/28/95

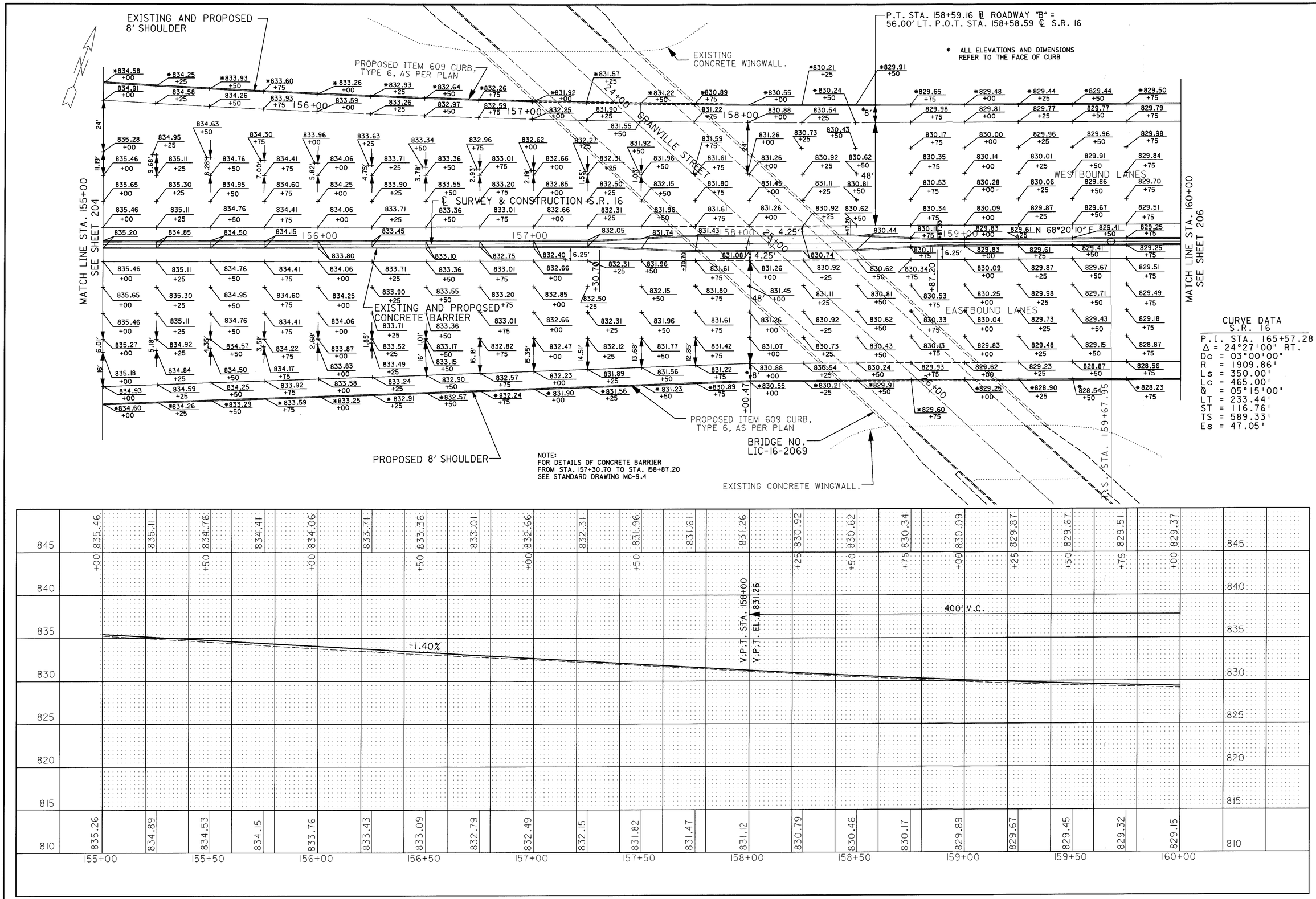

CALCULATED D.M. 3-15-95
CHECKED A.L.L. 3-16-95

PAVEMENT DETAIL SHEET STA. 155+00 TO STA. 160+00

LIC-16-19.72

L2112159 2/28/95

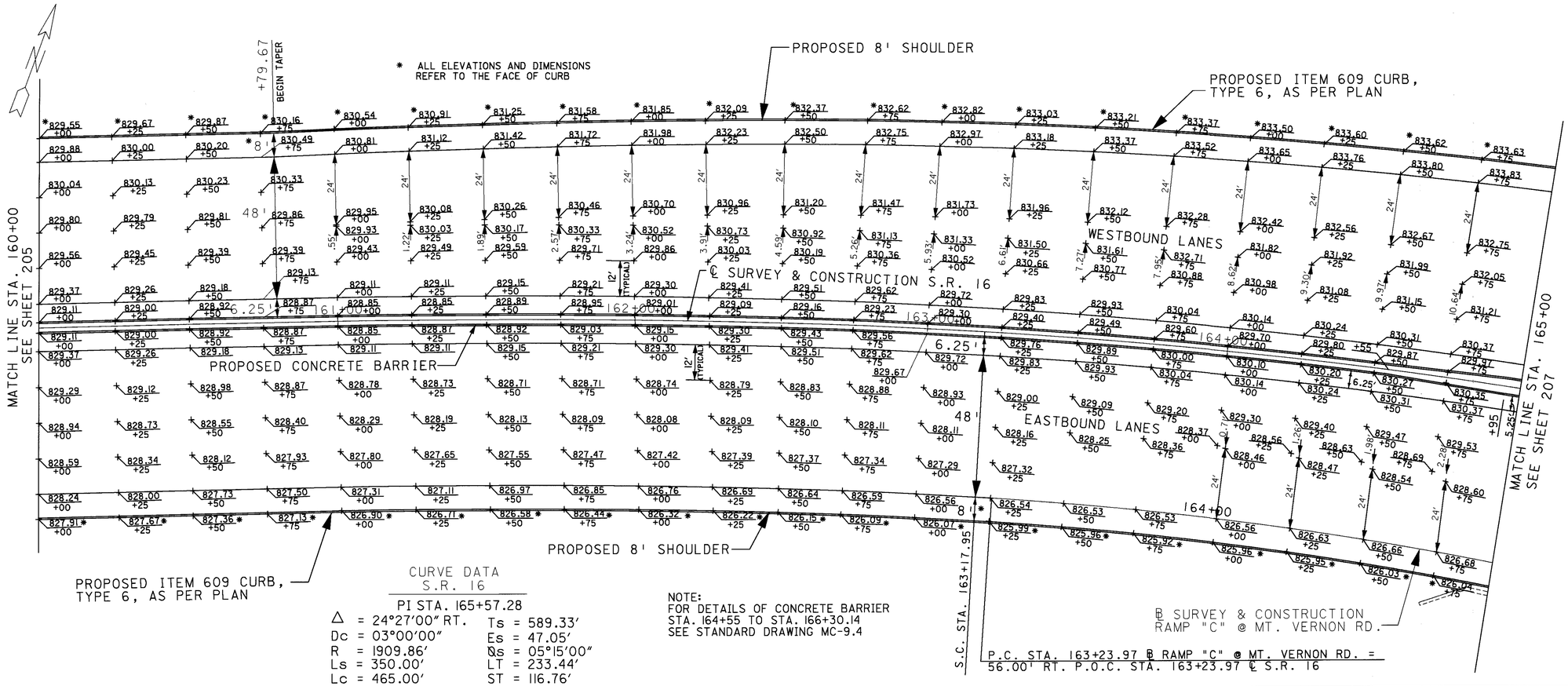

CURVE DATA
S.R. 16

PI STA. 165+57.28

Δ = 24°27'00" RT.	Ts = 589.33'
Dc = 03°00'00"	Es = 47.05'
R = 1909.86'	Θs = 05°15'00"
Ls = 350.00'	LT = 233.44'
Lc = 465.00'	ST = 116.76'

NOTE:
FOR DETAILS OF CONCRETE BARRIER STA. 164+55 TO STA. 166+30.14 SEE STANDARD DRAWING MC-9.4

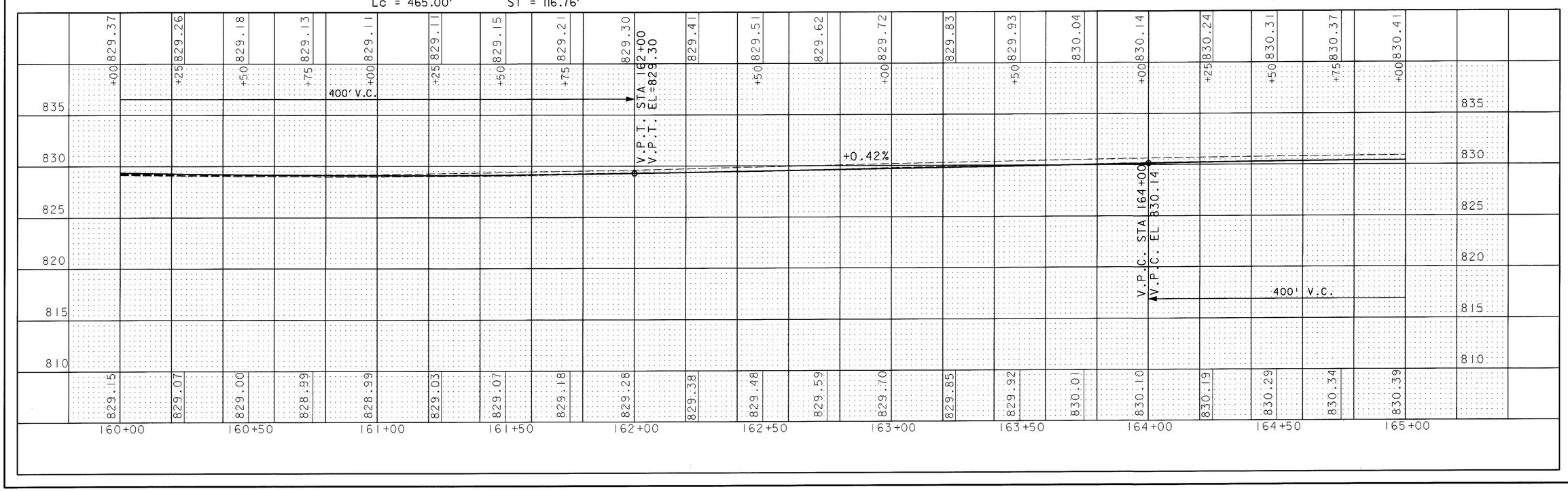

HORIZONTAL SCALE IN FEET 0 10 20 40

CALCULATED A.L.L. 3-13-95
CHECKED A.L.L. 3-16-95

PAVEMENT DETAIL SHEET
STA. 160+00 TO STA. 165+00

LIC-16-19.72

L2113159.DGN 02/28/95

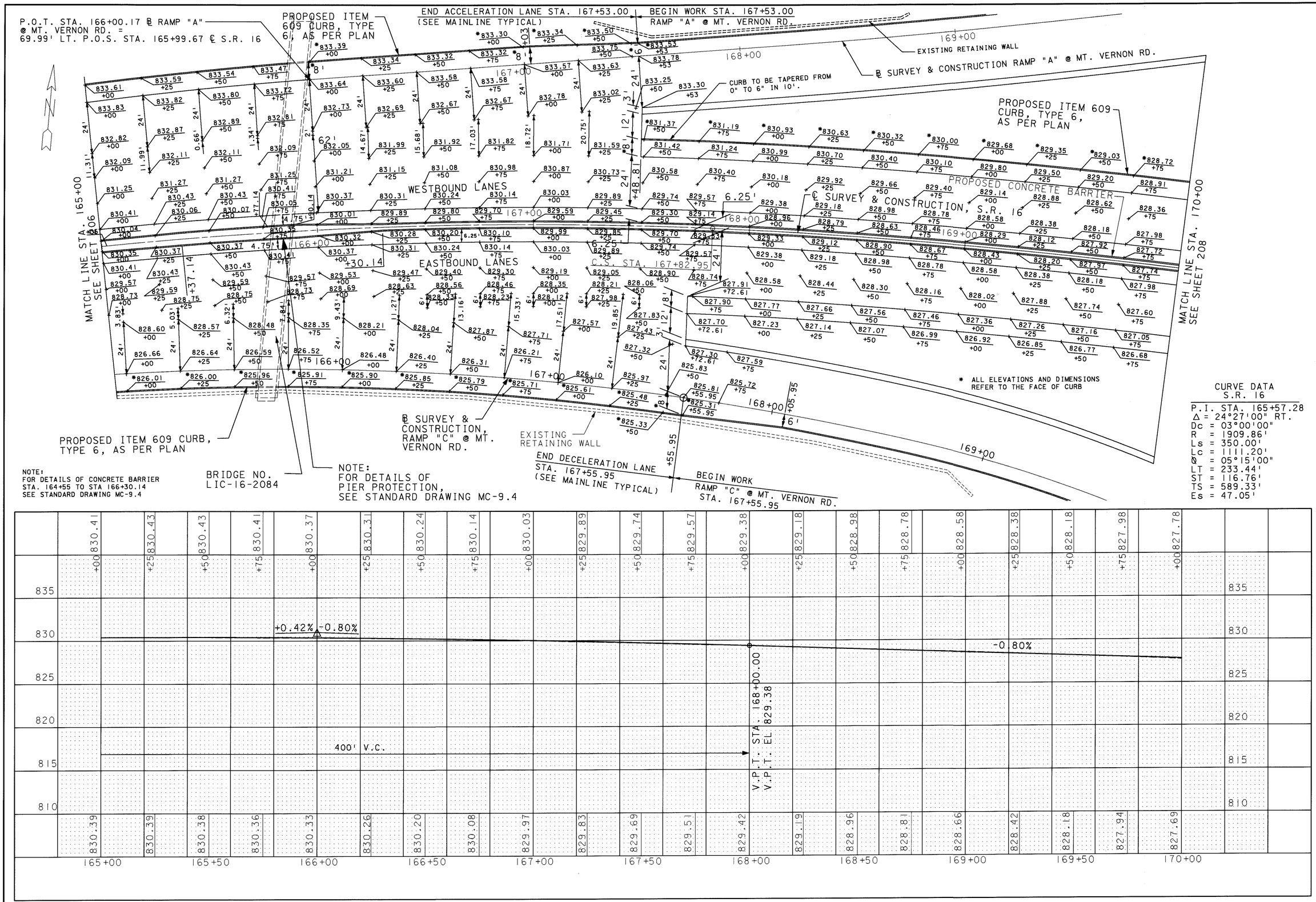

CALCULATED D.M.K. 3-15-95
CHECKED A.L.L. 3-16-95

PAVEMENT DETAIL SHEET
STA. 165+00 TO STA. 170+00

LIC-16-19.72

L2114159.DGN 02/28/95

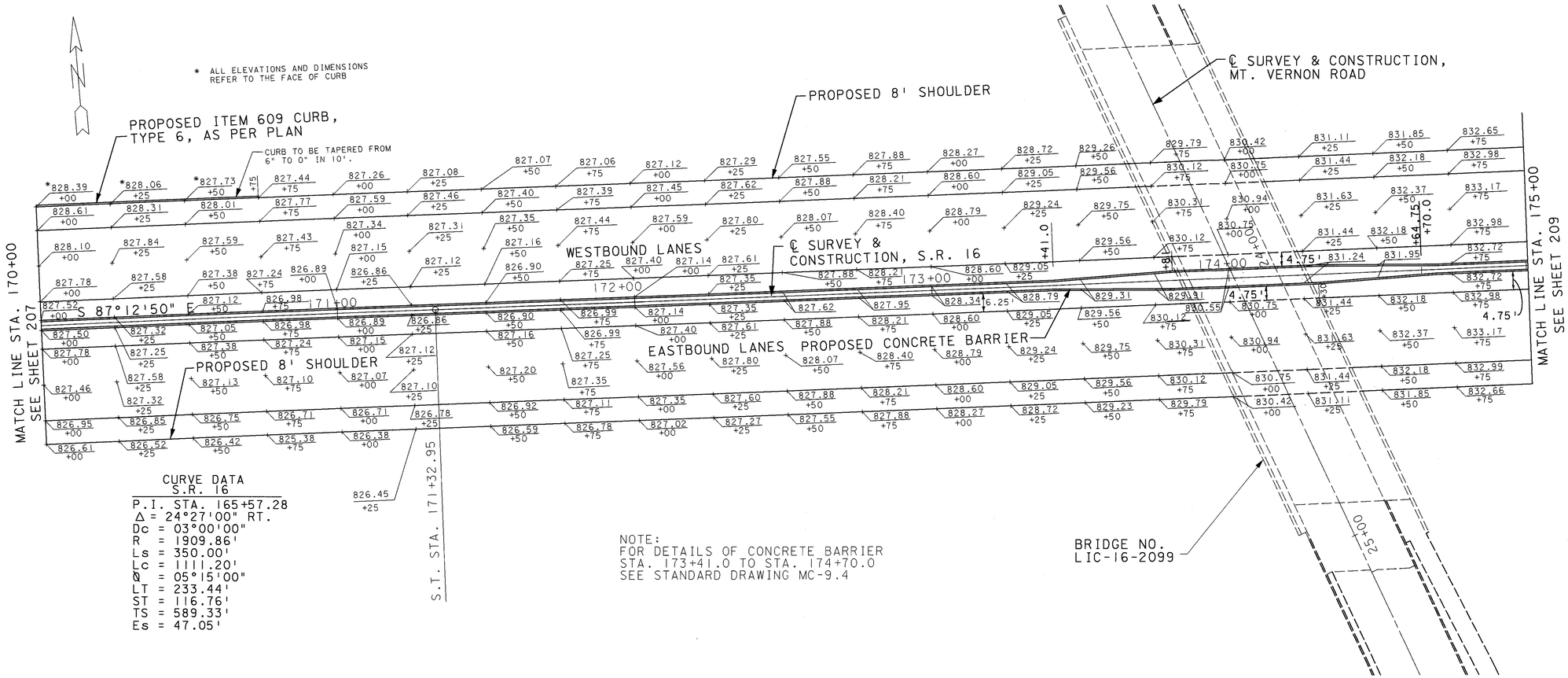

CURVE DATA
S.R. 16

P.I. STA. 165+57.28
Δ = 24°27'00" RT.
Dc = 03°00'00"
R = 1909.86'
Ls = 350.00'
Lc = 1111.20'
Ø = 05°15'00"
LT = 233.44'
ST = 116.76'
TS = 589.33'
Es = 47.05'

NOTE:
FOR DETAILS OF CONCRETE BARRIER STA. 173+41.0 TO STA. 174+70.0 SEE STANDARD DRAWING MC-9.4

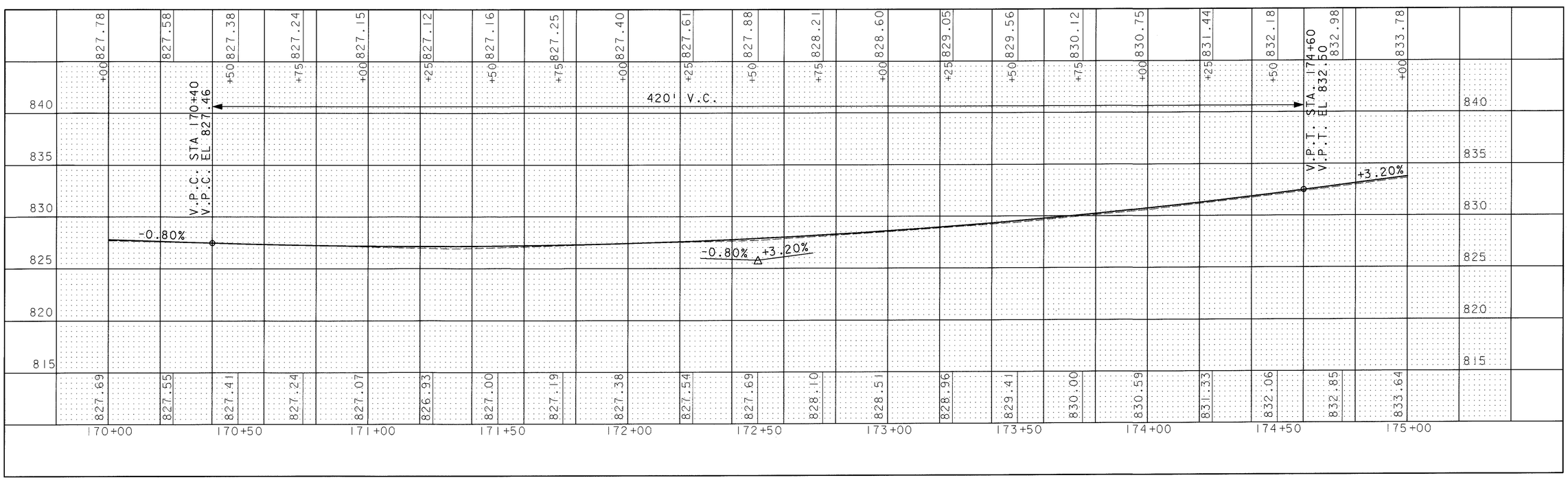

L2115159.DGN 6/6/95

CALCULATED D.M. 3-15-95
CHECKED A.L.L. 3-16-95

HORIZONTAL SCALE IN FEET 0 10 20 40

PAVEMENT DETAIL SHEET
STA. 170+00 TO STA. 175+00

LIC-16-19.72

CURVE DATA
S.R. 16

PI STA=178+79.86
△ = 05°10'09" LT.
Dc = 01°00'00"
T = 258.63
R = 5729.58
L = 516.92
E = 5.83

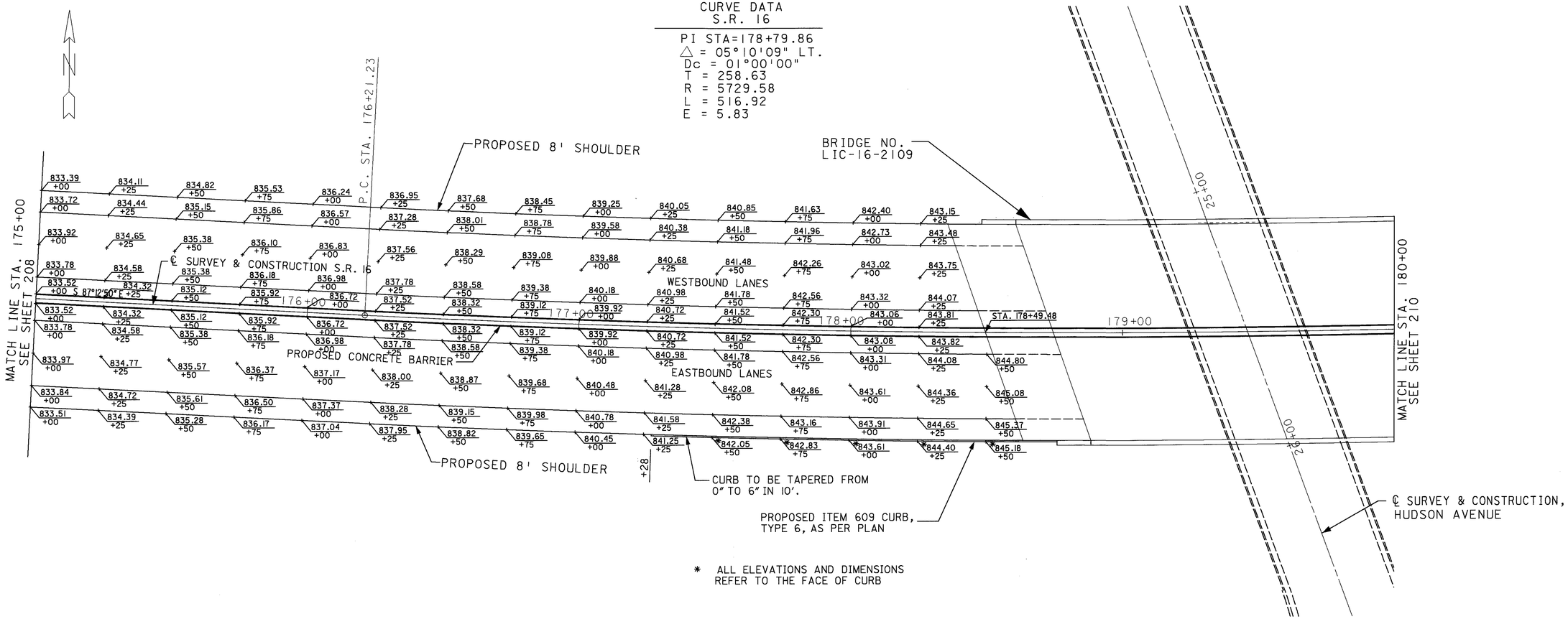

* ALL ELEVATIONS AND DIMENSIONS REFER TO THE FACE OF CURB

HORIZONTAL SCALE IN FEET 0 10 20 40

CALCULATED D.J.M. 3-15-95
CHECKED A.L.L. 3-16-95

PAVEMENT DETAIL SHEET
STA. 175+00 TO STA. 180+00

LIC-16-19.72

L2116159.DGN 02/28/95

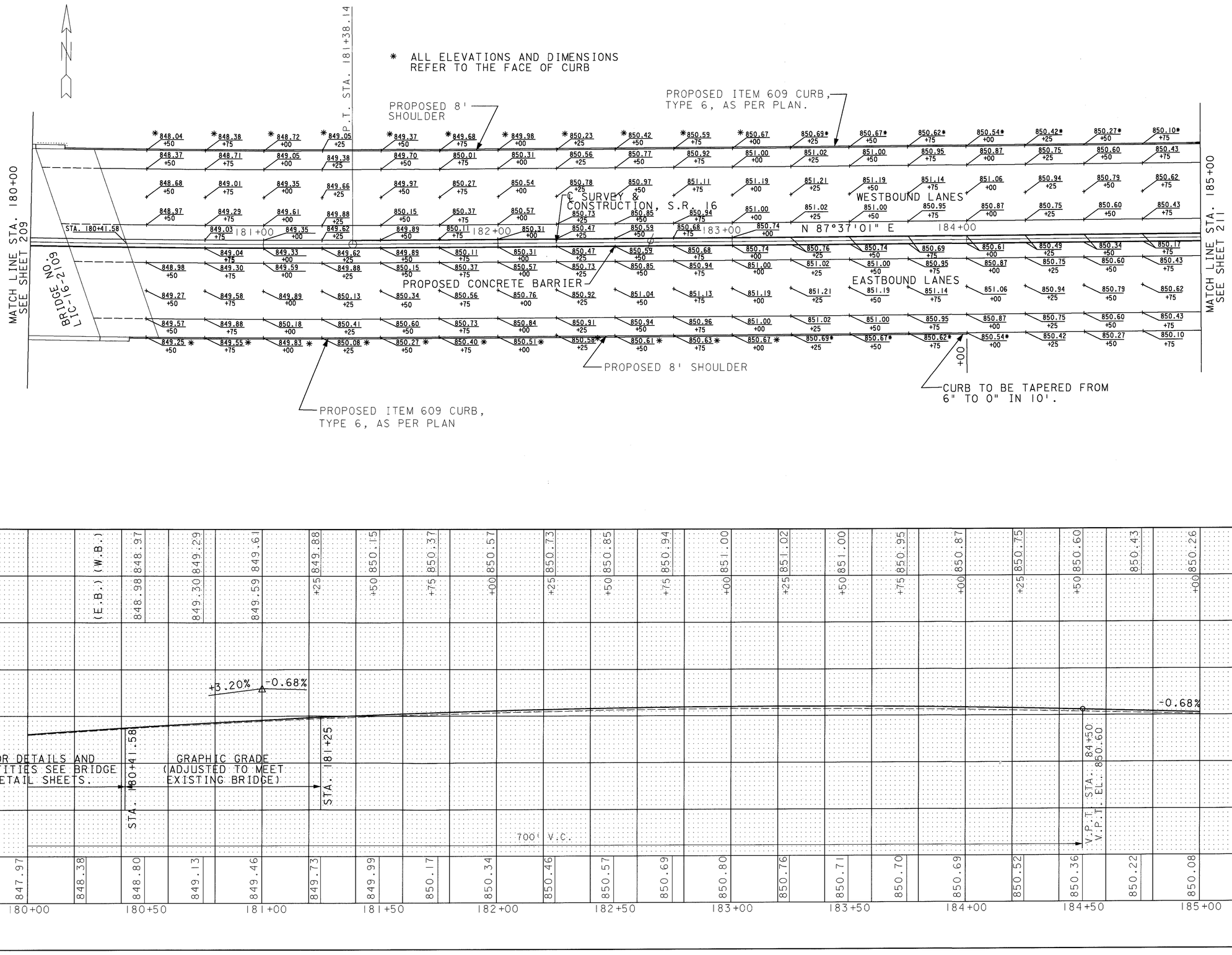

CALCULATED M.M. 3-13-95
CHECKED A.L.L. 3-16-95

0 10 20 40
HORIZONTAL SCALE IN FEET

PAVEMENT DETAIL SHEET
STA. 180+00 TO STA. 185+00

LIC-16-19.72

L2117159.DGN 6/6/95

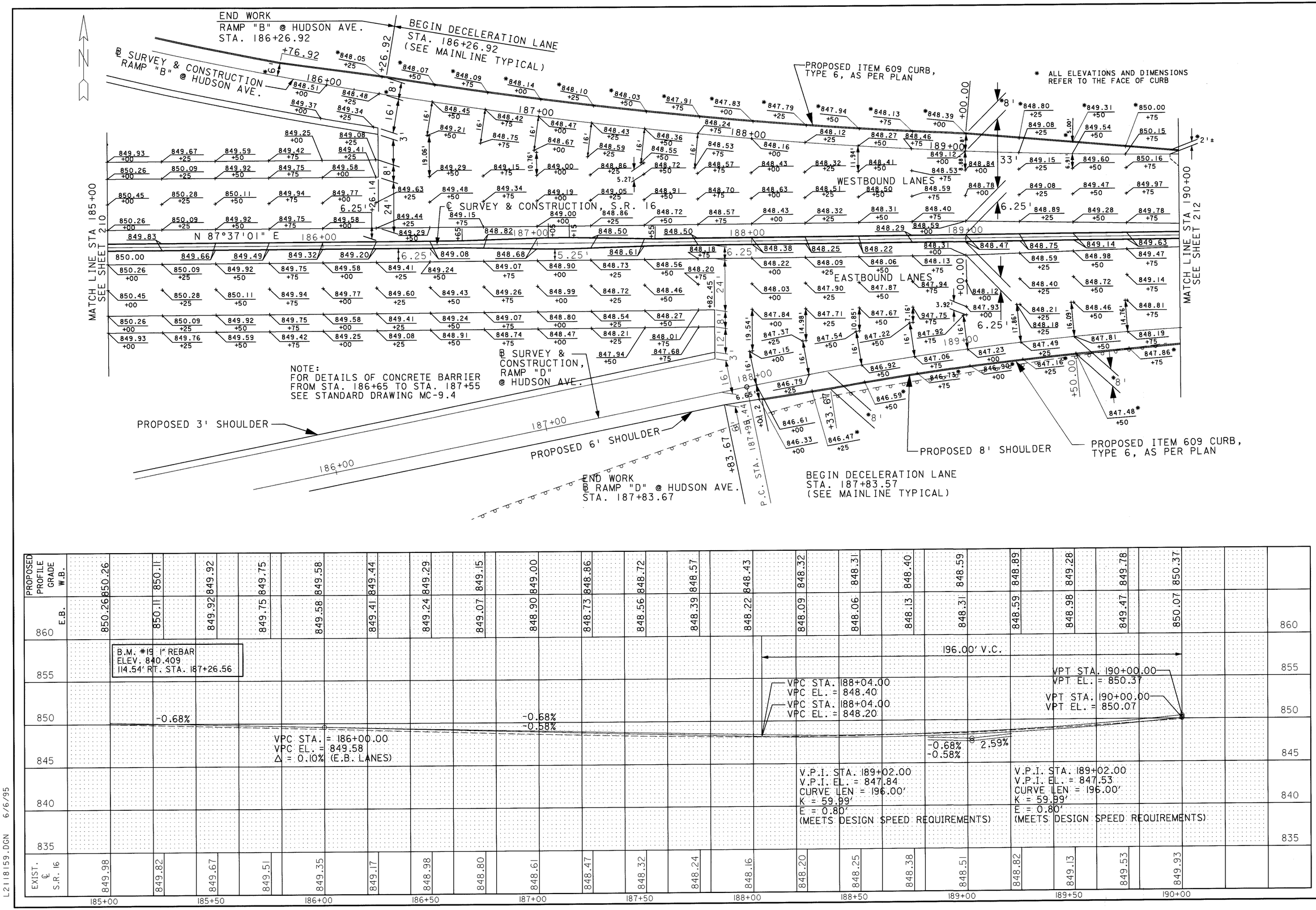

HORIZONTAL SCALE IN FEET

CALCULATED D.M.H. 3-13-95
CHECKED A.L.L. 3-16-95

PAVEMENT DETAIL SHEET
STA. 185+00 TO STA. 190+00

LIC-16-19.72

L2118159.DGN 6/6/95

FOR PAVEMENT CALCULATIONS SEE SHEETS 68-80
FOR GUARDRAIL QUANTITIES SEE SHEET 81
FOR LIGHTING QUANTITIES AND DETAILS SEE SHEETS 363-401
FOR SIGNING QUANTITIES AND DETAILS SEE SHEETS 318-362
FOR BRIDGE DETAILS AND QUANTITIES SEE SHEET

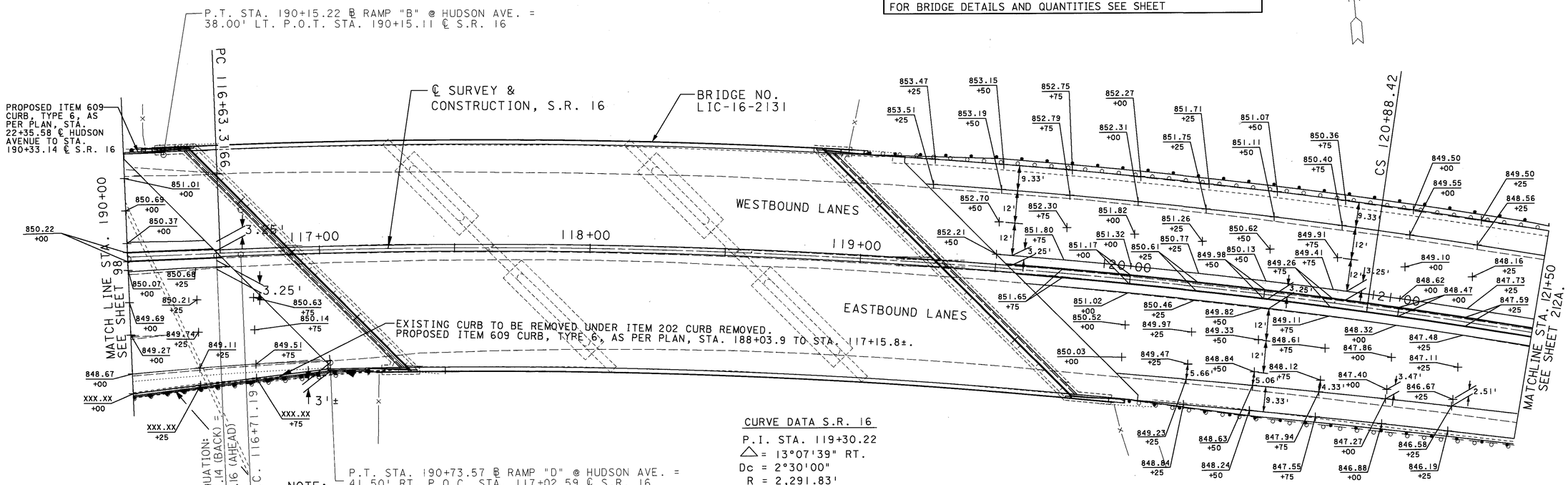

CURVE DATA S.R. 16

P.I. STA. 119+30.22
△ = 13°07'39" RT.
Dc = 2°30'00"
R = 2,291.83'
Ls = 200.00'
θs = 2°30'00"
LT = 133.35'
ST = 99.99'
Lc = 425.10'
Ts = 360.58'
Es = 9.89'
emax. - 0.0417

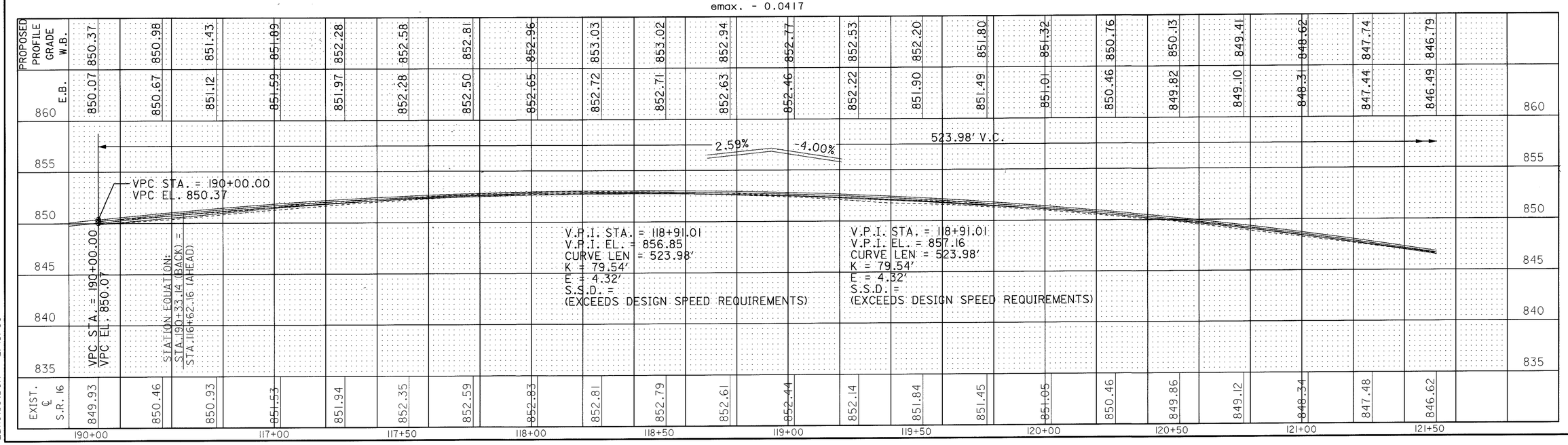

HORIZONTAL SCALE IN FEET 0 20 40

CALCULATED

CHECKED

PAVEMENT DETAIL SHEET
STA. 190+00(BK.) TO STA. 121+50(AH.)

LIC-16-19.72

L2119159.DGN 2/15/99

FOR PAVEMENT CALCULATIONS SEE SHEETS 68-80
FOR GUARDRAIL QUANTITIES SEE SHEET 81
FOR LIGHTING QUANTITIES AND DETAILS SEE SHEETS 363-401
FOR SIGNING QUANTITIES AND DETAILS SEE SHEETS 318-362
FOR BRIDGE DETAILS AND QUANTITIES SEE SHEET

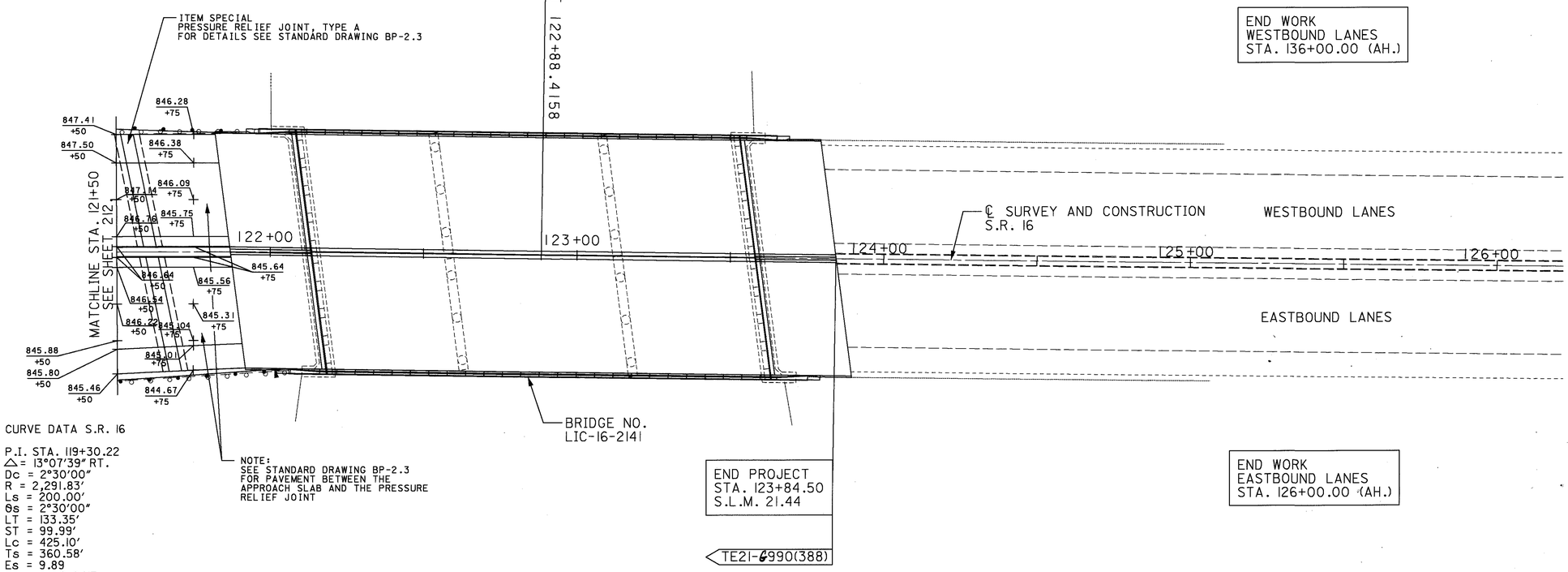

CURVE DATA S.R. 16

P.I. STA. 119+30.22
△= 13°07'39" RT.
Dc = 2°30'00"
R = 2,291.83'
Ls = 200.00'
θs = 2°30'00"
LT = 133.35'
ST = 99.99'
Lc = 425.10'
Ts = 360.58'
Es = 9.89
emax. - 0.0417

NOTE:
SEE STANDARD DRAWING BP-2.3
FOR PAVEMENT BETWEEN THE
APPROACH SLAB AND THE PRESSURE
RELIEF JOINT

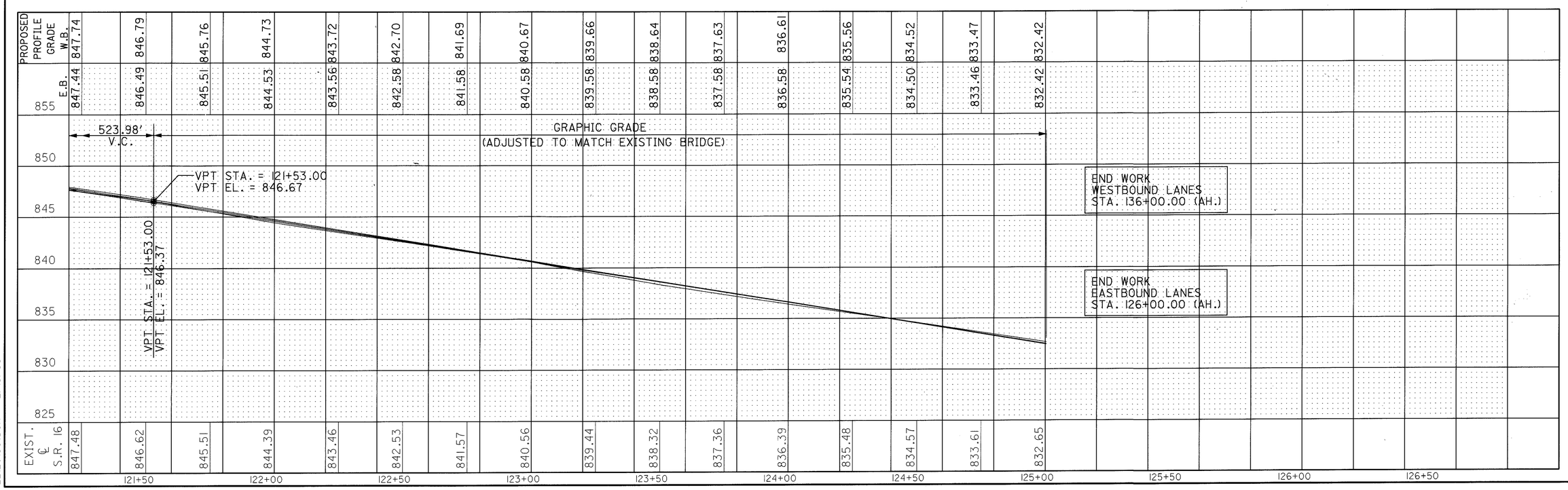

HORIZONTAL SCALE IN FEET
0 20 40

CALCULATED
CHECKED

PAVEMENT DETAIL SHEET
STA. 121+50 TO STA. 126+00

LIC-16-19.72

212A
547

L2120159.DGN 2/15/99

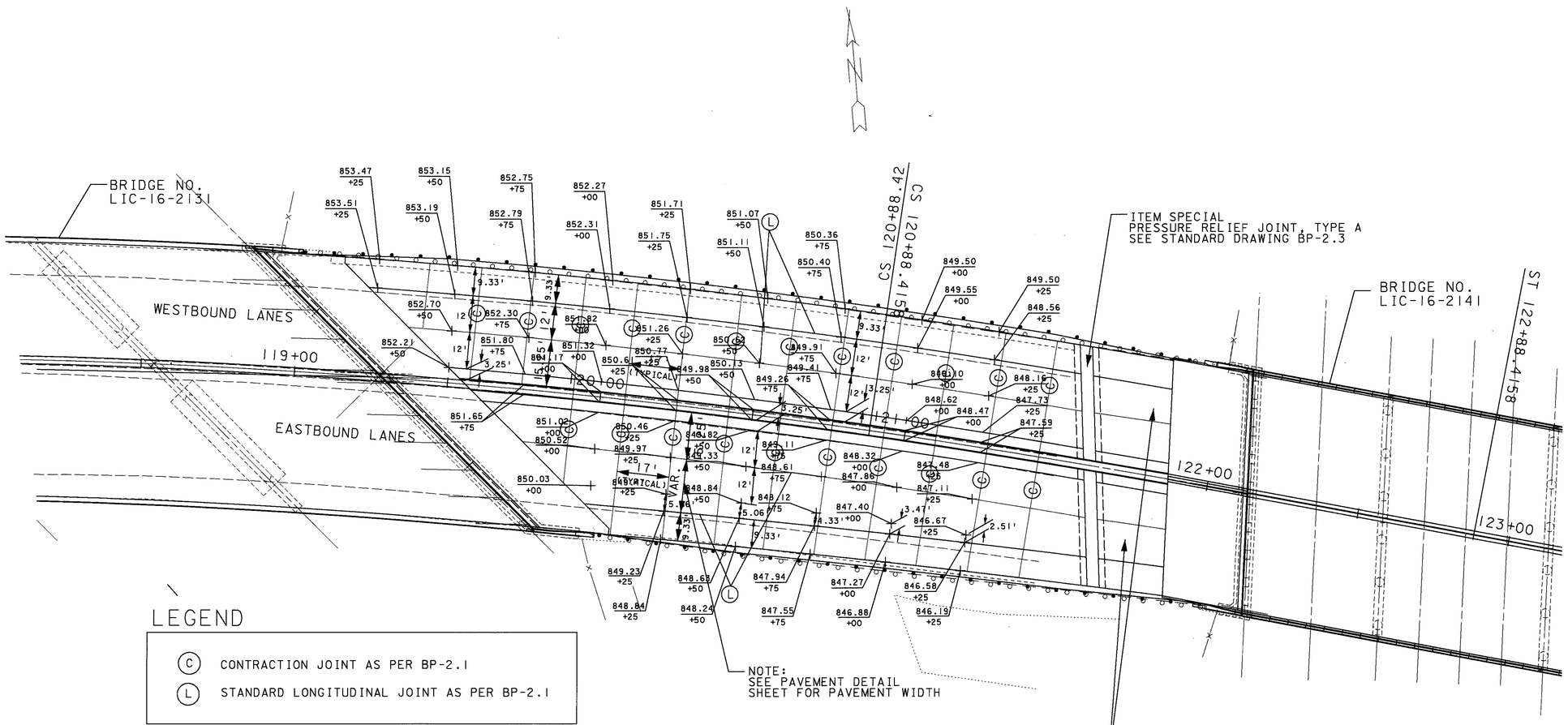

LEGEND

- (C) CONTRACTION JOINT AS PER BP-2.1
- (L) STANDARD LONGITUDINAL JOINT AS PER BP-2.1

CURVE DATA S.R. 16

P.I. STA. 119+30.22
△ = 13°07'39" RT.
Dc = 2°30'00"
R = 2,291.83'
Ls = 200.00'
θs = 2°30'00"
LT = 133.35'
ST = 99.99'
Lc = 425.10'
Ts = 360.58'
Es = 9.89'
emax. - 0.0417

HORIZONTAL SCALE IN FEET
0 20 40

CALCULATED
CHECKED

PAVEMENT DETAIL SHEET
PAVEMENT JOINT DETAIL SHEET

LIC-16-19.72

212B
547

PAVEDET.DGN 2/15/99

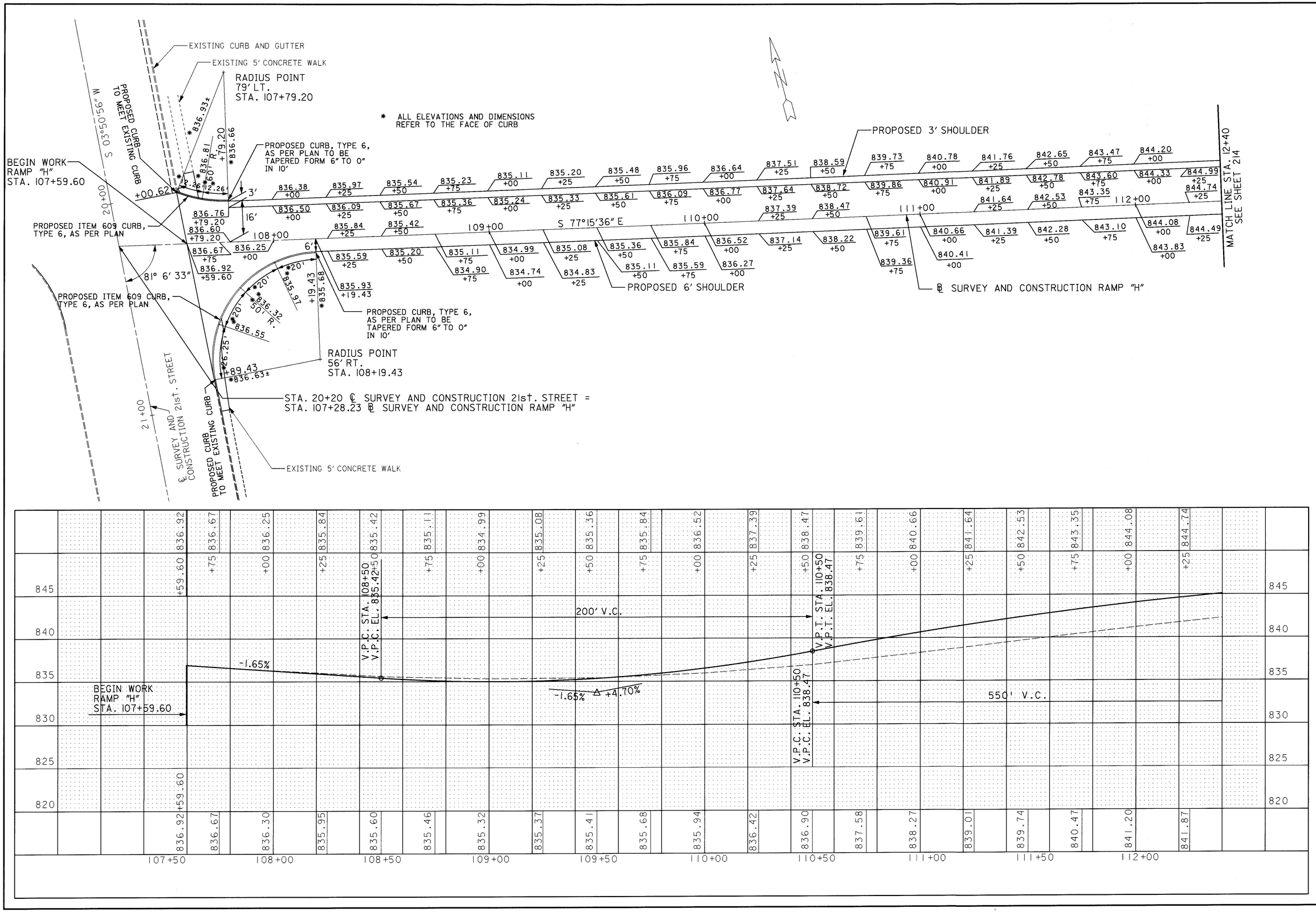

HORIZONTAL SCALE IN FEET

CALCULATED D.M. 3-13-95
CHECKED A.K. 3-14-95

PAVEMENT DETAIL SHEET RAMP "H"
STA. 107+59.60 TO STA. 112+40

LIC-16-19.72

L16219172.DGN 03/07/95

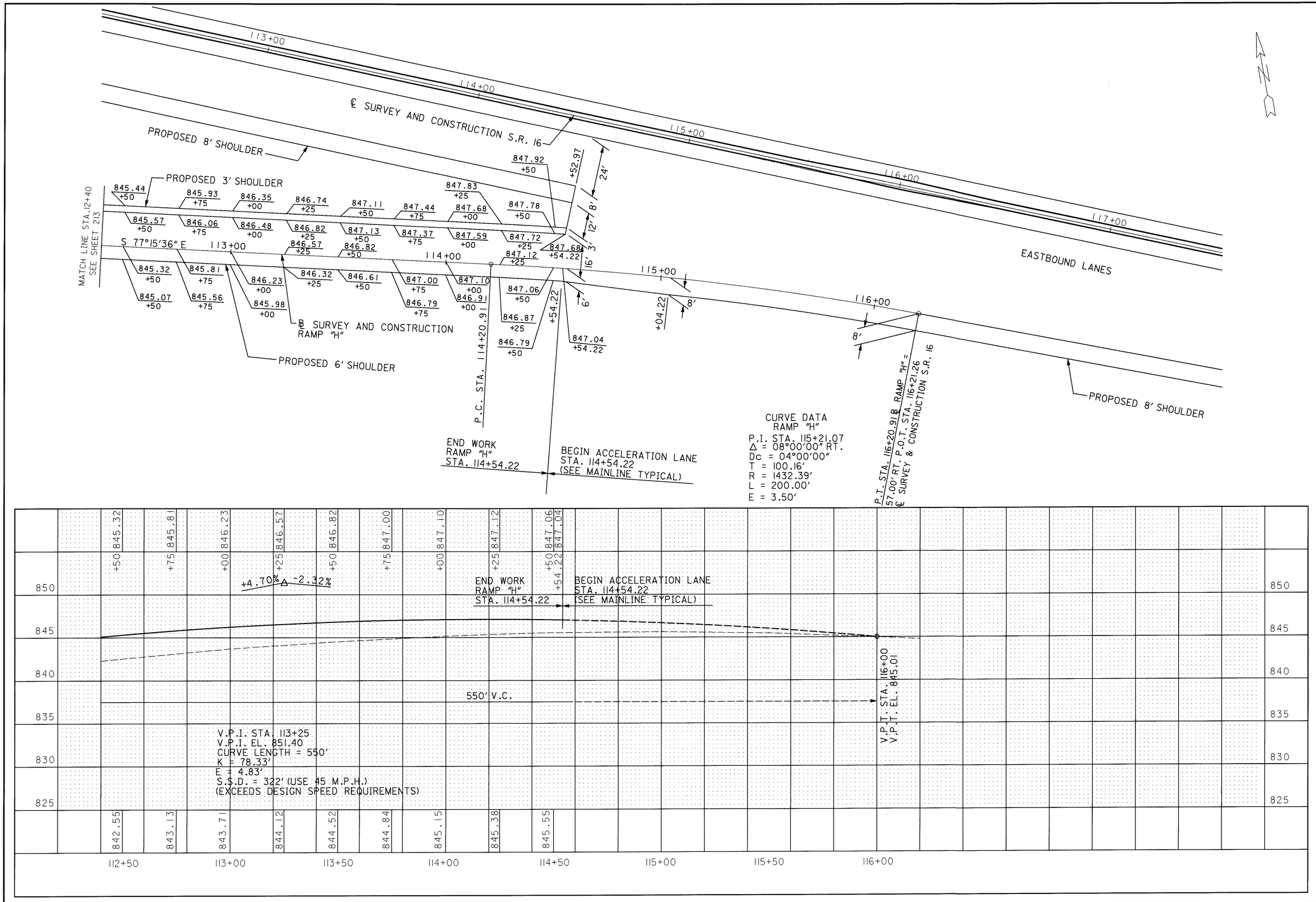

HORIZONTAL SCALE IN FEET

CALCULATED D.M. 3-13-95
CHECKED A.L.L. 3-16-95

PAVEMENT DETAIL SHEET RAMP "H"
STA. 112+40 TO STA. 116+21.24

LIC-16-19.72

L1621272.DGN 03/01/95

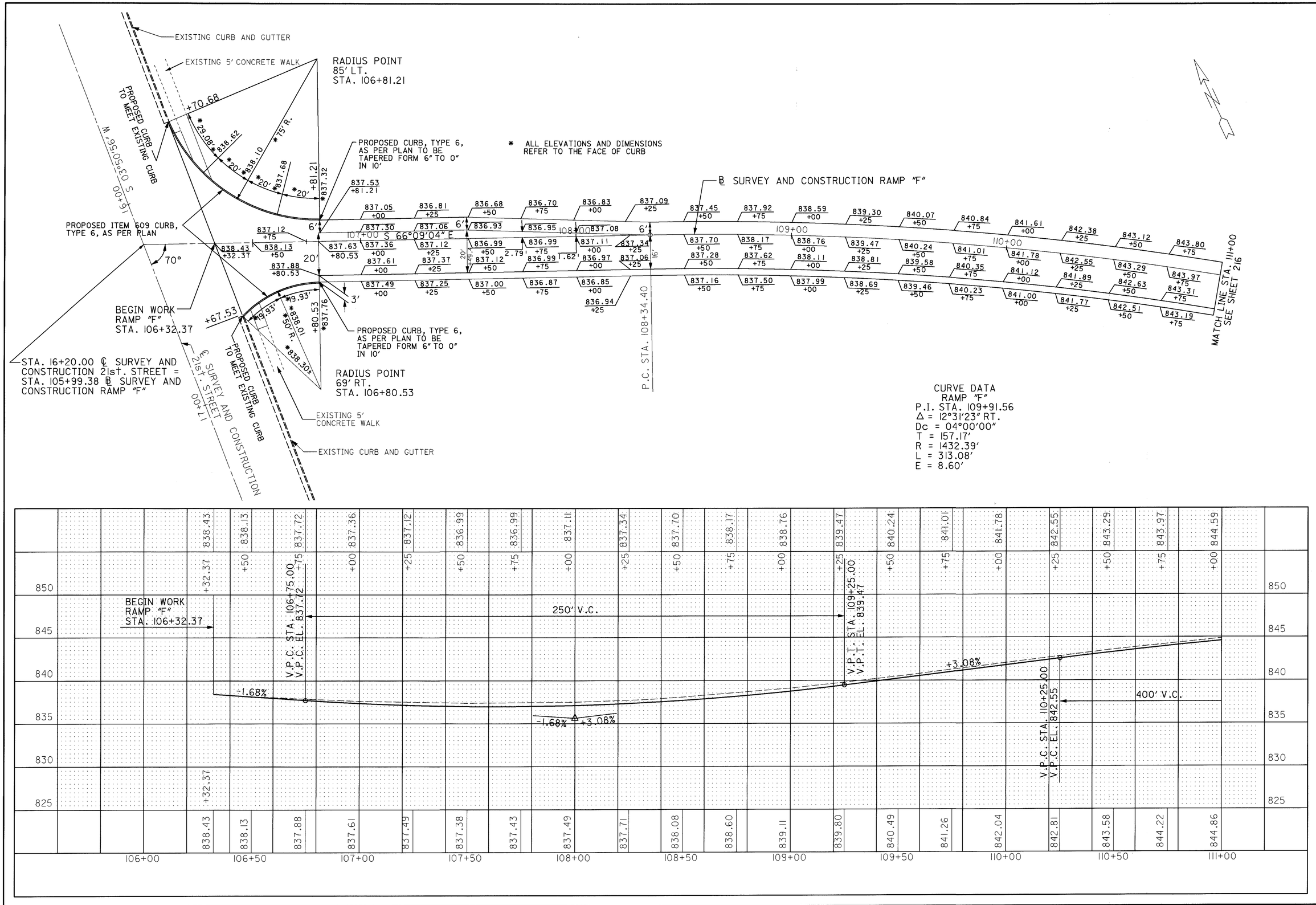

CALCULATED D.M. 3-15-95
CHECKED J.L. 3-16-95

HORIZONTAL SCALE IN FEET 0 10 20 40

PAVEMENT DETAIL SHEET RAMP "F"
STA. 106+32.37 TO STA. 111+00

LIC-16-19.72

L1621170.DGN 03/07/95

CURVE DATA
RAMP "F"

P.I. STA. 115+39.89
Δ = 14°11'59" LT.
Dc = 4°00'00"
T = 178.41'
R = 1432.39'
L = 354.99'
E = 11.07'

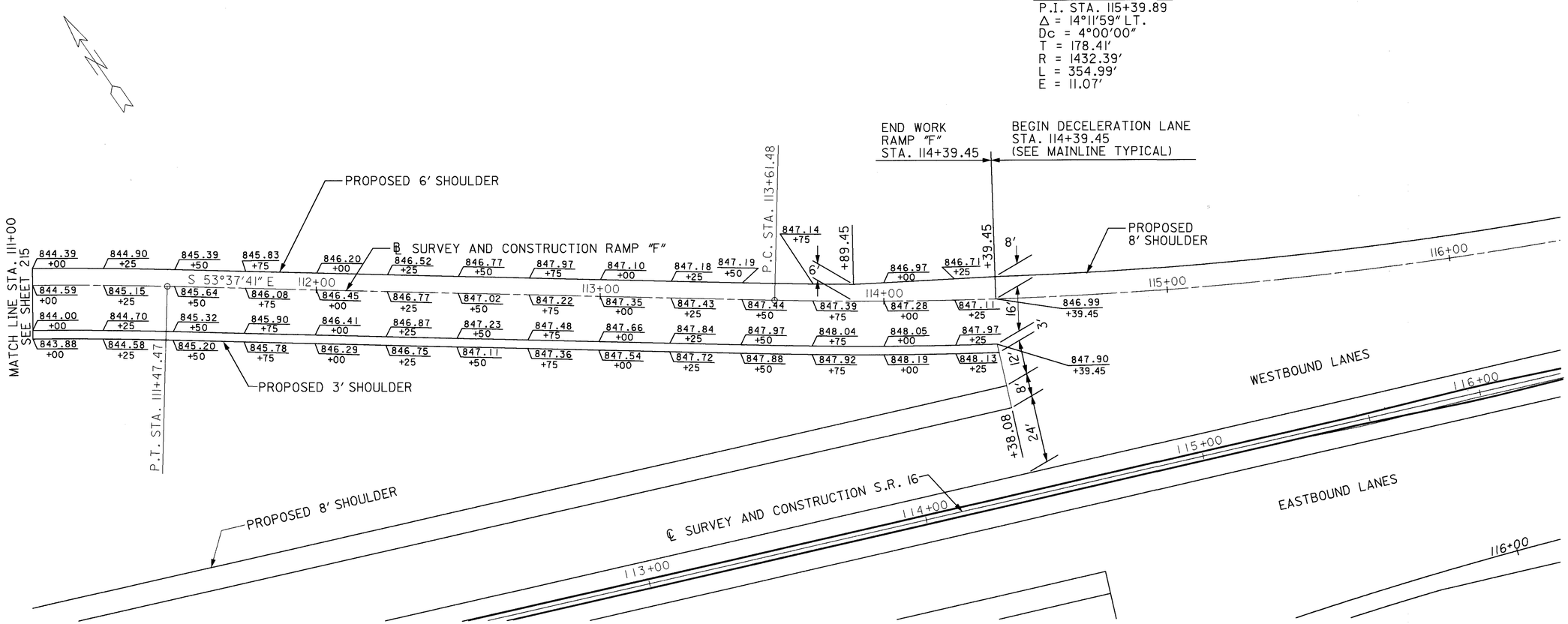

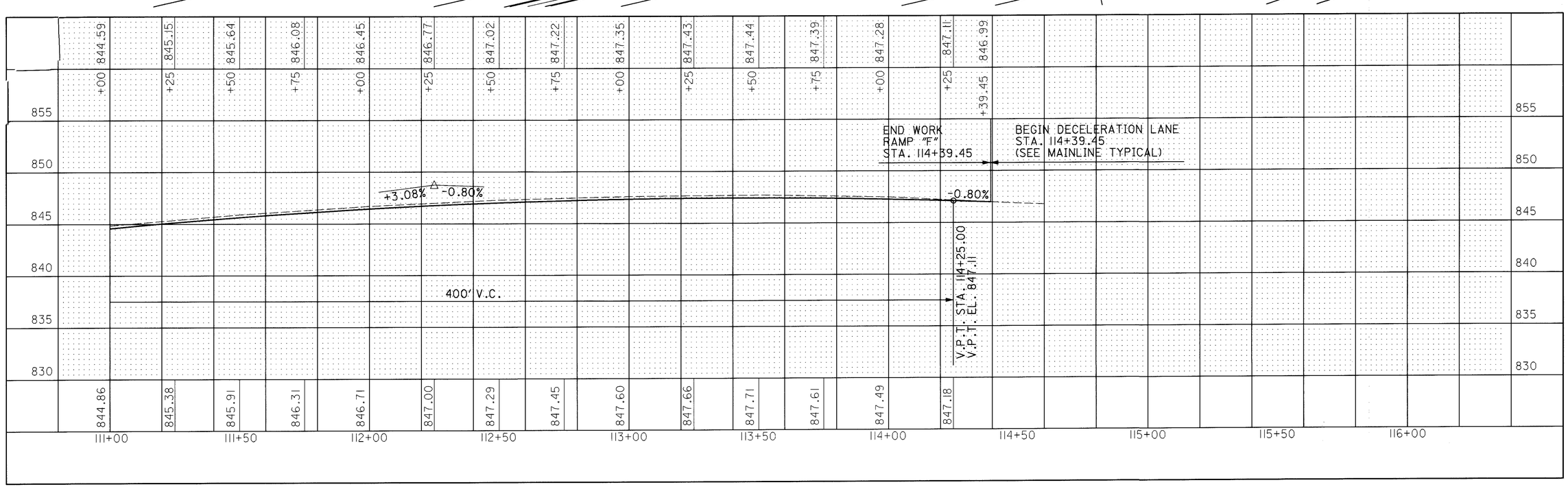

HORIZONTAL SCALE IN FEET
0 10 20 40

CALCULATED D.M. 3-15-95
CHECKED A.L.J. 3-16-95

PAVEMENT DETAIL SHEET RAMP "F"
STA. 111+00 TO STA. 114+39.40

LIC-16-19.72

L162I270.DGN 02/01/95

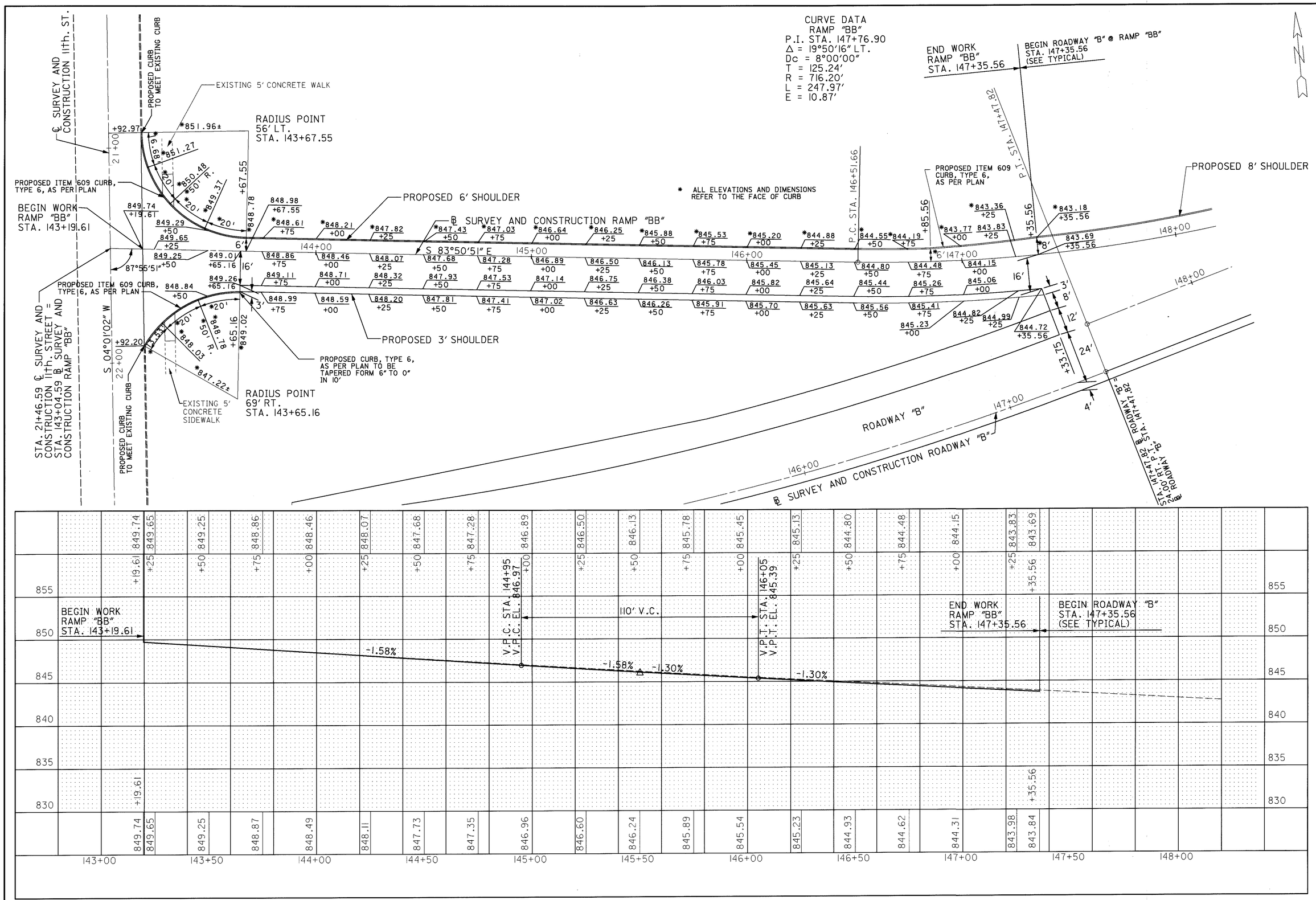

PAVEMENT DETAIL SHEET RAMP "BB"
STA. 143+19.61 TO STA. 148+20

LIC-16-19.72

L162181.DGN 03/07/95

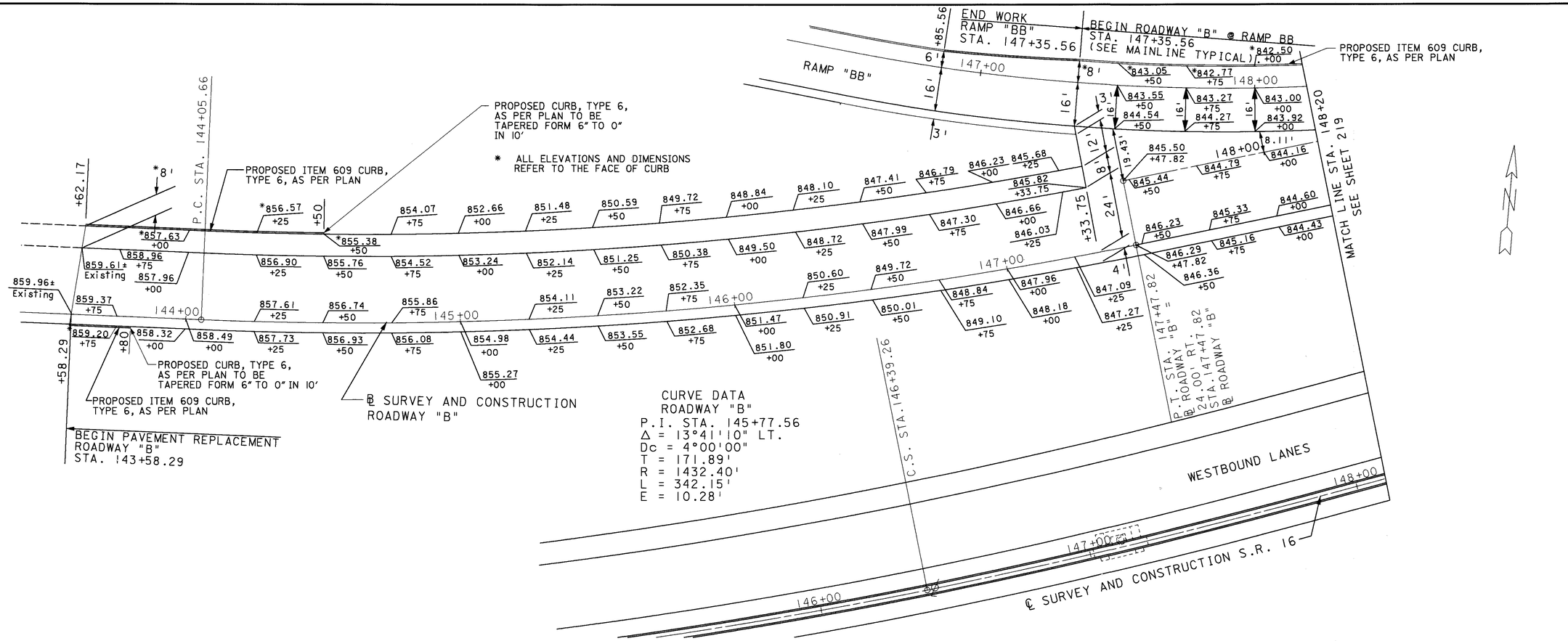

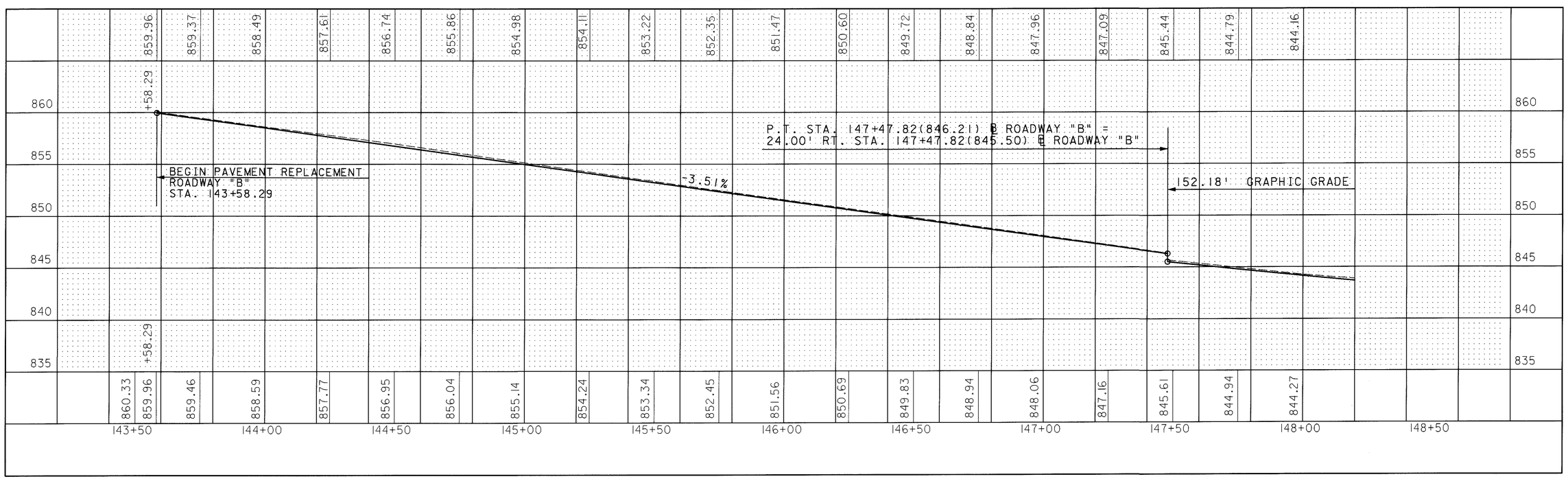

CALCULATED D.M. 3-13-95
CHECKED A.L. 3-16-95

PAVEMENT DETAIL SHEET ROADWAY "B"
STA. 143+58.29 TO STA. 148+20

LIC-16-19.72

L1621178.DGN 03/01/95

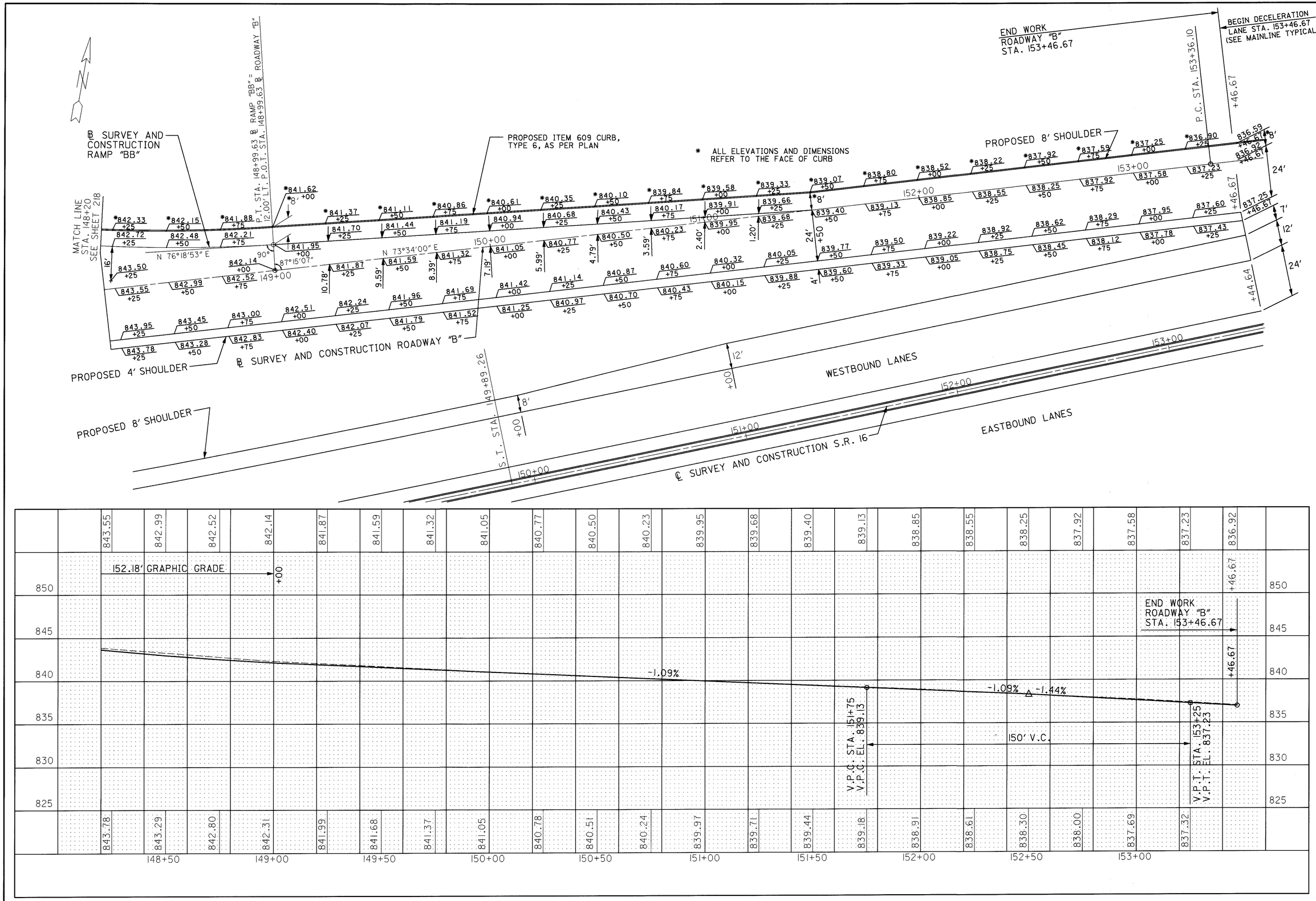

PAVEMENT DETAIL SHEET ROADWAY "B"
STA. 148+20 TO STA. 153+36.10

LIC-16-19.72

L162181.DGN 3/1/95

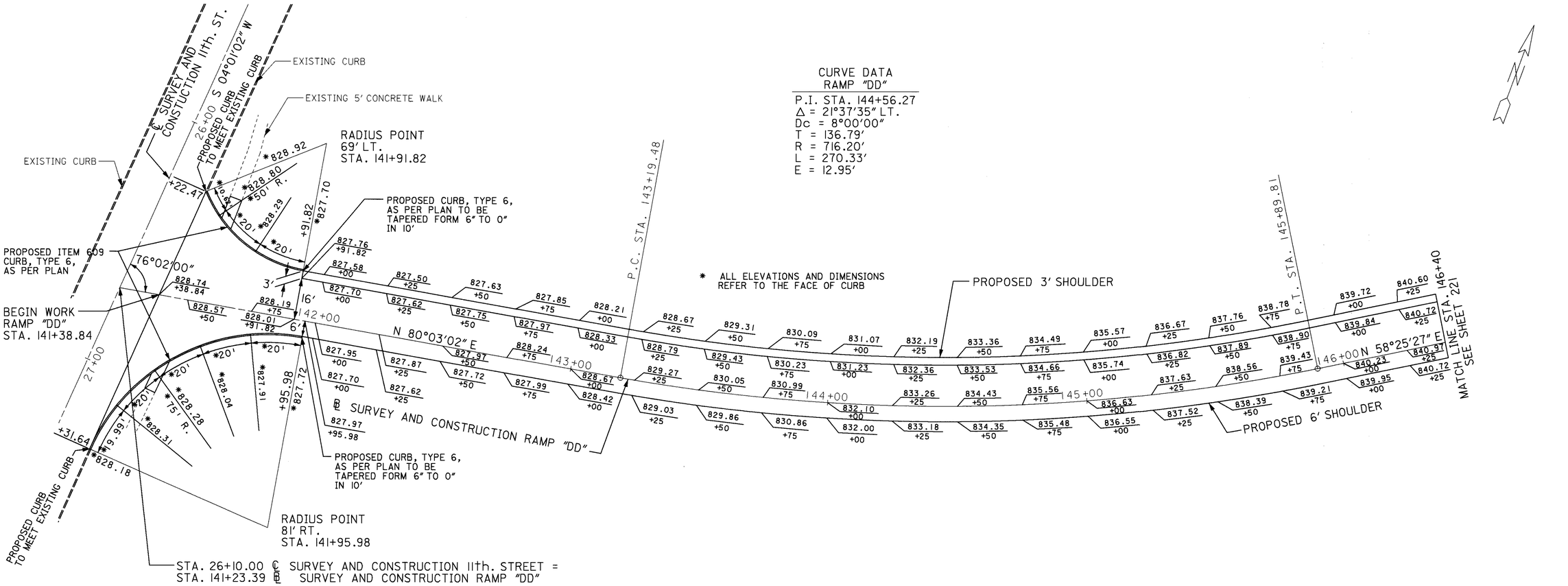

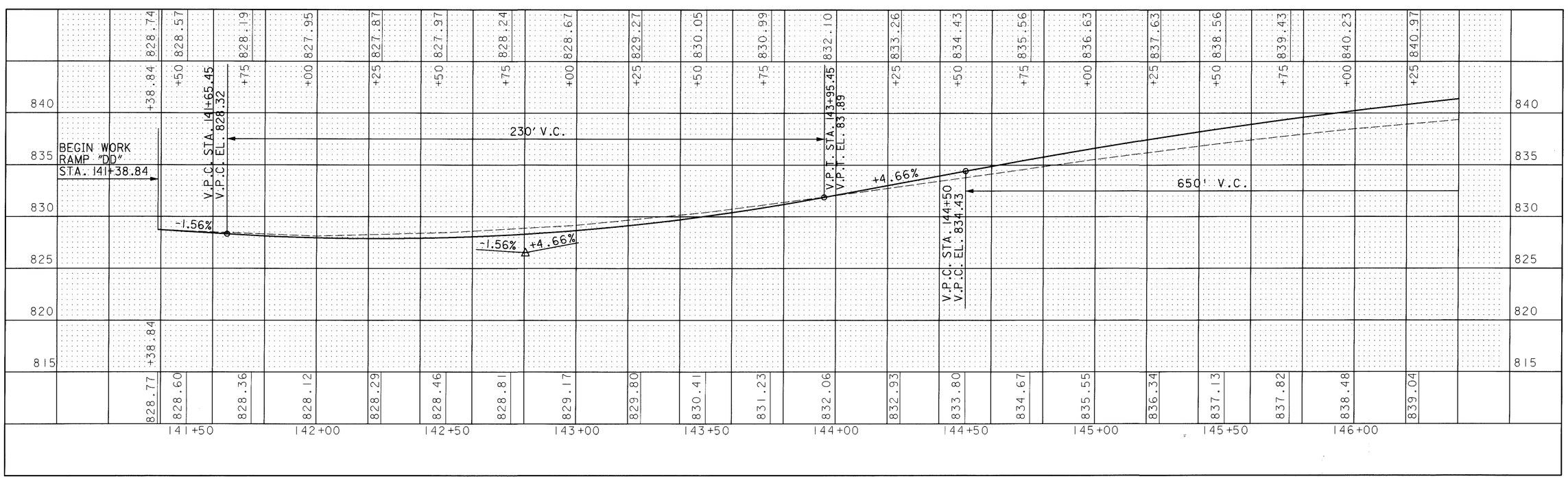

PAVEMENT DETAIL SHEET "RAMP DD"
STA. 141+38.84 TO STA. 146+40

HORIZONTAL SCALE IN FEET 0 10 20 40

CALCULATED D.M. 3-15-95
CHECKED A.L.L. 3-16-95

LIC-16-19.72

L162182.DGN 03/07/95

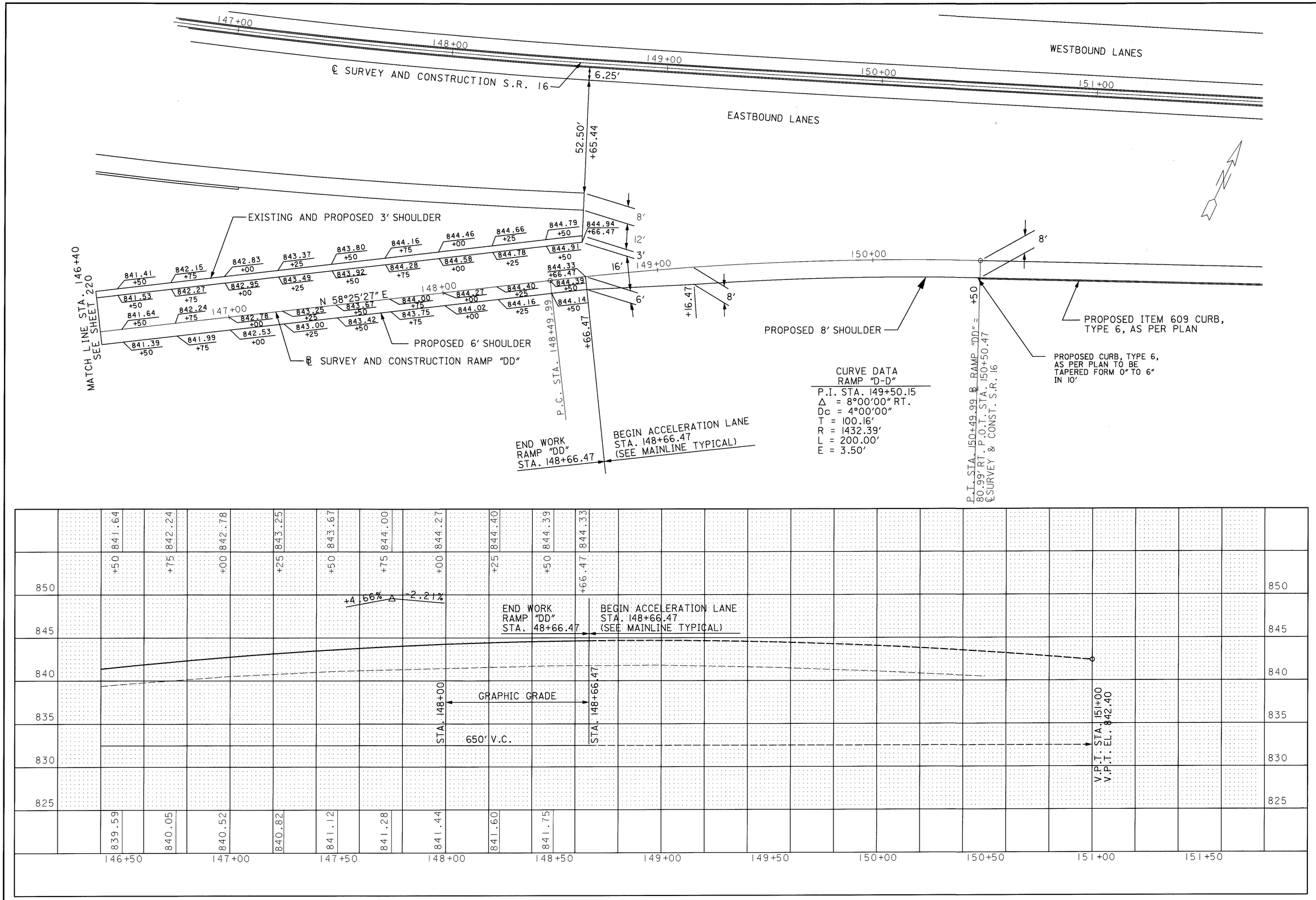

HORIZONTAL SCALE IN FEET
0' 10' 20' 40'

CALCULATED D.M. 3-13-95
CHECKED A.A.L. 3-16-95

PAVEMENT DETAIL SHEET RAMP "DD"
STA. 146+40 TO STA. 151+50

LIC-16-19.72

221/547

L1621282.DGN 03/8/95

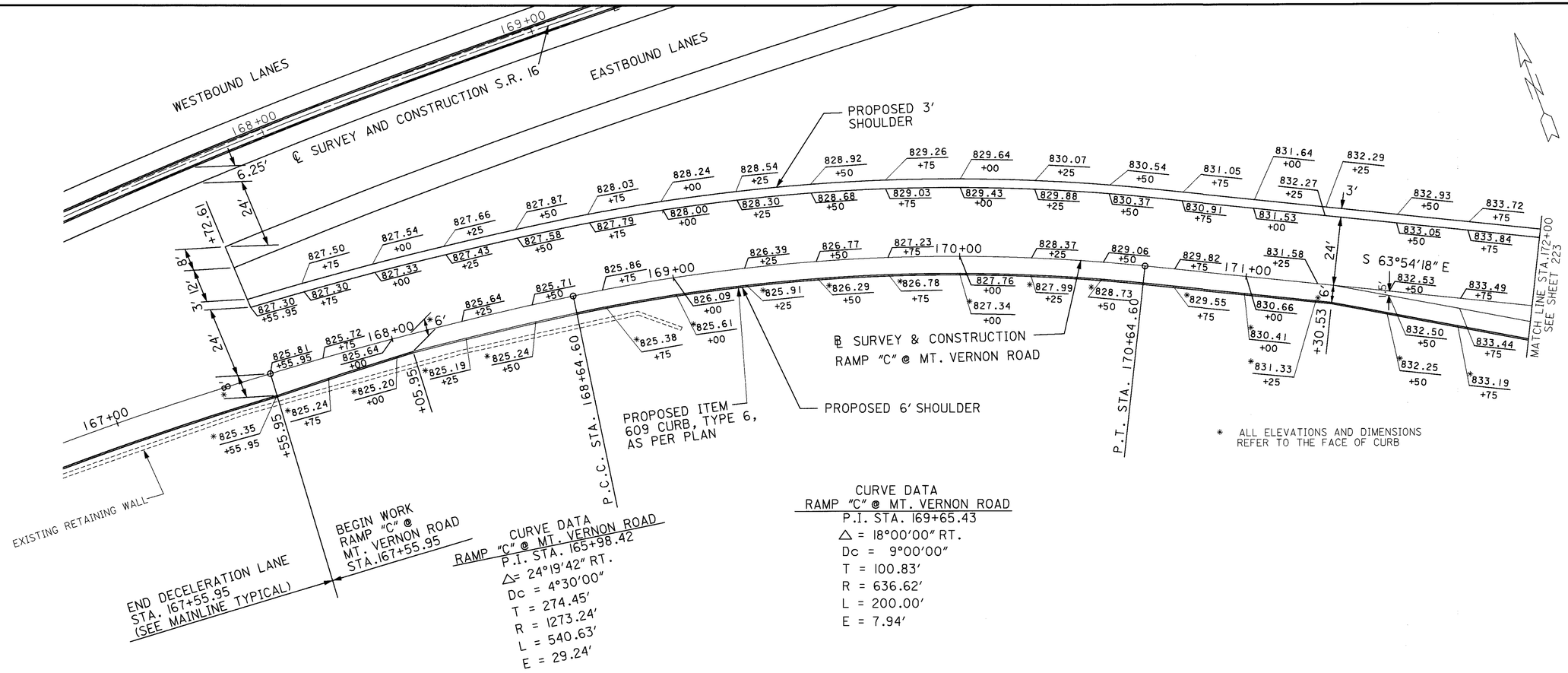

CURVE DATA
RAMP "C" @ MT. VERNON ROAD
P.I. STA. 169+65.43
△ = 18°00'00" RT.
Dc = 9°00'00"
T = 100.83'
R = 636.62'
L = 200.00'
E = 7.94'

CURVE DATA
RAMP "C" @ MT. VERNON ROAD
P.I. STA. 165+98.42
△= 24°19'42" RT.
Dc = 4°30'00"
T = 274.45'
R = 1273.24'
L = 540.63'
E = 29.24'

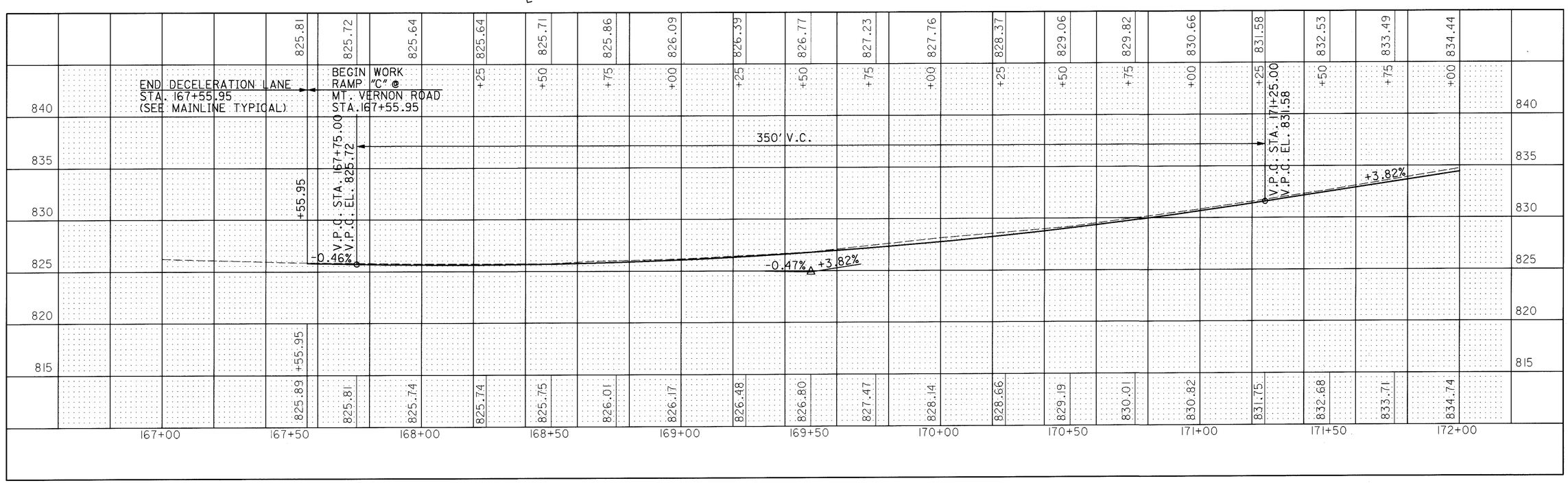

HORIZONTAL SCALE IN FEET 0 10 20 40

CALCULATED D.M. 3-13-95
CHECKED A.J.L. 3-16-95

PAVEMENT DETAIL SHEET RAMP "C" AT MT. VERNON ROAD
STA. 166+80 TO STA. 172+00

LIC-16-19.72

L1621284.DGN 03/01/95

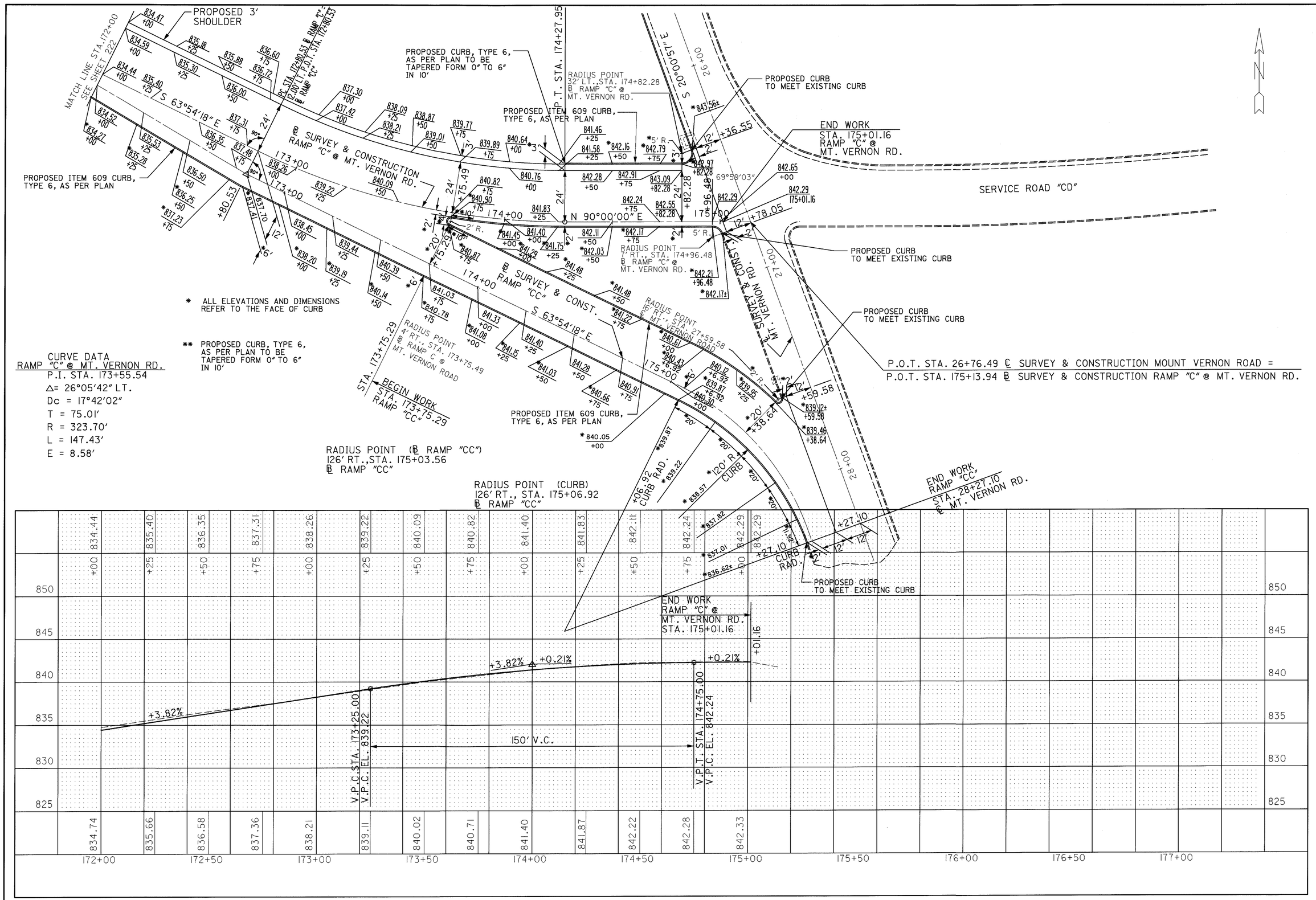

HORIZONTAL SCALE IN FEET 0 10 20 40

CALCULATED D.M. 3-15-95
CHECKED A.L.L. 3-16-95

PAVEMENT DETAIL SHEET RAMP "C" AT MT. VERNON ROAD STA. 172+00 TO STA. 175+01.39

LIC-16-19.72

L162\184.DGN 03/01/95

END ACCELERATION LANE
STA. 167+53.00
(SEE MAINLINE TYPICAL)

BEGIN WORK
STA. 167+53.00
RAMP "A"

CURVE DATA
RAMP "A" @ MT. VERNON ROAD

P.I. STA.170+09.01
△ = 05°30'00" LT.
Dc = 01°30'00"
T = 183.47'
R = 3819.72'
L = 366.67'
E = 4.40'

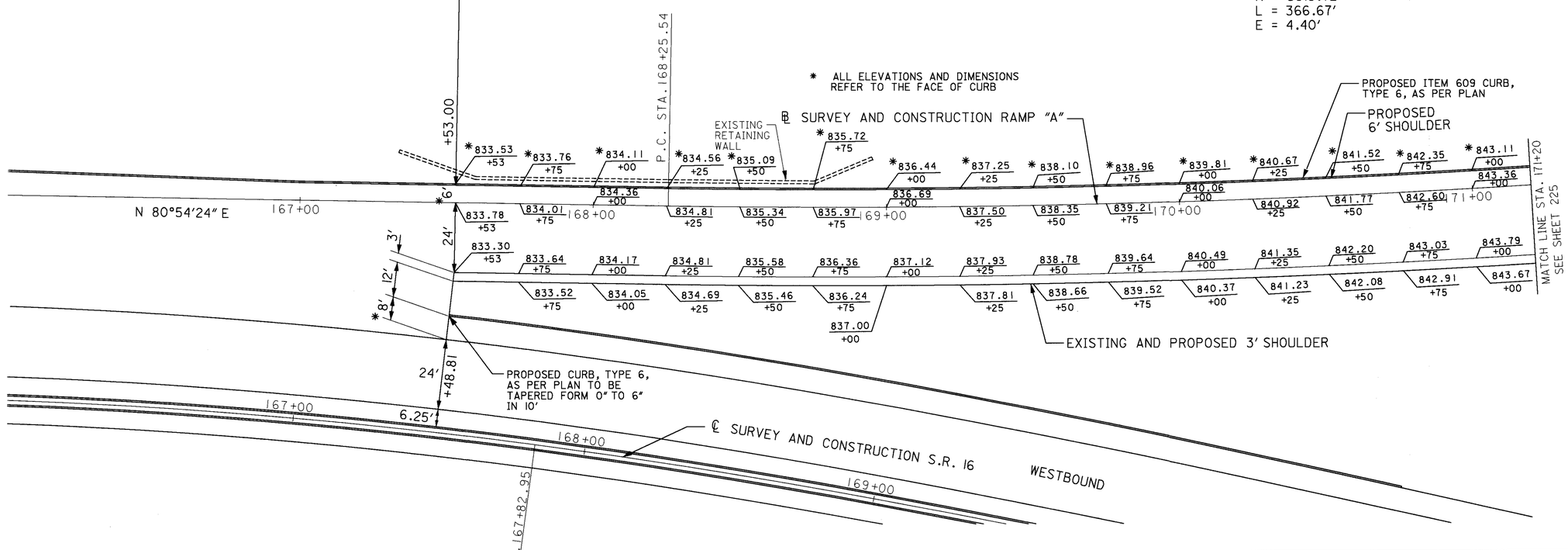

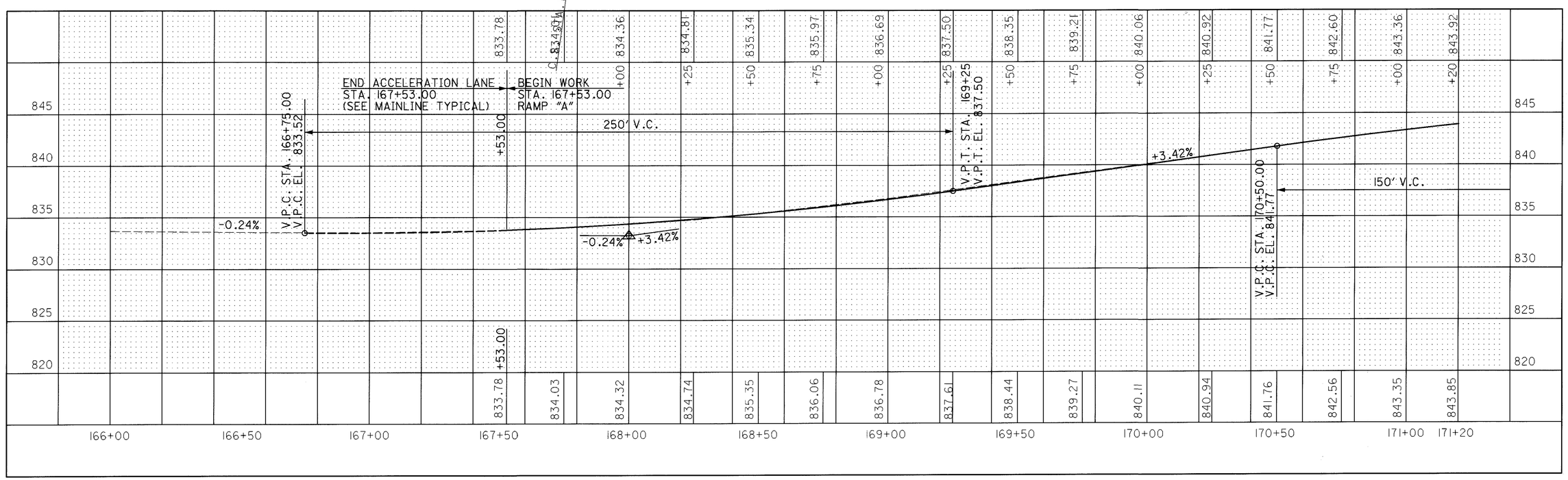

HORIZONTAL SCALE IN FEET
0 10 20 40

CALCULATED D.M. 3-15-95
CHECKED A.L.L. 3-16-95

PAVEMENT DETAIL SHEET RAMP "A" AT MT. VERNON ROAD
STA. 166+00 TO STA. 171+20

LIC-16-19.72

L162183.DGN 03/01/95

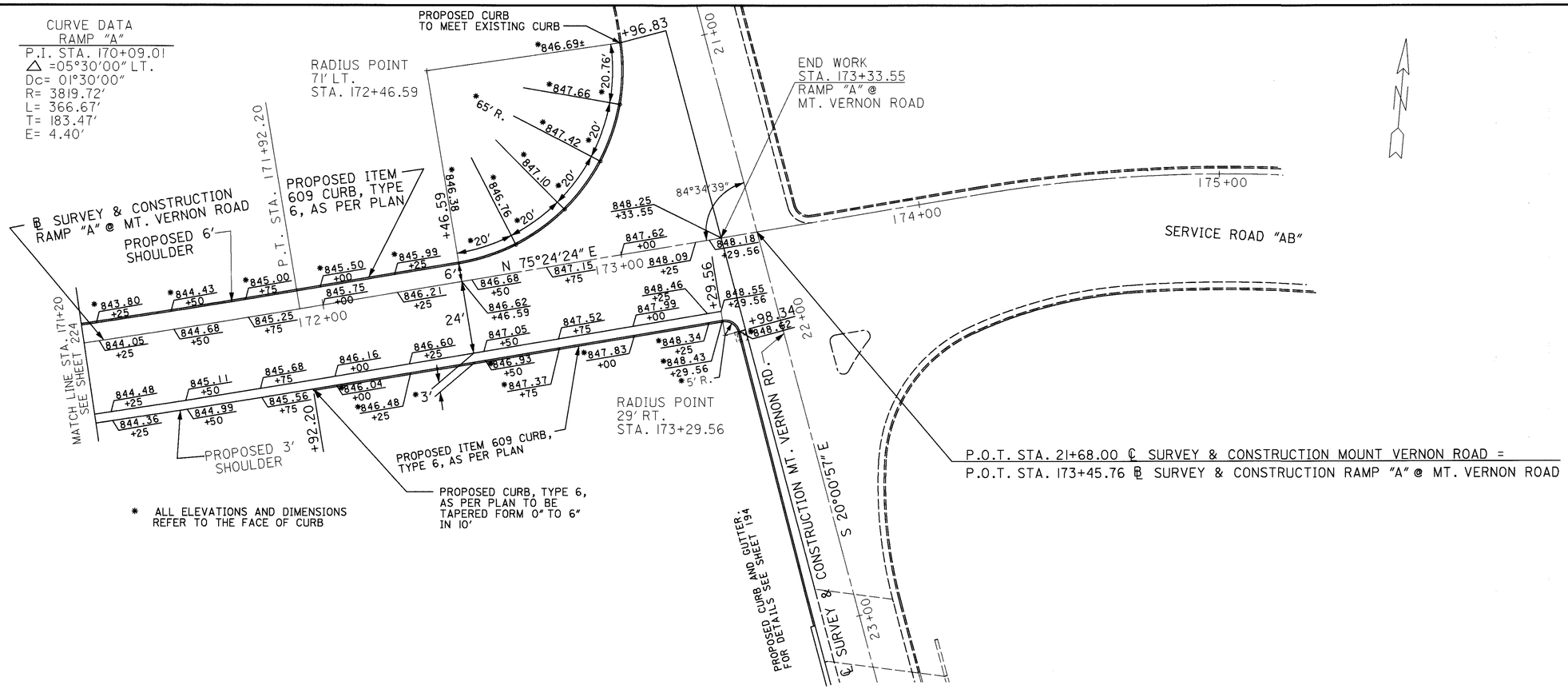

HORIZONTAL SCALE IN FEET 0 10 20 40

CALCULATED D.M. 3-15-95
CHECKED A.L.L. 3-16-95

PAVEMENT DETAIL SHEET RAMP "A" AT MT. VERNON ROAD
STA. 171+20 TO STA. 173+33.55

LIC-16-19.65

L162283.DGN 03/07/95

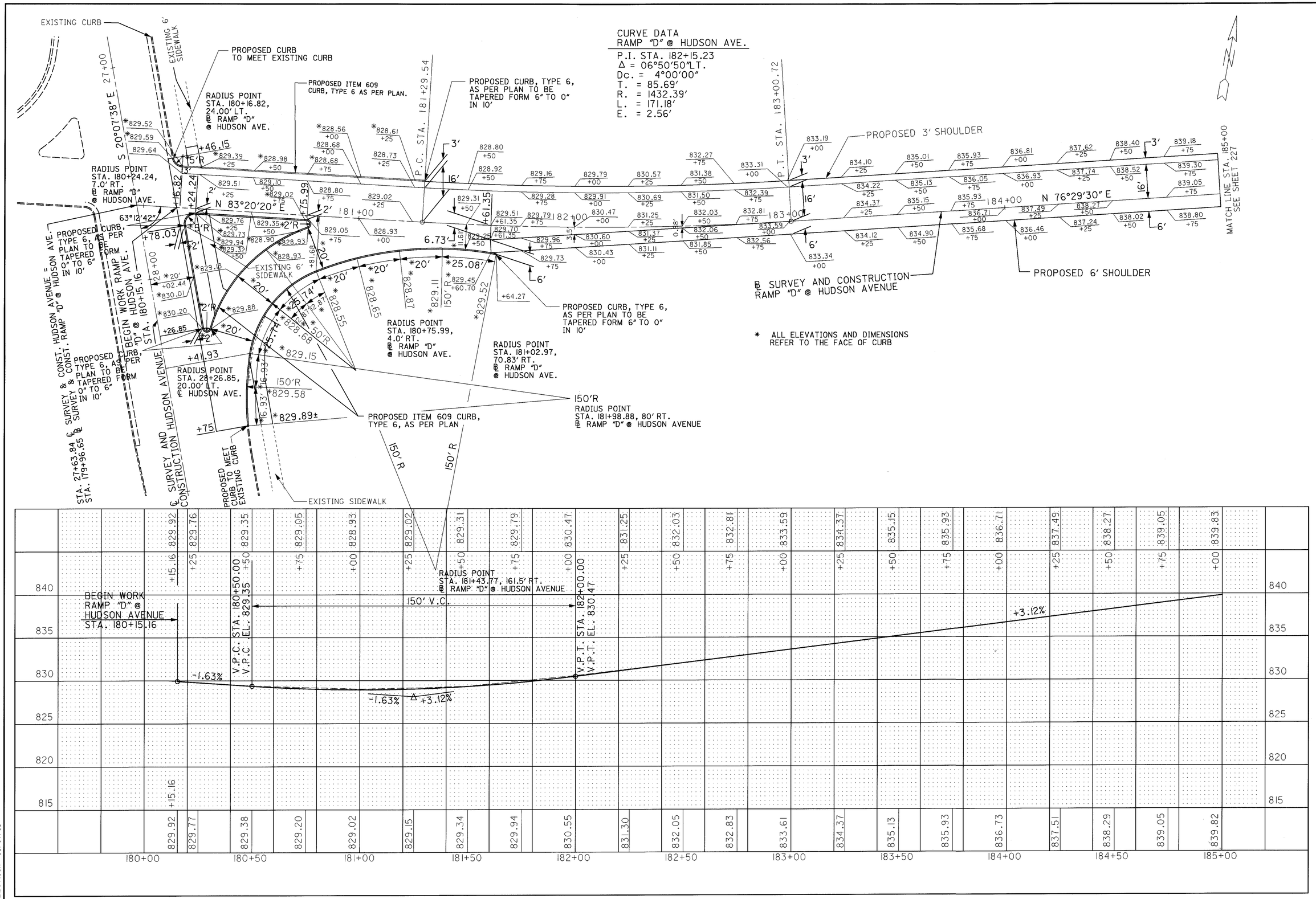
CURVE DATA
RAMP "D" @ HUDSON AVE.
P.I. STA. 182+15.23
Δ = 06°50'50" LT.
Dc. = 4°00'00"
T. = 85.69'
R. = 1432.39'
L. = 171.18'
E. = 2.56'
EXISTING CURB
EXISTING 6' SIDEWALK
PROPOSED CURB TO MEET EXISTING CURB
PROPOSED ITEM 609 CURB, TYPE 6 AS PER PLAN.
PROPOSED CURB, TYPE 6, AS PER PLAN TO BE TAPERED FORM 6" TO 0" IN 10'
RADIUS POINT STA. 180+16.82, 24.00' LT. ℄ RAMP "D" @ HUDSON AVE.
RADIUS POINT STA. 180+24.24, 7.0' RT. ℄ RAMP "D" @ HUDSON AVE.
S 20°07'38" E
N 83°20'20" E
63°12'42"
P.C. STA. 181+29.54
P.T. STA. 183+00.72
PROPOSED 3' SHOULDER
PROPOSED 6' SHOULDER
N 76°29'30" E
MATCH LINE STA. 185+00 SEE SHEET 227
℄ SURVEY AND CONSTRUCTION RAMP "D" @ HUDSON AVENUE
* ALL ELEVATIONS AND DIMENSIONS REFER TO THE FACE OF CURB
BEGIN WORK RAMP "D" @ HUDSON AVE. STA. 180+15.16
RADIUS POINT STA. 180+75.99, 4.0' RT. ℄ RAMP "D" @ HUDSON AVE.
RADIUS POINT STA. 181+02.97, 70.83' RT. ℄ RAMP "D" @ HUDSON AVE.
RADIUS POINT STA. 28+26.85, 20.00' LT. ℄ HUDSON AVE.
150'R RADIUS POINT STA. 181+98.88, 80' RT. ℄ RAMP "D" @ HUDSON AVENUE
PROPOSED ITEM 609 CURB, TYPE 6, AS PER PLAN
PROPOSED CURB, TYPE 6, AS PER PLAN TO BE TAPERED FORM 6" TO 0" IN 10'
PROPOSED CURB, TYPE 6, AS PER PLAN TO BE TAPERED FORM 6" TO 0" IN 10' ℄ RAMP "D" @ HUDSON AVE.
PROPOSED CURB, TYPE 6, AS PER PLAN TO BE TAPERED FORM 6" TO 0" IN 10' ℄ HUDSON AVE.
℄ SURVEY AND CONSTRUCTION HUDSON AVENUE
STA. 27+63.84 ℄ SURVEY & CONST. HUDSON AVENUE = STA. 179+96.65 ℄ SURVEY & CONST. RAMP "D" @ HUDSON AVE.
PROPOSED MEET CURB TO EXISTING CURB
EXISTING SIDEWALK
RADIUS POINT STA. 181+43.77, 161.5' RT. ℄ RAMP "D" @ HUDSON AVENUE
150' V.C.
V.P.C. STA. 180+50.00 EL. 829.35
V.P.T. STA. 182+00.00 EL. 830.47
-1.63%
+3.12%
HORIZONTAL SCALE IN FEET
CALCULATED D.M. 3-13-95
CHECKED A.K.J. 3-16-95
PAVEMENT DETAIL SHEET RAMP "D" AT HUDSON AVENUE
STA. 180+00 TO STA. 185+00
LIC-16-19.72
226/547
L162D07.DGN 03/07/95

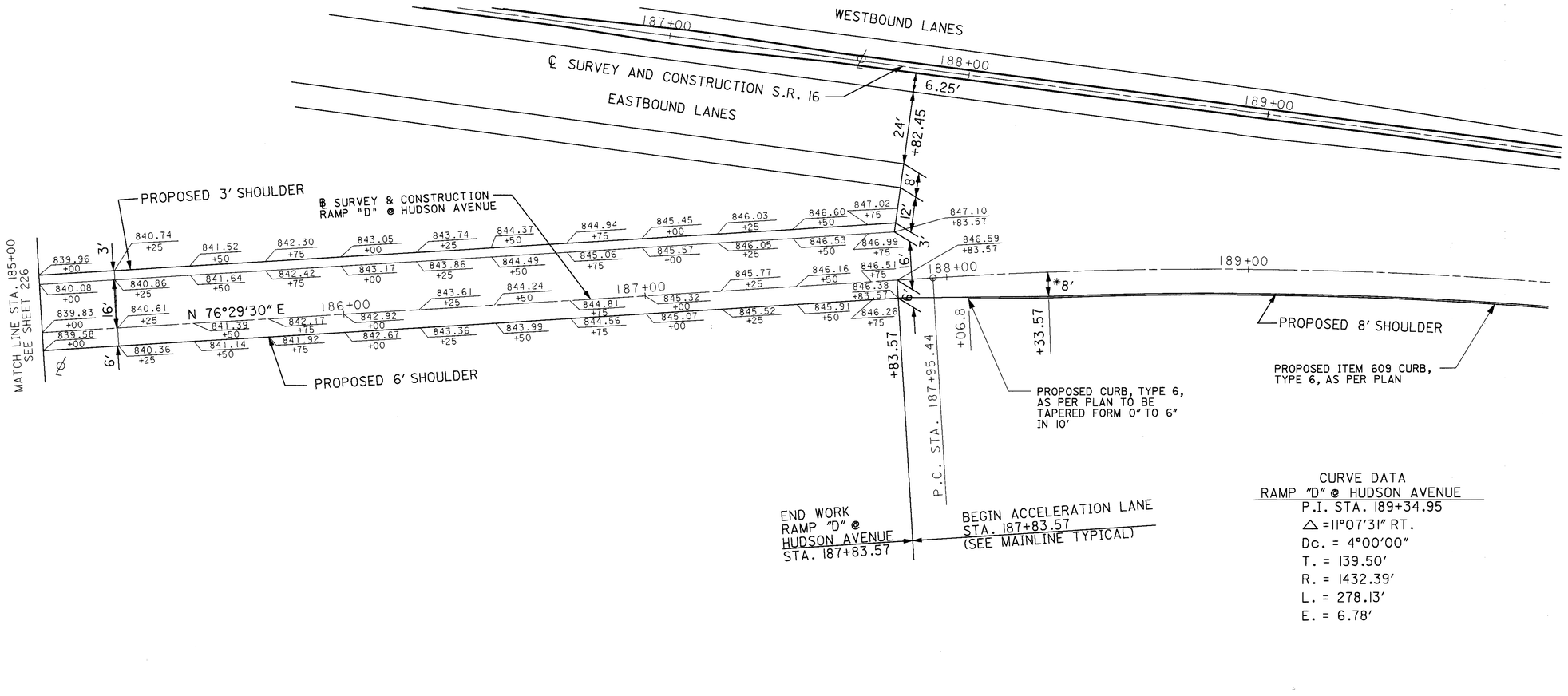

CURVE DATA
RAMP "D" @ HUDSON AVENUE

P.I. STA. 189+34.95
△ =11°07'31" RT.
Dc. = 4°00'00"
T. = 139.50'
R. = 1432.39'
L. = 278.13'
E. = 6.78'

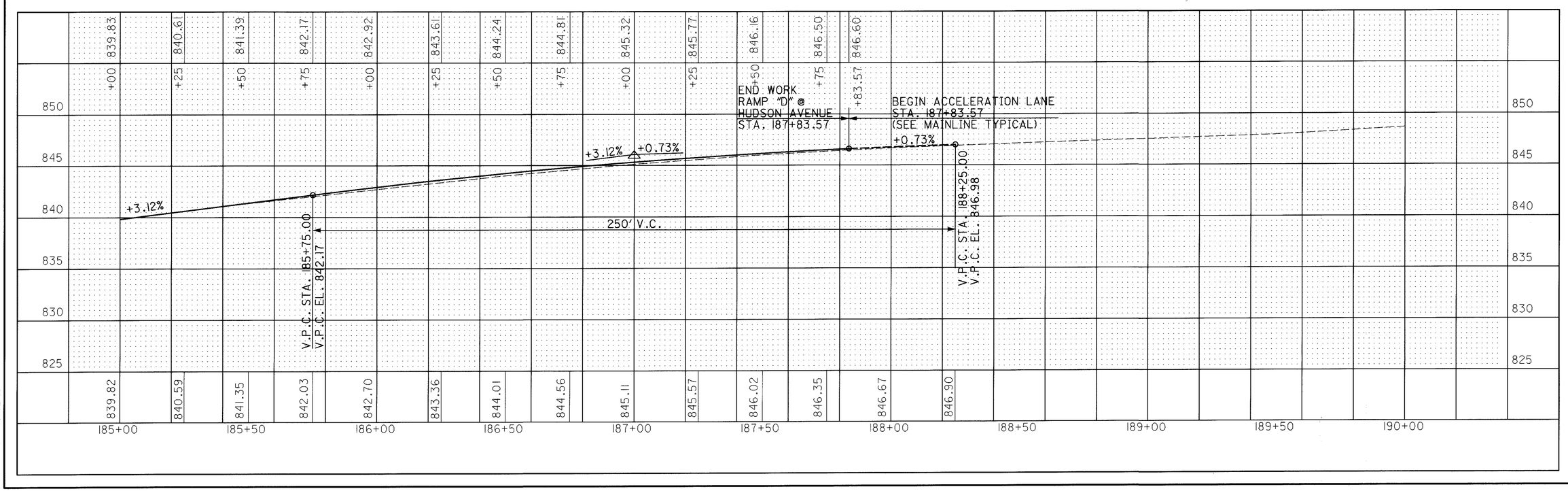

HORIZONTAL SCALE IN FEET 0 10 20 40

CALCULATED D.M. 3-13-95
CHECKED A.L.J. 3-16-95

PAVEMENT DETAIL SHEET RAMP "D" AT HUDSON AVENUE STA. 185+00 TO STA. 190+00

LIC-16-19.72

L162IDA7.DGN 03/02/95

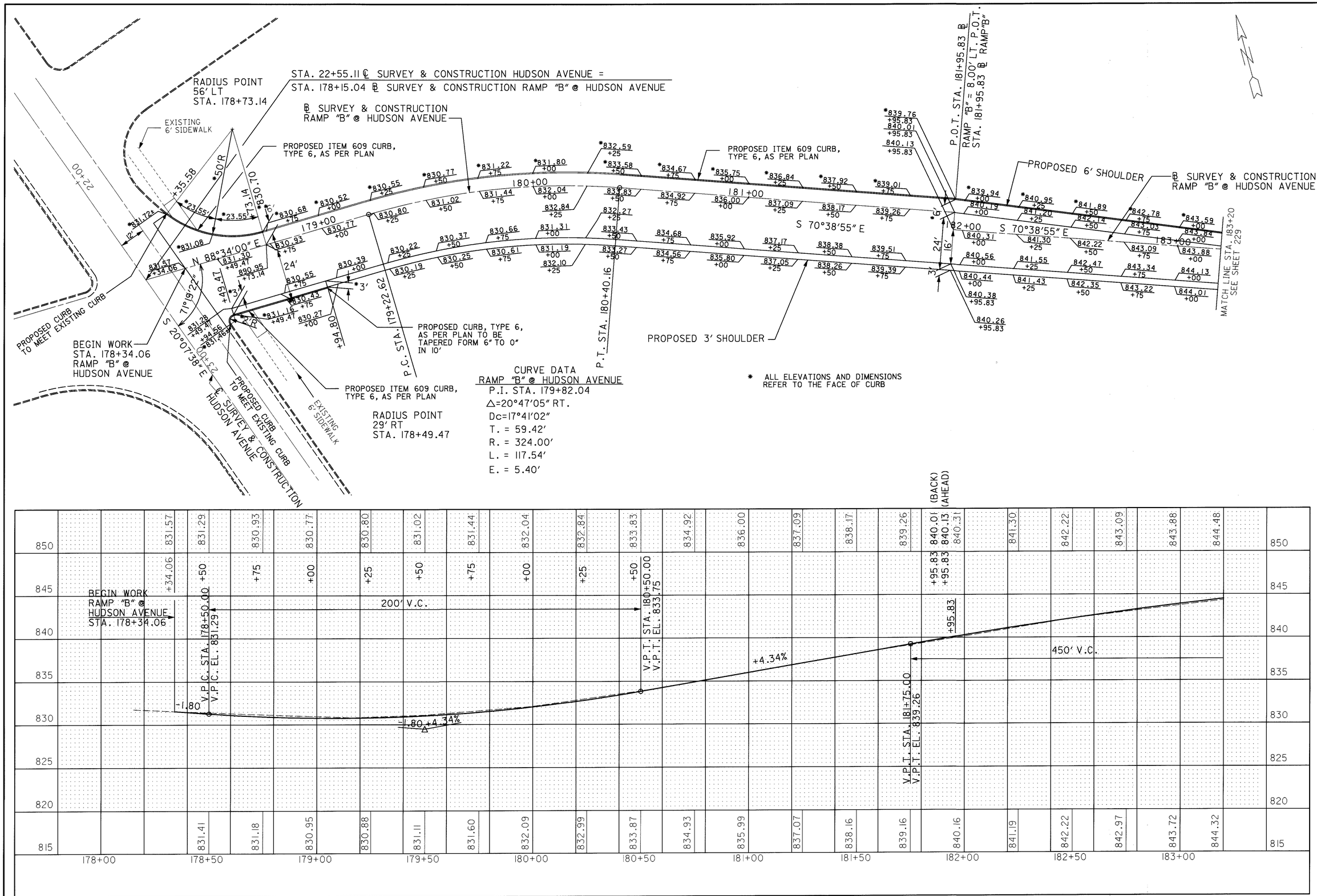

HORIZONTAL SCALE IN FEET 0 10 20 40

CALCULATED D.M. 3-13-95
CHECKED A.L.L. 3-16-95

PAVEMENT DETAIL SHEET RAMP "B" AT HUDSON AVENUE STA. 178+00 TO STA. 183+20

LIC-16-19.72

L162IB07.DGN 03/07/95

CURVE DATA
RAMP "B" @ HUDSON AVENUE
P.I. STA. 184+46.09
Δ =10°00'00" LT.
Dc = 5°00'00"
T = 100.26'
R = 1145.92'
L = 200.00'
E = 4.38'

END WORK
RAMP "B" @
HUDSON AVENUE
STA. 186+26.92

BEGIN DECELERATION LANE
STA. 186+26.92
(SEE MAINLINE TYPICAL)

CURVE DATA
RAMP "B" @ HUDSON AVENUE
P.I. STA. 187+81.35
Δ =11°44'04" LT.
Dc. = 2°30'00"
T. = 235.51'
R. = 2291.83'
L. = 469.38'
E. = 12.07'

* ALL ELEVATIONS AND DIMENSIONS REFER TO THE FACE OF CURB

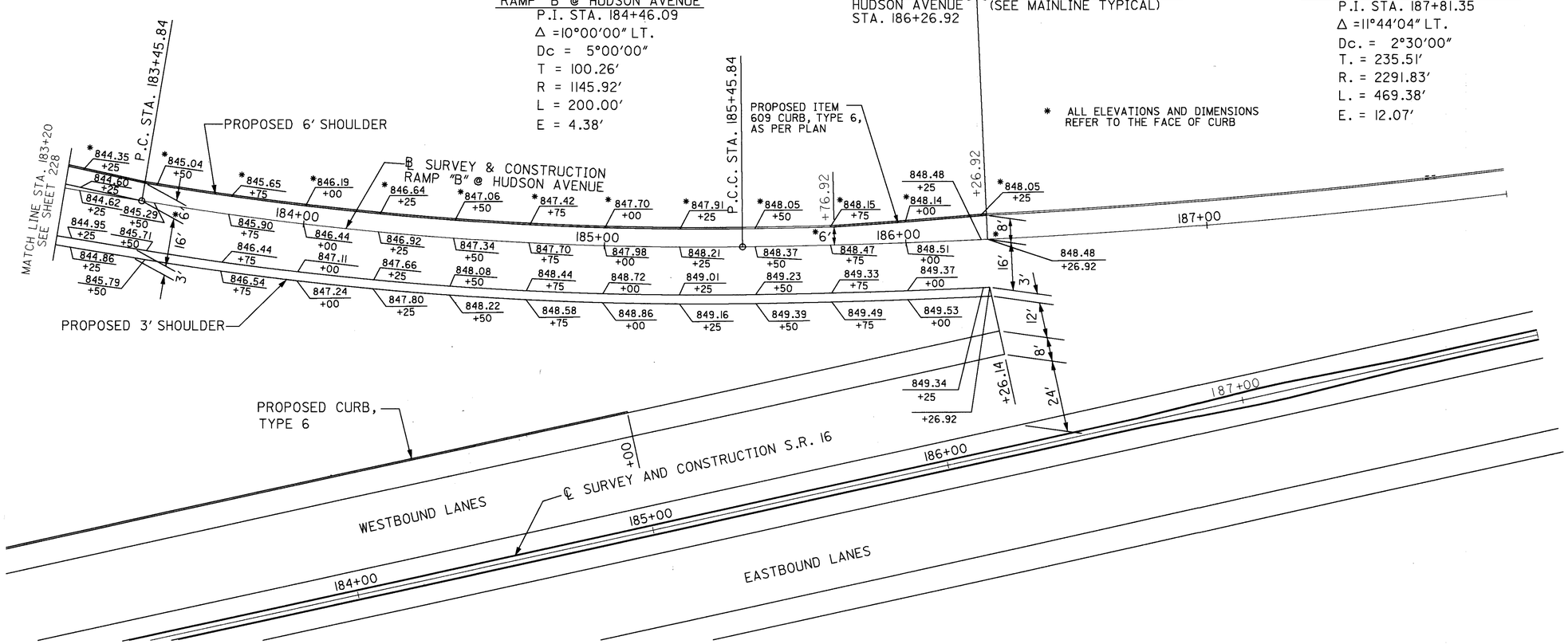

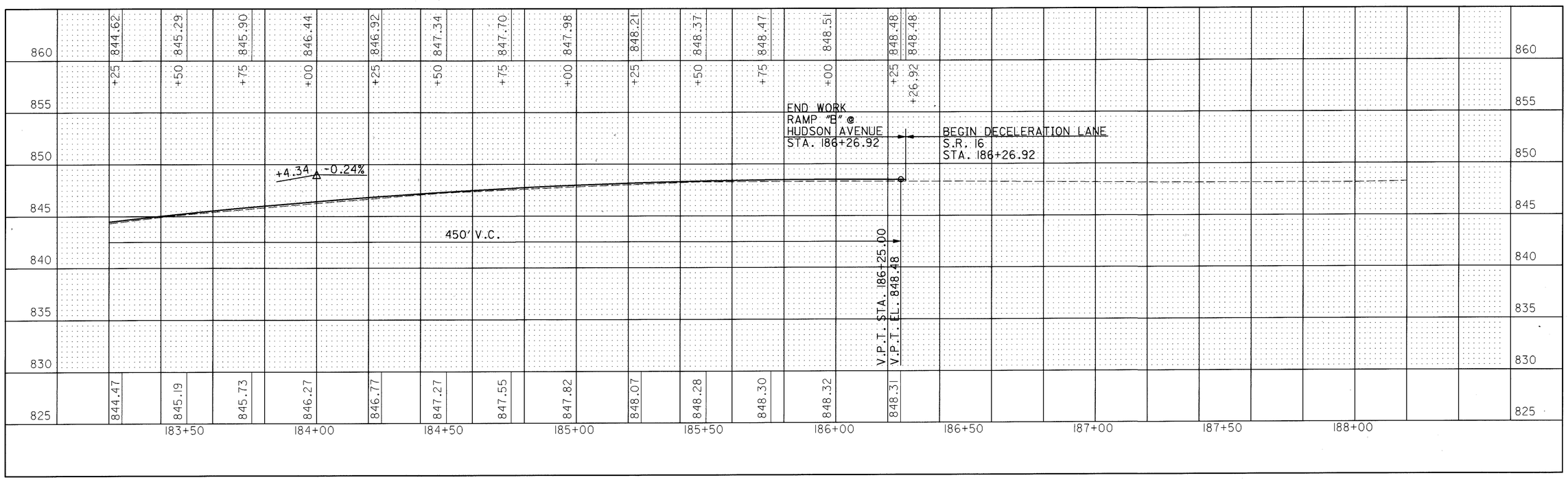

HORIZONTAL SCALE IN FEET
0 10 20 40

CALCULATED D.M. 3-13-95
CHECKED A.L.L. 3-16-95

PAVEMENT DETAIL SHEET RAMP "B" AT HUDSON AVENUE
STA. 183+20 TO STA. 188+00

LIC-16-19.72

L162IBA7.DGN 03/01/95

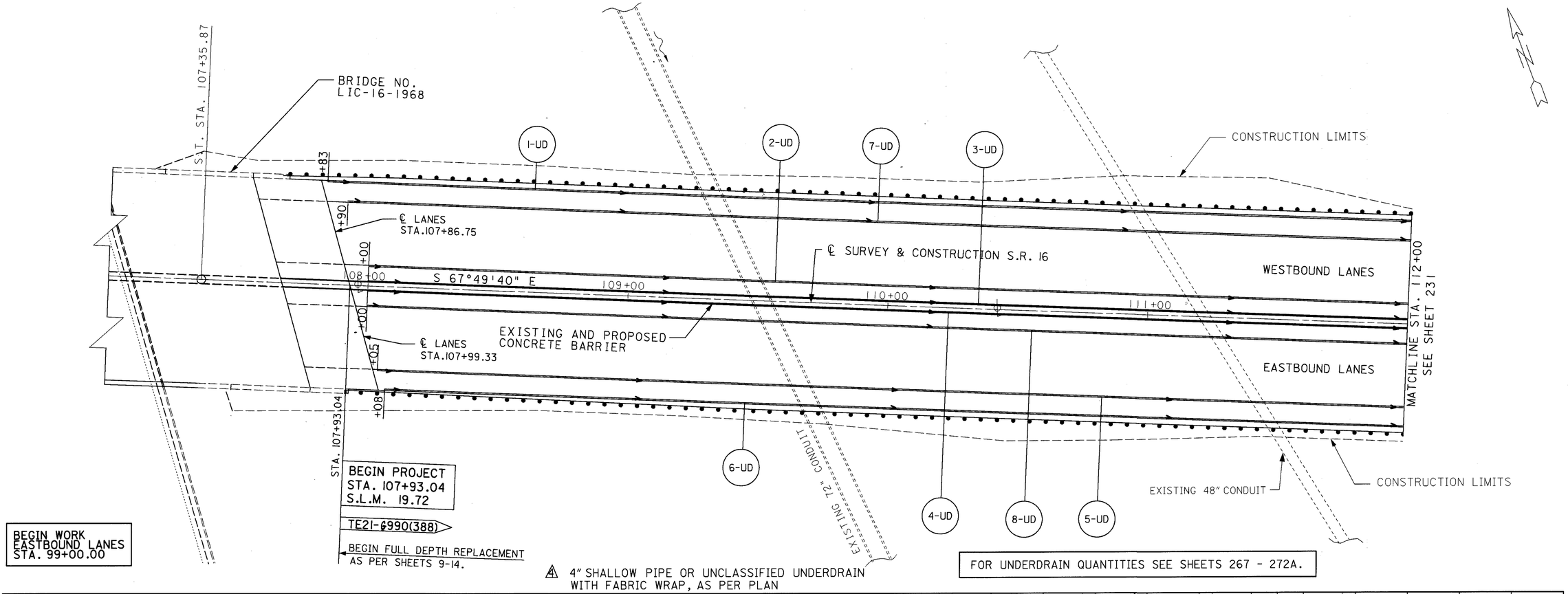

HORIZONTAL SCALE IN FEET
0 10 20 40

CALCULATED R.J.G. 3-13-95
CHECKED A.L. 5-16-95

UNDERDRAIN DETAILS
STA. 107+00 TO STA. 112+00

LIC-16-19.72

L016UD02.DGN 05/02/95

△1 6 LIN. FT. OF EXISTING CONDUIT TO BE REMOVED AS PER ITEM 603.01

△2 TO BE REMOVED AS PER ITEM 604.04

△3 4" SHALLOW PIPE OR UNCLASSIFIED UNDERDRAIN WITH FABRIC WRAP, AS PER PLAN

⊛ CONDUIT, TYPE B, 707.33, 707.42 OR 707.45

P.R.C.O. - PRECAST REINFORCED CONCRETE OUTLET

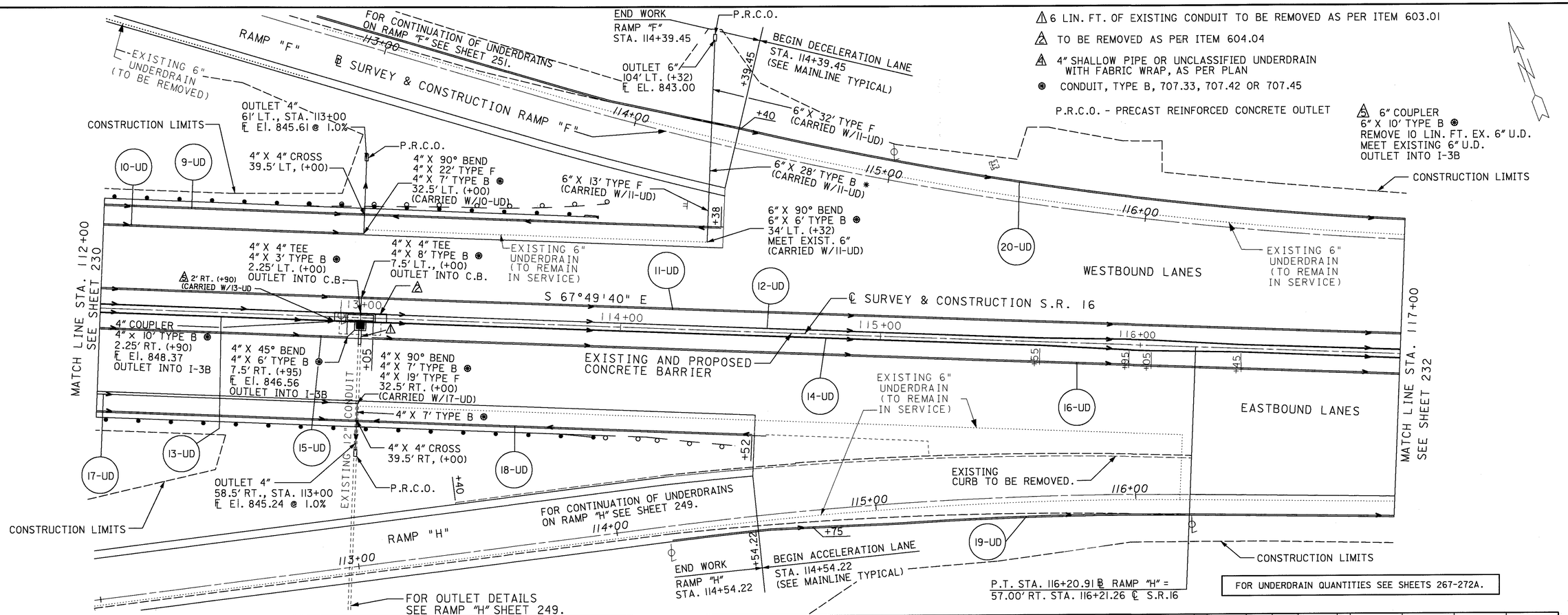

FOR UNDERDRAIN QUANTITIES SEE SHEETS 267-272A.

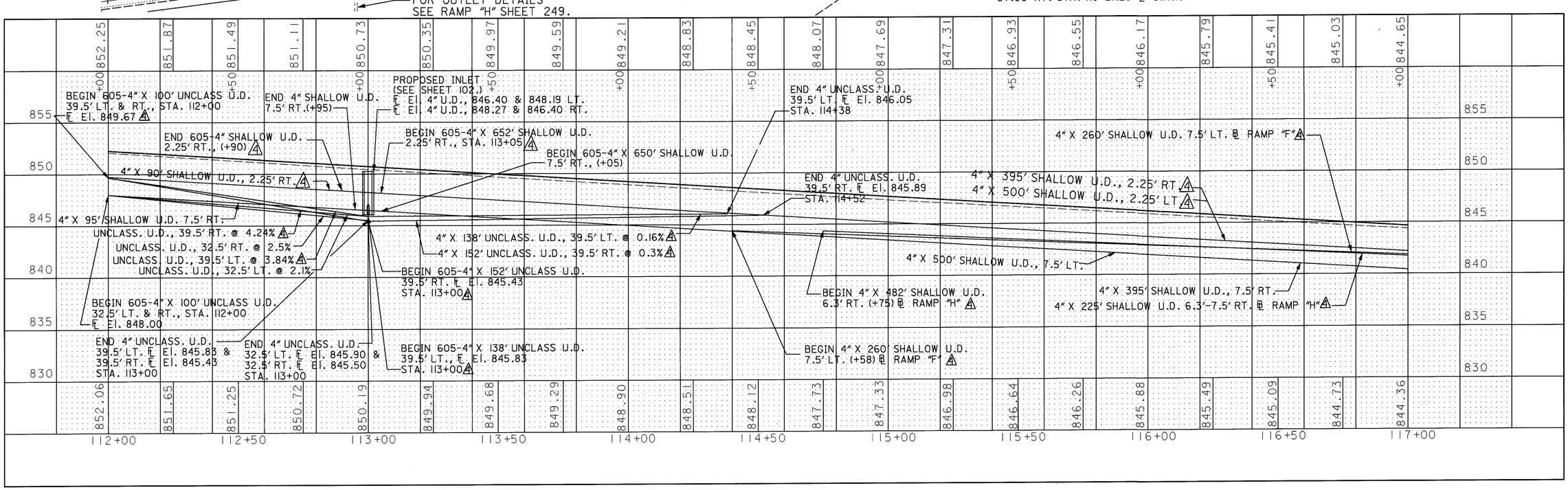

HORIZONTAL SCALE IN FEET 0 10 20 40

CALCULATED R.J.G. 3-13-95 CHECKED A.L.L. 3-16-95

UNDERDRAIN DETAILS STA. 112+00 TO STA. 117+00

LIC-16-19.72

L016UD03.DGN 05/03/95

P.T. STA. 117+16.47 ℄ RAMP "F" =
44.00' LT. P.O.T. STA. 117+16.47 ℄ S.R. 16

PT 117+16.47

CONSTRUCTION LIMITS

EXISTING 6" UNDERDRAIN (TO REMAIN IN SERVICE)

21-UD

EXISTING 15" CONDUIT (TO BE REPLACED)

6" X 45° BEND
6" X 7' TYPE B ⊛
46' LT. (+40)
MEET EXIST. 6"
OUTLET INTO C.B.
(CARRIED W/21-UD)

4" COUPLER
4" X 10' TYPE B ⊛
51.5' LT. (+35)
℄ El. 838.50
OUTLET INTO C.B.

22-UD

6" X 45° BEND
6" X 7' TYPE B ⊛
46' LT. (+45)
MEET EXIST. 6"
OUTLET INTO C.B.
(CARRIED W/22-UD)

4" COUPLER
4" X 10' TYPE B ⊛
51.1' LT. (+40)
℄ El. 838.07
OUTLET INTO C.B.

6" X 45° BEND
6" X 7' TYPE B ⊛
46' LT. (+55)
MEET EXIST. 6"
OUTLET INTO C.B.
(CARRIED W/23-UD)

4" COUPLER
4" X 10' TYPE B ⊛
51.1' LT. (+60)
℄ El. 838.06
OUTLET INTO C.B.

23-UD

EXISTING 24" CONDUIT (TO BE REPLACED)

4" COUPLER
4" X 10' TYPE B ⊛
53.0' LT. (+37)
OUTLET INTO C.B.

24-UD

EXISTING 24" CONDUIT

6" X 45° BEND
6" X 7' TYPE B ⊛
LT. (+32)
MEET EXIST. 6"
OUTLET INTO C.B.
(CARRIED W/24-UD)

EXISTING 6" UNDERDRAIN (TO REMAIN IN SERVICE)

2' LT. (+35)
(CARRIED W/29-UD)

2' LT. (+40)
(CARRIED W/30-UD)

EXISTING 6" UNDERDRAIN (TO REMAIN IN SERVICE)

WESTBOUND LANES

℄ SURVEY & CONSTRUCTION S.R. 16

29-UD

25-UD

4" X 45° BEND
4" X 6' TYPE B ⊛
7.5' LT. (+40)
℄ El. 836.98
OUTLET INTO I-3B

4" X 45° BEND
4" X 6' TYPE B ⊛
7.5' LT. (+45)
℄ El. 835.96
OUTLET INTO I-3B

30-UD

26-UD

4" X 45° BEND
4" X 6' TYPE B ⊛
7.5' LT. (+55)
℄ El. 836.05
OUTLET INTO I-3B

31-UD

27-UD

28-UD

4" X 45° BEND
7.5' LT. (+30)
4" X 8' TYPE B ⊛

118+00

S 67°49'40" E

118+00

119+00

2' LT. (+60)
(CARRIED W/31-UD)

4" COUPLER
4" X 10' TYPE B ⊛
2.25' LT. & RT. (+37)
OUTLET INTO I-3B

MATCH LINE STA. 117+00
SEE SHEET 231

MATCH LINE STA. 120+50
SEE SHEET 233

EXISTING AND PROPOSED CONCRETE BARRIER

EASTBOUND LANES

33-UD

37-UD

4" COUPLER
4" X 10' TYPE B ⊛
2.25' LT. & RT. (+35)
℄ El. 838.76
OUTLET INTO I-3B

4" X 45° BEND
4" X 11' TYPE B ⊛
7.5' RT. (+36)
℄ El. 837.01
OUTLET INTO I-3B

34-UD

4" COUPLER
4" X 10' TYPE B ⊛
2.25' LT. & RT. (+40)
℄ El. 837.75
OUTLET INTO I-3B

4" X 45° BEND
4" X 11' TYPE B ⊛
7.5' RT. (+38)
℄ El. 836.03
OUTLET INTO I-3B

38-UD

39-UD

4" COUPLER
4" X 10' TYPE B ⊛
2.25' LT. & RT. (+60)
℄ El. 837.04
OUTLET INTO I-3B

4" X 45° BEND
4" X 11' TYPE B ⊛
7.5' RT. (+61)
℄ El. 836.11
OUTLET INTO I-3B

35-UD

36-UD

32-UD

4" X 45° BEND
7.5' RT. (+35)
4" X 11' TYPE B ⊛
OUTLET INTO I-3B

40-UD

6" X 6" TEE
50.9' RT. (+18)
MEET EXIST. 6"

6" X 6" TEE
48.3' RT. (+21)
MEET EXIST. 6"

6" X 5' TYPE B ⊛

6" X 5' TYPE B ⊛

6" X 6" TEE
46.9' RT. (+77)
MEET EX. 6"

6" COUPLER 6" X 10' TYPE B ⊛
REMOVE 10 LIN. FT. EX. 6" U.D.
MEET EXISTING 6" U.D.
OUTLET INTO I-3B

6" X 30' TYPE F

6" X 4" X 6" CROSS
53.8' RT. (+21)
℄ El. 836.14

6" X 6" TYPE B ⊛

EXISTING 6" UNDERDRAIN (TO REMAIN IN SERVICE)

41-UD

OUTLET 6"
85.5' RT. (+18)
℄ El. 836.30

P.R.C.O.

STATION EQUATION:
STA. 118+69.02 (BACK) =
STA. 117+46.58 (AHEAD)

EXISTING 21" CONDUIT

EXISTING 6" UNDERDRAIN (TO REMAIN IN SERVICE)

41-UD

41-UD

42-UD

6" X 4" X 6" CROSS
52.4' RT. (+77)
℄ El. 836.09

43-UD

6" X 31' TYPE F

6" X 27' TYPE F

CONSTRUCTION LIMITS

OUTLET 6"
83.5' RT. (+21)
℄ El. 835.84

P.R.C.O.

OUTLET 6"
79.5' RT. (+77)
℄ El. 835.81

6 L.F. EXIST. CONDUIT TO BE REMOVED AS PER ITEM 603.01.

TO BE REMOVED AS PER ITEM 604.04

4" SHALLOW PIPE OR UNCLASSIFIED UNDERDRAIN WITH FABRIC WRAP, AS PER PLAN

P.R.C.O. - PRECAST REINFORCED CONCRETE OUTLET

⊛ CONDUIT, TYPE B, 707.33, 707.42 OR 707.45

FOR UNDERDRAIN QUANTITIES SEE SHEETS 267-272A.

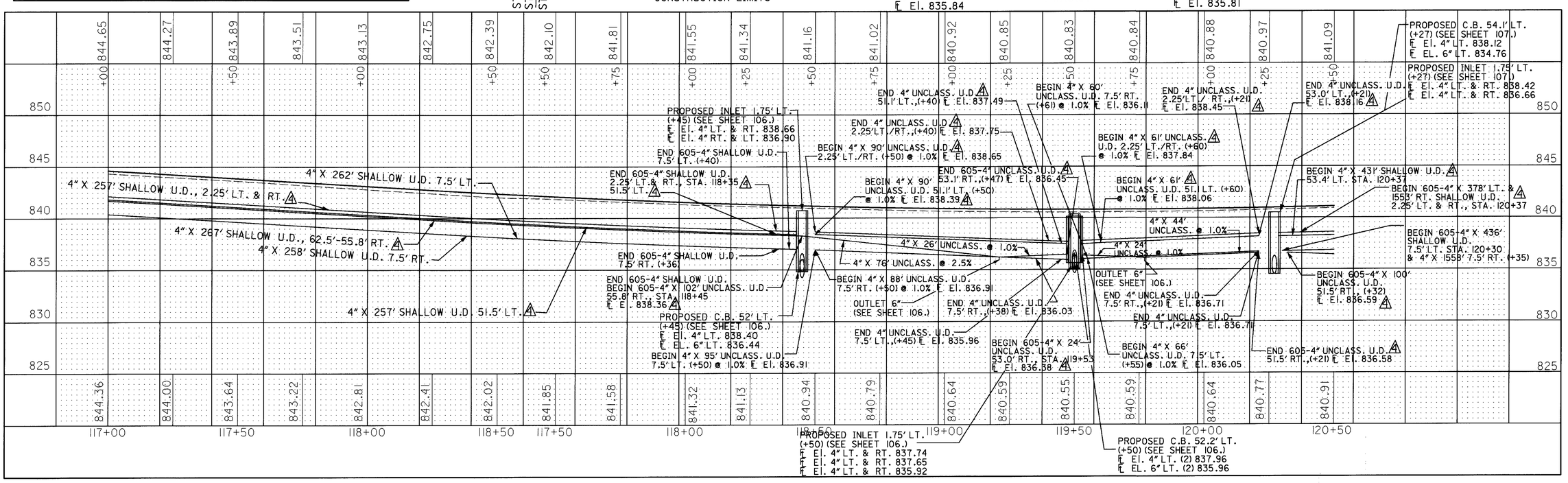

HORIZONTAL SCALE IN FEET
0 10 20 40

CALCULATED R.J.G. 3-13-95
CHECKED A.L.L. 3-16-95

UNDERDRAIN DETAILS
STA. 117+00 TO STA. 120+50

LIC-16-19.72

L016UD04.DGN 5/03/95

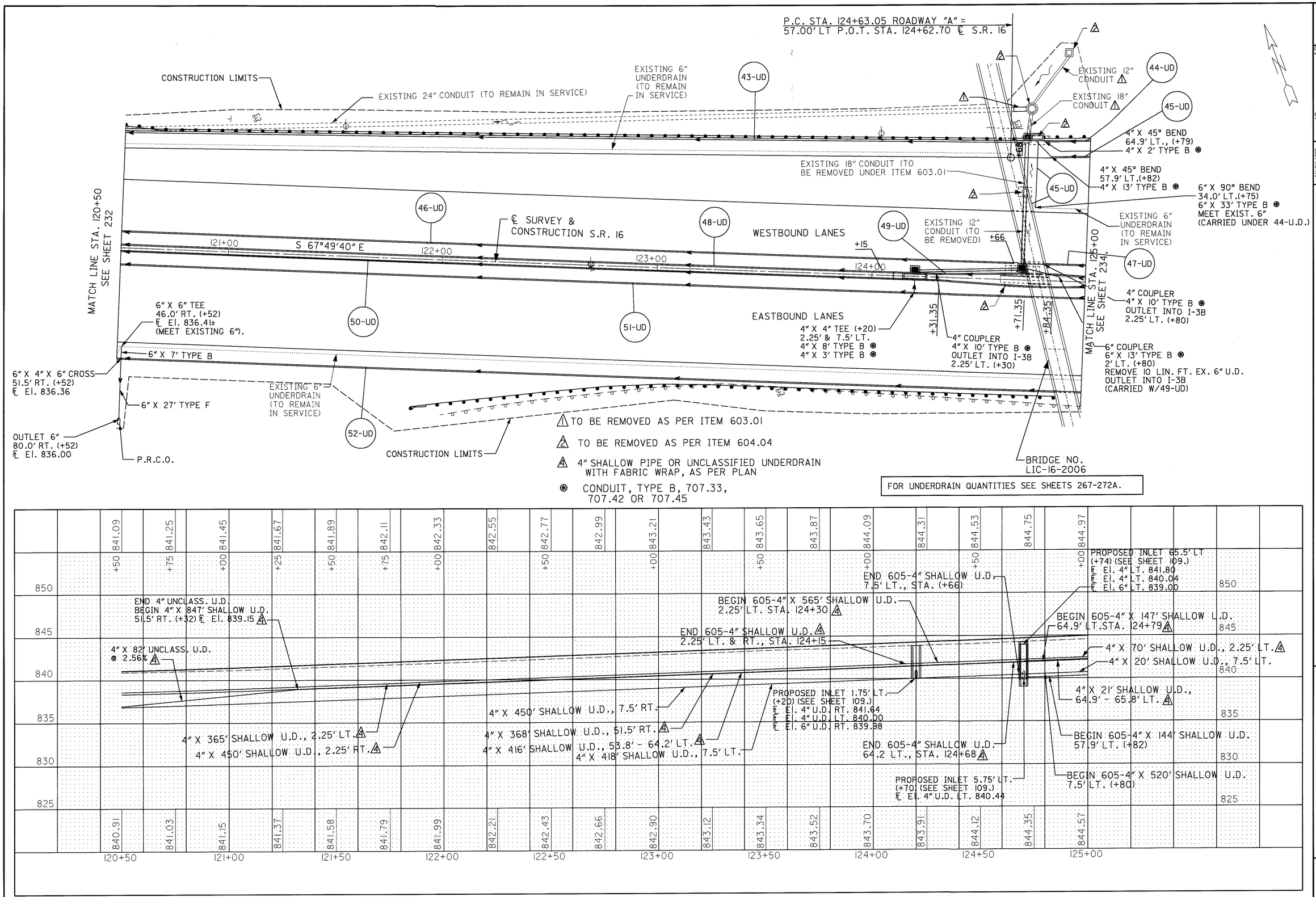

CALCULATED R.J.G. 3-13-95
CHECKED A.L. 3-16-95

UNDERDRAIN DETAILS
STA. 120+50 TO STA. 125+00

LIC-16-19.72

L016UD05.DGN 05/03/95

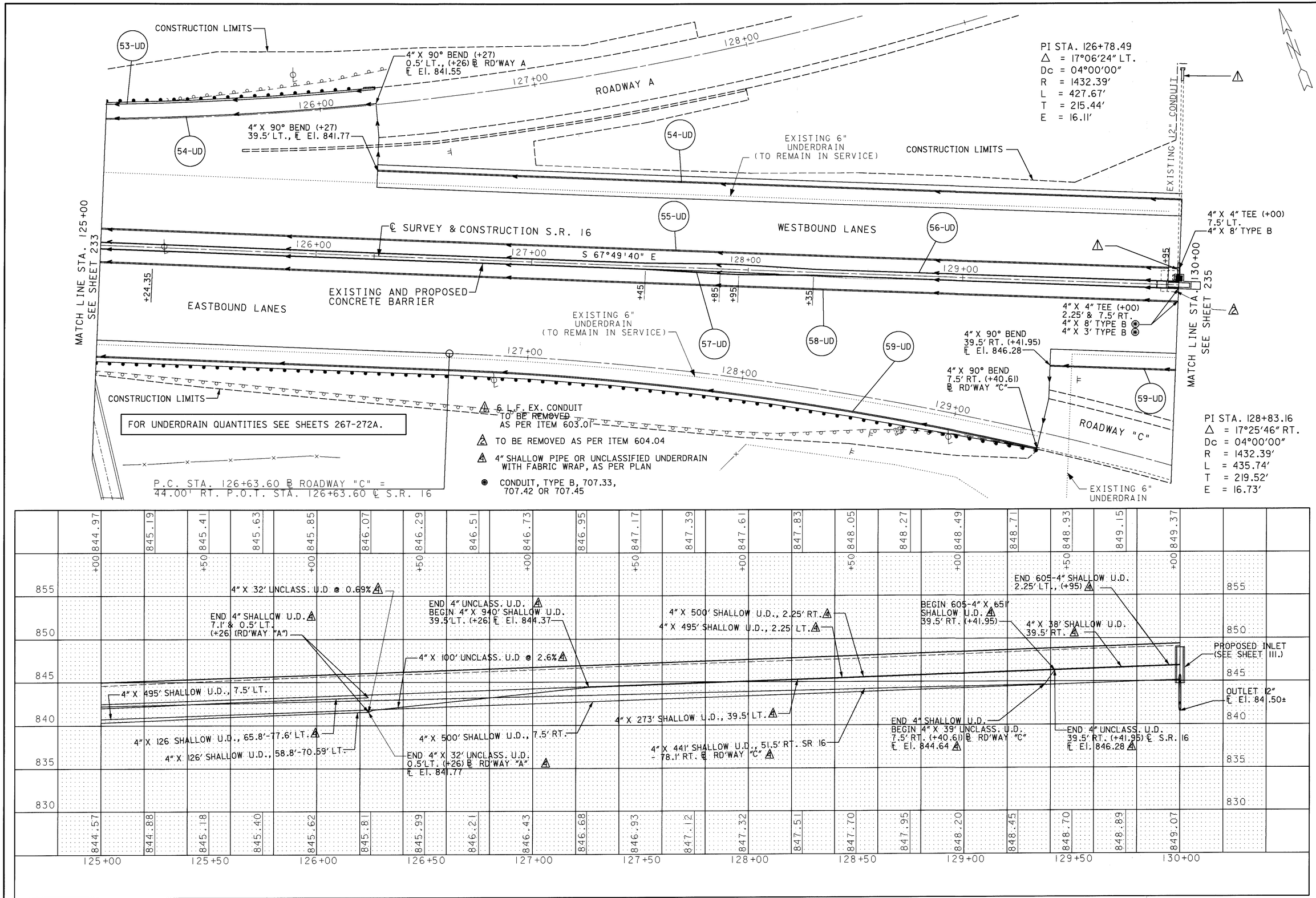

CALCULATED R.J.G. 3-13-95
CHECKED A.L.L. 3-16-95

UNDERDRAIN DETAILS
STA. 125+00 TO STA. 130+00

LIC-16-19.72

L016UD06.DGN 5/03/95

CURVE DATA
S.R. 16

PI STA. 141+22.54
Δ = 43°50'10" LT.
Dc = 03°00'00"
Rc = 1909.86'
Ls = 350.00'
Lc = 1111.20'
Ts = 944.48'
Θs = 05°15'00"
LT = 233.44'
ST = 116.26'
Es = 151.68'

FOR UNDERDRAIN QUANTITIES SEE SHEETS 267 - 272.

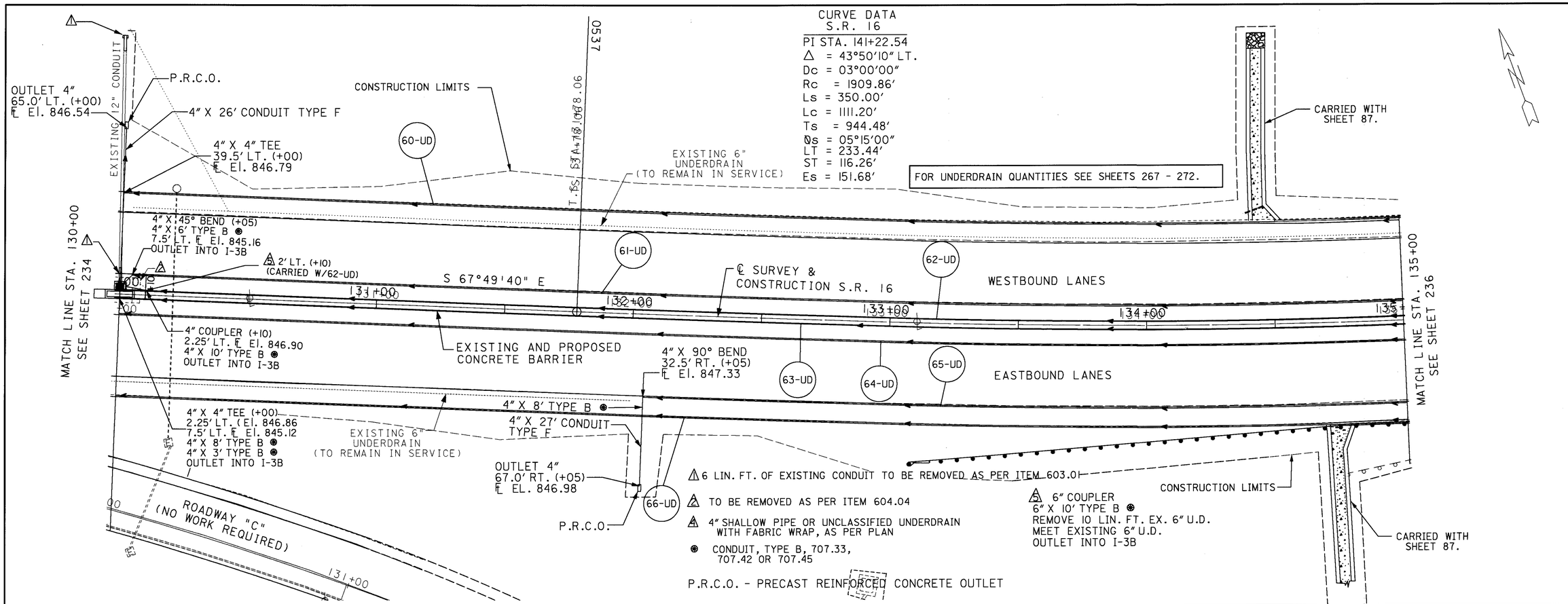

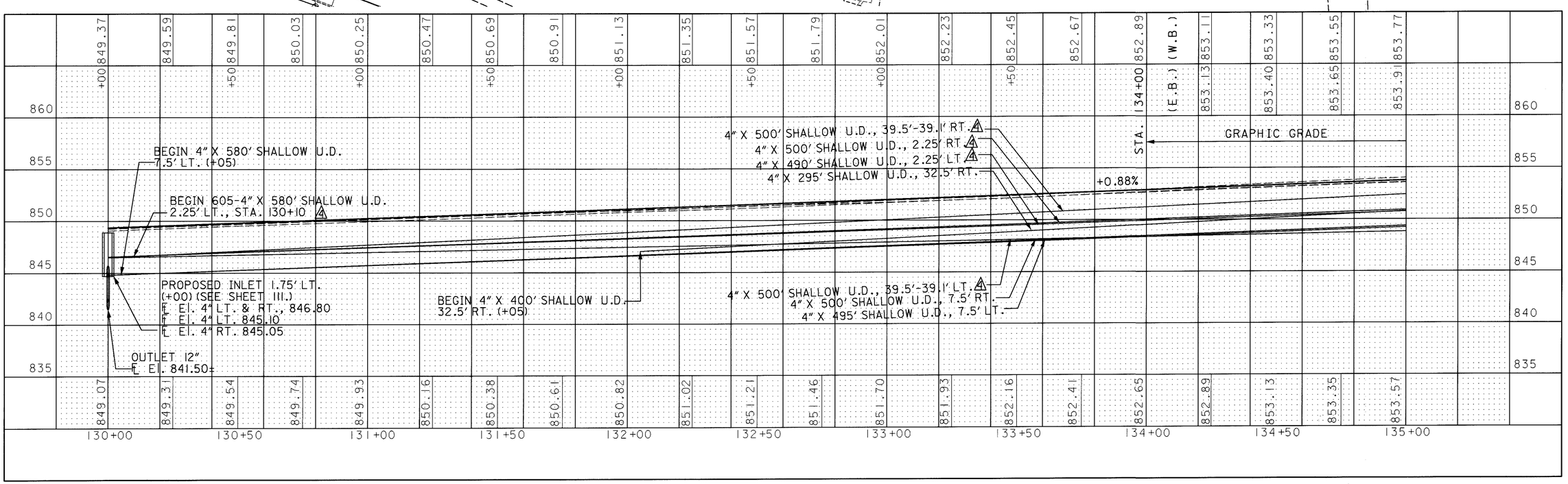

CALCULATED R.J.G. 3-13-95
CHECKED A.L.L. 3-16-95

0 10 20 40
HORIZONTAL SCALE IN FEET

UNDERDRAIN DETAILS
STA. 130+00 TO STA. 135+00

LIC-16-19.72

L016UD07.DGN 5/03/95

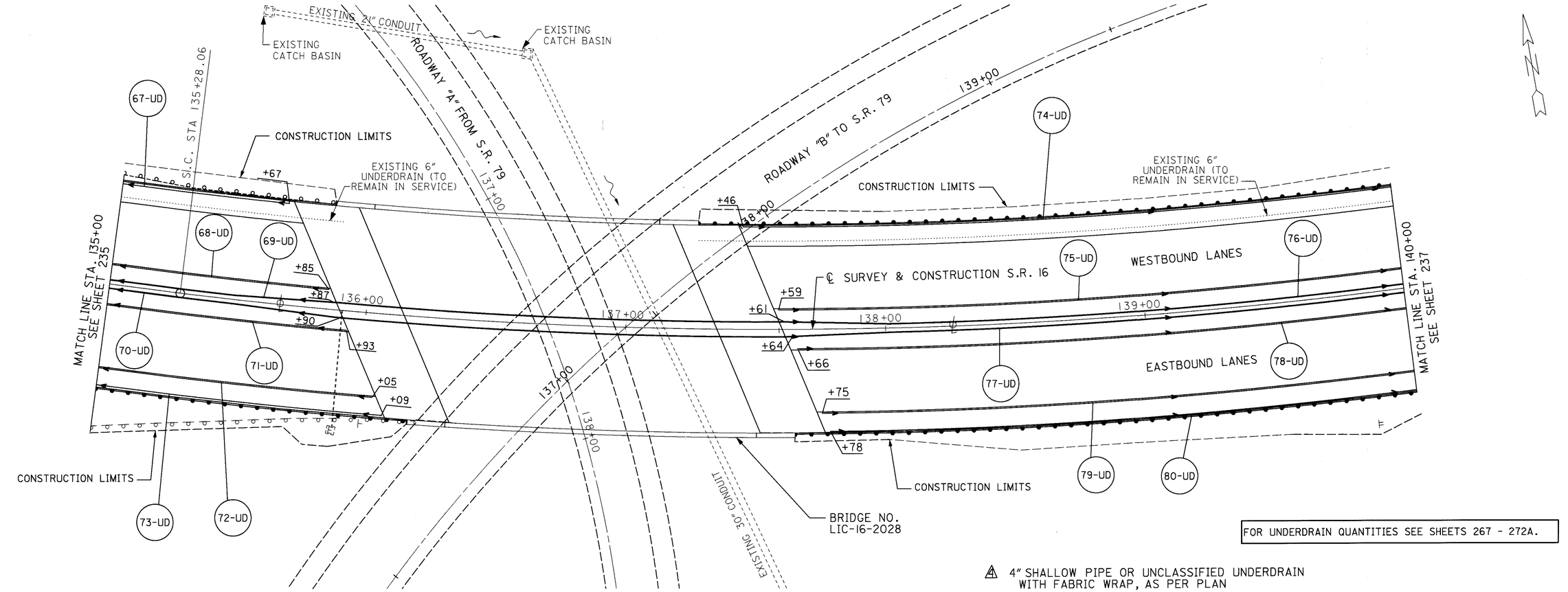

FOR UNDERDRAIN QUANTITIES SEE SHEETS 267 - 272A.

4" SHALLOW PIPE OR UNCLASSIFIED UNDERDRAIN WITH FABRIC WRAP, AS PER PLAN

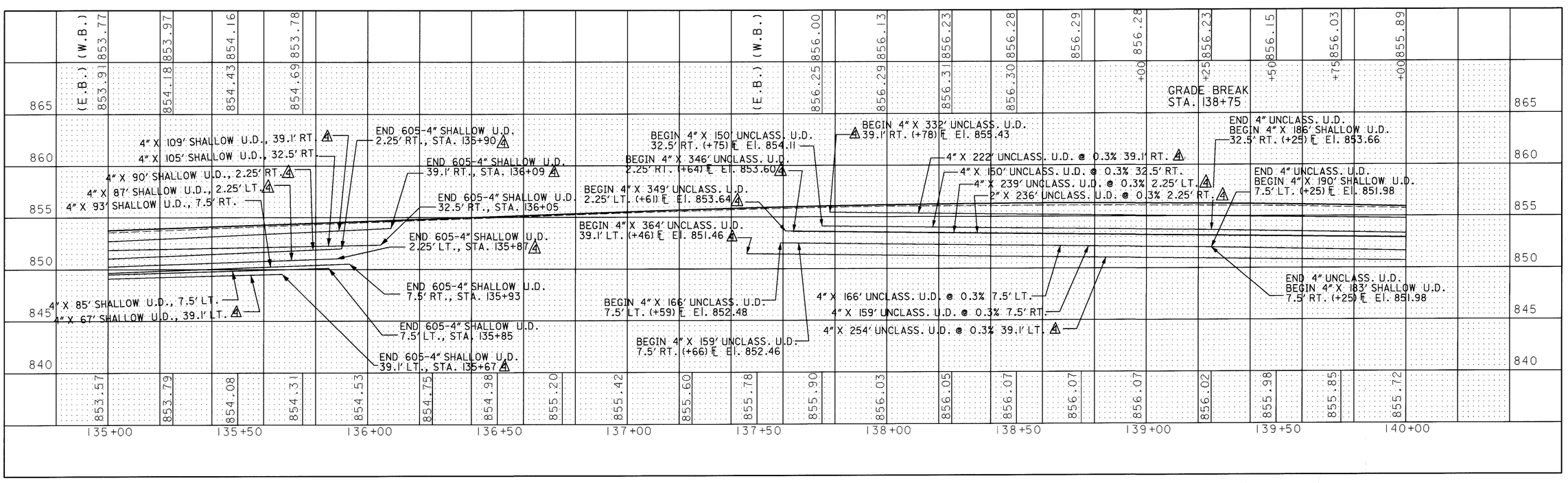

UNDERDRAIN DETAILS STA. 135+00 TO STA. 140+00

HORIZONTAL SCALE IN FEET 0 10 20 40

CALCULATED R.J.G. 3-13-95
CHECKED A.L. 3-16-95

LIC-16-19.72

L016UD08.DGN 05/03/95

FOR UNDERDRAIN QUANTITIES SEE SHEETS 267-272A.

△1 6 LIN. FT. OF EXISTING CONDUIT TO BE REMOVED AS PER ITEM 603.01

△2 TO BE REMOVED AS PER ITEM 604.04

△3 4" SHALLOW PIPE OR UNCLASSIFIED UNDERDRAIN WITH FABRIC WRAP, AS PER PLAN

⊗ CONDUIT, TYPE B, 707.33, 707.42 OR 707.45

△5 6" COUPLER
6" X 10' TYPE B ⊗ *
REMOVE 10 LIN. FT. EX. 6" U.D.
MEET EXISTING 6" U.D.
OUTLET INTO I-3B

P.R.C.O. - PRECAST REINFORCED CONCRETE OUTLET

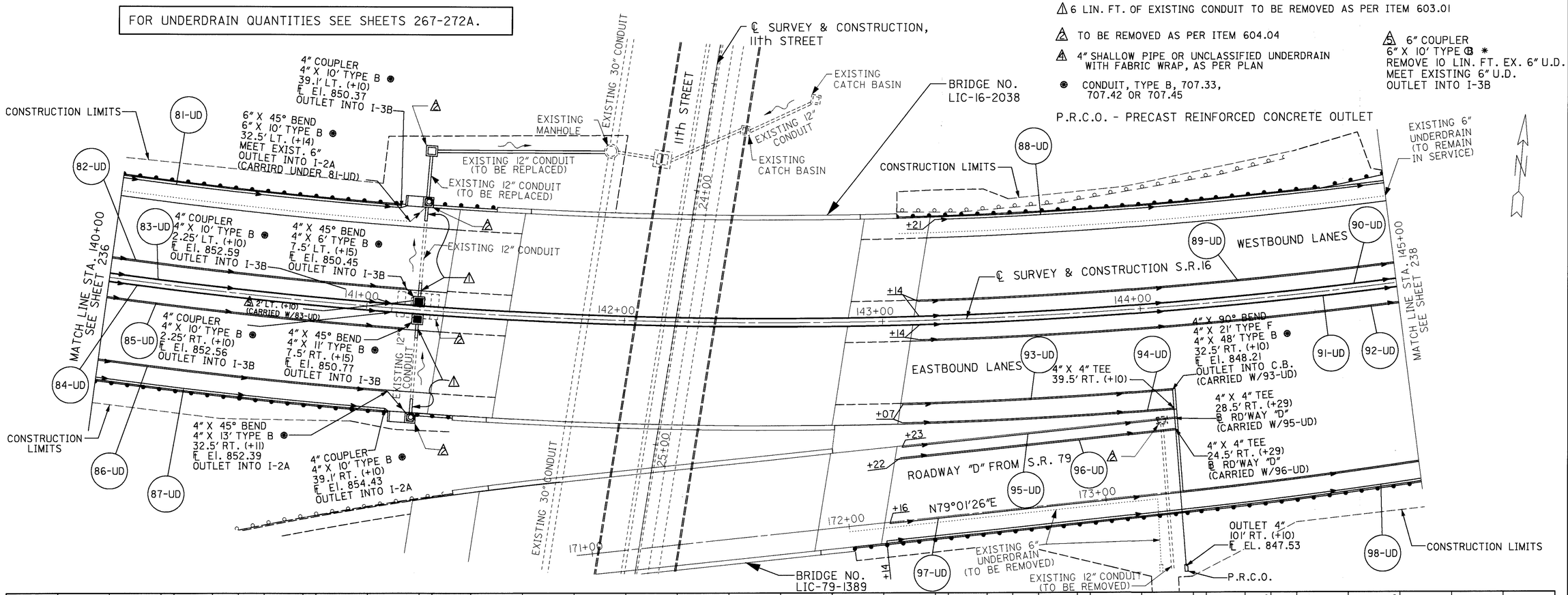

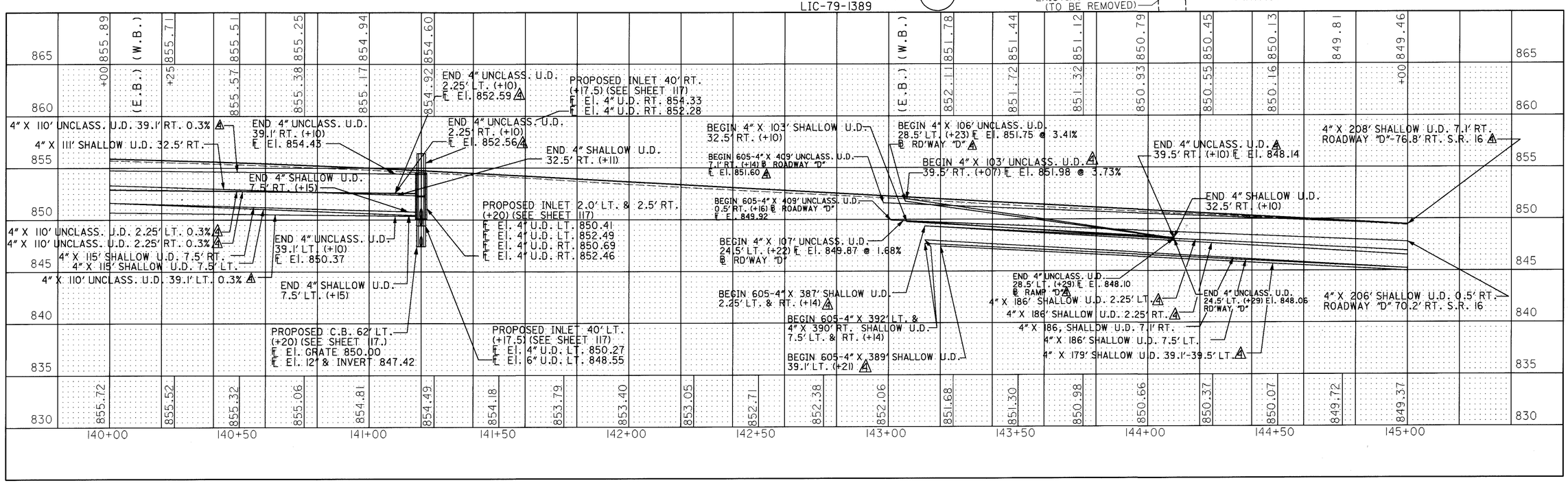

CALCULATED R.J.G. 3-13-95
CHECKED A.J.L. 3-16-95

UNDERDRAIN DETAILS STA. 140+00 TO STA. 145+00

LIC-16-19.72

L016UD09.DGN 05/03/95

CURVE DATA
S.R. 16

P.I. STA. 141+22.54
Δ = 43°50'10" LT.
Dc = 03°00'00"
Rc = 1909.86'
Ls = 350.00'
Lc = 1111.20'
Θ = 05°15'00"
LT = 233.44'
ST = 116.26'
Es = 151.68'
Ts = 944.48'

FOR UNDERDRAIN QUANTITIES SEE SHEETS 267 - 272A.

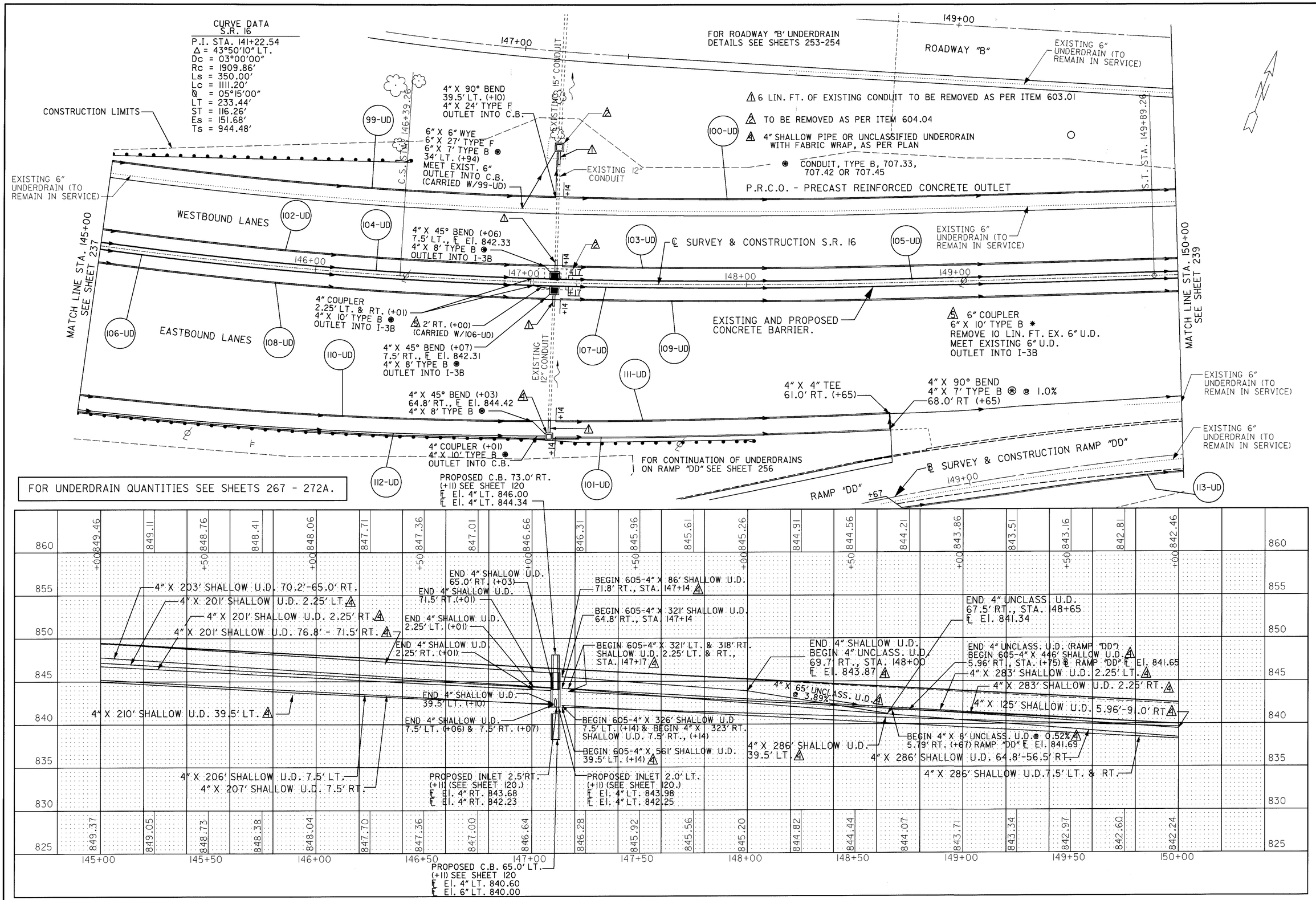

HORIZONTAL SCALE IN FEET
0 10 20 40

CALCULATED R.J.G. 3-13-95
CHECKED A.L. 3-16-95

UNDERDRAIN DETAILS
STA. 145+00 TO STA. 150+00

LIC-16-19.72

L016UD10.DGN 05/03/95

FOR UNDERDRAIN QUANTITIES SEE SHEETS 267-272A.

CURVE DATA
ROADWAY "B"
PI STA. 155+97.81
Δ = 05°13'50" LT.
Dc = 01°00'00"
R = 5279.58'
L = 523.06'
T = 261.71'
E = 5.97'

EXISTING CURB (TO BE REMOVED)
EXISTING 18" CONDUIT
EXISTING MANHOLE
EXISTING 18" CONDUIT
END WORK ROADWAY "B" STA. 153+46.67
EXISTING CATCH BASIN
BEGIN DECELERATION LANE STA. 153+46.67 (SEE MAINLINE TYPICAL)
EXISTING 10" CONDUIT
EXISTING 12" CONDUIT
CONSTRUCTION LIMITS
EXISTING 24" CONDUIT
℄ SURVEY & CONSTRUCTION, ROADWAY B
FOR ROADWAY "B" UNDERDRAIN DETAILS SEE SHEET 253-254.
ROADWAY "B"
EXISTING 12" CONDUIT
EXISTING 6" UNDERDRAIN
EXISTING 6" UNDERDRAIN (TO REMAIN IN SERVICE)
6" X 45° WYE 34' LT. (+28) 6" X 10' TYPE B ⊛ 6" X 26' TYPE F MEET EXIST. 6" OUTLET INTO C.B. (CARRIED W/114-UD)
EXISTING 6" UNDERDRAIN
4" X 45° BEND 7.5' LT.,(+40) OUTLET INTO I-3B 4" X 6' TYPE B ⊛
4" X 4" TEE, 43.5' LT. 4" X 10' TYPE F,(+00) OUTLET INTO C.B.
4" X 90° BEND (+44) 4" X 11' TYPE B ⊛ 43.5' LT.
EXISTING 6" UNDERDRAIN (TO REMAIN IN SERVICE)
6" COUPLER 6" X 10' TYPE B ⊛ REMOVE 10 LIN. FT. EX. 6" U.D. MEET EXISTING 6" U.D. OUTLET INTO I-3B
4" X 90° BEND (+44) 32.5' LT.
6" X 90° BEND 6" X 8' TYPE B ⊛ 6" X 11' TYPE F 34' LT. (+28) MEET EXIST. 6" OUTLET INTO C.B. (CARRIED W/114-UD)
6" X 45° BEND 6" X 11' TYPE B ⊛ 6" X 12' TYPE F 34' LT. (+12) ℄ El. 835.00± OUTLET INTO C.B. (CARRIED W/114-UD)
EXISTING 6" UNDERDRAIN (TO REMAIN IN SERVICE)
4" COUPLER 4" X 10' TYPE B ⊛ OUTLET INTO I-3B 2.25' LT. & RT.(+35)
2' RT. (+35) (CARRIED W/117-UD)
WESTBOUND LANES
N 68°20'10" E
EXISTING & PROPOSED CONCRETE BARRIER
℄ SURVEY & CONSTRUCTION S.R. 16
MATCH LINE STA. 238 SEE SHEET 239
MATCH LINE STA. 155+00 SEE SHEET 240
4" X 45° BEND 7.5' RT.,(+37) OUTLET INTO I-3B 4" X 11' TYPE B ⊛
EASTBOUND LANES
6" X 45° BEND 57' RT. (+41) 6" X 8' TYPE B ⊛ MEET EXIST. 6' OUTLET INTO C.B. (CARRIED W/123-UD)
4" X 45° BEND 4" X 12' TYPE B ⊛ 56.5' RT. (+35) OUTLET INTO C.B.
EXISTING CATCH BASIN (TO BE ABANDONED AND CONNECT THRU)
EXISTING 6" UNDERDRAIN (TO BE REMOVED)
RAMP "DD"
EXISTING CURB (TO BE REMOVED)
EXISTING 15" CONDUIT
6" X 45° BEND 6" X 9 TYPE B ⊛ 78.3' RT. (+25) MEET EXIST. 6" OUTLET INTO C.B. (CARRIED W/124-UD)
EXISTING 6" UNDERDRAIN (TO REMAIN IN SERVICE)
4" X 4" COUPLER 4" X 10' TYPE B ⊛ OUTLET INTO I-2A 79.5' RT. (+20)
EXISTING 15" CONDUIT
6 LIN. FT. OF EXISTING CONDUIT TO BE REMOVED AS PER ITEM 603.01
TO BE REMOVED AS PER ITEM 604.04
4" SHALLOW PIPE OR UNCLASSIFIED UNDERDRAIN WITH FABRIC WRAP, AS PER PLAN
⊛ CONDUIT, TYPE B, 707.33, 707.42 OR 707.45
EXISTING 6" UNDERDRAIN (TO REMAIN IN SERVICE)
EXISTING CURB (TO BE REMOVED)
CONSTRUCTION LIMITS

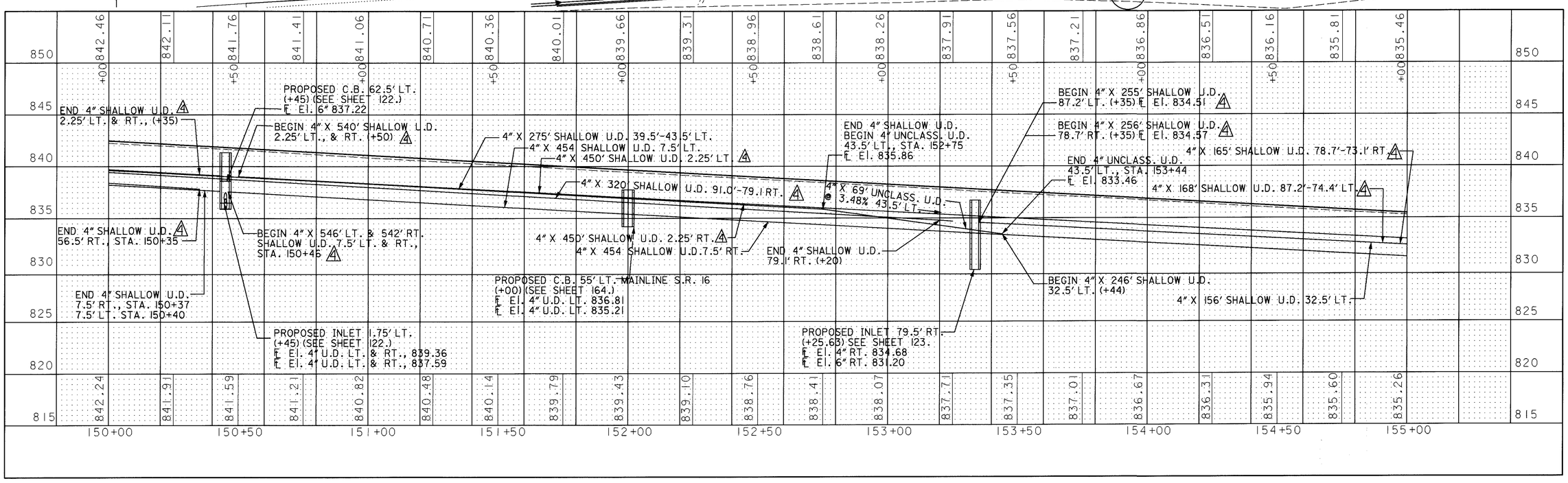

HORIZONTAL SCALE IN FEET 0 10 20 40

CALCULATED R.J.G. 5-13-95
CHECKED A.L.L. 5-16-95

UNDERDRAIN DETAILS STA. 150+00 TO STA. 155+00

LIC-16-19.72

L016UD11.DGN 05/03/95

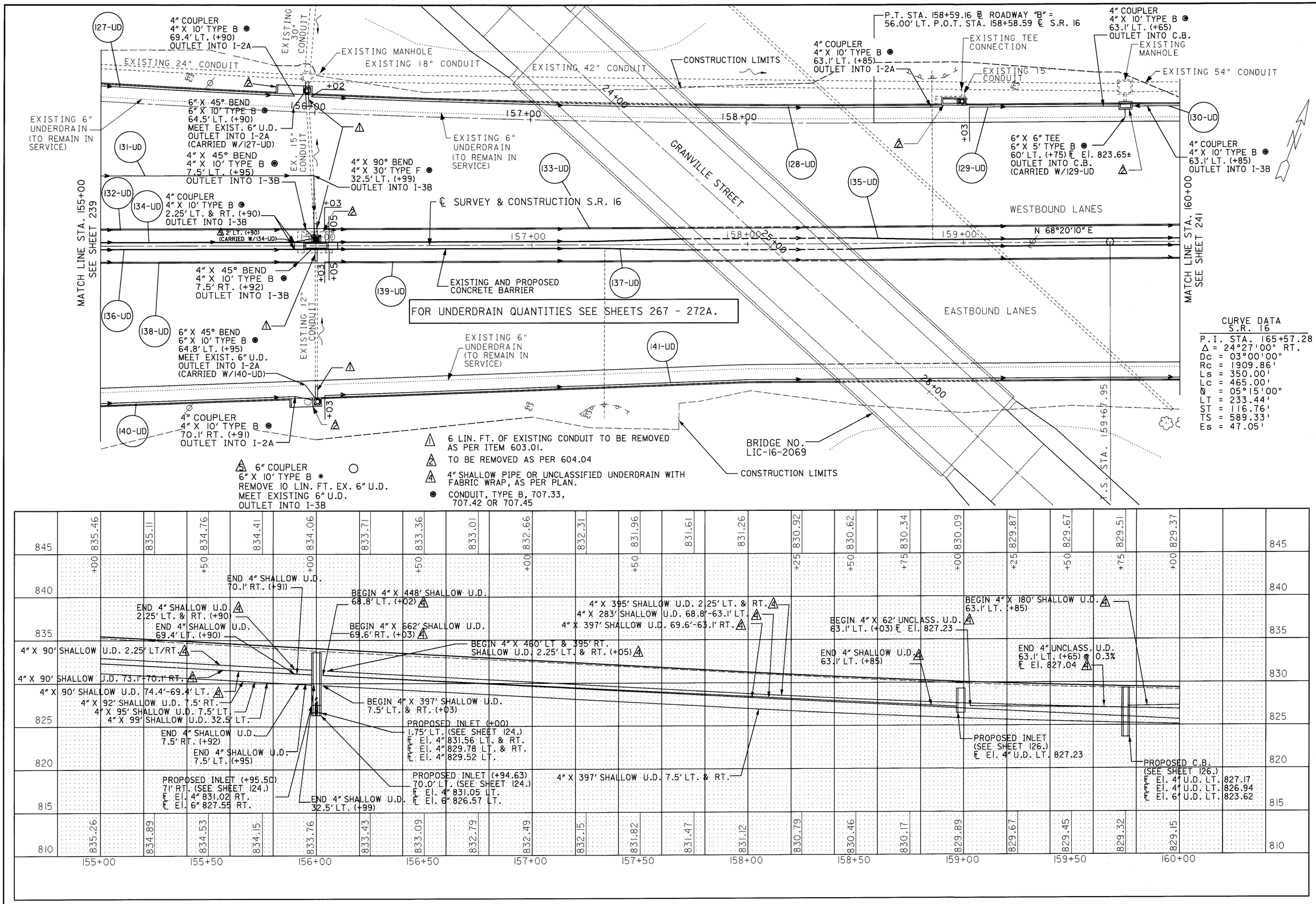

HORIZONTAL SCALE IN FEET 0 10 20 40

CALCULATED R.J.G. 3-13-95
CHECKED A.L.L. 3-16-95

UNDERDRAIN DETAILS STA. 155+00 TO STA. 160+00

LIC-16-19.72

L016UD12.DGN 5/03/95

FOR UNDERDRAIN QUANTITIES SEE SHEETS 267 - 272A.

CONSTRUCTION LIMITS

142-UD

EXISTING MANHOLE

EXISTING 18" CONDUIT (TO BE REMOVED)

EXISTING 24" CONDUIT

4" COUPLER
4" X 10' TYPE B ⊛
65.7' LT. (+77)
OUTLET INTO I-2A

143-UD

EXISTING MANHOLE

EXISTING 54" CONDUIT

EXISTING 54" CONDUIT

+65

+75

EXISTING 6" UNDERDRAIN (TO REMAIN IN SERVICE)

4" X 4" TEE
7.5' LT. (+75)
4" X 8' TYPE B ⊛
OUTLET INTO I-3B

4" COUPLER
4" X 10' TYPE B ⊛
2.25' LT. (+85)
OUTLET INTO I-3B

EXISTING 15" CONDUIT

4" X 45° BEND
4" X 7' TYPE B ⊛
7.5' LT. (+74)
OUTLET INTO I-3B

℄ SURVEY & CONSTRUCTION S.R. 16

EXISTING 27" CONDUIT

145-UD

WESTBOUND LANES

MATCH LINE STA. 160+00
SEE SHEET 240

4" COUPLER
4" X 10' TYPE B ⊛
2.25' LT. (+65)
OUTLET INTO I-3B

146-UD

144-UD

EXISTING 12" CONDUIT (TO BE REMOVED AS PER ITEM 603.1)

2' LT. (+65) (CARRIED W/146-UD)

+57

+65

2' LT. (+79) (CARRIED W/148-UD)

161+00

162+00

163+00

164+00

2' RT. (+85) (CARRIED W/149-UD)

4" X 4" TEES (+75)
2.25' & 7.5' RT.
4" X 8' TYPE B ⊛
4" X 3' TYPE B ⊛
OUTLET INTO I-3B

149-UD

152-UD

147-UD

4" COUPLER
4" X 10' TYPE B ⊛
2.25' LT. & RT. (+79)
OUTLET INTO I-3B

148-UD

151-UD

EXISTING & PROPOSED CONCRETE BARRIER

6" X 45° BEND
6" X 8' TYPE B ⊛
56.5' RT. (+25)
OUTLET INTO C.B.
(CARRIED W/ 153-UD
MEET EXIST. 6"

EXISTING 6" UNDERDRAIN (TO REMAIN IN SERVICE)

6" X 45° BEND
6" X 8' TYPE B ⊛
0.5' RT. (+35) ℄ RAMP "C"
OUTLET INTO C.B.
(CARRIED UNDER 150-UD)
MEET EXIST. 6"

EASTBOUND LANES

℄ SURVEY & CONSTRUCTION RAMP "C" @ MT. VERNON RD.

MATCH LINE STA. 165+00
SEE SHEET 242

6 LIN. FT. OF EXISTING CONDUIT TO BE REMOVED AS PER TIEM 603.01

TO BE REMOVED AS PER ITEM 604.04

4" SHALLOW PIPE OR UNCLASSIFIED UNDERDRAIN WITH FABRIC WRAP, AS PER PLAN

⊛ CONDUIT, TYPE B, 707.33, 707.42 OR 707.45

153-UD

4" COUPLER
4" X 10' TYPE B ⊛
63.1' RT. (+65)
OUTLET INTO C.B.

EXISTING 21" CONDUIT (TO BE REMOVED AS PER ITEM 603.01)

SC STA. 163+17.95

4" COUPLER
4" X 10' TYPE B ⊛
7.1' RT. (+35) ℄ RAMP "C"
OUTLET INTO C.B.

150-UD

EXISTING 6" UNDERDRAIN (TO REMAIN IN SERVICE)

+75

P.C. STA. 163+23.97 ℄ RAMP "C" @ MT. VERNON RD. =
56.00' RT. P.O.C. STA. 163+23.97 ℄ S.R. 16

PROPOSED INLET
(SEE SHEET 127.)
℄ El. 4" U.D. LT. 826.54
℄ El. 4" U.D. RT. 826.45
℄ El. 4" U.D. LT. 826.34
℄ El. 4" U.D. LT. & RT. 824.54

6" COUPLER
6" X 10' TYPE B ⊛
REMOVE 10 LIN. FT. EX. 6" U.D.
MEET EXISTING 6" U.D.
OUTLET INTO I-3B

PROPOSED INLET 2.5' LT.
(+69) (SEE SHEET 127.)
℄ El. 4" U.D. LT. 824.89
℄ El. 4" U.D. LT. 826.60

PROPOSED INLET 2.0' RT.
(+69) (SEE SHEET 127.)
℄ El. 4" U.D. RT. 826.70

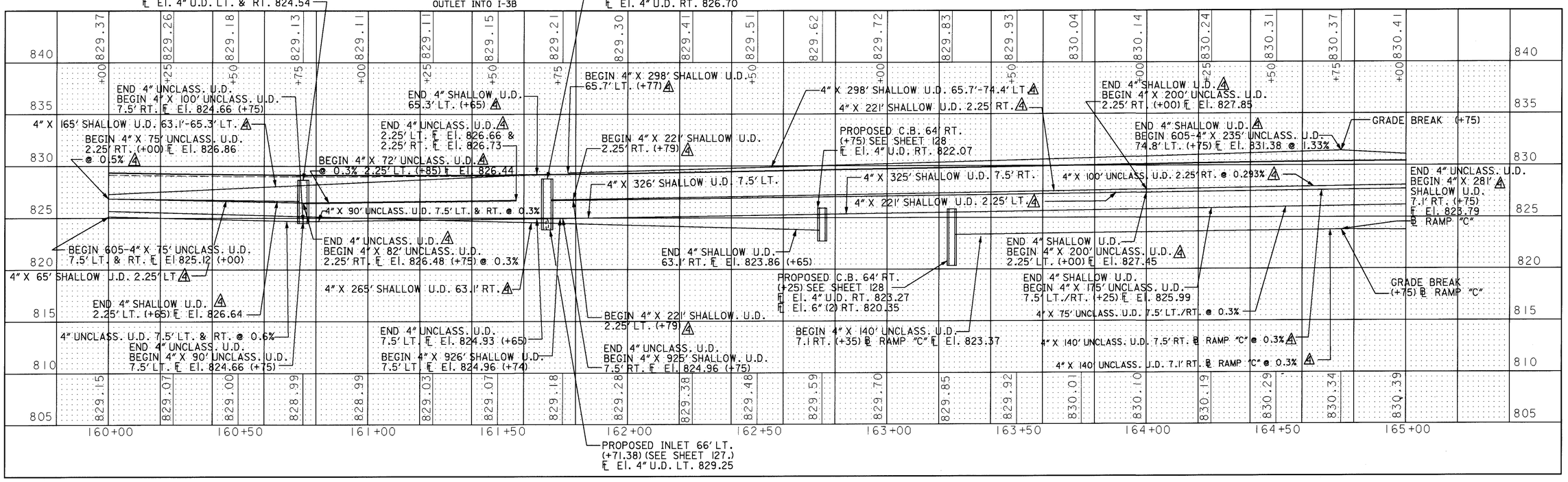

HORIZONTAL SCALE IN FEET
0 10 20 40

CALCULATED R.J.G. 3-13-95
CHECKED A.L.L. 3-16-95

UNDERDRAIN DETAILS STA. 160+00 TO STA. 165+00

LIC-16-19.72

L016UD13.DGN 5/03/95

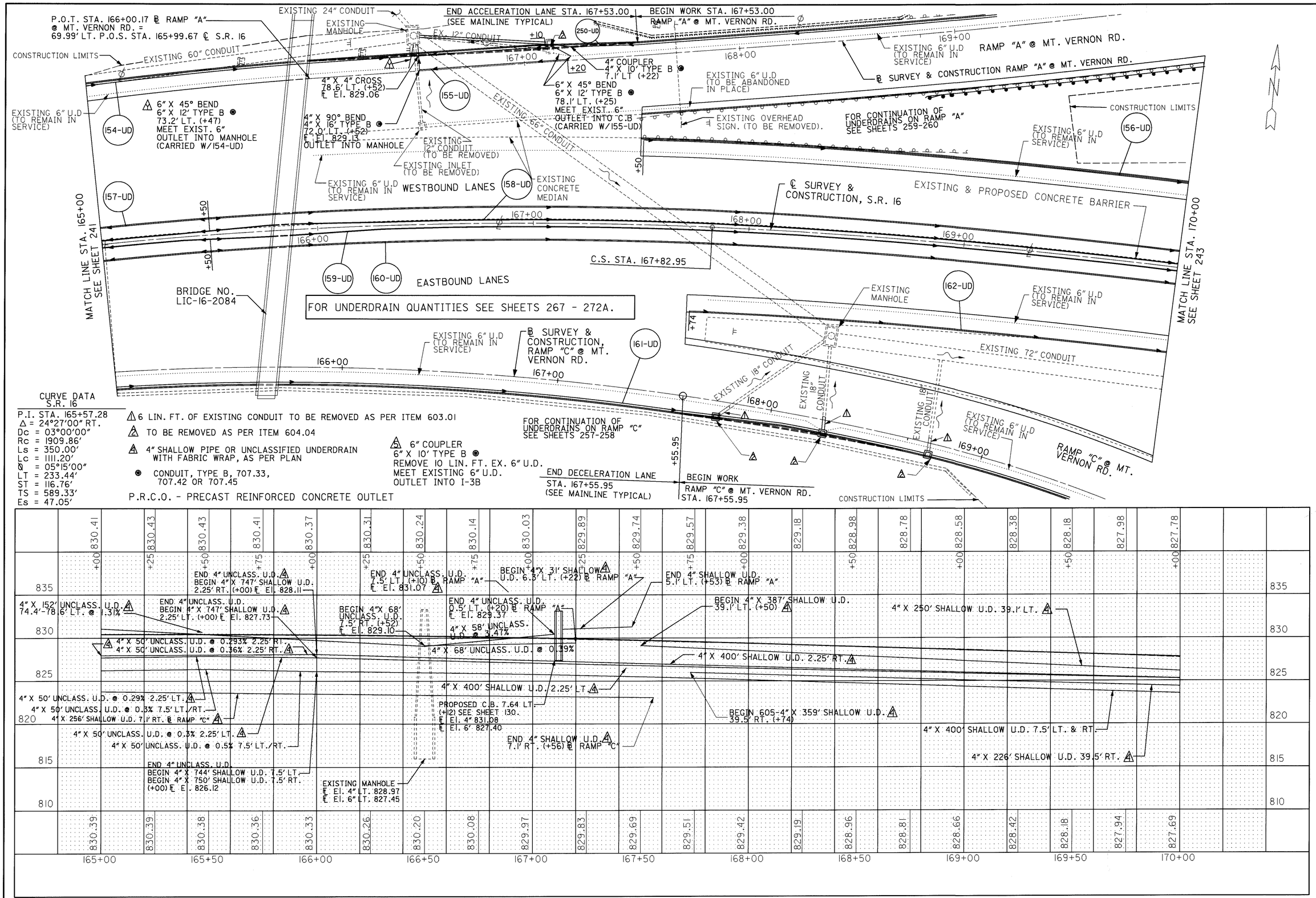
P.O.T. STA. 166+00.17 ℄ RAMP "A" @ MT. VERNON RD. = 69.99' LT. P.O.S. STA. 165+99.67 ℄ S.R. 16
EXISTING 24" CONDUIT
EXISTING MANHOLE
END ACCELERATION LANE STA. 167+53.00 (SEE MAINLINE TYPICAL)
BEGIN WORK STA. 167+53.00 RAMP "A" @ MT. VERNON RD.
EX. 12" CONDUIT
250-UD
CONSTRUCTION LIMITS
EXISTING 60" CONDUIT
4" X 4" CROSS 78.6' LT. (+52) ℄ El. 829.06
4" COUPLER 4" X 10' TYPE B ⊛ 7.1' LT (+22)
6" X 45° BEND 6" X 12' TYPE B ⊛ 78.1' LT. (+25) MEET EXIST. 6" OUTLET INTO C.B (CARRIED W/155-UD)
155-UD
EXISTING 66" CONDUIT
EXISTING 6" U.D (TO REMAIN IN SERVICE)
RAMP "A" @ MT. VERNON RD.
℄ SURVEY & CONSTRUCTION RAMP "A" @ MT. VERNON RD.
EXISTING 6" U.D (TO BE ABANDONED IN PLACE)
EXISTING 6" U.D (TO REMAIN IN SERVICE)
154-UD
6" X 45° BEND 6" X 12' TYPE B ⊛ 73.2' LT. (+47) MEET EXIST. 6" OUTLET INTO MANHOLE (CARRIED W/154-UD)
4" X 90° BEND 4" X 16' TYPE B ⊛ 72.0' LT. (+52) ℄ El. 829.13 OUTLET INTO MANHOLE
EXISTING 12" CONDUIT (TO BE REMOVED)
EXISTING INLET (TO BE REMOVED)
EXISTING OVERHEAD SIGN. (TO BE REMOVED).
FOR CONTINUATION OF UNDERDRAINS ON RAMP "A" SEE SHEETS 259-260
CONSTRUCTION LIMITS
156-UD
157-UD
158-UD
EXISTING CONCRETE MEDIAN
WESTBOUND LANES
℄ SURVEY & CONSTRUCTION, S.R. 16
EXISTING & PROPOSED CONCRETE BARRIER
MATCH LINE STA. 165+00 SEE SHEET 241
MATCH LINE STA. 170+00 SEE SHEET 243
C.S. STA. 167+82.95
159-UD
160-UD
EASTBOUND LANES
BRIDGE NO. LIC-16-2084
FOR UNDERDRAIN QUANTITIES SEE SHEETS 267 - 272A.
EXISTING MANHOLE
162-UD
EXISTING 6" U.D (TO REMAIN IN SERVICE)
EXISTING 72" CONDUIT
EXISTING 6" U.D (TO REMAIN IN SERVICE)
℄ SURVEY & CONSTRUCTION, RAMP "C" @ MT. VERNON RD.
161-UD
EXISTING 18" CONDUIT
EXISTING 18" CONDUIT
EXISTING 18" CONDUIT
EXISTING 6" U.D (TO REMAIN IN SERVICE)
RAMP "C" @ MT. VERNON RD.
FOR CONTINUATION OF UNDERDRAINS ON RAMP "C" SEE SHEETS 257-258
END DECELERATION LANE STA. 167+55.95 (SEE MAINLINE TYPICAL)
BEGIN WORK RAMP "C" @ MT. VERNON RD. STA. 167+55.95
CONSTRUCTION LIMITS
CURVE DATA S.R. 16
P.I. STA. 165+57.28
Δ = 24°27'00" RT.
Dc = 03°00'00"
Rc = 1909.86'
Ls = 350.00'
Lc = 1111.20'
Θ = 05°15'00"
LT = 233.44'
ST = 116.76'
TS = 589.33'
Es = 47.05'
6 LIN. FT. OF EXISTING CONDUIT TO BE REMOVED AS PER ITEM 603.01
TO BE REMOVED AS PER ITEM 604.04
4" SHALLOW PIPE OR UNCLASSIFIED UNDERDRAIN WITH FABRIC WRAP, AS PER PLAN
⊛ CONDUIT, TYPE B, 707.33, 707.42 OR 707.45
6" COUPLER 6" X 10' TYPE B ⊛ REMOVE 10 LIN. FT. EX. 6" U.D. MEET EXISTING 6" U.D. OUTLET INTO I-3B
P.R.C.O. - PRECAST REINFORCED CONCRETE OUTLET
END 4" UNCLASS. U.D. BEGIN 4" X 747' SHALLOW U.D. 2.25' RT. (+00) ℄ El. 828.11
END 4" UNCLASS. U.D. 7.5' LT. (+10) ℄ RAMP "A" ℄ El. 831.07
BEGIN 4" X 31' SHALLOW U.D. 6.3' LT. (+22) ℄ RAMP "A"
END 4" SHALLOW U.D. 5.1' LT. (+53) ℄ RAMP "A"
4" X 152' UNCLASS. U.D. 74.4'-78.6' LT. @ 1.31%
END 4" UNCLASS. U.D. BEGIN 4" X 747' SHALLOW U.D. 2.25' LT. (+00) ℄ El. 827.73
BEGIN 4" X 68' UNCLASS. U.D. 7.5' RT. (+52) ℄ El. 829.10
END 4" UNCLASS. U.D. 0.5' LT. (+20) ℄ RAMP "A" ℄ El. 829.37
4" X 58' UNCLASS. U.D. @ 3.47%
BEGIN 4" X 387' SHALLOW U.D. 39.1' LT. (+50)
4" X 250' SHALLOW U.D. 39.1' LT.
4" X 50' UNCLASS. U.D. @ 0.293% 2.25' RT.
4" X 50' UNCLASS. U.D. @ 0.36% 2.25' RT.
4" X 68' UNCLASS. U.D. @ 0.39%
4" X 400' SHALLOW U.D. 2.25' RT.
4" X 400' SHALLOW U.D. 2.25' LT.
4" X 50' UNCLASS. U.D. @ 0.29% 2.25' LT.
4" X 50' UNCLASS. U.D. @ 0.3% 7.5' LT./RT.
4" X 256' SHALLOW U.D. 7.1' RT. ℄ RAMP "C"
PROPOSED C.B. 7.64 LT. (+12) SEE SHEET 130. ℄ El. 4" 831.08 ℄ El. 6" 827.40
BEGIN 605-4" X 359' SHALLOW U.D. 39.5' RT. (+74)
4" X 400' SHALLOW U.D. 7.5' LT. & RT.
4" X 50' UNCLASS. U.D. @ 0.3% 2.25' LT.
4" X 50' UNCLASS. U.D. @ 0.5% 7.5' LT./RT.
END 4" SHALLOW U.D. 7.1' RT. (+56) ℄ RAMP "C"
4" X 226' SHALLOW U.D. 39.5' RT.
END 4" UNCLASS. U.D. BEGIN 4" X 744' SHALLOW U.D. 7.5' LT. BEGIN 4" X 750' SHALLOW U.D. 7.5' RT. (+00) ℄ El. 826.12
EXISTING MANHOLE ℄ El. 4" LT. 828.97 ℄ El. 6" LT. 827.45
830.41 830.43 830.43 830.41 830.37 830.31 830.24 830.14 830.03 829.89 829.74 829.57 829.38 829.18 828.98 828.78 828.58 828.38 828.18 827.98 827.78
830.39 830.39 830.38 830.36 830.33 830.26 830.20 830.08 829.97 829.83 829.69 829.51 829.42 829.19 828.96 828.81 828.66 828.42 828.18 827.94 827.69
835 830 825 820 815 810
165+00 165+50 166+00 166+50 167+00 167+50 168+00 168+50 169+00 169+50 170+00
HORIZONTAL SCALE IN FEET
CALCULATED R.J.G. 3-13-95
CHECKED A.L.L. 3-16-95
UNDERDRAIN DETAILS
STA. 165+00 TO STA. 170+00
LIC-16-19.72
L016UD14.DGN 5/03/95

FOR UNDERDRAIN QUANTITIES SEE SHEETS 267 - 272A.

CONSTRUCTION LIMITS

EXISTING 18" CONDUIT

EXISTING 24" CONDUIT

163-UD

6" X 45° BEND
6" X 7' TYPE B ⊛
6" X 16' TYPE F
34' LT. (+38)
MEET EXIST. 6"
OUTLET INTO C.B.
(CARRIED W/163-UD)

EXISTING 6"
UNDERDRAIN (TO
REMAIN IN SERVICE)

4" X 45° BEND
4" X 18' TYPE F
(+37) 39.5' LT.
℄ El. 824.83

4" X 45° BEND
4" X 18' TYPE F
(+63) 39.5' LT.
℄ El. 824.82

6" X 45° BEND
6" X 7' TYPE B ⊛
6" X 16' TYPE F
34' LT. (+62)
MEET EXIST. 6"
OUTLET INTO C.B.
(CARRIED W/173-UD)

164-UD

EXISTING 6"
UNDERDRAIN (TO
REMAIN IN SERVICE)

℄ SURVEY & CONSTRUCTION,
MT. VERNON ROAD

CONSTRUCTION LIMITS

WESTBOUND LANES

4" X 4" TEE
4" X 5' TYPE B ⊛
7.5' LT. (+00)
℄ El. 822.90
OUTLET INTO I-3B

EXISTING 12"
CONDUIT
(TO BE REPLACED)

4" COUPLER
4" X 10' TYPE B ⊛
2.25' LT & RT. (+60)
OUTLET INTO I-3B

4" X 4" TEE
4" X 5' TYPE B ⊛
7.5' LT. (+00)
℄ El. 823.15
OUTLET INTO I-3B

4" COUPLER
4" X 10' TYPE B ⊛
2.25' LT & RT. (+10)
℄ El. 824.97
OUTLET INTO I-3B

℄ SURVEY &
CONSTRUCTION, S.R. 16

MATCH LINE STA. 170+00
SEE SHEET 242

MATCH LINE STA. 175+00
SEE SHEET 244

167-UD 165-UD 168-UD 169-UD 166-UD 170-UD

+47 +52 171+00 172+00 173+00 174+00 175+00

S 87°12'50" E

4" COUPLER
4" X 10' TYPE B ⊛
2.25' LT & RT. (+90)
℄ El. 824.68
OUTLET INTO I-3B

4" X 4" TEE
4" X 8' TYPE B ⊛
7.5' RT. (+00)
℄ El. 822.90
OUTLET INTO I-3B

2' LT. (+35)
(CARRIED W/172-UD)

4" X 4" TEE
4" X 8' TYPE B ⊛
7.5' RT. (+00)
℄ El. 823.15
OUTLET INTO I-3B

EXISTING 12"
CONDUIT
(TO BE REPLACED)

EXISTING & PROPOSED CONCRETE BARRIER

EXISTING 6"
UNDERDRAIN (TO
REMAIN IN SERVICE)

EASTBOUND LANES

BRIDGE NO.
LIC-16-2099

171-UD 175-UD 172-UD 173-UD 176-UD 174-UD

EXISTING 24" CONDUIT

177-UD

EXISTING 72" CONDUIT

6" X 45° BEND
6" X 7' TYPE B ⊛
6" X 16' TYPE F
34' RT. (+38)
MEET EXIST. 6"
OUTLET INTO MANHOLE
(CARRIED W/177-UD)

EXISTING 6"
UNDERDRAIN (TO
REMAIN IN SERVICE)

EXISTING
MANHOLE

EXISTING
15" CONDUIT

4" X 45° BEND
4" X 20' TYPE F
(+62) 39.5' RT.
℄ El. 824.43

6" X 45° BEND
6" X 7' TYPE B ⊛
6" X 18' TYPE F
34' RT. (+62)
MEET EXIST. 6"
OUTLET INTO MANHOLE
(CARRIED W/178-UD)

178-UD

EXISTING 72" CONDUIT

CONSTRUCTION
LIMITS

EXISTING
MANHOLE

25+00

CURVE DATA
S.R. 16

P.I. STA. 165+57.28
Δ = 24°27'00" RT.
Dc = 03°00'00"
Rc = 1909.86'
Ls = 350.00'
Lc = 1111.20'
Ø = 05°15'00"
LT = 233.44'
ST = 116.76'
TS = 589.33'
Es = 47.05'

4" X 45° BEND
4" X 20' TYPE F
(+33) 39.5' RT.
℄ El. 822.17

EXISTING
CATCH BASIN

S.T. STA. 171+32.95

1 6 LIN. FT. OF EXISTING CONDUIT TO BE REMOVED AS PER ITEM 603.01

2 TO BE REMOVED AS PER ITEM 604.04

4 4" SHALLOW PIPE OR UNCLASSIFIED UNDERDRAIN WITH FABRIC WRAP, AS PER PLAN

⊛ CONDUIT, TYPE B, 707.33, 707.42 OR 707.45

P.R.C.O. - PRECAST REINFORCED CONCRETE OUTLET

5 6" COUPLER
6" X 10' TYPE B ⊛
REMOVE 10 LIN. FT. EX. 6" U.D.
MEET EXISTING 6" U.D.
OUTLET INTO I-3B

PROPOSED INLET 1.75' LT.
(+50) SEE SHEET 132.
℄ El. 4" U.D. LT. & RT. 824.36
℄ El. 4" U.D. LT. & RT. 824.17

827.78 827.58 827.38 827.24 827.15 827.12 827.16 827.25 827.40 827.61 827.88 828.21 828.60 829.05 829.56 830.12 830.75 831.44 832.18 832.98 833.78

+00 +50 +75 +00 +25 +50 +75 +00 +25 +50 +75 +00 +25 +50 +75 +00 +25 +50 +00

840 835 830 825 820 815

END 4" UNCLASS. U.D.
2.25' LT. & RT. (+40)
℄ El. 824.27 4

END 4" SHALLOW U.D. 4
39.5' LT. (+37)

BEGIN 4" X 29' 4
SHALLOW U.D.(+60)
2.25' LT. & RT.
℄ El. 824.46

BEGIN 4" X 703' SHALLOW U.D.
39.5' RT. (+62) 4

4" X 337' SHALLOW U.D. 39.5' LT. 4

4" X 290' SHALLOW U.D. 2.25' LT. & RT. 4

4" X 338' SHALLOW U.D. 39.5' RT. 4

BEGIN 4" X 34'
UNCLASS. U.D.(+06) 4
2.25' LT. & RT.
℄ El. 824.37 @ 0.3%

BEGIN 4" X 671'
SHALLOW U.D.
39.5' LT. (+63)
℄ El. 824.82 4

BEGIN 4" X 637' SHALLOW U.D.
2.25' LT. & RT. (+10) 4

4" X 83' UNCLASS. U.D. 39.5' RT. @ 2.41% 4

4" X 137' SHALLOW U.D. 39.1'-39.5' LT. 4

4" X 106' SHALLOW U.D.
2.25' LT.& RT. 4

END 4" SHALLOW U.D.
2.25' LT. & RT. (+90) 4

END 4" UNCLASS. U.D.
7.5' LT & RT. (+47)
℄ El. 823.04

BEGIN 4" X 48' UNCLASS. U.D.
7.5' LT. & RT. (+52) ℄ El. 823.29

PROPOSED INLET 1.75' LT.
(+00) SEE SHEET 132
℄ El. 4" U.D. LT. & RT. 824.87
℄ El. 4" U.D. LT. & RT. 823.00

4" X 343' SHALLOW U.D. 7.5' RT. 4

4" X 300' SHALLOW U.D 7.5' LT. 4

END 4" SHALLOW U.D.
BEGIN 4" X 83'
UNCLASS. U.D.
39.5' RT (+50)
℄ El. 824.17 4

END 4" SHALLOW U.D. LT. & RT.
BEGIN 4" X 47' UNCLASS U.D. @ 0.3%
7.5' LT. & RT. (+00) ℄ El. 822.90

END 4" UNCLASS. U.D.
7.5' LT & RT. (+47)
℄ El. 822.17

END 4" UNCLASS. U.D.
BEGIN 4" X 644' LT. & 650' RT.
SHALLOW U.D. 7.5' LT. & RT.
(+00) ℄ El. 823.15

END 4" SHALLOW U.D.
2.25' LT. & RT. (+94)
℄ El. 824.59 4

4" X 100' SHALLOW U.D. 7.5' LT. & RT.

827.69 827.55 827.41 827.24 827.07 826.93 827.00 827.19 827.38 827.54 827.69 828.10 828.51 828.96 829.41 830.00 830.59 831.33 832.06 832.85 833.64

170+00 170+50 171+00 171+50 172+00 172+50 173+00 173+50 174+00 174+50 175+00

PROPOSED INLET 1.75' LT.
(+00) SEE SHEET 132
℄ El. 4" U.D. LT. & RT. 824.58
℄ El. 4" U.D. LT. & RT. 822.85

PROPOSED C.B. 53' LT.
(+50) SEE SHEET 132
℄ El. 4" U.D. LT. (2) 824.65
℄ El. 6" LT. 822.16
℄ El. 6" LT. 822.49

EXISTING M.H. 55' RT.
(+50) SEE SHEET 132
℄ El. 4" U.D. RT. 822.51
℄ El. 4" U.D. RT. 821.97
℄ El. 6" RT. 820.91 & 820.77

HORIZONTAL SCALE IN FEET
0 10 20 40

CALCULATED R.J.G. 3-13-95
CHECKED A.L.L. 3-16-95

UNDERDRAIN DETAILS
STA. 170+00 TO STA. 175+00

LIC-16-19.72

L016UD15.DGN 05/03/95

FOR UNDERDRAIN QUANTITIES SEE SHEETS 267 - 272A.

CURVE DATA
S.R. 16

PI STA=178+79.86
△= 05°10'09" LT.
Dc= 01°00'00"
T=258.63
R=5729.58
L=516.92
E=5.83

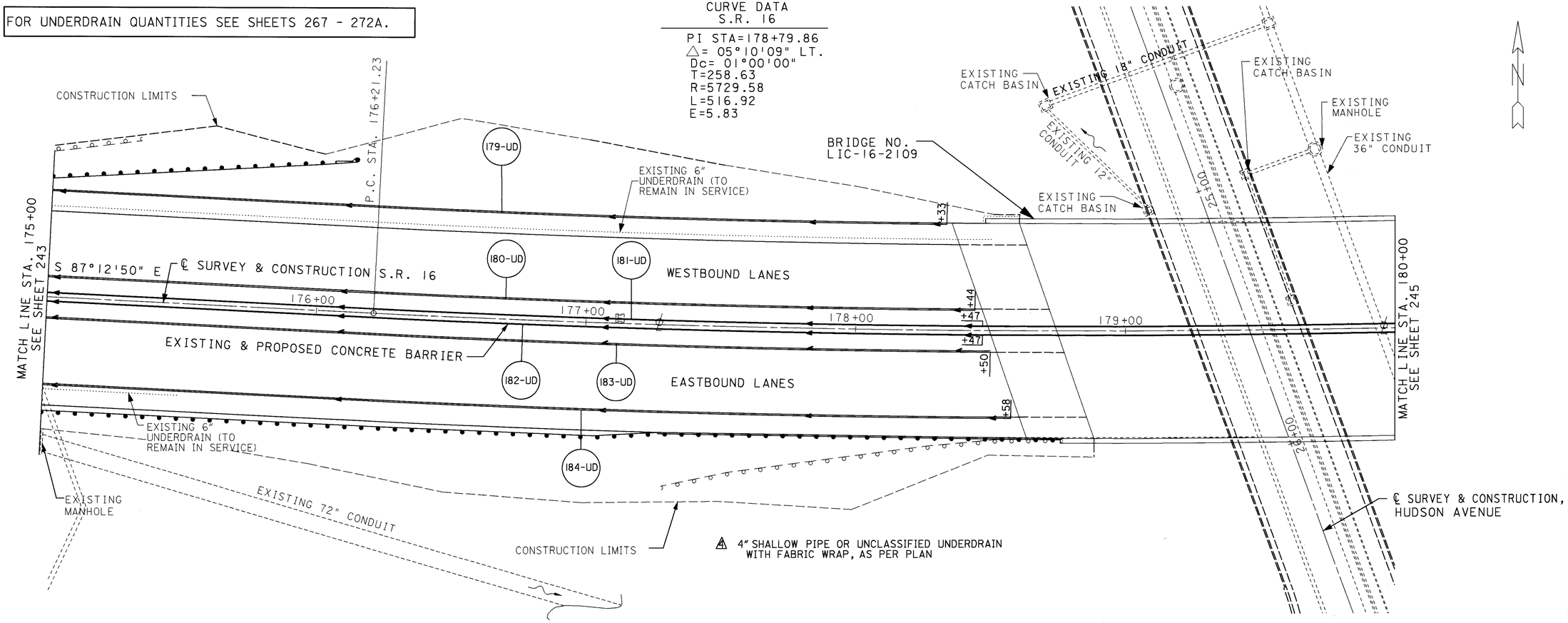

CALCULATED R.J.G. 3-13-95
CHECKED A.L.L. 3-16-95

HORIZONTAL SCALE IN FEET 0 10 20 40

UNDERDRAIN DETAILS STA. 175+00 TO STA. 180+00

LIC-16-19.72

LO16UD16.DGN 05/03/95

FOR UNDERDRAIN QUANTITIES SEE SHEETS 267 - 272A.

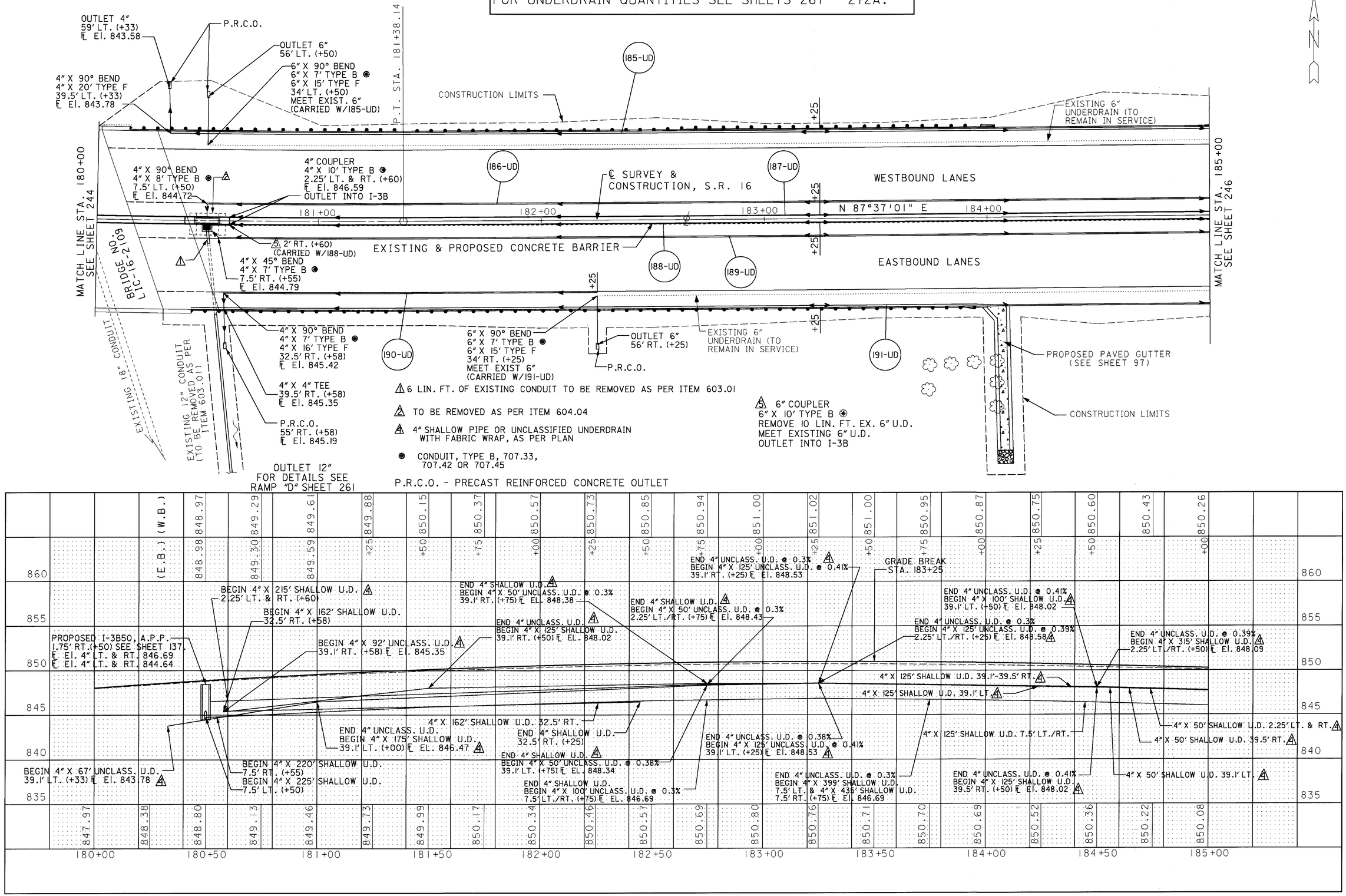

HORIZONTAL SCALE IN FEET 0 10 20 40

CALCULATED R.J.G. 3-13-95
CHECKED A.L.L. 3-16-95

UNDERDRAIN DETAILS STA. 180+00 TO STA. 185+00

LIC-16-19.72

L016UD17.DGN 05/03/95

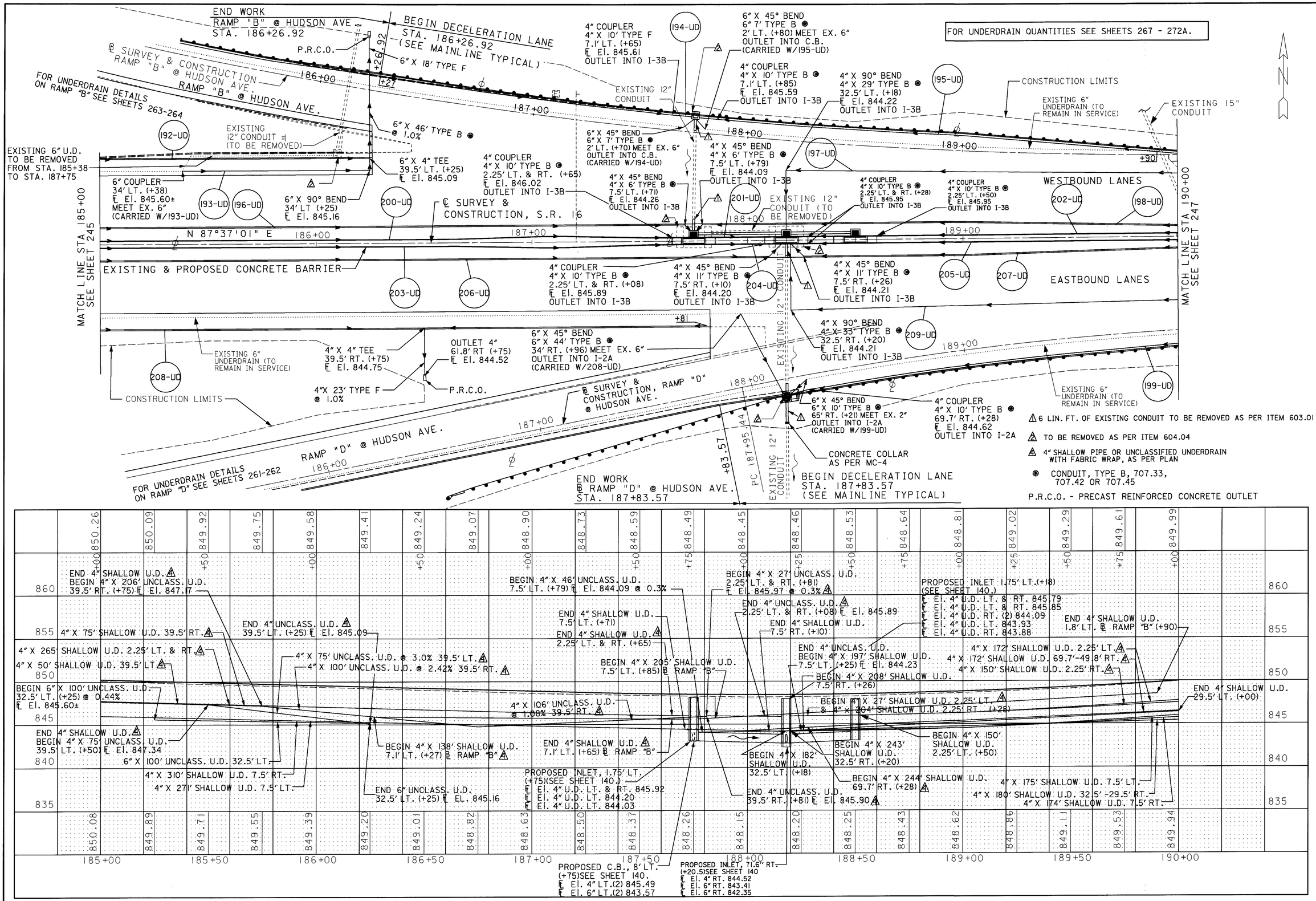

HORIZONTAL SCALE IN FEET 0 10 20 40

CALCULATED R.J.G. 3-13-95
CHECKED A.L.L. 5-16-95

UNDERDRAIN DETAILS STA. 185+00 TO STA. 190+00

LIC-16-19.72

L016UD18.DGN 05/03/95

FOR UNDERDRAIN QUANTITIES SEE SHEETS 267 - 272A.

NOTE: FOR UNDERDRAIN DETAILS STA. 117+00 TO STA. 122+00 SEE SHEETS 99 & 99A

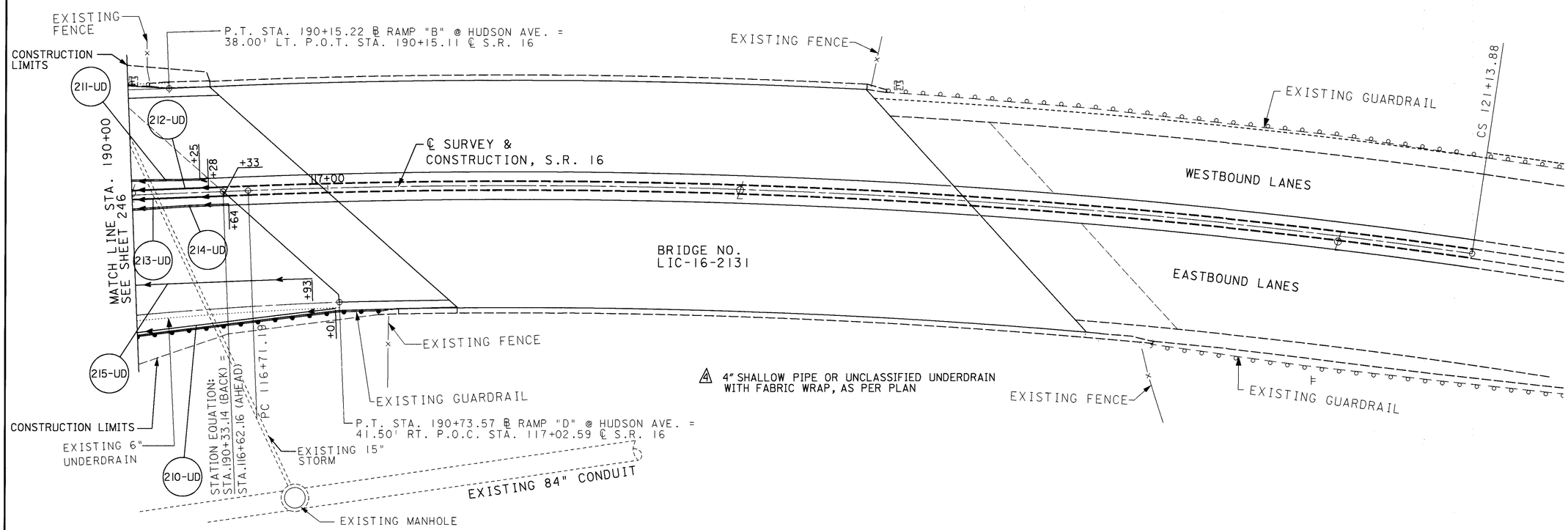

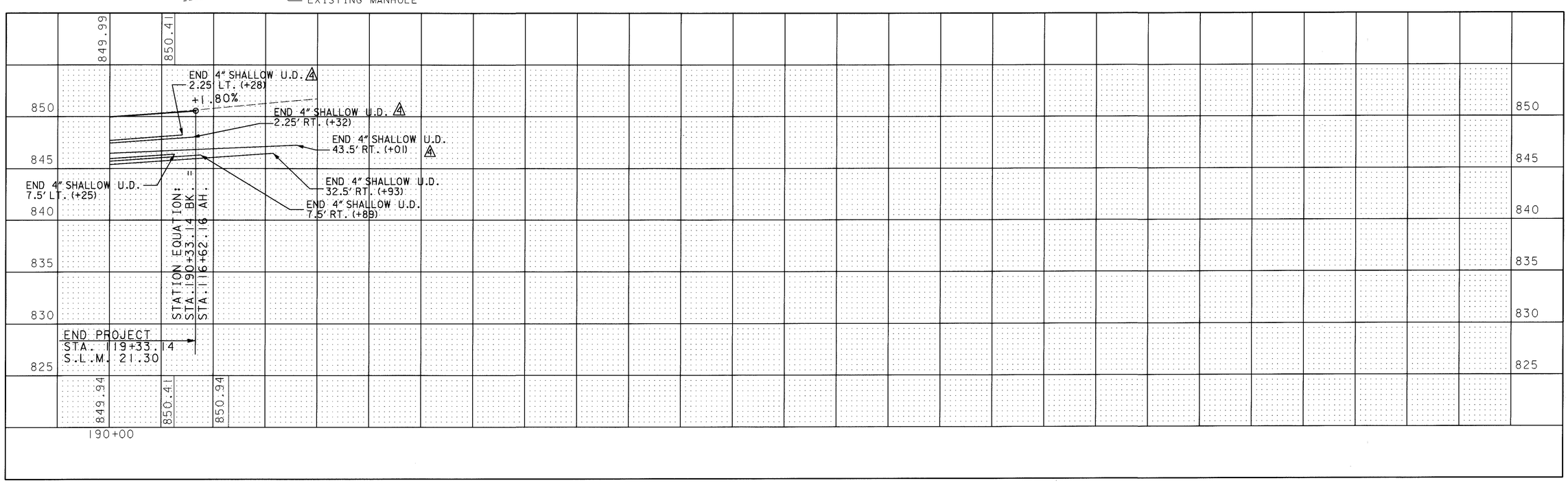

CALCULATED R.J.G. 5-15-95
CHECKED A.L.L. 5-16-95

HORIZONTAL SCALE IN FEET 0 10 20 40

UNDERDRAIN DETAILS
STA. 190+00 TO STA. 190+33.14

LIC-16-19.72

L016UD19.DGN 05/03/95

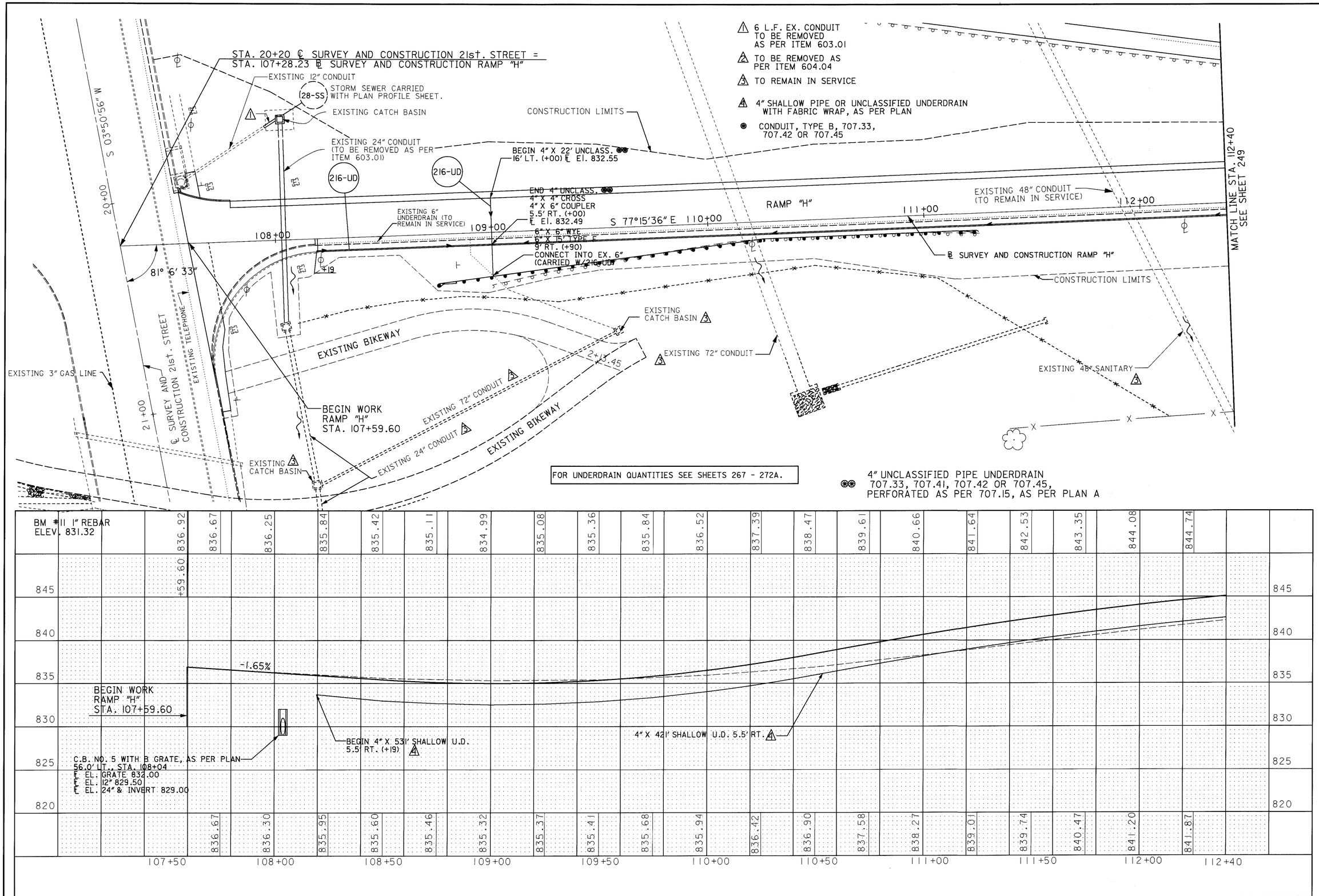

HORIZONTAL SCALE IN FEET 0 10 20 40

CALCULATED R.J.G. 3-13-95
CHECKED A.L.L. 3-16-95

UNDERDRAIN DETAILS RAMP "H"
STA. 107+59.60 TO STA. 112+40

LIC-16-19.72

L016UD22.DGN 05/08/95

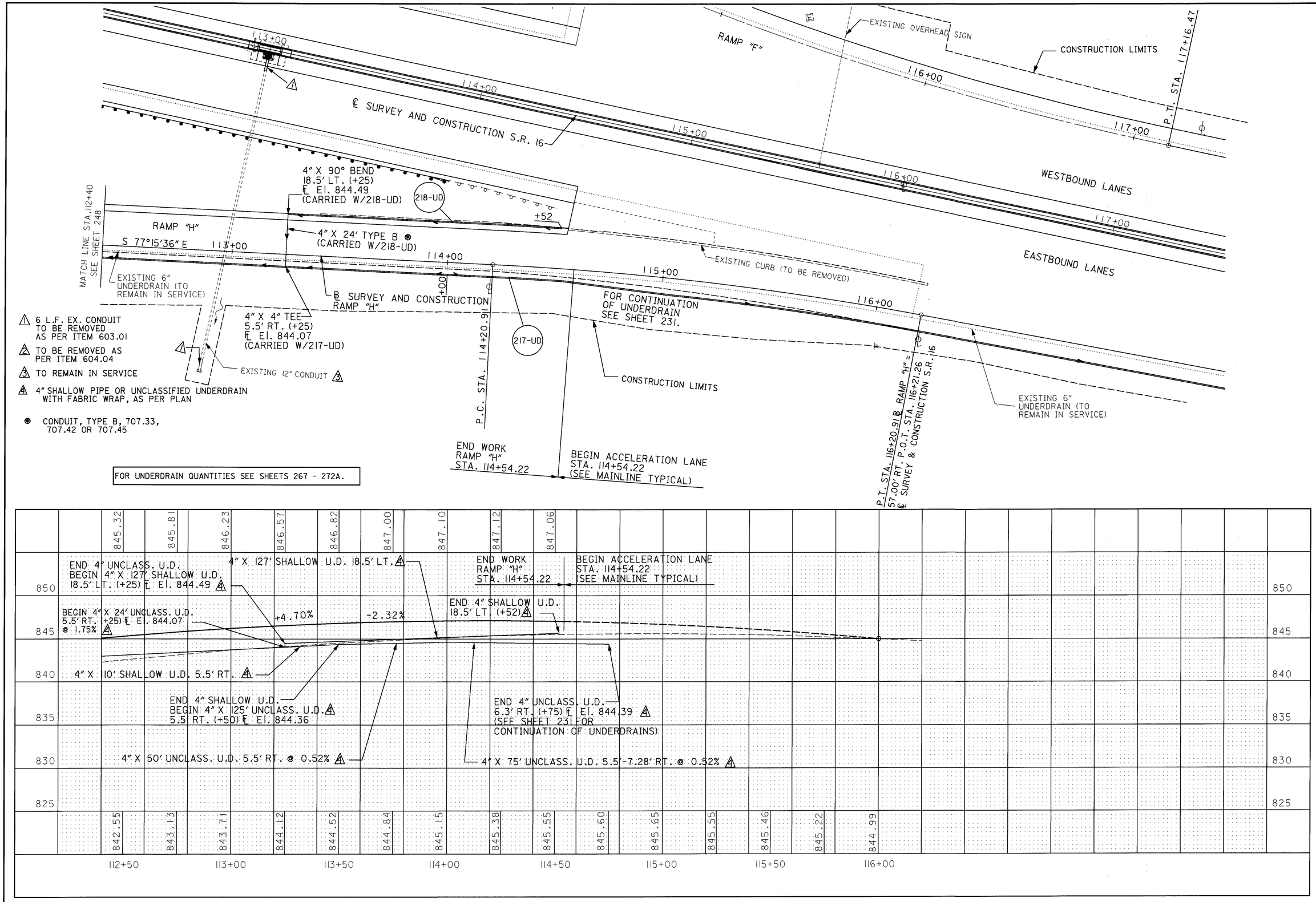

UNDERDRAIN DETAILS RAMP "H"
STA. 112+40 TO STA. 116+21.24

HORIZONTAL SCALE IN FEET 0 10 20 40

CALCULATED R.J.G. 3-13-95
CHECKED A.L.L. 3-16-95

LIC-16-19.72

L016UD23.DGN 05/03/95

FOR UNDERDRAIN QUANTITIES SEE SHEETS 267 - 272A.

1. 6 L.F. EX. CONDUIT TO BE REMOVED AS PER ITEM 603.01
2. TO BE REMOVED AS PER ITEM 604.04
3. TO REMAIN IN SERVICE
4. 4" SHALLOW PIPE OR UNCLASSIFIED UNDERDRAIN WITH FABRIC WRAP, AS PER PLAN

⊗ CONDUIT, TYPE B, 707.33, 707.42 OR 707.45

P.R.C.O. - PRECAST REINFORCED CONCRETE OUTLET

HORIZONTAL SCALE IN FEET 0 10 20 40

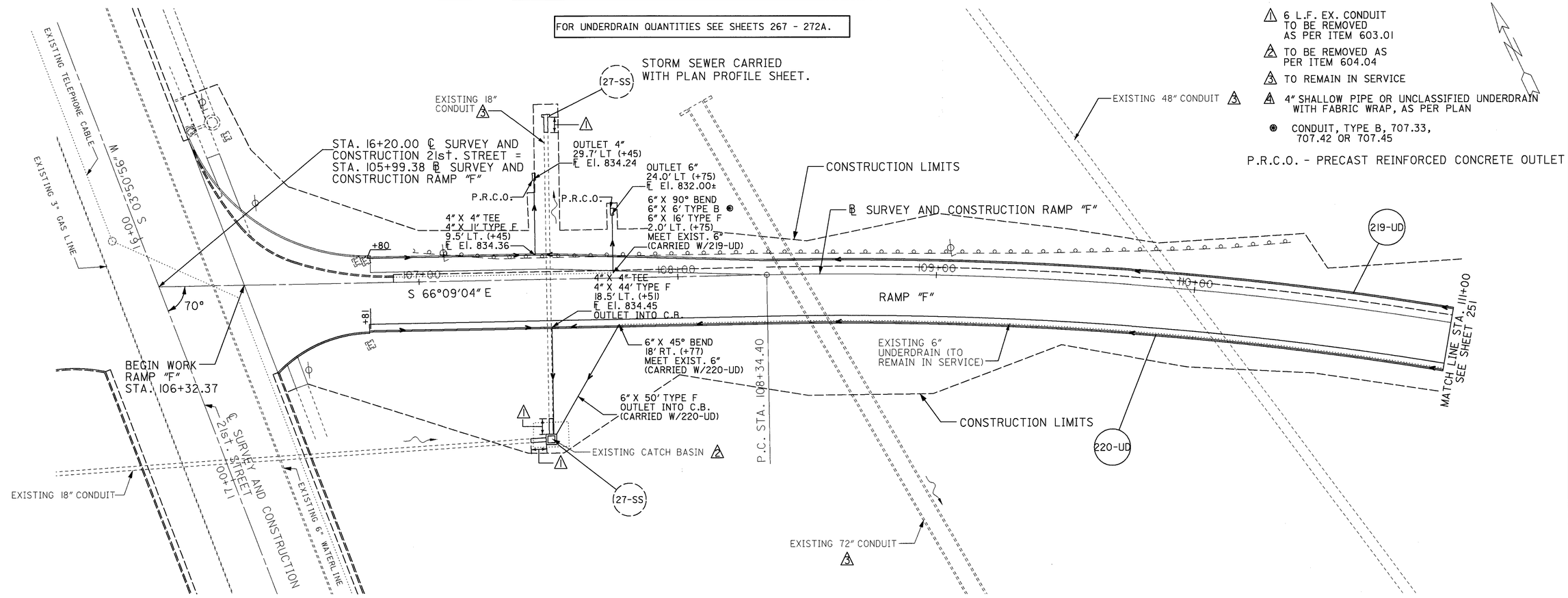

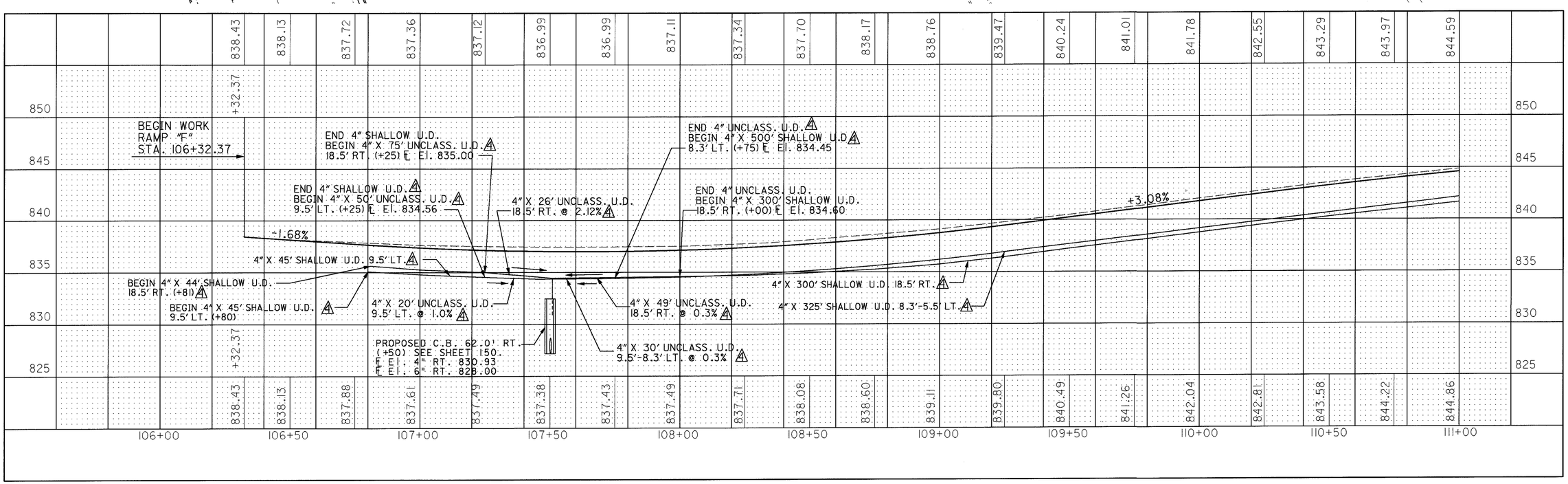

CALCULATED R.J.G. 3-13-95
CHECKED A.L. 3-16-95

UNDERDRAIN DETAILS RAMP "F"
STA. 106+32.37 TO STA. 111+00

LIC-16-19.72

L016UD20.DGN 5/03/95

1. 6 L.F. EX. CONDUIT TO BE REMOVED AS PER ITEM 603.01
2. TO BE REMOVED AS PER ITEM 604.04
3. TO REMAIN IN SERVICE
4. 4" SHALLOW PIPE OR UNCLASSIFIED UNDERDRAIN WITH FABRIC WRAP, AS PER PLAN

⊛ CONDUIT, TYPE B, 707.33, 707.42 OR 707.45

P.R.C.O. - PRECAST REINFORCED CONCRETE OUTLET

FOR UNDERDRAIN QUANTITIES SEE SHEETS 267 - 272A.

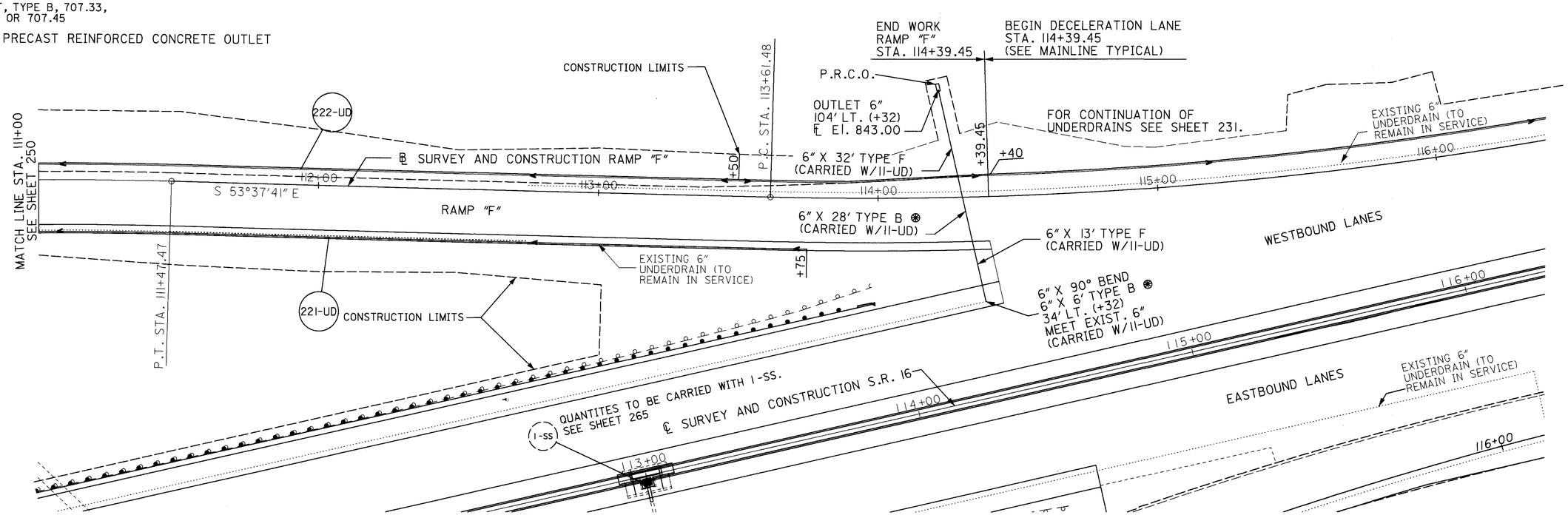

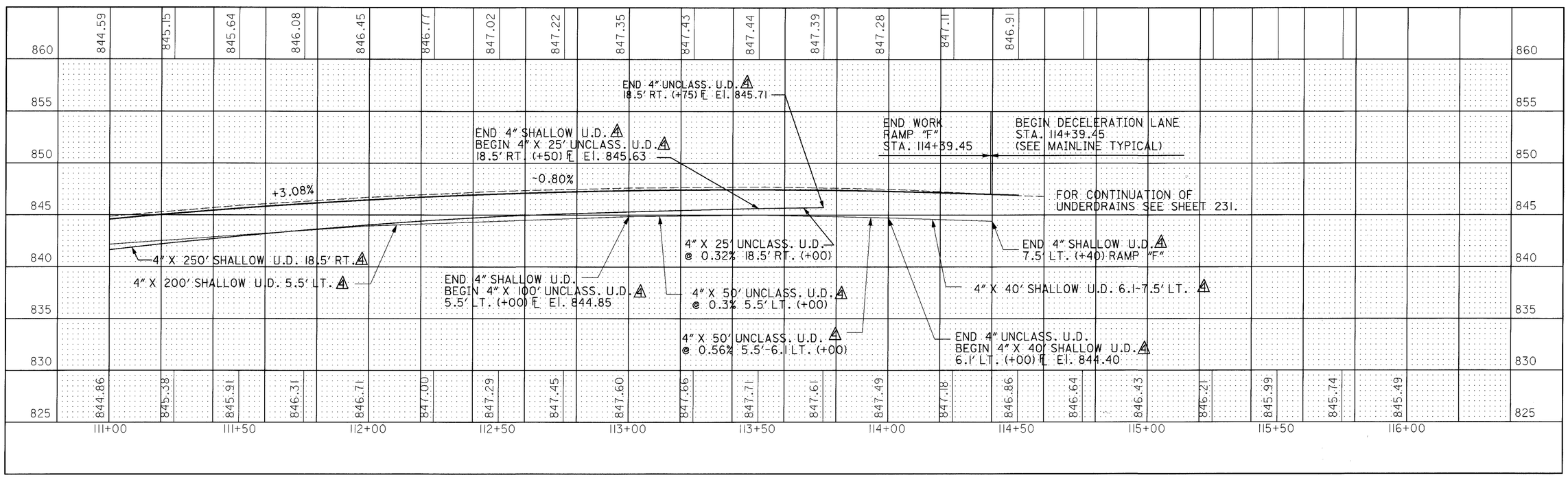

HORIZONTAL SCALE IN FEET 0 10 20 40

CALCULATED R.J.G. 3-13-95
CHECKED A.L.L. 3-16-95

UNDERDRAIN DETAILS RAMP "F"
STA. 111+00 TO STA. 114+39.40

LIC-16-19.72

L016UD21.DGN 5/03/95

FOR UNDERDRAIN QUANTITIES SEE SHEETS 267 - 272A.

1. 6 L.F. EX. CONDUIT TO BE REMOVED AS PER ITEM 603.01
2. TO BE REMOVED AS PER ITEM 604.04
3. TO REMAIN IN SERVICE
4. 4" SHALLOW PIPE OR UNCLASSIFIED UNDERDRAIN WITH FABRIC WRAP, AS PER PLAN

⊗ CONDUIT, TYPE B, 707.33, 707.42 OR 707.45

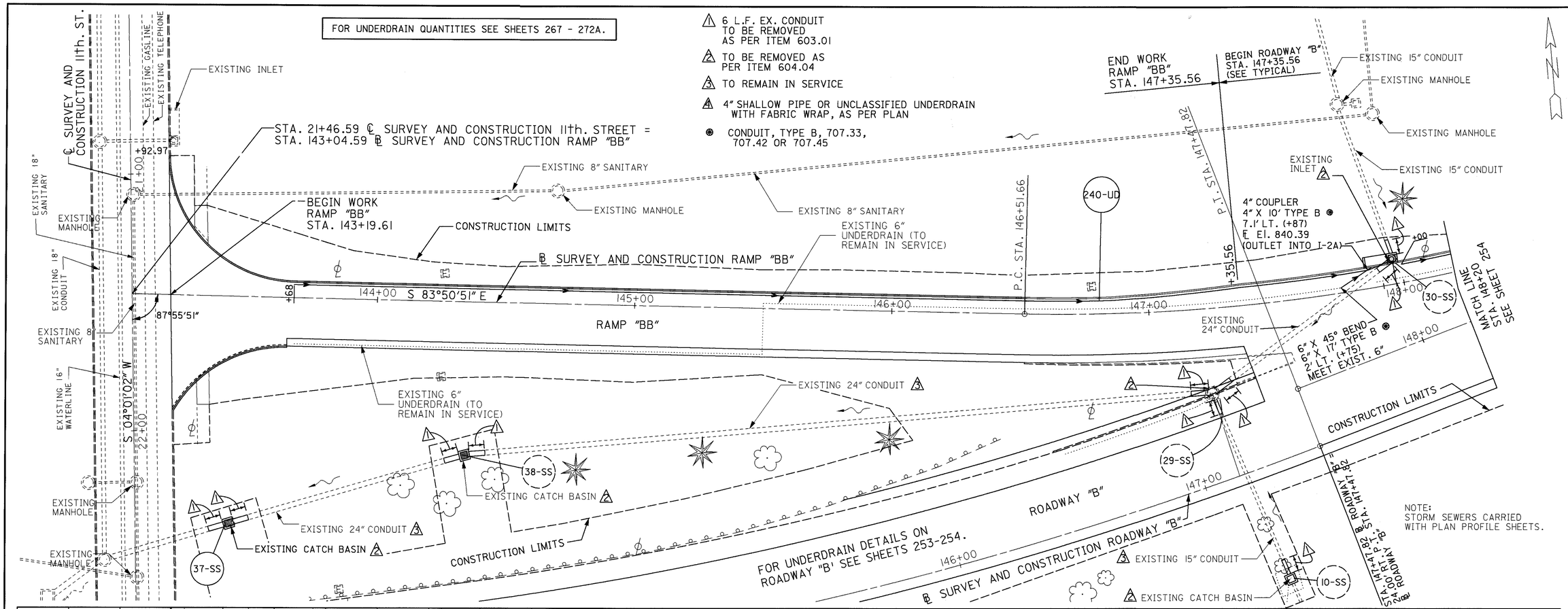

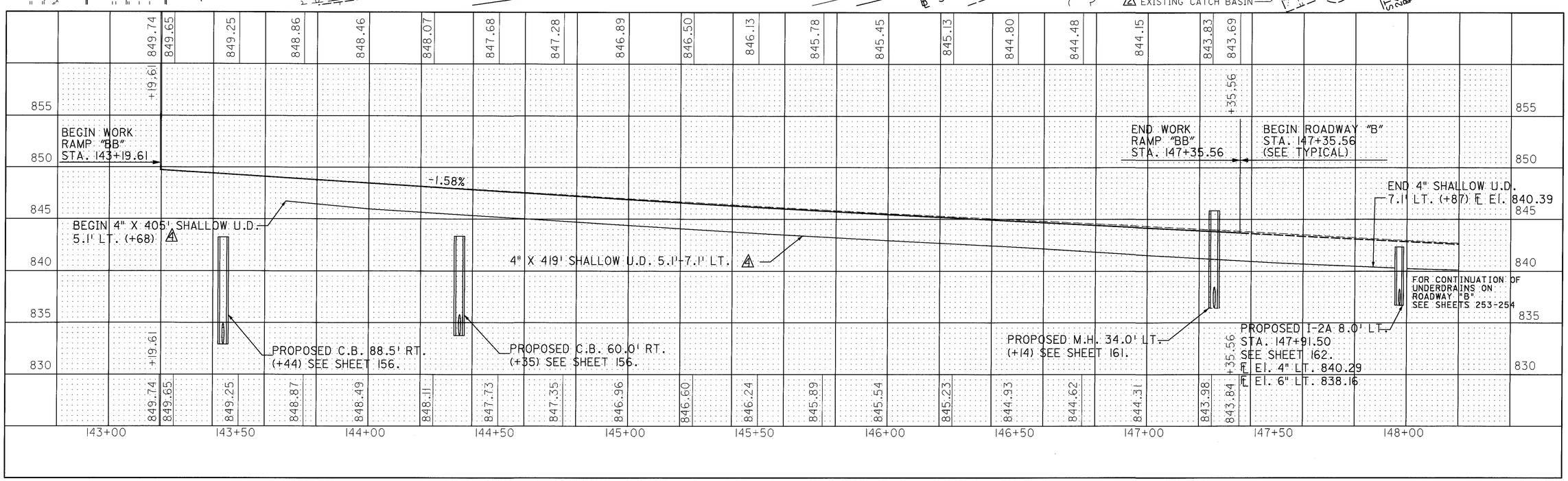

HORIZONTAL SCALE IN FEET 0 10 20 40

CALCULATED B.J.L.C. 3-13-95
CHECKED A.L.L. 3-16-95

UNDERDRAIN DETAILS RAMP "BB" STA. 143+19.61 TO STA. 148+20

LIC-16-19.72

L016UD34.DGN 5/08/95

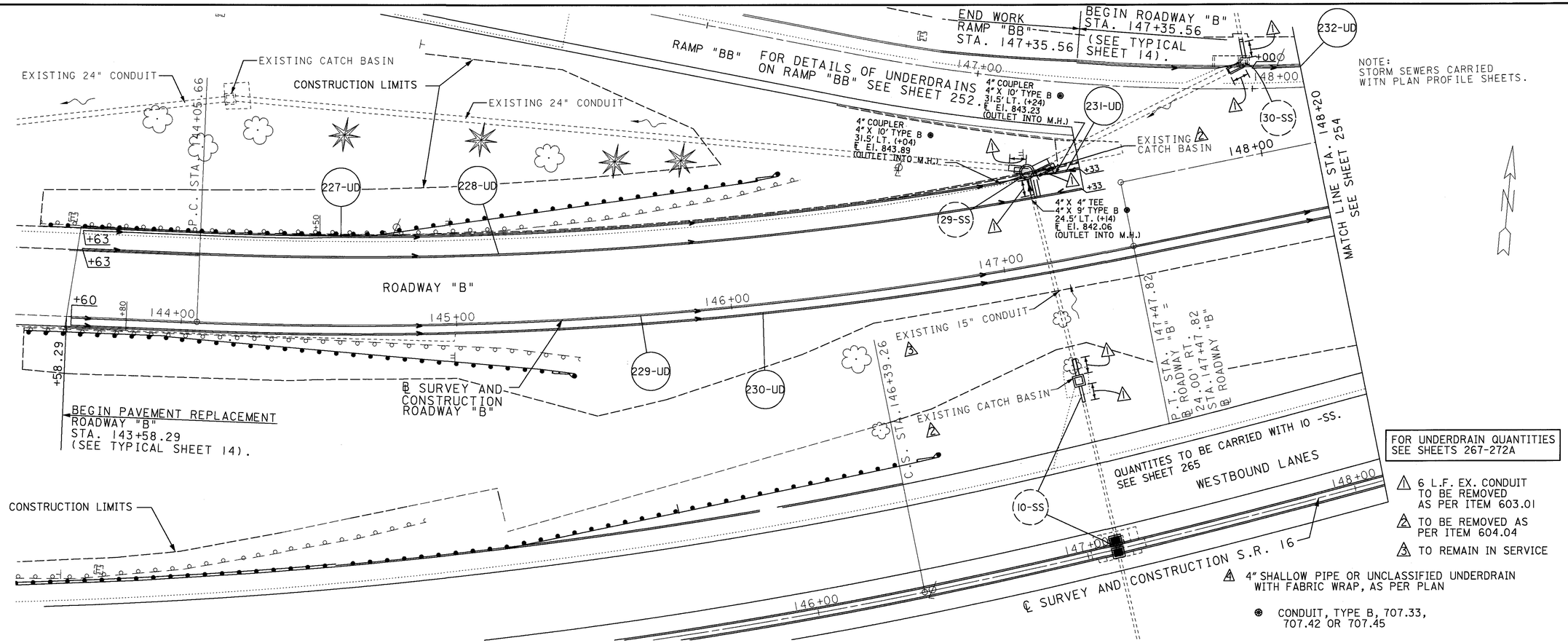

HORIZONTAL SCALE IN FEET
0 10 20 40

CALCULATED R.J.G. 3-13-95
CHECKED A.J.L. 3-16-95

UNDERDRAIN DETAILS ROADWAY "B"
STA. 143+58.29 TO STA. 148+20

LIC-16-19.72

L016UD35.DGN 5/08/95

FOR UNDERDRAIN QUANTITIES SEE SHEETS 267 - 272A.

1. 6 L.F. EX. CONDUIT TO BE REMOVED AS PER ITEM 603.01
2. TO BE REMOVED AS PER ITEM 604.04
3. TO REMAIN IN SERVICE
4. 4" SHALLOW PIPE OR UNCLASSIFIED UNDERDRAIN WITH FABRIC WRAP, AS PER PLAN

⊛ CONDUIT, TYPE B, 707.33, 707.42 OR 707.45

NOTE: STORM SEWERS CARRIED WITH PLAN PROFILE SHEETS.

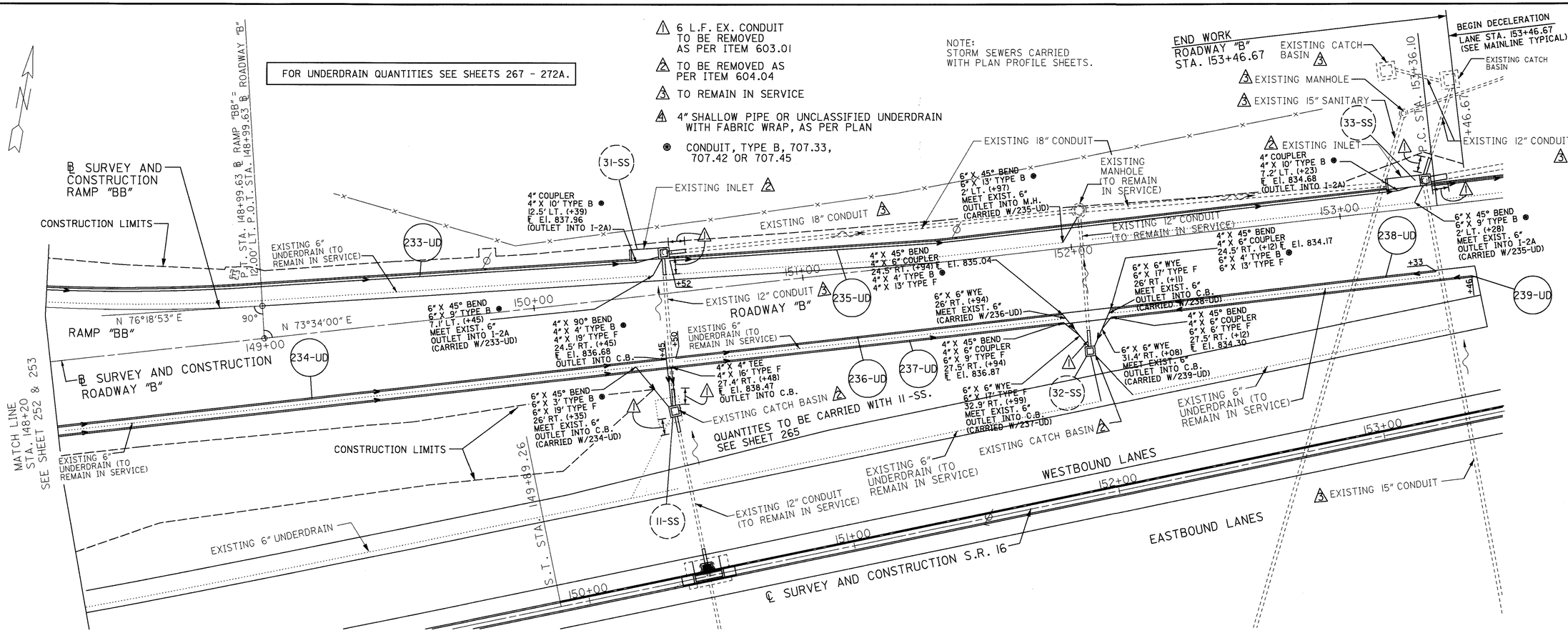

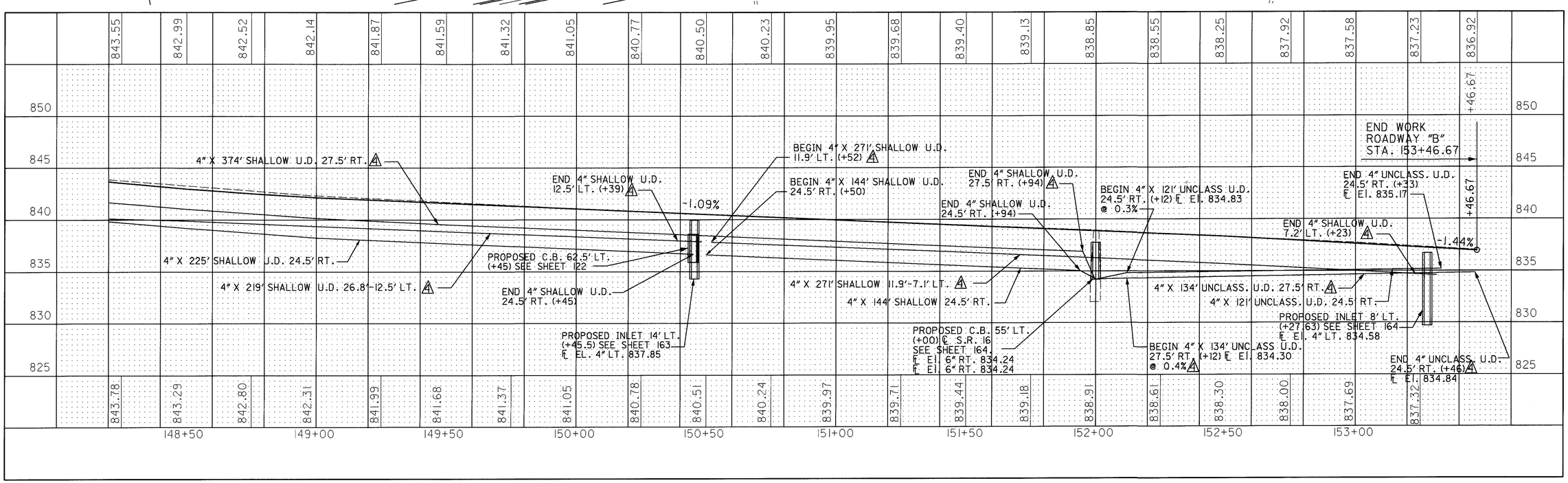

HORIZONTAL SCALE IN FEET 0 10 20 40

CALCULATED R.J.G. 3-13-95
CHECKED A.L.L. 3-16-95

UNDERDRAIN DETAILS ROADWAY "B" STA. 148+20 TO STA. 153+36.10

LIC-16-19.72

L016UD36.DGN 06/05/95

ROADWAY "D"

173+00

NOTE:
STORM SEWERS CARRIED
WITH PLAN PROFILE SHEETS.

EXISTING 8" SANITARY

℄ SURVEY AND CONSTRUCTION 11th. ST.

26+00 S 04°01'02" W

EXISTING CATCH BASIN

EXISTING 21" CONDUIT

EXISTING CURB

+22.47

6" X 45° BEND
6" X 19' TYPE F O
28' RT. (+09)
MEET EXIST. 6"
OUTLET INTO C.B.
(CARRIED W/223-UD)

EXISTING 18" CONDUIT

EXISTING 15" CONDUIT

+95

END 4" UNCLASS.
4" X 4" CROSS
4" X 4" WYE
4" X 30' TYPE F
18.5' LT. (+25)
℄ El. 825.25
OUTLET INTO C.B.

P.C. STA. 143+19.48

35-SS

EXISTING 12" CONDUIT
TO BE REMOVED
UNDER 48-SS

CONSTRUCTION LIMITS

EXISTING MANHOLE

76°02'00"

N 80°03'02" E

BEGIN 4" X 19' UNCLASS.
℄ RAMP "DD" (+25)
℄ El. 825.62

223-UD

EXISTING 6"
UNDERDRAIN (TO
REMAIN IN SERVICE)

P.T. STA. 145+89.81

146+00 N 58°25'27" E

MATCH LINE STA. 146+40
SEE SHEET 256

143+00

RAMP "DD"

144+00

145+00

℄ SURVEY AND CONSTRUCTION RAMP "DD"

EXISTING 16" WATERLINE

27+00

+31.64

34-SS

4" X 4" WYE
4" X 24' TYPE F
5.5' RT. (+17)
℄ El. 825.40
OUTLET INTO C.B.

BEGIN WORK
RAMP "DD"
STA. 141+38.84

EXISTING 10" WATERLINE

224-UD

CONSTRUCTION LIMITS

1 6 L.F. EX. CONDUIT TO BE REMOVED AS PER ITEM 603.01

2 TO BE REMOVED AS PER ITEM 604.04

3 TO REMAIN IN SERVICE

4 4" SHALLOW PIPE OR UNCLASSIFIED UNDERDRAIN WITH FABRIC WRAP, AS PER PLAN

4" UNCLASSIFIED PIPE UNDERDRAIN 707.33, 707.41, 707.42 OR 707.45, PERFORATED AS PER 707.15, AS PER PLAN A

STA. 26+10.00 ℄ SURVEY AND CONSTRUCTION 11th. STREET =
STA. 141+23.39 ℄ SURVEY AND CONSTRUCTION RAMP "DD"

FOR UNDERDRAIN QUANTITIES SEE SHEETS 267 - 272A.

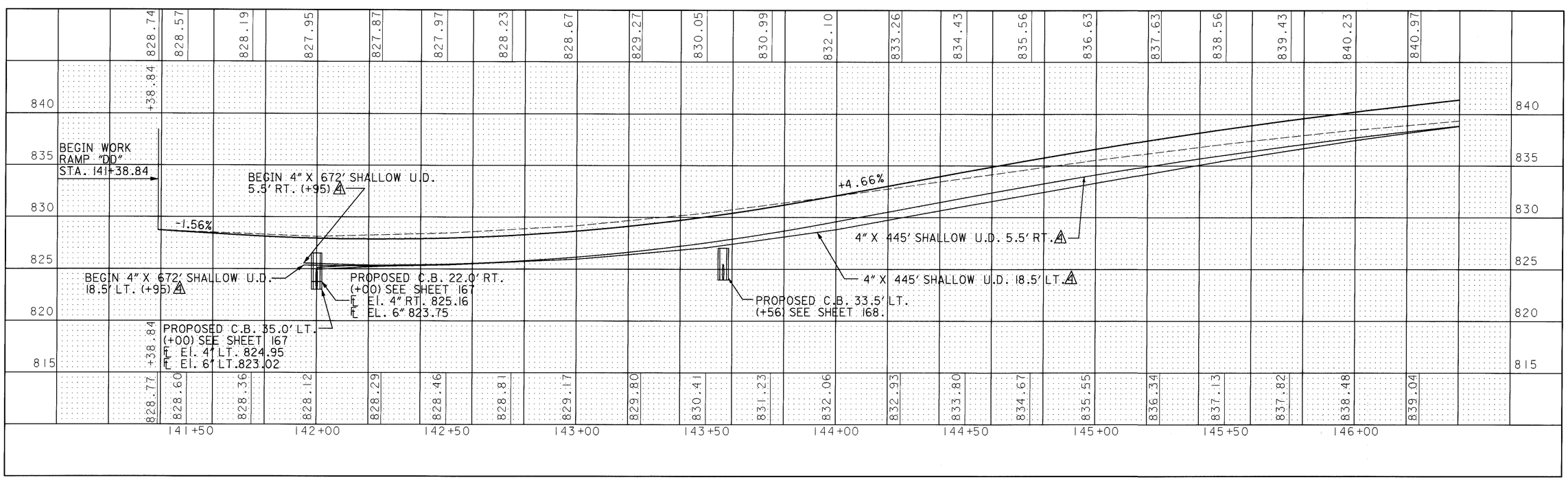

HORIZONTAL SCALE IN FEET
0 10 20 40

CALCULATED R.J.G. 3-13-95
CHECKED A.L.L. 3-16-95

UNDERDRAIN DETAILS "RAMP DD"
STA. 141+38.84 TO STA. 146+40

LIC-16-19.72

L016UD24.DGN 05/08/95

QUANTITES TO BE CARRIED WITH 8 -SS. SEE SHEET 265

147+00 148+00 149+00 150+00 151+00

℄ SURVEY AND CONSTRUCTION S.R. 16

WESTBOUND LANES

EASTBOUND LANES

8-SS

EXISTING 12" CONDUIT 3

EXISTING CATCH BASIN 2

EXISTING 12" CONDUIT 3

11-SS STORM SEWER CARRIED WITH PLAN PROFILE SHEET.

EXISTING 6" UNDERDRAIN

TO BE ABANDONED AND CONNECTED THROUGH

FOR CONTINUATION OF UNDERDRAINS SEE SHEET 238.

EXISTING CATCH BASIN 2

225-UD

EXISTING 6" UNDERDRAIN (TO REMAIN IN SERVICE)

MATCH LINE STA. 146+40 SEE SHEET 255

RAMP "DD"

N 58°25'27" E

147+00 148+00 149+00 150+00

+25 +67 +66.47

EXISTING 6" UNDERDRAIN (TO REMAIN IN SERVICE)

℄ SURVEY AND CONSTRUCTION RAMP "DD"

CONSTRUCTION LIMITS

226-UD

P.C. STA. 148+49.99

P.I. STA. 150+49.99 ℄ RAMP "DD" = 80.99' RT. P.O.T. STA. 150+50.47 ℄SURVEY & CONST. S.R. 16

1 6 L.F. EX. CONDUIT TO BE REMOVED AS PER ITEM 603.01

2 TO BE REMOVED AS PER ITEM 604.04

3 TO REMAIN IN SERVICE

4 4" SHALLOW PIPE OR UNCLASSIFIED UNDERDRAIN WITH FABRIC WRAP, AS PER PLAN

⊛ CONDUIT, TYPE B, 707.33, 707.42 OR 707.45

END WORK RAMP "DD" STA. 148+66.47

BEGIN ACCELERATION LANE STA. 148+66.47 (SEE MAINLINE TYPICAL)

FOR UNDERDRAIN QUANTITIES SEE SHEETS 267 - 272A.

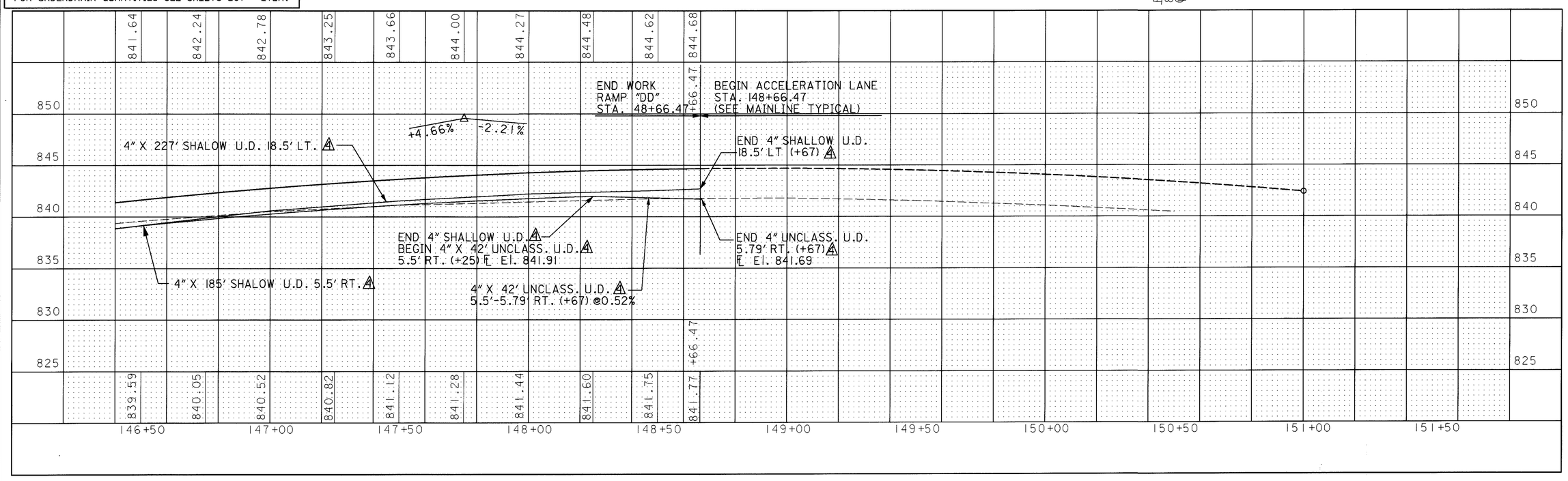

HORIZONTAL SCALE IN FEET 0' 10' 20' 40'

CALCULATED R.J.G. 5-15-95 CHECKED A.L.L. 5-16-95

UNDERDRAIN DETAILS RAMP "DD" STA. 146+40 TO STA. 151+50

LIC-16-19.72

L016UD25.DGN 05/03/95

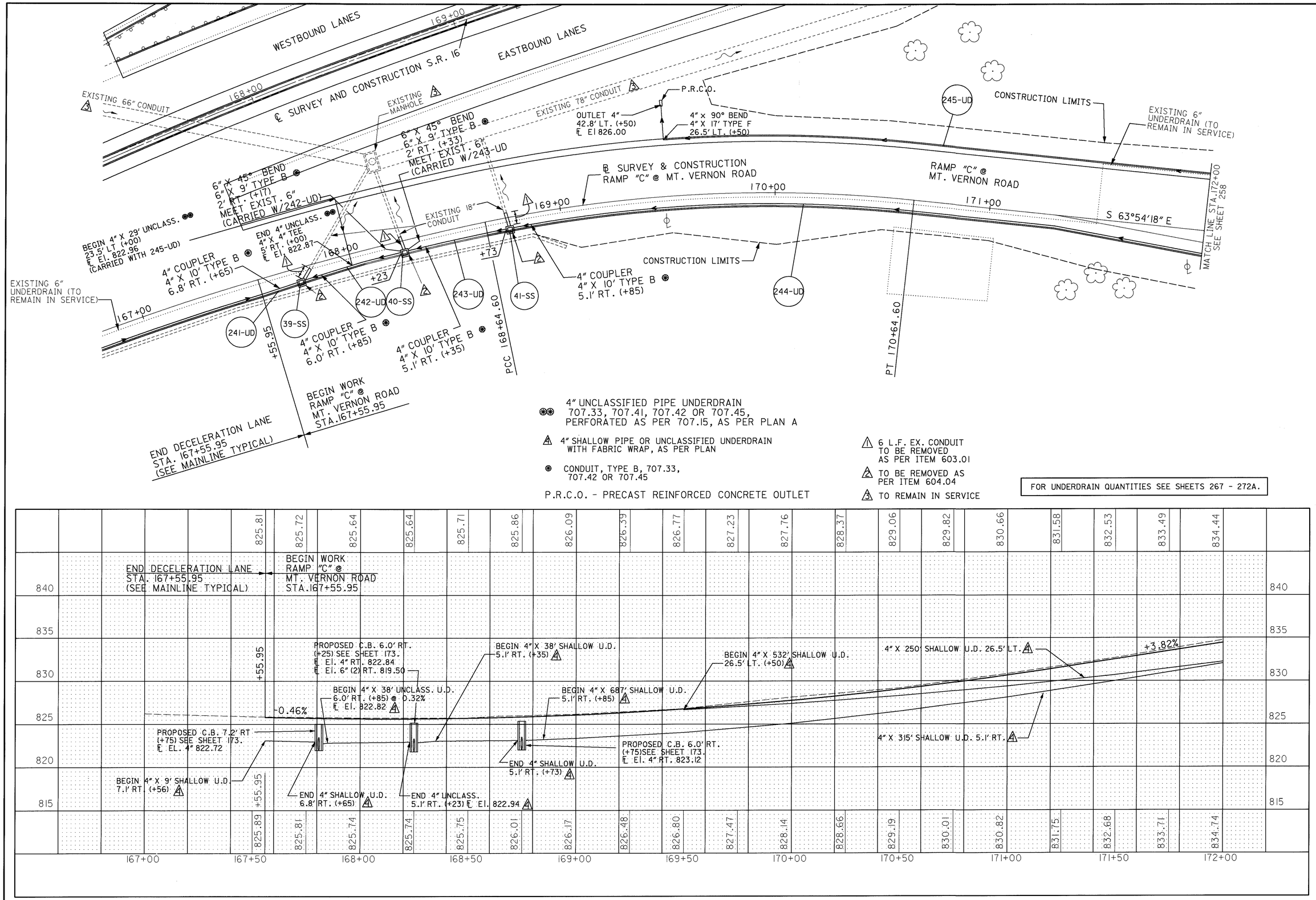

HORIZONTAL SCALE IN FEET
0 10 20 40

CALCULATED R.J.G. 3-10-95
CHECKED A.L.L. 3-16-95

UNDERDRAIN DETAILS RAMP "C" AT MT. VERNON ROAD
STA. 166+80 TO STA. 172+00

LIC-16-19.72

L016UD28.DGN 05/03/95

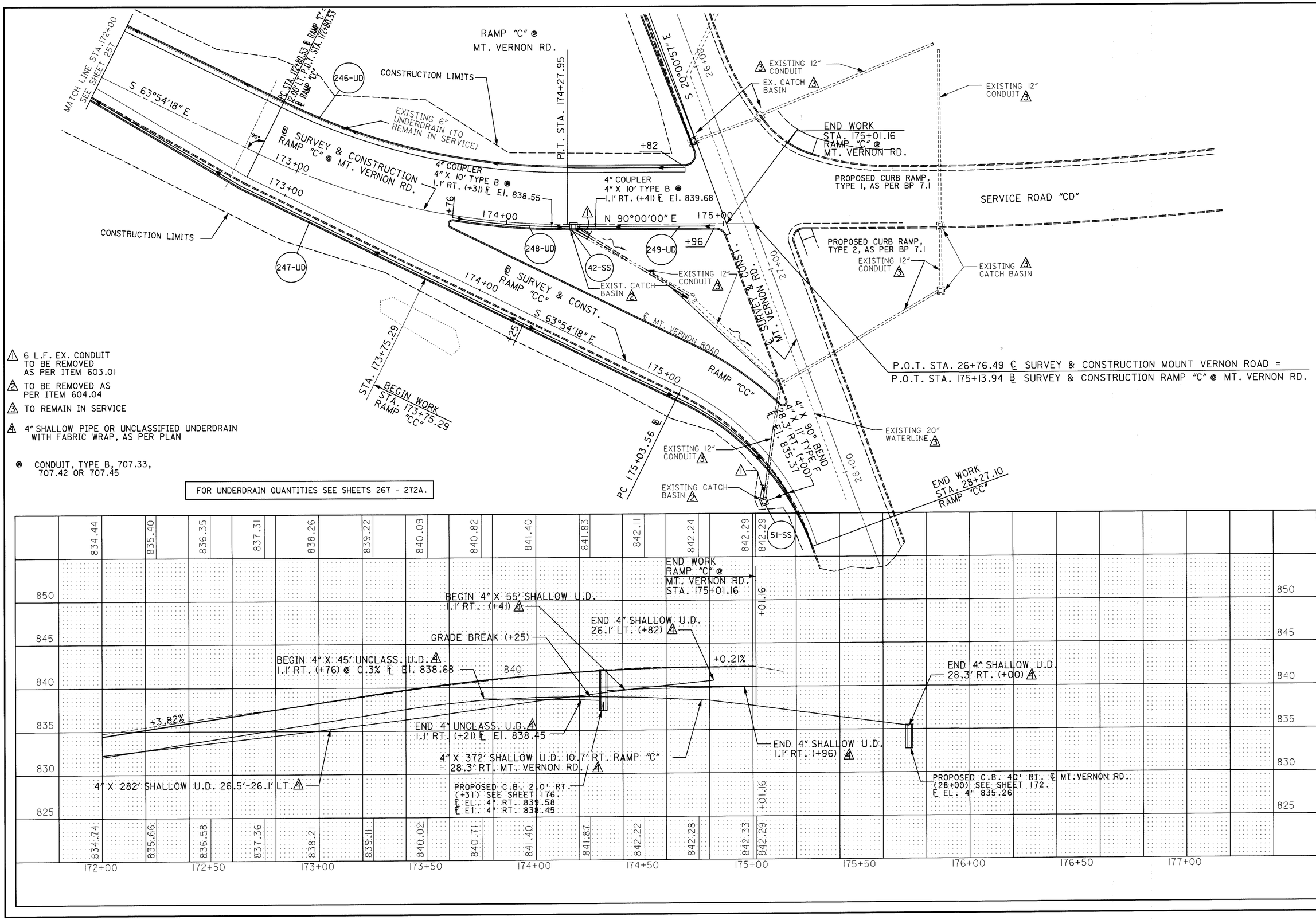

4 6 L.F. EX. CONDUIT TO BE REMOVED AS PER ITEM 603.01

2 TO BE REMOVED AS PER ITEM 604.04

3 TO REMAIN IN SERVICE

4 4" SHALLOW PIPE OR UNCLASSIFIED UNDERDRAIN WITH FABRIC WRAP, AS PER PLAN

⊛ CONDUIT, TYPE B, 707.33, 707.42 OR 707.45

FOR UNDERDRAIN QUANTITIES SEE SHEETS 267 - 272A.

HORIZONTAL SCALE IN FEET 0 10 20 40

CALCULATED R.J.G. 3-13-95
CHECKED A.L.L. 3-16-95

UNDERDRAIN DETAILS RAMP "C" AT MT. VERNON ROAD
STA. 172+00 TO STA. 175+01.39

LIC-16-19.72

L016UD29.DGN 5/03/95

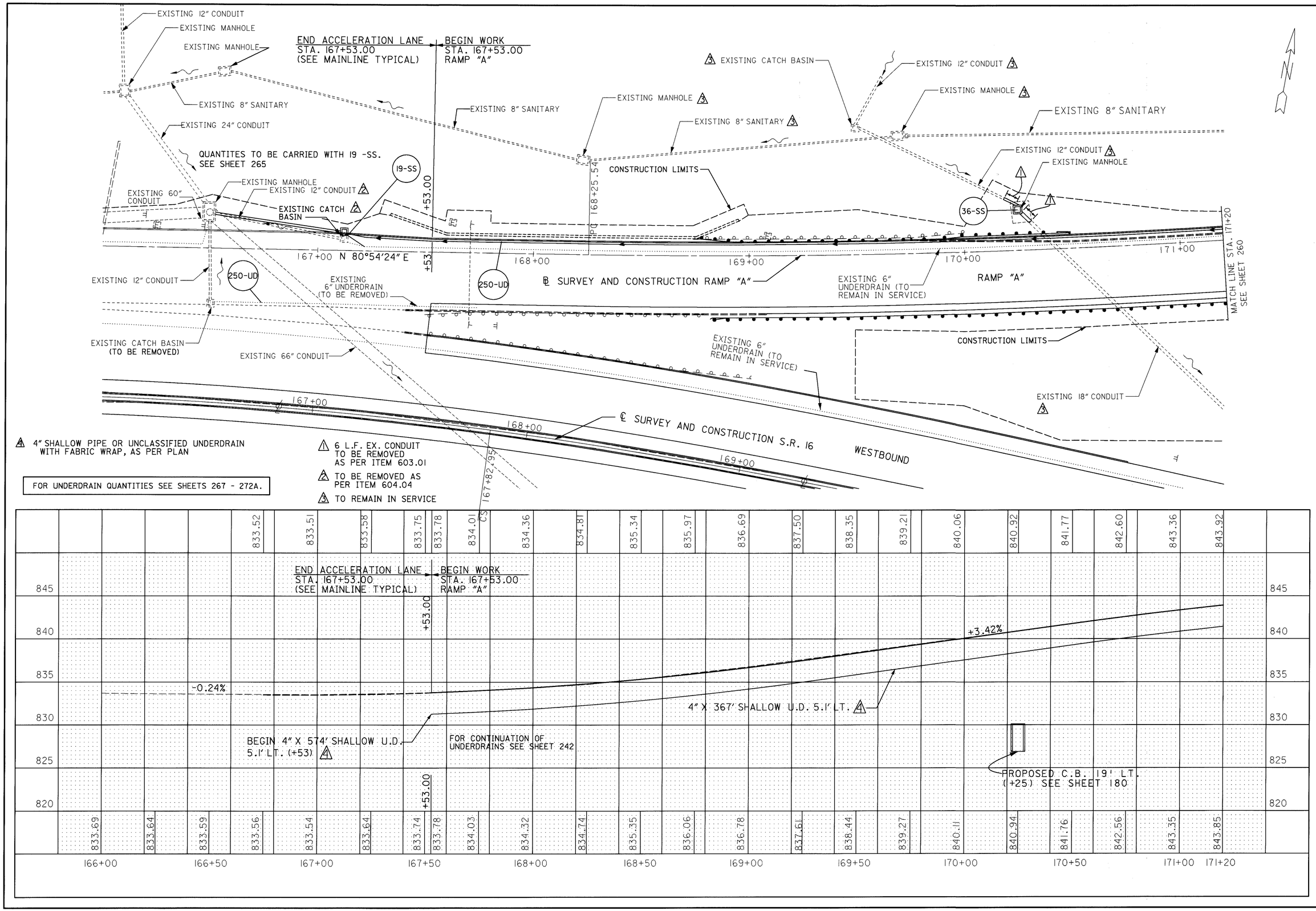

HORIZONTAL SCALE IN FEET
0 20 40

CALCULATED R.J.G. 3-15-95
CHECKED A.L.L. 3-16-95

UNDERDRAIN DETAILS RAMP "A" AT MT. VERNON ROAD
STA. 166+00 TO STA. 171+20

LIC-16-19.72

L016UD26.DGN 05/03/95

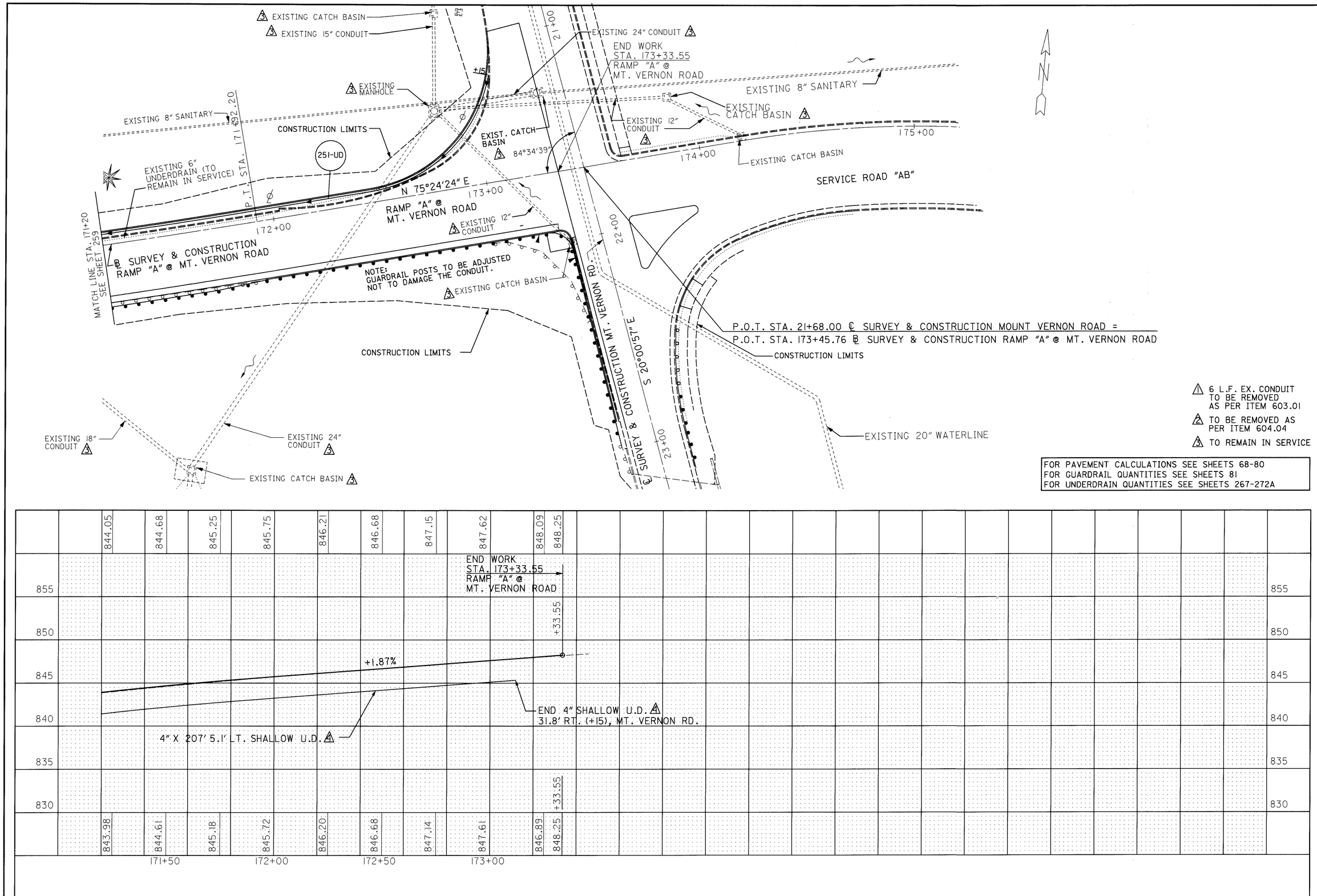

CALCULATED R.J.G. 3-15-95
CHECKED A.L.L. 3-16-95

UNDERDRAIN DETAILS RAMP "A" AT MT. VERNON ROAD STA. 171+20 TO STA. 173+33.55

LIC-16-19.72

L016UD27.DGN 05/03/95

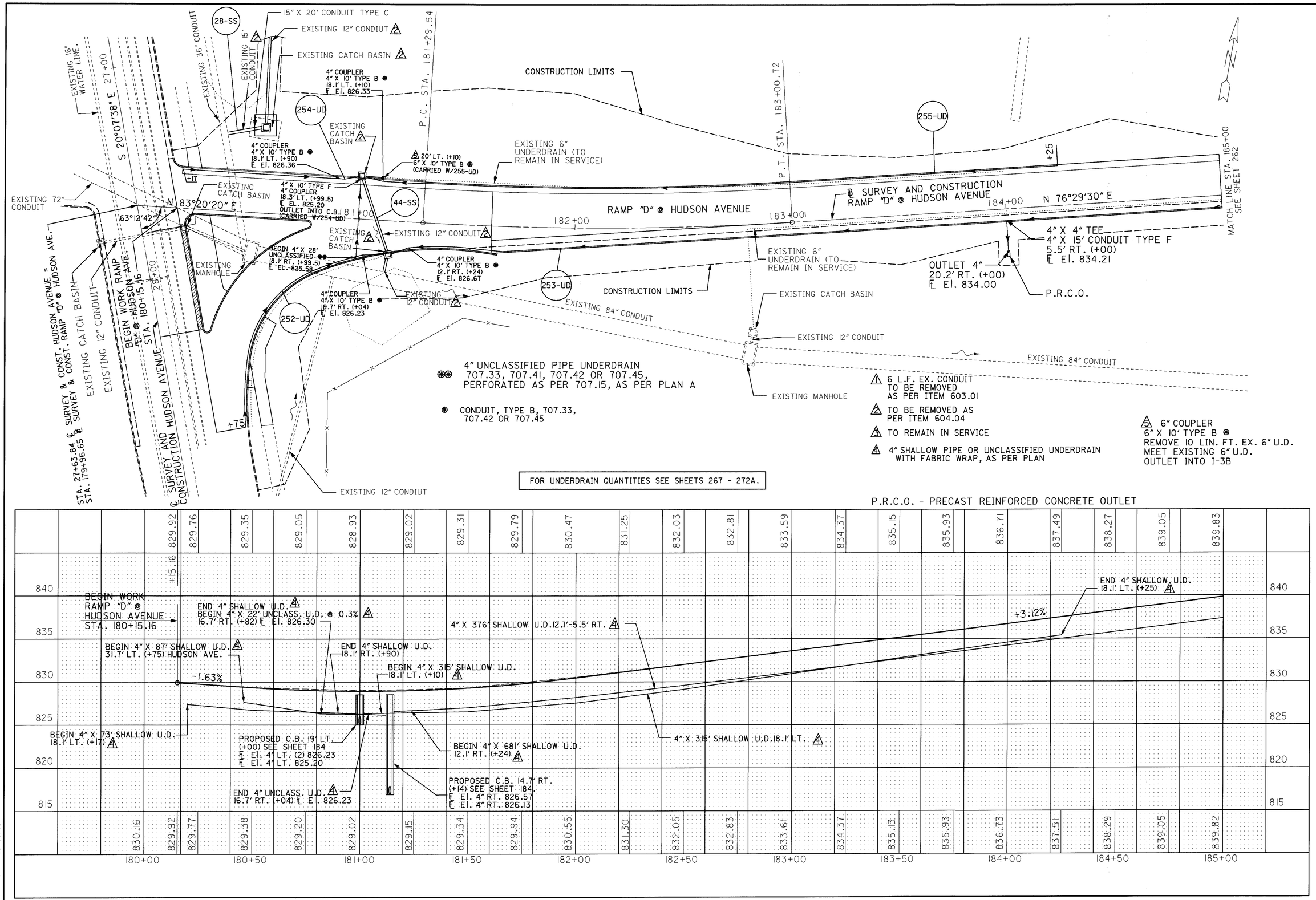

HORIZONTAL SCALE IN FEET
0 10 20 40

CALCULATED R.J.G. 3-13-95
CHECKED A.L.L. 3-16-95

UNDERDRAIN DETAILS RAMP "D" AT HUDSON AVENUE
STA. 180+00 TO STA. 185+00

LIC-16-19.72

L016UD32.DGN 05/08/95

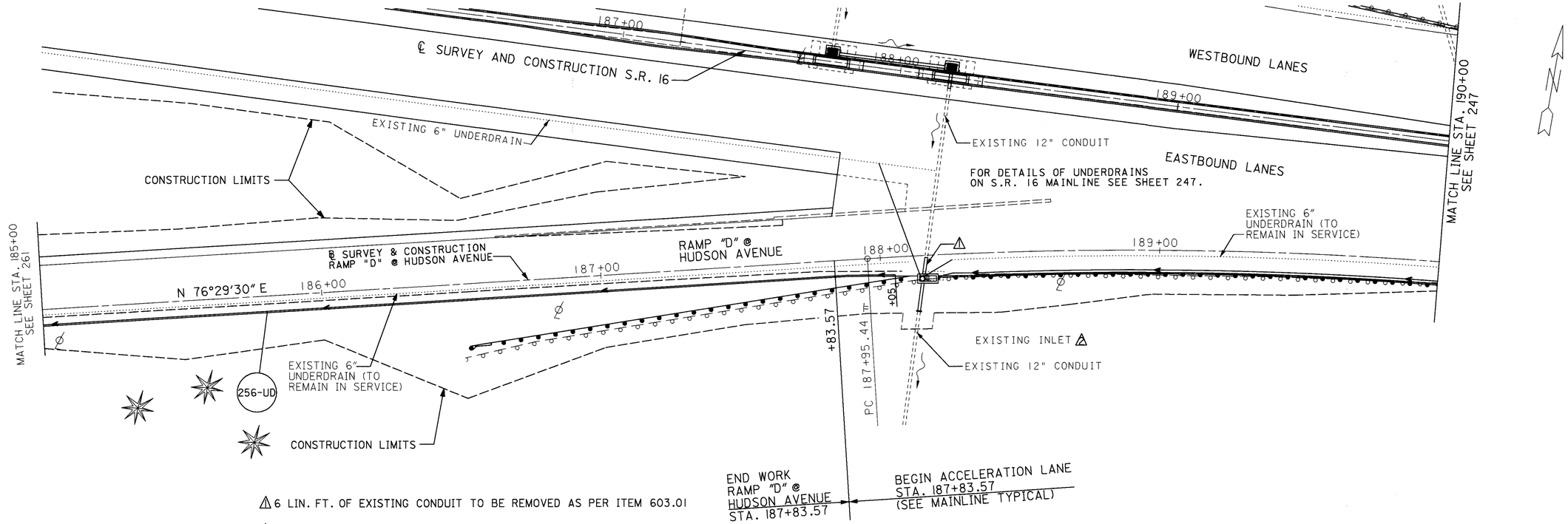

⚠ 6 LIN. FT. OF EXISTING CONDUIT TO BE REMOVED AS PER ITEM 603.01

⚠ TO BE REMOVED AS PER ITEM 604.04

⚠ 4" SHALLOW PIPE OR UNCLASSIFIED UNDERDRAIN WITH FABRIC WRAP, AS PER PLAN

⊗ CONDUIT, TYPE B, 707.33, 707.42 OR 707.45

P.R.C.O. - PRECAST REINFORCED CONCRETE OUTLET

FOR UNDERDRAIN QUANTITIES SEE SHEETS 267 - 272A.

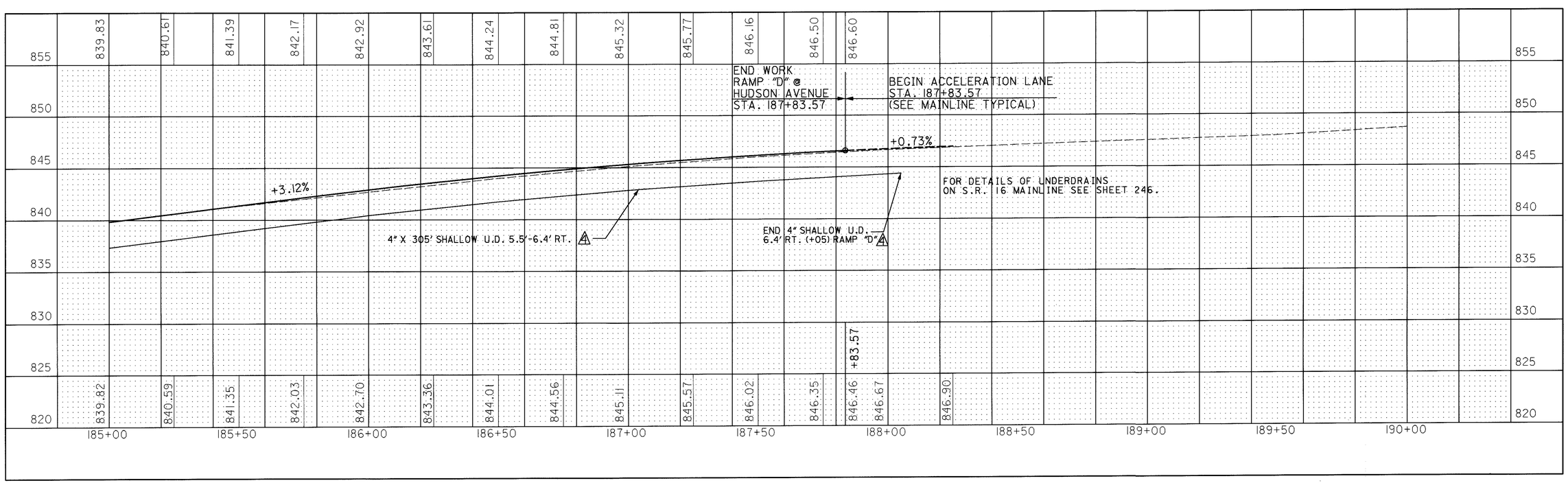

HORIZONTAL SCALE IN FEET 0 10 20 40

CALCULATED R.J.G. 3-13-95

CHECKED A.L.L. 3-16-95

UNDERDRAIN DETAILS RAMP "D" AT HUDSON AVENUE STA. 185+00 TO STA. 190+00

LIC-16-19.72

L016UD33.DGN 05/03/95

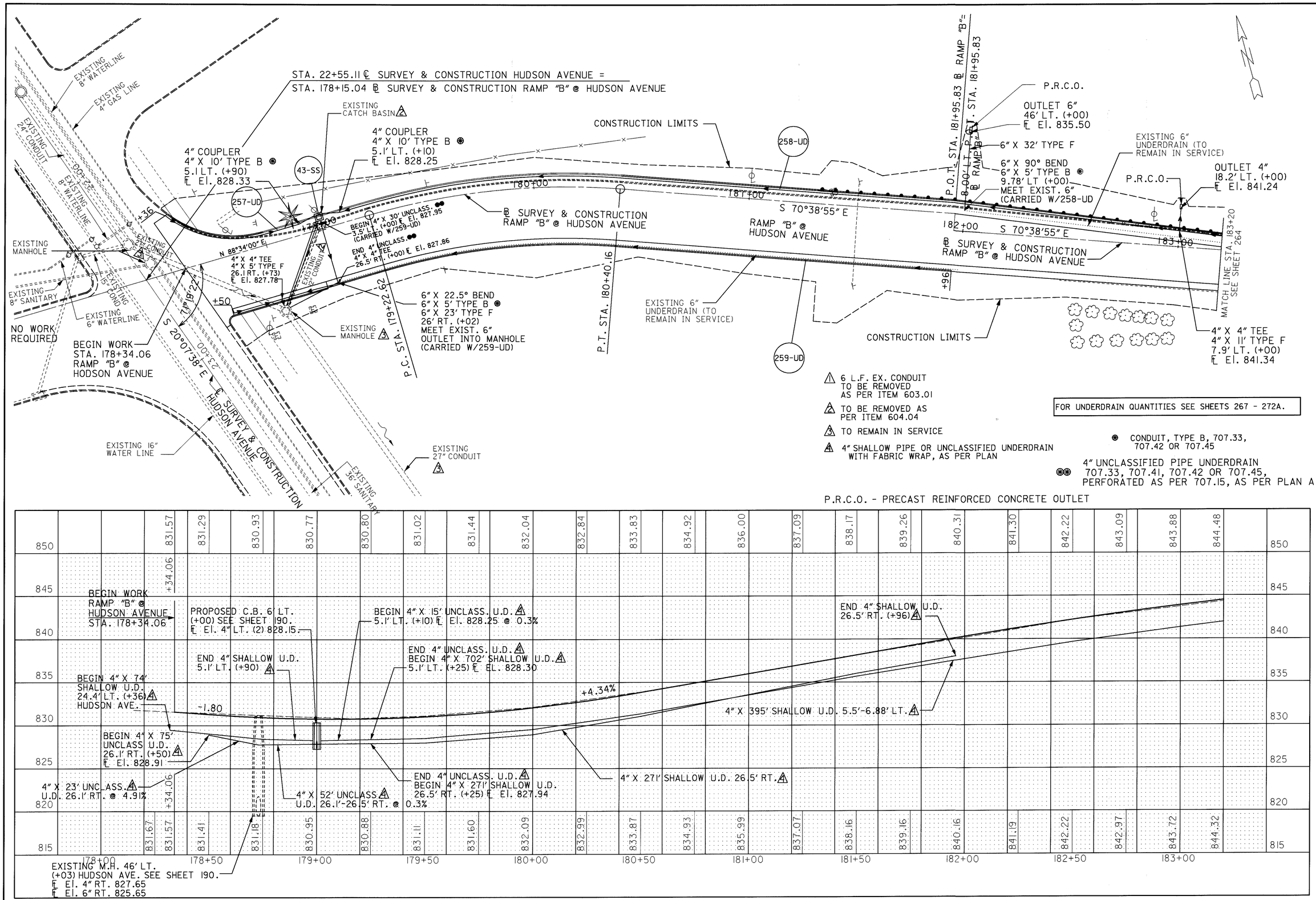

HORIZONTAL SCALE IN FEET
0 10 20 40

CALCULATED R.J.G. 3-13-95
CHECKED A.L.L. 3-16-95

UNDERDRAIN DETAILS RAMP "B" AT HUDSON AVENUE
STA. 178+00 TO STA. 183+20

LIC-16-19.72

L016UD30.DGN 5/08/95

END WORK
RAMP "B" @
HUDSON AVENUE
STA. 186+26.92

BEGIN DECELERATION LANE
STA. 186+26.92
(SEE MAINLINE TYPICAL)

EXISTING
12" CONDUIT
(TO BE REMOVED)

P.C.C. STA. 185+45.84

P.C. STA. 183+45.84

260-UD

MATCH LINE STA. 183+20
SEE SHEET 263

EXISTING 6"
UNDERDRAIN (TO
REMAIN IN SERVICE)

CONSTRUCTION LIMITS

EXISTING ⚠4
CATCH BASIN

+75

+26.92

184+00

185+00

186+00

187+00

℄ SURVEY & CONSTRUCTION
RAMP "B" @ HUDSON AVENUE

RAMP "B" @
HUDSON AVENUE

⚠5 EXISTING
12" CONDUIT

EXISTING
CATCH BASIN
(TO BE REMOVED)

FOR UNDERDRAIN DETAILS ON
MAINLINE SEE SHEET 246.

⚠2 EXISTING
INLET

CONSTRUCTION LIMITS

CONSTRUCTION LIMITS

EXISTING 6"
UNDERDRAIN (TO
REMAIN IN SERVICE)

26-SS

187+00

⚠2 EXISTING 12"
CONDUIT

+00

℄ SURVEY AND CONSTRUCTION S.R. 16

186+00

QUANTITES TO BE CARRIED WITH 24 -SS.
SEE SHEET 265

WESTBOUND LANES

185+00

CONSTRUCTION LIMITS

EASTBOUND LANES

184+00

⚠4 4" SHALLOW PIPE OR UNCLASSIFIED UNDERDRAIN
WITH FABRIC WRAP, AS PER PLAN

⚠1 6 L.F. EX. CONDUIT
TO BE REMOVED
AS PER ITEM 603.01

⊗ CONDUIT, TYPE B, 707.33,
707.42 OR 707.45

⚠2 TO BE REMOVED AS
PER ITEM 604.04

⚠5 TO REMAIN IN SERVICE

FOR UNDERDRAIN QUANTITIES SEE SHEETS 267-272A.

860	844.48	844.62	845.29	845.90	846.44	846.92	847.34	847.70	847.98	848.21	848.37	848.47	848.51	848.48	848.48												860
855																											855
850																											850
845																											845
840																											840
835																											835
830																											830
825	844.32	844.47	845.19	845.73	846.27	846.77	847.27	847.55	847.82	848.07	848.28	848.30	848.32	848.31	848.31												825
			183+50		184+00		184+50		185+00		185+50		186+00		186+50		187+00		187+50		188+00						

END WORK
RAMP "B" @
HUDSON AVENUE
STA. 186+26.92

BEGIN DECELERATION LANE
S.R. 16
STA. 186+26.92

END 4" SHALLOW U.D. ⚠4
BEGIN 4" X 75' UNCLASS. U.D. ⚠4
5.1' LT. (+50) 845.80

END 4" UNCLASS. U.D. ⚠4
BEGIN 4" X 2' SHALLOW U.D. ⚠4
7.1' LT. (+25) ℄ El. 845.80

-0.24%

+4.34

FOR CONTINUATION OF
UNDERDRAIN DETAILS
SEE SHEET 246.

4" X 230' SHALLOW U.D. 5.1' LT. ⚠4

4" X 25' UNCLASS. U.D.
5.1' LT. @ 0.6% ⚠4

END 4" SHALLOW U.D. ⚠4
7.1' LT. (+27) RAMP "B"

4" X 50' UNCLASS. U.D.
5.1'-7.1' LT. @ 0.3% ⚠4

HORIZONTAL
SCALE IN FEET
0 10 20 40

CALCULATED R.J.G. 3-13-95
CHECKED A.L.L. 3-16-95

UNDERDRAIN DETAILS RAMP "B" AT HUDSON AVENUE
STA. 183+20 TO STA. 188+00

LIC-16-19.72

L016UD31.DGN 05/03/95

STORM SEWER QUANTITIES

MARK	STATION (SOUTH) FROM	STATION (SOUTH) TO	SIDE	SHEET NO.	202 CATCH BASIN ABANDONED (EACH)	202 CATCH BASIN REMOVED (EACH)	202 PIPE REMOVED 24" AND UNDER (LIN.FT.)	601 ROCK CHANNEL PROTECTION TYPE C WITH FILTER (CU.YD.)	602 CONCRETE MASONRY (CU.YD.)	603 12" CONDUIT TYPE B, 706.01 OR 706.02 (LIN.FT.)	603 12" CONDUIT TYPE B (LIN.FT.)	603 12" CONDUIT TYPE C (LIN.FT.)	603 12" CONDUIT TYPE F 707.05 (LIN.FT.)	603 15" CONDUIT TYPE B, 706.01 OR 706.02 (LIN.FT.)	603 15" CONDUIT TYPE C (LIN.FT.)	603 18" CONDUIT TYPE B, 706.01 OR 706.02 (LIN.FT.)	603 18" CONDUIT TYPE B (LIN.FT.)	603 18" CONDUIT TYPE C, 706.01 OR 706.02 (LIN.FT.)	603 18" CONDUIT TYPE C (LIN.FT.)	603 21" CONDUIT TYPE B (LIN.FT.)	603 24" CONDUIT TYPE B, 706.01 OR 706.02 (LIN.FT.)	603 24" CONDUIT TYPE B (LIN.FT.)	603 24" CONDUIT TYPE C, 706.01 OR 706.02 (LIN.FT.)	603 24" CONDUIT TYPE C (LIN.FT.)	603 27" CONDUIT TYPE B, 706.01 OR 706.02 (LIN.FT.)	603 36" CONDUIT TYPE B, 706.01 OR 706.02 (LIN.FT.)	604 CATCH BASIN NO. 2-2A (EACH)	604 CATCH BASIN NO. 2-3 (EACH)	604 CATCH BASIN NO. 3 (EACH)	604 CATCH BASIN NO. 3A (EACH)	604 CATCH BASIN NO. 4 AS PER PLAN (EACH)	604 CATCH BASIN NO. 5 WITH B GRATE, AS PER PLAN (EACH)	604 INLET NO. 2A-6 (EACH)	604 INLET NO. 2A-8 (EACH)	604 INLET NO. 2A-10 (EACH)	604 INLET NO. 2A-12 (EACH)	604 INLET NO. 3B50 (EACH)	604 INLET NO. 3B50 AS PER PLAN B (EACH)	604 MANHOLE NO. 3 (EACH)
1-SS	113+00		℄/RT	83,102						6																												1		
2-SS	118+45		LT/RT	84,106				1.2	.37				12		13	12											1			1							1		
3-SS	119+50		LT/RT	84,106				.8	.25	12				12															1								1		
4-SS	120+27		LT/RT	84,107				3.3	.69													6			28		24			1		1					1		
5-SS	124+20	124+70	℄/LT	85,109							50																										1		
6-SS	124+70	124+88	℄/LT	85,109		2	59					32					74					6						1						1				1	1
7-SS	130+00		℄/LT	87,111					.20	12																											1		
8-SS	141+17.5 - 23+90 11TH ST		LT/RT	89,117						24	7	22	70															1					2					2	
9-SS	144+08		RT	89,118		1	122																																
10-SS	147+11		LT/RT	90,120						30	7																			1		1						2	
11-SS	150+45		LT/RT	91,122	1					24																						1					1		
12-SS	153+25.63		LT	91,123										6																				1					
13-SS	155+94.63 - 156+00		LT/RT	92,124						12				12					8															1	1	1			
14-SS	158+95.63		LT	92,126											6																			1					
15-SS	159+75		LT	92,126								8																	1										
16-SS	160+75 - 161+69		℄	93,127			94				94																										1		
17-SS	161+69 - 161+71.38		℄/LT	93,127							7			12	6																		1					2	
18-SS	162+75 - 163+75		RT	93,128																50					6				1	1									
19-SS	166+50 - 167+12 RAMP A		LT	94,130		1	37					59																		1									
20-SS	171+00 - 171+50		℄/LT	95,132							50																										1		
21-SS	171+50		℄/LT	96,132														6				12		6	6							1					1		
22-SS	171+50 S.R. 16 - 172+00		℄	97,132							50																										1		
23-SS	180+50 - 180+50 RAMP D		℄/LT	97,137,184						12		63	43		20																	1					1		
24-SS	187+75 - 188+50		℄/LT	98,140,141						12	75																		1								2		
25-SS	188+18 - 188+20.5		℄/RT	98,140						12			10																				1				1		
26-SS	186+10		LT	98		1	109																																
27-SS	107+50 RAMP F		LT & RT	148,150					.31							18																1							
28-SS	108+04 RAMP H		LT & RT	142,144						6													97									1							
29-SS	147+14 ROADWAY B		LT	158,161										6								12																	1
30-SS	147+91.5 RAMP BB		LT	158,162											6							6													1				
31-SS	150+45.5 ROADWAY B		LT	159,163						6						6																		1					
	TOTALS				1	5	421	5.3	1.82	168	308	184	135	48	51	36	74	6	8	50	42	97	6	28	12	24		2	1	5	4	1	6	4	1	4	2	15	7	2

QUANTITIES CARRIED TO SHEETS 62-63

CALCULATED A.L.L. 3/13/95
CHECKED D.M. 3/16/95

STORM SEWER QUANTITIES

LIC-16-19.72

L161933A.DGN 5/30/95

STORM SEWER AND EROSION PROTECTION QUANTITIES

MARK	STATION (SOUTH) FROM	STATION (SOUTH) TO	SIDE	SHEET NO.	202 CATCH BASIN REMOVED EACH	202 GUTTER REMOVED LIN. FT.	660 SODDING STAKED SQ.YD.	601 PAVED GUTTER, TYPE I-2, AS PER PLAN LIN. FT.	601 ROCK CHANNEL PROTECTION TYPE C WITH FILTER CU. YD.	601 CRUSHED AGGREGATE SLOPE PROTECTION SQ. YD.	603 12" CONDUIT TYPE B, 706.01 OR 706.02 LIN. FT.	603 12" CONDUIT TYPE B LIN. FT.	603 12" CONDUIT TYPE C, 706.01 OR 706.02 LIN. FT.	603 12" CONDUIT TYPE C LIN. FT.	603 12" CONDUIT TYPE F, 707.05 LIN. FT.	603 15" CONDUIT TYPE B, 706.01 OR 706.02 LIN. FT.	603 15" CONDUIT TYPE B LIN. FT.	603 18" CONDUIT TYPE B, 706.01 OR 706.02 LIN. FT.	603 18" CONDUIT TYPE C LIN. FT.	603 21" CONDUIT TYPE B, 706.01 OR 706.02 LIN. FT.	603 24" CONDUIT TYPE B, 706.01 OR 706.02 LIN. FT.	603 24" CONDUIT TYPE C, 706.01 OR 706.02 LIN. FT.	604 CATCH BASIN NO. 2-2B EACH	604 CATCH BASIN NO. 3A EACH	604 CATCH BASIN NO. 5 WITH B GRATE, AS PER PLAN EACH	604	604	604	604 INLET NO. 2A-12 EACH	604 CATCH BASIN NO. 2-2A EACH
32-SS	152+00		LT	159,164							6																			
33-SS	153+27.63 ROADWAY B		LT	159,164									6			6		6			6		1						1	
34-SS	142+00 RAMP DD		LT/RT	165,167													57			6					2					
35-SS	142+00 RAMP DD	143+56 RAMP DD	LT	165,168															159						1					
36-SS	170+25 RAMP A		LT	177,180											10			6							1					
37-SS	143+44 RAMP BB		RT	155,156																		12			1					
38-SS	144+35 RAMP BB		RT	155,156																		12			1					
39-SS	167+75 RAMP C		RT	171,173														6						1						
40-SS	168+25 RAMP C		RT	171,173														6						1						
41-SS	168+75 RAMP C		RT	171,173														6						1						
42-SS	174+31 RAMP C		RT	172,176									6											1						
43-SS	179+00 RAMP B		LT/RT	188,190	1							47												1						
44-SS	181+00 RAMP D - 181+14 RAMP D		LT/RT	182,184								34		11										2						
45-SS	NOT USED																													
46-SS	NOT USED																													
47-SS	NOT USED																													
48-SS	22+00 MT VERNON ROAD		RT	178,194							6													1						
49-SS	26+32 MT VERNON ROAD		RT	172,194							6													1						
50-SS	27+79 HUDSON AVE		LT	182							6		6											1						
51-SS	28+00 MT. VERNON RD.		RT	172							6																			1
1-D	134+42		LT	87		68	21	68	3																					
2-D	134+69		RT	87		108	30	108	3																					
3-D	184+08		RT	97		65	22	65	3																					
4-D	UNDER GRANVILLE BRIDGE		RT	92						100																				
5-D	UNDER GRANVILLE BRIDGE		LT	92						55																				
6-D	UNDER MT. VERNON RD. BRIDGE		RT	95						40																				
7-D	UNDER MT. VERNON RD. BRIDGE		LT	95						90																				
	TOTALS				1	241	73	241	9	285	30	81	18	11	10	6	57	30	159	6	6	24	1	10	6				1	1

QUANTITIES CARRIED TO SHEETS 62-63

CALCULATED A.L.L. 3/13/95
CHECKED D.W. 3/16/95

STORM SEWER AND EROSION PROTECTION QUANTITIES

LIC-16-19.72

L161933B.DGN 5/30/95

✳ CONDUIT, TYPE B, 707.33, 707.42 OR 707.45

MARK	STATION FROM	STATION TO	SIDE	SHEET NO.	202 PIPE REMOVED 24" & UNDER LIN.FT.	603 4" CONDUIT TYPE B ✳ LIN.FT.	603 6" CONDUIT TYPE B ✳ LIN.FT.	603 4" CONDUIT TYPE F LIN.FT.	603 6" CONDUIT TYPE F LIN.FT.	605 4" SHALLOW PIPE UNDERDRAIN LIN.FT.	605 4" SHALLOW PIPE UNDERDRAIN WITH FABRIC WRAP, AS PER PLAN LIN.FT.	605 4" UNCLASSIFIED PIPE UNDERDRAIN LIN.FT.	605 4" UNCLASSIFIED PIPE UNDERDRAIN WITH FABRIC WRAP, AS PER PLAN LIN.FT.	604 PRECAST REINFORCED CONCRETE OUTLET EACH	FOR INFORMATION ONLY BENDS AND BRANCHES TEE 4"x4" EACH	TEE 6"x6" EACH	BEND 4"x45° EACH	BEND 6"x45° EACH	BEND 4"x90° EACH	BEND 6"x90° EACH	45°WYE 4"x4" EACH	45°WYE	CROSS 4"x4" EACH	CROSS 6"x4" EACH	COUPLER 4" EACH	COUPLER 6" EACH
1-UD	107+83	112+00	LT	230							417														
2-UD	108+00	112+00	LT	230						400															
3-UD	108+00	112+00	LT	230							400														
4-UD	108+00	112+00	RT	230							400														
5-UD	108+05	112+00	RT	230						395															
6-UD	108+08	112+00	RT	230							392														
7-UD	107+90	112+00	LT	230						410															
8-UD	108+00	112+00	RT	230						400															
9-UD	112+00	114+38	LT	231									238	1								1			
10-UD	112+00	113+00	LT	231		7		22				100						1							
11-UD	112+00	117+00	LT	231		8	34		45	500				1	1				1						
12-UD	112+00	117+00	LT	231		3					500				1										
13-UD	112+00	113+00	RT	231	10	10	10				90													1	1
14-UD	113+05	117+00	RT	231							395														
15-UD	112+00	113+00	RT	231		6				95							1								
16-UD	113+05	117+00	RT	231						395															
17-UD	112+00	113+00	RT	231		7		19				100						1							
18-UD	112+00	114+52	RT	231									252	1								1			
19-UD	114+75 RAMP H	117+00	RT	231							225														
20-UD	114+40 RAMP F	117+00	LT	231							260														
21-UD	117+00	118+45	LT	232		10	7				257							1						1	
22-UD	118+50	119+50	LT	232		10	7						90					1						1	
23-UD	118+50	120+21	LT	232		10	7						71					1						1	
24-UD	120+27	120+50	LT	232		10					23													1	
25-UD	117+00	118+45	LT	232		6				262							1								
26-UD	118+50	119+50	LT	232		6						100					1								
27-UD	119+50	120+21	LT	232		6						66					1								
28-UD	120+27	120+50	LT	232		8				23							1								
29-UD	117+00	118+45	LT	232	10	10	10				257													1	1
30-UD	118+50	119+50	LT	232	10	10	10						100											1	1
31-UD	119+50	120+21	LT	232		10							71											1	
32-UD	120+27	120+50	LT	232		10					23													1	
33-UD	117+00	118+45	RT	232		10					257													1	
34-UD	118+50	119+50	RT	232		10							100											1	
35-UD	119+50	120+21	RT	232		10							71											1	
36-UD	120+27	120+50	RT	232		10					23													1	
37-UD	117+00	118+45	RT	232		11				258							1								
38-UD	118+50	119+50	RT	232		11						100					1								
39-UD	119+50	120+21	RT	232		11						71					1								
40-UD	120+27	120+50	RT	232		11				23							1								
41-UD	117+00	119+47	RT	232	98		10		62		267		102	2		2							1		
42-UD	119+53	120+21	RT	232	49		6		27				68	1		1							1		
SUB - TOTAL CARRIED TO SHEET 272					177	231	101	41	134	3161	4186	537	1163	6	2	3	9	3	2	1		2	2	13	3

CALCULATED R.J.G. 3/13/95
CHECKED A.L.L. 3/16/95

UNDERDRAIN QUANTITIES

LIC-16-19.72

L1619330.DGN 5/08/95

✳ CONDUIT, TYPE B, 707.33, 707.42 OR 707.45

MARK	STATION FROM	STATION TO	SIDE	SHEET NO.	202 PIPE REMOVED 24" AND UNDER	603 4" CONDUIT TYPE B ✳	603 6" CONDUIT TYPE B ✳	603 4" CONDUIT TYPE F	605 4" SHALLOW PIPE UNDERDRAIN	605 4" SHALLOW PIPE UNDERDRAIN WITH FABRIC WRAP, AS PER PLAN		605 4" UNCLASSIFIED PIPE UNDERDRAIN	605 4" UNCLASSIFIED PIPE UNDERDRAIN WITH FABRIC WRAP, AS PER PLAN		605 4" SHALLOW PIPE UNDERDRAIN, AS PER PLAN	604 PRECAST REINFORCED CONCRETE OUTLET	FOR INFORMATION ONLY BENDS AND BRANCHES TEE 4"x4"		BEND 4"x45°	BEND 4"x90°	45° WYE 4"x4"		CROSS 4"x4"	CROSS 6"x4"	COUPLER 4"	COUPLER 6"
					LIN.FT.	LIN.FT.	LIN.FT.	LIN.FT.	LIN.FT.	LIN.FT.		LIN.FT.	LIN.FT.			EACH	EACH		EACH	EACH	EACH		EACH	EACH	EACH	EACH
43-UD	120+50	124+68	LT	233	45					418																
44-UD	124+75	125+00	LT	233		35				21									1							
45-UD	124+75	125+00	LT	233		13			18										1							
46-UD	120+50	124+66	LT	233					416																	
47-UD	124+70	125+00	LT	233		10			20																1	
48-UD	120+50	124+15	LT	233						365																
49-UD	124+20	125+00	LT	233	10	10	13			70															1	1
50-UD	120+50	125+00	RT	233		3				450							1									
51-UD	120+50	125+00	RT	233		8			450								1									
52-UD	120+50	125+00	RT	233		7		27		368			82			1								1		
53-UD	125+00	126+27 ROADWAY A	LT	234						126																
54-UD	125+00	130+00	LT	234					126	273			132							2						
55-UD	125+00	129+95	LT	234					495																	
56-UD	125+00	129+95	LT	234						495																
57-UD	125+00	130+00	RT	234						500																
58-UD	125+00	130+00	RT	234					500																	
59-UD	125+00	130+00	RT	234						499			39							2						
60-UD	130+00	135+00	LT	235				26		500						1	1									
61-UD	130+00	135+00	LT	235		6			495										1							
62-UD	130+00	135+00	LT	235	10	10	10			490															1	1
63-UD	130+00	135+00	RT	235		3				500							1									
64-UD	130+00	135+00	RT	235		8			500								1									
65-UD	132+05	135+00	RT	235		8		27	295							1				1						
66-UD	130+00	135+00	RT	235						500																
67-UD	135+00	135+67	LT	236						67																
68-UD	135+00	135+85	LT	236					85																	
69-UD	135+00	135+87	LT	236						87																
70-UD	135+00	135+90	LT	236						90																
71-UD	135+00	135+93	RT	236					93																	
72-UD	135+00	136+05	RT	236					105																	
73-UD	135+00	136+09	RT	236						109																
74-UD	137+46	140+00	LT	236									254													
75-UD	137+59	140+00	LT	236					75			166														
76-UD	137+61	140+00	LT	236									239													
77-UD	137+64	140+00	RT	236									236													
78-UD	137+66	140+00	RT	236					75			159														
79-UD	137+75	140+00	RT	236					75			150														
80-UD	137+78	140+00	RT	236									222													
81-UD	140+00	141+20	LT	237		10							110												1	
82-UD	140+00	141+20	LT	237		6			115										1							
83-UD	140+00	141+20	LT	237	10	10	10						110												1	1
84-UD	140+00	141+20	RT	237		10							110												1	
85-UD	140+00	141+20	RT	237		11			115										1							
86-UD	140+00	141+20	RT	237		13			111										1							
87-UD	140+00	141+20	RT	237		10							110												1	
88-UD	143+21	145+00	LT	237						179																
89-UD	143+14	145+00	LT	237					186																	
90-UD	143+14	145+00	LT	237						186																
91-UD	143+14	145+00	LT	237						186																
SUB - TOTAL CARRIED TO SHEET 272					75	191	33	80	4350	6479		475	1644			3	5		6	5				1	7	3

CALCULATED R.J.G. 3/13/95
CHECKED A.L.L. 3/16/95

UNDERDRAIN QUANTITIES

LIC-16-19.72

L161933E.DGN 5/08/95

✳ CONDUIT, TYPE B, 707.33, 707.42 OR 707.45

MARK	STATION FROM	STATION TO	SIDE	SHEET NO.	202 PIPE REMOVED 24" AND UNDER LIN.FT.	603 4" CONDUIT TYPE B ✳ LIN.FT.	603 6" CONDUIT TYPE B ✳ LIN.FT.	603 4" CONDUIT TYPE F LIN.FT.	603 6" CONDUIT TYPE F LIN.FT.	605 4" SHALLOW PIPE UNDERDRAIN LIN.FT.	605 4" SHALLOW PIPE UNDERDRAIN WITH FABRIC WRAP, AS PER PLAN LIN.FT.	605	605 4" UNCLASSIFIED PIPE UNDERDRAIN LIN.FT.	605 4" UNCLASSIFIED PIPE UNDERDRAIN WITH FABRIC WRAP, AS PER PLAN LIN.FT.	605	605 4" SHALLOW PIPE UNDERDRAIN, AS PER PLAN	604 PRECAST REINFORCED CONCRETE OUTLET EACH	FOR INFORMATION ONLY BENDS AND BRANCHES TEE 4"x4" EACH	TEE 6"x4" EACH	BEND 4"x45° EACH	BEND 6"x45° EACH	BEND 4"x90° EACH	BEND 6"x90° EACH	45°WYE 4"x4" EACH	45°WYE 6"x6" EACH	CROSS 4"x4" EACH	CROSS 6"x4" EACH	COUPLER 4" EACH	COUPLER 6" EACH
92-UD	143+14	145+00	RT.	237						186																		
93-UD	143+07	144+10	RT.	237		48		21		103							1					1						
94-UD	143+07	144+10	RT.	237										103				1										
95-UD	172+23 ROADWAY D	173+29 ROADWAY D	LT.	237										106				1										
96-UD	172+22 ROADWAY D	173+28 ROADWAY D	LT.	237										107				1										
97-UD	172+16 ROADWAY D	145+00	RT.	237						206																		
98-UD	172+14 ROADWAY D	145+00	RT.	237							208																	
99-UD	145+00	147+10	LT.	238			7	24	27		210											1			1			
100-UD	147+14	150+00	LT.	238							286																	
101-UD	147+14	148+65	RT.	238		7					86			65								1						
102-UD	145+00	147+11	LT.	238		8				206										1								
103-UD	147+14	150+00	LT.	238						286																		
104-UD	145+00	147+11	LT.	238		10					201																1	
105-UD	147+17	150+00	LT.	238							283																	
106-UD	145+00	147+11	RT.	238	10	10	10				201																1	1
107-UD	147+17	150+00	RT.	238							283																	
108-UD	145+00	147+07	RT.	238		8				207										1								
109-UD	147+14	150+00	RT.	238						286																		
110-UD	145+00	147+11	RT.	238		8				203										1								
111-UD	147+14	150+00	RT.	238						286								1										
112-UD	145+00	147+11	RT.	238		10					201																1	
113-UD	148+67 ROADWAY D	150+00	RT.	238							125			8														
114-UD	150+00	155+00	LT.	239		11	29	10	49	156	275		69					1			1	2	1		1			
115-UD	150+00	150+45	LT.	239		10				40										1								
116-UD	150+46	155+00	LT.	239						454																		
117-UD	150+00	150+45	LT.	239	10	10	10				35																1	1
118-UD	150+50	155+00	LT.	239							450																	
119-UD	150+00	150+45	RT.	239		10					35																1	
120-UD	150+50	155+00	RT.	239							450																	
121-UD	150+00	150+45	RT.	239		11				37										1								
122-UD	150+46	155+00	RT.	239						454																		
123-UD	150+00	150+45	RT.	239		12	8			35										1	1							
124-UD	150+00	153+30	RT.	239		10	9				320										1						1	
125-UD	153+32	155+00	RT.	239							168																	
126-UD	153+35 ROADWAY B	155+00	LT.	239							165																	
127-UD	155+00	156+00	LT.	240		10	10				90										1						1	
128-UD	156+02	158+95	LT.	240		10	5				283																1	
129-UD	159+03	159+75	LT.	240		10								62					1								1	
130-UD	159+75	160+00	LT.	240		10					15																1	
131-UD	155+00	155+90	LT.	240		29				90												1						
132-UD	155+00	156+00	LT.	240		10				92										1								
133-UD	156+03	160+00	LT.	240						397																		
134-UD	155+00	156+00	LT.	240	10	10	10				90																1	1
135-UD	156+05	160+00	LT.	240							395																1	
136-UD	155+00	156+00	RT.	240		10					90																	
137-UD	156+05	160+00	RT.	240							395																	
138-UD	155+00	156+00	RT.	240		10				92										1								
139-UD	156+03	160+00	RT.	240						397																	1	
140-UD	155+00	156+00	RT.	240		10	10				91										1							
141-UD	156+03	160+00	RT.	240							397																	
142-UD	160+00	161+65	LT.	241							165																	
SUB - TOTAL CARRIED TO SHEET				272	30	302	108	55	76	4213	5993		69	451			1	5	1	8	5	6	1		2		13	3

CALCULATED R.J.G. 3/13/95
CHECKED A.L.L. 3/16/95

UNDERDRAIN QUANTITIES

LIC-16-19.72

L161933F.DGN 5/08/95

✳ CONDUIT, TYPE B, 707.33, 707.42 OR 707.45

MARK	STATION FROM	STATION TO	SIDE	SHEET NO.	202 PIPE REMOVED 24" AND UNDER (LIN.FT.)	603 4" CONDUIT TYPE B ✳ (LIN.FT.)	603 6" CONDUIT TYPE B ✳ (LIN.FT.)	603 4" CONDUIT TYPE F (LIN.FT.)	603 6" CONDUIT TYPE F (LIN.FT.)	605 4" SHALLOW PIPE UNDERDRAIN (LIN.FT.)	605 4" SHALLOW PIPE UNDERDRAIN WITH FABRIC WRAP, AS PER PLAN (LIN.FT.)	605	605 4" UNCLASSIFIED PIPE UNDERDRAIN (LIN.FT.)	605 4" UNCLASSIFIED PIPE UNDERDRAIN WITH FABRIC WRAP, AS PER PLAN (LIN.FT.)	605	605 4" SHALLOW PIPE UNDERDRAIN, AS PER PLAN	604 PRECAST REINFORCED CONCRETE OUTLET (EACH)	FOR INFORMATION ONLY BENDS AND BRANCHES TEE 4"x4" (EACH)	TEE	BEND 4"x45° (EACH)	BEND 6"x45° (EACH)	BEND 6"x90° (EACH)	BEND 4"x90° (EACH)	45° WYE 4"x4" (EACH)	45° WYE	CROSS 4"x4" (EACH)	CROSS 6"x4" (EACH)	COUPLER 4" (EACH)	COUPLER 6" (EACH)
143-UD	161+67	165+00	LT.	241		10					298			25														1	
144-UD	160+00	161+65	LT.	241		8							165					1											
145-UD	161+69	165+00	LT.	241		7				251			75							1									
146-UD	160+00	160+75	LT.	241	10	10	10				65																	1	1
147-UD	160+75	161+57	LT.	241		10								72														1	
148-UD	161+69	165+00	LT.	241	10	10	10				221			100														1	1
149-UD	160+00	161+57	RT.	241	10	3	10							157				1											1
150-UD	163+25	165+00	RT.	241		18	8							165						1	1							1	
151-UD	161+69	165+00	RT.	241		10					221			100														1	
152-UD	160+00	165+00	RT.	241		8				250			250					1											
153-UD	160+00	162+75	RT.	241		10	8				265										1							1	
154-UD	165+00	167+10	LT.	242			12							210							1					1			
155-UD	166+52	167+20	LT.	242	10	16	12						68								1		1						
156-UD	167+50	170+00	LT.	242							250																		
157-UD	165+00	170+00	LT.	242						400			100																
158-UD	165+00	170+00	LT.	242							400			100															
159-UD	165+00	170+00	RT.	242							400			100															
160-UD	165+00	170+00	RT.	242						400			100																
161-UD	165+00	167+56 RAMP C	RT.	242							256																		
162-UD	167+74	170+00	RT.	242							226																		
163-UD	170+00	171+50	LT.	243			7	18	16		137									1	1								
164-UD	171+50	175+00	LT.	243			7	18	16		337									1	1								
165-UD	170+00	171+47	LT.	243		5				100			47					1											
166-UD	171+50	175+00	LT.	243		10				300			48					1											
167-UD	170+00	171+00	LT.	243		10					90																	1	
168-UD	171+06	171+50	LT.	243		10								34														1	
169-UD	171+50	171+89	LT.	243		10					29																	1	
170-UD	172+00	175+00	LT.	243		10					290																	1	
171-UD	170+00	171+00	RT.	243		10					90																	1	
172-UD	171+06	171+50	RT.	243	10	10	13							34														1	1
173-UD	171+50	171+89	RT.	243	10	10	10				29																	1	1
174-UD	172+00	175+00	RT.	243		10					290																	1	
175-UD	170+00	171+47	RT.	243		8				100	47							1											
176-UD	171+52	175+00	RT.	243		8				300			48					1											
177-UD	170+00	171+50	RT.	243			7	20	16		50			83						1	1								
178-UD	171+50	175+00	RT.	243			7	20	18		338									1	1								
179-UD	175+00	178+33	LT.	244							333																		
180-UD	175+00	178+44	LT.	244						344																			
181-UD	175+00	178+47	LT.	244							347																		
182-UD	175+00	178+47	RT.	244							347																		
183-UD	175+00	178+50	RT.	244						350																			
184-UD	175+00	178+58	RT.	244							358																		
185-UD	180+33	185+00	LT.	245			7	20	15		225			242			2					1	1						
186-UD	180+50	185+00	LT.	245		8				350			100										1						
187-UD	180+50	185+00	LT.	245		10					265			175														1	
188-UD	180+50	185+00	RT.	245	10	10	10				265			175														1	1
189-UD	180+50	185+00	RT.	245		7				345			100							1									
190-UD	180+58	182+25	RT.	245		7	7	16	15	162							2						1						
191-UD	180+58	185+00	RT.	245							175			267				1				1							
SUB - TOTAL CARRIED TO SHEET 272					70	273	145	112	96	3652	6644		1101	2039			4	8		7	8	2	4			1		17	6

CALCULATED R.J.G. 3/13/95
CHECKED A.L. 3/16/95

UNDERDRAIN QUANTITIES

LIC-16-19.72

L161933G.DGN 5-08-95

** 4" UNCLASSIFIED PIPE UNDERDRAIN 707.33, 707.41, 707.42 OR 707.45 PERFORATED AS PER 707.15, AS PER PLAN A

* CONDUIT, TYPE B 707.33, 707.42 OR 707.45

** STATION EQUATION: STA. 190+33.14 (BACK)
STA. 116+62.16 (AHEAD)

MARK	STATION FROM	STATION TO	SIDE	SHEET NO.	603 4" CONDUIT TYPE B * LIN.FT.	603 6" CONDUIT TYPE B * LIN.FT.	603 4" CONDUIT TYPE F LIN.FT.	603 6" CONDUIT TYPE F LIN.FT.	605 4" SHALLOW PIPE UNDERDRAIN LIN.FT.	605 4" SHALLOW PIPE UNDERDRAIN WITH FABRIC WRAP, AS PER PLAN LIN.FT.	605 ** 4" UNCLASSIFIED AS PER PLAN LIN.FT.	605 4" UNCLASSIFIED PIPE UNDERDRAIN LIN.FT.	605 6" UNCLASSIFIED PIPE UNDERDRAIN LIN.FT.	605 4" UNCLASSIFIED PIPE UNDERDRAIN WITH FABRIC WRAP, AS PER PLAN LIN.FT.	605 4" SHALLOW PIPE UNDERDRAIN, AS PER PLAN LIN.FT.	604 PRECAST REINFORCED CONCRETE OUTLET EACH	FOR INFORMATION ONLY BENDS AND BRANCHES TEE 4"x4" EACH	TEE 6"x4" EACH	BEND 4"x45° EACH	BEND 6"x45° EACH	BEND 4"x90° EACH	BEND 6"x90° EACH	45° WYE 4"x4" EACH	45° WYE 6"x6" EACH	COUPLER 4" EACH	COUPLER 6" EACH	CROSS 4"x4" EACH
192-UD	185+00	186+25	LT.	246		46		18		50				75		1		2									
193-UD	185+25	186+25	LT.	246									100								1				1		
194-UD	186+26.92 RAMP B	187+75	LT.	246	10	7				138										1				1			
195-UD	187+75	189+90	LT.	246	10	7				205										1				1			
196-UD	185+00	187+75	LT.	246	6				271										1								
197-UD	188+18	190+00	LT.	246	29				182												1						
198-UD	187+75	190+00	LT.	246	6				175			46							1								
199-UD	188+20.5	190+00	RT.	246	10	10			172											1				1			
200-UD	185+00	187+75	LT.	246	10					265														1			
201-UD	187+81	188+18	LT.	246	10									27										1			
202-UD	188+18	190+00	LT.	246	20					172														2			
203-UD	185+00	187+75	RT.	246	10					265														1			
204-UD	187+81	188+18	RT.	246	10									27										1			
205-UD	188+18	190+00	RT.	246	10					172														1			
206-UD	185+00	187+18	RT.	246	11				310										1								
207-UD	187+18	190+00	RT.	246	11				174										1								
208-UD	185+00	187+81	RT.	246		44	23			75				206		1	1			1							
209-UD	188+20	190+00	RT.	246	33				180												1						
210-UD	190+00	** 117+01	RT.	247						72																	
211-UD	190+00	190+25	LT.	247					25																		
212-UD	190+00	190+28	LT.	247						28																	
213-UD	190+00	190+33	RT.	247						33																	
214-UD	190+00	** 116+64	RT.	247					34																		
215-UD	190+00	** 116+93	RT.	247					63																		
RAMP "H"																											
216-UD	108+19	112+40	RT.	248				15		421	22												1		1	1	
217-UD	112+40	114+75	RT.	249						110				125			1										
218-UD	113+25	114+52	LT/RT	249	24					127											1						
RAMP "F"																											
219-UD	106+80	111+00	LT.	250		6	11	16		370				50		2	1					1					
220-UD	106+81	111+00	RT.	250			44	50		344				75			1			1							
221-UD	111+00	112+75	RT.	251						250				25													
222-UD	111+00	114+40	LT.	251						240				100													
RAMP "DD"																											
223-UD	141+95	146+40	LT.	255			30	19		445	19									1			1				1
224-UD	141+95	146+40	RT.	255			24			445													1				
225-UD	146+40	148+67	LT.	256						227																	
226-UD	146+40	148+67	RT.	256						185				42													
ROADWAY "B"																											
227-UD	143+63	147+04	LT.	253	10					341														1			
228-UD	143+63	147+33	LT.	253	9					351		19					1										
229-UD	143+60	148+20	RT.	253					460																		
230-UD	143+60	148+20	RT.	253						460																	
231-UD	147+24	147+33	LT.	253	10									9										1			
232-UD	148+00	148+20	LT.	253						20																	
SUB-TOTAL CARRIED TO SHEET 272					239	127	132	118	2046	5811	41	65	100	761		4	5	2	4	6	3	2	2	1	11	2	2

CALCULATED R.J.G. 3/13/95
CHECKED A.L.J. 3/16/95

UNDERDRAIN QUANTITIES

LIC-16-19.72

05/08/95

L16933H.DGN

4" UNCLASSIFIED PIPE UNDERDRAIN
** 707.33, 707.41, 707.42 OR 707.45
PERFORATED AS PER 707.15 AS PER PLAN A
⊙ CONDUIT, TYPE B, 706.01 OR 706.02

✳ CONDUIT, TYPE B, 707.33, 707.42 OR 707.45

MARK	STATION FROM	STATION TO	SIDE	SHEET NO.	202 PIPE REMOVED 24" AND UNDER	603 4" CONDUIT TYPE B ✳	603 12" CONDUIT, TYPE B ⊙	603 15" CONDUIT, TYPE C	603 6" CONDUIT TYPE B ✳	603 4" CONDUIT TYPE F	603 6" CONDUIT TYPE F	605 4" SHALLOW PIPE UNDERDRAIN	605 4" SHALLOW PIPE UNDERDRAIN WITH FABRIC WRAP, AS PER PLAN	605 ** 4" UNCLASSIFIED AS PER PLAN A	605 4" UNCLASSIFIED PIPE UNDERDRAIN	605 6" UNCLASSIFIED PIPE UNDERDRAIN	605 4" UNCLASSIFIED PIPE UNDERDRAIN WITH FABRIC WRAP, AS PER PLAN	604 PRECAST REINFORCED CONCRETE OUTLET	FOR INFORMATION ONLY BENDS AND BRANCHES TEE 4"x4"	TEE 6"x4"	BEND 4"x45°	BEND 6"x45°	BEND 4"x90°	BEND 6"x22.5°	BEND 6"x90°	45° WYE 4"x4"	45° WYE 6"x6"	CROSS 4"x4"	CROSS 6"x4"	COUPLER 4"	COUPLER 6"	604 INLET, NO. I-2A6
					LIN.FT.	LIN.FT.	LIN.FT.	LIN.FT.	LIN.FT.	LIN.FT.	LIN.FT.	LIN.FT.	LIN.FT.	LIN.FT.	LIN.FT.	LIN.FT.	LIN.FT.	EACH	EACH	EACH	EACH	EACH	EACH	EACH	EACH	EACH	EACH	EACH	EACH	EACH	EACH
ROADWAY "B"																																
233-UD	148+20	150+39	LT.	254		10			9				219								1								1		
234-UD	148+20	150+45	RT.	254		4			3	19	19	225									1	1									
235-UD	150+52	153+23	LT.	254		10			22				271								2								1		
236-UD	150+50	151+94	RT.	254		4				13		144								1						1				1	
237-UD	148+20	151+94	RT.	254						16	26		374						1	1						1				1	
238-UD	152+12	153+33	RT.	254					4		13				121					1						1				1	
239-UD	152+12	153+46	RT.	254							23						134			1						1				1	
RAMP "BB"																																
240-UD	143+68	147+87	LT.	252		10							419																1		
RAMP "C" MT. VERNON RD.																																
241-UD	167+56	167+65	RT.	257		10							9																1		
242-UD	167+85	168+23	RT.	257		10			9								38				1								1		
243-UD	168+35	168+73	RT.	257		10			9				38								1								1		
244-UD	168+85	172+00	RT.	257		10							315																1		
245-UD	169+50	172+00	LT.	257						17			250					1				1									
246-UD	172+00	174+82	LT.	258									282																		
247-UD	172+00	28+00 MT. VERNON RD.	RT.	258						11			372									1									
248-UD	173+76	174+21	RT.	258		10											45												1		
249-UD	174+41	174+96	RT.	258		10											55												1		
RAMP "A" MT. VERNON RD.																																
250-UD	167+53	171+20	LT.	259	125								367																		
251-UD	171+20	21+15 MT. VERNON RD.	LT.	260									207																		
RAMP "D" HUDSON AVE.																																
252-UD	28+75 HUDSON AVE.	181+04	RT.	261		10							87				22												1		
253-UD	181+24	185+00	RT.	261		10				15			376						1										1		
254-UD	180+17	180+90	LT.	261		10			10				73	28															2		
255-UD	181+10	184+25	LT.	261	10	10			10				315																1	1	
256-UD	185+00	188+05	RT.	262									305																		
RAMP "B" HUDSON AVE.																																
257-UD	22+36 HUDSON AVE.	178+90	LT.	263		10							74																1		
258-UD	179+10	183+20	LT.	263		10			5	11	32		395				15	2	1					1					1		
259-UD	178+50	181+96	RT.	263					5	5	23		271	30			75		1				1								
260-UD	183+20	186+27	LT.	264									232				75														
SUB-TOTAL (FROM SHEET 267)					177	231			101	41	134	3161	4186		537		1163	6	2	3	9	3	2		1			2	2	13	3	
SUB-TOTAL (FROM SHEET 268)					75	191			33	80		4350	6479		475		1644	3	5		6		5						1	7	3	
SUB-TOTAL (FROM SHEET 269)					30	302			108	55	76	4213	5993		69		451	1	5	1	8	5	6		1		2			13	3	
SUB-TOTAL (FROM SHEET 270)					70	273			145	112	96	3652	6644		1101		2039	4	8		7	8	4		2			1		17	6	
SUB-TOTAL (FROM SHEET 271)						239			127	132	118	2046	5811	41	65	100	761	4	5	2	4	6	3		2	2	1	2		11	2	
SUB-TOTAL (FROM SHEET 272A)					445	110	6	15		23		780	586		128			2	2		4		5			3				1		1
SUB-TOTAL (THIS SHEET)					135	158			86	107	136	369	5251	58	121		459	3	4		4	6	3	1	1		4			16	5	
TOTAL CARRIED TO GENERAL SUMMARY					932	1504	6	15	600	550	560	18571	34950	99	2496	100	6517	23	31	6	42	28	28	1	7	5	7	5	3	78	22	1

CALCULATED R.J.C. 3/13/95
CHECKED J.A. 3/16/95

UNDERDRAIN QUANTITIES

LIC-16-19.72

272
547

L161933J.DGN 6/05/95

** 4" UNCLASSIFIED PIPE UNDERDRAIN 707.33, 707.41, 707.42 OR 707.45 PERFORATED AS PER 707.15 AS PER PLAN A

⊙ CONDUIT, TYPE B, 706.01 OR 706.02

* CONDUIT, TYPE B, 707.33, 707.42 OR 707.45

MARK	STATION FROM	STATION TO	SIDE	SHEET NO.	202 PIPE REMOVED 2-4" AND UNDER	603 4" CONDUIT TYPE B *	603 12" CONDUIT, TYPE B ⊙	603 15" CONDUIT, TYPE C	603 6" CONDUIT TYPE B *	603 4" CONDUIT TYPE F	603 6" CONDUIT TYPE F	605 4" SHALLOW PIPE UNDERDRAIN	605 4" SHALLOW PIPE UNDERDRAIN WITH FABRIC WRAP, AS PER PLAN	605 ** 4" UNCLASSIFIED AS PER PLAN A	605 4" UNCLASSIFIED PIPE UNDERDRAIN	605 6" UNCLASSIFIED PIPE UNDERDRAIN	605 4" UNCLASSIFIED PIPE UNDERDRAIN WITH FABRIC WRAP, AS PER PLAN	604 PRECAST REINFORCED CONCRETE OUTLET	FOR INFORMATION ONLY BENDS AND BRANCHES TEE 4"x4"	TEE 6"x4"	BEND 4"x45°	BEND 6"x45°	BEND 4"x90°	BEND 6"x22.5°	BEND 6"x90°	45° WYE 4"x4"	45° WYE 6"x6"	CROSS 4"x4"	CROSS 6"x4"	COUPLER 4"	COUPLER 6"	604 INLET, No. I-2A6
					LIN.FT.	LIN.FT.	LIN.FT.	LIN.FT.	LIN.FT.	LIN.FT.	LIN.FT.	LIN.FT.	LIN.FT.	LIN.FT.	LIN.FT.	LIN.FT.	LIN.FT.	EACH	EACH	EACH	EACH	EACH	EACH	EACH	EACH	EACH	EACH	EACH	EACH	EACH	EACH
MAINLINE																																
261-UD	119+17	121+80	LT.	99/99A		38				12			263					1	1		1		1			1						
262-UD	119+25	121+81	LT.	99/99A								225																				
263-UD	119+53	121+40	LT.	99		4						187									1											
264-UD	119+56	121+43	LT.	99	200	10							112		65						1								1			
265-UD	119+63	121+38	RT.	99		10						112			63						1											
266-UD	120+03	121+40	RT.	99								137																				
267-UD	120+10	121+40	RT.	99	150	14	6	15					130										1			1						1
268-UD	121+47	121+85	LT.	99/99A								38																				
269-UD	121+47	121+85	LT.	99/99A	35								38										1									
270-UD	121+47	121+86	RT.	99/99A								39																				
271-UD	121+47	121+89	RT.	99/99A								42																				
272-UD	121+47	121+90	RT.	99/99A	60	34				11			43					1	1				2			1						
TOTAL CARRIED TO SHEET 272					445	110	6	15		23		780	586		128			2	2		4		5			3				1		1

CALCULATED R.J.G. 3/13/95
CHECKED A.L.J. 3/16/95

UNDERDRAIN QUANTITIES

LIC-16-19.72

272A
547

L161933K.DGN 2/18/98

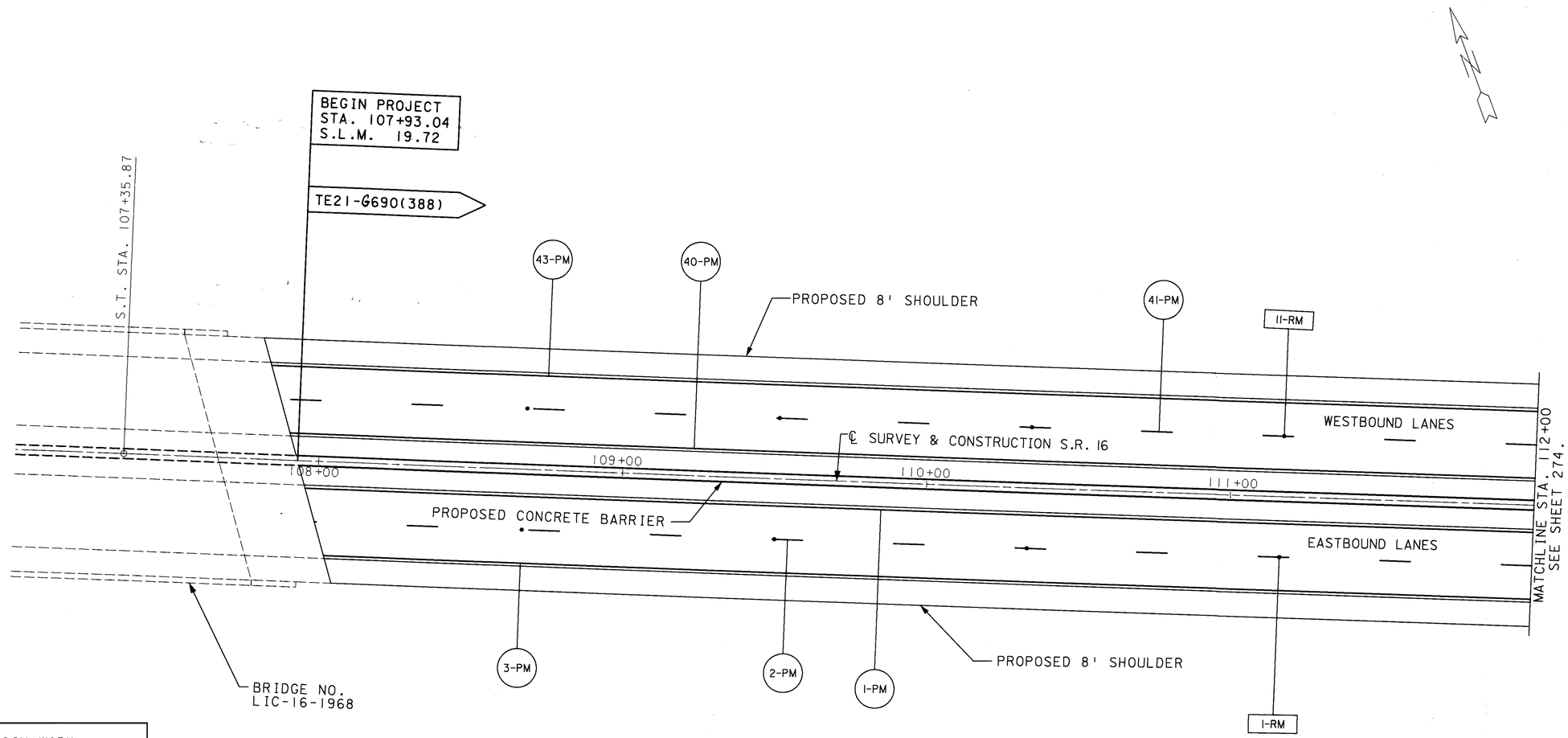

LEGEND

• - 2 WAY REFLECTORS
▫ - 1 WAY REFLECTORS

FOR QUANTITIES SEE SHEETS 310-316.

NOTE:

ITEM 644 THERMOPLASTIC

THE FOLLOWING QUANTITIES HAVE BEEN INCLUDED IN THE PAVEMENT MARKING SUB-SUMMARY TO BE USED AS DIRECTED BY THE ENGINEER FROM STA. 95+56(EASTBOUND LANES) AND STA. 105+00(WESTBOUND LANES) TO STA. 107+93.04. SEE SHEET 40.

ITEM 644 EDGE LINE(YELLOW) -.167 MILE
ITEM 644 EDGE LINE(WHITE) - .290 MILE
ITEM 644 LANE LINE - .324 MILE
ITEM 644 CHANNELIZING LINE - 355 LIN. FT.
ITEM 644 TRANSVERSE LINE - 242 LIN. FT.

HORIZONTAL SCALE IN FEET
0 10 20 40

CALCULATED J.L.S. 3/13/95
CHECKED SAB 02/17/99

PAVEMENT MARKING SHEET
STA. 107+00 TO STA. 112+00

LIC-16-19.72

L6502159 DGN 02/17/99

FOR PAVEMENT MARKINGS ON RAMP "F",
SEE SHEETS 293 & 294.

END WORK
RAMP "F"
STA. 114+39.45

BEGIN DECELERATION LANE
STA. 114+39.45
(SEE MAINLINE TYPICAL)

71+00

+39.45

2 WAY (YELLOW/RED)
@ 80'

RAMP "F" @ 21st. STREET

114+00

2 WAY (WHITE/RED)
@ 40"

50-PM

45-PM

43-PM

44-PM

41-RM

40-PM

PROPOSED 8' SHOULDER

PROPOSED 8' SHOULDER

11-RM

12-RM

115+00

116+00

WESTBOUND LANES

MATCH LINE STA. 112+00
SEE SHEET 273.

+38.08

+08.84

+18.08

113+00

114+00

115+00

116+00

℄ SURVEY & CONSTRUCTION S.R. 16

PROPOSED CONCRETE BARRIER

EASTBOUND LANES

+52.97

MATCH LINE STA. 117+00
SEE SHEET 275.

PROPOSED 8' SHOULDER

2-RM

3-PM

1-PM

2-PM

115+00

116+00

2 WAY (WHITE/RED)
@ 40'

RAMP "H" @ 21st. STREET

114+00

1-RM

PROPOSED 8' SHOULDER

+54.22

2 WAY (YELLOW/RED)
@ 80'

5-PM

8-PM

FOR PAVEMENT MARKINGS ON RAMP "H",
SEE SHEETS 291 & 292.

END WORK
RAMP "H"
STA. 114+54.22

BEGIN ACCELERATION LANE
STA. 114+54.22
(SEE MAINLINE TYPICAL)

P.T. STA. 116+20.91 ℄ RAMP "H" =
57.00' RT. P.O.T. STA. 116+21.26 ℄ S.R. 16

FOR QUANTITIES SEE SHEETS 310-316.

LEGEND

• - 2 WAY REFLECTORS
▫ - 1 WAY REFLECTORS

0 10 20 40
HORIZONTAL SCALE IN FEET

CALCULATED J.L.S. 3/13/95
CHECKED SAB 02/17/99

PAVEMENT MARKING SHEET
STA. 112+00 TO STA. 117+00

LIC-16-19.72

L6503159.DGN 02/17/99

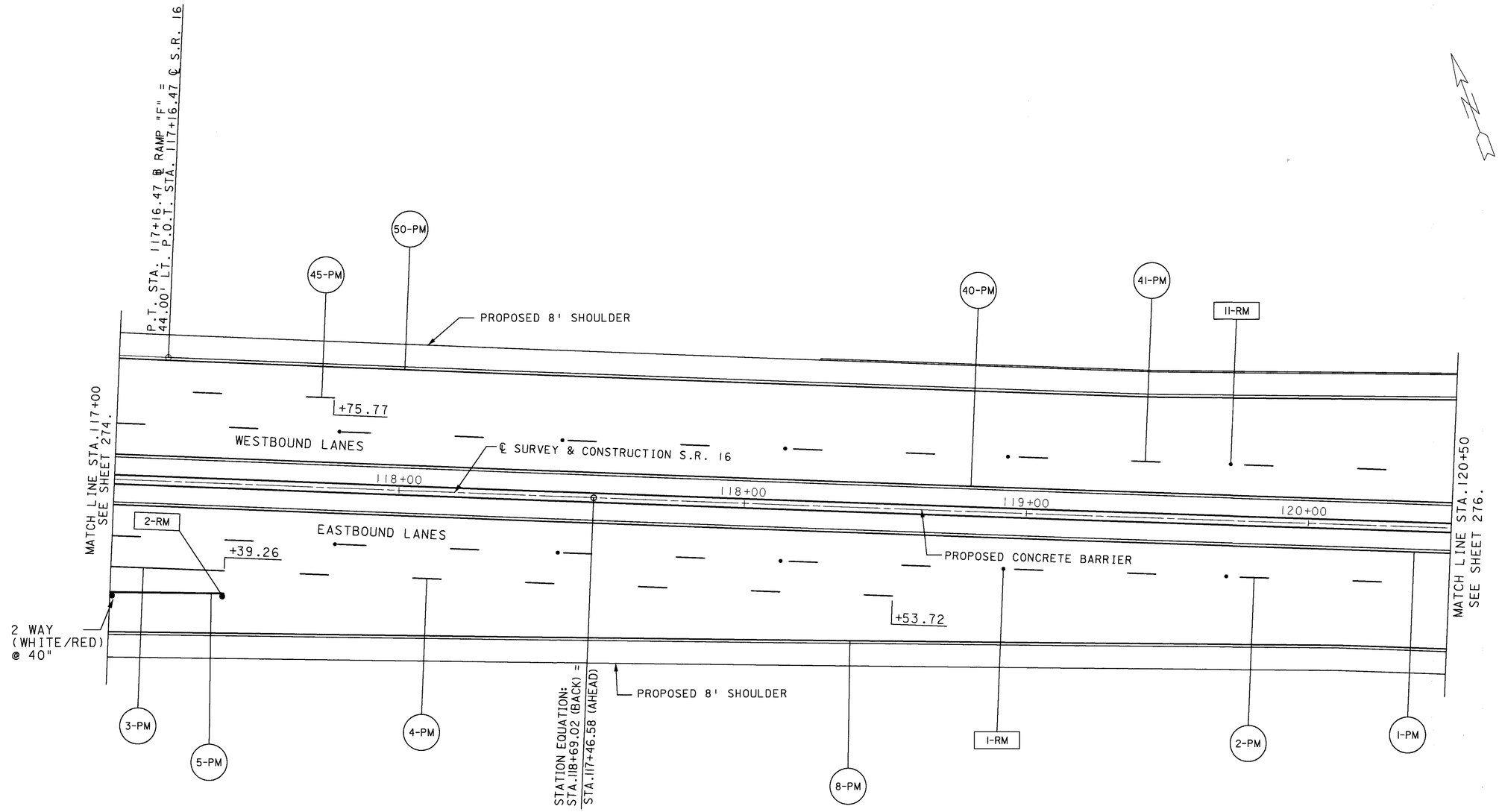

LEGEND

• - 2 WAY REFLECTORS
▫ - 1 WAY REFLECTORS

FOR QUANTITIES SEE SHEETS 310-316.

0 10 20 40
HORIZONTAL SCALE IN FEET

CALCULATED J.L.S. 3/10/95
CHECKED SAB 02-11-99

PAVEMENT MARKING SHEET
STA. 117+00 TO STA. 120+50

LIC-16-19.72

L6504159.DGN 02/17/99

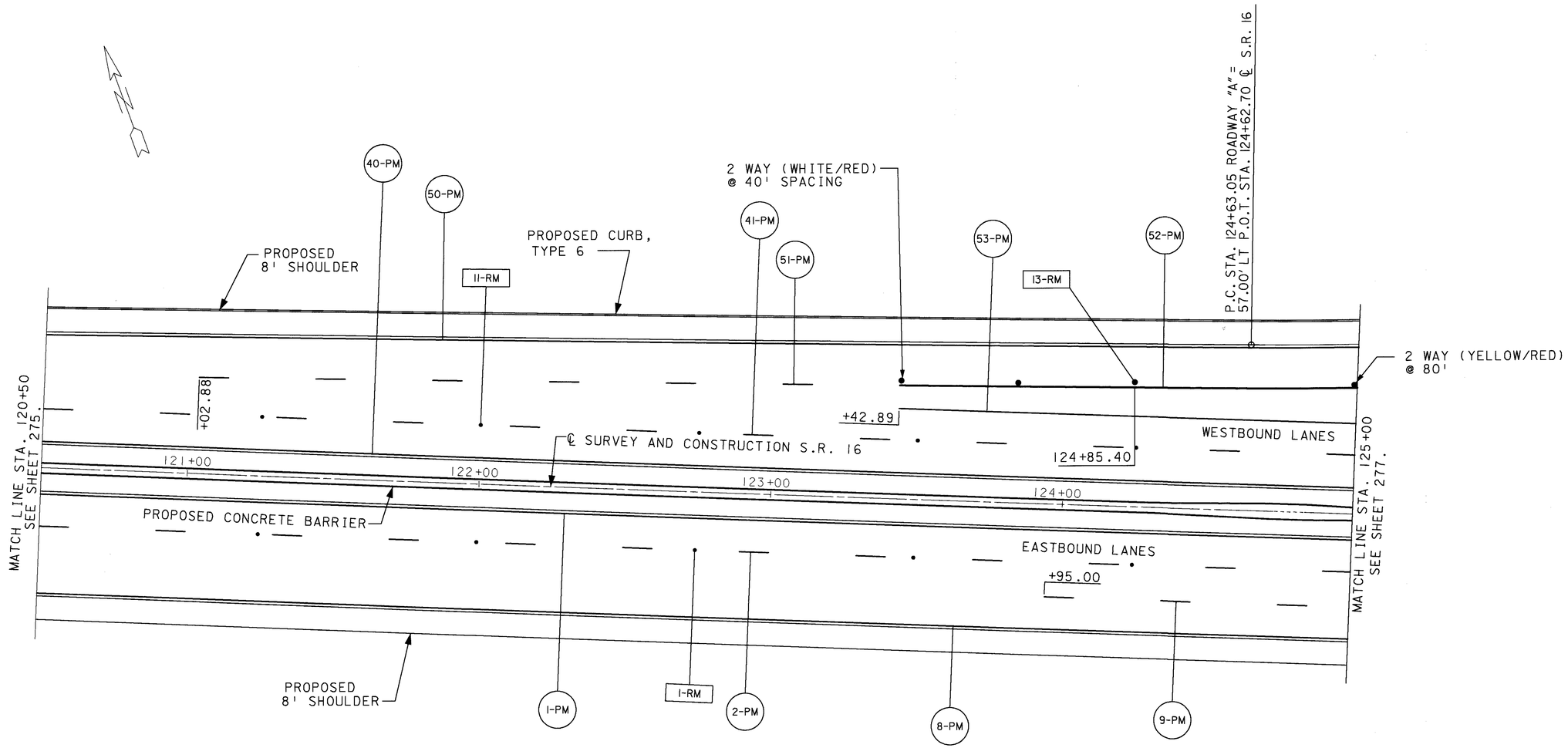

LEGEND

• - 2 WAY REFLECTORS
▫ - 1 WAY REFLECTORS

FOR QUANTITIES SEE SHEETS 310-316.

HORIZONTAL SCALE IN FEET
0 10 20 40

CALCULATED J.L.S. 3/13/95
CHECKED SAB 2-11-99

PAVEMENT MARKING SHEET
STA. 120+50 TO STA. 125+00

LIC-16-19.72

L6505159.DGN 02/17/99

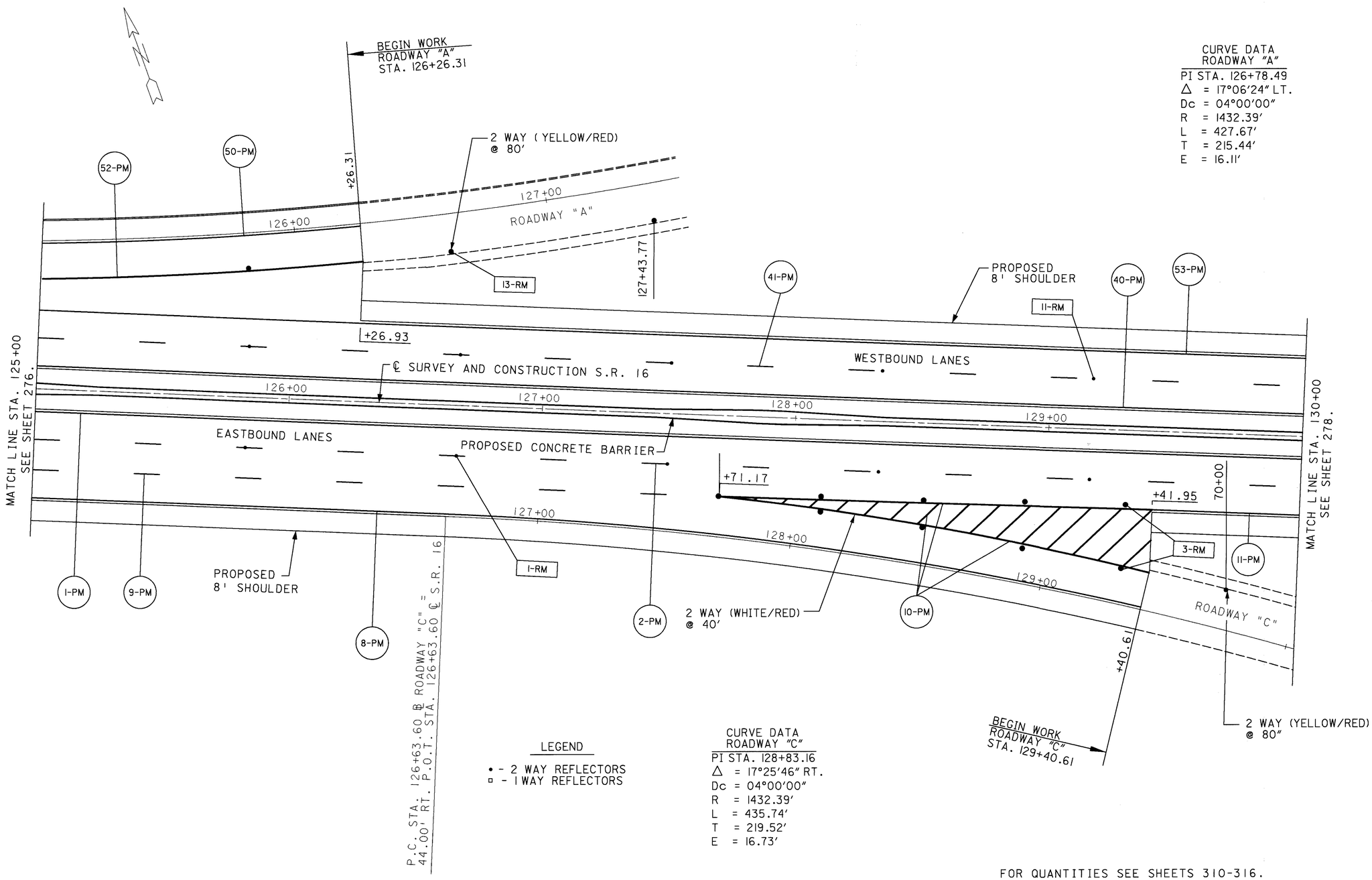

CURVE DATA
ROADWAY "A"

PI STA. 126+78.49
Δ = 17°06'24" LT.
Dc = 04°00'00"
R = 1432.39'
L = 427.67'
T = 215.44'
E = 16.11'

LEGEND

• - 2 WAY REFLECTORS
▫ - 1 WAY REFLECTORS

CURVE DATA
ROADWAY "C"

PI STA. 128+83.16
Δ = 17°25'46" RT.
Dc = 04°00'00"
R = 1432.39'
L = 435.74'
T = 219.52'
E = 16.73'

FOR QUANTITIES SEE SHEETS 310-316.

HORIZONTAL SCALE IN FEET
0 10 20 40

CALCULATED J.L.S. 3/13/95
CHECKED SAB 02/17-99

PAVEMENT MARKING SHEET
STA. 125+00 TO STA. 130+00

LIC-16-19.72

L6506159.DGN 02/17/99

CURVE DATA
S.R. 16

P.I. STA. 141+22.54
△ = 43°50'10" LT
Dc = 03°00'00"
Rc = 1909.86'
Ls = 350.00'
Lc = 1111.20'
Ts = 944.48'
Ø = 05°15'00"
LT = 233.44'
ST = 116.26'
Es = 151.68'

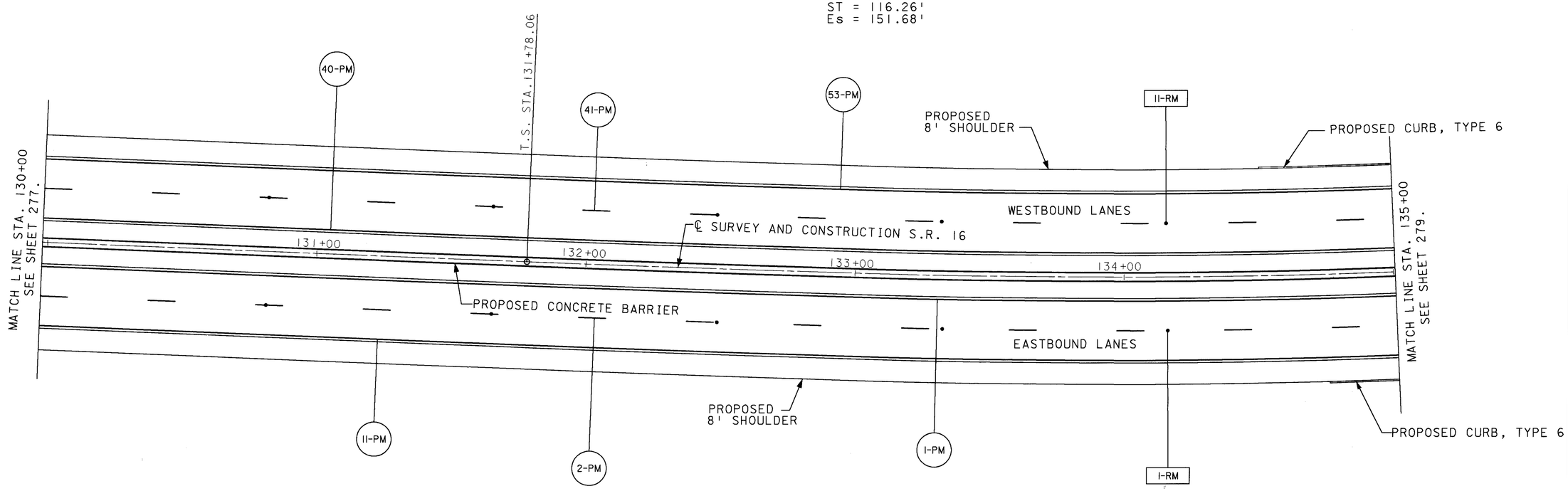

FOR QUANTITIES SEE SHEETS 310-316.

LEGEND

• - 2 WAY REFLECTORS
▫ - 1 WAY REFLECTORS

HORIZONTAL SCALE IN FEET
0 10 20 40

CALCULATED J.L.S. 3/13/95
CHECKED D.M. 3/17/95

PAVEMENT MARKING SHEET
STA. 130+00 TO STA. 135+00

LIC-16-19.72

L6507159.DGN 02/17/99

CURVE DATA
S.R. 16

P.I. STA. 141+22.54
△ = 43°50'10" LT.
Dc = 03°00'00"
Rc = 1909.86'
Ls = 350.00'
Lc = 1111.20'
Ts = 944.48'
Q = 05°15'00"
LT = 233.44'
ST = 116.26'
Es = 151.68'

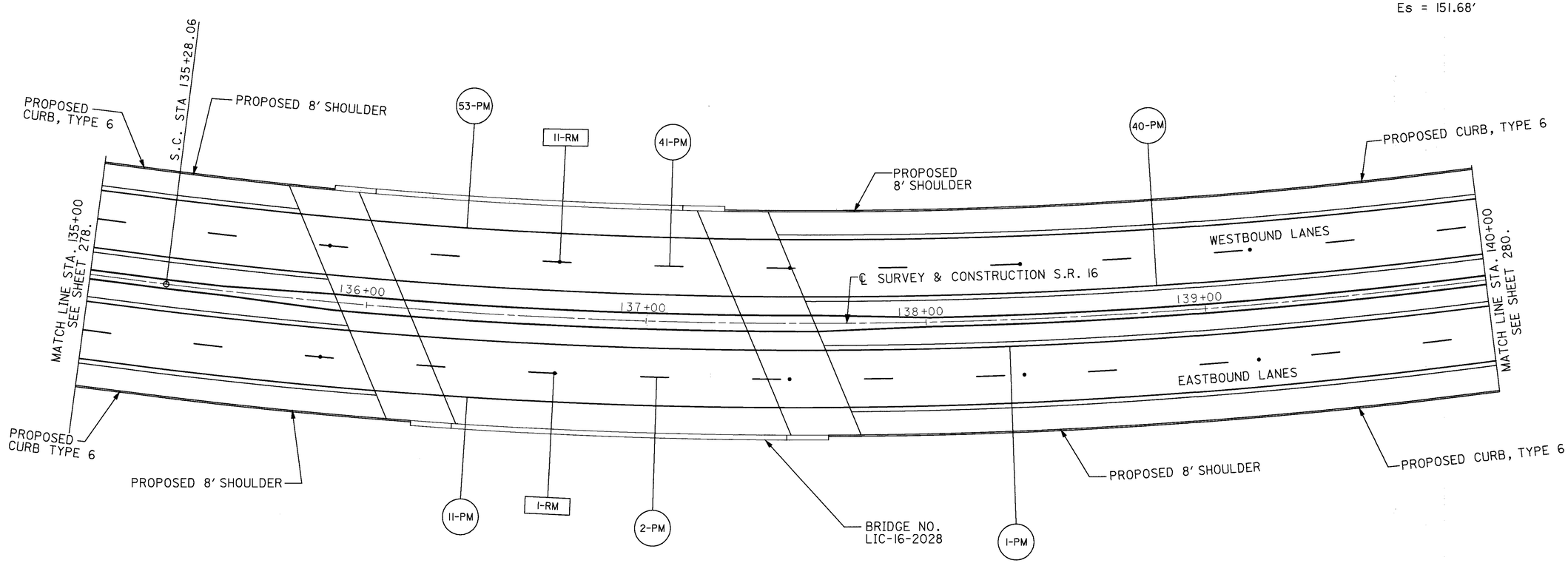

FOR QUANTITIES SEE SHEETS 310-316.

LEGEND

• - 2 WAY REFLECTORS
▫ - 1 WAY REFLECTORS

HORIZONTAL SCALE IN FEET
0 10 20 40

CALCULATED J.L.S. 3/13/95
CHECKED SAB 02-11-99

PAVEMENT MARKING SHEET
STA. 135+00 TO STA. 140+00

LIC-16-19.72

L6508159.DGN 02/17/99

CURVE DATA
S.R. 16

P.I. STA. 141+22.54
Δ = 43°50'10" LT.
Dc = 03°00'00"
Rc = 1909.86'
Ls = 350.00'
Lc = 1111.20'
Θ = 05°15'00"
LT = 233.44'
ST = 116.26'
Es = 151.68'
Ts = 944.48'

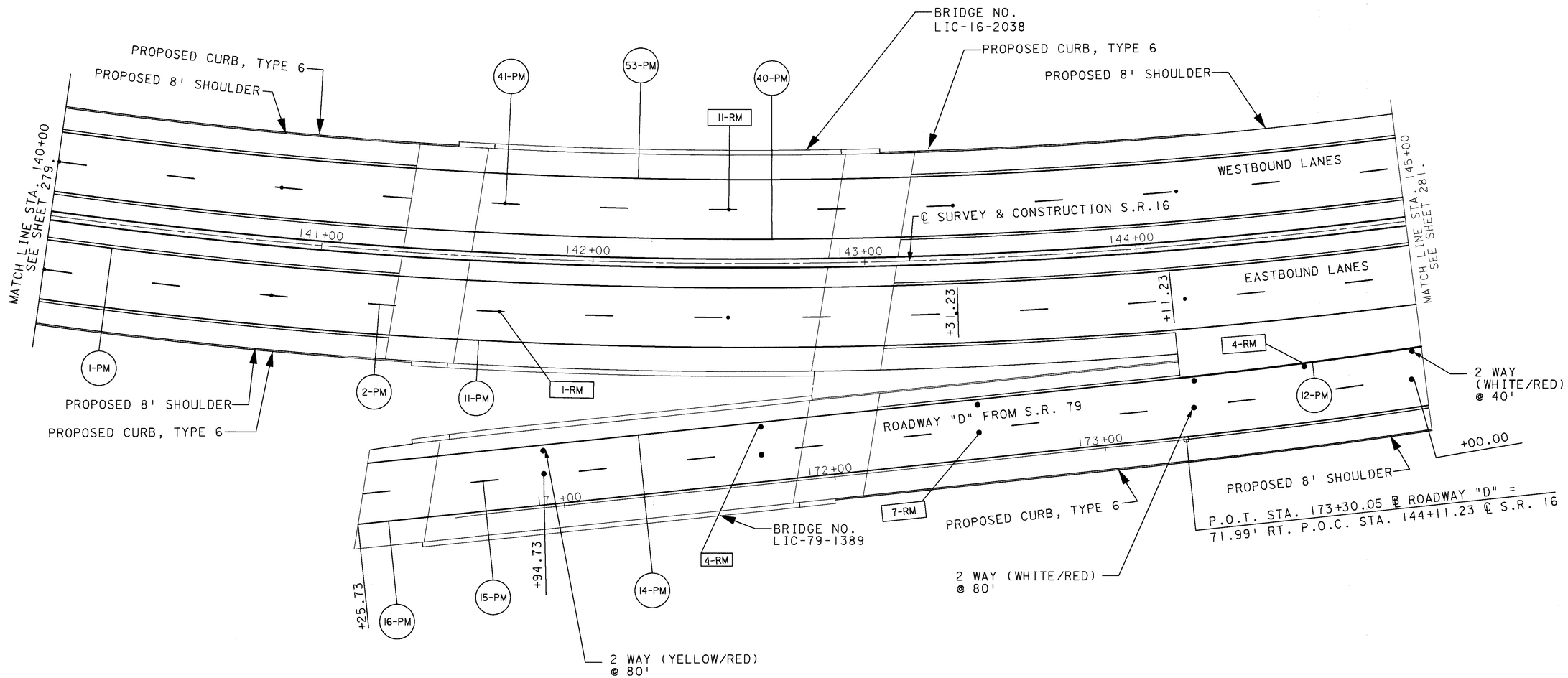

LEGEND

• - 2 WAY REFLECTORS
▫ - 1 WAY REFLECTORS

FOR QUANTITIES SEE SHEETS 310-316.

0 10 20 40
HORIZONTAL
SCALE IN FEET

CALCULATED J.L.S. 3/13/95
CHECKED SAB 02-17-99

PAVEMENT MARKING SHEET
STA. 140+00 TO STA. 145+00

LIC-16-19.72

L65091159.DGN 02-17-99

CURVE DATA
S.R. 16

P.I. STA. 141+22.54
Δ = 43°50'10" LT.
Dc = 03°00'00"
Rc = 1909.86'
Ls = 350.00'
Lc = 1111.20'
Θ = 05°15'00"
LT = 233.44'
ST = 116.26'
Es = 151.68'
Ts = 944.48'

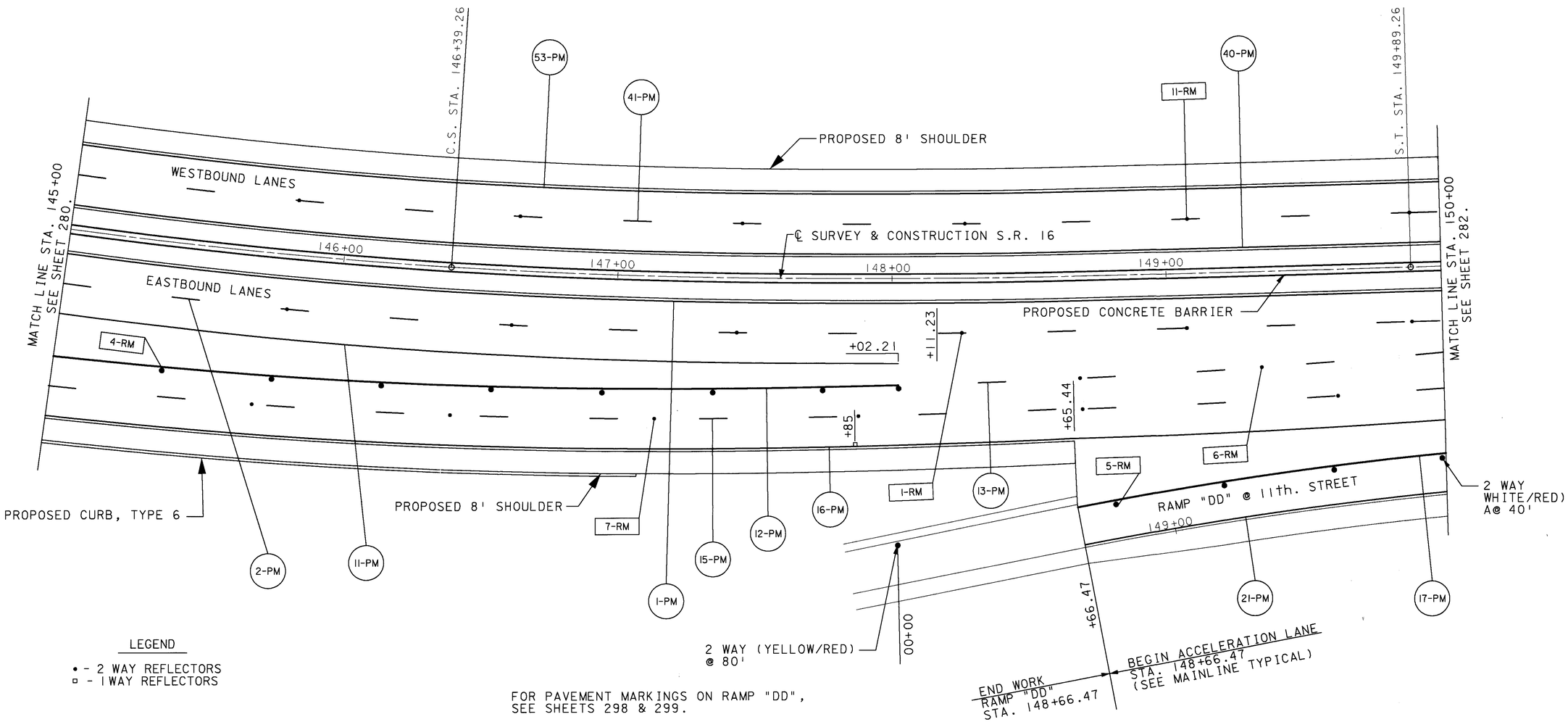

LEGEND

• - 2 WAY REFLECTORS
▫ - 1 WAY REFLECTORS

FOR PAVEMENT MARKINGS ON RAMP "DD",
SEE SHEETS 298 & 299.

FOR QUANTITIES SEE SHEETS 310-316.

0 10 20 40
HORIZONTAL
SCALE IN FEET

CALCULATED J.L.S. 3/13/95
CHECKED SAB 02-17-99

PAVEMENT MARKING SHEET
STA. 145+00 TO STA. 150+00

LIC-16-19.72

L65101159.DGN 02-17-99

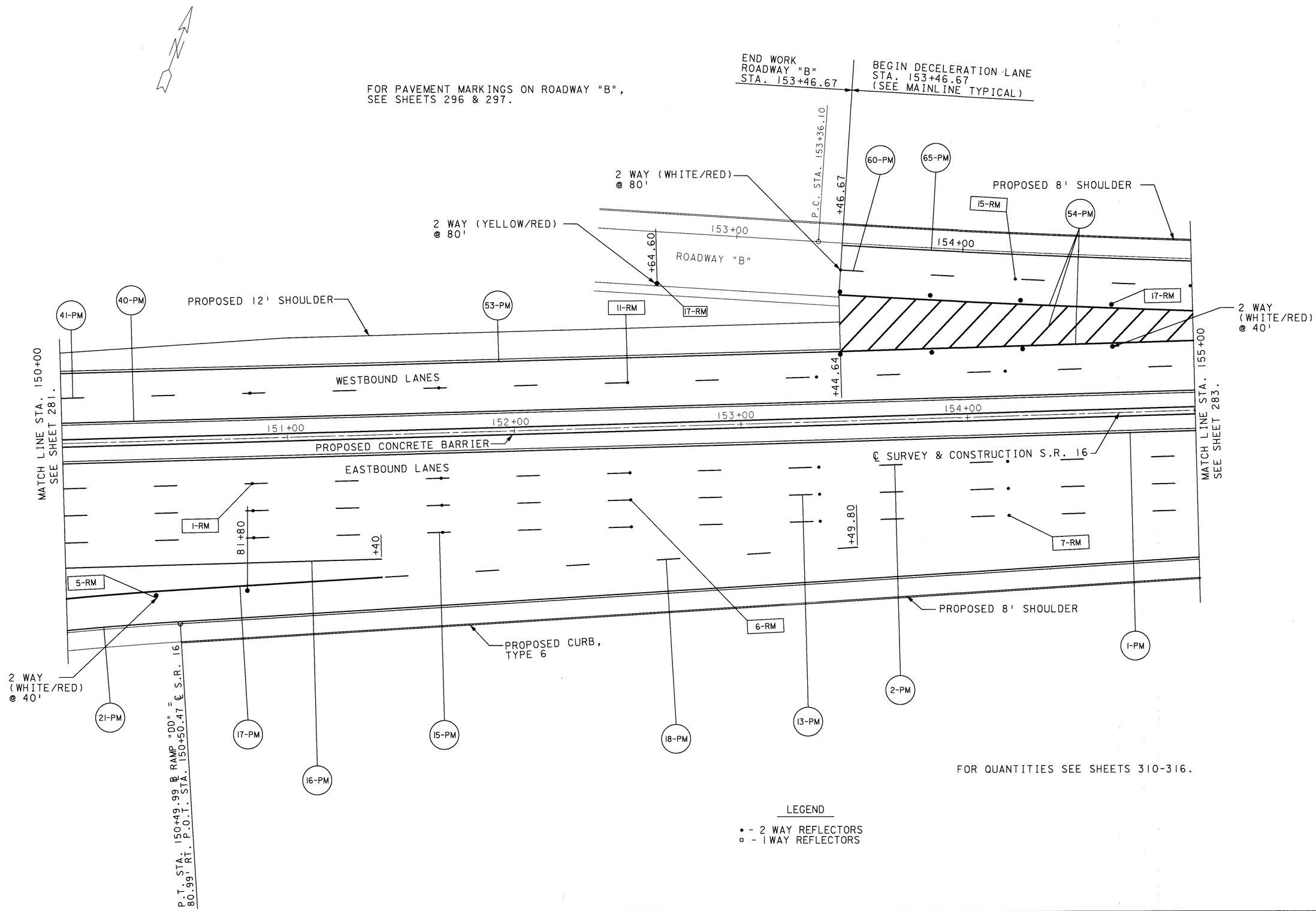

CALCULATED J.L.S. 3/13/95
CHECKED SAB 02-17-99

PAVEMENT MARKING SHEET
STA. 150+00 TO STA. 155+00

LIC-16-19.72

L6511159.DGN 02-17-99

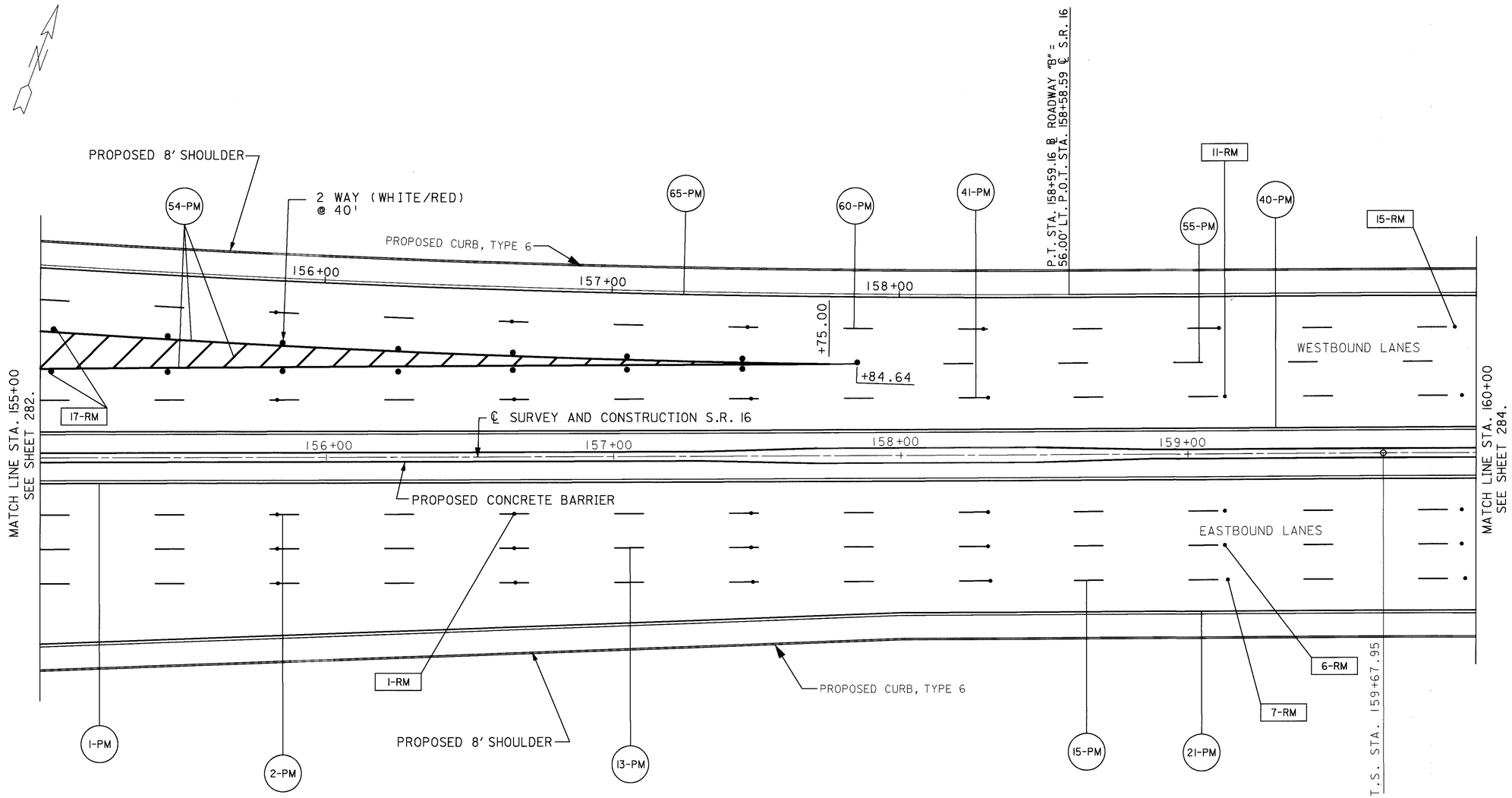

FOR QUANTITIES SEE SHEETS 310-316.

LEGEND

• - 2 WAY REFLECTORS
▫ - 1 WAY REFLECTORS

CURVE DATA
S.R. 16

P.I. STA. 165+57.28
Δ = 24°27'00" RT.
Dc = 03°00'00"
Rc = 1909.86'
Ls = 350.00'
Lc = 465.00'
Q = 05°15'00"
LT = 233.44'
ST = 116.76'
TS = 589.33'
Es = 47.05'

0 10 20 40
HORIZONTAL SCALE IN FEET

CALCULATED J.L.S. 3/13/95
CHECKED SAB 02-11-99

PAVEMENT MARKING SHEET
STA. 155+00 TO STA. 160+00

LIC-16-19.72

L6512159.DGN 02-17-99

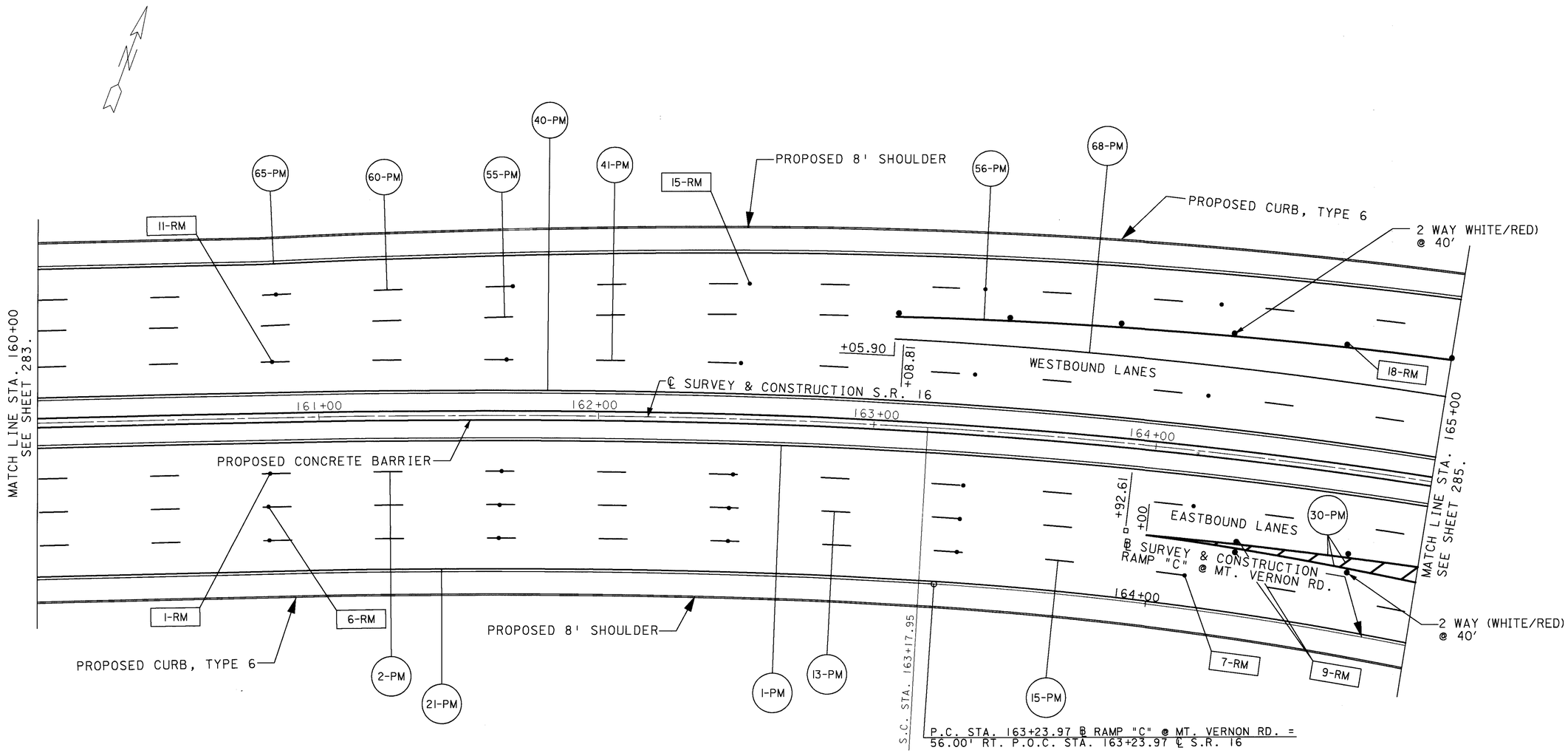

CURVE DATA
S.R. 16

PI STA. 165+57.28
Δ = 24°27'00" RT.
Dc = 03°00'00"
Rc = 1909.86'
Ls = 350.00'
Lc = 465.00'
Ts = 589.33'
Es = 47.05'
Θs = 05°15'00"
LT = 233.44'
ST = 116.76'

LEGEND

• - 2 WAY REFLECTORS
▫ - 1 WAY REFLECTORS

FOR QUANTITIES SEE SHEETS 310-316.

HORIZONTAL SCALE IN FEET
0 10 20 40

CALCULATED J.L.S. 3/13/95
CHECKED SAB 02-17-99

PAVEMENT MARKING SHEET
STA. 160+00 TO STA. 165+00

LIC-16-19.72

L6513159.DGN 02-17-99

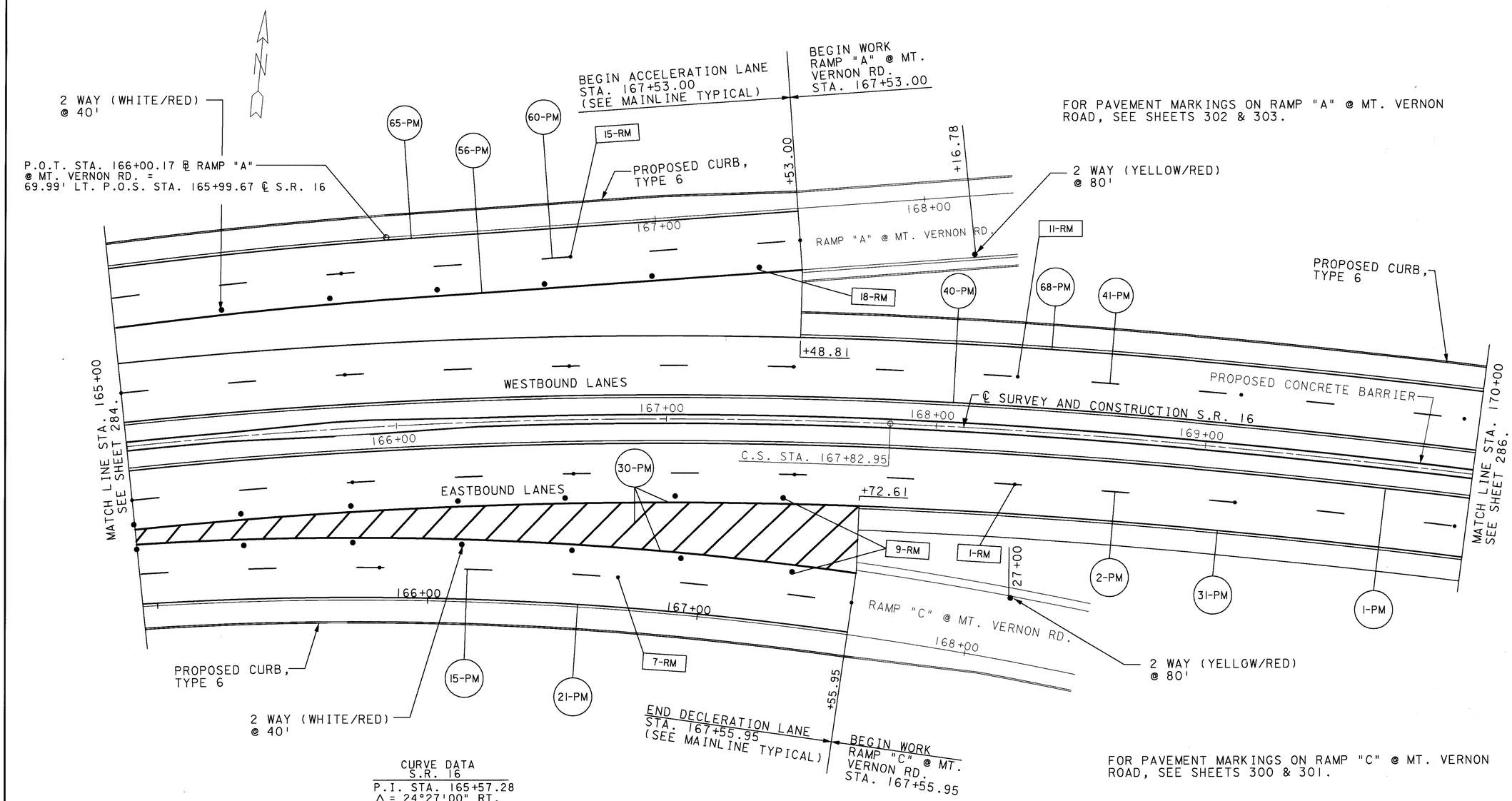

FOR PAVEMENT MARKINGS ON RAMP "C" @ MT. VERNON ROAD, SEE SHEETS 300 & 301.

CURVE DATA
S.R. 16

P.I. STA. 165+57.28
Δ = 24°27'00" RT.
Dc = 03°00'00"
Rc = 1909.86'
Ls = 350.00'
Lc = 1111.20'
Θ = 05°15'00"
LT = 233.44'
ST = 116.76'
TS = 589.33'
Es = 47.05'

FOR QUANTITIES SEE SHEETS 310-316

HORIZONTAL SCALE IN FEET 0 10 20 40

CALCULATED J.L.S. 3/13/95
CHECKED D.M. 3/17/95

PAVEMENT MARKING SHEET
STA. 165+00 TO STA. 170+00

LIC-16-19.72

L6514159.DGN 04/27/95

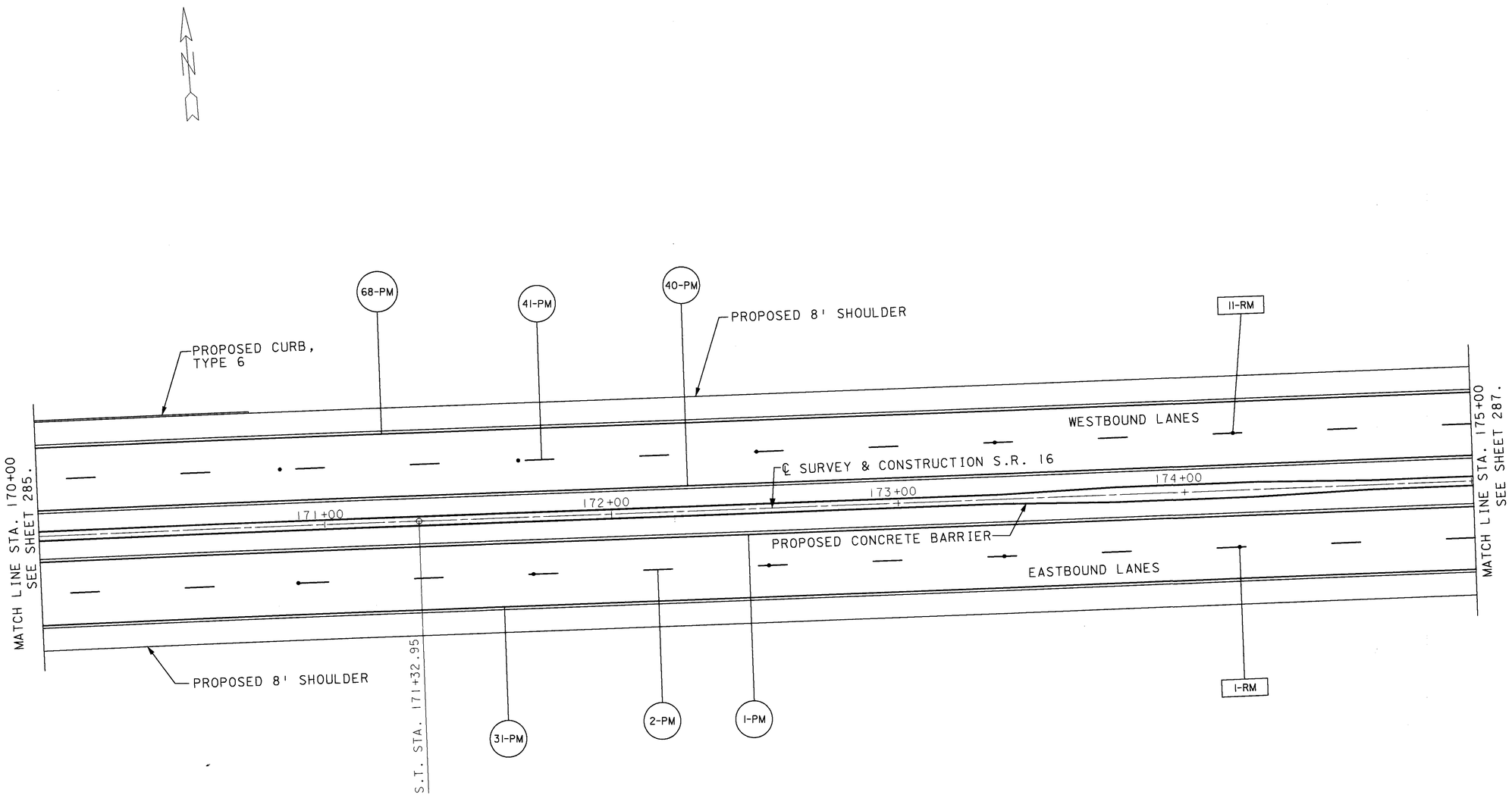

CURVE DATA
S.R. 16

P.I. STA. 165+57.28
Δ = 24°27'00" RT.
Dc = 03°00'00"
Rc = 1909.86'
Ls = 350.00'
Lc = 1111.20'
Θ = 05°15'00"
LT = 233.44'
ST = 116.76'
TS = 589.33'
Es = 47.05'

LEGEND

• - 2 WAY REFLECTORS
▫ - 1 WAY REFLECTORS

FOR QUANTITIES SEE SHEETS 310-316.

HORIZONTAL SCALE IN FEET
0 10 20 40

CALCULATED J.L.S. 3/13/95
CHECKED SAB 02-18-99

PAVEMENT MARKING SHEET
STA. 170+00 TO STA. 175+00

LIC-16-19.72

L65I5159.DGN 02-18-99

CURVE DATA
S.R. 16

PI STA=178+79.86
△ = 05°10'09" LT.
Dc = 01°00'00"
T = 258.63
R = 5729.58
L = 516.92
E = 5.83

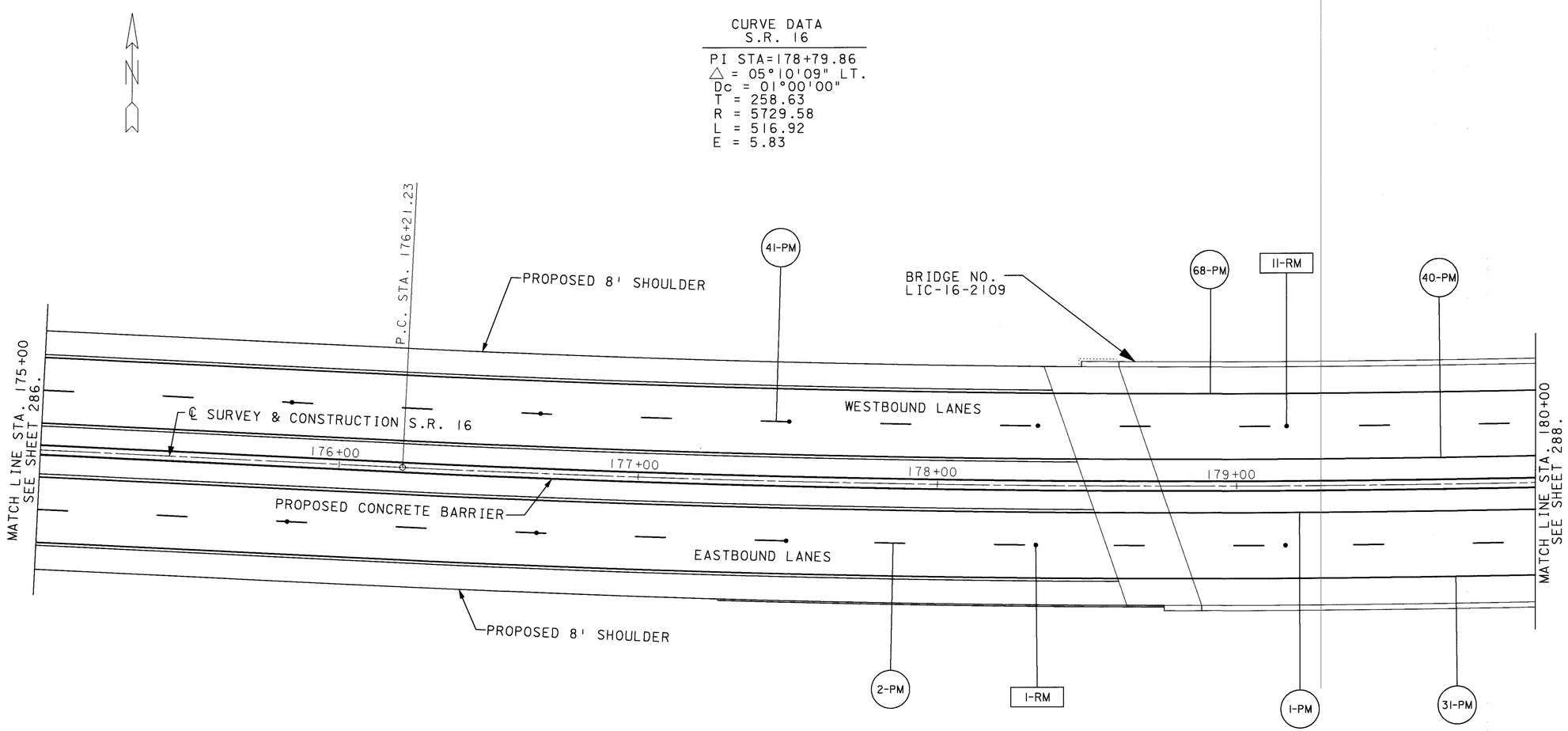

LEGEND

• - 2 WAY REFLECTORS
▫ - 1 WAY REFLECTORS

FOR QUANTITIES SEE SHEETS 310-316.

HORIZONTAL SCALE IN FEET
0 10 20 40

CALCULATED J.L.S. 3/13/95
CHECKED SAB 02-18-99

PAVEMENT MARKING SHEET
STA. 175+00 TO STA. 180+00

LIC-16-19.72

L6516159.DGN 02-18-99

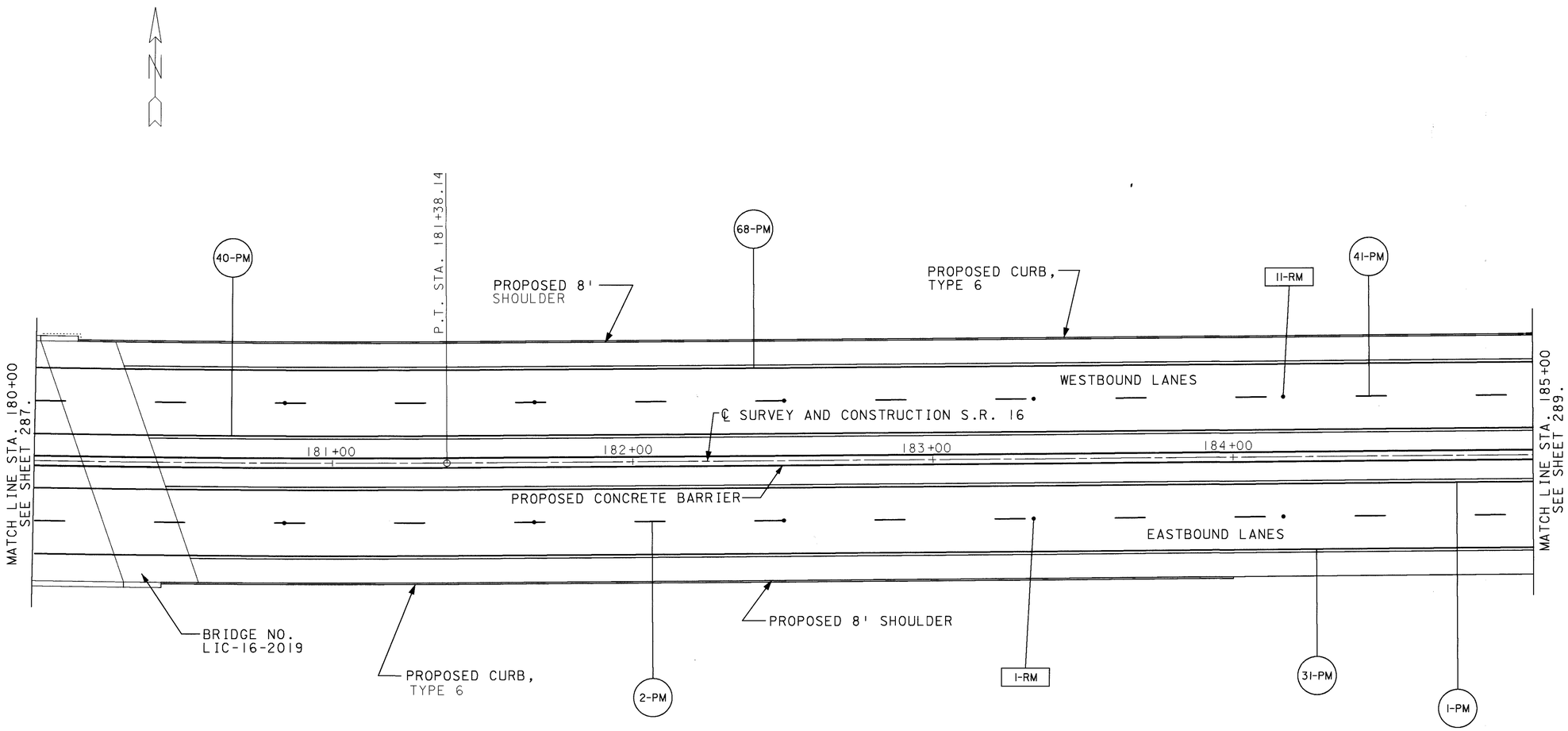

FOR QUANTITIES SEE SHEETS 310-316.

LEGEND

• - 2 WAY REFLECTORS
▫ - 1 WAY REFLECTORS

HORIZONTAL SCALE IN FEET
0 10 20 40

CALCULATED J.L.S. 3/13/95
CHECKED S.AB 02-11-99

PAVEMENT MARKING SHEET STA. 180+00 TO STA. 185+00

LIC-16-19.72

L65171159.DGN 02-18-99

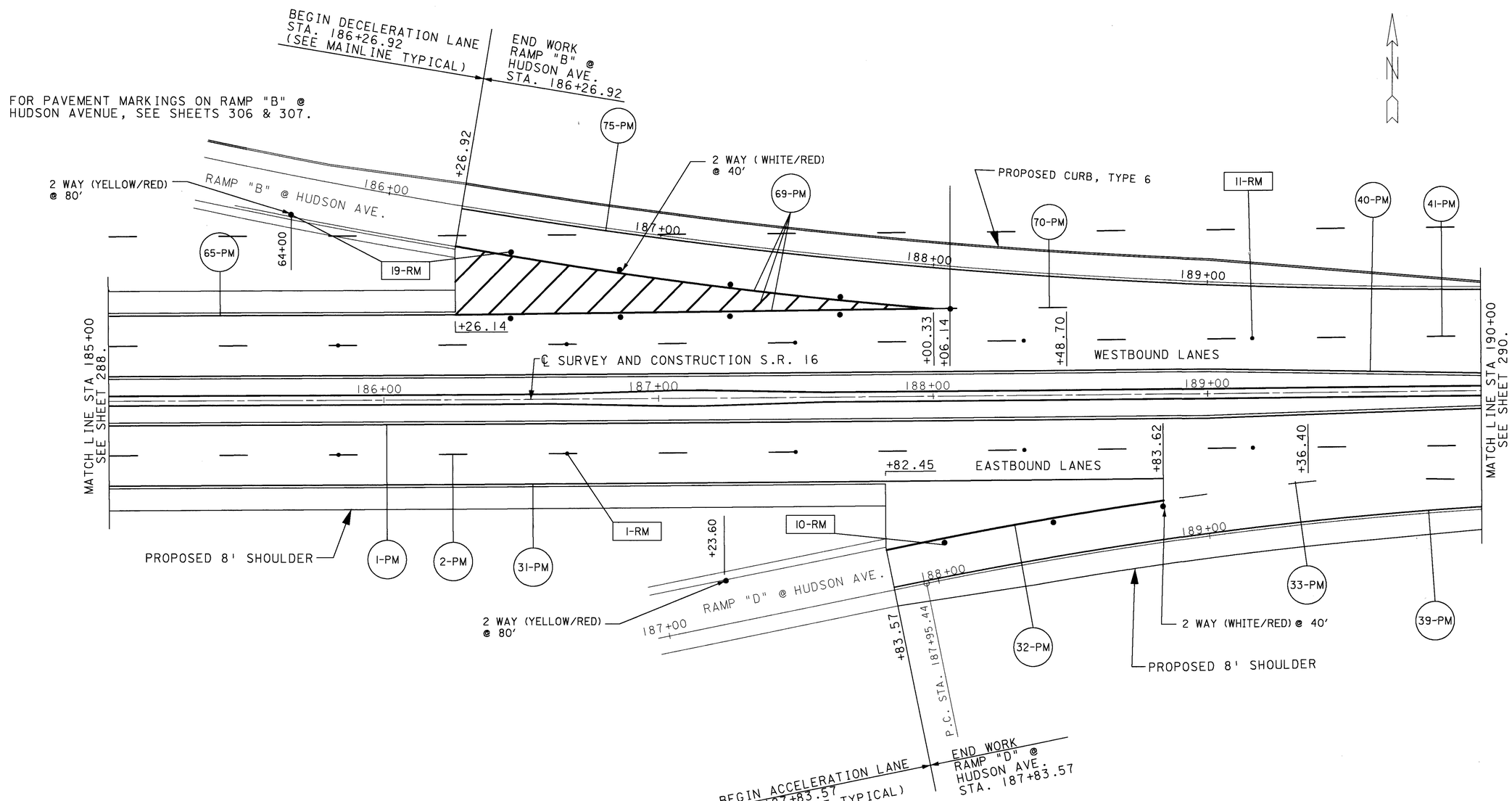

FOR QUANTITIES SEE SHEETS 310-316.

LEGEND

• - 2 WAY REFLECTORS
▫ - 1 WAY REFLECTORS

HORIZONTAL SCALE IN FEET
0 10 20 40

CALCULATED J.L.S. 3/13/95
CHECKED SAB. 02-18-99

PAVEMENT MARKING SHEET
STA. 185+00 TO STA. 190+00

LIC-16-19.72

L6518159.DGN 02-18-99

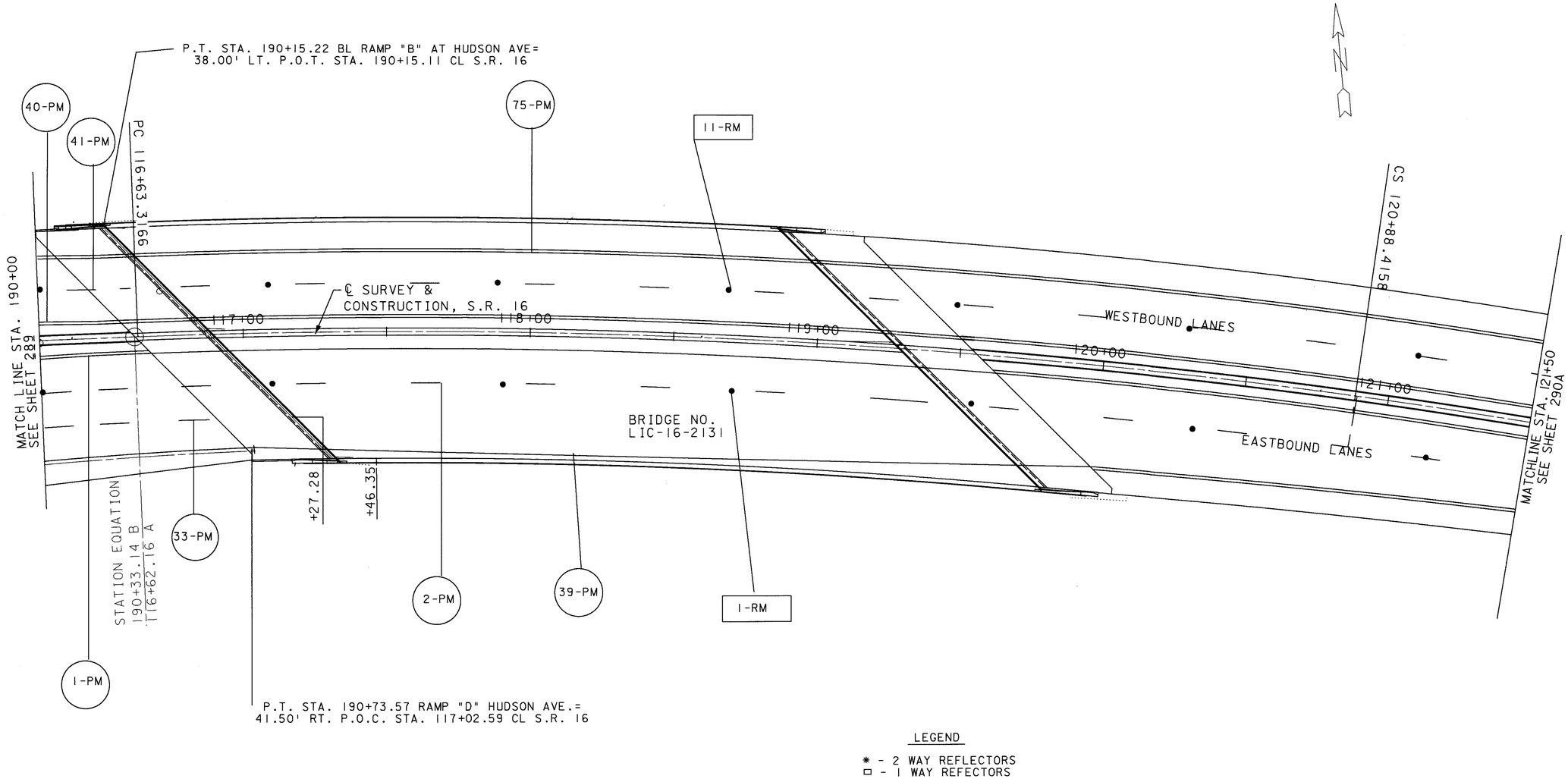

LEGEND

✱ - 2 WAY REFLECTORS
□ - 1 WAY REFECTORS

FOR QUANTITIES SE SHETT 310 - 316

HORIZONTAL SCALE IN FEET
0 20 40

CALCULATED
CHECKED SAB

PAVEMENT MARKING SHEET
STA. 190+00(BK.) TO STA. 121+50(AH.)

LIC-16-19.72

L6519159.DGN 2/18/99

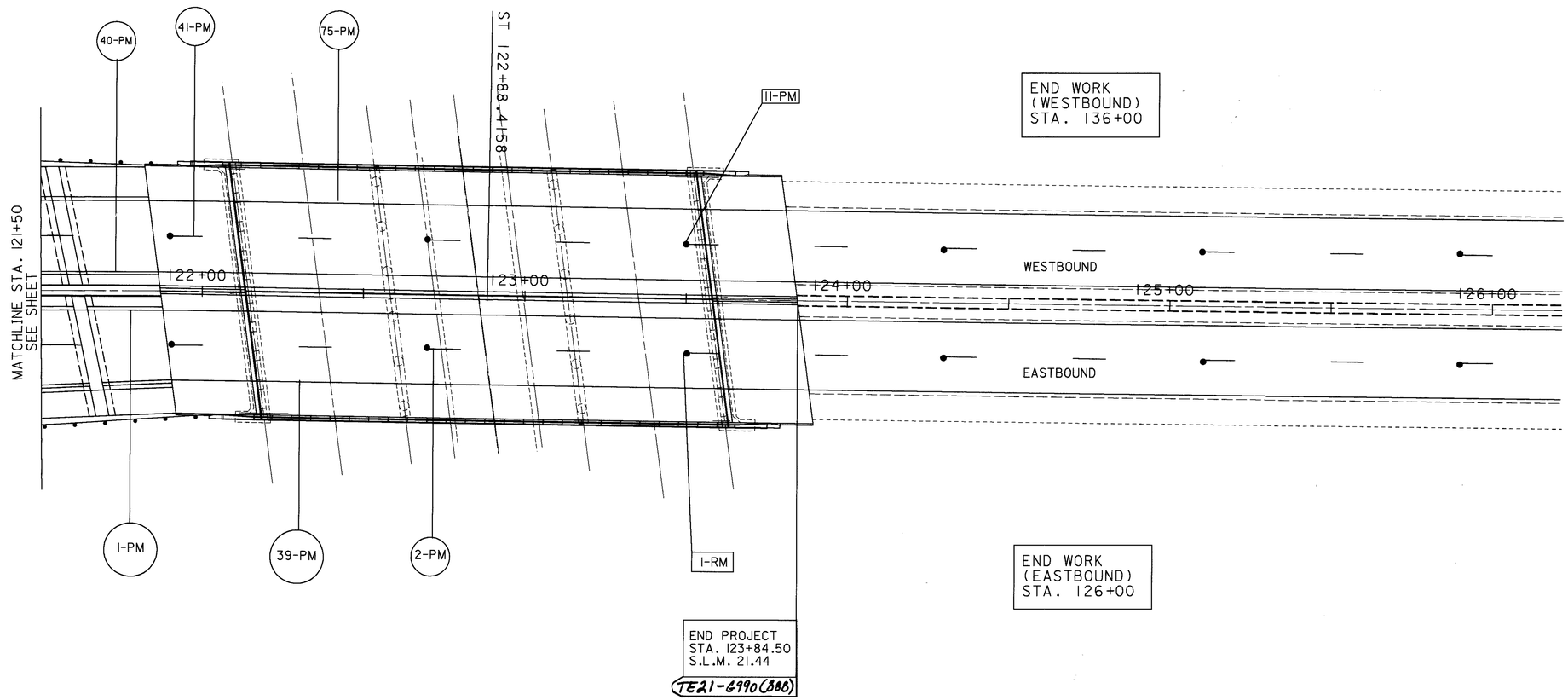

LEGEND

* - 2 WAY REFLECTORS
□ - 1 WAY REFECTORS

FOR QUANTITIES SE SHETT 310 - 316

HORIZONTAL SCALE IN FEET
0 20 40

CALCULATED

CHECKED

PAVEMENT MARKING DETAIL SHEET
STA. 121+50 TO STA. 126+00

LIC-16-19.72

L6519160.DGN 2/18/99

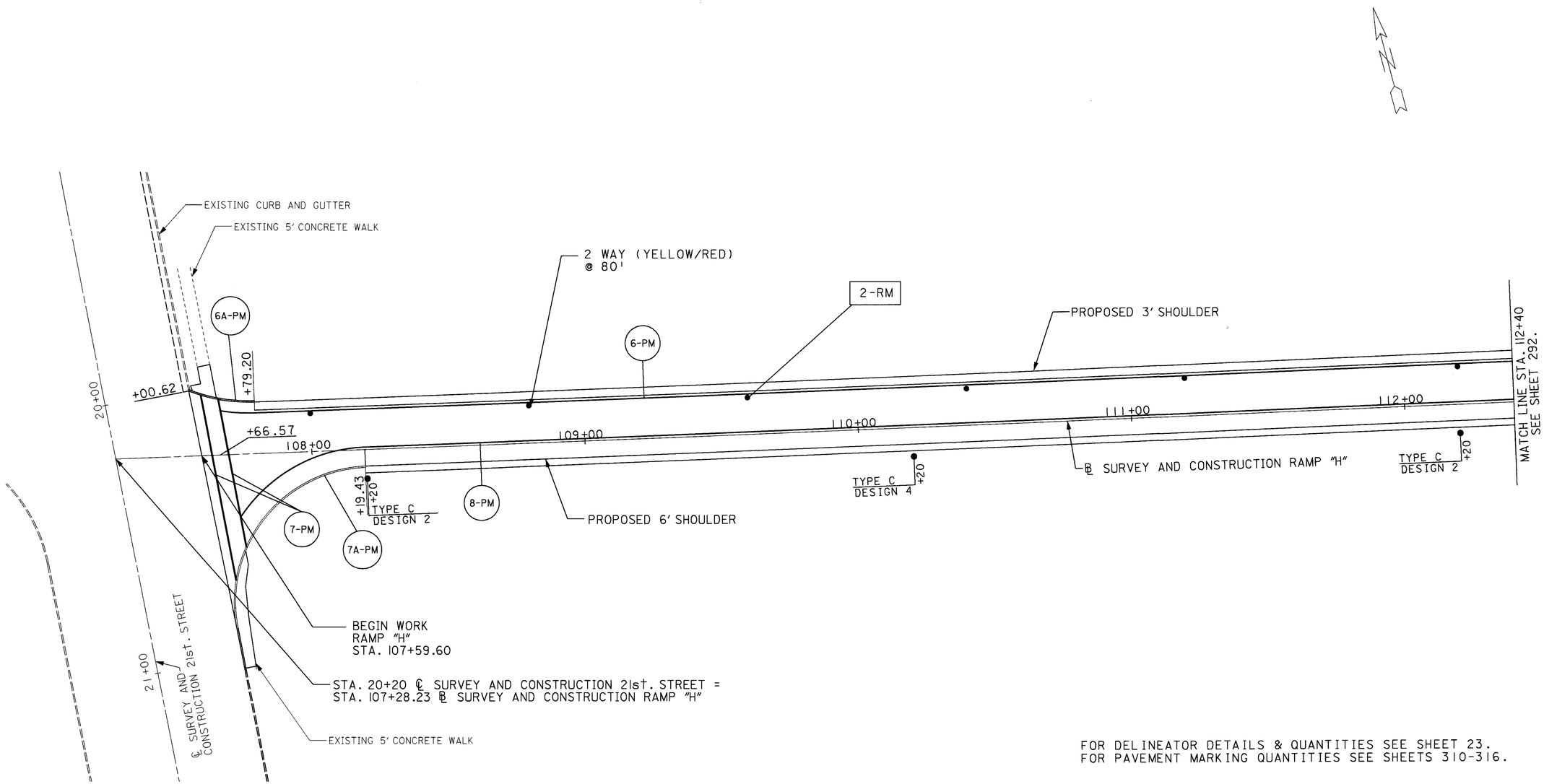

FOR DELINEATOR DETAILS & QUANTITIES SEE SHEET 23.
FOR PAVEMENT MARKING QUANTITIES SEE SHEETS 310-316.

0 10 20 40
HORIZONTAL
SCALE IN FEET

CALCULATED
J.L.S.
3/13/95

CHECKED
SAB
02-18-99

PAVEMENT MARKING SHEET RAMP "H"
STA. 107+59.60 TO STA. 112+40

LIC-16-19.72

L1665172.DGN 02-18-99

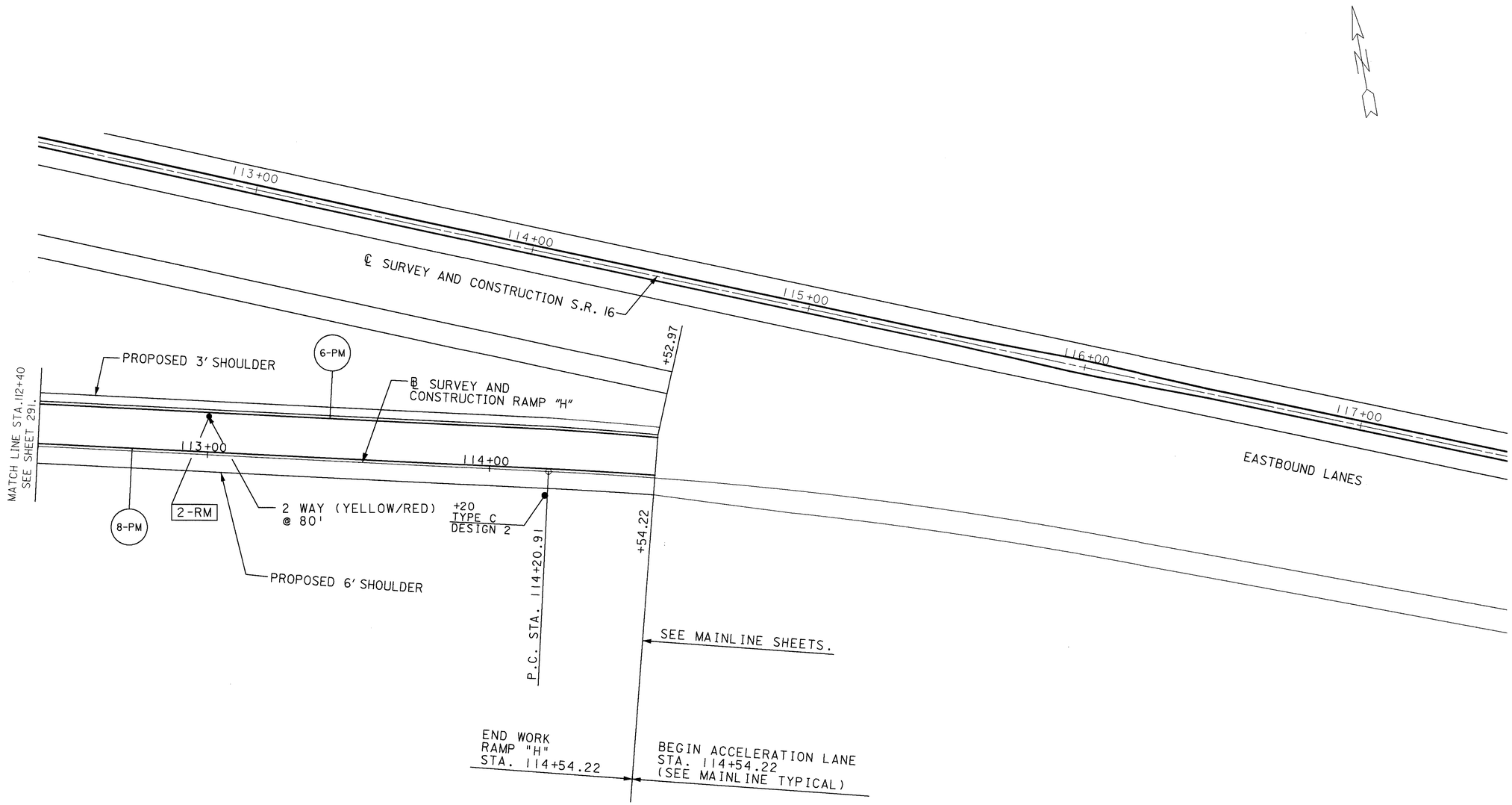

FOR QUANTITIES SEE SHEETS 310-316.
FOR DELINEATOR DETAILS & QUANTITIES SEE SHEETS 23.

0 10 20 40
HORIZONTAL SCALE IN FEET

CALCULATED J.L.S. 3/12/95
CHECKED SAB 02-18-99

PAVEMENT MARKING SHEET RAMP "H"
STA. 112+40 TO STA. 116+21.24

LIC-16-19.72

L1665272.DGN 02-18-99

* NOTE:
REMOVE CONFLICTING EXISTING CROSSWALK LINES UNDER ITEM 642 PAVEMENT MARKING REMOVED.

FOR QUANTITIES SEE SHEETS 310-316.
FOR DELINEATOR DETAILS & QUANTITIES SEE SHEET 23.

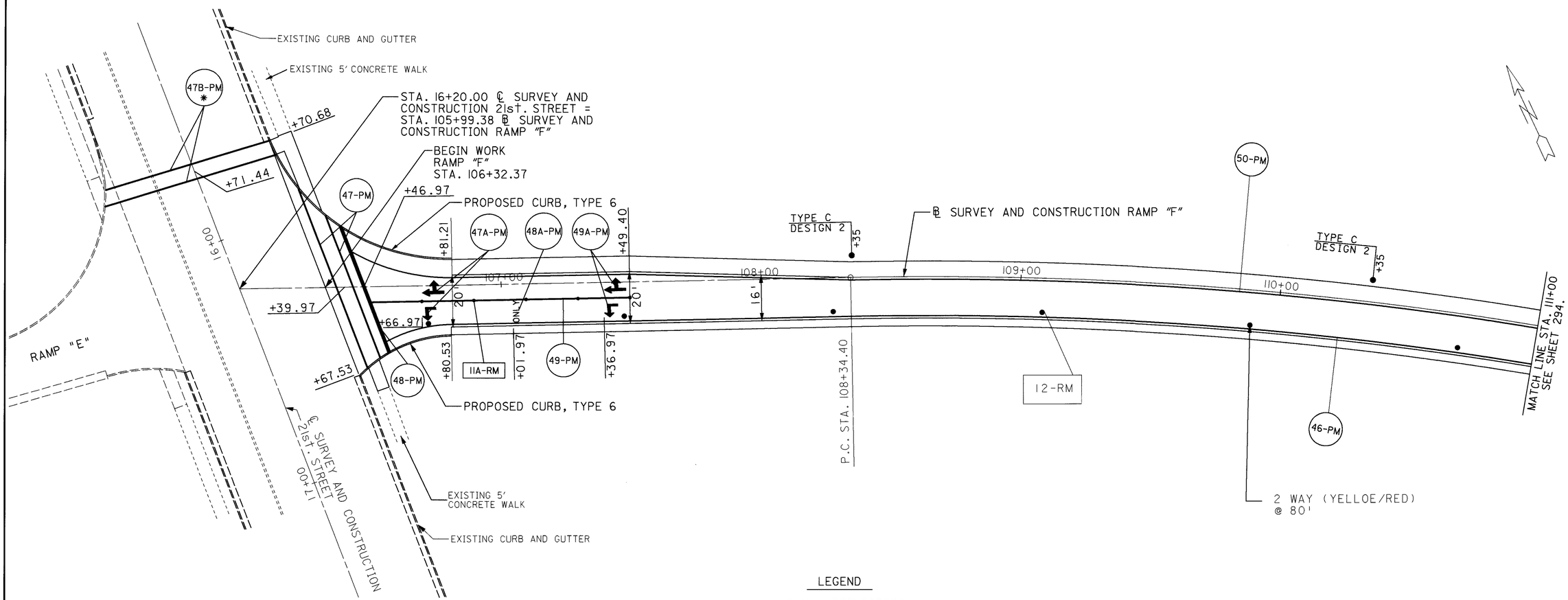

LEGEND

• - 2 WAY REFLECTORS
▫ - 1 WAY REFLECTORS

0 10 20 40
HORIZONTAL SCALE IN FEET

CALCULATED J.L.S. 3/13/95
CHECKED SAB 02-18-99

PAVEMENT MARKING SHEET RAMP "F"
STA. 106+32.37 TO STA. 111+00

LIC-16-19.72

L1665170.DGN 02-19-99

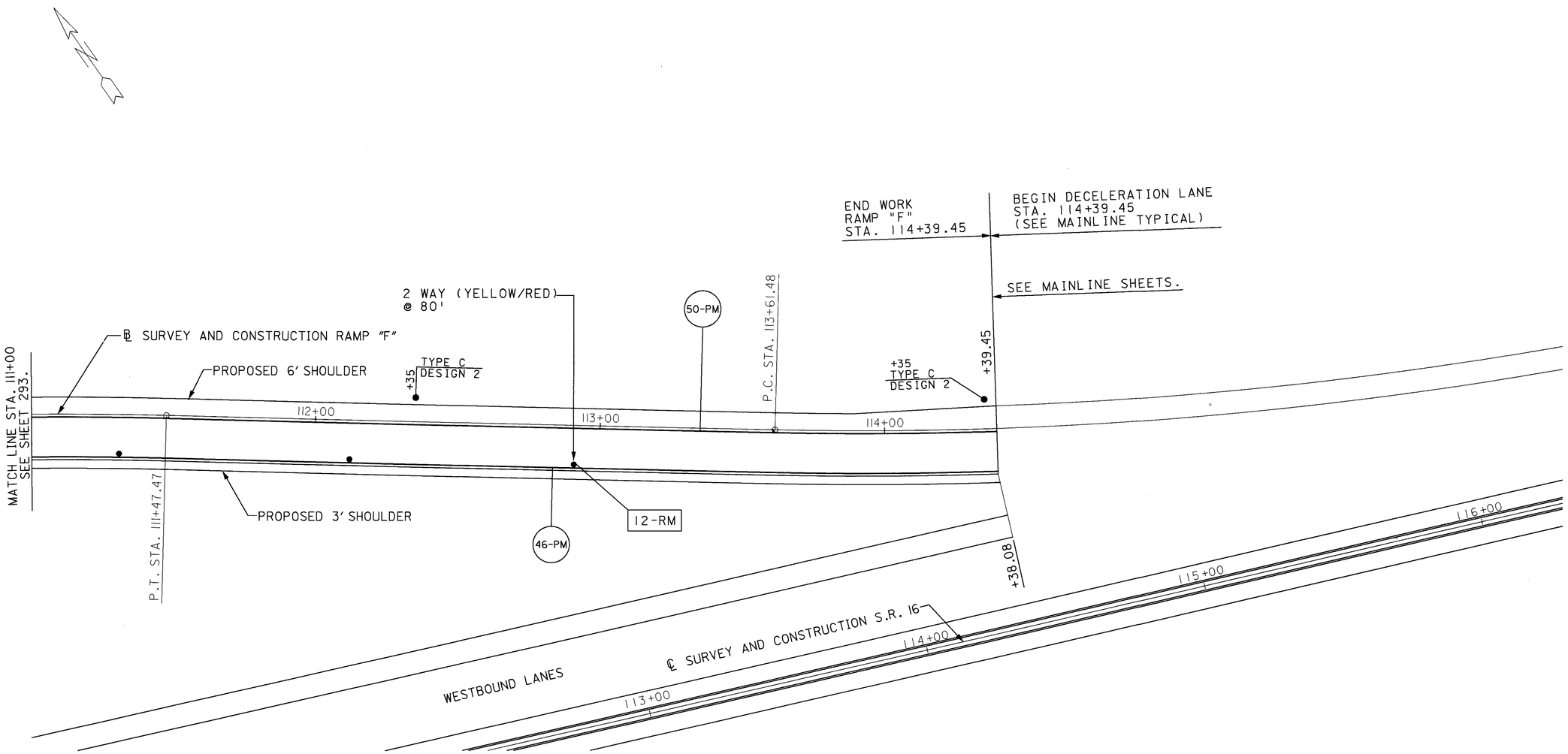

FOR QUANTITIES SEE SHEETS 310-316.
FOR DELINEATOR DETAILS & QUANTITIES SEE SHEET 23.

0 10 20 40
HORIZONTAL SCALE IN FEET

CALCULATED J.L.S. 3/13/95
CHECKED SAB 02-18-99

PAVEMENT MARKING SHEET RAMP "F"
STA. 111+00 TO STA. 114+39.40

LIC-16-19.72

L1665270.DGN 02-18-99

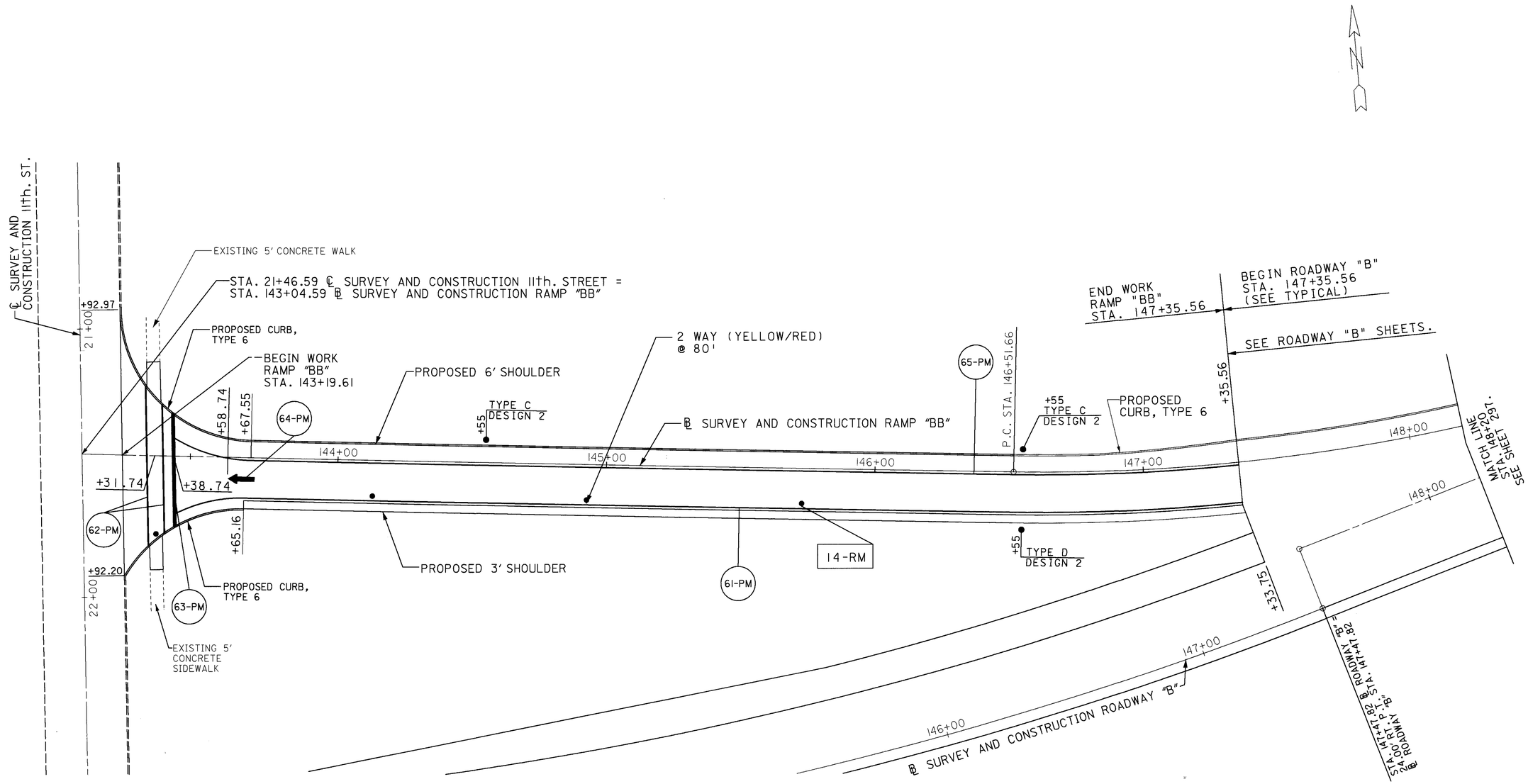

FOR QUANTITIES SEE SHEETS 310-316.
FOR DELINEATOR DETAILS & QUANTITIES SEE SHEET 23.

0 20 40
10 HORIZONTAL SCALE IN FEET

CALCULATED J.L.S. 3/13/95
CHECKED SAB 02-18-99

PAVEMENT MARKING SHEET RAMP "BB"
STA. 143+19.61 TO STA. 148+20

LIC-16-19.72

L166518I.DGN 02-18-99

FOR PAVEMENT MARKINGS ON RAMP "BB"
SEE SHEET 295.

FOR QUANTITIES SEE SHEETS 310-316.

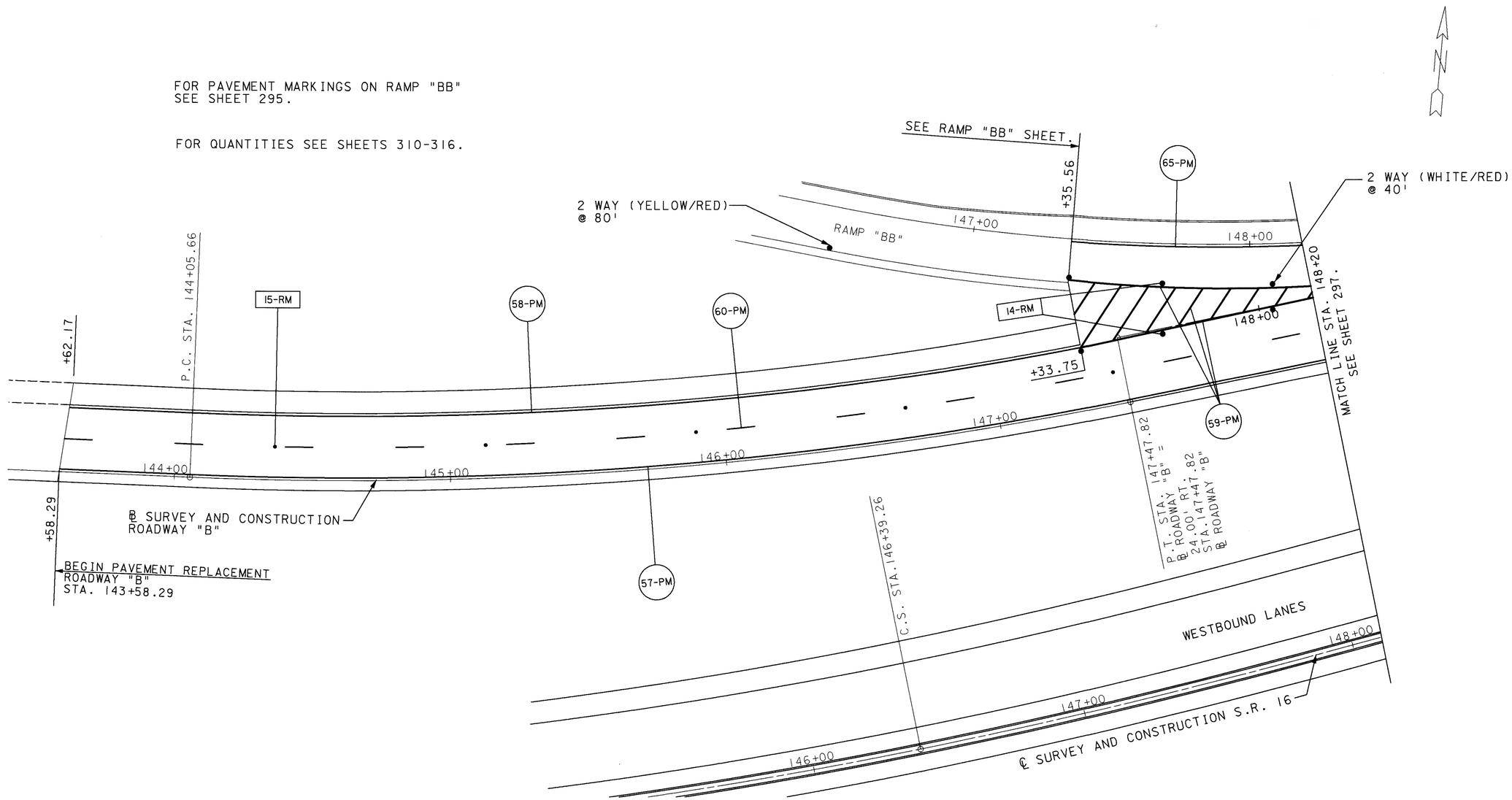

LEGEND

• - 2 WAY REFLECTORS
▫ - 1 WAY REFLECTORS

HORIZONTAL SCALE IN FEET
0 10 20 40

CALCULATED JLS 3/15/95
CHECKED SAB 02-18-99

PAVEMENT MARKING SHEET ROADWAY "B"
STA. 143+58.29 TO STA. 148+20

LIC-16-19.72

L16651178.DGN 02-18-99

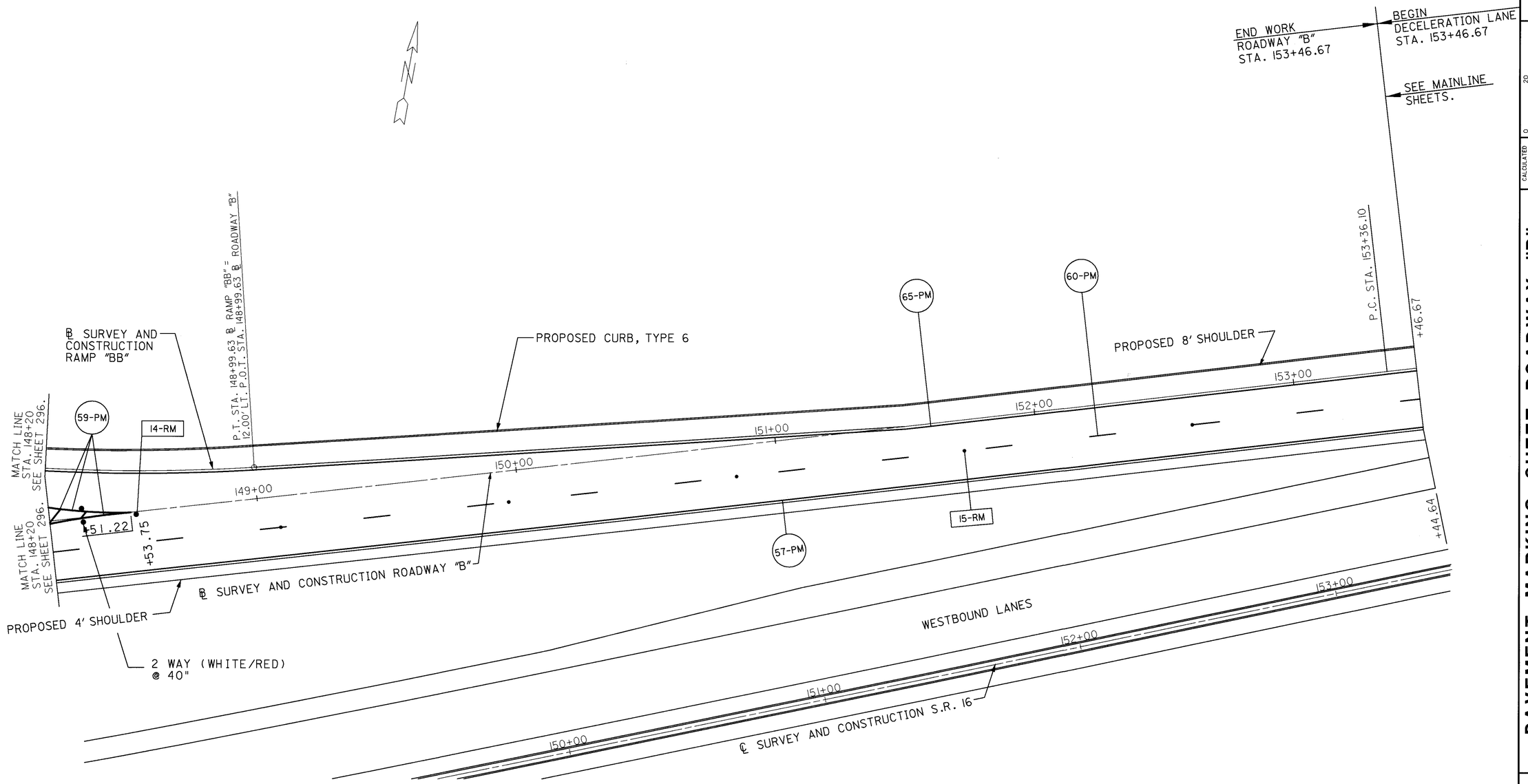

FOR QUANTITIES SEE SHEETS 310-316.

LEGEND

• - 2 WAY REFLECTORS
▫ - 1 WAY REFLECTORS

CALCULATED

CHECKED SAB

PAVEMENT MARKING SHEET ROADWAY "B"
STA. 148+20 TO STA. 153+36.10

LIC-16-19.72

L1665281.DGN 04/27/95

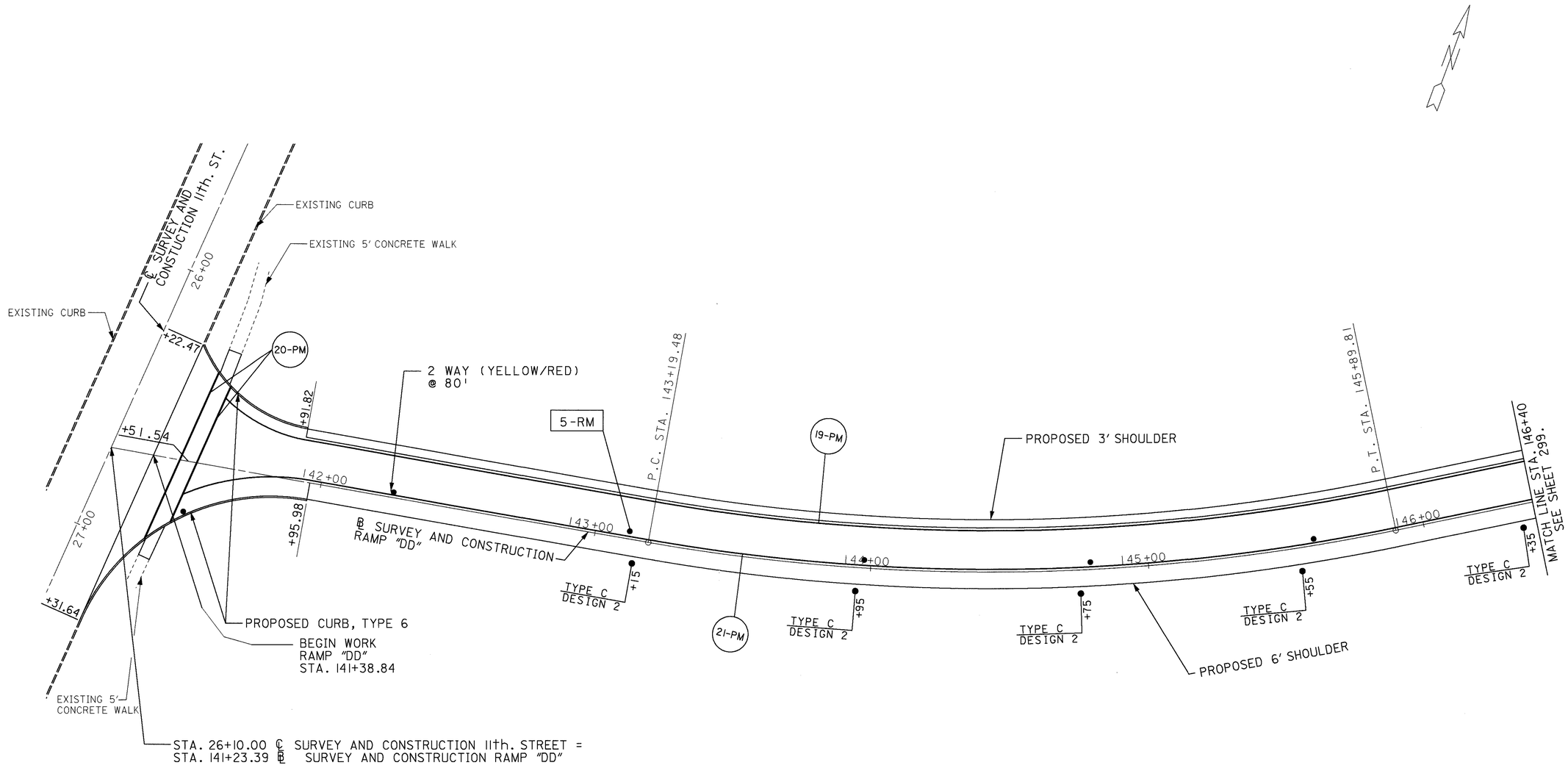

FOR QUANTITIES SEE SHEETS 310-316.
FOR DELINEATOR DETAILS & QUANTITIES SEE SHEET 23.

0 10 20 40
HORIZONTAL SCALE IN FEET

CALCULATED J.L.S. 3/15/95
CHECKED SAB 02-18-99

PAVEMENT MARKING SHEET "RAMP DD"
STA. 141+38.84 TO STA. 146+40

LIC-16-19.72

L1665182.DGN 02-18-99

FOR QUANTITIES SEE SHEETS 310-316.
FOR DELINEATOR DETAILS & QUANTITIES SEE SHEET 23.

HORIZONTAL SCALE IN FEET
0' 10' 20' 40'

CALCULATED J.L.S. 3/13/95
CHECKED SAB 02-18-99

PAVEMENT MARKING SHEET RAMP "DD"
STA. 146+40 TO STA. 151+50

LIC-16-19.72

L1665282.DGN 02-18-99

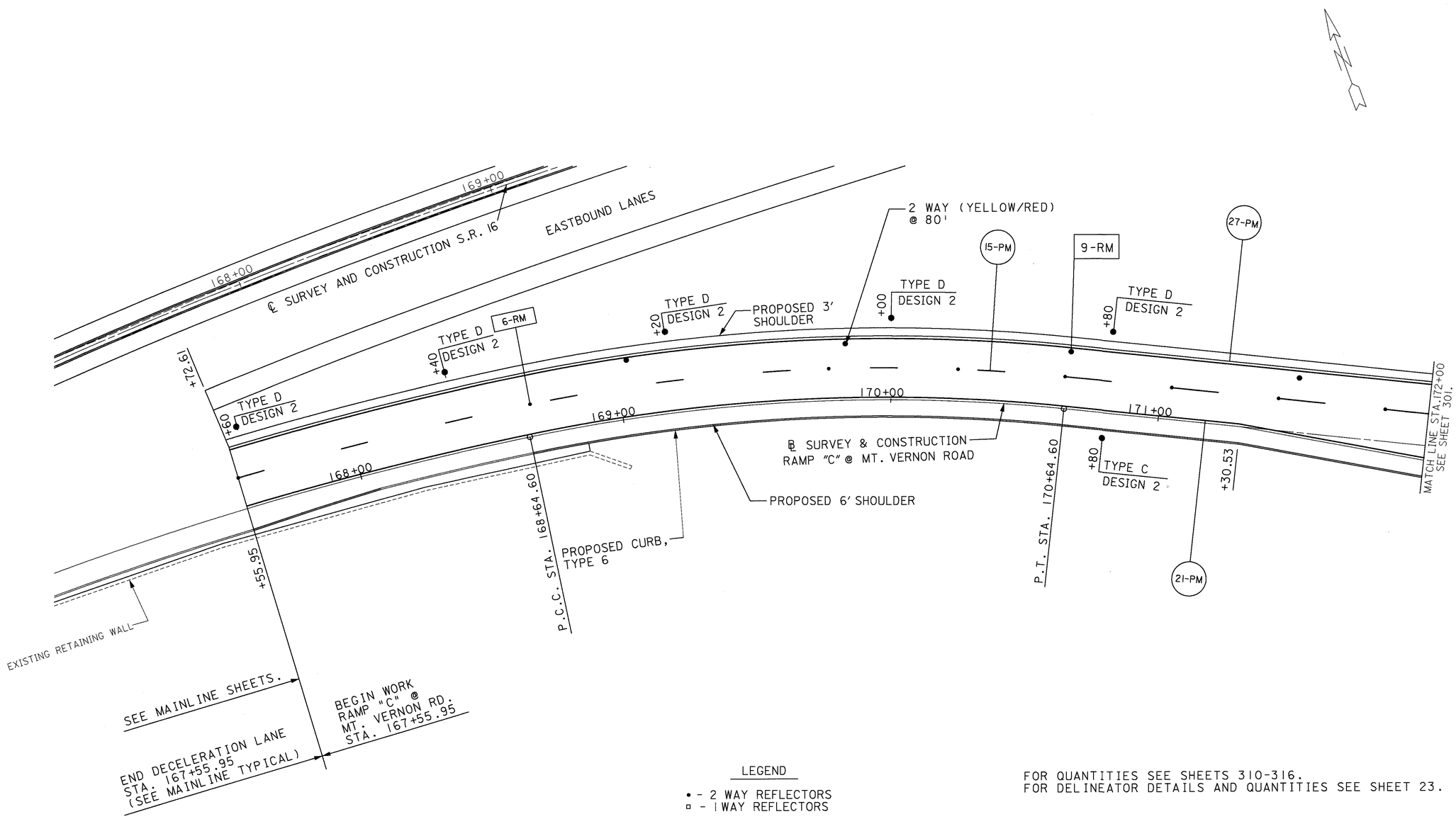

LEGEND

• - 2 WAY REFLECTORS
▫ - 1 WAY REFLECTORS

FOR QUANTITIES SEE SHEETS 310-316.
FOR DELINEATOR DETAILS AND QUANTITIES SEE SHEET 23.

0 10 20 40
HORIZONTAL SCALE IN FEET

CALCULATED JLLS 3/13/95
CHECKED SAB 02-18-99

PAVEMENT MARKING SHEET RAMP "C" AT MT. VERNON ROAD
STA. 166+80 TO STA. 172+00

LIC-16-19.72

L1665284.DGN 02-18-99

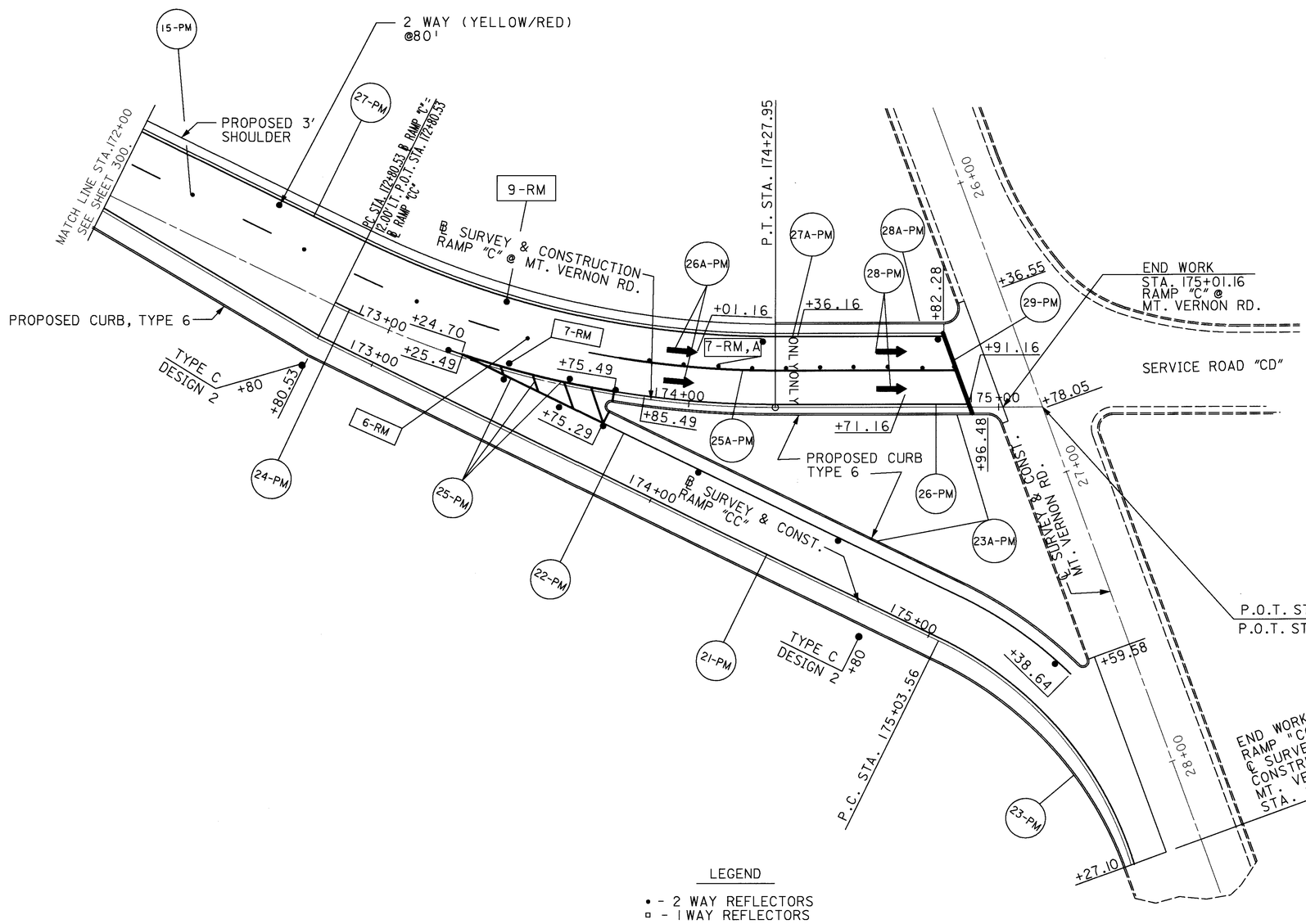

FOR PAVEMENT MARKINGS ON SERVICE ROAD "CD" AND MT. VERNON ROAD, SEE SHEET 308.

P.O.T. STA. 26+76.49 ℄ SURVEY & CONSTRUCTION MOUNT VERNON ROAD =
P.O.T. STA. 175+13.94 ℄ SURVEY & CONSTRUCTION RAMP "C" @ MT. VERNON RD.

LEGEND

• - 2 WAY REFLECTORS
▫ - 1 WAY REFLECTORS

FOR QUANTITIES SHEETS 310-316.
FOR DELINEATOR DETAILS AND QUANTITIES SEE SHEET 23.

HORIZONTAL SCALE IN FEET 0 10 20 40

CALCULATED J.L.S. 3/13/95
CHECKED SAB 02-18-99

PAVEMENT MARKING SHEET RAMP "C" AT MT. VERNON ROAD STA. 172+00 TO STA. 175+01.39

LIC-16-19.72

L1665184.DGN 02-18-99

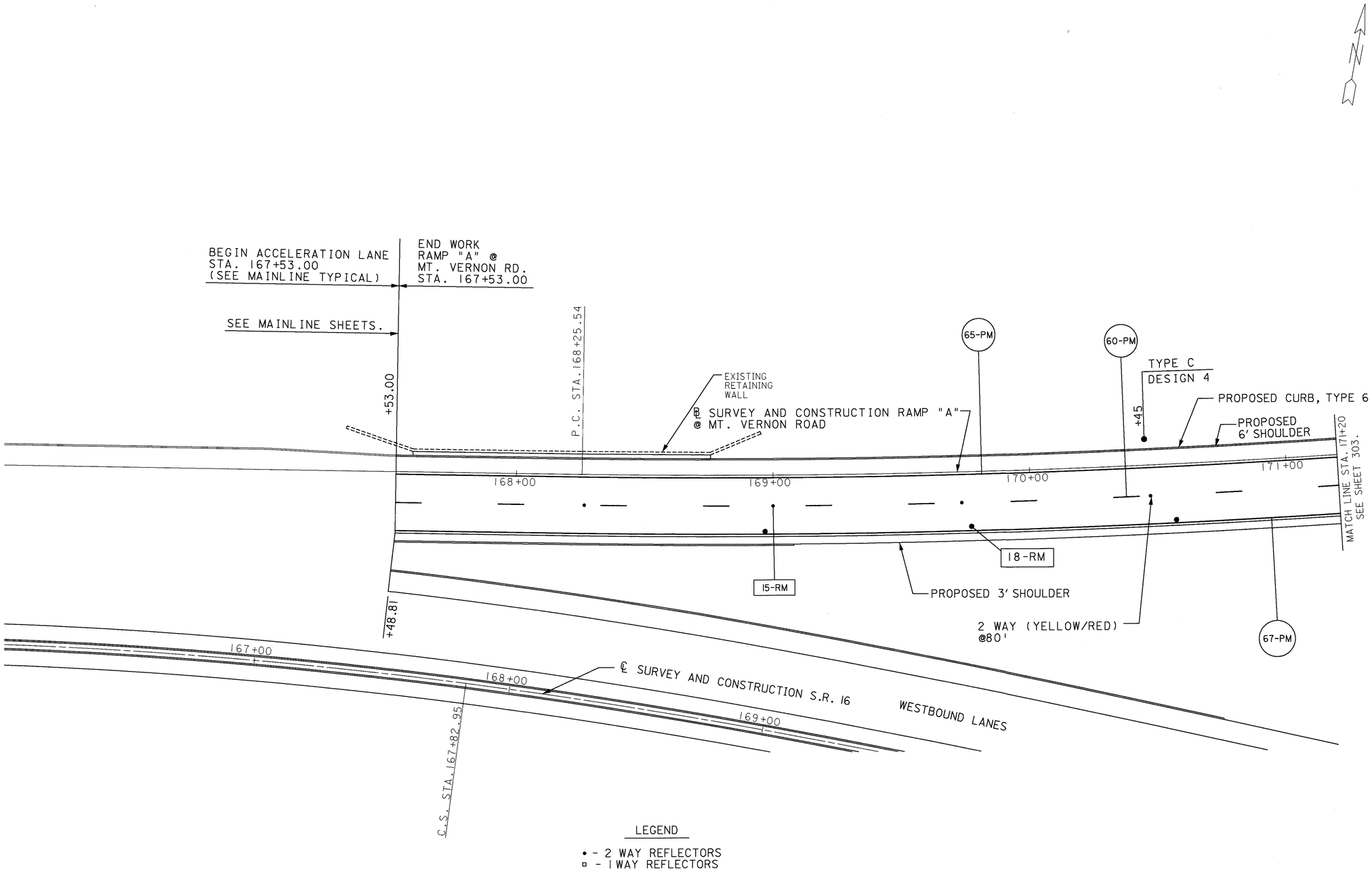

LEGEND

• - 2 WAY REFLECTORS
▫ - 1 WAY REFLECTORS

FOR QUANTITIES SEE SHEETS 310-316.
FOR DELINEATOR DETAILS AND QUANTITIES SEE SHEET 23.

0 10 20 40
HORIZONTAL SCALE IN FEET

CALCULATED J.L.S.
V.L.P.95
CHECKED D.M.
02-18-99

PAVEMENT MARKING SHEET RAMP "A" AT MT. VERNON ROAD
STA. 166+00 TO STA. 171+20

LIC-16-19.72

302
547

L16651B3.DGN 02-18-99

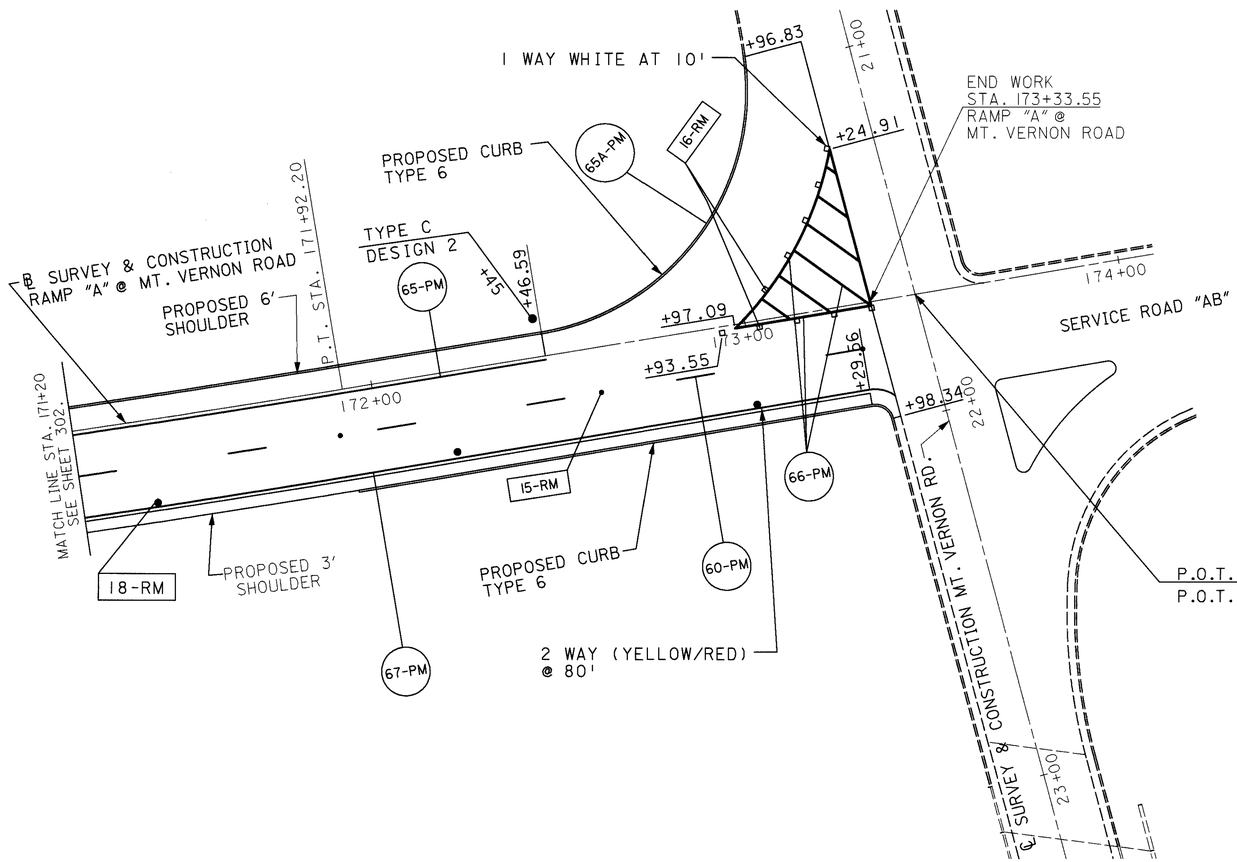

FOR PAVEMENT MARKINGS ON SERVICE ROAD "AB" AND MT. VERNON ROAD, SEE SHEET 308.

P.O.T. STA. 21+68.00 ℄ SURVEY & CONSTRUCTION MOUNT VERNON ROAD =
P.O.T. STA. 173+45.76 ℄ SURVEY & CONSTRUCTION RAMP "A" @ MT. VERNON ROAD

LEGEND

• - 2 WAY REFLECTORS
▫ - 1 WAY REFLECTORS

FOR QUANTITIES SEE SHEETS 310-316.
FOR DELINEATOR DETAILS AND QUANTITIES SEE SHEET 23.

HORIZONTAL SCALE IN FEET
0 10 20 40

CALCULATED J.L.S. 3/13/95
CHECKED SAB 02-18-99

PAVEMENT MARKING SHEET RAMP "A" AT MT. VERNON ROAD STA. 171+20 TO STA. 173+33.55

LIC-16-19.72

L1665283.DGN 02-18-99

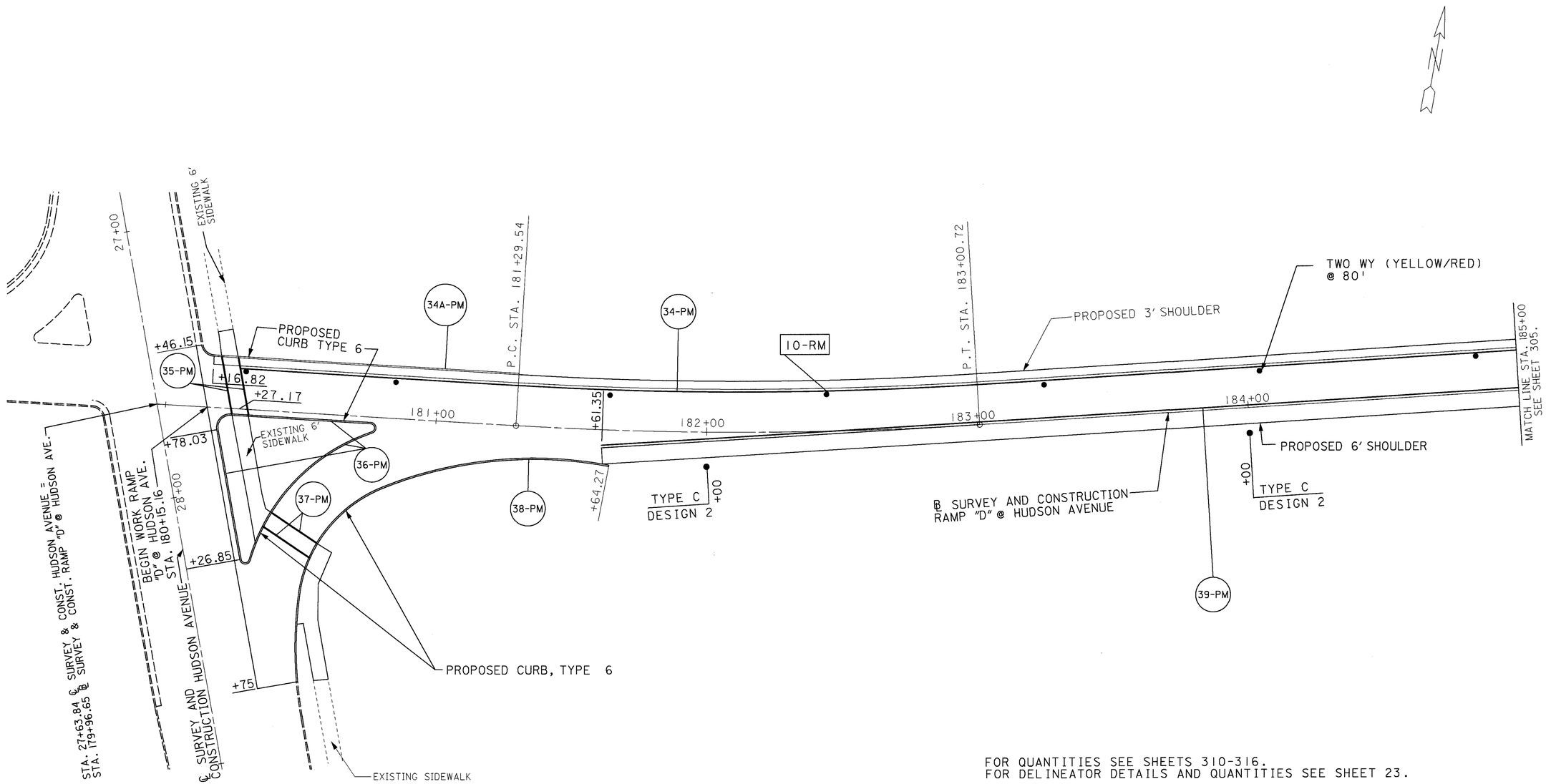

FOR QUANTITIES SEE SHEETS 310-316.
FOR DELINEATOR DETAILS AND QUANTITIES SEE SHEET 23.

HORIZONTAL SCALE IN FEET
0 10 20 40

CALCULATED J.L.S. 3/13/95
CHECKED SAB 02-18-99

PAVEMENT MARKING SHEET RAMP "D" AT HUDSON AVENUE STA. 180+00 TO STA. 185+00

LIC-16-19.72

304
547

L1665D07.DGN 02-18-99

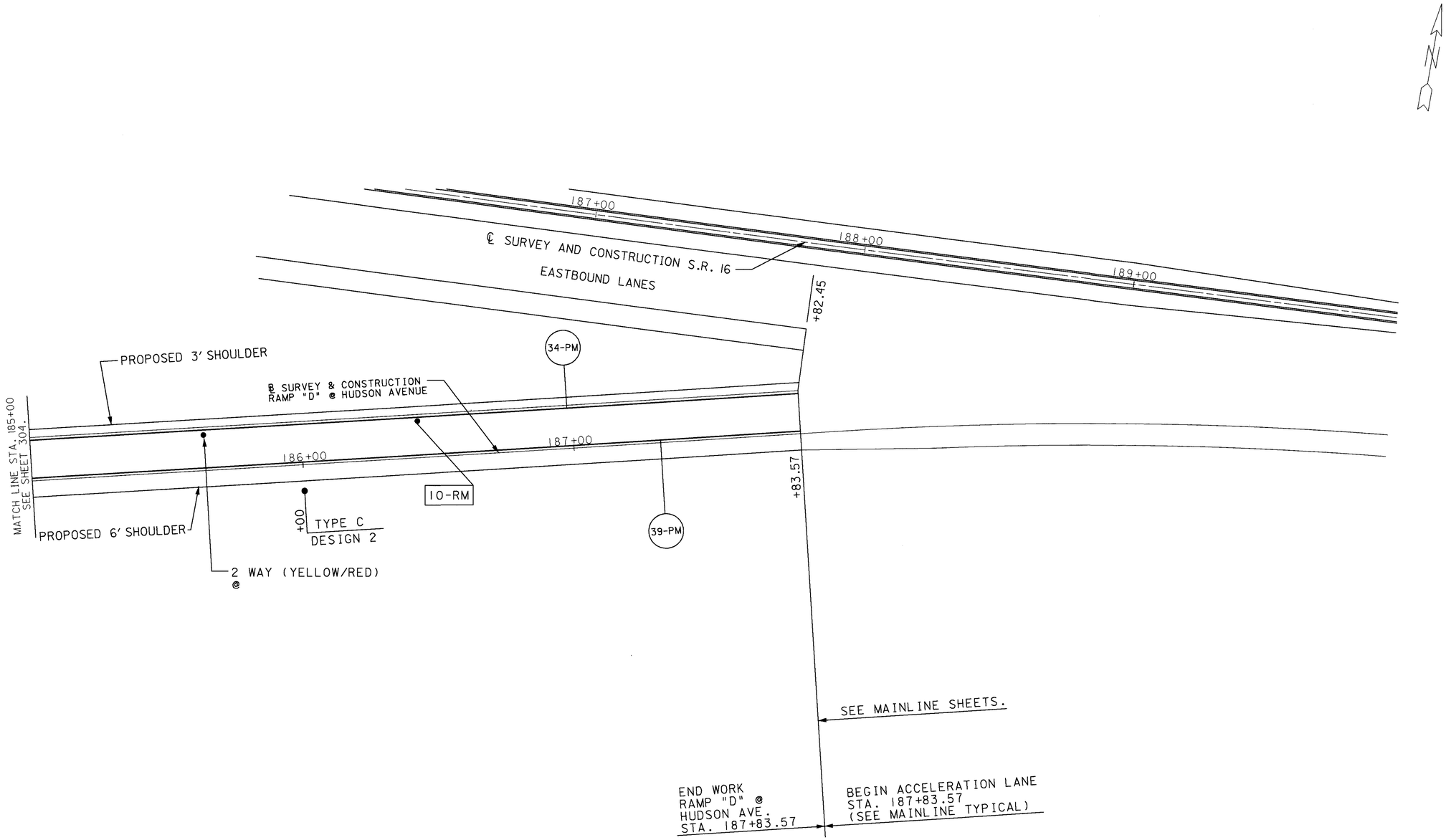

FOR QUANTITIES SEE SHEETS 310-316.
FOR DELINEATOR DETAILS AND QUANTITIES SEE SHEET 23.

0 10 20 40
HORIZONTAL
SCALE IN FEET

CALCULATED
J.L.S.
3/13/95

CHECKED
SAB
02-18-99

PAVEMENT MARKING SHEET RAMP "D" AT HUDSON AVENUE
STA. 185+00 TO STA. 190+00

LIC-16-19.72

305
547

L665DA7.DGN 04/27/95

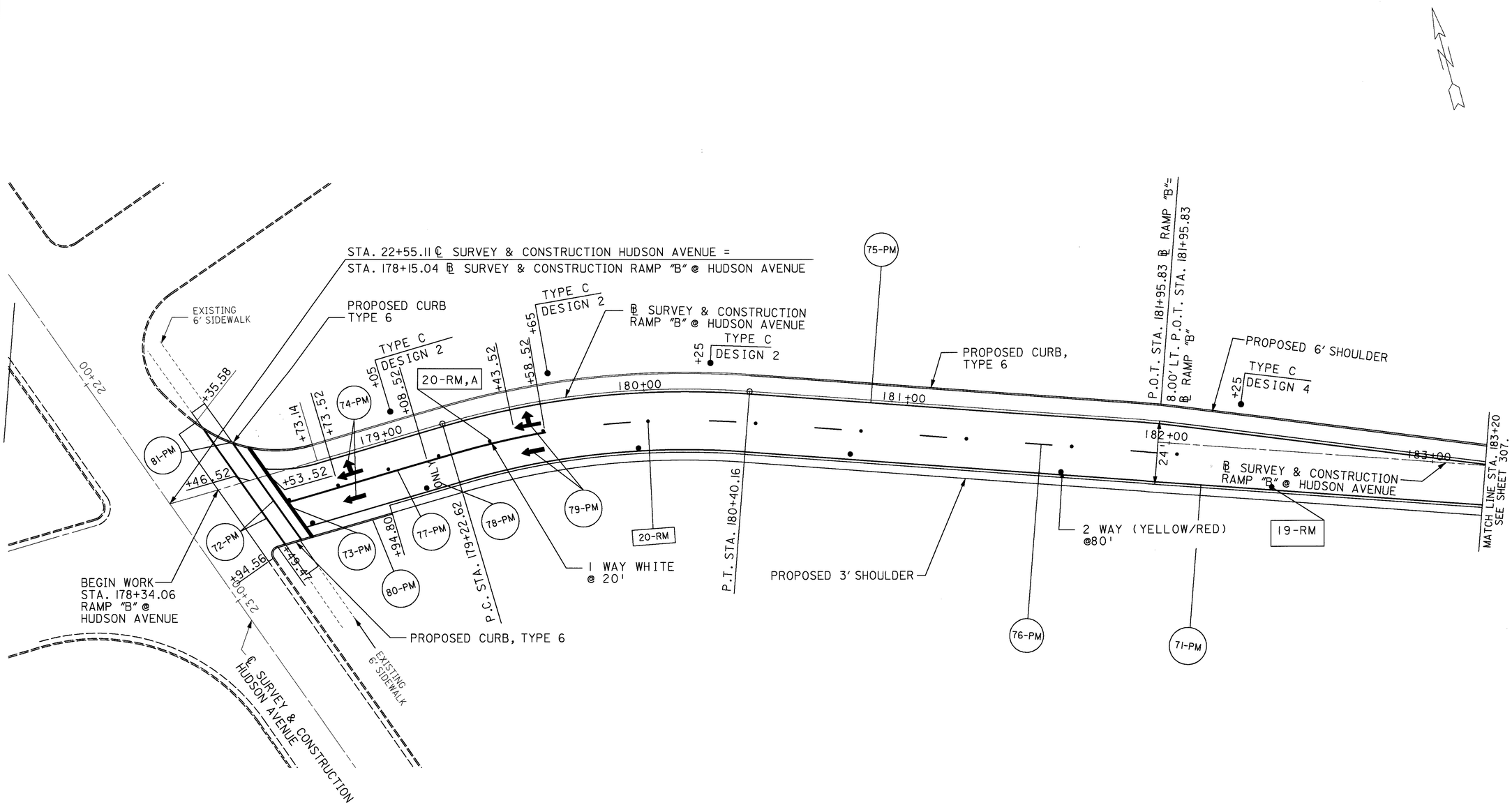

LEGEND

• - 2 WAY REFLECTORS
▫ - 1 WAY REFLECTORS

FOR QUANTITIES SEE SHEETS 310-316.
FOR DELINEATOR DETAILS AND QUANTITIES SEE SHEET 23.

0 20 40
10
HORIZONTAL SCALE IN FEET

CALCULATED J.L.S. 3/31/95
CHECKED SAB 02-18-99

PAVEMENT MARKING SHEET RAMP "B" AT HUDSON AVENUE
STA. 178+00 TO STA. 183+20

LIC-16-19.72

L1665B07.DGN 02-18-99

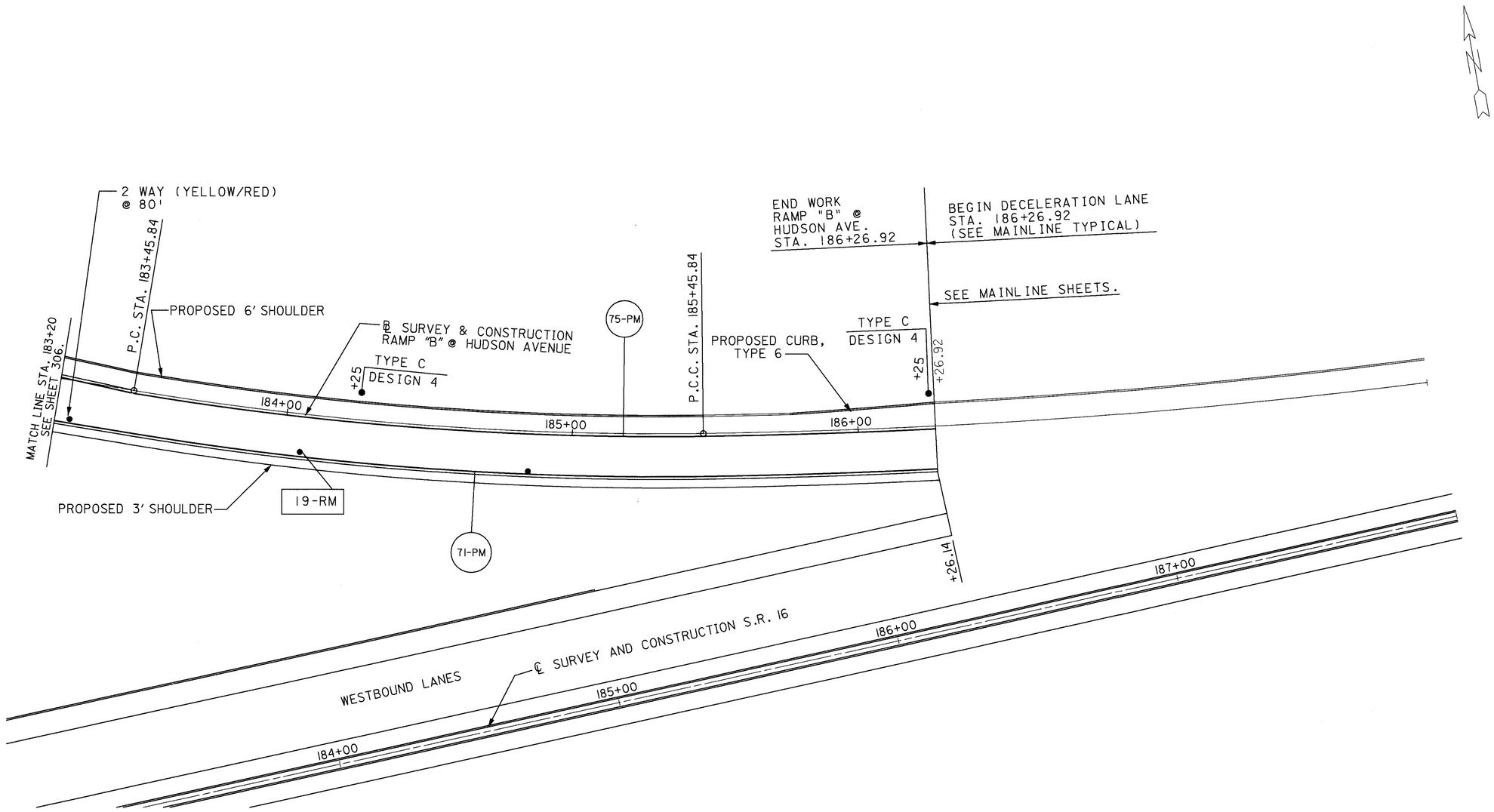

FOR QUANTITIES SEE SHEETS 310-316.
FOR DELINEATOR DETAILS AND QUANTITIES SEE SHEET 23.

0 20 40
10 HORIZONTAL SCALE IN FEET

CALCULATED J.L.S.T. 3/13/95
CHECKED SAB 02-18-99

PAVEMENT MARKING SHEET RAMP "B" AT HUDSON AVENUE
STA. 183+20 TO STA. 188+00

LIC-16-19.72

L1665BA7.DGN 02-18-99

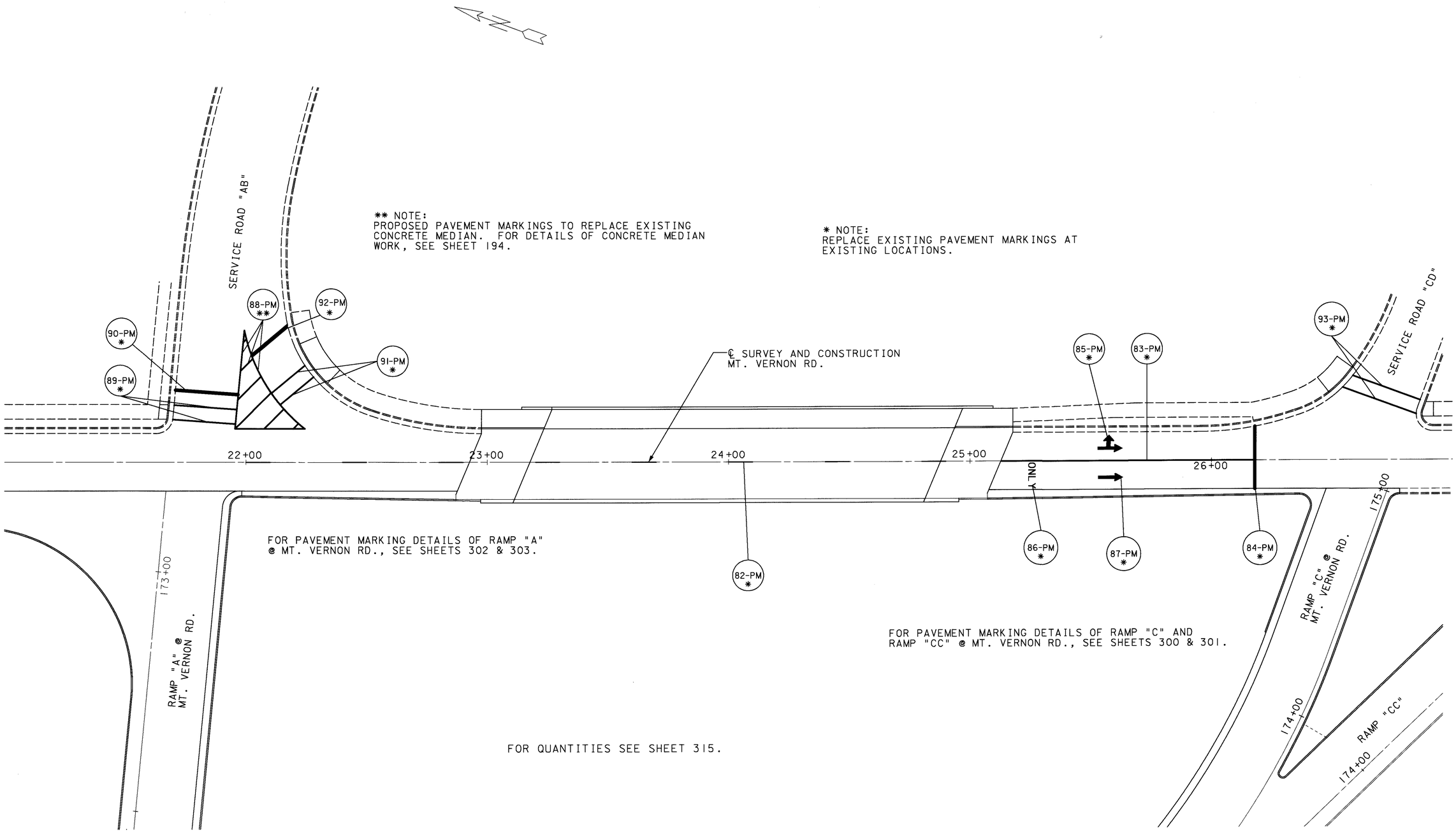

HORIZONTAL SCALE IN FEET
0 10 20 40

CALCULATED J.L.S. 3/15/95
CHECKED SAB 02-18-99

PAVEMENT MARKING SHEET AT MT. VERNON RD. STA. 21+00 TO STA. 27+00

LIC-16-19.72

L6520159.DGN 02-18-99

LOCATION	SHEET	MARK	STATION TO STATION	ITEM 828 EDGE LINE (WHITE) MILE	ITEM 828 EDGE LINE (YELLOW) MILE	ITEM 828 LANE LINE MILE	ITEM 642, TYPE 2 CENTER LINE MILE	ITEM 642, TYPE 2 CHANNELIZING LINE LIN.FT.	ITEM 642, TYPE 2 CURB MARKING (YELLOW) LIN.FT.	ITEM 642, TYPE 2 ISLAND MARKING (YELLOW) SQ.FT.	ITEM 642, TYPE 2 REMOVAL OF PAVEMENT MARKING LIN.FT.		ITEM 644 THERMOPLASTIC EDGE LINE (WHITE) MILE	ITEM 644 THERMOPLASTIC EDGE LINE (YELLOW) MILE	ITEM 644 THERMOPLASTIC LANE LINE MILE	ITEM 644 THERMOPLASTIC CHANNELIZING LINE LIN.FT.	ITEM 644 THERMOPLASTIC STOP LINE LIN.FT.	ITEM 644 THERMOPLASTIC CROSSWALK LINE LIN.FT.	ITEM 644 THERMOPLASTIC TRANSVERSE LINE (WHITE) LIN.FT.	ITEM 644 THERMOPLASTIC LANE ARROW (COMBINED) EACH	ITEM 644 THERMOPLASTIC LANE ARROW (THROUGH) EACH	ITEM 644 THERMOPLASTIC LANE ARROW (TURN) EACH	ITEM 644 THERMOPLASTIC WORD ON PAVEMENT 72 IN. "ONLY" EACH
			EASTBOUND LANES																				
1	273-275	1-PM	107+93.04 - 118+69.02(BK.)											.204									
1	275-290	1-PM	117+46.58(AH.) - 190+33.14(BK.)											1.380									
1	290	1-PM	116+62.16(AH.) - 126+00											.178									
1	273-275	2-PM	107+93.04 - 118+69.02(BK.)												.204								
1	275-290	2-PM	117+46.58(AH.) - 190+33.14(BK.)												1.380								
1	290	2-PM	116+62.16(AH.) - 119+30.69												.178								
1	273-275	3-PM	107+93.04 - 117+39.26										.179										
1	275	4-PM	117+39.26 - 118+69.02(BK.)												.025								
1	275	4-PM	117+46.58(AH.) - 118+53.72												.020								
1	274-275	5-PM	114+52.97 - 117+39.26													287							
			RAMP "H" @ 21st. STREET																				
1	291	6-PM	107+66.53(RAD.) - 107+79.20											.002									
1	291-292	6-PM	107+79.20 - 114+54.22											.128									
1	291	6A-PM	20+00.62(21st. ST.) - 107+79.20						24														
1	291	7-PM	107+66.57															124					
1	291	7A-PM	20+89.43(21st. ST.) - 108+19.43						86														
1	291	8-PM	107+65.25(RAD.) - 108+19.43										.010										
1	274,291-292	8-PM	108+19.43 - 116+20.19										.152										
			EASTBOUND LANES																				
1	274-277	8-PM	116+21.26 - 126+63.60										.197										
			ROADWAY "C"																				
1	277	8-PM	126+63.60 - 129+40.61										.052										
1	276-277	9-PM	123+95.00 - 127+71.17												.071								
1	277	10-PM	127+71.17 - 129+41.95													342			210				
			EASTBOUND LANES																				
1	277-281	11-PM	129+41.95 - 148+02.21										.352										
1	280-281	12-PM	144+11.23 - 148+02.21													391							
1	281-284	13-PM	148+02.21 - 164+00.00												.303								
			ROADWAY "D"																				
1	280	14-PM	170+25.73 - 173+30.05											.058									
1	280	15-PM	170+25.73 - 173+30.05												.058								
1	280-284	15-PM	144+11.23(S.R.16) - 163+23.97(S.R.16)												.362								
			TOTALS						110				0.942	1.950	2.601	1020		124	210				

TOTALS CARRIED TO SHEET 317.

CALCULATED JAS 3/13/95
CHECKED SAB 2-17-99

PAVEMENT MARKING QUANTITIES

LIC-16-19.72

L1619A65.DGN 02/17/95

LOCATION	SHEET	MARK	STATION TO STATION	ITEM 828 EDGE LINE (WHITE) MILE	ITEM 828 EDGE LINE (YELLOW) MILE	ITEM 828 LANE LINE MILE	ITEM 642, TYPE 2 CENTER LINE MILE	ITEM 642, TYPE 2 CHANNELIZING LINE LIN.FT.	ITEM 642, TYPE 2 CURB MARKING (YELLOW) LIN.FT.	ITEM 642, TYPE 2 ISLAND MARKING (YELLOW) SQ.FT.	ITEM 642, TYPE 2 REMOVAL OF PAVEMENT MARKING LIN.FT.	ITEM 644 THERMOPLASTIC EDGE LINE (WHITE) MILE	ITEM 644 THERMOPLASTIC EDGE LINE (YELLOW) MILE	ITEM 644 THERMOPLASTIC LANE LINE MILE	ITEM 644 THERMOPLASTIC CHANNELIZING LINE LIN.FT.	ITEM 644 THERMOPLASTIC STOP LINE LIN.FT.	ITEM 644 THERMOPLASTIC CROSSWALK LINE LIN.FT.	ITEM 644 THERMOPLASTIC TRANSVERSE LINE (WHITE) LIN.FT.	ITEM 644 THERMOPLASTIC LANE ARROW (COMBINED) EACH	ITEM 644 THERMOPLASTIC LANE ARROW (THROUGH) EACH	ITEM 644 THERMOPLASTIC LANE ARROW (TURN) EACH	ITEM 644 THERMOPLASTIC WORD ON PAVEMENT 72 IN. "ONLY" EACH
			ROADWAY "D" CONT.																			
1	284-285 & 300-301	15-PM	163+23.97(RAMP"C") - 173+75.49(RAMP"C")											.199								
1	280	16-PM	170+25.73 - 173+30.05									.058										
			EASTBOUND LANES																			
1	280-282	16-PM	144+11.23 - 151+40.00									.138										
1	281-282	17-PM	148+65.44 - 151+40.00												275							
1	282	18-PM	151+40.00 - 153+49.80											.040								
			RAMP "DD" @ 11th. STREET																			
1	298	19-PM	141+58.79(RAD.) - 141+91.82										.006									
1	298-299	19-PM	141+91.82 - 148+66.47										.128									
1	298	20-PM	141+51.54														118					
1	298	21-PM	141+49.12(RAD.) - 141+95.98									.009										
1	282,298-299	21-PM	141+95.98 - 150+49.99									.162										
1	282-284	21-PM	150+50.47(S.R.16) - 163+23.97(S.R.16)									.241										
			RAMP "C" @ MT. VERNON ROAD																			
1	284-285 & 300-301	21-PM	163+23.97 - 172+80.53									.181										
			RAMP "CC" @ MT. VERNON ROAD																			
1	301	21-PM	172+80.53 - 175+03.56									.042										
1	301	21-PM	175+03.56 - 28+27.10(MT.VERN.RD.)									.018										
1	301	22-PM	173+75.29 - 175+38.64										.031									
1	301	23-PM	175+03.56 - 28+27.10(MT.VERN.RD.)						95													
1	301	23A-PM	(SEE SHEET 301)						305													
1	301	24-PM	172+80.53 - 173+24.70											.008								
1	301	25-PM	173+24.70 - 173+75.49												102			30				
1	301	25A-PM	173+75.49 - 174+86.72												112							
1	301	26-PM	173+75.49 - 174+91.16									.022										
1	301	26A-PM	174+01.16																	2		
1	300-301	27-PM	167+55.95 - 174+82.28										.138									
1	301	27A-PM	174+36.16																			2
1	301	28-PM	174+71.16																	2		
1	301	28A-PM	174+27.95 - 26+36.55(MT.VERN.RD.)						65													
1	301	29-PM	174+91.16													28						
			TOTALS						465			0.871	0.303	0.247	489	28	118	30		4		2

TOTALS CARRIED TO SHEET 317.

CALCULATED JAS 3/15/95
CHECKED SAB 2-17-99

PAVEMENT MARKING QUANTITIES

LIC-16-19.72

L1619865.DGN 2/17/99

LOCATION	SHEET	MARK	STATION TO STATION	ITEM 828 EDGE LINE (WHITE) MILE	ITEM 828 EDGE LINE (YELLOW) MILE	ITEM 828 LANE LINE MILE	ITEM 642, TYPE 2 CENTER LINE MILE	ITEM 642, TYPE 2 CHANNELIZING LINE LIN.FT.	ITEM 642, TYPE 2 CURB MARKING (YELLOW) LIN.FT.	ITEM 642, TYPE 2 ISLAND MARKING (YELLOW) SQ.FT.	ITEM 642, TYPE 2 REMOVAL OF PAVEMENT MARKING LIN.FT.	ITEM 644 THERMOPLASTIC EDGE LINE (WHITE) MILE	ITEM 644 THERMOPLASTIC EDGE LINE (YELLOW) MILE	ITEM 644 THERMOPLASTIC LANE LINE MILE	ITEM 644 THERMOPLASTIC CHANNELIZING LINE LIN.FT.	ITEM 644 THERMOPLASTIC STOP LINE LIN.FT.	ITEM 644 THERMOPLASTIC CROSSWALK LINE LIN.FT.	ITEM 644 THERMOPLASTIC TRANSVERSE LINE (WHITE) LIN.FT.	ITEM 644 THERMOPLASTIC LANE ARROW (COMBINED) EACH	ITEM 644 THERMOPLASTIC LANE ARROW (THROUGH) EACH	ITEM 644 THERMOPLASTIC LANE ARROW (TURN) EACH	ITEM 644 THERMOPLASTIC WORD ON PAVEMENT 72 IN. "ONLY" EACH
			EASTBOUND LANES																			
1	284-285	30-PM	164+00.00 - 167+72.61												746			455				
1	285-289	31-PM	167+72.61 - 188+83.62									.400										
1	289	32-PM	187+82.45 - 188+83.62												102							
1	289-290	33-PM	188+83.62 - 190+33.18											.028								
1	290	33-PM	116+62.16 - 117+27.28											.012								
			RAMP "D" @ HUDSON AVENUE																			
1	304-305	34-PM	180+26.76 - 187+83.57										.143									
1	304	34A-PM	27+46.15(HUD.AVE.) - 181+29.54						119													
1	304	35-PM	180+27.17														43					
1	304	36-PM	(SEE SHEET 304)						187													
1	304	37-PM	(SEE SHEET 304)														40					
1	1 304	38-PM	28+75.00(HUD.AVE.) - 181+64.27						170													
1	289-290 & 304-305	39-PM	181+61.35 - 190+73.57									.173										
			EASTBOUND LANES																			
1	290	39-PM	117+02.59 - 126+00									.170										
1			BRIDGE L9C-16-2028	.03	.03	.03						(.03)	(.03)	(.03)								
1			LIC-16-2038	.03	.03	.03						(.03)	(.03)	(.03)								
1			LIC-79-1379R	.04	.04	.04						(.04)	(.04)	(.04)								
1			LIC-13-0988	.04	.04	.04						(.04)	(.04)	(.04)								
1			LIC-16-2109	.04	.04	.04						(.04)	(.04)	(.04)								
1			(LIC-16-2131	.14	.14	.14						(.14)	(.14)	(.14)								
1			LIC-16-2141)																			
			TOTALS	0.32	0.32	0.32			476			0.423	(.177)	0.080	848		83					

TOTALS CARRIED TO SHEET 317.

CALCULATED J.L.S. 3/15/95
CHECKED SAB 2-17-99

PAVEMENT MARKING QUANTITIES

LIC-16-19.72

L1619C65.DGN 2/17/99

42-PM (NOT USED)

LOCATION	SHEET	MARK	STATION TO STATION	ITEM 828 EDGE LINE (WHITE) MILE	ITEM 828 EDGE LINE (YELLOW) MILE	ITEM 828 LANE LINE MILE	ITEM 642, TYPE 2 CENTER LINE MILE	ITEM 642, TYPE 2 CHANNELIZING LINE LIN.FT.	ITEM 642, TYPE 2 CURB MARKING (YELLOW) LIN.FT.	ITEM 642, TYPE 2 ISLAND MARKING (YELLOW) SQ.FT.	ITEM 642, TYPE 2 REMOVAL OF PAVEMENT MARKING LIN.FT.		ITEM 644 THERMOPLASTIC EDGE LINE (WHITE) MILE	ITEM 644 THERMOPLASTIC EDGE LINE (YELLOW) MILE	ITEM 644 THERMOPLASTIC LANE LINE MILE	ITEM 644 THERMOPLASTIC CHANNELIZING LINE LIN.FT.	ITEM 644 THERMOPLASTIC STOP LINE LIN.FT.	ITEM 644 THERMOPLASTIC CROSSWALK LINE LIN.FT.	ITEM 644 THERMOPLASTIC TRANSVERSE LINE (WHITE) LIN.FT.	ITEM 644 THERMOPLASTIC LANE ARROW (COMBINED) EACH	ITEM 644 THERMOPLASTIC LANE ARROW (THROUGH) EACH	ITEM 644 THERMOPLASTIC LANE ARROW (TURN) EACH	ITEM 644 THERMOPLASTIC WORD ON PAVEMENT 72 IN. "ONLY" EACH
			WESTBOUND LANES																				
1	273-275	40-PM	107+93.04 - 118+69.02(BK.)											.204									
1	275-290	40-PM	117+46.58(AH.) - 190+33.14(BK.)											1.380									
1	290-290A	40-PM	116+62.16(AH.) - 126+00											.178									
1	273-275	41-PM	107+93.04 - 118+69.02(BK.)												.204								
1	275-290	41-PM	117+46.58(AH.) - 190+33.14(BK.)												1.380								
1	290-290A	41-PM	116+62.16(AH.) - 126+00												.178								
1	273-274	43-PM	107+93.04 - 114+38.08										.122										
1	274	44-PM	114+38.08 - 116+08.84													342			178				
1	274-275	45-PM	116+08.84 - 117+75.77												.032								
			RAMP "F" @ 21st. STREET																				
1	293	46-PM	106+49.90(RAD.) - 106+80.53											.006									
1	293-294	46-PM	106+80.53 - 114+39.45											.144									
1	293	47-PM	106+39.97															132					
1	293	47A-PM	106+66.97																	1		1	
1	293	47B-PM	15+71.44(21st. ST.)								133							133					
1	293	48-PM	106+46.97														51						
1	293	48A-PM	107+01.97																				1
1	293	49-PM	106+49.41 - 107+49.40													100							
1	293	49A-PM	107+36.97																	1		1	
1	293	50-PM	106+34.65(RAD.) - 106+81.21										.009										
1	274-275 & 293-294	50-PM	106+81.21 - 117+16.47										.196										
			WESTBOUND LANES																				
1	275-276	50-PM	117+16.47 - 124+62.70										.141										
			ROADWAY "A"																				
1	276-277	50-PM	124+63.05 - 126+26.31										.031										
			WESTBOUND LANES																				
1	276	51-PM	121+02.88 - 123+42.89												.045								
1	276-277	52-PM	123+42.89 - 126+26.93													284							
1	276-282	53-PM	123+42.89 - 153+44.64										.569										
1	282-283	54-PM	153+44.64 - 157+75.00													861			508				
1	283-284	55-PM	157+75.00 - 163+05.90												.101								
1	284-285	56-PM	163+05.90 - 167+48.81													443							
			TOTALS								133		1.068	1.912	1.940	2030	51	265	686	2		2	1

TOTALS CARRIED TO SHEET 317.

CALCULATED J.L.S. 3/15/95
CHECKED SAB 2-17-99

PAVEMENT MARKING QUANTITIES

LIC-16-19.72

L1619065.DGN 02/17/99

LOCATION	SHEET	MARK	STATION TO STATION	ITEM 828 EDGE LINE (WHITE) MILE	ITEM 828 EDGE LINE (YELLOW) MILE	ITEM 828 LANE LINE MILE	ITEM 642, TYPE 2 CENTER LINE MILE	ITEM 642, TYPE 2 CHANNELIZING LINE LIN.FT.	ITEM 642, TYPE 2 CURB MARKING (YELLOW) LIN.FT.	ITEM 642, TYPE 2 ISLAND MARKING (YELLOW) SQ.FT.	ITEM 642, TYPE 2 REMOVAL OF PAVEMENT MARKING LIN.FT.		ITEM 644 THERMOPLASTIC EDGE LINE (WHITE) MILE	ITEM 644 THERMOPLASTIC EDGE LINE (YELLOW) MILE	ITEM 644 THERMOPLASTIC LANE LINE MILE	ITEM 644 THERMOPLASTIC CHANNELIZING LINE LIN.FT.	ITEM 644 THERMOPLASTIC STOP LINE LIN.FT.	ITEM 644 THERMOPLASTIC CROSSWALK LINE LIN.FT.	ITEM 644 THERMOPLASTIC TRANSVERSE LINE (WHITE) LIN.FT.	ITEM 644 THERMOPLASTIC LANE ARROW (COMBINED) EACH	ITEM 644 THERMOPLASTIC LANE ARROW (THROUGH) EACH	ITEM 644 THERMOPLASTIC LANE ARROW (TURN) EACH	ITEM 644 THERMOPLASTIC WORD ON PAVEMENT 72 IN. "ONLY" EACH
			ROADWAY "B"																				
1	296-297	57-PM	143+58.29 - 153+46.67											.187									
1	296	58-PM	143+62.17 - 147+33.75										.070										
1	296-297	59-PM	147+33.75 - 148+51.22													235			146				
1	283,296-297	60-PM	143+60.23 - 158+59.16												.284								
			WESTBOUND LANES																				
1	283-285	60-PM	158+58.59 - 165+99.67												.140								
			RAMP "A" @ MT. VERNON ROAD																				
1	285,302-303	60-PM	166+00.17 - 173+33.55												.139								
			RAMP "BB" @ 11th STREET																				
1	295	61-PM	143+38.46(RAD.) - 143+65.16											.005									
1	295	61-PM	143+65.16 - 147+35.56											.070									
1	295	62-PM	143+31.74															107					
1	295	63-PM	143+38.74														42						
1	295	64-PM	143+58.74																	1			
1	295	65-PM	143+37.05(RAD.) - 143+67.55										.006										
1	295-297	65-PM	143+67.55 - 148+99.63										.101										
			ROADWAY "B"																				
1	283 & 297	65-PM	148+99.63 - 158+59.16										.182										
			WESTBOUND LANES																				
1	283-285	65-PM	158+58.59 - 165+99.67										.140										
			RAMP "A" @ MT. VERNON ROAD																				
1	285,302-303	65-PM	166+00.17 - 172+46.59										.122										
1	303	65A-PM	172+46.59 - 20+96.83(MT.VER.RD.)						100														
1	303	66-PM	(SEE SHEET 303)													134			81				
1	302-303	67-PM	167+53.00 - 173+36.73(RAD.)											.111									
			WESTBOUND LANES																				
1	284-289	68-PM	163+05.90 - 186+26.14										.439										
1	289	69-PM	186+26.14 - 188+00.33													349			227				
1	289	70-PM	188+00.33 - 188+48.70												.009								
			RAMP "B" @ HUDSON AVENUE																				
1	306	71-PM	178+61.81 - 178+94.80											.006									
1	306-307	71-PM	178+94.80 - 186+26.92											.139									
			TOTALS						100				1.060	0.518	0.572	718	42	107	454		1		

TOTALS CARRIED TO SHEET 317.

CALCULATED 3/13/99 JLK
CHECKED 2-17-99 SAB

PAVEMENT MARKING QUANTITIES

LIC-16-19.72

L1619E65.DGN 2/17-99

LOCATION	SHEET	MARK	STATION TO STATION	ITEM 828			ITEM 642, TYPE 2							ITEM 644 THERMOPLASTIC										
				EDGE LINE (WHITE)	EDGE LINE (YELLOW)	LANE LINE	CENTER LINE (DOUBLE SOLID)	LANE LINE	STOP LINE	CROSSWALK LINE	CURB MARKING (YELLOW)	ISLAND MARKING (YELLOW)	REMOVAL OF PAVEMENT MARKING	EDGE LINE (WHITE)	EDGE LINE (YELLOW)	LANE LINE	CHANNELIZING LINE	STOP LINE	CROSSWALK LINE	TRANSVERSE LINE (WHITE)	LANE ARROW (COMBINED)	LANE ARROW (THROUGH)	LANE ARROW (TURN)	WORD ON PAVEMENT 72 IN. "ONLY"
				MILE	MILE	MILE	MILE	MILE	LIN.FT.	LIN.FT.	LIN.FT.	SQ.FT.	LIN.FT.	MILE	MILE	MILE	LIN.FT.	LIN.FT.	LIN.FT.	LIN.FT.	EACH	EACH	EACH	EACH
			RAMP "B" @ HUDSON AVENUE CONT.																					
1	306	72-PM	178+46.52																99					
1	306	73-PM	178+53.52															41						
1	306	74-PM	178+73.52																		1	1		
1	306	75-PM	178+53.00(RAD.) - 178+73.14											.004										
1	289-290 & 306-307	75-PM	178+73.14 - 190+15.22											.216										
			WESTBOUND LANES																					
1	290	75-PM	190+15.11 - 190+33.14(BK.)											.003										
1	290	75-PM	116+62.16(AH.) - 126+00											.177										
			RAMP "B" @ HUDSON AVENUE																					
1	306	76-PM	179+58.52 - 181+95.83													.045								
1	306	77-PM	178+57.64 - 179+58.52														101							
1	306	78-PM	179+08.52																					1
1	306	79-PM	179+43.52																		1	1		
1	306	80-PM	22+94.56(HUD.AVE.) - 178+94.80								51													
1	306	81-PM	22+35.58(HUD.AVE.) - 178+73.14								47													
			MT. VERNON ROAD																					
1	308	82-PM	(SEE SHEET 308).					.059																
1	308	83-PM	(SEE SHEET 308).														105							
1	308	84-PM	(SEE SHEET 308).															28						
1	308	85-PM	(SEE SHEET 308).																		1			
1	308	86-PM	(SEE SHEET 308).																					1
1	308	87-PM	(SEE SHEET 308).																			1		
			SERVICE ROAD "AB" @ MT. VERNON RD.																					
1	308	88-PM	(SEE SHEET 308).														120			59				
1	308	89-PM	(SEE SHEET 308).																52					
1	308	90-PM	(SEE SHEET 308).															26						
1	308	91-PM	(SEE SHEET 308).																36					
																		18						
1	308	92-pm																						
			SERVICE ROAD "CD" @ MT. VERNON RD.																					
1	308	93-PM	(SEE SHEET 308).																62					
1																								
			TOTALS					0.059			98			0.400		0.045	326	113	249	59	3	3		2

TOTALS CARRIED TO SHEET 317.

CALCULATED JLA 3/13/95
CHECKED SAB 2-17-99

PAVEMENT MARKING QUANTITIES

LIC-16-19.72

L1619F65.DGN 2/17/99

LOCATION	SHEET	MARK	STATION TO STATION	ITEM 828 EDGE LINE (WHITE)	ITEM 828 EDGE LINE (YELLOW)	ITEM 828 LANE LINE	ITEM 642, TYPE 2 CENTER LINE (DOUBLE SOLID)	ITEM 642, TYPE 2 CHANNELIZING LINE	ITEM 642, TYPE 2 STOP LINE	ITEM 642, TYPE 2 CROSSWALK LINE	ITEM 642, TYPE 2 CURB MARKING (YELLOW)	ITEM 642, TYPE 2 ISLAND MARKING (YELLOW)	ITEM 642, TYPE 2 REMOVAL OF PAVEMENT MARKING	ITEM 644 THERMOPLASTIC EDGE LINE (WHITE)	ITEM 644 THERMOPLASTIC EDGE LINE (YELLOW)	ITEM 644 THERMOPLASTIC LANE LINE	ITEM 644 THERMOPLASTIC CHANNELIZING LINE	ITEM 644 THERMOPLASTIC STOP LINE	ITEM 644 THERMOPLASTIC CROSSWALK LINE	ITEM 644 THERMOPLASTIC TRANSVERSE LINE (WHITE)	ITEM 644 THERMOPLASTIC LANE ARROW (COMBINED)	ITEM 644 THERMOPLASTIC LANE ARROW (THROUGH)	ITEM 644 THERMOPLASTIC LANE ARROW (TURN)	ITEM 644 THERMOPLASTIC WORD ON PAVEMENT 72 IN. "ONLY"
				MILE	MILE	MILE	MILE	LIN.FT.	LIN.FT.	LIN.FT.	LIN.FT.	SQ.FT.	LIN.FT.	MILE	MILE	MILE	LIN.FT.	LIN.FT.	LIN.FT.	LIN.FT.	EACH	EACH	EACH	EACH
			WEST BOUND																					
1			BRIDGE LIC-16-2028	.03	.03	.03								(.03)	(.03)	(.03)								
1			LIC-16-2038	.03	.03	.03								(.03)	(.03)	(.03)								
1			LIC-79-1379R	.04	.04	.04								(.04)	(.04)	(.04)								
1			LIC-13-0988	.04	.04	.04								(.04)	(.04)	(.04)								
1			LIC-16-2109	.04	.04	.04								(.04)	(.04)	(.04)								
1			(LIC-16-2131	.14	.14	.14								(.14)	(.14)	(.14)								
1			LIC-16-2141)																					
			TOTALS	0.32	0.32	0.32								(0.32)	(0.32)	(0.32)								

TOTAL CARRIED TO SHEET 317.

CALCULATED J.L.A. 3/15/95
CHECKED SAB 2/17/99

PAVEMENT MARKING QUANTITIES

LIC-16-19.72

SHEET	MARK	STATION TO STATION	ITEM 621 RAISED PAVEMENT MARKER, INSTALLATION ONLY 1-WAY WHITE EACH	2-WAY WHITE/ RED EACH	2-WAY YELLOW/ RED EACH	SPACING C/C FEET
		EAST BOUND				
273-275	1-RM	107+93.04-118+69.02BK		15		80
275-290	1-RM	117+46.58AH-190+33.14		92		80
290-290A	1-RM	116+62.16AH-126+00		12		80
274-275	2-RM	114+54.22-117+39.26	7		9	20/40/80
291-292		RAMP H				
277	3-RM	127+71.17-130+00		9	1	40/80
		ROADWAY C				
280-281	4-RM	170+25.73-173+30.05		7	3	40/80
	4-RM	145+00-148+02.21				
		ROADWAY D				
281-282	6-RM	148+11.23-163+92.61		20		80
283-284						
280	7-RM	170+25.73-173+30.05		4		80
		ROADWAY D				
280-281-282	7-RM	144+11.23-173+24		38		80
283-284-285		SR 16, RAMP C				
300-301						
281-282	5-RM	141+38.84-151+40		2	10	40/80
298-299		RAMP DD				
284-285	9-RM	164+00-168+27		19	1	40/80
		RAMP C				
300-301	9-RM	167+55-175+01.16			9	80
		RAMP C				
301	7-RM	173+25.49-175+38.64		7	2	40/80
		RAMP CC				
301	7A-RM	173+75.29-175+01.16	10			20
		RAMP CC				
289-304	10-RM	180+00-188+83.62		3	6	40/80
		RAMP D				
		TOTALS (CARRIED TO OTHER TABLE)	17	228	41	

SHEET	MARK	STATION TO STATION	ITEM 621 RAISED PAVEMENT MARKER, INSTALLATION ONLY 1-WAY WHITE EACH	2-WAY WHITE/ RED EACH	2-WAY YELLOW/ RED EACH	SPACING C/C FEET
		WESTBOUND LANES				
273-275	11-RM	107+93.04-118+69.02BK		15		80
275-290	11-RM	117+46.58AH-190+33.14BK		92		80
290-290A	11-RM	116+62.16AH-126+00		12		80
274-293-294	12-RM	106+32.37-116+08.64		9	11	40/80
		RAMP F				
293	11A-RM	106+32.37-107+49.40	6			
		RAMP F				
276-277	13-RM	123+42.89-127+43.74		4	3	40/80
		ROADWAY A				
295-296-297	14-RM	143+19.61-148+53.75		9	6	40/80
		RAMP BB				
282-283-284	15-RM	153+46.67-167+53		18		80
296-285		ROADWAY B				
296-297	15-RM	143+58-153+46.67		12		80
282-283	17-RM	152+64.60-157+84.64		23	1	40/80
		ROADWAY B				
302-303	15-RM	167+53-173+33.55		7		80
		RAMP A				
				11	9	40/80
284-285	18-RM	163+08.81-172+20				
302-303		RAMP A				
303	16-RM		10			
289-307-308	19-RM	178+34.02-188+06.14		9	11	40/80
		RAMP B				
306	20-RM	178+34.02-182+00		5		80
306	20A-RM	178+00-179+58.52	6			20
		SUB-TOTALS	22	226	41	
		TOTALS(OTHER TABLE)	17	228	41	
		TOTAL (CARRIED TO GENERAL SUMMARY)		575		

CALCULATED J.A.S. 3/13/95
CHECKED SAB 02-18-99

ITEM 621 RAISED PAVEMENT MARKER

LIC-16-19.72

L16190665.DGN 2-19-99

				ITEM 828			ITEM 642, TYPE 2						ITEM 644 THERMOPLASTIC										
LOCATION	SHEET	MARK	STATION TO STATION	EDGE LINE (WHITE)	EDGE LINE (YELLOW)	LANE LINE	CENTER LINE (DOUBLE SOLID)	CHANNELIZING LINE	STOP LINE	CROSSWALK LINE	CURB MARKING (YELLOW)		REMOVAL OF PAVEMENT MARKING	EDGE LINE (WHITE)	EDGE LINE (YELLOW)	LANE LINE	CHANNELIZING LINE	STOP LINE	CROSSWALK LINE	TRANSVERSE LINE (WHITE)	LANE ARROW (COMBINED)	LANE ARROW (THROUGH)	LANE ARROW (TURN)	WORD ON PAVEMENT "Z IN; "ONLY"
				MILE	MILE	MILE	MILE	LIN.FT.	LIN.FT.	LIN.FT.	LIN.FT.		LIN.FT.	MILE	MILE	MILE	LIN.FT.	LIN.FT.	LIN.FT.	LIN.FT.	EACH	EACH	EACH	EACH
1			TOTALS CARRIED FROM SHEET 310								110			0.942	1.950	2.601	1020		124	210				
1			TOTALS CARRIED FROM SHEET 311								465			0.871	0.303	0.247	489	28	118	30		4		2
1			TOTALS CARRIED FROM SHEET 312	0.32	0.32	0.32					476			0.423	(0.177)	0.080	848		83					
1			TOTALS CARRIED FROM SHEET 313										133	1.068	1.912	1.940	2030	51	265	686	2		2	1
1			TOTALS CARRIED FROM SHEET 314								100			1.060	0.518	0.572	718	42	107	454		1		
1			TOTALS CARRIED FROM SHEET 315					0.312			98			0.400		0.045	326	113	249	59	3	3		2
1			TOTALS CARRIED FROM SHEET 315A	0.32	0.32	0.32								(0.320)	(0.320)	(0.320)								
			TOTALS	0.64	0.64	0.64		0.312			1249		133	4.444	4.186		5431	234	946	1439	5	8	2	5
			TOTALS CARRIED TO GENERAL SUMMARY	1.28		0.64		0.312			1249		133	8.630		5.165	5431	234	946	1439	15			5

CALCULATED J.L.S. 3/15/95
CHECKED SAB 2/17/99

PAVEMENT MARKING QUANTITIES

LIC-16-19.72

L16I9065.DGN 2-17-99

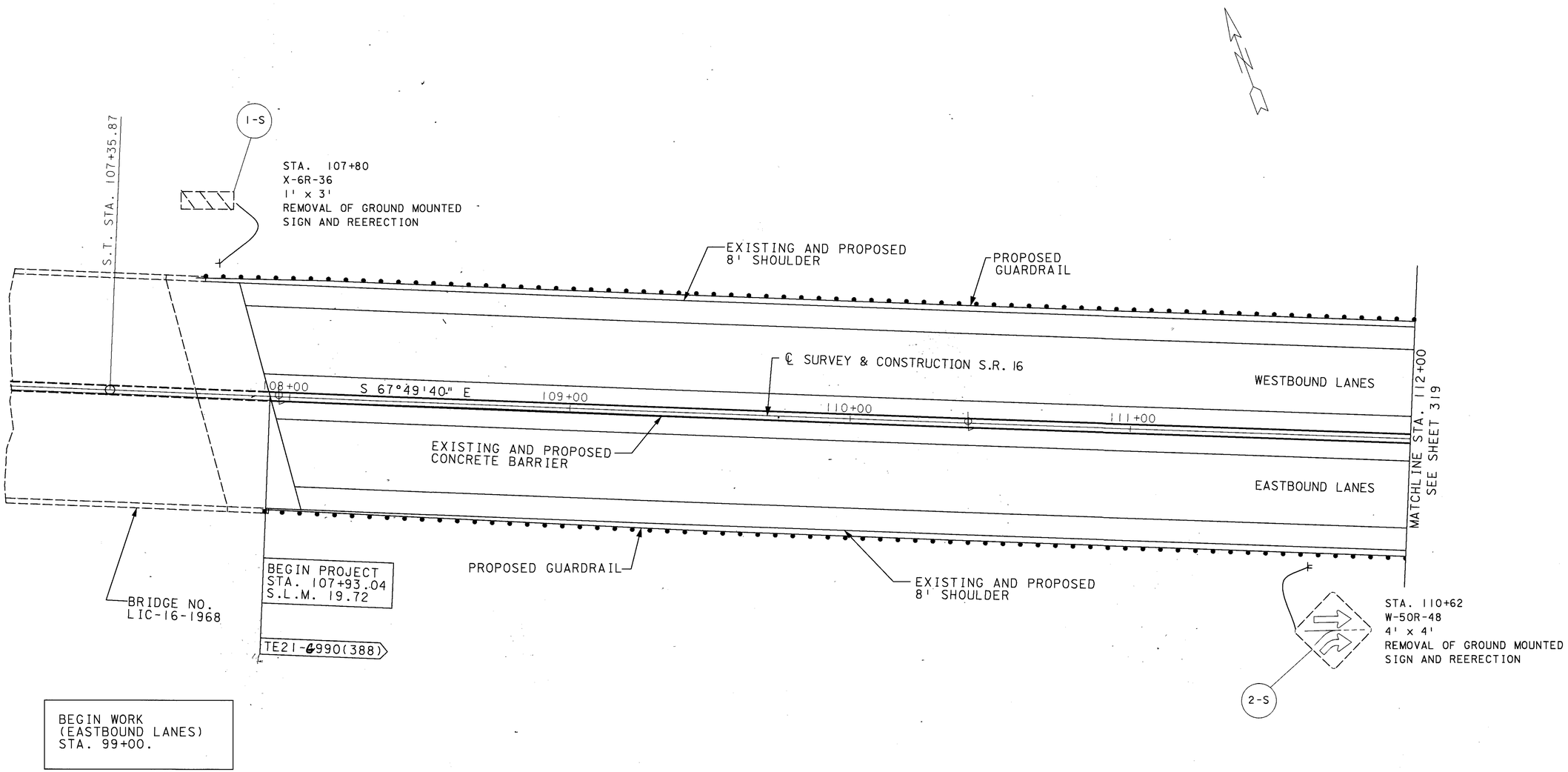

HORIZONTAL SCALE IN FEET
0 10 20 40

CALCULATED S.S.B. 3-13-95
CHECKED L.T. 3-16-95

SIGN INSTALLATION DETAIL SHEET
STA. 107+00 TO STA. 112+00

LIC-16-19.72

L6002159.DGN 2-19-99

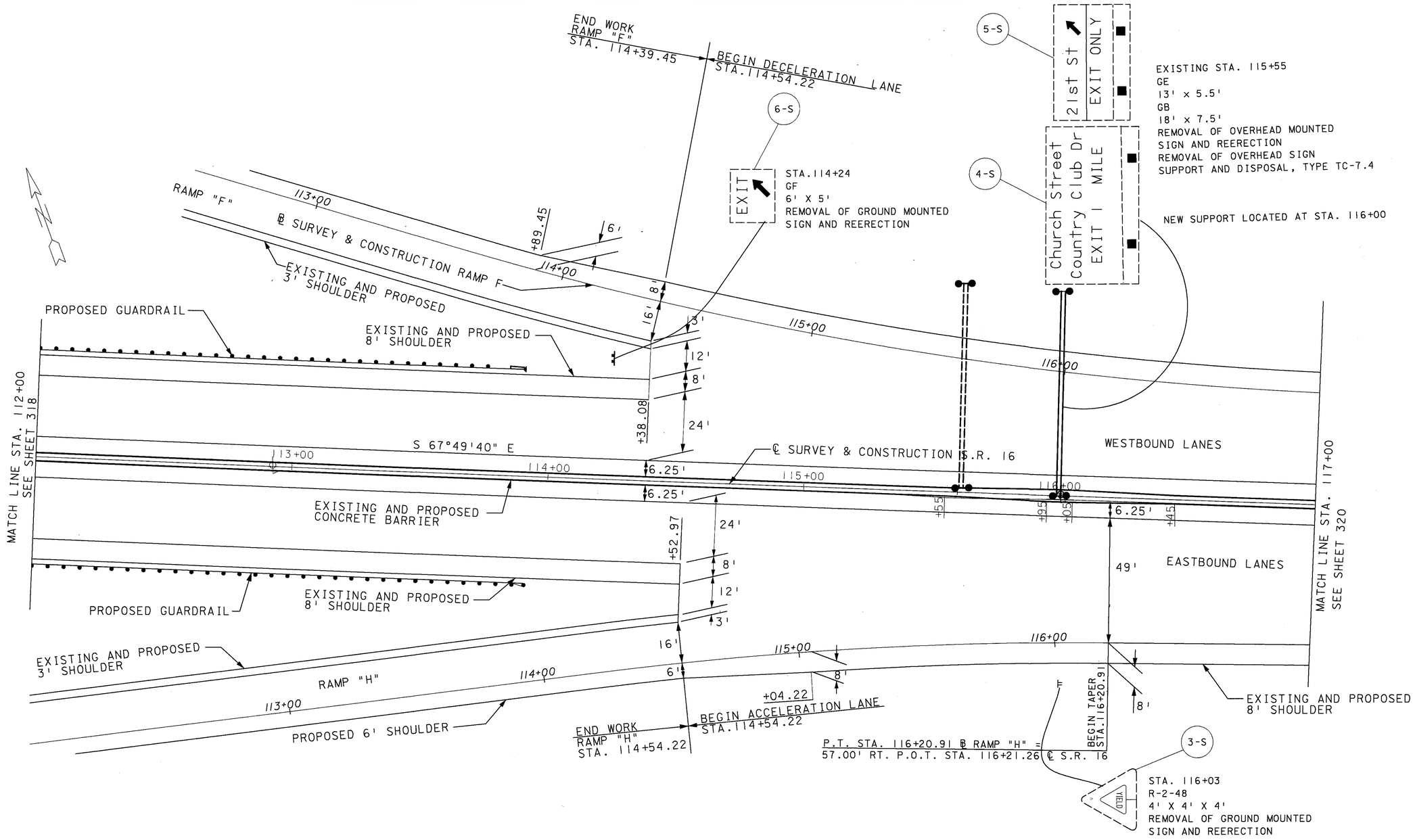

HORIZONTAL SCALE IN FEET
0 10 20 40

CALCULATED S.S. 3-13-95
CHECKED L.L. 3-16-95

SIGN INSTALLATION DETAIL SHEET
STA. 112+00 TO STA. 117+00

LIC-16-19.72

L6003159.DGN 2-19-99

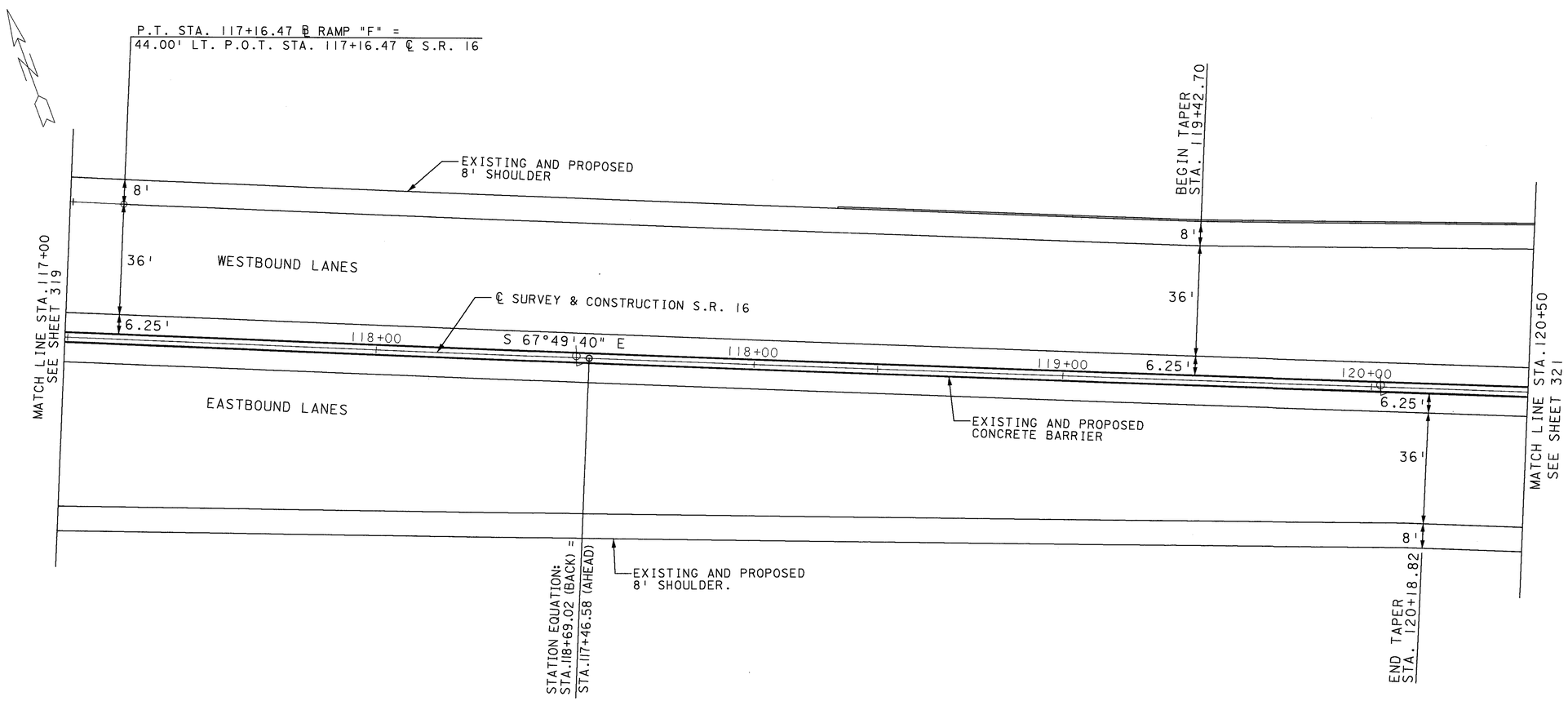

NO SIGNS THIS SHEET

HORIZONTAL SCALE IN FEET
0 10 20 40

CALCULATED S.S.B. 3-19-99
CHECKED L.T. 3-16-99

SIGN INSTALLATION DETAIL SHEET
STA. 117+00 TO STA. 120+50

LIC-16-19.72

L6004159.DGN 2-19-99

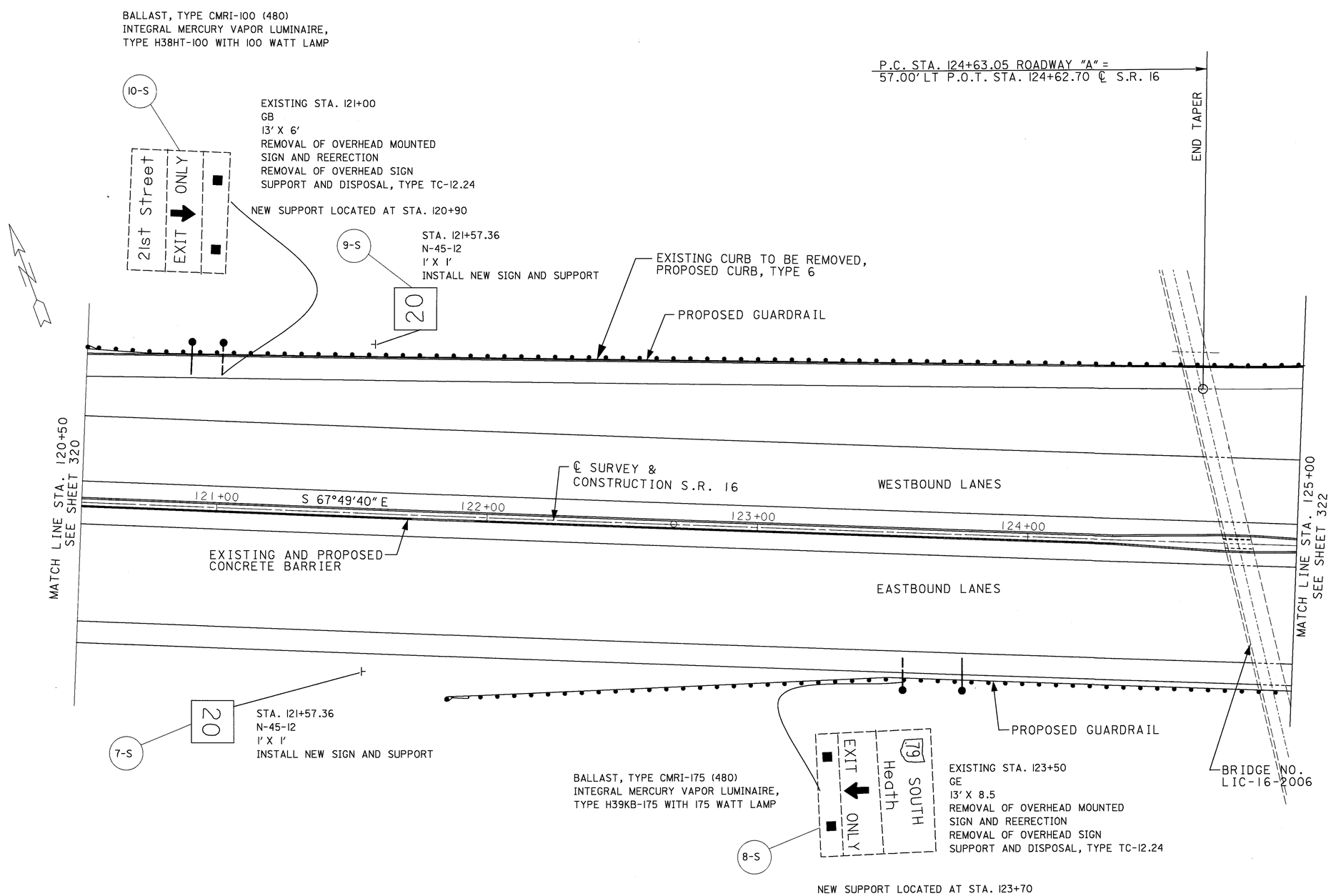

HORIZONTAL SCALE IN FEET
0 10 20 40

CALCULATED 3-15-95
CHECKED L.T. 3-16-95

SIGN INSTALLATION DETAIL SHEET
STA. 120+50 TO STA. 125+00

LIC-16-19.72

L6005159.DGN 2-19-99

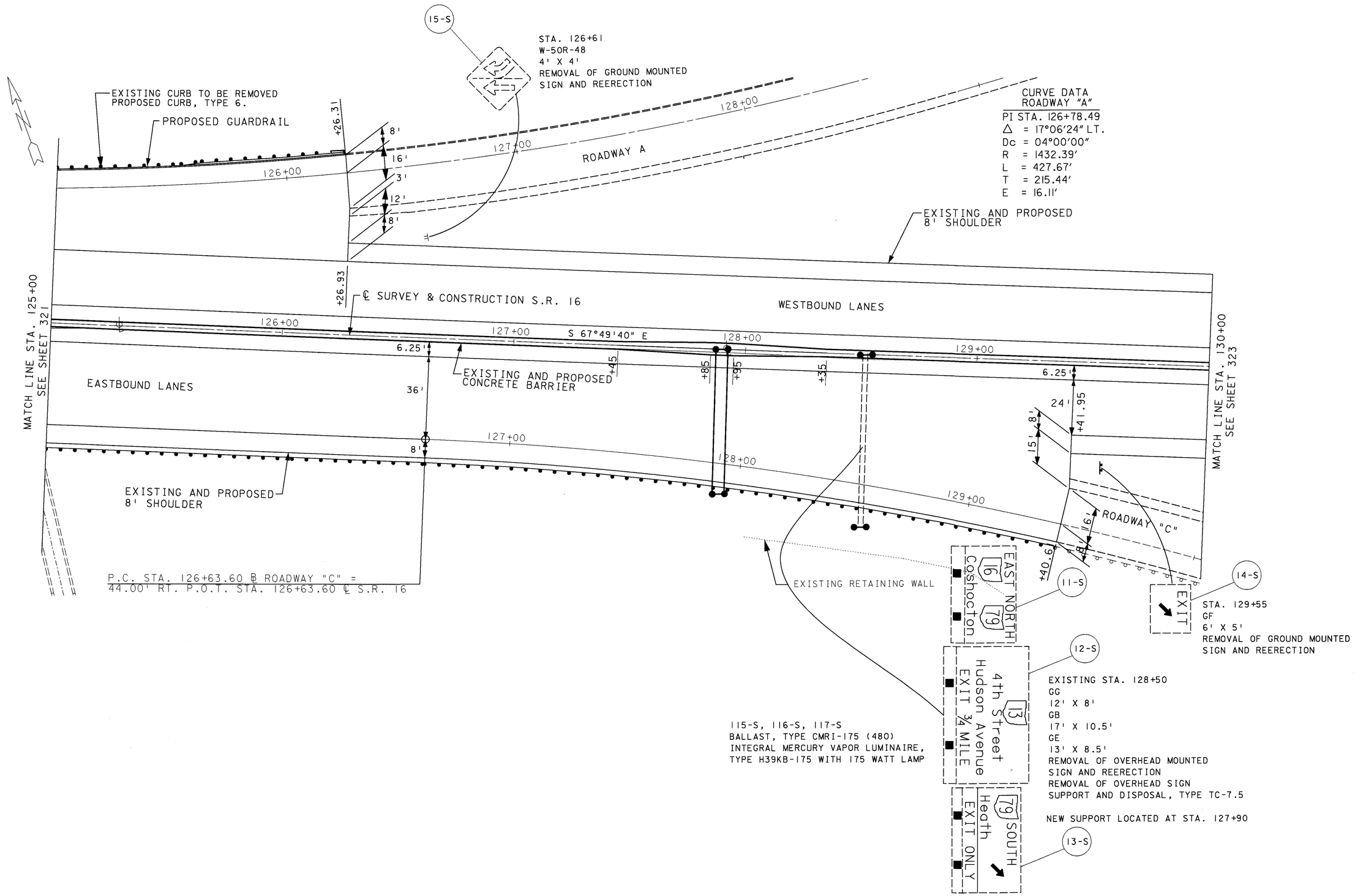

HORIZONTAL SCALE IN FEET
0 10 20 40

CALCULATED S.S.B. 3-13-95
CHECKED L.T. 3-16-95

SIGN INSTALLATION DETAIL SHEET
STA. 125+00 TO STA. 130+00

LIC-16-19.72

322
547

L6006159.DGN 2-19-99

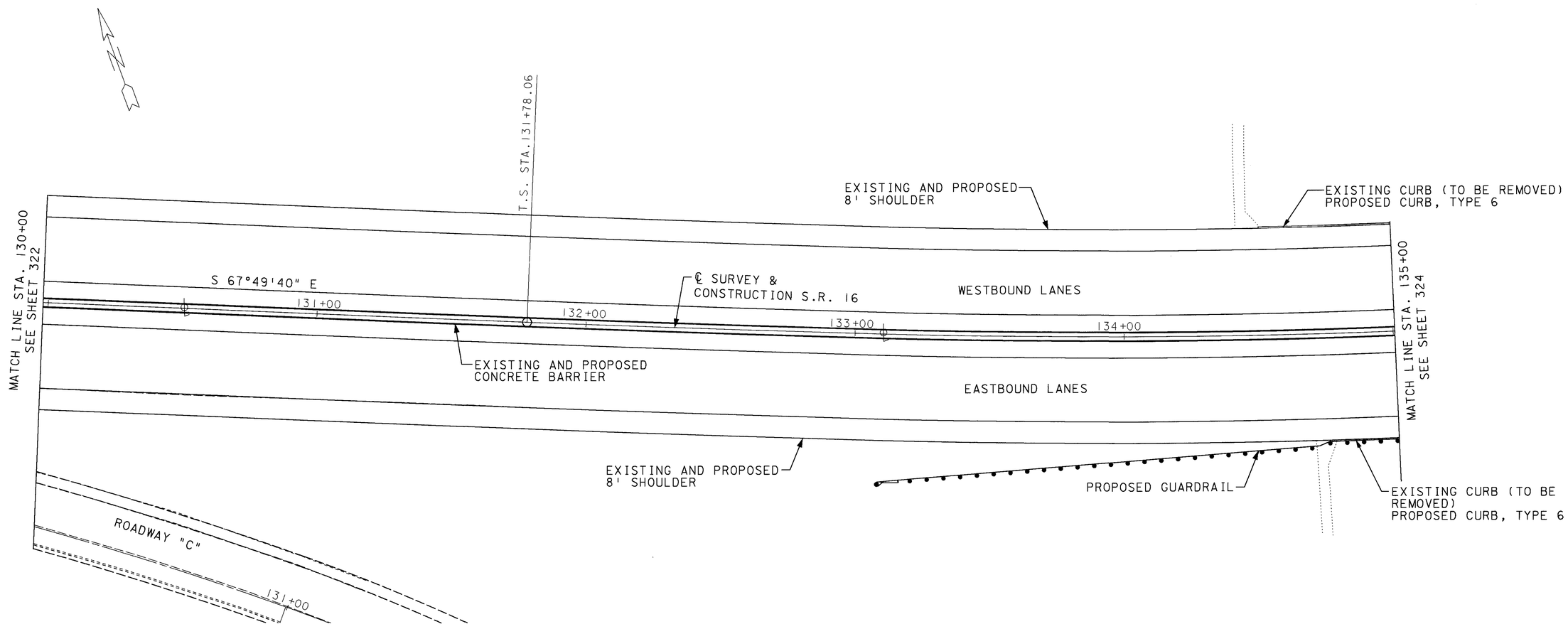

NO SIGNS THIS SHEET

HORIZONTAL SCALE IN FEET
0 10 20 40

CALCULATED S.S.R. 3-13-95
CHECKED L.T. 3-16-95

SIGN INSTALLATION DETAIL SHEET
STA. 130+00 TO STA. 135+00

LIC-16-19.72

323
547

L6007159.DGN 2-19-99

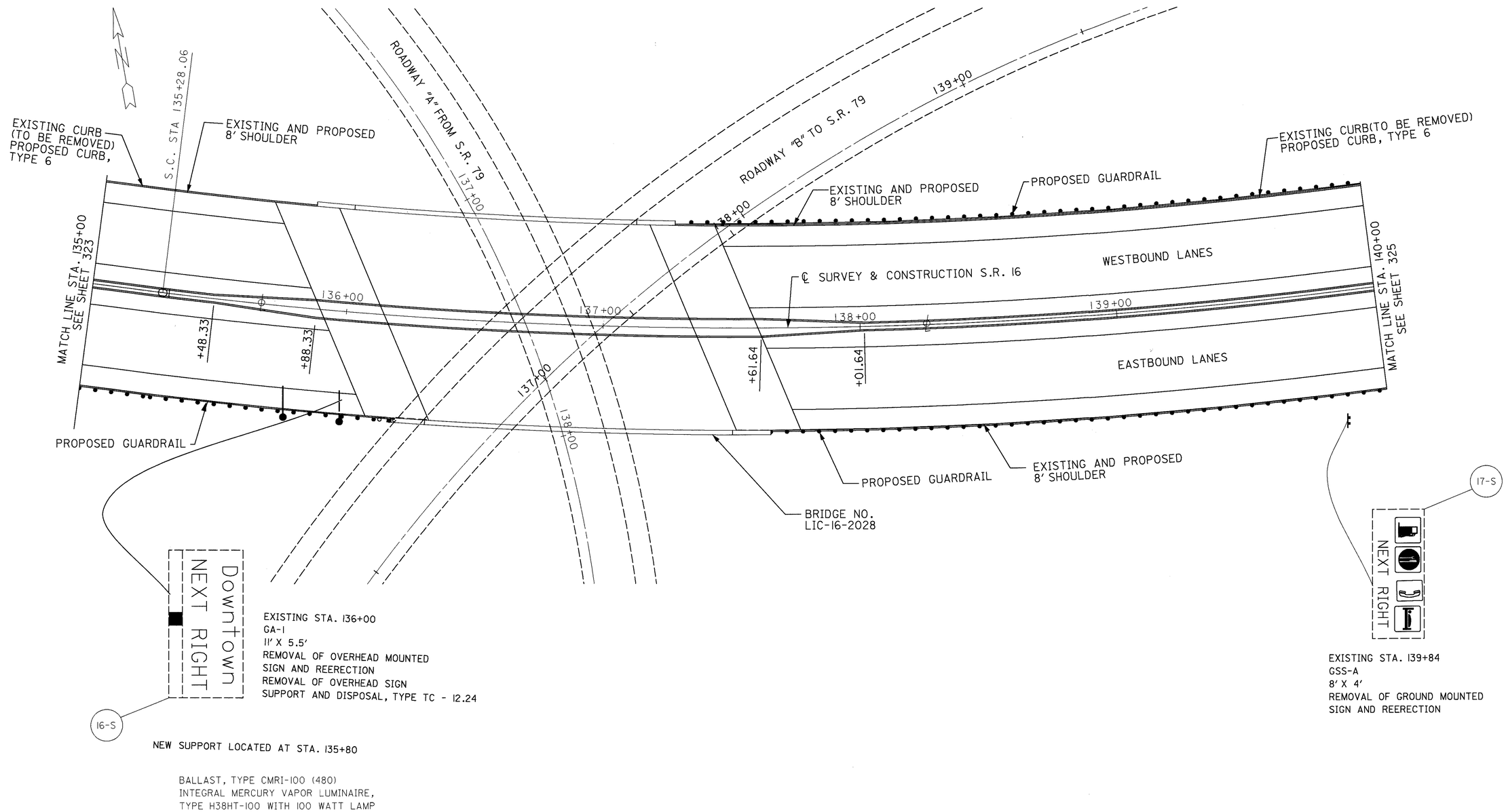

HORIZONTAL SCALE IN FEET
0 10 20 40

CALCULATED S.B. 3-13-95
CHECKED L.T. 3-16-95

SIGN INSTALLATION DETAIL SHEET
STA. 135+00 TO STA. 140+00

LIC-16-19.72

L6008159.DGN 2-19-99

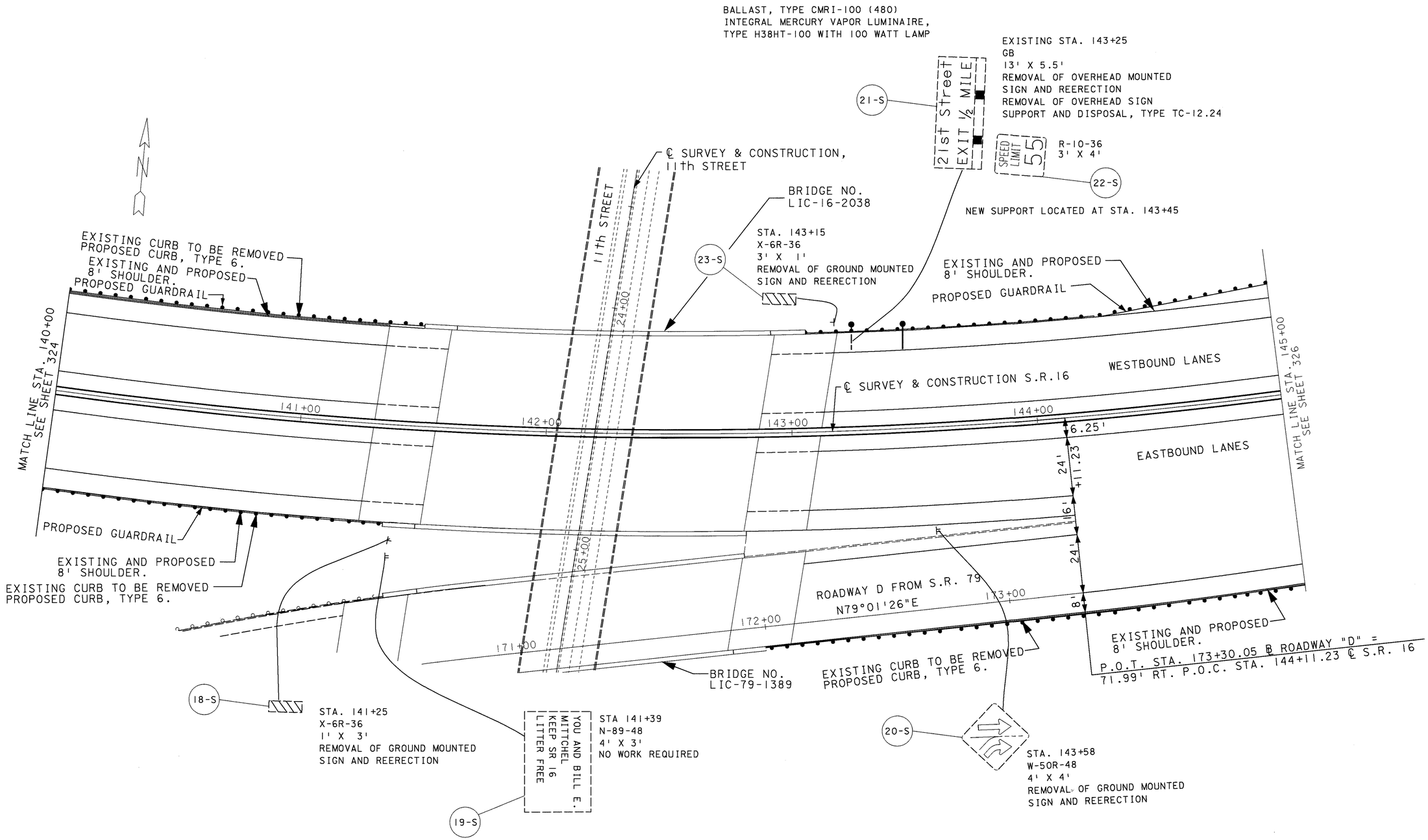

HORIZONTAL SCALE IN FEET
0 10 20 40

CALCULATED S.A.R. 3-13-95
CHECKED L.T. 3-16-95

SIGN INSTALLATION DETAIL SHEET
STA. 140+00 TO STA. 145+00

LIC-16-19.72

L6009159.DGN 2-19-99

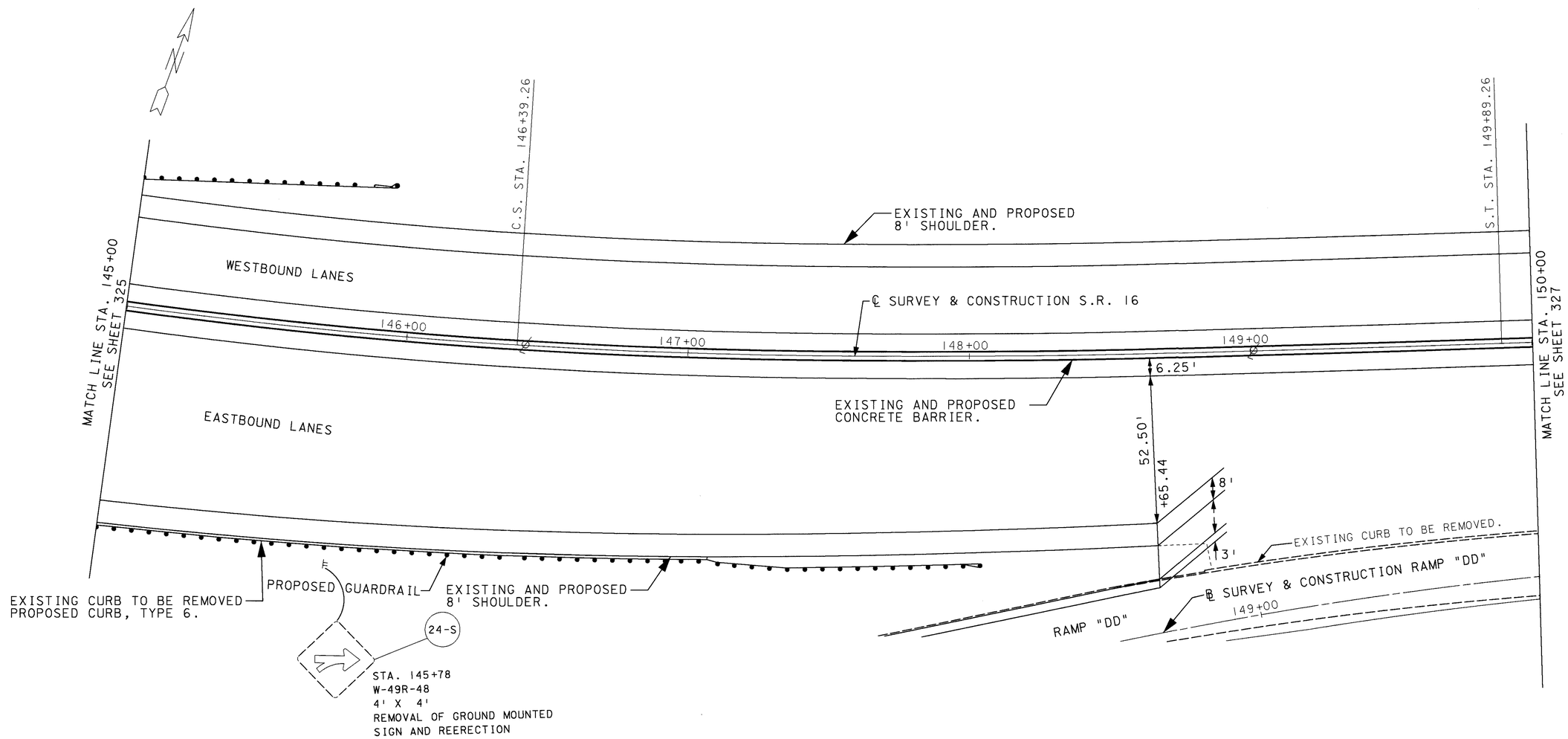

HORIZONTAL SCALE IN FEET
0 10 20 40

CALCULATED S.B. 3-13-95
CHECKED L.T. 3-16-95

SIGN INSTALLATION DETAIL SHEET
STA. 145+00 TO STA. 150+00

LIC-16-19.72

326
547

L6010159.DGN 2-19-99

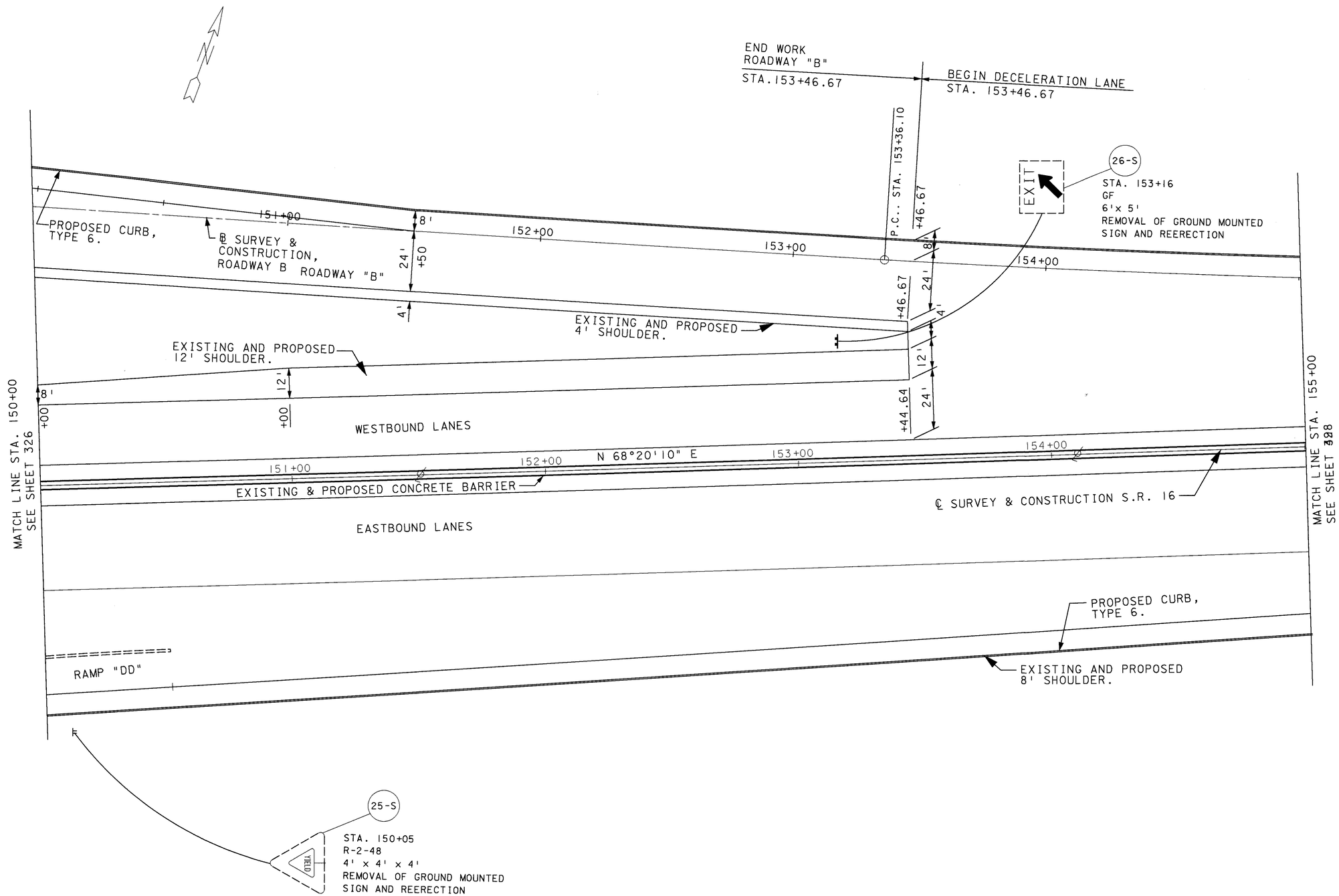

HORIZONTAL SCALE IN FEET
0 10 20 40

CALCULATED S.B. 3-13-95
CHECKED L.T. 3-16-95

SIGN INSTALLATION DETAIL SHEET
STA. 150+00 TO STA. 155+00

LIC-16-19.72

L60111159.DGN 2-19-99

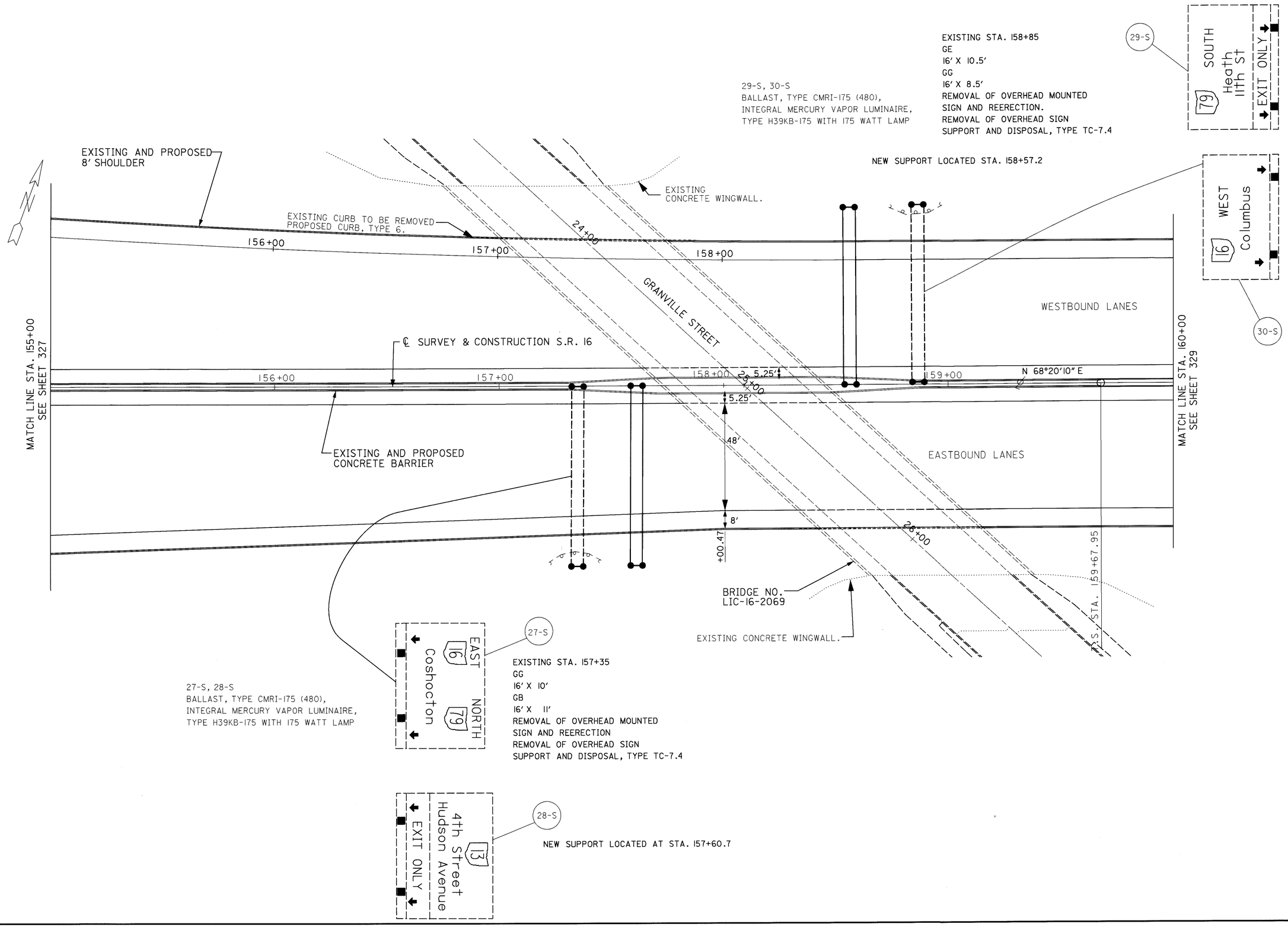

HORIZONTAL SCALE IN FEET
0 10 20 40

CALCULATED J.B. 3-13-95
CHECKED L.T. 3-16-95

SIGNING INSTALLATION DETAIL SHEET
STA. 155+00 TO STA. 160+00

LIC-16-19.72

L6012159 2-19-99

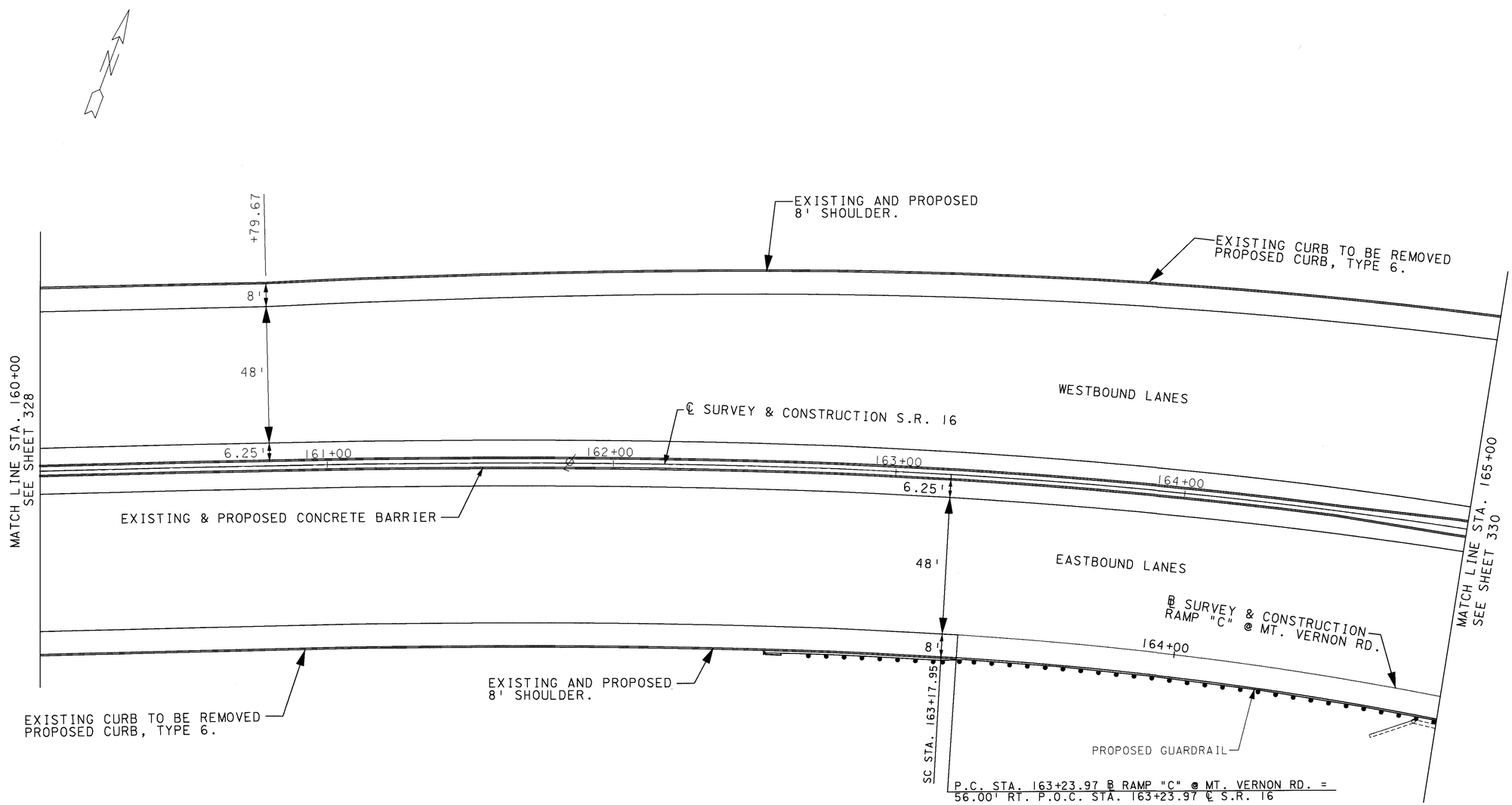

NO SIGNS THIS SHEET

0 10 20 40
HORIZONTAL
SCALE IN FEET

CALCULATED J.B. 3-13-95
CHECKED L.T. 3-16-95

SIGN INSTALLATION DETAIL SHEET
STA. 160+00 TO STA. 165+00

LIC-16-19.72

L6013159.DGN 2-19-99

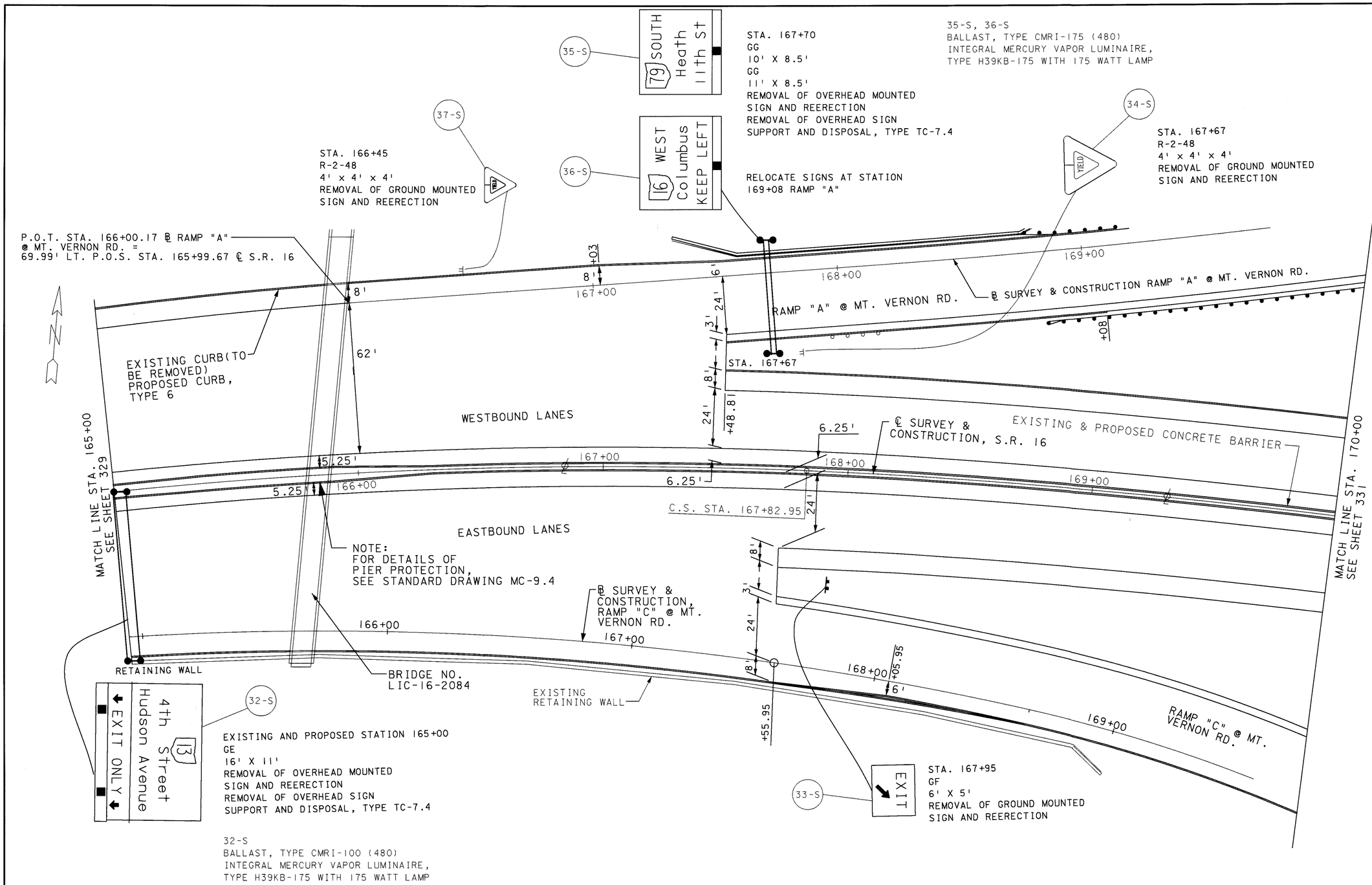

HORIZONTAL SCALE IN FEET 0 10 20 40

CALCULATED S.B. 3-13-95
CHECKED L.T. 3-16-95

SIGN INSTALLATION DETAIL SHEET
STA. 165+00 TO STA. 170+00

LIC-16-19.72

L6014159.DGN 2-19-99

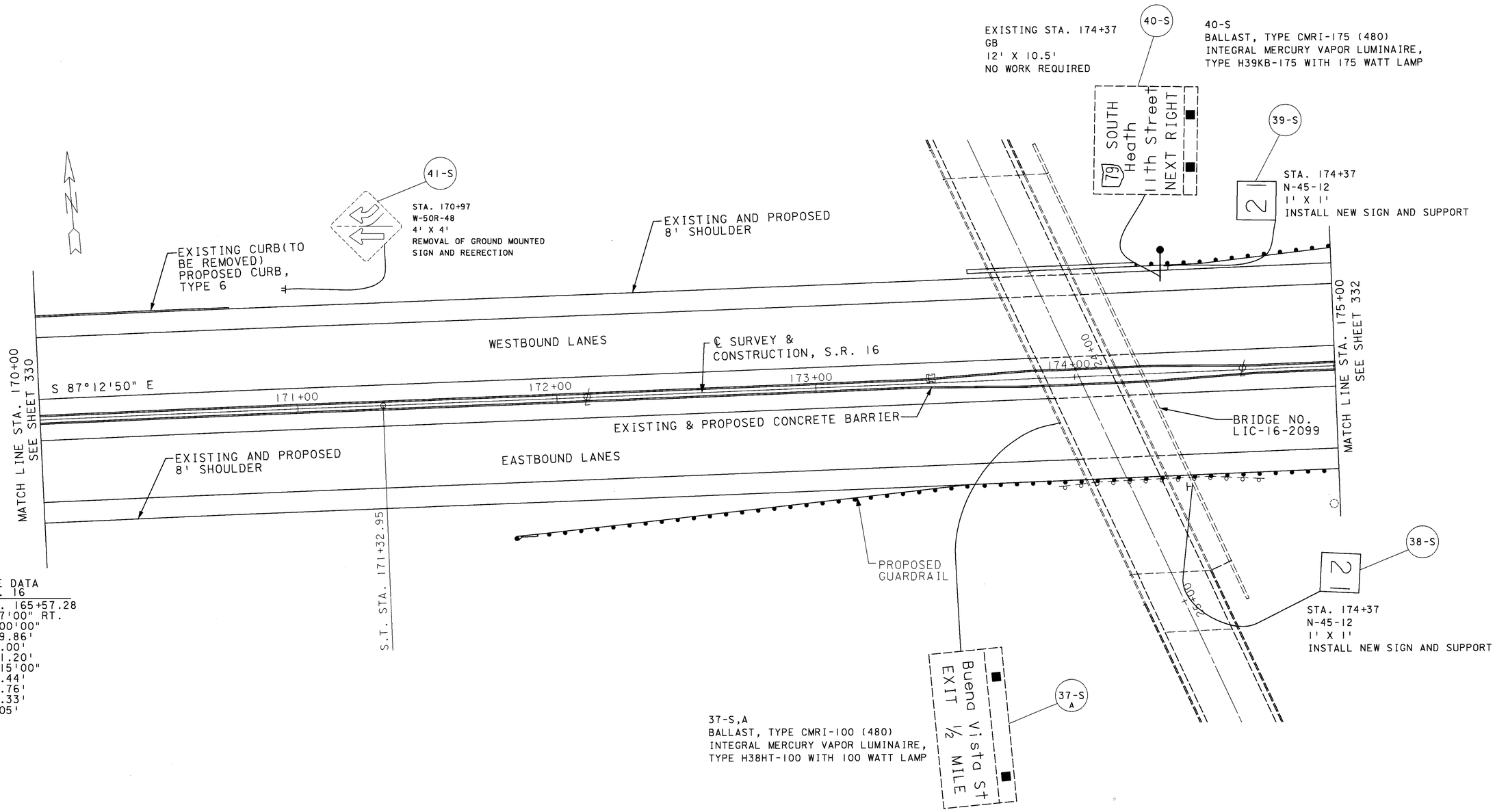

CURVE DATA
S.R. 16

P.I. STA. 165+57.28
Δ = 24°27'00" RT.
Dc = 03°00'00"
Rc = 1909.86'
Ls = 350.00'
Lc = 1111.20'
Θ = 05°15'00"
LT = 233.44'
ST = 116.76'
TS = 589.33'
Es = 47.05'

HORIZONTAL SCALE IN FEET
0 10 20 40

CALCULATED S.B. 3-15-95
CHECKED L.T. 3-16-95

SIGN INSTALLATION DETAIL SHEET
STA. 170+00 TO STA. 175+00

LIC-16-19.72

L6015159.DGN 2-19-99

CURVE DATA
S.R. 16

PI STA=178+79.86
△= 05°10'09" LT.
Dc= 01°00'00"
T=258.63
R=5729.58
L=516.92
E=5.83

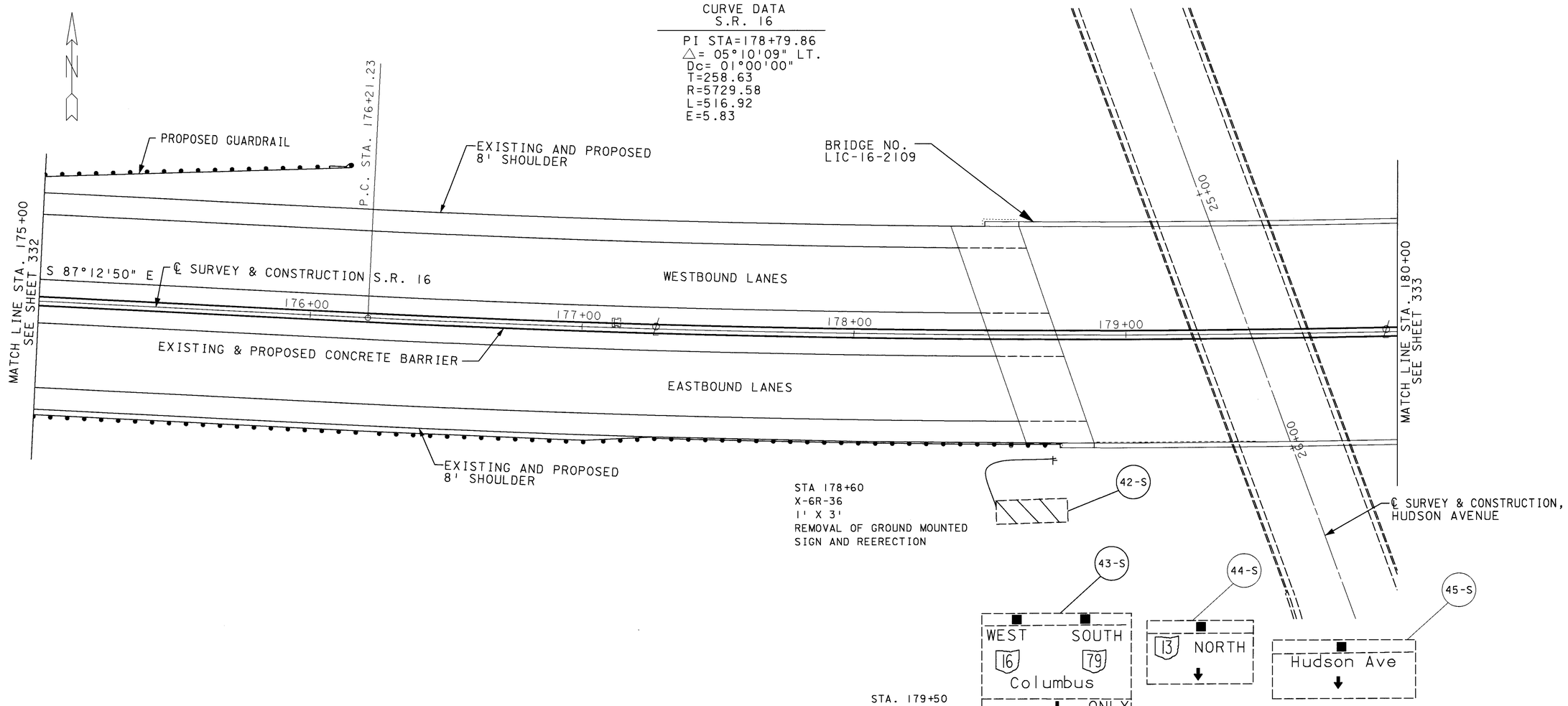

STA. 179+50
GB
12' X 7'
GG
7' X 4.5'
GG
8' X 4.5'
REMOVAL OF OVERHEAD MOUNTED
SIGN AND REERECTION
REMOVAL OF OVERHEAD SIGN
SUPPORT AND DISPOSAL, TYPE TC-18.26

43-S
BALLAST, TYPE CMRI-175 (480)
INTEGRAL MERCURY VAPOR LUMINAIRE,
TYPE H39KB-175 WITH 175 WATT LAMP

44-S, 45-S
BALLAST, TYPE CMRI-100 (480)
INTEGRAL MERCURY VAPOR LUMINAIRE,
TYPE H38HT-100 WITH 100 WATT LAMP

0 10 20 40
HORIZONTAL
SCALE IN FEET

CALCULATED J.B. 3-13-95
CHECKED L.T. 3-16-95

SIGN INSTALLATION DETAIL SHEET
STA. 175+00 TO STA. 180+00

LIC-16-19.72

L6016159.DGN 2-19-99

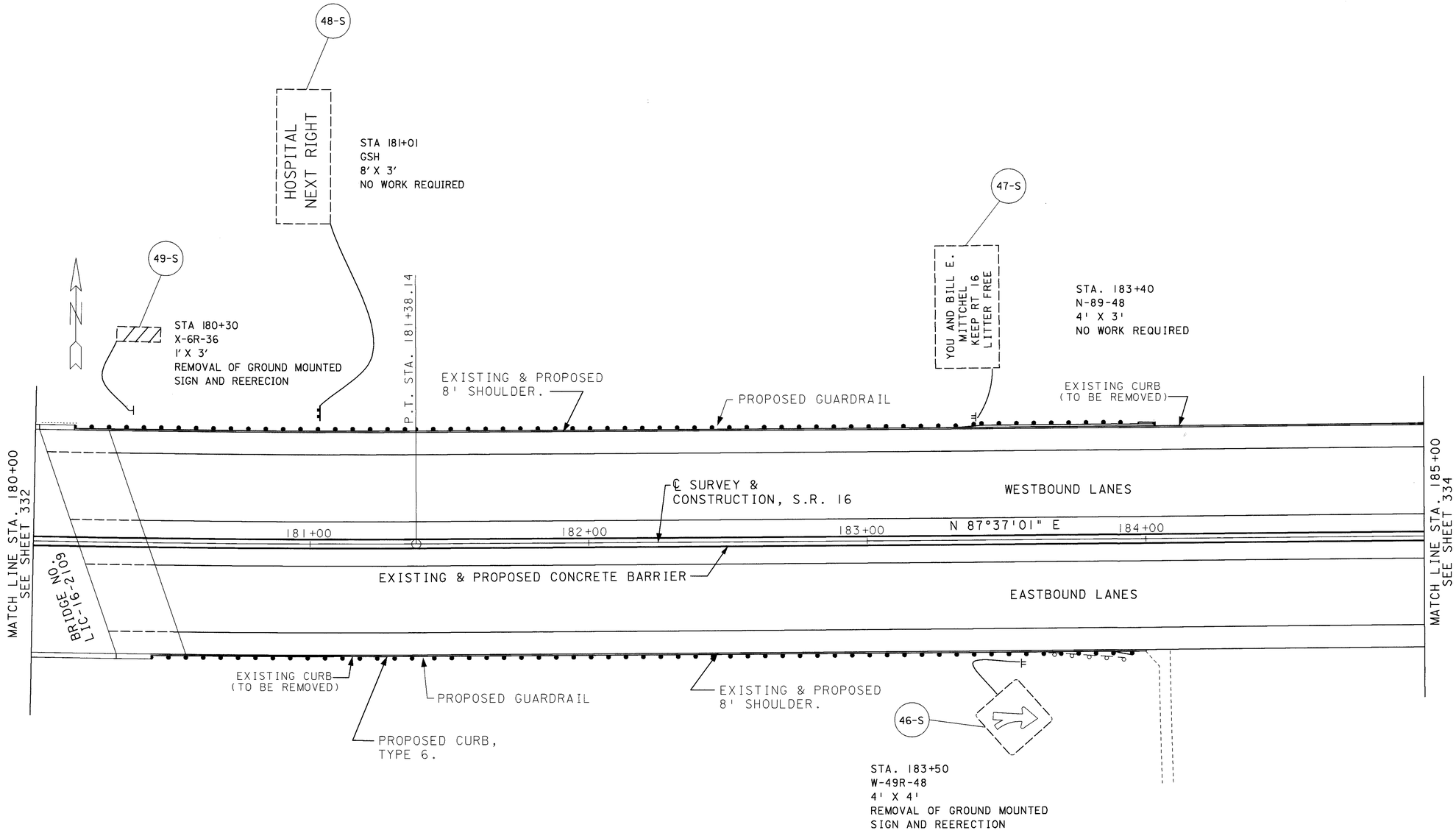

HORIZONTAL SCALE IN FEET
0 10 20 40

CALCULATED S.B. 3-13-95
CHECKED L.T. 3-16-95

SIGN INSTALLATION DETAIL SHEET
STA. 180+00 TO STA. 185+00

LIC-16-19.72

333
547

L6017159.DGN 2-19-99

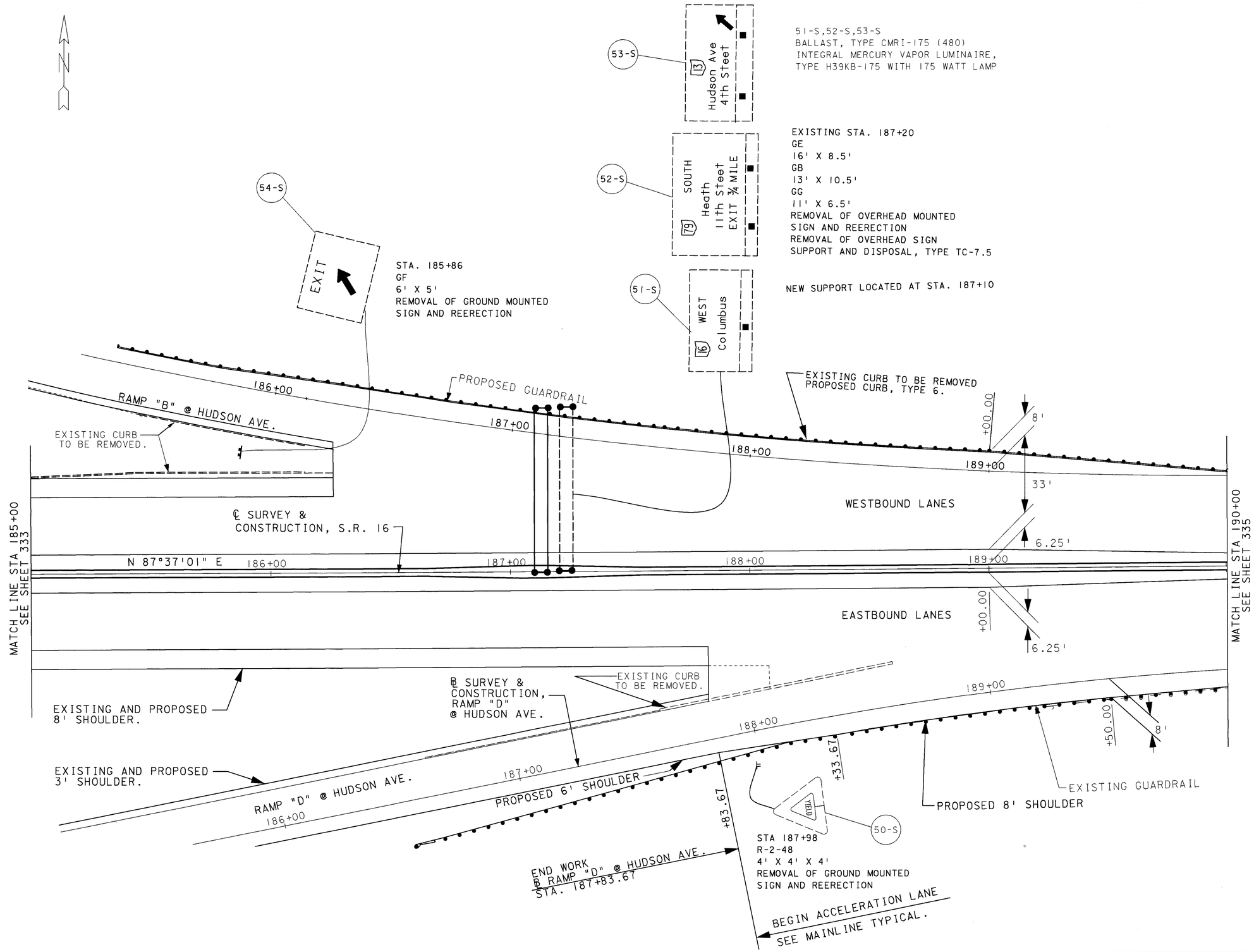

HORIZONTAL SCALE IN FEET
0 10 20 40

CALCULATED S.S. 3-15-95
CHECKED J.T. 3-16-95

SIGN INSTALLATION DETAIL SHEET
STA. 185+00 TO STA. 190+00

LIC-16-19.72

334
547

L6018159.DGN 2-19-99

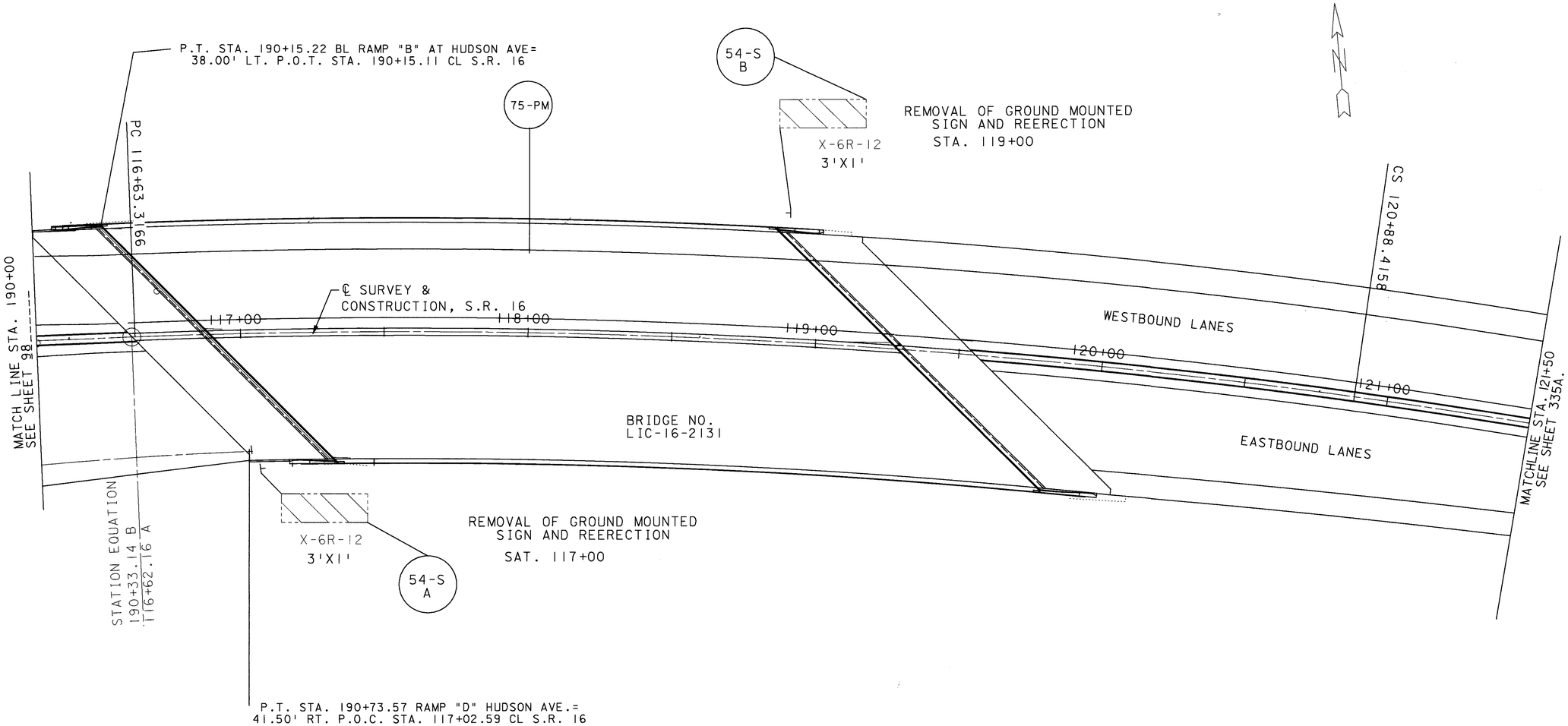

HORIZONTAL SCALE IN FEET
0 20 40

CALCULATED
CHECKED SAB

SIGN INSTALLATION DETAIL SHEET
STA. 190+00(BK.) TO STA. 121+50(AH.)

LIC-16-19.72

335
547

L6019159.DGN 2/19/99

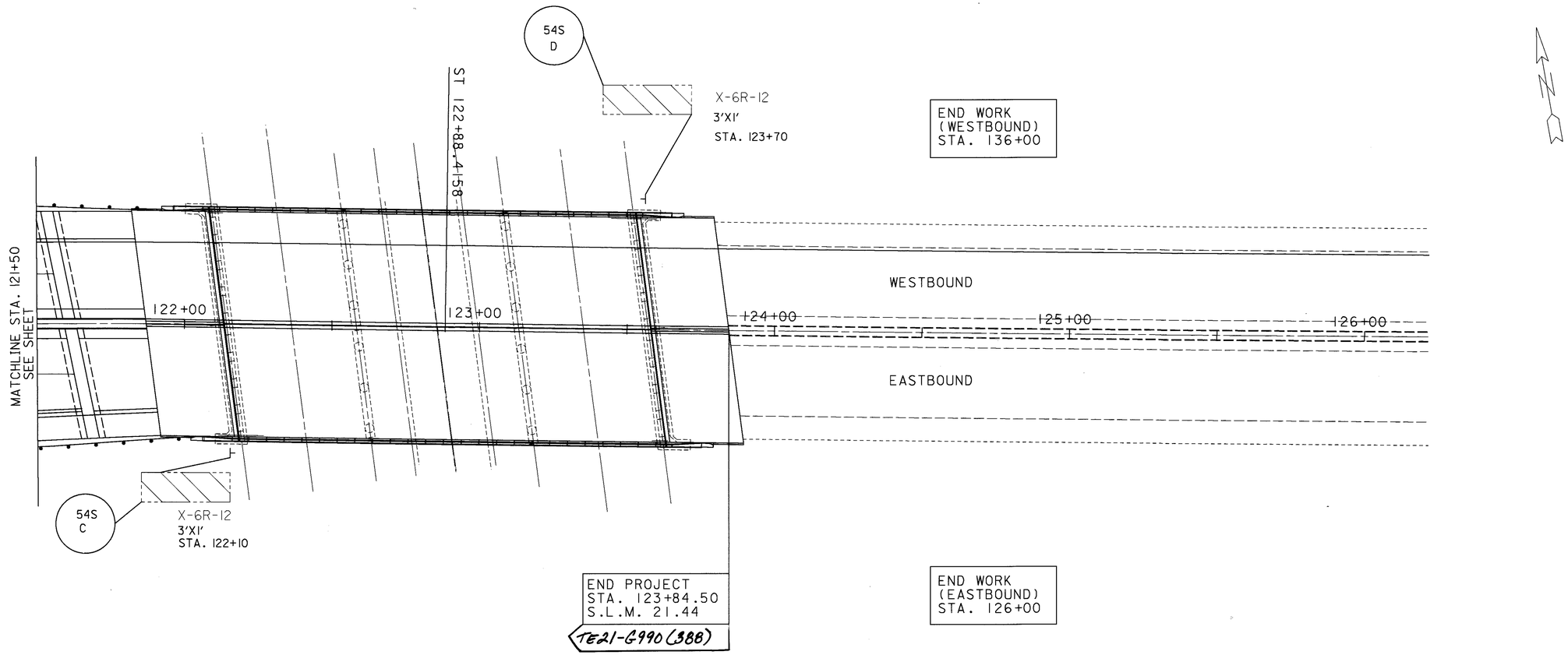

FOR QUANTITIES SEE SHEETS 310 - 316

HORIZONTAL SCALE IN FEET
0 20 40

CALCULATED
CHECKED

SIGN INSTALLATION DETAIL SHEET
STA. 121+50 TO STA. 123+70

LIC-16-19.72

335A
547

L6019160.DGN 2/19/99

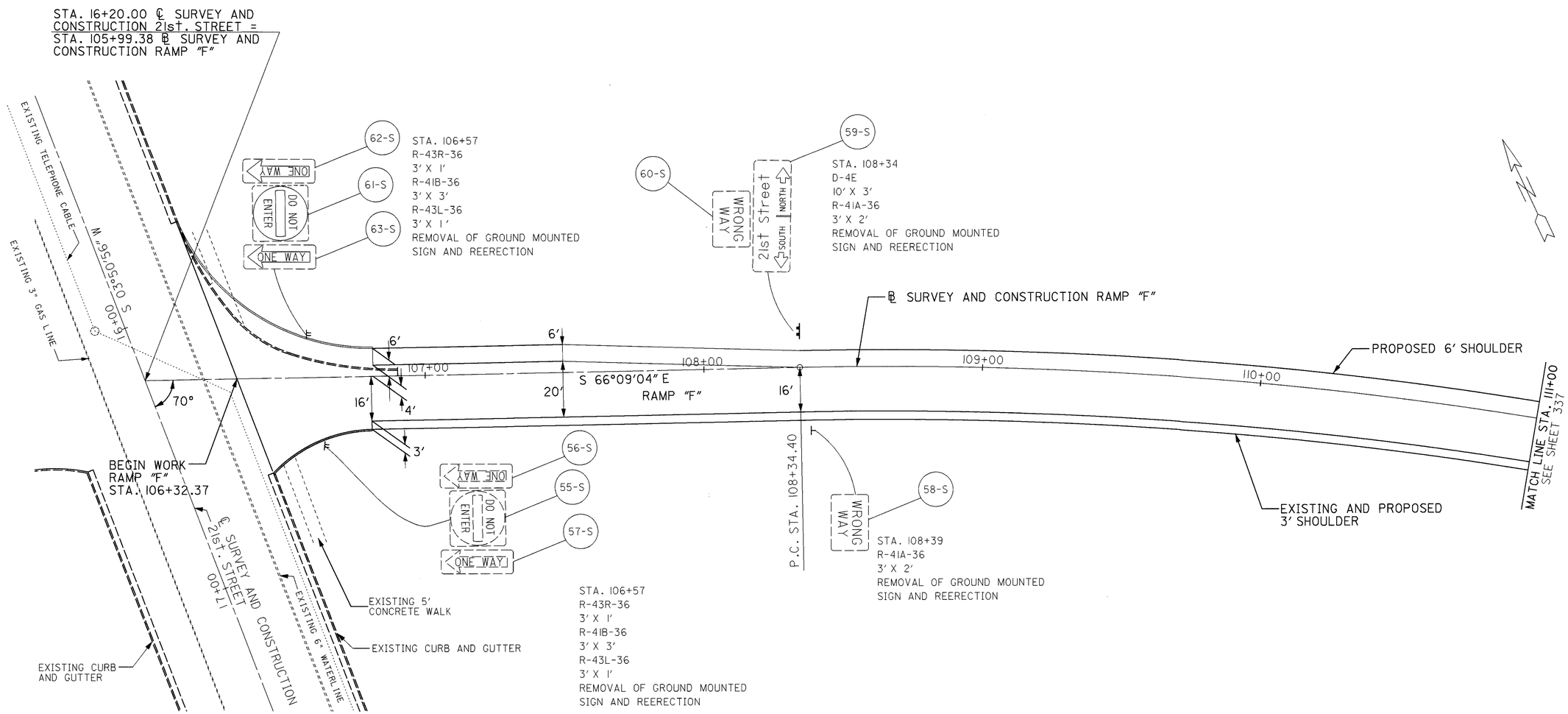

HORIZONTAL SCALE IN FEET
0 10 20 40

CALCULATED S.B. 3/13/95
CHECKED L.T. 3/16/95

SIGN INSTALLATION DETAIL SHEET RAMP "F"
STA. 106+32.37 TO STA. 111+00

LIC-16-19.72

L166017O.DGN 02-19-99

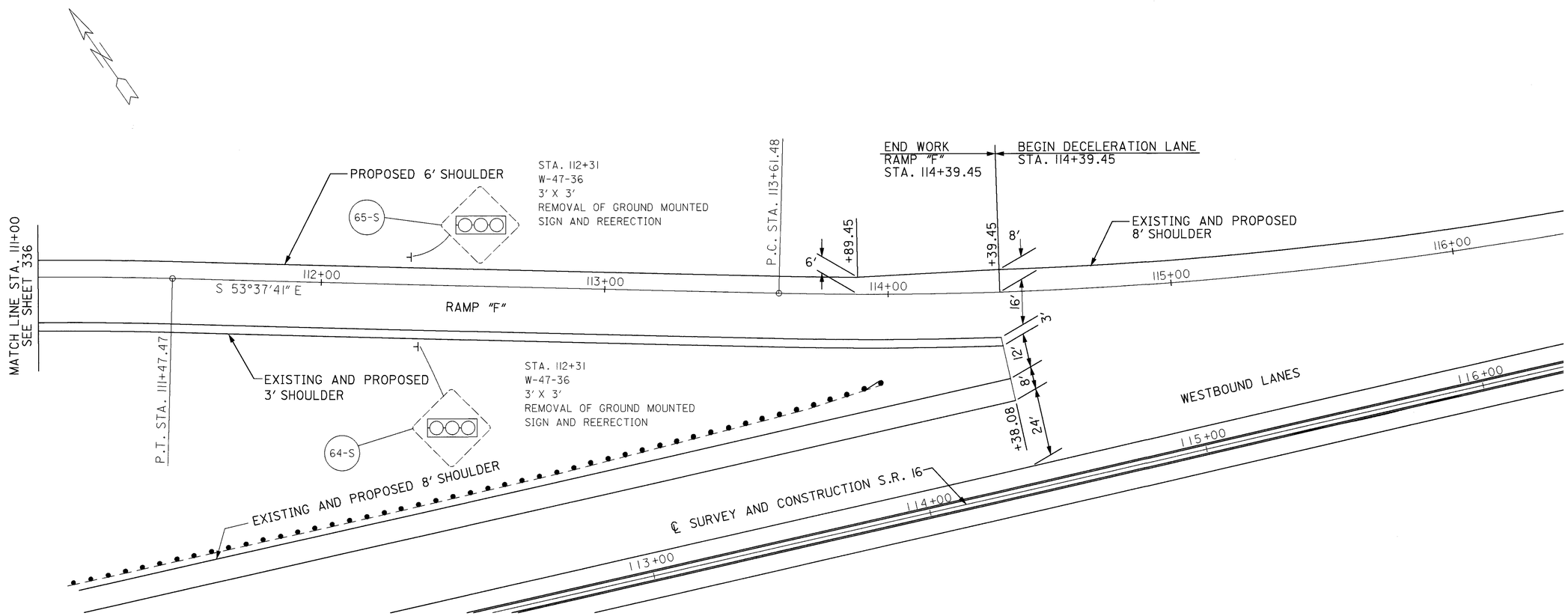

HORIZONTAL SCALE IN FEET
0 10 20 40

CALCULATED
CHECKED

SIGN INSTALLATION DETAIL SHEET RAMP "F"
STA. 111+00 TO STA. 114+39.40

LIC-16-19.72

L1660270.DGN 02-19-99

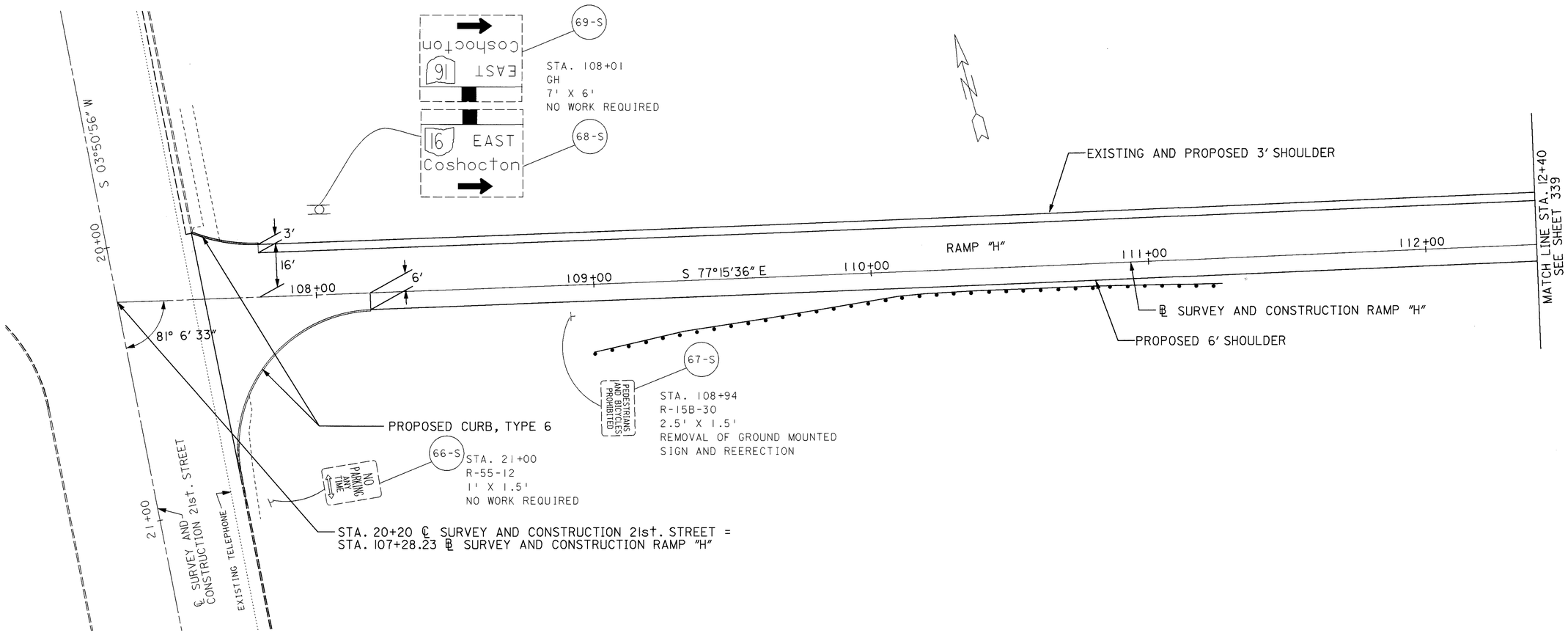

0 10 20 40
HORIZONTAL SCALE IN FEET

CALCULATED S.B. 3/13/95
CHECKED L.T. 3/16/95

SIGN INSTALLATION DETAIL SHEET RAMP "H"
STA. 107+59.60 TO STA. 112+40

LIC-16-19.72

338
547

LI660172.DGN 02-19-99

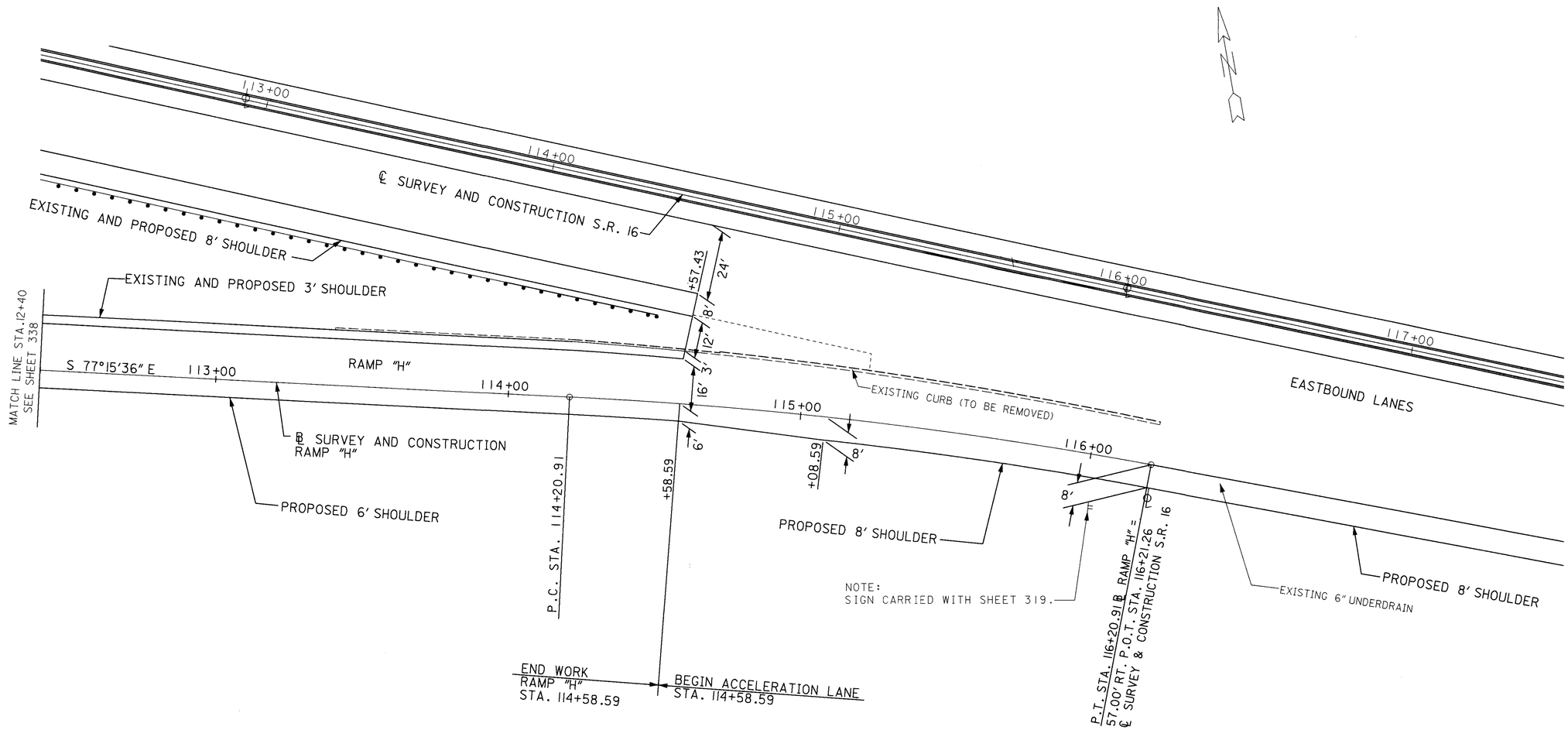

HORIZONTAL SCALE IN FEET
0 10 20 40

CALCULATED S.B. 3/13/95
CHECKED L.T. 3/16/95

SIGN INSTALLATION DETAIL SHEET RAMP "H"
STA. 112+40 TO STA. 116+21.24

LIC-16-19.72

339
547

L1660272.DGN 02-19-99

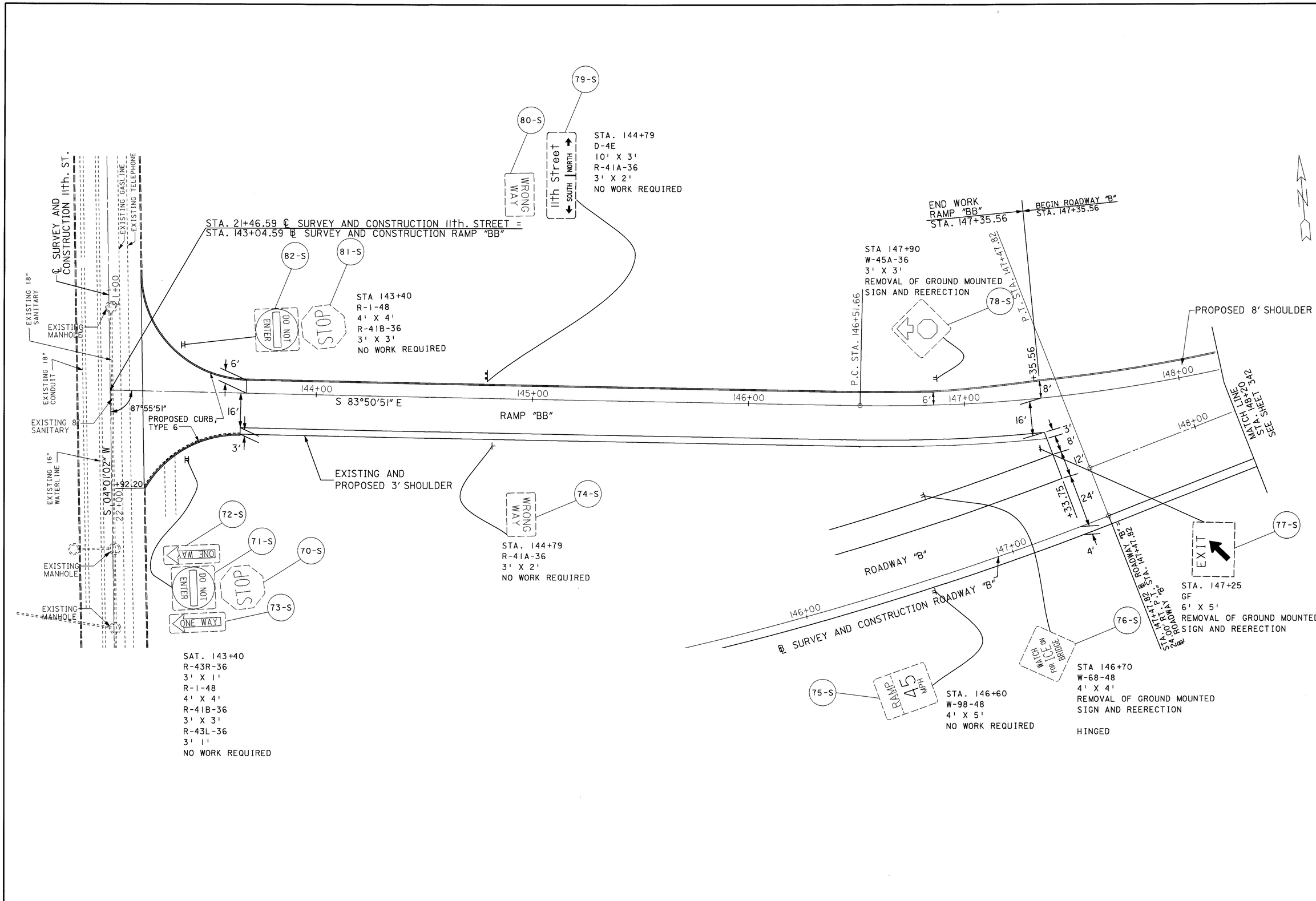

HORIZONTAL SCALE IN FEET
0 10 20 40

CALCULATED S.B. 3/13/95
CHECKED L.T. 3/16/95

SIGN INSTALLATION DETAIL SHEET RAMP"B-B"
STA. 143+19.61 TO STA. 148+20

LIC-16-19.72

340
547

L166018I.DGN 02-20-99

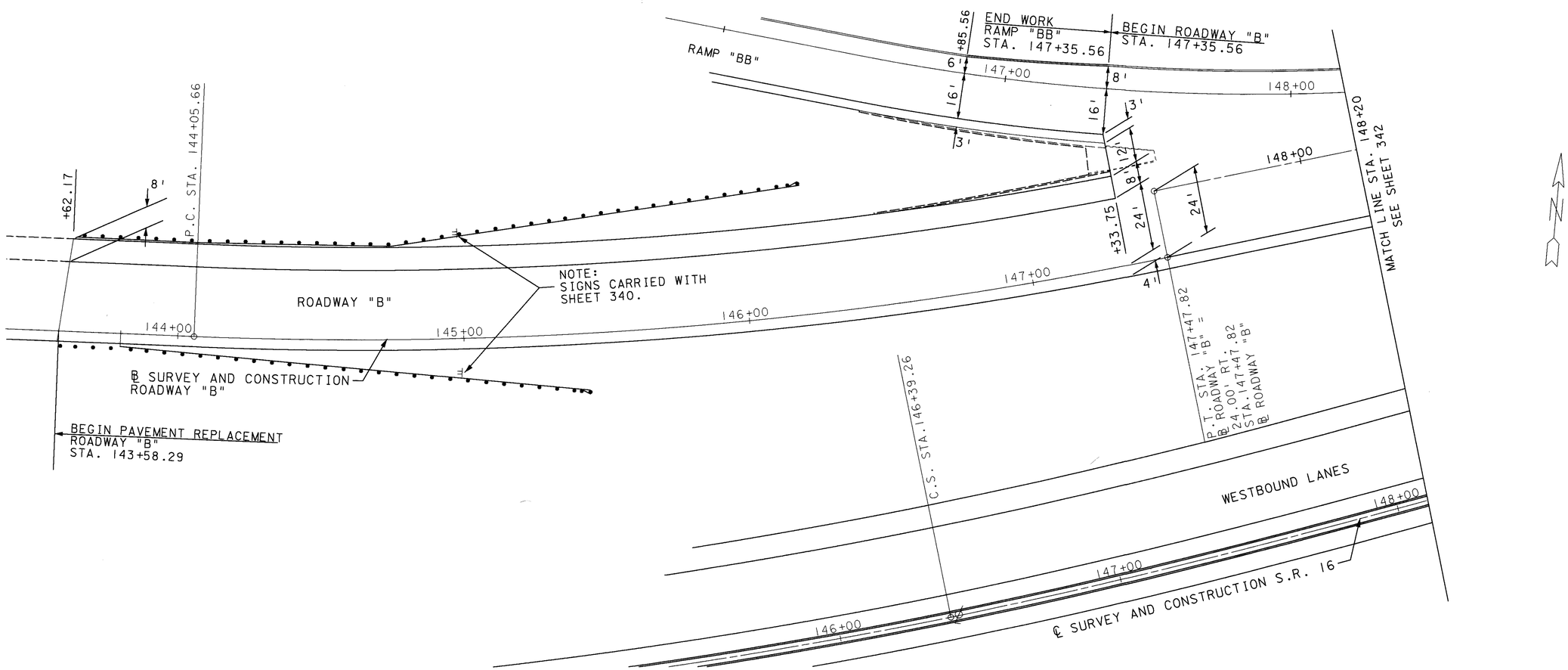

NO SIGNS THIS SHEET

CALCULATED S.B. 3/13/95
CHECKED L.T. 3/16/95

0 10 20 40
HORIZONTAL SCALE IN FEET

SIGN INSTALLATION DETAIL SHEET ROADWAY "B"
STA. 143+58.29 TO STA. 148+20

LIC-16-19.72

L1660178.DGN 02-20-99

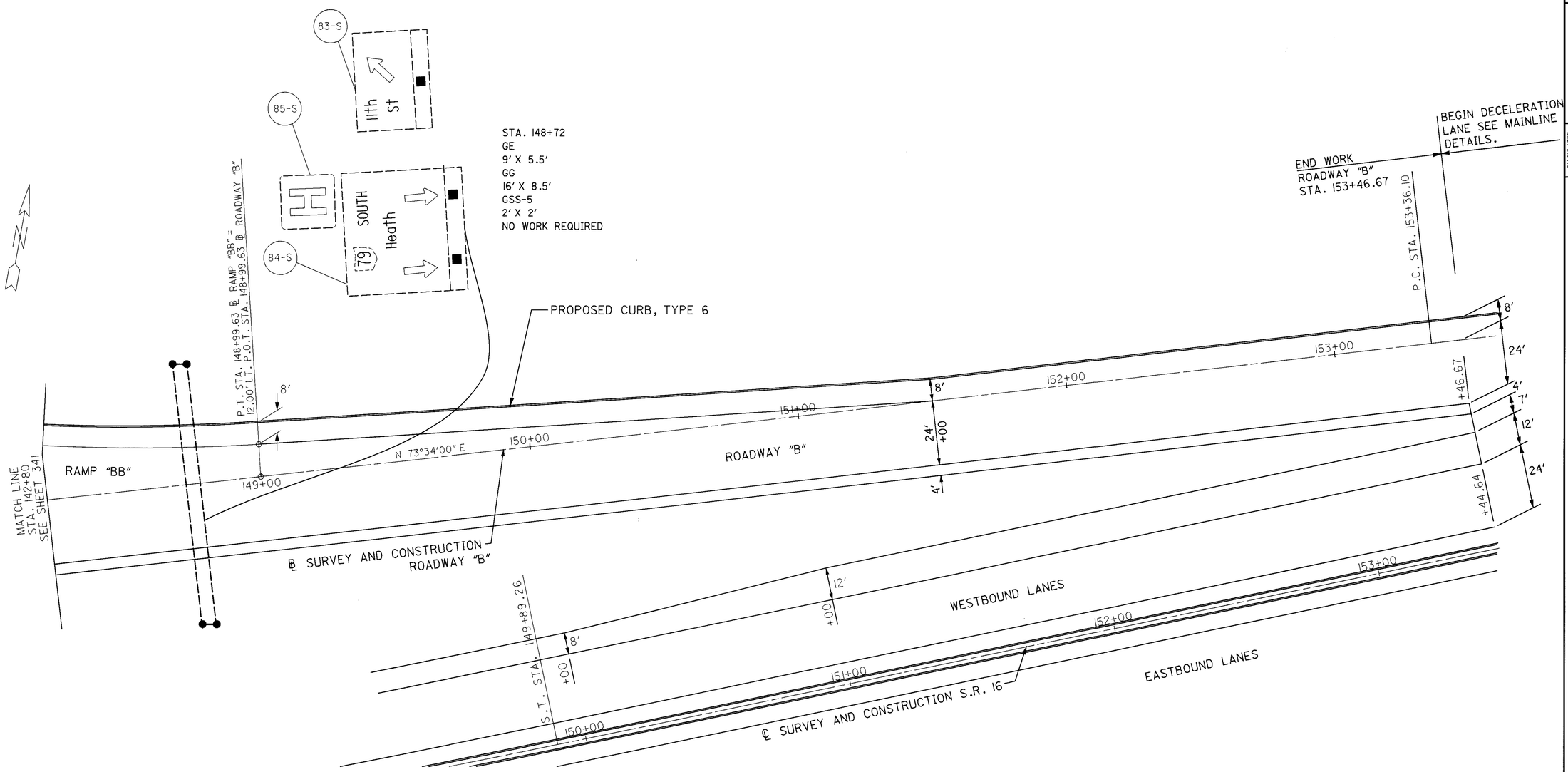

HORIZONTAL SCALE IN FEET
0 10 20 40

CALCULATED S.B. 3/13/95
CHECKED L.T. 3/16/95

SIGN INSTALLATION DETAIL SHEET ROADWAY "B" STA. 148+20 TO STA. 153+36.10

LIC-16-19.72

342
547

L166028I.DGN 02-20-99

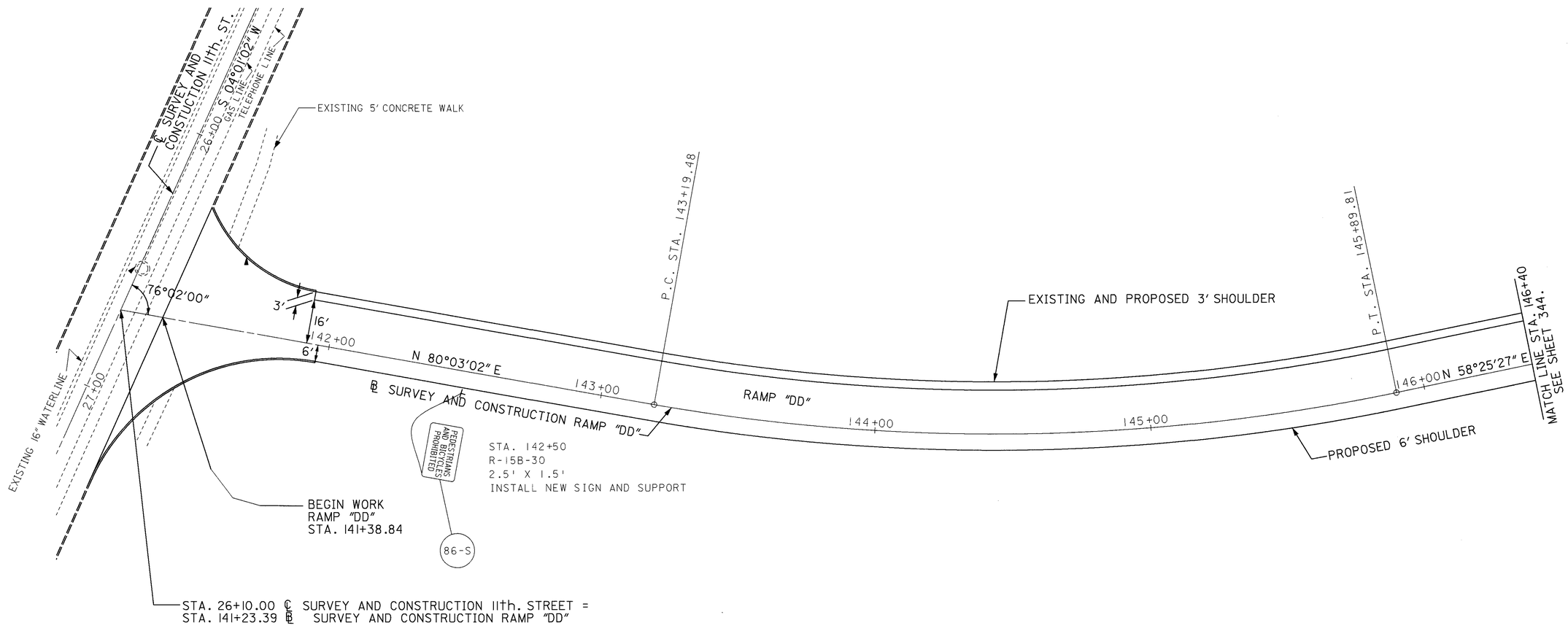

CALCULATED S.B. 3/13/95
CHECKED L.T. 3/16/95

0 10 20 40
HORIZONTAL SCALE IN FEET

SIGN INSTALLATION DETAIL SHEET "RAMP DD"
STA. 141+38.84 TO STA. 146+40

LIC-16-19.72

343
547

L166182.DGN 02-20-99

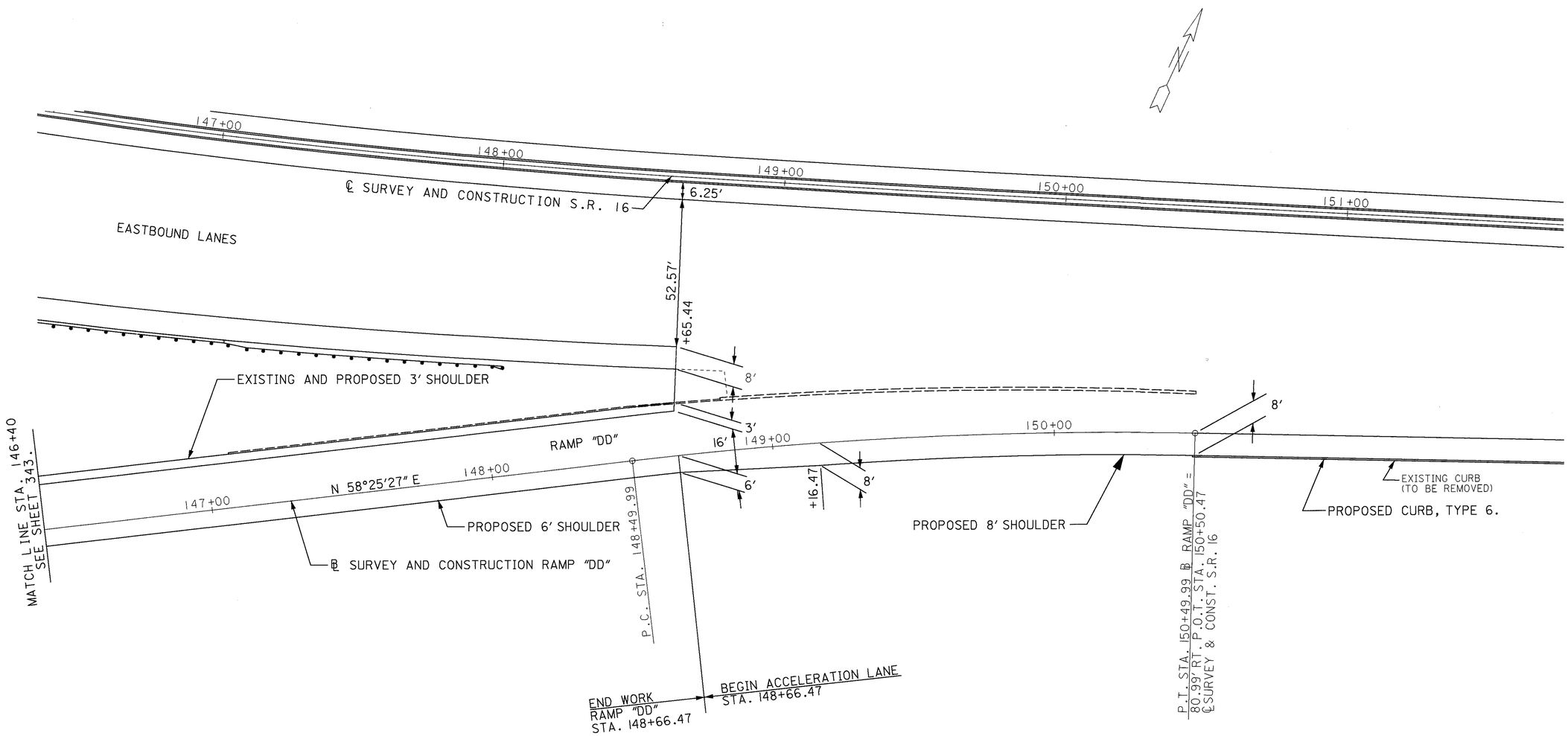

NO SIGNS THIS SHEET

HORIZONTAL SCALE IN FEET
0′ 10′ 20′ 40′

CALCULATED S.B. 3/13/95
CHECKED L.T. 3/16/95

SIGN INSTALLATION DETAIL SHEET RAMP "DD"
STA. 146+40 TO STA. 151+50

LIC-16-19.72

L1660282.DGN 02-20-99

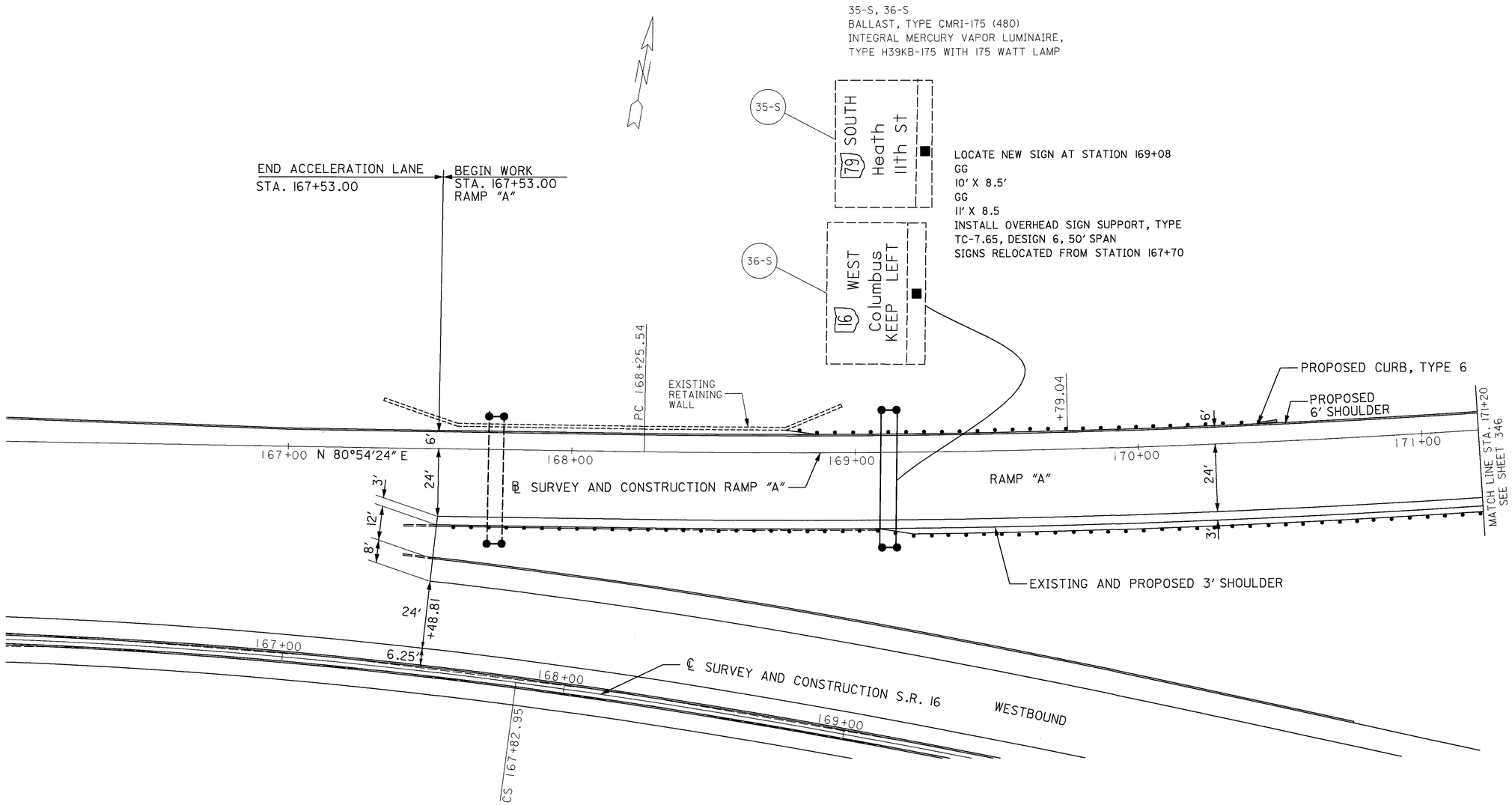

HORIZONTAL SCALE IN FEET
0 10 20 40

CALCULATED S.B. 3/13/95
CHECKED L.T. 3/16/95

SIGN INSTALLATION DETAIL SHEET RAMP "A"
AT MT. VERNON ROAD STA. 166+00 TO STA. 171+20

LIC-16-19.72

LI660183.DGN 02-20-99

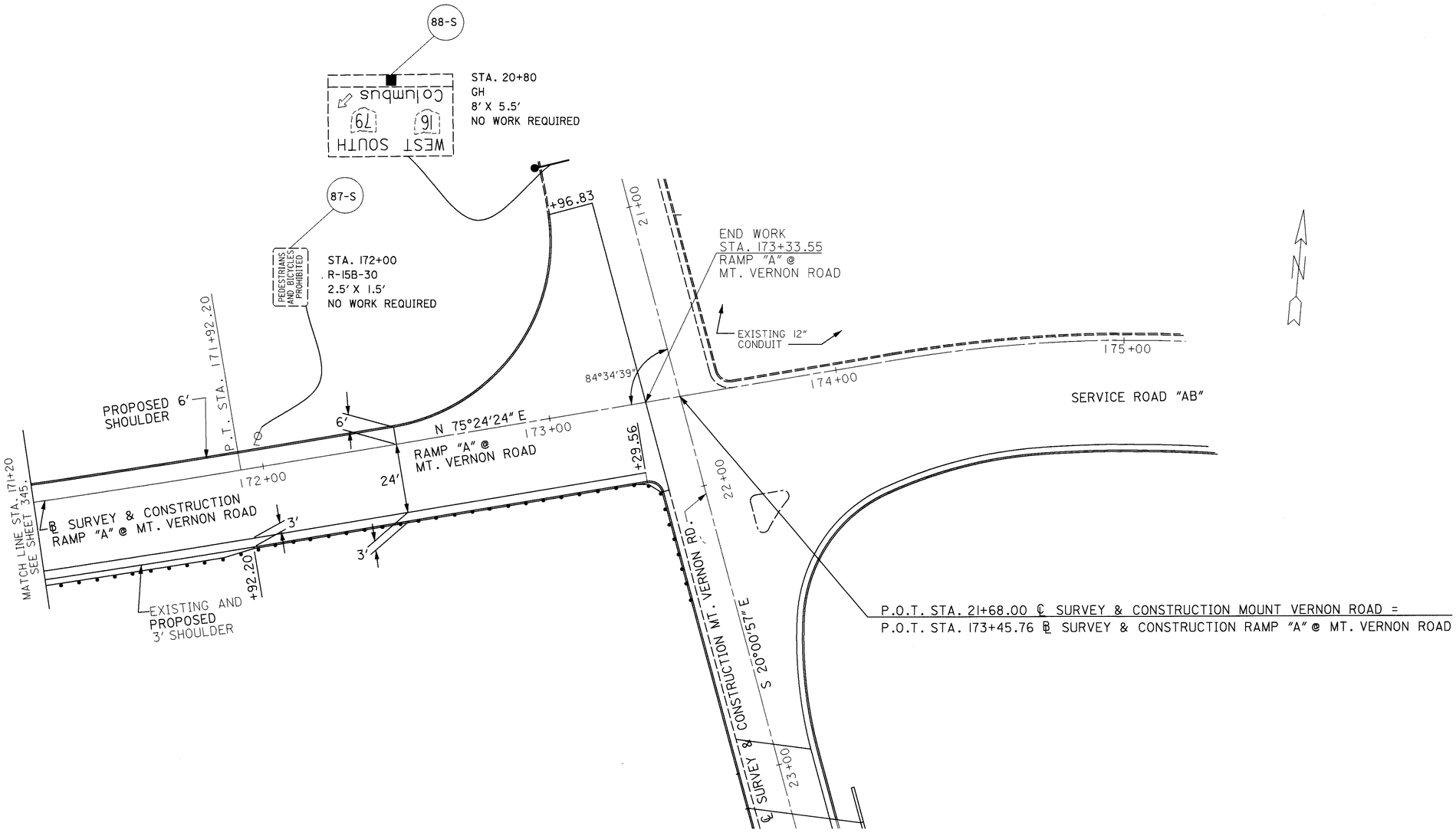

0 10 20 40
HORIZONTAL SCALE IN FEET

CALCULATED S.B. 3/13/95
CHECKED L.T. 3/16/95

SIGN INSTALLATION DETAIL SHEET RAMP "A" AT MT. VERNON ROAD STA. 171+20 TO STA. 173+33.55

LIC-16-19.72

346/547

L1660283.DGN 02-20-99

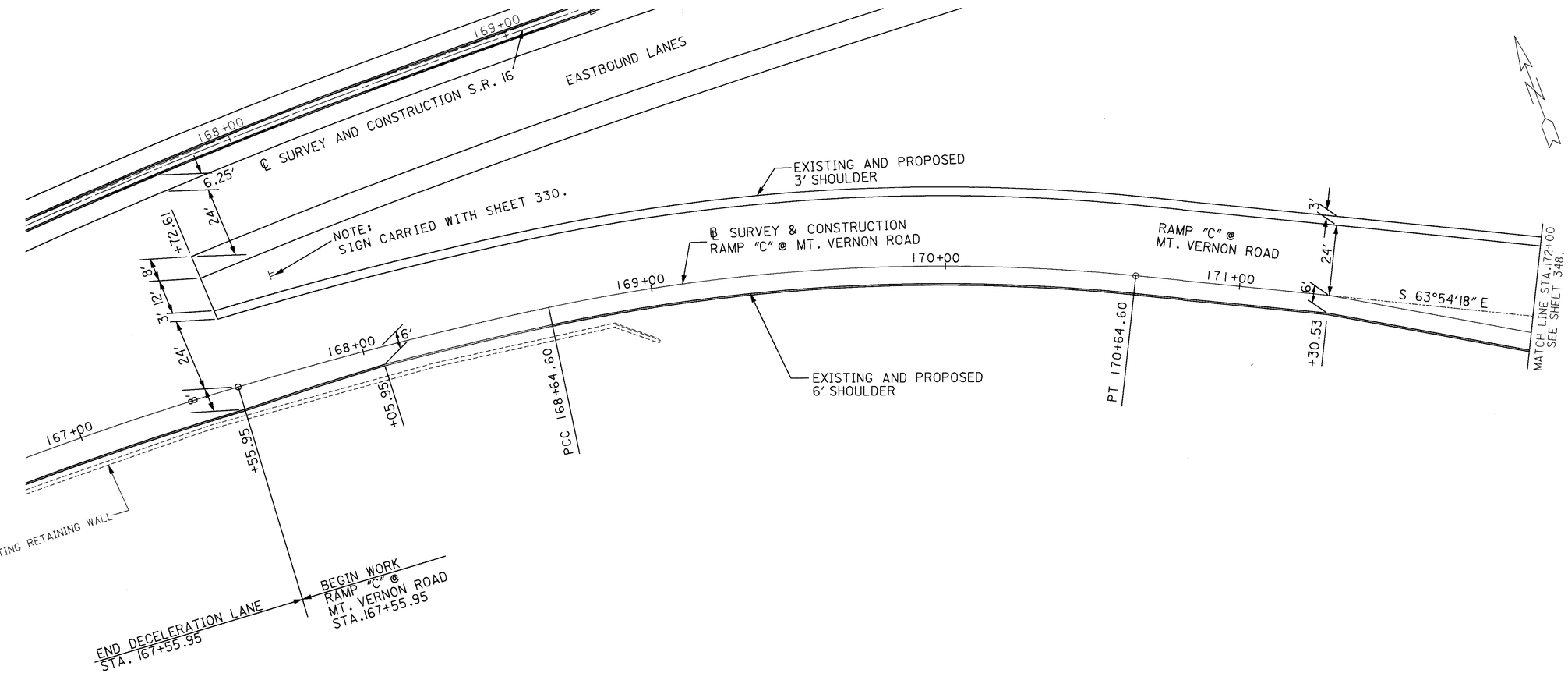

NO SIGNS THIS SHEET

0 10 20 40
HORIZONTAL
SCALE IN FEET

CALCULATED S.B. 3/13/95
CHECKED L.T. 3/16/95

SIGN INSTALLATION DETAIL SHEET RAMP "C" AT MT. VERNON ROAD STA. 166+80 TO STA. 172+00

LIC-16-19.72

LI660284.DGN 02-20-99

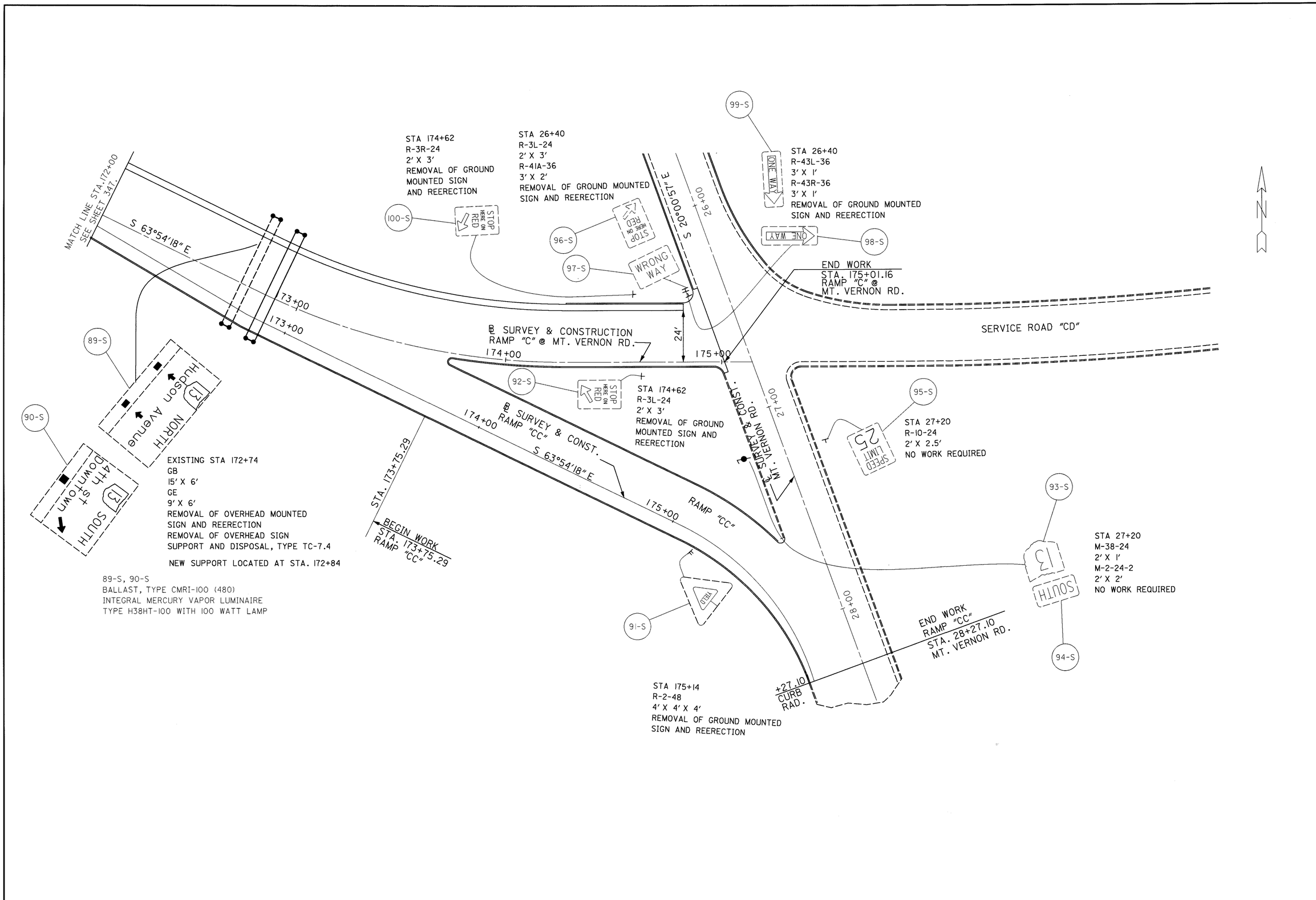

0 10 20 40
HORIZONTAL
SCALE IN FEET

CALCULATED S.B. 3/13/95
CHECKED L.T. 3/16/95

SIGN INSTALLATION DETAIL SHEET RAMP "C" AT MT. VERNON ROAD STA. 172+00 TO STA. 175+01.39

LIC-16-19.72

L1660184.DGN 02-20-99

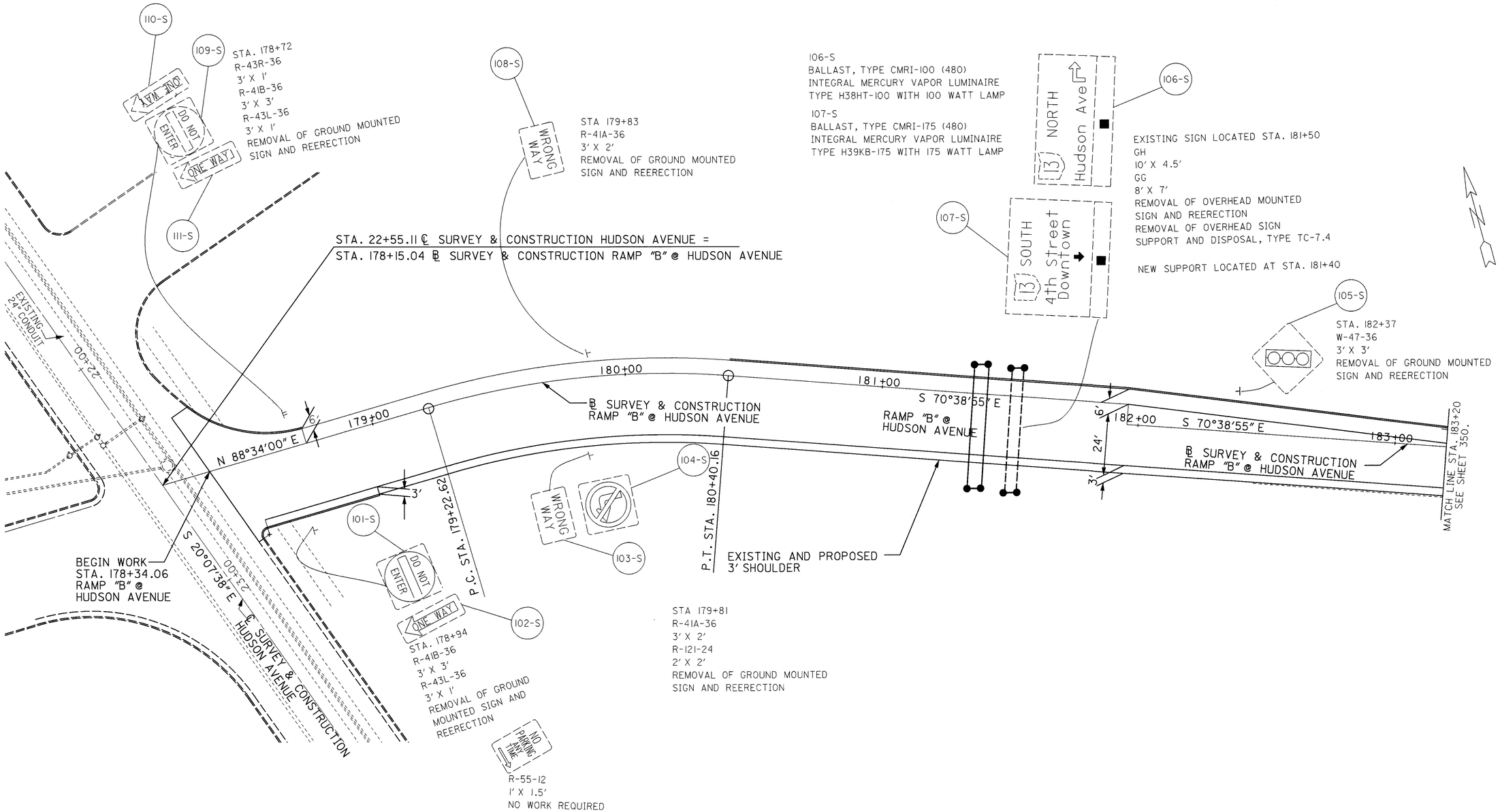

HORIZONTAL SCALE IN FEET
0 10 20 40

CALCULATED S.B. 3/13/95
CHECKED L.T. 3/16/95

SIGN INSTALLATION DETAIL SHEET RAMP "B" AT HUDSON AVENUE STA. 178+00 TO STA. 183+20

LIC-16-19.72

L1660B07.DGN 02-20-99

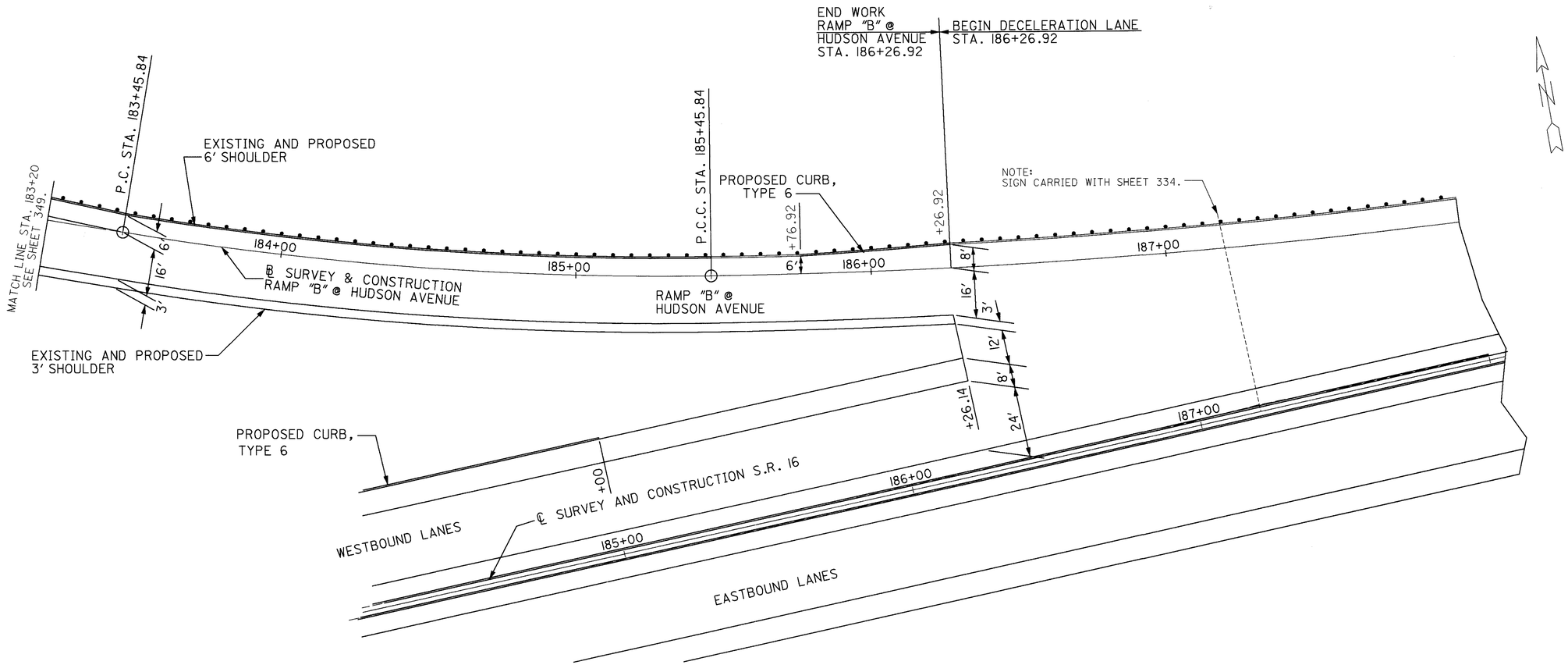

NO SIGNS THIS SHEET

CALCULATED S.B. 3/13/95
CHECKED L.T. 3/16/95

0 10 20 40
HORIZONTAL SCALE IN FEET

SIGN INSTALLATION DETAIL SHEET
RAMP "B" AT HUDSON AVENUE STA. 183+00 TO STA. 188+00

LIC-16-19.72

L1660BA7.DGN 02-20-99

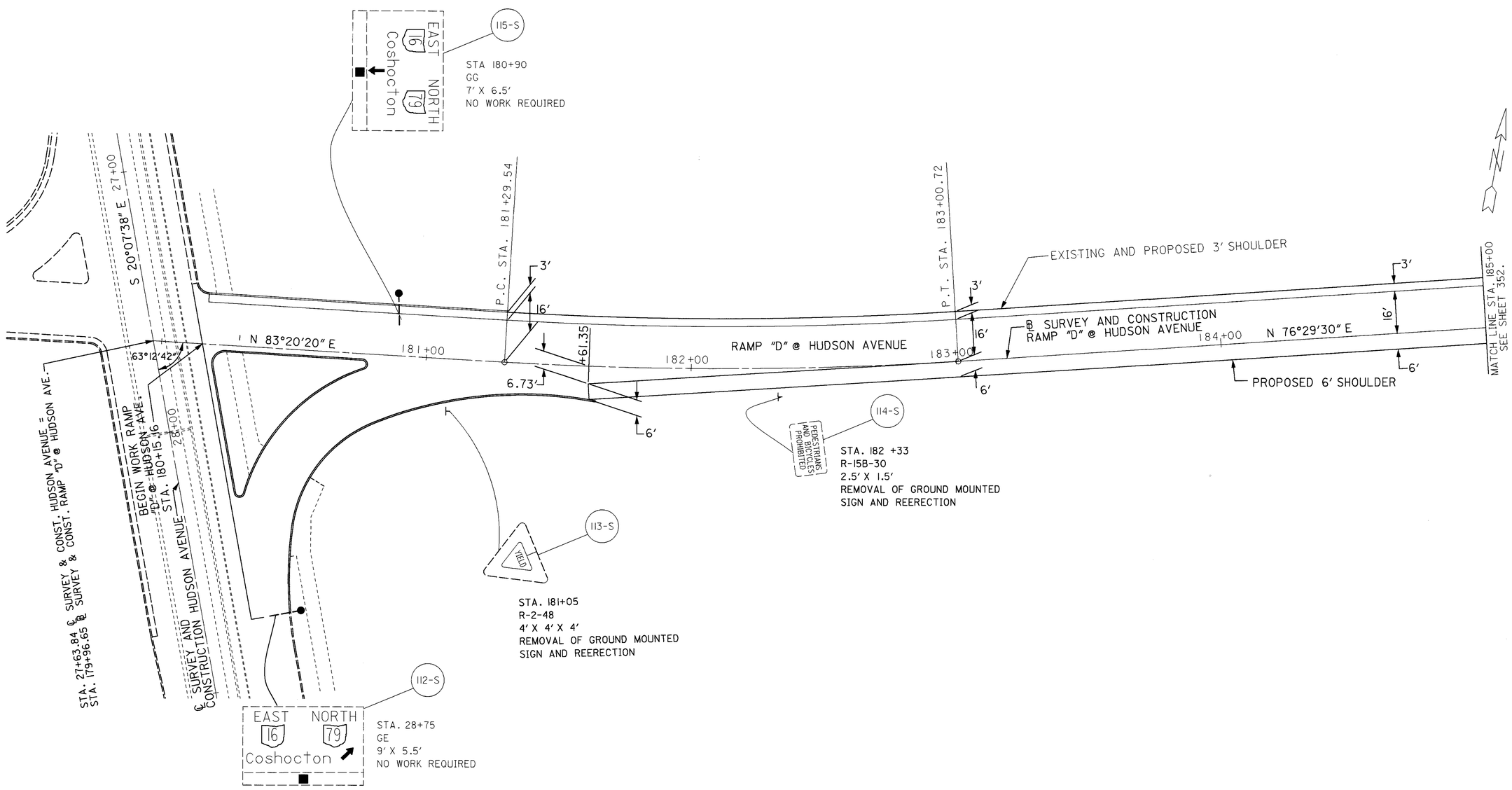

0 10 20 40
HORIZONTAL SCALE IN FEET

CALCULATED S.B. 3/13/95
CHECKED L.T. 3/16/95

SIGN INSTALLATION DETAIL SHEET RAMP "D" AT HUDSON AVENUE STA. 180+00 TO STA. 185+00

LIC-16-19.72

L166D007.DGN 02-20-99

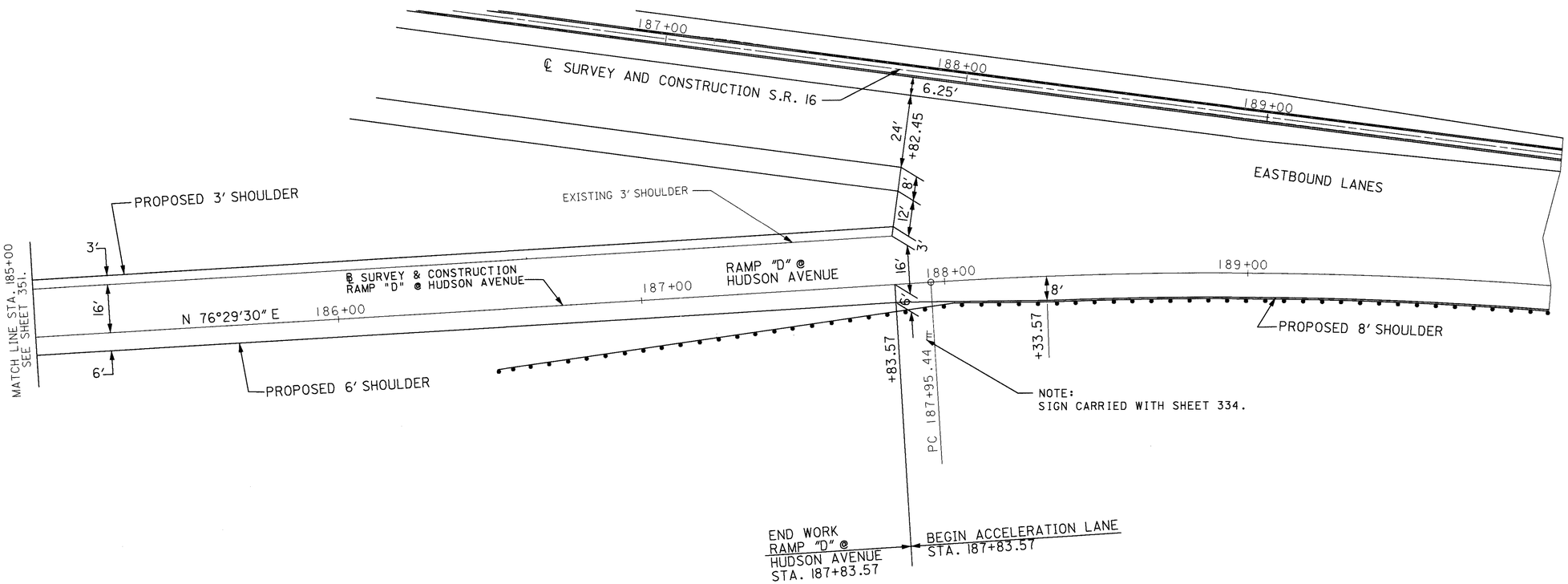

NO SIGNS THIS SHEET

HORIZONTAL SCALE IN FEET
0 10 20 40

CALCULATED S.B. 3/13/95
CHECKED L.T. 3/16/95

SIGN INSTALLATION DETAIL SHEET RAMP "D" AT HUDSON AVENUE STA. 185+00 TO STA. 190+00

LIC-16-19.72

L16600A7.DGN 02-20-99

SHEET NO.	SIGN NO.	LOCATION	STATION	SIDE	SIGN CODE	SIGN SIZE	CROSS SECTION SHEET NO.	ITEM 630 SIGN, FLAT STEET SQ FT			GROUND-MOUNTED SUPPORT, NO. 2 POST LIN FT		GROUND-MOUNTED SUPPORT, NO. 4 POST LIN FT	GROUND-MOUNTED SUPPORT, S4X7.7 BEAM LIN FT					BREAKAWAY BEAM CONNECTION EACH	SIGN SUPPORT ASSEMBLY POLE MOUNTED EACH		GROUND MOUNTED BEAM SUPPORT FOUNDATION EACH	RIGID OVERHEAD SIGN SUPPORT FOUNDATION EACH		REMOVAL OF GROUND MOUNTED SIGN AND REERECTION EACH			REMOVAL OF OVERHEAD MOUNTED SIGN AND REERECTION EACH		REMOVAL OF SIGN SUPPORT ASSEMBLY POLE MOUNTED AND DISPOSAL EACH	REMOVAL OF GROUND MOUNTED POST SUPPORT AND DISPOSAL EACH	REMOVAL OF GROUND MOUNTED BEAM SUPPORT AND DISPOSAL EACH
318	2-S	SR 16	110+62	RT	W-50R-48	4X4							15-15												1						2	
318	1-S	SR 16	107+80	LT	X-6R-36	1X3					14														1						1	
319	3-S	SR 16	116+30	RT	R-2-48	4X4X4					14-14														1						2	
319	4-S	SR 16	116+00	LT	GB	18X7.5	359																4					1				
319	5-S	SR 16	116+00	LT	GE	13X5.5	359																					1				
319	6-S	SR 16	114+24	MED	GF	6X5	359							17-17					2			2			1							2
321	7-S	SR 16	121+57.36	RT	N-45-12	1X1	359	1.00			9																					
321	8-S	SR 16	123+70	RT	GE	13X8.5	359																1					1				
321	9-S	SR 16	121+57.36	LT	N-45-12	1X1	359	1.00			9																					
321	10-S	SR 16	120+90	LT	GB	13X6	359																1					1				
322	11-S	SR 16	127+90	RT	GG	12X8	360																4					1				
322	12-S	SR 16	127+90	RT	GB	17X10.5	360																					1				
322	13-S	SR 16	127+90	RT	GE	13X8.5	360																					1				
322	14-S	SR 16	129+55	MED	GF	6X5	360							17-17					2			2			1							2
322	15-S	SR 16	126+61	LT	W-50R-48	4X4							15-15												1						2	
324	16-S	SR 16	135+80	RT	GA-1	11X5.5	360																1					1				
324	17-S	SR 16	139+84	RT	GSS-A	8X4	360							16-17								2			1							2
325	18-S	SR 16	141+25	RT	X-6R-36	1X3					14														1						1	
325	19-S	SR 16	141+39	RT	N-89-48	4X3		NO WORK REQUIRED																								
325	20-S	SR 16	143+58	RT	W-50R-48	4X4							15-15												1						2	
325	21-S	SR 16	143+45	LT	GB	13X5.5	360																1					1				
325	22-S	SR 16	143+45	LT	R-10-36	3X4														1					1					1		
325	23-S	SR 16	143+15	LT	X-6R-36	1X3					14														1						1	
326	24-S	SR 16	145+78	RT	W-49R-48	4X4							15-15												1						2	
327	25-S	SR 16	150+05	RT	R-2-48	4X4X4					14-14														1						2	
327	26-S	SR 16	153+16	MED	GF	6X5	360							17-17					2			2			1							2
328	27-S	SR 16	157+60.7	RT	GG	16X10	360																4					1				
328	28-S	SR 16	157+60.7	RT	GB	16X11	360																					1				
328	29-S	SR 16	158+57.2	LT	GE	16X10.5	361																4					1				
328	30-S	SR 16	158+57.2	LT	GG	16X8.5	361																					1				
	31-S							NUMBER NOT USED																				1				
330	32-S	SR 16	165+00	RT	GE	16X11	361																2					1				
330	33-S	SR 16	167+95	MED	GF	6X5	361							17-17					2			2			1							2
330	34-S	SR 16	167+67	LT	R-2-48	4X4X4					14-14														1						2	
330	35-S	SR 16	167+70	LT	GG	10X8.5	362																4					1				
330	36-S	SR 16	167+70	LT	GG	11X8.5	362																					1				
330	37-S	SR 16	166+45	LT	R-2-48	4X4X4					14-14														1						2	
331	37-S,A	SR 16	173+95	RT	GB	17X6	361																					1				
331	38-S	SR 16	174+37	RT	N-45-12	1X1		1.00			9																					
331	39-S	SR 16	174+37	LT	N-45-12	1X1		1.00			9																					
331	40-S	SR 16	174+37	LT	GB	12X10.5		NO WORK REQUIRED																								
331	41-S	SR 16	170+97	LT	W-50R-48	4X4							15-15												1						2	
332	42-S	SR 16	178+60	RT	X-6R-36	1X3					14														1						1	
332	43-S	SR 16	179+50	RT	GB	12X7	361																					1				
332	44-S	SR 16	179+50	RT	GG	7X4.5	361																					1				
TOTALS CARRIED TO SHEET 355.								4.00			204		150	169					8	1		10	26		19			20		1	22	10

CALCULATED S.B. 3/13/95
CHECKED L.T. 3/16/95

SIGNING QUANTITIES

LIC-16-19.72

L16SS3.DGN

SHEET NO.	SIGN NO.	LOCATION	STATION	SIDE	SIGN CODE	SIGN SIZE	CROSS SECTION SHEET NO.	ITEM 630																							
								SIGNS, FLAT SHEET, TYPE G		GROUND-MOUNTED SUPPORT, NO. 2 POST	GROUND-MOUNTED SUPPORT, NO. 3 POST	GROUND-MOUNTED SUPPORT, NO. 4 POST	GROUND-MOUNTED SUPPORT, S4X7.7 BEAM				ONE WAY SUPPORT, NO. 3 POST	BREAKAWAY BEAM CONNECTION	SIGN SUPPORT ASSEMBLY POLE MOUNTED	SIGN BACKING ASSEMBLY	GROUND MOUNTED BEAM SUPPORT FOUNDATION	RIGID OVERHEAD SIGN SUPPORT FOUNDATION		REMOVAL OF GROUND MOUNTED SIGN AND REERECTION			REMOVAL OF OVERHEAD MOUNTED SIGN AND REERECTION		REMOVAL OF SIGN SUPPORT ASSEMBLY POLE MOUNTED AND DISPOSAL	REMOVAL OF GROUND MOUNTED POST SUPPORT AND DISPOSAL	REMOVAL OF GROUND MOUNTED BEAM SUPPORT AND DISPOSAL
									SQ FT		LIN FT	LIN FT	LIN FT	LIN FT				LIN FT	EACH	EACH	EACH	EACH	EACH		EACH			EACH		EACH	EACH	EACH
332	45-S	SR 16	179+50	RT	GG	8X4.5	361																				1				
333	46-S	SR 16	183+50	RT	W-49R-48	4X4						15-15												1						2	
333	47-S	SR 16	183+40	LT	N-89-48	4X3		NO WORK REQUIRED																							
333	48-S	SR 16	181+01	LT	GSH	8X3		NO WORK REQUIRED																							
333	49-S	SR 16	180+30	LT	X-6R-36	1X3				14														1						1	
334	50-S	RAMP D	187+98	RT	R-2-48	4X4X4				14-14														1						2	
334	51-S	SR 16	187+10	LT	GG	11X6.5	361															4					1				
334	52-S	SR 16	187+10	LT	GB	13X10.5	361																				1				
334	53-S	SR 16	187+10	LT	GE	16X8.5	361																				1				
334	54-S	SR 16	185+86	MED	GF	6X5	361						16-16					2			2			1							2
336	55-S	RAMP F	106+57	RT	R-41B-36	3X3					14						16							1						2	
336	56-S	RAMP F	106+57	RT	R-43R-36	3X1																		1							
336	57-S	RAMP F	106+57	RT	R-43L-36	3X1																		1							
336	58-S	RAMP F	108+39	RT	R-41A-36	3X2					13													1						1	
336	59-S	RAMP F	108+34	LT	D-4E	10X3	361						16-16					2			2			1							2
336	60-S	RAMP F	108+34	LT	R-41A-36	3X2														1				1							
336	61-S	RAMP F	106+57	LT	R-41B-36	3X3					14						16							1						2	
336	62-S	RAMP F	106+57	LT	R-43R-36	3X1																		1							
336	63-S	RAMP F	106+57	LT	R-43L-36	3X1																		1							
337	64-S	RAMP F	112+31	RT	W-47-36	3X3						15												1						1	
337	65-S	RAMP F	112+31	LT	W-47-36	3X3						15												1						1	
338	66-S	21ST ST	21+00	RT	R-55-12	1X1.5		NO WORK REQUIRED																							
338	67-S	RAMP H	108+94	RT	R-15B-30	2.5X1.5				12														1						1	
338	68-S	RAMP H	108+01	LT	GH	7X6		NO WORK REQUIRED																							
338	69-S	RAMP H	108+01	LT	GH	7X6		NO WORK REQUIRED																							
340	70-S	RAMP BB	143+40	RT	R-1-48	4X4		NO WORK REQUIRED																							
340	71-S	RAMP BB	143+40	RT	R-41B-36	3X3		NO WORK REQUIRED																							
340	72-S	RAMP BB	143+40	RT	R-43R-36	3X1		NO WORK REQUIRED																							
340	73-S	RAMP BB	143+40	RT	R-43L-36	3X1		NO WORK REQUIRED																							
340	74-S	RAMP BB	144+79	RT	R-41A-36	3X2		NO WORK REQURIED																							
340	75-S	RDWAY B	146+60	RT	W-98-48	4X5		NO WORK REQUIRED																							
340	76-S	RDWAY B	146+70	LT	W-68-48	4X4						15-15												1						2	
340	77-S	RAMP BB	147+25	MED	GF	6X5	362						17-16					2			2			1							2
340	78-S	RAMP BB	147+90	LT	W-45A-36	3X3													1					1					1		
340	79-S	RAMP BB	144+79	LT	D-4E	10X3		NO WORK REQURIED																					1		
340	80-S	RAMP BB	144+79	LT	R-41A-36	3X2		NO WORK REQUIRED																							
340	81-S	RAMP BB	143+40	LT	R-1-48	4X4		NO WORK REQUIRED																							
340	82-S	RAMP BB	143+40	LT	R-41B-36	3X3		NO WORK REQUIRED																							
342	83-S	RDWAY B	148+72	LT	GE	9X5.5		NO WORK REQURIED																							
342	84-S	RDWAY B	148+72	LT	GG	16X8.5		NO WORK REQUIRED																							
342	85-S	RDWAY B	148+72	LT	GSS-5	2X2		NO WORK REQUIRED																							
343	86-S	RAMP DD	142+50	RT	R-15B-30	2.5X1.5			3.75	12																					
346	87-S	RAMP A	172+00	LT	R-15B-30	2.5X1.5	362	NO WORK REQUIRED																							
346	88-S	MT V RD	20+80	LT	GH	8X5.5		NO WORK REQUIRED																							
348	89-S	RAMP C	172+84	RT	GB	15X6																4					1				
348	90-S	RAMP C	172+84	RT	GE	9X6	362																				1				
348	91-S	RAMP CC	175+14	RT	R-2-48	4X4X4				14-14														1						2	
348	92-S	RAMP CC	174+62	RT	R-3L-24	2X3					13													1						1	
348	93-S	MT V RD	27+20	LT	M-2-24-2	2X2		NO WORK REQURIED																							
TOTALS CARRIED TO SHEET 355.									3.75	94	54	90	97				32	6	1	1	6	8		21			6		2	18	6

CALCULATED S.B. 3/13/95
CHECKED L.T. 3/16/95

SIGNING QUANTITIES

LIC-16-19.72

L16SS4.DGN

SHEET NO.	SIGN NO.	LOCATION	STATION	SIDE	SIGN CODE	SIGN SIZE	CROSS SECTION SHEET NO.	ITEM 630 SIGN, FLAT SHEET	SIGN, FLAT SHEET, TYPE G	SIGN, EXTRUSHEET, TYPE G	GROUND-MOUNTED SUPPORT, NO. 2 POST	GROUND-MOUNTED SUPPORT, NO. 3 POST	GROUND-MOUNTED SUPPORT, NO. 4 POST	GROUND-MOUNTED SUPPORT, S4X7.7 BEAM	GROUND-MOUNTED SUPPORT, W6X9 BEAM	GROUND-MOUNTED SUPPORT, W8X18 BEAM	GROUND-MOUNTED SUPPORT, W10X12 BEAM	ONE WAY SUPPORT, NO. 3 POST	BREAKAWAY BEAM CONNECTION	SIGN SUPPORT ASSEMBLY POLE MOUNTED	SIGN BACKING ASSEMBLY	GROUND MOUNTED BEAM SUPPORT FOUNDATION	RIGID OVERHEAD SIGN SUPPORT FOUNDATION	REMOVAL OF GROUND MOUNTED SIGN AND DISPOSAL	REMOVAL OF GROUND MOUNTED SIGN AND REERECTION	REMOVAL OF GROUND MOUNTED MAJOR SIGN AND DISPOSAL		REMOVAL OF OVERHEAD MOUNTED SIGN AND REERECTION	REMOVAL OF OVERHEAD MOUNTED SIGN AND DISPOSAL	REMOVAL OF MISCELLANEOUS TRAFFIC CONTROL ITEM, SIGN SUPPORT ASSEMBLY POLE MOUNTED AND DISPOSAL	REMOVAL OF GROUND MOUNTED POST SUPPORT AND DISPOSAL	REMOVAL OF GROUND MOUNTED BEAM SUPPORT AND DISPOSAL
								SQ.FT.	SQ.FT.	SQ.FT.	LIN FT	LIN FT	LIN FT	LIN FT	LIN FT	LIN FT	LIN FT	LIN FT	EACH	EACH	EACH	EACH	EACH	EACH	EACH	EACH		EACH	EACH	EACH	EACH	EACH
348	94-S	MT V RD	27+20	LT	M-38-24	2X1		NO WORK REQUIRED																							
348	95-S	MT V RD	27+20	RT	R-10-24	2X2.5		NO WORK REQUIRED																							
348	96-S	MT V RD	26+40	LT	R-3L-24	2X3						13												1						1	
348	97-S	MT V RD	26+40	LT	R-41A-36	3X2																		1							
348	98-S	MT V RD	26+40	LT	R-43L-36	3X1												16						1						1	
348	99-S	MT V RD	26+40	LT	R-43R-36	3X1																		1							
348	100-S	RAMP C	174+62	LT	R-3R-24	2X3						13												1						1	
349	101-S	RAMP B	178+94	RT	R-41B-36	3X3												16						1						1	
349	102-S	RAMP B	178+94	RT	R-43L-36	3X1																		1							
349	103-S	RAMP B	179+81	RT	R-41A-36	3X2						13												1						1	
349	104-S	RAMP B	179+81	RT	R-121-24	2X2																		1							
349	105-S	RAMP B	182+37	LT	W-47-36	3X3						15												1						1	
349	106-S	RAMP B	181+40	LT	GH	10X4.5	362															4					1				
349	107-S	RAMP B	181+40	LT	GG	8X7	362																				1				
349	108-S	RAMP B	179+83	LT	R-41A-36	3X2						13												1						1	
349	109-S	RAMP B	178+72	LT	R-41B-36	3X3						14						16						1						2	
349	110-S	RAMP B	178+72	LT	R-43R-36	3X1																		1							
349	111-S	RAMP B	178+72	LT	R-43L-36	3X1																		1							
351	112-S	RAMP D	28+75	RT	GE	9X5.5		NO WORK REQUIRED																							
351	113-S	RAMP D	181+05	RT	R-2-48	4X4X4					14-14													1						1	
351	114-S	RAMP D	182+33	RT	R-15B-30	2.5X1.5					12													1						1	
351	115-S	RAMP D	180+90	LT	GG	7X6.5		NO WORK REQUIRED																							
335	54-S,A	SR16	117+00	RT	X-6R-36	3X1					14													1							
335	54-S,B	SR16	119+00	LT	X-6R-36	3X1					14													1							
335A	54-S,C	SR16	122+00	RT	X-6R-36	3X1					14													1							
335A	54-S,D	SR16	123+70	LT	X-6R-36	3X1					14													1							
				TOTAL THIS SHEET							96	81						48				4		20			2			11	
				TOTAL FROM SHEET 353				4.00			204		150	169					8	1		10	26	19			20		1	22	10
				TOTAL FROM SHEET 354					3.75		94	54	90	97				32	6	1	1	6	8	21			6		2	18	6
TOTALS CARRIED TO GENERAL SUMMARY								4.00	3.75		394	135	240	266				80	14	2	1	16	38	60			28		3	51	16

CALCULATED S.B. 3/10/95
CHECKED J.T. 3/17/95

SIGNING SUB-SUMMARY & SIGNING QUANTITIES

LIC-16-19.72

L16SS5.DGN

L16SS6.DGN

SHEET NO.	SIGN NO.	LOCATION	STATION	SIDE	SIGN CODE	SIGN SIZE	CROSS SECTION SHEET NO.			TOTALS CARRIED TO GENERAL SUMMARY
319	4-S	SR 16	116+00	LT	GB	18X7.5	359		REMOVAL OF MISCELLANEOUS TRAFFIC CONTROL ITEM, OVERHEAD SIGN SUPPORT AND DISPOSAL, TYPE TC-7.4	7
321	8-S	SR 16	123+70	RT	GE	13X8.5	359		REMOVAL OF MISCELLANEOUS TRAFFIC CONTROL ITEM, OVERHEAD SIGN SUPPORT AND DISPOSAL, TYPE TC-7.5	2
321	10-S	SR 16	120+90	LT	GB	13X6	359		REMOVAL OF MISCELLANEOUS TRAFFIC CONTROL ITEM, OVERHEAD SIGN SUPPORT AND DISPOSAL, TYPE TC-12.24	4
322	11-S	SR 16	127+90	RT	GC	12X8	360		REMOVAL OF OVERHEAD SIGN SUPPORT AND DISPOSAL, TYPE TC-18.26	4
324	16-S	SR 16	135+80	RT	GA-1	11X5.5	360		OVERHEAD SIGN SUPPORT, TYPE 12.30, DESIGN 5,22' ARM	2
325	21-S	SR 16	143+45	LT	GB	13X5.5	360		OVERHEAD SIGN SUPPORT, TYPE 12.30, DESIGN 8, 28' ARM	2
328	27-S	SR 16	157+60.7	RT	GG	16X10	360		OVERHEAD SIGN SUPPORT, TYPE 7.65, DESIGN 6, 50 ' SPAN	1
328	29-S	SR 16	158+57.2	LT	GE	16X10.5	361		OVERHEAD SIGN SUPPORT, TYPE 7.65, DESIGN 6, 62' SPAN	1
330	32-S	SR 16	165+00	RT	GE	16X11	361		OVERHEAD SIGN SUPPORT, TYPE 7.65, DESIGN 6, 69' SPAN	2
330	35-S	SR 16	167+70	LT	GG	10X8.5	361		OVERHEAD SIGN SUPPORT, TYPE 7.65, DESIGN 6, 74' SPAN	1
331	37-S,A	SR 16	173+95	RT	GB	17X6	361		OVERHEAD SIGN SUPPORT, TYPE 7.65, DESIGN 6,70.6' SPAN AS PER PLAN	1
332	43-S	SR 16	179+50	RT	GB	12X7	361		OVERHEAD SIGN SUPPORT, TYPE 7.65, DESIGN 8, 77' SPAN	1
334	51-S	SR 16	187+10	LT	GG	11X6.5	361		OVERHEAD SIGN SUPPORT, TYPE 7.65, DESIGN 8, 79' SPAN	1
345	35-S	RAMP A	169+08	LT	GG	10X8.5	362		OVERHEAD SIGN SUPPORT, TYPE 7.65, DESIGN 8, 81' SPAN	1
348	89-S	RAMP C	172+84	RT	GB	15X6	362		OVERPASS STRUCTURE MOUNTED SIGN SUPPORT, TYPE TC-18.26, DES. 2	3
349	106-S	RAMP C	181+40	LT	GH	10X4.5	362		OVERPASS STRUCTURE MOUNTED SIGN SUPPORT, TYPE TC-18.26, DES. 7	1

ITEM 630

356
547

LIC-16-19.72

SIGNING SUB-SUMMARY & SIGNING QUANTITIES

CALCULATED S.B. 3/13/95

CHECKED L.T. 3/16/95

SIGN NO.	STATION	SHEET NO.	ITEM 631 REMOVAL OF DISCONNECT SWITCH WITH ENCLOSURE, TYPE X AND REERECTION EACH	ITEM 631 REMOVAL OF LUMINAIRE AND REERECTION EACH	ITEM 625 SIGN SERVICE EACH	ITEM 625 SIGNS WIRED EACH	ITEM 625 SIGNS WIRED, OVERPASS STRUCTURE MOUNTED EACH	ITEM 625 GROUND ROD EACH
4-S	116+00	319	1	2	1	1		1
5-S	116+00	319		2		1		
8-S	123+70	321	1	2	1	1		1
10-S	120+90	321	1	2	1	1		1
11-S	127+90	322	1	2	1	1		1
12-S	127+90	322		2		1		
13-S	127+90	322		2		1		
16-S	135+80	324	1	1	1	1		1
21-S	143+45	325	1	2	1	1		1
27-S	157+60.7	328	1	2	1	1		1
28-S	157+60.7	328		2		1		
29-S	158+57.2	328	1	2	1	1		1
30-S	158+57.2	328		2		1		
32-S	165+00	330	1	2	1	1		1
35-S	167+70	330	1	1				
36-S	167+70	330		1				
37-S,A	173+95	331		2	1		1	
43-S	179+50	332		2	1		1	
44-S	179+50	332		1			1	
45-S	179+50	332		1			1	
51-S	187+10	334	1	1	1	1		1
52-S	187+10	334		2		1		
53-S	187+10	334		2		1		
35-S	169+08	345				1		
36-S	169+08	345				1		
89-S	172+84	348	1	2	1	1		1
90-S	172+84	348		1		1		
TOTALS CARRIED TO SHEET 358			12	43	13	21	4	11

CALCULATED S.B. 3/15/95
CHECKED J.L. 3/16/95

SIGN LIGHTING QUANTITIES

LIC-16-19.72

L16SGNL1.DGN

SIGN NO.	STATION	SHEET NO.				ITEM 631										ITEM 625
						REMOVAL OF DISCONNECT SWITCH AND REERECTION	REMOVAL OF LUMINAIRE AND REERECTION	REMOVAL OF DISCONNECT SWITCH WITH ENCLOSURE AND DISPOSAL	REMOVAL OF SIGN WIRING AND DISPOSAL				SIGN SERVICE	SIGN WIRED	SIGN WIRED, OVERPASS STRUCTURE MOUNTED			GROUND ROD
						EACH	EACH	EACH	EACH				EACH	EACH	EACH			EACH
106-S	181+40	349				1	1						1	1				1
107-S	181+40	349												1				
				TOTAL THIS	SHEET	1	1						1	2				1
				TOTAL FROM	SHEET 357	21	75	1	1				25	35	7			20
TOTALS CARRIED TO GENERAL SUMMARY						22	76	1	1				26	37	7			21

CALCULATED S.B. 3/13/95
CHECKED L.T. 3/16/95

SIGN LIGHTING SUB-SUMMARY
SIGN LIGHTING QUANTITIES

LIC-16-19.72

L16SGNL2.DGN

L16SDET3.DGN

SEEDING	END WIDTH	SQ. YDS.

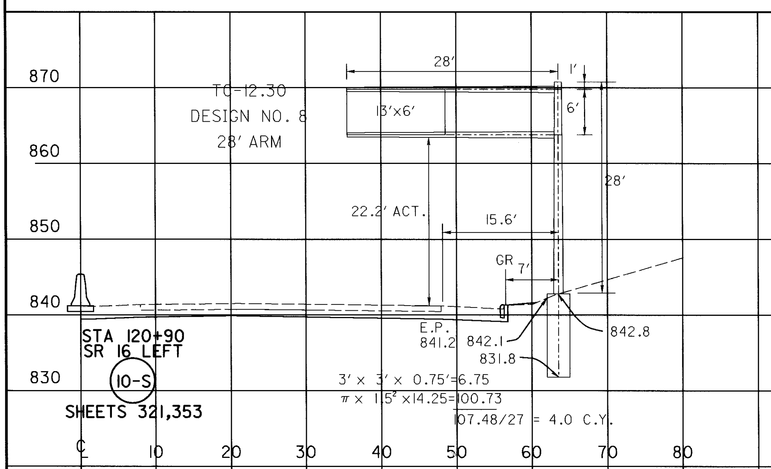

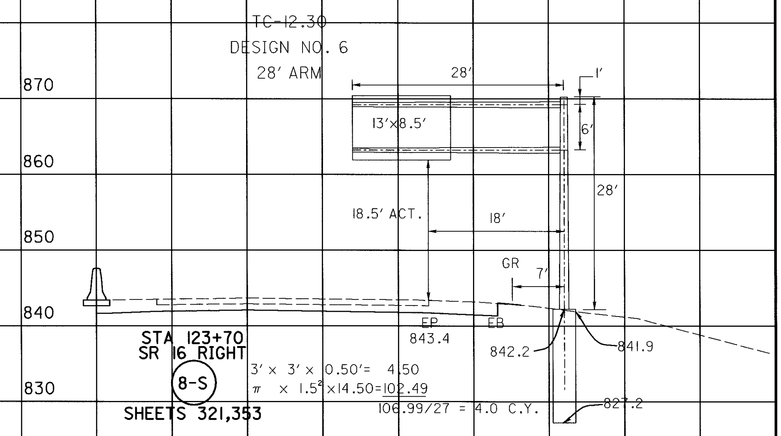

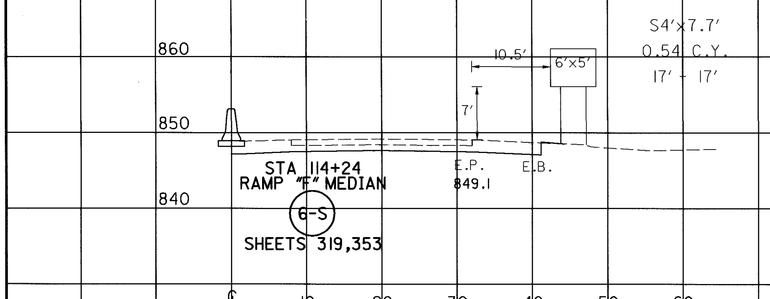

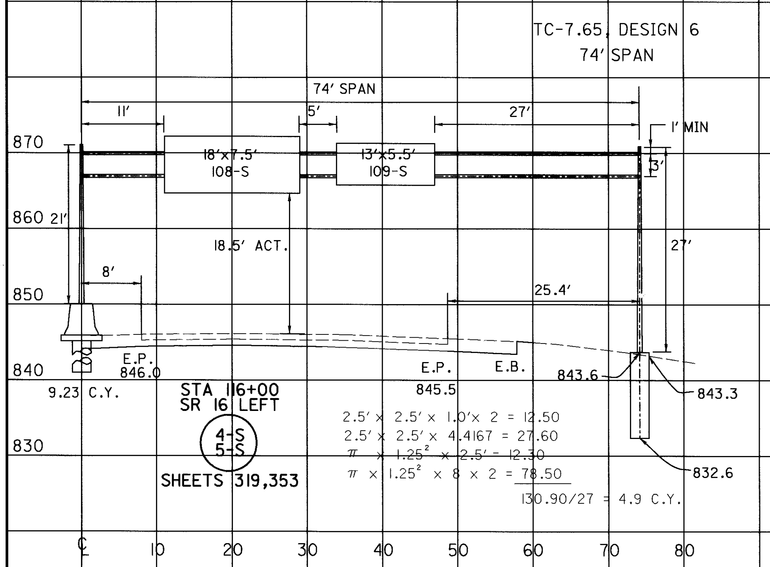

END AREA	CUT	FILL
VOLUME	CUT	FILL

359
547

LIC-16-19.72

CROSS SECTIONS
SIGN SUPPORT DETAILS

CALCULATED S.B. 3/13/95
CHECKED L.T. 3/16/95

LI6SDET4.DGN

SEEDING	END WIDTH	SQ. YDS.

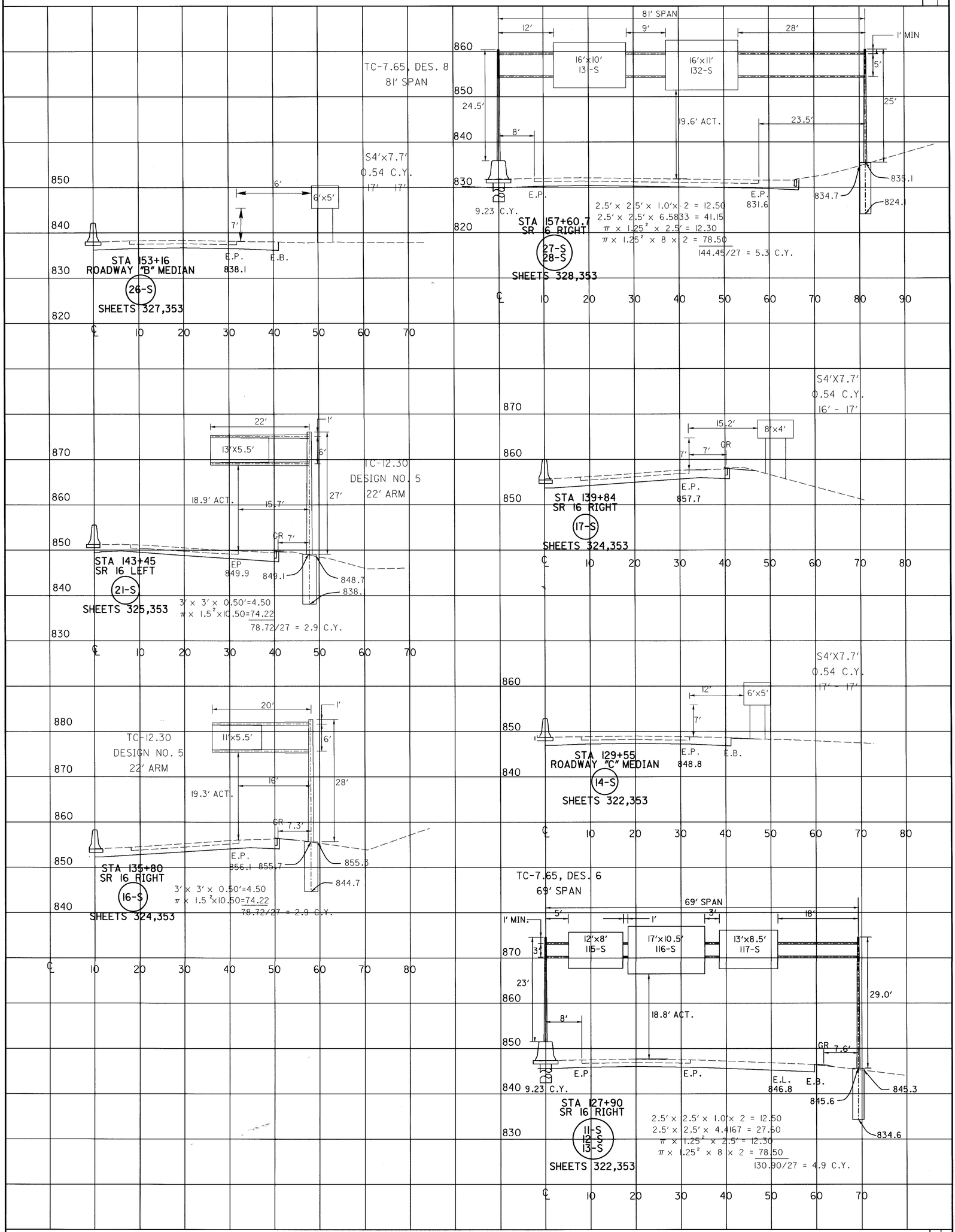

END AREA	
CUT	
FILL	

VOLUME	
CUT	
FILL	

360
547

LIC-16-19.72

CROSS SECTIONS
SIGN SUPPORT DETAILS

CALCULATED S.B. 3/13/95
CHECKED L.T. 3/16/95

L16SDET5.DGN

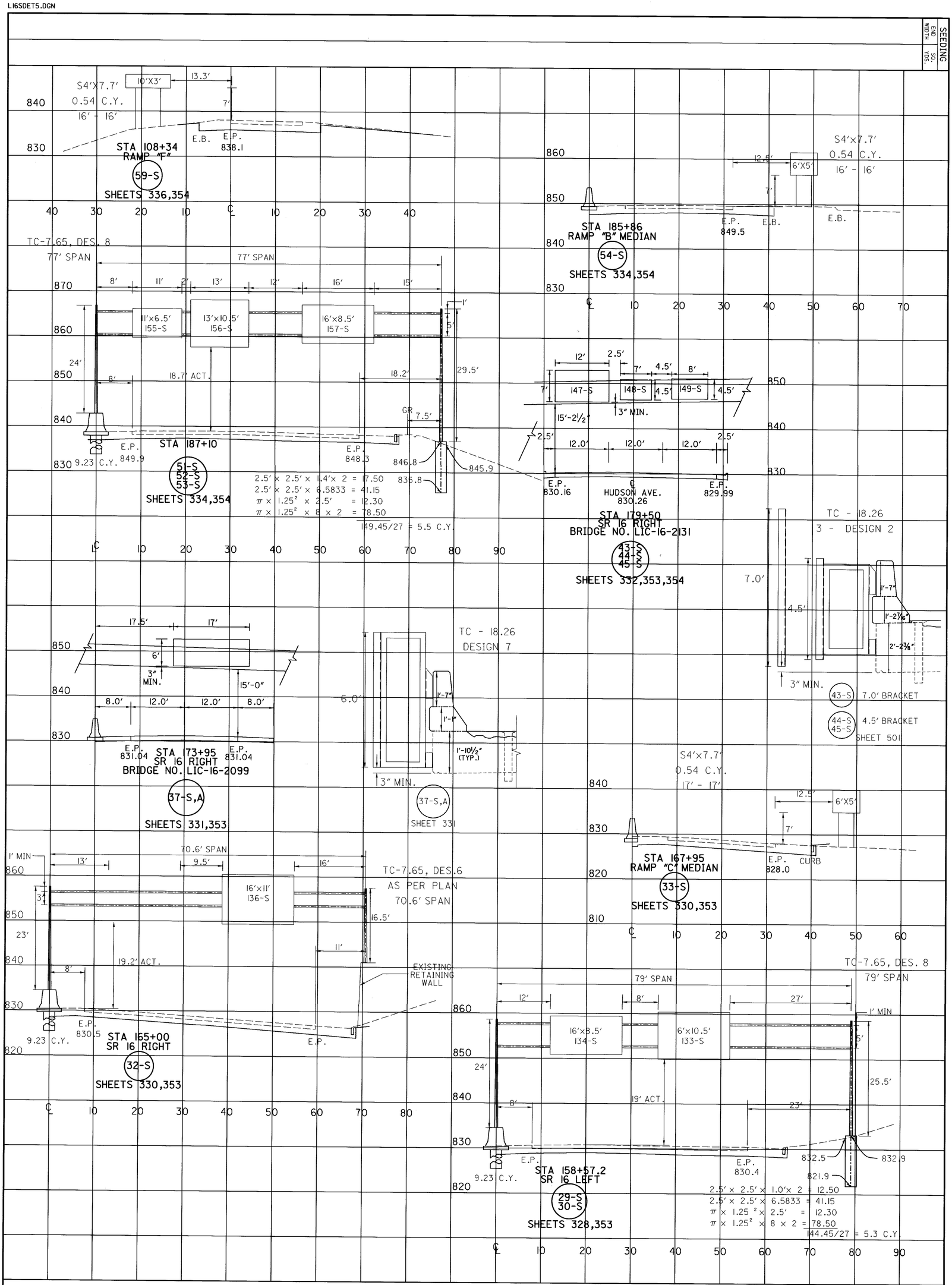

361
547

LIC-16-19.72

CROSS SECTIONS
SIGN SUPPORT DETAILS

CALCULATED S.B. 3/13/95
CHECKED L.T. 3/16/95

L16SDET6.DGN

SEEDING	
END WIDTH	SQ. YDS.

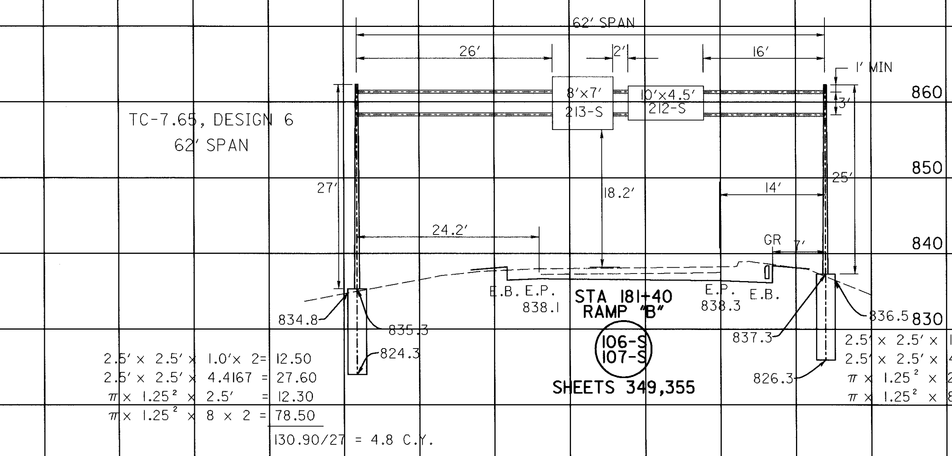

2.5' x 2.5' x 1.0'x 2= 12.50
2.5' x 2.5' x 4.4167 = 27.60
π x 1.25² x 2.5' = 12.30
π x 1.25² x 8 x 2 = 78.50
130.90/27 = 4.8 C.Y.

2.5' x 2.5' x 1.25'x 2 = 15.63
2.5' x 2.5' x 4.4167 =27.60
π x 1.25² x 2.5' = 12.30
π x 1.25² x 8 x 2 =78.50
134.03/27 = 5.0 C.Y.

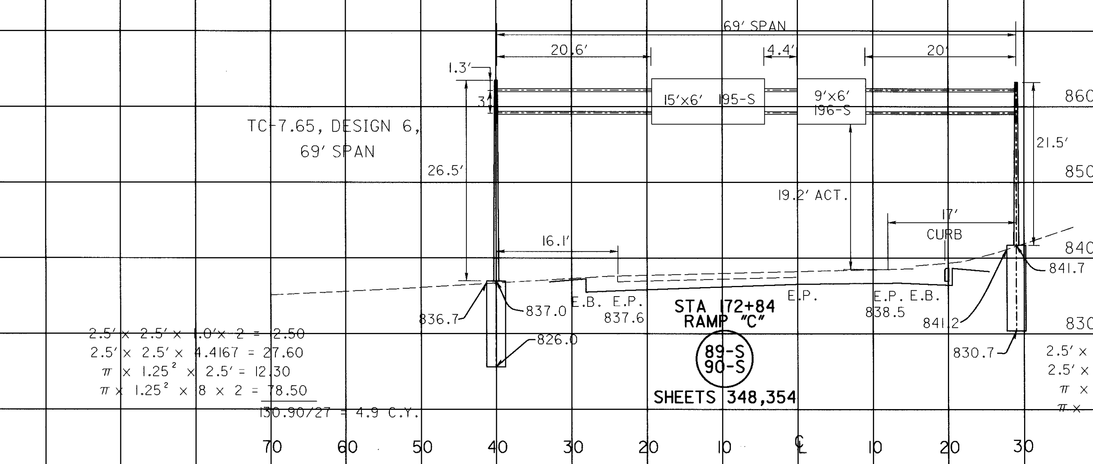

2.5' x 2.5' x 1.0'x 2 = 2.50
2.5' x 2.5' x 4.4167 = 27.60
π x 1.25² x 2.5' = 12.30
π x 1.25² x 8 x 2 = 78.50
130.90/27 = 4.9 C.Y.

2.5' x 2.5' x 1.0'x 2 = 12.50
2.5' x 2.5' x 4.4167 = 27.60
π x 1.25² x 2.5' = 12.30
π x 1.25² x 8 x 2 = 78.50
130.90/27 = 4.9 C.Y.

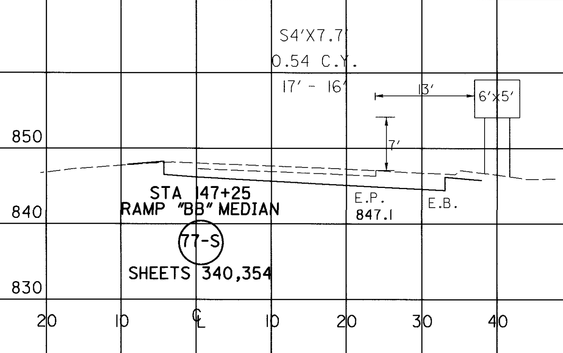

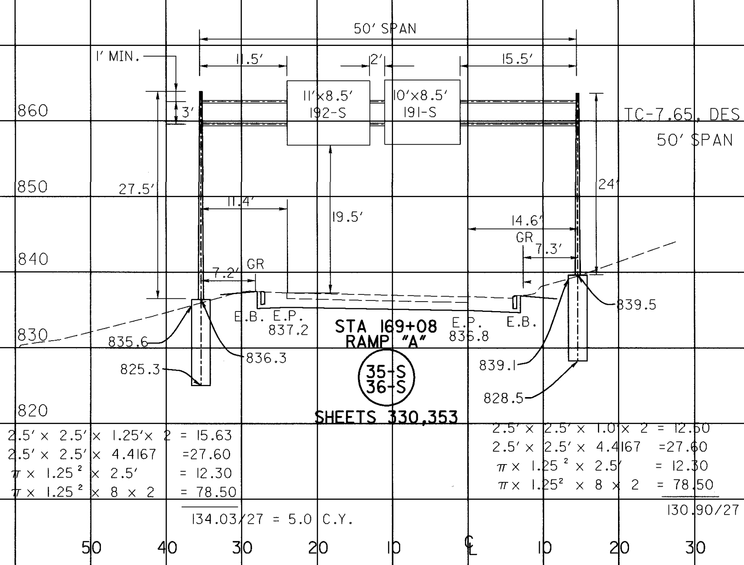

2.5' x 2.5' x 1.25'x 2 = 15.63
2.5' x 2.5' x 4.4167 =27.60
π x 1.25² x 2.5' = 12.30
π x 1.25² x 8 x 2 = 78.50
134.03/27 = 5.0 C.Y.

2.5' x 2.5' x 1.0'x 2 = 12.50
2.5' x 2.5' x 4.4167 =27.60
π x 1.25² x 2.5' = 12.30
π x 1.25² x 8 x 2 = 78.50
130.90/27 = 4.9 C.Y.

END AREA	
CUT	FILL
VOLUME	
CUT	FILL

362/547

LIC-16-19.72

CROSS SECTIONS
SIGN SUPPORT DETAILS

CALCULATED S.B. 3/13/95
CHECKED L.T. 3/16/95

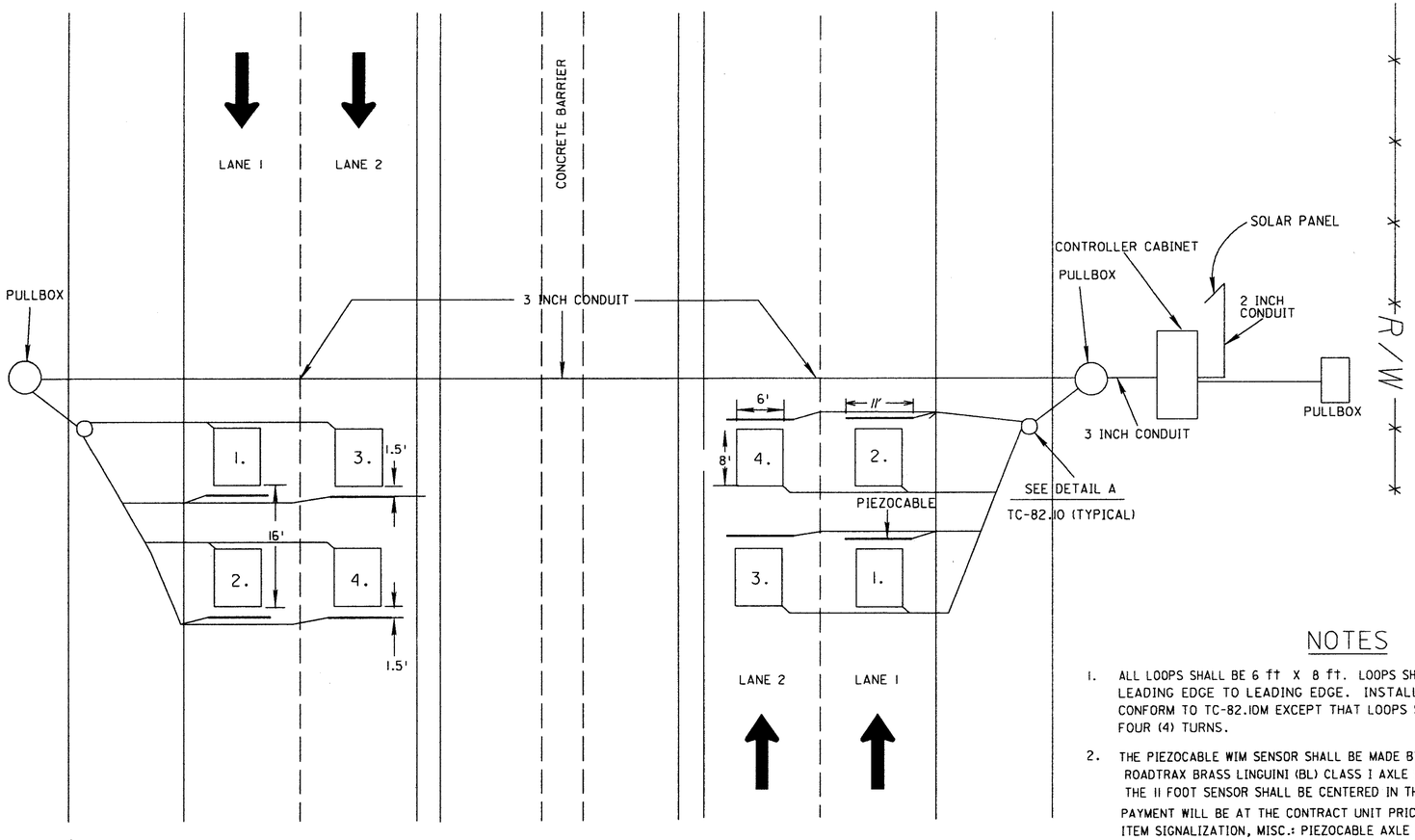

WEIGH-IN-MOTION/AUTOMATIC TRAFFIC RECORDER INSTALLATION
(STA. 183+50 ℄ SURVEY & CONSTRUCTION S.R. 16)

(FOR ADDITIONAL DETAILS SEE SHEET 97)

ITEM	ITEM EXT.	TOTAL	UNIT	DESCRIPTION
603	00400	100	FEET	4 INCH CONDUIT, TYPE E
625	25400	50	FEET	CONDUIT, 2 INCH, 713.04
625	25500	50	FEET	CONDUIT, 3 INCH, 713.04
625	25900	94	FEET	CONDUIT, JACKED OR DRILLED UNDER PAVEMENT, 3 INCH
625	29002	50	FEET	TRENCH, 24" DEEP
625	30706	3	EACH	PULL BOX, 713.08, 24 INCH
625	32000	1	EACH	GROUND ROD
632	26500	8	EACH	DETECTOR LOOP
632	62810	100	FEET	INTERCONNECT CABLE, MISC. : COAX CABLE (RG58 TYPE) LEADIN CABLE FOR PIEZOCABLE SENSOR
632	65200	122	FEET	LOOP DETECTOR LEAD-IN CABLE
632	90400	8	EACH	SIGNALIZATION, MISC. : PIEZOCABLE AXLE SENSOR , CLASS 1 (11 FEET IN LENGTH)
633	65001	1	EACH	CABINET, WITHOUT CONTROLLER, AS PER PLAN PREWIRED, PAD MOUNT,TYPE "M"
633	70000	1	CU.YD.	CONCRETE FOR CABINET FOUNDATION
633	70500	9	SQ.FT.	CONCRETE WORK PAD
633	99000	1	EACH	CONTROLLER ITEM, MICS. : SOLAR PANEL

TOTALS CARRIED TO THE GENERAL SUMMARY

NOTES

1. ALL LOOPS SHALL BE 6 ft X 8 ft. LOOPS SHALL BE SPACED 16 ft FROM LEADING EDGE TO LEADING EDGE. INSTALLATION OF LOOPS SHALL CONFORM TO TC-82.10M EXCEPT THAT LOOPS SHALL BE INSTALLED WITH FOUR (4) TURNS.

2. THE PIEZOCABLE WIM SENSOR SHALL BE MADE BY MEASUREMENT SPECIALITIES ROADTRAX BRASS LINGUINI (BL) CLASS 1 AXLE SENSOR OR EQUIVALENT. THE 11 FOOT SENSOR SHALL BE CENTERED IN THE 12 FOOT LANE.
   PAYMENT WILL BE AT THE CONTRACT UNIT PRICE PER EACH ITEM SIGNALIZATION, MISC.: PIEZOCABLE AXLE SENSOR, CLASS 1 (12 feet IN LENGTH) AND SHALL INCLUDE ALL MATERIAL, LABOR, TOOLS, EQUIPMENT AND INCIDENTALS NECESSARY FOR EACH INSTALLATION, IN PLACE COMPLETE AND ACCEPTED.
   THE CONTRACTOR SHALL HAVE A WIM PIEZO MANUFACTURER REPRESENTATIVE ON THE SITE DURING THE INSTALLATION OF THE FIRST SENSORS. THE REPRESENTATIVE SHALL SUPERVISE THE INSTALLATION AND TESTING OF THE PIEZO SENSORS. HE SHALL STAY ON SITE UNTIL, TO TH SATISFACTION OF THE ENGINEER , THE INSTALLATION CREW IS CAPABLE OF INSTALLING THE PIEZO SENSORS IN HIS ABSENCE. IF THE SENSOR MANUFACTURERS REPRESENTATIVE DOES NOT STAY ON SIT THE CONTRACTOR WILL BE ACCESSED IN ACCORDANCE WITH 107.03

3. THE ALUMINUM CABINET SHALL BE AS PER SHEET 362B.

4. CABLE AND WIRE SHALL BE IDENTIFIED IN ACCORDANCE WITH 632.04. IDENTIFICATION SHALL INCLUDE THE DIRECTION OF TRAVEL (ii.e., NB, WB) AND THE LOOP NUMBER AS SHOWN. EACH CABLE AND WIRE SHALL HAVE 5 FEET COILED IN THE CONTROLLER CABINET FOR CONNECTION BY OTHERS.

5. ADJACENT LOOPS (TRANSVERSE AND LONGITUDINAL) SHALL BE INSTALLED IN OPPOSITE DIRECTIONS, i.e., LANE 1, LOOP 1 AND LANE 2, LOOP 4 CLOCKWISE; LANE 1, LOOP 2 AND LANE 2, LOOP 3 COUNTERCLOCKWISE. EACH LOOP SHALL HAVE A SEPARATE LEAD-IN CABLE ROUTED TO THE CONTROLLER CABINET AND TAGGED.
   THE 6 BY 8 FEET LOOPS SHALL BE BURIED WITH 4 INCHES OF COVER AND HAVE 4 TURNS OF WIRE. THE 8 FOOT DIMENSION SHALL BE IN THE LONGITUDINAL DIRECTION OF TRAVEL. THE LOOP WIRE SHALL BE INSULATED AND SLEEVED AND MEET ISMA 51-5 STANDARDS, 14 GAUGE MULTI-STRANDED AND SLEEVED. THE LOOPS SHALL HAVE LIGHTNING PROTECTION.

NOTES
(continued)

6. REFERENCE IS MADE TO STANDARD DRAWING HL-30.11M FOR DETAILS OF DRAINING PULLBOXES. UNDERDRAINS FOR PULLBOXES SHALL BE USED AS DIRECTED BY THE ENGINEER AND SHALL BE PROVIDED WHERE THE LENGTH REQUIRED FOR A SATISFACTORY OUTLET DOES NOT EXCEED APPROXIMATELY 20'. AN ESTIMATED QUANTITY OF 100 FEET OF ITEM 603, 4 inch CONDUIT TYPE E IS INCLUDED IN THE GENERAL SUMMARY FOR THIS PURPOSE.

7. FIVE (5) WORKING DAYS PRIOR TO THE SCHEDULED INSTALLATION, THE CONTRACTOR SHALL CONTACT OFFICE OF TECH. SERVICES AT 614-466-3727.

8. ALL ITEMS SHALL CONFORM TO C&M SPECIFICATIONS 625, 713, 632, 732, 633 AND 733, UNLESS OTHERWISE SPECIFIED.

9. NOT USED.

10. LOOPS AND PIEZOCABLES SHALL BE CUT IN THE FINAL ASPHALT COURSE. THEY SHALL NOT BE INSTALLED BETWEEN THE INTERMEDIATE AND FINAL COURSES.

11. PIEZOCABLES SHALL BE INSTALLED WHEN THE TEMP. IS ABOVE 15 DEGREES CENTIGRADE, OR SPECIAL PROVISION MADE TO ENSURE CURING OF EPOXY TAKES PLACE.

12. THE SOLAR PANEL SHALL BE INSTALLED WITH 2 inch RIGID CONDUIT MOUNTED IN CONCRETE BASE WITH PANEL BEING AT A MIN. HEIGHT ABOVE GROUND LEVEL OF 15 FEET. SOLAR PANEL OUTPUT CABLE SHALL BE SECURED AND ROUTED TO THE INSIDE OF THE CABINET FOR CONNECTION TO TERMINAL BLOCK. SOLAR PANEL SHALL BE MOUNTED AT A 45° ANGLE FACING SOUTH.

13. SOLAR PANEL SHALL BE A SOLAREX MODEL VLX 53 (53 WATTS) INCLUDING WIRING AND ANCILLARY DEVICES. THE VOLTAGE REGULATOR TO SUPPLY THE ELECTRONICS SHALL BE PLACED IN THE CABINET. IT SHALL HAVE LIGHTNING PROTECTION

14. THE SENSOR ARRAY SHALL HAVE TEMPERATURE SENSORS. THE LOCATIONS OF THE SENSORS SHALL BE AS DIRECTED BY THE ENGINEER

15. ALL SENSORS ARE TO BE TESTED BY O.D.O.T. PERSONNEL AFTER THE INSTALLATION IS COMPLETE SO AS TO VERIFY THAT THE STATION IS UP AND OPERATING PROPERLY. IF THE ELECTRONIC EQUIPMENT DOES NOT PERFORM PROPERLY BECAUSE OF A POORLY INSTALLED SENSOR, THE CONTRACTOR SHALL BE RESPONSIBLE FOR THE REPLACEMENT OF THE FAULTY SENSOR, AS SOON AS POSSIBLE AT HIS OWN COST.

CALCULATED	CHECKED
J.H.C.	J.L.S.

DATE
06/06/91
09/28/92
03/26/93
07/25/95
01/21/98

AUTOMATIC TRAFFIC RECORDER PLAN INSERT SHEET

LIC-16-19.72

mat-4.dgn 3-8-99

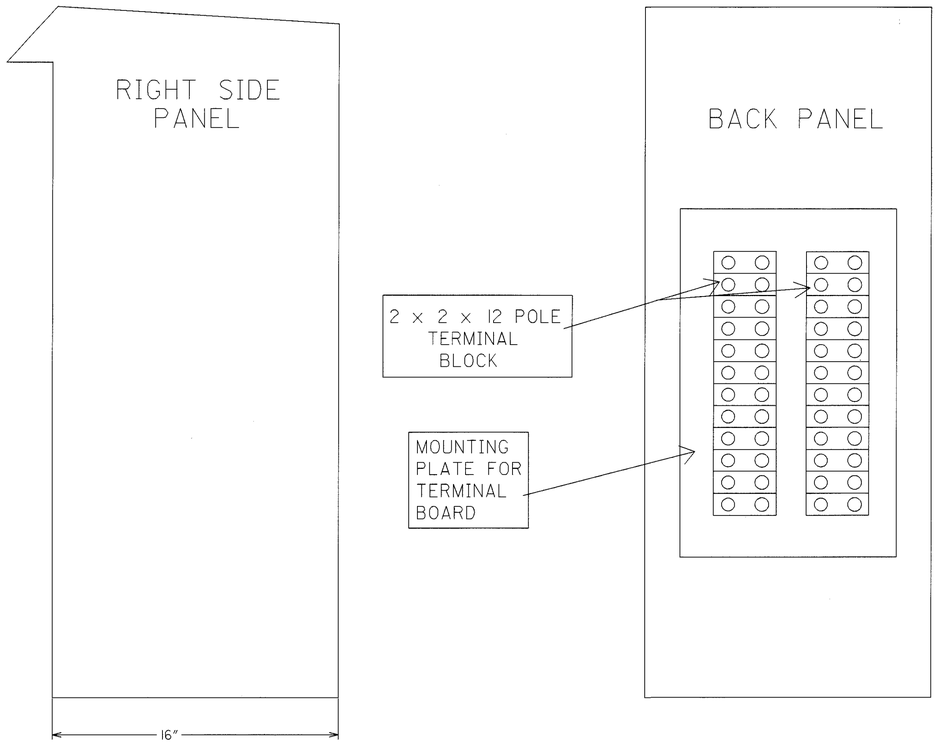

CABINET DETAILS

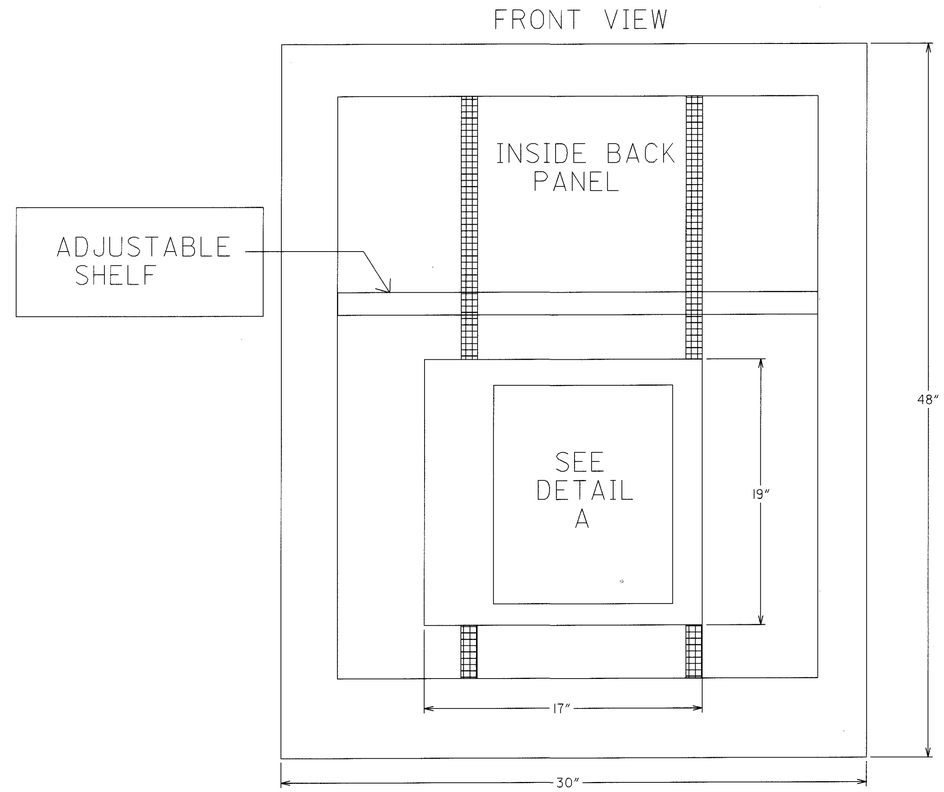

DETAIL A

DIFFERENT TERMINAL BLOCKS

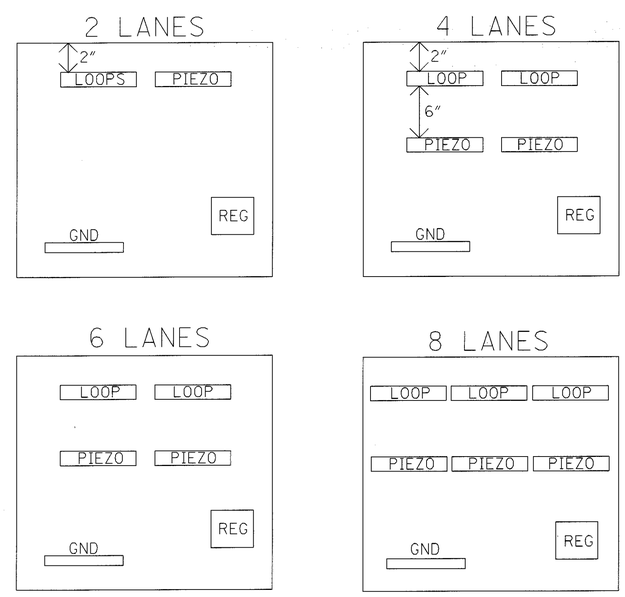

NOTES

1. THE ALUMINUM CABINET SHALL BE A PAD MOUNTED SIZE **3** AS SHOWN IN TABLE 7.3-1 OF THE NEMA STANDARD PUBLICATION No TS 2-1992. THE NOMINAL DIMENSIONS ARE: **24** INCHES WIDE BY **40** INCHES HIGH BY **15** INCHES DEEP.
   IT SHALL BE SHEET ALUMINUM AS DETAILED IN SECTION 7.2.2.1 OR CAST ALUMINUM DETAILED IN SECTION 7.2.2.2. IT SHALL ALSO CONFORM TO SECTIONS: 7.4, 7.5 EXCEPT FOR 7.5.7, 7.6 WITH ONE SHELF, 7.7.3, 7.8.3 SIZE 5, 7.84.
   THE CABINET SHALL BE INSTALLED WITH INTERNAL COMPONENTS FOR THE WEIGH-IN-MOTION EQUIPMENT AS NECESSARY TO PROVIDE COMPLETE OPERATION OF THE WIM SYSTEM.
   A. IT SHALL BE EQUIPPED WITH TWO ADJUSTABLE "C" CHANNELS MOUNTED ON EACH OF THE THREE INTERIOR SIDES FOR THE PURPOSE OF MOUNTING TERMINAL STRIP PANELS AND SHELVING. FURNISH THE CABINETS WITH ONE ADJUSTABLE SHELF WHICH WILL NOT SAG WHEN LOADED WITH THE WIM ELECTRONICS. DESIGN THE SHELVING TO ALLOW FOR THE PASSAGE OF AIR. PLACE NO EQUIPMENT ON THE BOTTOM OF THE CABINET.
   B. MOUNT A GROUNDING STRIP TO THE TERMINAL STRIP PANEL ON THE CABINET WALL FOR CONNECTION OF ALL COMMON CONDUCTORS WITH THE STRIP GROUNDING TO THE GROUND ROD.
   C. INSTALL THE HOUSING CABINET AS TO ALLOW ALL EQUIPMENT TO STAND IN AN UPRIGHT POSITION WITH ALL EQUIPMENT AND DEVICES CAPABLE OF BEING REMOVED BY PULLING STRAIGHT OUT AND NOT TURNING SIDEWAYS AND WITHOUT RELOCATING OR DISCONNECTING ONE DEVICE TO REMOVE ANOTHER DEVICE.
   D. PROVIDE THAT ALL CONNECTIONS ARE MADE ON TERMINAL BLOCKS USING SOLDERED SPADE TYPE CONNECTORS. PROVIDE THAT ALL HOUSING CABINET WIRING AND TERMINALS ARE CLEARLY MARKED AND LABELED AS SHOWN ON THE CABINET WIRING DIAGRAM DETAILS. PROVIDE THAT WIRING IS LACED OR BOUND TOGETHER WITH SELF-LOCKING NYLON TIE-WRAPS. MAKE A LOOP NUMBERING DIAGRAM WITH CORRESPONDING TERMINAL NUMBERS FOR EACH SITE AND STORE IN A PLASTIC WEATHER PROOF ENVELOPE IN THE ENCLOSURE. PROVIDE A DUPLICATE DIAGRAM TO THE ODOT PROJECT INSPECTOR.
   E. INSTALL ALL HOUSING CABINETS SO AS TO WITHSTAND ALL WEATHER CONDITIONS AND PREVENT THE INTRUSION OF REPTILES, RODENTS, AND INSECTS.
   F. THE CABINET SHALL INCLUDE A VENT, BUT NO FAN.
   G. MOUNTING FACILITIES SHALL INCLUDE ONE BACK PANEL WITH 5 HOLES (ALUMINUM).
   H. TERMINAL STRIPS MOUNTED HORIZONTALLY ON BACK PANEL 2" FROM TOP AND SIDES EQUIDISTANTLY SPACED FOR 2 LANE APPLICATIONS. SOLAR PANEL AND GROUND BAR TO BE MOUNTED 2" FROM BOTTOM AND LEFT OF BACK PANEL FOR ALL APPLICATIONS. 4-6 LANE APPLICATIONS TO HAVE ONE ROW OF TWO TERMINAL STRIPS MOUNTED HORIZONTALLY 2" FROM TOP AND SIDES OF BACK PLATE AND ONE ROW OF TWO TERMINAL STRIPS MOUNTED 8" FROM TOP 2" FROM AND SIDES BACK PLATE EQUIDISTANTLY SPACED. 8 LANE APPLICATIONS TO HAVE TWO ROWS OF THREE TERMINAL BLOCKS W/ 1ST ROW 2" FROM TOP AND SIDES OF BACK PLATE AND SECOND ROW 8" FROM TOP AND 2" FROM SIDES OF BACK PLATE EQUIDISTANTLY SPACED.
   I. LOCKS KEYED TO STATE MASTER.
2. THE CABINET SHALL BE ORIENTED SO THAT THE DOOR OPENS AWAY FROM THE ROADWAY, SO THAT THE FIELD TECHNICIAN CAN OBSERVE TRAFFIC WHILE WORKING ON THE SYSTEM.

CALCULATED
CHECKED
DATE 01/29/99

WEIGH-IN-MOTION AND AUTOMATIC TRAFFIC RECORDER

PLAN INSERT SHEET

LIC-16-19.72

362B
547

SBW

CABI.DGN 2/24/99

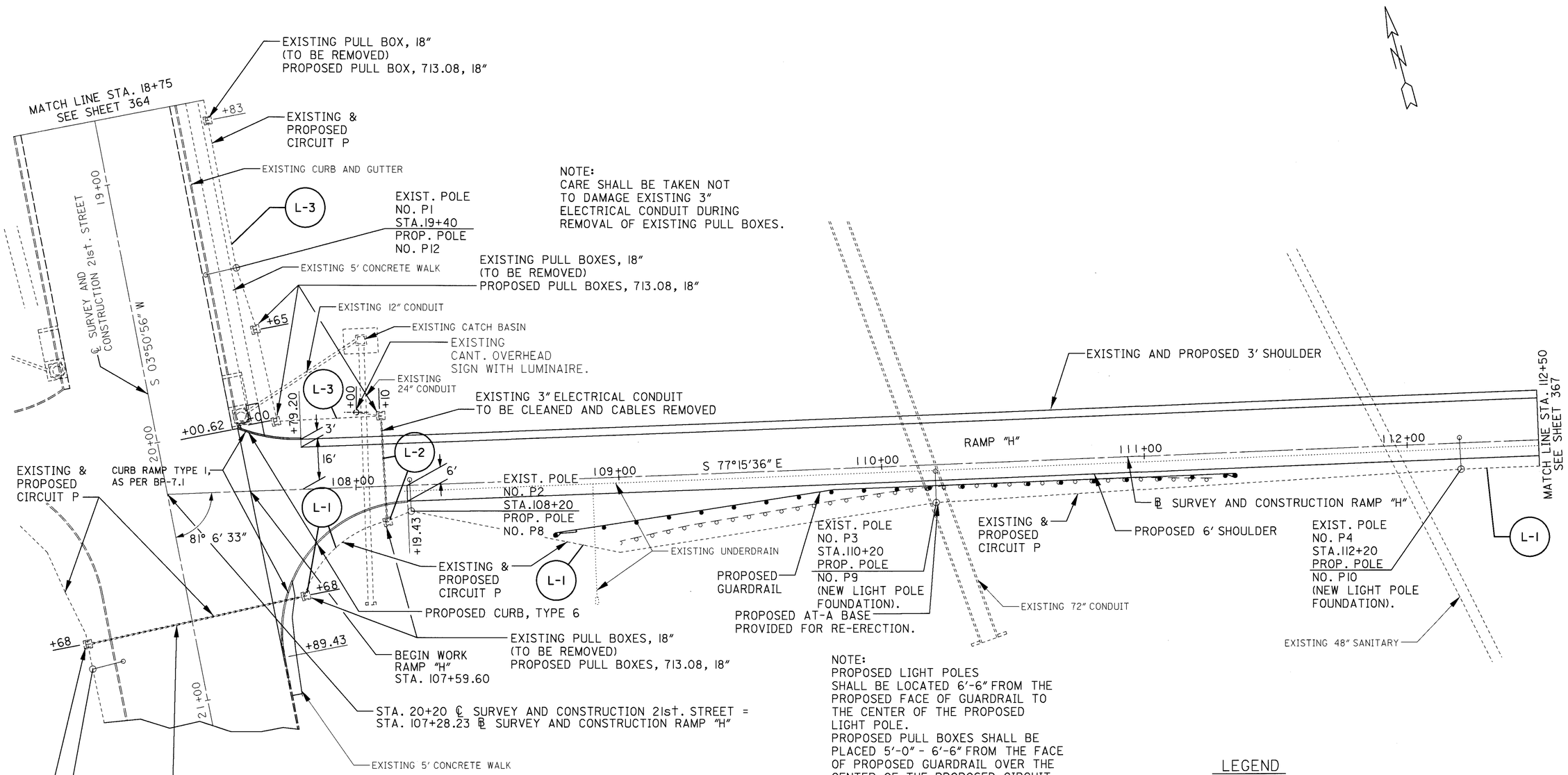

NOTE:
CARE SHALL BE TAKEN NOT
TO DAMAGE EXISTING 3"
ELECTRICAL CONDUIT DURING
REMOVAL OF EXISTING PULL BOXES.

NOTE:
PROPOSED LIGHT POLES
SHALL BE LOCATED 6'-6" FROM THE
PROPOSED FACE OF GUARDRAIL TO
THE CENTER OF THE PROPOSED
LIGHT POLE.
PROPOSED PULL BOXES SHALL BE
PLACED 5'-0" - 6'-6" FROM THE FACE
OF PROPOSED GUARDRAIL OVER THE
CENTER OF THE PROPOSED CIRCUIT.

NOTE:
CARE SHALL BE TAKEN NOT
TO DAMAGE EXISTING 3"
ELECTRICAL CONDUIT DURING
REMOVAL OF EXISTING PULL BOXES.

NOTE:
FOR LIGHTING QUANTITIES
SEE SHEETS 391-401.

LEGEND

- PULL BOX
- LIGHT POLE
- MEDIAN LIGHT POLE
- CONDUIT
- EXISTING AND PROPOSED CIRCUIT
- EXISTING MEDIAN LIGHT POLE AND LUMINAIRE TO BE RELOCATED

HORIZONTAL SCALE IN FEET
0 10 20 40

CALCULATED J.C. 3/10/95
CHECKED M.M. 3/10/95

LIGHTING DETAIL SHEET RAMP "H"
STA. 107+59.60 TO STA. 112+50

LIC-16-19.72

363
547

L1654164.DGN 4/28/95

EXISTING CIRCUIT N & P
PROPOSED CIRCUIT P

EXISTING POWER SERVICE
℄ 21ST STREET,
STA. 15+28, 47'RT.
(POWER SERVICE
NO.1).

EXISTING 3" ELECTRICAL CONDUIT
TO BE CLEANED AND CABLES REMOVED

EXISTING CURB AND GUTTER

STA. 16+20.00 ℄ SURVEY AND
CONSTRUCTION 21st. STREET =
STA. 105+99.38 ℄ SURVEY AND
CONSTRUCTION RAMP "F"

EXIST. POLE
NO. N6
STA.15+60
PROP. POLE
NO. P17

EXISTING CIRCUIT N
PROPOSED CIRCUIT P

NOTE:
CARE SHALL BE TAKEN NOT
TO DAMAGE EXISTING 3"
ELECTRICAL CONDUIT DURING
REMOVAL OF EXISTING PULL BOXES.

EXISTING
CIRCUIT K

+77

EXISTING 48" CONDUIT

EXISTING 5'
CONCRETE WALK

EXISTING PULL BOXES, 18"
(TO BE REMOVED)
PROPOSED PULL BOXES, 713.08, 18"

EXISTING CIRCUIT N & P
PROPOSED CIRCUIT P

EXISTING PULL BOX, 18"
(TO BE REMOVED)
PROPOSED PULL BOX, 713.08, 18"

CURB RAMP, TYPE 1,
AS PER BP-7.1

70°

+80

EXISTING CONDUIT TO
BE CLEANED AND CABLES
REMOVED.
CONDUIT TO BE EXTENDED.

+23

+50

EXISTING
CANT. OVERHEAD
SIGN WITH LUMINAIRE

BEGIN WORK
RAMP "F"
STA. 106+32.37

EXISTING 3"
ELECTRICAL
CONDUIT

107+00

16'

4'

6'

+67.53

EXISTING CIRCUIT N
PROPOSED CIRCUIT P

EXISTING GUARDRAIL
TO BE REMOVED.

EXISTING CIRCUIT K

EXISTING 18" CONDUIT

+80.53

3'

EXIST. POLE
NO. N7
STA.107+08
PROP. POLE
NO. P13
(NEW LIGHT POLE
FOUNDATION).

S 66°09'04" E

108+00

RAMP "F"

EXIST. POLE
NO. N8
STA.109+06
PROP. POLE
NO. P14
(NEW LIGHT POLE
FOUNDATION).

EXISTING 48" CONDUIT

EXISTING & PROPOSED
CIRCUIT P

PROPOSED AT-A BASE
PROVIDED FOR RE-ERECTION.

PROPOSED AT-A BASE
PROVIDED FOR RE-ERECTION.

EXISTING 5'
CONCRETE WALK

EXISTING PULL BOX, 18"
(TO BE REMOVED)
PROPOSED PULL BOX, 713.08, 18"

EXISTING CATCH BASIN

109+00

℄ SURVEY AND CONSTRUCTION RAMP "F"

P.C. STA. 108+34.40

EXIST. POLE
NO. K17
STA.17+00

17+00

16+00

S 03°50'56" W

EXISTING CURB
AND GUTTER

℄ SURVEY AND CONSTRUCTION
21st STREET

EXISTING CURB AND GUTTER

+80

EXISTING PULL BOX, 18"
(TO BE REMOVED)
PROPOSED PULL BOX, 713.08, 18"

18+00

110+00

EXISTING CIRCUIT N
PROPOSED CIRCUIT P

L-5

PROPOSED 6' SHOULDER

EXISTING & PROPOSED
3' SHOULDER

EXISTING 72" CONDUIT

111+00

EXISTING & PROPOSED
CIRCUIT P

NOTE:
FOR LIGHTING QUANTITIES
SEE SHEETS 391-401.

EXIST. POLE
NO. N9
STA.111+04
PROP. POLE
NO. P15

MATCH LINE STA. 111+50
SEE SHEET 367

MATCH LINE STA. 18+75
SEE SHEET 363

L-3 L-4 L-5 L-6 L-7 L-8

CURVE DATA
RAMP "F"

P.I. STA. 109+91.56
Δ = 12°31'23" RT.
Dc = 04°00'00"
T = 157.17'
R = 1432.39'
L = 313.08'
E = 8.60'

LEGEND

- PULL BOX
- LIGHT POLE
- MEDIAN LIGHT POLE
- CONDUIT
- EXISTING AND PROPOSED CIRCUIT
- EXISTING MEDIAN LIGHT POLE AND LUMINAIRE TO BE RELOCATED

0 10 20 40
HORIZONTAL SCALE IN FEET

CALCULATED J.C. 3/13/95
CHECKED M.M. 3/16/95

LIGHTING DETAIL SHEET RAMP "F"
STA. 106+32.37 TO STA. 111+50

LIC-16-19.72

LI652164.DGN 4/28/95

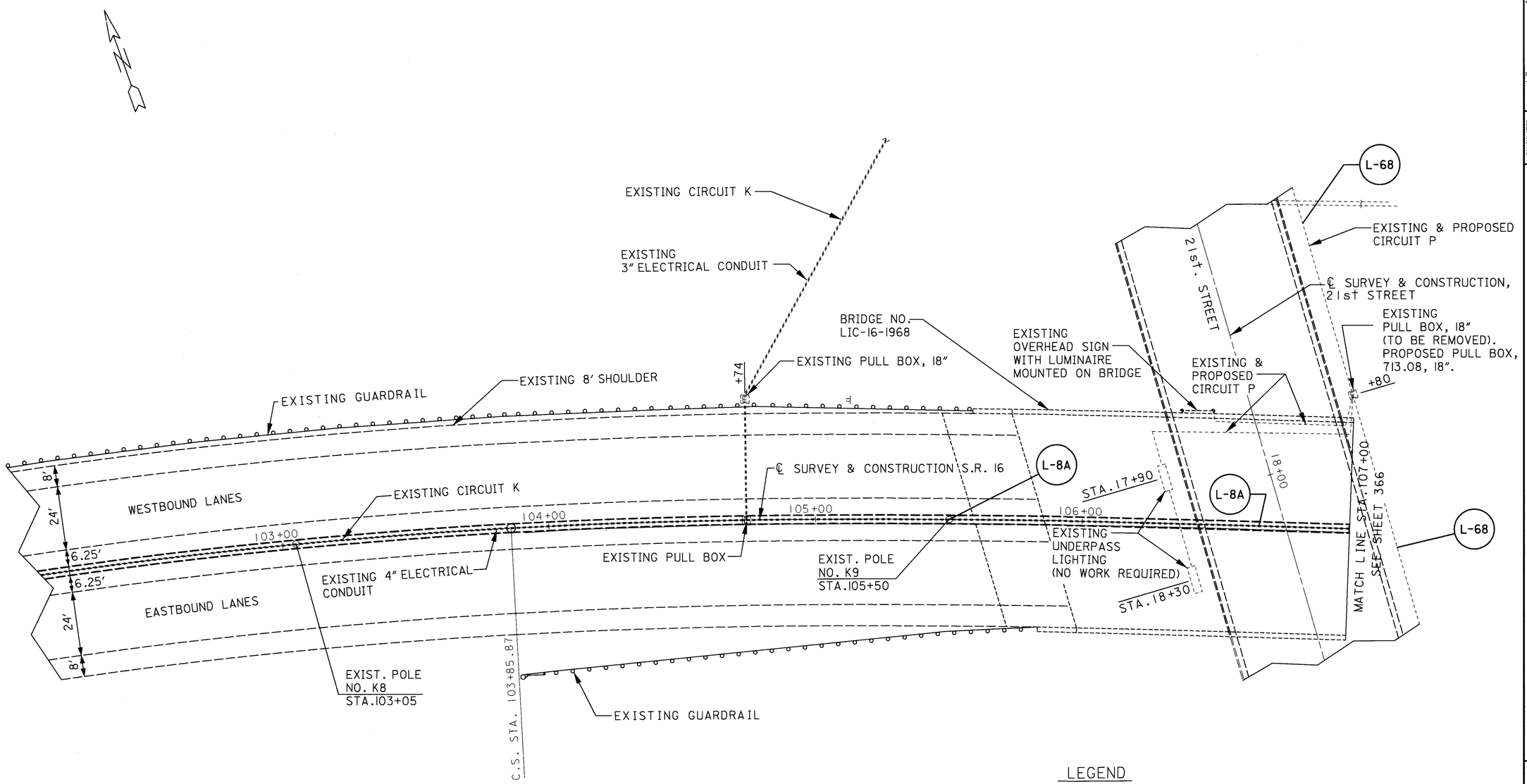

CURVE DATA
S.R. 16

P.I. STA. 98+73.88
Δ = 43°29'50" RT.
Dc = 03°00'00"
Rc = 1909.86'
Ls = 350.00'
Θs = 5°15'00"
LT = 233.44'
ST = 116.76'
Lc = 1099.91'
Es = 149.24'

NOTE:
FOR LIGHTING QUANTITIES SEE SHEETS 391-401.

LEGEND

- PULL BOX
- LIGHT POLE
- MEDIAN LIGHT POLE
- CONDUIT
- EXISTING AND PROPOSED CIRCUIT
- EXISTING MEDIAN LIGHT POLE AND LUMINAIRE TO BE RELOCATED

HORIZONTAL SCALE IN FEET
0 10 20 40

CALCULATED J.A. 3/16/95
CHECKED M.M. 3/16/95

LIGHTING DETAIL SHEET
STA. 102+00 TO STA. 107+00

LIC-16-19.72

L16I9I64.DGN 4/28/95

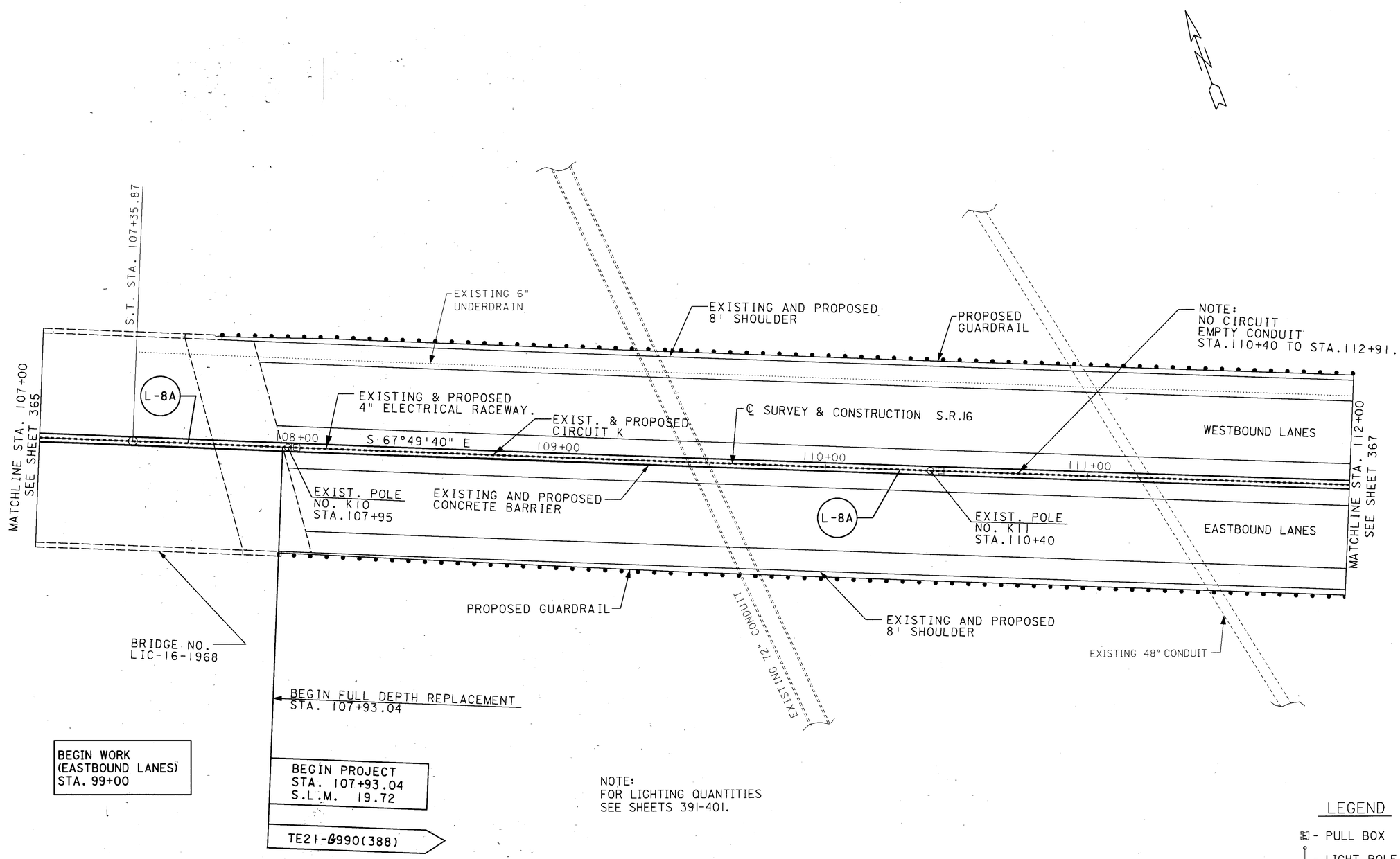

0 10 20 40
HORIZONTAL SCALE IN FEET

CALCULATED J.A. 3/15/95
CHECKED M.M. 3/16/95

LIGHTING DETAIL SHEET STA. 107+00 TO STA. 112+00

LIC-16-19.72

L1620164.DGN 4/28/95

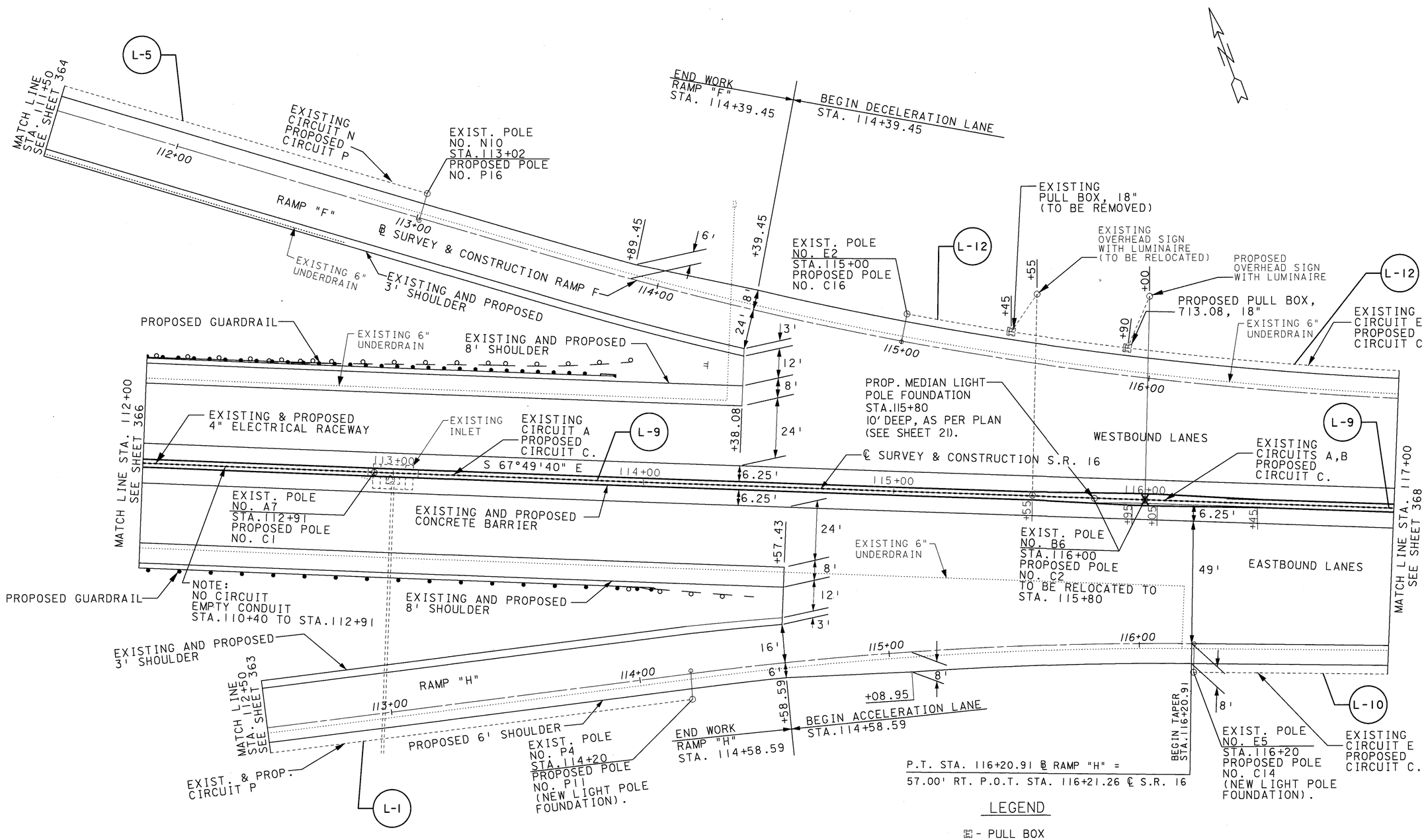

LIGHTING DETAIL SHEET STA. 112+00 TO STA. 117+00

LIC-16-19.72

L162164.DGN 4/28/95

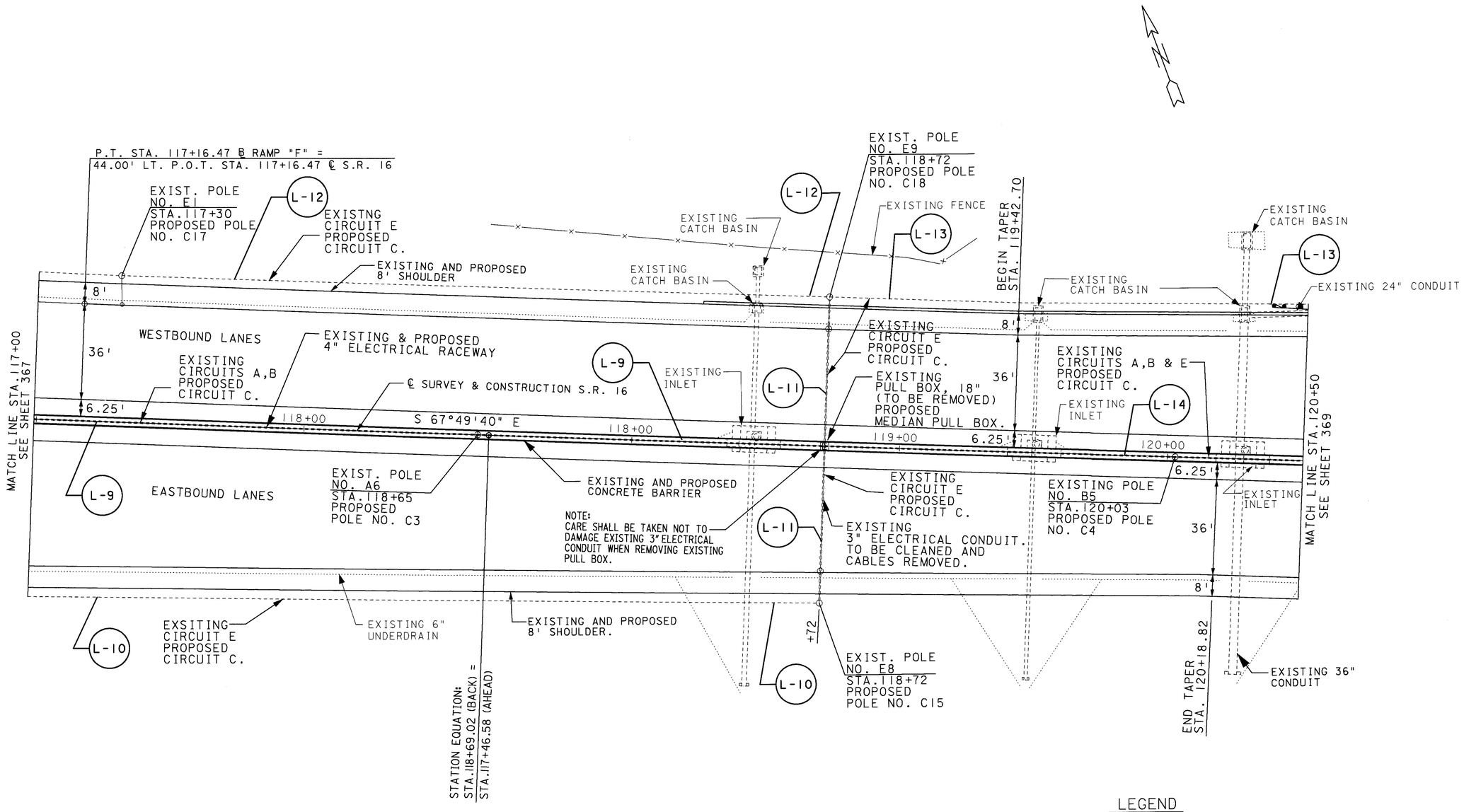

NOTE:
FOR LIGHTING QUANTITIES
SEE SHEETS 391-401.

LEGEND

- PULL BOX
- LIGHT POLE
- MEDIAN LIGHT POLE
- CONDUIT
- EXISTING AND PROPOSED CIRCUIT
- EXISTING MEDIAN LIGHT POLE AND LUMINAIRE TO BE RELOCATED

HORIZONTAL SCALE IN FEET 0 10 20 40

CALCULATED J.C. 3/13/95
CHECKED W.M. 3/16/95

LIGHTING DETAIL SHEET
STA. 117+00 TO STA. 120+50

LIC-16-19.72

L1622164.DGN 4/28/95

NOTE:
PROPOSED LIGHT POLES SHALL BE LOCATED 6'-6" FROM THE PROPOSED FACE OF GUARDRAIL TO THE CENTER OF THE PROPOSED LIGHT POLE.
PROPOSED PULL BOXES SHALL BE PLACED 5'-0" - 6'-6" FROM THE FACE OF PROPOSED GUARDRAIL OVER THE CENTER OF THE PROPOSED CIRCUIT.

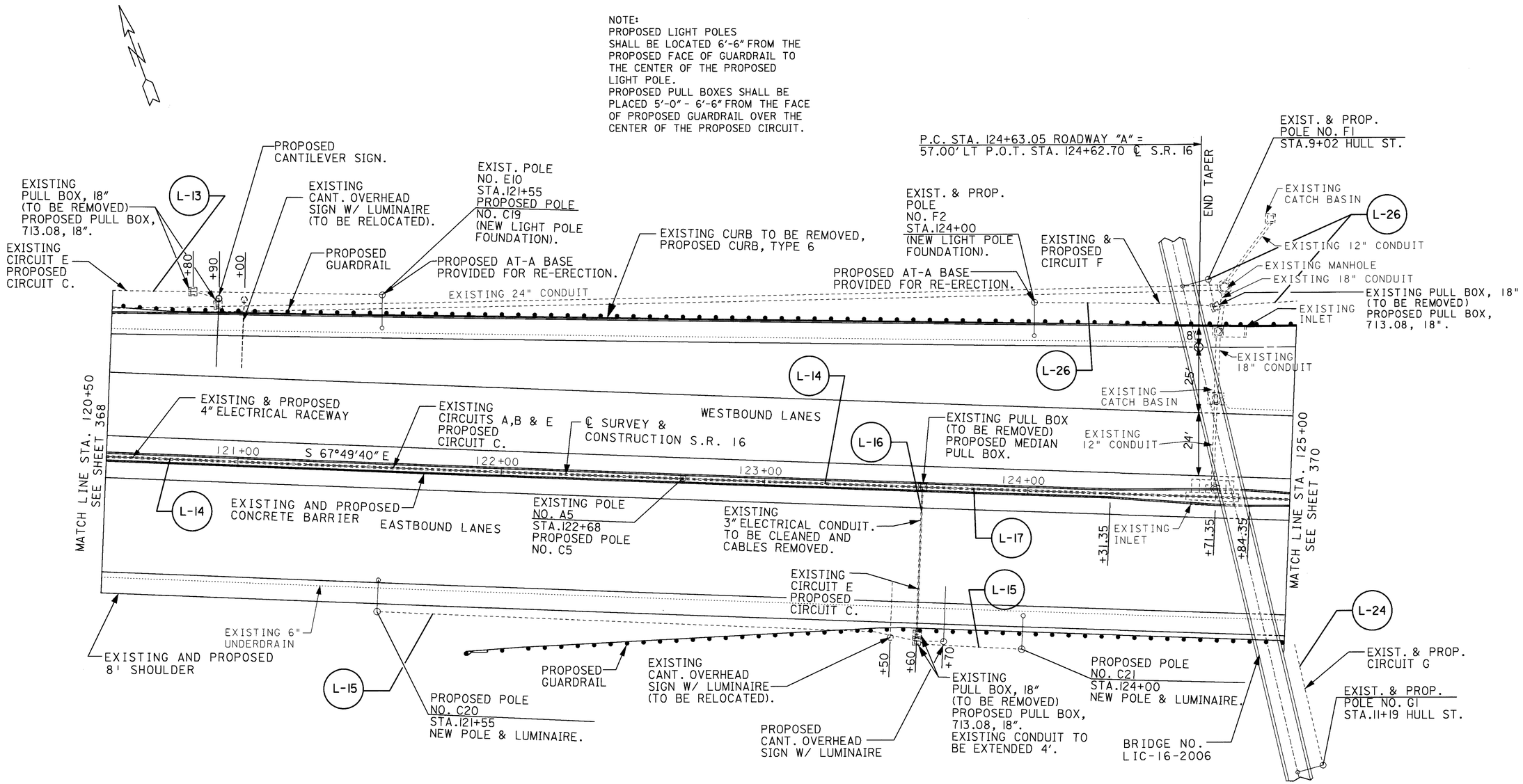

NOTE:
FOR LIGHTING QUANTITIES SEE SHEETS 391-401.

NOTE:
CARE SHALL BE TAKEN NOT TO DAMAGE EXISTING 3" ELECTRICAL CONDUIT WHEN REMOVING EXISTING PULL BOXES.

NOTE:
PROPOSED LIGHT POLES SHALL BE LOCATED 6'-6" FROM THE PROPOSED FACE OF GUARDRAIL TO THE CENTER OF THE PROPOSED LIGHT POLE.
PROPOSED PULL BOXES SHALL BE PLACED 5'-0" - 6'-6" FROM THE FACE OF PROPOSED GUARDRAIL OVER THE CENTER OF THE PROPOSED CIRCUIT.

LEGEND

- PULL BOX
- LIGHT POLE
- MEDIAN LIGHT POLE
- CONDUIT
- EXISTING AND PROPOSED CIRCUIT
- EXISTING MEDIAN LIGHT POLE AND LUMINAIRE TO BE RELOCATED

HORIZONTAL SCALE IN FEET 0 10 20 40

CALCULATED J.C. 3/15/95
CHECKED M.M. 3/16/95

LIGHTING DETAIL SHEET
STA. 120+50 TO STA. 125+00

LIC-16-19.72

L1623164.DGN 4/28/95

NOTE:
PROPOSED LIGHT POLES SHALL BE LOCATED 6'-6" FROM THE PROPOSED FACE OF GUARDRAIL TO THE CENTER OF THE PROPOSED LIGHT POLE.

CURVE DATA
ROADWAY "A"
PI STA. 126+78.49
Δ = 17°06'24" LT.
Dc = 04°00'00"
R = 1432.39'
L = 427.67'
T = 215.44'
E = 16.11'

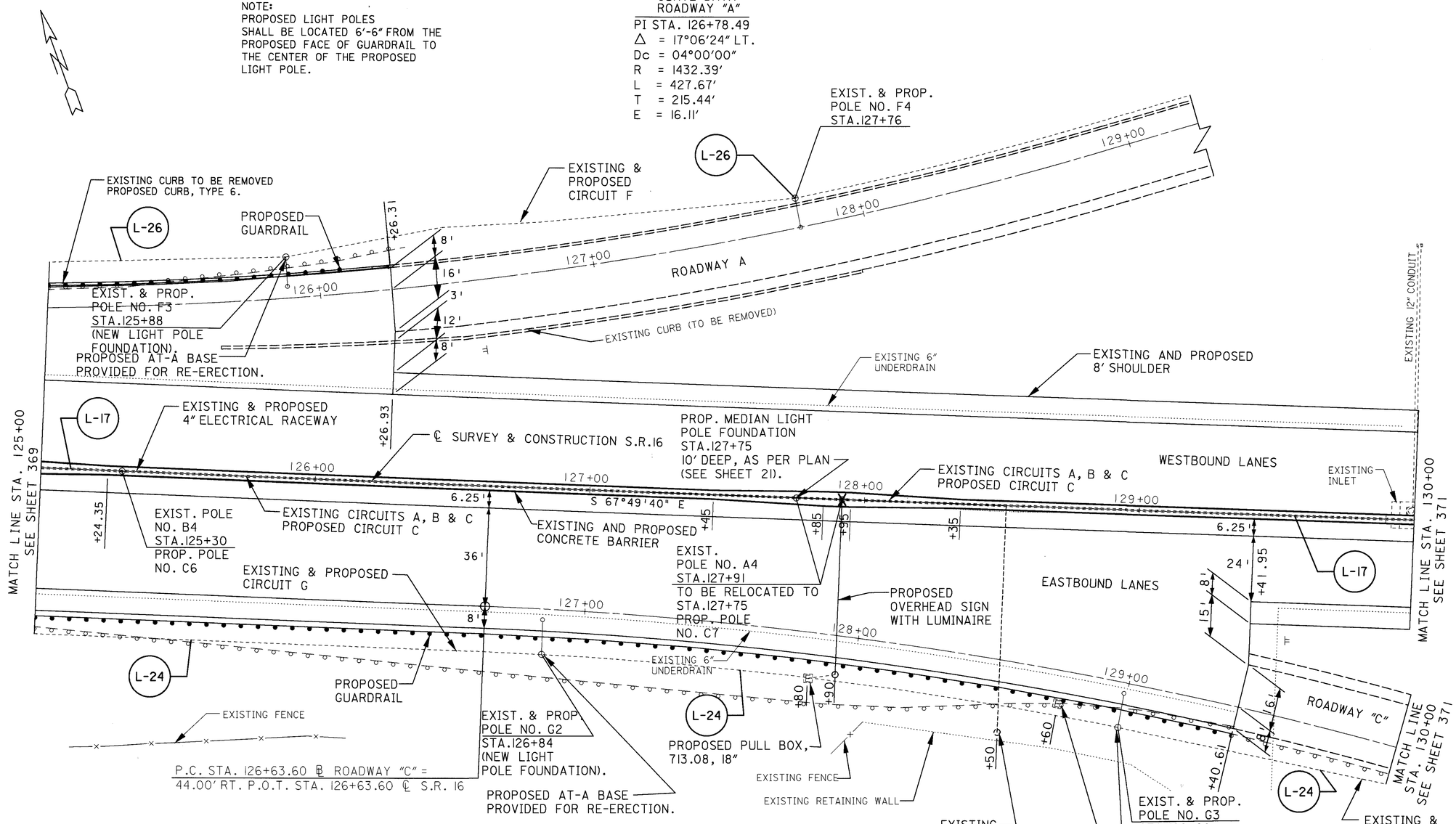

LEGEND

- PULL BOX
- LIGHT POLE
- MEDIAN LIGHT POLE
- CONDUIT
- EXISTING AND PROPOSED CIRCUIT
- EXISTING MEDIAN LIGHT POLE AND LUMINAIRE TO BE RELOCATED

NOTE:
FOR LIGHTING QUANTITIES SEE SHEETS 391-401.

NOTE:
PROPOSED LIGHT POLES SHALL BE LOCATED 6'-6" FROM THE PROPOSED FACE OF GUARDRAIL TO THE CENTER OF THE PROPOSED LIGHT POLE.
PROPOSED PULL BOXES SHALL BE PLACED 5'-0" - 6'-6" FROM THE FACE OF PROPOSED GUARDRAIL OVER THE CENTER OF THE PROPOSED CIRCUIT.

CURVE DATA
ROADWAY "C"
PI STA. 128+83.16
Δ = 17°25'46" RT.
Dc = 04°00'00"
R = 1432.39'
L = 435.74'
T = 219.52'
E = 16.73'

HORIZONTAL SCALE IN FEET 0 10 20 40

CALCULATED J.C. 3/31/95
CHECKED M.M. 3/31/95

LIGHTING DETAIL SHEET
STA. 125+00 TO STA. 130+00

LIC-16-19.72

L1624164.DGN 4/28/95

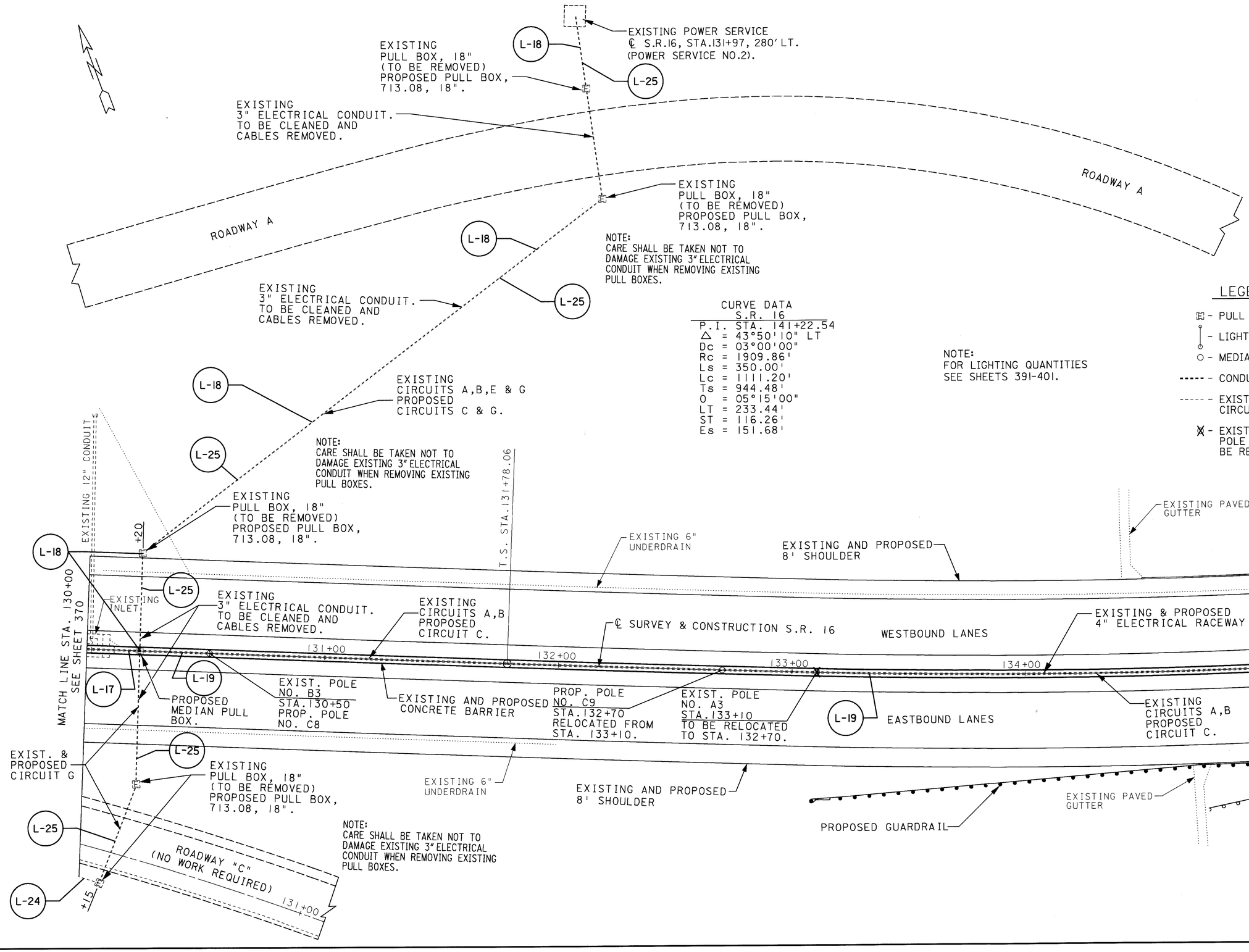

CURVE DATA
S.R. 16

P.I. STA. 141+22.54
△ = 43°50'10" LT
Dc = 03°00'00"
Rc = 1909.86'
Ls = 350.00'
Lc = 1111.20'
Ts = 944.48'
O = 05°15'00"
LT = 233.44'
ST = 116.26'
Es = 151.68'

NOTE:
FOR LIGHTING QUANTITIES
SEE SHEETS 391-401.

LEGEND

- PULL BOX
- LIGHT POLE
- MEDIAN LIGHT POLE
- CONDUIT
- EXISTING AND PROPOSED CIRCUIT
- EXISTING MEDIAN LIGHT POLE AND LUMINAIRE TO BE RELOCATED

HORIZONTAL SCALE IN FEET
0 10 20 40

CALCULATED J.C. 3/13/95
CHECKED M.M. 3/16/95

LIGHTING DETAIL SHEET
STA. 130+00 TO STA. 135+00

LIC-16-19.72

L1625164.DGN 4/28/95

CURVE DATA
S.R. 16

P.I. STA. 141+22.54
Δ = 43°50'10" LT.
Dc = 03°00'00"
Rc = 1909.86'
Ls = 350.00'
Lc = 1111.20'
Ts = 944.48'
Θ = 05°15'00"
LT = 233.44'
ST = 116.26'
Es = 151.68'

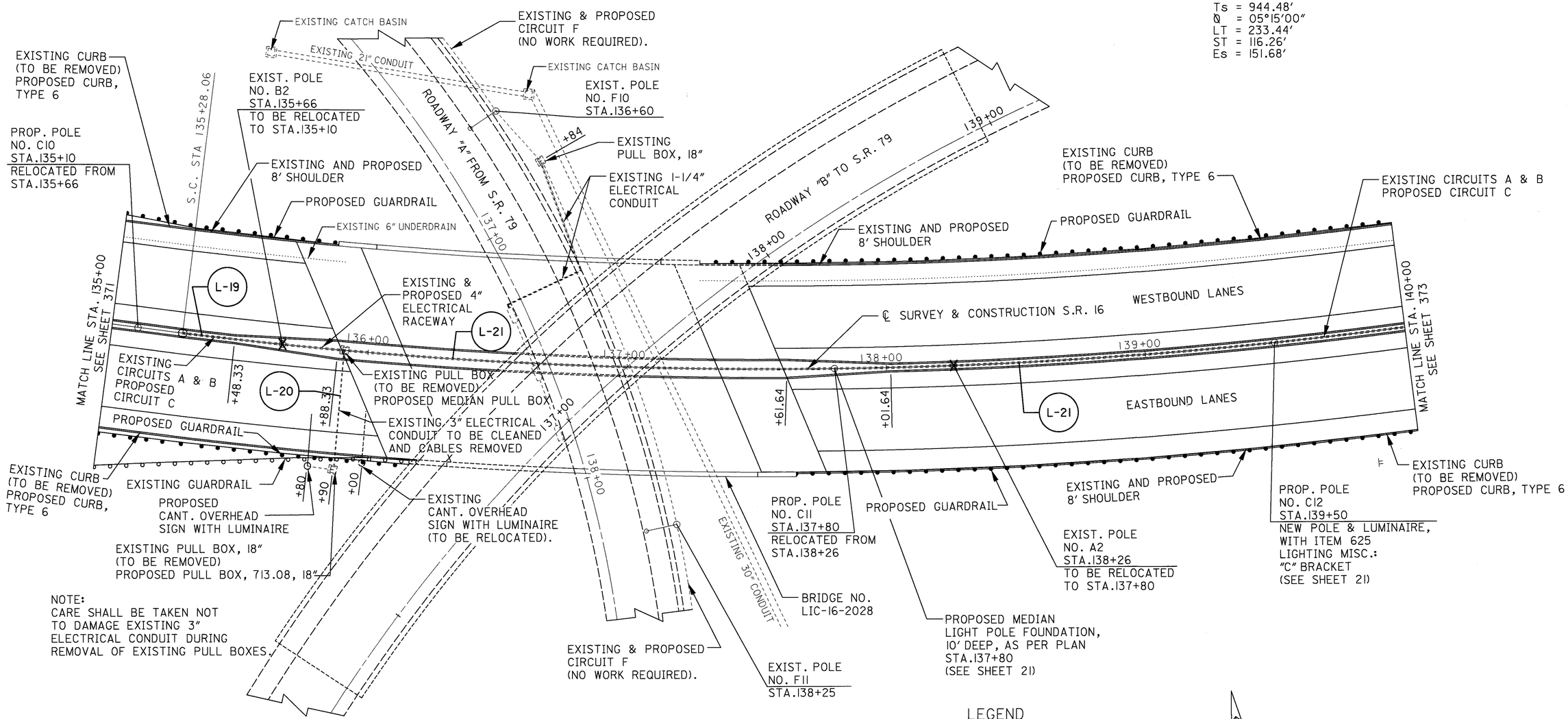

NOTE:
CARE SHALL BE TAKEN NOT TO DAMAGE EXISTING 3" ELECTRICAL CONDUIT DURING REMOVAL OF EXISTING PULL BOXES.

NOTE:
FOR LIGHTING QUANTITIES SEE SHEETS 391-401.

LEGEND

- PULL BOX
- LIGHT POLE
- MEDIAN LIGHT POLE
- CONDUIT
- EXISTING AND PROPOSED CIRCUIT
- EXISTING MEDIAN LIGHT POLE AND LUMINAIRE TO BE RELOCATED

0 10 20 40
HORIZONTAL SCALE IN FEET

CALCULATED J.C. 3/13/95
CHECKED M.M. 3/16/95

LIGHTING DETAIL SHEET
STA. 135+00 TO STA. 140+00

LIC-16-19.72

L1626164.DGN 5/1/95

CURVE DATA
S.R. 16

P.I. STA. 141+22.54
Δ = 43°50'10" LT.
Dc = 03°00'00"
Rc = 1909.86'
Ls = 350.00'
Lc = 1111.20'
Θ = 05°15'00"
LT = 233.44'
ST = 116.26'
Es = 151.68'
Ts = 944.48'

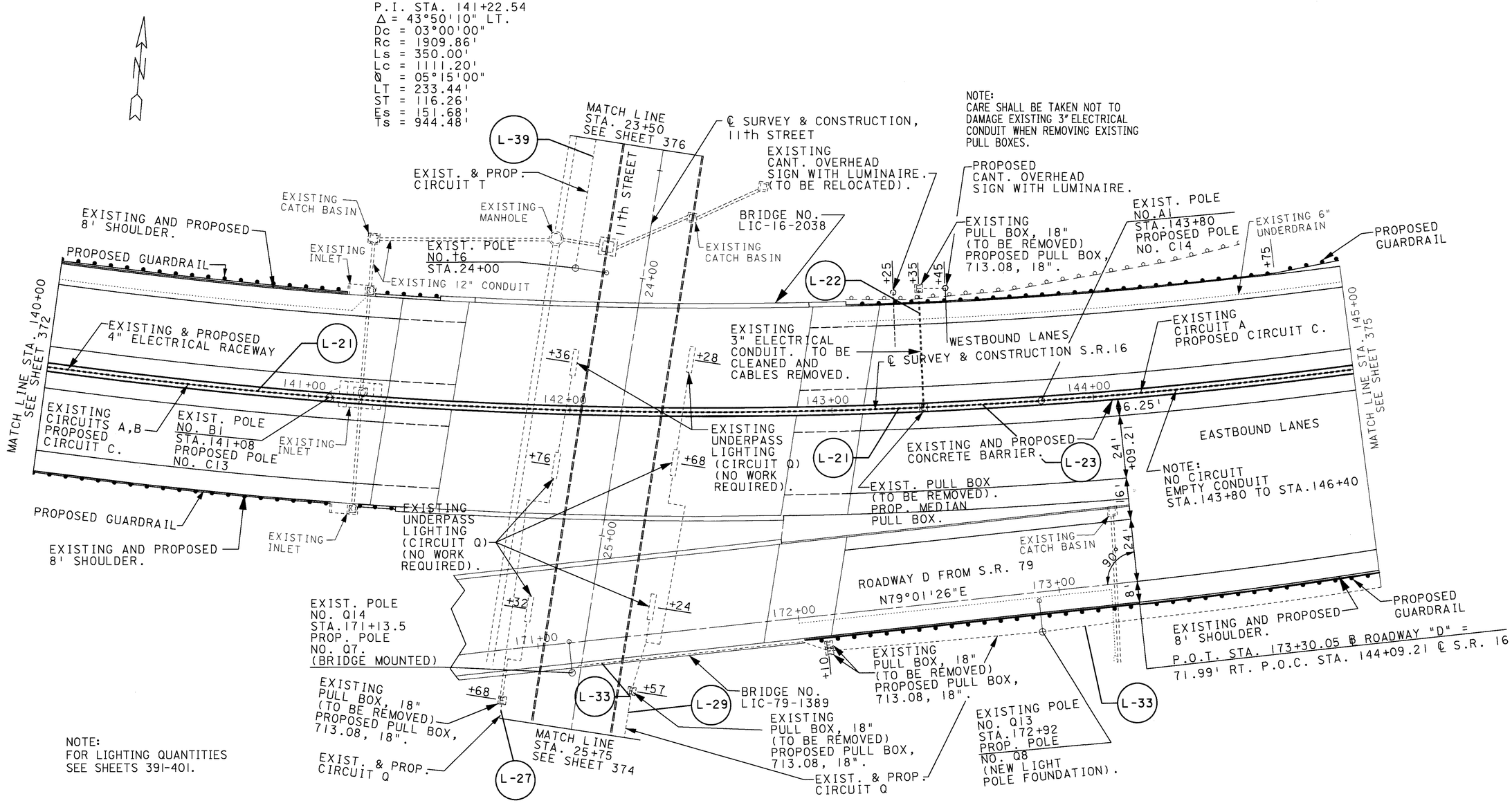

NOTE:
FOR LIGHTING QUANTITIES SEE SHEETS 391-401.

NOTE:
PROPOSED LIGHT POLES SHALL BE LOCATED 6'-6" FROM THE PROPOSED FACE OF GUARDRAIL TO THE CENTER OF THE PROPOSED LIGHT POLE.
PROPOSED PULL BOXES SHALL BE PLACED 5'-0" - 6'-6" FROM THE FACE OF PROPOSED GUARDRAIL OVER THE CENTER OF THE PROPOSED CIRCUIT.

LEGEND

- PULL BOX
- LIGHT POLE
- MEDIAN LIGHT POLE
- CONDUIT
- EXISTING AND PROPOSED CIRCUIT
- EXISTING MEDIAN LIGHT POLE AND LUMINAIRE TO BE RELOCATED

0 10 20 40
HORIZONTAL SCALE IN FEET

CALCULATED J.C. 3/13/95
CHECKED M.M. 3/16/95

LIGHTING DETAIL SHEET
STA. 140+00 TO STA. 145+00

LIC-16-19.72

L1627164.DGN 5/1/95

CURVE DATA
RAMP "DD"
P.I. STA. 144+56.27
Δ = 21°37'35" LT.
Dc = 8°00'00"
T = 136.79'
R = 716.20'
L = 270.33'
E = 12.95'

NOTE:
CARE SHALL BE TAKEN NOT TO DAMAGE EXISTING 3" ELECTRICAL CONDUIT DURING REMOVAL OF EXISTING PULL BOXES.

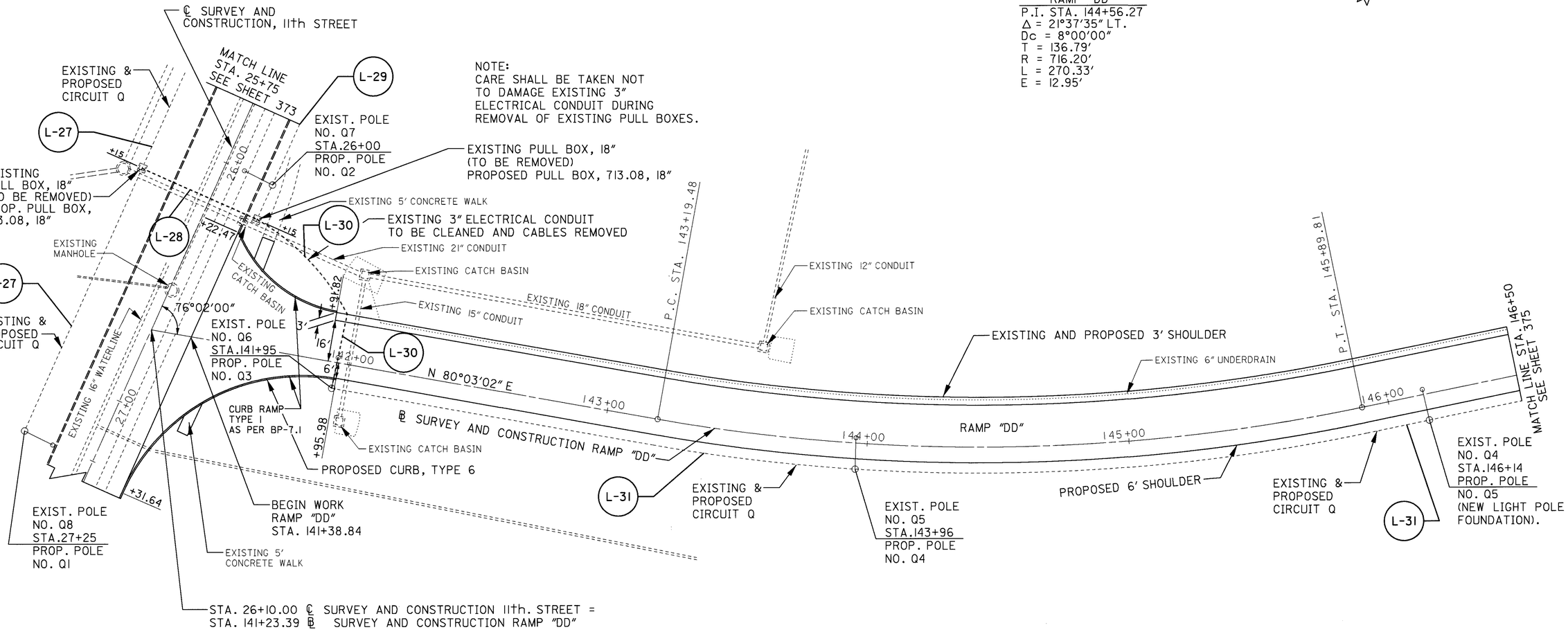

LEGEND

- PULL BOX
- LIGHT POLE
- MEDIAN LIGHT POLE
- CONDUIT
- EXISTING AND PROPOSED CIRCUIT
- EXISTING MEDIAN LIGHT POLE AND LUMINAIRE TO BE RELOCATED

NOTE:
FOR LIGHTING QUANTITIES SEE SHEETS 391-401.

HORIZONTAL SCALE IN FEET 0 10 20 40

CALCULATED J.C. 3/10/95
CHECKED M.M.A. 3/16/95

LIGHTING DETAIL SHEET RAMP "DD"
STA. 141+38.84 TO STA. 146+50

LIC-16-19.72

L16591G4.DGN 5/1/95

CURVE DATA
S.R. 16

P.I. STA. 141+22.54
Δ = 43°50'10" LT.
Dc = 03°00'00"
Rc = 1909.86'
Ls = 350.00'
Lc = 1111.20'
Θ = 05°15'00"
LT = 233.44'
ST = 116.26'
Es = 151.68'
Ts = 944.48'

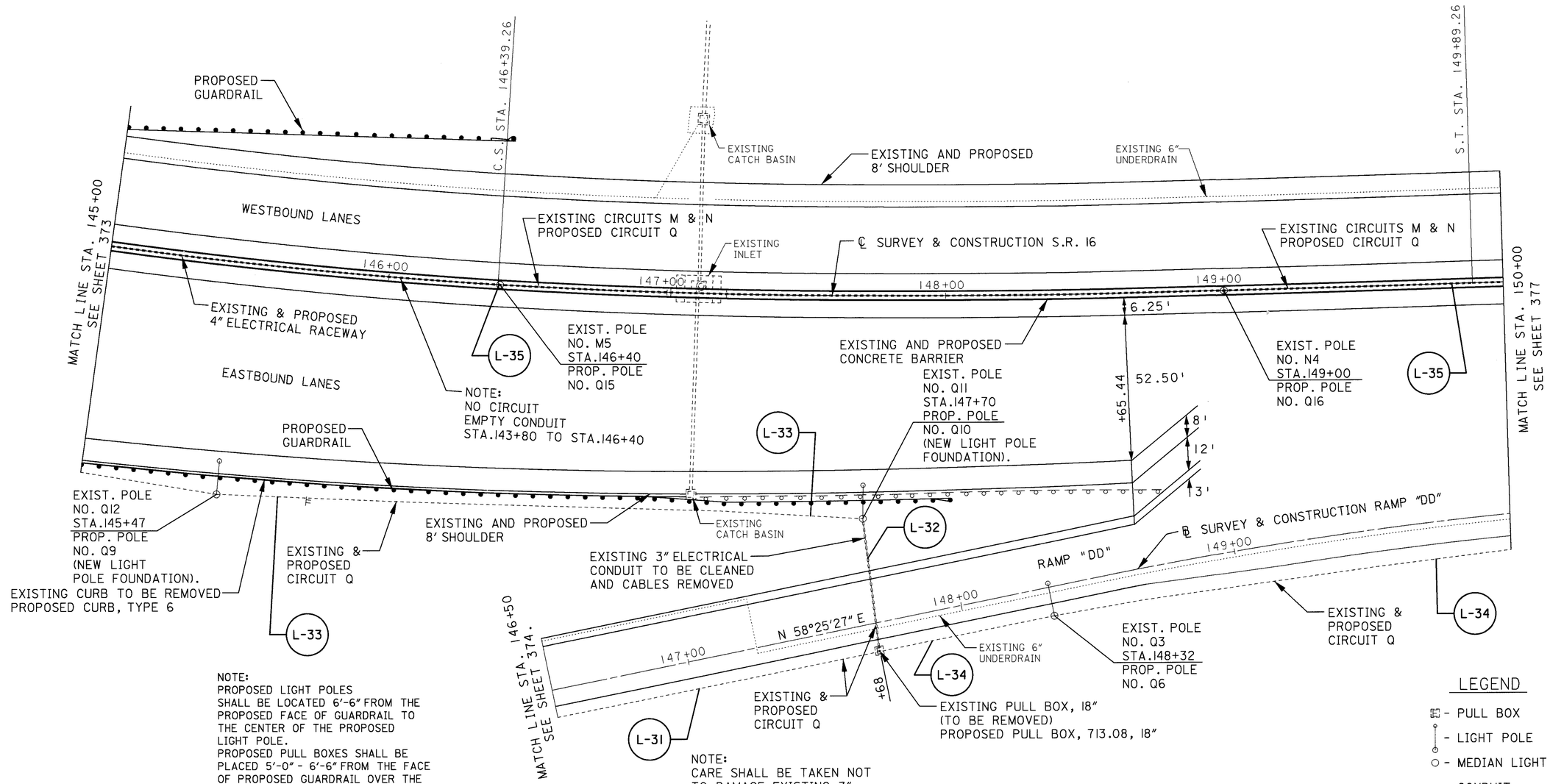

NOTE:
PROPOSED LIGHT POLES SHALL BE LOCATED 6'-6" FROM THE PROPOSED FACE OF GUARDRAIL TO THE CENTER OF THE PROPOSED LIGHT POLE.
PROPOSED PULL BOXES SHALL BE PLACED 5'-0" - 6'-6" FROM THE FACE OF PROPOSED GUARDRAIL OVER THE CENTER OF THE PROPOSED CIRCUIT.

NOTE:
CARE SHALL BE TAKEN NOT TO DAMAGE EXISTING 3" ELECTRICAL CONDUIT DURING REMOVAL OF EXISTING PULL BOXES.

NOTE:
FOR LIGHTING QUANTITIES SEE SHEETS 391-401.

LEGEND

- PULL BOX
- LIGHT POLE
- MEDIAN LIGHT POLE
- CONDUIT
- EXISTING AND PROPOSED CIRCUIT
- EXISTING MEDIAN LIGHT POLE AND LUMINAIRE TO BE RELOCATED

HORIZONTAL SCALE IN FEET
0 10 20 40

CALCULATED J.C. 3/10/95
CHECKED M.M. 3/16/95

LIGHTING DETAIL SHEET
STA. 145+00 TO STA. 150+00

LIC-16-19.72

375
547

L1628164.DGN 5/1/95

CURVE DATA
RAMP "BB"
P.I. STA. 147+76.90
Δ = 19°50'16" LT.
Dc = 8°00'00"
T = 125.24'
R = 716.20'
L = 247.97'
E = 10.87'

NOTE:
CARE SHALL BE TAKEN NOT TO DAMAGE EXISTING 3" ELECTRICAL CONDUIT DURING REMOVAL OF EXISTING PULL BOXES.

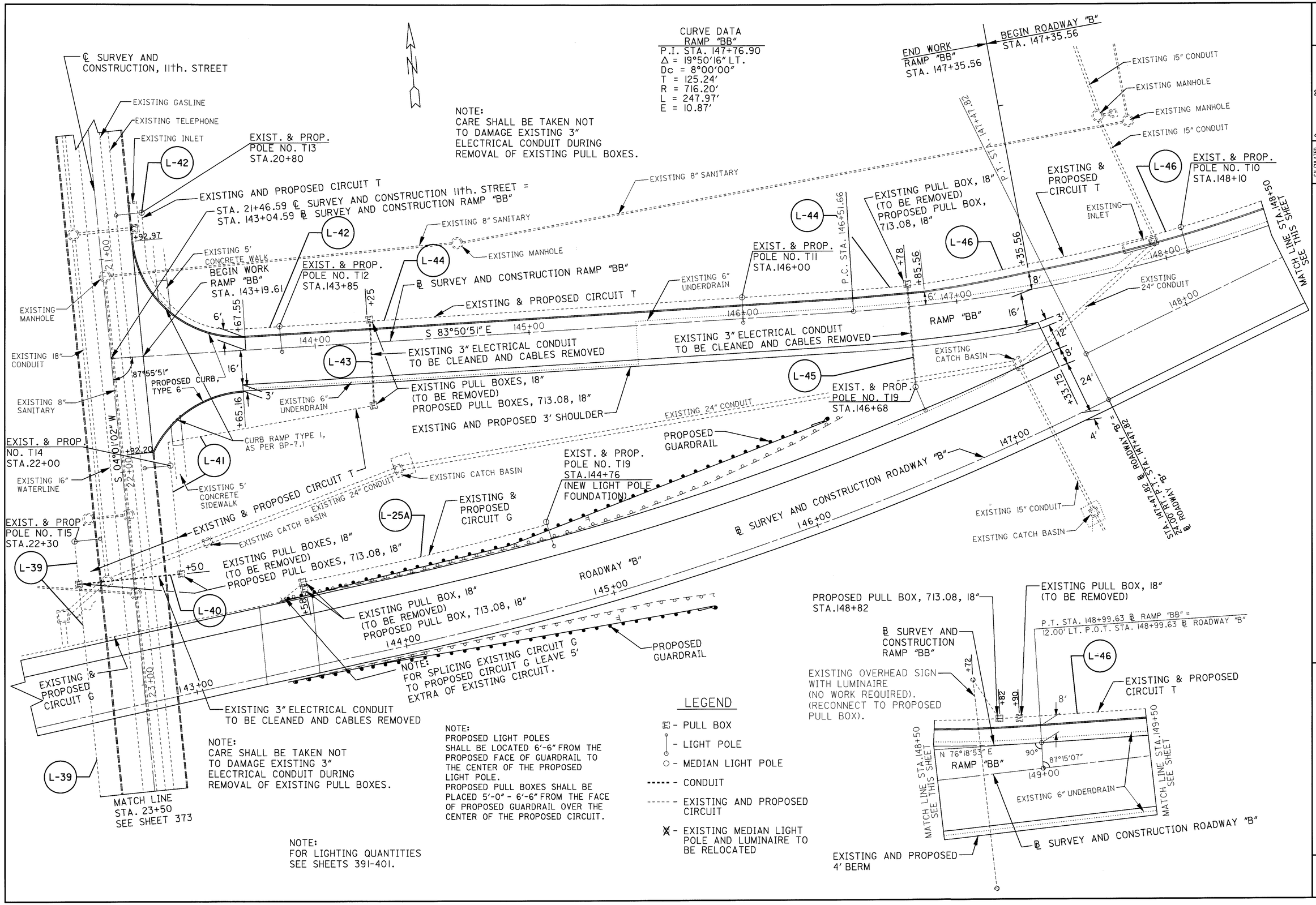

NOTE:
CARE SHALL BE TAKEN NOT TO DAMAGE EXISTING 3" ELECTRICAL CONDUIT DURING REMOVAL OF EXISTING PULL BOXES.

NOTE:
PROPOSED LIGHT POLES SHALL BE LOCATED 6'-6" FROM THE PROPOSED FACE OF GUARDRAIL TO THE CENTER OF THE PROPOSED LIGHT POLE.
PROPOSED PULL BOXES SHALL BE PLACED 5'-0" - 6'-6" FROM THE FACE OF PROPOSED GUARDRAIL OVER THE CENTER OF THE PROPOSED CIRCUIT.

NOTE:
FOR LIGHTING QUANTITIES SEE SHEETS 391-401.

LEGEND

- PULL BOX
- LIGHT POLE
- MEDIAN LIGHT POLE
- CONDUIT
- EXISTING AND PROPOSED CIRCUIT
- EXISTING MEDIAN LIGHT POLE AND LUMINAIRE TO BE RELOCATED

HORIZONTAL SCALE IN FEET 0 10 20 40

CALCULATED J.C. 3/10/95
CHECKED M.M. 3/10/95

LIGHTING DETAIL SHEET RAMP "BB" AND ROADWAY "B"
STA. 143+19.61 TO STA. 149+50

LIC-16-19.72

L1656164.DGN 5/1/95

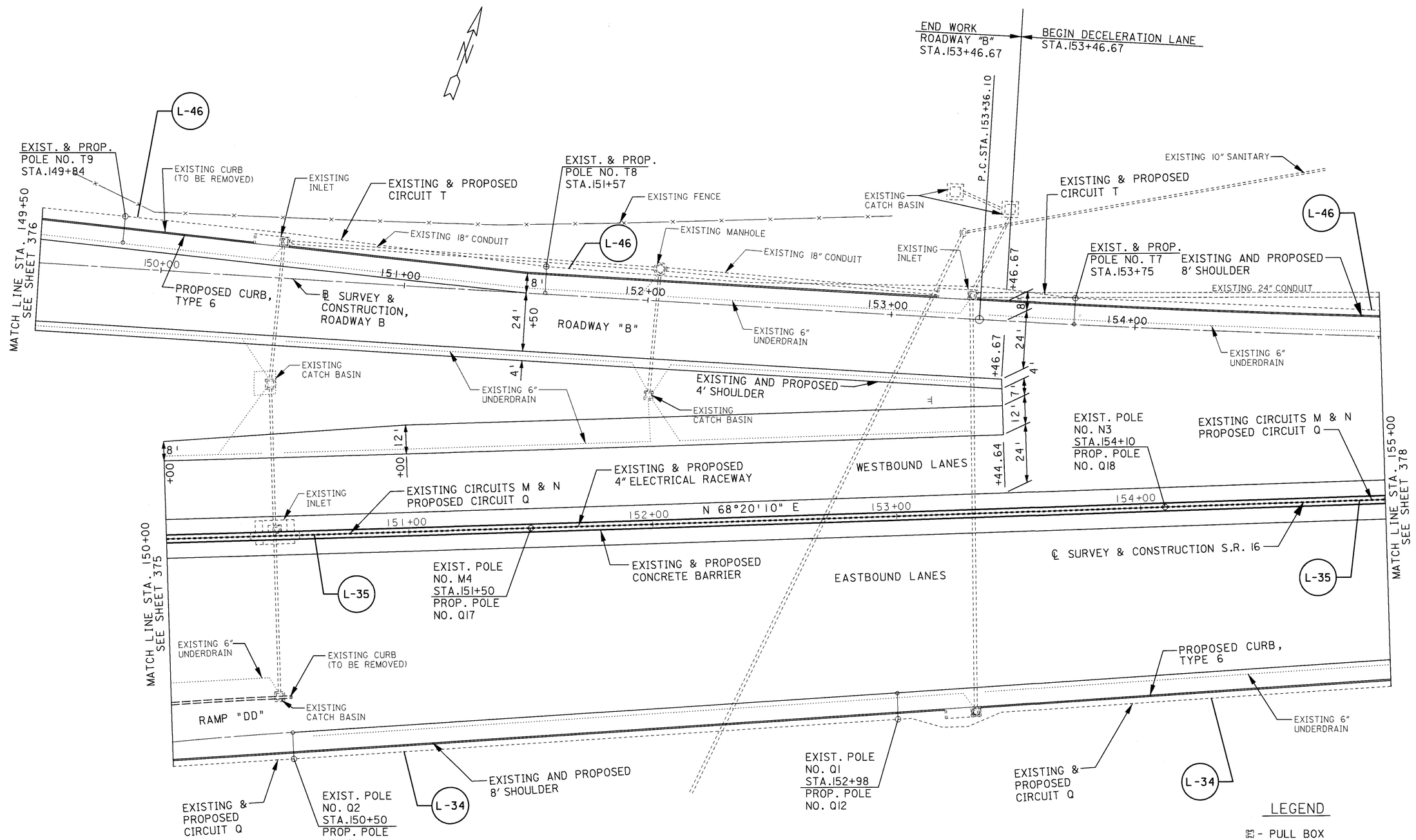

NOTE:
FOR LIGHTING QUANTITIES
SEE SHEETS 391-401.

CURVE DATA
ROADWAY "B"
PI STA. 155+97.81
△ = 05°13'50" LT.
Dc = 01°00'00"
R = 5279.58'
L = 523.06'
T = 261.71'
E = 5.97'

LEGEND

- PULL BOX
- LIGHT POLE
- MEDIAN LIGHT POLE
- CONDUIT
- EXISTING AND PROPOSED CIRCUIT
- EXISTING MEDIAN LIGHT POLE AND LUMINAIRE TO BE RELOCATED

HORIZONTAL SCALE IN FEET
0 10 20 40

CALCULATED J.C. 3/10/95
CHECKED M.M.L. 3/16/95

LIGHTING DETAIL SHEET
STA. 150+00 TO STA. 155+00

LIC-16-19.72

L1629164.DGN 5/1/95

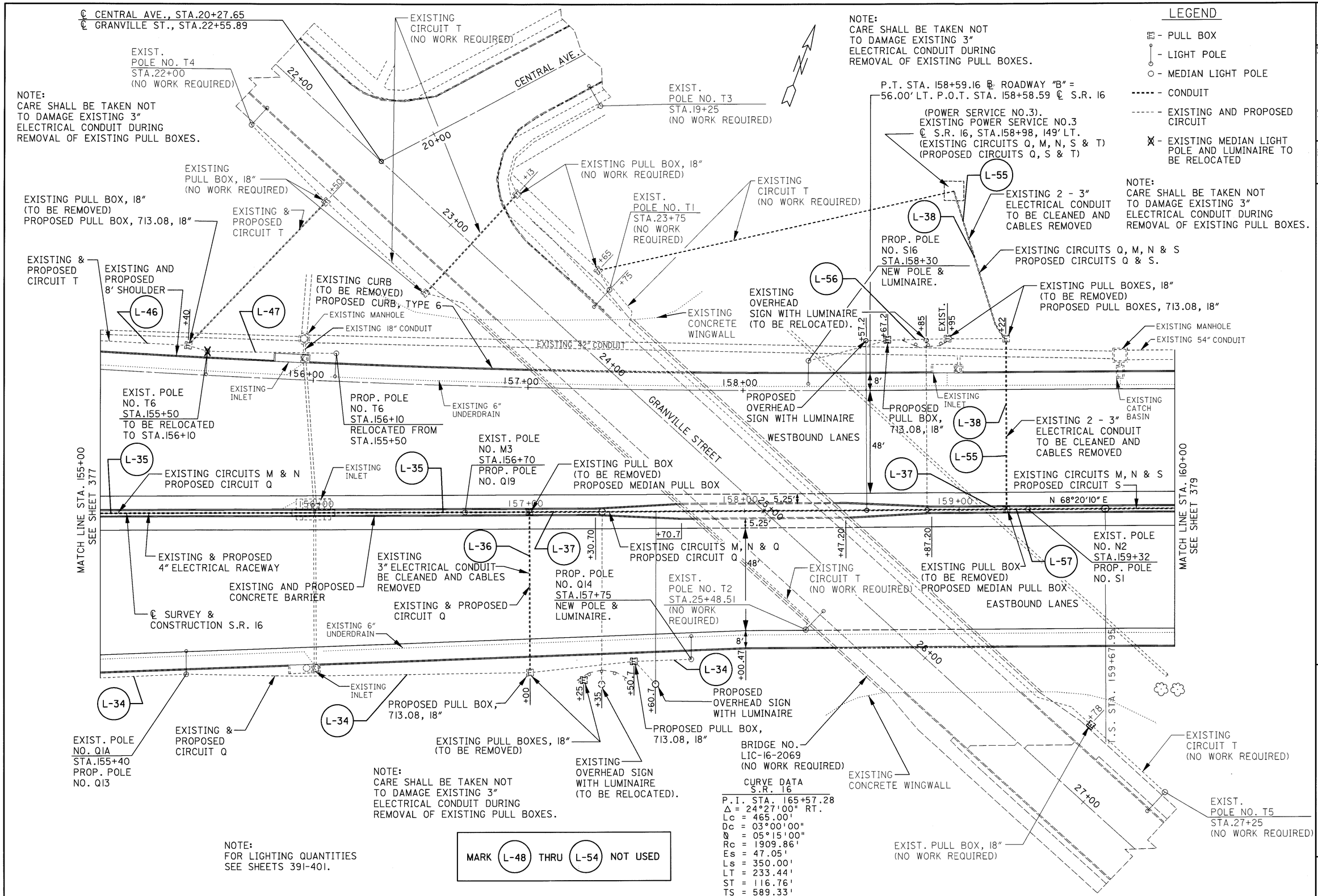

NOTE:
FOR LIGHTING QUANTITIES SEE SHEETS 391-401.

MARK (L-48) THRU (L-54) NOT USED

CURVE DATA
S.R. 16

P.I. STA. 165+57.28
Δ = 24°27'00" RT.
Lc = 465.00'
Dc = 03°00'00"
D = 05°15'00"
Rc = 1909.86'
Es = 47.05'
Ls = 350.00'
LT = 233.44'
ST = 116.76'
TS = 589.33'

L1630164.DGN 5/1/95

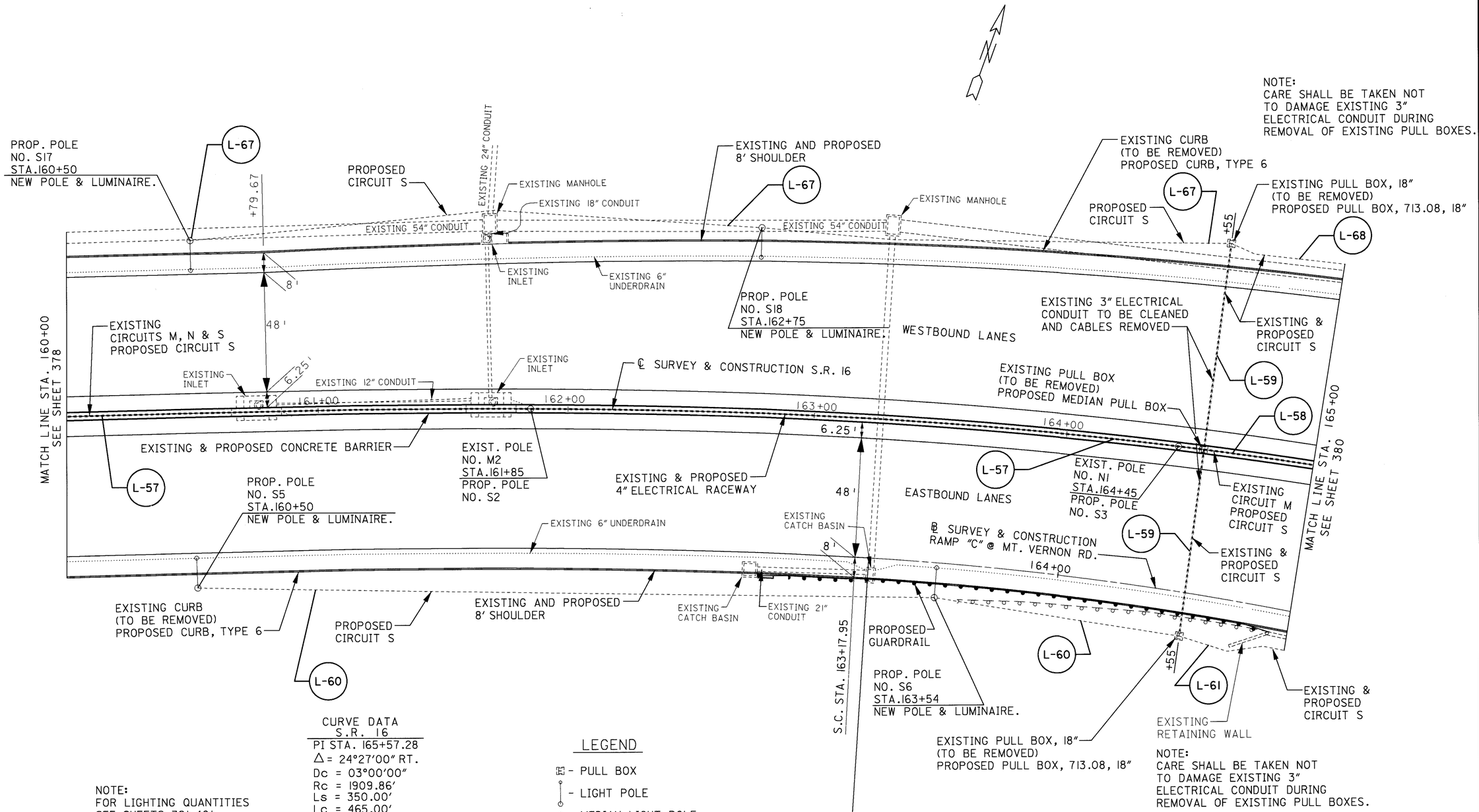

NOTE:
FOR LIGHTING QUANTITIES
SEE SHEETS 391-401.

CURVE DATA
S.R. 16

PI STA. 165+57.28
Δ = 24°27'00" RT.
Dc = 03°00'00"
Rc = 1909.86'
Ls = 350.00'
Lc = 465.00'
Ts = 589.33'
Es = 47.05'
θs = 05°15'00"
LT = 233.44'
ST = 116.76'

LEGEND

- PULL BOX
- LIGHT POLE
- MEDIAN LIGHT POLE
- CONDUIT
- EXISTING AND PROPOSED CIRCUIT
- EXISTING MEDIAN LIGHT POLE AND LUMINAIRE TO BE RELOCATED

HORIZONTAL SCALE IN FEET
0 10 20 40

CALCULATED A.A. 3/16/95
CHECKED M.M. 3/16/95

LIGHTING DETAIL SHEET
STA. 160+00 TO STA. 165+00

LIC-16-19.72

L1631164.DGN 5/1/95

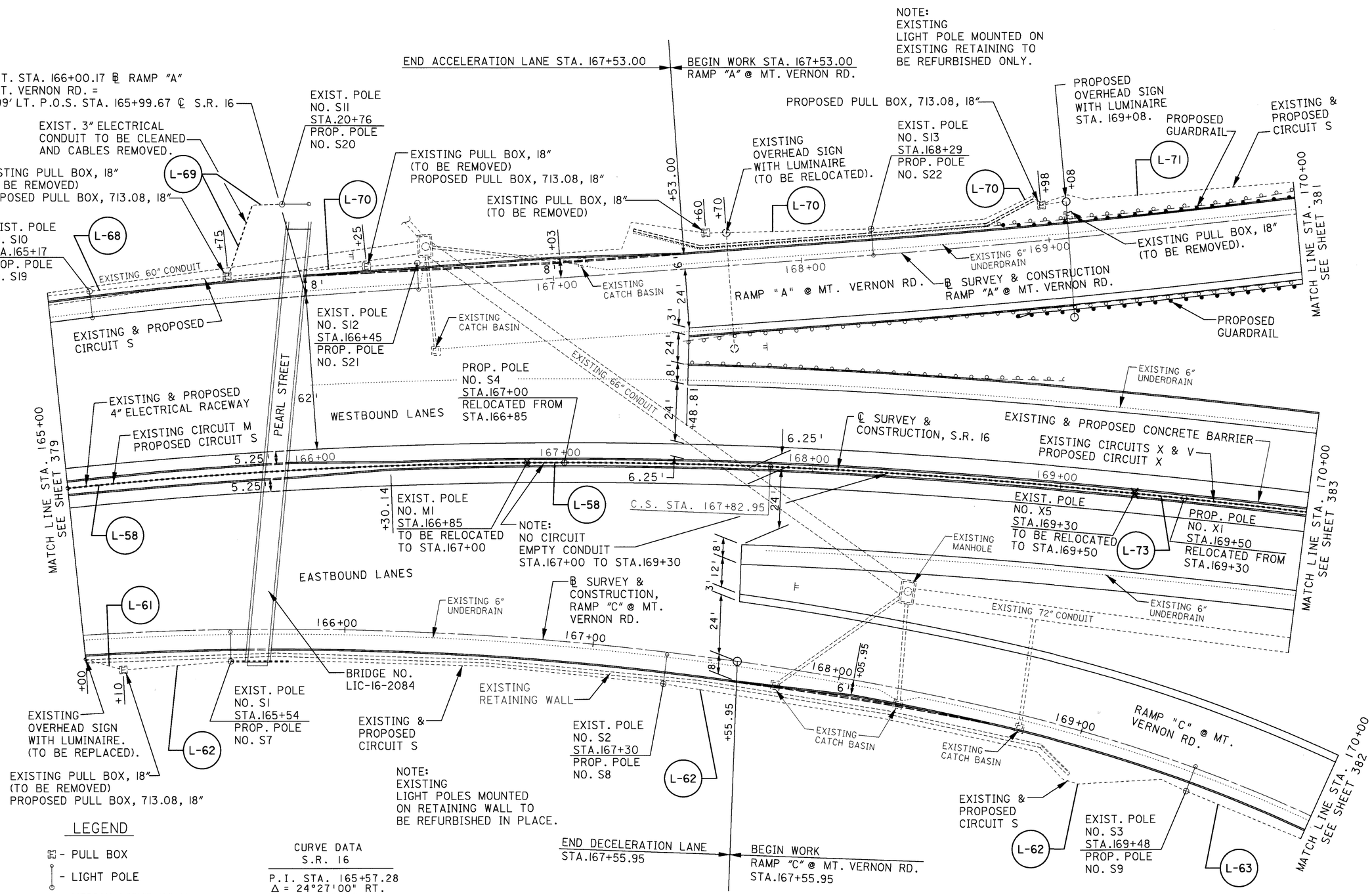

LEGEND

- PULL BOX
- LIGHT POLE
- MEDIAN LIGHT POLE
- CONDUIT
- EXISTING AND PROPOSED CIRCUIT
- EXISTING MEDIAN LIGHT POLE AND LUMINAIRE TO BE RELOCATED

CURVE DATA
S.R. 16

P.I. STA. 165+57.28
Δ = 24°27'00" RT.
Dc = 03°00'00"
Rc = 1909.86'
Ls = 350.00'
Lc = 1111.20'
Ø = 05°15'00"
LT = 233.44'
ST = 116.76'
TS = 589.33'
Es = 47.05'

NOTE:
FOR LIGHTING QUANTITIES
SEE SHEETS 391-401.

HORIZONTAL SCALE IN FEET
0 10 20 40

CALCULATED J.Z. 3/16/95
CHECKED M.M. 3/16/95

LIGHTING DETAIL SHEET
STA. 165+00 TO STA. 170+00

LIC-16-19.72

L1632164.DGN 5/1/95

NOTE:
FOR LIGHTING QUANTITIES
SEE SHEETS 391-401.

LEGEND

- PULL BOX
- LIGHT POLE
- MEDIAN LIGHT POLE
- CONDUIT
- EXISTING AND PROPOSED CIRCUIT
- EXISTING MEDIAN LIGHT POLE AND LUMINAIRE TO BE RELOCATED

CURVE DATA
RAMP "A"
P.I. STA. 170+09.01
△ = 05°30'00" LT.
Dc = 01°30'00"
R = 3819.72'
L = 366.67'
T = 183.47'
E = 4.40'

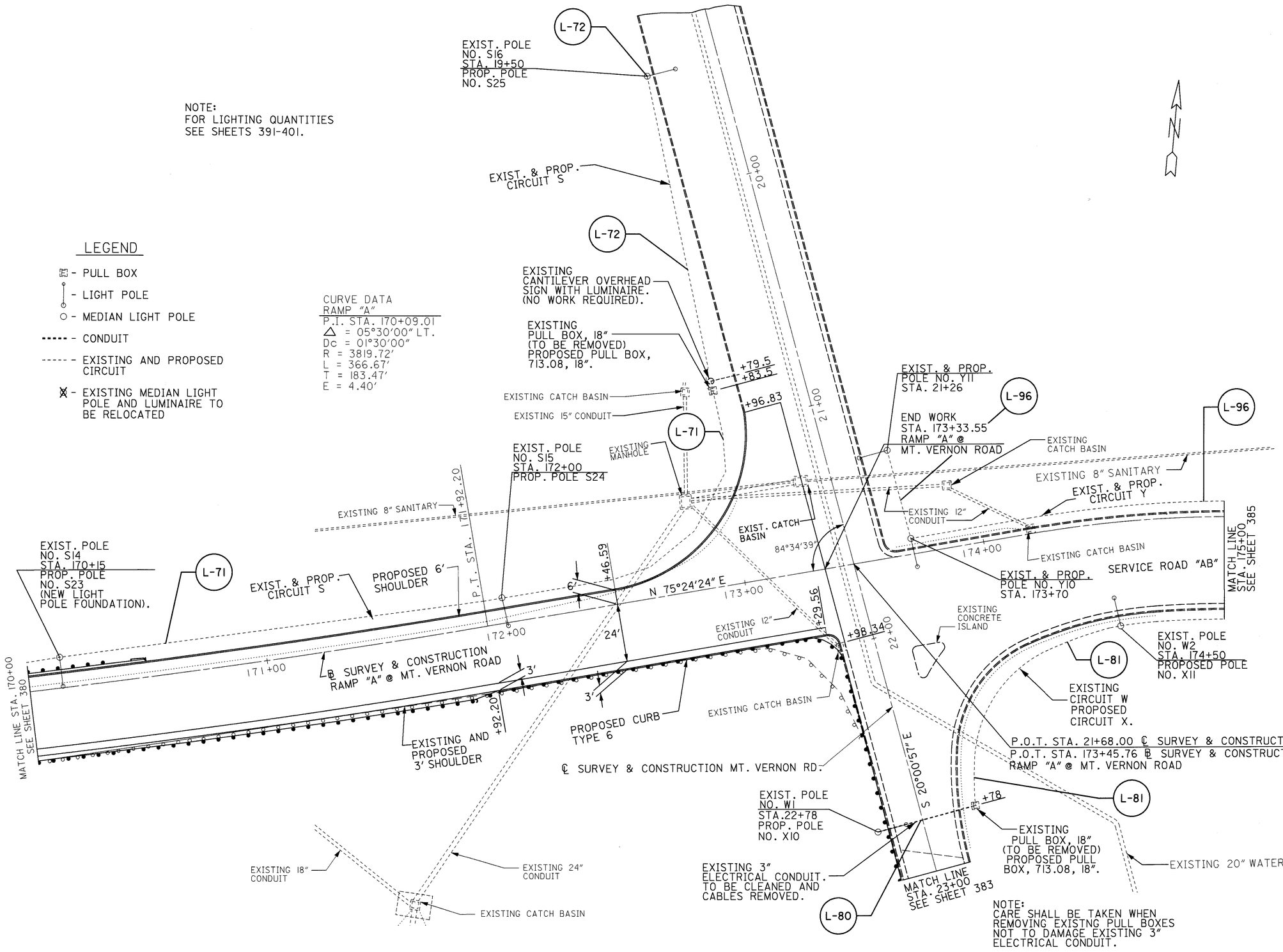

NOTE:
CARE SHALL BE TAKEN WHEN
REMOVING EXISTNG PULL BOXES
NOT TO DAMAGE EXISTING 3"
ELECTRICAL CONDUIT.

CALCULATED J.Z. 3/13/95
CHECKED M.K. 3/16/95

LIGHTING DETAIL SHEET RAMP "A" AT MT. VERNON ROAD
STA. 170+00 TO STA. 173+33.55

LIC-16-19.72

L166216 4.DGN 5/1/95

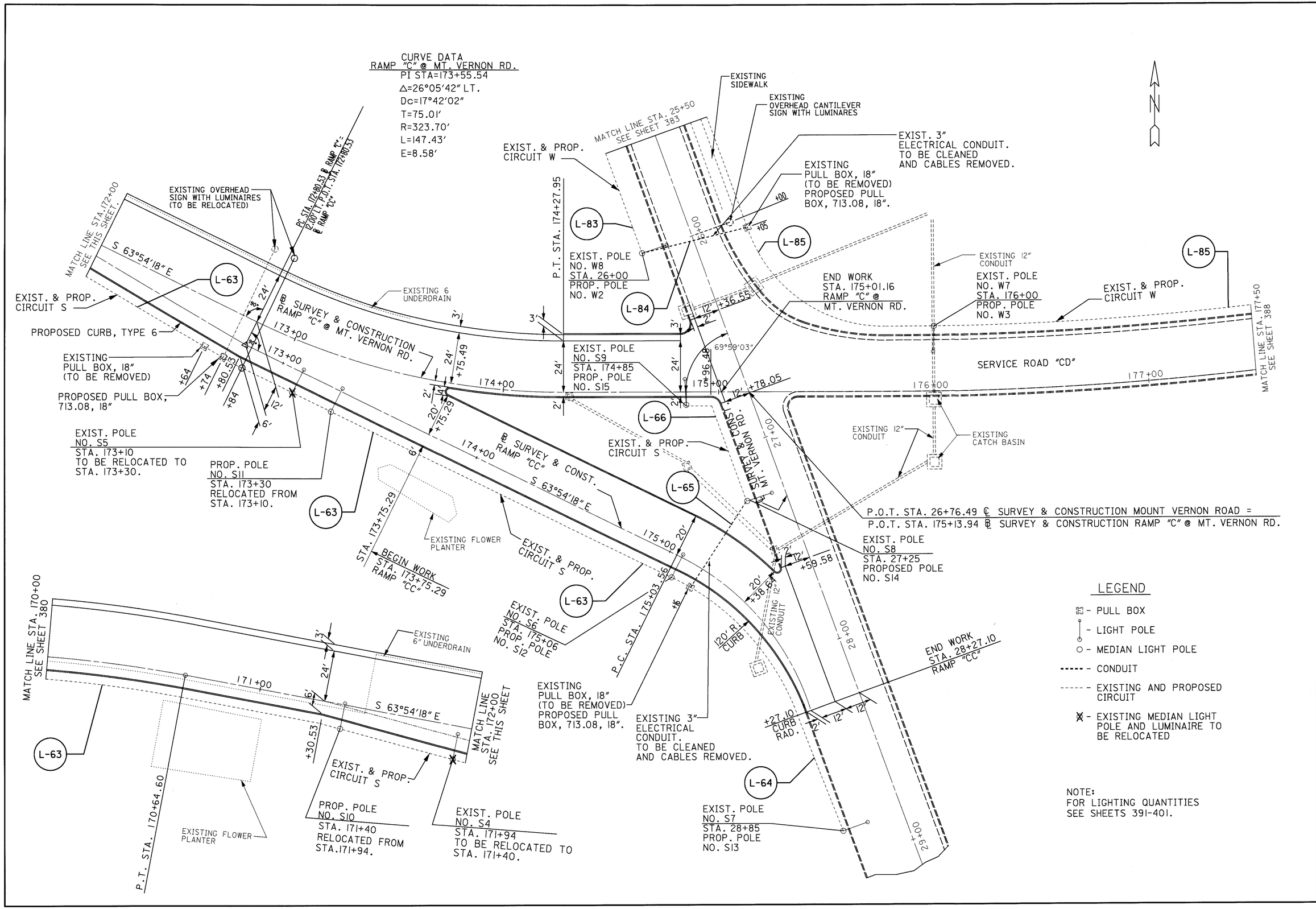
CURVE DATA
RAMP "C" @ MT. VERNON RD.
PI STA=173+55.54
Δ=26°05'42" LT.
Dc=17°42'02"
T=75.01'
R=323.70'
L=147.43'
E=8.58'
EXISTING SIDEWALK
EXISTING OVERHEAD CANTILEVER SIGN WITH LUMINARES
EXIST. 3" ELECTRICAL CONDUIT. TO BE CLEANED AND CABLES REMOVED.
EXISTING PULL BOX, 18" (TO BE REMOVED) PROPOSED PULL BOX, 713.08, 18".
MATCH LINE STA. 25+50 SEE SHEET 383
EXIST. & PROP. CIRCUIT W
P.T. STA. 174+27.95
EXIST. POLE NO. W8 STA. 26+00 PROP. POLE NO. W2
EXISTING OVERHEAD SIGN WITH LUMINAIRES (TO BE RELOCATED)
MATCH LINE STA. 172+00 SEE THIS SHEET.
S 63°54'18" E
EXIST. & PROP. CIRCUIT S
PROPOSED CURB, TYPE 6
EXISTING PULL BOX, 18" (TO BE REMOVED)
PROPOSED PULL BOX, 713.08, 18"
EXISTING 6" UNDERDRAIN
SURVEY & CONSTRUCTION RAMP "C" @ MT. VERNON RD.
EXIST. POLE NO. S9 STA. 174+85 PROP. POLE NO. S15
END WORK STA. 175+01.16 RAMP "C" @ MT. VERNON RD.
EXISTING 12" CONDUIT
EXIST. POLE NO. W7 STA. 176+00 PROP. POLE NO. W3
EXIST. & PROP. CIRCUIT W
SERVICE ROAD "CD"
MATCH LINE STA. 177+50 SEE SHEET 388
EXIST. POLE NO. S5 STA. 173+10 TO BE RELOCATED TO STA. 173+30.
PROP. POLE NO. S11 STA. 173+30 RELOCATED FROM STA. 173+10.
EXIST. & PROP. CIRCUIT S
SURVEY & CONST. RAMP "CC"
SURVEY & CONST. MT. VERNON RD.
EXISTING CATCH BASIN
P.O.T. STA. 26+76.49 ℄ SURVEY & CONSTRUCTION MOUNT VERNON ROAD = P.O.T. STA. 175+13.94 ℄ SURVEY & CONSTRUCTION RAMP "C" @ MT. VERNON RD.
EXIST. POLE NO. S8 STA. 27+25 PROPOSED POLE NO. S14
EXISTING FLOWER PLANTER
BEGIN WORK STA. 173+75.29 RAMP "CC"
EXIST. POLE NO. S6 STA. 175+06 PROP. POLE NO. S12
P.C. STA. 175+03.56
120' R. CURB
END WORK STA. 28+27.10 RAMP "CC"
EXISTING PULL BOX, 18" (TO BE REMOVED) PROPOSED PULL BOX, 713.08, 18".
EXISTING 3" ELECTRICAL CONDUIT. TO BE CLEANED AND CABLES REMOVED.
+27.10 CURB RAD.
EXIST. POLE NO. S7 STA. 28+85 PROP. POLE NO. S13
MATCH LINE STA. 170+00 SEE SHEET 380
EXISTING 6" UNDERDRAIN
S 63°54'18" E
MATCH LINE STA. 172+00 SEE THIS SHEET
P.T. STA. 170+64.60
EXISTING FLOWER PLANTER
PROP. POLE NO. S10 STA. 171+40 RELOCATED FROM STA. 171+94.
EXIST. POLE NO. S4 STA. 171+94 TO BE RELOCATED TO STA. 171+40.
LEGEND
- PULL BOX
- LIGHT POLE
- MEDIAN LIGHT POLE
- CONDUIT
- EXISTING AND PROPOSED CIRCUIT
- EXISTING MEDIAN LIGHT POLE AND LUMINAIRE TO BE RELOCATED
NOTE:
FOR LIGHTING QUANTITIES SEE SHEETS 391-401.
HORIZONTAL SCALE IN FEET
CALCULATED J.C. 3/15/95
CHECKED M.M.L. 3/16/95
LIGHTING DETAIL SHEET RAMP "C" AT MT. VERNON ROAD
STA. 170+00 TO STA. 175+01.39
LIC-16-19.72
382
547
L1664164.DGN 5/1/95

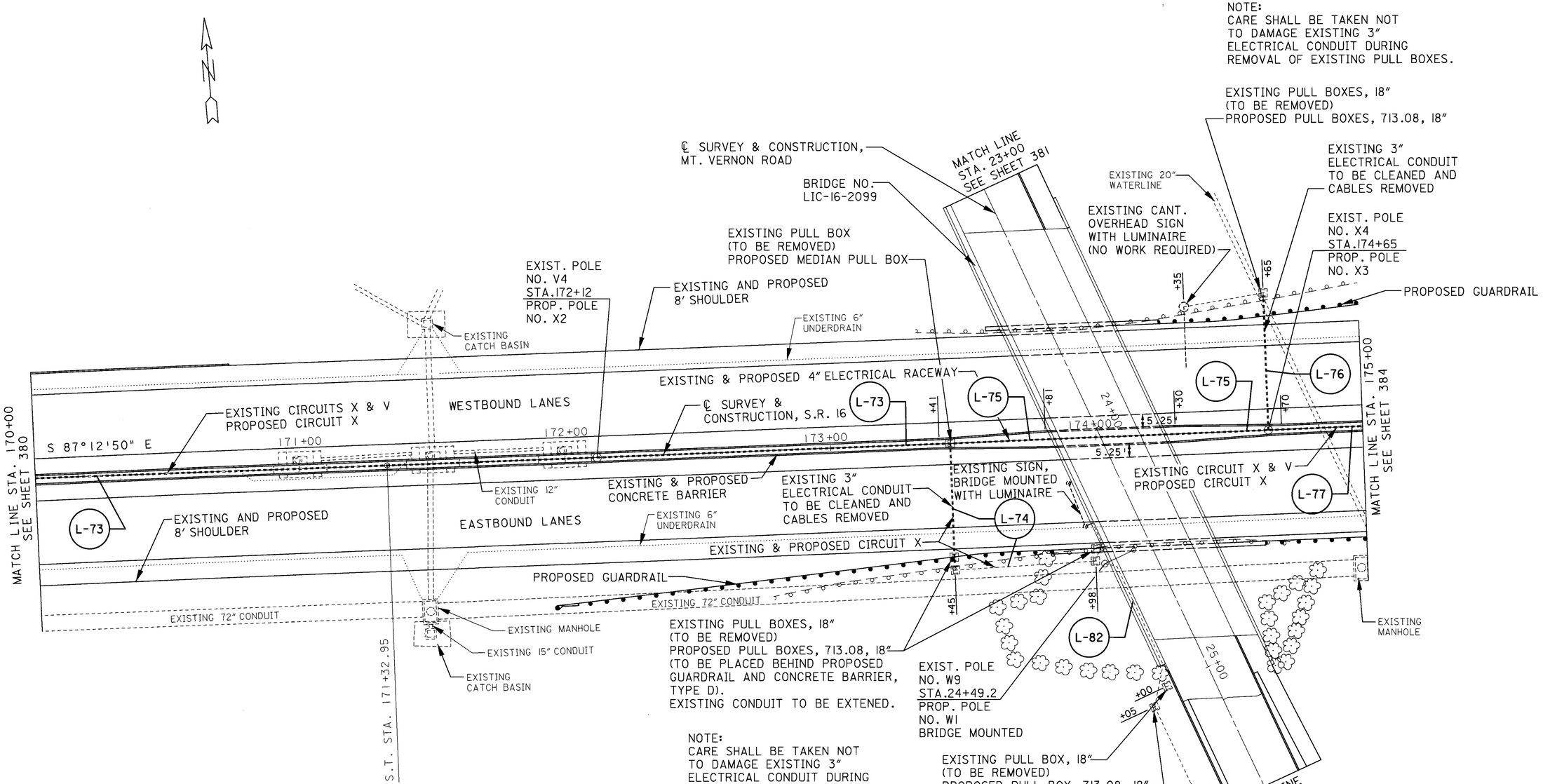

NOTE:
CARE SHALL BE TAKEN NOT TO DAMAGE EXISTING 3" ELECTRICAL CONDUIT DURING REMOVAL OF EXISTING PULL BOXES.

CURVE DATA
S.R. 16

P.I. STA. 165+57.28
Δ = 24°27'00" RT.
Dc = 03°00'00"
Rc = 1909.86'
Ls = 350.00'
Lc = 1111.20'
Θ = 05°15'00"
LT = 233.44'
ST = 116.76'
TS = 589.33'
Es = 47.05'

NOTE:
FOR LIGHTING QUANTITIES SEE SHEETS 391-401.

LEGEND

- PULL BOX
- LIGHT POLE
- MEDIAN LIGHT POLE
- CONDUIT
- EXISTING AND PROPOSED CIRCUIT
- EXISTING MEDIAN LIGHT POLE AND LUMINAIRE TO BE RELOCATED

HORIZONTAL SCALE IN FEET 0 10 20 40

CALCULATED J.C. 3/13/95
CHECKED M.M. 3/16/95

LIGHTING DETAIL SHEET
STA. 170+00 TO STA. 175+00

LIC-16-19.72

L1633164.DGN 5/1/95

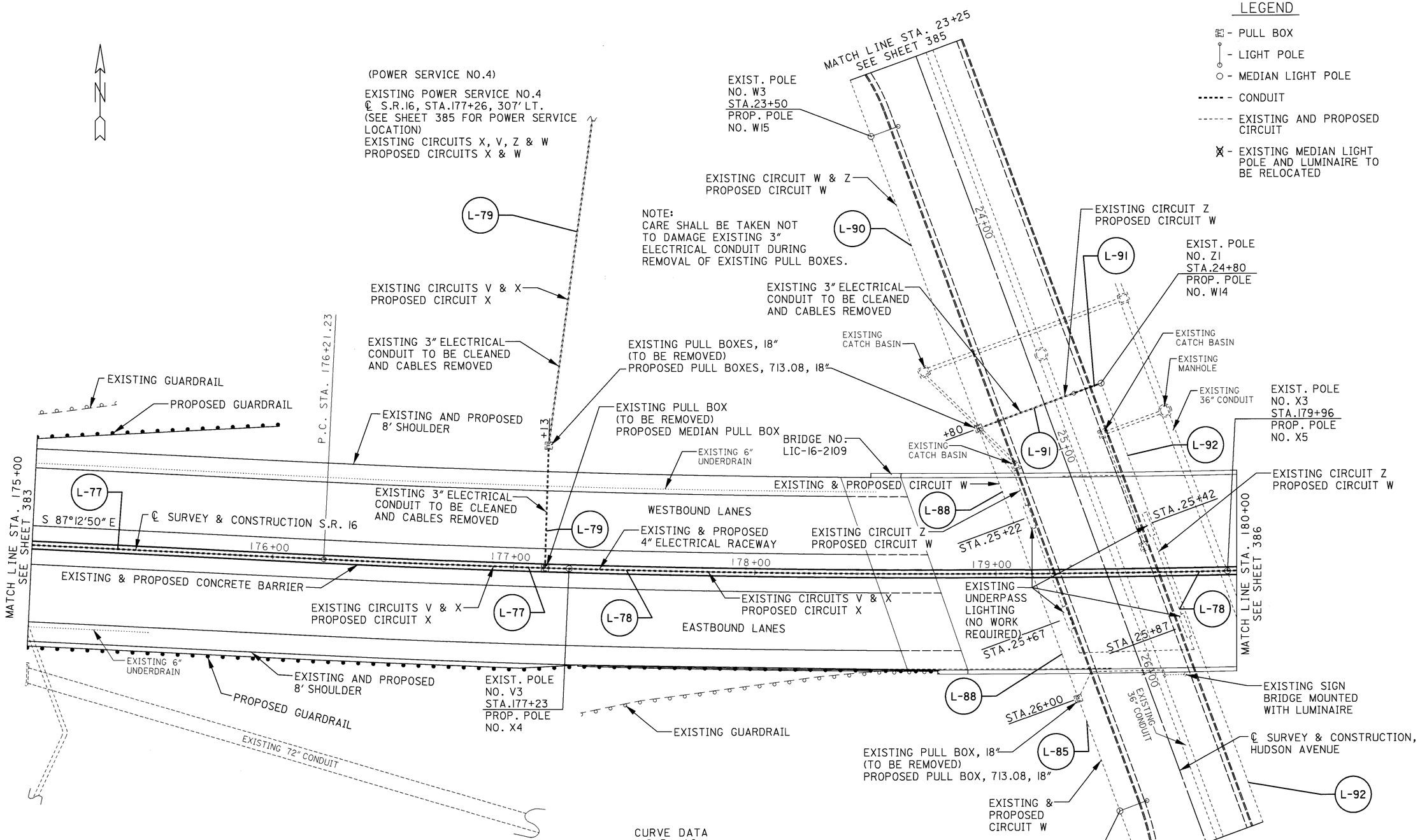

LEGEND

- PULL BOX
- LIGHT POLE
- MEDIAN LIGHT POLE
- CONDUIT
- EXISTING AND PROPOSED CIRCUIT
- EXISTING MEDIAN LIGHT POLE AND LUMINAIRE TO BE RELOCATED

HORIZONTAL SCALE IN FEET 0 10 20 40

CALCULATED J.C. 3/10/95
CHECKED M.M. 3/16/95

DETAIL SHEET
LIGHTING STA. 175+00 TO STA. 180+00

CURVE DATA
S.R. 16

PI STA=178+79.86
△= 05°10'09" LT.
Dc= 01°00'00"
T=258.63
R=5729.58
L=516.92
E=5.83

NOTE:
FOR LIGHTING QUANTITIES SEE SHEETS 391-401.

LIC-16-19.72

L1634164.DGN 5/1/95

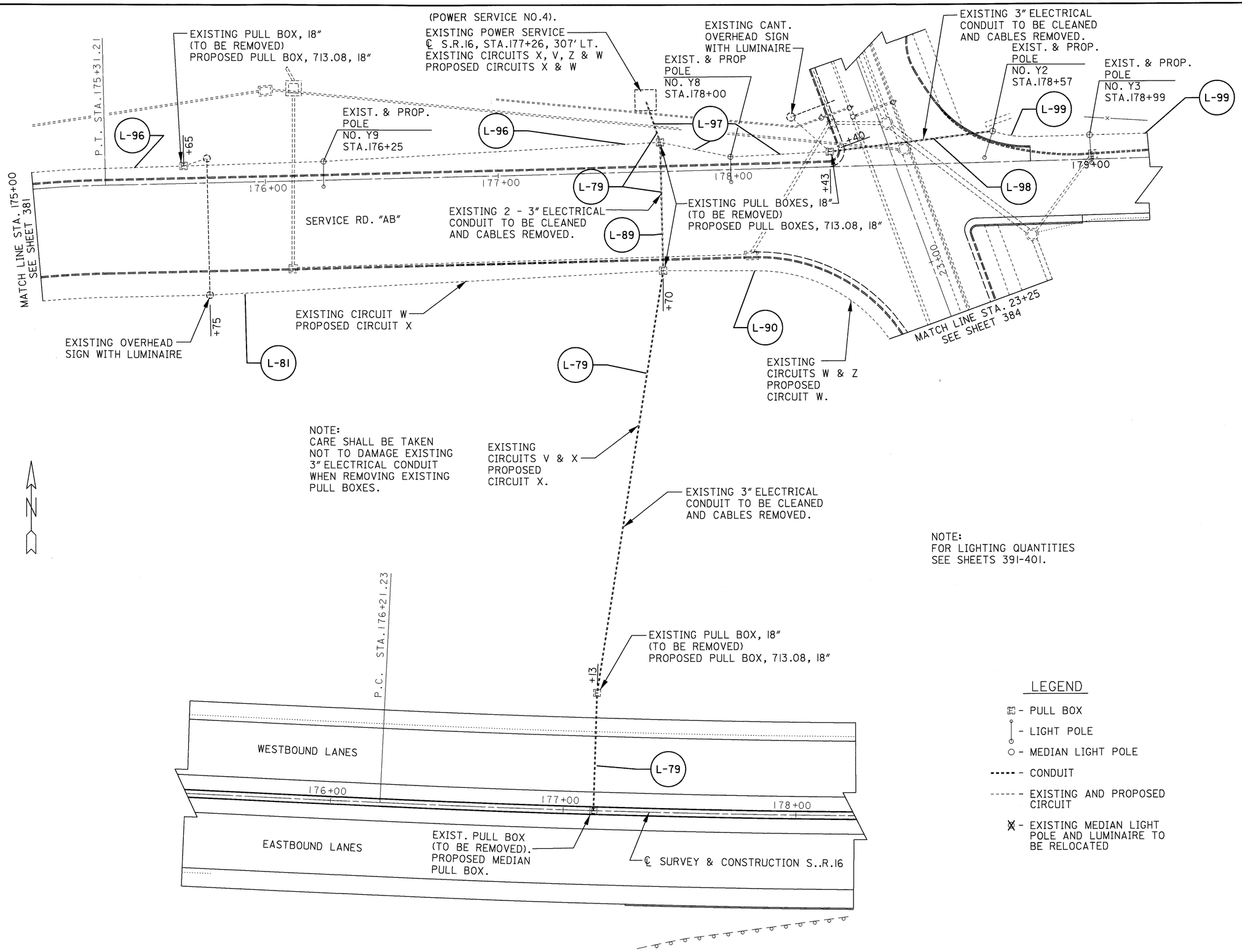

HORIZONTAL SCALE IN FEET
0 10 20 40

CALCULATED J.C. 3/13/95
CHECKED J.L.L. 3/16/95

LIGHTING DETAIL SHEET SERVICE RD. "AB"
STA. 175+00 TO STA. 180+00

LIC-16-19.72

L1669164.DGN 5/1/95

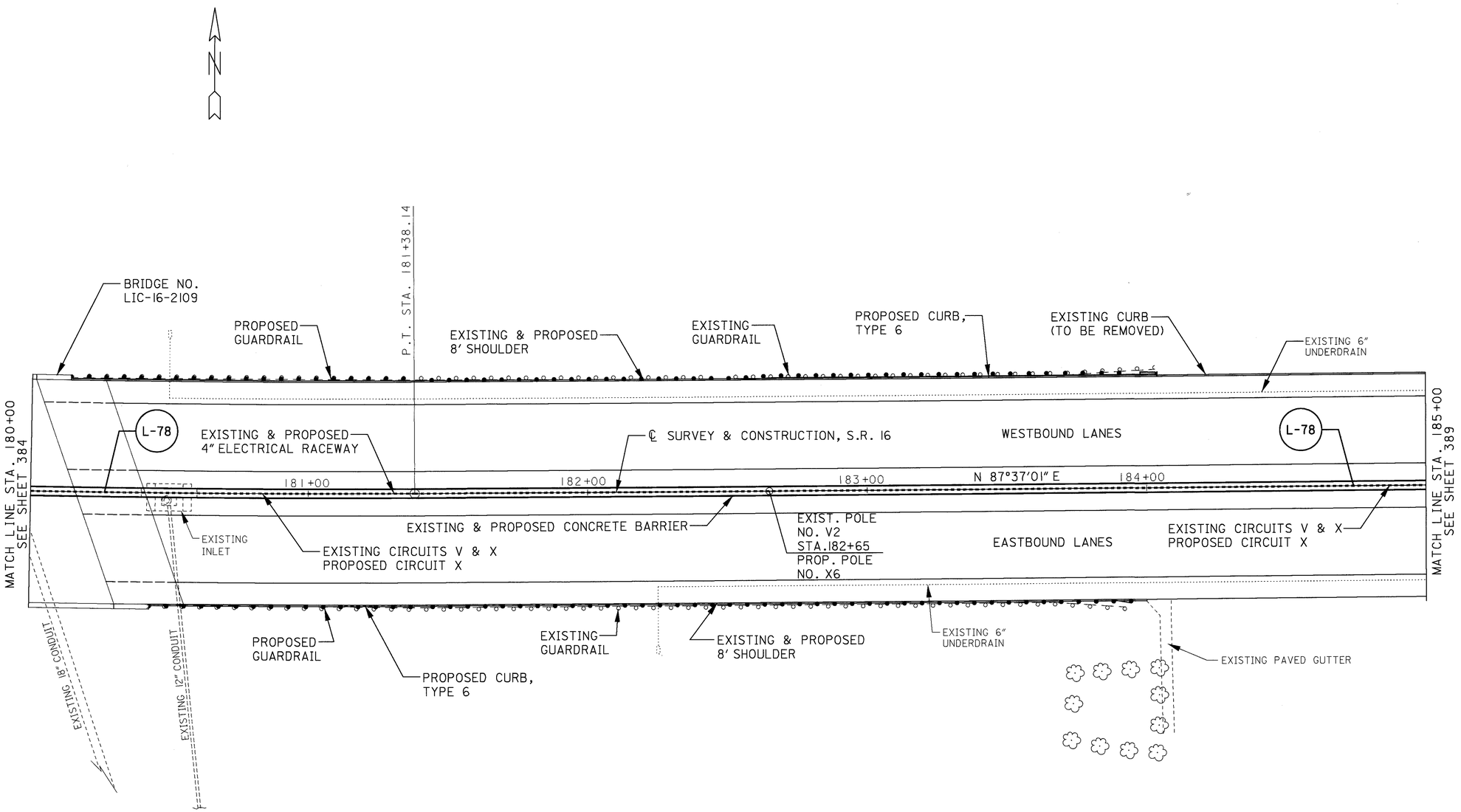

NOTE:
FOR LIGHTING QUANTITIES
SEE SHEETS 391-401.

LEGEND

- PULL BOX
- LIGHT POLE
- MEDIAN LIGHT POLE
- CONDUIT
- EXISTING AND PROPOSED CIRCUIT
- EXISTING MEDIAN LIGHT POLE AND LUMINAIRE TO BE RELOCATED

0 10 20 40
HORIZONTAL SCALE IN FEET

CALCULATED J.C. 3/10/95
CHECKED M.M. 3/10/95

LIGHTING DETAIL SHEET
STA. 180+00 TO STA. 185+00

LIC-16-19.72

L1635164.DGN 5/1/95

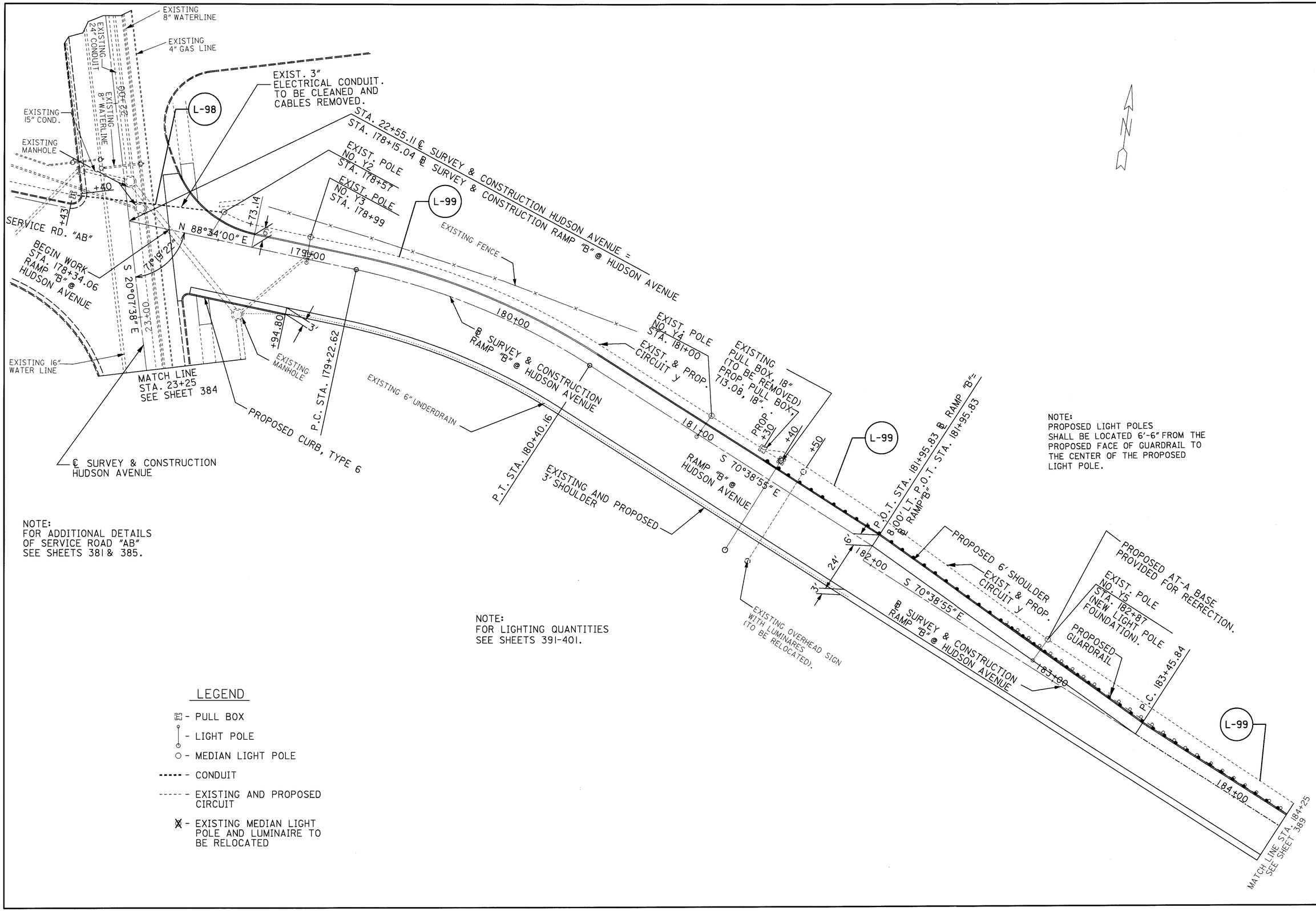

NOTE:
FOR ADDITIONAL DETAILS OF SERVICE ROAD "AB" SEE SHEETS 381 & 385.

NOTE:
FOR LIGHTING QUANTITIES SEE SHEETS 391-401.

NOTE:
PROPOSED LIGHT POLES SHALL BE LOCATED 6'-6" FROM THE PROPOSED FACE OF GUARDRAIL TO THE CENTER OF THE PROPOSED LIGHT POLE.

LEGEND

- PULL BOX
- LIGHT POLE
- MEDIAN LIGHT POLE
- CONDUIT
- EXISTING AND PROPOSED CIRCUIT
- EXISTING MEDIAN LIGHT POLE AND LUMINAIRE TO BE RELOCATED

CALCULATED J.C. 3/15/95
CHECKED M.M. 3/16/95

LIGHTING DETAIL SHEET RAMP "B" AT HUDSON AVENUE
STA. 178+00 TO STA. 184+25

LIC-16-19.72

L16651G4.DGN 5/1/95

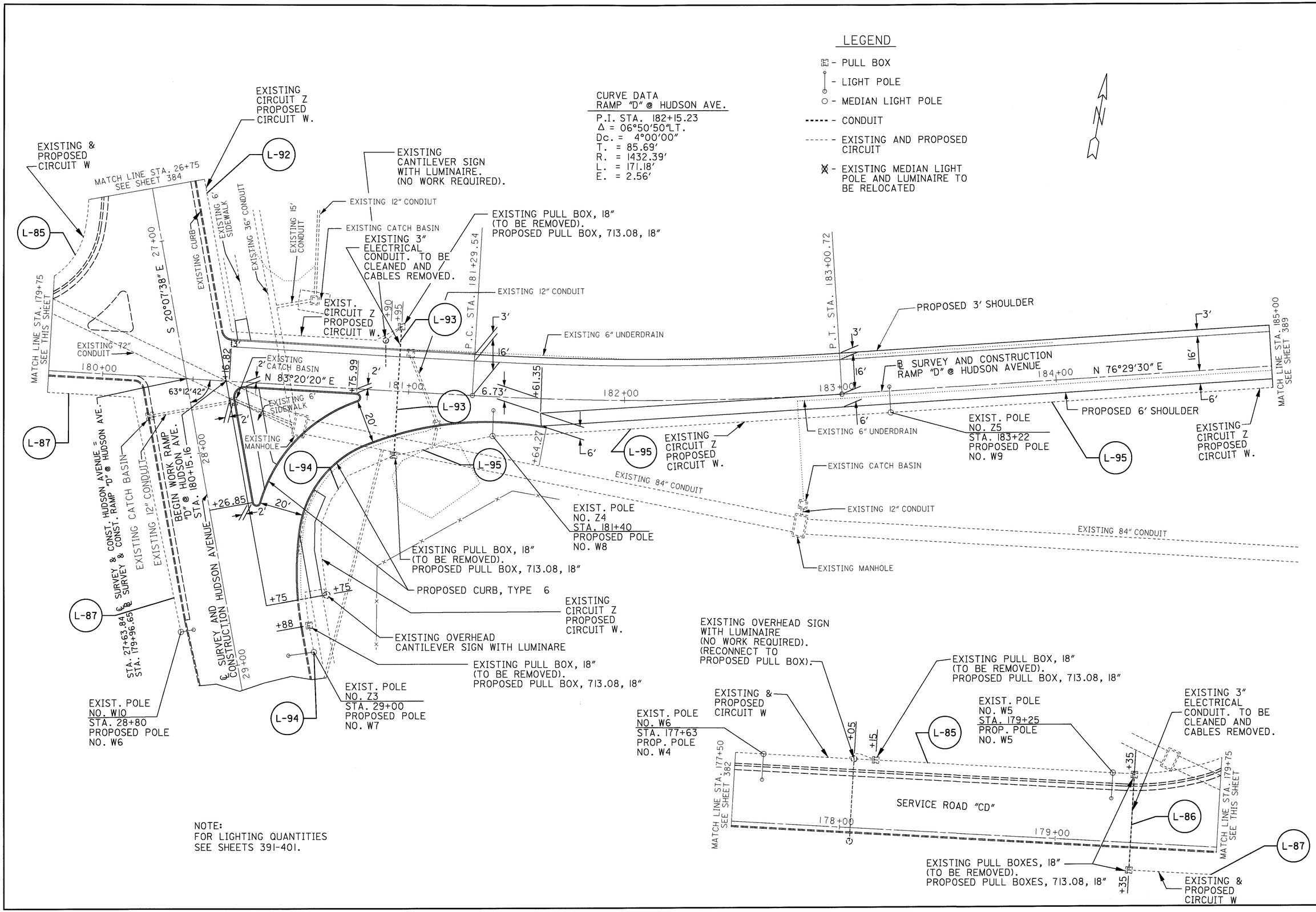

NOTE:
FOR LIGHTING QUANTITIES SEE SHEETS 391-401.

CALCULATED J.C. 3/15/95
CHECKED M.M. 3/16/95

LIGHTING DETAIL SHEET RAMP "D" AT HUDSON AVENUE STA. 180+00 TO STA. 185+00

LIC-16-19.72

L1667164.DGN 5/1/95

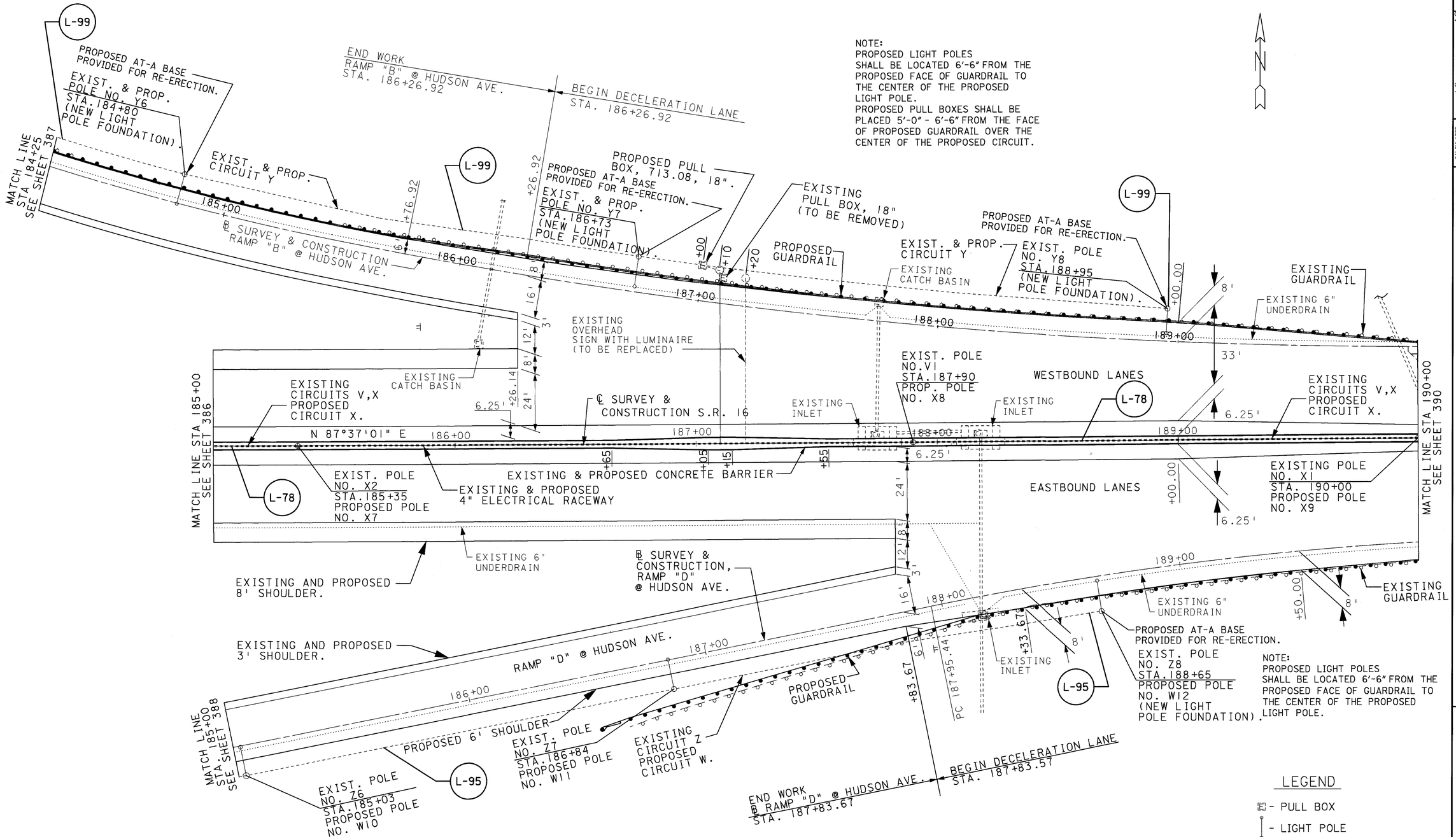

NOTE:
PROPOSED LIGHT POLES SHALL BE LOCATED 6'-6" FROM THE PROPOSED FACE OF GUARDRAIL TO THE CENTER OF THE PROPOSED LIGHT POLE.
PROPOSED PULL BOXES SHALL BE PLACED 5'-0" - 6'-6" FROM THE FACE OF PROPOSED GUARDRAIL OVER THE CENTER OF THE PROPOSED CIRCUIT.

NOTE:
PROPOSED LIGHT POLES SHALL BE LOCATED 6'-6" FROM THE PROPOSED FACE OF GUARDRAIL TO THE CENTER OF THE PROPOSED LIGHT POLE.

NOTE:
FOR LIGHTING QUANTITIES SEE SHEETS 391-401.

LEGEND

- PULL BOX
- LIGHT POLE
- MEDIAN LIGHT POLE
- CONDUIT
- EXISTING AND PROPOSED CIRCUIT
- EXISTING MEDIAN LIGHT POLE AND LUMINAIRE TO BE RELOCATED

CALCULATED J.C. 3/15/95
CHECKED M.M. 3/16/95

LIGHTING DETAIL SHEET
STA. 185+00 TO STA. 190+00

LIC-16-19.72

L1636164.DGN 5/1/95

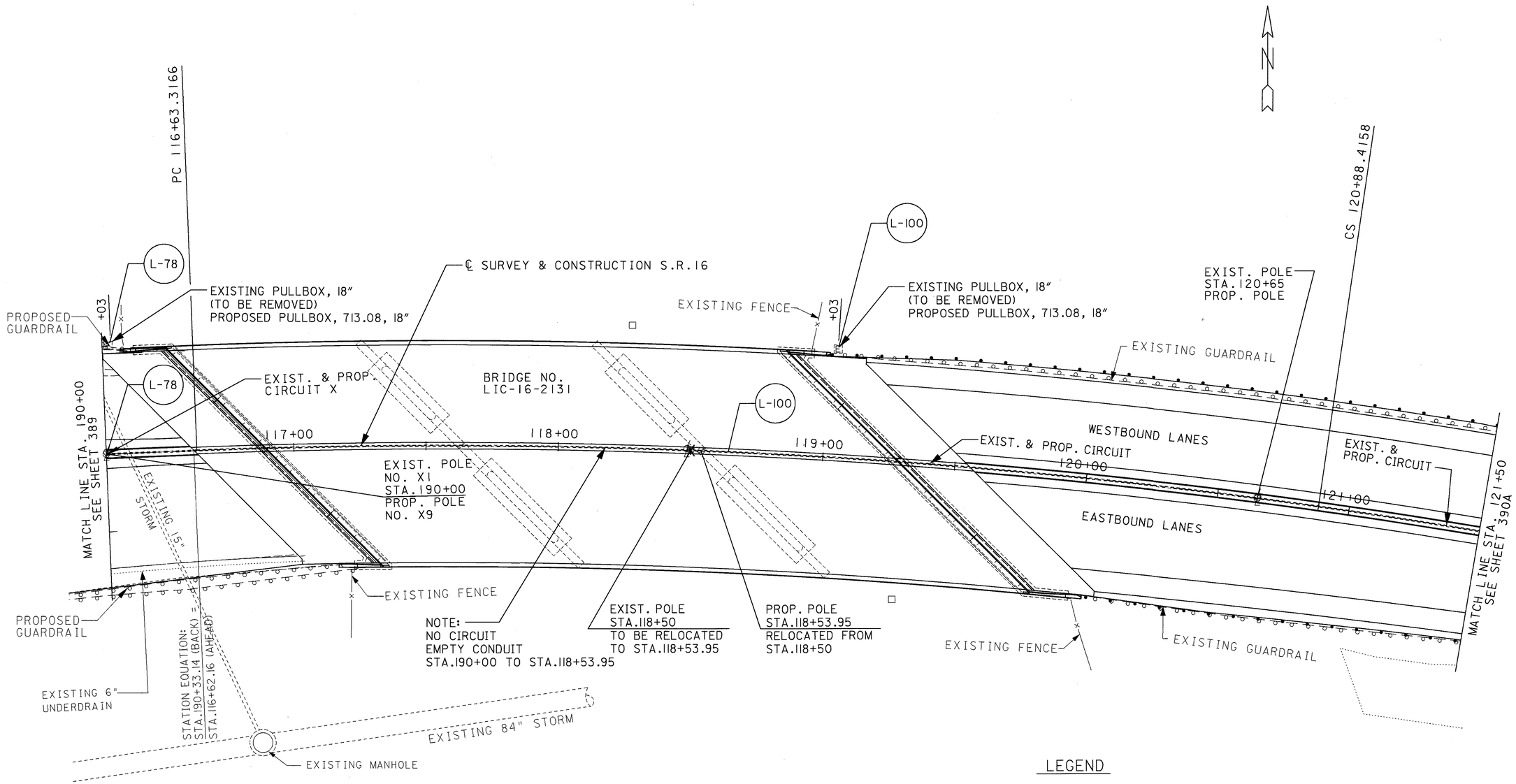

NOTE:
FOR LIGHTING QUANTITIES
SEE SHEETS 391-401.

LEGEND

- PULL BOX
- LIGHT POLE
- MEDIAN LIGHT POLE
- CONDUIT
- EXISTING AND PROPOSED CIRCUIT
- EXISTING MEDIAN LIGHT POLE AND LUMINAIRE TO BE RELOCATED

HORIZONTAL SCALE IN FEET
0 10 20 40

CALCULATED J.C. 3/13/95
CHECKED M.M. 3/16/95

LIGHTING DETAIL SHEET
STA. 190+00 TO STA. 121+50

LIC-16-19.72

L637164.DGN 02/06/99

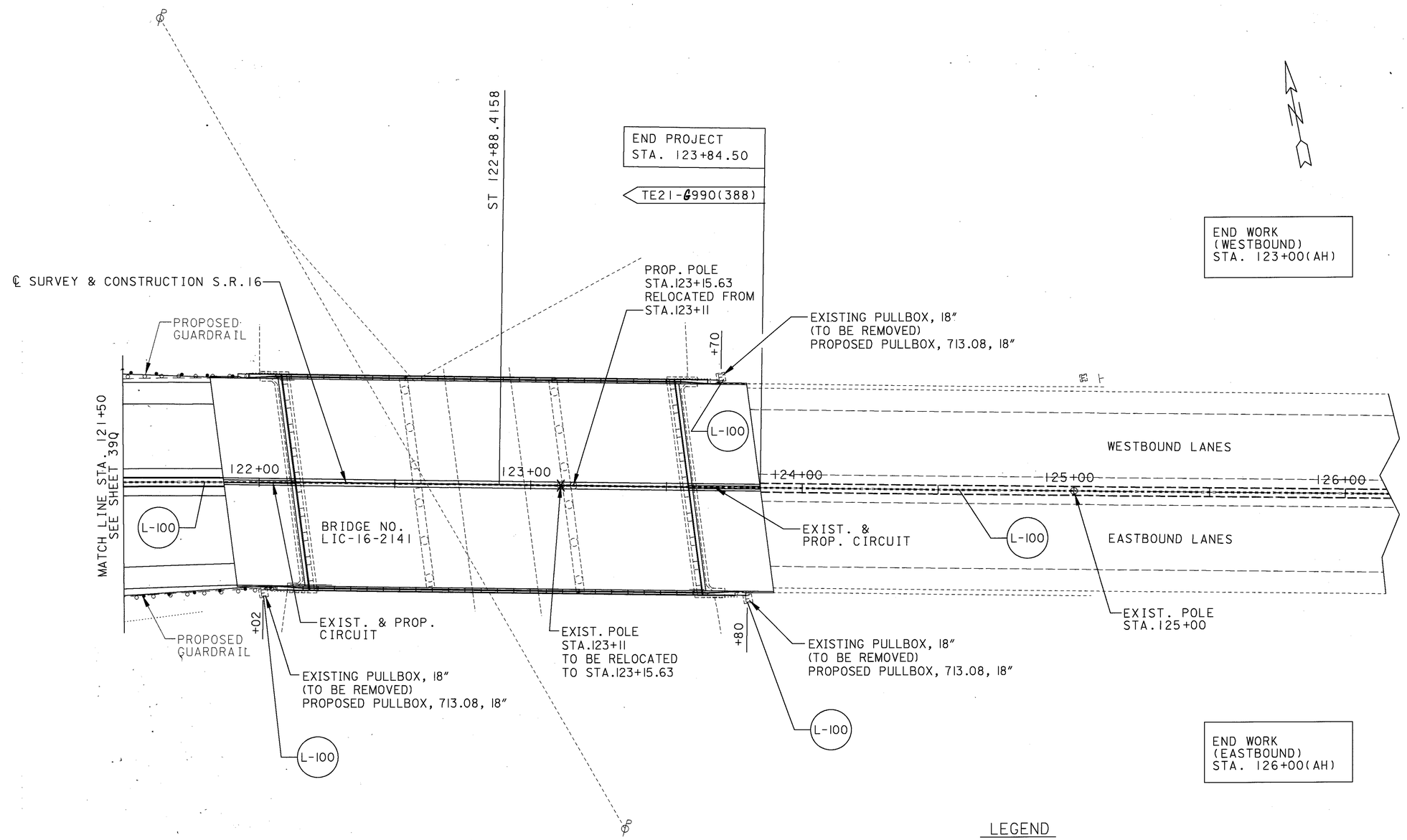

LEGEND

- PULL BOX
- LIGHT POLE
- MEDIAN LIGHT POLE
- CONDUIT
- EXISTING AND PROPOSED CIRCUIT
- EXISTING MEDIAN LIGHT POLE AND LUMINAIRE TO BE RELOCATED

NOTE:
FOR LIGHTING QUANTITIES
SEE SHEETS 391-401.

HORIZONTAL SCALE IN FEET
0 10 20 40

CALCULATED J.C. 3/13/95
CHECKED M.M. 3/16/95

LIGHTING DETAIL SHEET
STA. 121+50 TO STA. 126+00

LIC-16-19.72

L1639164.DGN 02/06/99

REFERENCE NO.	SHEET NO.	SIDE	LOCATION	STATION TO STATION FROM	STATION TO STATION TO	ITEM 202 LUMINAIRE REMOVED FOR STORAGE, AS PER PLAN (EACH)	ITEM 202 LIGHT POLE REMOVED FOR STORAGE, AS PER PLAN (EACH)	ITEM 202 PULL BOX REMOVED (EACH)	ITEM 202 LIGHT POLE FOUNDATION REMOVED, AS PER PLAN (EACH)	ITEM 625 REERECT EXISTING LUMINAIRE, AS PER PLAN (EACH)	ITEM 625 REERECT EXISTING LIGHT POLE, AS PER PLAN (EACH)	ITEM 625 NO. 2 AWG. 5,000 VOLT DISTRIBUTION CABLE (LIN.FT.)	ITEM 625 NO. 4 AWG. 5,000 VOLT DISTRIBUTION CABLE (LIN.FT.)	ITEM 625 1 1/2" DUCT. CABLE WITH TWO NO.4 AWG 5,000 VOLT CABLES (LIN.FT.)	ITEM 625 NO.10 AWG POLE AND BRACKET CABLE (LIN.FT.)	ITEM 625 LIGHT POLE, DESIGN AT12B41.7 (EACH)	ITEM 625 LIGHT POLE. MISC., MEDIAN MOUNT, LOW MAST, DESIGN A0N40 (EACH)	ITEM 625 LUMINAIRE, CONVENTIONAL STYLE B, TYPE II, 200 WATT, HIGH PRESSURE SODIUM, 713.11, 480 VOLT. (EACH)	ITEM 625 LUMINAIRE, LOW MAST, ASYMETRIC TYPE I, 400 WATT HIGH PRESSURE SODIUM, 713.21, 480 VOLT., AS PER PLAN (EACH)	ITEM 625 MEDIAN LIGHT POLE FOUNDATION, 10' DEEP (EACH)	ITEM 625 MEDIAN LIGHT POLE FOUNDATION, 10' DEEP, AS PER PLAN (EACH)	ITEM 625 LIGHT POLE FOUNDATION, 24" x 10' DEEP (EACH)	ITEM 625 MEDIAN PULL BOX (EACH)	ITEM 625 PULL BOX, 713.08, 18" (EACH)	ITEM 625 CABLE SPLICING KIT (EACH)	ITEM 625 CONNECTOR KIT, TYPE II (EACH)	ITEM 625 CONNECTOR KIT, TYPE III (EACH)	ITEM 625 CONNECTOR KIT, TYPE VIIB (EACH)	ITEM 625 GROUND ROD (EACH)	ITEM 625 TRANSFORMER BASE, TYPE AT-A (EACH)	ITEM 625 LIGHTING MISC. RELABEL EXISTING LIGHT POLE (EACH)	ITEM 625 TRENCH 24" DEEP (LIN.FT.)	ITEM 625 CONDUIT, 3", 713.04 (LIN.FT.)	ITEM 625 LIGHTING MISC., EXISTING LUMINAIRE REFURBISHED (EACH)	ITEM 625 CONDUIT CLEANED AND CABLES REMOVED (LIN.FT.)	603 4" CONDUIT TYPE E (LIN.FT.)	202 DISCONNECT EXISTING CIRCUIT (EACH)
CIRCUIT "P"																																					
L-1	363&367	LT.	21st ST. & RAMP "H"	20+68	114+20	3	3	1	3	3	3			700	94							2		1		4	4		2	1	4	650		1		20	2
L-2	363	RT.&LT.	RAMP "H"	108+10	108+10			2					100										2	4					1						40	40	1
L-3	363&364	LT.&RT.	RAMPS "H"&"F"	108+10	106+80			4						440									4	8	1	1					1	410		1		80	1
L-4	364	RT.&LT.	RAMP "F"	106+80	106+80			2					90										2	4									5		35	40	
L-5	364&367	LT.	RAMP "F"	106+80	113+02	2	2		2	2	2			665	94							2			4	4		2	2	4	625		2			2
L-6	364	LT.	21st ST. & RAMP "F"	15+60	106+80									120											1	1				1	95		1			1
L-7	364	RT.&LT.	21st ST.	15+70	15+70			2					180										2	2											88	40	
L-8	364	RT.	21st ST.	FROM POWER SERVICE STA. 15+28, 41' RT.	15+70								100																						40		
CIRCUIT "K"																																					
L-8A	365&366	℄	S.R. 16	105+50	110+40	2	2		2	2	2		1000							2					3	3		2									1
TOTALS CARRIED TO SHEET 401.						7	7	11	7	7	7		1470	1925	188					2		4		11	18	13	13		7	3	10	1780	5	5	203	220	8

CALCULATED J. C. 4/13/95
CHECKED N. M. 4/18/95

LIGHTING QUANTITIES CIRCUITS "P" & "K"

LIC-16-19.72

L16LSSP.DGN 5/02/95

LIGHTING QUANTITIES
CIRCUIT "C"

CALCULATED J. C. 4/13/95
CHECKED M. N. 4/18/95

REFERENCE NO.	SHEET NO.	SIDE	LOCATION	STATION TO STATION FROM	STATION TO STATION TO	ITEM 202 LUMINAIRE REMOVED FOR STORAGE, AS PER PLAN	ITEM 202 LIGHT POLE REMOVED FOR STORAGE, AS PER PLAN	ITEM 202 PULL BOX REMOVED	ITEM 202 LIGHT POLE FOUNDATION REMOVED, AS PER PLAN	ITEM 625 REERECT EXISTING LUMINAIRE, AS PER PLAN	ITEM 625 REERECT EXISTING LIGHT POLE, AS PER PLAN	ITEM 625 NO. 2 AWG, 5,000 VOLT DISTRIBUTION CABLE	ITEM 625 NO. 4 AWG, 5,000 VOLT DISTRIBUTION CABLE	ITEM 625 1 1/2" DUCT, CABLE WITH TWO NO.4 AWG 5,000 VOLT CABLES	ITEM 625 NO.10 AWG POLE AND BRACKET CABLE	ITEM 625 LIGHT POLE, DESIGN AT12B41.7	ITEM 625 LIGHT POLE, MISC., MEDIAN MOUNT, LOW MAST, DESIGN A0N40	ITEM 625 LUMINAIRE, CONVENTIONAL STYLE B, TYPE II, 200 WATT, HIGH PRESSURE SODIUM, 713.11, 480 VOLT	ITEM 625 LUMINAIRE, LOW MAST, ASYMETRIC TYPE I, 400 WATT HIGH PRESSURE SODIUM, 713.21, 480 VOLT, AS PER PLAN	ITEM 625 MEDIAN LIGHT POLE FOUNDATION, 10' DEEP	ITEM 625 MEDIAN LIGHT POLE FOUNDATION, 10' DEEP, AS PER PLAN	ITEM 625 LIGHT POLE FOUNDATION, 24" x 10' DEEP	ITEM 625 MEDIAN PULL BOX	ITEM 625 PULL BOX, 713.08, 18"	ITEM 625 CABLE SPLICING KIT	ITEM 625 CONNECTOR KIT, TYPE II	ITEM 625 CONNECTOR KIT, TYPE III	ITEM 625 CONNECTOR KIT, TYPE VIIB	ITEM 625 GROUND ROD	ITEM 625 TRANSFORMER BASE, TYPE A	ITEM 625 LIGHTING MISC., RELABEL EXISTING LIGHT POLE	ITEM 625 TRENCH 24" DEEP	ITEM 625 CONDUIT, 3", 713.04	ITEM 625 LIGHTING MISC., EXISTING LUMINAIRE REFURBISHED	ITEM 625 CONDUIT CLEANED AND CABLES REMOVED	603 4" CONDUIT TYPE E	202 DISCONNECT EXISTING CIRCUIT
				* STATION EQUATION STA. 118+69.02 BACK = STA. 117+46.58 AHEAD																																			
						EACH	EACH	EACH	EACH	EACH	EACH	LIN.FT.	LIN.FT.	LIN.FT.	LIN.FT.	EACH	EACH	EACH	EACH	EACH	EACH	EACH	EACH	EACH	EACH	EACH	EACH	EACH	EACH	EACH	EACH	LIN.FT.	LIN.FT.	EACH	LIN.FT.		EACH
CIRCUIT "C"																																							
L-9	367&368	℄	S.R.16	112+91	118+72	3	3		3	3	3		1440							2	1					3	3		3		3								
L-10	367&368	RT.	S.R.16	* 116+20	118+72	1	1		1	1	1			385								1				1	1		1		1	375					1		
L-11	368	RT.& LT.	S.R.16	118+72	118+72								270										1		2	2	2	2			2			2	115		2	
L-12	367&368	LT.	S.R.16	* 115+00	118+72			1						524										1	2	2	2		1		2	496		2		20	2	
L-13	368&369	LT.	S.R.16	118+72	121+55	1	1	1	1	1	1			303								1		1	2	1	1		2	1	1	283				20		
L-14	368&369	℄	S.R.16	118+72	123+60	2	2		2	2	2		1036							2						2	2		2		2							
L-15	369	RT.	S.R.16	121+55	124+00									265	220	2			2			2				2	2		2			245						
L-16	369	℄ & RT.	S.R.16	123+60	123+60			1					130										1	1	2			2	1			4	4		55	20		
L-17	369-371	℄	S.R.16	123+60	130+20	2	2		2	2	2	1380								1	1					2	2		2		2							
L-18	371	℄ & LT.	S.R.16	130+20	TO POWER SERVICE STA. 151+97, 280' RT.			3				810											1	3	4										380	60		
L-19	371&372	℄	S.R.16	130+20	135+90	3	3		3	3	3		1190							3						3	3		3		3							
L-20	372	℄ & RT.	S.R.16	135+90	135+90			1					110										1	1	2			2	1						45	20		
L-21	372&373	℄	S.R.16	135+90	143+35	2	2		2	2	2		1560		80		1		1	2	1					3	3		3		3							
L-22	373	℄ & LT.	S.R.16	143+35	143+35			1					110										1	1	2			2	1						45	20		
L-23	373	℄	S.R.16	143+35	143+80	1	1		1	1	1		100							1						1	1		1		1							
TOTALS CARRIED TO SHEET 401.						15	15	8	15	15	15	2190	5946	1477	300	2	1	2	1	11	3	4	5	8	16	22	22	8	23	1	20	1403	4	4	640	160	5	

LIC-16-19.72

392
547

L16LSSC.DGN 5/02/95

REFERENCE NO.	SHEET NO.	SIDE	LOCATION	STATION TO STATION FROM	STATION TO STATION TO	ITEM 202 LUMINAIRE REMOVED FOR STORAGE, AS PER PLAN	ITEM 202 LIGHT POLE REMOVED FOR STORAGE, AS PER PLAN	ITEM 202 PULL BOX REMOVED	ITEM 202 LIGHT POLE FOUNDATION REMOVED, AS PER PLAN	ITEM 625 REERECT EXISTING LUMINAIRE, AS PER PLAN	ITEM 625 REERECT EXISTING LIGHT POLE, AS PER PLAN	ITEM 625 NO. 2 AWG. 5,000 VOLT DISTRIBUTION CABLE	ITEM 625 NO. 4 AWG. 5,000 VOLT DISTRIBUTION CABLE	ITEM 625 1 1/2" DUCT, CABLE WITH TWO NO.4 AWG 5,000 VOLT CABLES	ITEM 625 NO.10 AWG POLE AND BRACKET CABLE	ITEM 625 LIGHT POLE, DESIGN AT12B41.7	ITEM 625 LIGHT POLE, MISC., MEDIAN MOUNT, LOW MAST, DESIGN A0N40	ITEM 625 LUMINAIRE, CONVENTIONAL STYLE B, TYPE II, 200 WATT, HIGH PRESSURE SODIUM, 713.11, 480 VOLT.	ITEM 625 LUMINAIRE, LOW MAST, ASYMETRIC TYPE I, 400 WATT HIGH PRESSURE SODIUM, 713.21, 480 VOLT., AS PER PLAN	ITEM 625 MEDIAN LIGHT POLE FOUNDATION, 10' DEEP	ITEM 625 MEDIAN LIGHT POLE FOUNDATION, 10' DEEP, AS PER PLAN	ITEM 625 LIGHT POLE FOUNDATION, 24" x 10' DEEP	MEDIAN PULL BOX	PULL BOX, 713.08, 18"	CABLE SPLICING KIT	CONNECTOR KIT, TYPE II	CONNECTOR KIT, TYPE III	CONNECTOR KIT, TYPE VIIB	GROUND ROD	TRANSFORMER BASE, TYPE AT-A	LIGHTING MISC., RELABEL EXISTING LIGHT POLE	TRENCH 24" DEEP	CONDUIT, 3", 713.04	LIGHTING MISC., EXISTING LUMINAIRE REFURBISHED	CONDUIT CLEANED AND CABLES REMOVED	603 4" CONDUIT TYPE E	202 DISCONNECT EXISTING CIRCUIT
						EACH	EACH	EACH	EACH	EACH	EACH	LIN.FT.	LIN.FT.	LIN.FT.	LIN.FT.	EACH	EACH	EACH	EACH	EACH	EACH	EACH	EACH	EACH	EACH	EACH	EACH	EACH	EACH	EACH	EACH	LIN.FT.	LIN.FT.	EACH	LIN.FT.		EACH
CIRCUIT "G"																																					
L-24	369-371	RT.	S.R.16 & HULL STREET	111+19	130+15	2	2	1	2	2	2			600								2		1	2	3	3		3	2		570		1		20	1
L-25	371	RT.& LT.	S.R.16	130+15	TO POWER SERVICE STA. 131+97, 280' LT.			2					1020											2	4			2								100	40	
L-25A	376	LT.	ROADWAY "B"	143+58	144+76	1	1	1	1	1	1			128								1		1	2	1	1		1			118				20	
TOTALS CARRIED TO SHEET 401.						3	3	4	3	3	3		1020	728								3		4	8	4	4	2	4	2		688		1	100	80	1

CALCULATED J. C. 4/13/95
CHECKED M. M. 4/18/95

LIGHTING QUANTITIES
CIRCUIT "G"

LIC-16-19.72

L16LSSC.DGN 5/02/95

REFERENCE NO.	SHEET NO.	SIDE	LOCATION	STATION TO STATION FROM	STATION TO STATION TO	ITEM 202 LUMINAIRE REMOVED FOR STORAGE, AS PER PLAN	ITEM 202 LIGHT POLE REMOVED FOR STORAGE, AS PER PLAN	ITEM 202 PULL BOX REMOVED	ITEM 202 LIGHT POLE FOUNDATION REMOVED, AS PER PLAN	ITEM 625 REERECT EXISTING LUMINAIRE, AS PER PLAN	ITEM 625 REERECT EXISTING LIGHT POLE, AS PER PLAN	ITEM 625 NO. 2 AWG. 5,000 VOLT DISTRIBUTION CABLE	ITEM 625 NO. 4 AWG. 5,000 VOLT DISTRIBUTION CABLE	ITEM 625 1 1/2" DUCT. CABLE WITH TWO NO.4 AWG 5,000 VOLT CABLES	ITEM 625 NO.10 AWG POLE AND BRACKET CABLE	ITEM 625 LIGHT POLE, DESIGN AT12B41.7	ITEM 625 LIGHT POLE, MISC., MEDIAN MOUNT, LOW MAST, DESIGN A0N40	ITEM 625 LUMINAIRE, CONVENTIONAL STYLE B, TYPE II, 200 WATT, HIGH PRESSURE SODIUM, 713.11, 480 VOLT.	ITEM 625 LUMINAIRE, LOW MAST, ASYMETRIC TYPE I, 400 WATT HIGH PRESSURE SODIUM, 713.21, 480 VOLT., AS PER PLAN	ITEM 625 MEDIAN LIGHT POLE FOUNDATION, 10' DEEP	ITEM 625 MEDIAN LIGHT POLE FOUNDATION, 10' DEEP, AS PER PLAN	ITEM 625 LIGHT POLE FOUNDATION, 24" x 10' DEEP	MEDIAN PULL BOX	PULL BOX, 713.08, 18"	CABLE SPLICING KIT	CONNECTOR KIT, TYPE II	CONNECTOR KIT, TYPE III	CONNECTOR KIT, TYPE VIIB	GROUND ROD	TRANSFORMER BASE, TYPE AT-A	RELABEL EXISTING LIGHT POLE	TRENCH 24" DEEP	CONDUIT, 3", 713.04	LIGHTING MISC., EXISTING LUMINAIRE REFURBISHED	CONDUIT CLEANED AND CABLES REMOVED	603 4" CONDUIT TYPE E	202 DISCONNECT EXISTING CIRCUIT
						EACH	EACH	EACH	EACH	EACH	EACH	LIN.FT.	LIN.FT.	LIN.FT.	LIN.FT.	EACH	EACH	EACH	EACH	EACH	EACH	EACH	EACH										LIN.FT.	LIN.FT.	EACH	LIN.FT.		EACH
CIRCUIT "F" @ ROADWAY "A"																																					
L-26	369&370	LT.	S.R.16	124+00	127+76	2	2	1	2	2	2			430								2		1	2	4	4			2		390		1		20	2
TOTALS CARRIED TO SHEET 401.						2	2	1	2	2	2			430								2		1	2	4	4			2		390		1		20	2

CALCULATED J. C. 4/13/95
CHECKED N. N. 4/18/95

LIGHTING QUANTITIES
CIRCUIT "F" AT ROADWAY "A"

LIC-16-19.72

394
547

L16LSSF2.DGN 5/02/95

REFERENCE NO.	SHEET NO.	SIDE	LOCATION	STATION TO STATION FROM	STATION TO STATION TO	ITEM 202 LUMINAIRE REMOVED FOR STORAGE, AS PER PLAN	ITEM 202 LIGHT POLE REMOVED FOR STORAGE, AS PER PLAN	ITEM 202 PULL BOX REMOVED	ITEM 202 LIGHT POLE FOUNDATION REMOVED, AS PER PLAN	ITEM 625 REERECT EXISTING LUMINAIRE, AS PER PLAN	ITEM 625 REERECT EXISTING LIGHT POLE, AS PER PLAN	ITEM 625 NO. 2 AWG. 5,000 VOLT DISTRIBUTION CABLE	ITEM 625 NO. 4 AWG. 5,000 VOLT DISTRIBUTION CABLE	ITEM 625 1 1/2" DUCT, CABLE WITH TWO NO.4 AWG 5,000 VOLT CABLES	ITEM 625 NO.10 AWG POLE AND BRACKET CABLE	ITEM 625 LIGHT POLE, DESIGN AT12B41.7	ITEM 625 LIGHT POLE, MISC.; MEDIAN MOUNT, LOW MAST, DESIGN AON40	ITEM 625 LUMINAIRE, CONVENTIONAL STYLE B, TYPE II, 200 WATT, HIGH PRESSURE SODIUM, 713.11, 480 VOLT.	ITEM 625 LUMINAIRE, LOW MAST, ASYMETRIC TYPE I, 400 WATT HIGH PRESSURE SODIUM, 713.21, 480 VOLT., AS PER PLAN	ITEM 625 MEDIAN LIGHT POLE FOUNDATION, 10' DEEP	ITEM 625 MEDIAN LIGHT POLE FOUNDATION, 10' DEEP, AS PER PLAN	ITEM 625 LIGHT POLE FOUNDATION, 24" x 10' DEEP	ITEM 625 MEDIAN PULL BOX	ITEM 625 PULL BOX, 713.08, 18"	ITEM 625 CABLE SPLICING KIT	ITEM 625 CONNECTOR KIT, TYPE II	ITEM 625 CONNECTOR KIT, TYPE III	ITEM 625 CONNECTOR KIT, TYPE VIIB	ITEM 625 GROUND ROD	ITEM 625 TRANSFORMER BASE, TYPE AT-A	ITEM 625 LIGHTING MISC.; RELABEL EXISTING LIGHT POLE	ITEM 625 TRENCH 24" DEEP	ITEM 625 CONDUIT, 3", 713.04	ITEM 625 LIGHTING MISC.; EXISTING LUMINAIRE REFURBISHED	ITEM 625 CONDUIT CLEANED AND CABLES REMOVED	603 4" CONDUIT TYPE E	202 DISCONNECT EXISTING CIRCUIT
						EACH	EACH	EACH	EACH	EACH	EACH	LIN.FT.	LIN.FT.	LIN.FT.	LIN.FT.	EACH	EACH	EACH	EACH	EACH	EACH	EACH	EACH	EACH	EACH	EACH	EACH	EACH	EACH	EACH	EACH	LIN.FT.	LIN.FT.	EACH	LIN.FT.		EACH
CIRCUIT "Q"																																							
L-27	373&374	RT.	11 th STREET	25+68	27+25			2						177									2	4	1	1				1	157		1		40	1
L-28	374	RT.&LT.	11 th STREET	26+15	26+15			1					106										1	2										48	20	
L-29	373&374	LT.	11 th STREET	25+57	26+15			1						78									1	2	1	1				1	58		1		20	1
L-30	374	LT.	11 th STREET & RAMP "DD"	26+15	141+95								180																					80		
L-31	374&375	RT.	RAMP "DD"	141+95	147+68	1	1		1	1	1			603								1			3	3				3	573		2			2
L-32	375	RT.	S.R. 16 & RAMP "DD"	147+70	147+68			1					130										1	2										55	20	
L-33	373&375	RT.	S.R. 16 & ROADWAY "D"	171+12	147+70	4	4	1	3	4	4		216	511								3		1	2	4	4		3		4	481				20	
L-34	375,377&378	RT.	S.R. 16 & RAMP "DD"	147+68	157+75			1						1067	110	1			1			1		1	2	5	5		2		5	1007		4		20	4
L-35	378	℄	S.R. 16	146+40	157+00	5	5		5	5	5		2220								5				5	5		5		5							
L-36	378	℄ &RT.	S.R. 16	157+00	157+00			1					170										1	1	2			2							75	20	
L-37	378	℄	S.R. 16	157+00	159+22								464																								
L-38	378	℄ &LT.	S.R. 16	159+22	TO POWER SERVICE STA. 158+98, 149' LT.			1					340										1	1										155	20	
TOTALS CARRIED TO SHEET 401.						10	10	9	9	10	10		3826	2436	110	1			1		5		5	2	9	16	19	19	2	10		19	2276		8	413	180	8

CALCULATED J.C.F. 4/10/95

CHECKED M. M. 4/18/95

LIGHTING QUANTITIES CIRCUIT "Q"

LIC-16-19.72

395
547

L16LSSO.DGN 5/02/95

REFERENCE NO.	SHEET NO.	SIDE	LOCATION	STATION TO STATION FROM	STATION TO STATION TO	ITEM 202 LUMINAIRE REMOVED FOR STORAGE, AS PER PLAN	ITEM 202 LIGHT POLE REMOVED FOR STORAGE, AS PER PLAN	ITEM 202 PULL BOX REMOVED	ITEM 202 LIGHT POLE FOUNDATION REMOVED, AS PER PLAN	ITEM 625 REERECT EXISTING LUMINAIRE, AS PER PLAN	ITEM 625 REERECT EXISTING LIGHT POLE, AS PER PLAN	ITEM 625 NO. 2 AWG. 5,000 VOLT DISTRIBUTION CABLE	ITEM 625 NO. 4 AWG. 5,000 VOLT DISTRIBUTION CABLE	ITEM 625 1 1/2" DUCT, CABLE WITH TWO NO.4 AWG 5,000 VOLT CABLES	ITEM 625 NO.10 AWG POLE AND BRACKET CABLE	ITEM 625 LIGHT POLE, DESIGN AT12B41.7	ITEM 625 LIGHT POLE, MISC.: MEDIAN MOUNT, LOW MAST, DESIGN A0N40	ITEM 625 LUMINAIRE, CONVENTIONAL STYLE B, TYPE II, 200 WATT, HIGH PRESSURE SODIUM, 713.11, 480 VOLT.	ITEM 625 LUMINAIRE, LOW MAST, ASYMETRIC TYPE I, 400 WATT HIGH PRESSURE SODIUM, 713.21, 480 VOLT., AS PER PLAN	ITEM 625 MEDIAN LIGHT POLE FOUNDATION, 10' DEEP	ITEM 625 MEDIAN LIGHT POLE FOUNDATION, 10' DEEP, AS PER PLAN	ITEM 625 LIGHT POLE FOUNDATION, 24" x 10' DEEP	MEDIAN PULL BOX	PULL BOX, 713.08, 18"	CABLE SPLICING KIT	CONNECTOR KIT, TYPE II	CONNECTOR KIT, TYPE III	CONNECTOR KIT, TYPE VIIB	GROUND ROD	TRANSFORMER BASE, TYPE AT-A	LIGHTING MISC.: RELABEL EXISTING LIGHT POLE	TRENCH 24" DEEP	CONDUIT, 3", 713.04	LIGHTING MISC.: EXISTING LUMINAIRE REFURBISHED	CONDUIT CLEANED AND CABLES REMOVED	603 4" CONDUIT TYPE E	202 DISCONNECT EXISTING CIRCUIT
						EACH	EACH	EACH	EACH	EACH	EACH	LIN.FT.	LIN.FT.	LIN.FT.	LIN.FT.	EACH	EACH	EACH	EACH	EACH	EACH	EACH	EACH										LIN.FT.	LIN.FT.	EACH	LIN.FT.		EACH
CIRCUIT "T"																																					
L-39	373&376	RT.	11th STREET	22+30	24+00									190											2	2					170		2			2
L-40	376	RT.& LT.	11th STREET	22+50	22+50			2					102										2	4										46	40	
L-41	376	LT.& RT.	11th STREET RAMP "BB"	22+50	144+25									170											1	1					160		1			1
L-42	376	LT.	11th STREET RAMP "BB"	20+80	144+25									170											2	2					150		2			2
L-43	376	LT.& RT.	RAMP "BB"	144+25	144+25			2					100										2	4										40	40	
L-44	376	LT.	RAMP "BB"	144+25	146+78									273											1	1					253		1			1
L-45	376	LT.& RT.	RAMP "BB"	146+78	146+68			1					116										1	2	1	1							1	48	20	1
L-46	376-378	LT.	RAMP "BB" & S.R.16	146+78	155+40			2						922									2	2	4	4		1			862		4		20	5
L-47	378	LT.	S.R.16	155+40	156+10	1	1		1	1	1			90								1			1	1		1			70					
TOTALS CARRIED TO SHEET 401.						1	1	7	1	1	1		318	1815								1		7	12	12	12		2			1665		11	134	120	12

CALCULATED J. C. 4/13/95
CHECKED J. H. 4/18/95

LIGHTING QUANTITIES
CIRCUIT "T"

LIC-16-19.72

L16LSST.DGN 01/23/99

REFERENCE NO.	SHEET NO.	SIDE	LOCATION	STATION TO STATION FROM	STATION TO STATION TO	ITEM 202 LUMINAIRE REMOVED FOR STORAGE, AS PER PLAN	ITEM 202 LIGHT POLE REMOVED FOR STORAGE, AS PER PLAN	ITEM 202 PULL BOX REMOVED	ITEM 202 LIGHT POLE FOUNDATION REMOVED, AS PER PLAN	ITEM 625 REERECT EXISTING LUMINAIRE, AS PER PLAN	ITEM 625 REERECT EXISTING LIGHT POLE, AS PER PLAN	ITEM 625 NO. 2 AWG. 5,000 VOLT DISTRIBUTION CABLE	ITEM 625 NO. 4 AWG. 5,000 VOLT DISTRIBUTION CABLE	ITEM 625 1 1/2" DUCT. CABLE WITH TWO NO.4 AWG 5,000 VOLT CABLES	ITEM 625 NO.10 AWG POLE AND BRACKET CABLE	ITEM 625 LIGHT POLE, DESIGN AT12B41.7	ITEM 625 LIGHT POLE, MISC., MEDIAN MOUNT, LOW MAST, DESIGN A0N40	ITEM 625 LUMINAIRE, CONVENTIONAL STYLE B, TYPE II, 200 WATT, HIGH PRESSURE SODIUM, 713.11, 480 VOLT.	ITEM 625 LUMINAIRE, LOW MAST, ASYMETRIC TYPE I, 400 WATT HIGH PRESSURE SODIUM, 713.21, 480 VOLT., AS PER PLAN	ITEM 625 MEDIAN LIGHT POLE FOUNDATION, 10' DEEP	ITEM 625 MEDIAN LIGHT POLE FOUNDATION, 10' DEEP, AS PER PLAN	ITEM 625 LIGHT POLE FOUNDATION, 24" x 10' DEEP	MEDIAN PULL BOX	PULL BOX, 713.08, 18"	CABLE SPLICING KIT	CONNECTOR KIT, TYPE II	CONNECTOR KIT, TYPE III	CONNECTOR KIT, TYPE VIIB	GROUND ROD	TRANSFORMER BASE, TYPE AT-A	LIGHTING MISC.: RELABEL EXISTING LIGHT POLE	TRENCH 24" DEEP	CONDUIT, 3", 713.04	LIGHTING MISC.: EXISTING LUMINAIRE REFURBISHED	CONDUIT CLEANED AND CABLES REMOVED	603 4" CONDUIT TYPE E	202 DISCONNECT EXISTING CIRCUIT
						EACH	EACH	EACH	EACH	EACH	EACH	LIN.FT.	LIN.FT.	LIN.FT.	LIN.FT.	EACH	EACH	EACH	EACH	EACH	EACH	EACH	EACH	EACH	EACH	EACH	EACH	EACH	EACH	EACH	EACH	LIN.FT.	LIN.FT.	EACH	LIN.FT.	EACH	EACH
CIRCUIT "S"																																					
L-55	378	℄&LT.	S.R. 16	FROM POWER SERVICE STA. 158+98, 149' LT.	159+22							340																							155		
L-56	378	LT.	S.R. 16	158+30	159+22			1						112	110	1		1				1		1		1	1		2		1	92				20	
L-57	378&379	℄	S.R. 16	159+22	164+55	3	3		3	3	3	1146								3					3	3		3		3							
L-58	379&380	℄	S.R. 16	164+55	167+00	1	1		1	1	1		510							1					1	1		1		1							
L-59	379	RT.&LT.	S.R. 16	164+55	164+55			2					350									1	2	4			2								155	40	
L-60	379	RT.	S.R. 16	160+50	164+55									425	220	2		2				2			2	2		2			405						
L-61	379&380	RT.	S.R. 16	164+55	165+10			1						65									1	2				1			55						1
L-62	380	RT.	S.R. 16 & RAMP "C" @ MT. VERNON RD.	165+10	169+48																									2			2				
L-63	380&382	RT.	RAMP "CC" & "C" @ MT. VERNON RD.	169+48	175+16	2	2	1	2	2	2			618								2		1	2	4	4		3		4	568		2		20	2
L-64	382	RT.	RAMP "CC" @ MT. VERNON RD.	175+16	28+85									145												1	1				1	135		1			1
L-65	382	RT.&LT.	RAMP "CC" @ MT. VERNON RD.	175+16	175+16			1					114										1	2											47	20	
L-66	382	RT.	RAMP "C" @ MT. VERNON RD.	27+25	174+85									70											2	2				2	60		2				2
L-67	379	LT.	S.R. 16	160+50	164+55									425	220	2		2				2			2	2		2			405						
L-68	379&380	LT.	S.R. 16	164+55	165+75									140											1	1				1	120		1				1
L-69	380	LT.	PEARL ST. & S.R. 16	165+75	20+76								100												1	1				1			1	40			1
L-70	380	LT.	S.R. 16 & RAMP "A" @ MT. VERNON RD.	165+75	168+98			3						365									3	6	2	2		1		2	325		2		60	2
L-71	380&381	LT.	RAMP "A" @ MT. VERNON RD.	168+98	20+83.5	1	1		1	1	1			480								1			2	2		1		2	450		1			1
L-72	381	RT.	MT. VERNON RD.	19+50	20+83.5			1						144									1	2	1	1		1		1	134		1		20	2
TOTALS CARRIED TO SHEET 401.						7	7	10	7	7	7	1486	1074	2989	550	5		5		4		8	1	10	18	23	23		17		21	2749		13	397	180	13

CALCULATED J. C. 4/13/95
CHECKED M. M. 4/18/95

LIGHTING QUANTITIES CIRCUIT "S"

LIC-16-19.72

397
547

L16LSSS.DGN 5/02/95

LIGHTING QUANTITIES
CIRCUIT "X"

CALCULATED J.C. 4/12/95
CHECKED M.M. 4/18/95

REFERENCE NO.	SHEET NO.	SIDE	LOCATION	STATION TO STATION FROM	STATION TO STATION TO	ITEM 202 LUMINAIRE REMOVED FOR STORAGE, AS PER PLAN (EACH)	ITEM 202 LIGHT POLE REMOVED FOR STORAGE, AS PER PLAN (EACH)	ITEM 202 PULL BOX REMOVED (EACH)	ITEM 202 LIGHT POLE FOUNDATION REMOVED, AS PER PLAN (EACH)	ITEM 625 REERECT EXISTING LUMINAIRE, AS PER PLAN (EACH)	ITEM 625 REERECT EXISTING LIGHT POLE, AS PER PLAN (EACH)	ITEM 625 NO. 2 AWG. 5,000 VOLT DISTRIBUTION CABLE (LIN.FT.)	ITEM 625 NO. 4 AWG. 5,000 VOLT DISTRIBUTION CABLE (LIN.FT.)	ITEM 625 1 1/2" DUCT. CABLE WITH TWO NO.4 AWG 5,000 VOLT CABLES (LIN.FT.)	ITEM 625 NO.10 AWG POLE AND BRACKET CABLE (LIN.FT.)	ITEM 625 LIGHT POLE, DESIGN AT12B41.7 (EACH)	ITEM 625 LIGHT POLE, MISC., MEDIAN MOUNT, LOW MAST, DESIGN A0N40 (EACH)	ITEM 625 LUMINAIRE, CONVENTIONAL STYLE B, TYPE II, 200 WATT, HIGH PRESSURE SODIUM, 713.11, 480 VOLT. (EACH)	ITEM 625 LUMINAIRE, LOW MAST, ASYMETRIC TYPE I, 400 WATT HIGH PRESSURE SODIUM, 713.21, 480 VOLT., AS PER PLAN (EACH)	ITEM 625 MEDIAN LIGHT POLE FOUNDATION, 10' DEEP (EACH)	ITEM 625 MEDIAN LIGHT POLE FOUNDATION, 10' DEEP, AS PER PLAN (EACH)	ITEM 625 LIGHT POLE FOUNDATION, 24" x 10' DEEP (EACH)	ITEM 625 MEDIAN PULL BOX (EACH)	ITEM 625 PULL BOX, 713.08, 18" (EACH)	ITEM 625 CABLE SPLICING KIT (EACH)	ITEM 625 CONNECTOR KIT, TYPE II (EACH)	ITEM 625 CONNECTOR KIT, TYPE III (EACH)	ITEM 625 CONNECTOR KIT, TYPE VIIB (EACH)	ITEM 625 GROUND ROD (EACH)	ITEM 625 TRANSFORMER BASE, TYPE AT-A (EACH)	ITEM 625 LIGHTING MISC.: RELABEL EXISTING LIGHT POLE (EACH)	ITEM 625 TRENCH 24" DEEP (LIN.FT.)	ITEM 625 CONDUIT, 3", 713.04 (LIN.FT.)	ITEM 625 LIGHTING MISC.: EXISTING LUMINAIRE REFURBISHED (EACH)	ITEM 625 CONDUIT CLEANED AND CABLES REMOVED (LIN.FT.)	603 4" CONDUIT TYPE E	202 DISCONNECT EXISTING CIRCUIT (EACH)
CIRCUIT "X"																																					
L-73	380&383	℄	S.R. 16	169+30	173+45	2	2		2	2	2		830							2					2	2		2		2							
L-74	383	℄ &RT.	S.R. 16	173+45	173+98			2					106	68								1	2	6				1			58	5		43	40	1
L-75	383	℄	S.R. 16	173+45	174+65								260																								
L-76	383	℄ &LT.	S.R. 16	174+65	174+65	1	1	1	1	1	1		124							1			1	2	1	1		2		1				52	20	1
L-77	383&384	℄	S.R. 16	174+65	177+13								516																								
L-78	384,386 389 & 390	℄ &LT.	S.R. 16	177+13	190+00	6	6	1	5	6	6		2634							5			1		6	6		5		6							
L-79	384&385	℄ &LT.	S.R. 16 & SERVICE RD. "AB"	177+13	TO POWER SERVICE STA. 177+26, 307' LT.			3					674									1	3	4			2							307	60	
L-80	381	RT.&LT.	MT. VERNON RD. & SERVICE RD. "AB"	22+78	22+78			1					100										1	2	1	1				1			1	40	20	1
L-81	381&385	RT.	SERVICE RD. "AB"	22+78	177+70									455											1	1				1	435		1			1
TOTALS CARRIED TO SHEET 401.						9	9	8	8	9	9		5244	523						8			2	8	14	11	11	2	10		11	493	5	2	442	140	4

LIGLSSX.DGN 02/15/99

LIC-16-19.72

398
547

REFERENCE NO.	SHEET NO.	SIDE	LOCATION	STATION TO STATION FROM	STATION TO STATION TO	ITEM 202 LUMINAIRE REMOVED FOR STORAGE, AS PER PLAN	ITEM 202 LIGHT POLE REMOVED FOR STORAGE, AS PER PLAN	ITEM 202 PULL BOX REMOVED	ITEM 202 LIGHT POLE FOUNDATION REMOVED, AS PER PLAN	ITEM 625 REERECT EXISTING LUMINAIRE, AS PER PLAN	ITEM 625 REERECT EXISTING LIGHT POLE, AS PER PLAN	ITEM 625 NO. 2 AWG. 5,000 VOLT DISTRIBUTION CABLE	ITEM 625 NO. 4 AWG. 5,000 VOLT DISTRIBUTION CABLE	ITEM 625 1 1/2" DUCT, CABLE WITH TWO NO.4 AWG 5,000 VOLT CABLES	ITEM 625 NO.10 AWG POLE AND BRACKET CABLE	ITEM 625 LIGHT POLE, DESIGN AT12B41.7	ITEM 625 LIGHT POLE, MISC.; MEDIAN MOUNT, LOW MAST, DESIGN A0N40	ITEM 625 LUMINAIRE, CONVENTIONAL STYLE B, TYPE II, 200 WATT, HIGH PRESSURE SODIUM, 713.11, 480 VOLT.	ITEM 625 LUMINAIRE, LOW MAST, ASYMETRIC TYPE I, 400 WATT HIGH PRESSURE SODIUM, 713.21, 480 VOLT., AS PER PLAN	ITEM 625 MEDIAN LIGHT POLE FOUNDATION, 10' DEEP	ITEM 625 MEDIAN LIGHT POLE FOUNDATION, 10' DEEP, AS PER PLAN	ITEM 625 LIGHT POLE FOUNDATION, 24" x 10' DEEP	ITEM 625 MEDIAN PULL BOX	ITEM 625 PULL BOX, 713.08, 18"	ITEM 625 CABLE SPLICING KIT	ITEM 625 CONNECTOR KIT, TYPE II	ITEM 625 CONNECTOR KIT, TYPE III	ITEM 625 CONNECTOR KIT, TYPE VIIB	ITEM 625 GROUND ROD	ITEM 625 TRANSFORMER BASE, TYPE AT-A	ITEM 625 LIGHTING MISC.; RELABEL EXISTING LIGHT POLE	ITEM 625 TRENCH 24" DEEP	ITEM 625 CONDUIT, 3", 713.04	ITEM 625 LIGHTING MISC.; EXISTING LUMINAIRE REFURBISHED	ITEM 625 CONDUIT CLEANED AND CABLES REMOVED	603 4" CONDUIT TYPE E	202 DISCONNECT EXISTING CIRCUIT
						EACH	EACH	EACH	EACH	EACH	EACH	LIN.FT.	LIN.FT.	LIN.FT.	LIN.FT.	EACH	EACH	EACH	EACH	EACH	EACH	EACH	EACH	EACH	EACH	EACH	EACH	EACH	EACH	EACH	LIN.FT.	LIN.FT.	EACH	LIN.FT.		EACH
CIRCUIT "W"																																					
L-82	383	RT.	MT. VERNON RD.	24+49.2	25+05	1	1	1		1	1		132										1	2	1	1				1						20	
L-83	382&383	RT.	MT. VERNON RD.	25+05	26+00									105																	95						
L-84	382	RT.&LT.	MT. VERNON RD.	26+00	26+05			1					94										1	2	1	1		1		1				1	37	20	2
L-85	382,384 & 388	LT.&RT.	MT. VERNON RD., SERVICE RD. "CD" & HUDSON AVE.	26+05	26+00			2						670									2	4	4	4		1		4	600		4		40	5
L-86	388	LT.&RT.	SERVICE RD. "CD"	179+35	179+35			2					110										2	4										45	40	
L-87	388	RT.	SERVICE RD. "CD" & HUDSON AVE.	179+35	28+80									195											1	1				1	185		1			1
L-88	384	RT.	HUDSON AVE.	24+80	26+00									130																	120						
L-89	385	RT.&LT.	SERVICE RD. "AB"	177+70	TO POWER SERVICE STA. 177+26, 307' LT.								170											2										75		
L-90	384&385	RT.	SERVICE RD. "AB" & HUDSON AVE.	177+70	24+80									280											1	1				1	260		1			1
L-91	384	RT.&LT.	HUDSON AVE.	24+80	24+80			1					130										1	2										55	20	
L-92	384&388	LT.	HUDSON AVE. & RAMP "D" @ HUDSON AVE.	24+80	180+95									365											1	1				1	350		1			1
L-93	388	RT.&LT.	RAMP "D" @ HUDSON AVE.	180+95	180+95			2					140										2	4				1						60	40	1
L-94	388	LT.&RT.	RAMP "D" @ HUDSON AVE. & HUDSON AVE.	29+00	180+95			1						125									1	2	1	1		1		1	105		1		20	2
L-95	388&389	RT.	RAMP "D" @ HUDSON AVE.	180+95	188+65	1	1		1	1	1			820								1			5	5		1	1	5	770		4			4
TOTALS CARRIED TO SHEET 401.						2	2	10	1	2	2		776	2690								1		10	22	15	15		5	1	15	2485		13	272	200	17

LIGHTING QUANTITIES
CIRCUIT "W"

CALCULATED J.C. 4/13/95
CHECKED N. M. 4/18/95

LIC-16-19.72

399
547

L16LSSW.DGN 5/02/95

REFERENCE NO.	SHEET NO.	SIDE	LOCATION	STATION TO STATION FROM	STATION TO STATION TO	ITEM 202 LUMINAIRE REMOVED FOR STORAGE, AS PER PLAN (EACH)	ITEM 202 LIGHT POLE REMOVED FOR STORAGE, AS PER PLAN (EACH)	ITEM 202 PULL BOX REMOVED (EACH)	ITEM 202 LIGHT POLE FOUNDATION REMOVED, AS PER PLAN (EACH)	ITEM 625 REERECT EXISTING LUMINAIRE, AS PER PLAN (EACH)	ITEM 625 REERECT EXISTING LIGHT POLE, AS PER PLAN (EACH)	ITEM 625 NO. 2 AWG. 5,000 VOLT DISTRIBUTION CABLE (LIN.FT.)	ITEM 625 NO. 4 AWG. 5,000 VOLT DISTRIBUTION CABLE (LIN.FT.)	ITEM 625 1 1/2" DUCT. CABLE WITH TWO NO.4 AWG 5,000 VOLT CABLES (LIN.FT.)	ITEM 625 NO.10 AWG POLE AND BRACKET CABLE (LIN.FT.)	ITEM 625 LIGHT POLE, DESIGN AT12B41.7 (EACH)	ITEM 625 LIGHT POLE, MISC., MEDIAN MOUNT, LOW MAST, DESIGN A0N40 (EACH)	ITEM 625 LUMINAIRE, CONVENTIONAL STYLE B, TYPE II, 200 WATT, HIGH PRESSURE SODIUM, 713.11, 480 VOLT. (EACH)	ITEM 625 LUMINAIRE, LOW MAST, ASYMETRIC TYPE I, 400 WATT HIGH PRESSURE SODIUM, 713.21, 480 VOLT., AS PER PLAN (EACH)	ITEM 625 MEDIAN LIGHT POLE FOUNDATION, 10' DEEP (EACH)	ITEM 625 MEDIAN LIGHT POLE FOUNDATION, 10' DEEP, AS PER PLAN (EACH)	ITEM 625 LIGHT POLE FOUNDATION, 24" x 10' DEEP (EACH)	MEDIAN PULL BOX (EACH)	PULL BOX, 713.08, 18" (EACH)	CABLE SPLICING KIT (EACH)	CONNECTOR KIT, TYPE II (EACH)	CONNECTOR KIT, TYPE III (EACH)	CONNECTOR KIT, TYPE VIIB (EACH)	GROUND ROD (EACH)	TRANSFORMER BASE, TYPE AT-A (EACH)	LIGHTING MISC., RELABEL EXISTING LIGHT POLE (EACH)	TRENCH 24" DEEP (LIN.FT.)	CONDUIT, 3", 713.04 (LIN.FT.)	LIGHTING MISC., EXISTING LUMINAIRE REFURBISHED (EACH)	CONDUIT CLEANED AND CABLES REMOVED (LIN.FT.)	603 4" CONDUIT TYPE E	202 DISCONNECT EXISTING CIRCUIT (EACH)
CIRCUIT "Y"																																					
L-96	381&385	LT.	WT. VERNON RD., SERVICE RD. "AB" & HUDSON AVE.	21+26	177+70			1						490									1	2	3	3		1			440		3		20	4
L-97	385	LT.	SERVICE RD. "AB"	FROM POWER SERVICE STA. 177+65, 30' LT.	178+43								60	93										2	1	1					73		1			2
L-98	385	RT.& LT.	HUDSON AVE. & RAMP "B"	22+40	178+57			1					160										1	2				1						70	20	1
L-99	387&389	LT.	RAMP "B" @ HUDSON AVE.	178+57	188+95	4	4	2	4	4	4			1118								4	2	4	7	7		6	4		1038		3		40	3
CIRCUIT																																					
L-100	390&390A	℄, RT. & LT.	S.R.16	118+53.95	125+00	3	3	4	3	3	3		1352								3		4		4	4		3									1
TOTALS CARRIED TO SHEET 401.						7	7	8	7	7	7		1572	1701							3		4		8	10	15	15		11	4		1551		7	70	80	11

CALCULATED J.L.C. 4/18/95
CHECKED M.M. 4/18/95

LIGHTING QUANTITIES CIRCUIT "Y"

LIC-16-19.72

400/547

L16LSSY.DGN 5/02/95

SHEET NO.	CIRCUIT DESCRIPTION	ITEM 202				ITEM 625																										603	202
		LUMINAIRE REMOVED FOR STORAGE, AS PER PLAN	LIGHT POLE REMOVED FOR STORAGE, AS PER PLAN	PULL BOX REMOVED	LIGHT POLE FOUNDATION REMOVED, AS PER PLAN	REERECT EXISTING LUMINAIRE, AS PER PLAN	REERECT EXISTING LIGHT POLE, AS PER PLAN	NO. 2 AWG. 5,000 VOLT DISTRIBUTION CABLE	NO. 4 AWG. 5,000 VOLT DISTRIBUTION CABLE	1 1/2" DUCT. CABLE WITH TWO NO.4 AWG 5,000 VOLT CABLES	NO.10 AWG POLE AND BRACKET CABLE	LIGHT POLE, DESIGN AT12B41.7	LIGHT POLE, MISC.: MEDIAN MOUNT, LOW MAST, DESIGN A0N40	LUMINAIRE, CONVENTIONAL STYLE B, TYPE II, 200 WATT, HIGH PRESSURE SODIUM, 713.11, 480 VOLT.	LUMINAIRE, LOW MAST, ASYMETRIC TYPE I, 400 WATT HIGH PRESSURE SODIUM, 713.21, 480 VOLT., AS PER PLAN	MEDIAN LIGHT POLE FOUNDATION, 10' DEEP	MEDIAN LIGHT POLE FOUNDATION, 10' DEEP, AS PER PLAN	LIGHT POLE FOUNDATION, 24" x 10' DEEP	MEDIAN PULL BOX	PULL BOX, 713.08, 18"	CABLE SPLICING KIT	CONNECTOR KIT, TYPE II	CONNECTOR KIT, TYPE III	CONNECTOR KIT, TYPE VIIB	GROUND ROD	TRANSFORMER BASE, TYPE AT-A	LIGHTING MISC.: RELABEL EXISTING LIGHT POLE	TRENCH 24" DEEP	CONDUIT, 3", 713.04	LIGHTING MISC.: EXISTING LUMINAIRE REFURBISHED	CONDUIT CLEANED AND CABLES REMOVED	4" CONDUIT TYPE E	DISCONNECT EXISTING CIRCUIT
		EACH	EACH	EACH	EACH	EACH	EACH	LIN.FT.	LIN.FT.	LIN.FT.	LIN.FT.	EACH	EACH	EACH	EACH	EACH	EACH	EACH	EACH									LIN.FT.	LIN.FT.	EACH	LIN.FT.		EACH
391	CIRCUIT "P" AND "K"	7	7	11	7	7	7		1470	1925	188					2		4		11	18	13	13		7	3	10	1780	5	5	203	220	8
392	CIRCUIT "C"	15	15	8	15	15	15	2190	5946	1477	300	2	1	2	1	11	3	4	5	8	16	22	22	8	23	1	20	1403	4	4	640	160	5
393	CIRCUIT "G"	3	3	4	3	3	3		1020	728								3		4	8	4	4	2	4	2		688		1	100	80	1
394	CIRCUIT "F" @ ROADWAY "A"	2	2	1	2	2	2			430								2		1	2	4	4			2		390		1		20	2
395	CIRCUIT "Q"	10	10	9	9	10	10		3826	2436	110	1		1		5		5	2	9	16	19	19	2	10		19	2276		8	413	180	8
396	CIRCUIT "T"	1	1	7	1	1	1		318	1815								1		7	12	12	12		2			1665		11	134	120	12
397	CIRCUIT "S"	7	7	10	7	7	7	1486	1074	2989	550	5		5		4		8	1	10	18	23	23		17		21	2749		13	397	180	13
398	CIRCUIT "X"	9	9	8	8	9	9		5244	523						8			2	8	14	11	11	2	10		11	493	5	2	442	140	4
399	CIRCUIT "W"	2	2	10	1	2	2		776	2690								1		10	22	15	15		5	1	15	2485		13	272	200	17
400	CIRCUIT "Y"	7	7	8	7	7	7		1572	1701						3		4		8	10	15	15		11	4		1551		7	70	80	11
	TOTALS CARRIED TO GENERAL SUMMARY	63	63	76	60	63	63	3676	21246	16714	1148	8	1	8	1	33	3	32	10	76	136	138	138	14	89	13	96	15480	14	65	2671	1380	81

CALCULATED J. C. 4/13/95
CHECKED M. M. 4/18/95

LIGHTING SUB-SUMMARY

LIC-16-19.72

L16LGTOT.DGN 02/15/99

BRIDGE NOTES

REFERENCE
DETAILED DRAWINGS OF THE EXISTING STRUCTURES MAY BE INSPECTED IN THE DISTRICT 5 OFFICE OF THE OHIO DEPARTMENT OF TRANSPORTATION, JACKSONTOWN,OHIO.

DESIGN SPECIFICATION
THESE STRUCTURE MODIFICATIONS CONFORM TO "STANDARD SPECIFICATIONS FOR HIGHWAY BRIDGES" ADOPTED BY THE AMERICAN ASSOCIATION OF STATE HIGHWAY AND TRANSPORTATION OFFICIALS, 1996 AND THE OHIO SUPPLEMENT TO THESE SPECIFICATIONS.

EXISTING STRUCTURE VERIFICATION
DETAILS AND DIMENSIONS SHOWN ON THESE PLANS PERTAINING TO THE EXISTING STRUCTURES HAVE BEEN OBTAINED FROM THE PLANS OF THE EXISTING STRUCTURES AND/OR FROM FIELD OBSERVATIONS AND MEASUREMENTS. CONSEQUENTLY,THEY ARE INDICATIVE OF THE EXISTING STRUCTURES AND THE PROPOSED WORK, BUT THEY SHALL BE CONSIDERED TENTATIVE AND APPROXIMATE. THE CONTRACTOR IS REFERRED TO CMS SECTIONS 102.05 AND 105.02.
CONTRACT BID PRICES SHALL BE BASED UPON A RECOGNITION OF THE UNCERTAINTIES DESCRIBED ABOVE AND UPON A PREBID EXAMINATION OF THE EXISTING STRUCTURES BY THE CONTRACTOR. HOWEVER, ALL PROJECT WORK SHALL BE BASED UPON ACTUAL DETAILS AND DIMENSIONS WHICH HAVE BEEN VERIFIED BY THE CONTRACTOR IN THE FIELD.

REMOVED MATERIALS
ALL REMOVED MATERIALS EXCEPT AS NOTED ELSEWHERE IN THE PLANS SHALL BECOME THE PROPERTY OF THE CONTRACTOR AND SHALL BE REMOVED BY HIM FROM THE JOB SITE.

PLACEMENT OF CONCRETE
WINGWALL CONCRETE ABOVE THE BRIDGE SEAT LEVEL SHALL NOT BE POURED UNTIL THE SUPERSTRUCTURE IS IN PLACE.

MONOLITHIC WEARING SURFACE IS ASSUMED, FOR DESIGN PURPOSES, TO BE 1" THICK.

CONCRETE DECK HAUNCH WIDTH
A HAUNCH WIDTH OF 9 INCHES SHALL BE USED FOR COMPUTING QUANTITY OF CONCRETE. HOWEVER, THE HAUNCH WIDTH MAY VARY BETWEEN 6 AND 12 INCHES.

DOWEL HOLES
AT NO ADDITIONAL COST TO THE STATE AND AS AN OPTION TO THE CONTRACTOR THE USE OF EPOXY OR VINYLESTER RESIN MAY BE USED, IN WHICH THE DOWEL HOLES SHALL BE 1/8" LARGER THAN THE DESIGNATED BAR SIZE FOR THE DOWEL HOLE OR THE DOWEL HOLE DIAMETERS SHALL BE AS SPECIFIED IN 510.02 AND PAID FOR AS PER 510.05.

FORMING AT SKEWED CONSTRUCTION JOINTS
THE CONTRACTOR SHALL BE AWARE THAT ADDITIONAL FORMING MAY BE NEEDED AT SKEWED CONSTRUCTION JOINTS DUE TO MECHANICAL SPLICE CONNECTORS AND/OR PHASE CONSTRUCTION. ADDITIONAL FORMING SHALL BE INCLUDED FOR PAYMENT IN THE UNIT PRICE BID FOR THE ITEM FOR WHICH THEY ARE USED.

MECHANICAL SPLICE CONNECTORS
ALL MECHANICAL SPLICE CONNECTORS USED ON THE BRIDGES AND APPROACH SLABS SHALL BE EPOXY COATED AND SHALL BE INCLUDED FOR PAYMENT IN THE UNIT PRICE BID FOR THE ITEM FOR WHICH THEY ARE USED.

SEALING WITH HMWM RESIN
ALL LONGITUDINAL CONSTRUCTION JOINTS IN BRIDGE DECKS AND APPROACH SLABS SHALL BE SEALED 2'-0" IN WIDTH OR AS DETAILED IN THE PLANS WITH HMWM (HIGH MOLECULAR WEIGHT METHACRYLATE) RESIN. PAYMENT SHALL BE INCLUDED IN THE FOLLOWING PAY ITEMS:
ITEM SPECIAL MICRO-SILICA MODIFIED CONCRETE OVERLAY USING HYDRO-DEMOLITION.
ITEM 611-REINFORCED CONCRETE APPROACH SLAB, (T=15"), AS PER PLAN.
ITEM 844-HIGH PERFORMANCE CONCRETE, SUPERSTRUCTURE, DECK.
SEE PROPOSAL NOTE.

DESIGN DATA
DESIGN LOADING HS20-44, CASE II AND THE ALTERNATE MILITARY LOADING
HIGH PERFORMANCE CONCRETE SUPERSTRUCTURE (DECK) MIX 4
COMPRESSIVE STRENGTH - 7,000 PSI
HIGH PERFORMANCE CONCRETE SUPERSTRUCTURE (PARAPET) MIX 2
COMPRESSIVE STRENGTH - 7,000 PSI
CONCRETE CLASS C
COMPRESSIVE STRENGTH - 4000 PSI
REINFORCING STEEL
ASTM A615, A616, A617 GRADE 60
MINIMUM YIELD STRENGTH - 60,000 PSI
STRUCTURAL STEEL
ASTM A572 YIELD STRENGTH 50,000 PSI
ASTM A36 YIELD STRENGTH 36,000 PSI

ITEM 611 REINFORCED CONCRETE APPROACH SLAB (T=15"), AS PER PLAN
HMWM JOINT SEALER, MECHANICAL SPLICE CONNECTORS, OR ANY CURB THAT IS ON OR ADJACENT TO ANY APPROACH SLABS SHALL BE INCLUDED FOR PAYMENT WITH ITEM 611-(RE-STEEL INCLUDED), UNLESS OTHERWISE STATED IN THE PLANS.

REMOVAL OF VANDAL AND PEDESTRAIN FENCING ON STRUCTURES; LIC-16-2006/2084/ & LIC-13-0988
THE CONTRACTOR SHALL TAKE SPECIAL CARE IN REMOVING THE EXISTING FENCE, POSTS AND INCIDENTALS THAT ARE DESIGNATED FOR PICK-UP BY CITY FORCES. THE MATERIALS SHALL BE STORED IN A NEAT MANNER AT EACH BRIDGE AT AN ACCESSABLE LOCATION. THE CONTRACTOR SHALL NOTIFY THE CITY ENGINEER (IN WRITING) 1 WEEK (7 DAYS) IN ADVANCE OF REMOVAL SO THAT APPROPRIATE ARRANGEMENTS CAN BE MADE.

ITEM 603 4" CONDUIT TYPE F, AS PER PLAN BR. NO. LIC-79-1379R
THIS ITEM SHALL INCLUDE CLEANING THE THE EXISTING WEEPHOLES, INSTALLING NEW 4" CONDUIT THRU THE EXISTING 6" PIPE AND FILLING AROUND THE PIPE AND ANY ADDITIONAL HARDWARE (TEES, BANDS ETC.) NECESSARY TO COMPLETE THE INSTALLATION OF THE 4" CONDUIT.

ITEM SPECIAL-SEALING OF CONCRETE SURFACES-(EPOXY-URETHANE)
SURFACES TO BE SEALED SHALL BE CLEANED PRIOR TO THE APPLICATION OF THE EPOXY-URETHANE SEALER. THE CLEANING SHALL BE DONE BY A LIGHT SANDBLAST OR WATER-BLAST, AS DIRECTED BY THE ENGINEER. THE ENGINEER SHALL APPROVE THE PRESSURE, PSI, TO INSURE PROPER CLEANLINESS OF THE CONCRETE SURFACES. ALL MATERIAL, LABOR, TOOLS, AND INCIDENTALS NESESSARY TO COMPLETE THIS ITEM SHALL BE INCLUDED FOR PAYMENT WITH ITEM SPECIAL-SEALING OF CONCRETE SURFACES, (EPOXY-URETHANE). (SEE PROPOSAL NOTE)

FINISH COAT
ALL STRUCTURAL STEEL SHALL BE PAINTED IN ACCORDANCE WITH SUPPLEMENTAL SPECIFICATIONS 815. THE FINISH COAT COLOR SHALL BE BLUE FS-595A-15102. COLORS GRAY AND GREEN SHALL NOT BE USED IN THE FINISH COAT.

STRUCTURE PAINTING
PRIOR TO START OF ANY PAINTING ON THE STRUCTURAL STEEL, THE PROJECT ENGINEER SHALL INSPECT ALL ROCKERS, BOLSTERS, FIXED AND SLIDING PLATES FOR PROPER ALIGNMENT.
IF THE PAINTING CONTRACTOR CHOOSES TO USE THE BEARINGS AS TIE OFF FOR THE SUPPORT SYSTEM (SCAFFOLDING, HOSES ETC.) HE SHALL BE RESPONSBLE FOR ANY RE-ALIGNMENT OF THE BEARINGS AS DIRECTED BY THE ENGINEER. COST OF THE REALIGNMENT SHALL BE BORNE BY THE PAINTING CONTRACTOR.

SAWCUTTING PARAPET JOINTS
THE PARAPETS AND CURBS ON THE FOLLOWING BRIDGES MAY BE SLIPPED FORMED AND THE NECESSARY DEFLECTION JOINTS CUT INTO THE PARAPETS AND CURBS. THE SAWCUT SHALL BE MADE IN THE COMPLETE CIRCUMFERENCE OF THE PARAPET, STARTING AND ENDING AT THE ELEVATION OF THE CONCRETE DECK. THE DEPTH OF THE SAWCUT SHALL BE 1½ INCH. THE SAWING SHALL BE DONE NO MORE THAN 48 HOURS AFTER THE CONCRETE PLACEMENT. THE USE OF AN EDGE GUIDE, FENCE OR JIG IS REQUIRED TO ENSURE THAT THE CUT IS STRAIGHT, TRUE AND ALIGNED ON ALL FACES OF THE PARAPET. THE JOINT WIDTH SHALL BE THE WIDTH OF THE SAW BLADE, NOT TO EXCEED ONE-QUARTER OF AN INCH. THE SAWCUT SHALL BE AIR BLASTED CLEAN AND FILLED WITH A CAULKING MATERIAL CONFORMING TO FEDERAL SPECIFICATION TT-S-00227E PRIOR TO SEALING OF CONCRETE SURFACES WITH EPOXY-URETHANE. THE BOTTOM ONE-HALF INCH OF BOTH THE INSIDE AND OUTSIDE FACES OF THE PARAPET SHOULD BE LEFT UNCAULKED TO ALLOW ANY WATER WHICH MAY ENTER THE JOINT TO ESCAPE. THE ABOVE WORK INCLUDING ALL LABOR EQUIPMENT AND MATERIALS SHALL BE INCLUDED IN THE UNIT PRICE BID FOR ITEM 844-HIGH PERFORMANCE CONCRETE SUPERSTRUCTURE (PARAPET) MIX 2.

EXPANSION JOINT ANGLE BR. NO. LIC-16-2131 & 2141
THE EXPANSION JOINT ANGLE (MC12 X 45) SHALL BE REPLACED WITH (MC13 X 50) TO ACCOMMODATE THE ADDITIONAL THICKNESS OF THE PROPOSED DECK AS DETAILED IN THE PLANS. FOR INSTALLATION, WELDING AND DETAILS OF THE EXPANSION JOINTS, SEE ST'D. DWG. EXJ-4-87 SHEETS 1 THRU 5.

CONTINGENCY QUANTITIES
THE CONTRACTOR SHALL NOT ORDER MATERIALS OR PERFORM WORK FOR ITEMS DESIGNATED BY PLAN NOTE TO BE USED "AS DIRECTED BY THE ENGINEER" UNLESS AUTHORIZED BY THE ENGINEER. THE ACTUAL WORK LOCATIONS AND QUANTITIES USED FOR SUCH ITEMS SHALL BE INCORPORATED INTO A CHANGE ORDER GOVERNING THIS PROJECT.

ITEM 519 - PATCHING CONCRETE STRUCTURE
THE CONTRACTOR SHALL SOUND ALL EXPOSED AREAS NOT BEING REMOVED AT BOTH ABUTMENTS, MARKING ALL UNSOUND AREAS FOR REMOVAL. ALL SECTIONS OF ITEM 519, PATCHING CONCRETE STRUCTURE IN THE CONSTRUCTION AND MATERIAL SPECIFICATIONS SHALL BE FOLLOWED EXCEPT THE SQUARE OR PREFERABLY SLIGHTLY UNDERCUT SHOULDERS SECTION. THE CONTRACTOR SHALL PRESERVE THE REINFORCING STEEL IN PLACE, THEREFORE THE DEPTH OF REMOVAL AT THE SHOULDERS SHALL BE APPROXIMATELY 1". AN ESTIMATED AMOUNT OF 137 SQ. FT. OF PATCHING CONCRETE STRUCTURE HAS BEEN CARRIED TO THE GENERAL SUMMARY FOR BIDDING PURPOSES. THE ACTUAL QUANTITIES SHALL BE FIELD VERIFIED.

DESIGN AGENCY
OHIO DEPARTMENT OF TRANSPORTATION DISTRICT 5

DESIGNED	DRAWN	REVIEWED	DATE
RSD	RSD	CLZ	2-22-99
CHECKED	REVISED	STRUCTURE FILE NUMBER	
DTF		4503635	

BRIDGE NOTES

LIC-16-19.72

LA16/904

ITEM 842 CLASS S CONCRETE, MISC: SUPERSTURCTURE USING LIGHTWEIGHT CONCRETE BR. NO. LIC-16-2028 (OVER ROADWAY 'A')

DESCRIPTION

THIS ITEM SHALL CONSIST OF FURNISHING AND PLACING PORTLAND CEMENT LIGHTWEIGHT CONCRETE FOR THE BRIDGE SUPERSTRUCTURE IN ACCORDANCE WITH THESE SPECIFICATIONS AND IN REASONABLY CLOSE CONFORMITY WITH THE LINES, GRADES AND DIMENSIONS SHOWN ON THE PLANS.

MATERIALS

MATERIALS SHALL BE:

FINE AGGREGATE
NATURAL SAND IN ACCORDANCE WITH 703.02.

COARSE AGGREGATE
LIGHTWEIGHT COARSE AGGREGATE SHALL BE ONLY PROCESSED AGGREGATES PREPARED FROM NATURAL DEPOSITS SUCH AS SHALES AND CLAYS, PRODUCED BY A ROTARY KILN OPERATION MEETING THE REQUIREMENTS OF ASTM C 330. BY PRODUCTS OF INDUSTRIES, SUCH AS FURNACE SLAG OR FLY ASH, SHALL NOT BE ACCEPTABLE. THE COARSE AGGREGATE SIZE DESIGNATION SHALL BE ¾ INCH TO NO. 4

PORTLAND CEMENT
TYPE II (ASTM C 150)

WATER
WATER SHALL BE FREE FROM SEWAGE, OIL, ACID, STRONG ALKALIES OR VEGETABLE MATTER, AND ALSO SHALL BE FREE FROM CLAY AND LOAM. WATER WHICH IS POTABLE IS SATISFACTORY.

AIR ENTRAINING ADMIXTURE
705.10, AS APPROVED BY THE ENGINEER.

CHEMICAL ADMIXTURE
705.12, TYPE A OR TYPE D, AS APPROVED BY THE ENGINEER.

PROPORTIONING

THE CONTRACTOR (ADVISED BY THE LIGHTWEIGHT AGGREGATE SUPPLIER) SHALL BE RESPONSIBLE FOR DESIGNING THE MIXTURE AND DETERMINING THE PROPORTIONS OF CEMENT, FINE AGGREGATE, COARSE AGGREGATE, WATER, AIR-ENTRAINMENT AND CHEMICAL ADMIXTURE, IN ACCORDANCE WITH THE "RECOMMENDED PRACTICES FOR SELECTING PROPORTIONS FOR STRUCTURAL LIGHTWEIGHT CONCRETE (ACI 211.2)," AMERICAN CONCRETE INSTITUTE, WHICH WILL PRODUCE A WORKABLE LIGHTWEIGHT CONCRETE MIX MEETING THE FOLLOWING REQUIREMENTS:

28-DAY AIR DRY UNIT WEIGHT
DESIGN UNIT WEIGHT 115 POUNDS PER CUBIC FOOT WITH A PERMISSABLE RANGE OF 113 POUNDS PER CUBIC FOOT TO 117 POUNDS PER CUBIC FOOT: THE AVERAGE SHALL NOT EXCEED 116 POUNDS PER CUBIC FOOT.

28-DAY COMPRESSIVE STRENGTH
4,500 PSI (MINIMUM).

CEMENT CONTENT
715 POUNDS PER CUBIC YARD (MINIMUM).

SLUMP
3-INCHES PLUS OR MINUS 1-INCH.

AIR CONTENT
6 PERCENT PLUS OR MINUS 2 PERCENT (ENTRAPPED PLUS ENTRAINED).

WATER-CEMENT RATIO
0.44 MAXIMUM, USING DAMP LIGHTWEIGHT AGGREGATES
0.75 MAXIMUM, NET WATER INCLUDING THE ABSORBED WATER

ALL LIGHTWEIGHT CONCRETE SHALL HAVE GOOD WORKABILITY AND OTHER PROPERTIES SUCH AS PROPER PLACEMENT, CONSOLIDATION AND FINISHING IS OBTAINED.

THE CONTRACTOR SHALL PROVIDE CERTIFIED TEST DATA IN ACCORDANCE WITH 101.061 FROM A RECOGNIZED TESTING LABORATORY THAT SHOWS THE PROPOSED LIGHTWEIGHT CONCRETE MIX MEETS THE REQUIREMENTS SPECIFIED ABOVE. THE MIX SHALL BE TESTED USING THE DAMP LOOSE VOLUMETRIC METHOD OUTLINED IN ACI 213R-79, SECTION 3.4.2. A RECOGNIZED TESTING LABORATORY IS ANY LABORATORY REGULARLY INSPECTED BY THE CEMENT AND CONCRETE REFERENCE LABORATORY. THE PROPOSED MIX DESIGNS SHALL BE APPROVED BY THE DIRECTOR. ANY ADJUSTMENTS SHALL BE APPROVED BY THE ENGINEER.

FIELD WORK

THE HANDLING OF THE LIGHTWEIGHT AGGREGATE SHALL BE ARRANGED TO PROVIDE A THROUGH SPRINKLING OF THE AGGREGATE DURING THE STOCKPILING TO PRODUCE DAMP AGGREGATE. SPRINKLING SHALL BE DONE IN SUCH A WAY AS TO OBTAIN UNIFORM DISTRIBUTION OF MOISTURE. AGGREGATES SHALL THEN BE ALLOWED TO DRAIN AS LONG AS NECESSARY TO PRODUCE A UNIFORM MOISTURE CONTENT, AND SUCH MOISTURE CONTENT SHALL BE MAINTAINED INSOFAR AS PRACTICAL UNTIL THE AGGREGATE IS USED. THE TYPE A OR TYPE D ADMIXTURE SHALL BE ADDED TO THE MIX IN STRICT ACCORDANCE WITH THE MANUFACTURER'S RECOMMENDATIONS.

THE SAME SOURCE OF AGGREGATE AND DESIGN MIX, ONCE ESTABLISHED AND CHECKED, SHALL BE USED THROUGHOUT THE WHOLE JOB.

VARIATIONS THAT EXIST IN BATCHING ARRANGEMENTS, READY MIX PLANT LAYOUTS, WEATHER AND AGGREGATE PROPERTIES MAY REQUIRE DAILY MINOR FIELD ADJUSTMENTS TO THE BATCH WEIGHTS OF THE AGGREGATE. THE LIGHTWEIGHT AGGREGATE SUPPLIER WILL PROVIDE, AT NO EXTRA COST TO THE PRODUCER OR OWNER, A QUALIFIED TECHNICAL REPRESENTATIVE TO THE PRODUCER OF THE LIGHTWEIGHT CONCRETE DURING THE PRODUCTION PERIOD. THE TECHNICAL REPRESENTATIVE FURNISHED BY THE LIGHTWEIGHT AGGREGATE PRODUCER SHALL REMAIN AVAILABLE AT THE PRODUCTION SITE UNTIL SUCH TIME AS THE PERFORMANCE OF THE CONCRETE IS PROVEN TO THE SATISFACTION OF THE ENGINEER.

THE ENGINEER WILL APPROVE THE MINIMUM DOSAGE RATE OF CHEMICAL (WATER-REDUCING) ADMIXTURE TO BE USED IN THE FIELD.

LIGHTWEIGHT CONCRETE SHALL BE PLACED, TESTED, FINISHED, CURED AND PROTECTED AS SPECIFIED IN ITEM 842. CARE SHALL BE TAKEN TO PROVIDE UNIFORM CONSOLIDATION WITHOUT OVER-VIBRATION. THE LIGHTWEIGHT CONCRETE SHALL BE WATER-CURED IN ACCORDANCE WITH 511.14 METHOD (A).

METHOD OF MEASUREMENT

THE YARDAGE SHALL BE THE NUMBER OF CUBIC YARDS DETERMINED BY CALCULATIONS FROM PLAN DIMENSIONS, IN PLACE, COMPLETED AND ACCEPTED. NO DEDUCTIONS WILL BE MADE FOR THE VOLUME OF THE REINFORCING STEEL. DEDUCTIONS WILL BE MADE FOR THE VOLUME OF STEEL BEAM FLANGES EMBEDDED IN THE DECK SLAB.

BASIS OF PAYMENT

PAYMENT SHALL BE MADE AT THE CONTRACT UNIT PRICE BID FOR:

ITEM	UNIT	DESCRIPTION
842	C.Y.	CLASS S CONCRETE, MISC.: SUPERSTRUCTURE, USING LIGHTWEIGHT CONCRETE

ITEM 518 SCUPPER, VERTICAL EXTENSION

FLAME CUT THE EXISTING DOWNSPOUT END TO UNIFORM, SQUARE AND NON-DETERIORATED END TO ENSURE AN EVEN SURFACE TO WHICH TO WELD ONTO. DOWNSPOUT EXTENSION SHALL BE ⅜" THICK STEEL PIPE. THE ACTUAL SIZE AND LENGTH OF EACH EXTENSION SHALL BE FIELD MEASURED BY THE CONTRACTOR TO ENSURE PROPER INSTALLATION. JOINT CONNECTIONS SHALL BE WELDED AS REQUIRED BY 863.23. PAINTING SHALL CONFORM TO 815. FINISH PAINT SHALL BE FS-595B-16251 (GRAY). ALL MATERIALS, LABOR, TOOLS AND INCIDENTALS NECESSARY TO COMPLETE THE ABOVE WORK SHALL BE PAID FOR WITH ITEM 518-SCUPPER, VERTICAL EXTENSION. PAINTING OF THE DOWNSPOUT AND DAMAGED AREAS SHALL BE INCLUDED IN ITEM 518 DOWNSPOUT MODIFICATION.

BR. NO'S. LIC-16-2028 7 EACH
LIC-16-2038 10 EACH
LIC-13-0988 10 EACH
LIC-16-2109 7 EACH

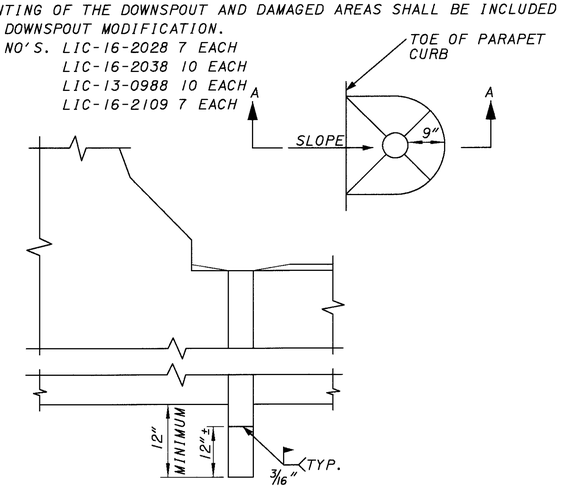

SECTION A-A

WELDED ATTACHMENT (LIC-16-2006/2084/2131/2141

WELDED ATTACHMENT OF SUPPORTS FOR CONCRETE DECK FINISHING MACHINE MAY BE MADE IN AREAS OF THE FACIA STRINGER FLANGES DESIGNATED "COMPRESSION". ATTACHMENTS SHALL NOT BE MADE TO AREAS DESIGNATED "TENSION". FILLET WELDS TO COMPRESSION FLANGES SHALL NOT BE CLOSER THAN 1" INCH FROM EDGE OF FLANGE, BE NOT MORE THAN 2" INCHES LONG, AND BE NOT SMALLER THAN THE MINIMUM SIZE REQUIRED BY AASHTO.

AREAS OF WORK

THE GENERAL AREAS OF WORK AS INDICATED ON THE PLAN AND ELEVATION AND DETAIL SHEETS ARE:

REMOVALS:

1. INSTALLATION OF FALSE DECKING SHALL BE COMPLETED PRIOR TO START OF CONSTRUCTION DURING PHASE OPERATIONS. BR. NO.'S LIC-16-2006/2084/2131/2141.
2. REMOVE ABUTMENTS, PARAPETS, DECK, APPROACH SLABS, EXP. JTS. & LIGHTING AS DETAILED.
3. INSTALL TEMPORARY SUPPORTS AND JACKING PROCEDURES ON BR. NO.'S LIC-16-2028/2131/2141.
4. INSTALL ASPHALT TAPERS ON BR. NO.'S LIC-16-2131/2141.

CONSTRUCTION

1. REPLACE ABUTMENTS, LIGHTING, PARAPETS, DECK AND APPROACH SLABS AS DETAILED.

DECK REPLACEMENTS BR. NO'S	DECK OVERLAYS BR. NO'S
LIC-16-2006	LIC-16-2028
LIC-16-2084	LIC-16-2038
LIC-16-2131	LIC-79-1379R
LIC-16-2141	LIC-13-0988
	LIC-16-2109

2. INSTALL VANDAL PROTECTION FENCE
3. PAINT BRIDGES

ITEM 863 STRUCTURAL STEEL MEMBERS, MISCELLANEOUS LEVEL FABRICATION BR. NO.'S LIC-2006/2084/2131/2141

AN ADDITIONAL AMOUNT OF 200 LBS. PER BRIDGE HAS BEEN INCLUDED IN THE BRIDGE SUMMARY FOR DETERIORATED CROSSFRAMES AND/OR STIFFENERS TO BE USED AS DIRECTED BY THE ENGINEER.

REMOVAL MISC.: BEARINGS REMOVED, ABUTMENTS LIC-16-2141

AS DIRECTED BY THE ENGINEER, THIS ITEM SHALL INCLUDE REMOVAL OF THE EXISTING SLIDING PLATES BY FLAME CUTTING AND GRINDING SMOOTH THE BOTTOM FLANGE OF THE BEAMS TO ENSURE PROPER INSTALLATION OF THE NEW PLATES. THE CONTRACTOR SHALL TAKE ALL PRECAUTION NOT TO DAMAGE THE FLANGES DURING REMOVAL.
ANY DAMAGES TO THE FLANGES CAUSED BY THE REMOVAL SHALL BE REPAIRED BY THE CONTRACTOR AT HIS OWN EXPENSE. THE ABOVE WORK SHALL INCLUDE ALL LABOR, TOOLS, MATERIALS AND INCIDENTALS NECESSARY TO COMPLETE THE WORK.

ANTI- GRAFFITI SEALER

THE CONTRACTOR SHALL SEAL THE REPLACED AREAS OF THE CONCRETE SLOPE PROTECTION ON BR. NO. LIC-16-2141. SPECIFICATIONS FOR THE SEALER AND COLOR CAN BE OBTAINED BY CONTACTING THE NEWARK CITY ENGINEER.
THE CONTRACTOR SHALL TAKE SPECIAL CARE AS TO NOT DAMAGE THE ANTI-GRAFFITI SEALER ON EXISTING BRIDGES. IF ANY DAMAGE IS DONE TO THE SEALER, AS DETERMINED BY THE ENGINEER, THE CONTRACTOR SHALL RE-APPLY NEW SEALER AS PER MANUFACTURER'S RECOMMENDATION TO THE DAMAGED AREAS AT HIS OWN EXPENSE.

ITEM 516, JACKING AND TEMPORARY SUPPORT OF SUPER-STRUCTURE, AS PER PLAN (LIC-16-2028/2131/2141)

THIS ITEM SHALL CONSIST OF FURNISHING ALL NECESSARY LABOR, MATERIALS, AND EQUIPMENT TO RAISE OR REPOSITION AND REBUILDING THE ABUTMENT SEATS TO THE DIMENSIONS AND REQUIREMENTS DEFINED IN THE PROJECT PLANS.

THE CONTRACTOR SHALL BE RESPONSIBLE FOR THE DESIGN, INSTALLATION AND OPERATION OF AN ADEQUATE JACKING SYSTEM, INCLUDING ANY TEMPORARY OR PERMANENT SUPPORTS NECESSARY TO PERFORM THE WORK DESCRIBED IN THE PROJECT PLANS. THREE (3) SETS OF JACKING PLANS, WHICH INCLUDE THE INFORMATION DESCRIBED IN THIS NOTE, SHALL BE SUBMITTED TO THE DIRECTOR FOR APPROVAL AT LEAST THIRTY (30) DAYS BEFORE ACTUAL WORK IS TO BEGIN. THA PLANS SHALL BE PREPARED AND STAMPED BY A REGISTERED PROFESSIONAL ENGINEER.

JACKING SUBMITTALS SHALL INCLUDE AT LEAST THE FOLLOWING:

1. THE SIGNATURE AND NUMBER, OR PROFESSIONAL SEAL, OF THE REGISTERED PROFESSIONAL ENGINEER WHO PREPARED THE SUBMITTAL.

2. CALCULATIONS AND ANALYSIS OF THE STRUCTURE TO DETERMINE AND DEFINE THE ACTUAL LOADING APPLIED AT THE CONTRACTOR'S SELECTION JACKING POINTS.

3. A DRAWING SHOWING THE PHYSICAL AND DIMENSIONAL POSITION OF THE JACKS WITH RESPECT TO THE STRUCTURE INCLUDING CLEARANCES AND CENTER OF LIFT.

4. A SCHEMATIC LAYOUT OF JACKS, CHECK VALVES, PUMPS WITH 3 WAY RETRACTOR VALVE, PRESSURE GAGES, FLOW CONTROL VALVES, ETC. IN ACCORDANCE WITH MANUFACTURER'S RECOMMENDATIONS. ALL JACKS FOR EACH ABUTMENT OR PIER SHALL BE CONNECTED TOGETHER. ALL JACKS AT EACH ABUTMENT OR PIER SHALL BE THE SAME SIZE.

5. ANALYSIS AND CALCLATIONS OF THE STRESSES INDUCED OR CREATED IN THE STRUCTURE AND ANY TEMPORARY OR PERMANENT SUPPORTS. DESIGN CALCULATIONS FOR ANY TEMPORARY OR PERMANENT SUPPORTS.

6. PHYSICAL DIMENSIONS, MATERIALS, AND FABRICATION DETAILS OF ANY TEMPORARY OR PERMANENT SUPPORTS. HORIZONTAL AND VERTICAL MOVEMENT RESTRAINT SHALL BE PROVIDED.

7. A STEP BY STEP PROCEDURE DETAILING ALL STEPS IN THE JACKING OPERATION.

8. METHOD OF ATTACHMENT TO STRUCTURAL MEMBERS. WELDING TO TENSION AREAS WILL NOT BE PERMITTED.

THE ENTIRE SYSTEM INCLUDING JACKS SHALL HAVE AT LEAST 20% MORE CAPACITY THAN
REQUIRED BASED ON CALCULATED LOADS.

FOR LIFTS GREATER THAN 1" INCH, JACKS SHALL HAVE LOCKING NUTS TO POSITIVELY LOCK AND SUPPORT THE STRUCTURE DURING THE LIFT.

JACKS SHALL HAVE A SWIVEL LOAD CAP, A DOMED PISTON HEAD OR SOME OTHER DEVICE TO PROTECT AGAINST THE EFFECTS OF SIDE LOAD ON THE JACK.

JACKS ALONE SHALL NOT BE USED TO SUPPORT LOADS EXCEPT DURING THE ACTUAL JACKING OPERATION. TEMPORARY SUPPORTS, BLOCKING OR OTHER METHODS APPROVED BY THE DIRECTOR SHALL BE USED.

SINGLE ACTING RAMS WITH NO OVER-TRAVEL PROTECTION SYSTEM SHALL NOT BE USED.

SPARE EQUIPMENT SHALL BE AVAILABLE ON SITE FOR THE REQUIRED STRUCTURE RAISING TO PROCEED IN THE EVENT OF BREAKDOWN. A LIST OF SPARE EQUIPMENT SHALL BE PROVIDED TO THE ENGINEER.

AT A MINIMUM, A JACKING OPERATION SHALL LIFT ALL BEAMS AT ANY ONE ABUTMENT SIMULTANEOUSLY. THE ONLY EXCEPTION IS THE SITUATION WHERE THE WORK INVOLVES REPLACING OR REHABILITATING INDIVIDUAL BEARINGS; NO PERMANENT SHIMMING IS REQUIRED AND THE HEIGHT OF THE LIFT SHALL NOT EXCEED 1/4" INCH.

MAXIMUM DIFFERENTIAL JACKING HEIGHT BETWEEN ANY ADJACENT ABUTMENTS OR PIERS SHALL BE 1" INCH OR LESS.

IF, DURING THE JACKING OPERATIONS, CRACKING OF THE CONCRETE SUPERSTRUCTURE, SEPARATION OF THE CONCRETE DECK FROM THE STEEL STRINGERS, OR OTHER DAMAGE TO THE STRUCTURE IS VISUALLY OBSERVED, THE JACKING OPERATION SHALL IMMEDIATELY CEASE AND APPROVED SUPPORTS SHALL BE INSTALLED. THE CONTRACTOR SHALL THEN ANALYZE THE DAMAGE AND SUBMIT A METHOD OF CORRECTION TO THE ENGINEER FOR APPROVAL. ANY BEAMS THAT SEPARATE FROM THE DECK SHALL BE EPOXY INJECTED FOR THE DISTANCE OF THE SEPARATION IN ACCORDANCE WITH THE PROPOSAL NOTE " CONCRETE REPAIR BY EPOXY INJECTION". COST OF THIS EPOXY INJECTION OR OTHER REQUIRED REPAIRS SHALL BE BORNE BY THE CONTRACTOR.

THE CONTRACTOR SHALL DEMONSTRATE TO THE ENGINEER THAT THE BRIDGE BEARINGS ARE FULLY SEATED BETWEEN ALL CONTACT AREAS. IF FULL SEATING IS NOT ATTAINED, SUITABLE MEANS OF REPAIR, SUBJECT TO THE APPROVAL OF THE ENGINEER, WILL BE REQUIRED AT THE CONTRACTOR'S EXPENSE.

THE JACKING OPERATION SHALL BE DIRECTED BY A PROFESSIONAL ENGINEER EMPLOYED BY THE CONTRACTOR. FAILURE TO HAVE A PROFESSIONAL ENGINEER PRESENT SHALL BE CAUSE FOR CEASING JACKING OPERATIONS.

THE CONTRACTOR SHALL USE ALL REASONABLE CARE TO AVOID ACCIDENTS OF INTERFERENCE WITH TRAFFIC AND PHASE CLOSURE.

SEE SEQUENCE OF CONSTRUCTION NOTE ON SHEET 26 OF 547.

APPROVAL OF THE ABOVE PLANS SHALL NOT RELIEVE THE CONTRACTOR OF RESPONSIBILITY FOR THE BEHAVIOR OF THE SUPPORT PROCEDURE PROPOSED. THE CONTRACTOR SHALL BE RESPONSIBLE FOR ALL DAMAGES AND ACCIDENTS RESULTING FROM INADEQUATE SAFETY PROCEDURES.

THE PLANS SHALL BE DESIGNED, SUBMITTED AND REVIEWED AS FOR ALL FALSEWORK ACCORDING TO THE REQUIREMENTS IN 501.06 OF THE CMS.

PAYMENT SHALL BE MADE AT THE LUMP SUM PRICE BID FOR ITEM 516, JACKING AND TEMPORARY SUPPORT CF SUPERSTRUCTURE, AS PER PLAN AND SHALL INCLUDE ALL NECESSARY TOOLS, LABOR, EQUIPMENT AND MATERIALS NECESSARY TO COMPLETE THIS ITEM OF WORK.

INSPECTION OF STRUCTURAL STEEL
BR. NO'S. LIC-16-2006/2084/2131/2141

THE ENGINEER SHALL VISUALLY INSPECT ALL EXISTING BUTT-WELDED SPLICES AND/OR TOP FLANGE COVER PLATE FILLET WELDS TO ENSURE THAT THEY ARE FREE OF DEFECTS. THE DECK SLAB HAUNCH FORMS IMMEDIATELY ADJACENT TO SUCH WELDS SHALL NOT BE ERECTED UNTIL AFTER THE ENGINEER HAS COMPLETED THIS INSPECTION. THIS INSPECTION SHALL NOT TAKE PLACE UNTIL AFTER THE TOP FLANGES ARE CLEANED AS SPECIFIED IN 842.08, BUT IT SHALL BE DONE BEFORE THE DECK SLAB REINFORCEMENT IS INSTALLED. THE COST ASSOCIATED WITH THIS INSPECTION SHALL BE INCLUDED WITH ITEMS 842 & 844, SUPERSTRUCTURE CONCRETE FOR PAYMENT.

ITEM 516 - RESET BEARINGS, AS PER PLAN

BR. NO'S. LIC-16-2006/2084
THIS ITEM SHALL INCLUDE JACKING AND RE-ALIGNMENT OF THE BEARINGS, INSTALLING NEW 1/8" INCH THICK PREFORMED BEARING PADS AS DIRECTED BY THE ENGINEER. SHIMS AT ABUTMENTS SHALL BE 12" X 22".
BR. NO. LIC-16-2131
THIS ITEM SHALL INCLUDE JACKING, REMOVING, STORING, RESETTING THE ABUTMENT BEARINGS AS DIRECTED BY THE ENGINEER. SHIMS AT THE ABUTMENTS SHALL BE 11" X 20". THE ABOVE WORK INCLUDING ALL LABOR, TOOLS MATERIALS AND INCIDENTALS SHALL BE INCLUDED FOR PAYMENT WITH ITEM 516-RESET BEARINGS, AS PER PLAN.

BEARING PADS INCLUDED FOR PAYMENT WITH ITEM 516 - 1/8" PREFORMED BEARING PADS (711.21) (12' X 22") OR (11" X 20").

COOPERATION WITH RAILROAD

THE CONTRACTOR IS TO COOPERATE AT ALL TIMES WITH THE LOCAL OFFICIALS OF THE RAILROAD COMPANY. HE SHALL USE ALL REASONABLE CARE AND DILIGENCE IN THE WORK IN ORDER TO AVOID ACCIDENTS, DAMAGE OR UNNECESSARY DELAY TO, OR INTERFERENCE WITH, THE TRAINS AND OTHER PROPERTY OF THE RAILROAD. THE CONTRACTOR SHALL NOTIFY THE LOCAL OFFICIALS OF THE RAILROAD PRIOR TO STARTING WORK THAT MAY AFFECT RAILROAD PROPERTY AND FACILITIES AND PAY THE RAILROAD COMPANY THE COST OF THE FLAGMEN FURNISHED BY THE RAILROAD COMPANY AND MADE NECCESSARY BECAUSE OF ANY OF THE CONTRACTOR'S OPERATIONS OVER THE TRACKS. NO SCAFFOLD, PLANKS OR OTHER EQUIPMENT SHALL BE SUSPENDED OR ERECTED ABOVE OR WITHIN 10 FEET OF THE RAIL OVER WHICH TRAINS ARE OPERATING WITHOUT PRIOR WRITTEN APPROVAL OF THE CHIEF ENGINEER OF THE RAILROAD COMPANY, OR HIS AUTHORIZED REPRESENTATIVE. FAILURE TO NOTIFY THE RAILROAD COMPANY AS NOTED ABOVE SHALL BE CAUSE FOR STOPPING WORK UNTIL ALL PROVISIONS FOR PROTECTING RAILROAD PROPERTY HAVE BEEN PROVIDED.

CSX TRANSPORTATION INC.
4901 BELFORT ROAD, SUITE 130
JACKSONVILLE, FL. 32256
(904) 245-1045

CONSTRUCTION CLEARANCE

CONSTRUCTION CLEARANCE OF 14 FEET HORIZONTALLY FROM THE CENTER OF TRACKS AND 22.11979 FEET (TWENTY TWO FEET, ONE AND SEVEN SIXTEENTH INCHES) VERTICALLY FROM A POINT LEVEL WITH THE TOP OF THE HIGHER RAIL AND 6 FEET FROM THE CENTER OF TRACKS SHALL BE MAINTAINED AT ALL TIMES.

DEMOLITION METHOD B

ON LIGHT TRAFFIC DENSITY LINES OR WHEN OVERHEAD PROTECTION SHIELD CANNOT BE INSTALLED DUE TO LIMITED CLEARANCE OR TYPE OF SUPERSTRUCTURE, TRACK MAY BE PROTECTED BY TIMBER MATS PLACED OVER THE TRACK STRUCTURE, SUBJECT TO APPROVAL BY THE ENGINEER. TIMBER MATS SHALL BE MADE IN SECTIONS SUCH THAT THEY MAY BE LIFTED IN AND OUT QUICKLY. MATS SHALL NOT REST ON TIES OR RAILS. GEO-FABRIC OR CANVAS SHALL BE PLACED OVER THE TRACK STRUCTURE TO KEEP THE BALLAST CLEAN.
THE CONTRACTOR SHALL SUBMIT DETAILED PLANS OF THE PROTECTION SHIELD OR THE TIMBER MATS TO THE DIVISION ENGINEER FOR APPROVAL PRIOR TO THE START OF DEMOLITION. THE PLANS SHALL BE PREPARED BY A REGISTERED PROFESSIONAL ENGINEER ANS SHALL BEAR HIS SEAL AND SIGNATURE.
BLASTING WILL NOT BE PERMITTED TO DEMOLISH A STRUCTURE OVER OR WITH IN RAILROAD RIGHT-OF WAY.

PORTIONS OF STRUCTURE REMOVED, SUPERSTRUCTURE

DESCRIPTION: THIS WORK SHALL CONSIST OF THE REMOVAL OF CONCRETE DECKS INCLUDING SIDEWALKS, PARAPETS, RAILING, DECK JOINTS, BULB ANGLES, REMAINING BULB ANGLE SUPPORT SYSTEMS AND OTHER APPURTENANCES FROM STEEL SUPPORTING SYSTEMS (BEAMS GIRDERS, CROSS FRAMES, ETC.). CARE SHALL BE TAKEN DURING DECK REMOVALS TO PROTECT PORTIONS OF SUCH SYSTEMS THAT ARE TO BE SALVAGED AND INCORPORATED INTO THE PROPOSED STRUCTURE. IN THIS RESPECT, THE USE OF EXPLOSIVES, HEADACHE BALLS AND/OR HOE RAM TYPE EQUIPMENT IS PROHIBITED.

PROTECTION OF TRAFFIC: PRIOR TO DEMOLITION OF ANY PORTIONS OF THE EXISTING SUPERSTRUCTURE, THE CONTRACTOR SHALL SUBMIT HIS PLANS, INCLUDING FALSE DECKING FOR THE PROTECTION OF TRAFFIC (VEHICULAR, PEDESTRIAN, BOAT, ETC.) ADJACENT TO AND/OR UNDER THE STRUCTURE, TO THE DIRECTOR FOR APPROVAL. THESE PLANS SHALL INCLUDE PROVISIONS FOR ANY DEVICES AND STRUCTURES THAT MAY BE NECESSARY TO ENSURE SUCH PROTECTION. TEMPORARY VERTICAL CLEARANCES SPECIFIED ON THE PLANS OR IN THE PROPOSAL SHALL BE MAINTAINED AT ALL TIMES EXCEPT AS OTHERWISE APPROVED BY THE DIRECTOR.

PROTECTION OF STEEL SUPPORT SYSTEMS: BEFORE DECK SLAB CUTTING IS PERMITTED, THE OUTLINE OF PRIMARY STEEL MEMBERS IN CONTACT WITH THE BOTTOM OF THE DECK SHALL BE DRAWN ON THE SURFACES OF DECK. SMALL DIAMETER PILOT HOLES SHALL BE DRILLED 2" INCHES OUTSIDE THESE LINES TO CONFIRM THE LOCATION OF FLANGE EDGES. DECK CUTS OVER OR WITHIN 2 INCHES OF FLANGE EDGES SHALL NOT EXTEND LOWER THAN THE BOTTOM LAYER OF DECK SLAB REINFORCING STEEL. CUTS MADE OUTSIDE 2" INCHES OF FLANGE EDGES MAY EXTEND THE FULL DEPTH OF THE DECK. DURING CUTTING OF THE DECK SLAB, CARE SHALL BE TAKEN NOT TO DAMAGE STEEL MEMBERS THAT ARE TO BE INCORPORATED INTO THE PROPOSED STRUCTURE.

REMOVAL METHODS: CONCRETE MAY BE REMOVED BY CUTTING AND BY MEANS OF HAND OPERATED PNEUMATIC HAMMERS EMPLOYING POINTED OR BLUNTED CHISEL TYPE TOOLS. FOR REMOVALS ABOVE STEEL MEMBERS, A HAMMER HEAVIER THAN 35 POUNDS BUT NOT TO EXCEED 90 POUNDS MAY BE USED AT THE APPROVAL OF THE ENGINEER, TO ENSURE ADEQUATE DEPTH CONTROL AND TO PREVENT NICKING OR GOUGING THE PRIMARY STEEL MEMBERS.

DECK REMOVALS: DUE TO THE POSSIBLE PRESENCE OF WELDED ATTACHMENTS TO EXISTING STRUCTURAL STEEL (FINISHING MACHINE, SCRUPPER AND FORM SUPPORTS, ETC.), CARE SHALL BE TAKEN DURING DECK REMOVAL TO AVOID DAMAGING STRINGERS WHICH ARE TO REMAIN. STRINGERS DAMAGED BY THE CONTRACTOR'S REMOVAL OPERATIONS SHALL, AT NO COST TO THE DEPARTMENT, BE REPLACED OR REPAIRED. PROPOSED REPAIRS, DEVELOPED BY A REGISTERED PROFESSIONAL ENGINEER, SHALL BE SUBMITTED IN WRITING FOR REVIEW AND APPROVAL BY THE DIRECTOR.

EXTRANEOUS MEMBERS: EXISTING EXTRANEOUS MEMBERS (I.E., FINISHING MACHINE AND FORM SUPPORTS, ETC., AND THE SUPPORT FOR SCUPPERS AND BULB ANGLES WHICH ARE TO BE REMOVED) ATTACHED BY WELDED CONNECTIONS TO PORTIONS OF THE TOP FLANGES DESIGNATED "TENSION" SHALL BE REMOVED AND THE FLANGE SURFACES GROUND SMOOTH. GRINDING SHALL BE CAREFULLY DONE AND PARALLEL TO THE FLANGE.

LOADING LIMITATIONS: NO PART OF THE STRUCTURE SHALL BE SUBJECTED TO UNIT STRESSES THAT EXCEED 136.5% OF THE ALLOWABLE UNIT STRESSES GIVEN IN THE AASHTO STANDARD SPECIFICATIONS FOR HIGHWAY BRIDGES DUE EITHER TO DEMOLITION, ERECTION OR CONSTRUCTION METHODS, OR TO THE USE OR MOVEMENT OF DEMOLITION OR ERECTION EQUIPMENT ON OR ACROSS THE STRUCTURE. STRUCTURAL ANALYSIS COMPUTATIONS, BY A REGISTERED PROFESSIONAL ENGINEER, SHOWING THE ALLOWABLE STRESSES AND THE MAXIMUM STRESSES PRODUCED BY THE CONTRACTOR'S METHODS OR EQUIPMENT SHALL BE SUBMITTED TO THE DIRECTOR FOR REVIEW AND APPROVAL AT LEAST TWO WEEKS PRIOR TO THE START OF THE WORK.

PAYMENT: THIS WORK WILL BE PAID FOR AT THE CONTACT LUMP SUM PRICE BID, WHICH PRICE AND PAYMENT SHALL BE FULL COMPENSATION FOR ALL LABOR, EQUIPMENT, MATERIALS AND INCIDENTALS NECESSARY TO COMPLETE THE WORK IN CONFORMANCE WITH THESE REQUIREMENTS, WITH PERTINENT PROVISIONS OF 202, AND TO THE SATISFACTION OF THE ENGINEER.

ITEM 202 APPROACH SLAB REMOVED, AS PER PLAN

ANY CURB THAT IS ON OR ADJACENT TO ANY OF THE APPROACH SLABS SHALL BE REMOVED. THIS REMOVAL SHALL BE INCLUDED FOR PAYMENT WITH ITEM 202 APPROACH SLAB REMOVED, AS PER PLAN, UNLESS OTHERWISE STATED IN THE PLANS.

SUBSTRUCTURE CONCRETE REMOVAL

SUBSTRUCTURE CONCRETE REMOVAL SHALL BE BY MEANS OF APPROVED PNEUMATIC HAMMERS EMPLOYING POINTED OR BLUNT CHISEL TOOLS. HYDRAULIC HOE-RAM TYPE HAMMERS WILL NOT BE PERMITTED. THE WEIGHT OF THE HAMMER SHALL NOT BE MORE THAN 35 POUNDS FOR REMOVAL WITHIN 18-INCHES OF PORTION TO BE PRESERVED. OUTSIDE THE 18-INCH LIMIT, A HAMMER HEAVIER THAN 35 POUNDS, BUT NOT TO EXCEED 90 POUNDS, MAY BE USED AT THE APPROVAL OF THE ENGINEER. PNEUMATIC HAMMERS SHALL NOT BE PLACED IN DIRECT CONTACT WITH REINFORCING STEEL THAT IS TO BE RETAINED IN THE REBUILT STRUCTURE.

REPLACEMENT OF EXISTING REINFORCING STEEL

ANY EXISTING REINFORCING BARS WHICH ARE TO BE INCORPORATED INTO THE NEW WORK AND WHICH ARE MADE UNUSABLE BY THE CONTRACTOR'S CONCRETE REMOVAL OPERATIONS SHALL BE REPLACED WITH NEW STEEL AT THEIR COST. ANY EXISTING REINFORCING BARS DEEMED BY THE ENGINEER TO BE UNUSABLE BECAUSE OF CORROSION SHALL BE REPLACED WITH NEW STEEL AND SHALL BE INCLUDED FOR PAYMENT IN THE APPROPRIATE CONCRETE ITEM.

CUT LINE CONSTRUCTION JOINT PREPARATION

SAW CUT BOUNDARIES OF PROPOSED CONCRETE REMOVALS 1" DEEP. REMOVE CONCRETE TO A ROUGH SURFACE. THE EXISTING REINFORCING STEEL WHERE REQUIRED IN THE PLANS SHALL BE LEFT IN PLACE. INSTALL DOWEL BARS IF SPECIFIED. PRIOR TO CONCRETE PLACEMENT ABRASIVELY CLEAN JOINT SURFACE AND EXPOSED REINFORCEMENT TO REMOVE LOOSE AND DISINTEGRATED CONCRETE AND LOOSE RUST. THE JOINT SURFACE AND EXPOSED REINFORCEMENT SHALL BE THOROUGHLY CLEANED OF ALL DIRT, DUST, OR OTHER FOREIGN MATERIAL BY THE USE OF WATER, AIR UNDER PRESSURE, OR OTHER METHODS THAT PRODUCE SATISFACTORY RESULTS. CONCRETE BONDING SURFACES SHALL BE WET WITHOUT FREE WATER AS CONCRETE IS PLACED.

CLEANING OF EXPOSED REINFORCING STEEL

ALL EXPOSED REINFORCING STEEL BEING PRESERVED IN PLACE SHALL BE CLEANED BY SANDBLASTING OR AN ALTERNATIVE METHOD APPROVED BY THE DISTRICT CONSTRUCTION ENGINEER TO REMOVE LOOSE RUST AND SURFACE CORROSION. PRIOR TO PLACEMENT OF THE CONCRETE, THE ENGINEER SHALL INSPECT AND APPROVE THE CONDITION OF THE RE-STEEL. THE ABOVE WORK INCLUDING LABOR, MATERIALS, TOOLS, AND INCIDENTALS SHALL BE INCLUDED IN THE UNIT BID PRICE FOR ALL THE 842 AND 844 CONCRETE ITEMS.

INSPECTION OF TEMPORARY VANDAL PROTECTION FENCE BR. NO. LIC-16-2006/2084

THE TEMPORARY VANDAL PROTECTION FENCE AS SHOWN ON SHEETS 409 AND 465 SHALL BE INSPECTED DAILY, INCLUDING WEEKENDS AND NON-WORKING DAYS.
THE CONTRACTOR SHALL DESIGNATE AN INDIVIDUAL OTHER THAN THE SUPERINTENDENT AND SUBJECT TO THE APPROVAL OF THE ENGINEER TO INSPECT THE FENCING AT THE BEGINNING AND END OF EACH DAY. DAILY, A WRITTEN RECORD OF THE REVIEW SHALL BE GIVEN TO THE PROJECT ENGINEER AND SHALL INCLUDE A RECORD OF DEFICIENCIES. A MINIMUM OF TWO REVIEWS EACH WEEK SHALL BE PERFORMED ON A SATURDAY OR SUNDAY NIGHT. THE DESIGNATED INDIVIDUAL OR QUALIFIED REPRESENTATIVE SHALL ALSO BE AVAILABLE ON A AROUND-THE-CLOCK BASIS TO REPAIR AND/OR REPLACE FENCING.
THESE INDIVIDUALS' NAMES AND PHONE NUMBERS SHALL BE GIVEN TO THE PROJECT ENGINEER AT THE PRE-CONSTRUCTION MEETING.
THE INSPECTOR SHALL BE INCLUDED IN THE LUMP SUM BID FOR ITEM 607 FENCE, MISC.; TEMPORARY VANDAL PROTECTION FENCE

BRIDGE NUMBER										ITEM	ITEM EXT.	GRAND TOTAL	UNIT	DESCRIPTION	SEE SHEET NO.
LIC-16 2006	LIC-16 2028	LIC-16 2038	LIC-79 1379R	LIC-16 2069	LIC-16 2084	LIC-13 0988	LIC-16 2109	LIC-16 2131	LIC-16 2141						
														ROADWAY	
-	-	-	-	-	-	LUMP	-	LUMP	-	201	11000	LUMP		CLEARING AND GRUBBING *	
-	267	267	67	-	-	156	267	389	322	202	22901	1,735	SQ YD	APPROACH SLAB REMOVED, AS PER PLAN *	
320	-	-	-	-	296	199	-	-	-	202	30000	815	SQ FT	WALK REMOVED *	
-	50	50	-	-	-	-	50	50	50	202	30500	250	LIN FT	CONCRETE MEDIAN REMOVED *	
-	-	-	-	-	-	-	-	-	191	202	32800	191	SQ YD	CONCRETE SLOPE PROTECTION REMOVED *	
-	-	-	50	-	-	-	-	-	-	202	38000	50	LIN FT	GUARDRAIL REMOVED *	
-	-	-	2	-	-	-	-	-	-	202	47000	2	EACH	BRIDGE TERMINAL ASSEMBLY REMOVED	
-	277	279	65	-	-	98	276	252	249	203	12000	1,496	CU YD	EXCAVATION NOT INCLUDING EMBANKMENT CONSTRUCTION *	
-	135	136	32	-	-	55	135	360	134	203	20000	987	CU YD	EMBANKMENT *	
-	406	408	96	-	-	166	404	418	403	203	50000	2,301	SQ YD	SUBGRADE COMPACTION *	
-	-	-	50	-	-	-	-	-	-	606	13000	50	LIN FT	GUARDRAIL, TYPE 5 *	
-	-	-	2	-	-	-	-	-	-	606	35000	2	EACH	BRIDGE TERMINAL ASSEMBLY, TYPE I *	
LUMP	-	-	-	-	LUMP	-	-	-	-	607	98200	LUMP		FENCE, MISC.: TEMPORARY VANDAL PROTECTION FENCE	
														EROSION CONTROL	
-	-	-	-	-	-	-	-	274	-	601	20500	274	CU YD	CRUSHED AGGREGATE SLOPE PROTECTION *	
-	-	-	-	-	-	-	-	-	191	601	21000	191	SQ YD	CONCRETE SLOPE PROTECTION *	
-	-	-	30	-	-	-	-	-	-	603	00407	30	LIN FT	4" CONDUIT, TYPE F, AS PER PLAN *	
-	2	2	-	-	-	2	2	-	-	604	36600	8	EACH	PRECAST REINFORCED CONCRETE OUTLET *	
														DRAINAGE	
-	LUMP	LUMP	LUMP	-	-	LUMP	LUMP	LUMP	LUMP	518	21230	LUMP		POROUS BACKFILL WITH FILTER FABRIC	
-	183	172	41	-	-	75	171	-	-	518	40000	642	LIN FT	6" PERFORATED CORRUGATED PLASTIC PIPE	
-	28	28	-	-	-	28	28	-	-	518	40011	112	LIN FT	6" NON-PERFORATED CORRUGATED PLASTIC PIPE, INCLUDING SPECIALS, AS PER PLAN	
														PAVEMENT	
-	68	68	16	-	-	48	67	70	67	304	20000	404	CU YD	AGGREGATE BASE *	
320	-	-	-	-	296	199	-	-	-	608	10000	815	SQ FT	4" CONCRETE WALK *	
-	450	450	103	-	-	168	451	468	428	611	25001	2,518	SQ YD	REINFORCED CONCRETE APPROACH SLAB (T=15"), AS PER PLAN *	
														LIGHTING	
-	-	-	-	-	-	-	-	2	2	625	10600	4	EACH	LIGHT POLE ANCHOR L-BOLTS, 1¼" DIA. X 60"	
-	-	-	4	-	-	4	4	2	2	625	10600	16	EACH	LIGHT POLE ANCHOR L-BOLTS, 1¼" DIA. X 69"	
245	301	310	335	-	371	408	352	552	340	625	25402	3,214	LIN FT	CONDUIT, 2", 713.07	
245	-	-	-	-	-	-	-	-	-	625	25502	245	LIN FT	CONDUIT, 3", 713.07	
-	173	182	-	-	-	-	193	294	200	625	25602	1,042	LIN FT	CONDUIT, 4", 713.07	
-	-	-	14	-	-	14	-	-	-	625	29002	28	LIN FT	TRENCH, 24" DEEP	
-	2	2	-	-	-	-	2	6	6	625	29910	18	EACH	TRANSITION JUNCTION BOX	
-	-	-	-	-	-	2	-	-	-	625	29920	2	EACH	STRUCTURE JUNCTION BOX, TYPE I WITH COVER PLATE	
-	4	4	5	-	-	3	4	-	-	625	29920	20	EACH	STRUCTURE JUNCTION BOX, TYPE II WITH COVER PLATE	
-	-	-	-	-	-	-	1	1	1	625	29920	3	EACH	STRUCTURE JUNCTION BOX, TYPE III WITH COVER PLATE	
-	1	1	1	-	-	1	1	1	1	625	33000	7	EACH	STRUCTURE GROUNDING SYSTEM	
														* QUANTITIES CARRIED TO SHEETS 62 - 67	

CALCULATED RSD CHECKED DTF

BRIDGE SUMMARY

LIC-16-19.72

1/2

405A/547

(P1D#15290) (02/23/99) L0161 7A.DGN

BRIDGE NUMBER										ITEM	ITEM EXT.	GRAND TOTAL	UNIT	DESCRIPTION	SEE SHEET NO.
LIC-16 2006	LIC-16 2028	LIC-16 2038	LIC-79 1379R	LIC-16 2069	LIC-16 2084	LIC-13 0988	LIC-16 2109	LIC-16 2131	LIC-16 2141						
														STRUCTURES	
60	99	95	34	-	46	88	113	691	397	202	11300	1623	CU YD	PORTIONS OF STRUCTURE REMOVED,SUPERSTRUCTURE	
-	29	17	7	-	-	22	20	148	84	202	11300	327	CU YD	PORTIONS OF STRUCTURE REMOVED, ABUTMENT	
-	-	-	-	-	-	-	-	2,598	-	202	23500	2,598	SQ YD	WEARING COURSE REMOVED	
263	-	-	-	-	206	-	-	-	-	202	75000	469	LIN FT	FENCE REMOVED, VANDAL PROTECTION FENCE ON STRUCTURE	
-	-	-	-	-	-	370	-	-	-	202	75000	370	LIN FT	FENCE REMOVED, PEDESTRIAN FENCE ON STRUCTURE	
-	-	-	-	-	-	-	-	-	20	202	98100	20	EACH	REMOVAL MISC.: BEARINGS REMOVED (ABUTMENT)	
-	-	-	-	-	-	-	-	23	16	202	98100	39	EACH	REMOVAL MISC.: SCUPPERS INCLUDING DOWNSPOUT	
21	-	-	-	-	20	-	-	244	157	202	98200	442	LIN FT	REMOVAL MISC.: EXPANSION JOINT REMOVED	
-	-	-	-	-	-	-	-	LUMP	LUMP	503	11100	LUMP		COFFERDAMS, CRIBS AND SHEETING	
LUMP	LUMP	LUMP	LUMP	-	LUMP	LUMP	LUMP	LUMP	LUMP	503	21300	LUMP		UNCLASSIFIED EXCAVATION	
-	3	3	18	-	-	-	4	16	6	512	33000	50	SQ YD	TYPE 2 WATERPROOFING	
294	731	685	386	-	242	547	763	1192	924	SPECIAL	51267510	5,764	SQ YD	SEALING OF CONCRETE SURFACES (EPOXY-URETHANE)	
-	-	-	-	-	-	-	-	-	184	512	75500	184	SQ YD	SEALING, MISC.: ANTI-GRAFFITI SEALER	
-	-	-	39	-	-	-	-	-	-	516	10000	39	LIN FT	PREFORMED ELASTOMERIC COMPRESSION JOINT SEAL (705.11) (1¼")	
-	-	-	-	-	-	-	-	244	158	516	11210	402	LIN FT	STRUCTURAL EXPANSION JOINT INCLUDING ELASTOMERIC STRIP SEAL	
21	-	-	-	-	20	-	-	-	-	516	12301	41	LIN FT	STRIP SEAL EXPANSION JOINT ANCHORED WITH ELASTOMERIC	
														CONCRETE, AS PER PLAN	
-	-	-	-	-	-	-	-	7	15	516	13200	22	SQ FT	½" PREFORMED EXPANSION JOINT FILLER	
-	126	54	-	-	-	58	54	162	91	516	13600	545	SQ FT	1" PREFORMED EXPANSION JOINT FILLER	
8	-	-	-	-	4	-	-	-	-	516	41100	12	EACH	⅛" PREFORMED BEARING PAD, 711.21 (12" X 22")	
-	-	-	-	-	-	-	-	22	-	516	41100	22	EACH	⅛" PREFORMED BEARING PAD, 711.21 (11" X 20")	
-	-	-	-	-	-	-	-	-	20	516	41100	20	EACH	⅛" PREFORMED BEARING PAD, 711.21 (8" X 19")	
8	-	-	-	-	4	-	-	22	-	516	46701	34	EACH	RESET BEARING, AS PER PLAN	
-	-	-	-	-	-	-	-	-	20	516	46900	20	EACH	BEARING DEVICE, MISC.: SLIDING PLATES (8" X 19")	
-	LUMP	-	-	-	-	-	-	LUMP	LUMP	516	47000	LUMP		JACKING AND TEMPORARY SUPPORT OF SUPERSTRUCTURE, AS PER PLAN	
-	-	-	-	-	-	-	-		8	518	12200	8	EACH	SCUPPER, INCLUDING SUPPORTS (FOR STEEL BEAM BRIDGE)	
-	7	2	-	-	-	-	1	-	-	518	12500	10	EACH	NEW SCUPPER, MISC.: (INCLUDING SUPPORTS)	
-	7	10	-	-	-	-	7	-	-	518	12700	24	EACH	SCUPPER, VERTICAL EXTENSION	
-	7	10	-	-	-	10	7	-	-	518	51300	34	EACH	DOWNSPOUT MODIFICATION	
	997	1140	569			558	1232			848	20000	4496	SQ YD	SURFACE PREPARATION USING HYDRODEMOLITION	
-	27	24	-	-	-	9	28	49	-	519	11100	137	SQ FT	PATCHING CONCRETE STRUCTURE	
-	-	-	569	-	-	558	-	-	-	848	10000	1127	SQ YD	MICRO-SILICA MODIFIED CONCRETE OVERLAY, USING	
														HYDRODEMOLITION (T=1¼")	
-	997	1,140	-	-	-	-	1,232	-	-	848	10000	3,369	SQ YD	MICRO-SILICA MODIFIED CONCRETE OVERLAY, USING	
														HYDRODEMOLITION (T=2")	
-	78	75	10	-	-	39	105	-	-	848	30000	307	CU YD	MICRO-SILICA MODIFIED CONCRETE OVERLAY (VARIABLE	
														THICKNESS), MATERIAL ONLY	
-	LUMP	LUMP	LUMP	-	-	LUMP	LUMP	-	-	848	50100	LUMP		TEST SLAB	
	99	110	55			55	123			848	50000	442	SQ YD	HAND CHIPPING	
-	-	-	-	-	-	189	-	-	-	SPECIAL	60739900	189	LIN FT	VANDAL PROTECTION FENCE, 6' STRAIGHT, COATED FABRIC	
-	-	-	-	-	-	186	-	-	-	SPECIAL	60739920	186	LIN FT	VANDAL PROTECTION FENCE, 10' CURVED, COATED FABRIC	
263	-	-	-	-	206	-	-	-	-	SPECIAL	60740000	469	LIN FT	VANDAL PROTECTION FENCE, COATED (FOR PEDESTRIAN BRIDGES)	
3,769	-	-	-	37,542	3,683	-	-	33,210	15,981	815	00050	94,185	SQ FT	SURFACE PREPARATION OF EXISTING STEEL, SYSTEM OZEU	
3,769	-	-	-	37,542	3,683	-	-	33,210	15,981	815	00056	94,185	SQ FT	FIELD PAINTING OF EXISTING STEEL, PRIME COAT, SYSTEM OZEU	
3,769	-	-	-	37,542	3,683	-	-	33,210	15,981	815	00060	94,185	SQ FT	FIELD PAINTING OF EXISTING STEEL, INTERMEDIATE COAT, SYSTEM OZEU	
3,769	-	-	-	37,542	3,683	-	-	33,210	15,981	815	00066	94,185	SQ FT	FIELD PAINTING OF EXISTING STEEL, FINISH COAT, SYSTEM OZEU	
160	-	-	-	808	160	-	-	-	-	815	00500	1,128	LIN FT	CAULKING	
15	-	-	-	40	15	-	-	80	60	815	00504	210	MAN HOUR	GRINDING FINS, TEARS, SLIVERS	
495	-	-	-	1,848	373	-	-	2607	1,445	815	00508	6,768	LIN FT	GRINDING FLANGE EDGES	
-	90	-	-	-	-	-	-	-	-	842	34000	90	CU YD	CLASS S CONCRETE, MISC.: SUPERSTRUCTURE, USING LIGHTWEIGHT CONCRETE	
-	7	-	-	-	-	-	-	169	105	842	45700	281	CU YD	CLASS C CONCRETE, ABUTMENT (REPAIR OR RECONSTRUCTION)	
90	25	114	-	-	73	-	53	608	335	844	48000	1,298	CU YD	HIGH PERFORMANCE CONCRETE SUPERSTRUCTURE (DECK) (MIX 4)	
-	101	10	44	-	-	113	97	151	85	844	48020	601	CU YD	HIGH PERFORMANCE CONCRETE SUPERSTRUCTURE (PARAPET) (MIX 2)	
LUMP	LUMP	LUMP	LUMP	-	LUMP	LUMP	LUMP	LUMP	LUMP	844	49000	LUMP		HIGH PERFORMANCE CONCRETE TRIAL MIX	
200	-	-	-	-	200	-	-	6,330	3.633	863	10200	10,363	POUND	STRUCTURAL STEEL MEMBERS, MISCELLANEOUS LEVEL FABRICATION	
-	-	-	-	-	-	-	-	6,326	3,416	863	20000	9,742	EACH	WELDED STUD SHEAR CONNECTORS	

CALCULATED RSD CHECKED DTF

BRIDGE SUMMARY

LIC-16-19.72

2/2

405B/547

L016I7A.DGN (02/23/99) (PID#15290)

NOTE:
SEE SHEET 2 & 3 OF 6 FOR
VANDAL PROTECTION FENCE.

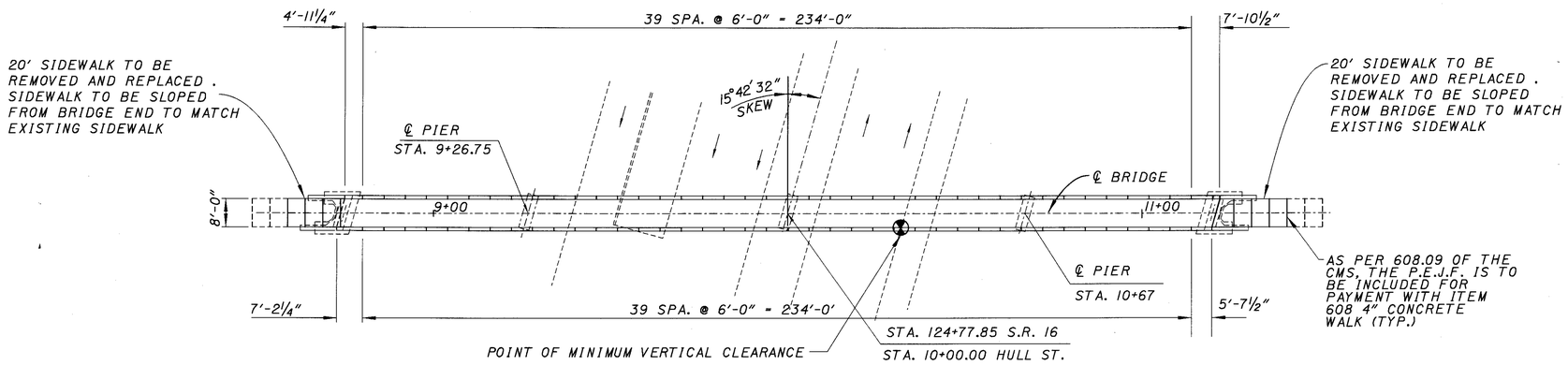

PLAN

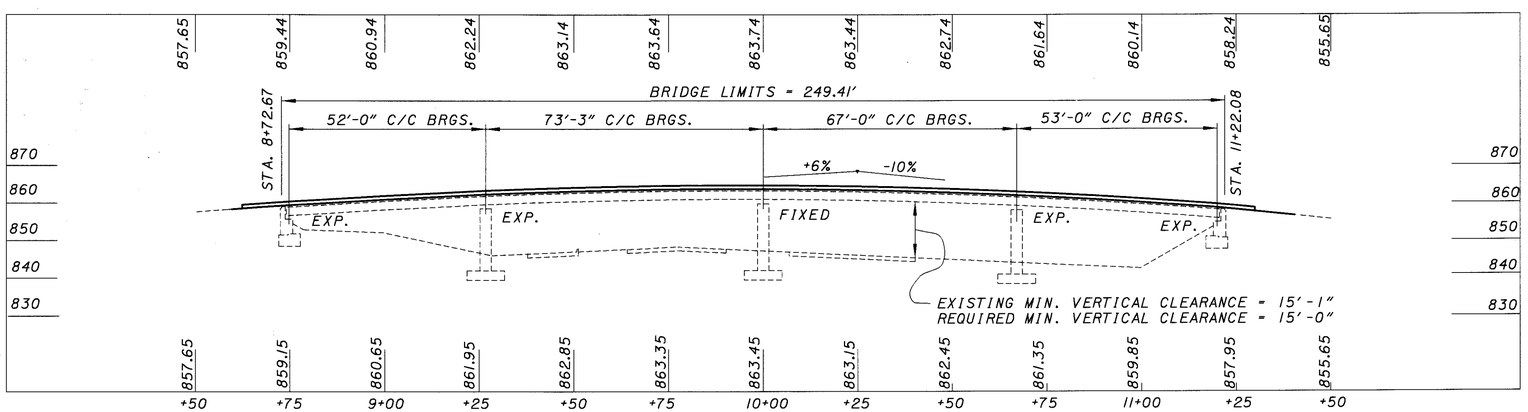

PROFILE ALONG ℄ BRIDGE

VERTICAL CURVE DATA
P.V.I. STA. 10+25.00
ELEV. 868.15
V.C. 250'
G1 + 6%
G2 -10%

NOTE: ROCKERS AT PIER 1 AND 3
AND BOTH ABUTMENTS TO BE RESET.

EXISTING STRUCTURE

TYPE: CONTINUOUS ROLLED STEEL BEAM WITH REINFORCED CONCRETE DECK AND SUBSTRUCTURES.
SPANS: 52'-0",73'-3",67'-0", AND 53'-0"
LOADING: PEDESTRIAN 85 LBS./SQ.FT.
WIDTH : 8'-0" F/F CURBS
SKEW: 15°42'32"
WEARING SURFACE: ½" MONOLITHIC CONCRETE
APPROACH SLABS: NONE
ALIGNMENT: TANGENT

PROPOSED STRUCTURE: (REHABILITATED)

TYPE: EXISTING CONTINUOUS STEEL BEAM WITH PROPOSED REINFORCED CONCRETE DECK
WITH VANDAL PROTECTION FENCE
ROADWAY: 8'-0" F/F CURBS
WEARING COURSE: 1" MONOLITHIC CONCRETE
APPROACH SLABS: NONE
S.F.N. 4503635

DESIGN AGENCY
OHIO DEPARTMENT OF TRANSPORTATION DISTRICT 5

DESIGNED	DRAWN	REVIEWED	DATE
D.D.H.	D.S.	DTF	2-20-99
CHECKED	REVISED	STRUCTURE FILE NUMBER	
C.L.Z.		4503635	

PROPOSED PLAN AND ELEVATION
BRIDGE NO. LIC-16-2006
UNDER HULL STREET

LIC-16-19.72

1/6

406/547

L016hu07

ITEM	ITEM EXT.	GRAND TOTAL	UNIT	DESCRIPTION	SUPER.	ABUT.	PIERS	GENERAL
202	11300	60	CU YD	PORTIONS OF STRUCTURE REMOVED, SUPERSTRUCTURE	60	--	--	--
202	30000	320	SQ FT	WALK REMOVED	--	--	--	320
202	75000	263	LIN FT	FENCE REMOVED, VANDAL PROTECTION FENCE ON STRUCTURES	263	--	--	--
202	98200	21	LIN FT	REMOVAL MISC.: EXPANSION JOINTS	21	--	--	--
503	21300	LUMP		UNCLASSIFIED EXCAVATION	--	--	--	LUMP
SPECIAL	51267510	294	SQ YD	SEALING OF CONCRETE SURFACES (EPOXY - URETHANE)	278	16	--	--
516	12301	21	LIN FT	STRIP SEAL EXPANSION ANCHORED WITH ELASTOMERIC CONCRETE, AS PER PLAN	21	--	--	--
516	46701	8	EACH	RESET BEARING, AS PER PLAN	8	--	--	--
607	98200	LUMP	LUMP	FENCE, MICS.: TEMPORARY VANDAL PROTECTION FENCE	LUMP	--	--	--
SPECIAL	60740000	263	LIN FT	VANDAL PROTECTION FENCE, COATED, (FOR PEDESTRIAN BRIDGES)	263	--	--	--
608	10000	320	SQ FT	4" CONCRETE WALK	--	--	--	320
625	25402	245	LIN FT	CONDUIT, 2", 713.07	245	--	--	--
625	25502	245	LIN FT	CONDUIT, 3", 713.07	245	--	--	--
815	00050	3769	SQ FT	SURFACE PREPARATION OF EXISTING STEEL, SYSTEM OZEU, SS815	3769	--	--	--
815	00056	3769	SQ FT	FIELD PAINTING OF EXISTING STEEL, PRIME COAT, SYSTEM OZEU, SS815	3769	--	--	--
815	00060	3769	SQ FT	FIELD PAINTING OF EXISTING STEEL, INTERMEDIATE COAT, SYSTEM OZEU, SS815	3769	--	--	--
815	00066	3769	SQ FT	FIELD PAINTING OF EXISTING STEEL, FINISH COAT, SYSTEM OZEU, SS815	3769	--	--	--
815	00500	160	LIN FT	CAULKING	160	--	--	--
815	00504	15	MNHR	GRINDING FINS, TEARS, SLIVERS	15	--	--	--
815	00508	495	LIN FT	GRINDING FLANGE EDGES	495	--	--	--
844	48000	90	CU YD	HIGH PERFORMANCE CONCRETE, SUPERSTRUCTURE(DECK) MIX 4	90	--	--	--
844	49000	LUMP		HIGH PERFORMANCE CONCRETE TRIAL MIX	LUMP			
863	10200	200	POUND	STRUCTURAL STEEL MEMBERS, MISCELLANEOUS LEVEL FABRICATION	200			
			QUANTITIES	CARRIED TO SHEETS 405A AND 405B				
				** SEE PROPOSAL NOTE				

CALCULATED D.D.H. CHECKED R.S.D.

BRIDGE SUMMARY
BRIDGE NO. LIC-16-2006
HULL STREET

LIC-16-19.72

L0160001.GGS 2/10/99 SCALE=1

SEE NOTE ON VANDAL PROTECTION FENCE REMOVED ON BRIDGE NOTE SHEET.

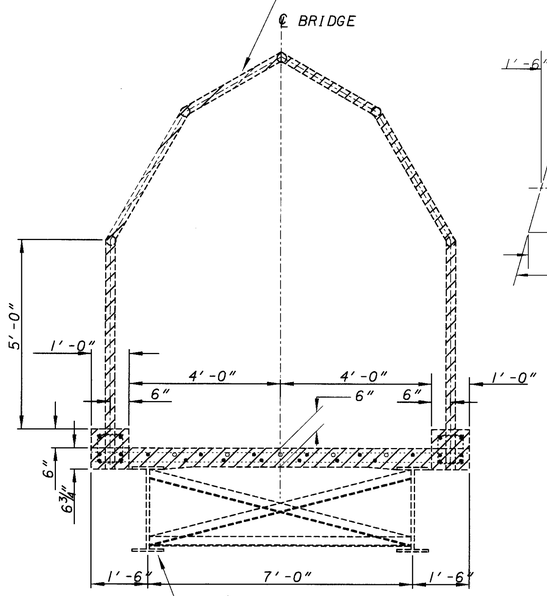

EXISTING

W27 X 94 SPANS 1 & 4
W27 X 102 SPANS 2 & 3

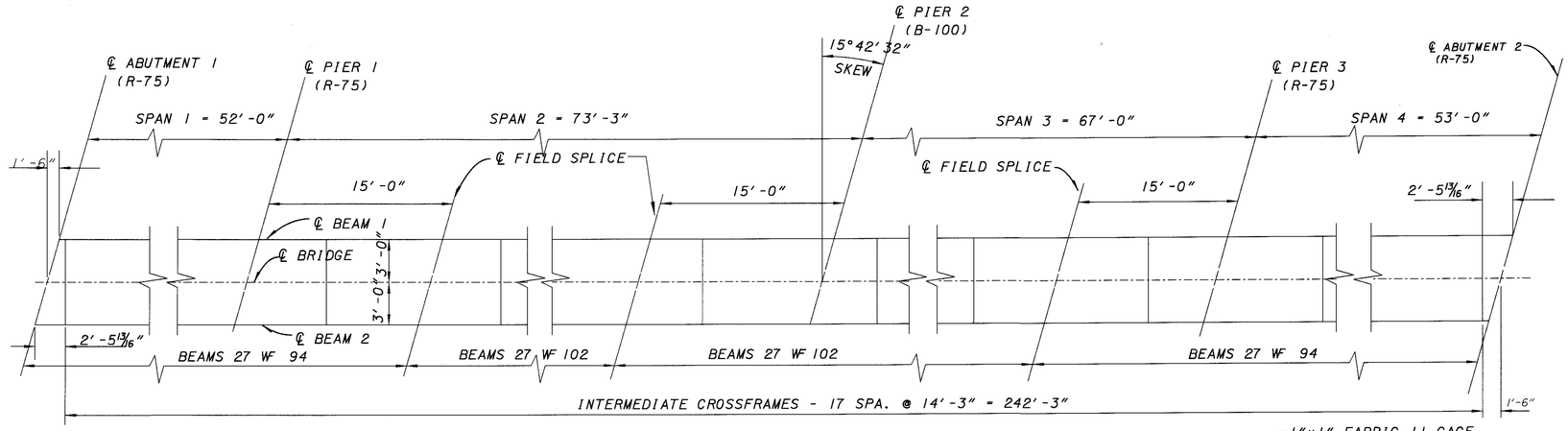

NOTE: DOWEL HOLES AND RE-STEEL TO BE INCLUDED WITH ITEM 844 HIGH PERFORMANCE CONCRETE, SUPERSTRUCTURE (DECK)

EXISTING STEEL FRAMING PLAN

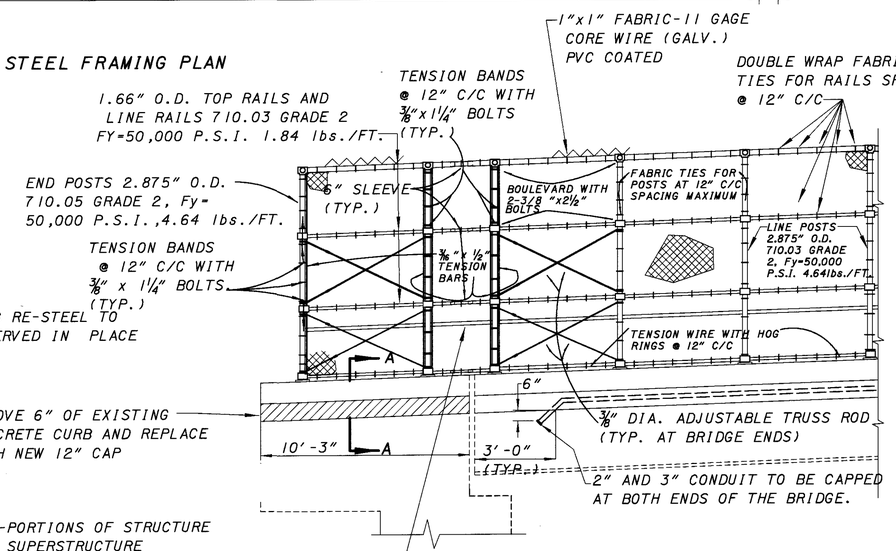

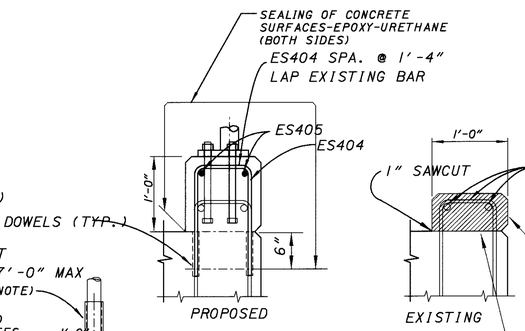

SECTION A-A

PAYMENT FOR HANDRAIL INCLUDING LABOR, TOOLS, MATERIALS AND INCIDENTALS NECESSARY TO COMPLETE THE WORK SHALL BE INCLUDED WITH ITEM SPECIAL - VANDAL PROTECTION FENCE.

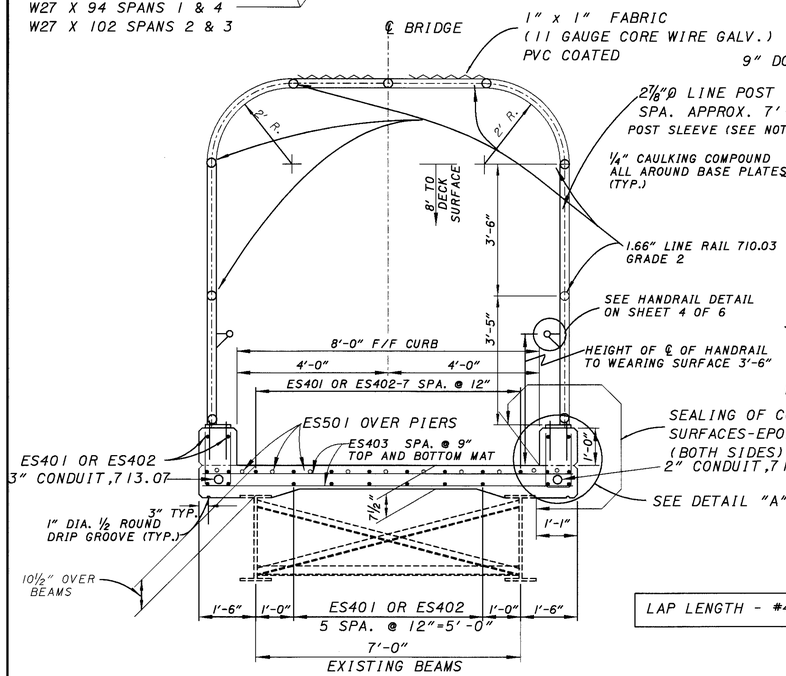

PROPOSED TRANSVERSE SECTION

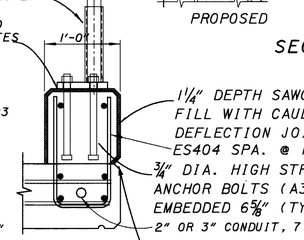

DETAIL "A"

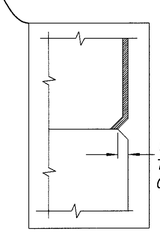

LAP LENGTH - #4 BAR-1'-9"

NOTE: FOR DETAILS OF POST SLEEVE, ANCHOR BOLTS AND ADDITIONAL NOTES FOR VANDAL PROTECTION FENCE, SEE ST'D. DWG. VPF-1-90, BP-1, SHT. 2 OF 6.

OUTSIDE ELEVATION

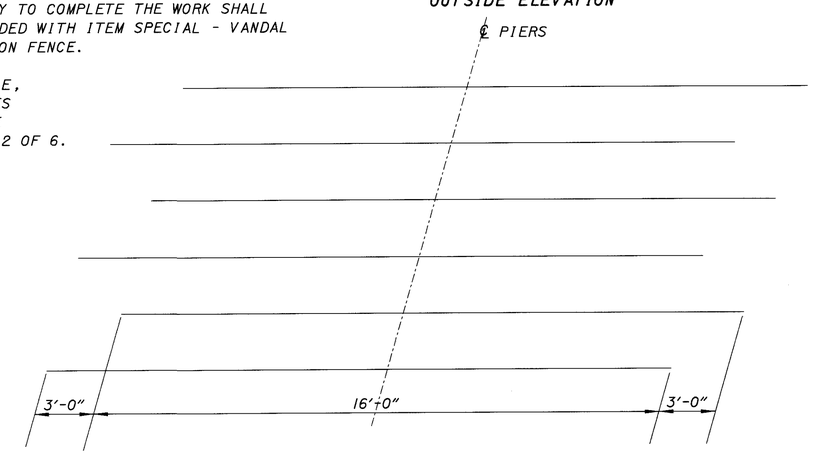

DIAGRAM SHOWING STAGGER OF ES501 OVER PIERS

DESIGN AGENCY	OHIO DEPARTMENT OF TRANSPORTATION DISTRICT 5
REVIEWED	CLZ
DATE	2-20-99
STRUCTURE FILE NUMBER	4503635
DRAWN	RSD
REVISED	
DESIGNED	RSD
CHECKED	DTF

TRANSVERSE SECTION AND FENCE DETAILS
BRIDGE NO. LIC-16-2006
UNDER HULL STREET

LIC-16-19.72

3/6

408/547

1016hu56 (SCALE 2) 2-09-99

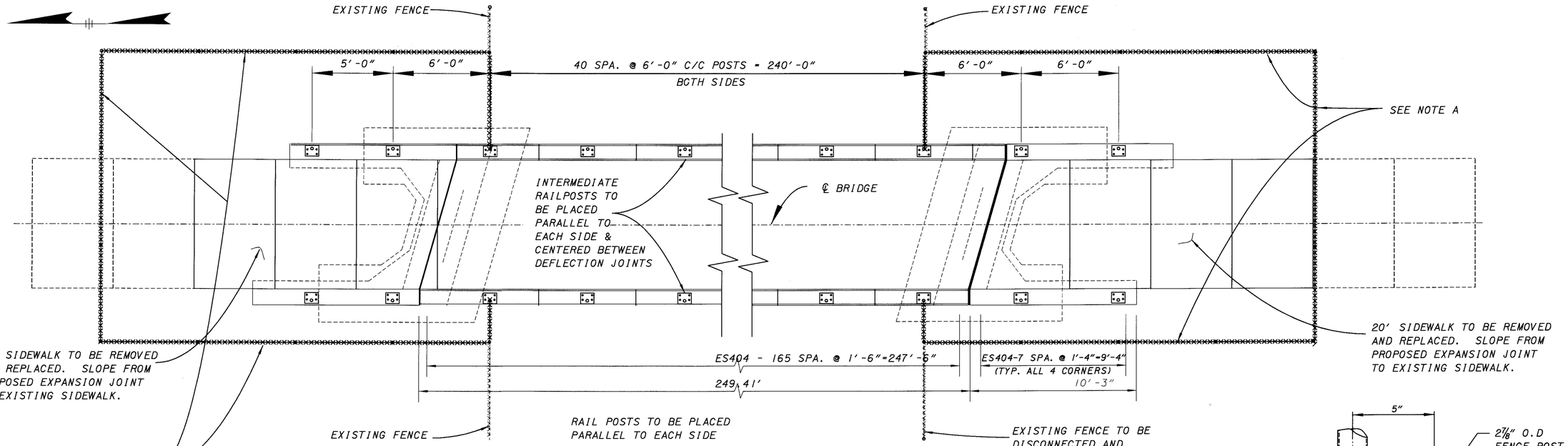

PLAN

NOTE A:

THE CONTRACTOR IS TO ENCLOSE THE WORK AREA BY USING A CHAIN LINK FENCE 6 FOOT HIGH (MIN.). THIS SHALL INCLUDE POSTS , FENCE, GATES, HARDWARE, INCIDENTALS, LABOR AND MATERIALS NECESSARY TO INSTALL THE FENCE IN PLACE. THE CONTRACTOR SHALL RETURN THE AREA TO ITS ORIGINAL CONDITION. THE ABOVE WORK SHALL BE INCLUDED IN THE UNIT PRICE BID FOR ITEM 607 FENCE, MISCELLANEOUS, TEMPORARY VANDAL PROTECTION FENCE.

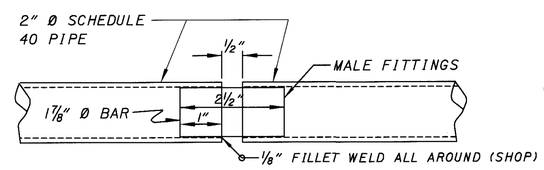

HANDRAIL JOINT DETAIL
(MAX. SPACING 30')

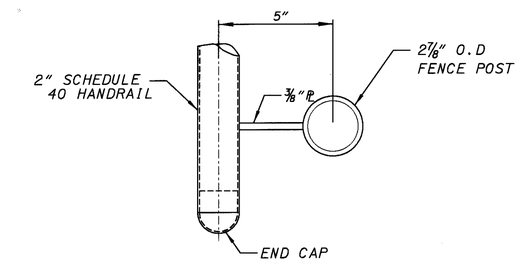

PLAN VIEW
(AT END OF HANDRAIL)

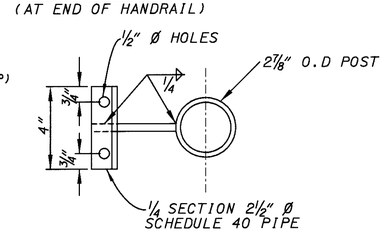

SECTION A-A
(HANDRAIL NOT SHOWN)

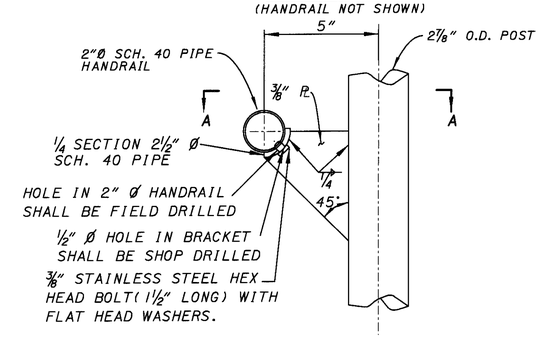

HANDRAIL DETAIL

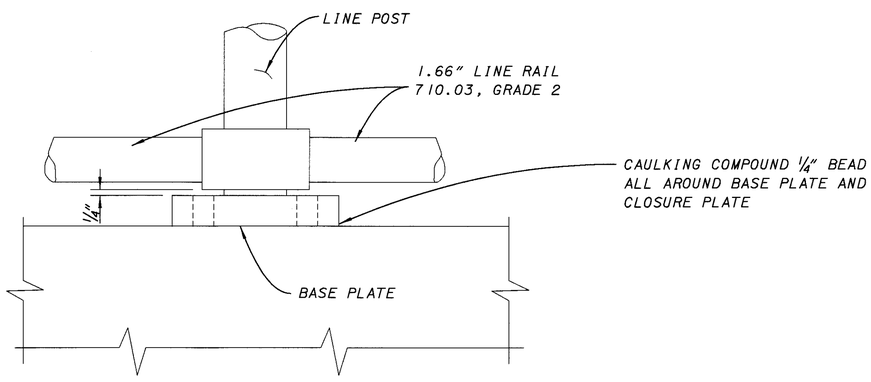

ELEVATION AT LINE POST

L016HU40 (SCALE 10) 2-09-99

DESIGN AGENCY
OHIO DEPARTMENT OF TRANSPORTATION DISTRICT 5

DESIGNED	DRAWN	REVIEWED	DATE
R.S.D.	D.S.	DTF	2-20-99
CHECKED	REVISED	STRUCTURE FILE NUMBER	
C.L.Z.		4503635	

FENCE DETAILS
BRIDGE NO. LIC-16-2006
UNDER HULL STREET

LIC-16-19.72

D.S. BROWN COMPANY	WATSON BOWMAN (WABO) ASSOCIATES, INC.	STRUCTURAL ACCESSORIES INC.
TYPE SS-E STEEL EXTRUSION	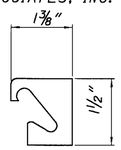 TYPE E STEEL EXTRUSION	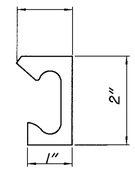 TYPE AM2 STEEL EXTRUSION
STRIP SEAL SSE2 (SEE SHEET 545 FOR DETAILS)	STRIP SEAL SE-300	STRIP SEAL ONFLEX 40SEQ

NOTE: CONTRACTOR MAY USE ANY OF THE ABOVE STRIP SEALS, AND EXTRUSIONS, BUT THE CONTRACTOR MUST USE STRIP SEAL THAT CORRESPONDS WITH MANUFACTURERS EXTRUSION.

D.S. BROWN CO.
P.O. BOX 158
NORTH BALTIMORE, OH., 45872
PH. # (419) 257-3561

STRUCTURAL ACCESSORIES
P.O. BOX 10
TERRYVILLE, CT., 06786
PH. # (203) 589-8826

WABO CORP.
P.O. BOX 9
AMHERST, N.Y., 14120
PH. # (716) 691-7566

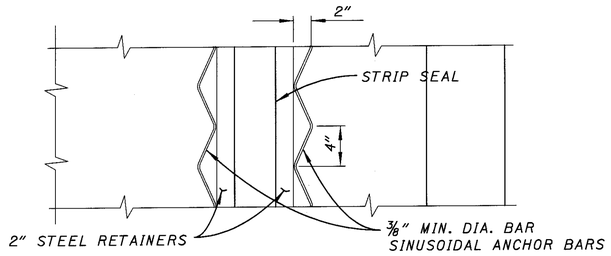

PROPOSED PLAN

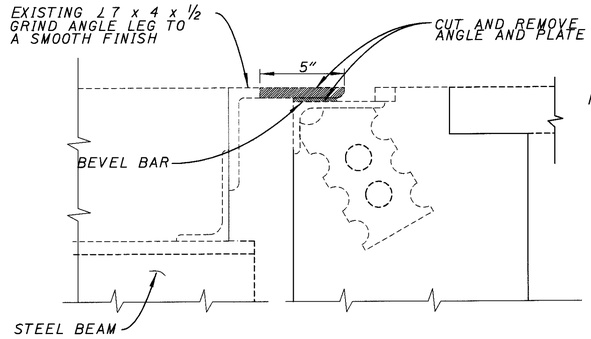

EXISTING ELEVATION

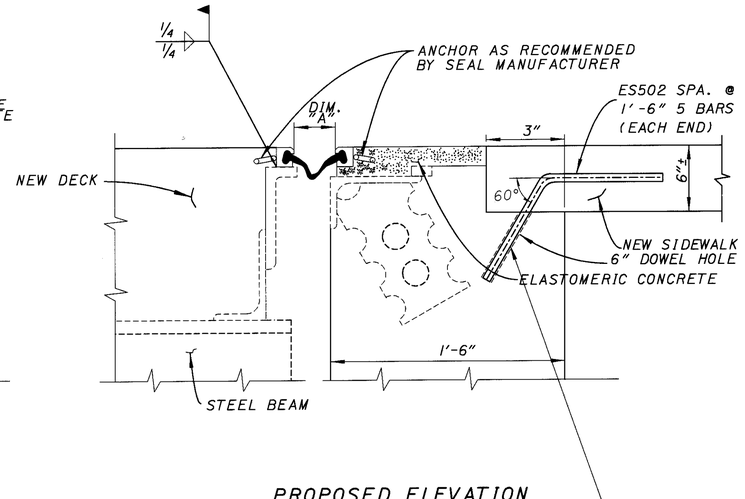

PROPOSED ELEVATION

EXPANSION JOINT DETAIL

NOTE: DOWEL HOLES AND RE-STEEL TO BE INCLUDED WITH ITEM 608 4" CONCRETE WALK.

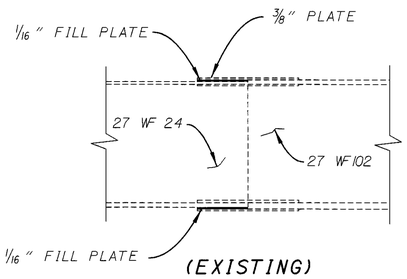

AMBIENT TEMP. F°	DIMENSION "A" LIC-16-2006	
	3" SEAL	
	SOUTH EXP. JT.	NORTH EXP. JT.
90°	1 1/4"	1 1/4"
80°	1 3/8"	1 3/8"
70°	1 1/2"	1 1/2"
60°	1 5/8"	1 5/8"
50°	1 3/4"	1 3/4"
40°	1 3/4"	1 3/4"
30°	2"	2"

BEAM SPLICE DETAIL
FOR ADDITIONAL DETAILS NOT SHOWN
SEE ST'D. DWG. SD-1-65 SHT.3

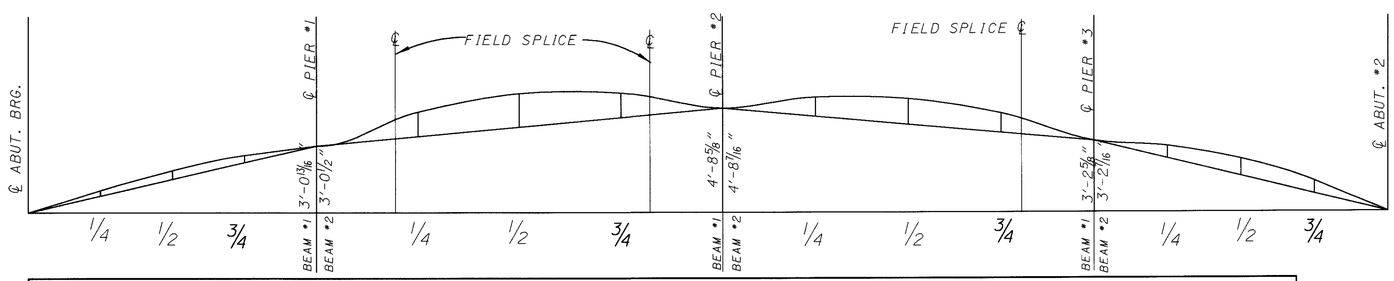

DEFLECTION AND CAMBER (All dimensions in inches)	SPAN 1			SPAN 2					SPAN 3				SPAN 4		
	1/4 PT.	1/2 PT.	3/4 PT.	FIELD SPLICE	1/4 PT.	1/2 PT.	3/4 PT.	FIELD SPLICE	1/4 PT.	1/2 PT.	3/4 PT.	FIELD SPLICE	1/4 PT.	1/2 PT.	3/4 PT.
DEFLECTION DUE TO WEIGHT OF STEEL	1/16	1/16	0	1/8	1/8	3/16	1/8	1/16	1/16	1/16	1/16	1/16	1/16	1/16	1/16
DEFLECTION DUE TO REMAINING DEADLOAD	1/4	1/4	1/16	3/8	1/2	13/16	1/2	3/8	3/16	3/8	1/4	3/16	3/16	3/8	5/16
ADJUSTMENT REQUIRED FOR VERTICAL CURVE - BEAM #1	3/4	1 7/16	1 3/8	3 5/16	3 7/8	5 1/8	3 7/8	3 5/16	3 1/4	4 5/16	3 1/4	2 3/4	2	2 11/16	2
ADJUSTMENT REQUIRED FOR VERTICAL CURVE - BEAM #2	5/8	1 1/4	1 1/4	3 5/16	3 7/8	5 1/8	3 7/8	3 5/16	3 1/4	4 5/16	3 1/4	2 3/4	2	2 11/16	2
REQUIRED SHOP CAMBER BEAM #1	1 1/16	1 3/4	1 7/16	3 13/16	4 1/2	6 1/8	4 1/2	3 3/4	3 1/2	4 3/4	3 9/16	3	2 1/4	3 1/8	2 3/8
REQUIRED SHOP CAMBER BEAM #2	15/16	1 9/16	1 5/16	3 13/16	4 1/2	6 1/8	4 1/2	3 3/4	3 1/2	4 3/4	3 9/16	3	2 1/4	3 1/8	2 3/8

DEFLECTION AND CAMBER DATA
(FOR INFORMATION ONLY CONTRACTOR TO ESTABLISH SCREED ELEVATIONS ACCORDINGLY)

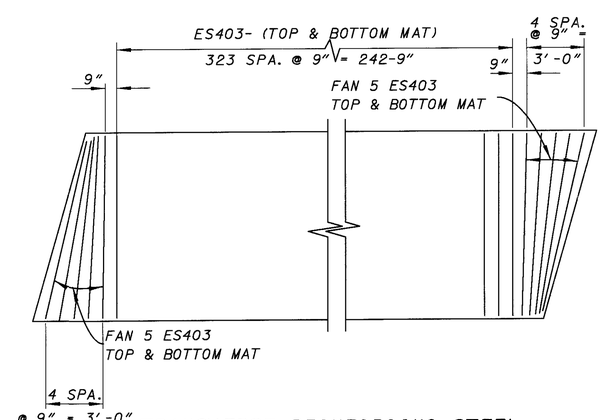

TRANSVERSE REINFORCING STEEL LAYOUT

DESIGN AGENCY: OHIO DEPARTMENT OF TRANSPORTATION DISTRICT 5

DATE: 2-20-99 | REVIEWED: CLZ | STRUCTURE FILE NUMBER: 4503635

DRAWN: D.S. | REVISED:

DESIGNED: RSD | CHECKED: DTF

EXPANSION JOINT AND STRUCTURAL DETAILS
BRIDGE NO. LIC-16-2006
UNDER HULL STREET

LIC-16-19.72

5/6

410/547

L016hu70

BAR SCHEDULE

SUPERSTRUCTURE				
MARK	NUMBER	LENGTH	SHAPE	WEIGHT
ES401	156	40'-0"	ST.	4,168
ES402	26	19'-1"	ST.	331
ES403	668	9'-8"	ST.	4,314
ES404	364	3'-7"	BT.	871
ES405	8	9'-11"	ST.	53
ES501	33	19'-0"	ST.	654
ES502	10	3'-2"	BT.	33
TOTAL				10,424

SUPERSTRUCTURE				
MARK	NUMBER	LENGTH	SHAPE	WEIGHT

BENDING DIAGRAMS

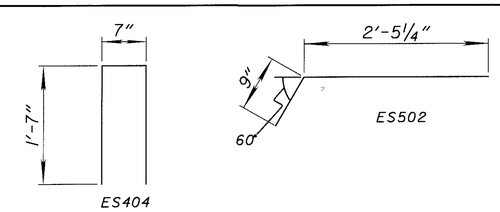

NOTE: ALL RE-STEEL TO BE INCLUDED WITH ITEM 844-HIGH PERFORMANCE CONCRETE, SUPERSTRUCTURE (DECK)

DESIGN AGENCY: OHIO DEPARTMENT OF TRANSPORTATION DISTRICT 5

REVIEWED CLZ 2-13-99 | DATE | STRUCTURE FILE NUMBER 4503635

DRAWN DDH | REVISED

DESIGNED DDH | CHECKED KAK

BAR SCHEDULES AND BENDING DIAGRAMS
BRIDGE NO. LIC-16-2006
UNDER HULL ST.

LIC-16-19.72

6/6

411/547

L016HU72 (SCALE 1) 2-09-99

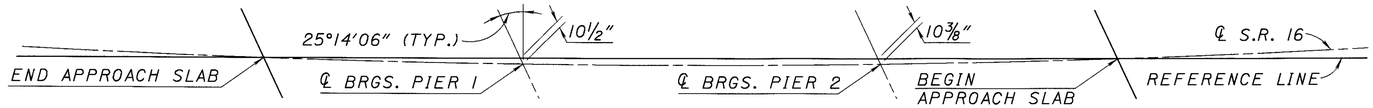

LAYOUT OF CENTERLINE

** PAVEMENT REMOVED WITH ITEM 203 EXCAVATION NOT INCLUDING EMBANKMENT CONSTRUCTION

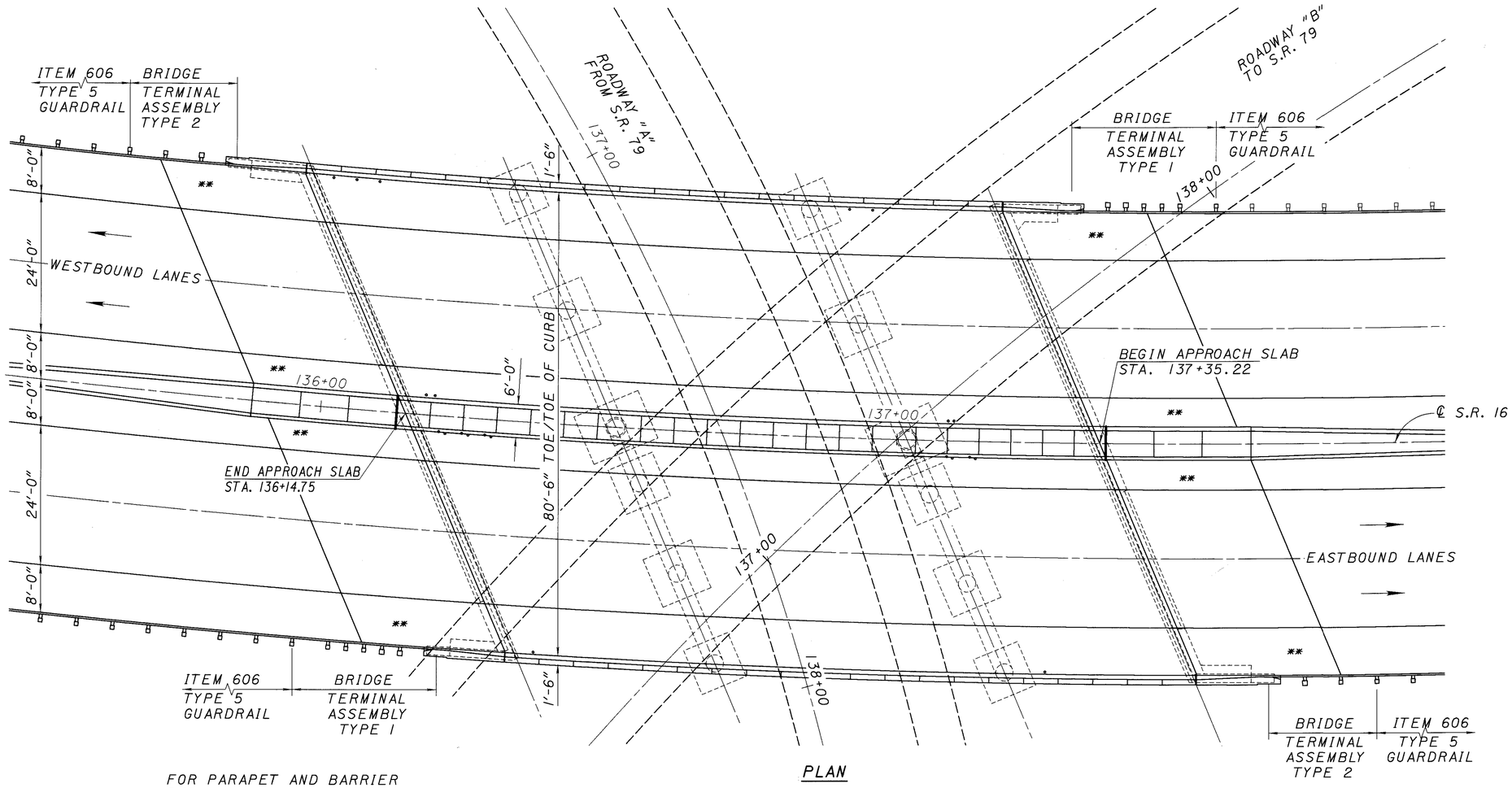

PLAN

FOR PARAPET AND BARRIER DETAILS AND LAYOUTS SEE SHEETS 3, 8, 9, 10, 11, 12 & 16 OF 16.

VERTICAL CURVE DATA
S.R. 16

P.V.I. = STA. 139+25
ELEV. 857.51
V.C. = 450'
G1 = +0.88%
G2 = -1.40%

HORIZONTAL CURVE DATA
S.R. 16

PI = STA. 141+22.54
Δ = 43°50'10" L.F.
Rc = 1909.86'
Δc = 33°20'10" L.F.
Dc = 3°00'00"

HORIZONTAL CURVE DATA
ROADWAY "A"

PI = STA. 138+06.33
Δ = 109°10'20" RT.
Rc = 440.74'
Δc = 76°40'20" RT.
Dc = 13°00'00"

NOTE: FOR PHASES OF CONSTRUCTION SEE SHEET 4/16

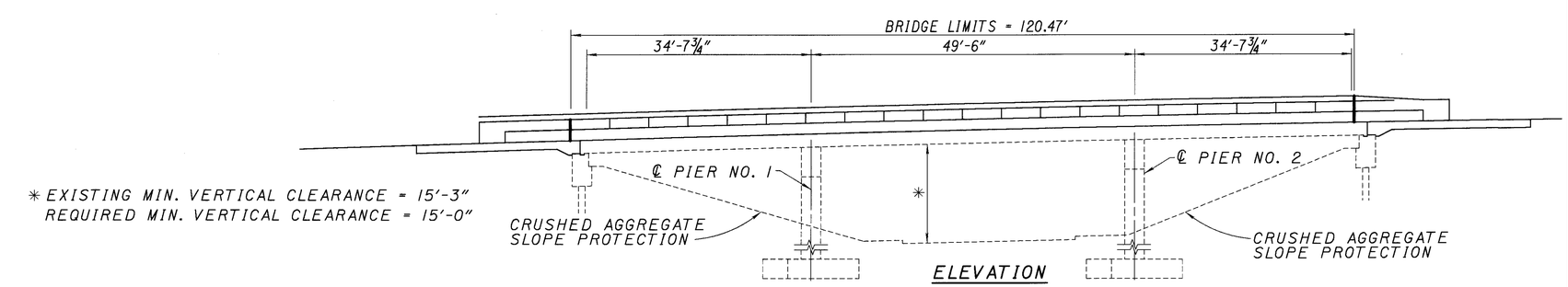

ELEVATION

* EXISTING MIN. VERTICAL CLEARANCE = 15'-3"
REQUIRED MIN. VERTICAL CLEARANCE = 15'-0"

EXISTING STRUCTURE

TYPE: CONTINUOUS REINFORCED CONCRETE SLAB WITH REINFORCED CONCRETE SUBSTRUCTURE
SPANS: 34'-7¾", 49'-6", AND 34'-7¾"
ROADWAY: 81'-6" FACE TO FACE OF PARAPETS
LOADING: HS 20-44
SKEW: 25°14'06" R.F. FROM REFERENCE CHORD
WEARING SURFACE: 1" MONOLITHIC CONCRETE
APPROACH SLABS: AS-1-67 (25' LONG)
ALIGNMENT: 03°00'00" LT.
SUPERELEVATION: 0.071'/FT.

REHABILITATED STRUCTURE

ROADWAY: 80'-6" TOE TO TOE OF CURB INCLUDING 6'-0" MEDIAN BARRIER (50")
BRIDGE RAILING: DEFLECTOR PARAPET TYPE
WEARING SURFACE: 2" MICRO-SILICA MODIFIED
APPROACH SLABS: AS-1-81 (25' LONG)

DESIGN AGENCY: OHIO DEPARTMENT OF TRANSPORTATION DISTRICT 5

REVIEWED	DATE	DRAWN	REVISED	DESIGNED	CHECKED
DTF	2-20-99	DDH		RSD	CLZ

STRUCTURE FILE NUMBER 4500067

GENERAL PLAN AND ELEVATION
BRIDGE NO. LIC-16-2028
S.R. 16 OVER ROADWAY "A" UNDER S.R. 79

LIC-16-19.72

1/16

412/547

L0162A07 (SCALE 1) 2-09-99

ITEM	ITEM EXT.	GRAND TOTAL	UNIT	DESCRIPTION	SUPER.	ABUT.	PIERS	GENERAL
202	11300	99	CU YD	PORTIONS OF STRUCTURE REMOVED, SUPERSTRUCTURE	99	--	--	--
202	11300	29	CU YD	PORTIONS OF STRUCTURE REMOVED, ABUTMENT	--	29	--	--
202	22900	267	SQ YD	APPROACH SLAB REMOVED, AS PER PLAN	--	--	--	267
202	30500	50	LIN FT	CONCRETE MEDIAN REMOVED	--	--	--	50
203	12000	277	CU YD	EXCAVATION NOT INCLUDING EMBANKMENT CONSTRUCTION	--	--	--	277
203	20000	135	CU YD	EMBANKMENT	--	--	--	135
203	50000	406	SQ YD	SUBGRADE COMPACTION	--	--	--	406
304	20000	68	CU YD	AGGREGATE BASE	--	--	--	68
503	21300	LUMP		UNCLASSIFIED EXCAVATION	--	--	--	LUMP
512	33000	3	SQ YD	TYPE 2 WATERPROOFING	--	3	--	--
SPECIAL	51267510	731	SQ YD	SEALING OF CONCRETE SURFACES (EPOXY - URETHANE)	622	109	--	--
					LUMP	--	--	--
516	13600	126	SQ FT	1" PREFORMED EXPANSION JOINT FILLER	126	--	--	--
516	47000	LUMP		JACKING AND TEMPORARY SUPPORT OF SUPERSTRUCTURE	LUMP			
518	51300	7	EACH	DOWNSPOUT MODIFICATION	7	--	--	--
518	12500	7	EACH	NEW SCUPPER, MISC.: INCLUDING SUPPORTS	7	--	--	--
518	12700	7	EACH	SCUPPER, VERTICAL EXTENSION	7	--	--	--
518	21230	LUMP		POROUS BACKFILL WITH FILTER FABRIC	--	LUMP	--	--
518	40000	183	LIN FT	6" PERFORATED CORRUGATED PLASTIC PIPE (SS 944)	--	183	--	--
518	40010	28	LIN FT	6" NON-PERFORATED CORRUGATED PLASTIC PIPE INCLUDING SPECIALS (SS944)*	--	28	--	--
519	11100	27	SQ FT	PATCHING CONCRETE STRUCTURE	--	27	--	--
604	36600	2	EACH	PRECAST REINFORCED CONCRETE OUTLET	--	2	--	--
611	25001	450	SQ YD	REINFORCED CONCRETE APPROACH SLAB (T=15"), AS PER PLAN	--	--	--	450
625	25402	301	LIN FT	CONDUIT, 2", 713.07	241	60	--	--
625	25602	173	LIN FT	CONDUIT, 4", 713.07	123	--	--	50
625	29910	2	EACH	TRANSITION JUNCTION BOX	2	--	--	--
625	29920	4	EACH	STRUCTURE JUNCTION BOX, TYPE II WITH COVER PLATE	4	--	--	--
625	33000	1	EACH	STRUCTURE GROUNDING SYSTEM	1	--	--	--
842	34450	90	CU YD	CLASS S CONCRETE, MISC.: SUPERSTRUCTURE, USING LIGHTWEIGHT CONCRETE	90	--	--	--
842	45700	7	CU YD	CLASS C CONCRETE, ABUTMENT REPAIR OR RECONSTRUCTION	--	7	--	--
844	48000	25	CU YD	HIGH PERFORMANCE CONCRETE, SUPERSTRUCTURE(DECK) MIX 4	25	--	--	--
844	48020	101	CU YD	HIGH PERFORMANCE CONCRETE, SUPERSTRUCTURE(PARAPETS) MIX 2	45	18	--	38
844	49000	LUMP		HIGH PERFORMANCE CONCRETE TRIAL MIX	LUMP			
848	10000	997	SQ YD	MICRO-SILICA MODIFIED CONCRETE OVERLAY, USING HYDRODEMOLITION (T=2")	997	--	--	--
848	30000	78	CU YD	MICRO-SILICA MODIFIED CONCRETE OVERLAY (VARIABLE THICKNESS), MATERIAL ONLY	78	--	--	--
848	50100	LUMP		TEST SLAB	LUMP	--	--	--
848	20000	997	SQ YD	SURFACE PREPARATION USING HYDRODEMOLITION	997			
848	50000	99	SQ YD	HAND CHIPPING	99			

QUANTITIES CARRIED TO SHEETS 405A AND 405B

CALCULATED D.D.H.
CHECKED R.S.D.

BRIDGE SUMMARY
BRIDGE NO. LIC-16-2028
S.R. 16 OVER ROADWAY 'A' UNDER S.R. 79

LIC-16-19.72

L0160001.GGS 2/10/99 SCALE=1

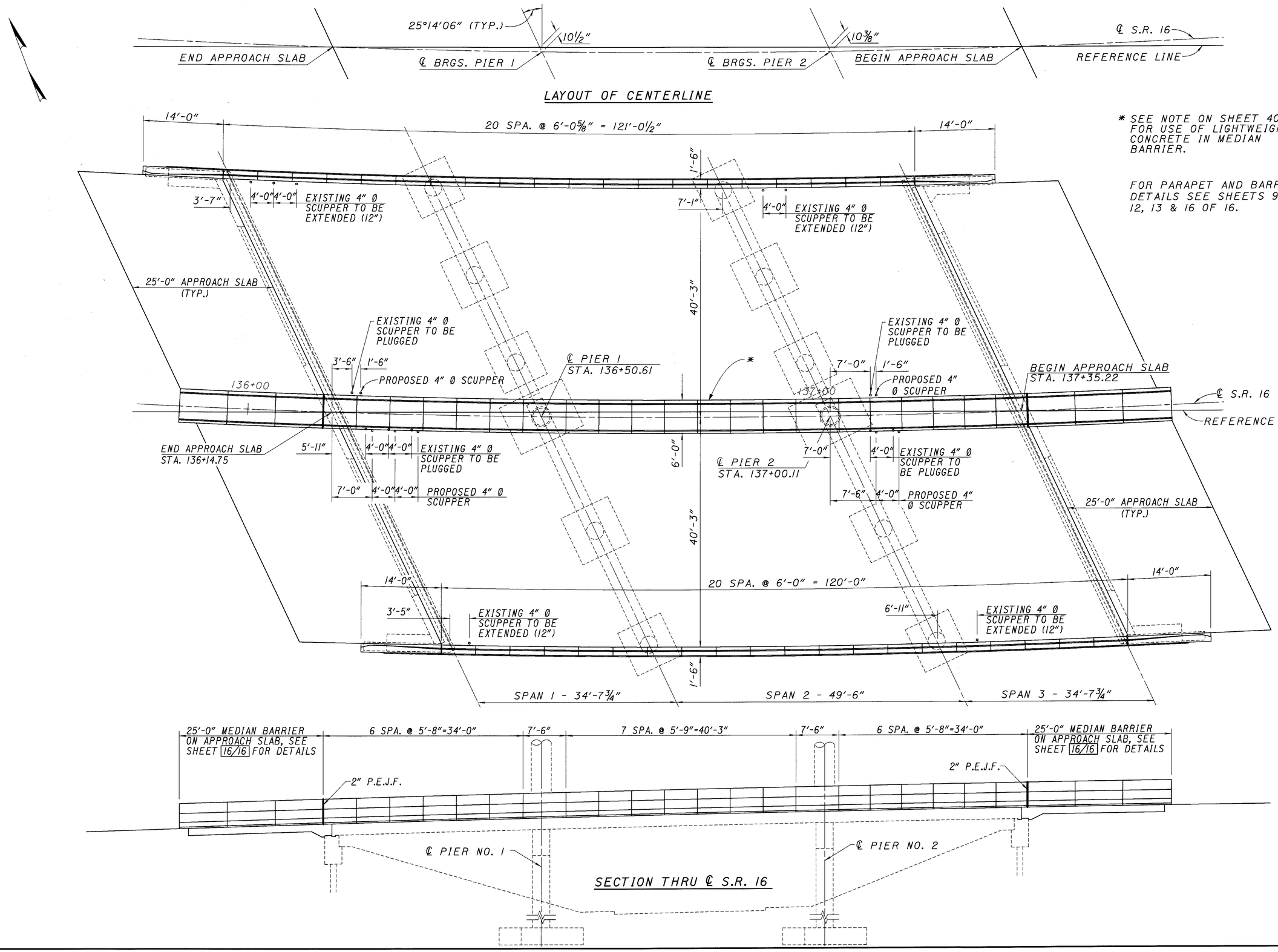

* SEE NOTE ON SHEET 403 FOR USE OF LIGHTWEIGHT CONCRETE IN MEDIAN BARRIER.

FOR PARAPET AND BARRIER DETAILS SEE SHEETS 9, 10, 12, 13 & 16 OF 16.

DESIGN AGENCY	DATE	STRUCTURE FILE NUMBER
OHIO DEPARTMENT OF TRANSPORTATION DISTRICT 5	REVIEWED CLZ 2-09-99	4500067
DESIGNED RSD / CHECKED	DRAWN DDH / REVISED RSD	

GENERAL PLAN
BRIDGE NO. LIC-16-2028
S.R. 16 OVER ROADWAY 'A' UNDER S.R. 79

LIC-16-19.72

3/16

414/547

L0162A42 (SCALE 1) 2-09-99

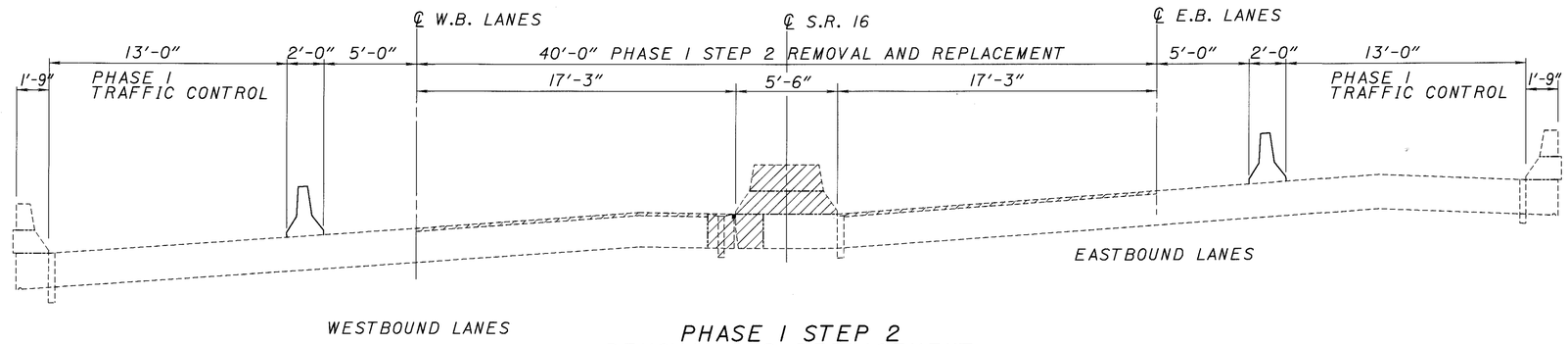

PHASE I STEP 2
REMOVAL AND REPLACEMENT

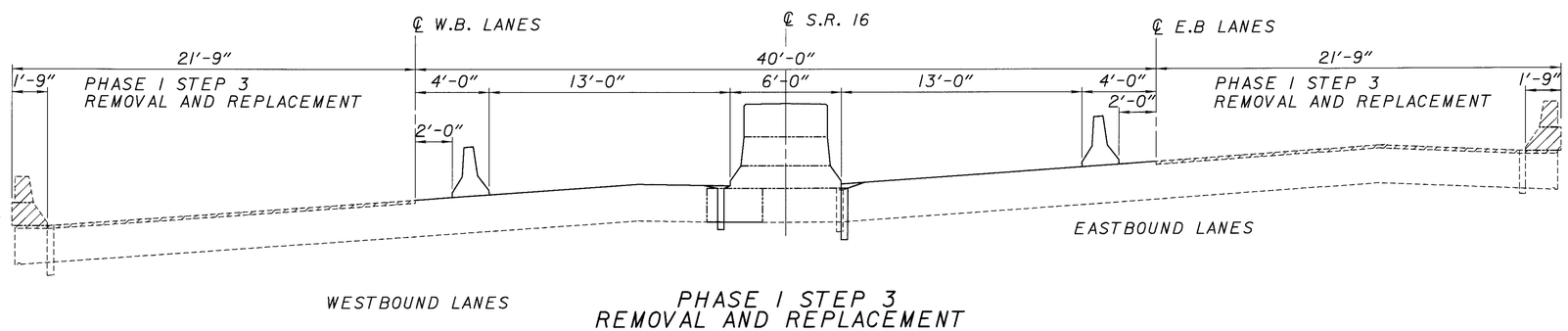

PHASE I STEP 3
REMOVAL AND REPLACEMENT

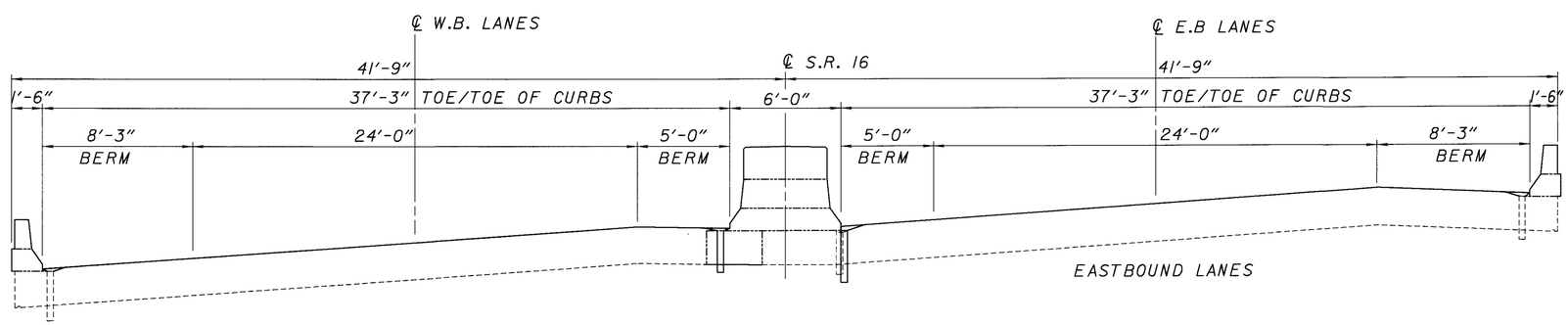

PHASE I REPLACEMENT

L162A56A (SCALE 4)2-09-99

DESIGN AGENCY
OHIO DEPARTMENT
OF TRANSPORTATION
DISTRICT 5

DESIGNED	DRAWN	REVIEWED	DATE
RSD	DDH	CLZ	2-09-99
CHECKED	REVISED	STRUCTURE FILE NUMBER	
DTF		4500067	

TRAFFIC CONTROL
BRIDGE NO. LIC-16-2028
S.R. 16 OVER ROADWAY 'A' UNDER S.R. 79

LIC-16-19.72

4/16

415/547

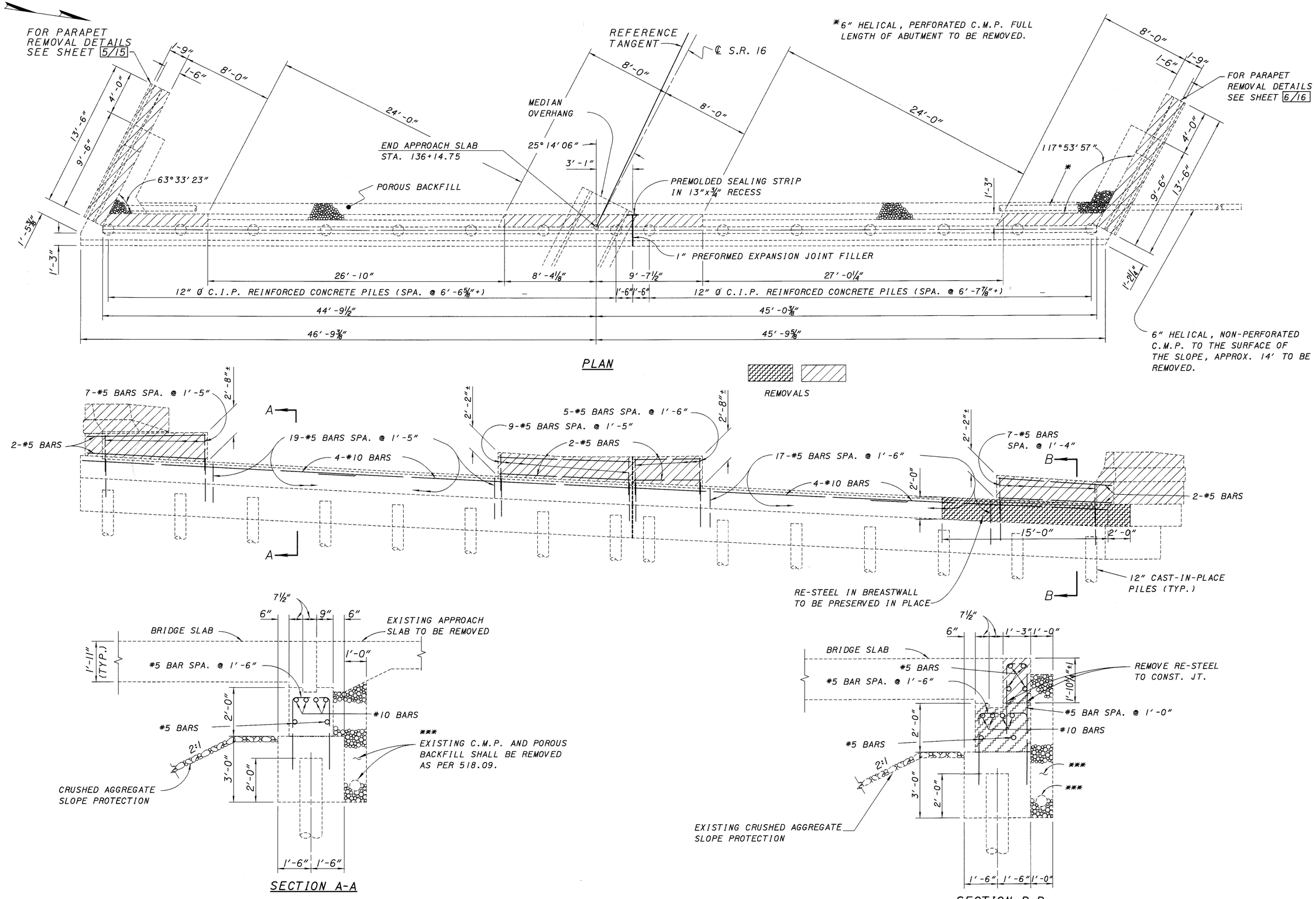

DESIGN AGENCY
OHIO DEPARTMENT OF TRANSPORTATION DISTRICT 5

DESIGNED	DRAWN	REVIEWED	DATE
RSD	DDH	CLZ	2-10-99
CHECKED	REVISED	STRUCTURE FILE NUMBER	
DTF		4500067	

EXISTING REAR ABUTMENT (REMOVALS)

BRIDGE NO. LIC-16-2028
S.R. 16 OVER ROADWAY 'A' UNDER S.R. 79

LIC-16-19.72

5/16

416/547

L0162A31 (SCALE4) 2-10-99

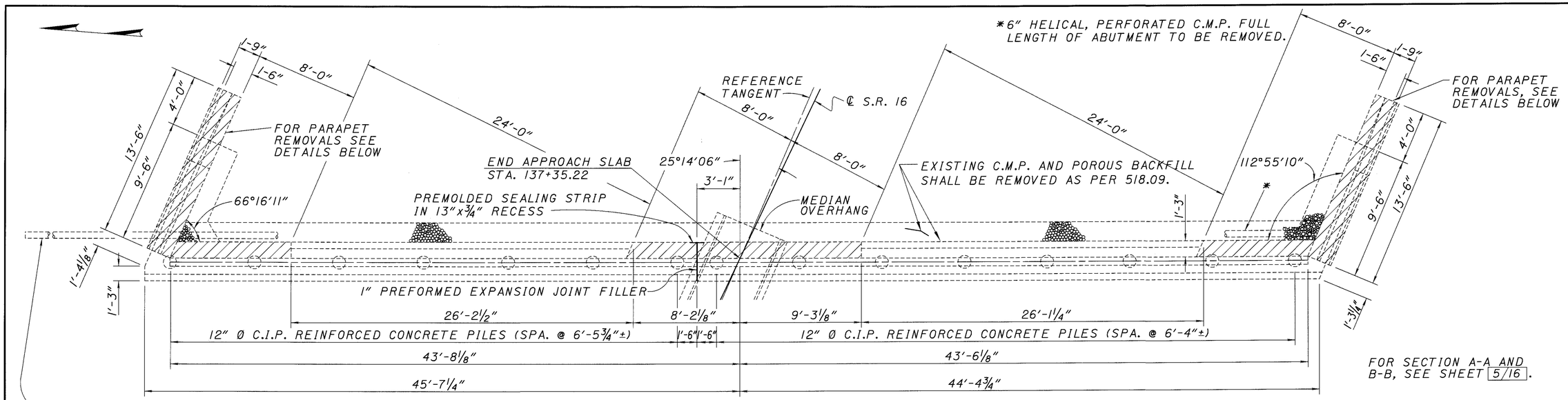

PLAN

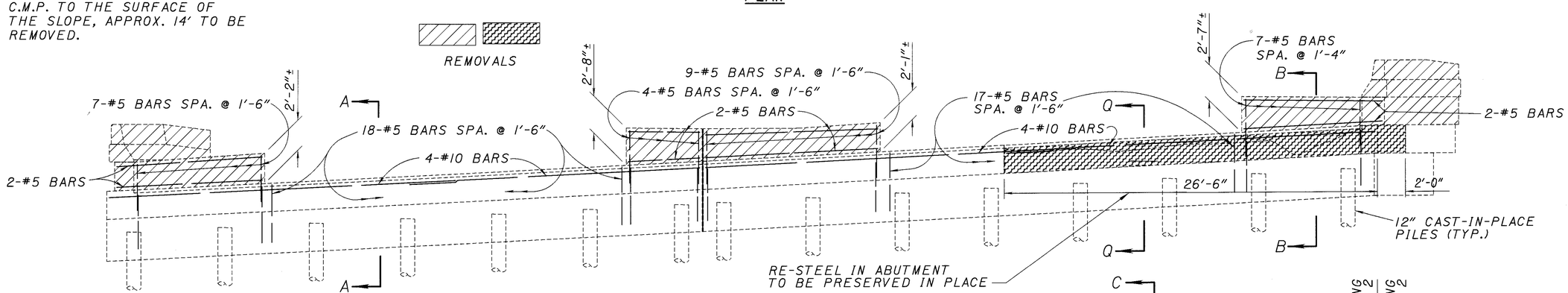

ELEVATION

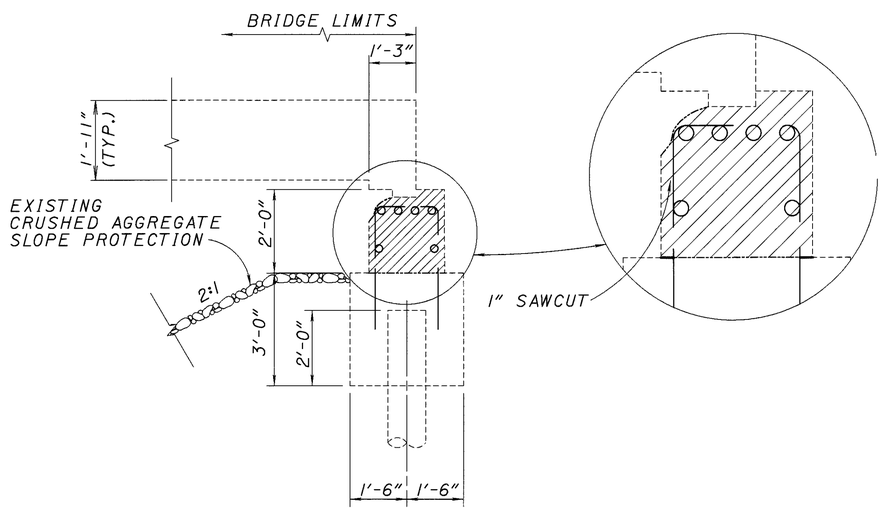

SECTION Q-Q

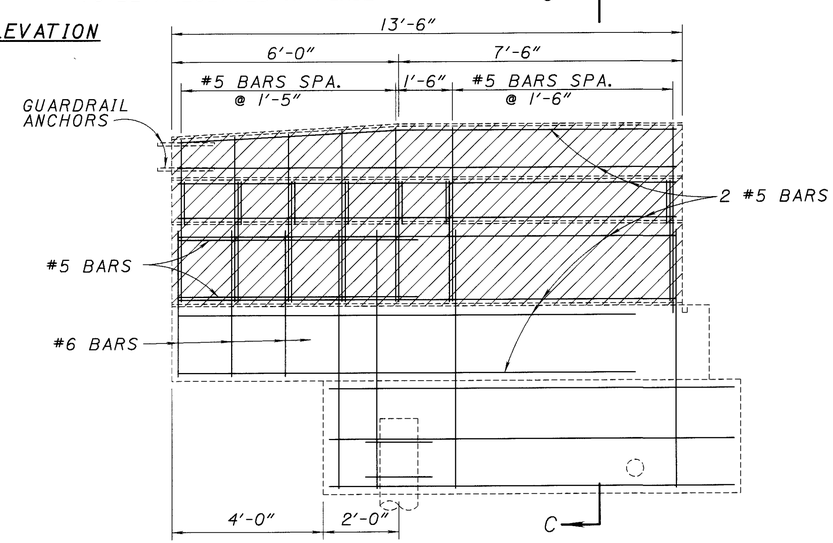

WINGWALL ELEVATION

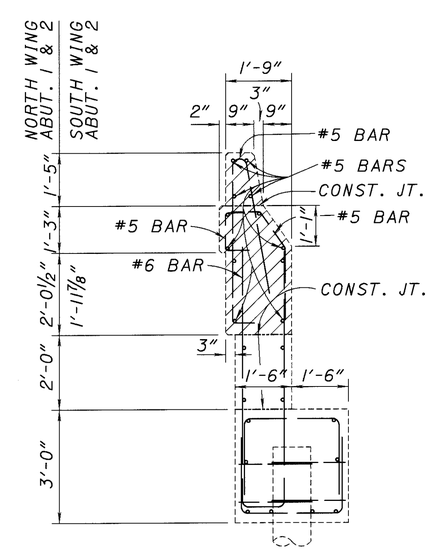

SECTION C-C

DESIGN AGENCY	OHIO DEPARTMENT OF TRANSPORTATION DISTRICT 5
DESIGNED RSD / CHECKED DTF	DRAWN DDH / REVISED
REVIEWED CLZ 2-10-99	DATE / STRUCTURE FILE NUMBER 4500067

EXISTING FORWARD ABUTMENT (REMOVALS)
BRIDGE NO. LIC-16-2028
S.R. 16 OVER ROADWAY 'A' UNDER S.R. 79

LIC-16-19.72

LA162A31 (SCALE 4) 2-10-99

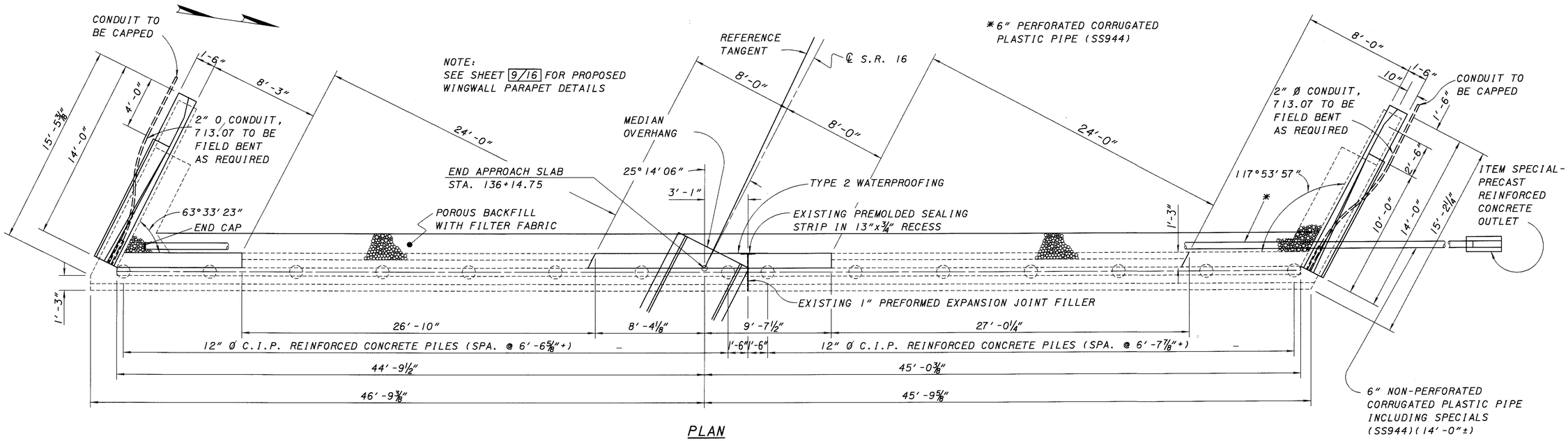

PLAN

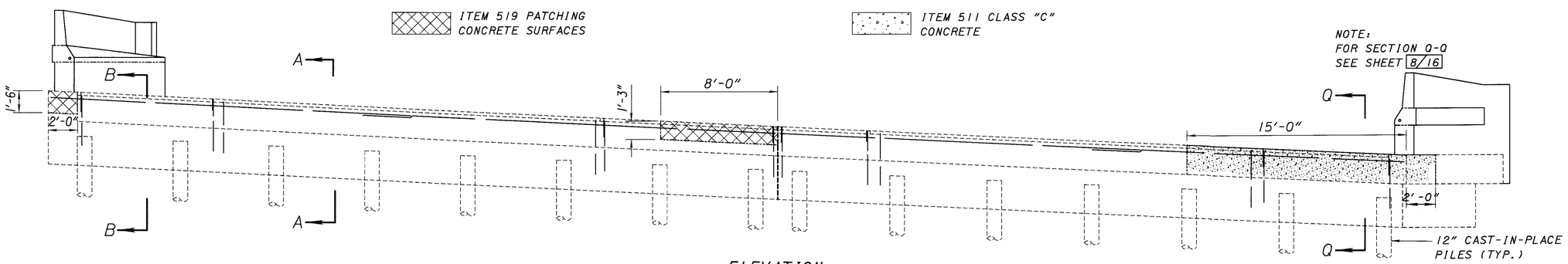

ELEVATION

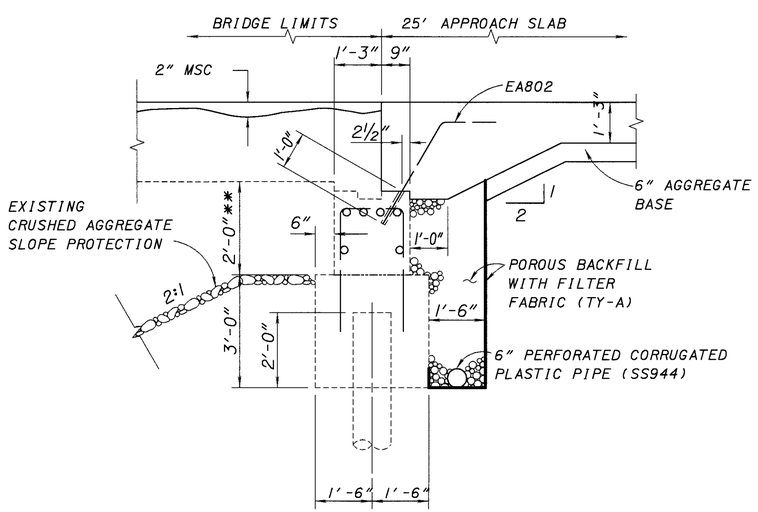

SECTION A-A

NOTE:
FOR APPROACH SLAB DETAILS SEE SHEETS 15/16 AND 16/16

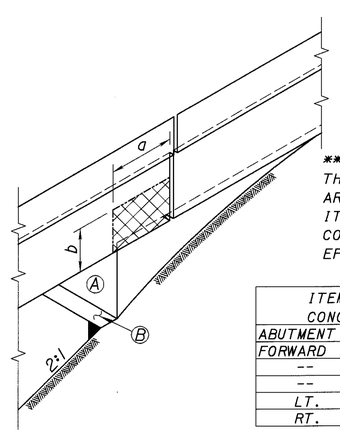

NOTE:
DOWEL HOLES AND RE-STEEL TO BE INCLUDED IN ITEM 842-CLASS C CONCRETE, ABUTMENT (REPAIR OR RECONSTRUCTION)

**NOTE:
THE BACKWALLS A AND B ARE TO BE SEALED WITH ITEM SPECIAL- SEALING CONCETE SURFACES- EPOXY.

ITEM 519 PATCHING CONCRETE SURFACES			
ABUTMENT & SIDE		DIMENSION	
FORWARD	REAR	a	b
--	LT.	--	--
--	RT	--	--
LT.	--	--	--
RT.	--	1'-6"	1'-0"

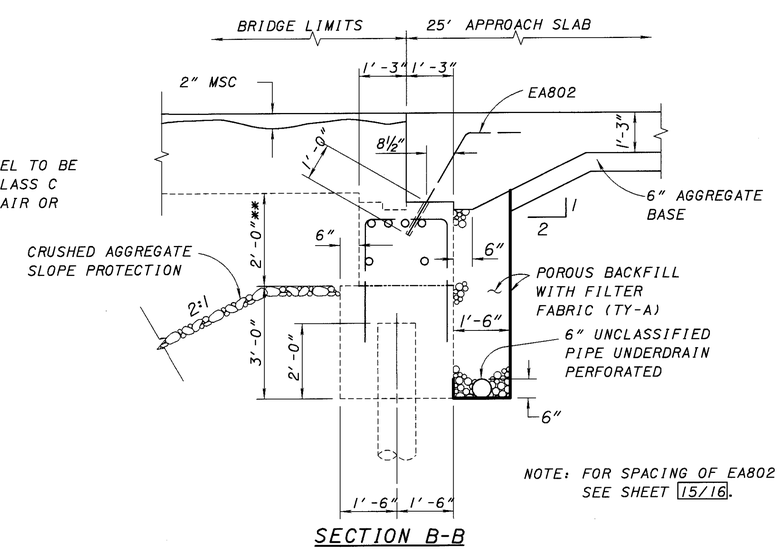

SECTION B-B

NOTE: FOR SPACING OF EA802 SEE SHEET 15/16.

DESIGN AGENCY: OHIO DEPARTMENT OF TRANSPORTATION DIST. 5 BRIDGE DEPT.

DESIGNED RSD | CHECKED DTF | DRAWN DDH | REVISED | REVIEWED CLZ 2-10-99 | DATE | STRUCTURE FILE NUMBER 4500067

PROPOSED REAR ABUTMENT
BRIDGE NO. LIC-16-2028
S.R. 16 OVER ROADWAY 'A' UNDER S.R. 79

LIC-16-19.72

7/16

418/547

L0162A32 (SCALE 1) 2-10-99

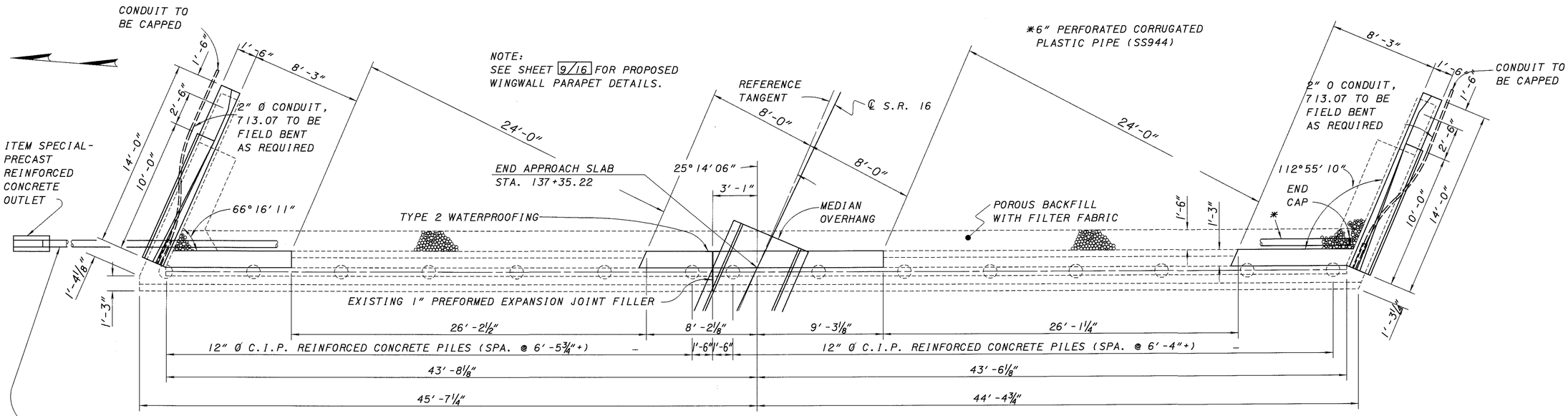

PLAN

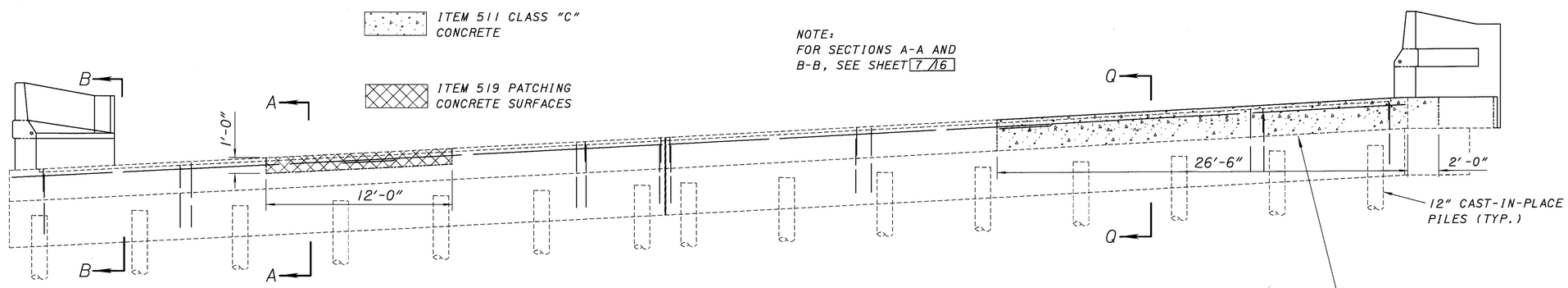

ELEVATION

NOTE:
DOWEL HOLES AND RE-STEEL TO BE INCLUDED IN ITEM 842- CLASS C CONCRETE, ABUTMENT (REPAIR OR RECONSTRUCTION)

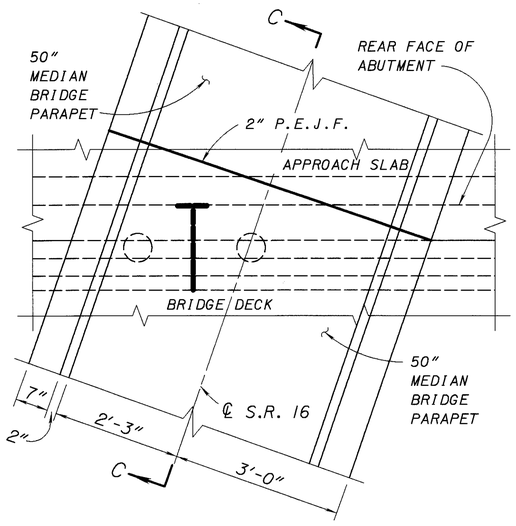

MEDIAN OVERHANG PLAN

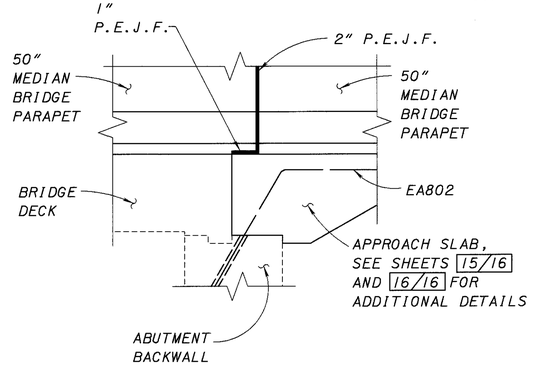

SECTION C-C

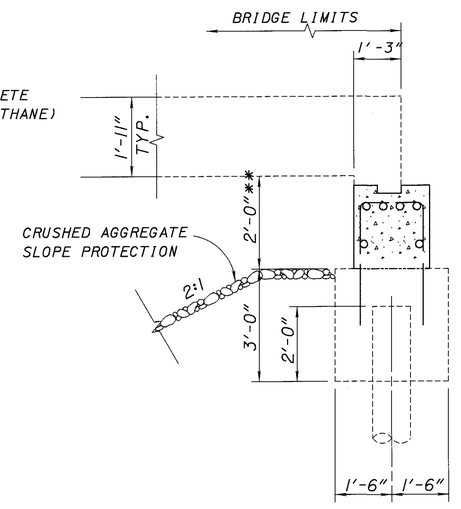

SECTION Q-Q

DESIGN AGENCY: OHIO DEPARTMENT OF TRANSPORTATION DISTRICT 5

DESIGNED	DRAWN	REVIEWED	DATE
RSD	DDH	CLZ	2-10-99
CHECKED	REVISED	STRUCTURE FILE NUMBER	
DTF		4500067	

PROPOSED FORWARD ABUTMENT
BRIDGE NO. LIC-16-2028
S.R. 16 OVER ROADWAY 'A' UNDER S.R. 79

LIC-16-19.72

8/16

419/547

LA162A32 (SCALE 4) 2-10-99

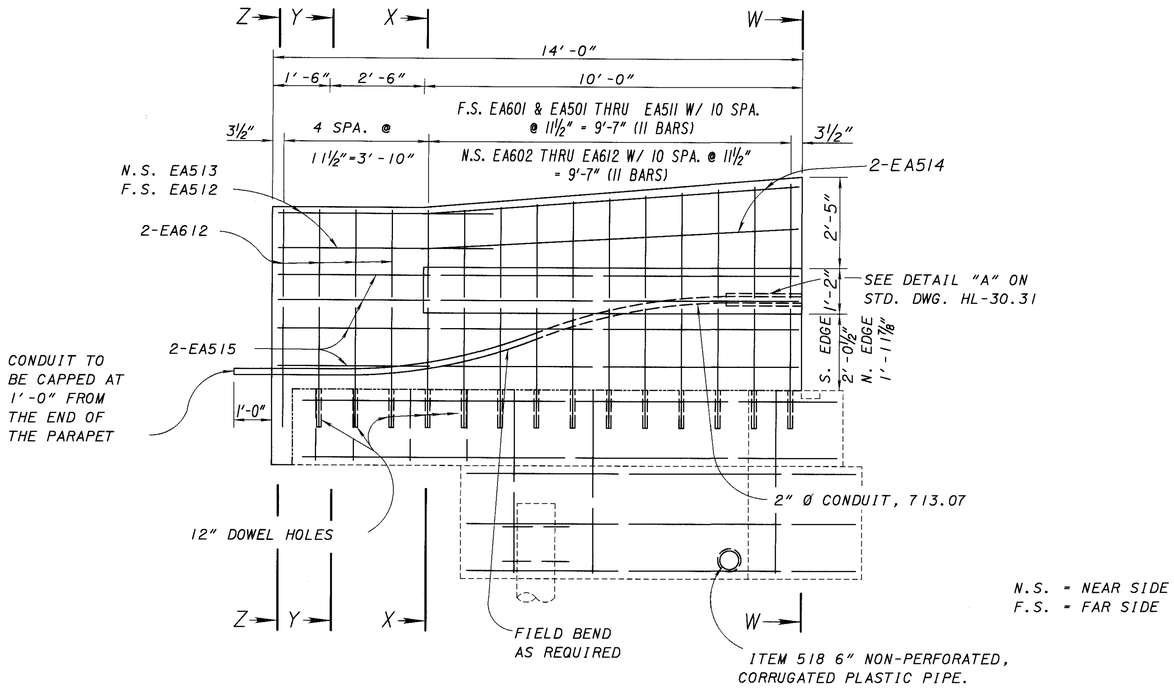

N.S. = NEAR SIDE
F.S. = FAR SIDE

NOTE:
DOWEL HOLES TO BE INCLUDED WITH ITEM 844 HIGH PERFORMANCE CONCRETE. SUPERSTRUCTURE (PARAPETS)

WINGWALL PARAPET DETAILS

(FROM SHEETS 7/16 AND 8/16)

* JOINT SEALER, 705.04

**SEALING CONCRETE SURFACES (EPOXY-URETHANE)

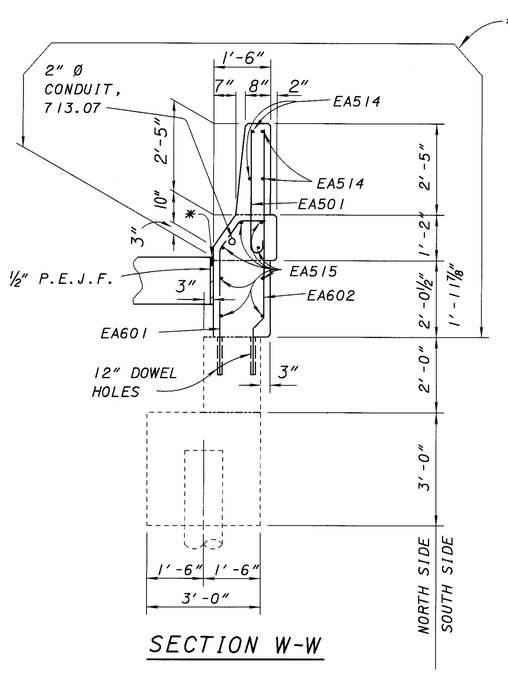

SECTION W-W

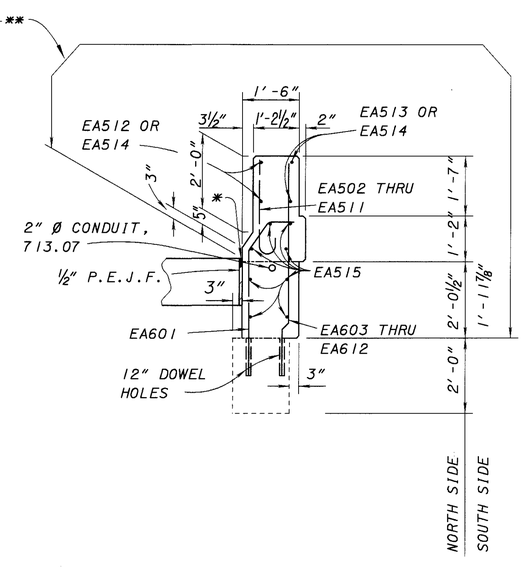

SECTION X-X

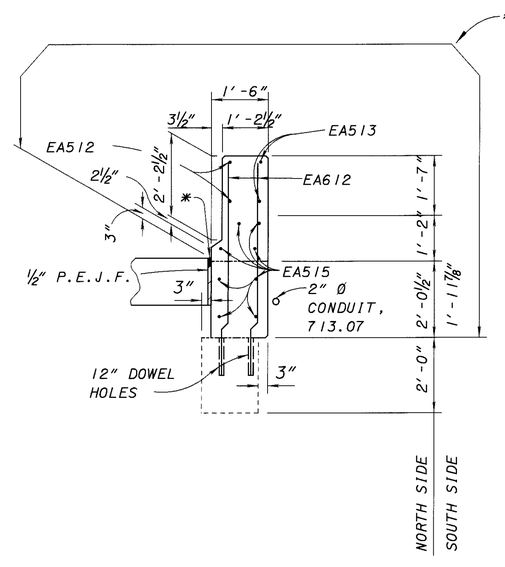

SECTION Y-Y

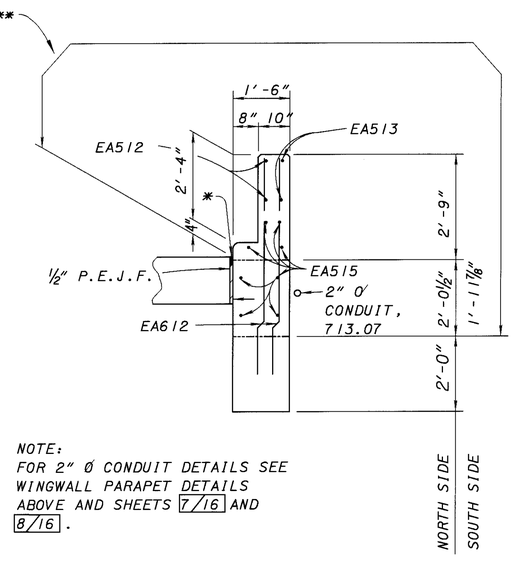

SECTION Z-Z

NOTE:
FOR 2" Ø CONDUIT DETAILS SEE WINGWALL PARAPET DETAILS ABOVE AND SHEETS 7/16 AND 8/16.

PARAPET DETAILS

L0162A53 (SCALE 1) 2-10-99

DESIGNED	DRAWN	REVIEWED	DATE
RSD	DDH	CLZ	2-10-99
CHECKED	REVISED	STRUCTURE FILE NUMBER	
DFT		4500067	

DESIGN AGENCY
OHIO DEPARTMENT OF TRANSPORTATION
DISTRICT 5

PARAPET DETAILS
BRIDGE NO. LIC-16-2028
S.R. 16 OVER ROADWAY 'A' UNDER S.R. 79

LIC-16-19.72

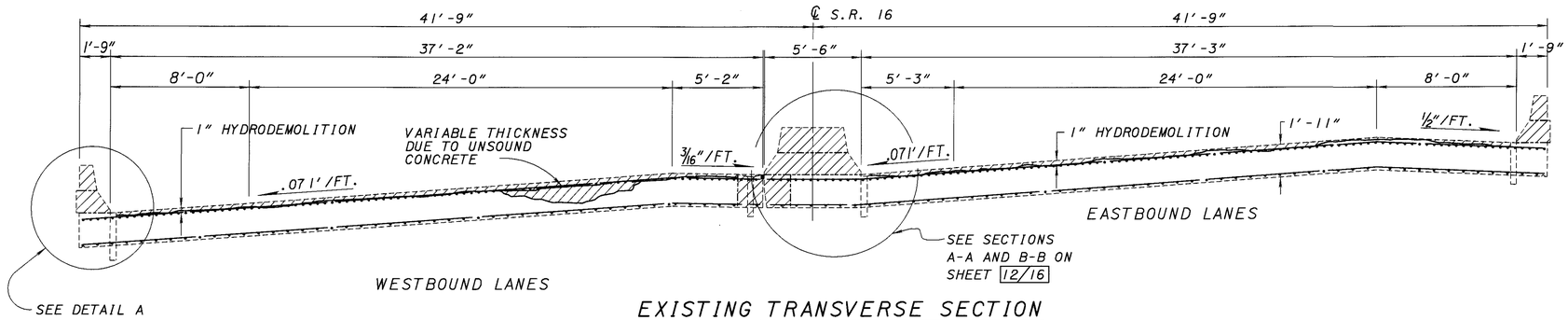

EXISTING TRANSVERSE SECTION

LOOKING EAST

REMOVALS

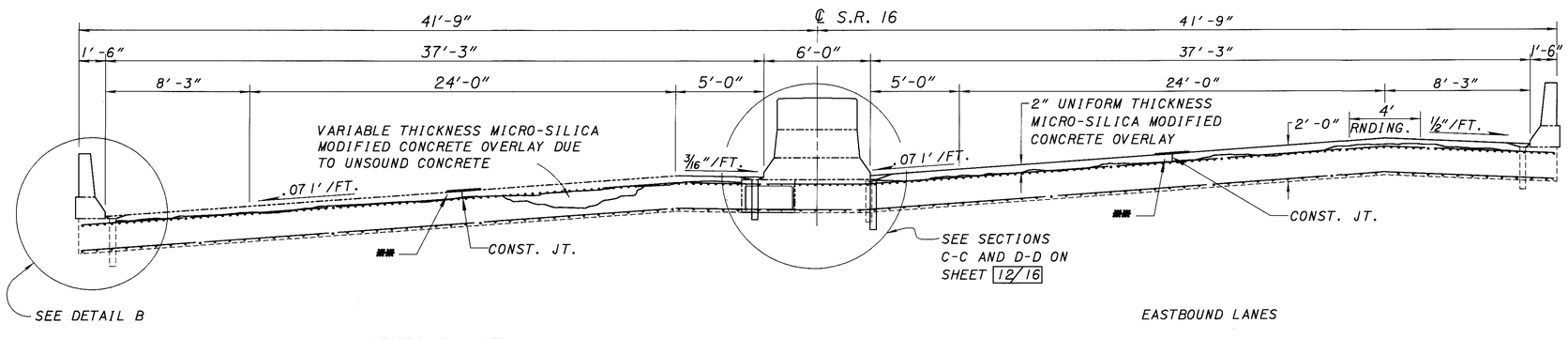

PROPOSED TRANSVERSE SECTION

LOOKING EAST

**NOTE:
TREATING CONCRETE BRIDGE DECK WITH HMWM SEALER (2'-0") SHALL BE INCLUDED WITH ITEM 848-MICRO SILICA MODIFIED CONCRETE OVERLAY USING HYDRODEMOLITION (2" THICK) FOR PAYMENT.

NOTE:
DOWEL HOLES AND RE-STEEL SHALL BE INCLUDED WITH ITEM 844-HIGH PERFORMANCE CONCRETE SUPERSTRUCTURE (PARAPET) FOR PAYMENT.

NOTE:
FOR DECK RE-STEEL LAYOUT SEE SHEET 11/16.

NOTE:
FOR ADDITIONAL PARAPET AND MEDIAN BARRIER DETAILS SEE SHEET 12/16 AND 13/16.

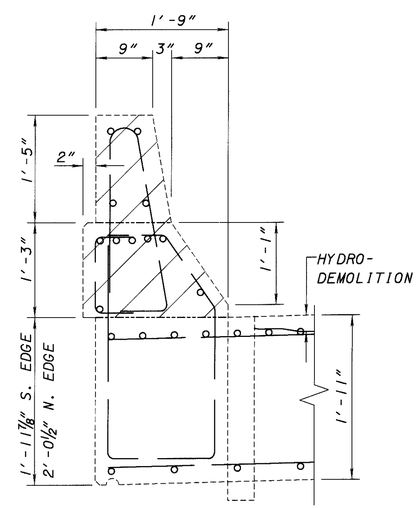

DETAIL A

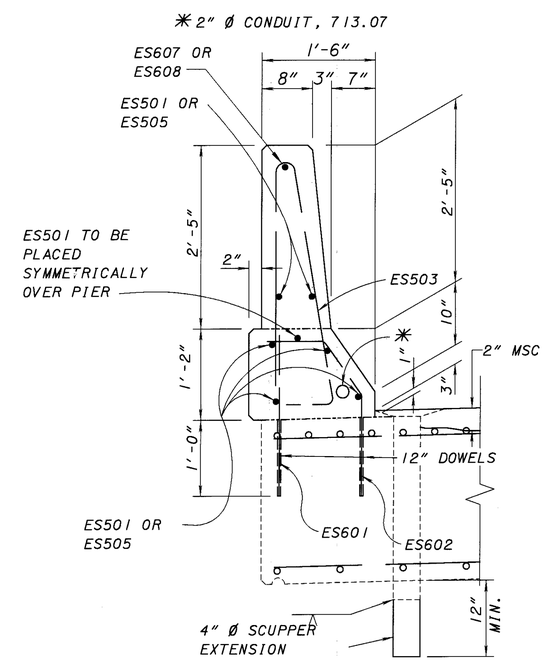

DETAIL B

DESIGN AGENCY: OHIO DEPARTMENT OF TRANSPORTATION DISTRICT 5

DESIGNED RSD | DRAWN DDH | REVIEWED CLZ | DATE 2-10-99
CHECKED DTF | REVISED | STRUCTURE FILE NUMBER 4500067

TRANSVERSE SECTION
BRIDGE NO. LIC-16-2028
S.R. 16 OVER ROADWAY 'A' UNDER S.R. 79

LIC-16-19.72

10/16

421/547

L0162A56 (SCALE 1) 2-10-99

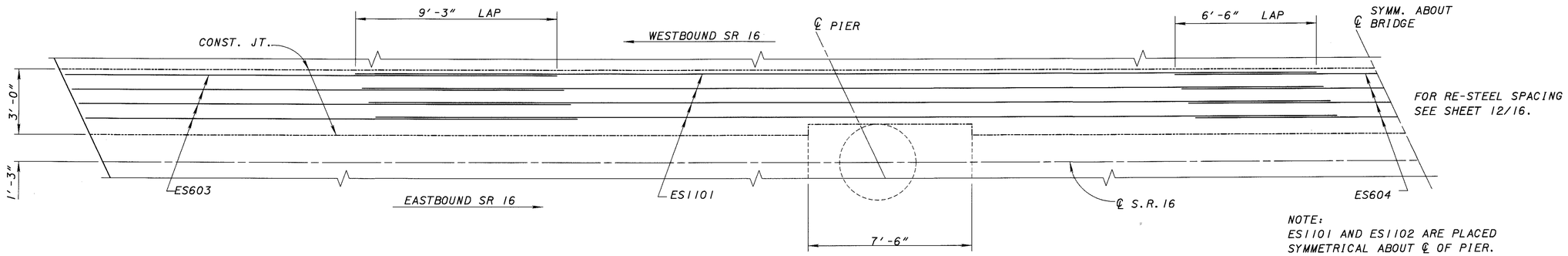

FOR RE-STEEL SPACING SEE SHEET 12/16.

NOTE:
ES1101 AND ES1102 ARE PLACED SYMMETRICAL ABOUT ℄ OF PIER.
ES604 AND ES1103 ARE PLACED SYMMETRICAL ABOUT ℄ OF BRIDGE

PART PLAN RE-STEEL IN TOP OF SLAB

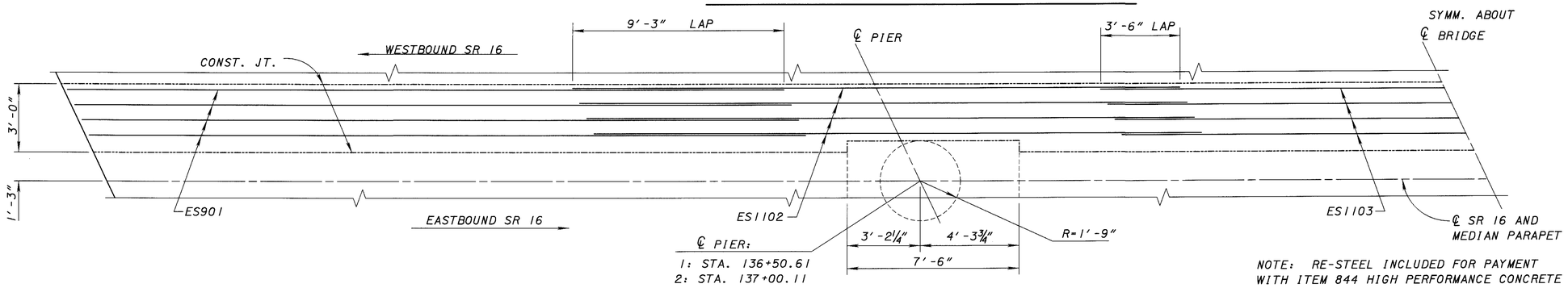

NOTE: RE-STEEL INCLUDED FOR PAYMENT WITH ITEM 844 HIGH PERFORMANCE CONCRETE SUPERSTRUCTURE (DECK).

PART PLAN RE-STEEL IN BOTTOM OF SLAB

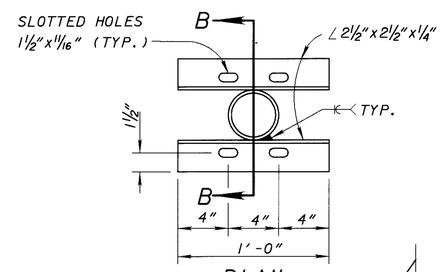

PLAN

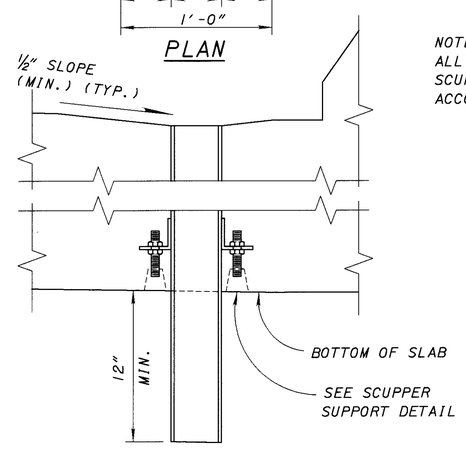

ELEVATION

(SECTION B-B)

NOTE:
ALL COMPONENTS OF THE SCUPPERS SHALL BE GALVANIZED ACCORDING TO 711.02.

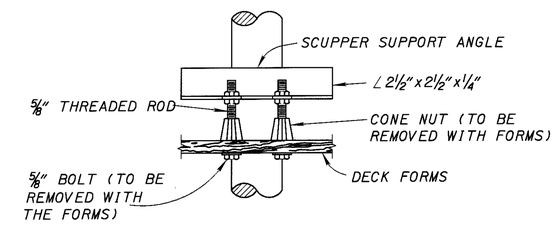

SCUPPER SUPPORT DETAIL

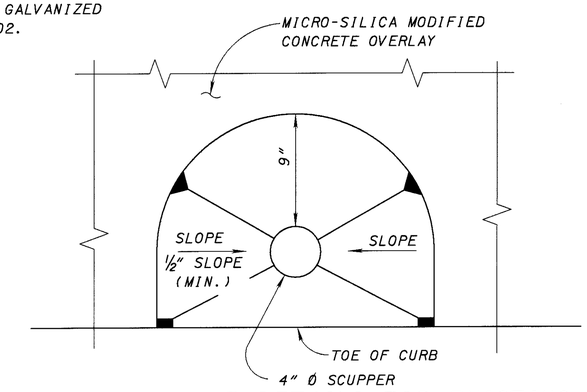

SLOPE DETAILS FOR EXISTING AND PROPOSED SCUPPERS

DESIGN AGENCY: OHIO DEPARTMENT OF TRANSPORTATION DISTRICT 5

DATE: 2-10-99 | REVIEWED: CLZ | STRUCTURE FILE NUMBER: 4500067

DRAWN: DDH | REVISED:

DESIGNED: RSD | CHECKED: DTF

RE-STEEL AND SCUPPER DETAILS
BRIDGE NO. LIC-16-2028
S.R. 16 OVER ROADWAY 'A' UNDER S.R. 79

LIC-16-19.72

11/16

422/547

L0162A71 (SCALE 2.6667) 2-10-99

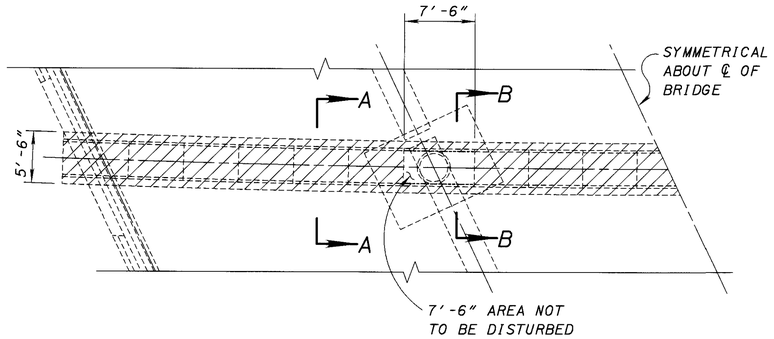

EXISTING MEDIAN PARAPET

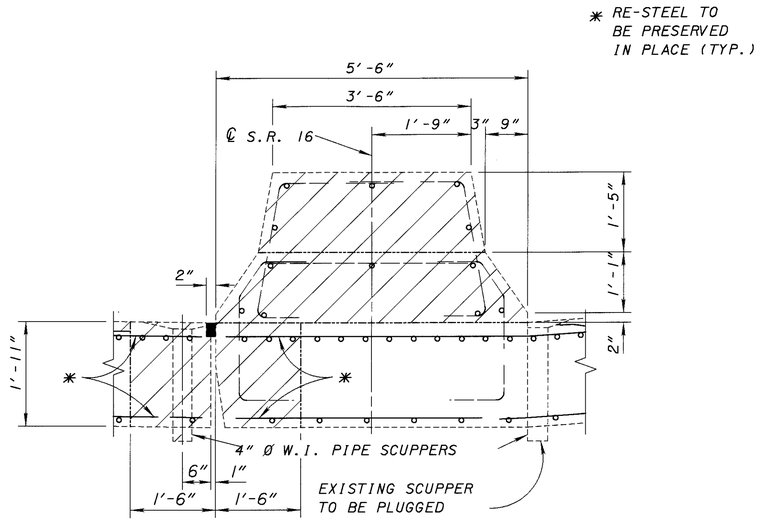

SECTION A-A

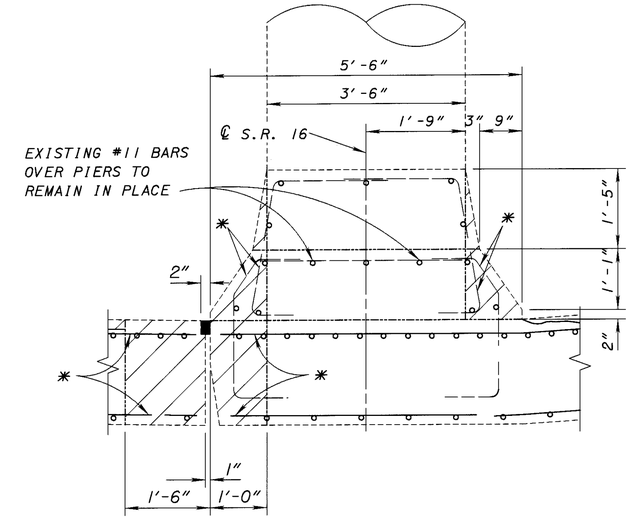

SECTION B-B

NOTE:
DOWEL HOLES AND RE-STEEL TO BE INCLUDED FOR PAYMENT WITH ITEM 511 CLASS S CONCRETE, MISC.: SUPERSTRUCTURE, USING LIGHT WEIGHT CONCRETE

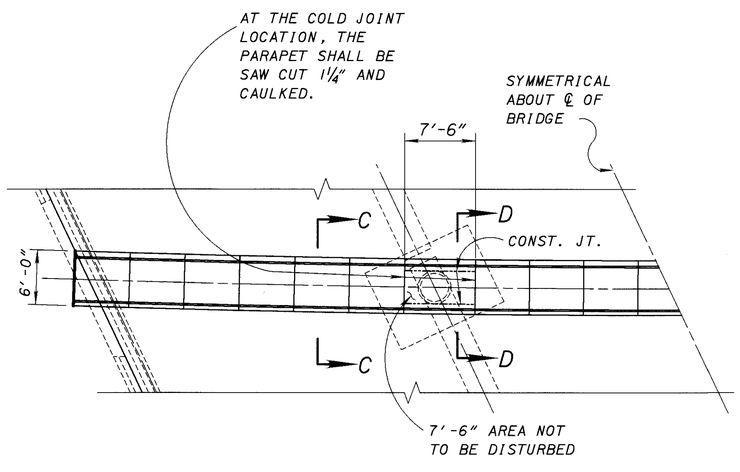

PROPOSED MEDIAN PARAPET

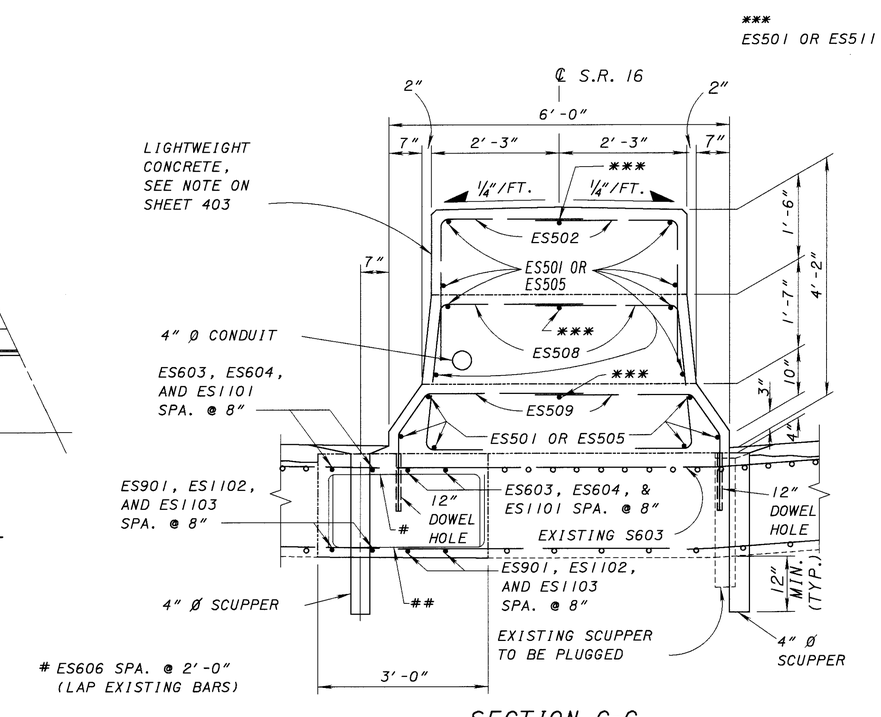

SECTION C-C

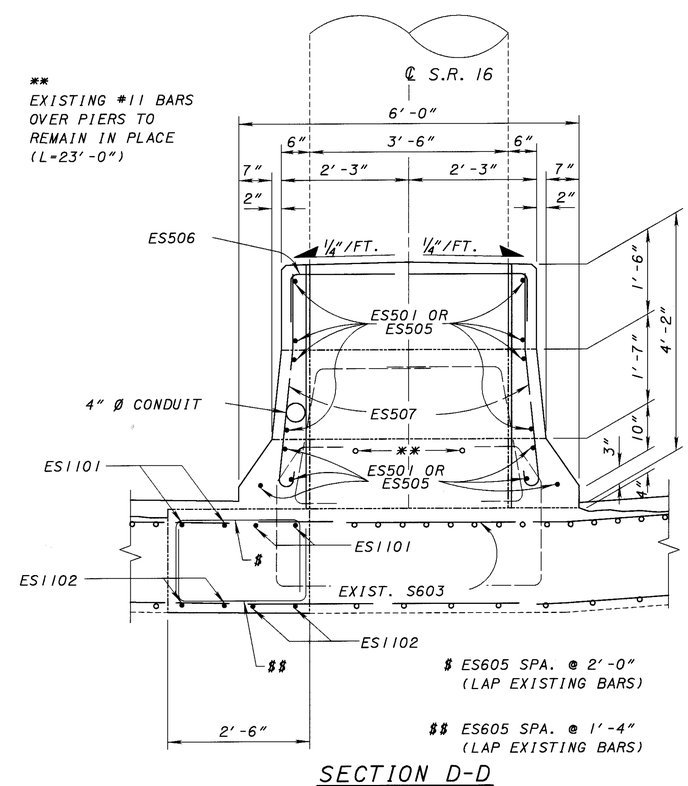

SECTION D-D

L0162A13 (SCALE 1) 2-10-99

DESIGN AGENCY: OHIO DEPARTMENT OF TRANSPORTATION DISTRICT 5

DESIGNED RSD | CHECKED DTF | DRAWN DDH | REVISED | REVIEWED CLZ | DATE 2-10-99 | STRUCTURE FILE NUMBER 4500067

MEDIAN BARRIER DETAILS
BRIDGE NO. LIC-16-2028
S.R. 16 OVER ROADWAY 'A' UNDER S.R. 79

LIC-16-19.72

12/16

423/547

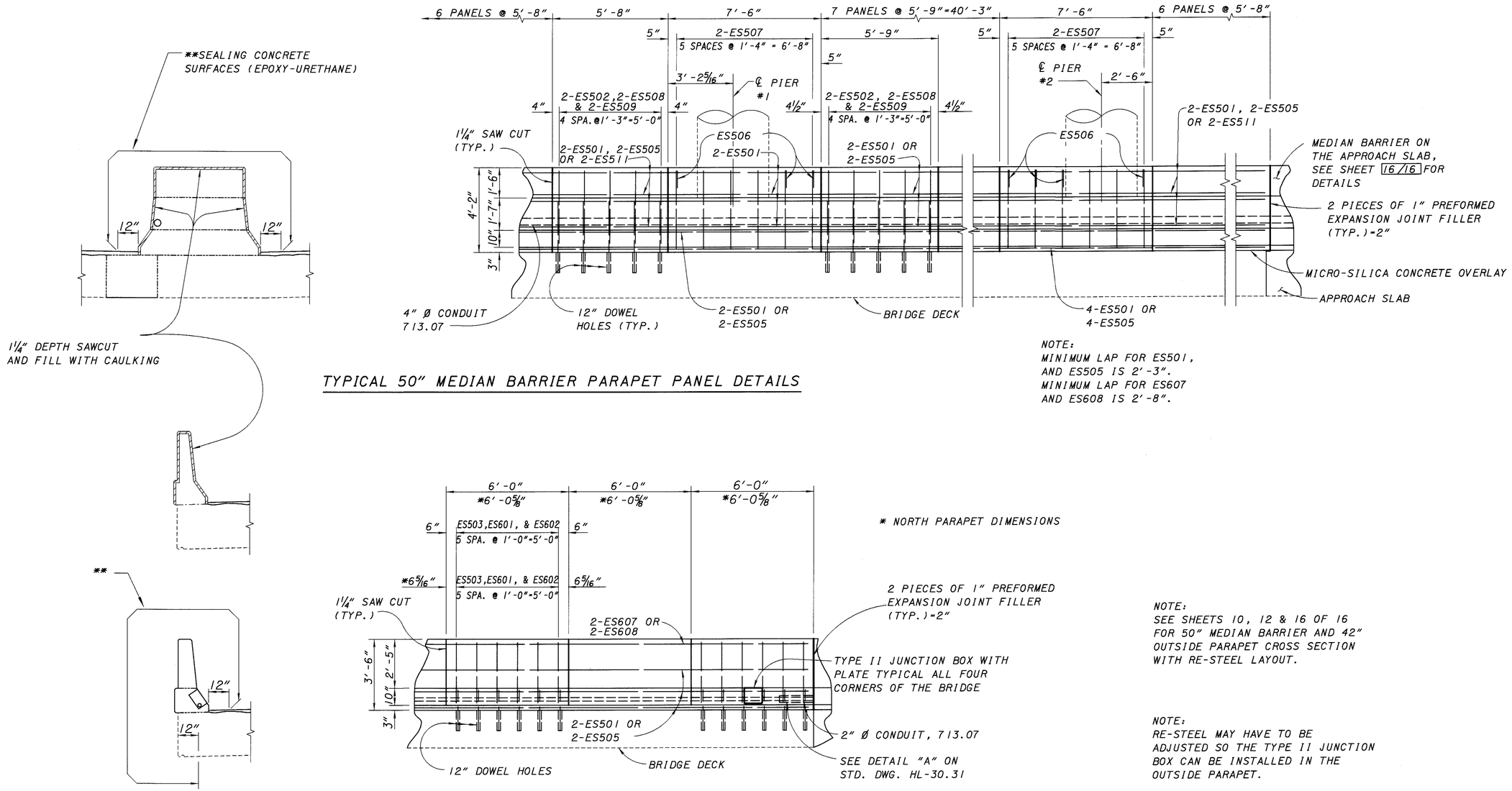

NOTE:
MINIMUM LAP FOR ES501, AND ES505 IS 2'-3".
MINIMUM LAP FOR ES607 AND ES608 IS 2'-8".

TYPICAL 50" MEDIAN BARRIER PARAPET PANEL DETAILS

* NORTH PARAPET DIMENSIONS

TYPICAL 42" OUTSIDE PARAPET PANEL DETAILS

NOTE:
SEE SHEETS 10, 12 & 16 OF 16 FOR 50" MEDIAN BARRIER AND 42" OUTSIDE PARAPET CROSS SECTION WITH RE-STEEL LAYOUT.

NOTE:
RE-STEEL MAY HAVE TO BE ADJUSTED SO THE TYPE II JUNCTION BOX CAN BE INSTALLED IN THE OUTSIDE PARAPET.

NOTE:
RE-STEEL AND DOWEL HOLES TO BE INCLUDED IN THE FOLLOWING ITEMS:
ITEM SPECIAL-CLASS S CONCRETE, MISC.: SUPERSTRUCTURE USING LIGHTWEIGHT CONCRETE
ITEM 844-HIGH PERFORMANCE CONCRETE, SUPERSTRUCTURE (PARAPET)

DESIGN AGENCY: OHIO DEPARTMENT OF TRANSPORTATION DISTRICT 5

DESIGNED	DRAWN	REVIEWED	DATE
RSD	DDH	CLZ	2-10-99
CHECKED	REVISED	STRUCTURE FILE NUMBER	
DTF		4500067	

PARAPET DETAILS
BRIDGE NO. LIC-16-2028
S.R. 16 OVER ROADWAY 'A' UNDER S.R. 79

LIC-16-19.72

13/16

424/547

LA162A53 (SCALE 1) 2-10-99

BENDING DIAGRAMS

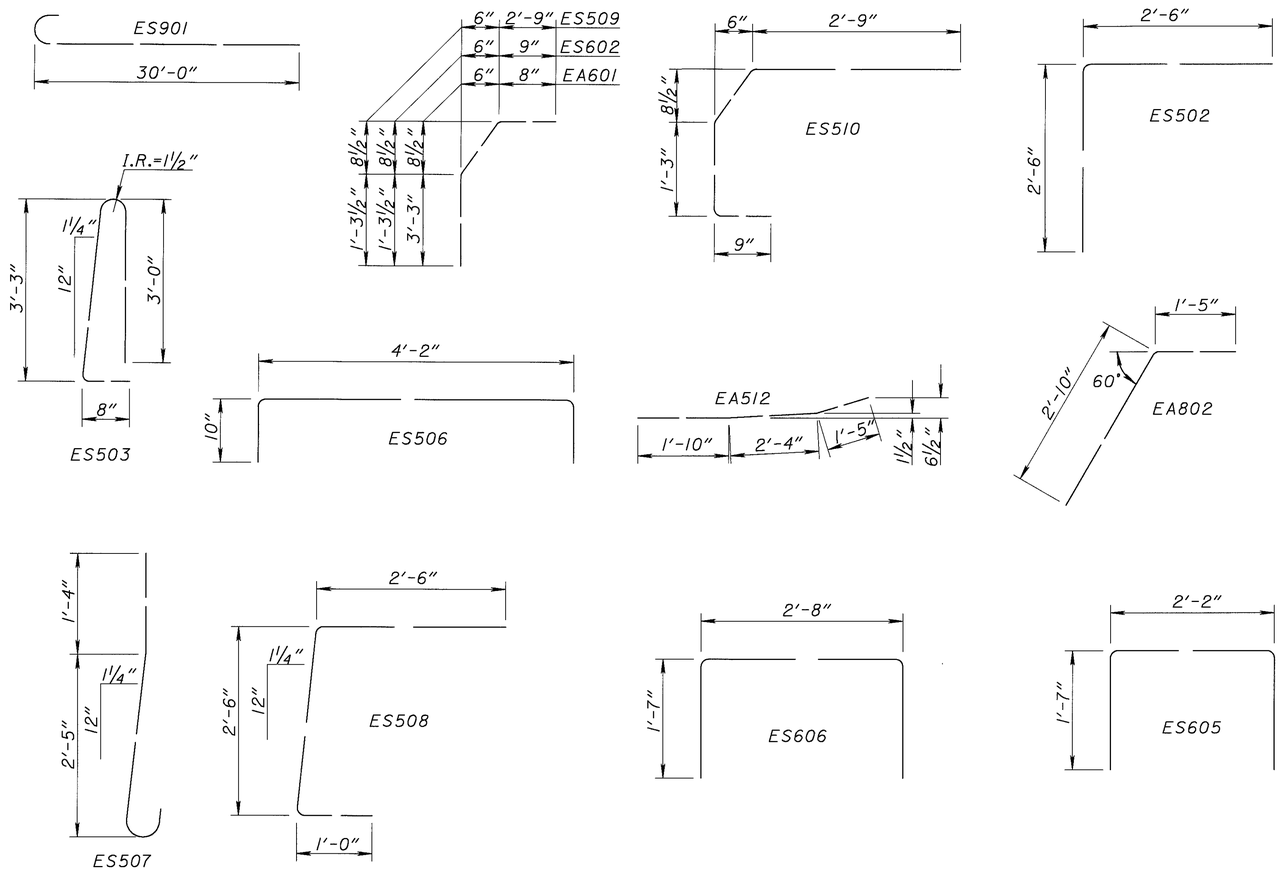

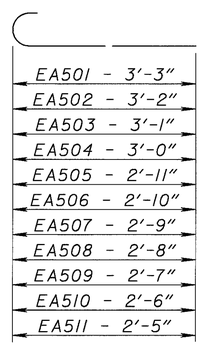

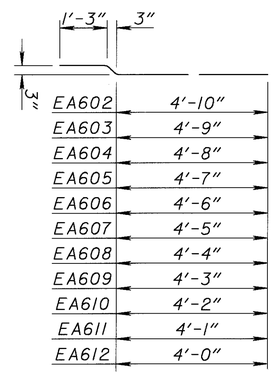

NOTE: RE-STEEL SHALL BE INCLUDED IN ITEMS 511 AND 844 AS PER 509.12.

BAR SCHEDULE

SUPERSTRUCTURE

MARK	NUMBER	LENGTH	SHAPE	WEIGHT
ES501	85	40'-0"	ST.	3,546
ES502	262	4'-11"	ST.	1,344
ES503	240	7'-1"	BT.	1,773
ES504	34	24'-6"	ST.	869
ES505	26	6'-11"	ST.	188
ES506	7	5'-7"	BT.	41
ES507	24	4'-4"	BT.	108
ES508	262	5'-9"	BT.	1,571
ES509	190	4'-10"	BT.	958
ES510	72	5'-5"	BT.	407
ES511	6	33'-8"	ST.	211
ES601	240	2'-0"	ST.	721
ES602	240	2'-10"	BT.	1,021
ES603	8	22'-6"	ST.	270
ES604	4	18'-6"	ST.	111
ES605	20	5'-1"	BT.	153
ES606	137	5'-7"	BT.	1,149
ES607	6	40'-0"	ST.	360
ES608	2	8'-2"	ST.	25
ES901	8	31'-3"	BT.	850
ES1101	8	44'-0"	ST.	1870
ES1102	8	26'-6"	ST.	1126
ES1103	4	30'-0"	ST.	638
SUB-TOTAL				19,310
TOTAL				

ABUTMENT

MARK	NUMBER	LENGTH	SHAPE	WEIGHT
EA501	4	3'-10"	BT.	16
EA502	4	3'-9"	BT.	16
EA503	4	3'-8"	BT.	15
EA504	4	3'-7"	BT.	15
EA505	4	3'-6"	BT.	15
EA506	4	3'-5"	BT.	14
EA507	4	3'-4"	BT.	14
EA508	4	3'-3"	BT.	14
EA509	4	3'-2"	BT.	13
EA510	4	3'-1"	BT.	13
EA511	4	3'-0"	BT.	13
EA512	8	5'-8"	BT.	47
EA513	8	5'-8"	ST.	47
EA514	16	10'-0"	ST.	167
EA515	32	13'-8"	ST.	456
EA601	44	4'-9"	BT.	314
EA602	4	6'-4"	BT.	38
EA603	4	6'-3"	BT.	38
EA604	4	6'-2"	BT.	37
EA605	4	6'-1"	BT.	37
EA606	4	6'-0"	BT.	36
EA607	4	5'-11"	BT.	36
EA608	4	5'-10"	BT.	35
EA609	4	5'-9"	BT.	35
EA610	4	5'-8"	BT.	34
EA611	4	5'-7"	BT.	34
EA612	36	5'-6"	BT.	297
EA802	110	4'-2"	BT.	1,224
SUB-TOTAL				3,070
TOTAL				22,380

DESIGN AGENCY
OHIO DEPARTMENT OF TRANSPORTATION
DISTRICT 5

DESIGNED RSD | CHECKED CLZ | DRAWN DDH | REVISED | REVIEWED DTF | DATE 2-10-99 | STRUCTURE FILE NUMBER 4500067

BAR SCHEDULES AND BENDING DIAGRAMS
BRIDGE NO. LIC-16-2028
S.R. 16 OVER ROADWAY 'A' UNDER S.R. 79

LIC-16-19.65

LO162A72 (SCALE 1) 2-10-99

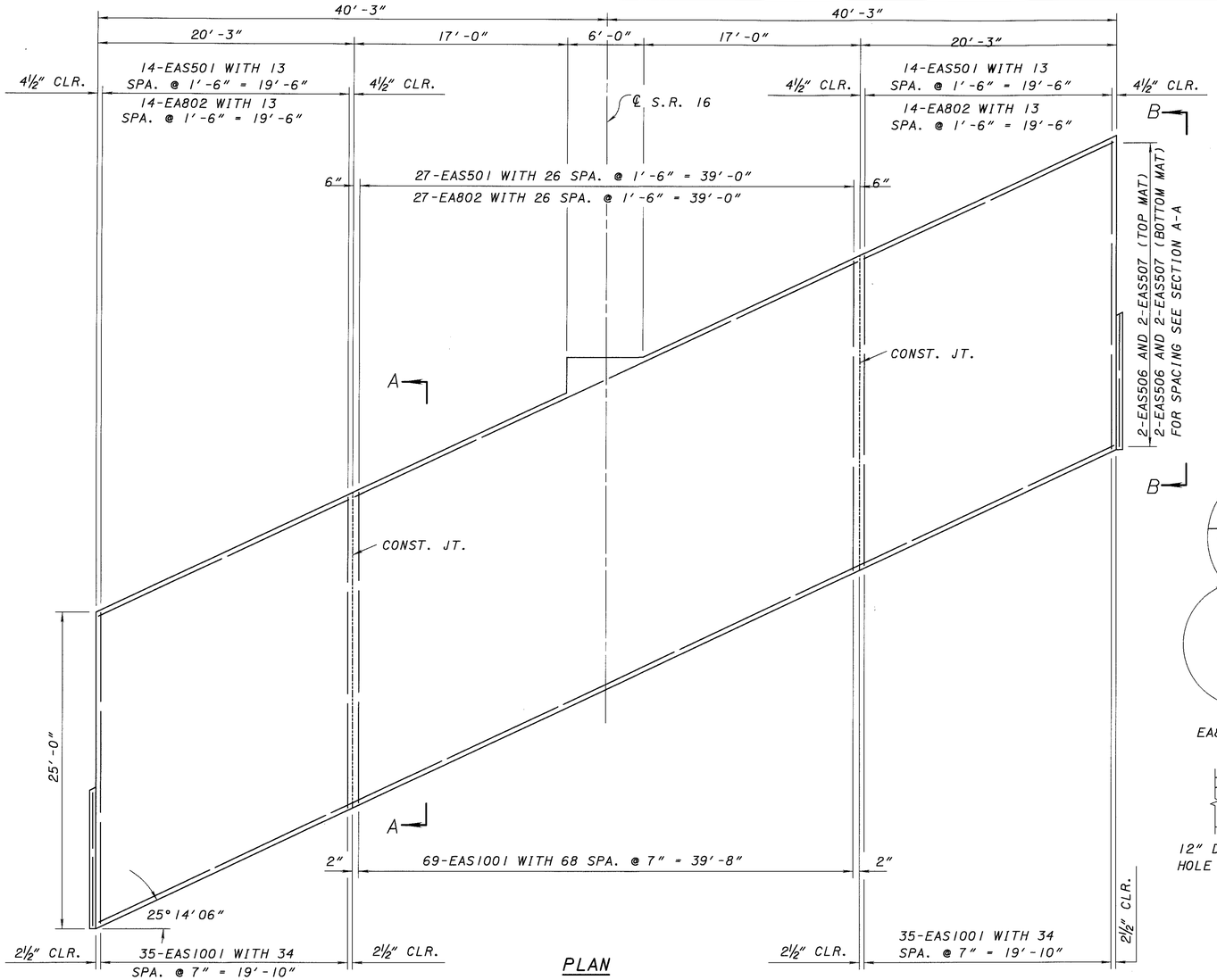

PLAN

*NOTE: RE-STEEL, MECHANICAL SPLICE CONNECTORS, CURBS AND HMWM SEALER SHALL BE INCLUDED FOR PAYMENT WITH ITEM 611 REINFORCED CONCRETE APPROACH SLABS (T=15"), AS PER PLAN.

NOTE: FOR EA802 BENDING DIAGRAMS AND QUANTITIES, SEE SHEET 14/16

NOTE: FOR ADDITIONAL DETAILS SEE STD. DWG. AS-1-81.

BAR SCHEDULE (EPOXY COATED)					
MARK	NO. REQD.	LENGTH	SHAPE	WEIGHT	
EAS401	32	3'-2"	BT.	68	*
EAS501	110	24'-6"	ST.	2811	*
EAS506	228	23'-4"	ST.	5549	*
EAS507	228	22'-2"	ST.	5271	*
EAS511	4	10'-6"	ST.	44	*
EAS1001	278	25'-11"	BT.	31002	*
TOTAL (2 APPROACH SLABS)				44745	*

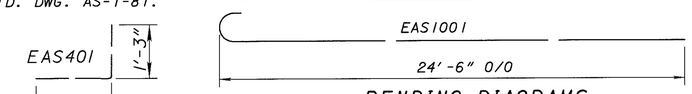

BENDING DIAGRAMS

NOTE 1:
PREFORMED ELASTOMERIC JOINT SEALER 705.11 (1¼" FOR ½" JOINT) DEPRESSED ⅛" BELOW ROADWAY, PLACED IN ½"x2¼" GROOVE.

NOTE 2:
TYPE A WATERPROOFING SHALL NOT EXTEND ABOVE THE BOTTOM OF THE GROOVE INTO WHICH THE PREFORMED ELASTOMERIC JOINT SEALER IS TO BE PLACED. IT SHALL BE APPLIED TO THE ENTIRE AREA OF THE ABUTMENT OR SUPERSTRUCTURE WHICH COMES INTO CONTACT WITH THE APPROACH SLAB.

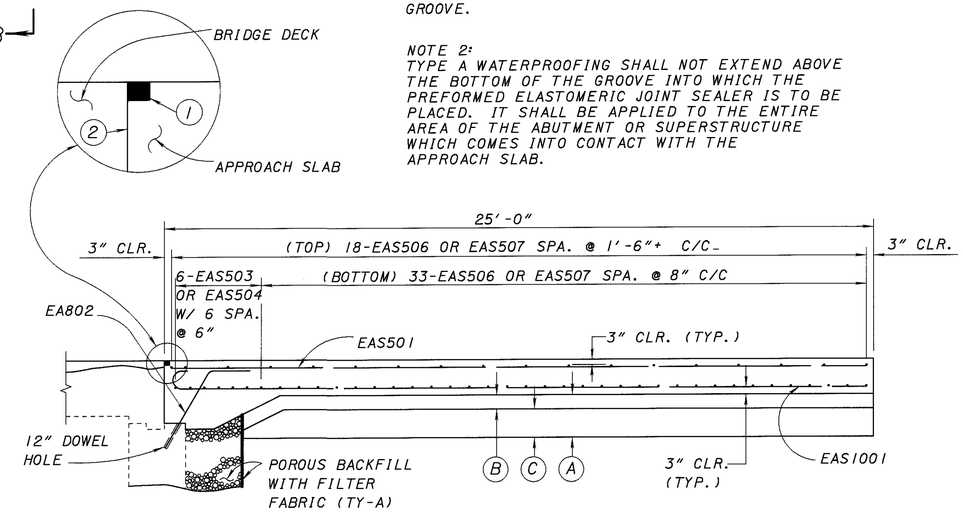

SECTION A-A

(A) 1'-6" EXCAVATION NOT INCLUDING EMBANKMENT CONSTRUCTION (UNDER PROPOSED APPROACH SLAB) (AS-1-81)

(B) 0'-6" PROPOSED AGGREGATE BASE

(C) 1'-0" PROPOSED EMBANKMENT

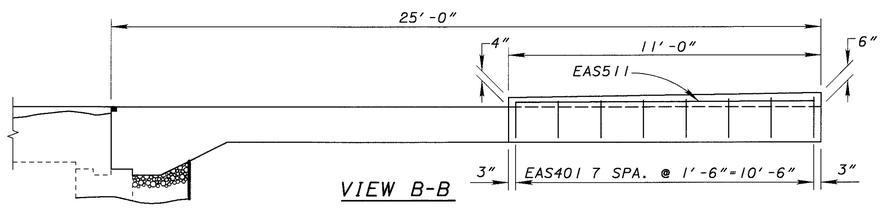

VIEW B-B

LAP LENGTH NO. 5 BAR-2'-3"

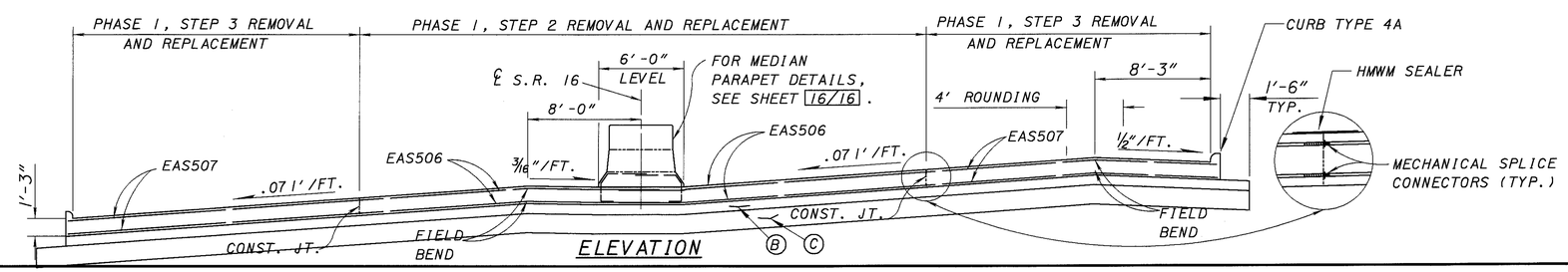

ELEVATION

ITEM	DESCRIPTION	QUANTITY	UNIT
203	EXCAVATION NOT INCLUDING EMBANKMENT CONSTRUCTION	277	CU. YD.
203	EMBANKMENT	135	CU. YD.
203	SUBGRADE COMPACTION	406	SQ. YD.
304	AGGREGATE BASE	68	CU. YD.
518	POROUS BACKFILL WITH FILTER FABRIC, TYPE A	LUMP	
611	REINFORCED CONCRETE APPROACH SLAB T=15"	450	SQ. YD.

QUANTITIES CARRIED TO SHEET 2/16

DESIGN AGENCY: OHIO DEPARTMENT OF TRANSPORTATION DISTRICT 5

DESIGNED RSD | CHECKED CLZ | DRAWN DDH | REVISED | REVIEWED DDH | DATE 2-10-99 | STRUCTURE FILE NUMBER 4500067

APPROACH SLAB DETAILS
BRIDGE NO. LIC-16-2028
S.R. 16 OVER ROADWAY 'A' UNDER S.R. 79

LIC-16-19.72

15/16

426/547

L0162A28 (SCALE 1) 2-10-99

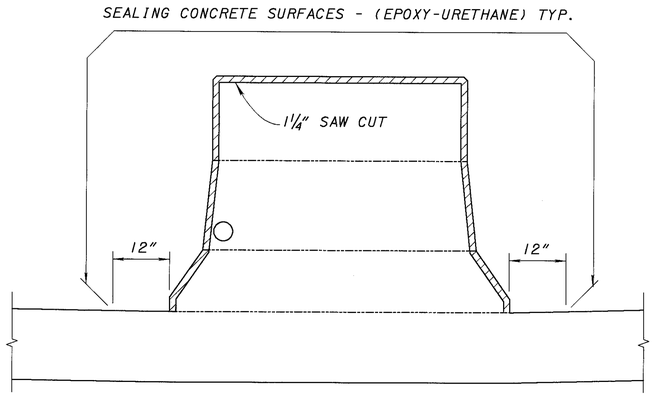

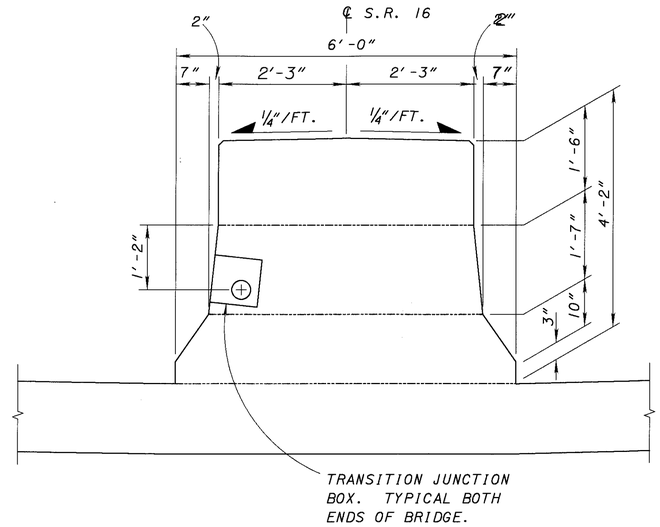

SECTION A-A

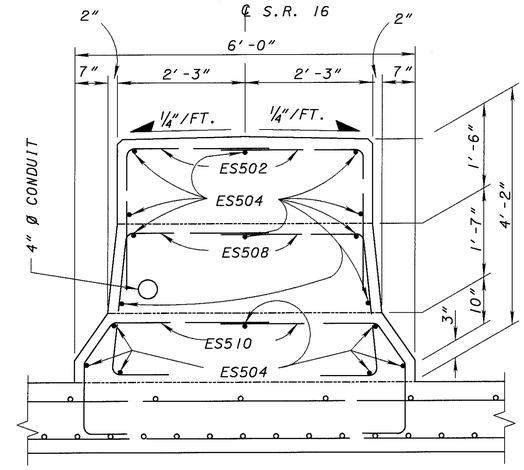

SECTION B-B

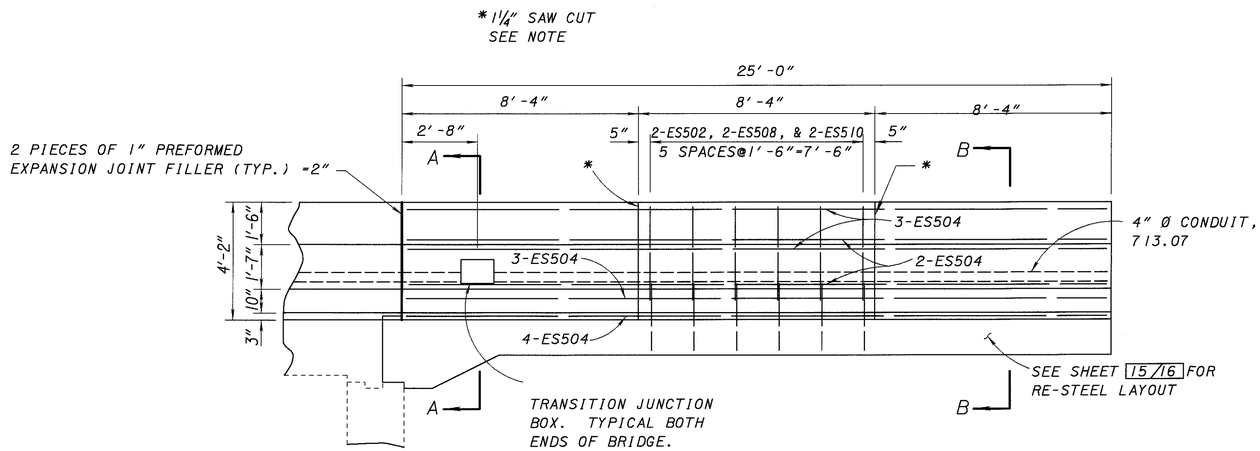

TYPICAL 50" MEDIAN BARRIER ON APPROACH SLAB DETAILS

NOTE:
MEDIAN BARRIER ON APPROACH SLABS SHALL BE INCLUDED FOR PAYMENT WITH ITEM 844 HIGH PERFORMANCE CONCRETE SUPERSTRUCTURE (PARAPET)

DESIGN AGENCY
OHIO DEPARTMENT OF TRANSPORTATION DISTRICT 5

DESIGNED	DRAWN	REVIEWED	DATE
RSD	DDH	CLZ	2-10-99
CHECKED	REVISED	STRUCTURE FILE NUMBER	
DTF		4500067	

MEDIAN BARRIER ON APPROACH SLAB DETAILS
BRIDGE NO. LIC-16-2028
S.R. 16 OVER ROADWAY 'A' UNDER S.R.79

LIC-16-19.72

L0162A29(SCALE 1) 2-10-99

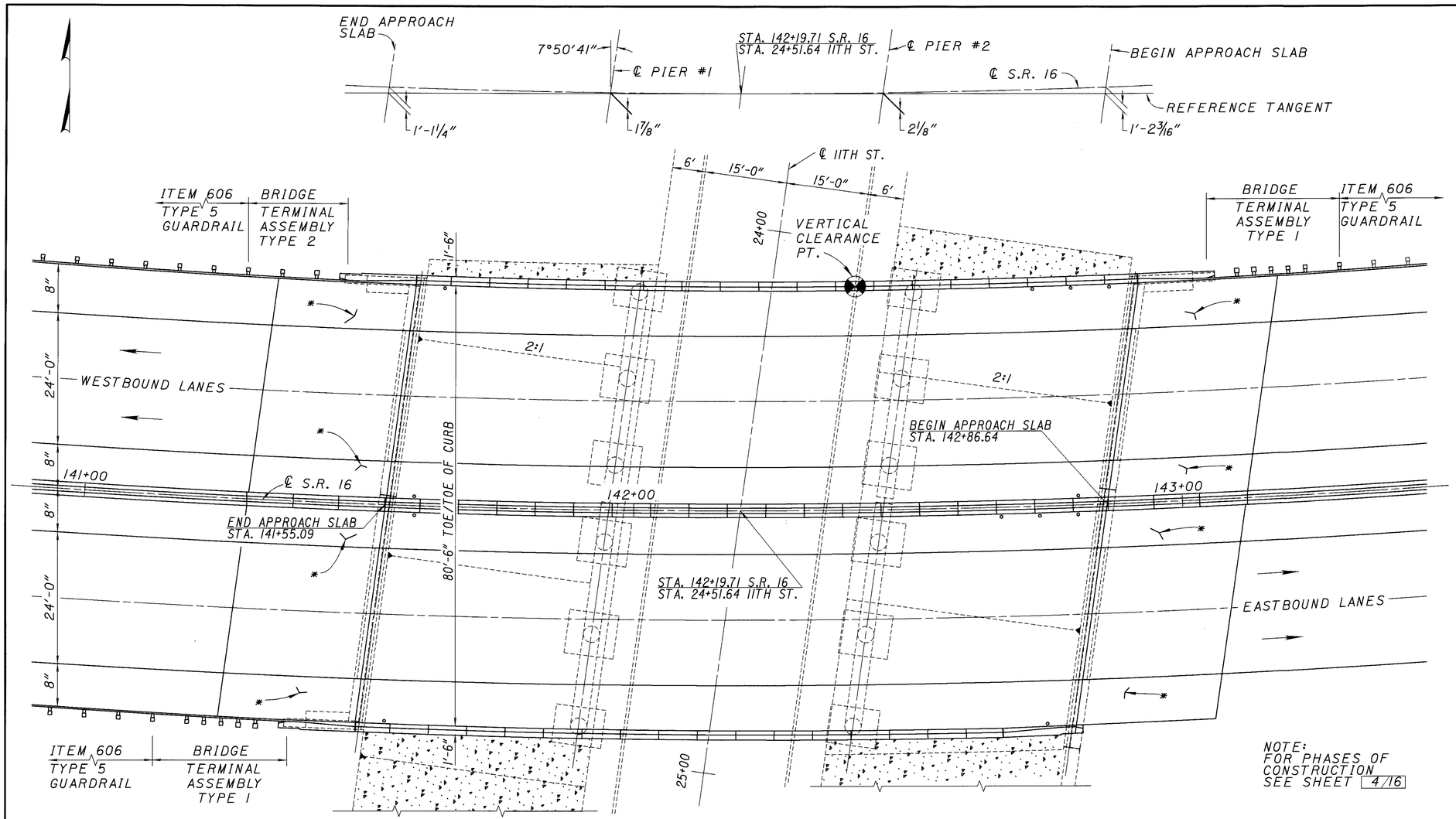

PLAN

NOTE:
FOR PHASES OF CONSTRUCTION SEE SHEET 4/16

FOR PARAPET DETAILS AND LAYOUTS SEE SHEETS 2, 8, 12 & 16 OF 16.

* PAVEMENT REMOVAL IN THESE AREAS SHALL BE INCLUDED WITH ITEM 203-EXCAVATION NOT INCLUDING EMBANKMENT CONSTRUCTION AS PER 202.05.

HORIZONTAL CURVE DATA

PI = STA. 141+22.54
Δ = 43°50'10" L.F.
Rc = 1909.86'
Δc = 32°20'10" L.F.
Dc = 3°00'00"

VERTICAL CURVE DATA

P.V.I. = STA. 139+25
ELEV. 857.51
V.C. = 450'
G1 = +0.88%
G2 = -1.40%

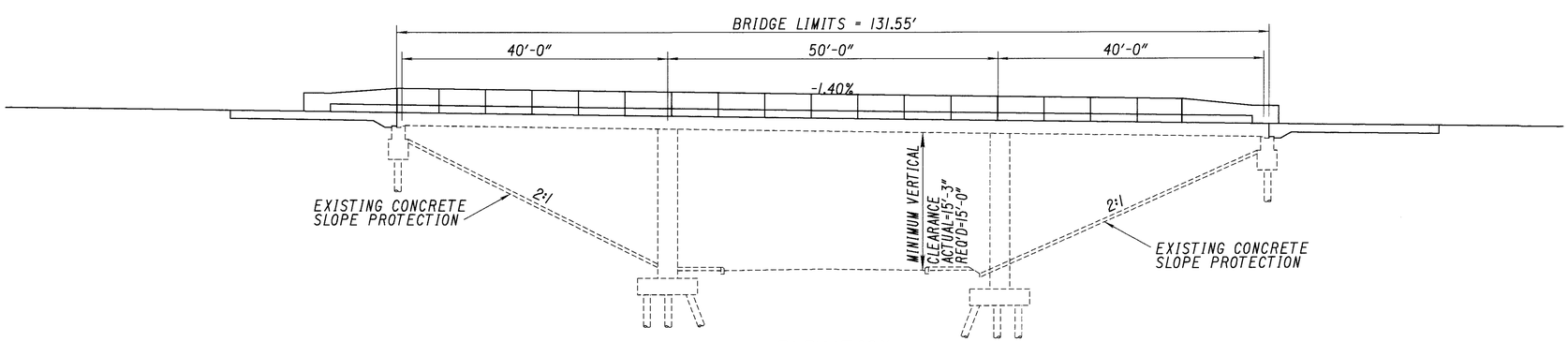

ELEVATION

EXISTING STRUCTURE

TYPE: CONTINUOUS REINFORCED CONCRETE SLAB WITH REINFORCED CONCRETE SUBSTRUCTURE
SPANS: 40'-0", 50'-0", AND 40'-0" ALONG REFERENCE TANGENT
ROADWAY: 81'-6" FACE TO FACE OF PARAPETS
LOADING: HS 20-44
SKEW: 7°50'41"
WEARING SURFACE: 1" MONOLITHIC CONCRETE
APPROACH SLABS: AS-1-67 (25' LONG)
ALIGNMENT: 03°00'00" LT.
SUPERELEVATION: 0.071'/FT.

REHABILITATED STRUCTURE

ROADWAY: 80'-6" TOE TO TOE OF CURB INCLUDING 2'-6" MEDIAN BARRIER
BRIDGE RAILING: DEFLECTOR PARAPET TYPE
WEARING SURFACE: 2" MICRO-SILICA MODIFIED CONCRETE OVERLAY (1" HYDRODEMOLITION)
APPROACH SLABS: AS-1-81 (25' LONG)

DESIGN AGENCY: OHIO DEPARTMENT OF TRANSPORTATION DISTRICT 5

DESIGNED	DRAWN	REVIEWED	DATE
RSD	DDH	DTF	2-11-99
CHECKED	REVISED	STRUCTURE FILE NUMBER	
&		4504410	

GENERAL PLAN AND ELEVATION
BRIDGE NO. LIC-16-2038
S.R. 16 OVER 11TH STREET

LIC-16-19.72

1/16

428/547

L0162007 (SCALE 1)2-11-99

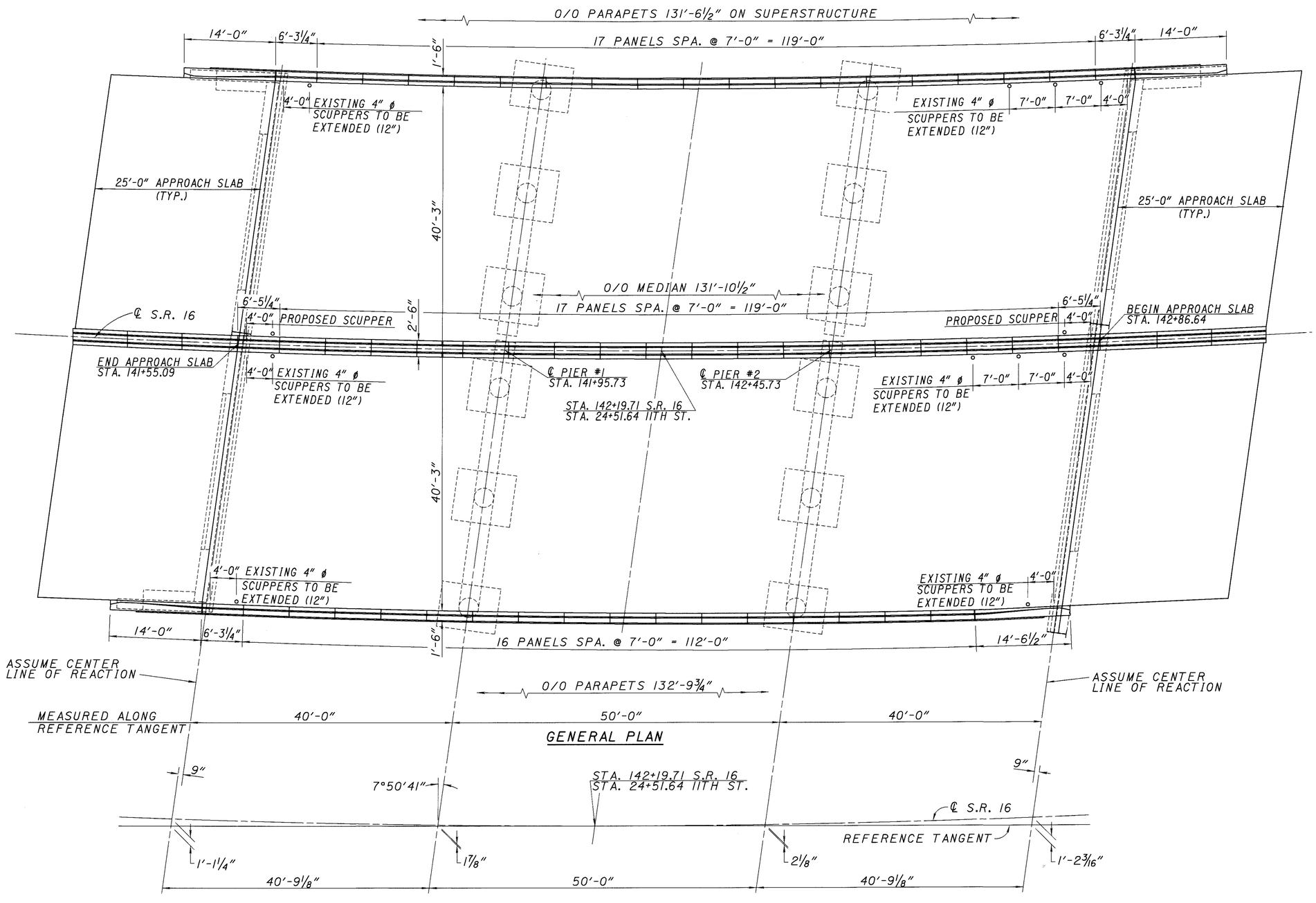

LAYOUT OF CENTERLINE

FOR PARAPET AND BARRIER DETAILS SEE SHEETS 7, 8, 9, 10 & 12 OF 16.

DESIGNED	DRAWN	REVIEWED	DATE	DESIGN AGENCY
RSD	DDH	DTF	2-11-99	OHIO DEPARTMENT OF TRANSPORTATION DISTRICT 5
CHECKED	REVISED	STRUCTURE FILE NUMBER		
CLZ		4504410		

GENERAL PLAN
BRIDGE NO. LIC-16-2038
S.R. 16 OVER 11TH STREET

LIC-16-19.72

L0162042 (SCALE 1) 2-11-99

ITEM	ITEM EXT.	GRAND TOTAL	UNIT	DESCRIPTION	SUPER.	ABUT.	PIERS	GENERAL
202	11300	95	CU YD	PORTIONS OF STRUCTURE REMOVED, SUPERSTRUCTURE	95	--	--	--
202	11300	17	CU YD	PORTIONS OF STRUCTURE REMOVED, ABUTMENT	--	17	--	--
202	22900	267	SQ YD	APPROACH SLAB REMOVED, AS PER PLAN	--	--	--	267
202	30500	50	LIN FT	CONCRETE MEDIAN REMOVED	--	--	--	50
203	12000	279	CU YD	EXCAVATION NOT INCLUDING EMBANKMENT CONSTRUCTION	--	--	--	279
203	20000	136	CU YD	EMBANKMENT	--	--	--	136
203	50000	408	SQ YD	SUBGRADE COMPACTION	--	--	--	408
304	20000	68	CU YD	AGGREGATE BASE	--	--	--	68
503	21300	LUMP		UNCLASSIFIED EXCAVATION	--	--	--	LUMP
512	33000	3	SQ YD	TYPE 2 WATERPROOFING	--	3	--	--
SPECIAL	5126751O	685	SQ YD	SEALING OF CONCRETE SURFACES (EPOXY - URETHANE)	594	91	--	--
516	13600	54	SQ FT	1" PREFORMED EXPANSION JOINT FILLER	54	--	--	--
518	51300	10	EACH	DOWNSPOUT MODIFICATION	10	--	--	--
518	12500	2	EACH	NEW SCUPPER, MISC.: INCLUDING SUPPORTS	2	--	--	--
518	12700	10	EACH	SCUPPER, VERTICAL EXTENSION	10	--	--	--
518	21230	LUMP		POROUS BACKFILL WITH FILTER FABRIC	--	LUMP	--	--
518	40000	172	LIN FT	6" PERFORATED CORRUGATED PLASTIC PIPE (SS 944)	--	172	--	--
518	40010	28	LIN FT	6" NON-PERFORATED CORRUGATED PLASTIC PIPE INCLUDING SPECIALS (SS944)	--	28	--	--
519	11100	24	SQ FT	PATCHING CONCRETE STRUCTURE	--	24	--	--
604	36600	2	EACH	PRECAST REINFORCED CONCRETE OUTLET	--	2	--	--
611	25001	450	SQ YD	REINFORCED CONCRETE APPROACH SLAB (T=15"), AS PER PLAN	--	--	--	450
625	25402	310	LIN FT	CONDUIT, 2", 713.07	264	46	--	--
625	25602	182	LIN FT	CONDUIT, 4", 713.07	132	--	--	50
625	29910	2	EACH	TRANSITION JUNCTION BOX	2	--	--	--
625	29920	4	EACH	STRUCTURE JUNCTION BOX, TYPE II WITH COVER PLATE	4	--	--	--
625	33000	1	EACH	STRUCTURE GROUNDING SYSTEM	1	--	--	--
844	48000	24	CU YD	HIGH PERFORMANCE CONCRETE, SUPERSTRUCTURE (DECK) MIX 4	24	--	--	--
844	48020	87	SQ YD	HIGH PERFORMANCE CONCRETE, SUPERSTRUCTURE(PARAPETS) MIX 2	65	11	--	11
844	49000	LUMP		HIGH PERFORMANCE CONCRETE TRIAL MIX	LUMP			
848	10000	1140	SQ YD	MICRO-SILICA MODIFIED CONCRETE OVERLAY, USING HYDRODEMOLITION (T=2")	1140	--	--	--
848	30000	75	CU YD	MICRO-SILICA MODIFIED CONCRETE OVERLAY (VARIABLE THICKNESS), MATERIAL ONLY	65	--	--	--
848	50100	LUMP		TEST SLAB	LUMP	--	--	--
848	20000	1140	SQ YD	SURFACE PREPARATION USING HYDRODEMOLITION	1140			
848	50000	110	SQ YD	HAND CHIPPING	110			

CALCULATED D.D.H.
CHECKED R.S.D.

BRIDGE SUMMARY
BRIDGE NO. LIC-16-2038
S.R. 16 OVER 11TH STREET

LIC-16-19.72

L0160001.GGS 2/10/99 SCALE=1

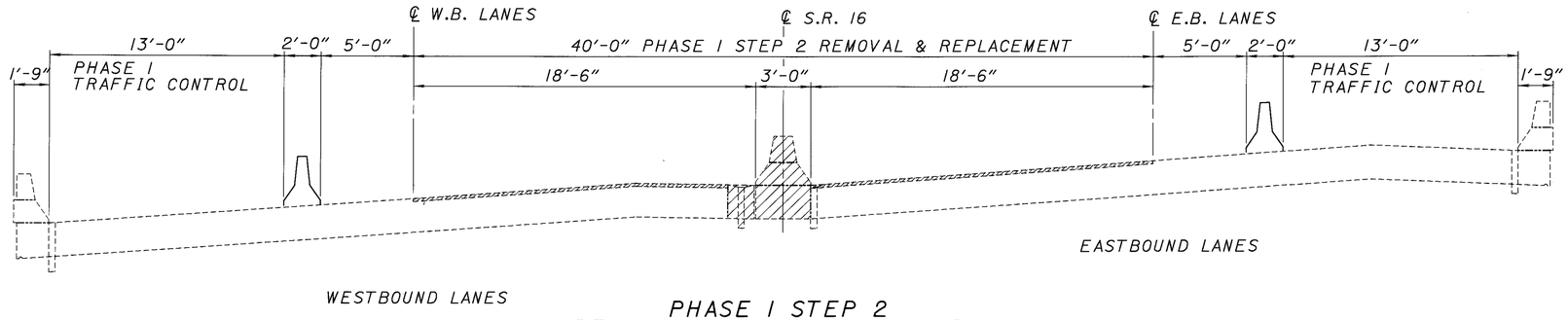

PHASE I STEP 2
REMOVAL AND TRAFFIC CONTROL

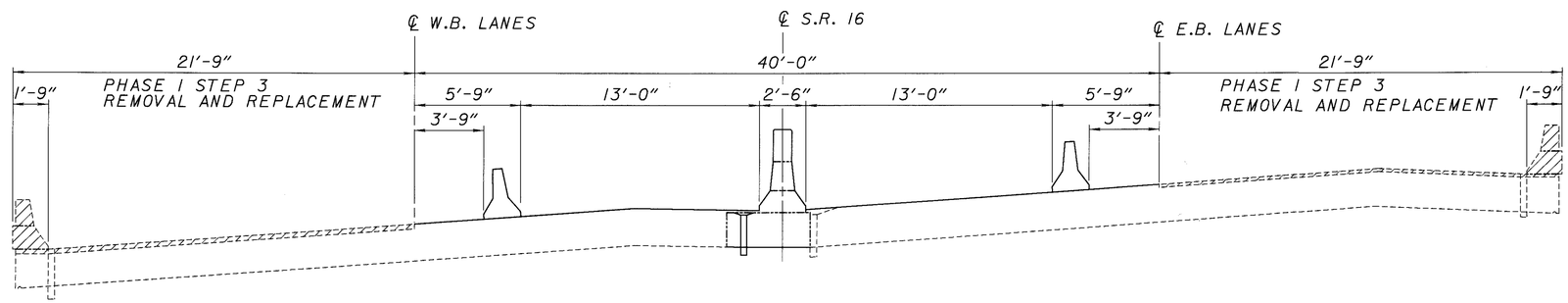

PHASE I STEP 3
REMOVAL AND TRAFFIC CONTROL

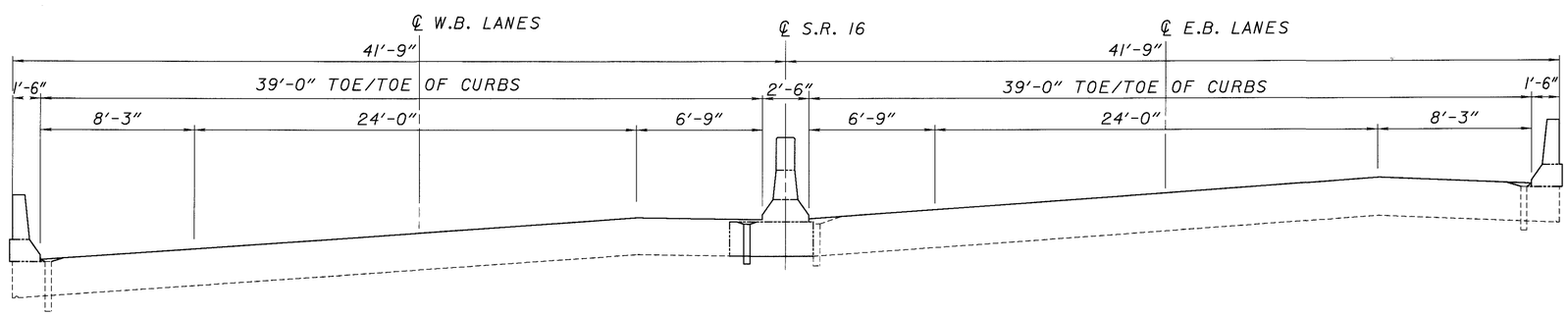

PHASE I REPLACEMENT

DESIGN AGENCY
OHIO DEPARTMENT
OF TRANSPORTATION
DISTRICT 5

DESIGNED	DRAWN	REVIEWED	DATE
RSD	DDH	DTF	2-11-99
CHECKED	REVISED	STRUCTURE FILE NUMBER	
CLZ		4504410	

TRAFFIC CONTROL
BRIDGE NO. LIC-16-2038
S.R. 16 OVER 11TH STREET

LIC-16-19.72

4 / 16

431
547

L162056A(SCALE 4) 2-11-99

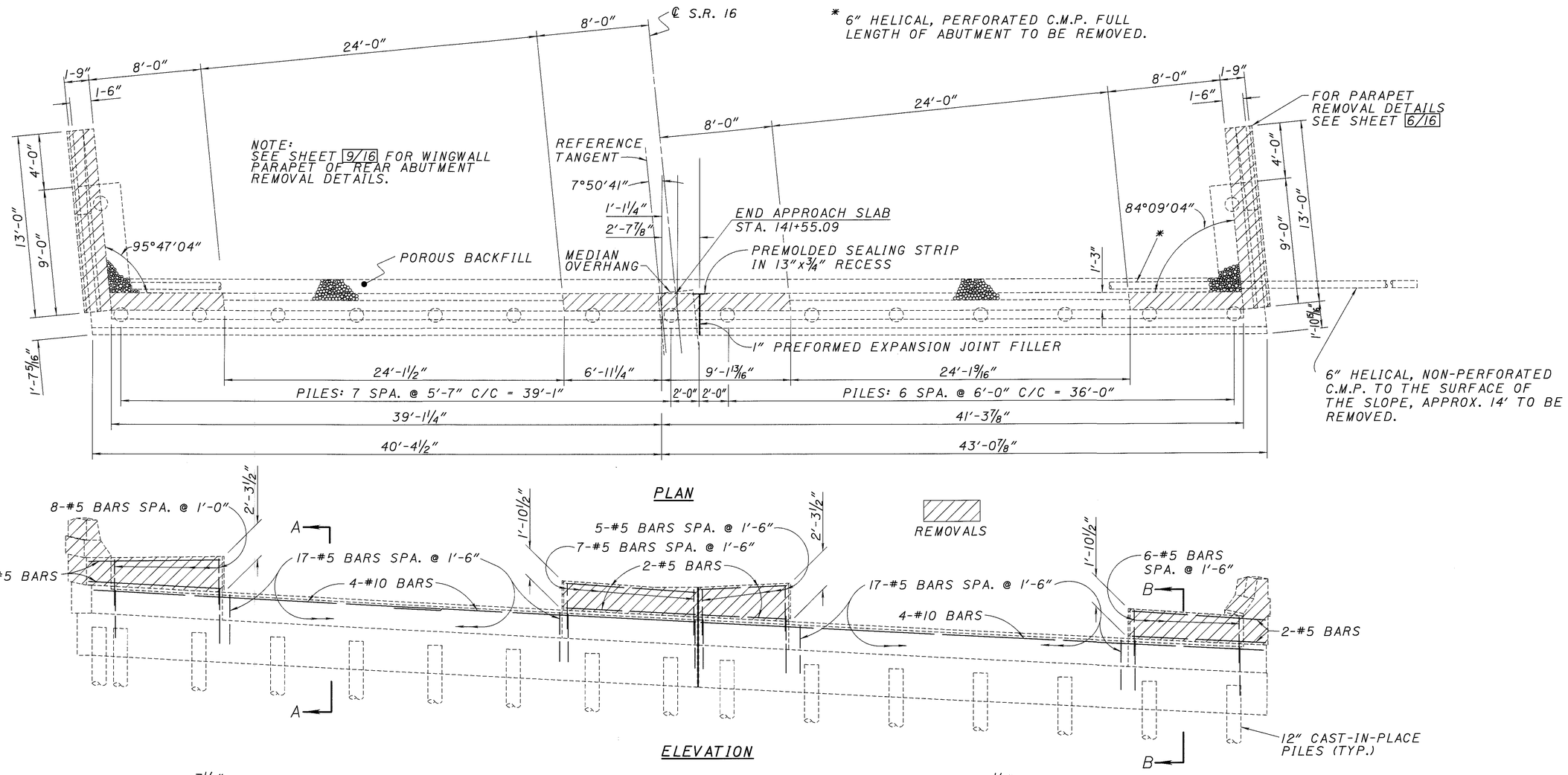

PLAN

ELEVATION

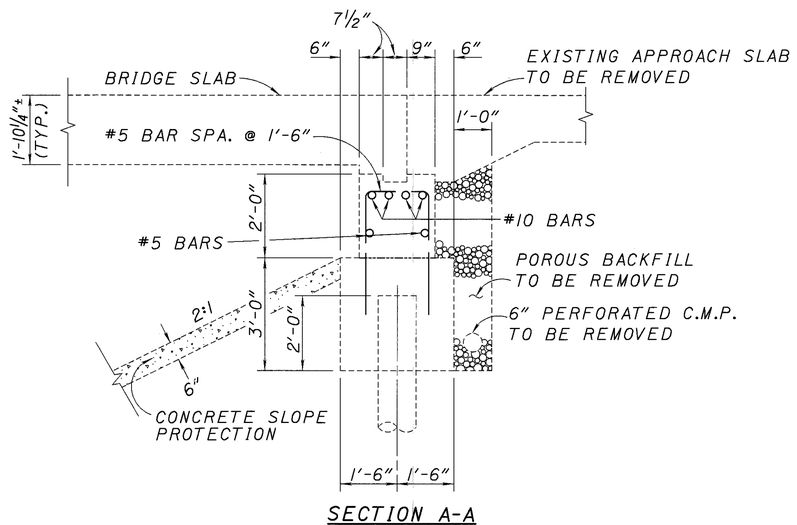

SECTION A-A

NOTE:
EXISTING C.M.P. AND POROUS BACKFILL SHALL BE REMOVED AS PER 518.09.

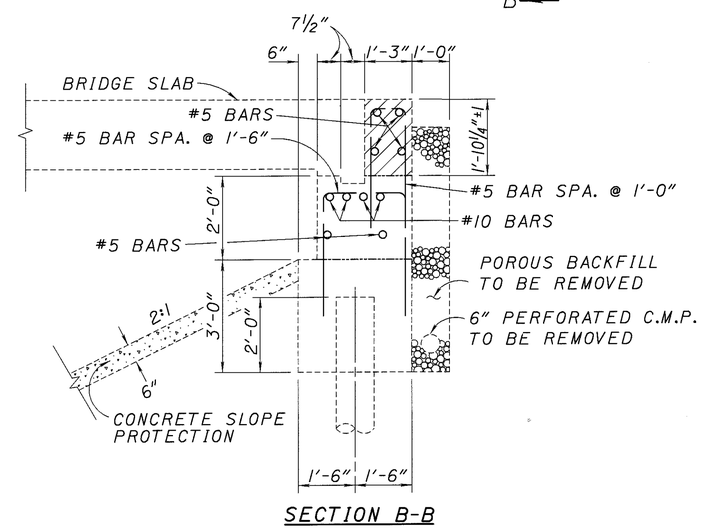

SECTION B-B

DESIGN AGENCY	OHIO DEPARTMENT OF TRANSPORTATION DISTRICT 5
REVIEWED DTF	DATE 2-11-99
STRUCTURE FILE NUMBER	4504410
DRAWN DDH	REVISED
DESIGNED RSD	CHECKED CLZ

EXISTING REAR ABUTMENT (REMOVALS)
BRIDGE NO. LIC-16-2038
S.R. 16 OVER 11TH STREET

LIC-16-19.72

5/16

432/547

L0162031 (SCALE 4) 2-11-99

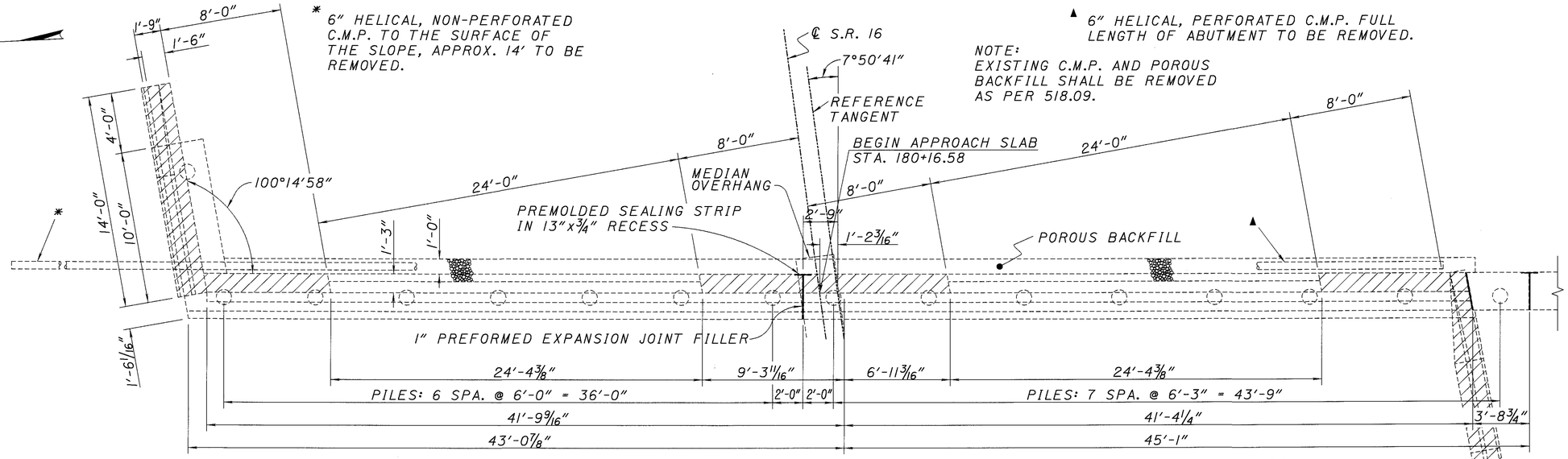

PLAN

NOTE:
FOR SECTIONS A-A AND B-B, SEE SHEET 5/16.

REMOVALS

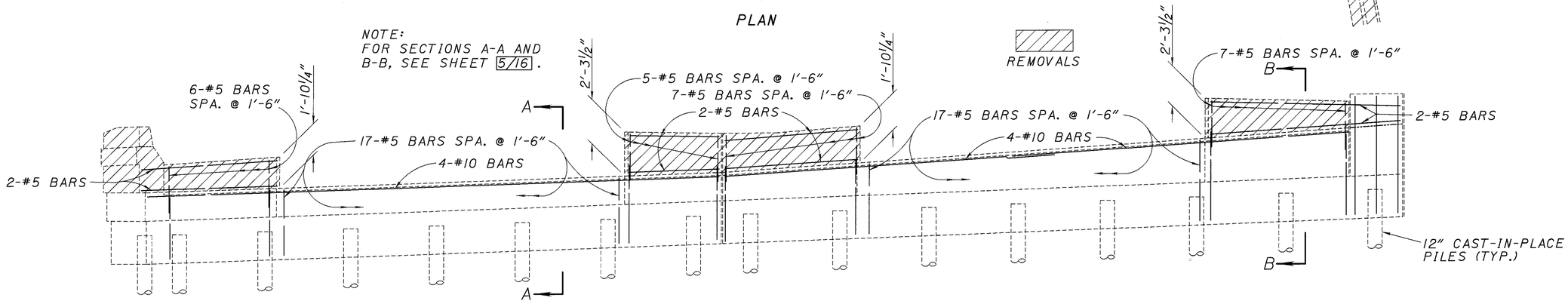

ELEVATION

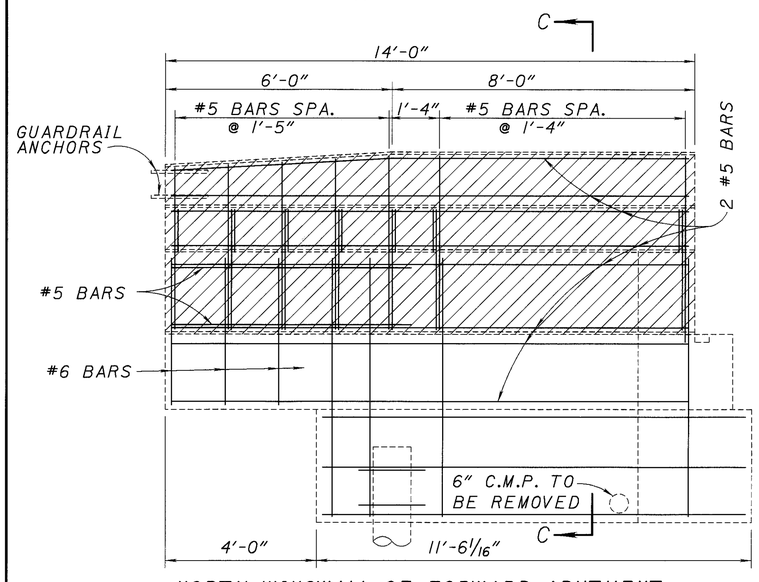

NORTH WINGWALL OF FORWARD ABUTMENT

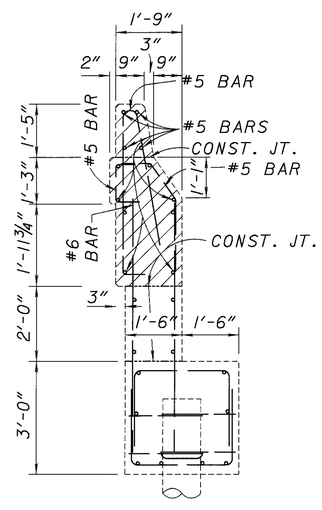

SECTION C-C

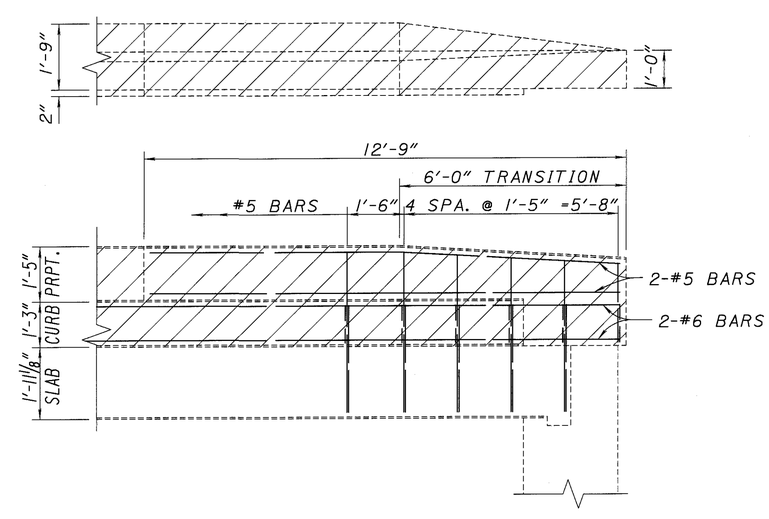

SOUTH PARAPET FORWARD ABUTMENT

DESIGN AGENCY	OHIO DEPARTMENT OF TRANSPORTATION DISTRICT 5
REVIEWED DTF	DATE 2-11-99
STRUCTURE FILE NUMBER	4504410
DRAWN DDH	REVISED
DESIGNED CLZ	CHECKED CLZ

EXISTING FORWARD ABUTMENT (REMOVALS)
BRIDGE NO. LIC-16-2038
S.R. 16 OVER 11TH STREET

LIC-16-19.72

6/16

433/547

LA162031 (SCALE 4) 2-11-99

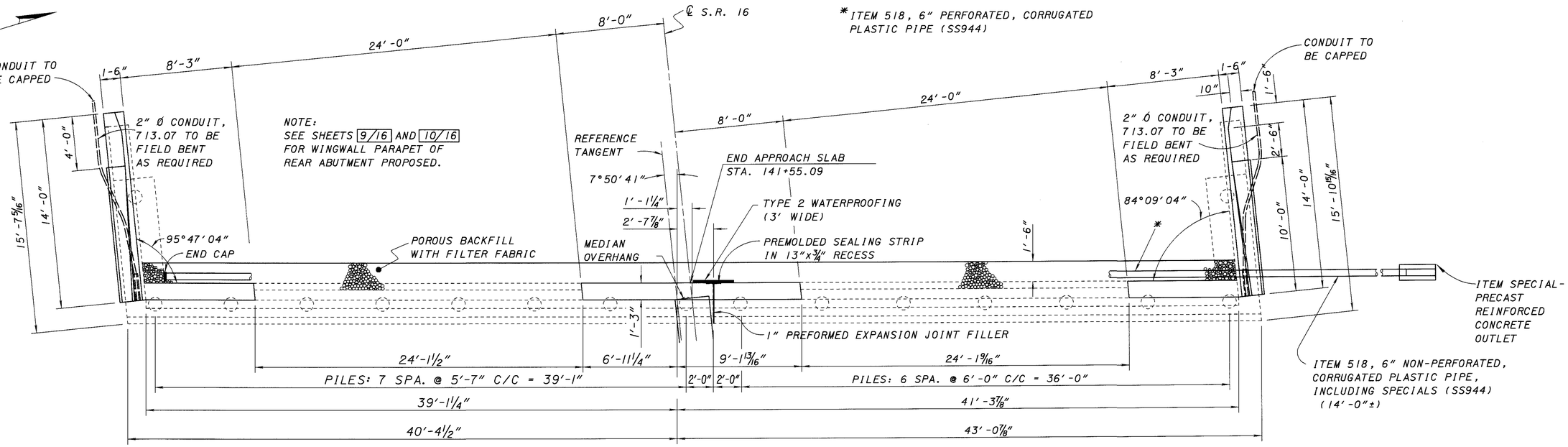

PLAN

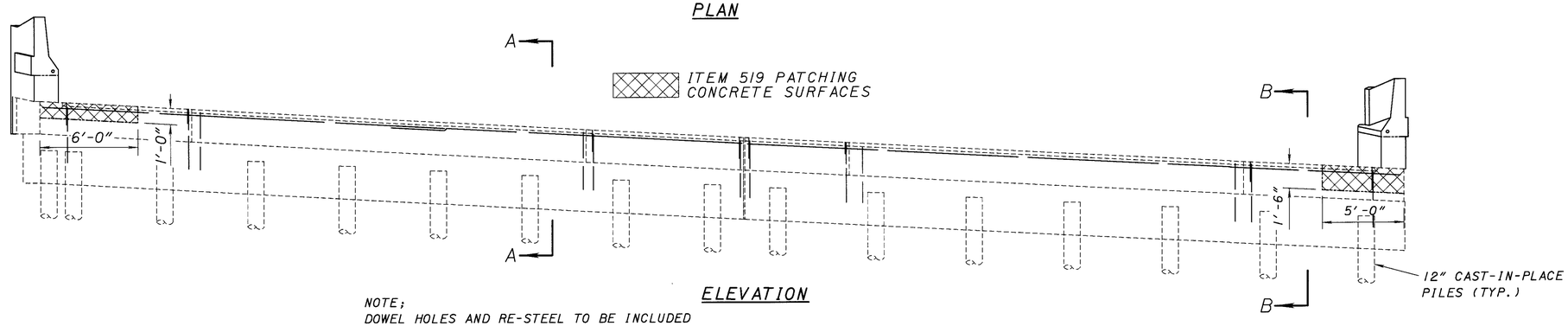

ELEVATION

NOTE;
DOWEL HOLES AND RE-STEEL TO BE INCLUDED WITH ITEM 611 REINFORCED CONCRETE APPROACH SLAB (T=15"), AS PER PLAN. FOR APPROACH SLAB DETAILS, SEE SHEET 15/16 AND 16/16.

** SEALING CONCRETE SURFACES (EPOXY-URETHANE)

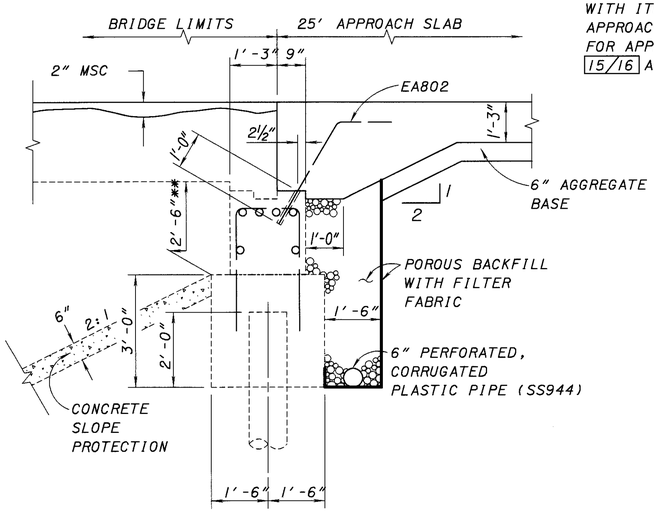

SECTION A-A

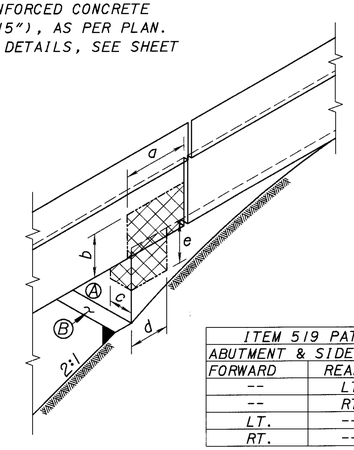

NOTE:
THE BACKWALLS (A) AND (B) ARE TO BE SEALED WITH ITEM SPECIAL-SEALING CONCRETE SURFACES-(EPOXY-URETHANE)

ITEM 519 PATCHING CONCRETE SURFACES						
ABUTMENT & SIDE		DIMENSION				
FORWARD	REAR	a	b	c	d	e
--	LT.	--	--	▲	1'-6"	0'-6"
--	RT	--	--	▲	1'-4"	1'-0"
LT.	--	1'-4"	1'-0"	▲	--	--
RT.	--	--	--	--	--	--

▲ SEE ELEVATION VIEW FOR DIMENSIONS OF THE AREA TO BE PATCHED

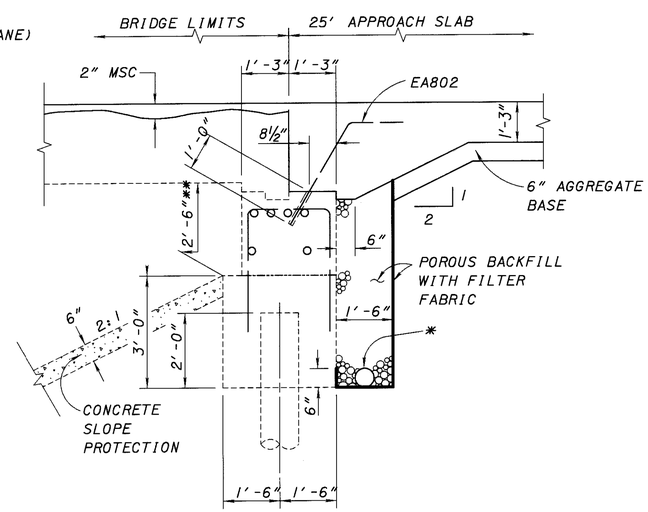

SECTION B-B

DESIGN AGENCY: OHIO DEPARTMENT OF TRANSPORTATION DISTRICT 5

REVIEWED DTF DATE 2-11-99 | STRUCTURE FILE NUMBER 4504410

DRAWN DDH | REVISED

DESIGNED | CHECKED

PROPOSED REAR ABUTMENT
BRIDGE NO. LIC-16-2038
S.R. 16 OVER 11TH STREET

LIC-16-19.72

7/16

434/547

LO162032 (SCALE 1) 2-11-99

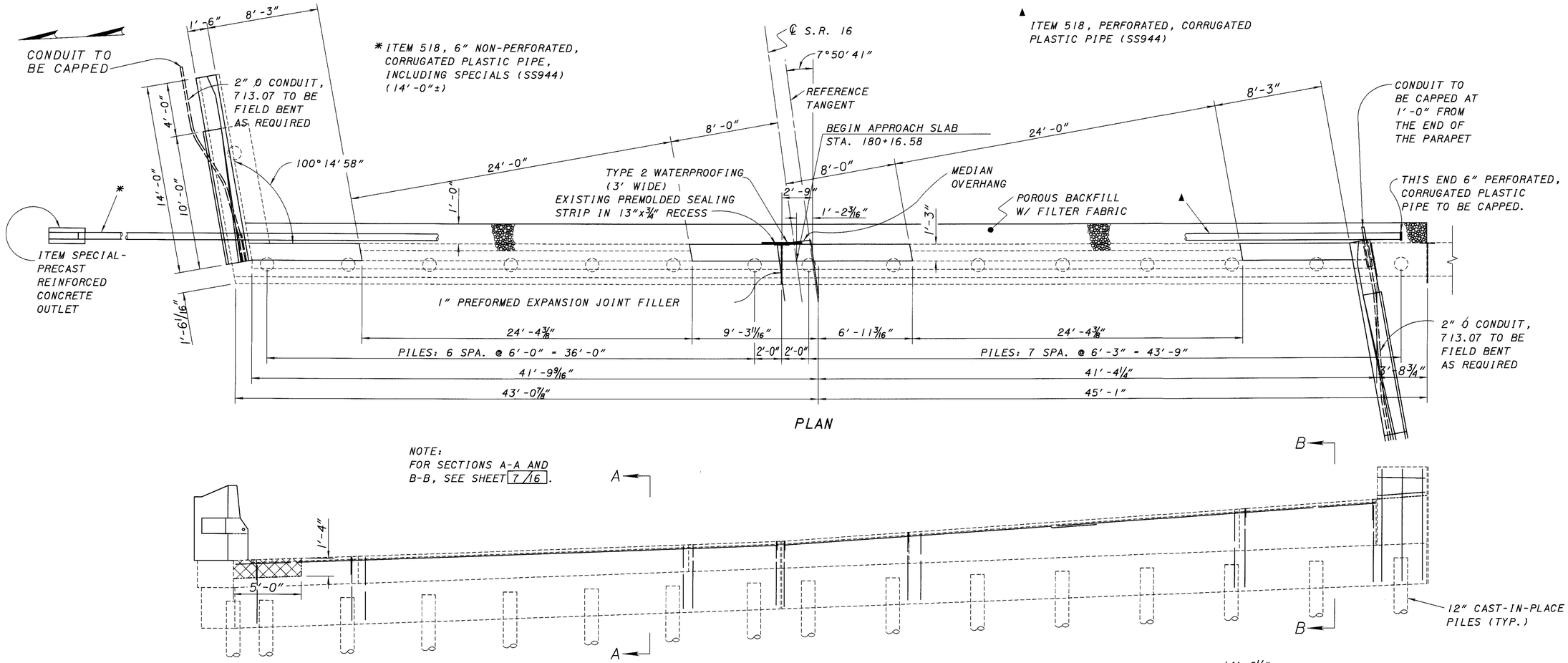

NOTE:
FOR SECTIONS A-A AND B-B, SEE SHEET 7/16.

ELEVATION

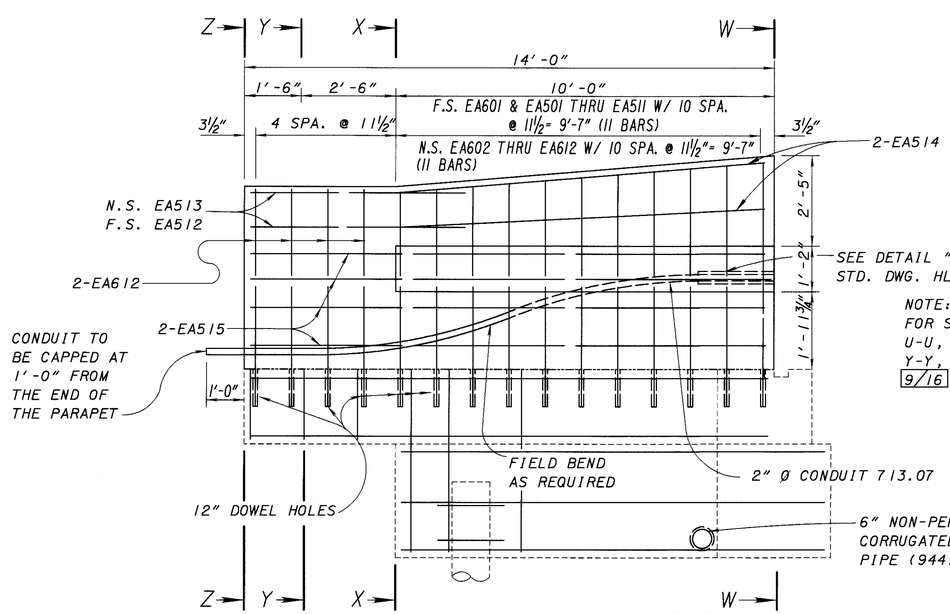

NORTH WINGWALL OF FORWARD ABUTMENT

NOTE:
FOR APPROACH SLAB DETAILS SEE SHEETS 15/16 AND 16/16

NOTE:
FOR SECTIONS S-S, T-T, U-U, V-V, W-W, X-X, Y-Y, AND Z-Z SEE SHEET 9/16.

N.S. = NEAR SIDE
F.S. = FAR SIDE

NOTE: DOWEL HOLES AND RE-STEEL TO BE INCLUDED FOR PAYMENT WITH ITEM 844-HIGH PERFORMANCE CONCRETE SUPERSTRUCTURE (PARAPET)

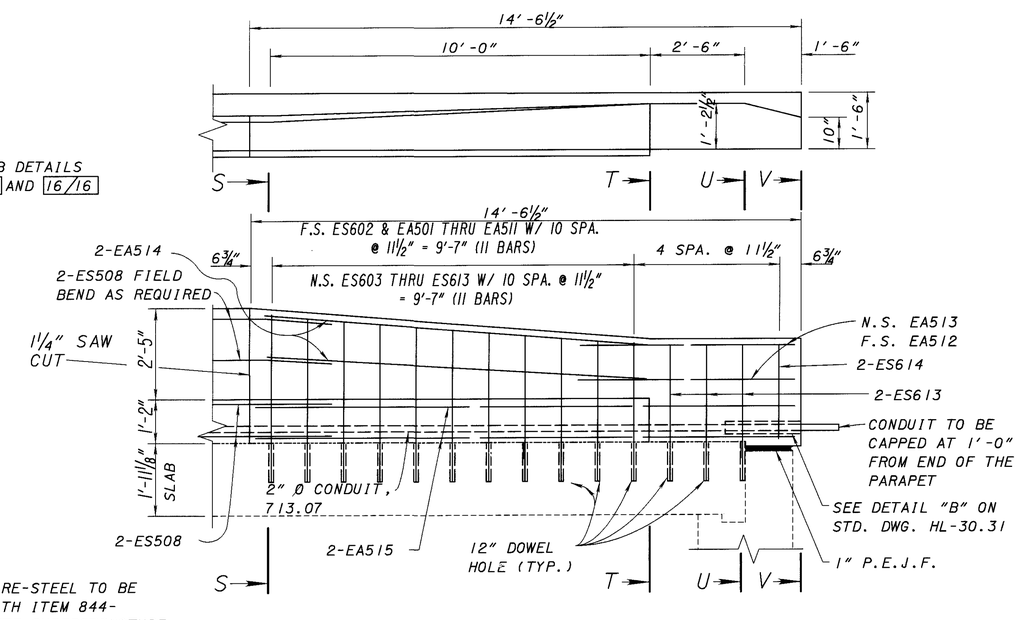

SOUTH PARAPET FORWARD ABUTMENT

DESIGN AGENCY	OHIO DEPARTMENT OF TRANSPORTATION DISTRICT 5
REVIEWED / DATE	DTF 2-11-99
STRUCTURE FILE NUMBER	4504410
DRAWN	DDH
REVISED	
DESIGNED	CZ
CHECKED	CZ

PROPOSED FORWARD ABUTMENT
BRIDGE NO. LIC-16-2038
S.R. 16 OVER 11TH STREET

LIC-16-19.72

8/16

435/547

LAI62032 (SCALE 1) 2-11-99

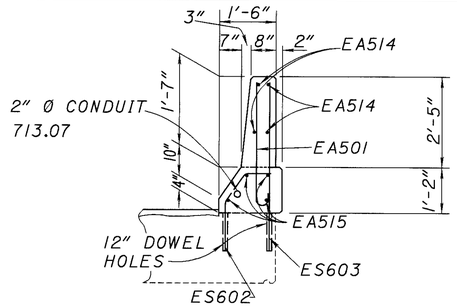

SECTION S-S

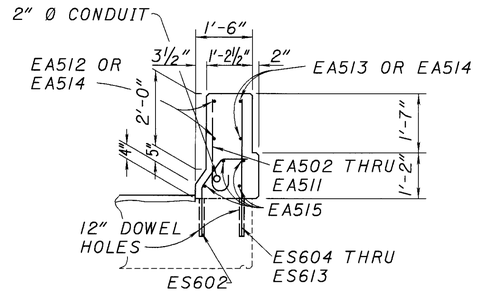

SECTION T-T

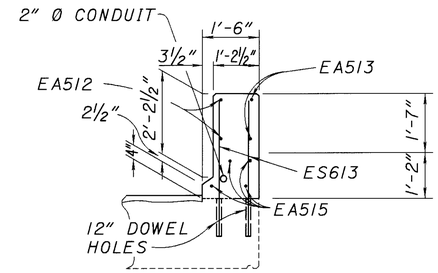

SECTION U-U

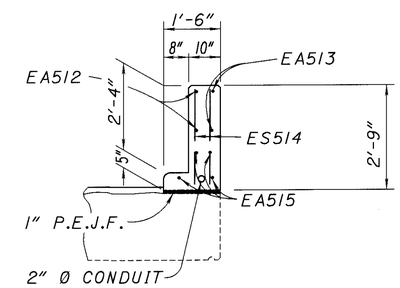

SECTION V-V

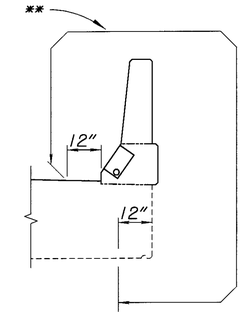

PARAPET ENDING ON THE BRIDGE

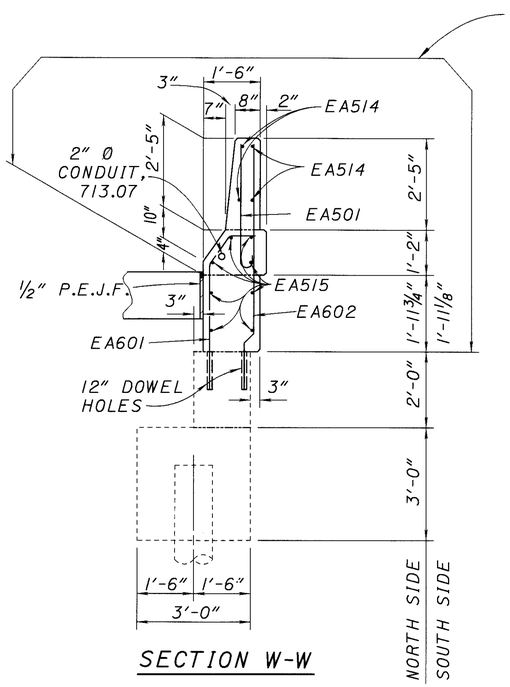

SECTION W-W

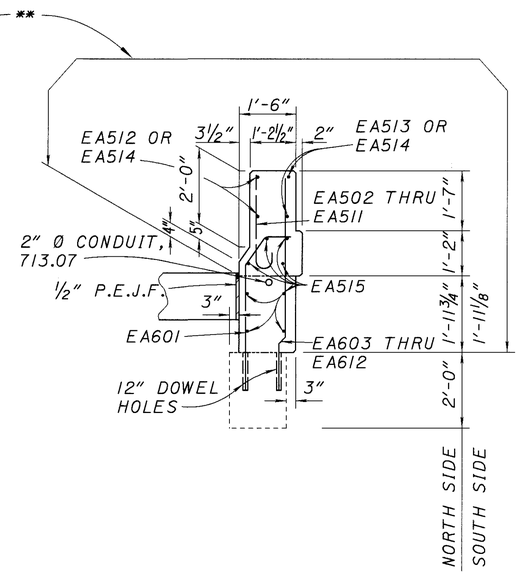

SECTION X-X

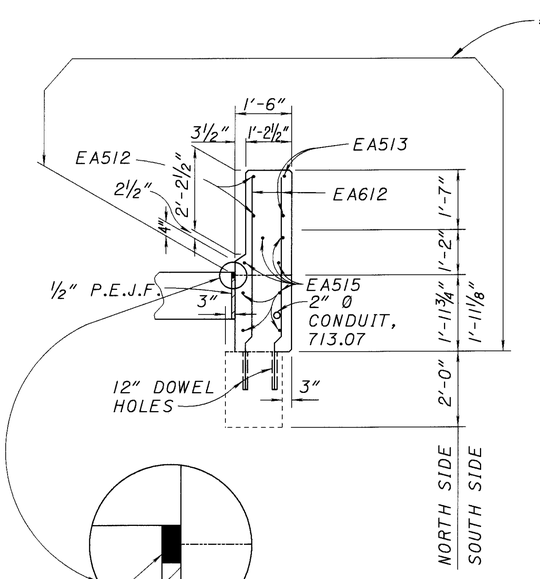

SECTION Y-Y

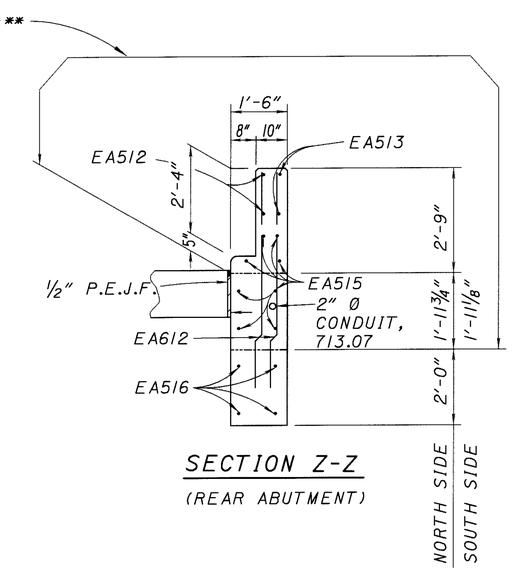

SECTION Z-Z

(REAR ABUTMENT)

2" JOINT SEALER, 705.04, TO BE INCLUDED FOR PAYMENT WITH ITEM 611 REINFORCED CONCRETE APPROACH SLAB (T=15"), AS PER PLAN

NOTE: DOWEL HOLES AND RE-STEEL TO BE INCLUDED FOR PAYMENT WITH ITEM 844-HIGH PERFORMANCE CONCRETE SUPERSTRUCTURE (PARAPET)

**SEALING CONCRETE SURFACES - (EPOXY-URETHANE)

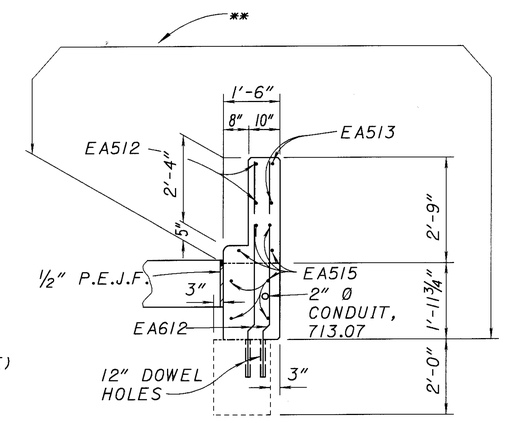

SECTION Z-Z

(FORWARD ABUTMENT)

PARAPET ENDING OFF THE BRIDGE

L0162053 (SCALE 1) 2-11-99

DESIGNED	DRAWN	REVIEWED	DATE	DESIGN AGENCY
CHECKED	DDH	DTF	2-11-99	OHIO DEPARTMENT OF TRANSPORTATION DISTRICT 5
	REVISED	STRUCTURE FILE NUMBER		
		4504410		

PARAPET DETAILS
BRIDGE NO. LIC-16-2038
S.R. 16 OVER 11TH. STREET.

LIC-16-19.72

9/16

436/547

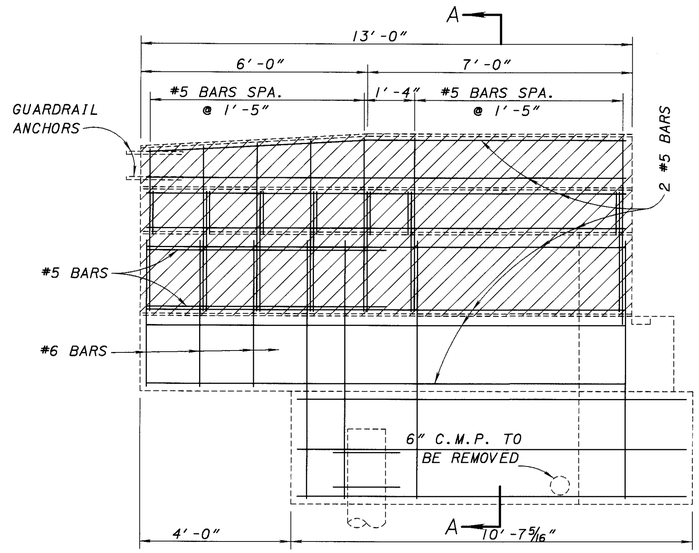

WINGWALL PARAPET OF REAR ABUTMENT (FOR BOTH SIDES)

(FROM SHEET 7/16)

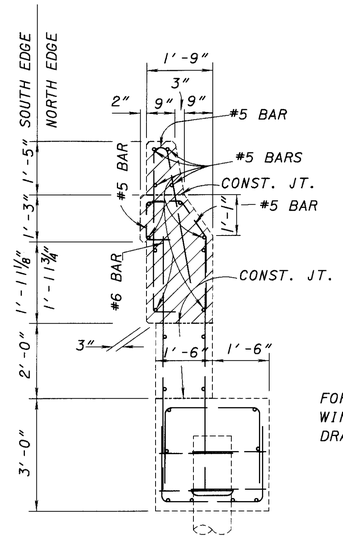

SECTION A-A

FOR ADDITIONAL EXISTING WINGWALL DETAILS SEE DRAWING BR-1-67.

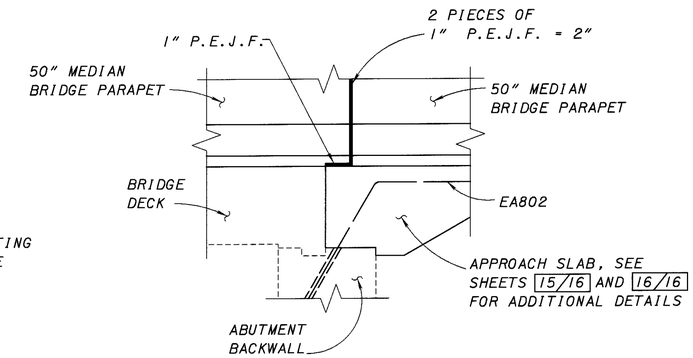

SECTION C-C

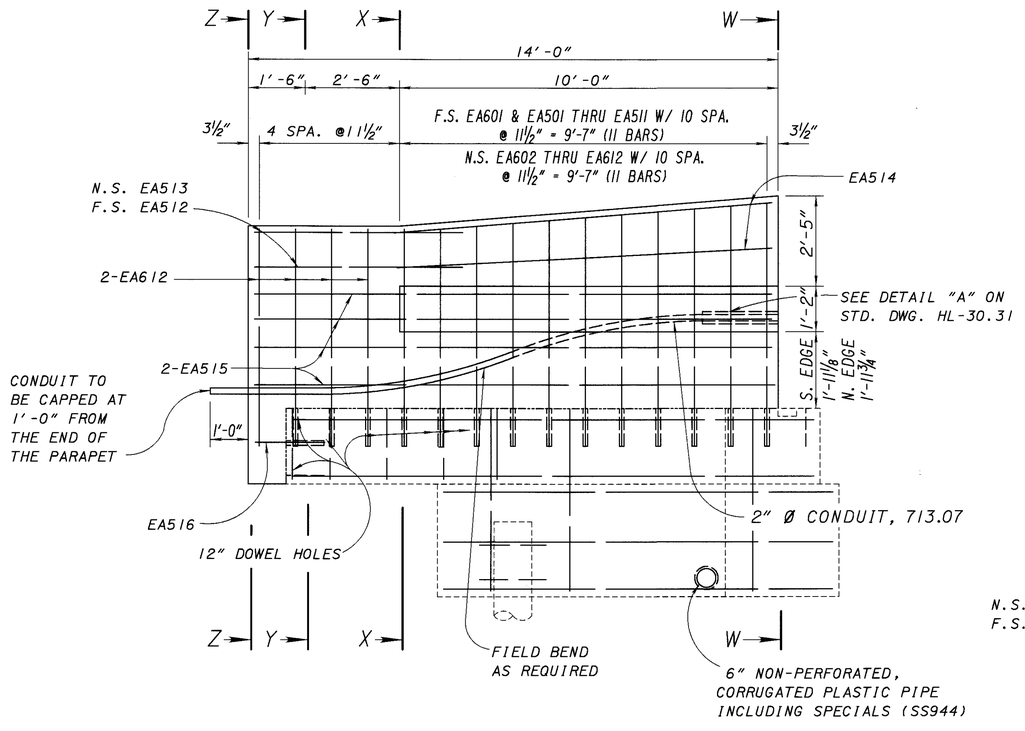

NOTE:
DOWEL HOLES AND RE-STEEL TO BE INCLUDED WITH ITEM 844-HIGH PERFORMANCE CONCRETE SUPERSTRUCTURE (PARAPET)

NOTE:
FOR PROPOSED WINGWALL DETAILS AND SECTIONS W-W, X-X, Y-Y, AND Z-Z SEE SHEET 9/16.

N.S. = NEAR SIDE
F.S. = FAR SIDE

WINGWALL PARAPET OF REAR ABUTMENT (FOR BOTH SIDES)

(FROM SHEET 9/16)

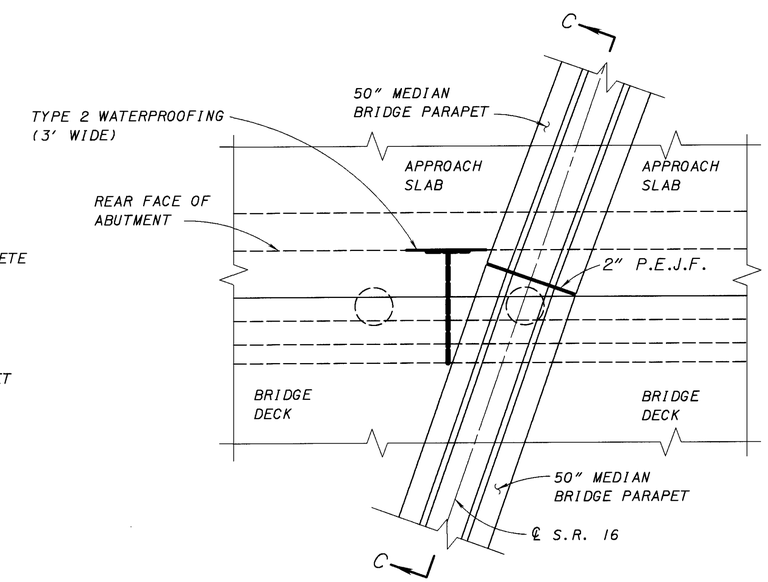

DESIGN AGENCY: OHIO DEPARTMENT OF TRANSPORTATION DISTRICT 5

REVIEWED DTF DATE 2-11-99 STRUCTURE FILE NUMBER 4504410

DRAWN DDH REVISED

DESIGNED RSD CHECKED

PARAPET DETAILS
BRIDGE NO. LIC-16-2038
S.R. 16 OVER 11TH STREET

LIC-16-19.72

10/16

437/547

LB162053 (SCALE 2) 2-11-99

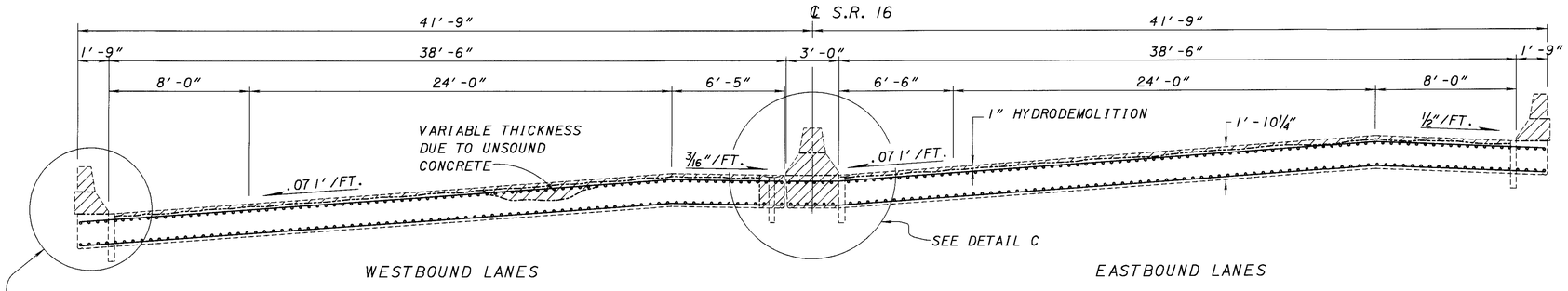

EXISTING TRANSVERSE SECTION

LOOKING EAST

REMOVALS

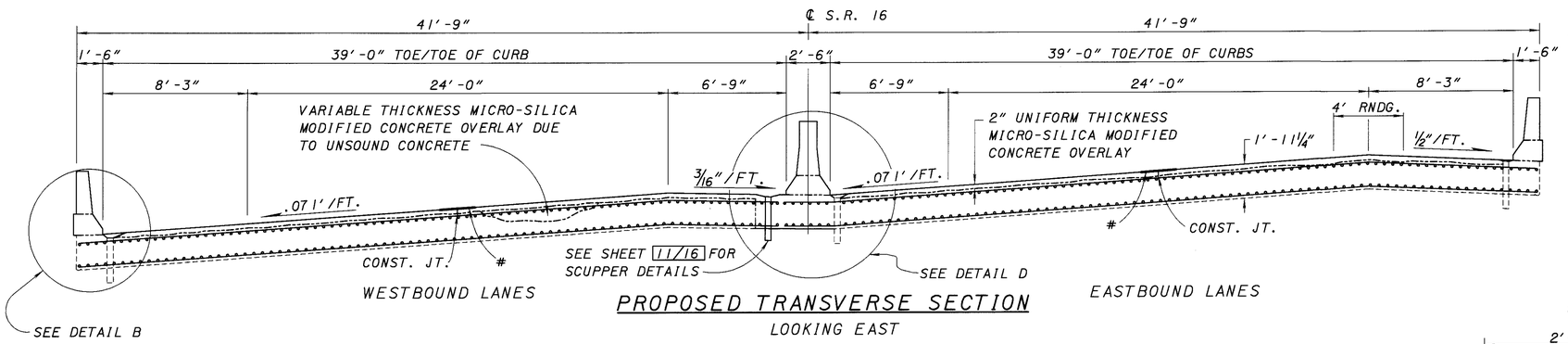

PROPOSED TRANSVERSE SECTION

LOOKING EAST

NOTE:
RE-STEEL AND DOWEL HOLES TO BE INCLUDED WITH ITEM 844-HIGH PERFORMANCE CONCRETE SUPERSTRUCTURE (PARAPET)

NOTE:
FOR ADDITIONAL PARAPET AND MEDIAN BARRIER DETAILS SEE SHEET 13/16

NOTE:
FOR DECK RE-STEEL LAYOUT SEE SHEET 12/16

LEGEND
N.S. = NORTH SIDE
S.S. = SOUTH SIDE

*2" Ø CONDUIT, 713.07

▲ NORTH SIDE ES501 OR ES507
SOUTH SIDE ES501 OR ES508

▲▲ NORTH SIDE ES618R ES619
SOUTH SIDE ES618R ES620

TREATING CONCRETE BRIDGE DECK WITH HMWM SEALER (2'-0" WIDTH) TO BE INCLUDED IN ITEM 848-MICRO SILICA MODIFIED CONCRETE OVERLAY USING HYDRODEMOLITION (T=2")

LAP LENGTH	
NO.5	2'-3"
NO.6	2'-8"

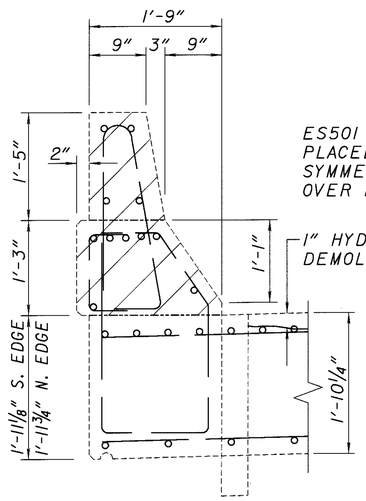

DETAIL A
EXISTING

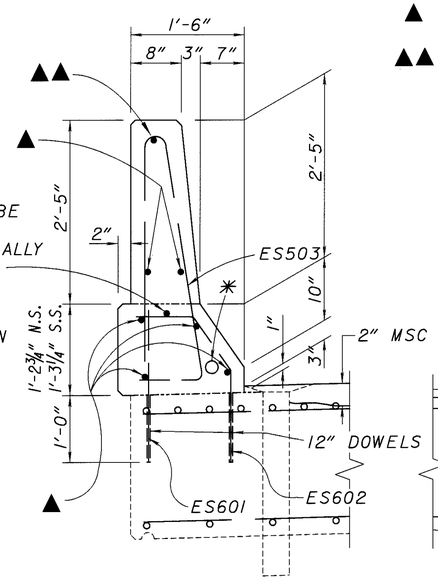

DETAIL B
PROPOSED

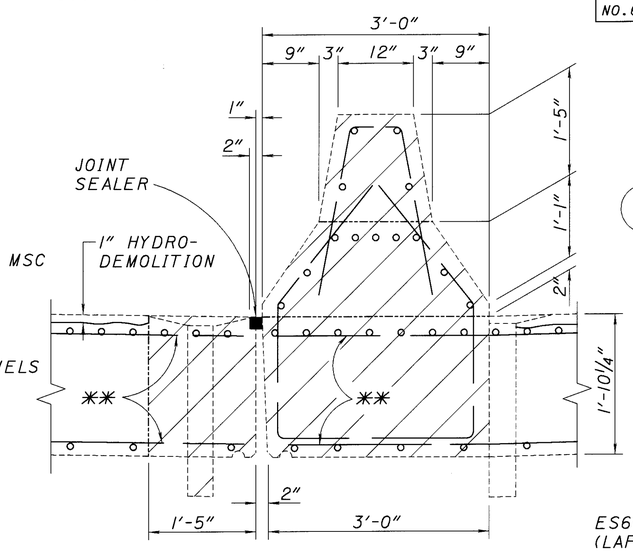

DETAIL C
EXISTING

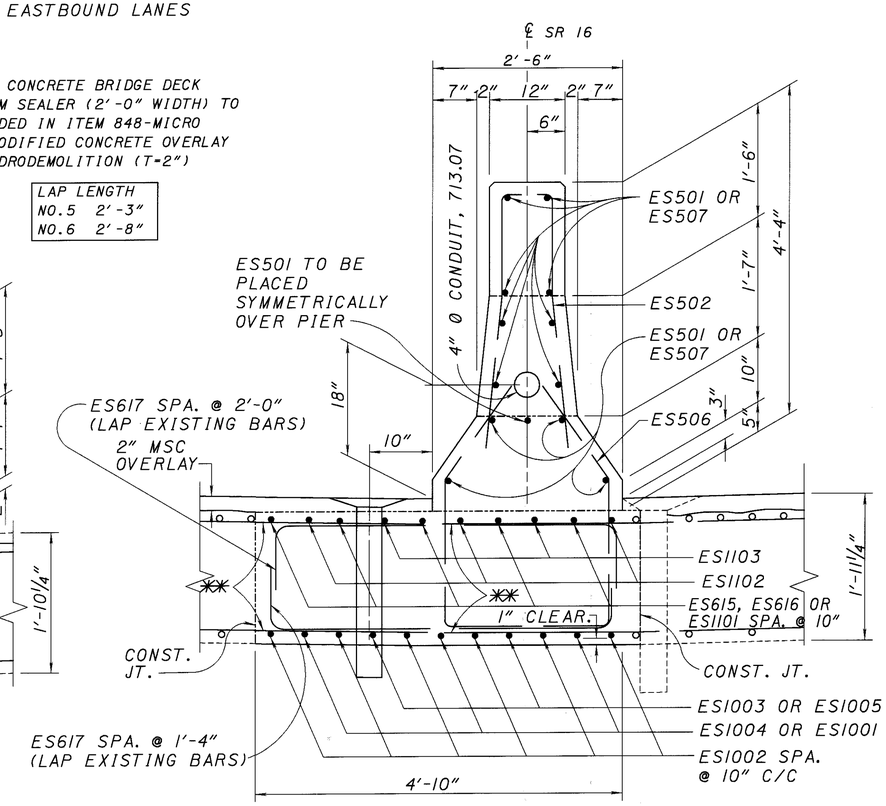

DETAIL D
PROPOSED

** EXISTING TRANSVERSE RE-STEEL SHALL REMAIN IN PLACE

DESIGN AGENCY	DATE	STRUCTURE FILE NUMBER
OHIO DEPARTMENT OF TRANSPORTATION DISTRICT 5	REVIEWED DTF 2-11-99	4504410
DRAWN DDH	REVISED	
DESIGNED RSD / CHECKED		

TRANSVERSE SECTION
BRIDGE NO. LIC-16-2038
S.R. 16 OVER 11TH STREET

LIC-16-19.72

11/16

438/547

LO162056 (SCALE 4) 2-11-99

NOTE:
ES1101, ES1102, AND ES1103 ARE SYMMETRICALLY PLACE ABOUT THE ℄ OF THE PIER.

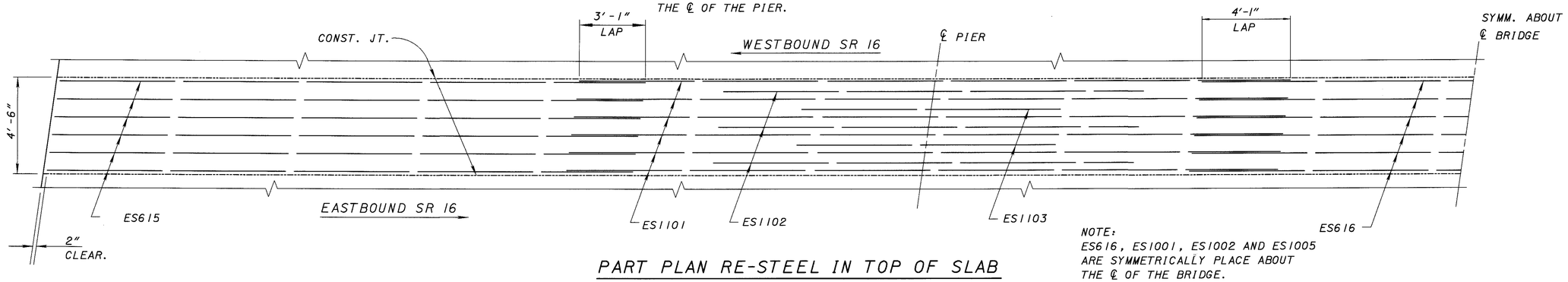

NOTE:
ES616, ES1001, ES1002 AND ES1005 ARE SYMMETRICALLY PLACE ABOUT THE ℄ OF THE BRIDGE.

PART PLAN RE-STEEL IN TOP OF SLAB

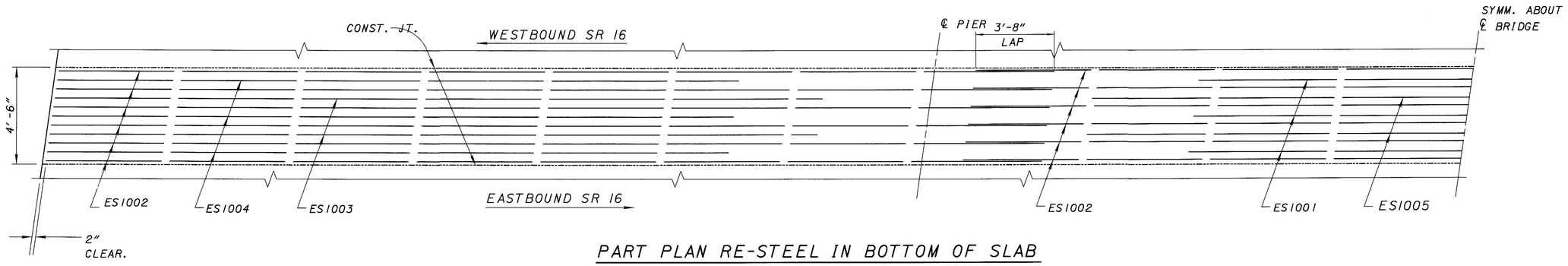

PART PLAN RE-STEEL IN BOTTOM OF SLAB

NOTE:
RE-STEEL TO BE INCLUDED IN ITEM 844-HIGH PERFROMANCE CONCRETE SUPERSTRUCTURE (DECK)

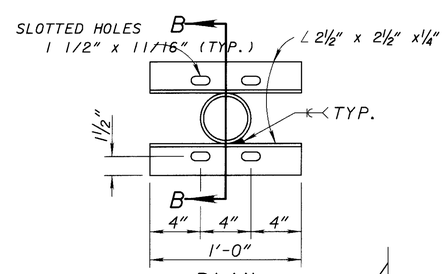

PLAN

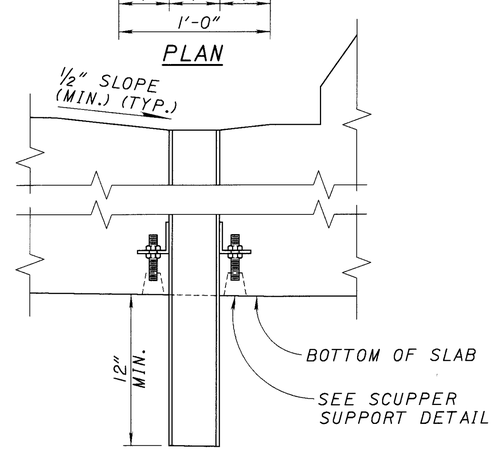

ELEVATION
(SECTION B-B)

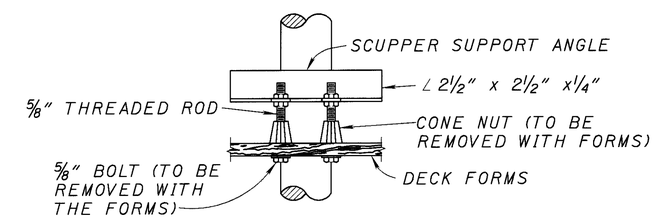

SCUPPER SUPPORT DETAIL

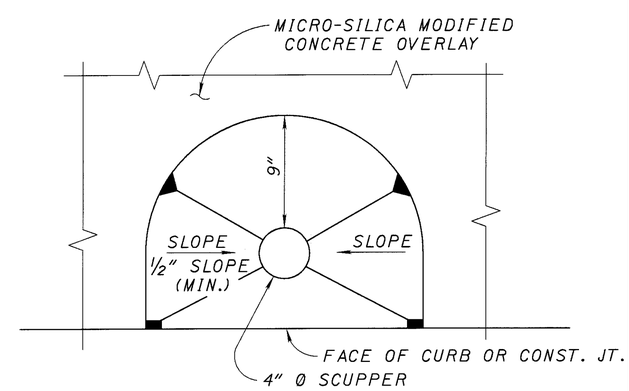

SLOPE DETAILS FOR EXISTING AND PROPOSED SCUPPERS

DESIGN AGENCY
OHIO DEPARTMENT OF TRANSPORTATION
DISTRICT 5

REVIEWED DTF DATE 2-11-99
STRUCTURE FILE NUMBER 4504410

DRAWN DDH REVISED

DESIGNED RSD CHECKED

RE-STEEL AND SCUPPER DETAILS
BRIDGE NO. LIC-16-2038
S.R. 16 OVER 11TH STREET

LIC-16-19.72

12/16

439/547

L016207 (SCALE 2.6667) 2-11-99

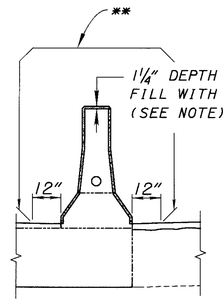

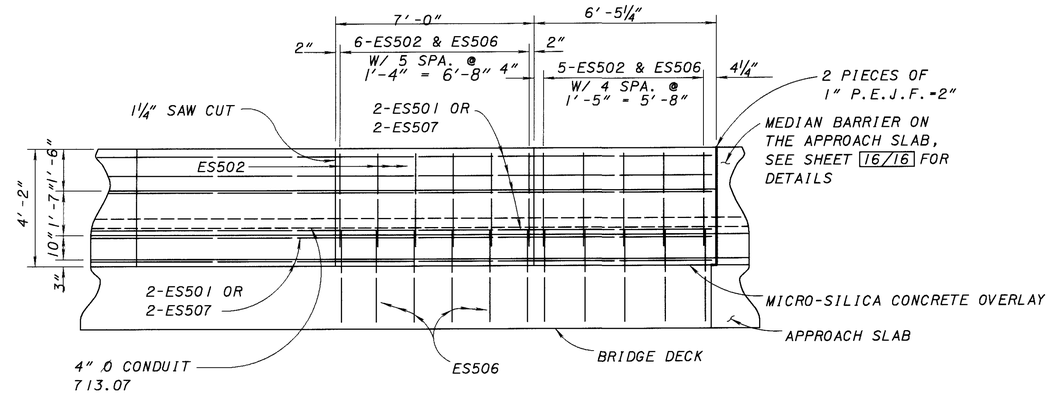

TYPICAL 50" MEDIAN BARRIER PARAPET PANEL DETAILS

** SEALING CONCRETE SURFACES-(EPOXY-URETHANE)

● NORTH SIDE ES618 OR ES619
SOUTH SIDE ES618 OR ES620

** NORTH SIDE 2-ES501 OR 2-ES507
SOUTH SIDE 2-ES501 OR 2-ES508
(MIN. LAP FOR ES501, ES507, & ES508 IS 2'-3")

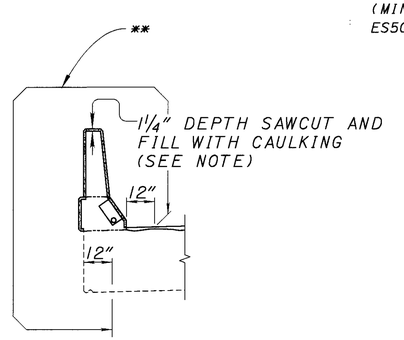

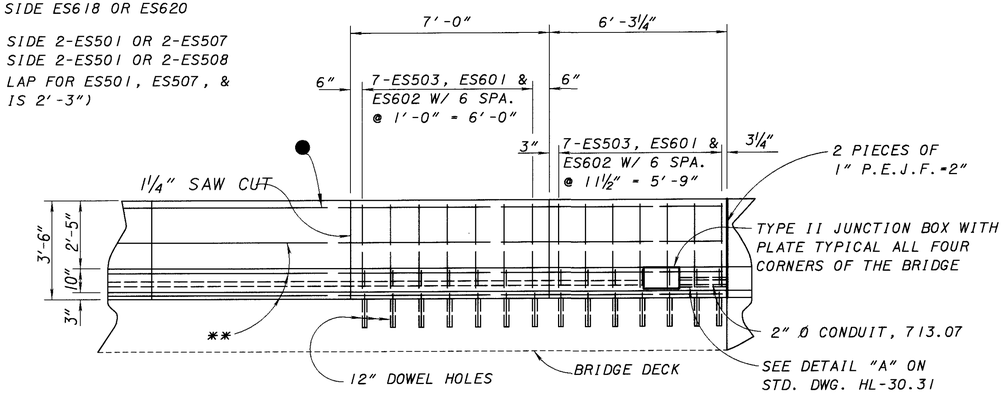

TYPICAL 42" OUTSIDE PARAPET PANEL DETAILS

NOTE:
DOWEL HOLES AND RE-STEEL TO BE INCLUDED IN ITEM 844-HIGH PERFORMANCE CONCRETE SUPERSTRUCTURE (PARAPET)

NOTE:
SEE SHEETS 10, 12 & 16 OF 16 FOR 50" MEDIAN BARRIER AND 42" OUTSIDE PARAPET CROSS SECTION WITH RE-STEEL LAYOUT.

NOTE:
SOME RE-STEEL MAY HAVE TO BE FIELD ADJUSTED SO THE TYPE II JUNCTION BOX CAN BE INSTALLED IN THE OUTSIDE PARAPET.

DESIGN AGENCY
OHIO DEPARTMENT OF TRANSPORTATION DISTRICT 5

DESIGNED	DRAWN	REVIEWED	DATE
RSD	DDH	DTF	2-11-99
CHECKED	REVISED	STRUCTURE FILE NUMBER	
		4504410	

PARAPET DETAILS
BRIDGE NO. LIC-16-2038
S.R. 16 OVER 11TH STREET

LIC-16-19.72

13/16

440

LA162053 (SCALE 1) 2-11-99

BENDING DIAGRAMS

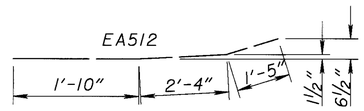

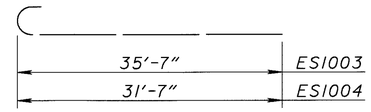

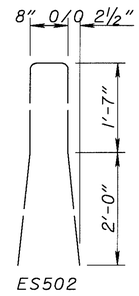

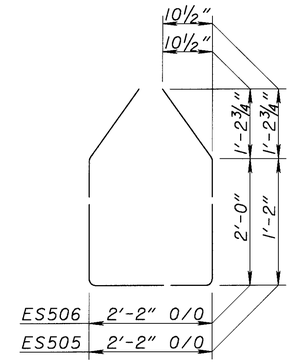

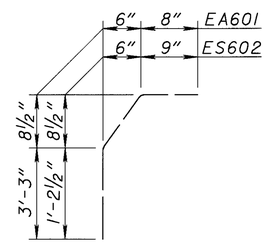

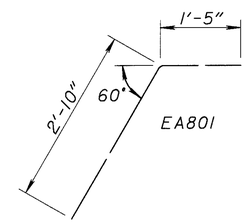

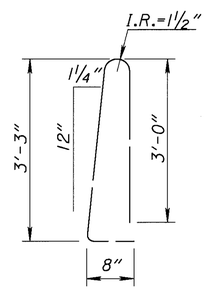

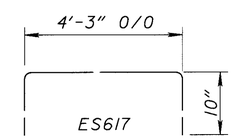

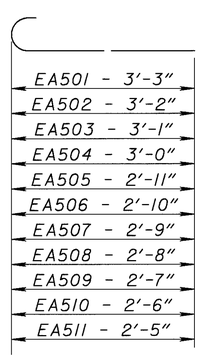

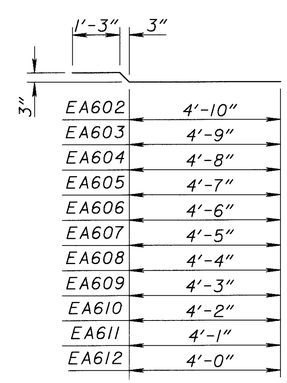

NOTE:
RE-STEEL TO BE INCLUDED IN THE APPROPRIATE CONCRETE ITEMS FOR PAYMENT.

BAR SCHEDULE

SUPERSTRUCTURE

MARK	NUMBER	LENGTH	SHAPE	WEIGHT
ES501	81	40'-0"	ST.	3,379
ES502	148	7'-7"	BT.	1,171
ES503	253	7'-1"	BT.	1,862
ES504	24	24'-6"	ST.	613
ES505	36	7'-2"	BT.	269
ES506	112	8'-10"	BT.	1,032
ES507	18	18'-4"	ST.	344
ES508	8	7'-9"	ST.	65
ES601	252	2'-0"	ST.	757
ES602	263	2'-9"	BT.	1,086
ES603	1	4'-5"	ST.	7
ES604	1	4'-4"	ST.	7
ES605	1	4'-3"	ST.	6
ES606	1	4'-2"	ST.	6
ES607	1	4'-1"	ST.	6
ES608	1	4'-0"	ST.	6
ES609	1	3'-11"	ST.	6
ES610	1	3'-10"	ST.	6
ES611	1	3'-9"	ST.	6
ES612	1	3'-8"	ST.	6
ES613	7	3'-7"	ST.	38
ES614	2	2'-4"	ST.	7
ES615	12	27'-2"	ST.	490
ES616	6	25'-2"	ST.	227
ES617	166	5'-7"	BT.	1,392
ES618	12	40'-0"	ST.	360
ES619	1	19'-3"	ST.	29
ES620	1	8'-9"	ST.	13
ES1001	3	25'-4"	ST.	327
ES1002	18	46'-2"	ST.	3,576
ES1003	4	37'-0"	BT.	637
ES1004	6	33'-0"	BT.	852
ES1005	2	35'-0"	ST.	301
ES1101	12	33'-0"	ST.	2,104
ES1102	6	19'-6"	ST.	622
ES1103	4	12'-0"	ST.	255
SUB-TOTAL				21,870

ABUTMENT

MARK	NUMBER	LENGTH	SHAPE	WEIGHT
EA501	4	3'-10"	BT.	16
EA502	4	3'-9"	BT.	16
EA503	4	3'-8"	BT.	15
EA504	4	3'-7"	BT.	15
EA505	4	3'-6"	BT.	14
EA506	4	3'-5"	BT.	14
EA507	4	3'-4"	BT.	14
EA508	4	3'-3"	BT.	14
EA509	4	3'-2"	BT.	13
EA510	4	3'-1"	BT.	13
EA511	4	3'-0"	BT.	13
EA512	8	5'-8"	BT.	47
EA513	8	5'-8"	ST.	47
EA514	16	10'-0"	ST.	167
EA515	28	13'-8"	ST.	399
EA516	2	1'-10"	ST.	4
EA601	33	4'-9"	BT.	235
EA602	3	6'-4"	BT.	29
EA603	3	6'-3"	BT.	28
EA604	3	6'-2"	BT.	28
EA605	3	6'-1"	BT.	27
EA606	3	6'-0"	BT.	27
EA607	3	5'-11"	BT.	27
EA608	3	5'-10"	BT.	26
EA609	3	5'-9"	BT.	26
EA610	3	5'-8"	BT.	26
EA611	3	5'-7"	BT.	25
EA612	24	5'-6"	BT.	223
EA802	110	4'-2"	BT.	1,224
SUB-TOTAL				2,273
TOTAL				24,643

DESIGN AGENCY
OHIO DEPARTMENT OF TRANSPORTATION DISTRICT 5

DESIGNED RSD | CHECKED | DRAWN DDH | REVIEWED DTF 2-11-99 | DATE | REVISED | STRUCTURE FILE NUMBER 4504410

BAR SCHEDULES AND BENDING DIAGRAMS
BRIDGE NO. LIC-16-2038
S.R. 16 OVER 11TH STREET

LIC-16-19.72

14/16

441/547

LQ162072 (SCALE 1) 2-11-99

*NOTE:
MECHANICAL SPLICE CONNECTORS, CURBS, HMWM SEALER AND RE-STEEL SHALL BE INCLUDED FOR PAYMENT WITH ITEM 611 REINFORCED CONCRETE APPROACH SLABS (T=15"), AS PER PLAN FOR PAYMENT.

NOTE: FOR EA801 BENDING DIAGRAMS AND QUANTITIES, SEE SHEET 14/16

NOTE: FOR ADDITIONAL DETAILS SEE STD. DWG. AS-1-81.

BAR SCHEDULE					
MARK	NO. REQD.	LENGTH	SHAPE	WEIGHT	
EAS401	24	3'-2"	BT.	51	*
EAS501	110	24'-6"	ST.	2,811	*
EAS504	228	21'-4"	ST.	5,093	*
EAS505	228	20'-0"	ST.	4,756	*
EAS511	3	10'-6"	ST.	33	*
EAS1001	278	25'-11"	BT.	31,002	*
TOTAL (2 APPROACH SLABS)				43,746	*

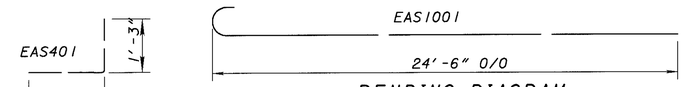

BENDING DIAGRAM

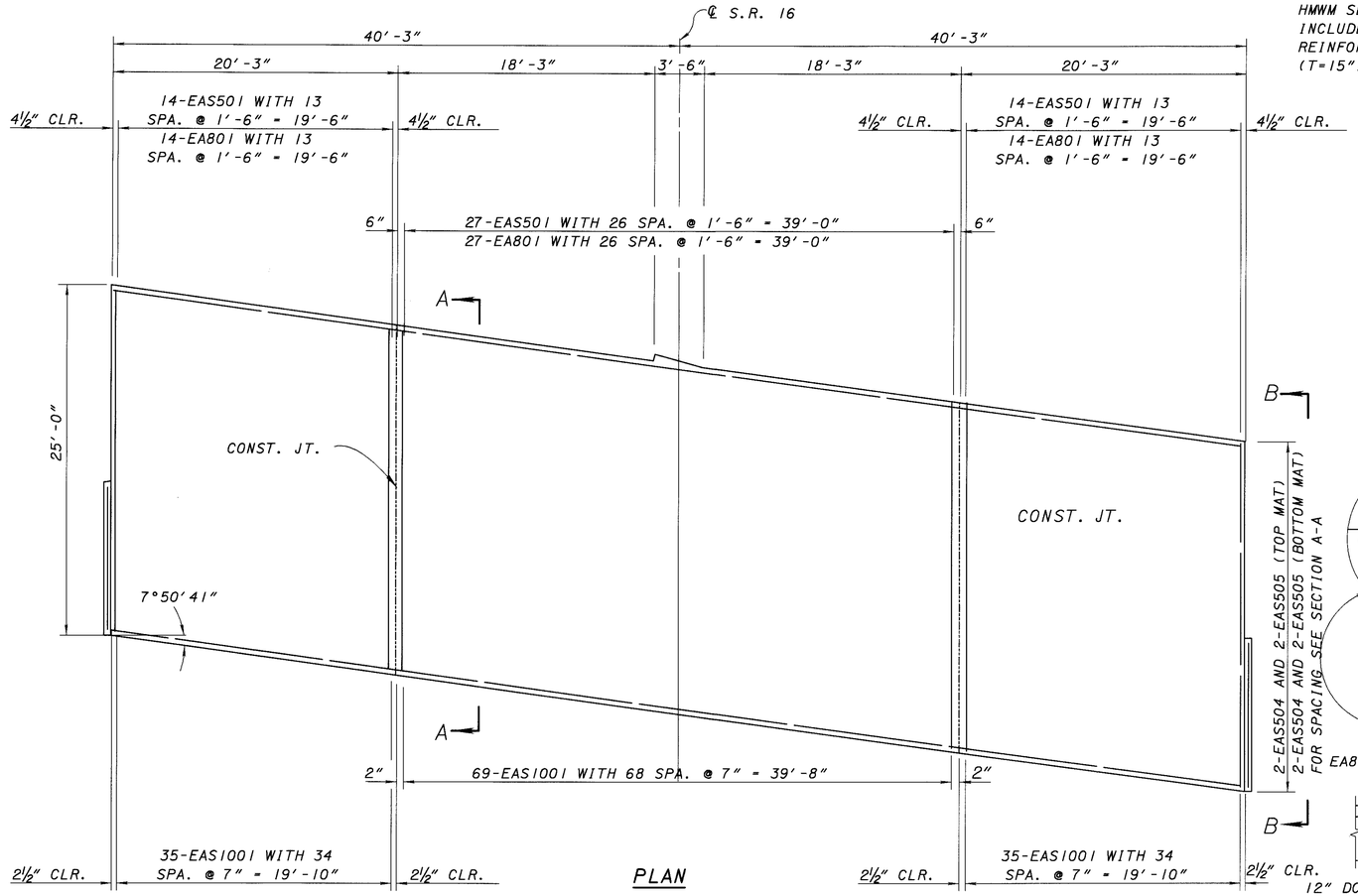

PLAN

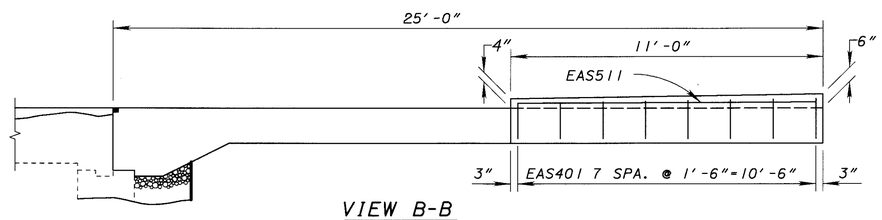

VIEW B-B

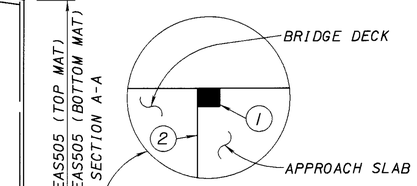

NOTE 1:
PREFORMED ELASTOMERIC JOINT SEALER 705.11 (1¼" FOR ½" JOINT) DEPRESSED ⅛" BELOW ROADWAY, PLACED IN ½"x2¼" GROOVE.

NOTE 2:
TYPE A WATERPROOFING SHALL NOT EXTEND ABOVE THE BOTTOM OF THE GROOVE INTO WHICH THE PREFORMED ELASTOMERIC JOINT SEALER IS TO BE PLACED. IT SHALL BE APPLIED TO THE ENTIRE AREA OF THE ABUTMENT OR SUPERSTRUCTURE WHICH COMES INTO CONTACT WITH THE APPROACH SLAB.

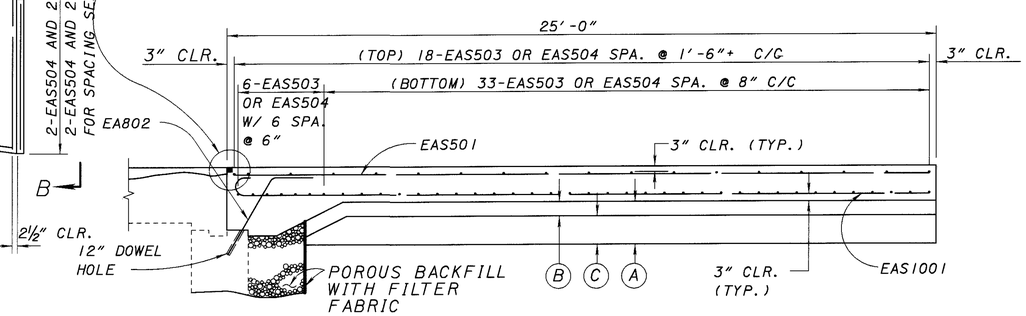

SECTION A-A

LAP LENGTH
NO. 5 BAR 2'-3"

(A) 1'-7" EXCAVATION NOT INCLUDING EMBANKMENT CONSTRUCTION (UNDER PROPOSED APPROACH SLAB) (AS-1-81)

(B) 0'-6" PROPOSED AGGREGATE BASE

(C) 1'-0" PROPOSED EMBANKMENT

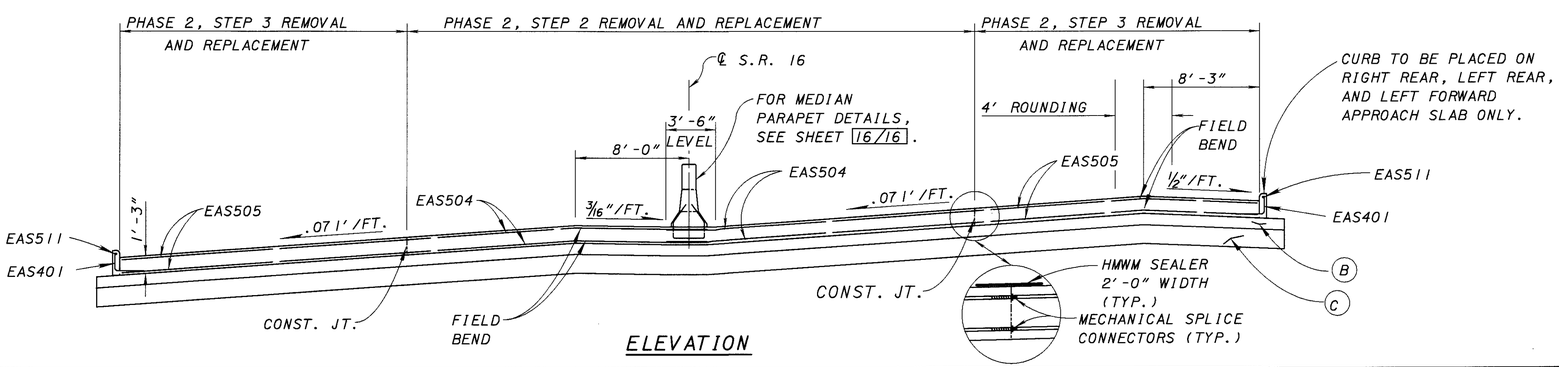

ELEVATION

ITEM	DESCRIPTION	QUANTITY	UNIT
203	EXCAVATION NOT INCLUDING EMBANKMENT CONSTRUCTION	279	CU. YD.
203	EMBANKMENT	136	CU. YD.
203	SUBGRADE COMPACTION	408	SQ. YD.
304	AGGREGATE BASE	68	CU. YD.
518	POROUS BACKFILL WITH FILTER FABRIC	LUMP	CU. YD.
611	REINFORCED CONCRETE APPROACH SLAB (T=15"), AS PER PLAN	447	SQ. YD.

QUANTITIES CARRIED TO SHEET 2/16

DESIGN AGENCY: OHIO DEPARTMENT OF TRANSPORTATION DISTRICT 5

DATE: 2-11-99 | REVIEWED: DTF | STRUCTURE FILE NUMBER: 4504410

DRAWN: DDH | REVISED:

DESIGNED: RSD | CHECKED: CZ

APPROACH SLAB DETAILS
BRIDGE NO. LIC-16-2038
S.R. 16 OVER 11TH STREET

LIC-16-19.72

15/16

442/547

L0162028 (SCALE 1) 2-11-99

PARAPETS INCLUDED FOR PAYMENT
WITH ITEM 844- HIGH PERFORMANCE
CONMCRETE SUPERSTRUCTURE (PARAPET)

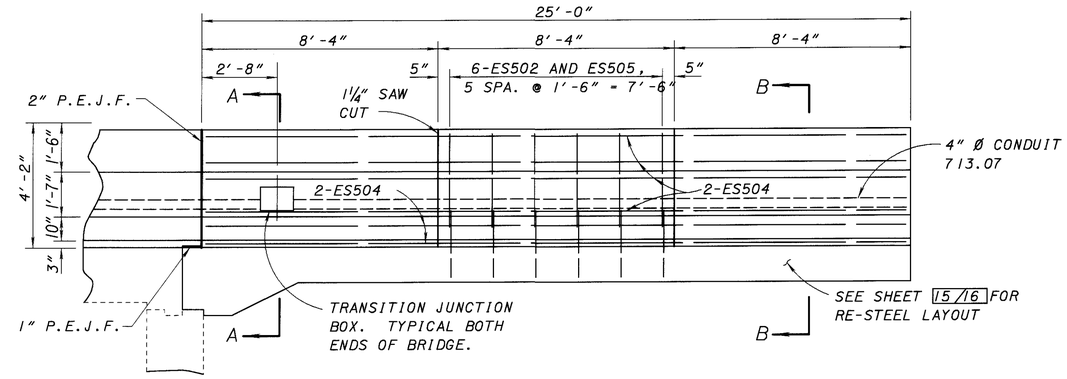

TYPICAL 50" MEDIAN BARRIER ON APPROACH SLAB DETAILS

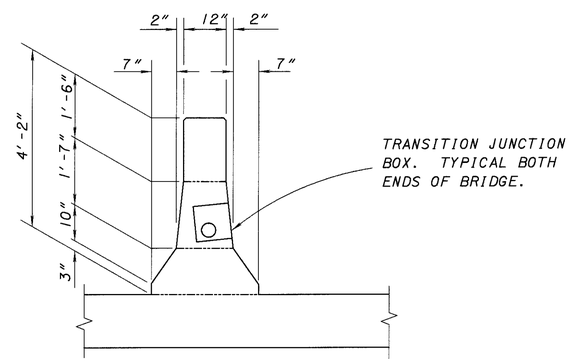

SECTION A-A

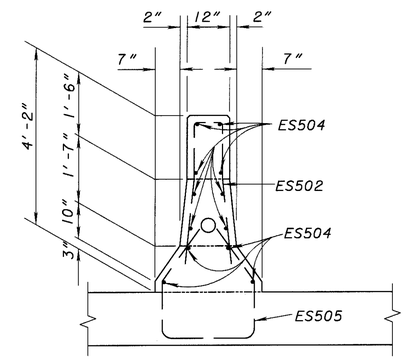

SECTION B-B

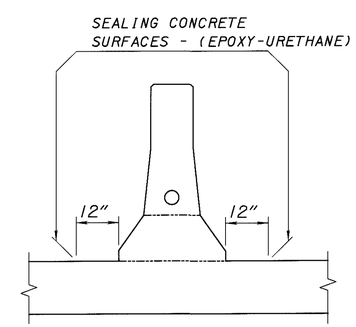

DESIGN AGENCY
OHIO DEPARTMENT OF TRANSPORTATION DISTRICT 5

DESIGNED RSD | DRAWN DDH | REVIEWED DTF 2-11-99 | DATE | STRUCTURE FILE NUMBER 4504410

CHECKED | REVISED

MEDIAN BARRIER ON APPROACH SLAB DETAILS
BRIDGE NO. LIC-16-2038
S.R. 16 OVER 11TH STREET

LIC-16-19.72

16/16

443/547

L0162029 (SCALE 1) 2-11-99

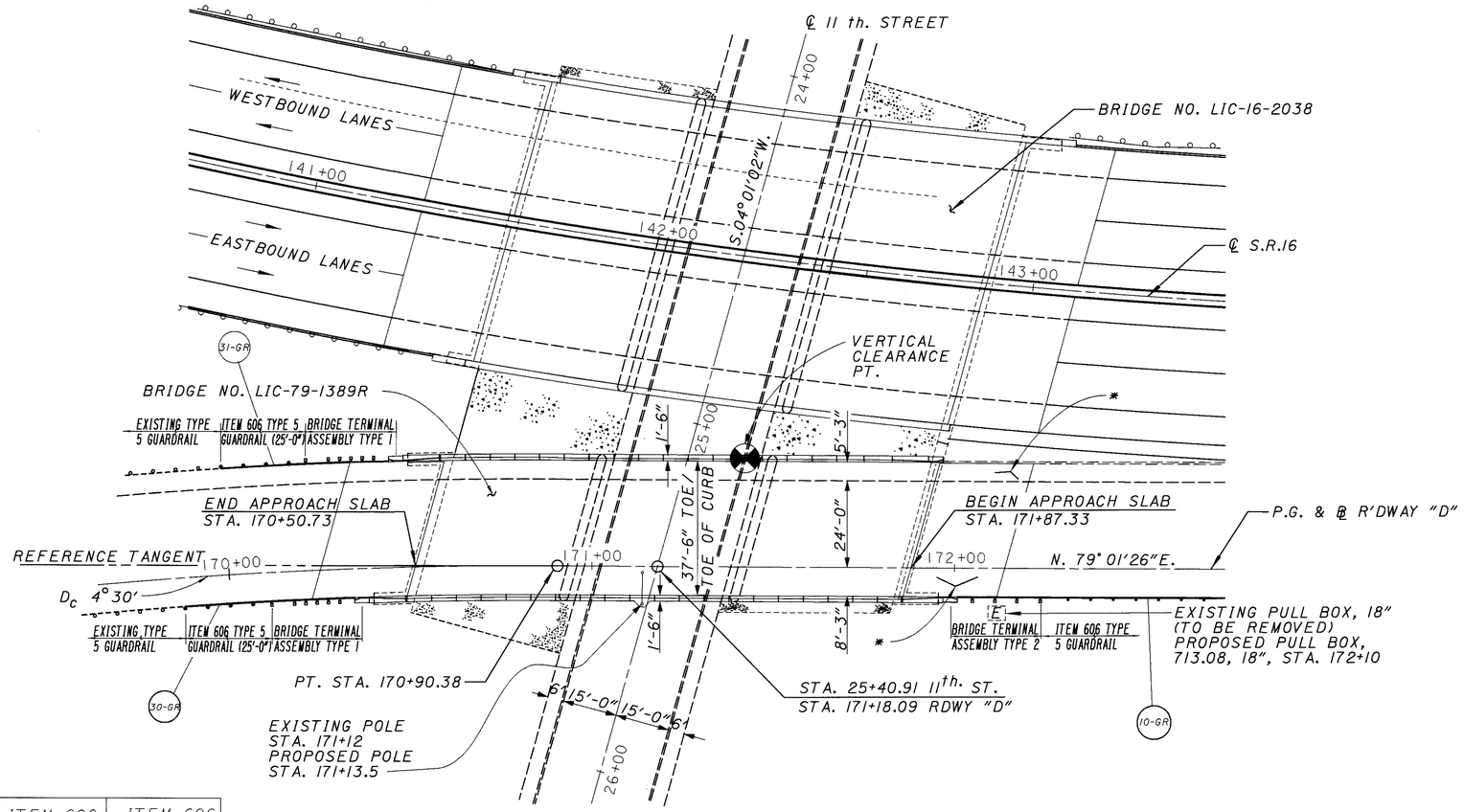

* PAVEMENT REMOVED WITH ITEM 203 EXCAVATION NOT INCLUDING EMBANKMENT CONSTRUCTION AS PER 202.05

MARK	ITEM 202 GUARDRAIL REMOVED	ITEM 202 BRIDGE TERMINAL ASSEMBLY REMOVED	ITEM 606 GUARDRAIL TYPE-5	ITEM 606 BRIDGE TERMINAL ASSEMBLY TYPE-1
	LIN. FT.	EACH	LIN. FT.	EACH
10-GR	(SEE	SHEET 81)		
30-GR	25	1	25	1
31-GR	25	1	25	1
TOTAL	50	2	50	2

VERTICAL CURVE DATA

P.V.I STA. 171+00.00
ELEV. 855.80
V.C. 400.00'
G_1 = +2.32%
G_2 = -1.08%

HORIZONTAL CURVE DATA

P.I. STA. 169+90.584
Δ_c = 09°-00'-00" RT.
D_c = 04°-30'-00"
L_c = 200.00'
R_c = 1273.24'

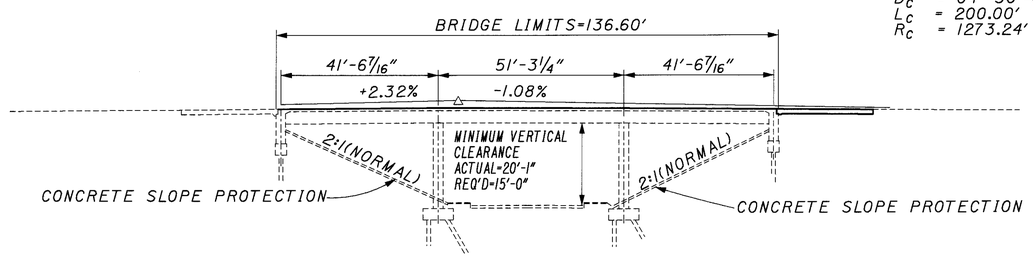

PROFILE ALONG ℄ ROADWAY "D"

EXISTING STRUCTURE

TYPE: PRESTRESSED CONCRETE I BEAMS W/ REINFORCED CONCRETE SLAB AND SUBSTRUCTURES

SPAN: 41'-6 7/16", 51'-3 1/4", 41'-6 7/16" MEASURED ALONG THE REFERENCE TANGENT

ROADWAY: 38'-6" F/F OF PARAPETS

LOADING: HS 20-44

SKEW: 14°-59'-36" L.F.

WEARING SURFACE: 1" MONOLITHIC CONCRETE

APPROACH SLAB: AS-1-67 (25' LONG) FORWARD
AS-1-81 (25' LONG) REAR

ALINGMENT: 4°-30' & TANGENT

SUPERELEVATION: VARIABLE

REHABILITATING STRUCTURE

ROADWAY: 37'-6" TOE/TOE OF CURB

BRIDGE RAILING: DEFLECTOR PARAPET TYPE

WEARING SURFACE: 1 1/4" MICRO-SILICA MODIFIED CONCRETE OVERLAY(1 1/4" HYDRODEMOLITION)

APPROACH SLAB: AS-1-81 (25' LONG) (FORWARD ONLY)

DESIGN AGENCY: OHIO DEPARTMENT OF TRANSPORTATION DISTRICT 5

DESIGNED RSD | CHECKED DTF | DRAWN RSD | REVISED | REVIEWED CLZ | DATE 2-11-99 | STRUCTURE FILE NUMBER 4504429

GENERAL PLAN & ELEVATION
BRIDGE NO. LIC-79-1379R
S.R. 79 ROADWAY D OVER 11TH STREET

LIC-16-19.72

1/14

444/547

L079.dgn (SCALE 20) 2-11-99

ITEM	ITEM EXT.	GRAND TOTAL	UNIT	DESCRIPTION	SUPER.	ABUT.	PIERS	GENERAL
202	11300	34	CU YD	PORTIONS OF STRUCTURE REMOVED, SUPERSTRUCTURE	34	--	--	--
202	11300	7	CU YD	PORTIONS OF STRUCTURE REMOVED, ABUTMENT	--	7	--	--
202	22901	67	SQ YD	APPROACH SLAB REMOVED, AS PER PLAN	--	--	--	67
202	38000	50	LIN FT	GUARDRAIL REMOVED	--	--	--	50
202	47000	2	EACH	BRIDGE TERMINAL ASSEMBLY REMOVED	--	--	--	2
203	12000	65	CU YD	EXCAVATION NOT INCLUDING EMBANKMENT CONSTRUCTION	--	--	--	65
203	20000	32	CU YD	EMBANKMENT	--	--	--	32
203	50000	96	SQ YD	SUBGRADE COMPACTION	--	--	--	96
304	20000	16	CU YD	AGGREGATE BASE	--	--	--	68
503	21300	LUMP		UNCLASSIFIED EXCAVATION	--	--	--	LUMP
512	33000	18	SQ YD	TYPE 2 WATERPROOFING	--	18	--	--
SPECIAL	51267510	386	SQ YD	SEALING OF CONCRETE SURFACES (EPOXY - URETHANE)	327	59	--	--
516	10000	39	LIN FT	PREFORMED ELASTOMERIC COMPRESSION JOINT SEAL (705.11) (1 1/4")	39	--	--	--
518	21230	LUMP		POROUS BACKFILL WITH FILTER FABRIC	--	LUMP	--	--
518	40000	41	LIN FT	6" PERFORATED CORRUGATED PLASTIC PIPE (SS 944)	--	41	--	--
603	00407	30	LIN FT	4" CONDUIT, TYPE F 707.17, NON-PERFORATED, ASTM 3034, SDR35, AS PER PLAN	--	30	--	--
606	13000	50	LIN FT	GUARDRAIL, TYPE 5	--	--	--	50
606	35000	2	EACH	BRIDGE TERMINAL ASSEMBLY, TYPE 1	--	--	--	2
611	25001	103	SQ YD	REINFORCED CONCRETE APPROACH SLAB (T=15"), AS PER PLAN	--	--	--	103
625	10600	4	EACH	LIGHT POLE ANCHOR L-BOLTS	4	--	--	--
625	25402	335	LIN FT	CONDUIT, 2", 713.07	289	46	--	--
625	29002	14	LIN FT	TRENCH, 24" DEEP	--	--	--	14
625	29920	5	EACH	STRUCTURE JUNCTION BOX, TYPE II WITH COVER PLATE	5	--	--	--
625	33000	1	EACH	STRUCTURE GROUNDING SYSTEM	1	--	--	--
844	48020	44	CU YD	HIGH PERFORMANCE CONCRETE, SUPERSTRUCTURE (PARAPETS) MIX 2	36	8	--	--
844	49000	LUMP		HIGH PERFORMANCE CONCRETE TRIAL MIX				
848	10000	569	SQ YD	MICRO-SILICA MODIFIED CONCRETE OVERLAY, USING HYDRODEMOLITION (T=1 1/4")	569	--	--	--
848	30000	10	CU YD	MICRO-SILICA MODIFIED CONCRETE OVERLAY (VARIABLE THICKNESS), MATERIAL ONLY	10	--	--	--
848	50100	LUMP		TEST SLAB	LUMP	--	--	--
848	20000	569	SQ YD	SURFACE PREPARATION USING HYDRODEMOLITION	569			
848	50000	55	SQ YD	HAND CHIPPING	55			

QUANTITIES CARRIED TO SHEETS 405A AND 405B

CALCULATED D.D.H.
CHECKED R.S.D.

BRIDGE SUMMARY
BRIDGE NO. LIC-79-1379R
S.R. 79 ROADWAY 'D' OVER 11TH STREET

LIC-16-19.72

L0160001.GGS 2/10/99 SCALE=1

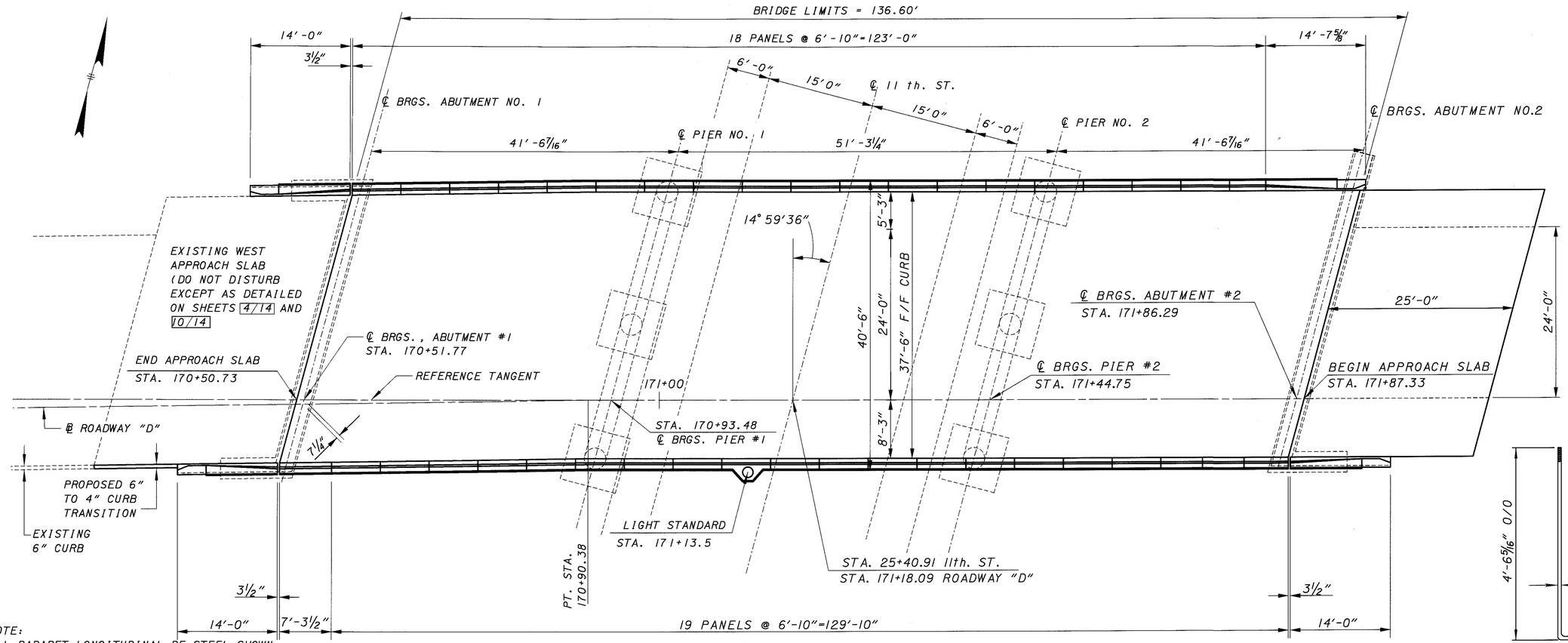

GENERAL PLAN

NOTE:
ALL PARAPET LONGITUDINAL RE-STEEL SHOWN BELOW ARE ES505 BARS. FOR ADDITIONAL PARAPET RE-STEEL LOCATIONS, LENGTHS, AND BAR SIZES, SEE SHEETS 11/14 AND 12/14

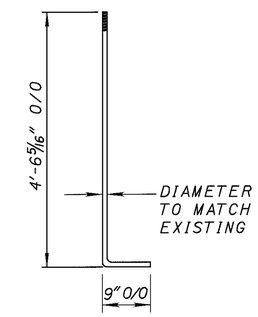

ANCHOR BOLT DETAIL

A: GROUNDING BUSHING FOR 1½" Ø CONDUIT
A1: GROUNDING BUSHING & LOCKNUT FOR 1½" Ø CONDUIT
B: 1½" Ø CONDUIT 713.07
C: TYPE II JUNCTION BOX
D: GROUNDING BUSHING FOR 2" Ø CONDUIT, INCLUDING LOCKNUT
E: 2" Ø CONDUIT 713.07
F: 2" Ø CONDUIT DRAIN 713.07

NOTE: FOR MORE DETAILS SEE STD. DWGS. HL-10.11, HL-10.12, HL-10.13, HL-20.14 AND HL-50.21

NOTE: REMOVALS OF JUNCTION BOXES, WIRING, ETC. AT PILASTER LOCATIONS SHALL BE INCLUDED WITH ITEM 202-PORTIONS OF STRUCTURE REMOVED, SUPERSTRUCTURE.

NOTE: THE TOP OF THE CONCRETE BARRIER SHALL BE FLAT, SMOOTH, AND LEVEL TO ELIMINATE NEED FOR LIGHT POLE SHIMS. GRIND SURFACE, IF REQUIRED, TO MAKE CONCRETE LEVEL.

NOTE: JUNCTION BOXES SHALL CONFORM TO 713.10, EXCEPT THAT GALVANIZED STEEL PLATE COVERS SHALL CONFORM TO ASTM A-242 OR A-36.

NOTE: CONSTRUCTION SHALL CONFORM TO REQUIREMENTS OF 511, 622 AND 625

NOTE: FOR STRUCTURE GROUNDING SEE STD. DWG. HL-50.21

NOTE: THE UNIT PRICE BID FOR "ITEM 625- STRUCTURE JUNCTION BOX, TYPE II WITH COVER PLATE" SHALL BE FULL COMPENSATION FOR FURNISHING AND PLACING THE TYPE II JUNCTION BOX, MODIFIED 1½" DIA. CONDUIT, GROUNDING BUSHINGS, LOCKNUTS, AND ALL LABOR, MATERIAL, EQUIPMENT, AND INCIDENTALS NECESSARY TO COMPLETE THE WORK AS SPECIFIED

NOTE: THE UNIT PRICE BID FOR "ITEM 625-CONDUIT, 2", 713.07" SHALL BE FULL COMPENSATION FOR FURNISHING AND PLACING THE 2" CONDUIT, 2" CONDUIT DRAIN AND ALL LABOR, MATERIAL, EQUIPMENT, AND INCIDENTALS NECESSARY TO COMPLETE THE WORK AS SPECIFIED

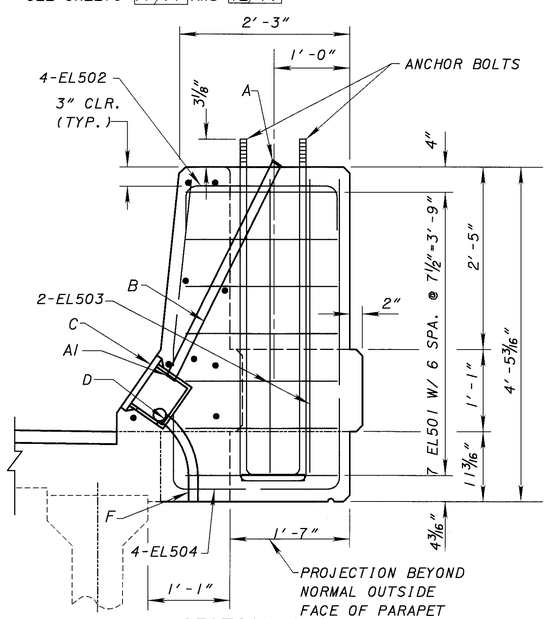

SECTION A-A

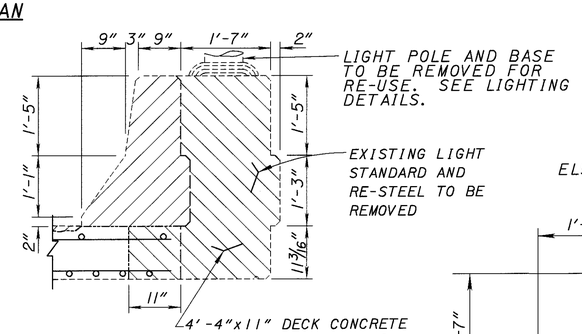

SECTION A-A

PARAPET REMOVALS

LIGHT STANDARD REMOVALS

NOTE:
RE-STEEL TO BE INCLUDED FOR PAYMENT WITH ITEM 844-HIGH PERFORMANCE CONCRETE SUPERSTRUCTURE (PARAPET)

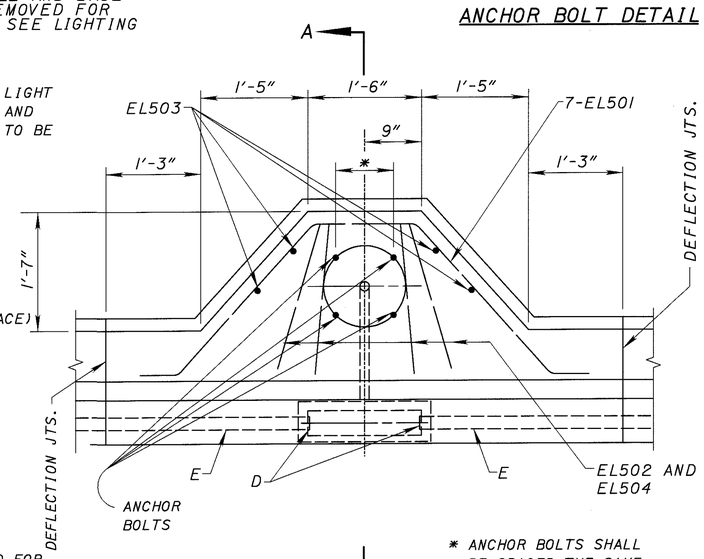

PLAN

* ANCHOR BOLTS SHALL BE SPACED THE SAME AS THE EXISTING ANCHOR BOLTS

DESIGN AGENCY:	OHIO DEPARTMENT OF TRANSPORTATION DISTRICT 5
DESIGNED RSD / CHECKED DTF	DRAWN RSD / REVISED
REVIEWED CLZ 2-11-99	DATE
STRUCTURE FILE NUMBER 4504429	

GENERAL PLAN
BRIDGE NO. LIC-79-1379R
S.R.79 ROADWAY D OVER 11TH STREET

LIC-16-19.72

3/14

446/547

L07942 (SCALE 8) 2-11-99

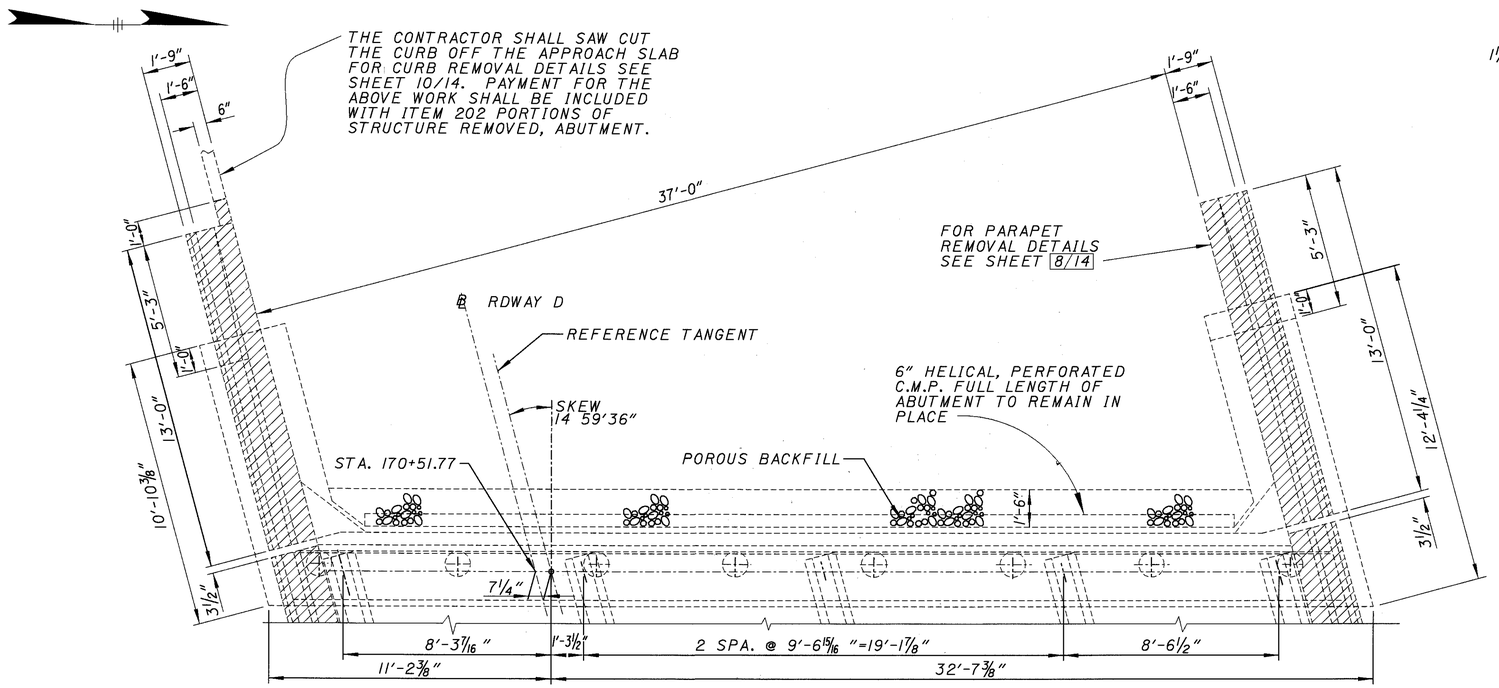

PLAN

REMOVALS

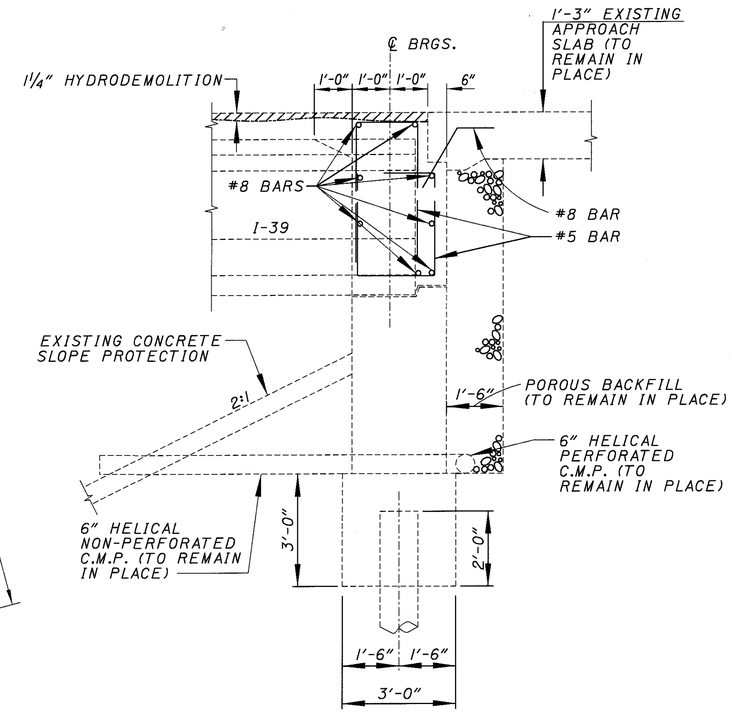

SECTION B-B

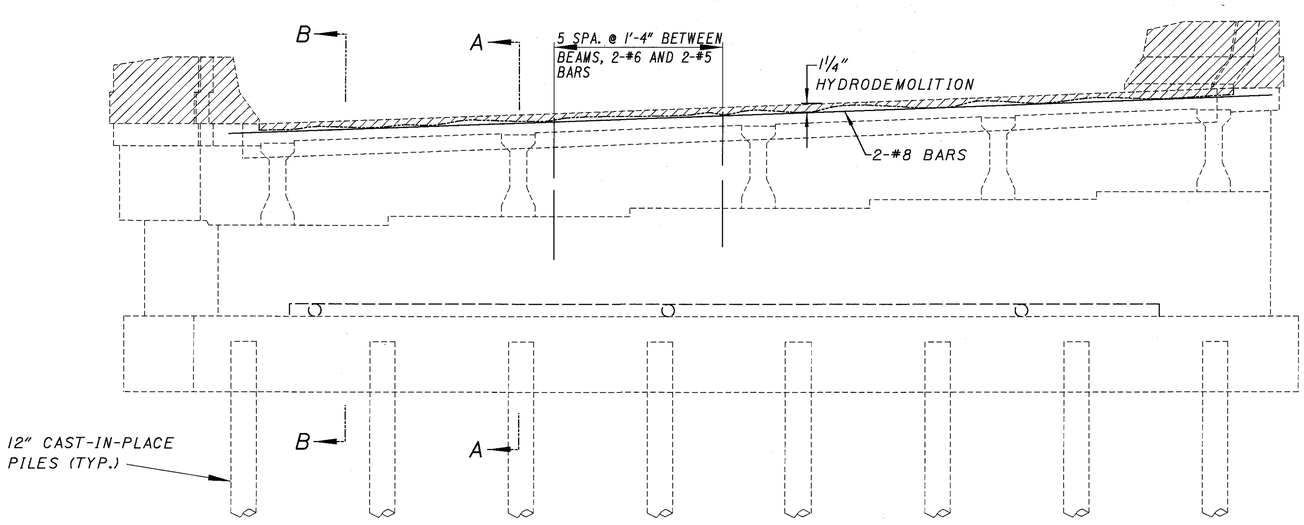

ELEVATION

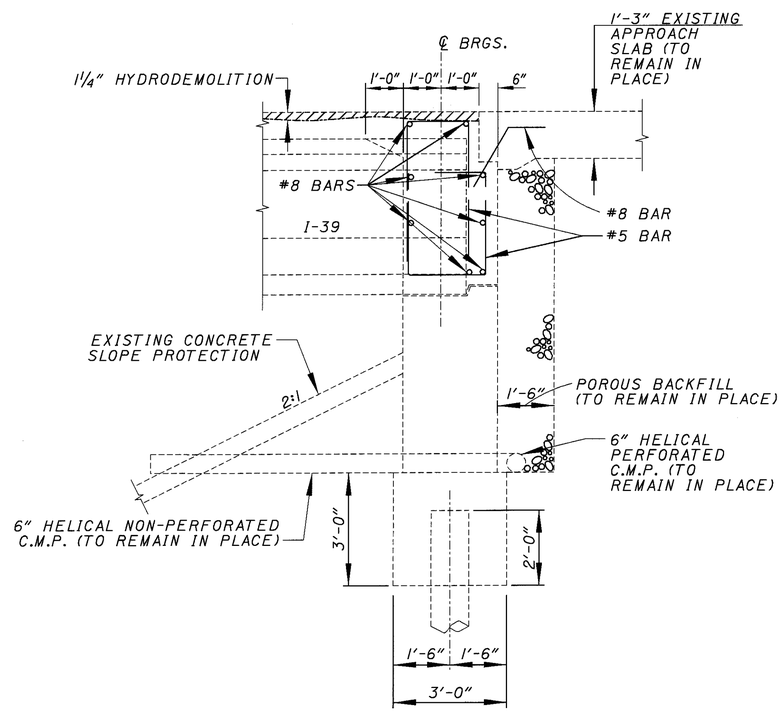

SECTION A-A

L07931(SCALE 3) 2-11-99

DESIGN AGENCY: OHIO DEPARTMENT OF TRANSPORTATION DISTRICT 5

REVIEWED CLZ | DATE 2-11-99 | STRUCTURE FILE NUMBER 4504429

DRAWN RSD | REVISED

DESIGNED RSD | CHECKED DTF

EXISTING REAR ABUTMENT (REMOVALS)
BRIDGE NO. LIC-79-1379R
S.R.79 ROADWAY D OVER 11TH STREET

LIC-16-19.72

4/14

447/547

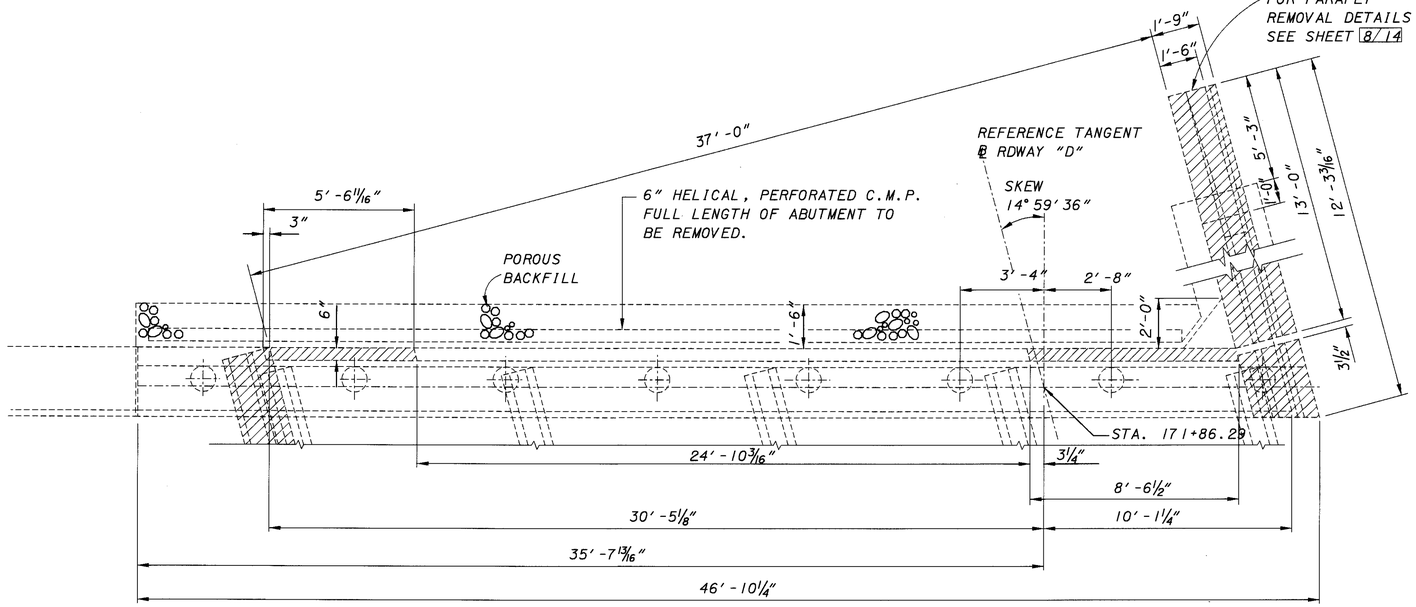

PLAN

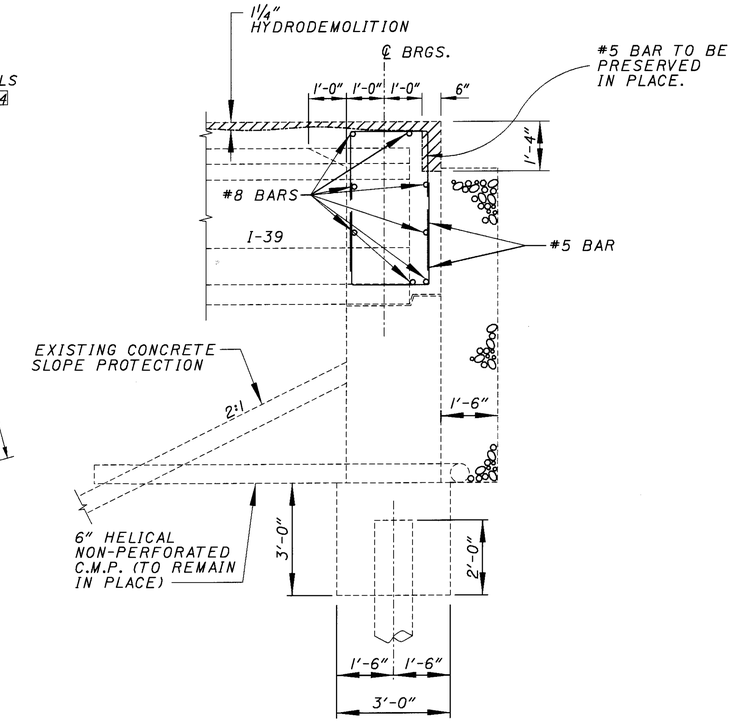

SECTION B-B

CONCRETE REMOVALS

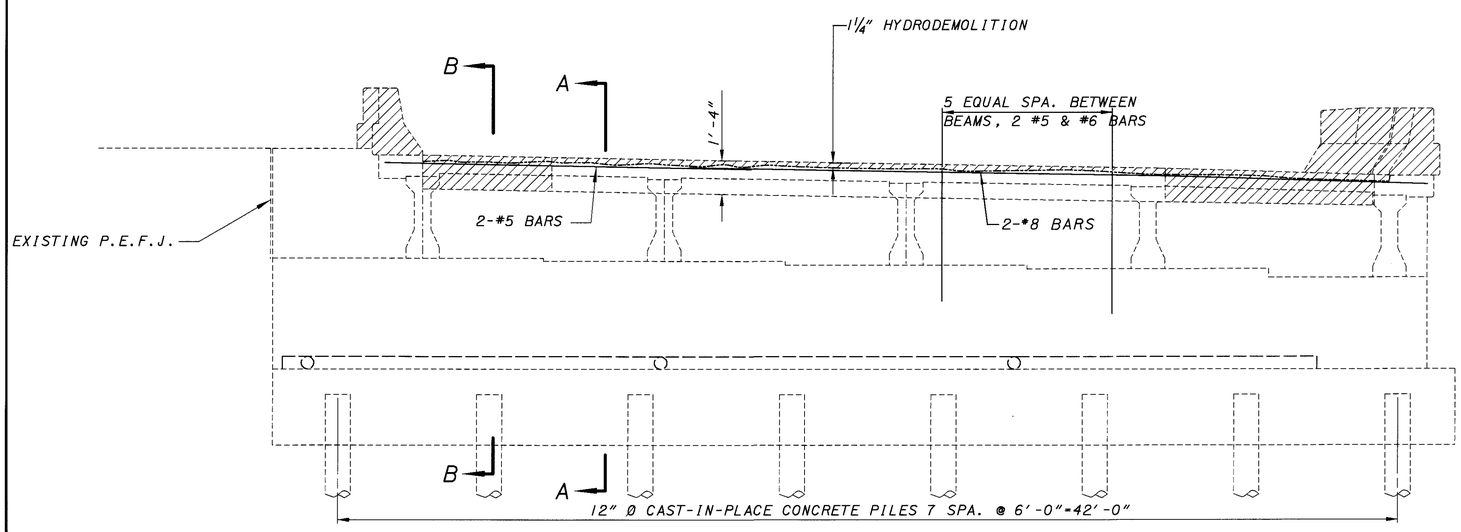

ELEVATION

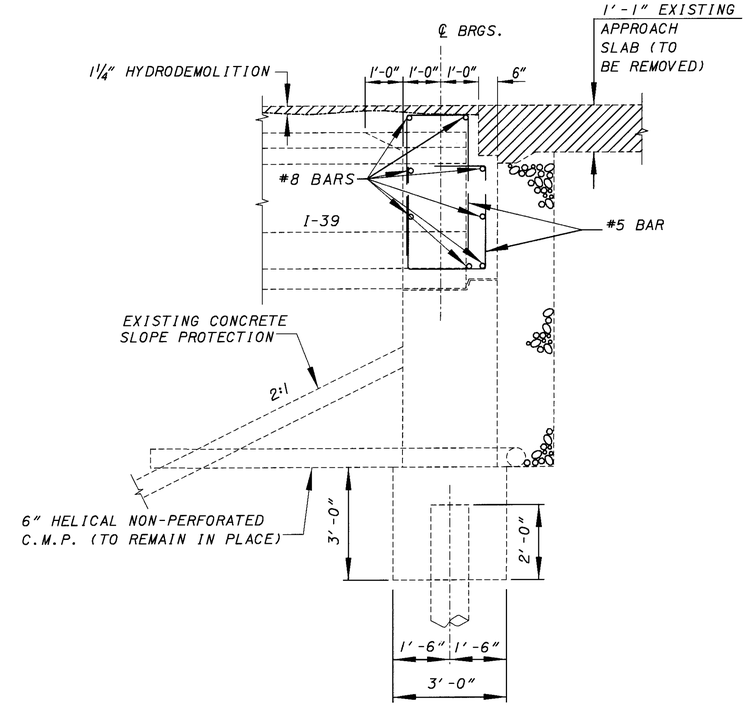

SECTION A-A

DESIGN AGENCY	OHIO DEPARTMENT OF TRANSPORTATION DISTRICT 5
REVIEWED CLZ	DATE 2-11-99
STRUCTURE FILE NUMBER	4504429
DRAWN RSD	REVISED
DESIGNED RSD	CHECKED DTF

EXISTING FORWARD ABUTMENT (REMOVALS)
BRIDGE NO. LIC-79-1379R
S.R.79 ROADWAY D OVER 11TH STREET

LIC-16-19.72

5/14

448/547

L07931A (SCALE 3) 2-11-99

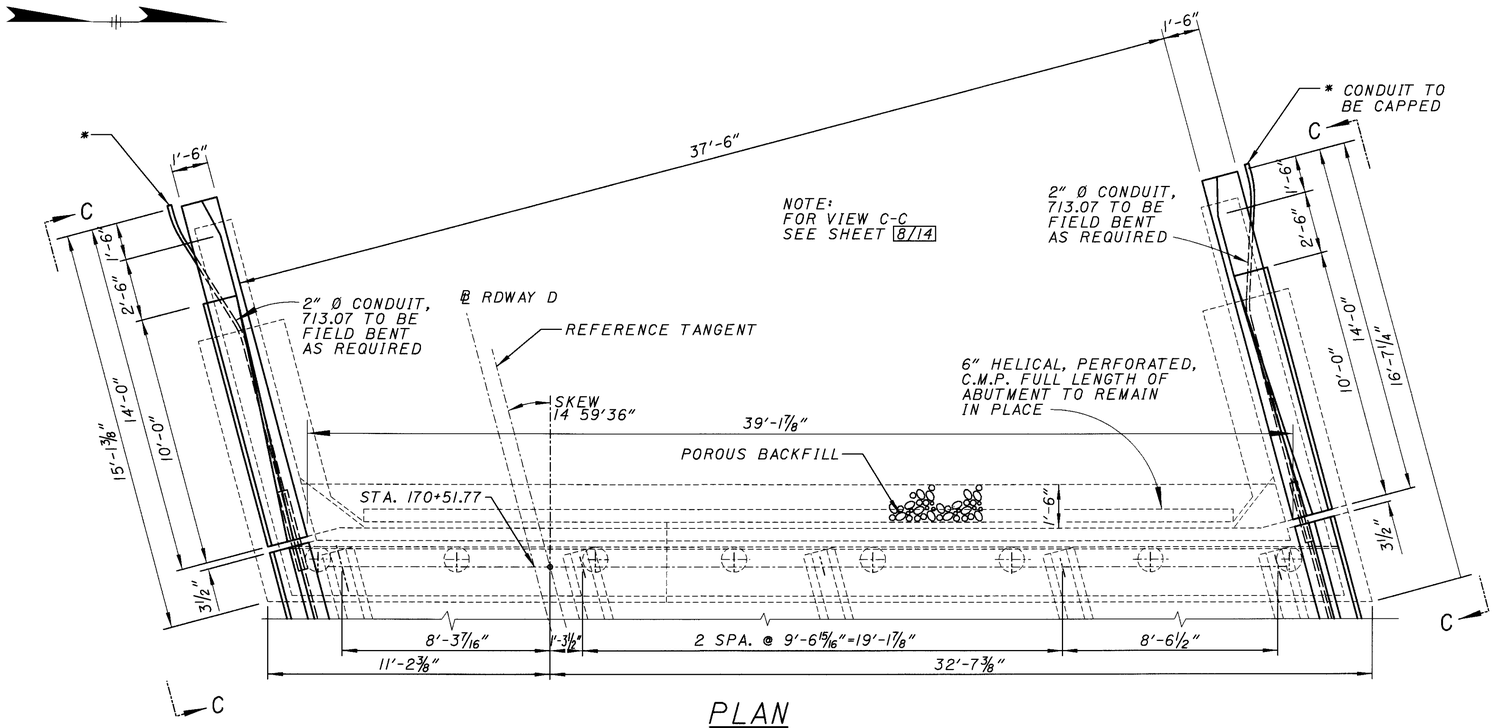

PLAN

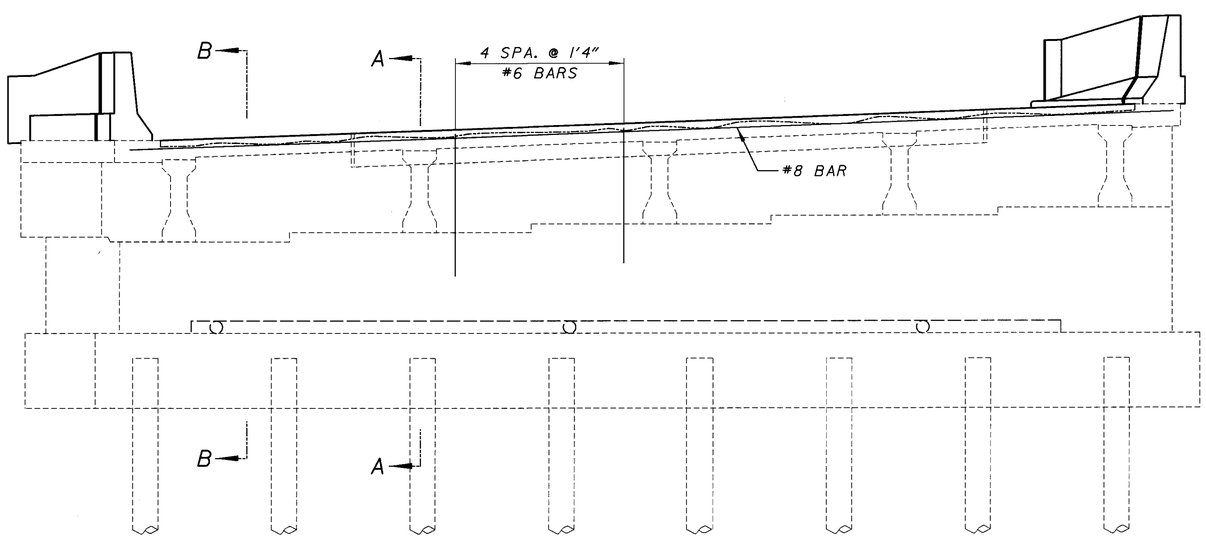

ELEVATION

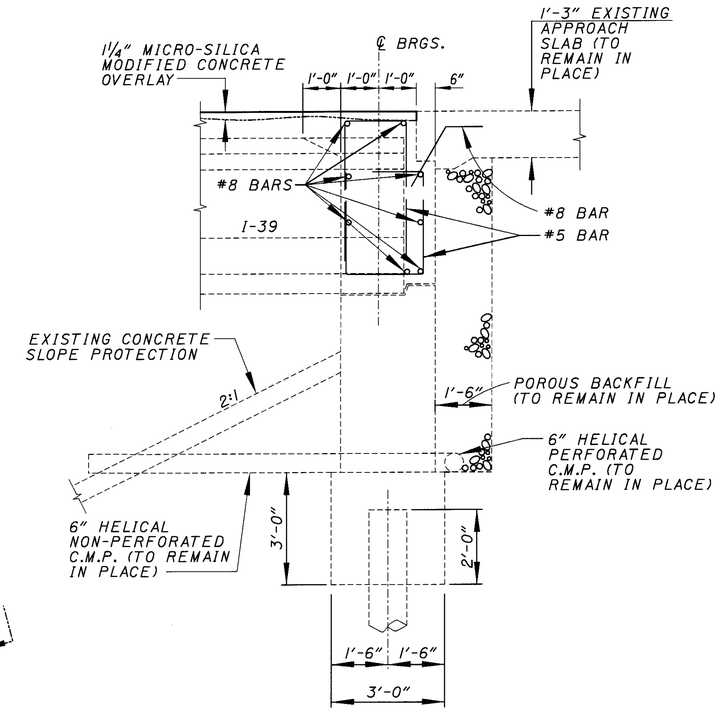

SECTION B-B

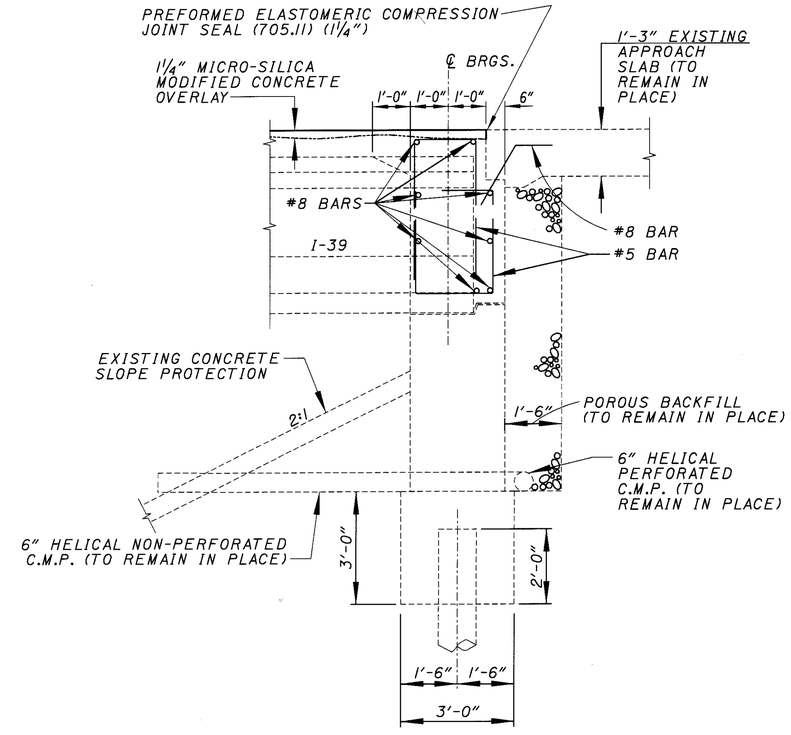

SECTION A-A

DESIGN AGENCY: OHIO DEPARTMENT OF TRANSPORTATION DISTRICT 5

DESIGNED	DRAWN	REVIEWED	DATE
RSD	RSD	CLZ	2-12-99
CHECKED	REVISED	STRUCTURE FILE NUMBER	
DTF		4504429	

PROPOSED REAR ABUTMENT
BRIDGE NO. LIC-79-1379R
S.R.79 ROADWAY 'D' OVER 11TH STREET

LIC-16-19.72

6/14

449/547

L07932 (SCALE 3) 2-12-99

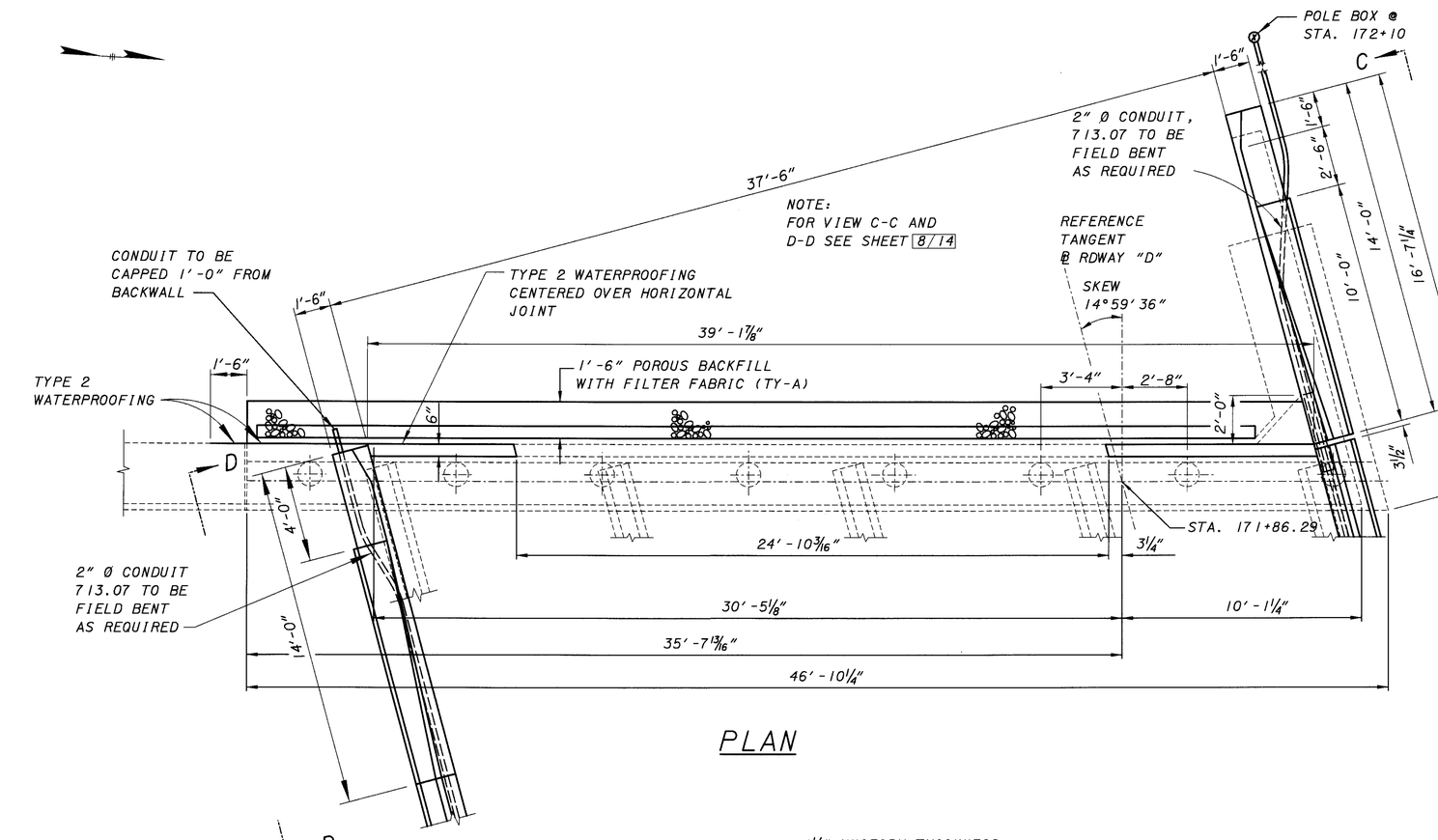

PLAN

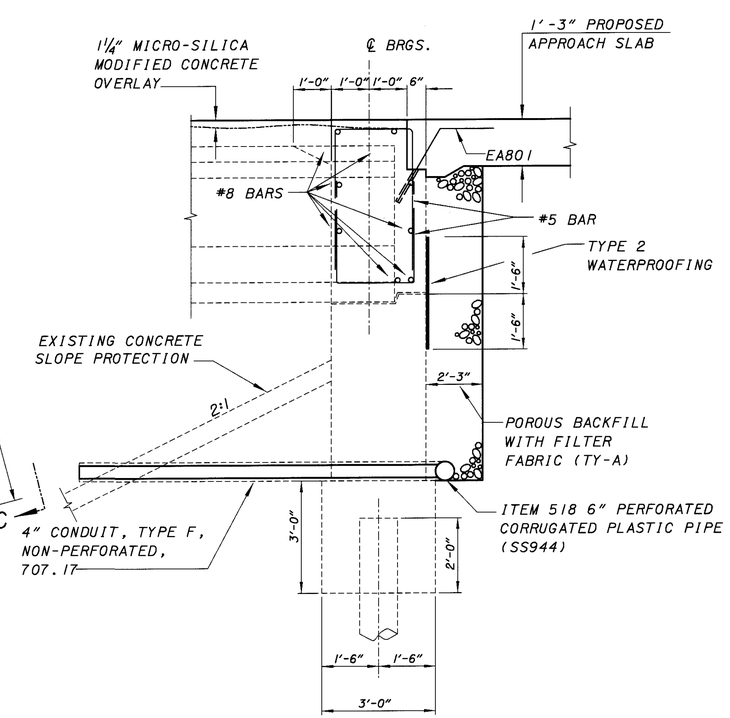

SECTION B-B

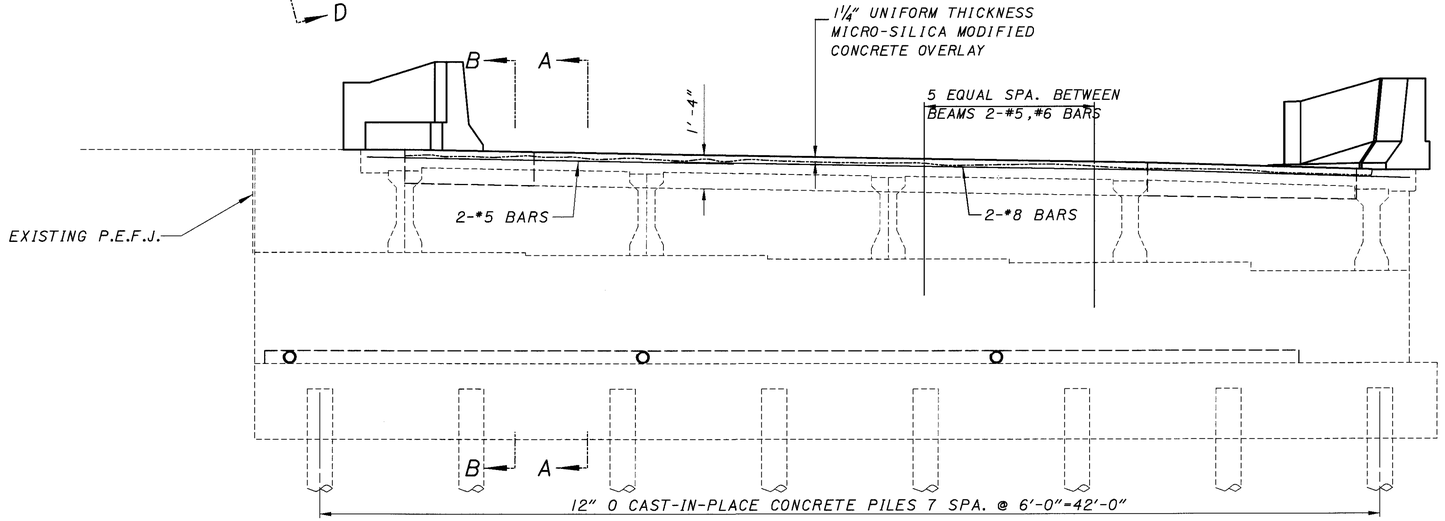

ELEVATION

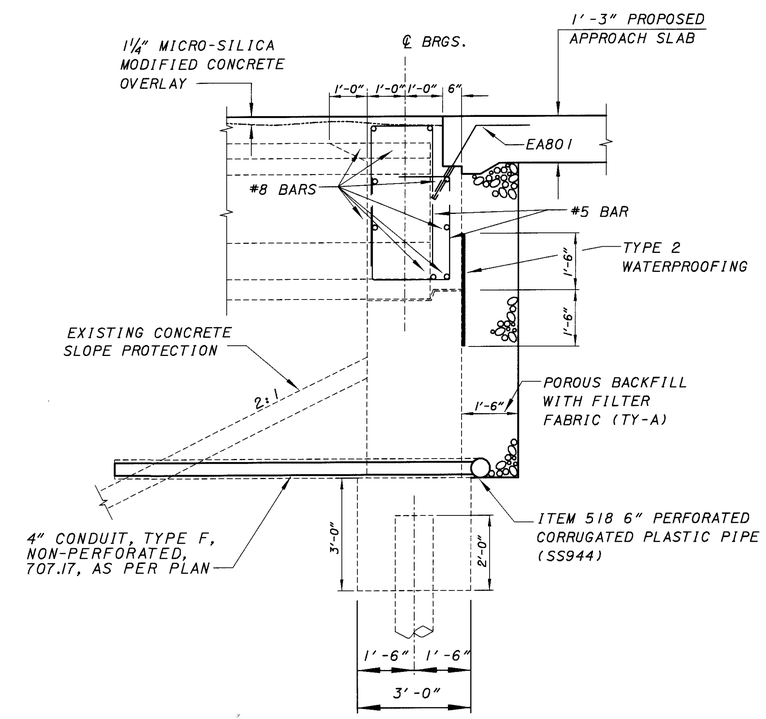

SECTION A-A

DESIGN AGENCY	OHIO DEPARTMENT OF TRANSPORTATION DISTRICT 5
REVIEWED CLZ	DATE 2-12-99
STRUCTURE FILE NUMBER	4504429
DRAWN RSD	REVISED
DESIGNED RSD	CHECKED DTF

PROPOSED FORWARD ABUTMENT
BRIDGE NO. LIC-79-1379R
S.R.79 ROADWAY D OVER 11TH STREET

LIC-16-19.72

7/14

450/547

L07932A (SCALE 3) 2-12-99

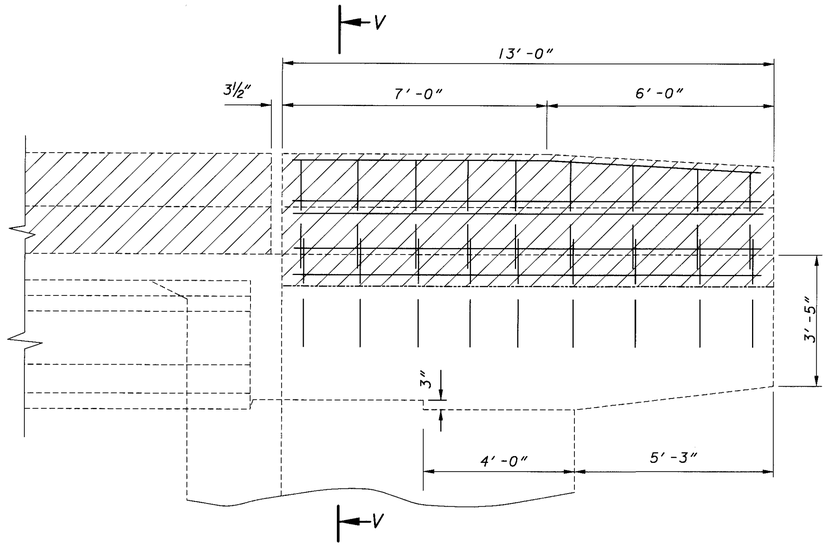

EXISTING VIEW C-C

NOTE:
DOWEL HOLES AND RE-STEEL TO BE INCLUDED WITH ITEM 844-HIGH PERFORMANCE CONCRETE SUPERSTRUCTURE (PARAPET)

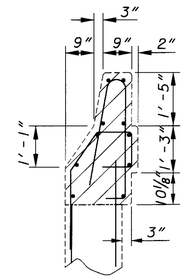

SECTION V-V

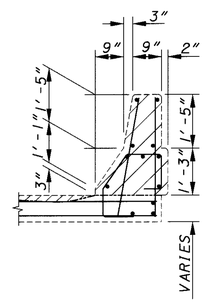

SECTION F-F

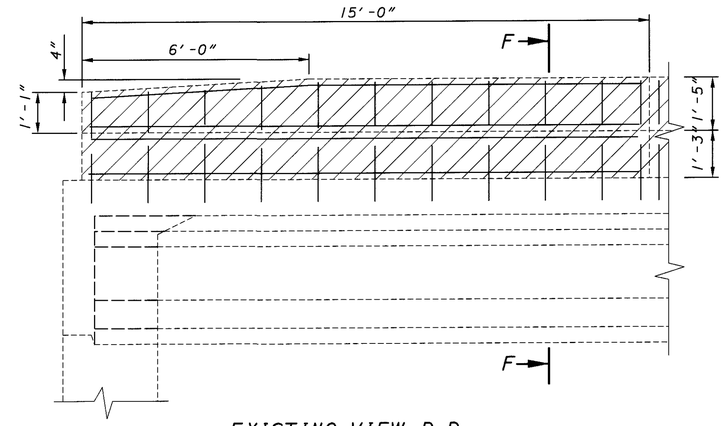

EXISTING VIEW D-D

NOTE:
FOR SECTIONS R-R, S-S, T-T, U-U, W-W, X-X, Y-Y, AND Z-Z SEE SHEET 9/14

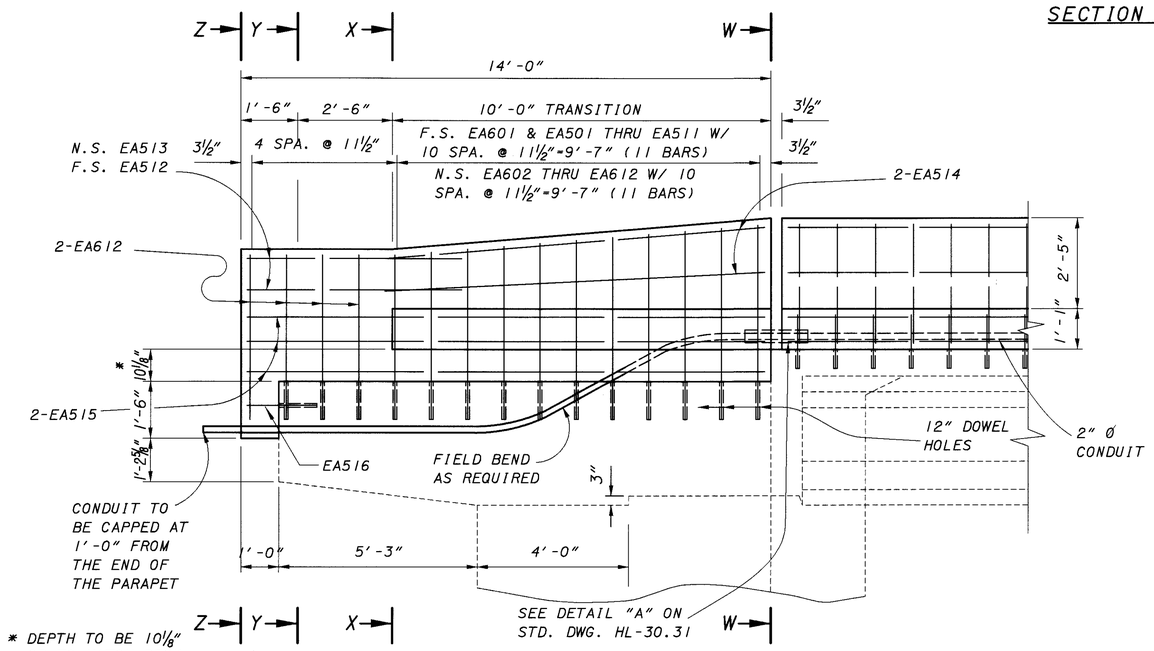

* DEPTH TO BE 10⅛″ OR TO MATCH DECK THICKNESS AT THE CORNER

PROPOSED VIEW C-C

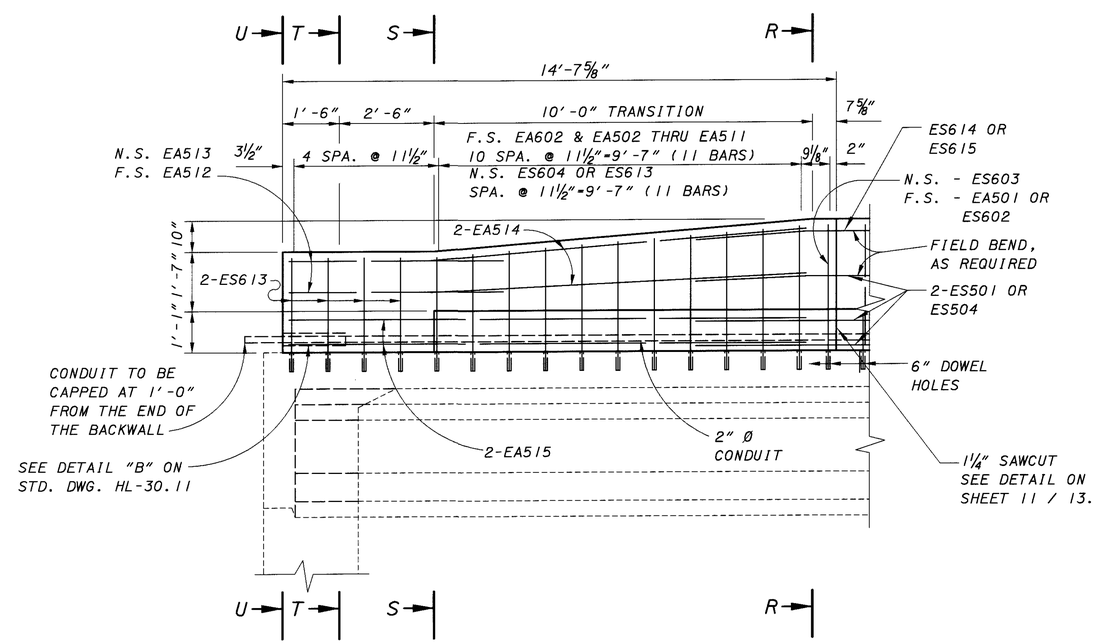

PROPOSED VIEW D-D

DESIGN AGENCY	OHIO DEPARTMENT OF TRANSPORTATION DISTRICT 5
DATE	2-12-99
REVIEWED	CLZ
STRUCTURE FILE NUMBER	4504429
DRAWN	DDH
REVISED	
DESIGNED	RSD
CHECKED	DTF

WINGWALL DETAILS
BRIDGE NO. LIC-79-1379R
S.R. 79 ROADWAY D OVER 11TH STREET

LIC-16-19.72

L07974 (SCALE 2) 2-12-99

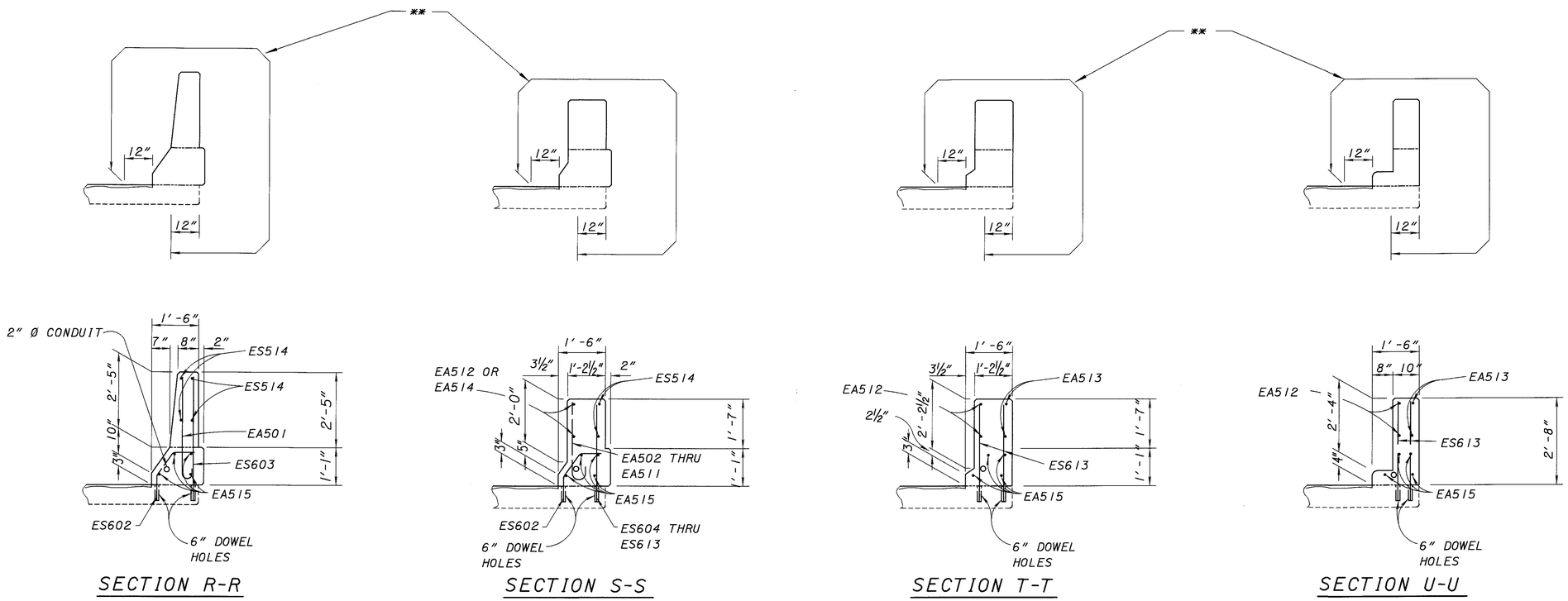

PARAPET ENDING ON THE BRIDGE

** SEALING OF CONCRETE SURFACES (EPOXY-URETHANE)

NOTE:
DOWEL HOLES AND RE-STEEL TO BE INCLUDED FOR PAYMENTWITH ITEM 844-HIGH PERFORMANCE CONCRETE SUPERSTRUCTURE (PARAPET)

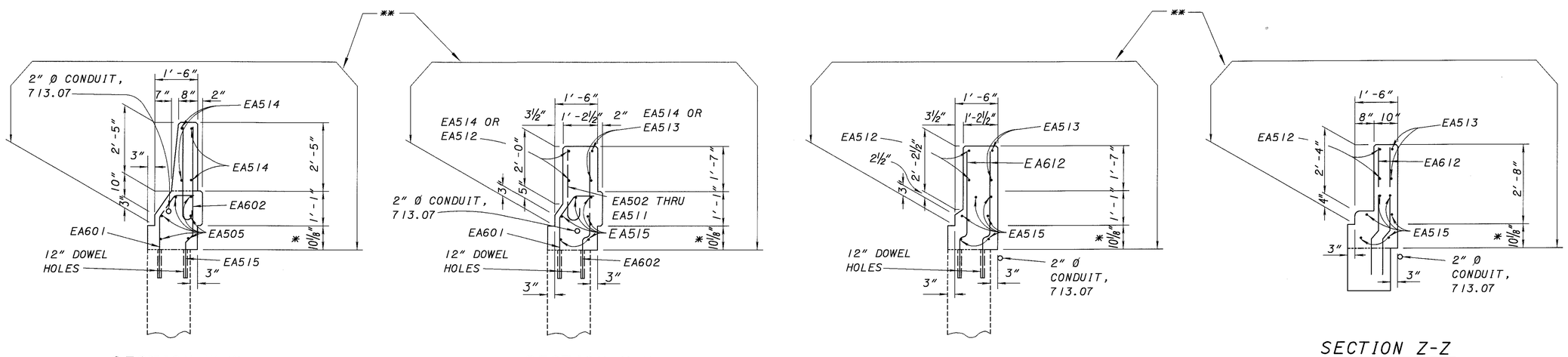

PARAPET ENDING OFF THE BRIDGE

* DEPTH TO BE 10⅛" OR TO MATCH DECK THICKNESS AT THE CORNER.

L0791353 (SCALE 2) 2-12-99

DESIGN AGENCY	OHIO DEPARTMENT OF TRANSPORTATION DISTRICT 5
REVIEWED	CLZ 2-12-99
DATE	
STRUCTURE FILE NUMBER	4504429
DRAWN	DDH
REVISED	
DESIGNED	RSD
CHECKED	DTF

PARAPET DETAILS
BRIDGE NO. LIC-79-1379R
S.R. 79 ROADWAY D OVER 11TH STREET

LIC-16-19.72

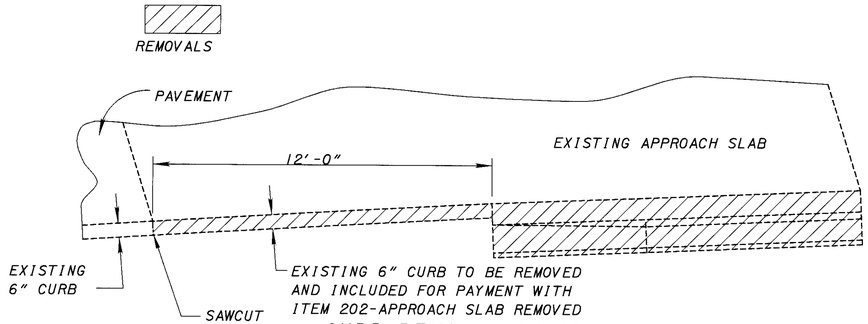

CURB REMOVAL DETAIL
(RIGHT REAR ONLY)

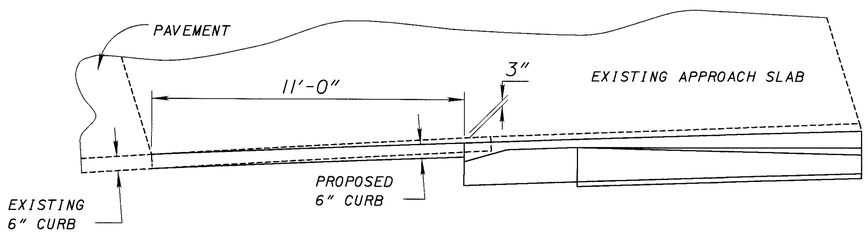

PROPOSED CURB DETAIL
(RIGHT REAR ONLY)

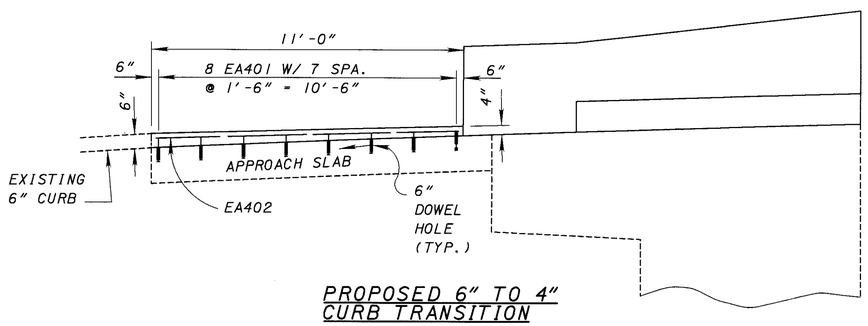

PROPOSED 6" TO 4" CURB TRANSITION
(RIGHT REAR ONLY)

NOTE:
CURB TO BE INCLUDED FOR PAYMENT WITH 611 REINFORCED CONCRETE APPROACH SLAB (T=15") AS PER PLAN.

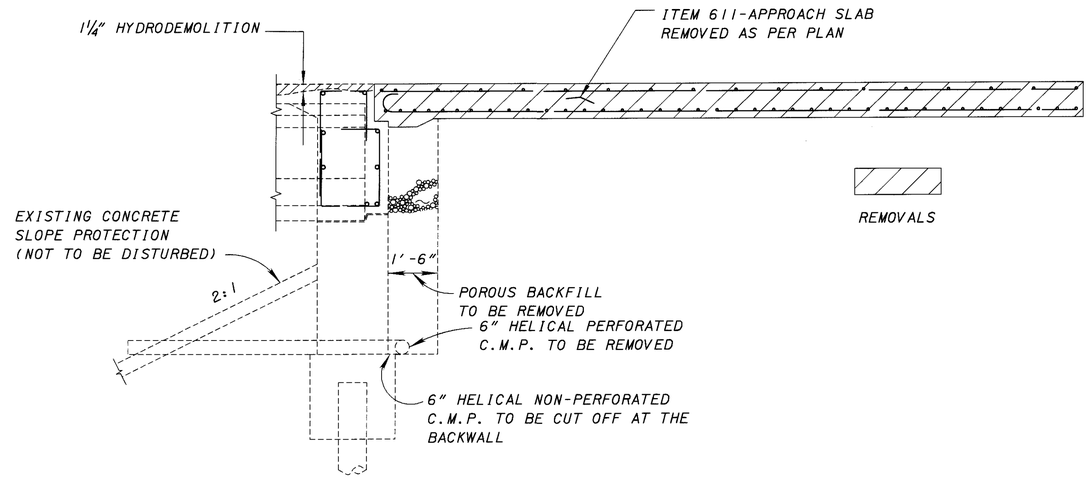

EXISTING PIPE DETAILS
(FORWARD ABUTMENT ONLY)

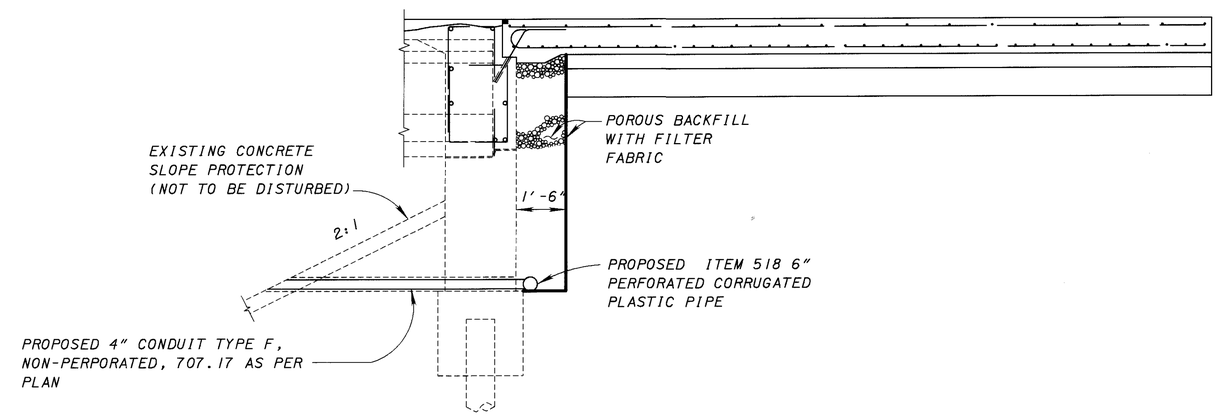

PROPOSED PIPE DETAILS
(FORWARD ABUTMENT ONLY)

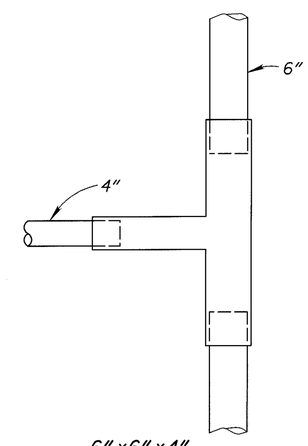

6"x6"x4"
TEE Y CONNECTION

L0791369 (SCALE 1) 2-12-99

DESIGN AGENCY
OHIO DEPARTMENT OF TRANSPORTATION DISTRICT 5

DESIGNED	DRAWN	REVIEWED	DATE
RSD	DDH	CLZ	2-12-99
CHECKED	REVISED	STRUCTURE FILE NUMBER	
DTF		4504429	

TYPICAL DETAILS
BRIDGE NO. LIC-79-1379R
S.R. 79 ROADWAY D OVER 11TH STREET

LIC-16-19.72

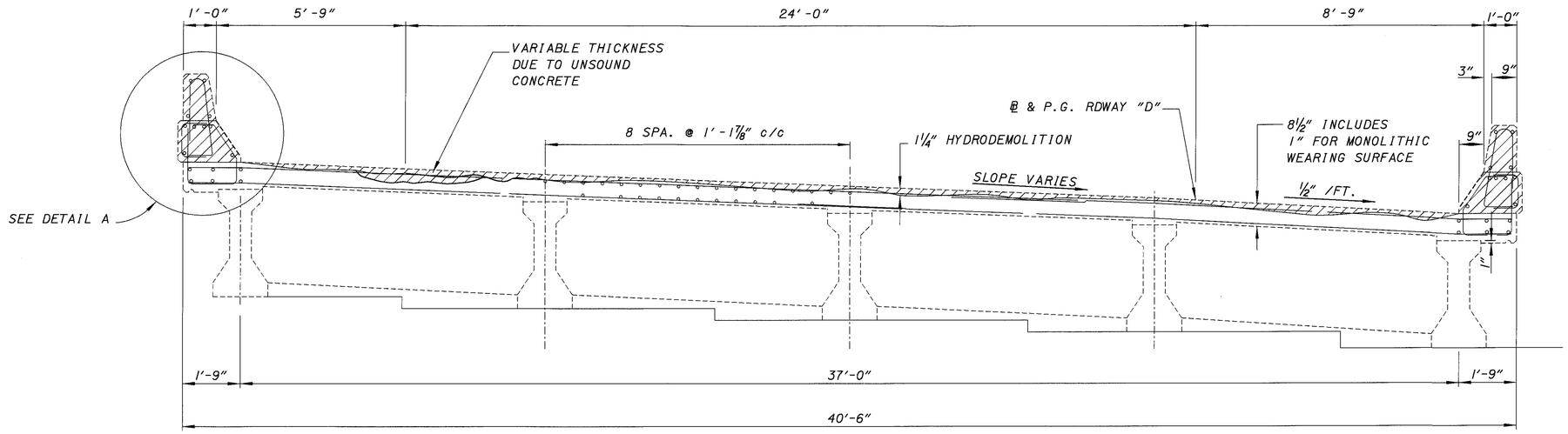

EXISTING TRANSVERSE SECTION THRU SPAN 2

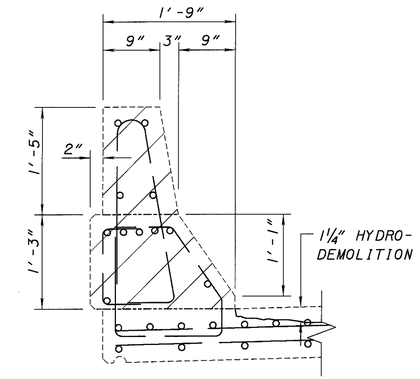

DETAIL A

NOTE:
PARAPET REMOVAL SHALL BE INCLUDED FOR PAYMENT WITH ITEM 202-PORTIONS OF STRUCTURE REMOVED, SUPERSTRUCTURE

NOTE:
DOWEL HOLES AND RE-STEEL TO BE INCLUDED WITH ITEM 844-HIGH PERFORMANCE CONCRETE SUPERSTRUCTURE (PARAPET)

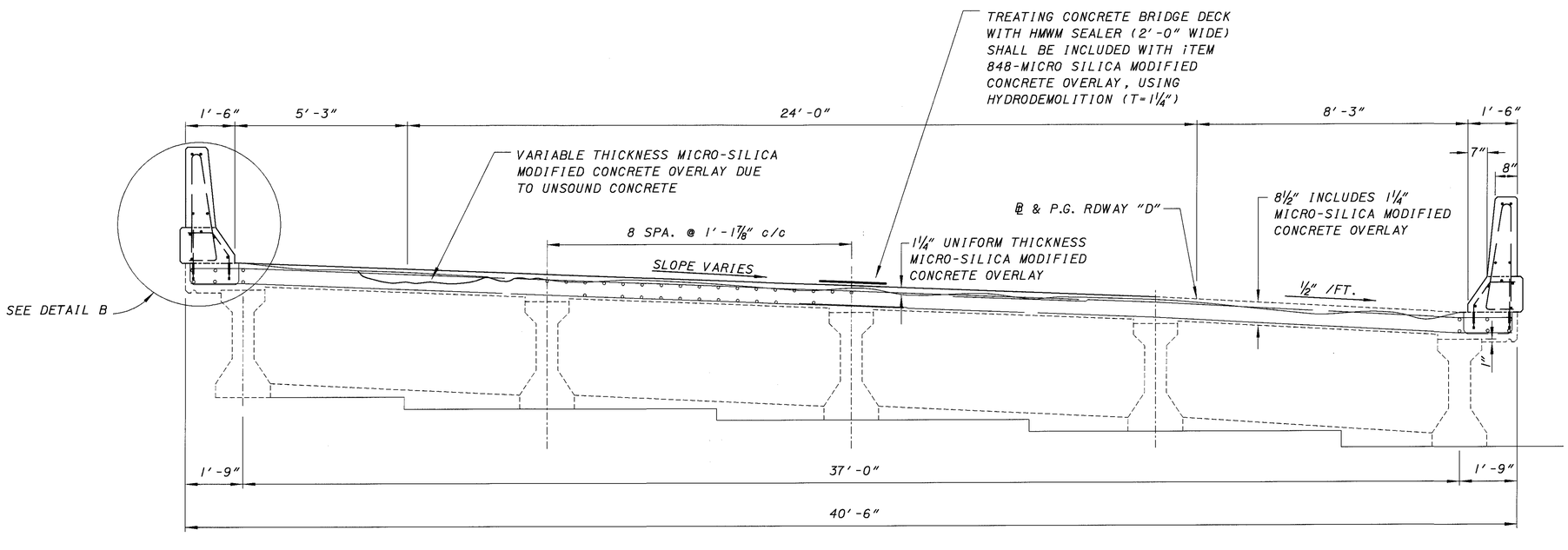

PROPOSED TRANSVERSE SECTION THRU SPAN 2

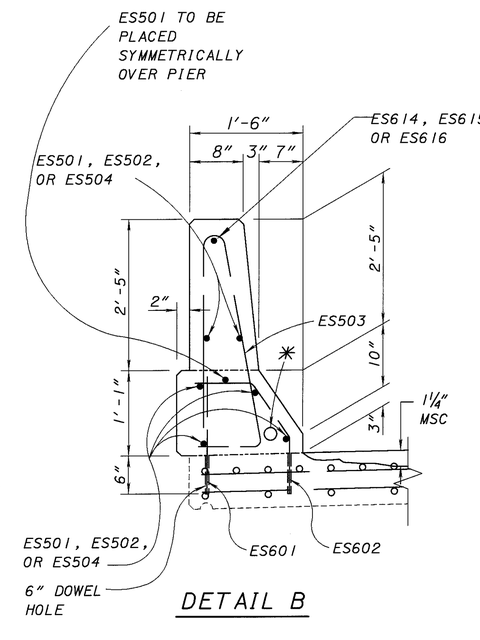

DETAIL B

✳ 2" Ø CONDUIT, 713.07

DESIGN AGENCY
OHIO DEPARTMENT OF TRANSPORTATION DISTRICT 5

DATE 2-12-99
STRUCTURE FILE NUMBER 4504429

REVIEWED DTF

DRAWN RSD
REVISED

DESIGNED RSD
CHECKED CLZ

TRANSVERSE SECTION
BRIDGE NO. LIC-79-1379R
S.R. 79 ROADWAY D OVER 11TH STREET

LIC-16-19.72

11/14

454/547

L0791356 (SCALE 2) 2-12-99

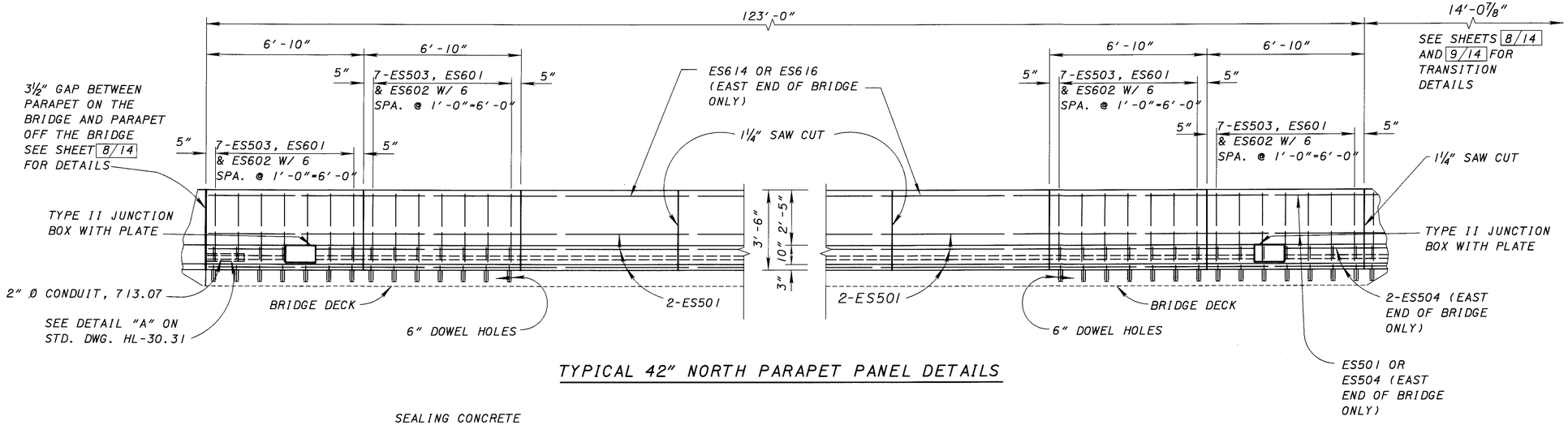

TYPICAL 42" NORTH PARAPET PANEL DETAILS

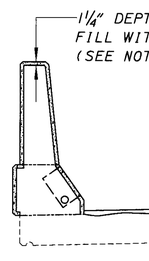

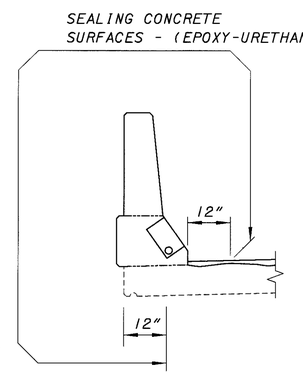

NOTE:
DOWEL HOLES AND RE-STEEL TO BE INCLUDED FOR PAYMENT WITH ITEM 844-HIGH PERFORMANCE CONCRETE SUPERSTRUCTURE (PARAPET)

NOTE:
RE-STEEL MAY NEED TO BE ADJUSTED SO THE TYPE II JUNCTION BOX CAN BE INSTALLED PROPERLY IN THE OUTSIDE PARAPET.

NOTE:
SEE SHEETS 10/13 FOR 42" OUTSIDE PARAPET CROSS SECTION WITH RE-STEEL LAYOUT.

NOTE:
LAP LENGTH FOR
#5 BARS IS 2'-3"
#6 BARS IS 2'-8"

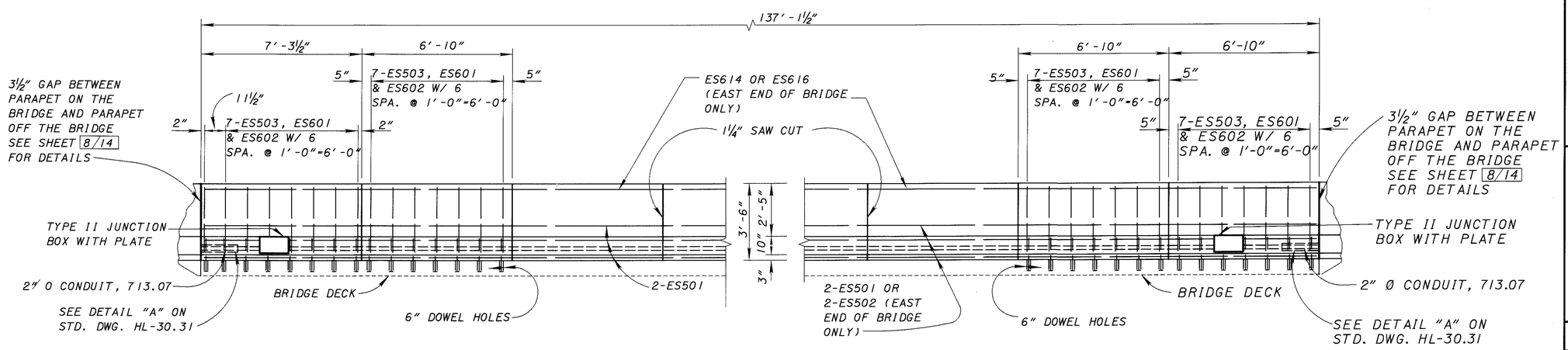

TYPICAL 42" SOUTH PARAPET PANEL DETAILS

DESIGN AGENCY
OHIO DEPARTMENT OF TRANSPORTATION DISTRICT 5

DESIGNED	DRAWN	REVIEWED	DATE
RSD	DDH	CLZ	2-12-99
CHECKED	REVISED	STRUCTURE FILE NUMBER	
DTF		4504429	

PARAPET DETAILS
BRIDGE NO. LIC-79-1379R
S.R. 79 ROADWAY D OVER 11TH STREET

LIC-16-19.72

12/14

455/547

L0791B53 (SCALE 1) 2-12-99

BENDING DIAGRAMS

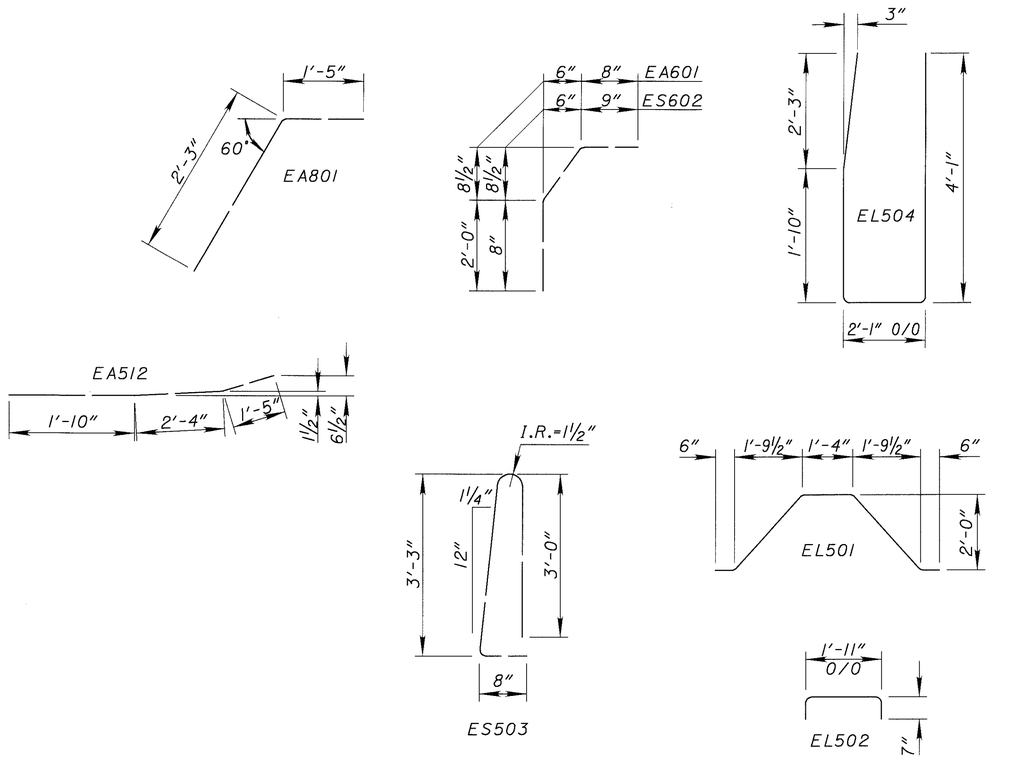

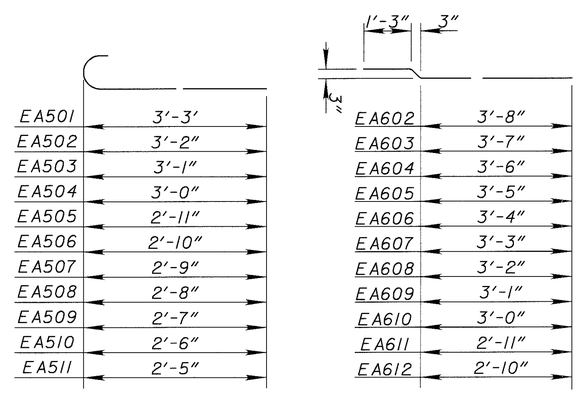

NOTE:
RE-STEEL TO BE INCLUDED IN THE APPROPRIATE CONCRETE ITEM FOR PAYMENT

BAR SCHEDULE

SUPERSTRUCTURE

MARK	NUMBER	LENGTH	SHAPE	WEIGHT
ES501	40	40'-0"	ST.	1,669
ES502	6	23'-7"	ST.	148
ES503	267	7'-1"	BT.	1,973
ES504	6	11'-10"	ST.	74
ES601	267	1'-6"	ST.	602
ES602	279	2'-3"	BT.	943
ES603	2	3'-10"	ST.	12
ES604	1	3'-9"	ST.	6
ES605	1	3'-8"	ST.	6
ES606	1	3'-7"	ST.	5
ES607	1	3'-6"	ST.	5
ES608	1	3'-5"	ST.	5
ES609	1	3'-4"	ST.	5
ES610	1	3'-3"	ST.	5
ES611	1	3'-2"	ST.	5
ES612	1	3'-1"	ST.	5
ES613	9	3'-0"	ST.	41
ES614	6	40'-0"	ST.	360
ES615	1	13'-6"	ST.	20
ES616	1	24'-10"	ST.	37
EL501	7	7'-7"	BT.	55
EL502	4	2'-10"	BT.	12
EL503	4	4'-1"	ST.	17
EL504	4	10'-0"	BT.	42
SUB-TOTAL				6,052
TOTAL				7,606

ABUTMENT

MARK	NUMBER	LENGTH	SHAPE	WEIGHT
EA401	8	9"	ST.	4
EA402	1	10'-8"	ST.	7
EA501	4	3'-10"	BT.	16
EA502	4	3'-9"	BT.	16
EA503	4	3'-8"	BT.	15
EA504	4	3'-7"	BT.	15
EA505	4	3'-6"	BT.	15
EA506	4	3'-5"	BT.	14
EA507	4	3'-4"	BT.	14
EA508	4	3'-3"	BT.	14
EA509	4	3'-2"	BT.	13
EA510	4	3'-1"	BT.	13
EA511	4	3'-0"	BT.	13
EA512	8	5'-8"	BT.	47
EA513	8	5'-8"	ST.	47
EA514	16	10'-0"	ST.	167
EA515	22	13'-8"	ST.	314
EA516	3	1'-10"	ST.	6
EA601	33	3'-6"	BT.	173
EA602	3	5'-2"	BT.	23
EA603	3	5'-1"	BT.	23
EA604	3	5'-0"	BT.	23
EA605	3	4'-11"	BT.	22
EA606	3	4'-10'	BT.	22
EA607	3	4'-9"	BT.	21
EA608	3	4'-8"	BT.	21
EA609	3	4'-7"	BT.	21
EA610	3	4'-6"	BT.	20
EA611	3	4'-5"	BT.	20
EA612	27	4'-4"	BT.	176
EA801	25	3'-7"	BT.	239
SUB-TOTAL				1,554

DESIGN AGENCY
OHIO DEPARTMENT OF TRANSPORTATION
DISTRICT 5

DESIGNED	DRAWN	REVIEWED	DATE
DDH	DDH	CLZ	2-12-99
CHECKED	REVISED	STRUCTURE FILE NUMBER	
DTF		4504429	

BAR SCHEDULES AND BENDING DIAGRAMS

BRIDGE NO. LIC-79-1379R
S.R. 79 ROADWAY D OVER 11TH STREET

LIC-16-19.72

L0791372 (SCALE 1) 2-12-99

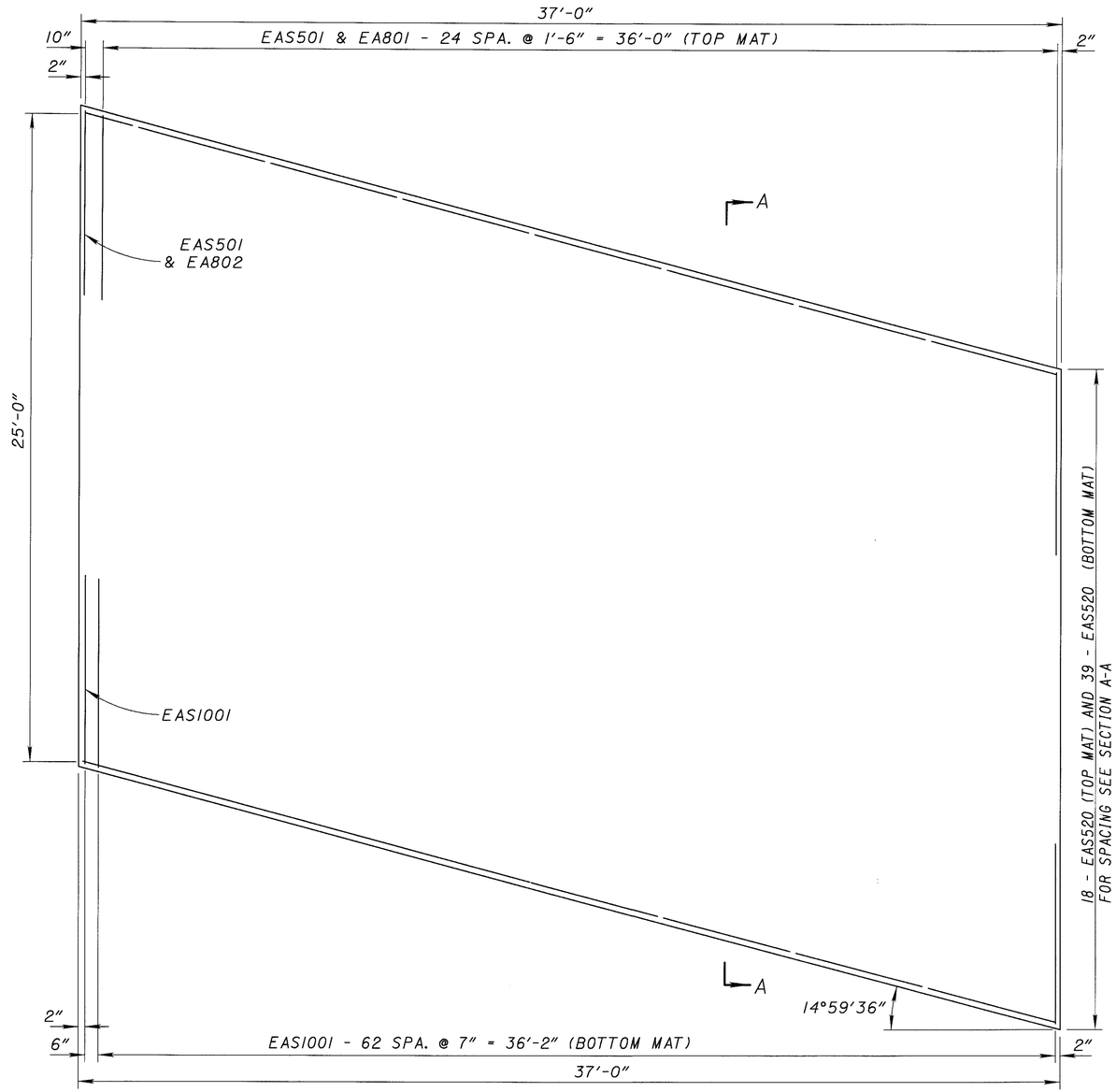

PLAN

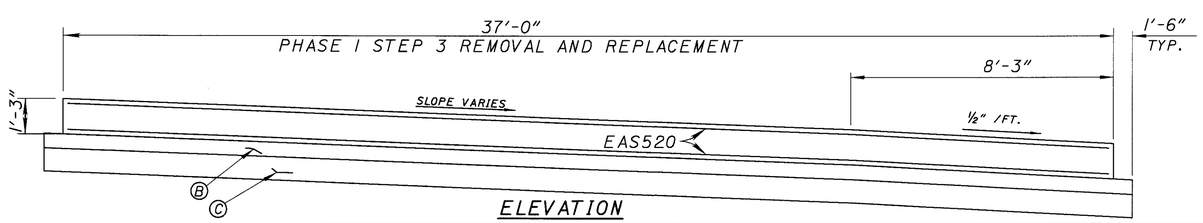

ELEVATION

*NOTE:
MECHANICAL SPLICE CONNECTORS, CURBS AND RE-STEEL SHALL BE INCLUDED FOR PAYMENT WITH ITEM 611 REINFORCED CONCRETE APPROACH SLAB (T=15"), AS PER PLAN .

NOTE: FOR EA801 BENDING DIAGRAMS AND QUANTITIES, SEE SHEET 13/14

NOTE: FOR ADDITIONAL DETAILS SEE STD. DWG. AS-1-81.

NOTE: PREFORMED ELASTOMERIC JOINT SEALER 705.11 AND TYPE A WATER-PROOFING TO BE INCLUDED IN ITEM 611 REINFORCED CONCRETE APPROACH SLAB (T=15"), AS PER PLAN

BAR SCHEDULE					
MARK	NO. REQD.	LENGTH	SHAPE	WEIGHT	
EAS501	26	24'-6"	ST.	664	*
EAS520	57	38'-0"	ST.	2259	*
EAS1001	63	25'-11"	BT.	7026	*
TOTAL (1 APPROACH SLAB)				9949	*

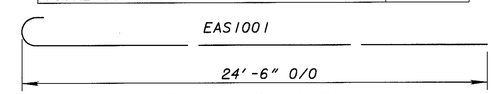

BENDING DIAGRAM

NOTE 1:
PREFORMED ELASTOMERIC JOINT SEALER 705.11 (1 1/4" FOR 1/2" JOINT) DEPRESSED 1/8" BELOW ROADWAY, PLACED IN 1/2"x2 1/4" GROOVE.

NOTE 2:
TYPE A WATERPROOFING SHALL NOT EXTEND ABOVE THE BOTTOM OF THE GROOVE INTO WHICH THE PREFORMED ELASTOMERIC JOINT SEALER IS TO BE PLACED. IT SHALL BE APPLIED TO THE ENTIRE AREA OF THE ABUTMENT OR SUPERSTRUCTURE WHICH COMES INTO CONTACT WITH THE APPROACH SLAB.

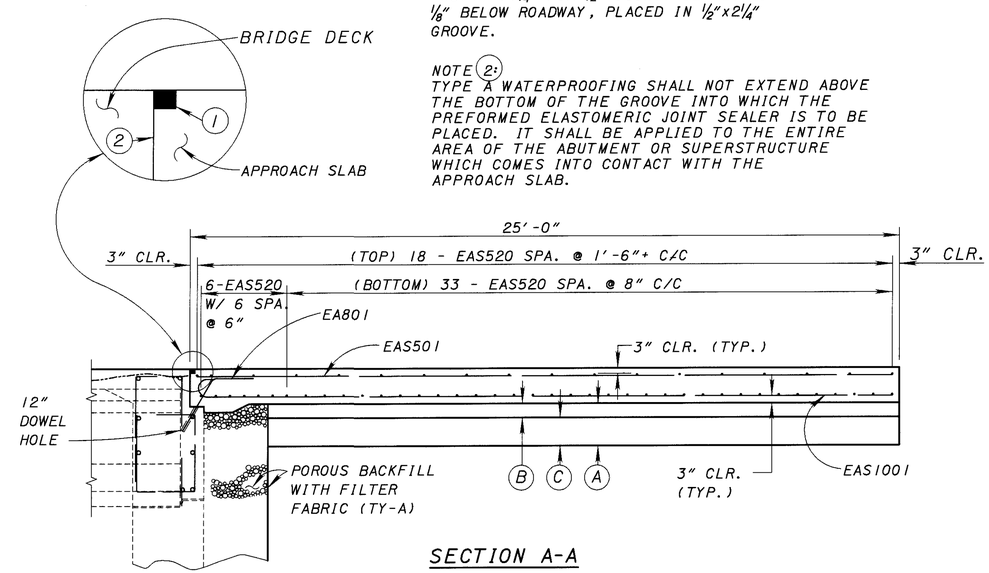

SECTION A-A

(A) 1'-8" EXCAVATION NOT INCLUDING EMBANKMENT CONSTRUCTION (UNDER PROPOSED APPROACH SLAB) (AS-1-81)

(B) 0'-6" PROPOSED AGGREGATE BASE

(C) 1'-0" PROPOSED EMBANKMENT

ITEM	DESCRIPTION	QUANTITY	UNIT
203	EXCAVATION NOT INCLUDING EMBANKMENT CONSTRUCTION	65	CU. YD.
203	EMBANKMENT	32	CU. YD.
203	SUBGRADE COMPACTION	96	SQ. YD.
304	AGGREGATE BASE	16	CU. YD.
518	POROUS BACKFILL WITH FILTER FABRIC, TYPE A	LUMP	
611	REINFORCED CONCRETE APPROACH SLAB (T=15")	104	SQ. YD.

QUANTITIES CARRIED TO SHEET 2/14

DESIGN AGENCY
OHIO DEPARTMENT OF TRANSPORTATION DISTRICT 5

DESIGNED DDH | CHECKED DTF | DRAWN DDH | REVISED | REVIEWED CLZ | DATE 2-12-99 | STRUCTURE FILE NUMBER 4504429

FORWARD (EAST) APPROACH SLAB DETAILS
BRIDGE NO. LIC-79-1379R
S.R. 79 ROADWAY D OVER 11TH STREET

LIC-16-19.72

14/14

457/547

L079/328

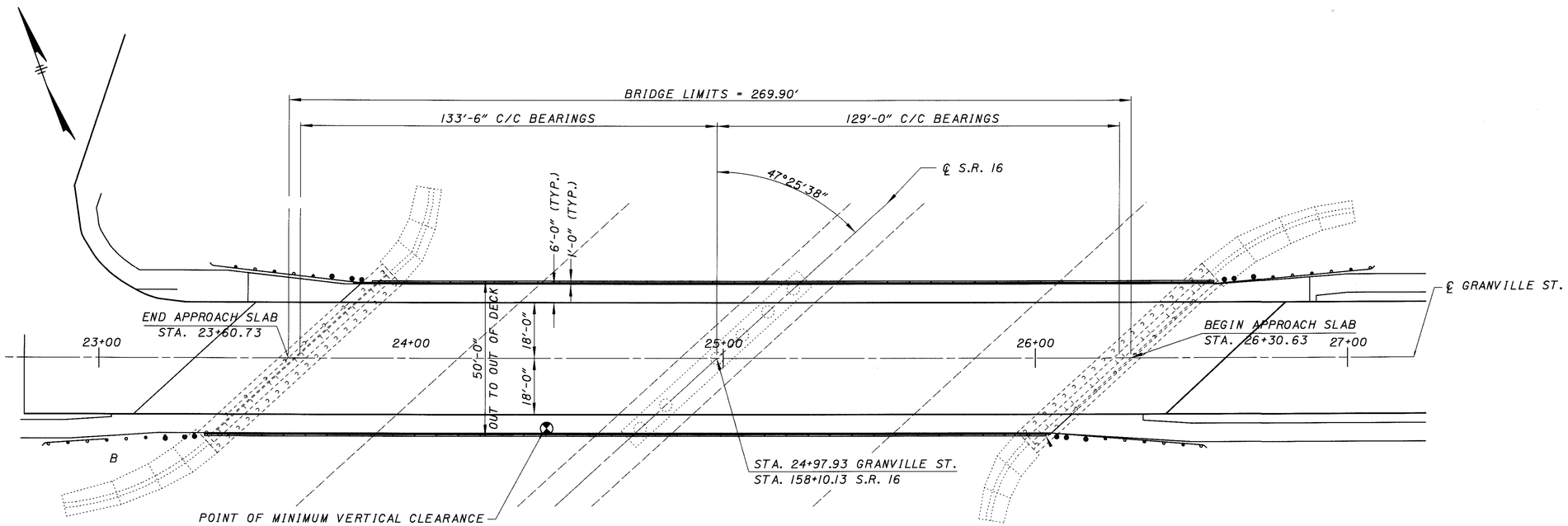

PLAN

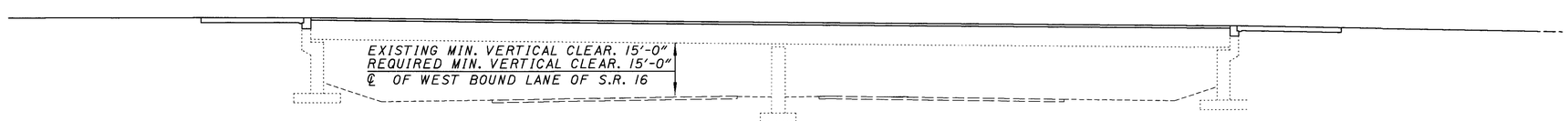

ELEVATION

EXISTING STRUCTURE

TYPE: CONTINUOUS WELDED STEEL GIRDER WITH 8½" REINFORCED CONCRETE DECK AND SUB-STRUCTURE

SPANS: 133'-6", 129'-0"

ROADWAY: 36'-0" FACE TO FACE OF CURBS WITH 6'-0" SIDEWALKS

LOADING: HS 20-44

SKEW: 47°25'38"

WEARING SURFACE: 1" MONOLITHIC CONCRETE

APPROACH SLABS: AS-1-81 (30') LONG

ALIGNMENT: TANGENT

DESIGN AGENCY
OHIO DEPARTMENT OF TRANSPORTATION
DISTRICT 5

DESIGNED	DRAWN	REVIEWED	DATE
TAG	RSD	CLZ	2/20/99
CHECKED	REVISED	STRUCTURE FILE NUMBER	
DTF		4500121	

PLAN AND ELEVATION
BRIDGE NO. LIC-16-2069
GRANVILLE ST. OVER S.R. 16

LIC-16-19.72

1/4

458/547

L0160001.BPE

ITEM	ITEM EXT.	GRAND TOTAL	UNIT	DESCRIPTION	SEE SHEET NO.
815	00050	37,542	SQ FT	SURFACE PREPARATION OF EXISTING STEEL, SYSTEM OZEU	
815	00056	37,542	SQ FT	FIELD PAINTING OF EXISTING STEEL, PRIME COAT, SYSTEM OZEU	
815	00060	37,542	SQ FT	FIELD PAINTING OF EXISTING STEEL, INTERMEDIATE COAT, SYSTEM OZEU	
815	00066	37,542	SQ FT	FIELD PAINTING OF EXISTING STEEL, FINISH COAT, SYSTEM OZEU	
815	00500	808	LIN FT	CAULKING	
815	00504	40	MAN HOUR	GRINDING FINS, TEARS, SLIVERS	
815	00508	1848	LIN FT	GRINDING FLANGE EDGES	

CALCULATED TAG
CHECKED RSD

ESTIMATED QUANTITIES
BR. NO. LIC-16-2069
GRANVILLE STREET OVER S.R. 16

LIC-16-19.72

L0160001.BNS (02/19/99)

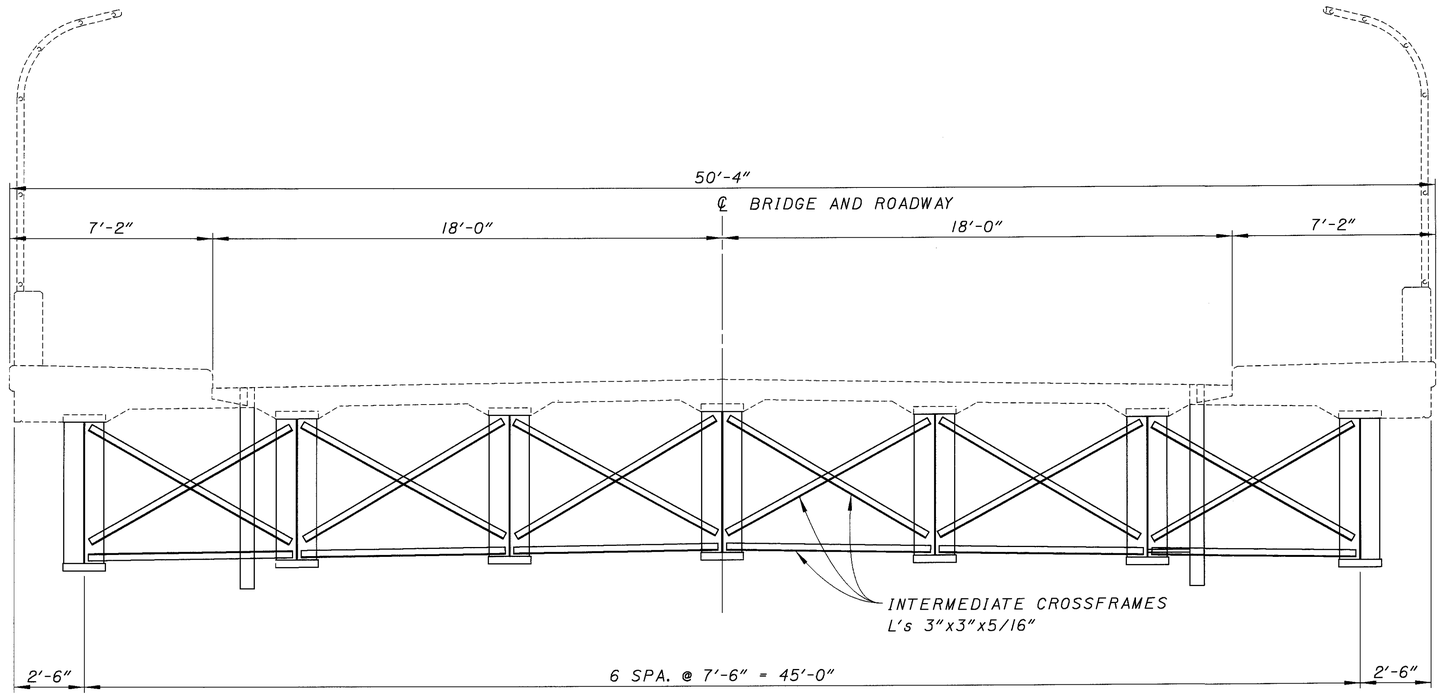

PROPOSED TRANSVERSE SECTION

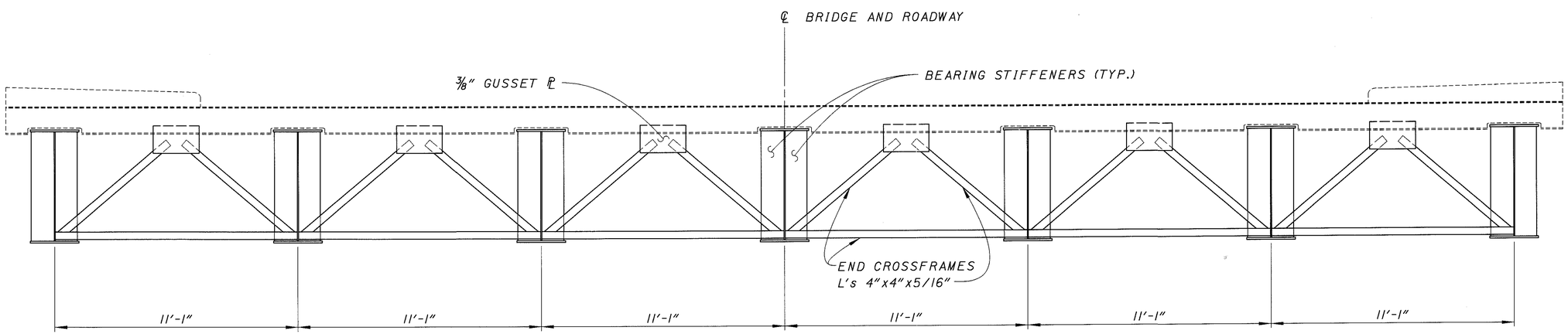

END CROSS FRAMES

SHOWN ON SKEW

DESIGN AGENCY
OHIO DEPARTMENT
OF TRANSPORTATION
DISTRICT 5

REVIEWED CLZ DATE 2-20-99
STRUCTURE FILE NUMBER 4500121

DRAWN DTF
REVISED

DESIGNED DTF
CHECKED RSD

TRANSVERSE SECTION
BRIDGE NO. LIC-16-2069
GRANVILLE ST. OVER S.R. 16

LIC-16-19.72

3/4

460/547

L016000I.BTS (02/19/99) (PID# 15290)

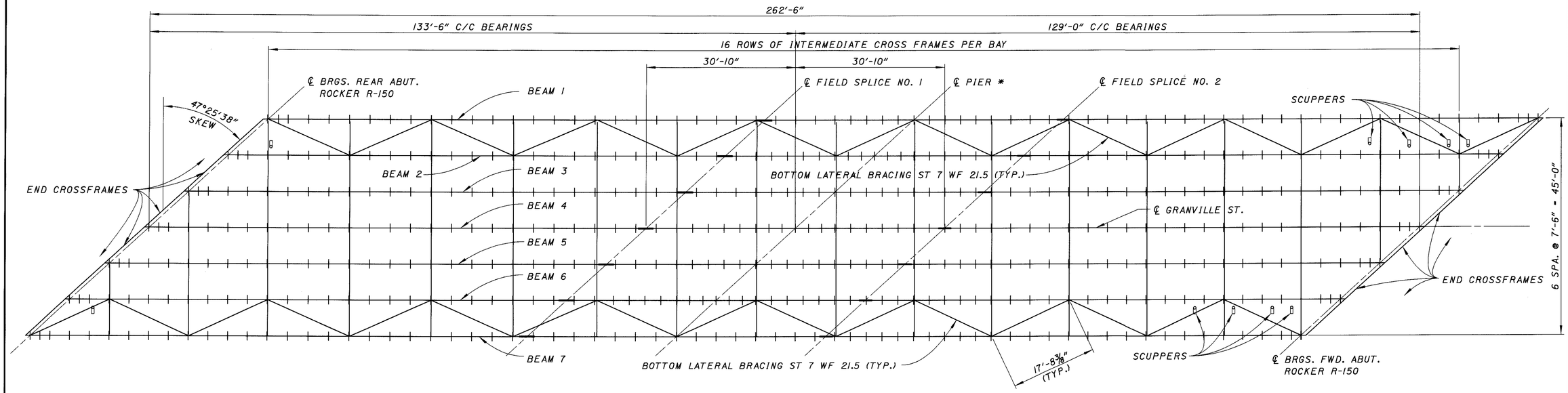

EXISTING FRAMING PLAN

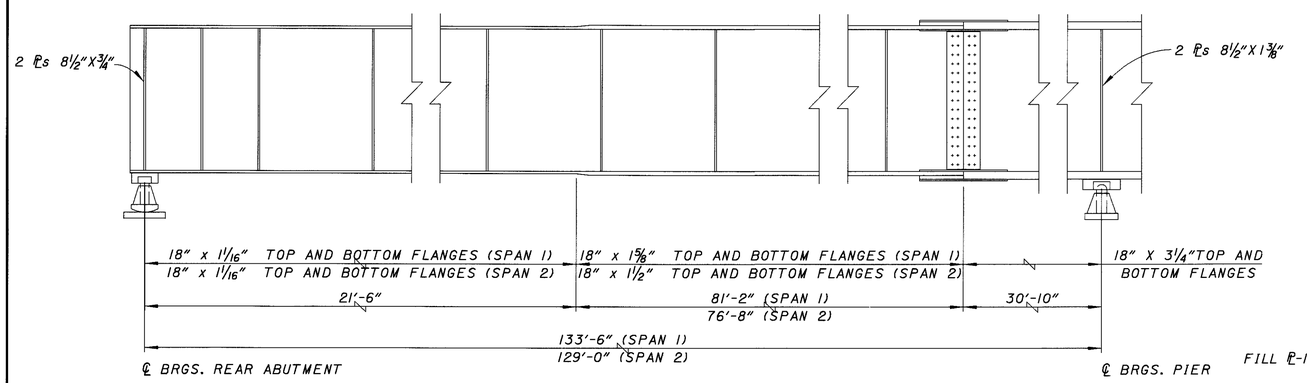

EXISTING GIRDER ELEVATION

* SPECIAL BOLSTERS FOR PIER
USE STANDARD DRAWING RB-1-55 WITH FOLLOWING DIMENSIONS:

A	B	C	D	F	G	H	K	L	M	R	T	Y
4 1/2	24	4 1/2	4	7/8	14 1/2	23 1/8	17	32	30	14 1/2	4	2 3/16

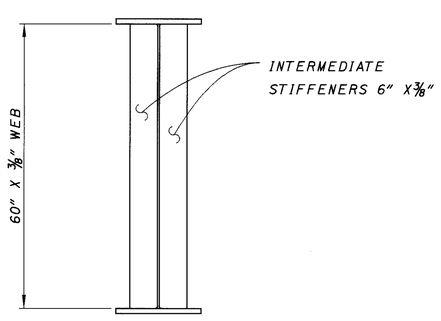

INTERMIATE STIFFENERS

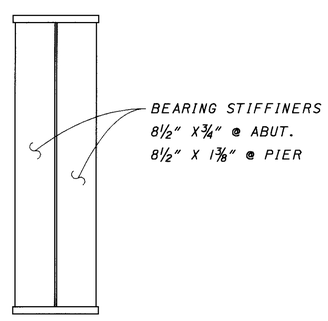

BEARING STIFFENERS

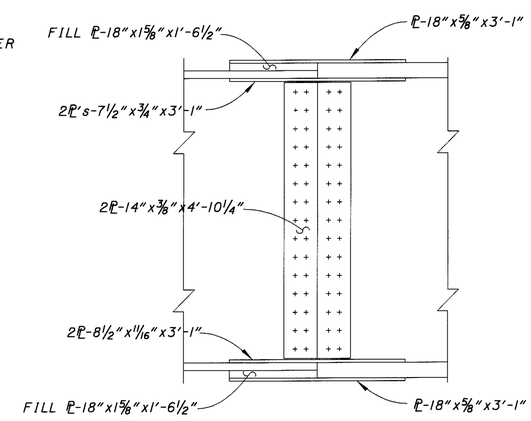

FIELD SPLICE DETAIL (SPAN 1)

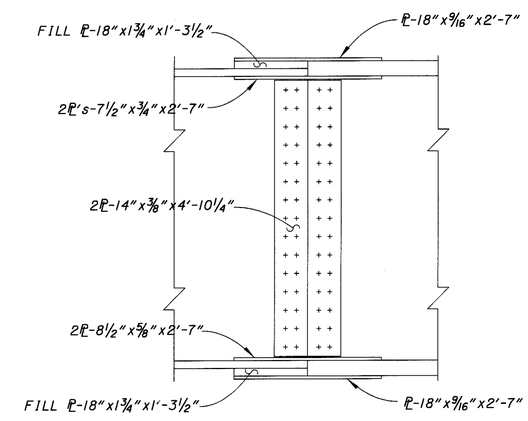

FIELD SPLICE DETAIL (SPAN 2)

DESIGN AGENCY
OHIO DEPARTMENT OF TRANSPORTATION

DESIGNED	DRAWN	REVIEWED	DATE
DTF	DTF	CLZ	
CHECKED	REVISED	STRUCTURE FILE NUMBER	
RSD		4500121	

FRAMING PLAN
BRIDGE NO. LIC-16-20.69
GRANVILLE ST. OVER S.R. 16

LIC-16-19.72

4 / 4

461 / 547

L0160001.BFP (02/19/99) (PID#15290)

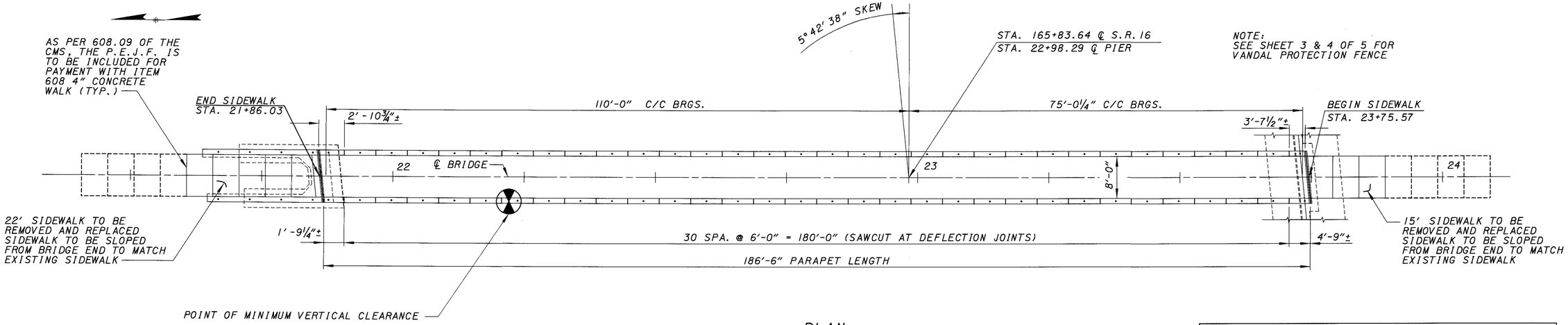

PLAN

*THE 75' SPAN SHALL BE POURED FIRST DUE TO POSSIBLE UPLIFT OF THE FIRST SPAN

VERTICAL CURVE DATA
P.V.I. STA. 22+75
ELEV. 855.11
G1 +5.60 %
G2 -6.64%
V.C. 100'

NOTE:
ROCKERS AT PIER AND BOTH ABUTMENTS TO BE RESET.

EXISTING STRUCTURE

TYPE: CONTINUOUS ROLLED STEEL BEAM WITH REINFORCED CONCRETE DECK AND SUBSTRUCTURE
SPANS: 110'-0" AND 75'-0¼" C/C BRGS.
ROADWAY: 8'-0" F/F CURBS
LOADING: PEDESTRIAN, 85 LBS./SQ.FT.
SKEW: 5°42'38" R.F.
WEARING SURFACE: ½" MONOLITHIC CONCRETE
ALIGNMENT: TANGENT

PROPOSED STRUCTURE: (REHABILITATED)

TYPE: EXISTING CONTINUOUS ROLLED STEEL BEAM WITH PROPOSED REINFORCED CONCRETE DECK WITH VANDAL PROTECTION FENCE
ROADWAY: 8'-0" F/F CURBS
WEARING SURFACE: 1" MONOLITHIC CONCRETE
APPROACH SLABS: NONE
S.F.N. 4500458

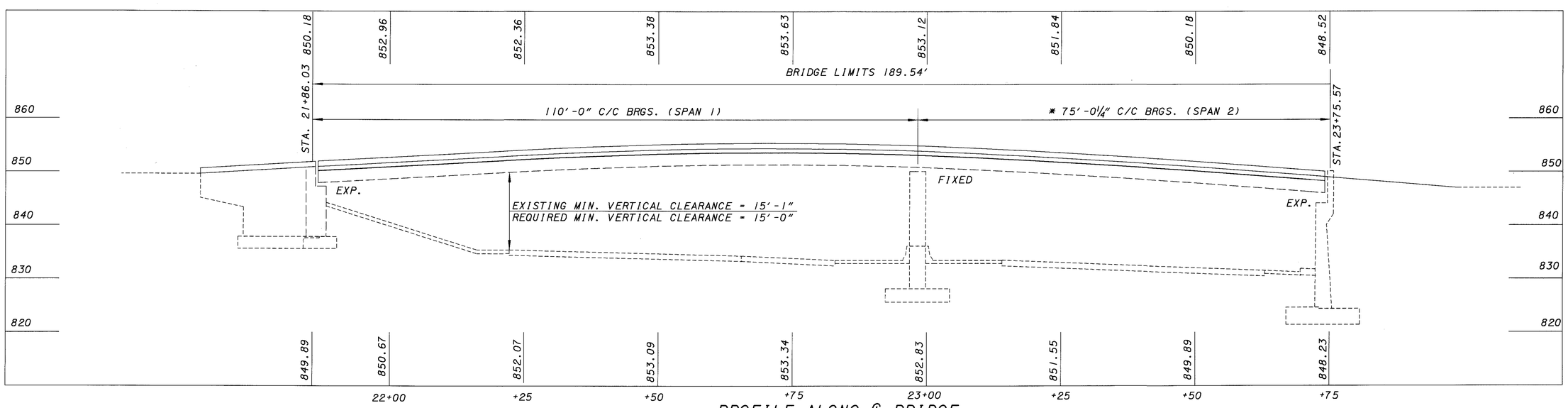

PROFILE ALONG ℄ BRIDGE

L0162007 (SCALE 10) 2-12-99

DESIGN AGENCY
OHIO DEPARTMENT OF TRANSPORTATION DISTRICT 5

DESIGNED	DRAWN	REVIEWED	DATE
RSD	RSD	CLZ	2-12-99
CHECKED	REVISED	STRUCTURE FILE NUMBER	
DTF		4500458	

PROPOSED PLAN AND ELEVATION
BRIDGE NO. LIC-16-2084
PEARL STREET OVER S.R.16

LIC-16-19.72

ITEM	ITEM EXT.	GRAND TOTAL	UNIT	DESCRIPTION	SUPER.	ABUT.	PIERS	GENERAL
202	11300	46	CU YD	PORTIONS OF STRUCTURE REMOVED, SUPERSTRUCTURE	46	--	--	--
202	30000	296	SQ FT	WALK REMOVED	--	--	--	296
202	75000	206	LIN FT	FENCE REMOVED, VANDAL PROTECTION FENCE ON STRUCTURES*	206	--	--	--
202	98200	20	LIN FT	REMOVAL MISC.: EXPANSION JOINTS	20	--	--	--
503	21300	LUMP		UNCLASSIFIED EXCAVATION	--	--	--	LUMP
SPECIAL	51267510	242	SQ YD	SEALING OF CONCRETE SURFACES (EPOXY - URETHANE)	234	8	--	--
516	12301	20	LIN FT	STRIP SEAL EXPANSION JOINT ANCHORED WITH ELASTOMERIC CONCRETE, AS PER PLAN	20	--	--	--
516	46701	4	EACH	RESET BEARING, AS PER PLAN	4	--	--	--
607	98200	LUMP	LUMP	FENCE, MICS.: TEMPORARY VANDAL PROTECTION FENCE	LUMP	--	--	--
SPECIAL	60740000	206	LIN FT	VANDAL PROTECTION FENCE, COATED, (FOR PEDESTRIAN BRIDGES)	206	--	--	--
608	10000	296	SQ FT	4" CONCRETE WALK	--	--	--	296
625	25402	371	LIN FT	CONDUIT, 2", 713.07	371	--	--	--
815	00050	3683	SQ FT	SURFACE PREPARATION OF EXISTING STEEL, SYSTEM OZEU, SS815	3683	--	--	--
815	00056	3683	SQ FT	FIELD PAINTING OF EXISTING STEEL, PRIME COAT, SYSTEM OZEU, SS815	3683	--	--	--
815	00060	3683	SQ FT	FIELD PAINTING OF EXISTING STEEL, INTERMEDIATE COAT, SYSTEM OZEU, SS815	3683	--	--	--
815	00066	3683	SQ FT	FIELD PAINTING OF EXISTING STEEL, FINISH COAT, SYSTEM OZEU, SS815	3683	--	--	--
815	00500	160	LIN FT	CAULKING	160	--	--	--
815	00508	373	LIN FT	GRINDING FLANGE EDGES	373	--	--	--
815	00504	15	MNHR	GRINDING FINS, TEARS, SLIVERS	15	--	--	--
844	48000	73	CU YD	HIGH PERFORMANCE CONCRETE, SUPERSTRUCTURE (DECK) MIX 4	73	--	--	--
844	49000	LUMP		HIGH PERFORMANCE CONCRETE TRIAL MIX				
863	10200	200	POUND	STRUCTURAL STEEL MEMBERS, MISCELLANEOUS LEVEL FABRICATION	200			

QUANTITIES CARRIED TO SHEETS 405A AND 405B

** SEE PROPOSAL NOTE

CALCULATED D.D.H. CHECKED R.S.D.

BRIDGE SUMMARY
BRIDGE NO. LIC-16-2084
PEARL STREET

LIC-16-19.72

L0160001.GGS 2/10/99 SCALE=1

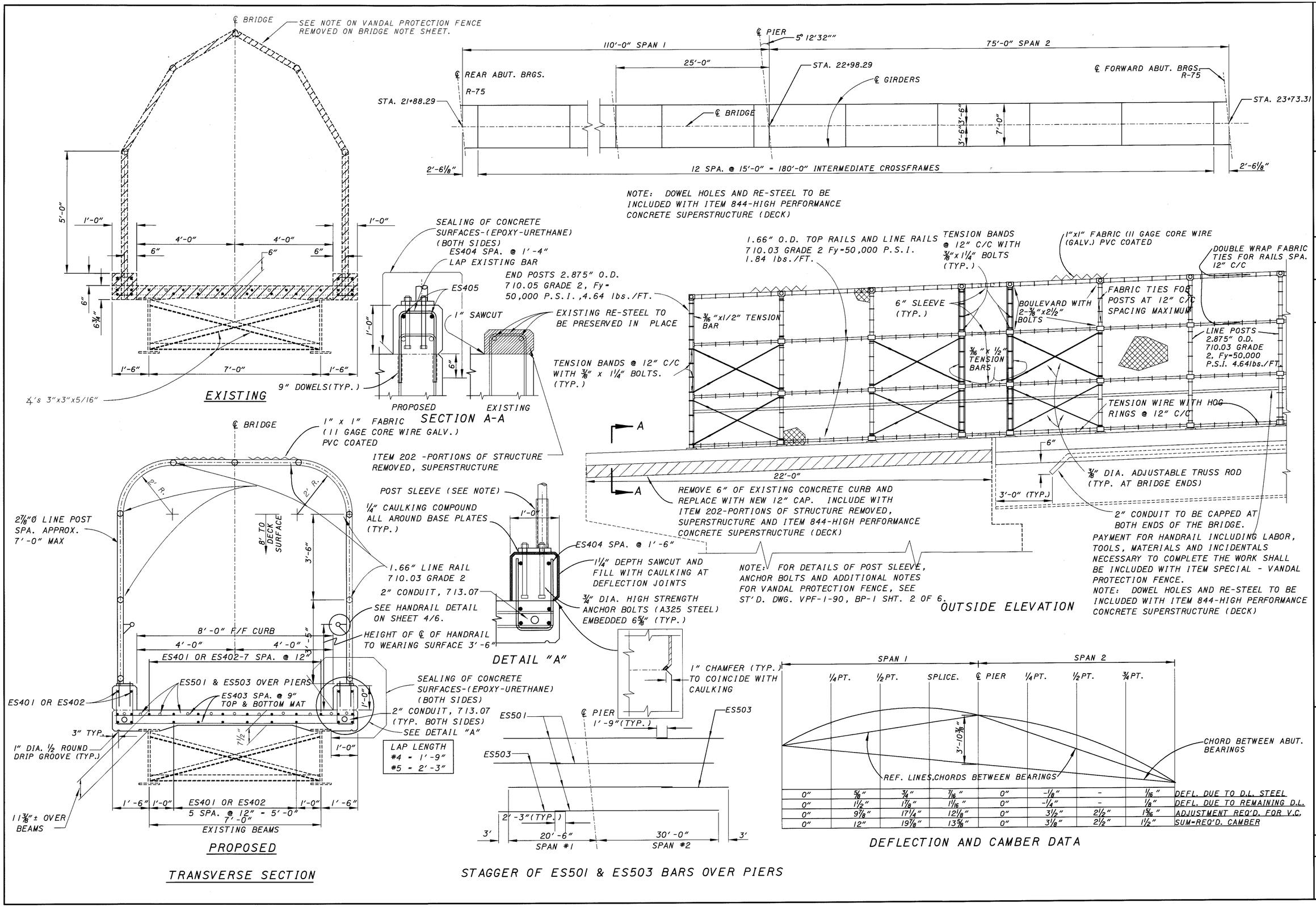

0"	5/8"	3/4"	7/16"	0"	-1/8"	-	1/16"	DEFL. DUE TO D.L. STEEL
0"	1 1/2"	1 7/8"	1 11/16"	0"	-1/4"	-	1/8"	DEFL. DUE TO REMAINING D.L.
0"	9 7/8"	17 1/4"	12 1/8"	0"	3 1/2"	2 1/2"	1 5/16"	ADJUSTMENT REQ'D. FOR V.C.
0"	12"	19 7/8"	13 5/8"	0"	3 1/8"	2 1/2"	1 1/2"	SUM-REQ'D. CAMBER

DESIGN AGENCY: OHIO DEPARTMENT OF TRANSPORTATION DISTRICT 5

REVIEWED: CLZ 2-12-99 | DATE | STRUCTURE FILE NUMBER: 4500458

DRAWN: RSD | REVISED

DESIGNED: RSD | CHECKED: KAK

TRANSVERSE SECTIONS AND FENCE DETAILS

BRIDGE NO. LIC-16-2084
PEARL STREET OVER S.R.16

LIC-16-19.72

3/6

464/547

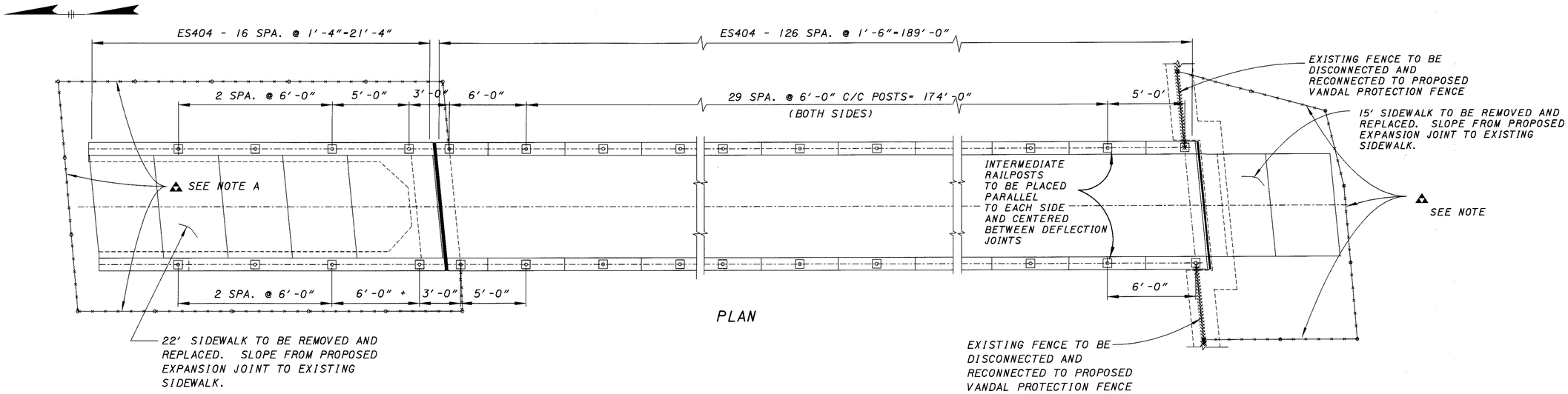

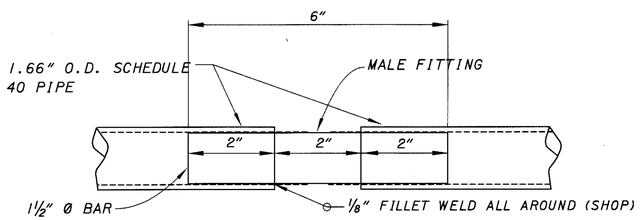

LINE RAIL JOINT DETAIL
(AT BRIDGE EXP. JOINTS)

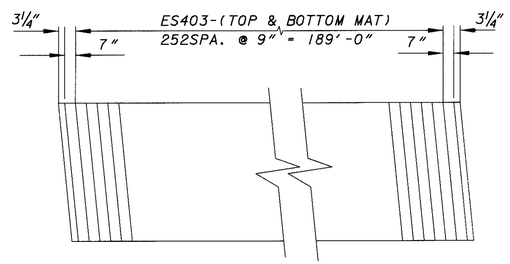

TRANSVERSE REINFORCING STEEL LAYOUT

NOTE A:

CONTRACTOR TO ENCLOSE WORK AREA BY USING A CHAIN LINK FENCE 6 FOOT HIGH (MIN.) . THIS SHALL INCLUDE POSTS , FENCE, GATES, HARDWARE, INCIDENTALS, LABOR AND MATERIALS NECESSARY TO INSTALL THE FENCE IN PLACE. THE CONTRACTOR SHALL RETURN THE AREA TO ITS ORIGINAL CONDITION. THE ABOVE WORK SHALL BE INCLUDED IN THE UNIT PRICE BID FOR ITEM 607 FENCE, MISCELLANEOUS, TEMPORARY VANDAL PROTECTION FENCE.

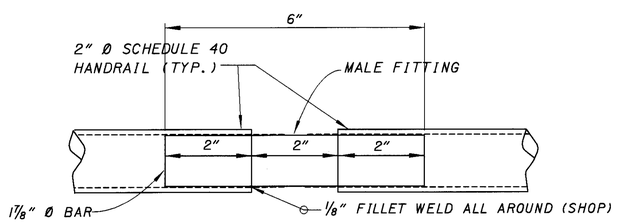

HANDRAIL JOINT DETAIL
(AT BRIDGE EXP. JOINTS)

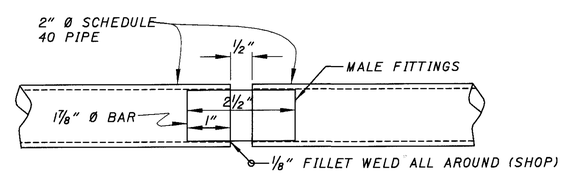

HANDRAIL JOINT DETAIL
(MAX. SPACING 30')

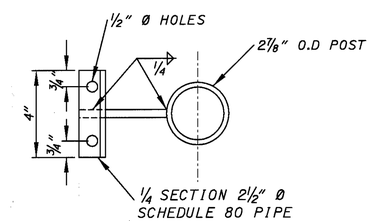

SECTION A-A
(HANDRAIL NOT SHOWN)

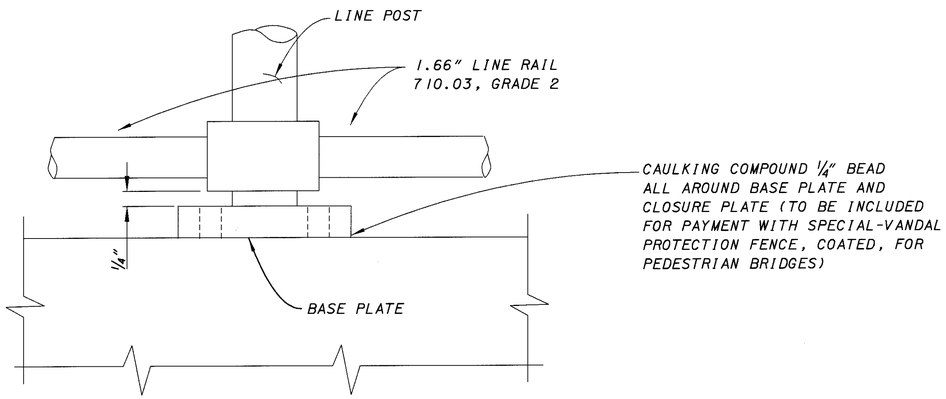

ELEVATION AT LINE POST

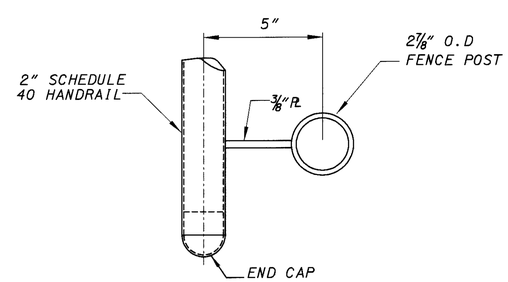

PLAN VIEW
(AT END OF HANDRAIL)

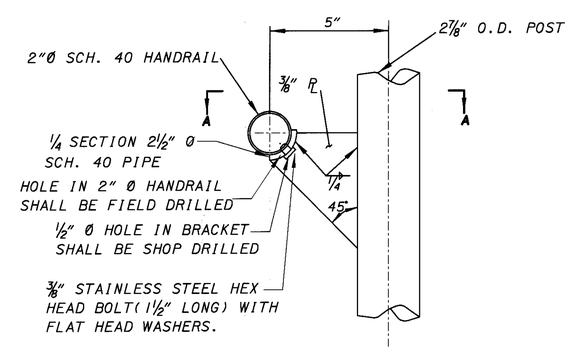

HANDRAIL DETAIL

DESIGN AGENCY
OHIO DEPARTMENT OF TRANSPORTATION
DISTRICT 5

DESIGNED	DRAWN	REVIEWED	DATE
RSD	RSD	CLZ	2-13-99
CHECKED	REVISED	STRUCTURE FILE NUMBER	
KAK		4500458	

FENCE DETAILS
BRIDGE NO. LIC-16-2084
PEARL STREET

LIC-16-19.72

4 / 6

465 / 547

L0162840 (SCALE 1.75) 2-13-99

D.S. BROWN COMPANY	WATSON BOWMAN (WABO) ASSOCIATES, INC.	STRUCTURAL ACCESSORIES INC.
TYPE SS-E STEEL EXTRUSION	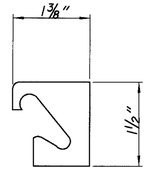 TYPE E STEEL EXTRUSION	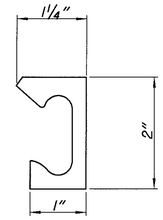 TYPE AM2 STEEL EXTRUSION
STRIP SEAL SSE2 (SEE SHEET 545 FOR DETAILS)	STRIP SEAL SE-300	STRIP SEAL ONFLEX 40SEQ

D.S. BROWN CO.
P.O. BOX 158
NORTH BALTIMORE, OH., 45872
PH. • (419) 257-3561

STRUCTURAL ACCESSORIES
P.O. BOX 10
TERRYVILLE, CT., 06786
PH. • (203) 589-8826

WABO CORP.
P.O. BOX 9
AMHERST, N.Y., 14120
PH. • (716) 691-7566

NOTE: CONTRACTOR MAY USE ANY OF THE ABOVE STRIP SEALS, AND EXTRUSIONS, BUT THE CONTRACTOR MUST USE STRIP SEAL THAT CORRESPONDS WITH MANUFACTURERS EXTRUSION.

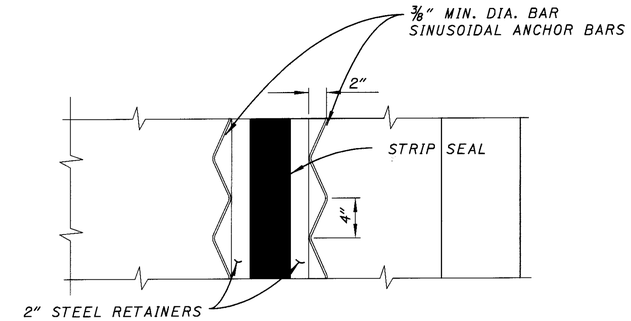

PROPOSED PLAN

AMBIENT TEMP. F°	DIMENSION "A" LIC-16-2084	
	3" SEAL	
	SOUTH EXP. JT.	NORTH EXP. JT.
90°	1 3/8"	1 3/8"
80°	1 3/8"	1 3/8"
70°	1 1/2"	1 1/2"
60°	1 5/8"	1 1/2"
50°	1 5/8"	1 5/8"
40°	1 3/4"	1 5/8"
30°	1 7/8"	1 3/4"

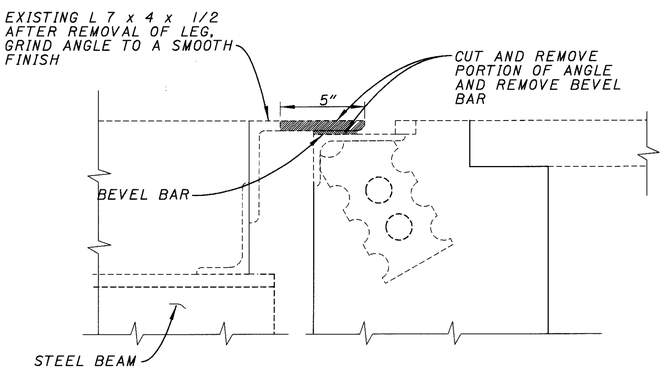

EXISTING ELEVATION

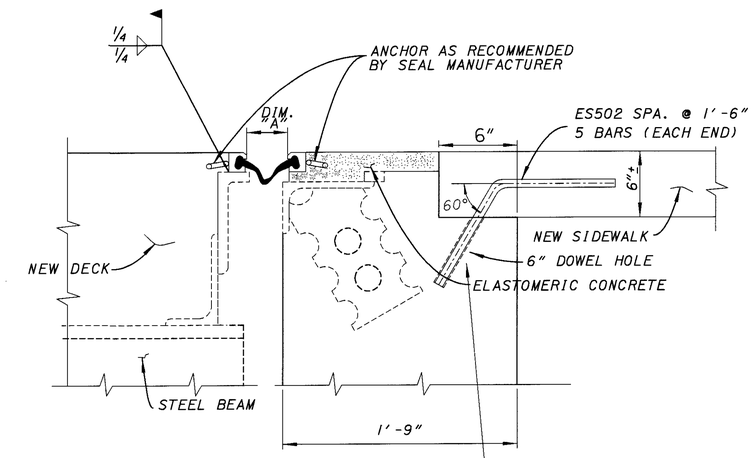

PROPOSED ELEVATION

NOTE:
DOWEL HOLES AND RE-STEEL TO BE INCLUDED WITH ITEM 608-4" CONCRETE WALK FOR PAYMENT.

EXPANSION JOINT DETAIL

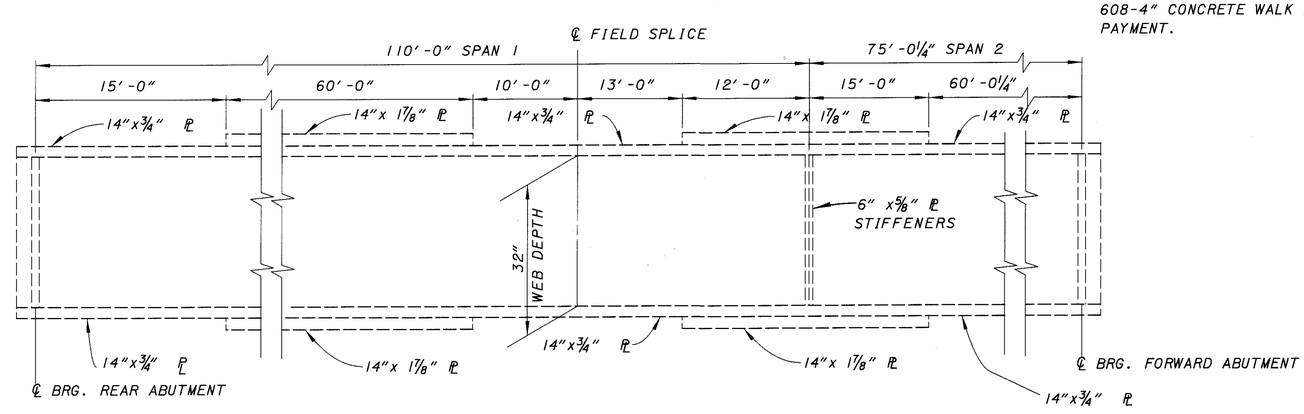

GIRDER ELEVATION

DESIGN AGENCY: OHIO DEPARTMENT OF TRANSPORTATION DISTRICT 5

DESIGNED RSD | CHECKED KAK | DRAWN RSD | REVISED | REVIEWED CLZ | DATE 2-13-99 | STRUCTURE FILE NUMBER 4500458

EXPANSION JOINT DETAILS
BRIDGE NO. LIC-16-2084
PEARL STREET

LIC-16-19.72

5/6

466/547

L0162070 (SCALE 20) 2-13-99

BAR SCHEDULE

SUPERSTRUCTURE

MARK	NUMBER	LENGTH	SHAPE	WEIGHT
ES401	104	40'-0"	ST.	2,779
ES402	26	36'-3"	ST.	630
ES403	506	9'-8"	ST.	3,267
ES404	689	3'-7"	BT.	685
ES405	4	21'-8"	ST.	58
ES501	11	40'-0"	ST.	459
ES502	10	3'-2"	BT.	33
ES503	11	15'-9"	ST.	181
TOTAL				8,065

BENDING DIAGRAMS

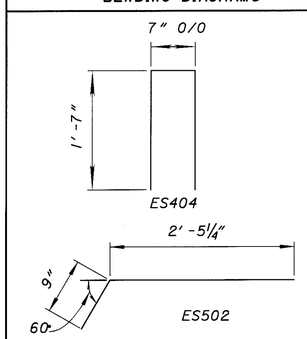

NOTE:
ALL RE-STEEL TO BE INCLUDED WITH ITEM 844-HIGH PERFORMANCE CONCRETE SUPERSTRUCTURE (DECK)

DESIGN AGENCY
OHIO DEPARTMENT OF TRANSPORTATION DISTRICT 5

REVIEWED CLZ DATE 2-13-99
STRUCTURE FILE NUMBER 4503481

DRAWN DDH
REVISED

DESIGNED RSD
CHECKED KAK

BAR SCHEDULES AND BENDING DIAGRAMS
BRIDGE NO. LIC-16-2084
OVER PEARL STREET

LIC-16-19.72

6 / 6

467 / 547

L0162072 (SCALE 1) 2-13-99)

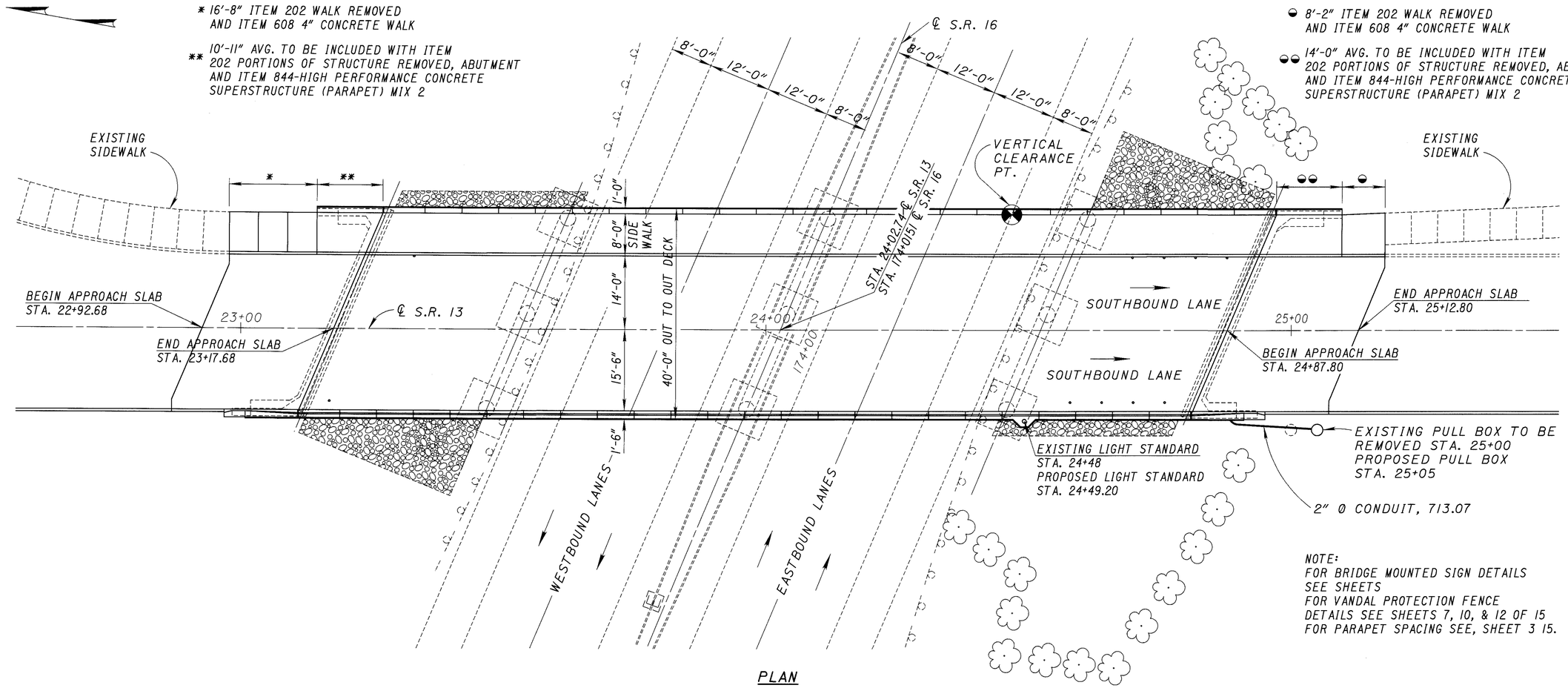

NOTE:
FOR BRIDGE MOUNTED SIGN DETAILS SEE SHEETS
FOR VANDAL PROTECTION FENCE DETAILS SEE SHEETS 7, 10, & 12 OF 15
FOR PARAPET SPACING SEE, SHEET 3 15.

PLAN

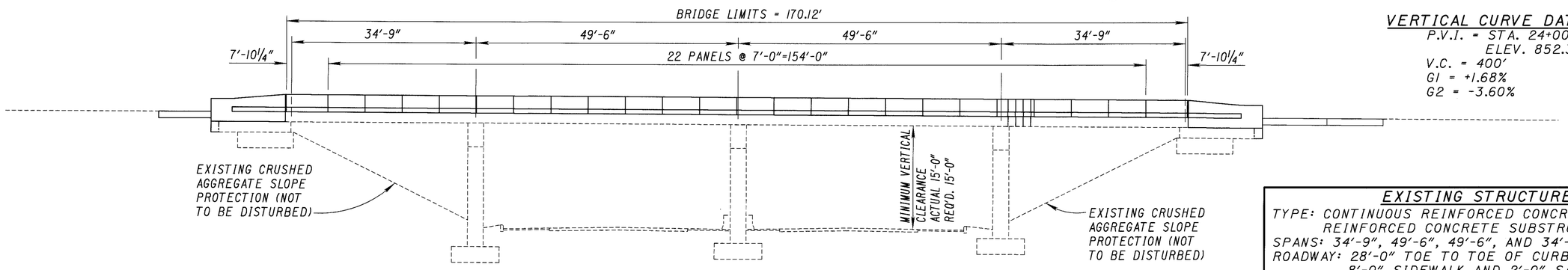

ELEVATION

VERTICAL CURVE DATA

P.V.I. = STA. 24+00
ELEV. 852.30
V.C. = 400'
G1 = +1.68%
G2 = -3.60%

EXISTING STRUCTURE

TYPE: CONTINUOUS REINFORCED CONCRETE SLAB WITH REINFORCED CONCRETE SUBSTRUCTURE
SPANS: 34'-9", 49'-6", 49'-6", AND 34'-9"
ROADWAY: 28'-0" TOE TO TOE OF CURBS WITH 8'-0" SIDEWALK AND 2'-0" SAFETY CURB
LOADING: HS 20-44
SKEW: 22°48'07" L.F.
WEARING SURFACE: 1" MONOLITHIC CONCRETE
APPROACH SLABS: AS-1-67 (25' LONG)
ALIGNMENT: TANGENT
SUPERELEVATION: NONE

REHABILITATED STRUCTURE

ROADWAY: 29'-6" TOE TO TOE OF CURBS
BRIDGE RAILING: DEFLECTOR PARAPET TYPE (WEST SIDE) AND 8'-0" SIDEWALK WITH VANDAL PROTECTION (EAST SIDE)
WEARING SURFACE: 1 1/4" MICRO-SILICA MODIFIED CONCRETE OVERLAY (1 1/4" HYDRODEMOLITION)
APPROACH SLABS: AS-1-81 (25' LONG)

DESIGN AGENCY: OHIO DEPARTMENT OF TRANSPORTATION DISTRICT 5
DATE: 2-11-99
REVIEWED: CLZ
STRUCTURE FILE NUMBER: 4500660
DRAWN: DDH
REVISED:
DESIGNED: RSD
CHECKED: DTF

GENERAL PLAN AND ELEVATION
BRIDGE NO. LIC-13-0988
S.R. 13 (MT. VERNON RD.) OVER S.R.16

LIC-16-19.72

1/15

468/547

L0130907 (SCALE 10.667) 2-11-99

ITEM	ITEM EXT.	GRAND TOTAL	UNIT	DESCRIPTION	SUPER.	ABUT.	PIERS	GENERAL
202	11000	LUMP		CLEARING AND GRUBBING	--	--	--	LUMP
202	11300	88	CU YD	PORTIONS OF STRUCTURE REMOVED, SUPERSTRUCTURE	88	--	--	--
202	11300	22	CU YD	PORTIONS OF STRUCTURE REMOVED, ABUTMENT	--	22	--	--
202	22900	156	SQ YD	APPROACH SLAB REMOVED, AS PER PLAN	--	--	--	156
202	30000	199	SQ FT	WALK REMOVED	--	--	--	199
202	75000	370	LIN FT	FENCE REMOVED, PEDESTRIAN FENCING ON STRUCTURES	370	--	--	--
203	12000	98	CU YD	EXCAVATION NOT INCLUDING EMBANKMENT CONSTRUCTION	--	--	--	98
203	20000	55	CU YD	EMBANKMENT	--	--	--	55
203	50000	166	SQ YD	SUBGRADE COMPACTION	--	--	--	166
304	20000	48	CU YD	AGGREGATE BASE	--	--	--	48
503	21300	LUMP		UNCLASSIFIED EXCAVATION	--	--	--	LUMP
SPECIAL	51267510	547	SQ YD	SEALING OF CONCRETE SURFACES (EPOXY - URETHANE)	466	81	--	--
516	13600	58	SQ FT	1" PREFORMED EXPANSION JOINT FILLER	58	--	--	--
518	51300	10	EACH	DOWNSPOUT MODIFICATION	10	--	--	--
518	21200	LUMP		POROUS BACKFILL WITH FILTER FABRIC	--	LUMP	--	--
518	40000	75	LIN FT	6" PERFORATED CORRUGATED PLASTIC PIPE (SS 944)	--	75	--	--
518	40010	28	LIN FT	6" NON-PERFORATED CORRUGATED PLASTIC PIPE INCLUDING SPECIALS (SS944)	--	28	--	--
519	11100	9	SQ FT	PATCHING CONCRETE STRUCTURE	--	9	--	--
604	36600	2	EACH	PRECAST REINFORCED CONCRETE OUTLET	--	2	--	--
SPECIAL	60739900	189	LIN FT	VANDAL PROTECTION FENCE, 6' STRAIGHT, COATED FABRIC	189	--	--	--
SPECIAL	60739920	186	LIN FT	VANDAL PROTECTION FENCE, 10' CURVED, COATED FABRIC	186	--	--	--
608	10000	199	SQ FT	4" CONCRETE WALK	--	--	--	199
611	25001	168	SQ YD	REINFORCED CONCRETE APPROACH SLAB (T=15"), AS PER PLAN	--	--	--	168
625	10600	4	EACH	LIGHT POLE ANCHOR L-BOLTS	4	--	--	--
625	25402	408	LIN FT	CONDUIT, 2", 713.07	351	57	--	--
625	29002	14	LIN FT	TRENCH, 24" DEEP	--	--	--	14
625	29920	2	EACH	STRUCTURE JUNCTION BOX, TYPE I WITH COVER PLATE	2	--	--	--
625	29920	3	EACH	STRUCTURE JUNCTION BOX, TYPE II WITH COVER PLATE	3	--	--	--
625	33000	1	EACH	STRUCTURE GROUNDING SYSTEM	1	--	--	--
844	48020	113	CU YD	HIGH PERFORMANCE CONCRETE, SUPERSTRUCTURE (PARAPET) MIX 2	92	21	--	--
844	49000	LUMP		HIGH PERFORMANCE CONCRETE TRIAL MIX				
848	10000	558	SQ YD	MICRO-SILICA MODIFIED CONCRETE OVERLAY, USING HYDRODEMOLITION (T=1 1/4")	558	--	--	--
848	30000	39	CU YD	MICRO-SILICA MODIFIED CONCRETE OVERLAY (VARIABLE THICKNESS), MATERIAL ONLY	39	--	--	--
848	50100	LUMP		TEST SLAB	LUMP	--	--	--
848	20000	558	SQ YD	SURFACE PREPARATION USING HYDRODEMOLITION	558			
848	50000	55	SQ YD	HAND CHIPPING	55			
				QUANTITIES CARRIED TO SHEETS 405A AND 405B				

CALCULATED D.D.H.
CHECKED R.S.D.

BRIDGE SUMMARY
BRIDGE NO. LIC-13-0988
S.R. 13 (MT. VERNON RD.) OVER S.R. 16

LIC-16-19.72

L0160001.GGS 2/10/99 SCALE=1

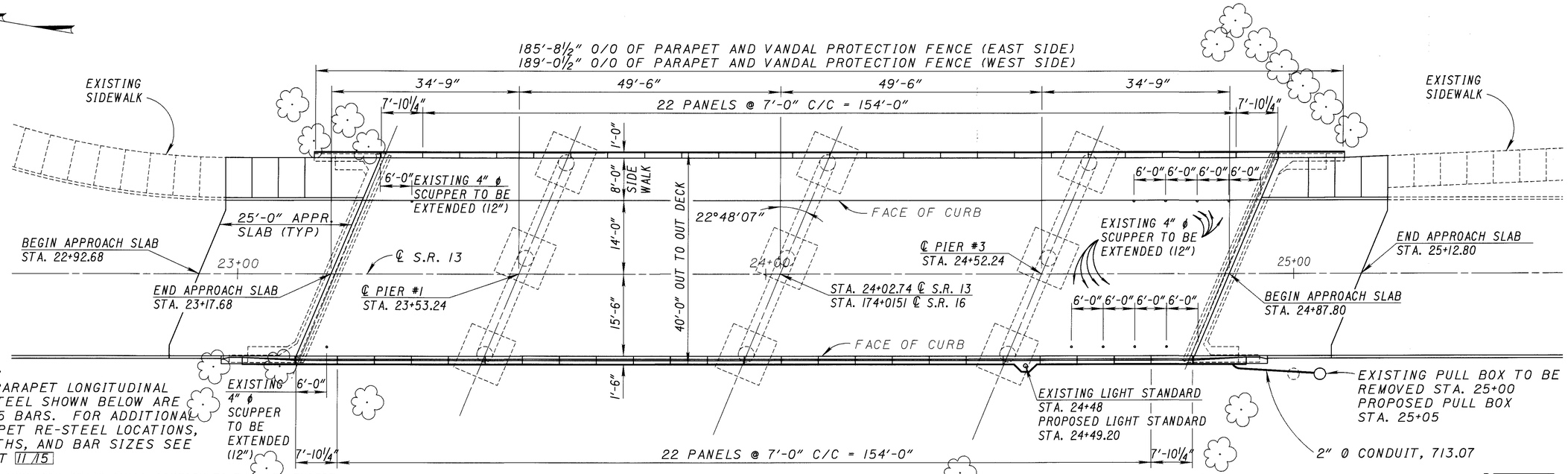

NOTE:
ALL PARAPET LONGITUDINAL RE-STEEL SHOWN BELOW ARE ES505 BARS. FOR ADDITIONAL PARAPET RE-STEEL LOCATIONS, LENGTHS, AND BAR SIZES SEE SHEET 11/15

NOTE: JUNCTION BOXES SHALL CONFORM TO 713.10, EXCEPT THAT GALVANIZED STEEL PLATE COVERS SHALL CONFORM TO ASTM A-242 OR A-36.

NOTE: CONSTRUCTION SHALL CONFORM TO REQUIREMENTS OF 511, 622 AND 625

NOTE: FOR STRUCTURE GROUNDING SEE STD. DWG. HL-50.21

NOTE: THE UNIT PRICE BID FOR "ITEM 625- STRUCTURE JUNCTION BOX, TYPE II WITH COVER PLATE" SHALL BE FULL COMPENSATION FOR FURNISHING AND PLACING THE TYPE II JUNCTION BOX, MODIFIED 1½" DIA. CONDUIT, GROUNDING BUSHINGS, LOCKNUTS, AND ALL LABOR, MATERIAL, EQUIPMENT, AND INCIDENTALS NECESSARY TO COMPLETE THE WORK AS SPECIFIED

NOTE:
ALL TREES WITH BRANCHES WITHIN 5'-0"± OF THE BRIDGE SHALL BE REMOVED UNDER ITEM 201 CLEARING AND GRUBBING (LUMP SUM)

GENERAL PLAN

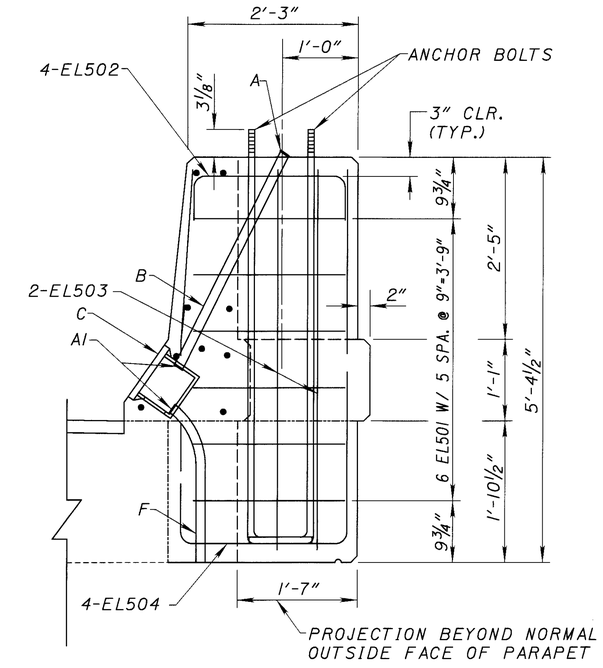

SECTION A-A

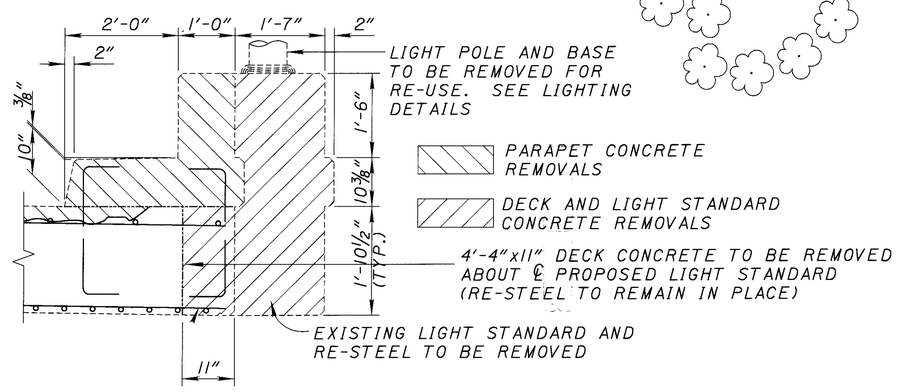

A: GROUNDING BUSHING FOR 1½" ø CONDUIT
A1: GROUNDING BUSHING & LOCKNUT FOR 1½" ø CONDUIT
B: 1½" ø CONDUIT 713.07
C: TYPE II JUNCTION BOX
D: GROUNDING BUSHING FOR 2" ø CONDUIT, INCLUDING LOCKNUT
E: 2" ø CONDUIT 713.07
F: 2" ø CONDUIT DRAIN 713.07

NOTE: FOR MORE DETAILS SEE STD. DWGS. HL-10.11, HL-10.12, HL-10.13, HL-20.14 AND HL-50.21

NOTE: REMOVALS OF JUNCTION BOXES, WIRING, ETC. AT PILASTER LOCATIONS SHALL BE INCLUDED WITH ITEM 202-PORTIONS OF STRUCTURE REMOVED, SUPERSTRUCTURE.

NOTE: THE TOP OF THE CONCRETE BARRIER SHALL BE FLAT, SMOOTH, AND LEVEL TO ELIMINATE NEED FOR LIGHT POLE SHIMS. GRIND SURFACE, IF REQUIRED, TO MAKE CONCRETE LEVEL.

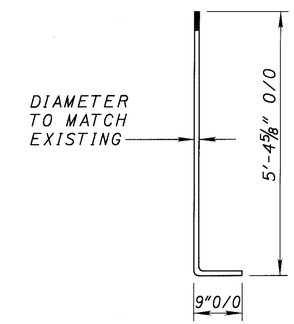

ANCHOR BOLT DETAIL

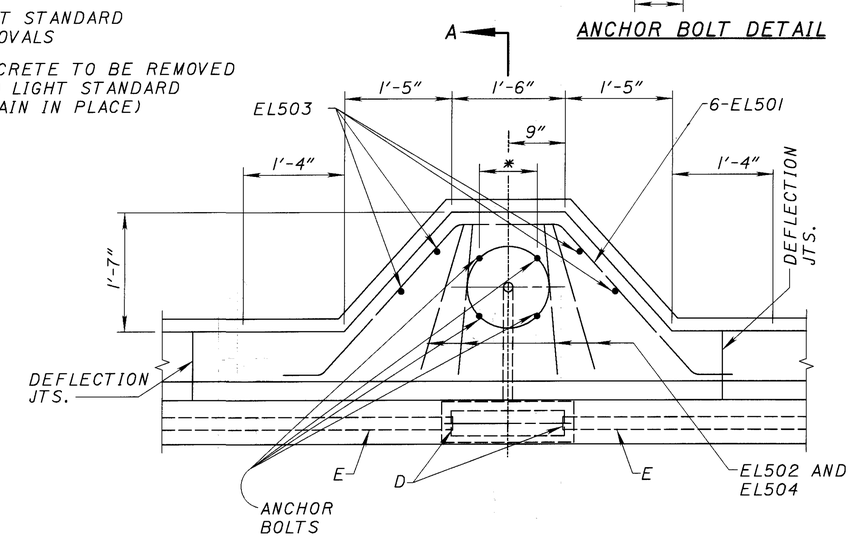

NOTE:
RE-STEEL TO BE INCLUDED WITH ITEM 844 HIGH PERFORMANCE CONCRETE, SUPERSTRUCTURE (PARAPET).

PLAN

* ANCHOR BOLTS SHALL BE SPACED THE SAME AS THE EXISTING ANCHOR BOLTS

DESIGN AGENCY: OHIO DEPARTMENT OF TRANSPORTATION DISTRICT 5

DESIGNED	DRAWN	REVIEWED	DATE
RSD	DDH	CLZ	2-11-99
CHECKED	REVISED	STRUCTURE FILE NUMBER	
DTF		4500660	

GENERAL PLAN
BRIDGE NO. LIC-13-0988
S.R. 13 (MT. VERNON RD.) OVER S.R. 16

LIC-16-19.72

3/15

470/547

L0130942 (SCALE 1) 2-11-99

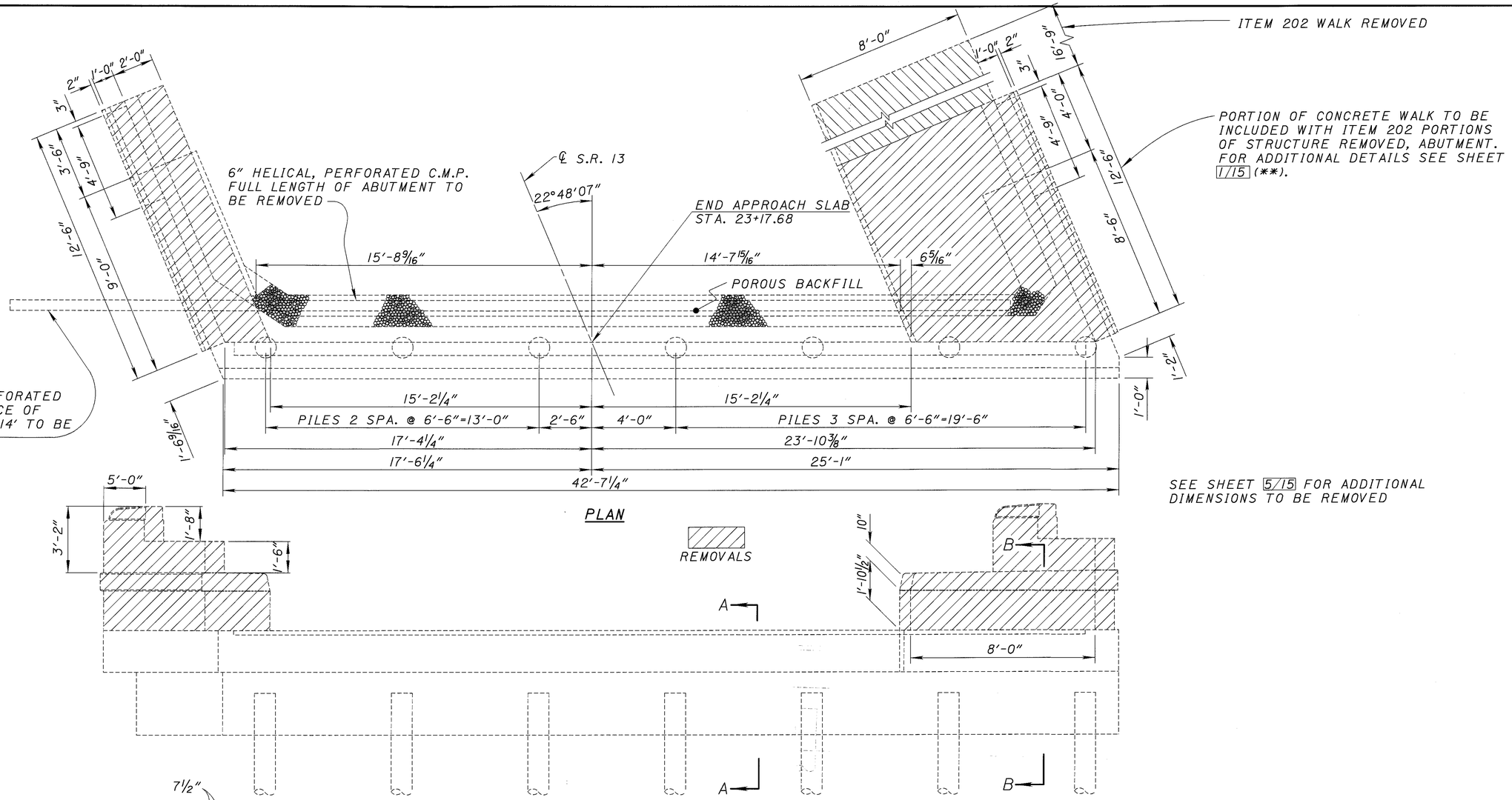

NOTE:
EXISTING C.M.P. AND POROUS BACKFILL SHALL BE REMOVED AS PER 518.09.

DESIGN AGENCY: OHIO DEPARTMENT OF TRANSPORTATION DISTRICT 5

DESIGNED	DRAWN	REVIEWED	DATE
RSD	DDH	CLZ	2-11-99
CHECKED	REVISED	STRUCTURE FILE NUMBER	
DTF		4500660	

EXISTING REAR ABUTMENT (REMOVALS)
BRIDGE NO. LIC-13-0988
S.R. 13 (MT. VERON RD.) OVER S.R. 16

LIC-16-19.72

4/15

471/547

L0130931 (SCALE 2.6667) 2-11-99

NOTE:
EXISTING C.M.P. AND POROUS BACKFILL SHALL BE REMOVED AS PER 518.09.

ITEM 202 WALK REMOVED

PORTION OF CONCRETE WALK TO BE INCLUDED WITH ITEM 202 PORTIONS OF STRUCTURE REMOVED, ABUTMENT. FOR ADDITIONAL DETAILS SEE SHEET 1/15 (●●).

6" HELICAL, NON-PERFORATED C.M.P. TO THE SURFACE OF THE SLOPE, APPROX. 14' TO BE REMOVED

6" HELICAL, PERFORATED C.M.P. FULL LENGTH OF ABUTMENT TO BE REMOVED

℄ S.R. 13

22°48'07"

BEGIN APPROACH SLAB STA. 24+87.80

POROUS BACKFILL

8'-0"
2"
1'-0"
3"
2'-8"
3'-6"
4'-9"
12'-6"
10'-6"
6 5/16"
15'-8 9/16"
14'-7 15/16"
2'-0"
1'-0"
2"
3"
4'-0"
4'-9"
12'-6"
10'-8"
1'-2"
1'-0"
9 1/16"
15'-2 1/4"
15'-2 1/4"
PILES 3 SPA. @ 6'-6"=19'-6"
2'-6"
4'-0"
PILES 2 SPA. @ 6'-6"=13'-0"
23'-10 3/8"
17'-4 1/4"
24'-0 3/8"
18'-6 7/8"
42'-7 1/4"

SEE SHEET 4/15 FOR ADDITIONAL DIMENSIONS TO BE REMOVED

PLAN

REMOVALS

NOTE:
FOR SECTIONS A-A AND B-B SEE SHEET 4/15

10"
1'-10 1/2"
8'-0"

ELEVATION

12'-6"
5'-0"
1'-0"
5'-6"
1'-0"
3"
1'-6"
11 1/2"
1'-10 1/2"
2'-0"
3'-0"
3'-6"
6" C.M.P.

VIEW F-F

1'-0"
8'-0"
10"
1'-6"
11 1/2"
1'-10 1/2"
2'-0"
3'-0"
1'-9"
3'-0"

SECTION C-C

12'-6"
1'-0"
5'-6"
1'-0"
5'-0"
3"
8"
2'-6"
3'-2"
1'-6"
10 3/8"
1'-10 1/2"
2'-0"
3'-0"
4'-0"

VIEW E-E

2'-0"
1'-0"
2"
10"
1'-6"
10 3/8"
1'-9"
1'-10 1/2"
2'-0"
3'-0"
3'-0"

SECTION D-D

LAN30931 (SCALE 2.6667) 2-11-99

DESIGN AGENCY	OHIO DEPARTMENT OF TRANSPORTATION DISTRICT 5
DATE	2-11-99
REVIEWED	CLZ
STRUCTURE FILE NUMBER	4500660
DRAWN	DDH
REVISED	
DESIGNED	RSD
CHECKED	DTF

EXISTING FORWARD ABUTMENT (REMOVALS)
BRIDGE NO. LIC-13-0988
S.R. 13 (MT. VERNON RD.) OVER S.R. 16

LIC-16-19.72

5/15

472/547

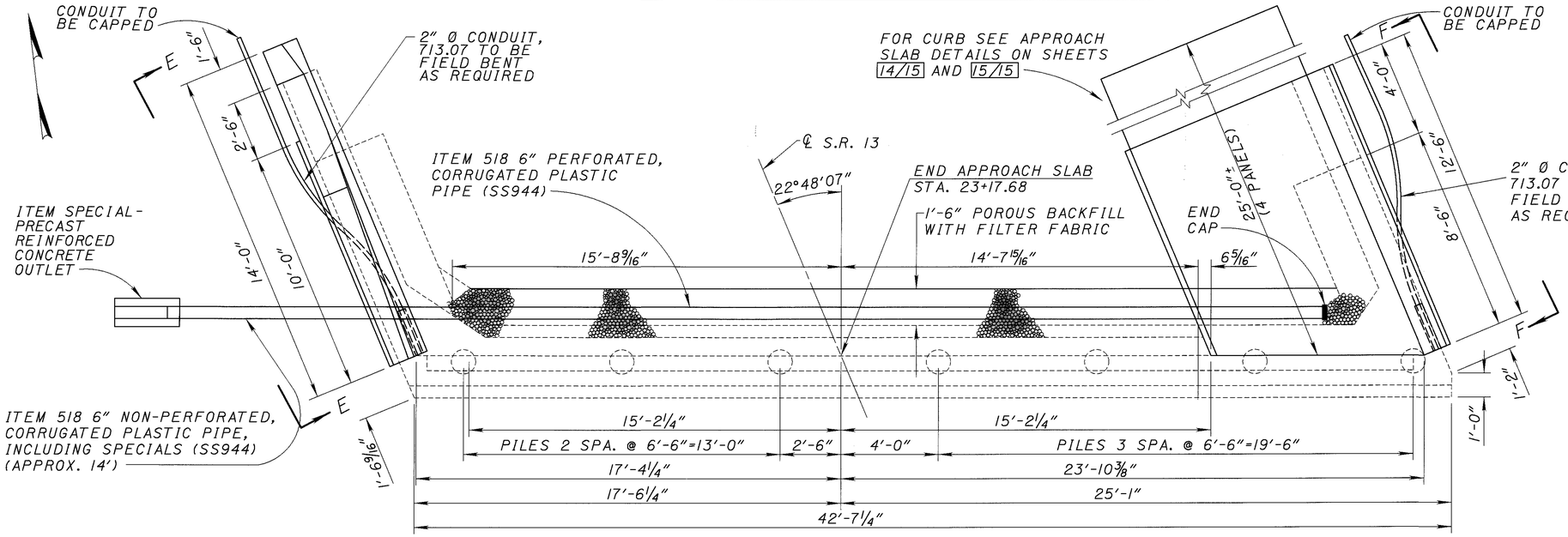

PLAN

NOTE:
FOR VIEWS E-E AND F-F SEE SHEET 7/15.

NOTE:
THE BACKWALLS Ⓐ AND Ⓑ ARE TO BE SEALED WITH ITEM SPECIAL - SEALING CONRETE SURFACES (EPOXY-URETHANE).

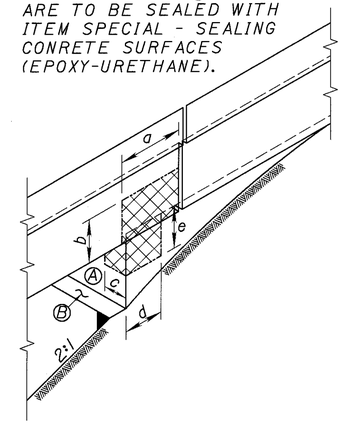

NOTE:
FOR APPROACH SLAB DETAILS SEE SHEETS 14/15 AND 15/15

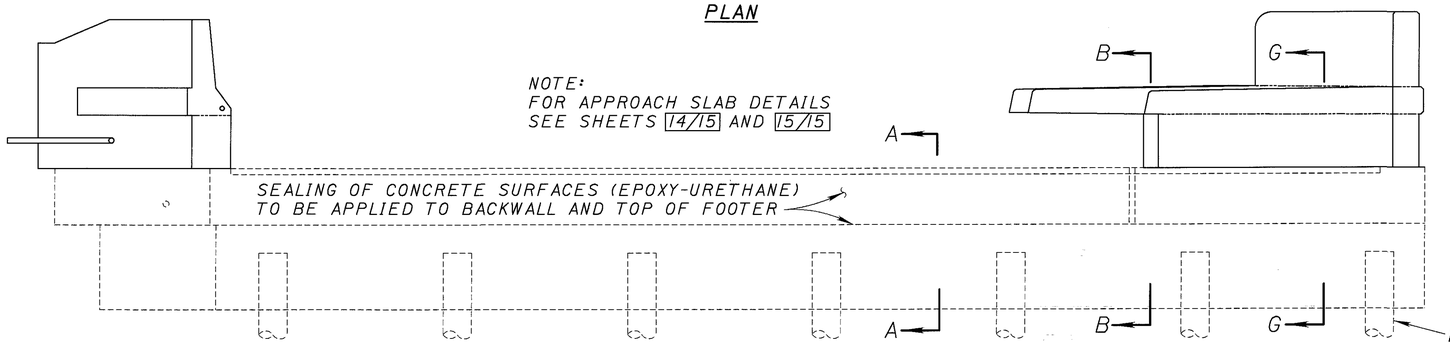

ELEVATION

ITEM 519 PATCHING CONCRETE SURFACES						
ABUTMENT & SIDE		DIMENSION				
FORWARD	REAR	a	b	c	d	e
--	LT.	1'-6"	1'-0"	1'-0"	1'-0"	1'-0"
--	RT	--	--	--	--	--
LT.	--	--	--	--	--	--
RT.	--	2'-0"	2'-0"	--	--	--

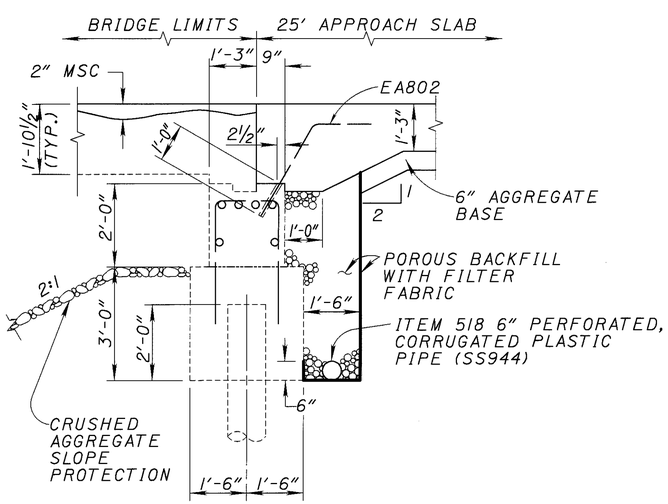

SECTION A-A

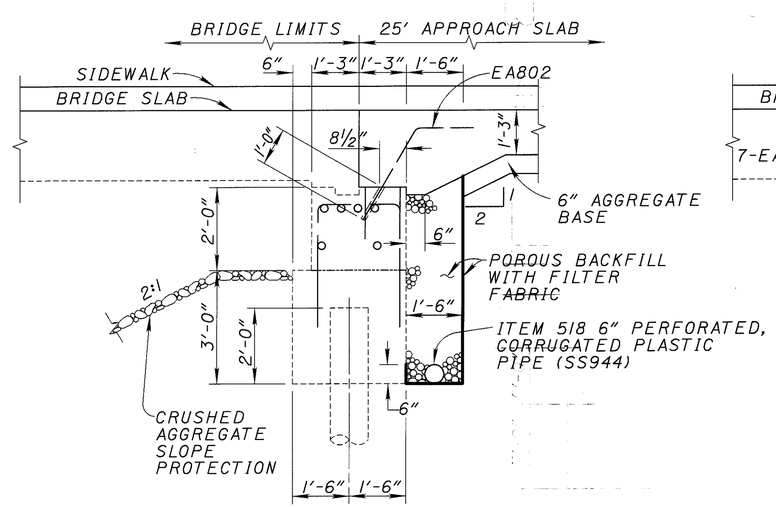

SECTION B-B

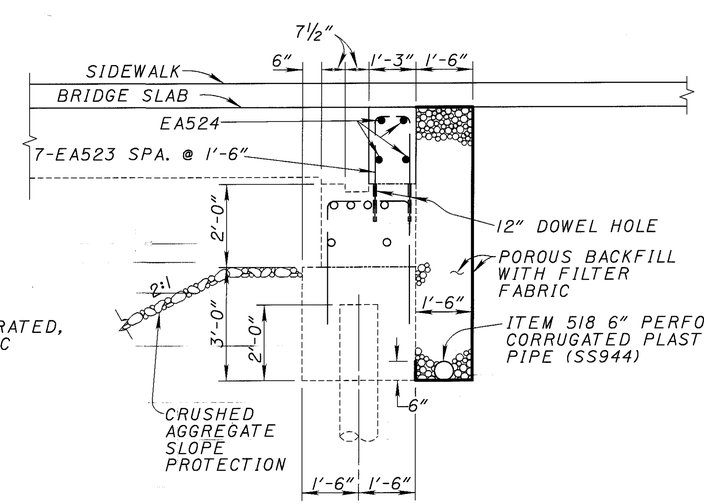

SECTION G-G

DESIGNED	CHECKED	DRAWN	REVISED	REVIEWED	DATE	STRUCTURE FILE NUMBER	DESIGN AGENCY
RSD	DTF	DDH		CLZ	2-11-99	4500660	OHIO DEPARTMENT OF TRANSPORTATION DISTRICT 5

PROPOSED REAR ABUTMENT
BRIDGE NO. LIC-13-0988
S.R. 13 (MT. VERNON RD.) OVER S.R. 16

LIC-16-19.72

L0130932 (SCALE 2.6667) 2-11-99

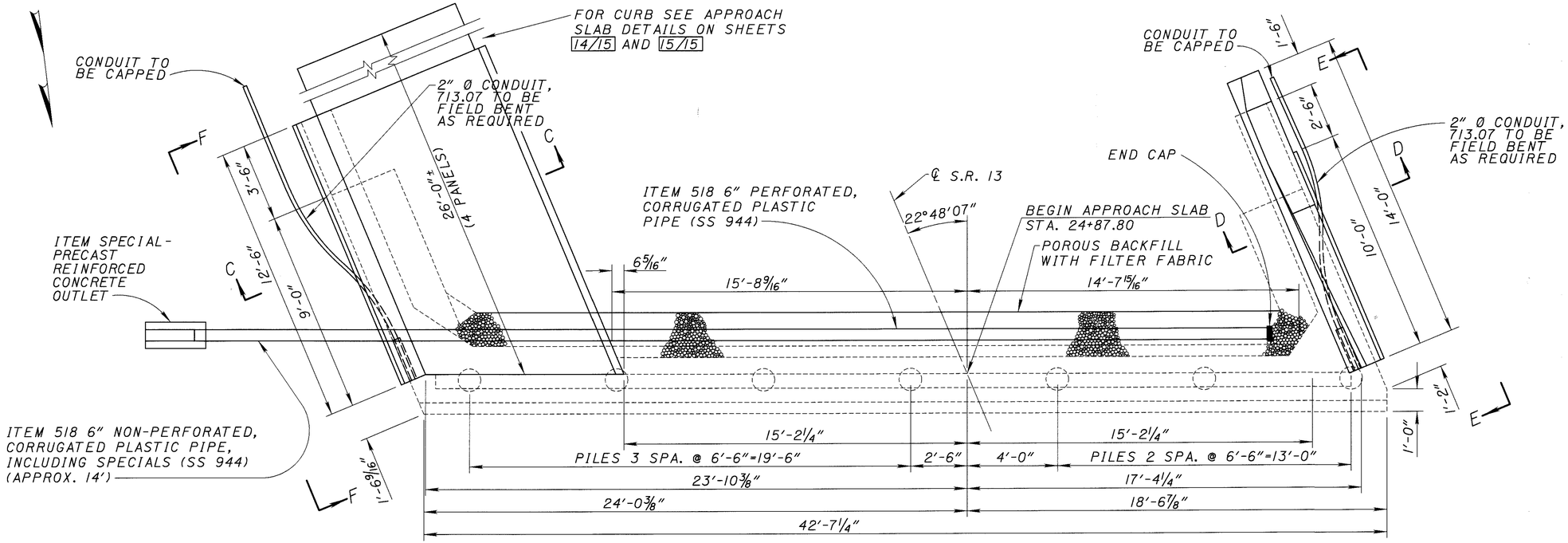

PLAN

NOTE:
FOR APPROACH SLAB DETAILS SEE SHEETS 14/15 AND 15/15

NOTE:
FOR SECTIONS A-A, B-B AND G-G SEE SHEET 6/15

NOTE:
FOR FENCE POST SPACING ON BRIDGE SEE SHEET 12/15

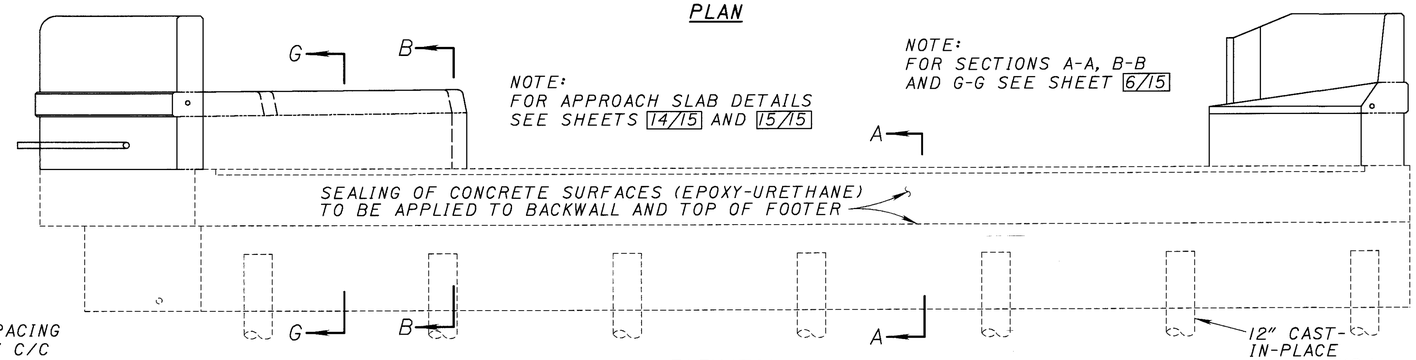

ELEVATION

NOTE:
FOR ADDITIONAL VANDAL PROTECTION FENCE DETAILS SEE STD. DWG. VPF-1-90.

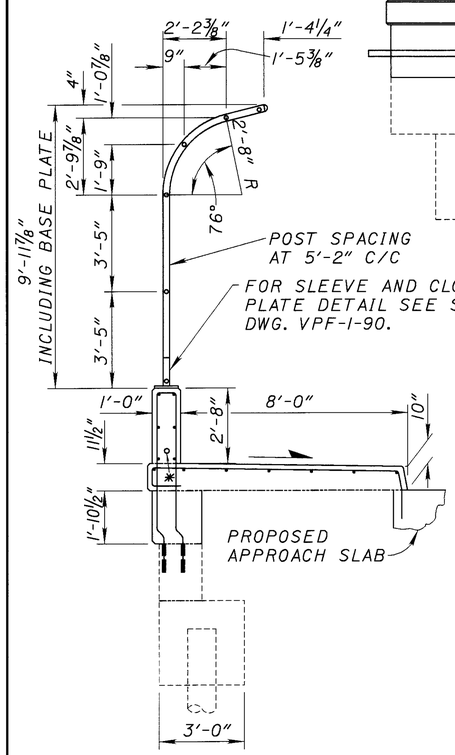

SECTION C-C

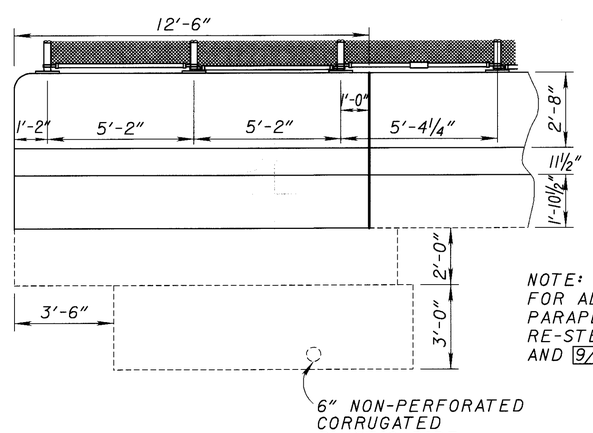

VIEW F-F

NOTE:
FOR ADDITIONAL ABUTMENT PARAPET DETAILS INCLUDING RE-STEEL SEE SHEET 8/15 AND 9/15

* 2" Ø CONDUIT, 713.07

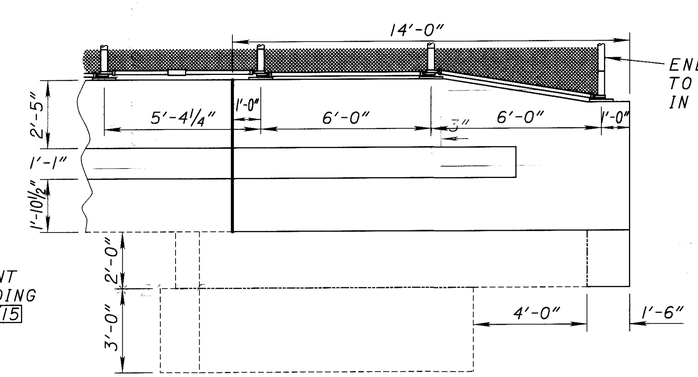

VIEW E-E

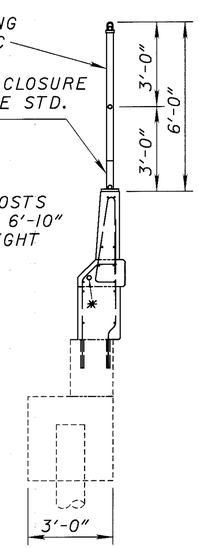

SECTION D-D

DESIGN AGENCY	DATE	STRUCTURE FILE NUMBER
OHIO DEPARTMENT OF TRANSPORTATION DISTRICT 5	2-11-99	4500660

DESIGNED	DRAWN	REVIEWED	REVISED
RSD	DDH	CLZ	
CHECKED			
DTF			

PROPOSED FORWARD ABUTMENT
BRIDGE NO. LIC-13-0988
S.R. 13 (MT. VERNON RD.) OVER S.R. 16

LIC-16-19.72

7/15

474/547

LAI30932 (SCALE 2.6667) 2-11-99

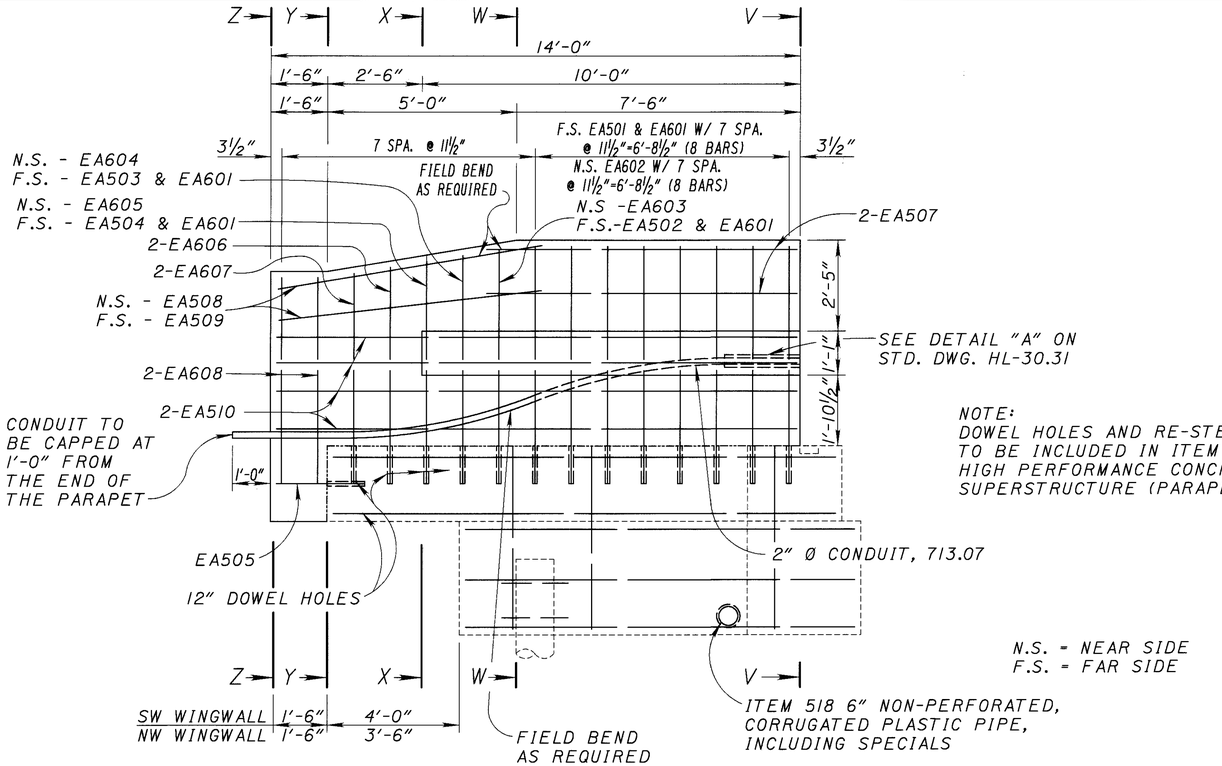

NOTE:
DOWEL HOLES AND RE-STEEL TO BE INCLUDED IN ITEM 844 HIGH PERFORMANCE CONCRETE, SUPERSTRUCTURE (PARAPETS)

N.S. = NEAR SIDE
F.S. = FAR SIDE

PROPOSED WEST WINGWALL PARAPETS

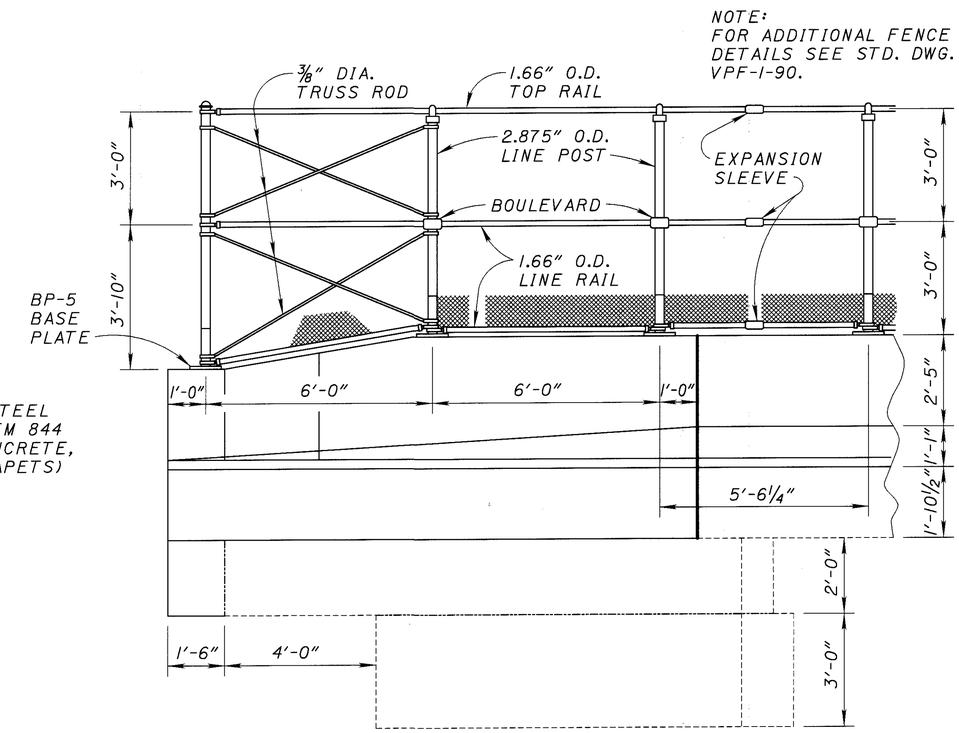

PROPOSED WEST WINGWALL PARAPET FENCE DETAIL

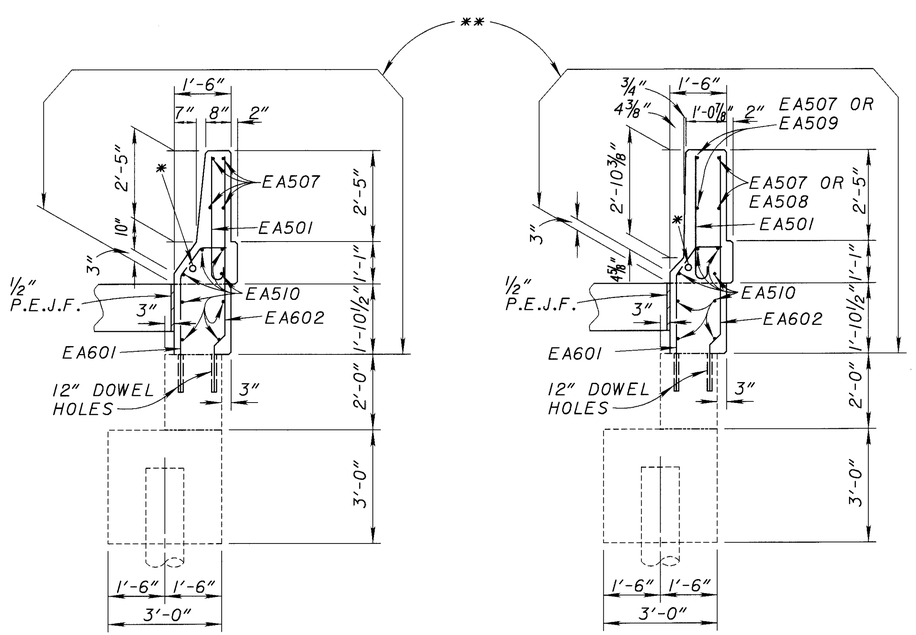

SECTION V-V

SECTION W-W

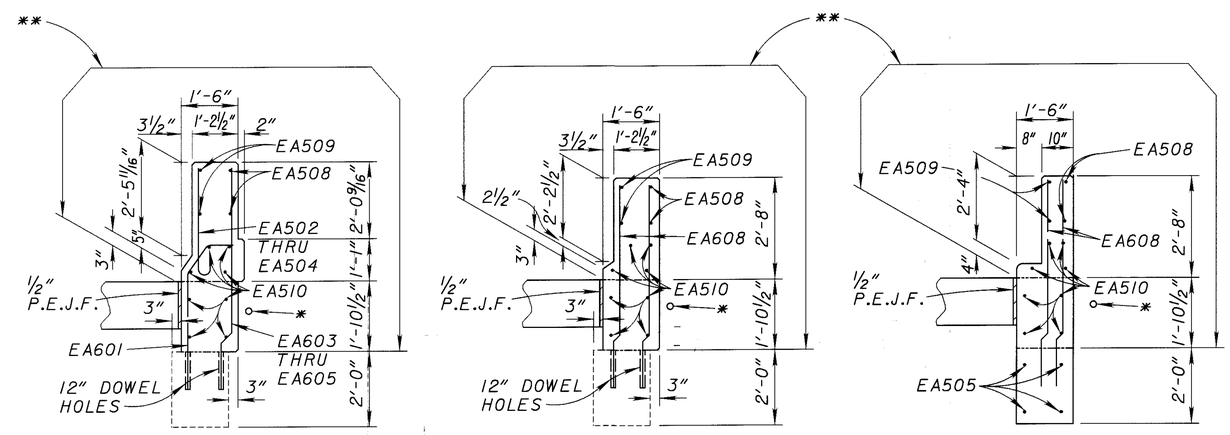

SECTION X-X

SECTION Y-Y

SECTION Z-Z

* 2" Ø CONDUIT, 713.07

**SEALING OF CONCRETE SURFACES (EPOXY-URETHANE)

DESIGN AGENCY: OHIO DEPARTMENT OF TRANSPORTATION DISTRICT 5

DATE: 2-11-99 | REVIEWED: CLZ | STRUCTURE FILE NUMBER: 4500660

DRAWN: DDH | REVISED:

DESIGNED: RSD | CHECKED: DTF

PARAPET DETAILS
BRIDGE NO. LIC-13-0988
S.R. 13 (MT. VERNON RD.) OVER S.R. 16

LIC-16-19.72

8/15

475/547

L0130953 (SCALE 1) 2-11-99

NOTE:
DOWEL HOLES AND RE-STEEL TO BE INCLUDED WITH HIGH PERFORMANCE CONCRETE, SUPERSTRUCTURE (PARAPETS)

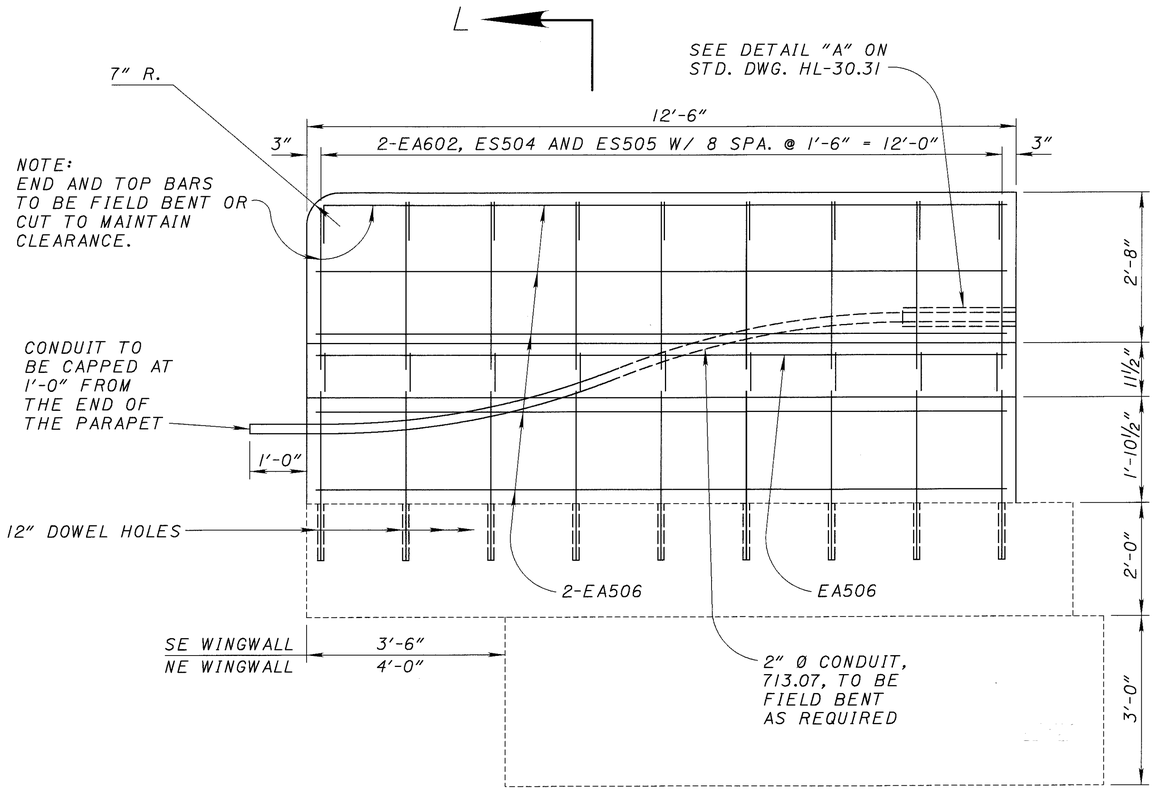

PROPOSED EAST WINGWALL PARAPET

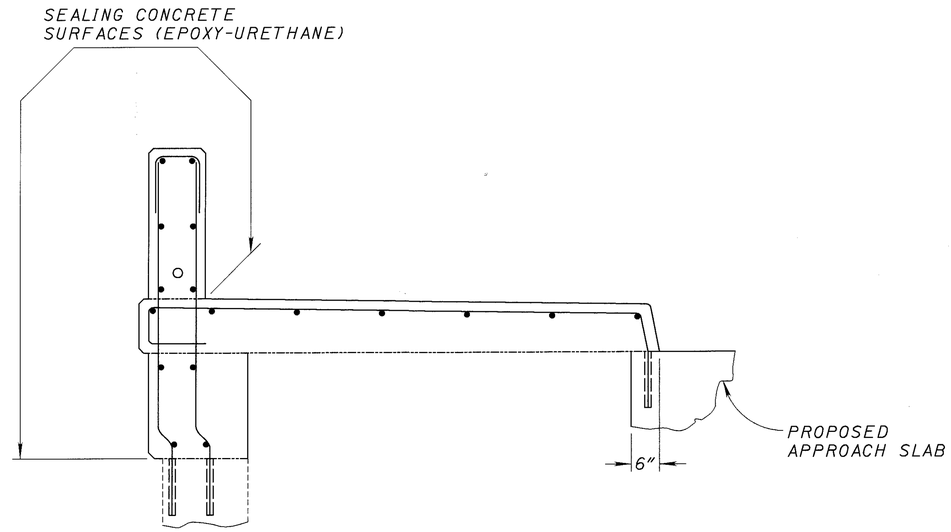

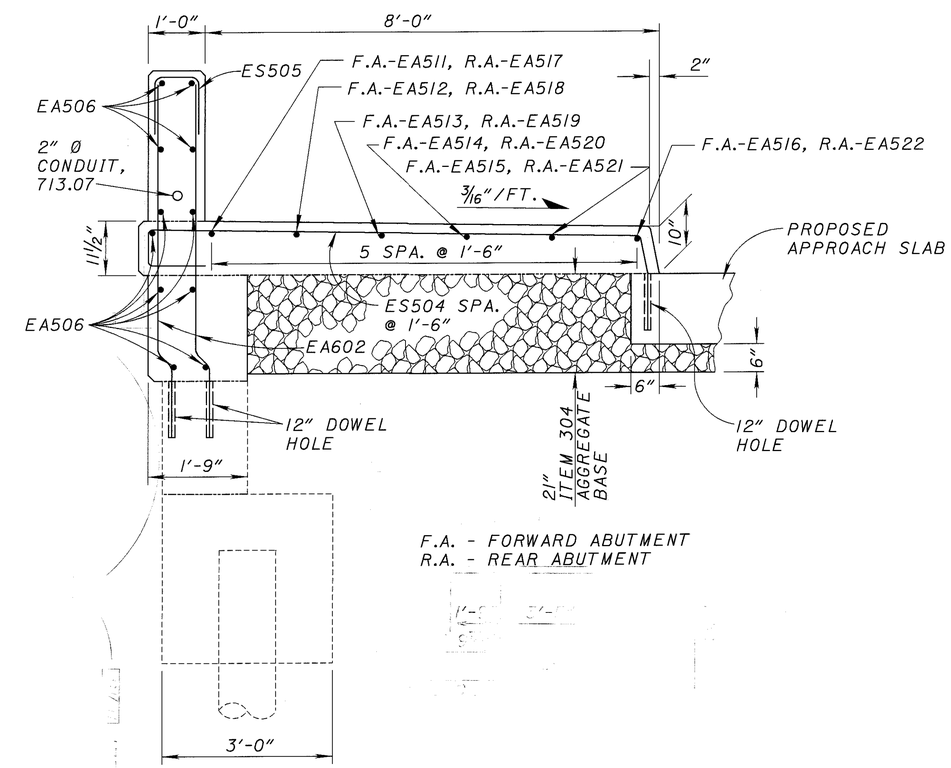

SECTION L-L

DESIGNED RSD	DRAWN DDH	REVIEWED CLZ	DATE 2-11-99
CHECKED DTF	REVISED	STRUCTURE FILE NUMBER 4500660	

DESIGN AGENCY
OHIO DEPARTMENT OF TRANSPORTATION
DIST. 5 BRIDGE DEPT.

EAST ABUTMENT PARAPET DETAILS
BRIDGE NO. LIC-13-0988
S.R. 13 (MT. VERNON RD.) OVER S.R. 16

LIC-16-19.72

LB130953 (SCALE 1.3333) 2-11-99

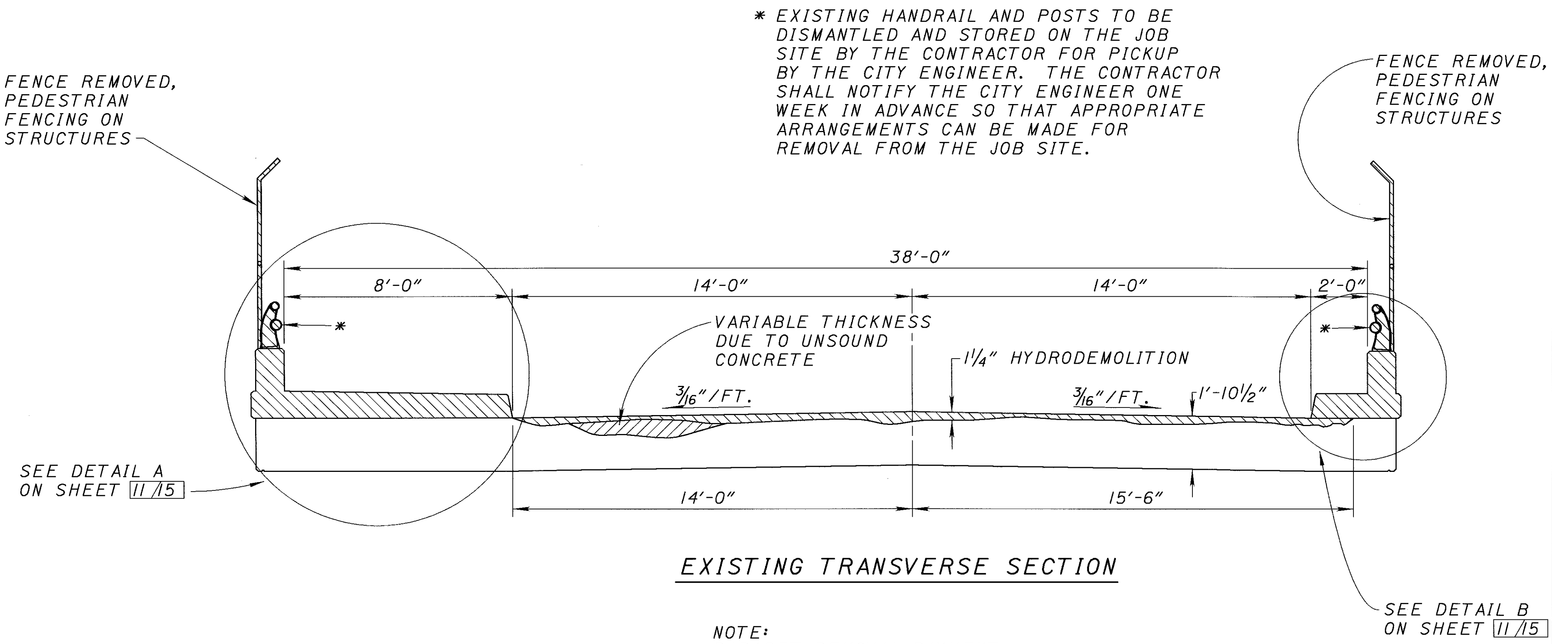

EXISTING TRANSVERSE SECTION

NOTE:
PARAPET REMOVAL PAYMENT INCLUDED IN ITEM 202 PORTIONS OF STRUCTURE REMOVED, SUPERSTRUCTURE.

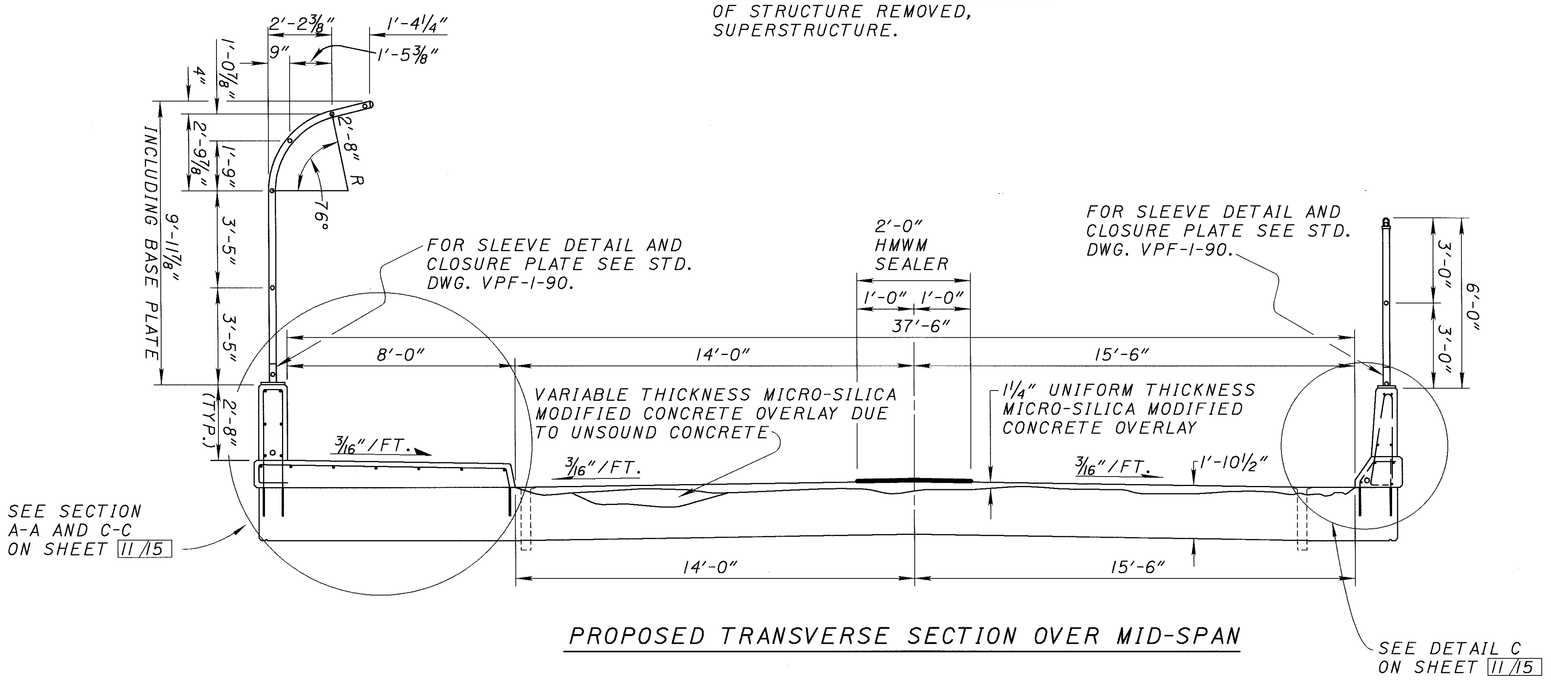

PROPOSED TRANSVERSE SECTION OVER MID-SPAN

NOTE:
TREATING CONCRETE BRIDGE DECK WITH HMWM SEALER (2'-0" WIDE) TO BE INCLUDED IN ITEM 848 MICRO-SILICA MODIFIED CONCRETE OVERLAY, USING HYDRODEMOLITION (T=1¼")

NOTE:
FOR ADDITIONAL FENCE DETAILS INCLUDING POST SPACING SEE SHEET AND STD. DWG. VPF-1-90 DATED 3-24-93, POST SECTIONS PS-1 AND PS-4.

NOTE:
FOR EXISTING AND PROPOSED PARAPET DIMENSIONS SEE SHEET 11/15

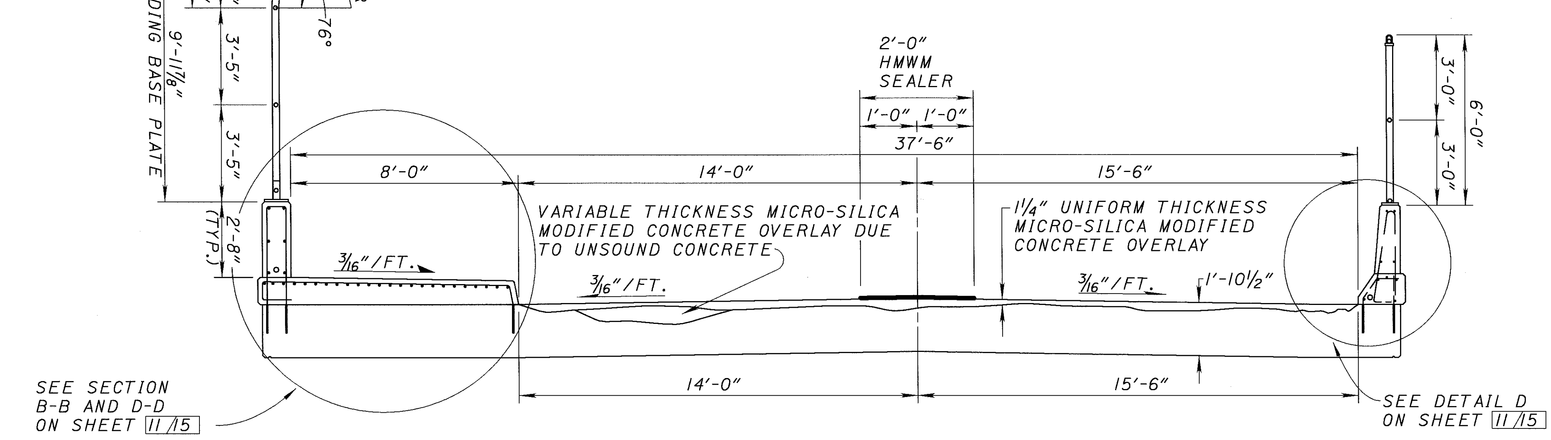

PROPOSED TRANSVERSE SECTION OVER PIERS

477/547	10/15	LIC-16-19.72	TRANSVERSE SECTION BRIDGE NO. LIC-13-0988 S.R. 13 (MT. VERNON RD.) OVER S.R. 16	DESIGNED RSD CHECKED DTF	DRAWN DDH REVISED	REVIEWED CLZ DATE 2-11-99 STRUCTURE FILE NUMBER 4500660	DESIGN AGENCY OHIO DEPARTMENT OF TRANSPORTATION DISTRICT 5

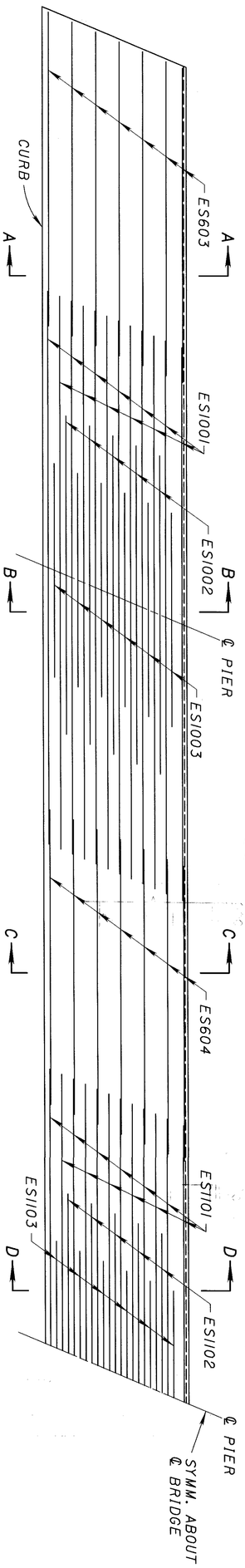

PART PLAN RE-STEEL IN SIDEWALK

PARAPET REMOVAL TO BE INCLUDED IN ITEM 202 PORTIONS OF STRUCTURE REMOVED, SUPERSTRUCTURE FOR PAYMENT

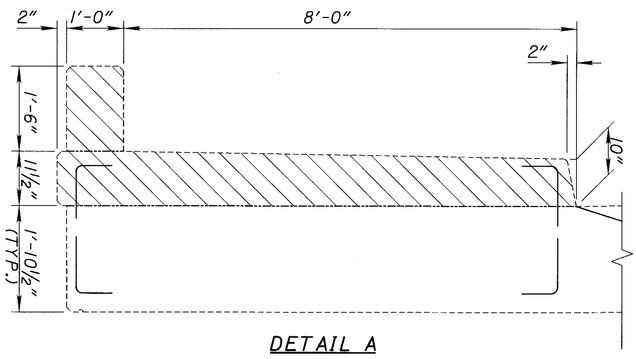

DETAIL A
FROM SHEET 10/15

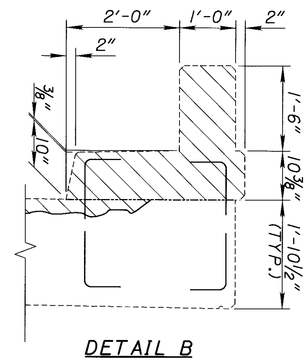

DETAIL B
FROM SHEET 10/15

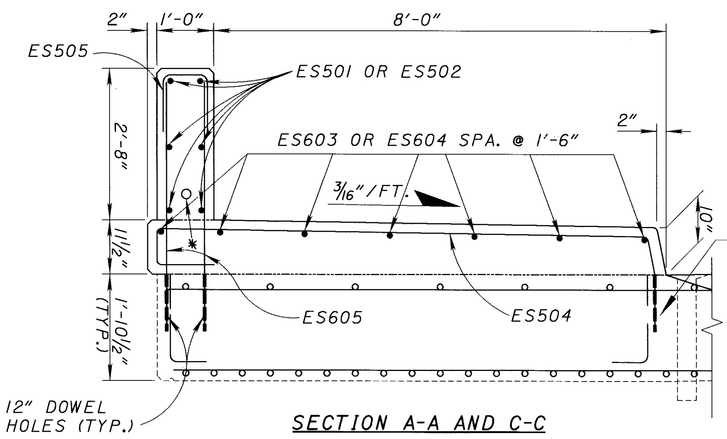

SECTION A-A AND C-C
FROM SHEET 10/15

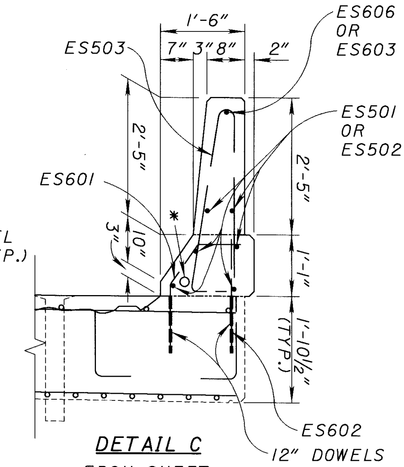

DETAIL C
FROM SHEET 10/15

LAP LENGTHS	
#5	2'-3"
#6	2'-8"

* 2" Ø CONDUIT, 713.07

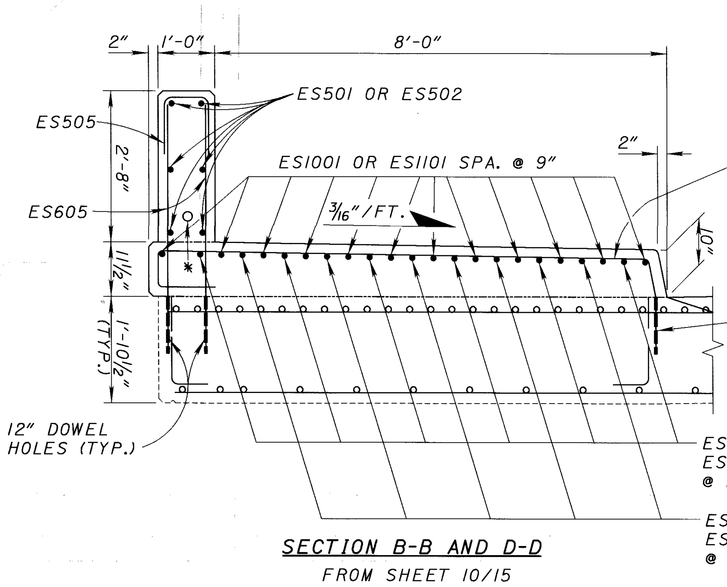

SECTION B-B AND D-D
FROM SHEET 10/15

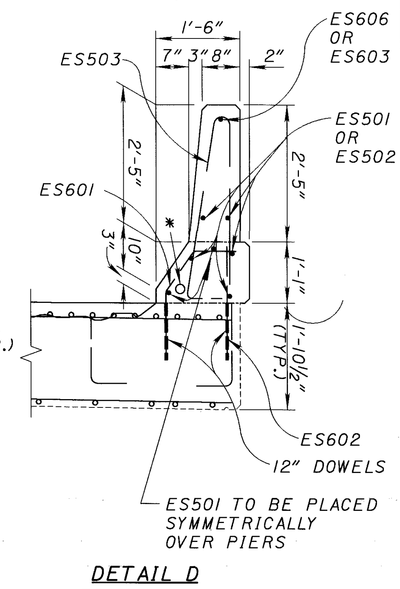

DETAIL D
FROM SHEET 10/15

NOTE:
SIDEWALK CONCRETE, DOWEL HOLES AND RE-STEEL TO BE INCLUDED WITH ITEM 844 HIGH PERFORMANDE CONCRETE, SUPERSTRUCTURE (PARAPETS)

NOTE:
SEE SHEET 12/15 FOR SEALING CONCRETE SURFACE (EPOXY-URETHANE)

478/547	11/15	LIC-16-19.72	PARAPET DETAILS BRIDGE NO. LIC-13-0988 S.R. 13 (MT. VERNON RD.) OVER S.R. 16	DESIGNED RSD CHECKED DTF	DRAWN DDH REVISED	REVIEWED CLZ DATE 2-11-99 STRUCTURE FILE NUMBER 4500660	DESIGN AGENCY OHIO DEPARTMENT OF TRANSPORTATION DISTRICT 5

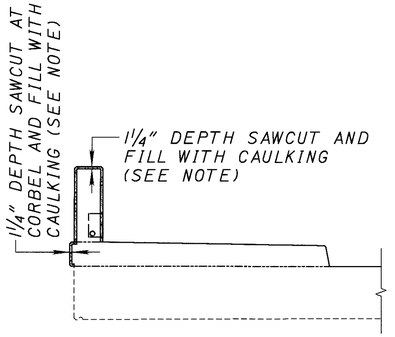

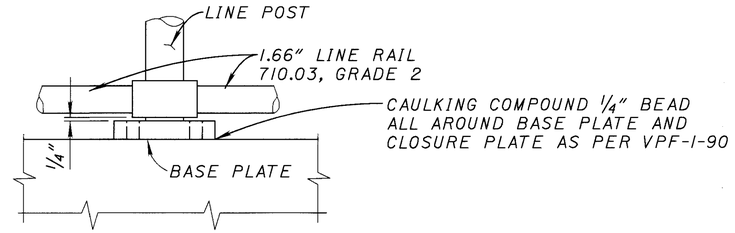

ELEVATION AT LINE POST

NOTE:
SIDEWALK CONCRETE, DOWEL HOLES AND RE-STEEL TO BE INCLUDED WITH ITEM 844 HIGH PERFORMANCE CONCRETE, SUPERSTRUCTURE (PARAPETS).

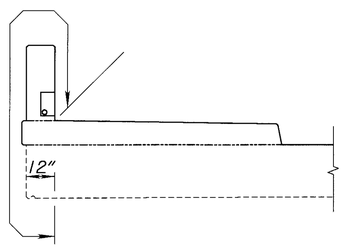

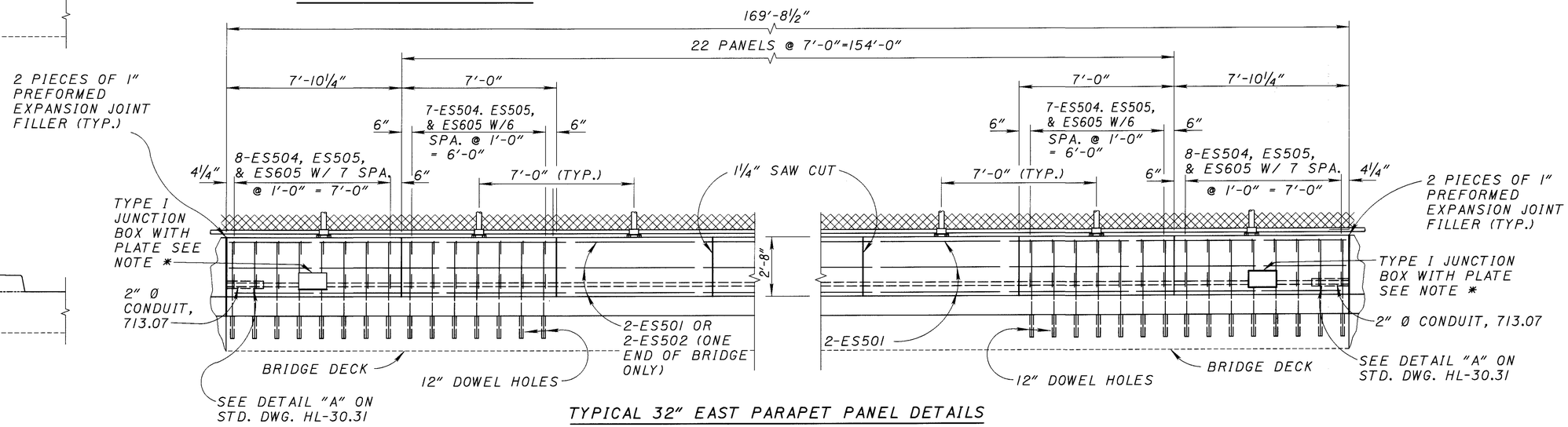

TYPICAL 32" EAST PARAPET PANEL DETAILS

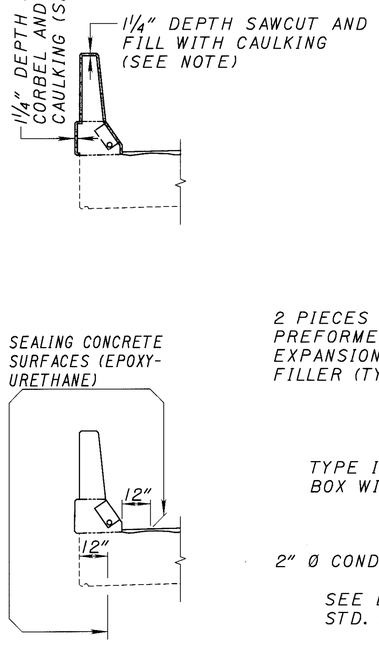

*NOTE:
RE-STEEL MAY NEED TO BE ADJUSTED SO THE TYPE I OR TYPE II JUNCTION BOX CAN BE INSTALLED PROPERLY IN THE OUTSIDE PARAPET.

NOTE:
SEE SHEETS 10/15 AND 11/15 FOR 32" OUTSIDE PARAPET CROSS SECTION WITH RE-STEEL LAYOUT.

NOTE:
LAP LENGTH FOR #5 BARS IS 2'-3"

NOTE:
FOR FENCE POST SPACING OFF THE BRIDGE SEE SHEET 7/15

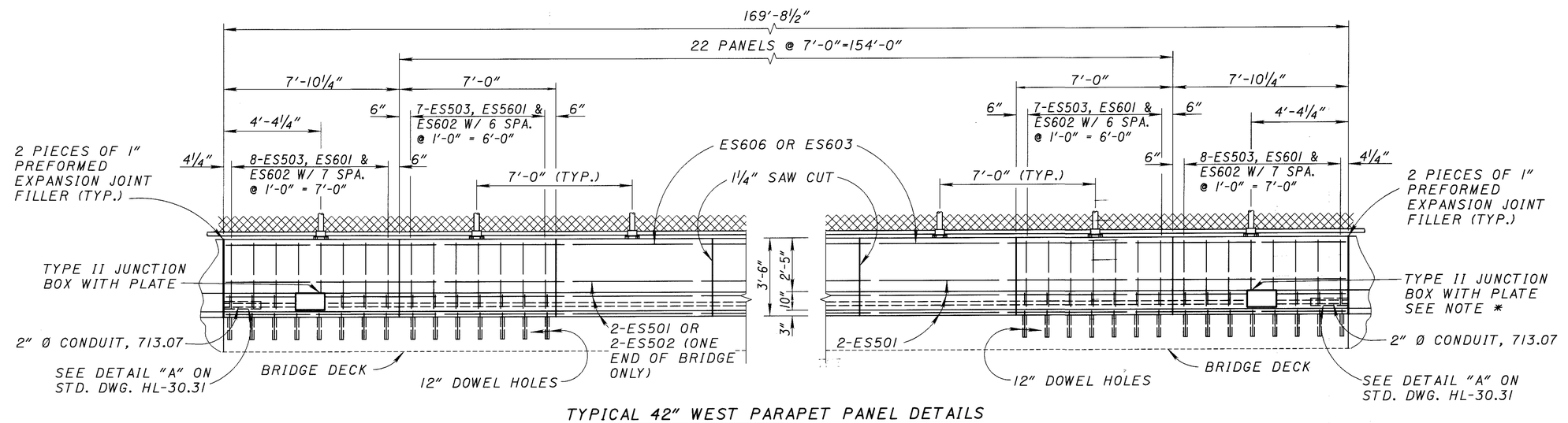

TYPICAL 42" WEST PARAPET PANEL DETAILS

DESIGN AGENCY: OHIO DEPARTMENT OF TRANSPORTATION DISTRICT 5

DESIGNED	DRAWN	REVIEWED	DATE
RSD	DDH	CLZ	2-11-99
CHECKED	REVISED	STRUCTURE FILE NUMBER	
DTF		4504410	

PARAPET DETAILS
BRIDGE NO. LIC-16-2038
S.R. 13 (MT. VERNON RD.) OVER S.R. 16

LIC-16-19.72

12/15

479/547

LAI30953 (SCALE 1) 2-11-99

BENDING DIAGRAMS

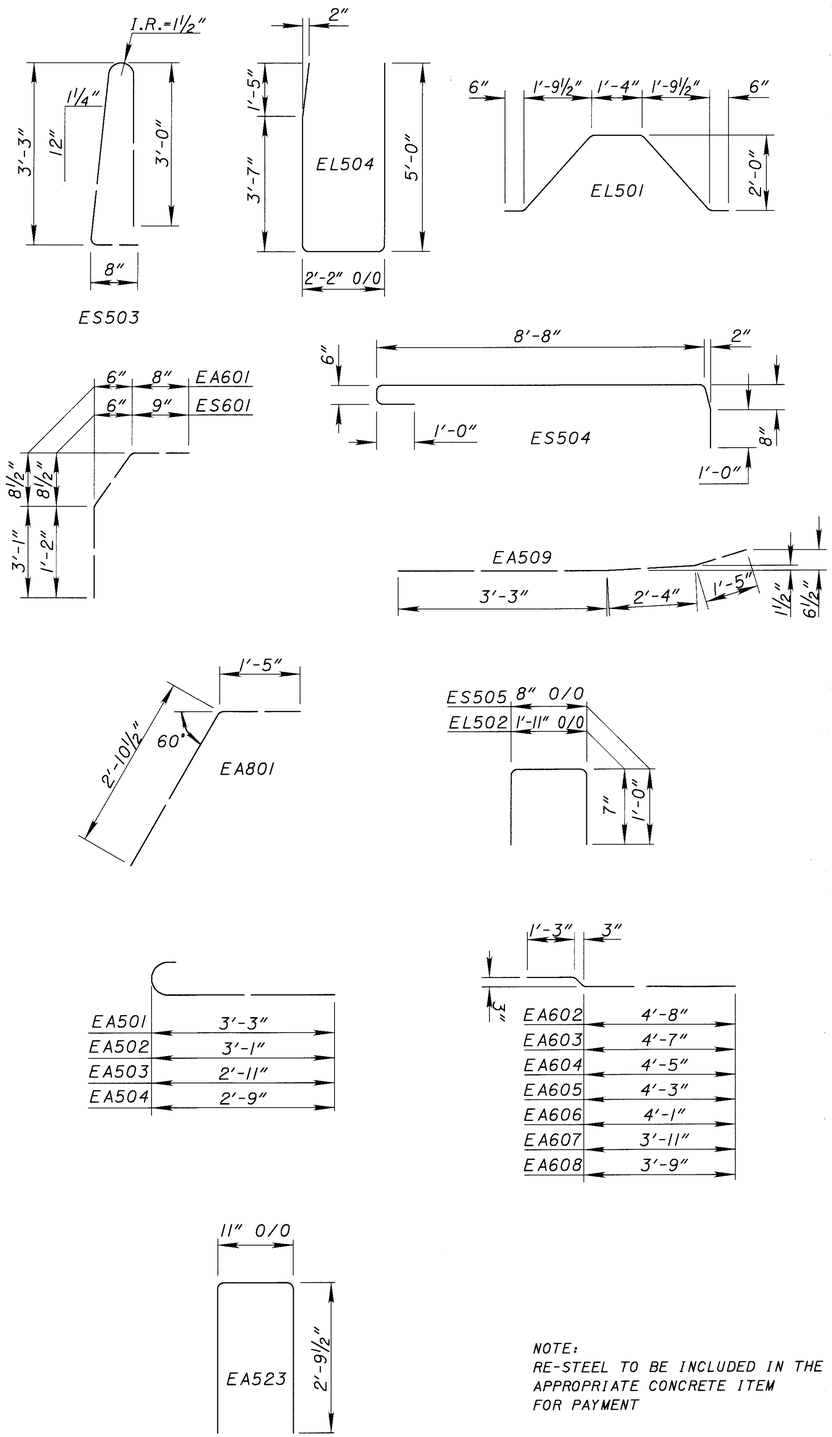

NOTE:
RE-STEEL TO BE INCLUDED IN THE APPROPRIATE CONCRETE ITEM FOR PAYMENT

BAR SCHEDULE

SUPERSTRUCTURE

MARK	NUMBER	LENGTH	SHAPE	WEIGHT
ES501	54	40'-0"	ST.	2253
ES502	12	18'-5"	ST.	231
ES503	170	7'-1"	BT.	1256
ES504	188	11'-9"	BT.	2304
ES505	188	2'-5"	BT.	474
ES601	170	2'-9"	BT.	702
ES602	170	2'-0"	ST.	511
ES603	15	20'-0"	ST.	451
ES604	14	18'-9"	ST.	394
ES605	340	4'-5"	ST.	2256
ES606	4	40'-0"	ST.	240
ES1001	24	35'-2"	ST.	3632
ES1002	10	20'-3"	ST.	871
ES1003	12	13'-7"	ST.	701
ES1101	12	35'-1"	ST.	2237
ES1102	5	20'-3"	ST.	538
ES1103	6	13'-7"	ST.	433
EL501	6	7'-7"	BT.	47
EL502	4	2'-10"	BT.	12
EL503	4	5'-0"	ST.	21
EL504	4	11'-11"	BT.	50
SUB-TOTAL				19,614

ABUTMENT

MARK	NUMBER	LENGTH	SHAPE	WEIGHT
EA501	16	3'-10"	BT.	64
EA502	2	3'-8"	BT.	8
EA503	2	3'-6"	BT.	7
EA504	2	3'-4"	BT.	7
EA505	2	2'-4"	ST.	5
EA506	34	12'-2"	ST.	431
EA507	8	7'-6"	ST.	63
EA508	4	7'-0"	ST.	29
EA509	4	7'-0"	BT.	29
EA510	16	13'-8"	ST.	228
EA511	1	12'-1"	ST.	13
EA512	1	11'-5"	ST.	12
EA513	1	10'-10"	ST.	11
EA514	1	10'-2"	ST.	11
EA515	1	9'-7"	ST.	10
EA516	1	8'-11"	ST.	9
EA517	1	12'-3"	ST.	13
EA518	1	12'-10"	ST.	13
EA519	1	13'-6"	ST.	14
EA520	1	14'-1"	ST.	15
EA521	1	14'-9"	ST.	15
EA522	1	15'-5"	ST.	16
EA523	14	6'-3"	BT.	91
EA524	8	9'-8"	ST.	81
EA601	22	4'-7"	BT.	151
EA602	52	6'-2"	BT.	482
EA603	2	6'-1"	BT.	18
EA604	2	5'-11"	BT.	18
EA605	2	5'-9"	BT.	17
EA606	4	5'-7"	BT.	34
EA607	4	5'-5"	BT.	33
EA608	8	5'-3"	BT.	63
EA802	44	4'-2"	BT.	490
SUB-TOTAL				2501

TOTALS 22,115 LBS.

DESIGN AGENCY
OHIO DEPARTMENT OF TRANSPORTATION
DISTRICT 5

DATE 2-11-99
STRUCTURE FILE NUMBER 4500660

REVIEWED CLZ
DRAWN DDH
REVISED
DESIGNED RSD
CHECKED DTF

BAR SCHEDULES AND BENDING DIAGRAMS
BRIDGE NO. LIC-13-0988
S.R. 13 (MT. VERNON RD.) OVER S.R. 16

LIC-16-19.72

480/547

L0130972 (SCALE 1) 2-4-99

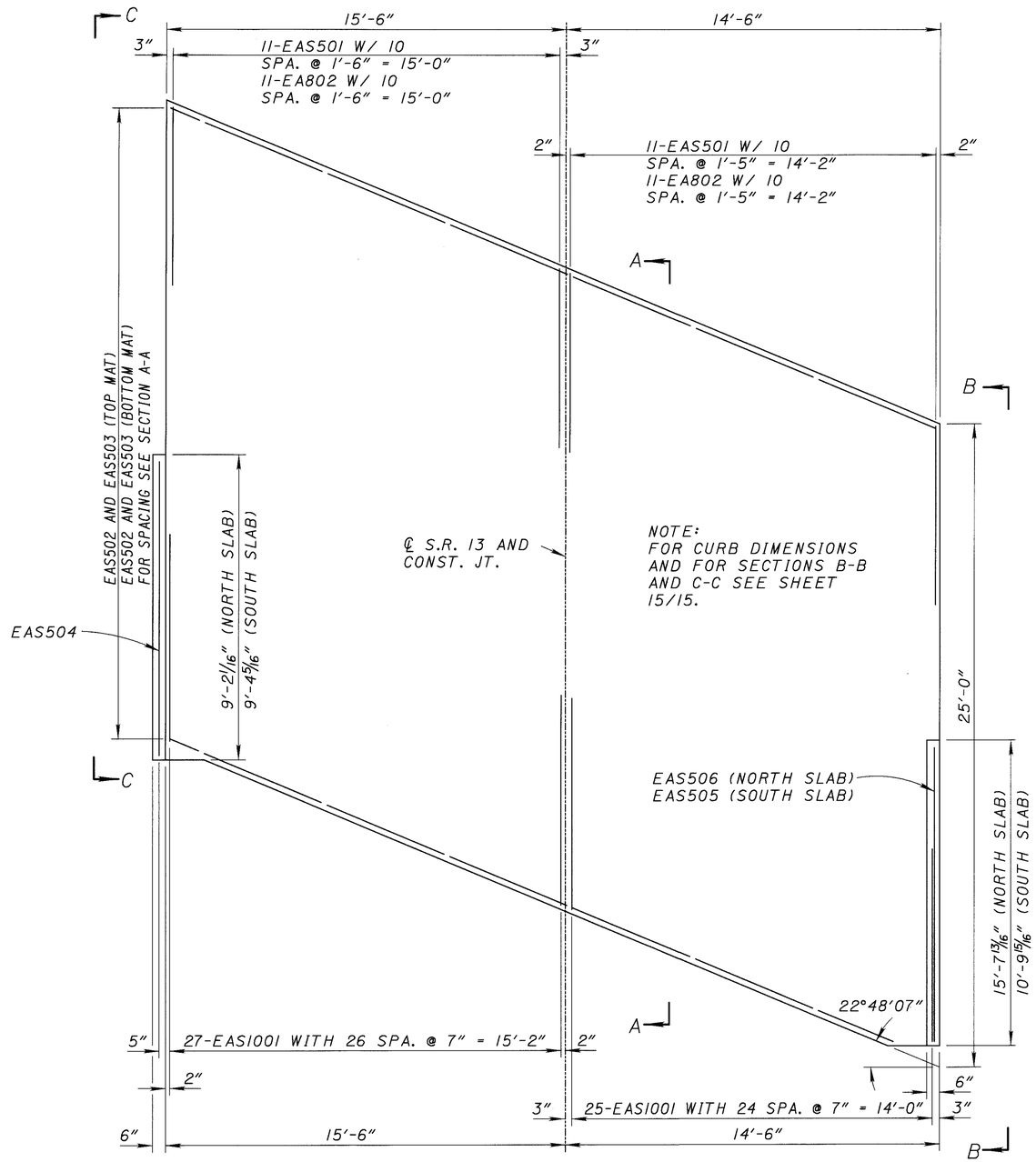

PLAN

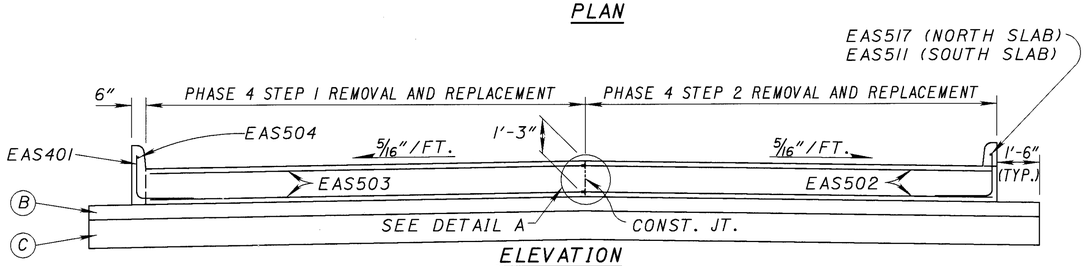

ELEVATION

* NOTE: EPOXY COATED RE-STEEL INCLUDED FOR PAYMENT WITH ITEM 611 REINFORCED CONCRETE APPROACH SLAB T=15", AS PER PLAN

NOTE: FOR EA802 BENDING DIAGRAMS AND QUANTITIES, SEE SHEET 13/15

NOTE: FOR ADDITIONAL DETAILS SEE STD. DWG. AS-1-81.

BAR SCHEDULE

MARK	NO. REQD.	LENGTH	SHAPE	WEIGHT	
EAS401	33	3'-2"	BT.	70	*
EAS501	44	24'-6"	ST.	1124	*
EAS502	114	15'-8"	ST.	1863	*
EAS503	114	16'-7"	ST.	1972	*
EAS504	4	8'-10"	ST.	37	*
EAS505	3	10'-6"	ST.	33	*
EAS506	1	15'-3"	ST.	16	*
EAS1001	104	25'-11"	BT.	11598	*
TOTAL (2 APPROACH SLABS)				16713	*

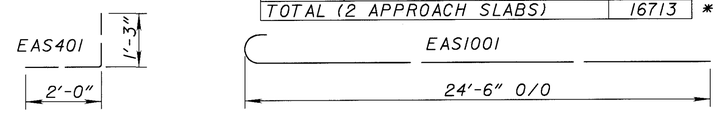

BENDING DIAGRAMS

NOTE: PREFORMED ELASTOMERIC JOINT SEALER 705.11 AND TYPE A WATER-PROOFING TO BE INCLUDED IN ITEM 611 REINFORCED CONCRETE APPROACH SLAB (T=15"), AS PER PLAN

NOTE (1): PREFORMED ELASTOMERIC JOINT SEALER 705.11 (1 1/4" FOR 1/2" JOINT) DEPRESSED 1/8" BELOW ROADWAY, PLACED IN 1/2"x2 1/4" GROOVE.

NOTE (2): TYPE A WATERPROOFING SHALL NOT EXTEND ABOVE THE BOTTOM OF THE GROOVE INTO WHICH THE PREFORMED ELASTOMERIC JOINT SEALER IS TO BE PLACED. IT SHALL BE APPLIED TO THE ENTIRE AREA OF THE ABUTMENT OR SUPERSTRUCTURE WHICH COMES INTO CONTACT WITH THE APPROACH SLAB.

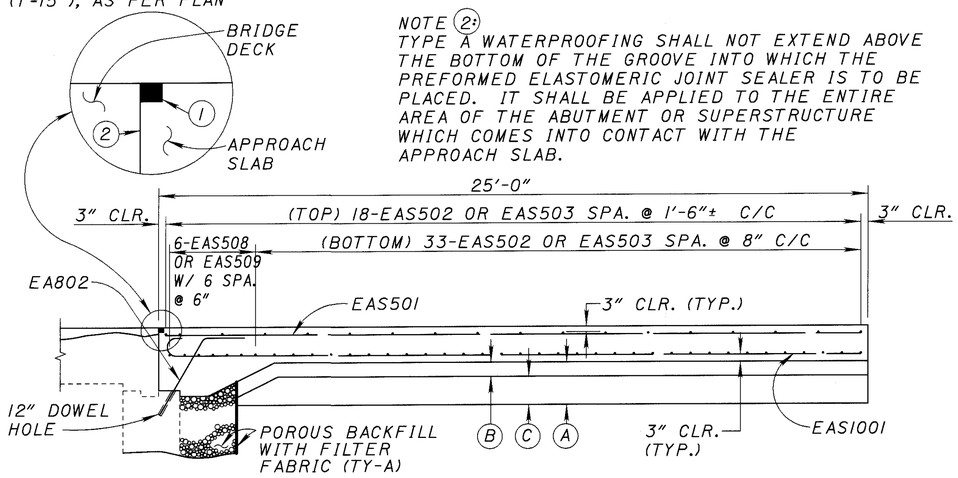

SECTION A-A

NOTE: MECHANICAL SPLICE CONNECTORS, HMWM, AND CURBS TO BE INCLUDED IN ITEM 611 REINFORCED CONCRETE APPROACH SLAB (T=15"), AS PER PLAN FOR PAYMENT.

(A) 1'-8" EXCAVATION NOT INCLUDING EMBANKMENT CONSTRUCTION (UNDER PROPOSED APPROACH SLAB) (AS-1-81)

(B) 0'-6" PROPOSED AGGREGATE BASE

(C) 1'-0" PROPOSED EMBANKMENT

DETAIL A

ITEM	DESCRIPTION	QUANTITY	UNIT
203	EXCAVATION NOT INCLUDING EMBANKMENT CONSTRUCTION	98	CU. YD.
203	EMBANKMENT	55	CU. YD.
203	SUBGRADE COMPACTION	166	SQ. YD.
304	AGGREGATE BASE	48	CU. YD.
518	POROUS BACKFILL WITH FILTER FABRIC	LUMP	
611	REINFORCED CONCRETE APPROACH SLAB (T=15"), AS PER PLAN	168	SQ. YD.

QUANTITIES CARRIED TO SHEET 2/15

OHIO DEPARTMENT OF TRANSPORTATION
DISTRICT 5
DESIGN AGENCY

DATE 2-11-99
STRUCTURE FILE NUMBER 4500660
REVIEWED CLZ
DRAWN DDH
REVISED
DESIGNED RSD
CHECKED DTF

APPROACH SLAB DETAILS
BRIDGE NO. LIC-13-0988
S.R. 13 (MT. VERNON RD.) OVER S.R. 16

LIC-16-19.72

14/15

481/547

L0130928 (SCALE 1) 2-11-99

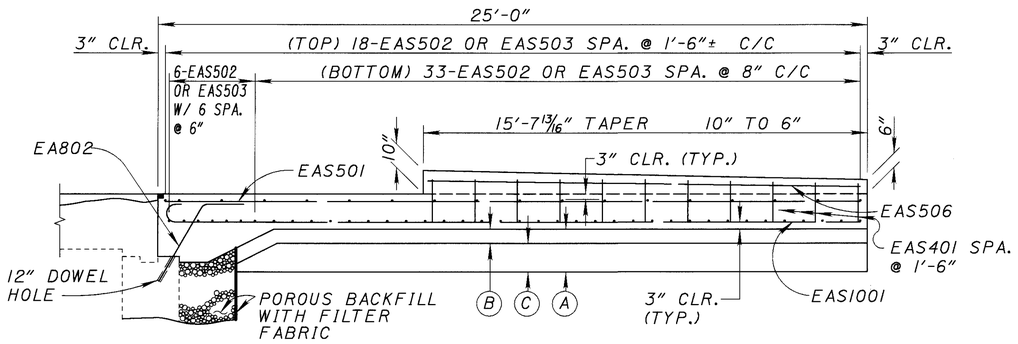

VIEW B-B (NORTH SLAB)

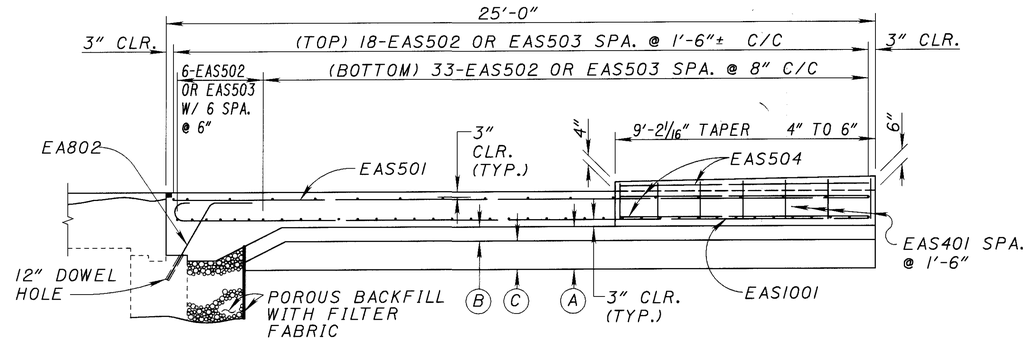

VIEW C-C (NORTH SLAB)

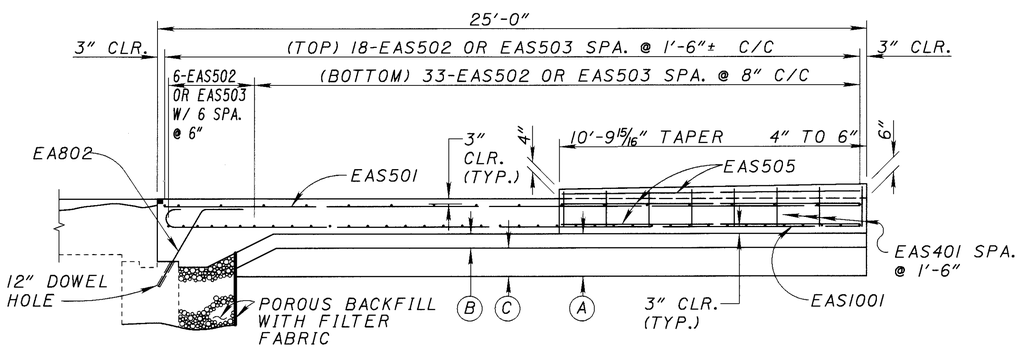

VIEW B-B (SOUTH SLAB)

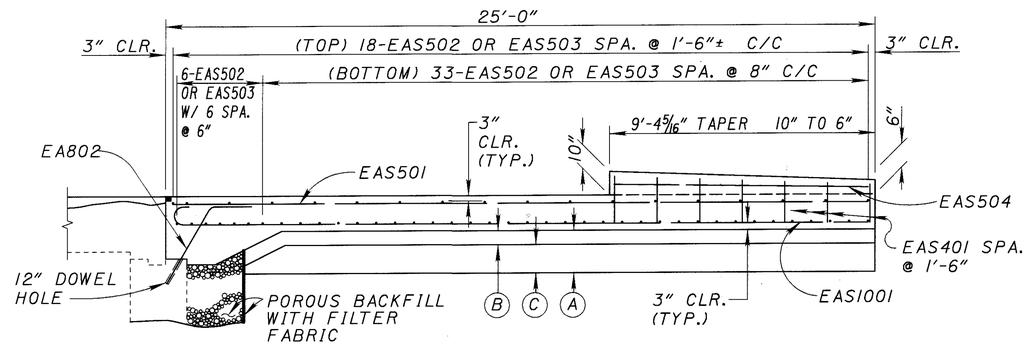

VIEW C-C (SOUTH SLAB)

(A) 1'-8" EXCAVATION NOT INCLUDING EMBANKMENT CONSTRUCTION (UNDER PROPOSED APPROACH SLAB) (AS-1-81)

(B) 0'-6" PROPOSED AGGREGATE BASE

(C) 1'-0" PROPOSED EMBANKMENT

NOTE:
RE-STEEL MARKED "EAS" TO BE INCLUDED WITH REINFORCED CONCRETE APPROACH SLAB (T=15"), AS PER PLAN FOR PAYMENT.

NOTE:
DOWEL HOLES AND EA802 BARS TO BE INCLUDED WITH ITEM 844, HIGH PERFORMANCE CONCRETE, SUPERSTRUCTURE (PARAPETS) FOR PAYMENT.

DESIGN AGENCY: OHIO DEPARTMENT OF TRANSPORTATION DISTRICT 5

DESIGNED	DRAWN	REVIEWED	DATE
RSD	DDH	CLZ	2-11-99
CHECKED	REVISED	STRUCTURE FILE NUMBER	
DTF		4500660	

APPROACH SLAB DETAILS
BRIDGE NO. LIC-13-0988
S.R. 13 (MT. VERNON RD.) OVER S.R. 16

LIC-16-19.72

15/15

482/547

LAI30928 (SCALE 1) 2-11-99

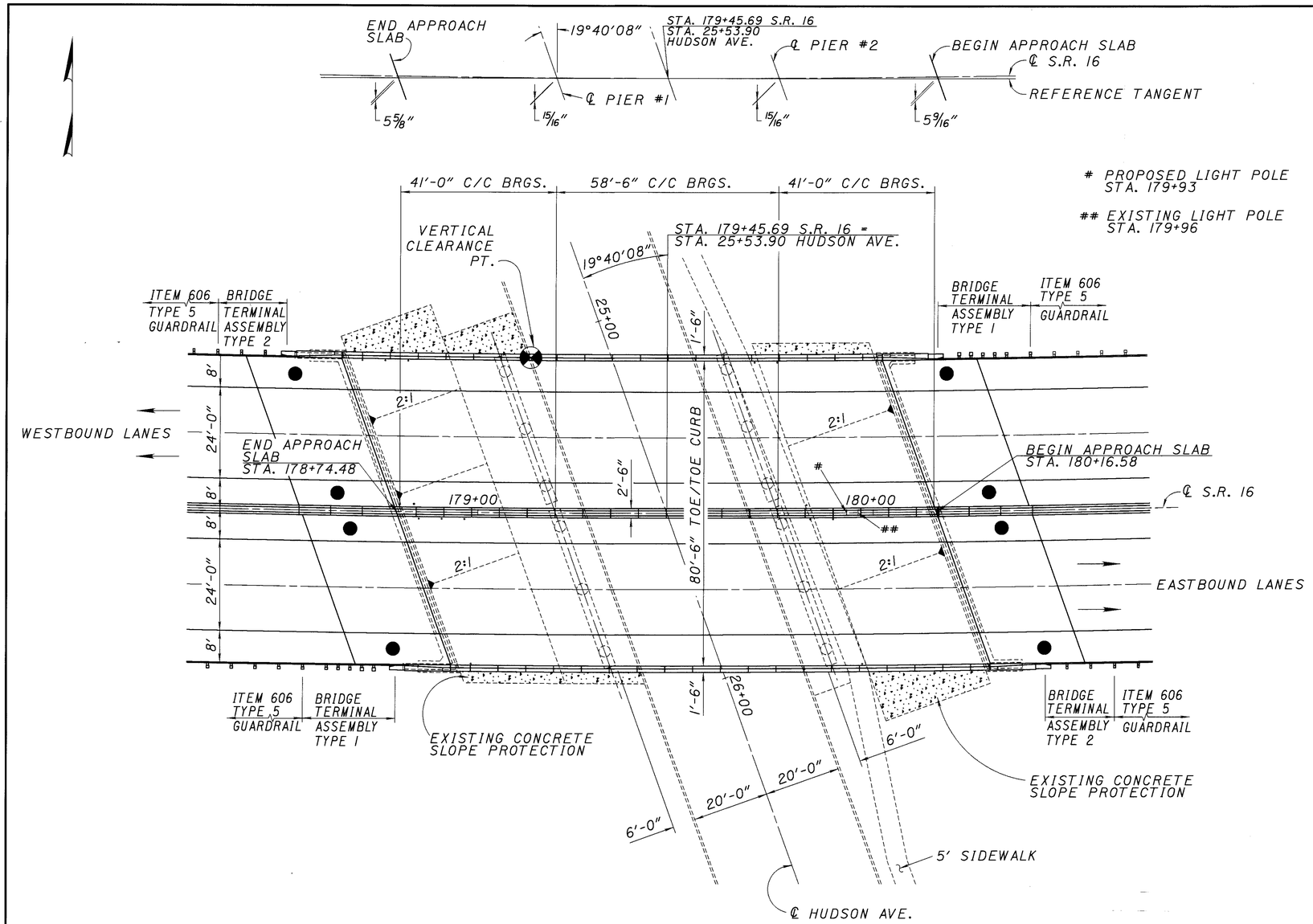

PLAN

PROPOSED LIGHT POLE STA. 179+93

EXISTING LIGHT POLE STA. 179+96

NOTE:
FOR PHASES OF CONSTRUCTION SEE SHEET 4/15

● PAVEMENT REMOVED WITH EXCAVATION NOT INCLUDING EMBANKMENT CONSTRUCTION AS PER 202.05.

FOR LIGHTING DETAILS SEE SHEETS 3/15 AND 12/15. ALSO REFER TO STANDARD DRAWINGS HL-20.13, HL-20.14, HL-20.15, HL-30.31, HL-30.32, AND HL-30.33. ALL DATED 5-1-87.

HORIZONTAL CURVE DATA

PI = STA. 178+79.87
Dc = 01°00'00"
Rc = 5729.58'
Δc = 05°10'09" LT.
Lc = 516.92'

VERTICAL CURVE DATA

P.V.I. = STA. 181+00
ELEV. 852.98
V.C. = 700'
G1 = +3.2%
G2 = -0.68%

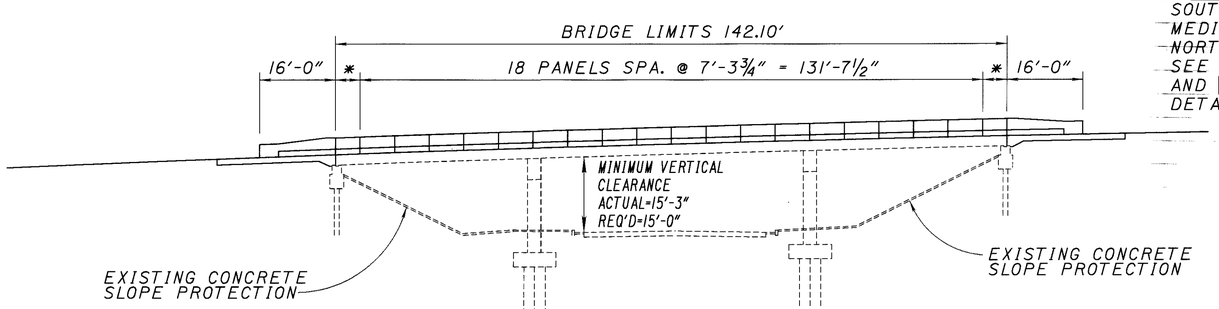

ELEVATION

* END PARAPET PANELS
SOUTH PARAPETS = 5'-2"
MEDIAN BARRIER = 5'-8 1/4"
NORTH PARAPETS = 5'-3 1/2"
SEE SHEETS 3/15, 10/15 AND 12/15 FOR ADDITIONAL DETAILS.

EXISTING STRUCTURE

TYPE: CONTINUOUS REINFORCED CONCRETE SLAB WITH REINFORCED CONCRETE SUBSTRUCTURE
SPANS: 41'-0", 58'-6", AND 41'-0" ALONG REFERENCE TANGENT
ROADWAY: 81'-6" FACE TO FACE OF PARAPETS
LOADING: HS 20-44
SKEW: 19°40'08" R.F. TO REFERENCE TANGENT
WEARING SURFACE: 1" MONOLITHIC CONCRETE
APPROACH SLABS: AS-1-67 (25' LONG)
ALIGNMENT: 01°00'00" LT.
SUPERELEVATION: 0.024'/FT.

REHABILITATED STRUCTURE

ROADWAY: 80'-6" TOE TO TOE OF CURB INCLUDING 2'-6" MEDIAN BARRIER
BRIDGE RAILING: DEFLECTOR PARAPET TYPE
WEARING SURFACE: 2" MICRO-SILICA MODIFIED CONCRETE OVERLAY (1" HYDRODEMOLITION)
APPROACH SLABS: AS-1-81 (25' LONG)

DESIGN AGENCY: OHIO DEPARTMENT OF TRANSPORTATION DISTRICT 5
DATE 2-11-99
REVIEWED CLZ
STRUCTURE FILE NUMBER 4500873
DRAWN DDH
REVISED
DESIGNED RSD
CHECKED DTF

GENERAL PLAN AND ELEVATION
BRIDGE NO. LIC-16-2109
S.R. 16 OVER HUDSON AVE.

LIC-16-19.72

1/15

483/547

L0162107 (SCALE 1) 2-11-99

ITEM	ITEM EXT.	GRAND TOTAL	UNIT	DESCRIPTION	SUPER.	ABUT.	PIERS	GENERAL
202	11300	113	CU YD	PORTIONS OF STRUCTURE REMOVED, SUPERSTRUCTURE	113	--	--	--
202	11300	20	CU YD	PORTIONS OF STRUCTURE REMOVED, ABUTMENT	--	20	--	--
202	22900	267	SQ YD	APPROACH SLAB REMOVED, AS PER PLAN	--	--	--	267
202	30500	50	LIN FT	CONCRETE MEDIAN REMOVED	--	--	--	50
203	12000	276	CU YD	EXCAVATION NOT INCLUDING EMBANKMENT CONSTRUCTION	--	--	--	276
203	20000	135	CU YD	EMBANKMENT	--	--	--	135
203	50000	404	SQ YD	SUBGRADE COMPACTION	--	--	--	404
304	20000	67	CU YD	AGGREGATE BASE	--	--	--	67
503	21300	LUMP		UNCLASSIFIED EXCAVATION	--	--	--	LUMP
512	33000	4	SQ YD	TYPE 2 WATERPROOFING	--	4	--	--
SPECIAL	51267510	763	SQ YD	SEALING OF CONCRETE SURFACES (EPOXY - URETHANE)	645	118	--	--
516	13600	54	SQ FT	1" PREFORMED EXPANSION JOINT FILLER	54	--	--	--
518	51300	7	EACH	DOWNSPOUT MODIFICATION	7	--	--	--
518	12500	1	EACH	NEW SCUPPER, MISC.: INCLUDING SUPPORTS	1	--	--	--
518	12700	7	EACH	SCUPPER, VERTICAL EXTENSION	7	--	--	--
518	21200	LUMP		POROUS BACKFILL WITH FILTER FABRIC	--	LUMP	--	--
518	40000	171	LIN FT	6" PERFORATED CORRUGATED PLASTIC PIPE (SS 944)	--	171	--	--
518	40010	28	LIN FT	6" NON-PERFORATED CORRUGATED PLASTIC PIPE INCLUDING SPECIALS (SS944)	--	28	--	--
519	11100	28	SQ FT	PATCHING CONCRETE STRUCTURE	--	28	--	--
SPECIAL	60436600	2	EACH	PRECAST REINFORCED CONCRETE OUTLET	--	2	--	--
611	25001	451	SQ YD	REINFORCED CONCRETE APPROACH SLAB (T=15"), AS PER PLAN	--	--	--	451
625	10600	4	EACH	LIGHT POLE ANCHOR L-BOLTS	4	--	--	--
625	25402	352	LIN FT	CONDUIT, 2", 713.07	284	68	--	--
625	25602	193	LIN FT	CONDUIT, 4", 713.07	143	50	--	--
625	29910	2	EACH	TRANSITION JUNCTION BOX	2	--	--	--
625	29920	4	EACH	STRUCTURE JUNCTION BOX, TYPE II WITH COVER PLATE	4	--	--	--
625	29920	1	EACH	STRUCTURE JUNCTION BOX, TYPE III WITH COVER PLATE	1	--	--	--
625	33000	1	EACH	STRUCTURE GROUNDING SYSTEM	1	--	--	--
848	20000	1232	SQ YD	SURFACE PREPARATION USING HYDRODEMOLITION	1232			
848	50000	123	SQ YD	HAND CHIPPING	123			
844	48000	53	CU YD	HIGH PERFORMANCE CONCRETE, SUPERSTRUCTURE (DECK) MIX 4	53	--	--	--
844	48020	97	CU YD	HIGH PERFORMANCE CONCRETE, SUPERSTRUCTURE(PARAPETS)	68	18	--	11
844	49000	LUMP		HIGH PERFORMANCE CONCRETE TRIAL MIX				
848	10000	1232	SQ YD	MICRO-SILICA MODIFIED CONCRETE OVERLAY, USING HYDRODEMOLITION (T=2")	1232	--	--	--
848	30000	105	CU YD	MICRO-SILICA MODIFIED CONCRETE OVERLAY (VARIABLE THICKNESS), MATERIAL ONLY	105	--	--	--
848	50100	LUMP		TEST SLAB	LUMP	--	--	--

QUANTITIES CARRIED TO SHEETS 405A AND 405B

CALCULATED D.D.H.
CHECKED R.S.D.

BRIDGE SUMMARY
BRIDGE NO. LIC-16-2109
S.R. 16 OVER HUDSON AVE.

LIC-16-19.72

L0160001.GGS 2/10/99 SCALE=1

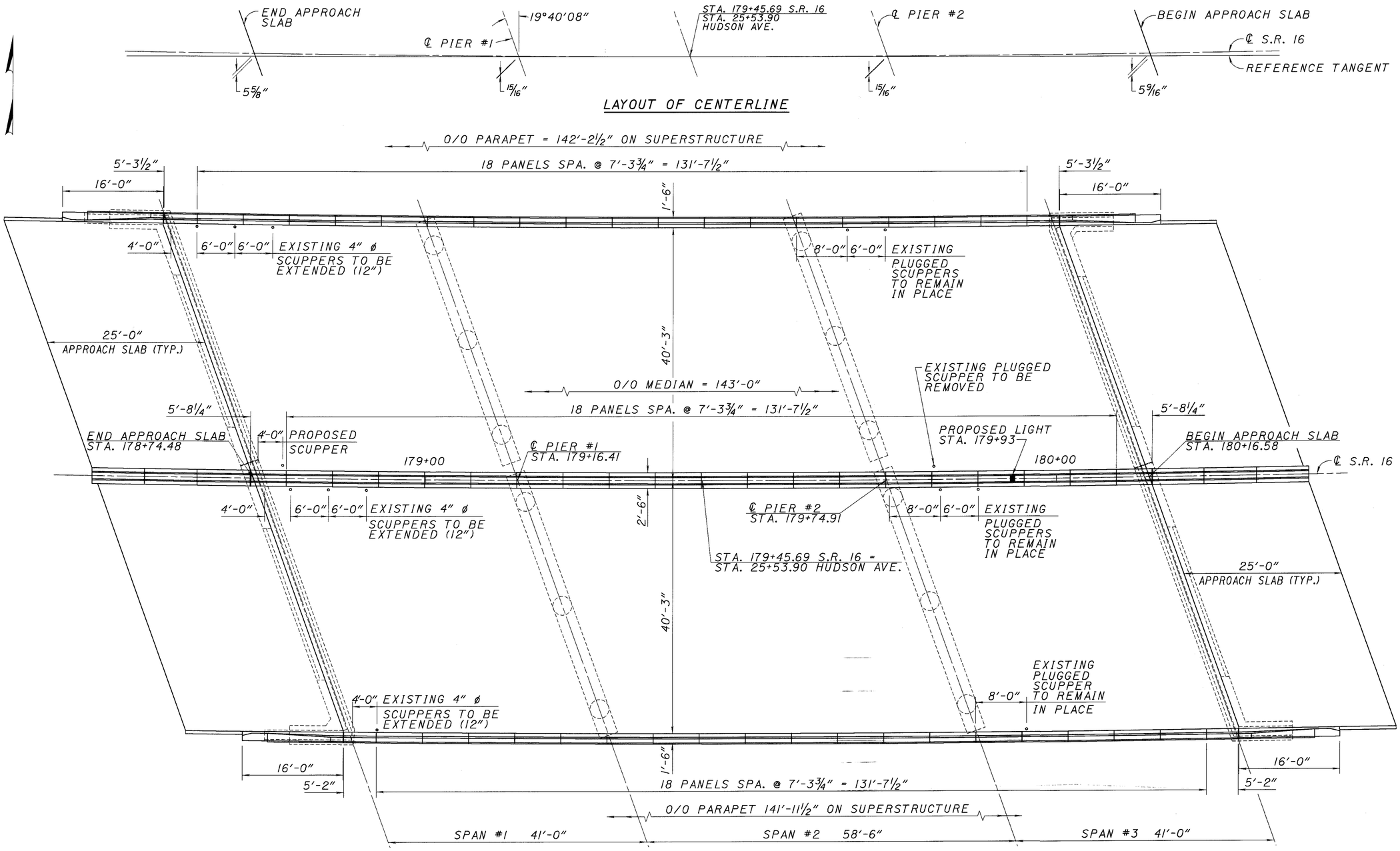

GENERAL PLAN

DESIGNED RSD	DRAWN DDH	REVIEWED CLZ	DATE 2-11-99
CHECKED DTF	REVISED	STRUCTURE FILE NUMBER 4500873	

DESIGN AGENCY
OHIO DEPARTMENT OF TRANSPORTATION
DISTRICT 5

GENERAL PLAN
BRIDGE NO. LIC-16-2109
S.R. 16 OVER HUDSON AVE.

LIC-16-19.72

L0162142 (SCALE 1) 2-11-99

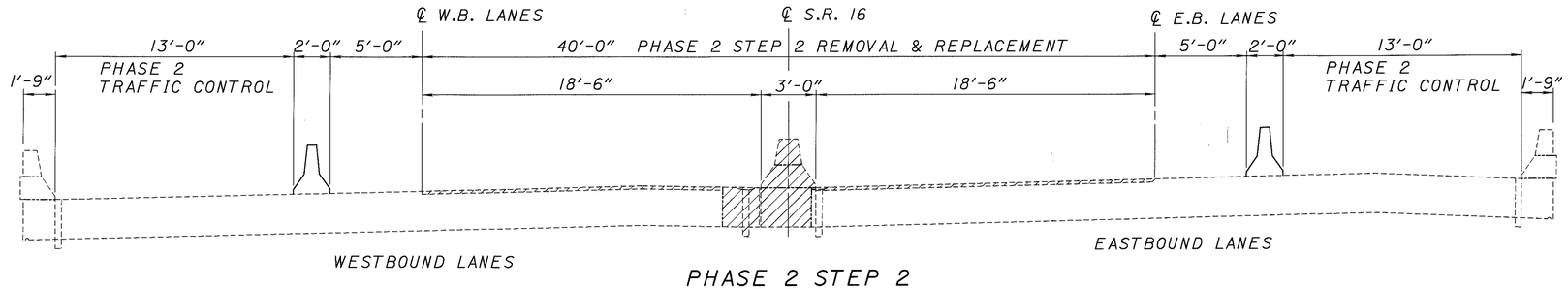

PHASE 2 STEP 2
REMOVAL AND TRAFFIC CONTROL

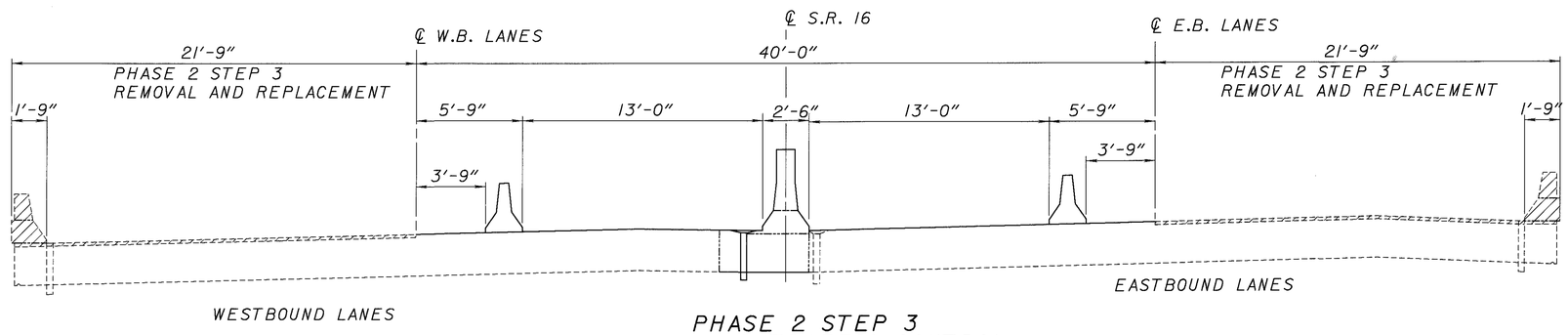

PHASE 2 STEP 3
REMOVAL AND TRAFFIC CONTROL

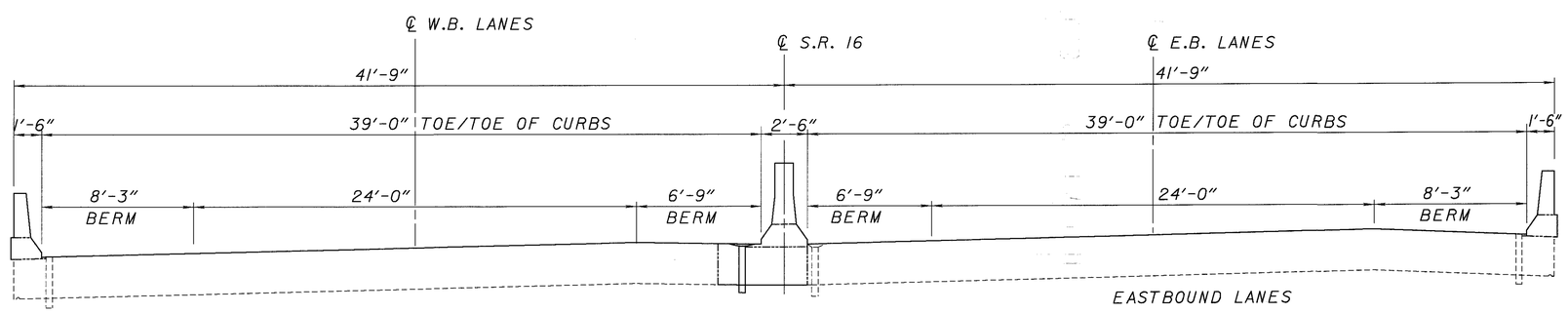

PHASE 2
REPLACEMENT

DESIGN AGENCY
OHIO DEPARTMENT OF TRANSPORTATION
DISTRICT 5

DESIGNED	DRAWN	REVIEWED	DATE
RSD	DDH	CLZ	2-11-99
CHECKED	REVISED	STRUCTURE FILE NUMBER	
DTF		4500873	

TRAFFIC CONTROL
BRIDGE NO. LIC-16-2109
S.R. 16 OVER HUDSON AVE.

LIC-16-19.72

LI62156A (SCALE 1) 2-11-99

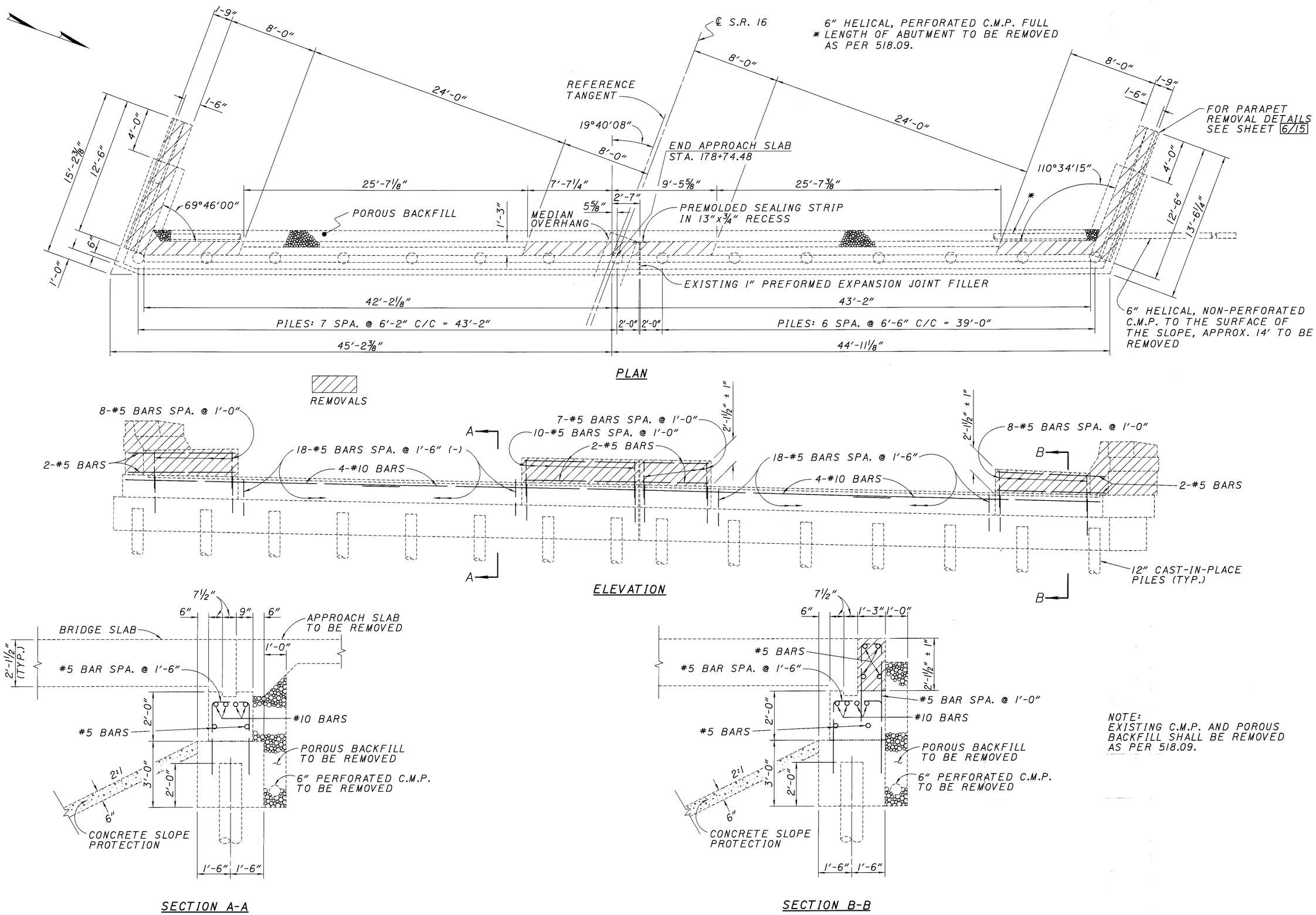

DESIGN AGENCY: OHIO DEPARTMENT OF TRANSPORTATION DISTRICT 5

DATE 2-11-99 | REVIEWED CLZ | STRUCTURE FILE NUMBER 4500873

DRAWN DDH | REVISED

DESIGNED RSD | CHECKED DTF

EXISTING REAR ABUTMENT (REMOVALS)
BRIDGE NO. LIC-16-2109
S.R. 16 OVER HUDSON AVE.

LIC-16-19.72

5/15

487/547

L0162131 (SCALE 4) 2-11-99

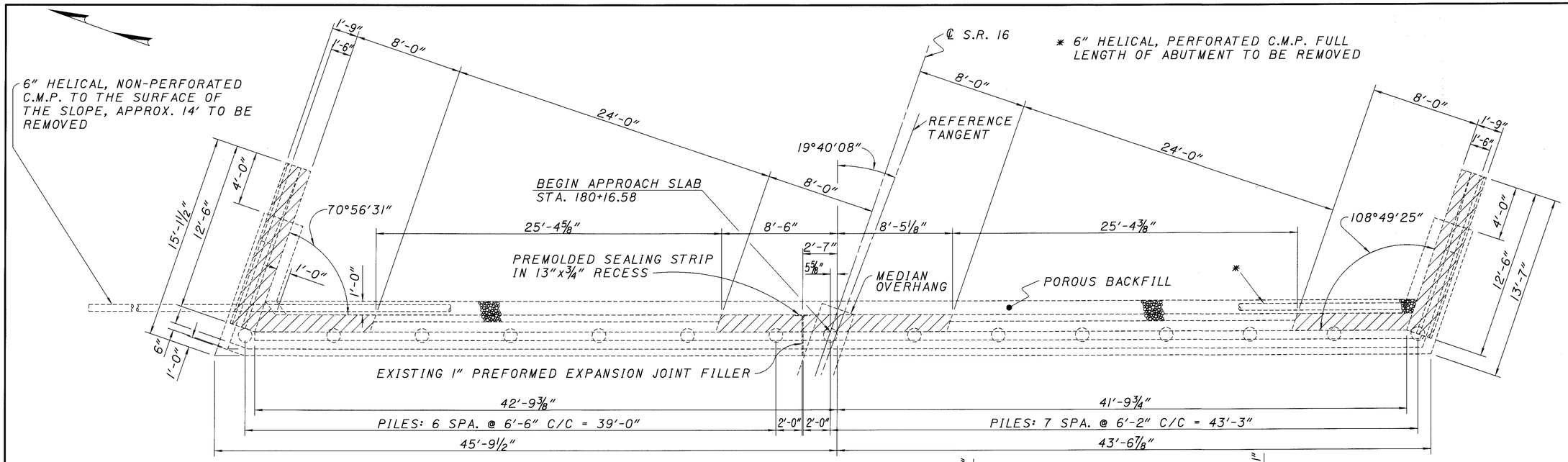

PLAN

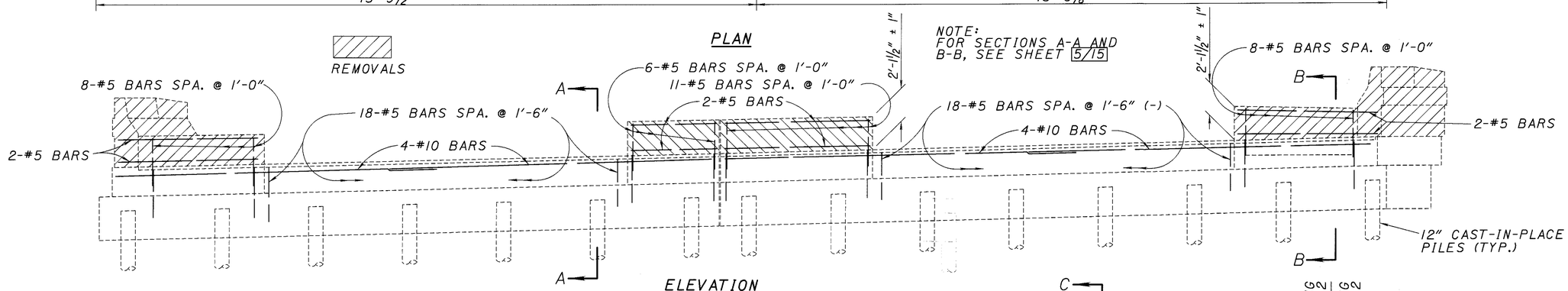

ELEVATION

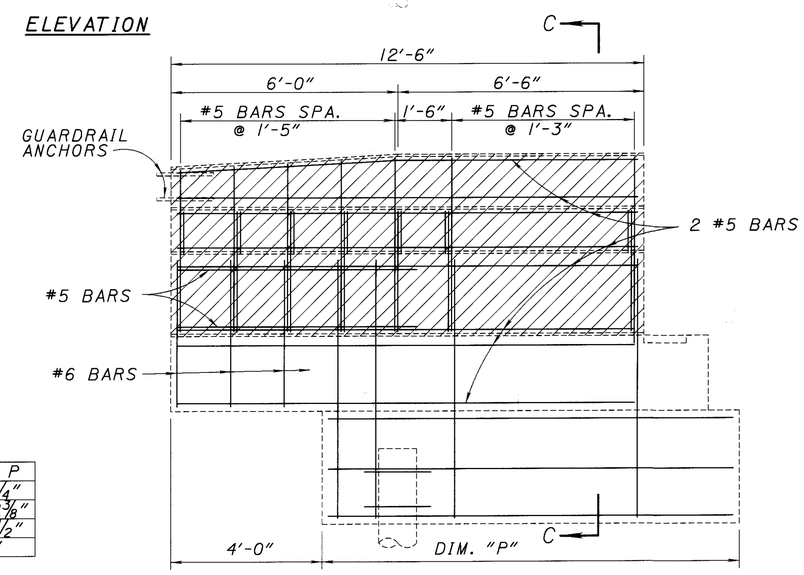

WINGWALL ELEVATION

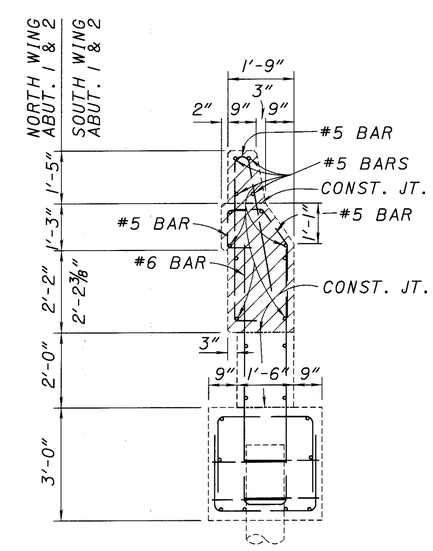

SECTION C-C

NOTE:
EXISTING C.M.P. AND POROUS BACKFILL SHALL BE REMOVED AS PER 518.09.

POINT	DIM. P
NORTHWING ABUT. #1	9'-6 1/4"
SOUTHWING ABUT. #1	10'-2 3/8"
NORTHWING ABUT. #2	10'-1 1/2"
SOUTHWING ABUT. #2	9'-7"

DESIGN AGENCY: OHIO DEPARTMENT OF TRANSPORTATION DISTRICT 5

DATE 2-11-99 | REVIEWED CLZ | STRUCTURE FILE NUMBER 4500873

DRAWN DDH | REVISED

DESIGNED RSD | CHECKED DTF

EXISTING FORWARD ABUTMENT (REMOVALS)
BRIDGE NO. LIC-16-2109
S.R. 16 OVER HUDSON AVE.

LIC-16-19.72

6/15

488/547

LA162131 (SCALE 4) 2-11-99

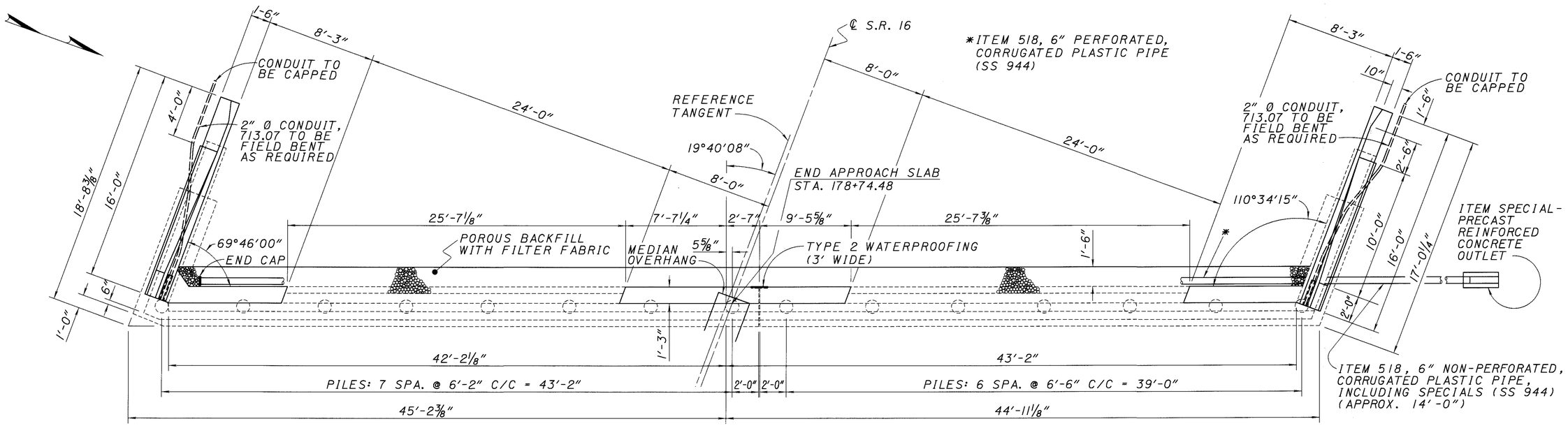

PLAN

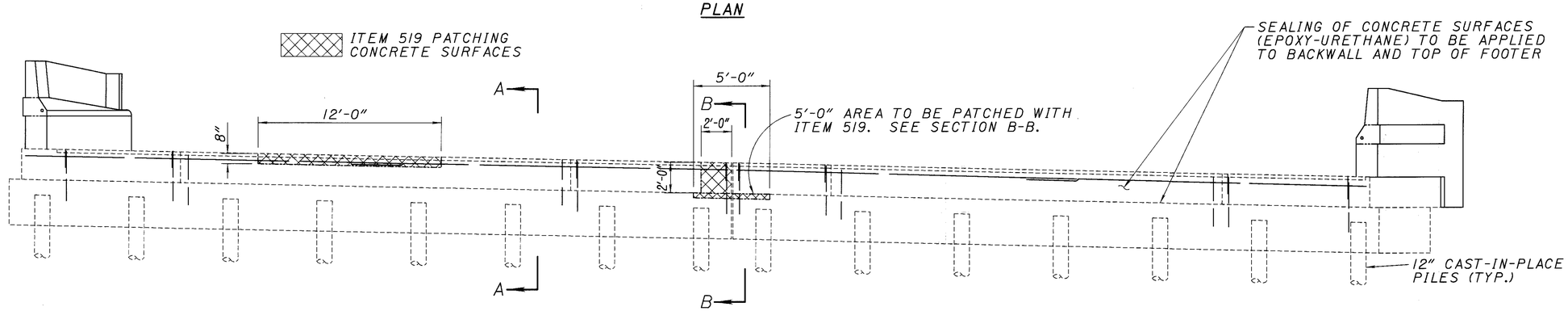

ELEVATION

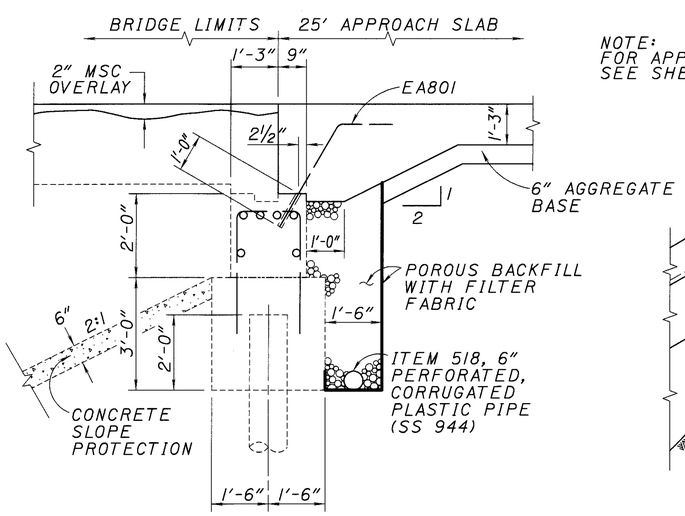

SECTION A-A

NOTE:
FOR APPROACH SLAB DETAILS SEE SHEETS 14/15 AND 15/15

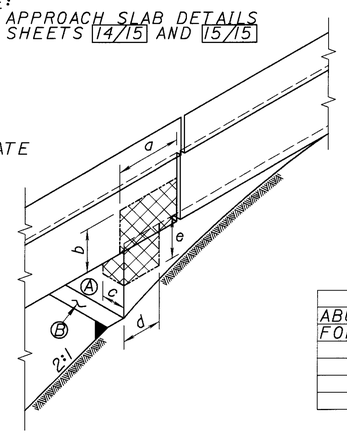

NOTE:
DOWEL HOLES AND RE-STEEL TO BE INCLUDED IN ITEM 844 HIGH PERFORMANCE CONCRETE, SUPERSTRUCTURE (PARAPETS) FOR PAYMENT.

NOTE:
THE BACKWALLS Ⓐ AND Ⓑ ARE TO BE SEALED WITH ITEM SPECIAL - SEALING CONCRETE SURFACES (EPOXY-URETHANE).

ITEM 519 PATCHING CONCRETE SURFACES						
ABUTMENT & SIDE		DIMENSION				
FORWARD	REAR	a	b	c	d	e
--	LT.	0'-11"	0'-9"	2'-0"	1'-0"	0'-6"
--	RT	2'-0"	1'-6"	--	--	--
LT.	--	--	--	--	--	--
RT.	--	1'-6"	1'-0"	0'-9"	2'-0"	0'-9"

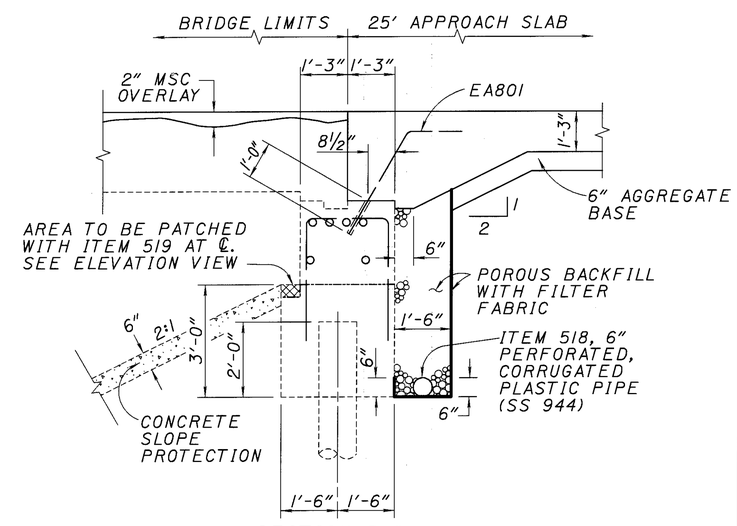

SECTION B-B

DESIGN AGENCY: OHIO DEPARTMENT OF TRANSPORTATION DISTRICT 5

DESIGNED RSD | CHECKED DTF | DRAWN DDH | REVISED | REVIEWED CLZ | DATE 2-11-99 | STRUCTURE FILE NUMBER 4500873

PROPOSED REAR ABUTMENT BRIDGE, NO. LIC-16-2109 S.R. 16 OVER HUDSON AVE.

LIC-16-19.72

7/15

489/547

L0162/32 (SCALE 4) 2-11-99

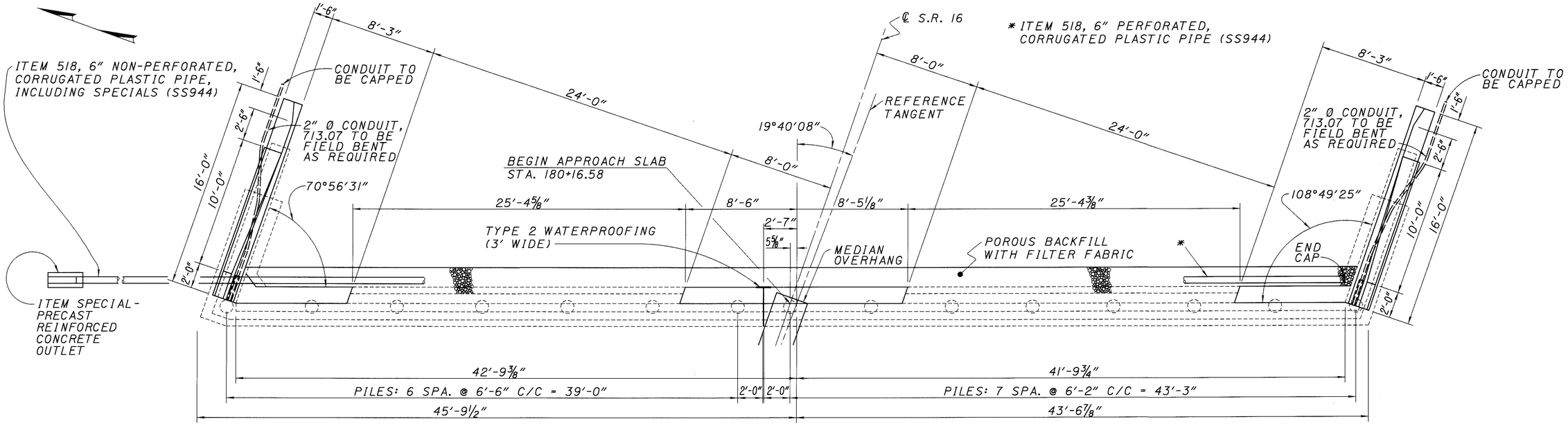

PLAN

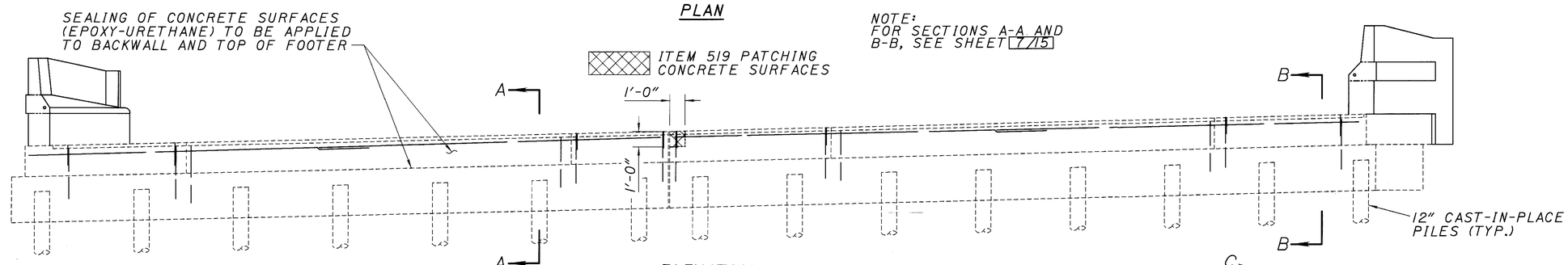

NOTE:
FOR SECTIONS A-A AND B-B, SEE SHEET 7/15

ELEVATION

NOTE:
DOWEL HOLES AND RE-STEEL TO BE INCLUDED WITH ITEM 844 HIGH PERFORMANCE CONCRETE, SUPERSTRUCTURE (PARAPETS) FOR PAYMENT.

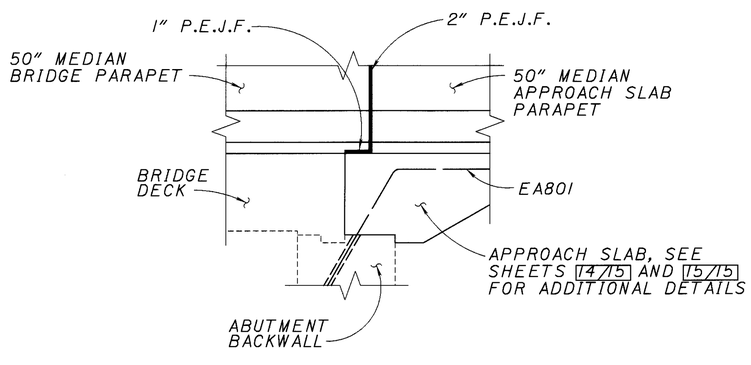

SECTION C-C

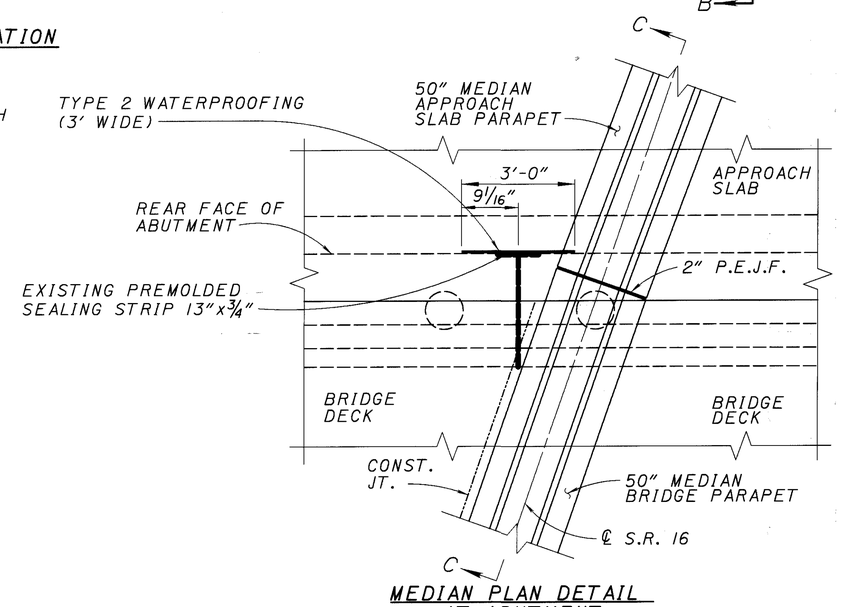

MEDIAN PLAN DETAIL AT ABUTMENT

DESIGN AGENCY	OHIO DEPARTMENT OF TRANSPORTATION DISTRICT 5
DATE	2-11-99
REVIEWED	CLZ
STRUCTURE FILE NUMBER	4500873
DRAWN	DDH
REVISED	
DESIGNED	RSD
CHECKED	DTF

PROPOSED FORWARD ABUTMENT
BRIDGE NO. LIC-16-2109
S.R. 16 OVER HUDSON AVE.

LIC-16-19.72

LA162132 (SCALE 4) 2-11-99

NOTE:
THE 2" Ø CONDUIT, 713.07, DETAILS ARE TYPICAL FOR ALL FOUR 16'-0" END PARAPETS.

NOTE:
DOWEL HOLES AND RE-STEEL TO BE INCLUDED WITH ITEM 844 HIGH PERFORMANCE CONCRETE, SUPERSTRUCTURE (PARAPETS) FOR PAYMENT.

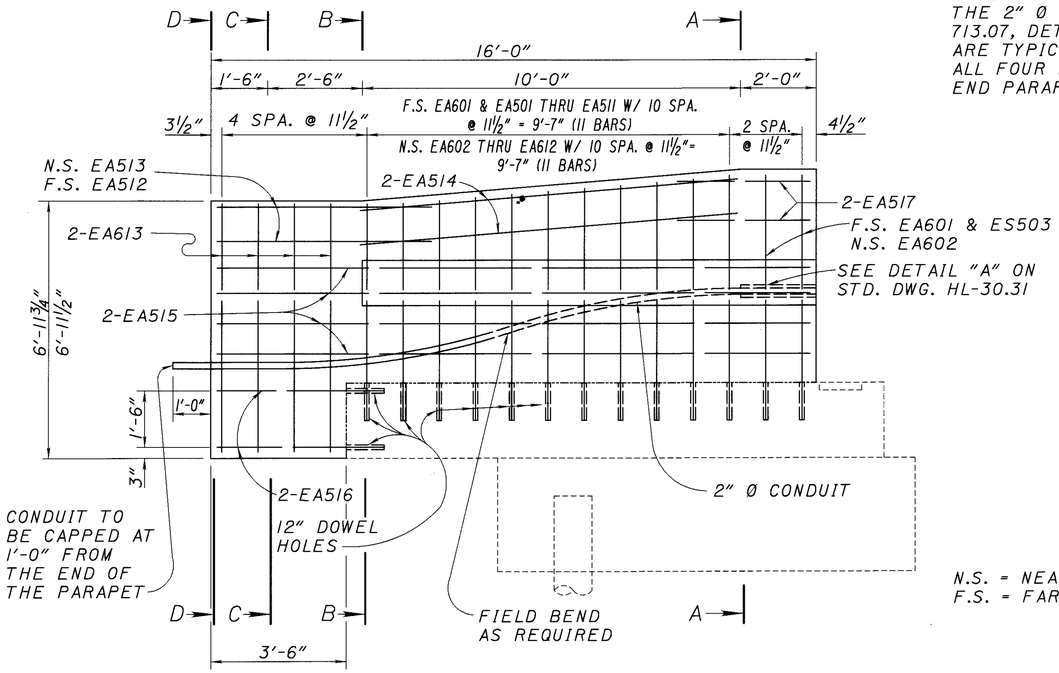

WINGWALL ELEVATION

N.S. = NEAR SIDE
F.S. = FAR SIDE

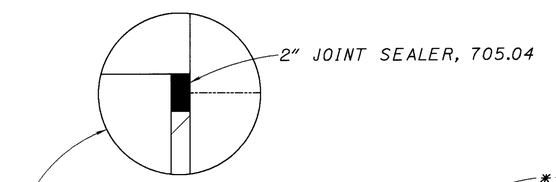

* SEALING OF CONCRETE SURFACES (EPOXY-URETHANE)

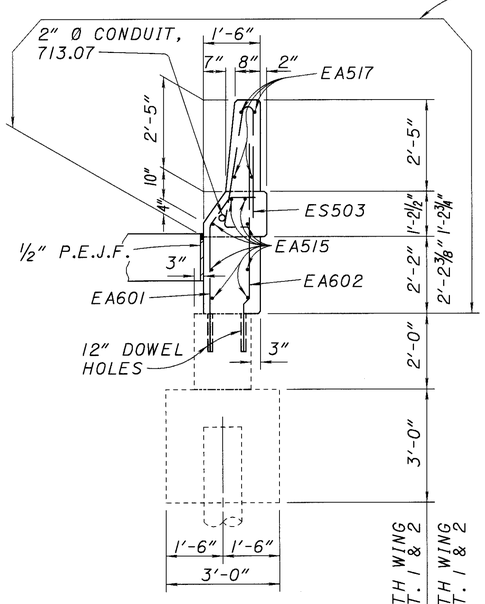

SECTION A-A

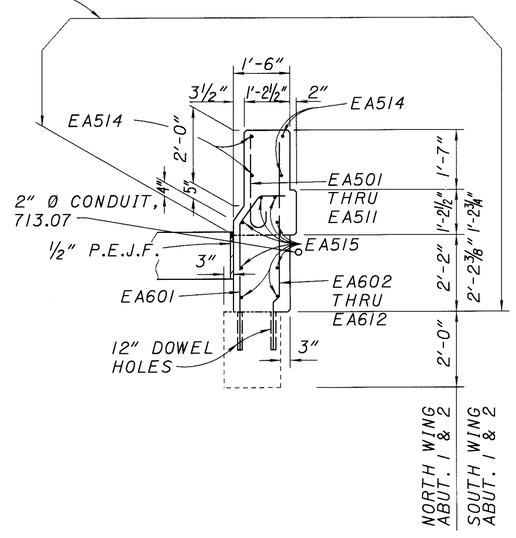

SECTION B-B

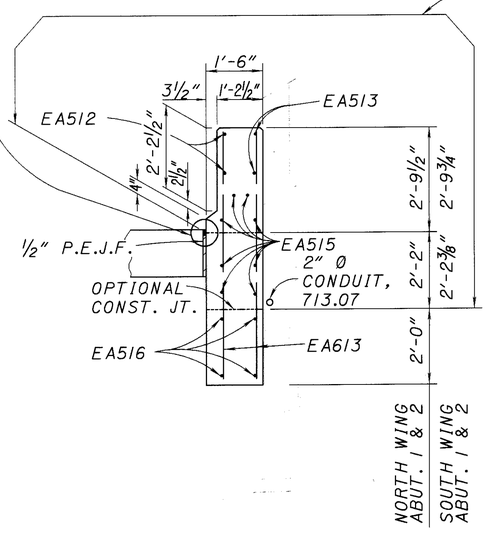

SECTION C-C

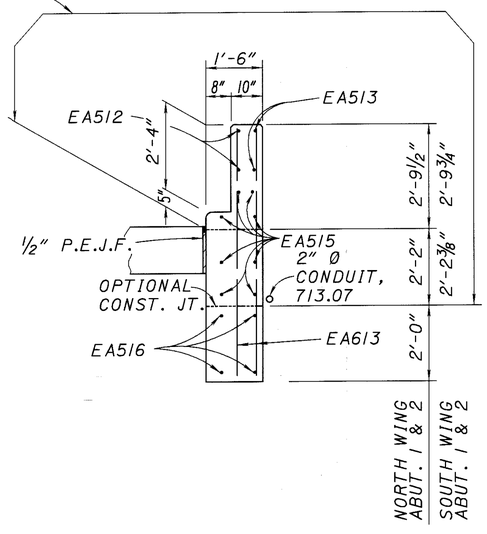

SECTION D-D

DESIGN AGENCY	DATE	STRUCTURE FILE NUMBER
OHIO DEPARTMENT OF TRANSPORTATION DISTRICT 5	2-11-99	4500873

DESIGNED	DRAWN	REVIEWED
RSD	DDH	CLZ
CHECKED	REVISED	
DTF		

PARAPET DETAILS (WINGWALLS)
BRIDGE NO. LIC-16-2109
S.R. 16 OVER HUDSON AVE.

LIC-16-19.72

9/15

491/547

L0162153 (SCALE 1) 2-11-99

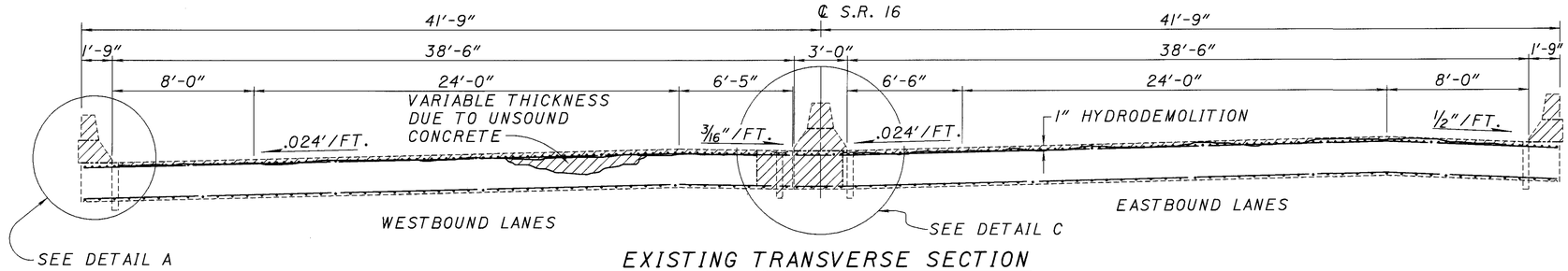

ITEM 202 PORTIONS OF STRUCTURE REMOVED, SUPERSTRUCTURE

EXISTING TRANSVERSE SECTION

LOOKING EAST

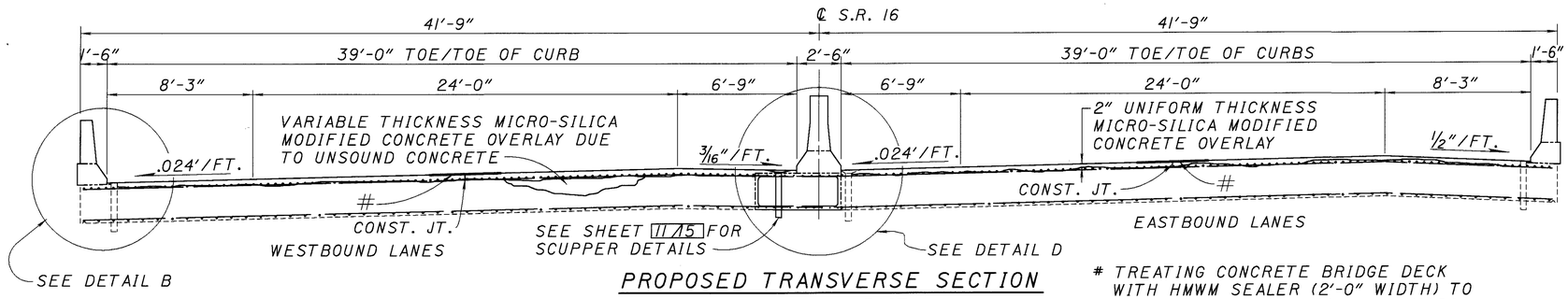

NOTE:
FOR ADDITIONAL PARAPET AND MEDIAN BARRIER DETAILS SEE SHEET 12/15

NOTE:
FOR DECK RE-STEEL LAYOUT SEE SHEET 11/15

PROPOSED TRANSVERSE SECTION

LOOKING EAST

TREATING CONCRETE BRIDGE DECK WITH HMWM SEALER (2'-0" WIDTH) TO BE INCLUDED WITH ITEM 848 MICRO-SILICA MODIFIED CONCRETE OVERLAY, USING HYDRODEMOLITION (T=2") FOR PAYMENT.

LAP LENGTHS	
#5	2'-3"
#6	2'-8"

NOTE:
DOWEL HOLES AND RE-STEEL TO BE INCLUDED WITH ITEM 844 HIGH PERFORMANCE CONCRETE SUPERSTRUCTURE (PARAPETS) FOR PAYMENT.

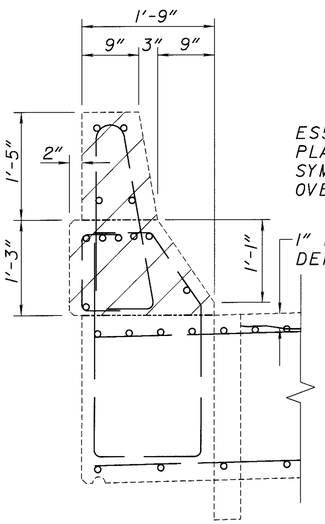

DETAIL A
EXISTING

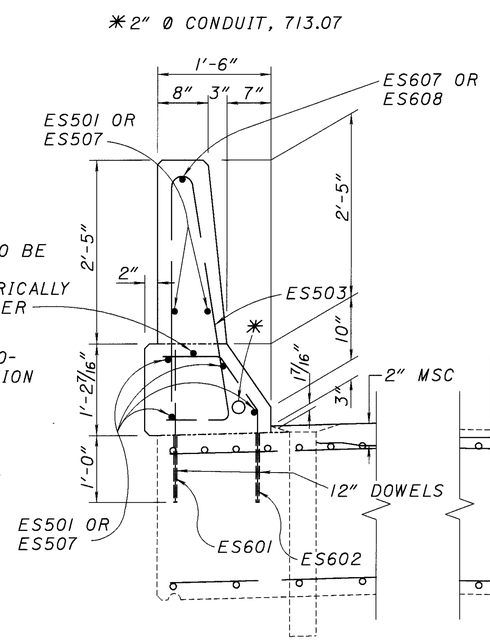

DETAIL B
PROPOSED

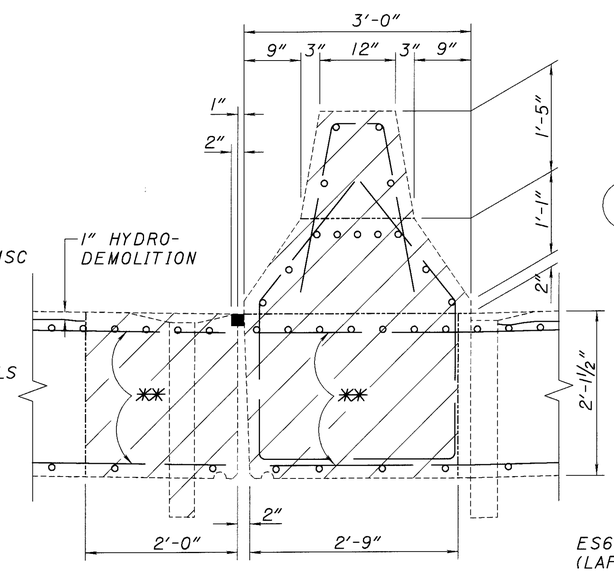

DETAIL C
EXISTING

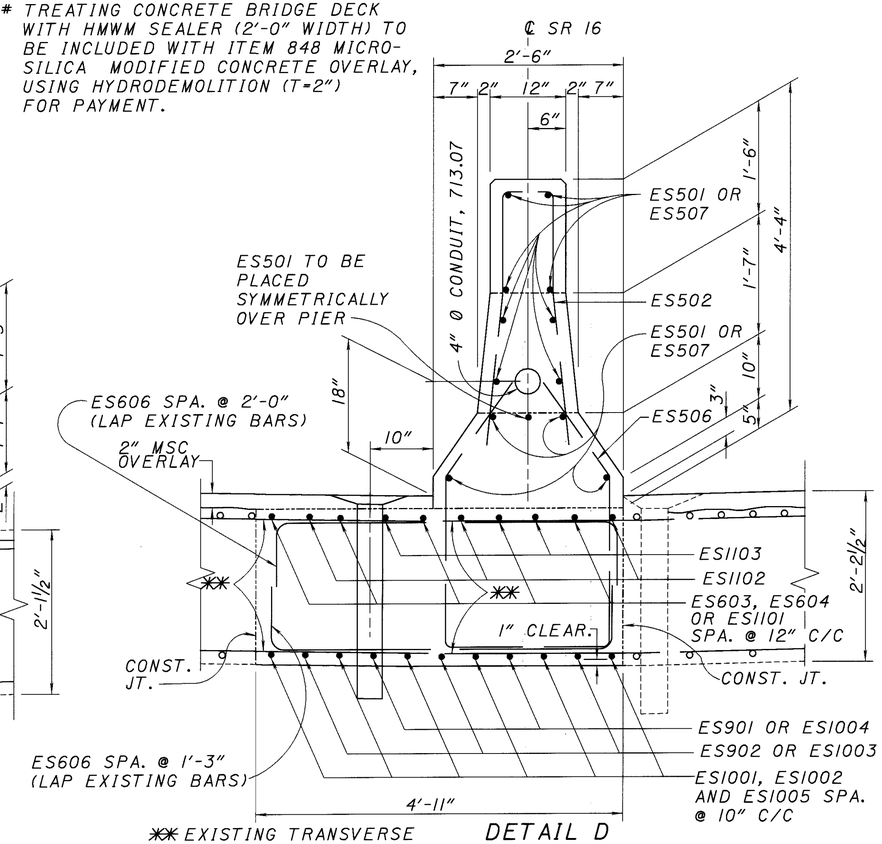

✳✳ EXISTING TRANSVERSE RE-STEEL SHALL REMAIN IN PLACE

DETAIL D
PROPOSED

L0162156 (SCALE 1) 2-11-99

DESIGN AGENCY	DATE	STRUCTURE FILE NUMBER
OHIO DEPARTMENT OF TRANSPORTATION DISTRICT 5	2-11-99	4500873

DESIGNED	DRAWN	REVISED	CHECKED
RSD	DDH	CLZ	DTF

TRANSVERSE SECTION
BRIDGE NO. LIC-16-2109
S.R. 16 OVER HUDSON AVE.

LIC-16-19.72

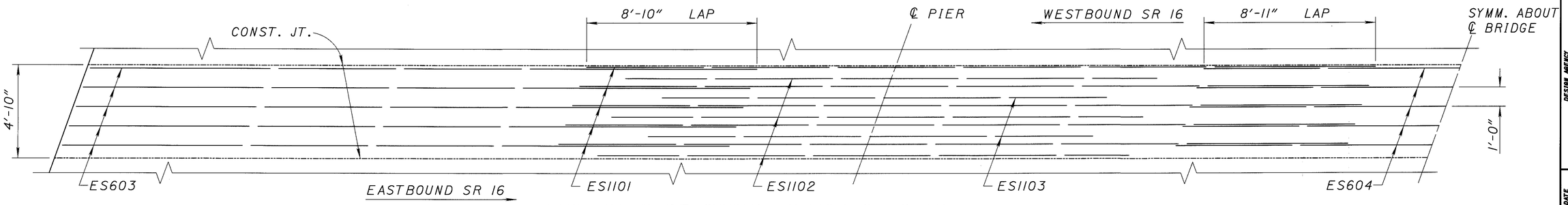

PART PLAN RE-STEEL IN TOP OF SLAB

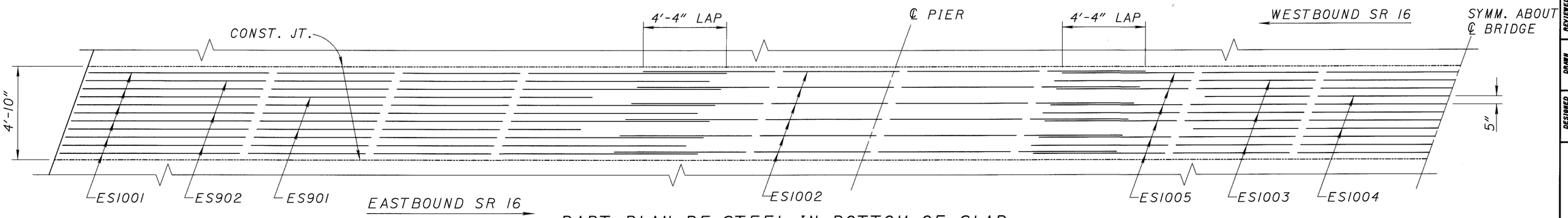

PART PLAN RE-STEEL IN BOTTOM OF SLAB

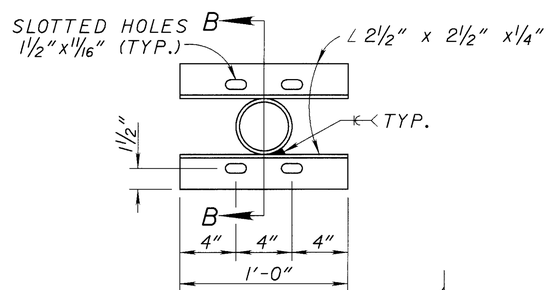

PLAN

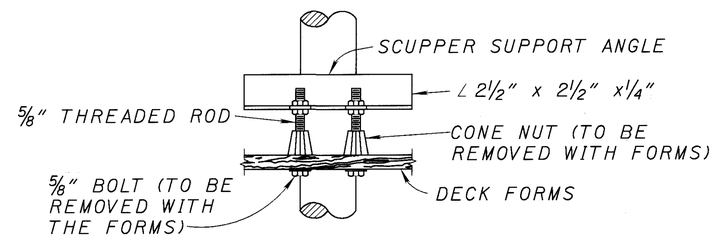

SCUPPER SUPPORT DETAIL

NOTE:
ALL COMPONENTS OF THE SCUPPERS SHALL BE GALVANIZED ACCORDING TO 711.02.

NOTE:
RE-STEEL TO BE INCLUDED WITH ITEM 844 HIGH PERFORMANCE CONCRETE, SUPERSTRUCTURE (DECK) FOR PAYMENT.

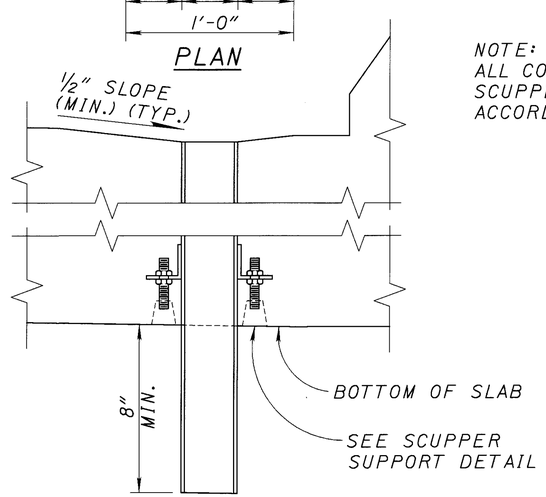

ELEVATION
(SECTION B-B)

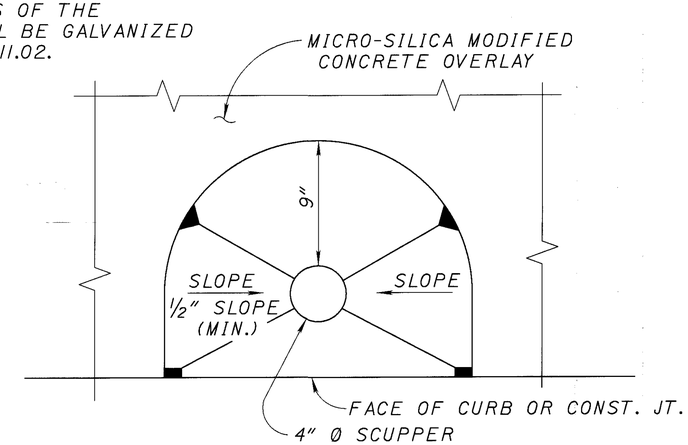

SLOPE DETAILS FOR EXISTING AND PROPOSED SCUPPERS

DESIGN AGENCY
OHIO DEPARTMENT OF TRANSPORTATION
DISTRICT 5

DESIGNED	DRAWN	REVIEWED	DATE
RSD	DDH	CLZ	2-11-99
CHECKED	REVISED	STRUCTURE FILE NUMBER	
DTF		4500873	

RE-STEEL AND SCUPPER DETAILS
BRIDGE NO. LIC-16-2109
S.R. 16 OVER HUDSON AVE.

LIC-16-19.72

11/15

493/547

L0162171 (SCALE 2.6667) 2-11-99

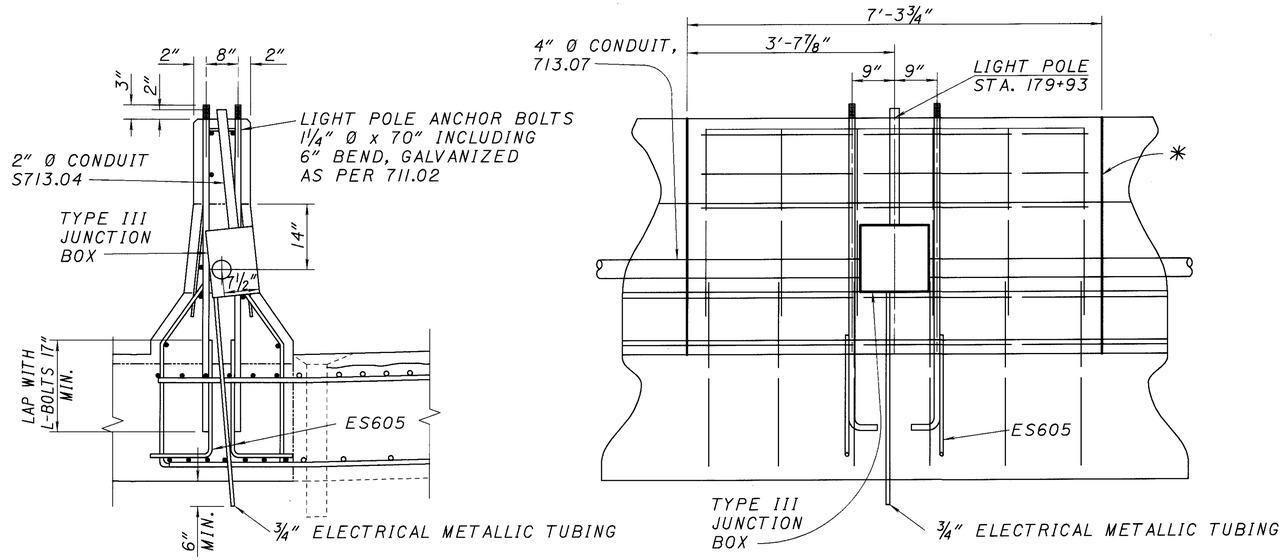

JUNCTION BOX DETAILS FOR ON BRIDGE 50" MEDIAN BARRIER (LIGHT POLE)

LAP LENGTHS	
*5	2'-3"
*6	2'-8"

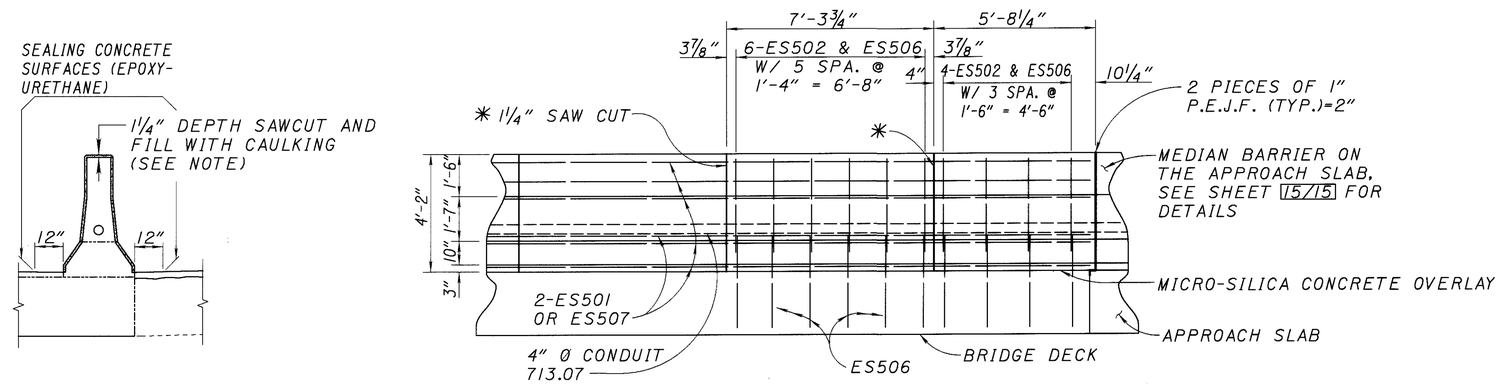

NOTE:
DOWEL HOLES AND RE-STEEL TO BE INCLUDED WITH ITEM 844 HIGH PERFORMANCE CONCRETE, SUPERSTRUCTURE (PARAPETS) FOR PAYMENT.

TYPICAL 50" MEDIAN BARRIER PARAPET PANEL DETAILS

NOTE:
SEE SHEET 10/15 FOR 50" MEDIAN BARRIER AND 42" OUTSIDE PARAPET CROSS SECTION WITH RE-STEEL LAYOUT.

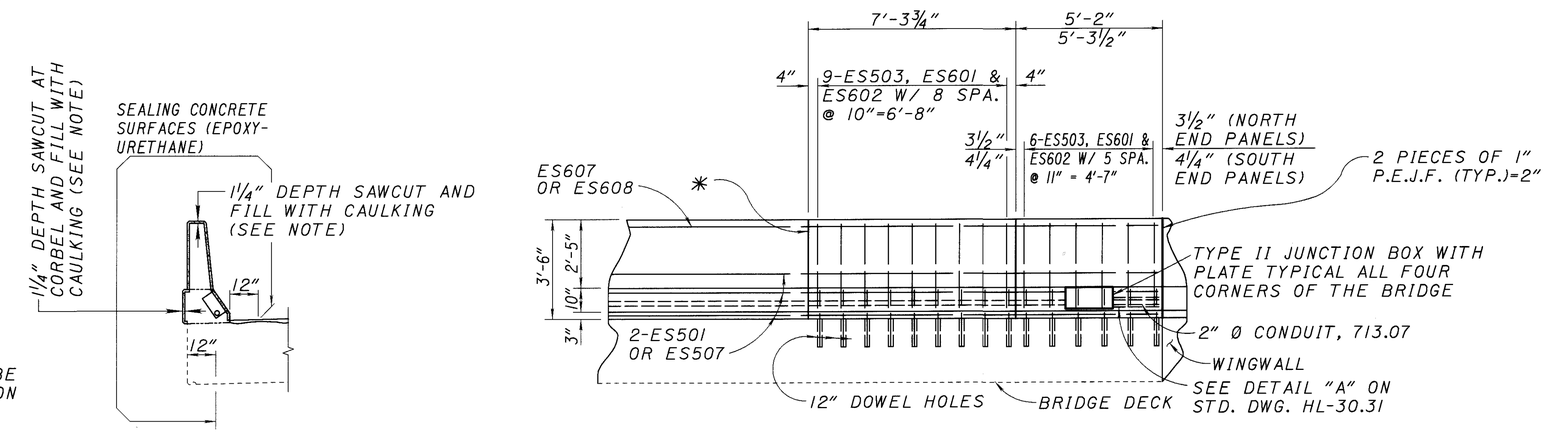

NOTE:
SOME RE-STEEL MAY HAVE TO BE MOVED SO THE TYPE II JUNCTION BOX CAN BE INSTALLED IN THE OUTSIDE PARAPET.

TYPICAL 42" OUTSIDE PARAPET PANEL DETAILS

DESIGN AGENCY
OHIO DEPARTMENT
OF TRANSPORTATION
DISTRICT 5

DESIGNED	DRAWN	REVIEWED	DATE
RSD	DDH	CLZ	2-11-99
CHECKED	REVISED	STRUCTURE FILE NUMBER	
DTF		4500873	

PARAPET DETAILS
BRIDGE NO. LIC-16-2109
S.R. 16 OVER HUDSON AVE.

LIC-16-19.72

12/15

494/547

LAI62153 (SCALE 1) 2-11-99

BENDING DIAGRAMS

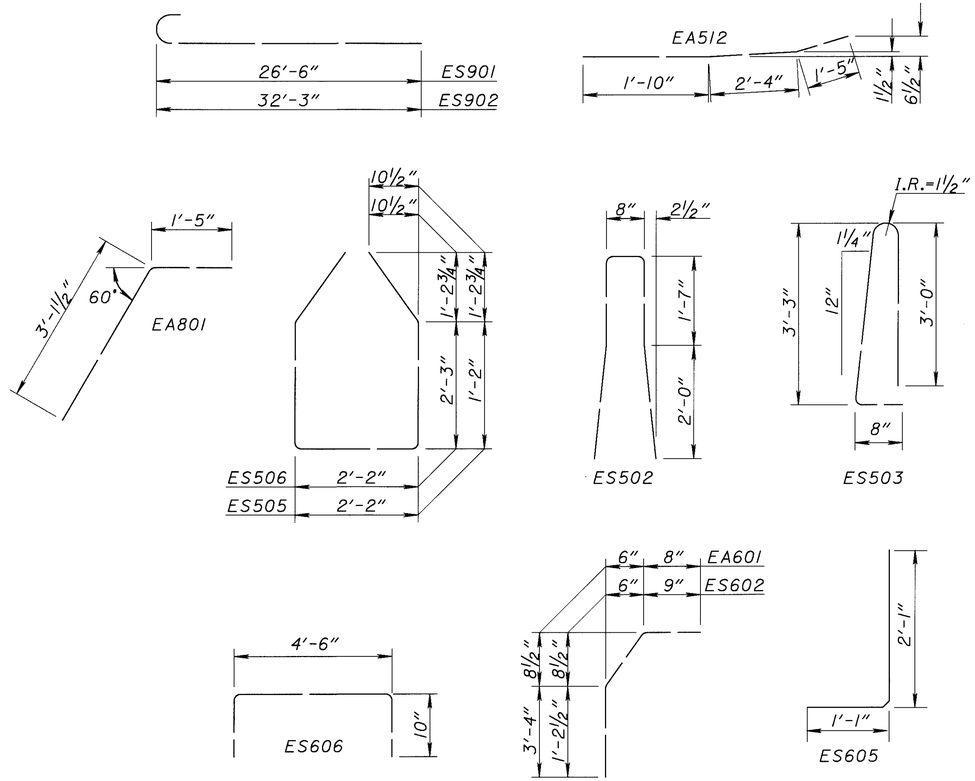

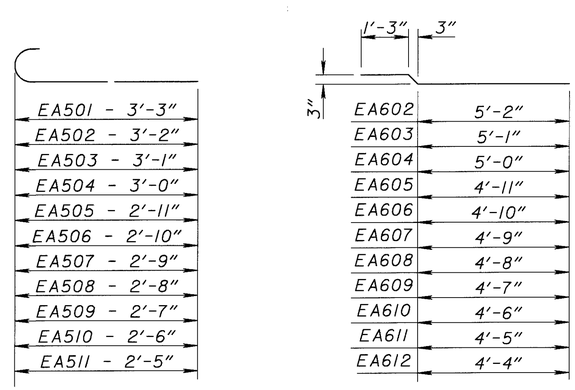

NOTE:
RE-STEEL TO BE INCLUDED IN THE
APPROPRIATE CONCRETE ITEM FOR PAYMENT

BAR SCHEDULE

SUPERSTRUCTURE

MARK	NUMBER	LENGTH	SHAPE	WEIGHT
ES501	78	40'-0"	ST.	3,254
ES502	152	7'-7"	BT.	1,202
ES503	356	7'-1"	BT.	2,630
ES504	24	24'-6"	ST.	613
ES505	36	7'-2"	BT.	269
ES506	116	9'-4"	BT.	1,129
ES507	24	28'-8"	ST.	718
ES601	348	2'-0"	ST.	1,045
ES602	348	2'-9"	BT.	1,437
ES603	10	34'-6"	ST.	518
ES604	5	26'-6"	ST.	199
ES605	4	3'-1"	BT.	19
ES606	187	5'-11"	BT.	1,662
ES607	6	40'-0"	ST.	360
ES608	2	29'-6"	ST.	89
ES901	4	27'-9"	BT.	377
ES902	6	33'-6"	BT.	683
ES1001	12	33'-0"	ST.	1,704
ES1002	12	26'-0"	ST.	1,343
ES1003	3	41'-6"	ST.	536
ES1004	2	25'-4"	ST.	218
ES1005	6	41'-0"	ST.	1,059
ES1101	10	40'-10"	ST.	2,169
ES1102	6	27'-6"	ST.	877
ES1103	4	23'-0"	ST.	489
SUB-TOTAL				24,599

ABUTMENT

MARK	NUMBER	LENGTH	SHAPE	WEIGHT
EA501	4	3'-10"	BT.	16
EA502	4	3'-9"	BT.	16
EA503	4	3'-8"	BT.	15
EA504	4	3'-7"	BT.	15
EA505	4	3'-6"	BT.	15
EA506	4	3'-5"	BT.	14
EA507	4	3'-4"	BT.	14
EA508	4	3'-3"	BT.	14
EA509	4	3'-2"	BT.	13
EA510	4	3'-1"	BT.	13
EA511	4	3'-0"	BT.	13
EA512	8	5'-8"	BT.	47
EA513	8	5'-8"	ST.	47
EA514	16	10'-0"	ST.	167
EA515	32	15'-8"	ST.	523
EA516	16	4'-4"	ST.	72
EA517	16	4'-0"	ST.	67
EA601	52	4'-10"	BT.	378
EA602	12	6'-8"	BT.	120
EA603	4	6'-7"	BT.	40
EA604	4	6'-6"	BT.	39
EA605	4	6'-5"	BT.	39
EA606	4	6'-4"	BT.	38
EA607	4	6'-3"	BT.	38
EA608	4	6'-2"	BT.	37
EA609	4	6'-1"	BT.	37
EA610	4	6'-0"	BT.	36
EA611	4	5'-11"	BT.	36
EA612	4	5'-10"	BT.	35
EA613	32	6'-7"	ST.	316
EA801	110	4'-6"	BT.	1322
SUB-TOTAL				3,592

TOTAL 28,191 POUNDS

DESIGN AGENCY: OHIO DEPARTMENT OF TRANSPORTATION DISTRICT 5

DATE 2-11-99 | REVIEWED CLZ | STRUCTURE FILE NUMBER 4500873

DRAWN DDH | REVISED | DESIGNED RSD | CHECKED DTF

BAR SCHEDULES AND BENDING DIAGRAMS
BRIDGE NO. LIC-16-2109
S.R. 16 OVER HUDSON AVE.

LIC-16-19.72

LOI62172 (SCALE 1) 2-11-99

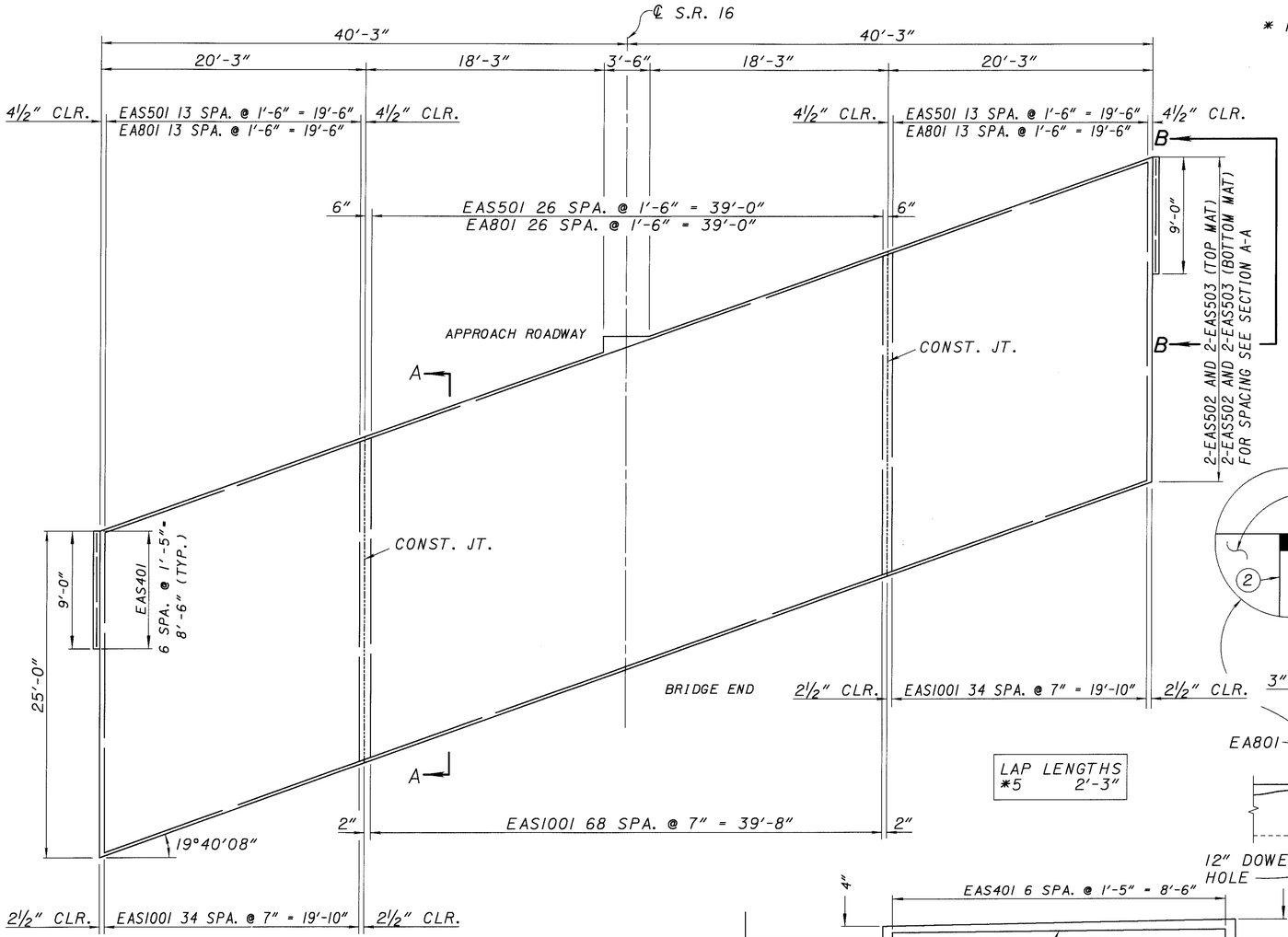

NOTE:
MECHANICAL SPLICE CONNECTORS AND CURBS TO BE INCLUDED IN ITEM 611, REINFORCED CONCRETE APPROACH SLAB (T=15"), AS PER PLAN FOR PAYMENT.

PLAN

* NOTE: EPOXY COATED RE-STEEL INCLUDED FOR PAYMENT WITH ITEM 611 REINFORCED CONCRETE APPROACH SLAB (T=15"), AS PER PLAN

NOTE: FOR EA801 BENDING DIAGRAMS AND QUANTITIES, SEE SHEET 12/15 AND 13/15

LAP LENGTHS
*5 2'-3"

BAR SCHEDULE					
MARK	NO. REQD.	LENGTH	SHAPE	WEIGHT	
EAS401	21	3'-2"	BT.	44	
EAS402	3	8'-6"	ST.	17	
EAS501	110	24'-6"	ST.	2811	*
EAS502	228	21'-3"	ST.	5053	*
EAS503	228	22'-6"	ST.	5351	*
EAS1001	278	25'-11"	BT.	31002	*
TOTAL (2 APPROACH SLABS)				44278	*

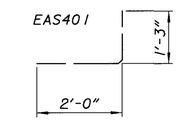

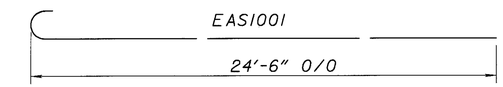

NOTE 1:
PREFORMED ELASTOMERIC JOINT SEALER 705.11 (1¼" FOR ½" JOINT) DEPRESSED ⅛" BELOW ROADWAY, PLACED IN ½"x2¼" GROOVE.

NOTE 2:
TYPE A WATERPROOFING SHALL NOT EXTEND ABOVE THE BOTTOM OF THE GROOVE INTO WHICH THE PREFORMED ELASTOMERIC JOINT SEALER IS TO BE PLACED. IT SHALL BE APPLIED TO THE ENTIRE AREA OF THE ABUTMENT OR SUPERSTRUCTURE WHICH COMES INTO CONTACT WITH THE APPROACH SLAB.

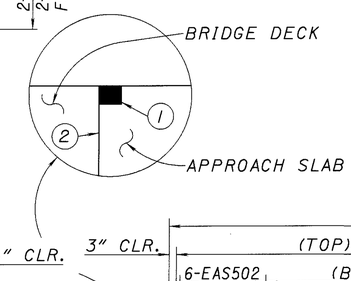

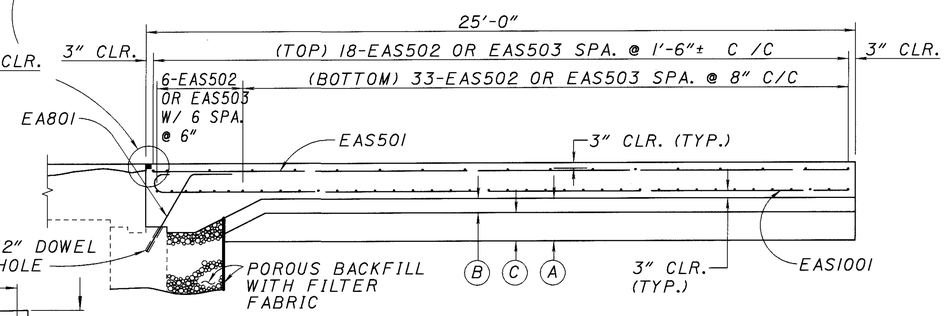

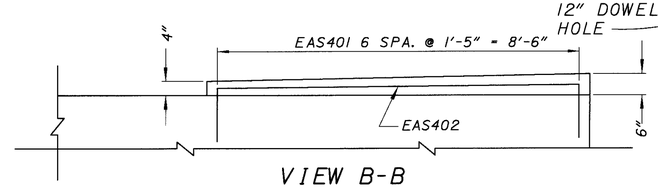

VIEW B-B
(APPLIES TO LEFT AND RIGHT FORWARD AND RIGHT REAR ONLY)

SECTION A-A

(A) 1'-6" EXCAVATION NOT INCLUDING EMBANKMENT CONSTRUCTION (UNDER PROPOSED APPROACH SLAB) (AS-1-81)

0'-6" PROPOSED AGGREGATE BASE

1'-0" PROPOSED EMBANKMENT

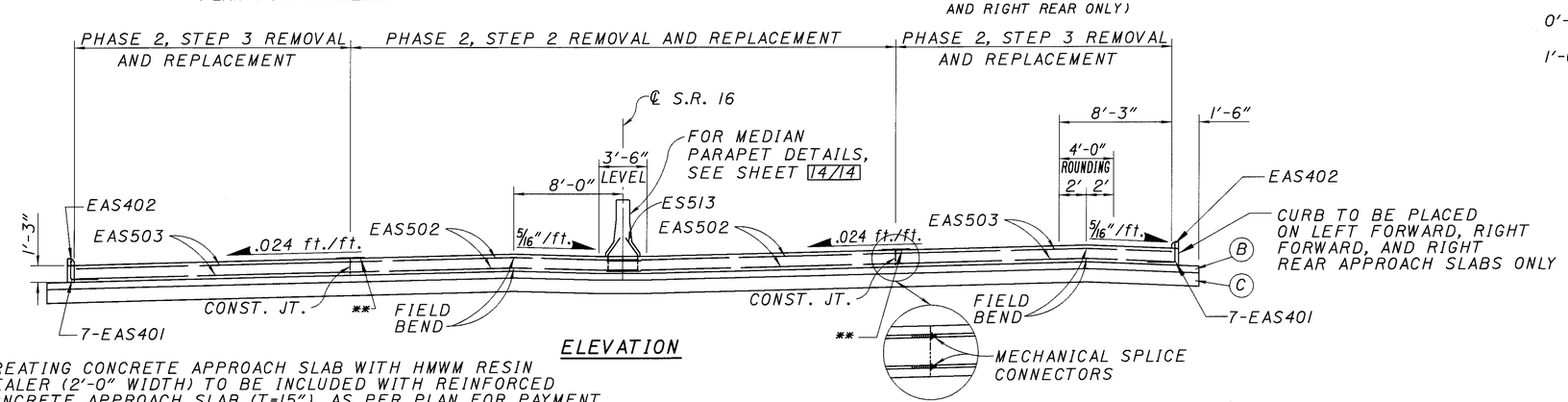

ELEVATION

**TREATING CONCRETE APPROACH SLAB WITH HMWM RESIN SEALER (2'-0" WIDTH) TO BE INCLUDED WITH REINFORCED CONCRETE APPROACH SLAB (T=15"), AS PER PLAN FOR PAYMENT

ITEM	DESCRIPTION	QUANTITY	UNIT
203	EXCAVATION NOT INCLUDING EMBANKMENT CONSTRUCTION	246	CU. YD.
203	EMBANKMENT	133	CU. YD.
203	SUBGRADE COMPACTION	434	SQ. YD.
304	AGGREGATE BASE	66	CU. YD.
518	POROUS BACKFILL WITH FILTER FABRIC	LUMP	
611	REINFORCED CONCRETE APPROACH SLAB (T=15"), AS PER PLAN	447	SQ. YD.

QUANTITIES CARRIED TO SHEET 2/15

DESIGN AGENCY: OHIO DEPARTMENT OF TRANSPORTATION DISTRICT 5

DATE 2-11-99 | REVIEWED CLZ | STRUCTURE FILE NUMBER 4500873

DRAWN DDH | REVISED

DESIGNED RSD | CHECKED DTF

APPROACH SLAB DETAILS
BRIDGE NO. LIC-16-2109
S.R. 16 OVER HUDSON AVE.

LIC-16-19.72

L0162128 (SCALE 5.3333) 2-11-99

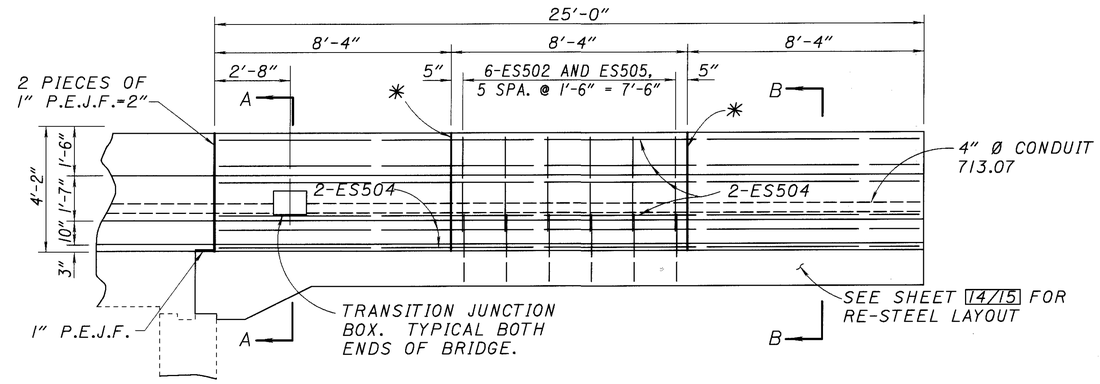

TYPICAL 50" MEDIAN BARRIER ON APPROACH SLAB DETAILS

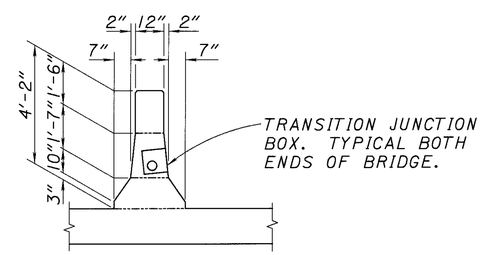

SECTION A-A

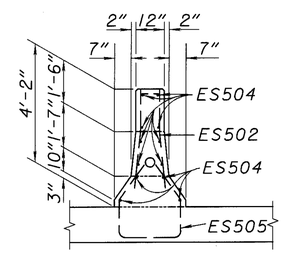

SECTION B-B

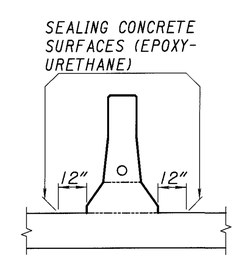

✳ 1¼" DEPTH SAWCUT AND FILL WITH CAULKING AT DEFLECTION JOINTS

DESIGN AGENCY
OHIO DEPARTMENT OF TRANSPORTATION DISTRICT 5

DATE REVIEWED CLZ 2-11-99

STRUCTURE FILE NUMBER 4500873

DRAWN DDH REVISED

DESIGNED RSD CHECKED DTF

MEDIAN BARRIER ON APPROACH SLAB DETAILS
BRIDGE NO. LIC-16-2109
S.R. 16 OVER HUDSON AVE.

LIC-16-19.72

15/15

497/547

L0162129 (SCALE 1) 2-11-99

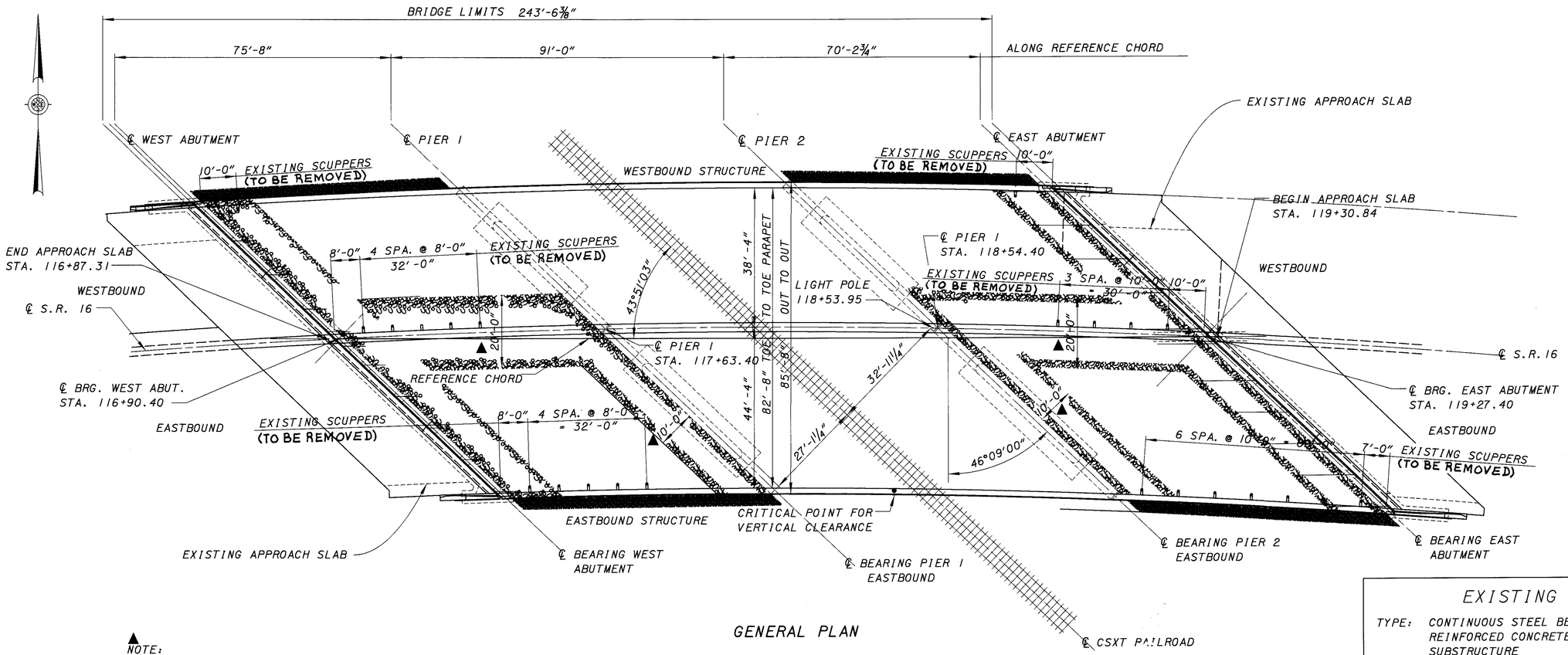

GENERAL PLAN

▲ NOTE:
LIMITS ESTIMATED QUANTITIES OF ITEM 601 CRUSHED AGGREGATE SLOPE PROTECTION

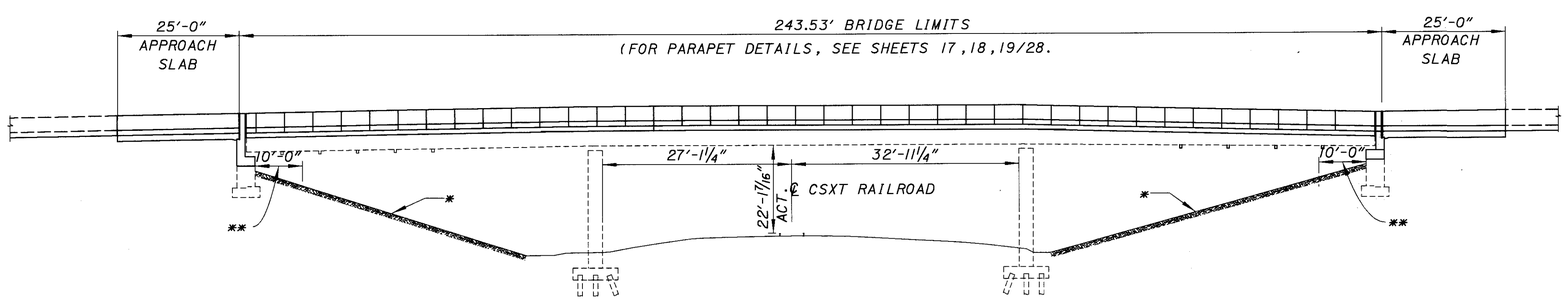

*EXISTING CRUSHED AGGREGATE SLOPE PROTECTION

** NOTE:
CRUSHED AGGREGATE SLOPE TO BE REMOVED WITH ITEM 503-UNCLASSIFIED EXCAVATION. QUANTITIES FOR REPLACEMENT TO BE INCLUDED WITH ITEM 203-EMBANKMENT 180 CU.YD. AND ITEM 601 CRUSHED AGGREGATE SLOPE PROTECTION 274 CU. YD. WHICH INCLUDES AREAS TO TRAVEL UPSLOPE TO ABUTMENTS AND ADDITIONAL 50 CU. YD. TO BE USED AS DIRECTED BY THE ENGINEER.

PROFILE @ ℄ S.R. 16

EXISTING STRUCTURE

TYPE: CONTINUOUS STEEL BEAM WITH REINFORCED CONCRETE DECK AND SUBSTRUCTURE
SPANS: ON CHORDS BETWEEN EACH BEARINGS 73'-0" / 91'-0" / 73'-0" C/C BRGS.
ON CHORD BETWEEN ABUTMENT BEARINGS 75.67' / 91.00 / 70.23' C/C BEARINGS
ROADWAY: 86'-3" O/O DECK
36'-10" TOE/TOE SAFETY PARAPET W.B. LANES
42'-10" TOE/TOE SAFETY PARAPET E.B. LANES
WITH 2'-6" MEDIAN BARRIER
LOAD FREQUENCY: HS20-44 AND THE ALTERNATE MILITARY LOADING
SKEW: 8°10'00" RT. FORWARD
WEARING SURFACE: 2" ASPHALT CONCRETE OVERLAY
ALIGNMENT: TANGENT
APPROACH SLABS: (25' LONG) AS-1-54
SUPERELEVATION: VARIES

REHABILITATED STRUCTURE

TYPE: EXISTING CONTINUOUS STEEL BEAM WITH PROPOSED REINFORCED CONCRETE DECK AND SUBSTRUCTURE
SPANS: ON CHORDS BETWEEN EACH BEARINGS 73'-0" / 91'-0" / 73'-0" C/C BEARINGS
ON CHORD BETWEEN ABUTMENT BEARINGS 75.67' / 91.00' / 70.23' C/C BEARINGS
ROADWAY: 85'-8" O/O DECK
37'-1" TOE/TOE SAFETY PARAPET W.B. LANES
43'-1" TOE/TOE SAFETY PARAPET E.B. LANES
WITH 2'-6" MEDIAN BARRIER
LOAD FREQUENCY: HS20-44 AND THE ALTERNATE MILITARY LOADING
SKEW: 8°10'00" RT. FORWARD
WEARING SURFACE: 1" MONOLITHIC CONCRETE
ALIGNMENT: TANGENT
APPROACH SLABS: (25' LONG) AS-1-81
SUPERELEVATION: VARIES

DESIGN AGENCY: OHIO DEPARTMENT OF TRANSPORTATION DISTRICT 5

DESIGNED	DRAWN	REVIEWED	DATE
DTF	DTF	CLZ	2-19-99
CHECKED	REVISED	STRUCTURE FILE NUMBER	
RSD		4500938	

GENERAL PLAN AND ELEVATION
BRIDGE NO. LIC-16-2/31
OVER CSXT RAILROAD INC.

LIC-16-19.72

L016000I.BPE (01-27-99) SCALE 16

ITEM	ITEM EXT.	GRAND TOTAL	UNIT	DESCRIPTION	SUPER.	ABUT.	PIERS	GENERAL
201	11000	LUMP		CLEARING AND GRUBBING *				LUMP
202	11300	148	CU YD	PORTIONS OF STRUCTURE REMOVED, ABUTMENT		148		
202	11300	691	CU YD	PORTIONS OF STRUCTURE REMOVED, SUPERSTRUCTURE	691			
202	22901	389	SQ YD	APPROACH SLAB REMOVED, AS PER PLAN *				389
202	23500	2598	SQ YD	WEARING COURSE REMOVED				2598
202	30500	50	LIN FT	CONCRETE MEDIAN REMOVED				50
202	98100	23	~~EACH~~	REMOVAL MISC.: SCUPPERS INCLUDING DOWNSPOUT	23			
202	98200	244	LIN FT	REMOVAL MISC.: EXPANSION JOINT REMOVED	244			
203	12000	252	CU YD	EXCAVATION NOT INCLUDING EMBANKMENT CONSTRUCTION *				252
203	20000	360	CU YD	EMBANKMENT *				360
203	50000	418	SQ YD	SUBGRADE COMPACTION *				418
304	20000	70	CU YD	AGGREGATE BASE *				70
503	11100	LUMP		COFFERDAMS, CRIBS AND SHEETING				LUMP
503	21300	LUMP		UNCLASSIFIED EXCAVATION				LUMP
512	33000	16	SQ YD	TYPE 2 WATERPROOFING		16		
SPECIAL	51267510	1192	SQ YD	SEALING OF CONCRETE SURFACES (EPOXY - URETHANE)	792	400		
516	11210	244	LIN FT	STRUCTURAL EXPANSION JOINT INCLUDING ELASTOMERIC STRIP SEAL	244			
516	13200	7	SQ FT	1/2" PREFORMED EXPANSION JOINT FILLER	7			
516	13600	162	SQ FT	1" PREFORMED EXPANSION JOINT FILLER	21	141		
516	41100	22	EACH	1/8" PREFORMED BEARING PAD, 711.21		22		
516	46701	22	EACH	RESET BEARING, AS PER PLAN		22		
516	47000	LUMP		JACKING AND TEMPORARY SUPPORT OF SUPERSTRUCTURE				
518	21230	LUMP		POROUS BACKFILL WITH FILTER FABRIC *		LUMP		
519	11100	49	SQ FT	PATCHING CONCRETE STRUCTURE			49	
601	20500	274	CU YD	CRUSHED AGGREGATE SLOPE PROTECTION *				274
611	25001	468	SQ YD	REINFORCED CONCRETE APPROACH SLAB (T=15"), AS PER PLAN *				468
625	10600	2	EACH	LIGHT POLE ANCHOR L-BOLTS, 1 1/4" DIA. X 60" *	2			
625	10600	2	EACH	LIGHT POLE ANCHOR L-BOLTS, 1 1/4" DIA. X 69" *	2			
625	25402	552	LIN FT	CONDUIT, 2", 713.07 *	552			
625	25602	294	LIN FT	CONDUIT, 4", 713.07 *	294			
625	29910	6	EACH	TRANSITION JUNCTION BOX *	6			
625	29920	1	EACH	STRUCTURE JUNCTION BOX, TYPE III WITH COVER PLATE *	1			
625	33000	1	EACH	STRUCTURE GROUNDING SYSTEM*	1			
815	00050	33210	SQ FT	SURFACE PREPARATION OF EXISTING STEEL, SYSTEM OZEU	33210			
815	00056	33210	SQ FT	FIELD PAINTING OF EXISTING STEEL, PRIME COAT, SYSTEM OZEU	33210			
815	00060	33210	SQ FT	FIELD PAINTING OF EXISTING STEEL, INTERMEDIATE COAT, SYSTEM OZEU	33210			
815	00066	33210	SQ FT	FIELD PAINTING OF EXISTING STEEL, FINISH COAT, SYSTEM OZEU	33210			
815	00504	80	MAN HOUR	GRINDING FINS, TEARS, SLIVERS	80			
815	00508	2607	LIN FT	GRINDING FLANGE EDGES	2607			
842	45700	169	CU YD	CLASS C CONCRETE, ABUTMENT REPAIR OR RECONSTRUCTION		169		
844	48000	608	CU YD	HIGH PERFORMANCE CONCRETE SUPERSTRUCTURE (DECK) MIX 4	608			
844	48020	151	CU YD	HIGH PERFORMANCE CONCRETE SUPERSTRUCTURE (PARAPET) MIX 2	151			
863	10200	6330	LBS.	STRUCTURAL STEEL MEMBERS, MISCELLANEOUS LEVEL FABRICATION	6330			
863	20000	6326	EACH	WELDED STUD SHEAR CONNECTOR	6326			
				QUANTITIES CARRIED TO SHEET 405A &405B				

CALCULATED DTF
CHECKED RSD

BRIDGE SUMMARY
BRIDGE NO. LIC-16-2131
OVER CSXT RAILROAD

LIC-16-19.72

L0160001.BWS (SCALE 1) 2-26-99

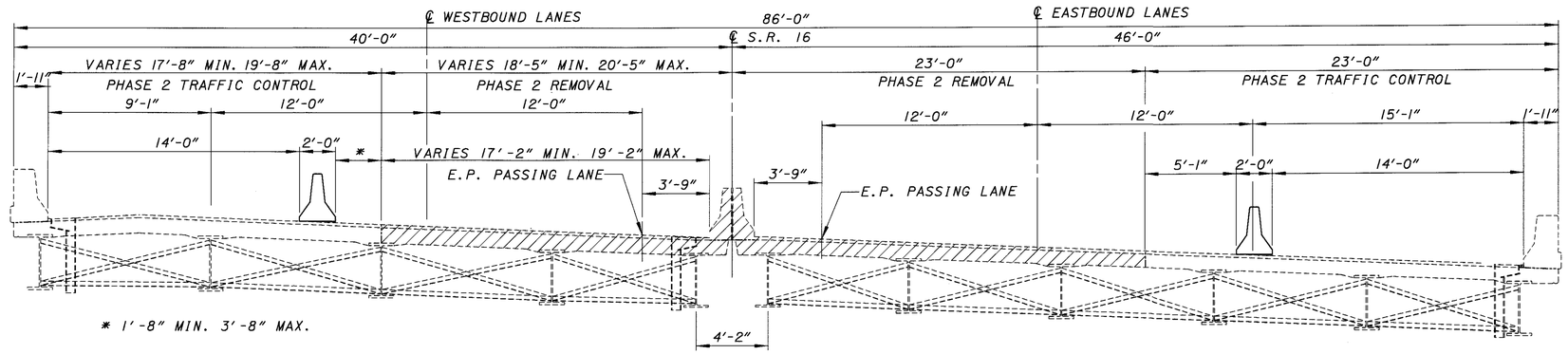

PHASE 2 REMOVALS

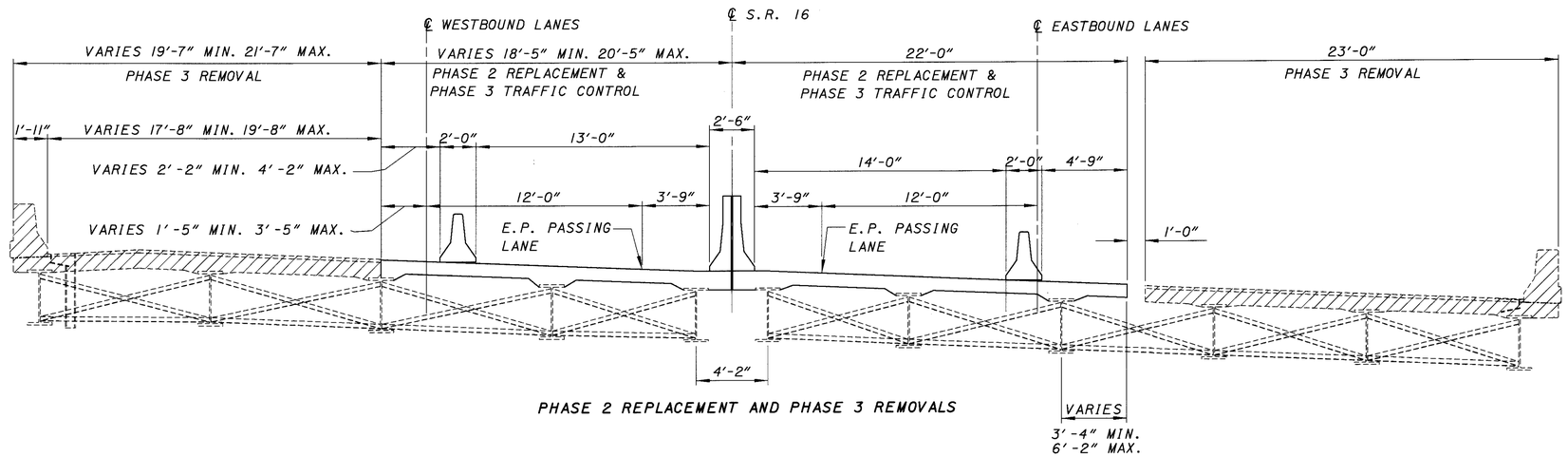

PHASE 2 REPLACEMENT AND PHASE 3 REMOVALS

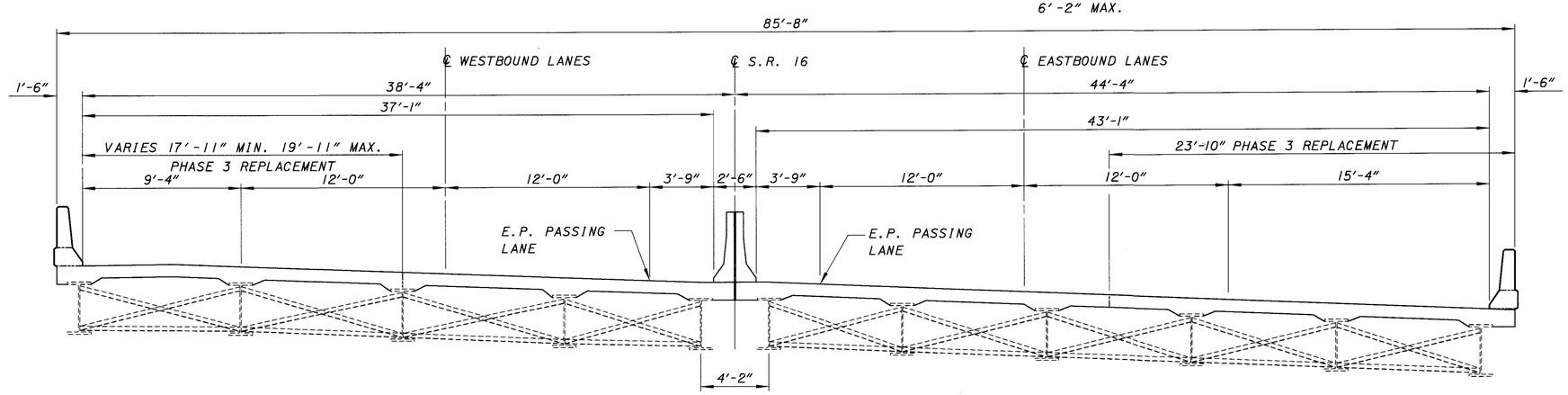

PHASE 3 REPLACEMENT

DESIGN AGENCY
OHIO DEPARTMENT OF TRANSPORTATION
DIST. 5 BRIDGE DEPT.

DESIGNED	DRAWN	REVIEWED	DATE
DTF	DTF	CLZ	2-26-99
CHECKED	REVISED	STRUCTURE FILE NUMBER	
RSD		4500938	

TRAFFIC CONTROL
BRIDGE NO. LIC-16-2131
S.R. 16 OVER CSXT RAILROAD

LIC-16-19.72

L0160001.BMT (02-27-99) SCALE 4

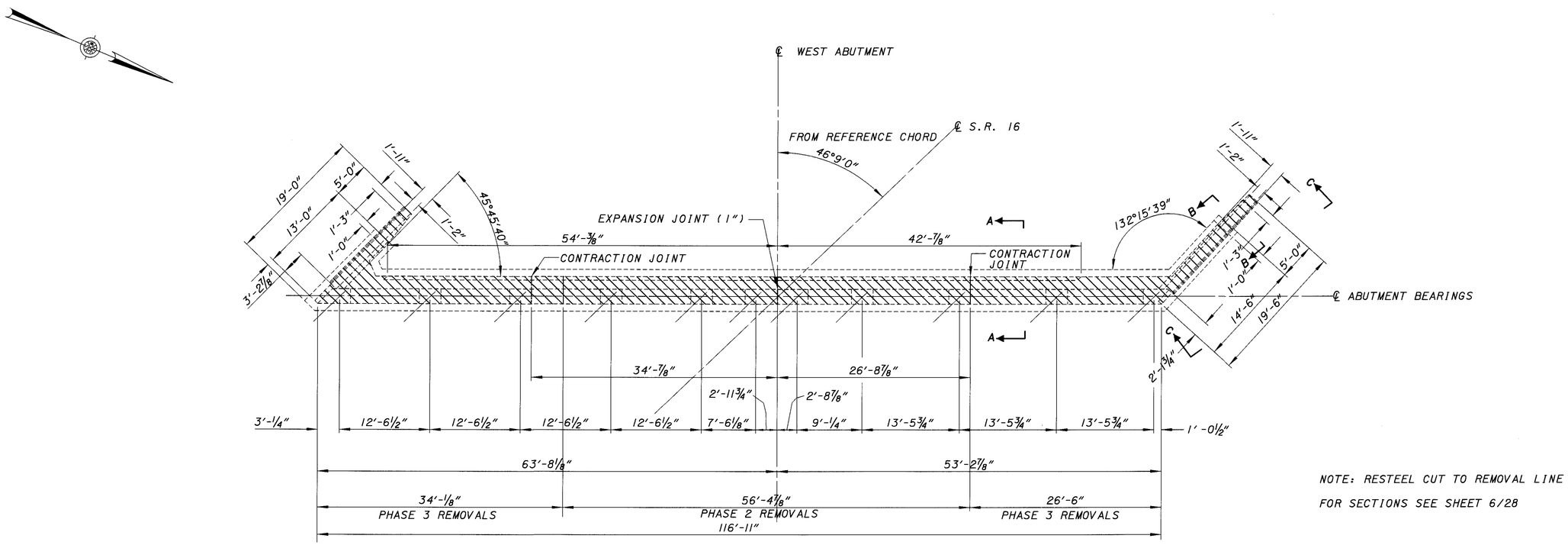

PLAN

NOTE: RESTEEL CUT TO REMOVAL LINE

FOR SECTIONS SEE SHEET 6/28

AREAS TO BE REMOVED

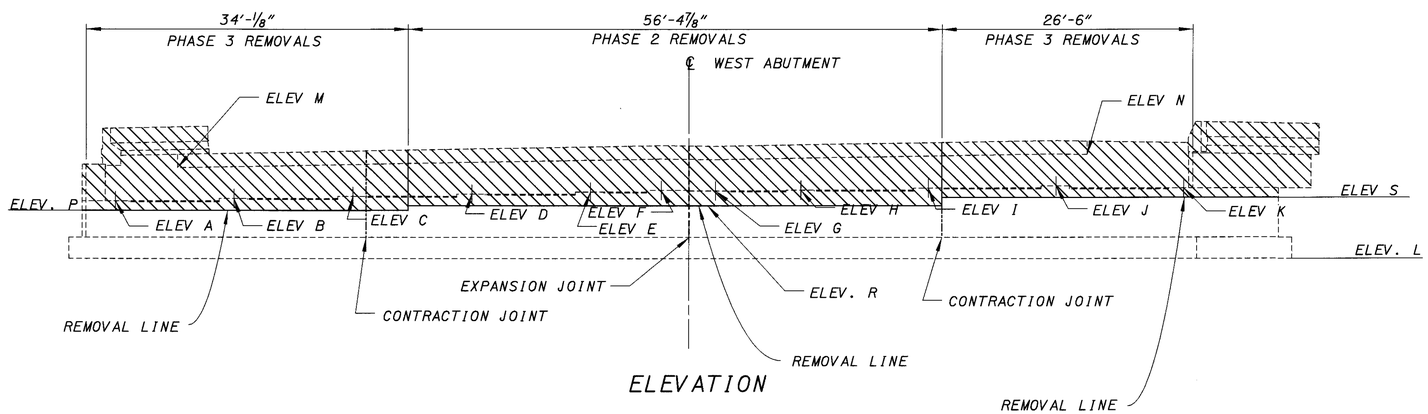

ELEVATION

ELEVATIONS	
ELEV.	
A	845.10
B	845.39
C	845.68
D	845.93
E	846.11
F	846.28
G	846.18
H	846.29
I	846.53
J	846.75
K	846.49
L	839.06
M	849.05
N	850.57
P	844.10
R	844.68
S	845.49

DESIGN AGENCY
OHIO DEPARTMENT OF TRANSPORTATION PRODUCTION DEPT.

DESIGNED	DRAWN	REVIEWED	DATE
DTF	DTF	CLZ	2-26-99
CHECKED	REVISED	STRUCTURE FILE NUMBER	
RSD		4500938	

EXISTING WEST ABUTMENT REMOVAL
BRIDGE NO. LIC-16-21.73 OVER CSXT RAILROAD

LIC-16-19.72

LO160002.BEA SCALE 8

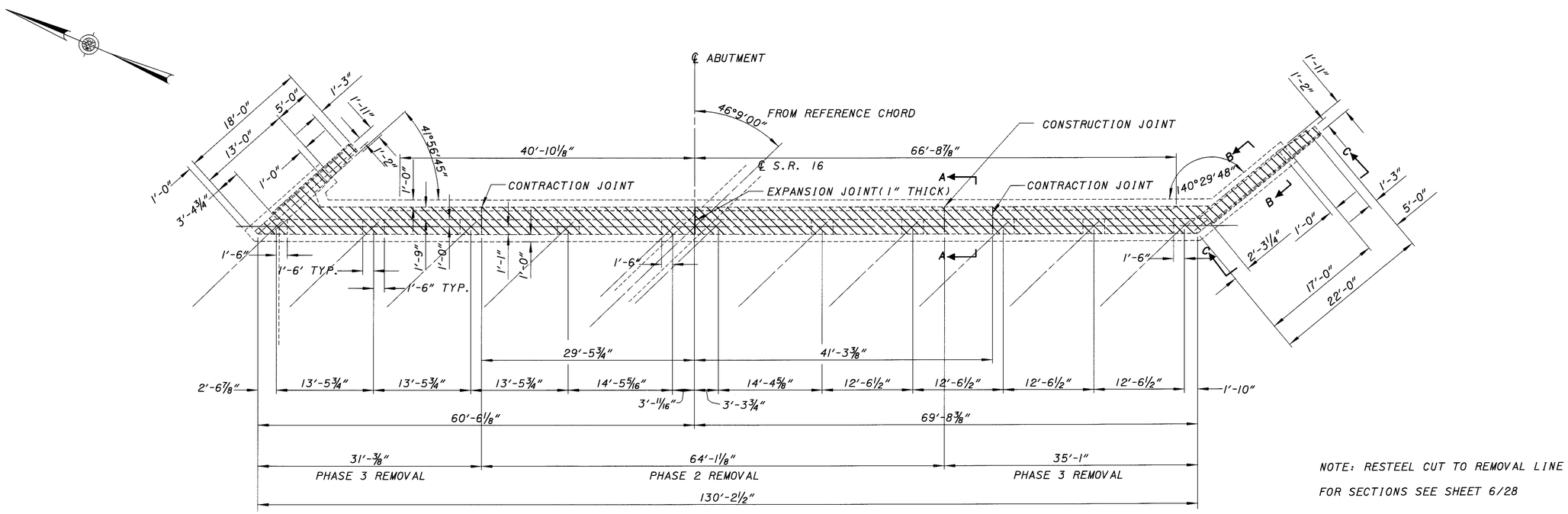

PLAN

NOTE: RESTEEL CUT TO REMOVAL LINE

FOR SECTIONS SEE SHEET 6/28

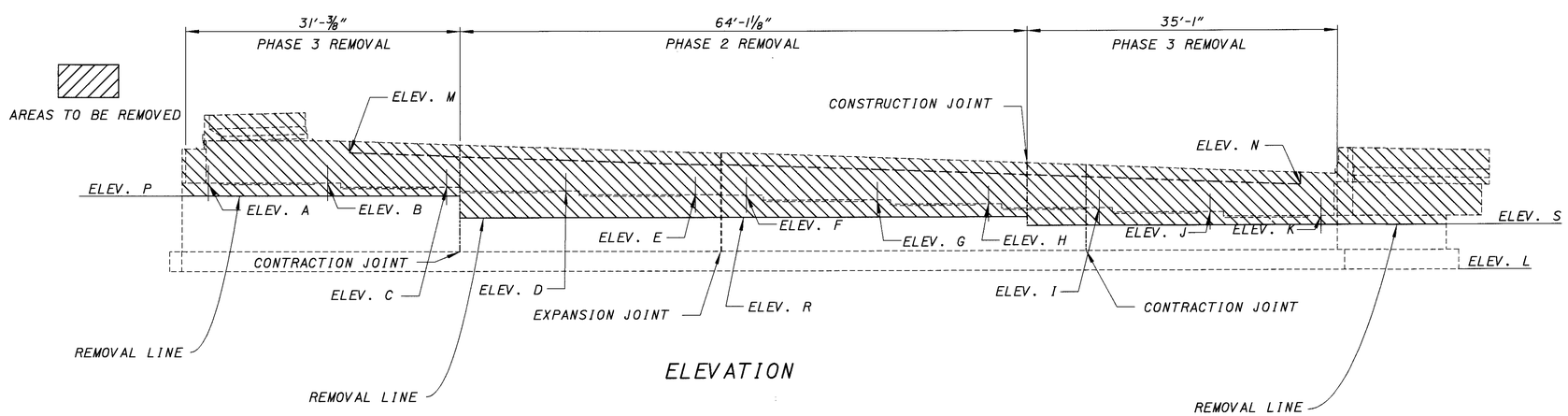

ELEVATION

ELEVATIONS	
ELEV.	
A	848.39
B	848.42
C	847.97
D	847.51
E	847.10
F	847.06
G	846.50
H	846.06
I	845.57
J	845.08
K	844.57
L	838.40
M	852.24
N	848.46
P	846.97
R	844.57
S	843.57

DESIGN AGENCY
OHIO DEPARTMENT OF TRANSPORTATION
PRODUCTION DEPT.

DESIGNED	DRAWN	REVIEWED	DATE
DTF	DTF	CLZ	2-26-99
CHECKED	REVISED	STRUCTURE FILE NUMBER	
RSD		4500938	

EXISTING EAST ABUTMENT REMOVAL
BRIDGE NO. LIC-16-21.31 OVER CSXT RAILROAD

LIC-16-19.72

L0160001.BEA SCALE 8

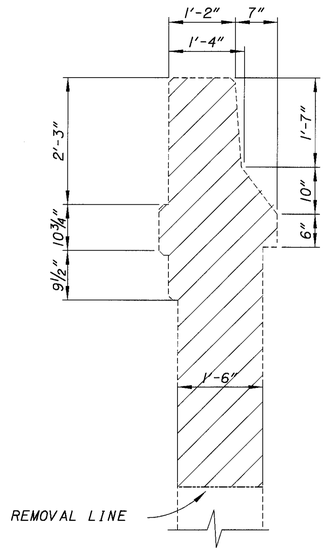

SECTION B-B

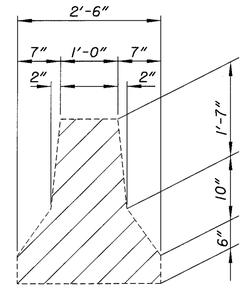

MEDIAN BARRIER

(BACKWALL & APPROACH SLAB)

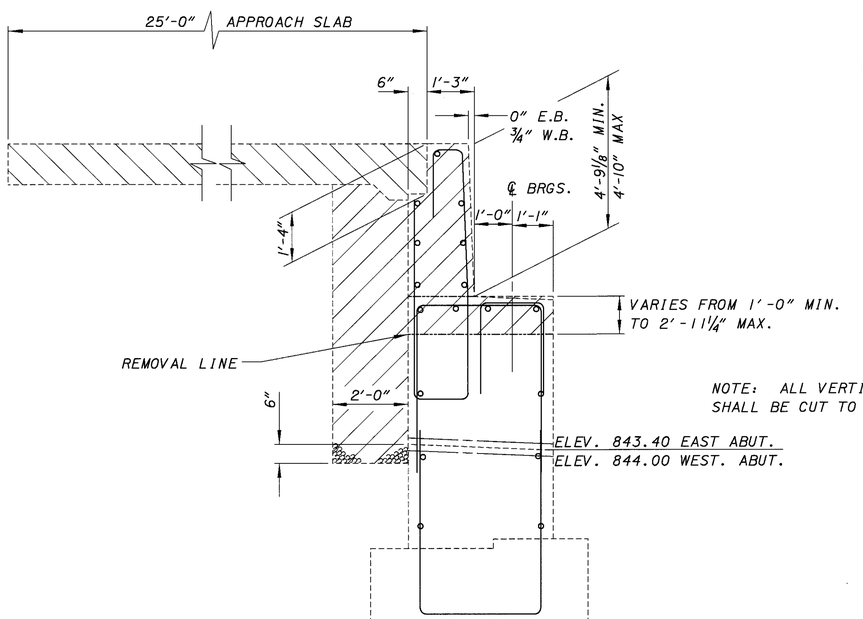

SECTION A-A

NOTE: ALL VERTICAL RE-STEEL SHALL BE CUT TO THE REMOVAL LINE.

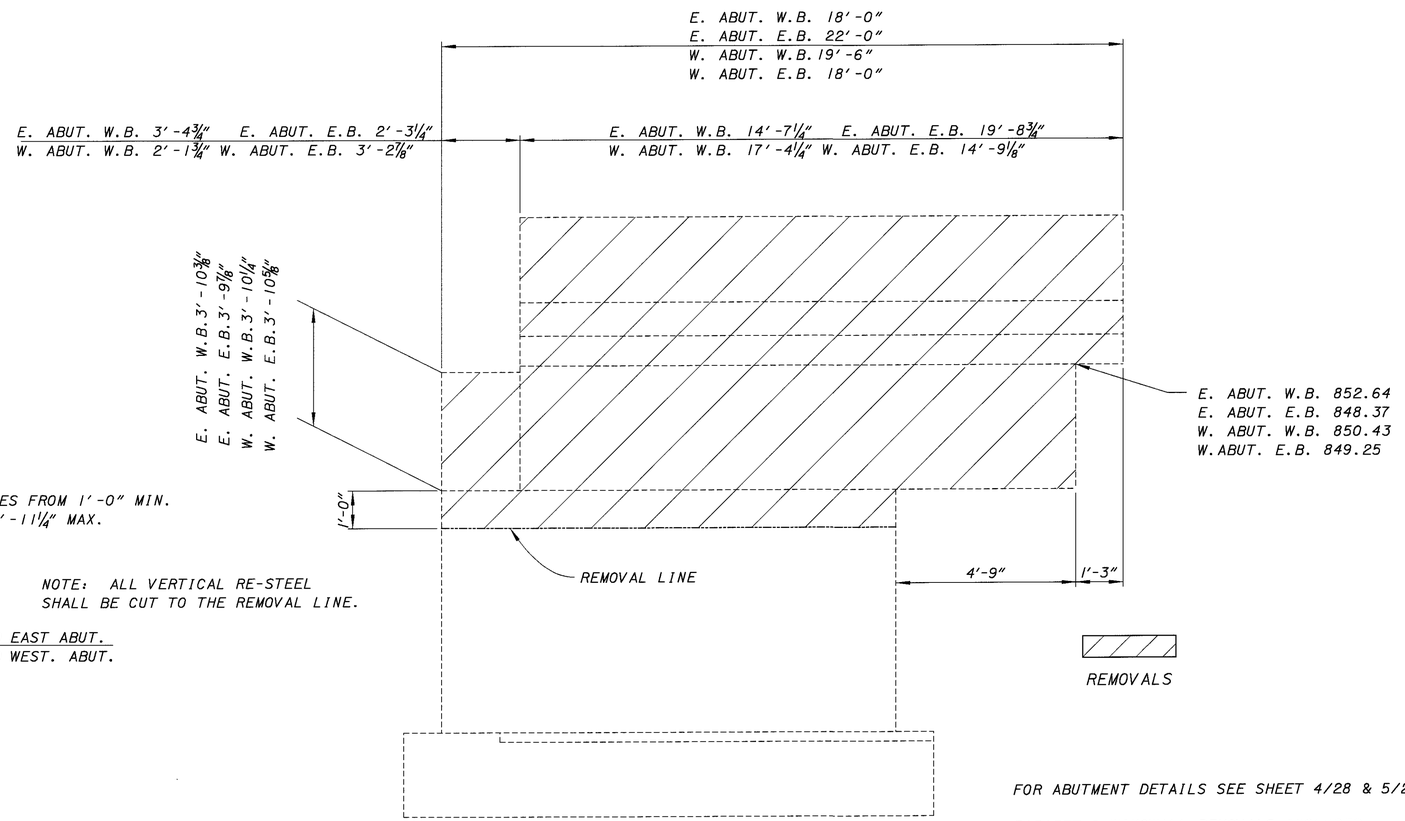

VIEW C-C

FOR ABUTMENT DETAILS SEE SHEET 4/28 & 5/28

PARAPET & WINGWALL REMOVALS INCLUDED WITH ITEM 202 - PORTIONS OF STRUCTURE REMOVED, ABUTMENT

DESIGN AGENCY
OHIO DEPARTMENT OF TRANSPORTATION
DISTRICT 5

DESIGNED	DRAWN	REVIEWED	DATE
DTF	DTF	CLZ	2-26-99
CHECKED	REVISED	STRUCTURE FILE NUMBER	
RSD		4500938	

EXISTING ABUTMENT REMOVAL DETAILS
BRIDGE NO. LIC-16-2131
OVER CSXT RAILROAD

LIC -16-19.72

\\LO160003.BEA (01-07-99) SCALE 2

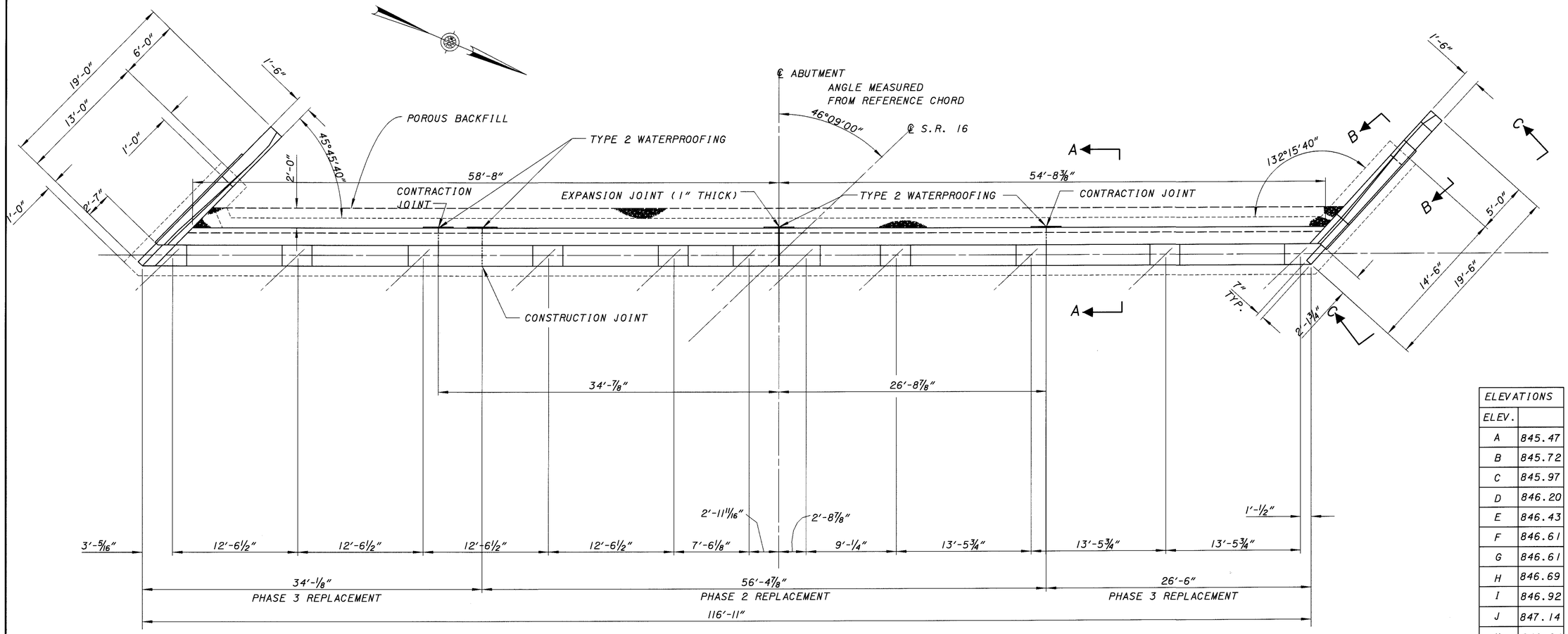

PLAN

FOR MEDIAN PARAPET DETAILS REFER TO SHEET 19/28

ELEVATIONS	
ELEV.	
A	845.47
B	845.72
C	845.97
D	846.20
E	846.43
F	846.61
G	846.61
H	846.69
I	846.92
J	847.14
K	846.84
L	839.06
M	850.47
N	851.87
P	844.10
R	844.68
S	845.49

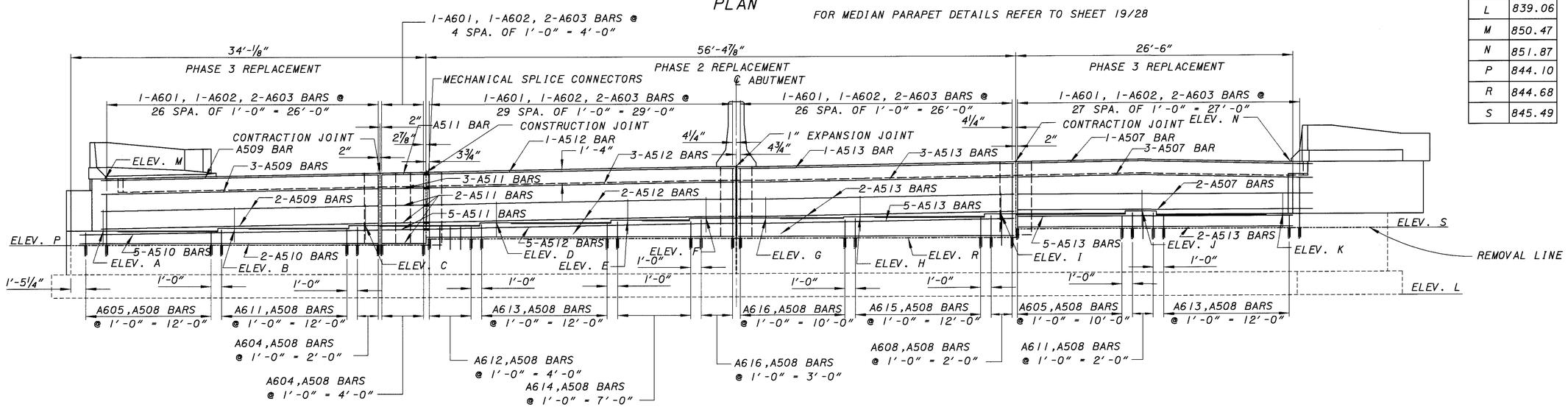

ELEVATION

FOR SECTION A-A, B-B SEE SHEET 10/28
FOR VIEW C-C SEE SHEET 9/28
LAP LENGTH #5 BAR = 2'-3"

DESIGN AGENCY
OHIO DEPARTMENT
OF TRANSPORTATION
D-05 PRODUCTION DEPT.

DESIGNED	DRAWN	REVIEWED	DATE
DTF	DTF	CLZ	2-26-99
CHECKED	REVISED	STRUCTURE FILE NUMBER	
RSD		4500938	

PROPOSED WEST ABUTMENT
BRIDGE NO. LIC-16-21.31 OVER CSXT RAILROAD

LIC-16-19.72

L0160002.BPA (2-27-99)SCALE 5.333

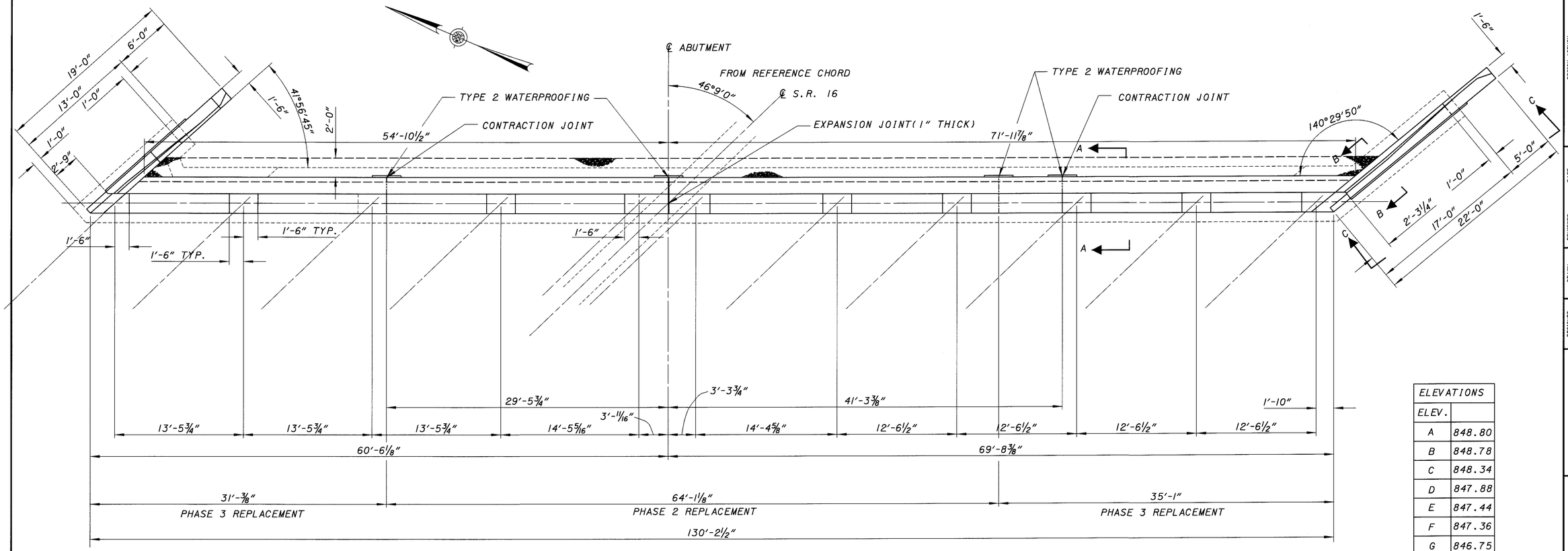

ELEVATIONS	
ELEV.	
A	848.80
B	848.78
C	848.34
D	847.88
E	847.44
F	847.36
G	846.75
H	846.28
I	845.80
J	845.31
K	844.81
L	838.40
M	853.83
N	849.79
P	846.97
R	844.57
S	843.57

FOR SECTION A-A, B-B SEE SHEET 10/28

FOR VIEW C-C SEE SHEET 9/28

LAP LENGTH #5 BAR = 2'-3"

L0160001.BPA (2-27-99)SCALE 5.333

DESIGN AGENCY
OHIO DEPARTMENT OF TRANSPORTATION
D-05 PRODUCTION DEPT.

DESIGNED	CHECKED	DRAWN	REVISED	REVIEWED	DATE	STRUCTURE FILE NUMBER
DTF	RSD	DTF		CLZ	2-26-99	4500938

PROPOSED EAST ABUTMENT

BRIDGE NO. LIC-16-21.31 OVER CSXT RAILROAD

LIC-16-19.72

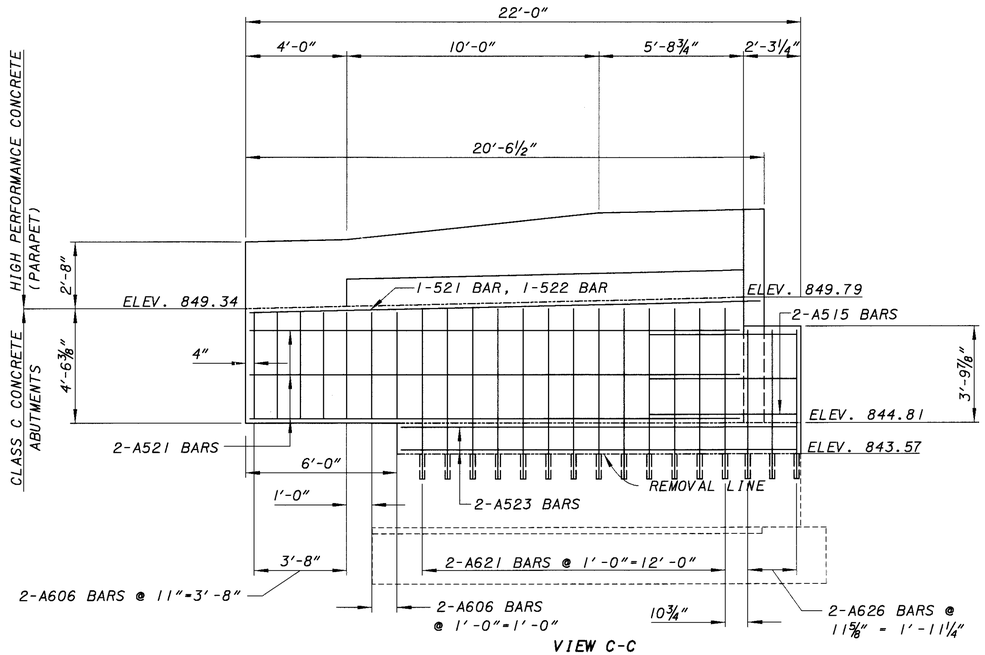

VIEW C-C
EAST ABUTMENT EAST BOUND LANE

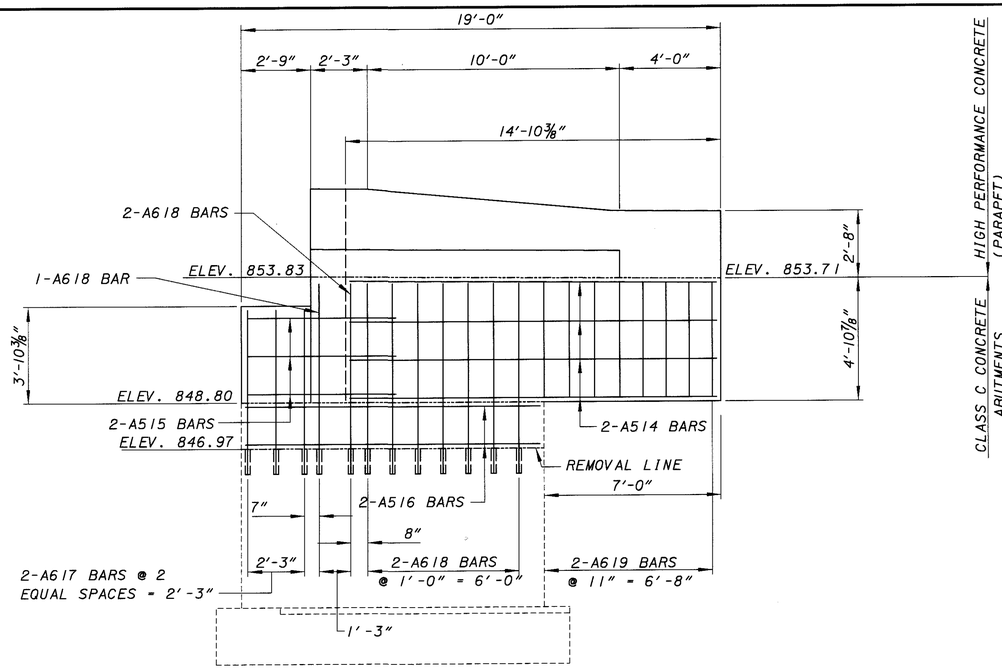

VIEW C-C
EAST ABUTMENT WEST BOUND LANE

LAP LENGTH #5 BARS = 2'-3"

FOR PARAPET DETAILS SEE SHEETS 10/28, 17/28 & 18/28

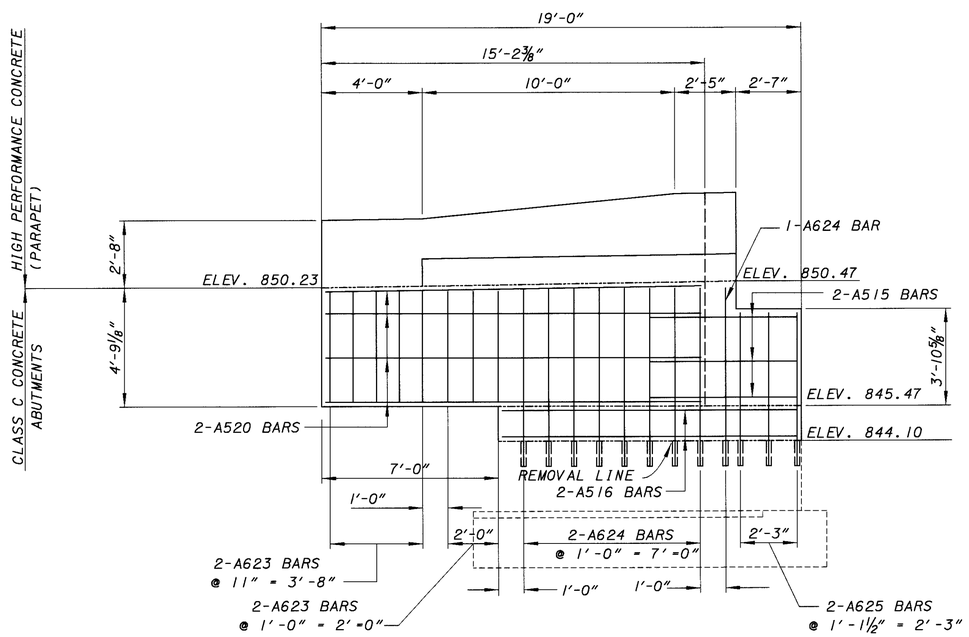

VIEW C-C
WEST ABUTMENT EAST BOUND LANE

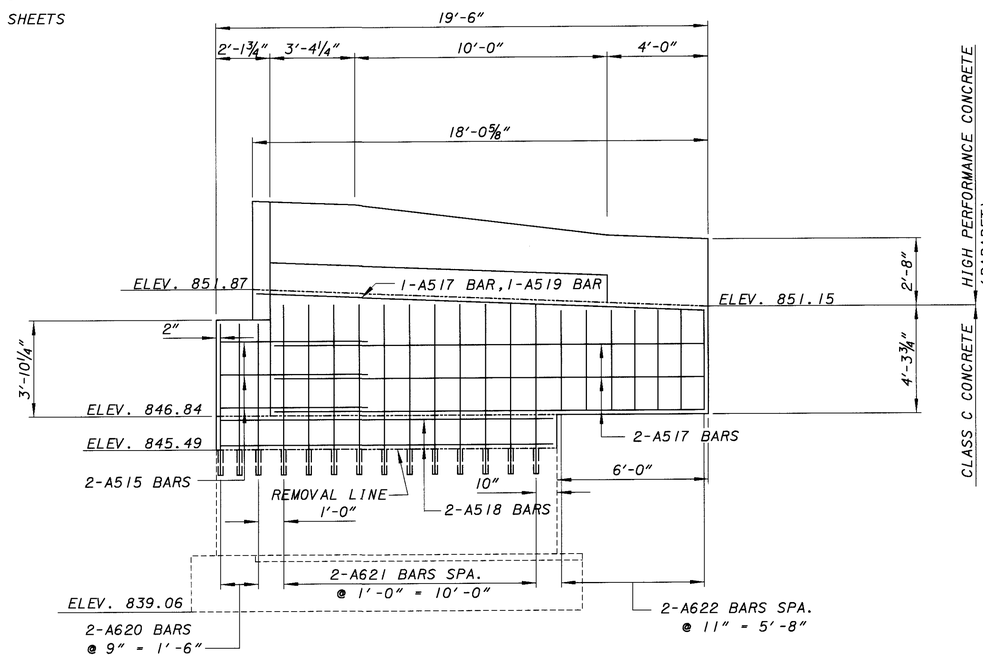

VIEW C-C
WEST ABUTMENT WEST BOUND LANE

DESIGN AGENCY
OHIO DEPARTMENT OF TRANSPORTATION
PRODUCTION DEPT.

DESIGNED	DRAWN	REVIEWED	DATE
DTF	DTF	CLZ	2-26-99
CHECKED	REVISED	STRUCTURE FILE NUMBER	
RSD		4500938	

PROPOSED ABUTMENT DETAILS
BRIDGE NO. LIC-16-2131
OVER CSXT RAILROAD

LIC-16-19.72

LO160003.BPA (2-27-99) SCALE 3

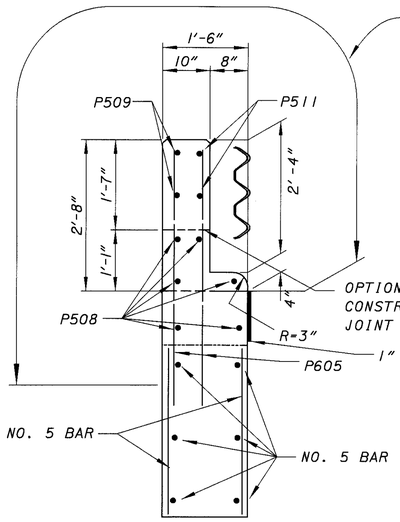

SECTION F-F

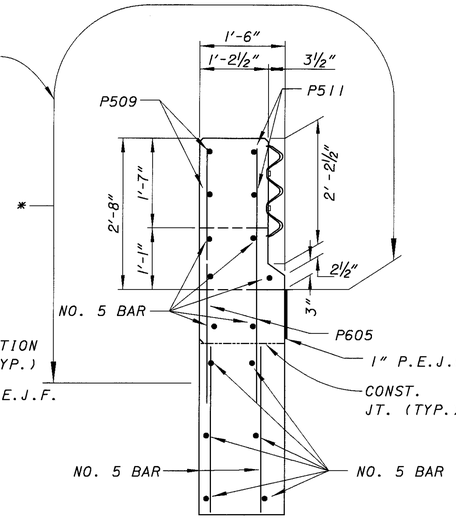

SECTION E-E

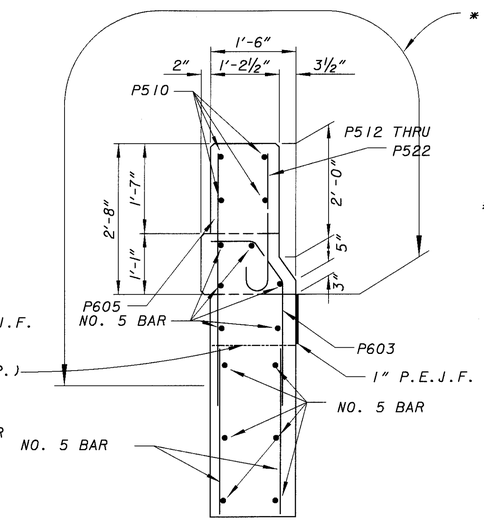

SECTION D-D

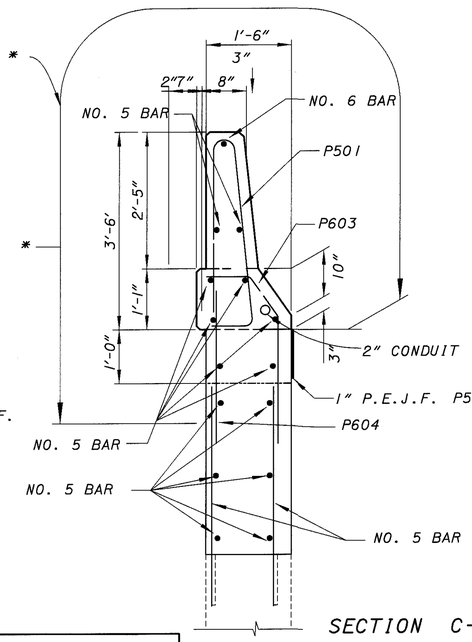

SECTION C-C

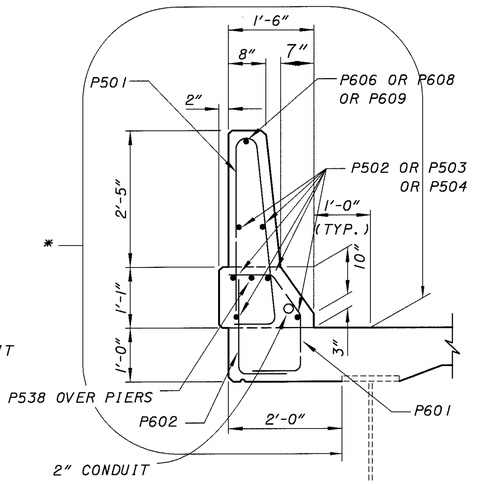

SECTION B-B

(SEE DETAILS ON SHEET 17/28 & 18/28

NOTES:
SOME RE-STEEL IN THE PARAPET MAY HAVE TO BE ADJUSTED SO THE TYPE III JUNCTION BOX CAN BE INSTALLED.

IF THE PARAPETS ARE SLIP-FORMED AND THE CONTRACTOR CANNOT ENSURE THAT THE JUNCTION BOXES WILL BE FLUSH WITH THE FACE OF THE CONCRETE, THEN THAT SECTION OF THE PARAPET SHALL BE FORMED AND POURED BY HAND.

	SEALING OF CONCRETE SURFACES-EPOXY-URETHANE		
	DESCRIPTION OF AREA	AREA LOCATION ON ABUTMENTS	
		WEST	EAST
A	CURTAIN WALLS	4.60	5.11
B	FACE OF BREASTWALL*	33.28	43.22
C	BRIDGE SEAT	26.87	29.92
D	BACKWALL	80.42	89.74
E	SIDE OF WINGWALL*	14.50	16.04
F	ABUTMENT PARAPETS	27.17	29.13
	DECK-MEDIAN PARAPET	258.00	
	DECK-PARAPETS	533.89	
	GRAND TOTAL	1191.89	

QUANTITIES CARRIED TO SHEET 2/28.
* EXPOSED SURFACES ONLY

*SEALING OF CONCRETE SURFACES (EPOXY-URETHANE)

NOTE: FOR PARAPET RE-STEEL. SEE SHEETS 17/28 & 18/28

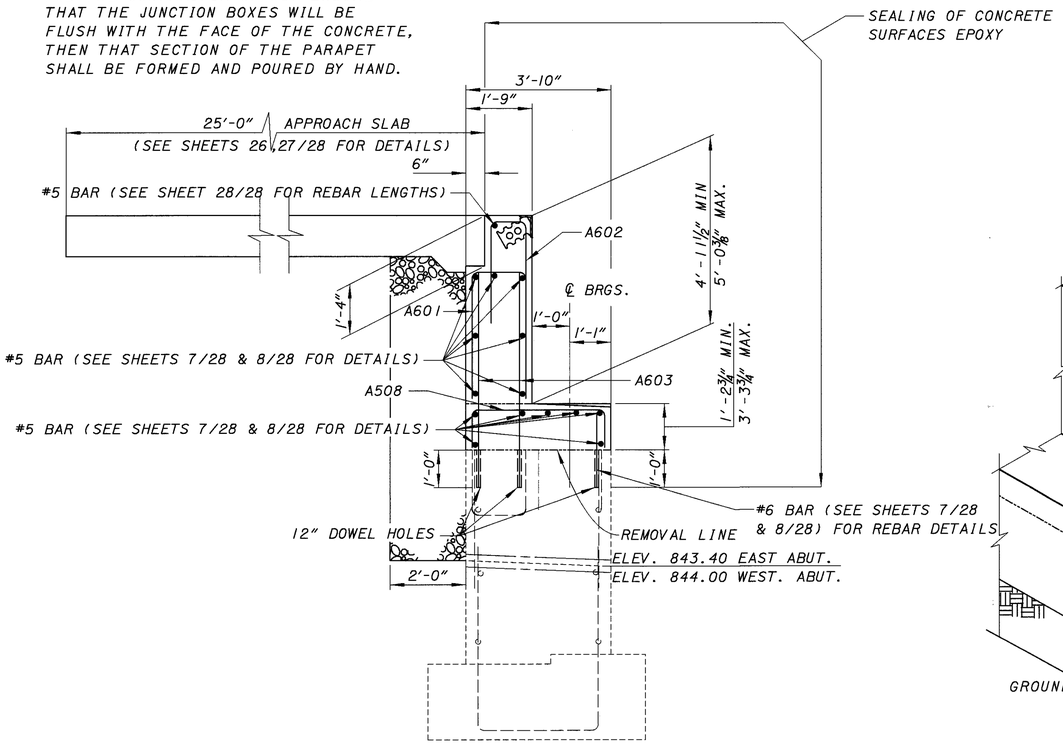

SECTION A-A

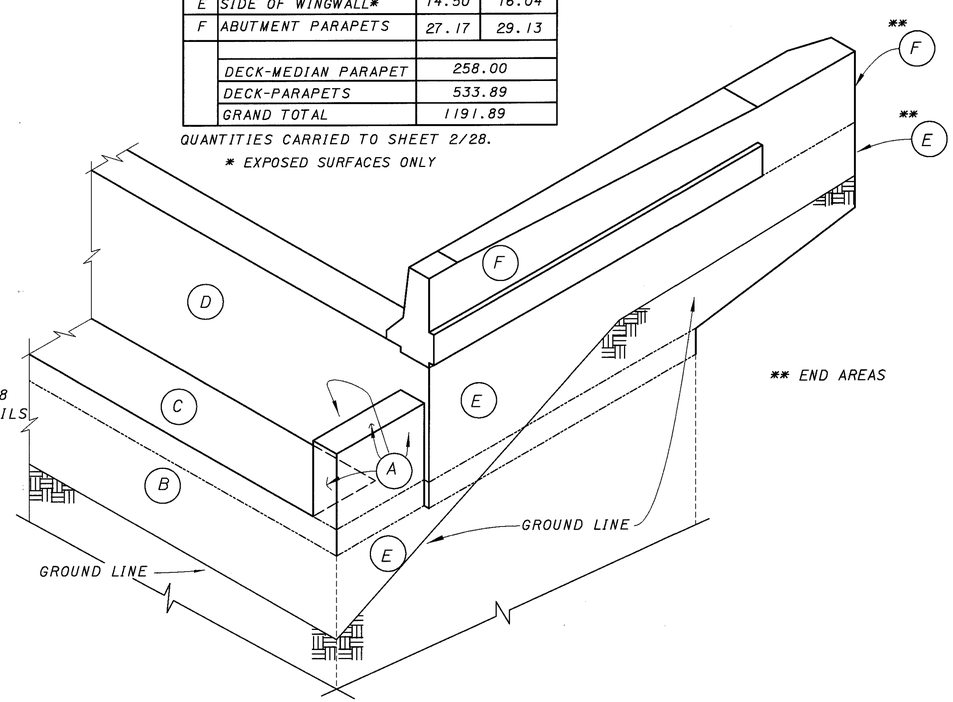

** END AREAS

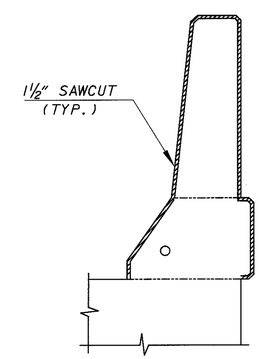

DETAIL A

(SECTION THROUGH SAWCUT)
SAWCUT PERIMETER 1½"

FOR ADDITIONAL DETAILS, SEE ST'D. DWG BR-1M

DESIGN AGENCY
OHIO DEPARTMENT OF TRANSPORTATION DISTRICT 5

DATE	REVIEWED	STRUCTURE FILE NUMBER
2-26-99	CLZ	4500938

DRAWN	REVISED
DTF	

DESIGNED	CHECKED
DTF	RSD

PROPOSED ABUTMENT AND PARAPET DETAILS
BRIDGE NO. LIC-16-2131
OVER CSX RAILROAD

LIC -16-19.72

L0160004.BPA (01-07-99) SCALE 2

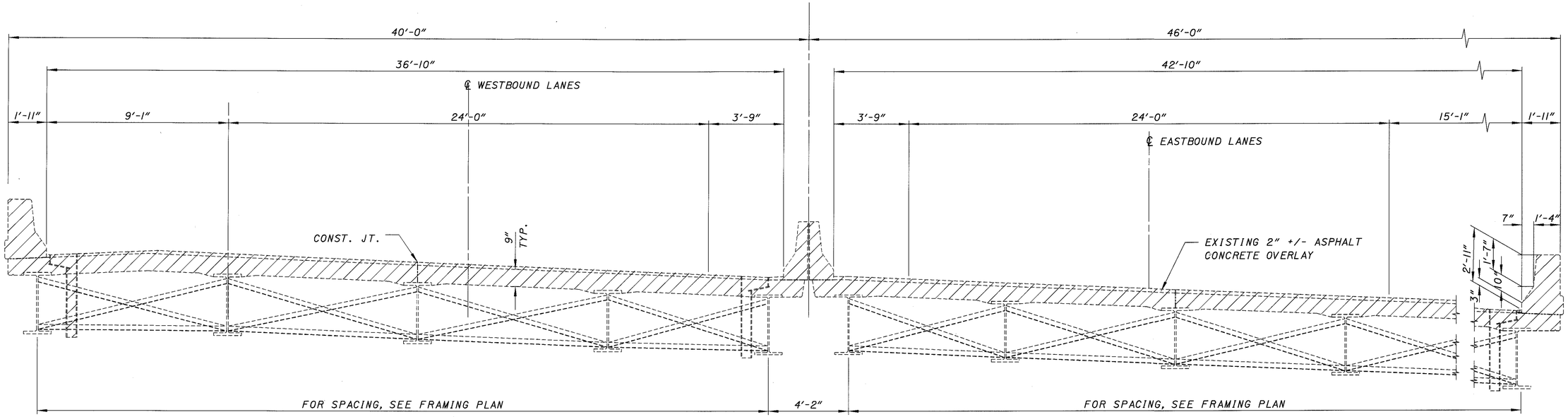

EXISTING TRANSVERSE SECTION

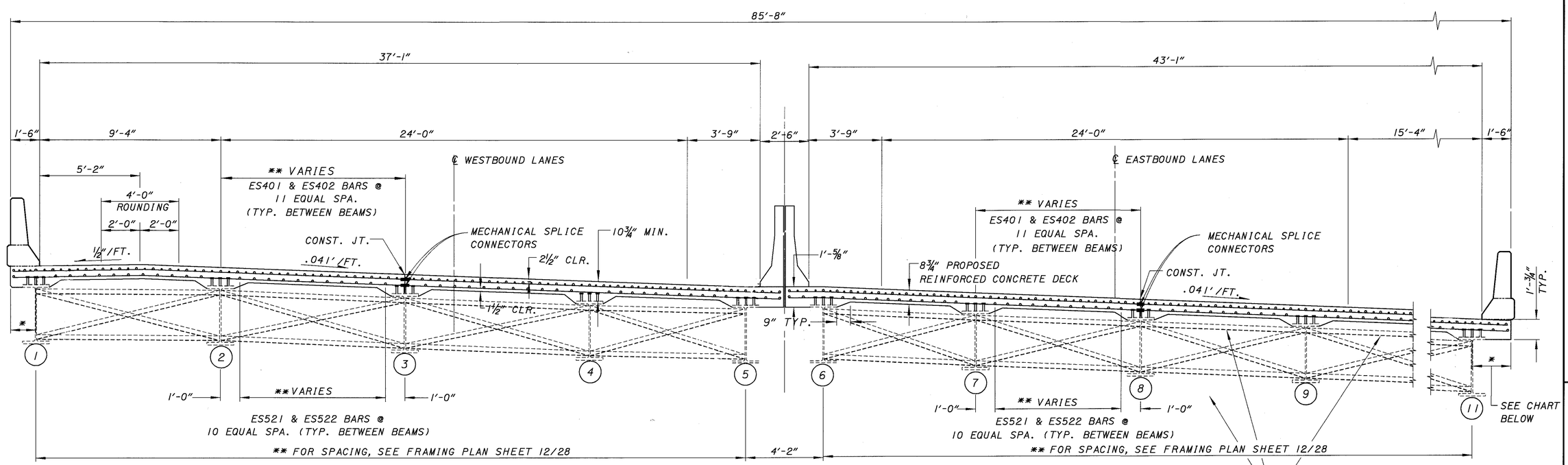

PROPOSED TRANSVERSE SECTION

* DISTANCE MEASURED FROM ℄ BEAM PERPENDICULAR TO EDGE OF DECK

LOCATION	WEST ABUT.	1/4 PT.	1/2 PT.	3/4 PT.	PIER 1	1/4 PT.	1/2 PT.	3/4 PT.	PIER 2	1/4 PT.	1/2 PT.	3/4 PT.	EAST ABUT.
BM#1	1'-6"	1'-8 1/2"	1'-9 3/8"	1'-8 1/2"	1'-6"	1'-10"	1'-11 3/16"	1'-10"	1'-6"	1'-8 1/2"	1'-9 3/8"	1'-8 1/2"	1'-6"
BM#5	1'-11 1/2"	1'-8 3/4"	1'-8"	1'-8 3/4"	1'-11 1/2"	1'-7 7/16"	1'-6 1/8"	1'-7 7/16"	1'-11 1/2"	1'-8 7/8"	1'-8"	1'-8 7/8"	1'-11 1/2"
BM#6	2'-1 7/16"	2'-4 1/16"	2'-4 15/16"	2'-4 1/16"	2'-1 7/16"	2'-5 1/2"	2'-6 13/16"	2'-5 1/2"	2'-1 7/16"	2'-4 1/16"	2'-4 15/16"	2'-4 1/16"	2'-1 7/16"
BM#11	2'-0"	1'-9 1/4"	1'-8 3/8"	1'-9 1/4"	2'-0"	1'-7 11/16"	1'-6 1/4"	1'-7 11/16"	2'-0"	1'-9 1/4"	1'-8 3/8"	1'-9 1/4"	2'-0"

DESIGN AGENCY: OHIO DEPARTMENT OF TRANSPORTATION DIST. 5 BRIDGE DEPT.

DESIGNED DTF | CHECKED RSD | DRAWN RSD | REVISED | REVIEWED CLZ | DATE 2-26-99 | STRUCTURE FILE NUMBER 4500938

TRANSVERSE SECTION
BRIDGE NO. LIC-16-2131
OVER CSXT RAILROAD

LIC-16-19.72

508
547

\\LO160001.BTS (02-23-99) SCALE 2.6667

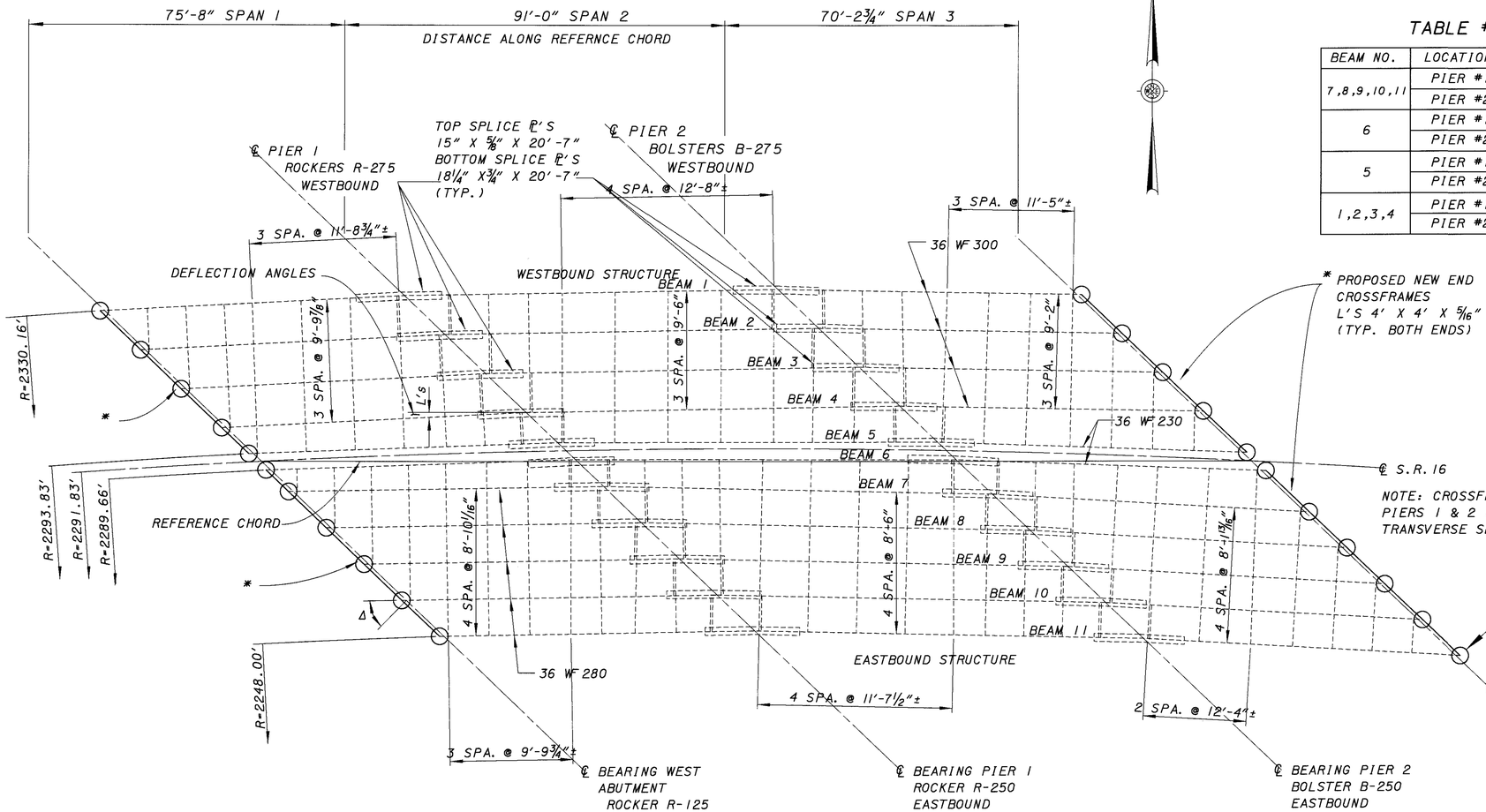

* PROPOSED NEW END CROSSFRAMES L'S 4' X 4' X 5/16" (TYP. BOTH ENDS)

NOTE: CROSSFRAMES INDICATED BY DOUBLE LINE AT PIERS 1 & 2 INCLUDE TOP ANGLE AS SHOWN IN TRANSVERSE SECTION ON SHEET 11/28.

ITEM 516 RESET BEARINGS, AS PER PLAN
RESET ALL ABUTMENT BEARINGS, SEE GENERAL NOTES FOR DETAILS

FRAMING PLAN

NOTE: WELDED ATTACHMENTS OF SUPPORTS FOR THE CONCRETE DECK FINISHING MACHINE MAY BE MADE TO AREAS OF THE FASCIA STRINGER DESIGNATED "COMPRESSION". ATTACHMENTS SHALL NOT BE MADE TO AREAS DESIGNATED "TENSION". FILLET WELDS TO COMPRESSION FLANGES SHALL NOT BE CLOSER THAN 1" FROM EDGE OF FLANGE, NOT MORE THAN 2" LONG AND NOT SMALLER THAN THE MINIMUM SIZE REQUIRED BY AASHTO

COMPRESSION - COMPRESSION ZONES @ THE TOP FLANGE OF BEAM
TENSION - TENSION ZONES @ THE TOP FLANGE OF BEAM

TABLE #2

BEAM NO.	LOCATION	DEFL. ANGLE
7,8,9,10,11	PIER #1	2°08'00"
	PIER #2	2°08'22"
6	PIER #1	2°03'14"
	PIER #2	2°03'15"
5	PIER #1	2°02'47"
	PIER #2	2°02'46"
1,2,3,4	PIER #1	1°59'01"
	PIER #2	1°58'45"

TABLE #1

BEAM NO.	LOCATION	LENGTH C/C BEARING
7,8,9,10,11	SPAN #1	74'-4⅝"
	SPAN #2	93'-0⅛"
	SPAN #3	74'-10⅜"
6	SPAN #1	73'-0¾"
	SPAN #2	91'-1⅛"
	SPAN #3	73'-1"
5	SPAN #1	72'-11¼"
	SPAN #2	90'-11"
	SPAN #3	72'-11"
1,2,3,4	SPAN #1	71'-10⅞"
	SPAN #2	89'-5 3/16"
	SPAN #3	71'-6 9/16"

ANGLE Δ

BEAM NO.	W. ABUT.	E. ABUT.
7,8,9,10,11	45°11'36"	49°27'58"
6	44°09'09"	48°15'39"
5	44°03'06"	48°08'39"
1,2,3,4	43°11'35"	47°09'22"

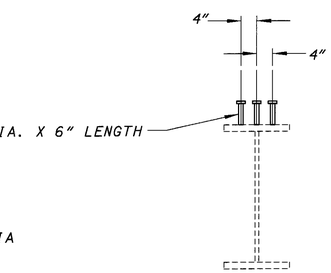

SHEAR CONNECTOR DETAIL

NOTE BEAM 3 SHALL HAVE ONLY TWO CONNECTORS

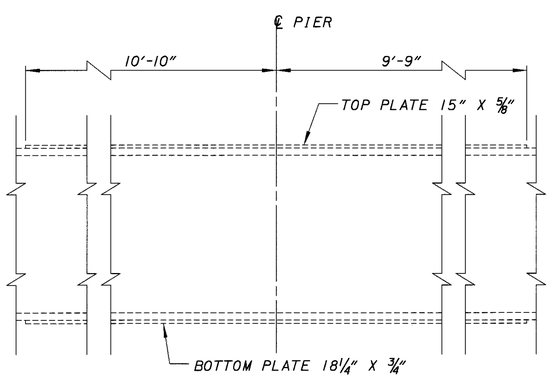

BEAM SPLICE DETAIL

NOTE: FOR ADDITIONAL DETAILS REFER TO STANDARD DRAWING SD-1-69

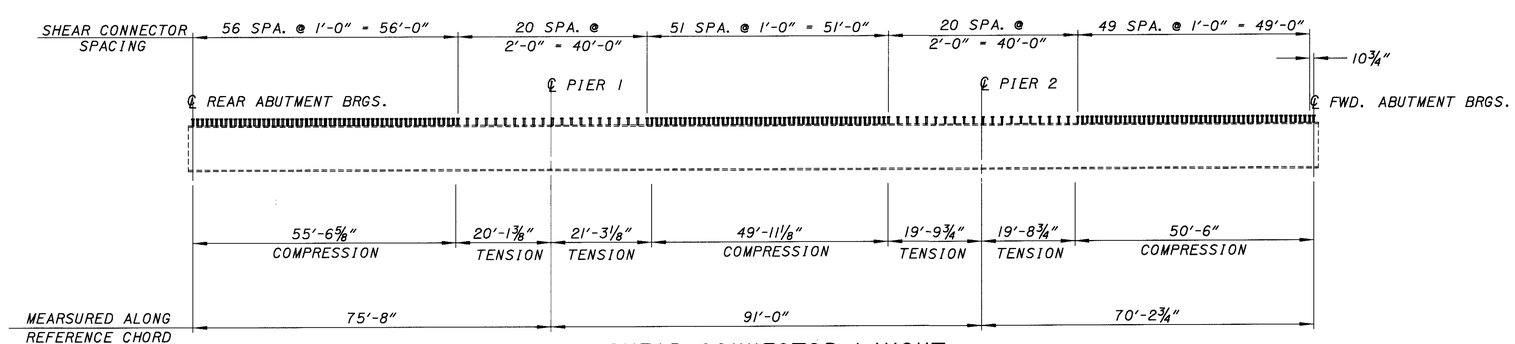

SHEAR CONNECTOR LAYOUT

DESIGN AGENCY: OHIO DEPARTMENT OF TRANSPORTATION DISTRICT 5

DESIGNED	CHECKED	DRAWN	REVISED	REVIEWED	DATE	STRUCTURE FILE NUMBER
DTF	RSD	RSD		CLZ	2-26-99	4500938

EXISTING FRAMING PLAN
BRIDGE NO. LIC-16-2131
OVER CSXT RAILROAD INC.

LIC-16-19.72

LO160001.BFP (02-27-99) SCALE 16

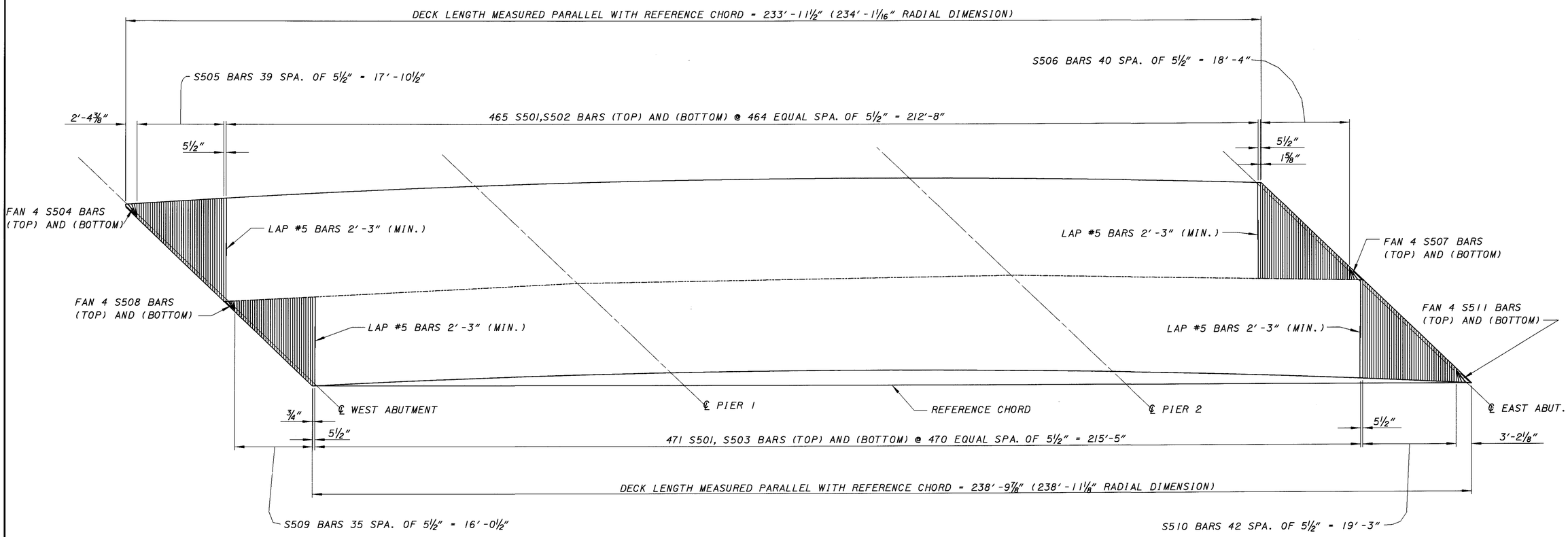

PLAN VIEW
REINFORCING STEEL LAYOUT
WESTBOUND LANES

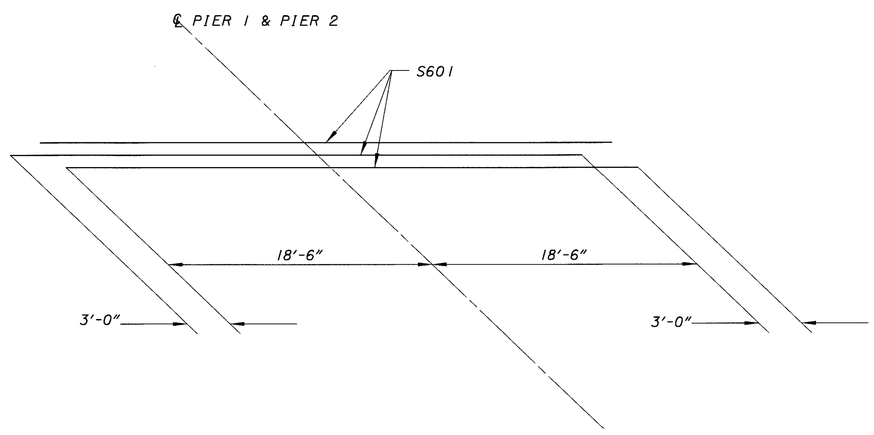

STAGGER OF S601 BARS OVER PIERS

L0160001.BSD (2-27-99) SCALE 10.6667

DESIGN AGENCY
OHIO DEPARTMENT OF TRANSPORTATION
DIST 5, PRODUCTION DEPT.

DESIGNED	DRAWN	REVIEWED	DATE
DTF	DTF	CLZ	2-26-99
CHECKED	REVISED	STRUCTURE FILE NUMBER	
RSD		4500938	

WESTBOUND SUPERSTRUCTURE DETAILS
BRIDGE NO. LIC-16-21.31
OVER CSXT RAILROAD

LIC-16-19.72

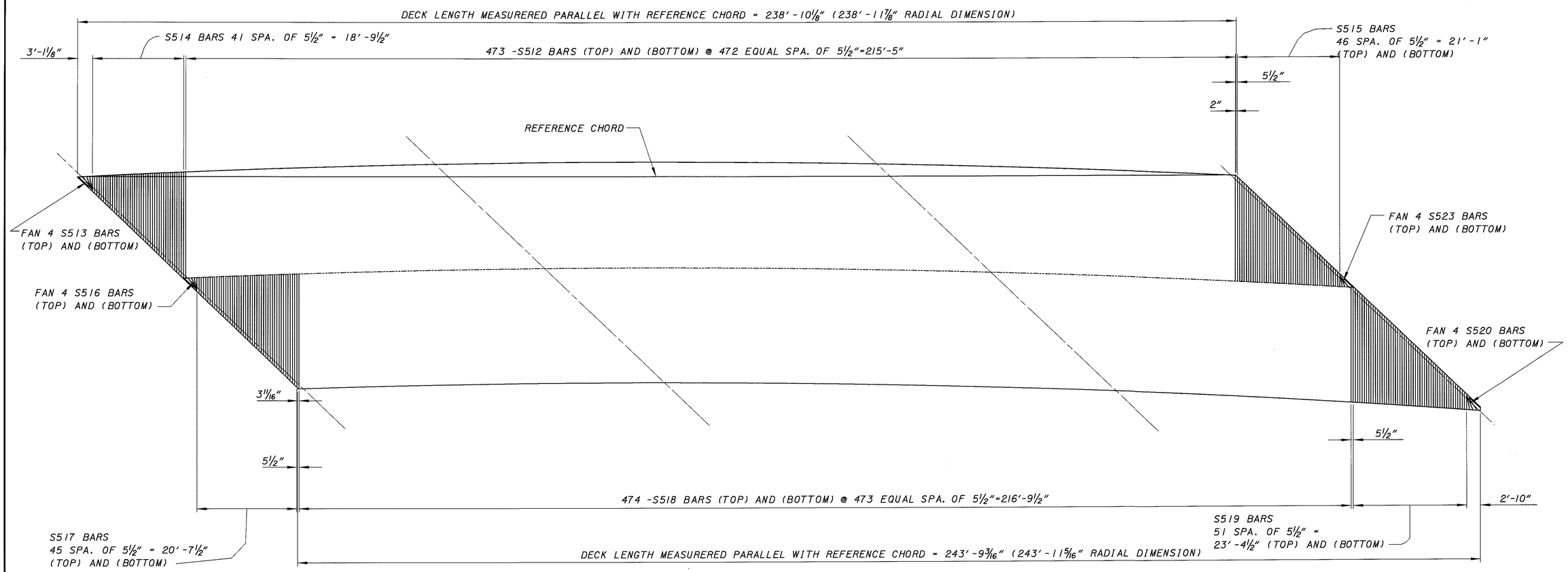

PLAN VIEW
REINFORCING STEEL LAYOUT
EASTBOUND LANES

DESIGN AGENCY
OHIO DEPARTMENT
OF TRANSPORTATION
DIST 5. PRODUCTION DEPT.

DESIGNED	DRAWN	REVIEWED	DATE
DTF	DTF	CLZ	2-26-99
CHECKED	REVISED	STRUCTURE FILE NUMBER	
RSD		4500938	

EASTBOUND SUPERSTRUCTURE DETAILS
BRIDGE NO. LIC-16-21.31
OVER CSXT RAILROAD

LIC-16-19.72

14/28

511/547

L0160001.BSD (2-26-99) SCALE 10.6667

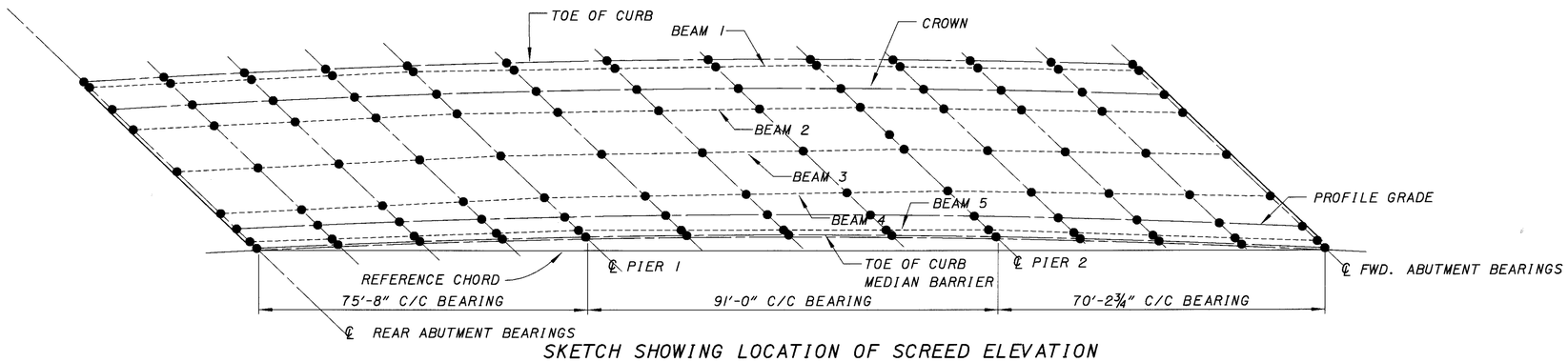

SKETCH SHOWING LOCATION OF SCREED ELEVATION
WESTBOUND LANES

DECK SCREED ELEVATIONS (WESTBOUND LANES)

	TOE OF LEFT CURB		BM #1		BM # 2		BM # 3		BM # 4		PROFILE GRADE		BM # 5		TOE OF RIGHT CURB	
	STATIONS	ELEV.	STATIONS	ELEV.	STATIONS	ELEV.	STATIONS	ELEV.	STATIONS	ELEV.	STATIONS	ELEV.	STATIONS	ELEV.	STATIONS	ELEV.
℄ BRGS REAR ABUT.	190+26.10	851.87	190+26.11	851.87	116+64.22	852.17	116+73.26	851.95	116+82.37	851.72	116+85.72	851.64	116+88.52	851.57	116+89.23	851.55
¼ POINT SPAN 1	116+72.75	852.36	116+72.94	852.36	116+81.98	852.55	116+91.09	852.32	117+00.28	852.08	117+03.69	851.99	117+06.74	851.90	117+07.25	851.89
MIDSPAN SPAN 1	116+90.36	852.72	116+90.62	852.72	116+99.73	852.89	117+08.92	852.64	117+18.18	852.39	117+21.79	852.28	117+24.96	852.19	117+25.41	852.18
¾ POINT SPAN 1	117+08.11	852.99	117+08.30	852.99	117+17.49	853.15	117+26.75	852.89	117+36.19	852.61	117+40.03	852.49	117+43.18	852.40	117+43.70	852.38
℄ PIER 1	117+25.98	853.24	117+25.98	853.24	117+35.24	853.39	117+44.58	853.10	117+53.99	852.81	117+58.41	852.67	117+61.40	852.58	117+62.15	852.55
¼ POINT SPAN 2	117+47.66	853.52	117+47.97	853.53	117+57.32	853.64	117+66.75	853.34	117+76.26	853.02	117+80.72	852.87	117+84.11	852.76	117+84.53	852.75
MIDSPAN SPAN 2	117+69.54	853.75	117+69.97	853.76	117+79.41	853.85	117+88.93	853.52	117+98.53	853.18	118+03.24	853.02	118+06.82	852.89	118+07.13	852.88
¾ POINT SPAN 2	117+91.63	853.88	117+91.96	853.89	118+01.49	853.96	118+11.10	853.61	118+20.79	853.25	118+26.00	853.05	118+29.53	852.92	118+29.97	852.90
℄ PIER 2	118+13.95	853.95	118+13.95	853.95	118+23.57	854.02	118+33.26	853.64	118+43.03	853.26	118+49.00	853.03	118+52.24	852.90	118+53.05	852.86
¼ POINT SPAN 3	118+31.32	853.99	118+31.54	853.99	118+41.23	854.03	118+51.00	853.64	118+60.85	853.24	118+66.93	852.98	118+70.45	852.84	118+71.04	852.81
MIDSPAN SPAN 3	118+48.84	854.00	118+49.14	854.00	118+58.90	854.01	118+68.73	853.60	118+78.65	853.18	118+85.00	852.91	118+88.67	852.75	118+89.18	852.73
¾ POINT SPAN 3	118+66.51	853.95	118+66.73	853.95	118+76.56	853.95	118+86.47	853.52	118+96.45	853.08	119+03.24	852.77	119+06.88	852.61	119+07.49	852.58
℄ BRGS. FWD. ABUT.	118+84.32	853.83	118+84.53	853.83	118+94.22	853.81	119+04.19	853.37	119+14.24	852.91	119+21.65	852.56	119+25.09	852.40	119+25.96	852.36

SCREED ELEVATIONS GIVEN ARE FOR THE TOP SURFACE OF THE CONCRETE DECK
PRIOR TO CONCRETE PLACEMENT. ALLOWANCES HAVE BEEN MADE FOR ANTICIPATED
DEFLECTIONS OF BEAMS DUE TO WEIGHT OF THE CONCRETE DECK.

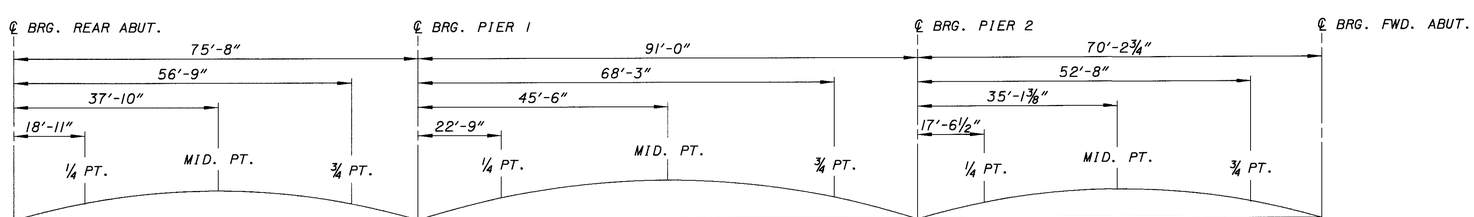

DEFLECTION DUE TO REMAINING DEAD LOAD	⅜"	9/16"	¼"	¼"	½"	¼"	⅛"	⅜"	5/16"

DEFLECTION DIAGRAM

DESIGN AGENCY
OHIO DEPARTMENT
OF TRANSPORTATION
DISTRICT 5

DESIGNED	DRAWN	REVIEWED	DATE
DTF	RSD	CLZ	2-26-99
CHECKED	REVISED	STRUCTURE FILE NUMBER	
KAK		4500938	

DECK SCREED ELEVATION AND DEFLECTION DIAGRAM
BRIDGE NO. LIC-16-2/31
OVER CSXT RAILROAD

LIC-16-19.72

LO160003.BSD (02-27-99) SCALE 16

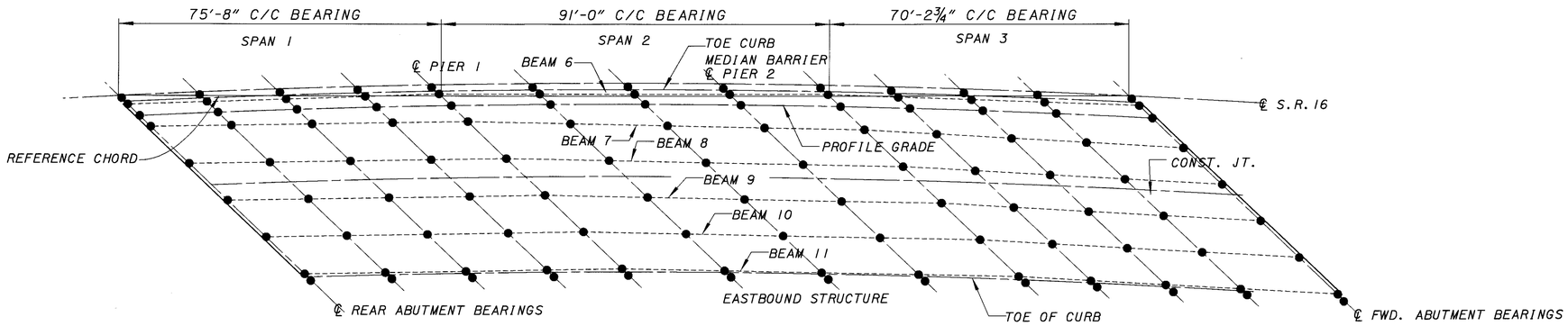

SKETCH SHOWING LOCATION OF SCREED ELEVATION
EASTBOUND LANES

DECK SCREED ELEVATIONS (EASTBOUND LANES)

	TOE OF LEFT CURB		BM #6		PROFILE GRADE		BM # 7		BM # 8		BM # 9		BM # 10		BM # 11		TOE OF RIGHT CURB	
	STATIONS	ELEV.	STATIONS	ELEV.	STATIONS	ELEV.	STATIONS	ELEV.	STATIONS	ELEV.	STATIONS	ELEV.	STATIONS	ELEV.	STATIONS	ELEV.	STATIONS	ELEV.
℄ BRGS REAR ABUT.	116+91.58	851.59	116+92.44	851.57	116+95.11	851.50	116+97.59	851.44	117+06.26	851.21	117+15.01	850.98	117+23.82	850.73	117+32.71	850.48	117+33.21	850.47
¼ POINT SPAN 1	117+09.64	851.93	117+10.72	851.90	117+13.22	851.83	117+16.24	851.75	117+24.99	851.50	117+33.81	851.25	117+42.71	850.99	117+51.67	850.72	117+51.94	850.72
MIDSPAN SPAN 1	117+27.83	852.20	117+29.00	852.17	117+31.47	852.10	117+34.90	852.00	117+43.73	851.74	117+52.62	851.47	117+61.59	851.19	117+70.63	850.91	117+70.83	850.90
¾ POINT SPAN 1	117+46.17	852.41	117+47.29	852.38	117+49.87	852.30	117+53.57	852.18	117+62.47	851.90	117+71.44	851.62	117+80.48	851.33	117+89.59	851.02	117+89.87	851.01
℄ PIER 1	117+64.66	852.57	117+65.57	852.55	117+68.41	852.45	117+72.23	852.33	117+81.21	852.03	117+90.25	851.73	117+99.36	851.42	118+08.55	851.10	118+09.08	851.08
¼ POINT SPAN 2	117+87.08	852.76	117+88.36	852.72	117+90.92	852.63	117+95.57	852.47	118+04.64	852.15	118+13.77	851.82	118+22.98	851.49	118+32.25	851.14	118+32.41	851.14
MIDSPAN SPAN 2	118+09.74	852.89	118+11.16	852.83	118+13.65	852.74	118+18.92	852.55	118+28.08	852.21	118+37.30	851.86	118+46.60	851.50	118+55.96	851.13	118+55.99	851.13
¾ POINT SPAN 2	118+32.63	852.90	118+33.96	852.85	118+36.62	852.75	118+42.27	852.53	118+51.52	852.17	118+60.83	851.79	118+70.22	851.41	118+79.67	851.02	118+79.83	851.01
℄ PIER 2	118+55.77	852.86	118+56.76	852.82	118+59.84	852.69	118+65.63	852.45	118+74.96	852.07	118+89.36	851.67	118+93.83	851.26	119+03.38	850.84	119+03.96	850.82
¼ POINT SPAN 3	118+73.80	852.80	118+75.04	852.75	118+77.93	852.62	118+84.42	852.35	118+93.82	851.94	119+03.30	851.52	119+12.84	851.10	119+22.46	850.66	119+22.77	850.64
MIDSPAN SPAN 3	118+91.98	852.71	118+93.33	852.65	118+96.19	852.52	119+03.22	852.21	119+12.70	851.79	119+22.24	851.35	119+31.85	850.90	119+41.54	850.44	119+41.77	850.43
¾ POINT SPAN 3	119+10.33	852.55	119+11.62	852.49	119+14.61	852.35	119+22.03	852.01	119+31.57	851.56	119+41.19	851.10	119+50.87	850.64	119+60.62	850.16	119+60.95	850.14
℄ BRGS. FWD. ABUT.	119+28.85	852.33	119+29.91	852.28	119+33.20	852.12	119+40.84	851.76	119+50.45	851.29	119+60.13	850.81	119+69.88	850.32	119+79.70	849.82	119+80.32	849.79

SCREED ELEVATIONS GIVEN ARE FOR THE TOP SURFACE OF THE CONCRETE DECK PRIOR TO CONCRETE PLACEMENT. ALLOWANCES HAVE BEEN MADE FOR ANTICIPATED DEFLECTIONS OF BEAMS DUE TO WEIGHT OF THE CONCRETE DECK.

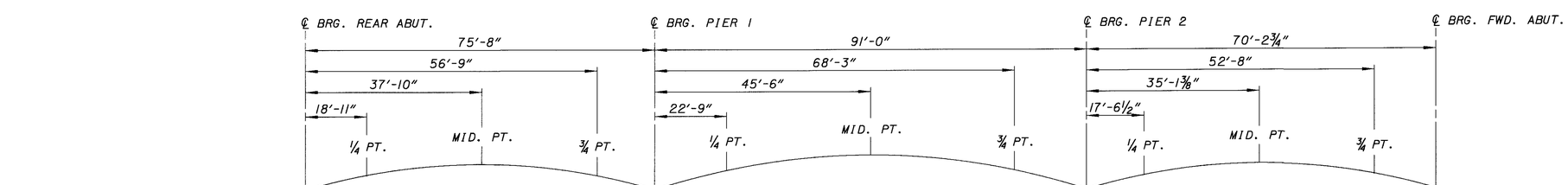

DEFLECTION DUE TO REMAINING DEAD LOAD	⅜"	½"	¼"	¼"	½"	¼"	⅛"	⅜"	¼"

DEFLECTION DIAGRAM

DESIGN AGENCY
OHIO DEPARTMENT OF TRANSPORTATION
DISTRICT 5

REVIEWED CLZ | DATE 2-26-99 | STRUCTURE FILE NUMBER 4500938

DRAWN RSD | REVISED

DESIGNED DTF | CHECKED KAK

DECK SCREED ELEVATION AND DEFLECTION DIAGRAM
BRIDGE NO. LIC-16-2131
OVER CSXT RAILROAD

LIC-16-19.72

L0160002.BSD (02-27-99) SCALE 16

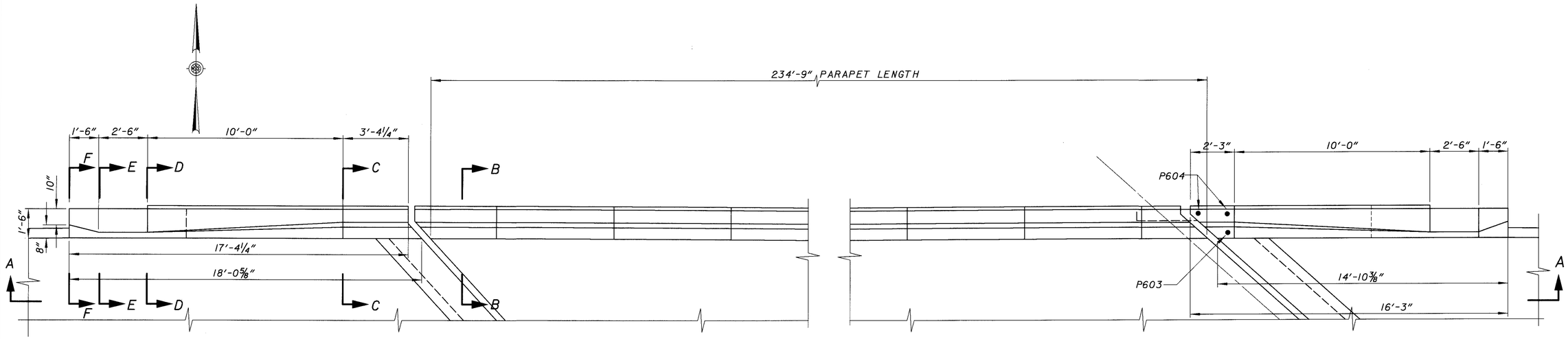

PART PARAPET PLAN

MIN. LAP LENGTH
#5 REBAR 2'-3"
#6 REBAR 2'-8"

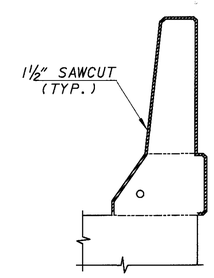

DETAIL A
(SECTION THROUGH SAWCUT)
SAWCUT PERIMETER 1½"

FOR ADDITIONAL DETAILS,
SEE ST'D. DWG BR-1M

NOTE: FOR SECTIONS B-B, C-C, D-D, E-E AND F-F, SEE SHEET 10/28.

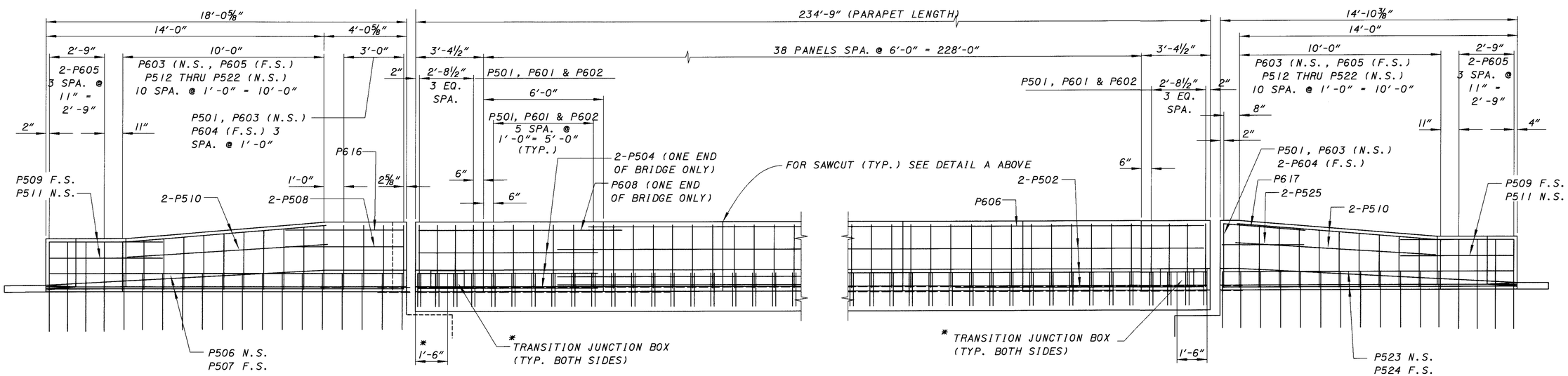

VIEW A-A

DESIGN AGENCY
OHIO DEPARTMENT
OF TRANSPORTATION
DISTRICT 5

DESIGNED	DRAWN	REVIEWED	DATE
RSD	RSD	CLZ	2-26-99
CHECKED	REVISED	STRUCTURE FILE NUMBER	
DTF		4500938	

PARAPET DETAILS (WESTBOUND LANES)
BRIDGE NO. LIC-16-2131
OVER CSXT RAILROAD

LIC-16-19.72

L0160002.BPD (02-27-99) SCALE 2.6667

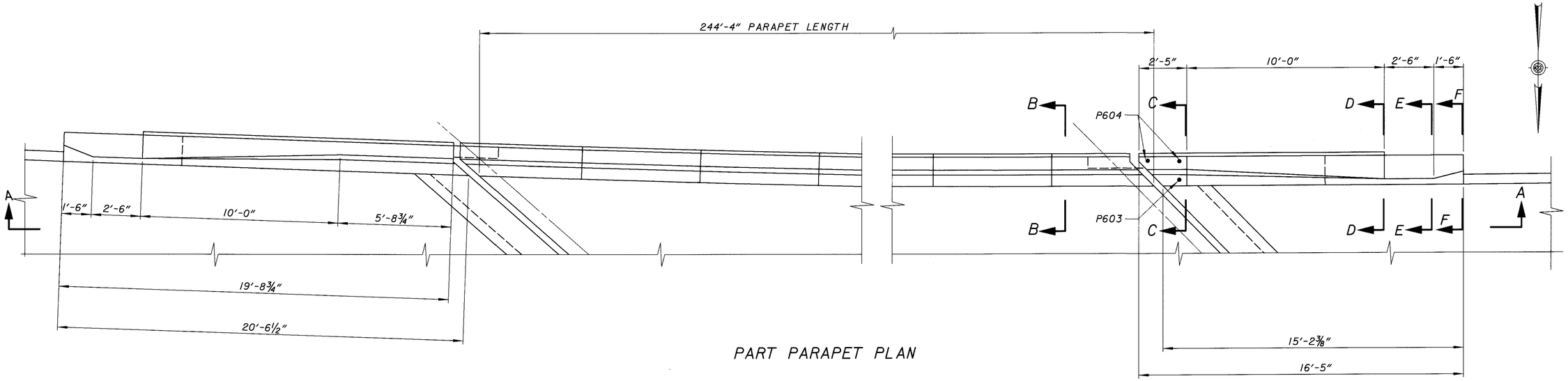

PART PARAPET PLAN

MIN. LAP
#5 REBAR 2'-3"
#6 REBAR 2'-8"

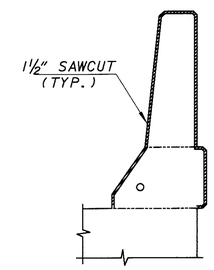

DETAIL A
(SECTION THROUGH SAWCUT)
SAWCUT PERIMETER 1½"
FOR ADDITIONAL DETAILS,
SEE ST'D. DWG BR-1M

NOTE: FOR SECIONS B-B, C-C.
D-D, E-E AND F-F, SEE SHEET 10/28

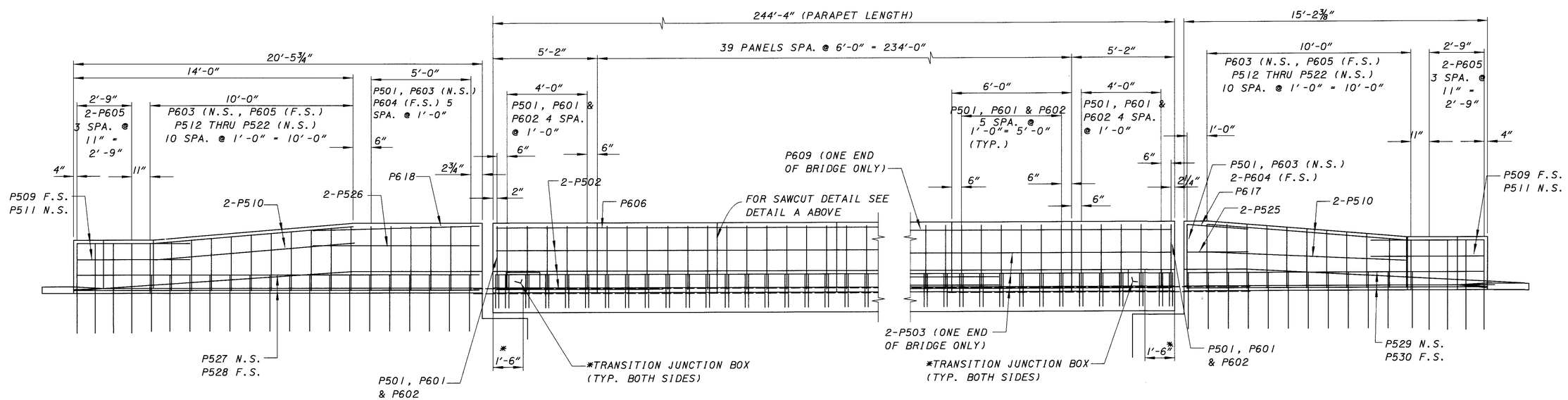

VIEW A-A

DESIGN AGENCY
OHIO DEPARTMENT
OF TRANSPORTATION
DISTRICT 5

DESIGNED	DRAWN	REVIEWED	DATE
RSD	RSD	CLZ	2-26-99
CHECKED	REVISED	STRUCTURE FILE NUMBER	
DTF		4500938	

PARAPET DETAILS (EASTBOUND LANES)
BRIDGE NO. LIC-16-2131
OVER CSXT RAILROAD

LIC-16-19.72

L0160003.BPD (02-27-99) SCALE 2.6667

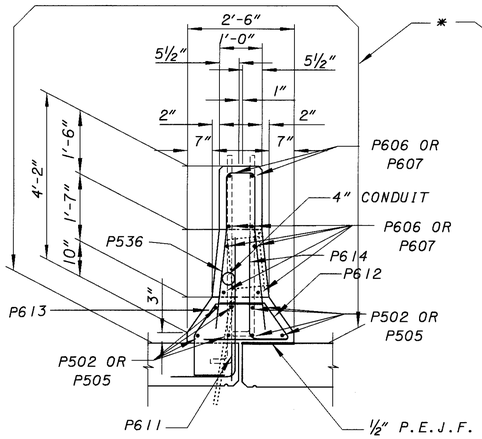

SECTION AT MEDIAN LIGHT POLE

(MEDIAN PARAPET)
MEDIAN MOUNTED LIGHT POLE
SUPERSTRUCTURE
SEE SHEET 20/28 FOR ADDITIONAL
LIGHT POLE RE-STEEL

* SEALING OF CONCRETE SURFACES, EPOXY-URETHANE

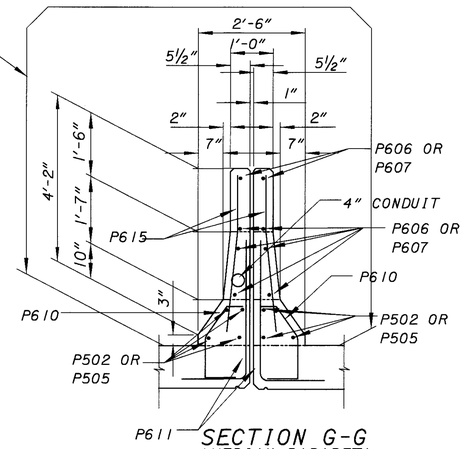

SECTION G-G
(MEDIAN PARAPET)
SUPERSTRUCTURE

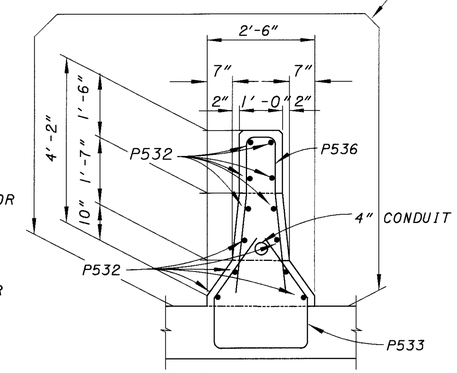

SECTION I-I
(APPROACH SLAB)

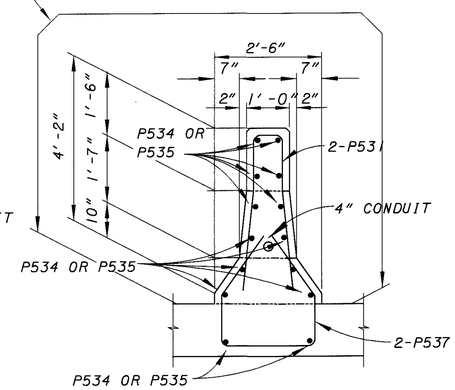

SECTION H-H
(BACKWALL)

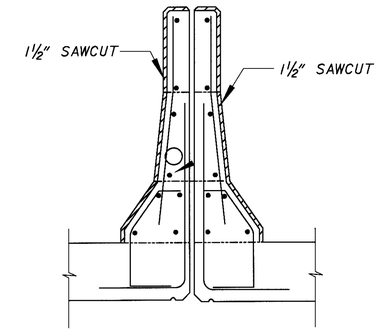

SECTION THRU SAWCUT

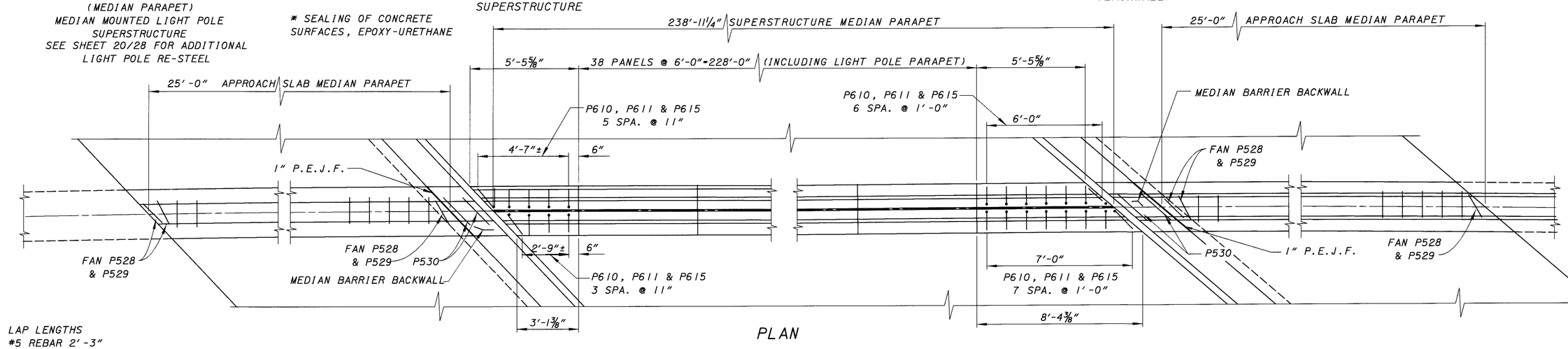

PLAN

LAP LENGTHS
#5 REBAR 2'-3"
#6 REBAR 2'-8"

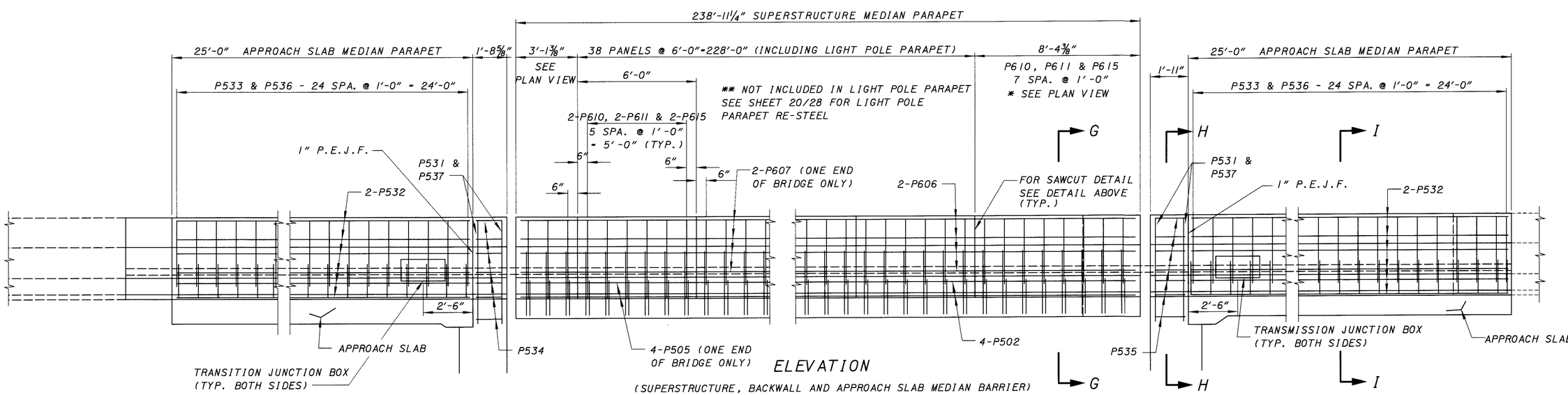

ELEVATION

(SUPERSTRUCTURE, BACKWALL AND APPROACH SLAB MEDIAN BARRIER)

L0160004.BPD (02-27-99) SCALE 2.6667

DESIGN AGENCY
OHIO DEPARTMENT OF TRANSPORTATION
DISTRICT 5

DESIGNED	DRAWN	REVIEWED	DATE
RSD	RSD	CLZ	2-26-99
CHECKED	REVISED	STRUCTURE FILE NUMBER	
DTF		4500938	

MEDIAN PARAPET DETAILS

BRIDGE NO. LIC-16-2131
OVER CSXT RAILROAD

LIC-16-19.72

LIGHT POLE DETAIL (MEDIAN PARAPET)
BR. NO. LIC-16-2131 STA. 118+53.95

A: GROUNDING BUSHING FOR 2" DIA. CONDUIT
B: GROUNDING BUSHING & LOCKNUT FOR 2" DIA. CONDUIT
C: 2" DIA. CONDUIT
D: TYPE III JUNCTION BOX
E: ¾" ELECTICAL METALLIC TUBING
F: 4" DIA. CONDUIT
G: GROUNDING BUSHING FOR 4" DIA. CONDUIT, INCLUDING LOCKNUT

NOTE: FOR ADDITIONAL DETAILS, SEE ST'D. DWGS HL-10.11, HL-10.12, HL-10.13, HL-20.13 AND HL-50.21

NOTE: REMOVALS OF JUNCTION BOXES, WIRING, ETC. AT MEDIAN LIGHT POLE LOCATIONS SHALL BE INCLUDED WITH 202-PORTIONS OF STRUCTURE REMOVED, SUPERSTRUCTURE

NOTE: THE TOP OF THE CONCRETE BARRIER SHALL BE FLAT, SMOOTH AND LEVEL TO ELIMINATE NEED FOR LIGHT POLE SHIMS. GRIND SURFACE, IF REQUIRED, TO MAKE CONCRETE LEVEL.

NOTE: JUNCTION BOXES SHALL CONFORM TO 713.10, EXCEPT THAT GALVANIZED STEEL PLATE COVERS SHALL CONFORM TO ASTM A-242 OR A-36.

NOTE: THE UNIT PRICE BID FOR EACH "ITEM 625, STRUCTURE JUNCTION BOX TYPE III WITH COVER PLATE", SHALL BE FULL COMPENSATION FOR FURNISHING AND PLACING THE TYPE III JUNCTION BOX, 2" DIA. CONDUIT, GROUNDING BUSHINGS, LOCKNUTS, EMT AND ALL LABOR, MATERIALS, EQUIPMENT AND INCIDENTALS NECESSARY TO COMPLETE THE WORK AS SPECIFIED.

NOTE: CONSTRUCTION SHALL CONFORM TO REQUIREMENTS OF 622 AND 625.

NOTE: FOR STRUCTURE GROUNDING, SEE ST'D. DWG. HL-50.21.

A: GROUNDING BUSHING FOR 2" DIA. CONDUIT
B: GROUNDING BUSHING & LOCKNUT FOR 2" DIA. CONDUIT
C: 2" DIA. CONDUIT
D: TYPE III JUNCTION BOX
E: ¾" ELECTRICAL METALLIC TUBING
F: 4" DIA. CONDUIT
G: GROUNDING BUSHING FOR 4" DIA. CONDUIT, INCLUDING LOCKNUT

NOTE: FOR ADDITIONAL DETAILS, SEE ST'D. DWGS HL-10.11, HL-10.12, HL-10.13, HL-20.13 AND HL-50.21

NOTE: REMOVALS OF JUNCTION BOXES, WIRING, ETC. AT MEDIAN LIGHT POLE LOCATIONS SHALL BE INCLUDED WITH 202-PORTIONS OF STRUCTURE REMOVED, SUPERSTRUCTURE

NOTE: FOR RE-STEEL, SEE SHEET 19/28.

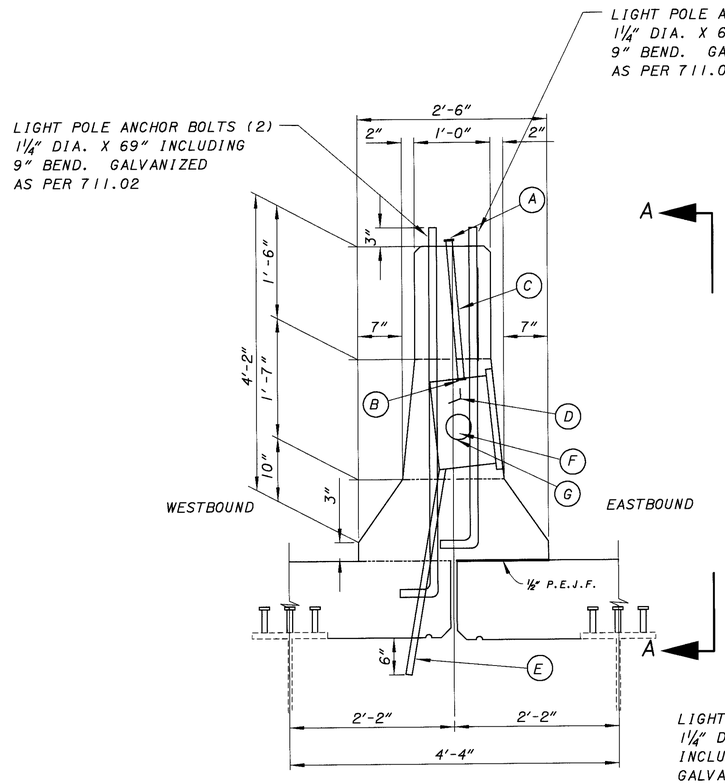

(MEDIAN PARAPET)
MEDIAN MOUNTED LIGHT POLE
SUPERSTRUCTURE

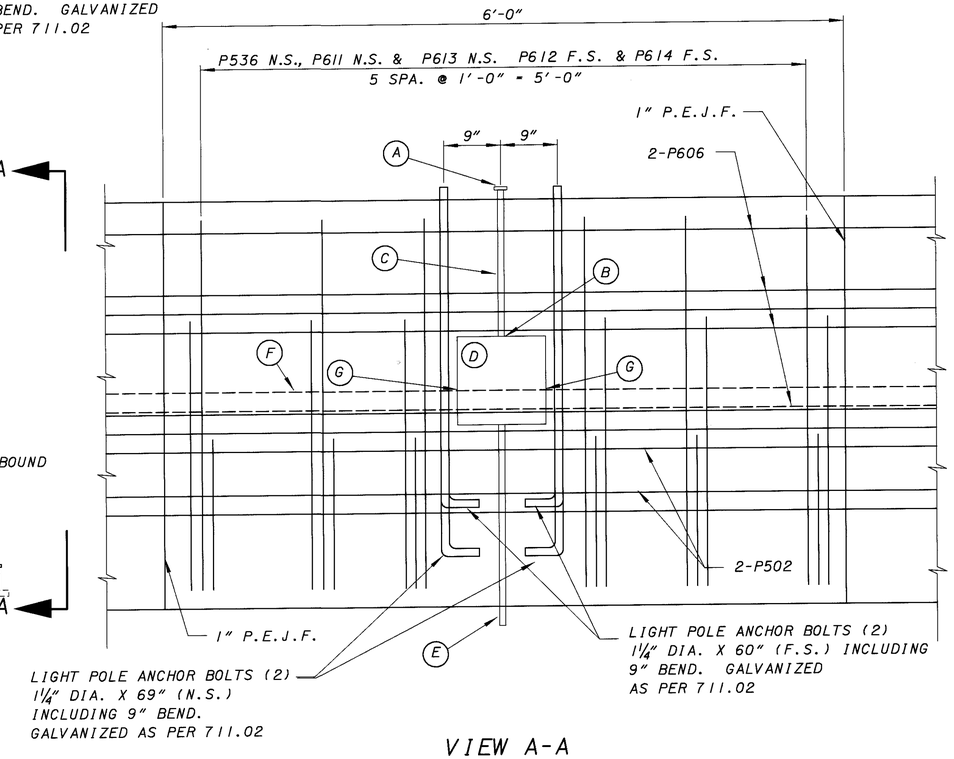

VIEW A-A

MEDIAN PARAPET AT LIGHT POLE LOCATION

DESIGN AGENCY
OHIO DEPARTMENT OF TRANSPORTATION DISTRICT 5

DESIGNED	DRAWN	REVIEWED	DATE
RSD	RSD	CLZ	2-26-99
CHECKED	REVISED	STRUCTURE FILE NUMBER	
DTF		4500938	

MEDIAN LIGHT POLE DETAILS
BRIDGE NO. LIC-16-2131
OVER CSXT RAILROAD

LIC-16-19.72

L016000 1.BPD (SCALE 4) 02-27-99

LQ160002.BEJ (02-27-99) SCALE 2.6667

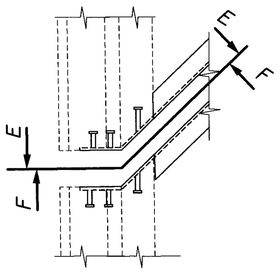

PART PLAN
ABUTMENT WINGWALL

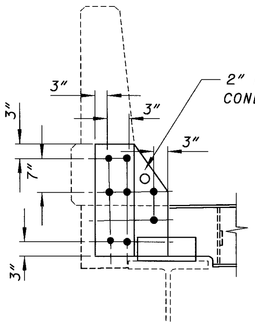

SECTION F-F
(SUPERSTRUCTURE ARMOR)

SECTION E-E
(ABUTMENT ARMOR)

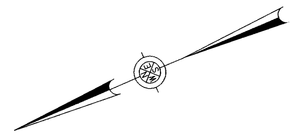

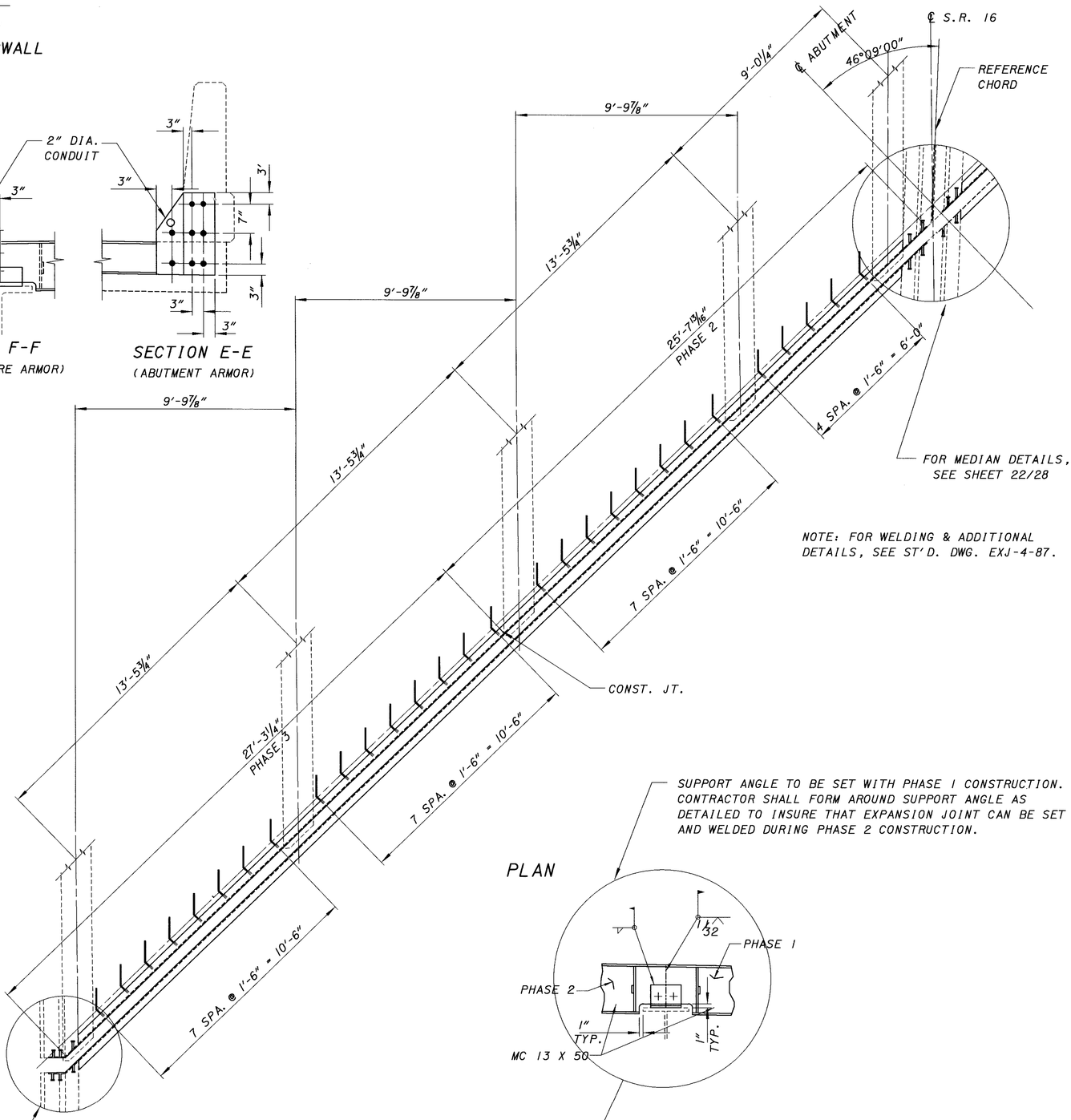

NOTE: FOR WELDING & ADDITIONAL DETAILS, SEE ST'D. DWG. EXJ-4-87.

SUPPORT ANGLE TO BE SET WITH PHASE 1 CONSTRUCTION. CONTRACTOR SHALL FORM AROUND SUPPORT ANGLE AS DETAILED TO INSURE THAT EXPANSION JOINT CAN BE SET AND WELDED DURING PHASE 2 CONSTRUCTION.

PLAN

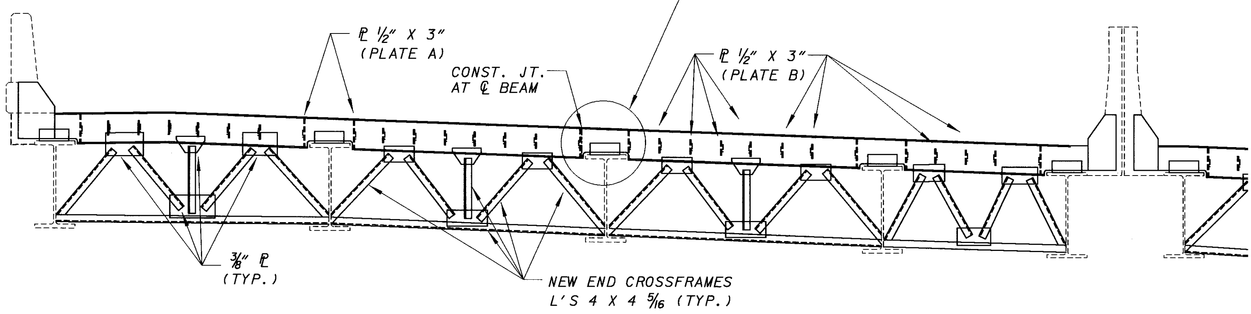

ELEVATION

518/547	21/28	LIC-16-19.7	WEST ABUTMENT WESTBOUND LANES EXP. JT. BRIDGE NO. LIC-16-2131 OVER CSXT RAILROAD	DESIGNED RSD CHECKED DTF	DRAWN RSD REVISED	REVIEWED CLZ STRUCTURE FILE NUMBER 4500938	DATE 2-26-99	DESIGN AGENCY OHIO DEPARTMENT OF TRANSPORTATION DISTRICT 5

LQ160002.BEJ (02-27-99) SCALE 2.6667

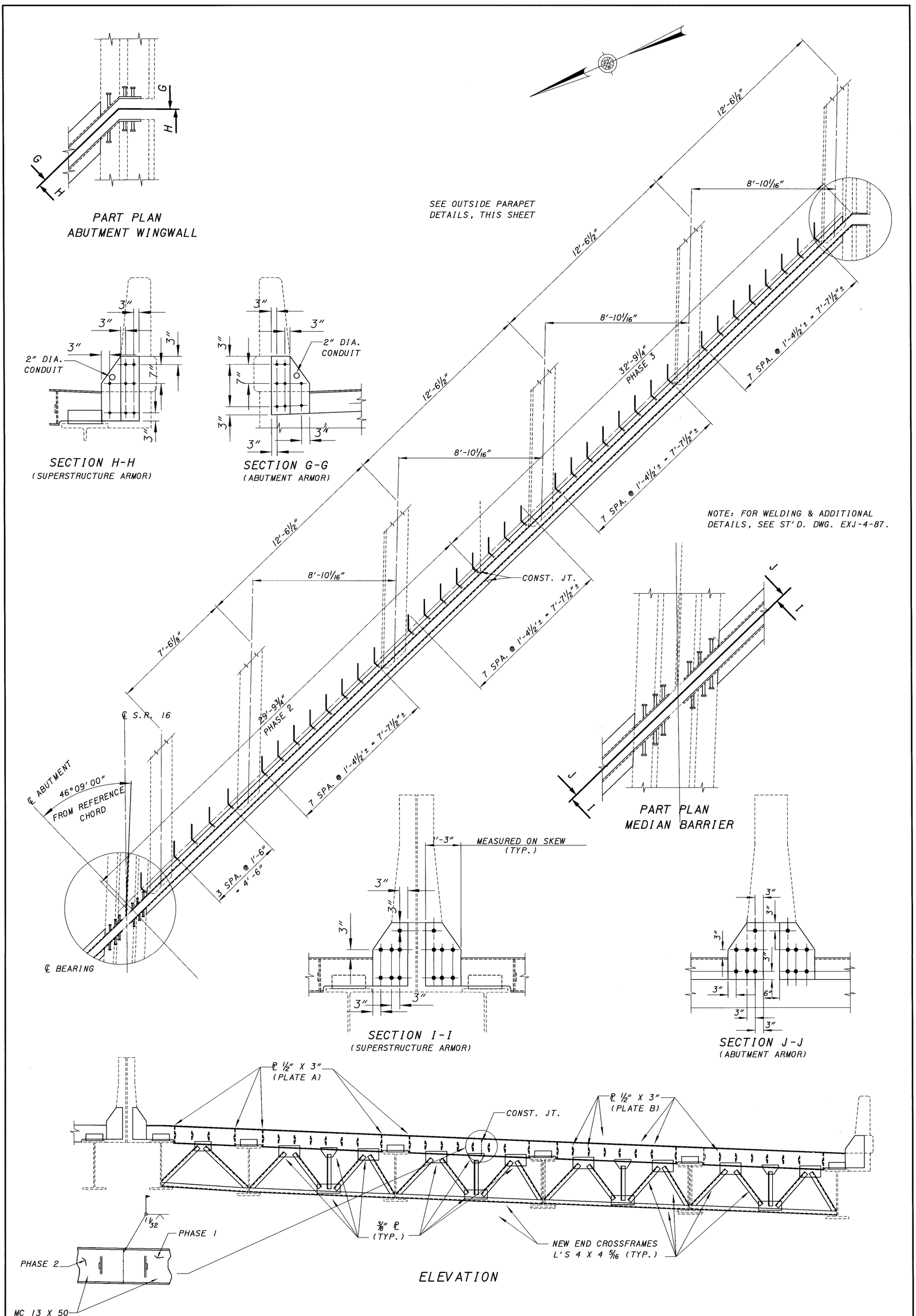

519/547	22/28	LIC-16-1_.72	WEST ABUTMENT EASTBOUND LANES EXP. JT. BRIDGE NO. LIC-16-2131 OVER CSXT RAILROAD	DESIGNED RSD CHECKED DTF	DRAWN RSD REVISED	REVIEWED CLZ STRUCTURE FILE NUMBER 4500938	DATE 2-26-99	DESIGN AGENCY OHIO DEPARTMENT OF TRANSPORTATION DISTRICT 5

LQ160001.BEJ (02-27-99) SCALE 2.6667

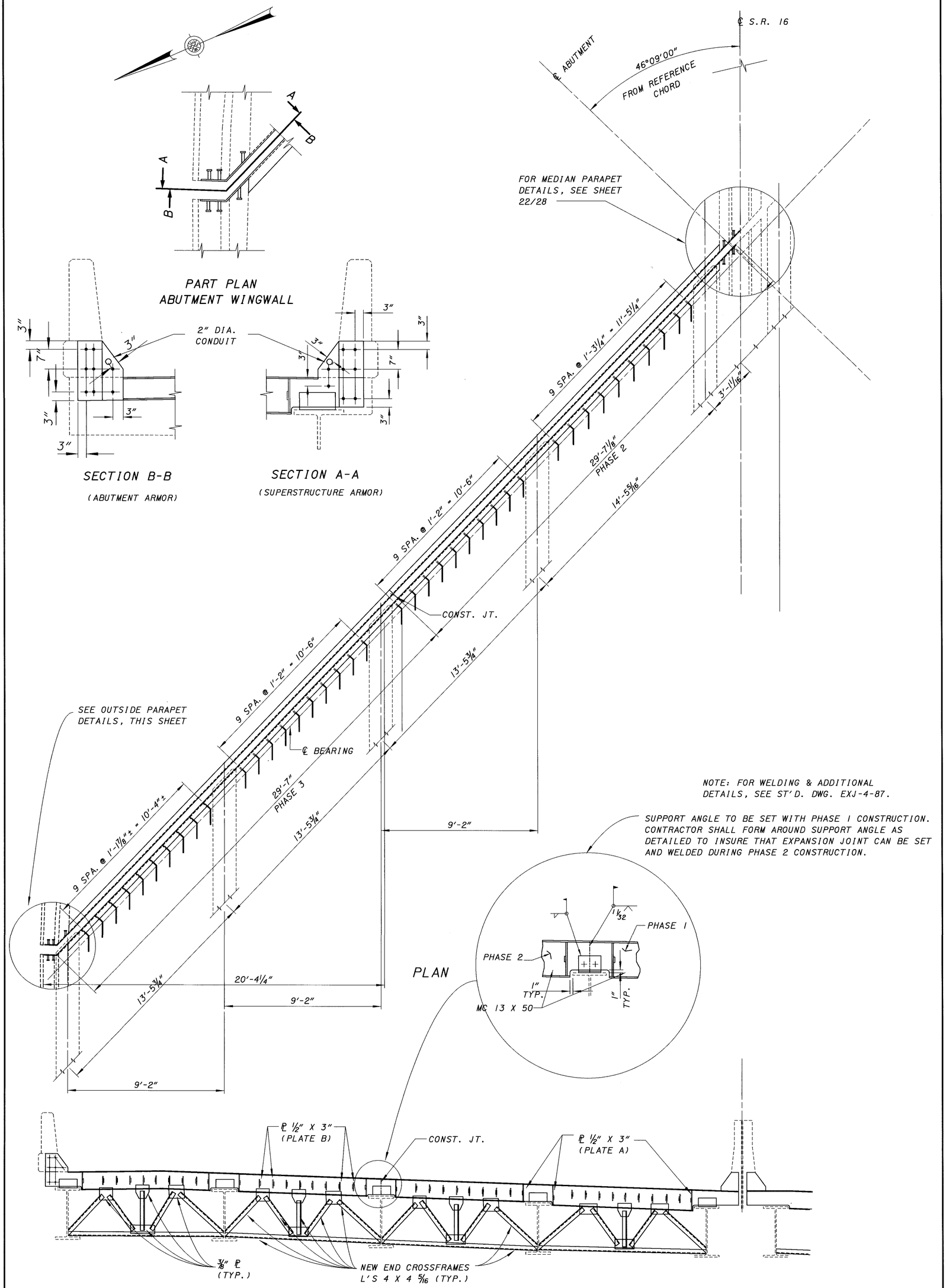

520 / 547	23 / 28	LIC-16-19.72	EAST ABUTMENT WESTBOUND LANES EXP. JT. BRIDGE NO. LIC-16-2131 OVER CSXT RAILROAD	DESIGNED RSD CHECKED DTF	DRAWN RSD REVISED	REVIEWED CLZ STRUCTURE FILE NUMBER 4500938	DATE 2-26-99	DESIGN AGENCY OHIO DEPARTMENT OF TRANSPORTATION DISTRICT 5

L0160001.BEJ (02-27-99) SCALE 2.6667

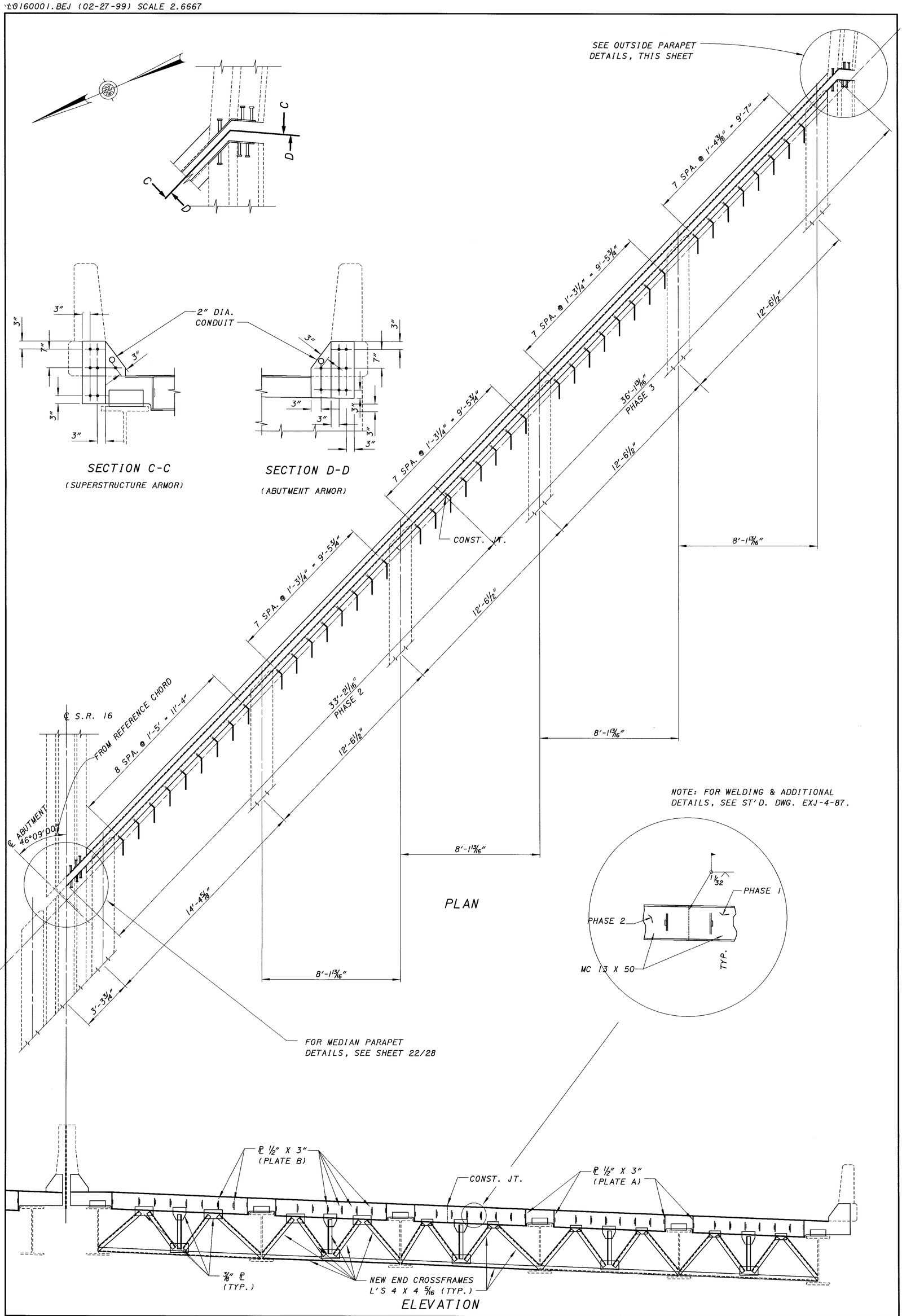

521 / 547	24 / 28	LIC-16-19.72	EAST ABUTMENT EASTBOUND LANES EXP. JT. BRIDGE NO. LIC-16-2131 OVER CSXT RAILROAD	DESIGNED RSD CHECKED DTF	DRAWN RSD REVISED	REVIEWED CLZ STRUCTURE FILE NUMBER 4500938	DATE 2-26-99	DESIGN AGENCY OHIO DEPARTMENT OF TRANSPORTATION DISTRICT 5

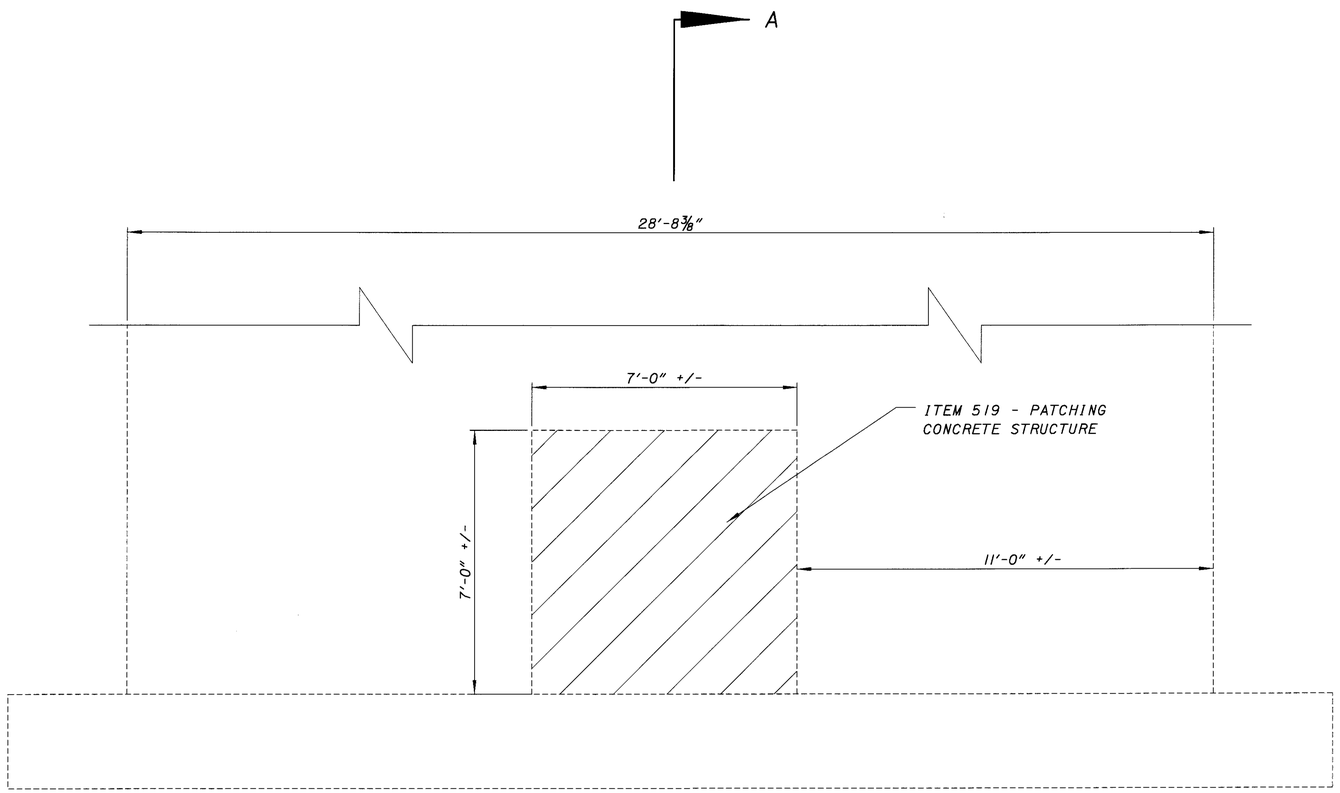

PIER 2 WESTBOUND

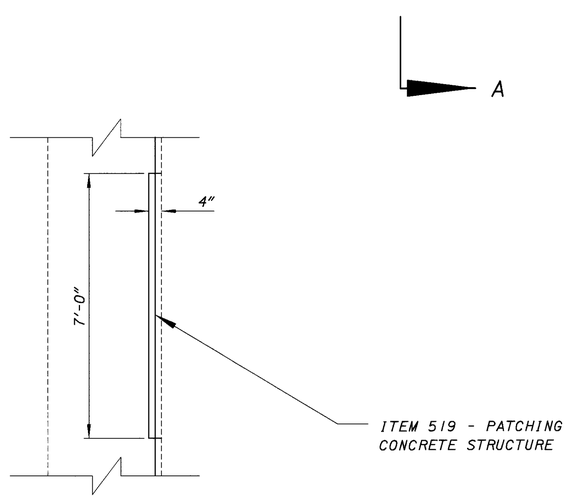

SECTION A-A

D.S. BROWN COMPANY	WATSON BOWMAN (WABO) ASSOCIATES, INC.	STRUCTURAL ACCESSORIES INC.
TYPE SS-E STEEL EXTRUSION	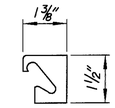 TYPE E STEEL EXTRUSION	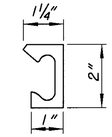 TYPE AM2 STEEL EXTRUSION
STRIP SEAL SSE2	STRIP SEAL SE-300	STRIP SEAL ONFLEX 40SEQ
D.S. BROWN CO. P.O. BOX 158 NORTH BALTIMORE, OH. 45872 PH. # (419) 257-3561	STRUCTURAL ACCESSORIES P.O. BOX 10 TERRYVILLE, CT. 06786 PH. # (203) 589-8826	WABO CORP. P.O. BOX 9 AMHERST, N.Y. 14120 PH. # (716) 691-7566

NOTE: CONTRACTOR MAY USE ANY OF THE ABOVE STRIP SEALS, AND EXTRUSIONS, BUT THE CONTRACTOR MUST USE STRIP SEAL THAT CORRESPONDS WITH MANUFACTURERS EXTRUSION.

AMBIENT TEMP. F°	DIMENSION A	
	3" SEAL	
	REAR	FORWARD
90°	1 3/8"	1 5/8"
80°	1 1/2"	1 5/8"
70°	1 1/2"	1 5/8"
60°	1 5/8"	1 3/4"
50°	1 3/4"	1 3/4"
40°	1 3/4"	1 3/4"
30°	1 7/8"	1 7/8"

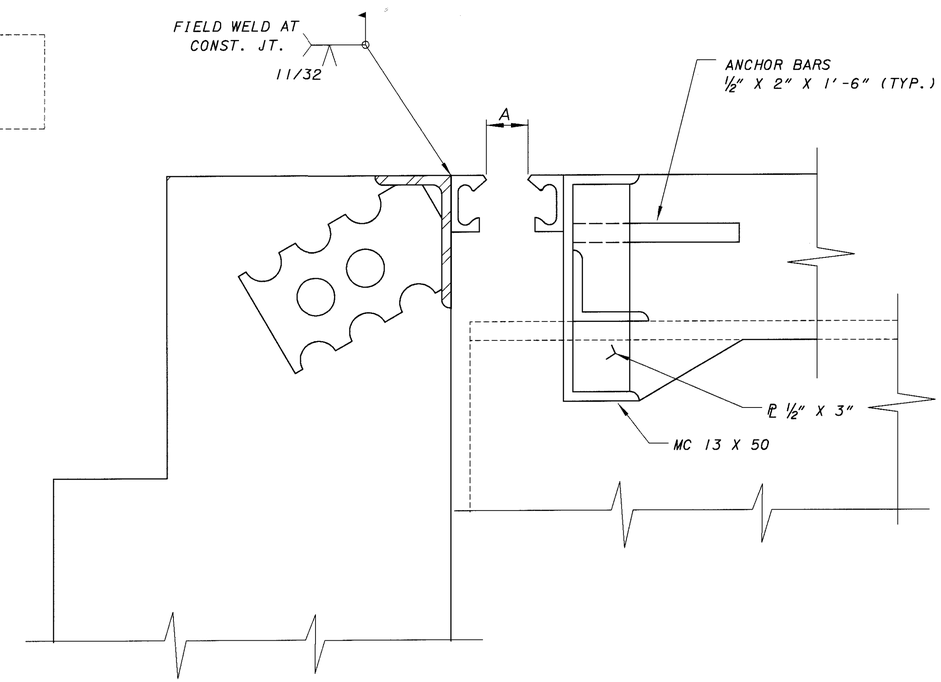

SECTION AT ℄ ROADWAY

DESIGN AGENCY
OHIO DEPARTMENT OF TRANSPORTATION
DISTRICT 5

DATE 2-26-99 | REVIEWED CLZ | STRUCTURE FILE NUMBER 4500962

DRAWN RSD | REVISED

DESIGNED RSD | CHECKED DTF

EXPANSION JOINT DETAILS & PIER PATCHING

BRIDGE NO. LIC-16-2141
OVER CSXT RAILROAD

LIC-16-19.72

L0160003.BEJ (02-27-99) SCALE 2

L0160002.BAS (02-27-99) SCALE 8

DIMENSIONS GIVEN ARE PARALLEL TO ℄ OF ROADWAY

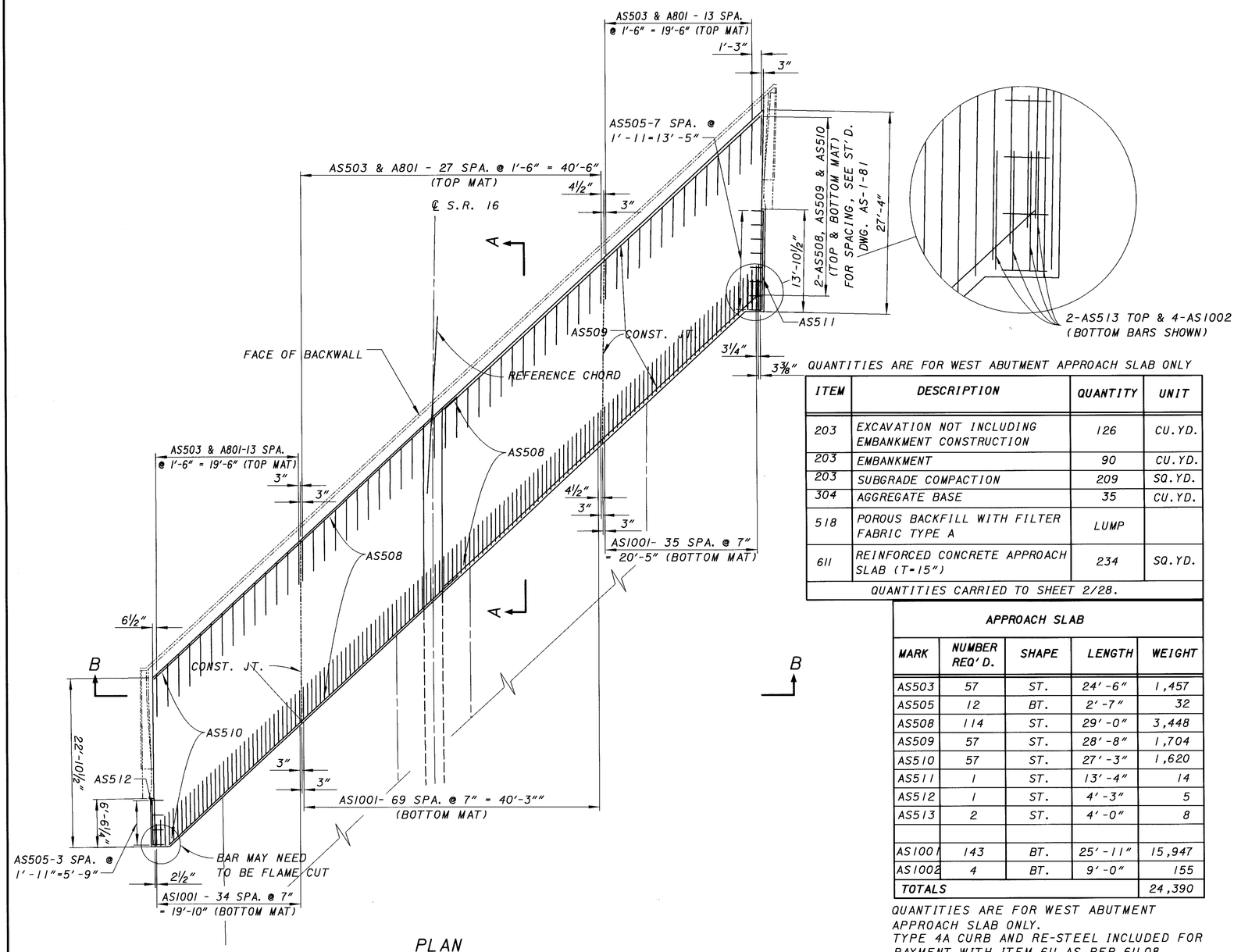

PLAN

QUANTITIES ARE FOR WEST ABUTMENT APPROACH SLAB ONLY

ITEM	DESCRIPTION	QUANTITY	UNIT
203	EXCAVATION NOT INCLUDING EMBANKMENT CONSTRUCTION	126	CU.YD.
203	EMBANKMENT	90	CU.YD.
203	SUBGRADE COMPACTION	209	SQ.YD.
304	AGGREGATE BASE	35	CU.YD.
518	POROUS BACKFILL WITH FILTER FABRIC TYPE A	LUMP	
611	REINFORCED CONCRETE APPROACH SLAB (T=15")	234	SQ.YD.
QUANTITIES CARRIED TO SHEET 2/28.			

APPROACH SLAB

MARK	NUMBER REQ'D.	SHAPE	LENGTH	WEIGHT
AS503	57	ST.	24'-6"	1,457
AS505	12	BT.	2'-7"	32
AS508	114	ST.	29'-0"	3,448
AS509	57	ST.	28'-8"	1,704
AS510	57	ST.	27'-3"	1,620
AS511	1	ST.	13'-4"	14
AS512	1	ST.	4'-3"	5
AS513	2	ST.	4'-0"	8
AS1001	143	BT.	25'-11"	15,947
AS1002	4	BT.	9'-0"	155
TOTALS				24,390

QUANTITIES ARE FOR WEST ABUTMENT APPROACH SLAB ONLY.
TYPE 4A CURB AND RE-STEEL INCLUDED FOR PAYMENT WITH ITEM 611 AS PER 611.08.

LAP LENGTH
NO. 5 BAR-2'-3"
NO. 10 BAR-7'-5"

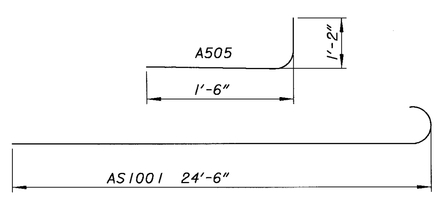

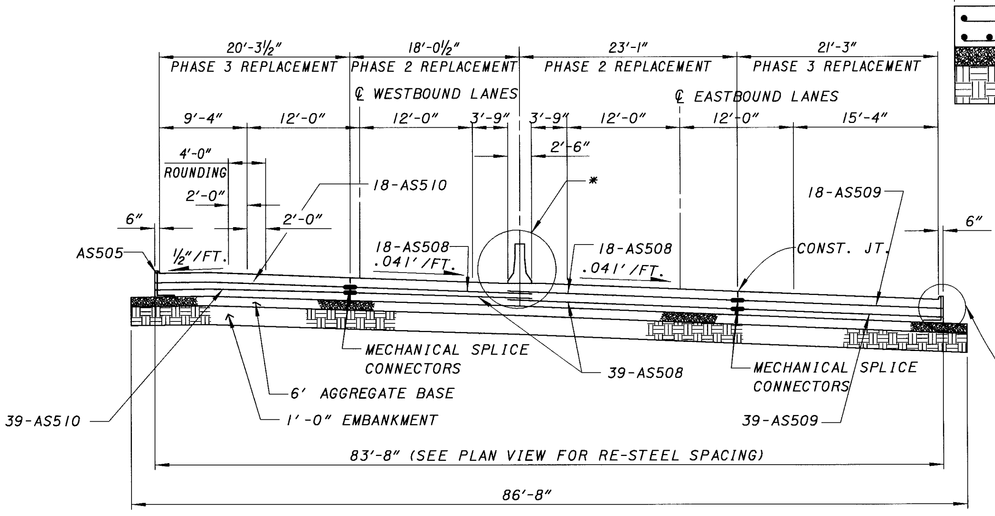

SECTION B-B

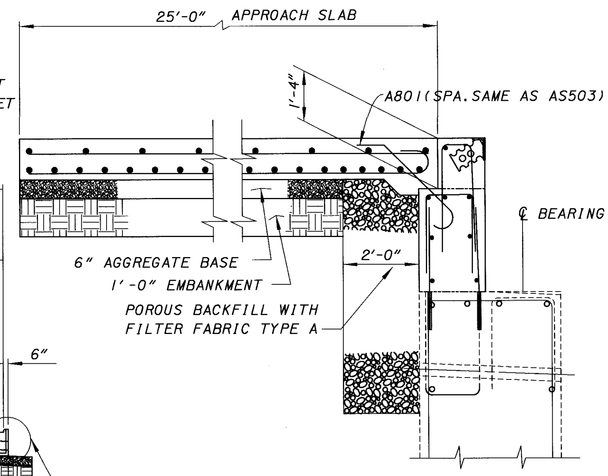

SECTION A-A

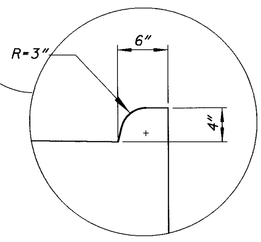

TYPE 4A CURB

523/547	26/28	LIC-16-19 2	PROPOSED WEST ABUTMENT APPROACH SLAB BRIDGE NO. LIC-16-2131 OVER CSXT RAILROAD	DESIGNED RSD CHECKED DTF	DRAWN RSD REVISED	REVIEWED CLZ DATE 2-26-99 STRUCTURE FILE NUMBER 4500938	DESIGN AGENCY OHIO DEPARTMENT OF TRANSPORTATION DISTRICT 5

L0160001.BAS (02-27-99) SCALE 8

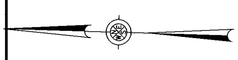

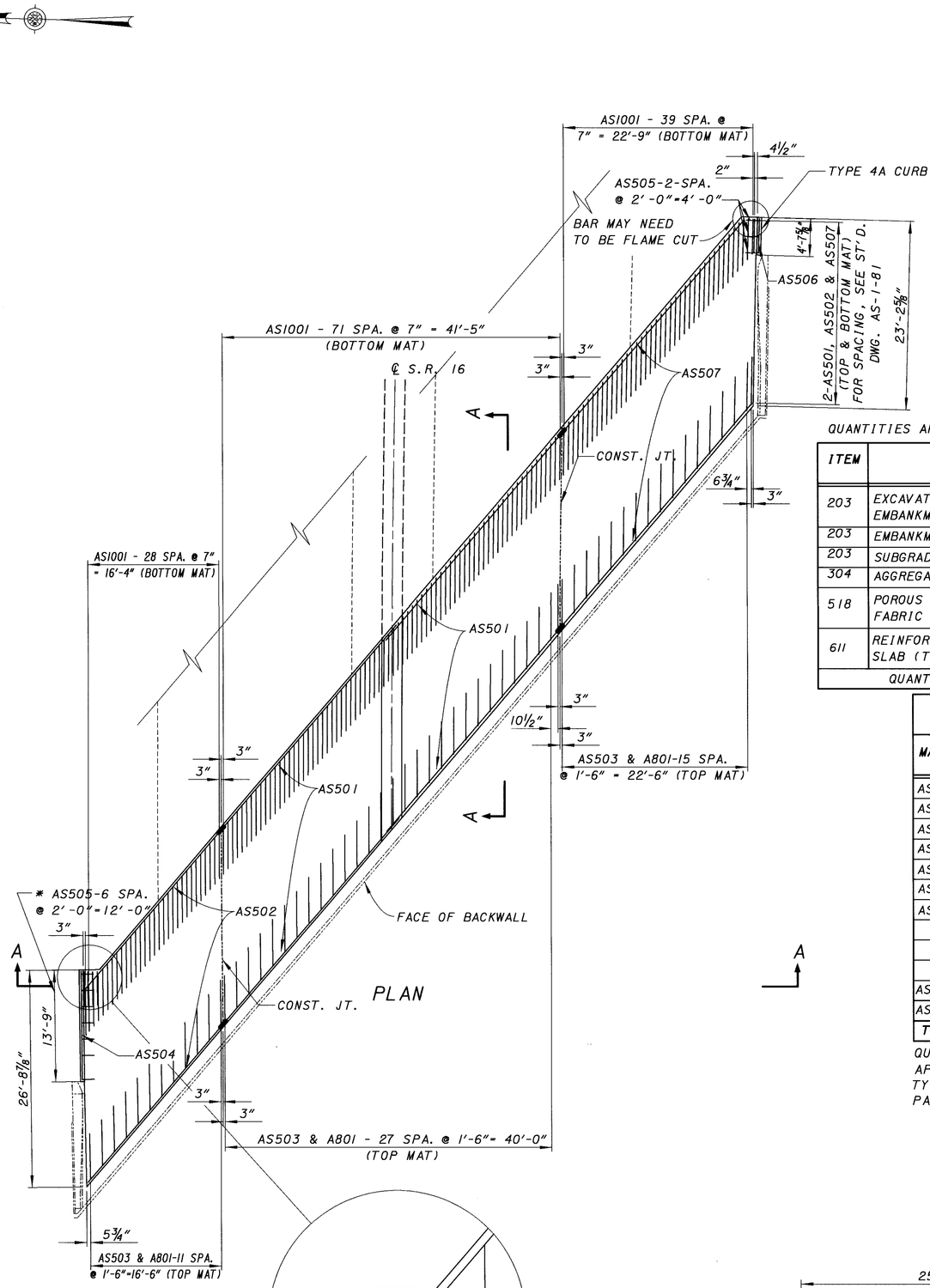

* DIMENSIONS GIVEN ARE PARALLEL TO ℄ OF ROADWAY

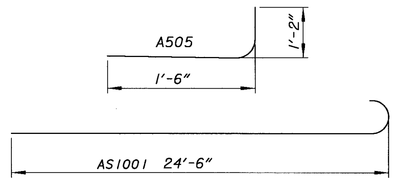

BENDING DIAGRAM

QUANTITIES ARE FOR EAST ABUTMENT APPROACH SLAB ONLY

ITEM	DESCRIPTION	QUANTITY	UNIT
203	EXCAVATION NOT INCLUDING EMBANKMENT CONSTRUCTION	126	CU.YD.
203	EMBANKMENT	90	CU.YD.
203	SUBGRADE COMPACTION	209	SQ.YD.
304	AGGREGATE BASE	36	CU.YD.
518	POROUS BACKFILL WITH FILTER FABRIC TYPE A	LUMP	
611	REINFORCED CONCRETE APPROACH SLAB (T=15")	234	SQ.YD.
QUANTITIES CARRIED TO SHEET 2/28.			

APPROACH SLAB

MARK	NUMBER REQ'D.	SHAPE	LENGTH	WEIGHT
AS501	114	ST.	33'-6"	3,983
AS502	57	ST.	26'-0"	1,546
AS503	58	ST.	24'-6"	1,482
AS504	1	ST.	13'-3"	14
AS505	10	BT.	2'-7"	25
AS506	1	ST.	4'-2"	4
AS507	57	ST.	34'-9"	2,066
AS1001	143	BT.	25'-11"	15,947
AS1002	4	BT.	9'-0"	155
TOTALS				25,222

QUANTITIES ARE FOR EAST ABUTMENT APPROACH SLAB ONLY.
TYPE 4A CURB AND RE-STEEL INCLUDED FOR PAYMENT WITH ITEM 611 AS PER 611.08.

LAP LENGTH
NO. 5 BAR-2'-3"
NO. 10 BAR-7'-5"

* FOR MED. PARAPET DETAILS SEE SHEET 19/28

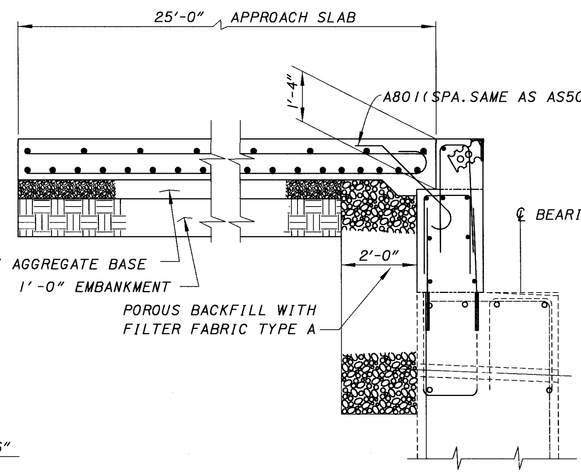

SECTION A-A

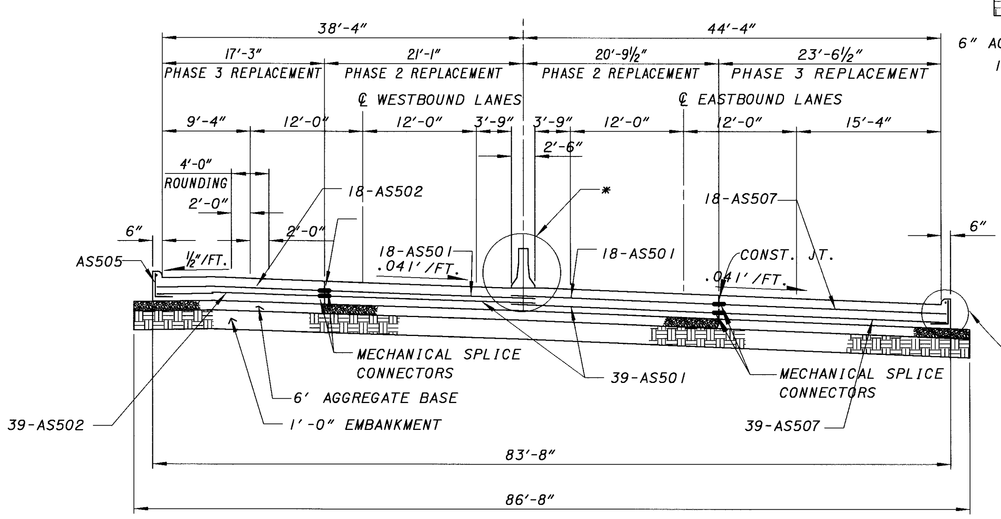

VIEW A-A

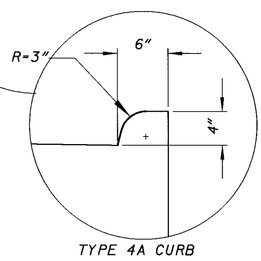

TYPE 4A CURB

524 / 547	27 / 28	LIC-16-19.72	PROPOSED EAST ABUTMENT APPROACH SLAB BRIDGE NO. LIC-16-2131 OVER CSXT RAILROAD	DESIGNED RSD CHECKED DTF	DRAWN RSD REVISED	REVIEWED CLZ STRUCTURE FILE NUMBER 4500938	DATE 2-26-99	DESIGN AGENCY OHIO DEPARTMENT OF TRANSPORTATION DISTRICT 5

BAR SCHEDULE

ABUTMENTS

MARK	NUMBER	LENGTH	SHAPE	WEIGHT
A501	8	27'-6"	ST.	230
A502	7	29'-7"	ST.	216
A503	15	29'-0"	ST.	454
A504	15	34'-2"	ST.	535
A505	15	6'-6"	ST.	102
A506	8	30'-10"	ST.	257
A507	15	28'-2"	ST.	441
A508	248	5'-3"	BT.	1358
A509	8	26'-6"	ST.	221
A510	7	28'-6"	ST.	208
A511	15	4'-2"	ST.	65
A512	15	29'-5"	ST.	462
A513	22	26'-4"	ST.	604
A514	8	14'-6"	ST.	121
A515	24	5'-10"	ST.	146
A516	8	11'-8"	ST.	97
A517	7	17'-0"	ST.	124
A518	4	13'-2"	ST.	55
A519	1	17'-8"	ST.	18
A520	8	14'-10"	ST.	124
A521	7	19'-4"	ST.	141
A522	1	20'-2"	ST.	21
A523	4	15'-8"	ST.	65
A601	247	10'-6"	BT.	3895
A602	247	6'-3"	BT.	2319
A603	494	5'-6"	ST.	4081
A604	23	2'-8"	ST.	92
A605	38	2'-2"	ST.	124
A606	28	4'-1"	ST.	172
A607	21	3'-7"	ST.	113
A608	28	3'-0"	ST.	126
A609	26	2'-6"	ST.	98
A610	15	2'-0"	ST.	45
A611	16	2'-5"	ST.	58
A612	5	2'-1"	ST.	16
A613	26	2'-4"	ST.	91
A614	8	2'-7"	ST.	31
A615	13	2'-10"	ST.	55
A616	15	2'-9"	ST.	62
A617	6	6'-6"	ST.	59
A618	17	7'-6"	ST.	192
A619	16	4'-6"	ST.	108
A620	6	6'-0"	ST.	54
A621	48	6'-9"	ST.	487
A622	14	3'-11"	ST.	82
A623	16	4'-4"	ST.	104
A624	17	7'-1"	ST.	181
A625	6	6'-1"	ST.	55
A626	6	5'-10"	ST.	53
A801	114	6'-3"	BT.	1902
TOTAL ABUTMENTS				20,720

PARAPETS

MARK	NUMBER	LENGTH	SHAPE	WEIGHT
P501	494	7'-1"	BT.	3650
P502	120	40'-0"	ST.	5006
P503	6	17'-6"	ST.	110
P504	6	8'-0"	ST.	50
P505	8	12'-0"	ST.	100
P506	2	17'-6"	ST.	37
P507	2	16'-10"	ST.	35
P508	2	5'-10"	ST.	12
P509	8	5'-8"	ST.	47
P510	16	10'-0"	ST.	167
P511	8	5'-8"	BT.	47
P512	4	3'-10"	BT.	16
P513	4	3'-9"	BT.	16
P514	4	3'-8"	BT.	15
P515	4	3'-7"	BT.	15
P516	4	3'-6"	BT.	15
P517	4	3'-5"	BT.	14
P518	4	3'-4"	BT.	14
P519	4	3'-3"	BT.	14
P520	4	3'-2"	BT.	13
P521	4	3'-1"	BT.	13
P522	4	3'-0"	BT.	13
P523	2	14'-4"	ST.	30
P524	2	15'-9"	ST.	33
P525	4	4'-3"	ST.	18
P526	2	7'-8"	ST.	16
P527	2	20'-0"	ST.	42
P528	2	19'-2"	ST.	40
P529	2	14'-10"	ST.	31
P530	2	16'-0"	ST.	33
P531	4	7'-11"	BT.	33
P532	24	24'-6"	ST.	613
P533	50	7'-9"	BT.	404
P534	14	1'-4"	ST.	20
P535	14	1'-7"	ST.	23

PARAPETS (CONT.)

MARK	NUMBER	LENGTH	SHAPE	WEIGHT
P536	50	7'-8"	BT.	400
P537	4	8'-0"	BT.	33
P538	4	37'-0"	ST.	154
P601	482	3'-1"	BT.	2232
P602	482	2'-5"	BT.	1750
P603	56	3'-9"	BT.	315
P604	12	2'-10"	ST.	51
P605	76	4'-6"	ST.	514
P606	60	40'-0"	ST.	3605
P607	8	15'-5"	ST.	185
P608	1	11'-3"	ST.	17
P609	1	20'-10"	ST.	31
P610	469	2'-5"	BT.	1702
P611	475	4'-7"	BT.	3270
P612	6	3'-5"	BT.	31
P613	6	3'-3"	BT.	29
P614	6	2'-11"	BT.	26
P615	469	3'-8"	BT.	2583
P616	1	5'-10"	ST.	9
P617	2	4'-3"	ST.	13
P618	1	8'-2"	ST.	12
TOTAL PARAPETS				27,717

SUPERSTRUCTURE

MARK	NUMBER	LENGTH	SHAPE	WEIGHT	
S401	654	40'-0"	ST.	17154	
S402	109	14'-2"	ST.	1013	
S501	1872	12'-0"	ST.	23430	
S502	930	11'-9"	ST.	11397	
S503	942	10'-6"	ST.	10316	
S504	8	2'-7"	ST.	22	
S505	2 SERIES OF 40	2'-7" TO 20'-10"	ST. ST.	977	VARIES BY 5½" INCREMENTS
S506	2 SERIES OF 41	19'-8" TO 2'-5"	ST. ST.	944	VARIES BY 5¹⁄₁₆" INCREMENTS
S507	8	2'-5"	ST.	20	
S508	8	2'-0"	ST.	17	
S509	2 SERIES OF 36	2'-0" TO 18'-2"	ST. ST.	757	VARIES BY 5⅜" INCREMENTS
S510	2 SERIES OF 43	20'-1" TO 2'-5"	ST. ST.	1009	VARIES BY 4¹⁵⁄₁₆" INCREMENTS
S511	8	2'-5"	ST.	20	
S512	946	21'-9"	ST.	21460	
S513	8	2'-9"	ST.	23	
S514	2 SERIES OF 42	2'-9" TO 21'-8"	ST. ST.	1070	VARIES BY 5⅜" INCREMENTS
S515	2 SERIES OF 47	21'-5" TO 2'-5"	ST. ST.	1168	VARIES BY 4¹³⁄₁₆" INCREMENTS
S516	8	2'-7"	ST.	22	
S517	2 SERIES OF 46	2'-7" TO 23'-2"	ST. ST.	1235	VARIES BY 5⅜" INCREMENTS

SUPERSTRUCTURE

MARK	NUMBER	LENGTH	SHAPE	WEIGHT	
S518	948	23'-8"	ST.	23401	
S519	2 SERIES OF 52	23'-7" TO 2'-10"	ST. ST.	1433	VARIES BY 4¾" INCREMENTS
S520	8	2'-10"	ST.	24	
S521	636	40'-0"	ST.	26534	
S522	106	17'-6"	ST.	1935	
S523	8	2'-5"	ST.	20	
S601	214	40'-0"	ST.	12857	
TOTAL SUPERSTRUCTURE				158,258	

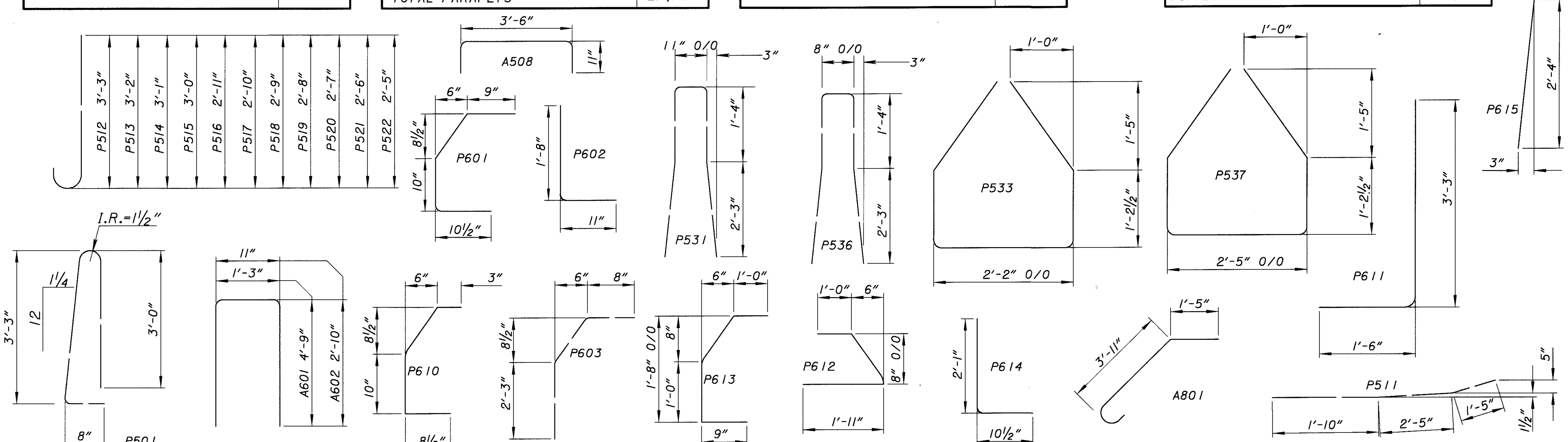

DESIGN AGENCY
OHIO DEPARTMENT OF TRANSPORTATION DISTRICT 5

DATE | REVIEWED | STRUCTURE FILE NUMBER 4500962 | DRAWN RSD | REVISED | DESIGNED RSD | CHECKED

BAR SCHEDULES AND BENDING DIAGRAMS
BRIDGE NO. LIC-16-2131
OVER CSXT RAILROAD

LIC-16-19.72

L0160001.BRL (SCALE 1) 02-27-99

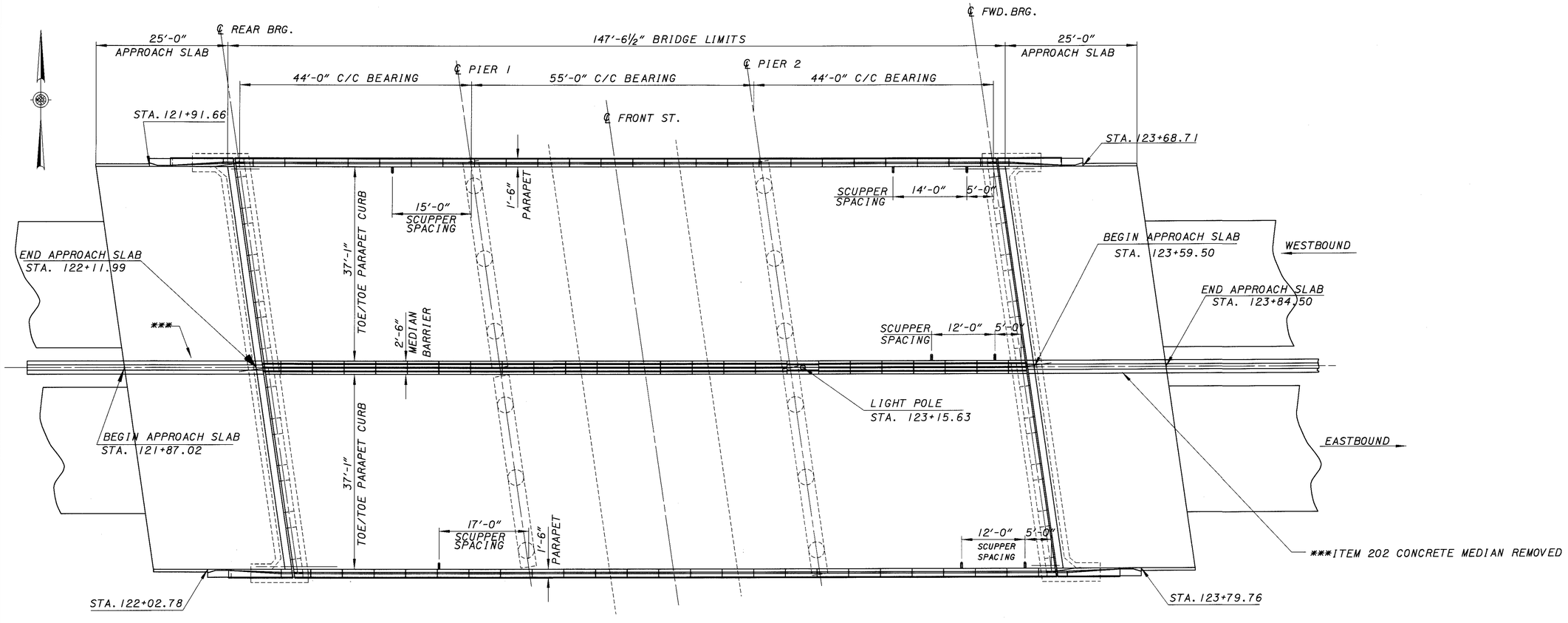

PLAN

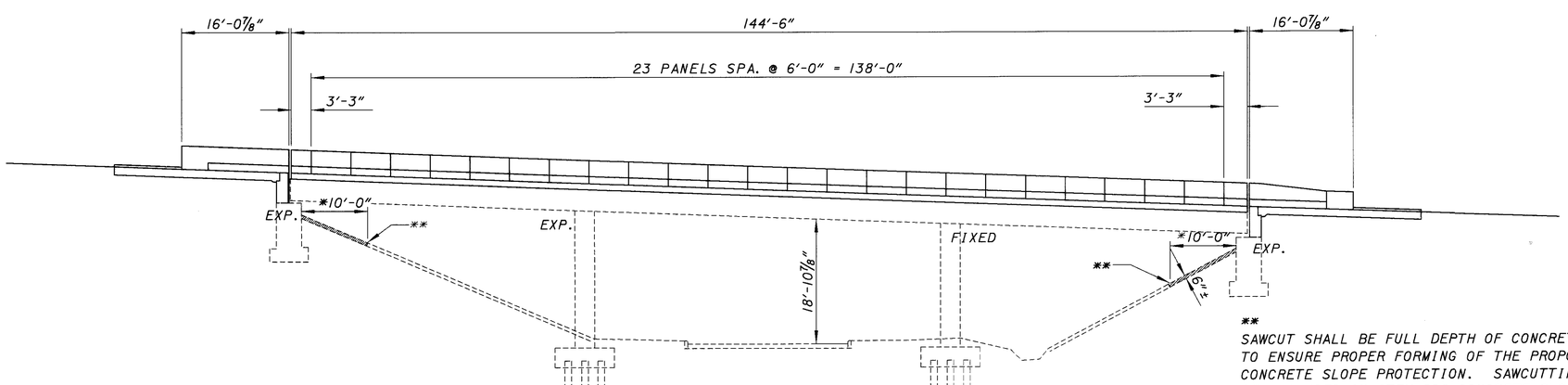

ELEVATION

NOTE:
PROPOSED CONCRETE SLOPE PROTECTION SHALL BE PAINTED WITH AN ANTI-GRAFFITI PAINT.

**
SAWCUT SHALL BE FULL DEPTH OF CONCRETE TO ENSURE PROPER FORMING OF THE PROPOSED CONCRETE SLOPE PROTECTION. SAWCUTTING TO BE INCLUDED IN ITEM 202-CONCRETE SLOPE PROTECTION REMOVED.

*
CONCRETE SLOPE PROTECTION TO BE REMOVED AND REPLACE. QUANTITIES TO BE INCLUDED IN ITEM 202-CONCRETE SLOPE PROTECTION REMOVED (191 SQ.YD.) AND ITEM 602 CONCRETE SLOPE PROTECTION (191 SQ.YD.)

EXISTING STRUCTURE

TYPE: CONTINUOUS STEEL BEAM WITH REINFORCED CONCRETE DECK AND SUBSTRUCTURE
SPANS: 44'-0" / 55'-0": / 44'-0" C/C BRGS.
ROADWAY: 80'-0" O/O DECK
76'-2" TOE/TOE SAFETY PARAPET WITH 2'-6" MEDIAN BARRIER
LOAD FREQUENCY: HS20-44 AND THE ALTERNATE MILITARY LOADING
SKEW: 8° 10' 00" RT. FORWARD
WEARING SURFACE: 1½" SDC OVERLAY
ALIGNMENT: TANGENT
APPROACH SLABS: (25' LONG) AS-1-54
SUPERELEVATION: VARIES

REHABILITATED STRUCTURE

TYPE: EXISTING CONTINUOUS STEEL BEAM WITH REINFORCED CONCRETE DECK AND SUBSTRUCTURE
SPANS: 44'-0" / 55'-0": / 44'-0" C/C BRGS.
ROADWAY: 79'-8" O/O DECK
76'-8" TOE/TOE SAFETY PARAPET WITH 2'-6" MEDIAN BARRIER
LOAD FREQUENCY: HS20-44 AND THE ALTERNATE MILITARY LOADING
SKEW: 8° 10' 00" RT. FORWARD
WEARING SURFACE: 1" MONOLITHIC CONCRETE
ALIGNMENT: TANGENT
APPROACH SLABS: (25' LONG) AS-1-81
SUPERELEVATION: VARIES

DESIGN AGENCY
OHIO DEPARTMENT OF TRANSPORTATION DISTRICT 5

DESIGNED	DRAWN	REVIEWED	DATE
RSD	RSD	CLZ	2-13-99
CHECKED	REVISED	STRUCTURE FILE NUMBER	
DFT		4500962	

GENERAL PLAN AND ELEVATION
BRIDGE NO. LIC-16-2141
OVER FRONT STREET

LIC-16-19.72

L016000.BPE (01-08-97) SCALE 10.667

ITEM	ITEM EXT.	GRAND TOTAL	UNIT	DESCRIPTION	SUPER.	ABUT.	PIERS	GENERAL
202	11300	84	CU YD	PORTIONS OF STRUCTURE REMOVED, ABUTMENT		84		
202	11300	397	CU YD	PORTIONS OF STRUCTURE REMOVED, SUPERSTRUCTURE	397			
202	22901	322	SQ YD	APPROACH SLAB REMOVED, AS PER PLAN *				322
202	30500	50	LIN FT	CONCRETE MEDIAN REMOVED *				50
202	32800	191	SQ YD	CONCRETE SLOPE PROTECTION REMOVED *				191
202	98100	20	EACH	REMOVAL MISC.: BEARINGS REMOVED, ABUTMENTS		20		
202	98100	16	EACH	REMOVAL MISC.: SCUPPERS INCLUDING DOWNSPOUT *	16			
202	98200	157	LIN FT	REMOVAL MISC.: EXPANSION JOINT REMOVED	157			
203	12000	249	CU YD	EXCAVATION NOT INCLUDING EMBANKMENT CONSTRUCTION *				249
203	20000	134	CU YD	EMBANKMENT *				134
203	50000	403	SQ YD	SUBGRADE COMPACTION *				403
304	20000	67	CU YD	AGGREGATE BASE *				67
503	11100	LUMP		COFFERDAMS, CRIBS AND SHEETING				
503	21300	LUMP		UNCLASSIFIED EXCAVATION				
511	45500	105	CU YD	CLASS C CONCRETE, ABUTMENT(REPAIR OR RECONSTRUCTION)		105		
512	33000	6	SQ YD	TYPE 2 WATERPROOFING		6		
SPECIAL	51267510	924	SQ YD	SEALING OF CONCRETE SURFACES (EPOXY-URETHANE)	683	241		
516	11210	158	LIN FT	STRUCTURAL EXPANSION JOINT INCLUDING ELASTOMERIC STRIP SEAL	158			
516	13200	15	SQ FT	½" PREFORMED EXPANSION JOINT FILLER	15			
516	13600	11	SQ FT	1" PREFORMED EXPANSION JOINT FILLER	11			
516	41100	20	EACH	1/8" PREFORMED BEARING PAD, 711.21		20		
516	46900	20	EACH	BEARING DEVICE, MISC.: SLIDING PLATES		20		
516	47000	LUMP		JACKING AND TEMPORARY SUPPORT OF SUPERSTRUCTURE				
518	12000	8	EACH	SCUPPER, INCLUDING SUPPORTS(FOR STEEL BEAM BRIDGE)	8			
518	21230	LUMP		POROUS BACKFILL WITH FILTER FABRIC *				
601	21000	191	SQ YD	CONCRETE SLOPE PROTECTION *				191
611	25001	428	SQ YD	REINFORCED CONCRETE APPROACH SLAB (T=15"), AS PER PLAN *				428
625	10600	2	EACH	LIGHT POLE ANCHOR BOLTS, 1¼" X 60" *	2			
625	10600	2	EACH	LIGHT POLE ANCHOR BOLTS, 1¼" X 69" *	2			
625	25402	340	LIN FT	CONDUIT, 2", 713.07 *	340			
625	25602	200	LIN FT	CONDUIT, 4", 713.07 *	200			
625	29910	6	EACH	TRANSITION JUNCTION BOX *	6			
625	29920	1	EACH	STRUCTURE JUNCTION BOX, TYPE III *	1			
625	33000	1	EACH	STRUCTURE GROUNDING SYSTEM *	1			
815	00050	15,981	SQ FT	SURFACE PREPARATION OF EXISTING STEEL, SYSTEM OZEU	15,981			
815	00056	15,981	SQ FT	FIELD PAINTING OF EXISTING STEEL, PRIME COAT, SYSTEM OZEU	15,981			
815	00060	15,981	SQ FT	FIELD PAINTING OF EXISTING STEEL, INTERMEDIATE COAT, SYSTEM OZEU	15,981			
815	00066	15,981	SQ FT	FIELD PAINTING OF EXISTING STEEL, FINISH COAT, SYSTEM OZEU	15,981			
815								
815	00504	60	MAN HOUR	GRINDING FINS, TEARS, SLIVERS	60			
815	00508	1,445	LIN FT	GRINDING FLANGS EDGES	1,445			
844	48000	335	CU YD	HIGH PERFORMANCE CONCRETE SUPERSTRUCTURE (DECK)(MIX 4)	335			
844	48020	85	CU YD	HIGH PERFORMANCE CONCRETE SUPERSTRUCTURE (PARAPET)(MIX 2)	66	8		11
844	49000	LUMP		HIGH PERFORMANCE CONCRETE TRIAL MIX				
863	10200	3,533	POUND	STRUCTURAL STEEL MEMBERS, MISCELLANEOUS LEVEL FABRICATION				
863	20000	3,416	EACH	WELDED STUD SHEAR CONNECTOR	3,416			
				* QUANTITIES CARRIED TO SHEET 405A/457 & 405B/457				

CALCULATED RSD
CHECKED DTF

BRIDGE SUMMARY
BRIDGE NO. LIC-16-2141
OVER FRONT STREET

LIC-16-19.72

L016000LBSS (02-01-99) SCALE 1

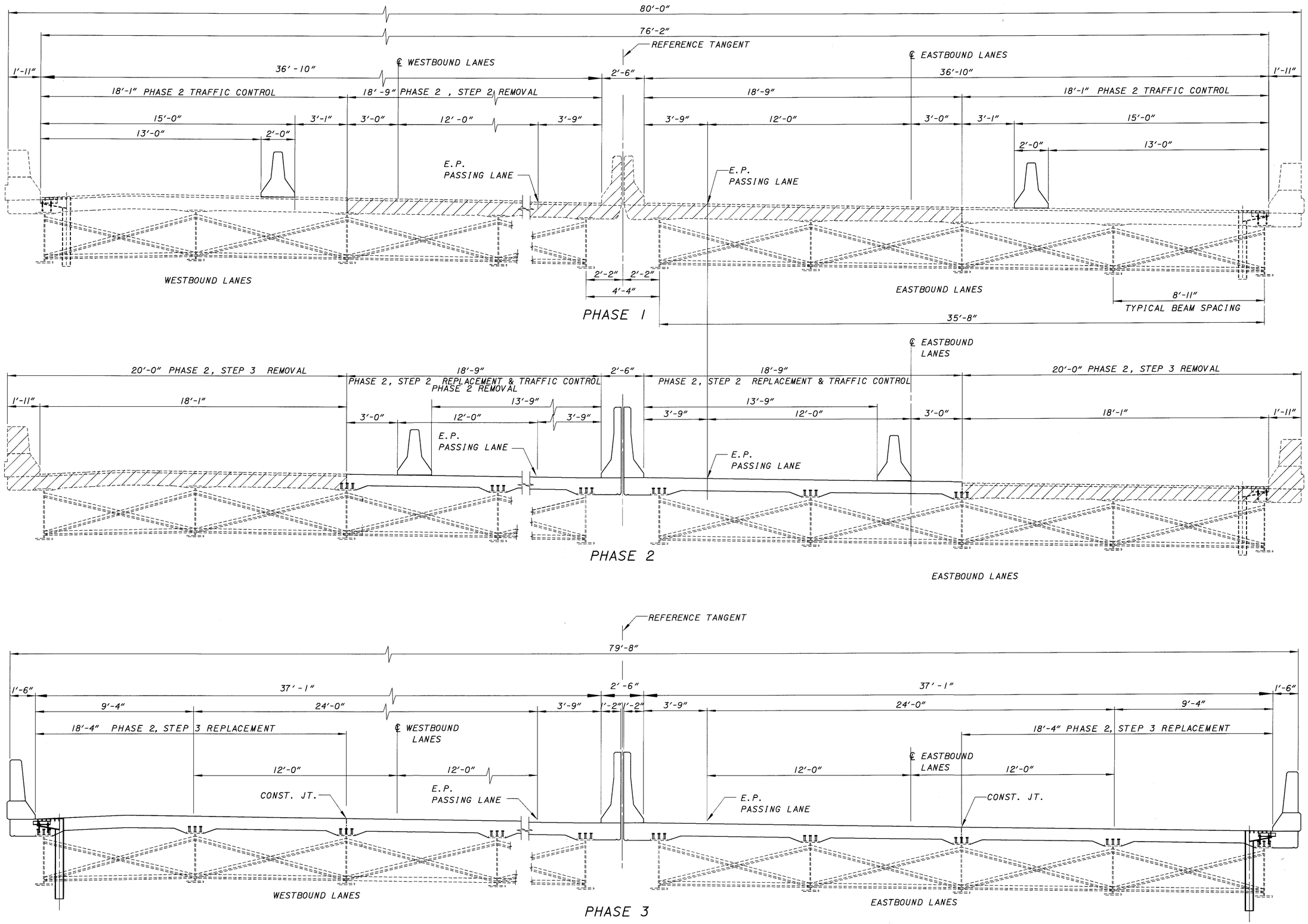

L0160001.BMT(01-10-99) SCALE 2.6667

DESIGN AGENCY
OHIO DEPARTMENT OF TRANSPORTATION DISTRICT 5

DESIGNED	DRAWN	REVIEWED	DATE
RSD	RSD	CLZ	2-13-99
CHECKED	REVISED	STRUCTURE FILE NUMBER	
DTF		4500962	

TRAFFIC CONTROL
BRIDGE NO. LIC-16-2141
OVER FRONT STREET

LIC-16-19.72

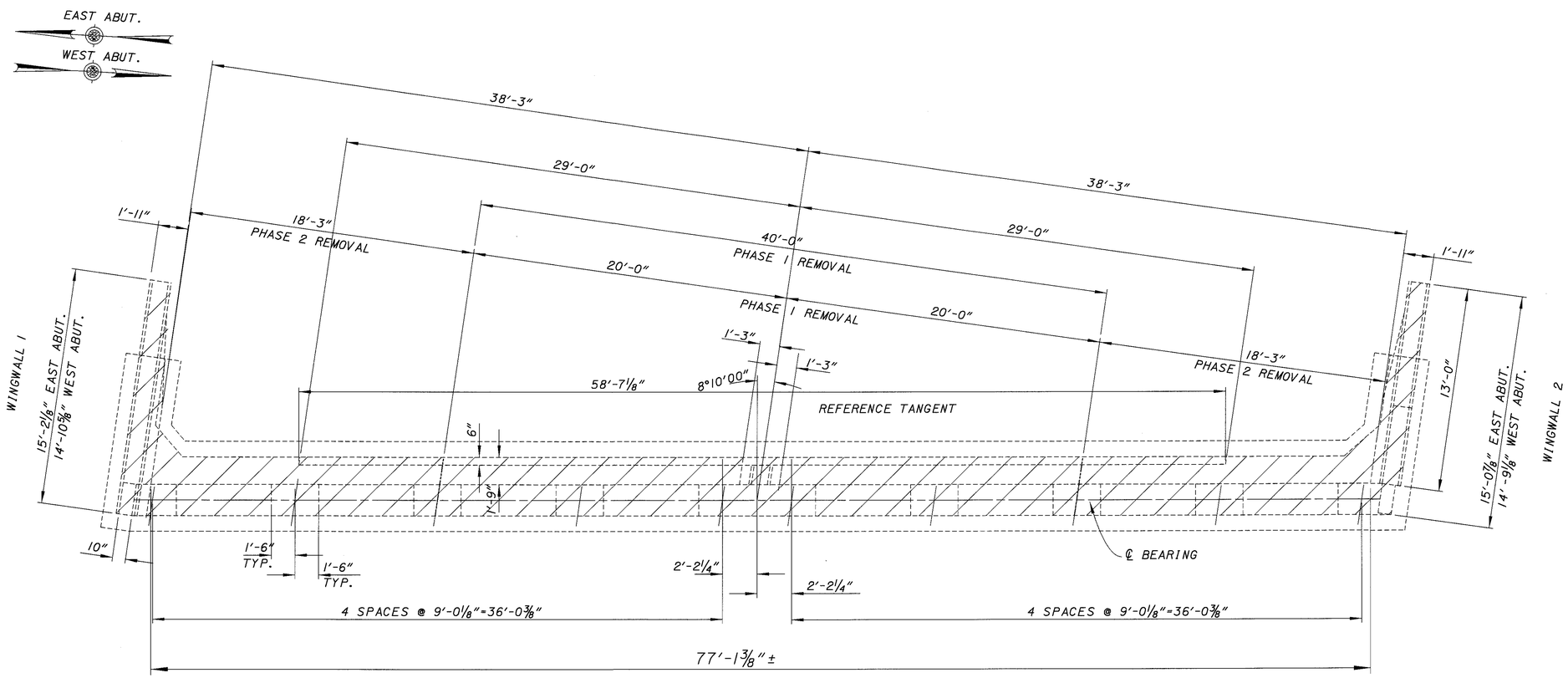

PLAN

ELEVATIONS		
ELEV.	E. ABUT.	W. ABUT.
A	832.81	838.57
B	833.05	838.78
C	833.30	839.01
D	833.54	839.21
E	833.76	839.44
F	833.82	839.50
G	833.91	839.77
H	833.97	840.04
I	833.99	840.34
J	833.84	840.28

REMOVALS

FOR SECTION A-A
AND PARAPET DETAILS,
SEE SHEET 5/22.

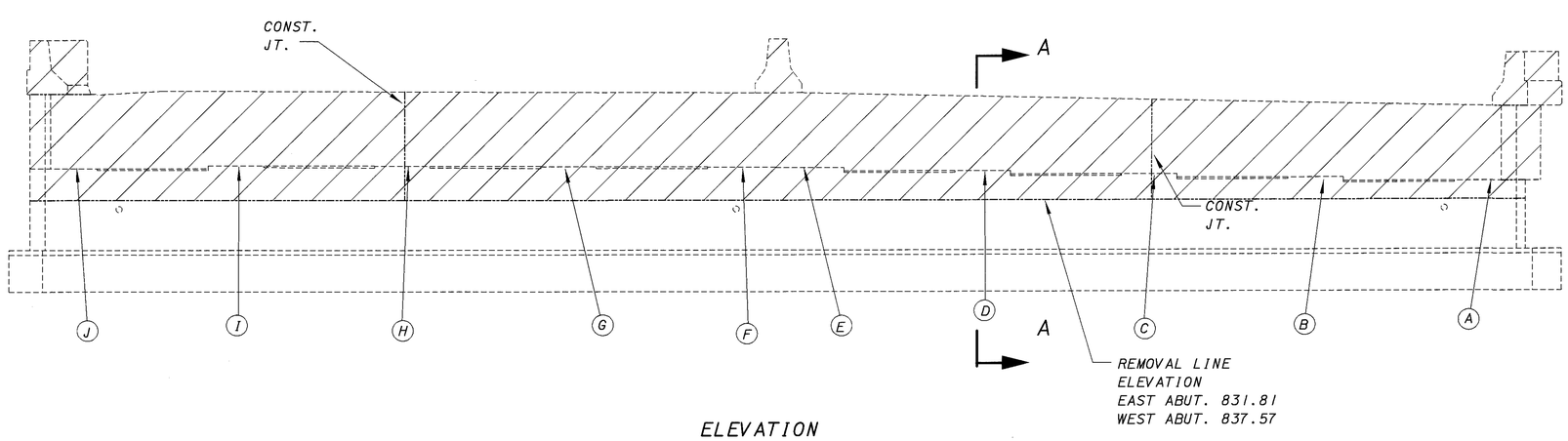

ELEVATION

NOTE:
ABUTMENT REMOVALS TO BE INCLUDED WITH
ITEM 202-PORTIONS OF STRUCTURE REMOVED,
ABUTMENT.

NOTE:
RE-STEEL TO BE REMOVED
TO THE REMOVAL LINE.

DESIGN AGENCY
OHIO DEPARTMENT
OF TRANSPORTATION
DISTRICT 5

DATE 2-12-99
REVIEWED CLZ
STRUCTURE FILE NUMBER 4500962

DRAWN RSD
REVISED

DESIGNED RSD
CHECKED DTF

EXISTING ABUTMENT REMOVAL
BRIDGE NO. LIC-16-2141
OVER FRONT STREET

LIC-16-19.72

4 / 22

529
547

10160001.BEA (01-06-99) SCALE 4

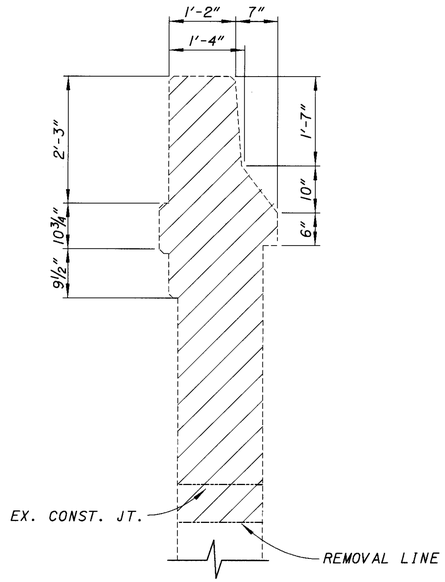

SECTION C-C

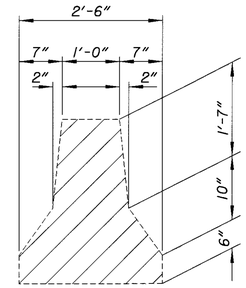

MEDIAN BARRIER
(BACKWALL & APPROACH SLAB)

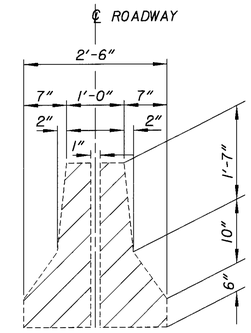

MEDIAN BARRIER
(SUPERSTRUCTURE)

	E. ABUT.	W. ABUT.
WINGWALL 1	15'-2⅛"	14'-10⅞"
WINGWALL 2	15'-0⅞"	14'-9⅛"

WINGWALL 1 (E. ABUT. 2'-2⅛") (W. ABUT. 1'-10⅞")
WINGWALL 2 (E. ABUT. 2'-0⅞") (W. ABUT. 1'-9⅛")

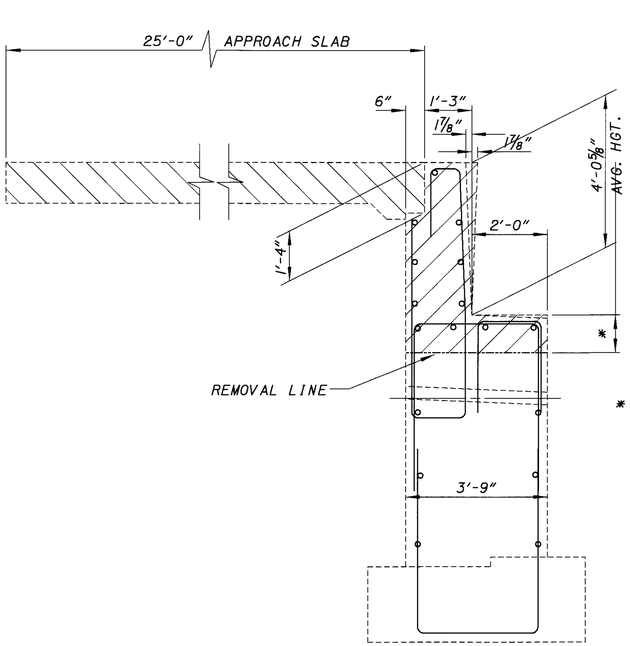

SECTION A-A

* EAST ABUT. 1'-0" MIN. TO 1'-9⅜"± MAX.
WEST ABUT. 1'-0" MIN. TO 2'-5⅝"± MAX.

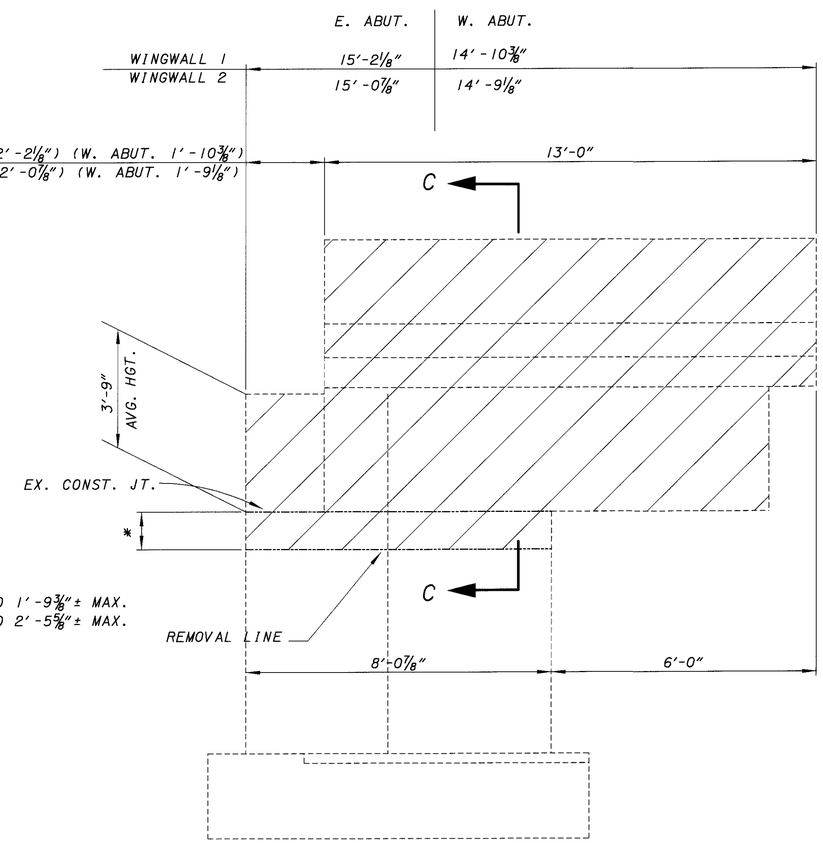

VIEW A-A

NOTES

- ALL VERTICAL RE-STEEL SHALL BE CUT TO THE REMOVAL LINE.
- FOR ABUTMENT DETAILS, SEE SHEET 4/22.
- PARAPET AND WINGWALL REMOVALS TO BE INCLUDED WITH ITEM 202-PORTIONS OF STRUCTURE REMOVED, ABUTMENT.

REMOVALS

L0160003.BEA (01-07-99) SCALE 2

DESIGN AGENCY
OHIO DEPARTMENT OF TRANSPORTATION DISTRICT 5

DESIGNED	DRAWN	REVIEWED	DATE
RSD	RSD	CLZ	2-13-99
CHECKED	REVISED	STRUCTURE FILE NUMBER	
DTF		4500962	

EXISTING ABUTMENT REMOVAL DETAILS
BRIDGE NO. LIC-16-2141
OVER FRONT STREET

LIC -16-19.72

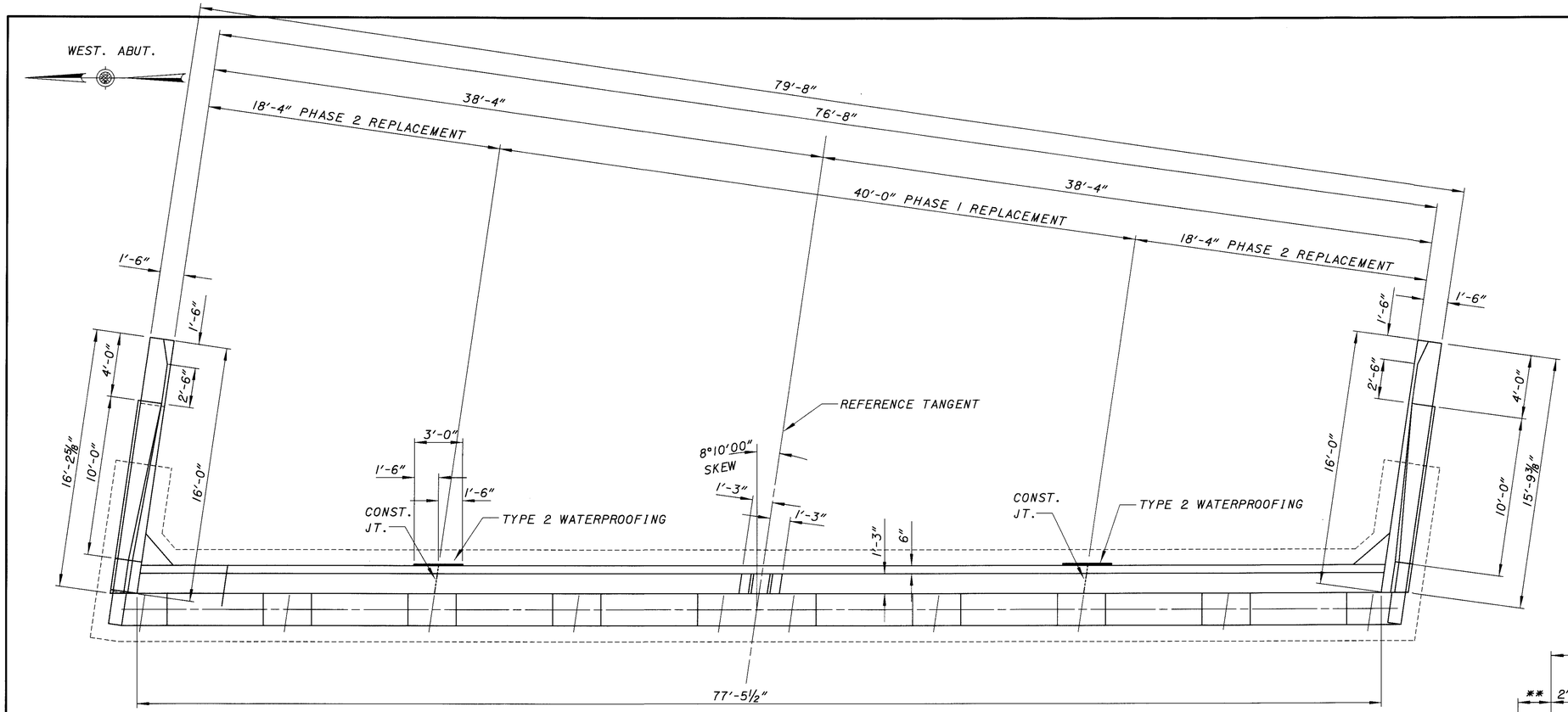

PLAN

ELEVATIONS	
ELEV.	W. ABUT.
A	839.19
B	839.38
C	839.57
D	839.76
E	839.95
F	840.01
G	840.24
H	840.48
I	840.73
J	840.66
K	844.75
L	843.28
M	843.58
N	842.11
O	845.60
P	843.96

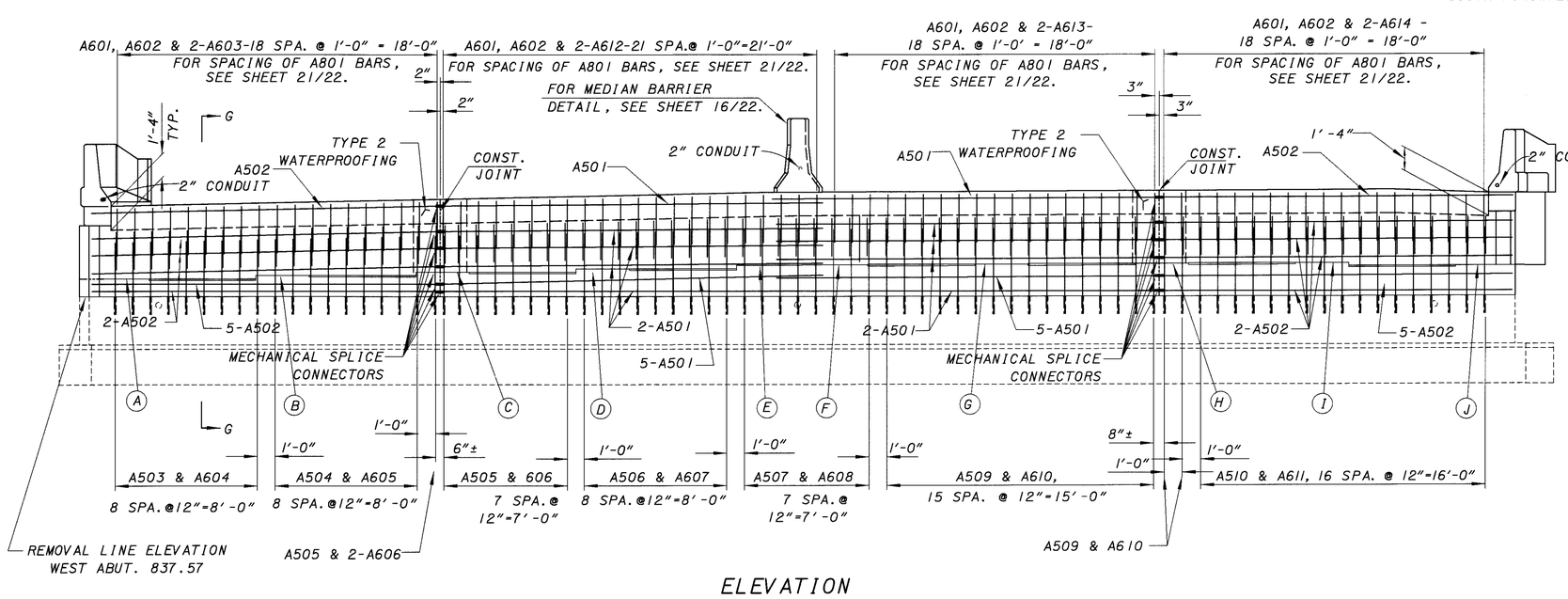

ELEVATION

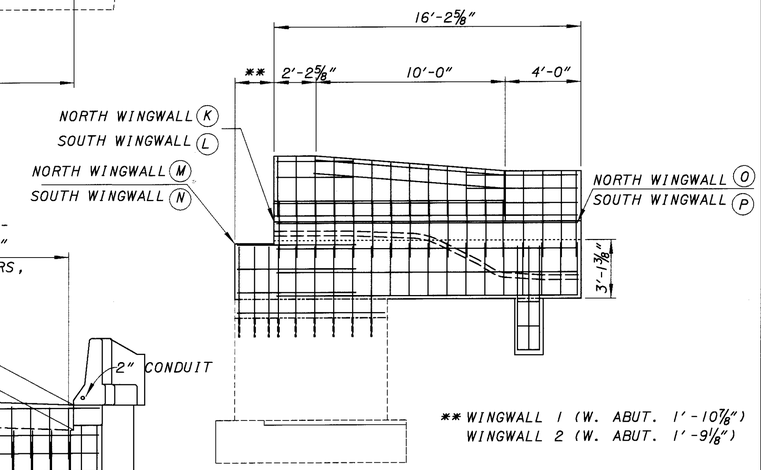

FOR RE-STEEL LAYOUT, PARAPET AND WINGWALL DETAILS, SEE SHEET 8/22.

LAP LENGTH NO. 5 BAR 2'-3"

WINGWALL ELEVATION

DESIGN AGENCY
OHIO DEPARTMENT OF TRANSPORTATION DISTRICT 5

DESIGNED	DRAWN	REVIEWED	DATE
RSD	RSD	CLZ	2-16-99
CHECKED	REVISED	STRUCTURE FILE NUMBER	
DTF		4500962	

PROPOSED WEST ABUTMENT
BRIDGE NO. LIC-16-2141
OVER FRONT STREET

LIC-16-19.72

6/22

531/547

L0160002.BPA (01-08-99) SCALE 4

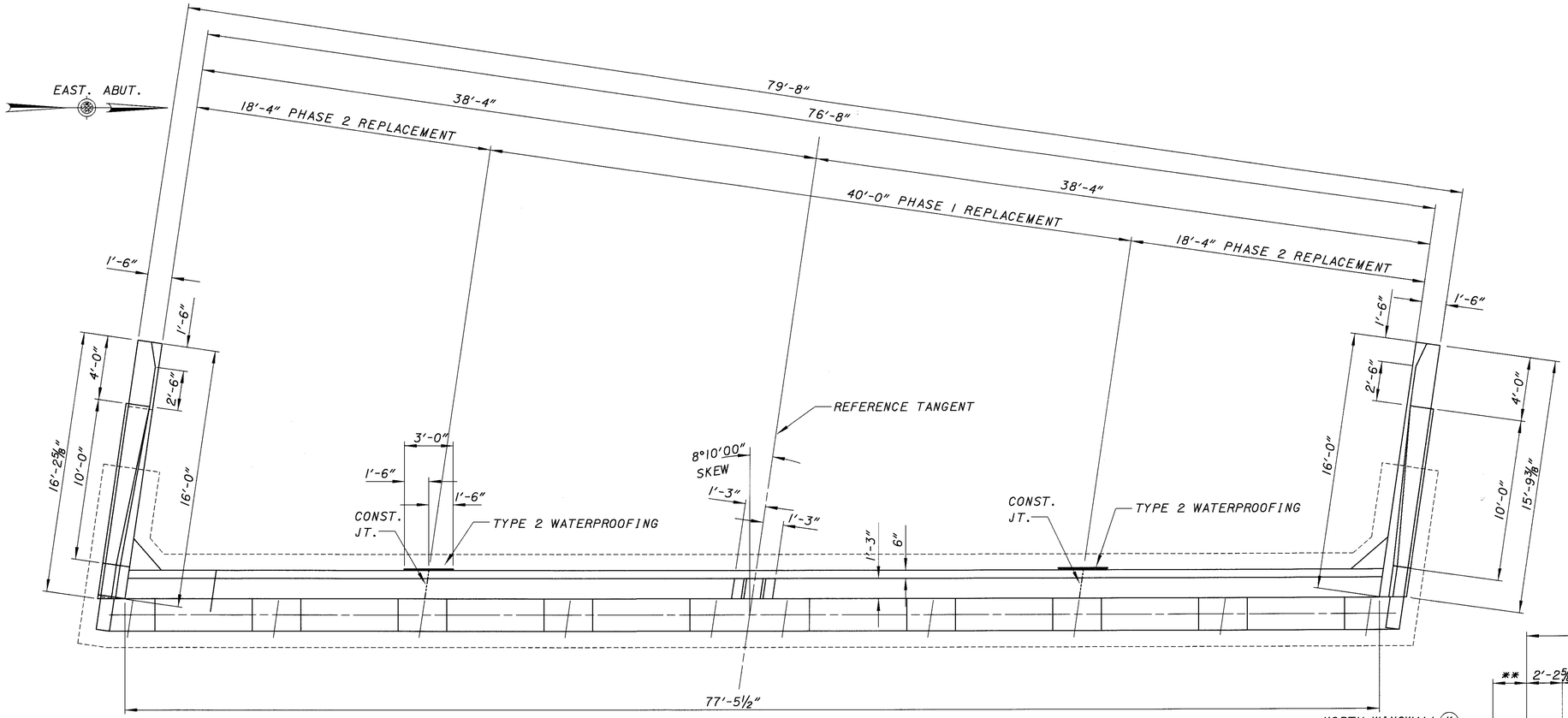

PLAN

ELEVATIONS	
ELEV.	E. ABUT.
A	833.46
B	833.65
C	833.84
D	834.04
E	834.23
F	834.26
G	834.28
H	834.31
I	834.34
J	834.17
K	838.28
L	837.55
M	837.11
N	836.38
O	837.50
P	836.97

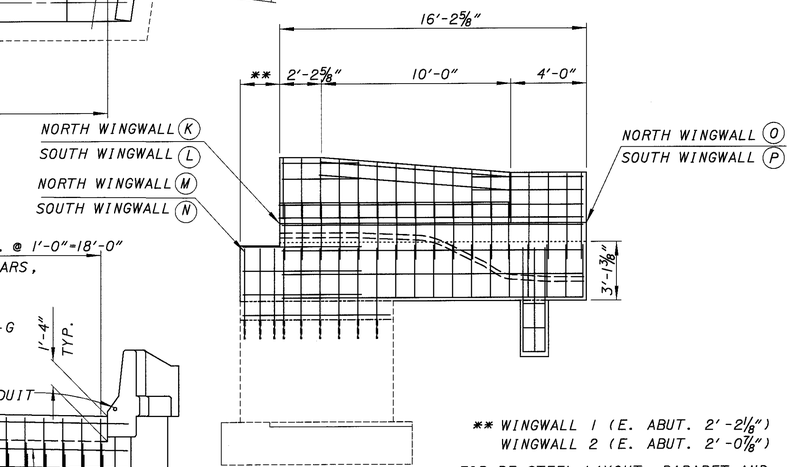

** WINGWALL 1 (E. ABUT. 2'-2⅛")
WINGWALL 2 (E. ABUT. 2'-0⅞")

FOR RE-STEEL LAYOUT, PARAPET AND WINGWALL DETAILS, SEE SHEET 8/22.

WINGWALL ELEVATION

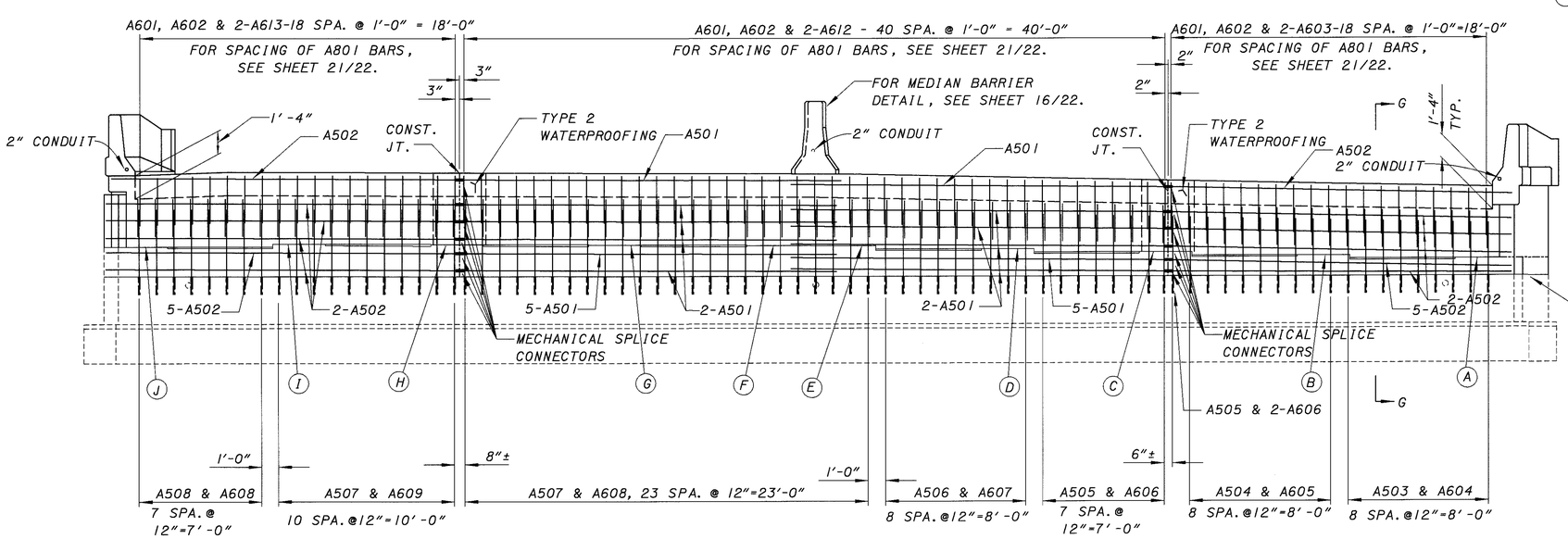

ELEVATION

REMOVAL LINE ELEVATION
EAST ABUT. 831.81

LAP LENGTH NO. 5 2'-3"

DESIGN AGENCY
OHIO DEPARTMENT OF TRANSPORTATION DISTRICT 5

REVIEWED CLZ 2-16-99 DATE
STRUCTURE FILE NUMBER 4500962

DRAWN RSD
REVISED

DESIGNED RSD
CHECKED DTF

PROPOSED EAST ABUTMENT
BRIDGE NO. LIC-16-2141
OVER FRONT STREET

LIC-16-19.72

7/22

532/547

L0160002.BPA (01-08-99) SCALE 4

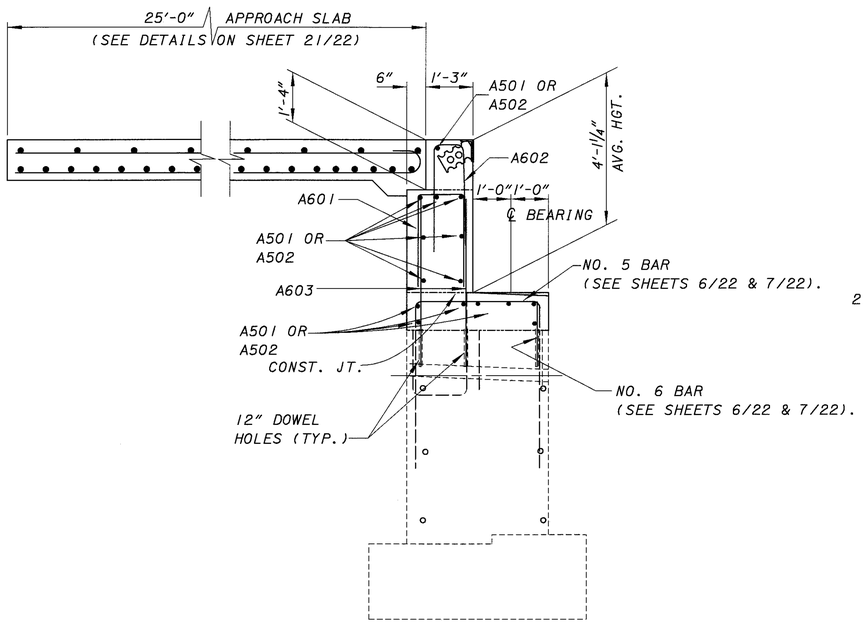

SECTION G-G

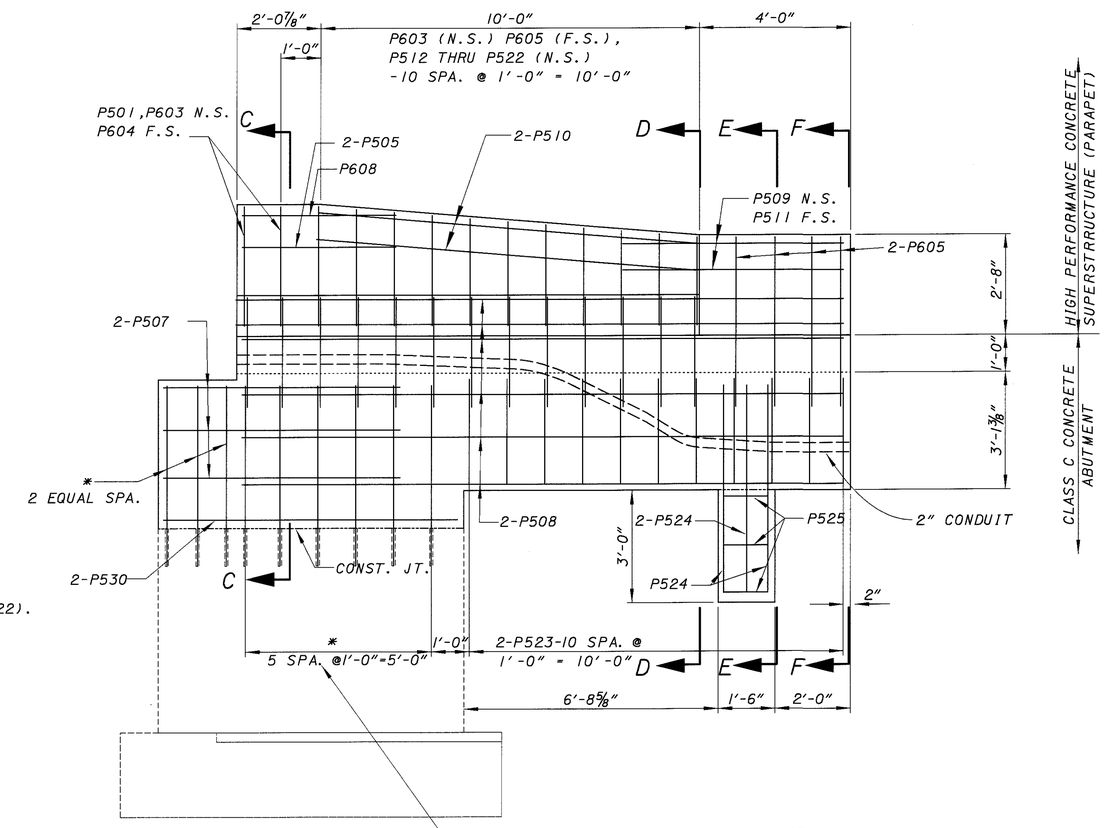

VIEW A-A

NOTE:
SECTIONS ON SHEET 9/22.

* 2-P506 N. WINGWALL (E. & W. ABUT.)
2-P531 S. WINGWALL (E. & W. ABUT.)

L0160004.BPA 02-17-99 (SCALE 2)

DESIGNED	DRAWN	REVIEWED	DATE
RSD	RSD	CLZ	11/24/97
CHECKED	REVISED	STRUCTURE FILE NUMBER	
DTF		4500962	

DESIGN AGENCY
OHIO DEPARTMENT
OF TRANSPORTATION
DISTRICT 5

PROPOSED ABUTMENT AND PARAPET DETAILS
BRIDGE NO. LIC-16-2141
OVER FRONT STREET

LIC-16-2141

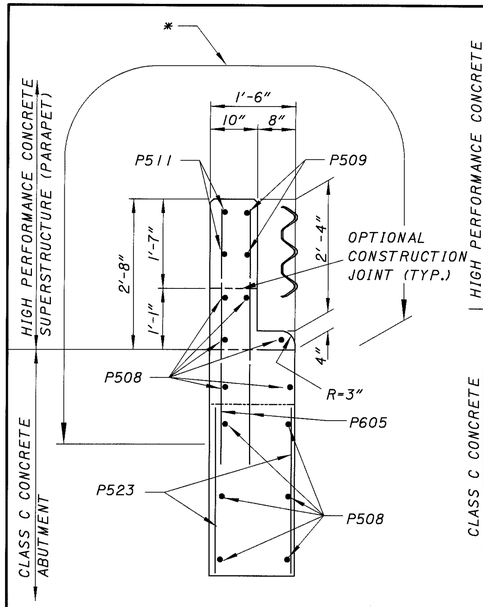

SECTION F-F

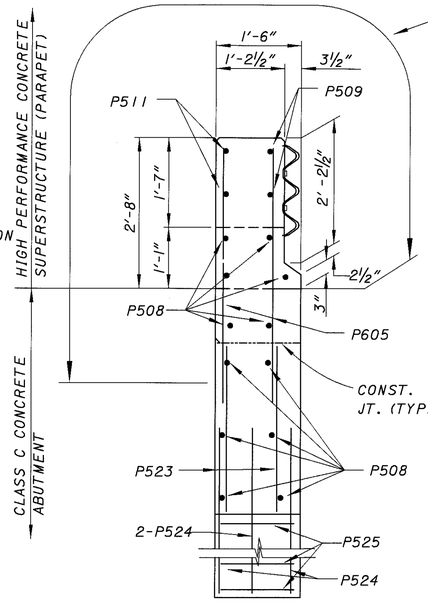

SECTION E-E

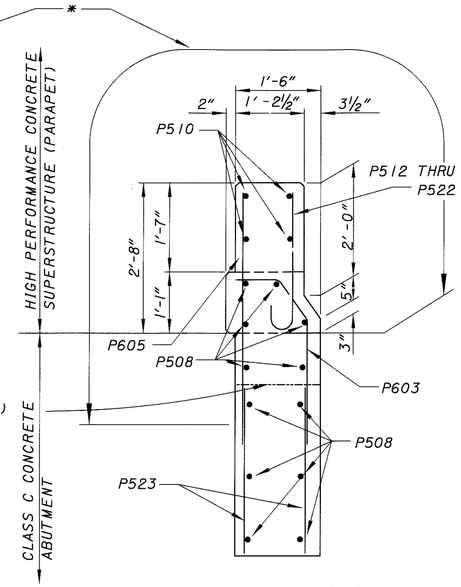

SECTION D-D

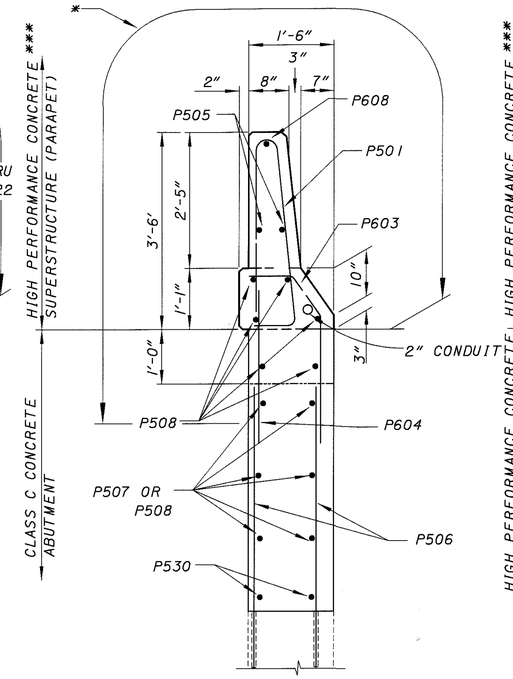

SECTION C-C

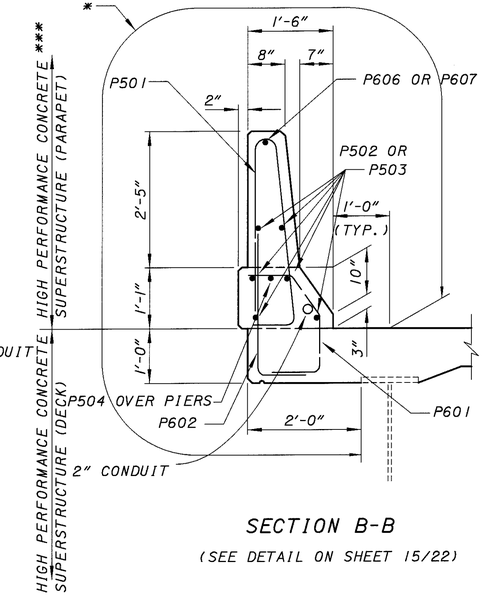

SECTION B-B

(SEE DETAIL ON SHEET 15/22)

NOTES:
SOME RE-STEEL IN THE PARAPET MAY HAVE TO BE ADJUSTED SO THE TYPE II JUNCTION BOX CAN BE INSTALLED.

IF THE PARAPETS ARE SLIP-FORMED AND THE CONTRACTOR CANNOT ENSURE THAT THE JUNCTION BOXES WILL BE FLUSH WITH THE FACE OF THE CONCRETE, THEN THAT SECTION OF THE PARAPET SHALL BE FORMED AND POURED BY HAND.

*SEALING OF CONCRETE SURFACES (EPOXY-URETHANE)

NOTE: FOR PARAPET RE-STEEL. SEE SHEET 15/22.

	SEALING OF CONCRETE SURFACES-EPOXY-URETHANE		
	DESCRIPTION OF AREA	AREA LOCATION ON ABUTMENTS	
		WEST	EAST
A	CURTAIN WALLS	3.5	3.5
B	FACE OF BREASTWALL*	29.76	28.33
C	BRIDGE SEAT	17.22	17.22
D	BACKWALL	35.32	35.32
E	SIDE OF WINGWALL*	5.00	5.00
F	ABUTMENT PARAPETS	30.50	30.50
	DECK-MEDIAN PARAPET	253.76	
	DECK-PARAPETS	428.64	
	GRAND TOTAL	923.57	

QUANTITIES CARRIED TO SHEET 2/22.

* EXPOSED SURFACES ONLY

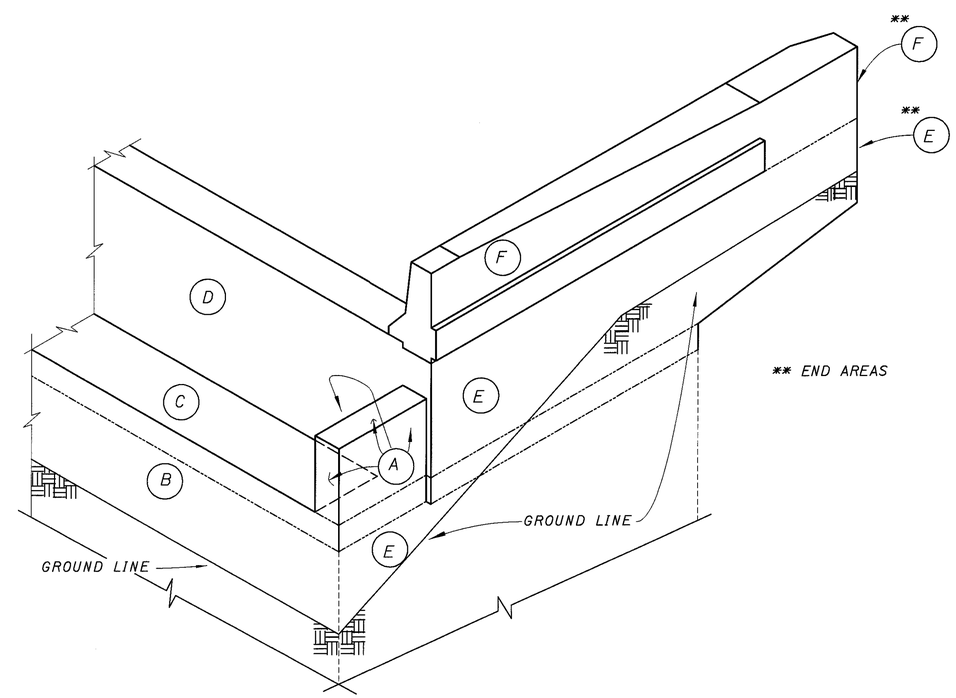

** END AREAS

DESIGN AGENCY
OHIO DEPARTMENT OF TRANSPORTATION DISTRICT 5

DESIGNED	DRAWN	REVIEWED	DATE
RSD	RSD	CLZ	2-20-99
CHECKED	REVISED	STRUCTURE FILE NUMBER	
DTF		4500962	

PROPOSED ABUTMENT AND PARAPET DETAILS
BRIDGE NO. LIC-16-2/41
OVER FRONT STREET

LIC -16-19.72

L0160003.BPA (01-07-99) SCALE 2

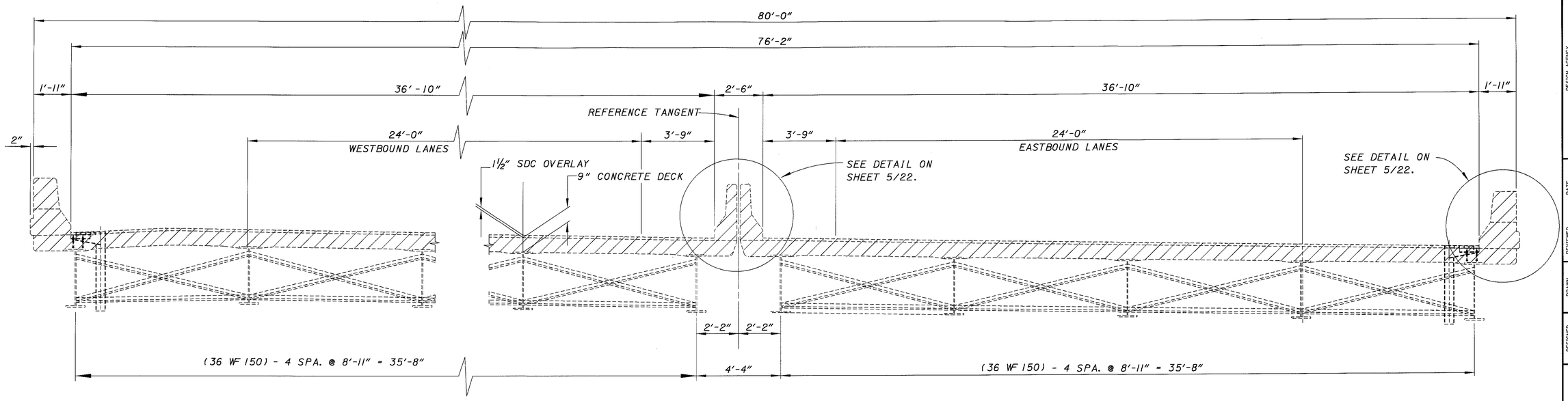

EXISTING TRANSVERSE SECTION

MINIMUM LAP LENGTH
#4 RE-STEEL = 1'-9"
#5 RE-STEEL = 2'-3"

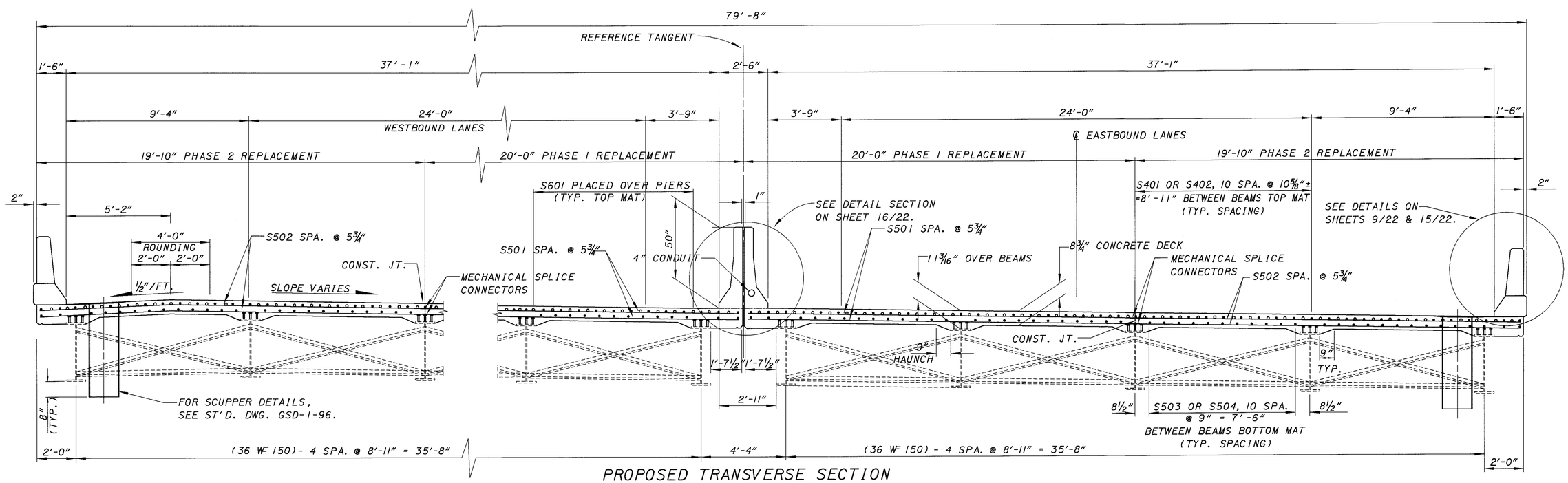

PROPOSED TRANSVERSE SECTION

L0160001.BTS (01-17-99) SCALE 2.6667

DESIGN AGENCY
OHIO DEPARTMENT
OF TRANSPORTATION
DISTRICT 5

DESIGNED	DRAWN	REVIEWED	DATE
RSD	RSD	CLZ	2-20-99
CHECKED	REVISED	STRUCTURE FILE NUMBER	
DTF		4500962	

TRANSVERSE SECTIONS
BRIDGE NO. LIC-16-2141
OVER FRONT STREET

LIC-16-19.72

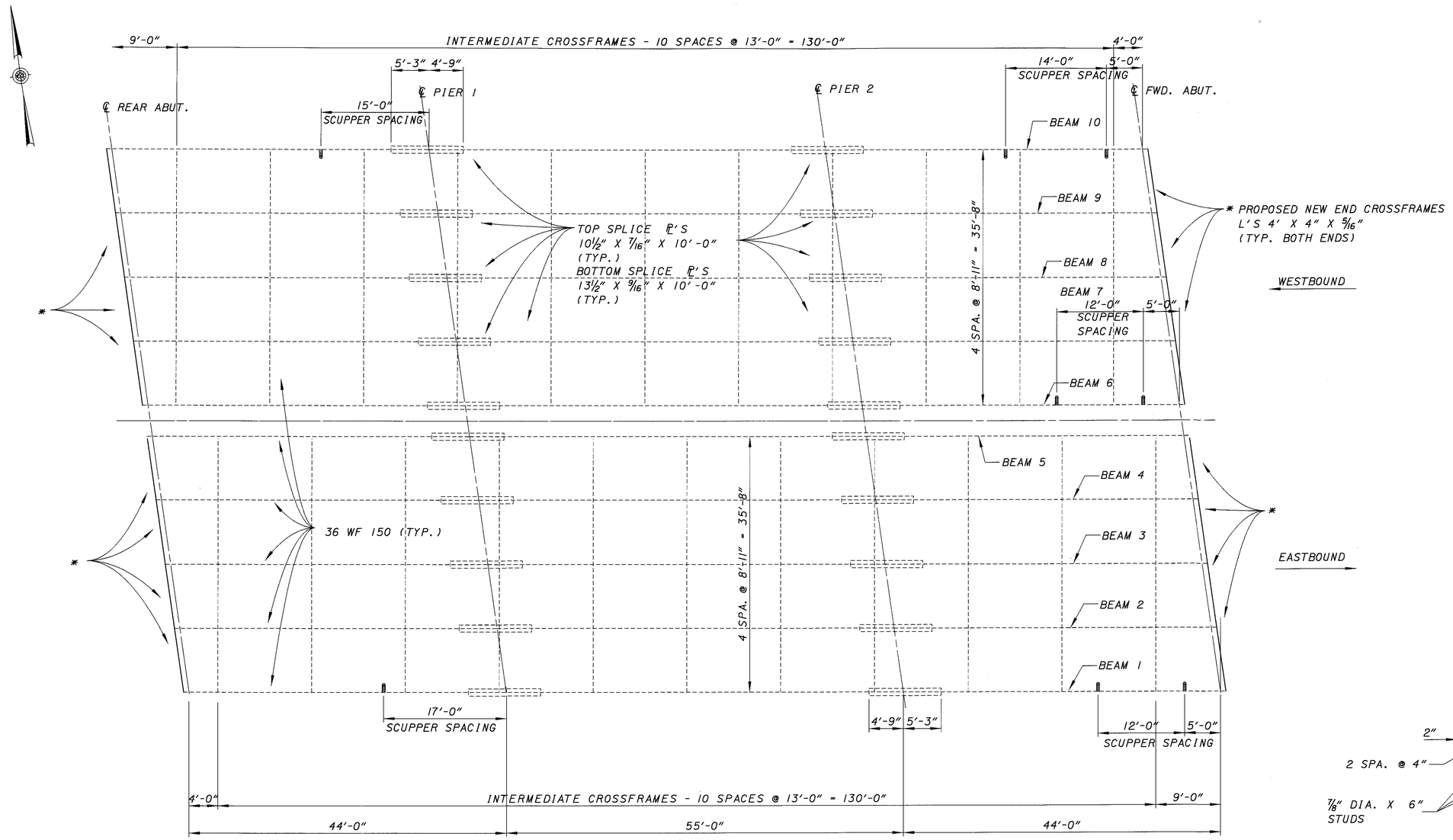

FRAMING PLAN

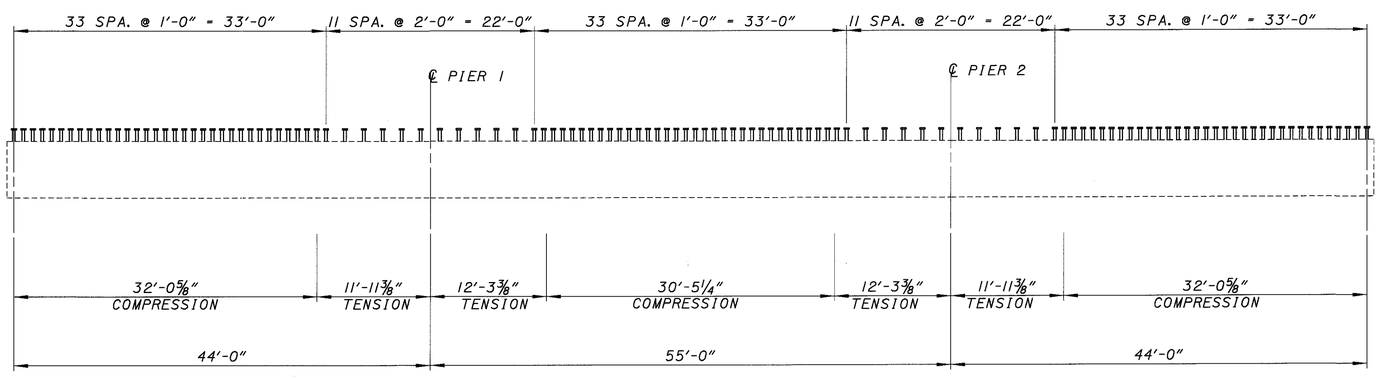

SHEAR CONNECTOR DETAILS

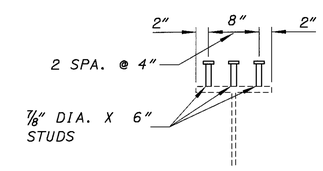

SECTION A-A
(BEAMS 1, 2, 4-7, 9, 10)

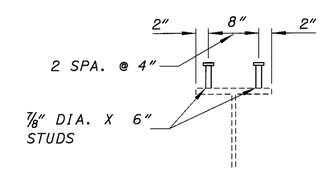

SECTION A-A
(BEAMS 3 & 8)

L0160001.BFP (01-08-99) SCALE 8

DESIGN AGENCY
OHIO DEPARTMENT
OF TRANSPORTATION
DISTRICT 5

DESIGNED	DRAWN	REVIEWED	DATE
RSD	RSD	CLZ	2-20-99
CHECKED	REVISED	STRUCTURE FILE NUMBER	
DTF		4500962	

FRAMING PLAN AND SHEAR CONNECTOR DETAILS
BRIDGE NO. LIC-16-2141
OVER FRONT STREET

LIC-16-19.72

11/22

536
547

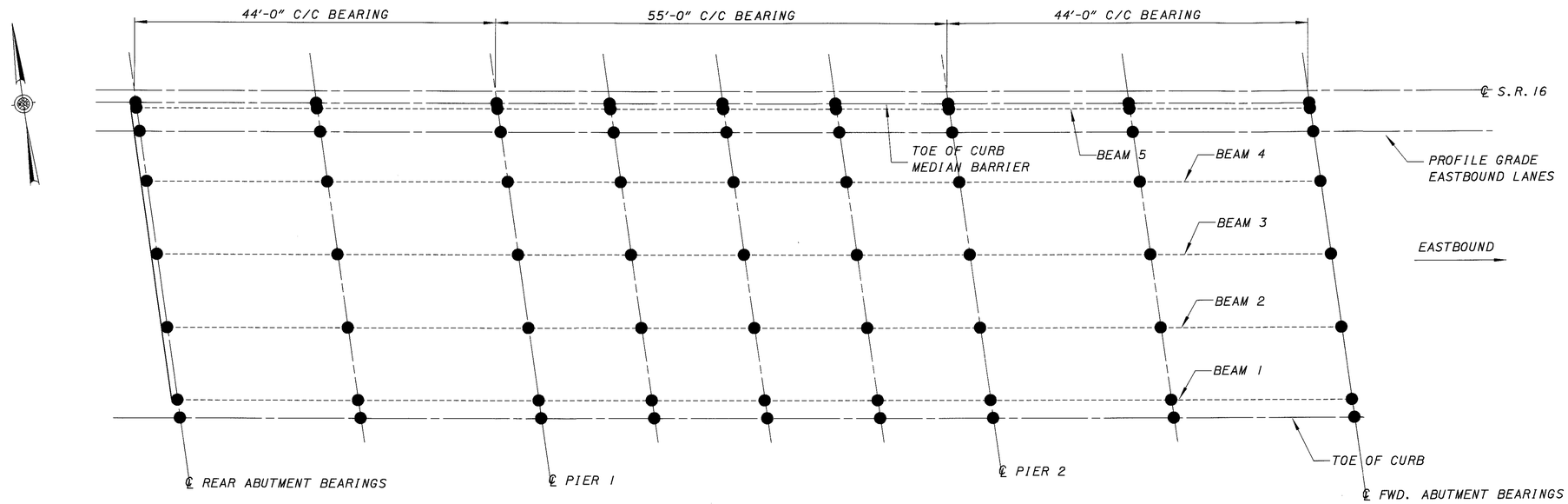

DECK SCREED ELEVATIONS (EASTBOUND LANES)

	TOE OF LEFT CURB		BM #5		PROFILE GRADE		BM # 4		BM # 3		BM # 2		BM # 1		TOE OF RIGHT CURB	
	STATIONS	ELEV.	STATIONS	ELEV.	STATIONS	ELEV.	STATIONS	ELEV.	STATIONS	ELEV.	STATIONS	ELEV.	STATIONS	ELEV.	STATIONS	ELEV.
℄ BRGS REAR ABUT.	122+14.41	844.07	122+14.54	844.05	122+14.96	843.98	122+15.79	843.86	122+17.03	843.67	122+18.28	843.48	122+19.53	843.29	122+19.60	843.28
MIDSPAN SPAN 1	122+36.41	843.20	122+36.54	843.18	122+36.95	843.12	122+37.80	842.99	122+39.05	842.80	122+40.31	842.61	122+41.57	842.42	122+41.64	842.41
℄ PIER 1	122+58.41	842.31	122+58.54	842.29	122+58.95	842.23	122+59.80	842.10	122+61.07	841.91	122+62.34	841.72	122+62.60	841.53	122+63.68	841.52
1/4 POINT SPAN 2	122+72.16	841.76	122+72.29	841.74	122+72.70	841.68	122+73.57	841.55	122+74.84	841.36	122+76.11	841.17	122+77.39	840.97	122+77.46	840.96
MIDSPAN SPAN 2	122+85.77	841.22	122+85.91	841.20	122+86.45	841.14	122+87.18	841.01	122+88.61	840.81	122+89.89	840.62	122+91.17	840.43	122+91.24	840.42
3/4 POINT SPAN 2	122+99.67	840.66	122+99.80	840.64	123+00.20	840.58	123+01.08	840.45	123+02.36	840.25	123+03.64	840.06	123+04.92	839.87	123+04.99	839.86
℄ PIER 2	123+13.42	840.11	123+13.55	840.09	123+13.95	840.03	123+14.83	839.90	123+16.10	839.70	123+17.38	839.51	123+18.66	839.32	123+18.74	839.31
MIDSPAN SPAN 3	123+35.41	839.24	123+35.54	839.22	123+35.95	839.16	123+36.82	839.03	123+38.10	838.83	123+39.38	838.64	123+40.66	838.45	123+40.73	838.44
℄ BRGS. FWD. ABUT.	123+57.41	838.35	123+57.54	838.33	123+57.95	838.27	123+58.82	838.14	123+60.10	837.94	123+61.38	837.75	123+62.66	837.56	123+62.73	837.55

SCREED ELEVATIONS GIVEN ARE FOR THE TOP SURFACE OF THE CONCRETE DECK PRIOR TO CONCRETE PLACEMENT. ALLOWANCES HAVE BEEN MADE FOR ANTICIPATED DEFLECTIONS OF BEAMS DUE TO WEIGHT OF THE CONCRETE DECK.

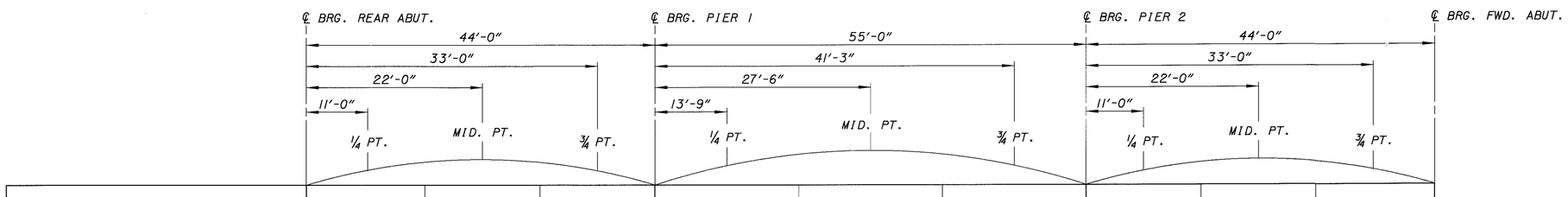

DEFLECTION DUE TO REMAINING DEAD LOAD	1/16	1/8	1/16	1/16	1/8	1/16	1/16	1/8	1/16

NOTE: EXISTING BEAMS HAVE NO SHOP CAMBER

DEFLECTION DIAGRAM

DESIGN AGENCY
OHIO DEPARTMENT OF TRANSPORTATION DISTRICT 5

REVIEWED DTF | DATE 2-20-99 | STRUCTURE FILE NUMBER 4500962

DRAWN RSD | REVISED

DESIGNED DTF | CHECKED KAK

DECK SCREED ELEVATIONS AND DEFLECTION DIAGRAM
BRIDGE NO. LIC-16-2141
OVER FRONT STREET

LIC-16-19.72

L0160003.BSD (02-11-99) SCALE 8

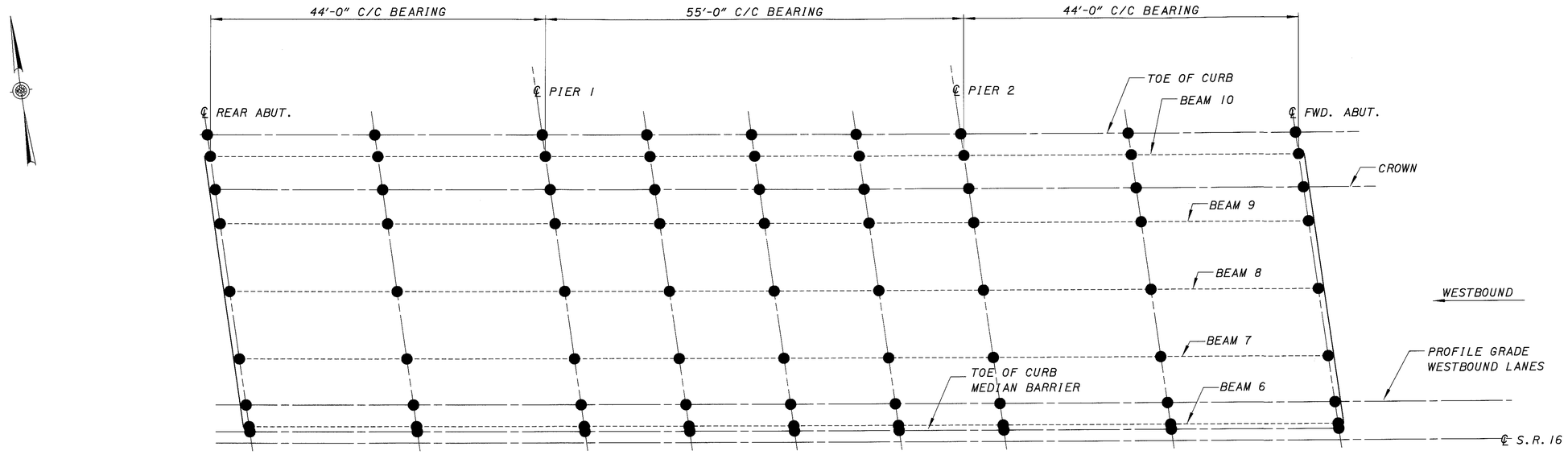

DECK SCREED ELEVATIONS (WESTBOUND LANES)

	TOE OF LEFT CURB		BM #10		BM # 9		BM # 8		BM # 7		PROFILE GRADE		BM # 6		TOE OF RIGHT CURB	
	STATIONS	ELEV.	STATIONS	ELEV.	STATIONS	ELEV.	STATIONS	ELEV.	STATIONS	ELEV.	STATIONS	ELEV.	STATIONS	ELEV.	STATIONS	ELEV.
℄ BRGS REAR ABUT.	122+08.96	844.76	122+09.02	844.76	122+10.23	844.83	122+11.46	844.58	122+12.69	844.34	122+13.56	844.18	122+13.93	844.11	122+14.06	844.08
MIDSPAN SPAN 1	122+30.85	843.79	122+30.92	843.79	122+32.17	843.87	122+33.43	843.65	122+34.68	843.44	122+35.54	843.30	122+35.93	843.25	122+36.06	843.21
℄ PIER 1	122+52.81	842.78	122+52.88	842.77	122+54.14	842.87	122+55.40	842.69	122+56.66	842.51	122+57.53	842.39	122+57.93	842.34	122+58.06	842.32
1/4 POINT SPAN 2	122+66.54	842.17	122+66.61	842.17	122+67.87	842.27	122+69.14	842.11	122+70.41	841.95	122+71.27	841.84	122+71.68	841.79	122+71.81	841.77
MIDSPAN SPAN 2	122+80.25	841.57	122+80.33	841.57	122+81.46	841.69	122+82.73	841.54	122+84.01	841.39	122+85.02	841.29	122+85.28	841.25	122+85.42	841.24
3/4 POINT SPAN 2	122+93.98	840.94	122+94.06	840.94	122+95.34	841.06	122+96.62	840.93	122+97.90	840.80	122+98.77	840.72	122+99.17	840.68	122+99.31	840.67
℄ PIER 2	123+07.73	840.31	123+07.80	840.31	123+09.08	840.44	123+10.36	840.33	123+11.64	840.23	123+12.52	840.16	123+12.92	840.13	123+13.06	840.12
MIDSPAN SPAN 3	123+29.73	839.30	123+29.80	839.30	123+31.08	839.44	123+32.36	839.38	123+33.64	839.31	123+34.51	839.27	123+34.92	839.26	123+35.05	839.25
℄ BRGS. FWD. ABUT.	123+51.73	838.28	123+51.80	838.27	123+53.08	838.44	123+54.36	838.41	123+55.64	838.38	123+56.51	838.37	123+56.92	838.36	123+57.05	838.36

SCREED ELEVATIONS GIVEN ARE FOR THE TOP SURFACE OF THE CONCRETE DECK PRIOR TO CONCRETE PLACEMENT. ALLOWANCES HAVE BEEN MADE FOR ANTICIPATED DEFLECTIONS OF BEAMS DUE TO WEIGHT OF THE CONCRETE DECK.

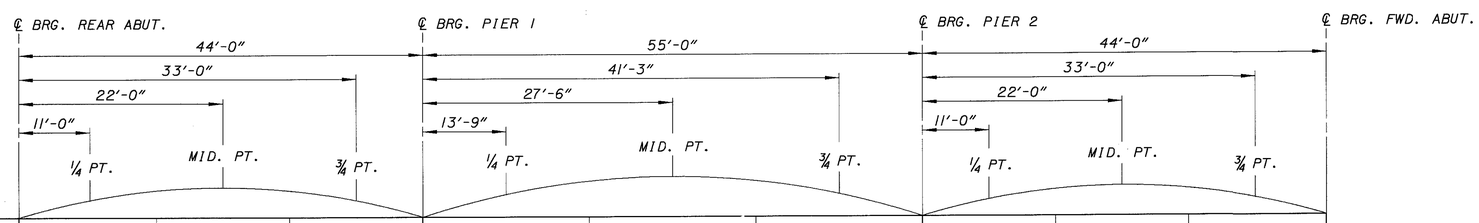

DEFLECTION DUE TO REMAINING DEAD LOAD	1/16	1/8	1/16	1/16	1/8	1/16	1/16	1/8	1/16

NOTE: EXISTING BEAMS HAVE NO SHOP CAMBER

DEFLECTION DIAGRAM

DESIGN AGENCY
OHIO DEPARTMENT OF TRANSPORTATION DISTRICT 5

DESIGNED DTF | CHECKED KAK | DRAWN RSD | REVISED | REVIEWED CLZ 2-20-99 | DATE | STRUCTURE FILE NUMBER 4500962

DECK SCREED ELEVATIONS AND DEFLECTION DIAGRAM
BRIDGE NO. LIC-16-2141
OVER FRONT STREET

LIC-16-19.72

L0160004.BSD (01-08-99) SCALE 8

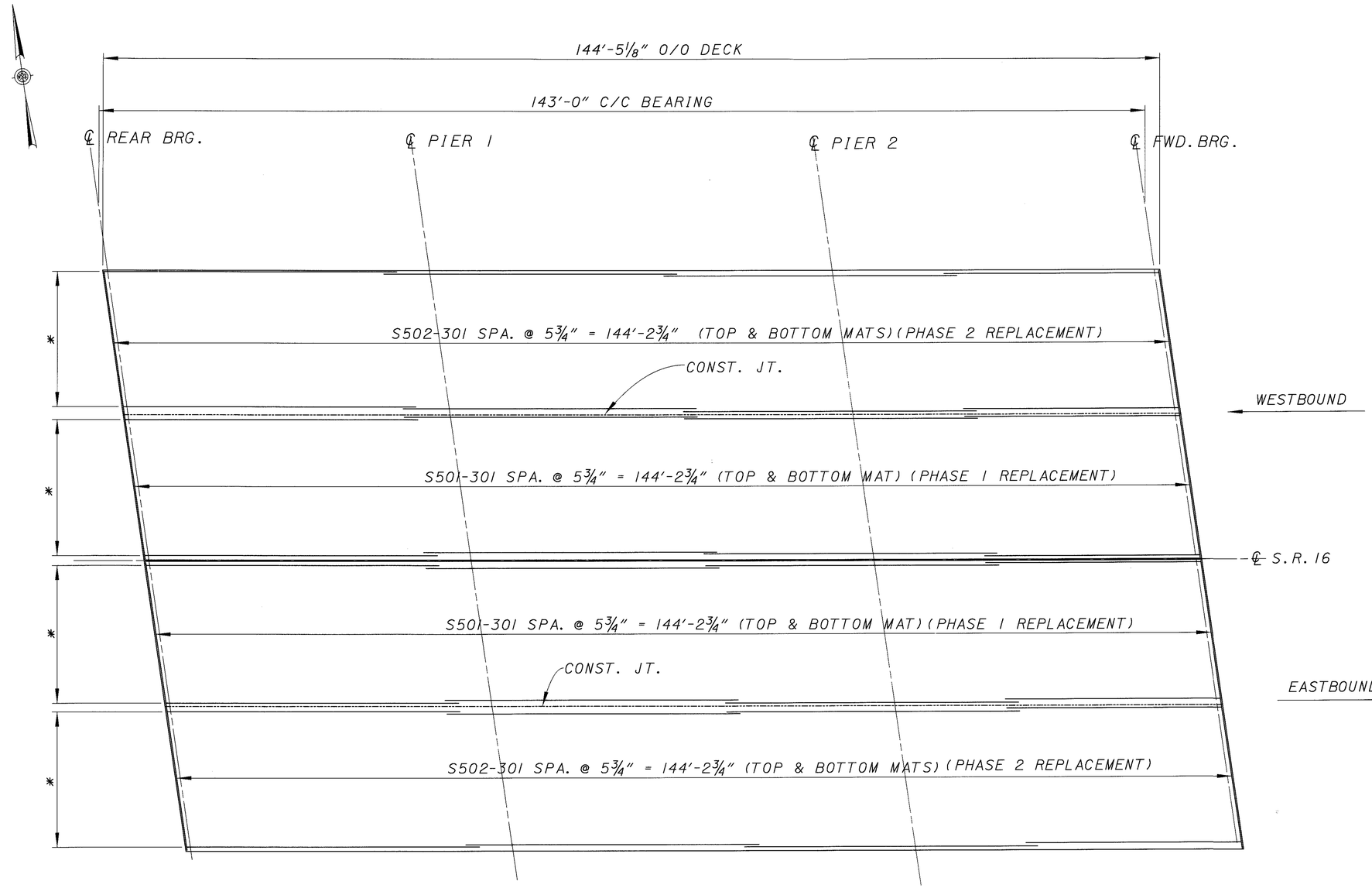

* FOR SPACING OF LONGITUDINAL RE-STEEL, SEE SHEET 10/22.

PLAN VIEW SHOWING REINFORCING STEEL LAYOUT

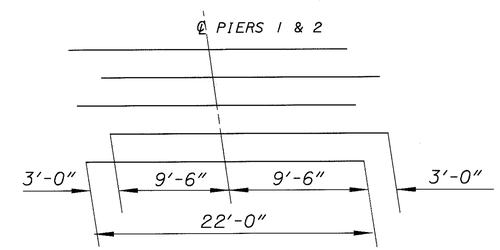

DIAGRAM SHOWING STAGGER OF S601 BARS OVER PIERS

L0160001.BSD (01-08-97) SCALE 10.667

DESIGN AGENCY
OHIO DEPARTMENT OF TRANSPORTATION DISTRICT 5

DESIGNED	DRAWN	REVIEWED	DATE
RSD	RSD	CLZ	2-20-99
CHECKED	REVISED	STRUCTURE FILE NUMBER	
DTF		4500962	

REINFORCING STEEL LAYOUT
BRIDGE NO. LIC-16-2141 OVER FRONT STREET

LIC-16-19.72

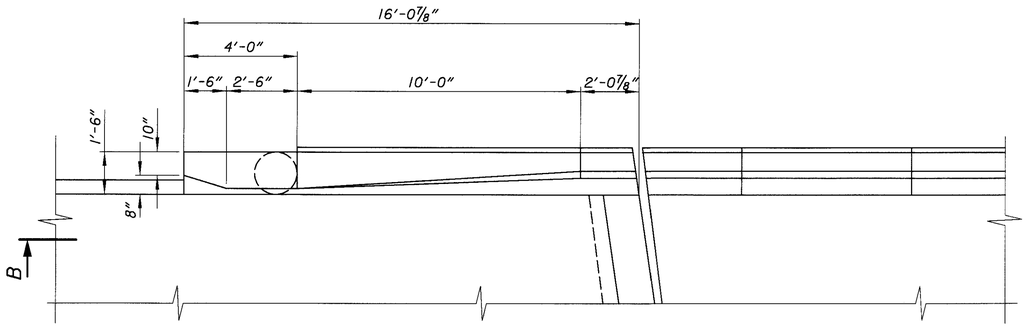

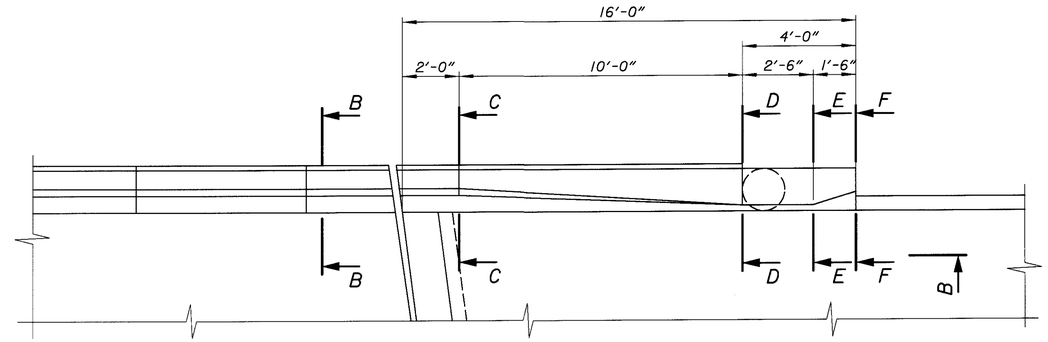

PARTIAL PARAPET PLAN

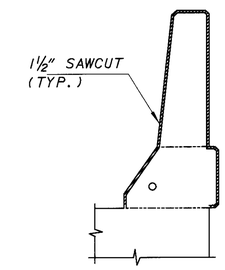

SECTION THROUGH SAWCUT

FOR PARAPET DETAILS,
SEE SHEET 9/22.

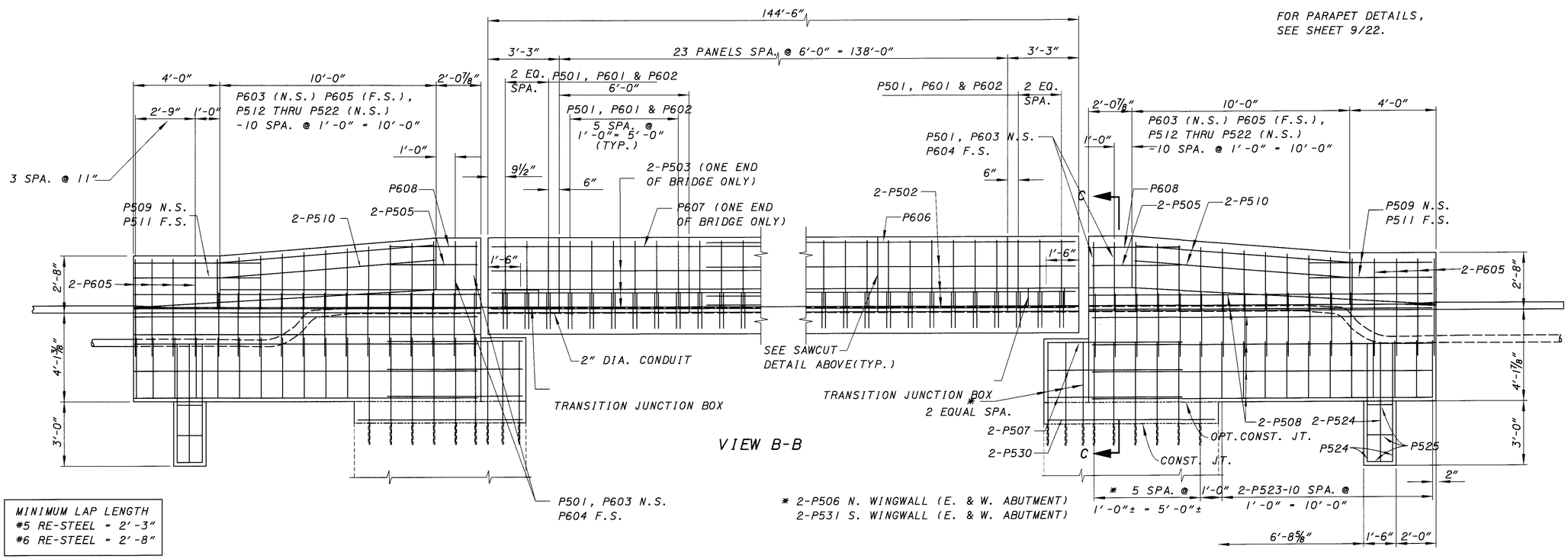

VIEW B-B

MINIMUM LAP LENGTH
#5 RE-STEEL = 2'-3"
#6 RE-STEEL = 2'-8"

* 2-P506 N. WINGWALL (E. & W. ABUTMENT)
2-P531 S. WINGWALL (E. & W. ABUTMENT)

DESIGNED	DRAWN	REVIEWED	DATE	DESIGN AGENCY
RSD	RSD	CLZ	2-19-99	OHIO DEPARTMENT OF TRANSPORTATION DISTRICT 5
CHECKED	REVISED	STRUCTURE FILE NUMBER		
DTF		4500962		

PARAPET LAYOUT
BRIDGE NO. LIC-16-2141
OVER FRONT STREET

LIC-16-19.72

10160001.BPD (01-14-99) SCALE 2.6667

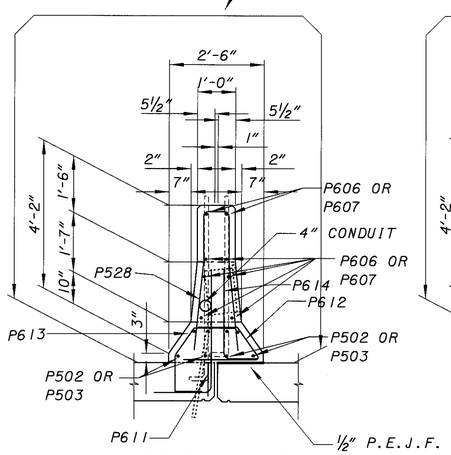

SECTION C-C

(MEDIAN PARAPET)
MEDIAN MOUNTED LIGHT POLE SUPERSTRUCTURE

SEE SHEET 17/22 FOR ADDITIONAL LIGHT POLE RE-STEEL

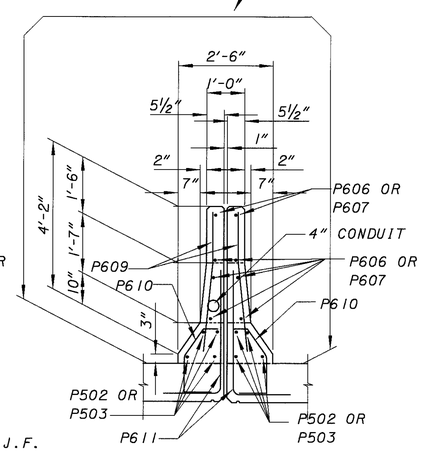

SECTION C-C

(MEDIAN PARAPET)
SUPERSTRUCTURE

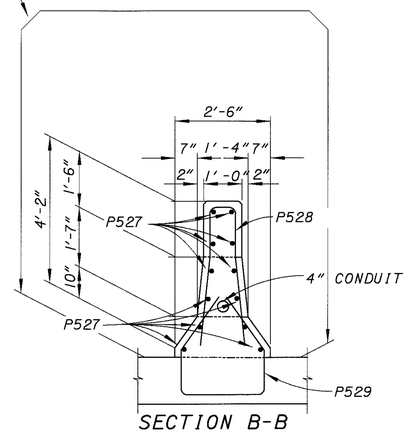

SECTION B-B

(APPROACH SLAB)

*SEALING OF CONCRETE SURFACES-
EPOXY URETHANE

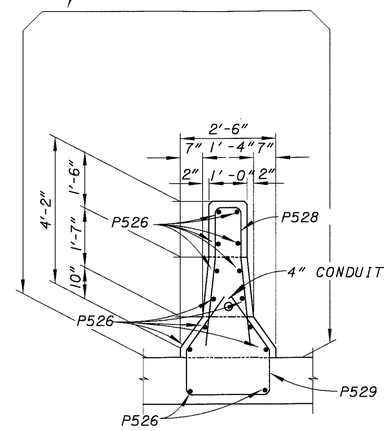

SECTION A-A

(BACKWALL)

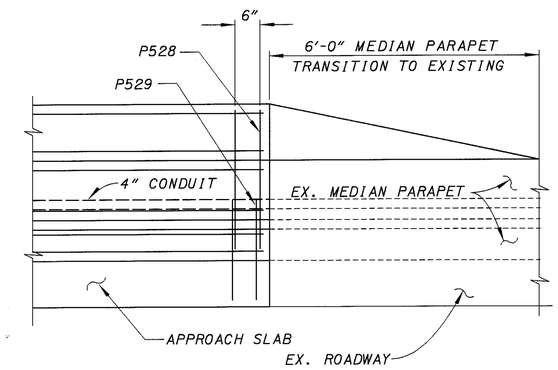

ELEVATION
PARAPET TRANSITION TO EXISTING

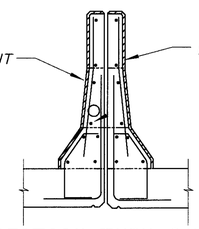

SECTION THRU SAWCUT

**NOT INCLUDED IN LIGHT POLE PARAPET.
SEE SHEET 17/22 FOR LIGHT POLE
PARAPET RE-STEEL.

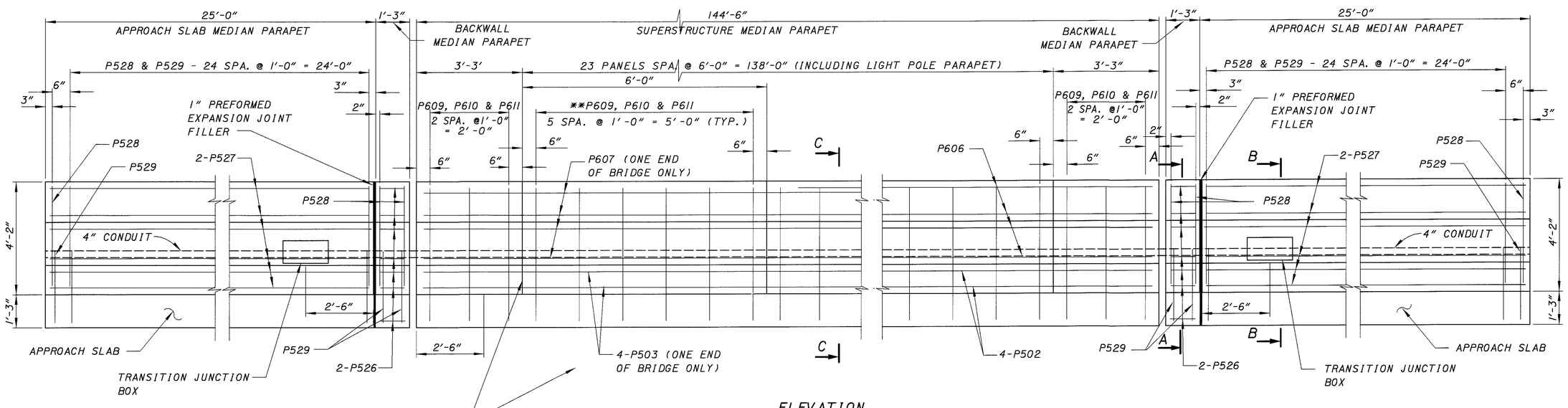

ELEVATION

(SUPERSTRUCTURE, BACKWALL AND APPROACH SLAB MEDIAN PARAPET)

DESIGN AGENCY
OHIO DEPARTMENT OF TRANSPORTATION DISTRICT 5

DESIGNED	DRAWN	REVIEWED	DATE
RSD	RSD	CLZ	2-19-99
CHECKED	REVISED	STRUCTURE FILE NUMBER	
DTF		4500962	

MEDIAN PARAPET DETAILS
BRIDGE NO. LIC-16-2141
OVER FRONT STREET

LIC-16-19.72

16 / 22

541 / 547

L0160004.BPD (01-16-99) SCALE 4

LIGHT POLE DETAIL (MEDIAN PARAPET)
BR. NO. LIC-16-2141 STA. 123+15.63

A: GROUNDING BUSHING FOR 2" DIA. CONDUIT
B: GROUNDING BUSHING & LOCKNUT FOR 2" DIA. CONDUIT
C: 2" DIA. CONDUIT
D: TYPE III JUNCTION BOX
E: 3/4" ELECTRICAL METALLIC TUBING
F: 4" DIA. CONDUIT
G: GROUNDING BUSHING FOR 4" DIA. CONDUIT, INCLUDING LOCKNUT

NOTE: FOR ADDITIONAL DETAILS, SEE ST'D. DWGS HL-10.11, HL-10.12, HL-10.13, HL-20.13 AND HL-50.21

NOTE: REMOVALS OF JUNCTION BOXES, WIRING, ETC. AT MEDIAN LIGHT POLE LOCATIONS SHALL BE INCLUDED WITH 202-PORTIONS OF STRUCTURE REMOVED, SUPERSTRUCTURE

NOTE: THE TOP OF THE CONCRETE BARRIER SHALL BE FLAT, SMOOTH AND LEVEL TO ELIMINATE NEED FOR LIGHT POLE SHIMS. GRIND SURFACE, IF REQUIRED, TO MAKE CONCRETE LEVEL.

NOTE: JUNCTION BOXES SHALL CONFORM TO 713.10, EXCEPT THAT GALVANIZED STEEL PLATE COVERS SHALL CONFORM TO ASTM A-242 OR A-36.

NOTE: THE UNIT PRICE BID FOR EACH "ITEM 625, STRUCTURE JUNCTION BOX TYPE III WITH COVER PLATE", SHALL BE FULL COMPENSATION FOR FURNISHING AND PLACING THE TYPE III JUNCTION BOX, 2" DIA. CONDUIT, GROUNDING BUSHINGS, LOCKNUTS, EMT AND ALL LABOR, MATERIALS, EQUIPMENT AND INCIDENTALS NECESSARY TO COMPLETE THE WORK AS SPECIFIED.

NOTE: CONSTRUCTION SHALL CONFORM TO REQUIREMENTS OF 622 AND 625.

NOTE: FOR STRUCTURE GROUNDING, SEE ST'D. DWG. HL-50.21.

A: GROUNDING BUSHING FOR 2" DIA. CONDUIT
B: GROUNDING BUSHING & LOCKNUT FOR 2" DIA. CONDUIT
C: 2" DIA. CONDUIT
D: TYPE III JUNCTION BOX
E: 3/4" ELECTRICAL METALLIC TUBING
F: 4" DIA. CONDUIT
G: GROUNDING BUSHING FOR 4" DIA. CONDUIT, INCLUDING LOCKNUT

NOTE: FOR ADDITIONAL DETAILS, SEE ST'D. DWGS HL-10.11, HL-10.12, HL-10.13, HL-20.13 AND HL-50.21

NOTE: REMOVALS OF JUNCTION BOXES, WIRING, ETC. AT MEDIAN LIGHT POLE LOCATIONS SHALL BE INCLUDED WITH 202-PORTIONS OF STRUCTURE REMOVED, SUPERSTRUCTURE

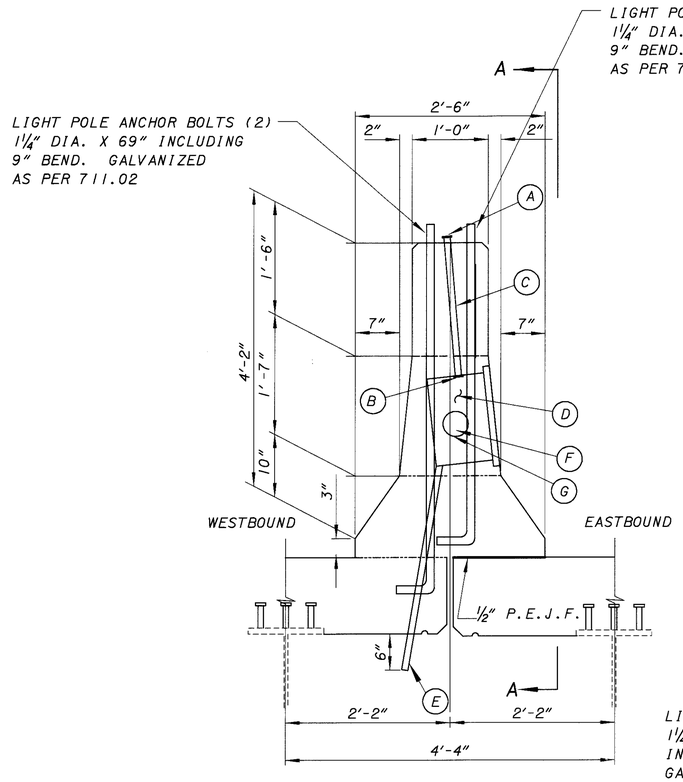

(MEDIAN PARAPET)
MEDIAN MOUNTED LIGHT POLE
SUPERSTRUCTURE

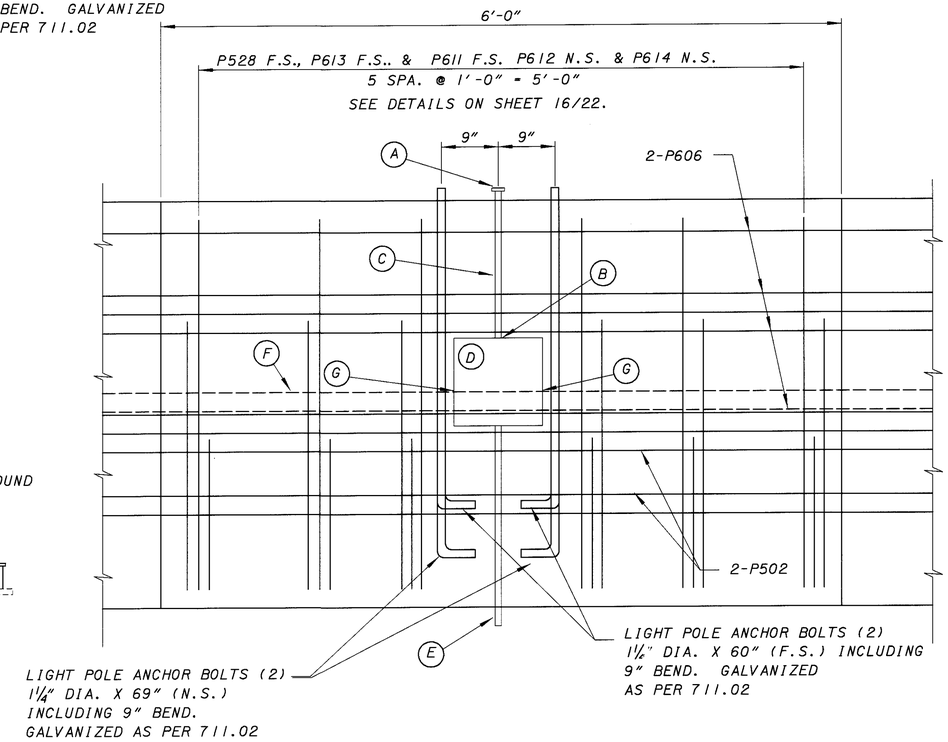

VIEW A-A
MEDIAN PARAPET AT LIGHT POLE LOCATION

DESIGN AGENCY
OHIO DEPARTMENT OF TRANSPORTATION DISTRICT 5

DESIGNED	DRAWN	REVIEWED	DATE
RSD	RSD	CLZ	2-20-99
CHECKED	REVISED	STRUCTURE FILE NUMBER	
DTF		4500962	

MEDIAN LIGHT POLE DETAILS
BRIDGE NO. LIC-16-2141
OVER FRONT STREET

LIC-16-19.72

L0160005.BPD (SCALE 4) 02-02-99

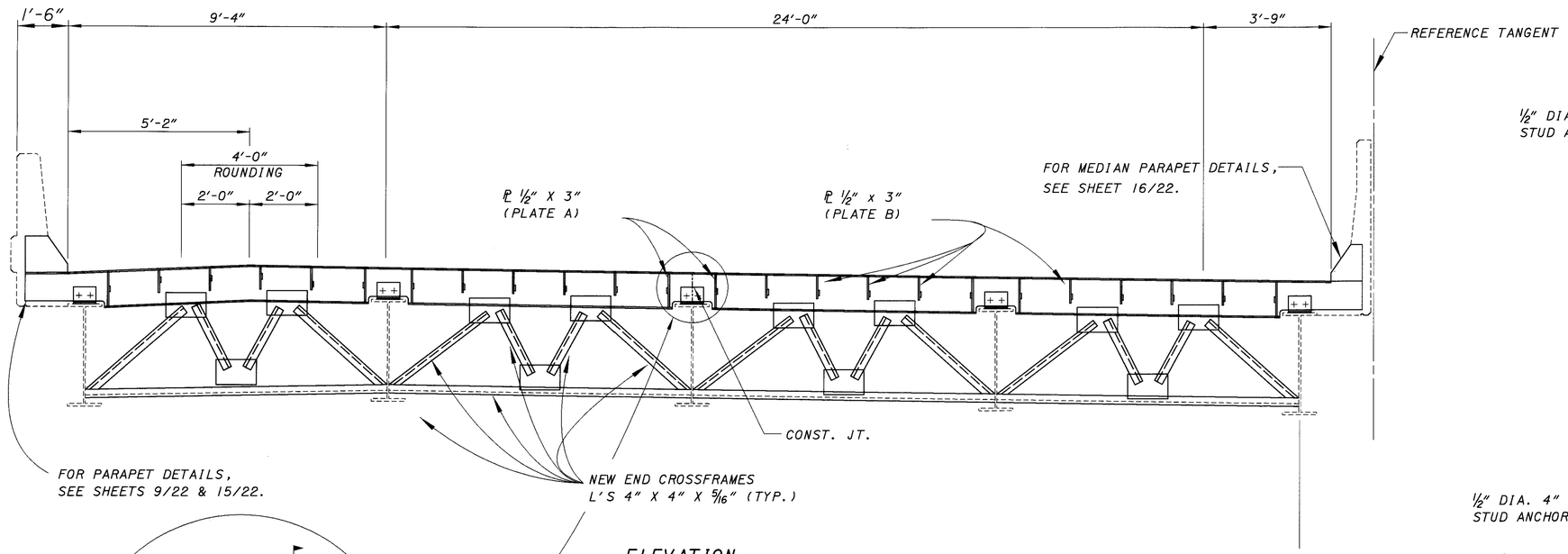

ELEVATION

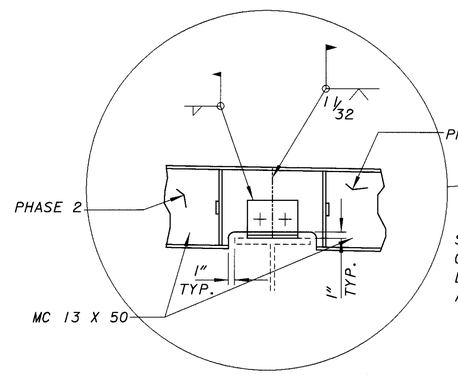

SUPPORT ANGLE TO BE SET WITH PHASE 1 CONSTRUCTION. CONTRACTOR SHALL FORM AROUND SUPPORT ANGLE AS DETAILED TO INSURE THAT EXPANSION JOINT CAN BE SET AND WELDED DURING PHASE 2 CONSTRUCTION.

NOTE: FOR WELDING AND ADDITIONAL DETAILS, SEE ST'D. DWG. EXJ-4-87.

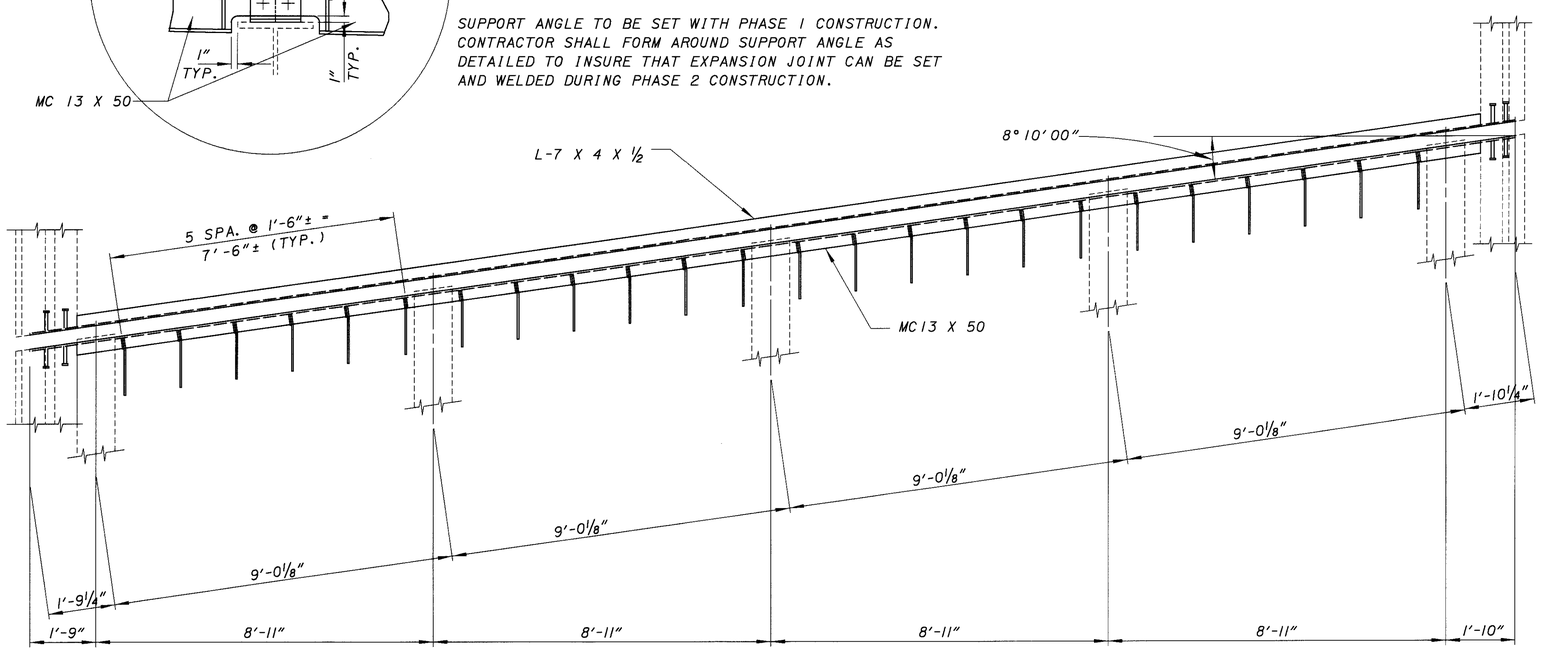

PLAN

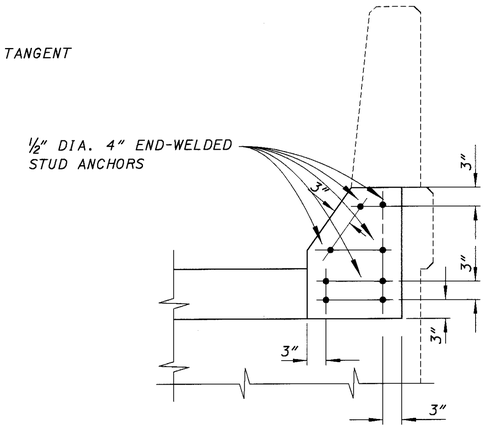

SECTION B-B
(ABUTMENT ARMOR)

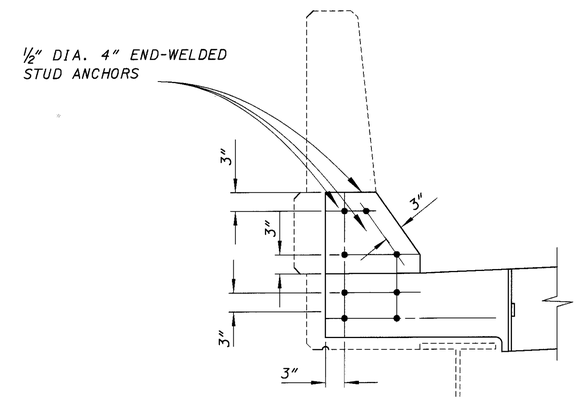

SECTION A-A
(SUPERSTRUCTURE ARMOR)

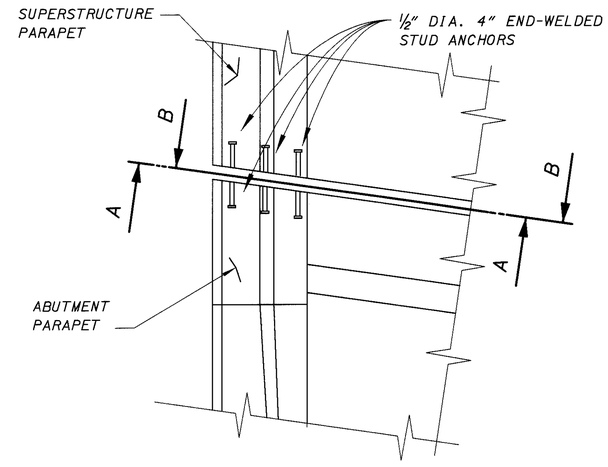

PART PLAN
ABUTMENT WINGWALL

DESIGN AGENCY
OHIO DEPARTMENT OF TRANSPORTATION DISTRICT 5

DESIGNED	DRAWN	REVIEWED	DATE
RSD	RSD	CLZ	2-20-99
CHECKED	REVISED	STRUCTURE FILE NUMBER	
DTF		4500962	

EXPANSION JOINT - WESTBOUND LANES
BRIDGE NO. LIC-16-2141
OVER FRONT STREET

LIC-16-19.72

L0160001.BEJ (01-11-99) SCALE 2.0000

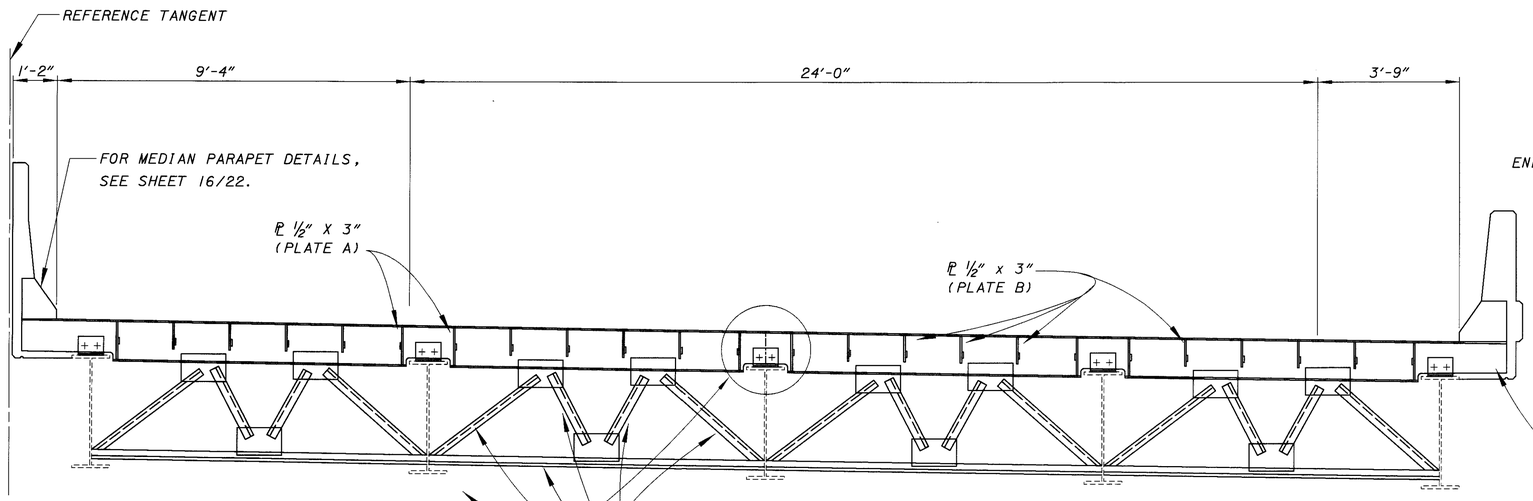

ELEVATION

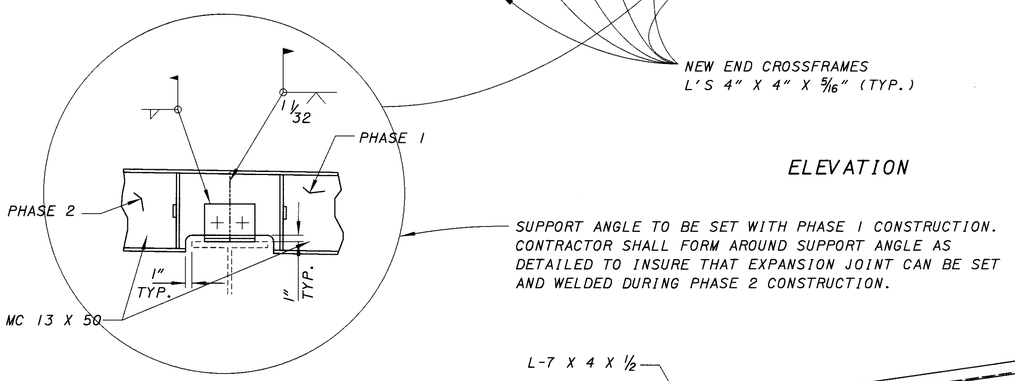

NOTE: FOR WELDING AND ADDITIONAL DETAILS, SEE ST'D. DWG. EXJ-4-87.

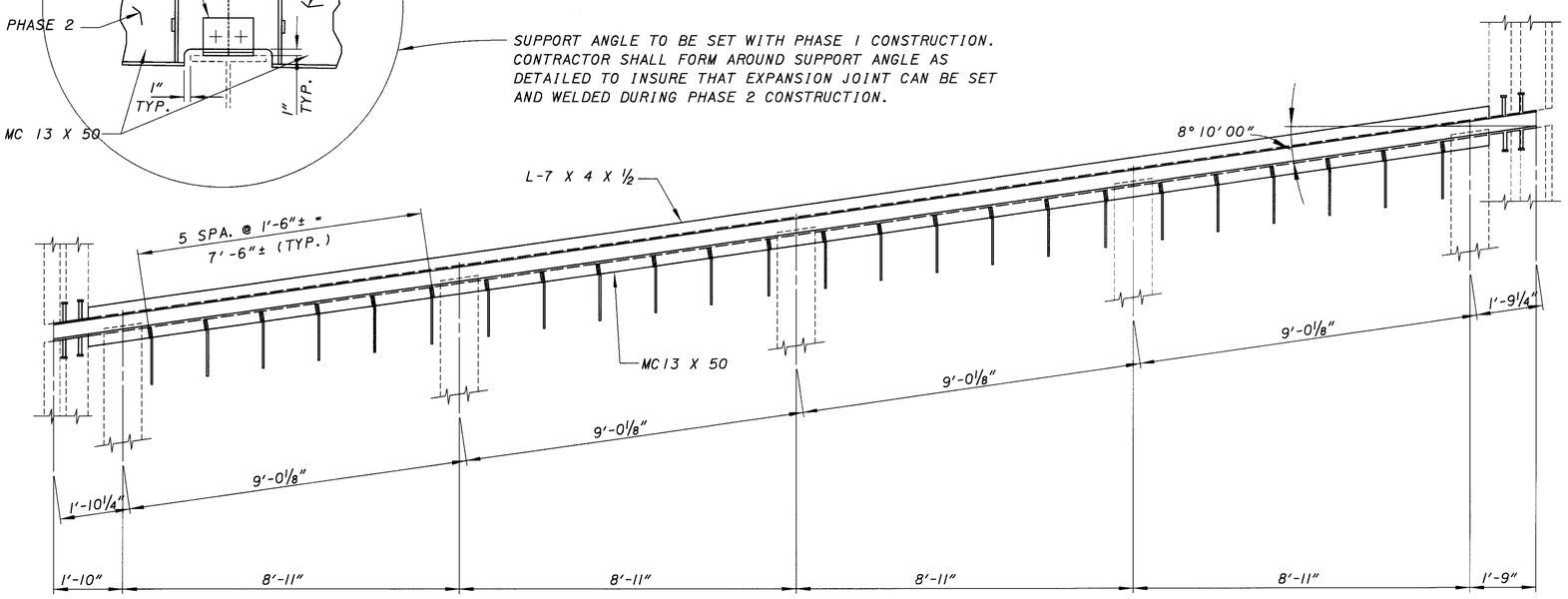

PLAN

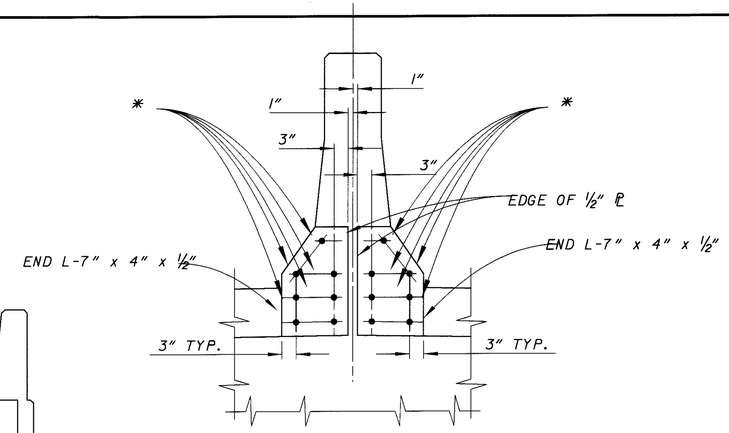

SECTION C-C
(ABUTMENT ARMOR)

* 1/2" DIA. 4" END-WELDED STUD ANCHORS

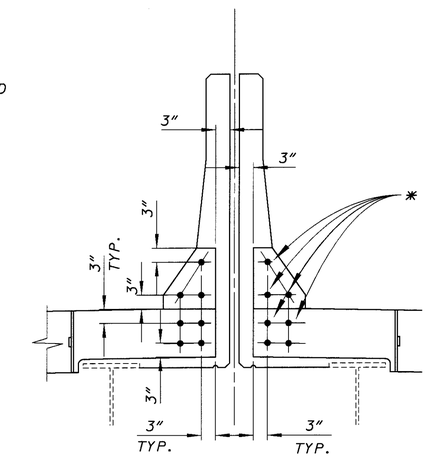

SECTION D-D
(SUPERSTRUCTURE ARMOR)

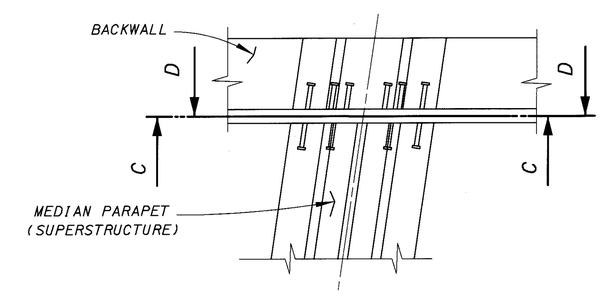

PART PLAN
MEDIAN PARAPET

DESIGN AGENCY
OHIO DEPARTMENT OF TRANSPORTATION DISTRICT 5

DESIGNED	DRAWN	REVIEWED	DATE
RSD	RSD	CLZ	2-20-99
CHECKED	REVISED	STRUCTURE FILE NUMBER	
DTF		4500962	

EXPANSION JOINT - EASTBOUND LANES
BRIDGE NO. LIC-16-2141
OVER FRONT STREET

LIC-16-19.72

L0160001.BEJ (01-11-99) SCALE 2.0000

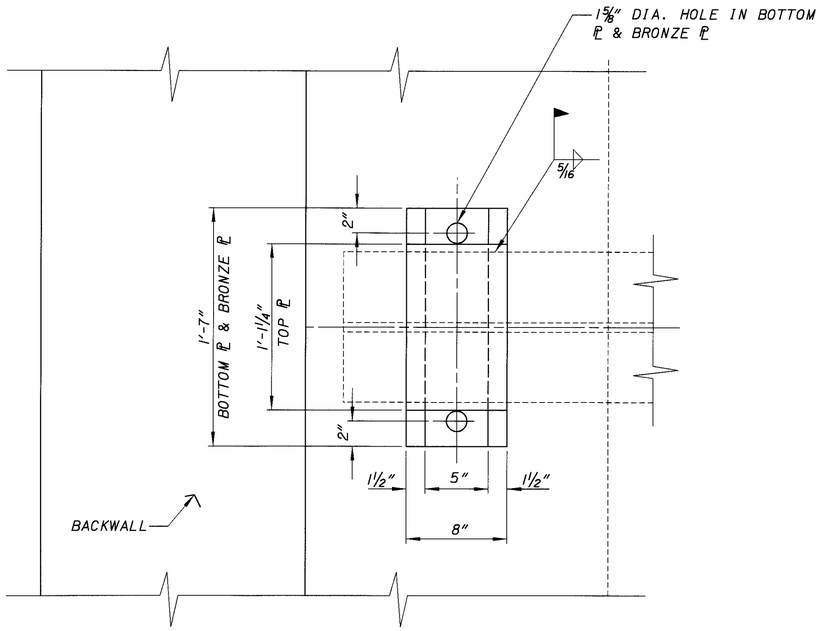

PART PLAN
ABUTMENT BEARING PLATES

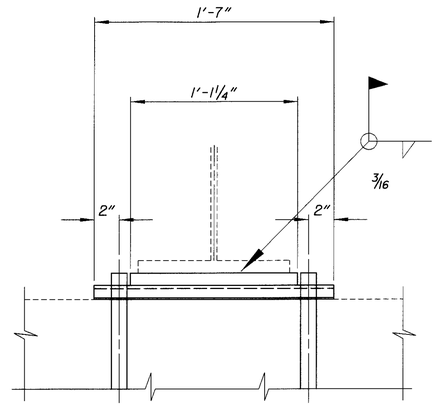

SECTION A-A

D.S. BROWN COMPANY	WATSON BOWMAN (WABO) ASSOCIATES, INC.	STRUCTURAL ACCESSORIES INC.
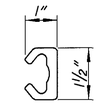 TYPE SS-E STEEL EXTRUSION	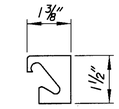 TYPE E STEEL EXTRUSION	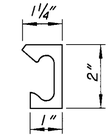 TYPE AM2 STEEL EXTRUSION
STRIP SEAL SSE2	STRIP SEAL SE-300	STRIP SEAL ONFLEX 40SEQ
D.S. BROWN CO. P.O. BOX 158 NORTH BALTIMORE, OH. 45872 PH. # (419) 257-3561	STRUCTURAL ACCESSORIES P.O. BOX 10 TERRYVILLE, CT. 06786 PH. # (203) 589-8826	WABO CORP. P.O. BOX 9 AMHERST, N.Y. 14120 PH. # (716) 691-7566

NOTE: CONTRACTOR MAY USE ANY OF THE ABOVE STRIP SEALS, AND EXTRUSIONS, BUT THE CONTRACTOR MUST USE STRIP SEAL THAT CORRESPONDS WITH MANUFACTURERS EXTRUSION.

AMBIENT TEMP. F°	DIMENSION A	
	3" SEAL	
	REAR	FORWARD
90°	1⅜"	1⅝"
80°	1½"	1⅝"
70°	1⅝"	1⅝"
60°	1⅝"	1¾"
50°	1¾"	1¾"
40°	1¾"	1¾"
30°	1⅞"	1¾"

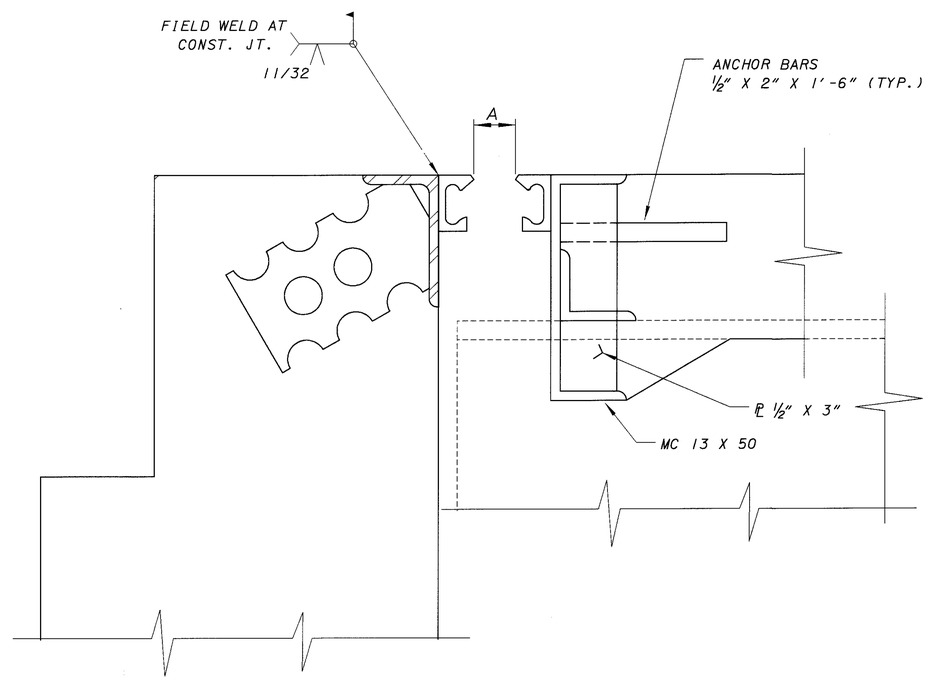

SECTION AT ℄ ROADWAY

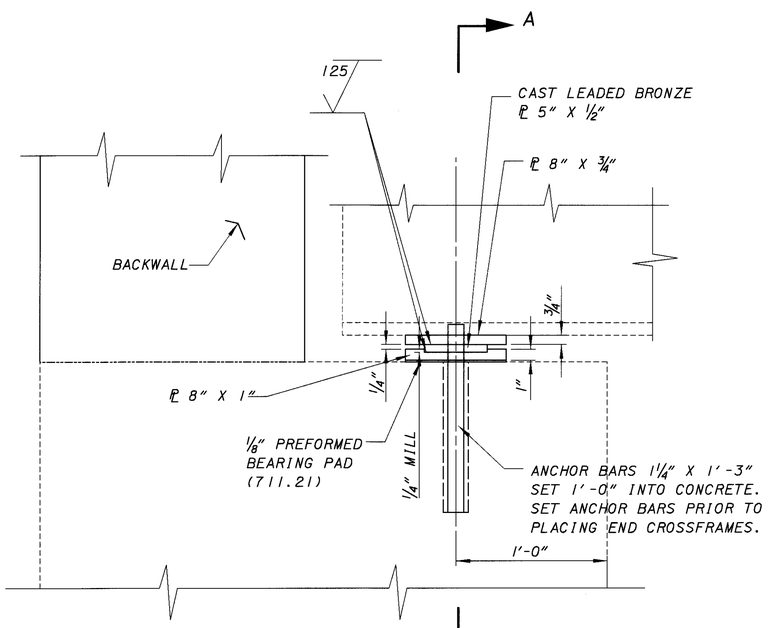

PART ELEVATION
ABUTMENT BEARING PLATES

ABUTMENT BEARING PLATES

QUANTITY	DESCRIPTION	SIZE
20	TOP PLATE	8" X ¾" X 19"
20	CAST LEADED BRONZE ℙ	5" X ½" X 19"
20	BOTTOM PLATE	8" X 1" X 19"
40	ANCHOR BARS	1¼" X 1'-3"
40	DOWEL HOLES	

DESIGN AGENCY: OHIO DEPARTMENT OF TRANSPORTATION DISTRICT 5

DESIGNED RSD | CHECKED DTF | DRAWN RSD | REVISED | REVIEWED CLZ | DATE 2-20-99 | STRUCTURE FILE NUMBER 4500962

BEARING PLATES AND EXPANSION JOINT DETAILS
BRIDGE NO. LIC-16-2141
OVER FRONT STREET

LIC-16-19.72

L0160002.BSD (01-26-99) SCALE 1

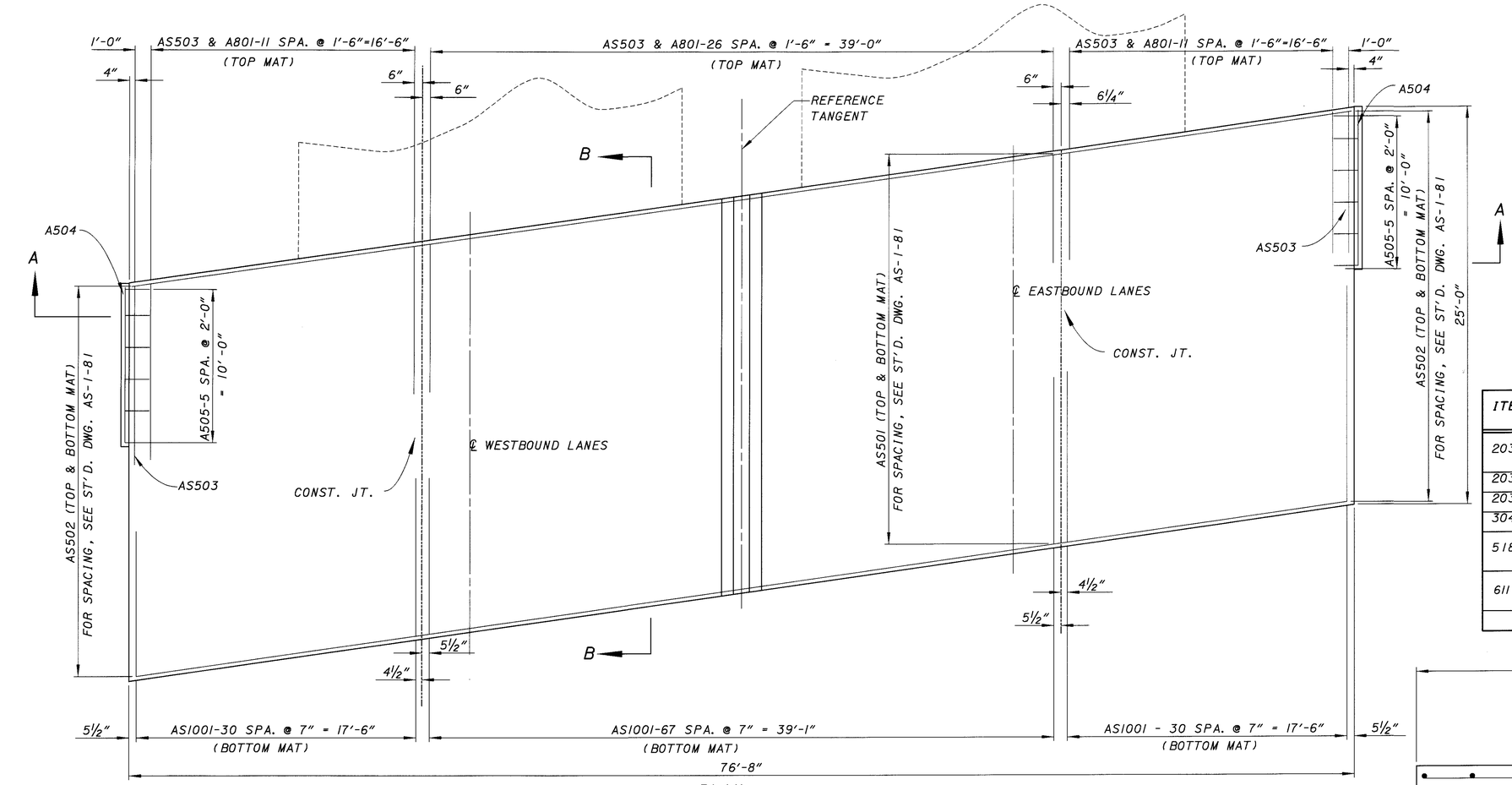

PLAN

APPROACH SLAB				
MARK	NUMBER REQ'D.	SHAPE	LENGTH	WEIGHT
AS501	114	ST.	40'-5"	4,806
AS502	228	ST.	18'-0"	4,280
AS503	104	ST.	24'-6"	2,658
AS504	4	ST.	9'-8"	40
AS505	24	BT.	2'-7"	65
AS1001	254	BT.	25'-11"	28,326
TOTALS				40,175

QUANTITIES ARE FOR 2 APPROACH SLABS.
TYPE 4A CURB AND RE-STEEL INCLUDED FOR PAYMENT WITH ITEM 611 AS PER 611.08.

LAP LENGTH: NO. 5 BARS = 2'-3"

QUANTITIES ARE FOR 2 APPROACH SLABS

ITEM	DESCRIPTION	QUANTITY	UNIT
203	EXCAVATION NOT INCLUDING EMBANKMENT CONSTRUCTION	249	CU.YD.
203	EMBANKMENT	134	CU.YD.
203	SUBGRADE COMPACTION	403	SQ.YD.
304	AGGREGATE BASE	67	CU.YD.
518	POROUS BACKFILL WITH FILTER FABRIC TYPE A	LUMP	
611	REINFORCED CONCRETE APPROACH SLAB (T=15") AS PER PLAN	428	SQ.YD.
QUANTITIES CARRIED TO SHEET 2/22.			

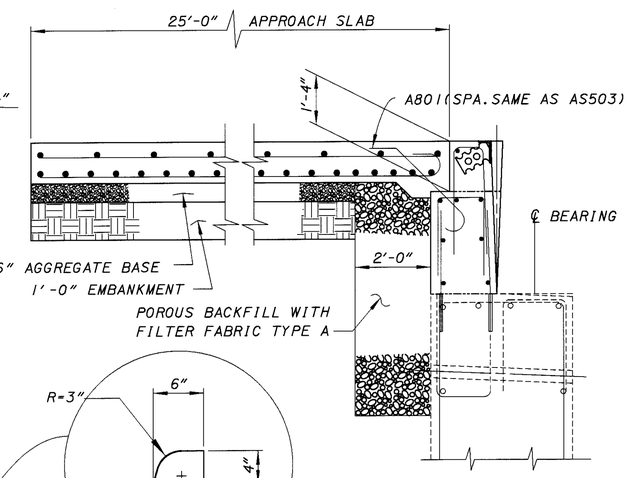

SECTION B-B

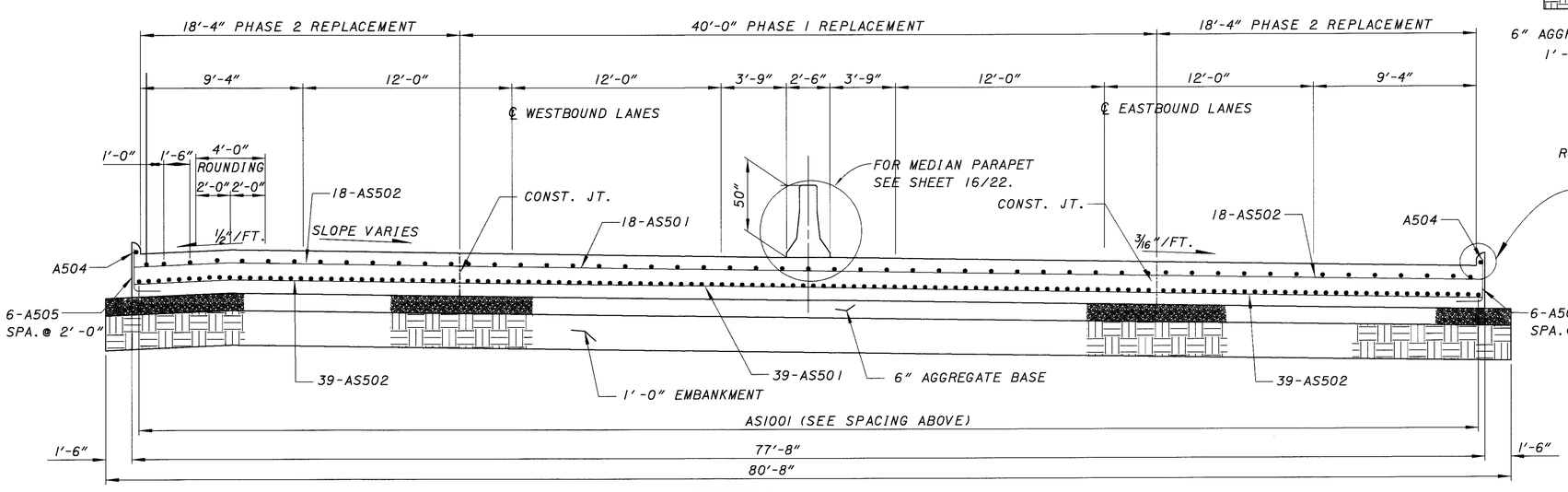

SECTION A-A

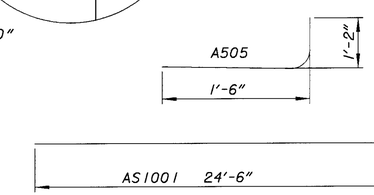

BENDING DIAGRAM

DESIGN AGENCY
OHIO DEPARTMENT OF TRANSPORTATION DISTRICT 5

DATE 2-20-99
REVIEWED DTF
STRUCTURE FILE NUMBER 4500962
DRAWN RSD
REVISED
DESIGNED RSD
CHECKED KAK

PROPOSED APPROACH SLABS
BRIDGE NO. LIC-16-2141
OVER FRONT STREET

LIC-16-19.72

21 / 22

546
547

L0160001.BAS (01-12-97) SCALE 4.00

BAR SCHEDULE

ABUTMENTS

MARK	NUMBER	LENGTH	SHAPE	WEIGHT
A501	56	21'-3"	ST.	1241
A502	56	19'-3"	ST.	1124
A503	18	7'-10"	BT.	147
A504	18	8'-2"	BT.	153
A505	18	8'-8"	BT.	162
A506	18	9'-0"	BT.	169
A507	43	9'-8"	BT.	434
A508	8	9'-4"	BT.	78
A509	18	10'-0"	BT.	188
A510	17	10'-6"	BT.	186
A601	158	5'-10"	BT.	1,384
A602	158	5'-11"	BT.	1,404
A603	76	5'-3"	ST.	599
A604	18	2'-5"	ST.	65
A605	18	2'-7"	ST.	70
A606	18	2'-10"	ST.	77
A607	18	3'-0"	ST.	81
A608	40	3'-2"	ST.	190
A609	11	3'-4"	ST.	55
A610	18	3'-6"	ST.	95
A611	17	3'-9"	ST.	96
A612	126	5'-7"	ST.	1,057
A613	76	6'-0"	ST.	685
A614	38	6'-5"	ST.	366
TOTAL ABUTMENTS				10,106

PARAPETS

MARK	NUMBER	LENGTH	SHAPE	WEIGHT
P501	296	7'-1"	BT.	2,187
P502	60	40'-0"	ST.	2,503
P503	20	31'-8"	ST.	661
P504	4	22'-0"	ST.	92
P505	8	4'-0"	ST.	46
P506	36	4'-11"	ST.	222
P507	24	6'-0"	ST.	150
P508	48	15'-8"	ST.	784
P509	8	5'-8"	BT.	47
P510	16	10'-0"	ST.	167
P511	8	5'-8"	ST.	47
P512	4	3'-10"	BT.	16
P513	4	3'-9"	BT.	16
P514	4	3'-8"	BT.	15
P515	4	3'-7"	BT.	15
P516	4	3'-6"	BT.	15
P517	4	3'-5"	BT.	14
P518	4	3'-4"	BT.	14
P519	4	3'-3"	BT.	14
P520	4	3'-2"	BT.	13
P521	4	3'-1"	BT.	13
P522	4	3'-0"	BT.	13
P523	88	2'-9"	ST.	252
P524	16	5'-11"	ST.	98
P525	12	4'-2"	BT.	52
P526	28	11"	ST.	27
P527	24	24'-6"	ST.	613
P528	62	7'-9"	BT.	501
P529	56	7'-9"	BT.	453
P530	8	7'-8"	ST.	64
P531	36	5'-4"	ST.	200

PARAPETS (CONT.)

MARK	NUMBER	LENGTH	SHAPE	WEIGHT
P601	288	3'-1"	BT.	1,334
P602	288	3'-5"	BT.	1478
P603	52	3'-9"	BT.	293
P604	8	2'-10"	ST.	34
P605	76	4'-6"	ST.	514
P606	30	40'-0"	ST.	1,802
P607	10	32'-2"	ST.	483
P608	4	4'-0"	ST.	24
P609	276	3'-8"	BT.	1,520
P610	276	2'-5"	BT.	1,002
P611	282	4'-6"	BT.	1,906
P612	6	3'-5"	BT.	31
P613	6	3'-3"	BT.	29
P614	6	2'-10"	BT.	26
TOTAL PARAPETS				19,800

SUPERSTRUCTURE

MARK	NUMBER	LENGTH	SHAPE	WEIGHT
S401	270	40'-0"	ST.	7,214
S402	90	29'-5"	ST.	1,768
S501	1208	19'-10"	ST.	24,989
S502	1208	19'-8"	ST.	24,779
S503	288	40'-0"	ST.	12,015
S504	96	31'-0"	ST.	3,104
S601	176	22'-0"	ST.	5,816
TOTAL SUPERSTRUCTURE				79,685
TOTAL PARAPETS				19,800
TOTAL ABUTMENTS				10,106
GRAND TOTAL				109,077

NOTE:
RE-STEEL TO BE INCLUDED IN THE APPROPRIATE CONCRETE ITEM FOR PAYMENT

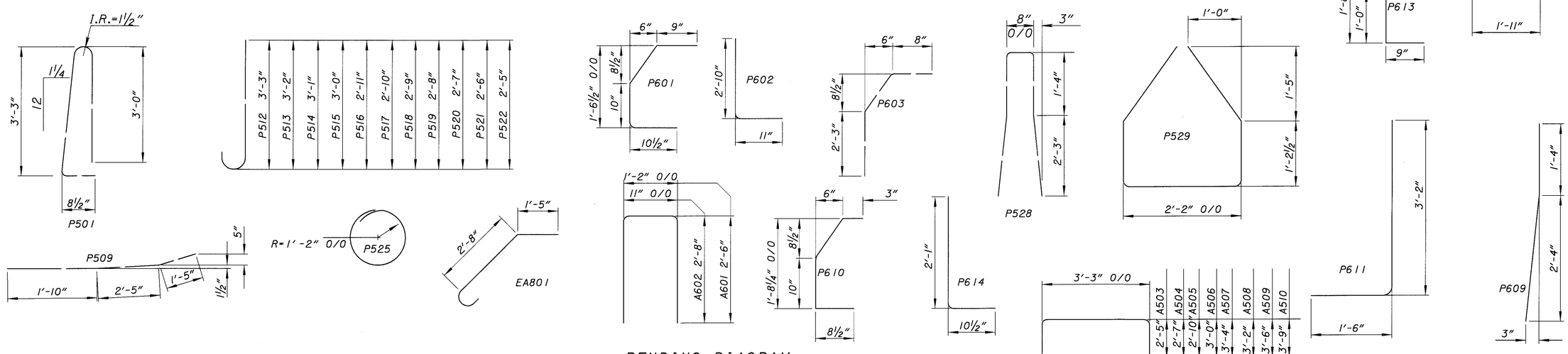

BENDING DIAGRAM

DESIGN AGENCY
OHIO DEPARTMENT OF TRANSPORTATION DISTRICT 5

DESIGNED	DRAWN	REVIEWED	DATE
RSD	RSD	CLZ	2-20-99
CHECKED	REVISED	STRUCTURE FILE NUMBER	
DTF		4500962	

BAR SCHEDULES AND BENDING DIAGRAMS
BRIDGE NO. LIC-16-2141
OVER FRONT STREET

LIC-16-19.72

22/22

547/547

L0160001.BRL (SCALE 1) 01-16-99

OHIO DEPARTMENT OF TRANSPORTATION

PART 2 - LIC-16-21.44/LIC-79-12.19

(FOR PART 1, SEE LIC-16-19.72)

LOCATION MAP

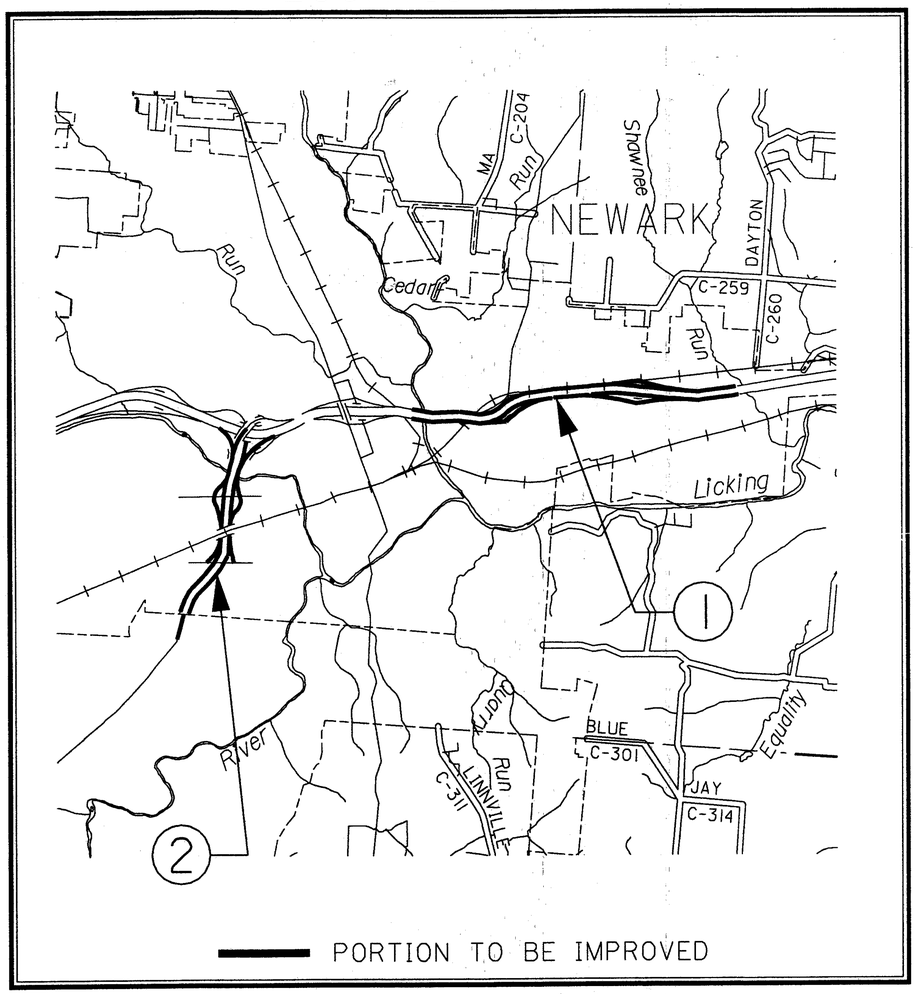

N

PROJECT DESCRIPTION:

THIS PROJECT SHALL CONSIST OF PLANING AND RESURFACING MAINLINE, RAMPS AND SHOULDERS OF LICKING COUNTY SR 16 FROM SLM 21.44 TO SLM 23.66 AND SR 79 FROM SLM 12.19 TO SLM 13.66 AND ROADWAYS A,B, C & D

LOCATION	COUNTY	ROUTE	SECTIONS	PROJECT TERMINI		NET LENGTH MILES	CITY
				BEGIN	END		
1	LIC	SR 16	(21.31)	21.44	23.66	2.22	NEWARK
2	LIC	SR 79	(12.11-13.66)	12.19	13.66	1.47	HEATH/NEWARK

INDEX OF SHEETS:

TITLE SHEET - - - - - - - - - - - - - - - 1
GENERAL NOTES - - - - - - - - - - - - - - 2-8
TYPICAL SECTIONS - - - - - - - - - - - - 9,10
PLAN SHEETS SR 16 - - - - - - - - - - - - 11-15
PLAN SHEETS SR 79 - - - - - - - - - - - - 16-35
ASPHALT CONCRETE DATA - - - - - - - - - 36,37
PAVED SHOULDER DATA - - - - - - - - - - 38-41
RAMP DATA - - - - - - - - - - - - - - - 42,43
GORE AREA DATA - - - - - - - - - - - - - 44
RAMP PAVED SHOULDER DATA - - - - - - - - 45
BRIDGE DECK TREATMENT DATA - - - - - - - 46-48
EDGE LINE SUB-SUMMARY - - - - - - - - - - 49
LANE LINE/EDGE LINE SUB-SUMMARY - - - - 50
CENTER LINE SUB-SUMMARY - - - - - - - - - 51
LANE LINE/AUXILIARY SUB-SUMMARY - - - - 52
RAISED PAVEMENT MARKER DATA - - - - - - 53,54
LOCATION 1 & 2 SUB-SUMMARY - - - - - - - 55,56
GENERAL SUMMARY - - - - - - - - - - - - - 57

1997 SPECIFICATIONS

THE STANDARD 1997 SPECIFICATIONS OF THE STATE OF OHIO DEPARTMENT OF TRANSPORTATION, INCLUDING CHANGES AND SUPPLEMENTAL SPECIFICATIONS LISTED IN THE PLANS AND THE PROPOSAL SHALL GOVERN THESE IMPROVEMENTS.

I HEREBY APPROVE THESE PLANS AND DECLARE THAT THE MAKING OF THESE IMPROVEMENTS WILL NOT REQUIRE THE CLOSING OF THE HIGHWAY AND PROVISIONS FOR THE MAINTENANCE AND SAFETY OF TRAFFIC WILL BE AS INDICATED IN THE PROPOSAL.

APPROVED Michael D. Lopez/aes
DATE 3/3/99 DISTRICT DEPUTY DIRECTOR

APPROVED Gordon Proctor /fhl
DATE 3-5-99 DIRECTOR, DEPARTMENT OF TRANSPORTATION

DESIGN DESIGNATION	SR 16	SR 79
CURRENT ADT (1999)	27900	37400
DESIGN YEAR ADT (2011)	37100	49700
DESIGN HOURLY VOLUME (2011)	3700	4970
DIRECTIONAL DISTRIBUTION	50%	50%
TRUCKS	12%	5%
DESIGN SPEED	55mph	35/55mph
LEGAL SPEED	55mph	35/55mph

* NOTE:
ALL SHEETS IN PART 2 SHALL INDICATE LIC-16-21.44/LIC-79-12.19

ENGINEER'S SEAL

STATE OF OHIO TIM J. DAUMMUELLER 43359 REGISTERED PROFESSIONAL ENGINEER

STANDARD DRAWINGS	SUPPLEMENTAL SPECIFICATIONS
SEE PART 1	SEE PART 1

UNDERGROUND UTILITIES
TWO WORKING DAYS
BEFORE YOU DIG
CALL 1-800-362-2764 (TOLL FREE)
OHIO UTILITIES PROTECTION SERVICE
NON-MEMBERS MUST BE CALLED DIRECTLY

PLAN PREPARED BY:
District 5 Production

FEDERAL PROJECT NO. TE21-6990 (336) TE21G990 (388)
PID NO. 15290
CONSTRUCTION PROJECT NO.
TITLE SHEET
LIC-16-21.44/LIC-79-12.19
1-57

DESIGNER-LARRY EBY JR.
-L0160001.MTS 2-17-99

GENERAL NOTES

CONSTRUCTION PLANS

REFERENCE IS HEREBY MADE TO THE FOLLOWING DESIGNATED PLANS FOR FORMER CONSTRUCTION PROJECTS, PORTIONS OF WHICH COVER AREAS INCLUDED IN THE CURRENT CONSTRUCTION PLAN:
PROJECT #532(85), LIC-16-21.71
PROJECT #839(85), LIC-79-12.53

COPIES OF THESE PLANS ARE ON FILE AT THE O.D.O.T. DISTRICT 5 OFFICE OR AT THE OFFICE OF THE ADMINISTRATOR OF CONTRACT SALES COLUMBUS, OHIO

WORK LIMITS

THE WORK LIMITS SHOWN ON THESE PLANS ARE FOR PHYSICAL CONSTRUCTION ONLY. THE INSTALLATION AND OPERATION OF ALL TEMPORARY TRAFFIC CONTROL DEVICES REQUIRED BY THESE PLANS SHALL BE PROVIDED BY THE CONTRACTOR WHETHER INSIDE OR OUTSIDE THESE WORK LIMITS.

CONTINGENCY QUANTITIES

THE CONTRACTOR SHALL NOT ORDER MATERIALS OR PERFORM WORK FOR ITEMS DESIGNATED BY PLAN NOTE TO BE USED "AS DIRECTED BY THE ENGINEER" UNLESS AUTHORIZED BY THE ENGINEER.

ITEM 407 TACK COAT

THE RATE OF APPLICATION OF THE 407 TACK COAT SHALL BE SUBJECT TO ADJUSTMENT AS DIRECTED BY THE ENGINEER. PLAN QUANTITIES INDICATE AN AVERAGE APPLICATION RATE OF 0.075 GALLONS PER SQUARE YARD OF TACK COAT FOR ESTIMATING PURPOSES ONLY.

ITEM 407 TACK COAT.702.13

THE RATE OF APPLICATION OF THE 407 TACK COAT SHALL BE SUBJECT TO ADJUSTMENT AS DIRECTED BY THE ENGINEER. PLAN QUANTITIES INDICATE AN AVERAGE APPLICATION RATE OF 0.075 GALLONS PER SQUARE YARD OF TACK COAT FOR ESTIMATING PURPOSES ONLY.

ITEM 407 TACK COAT FOR INTERMEDIATE COURSE

THE RATE OF APPLICATION OF THE 407 TACK COAT FOR INTERMEDIATE COURSE SHALL BE SUBJECT TO ADJUSTMENT AS DIRECTED BY THE ENGINEER. PLAN QUANTITIES INDICATE AN AVERAGE APPLICATION RATE OF 0.05 GALLONS PER SQUARE YARD OF TACK COAT FOR ESTIMATING PURPOSES ONLY.

PROFILE AND ALIGNMENT

THE PROPOSED PAVEMENT RESURFACING SHALL FOLLOW THE ALIGNMENT AND PROFILE OF THE EXISTING PAVEMENT.

ITEM 617, COMPACTED AGGREGATE, TYPE A, AS PER PLAN

ALL AGGREGATE SHALL BE 100% CRUSHED LIMESTONE. ALL QUALITY REQUIREMENTS EXCEPT SHALE SHALL BE WAIVED. OTHER GRADATION REQUIREMENTS SHALL BE AS SPECIFIED EXCEPT THE PLASTICITY INDEX SHALL BE WAIVED. IF SO DESIRED, THE CONTRACTOR MAY USE RECYCLED ASPHALT CONCRETE PAVEMENT (RACP MEETING REQUIREMENTS OF 617.03) IN LIEU OF CRUSHED LIMESTONE.

THE FOLLOWING ESTIMATED QUANTITIES ARE CARRIED TO THE GENERAL SUMMARY TO BE USED AS DIRECTED BY THE ENGINEER FOR LOW SHOULDER AREAS THROUGHOUT THE PROJECT.

LOCATION 1 - 300 CU.YD.
LOCATION 2 - 100 CU.YD.

ITEM 614 WORK ZONE MARKING SIGN

A QUANTITY OF WORK ZONE MARKING SIGNS HAS BEEN INCLUDED IN THE GENERAL SUMMARY TO BE USED AS DIRECTED BY THE ENGINEER.
THE FOLLOWING QUANTITIES HAVE BEEN CARRIED TO THE GENERAL SUMMARY.

ITEM 614 WORK ZONE MARKING SIGN
LOCATION 1 - 10 EACH
LOCATION 2 - 10 EACH

BUTT JOINT

A BUTT JOINT IS REQUIRED AT THE BEGINNING, END AND AS SHOWN ON THE PLAN SHEETS.
OF THE PROJECT AS PER SCD BP-3.1, 2-21-92.

PAVEMENT MARKING

STOP LINES, CROSSWALK LINES, CHANNELIZING LINES, TURN ARROWS, ETC., SHOWN ON THE PLAN ARE TAKEN FROM EXISTING MARKINGS. IT SHALL BE THE RESPONSIBILITY OF THE CONTRACTOR TO PLACE NEW PAVEMENT MARKINGS AS NEAR AS POSSIBLE TO THE EXISTING LOCATIONS UNLESS OTHERWISE DESIGNATED BY THE ENGINEER.

WATER REMOVED FROM PLANED SURFACE

ALL WATER WHICH HAS ACCUMULATED ON THE PLANED SURFACE SHALL BE REMOVED TO THE SATISFACTION OF THE ENGINEER PRIOR TO RESURFACING. THIS SHALL BE THE CONTRACTORS RESPONSIBILITY AND IS PAID FOR UNDER ITEM 254 PAVEMENT PLANING BITUMINIOUS.

GENERAL NOTES

WORK RESTRICTIONS AND LANE CLOSURES

AT LEAST ONE LANE OF TRAFFIC SHALL BE MAINTAINED EASTBOUND AND WESTBOUND AT ALL TIMES. NO WORK SHALL BE PERFORMED AND ALL EXISTING LANES SHALL BE OPEN TO TRAFFIC DURING THE FOLLOWING DESIGNATED HOLIDAYS OR EVENTS:

MEMORIAL DAY, FOURTH OF JULY, LABOR DAY AND THANKSGIVING

THE PERIOD OF TIME THAT THE LANES ARE TO BE OPEN DEPENDS ON THE DAY OF THE WEEK ON WHICH THE HOLIDAY FALLS. THE FOLLOWING SCHEDULE SHALL BE USED TO DETERMINE THIS PERIOD:

DAY OF THE WEEK	TIME ALL LANES MUST BE OPEN TO TRAFFIC
SUNDAY	12:00N FRIDAY THROUGH 12:00N MONDAY
MONDAY	12:00N FRIDAY THROUGH 12:00N TUESDAY
TUESDAY	12:00N MONDAY THROUGH 12:00N WEDNESDAY
WEDNESDAY	12:00N TUESDAY THROUGH 12:00N THURSDAY
THURSDAY	12:00N WEDNESDAY THROUGH 12:00N MONDAY
FRIDAY	12:00N THURSDAY THROUGH 12:00N MONDAY
SATURDAY	12:00N FRIDAY THROUGH 12:00N MONDAY

AREAS THAT ARE PLANED SHALL NOT BE OPENED TO TRAFFIC. ALL PLANED AREAS MUST BE INLAID WITH PROPOSED COURSE OF ASPHALT CONCRETE AND HAVE TEMPORARY OR PERMANENT PAVEMENT MARKINGS IN PLACE PRIOR TO BEING OPENED TO TRAFFIC.
OVERNIGHT CLOSURES MUST MEET SPECIFICATIONS AS OUTLINED IN THE CONSTRUCTION AND MAINTENANCE OPERATIONS SECTION OF THE OHIO MANUAL OF UNIFORM TRAFFIC CONTROL DEVICES FOR STREETS AND HIGHWAYS.
THE FINAL PAVEMENT MARKINGS SHALL BE PLACED AFTER ALL OTHER WORK IS COMPLETED.

THE FOLLOWING QUANTITY HAS BEEN CARRIED TO THE GENERAL SUMMARY FOR THE PURPOSES DESCRIBED ABOVE:

ITEM 614 MAINTAINING LUMP SUM

ITEM 614, WORK ZONE SPEED LIMIT SIGN

THE CONTRACTOR SHALL FURNISH, INSTALL, MAINTAIN, COVER DURING SUSPENSION OF WORK, AND SUBSEQUENTLY REMOVE WORK ZONE SPEED LIMIT SIGNS AND SUPPORTS (R-10-48) (45MPH) WITHIN THE WORK LIMITS IN ACCORDANCE WITH THE FOLLOWING REQUIREMENTS.

THE CONTRACTOR SHALL COVER OR REMOVE ANY EXISTING SPEED LIMIT OR MINIMUM SPEED SIGNS WITHIN THE REDUCED SPEED ZONE. THESE SIGNS SHALL BE RESTORED DURING SUSPENSION OR TERMINATION OF THE REDUCED SPEED LIMIT. THE EXPENSE OF COVERING OR REMOVAL AND RESTORATION OF EXISTING SPEED LIMIT OR MINIMUM SPEED SIGNS SHALL BE INCLUDED IN THE PAY ITEM FOR THE WORK ZONE SPEED LIMIT SIGNS.

THE WORK ZONE SPEED LIMIT SIGNS MAY BE ERECTED OR UNCOVERED NO MORE THAN 4 HOURS BEFORE THE ACTUAL START OF WORK. THE SIGNS SHALL BE REMOVED OR COVERED NO LATER THAN 4 HOURS FOLLOWING RESTORATION OF ALL LANES TO TRAFFIC WITH NO RESTRICTIONS, OR SOONER AS DIRECTED BY THE ENGINEER.

THE CONTRACTOR SHALL ERECT A WORK ZONE SPEED LIMIT SIGN IN ADVANCE OF ANY LANE RESTRICTION. ENGINEER. THE SIGN SHALL BE MOUNTED ON BOTH SIDES OF DIVIDED HIGHWAYS, 500 FEET IN ADVANCE OF THE LANE REDUCTION TAPER. THE SIGN SHALL BE REPEATED, ON THE SIDE NEAREST TRAFFIC, EVERY 1/2 MILE FOR 45 MPH ZONES. THESE SIGNS SHALL ALSO BE ERECTED IMMEDIATELY AFTER EACH OPEN ENTRANCE RAMP WITHIN THE ZONE. A SIGN TO INDICATE THE RESUMPTION OF THE STATUTORY SPEED LIMIT SHALL BE ERECTED AT THE END OF ANY REDUCED SPEED ZONE. THIS SIGN SHALL BE AN R-10-48 (55 MPH).

THE CONTRACTOR MAY USE SIGNS AND SUPPORTS IN USED BUT GOOD CONDITION PROVIDED THE SIGNS MEET CURRENT ODOT SPECIFICATIONS. SIGN FACES SHALL BE REFLECTORIZED WITH TYPE G SHEETING COMPLYING WITH THE REQUIREMENTS OF 730.19 AND U.S. DEPARTMENT OF TRANSPORTATION SUPPLEMENTAL SPECIFICATION FOR TYPE III-C SHEETING, FP-85. WORK ZONE SPEED LIMIT SIGNS SHALL BE MOUNTED ON TWO(2) ITEM 630 GROUND MOUNTED SUPPORTS, NO. 3 POSTS.

WORK ZONE SPEED LIMIT SIGNS AND SUPPORTS WILL BE MEASURED AS THE NUMBER OF SIGN INSTALLATIONS, INCLUDING THE SIGNS AND NECESSARY SUPPORTS. IF A SIGN AND SUPPORT COMBINATION IS REMOVED AND REERECTED AT ANOTHER LOCATION WITHIN THE PROJECT DUE TO CHANGES IN THE SPEED ZONE DIRECTED BY THE ENGINEER, IT SHALL BE CONSIDERED ANOTHER UNIT.

PAYMENT FOR ACCEPTED QUANTITIES, COMPLETE IN PLACE, WILL BE MADE AT THE CONTRACT UNIT PRICE. PAYMENT SHALL BE FULL COMPENSATION FOR ALL MATERIALS, LABOR, INCIDENTALS AND EQUIPMENT FOR FURNISHING, ERECTING, MAINTAINING, COVERING DURING SUSPENSION OF WORK, AND REMOVING THE SIGNS AND SUPPORTS.

ITEM 614 WORK ZONE SPEED LIMIT SIGN 8 EACH - LOCATION 1
8 EACH - LOCATION 2

ITEM 614 PORTABLE CHANGEABLE MESSAGE SIGN, AS PER PLAN

THE CONTRACTOR SHALL FURNISH, INSTALL, MAINTAIN AND REMOVE (WHEN NO LONGER NEEDED) A CHANGEABLE MESSAGE SIGN, ON SITE, FOR THE DURATION OF THE PROJECT. THE SIGN SHALL BE OF A TYPE SHOWN ON A LIST OF APPROVED PCMS UNITS MAINTAINED BY THE DIRECTOR. THE LIST CURRENTLY CONTAINS CLASS III AND II UNITS WITHIN MINIMUM LEGIBILITY DISTANCES OF 650' AND 850' RESPECTIVELY.

EACH SIGN SHALL BE TRAILER MOUNTED AND EQUIPPED WITH A FUNCTIONAL DIMMING MECHANISM TO DIM THE SIGN DURING DARKNESS AND A TAMPER AND VANDAL PROOF ENCLOSURE. EACH SIGN SHALL BE PROVIDED WITH APPROPRIATE TRAINING AND OPERATION INSTRUCTIONS TO ENABLE ON-SITE PERSONNEL TO OPERATE AND TROUBLE-SHOOT THE UNIT. THE SIGN SHALL ALSO BE CAPABLE OF BEING POWERED BY AN ELECTRICAL SERVICE DROP FROM A LOCAL UTILITY COMPANY.

THE LOCATIONS FOR THOSE UNITS SHALL BE AS DIRECTED BY THE PROJECT ENGINEER. PLACEMENT, OPERATION, MAINTENANCE AND ALL ACTIVATION OF THE SIGNS BY THE CONTRACTOR SHALL BE AS DIRECTED BY THE PROJECT ENGINEER. THE PCMS SHALL BE LOCATED IN A HIGHLY VISIBLE POSITION YET PROTECTED FROM TRAFFIC. THE CONTRACTOR SHALL, AT THE DIRECTION OF THE PROJECT ENGINEER, RELOCATE THE PCMS TO IMPROVE VISIBILITY OR ACCOMMODATE CHANGED CONDITIONS. WHEN NOT IN USE, THE PCMS WILL BE OFF, FACING AWAY FROM ALL TRAFFIC AND SHALL DISPLAY ONE OR MORE HIGH INTENSITY YELLOW REFLECTIVE SHEETING SURFACES OF A 9-INCH BY 15-INCH MINIMUM SIZE FACING TRAFFIC.

THE ENGINEER SHALL BE PROVIDED ACCESS TO EACH SIGN UNIT AND SHALL BE PROVIDED WITH APPROPRIATE TRAINING AND OPERATION INSTRUCTIONS TO ENABLE ODOT PERSONNEL TO OPERATE AND TROUBLE-SHOOT THE UNIT AND TO REVISE MESSAGES IF NECESSARY.

ALL MESSAGES TO BE DISPLAYED ON THE SIGN WILL BE PROVIDED BY THE ENGINEER. A LIST OF ALL REQUIRED PREPROGRAMMED MESSAGES WILL BE GIVEN TO THE CONTRACTOR AT THE PROJECT PRECONSTRUCTION CONFERENCE. THE SIGN SHALL HAVE THE CAPABILITY TO STORE UP TO 99 MESSAGES. MESSAGE MEMORY OR PREPROGAMMED DISPLAYS SHALL NOT BE LOST AS A RESULT OF POWER FAILURES TO THE ONBOARD COMPUTER. THE SIGN LEGEND SHALL BE CAPABLE OF BEING CHANGED IN THE FIELD. THREE-LINE PRESENTATION FORMATS WITH UP TO SIX MESSAGE PHASES SHALL BE SUPPORTED, BUT NORMALLY, NOT MORE THAN TWO-MESSAGE PHASES SHOULD BE EMPLOYED, ALTHOUGH THREE-PHASES MAY BE USED IN UNUSUAL CONDITIONS. THE PCMS FORMAT SHALL PERMIT THE COMPLETE MESSAGE FOR EACH PHASE TO BE READ AT LEAST ONCE.

THE PCMS SHALL CONTAIN AN ACCURATE CLOCK AND PROGRAMMING LOGIC WHICH WILL ALLOW THE SIGN TO BE ACTIVATED, DEACTIVATED OR MESSAGES CHANGED AUTOMATICALLY AT DIFFERANT TIMES OF THE DAY FOR DIFFERANT DAYS OF THE WEEK.

THE PCMS UNIT SHALL BE MAINTAINED IN GOOD WORKING ORDER BY THE CONTRACTOR IN ACCORDANCE WITH THE PROVISIONS OF 614.03 (C) THE CONTRACTOR SHALL, PRIOR TO ACTIVATING THE UNIT, MAKE ARRANGEMENTS WITH AN AUTHORIZED SERVICE AGENT FOR THE PCMS TO ASSURE PROMPT SERVICE IN THE EVENT OF FAILURE. ANY FAILURE SHALL NOT RESULT IN THE SIGN BEING OUT OF SERVICE FOR MORE THAN 12 HOURS INCLUDING WEEKENDS. FAILURE TO COMPLY MAY RESULT IN AN ORDER TO STOP WORK AND OPEN ALL TRAFFIC LANES AND/OR IN THE DEPARTMENT TAKING APPROPRIATE ACTION TO SAFELY CONTROL TRAFFIC AND THE ENTIRE COST TO CONTROL TRAFFIC ACCRUED BY THE DEPARTMENT WILL BE DEDUCTED FROM MONEYS DUE, OR TO BECOME DUE TO THE CONTRACTOR ON HIS CONTRACT.

THE CONTRACTOR SHALL BE RESPONSIBLE FOR 24 HOURS PER DAY OPERATION AND MAINTENANCE OF THESE SIGNS ON THE PROJECT FOR THE DURATION OF THE PROJECT.

THE REQUIREMENT TO FURNISH, INSTALL, MAINTAIN, AND REMOVE A PCMS UNIT ON THIS PROJECT SHALL NOT IN ANY WAY RELIEVE THE CONTRACTOR OF HIS RESPONSIBLITIES AS OUTLINED IN 104.04.

PAYMENT FOR THE ABOVE DESCRIBED ITEM SHALL BE AT THE CONTRACT UNIT PRICE BID FOR ITEM 614 PORTABLE CHANGEABLE MESSAGE SIGN, AS PER PLAN, SIGN-MONTH AND SHALL INCLUDE ALL LABOR, MATERIALS, EQUIPMENT, FUELS, LUBRICATING OILS, SOFTWARE, HARDWARE, AND INCIDENTALS TO PERFORM THE ABOVE DESCRIBED WORK.

THIS PROJECT SHALL REQUIRE 4 (FOUR) ITEM 614 PORTABLE CHANGEABLE MESSAGE SIGNS, AS PER PLAN. FOR LOCATION 1 AND 1 (ONE) FOR LOCATION 2.

ALL WORK SHALL BE COMPLETED ON ONE PART BEFORE THE SIGNS ARE MOVED AND UTILIZED ON THE OTHER SECTION OF INTERSTATE.

THE FOLLOWING QUANTITY HAS BEEN INCLUDED IN THE GENERAL SUMMARY TO PERFORM THE WORK AS DESCRIBED ABOVE.

ITEM 614 PORTABLE CHANGEABLE MESSAGE SIGN, AS PER PLAN
LOCATION 1 - 8 SIGN-MONTH
LOCATION 2 - 2 SIGN MONTH

SEQUENCE OF OPERATIONS

Except for the pedestrian overpass structures, all of Part 2 may begin work on 4/3/00 as directed by the Engineer.

Part 2 (Lic-16-21.44) is divided into two Phases. Phase 1 is a mill/fill of Lic SR 16 from SLM 21.44 to 23.66. Phase 2 is a mill/fill of Lic SR 79 from SLM 12.19 to 13.66 along with Roadways A, B, C, and D. Phase 1 is separated into two sections. The section from SLM 21.44 to 21.67(Sta. 123+90.50 to Sta.136+00) shall not be constructed as part of Part 2 but is to be included with Phases 2 and 3 of Part 1(Lic-16-19.80) which is to be constructed in calendar year 2000. The rest of Phase 1 (SLM 21.67 to 23.66) as well as all of Phase 2 is to be completed by November 15, 1999. Work on Phase 2 shall not begin until completion of Phase 1(SLM 21.67 to 23.66). Failure to complete the work on time shall be subject to liquidated damages of $2000.00 per day for anytime over that payable to the Ohio Department of Transportation. Traffic Control shall be maintained during closures by use of Portable Changeable Message Signs as directed by the Engineer. Each ramp shall be closed a maximum 6 hours(9:00 AM to 3:00 PM) for construction purposes and shall be subject to liquidated damages of $2000.00 per hour for anytime over that payable to the Ohio Department of Transportation. Traffic shall not be maintained on any planed surface. Roadway shall not be opened up to traffic without the permanent or temporary pavement markings in place.

Phase 1 consists of three steps. Step 1 consists of milling down to the existing concrete(approximately 3") from the concrete barrier to a distance 2 ft. beyond the lane line(approximately 15.5 ft.) . 1.75" of 446 Asphalt Concrete Intermediate Course, Type 2, PG 64-28 shall then be placed on the bare concrete surface(after tack coat is applied). Step 2 consists of milling down to the existing concrete the rest of the pavement(approximately 18 ft.) and resurfacing with the 1.75" of 446 Asphalt Concrete Intermediate Course, Type 2, PG64-28. Step 3 consists of applying the 1.5" Asphalt Concrete Surface Course, Type 1H to the entire pavement width.

Phase 2 consists of three steps. Step 1 consists of milling 3.25 " from the concrete barrier to a distance 1 ft. beyond the lane line(approximately 19.5 ft.) and applying 1.75" of 446 Asphalt Concrete Intermediate Course, Type 2, PG64-28. Step 2 consists doing the same for the rest of the pavement(approximately 19 ft.). Step 3 consists of applying the 1.5" Asphalt Concrete Surface Course, Type 1H to the entire pavement width. Roadways A, B, C, and D are considered as ramps and as such shall have the same work restrictions noted above. For both Phase 1 and 2, the 6 hour time limitation shall apply for Step1/2 as well as Step 3 (ramps may be closed on two separate occasions for a maximum 6 hours each). Ramps shall be maintained at all other times.

All work and traffic control devices shall be in accordance with 614 and other applicable portions of the specifications, as well as the Ohio Manual of Uniform Traffic Control Devices. Payment for all the labor, equipment and materials as described above shall be included in the lump sum contract price for 614, MAINTAINING TRAFFIC, unless separately itemized in the plan.

GENERAL NOTES

1. It is intended that this drawing be used for treatment of drop-offs that develop during construction operations, and that are not otherwise provided for in the construction plans. Where the plans do not provide specific items for labor, equipment, or materials to implement the drop-off treatments specified hereon, they shall be included for payment in the lump sum bid for Item 614 - Maintaining Traffic.
2. While the need for certain advisory signing is noted hereon, it is not intended that this be indicative of all signing that may be required to advise or warn motorists, and all requirements of the Ohio Manual of Uniform Traffic Control Devices (OMUTCD) must be fulfilled.
3. In urban or otherwise heavily developed areas where pedestrians and/or bicyclists may be present in significant numbers, additional signing and protective measures other than those shown hereon may be required.
4. The drop-off treatment selected for use at any given location shall be as appropriate for the prevailing conditions at the site.
5. Where concrete barrier is specified, it shall be in accordance with Standard Construction Drawing MC-9.2 and Item 622.
6. When drums are specified for a dropoff condition, a minimum number of four drums shall be used. Spacing shall be as indicated in the plans or as specified in the OMUTCD.
7. When OW-151 (Low Shoulder) signs or OW-171 (Uneven Lanes) and OWP-171 signs are required, they shall be placed 750′ in advance of the condition, on all intersecting entrance ramps within the limits of the condition and immediately beyond all intersecting roadways within the limits of the condition. When the dropoff condition extends more than one-half mile, additional signs should be erected at intervals of one mile or less.
8. For locations, such as at ramps, lane shifts, lane closures, etc., where traffic is required to negotiate any difference in elevation between pavements, a 3:1 slope treatment similar to the Optional Wedge Treatment shall be provided.
9. Portable concrete barrier shall be placed on the same level as the traffic surface and shall not encroach on lane width(s) designated as the minimum required for traffic use. Where drums are used, and their presence would reduce traveled lane widths to less than 10′, drums may be placed on the opposite level from that of traffic provided the dropoff depth does not exceed 5″ and approval is granted by the Project Engineer.
10. Pavement Repairs (or similar work):
    a. Lengths greater than 60 feet - utilize appropriate treatment from Condition I.
    b. Lengths of 60 feet or less - repairs shall be effected in accordance with 255.08. Drums may be used as a separator adjacent to the traveled lane.

OPTIONAL WEDGE TREATMENT

(MILLING OR RESURFACING)

1. This treatment may be used when permitted for Condition I only.
2. OW-171 and OWP-171 signs required.

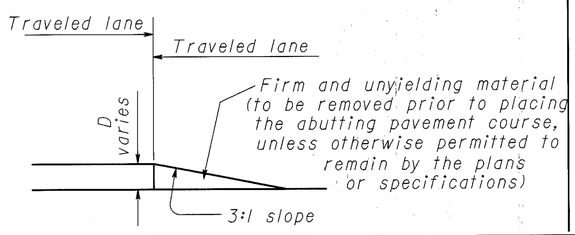

CONDITION I

DROPOFFS BETWEEN TRAVELED LANES

1. These treatments are to be used for resurfacing, pavement planing, excavation, etc. between or within traveled lanes.

D (In.)	Treatment
≤1½	Erect OW-171 and OWP-171 signs.
>1½-3	1) Lane closure utilizing drums* as shown below OR 2) Optional Wedge Treatment
>3-5	Lane closure utilizing drums as shown below.
>5	Lane closure utilizing portable concrete barrier as shown below.

*Cones may be used for daytime only conditions.

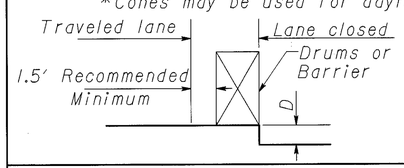

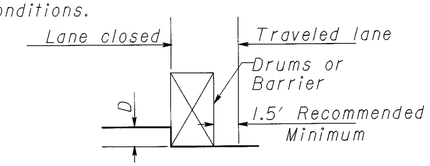

CONDITION II

DROPOFFS WITHIN GRADED SHOULDER AREA

1. The treatments indicated below are for use in conjunction with resurfacing, planing, or excavations within the graded shoulder area.
2. The graded shoulder area is that flat or gradually sloping area between the edge of a normally traveled lane and the more steeply sloping ditch foreslope or embankment slope. Its surface may be soil or turf, and/or it may be inclusive of a "treated" area (improved with aggregates, asphaltic materials, or concrete). For the purposes herein, its maximum width shall be considered to be twelve (12) feet.

D (In.)	Treatment
≤1½	1) If edgelines are present, no treatment necessary OR 2) Erect OW-171 and OWP-171 signs.
>1½-5	1) If min. lane width* requirements can be met, maintain lanes utilizing drums as shown below OR 2) If min. lane width* requirements cannot be met, close adjacent lane utilizing drums OR 3) Optional Shoulder Treatment.
>5-12 Daylight only	If min. lane width* requirements can be met, maintain lanes utilizing drums as shown below.
>5-24	1) If min. lane width* requirements can be met, maintain lanes utilizing portable concrete barrier as shown below. OR 2) If min. lane width* requirements cannot be met, close adjacent lane utilizing drums.
>24	Lane closure utilizing portable concrete barrier as shown below.

*Minimum lane widths shall be 10′ unless otherwise specified in the plans.

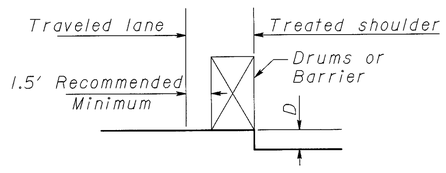

OPTIONAL SHOULDER TREATMENT

1. This treatment may not be used within a bituminous shoulder where a hot longitudinal joint per 401.15 is required.
2. OW-151 signs required.

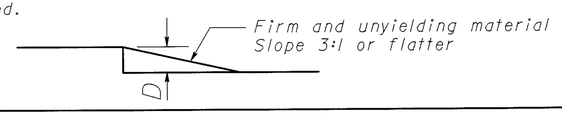

CONDITION III

DROPOFFS BEYOND GRADED SHOULDER OR BACK OF CURB

1. See Note 2 under Condition II.
2. Use Chart A or B below, as applicable.

CHART A

USE FOR:
1. Uncurbed Facilities.
2. Curbed Facilities, where:
   a. Curbs are less than 6″ in height.
   b. Curbs are 6″ or greater in height and the legal speed is greater than 40 mph.

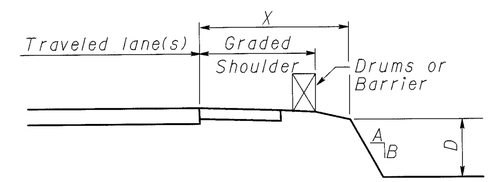

X (Ft.)	D (In.)	A/B	Treatment Required	
			Day	Night
0-4	Any	Any	(a)	(a)
4-30	Any	3:1 or Flatter	None	None
4-12	≤3	Steeper than 3:1	None	None
4-12	>3-<12	Steeper than 3:1	Drums	Drums
4-12	>12	Steeper than 3:1	Drums	Barrier
>12-20	≤12	Steeper than 3:1	None	None
>12-20	>12-<24	Steeper than 3:1	Drums	Drums
>12-20	>24	Steeper than 3:1	Drums	Barrier
>20-30	≤24	Steeper than 3:1	None	Drums
>20-30	>24	Steeper than 3:1	Drums	Barrier
>30	Any	Any	None	None

(a) Use treatment specified under Condition II.

CHART B

USE FOR: Curbed facilities, where the curb is 6″ or greater in height and the legal speed is 40 mph or less.

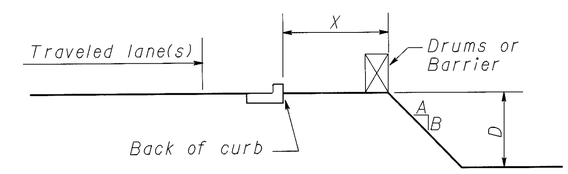

X (Ft.)	D (In.)	A/B	Treatment Required	
			Day	Night
0-10	<12	Any	None	Drums
0-10	>12	Any	Drums	Drums
>10	Any	Any	None	None

STATE OF OHIO
DEPARTMENT OF TRANSPORTATION
BUREAU OF LOCATION AND DESIGN

DROPOFFS IN WORK ZONES

DESIGNED	DRAWN	TRACED	CHECKED	REVIEWED	DATE	REVISED

RPM General Notes

Materials Supplied by The Department

All materials are to be Contractor furnished, except that the Department shall supply RPM materials in the quantities shown herein to the Contractor. Pay items for the Department supplied materials shall be indicated as "Installation Only". The quantity and type of Department supplied materials are shown on sheet 31 of this plan.

The Contractor shall pick up the department supplied RPM materials at the direction of the Project Engineer.
For some projects having quantities of less than 20 RPMs, the contractor may pick up RPM materials at the District Offices. Quantities over 20 RPMs will be picked up at the Recycler's Warehouse or as arranged with the District. The Contractor shall pick up Department supplied RPM materials at the specified location(s) for transport to the work site or to the Contractor's storage facility. The Recycled Raised Pavement Marker (RPM) Authorization Form is to be signed by the District Construction Engineer prior to pick up of the RPMs. The Contractor shall notify the District and / or the parties listed on the authorization form in writing at least five (5) calendar days prior to pick up of the department supplied materials. The contractor shall store the RPMs without damage or contamination with foreign matter. A deduction in the amount of the actual cost to the Department shall be made for materials damaged by the Contractor or for castings received by the Contractor which were not installed and were not returned to the Department.

Return of Non-performed Raised Pavement Marker Materials Supplied by the Department

Raised Pavement Marker Materials Supplied by the Department, that are non-performed shall be carefully repacked or packed in the boxes in the same style and quantity as originally received from the Department. Casting styles shall not be mixed within any one container. The Contractor shall clearly mark on the outside of each container, the color of the prismatic retro-reflector, the style of casting. Boxes shall be placed on skids or pallets in the same style (Low Profile or Conventional, reflectorised or non reflectorised) and no more than 420 RPMs (or 21 Boxes) on one skid.

Only use the boxes supplied by the Raised Pavement Marker Recycler. Boxes must be marked with the recycler's part or catalog number and the project number. The recycler's catalog or part numbers may be obtained from the Office of Traffic Engineering in Columbus, Ohio or from the recycler. Boxes not marked with the proper recycler's catalog or part numbers, and the department's project number will not be accepted at the recycler's warehouse

Non Performed Materials will be returned to the location as specified by the District Construction Engineer within 30 Days of the completion of the project.

The above work including all labor, equipment and material needed to perform the work, shall be considered incidental to the respective pay item.

If the department has to repackage the RPMs correctly, the Contractor will be assessed the actual cost for repackaging the Materials by the Department's Forces.

Loading of Materials Supplied by the Department at the Recycler's Warehouse

Trucks shall have a loading height of 48 inches and be able to back up flush to the loading dock.

Trucks shall not have any obstructions or protrusions that prevent the loading by a standard forklift or lift truck.

Semi trucks or 20 foot commercial trucks are the most appropriate trucks for loads in excess of 4 pallets (one pallet = 21 boxes = 2000 LBS).

Stake body trucks are appropriate to load less than 4 pallets, provided the truck is rated for the load and the load can be safely secured for transport by chaining or strapping down as needed.

Pickup trucks are appropriate for loads of approximately one pallet, provided the pickup truck is rated for the load and the load can be safely secured for transport.

Dump trucks, tilt bed trucks, and non commercial moving vans will not be loaded by the recyclers warehouse.

The warehouse supervisor will refuse to load any truck that is unsafe to load or unsuitable for the load being placed on the truck.

FREEWAY & EXPRESSWAY MAINLINE MARKINGS

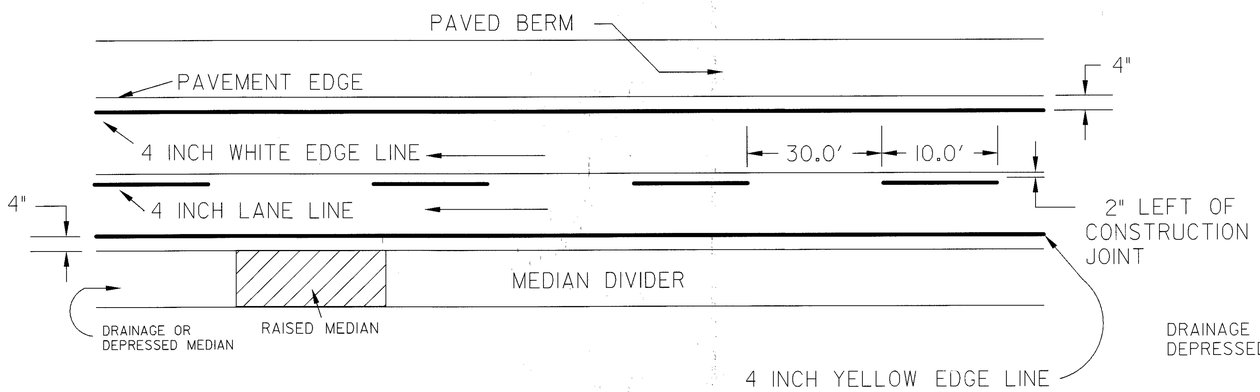

MULTILANE DIVIDED & UNDIVIDED HIGHWAY MARKINGS

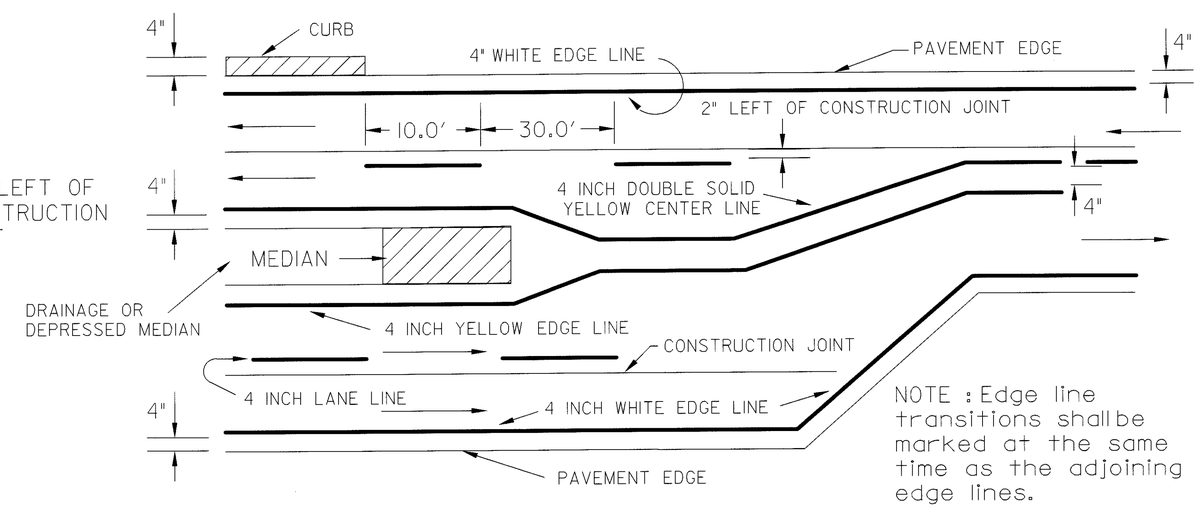

NOTE : Edge line transitions shall be marked at the same time as the adjoining edge lines.

TWO LANE MARKINGS

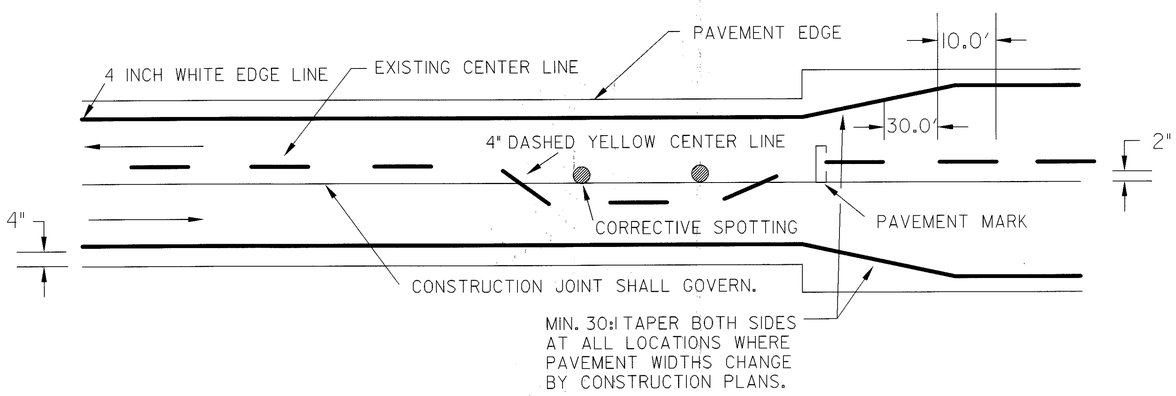

NOTES:

1. The distance from the pavement edge to the nearest edge of the edgeline may be increased with the approval of the engineer in order to maintain uniform lane width.

2. See TC-72.20 for entrance and exit ramp markings.

3. The cycle length for dashed lines shall be 40.0' plus or minus 6". The minimum length of dash shall be sufficiently long to maintain a 3:1 ratio between length of gap and length of dash.

Ohio Department of Transportation

Pavement Marking Typical Details

DATE
11-80
9-86
9-91
lme
7-97

CALCULATED LME
CHECKED T.J.D.

PAVEMENT MARKING TYPICALS

LIC-16-21.44

L0160001.PMT 02-20-99

TYPICAL 1

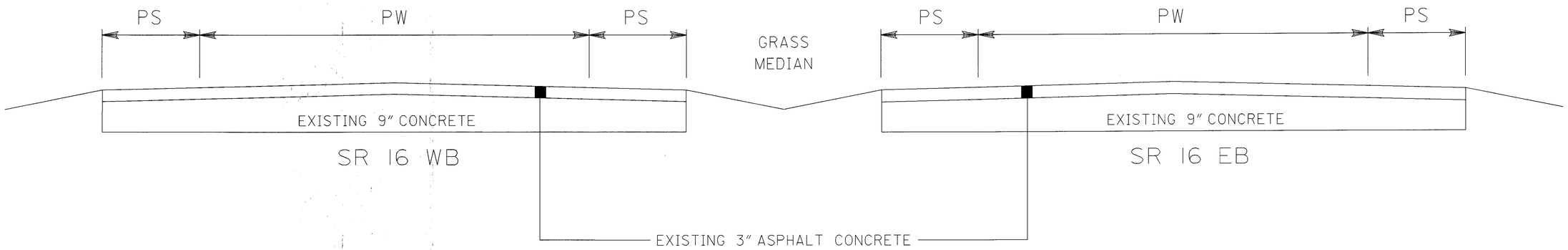

TYPICAL 2

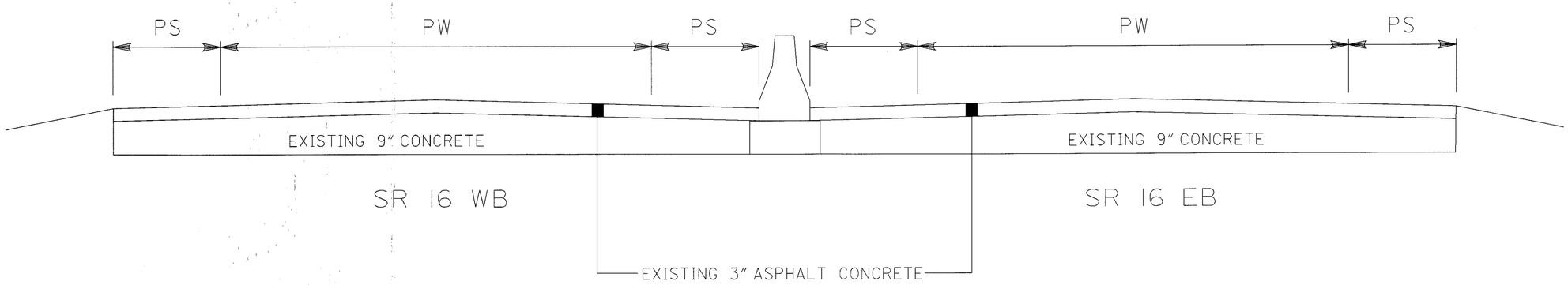

MAINLINE TYPICAL SECTIONS SR 16

LIC-16-21.44

L0160001.MTD 2-12-99

TYPICAL 1

SR 79

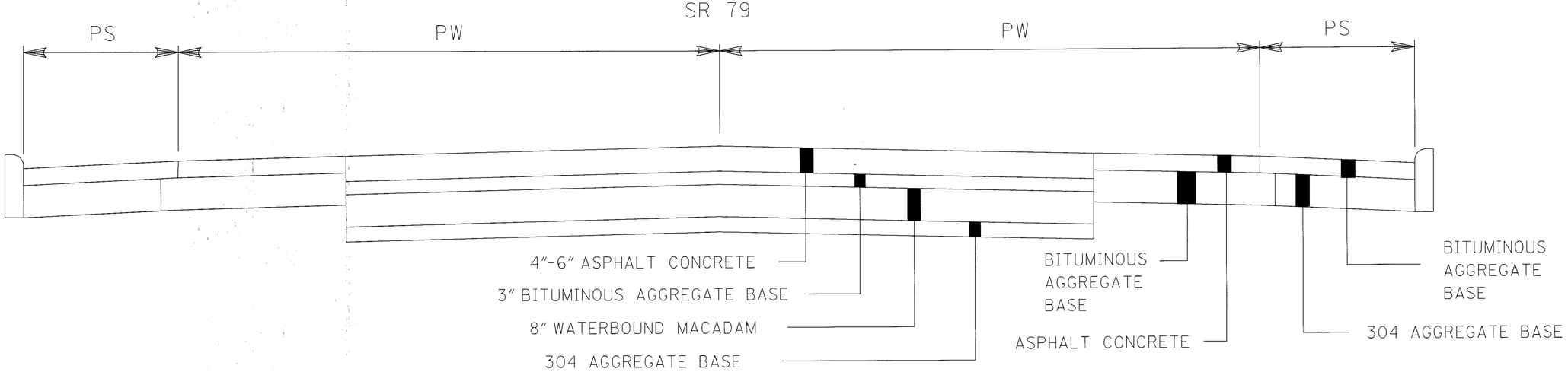

TYPICAL 2

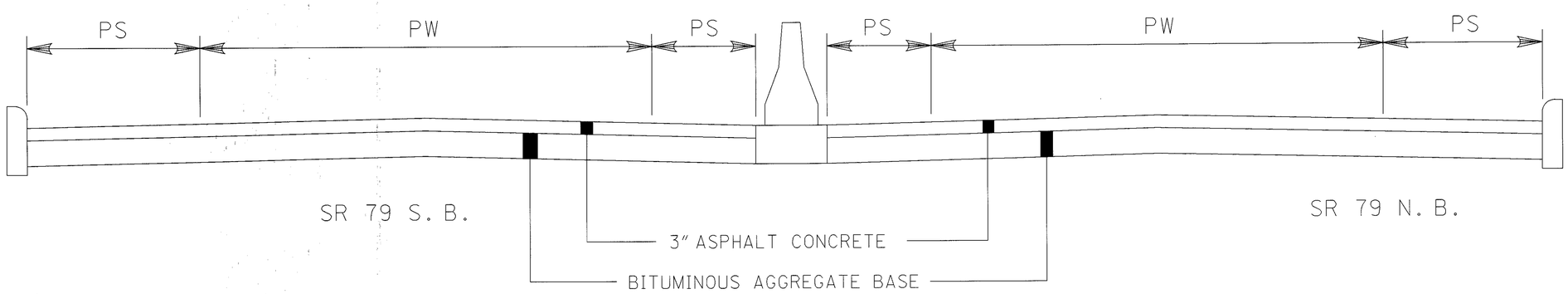

MAINLINE TYPICAL SECTIONS SR 79

LIC-16-21.44

L0160002.MTD 2-26-99

NOT TO SCALE

CALCULATED LME
CHECKED TJD

PLAN SHEET SR 16

LIC-16-21.44

L0160039.MPL 2-25-99

NOT TO SCALE

CALCULATED LME
CHECKED TJD

PLAN SHEET SR 16

LIC-16-21.44

L0160038.MPL 2-25-99

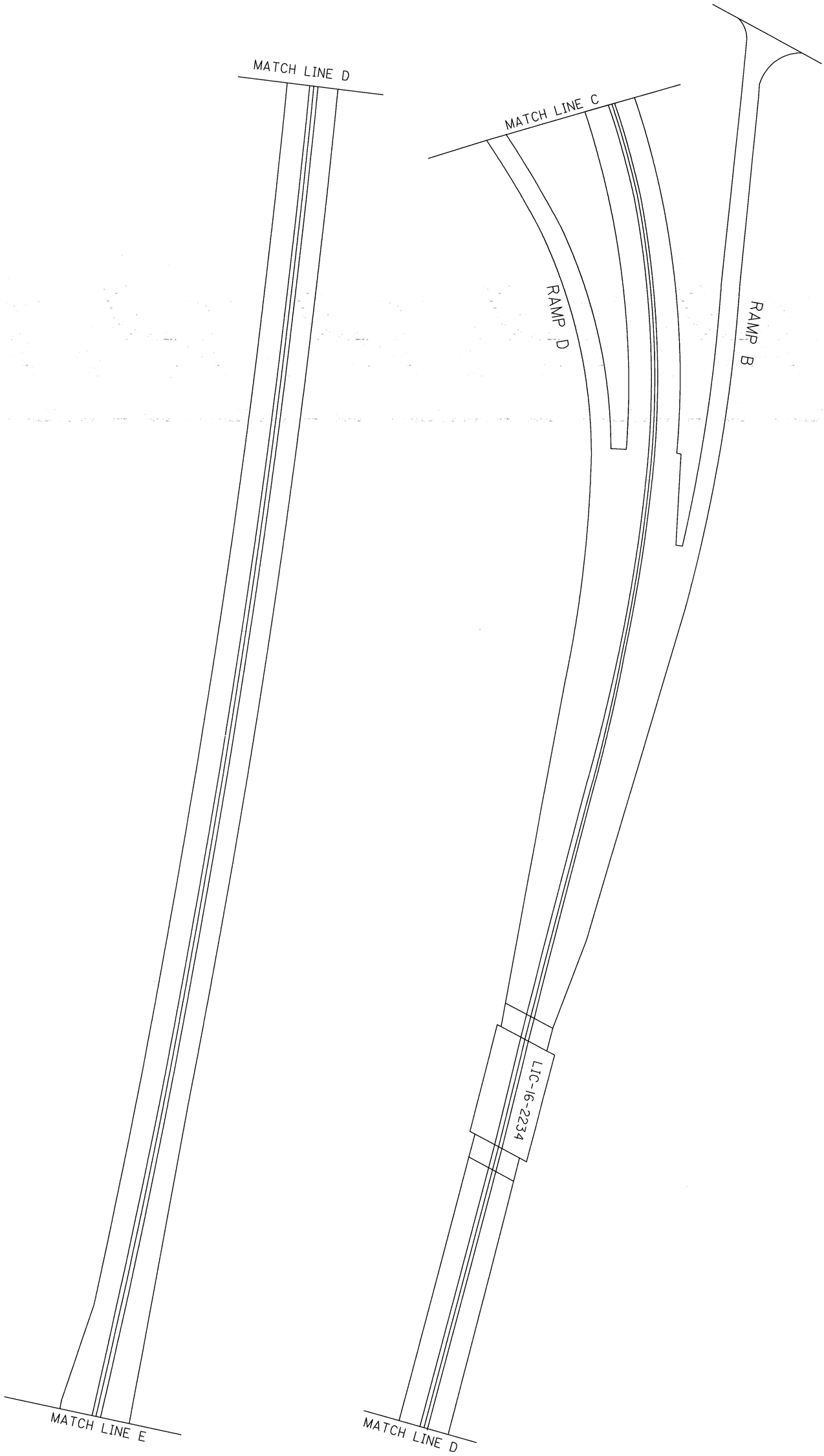

NOT TO SCALE

LIC-16-21.44

PLAN SHEET SR 16

CALCULATED LME
CHECKED TJD

NOT TO SCALE

CALCULATED LME
CHECKED TJD

PLAN SHEET SR 16

LIC-16-21.44

L0160035.MPL 2-25-99

L0160034.MPL 2-25-99

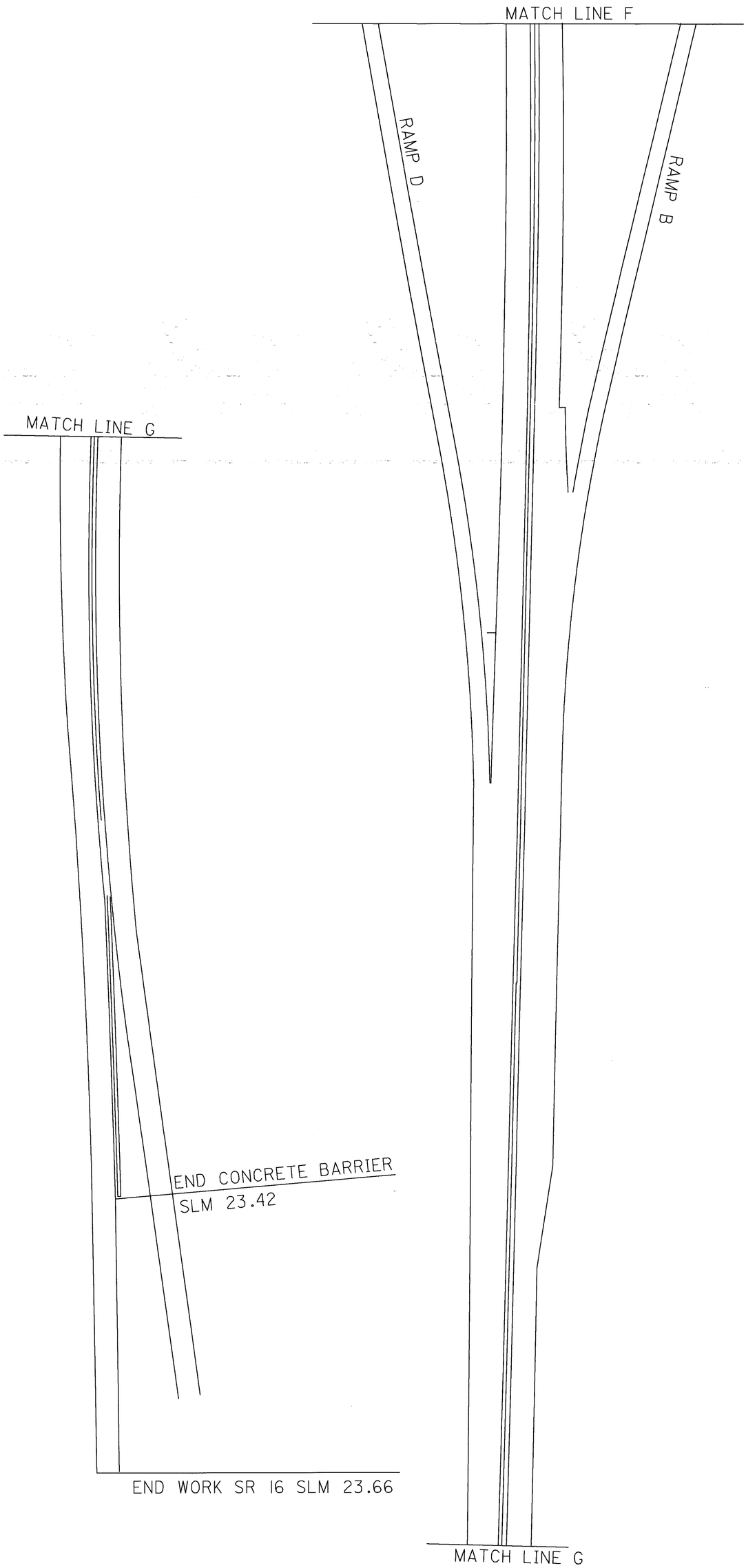

NOT TO SCALE

15 / 57	LIC-16-21.44	PLAN SHEET SR 16	CALCULATED LME / CHECKED TJD	N

NOT TO SCALE

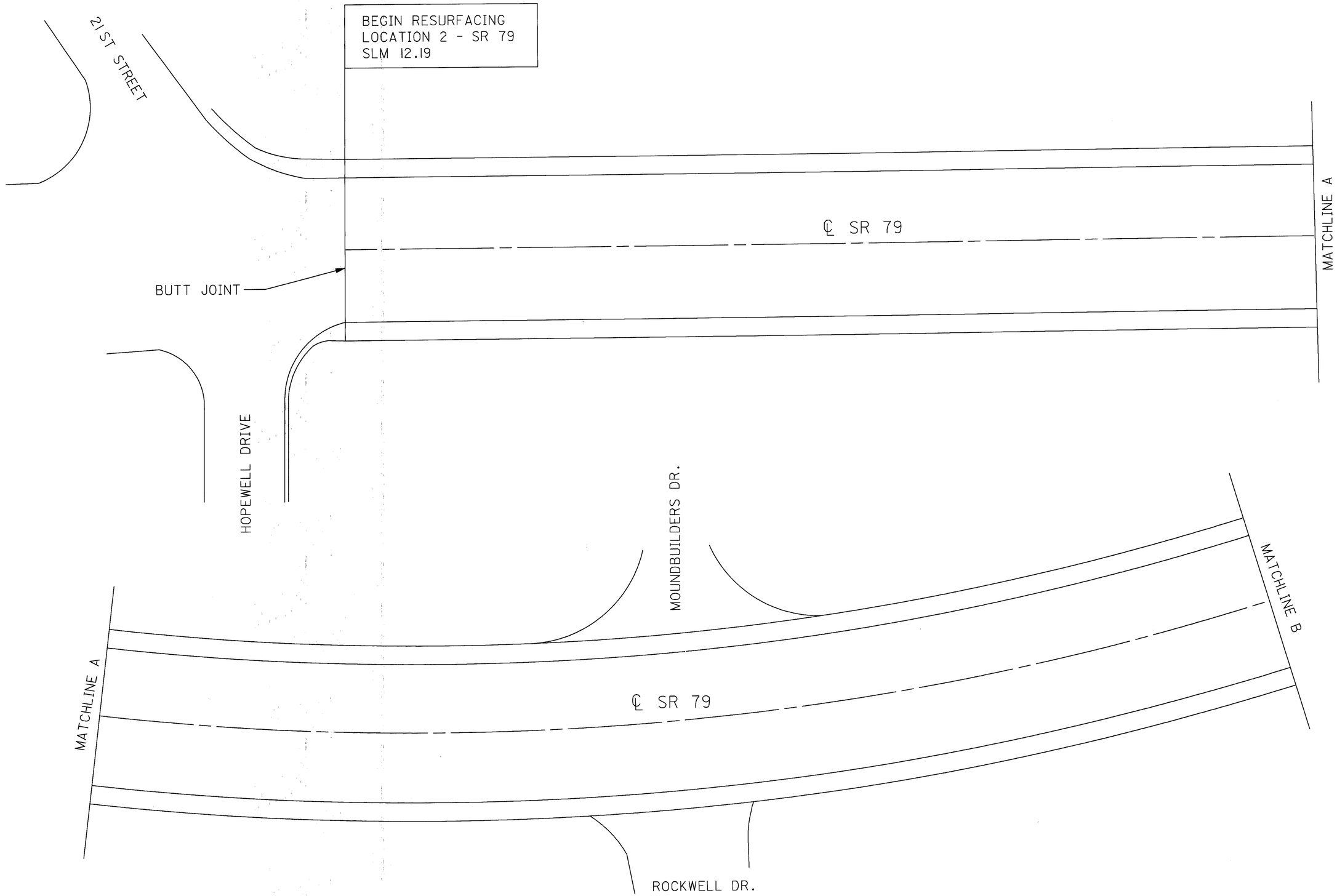

CALCULATED LME
CHECKED TJD

PLAN SHEET SR 79

LIC-16-21.44

16/57

L0160016.MPL 2-24-99

NOT TO SCALE

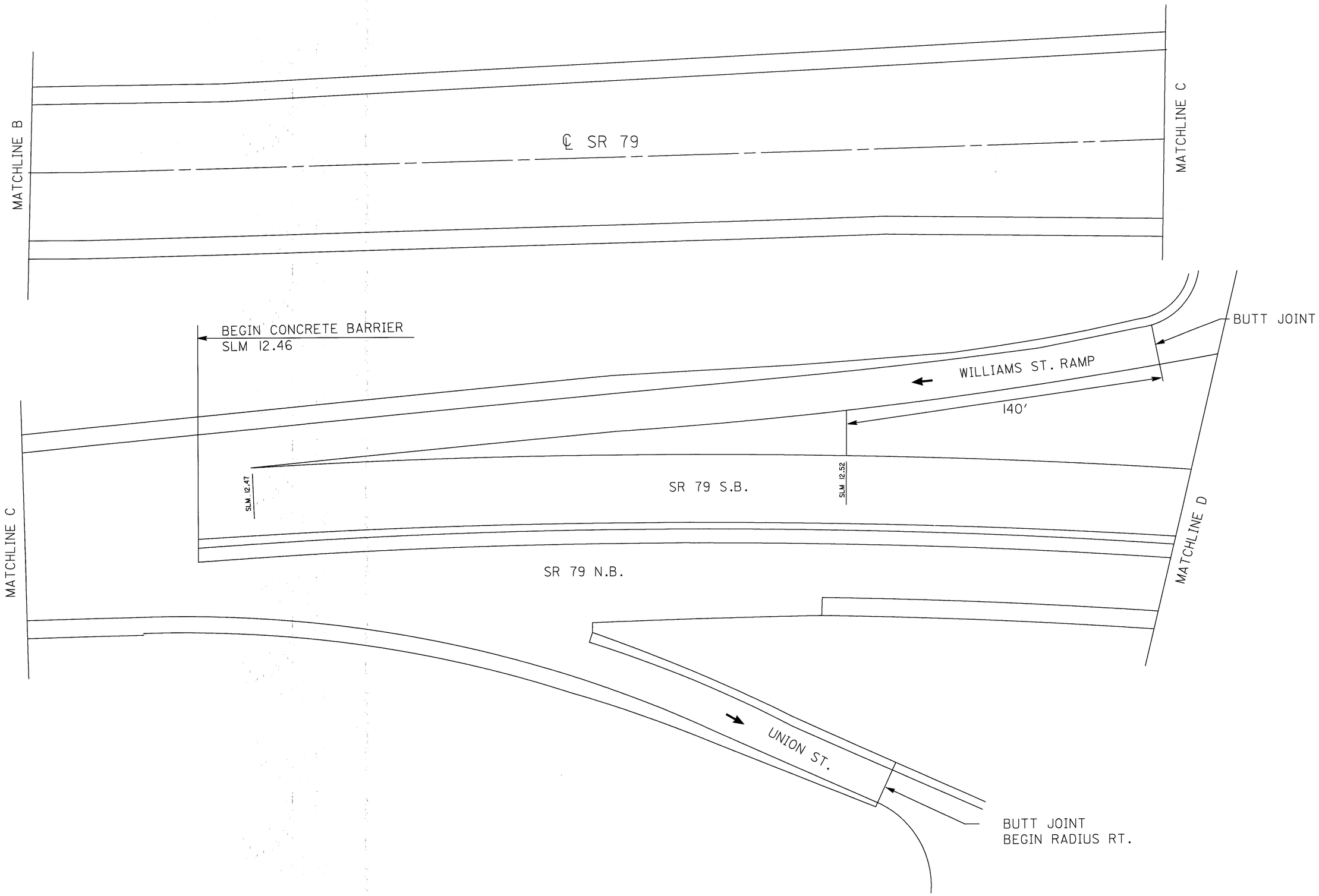

CALCULATED LME
CHECKED TJD

PLAN SHEET SR 79 N.B. & S.B.

LIC-16-21.44

17/57

\\\\L0160008.MPL 2-24-99

NOT TO SCALE

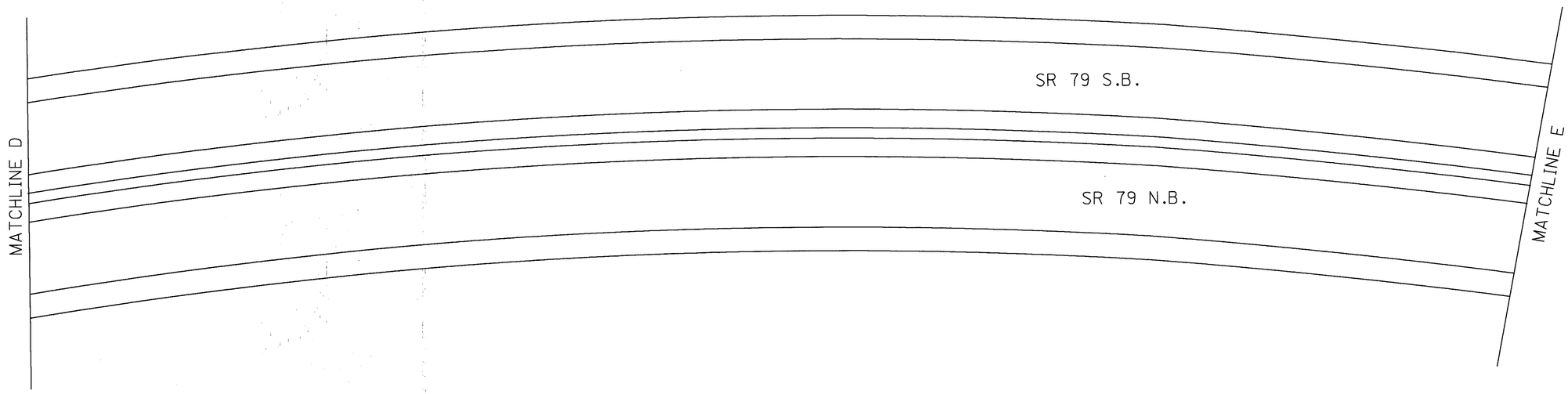

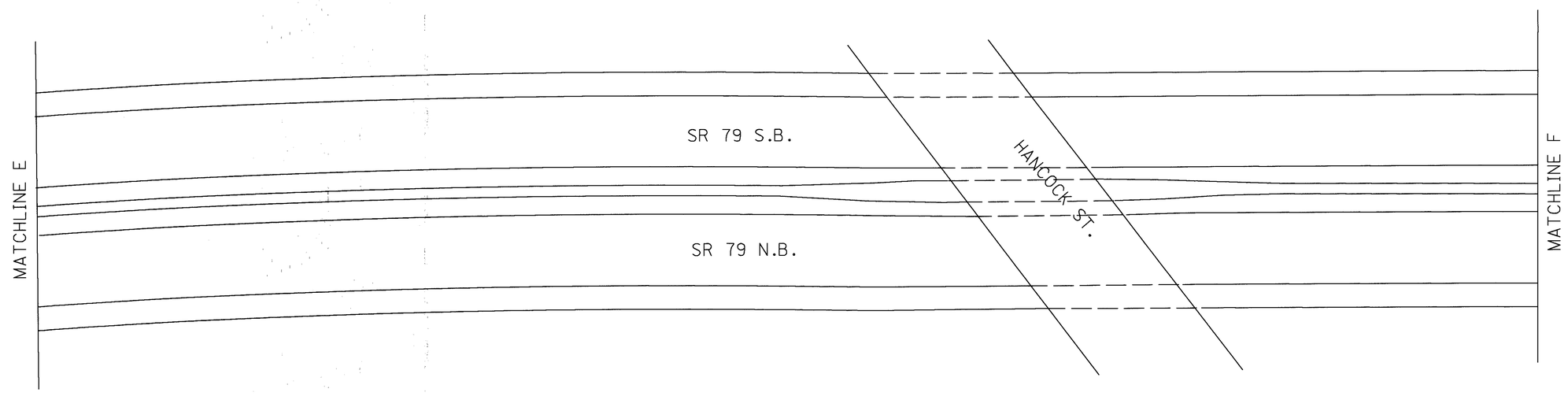

CALCULATED LME
CHECKED TJD

PLAN SHEET SR 79 N.B. & S.B.

LIC-16-21.44

18
57

L0160012.MPL 2-24-99

NOT TO SCALE

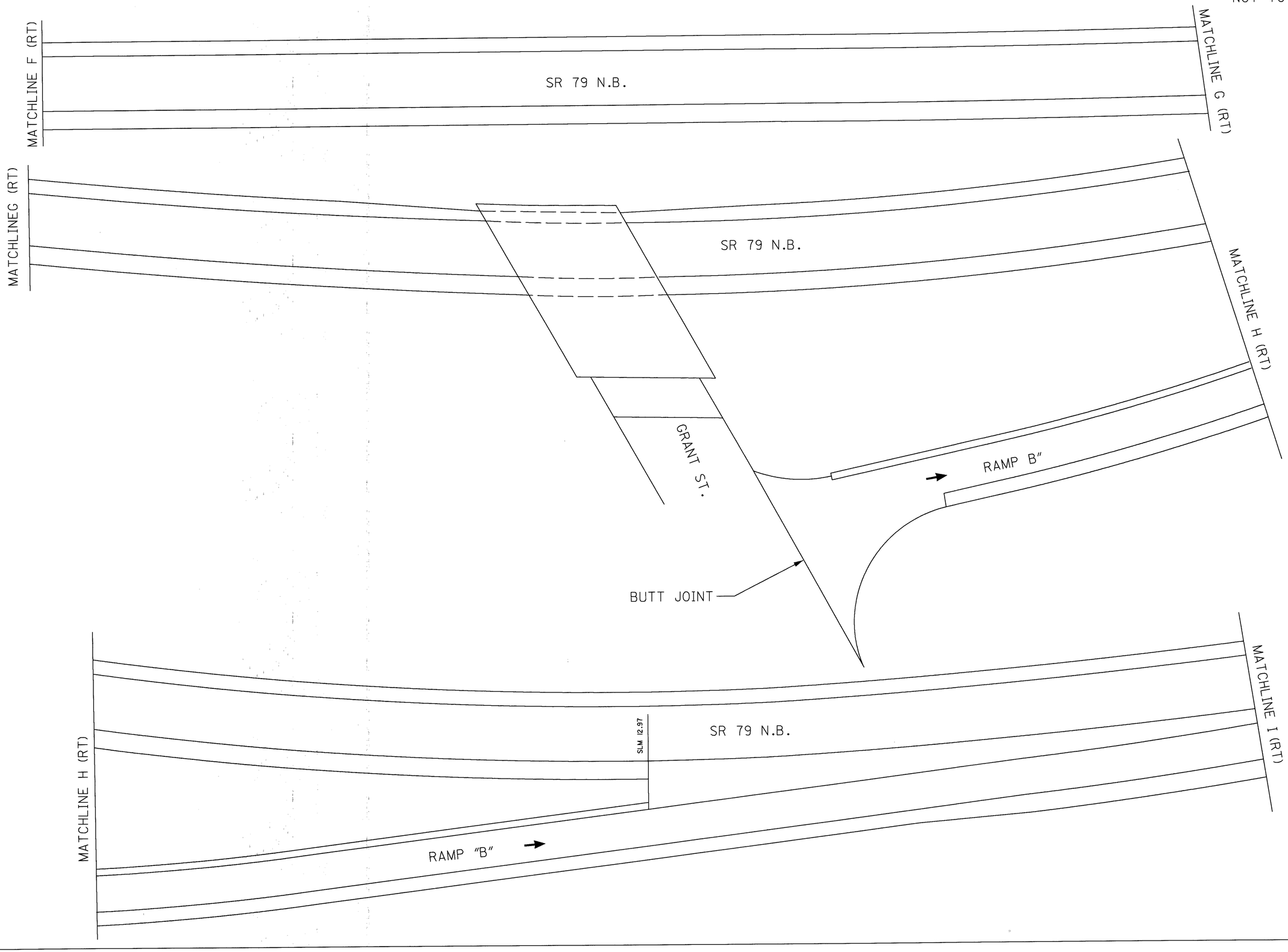

CALCULATED LME
CHECKED TJD

PLAN SHEET SR 79 N.B.

LIC-16-21.44

19
57

L0160022.MPL 2-25-99

NOT TO SCALE

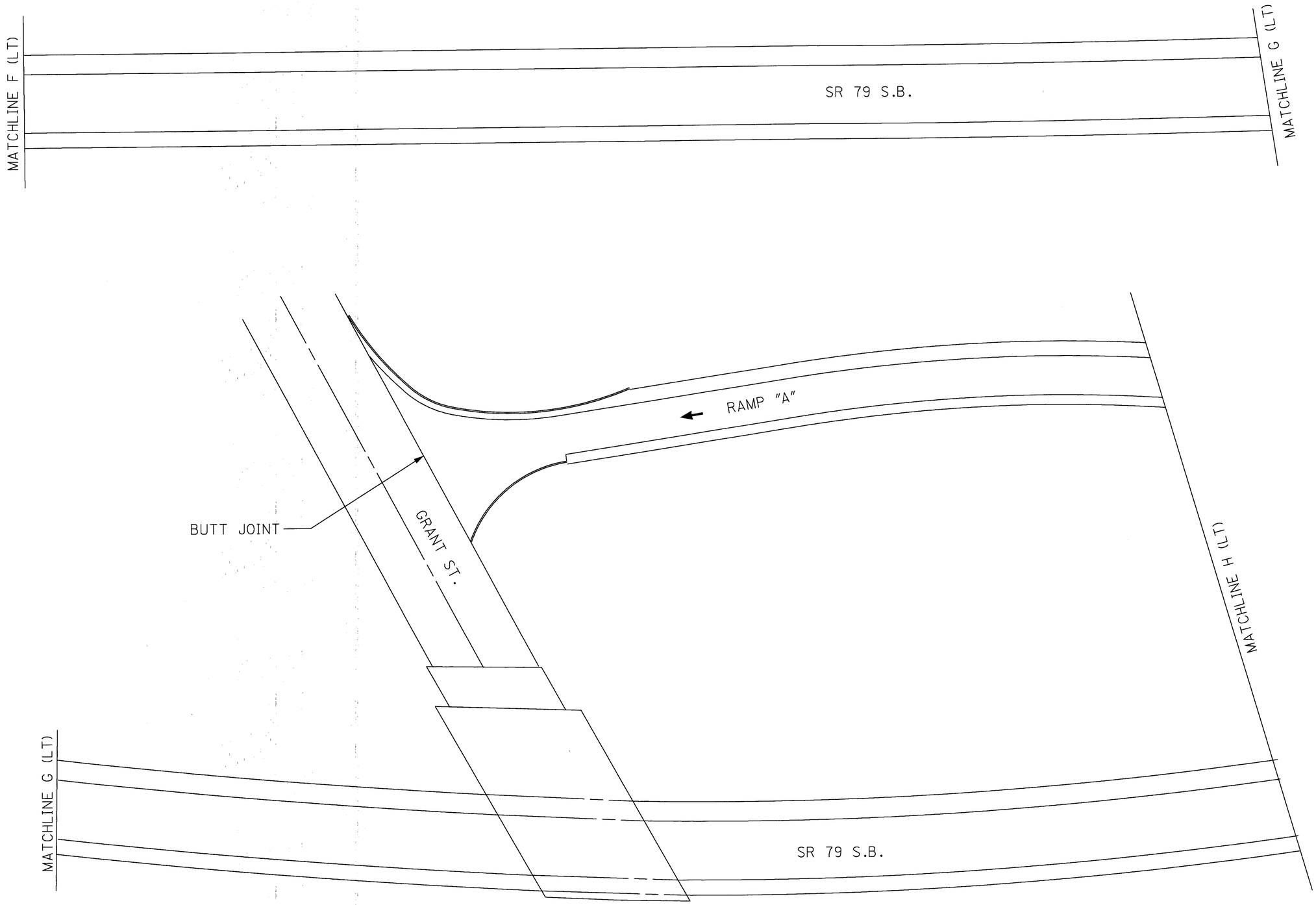

CALCULATED LME
CHECKED TJD

PLAN SHEET SR 79 S.B.

LIC-16-21.44

20/57

L0160007.MPL 2-24-99

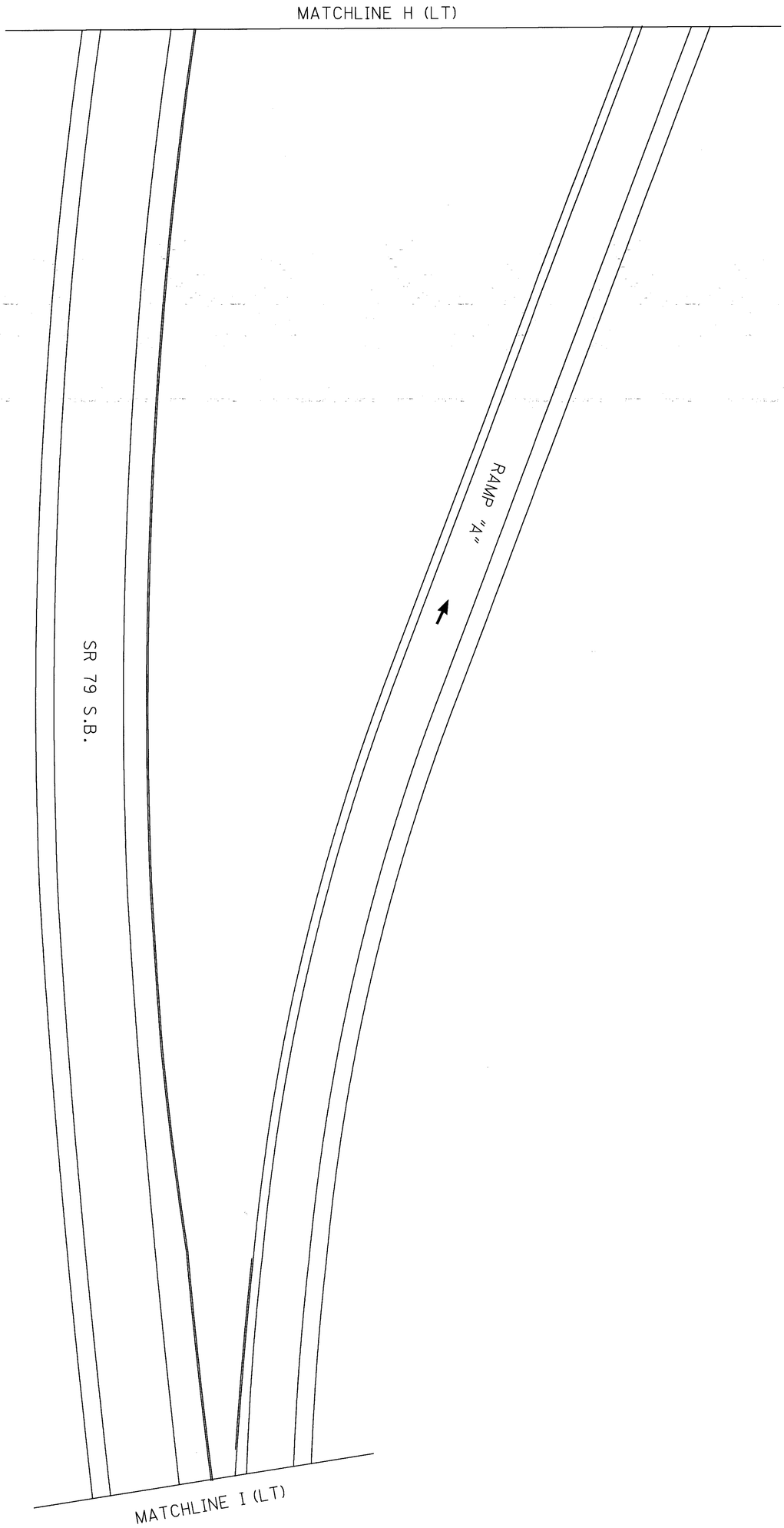

NOT TO SCALE

LIC-16-21.44

PLAN SHEET SR 79 S.B.

CALCULATED LME

CHECKED TJD

NOT TO SCALE

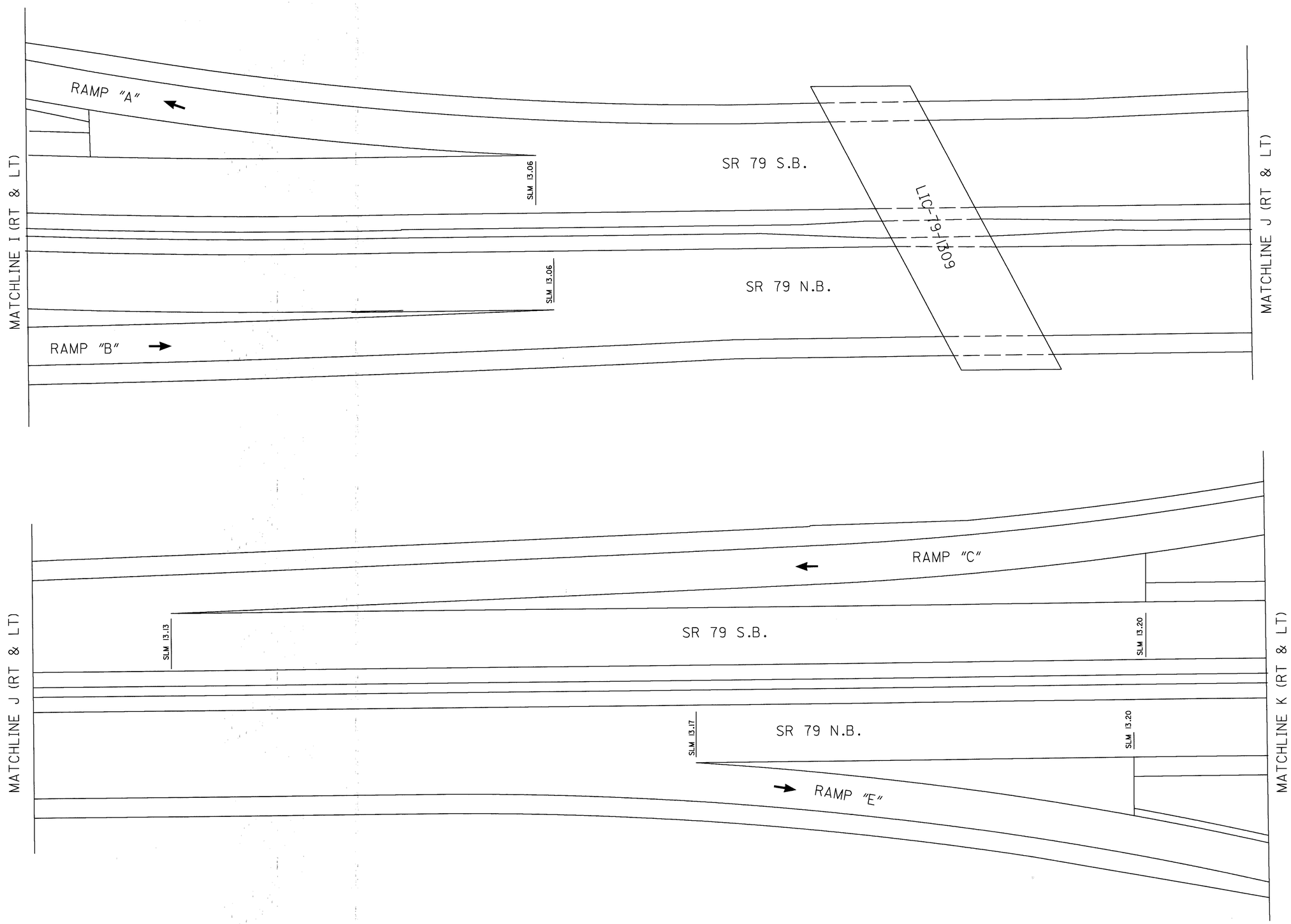

CALCULATED LME
CHECKED TJD

PLAN SHEET SR 79 N.B. & S.B.

LIC-16-21.44

L0160011.MPL 2-24-99

L0160020.MPL 2-24-99

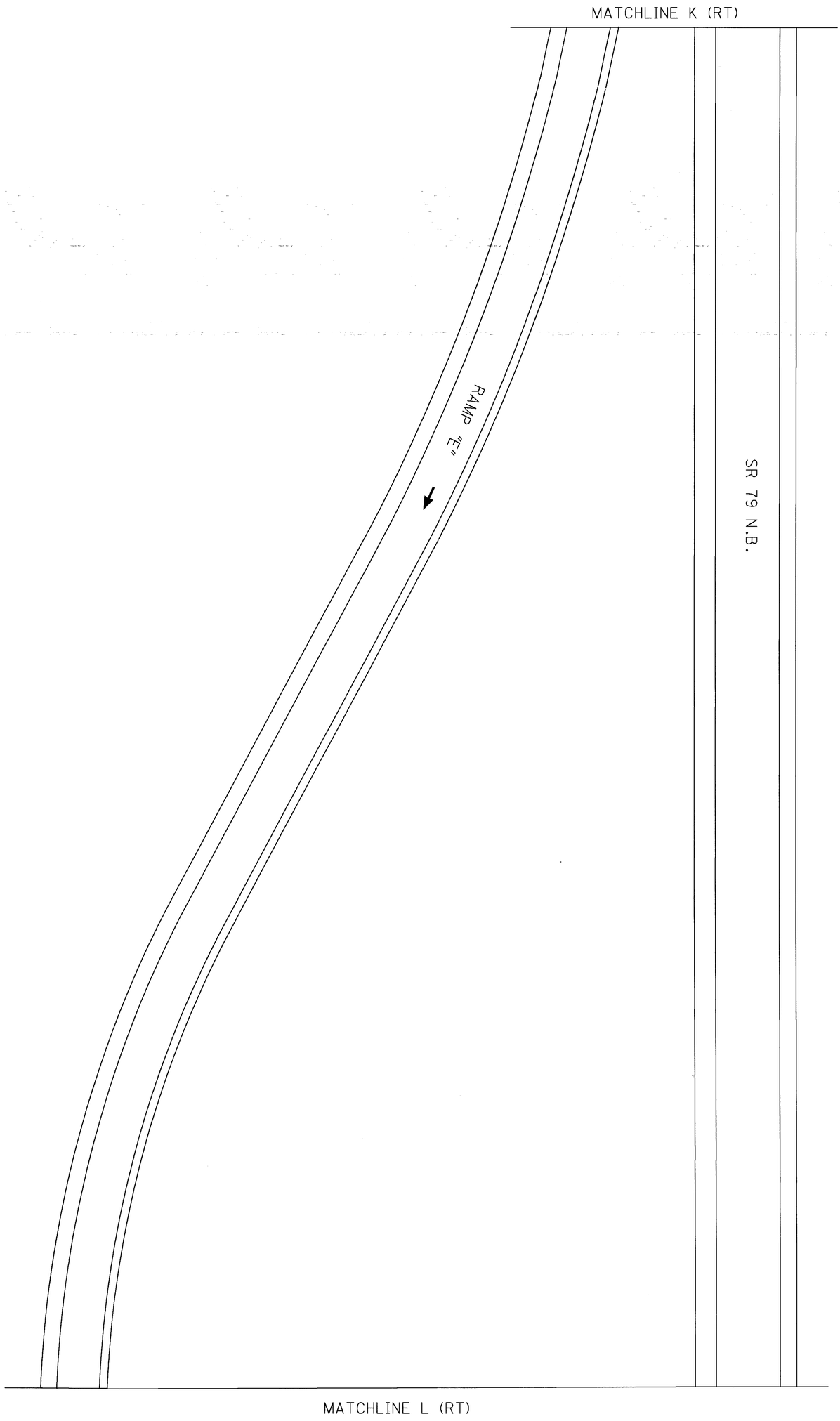

NOT TO SCALE

23/57	LIC-16-21.44	PLAN SHEET SR 79 N.B.	CALCULATED LME / CHECKED TJD	N

NOT TO SCALE

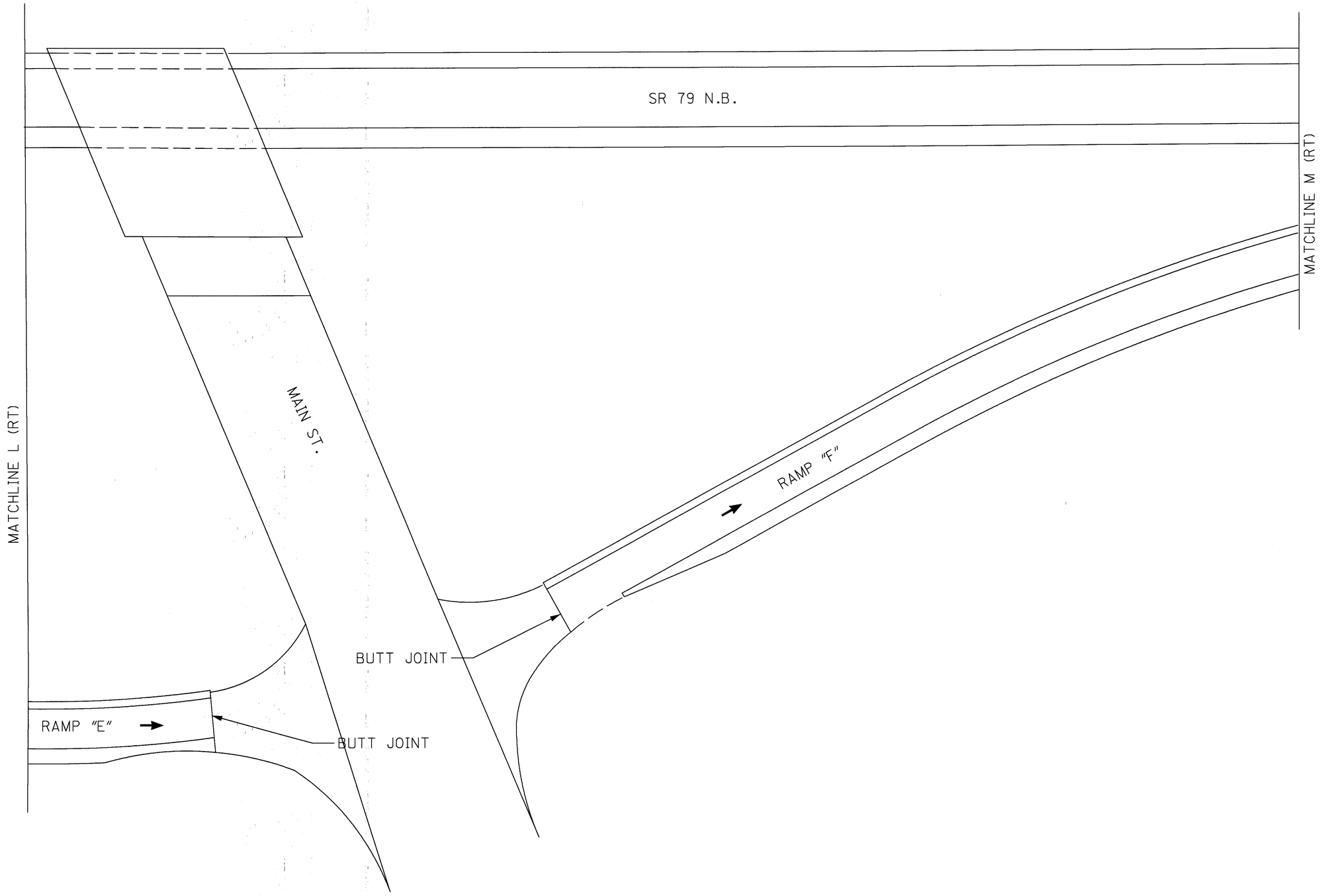

CALCULATED LME
CHECKED TJD

PLAN SHEET SR 79 N.B.

LIC-16-21.44

24
57

\\\\\ L0160019.MPL 2-24-99

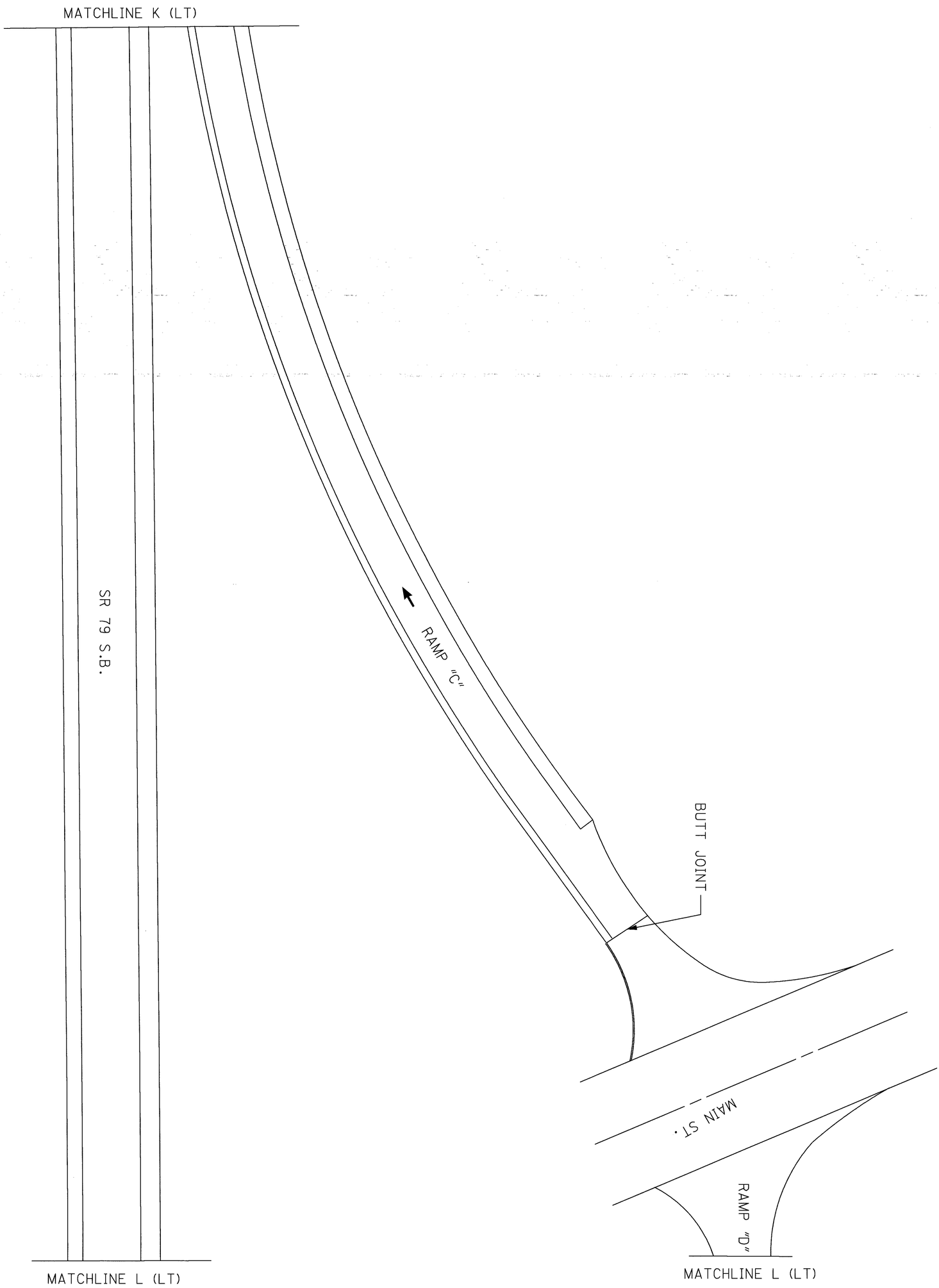

NOT TO SCALE

LIC-16-21.44

PLAN SHEET SR 79 S.B.

CALCULATED LME
CHECKED TJD

NOT TO SCALE

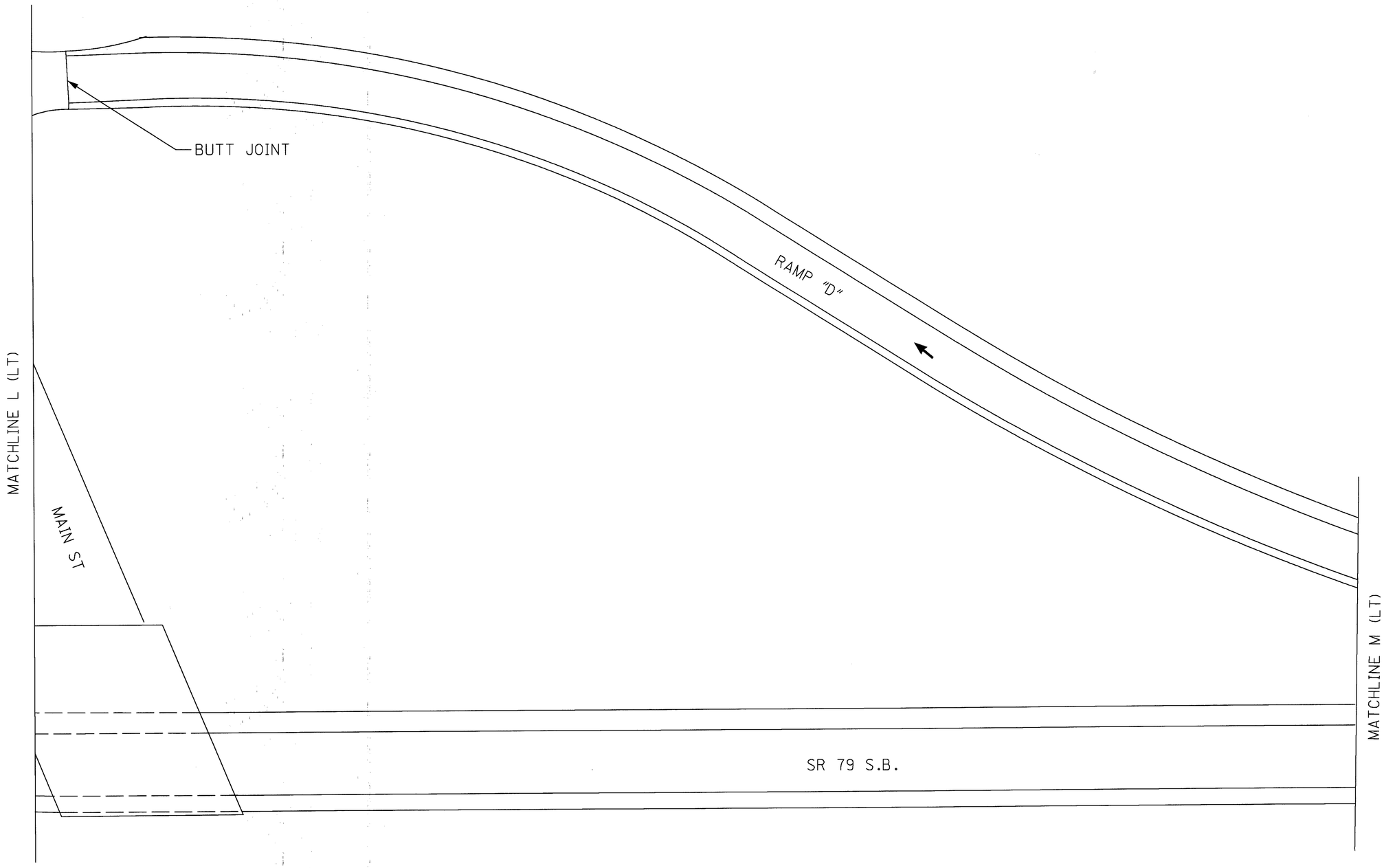

CALCULATED LME
CHECKED TJD

PLAN SHEET SR 79 S.B.

LIC-16-21.44

26
57

\\\\ L0160003.MPL 2-24-99

NOT TO SCALE

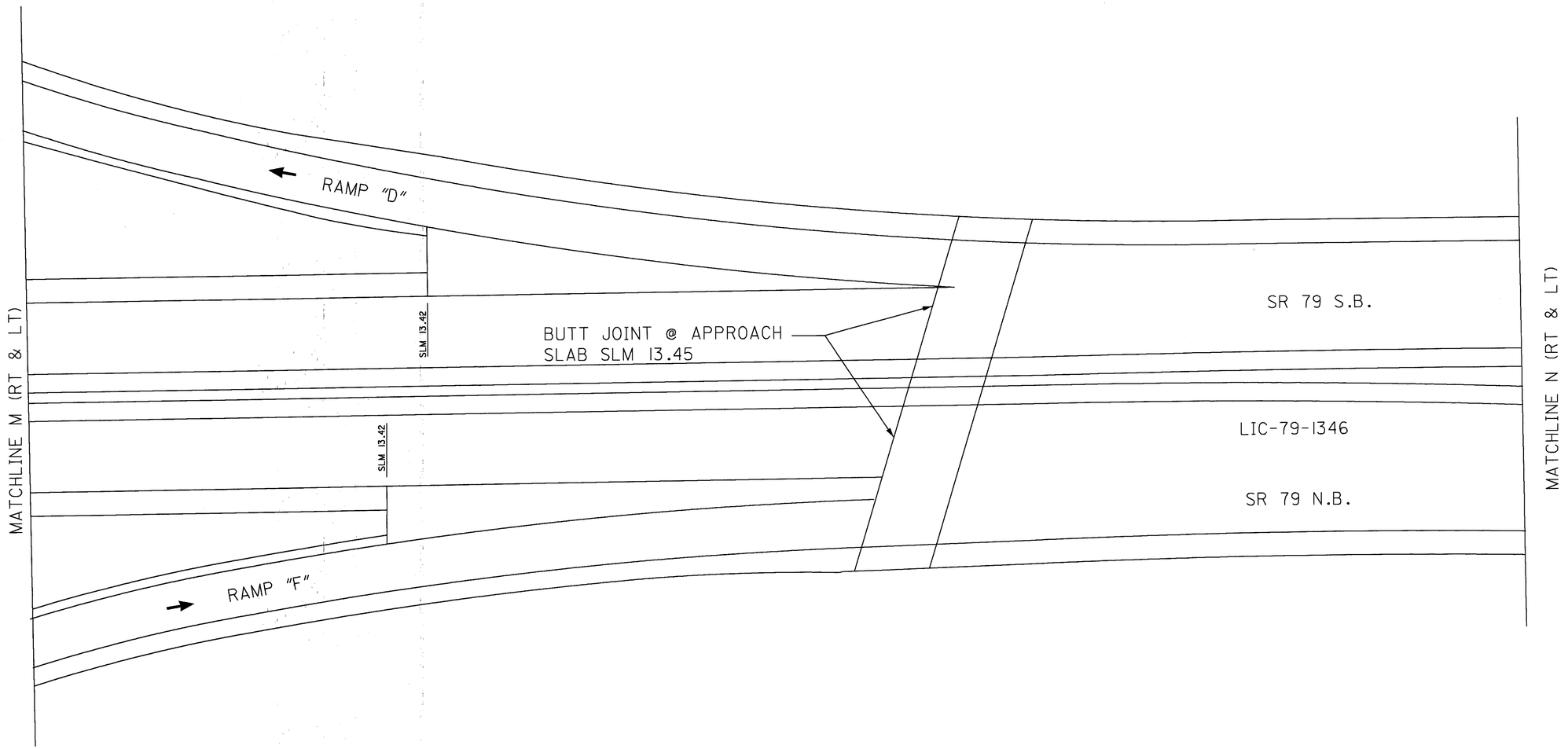

CALCULATED LME
CHECKED TJD

PLAN SHEET SR 79 N.B. & S.B.

LIC-16-21.44

L0160009.MPL 2-24-99

NOT TO SCALE

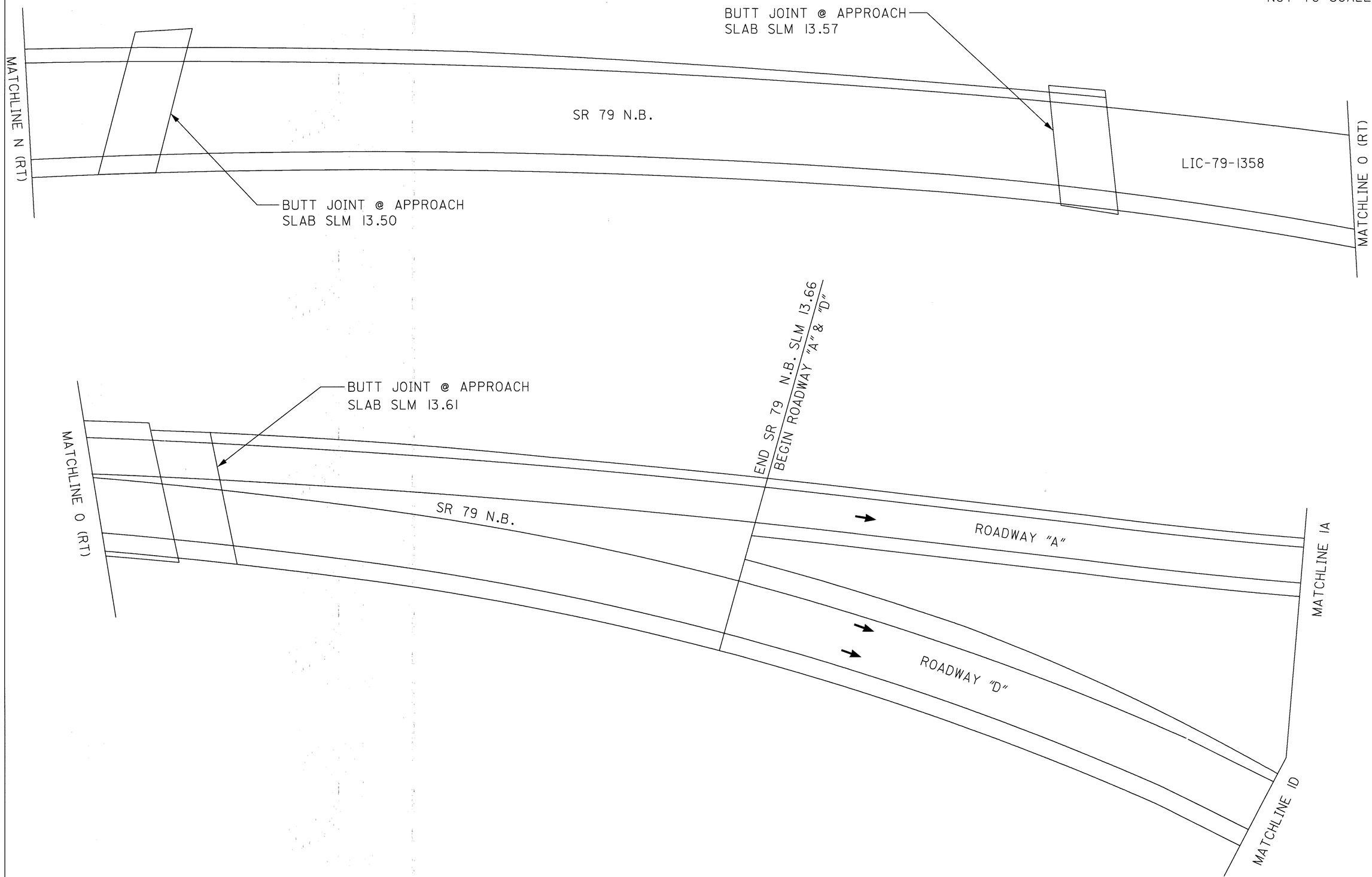

HORIZONTAL SCALE IN FEET

CALCULATED LME
CHECKED TJD

PLAN SHEET SR 79 N.B.

LIC-16-21.44

L016001B.MPL 2-24-99

NOT TO SCALE

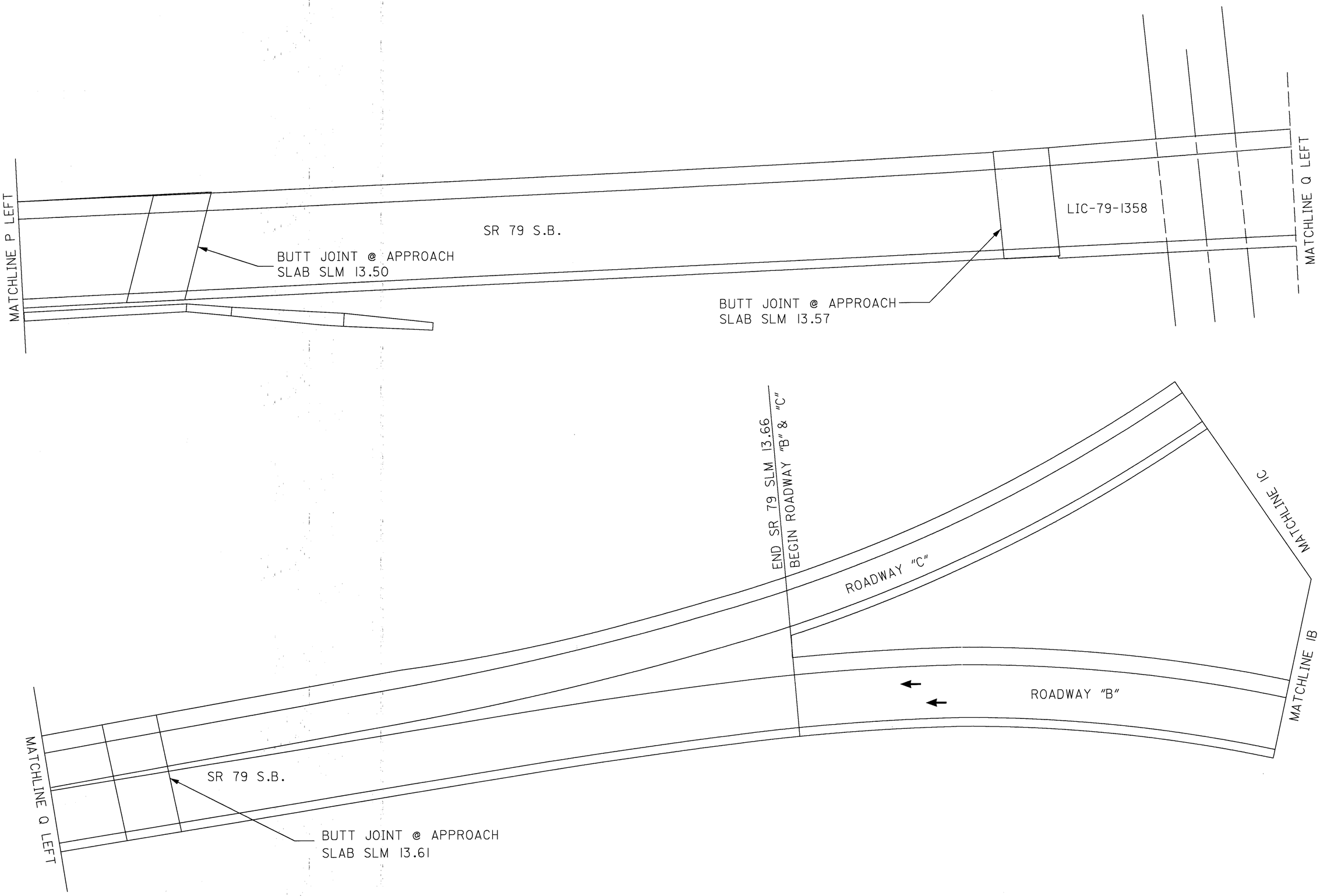

CALCULATED LME
CHECKED TJD

PLAN SHEET SR 79 S.B.

LIC-16-21.44

\\t010100002.MPL 2-24-99

NOT TO SCALE

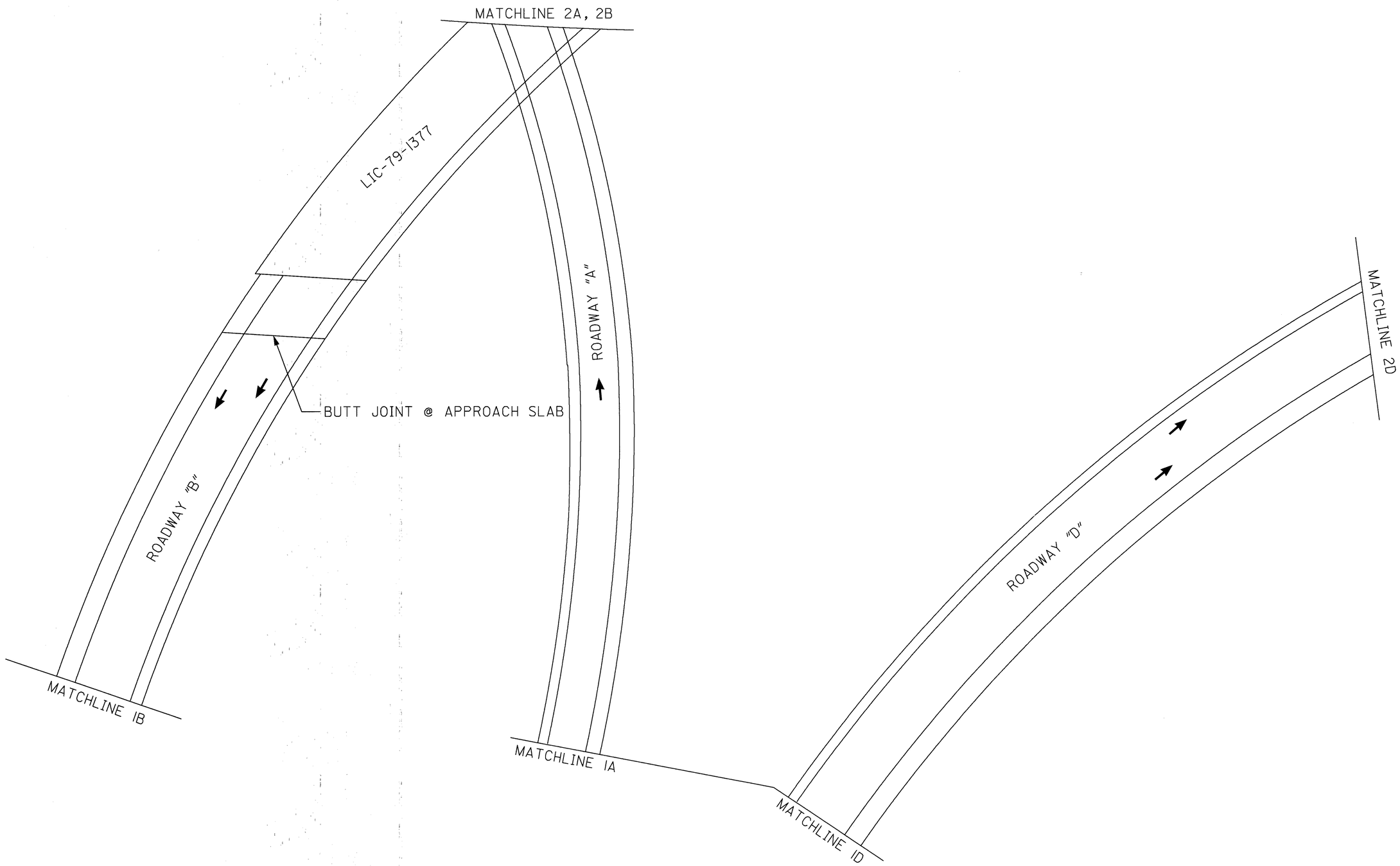

CALCULATED LME
CHECKED TJD

PLAN SHEET ROADWAYS "A", "B" & "D"

LIC-16-21.44

30
57

\\\\L0160028.MPL 2-25-99

NOT TO SCALE

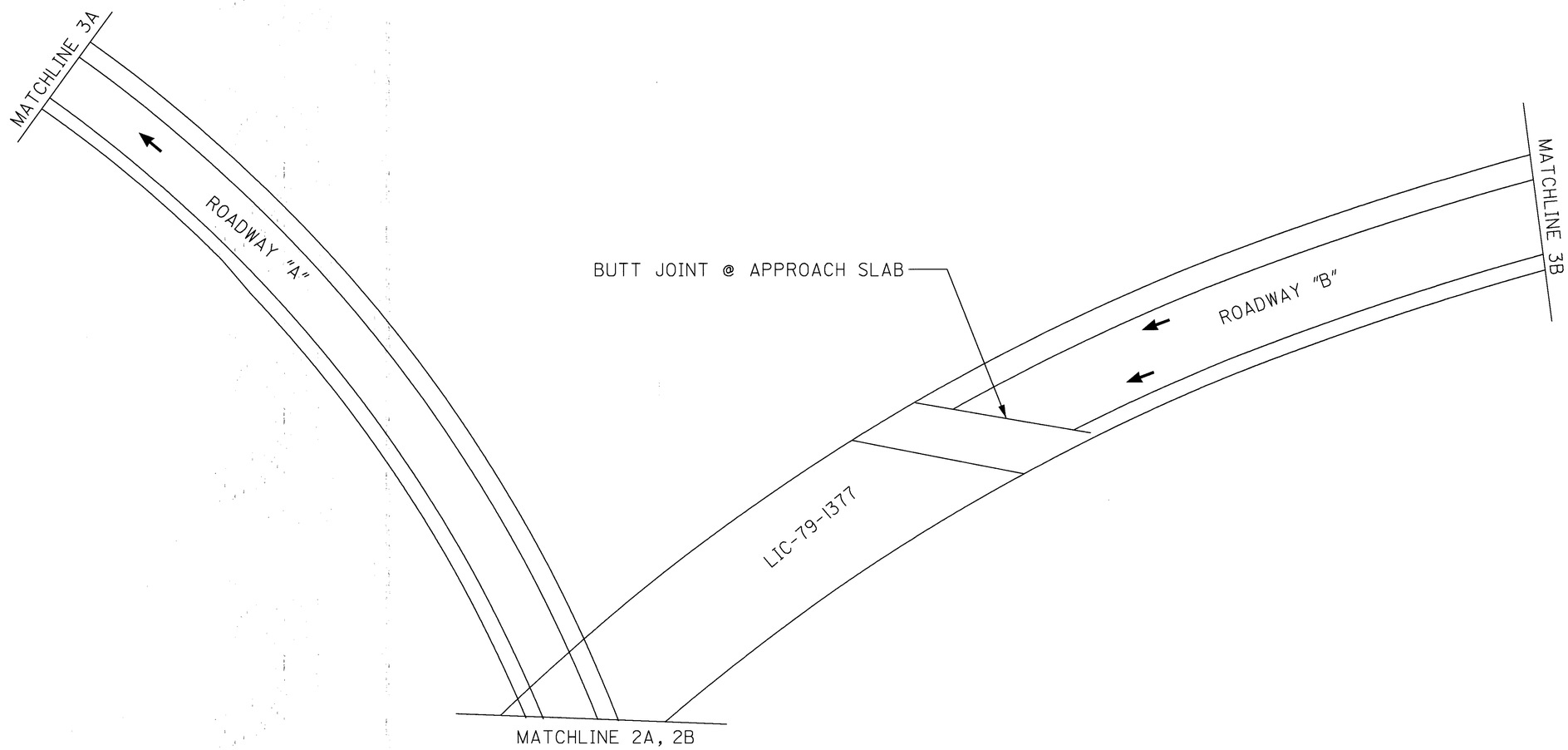

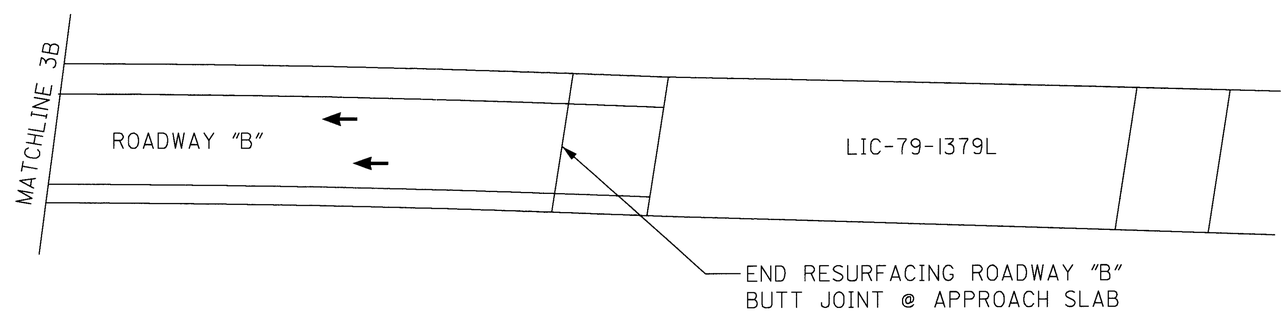

CALCULATED LME
CHECKED TJD

PLAN SHEET ROADWAY "B" & "A"

LIC-16-21.44

\\\\ L0160029.MPL 2-25-99

NOT TO SCALE

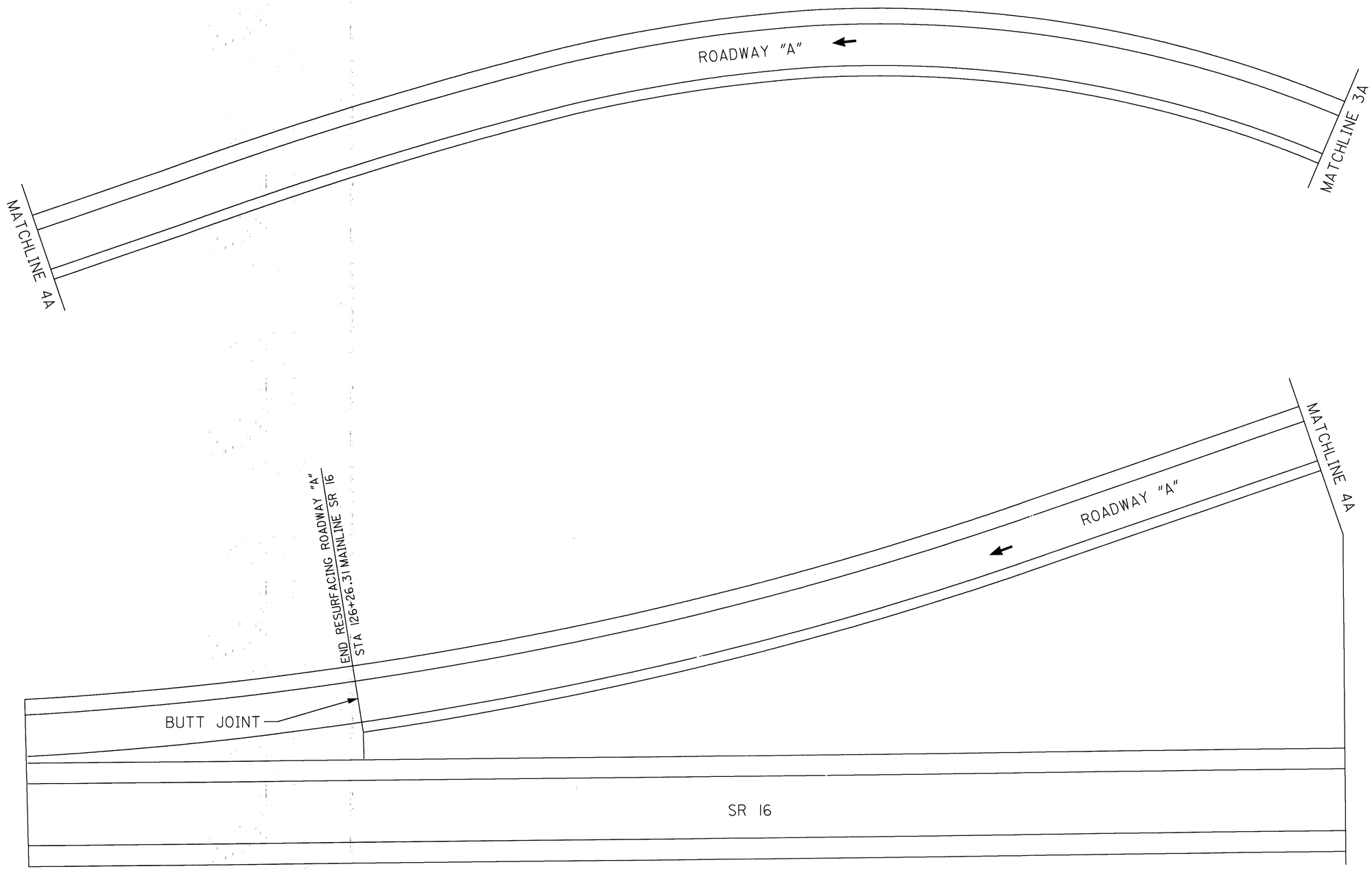

CALCULATED LME
CHECKED TJD

PLAN SHEET ROADWAY "A"

LIC-16-21.44

L016031.MPL 2-25-99

NOT TO SCALE

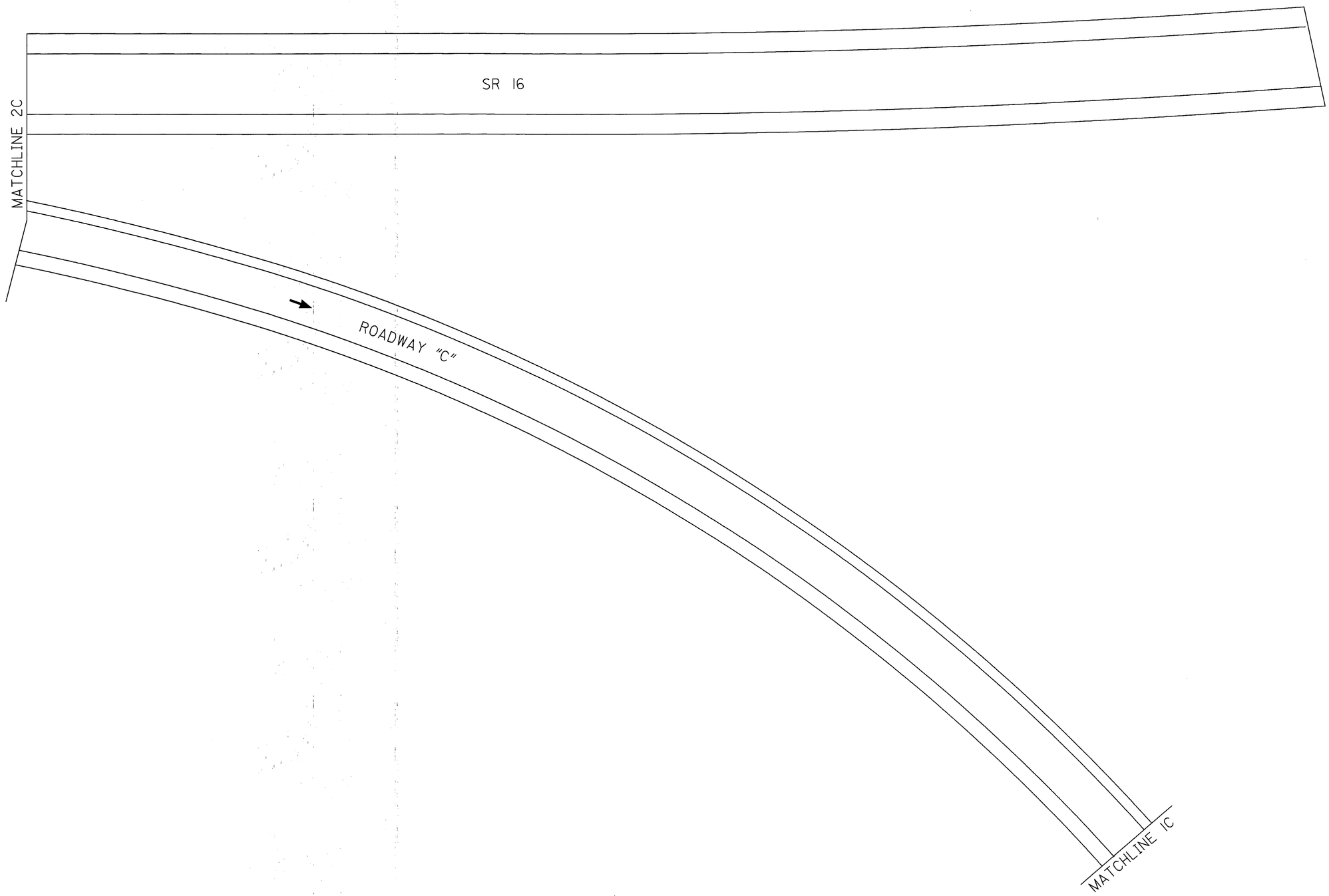

CALCULATED LME
CHECKED TJD

PLAN SHEET ROADWAY "C"

LIC-16-21.44

33
57

LO160030.MPL 2-25-99

NOT TO SCALE

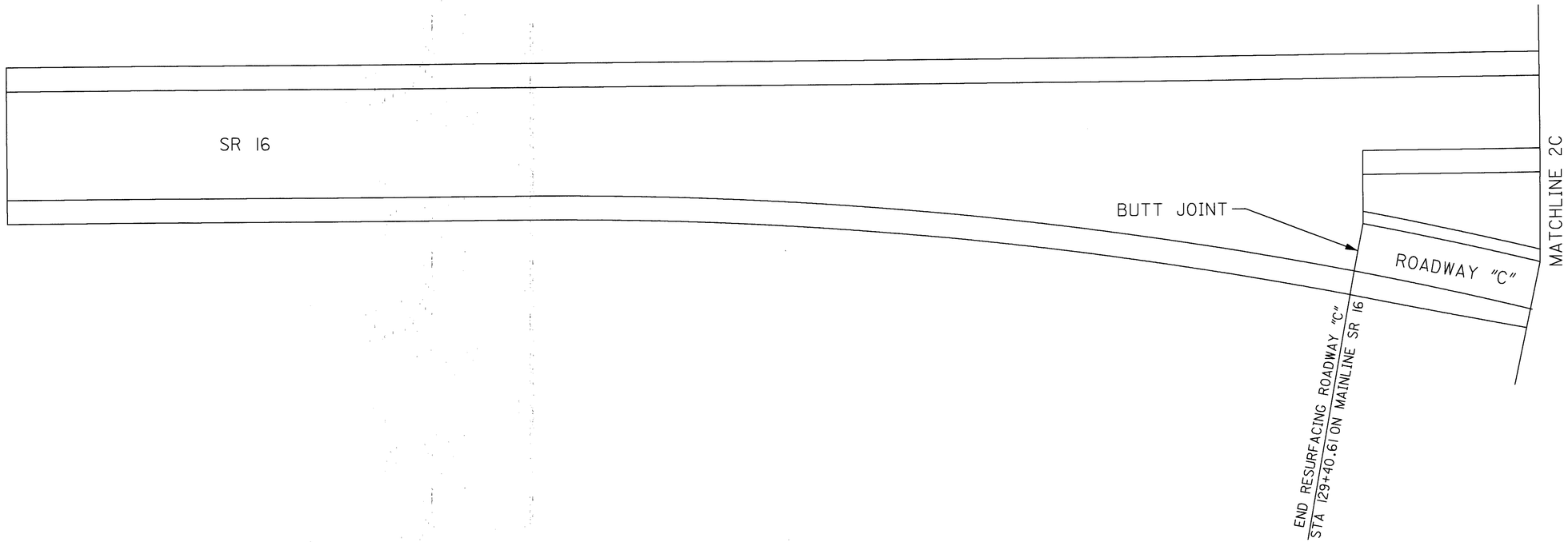

CALCULATED LME
CHECKED TJD

PLAN SHEET ROADWAY "C"

LIC-16-21.44

\\\\ L0160032.MPL 2-25-99

NOT TO SCALE

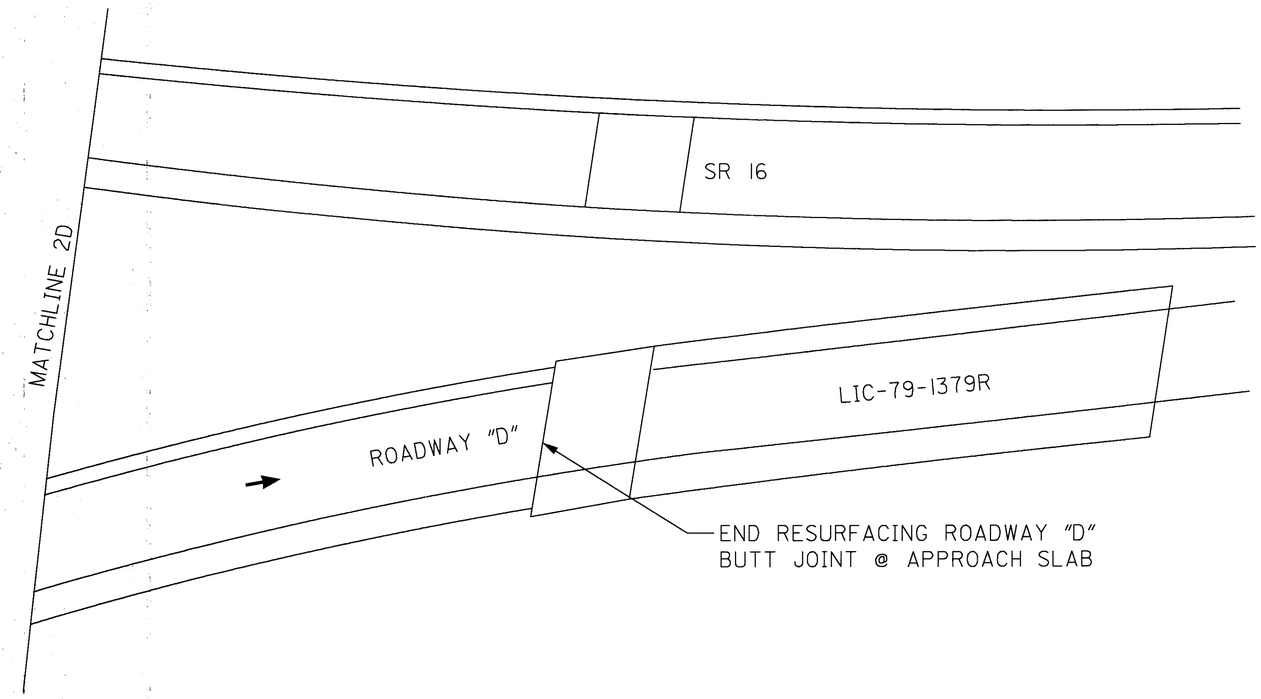

CALCULATED LME
CHECKED TJD

PLAN SHEET ROADWAY "D"

LIC-16-21.44

35
57

L0160026.MPL 2-25-99

DEPARTMENT OF TRANSPORTATION
M&R707 REV. 9-1-83

ASPHALT CONCRETE

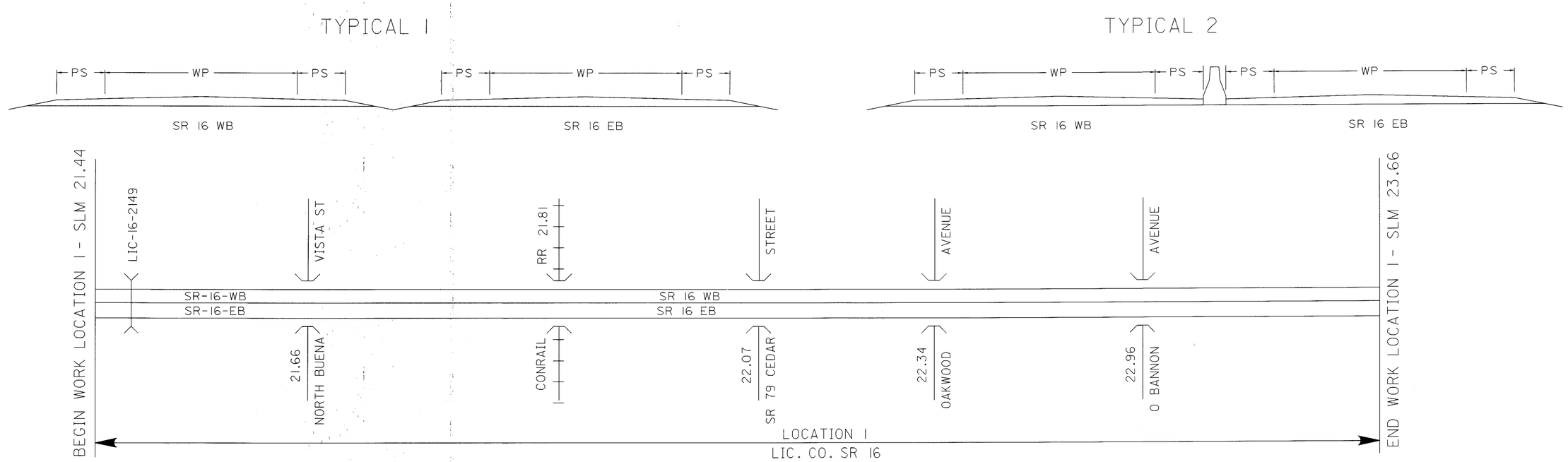

BRIDGE DEDUCTIONS ( )

PAVEMENT DATA

LOCATION	ROUTE	LOG POINT TO LOG POINT	LENGTH MILES	LENGTH FEET	WP FEET	TYPICAL	EXISTING TYPE PAVEMENT	PAVEMENT AREA SQ.YD.	PROPOSED PAVEMENT 407 TACK COAT FOR INTERMEDIATE @ 0.05 GAL/S.Y. GALLON	407 TACK COAT, 702.13 @ 0.075 GAL/S.Y. GALLON	446 ASPHALT CONCRETE THICK AVG. INCHES	INTERMEDIATE COURSE, TYPE 2, PG 64-28 CU.YD.	THICK AVG. INCHES	SURFACE COURSE, TYPE IH CU.YD.	254 PAVEMENT PLANING, BITUMINOUS (AVG. DEPTH 3.0") SQ.YD.	614 TEMPORARY EDGE LINE CLASS I MILE	614 TEMPORARY LANE LINE CLASS II MILE
		EASTBOUND															
1	SR 16	21.44 - 23.45	2.01	10613	24	2	404	28301	1415	2122	1.75	1375.7	1.50	1179.2	28301	8.04	4.02
		23.45 - 23.66	0.21	1109	24	1	404	2957	148	222	1.75	143.7	1.50	123.2	2957	0.84	0.42
		WEST BOUND															
1	SR 16	21.44 - 23.45	2.01	10613	24	2	404	28301	1415	2122	1.75	1375.7	1.50	1179.2	28301	8.04	4.02
		23.45 - 23.66	0.21	1109	24	1	404	2957	148	222	1.75	143.7	1.50	123.2	2957	0.84	0.42
	BRIDGE	DEDUCTIONS						(5894)	(295)	(442)		(286.5)		(245.6)	(5894)	(1.67)	(0.84)
	TOTAL	LOCATION 1 CARRIED TO SUB SUMMARY						56622	2831	4246		2752.3		2359.2	56622	16.09	8.04

CALCULATED LME
CHECKED TJD

ASPHALT CONCRETE DATA

LIC-16-21.44

36
57

L0160001.MAC 2-22-99

DOT 1920

DEPARTMENT OF TRANSPORTATION
M&R707 REV. 9-1-83

ASPHALT CONCRETE

CALCULATED LME
CHECKED TJD

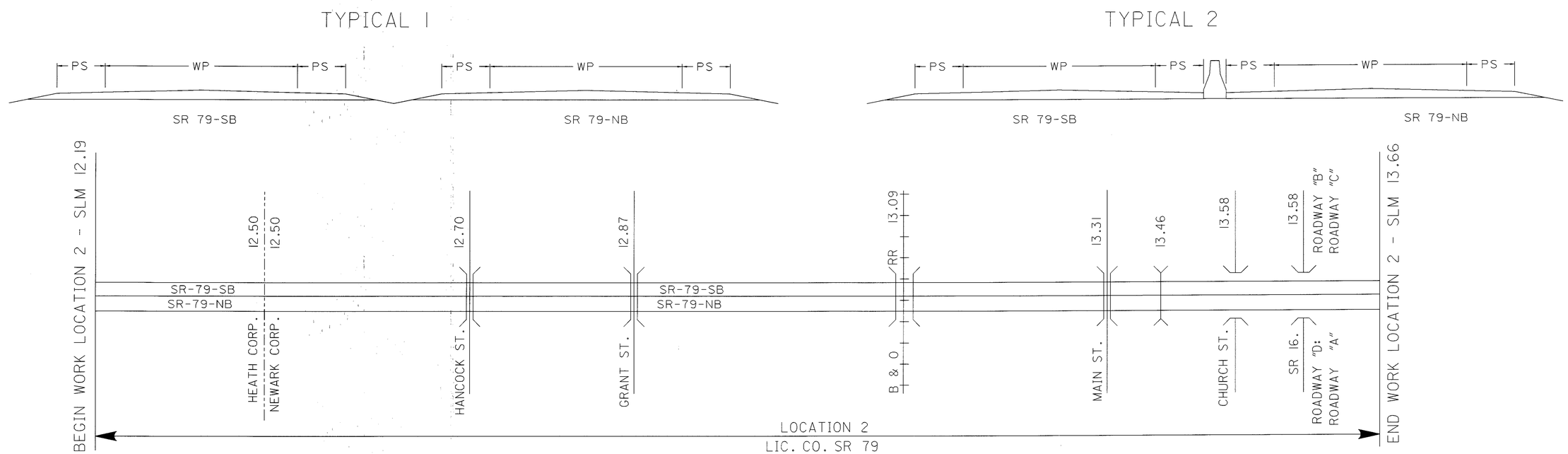

DEDUCTIONS ( ) PAVEMENT DATA

LOCATION	ROUTE	LOG POINT TO LOG POINT	LENGTH MILES	LENGTH FEET	WP FEET	TYPICAL	EXISTING TYPE PAVEMENT	PAVEMENT AREA SQ.YD.	PROPOSED PAVEMENT 407 TACK COAT INTERMEDIATE COURSE @ 0.05 GAL/S.Y. GALLON	407 TACK COAT, @ 0.075 GAL/S.Y. GALLON	446 ASPHALT CONCRETE THICK AVG. INCHES	446 INTERMEDIATE COURSE, TYPE 2, PG 64-28 CU.YD.	446 THICK AVG. INCHES	446 SURFACE COURSE, TYPE IH CU.YD.	254 PAVEMENT PLANING, BITUMINOUS (AVG. DEPTH 3.0") SQ.YD.	614 TEMPORARY EDGE LINE CLASS I MILE	614 TEMPORARY LANE LINE CLASS II MILE		614 TEMPORARY CENTERLINE CLASS II MILE	
2	SR 79	12.19-12.47	0.28	1478	60 (AVG)	1	404	9853	493	739	1.75	479.0	1.50	410.5	9853	0.112			0.56	
		NORTH BOUND																		
2	SR 79	12.47-13.06	0.59	3115	24	2	404	8307	415	623	1.75	403.8	1.50	346.1	8307	2.36	1.18			
		13.06-13.17	0.11	581	36	2	404	2324	116	174	1.75	113.0	1.50	96.8	2324	0.44	0.22			
		13.17-13.45	0.28	1478	24	2	404	3941	197	296	1.75	191.6	1.50	164.2	3941	1.12	0.56			
		13.50-13.57	0.07	370	38 (AVG)	2	404	1562	78	117	1.75	75.9	1.50	65.1	1562	0.28	0.14			
		13.61-13.66	0.05	264	54 (AVG)	2	404	1584	79	119	1.75	77.0	1.50	66.0	1564	0.20	0.10			
		ROADWAY A	0.31	1662		1	404	4801	240	360	1.75	233.4	1.50	200.0	4801	1.24				
		ROADWAY D	0.13	669		1	404	2793	140	209	1.75	135.8	1.50	116.4	2793	0.52				
		SOUTH BOUND																		
2	SR 79	12.47-12.48	0.01	53	37 (AVG)	2	404	218	11	16	1.75	10.6	1.50	9.1	218	0.04	0.02			
		12.48-13.06	0.58	3115	24	2	404	8304	415	623	1.75	403.7	1.50	346.0	8304	2.32	1.16			
		13.06-13.13	0.07	370	36	2	404	1480	74	111	1.75	71.9	1.50	61.7	1480	0.28	0.14			
		13.13-13.45	0.32	1690	24	2	404	4507	225	338	1.75	219.1	1.50	187.8	4507	1.28	0.64			
		13.50-13.57	0.07	370	36 (AVG)	2	404	1480	74	111	1.75	71.9	1.50	61.7	1480	0.28	0.14			
		13.61-13.66	0.05	264	53 (AVG)	2	404	1525	76	114	1.75	74.1	1.50	63.5	1525	0.20	0.10			
		ROADWAY B	0.19	999		1	404	2725	136	204	1.75	132.5	1.50	113.5	2725	0.76				
		ROADWAY C	0.14	759		1	404	2194	110	164	1.75	106.6	1.50	91.4	2194	0.56				
	TOTAL LOCATION 2 CARRIED TO SUB SUMMAY								2879	4318		2799.9		2399.8	57578	11.99	4.40		0.56	

ASPHALT CONCRETE DATA

LIC-16-21.44

L0160002.MAC 2-22-99

DOT 1920

DEPARTMENT OF TRANSPORTATION
M & R 684 REV.9-1-79

PAVED SHOULDERS

TYPICAL 1

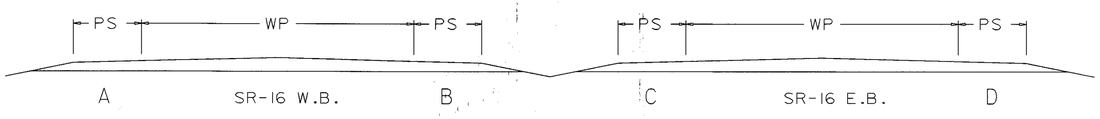

TYPICAL 2

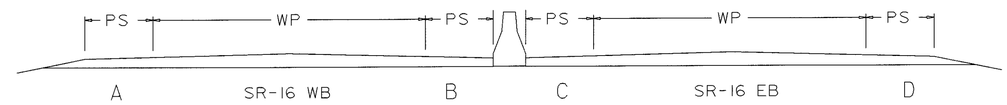

DEDUCTIONS ()

PAVED SHOULDER DATA

LOCATION	ROUTE	LOG POINT TO LOG POINT	LENGTH MILE	LENGTH FEET	TYPICAL	PROPOSED WIDTH (FEET) A	B	C	D	SHOULDER AREA SQ.YD.	407 TACK COAT, 702.13 @ 0.075 GAL/S.Y. GALLON	TACK COAT FOR INTERMEDIATE COURSE @ 0.05 GAL/S.Y. GALLON	446 ASPHALT CONCRETE THICK AVG. INCH	INTERMEDIATE COURSE, TYPE 2, PG 64-28 CU.YD.	THICK AVG. INCH	SURFACE COURSE, TYPE IH CU.YD.	254 PAVEMENT PLANING, BITUMINOUS (AVG. 3.0" IN DEPTH) SQ.YD.	617 SHOULDER PREPARATION SQ.YD.	WATER M.GAL			*NOTES
		EASTBOUND																				
1	SR 16	21.44-21.57	.13	686	2			3.75	8	896	67	45	1.75	43.6	1.25	31.1	896					
		21.57-21.58	.01	53	2			3.75	7	63	5	3	1.75	3.1	1.25	2.2	63					
		21.58-21.60	.02	106	2			3.75	6	115	9	6	1.75	5.6	1.25	4.0	115					
		21.60-22.08	.48	2534	2			3.75	8	3308	248	165	1.75	160.8	1.25	114.9	3308					
		22.08-22.10	.02	106	2			3.75	15	221	16	11	1.75	10.7	1.25	7.7	221					
		22.10-23.00	.90	4752	2			3.75	8	6204	465	310	1.75	301.6	1.25	215.4	6204					
		23.00-23.03	.03	158	2			3.75	15	329	25	16	1.75	16.0	1.25	11.4	329					
		23.03-23.45	.42	2218	2			3.75	8	2896	217	145	1.75	140.8	1.25	100.6	2896					
		23.45-23.66	.21	1109	1			3.75	8	1448	109	72	1.75	70.4	1.25	50.3	1448					
1	SR 16	WEST BOUND																				
		21.44-21.55	.11	581	2	8	3.75			758	57	38	1.75	36.8	1.25	26.3	758					
		21.55-21.56	.01	53	2	7	3.75			63	5	3	1.75	3.1	1.25	2.2	63					
		21.56-21.58	.02	106	2	5	3.75			103	8	5	1.75	5.0	1.25	3.6	103					
		21.58-22.32	.74	3907	2	8	3.75			5101	382	255	1.75	248.0	1.25	177.1	5101					
		22.32-22.35	.03	158	2	15	3.75			329	25	16	1.75	16.0	1.25	11.4	329					
		22.35-22.56	.21	1109	2	8	3.75			1448	109	72	1.75	70.4	1.25	50.3	1448					
		22.56-22.64	.08	422	2	5.5	3.75			434	32	22	1.75	21.1	1.25	15.1	434					
TOTAL CARRIED TO NEXT SHEET			3.42	18058						23716	1779	1184		1153.0		823.6	23716					

CALCULATED LME
CHECKED TJD

PAVED SHOULDERS

LIC-16-21.44

L0160001.MPS 2-22-99

DEPARTMENT OF TRANSPORTATION
M & R 684 REV.9-1-79

PAVED SHOULDERS

TYPICAL 1

TYPICAL 2

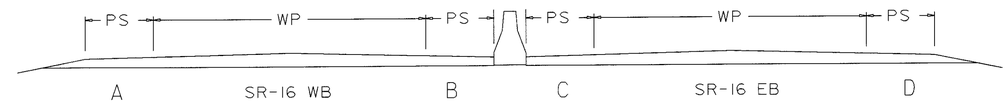

DEDUCTIONS ()

PAVED SHOULDER DATA

LOCATION	ROUTE	LOG POINT TO LOG POINT	LENGTH MILE	LENGTH FEET	TYPICAL	PROPOSED WIDTH (FEET) A	B	C	D	SHOULDER AREA SQ.YD.	407 TACK COAT, 702.13 @ 0.075 GAL/S.Y. GALLON	TACK COAT FOR INTERMEDIATE COURSE @ 0.05 GAL/S.Y. GALLON	446 ASPHALT CONCRETE THICK AVG. INCH	INTERMEDIATE COURSE, TYPE 2, PG 64-28 CU.YD.	THICK AVG. INCH	SURFACE COURSE, TYPE IH CU.YD.	254 PAVEMENT PLANING, BITUMINOUS (AVG. 3.0" IN DEPTH) SQ.YD.	617 SHOULDER PREPARATION SQ.YD.	WATER M.GAL			* NOTES
		WEST BOUND																				
1	SR 16	22.64-23.18	.54	2851	2	8	3.75			3722	279	186	1.75	180.9	1.25	129.2	3722					
		23.18-23.21	.03	158	2	15	3.75			329	25	16	1.75	16.0	1.25	11.4	329					
		23.21-23.42	.21	1109	2	8	3.75			1448	109	72	1.75	70.4	1.25	50.3	1448					
		23.42-23.45	.03	158	2	15	3.75			329	25	16	1.75	16.0	1.25	11.4	329					
		23.45-23.66	.21	1109	1	8	3.75			1448	109	72	1.75	70.4	1.25	50.3	1448					
	TOTAL THIS SHEET		1.02	5385						7276	547	362		353.7		252.6	7276					
TOTAL FROM PREVIOUS SHEET			3.42	18058						23716	1779	1184		1153.0		823.6	23716					
	TOTAL LOCATION 1		4.44	23443						30992	2326	1546		1506.7		1076.2	30992					
	CARRIED TO																					
	SUB SUMMARY																					

CALCULATED LME
CHECKED TJD

PAVED SHOULDERS

LIC-16-21.44

L0160004.MPS 2-22-99

DEPARTMENT OF TRANSPORTATION
M & R 684 REV.9-1-79

PAVED SHOULDERS

TYPICAL 1

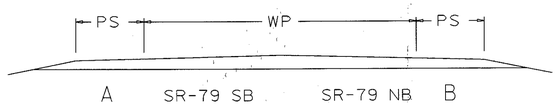

TYPICAL 2

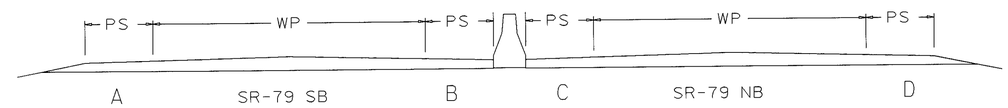

* AREA INCLUDED WITH RAMP QUANTITIES

DEDUCTIONS ()

PAVED SHOULDER DATA

LOCATION	ROUTE	LOG POINT TO LOG POINT	LENGTH MILE	LENGTH FEET	TYPICAL	PROPOSED WIDTH (FEET) A	B	C	D	SHOULDER AREA SQ.YD.	407 TACK COAT @ 0.075 GAL/S.Y. GALLON	TACK COAT FOR INTERMEDIATE COURSE @ 0.05 GAL/S.Y. GALLON	446 ASPHALT CONCRETE THICK AVG. INCH	INTERMEDIATE COURSE, TYPE 2, PG 64-28 CU.YD.	THICK AVG. INCH	SURFACE COURSE, TYPE 1H CU.YD.	254 PAVEMENT PLANING, BITUMINOUS (AVG. 3.25" IN DEPTH) SQ.YD.	617 SHOULDER PREPARATION SQ.YD.	WATER M.GAL			* NOTES
2	SR 79	12.19-12.47	0.28	1478	1	8	8			2628	197	131	1.75	127.8	1.50	109.5	2628					
		NORTH BOUND																				
		12.47-12.97	0.50	2640	2			6.25	8	4180	314	209	1.75	203.2	1.50	174.2	4180					
		12.97-13.06	0.09	475	2			6.25	*	330	25	16	1.75	16.0	1.50	13.8	330					
		13.06-13.17	0.11	581	2			6.25	8	920	69	45	1.75	44.7	1.50	38.3	920					
		13.17-13.20	0.03	158	2			6.25	*	110	8	6	1.75	5.3	1.50	4.6	110					
		13.20-13.42	0.22	1162	2			6.25	8	1840	138	92	1.75	89.4	1.50	76.7	1840					
		13.42-13.45	0.03	158	2			6.25	*	110	8	6	1.75	5.3	1.50	4.6	110					
		13.50-13.57	0.07	370	2			6.25	8	585	44	29	1.75	28.4	1.50	24.4	585					
		13.61-13.66	0.05	2640	2			6.25	8	4180	314	209	1.75	203.2	1.50	174.2	4180					
		SOUTH BOUND																				
2	SR 79	12.47-12.48	0.01	53	2	8	6.25			84	6	4	1.75	4.1	1.50	3.5	84					
		12.48-12.52	0.04	211	2	*	6.25			147	11	7	1.75	7.1	1.50	6.1	147					
		12.52-13.03	0.51	2693	2	8	6.25			4264	320	213	1.75	207.3	1.50	177.7	4264					
		13.03-13.06	0.03	158	2	*	6.25			110	8	6	1.75	5.3	1.50	4.6	110					
		13.06-13.13	0.07	370	2	8	6.25			585	44	29	1.75	28.4	1.50	24.4	585					
		13.13-13.20	0.07	370	2	*	6.25			257	19	13	1.75	12.5	1.50	10.7	257					
		13.20-13.42	0.22	1162	2	8	6.25			1840	138	77	1.75	89.4	1.50	76.7	1840					
	TOTALS CARRIED TO NEXT SHEET									22170	1663	1092		1077.4		924.0	22170					

CALCULATED LME
CHECKED TJD

PAVED SHOULDERS

LIC-16-21.44

L0160002.MPS 2-23-99

DEPARTMENT OF TRANSPORTATION
M & R 684 REV.9-1-79

PAVED SHOULDERS

TYPICAL 1

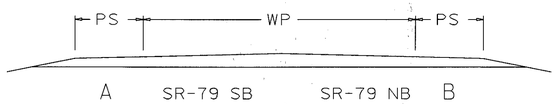

TYPICAL 2

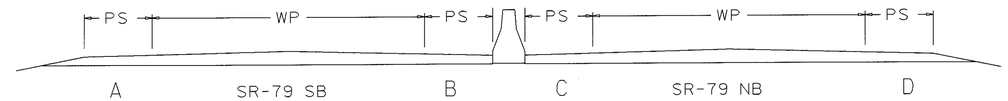

* AREA INCLUDED WITH RAMP QUANTITIES

DEDUCTIONS ()

PAVED SHOULDER DATA

LOCATION	ROUTE	LOG POINT TO LOG POINT	LENGTH MILE	LENGTH FEET	TYPICAL	PROPOSED WIDTH (FEET) A	B	C	D	SHOULDER AREA SQ.YD.	407 TACK COAT @ 0.075 GAL/S.Y. GALLON	TACK COAT FOR INTERMEDIATE COURSE @ 0.05 GAL/S.Y. GALLON	446 ASPHALT CONCRETE THICK AVG. INCH	INTERMEDIATE COURSE, TYPE 2, PG 64-28 CU.YD.	THICK AVG. INCH	SURFACE COURSE, TYPE IH CU.YD.	254 PAVEMENT PLANING, BITUMINOUS (AVG. 3.25" IN DEPTH) SQ.YD.	617 SHOULDER PREPARATION SQ.YD.	WATER M.GAL			*NOTES
		SOUTH BOUND																				
2	SR 79	13.42-13.45	0.03	158	*	6.25				110	8	6	1.75	5.3	1.50	4.6	110					
		13.50-13.57	0.07	370	8	6.25				585	44	29	1.75	28.4	1.50	24.4	585					
		13.61-13.66	0.05	264	8	6.25				418	31	21	1.75	20.3	1.50	17.4	418					
	TOTALS THIS SHEET									1113	83	56		54.0		46.4	1113					
	TOTALS FROM PREVIOUS SHEET									22170	1663	1092		1077.4		924.0	22170					
	TOTALS LOCATION 2 CARRIED TO THE SUB SUMMARY									23283	1746	1148		1131.4		970.4	23283					

CALCULATED LME
CHECKED TJD

PAVED SHOULDERS

LIC-16-21.44

L0160005.MPS 2-23-99

TREATMENT ON RAMPS

ALL AREAS TAKEN FROM PREVIOUS CONSTRUCTION PLAN

LOCATION	ROUTE	RAMP LENGTH	DESCRIPTION	AREA IN SQ.YDS.	PROPOSED ITEMS										
					407		446 ASPHALT CONCRETE				254				
					TACK COAT FOR INTERMEDIATE @ 0.050 GAL/S.Y. GALLON	TACK COAT, 702.13 @ 0.075 GAL/S.Y. GALLON	THICK INCH	INTERMEDIATE COURSE, TYPE 2 PG-64-28 CU.YD.	THICK INCH	SURFACE COURSE, TYPE IH CU.YD.	PAVEMENT PLANING, BITUMINOUS (3.25" AVG.) SQ.YD.	EXISTING SURFACE			
			EAST BOUND												
1	SR 16	332	RAMP D (BUENA VISTA STREET)	638	32	48	1.75	31.0	1.25	22.2	638				
		545	RAMP C (CEDAR STREET)	1550	78	116	1.75	75.3	1.25	53.8	1550				
		817	RAMP D (CEDAR STREET)	1472	74	110	1.75	71.6	1.25	51.1	1472				
		65	SIDE RAMP (CEDAR STREET) D	185	9	14	1.75	9.0	1.25	6.4	185				
		704	RAMP C (O BANNON AVENUE)	1333	67	100	1.75	64.8	1.25	46.3	1333				
		873	RAMP D (O BANNON AVENUE)	1620	81	122	1.75	78.8	1.25	56.2	1620				
			WEST BOUND												
1	SR 16	450	RAMP E (BUENA VISTA STREET)	880	44	66	1.75	42.8	1.25	30.6	880				
		558	RAMP B (CEDAR STREET)	1090	54	82	1.75	53.0	1.25	37.8	1090				
		752	RAMP A (CEDAR STREET)	1367	68	102	1.75	66.4	1.25	47.5	1367				
		68	SIDE RAMP A	180	9	14	1.75	8.8	1.25	6.2	180				
		587	RAMP B (O BANNON AVENUE)	1129	56	85	1.75	54.9	1.25	39.2	1129				
		677	RAMP A (O BANNON AVENUE)	1282	64	96	1.75	62.3	1.25	44.5	1282				
			TOTAL LOCATION 1 CARRIED TO SUB SUMMAY		636	955		618.7		441.8	12726				

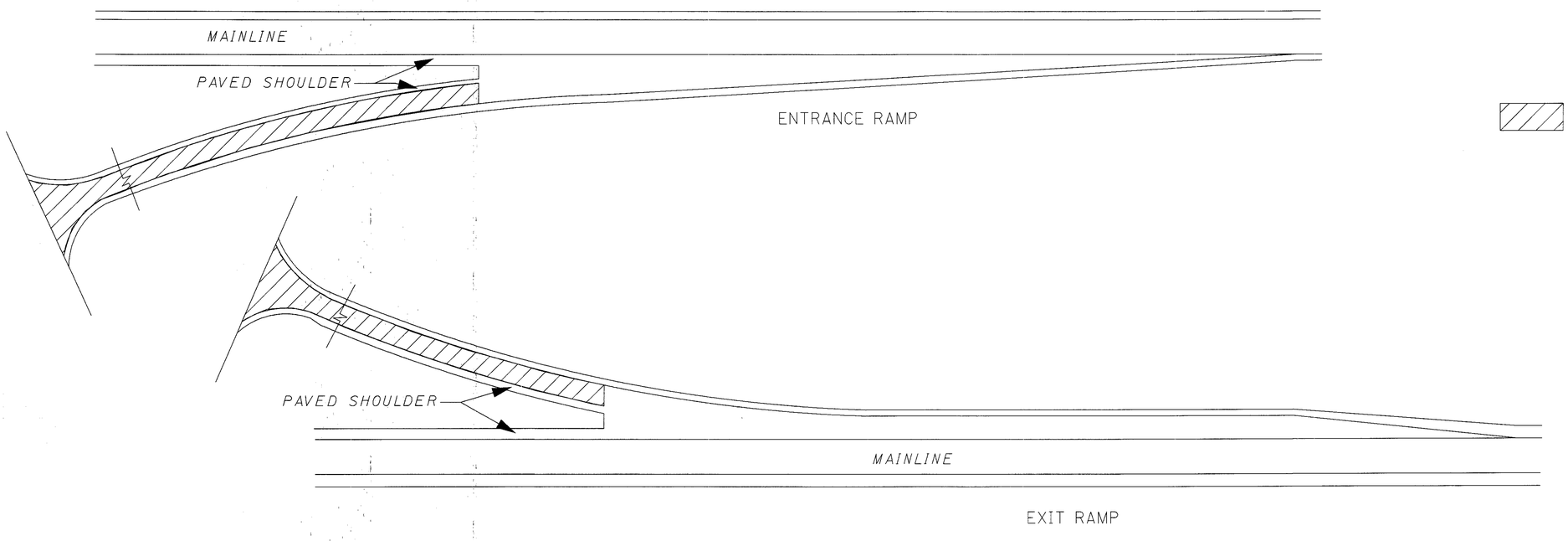

RAMP AREA THAT IS TO BE PLANED AND RESURFACED (RAMP SHOULDER TREATMENT SHOWN ON SHEET 42)

CALCULATED LME
CHECKED TJD

TREATMENT ON RAMPS

LIC-16-21.44

TREATMENT ON RAMPS

ALL AREAS TAKEN FROM PREVIOUS CONSTRUCTION PLAN

INCLUDES SHOULDERS
LEFT AND RIGHT

LOCATION	ROUTE	RAMP LENGTH	DESCRIPTION	AREA IN SQ.YDS.	PROPOSED ITEMS										
					407		446 ASPHALT CONCRETE				254				
					TACK COAT @ 0.075 GAL/S.Y. GALLON	TACK COAT, INTERMEDIATE COURSE @ 0.05 GAL/S.Y. GALLON	THICK INCH	INTERMEDIATE COURSE, TYPE 2 PG-64-28 CU.YD.	THICK INCH	SURFACE COURSE, TYPE IH CU.YD.	PAVEMENT PLANING, BITUMINOUS (3.25" AVG.) SQ.YD.	EXISTING SURFACE			
			NORTH BOUND												
2	SR 79		UNION STREET OFF RAMP	613	46	31	1.75	29.8	1.50	25.5	613	404			
			RAMP B	2790	209	140	1.75	135.6	1.50	116.2	2790	404			
			RAMP E	2332	175	117	1.75	113.4	1.50	97.2	2332	404			
			RAMP F	1639	123	82	1.75	79.7	1.50	68.3	1639	404			
2	SR 79		SOUTH BOUND												
			WILLIAMS ST. RAMP	940	71	47	1.75	45.7	1.50	39.2	940	404			
			RAMP A	3030	227	152	1.75	147.3	1.50	126.2	3030	404			
			RAMP C	2276	171	114	1.75	110.6	1.50	94.8	2276	404			
			RAMP D	2322	174	116	1.75	112.9	1.50	96.8	2322	404			
			TOTAL LOCATION 2 CARRIED TO SUB SUMMAY		1196	799		775.0		664.2	15942				

CALCULATED LME
CHECKED TJD

TREATMENT ON RAMPS

LIC-16-21.44

L0160003.MEA 2-22-99

TREATMENT ON GORE AREAS

ALL AREAS TAKEN FROM PREVIOUS CONSTRUCTION PLAN

LOCATION	ROUTE	LOG POINT TO LOG POINT	DESCRIPTION	AREA IN SQ.YDS.	PROPOSED ITEMS										
					407		446 ASPHALT CONCRETE				254				
					TACK COAT INTERMEDIATE COURSE @ 0.05 GAL/S.Y. GALLON	TACK COAT, 702.13 @ 0.075 GAL/S.Y. GALLON	THICK INCH	INTERMEDIATE COURSE, TYPE 2 PG 64-28 CU.YD.	THICK INCH	SURFACE COURSE, TYPE IH CU.YD.	PAVEMENT PLANING, BITUMINOUS (3.0" AVG.) SQ.YD.	EXISTING SURFACE			
1	SR 16	EASTBOUND	RAMP D (BUENA VISTA) DECELERATION LANE	284	14	21	1.75	13.8	1.50	11.8	284	404			
			RAMP CE (CEDAR STREET) DECELERATION LANE	588	29	44	1.75	28.6	1.50	24.5	588	404			
			RAMP D (CEDAR STREET) ACCELERATION LANE	1420	71	106	1.75	69.0	1.50	59.2	1420	404			
			RAMP C (O BANNON AVENUE) DECELERATION LANE	1342	67	101	1.75	65.2	1.50	55.9	1342	404			
			RAMP D (O BANNON AVENUE) ACCELERATION LANE	1297	65	97	1.75	63.0	1.50	54.0	1297	404			
1	SR 16	WEST BOUND	RAMP E (BUENA VISTA STREET) ACCELERATION LANE	299	15	22	1.75	14.5	1.50	12.4	299	404			
			RAMP B (CEDAR STREET) DECELERATION LANE	1124	56	84	1.75	54.6	1.50	46.8	1124	404			
			RAMP A (CEDAR STREET) ACCELERATION LANE	902	45	68	1.75	43.8	1.50	37.6	902	404			
			RAMP B (O BANNON AVENUE) DECELERATION LANE	1370	68	103	1.75	66.6	1.50	57.1	1370	404			
			RAMP A (O BANNON AVENUE) ACCELERATION LANE	1556	78	117	1.75	75.6	1.50	64.8	1556	404			
			TOTAL LOCATION 1 CARRIED TO SUB SUMMARY		508	742		494.7		424.1	10182				

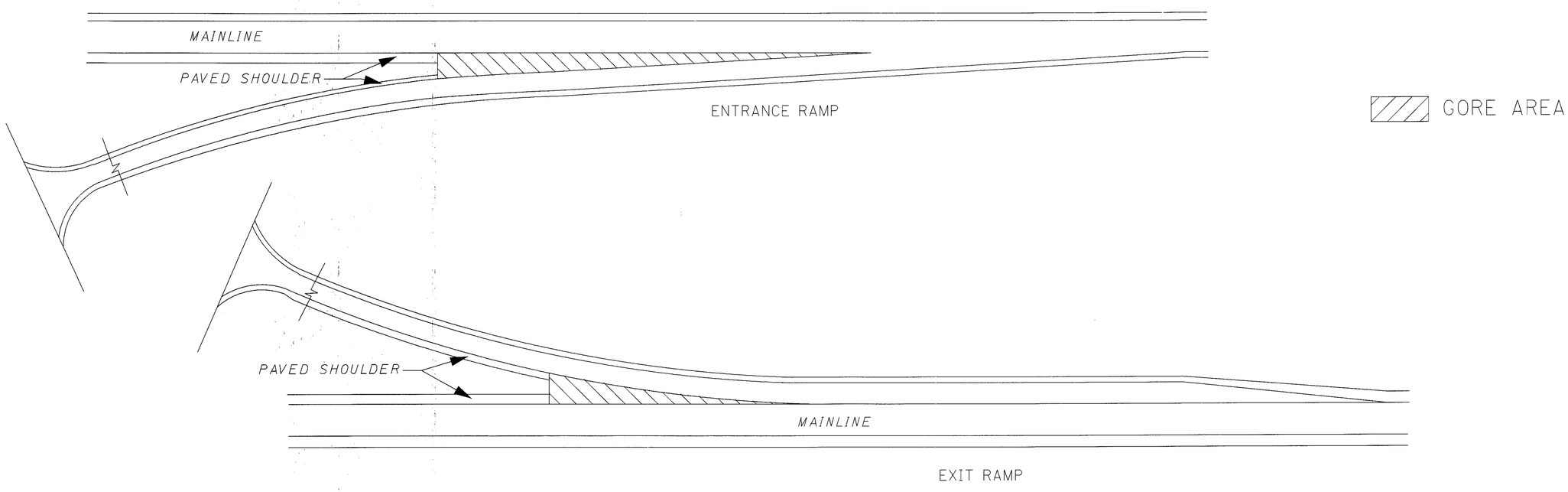

CALCULATED LME
CHECKED TJD

TREATMENT ON GORE AREAS

LIC-16-21.44

LO160002.MEA 2-22-99

DEPARTMENT OF TRANSPORTATION
M & R 684 REV.9-1-79

PAVED SHOULDERS ON RAMPS

TYPICAL 1

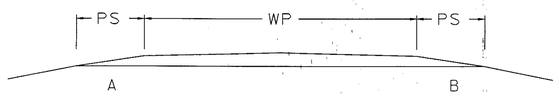

TYPICAL 2

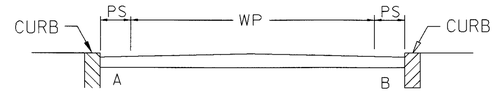

TYPICAL 3

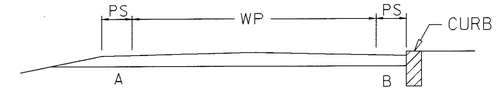

TYPICAL 4

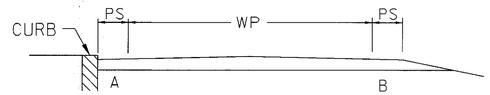

TYPICAL 5

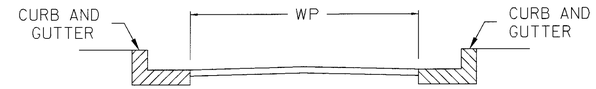

PAVED SHOULDER DATA

LOCATION	ROUTE	DESCRIPTION	LENGTH (FEET) A	LENGTH (FEET) B	TYPICAL	PROPOSED WIDTH (FEET) A	PROPOSED WIDTH (FEET) B	SHOULDER AREA SQ.YD.	407 TACK COAT FOR INTERMEDIATE COURSE @ 0.05 GAL/S.Y. GALLON	407 TACK COAT 702.13 @ 0.075 GAL/S.Y. GALLON	446 ASPHALT CONCRETE THICK INCHES	446 INTERMEDIATE COURSE, TYPE 2, PG 64-28 CU.YD.	446 THICK INCHES	446 SURFACE COURSE, TYPE IH CU.YD.	254 PAVEMENT PLANING, BITUMINOUS 3.0" AVERAGE DEPTH SQ.YD.					* NOTES
		EAST BOUND																		
1	SR 16	RAMP D (BUENA VISTA STREET)	318	244	1	4	6	304	15	23	1.75	14.8	1.50	12.7	304					
				50	1		4.5	25	1	2	1.75	1.2	1.50	1.0	25					
		RAMP C (CEDAR STREET)	488	143	1	3	5.5	250	12	19	1.75	12.2	1.50	10.4	250					
				343	1		3	114	6	8	1.75	5.5	1.50	4.8	114					
		RAMP D (CEDAR STREET)	488	637	1	3	3	375	19	28	1.75	18.2	1.50	15.6	375					
			150	250	1	2.5	5.5	194	10	14	1.75	9.4	1.50	8.1	194					
		SIDE RAMP	65		1	3		22	1	2	1.75	1.1	1.50	0.9	22					
		RAMP C (O BANNON AVENUE)	654	154	1	3	5.5	312	16	23	1.75	15.2	1.50	13.0	312					
				500	1		3	167	8	12	1.75	8.1	1.50	6.9	167					
		RAMP D (O BANNON AVENUE)	582	582	1	3	3	388	19	29	1.75	18.9	1.50	16.2	388					
			150	150	1	2.5	5.5	133	7	10	1.75	6.5	1.50	5.5	133					
		WEST BOUND																		
1	SR 16	RAMP E (BUENA VISTA STREET)	194	429	1	4	6	372	19	28	1.75	18.1	1.50	15.5	372					
		RAMP B (CEDAR STREET)	558	502	1	3	3	353	18	26	1.75	17.2	1.50	14.7	353					
		RAMP A (CEDAR STREET)	330	482	1	3	3	271	14	20	1.75	13.2	1.50	11.3	271					
			150	250	1	2.5	5.5	194	10	14	1.75	9.4	1.50	8.1	194					
		RAMP B (O BANNON AVENUE)	531	431	1	3	3	321	16	24	1.75	15.6	1.50	13.4	321					
				100	1		5.5	61	3	4	1.75	3.0	1.50	2.5	61					
		RAMP A (O BANNON AVENUE)	471	471	1	3	3	314	16	24	1.75	15.3	1.50	13.1	314					
			150	150	1	2.5	5.5	133	7	10	1.75	6.5	1.50	5.5	133					
		TOTALS							217	320		209.4		179.2	4303					

QUANTITIES CARRIED TO THE SUB SUMMARY

CALCULATED LME
CHECKED TJD

PAVED SHOULDERS ON RAMPS

PAVED

LIC-16-21.44

L0160003.MPS 2-22-99

CALCULATED LME
CHECKED TJD

BRIDGE TREATMENT

LIC-16-2149: REMOVE 1.0" & PLACE 1.5" ASPHALT CONCRETE
LIC-16-2166: REMOVE 1.0" & PLACE 1.5" ASPHALT CONCRETE
LIC-16-2181: PLACE TYPE 3 WATERPROOFING & 1.5" ASPHALT CONCRETE
LIC-16-2207: REMOVE 1.0" & PLACE 1.5" ASPHALT CONCRETE
LIC-16-2234: PLACE TYPE 3 WATERPROOFING & 3.25" ASPHALT CONCRETE
LIC-16-2296: PLACE TYPE 3 WATERPROOFING & 3.25" ASPHALT CONCRETE

* DEDUCTED 2.5' FROM BRIDGE WITH FOR CONCRETE BARRIER

BRIDGE DECK DATA

LOCATION	COUNTY, ROUTE, BRIDGE NO.	LENGTH (BRIDGE LIMITS)	WIDTH	BRIDGE DECK AREA *	202 WEARING COURSE REMOVED DEPTH 1.5"	BRIDGE DECK REPAIR ☐ SS-845 LATEX MODIFIED CONCRETE ☐ SS-850 DENSE CONCRETE: ----" THICK OVERLAY	VARIABLE THICKNESS OVERLAY	FULL-DEPTH REPAIR	PATCHING CONCRETE BRIDGE DECK, TYPE B	STEEL DRIP STRIP	ITEM 512 TYPE 3 MEMBRANE WATERPROOFING	446 ASPHALT CONCRETE THICK (AVG.)	INTERMEDIATE COURSE, TYPE 2, PG 64-28	THICK (AVG.)	SURFACE COURSE, TYPE IH	407 TACK COAT FOR INTERMEDIATE COURSE @ 0.05 GAL/S.Y.	TACK COAT @ 0.075 GAL/S.Y.	
		FEET	FEET	SQ.YD.	SQ.YD.	SQ.YD.	CU.YD.	CU.YD.	SQ.YD.	SQ.YD.	SQ.YD.	INCH	CU.YD.	INCH	CU.YD.	GALLON	GALLON	
1	LIC-16-2149	237	76.1	1938	2732	(SEE DETAIL 1 ON SHEET 47.)								1.5	80.8		145	
	LIC-16-2166	132	76.1	1079	1874	(SEE DETAIL 1 ON SHEET 47.)								1.5	45.0		81	
	LIC-16-2181	237	76.1	1938	794	(SEE DETAIL 2 ON SHEET 47.)					1971			1.5	80.8			
	LIC-16-2207	239	76.1	1954	2749	(SEE DETAIL 1 ON SHEET 47.)								1.5	81.4		147	
	LIC-16-2234	128	82.2	1134	1192	(SEE DETAIL 3 ON SHEET 48.)					1169	1.75	55.1	1.5	47.2	57		
	LIC-16-2296	132	76.1	1079	1192	(SEE DETAIL 3 ON SHEET 48.)					1112	1.75	52.4	1.5	45.0	54		
	TOTALS LOCATION 1				10533						4252		107.5		380.2	111	373	
	CARRIED TO SUB SUMMARY																	

BRIDGE DECK TREATMENT

LIC-16-21.44

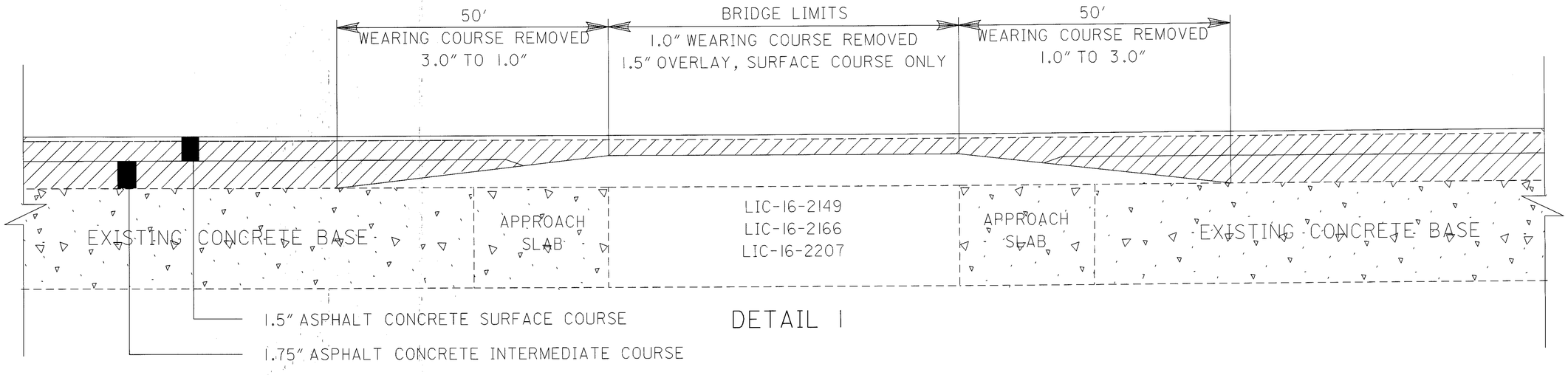

DETAIL 1

PAVEMENT PLANING BITUMINOUS OR WEARING COURSE REMOVED

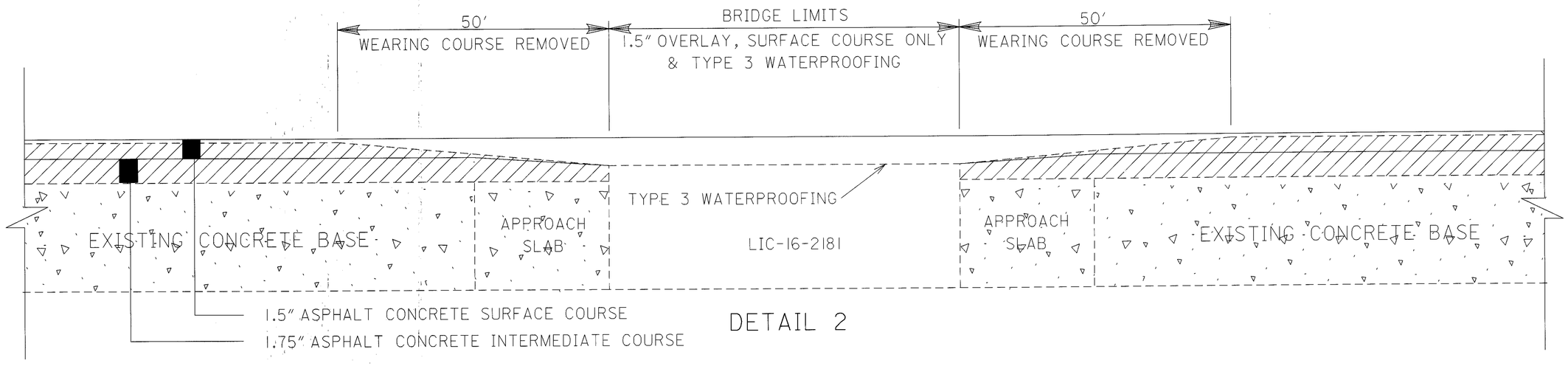

DETAIL 2

NOTE:
IT IS THE CONTRACTOR'S RESPONSIBILITY TO VERIFY ASPHALT THICKNESS ON BRIDGES AND APPROACH SLABS WITH WEARING COURSE REMOVED. CARE SHALL BE TAKEN NOT TO DAMAGE UNDERLYING CONCRETE.

ALL PLANING AND ASPHALT TAPERS SHALL BE AT A RATE OF 25'/1"

ALL FEATHERING SHALL BE AS PER SCD BP-3.1

WEARING COURSE REMOVED:
LIC-16-2149: [2(50' X 71.5')+(237' X 73.6'0]/9 = 2732 SQ.YD.
LIC-16-2166: [2(50' X 71.5')+(132' X 73.6'0]/9 = 1874 SQ.YD.
LIC-16-2181: 2(50' X 71.5')/9 = 794 SQ.YD.
LIC-16-2207: [2(50' X 71.5')+(132' X 73.6'0]/9 = 1874 SQ.YD.

CARRIED TO SHEET 46.

BRIDGE DEUCTIONS:
LIC-16-2149: (237' X 48') / 9 = 1264 SQ.YD.
LIC-16-2166: (132' X 48') / 9 = 704 SQ.YD.
LIC-16-2181: (237' X 48') / 9 = 1264 SQ.YD.
LIC-16-2207: (239' X 48') / 9 = 1275 SQ.YD.

CARRIED TO SHEET 36.

CALCULATED LME
CHECKED TJD

BRIDGE DECK TREATMENTS

LIC-16-21.44

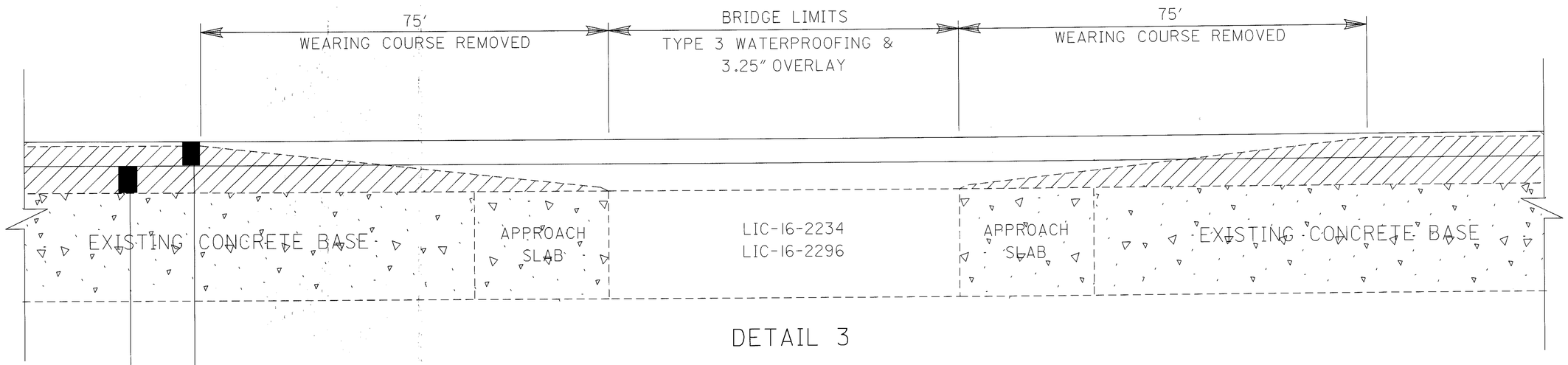

DETAIL 3

1.5" ASPHALT CONCRETE SURFACE COURSE

1.75" ASPHALT CONCRETE INTERMEDIATE COURSE

PAVEMENT PLANING BITUMINOUS OR WEARING COURSE REMOVED

NOTE:
IT IS THE CONTRACTOR'S RESPONSIBILITY TO VERIFY ASPHALT THICKNESS ON BRIDGES AND APPROACH SLABS WITH WEARING COURSE REMOVED.
CARE SHALL BE TAKEN NOT TO DAMAGE UNDERLYING CONCRETE.

ALL PLANING AND ASPHALT TAPERS SHALL BE AT A RATE OF 25'/1"

ALL FEATHERING SHALL BE AS PER SCD BP-3.1

WEARING COURSE REMOVED:
LIC-16-2234: 2(75' X 71.5') / 9 = 1192 SQ.YD.
LIC-16-2296: 2(75' X 71.5') / 9 = 1192 SQ.YD.

CARRIED TO SHEET 46

BRIDGE DEDUCTIONS:
LIC-16-2234: (128 X 48') / 9 = 683 SQ.YD.
LIC-16-2296: (132' X 48') / 9 = 704 SQ.YD.

CARRIED TO SHEET 36.

CALCULATED LME
CHECKED TJD

BRIDGE DECK TREATMENTS

LIC-16-21.44

ITEM 644 EDGE LINE SUB-SUMMARY

* DEDUCTION FOR CONCRETE BRIDGES

LOCATION	CO.	ROUTE	S.L.D. FROM	S.L.D. TO	WHITE EDGE LINE QU. TOTAL MILES	WHITE EDGE LINE QU. HIGHWAY	WHITE EDGE LINE QU. RAMP	YELLOW EDGE LINE QU. TOTAL MILES	YELLOW EDGE LINE QU. HIGHWAY	YELLOW EDGE LINE QU. RAMP					EDGE LINE TOTAL MILES	REMARKS
		EAST BOUND														
1	LIC	SR 16	21.44	23.66	1.69	1.69		2.17	2.17						3.86	
		RAMP D			0.14		0.14	0.06		0.06					0.20	OFF RAMP TO N BUENA VISTA STREET
		RAMP C			0.13		0.13	0.09		0.09					0.22	OFF RAMP TO CEDAR STREET
		RAMP D			0.17		0.17	0.12		0.12					0.29	ON RAMP FROM CEDAR STREET
		RAMP C			0.55		0.55	0.12		0.12					0.67	OFF RAMP TO O BANNON AVENUE
		RAMP D			0.16		0.16	0.14		0.14					0.30	ON RAMP FROM O BANNON AVENUE
								0.01		0.01					0.01	SIDE RAMP CEDAR STREET
		WEST BOUND														
															3.81	
1	LIC	SR 16	21.44	23.66	1.64	1.64		2.17	2.17						0.17	ON RAMP FROM N BUENA VISTA STREET
		RAMP E			0.13		0.13	0.04		0.04					0.23	ON RAMP FROM CEDAR STREET
		RAMP A			0.14		0.14	0.09		0.09					0.01	SIDE RAMP CEDAR STREET
								0.01		0.01					0.25	OFF RAMP TO CEDAR STREET
		RAMP B			0.16		0.16	0.09		0.09					0.26	ON RAMP FROM O BANNON AVENUE
		RAMP A			0.14		0.14	0.12		0.12					0.26	OFF RAMP TO O BANNON AVENUE
		RAMP B			0.16		0.16	0.10		0.10						
		TOTAL LOCATION 1			5.21	3.33	1.88	5.33	4.34	0.99					10.54	
		NORTH BOUND														
2	LIC	SR 79	12.19	13.66	1.47	1.47		1.20	1.20						2.67	
		UNION STREET RAMP			0.04		0.04	0.04		0.04					0.08	
		RAMP B			0.11		0.11	0.11		0.11					0.22	ON RAMP FROM GRANT STREET
		RAMP E			0.13		0.13	0.13		0.13					0.26	OFF RAMP TO MAIN STREET
		RAMP F			0.11		0.11	0.11		0.11					0.22	ON RAMP FROM MAIN STREET
		ROADWAY A			0.31		0.31	0.31		0.31					0.62	
		ROADWAY D			0.13		0.13	0.13		0.13					0.26	
					*(0.12)	*(0.12)		*(0.12)	*(0.12)						*(0.24)	
		SOUTH BOUND														
2	LIC	SR 79	12.19	13.66	1.47	1.47		1.20	1.20						2.67	
		WILLIAMS STREET			0.05		0.05	0.05		0.05					0.10	
		RAMP A			0.15		0.15	0.15		0.15					0.30	OFF RAMP TO GRANT STREET
		RAMP C			0.11		0.11	0.11		0.11					0.22	ON RAMP FROM MAIN STREET
		RAMP D			0.13		0.13	0.13		0.13					0.26	OFF RAMP TO MAIN STREET
		ROADWAY B			0.19		0.19	0.19		0.19					0.38	
		ROADWAY C			0.14		0.14	0.14		0.14					0.28	
					*(0.15)	*(0.15)		*(0.15)	*(0.15)						*(0.30)	
		TOTAL LOCATION 2			4.27	2.67	1.60	3.73	2.13	1.60					8.00	

CALCULATED SAB
CHECKED TJD

EDGE LINE SUB-SUMMARY

LIC-16-21.44

L0160001.TEL 02-23-99

ITEM 828 EDGE LINE SUB-SUMMARY

* DEDUCTION FOR CONCRETE BRIDGES

LOCATION	CO.	ROUTE	S.L.D. FROM	S.L.D. TO	WHITE EDGE LINE QU. TOTAL MILES	WHITE EDGE LINE QU. HIGHWAY	WHITE EDGE LINE QU. RAMP	YELLOW EDGE LINE QU. TOTAL MILES	YELLOW EDGE LINE QU. HIGHWAY	YELLOW EDGE LINE QU. RAMP					EDGE LINE TOTAL MILES	REMARKS
		NORTH BOUND														
2	LIC	SR 79														
		BRIDGE LIC-79-1346			0.05	0.05		0.05	0.05						0.10	
		BRIDGE LIC-79-1358L			0.04	0.04		0.04	0.04						0.08	
		BRIDGE LIC-79-1379L ROADWAY D			0.03	0.03		0.03	0.03						0.06	
		SOUTH BOUND														
2	LIC	SR 79														
		BRIDGE LIC-79-1346			0.05	0.05		0.05	0.05						0.10	
		BRUDGE LIC-79-1358R			0.04	0.04		0.04	0.04						0.08	
		BRIDGE LIC-79-1379L ROADWAY B			0.06	0.06		0.06	0.06						0.12	
		TOTAL LOCATION 2 CARRIED TO THE SUB SUMMARY			0.27	0.27		0.27	0.27						0.54	

ITEM 828 LANE LINE SUB-SUMMARY

* DEDUCTION FOR CONCRETE BRIDGES

LOCATION	CO.	ROUTE	SLM FROM	SLM TO	QUANTITIES TOTAL MILES	QUANTITIES DASHED	
		NORTH BOUND					
2	LIC	SR 79					
		BRIDGE LIC-79-1346			0.05	0.05	
		BRIDGE LIC-79-1358L			0.04	0.04	
		SOUTH BOUND					
2	LIC	SR 79					
		BRIDGE LIC-79-1346			0.05	0.05	
		BRUDGE LIC-79-1358R			0.04	0.04	
		TOTAL LOCATION 2 CARRIED TO THE SUB SUMMARY			0.18	0.18	

CALCULATED SAB
CHECKED TJD

LANE LINE & EDGE LINE SUB-SUMMARY

LIC-16-21.44

ITEM 644 CENTER LINE SUB-SUMMARY

QUANTITIES INCLUDE CL AROUND OUTSIDE OF PAINTED ISLAND

LOCATION	CO.	ROUTE	S.L.M.		CENTER LINES QUANTITIES		PARTICIPATION TYPE				TOTAL CENTER LINE	REMARKS
			FROM	TO	TOTAL MILES	EQUIVALENT SOLID LINE	IRG	FG	RSG	NON FED STATE	MILES	
	NORTH	BOUND										
2	LIC	SR 79	12.19	12.46	0.37	.740					0.37	
TOTAL LOCATION 2 CARRIED TO SUB SUMMARY					0.37	0.740					0.37	

CALCULATED SAB
CHECKED LME

CENTER LINE SUB-SUMMARY

LIC-16-21.44

L016000I.TCL 02-23-99

ITEM 644 LANE LINE SUB-SUMMARY AND AUXILIARY MARKINGS

* DEDUCTION FOR CONCRETE BRIDGES

LOCATION	CO.	ROUTE	S.L.M. FROM	S.L.M. TO	QUANTITIES TOTAL MILES	4" LANE LINES DASHED	4" LANE LINES SOLID	AUXILIARY MARKINGS CHANNELIZING LINE LIN.FT.	TRANSVERSE LINE WHITE LIN.FT.	TRANSVERSE LINE YELLOW LIN.FT.	STOP LINE LIN.FT.	LANE ARROW THRU EACH	LANE ARROW LEFT EACH	ONLY 96" EACH	CROSS-WALK LINE LIN.FT.	REMARKS
	EAST	BOUND														
1	LIC	SR 16	21.44	23.66	2.22	2.22										
		RAMP D			0.01	0.01		215	85		23	1			71	OFF RAMP TO N BUENA VISTA STREET
		RAMP C			0.01	0.01		215	80		40	1			96	OFF RAMP TO CEDAR STREET
		RAMP D			0.04	0.04		325							70	ON RAMP FROM CEDAR STREET
		RAMP D													52	SIDE RAMP
		RAMP C			0.06	0.06		243	90		30	1				OFF RAMP TO O BANNON AVENUE
		RAMP C			0.05	0.05		275							76	ON RAMP FROM O BANNON AVENUE
	WEST	BOUND														
1	LIC	SR 16	21.44	23.66	2.22	2.22		223								
		RAMP E			0.02	0.02		250							72	ON RAMP FROM N BUENA VISTA STREET
		RAMP A			0.02	0.02									74	ON RAMP FROM CEDAR STREET
		RAMP A													44	SIDE RAMP
		RAMP B			0.03	0.03		358	130		34	1			86	OFF RAMP TO CEDAR STREET
		RAMP A			0.05	0.05		300								ON RAMP FROM O BANNON AVENUE
		RAMP B			0.05	0.05		260	95		28	1			80	OFF RAMP TO O BANNON AVENUE
	TOTAL LOCATION 1				4.78	4.78		2664	480		155	5			721	
	NORTH	BOUND														
2	LIC	SR 79	12.19	13.66	1.47	1.47										
		ROADWAY D			0.18	0.18										
		THIRD LANE			0.14	0.14										
		UNION STREET						126	36							
		RAMP B						150								ON RAMP FROM GRANT STREET
		RAMP E						330	218		44	1			123	OFF RAMP TO MAIN STREET
		RAMP F						200							101	ON RAMP FROM MAIN STREET
		ROADWAY D						552	376							
		C						50					1	1		
		TO PARK			*(0.09)	*(0.09)										
	SOUTH	BOUND														
2	LIC	SR 79	12.19	13.66	1.47	1.47										
	ROADWAY B				0.31	0.31										
	THIRD LANE				0.09	0.09										
	WILLIAMS STREET							82								
	RAMP A							310	175		40	1				OFF RAMP TO GRANT STREET
	RAMP C							150							94	ON RAMP FROM MAIN STREET
	RAMP D							344	222		38	1			107	OFF RAMP TO MAIN STREET
	ROADWAY C							120								
	HOPEWELL DRIVE							485			30		3	2		
	ENT. TO ROCKWELL							200		645			2	1		
					*(0.09)	*(0.09)										
	TOTAL LOCATION 2				3.48	3.48		3099	1027	645	152	3	6	4	425	
									1672			9				

CALCULATED SAB
CHECKED TJD

LANE LINE SUB-SUMMARY AND AUXILIARY MARKINGS

LIC-16-21.44

CALC. BY SAB
DATE 02-24-99
CHKD. BY
DATE

LOCATION SUB-SUMMARY

DETAIL	
1	TAPERED ACCELERATION LANE
2	DECELERATION LANE
3	MULTILANE DIVIDED/ CONTROLLED ACCESS

DETAIL	
4	4 LANE DIVIDED TO 2 LANE TRANSITION
5	4 LANE UNDIVIDED TO 2 LANE TRANSITION
6	ONE LANE BRIDGE
7	STOP APPROACH
8	THRU APPROACH
9	TWO WAY LEFT TURN LANE

DETAIL	
10	APPROACH W/LT. TURN LANE
11	HORIZONTAL CURVE 40' (NOTE 2)
12	HORIZONTAL CURVE ALT. (NOTE 3)
GAP	CENTERLINE AT 80' TYP.

LOCATION NUMBER	LOCATION				DETAIL	RPM	ITEM QUANTITIES INSTALLATION ONLY			PRISMATIC RETRO-REFLECTOR	PRISMATIC RETRO-REFLECTOR COLORS					REMARKS
	COUNTY	ROUTE	S.L.M. MILES FROM	S.L.M. MILES TO			RPM	RPM CASTING	PRISMATIC RETRO-REFLECTOR		ONE-WAY WHITE	ONE-WAY YELLOW	TWO-WAY YELLOW/ YELLOW	TWO-WAY WHITE/ RED	TWO-WAY YELLOW/ RED	
		EAST	BOUND													
1	LIC	SR 16	21.44	23.66	3		146							146		
		RAMP	D		2		9							5	4	OFF RAMP TO N BUENA VISTA ST.
		RAMP	C		2		11							5	6	OFF RAMP TO CEDAR STREET
		RAMP	D		1		17							8	9	ON RAMP FROM CEDAR STREET
		RAMP	D				2								2	SIDE RAMP
		RAMP	C		2		15							8	7	OFF RAMP TO O BRANNON AVE
		RAMP	C		1		16							7	9	ON RAMP FROM O BRANNON AVE
		WEST	BOUND													
1	LIC	SR 16	21.44	23.66	3		146							146		
		RAMP	E		1		9							6	3	ON RAMP FROM BUENA VISTA ST.
		RAMP	A		1		12							6	6	ON RAMP FROM CEDAR STREET
		RAMP	A				2								2	SIDE RAMP
		RAMP	B		2		15							9	6	OFF RAMP TO CEDAR STREET
		RAMP	A		1		16							8	8	ON RAMP FROM O BRANNON AVENUE
		RAMP	B		2		14							7	7	OFF RAMP TO O BRANNON AVENUE
		TOTAL	LOCATION	1			430							361	69	
TOTAL PART 1 CARRIED TO SUB SUMMARY																

CALCULATED SAB
CHECKED LME

RPM LOCATION SUB-SUMMARY

LIC-16-21.44

L0160001.TRM 02-24-99

CALC. BY SAB
DATE 02-24-99
CHKD. BY
DATE

LOCATION SUB-SUMMARY

DETAIL	
1	TAPERED ACCELERATION LANE
2	DECELERATION LANE
3	MULTILANE DIVIDED/ CONTROLLED ACCESS

DETAIL	
4	4 LANE DIVIDED TO 2 LANE TRANSITION
5	4 LANE UNDIVIDED TO 2 LANE TRANSITION
6	ONE LANE BRIDGE
7	STOP APPROACH
8	THRU APPROACH
9	TWO WAY LEFT TURN LANE

DETAIL	
10	APPROACH W/LT. TURN LANE
11	HORIZONTAL CURVE 40' (NOTE 2)
12	HORIZONTAL CURVE ALT. (NOTE 3)
GAP	CENTERLINE AT 80' TYP.

LOCATION NUMBER	LOCATION				DETAIL	RPM	ITEM QUANTITIES INSTALLATION ONLY			PRISMATIC RETRO-REFLECTOR	PRISMATIC RETRO-REFLECTOR COLORS					REMARKS
											ONE-WAY		TWO-WAY			
	COUNTY	ROUTE	S.L.M. MILES FROM	S.L.M. MILES TO			RPM	RPM CASTING	PRISMATIC RETRO-REFLECTOR		WHITE	YELLOW	YELLOW/ YELLOW	WHITE/ RED	YELLOW/ RED	
			NORTH	BOUND												
2	LIC	SR 79	12.19	13.66	3		97							97		
		ROADWAY D			3		12							12		
		THIRD LANE			3		9							9		
		UNION STREET			2		8							5	3	OFF RAP TO UNION STREET
		RAMP B			1		12							4	8	ON RAMP FROM GRANT STREET
		RAMP E			2		18							9	9	OFF RAMP TO MAIN STREET
		RAMP F			1		12							5	7	ON RAMP FROM MAIN STREET
		ROADWAY A					20								20	
		ROADWAY D			2		24							15	9	ON RAMP
			SOUTH	BOUND												
2	LIC	SR 79	12.19	13.66	3		97							97		
		ROADWAY B			3		20							20		
		THIRD LANE			3		6							6		
		SR 79	12.19	12.46			106				36		49	21		CL & 40' (Y/Y) NORTH & SOUTH
																BOTH SIDES OF ISLAND. CHANNEL
																LINE & 40' (W/R) HOPEWELL, PARK,
																ROCKWELL EL & 40' NORTH & SO.
		WILLIAMS STREET			1		6							3	3	ON RAMP FROM WILLIAMS ST.
		RAMP A			2		19							9	10	OFF RAMP TO GRANT STREET
		RAMP C			1		11							4	7	ON RAMP FROM MAIN STREET
		RAMP D			2		18							9	9	OFF RAMP TO MAIN STREET
		ROADWAY B			1		13								13	
		ROADWAY C			1		12							3	9	
		TOTAL LOCATION 2					520				36		49	328	107	

CALCULATED SAB
CHECKED LME

RPM LOCATION SUB-SUMMARY

LIC-16-21.44

QUANTITIES CARRIED TO GENERAL SUMMARY

CALCULATED LME CHECKED TD

SHEET NUMBER 2	3	4	36	39	42	44	45	46	49	52	53	ITEM	ITEM EXT. NO.	SUB-TOTAL	UNIT	DESCRIPTION
								10533				202	23500	10533	SQ.YARD	WEARING COURSE REMOVED
			56622	30992	12726	10182	4303					254	01000	114825	SQ.YARD	PAVEMENT PLAINING BITUMINOUS
								373				407	10000	373	GALLON	TACK COAT
			2831	1546	636	508	217	111				407	14000	5849	GALLON	TACK COAT FOR INTERMEDIATE COURSE
			4246	2326	955	742	320					407	13900	8589	GALLON	TACK COAT 702.13
			2752.3	1506.7	618.7	494.7	209.4	107.5				446	46040	5689.3	CU.YARD	ASPHALT CONCRETE INTERMEDATE COURSE, TYPE 2, PG 64-28
			2359.2	1076.2	441.8	424.1	179.2	380.2				446	50000	4860.7	CU.YARD	ASPHALT CONCRETE SURFACE COURSE, TYPE IH
								4252				512	33010	4252	SQ. YARD	TYPE 3, WATER PROFFING
10												614	12460	10	EACH	WORK ZONE MARKING SIGN
	8											614	12470	8	EACH	WORK ZONE SPEED LIMIT SIGN
		8										614	18601	8	EACH	PORTABLE CHANGEABLE MESSAGE SIGN A, AS PER PLAN
			8.04									614	20400	8.04	MILE	TEMPORARY LANE LINE CLASS II
												614	21400		MILE	TEMPORARY CENTER LINE, CLASS II
			16.09									614	22000	16.09	MILE	TEMPORARY EDGE LINE CLASS I
300												617	10101	300	CU.YARD	COMPACTED AGGREGATE, TYPE A, AS PER PLAN
									10.54			644	00100	10.54	MILE	EDGE LINE
												644	00300		MILE	CENTER LINE
										4.78		644	00200	4.78	MILE	LANE LINE
										155		644	00500	155	LIN. FT.	STOP LINE
												644	01410		EACH	WORD ON PAVEMENT, 96"
										2664		644	00400	2664	LIN. FT.	CANNELIZING LINE
										721		644	00600	721	LIN. FT.	CROSSWALK LINE
										480		644	00700	480	LIN. FT.	TRANSVERSE LINE
										5		644	01300	5	EACH	LANE ARROW
											430	621	00200	430	EACH	RAISED PAVEMENT MARKER, INSTALLATION ONLY
												828	10000		MILE	EDGE LINE
												828	10100		MILE	LANE LINE

LOCATION I SUB-SUMMARY

LIC-16-21.44

10160001.mgs 02-26-99

QUANTITIES CARRIED TO GENERAL SUMMARY

CALCULATE LME
CHECKED TD

SHEET NUMBER												ITEM	ITEM EXT. NO.	SUB-TOTAL	UNIT	DESCRIPTION
2	3	4	37	41	43	49	50	51	52	54						
												202	23500		SQ.YARD	WEARING COURSE REMOVED
												254	01000	96803	SQ.YARD	PAVEMENT PLAINING BITUMINOUS
			57578	23283	15942							407	10000	7260	GALLON	TACK COAT
			4318	1746	1196							407	14000	4826	GALLON	TACK COAT FOR INTERMEDIATE COURSE
			2879	1148	799							407	13900		GALLON	TACK COAT 702.13
			2799.9	1131.4	775.0							446	46040	4706.3	CU.YARD	ASPHALT CONCRETE INTERMEDATE COURSE, TYPE 2, PG 64-28
			2399.8	970.4	664.2							446	50000	4034.4	CU.YARD	ASPHALT CONCRETE SURFACE COURSE, TYPE IH
												512	33010		SQ. YARD	TYPE 3, WATER PROFFING
10												614	12460	10	EACH	WORK ZONE MARKING SIGN
	8											614	12470	8	EACH	WORK ZONE SPEED LIMIT SIGN
		2										614	18601	2	EACH	PORTABLE CHANGEABLE MESSAGE SIGN A, AS PER PLAN
			4.40									614	20400	4.40	MILE	TEMPORARY LANE LINE CLASS II
			0.56									614	21400	0.56	MILE	TEMPORARY CENTER LINE, CLASS II
			11.99									614	22000	11.99	MILE	TEMPORARY EDGE LINE CLASS I
100												617	10101	100	CU.YARD	COMPACTED AGGREGATE, TYPE A, AS PER PLAN
						8.00						644	00100	8.00	MILE	EDGE LINE
								0.37				644	00300	0.37	MILE	CENTER LINE
									3.48			644	00200	3.48	MILE	LANE LINE
									152			644	00500	152	LIN. FT.	STOP LINE
									4			644	01410	4	EACH	WORD ON PAVEMENT, 96"
									3099			644	00400	3099	LIN. FT.	CANNELIZING LINE
									425			644	00600	425	LIN. FT.	CROSSWALK LINE
									1672			644	00700	1672	LIN. FT.	TRANSVERSE LINE
									9			644	01300	9	EACH	LANE ARROW
										520		621	00200	520	EACH	RAISED PAVEMENT MARKER, INSTALLATION ONLY
							0.54					828	10000	0.54	MILE	EDGE LINE
							0.18					828	10100	0.18	MILE	LANE LINE

LOCATION 2 SUB-SUMMARY

LIC-16-21.44

10160002.mgs 02-26-99

SUB-TOTALS TE21-G990(388)	TE21-G990(536)	ITEM	ITEM EXT. NO.	GRAND TOTAL LOCATIONS 1 & 2	UNIT	DESCRIPTION
LOCATION 1	LOCATION 2					
10533		202	23500	10533	SQ.YARD	WEARING COURSE REMOVED
114825	96803	254	01000	211628	SQ.YARD	PAVEMENT PLAINING BITUMINOUS
373	7260	407	10000	7633	GALLON	TACK COAT
5849	4826	407	14000	10675	GALLON	TACK COAT FOR INTERMEDIATE COURSE
8589		407	13900	8589	GALLON	TACK COAT 702.13
5689.3	4706.3	446	46040	10395.6	CU.YARD	ASPHALT CONCRETE INTERMEDATE COURSE, TYPE 2, PG 64-28
4860.7	4034.4	446	50000	8895.1	CU.YARD	ASPHALT CONCRETE SURFACE COURSE, TYPE IH
4252		512	33010	4252	SQ. YARD	TYPE 3, WATER PROFFING
10	10	614	12460	20	EACH	WORK ZONE MARKING SIGN
8	8	614	12470	16	EACH	WORK ZONE SPEED LIMIT SIGN
8	2	614	18601	10	EACH	PORTABLE CHANGEABLE MESSAGE SIGN A, AS PER PLAN
8.04	4.40	614	20400	12.44	MILE	TEMPORARY LANE LINE CLASS II
	0.56	614	21400	0.56	MILE	TEMPORARY CENTER LINE, CLASS II
16.09	11.99	614	22000	28.08	MILE	TEMPORARY EDGE LINE CLASS I
300	100	617	10101	400	CU.YARD	COMPACTED AGGREGATE, TYPE A, AS PER PLAN
10.54	8.00	644	00100	18.54	MILE	EDGE LINE
	0.37	644	00300	0.37	MILE	CENTER LINE
4.78	3.48	644	00200	8.26	MILE	LANE LINE
155	152	644	00500	307	LIN. FT.	STOP LINE
	4	644	01410	4	EACH	WORD ON PAVEMENT, 96"
2664	3099	644	00400	5763	LIN. FT.	CANNELIZING LINE
721	425	644	00600	1146	LIN. FT.	CROSSWALK LINE
480	1672	644	00700	2152	LIN. FT.	TRANSVERSE LINE
5	9	644	01300	14	EACH	LANE ARROW
430	520	621	00200	950	EACH	RAISED PAVEMENT MARKER, INSTALLATION ONLY
	0.54	828	10000	0.54	MILE	EDGE LINE
	0.18	828	10100	0.18	MILE	LANE LINE
		614	11000		LUMP	MAINTAINING TRAFFIC
		623	10000		LUMP	CONSTRUCTION LAYOUT STAKES
		624	10000		LUMP	MOBILIZATION
		806	16000	16	MONTH	FIELD OFFICE, TYPE B

CALCULATED LME
CHECKED TD

GENERAL SUMMARY

LIC-16-2144

L0160003.MGS 02-26-99

State of Ohio
Department of Transportation
Division of Highways
Testing Laboratory

LOG OF BORING

1/20

Date Started 9/22/92 Sampler: Type SS Dia. 1 3/8" Water Elev. - Project Identification: LICKING
Date completed 9/22/92 LIC-16-19.77
Boring No. B-1 Station & Offset 112+00, 6' RT. E/P (INSIDE EB PASSING LANE) Surface Elev. CL SUBSOIL INVESTIGATION

Depth	Std. (N)	Pen.	Rec. ft	Loss ft	Description	Sample No.	% Agg	% C.S.	% F.S.	% Silt	% Clay	L.L.	P.I.	W.C.	SHTL Class
CL 0					CONCRETE										
2	AUGERED				SUBBASE										VISUAL VISUAL
	10/70/18				BROWN GRAVELLY SANDY SILT	1	21	16	22	31	10	NP	NP	10	A-4A
4	20/19/31				BROWN SILTY GRAVELLY SAND	2	31	17	18	25	9	19	5	9	A-2-4
6	28/28/21				BROWN GRAVELLY SANDY SILT	3	17	19	24	29	11	21	5	13	A-4A
					BOTTOM OF BORING										
8															
10															
12															
14															
16															
18															
20															
22															
24															
26															
28															
30															
32															
34															
36															

Particle Sizes: Agg= >2.00mm, Coarse Sand= 2.00-0.42mm, Fine Sand= 0.42-0.074mm, Silt= 0.074-0.005mm, Clay= <0.005mm

Form TE-15 Revised 6/92

State of Ohio
Department of Transportation
Division of Highways
Testing Laboratory

LOG OF BORING

2/20

Date Started 9/24/92 Sampler: Type SS Dia. 1 3/8" Water Elev. - Project Identification: LICKING
Date completed 9/24/92 LIC-16-19.77
Boring No. B-2 Station & Offset 116+00, 6' LT. E/P (INSIDE WB PASSING LANE) Surface Elev. CL SUBSOIL INVESTIGATION

Depth	Std. (N)	Pen.	Rec. ft	Loss ft	Description	Sample No.	% Agg	% C.S.	% F.S.	% Silt	% Clay	L.L.	P.I.	W.C.	SHTL Class
CL 0					CONCRETE										
2	AUGERED				SUBBASE										VISUAL VISUAL
	6/8/11				BROWN SILTY GRAVELLY SAND	56	21	18	24	24	13	NP	NP	13	A-4A
4	21/13/22				BROWN GRAVELLY SANDY SILT	57	19	14	19	33	15	20	6	8	A-4A
	26/30/27				BROWN GRAVELLY SANDY SILT	58	20	17	19	31	13	23	7	10	A-4A
6					BOTTOM OF BORING										
8															
10															
12															
14															
16															
18															
20															
22															
24															
26															
28															
30															
32															
34															
36															

Particle Sizes: Agg= >2.00mm, Coarse Sand= 2.00-0.42mm, Fine Sand= 0.42-0.074mm, Silt= 0.074-0.005mm, Clay= <0.005mm

Form TE-15 Revised 6/92

State of Ohio
Department of Transportation
Division of Highways
Testing Laboratory

LOG OF BORING

3/20

Date Started 9/22/92 Sampler: Type SS Dia. 1 3/8" Water Elev. - Project Identification: LICKING
Date completed 9/22/92 LIC-16-19.77
Boring No. B-3 Station & Offset 119+00, 6' RT. E/P (INSIDE EB PASSING LANE) Surface Elev. CL SUBSOIL INVESTIGATION

Depth	Std. (N)	Pen.	Rec. ft	Loss ft	Description	Sample No.	% Agg	% C.S.	% F.S.	% Silt	% Clay	L.L.	P.I.	W.C.	SHTL Class
CL 0					CONCRETE										
2	AUGERED				SUBBASE										VISUAL VISUAL
	2/9/13				BROWN SILTY GRAVELLY SAND	4	26	17	19	26	12	23	7	9	A-4A
4	7/12/15				BROWN GRAVELLY SANDY SILT	5	25	17	17	29	12	24	8	12	A-4A
6	24/18/13				BROWN GRAVELLY SANDY SILT	6	18	15	19	34	14	26	7	30	A-4A
					BOTTOM OF BORING										
8															
10															
12															
14															
16															
18															
20															
22															
24															
26															
28															
30															
32															
34															
36															

Particle Sizes: Agg= >2.00mm, Coarse Sand= 2.00-0.42mm, Fine Sand= 0.42-0.074mm, Silt= 0.074-0.005mm, Clay= <0.005mm

Form TE-15 Revised 6/92

State of Ohio
Department of Transportation
Division of Highways
Testing Laboratory

LOG OF BORING

4/20

Date Started 9/24/92 Sampler: Type SS Dia. 1 3/8" Water Elev. - Project Identification: LICKING
Date completed 9/24/92 LIC-16-19.77
Boring No. B-4 Station & Offset 123+00, 6' LT. E/P (INSIDE WB PASSING LANE) Surface Elev. CL SUBSOIL INVESTIGATION

Depth	Std. (N)	Pen.	Rec. ft	Loss ft	Description	Sample No.	% Agg	% C.S.	% F.S.	% Silt	% Clay	L.L.	P.I.	W.C.	SHTL Class
CL 0					CONCRETE										
2	AUGERED				SUBBASE										VISUAL VISUAL
	3/4/7				BROWN GRAVELLY SANDY SILT	53	25	13	17	29	16	23	8	10	A-4A
4	16/11/19				BROWN SANDY SILT	54	0	16	27	32	25	24	8	11	A-4A
	22/50(0.3)				BROWN GRAVELLY SANDY SILT	55	23	14	18	27	18	23	8	10	A-4A
6					BOTTOM OF BORING										
8															
10															
12															
14															
16															
18															
20															
22															
24															
26															
28															
30															
32															
34															
36															

Particle Sizes: Agg= >2.00mm, Coarse Sand= 2.00-0.42mm, Fine Sand= 0.42-0.074mm, Silt= 0.074-0.005mm, Clay= <0.005mm

Form TE-15 Revised 6/92

CALCULATED
CHECKED

SOIL PROFILES

LIC-16-19.72

1/5

State of Ohio
Department of Transportation
Division of Highways
Testing Laboratory

5/20

LOG OF BORING

Date Started 9/22/92 Sampler: Type SS Dia. 1 3/8" Water Elev. - Project Identification: LICKING
Date completed 9/22/92 LIC-16-19.77
Boring No. B-5 Station & Offset 127+00, 6' RT. E/P (INSIDE EB PASSING LANE) Surface Elev. CL SUBSOIL INVESTIGATION

Depth	Std. (IN)	Pen.	Rec. ft	Loss ft	Description	Sample No.	% Agg	% C.S.	% F.S.	% Silt	% Clay	L.L.	P.I.	W.C.	SHTL Class
CL 0					CONCRETE	-	-	-	-	-	-	-	-	-	VISUAL
2	AUGERED				SUBBASE	-	-	-	-	-	-	-	-	-	VISUAL
4	6/12/15				BROWN SANDY SILT	7	15	18	23	30	14	21	6	10	A-4a
	17/10/12				BROWN SANDY SILT	8	14	21	25	27	13	24	9	13	A-4a
6	31/20/18				BROWN SANDY SILT	9	11	11	14	43	21	28	7	16	A-4a
8					BOTTOM OF BORING										
10															
12															
14															
16															
18															
20															
22															
24															
26															
28															
30															
32															
34															
36															

Particle Sizes: Agg= >2.00mm, Coarse Sand= 2.00-0.42mm, Fine Sand= 0.42-0.074mm, Silt= 0.074-0.005mm, Clay= <0.005mm

Form TE-125 Revised 6/92

State of Ohio
Department of Transportation
Division of Highways
Testing Laboratory

6/20

LOG OF BORING

Date Started 9/24/92 Sampler: Type SS Dia. 1 3/8" Water Elev. - Project Identification: LICKING
Date completed 9/24/92 LIC-16-19.77
Boring No. B-6 Station & Offset 131+00, 6' LT. E/P (INSIDE WB PASSING LANE) Surface Elev. CL SUBSOIL INVESTIGATION

Depth	Std. (IN)	Pen.	Rec. ft	Loss ft	Description	Sample No.	% Agg	% C.S.	% F.S.	% Silt	% Clay	L.L.	P.I.	W.C.	SHTL Class
CL 0					CONCRETE	-	-	-	-	-	-	-	-	-	VISUAL
2	AUGERED				SUBBASE	-	-	-	-	-	-	-	-	-	VISUAL
	4/6/13				GRAY GRAVELLY SANDY SILT	51	25	14	17	27	17	22	7	10	A-4a
4	23/16/50(0.4')				BROWN GRAVELLY SANDY SILT	52	20	17	20	28	15	21	6	8	A-4a
6					BOTTOM OF BORING										
8															
10															
12															
14															
16															
18															
20															
22															
24															
26															
28															
30															
32															
34															
36															

Particle Sizes: Agg= >2.00mm, Coarse Sand= 2.00-0.42mm, Fine Sand= 0.42-0.074mm, Silt= 0.074-0.005mm, Clay= <0.005mm

Form TE-125 Revised 6/92

State of Ohio
Department of Transportation
Division of Highways
Testing Laboratory

7/20

LOG OF BORING

Date Started 9/23/92 Sampler: Type SS Dia. 1 3/8" Water Elev. - Project Identification: LICKING
Date completed 9/23/92 LIC-16-19.77
Boring No. B-7 Station & Offset 135+00, 6' RT. E/P (INSIDE EB PASSING LANE) Surface Elev. CL SUBSOIL INVESTIGATION

Depth	Std. (IN)	Pen.	Rec. ft	Loss ft	Description	Sample No.	% Agg	% C.S.	% F.S.	% Silt	% Clay	L.L.	P.I.	W.C.	SHTL Class
CL 0					CONCRETE	-	-	-	-	-	-	-	-	-	VISUAL
2	AUGERED				SUBBASE	-	-	-	-	-	-	-	-	-	VISUAL
	4/7/9				BROWN GRAVELLY SANDY SILT	10	17	12	16	43	12	21	6	8	A-4a
4	6/10/14				BROWN SILTY GRAVELLY SAND	11	27	18	18	24	13	24	7	12	A-4a
6	14/18/22				BROWN SILTY GRAVELLY SAND	12	30	16	18	25	11	24	6	11	A-4a
8					BOTTOM OF BORING										
10															
12															
14															
16															
18															
20															
22															
24															
26															
28															
30															
32															
34															
36															

Particle Sizes: Agg= >2.00mm, Coarse Sand= 2.00-0.42mm, Fine Sand= 0.42-0.074mm, Silt= 0.074-0.005mm, Clay= <0.005mm

Form TE-125 Revised 6/92

State of Ohio
Department of Transportation
Division of Highways
Testing Laboratory

8/20

LOG OF BORING

Date Started 9/24/92 Sampler: Type SS Dia. 1 3/8" Water Elev. - Project Identification: LICKING
Date completed 9/24/92 LIC-16-19.77
Boring No. B-8 Station & Offset 139+00, 6' LT. E/P (INSIDE WB PASSING LANE) Surface Elev. CL SUBSOIL INVESTIGATION

Depth	Std. (IN)	Pen.	Rec. ft	Loss ft	Description	Sample No.	% Agg	% C.S.	% F.S.	% Silt	% Clay	L.L.	P.I.	W.C.	SHTL Class
CL 0					CONCRETE	-	-	-	-	-	-	-	-	-	VISUAL
2	AUGERED				SUBBASE	-	-	-	-	-	-	-	-	-	VISUAL
	4/6/13				BROWN SILTY SANDY GRAVEL	48	44	12	13	21	10	24	8	11	A-2-4
4	17/16/19				BROWN SILTY SANDY GRAVEL	49	37	16	16	19	12	20	5	11	A-2-4
	35/30/27				BROWN SILTY GRAVELLY SAND	50	33	20	17	21	9	NP	NP	8	A-2-4
6					BOTTOM OF BORING										
8															
10															
12															
14															
16															
18															
20															
22															
24															
26															
28															
30															
32															
34															
36															

Particle Sizes: Agg= >2.00mm, Coarse Sand= 2.00-0.42mm, Fine Sand= 0.42-0.074mm, Silt= 0.074-0.005mm, Clay= <0.005mm

Form TE-125 Revised 6/92

CALCULATED
CHECKED

SOIL PROFILES

LIC-16-19.72

2/5

State of Ohio
Department of Transportation
Division of Highways
Testing Laboratory

9/20

LOG OF BORING

Date Started 9/23/92 Sampler: Type SS Dia. 1 3/8" Water Elev. - Project Identification: LICKING
Date completed 9/23/92 LIC-16-19.77
Boring No. B-9 Station & Offset 143+50, 6' RT. E/P (INSIDE EB PASSING LANE) Surface Elev. CL SUBSOIL INVESTIGATION

	Depth	Std. (IN)	Pen.	Rec. ft	Loss ft	Description	Sample No.	% Agg	% C.S.	% F.S.	% Silt	% Clay	L.L.	P.I.	W.C.	SHTL Class
CL	0					CONCRETE	-	-	-	-	-	-	-	-	-	VISUAL
		AUGERED				SUBBASE	-	-	-	-	-	-	-	-	-	VISUAL
	2	8/10/15				BROWN SILTY GRAVELLY SAND	13	32	18	20	25	5	NP	NP	11	A-2-4
	4	12/24/37				BROWN SILTY SANDY GRAVEL	14	40	20	13	20	7	NP	NP	11	A-2-4
	6	24/16/19				BROWN SILTY SANDY GRAVEL	15	27	17	15	19	12	24	7	13	A-2-4
	8					BOTTOM OF BORING										
	10															
	12															
	14															
	16															
	18															
	20															
	22															
	24															
	26															
	28															
	30															
	32															
	34															
	36															

Particle Sizes: Agg= >2.00mm, Coarse Sand= 2.00-0.42mm, Fine Sand= 0.42-0.074mm, Silt= 0.074-0.005mm, Clay= <0.005mm

Form TE-121 Revised 6/92

State of Ohio
Department of Transportation
Division of Highways
Testing Laboratory

10/20

LOG OF BORING

Date Started 9/24/92 Sampler: Type SS Dia. 1 3/8" Water Elev. - Project Identification: LICKING
Date completed 9/24/92 LIC-16-19.77
Boring No. B-10 Station & Offset 147+00, 6' LT. E/P (INSIDE WB PASSING LANE) Surface Elev. CL SUBSOIL INVESTIGATION

	Depth	Std. (IN)	Pen.	Rec. ft	Loss ft	Description	Sample No.	% Agg	% C.S.	% F.S.	% Silt	% Clay	L.L.	P.I.	W.C.	SHTL Class
CL	0					CONCRETE	-	-	-	-	-	-	-	-	-	VISUAL
		AUGERED				SUBBASE	-	-	-	-	-	-	-	-	-	VISUAL
	2	7/12/14				BROWN GRAVELLY SANDY SILT	45	20	16	20	29	15	20	6	7	A-4A
	4	12/12/14				BROWN GRAVELLY SANDY SILT	46	22	13	19	30	16	21	6	12	A-4A
	6	21/8/11				BROWN SILTY SANDY GRAVEL	47	42	16	17	17	8	NP	NP	8	A-1-B
	8					BOTTOM OF BORING										
	10															
	12															
	14															
	16															
	18															
	20															
	22															
	24															
	26															
	28															
	30															
	32															
	34															
	36															

Particle Sizes: Agg= >2.00mm, Coarse Sand= 2.00-0.42mm, Fine Sand= 0.42-0.074mm, Silt= 0.074-0.005mm, Clay= <0.005mm

Form TE-121 Revised 6/92

State of Ohio
Department of Transportation
Division of Highways
Testing Laboratory

11/20

LOG OF BORING

Date Started 9/23/92 Sampler: Type SS Dia. 1 3/8" Water Elev. - Project Identification: LICKING
Date completed 9/23/92 LIC-16-19.77
Boring No. B-11 Station & Offset 151+00, 6' RT. E/P (INSIDE EB PASSING LANE) Surface Elev. GL SUBSOIL INVESTIGATION

	Depth	Std. (IN)	Pen.	Rec. ft	Loss ft	Description	Sample No.	% Agg	% C.S.	% F.S.	% Silt	% Clay	L.L.	P.I.	W.C.	SHTL Class
CL	0					CONCRETE	-	-	-	-	-	-	-	-	-	VISUAL
		AUGERED				SUBBASE	-	-	-	-	-	-	-	-	-	VISUAL
	2	5/12/13				BROWN SILTY SANDY GRAVEL	16	35	15	17	19	14	25	8	14	A-2-4
	4	8/6/9				BROWN GRAVELLY SANDY SILT	17	20	10	18	29	23	24	8	12	A-4A
	6	9/10/14				BROWN SANDY SILT	18	11	10	17	38	24	23	8	12	A-4A
	8					BOTTOM OF BORING										
	10															
	12															
	14															
	16															
	18															
	20															
	22															
	24															
	26															
	28															
	30															
	32															
	34															
	36															

Particle Sizes: Agg= >2.00mm, Coarse Sand= 2.00-0.42mm, Fine Sand= 0.42-0.074mm, Silt= 0.074-0.005mm, Clay= <0.005mm

Form TE-121 Revised 6/92

State of Ohio
Department of Transportation
Division of Highways
Testing Laboratory

12/20

LOG OF BORING

Date Started 9/24/92 Sampler: Type SS Dia. 1 3/8" Water Elev. - Project Identification: LICKING
Date completed 9/24/92 LIC-16-19.77
Boring No. B-12 Station & Offset 155+00, 6' LT. E/P (INSIDE WB PASSING LANE) Surface Elev. CL SUBSOIL INVESTIGATION

	Depth	Std. (IN)	Pen.	Rec. ft	Loss ft	Description	Sample No.	% Agg	% C.S.	% F.S.	% Silt	% Clay	L.L.	P.I.	W.C.	SHTL Class
CL	0					CONCRETE	-	-	-	-	-	-	-	-	-	VISUAL
		AUGERED				SUBBASE	-	-	-	-	-	-	-	-	-	VISUAL
	2	5/8/12				BROWN GRAVELLY SANDY SILT	42	23	15	19	28	15	21	6	9	A-4A
	4	9/8/20				GRAY GRAVELLY SANDY SILT	43	18	10	17	34	21	19	4	11	A-4A
	6	13/13/17				GRAY SANDY SILT	44	0	5	23	54	18	NP	NP	14	A-4B
	8					BOTTOM OF BORING										
	10															
	12															
	14															
	16															
	18															
	20															
	22															
	24															
	26															
	28															
	30															
	32															
	34															
	36															

Particle Sizes: Agg= >2.00mm, Coarse Sand= 2.00-0.42mm, Fine Sand= 0.42-0.074mm, Silt= 0.074-0.005mm, Clay= <0.005mm

Form TE-121 Revised 6/92

CALCULATED

CHECKED

SOIL PROFILES

LIC-16-19.72

3/5

State of Ohio
Department of Transportation
Division of Highways
Testing Laboratory

13/20

LOG OF BORING

Date Started 9/23/92 Sampler: Type SS Dia. 1 3/8" Water Elev. - Project Identification: LICKING
Date completed 9/23/92 LIC-16-19.77
Boring No. B-16 Station & Offset 159+00, 6' RT. E/P (INSIDE EB PASSING LANE) Surface Elev. ℄ SUBSOIL INVESTIGATION

Depth (m)	Std. Pen.	Rec. ft.	Loss ft.	Description	Sample No.	% Agg	% C.S.	% F.S.	% Silt	% Clay	L.L.	P.I.	W.C.	SHTL Class
℄ 0				CONCRETE SUBBASE	-	-	-	-	-	-	-	-	-	VISUAL
2	AUGERED				-	-	-	-	-	-	-	-	-	
4	5/7/8			BROWN GRAVELLY SANDY SILT	19	16	13	26	29	16	18	5	10	A-4A
6	12/11/12			BROWN SILTY GRAVELLY SAND	20	24	17	27	23	9	NP	NP	12	A-2-4
8	8/8/6			BROWN SILTY GRAVELLY SAND	21	17	15	30	23	15	NP	NP	23	A-4A
10				BOTTOM OF BORING										
12														
14														
16														
18														
20														
22														
24														
26														
28														
30														
32														
34														
36														

Particle Sizes: Agg= >2.00mm, Coarse Sand= 2.00-0.42mm, Fine Sand= 0.42-0.074mm, Silt= 0.074-0.005mm, Clay= <0.005mm

Form TE-93 Revised 6/92

State of Ohio
Department of Transportation
Division of Highways
Testing Laboratory

14/20

LOG OF BORING

Date Started 9/24/92 Sampler: Type SS Dia. 1 3/8" Water Elev. - Project Identification: LICKING
Date completed 9/24/92 LIC-16-19.77
Boring No. B-18 Station & Offset 163+00, 6' LT. E/P (INSIDE WB PASSING LANE) Surface Elev. ℄ SUBSOIL INVESTIGATION

Depth (m)	Std. Pen.	Rec. ft.	Loss ft.	Description	Sample No.	% Agg	% C.S.	% F.S.	% Silt	% Clay	L.L.	P.I.	W.C.	SHTL Class
℄ 0				CONCRETE SUBBASE	-	-	-	-	-	-	-	-	-	VISUAL
2	AUGERED				-	-	-	-	-	-	-	-	-	
4	5/10/25			GRAY SILTY SANDY GRAVEL	39	47	7	13	23	10	19	5	9	A-2-4
6	22/15/18			GRAY GRAVELLY SANDY SILT	40	27	11	19	31	12	18	4	10	A-4A
8	13/16/19			GRAY GRAVELLY SANDY SILT	41	15	14	19	37	15	18	4	9	A-4A
10				BOTTOM OF BORING										
12														
14														
16														
18														
20														
22														
24														
26														
28														
30														
32														
34														
36														

Particle Sizes: Agg= >2.00mm, Coarse Sand= 2.00-0.42mm, Fine Sand= 0.42-0.074mm, Silt= 0.074-0.005mm, Clay= <0.005mm

Form TE-93 Revised 6/92

State of Ohio
Department of Transportation
Division of Highways
Testing Laboratory

15/20

LOG OF BORING

Date Started 9/23/92 Sampler: Type SS Dia. 1 3/8" Water Elev. - Project Identification: LICKING
Date completed 9/23/92 LIC-16-19.77
Boring No. B-15 Station & Offset 167+00, 6' RT. E/P (INSIDE EB PASSING LANE) Surface Elev. ℄ SUBSOIL INVESTIGATION

Depth (m)	Std. Pen.	Rec. ft.	Loss ft.	Description	Sample No.	% Agg	% C.S.	% F.S.	% Silt	% Clay	L.L.	P.I.	W.C.	SHTL Class
℄ 0				CONCRETE SUBBASE	-	-	-	-	-	-	-	-	-	VISUAL
2	AUGERED				-	-	-	-	-	-	-	-	-	
4	8/10/11			BROWN GRAVELLY SANDY SILT	22	15	9	14	39	23	24	8	16	A-4A
6	12/10/16			GRAY CLAYEY SILT	23	0	1	3	55	41	26	8	19	A-4B
8	9/12/15			GRAY CLAYEY SILT	24	0	0	1	55	44	29	10	23	A-4B
10				BOTTOM OF BORING										
12														
14														
16														
18														
20														
22														
24														
26														
28														
30														
32														
34														
36														

Particle Sizes: Agg= >2.00mm, Coarse Sand= 2.00-0.42mm, Fine Sand= 0.42-0.074mm, Silt= 0.074-0.005mm, Clay= <0.005mm

Form TE-93 Revised 6/92

State of Ohio
Department of Transportation
Division of Highways
Testing Laboratory

16/20

LOG OF BORING

Date Started 9/23/92 Sampler: Type SS Dia. 1 3/8" Water Elev. - Project Identification: LICKING
Date completed 9/23/92 LIC-16-19.77
Boring No. B-16 Station & Offset 171+00, 6' LT. E/P (INSIDE WB PASSING LANE) Surface Elev. ℄ SUBSOIL INVESTIGATION

Depth (m)	Std. Pen.	Rec. ft.	Loss ft.	Description	Sample No.	% Agg	% C.S.	% F.S.	% Silt	% Clay	L.L.	P.I.	W.C.	SHTL Class
℄ 0				CONCRETE SUBBASE	-	-	-	-	-	-	-	-	-	VISUAL
2	AUGERED				-	-	-	-	-	-	-	-	-	
4	4/11/16			GRAY GRAVELLY SANDY SILT	36	17	13	19	37	14	20	6	9	A-4A
6	16/13/18			GRAY SILTY SANDY GRAVEL	37	38	8	15	27	12	20	6	9	A-4A
8	23/24/21			GRAY SILTY SANDY GRAVEL	38	50	9	11	24	6	NP	NP	9	A-2-4
10				BOTTOM OF BORING										
12														
14														
16														
18														
20														
22														
24														
26														
28														
30														
32														
34														
36														

Particle Sizes: Agg= >2.00mm, Coarse Sand= 2.00-0.42mm, Fine Sand= 0.42-0.074mm, Silt= 0.074-0.005mm, Clay= <0.005mm

Form TE-93 Revised 6/92

CALCULATED
CHECKED

SOIL PROFILES

LIC-16-19.72

State of Ohio
Department of Transportation
Division of Highways
Testing Laboratory

(17/20)

LOG OF BORING

Date Started 9/23/92 Sampler: Type SS Dia. 1 3/8" Water Elev. -- Project Identification: LICKING
Date completed 9/23/92 LIC-16-19.77
Boring No. B-17 Station & Offset 175+00, 5' RT. E/P (INSIDE EB PASSING LANE) Surface Elev. ℄ SUBSOIL INVESTIGATION

Depth	Std. (IN)	Pen.	Rec.	Loss	Description	Sample No.	% Agg	% C.S.	% F.S.	% Silt	% Clay	L.L.	P.I.	W.C.	SHTL Class
℄ 0															
	AUGERED				CONCRETE										VISUAL
					SUBBASE										
2	5/6/9				BROWN GRAVELLY SANDY SILT	25	21	13	14	33	19	22	6	12	A-4A
4	10/7/13				GRAY SILT AND CLAY	26	0	2	3	53	42	29	11	19	A-6A
6	10/13/13				GRAY AND BROWN SILT	27	0	0	12	60	28	22	6	22	A-4B
8					BOTTOM OF BORING										
10															
12															
14															
16															
18															
20															
22															
24															
26															
28															
30															
32															
34															
36															

Particle Sizes: Agg= >2.00mm, Coarse Sand= 2.00-0.42mm, Fine Sand= 0.42-0.074mm, Silt= 0.074-0.005mm, Clay= <0.005mm

Form TE-93 Revised 6/92

State of Ohio
Department of Transportation
Division of Highways
Testing Laboratory

(18/20)

LOG OF BORING

Date Started 9/23/92 Sampler: Type SS Dia. 1 3/8" Water Elev. -- Project Identification: LICKING
Date completed 9/23/92 LIC-16-19.77
Boring No. B-18 Station & Offset 181+00, 6' LT. EP (INSIDE WB PASSING LANE) Surface Elev. ℄ SUBSOIL INVESTIGATION

Depth	Std. (IN)	Pen.	Rec.	Loss	Description	Sample No.	% Agg	% C.S.	% F.S.	% Silt	% Clay	L.L.	P.I.	W.C.	SHTL Class
℄ 0															
	AUGERED				CONCRETE										VISUAL
					SUBBASE										
2	8/17/20				GRAY SILTY SANDY GRAVEL	33	40	17	17	18	8	21	4	9	A-2-4
4	17/22/20				GRAY SILTY SANDY GRAVEL	34	37	17	15	21	10	23	6	11	A-2-4
6	18/17/27				BROWN SILTY SANDY GRAVEL	35	40	13	13	23	11	22	6	10	A-2-4
8					BOTTOM OF BORING										
10															
12															
14															
16															
18															
20															
22															
24															
26															
28															
30															
32															
34															
36															

Particle Sizes: Agg= >2.00mm, Coarse Sand= 2.00-0.42mm, Fine Sand= 0.42-0.074mm, Silt= 0.074-0.005mm, Clay= <0.005mm

Form TE-93 Revised 6/92

State of Ohio
Department of Transportation
Division of Highways
Testing Laboratory

(19/20)

LOG OF BORING

Date Started 9/23/92 Sampler: Type SS Dia. 1 3/8" Water Elev. -- Project Identification: LICKING
Date completed 9/23/92 LIC-16-19.77
Boring No. B-19 Station & Offset 185+00, 6' RT. E/P (INSIDE EB PASSING LANE) Surface Elev. ℄ SUBSOIL INVESTIGATION

Depth	Std. (IN)	Pen.	Rec.	Loss	Description	Sample No.	% Agg	% C.S.	% F.S.	% Silt	% Clay	L.L.	P.I.	W.C.	SHTL Class
℄ 0															
	AUGERED				CONCRETE										VISUAL
					SUBBASE										
2	8/8/12				BROWN GRAVELLY SANDY SILT	28	23	15	21	27	14	22	6	10	A-4A
4	15/27/50(0.3')				BROWN SILTY SANDY GRAVEL	29	38	15	18	21	8	NP	NP	10	A-2-4
6					BOTTOM OF BORING										
8															
10															
12															
14															
16															
18															
20															
22															
24															
26															
28															
30															
32															
34															
36															

Particle Sizes: Agg= >2.00mm, Coarse Sand= 2.00-0.42mm, Fine Sand= 0.42-0.074mm, Silt= 0.074-0.005mm, Clay= <0.005mm

Form TE-93 Revised 6/92

State of Ohio
Department of Transportation
Division of Highways
Testing Laboratory

(20/20)

LOG OF BORING

Date Started 9/23/92 Sampler: Type SS Dia. 1 3/8" Water Elev. -- Project Identification: LICKING
Date completed 9/23/92 LIC-16-19.77
Boring No. B-20 Station & Offset 188+00, 6' LT. E/P (INSIDE WB PASSING LANE) Surface Elev. ℄ SUBSOIL INVESTIGATION

Depth	Std. (IN)	Pen.	Rec.	Loss	Description	Sample No.	% Agg	% C.S.	% F.S.	% Silt	% Clay	L.L.	P.I.	W.C.	SHTL Class
℄ 0															
	AUGERED				CONCRETE										VISUAL
					SUBBASE										
2	7/5/9				BROWN SILTY GRAVELLY SAND	30	32	16	16	28	8	21	6	11	A-4A
4	15/19/30				BROWN SILTY GRAVELLY SAND	31	28	15	22	27	8	NP	NP	9	A-2-4
6	28/24/26				BROWN SILTY SANDY GRAVEL	32	28	15	22	20	5	NP	NP	10	A-1-B
8					BOTTOM OF BORING										
10															
12															
14															
16															
18															
20															
22															
24															
26															
28															
30															
32															
34															
36															

Particle Sizes: Agg= >2.00mm, Coarse Sand= 2.00-0.42mm, Fine Sand= 0.42-0.074mm, Silt= 0.074-0.005mm, Clay= <0.005mm

Form TE-93 Revised 6/92

CALCULATED
CHECKED

SOIL PROFILES

LIC-16-19.72

5/5