LOR-83-17.10	OHIO	1
	FHWA REGION 5	15
BRM-ID42(4)	FEDERAL PROJECT	

LORAIN COUNTY

STATE OF OHIO
DEPARTMENT OF TRANSPORTATION
LOR - 83 - 17.10
CITY OF AVON
LORAIN COUNTY

BRM-ID42(4)

MICROFILMED
DEC 6 1989

DESIGN DESIGNATION

1980 ADT	=	7,070
2000 ADT	=	14,140
DHV	=	990
D	=	55%
T	=	11%
V	=	50MPH

CONVENTIONAL SIGNS

County Line
Township Line
Section Line
Corporation Line or
Fence Line (existing) (proposed)
Center Line
Trees , Stumps , (to be removed)
Utility Poles: Telephone , Power , Light .

Limited Access (only) LA
Right of Way (only) RW
Limited Access & Right of Way LA & RW
Existing Right of Way
Property Line (in existing fence)
Railroad or
Guardrail (existing) (proposed)
Waterline W W.V. Gasline G G.V.

INDEX OF SHEETS

TITLE SHEET	1
TYPICAL SECTIONS	2
GENERAL NOTES AND DETOUR MAP	3, 3A
GENERAL SUMMARY	4
PLAN AND PROFILE	5
CROSS SECTIONS	6-8
CHANNEL DETAILS	9-10
STRUCTURE OVER 20'	11-14
RIGHT OF WAY	15

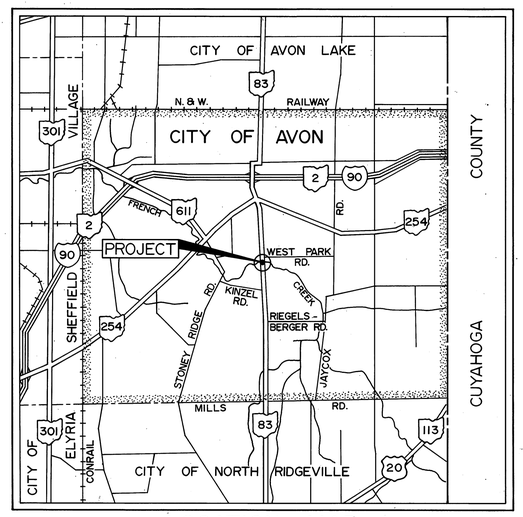

LOCATION MAP

SCALE IN MILES
0 1 2 3 4

LINE DATA

BEGIN PROJECT	STA. 902+75
END PROJECT	STA. 904+75
NET PROJECT LENGTH	200.00 LIN. FT. or 0.038 MILES
BEGIN WORK	STA. 902+00
END WORK	STA. 905+25
NET WORK LENGTH	325 LIN. FT. or 0.062 MILES

UNDERGROUND UTILITIES
48 HOURS
BEFORE YOU DIG
Call 800-362-2764 (Toll Free)
OHIO UTILITIES PROTECTION SERVICE
NON-MEMBERS
MUST BE CALLED DIRECTLY

Portion to be improved
State & Federal Routes
Other Roads

SCALES

Plan 0 50 100'
Profile: Horizontal 0 50 100', Vertical 0 5 10'
Cross Section: Horizontal 0 5 10', Vertical 0 5 10'

SUPPLEMENTAL SPECIFICATIONS		
847	10-17-83	
824	10-8-82	
947	10-17-83	

1985 SPECIFICATIONS

The standard specifications of the State of Ohio, Department of Transportation, including changes and supplemental specifications listed in the proposal shall govern this improvement.

I hereby approve these plans and declare that the making of this improvement will require the closing to traffic of the highway and that detours will be provided as indicated on the plans.

MICROFILMED
JUL 18 1986

Approved Gary W. Pons
Date 9/17/84 District Deputy Director of Transportation

FFE Approved Walter J. Gratings for
Date 10-24-84 Engineer, Bureau of Bridges and Structural Design

Approved
Date Chief Engineer, Planning and Design

Approved Warren J Smith
Date 2/22/85 Director, Department of Transportation

SUPPLEMENTAL PRINTS OF STANDARD CONSTRUCTION DRAWINGS					
BP-5	7-16-81		AS-1-81	11-27-81	
CB-2-3 & 2-4	5-1-79				
GR-1	2-5-82		DBR-2-73	4-10-73	
GR-2B	2-5-82		PSBD-1-81	9-18-81	
GR-3	2-5-82				
GR-4A	1-30-84				
LA-1	6-1-79				
MC-4	7-26-76				

PLAN PREPARED BY:
LORAIN COUNTY ENGINEER
(Roadway Plan)
and
R.E. WARNER & ASSOCIATES
(Structure Plans)

SEAL

Project: LOR-83-17.10 LORAIN CO.
Date of Letting _____ 198 , Contract No. _____

DEPARTMENT OF TRANSPORTATION
FEDERAL HIGHWAY ADMINISTRATION

APPROVED:

DIVISION ADMINISTRATOR DATE

FED. RD. DIVISION	STATE	PROJECT	
5	OHIO	BRM-ID42(4)	

LOR-83-17.10
LORAIN COUNTY

TYPICAL SECTIONS

TYPE 404

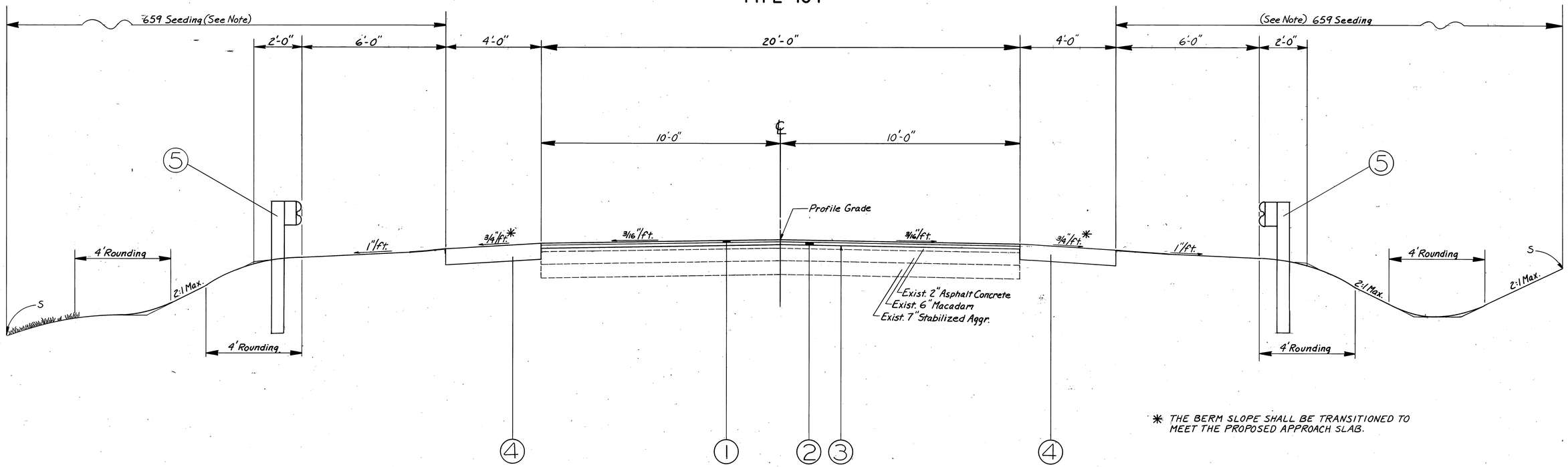

* THE BERM SLOPE SHALL BE TRANSITIONED TO MEET THE PROPOSED APPROACH SLAB.

STA. 902+75 to STA. 903+33.92 = 58.92 L.F.
STA. 904+14.08 to STA. 904+75 = 60.92 L.F.
TOTAL = 119.84 L.F.

LOR-83-17.10
LIMITS OF BRIDGE AND APPROACH SLABS
STA. 903+33.92 to STA. 904+14.08

LEGEND

1. 404- 1¼" Asphalt Concrete, AC-20
2. 403- Variable Asphalt Concrete, AC-20
3. 407-Tack Coat (See General Note)
4. 304-8" Aggregate Base
5. 606- Guardrail, Type 5

GENERAL NOTES

CALC. BY: EAB 6-84
CHKD BY: CPW 6-84

FED. RD. DIVISION	STATE	PROJECT	
5	OHIO	BRM-ID42(4)	

LOR-83-17.10
LORAIN COUNTY

FIELD OFFICE:

THE CONTRACTOR SHALL PROVIDE A SUITABLE FIELD OFFICE HAVING A MINIMUM OF 150 SQUARE FEET OF FLOOR SPACE. PAYMENT SHALL BE AT THE LUMP SUM PRICE BID FOR ITEM 619, FIELD OFFICE.

ROUNDING OF CORNERS SHOWN ON CROSS SECTIONS:

THE ROUNDED CORNERS SHOWN ON THE TYPICAL SECTIONS, APPLY TO ALL CROSS SECTIONS EVEN THOUGH OTHERWISE SHOWN ON THESE PLANS.

UNDERGROUND UTILITIES:

THE LOCATIONS OF THE UNDERGROUND UTILITIES SHOWN ON THE PLANS ARE AS OBTAINED FROM THE OWNERS OF THE UTILITY AS REQUIRED BY SECTION 153.64 OF THE OHIO REVISED CODE.

CONTINGENCY QUANTITIES:

THE CONTRACTOR SHALL NOT ORDER MATERIALS OR PERFORM WORK FOR PLAN ITEMS SET UP TO BE USED "AS DIRECTED BY THE ENGINEER" UNLESS AUTHORIZED BY THE ENGINEER. THE ACTUAL WORK LOCATIONS AND QUANTITIES USED AT THE ENGINEER'S DISCRETION SHALL BE MADE A MATTER OF RECORD BY INCORPORATION INTO THE FINAL CHANGE ORDER GOVERNING COMPLETION OF THIS PROJECT.

ELEVATION DATUM:

ALL ELEVATIONS ARE BASED ON U.S.G.S. DATUM.

LOCATION OF GUARDRAIL:

THE LOCATIONS OF GUARDRAIL RUNS, AS SHOWN IN THESE PLANS, ARE SUBJECT TO ADJUSTMENT PRIOR TO FINAL ACCEPTANCE. THE ENGINEER SHALL BE SATISFIED THAT ALL INSTALLATIONS WILL AFFORD MAXIMUM PROTECTION FOR TRAFFIC.

REMOVAL OF TREES AND STUMPS:

ALL TREES AND STUMPS SPECIFICALLY MARKED FOR REMOVAL WITHIN THE CONSTRUCTION LIMITS OF THIS PROJECT SHALL BE REMOVED UNDER THE LUMP SUM PRICE BID FOR ITEM 201 CLEARING AND GRUBBING, EXCEPT THAT THOSE TREES FOR WHICH PROTECTION AND PRESERVATION WORK IS INDICATED ELSEWHERE IN THESE PLANS SHALL NOT BE REMOVED.

THE FOLLOWING IS AN APPROXIMATE ESTIMATE OF THE NUMBER OF TREES AND STUMPS TO BE REMOVED:

SIZES	NO. TREES	NO. STUMPS
18"	0	1
30"	1	0
48"	0	0
60"	0	0

THE ABOVE ESTIMATE IS APPROXIMATE AND THE STATE OF OHIO RESERVES THE RIGHT TO ORDER THE REMOVAL OF ADDITIONAL TREES OR STUMPS OUTSIDE OF THE LIMITS OF CONSTRUCTION BUT WITHIN THE RIGHT-OF-WAY AND/OR EASEMENT LINES. PAYMENT FOR THE REMOVAL OF THESE ADDITIONAL TREES OR STUMPS SHALL BE INCLUDED IN THE LUMP SUM PRICE BID FOR ITEM 201 CLEARING AND GRUBBING.

SEEDING:

QUANTITIES FOR SEEDING, WHERE REQUIRED BY PLAN, ARE CALCULATED FOR THE SOIL AREAS BETWEEN TEN(10) FEET OUTSIDE THE WORK LIMITS, AS SHOWN ON THE CROSS SECTIONS, OR TO THE RIGHT OF WAY OR TEMPORARY LINES, IF SUCH LINE IS LESS THAN TEN(10) FEET FROM THE WORK LIMITS.

WATERING PERMANENT SEEDED AREAS:

THE FOLLOWING ESTIMATED QUANTITY IS TO BE USED AS DIRECTED BY THE ENGINEER TO PROMOTE GROWTH OF THE PERMANENT SEEDED AREAS AS PER 659.09:

ITEM 659 WATER 1 M-GAL.

DUST CONTROL:

THE FOLLOWING ESTIMATED QUANTITY HAS BEEN PROVIDED IN THE GENERAL SUMMARY TO BE USED FOR DUST CONTROL AS DIRECTED BY THE ENGINEER:

ITEM 616 WATER 1 M-GAL.

DRAINS:

ALL DRAINS WHICH ARE ENCOUNTERED DURING CONSTRUCTION SHALL BE PROVIDED WITH UNOBSTRUCTED OUTLETS UNDER THE DIRECTION OF THE ENGINEER.

EXISTING COLLECTORS AND ISOLATED DRAINS WHICH ARE ENCOUNTERED ABOVE THE ELEVATION OF THE ROADWAY DITCHES SHALL BE OUTLETTED INTO THE ROADWAY DITCH BY 603 TYPE F CONDUIT. THE OPTIMUM ELEVATION SHALL BE, IF POSSIBLE, ONE FOOT ABOVE THE FLOWLINE ELEVATION OF THE DITCH. LATERAL DRAINS WHICH CROSS THE ROADWAY SHALL BE INTERCEPTED BY 603 TYPE E CONDUIT AND CARRIED IN A LONGITUDINAL DIRECTION TO AN ADEQUATE OUTLET.

THE LOCATION, TYPE, SIZE AND GRADE OF REQUIRED REPLACEMENTS SHALL BE DETERMINED BY THE ENGINEER DURING CONSTRUCTION AND PAYMENT SHALL BE MADE ON FINAL MEASUREMENTS.

THE FOLLOWING ESTIMATED QUANTITIES HAVE BEEN INCLUDED IN THE GENERAL SUMMARY FOR THE WORK NOTED ABOVE:

ITEM 603	6" CONDUIT, TYPE E	50 LIN. FT.
ITEM 603	6" CONDUIT, TYPE F	10 LIN. FT.

NECESSARY BENDS AND BRANCHES SHALL BE INCLUDED FOR PAYMENT IN THE PERTINENT CONDUIT ITEM.

NONE OF THE ABOVE MATERIALS SHALL BE ORDERED BY THE CONTRACTOR UNTIL REQUESTED BY THE ENGINEER.

SANITARY FLOW INTO HIGHWAY DRAINAGE SYSTEMS:

THIS PLAN MAKES NO PROVISION FOR CONNECTING, NOR SHALL THE ENGINEER OR CONTRACTOR CONNECT, ANY EXISTING OR NEW DRAINAGE INTO THE HIGHWAY DRAINAGE SYSTEM WHEN SUCH DRAINS CARRY FLOW FROM ANY PLUMBING FIXTURES INCLUDING FLOOR DRAINS AND SINK DRAINS OR DRAINS FROM LIVESTOCK LOTS OR BARNS.

EXISTING PIPE CARRYING FLOW WHICH COMES WITHIN THE CATEGORY OUTLINED ABOVE SHALL BE PLUGGED WITH CLASS C CONCRETE AT THE RIGHT OF WAY LINE. PAYMENT FOR SAID PLUGGING SHALL BE INCLUDED IN THE UNIT PRICE BID FOR ITEM 203 EXCAVATION.

CONNECTIONS TO EXISTING PIPE:

WHERE THE PLANS PROVIDE FOR PROPOSED CONDUIT TO BE CONNECTED TO, OR TO CROSS EITHER OVER OR UNDER AN EXISTING SEWER, IT SHALL BE THE RESPONSIBILITY OF THE CONTRACTOR TO LOCATE THE EXISTING PIPE BOTH AS TO LINE AND GRADE BEFORE HE STARTS TO LAY THE PROPOSED CONDUIT.

PAYMENT FOR ALL OPERATIONS DESCRIBED ABOVE SHALL BE INCLUDED IN THE UNIT PRICE BID FOR THE PERTINENT 603 CONDUIT ITEMS.

407 TACK COAT:

THE TACK COAT OPERATION SHALL BE DETERMINED AS PER SPEC. 407.05. PLAN QUANTITIES INDICATE AVERAGE APPLICATION RATES OF 0.1 GALLONS PER SQUARE YARD OF TACK COAT FOR ESTIMATING PURPOSES ONLY.

EROSION CONTROL PADS AND ANIMAL GUARDS:

EROSION CONTROL PADS AND ANIMAL GUARDS SHALL BE PROVIDED AT THE OUTLET END OF ALL PIPE UNDERDRAINS AND FARM DRAINS, AS PER STANDARD CONSTRUCTION DRAWING MC-4, EXCEPT WHEN THEY OUTLET INTO A DRAINAGE STRUCTURE. PAYMENT FOR THE EROSION CONTROL PADS AND ANIMAL GUARDS SHALL BE INCLUDED IN THE PRICE BID FOR ITEM 603, 6" CONDUIT, TYPE F.

UTILITY OWNERSHIP

THE FOLLOWING UTILITIES AND OWNERS ARE LOCATED WITHIN THE WORK LIMITS OF THIS PROJECT:

TELEPHONE:	CENTRAL TELEPHONE COMPANY OF OHIO 203 WEST 9th STREET LORAIN, OHIO 44052	PH. 216-244-8100
POWER:	CLEVELAND ELECTRIC ILLUMINATING CO. 55 PUBLIC SQUARE CLEVELAND, OHIO 44178	PH. 216-622-9800
GAS:	COLUMBIA GAS OF OHIO 27121 CENTER RIDGE ROAD WESTLAKE, OHIO 44145	PH. 216-871-1020
WATER:	CITY OF AVON WATER WORKS 36774 DETROIT ROAD AVON, OHIO 44011	PH. 216-934-5102
SANITARY SEWER:	FRENCH CREEK WASTEWATER TREATMENT PLANT 2350 ABBE ROAD SHEFFIELD VILLAGE, OHIO 44055	PH. 216-934-5251

GUARD RAIL OVER CULVERTS:

WHEN SUFFICIENT POST DEPTH IS AVAILABLE DUE TO A CULVERT, THE GUARD RAIL POSTS DIRECTLY OVER THE CULVERT SHALL NOT BE DRIVEN, BUT SET IN HOLES. IF THE DISTANCE BETWEEN GROUND LINE AND THE TOP OF CULVERT IS LESS THAN 3 FEET, THE POST SHALL BE ENCASED IN A MINIMUM OF 4" THICKNESS OF CLASS "C" CONCRETE FOR THE FULL DEPTH OF THE POST. PAYMENT FOR THE ABOVE SHALL BE INCLUDED IN THE UNIT PRICE FOR ITEM 606, GUARDRAIL TYPE 5.

UTILITY NOTIFICATION:

AT LEAST TWO WORKING DAYS PRIOR TO COMMENCING CONSTRUCTION OPERATIONS IN ANY AREA WHICH MAY INVOLVE UNDERGROUND FACILITIES THE CONTRACTOR SHALL NOTIFY THE PROJECT ENGINEER, THE REGISTERED UNDERGROUND UTILITY PROTECTION SERVICES AND THE OWNERS OF ALL UNDERGROUND UTILITY FACILITIES SHOWN IN THE PLANS

THE OWNER OF THE UNDERGROUND UTILITY FACILITY SHALL, WITHIN FORTY-EIGHT HOURS, EXCLUDING SATURDAYS, SUNDAYS AND LEGAL HOLIDAYS, AFTER NOTICE IS RECEIVED, STAKE, MARK OR OTHERWISE DESIGNATE THE LOCATION OF THE UNDERGROUND UTILITY FACILITIES IN THE CONSTRUCTION AREA IN SUCH A MANNER AS TO INDICATE THEIR COURSE TOGETHER WITH THE APPROXIMATE DEPTH AT WHICH THEY WERE INSTALLED. THE MARKING OR LOCATING SHALL BE COORDINATED TO STAY APPROXIMATELY TWO DAYS AHEAD OF THE PLANNED CONSTRUCTION.

614 MAINTAINING TRAFFIC:

THROUGH TRAFFIC ON S.R. 83 SHALL BE DETOURED AS SHOWN BELOW. THE DETOURS SHALL BE LIMITED TO 90 CONSECUTIVE CALENDAR DAYS DURATION.

ALL DETOUR SIGNING WILL BE PROVIDED BY STATE FORCES.

THE CONTRACTOR SHALL FURNISH GATES AND BARRICADES ACCORDING TO PLATE C-7 OF THE OHIO MANUAL OF UNIFORM TRAFFIC CONTROL DEVICES.

FINAL PAVEMENT MARKINGS:

FINAL PAVEMENT MARKING WILL BE PROVIDED BY THE CITY OF AVON FORCES.

CONSTRUCTION NOISE:

IN ORDER TO MINIMIZE ADVERSE CONSTRUCTION NOISE IMPACTS, NO POWER-OPERATED, CONSTRUCTION-TYPE DEVICE SHALL BE OPERATED BETWEEN THE HOURS OF 10:00 P.M. TO 6:00 A.M. IN ADDITION, NO POWER OPERATED, CONSTRUCTION-TYPE DEVICE SHALL BE OPERATED IN SUCH A MANNER THAT THE NOISE CREATED SUBSTANTIALLY EXCEEDS THE NOISE CUSTOMARILY AND NECESSARILY ATTENDANT TO THE REASONABLE AND EFFICIENT PERFORMANCE OF SUCH EQUIPMENT.

GUARDRAIL REMOVED FOR STORAGE:

ALL GUARD RAIL REMOVED FOR STORAGE SHALL BE REMOVED AND STORED ON PROJECT SITE FOR REMOVAL BY THE CITY OF AVON.

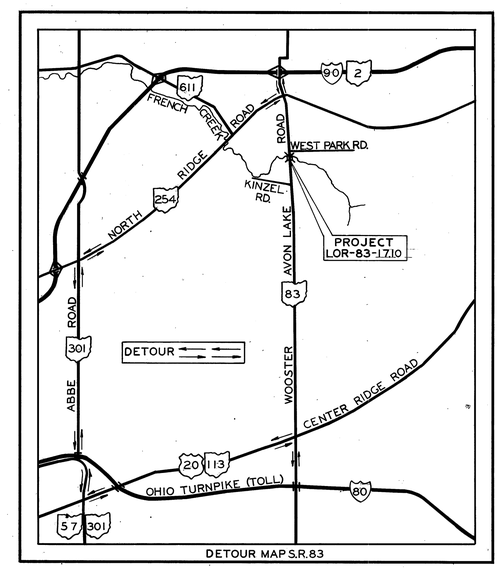

DETOUR MAP S.R. 83

MICROFILMED
JUL 18 1986

614 WORK ZONE PAVEMENT MARKINGS

GENERAL

THE CONTRACTOR SHALL FURNISH, INSTALL, MAINTAIN AND WHEN NECESSARY, REMOVE WORK ZONE RETROREFLECTIVE PAVEMENT MARKINGS ON EXISTING, RECONSTRUCTED, RESURFACED OR TEMPORARY ROADS WITHIN THE WORK LIMITS, IN ACCORDANCE WITH THE FOLLOWING REQUIREMENTS.

THE MARKINGS SHALL BE MAINTAINED IN GOOD CONDITION TO PROVIDE DAY AND NIGHT VISIBILITY. THE MARKINGS SHALL BE REPAIRED OR REPLACED AS DIRECTED BY THE ENGINEER TO MAINTAIN REQUIRED VISUAL EFFECTIVENESS AND NIGHT VISIBILITY AT NO ADDITIONAL COST TO THE STATE.

THE CONTRACTOR SHALL, IN ADVANCE OF ANY SECTION OF ROADWAY LACKING OMUTCD FULL PATTERN STANDARD DIMENSION EDGE LINE OR CENTER LINE MARKINGS, ERECT A "NO EDGE LINES" (OW-167) SIGN OR "UNMARKED NO PASSING ZONES" (OW-168) SIGN OR BOTH AS MAY BE APPROPRIATE. THESE SIGNS SHALL BE IN PLACE PRIOR TO EXPOSING THE ROADWAY TO TRAFFIC. THESE SIGNS SHALL BE REPEATED EVERY 1 TO 2 MILES AND AT OTHER LOCATIONS AS NECESSARY. THESE SIGNS SHALL BE REMOVED WHEN THEY NO LONGER APPLY. THE COST FOR FURNISHING AND ERECTING AND SUBSEQUENTLY REMOVING THESE SIGNS SHALL BE INCLUDED IN 614 MAINTAINING TRAFFIC, UNLESS SPECIFICALLY ITEMIZED.

TEMPORARY PAVEMENT MARKING MATERIALS

UNLESS OTHERWISE INDICATED ON THE PLANS, TEMPORARY PAVEMENT MARKINGS MAY BE EITHER 621.02 PAINT OR 947.03 TYPE B OR C PREFORMED MATERIAL. *WHERE PAVEMENT MARKINGS ARE NOT LIABLE TO BE TRACKED, EITHER CONVENTIONAL OR FAST-DRYING PAINT MAY BE USED FOR 621.02.*

PAINT

PAINTED MARKINGS SHALL BE IN ACCORDANCE WITH 621 EXCEPT THAT THE INCREASE OF 25 PERCENT IN THE APPLICATION RATE FOR NEW BITUMINOUS PAVEMENT AND PARAGRAPH 621.14 SHALL NOT APPLY.

TYPE B AND TYPE C PREFORMED MATERIAL

PREFORMED MATERIAL SHALL COMPLY WITH 947.03 EXCEPT THAT NO PREFORMED MATERIAL CONTAINING METAL SHALL BE PLACED ON ANY SURFACE UNLESS IT WILL BE REMOVED LATER BY THE CONTRACTOR. TEMPORARY PAVEMENT MARKINGS OF 947.03 PREFORMED MATERIAL SHALL BE REMOVED PRIOR TO PLACEMENT OF 621 OR 847 SURFACE COURSE MARKINGS AT THAT LOCATION. PREFORMED MATERIAL SHALL BE APPLIED IN ACCORDANCE WITH 847 EXCEPT AS MODIFIED HEREIN.

PLACEMENT

TEMPORARY MARKINGS SHALL BE COMPLETE AND IN PLACE ON ALL PAVEMENT PRIOR TO EXPOSING IT TO TRAFFIC. WHEN TEMPORARY MARKINGS CONFLICT WITH THE TRAFFIC PATTERN, THEY SHALL BE REMOVED BY THE CONTRACTOR IN ACCORDANCE WITH 621.134.

TEMPORARY MARKING CLASSES

CLASS I MARKINGS

CLASS I MARKINGS SHALL BE APPLIED TO THE FULL DIMENSIONS AS DEFINED IN 621 WITH THE FOLLOWING ADDITIONS OR EXCEPTIONS:

1) LANE LINES SHALL BE 4-INCHES IN WIDTH.
2) TRANSVERSE LINES SHALL BE 8-INCHES IN WIDTH.
3) STOP LINES SHALL BE 12-INCHES IN WIDTH.
4) CROSS WALK LINES SHALL BE 8-INCHES IN WIDTH.

CLASS II MARKINGS

CLASS II MARKINGS (ABBREVIATED) SHALL BE DEFINED AS FOLLOWS:

CENTER LINES SHALL CONSIST OF SINGLE, YELLOW 4-INCH WIDE BY A MINIMUM OF 48-INCH LONG DASHES SPACED AT A MAXIMUM OF 40-FOOT INTERVALS.

LANE LINES SHALL CONSIST OF WHITE 4-INCH WIDE BY A MINIMUM OF 48-INCH LONG DASHES SPACED AT A MAXIMUM OF 40-FOOT INTERVALS.

GORE MARKINGS SHALL BE TWO CONTINUOUS, WHITE 4-INCH LINES PLACED AT THE THEORETICAL GORE OF AN EXIT RAMP OR DIVERGING ROADWAYS.

THE PAINT APPLICATION RATE SHALL BE NOT LESS THAN 1.6 GALLONS PER MILE FOR LANE LINE AND CENTER LINE AND 16 GALLONS PER MILE FOR GORE MARKINGS.

CONFLICTING EXISTING MARKINGS

THE CONTRACTOR SHALL, PRIOR TO PLACING TEMPORARY MARKINGS, REMOVE ALL CONFLICTING EXISTING MARKINGS VISIBLE TO THE TRAVELING PUBLIC DURING DAYLIGHT OR NIGHTTIME HOURS IN ACCORDANCE WITH 621.134. THE COST FOR REMOVAL OF CONFLICTING MARKINGS SHALL BE INCLUDED IN 614 MAINTAINING TRAFFIC UNLESS SPECIFICALLY ITEMIZED.

THE CONTRACTOR SHALL ALSO REMOVE THE PRISMATIC RETRO-REFLECTOR WITHIN ANY RAISED PAVEMENT MARKER (RPM) WHICH IS IN CONFLICT WITH THE TEMPORARY PAVEMENT MARKINGS. WHEN THE TEMPORARY PAVEMENT MARKINGS ARE REMOVED AND THE RPM IS NO LONGER IN CONFLICT, THE CONTRACTOR SHALL THOROUGHLY CLEAN THE RECESSED REFLECTOR ATTACHMENT AREA OF THE CASTING AND INSTALL A NEW PRISMATIC RETRO-REFLECTOR OF THE SAME KIND AND COLOR. THE COST FOR THIS WORK SHALL BE INCIDENTAL TO THE VARIOUS PAY ITEMS.

INTERIM MARKINGS

WITHIN 21 CALENDAR DAYS AFTER OPENING ANY LENGTH OF PAVEMENT TO TRAFFIC, THE 621 OR 847 PAVEMENT MARKINGS CALLED FOR IN THE PLANS OR EQUIVALENT 614 CLASS I, PAINT MARKINGS SHALL BE APPLIED. THE CONTRACTOR SHALL FURNISH ALL LABOR, EQUIPMENT, AND MATERIAL NECESSARY TO PLACE AND MAINTAIN 614 CLASS I PAINT MARKINGS AS PART OF THE LUMP SUM BID FOR 614 MAINTAINING TRAFFIC.

FOR EACH CALENDAR DAY BEYOND 21 DAYS THAT THIS WORK SHALL REMAIN UNCOMPLETED, THE PROVISIONS OF 108.07 WILL BE INVOKED, EXCEPT THAT BETWEEN NOVEMBER 15 AND APRIL 15 WEATHER CONDITIONS SHALL NOT BE AN ACCEPTABLE REASON FOR EXTENSION.

METHOD OF MEASUREMENT

TEMPORARY PAVEMENT MARKINGS WILL BE MEASURED COMPLETE IN PLACE, BY CLASS AND MATERIAL, IN THE UNITS DESIGNATED. LINE QUANTITIES WILL BE THE LENGTH OF THE COMPLETED STRIPE, INCLUDING GAPS, INTERSECTIONS, AND OTHER SECTIONS OF PAVEMENT NOT NORMALLY MARKED, IN ACCORDANCE WITH 621.15.

TEMPORARY PAVEMENT MARKINGS WILL INCLUDE THE LAYOUT, APPLICATION AND REMOVAL OF THE MARKINGS, WHEN REQUIRED.

BASIS OF PAYMENT

PAYMENT FOR ACCEPTED QUANTITIES COMPLETE IN PLACE WILL BE MADE AT THE CONTRACT UNIT PRICE. PAYMENT SHALL BE FULL COMPENSATION FOR ALL MATERIALS, LABOR, INCIDENTALS AND EQUIPMENT FOR PLACEMENT, MAINTENANCE AND NECESSARY REMOVAL OF THE MARKINGS.

ITEM	UNIT	DESCRIPTION
614	MILES	TEMPORARY LANE LINES, CLASS _____, *
614	MILES	TEMPORARY CENTER LINES, CLASS _____, *
614	LIN. FT.	TEMPORARY CHANNELIZING LINES, CLASS I, *
614	MILES	TEMPORARY EDGE LINES, CLASS I, *
614	LIN. FT.	TEMPORARY GORE MARKINGS, CLASS II, *
614	LIN. FT.	TEMPORARY STOP LINES, CLASS I, *
614	LIN. FT.	TEMPORARY CROSSWALK LINES, CLASS I, *
614	EACH	TEMPORARY LANE ARROWS, CLASS I, *
614	EACH	TEMPORARY RAILROAD SYMBOL MARKINGS, CLASS I, *
614	EACH	TEMPORARY WORD "ONLY" ON PAVEMENT, 72-INCH, CLASS I, *
614	LIN. FT.	TEMPORARY TRANSVERSE LINES, CLASS I, *
614	LIN. FT.	TEMPORARY DOTTED LINES, CLASS I, *

*621 PAINT, 947.03 TYPE B OR 947.03 TYPE C

A QUANTITY OF 0.06 MILES OF TEMPORARY CENTER LINES, CLASS II HAS BEEN CARRIED TO THE GENERAL SUMMARY TO BE USED AS DIRECTED BY THE ENGINEER.

THE ROAD SHALL NOT BE OPENED TO TRAFFIC WITHOUT EITHER THE PERMANENT OR TEMPORARY PAVEMENT MARKINGS IN PLACE.

CALC. BY: EAB 6-84
CHK'D BY: CPW 6-84

FED. RD. DIVISION	STATE	PROJECT	
5	OHIO	BRM-ID42(4)	

LOR-83-17.10
LORAIN COUNTY

MICROFILMED
JUL 18 1986

GENERAL SUMMARY

FROM SHEET NUMBER 3	3A	4	5	9				ITEM	PLAN TOTAL	UNIT	DESCRIPTION
LUMP								201	LUMP		CLEARING AND GRUBBING — ROADWAY
			129					202	129	SQ.YD.	WEARING COURSE REMOVED
			124					202	124	LIN.FT.	GUARDRAIL REMOVED FOR STORAGE
			192					203	192	CU.YD.	EXCAVATION NOT INCLUDING EMBANKMENT CONSTRUCTION
			513					203	513	CU.YD.	EMBANKMENT
			150					606	150	LIN.FT.	GUARDRAIL, TYPE 5
			4					606	4	EACH	ANCHOR ASSEMBLY, STANDARD TYPE T
			4					606	4	EACH	BRIDGE TERMINAL ASSEMBLY, STANDARD TYPE B
	0.06							614	0.06	MILE	TEMPORARY CENTERLINE, CLASS II
1								616	1	M GAL.	WATER
											EROSION CONTROL
			962					659	962	SQ.YD.	SEEDING AND MULCHING
		0.09						659	0.09	TON	COMMERCIAL FERTILIZER
1								659	1	M GAL.	WATER
											DRAINAGE
50								603	50	LIN.FT.	6" CONDUIT, TYPE E
10								603	10	LIN.FT.	6" CONDUIT, TYPE F
			317					603	317	LIN.FT.	21" CONDUIT, TYPE C
			2					604	2	EACH	CATCH BASIN, STANDARD NO. 2-3
											PAVEMENT
			43					304	43	CU.YD.	AGGREGATE BASE
			22					403	22	CU.YD.	ASPHALT CONCRETE, AC-20
			22					404	22	CU.YD.	ASPHALT CONCRETE, AC-20
			62					407	62	GAL.	TACK COAT
			133					611	133	SQ.YD.	REINFORCED CONCRETE APPROACH SLAB (T=12") MODIFIED AS PER PLAN
											STRUCTURES OVER 20 FEET
											LOR-83-17.12 SEE SHEET 12
LUMP								619	LUMP		FIELD OFFICE
								623	LUMP		CONSTRUCTION LAYOUT STAKES
								624	LUMP		MOBILIZATION
								614	LUMP		MAINTAINING TRAFFIC

659 COMMERCIAL FERTILIZER CALCULATION

659 SEEDING FROM SUMMARY = 962 SQ. YDS.
ITEM 659 FERTILIZER 962 SQ. YDS. × 9 × 20 ÷ (1,000 × 2,000) = 0.09 TON

CALC. BY: EAB 6-84
CHKD BY: CPW 6-84

FED RD. DIVISION	STATE	PROJECT	
5	OHIO	BRM-ID42(4)	

LOR-83-17.10
LORAIN COUNTY

SCALE IN FEET
50 0 50 100

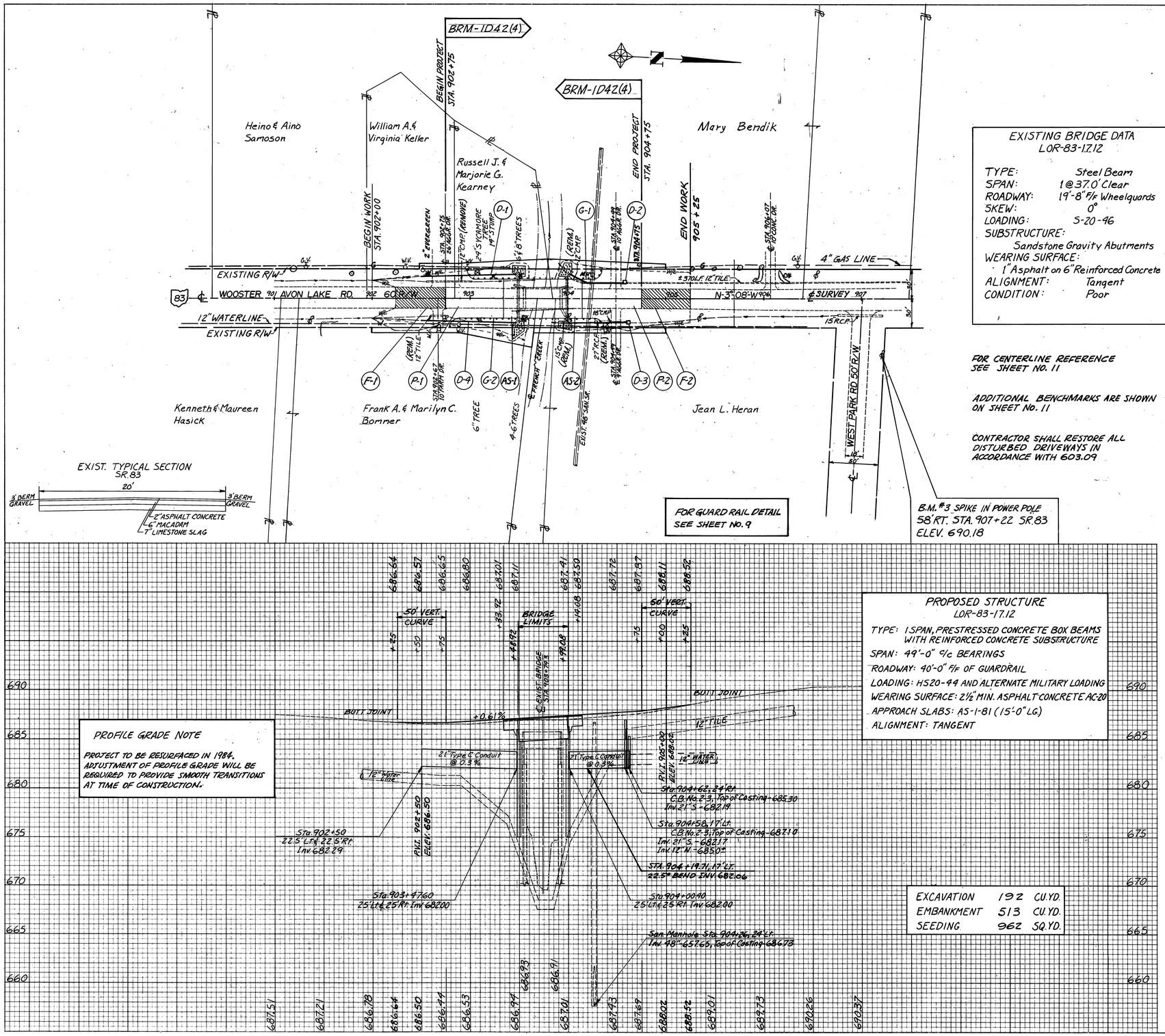

EXISTING BRIDGE DATA
LOR-83-17.12

TYPE: Steel Beam
SPAN: 1@37.0' Clear
ROADWAY: 19'-8" F/F Wheelguards
SKEW: 0°
LOADING: S-20-96
SUBSTRUCTURE: Sandstone Gravity Abutments
WEARING SURFACE: 1" Asphalt on 6" Reinforced Concrete
ALIGNMENT: Tangent
CONDITION: Poor

FOR CENTERLINE REFERENCE SEE SHEET NO. 11

ADDITIONAL BENCHMARKS ARE SHOWN ON SHEET NO. 11

CONTRACTOR SHALL RESTORE ALL DISTURBED DRIVEWAYS IN ACCORDANCE WITH 603.09

PROFILE GRADE NOTE

PROJECT TO BE RESURFACED IN 1984. ADJUSTMENT OF PROFILE GRADE WILL BE REQUIRED TO PROVIDE SMOOTH TRANSITIONS AT TIME OF CONSTRUCTION.

PROPOSED STRUCTURE
LOR-83-17.12

TYPE: 1 SPAN, PRESTRESSED CONCRETE BOX BEAMS WITH REINFORCED CONCRETE SUBSTRUCTURE
SPAN: 49'-0" ©/c BEARINGS
ROADWAY: 40'-0" F/F OF GUARDRAIL
LOADING: HS20-44 AND ALTERNATE MILITARY LOADING
WEARING SURFACE: 2½" MIN. ASPHALT CONCRETE AC-20
APPROACH SLABS: AS-1-81 (15'-0" LG.)
ALIGNMENT: TANGENT

EXCAVATION	192	CU.YD.
EMBANKMENT	513	CU.YD.
SEEDING	962	SQ.YD.

THE EXISTING DRAINAGE CONDUITS, 12" TILE, 12" C.M.P., 15" C.M.P., 18" C.M.P. AND 27" R.C.P. ARE TO BE REMOVED UNDER ITEM 603.

* Includes portion on existing bridge and anchor assemblies

† See note, Sheet No. 14

REF. NO.	STATION LIMITS	SIDE	202 Guardrail Removed For Storage Lin.Ft.	603 21" Storm Sewer Type C Conduit 706.02 Lin.Ft.	603 21"x21"x22.5° BEND EACH	604 Catch Basin Standard No. 2-3 Each	304 Aggregate Base 8" Cu.Yd.	407 Tack Coat Gal.	202 WEARING COURSE REMOVED SQ.YD.	403 Asphalt Concrete (AC-20) 1¼" Cu.Yd.	403 Asphalt Concrete (AC-20) VAR. 1¼" Cu.Yd.	404 Asphalt Concrete (AC-20) 1¼" Cu.Yd.	611 Reinforced Concrete Approach Slabs, As Per Plan † (T=12") Sq.Yd.	606 Bridge Terminal Assembly Type B Each	606 Anchor Assembly Type T Each	606 Guard Rail Type 5 Lin.Ft.	TOTALS
D-1	902+50 to 903+47.6	Lt.		98													
D-2	904+00.4 to 904+58	Lt.		59	1	1											
D-3	904+00.4 to 904+62	Rt.		62		1											
D-4	902+50 to 903+47.6	Rt.		98													
G-1	903+02 to 904+27	Lt.	*62											2	2	68.75	
G-2	902+90 to 904+27	Rt.	*62											2	2	81.25	
AS-1	903+33.92 to 903+48.92							6.7		2.3	—		66.7				
AS-2	903+99.08 to 904+14.08							6.7		2.3	—		66.7				
P-1	902+75 to 903+33.92						11.6	13.1			6.9	4.5					
P-2	904+14.08 to 904+75						12.0	13.5			8.7	4.7					
F-1	902+25 to 902+75						9.9	11.1	6.7	0.8		3.9					
F-2	904+75 to 905+25						9.9	11.1	6.2	0.6		3.9					
TOTALS			124	317	X	2	43.4	62.2	12.9	21.6		21.6	133.4	4	4	150	

STA. 901+00 to STA. 907+00

FINAL SURVEY	BY	DATE
SURVEYED		
PLOTTED		
TEMPLATE		
AREAS		
AREAS CHECKED		
NOTE BOOK		
NO.		

ORIGINAL SURVEY	BY	DATE
SURVEYED		
PLOTTED		
TEMPLATE		
AREAS		
AREAS CHECKED		
NOTE BOOK		
NO.		

FED. RD. DIVISION	STATE	PROJECT	
5	OHIO	BRM-ID42(4)	

6 / 15

LOR 83-17.10
LORAIN COUNTY
Calc. by EJB 6-84
ChKd. by CPW 6-84

SEEDING END WIDTH	SEEDING SQ. YDS.			END AREA CUT	END AREA FILL	VOLUME CUT	VOLUME FILL
			690.0				
35		STA. 903+00	STA. 903+00 685.0	4	53		
	189		690.0				
			685.0			8	62
			690.0				
33 / 37	AHEAD / BACK	STA. 902+50	STA. 902+50 AHEAD / BACK	4 / 39	24 / 0		
	103					36	
.0 / 40			690.0				
			STA. 902+00 685.0	0	0		
			690.0				
			685.0				
			690.0				
			685.0				

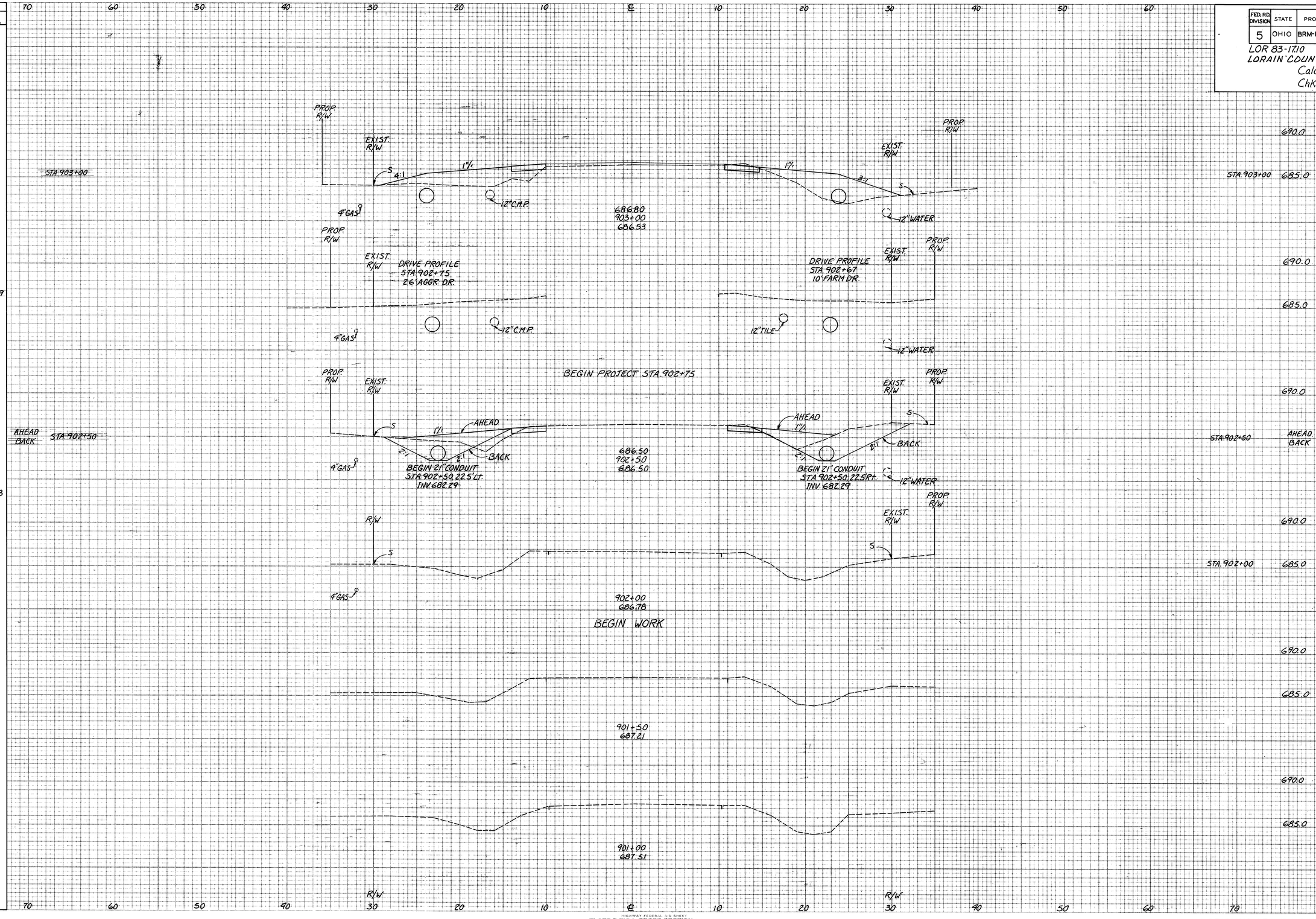

FINAL SURVEY — SURVEYED, PLOTTED, TEMPLATE, AREAS, AREAS CHECKED, NOTE BOOK NO., BY, DATE

ORIGINAL SURVEY — SURVEYED, PLOTTED, TEMPLATE, AREAS, AREAS CHECKED, NOTE BOOK NO., BY, DATE

MICROFILMED JUL 18 1986

HIGHWAY FEDERAL AID SHEET
PLATE 3-FULL CROSS SECTION-FULL LINE

X-SECTIONS STA. 901+00 TO STA. 903+00

FED. RD. DIVISION	STATE	PROJECT	
5	OHIO	BRM-ID42(4)	

7 / 15

LOR 83-17.10
LORAIN COUNTY
Calc. by EAB 6-84
ChKd by CPW 6-84

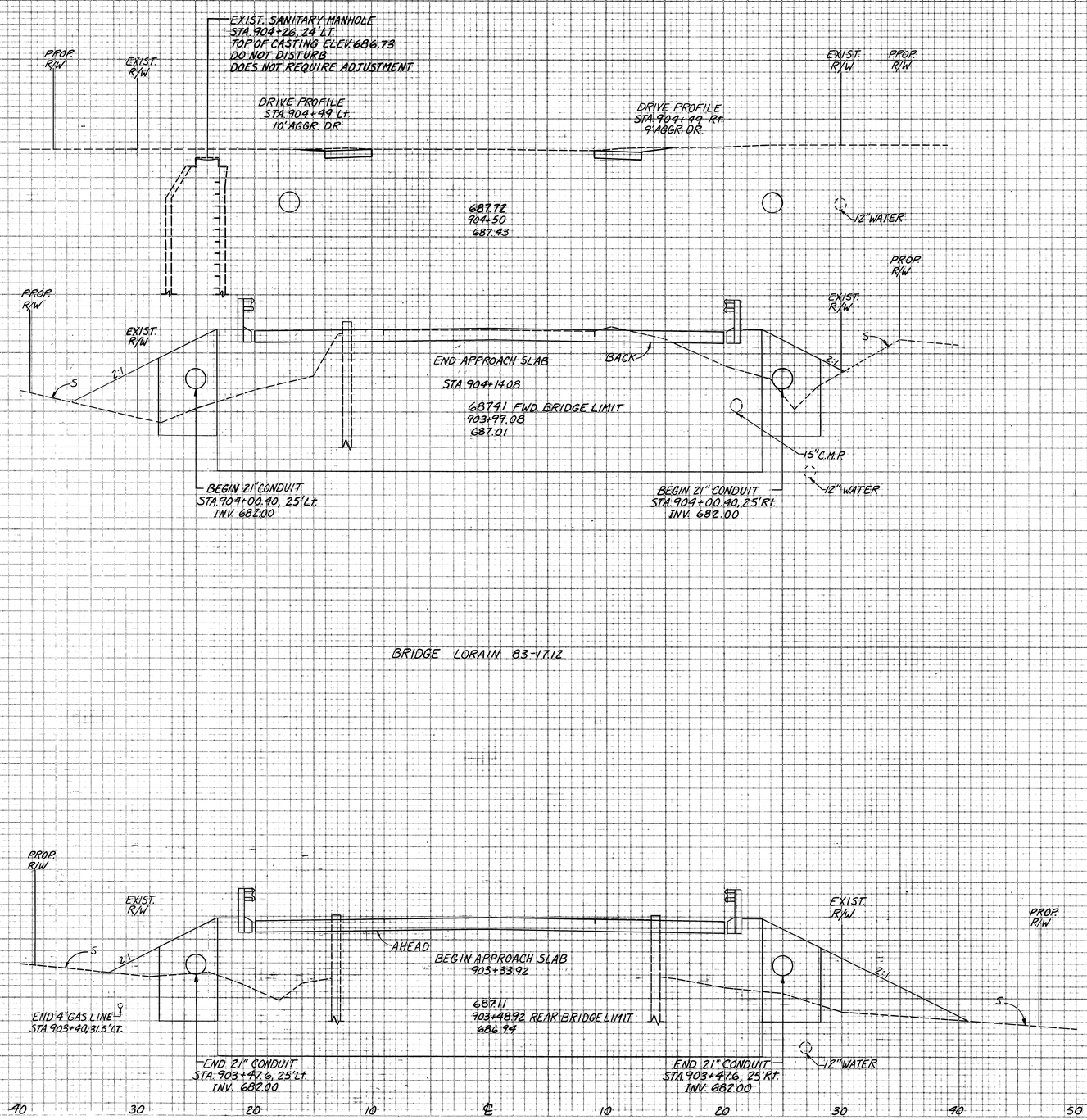

SEEDING END WIDTH	SEEDING SQ. YDS.	
47		AHEAD STA. 903+99.08
35		BACK
	98	ADDITIONAL FOR CHANNEL
45		STA. 903+48.92
	75	
45		AHEAD STA. 903+33.92
57		BACK
	173	
35		STA. 903+00

ADDITIONAL EXCAVATION FOR CHANNEL (Carried from Sheet 7)

	END AREA CUT	END AREA FILL	VOLUME CUT	VOLUME FILL
STA. 904+14.08 AHEAD	4	142		
BACK	23	126		
			13	71
STA. 903+99.08	23	126		
			66	
STA. 903+48.92	35	189		
			20	105
STA. 903+33.92 AHEAD	35	189		
BACK	4	192		
			5	154
STA. 903+00	4	53		

MICROFILMED JUL 18 1986

FINAL SURVEY — SURVEYED, PLOTTED, VOLUMES, NOTE BOOK, AREAS CHECKED, DATE, BY

ORIGINAL SURVEY — SURVEYED, PLOTTED, VOLUMES, NOTE BOOK NO., AREAS CHECKED, DATE, BY

HIGHWAY FEDERAL AID SHEET
PLATE 3-FULL CROSS SECTION-FULL LINE
CPW PDX 12

X-SECTIONS STA. 903+48.92 TO STA. 904+50

FED. RD. DIVISION	STATE	PROJECT	
5	OHIO	BRM-ID42(4)	

8
15

LOR-83-1710
LORAIN COUNTY
Calc. by EAB 6-84
Chkd. by CPW 6-84

SEEDING END WIDTH	SEEDING SQ. YDS.

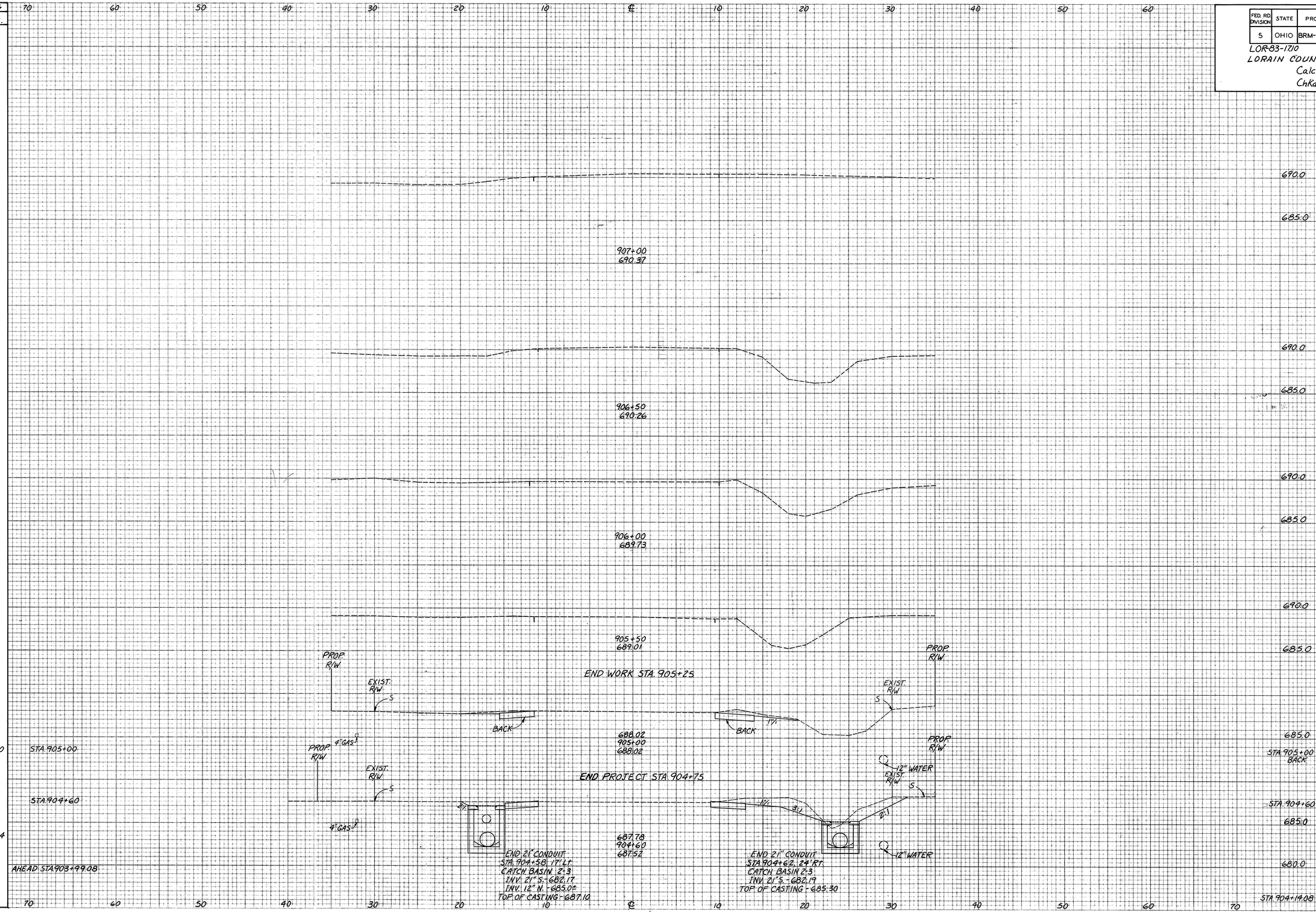

END AREA CUT	END AREA FILL	VOLUME CUT	VOLUME FILL
8	0		
22	0		
22	121		
4	142		

11
80
25
244
47

FINAL SURVEY — NOTE BOOK NO. — SURVEYED — PLOTTED — TEMPLATE — AREAS — AREAS CHECKED — BY — DATE

ORIGINAL SURVEY — NOTE BOOK NO. — SURVEYED — PLOTTED — TEMPLATE — AREAS — AREAS CHECKED — BY — DATE

MIL

JUL 1 8 1986

HIGHWAY FEDERAL AID SHEET
PLATE 3-FULL CROSS SECTION-FULL LINE
CONTROL 20912

X-SECTIONS STA. 904+60 TO STA. 907+00

Calc. By: EAB 6-84
Chkd. By: CPW 6-84

FED. RD. DIVISION	STATE	PROJECT	
5	OHIO	BRM-ID42(4)	

9
15

LOR-83-17.10
LORAIN COUNTY

20 0 20 40 60
Scale in Feet

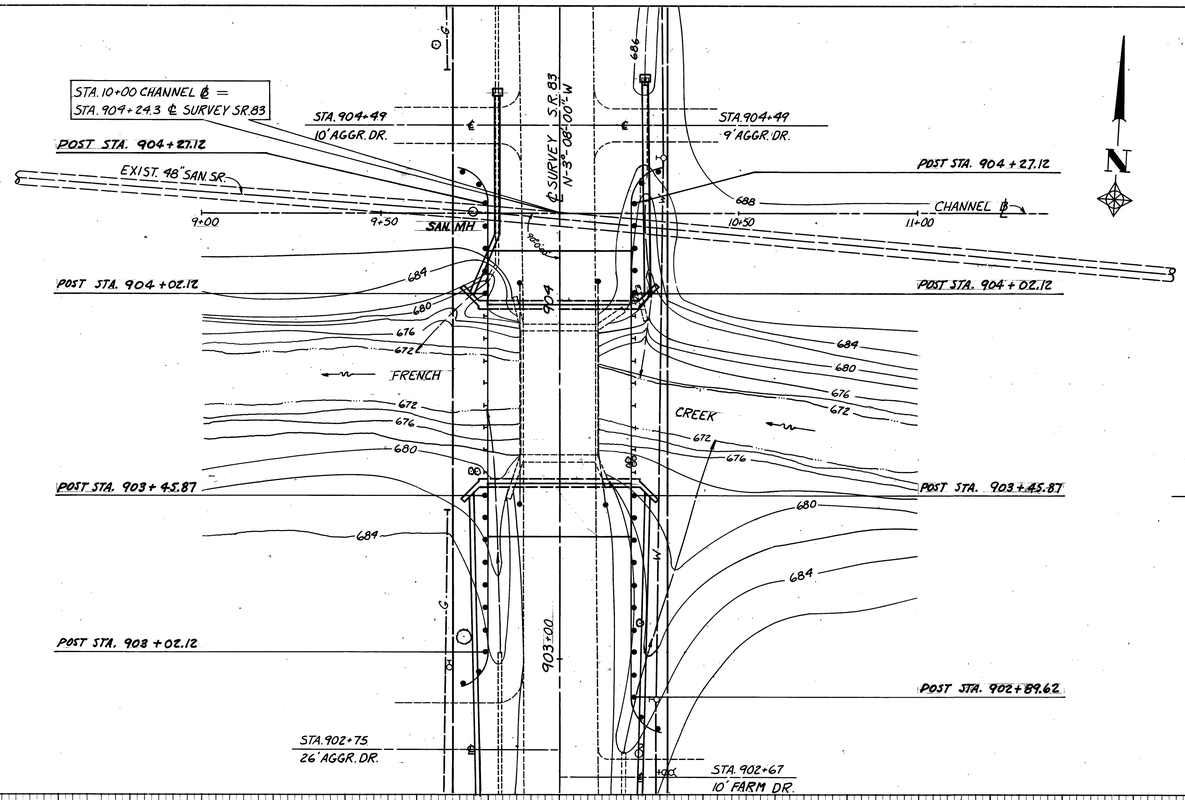

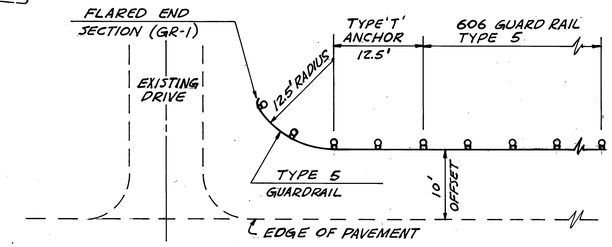

DETAIL OF GUARDRAIL
AT DRIVE OPENINGS

MICROFILMED
JUL 18 1986

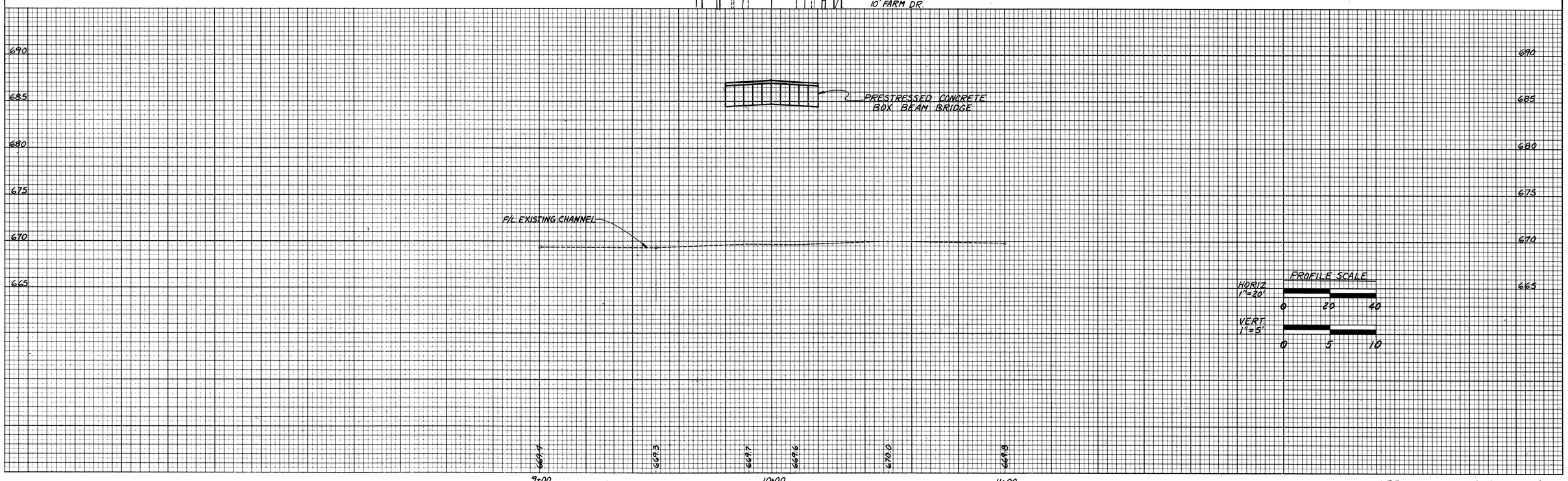

GUARDRAIL AND CHANNEL DETAILS

FINAL SURVEY
NOTE BOOK NO.
SURVEYED
PLOTTED
TEMPLATE
AREAS
AREAS CHECKED
BY
DATE

ORIGINAL SURVEY
NOTE BOOK NO.
SURVEYED
PLOTTED
TEMPLATE
AREAS
AREAS CHECKED
BY
DATE

END AREA		CU YDS.	
CUT	FILL	CUT	FILL

FED RD DIVISION	STATE	PROJECT	
5	OHIO	BRM-ID42(4)	

10
15

LOR-83-17.10
LORAIN COUNTY
Calc. by EAB 6-84
Chkd. by CPW 6-84

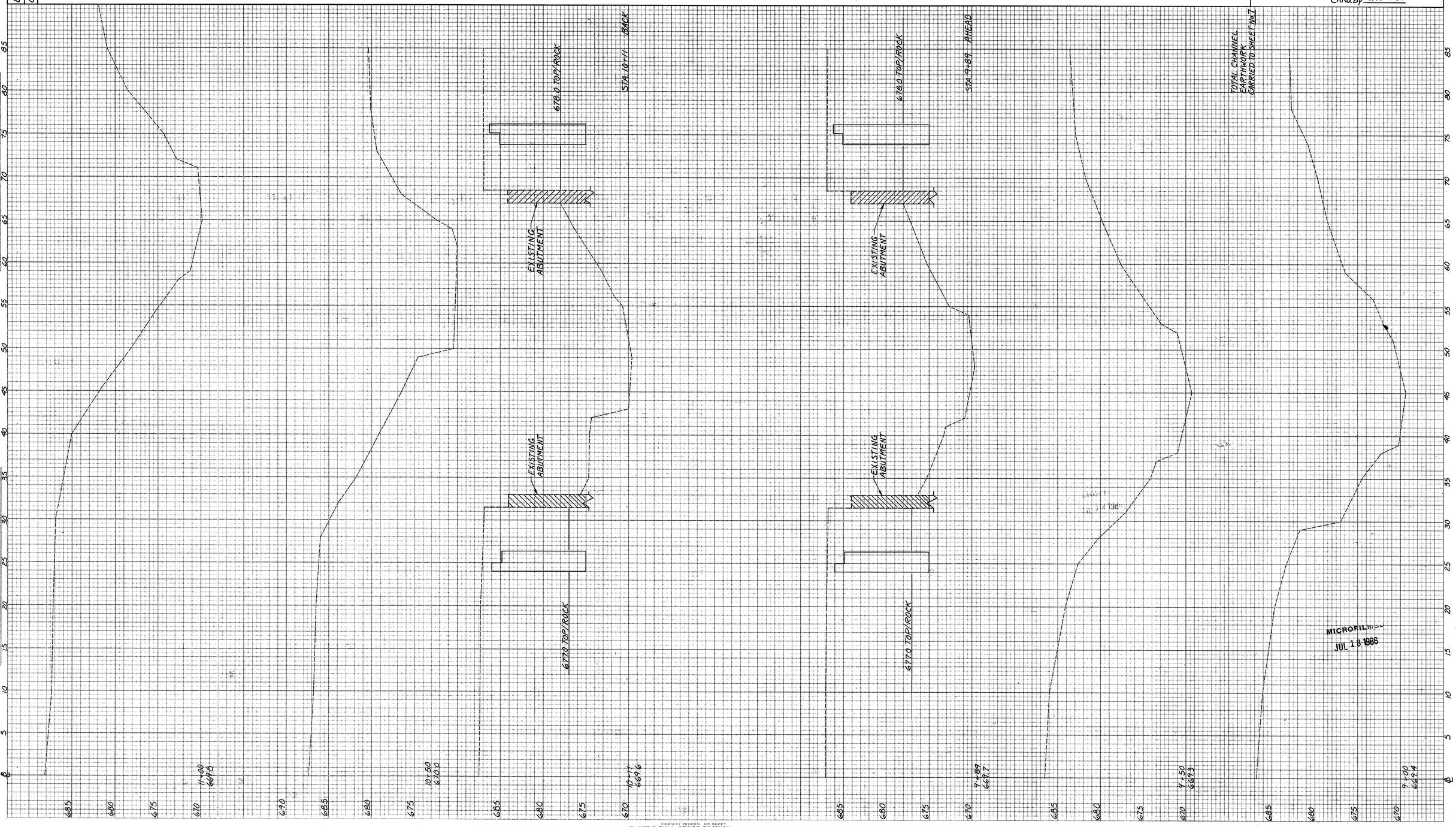

FINAL SURVEY
SURVEYED
PLOTTED
TEMPLATE
AREAS
AREAS CHECKED
NOTE BOOK NO.
BY
DATE

ORIGINAL SURVEY
SURVEYED
PLOTTED
TEMPLATE
AREAS
AREAS CHECKED
NOTE BOOK NO.
BY
DATE

MICROFILMED
JUL 18 1986

HIGHWAY FEDERAL AID SHEET
PLATE 3-FULL CROSS SECTION-FULL LINE
©TELEDYNE

CHANNEL X-SECTIONS

FED RD DIVISION	STATE	PROJECT	
5	OHIO		

11 / 15

LOR-83-17.10
LORAIN COUNTY

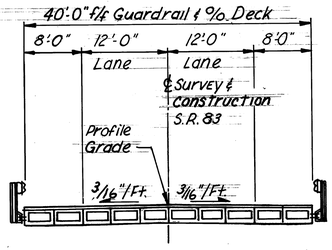

TRANSVERSE SECTION

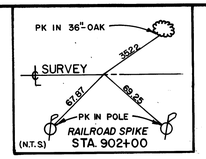

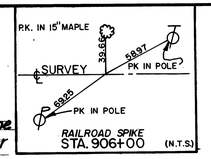

Scale : 1"=20'-0"

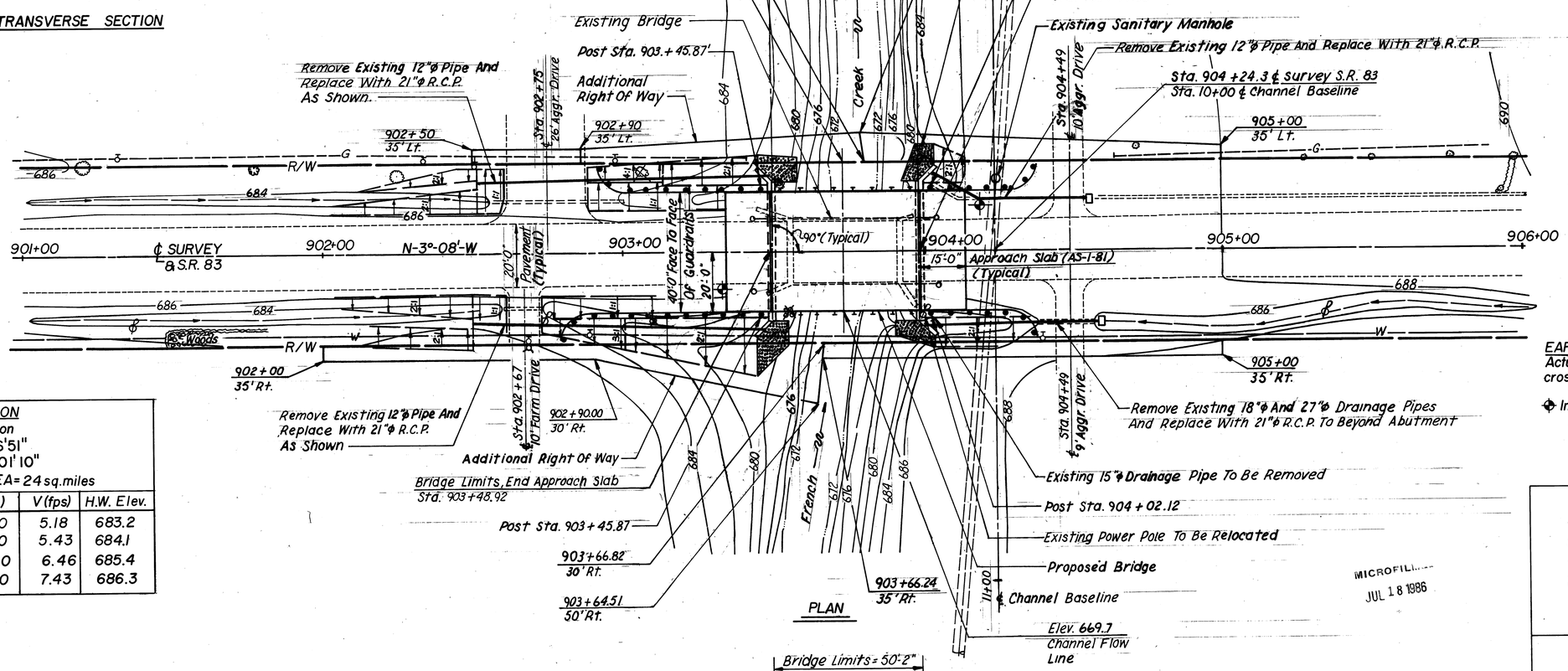

EARTHWORK limits shown are approximate. Actual slopes shall conform to plan cross-sections.

◆ Indicates Soil Boring Locations

BRIDGE LOCATION
Quadrangle: Avon
Latitude: 41° 26' 51"
Longitude: 82° 01' 10"
DRAINAGE AREA = 24 sq. miles

F(yr.)	Q(cfs)	V(fps)	H.W. Elev.
10	2250	5.18	683.2
25	2590	5.43	684.1
50	3200	6.46	685.4
100	3680	7.43	686.3

MICROFILMED
JUL 18 1986

EXISTING STRUCTURE
TYPE: STEEL BEAM
SPAN: 1 AT 37'-0" CLEAR
ROADWAY: 19'-8" F/F WHEELGUARDS
ALIGNMENT: TANGENT
WEARING SURFACE: 1" ASPHALT ON 6" REINFORCED CONCRETE
CONDITION: POOR

PROPOSED STRUCTURE
TYPE: 1 SPAN, PRESTRESSED CONCRETE BOX BEAMS WITH REINFORCED CONCRETE SUBSTRUCTURE
SPAN: 49'-0" c/c BEARINGS
ROADWAY: 40'-0" f/f GUARDRAILS
LOADING: HS20-44 & THE ALTERNATE MILITARY LOADING
WEARING SURFACE: 2½" MIN. ASPHALT CONCRETE AC-20
APPROACH SLABS: AS-1-81 (15'-0" LONG)
ALIGNMENT: TANGENT SKEW 0°

1 / 4

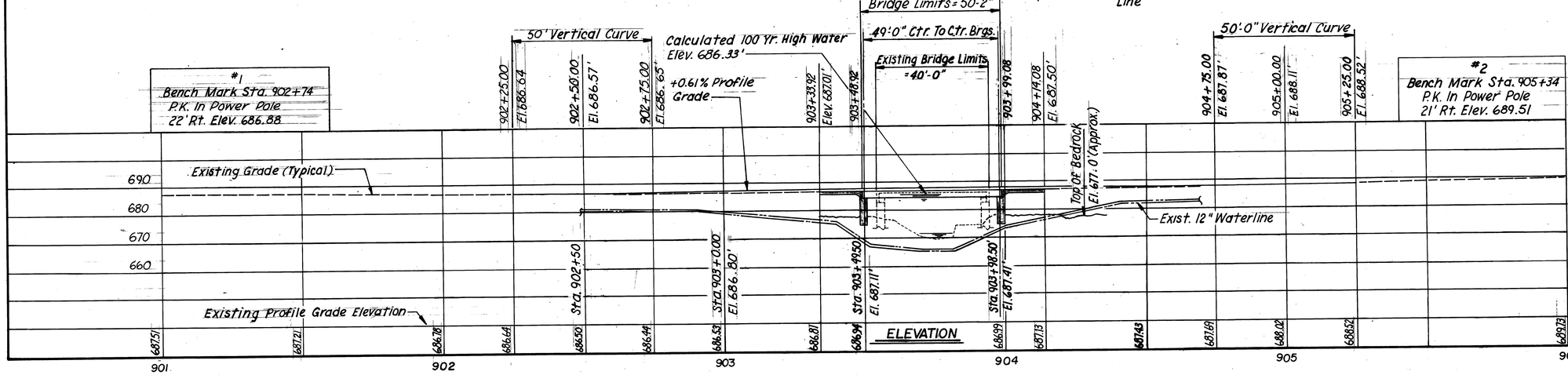

R.E. WARNER & ASSOCIATES
CONSULTING ENGINEERS
2130 W. PARK DR. LORAIN, OHIO

SITE PLAN

BRIDGE NO. LOR-83-17.12
OVER
FRENCH CREEK
STA. 903+48.92 TO STA. 903+99.08

SCALE: 1"=20'

PRESENT TOPOGRAPHY		PROPOSED WORK			
SURVEYED	DRAWN	DESIGNED	DRAWN	CHECKED	REVIEWED
LORAIN COUNTY	LORAIN COUNTY	RcR	D.C./WMS	REW	

FED. RD. DIVISION	STATE	PROJECT	
5	OHIO		

12 / 15

LOR - 83 - 17.10
LORAIN COUNTY

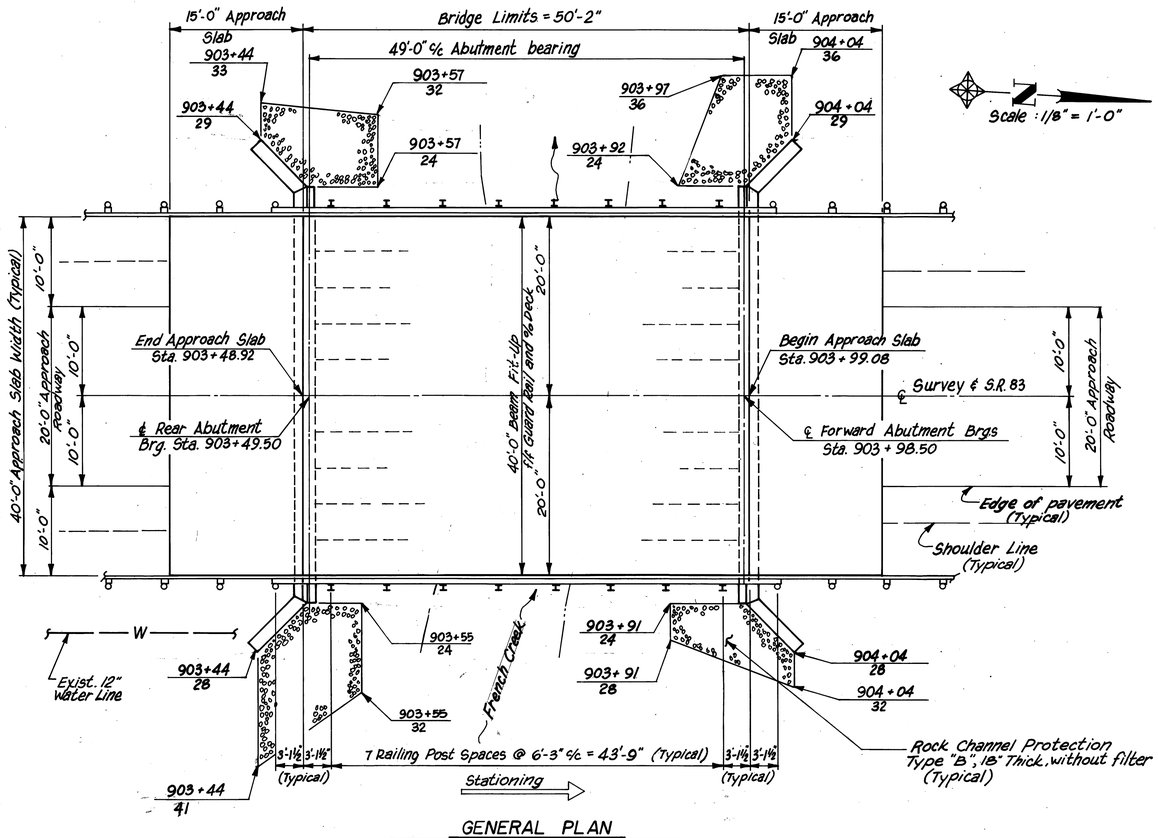

GENERAL PLAN

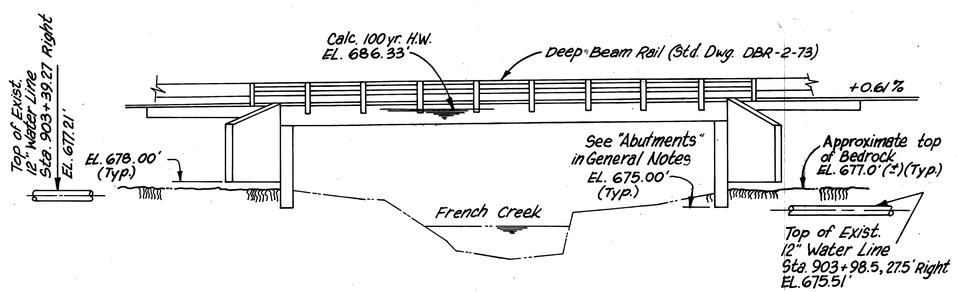

GENERAL ELEVATION

GENERAL NOTES

REFERENCE: shall be made to the Standard Drawings:

DBR-2-73 (Dated 4-10-73)
PSBD-1-81, sheets 1,2,3 and 4 of 4 (Dated 9-18-81)
AS-1-81, sheets 1 and 2 of 3 (Dated 11-27-81)
Supplemental Specification 824 (Dated 10-8-82)

DESIGN SPECIFICATIONS: This structure conforms to "Standard Specifications for Highway Bridges" adopted by the American Association of State Highway and Transportation Officials, 1977, including the 1978 through 1982 interim Specifications and the Ohio Supplement" to these specifications.

DESIGN DATA: Design Loading – HS20-44 and the Alternate Military Loading.

Concrete Class "C" – f'c = 4000psi for substructure.
Reinforcing Steel – ASTM A615, A616 or A617 – Fy = 60,000psi
Concrete for prestressing concrete beams – f'c = 5500psi at 28 days (min.)
Prestressing Strands – ASTM A416 Grade 270, 1/2" Dia., Seven Wire, Uncoated, Stress-Relieved.
Strands – As = 0.153 sq. in.
f's = 270,000psi
Initial stress 0.7 f's = 189,000psi
Deck Protection Method: Membrane Waterproofing, asphalt concrete overlay, epoxy coated reinforcing steel, and liquid sealant.

ITEM SPECIAL, SEALING OF CONCRETE SURFACES: A concrete sealer, either silane or an epoxy sealer, shall be applied to the concrete surface shown on sheet 4/4 . See the Proposal for surface preparation requirements, application rates, materials requirements and application procedures.

REMOVAL OF EXISTING STRUCTURE: The existing structure shall be removed in accordance with C.M.S. specification Item 202.

ABUTMENTS: Shall extend a minimum of 2'-0" into bedrock or to the elevation specified, whichever is lower except at wingwalls. Bottom elevation of wingwalls shall be as specified.

UTILITY LINES: All expenses involved in relocating the affected utility lines shall be borne by the owners. The contractor and owners are requested to cooperate by arranging their work in such a manner that inconvenience to either will be held to a minimum.

FOUNDATION BEARING PRESSURE: Abutment footing, as designed, produce a maximum bearing pressure of 3.5 tons per sq. ft.

CONTRACTOR: Shall not ford the stream or operate equipment in the stream at any time.

MICROFILMED
JUL 18 1986

ESTIMATED QUANTITIES

ITEM	TOTAL	UNIT	DESCRIPTION	SUPER.	ABUTS.	GEN.
202	Lump	Sum	Structure removed			Lump
403	10	Cu.Yd.	Asphalt Concrete (AC-20)	10		
404	8	Cu.Yd.	Asphalt Concrete (AC-20)	8		
503	15	Cu.Yd.	Rock Excavation		15	
503	125	Cu.Yd.	Unclassified Excavation		125	
503	Lump	Sum	Coffer dams, cribs and sheeting			Lump
509	10,487	Lbs.	Reinforcing Steel, Grade 60		10,487	
Special	31	Sq.Yd.	Sealing of Concrete Surfaces (See Proposal Note)	31		
511	90	Cu.Yd.	Class "C" Concrete for Abutments		90	
512	222	Sq.Yd.	Type "D" Waterproofing as per plan	222		
515	10	Each	Prestressed Concrete Bridge Member (B27-48 x 50' Lg.)	10		
516	174	Sq.Ft.	1" Preformed Expansion Joint Filler		174	
516	20	Each	1/8" x 5" x 18" Preformed Bearing Pad, 711.21		20	
516	80	Lin.Ft.	Joint Sealer as per plan		80	
516	40	Each	1" x 5" x 18" Elastomeric Bearing Pad (50 Durometer)		40	
517	112.50	Lin.Ft.	Railing (deep beam with steel tubular backup, Type 2 steel posts & bolts)	112.50		
518	96	Lin.Ft.	6" Perforated, Helical Corrugated Steel Pipe, 707.01		96	
518	46	Cu.Yd.	Porous Backfill with filter fabric		46	
518	40	Lin.Ft.	6" Non-Perforated, Helical Corrugated Steel Pipe, Including Specials, 707.01		40	
Special	78	Sq.Ft.	Steel Drip Strip	78		
601	21	Cu.Yd.	Rock Channel Protection, 18" Deep, Type "B" With Out Filter			21

2 / 4

R.E. WARNER & ASSOCIATES
CONSULTING ENGINEERS
2130 W. PARK DR. LORAIN, OHIO

GENERAL PLAN, GENERAL NOTES AND ESTIMATED QUANTITIES

BRIDGE NO. LOR-83-17.12
OVER
FRENCH CREEK Sta. 903+48.92 To Sta. 903+99.08

DESIGNED	DRAWN	TRACED	CHECKED	REVIEWED	DATE	REVISED
RCR	WMS/MSW	E.P.O.	R.E.W.			

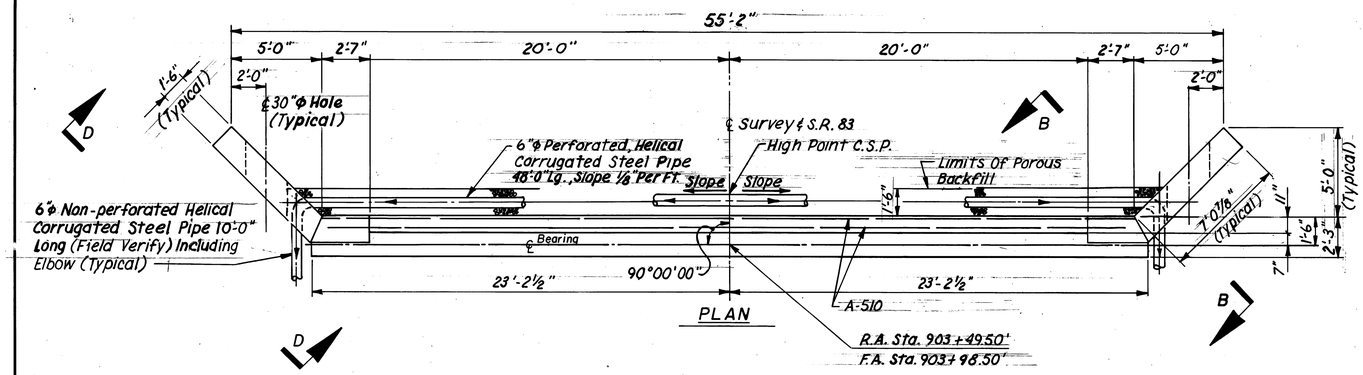

PLAN

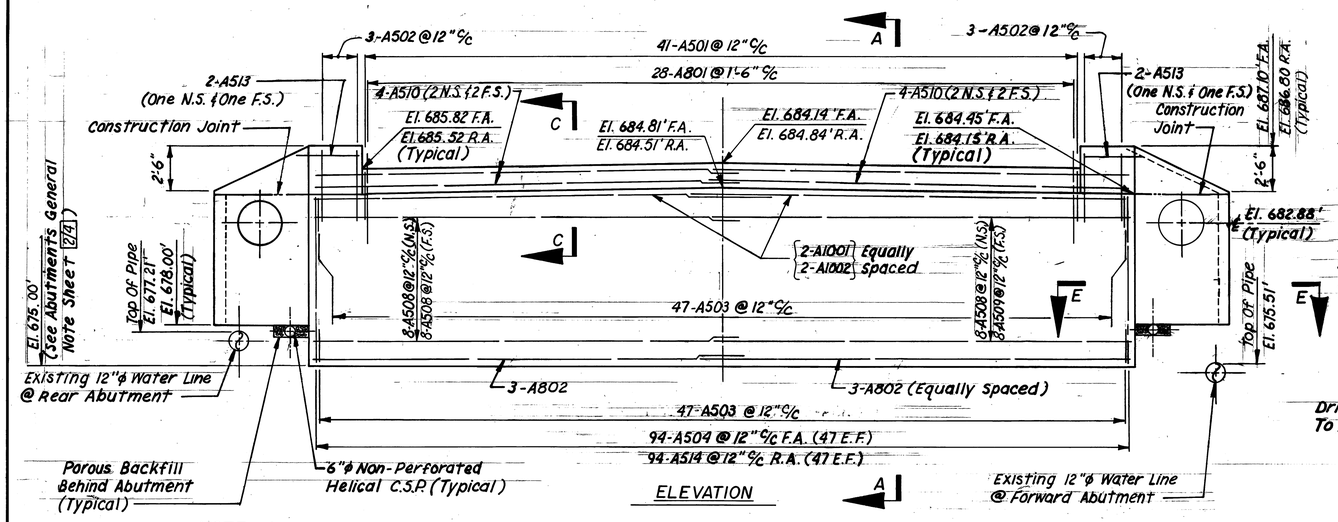

ELEVATION

NOTE A: All Concrete Above The Level Of The Beam Seat To Be Poured After The Prestressed Box Beams Have Been Set.

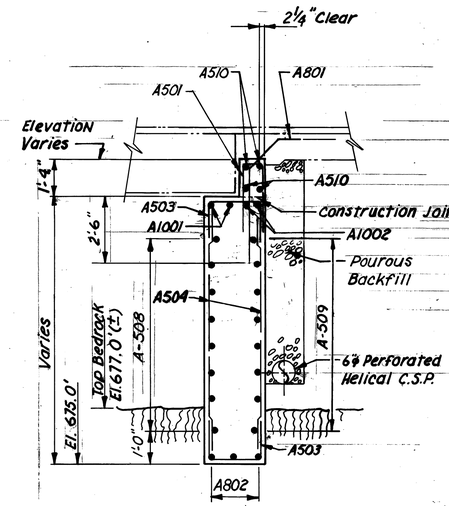

SECTION A-A

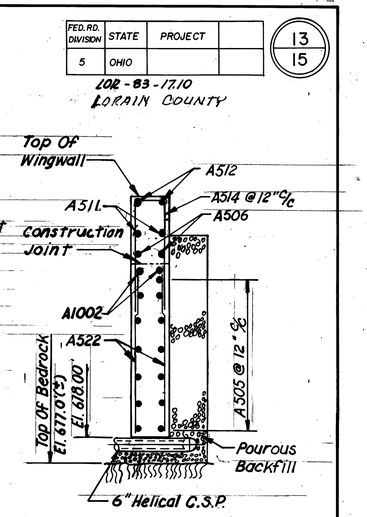

SECTION B-B

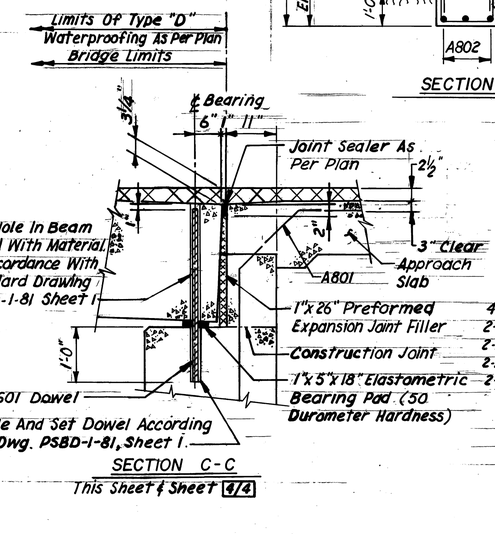

SECTION C-C

This Sheet & Sheet 4/4

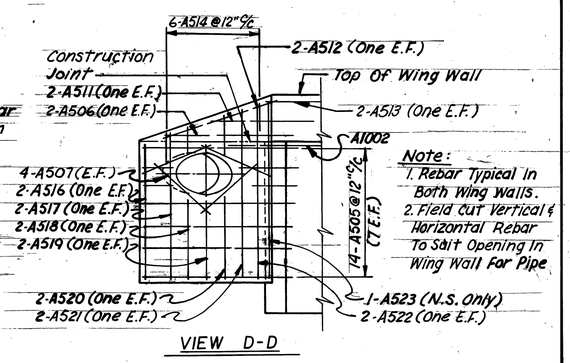

VIEW D-D

Note:
1. Rebar Typical In Both Wing Walls.
2. Field Cut Vertical & Horizontal Rebar To Suit Opening In Wing Wall For Pipe.

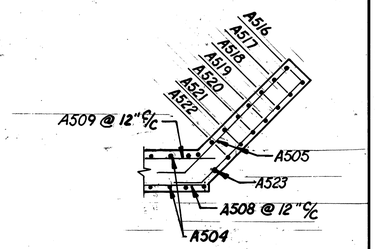

SECTION E-E

3/4

MICROFILMED
JUL 18 1986

FORWARD & REAR ABUTMENT REINFORCING STEEL

MARK	NO.	LENGTH	TYPE	A	B	C	D	E	WEIGHT(LBS)
A501	82	5'-11"	1	2'-10"	6"	2'-10"			506
A502	12	9'-0"	1	4'-1"	1'-1"	4'-1"			113
A503	188	5'-0"	1	1'-9"	1'-9"	1'-9"			981
A504	94	9'-0"	Straight						882
A505	56	9'-10"	3	1'-6"	8'-5"				575
A506	8	8'-7"	3	1'-6"	7'-2"				72
A507	32	4'-6"	Straight						151
A508	32	24'-0"	Straight						802
A509	32	24'-6"	Straight						818
A510	16	23'-0"	Straight						384
A511	8	6'-0"	3	1'-6"	4'-7"				51
A512	8	6'-6"	Straight						55
A513	8	2'-4"	Straight						20
A514	24	4'-4"	1	1'-9"	1'-1"	1'-9"			109
A515	94	8'-8"	Straight						850
A516	8	6'-1"	Straight						51
A517	8	6'-5"	Straight						54
A518	8	6'-9"	Straight						57
A519	8	7'-1"	Straight						60
A520	8	7'-5"	Straight						62
A521	8	7'-9"	Straight						65
A522	8	8'-1"	Straight						68

MARK	NO.	LENGTH	TYPE	A	B	C	D	E	WEIGHT(LBS)
A523	4	8'-6"	Straight						36
A601	40	3'-3"	Straight						*
A801	56	7'-6"	2	2'-7"	1'-6"	3'-3"			1122
A802	12	24'-6"	Straight						785
A1001	8	25'-2"	Straight						867
A1002	8	25'-9"	Straight						887

BENT BARS (ALL DIMENSIONS OUT TO OUT OF BAR)

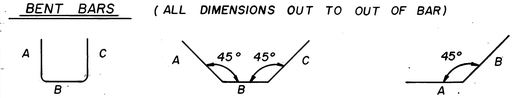

* Included With Item 515 For Payment. See Section C-C For Location

REQUIRED LAP LENGTH
NO. 5 Bar = 1'-8" Minimum
NO. 8 Bar = 2'-7" "
NO. 10 Bar = 4'-4" "

REINFORCING STEEL CLEARANCES:
REFER TO C.M.S. SECTION 509.04.

NOTES:

BRIDGE SEAT REINFORCING: Reinforcing steel in the vicinity of the beam seat shall be accurately placed to avoid interference with the drilling of anchor bar holes.

REINFORCING STEEL SAMPLES: Refer to C.M.S. sections 108.03, 700, 709.01 through 709.05 and 709.08. Sufficient additional reinforcing steel shall be provided for test sampling. Random samples shall be replaced in the structure by the additional steel, spliced in accordance with 509.08.

POROUS BACKFILL: With filter fabric, shall extend upward to the plane of the subgrade, Backfill shall not be placed higher than EL.680.00 before beams are set and anchored.

NOTATION

F.A.– Forward Abutment; R.A.– Rear Abutment
N.S.– Near Side; Sht.– Sheet; EL.– Elevation
F.S.– Far Side; Mat'l– Material
E.F.– Each Face; C.S.P.– Corrugated Steel Pipe

R.E. WARNER & ASSOCIATES
CONSULTING ENGINEERS
2130 W. PARK DR. LORAIN, OHIO

ABUTMENT DETAILS
BRIDGE NO. LOR-83-17.12
OVER
FRENCH CREEK Sta. 903+48.92 To Sta. 903+99.08

DESIGNED	DRAWN	TRACED	CHECKED	REVIEWED	DATE	REVISED
RER	WMS/MSW	E.P.O.	REW			

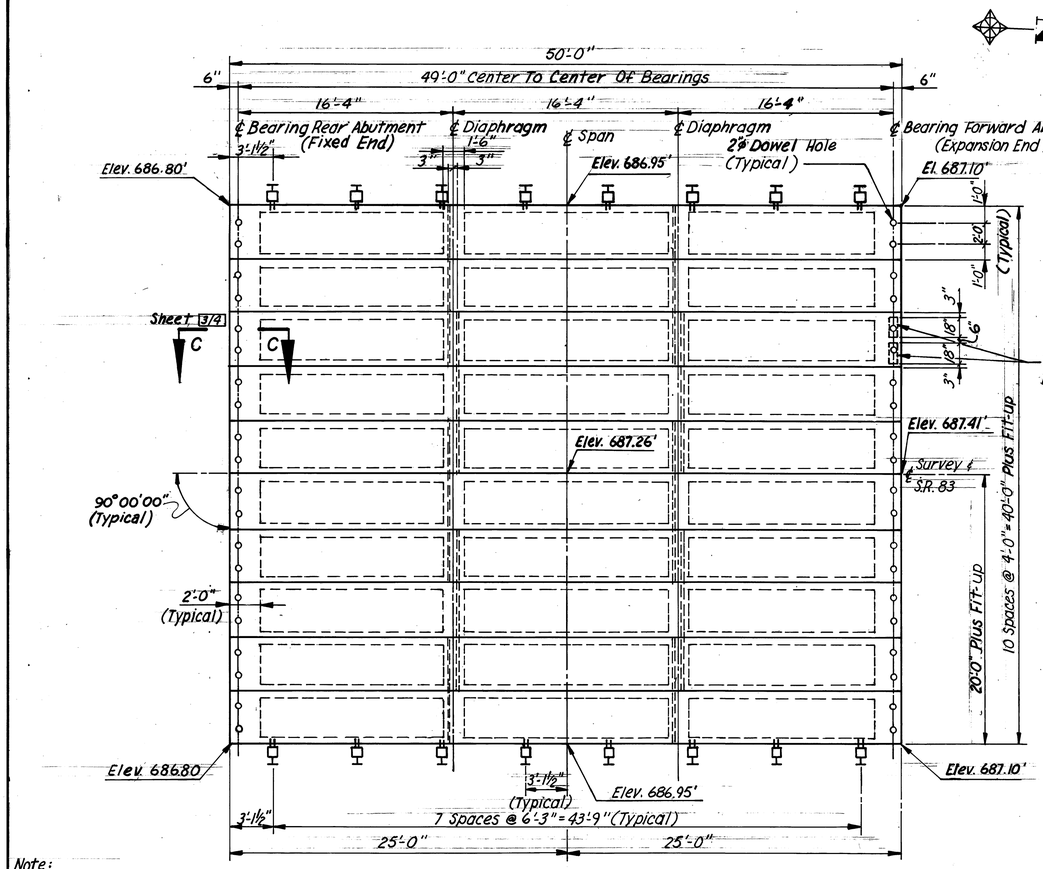

Note:
1.) Elevations Given On Deck Plan Are Top Of Pavement.
2.) Asphalt Concrete Wearing Surface Is Not Shown On Deck Plan.

DECK PLAN

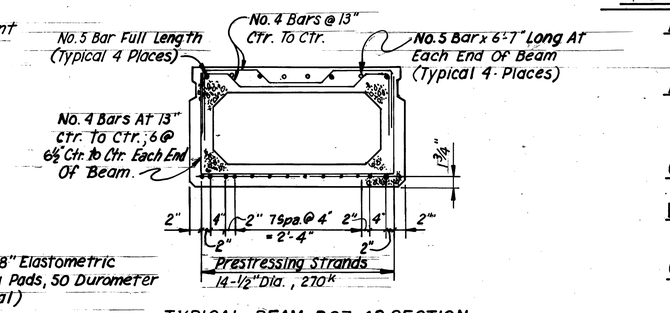

TYPICAL BEAM B27 48 SECTION

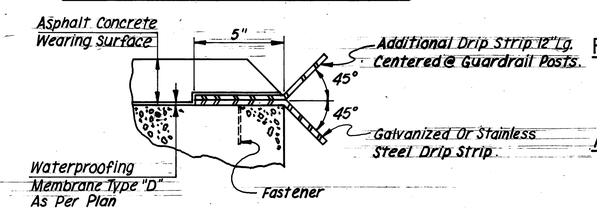

DRIP STRIP: Prior to applying deck membrane, a bent drip strip shall be installed along the edges of the deck as shown. The strips shall be fastened at 1'-6" c/c maximum with 1 1/4"x5/32"x1/4" flat head drive pin and washer, (length x shank dia. x head dia.), or #10 galvanized screws and expansion anchors, subject to the approval of the field engineer. The strips shall be placed the full length of the deck, ending at the face of the abutment wingwall. Where splices are required, a 3"(minimum) lap shall be used with a fastener through the lap. Steel for galvanized strips shall be 8"x0.105" and shall meet the requirements of ASTM A568. Galvanizing shall be in accordance with 711.02. Stainless steel shall be 20 gauge ASTM A167, type 304, mill finish. Payment shall be at the contract price bid for item Special, Sq. ft., Steel Drip Strip, which shall include all materials, labor, tools and incidentals necessary to complete the item.

NOTES

ADDITIONAL NOTES: See Standard Drawing PSBD-1-81, Sheet 1 of 4 for notes on Transverse Tie Rods, Galvanizing, Anchor Dowels, Non-shrink Mortar and Grout, and Mortaring of Shear keys.

ADDITIONAL DETAILS: See Standard Drawing PSBD-1-81 Sheets 1,2, and 3 of 4 for Beam Lifting Inserts, End Details of Transverse Tie Rod Anchorage, Normal Crown Treatment at ℄ Roadway, Beam Dimensional Tolerances, Beam Dimensions, Wall thickening at Guard Rail Anchors, Anchor Dowels, Reinforcement of Beam Ends, and Diaphram Details.

CONCRETE STRESSES: Minimum concrete strength at 28 days f'c=5500psi. Minimum concrete strength at time of initial prestressing f'ci=4000psi

PRESTRESSING STRANDS: Prestressing strands shall be ASTM A416 1/2" dia. 270k seven-wire, uncoated, stress-relieved strand. As=.153 sq.in. Initial tension=28900 lbs. per strand.

CALCULATED CAMBER at time of paving, included allowance for camber growth due to creep, is 1.0". Calculated deflection due to weight of wearing surface and railing is 0.25". Net final camber of beams is 0.75". This is 0.75" in excess of amount required to place the top of the beam parallel to profile grade. This excess amount shall be compensated for by thickening the 403 leveling course from 1 1/4" at center of spans to 2" at ends of spans.

RAILING: For details of type 2 Posts and Anchors, See Standard Drawing DBR-2-73 Dimension ① shown on Type 2 Post shall be 8". The Guard Rail assemblies and Rail, excluding the Concrete Anchor assemblies, are included in Item 517, Railing, for payment. Anchor assemblies are included in Item 515, Prestressed Concrete Bridge Members, for payment.

ASPHALT CONCRETE WEARING SURFACE shall consist of a variable thickness of 403 and 1 1/4" thickness of 404. The 403 shall be placed in two operations; The first course shall be of 1 1/4" uniform thickness, the second shall be feathered to place the surface parallel to and 1 1/4" below final pavement surface elevation.

EPOXY COATED REINFORCEMENT shall be used for all reinforcing bars in prestressed box beams.

FABRICATION DRAWINGS of prestressed concrete box beam shall show complete details of reinforcing steel.

APPROACH SLAB AS PER PLAN: Instead of the two (2) inch joint sealer as per Standard Drawing AS-1-81, Note 1; Use Evazote or Will-Seal. Size as recommended by manufacturer

Evazote: Evazote 50 as manufactured by:
E-Poxy Industries Inc.
14 West Shore Street
Ravena, N.Y. 12143
Telephone (518) 756-6193

or E.V.A. as manufactured by:
THERMAL-CHEM INC.,
1400 Louis Avenue
Elk Grove Villiage, Illinois 60007 USA
Telephone (323) 364-0364

Will-Seal as manufactured by:
Illbruck/USA Inc.
3800 Washington Ave.
Minneapolis, MN. 55412
Telephone (612) 521-3555

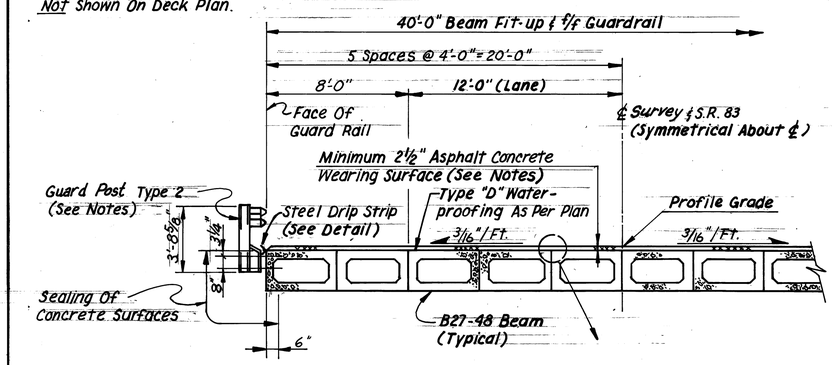

TYPICAL TRANSVERSE SECTION

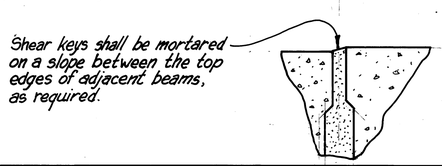

TYPE "D" WATERPROOFING AS PER PLAN:

Item 512.07 shall be modified so that the three coats of bituminous material, 702.06 and the AC-20, 702.01 for filling joints and irregularities in the surface shall meet the following specifications. The bituminous material shall meet 702.01(AC-20) with the addition of granulated crumb rubber. The granulated rubber shall be 100 percent vulcanized and meet the following granulation requirements.

SIEVE SIZE	PERCENT PASSING
No. 8	100
No. 10	98-100
No. 30	0-10
No. 40	0-4

The sieves shall comply with the requirements of AASHTO M92 (ASTM E11). The granulated rubber, irrespective of diameter, shall not be greater than 1/2 inch in length and contain no more than two percent moisture.

The specific gravity of the rubber material shall be 1.15 ± 0.02 and shall be free of excess fabric (0.5 percent by weight), wire or other contaminating materials, except that up to four percent calcium carbonate my be included to prevent the rubber particles from sticking together.

Granulated crumb rubber shall be accepted by certification from the rubber supplier in accordance with the requirements of 101.061.

The percentage of crumb vulcanized rubber shall be 25 ± 4 percent by weight of the asphalt cement.

The temperature of the asphalt shall be between 350F. and 425F. before addition of the crumb vulcanized rubber. The materials shall be carefully combined and mixed and reacted for a period of time. The temperature of the asphalt-rubber mixture shall be above 325F. during the reaction period.

If a job delay results after the full reaction has occured, the asphalt-rubber material may be allowed to cool and be slowly reheated to an acceptable spraying temperature just prior to application. However, because of the Polymer Reversion that can occur when crumb rubber is held at prolonged high temperatures the asphalt-rubber material shall not be reheated to temperatures above 325F.

The asphalt-rubber mixing equipment shall be a hot oil, double boiler tar kettle type with mechanical agitation capable of combining the asphalt and rubber into a homogenized mix.

An approved alternate to the above crumb rubber material may be used.

Instead of 1/3 Gal. of asphalt per square yard, the final layer of waterproofing fabric shall be covered with not less than 0.75 Gal./Sq. Yd. of bituminous material.

Immediately after the bituminous material has been sprayed on the bridge, limestone (703.05 quality) shall be applied at the rate of 40 Lb./Sq. Yd. When placed, the temperature of the limestone shall be above 275F. the limestone shall be No.8 before heating in the asphalt plant. The limestone shall be relatively dust free.

Payment for all of the above shall be included in the unit price bid per square yard for Item 512, Type"D" Waterproofing, as per plan which shall include all labor, material, equipment, and incidentals necessary to complete the above work.

MICROFILMED
JUL 18 1986

R.E. WARNER & ASSOCIATES
CONSULTING ENGINEERS
2130 W. PARK DR. LORAIN, OHIO

SUPERSTRUCTURE

BRIDGE NO. LOR-83-17.12
OVER
FRENCH CREEK
Sta. 903+48.92 To Sta. 903+99.08

DESIGNED	DRAWN	TRACED	CHECKED	REVIEWED	DATE	REVISED
R.C.R	WMS/ MSW	R.J.B.	R.E.W.			

CALC. BY: JP 6-84
CHK'D BY: CPW 6-84

STATE JOB NUMBER	FED. RD. DIVISION	STATE	PROJECT	
03895(0)	5	OHIO	BRM-ID42(4)	

15 / 15

1 / 1

LOR - 83 - 17.10

SCALE IN FEET

20 0 20 40

RIGHT OF WAY PLAN

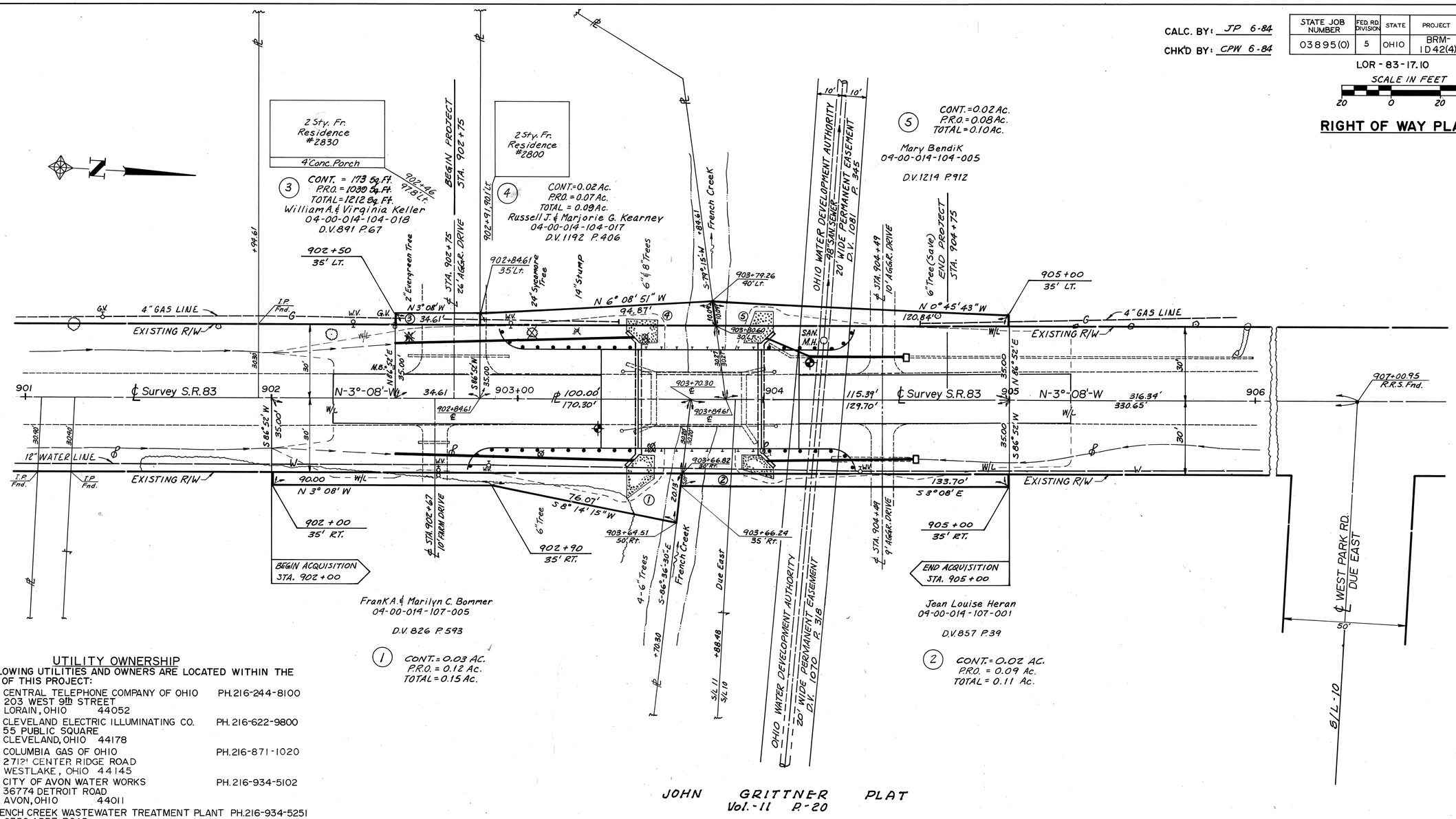

UTILITY OWNERSHIP

THE FOLLOWING UTILITIES AND OWNERS ARE LOCATED WITHIN THE WORK LIMITS OF THIS PROJECT:

TELEPHONE:	CENTRAL TELEPHONE COMPANY OF OHIO 203 WEST 9th STREET LORAIN, OHIO 44052	PH. 216-244-8100
POWER:	CLEVELAND ELECTRIC ILLUMINATING CO. 55 PUBLIC SQUARE CLEVELAND, OHIO 44178	PH. 216-622-9800
GAS:	COLUMBIA GAS OF OHIO 2712! CENTER RIDGE ROAD WESTLAKE, OHIO 44145	PH. 216-871-1020
WATER:	CITY OF AVON WATER WORKS 36774 DETROIT ROAD AVON, OHIO 44011	PH. 216-934-5102
SANITARY SEWER:	FRENCH CREEK WASTEWATER TREATMENT PLANT 2350 ABBE ROAD SHEFFIELD VILLAGE, OHIO 44055	PH. 216-934-5251

SUMMARY OF ADDITIONAL RIGHT OF WAY REQUIRED

NO. OF STRUCTURES 0 NO. OF PROPERTY OWNERS 5 NO. OF TOTAL TAKES 0

PARCEL NO.	TYPE FUNDS	PROPERTY OWNERS	RECORDED VOL.	RECORDED PAGE	DEED AREA	TOTAL P.R.O.	GROSS TAKE (IN ACRES)	P.R.O. IN TAKE	NET TAKE	NET RESIDUE LEFT	NET RESIDUE RIGHT	BLDG.	SHEET NO.	REMARKS	VOL.	PAGE
1	LOCAL & STATE	Frank A. & Marilyn C. Bommer	826	593	2.91	0.17	0.15	0.12	0.03		2.71	NO		946831 Pg. 85		
2	LOCAL & STATE	Jean Louise Heran	857	39	11.22	0.23	0.11	0.09	0.02		10.97	NO		1357 Pg. 16	1357	16
3	LOCAL & STATE	William A. & Virginia Keller	891	67	0.42	0.06	1212 S.F.	1039 S.F.	173 S.F.	0.35		NO		1357 Pg. 464	1357	464
4	LOCAL & STATE	Russell J. & Marjorie G. Kearney	1192	406	0.32	0.07	0.09	0.07	0.02	0.23		NO		1357 Pg. 467	1357	467
5	LOCAL & STATE	Mary Bendik	1214	912	9.63	0.42	0.10	0.08	0.02	9.19		NO		1357 Pg. 13	1357	13

LORAIN COUNTY — ORIGINAL AVON TOWNSHIP — SECTION 14 — TOWN 7N — RANGE 16W
CITY OF AVON

TYPE FUNDS: LOCAL & STATE

PLAN COMPLETED 8-21-84

REVISION DATE	DESCRIPTION
J.E.C. 12-17-84	Par. 3 & 4 - Rev. Areas.

LOR 83-17.10

LOR-83-17.10

INTRODUCTION

This report summarizes the general subsurface conditions and structural characteristics of the site's subsoil materials. The work was performed by SOLAR TESTING LABORATORIES, INC. 9540 Midwest Avenue, Garfield Heights, OHIO, 44125 by agreement with the BOARD of COMMISSIONERS of LORAIN COUNTY.

EXPLORATION

The exploration consisted of two drive sample borings made by means of a truck mounted rotary drill equipped with a split barrel sampling device, performed on October 15 and 20, 1982.

INVESTIGATIONAL FINDINGS AND OBSERVATIONS

Boring B-1 (in the vicinity of the forward abutment) indicates an approximate (8") topsoil mantel over its immediate area. Underlying this mantel, the predominate subsurface materials consist of brown silty clay with varying fractions of sand and gravel. These predominately cohesive materials were found in a stiff structural state and with a moist to wet consistency, and extended to approximately five (5) feet below existing grade. Boring B-1 penetrated to a depth of 10.0 feet, elevation 677.06, and was terminated in consolidated sandstone in a hard structural state. No water or seepage was found in the sandstone strata. Boring B-2 (in the vicinity of the rear abutment) indicates approximately a total of six inches (6") of blacktop and gravel over its immediate area, underlain by brown sand to a depth of approximately 3.5 feet below grade. Underlying these materials, the predominate subsurface materials consist of layers of brown sandy clay, with silty clay, sandstone, and light brown sandy clay. These predominately cohesive materials were found in a medium stiff structural state and with a general consistency, and extended to approximately 5.5 feet below existing grade. Boring B-2 penetrated to a depth of 7.0 feet, elevation 680.22, and was terminated in consolidated sandstone in a hard structural state. No water or seepage was found in the sandstone strata.

LOG OF BORING

Date Started: 10-15-82 Sampler Size: 2" Auger Size: 4" Surface Elev. 687.06
Date Completed: 10-15-82 Sampler Hammer Wt: 140 Lbs. Drop: 30 in.
Boring No. B-1 Station and Offset: 904+1, 15' Lt. (Forward Abutment)

Elevation	Depth	Soil Description	Remarks	Sample No.	Sample Depth	Blows on Sampler
687.06	0					
	2	8" Topsoil Stiff brown Silty Clay, some Sand trace Gravel (CL)	Moist To Wet	1	0-1.5	3-6-8
	4					
682.06	6	Hard brown Sandstone		2 3	3.5-5.0 5.0-6.5	2-3-8 50/1"
	8					
677.06	10	End of test hole 10.0'		4	8.5-10.0	50/1"
	12					
	14					
672.06	16					

LOG OF BORING

Date Started: 10-20-82 Sampler Size: 2" Auger Size: 4" Surface Elev. 687.22
Date Completed: 10-20-82 Sampler Hammer Wt: 140 Lbs. Drop: 30 in.
Boring No. B-2 Station and Offset: 903+33, 12' Rt. (Rear Abutment)

Elevation	Depth	Soil Description	Remarks	Sample No.	Sample Depth	Blows on Sampler
687.22	0					
	2	3" Blacktop, 3" Gravel Base Loose brown Sand	Moist	1	0-1.5	5-5-3
	4	Medium stiff brown Sandy Clay and Silty Clay (CL), Sandstone	Moist	2	3.5-5.0	7-19-9
682.55	6	Medium stiff light brown Sandy Clay, Sandstone	Moist	3	5.0-6.5	7-14-50/1"
	8	End of test hole 7.0'				
677.22	10					
	12					
	14					
672.55	16					

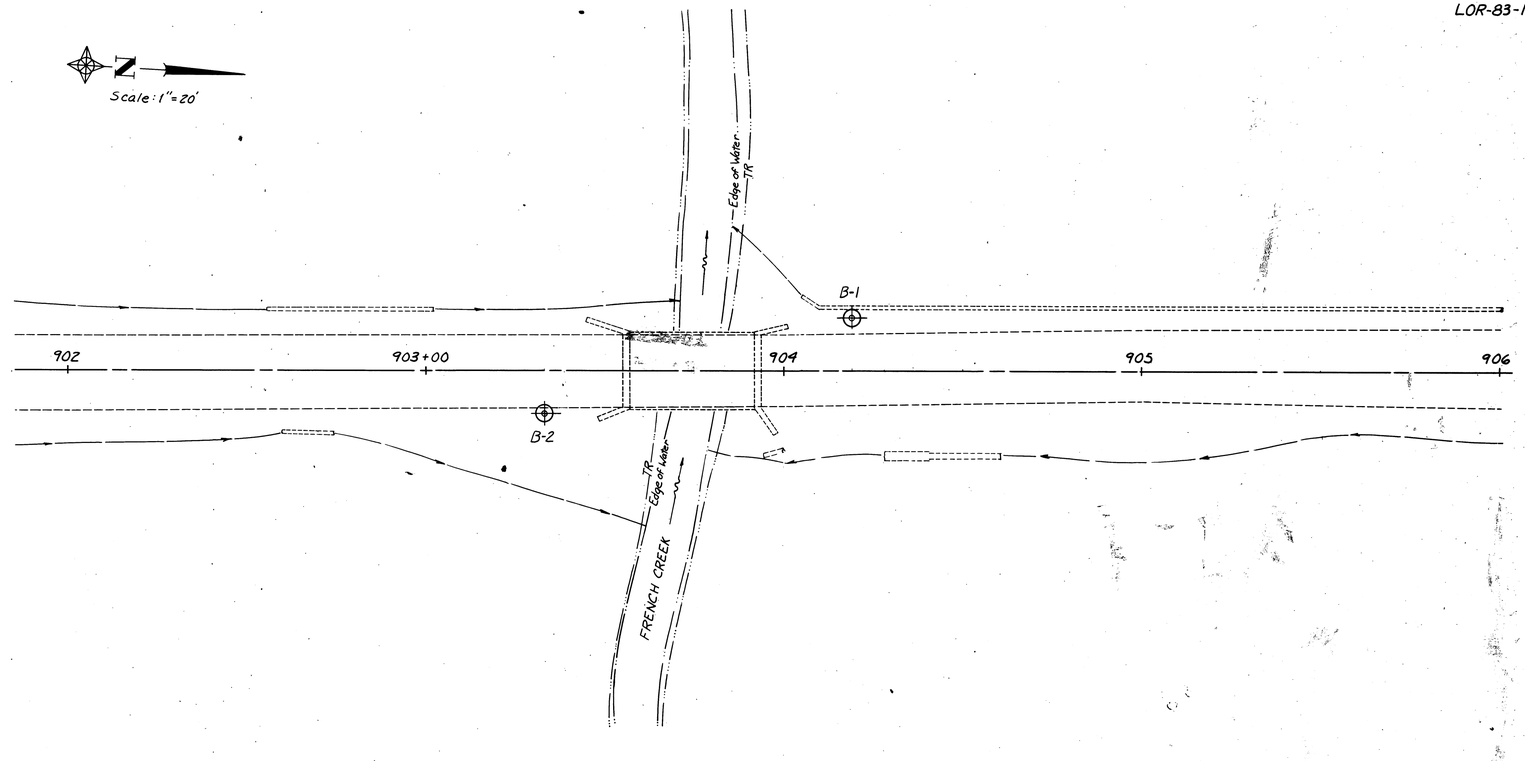

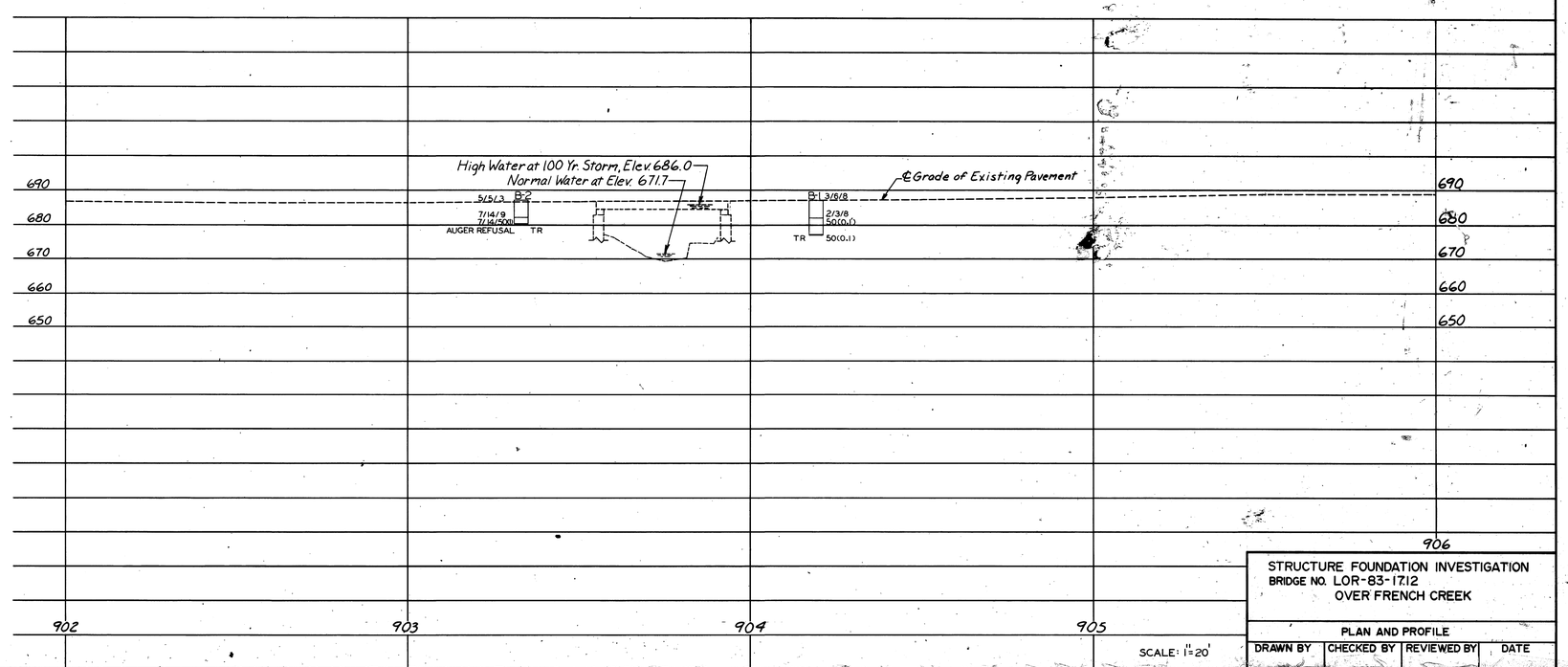

STRUCTURE FOUNDATION INVESTIGATION
BRIDGE NO. LOR-83-17.12
OVER FRENCH CREEK

PLAN AND PROFILE

SCALE: 1" = 20'

DRAWN BY	CHECKED BY	REVIEWED BY	DATE