3018

MICROFILMED
SEP 24 1987

FED. RD. DIVISION	STATE	FED. AID PROJ. NO.	
2	OHIO	I-475-7(19)204	

1 / 271

LUCAS COUNTY
CITY OF TOLEDO
TOLEDO EXPRESSWAY SYSTEM

EXPRESSWAY-PART 31
LUC 475-9.62

STATE OF OHIO
DEPARTMENT OF HIGHWAYS

LUC-475-9.62
LUCAS COUNTY
CITY OF TOLEDO-SYLVANIA TOWNSHIP
TOLEDO EXPRESSWAY SYSTEM - PART 31
NORTHWEST EXPRESSWAY
U.S. 23 INTERCHANGE TO COREY ROAD
GRADE SEPARATION WITH THE NEW YORK CENTRAL RAILROAD CO.

I-475-7(19)204
LIMITED ACCESS

CONVENTIONAL SIGNS

- CL. ..ER LINE
- FENCE LINE
- GUARD RAIL
- POWER POLE
- TELEPHONE POLE
- TREES OR STUMPS
- RIGHT OF WAY - LIMITED ACCESS — LA&R/W —
- RIGHT OF WAY - NON LIMITED ACCESS — R/W —
- RIGHT OF WAY- LIMITED ACCESS ONLY — LA —
- CORPORATION LINE
- RAILROAD

INDEX OF SHEETS

1	TITLE SHEET	90-100	CULVERTS
2	SCHEMATIC PLAN	101-103	UNDERDRAINS
3-5	GENERAL NOTES	103	EXISTING DRAINAGE STRUCTURES
6-9	SUMMARY OF QUANTITIES	104-107	DRAINAGE DETAILS
10-18	QUANTITY CALCULATIONS	108	WATERSHED AREAS
19-24	TYPICAL SECTIONS	109-111	DELINEATORS AND PAVEMENT MARKING
25	GEOMETRIC PLAN	112-123	TRAFFIC CONTROL PLANS
26	GEOMETRIC DATA	125,126,126A,127-139	LIGHTING PLANS
27	TRAVERSE TIES	140-151	RIGHT OF WAY *
28	TEMPORARY RUNAROUND	152	CROSS-SECTION LAYOUT
29-36	PAVEMENT PLANS	153-217	CROSS-SECTIONS
37	APPROACH SLAB AND GUARD RAIL DETAILS	218	BRIDGES-GENERAL NOTES
38-39	INTERSECTION AND DRIVEWAY DETAILS	219-226	BRIDGE NO. LUC-475-0980
39A,39B,40	MISCELLANEOUS DETAILS	227-234	BRIDGE NO. LUC-475-1034
41-48	RAILROAD RUNAROUND	235-248	BRIDGE NO. LUC-475-1040
49-57,57A	GRADING AND SLOPE PROTECTION	249-257	BRIDGE NO. LUC-475-1098
58-68	PROFILES	258-271	BRIDGE NO. LUC-475-1146
69-77	DRAINAGE PLANS		
78-89	SEWER PROFILES		

124 DELETED
* INCLUDES FENCE AND EXISTING UTILITIES

LINE DATA

PROJECT	BEGIN STATION	END STATION	LENGTH Lin. Ft.	LENGTH Miles
Rural	7+23.32 W.B. Lane	102+62.48 N.W. Exp.	9,539.16	1.806
Municipal	102+62.48 N.W. Exp.	108+50.00 N.W. Exp.	587.52	0.111
TOTAL LENGTH OF PROJECT			10,126.68	1.917

WORK		BEGIN STATION	END STATION	LENGTH Lin. Ft.	LENGTH Miles
RURAL	N.W. Expressway	835+98.00 S.B. U.S. 23 = 2+28.62 W.B. Lane	102+62.48	10,033.86	
RURAL	N.Y.C.R.R. Runaround	7055+69.50	7073+00.50	1,731.00	
RURAL	Holland-Sylvania Rd.	0+12.00	13+02.00	1,290.00	
RURAL	Rural Length of Work			13,054.86	2.472
MUN.	N.W. Expressway	102+62.48	109+50.00	687.52	
MUN.	Corey Rd.	3+73.00	14+78.00	1,105.00	
MUN.	Municipal Length of Work			1,792.52	0.339
TOTAL LENGTH OF WORK				14,847.38	2.812

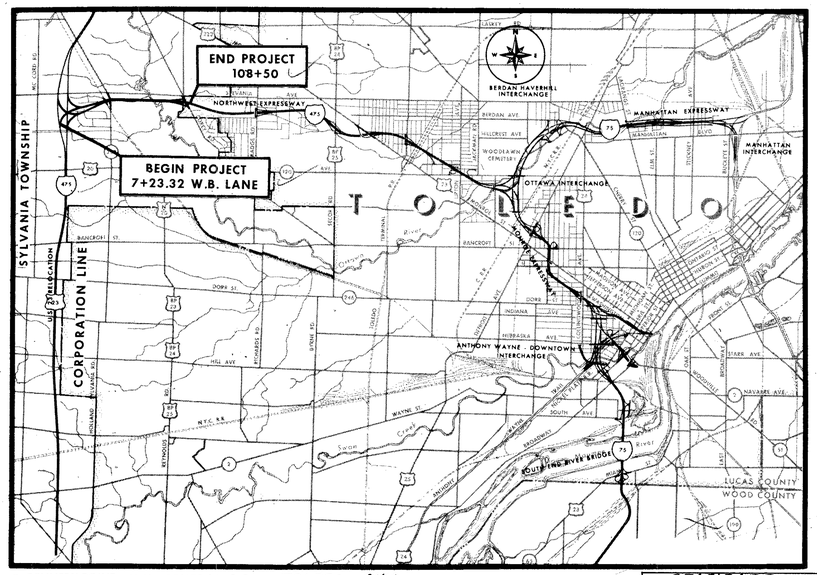

• DELIVERY POINT - N.Y. CENTRAL R.R. TOLEDO, OHIO
AVERAGE HAUL - ONE HALF MILE

1967 SPECIFICATIONS

THIS IMPROVEMENT IS ESPECIALLY DESIGNED FOR THROUGH TRAFFIC AND HAS BEEN DECLARED A LIMITED ACCESS HIGHWAY OR FREEWAY BY ACTION OF THE DIRECTOR OF HIGHWAYS IN ACCORDANCE WITH THE PROVISIONS OF SECTION 5511.02 OF THE REVISED CODE OF OHIO.

THE STANDARD SPECIFICATIONS OF THE STATE OF OHIO DEPARTMENT OF HIGHWAYS, INCLUDING CHANGES AND SUPPLEMENTAL SPECIFICATIONS LISTED IN THE PROPOSAL SHALL GOVERN THIS IMPROVEMENT

THE RIGHT OF WAY FOR THIS IMPROVEMENT WILL BE PROVIDED BY THE STATE OF OHIO.

I HEREBY APPROVE THESE PLANS AND DECLARE THAT THE MAKING OF THIS IMPROVEMENT WILL NOT REQUIRE THE CLOSING TO TRAFFIC OF THE HIGHWAY AND THAT PROVISIONS FOR THE MAINTENANCE AND SAFETY OF THE TRAFFIC WILL BE AS SET FORTH IN THE PLANS AND ESTIMATE.

APPROVED
DATE 10-25-65 — B. G. Keeling — COUNTY ENGINEER, LUCAS COUNTY

APPROVED
DATE 10-27-65 — Louis Kuhn — CITY MANAGER, CITY OF TOLEDO

APPROVED
DATE 10-27-65 — Thomas Basich — DIRECTOR OF PUBLIC SERVICE, CITY OF TOLEDO

APPROVED
DATE 10-28-65 — Thomas M. Major — DIVISION DEPUTY DIRECTOR

APPROVED
DATE 11-17-66 — A. H. Alfrater — ENGINEER OF BRIDGES

APPROVED
DATE 11-17-66 — R. N. Ricketts — ENGINEER OF LOCATION AND DESIGN

APPROVED
DATE 11-17-66 — W. E. Shultz — DEPUTY DIRECTOR OF DESIGN AND CONSTRUCTION

APPROVED
DATE 11-29-66 — T. H. Board — DEPUTY DIRECTOR OF RIGHT OF WAY

APPROVED
DATE 11-29-66 — G. W. Wilson — DEPUTY DIRECTOR OF PLANNING AND PROGRAMMING

APPROVED
DATE — — — — FIRST ASSISTANT DIRECTOR

APPROVED
DATE 11/29/66 — Rex M. Ashelen — DIRECTOR OF HIGHWAYS

NOTE: PROJECT DESIGNATION LUC 120-10.17 APPEARING THROUGHOUT THIS PLAN SHALL BE CONSIDERED TO READ LUC 475-9.62.

DESIGN DESIGNATION
Current A.D.T. (1969) — 44,430
Design Year A.D.T. (1975) — 63,470
D.H.V. (1975) — 6,980
D. (Directional Distribution) — 55%
T. (Percent B & C Trucks) — 4%
V. (Design Speed) — 70 M.P.H.

LOCATION MAP

1 ½ ¼ 0 1 2 3
SCALE IN MILES

PORTION TO BE IMPROVED

OTHER SCALES - FEET
PLAN 50 25 0 50
PROFILE HORIZONTAL 100 50 0 100
PROFILE VERTICAL 10 5 0 10
CROSS SECTION 10 5 0 10

Sheet 231 revised 12-4-67. cw
Sheet 267 revised 7-8-68 EBL
Sheet 255 revised 1-24-69 EBL

PREPARED AND RECOMMENDED BY
HOWARD, NEEDLES, TAMMEN & BERGENDOFF
CONSULTING ENGINEERS
KANSAS CITY CLEVELAND NEW YORK
R. N. Bergendoff

STATE OF OHIO
R. N. BERGENDOFF
14987
REGISTERED
PROFESSIONAL ENGINEER

SUPPLEMENTAL SPECIFICATIONS

NUMBER	DATE	NUMBER	DATE
811	1-1-67	828	1-1-67
806	1-1-67	1001	3-21-66
808	1-13-67	804	3-28-67
809	1-1-67		
810	1-1-67		
815	1-1-67		
816	8-6-65		
825	1-1-67		

STANDARD CONSTRUCTION DRAWINGS

Number	Date	Number	Date
GR-5A	6-1-65	HL-1	11-1-65
GR-5B	6-1-65	HL-2	11-1-65
SP-53	6-30-61	HL-3	11-1-65
F-2	6-1-65	HL-4	1-1-66
F-5	10-1-66	HW-3	6-1-65
MC-1	6-1-65	HW-E	6-1-65
MC-4	6-1-65	CB-3	6-1-65
BP-6	6-1-65	CB 2-2-A & B	6-1-65
F-1	6-1-65	CB-3A	6-1-65
F-3	10-1-66	CB-5	6-1-65
BP-1	6-1-65	CB-8	6-1-65
BP-2	1-10-67	I-2	6-1-65
BP-3	1-10-67	I-2A	6-1-65
BP-4	1-10-67	M.H.-1	6-1-65
FACI-1	9-15-67	M.H.-2	6-1-65
FACI-2	6-1-65	RB-1-55	2-2-59
BP-7	1-1-66	SD-2-64	11-25-64
GR-1	1-1-67	BR-1-65	11-24-65
GR-2A	1-1-67	SD-1-63	11-12-63
GR-6	6-1-65	AS-1-54	8-10-65
MC-3	5-1-66	F-6	10-1-66
MC-6	6-1-65	MH-1A	8-1-66
HW-1	6-1-65		
HW-2	6-1-65	MC-7	3-1-66
L-1	6-1-65	CB-4	6-1-65
BP-5	6-1-65	CB-6	6-1-65

Rev. 9-14-67
Rev 7-20-67 Rev. 4-4-67 Rev. 12-28-66 Rev 1-30-67 Rev 5-12-67

DEPARTMENT OF TRANSPORTATION
FEDERAL HIGHWAY ADMINISTRATION
BUREAU OF PUBLIC ROADS
APPROVED: _____
DIVISION ENGINEER — DATE

FILE NO.
LUCAS COUNTY
SEC. LUC 475-9.62 PART 31
DATE OF LETTING _____ 196 ___
CONTRACT NO. _____

MICROFILMED
SEP 24 1987

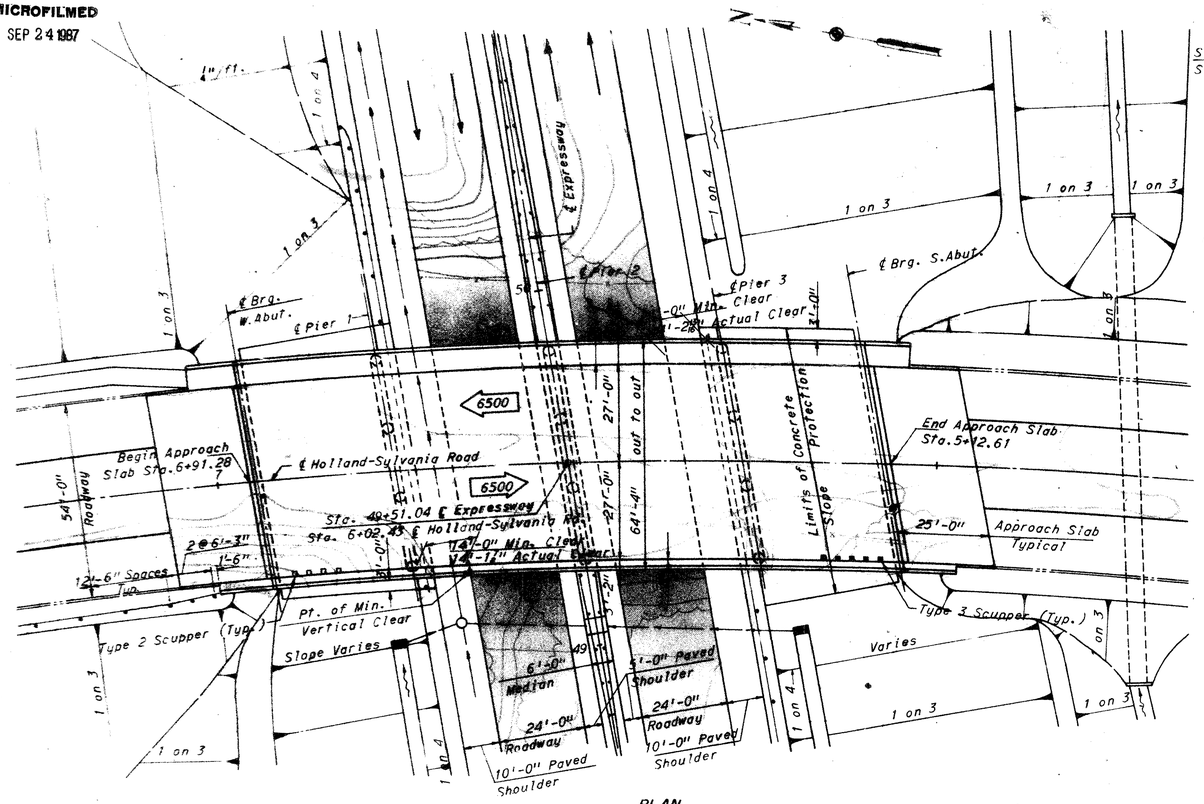

PLAN

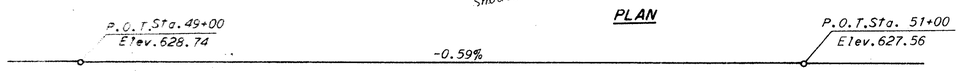

PROFILE GRADE - EXPRESSWAY

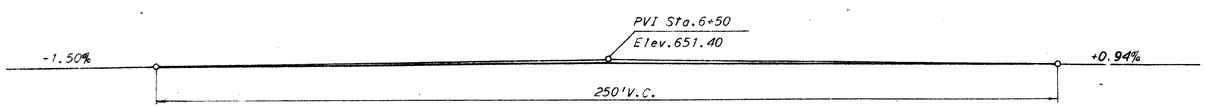

PROFILE GRADE - HOLLAND-SYLVANIA ROAD

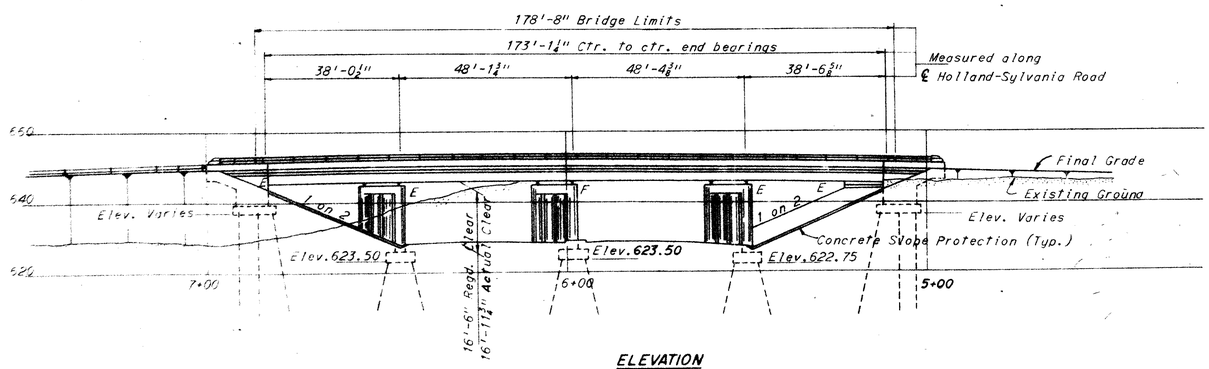

ELEVATION

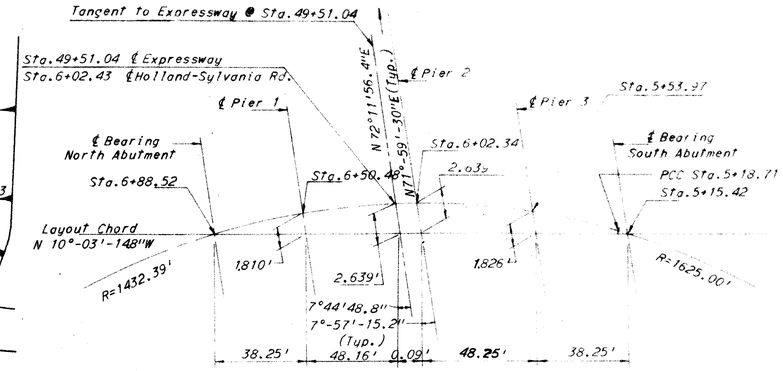

LAYOUT SKETCH
No Scale

FED. RD. DIVISION	STATE	PROJECT	
2	OHIO		

235
2-1

LUCAS COUNTY
CITY OF TOLEDO
TOLEDO EXPRESSWAY SYSTEM
EXPRESSWAY - PART 31
LUC-475-9.62

CURVE DATA

℄ Holland-Sylvania Road

Δ=17°-23'-15"	Δ=2°-10'-55.9"
D=4°-00'-00"	D=3°-11'-33.2"
R=1432.39'	R=1625.000'
L=434.687'	L=71.144'
T=219.027'	T=35.573'
PI=7+37.40	PI=4+83.046

ESTIMATED QUANTITIES

ITEM	TOTAL	UNIT	DESCRIPTION	ABUTMENTS	PIERS	SUPER-STRUCTURE	GENERAL
503	625	Cu.Yd.	Unclassified Excavation	380	245		
601	786	Sq.Yd.	Concrete Slope Protection				786
511	365	Cu.Yd.	Class C Concrete (Superstructure)			365	
511	126	Cu.Yd.	Class C Concrete (Pier Caps and Columns)		126		
511	211	Cu.Yd.	Class E Concrete (Pier and Abutment Footings)	105	106		
511	143	Cu.Yd.	Class E Concrete (Stub Abutments above Footings)	143			
512	16	Lin.Ft.	Waterproofing Premolded Sealing Strip	16			
509	145,200	Lbs.	Reinforcing Steel	17,780	41,850	85,890	
513	224,000	Lbs.	Structural Steel			224,000	
514	224,000	Lbs.	Field Painting of Structural Steel			224,000	
516	64	Sq.Ft.	½" Preformed Expansion Joint Filler (AASHO M-153)	64			
517	408	Lin.Ft.	Bridge railing, Type 2	58		350	
505	Lump Sum	Lump Sum	First Test Pile				
507	2,768	Lin.Ft.	12" Cast-in-place Reinforced Concrete Piles	1,224	1,544		
518	4	Each	Scuppers Type 2 (Including Supports)			4	
518	5	Each	Scuppers Type 3 (Including Supports) as per plan			5	
518	124	Lin.Ft.	6" Perforated Helical C.M.P. 707.06 including	124			
			Specials				
518	100	Lin.Ft.	6" Helical C.M.P., 707.06 non-perforated	100			
518	50	Cu.Yd.	Porous Backfill	50			
808	365	Units	Water Reducing Set Retarding Admixture			365	
625			For Lighting Details and Quantities see sheet 134.				
825	1405	Sq.Yd.	Concrete surface treatment	73		1332	
828	108	Lin.Ft.	Joint sealer (end dam)	108			

Notes:
All piles shall be 12" ϕ cast-in-place concrete piles with an average estimated length of 36' at abutments, 22' at piers 1 and 3, and 24' at pier 2. These estimates are based on boring data and are approximate only. The contractor shall assume full responsibility for length of piling selected for driving.
(6500) Denotes 1975 average Daily Traffic.

PROPOSED STRUCTURE

Type:	4 Span Continuous rolled beams with reinforced concrete deck and substructure
Spans:	38'-0½", 48'-1¾", 48'-4⅜", 38'-6⅝" = 173'-1¼" ctr. to ctr. end bearings
Roadway:	54'-0" face to face of curbs with 2'-0" safety curb and 6'-0" sidewalk
Out to Out of Structure:	64'-4"
Loading	CF(400)57
Skew:	None
Wearing Surface	1" monolithic concrete
Approach Slabs:	4S-1-54 (25'-0" long)
Alignment:	4° Curve left

H.N.T.B. BRIDGE NO. 76

HOWARD, NEEDLES, TAMMEN & BERGENDOFF
CONSULTING ENGINEERS
KANSAS CITY CLEVELAND NEW YORK

SITE PLAN

EXPRESSWAY UNDER HOLLAND SYLVANIA ROAD
BR NO LUC 475 1040 STA. 5+12.61
SCALE: 1" = 20' STA. 6+91.28

TOLEDO EXPRESSWAY SYSTEM
TOLEDO LUCAS COUNTY OHIO

DRAWN J.MM	TRACED	CHECKED V.R.V.	REVIEWED R.J.R.	REVISED
DATE 5-9-65	DATE	DATE 6-2-65	DATE 10-8-65	1102 SHEET 235

MICROFILMED
SEP 24 1987

REG. NO. DIVISION	STATE	PROJECT	
7	OHIO		

236
271

LUCAS COUNTY
CITY OF TOLEDO

TOLEDO EXPRESSWAY SYSTEM
EXPRESSWAY - PART 31
LUC-475-9.62

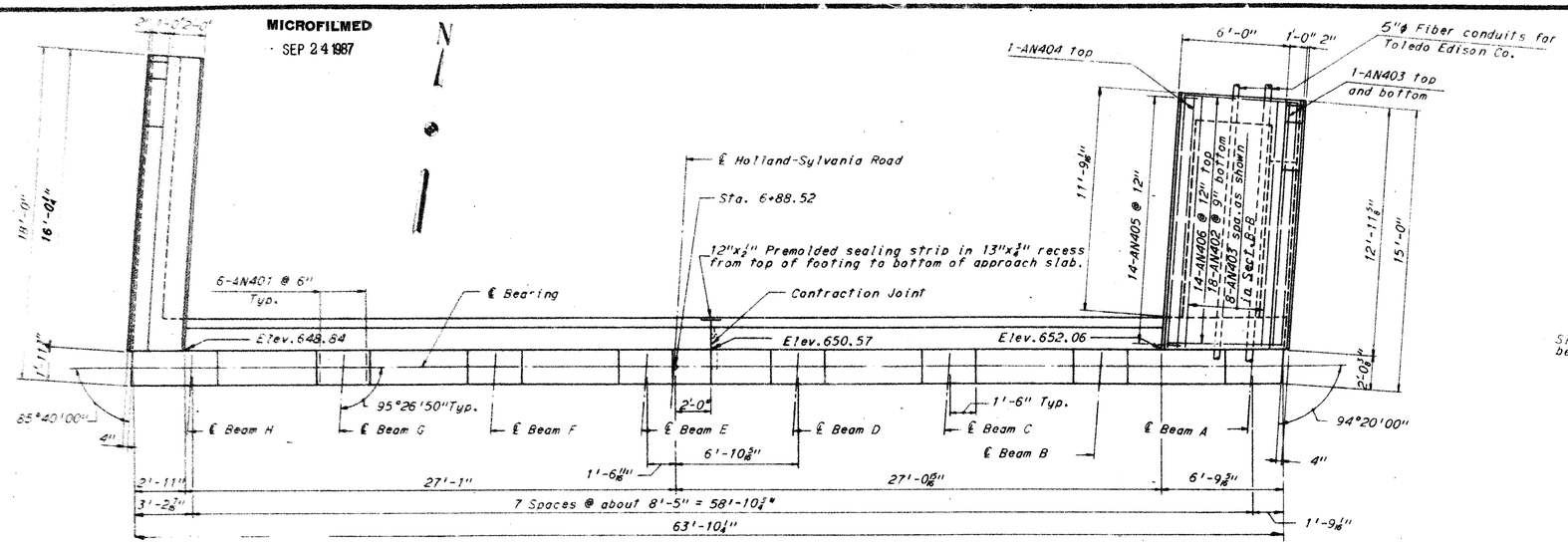

PLAN

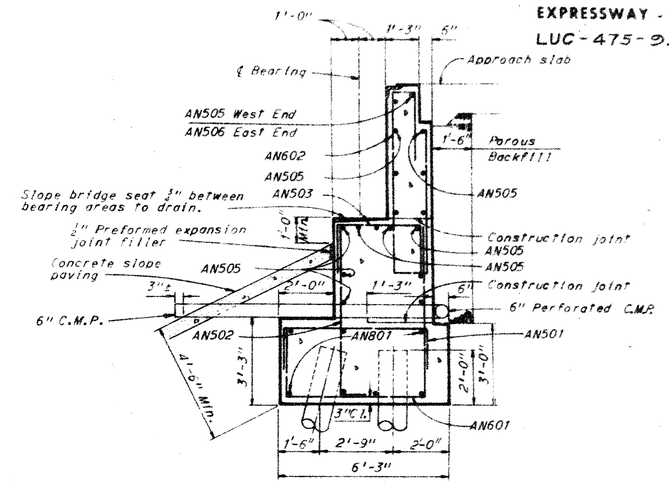

SECTION A-A
3/8"=1'-0"

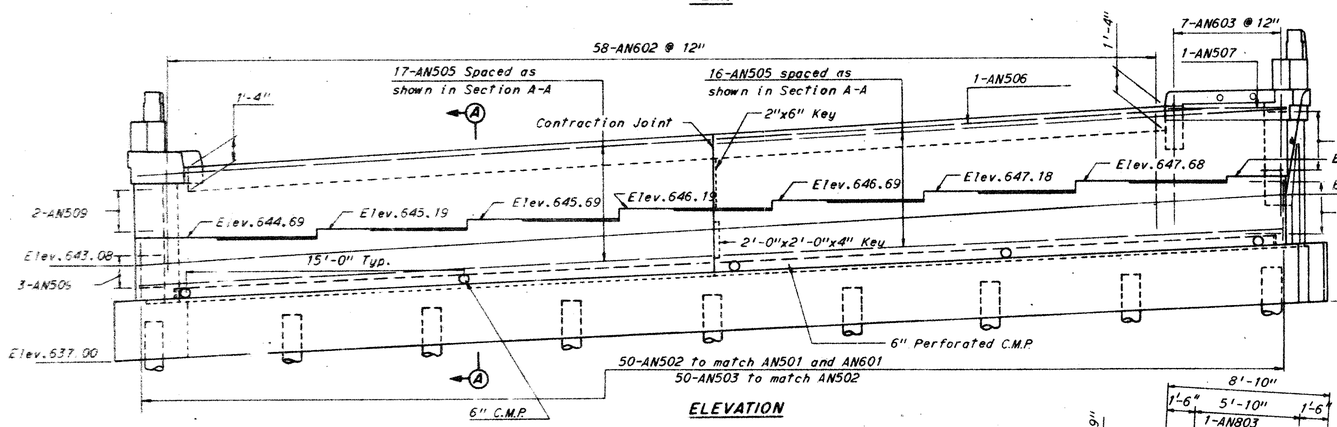

ELEVATION

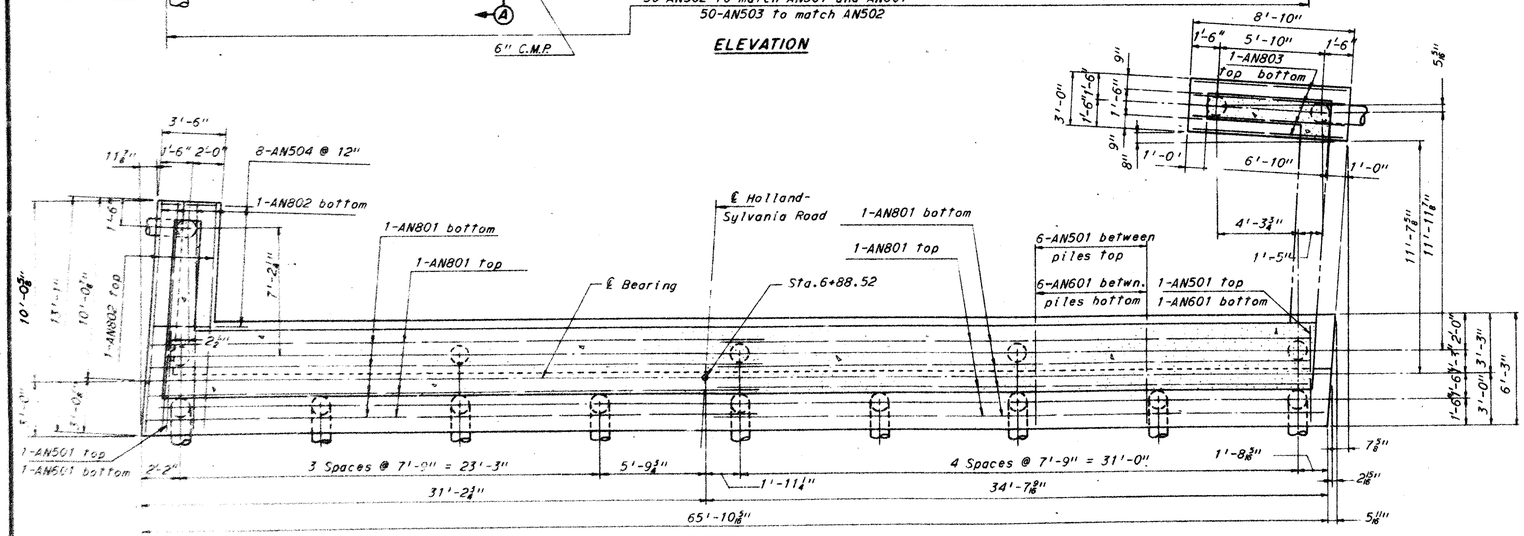

FOOTING PLAN

Notes:

Elevations given at the top of backwall in plan are to the back of L8x6x3/8 of end dam.

For roadway end dam details see Ohio Standard Drawing SD-1-65, Sheet 2 of 4.

AN401 bars shall be placed 2 1/2"± below top of bridge seat.

n.f. denotes near face, f.f. denotes far face, and e.f. denotes each face.

For reinforcement schedule see Sheet 247.

For longitudinal parapet reinforcement and railing post spacing see Sheet 244.

For curb and parapet dimensions see Sheet 237.

Shear keys at contraction joints shall be centered between front and back faces.

All battered piles are battered 3 in 12.

Pile dimensions are measured along bottom of footing.

All piles are 12"ϕ cast-in-place concrete.

For Section B-B see Sheet 237.

H.N.T.B. BRIDGE NO. 76

HOWARD, NEEDLES, TAMMEN & BERGENDOFF
CONSULTING ENGINEERS
KANSAS CITY CLEVELAND NEW YORK

NORTH ABUTMENT

EXPRESSWAY UNDER HOLLAND - SYLVANIA ROAD
BR NO. LUC-475-1040 STA 5+12.61
SCALE: 1/4" = 1'-0" STA 6+91.28

TOLEDO EXPRESSWAY SYSTEM
TOLEDO LUCAS COUNTY OHIO

DRAWN J.M.M.	TRACED	CHECKED R.F.	REVIEWED	REVISED
DATE 4-12-65	DATE	DATE 6-20-65	DATE	1102 SHEET 236

MICROFILMED
SEP 24 1987

FED. RD. DIVISION	STATE	PROJECT	
2	OHIO		

LUCAS COUNTY
CITY OF TOLEDO
TOLEDO EXPRESSWAY SYSTEM
EXPRESSWAY - PART 31
LUC-475-9.62

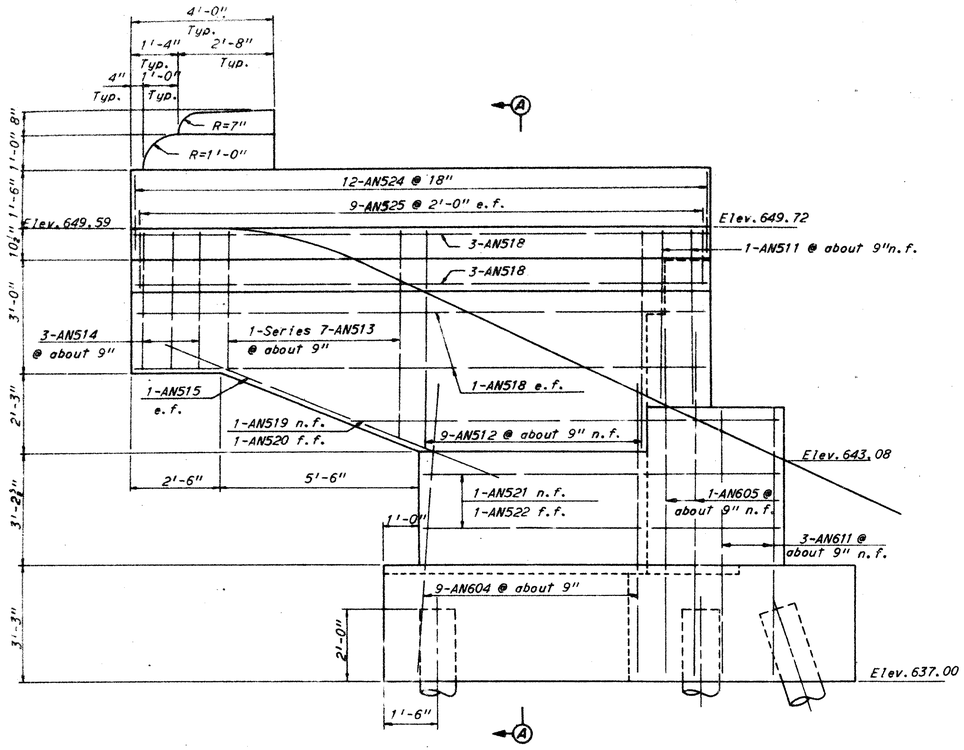

ELEVATION NORTHWEST WINGWALL
$\frac{1}{4}$"=1'-0"

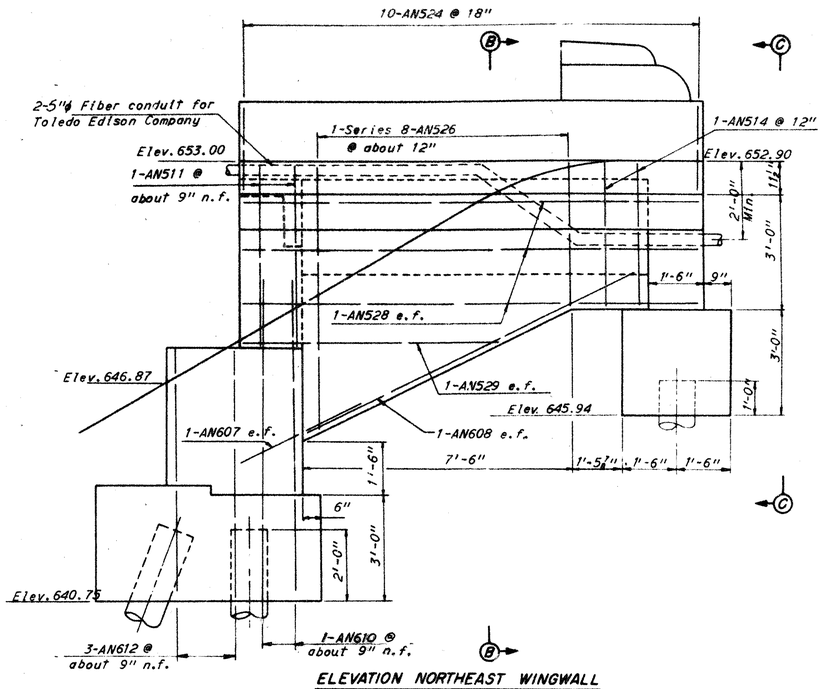

ELEVATION NORTHEAST WINGWALL
$\frac{1}{4}$"=1'-0"

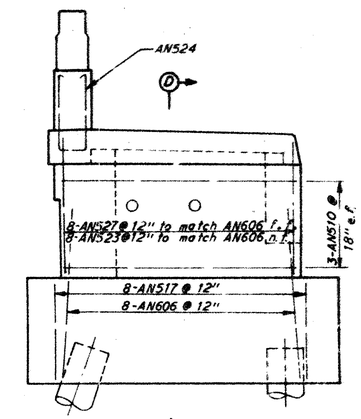

VIEW C-C
$\frac{1}{4}$"=1'-0"

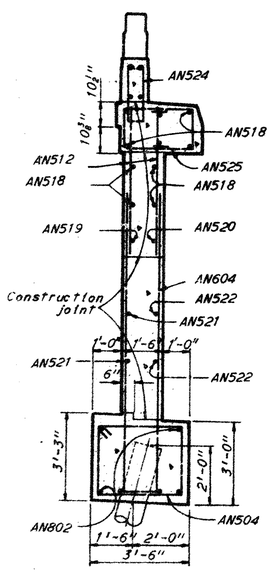

SECTION A-A
$\frac{3}{8}$"=1'-0"

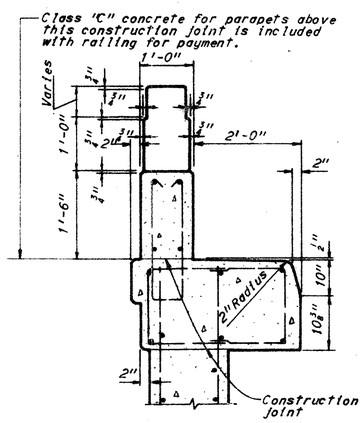

CURB AND PARAPET DETAILS
$\frac{3}{8}$"=1'-0"

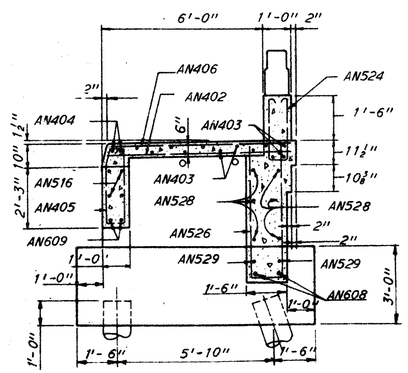

SECTION B-B
$\frac{3}{8}$"=1'-0"

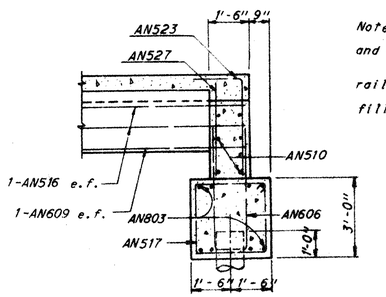

SECTION D-D
$\frac{3}{8}$"=1'-0"

Notes:
n.f. denotes near face, f.f. denotes far face, and e.f. denotes each face.
For reinforcement schedule see Sheet 247.
For longitudinal parapet reinforcement and railing post spacing see Sheet 244.
Earth fill under sidewalk is to be back-filled and compacted before sidewalk is placed.

H.N.T.B. BRIDGE NO. 76

HOWARD, NEEDLES, TAMMEN & BERGENDOFF
CONSULTING ENGINEERS
KANSAS CITY CLEVELAND NEW YORK

NORTH ABUTMENT WINGWALLS

EXPRESSWAY UNDER HOLLAND - SYLVANIA ROAD
BR. NO. LUC-475-1040 STA. 5+12.61
SCALE: AS SHOWN STA. 6+91.28
TOLEDO EXPRESSWAY SYSTEM
TOLEDO LUCAS COUNTY

DRAWN JMM	TRACED	CHECKED REF	REVIEWED MJH	REVISED
DATE 4-15-65	DATE	DATE 4-20-65	DATE 10-8-65	1105

MICROFILMED
SEP 24 1987

FED. RD. DIVISION	STATE	PROJECT	
2	OHIO		

LUCAS COUNTY
CITY OF TOLEDO
TOLEDO EXPRESSWAY SYSTEM
EXPRESSWAY - PART 31
LUC-475-9.62

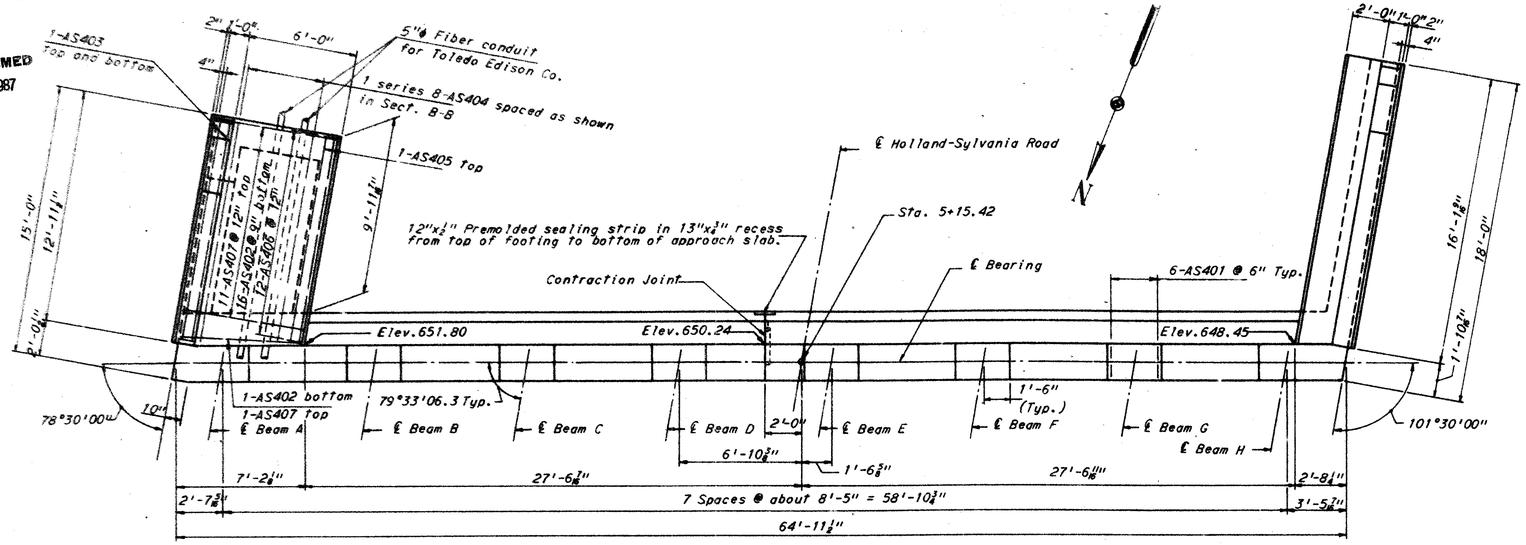

PLAN

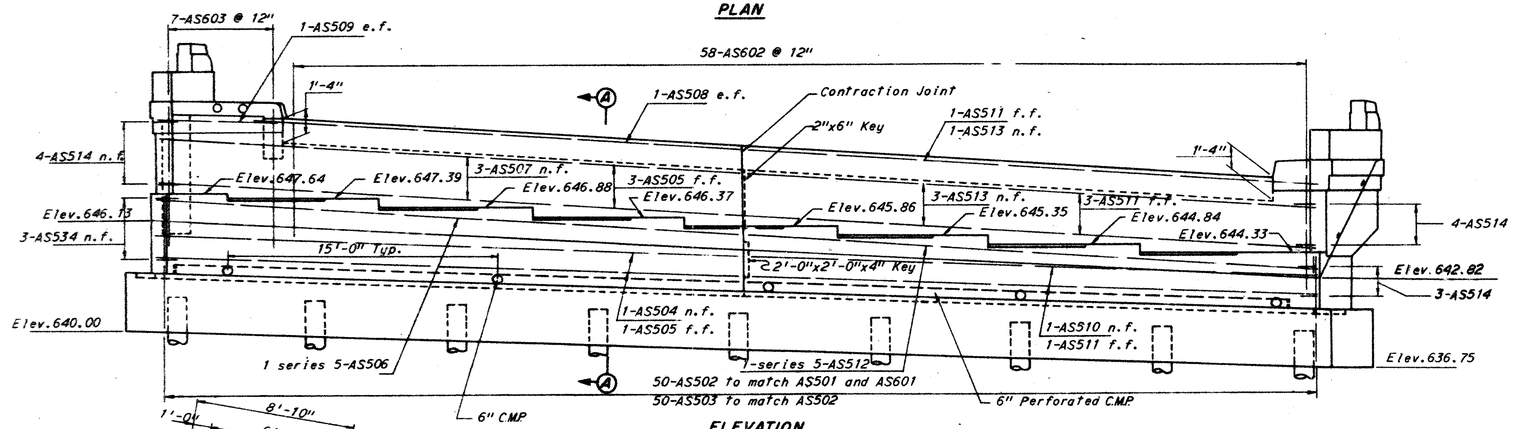

ELEVATION

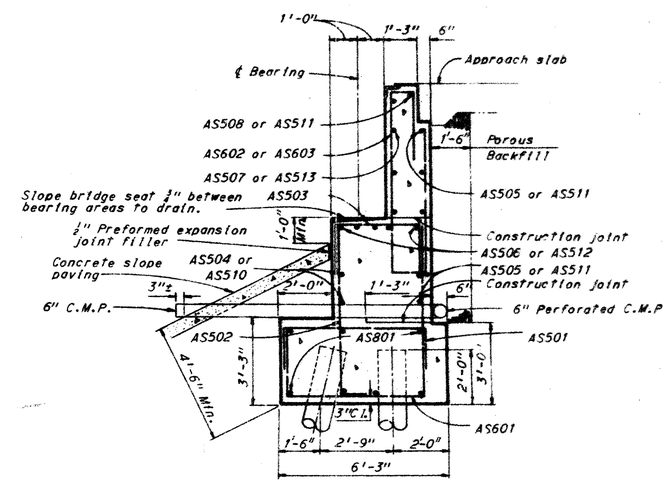

SECTION A-A
⅛"=1'-0"

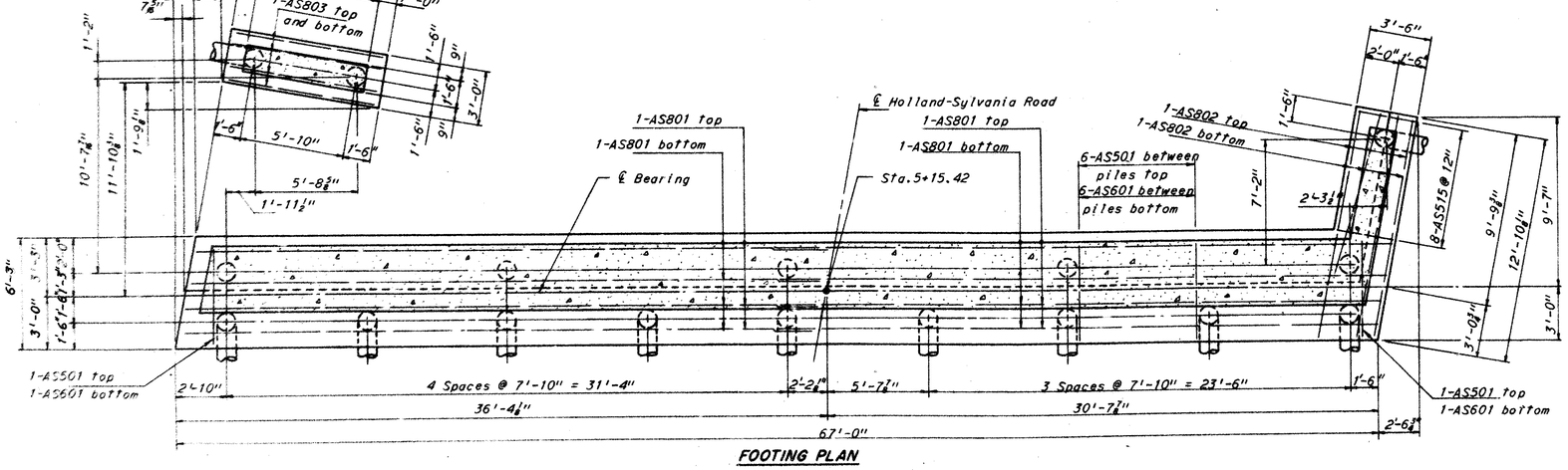

FOOTING PLAN

Notes:

Elevations given at the top of backwall in plan are to the back of L8x6x½ of end dam.

For roadway end dam details see Ohio Standard Drawing SD-1-63, Sheet 2 of 4.

AS401 bars shall be placed 2½"± below top of bridge seat.

n.f. denotes near face, f.f. denotes far face, and e.f. denotes each face.

For reinforcement schedule see Sheet 247.

For longitudinal parapet reinforcement and railing post spacing see Sheet 244.

For curb and parapet dimensions see Sheet 237.

Shear keys at contraction joints shall be centered between front and back faces.

All battered piles are battered 3 in 12.

Pile dimensions are measured along bottom of footing.

All piles are 12"ϕ cast-in-place concrete.

H.N.T.B. BRIDGE NO. 76

HOWARD, NEEDLES, TAMMEN & BERGENDOFF
CONSULTING ENGINEERS
KANSAS CITY CLEVELAND NEW YORK

SOUTH ABUTMENT

EXPRESSWAY UNDER HOLLAND - SYLVANIA ROAD
BR NO. LUC 475-1040 STA. 5+12.61
SCALE: 1/4" = 1'- 0" STA. 6+91.28
TOLEDO EXPRESSWAY SYSTEM
TOLEDO LUCAS COUNTY

DRAWN J.M.M.	TRACED	CHECKED R.E.P.	REVIEWED H.J.K.	REVISED
DATE 4-21-65	DATE	DATE 4-22-65	DATE 10-8-65	1107

MICROFILMED
SEP 24 1987

FED. RD. DIVISION	STATE	PROJECT	
2	OHIO		

239
271

LUCAS COUNTY
CITY OF TOLEDO
TOLEDO EXPRESSWAY SYSTEM
EXPRESSWAY - PART 31
LUC-475-9.62

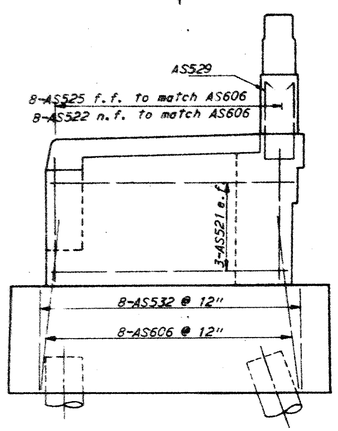

VIEW D D
$\frac{1}{4}$"=1'-0"

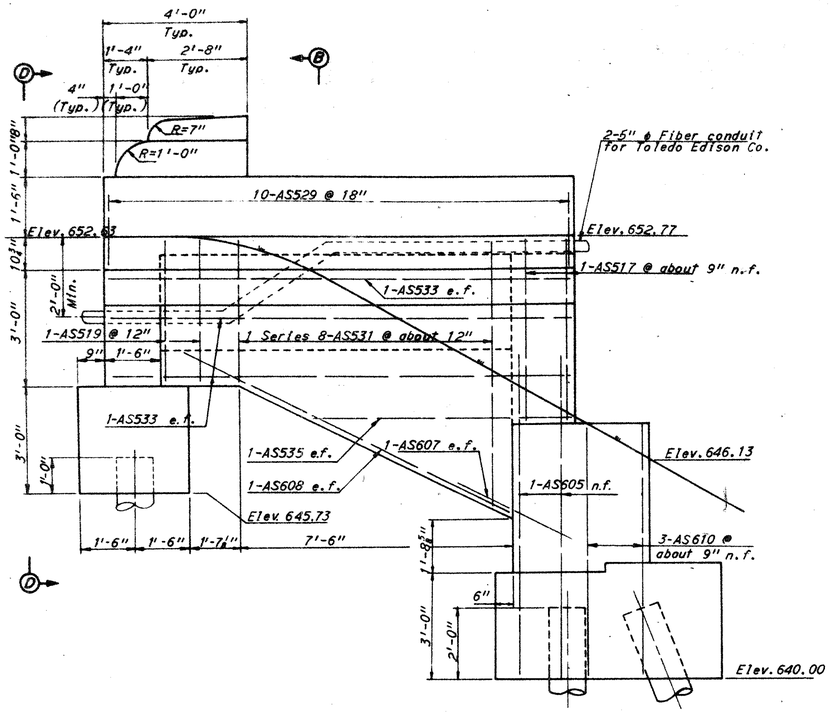

ELEVATION SOUTHEAST WINGWALL
$\frac{1}{4}$"=1'-0"

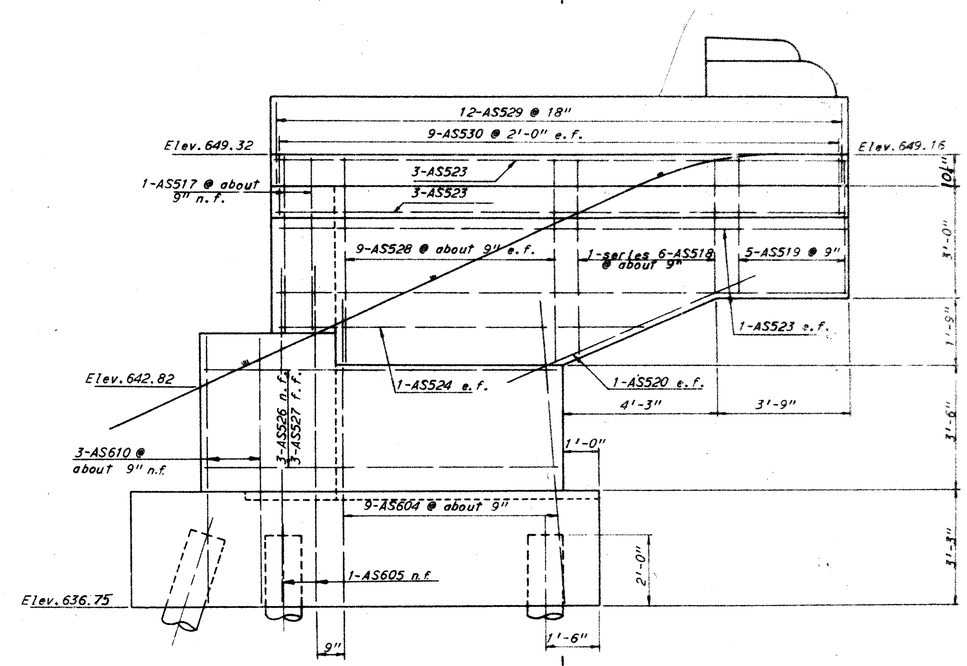

ELEVATION SOUTHWEST WINGWALL
$\frac{1}{4}$"=1'-0"

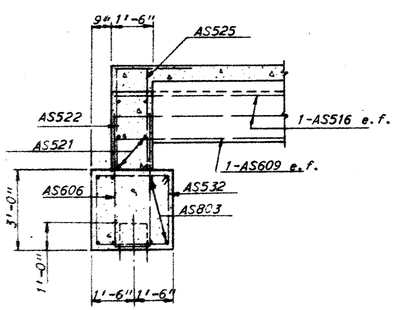

SECTION A-A
$\frac{1}{4}$"=1'-0"

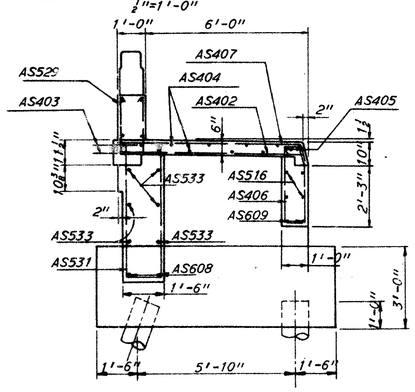

SECTION B-B
$\frac{1}{4}$"=1'-0"

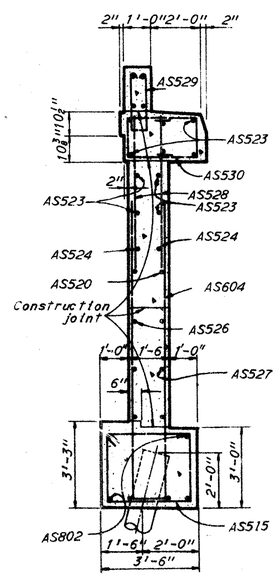

SECTION C-C
$\frac{1}{4}$"=1'-0"

Notes:
n.f. denotes near face, f.f. denotes far face, and e.f. denotes each face.
For reinforcement schedule see Sheet 247.
For longitudinal parapet reinforcement and railing post spacing see Sheet 244.
For curb and parapet dimensions see Sheet 237.
Earth fill under sidewalk is to be back-filled and compacted before sidewalk is placed.

H.N.T.B. BRIDGE NO. 76

HOWARD, NEEDLES, TAMMEN & BERGENDOFF
CONSULTING ENGINEERS
KANSAS CITY CLEVELAND NEW YORK

SOUTH ABUTMENT WINGWALLS

EXPRESSWAY UNDER HOLLAND - SYLVANIA ROAD
BR NO. LUC-475-1040 STA 5+12.6
SCALE: AS SHOWN STA 6+91.
TOLEDO EXPRESSWAY SYSTE
TOLEDO LUCAS COUNTY

DRAWN	TRACED	CHECKED	REVIEWED	REVISED
DATE	DATE	DATE	DATE	

239

MICROFILMED
SEP 24 1987

FED. RD. DIVISION	STATE	FEDERAL AID PROJECT	
5	OHIO		

240
271

LUCAS COUNTY
CITY OF TOLEDO
TOLEDO EXPRESSWAY SYSTEM
EXPRESSWAY - PART 31
LUC-475-9.62

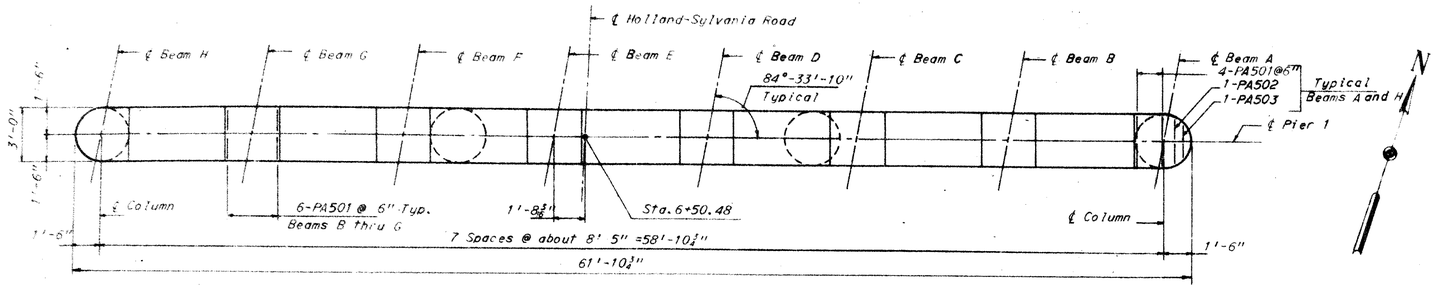

PLAN

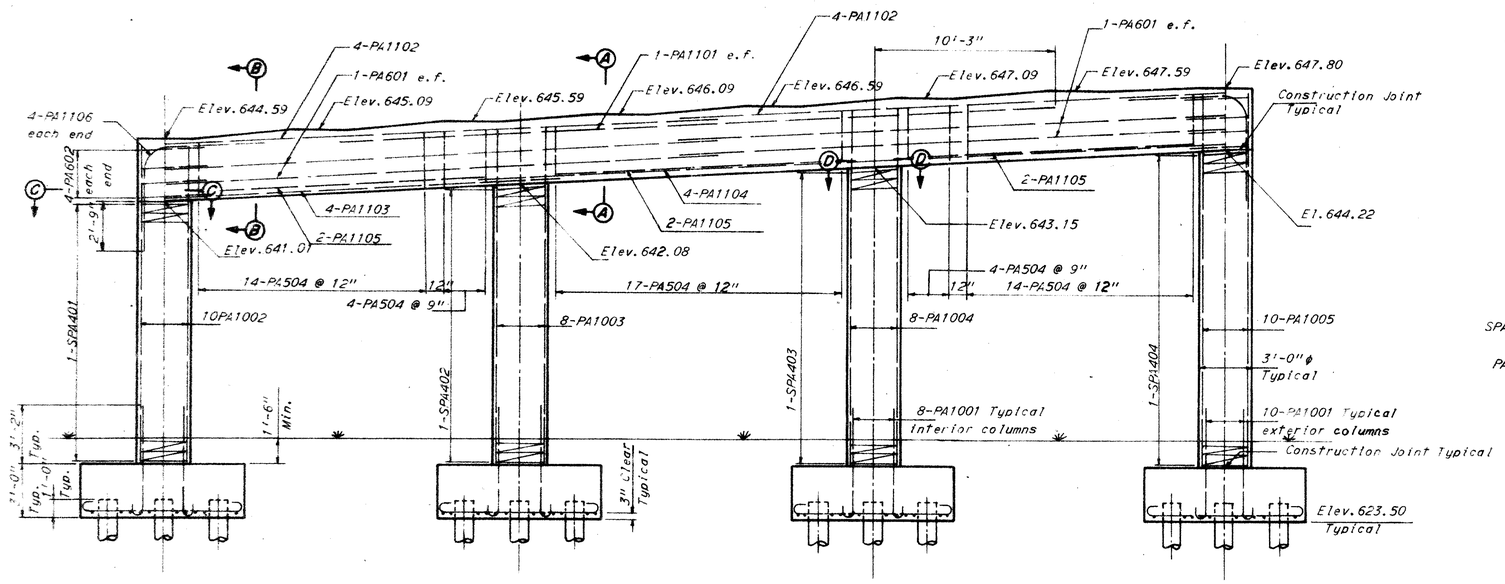

ELEVATION

FOOTING PLAN

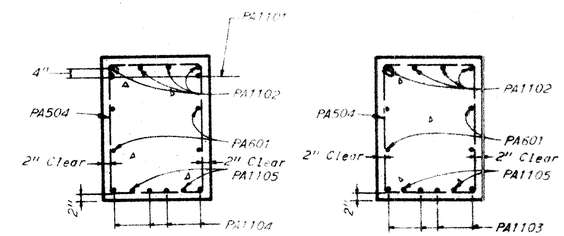

SECTION A-A
1/4"=1'-0"

SECTION B-B
1/4"=1'-0"

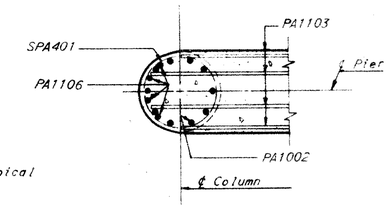

SECTION C-C
3/8"=1'-0"

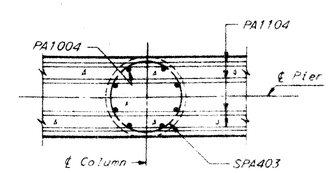

SECTION D-D
3/8"=1'-0"

Note:
PA501, PA502, and PA503 bar shall be placed 2 1/4"± below top of cap beam.
For reinforcement schedule see Sheet 247.
All battered piles shall be battered 3 in 12.
Pile dimensions are measured along bottom of footing.
All piles are 12"ϕ cast-in-place concrete.
e.f. denotes each face
The first four stirrups on either side of columns shall be placed with hooks in the bottom of cap. All others shall be placed with hooks in the top as shown in Sections A-A and B-B

H.N.T.B. BRIDGE NO. 76

HOWARD, NEEDLES, TAMMEN & BERGENDOFF
CONSULTING ENGINEERS
KANSAS CITY CLEVELAND NEW YORK

PIER 1

EXPRESSWAY UNDER HOLLAND - SYLVANIA ROAD
BR NO LUC 475 1040 STA 5+12.61
SCALE: 1/4" = 1' - 0" STA 6+91.35
TOLEDO EXPRESSWAY SYSTEM
TOLEDO LUCAS COUNTY

DRAWN ADL	TRACED	CHECKED SAF	REVIEWED MJK	REVISED
DATE 4-14-65	DATE	DATE 4-20-65	DATE 10-8-65	1969

240

MICROFILMED
SEP 24 1987

FED. RD. DIVISION	STATE	PROJECT	
2	OHIO		

LUCAS COUNTY
CITY OF TOLEDO
TOLEDO EXPRESSWAY SYSTEM
EXPRESSWAY - PART 31
LUC-475-9.62

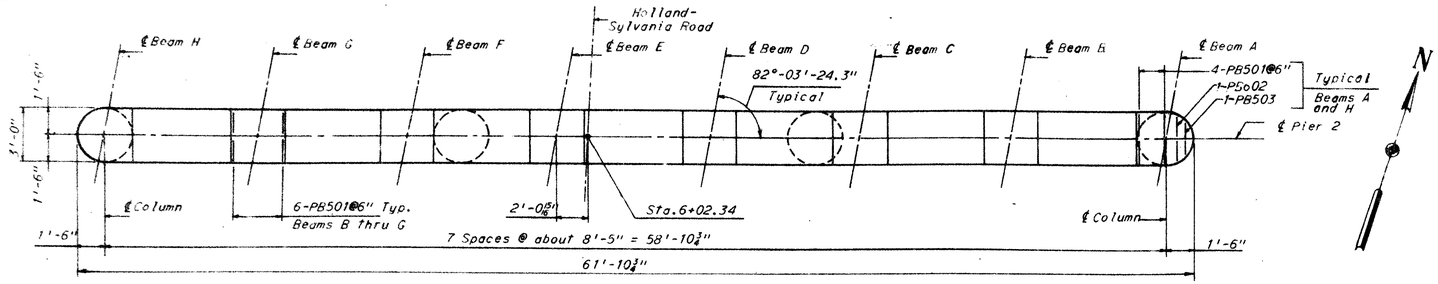

PLAN

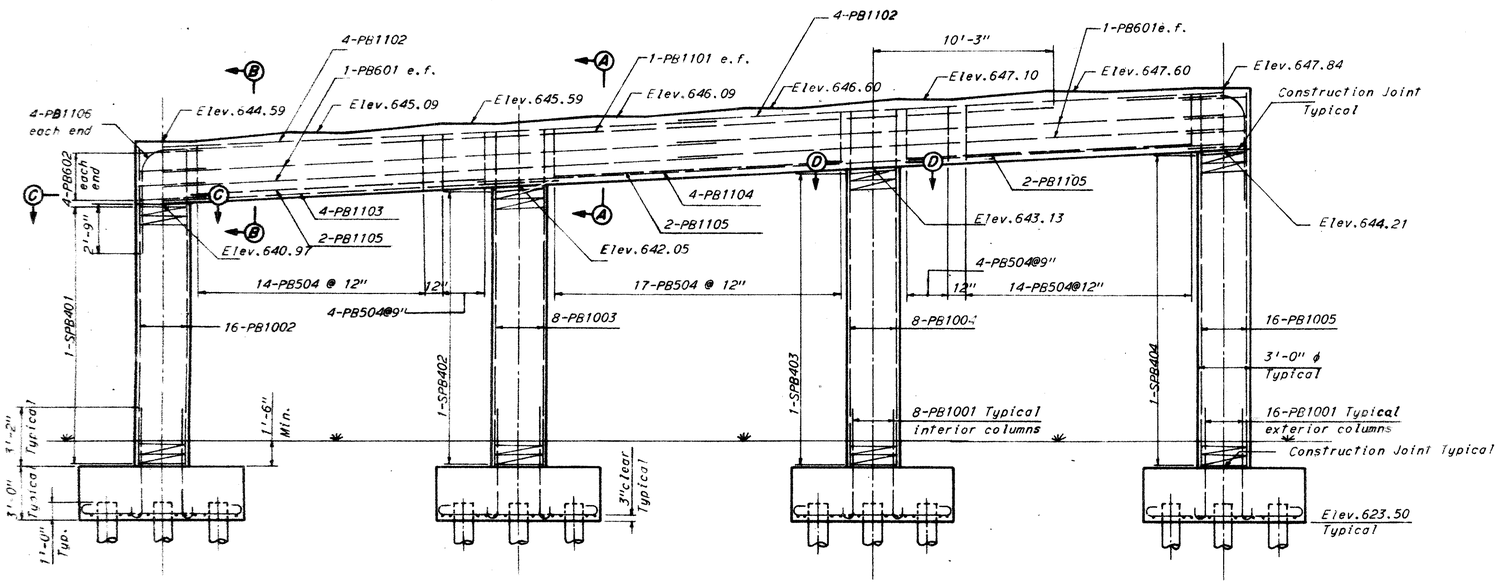

ELEVATION

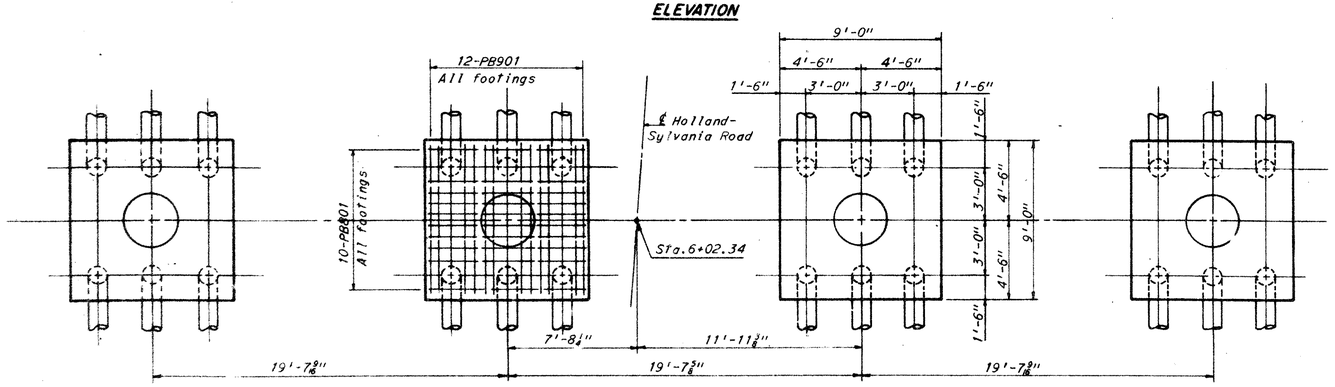

FOOTING PLAN

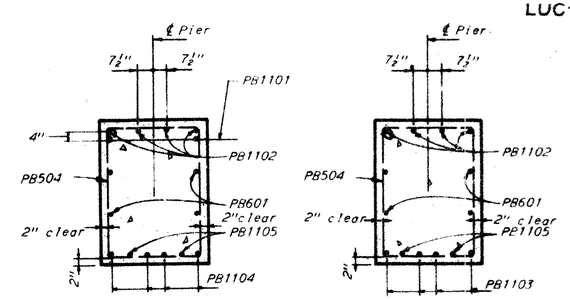

SECTION A-A
1/4"=1'-0"

SECTION B-B
1/4"=1'-0"

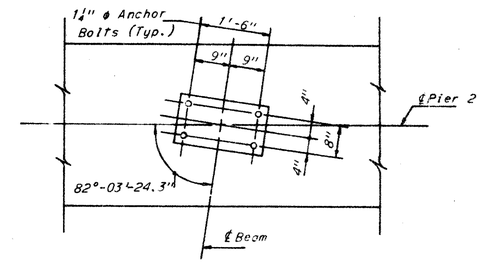

ANCHOR BOLT SETTING DIAGRAM
3/4" = 1'-0"

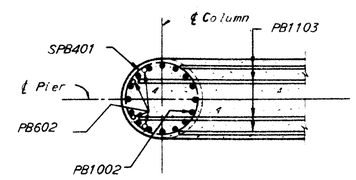

SECTION C-C
3/8"=1'-0"

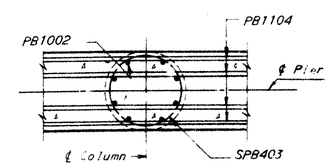

SECTION D-D
3/8"=1'-0"

Note:
PB501, PB502, and PB503 bar shall be placed 2 1/2"± below top of cap beam.
For reinforcement schedule see Sheet 247.
All battered piles shall be battered 3 in. 12.
Pile dimensions are measured along bottom of footing.
All piles are 12"ϕ cast-in-place concrete
Special care shall be taken when placing reinforcing steel so as not to interfere with anchor bolt setting.
e.f. denotes each face
The first four stirrups on either side of columns shall be placed with hooks in the bottom of cap. All others shall be placed with hooks in the top as shown in Sections A-A and B-B.
The structure shall be grounded by welding No. 0 lead to outside beam, then leading down inside pier cap and column and welding to 12"ϕ cast-in-place pile casing. (See lighting notes)

H.N.T.B. BRIDGE NO. 76

HOWARD, NEEDLES, TAMMEN & BERGENDOFF
CONSULTING ENGINEERS
KANSAS CITY CLEVELAND NEW YORK

PIER 2

EXPRESSWAY UNDER HOLLAND - SYLVANIA ROAD
BR NO LUC-475-1040 STA 5+12.61
SCALE: 1/4" = 1'-0" STA 6+91.28

TOLEDO EXPRESSWAY SYSTEM
TOLEDO LUCAS COUNTY OHIO

DRAWN BOL	TRACED	CHECKED	REVIEWED	REVISED
DATE 4-16-65	DATE	DATE	DATE	1102 SHEET 3

MICROFILMED
SEP 24 1987

FED. RD. DIVISION	STATE	PROJECT	
5	OHIO		

242
271

LUCAS COUNTY
CITY OF TOLEDO
TOLEDO EXPRESSWAY SYSTEM
EXPRESSWAY - PART 31
LUC-475-9.62

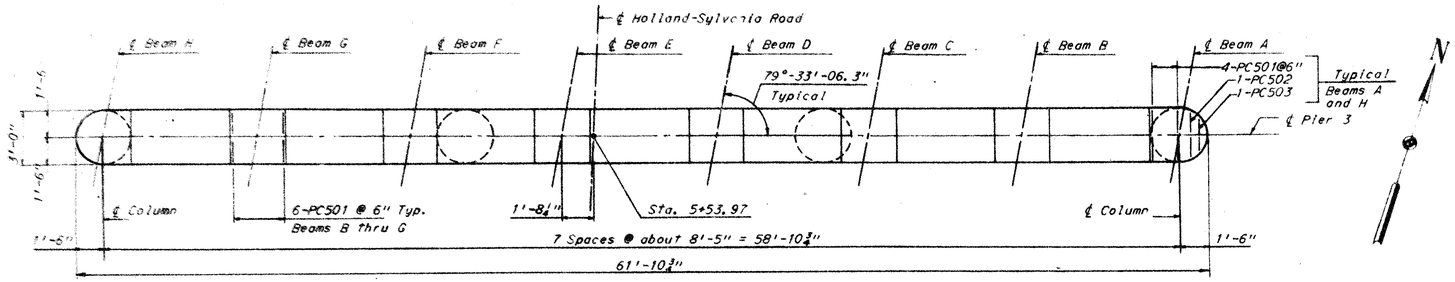

PLAN

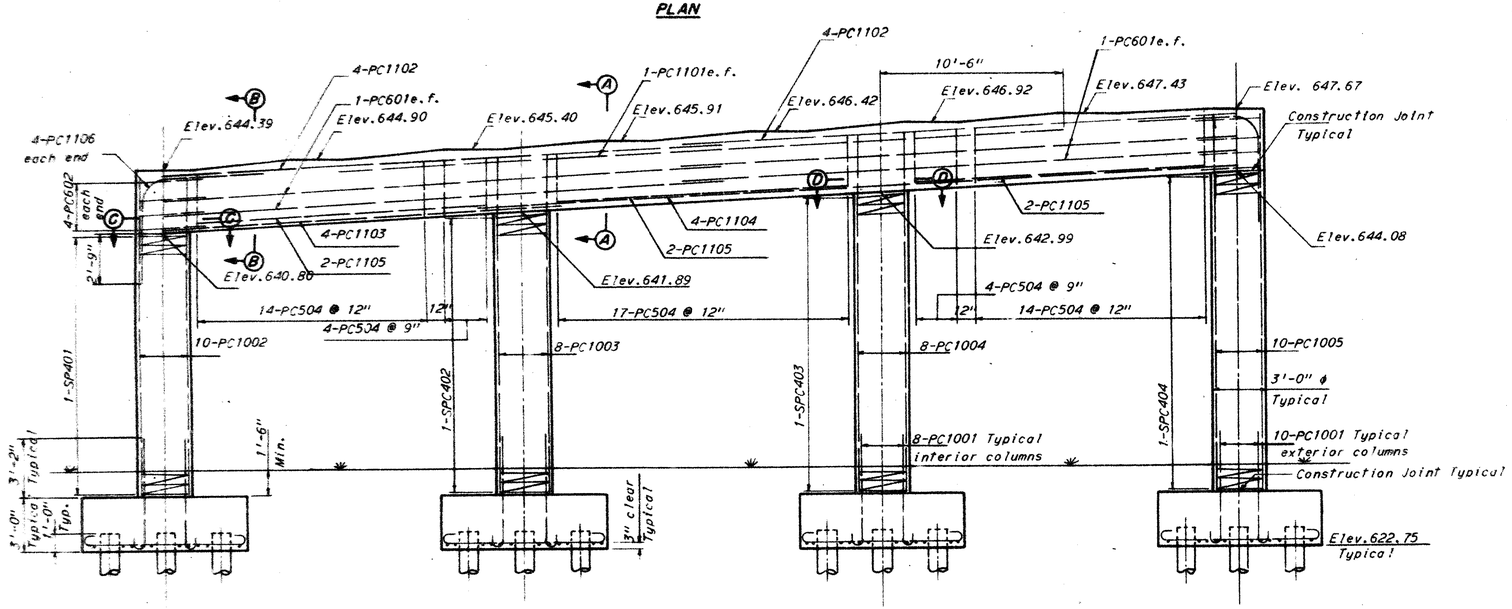

ELEVATION

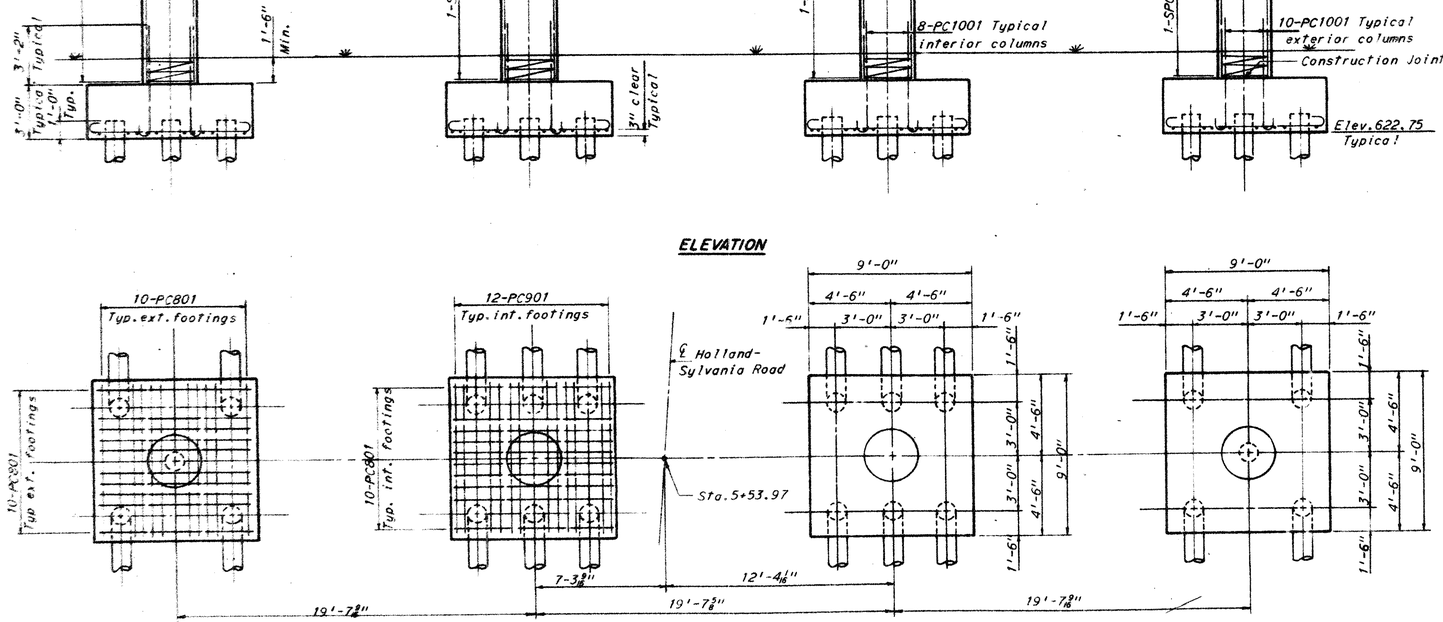

FOOTING PLAN

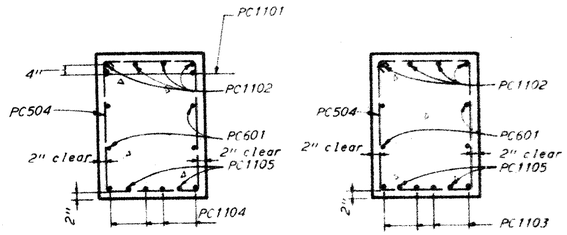

SECTION A-A
½"=1'-0"

SECTION B-B
½"=1'-0"

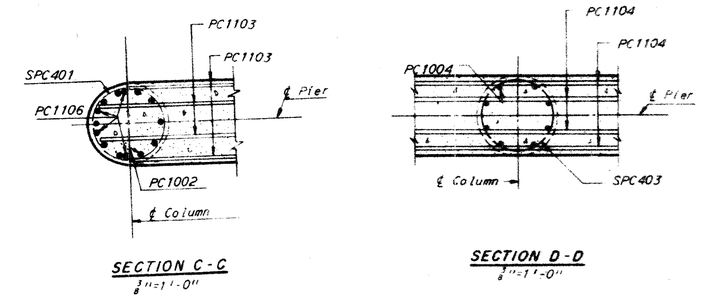

SECTION C-C
⅜"=1'-0"

SECTION D-D
⅜"=1'-0"

Note:
PC501, PC502, and PC503 bar shall be placed 2½"± below top of cap beam.
For reinforcement schedule see Sheet 247.
All battered piles shall be battered 3 in 12.
Pile dimensions are measured along bottom of footing.
All piles are 12"ϕ cast-in-place concrete
e.f. denotes each face.
The first four stirrups on either side of columns shall be placed with hooks in the bottom of cap. All others shall be placed with hooks in the top as shown in Sections A-A and B-B.

H.N.T.B. BRIDGE NO. 76

HOWARD, NEEDLES, TAMMEN & BERGENDOFF
CONSULTING ENGINEERS
KANSAS CITY CLEVELAND NEW YORK

PIER 3

EXPRESSWAY UNDER HOLLAND - SYLVANIA ROAD
BR NO LUC-475-1040 STA. 5+12.61
SCALE: 1/4" = 1' - 0" STA. 6+91.28
TOLEDO EXPRESSWAY SYSTEM
TOLEDO LUCAS COUNTY OHIO

DRAWN RDL	TRACED	CHECKED S.M.	REVIEWED R.L.	REVISED
DATE 4-20-65	DATE	DATE 4-26-65	DATE 10-8-65	1102 SHEET 242

MICROFILMED
SEP 24 1987

FED. RD. DIVISION	STATE	PROJECT	
1	OHIO		

243 / 271

LUCAS COUNTY
CITY OF TOLEDO
TOLEDO EXPRESSWAY SYSTEM
EXPRESSWAY - PART 31
LUC-475-9.62

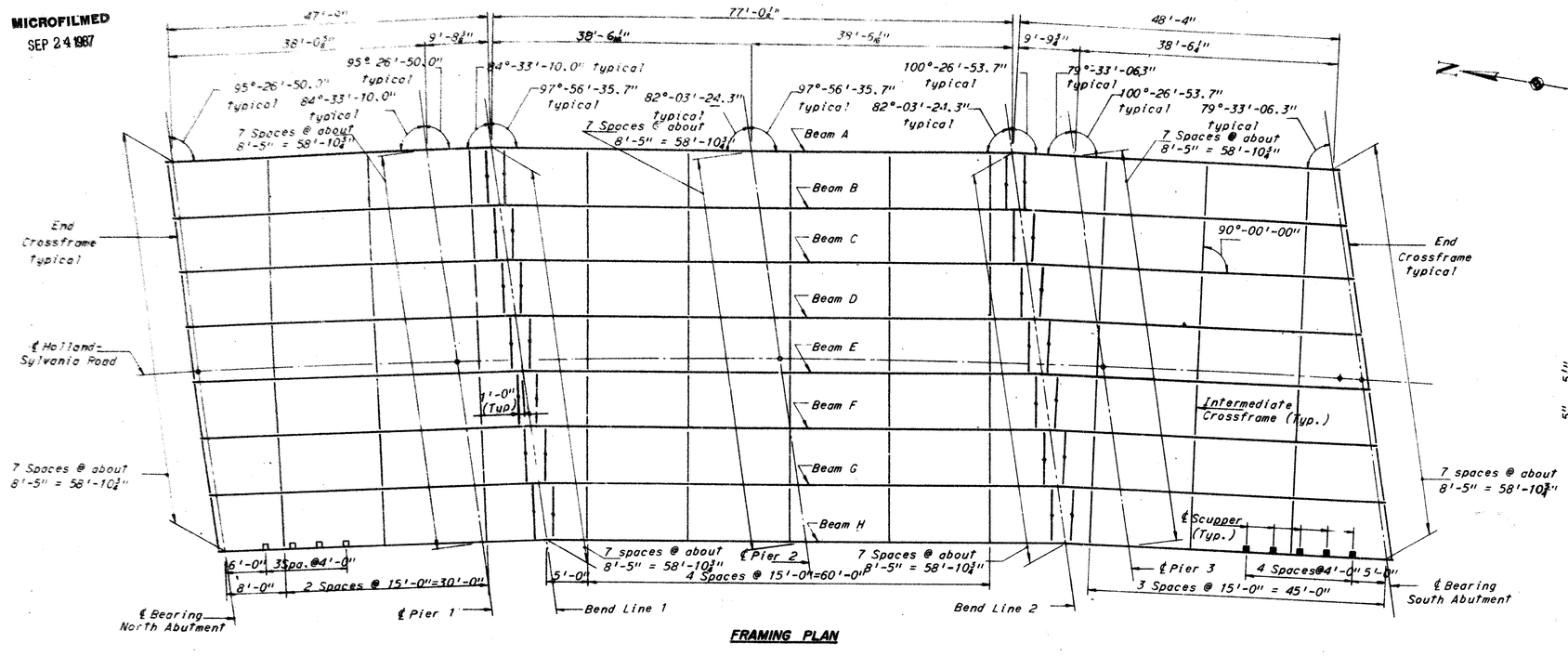

FRAMING PLAN

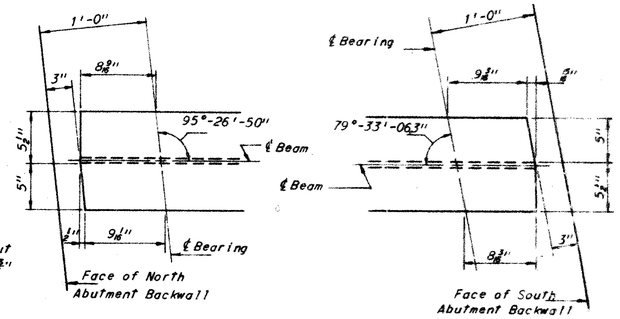

END BEAM DETAILS
1 1/2" = 1'-0"

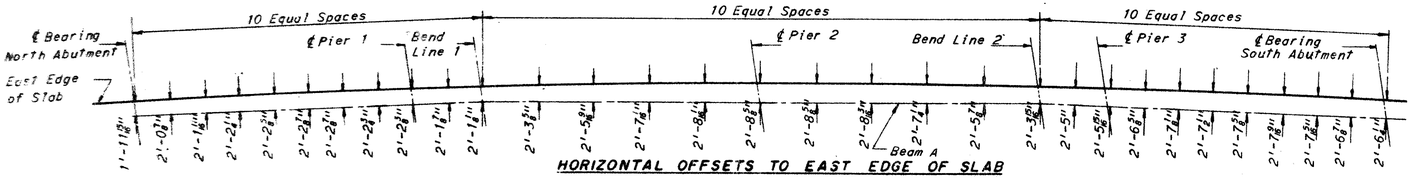

HORIZONTAL OFFSETS TO EAST EDGE OF SLAB

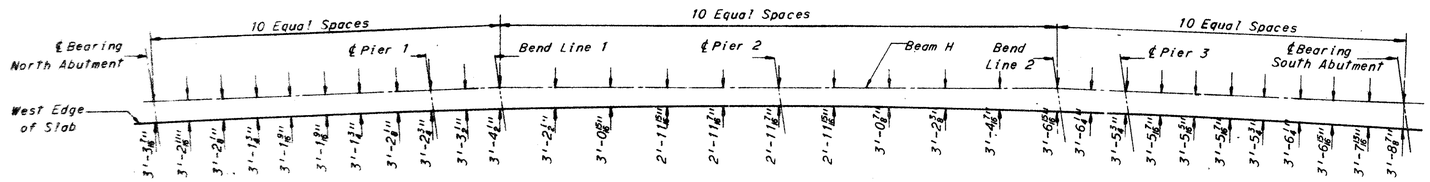

HORIZONTAL OFFSETS TO WEST EDGE OF SLAB

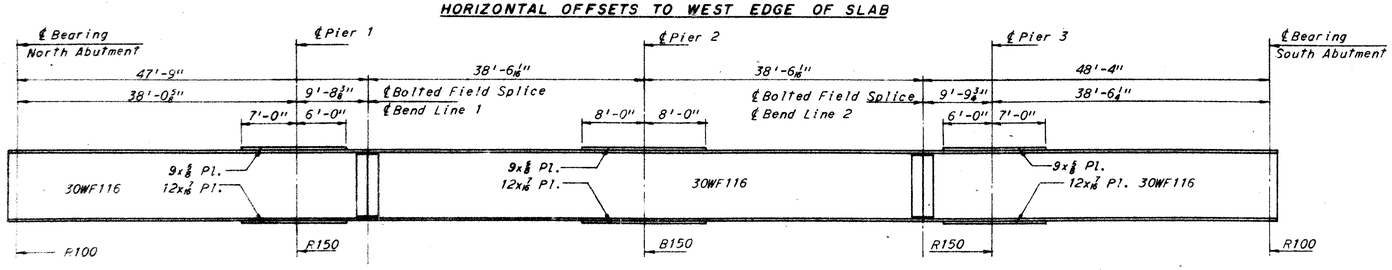

BEAM ELEVATION

Notes:

For moment plate details use Ohio Standard Drawing SD-1-63 sheet 1 of 4 except that field welds shall be changed to shop welds.

For curb plate details use Ohio Standard Drawing SD-1-63, Sheet 4 of 4 with the following exceptions: the curb plates shown in Section B-B shall not be bent and the 5" and 2" dimensions shall be changed to 7".

For details of roadway end dam see Ohio Standard Drawing SD-1-63, Sheet 2 of 4. The supporting L6x4x3/8 in the Roadway End Dam table shall be increased to L8x4x3/8

For end crossframe details see Ohio Standard Drawing SD-1-63, Sheet 2 of 4.

For field splice details see Sheet 245.

For intermediate crossframe details see Sheet 245.

For details of rockers and bolsters see Ohio Standard Drawing RB-1-55.

Dimensions to scuppers are measured along centerline of beam.

For details of Type 2 scupper see Ohio Drawing SD-1-63, Sheet 3 of 4.

These details shall be used with the following exceptions: there shall be no bulb angles, there shall be no cutout in side plate of scupper for bulb angle, all grating bars shall be the same size, and the 6 3/8" end plate dimension shall be 6 1/2".

For details of Type 3 scupper see Sheet 245.

□ Denotes Type 2 Scupper.

■ Denotes Type 3 Scupper.

All crossframes are intermediate crossframes unless shown otherwise.

For crossframes at bent points see Sheet 245.

—◆— Denotes bend point crossframe.

H.N.T.B. BRIDGE NO. 76

HOWARD, NEEDLES, TAMMEN & BERGENDOFF
CONSULTING ENGINEERS
KANSAS CITY CLEVELAND NEW YORK

FRAMING PLAN

EXPRESSWAY UNDER HOLLAND SYLVANIA ROAD
BR NO LUC 475-1040 STA. 5+12.61
SCALE: AS SHOWN STA. 6+91.28

TOLEDO EXPRESSWAY SYSTEM
TOLEDO LUCAS COUNTY OHIO

DRAWN DAT	TRACED	CHECKED DAT	REVIEWED MGR	REVISED
DATE 5-10-63	DATE	DATE 4-22-65	DATE 10-8-68	1802 SHEET 243

MICROFILMED
SEP 24 1987

FED. RD. DIVISION	STATE	PROJECT	
2	OHIO		

LUCAS COUNTY
CITY OF TOLEDO
TOLEDO EXPRESSWAY SYSTEM
EXPRESSWAY - PART 31
LUC-475-9.62

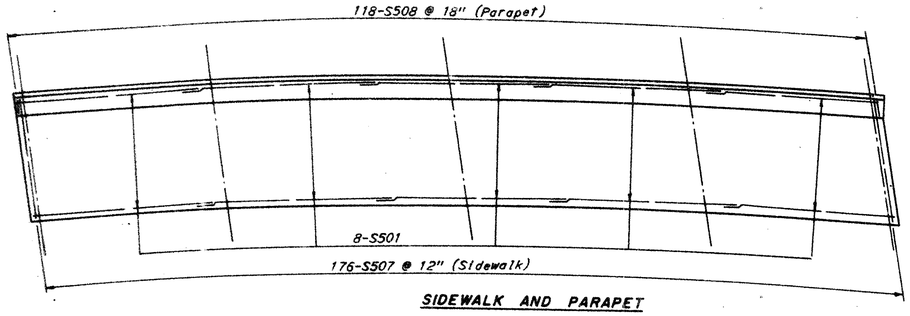

SIDEWALK AND PARAPET

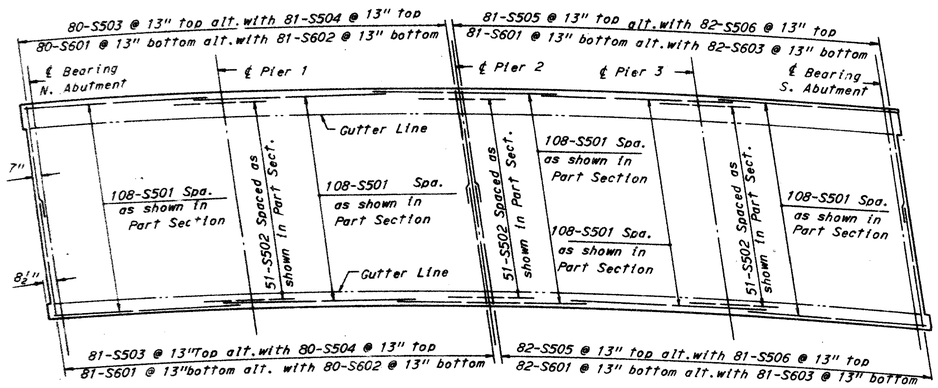

DECK PLAN

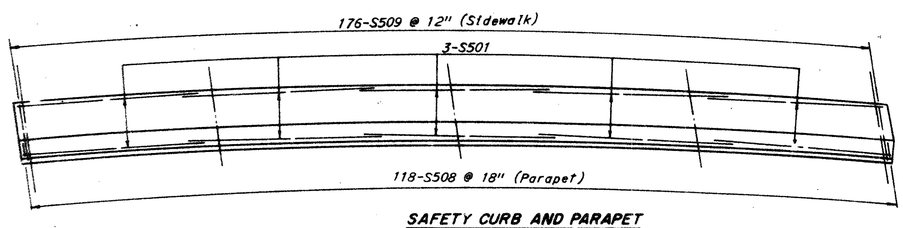

SAFETY CURB AND PARAPET

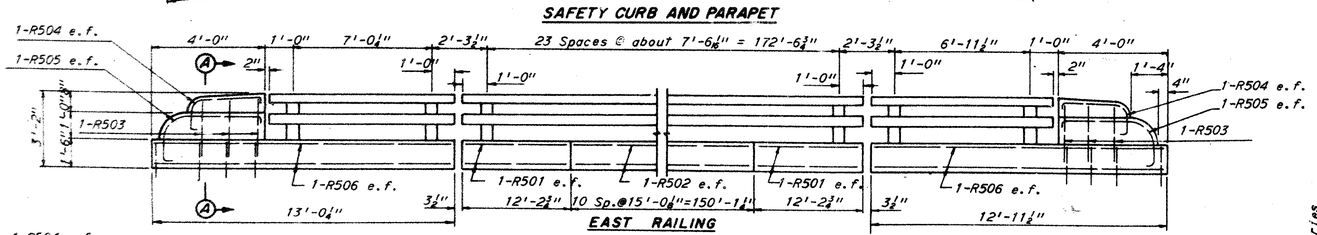

EAST RAILING

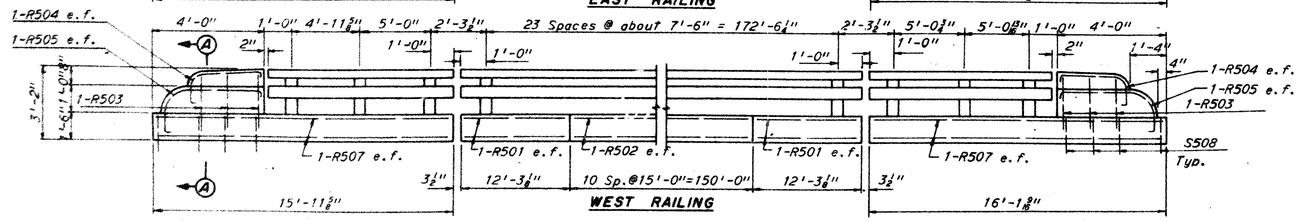

WEST RAILING

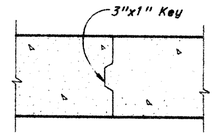

OPTIONAL CONSTRUCTION JOINT
1½"=1'-0"

¼" Preformed expansion joint filler meeting the requirements of Section 705.03 (Type 1). Include for payment in unit price bid for Item 517.

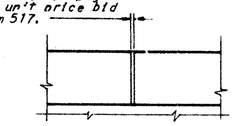

PARAPET JOINT DETAIL

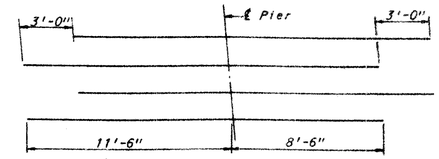

DIAGRAM SHOWING PLACEMENT OF S502 OVER PIERS

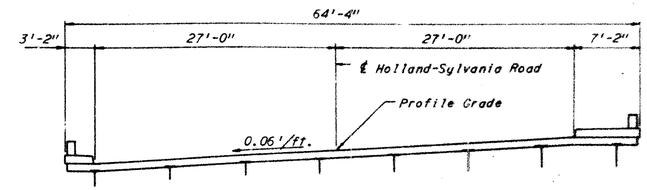

TYPICAL SECTION
¼"=1'-0"

*This is the nominal dimension. The quantity of deck concrete to be paid for shall be based on this dimension, even though deviation from it may be necessary because the top flange of the beam may not have the exact camber or conformation required to place it parallel to the finished grade. Deduction shall be made for volume of encased steel plates as per Sec. 511.19 of the Construction and Materials Specifications.

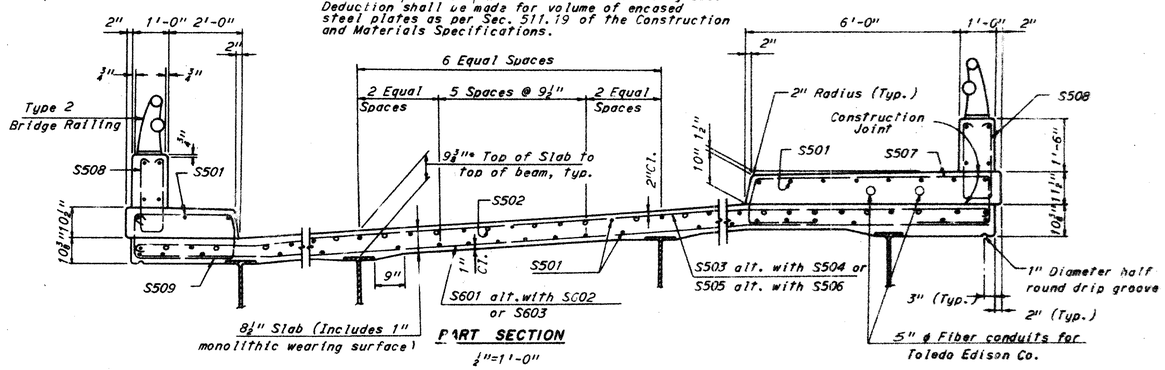

PART SECTION
¼"=1'-0"

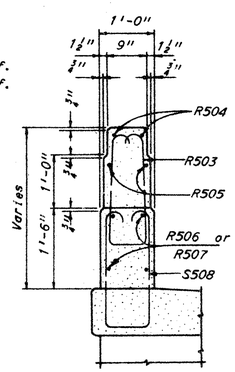

SECTION A-A
¾"=1'-0"

Notes:
A typical haunch width of 9" shall be used for computing quantity of concrete. However, the haunch width may vary between 6" and 12" provided that the slope shall be not more than 1:4 for a haunch less than 9" in width.
Reinforcing steel shall be adjusted as required to clear scuppers.
For reinforcement schedule see Sheet 248.
All horizontal dimensions shown on Typical Section are measured radially.
All railing shall be Type 2.
All railing dimensions are given along ℄ parapet.
Railing posts shall be normal to grade.

Payment for railing shall be made at the contract unit price bid for "Item 517 Bridge Railing Type 2". Pay length shall be the overall length of the parapet and shall include cost of shims, nuts, anchor bolts, set screws, etc. necessary to complete the installation of railing.
Concrete, longitudinal and end post reinforcing steel in parapets shall be included in "Item 517 Bridge Railing Type 2", for payment. All other reinforcing steel in parapets shall be included in "Item 509 for payment".
For additional details and notes regarding railing, see Ohio Standard Drawing BR-1-65, Sheet 2 of 2.

H.N.T.S. BRIDGE NO. 76 — Revised 10-17-67

HOWARD, NEEDLES, TAMMEN & BERGENDOFF
CONSULTING ENGINEERS
KANSAS CITY CLEVELAND NEW YORK

SUPERSTRUCTURE DETAILS

EXPRESSWAY UNDER HOLLAND SYLVANIA ROAD
BR. NO. LUC-475-1040 STA. 5+12.61
SCALE: AS SHOWN STA. 6+91.28
TOLEDO EXPRESSWAY SYSTEM
TOLEDO LUCAS COUNTY - OHIO

DRAWN	TRACED	CHECKED	REVIEWED	REV.	5-17-67
DATE 4-23-65	DATE	DATE 4-30-65	DATE 10-8-65	1802	SHEET 249

MICROFILMED
SEP 24 1987

FED. RD. DIVISION	STATE	PROJECT	
7	OHIO		

LUCAS COUNTY
CITY OF TOLEDO

TOLEDO EXPRESSWAY SYSTEM
EXPRESSWAY - PART 31
LUC-475-9.62

TOP OF PAVEMENT ELEVATIONS (See Note A)

Girder	North Abut.	.1	.2	.3	.4	.5	.6	.7	.8	.9	Bend Line 1	.1	.2	.3	.4	.5	.6	.7	.8	.9	Bend Line 2	.1	.2	.3	.4	.5	.6	.7	.8	.9	South Abut.	Pier 1	Pier 2	Pier 3
A	652.06	652.09	652.12	652.15	652.17	652.19	652.21	652.23	652.25	652.26	652.27	652.29	652.29	652.30	652.30	652.29	652.27	652.25	652.23	652.20	652.16	652.14	652.11	652.08	652.05	652.02	651.98	651.94	651.90	651.86	651.81	652.25	652.29	652.11
B	651.86	651.89	651.91	651.94	651.96	651.98	652.00	652.02	652.04	652.05	652.07	652.07	652.07	652.06	652.05	652.04	652.03	652.01	651.99	651.97	651.94	651.91	651.88	651.84	651.81	651.77	651.73	651.69	651.65	651.61	651.57	652.03	652.04	651.87
C	651.36	651.39	651.41	651.44	651.46	651.48	651.50	651.52	651.54	651.55	651.57	651.57	651.57	651.56	651.55	651.54	651.53	651.51	651.49	651.46	651.43	651.40	651.37	651.33	651.30	651.26	651.22	651.18	651.14	651.10	651.06	651.54	651.54	651.37
D	650.86	650.89	650.91	650.94	650.96	650.98	651.00	651.02	651.04	651.05	651.07	651.07	651.07	651.06	651.05	651.04	651.02	551.00	650.98	650.96	650.93	650.90	650.86	650.83	650.79	650.75	650.72	650.68	650.63	650.59	650.55	651.04	651.04	650.86
E	650.36	650.39	650.42	650.44	650.46	650.48	650.50	650.52	650.54	650.55	650.57	650.57	650.56	650.56	650.55	650.54	650.52	650.50	650.48	650.45	650.42	650.39	650.36	650.32	650.28	650.25	650.21	650.17	650.12	650.08	650.04	650.54	650.54	650.35
F	649.87	649.89	649.92	649.94	649.96	649.98	650.00	650.02	650.04	650.05	650.07	650.07	650.06	650.06	650.05	650.03	650.02	650.00	649.97	649.95	649.92	649.88	649.85	649.81	649.78	649.74	649.70	649.66	649.61	649.57	649.53	650.04	650.03	649.85
G	649.37	649.39	649.42	649.44	649.46	649.48	649.50	649.52	649.54	649.55	649.57	649.57	649.56	649.56	649.54	649.53	649.51	649.49	649.47	649.44	649.41	649.38	649.34	649.30	649.27	649.23	649.19	649.14	649.10	649.06	649.02	649.54	649.53	649.34
H	648.87	648.89	648.92	648.94	648.96	648.98	649.00	649.02	649.04	649.05	649.07	649.07	649.06	649.05	649.05	649.03	649.01	648.99	648.96	648.94	648.90	648.87	648.83	648.80	648.76	648.72	648.68	648.63	648.59	648.55	648.51	649.04	649.03	648.83

GUTTER ELEVATIONS (See Note B)

Gutter	North Abut.	.25	.50	.75	Pier 1	.25	.50	.75	Pier 2	.25	.50	.75	Pier 3	.25	.50	.75	South Abut.
East	652.06	652.12	652.17	652.21	652.25	652.28	652.29	652.30	652.29	652.26	652.22	652.17	652.10	652.04	651.97	651.89	651.80
West	648.87	648.94	648.98	649.02	649.05	649.08	649.09	649.08	649.06	649.02	648.98	648.91	648.83	648.76	648.78	648.58	648.48

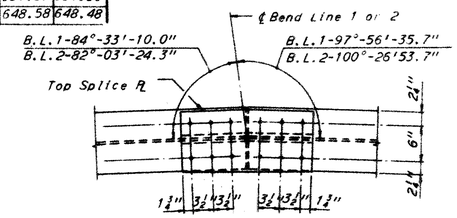

PLAN

Camber Note:
The concrete floor shall be uniform thickness between beams as shown on Sheet 244 and shall be set to the desired roadway surface by increasing the thickness of the haunches of the beams. The thickness of the floor over the beams at the supports is shown on Sheet
The screed setting allowance shall be made above the top of the payment surface, to compensate for the deflection due to the dead load of the concrete. Screeds may need further adjustment due to the irregularities of the fabricated steel.

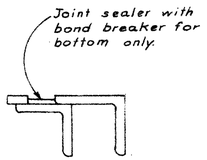

END DAM SECTION

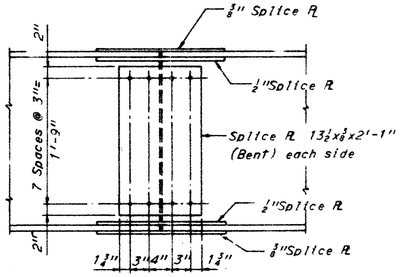

ELEVATION

BEAM SPLICE DETAILS
1"=1'-0"

Note A:
The elevations shown in this table represent the final pavement elevations.
Note B:
The gutter elevations shown in this table are adjusted to compensate for dead load deflection due to concrete.

Notes:
Bolts shall be 1" diameter, high strength.
For additional details see Sheet SD-2-64.

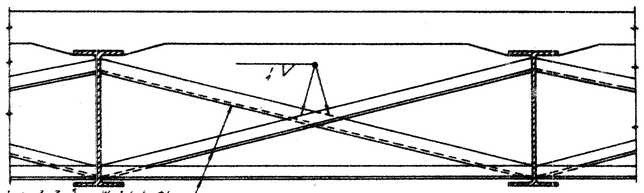

Intermediate crossframe angles 3x3x⅜. Weld both sides of vertical leg and top side of horizontal leg to beam with ¼" continuous fillet weld.

TYPICAL INTERMEDIATE CROSSFRAME

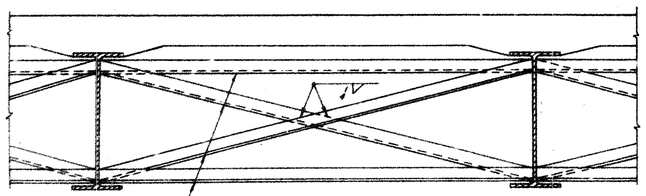

Bend point crossframe angles 4x4x⅜. Weld both sides of vertical leg and top side of horizontal leg to beam with ¼" continuous fillet weld.

CROSSFRAME AT BEND POINTS

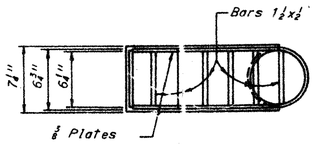

PLAN

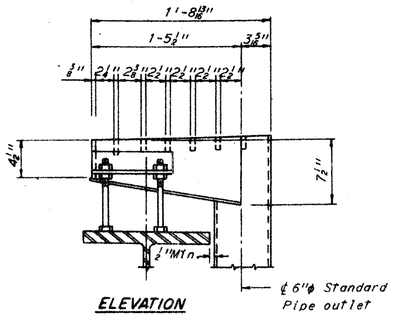

ELEVATION

TYPE 3 SCUPPER DETAILS
1½"=1'-0"

For additional scupper details see Ohio Standard Drawings SD-1-63 Sheet 3 of 4.

N.N.T.B. BRIDGE NO. 76

HOWARD, NEEDLES, TAMMEN & BERGENDOFF
CONSULTING ENGINEERS
KANSAS CITY CLEVELAND NEW YORK

SUPERSTRUCTURE DETAILS

EXPRESSWAY UNDER HOLLAND - SYLVANIA ROAD
BR NO LUC-475-1040 STA. 5+12.61
SCALE: AS SHOWN STA. 6+91.28
TOLEDO EXPRESSWAY SYSTEM
TOLEDO LUCAS COUNTY OHIO

DRAWN	TRACED	CHECKED	REVIEWED	REVISED
DATE 4-30-65	DATE	DATE 5-1-65	DATE 10-8-65	1903 SHEET 245

MICROFILMED
SEP 24 1987

FED. RD. DIVISION	STATE	PROJECT	
5	OHIO		

246
27

LUCAS COUNTY
CITY OF TOLEDO
TOLEDO EXPRESSWAY SYSTEM
EXPRESSWAY - PART 31
LUC-475-9.62

BRIDGE 76 — DEFLECTION AND CAMBER

		Span 1									Span 2									Span 3									Span 4									Piers		
		.1	.2	.3	.4	.5	.6	.7	.8	.9	.1	.2*	.3	.4	.5	.6	.7	.8	.9	.1	.2	.3	.4	.5	.6	.7	.8*	.9	.1	.2	.3	.4	.5	.6	.7	.8	.9	1	2	3
A	1	0	0	1/16	1/16	1/16	1/16	0	0	0	0	0	1/16	0	0	0	1/16	0	0	0	0	1/16	0	1/16	0	1/16	0	0	0	0	0	1/16	1/16	0	1/16	1/16	0	0	0	0
	2	1/16	1/16	1/16	1/16	1/16	1/16	1/16	1/16	0	0	1/16	1/16	1/8	1/8	1/8	1/8	1/16	1/16	0	1/16	1/16	1/8	1/8	1/8	1/8	1/16	1/16	0	1/16	1/16	1/16	1/16	1/16	1/16	1/16	1/16	0	0	0
	3	1/16	1/8	3/16	3/16	3/16	3/16	1/8	1/16	1/16	1/8	3/16	1/4	5/16	5/16	5/16	5/16	1/4	3/16	1/8	3/16	1/4	5/16	5/16	5/16	5/16	1/4	3/16	1/16	1/8	1/16	3/16	3/16	3/16	3/16	1/8	1/16	0	0	0
	4	1/8	3/16	5/16	5/16	5/16	5/16	5/16	1/4	1/16	1/4	1/4	3/8	7/16	7/16	7/16	7/16	3/8	1/4	1/4	3/8	7/16	7/16	7/16	7/16	7/16	3/8	1/4	1/16	3/16	5/16	5/16	5/16	5/16	5/16	1/4	1/8	0	0	0
	5	3/16	13/16	1 1/16	1 1/8	1 1/4	2	2 1/8	2 1/16	2 1/8	3 1/16	3 1/4	3 7/8	3 15/16	3 15/16	4 1/16	4 1/8	4 1/4	4 1/16	4 1/16	4 1/4	4 1/16	4 1/8	3 15/16	3 7/8	3 7/8	3 7/8	3 7/8	2 11/16	2 9/16	2 5/8	2 7/8	1 3/4	1 1/4	1 1/4	1/8	7/16	0	2 13/16	4 1/16	3
B	1	0	1/16	0	0	0	1/16	0	0	0	0	0	0	0	1/16	0	0	0	0	0	0	0	0	1/16	0	0	0	0	0	0	0	1/16	0	0	0	1/16	0	0	0	0	0
	2	1/16	1/16	1/8	1/8	1/8	1/8	1/16	1/16	0	0	1/16	1/8	1/8	1/8	1/8	1/8	1/8	1/16	0	1/16	1/8	1/8	1/8	1/8	1/8	1/8	1/16	0	1/16	1/16	1/8	1/8	1/8	1/8	1/16	1/16	0	0	0
	3	1/16	1/16	1/8	1/8	1/8	1/8	1/8	1/16	1/16	1/16	1/8	3/16	3/16	3/16	3/16	3/16	3/16	1/8	1/16	1/8	3/16	3/16	3/16	3/16	3/16	1/8	1/16	1/16	1/16	1/8	1/8	1/8	1/8	1/8	1/16	1/16	0	0	0
	4	1/8	3/16	1/4	1/4	1/4	1/4	3/16	1/8	1/16	1/16	3/16	5/16	5/16	5/16	5/16	5/16	5/16	3/16	1/16	3/16	5/16	5/16	5/16	5/16	5/16	3/16	1/16	1/16	3/16	5/16	5/16	5/16	5/16	5/16	3/16	1/16	0	0	0
	5	3/8	11/16	1 1/16	1 3/16	1 9/16	1 15/16	2 1/8	2 3/8	2 9/16	2 15/16	3 3/16	3 7/16	3 9/16	3 3/4	3 13/16	3 15/16	3 15/16	3 7/16	3 7/8	6 15/16	3 15/16	3 13/16	3 3/4	3 9/16	3 9/16	3 5/16	3 1/16	2 11/16	2 3/8	2 3/8	2 1/16	1 11/16	1 7/16	1	15/16	5/16	2 15/16	3 3/8	2 7/8
C	1	0	1/16	0	0	0	1/16	0	0	0	0	0	0	0	1/16	0	0	0	0	0	0	0	0	1/16	0	0	0	0	0	0	0	1/16	0	0	0	1/16	0	0	0	0	0
	2	1/16	1/16	1/8	1/8	1/8	1/16	1/16	1/16	0	0	1/16	1/8	1/8	1/8	1/8	1/8	1/16	0	0	1/16	1/8	1/8	1/8	1/8	1/8	1/16	0	0	1/16	1/16	1/8	1/8	1/8	1/8	1/16	1/16	0	0	0	0
	3	1/16	1/16	1/8	1/8	1/8	1/8	1/8	1/16	1/16	1/16	1/8	3/16	3/16	3/16	3/16	3/16	3/16	1/8	1/16	1/8	3/16	3/16	3/16	3/16	3/16	1/8	1/16	1/16	1/16	1/8	1/8	1/8	1/8	1/8	1/16	1/16	0	0	0
	4	1/8	3/16	1/4	1/4	1/4	1/4	3/16	1/8	1/16	1/16	3/16	5/16	5/16	5/16	5/16	5/16	5/16	3/16	1/16	3/16	5/16	5/16	5/16	5/16	5/16	3/16	1/16	1/16	3/16	5/16	5/16	5/16	5/16	5/16	3/16	1/16	0	0	0
	5	1/2	13/16	1 1/16	1 1/16	1 11/16	2 1/16	2 1/4	2 1/2	2 11/16	3 1/16	3 3/16	3 11/16	3 11/16	3 7/8	3 15/16	3 15/16	3 15/16	3 1/16	4 1/16	4	4 1/16	3 15/16	3 7/8	3 11/16	3 9/16	3 5/16	3 1/16	2 9/16	2 1/2	2 3/8	2	1 7/8	1 3/8	1	3/4	5/16	3	4 1/16	2 7/8
D	1	0	1/16	0	0	0	1/16	0	0	0	0	0	0	0	1/16	0	0	0	0	0	0	0	0	1/16	0	0	0	0	0	0	0	1/16	0	0	0	1/16	0	0	0	0	0
	2	1/16	1/16	1/8	1/8	1/8	1/16	1/16	1/16	0	0	1/16	1/8	1/8	1/8	1/8	1/8	1/16	0	0	1/16	1/8	1/8	1/8	1/8	1/8	1/16	0	0	1/16	1/16	1/8	1/8	1/8	1/8	1/16	1/16	0	0	0	0
	3	1/16	1/16	1/8	1/8	1/8	1/8	1/8	1/16	1/16	1/16	1/8	3/16	3/16	3/16	3/16	3/16	3/16	1/8	1/16	1/8	3/16	3/16	3/16	3/16	3/16	1/8	1/16	1/16	1/16	1/8	1/8	1/8	1/8	1/8	1/16	1/16	0	0	0
	4	1/8	3/16	1/4	1/4	1/4	1/4	3/16	1/8	1/16	1/16	3/16	5/16	5/16	5/16	5/16	5/16	5/16	3/16	1/16	3/16	5/16	5/16	5/16	5/16	5/16	3/16	1/16	1/16	3/16	5/16	5/16	5/16	5/16	5/16	3/16	1/16	0	0	0
	5	3/8	13/16	1 1/16	1 3/16	1 11/16	1 15/16	2 1/8	2 3/8	2 11/16	3 1/16	3 3/16	3 9/16	3 11/16	3 7/8	3 13/16	3 15/16	3 15/16	3 7/16	3 7/8	3 15/16	3 15/16	3 13/16	3 7/8	3 9/16	3 7/16	3 3/16	3 1/16	2 11/16	2 3/8	2 3/8	2 1/16	1 11/16	1 3/8	1	13/16	5/16	2 7/8	4	3
E	1	0	1/16	0	0	0	1/16	0	0	0	0	0	0	0	1/16	0	0	0	0	0	0	0	0	1/16	0	0	0	0	0	0	0	1/16	0	0	0	1/16	0	0	0	0	0
	2	1/16	1/16	1/8	1/8	1/8	1/16	1/16	1/16	0	0	1/16	1/8	1/8	1/8	1/8	1/8	1/16	0	0	1/16	1/8	1/8	1/8	1/8	1/8	1/16	0	0	1/16	1/16	1/8	1/8	1/8	1/8	1/16	1/16	0	0	0	0
	3	1/16	1/16	1/8	1/8	1/8	1/8	1/8	1/16	1/16	1/16	1/8	3/16	3/16	3/16	3/16	3/16	3/16	1/8	1/16	1/8	3/16	3/16	3/16	3/16	3/16	1/8	1/16	1/16	1/16	1/8	1/8	1/8	1/8	1/8	1/16	1/16	0	0	0
	4	1/8	3/16	1/4	1/4	1/4	1/4	3/16	1/8	1/16	1/16	3/16	5/16	5/16	5/16	5/16	5/16	5/16	3/16	1/16	3/16	5/16	5/16	5/16	5/16	5/16	3/16	1/16	1/16	3/16	5/16	5/16	5/16	5/16	5/16	3/16	1/16	0	0	0
	5	1/2	13/16	1 1/16	1 1/16	1 11/16	2 1/16	2 1/4	2 1/2	2 11/16	3 1/16	3 3/16	3 11/16	3 11/16	3 7/8	3 15/16	3 15/16	3 15/16	3 1/16	4 1/16	4	4 1/16	3 15/16	3 7/8	3 11/16	3 9/16	3 5/16	3 1/16	2 9/16	2 1/2	2 3/8	2	1 7/8	1 3/8	1	3/4	5/16	3	4 1/16	2 7/8
F	1	0	1/16	0	0	0	1/16	0	0	0	0	0	0	0	1/16	0	0	0	0	0	0	0	0	1/16	0	0	0	0	0	0	0	1/16	0	0	0	1/16	0	0	0	0	0
	2	1/16	1/16	1/8	1/8	1/8	1/16	1/16	1/16	0	0	1/16	1/8	1/8	1/8	1/8	1/8	1/16	0	0	1/16	1/8	1/8	1/8	1/8	1/8	1/16	0	0	1/16	1/16	1/8	1/8	1/8	1/8	1/16	1/16	0	0	0	0
	3	1/16	1/16	1/8	1/8	1/8	1/8	1/8	1/16	1/16	1/16	1/8	3/16	3/16	3/16	3/16	3/16	3/16	1/8	1/16	1/8	3/16	3/16	3/16	3/16	3/16	1/8	1/16	1/16	1/16	1/8	1/8	1/8	1/8	1/8	1/16	1/16	0	0	0
	4	1/8	3/16	1/4	1/4	1/4	1/4	3/16	1/8	1/16	1/16	3/16	5/16	5/16	5/16	5/16	5/16	5/16	3/16	1/16	3/16	5/16	5/16	5/16	5/16	5/16	3/16	1/16	1/16	3/16	5/16	5/16	5/16	5/16	5/16	3/16	1/16	0	0	0
	5	1/2	13/16	1 1/16	1 1/16	1 11/16	2 1/16	2 1/4	2 1/2	2 11/16	3 1/16	3 3/16	3 11/16	3 11/16	3 7/8	3 15/16	3 15/16	3 15/16	3 1/16	4 1/16	4	4 1/16	3 15/16	3 7/8	3 11/16	3 9/16	3 5/16	3 1/16	2 9/16	2 1/2	2 3/8	2	1 7/8	1 3/8	1	3/4	5/16	3	4 1/16	2 7/8
G	1	0	1/16	0	0	0	1/16	0	0	0	0	0	0	0	1/16	0	0	0	0	0	0	0	0	1/16	0	0	0	0	0	0	0	1/16	0	0	0	1/16	0	0	0	0	0
	2	1/16	1/16	1/8	1/8	1/8	1/16	1/16	1/16	0	0	1/16	1/8	1/8	1/8	1/8	1/8	1/16	0	0	1/16	1/8	1/8	1/8	1/8	1/8	1/16	0	0	1/16	1/16	1/8	1/8	1/8	1/8	1/16	1/16	0	0	0	0
	3	1/16	1/16	1/8	1/8	1/8	1/8	1/8	1/16	1/16	1/16	1/8	3/16	3/16	3/16	3/16	3/16	3/16	1/8	1/16	1/8	3/16	3/16	3/16	3/16	3/16	1/8	1/16	1/16	1/16	1/8	1/8	1/8	1/8	1/8	1/16	1/16	0	0	0
	4	1/8	3/16	1/4	1/4	1/4	1/4	3/16	1/8	1/16	1/16	3/16	5/16	5/16	5/16	5/16	5/16	5/16	3/16	1/16	3/16	5/16	5/16	5/16	5/16	5/16	3/16	1/16	1/16	3/16	5/16	5/16	5/16	5/16	5/16	3/16	1/16	0	0	0
	5	1/2	13/16	1 1/16	1 1/16	1 11/16	2 1/16	2 1/4	2 1/2	2 11/16	3 1/16	3 3/16	3 11/16	3 11/16	3 7/8	3 15/16	3 15/16	3 15/16	3 1/16	4 1/16	4	4 1/16	3 15/16	3 7/8	3 11/16	3 9/16	3 5/16	3 1/16	2 9/16	2 1/2	2 3/8	2	1 7/8	1 3/8	1	3/4	5/16	3	4 1/16	2 7/8
H	1	0	0	1/16	1/16	1/16	0	0	0	0	0	0	1/16	1/16	0	0	0	0	0	0	0	1/16	1/16	1/16	0	0	0	0	0	0	1/16	1/16	1/16	0	0	0	0	0	0	0	0
	2	1/16	1/16	1/16	1/16	1/16	1/16	1/16	0	0	0	1/16	1/16	1/16	1/16	1/16	1/16	1/16	0	0	1/16	1/16	1/16	1/16	1/16	1/16	1/16	0	0	1/16	1/16	1/16	1/16	1/16	1/16	1/16	1/16	0	0	0	0
	3	1/16	1/16	1/8	1/8	1/8	1/8	1/8	1/16	1/16	1/16	1/8		3/16	3/16	3/16	3/16	3/16	1/8	1/16	1/8	3/16	3/16	3/16	3/16	3/16	1/8	1/16	1/16	1/16	1/8	1/8	1/8	1/8	1/8	1/16	1/16	0	0	0
	4	1/8	1/8	1/4	1/4	1/4	1/4	1/8	1/8	1/16	1/16	1/8	4	5/16	5/16	5/16	5/16	5/16	1/8	1/16	1/8	4	5/16	5/16	5/16	5/16	1/8	1/16	1/16	1/8	1/8	1/8	1/8	1/8	1/8	1/16	1/16	0	0	0
	5	3/8	3/4	1 1/16	1 1/8	1 11/16	2	2 1/4	2 7/16	2 3/8	3 3/16	3 7/16	3 3/8	3 13/16	3 15/16	4 1/16	4 1/16	4 1/8	4 1/16	4 1/16	4 3/8	4 1/16	3 15/16	3 13/16	3 11/16	3 1/2	3 3/8	3 1/16	2 5/8	2 9/16	2 3/8	1 13/16	1 5/8	1 1/4	15/16	11/16	5/16	3	4 1/16	2 3/8

BRIDGE 78 — DEFLECTION AND CAMBER

		Span 1									Span 2									Span 3									Piers	
		.1	.2	.3	.4	.5	.6	.7	.8	.9	.1*	.2	.3	.4	.5	.6	.7	.8	.9*	.1	.2	.3	.4	.5	.6	.7	.8	.9	1	2
A	1	0	1/16	1/16	1/16	1/16	1/16	0	0	0	0	1/16	1/16	1/8	1/8	1/8	1/8	1/16	0	0	0	0	1/16	1/16	1/16	1/16	1/16	0	0	0
	2	1/8	1/4	5/16	3/8	5/16	1/4	5/16	1/16	0	1/16	1/4	7/16	9/16	5/8	9/16	7/16	1/4	1/16	0	1/16	1/16	1/4	5/16	3/8	3/8	1/4	1/8	0	0
	3	-1/8	-3/16	0	1/8	3/16	1/4	3/16	1/8	-1/16	3/16	1/16	3/8	1/16	1/8	1/8	15/16	1/4	1/16	-1/16	1/8	1/16	1/4	1/8	1/8	0	-1/16	-1/8	0	0
	4	0	1/8	11/16	15/16	9/16	9/16	1/8	1/16	-1/16	13/16	1	1 1/4	1 3/8	1 13/16	1 9/16	1 5/16	1 1/16	5/16	-1/16	3/16	3/8	9/16	9/16	9/16	7/16	1/8	0	0	0
	5	5/8	1 1/4	2 1/8	2 13/16	3 1/16	4	4 3/8	4 15/16	5 1/4	6 9/16	6 3/4	7	7 1/16	7 9/16	7 13/16	7 1/16	6 13/16	6 9/16	5 1/4	4 3/4	4 3/8	4	3 7/16	2 13/16	2 3/16	1 1/4	5/8	5 13/16	5 11/16
B	1	0	1/16	1/16	1/16	1/16	1/16	0	0	0	0	1/16	1/16	1/8	1/8	1/8	1/8	1/16	0	0	0	0	1/16	1/16	1/16	1/16	1/16	0	0	0
	2	1/8	1/4	5/16	3/8	5/16	1/4	3/16	1/16	0	1/16	1/4	7/16	9/16	5/8	9/16	7/16	1/4	1/16	0	1/16	1/16	1/4	5/16	3/8	3/8	1/4	1/8	0	0
	3	-1/8	-3/16	-1/4	-1/4	-1/4	-1/4	-1/4	-3/16	-1/8	3/16	5/16	9/16	1/2	7/16	1/2	9/16	5/8	11/16	-1/8	-3/16	-1/4	-1/4	-1/4	-1/4	-1/8	-3/16	-1/8	0	0
	4	0	1/8	11/16	15/16	3/16	1/16	-1/16	-1/8	-1/8	13/16	15/16	1 1/16	1 1/16	1 1/16	1 1/16	15/16	3/4	1/16	-1/8	-1/8	-1/16	1/16	1/8	1/8	3/16	3/16	1/8	0	0
	5	5/8	1 1/4	1 7/8	2 3/8	3	3 1/2	3 15/16	4 1/16	5 1/16	6 1/8	6 1/16	6 1/16	6 1/16	6 1/16	6 1/16	6 1/16	6 1/16	6 1/16	5 1/16	4 1/16	3 15/16	3 1/2	3	2 7/16	1 15/16	1 5/16	5/8	5 1/4	5 11/16
C	1	0	1/16	1/16	1/16	1/16	1/16	0	0	0	0	1/16	1/16	1/8	1/8	1/8	1/8	1/16	0	0	0	0	1/16	1/16	1/16	1/16	1/16	0	0	0
	2	1/8	1/4	5/16	3/8	5/16	1/4	3/16	1/16	0	1/16	1/4	7/16	9/16	5/8	9/16	7/16	1/4	1/16	0	1/16	1/16	1/4	5/16	3/8	3/8	1/4	1/8	0	0
	3	-1/8	-3/16	-1/4	-1/4	-1/4	-1/4	-1/4	-3/16	-1/8	3/16	5/16	9/16	1/2	7/16	1/2	9/16	5/8	11/16	-1/8	-3/16	-1/4	-1/4	-1/4	-1/4	-1/8	-3/16	-1/8	0	0
	4	0	1/8	11/16	15/16	3/16	1/16	-1/16	-1/8	-1/8	13/16	15/16	1 1/16	1 1/16	1 1/16	1 1/16	15/16	3/4	1/16	-1/8	-1/8	-1/16	1/16	1/8	1/8	3/16	3/16	1/8	0	0
	5	5/8	1 1/4	1 7/8	2 3/8	3	3 1/2	3 15/16	4 1/16	5 1/16	6 1/8	6 1/16	6 1/16	6 1/16	6 1/16	6 1/16	6 1/16	6 1/16	6 1/16	5 1/16	4 1/16	3 15/16	3 1/2	3	2 7/16	1 15/16	1 5/16	5/8	5 1/4	5 11/16
D	1	0	1/16	1/16	1/16	1/16	1/16	0	0	0	0	1/16	1/16	1/8	1/8	1/8	1/8	1/16	0	0	0	0	1/16	1/16	1/16	1/16	1/16	0	0	0
	2	1/8	1/4	5/16	3/8	5/16	1/4	3/16	1/16	0	1/16	1/4	7/16	9/16	5/8	9/16	7/16	1/4	1/16	0	1/16	1/16	1/4	5/16	3/8	3/8	1/4	1/8	0	0
	3	-1/8	-3/16	-1/4	-1/4	-1/4	-1/4	-1/4	-3/16	-1/8	3/16	5/16	9/16	1/2	7/16	1/2	9/16	5/8	11/16	-1/8	-3/16	-1/4	-1/4	-1/4	-1/4	-1/8	-3/16	-1/8	0	0
	4	0	1/8	11/16	15/16	3/16	1/16	-1/16	-1/8	-1/8	13/16	15/16	1 1/16	1 1/16	1 1/16	1 1/16	15/16	3/4	1/16	-1/8	-1/8	-1/16	1/16	1/8	1/8	3/16	3/16	1/8	0	0
	5	5/8	1 1/4	1 7/8	2 3/8	3	3 1/2	3 15/16	4 1/16	5 1/16	6 1/8	6 1/16	6 1/16	6 1/16	6 1/16	6 1/16	6 1/16	6 1/16	6 1/16	5 1/16	4 1/16	3 15/16	3 1/2	3	2 7/16	1 15/16	1 5/16	5/8	5 1/4	5 11/16

SCHEMATIC DETAIL

Notes:
Line 1. Deflection due to weight of steel.
Line 2. Deflection due to remaining dead load.
Line 3. Adjustment required for vertical curve.
Line 4. Required shop camber.
Line 5. Vertical offsets.
Values given in table are in inches rounded to nearest 1/16 inch.
Negative deflections indicate upward deflection; negative camber indicates downward camber.
* Denotes splice point.

H.N.T.B. BRIDGE NO. 76 and 78

HOWARD, NEEDLES, TAMMEN & BERGENDOFF
CONSULTING ENGINEERS
KANSAS CITY CLEVELAND NEW YORK

DEFLECTION AND CAMBER

LUC-475-0980 LUC-475-1040

SCALE: NONE

TOLEDO EXPRESSWAY SYSTEM
TOLEDO LUCAS COUNTY OHIO

DRAWN DGS	TRACED	CHECKED	REVIEWED	REVISED
DATE 6-25-69	DATE	DATE 6-28-69	DATE 10-8-69	1102 SHEET 2

MICROFILMED
SEP 24 1987

MARK	NUMBER	LENGTH	TYPE	DIMENSIONS A	DIMENSIONS B	DIMENSIONS C	SERIES INCRE.	WEIGHT POUNDS
SOUTH ABUTMENT								
AS401	48	2'-11"	104	2'-0"	1'-0½"			94
AS402	17	6'-6"	Str.					74
AS403	4	12'-7"	Str.					34
AS404	1Ser of 8	11'-5"to 12'-7"	Str.				2"	64
AS405	2	11'-4"	Str.					15
AS406	12	7'-2"	116	8"	1'-11"	10"		57
AS407	12	7'-1"	108	6'-6½"	8"	7¾"		57
AS501	50	8'-4"	105	5'-5"	1'-7"			432
AS502	50	7'-6"	104	6'-7"	1'-0½"			390
AS503	50	8'-4"	105	3'-5"	2'-7"			434
AS504	2	32'-5"	Str.					68
AS505	5	31'-9".	Str.					166
AS506	1Ser of 5	31'-9"to 32'-5"	Str.				2"	167
AS507	3	32'-1"	Str.					100
AS508	2	27'-4"	Str.					57
AS509	2	6'-9"	Str.					14
AS510	2	31'-8"	Str.					66
AS511	6	32'-4"	Str.					202
AS512	1Ser of 5	31'-8"to 32'-4"	Str.				2"	168
AS513	4	32'-1"	Str.					134
AS514	11	3'-1"	104	1'-7"	1'-7½"			35
AS515	8	11'-11"	109	3'-2"	2'-7"			100
AS516	4	11'-4"	Str.					47
AS517	4	4'-8"	Str.					19
AS518	1Ser of 6	7'-11"to 11'-5"	105	1'-2"	3'-6"to 5'-3"		8⅜"	60
AS519	7	7'-11"	105	1'-2"	3'-6"			58
AS520	2	7'-10"	Str.					16
AS521	6	6'-6".	Str.					40
AS522	8	5'-0"	104	3'-6"	1'-7½"			42
AS523	10	15'-9"	Str.					164
AS524	2	10'-0"	Str.					21
AS525	8	3'-6"	Str.					28
AS526	3	9'-8"	Str.					30
AS527	3	7'-8"	Str.					24
AS528	18	5'-3"	Str.					99
AS529	22	5'-5"	110					124
AS530	18	5'-1"	105	1'-4"	2'-0"			95
AS531	1Ser of 8	7'-11"to 15'-11"	105	1'-2"	3'-6"to 7'-6"		1'-1⅜"	100
AS532	8	10'-11"	109	2'-8"	2'-7"			91
AS533	6	12'-6"	Str.					78
AS534	3	5'-5"	118	3'-4"	8"	1'-6½"		17
AS535	2	7'-0"	Str.					14
AS601	50	14'-4"	106	5'-5"	6'-7"	2'-8"		1077
AS602	58	15'-6"	117	6'-4"	5'-0"			1350
AS603	7	17'-4"	125	1'-5"	7'-0"			182
AS604	9	17'-8"	105	1'-2"	8'-5"			239
AS605	4	10'-1"	104	9'-3"	1'-0"			61
AS606	8	10'-2"	105	1'-2"	4'-8"			122
AS607	2	4'-0"	Str.					12
AS608	2	10'-2"	Str.					31
AS609	2	11'-4"	Str.					34
AS610	6	8'-0"	104	7'-2"	1'-0"			72
AS801	14	34'-7"	Str.					1293
AS802	6	12'-6"	Str.					200
AS803	8	8'-6"	Str.					182
							Total	8,950
NORTH ABUTMENT								
AN401	48	2'-11"	104	2'-0"	1'-0½"			94
AN402	18	6'-6"	Str.					78
AN403	12	12'-7"	Str.					101
AN404	2	13'-1"	Str.					17
AN405	14	7'-2"	116	8"	1'-11"	10"		67
AN406	14	7'-1"	108	6'-6½"	8"	7¾"		66

MARK	NUMBER	LENGTH	TYPE	DIMENSIONS A	DIMENSIONS B	DIMENSIONS C	SERIES INCRE.	WEIGHT POUNDS
AN501	50	8'-4"	105	5'-5"	1'-7"			434
AN502	50	7'-6"	104	6'-7"	1'-0½"			391
AN503	50	7'-8"	105	3'-5"	2'-3"			400
AN504	8	11'-11"	109	3'-2"	2'-7"			99
AN505	33	31'-5"	Str.					1081
AN506	1	26'-8"	Str.					28
AN507	1	6'-9"	Str.					7
AN508	3	4'-11"	104	1'-7"	3'-5½"			15
AN509	8	3'-1"	104	1'-7"	1'-7½"			26
AN510	6	6'-6"	Str.					40
AN511	4	4'-8"	Str.					19
AN512	9	5'-9"	Str.					54
AN513	1Ser of 7	7'-11"to 11'-11"	105	1'-2"	3'-6"to 5'-6"		8"	72
AN514	5	7'-11"	105	1'-2"	3'-6"			41
AN515	2	9'-1"	Str.					20
AN516	4	13'-1"	Str.					55
AN517	8	10'-11"	109	2'-8"	2'-7"			91
AN518	10	15'-8"	Str.					160
AN519	1	12'-0"	Str.					13
AN520	1	10'-0"	Str.					10
AN521	2	10'-8"	Str.					22
AN522	2	8'-8"	Str.					18
AN523	8	5'-0"	104	3'-6"	1'-7½"			42
AN524	22	5'-5"	110					124
AN525	18	5'-1"	105	1'-4"	2'-0"			95
AN526	1Ser of 8	7'-11"to 15'-5"	105	1'-2"	3'-6"to 7'-3"		1'-0⅜"	97
AN527	8	3'-6"	Str.					29
AN528	6	12'-7"	Str.					16
AN601	50	14'-4"	106	5'-5"	6'-7"	2'-8"		1076
AN602	58	15'-6"	117	6'-4"	5'-0"			1350
AN603	7	17'-4"	125	1'-5"	7'-0"			182
AN604	9	17'-0"	105	1'-2"	8'-1"			230
AN605	2	10'-2"	104	9'-4"	1'-0"			31
AN606	8	10'-8"	105	1'-2"	4'-11"			128
AN607	2	4'-0"	Str.					12
AN608	2	10'-3"	Str.					31
AN609	2	13'-1"	Str.					39
AN610	2	9'-8"	104	8'-10"	1'-0"			29
AN611	3	8'-1"	104	7'-3"	1'-0"			36
AN612	3	7'-6"	104	6'-8"	1'-0"			34
AN801	14	34'-0"	Str.					1271
AN802	6	12'-6"	Str.					200
AN803	8	8'-6"	Str.					182
							Total	8,830
PIER 1								
SPA401	1	340'-11"	112	41.3	14'-6"			269
SPA402	1	363'-3"	112	44	15'-6"			287
SPA403	1	387'-2"	112	46.9	16'-7"			306
SPA404	1	411'-1"	112	49.8	17'-8"			325
PA501	44	4'-3"	105	2'-6"	1'-0"			195
PA502	2	4'-2"	105	2'-5"	1'-0"			9
PA503	2	3'-8"	105	1'-11"	1'-0"			8
PA504	53	12'-1"	109	2'-8"	3'-2"			650
PA601	8	30'-5"	Str.					366
PA602	8	7'-9"	113	1'-11"	3'-11"	2'-6"		93
PA801	60	10'-8"	100	8'-6"				1709

MARK	NUMBER	LENGTH	TYPE	DIMENSIONS A	DIMENSIONS B	DIMENSIONS C	SERIES INCRE.	WEIGHT POUNDS
PA901	24	11'-0"	100	8'-6"				898
PA1001	36	7'-4"	101	5'-11"				1135
PA1002	10	17'-8"	Str.					761
PA1003	8	18'-3"	Str.					643
PA1004	8	19'-9"	Str.					680
PA1005	10	20'-10"	Str.					896
PA1101	2	40'-0"	Str.					425
PA1102	8	31'-3"	Str.					1328
PA1103	4	22'-6"	Str.					477
PA1104	4	42'-0"	Str.					894
PA1105	6	15'-6"	Str.					494
PA1106	8	11'-7"	111					492
							Total	13,340
PIER 2								
SPA401	1	339'-3"	112	41.1	14'-5"			268
SPB402	1	363'-3"	112	44.0	15'-6"			287
SPB403	1	387'-2"	112	46.9	16'-7"			306
SPB404	1	411'-1"	112	49.8	17'-8"			324
PB501	44	4'-3"	105	2'-6"	1'-0"			195
PB502	2	4'-2"	105	2'-5"	1'-0"			9
PB503	2	3'-8"	105	1'-11"	1'-0"			8
PB504	53	12'-1"	109	2'-8"	3'-2"			650
PB601	8	30'-5"	Str.					366
PB602	8	7'-9"	113	1'-11"	3'-11"	2'-6"		93
PB801	40	10'-8"	100	8'-6"				1140
PB901	48	11'-0"	100	8'-6"				1795
PB1001	48	7'-4"	101	5'-11"				1510
PB1002	16	17'-7"	Str.					1211
PB1003	8	18'-8"	Str.					643
PB1004	8	19'-9"	Str.					680
PB1005	16	20'-10"	Str.					1435
PB1101	2	40'-0"	Str.					425
PB1102	8	31'-3"	Str.					1328
PB1103	4	22'-6"	Str.					477
PB1104	4	42'-0"	Str.					894
PB1105	6	15'-6"	Str.					494
PB1106	8	11'-7"	111					492
							Total	15,030
PIER 3								
SPC401	1	352'-6"	112	42.7	15'-0"			278
SPC402	1	376'-5"	112	45.6	16'-1"			297
SPC403	1	402'-0"	112	48.7	17'-3"			319
SPC404	1	426'-0"	112	51.6	18'-4"			337
PC501	44	4'-3"	105	2'-6"	1'-0"			195
PC502	2	4'-2"	105	2'-5"	1'-0"			9
PC503	2	3'-8"	105	1'-11"	1'-0"			8
PC504	53	12'-1"	109	2'-8"	3'-2"			650
PC601	8	30'-5"	Str.					366
PC602	8	7'-9"	113	1'-11"	3'-11"	2'-6"		93

FED. RD. DIVISION	STATE	PROJECT	
2	OHIO		

247
271

LUCAS COUNTY
CITY OF TOLEDO
TOLEDO EXPRESSWAY SYSTEM
EXPRESSWAY - PART 31
LUC-475-9.62

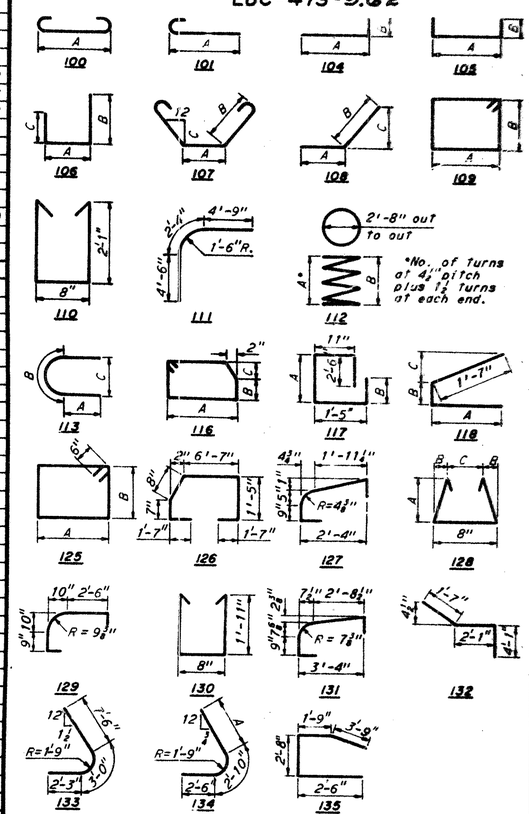

BENDING DIAGRAMS

Notes:
Spiral reinforcement shall not have deformations but shall in other respects conform to Item 509. Four steel channel, tee, or angle spacers, weighing approximately 0.68 pounds per linear foot shall be provided for each spiral unit. They shall be equally spaced along the periphery of the coil. An allowance of 0.68 pounds per linear foot for spacers is included with the weight of the spiral bars and paid for as reinforcing steel.
All bar dimensions are given out to out.
All bars of a series shall vary in length by a constant increment.
**To be included for payment in unit price bid for Item 517.
For Replacement Reinforcement Schedule see sheet 226.

H.N.T.B. BRIDGE NO. 76

HOWARD, NEEDLES, TAMMEN & BERGENDOFF
CONSULTING ENGINEERS
KANSAS CITY CLEVELAND NEW YORK

REINFORCEMENT SCHEDULE

EXPRESSWAY UNDER HOLLAND - SYLVANIA ROAD
BR. NO. LUC-475-1040 STA. 5+12.61
SCALE: NONE STA. 6+91.28
TOLEDO EXPRESSWAY SYSTEM
TOLEDO LUCAS COUNTY OHIO

DRAWN	TRACED	CHECKED	REVIEWED	REVISED
DATE	DATE	DATE	DATE	1802 SHEET 247

MICROFILMED
SEP 24 1987

MARK	NUMBER	LENGTH	TYPE	DIMENSIONS A	B	C	SERIES INCRE.	WEIGHT POUNDS
PIER 3 (CONTINUED)								
PC901	60	10'-8"	100	8'-6"				1709
PC901	24	11'-0"	100	8'-6"				898
PC1001	36	7'-4"	101	5'-11"				1135
PC1002	10	18'-2"	Str.					782
PC1003	8	19'-3"	Str.					662
PC1004	8	20'-5"	Str.					703
PC1005	10	21'-6"	Str.					925
PC1101	2	40'-0"	Str.					425
PC1102	8	31'-3"	Str.					1332
PC1103	4	22'-6"	Str.					477
PC1104	4	42'-0"	Str.					894
PC1105	6	15'-6"	Str.					494
PC1106	8	11'-7"	111					492
							Total	13,480
DECK								
S501	595	36'-3"	Str.					22,495
S502	153	20'-0"	Str.					3,192
S503	161	41'-11"	101	41'-4"				7,039
S504	161	25'-1"	101	24'-6"				4,212
S505	163	42'-3"	101	41'-8"				7,183
S506	163	25'-5"	101	24'-10"				4,322
S507	176	11'-11"	126					2,188
S508	236	5'-5"	110					1,334
S509	176	8'-2"	116	2'-8"	7"	8"		1,500
S601	324	29'-0"	Str.					14,113
S602	161	37'-3"	Str.					9,008
S603	163	38'-0"	Str.					9,303
							Total	85,890
PARAPET								
R501	16	11'-9"	Str.					**
R502	80	14'-9"	Str.					**
R503	12	6'-1"	128	2'-5"	$1\frac{1}{2}$"	5"		**
R504	8	4'-0"	127					**
R505	8	5'-5"	129					**
R506	8	12'-6"	Str.					**
R507	8	15'-6"	Str.					**

MARK	NUMBER	LENGTH	TYPE	DIMENSIONS A	B	C	SERIES INCRE.	WEIGHT POUNDS

MARK	NUMBER	LENGTH	TYPE	DIMENSIONS A	B	C	SERIES INCRE.	WEIGHT POUNDS

FED. RD. DIVISION	STATE	PROJECT	
2	OHIO		

LUCAS COUNTY
CITY OF TOLEDO
TOLEDO EXPRESSWAY SYSTEM
EXPRESSWAY - PART 31
LUC-475-9.62

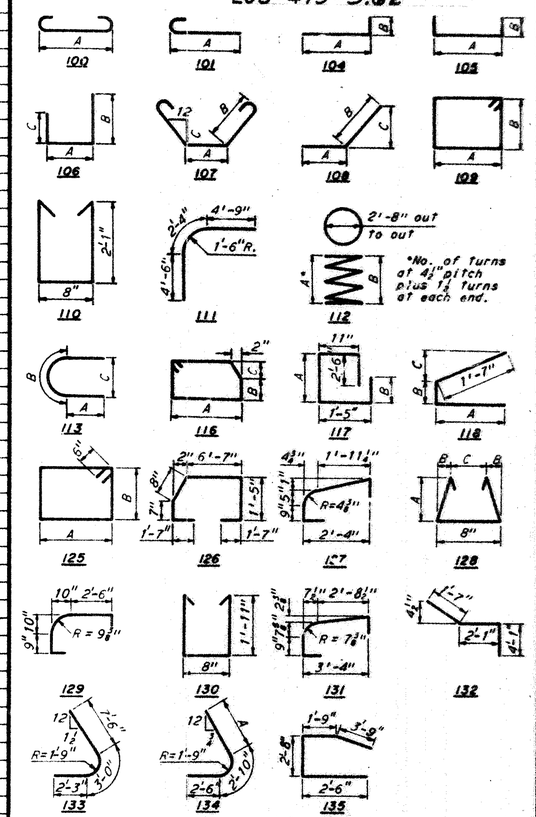

BENDING DIAGRAMS

Notes:
Spiral reinforcement shall not have deformations but shall in other respects conform to Item 509. Four steel channel, tee, or angle spacers, weighing approximately 0.68 pounds per linear foot shall be provided for each spiral unit. They shall be equally spaced along the periphery of the coil. An allowance of 0.68 pounds per linear foot for spacers is included with the weight of the spiral bars and paid for as reinforcing steel.
All bar dimensions are given out to out.
All bars of a series shall vary in length by a constant increment.
**To be included for payment in unit price bid for Item 517.
For Replacement Reinforcement Schedule see sheet 226.

H.N.T.B. BRIDGE NO. 76

HOWARD, NEEDLES, TAMMEN & BERGENDOFF
CONSULTING ENGINEERS
KANSAS CITY CLEVELAND NEW YORK

REINFORCEMENT SCHEDULE

EXPRESSWAY UNDER HOLLAND - SYLVANIA ROAD
BR. NO. LUC-475-1040 STA. 5+12.61
SCALE: NONE STA. 6+91.28
TOLEDO EXPRESSWAY SYSTEM
TOLEDO LUCAS COUNTY OHIO

DRAWN JLT	TRACED	CHECKED JLT	REVIEWED JLT	REVISED
DATE 10-6-65	DATE	DATE 10-7-65	DATE 10-8-65	1803 SHEET 248