STATE OF OHIO
DEPARTMENT OF TRANSPORTATION

MAD-29-10.61

JEFFERSON TOWNSHIP
MADISON COUNTY

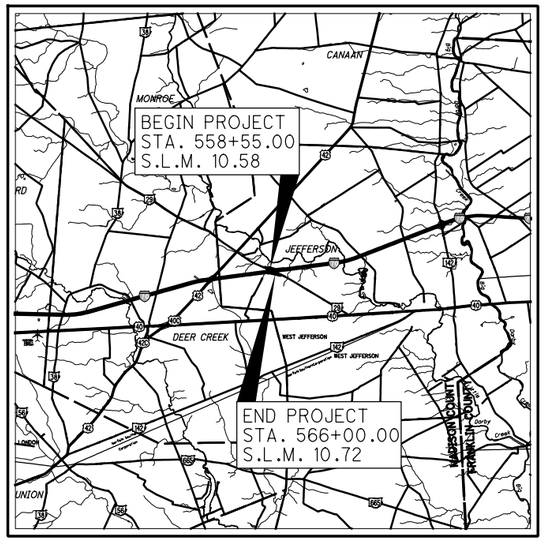

LOCATION MAP

LATITUDE: 39°57'35" LONGITUDE: 83°20'40"

SCALE IN MILES

0 2 4 6 8

N

PORTION TO BE IMPROVED
INTERSTATE HIGHWAY
FEDERAL ROUTES
STATE ROUTES
COUNTY & TOWNSHIP ROADS
OTHER ROADS

DESIGN DESIGNATION

CURRENT ADT (2017)	3,400
DESIGN YEAR ADT (2029)	4,200
DESIGN HOURLY VOLUME (2029)	500
DIRECTIONAL DISTRIBUTION	59%
TRUCKS (24 HOUR B&C)	13%
DESIGN SPEED	60 MPH
LEGAL SPEED	55 MPH
DESIGN FUNCTIONAL CLASSIFICATION	05 MAJOR COLLECTOR (RURAL)
NHS PROJECT	NO

DESIGN EXCEPTIONS

NONE REQUIRED

UNDERGROUND UTILITIES

Contact Two Working Days Before You Dig

OHIO811.org
Before You Dig

OHIO811, 8-1-1, or 1-800-362-2764
(Non-members must be called directly)

PLAN PREPARED BY:

PARSONS
100 E. Campus View Blvd., Suite 250 • Columbus, Ohio 43235

INDEX OF SHEETS:

TITLE	1
TYPICAL SECTIONS	2 - 3
PAVEMENT DETAILS	4
GENERAL NOTES	5 - 6
MAINTENANCE OF TRAFFIC	
NOTES	7 - 8
DETOUR PLANS	9 - 10
GENERAL SUMMARY	11 - 12
ROADWAY SUBSUMMARY	13
PAVEMENT SUBSUMMARY	14
CALCULATIONS	15 - 16
PROJECT SITE PLAN	17 - 18
PLAN & PROFILE	19 - 22
CROSS SECTIONS - ROADWAY	23 - 29
SUPERELEVATION TABLE	30
CROSS SECTIONS - CHANNEL	31 - 43
TRAFFIC CONTROL	44 - 46
STRUCTURES OVER 20 FOOT SPAN MAD-29-1061	47 - 76

PROJECT DESCRIPTION

REPLACEMENT OF BRIDGE DECK ON MAD-29-1061 OVER I-70, RECONSTRUCTION OF APPROACH ROADWAY, FULL DEPTH PAVEMENT REPLACEMENT ON RAMP B, AND DITCH CLEANOUT ALONG SNYDER LANE.

EARTH DISTURBED AREA

PROJECT EARTH DISTURBED AREA:	1.72*
ESTIMATED CONTRACTOR EARTH DISTURBED AREA:	0.25*
NOTICE OF INTENT (NOI) EARTH DISTURBED AREA:	N/A*

* MAINTENANCE PROJECT

LIMITED ACCESS

THIS IMPROVEMENT IS ESPECIALLY DESIGNED FOR THROUGH TRAFFIC AND HAS BEEN DECLARED A LIMITED ACCESS HIGHWAY OR FREEWAY BY ACTION OF THE DIRECTOR IN ACCORDANCE WITH THE PROVISIONS OF SECTION 5511.02 OF THE OHIO REVISED CODE.

2019 SPECIFICATIONS

THE STANDARD SPECIFICATIONS OF THE STATE OF OHIO, DEPARTMENT OF TRANSPORTATION, INCLUDING CHANGES AND SUPPLEMENTAL SPECIFICATIONS LISTED IN THE PROPOSAL SHALL GOVERN THIS IMPROVEMENT.

ENGINEERS SEAL:
FOR STRUCTURES OVER 20 FOOT SPAN

STATE OF OHIO
ROBERT W. BALLARD III
E-57233
REGISTERED PROFESSIONAL ENGINEER

SIGNED: Robert W. Ballard III
DATE: 5/1/2020

ENGINEERS SEAL:
FOR ENTIRE PLAN EXCEPT STRUCTURES OVER 20 FOOT SPAN

STATE OF OHIO
GIOVANNI FURIO
E-82889
REGISTERED PROFESSIONAL ENGINEER

SIGNED: Giovanni Furio
DATE: 5/1/2020

STANDARD CONSTRUCTION DRAWINGS								SUPPLEMENTAL SPECIFICATIONS		SPECIAL PROVISIONS
BP-1.1	7/28/00	MGS-1.1	1/19/18	AS-1-15	7/17/15	MT-95.30	7/19/19	800	7/17/20	
BP-2.1	7/17/15	MGS-2.1	1/19/18	AS-2-15	1/18/19	MT-98.29	1/17/20	831	10/21/16	
BP-2.2	7/18/08	MGS-3.1	1/19/18	GSD-1-19	1/18/19	MT-101.60	1/17/20	832	10/19/18	
BP-2.3	7/18/14	MGS-4.3	1/18/13	SBR-1-13	7/20/18	MT-101.90	7/21/17	846	4/17/15	
BP-2.4	7/19/13	MGS-5.2	7/15/16	VPF-1-90	7/20/18	MT-105.10	1/17/20			
BP-2.5	7/19/13	MGS-5.3	7/15/16	SICD-1-96	7/18/14	TC-52.10	10/18/13			
BP-3.1	1/17/20	MGS-6.1	1/19/18	SICD-2-14	7/18/14	TC-61.30	7/19/19			
BP-6.1	7/19/13					TC-65.10	1/17/14			
						TC-65.11	7/21/17			
DM-1.1	7/21/17					TC-72.20	7/20/18			
DM-1.2	1/18/13									
DM-4.1	7/20/18									
DM-4.2	7/20/12									
DM-4.3	1/15/16									
DM-4.4	1/15/16									

PLAN CERTIFIED AS TO COMPLETENESS AND QUALITY

Robert W. Ballard III — SIGNATURE — 5/1/2020 DATE

PARSONS — FIRM — SENIOR ENGINEERING MANAGER — TITLE

I HEREBY APPROVE THESE PLANS AND DECLARE THAT THE MAKING OF THIS IMPROVEMENT WILL REQUIRE THE CLOSING TO TRAFFIC OF THE HIGHWAY EXCEPT AS NOTED ON SHEETS 9-10, AND THAT DETOURS WILL BE PROVIDED AS INDICATED ON THE PLANS.

APPROVED Matthew R. Bledsoe
DATE 6/18/2020 DISTRICT DEPUTY DIRECTOR

APPROVED
DATE DIRECTOR, DEPARTMENT OF TRANSPORTATION

FEDERAL PROJECT NO. E170 (753)
PID NO. 104867
CONSTRUCTION PROJECT NO.
RAILROAD INVOLVEMENT NONE
MAD-29-10.61

REV. 9/21/2020 RLW

pw:\\VANVA01PWINT01.parsons.com:Ohio State\Documents\MAD-70-08.62\05 - Design\CAD\104867\roadway\sheets\104867_GT001.dgn, Sheet - 5/1/2020 10:59:20 AM - p003821B

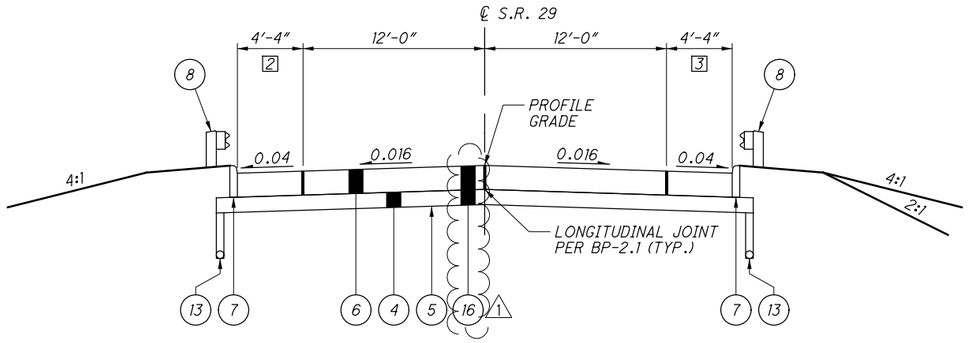

PROPOSED CONCRETE SECTION

STA. 558+55.00 TO STA. 559+47.38

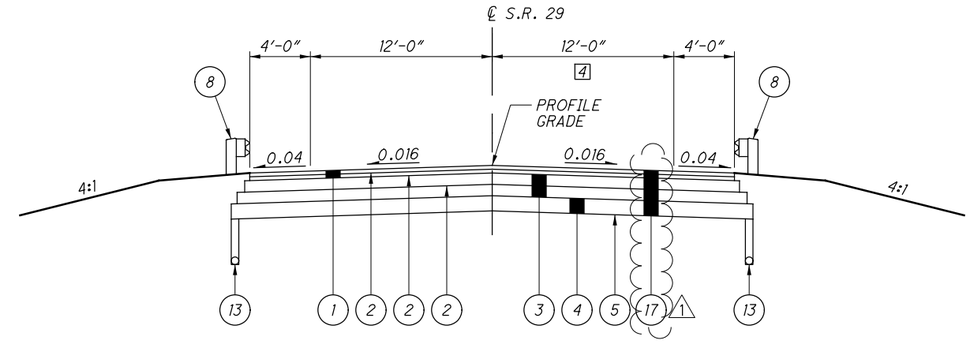

PROPOSED ASPHALT SECTION

STA. 565+48.62 TO STA. 566+00.00

STA 565+48.62 TO STA 565+73.62 PER STD DWG AS-2-15.

ITEM 301, ASPHALT CONCRETE BASE T=14½" TRANSITION TO T=6½" AS FROM STA 564+53.87 TO STA 564+73.62

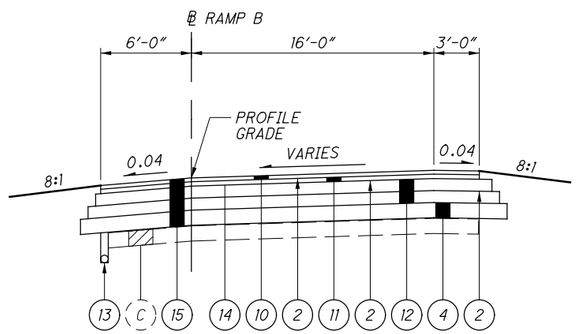

RAMP B SECTION

STA. 46+50.00 TO STA. 47+40.00

STA. 542+86.00 TO STA. 547+37.53

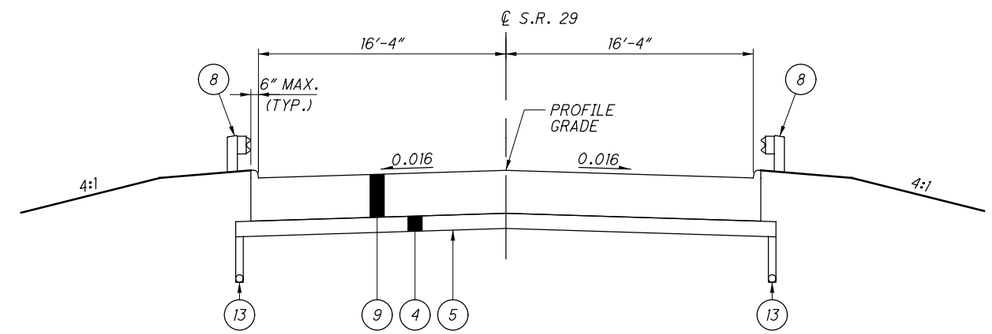

APPROACH SLAB

STA. 559+47.38 TO STA. 559+77.38

STA. 565+18.62 TO STA. 565+48.62

LEGEND

1. ITEM 441 - ASPHALT CONCRETE SURFACE COURSE, TYPE 1, (448), PG64-22 (T=3") *
2. ITEM 407 - NON-TRACKING TACK COAT (RATE PER CMS TABLE 407.06-1)
3. ITEM 301 - ASPHALT CONCRETE BASE, PG64-22 (T=9") *
4. ITEM 304 - AGGREGATE BASE (T=6")
5. ITEM 204 - SUBGRADE COMPACTION
6. ITEM 452 - 9.5" NON-REINFORCED CONCRETE PAVEMENT, CLASS QC1
7. ITEM 609 - CURB, TYPE 6
8. ITEM 606 - GUARDRAIL, TYPE MGS
9. ITEM 526 - REINFORCED CONCRETE APPROACH SLABS (T=17")
10. ITEM 442 - ASPHALT CONCRETE SURFACE COURSE, 12.5MM, TYPE A (446), AS PER PLAN (PG76-22M) (T=1.5")
11. ITEM 442 - ASPHALT CONCRETE INTERMEDIATE COURSE, 19 MM, TYPE A (446) (T=1.75")
12. ITEM 301 - ASPHALT CONCRETE BASE, PG64-22 (T=9.5") **
13. ITEM 605 - 6" BASE PIPE UNDERDRAIN
14. ITEM 442 - ANTI-SEGREGATION EQUIPMENT
15. ITEM 202 - PAVEMENT REMOVED
16. ITEM 202 - PAVEMENT REMOVED, AS PER PLAN
17. ITEM 202 - PAVEMENT REMOVED, ASPHALT, AS PER PLAN

1

* PLACE IN TWO EQUAL LIFTS WITH NON-TRACKING TACK COAT IN BETWEEN

** PLACE IN ONE 4.5" LIFT & ONE 5.0" LIFT WITH NON-TRACKING TACK COAT IN BETWEEN

2 VARIES 4'-0" TO 4'-4", FROM STA. 558+55.00 TO STA. 558+64.00

3 VARIES 4'-0" TO 4'-4", FROM STA. 558+55.00 TO STA. 558+58.00

4 VARIES 12'-0" TO 14'-8", FROM STA. 565+53.03 TO STA. 566+00.00

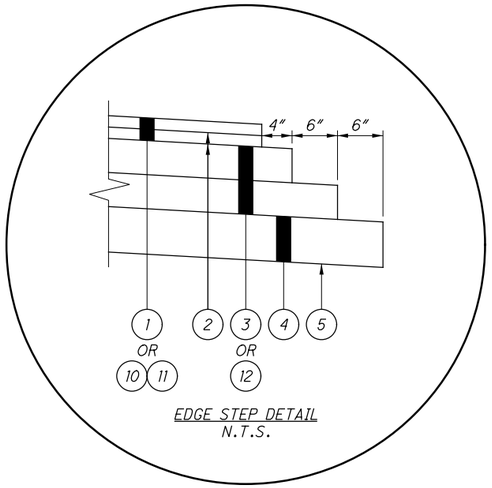

EDGE STEP DETAIL

N.T.S.

REV.	BY	DATE	DESCRIPTION
	GF	09/15/20	1 AS PER PLAN ITEMS ADDED

DATE COMPLETED

pw:\\VANVA01PWINT01.parsons.com:Ohio State\Documents\MAD-70-08.62\05 - Design\CAD\104867\roadway\sheets\104867_GY000.dgn, Sheet - 9/15/2020 4:22:27 PM - p0038218

CALCULATED GF

CHECKED DWO

PROPOSED TYPICAL SECTIONS

MAD-29-10.61

ROUNDING
THE ROUNDING AT SLOPE BREAKPOINTS SHOWN ON THE TYPICAL SECTIONS APPLIES TO ALL CROSS-SECTIONS EVEN THOUGH OTHERWISE SHOWN.

UTILITIES
LISTED BELOW ARE ALL UTILITIES LOCATED WITHIN THE PROJECT CONSTRUCTION LIMITS TOGETHER WITH THEIR RESPECTIVE OWNERS:

CENTURYLINK/QWEST
DANIEL BECKETT
441 WEST BROAD ST.
PATASKALA, OHIO 43062
(740) 927-8282
DANIEL.E.BECKETT@CENTURYLINK.COM

THE LOCATION OF THE UNDERGROUND UTILITIES SHOWN ON THE PLANS ARE AS OBTAINED FROM THE OWNERS AS REQUIRED BY SECTION 153.64 O.R.C.

EXISTING PLANS
EXISTING PLANS ENTITLED MAD-70-8.62 (PID 107109), MAD-70-10.27 (PID 83245), S.R. 29 IMPROVEMENTS AT I-70 EASTBOUND RAMPS (PID 109471), MAD-70-8.68 (PID 19124), MAD-70-6.25 (I-70-3(9)75), & D06-EXTRUSIGN-CITIES (PID 89303) MAY BE INSPECTED IN THE ODOT DISTRICT 6 OFFICE IN DELAWARE, OHIO.

WORK LIMITS
THE WORK LIMITS SHOWN ON THESE PLANS ARE FOR PHYSICAL CONSTRUCTION ONLY. PROVIDE THE INSTALLATION AND OPERATION OF ALL WORK ZONE TRAFFIC CONTROL AND WORK ZONE TRAFFIC CONTROL DEVICES REQUIRED BY THESE PLANS WHETHER INSIDE OR OUTSIDE THESE WORK LIMITS.

PROTECTION OF RIGHT-OF-WAY LANDSCAPING
PRIOR TO BEGINNING WORK, THE CONTRACTOR, THE PROJECT ENGINEER, AND A REPRESENTATIVE OF THE MAINTAINING AGENCY WILL REVIEW AND RECORD ALL LANDSCAPING ITEMS WITHIN THE RIGHT-OF-WAY (BOTH WITHIN AND OUTSIDE THE CONSTRUCTION LIMITS). A RECORD OF THIS REVIEW WILL BE KEPT IN THE PROJECT ENGINEER'S FILES. PRIOR TO FINAL ACCEPTANCE, A FINAL REVIEW OF LANDSCAPING ITEMS WILL BE MADE.

CONSTRICT ALL ACTIVITIES, EQUIPMENT STORAGE, AND STAGING TO WITHIN THE CONSTRUCTION LIMITS. UNLESS OTHERWISE IDENTIFIED IN THE PLANS OR PROPOSAL, THE CONSTRUCTION LIMITS ARE IDENTIFIED AS 30 FEET FROM THE EDGE OF PAVEMENT.

SUBMIT A WRITTEN REQUEST TO THE PROJECT ENGINEER TO USE ANY AREA OUTSIDE THESE LIMITS. THE DOCUMENT SUBMITTED MUST CLEARLY IDENTIFY THE AREA AND EXPLAIN THE PROPOSED USE AND RESTORATION OF THE AREA. USE OF THESE AREAS FOR DISPOSAL OF WASTE MATERIAL AND CONSTRUCTION DEBRIS, EXCAVATION OF BORROW MATERIAL AND PLACEMENT
OF PORTABLE PLANTS IS PROHIBITED. THE REQUEST MUST BE APPROVED, IN WRITING, BEFORE THE CONTRACTOR HAS PERMISSION TO USE THE AREA.

ANY ITEMS DAMAGED BEYOND THE CONSTRUCTION LIMITS, AS DEFINED ABOVE, WILL BE REPLACED IN KIND OR AS APPROVED BY THE PROJECT ENGINEER.

CLEARING AND GRUBBING
REMOVE ALL TREES AND STUMPS SPECIFICALLY MARKED FOR REMOVAL WITHIN THE CONSTRUCTION LIMITS UNDER THE LUMP SUM BID FOR ITEM 201, CLEARING AND GRUBBING. THE FOLLOWING IS AN APPROXIMATE ESTIMATE OF THE NUMBER OF TREES AND STUMPS TO BE REMOVED.

SIZES	NO. TREES	NO. STUMPS	TOTAL
18"	6		6
30"	1		1
48"	1		1

CONTRACTION AND/OR EXPANSION JOINTS
ALTHOUGH SPECIFIC LOCATIONS OF CERTAIN CONTRACTION AND EXPANSION JOINTS HAVE BEEN DETAILED ON THIS PLAN, NO WAIVER OF THE SPECIFICATIONS IS INTENDED. IN ALL CASES, THE PROVISION OF EXPANSION JOINTS AT ALL MAJOR STRUCTURES INCLUDING THE MAXIMUM SPACING BETWEEN CONTRACTION JOINTS IS IN ACCORDANCE WITH STANDARD CONSTRUCTION DRAWING BP-2.2 AND THE SPECIFICATIONS.

1

SURVEYING PARAMETERS
PRIMARY PROJECT CONTROL MONUMENTS GOVERN ALL POSITIONING ON ODOT PROJECTS. SEE THIS SHEET FOR A TABLE CONTAINING PROJECT CONTROL INFORMATION.

USE THE FOLLOWING PROJECT CONTROL, VERTICAL POSITIONING, AND HORIZONTAL POSITIONING PARAMETERS FOR ALL SURVEYING:

PROJECT CONTROL

POSITIONING METHOD: GPS (VRS)
MONUMENT TYPE: CONCRETE MONUMENTS

VERTICAL POSITIONING

ORTHOMETRIC HEIGHT DATUM: NAVD88
GEOID: GEOID12A

HORIZONTAL POSITIONING

REFERENCE FRAME: NAV83 (2011)
ELLIPSOID: GRS80
MAP PROJECTION: LAMBERT CONFORMAL CONIC
COORDINATE SYSTEM: OHIO STATE PLANE, SOUTH ZONE
COMBINED SCALE FACTOR: 1.0000000000
ORIGIN OF COORDINATE
SYSTEM: 1 METER = OHIO STATE PLANE, SOUTH ZONE (0,0)

USE THE POSITIONING METHODS AND MONUMENT TYPE USED IN THE ORIGINAL SURVEY TO RESTORE ALL MONUMENTS RELATED TO PRIMARY PROJECT CONTROL THAT ARE DAMAGED OR DESTROYED BY CONSTRUCTION ACTIVITIES. RESTORE THE DAMAGED OR DESTROYED MONUMENTS IN ACCORDANCE WITH SUPPLEMENTAL SPECIFICATION 823.

UNITS ARE IN U.S. SURVEY FEET. USE THE FOLLOWING CONVERSION FACTOR: 1 METER = 3.280833333 U.S. SURVEY FEET.

BENCHMARKS FOR PROJECT MAD-29-10.61

BM-#	DESCRIPTION		
BM-1	NORTHING: 714844.27	EASTING: 1732586.10	ELEV: 964.41
	TOP OF IRON PIN IN CENTERLINE CONCRETE MONUMENT AT STATION 551+00 ±150 FT EAST OF OVERHEAD TRUSS SIGN SUPPORT OVER WEST BOUND I-70 EXIT 79/EXIT 80.		
BM-4	NORTHING: 715219.77	EASTING: 1735544.56	ELEV: 964.18
	"[]" CUT NORTH SIDE CONCRETE PAD FOR CABLE GUARDRAIL BARRIER ±100 FT WEST OF EMERGENCY TURN AROUND, ±1/2 MILE EAST OF SR-29 OVERPASS IN MEDIAN.		

MEDIAN AND/OR CURBING ON APPROACH SLABS
WITHIN THE LIMITS OF THE APPROACH SLAB, TRANSITION THE SHAPE OF THE MEDIAN AND/OR CURBING ON APPROACH SLABS FROM THE STANDARD SECTION ON THE APPROACHES TO THE SECTION USED ON THE BRIDGE.

CONNECTION BETWEEN EXISTING AND PROPOSED GUARDRAIL
WHEN IT IS NECESSARY TO SPLICE PROPOSED GUARDRAIL TO EXISTING GUARDRAIL, ONLY THE EXISTING GUARDRAIL SHALL BE CUT, DRILLED, OR PUNCHED. THE CONNECTION SHALL BE MADE USING A W-BEAM, BEAM SPLICE AS SHOWN IN AASHTO M 180-12, EXCEPT THE BEAM WASHERS ARE NOT TO BE USED. PAYMENT SHALL BE INCLUDED IN THE CONTRACT PRICE FOR THE RESPECTIVE GUARDRAIL ITEMS.

SEEDING AND MULCHING
THE FOLLOWING QUANTITIES ARE PROVIDED TO PROMOTE GROWTH AND CARE OF PERMANENT SEEDED AREAS:

ITEM 659, SOIL ANALYSIS TEST	1 EACH
ITEM 659, TOPSOIL	90 CU. YD.
ITEM 659, SEEDING AND MULCHING	811 SQ. YD.
ITEM 659, REPAIR SEEDING AND MULCHING	41 SQ. YD
ITEM 659, COMMERCIAL FERTILIZER	0.12 TON
ITEM 659, LIME	0.17 ACRES
ITEM 659, WATER	6 M. GAL.

SEEDING AND MULCHING SHALL BE APPLIED TO ALL AREAS OF EXPOSED SOIL BETWEEN THE RIGHT-OF-WAY LINES, AND WITHIN THE CONSTRUCTION LIMITS FOR AREAS OUTSIDE THE RIGHT-OF-WAY LINES COVERED BY WORK AGREEMENT OR SLOPE EASEMENT. QUANTITY CALCULATIONS FOR SEEDING AND MULCHING ARE BASED ON THESE LIMITS.

EXISTING SUBSURFACE DRAINAGE
PROVIDE UNOBSTRUCTED OUTLETS FOR ALL EXISTING UNDERDRAINS OR AGGREGATE DRAINS ENCOUNTERED DURING CONSTRUCTION.

PROVIDE AN OUTLET PER STANDARD CONSTRUCTION DRAWING DM-1.1 FOR ALL UNDERDRAINS THAT OUTLET TO A SLOPE. UNDERDRAINS THAT CAN BE CONNECTED TO THE NEW OR EXISTING UNDERDRAINS AT THE END OF THE PROJECT LIMITS AS WELL AS ALL NECESSARY BENDS OR BRANCHES REQUIRED FOR CONNECTION ARE INCLUDED IN THE BASIS OF PAYMENT FOR UNCLASSIFIED PIPE UNDERDRAINS.

THE FOLLOWING ESTIMATED QUANTITIES HAVE BEEN INCLUDED IN THE GENERAL SUMMARY FOR THE WORK NOTED ABOVE:

ITEM 605, 6" UNCLASSIFIED PIPE UNDERDRAINS 20 FT.

ASBESTOS ABATEMENT
ON JULY 24, 2017, MR. MATTHEW GEIGER, OHIO DEPARTMENT OF HEALTH (ODH) CERTIFIED ASBESTOS HAZARD EVALUATION SPECIALIST (AHES OH #35832) OF LAWHON & ASSOCIATES, INC. (L&A) CONDUCTED AN ASBESTOS SURVEY OF MAD-00029-10610 (OH-29) BRIDGE (SFN #4900243) OVER I-70, MADISON, OHIO. NO ASBESTOS CONTAINING MATERIAL (ACM) WAS IDENTIFIED IN THE COURSE OF THE SURVEY.

A COPY OF THE OHIO ENVIRONMENTAL PROTECTION AGENCY NOTIFICATION FOR ASBESTOS DEMOLITION AND RENOVATION FORM WITH SECTIONS I-IV & VI COMPLETED IS AVAILABLE AT THE DISTRICT 6 ODOT OFFICE (PLANNING DEPARTMENT). THE FORM MUST BE SUBMITTED TO OEPA-CDO (P.O. BOX 1049, COLUMBUS, OHIO 43216-1049) AT LEAST 10 DAYS PRIOR TO DEMOLITION/RENOVATION ACTIVITIES.

ITEM 606 - ANCHOR ASSEMBLY, MGS TYPE B
THIS ITEM SHALL CONSIST OF FURNISHING AND INSTALLING ANY OF THE GUARDRAIL END TERMINALS FOR TYPE MGS GUARDRAIL AS LISTED ON ROADWAY ENGINEERING'S WEB PAGE UNDER ROADSIDE SAFETY DEVICES FOR APPROVED GUARDRAIL END TREATMENTS. INSTALLATION SHALL BE AT THE LOCATIONS SPECIFIED IN THE PLANS, IN ACCORDANCE WITH THE MANUFACTURER'S SPECIFICATIONS.

REFER TO THE MANUFACTURER'S INSTRUCTIONS REGARDING THE INSTALLATION OF, AND THE GRADING AROUND, THE FOUNDATION TUBES AND GROUND STRUT. THE TOP OF ANY FOUNDATION TUBE SHOULD BE LESS THAN 4 INCHES ABOVE THE GROUND. THE PLACEMENT OF THE FOUNDATION TUBES SHOULD BE AN APPROPRIATE DEPTH BELOW THE LEVEL LINE IN ORDER TO MAINTAIN THE FINISHED GUARDRAIL HEIGHT OF 31 INCHES FROM THE EDGE OF THE SHOULDER.

ON-SITE GRADING IS REQUIRED IF THE TOP OF THE FOUNDATION TUBES OR TOP OF THE GROUND STRUT DOES PROJECT MORE THAN 4 INCHES ABOVE THE GROUND LINE.

THE FACE OF THE TYPE B IMPACT HEAD SHALL BE COVERED WITH TYPE G REFLECTIVE SHEETING, PER CMS 730.19.

PAYMENT FOR THE ABOVE WORK SHALL BE MADE AT THE UNIT PRICE BID FOR ITEM 606, ANCHOR ASSEMBLY, MGS TYPE B, EACH, AND SHALL INCLUDE ALL LABOR, TOOLS, EQUIPMENT AND MATERIALS NECESSARY TO CONSTRUCT A COMPLETE AND FUNCTIONAL ANCHOR ASSEMBLY SYSTEM, INCLUDING REFLECTIVE SHEETING AND ALL RELATED HARDWARE, GRADING, EMBANKMENT AND EXCAVATION NOT SEPARATELY SPECIFIED, AS REQUIRED BY THE MANUFACTURER.

ITEM 442 - ASPHALT CONCRETE SURFACE COURSE, 12.5MM, TYPE A (446), AS PER PLAN (PG76-22M) (T=1.5")
THE SURFACE COURSE BINDER FOR RAMP B PAVEMENT SHALL BE PG76-22M.

ANTI-SEGREGATION EQUIPMENT
PROVIDE ANTI-SEGREGATION EQUIPMENT FOR ALL COURSES OF UNIFORM THICKNESS IN ACCORDANCE WITH CMS 401.12.

RIGHT-OF-WAY
WORK TO BE PERFORMED ON MADISON COUNTY ROAD RIGHT-OF-WAY (SNYDER LANE) PER LETTER OF AGREEMENT DATED 5/6/20.

2 **ITEM 202 PAVEMENT REMOVED, AS PER PLAN**
INCLUDE PAVEMENT REMOVAL PER C&MS 202.05 AND REMOVAL OF EXISTING AGGREGATE BASE, AS SHOWN IN THE PLANS.

ITEM 202 PAVEMENT REMOVED, ASPHALT, AS PER PLAN
INCLUDE PAVEMENT REMOVAL PER C&MS 202.05 AND REMOVAL OF EXISTING AGGREGATE BASE, AS SHOWN IN THE PLANS.

REV. BY	DATE	DESCRIPTION
GF	09/15/20	2 AS PER PLAN NOTES ADDED
GF	09/09/20	1 CONSTRUCTION NOISE NOTE REMOVED

DATE COMPLETED

pw:\\VANVA01PWINT01.parsons.com:Ohio State\Documents\MAD-70-08.62\05 - Design\CAD\104867\roadway\sheets\104867_GN000.dgn, Sheet - 9/15/2020 4:47:29 PM - p0038218

CALCULATED GF
CHECKED DWO

GENERAL NOTES

MAD-29-10.61

SHEET NUM. 5	6	13	14	16	48							PART. 01/IMS/BR	ITEM	ITEM EXT	GRAND TOTAL	UNIT	DESCRIPTION	SEE SHEET NO.
																	ROADWAY	
2 LS												LS	201	11000	LS		CLEARING AND GRUBBING	
6												6	201	21800	6	EACH	TREE REMOVED, 18"	
1												1	201	23000	1	EACH	TREE REMOVED, 30"	
1												1	201	24800	1	EACH	TREE REMOVED, 48"	
		1 1,528										1,528	202	23000	1,528	SY	PAVEMENT REMOVED	
		331										331	202	23001	331	SY	PAVEMENT REMOVED, AS PER PLAN	5
		181										181	202	23011	181	SY	PAVEMENT REMOVED, ASPHALT, AS PER PLAN	5
		184										184	202	32000	184	FT	CURB REMOVED	
		150										150	202	38000	150	FT	GUARDRAIL REMOVED	
		2										2	202	42050	2	EACH	ANCHOR ASSEMBLY REMOVED, TYPE B	
		4										4	202	47000	4	EACH	BRIDGE TERMINAL ASSEMBLY REMOVED	
	247											247	SPECIAL	20270110	247	FT	PIPE CLEANOUT, 24" AND UNDER	6
	314											314	SPECIAL	20270120	314	FT	PIPE CLEANOUT, 27" TO 48"	6
		105										105	203	10000	105	CY	EXCAVATION	
		42										42	203	20000	42	CY	EMBANKMENT	
			2,332									2,332	204	10000	2,332	SY	SUBGRADE COMPACTION	
		2,383										2,383	209	10000	2,383	FT	DITCH CLEANOUT	
		125										125	606	15050	125	FT	GUARDRAIL, TYPE MGS	
		2										2	606	26050	2	EACH	ANCHOR ASSEMBLY, MGS TYPE B	
		4										4	606	35002	4	EACH	MGS BRIDGE TERMINAL ASSEMBLY, TYPE 1	
																	EROSION CONTROL	
		14										14	601	21060	14	SY	TIED CONCRETE BLOCK MAT, TYPE 2	
1												1	659	00100	1	EACH	SOIL ANALYSIS TEST	
90												90	659	00300	90	CY	TOPSOIL	
811												811	659	10000	811	SY	SEEDING AND MULCHING	
41												41	659	14000	41	SY	REPAIR SEEDING AND MULCHING	
0.12												0.12	659	20000	0.12	TON	COMMERCIAL FERTILIZER	
0.17												0.17	659	31000	0.17	ACRE	LIME	
6												6	659	35000	6	MGAL	WATER	
					10							10	670	00500	10	SY	SLOPE EROSION PROTECTION	
				1,785								1,785	670	00700	1,785	SY	DITCH EROSION PROTECTION	
												25,000	832	30000	25,000	EACH	EROSION CONTROL	
																	DRAINAGE	
20												20	605	13300	20	FT	6" UNCLASSIFIED PIPE UNDERDRAINS	
		710										710	605	14000	710	FT	6" BASE PIPE UNDERDRAINS	
		54										54	605	31100	54	FT	AGGREGATE DRAINS	
																	PAVEMENT	
			32									32	252	01500	32	FT	FULL DEPTH PAVEMENT SAWING	
			32									32	255	20000	32	FT	FULL DEPTH PAVEMENT SAWING	
			451									451	301	46000	451	CY	ASPHALT CONCRETE BASE, PG64-22	
			447									447	304	20000	447	CY	AGGREGATE BASE	
			285									285	407	20000	285	GAL	NON-TRACKING TACK COAT	
			16									16	441	50000	16	CY	ASPHALT CONCRETE SURFACE COURSE, TYPE 1, (448), PG64-22	
			138									138	442	00100	138	CY	ANTI-SEGREGATION EQUIPMENT	
			64									64	442	10001	64	CY	ASPHALT CONCRETE SURFACE COURSE, 12.5 MM, TYPE A (446), AS PER PLAN (PG76-22M)	5
			74									74	442	10100	74	CY	ASPHALT CONCRETE INTERMEDIATE COURSE, 19 MM, TYPE A (446)	
			64									64	SPECIAL	45131000	64	FT	PRESSURE RELIEF JOINT, TYPE B	4
			315									315	452	13060	315	SY	9.5" NON-REINFORCED CONCRETE PAVEMENT, CLASS QC 1P	
		27										27	609	24510	27	FT	CURB, TYPE 4-C	
		151										151	609	26000	151	FT	CURB, TYPE 6	

REV. BY	DATE	DESCRIPTION
GF	09/17/20	△2 ITEM 201E11000 ADDED
GF	09/15/20	△1 ITEM 202E23000, 202E23001, & 202E23011

DATE COMPLETED

CALCULATED GF CHECKED DWO

GENERAL SUMMARY

MAD-29-10.61

pw:\\VANVA01PWINT01.parsons.com:Ohio State\Documents\MAD-70-08.62\05 - Design\CAD\104867\roadway\sheets\104867_GG000.dgn, Sheet - 9/17/2020 11:39:10 AM - p003821B

SHEET NUM. 6	7	8	13	46	50							PART. 01/IMS/BR	ITEM	ITEM EXT	GRAND TOTAL	UNIT	DESCRIPTION	SEE SHEET NO.
																	TRAFFIC CONTROL	
				5								5	621	00100	5	EACH	RPM (2-WAY, YELLOW/YELLOW)	
				7								7	621	00100	7	EACH	RPM (2-WAY, RED/YELLOW)	
			26									26	626	00102	26	EACH	BARRIER REFLECTOR, TYPE 1 (BIDIRECTIONAL)	
			4									4	626	00110	4	EACH	BARRIER REFLECTOR, TYPE 2 (BIDIRECTIONAL)	
1												1	632	90400	1	EACH	SIGNALIZATION, MISC.: RWIS SENSOR, VX21-2	44
				0.03								0.03	644	00104	0.03	MILE	EDGE LINE, 6"	
				0.02								0.02	644	00300	0.02	MILE	CENTER LINE	
				0.49								0.49	646	10010	0.49	MILE	EDGE LINE, 6"	
				0.13								0.13	646	10200	0.13	MILE	CENTER LINE	
				140								140	831	00100	140	FT	LONGITUDINAL CHANNELIZING DEVICE	
				140								140	831	00500	140	FT	REMOVAL OF LONGITUDINAL CHANNELIZING DEVICE	
																	STRUCTURE OVER 20 FOOT SPAN (MAD-29-1061)	
					LS							LS	202	11203	LS		PORTIONS OF STRUCTURE REMOVED, OVER 20 FOOT SPAN, AS PER PLAN	61
					176							176	202	22900	176	SY	APPROACH SLAB REMOVED	
					163							163	503	21100	163	CY	UNCLASSIFIED EXCAVATION	
					172,799							172,799	509	10000	172,799	LB	EPOXY COATED REINFORCING STEEL	
					272							272	510	10000	272	EACH	DOWEL HOLES WITH NONSHRINK, NONMETALLIC GROUT	
					8							8	511	33501	8	EACH	SEMI-INTEGRAL DIAPHRAGM GUIDE, AS PER PLAN	69
					697							697	511	34447	697	CY	CLASS QC2 CONCRETE WITH QC/QA, BRIDGE DECK, AS PER PLAN	49
					178							178	511	34450	178	CY	CLASS QC2 CONCRETE WITH QC/QA, BRIDGE DECK (PARAPET)	
					23						2	23	511	44110	23	CY	CLASS QC1 CONCRETE, ABUTMENT NOT INCLUDING FOOTING	
					1,756							1,756	512	10050	1,756	SY	SEALING OF CONCRETE SURFACES (NON-EPOXY)	
					4,080							4,080	513	20001	4,080	EACH	WELDED STUD SHEAR CONNECTORS, AS PER PLAN	62
					1,074						1	1,074	513	90000	1,074	LB	STRUCTURAL STEEL, MISC.: ADDITIONAL INTERMEDIATE BRACING MEMBERS	49
					LS							LS	513	95020	LS		STRUCTURAL STEEL, MISC.: FIELD DRILLED HOLES IN EXISTING GIRDERS	61
					56,262							56,262	514	00050	56,262	SF	SURFACE PREPARATION OF EXISTING STRUCTURAL STEEL	
					56,262							56,262	514	00056	56,262	SF	FIELD PAINTING OF EXISTING STRUCTURAL STEEL, PRIME COAT	
					57,327							57,327	514	00060	57,327	SF	FIELD PAINTING STRUCTURAL STEEL, INTERMEDIATE COAT	
					57,327							57,327	514	00066	57,327	SF	FIELD PAINTING STRUCTURAL STEEL, FINISH COAT	
					45							45	514	00504	45	MNHR	GRINDING FINS, TEARS, SLIVERS ON EXISTING STRUCTURAL STEEL	
					26							26	514	10000	26	EACH	FINAL INSPECTION REPAIR	
					129							129	516	10010	129	FT	ARMORLESS PREFORMED JOINT SEAL	
					126							126	516	13600	126	SF	1" PREFORMED EXPANSION JOINT FILLER	
					210							210	516	13900	210	SF	2" PREFORMED EXPANSION JOINT FILLER	
					388							388	516	25000	388	SF	NYLON REINFORCED NEOPRENE SHEETING	
					15							15	516	44201	15	EACH	ELASTOMERIC BEARING WITH INTERNAL LAMINATES AND LOAD PLATE (NEOPRENE), AS PER PLAN	64
																	(22" x 26" x 3.80" WITH 23" x 27" x 1.5" PLATE)	
					10							10	516	44401	10	EACH	ELASTOMERIC BEARING WITH INTERNAL LAMINATES AND LOAD PLATE (NEOPRENE), AS PER PLAN	64
																	(17.5" x 17.5" x 5.70" WITH 23" x 20" x 1.5" PLATE)	
					10							10	516	46501	10	EACH	BEARING, PTFE (TEFLON), AS PER PLAN	64
					LS							LS	516	47001	LS		JACKING AND TEMPORARY SUPPORT OF SUPERSTRUCTURE, AS PER PLAN	49
					68							68	518	21200	68	CY	POROUS BACKFILL WITH GEOTEXTILE FABRIC	
					222							222	519	11101	222	SF	PATCHING CONCRETE STRUCTURE, AS PER PLAN	49
					217							217	526	30010	217	SY	REINFORCED CONCRETE APPROACH SLABS WITH QC/QA (T=17") 3	
					129							129	526	90030	129	FT	TYPE C INSTALLATION	
					1,074							1,074	607	39900	1,074	FT	VANDAL PROTECTION FENCE, 6' STRAIGHT, COATED FABRIC	
																	MAINTENANCE OF TRAFFIC	
		500										500	614	11110	500	HOUR	LAW ENFORCEMENT OFFICER WITH PATROL CAR FOR ASSISTANCE	
	LS											LS	614	12420	LS		DETOUR SIGNING	
	10											10	614	13000	10	CY	ASPHALT CONCRETE FOR MAINTAINING TRAFFIC	
		18										18	614	18600	18	SNMT	PORTABLE CHANGEABLE MESSAGE SIGN	
	1	1										2	616	10000	2	MGAL	WATER	
																	INCIDENTALS	
												LS	103	05000	LS		PREMIUM FOR CONTRACT PERFORMANCE BOND AND FOR PAYMENT BOND	
												LS	614	11000	LS		MAINTAINING TRAFFIC	
												18	619	16010	18	MNTH	FIELD OFFICE, TYPE B	
												LS	623	10000	LS		CONSTRUCTION LAYOUT STAKES AND SURVEYING	
												LS	624	10000	LS		MOBILIZATION	

REV. BY	DATE	DESCRIPTION
GF	09/18/20	3 526E30000 CHANGED TO 526E30010
GF	09/18/20	2 QUANTITY CHANGE FOR ITEM 511E44110
GF	09/09/20	1 QUANTITY CHANGE FOR ITEM 513E90000

DATE COMPLETED

pw:\\VANVA01PWINT01.parsons.com:Ohio State\Documents\MAD-70-08.62\05 - Design\CAD\104867\roadway\sheets\104867_GG000.dgn, Sheet - 9/18/2020 12:52:25 PM - p003821B

CALCULATED GF CHECKED DWO

GENERAL SUMMARY

MAD-29-10.61

REF NO.	SHEET NO.	STATION TO STATION	202 PAVEMENT REMOVED (SY)	202 PAVEMENT REMOVED, AS PER PLAN (SY)	202 PAVEMENT REMOVED, ASPHALT, AS PER PLAN (SY)	202 CURB REMOVED (FT)	202 GUARDRAIL REMOVED (FT)	202 ANCHOR ASSEMBLY REMOVED, TYPE B (EACH)	202 BRIDGE TERMINAL ASSEMBLY REMOVED (EACH)	203 EXCAVATION (CY)	203 EMBANKMENT (CY)	209 DITCH CLEANOUT (FT)	601 TIED CONCRETE BLOCK MAT, TYPE 2 (SY)
		CHANNEL (SYNDER LANE)											
	17-18	544+50 567+50										2383.00	
		S. R. 29											
R-1	19	558+43 TO 558+93					50.00		1.00				
	19	558+55 TO 559+92		331.00									
	19	558+55 LT TO 559+75 LT				120.00							
	19	558+55 RT TO 559+19 RT				64.00							
R-2	19	559+18 TO 559+43					25.00	1.00	1.00				
R-3	21	565+04 TO 566+08					50.00	1.00	1.00				
	21	565+21 TO 566+00			181.00								
E-1	21	565+66 RT											9.00
R-4	21	565+78 TO 566+28					25.00		1.00				
E-2	21	566+24 LT											5.00
		RAMP B											
	22	46+50 547+38	1528.00							105.00	42.00		
		TOTALS CARRIED TO GENERAL SUMMARY	1528	331	181	184	150	2	4	105	42		14

REF NO.	SHEET NO.	STATION TO STATION	605 6" BASE PIPE UNDERDRAINS (FT)	605 AGGREGATE DRAINS (FT)		606 GUARDRAIL, TYPE MGS (FT)	606 ANCHOR ASSEMBLY, MGS TYPE B (EACH)	606 MGS BRIDGE TERMINAL ASSEMBLY, TYPE 1 (EACH)		609 CURB, TYPE 4-C (FT)	609 CURB, TYPE 6 (FT)		626 BARRIER REFLECTOR, TYPE 1 (BIDIRECTIONAL) (EACH)	626 BARRIER REFLECTOR, TYPE 2 (BIDIRECTIONAL) (EACH)
		S. R. 29												
G-1	19	558+43 RT TO 558+93 RT				50.00		1.00						1.00
G-2	19	559+43 LT TO 559+68 LT				25.00	1.00	1.00						1.00
C-1	19	558+55 RT TO 558+93 RT									38.00			
C-2	19	558+55 LT TO 559+68 LT									113.00			
	19	559+17 RT TO 565+04 RT											13.00	
	19	559+21 RT		12										
	19	559+92 LT TO 565+78 LT											13.00	
U-1	19	558+55 LT TO 559+71 LT	116.00											
U-2	19	558+55 RT TO 559+16 RT	60.00											
	19	559+77 LT		22										
		565+16 RT		14										
C-3	21	565+24 RT TO 565+28 RT								4.00				
G-3	21	565+28 RT TO 565+78 RT				25.00	1.00	1.00						1.00
C-4	21	565+80 LT TO 566+03 LT								23.00				
G-4	21	566+03 LT TO 566+28 LT				25.00		1.00						1.00
U-3	21	565+80 LT TO 566+00 LT	20.00											
U-4	21	565+25 RT TO 566+00 RT	75.00											
	21	565+75 LT		6										
		RAMP B												
U-51	22	46+50 LT TO 543+95 LT	109											
U-52	22	544+03 LT TO 547+38 LT	330											
		TOTALS CARRIED TO GENERAL SUMMARY	710	54		125	2	4		27	151		26	4

REV. BY	DATE	DESCRIPTION
GF	09/15/20	1 AS PER PLAN ITEMS & PVMT REMOVED QTY

DATE COMPLETED

pw:\\VANVA01PWINT01.parsons.com:Ohio State\Documents\MAD-70-08.62\05 - Design\CAD\104867\roadway\sheets\104867_GS001.dgn, Sheet - 9/15/2020 5:17:13 PM - p0038218

CALCULATED GF
CHECKED DWO

ROADWAY SUBSUMMARY

MAD-29-10.61

REV. BY	DATE	DESCRIPTION
GF	09/17/20	1 CLEARING & GRUBBING NOTE, CONST LMTS

DATE COMPLETED

pw:\\VANVA01PWINT01.parsons.com:Ohio State\Documents\MAD-70-08.62\05 - Design\CAD\104867\drainage\sheets\104867_DE001.dgn, Sheet - 9/17/2020 11:02:22 AM - p003821B

HORIZONTAL SCALE IN FEET 0 50 100 200

CALCULATED GF
CHECKED DWO

PLAN - CHANNEL
STA. 544+00.00 TO STA. 557+00.00

MAD-29-10.61

REV. BY	DATE	DESCRIPTION
GF	09/17/20	1 CLEARING & GRUBBING NOTE, CONST LMTS

DATE COMPLETED

pw:\\VANVA01PWINT01.parsons.com:Ohio State\Documents\MAD-70-08.62\05 - Design\CAD\104867\drainage\sheets\104867_DE002.dgn, Sheet - 9/17/2020 11:09:04 AM - p0038218

HORIZONTAL SCALE IN FEET
0 25 50 100

CALCULATED GF
CHECKED DWO

PLAN - CHANNEL
STA. 557+00.00 TO STA. 568+00.00

MAD-29-10.61

ESTIMATED QUANTITES

ITEM	ITEM EXT	TOTAL	UNIT	DESCRIPTION	GEN	ABUT	PIERS	SUPER	REF. SHEET
202	11203	1	LS	PORTIONS OF STRUCTURE REMOVED, OVER 20 FOOT SPAN, AS PER PLAN	1				15/30
202	22900	176	SY	APPROACH SLAB REMOVED	176				
503	21100	163	CY	UNCLASSIFIED EXCAVATION		163			
509	10000	172799	LB	EPOXY COATED REINFORCING STEEL		1360		171439	
510	10000	272	EACH	DOWEL HOLES WITH NONSHRINK, NONMETALLIC GROUT		84	188		
511	33501	8	EACH	SEMI-INTEGRAL DIAPHRAGM GUIDE, AS PER PLAN		8			23/30
511	34447	697	CY	CLASS QC2 CONCRETE WITH QC/QA, BRIDGE DECK, AS PER PLAN				697	3/30
511	34450	178	CY	CLASS QC2 CONCRETE WITH QC/QA, BRIDGE DECK (PARAPET)		14		164	
511	44110	23	CY	CLASS QC1 CONCRETE, ABUTMENT NOT INCLUDING FOOTING		2 23			
512	10050	1756	SY	SEALING OF CONCRETE SURFACES (NON-EPOXY)		142	381	1233	
513	20001	4080	EACH	WELDED STUD SHEAR CONNECTORS, AS PER PLAN				4080	16/30
513	90000	1074	LB	STRUCTURAL STEEL, MISC.: ADDITIONAL INTERMEDIATE BRACING MEMBERS			1	1074	3/30
513	95020	1	LS	STRUCTURAL STEEL, MISC.: FIELD DRILLED HOLES IN EXISTING GIRDERS				1	15/30
514	00050	56262	SF	SURFACE PREPARATION OF EXISTING STRUCTURAL STEEL				56262	
514	00056	56262	SF	FIELD PAINTING OF EXISTING STRUCTURAL STEEL, PRIME COAT				56262	
514	00060	57327	SF	FIELD PAINTING STRUCTURAL STEEL, INTERMEDIATE COAT				57327	
514	00066	57327	SF	FIELD PAINTING STRUCTURAL STEEL, FINISH COAT				57327	
514	00504	45	MNHR	GRINDING FINS, TEARS, SLIVERS ON EXISTING STRUCTURAL STEEL				45	
514	10000	26	EACH	FINAL INSPECTION REPAIR				26	
516	10010	129	FT	ARMORLESS PREFORMED JOINT SEAL	129				
516	13600	126	SF	1" PREFORMED EXPANSION JOINT FILLER		126			
516	13900	210	SF	2" PREFORMED EXPANSION JOINT FILLER		210			
516	25000	388	SF	NYLON REINFORCED NEOPRENE SHEETING		388			
516	44201	15	EACH	ELASTOMERIC BEARING WITH INTERNAL LAMINATES AND LOAD PLATE (NEOPRENE), AS PER PLAN			15		18/30
				(22" x 26" x 3.80" WITH 23" x 27" x 1.5" PLATE)					
516	44401	10	EACH	ELASTOMERIC BEARING WITH INTERNAL LAMINATES AND LOAD PLATE (NEOPRENE), AS PER PLAN		10			18/30
				(17.5" x 17.5" x 5.70" WITH 23" x 20" x 1.5" PLATE)					
516	46501	10	EACH	BEARING, PTFE (TEFLON), AS PER PLAN		10			18/30
516	47001	1	LS	JACKING AND TEMPORARY SUPPORT OF SUPERSTRUCTURE, AS PER PLAN				1	3/30
518	21200	68	CY	POROUS BACKFILL WITH GEOTEXTILE FABRIC		68			
519	11101	222	SF	PATCHING CONCRETE STRUCTURE, AS PER PLAN		82	140		3/30
526	30000	217	SY	REINFORCED CONCRETE APPROACH SLABS (T=17")	217				
526	90030	129	FT	TYPE C INSTALLATION	129				
607	39900	1074	FT	VANDAL PROTECTION FENCE, 6' STRAIGHT, COATED FABRIC				1074	

REV. BY	DATE	DESCRIPTION
GF	09/18/20	2 QUANTITY CHANGE FOR ITEM 511E44110
GF	09/09/20	1 QUANTITY CHANGE FOR ITEM 513E90000

DATE COMPLETED

pw:\\VANVA01PWINT01.parsons.com:Ohio State\Documents\MAD-70-08.62\05 - Design\CAD\104867\structures\MAD-29-1061\Sheets\029_1061C_SQ001.dgn, Sheet - 9/18/2020 9:39:41 AM - p003821B

PARSONS
100 E. Campus View Blvd., Suite 250 • Columbus, Ohio 43235

DESIGNED	DRAWN	REVIEWED	DATE
JRE	GF	RWB	3/17
CHECKED	REVISED	STRUCTURE FILE NUMBER	
JLW		4900243	

ESTIMATED QUANTITIES
BRIDGE NO. MAD-SR29-1061
OVER I.R. 70

MAD-29-10.61
PID No. 104867