STATE OF OHIO
DEPARTMENT OF TRANSPORTATION

OHIO	1 / 7
FHWA REGION 5	
FEDERAL PROJECT	

MAH-680-0414

PLAN NO. BR-17-78

MAH-I-680-0414
CITY OF YOUNGSTOWN
MAHONING COUNTY
STEEL ST. BRIDGE REPAIR

CONVENTIONAL SIGNS

County Line
Township Line
Section Line
Corporation Line or
Fence Line (existing) (proposed)
Center Line 352 353
Trees, Stumps, (to be removed)
Utility Poles: Telephone, Power, Light

Limited Access (only) LA
Right of Way (only) RW
Limited Access & Right of Way LA & RW
Existing Right of Way
Property Line (in existing fence)
Railroad or
Guardrail (existing) (proposed)

INDEX OF SHEETS

1	TITLE SHEET
2	GENERAL NOTES & SUMMARY
3	BEAM REPAIR DETAILS
4-7	TRAFFIC MAINTENANCE

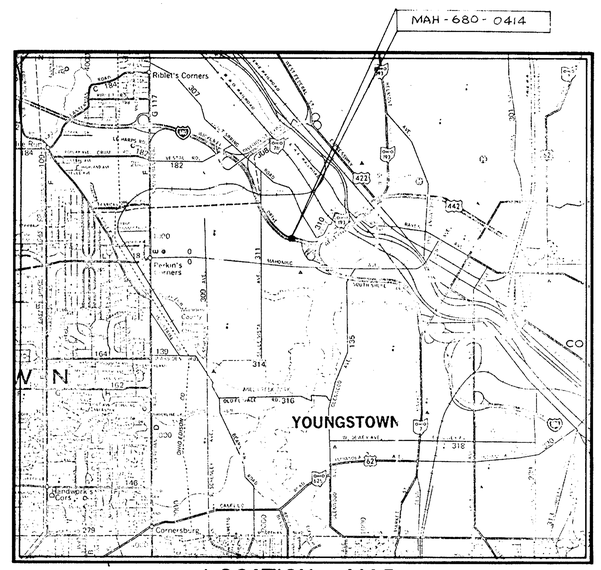

LOCATION MAP

SCALE IN MILES
0 1/8 1/4 1/2 1

Portion to be improved
State & Federal Routes
Other Roads

LINE DATA

BEGIN WORK STA. 929+98.87
END WORK STA. 929+98.87
LENGTH OF WORK 0.00 mi.

LENGTH OF PROJECT 0.00 mi.

SCALES

Plan
Profile: Horizontal, Vertical
Cross Section: Horizontal, Vertical

MICROFILMED
OCT 1 1985

1977 SPECIFICATIONS

The standard specifications of the State of Ohio, Department of Transportation, including changes and supplemental specifications listed in the proposal shall govern this improvement.

The right of way for this improvement will be provided by the State of Ohio.

I hereby approve these plans and declare that the making of this improvement will *not require the closing to traffic of the highway.*

SUPPLEMENTAL SPECIFICATIONS	

SUPPLEMENTAL PRINTS OF STANDARD CONSTRUCTION DRAWINGS				
	TC-35.10 10/5/77			

Approved Carmen L. Cafaro
Date 3-31-78 DEPUTY DIRECTOR OF PUBLIC WORKS, CITY OF YOUNGSTOWN

Approved William M. Goldman
Date 4-3-78 District Deputy Director of Transportation

Approved Robert B. Pfeifer
Date 5-4-78 Engineer, Bureau of Bridges and Structural Design

Approved George E. Nelms
Date 5-30-78 Chief Engineer, Operations

Approved David L. Mein
Date 5-31-78 Director, Department of Transportation

Plan Prepared By:
ODOT D-4

Project:
Date of Letting _____ 19__, Contract No. _____

SEAL

DEPARTMENT OF TRANSPORTATION
FEDERAL HIGHWAY ADMINISTRATION

APPROVED:

DIVISION ENGINEER DATE

LD0300 Rev. 11-21-73

SPECIFICATIONS: ALL MATERIALS AND ITEMS OF WORK SHALL CONFORM TO THE CONSTRUCTION AND MATERIALS SPECIFICATIONS, STATE OF OHIO, DEPT. OF TRANSPORTATION, DATED JAN. 1, 1977, UNLESS OTHERWISE NOTED HEREIN.

STRUCTURAL STEEL: NEW STRUCTURAL STEEL SHALL CONFORM TO ASTM A-36, UNIT STRESS 20,000 PSI.

NON-DESTRUCTIVE TESTS OF ALL WELDED JOINTS SHALL BE IN ACCORDANCE WITH 513.21 OF THE CONSTRUCTION AND MATERIALS SPECIFICATIONS.

PLANS OF EXISTING STRUCTURE MAY BE REVIEWED AT THE DISTRICT OFFICE AT RAVENNA, OR AT THE CENTRAL OFFICE, COLUMBUS, OHIO.

EPOXY RESIN SHALL BE APPLIED BY THE INJECTION METHOD BETWEEN THE CONCRETE DECK AND THE PORTION OF BEAM A WHICH WAS PULLED LOOSE FROM THE DECK. THE PROCEDURE IS AS FOLLOWES: INSERT INJECTION TUBES AT 9" CENTERS WITHIN THE VOID AREA AS DIRECTED BY THE ENGINEER. SEAL THE OPENING ALONG THE EDGE OF FLANGE. INJECT THE EPOXY RESIN STARTING AT ONE END AND PROCEED TOWARD THE OTHER END UNTIL THE VOID IS COMPLETELY FULL USING A PRESSURE OF BETWEEN 14 AND 20 PSI. APPLICATION SHALL BE IN ACCORDANCE WITH THE MANUFACTURERS RECOMMENDATIONS. THE MATERIAL SHALL BE IN ACCORDANCE WITH AASHTO-M234-72.

TRAFFIC NOTES

ALL TRAFFIC CONTROL DEVICES AND THE MANNER IN WHICH THEY ARE USED SHALL BE CONSISTANT WITH THESE PLANS AND THE "OHIO MANUAL OF UNIFORM TRAFFIC CONTROL DEVICES FOR STREETS AND HIGHWAYS" CURRENT EDITION, LATEST REVISION.

A PROGRESS SCHEDULE SHALL BE SUBMITTED AT THE TIME OF THE PRE-CONSTRUCTION CONFERENCE TO THE STATE WITH A COPY TO THE CITY OF YOUNGSTOWN, TRAFFIC ENGINEER, FOR HIS USE IN TRAFFIC CONTROL. ANY DEVIATION FROM THIS SCHEDULE MUST BE APPROVED BY BOTH THE STATE AND THE CITY.

ALL SIGNS, BARRELS AND BARRICADES THAT ARE TO CONVEY THEIR MESSAGES DURING HOURS OF DARKNESS SHALL BE REFLECTORIZED OR ILLUMINATED. ALL SIGNS SHALL BE POST MOUNTED UNLESS OTHERWISE AUTHORIZED BY THE ENGINEER.

ØA OUTLINES THE PROCEDURE TO BE USED FOR CLOSING THE ACCELERATION LANE AND BERM ON I-680 N.

ØB OUTLINES THE PROCEDURE TO BE USED FOR CLOSING THE PASSING LANE AND CRUISING LANE ON I-680 N.
THE RAMP FROM THE WEST FEDERAL EXPRESSWAY TO I-680 N SHALL BE CLOSED DURING ØB, AND TRAFFIC SHALL BE DETOURED AS PER PLAN.

TRAFFIC CONTROL UNDER ØA OR ØB SHALL BE USED AS NECESSARY BY THE CONTRACTOR. HOWEVER, ALL TRAFFIC LANES SHALL BE RESTORED TO NORMAL OPERATION BETWEEN THE HOURS OF 3:00 P.M. AND 6:00 P.M. EACH WORK DAY.

IN ADDITION, THE CONTRACTOR SHALL PROVIDE THE SERVICE OF ONE OFF-DUTY, UNIFORMED POLICE OFFICER WITH A MARKED POLICE VEHICLE, TO BE STATIONED NEAR THE BEGINNING OF THE LANE CLOSURE ON I-680 DURING THE HOURS ØA OR ØB CONTROL IS IN EFFECT. PAYMENT FOR THIS OFFICER AND POLICE VEHICLE SHALL BE INCLUDED IN THE PRICE BID FOR ITEM 614 MAINTAINING TRAFFIC.

PROPOSED WORK

1. PROVIDE AND ERECT JACKING BEAM AND OTHER ASSOCIATED JACKING MATERIAL AS SHOWN ON THE PLANS INCLUDING DRILLING OF 1½" Φ HOLES THROUGH THE DECK TO ACCOMMODATE THE TAKE-UP RODS. PERFORM JACKING AS NOTED IN THE JACKING PROCEDURE.
2. REMOVE THE DAMAGED CROSS-FRAMES AND PORTIONS OF BEAM A AS SHOWN ON PLAN.
3. STRAIGHTEN THE REMAINING PORTION OF BEAM A. HEAT MAY BE USED FOR STRAIGHTENING IN ACCORDANCE WITH 513.06 OF THE CONSTRUCTION AND MATERIALS SPECIFICATIONS BY PERSONS HAVING DEMONSTRATED SUCH CAPABILITIES AND HAVING A RECORD OF SUCCESSFUL ACCOMPLISHMENT IN HEAT STRAIGHTENING.
4. INSTALL NEW PORTIONS OF W 33 x 152 AND WELD WITH FULL PENETRATION WELDS. GRIND BOTH SIDES OF WEBS AND BOTTOM FLANGE SMOOTH AS INDICATED ON PLANS.
5. CONDUCT NON-DESTRUCTIVE TESTS OF WELDS IN ACCORDANCE WITH 513.21 OF THE CONSTRUCTION AND MATERIALS SPECIFICATIONS
6. REPLACE THE REMOVED CROSS-FRAMES WITH NEW MATERIAL
7. INJECT EPOXY RESIN INTO THE VOID AREA BETWEEN THE CONCRETE DECK AND TOP OF BEAM A.
8. REMOVE THE JACKING BEAM AND ASSOCIATED MATERIAL. PLUG THE HOLES IN THE DECK, WHICH WERE MADE TO ACCOMODATE THE TAKE-UP RODS, WITH CONCRETE AS SPECIFIED BY THE ENGINEER.
9. FIELD PAINT PORTIONS OF THE STRUCTURE IN ACCORDANCE WITH 514 OF THE CONSTRUCTION AND MATERIALS SPECIFICATIONS AS FOLLOWS: A) TOTAL FACIA SIDE OF BEAM A FROM PIER 2 TO PIER 3, AND ALL OF BOTTOM FLANGE; B) OTHER PORTIONS OF BEAM A WHICH CONSIST OF NEW STEEL AND AREAS OF EXISTING STEEL DAMAGED BY STRAIGHTENING OR WELDING OPERATION; C) ALL OF THE NEW CROSS-FRAMES. THE FINISH COAT SHALL BE CORROSIVE RESISTANT PAINT MEETING THE REQUIREMENTS OF ITEM 708.09 AND SHALL BE THE SAME COLOR AS THE EXISTING BEAMS.

JACKING PROCEDURE

INITIAL JACKING SHALL BE SUFFICIENT TO SUPPORT THE DECK WHEN THE BOTTOM OF BEAM A IS REMOVED; THAT IS, TO RAISE THE DECK ABOUT ⅛" ABOVE ITS PRESENT POSITION AT THE CENTER OF THE SPAN. TAKE-UP RODS SHALL BE TIGHTENED TO SNUG CONDITION. AFTER REMOVAL OF PORTIONS OF BEAM A THE DECK SHALL BE JACKED SUCH THAT THE DECK CAMBER BETWEEN CENTERLINES OF PIERS 2 AND 3 SHALL BE ⅜" OVER THE BEAM BEING REPAIRED. TAKE-UP RODS SHALL AGAIN BE TIGHTENED TO SNUG CONDITION. CHECKS SHALL BE MADE THROUGHOUT THE REPAIR OF BEAM A TO INSURE THAT THE ABOVE DIMENSIONS ARE MAINTAINED.

ALTERNATE JACKING METHODS MAY BE PROVIDED BY THE CONTRACTOR SUBJECT TO THE APPROVAL OF THE DIRECTOR.

GENERAL SUMMARY

ITEM	QUAN.	UNIT	DESCRIPTION
202	LUMP	SUM	PORTIONS EXIST. STRUCTURE REMOVED
513	2680	LBS	STRUCTURAL STEEL
513	LUMP	SUM	STRUCTURAL STEEL HEAT STRAIGHTENING
514	2680	LBS.	FIELD PAINTING OF NEW STRUCTURAL STEEL
514	LUMP	SUM	CLEAN AND PAINT EXISTING STRUCTURAL STEEL, AS PER PLAN
SPEC.	LUMP	SUM	INJECTED EPOXY RESIN
SPEC.	LUMP	SUM	DECK JACKING
614	LUMP	SUM	MAINTAINING TRAFFIC

MICROFILMED
OCT 1 1985

F.H.W.A. REGION	STATE	PROJECT	
5	OHIO		

3/7

MAH-680-0414

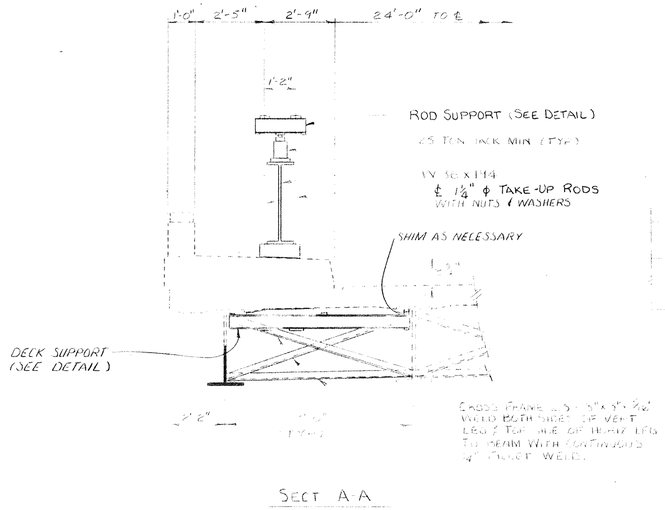

SECT A-A

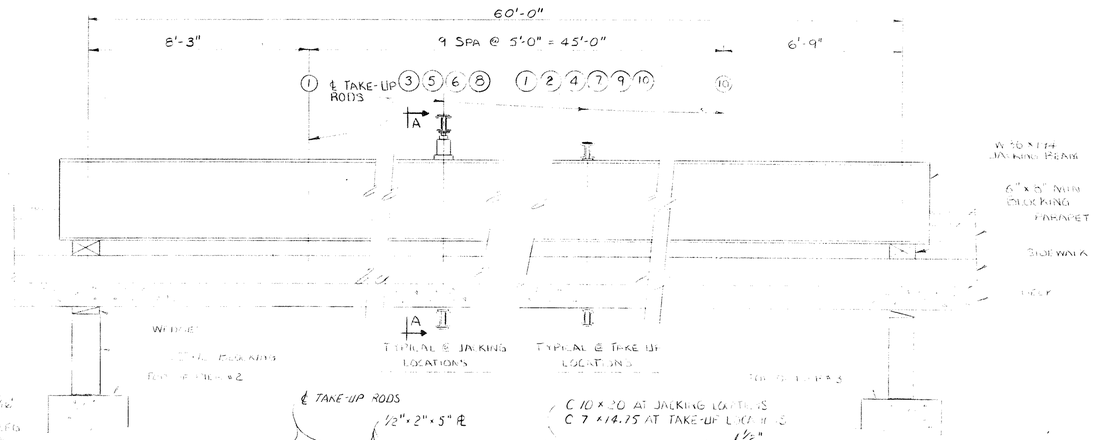

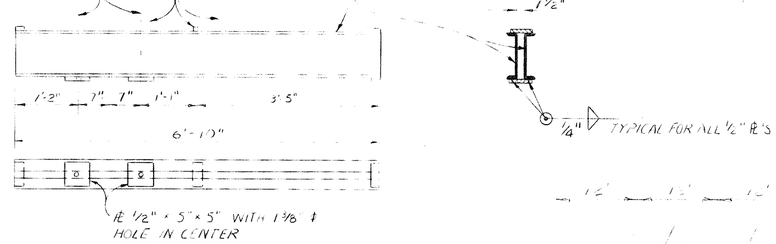

DECK SUPPORT DETAIL

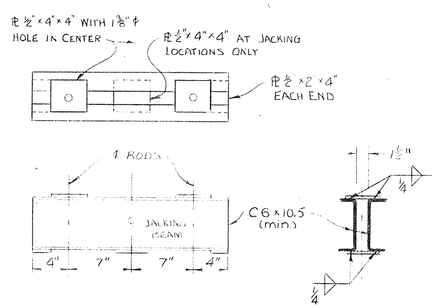

ROD SUPPORT DETAIL

TAKE-UP RODS SHALL BE THREADED AT BOTH ENDS TO ACCOMODATE STANDARD NUTS CONFORMING TO ASTM-A325.

FALSEWORK FOR SUPPORTING AND JACKING OF THE DECK SHALL CONFORM TO MATERIALS AS SPECIFIED BELOW:

STRUCTURAL STEEL, SECTIONS AND PLATES, ASTM-A36.

STEEL RODS, ASTM-A325 FOR PHYSICAL PROPERTIES, EXCEPT THAT THE MINIMUM ELONGATION SHALL BE 10%. THE CHEMICAL PROPERTIES ARE WAIVED.

TIMBER. STRUCTURAL GRADE, f = 1800 PSI.

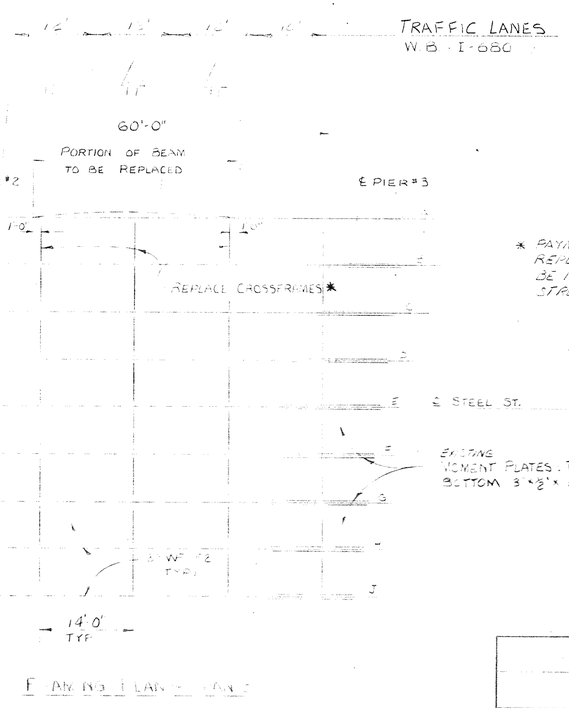

* PAYMENT FOR FURNISHING AND REPLACING CROSSFRAMES SHALL BE INCLUDED IN ITEM 513, LBS. STRUCTURAL STEEL.

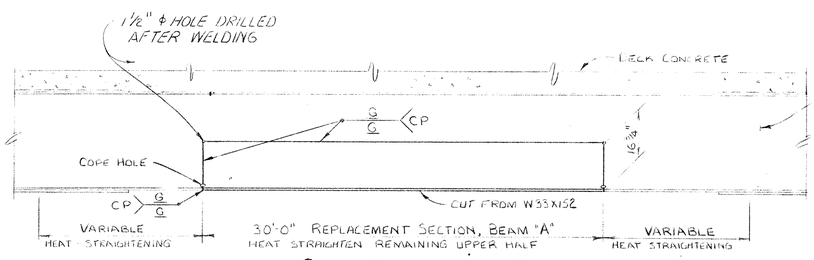

BEAM REPLACEMENT DETAIL

N.T.S.

WELD LEGEND

CP = COMPLETE PENETRATION WELD

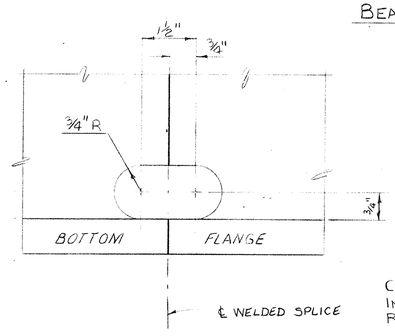

FINISHED COPE HOLE DETAIL

N.T.S.

COPE HOLE SHALL BE DRILLED IN EXISTING BEAM BEFORE REMOVING BOTTOM FLANGE.

STATE OF OHIO
DEPARTMENT OF TRANSPORTATION

DIST. 4 BRIDGE DEPT.

SUPERSTRUCTURE
REPAIRS

MAH-680-0414

DESIGNED	DRAWN		CHECKED	REVIEWED	DATE	
MAF	MAF					

FED. RD.	STATE	PROJECT	
	OHIO		

4/7

MAH-680-0414

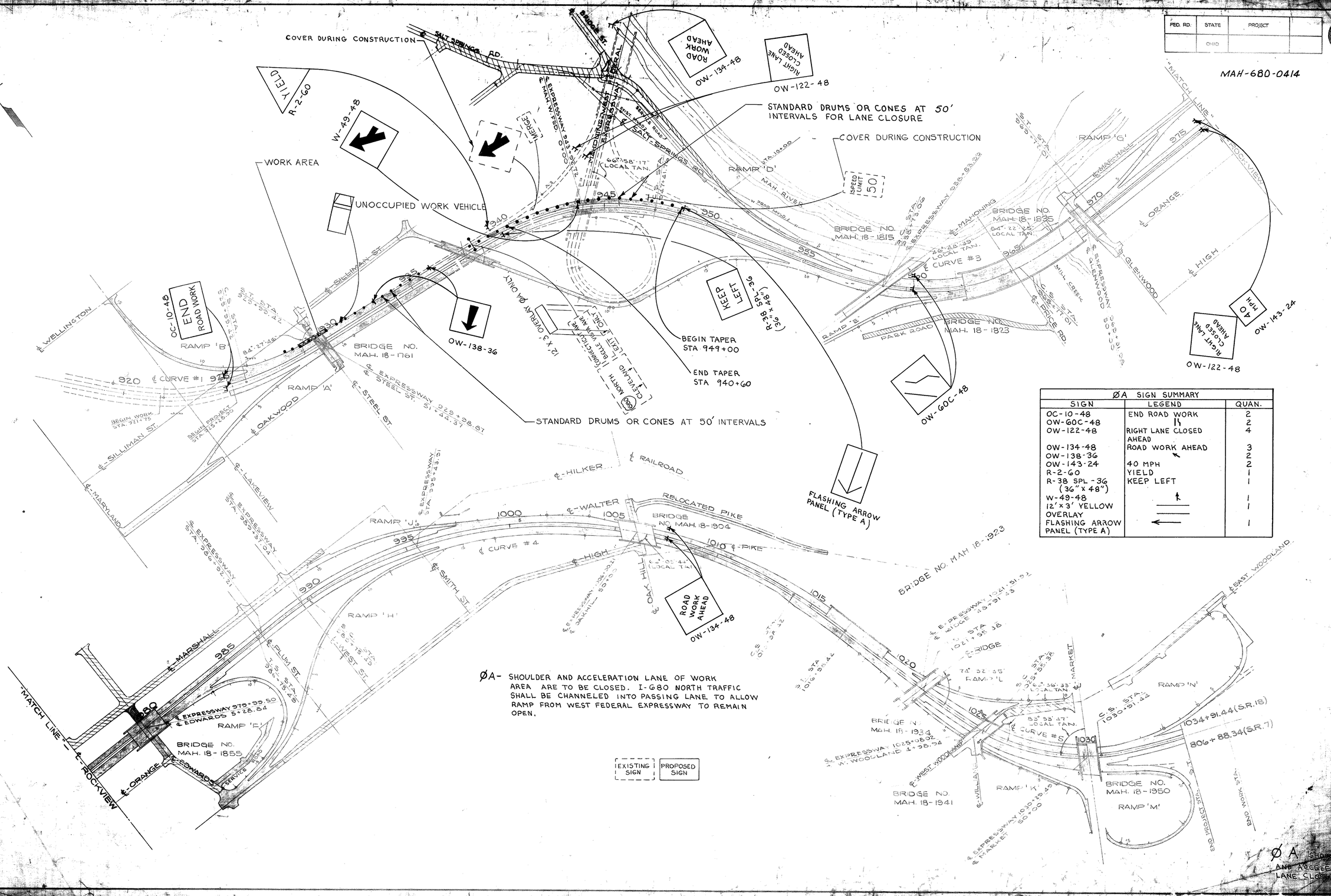

ØA- SHOULDER AND ACCELERATION LANE OF WORK AREA ARE TO BE CLOSED. I-680 NORTH TRAFFIC SHALL BE CHANNELED INTO PASSING LANE TO ALLOW RAMP FROM WEST FEDERAL EXPRESSWAY TO REMAIN OPEN.

EXISTING SIGN | PROPOSED SIGN

ØA SIGN SUMMARY		
SIGN	LEGEND	QUAN.
OC-10-48	END ROAD WORK	2
OW-60C-48	⇅	2
OW-122-48	RIGHT LANE CLOSED AHEAD	4
OW-134-48	ROAD WORK AHEAD	3
OW-138-36	↖	2
OW-143-24	40 MPH	2
R-2-60	YIELD	1
R-38 SPL-36 (36"x48")	KEEP LEFT	1
W-49-48	↑	1
12'x3' YELLOW OVERLAY	═══	1
FLASHING ARROW PANEL (TYPE A)	←	1

FED. RD.	STATE	PROJECT	
	OHIO		

MAH-680-0414

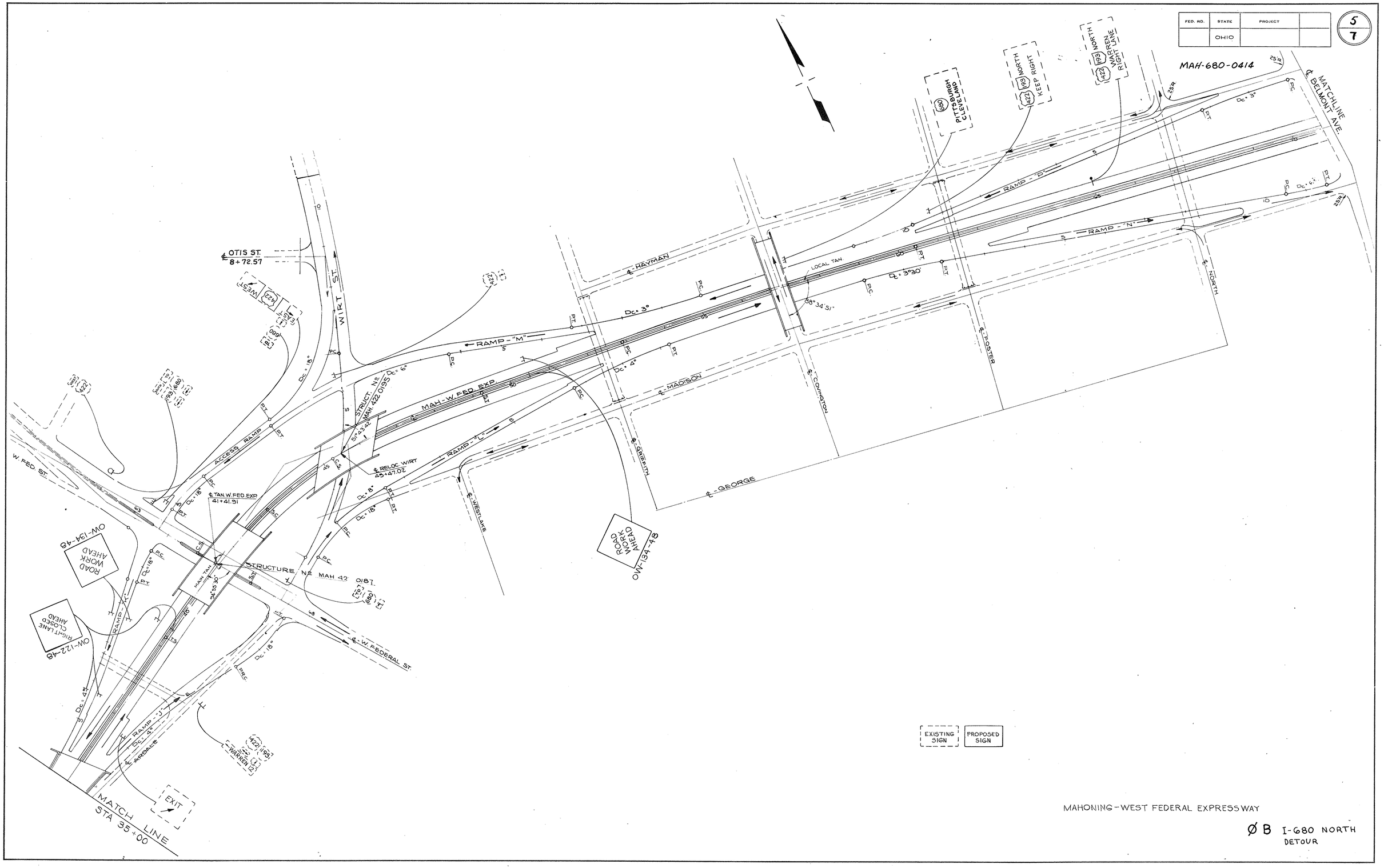

MAHONING-WEST FEDERAL EXPRESSWAY

Ø B I-680 NORTH
DETOUR

FED. RD.	STATE	PROJECT	
	OHIO		

6
7

MAH-680-0414

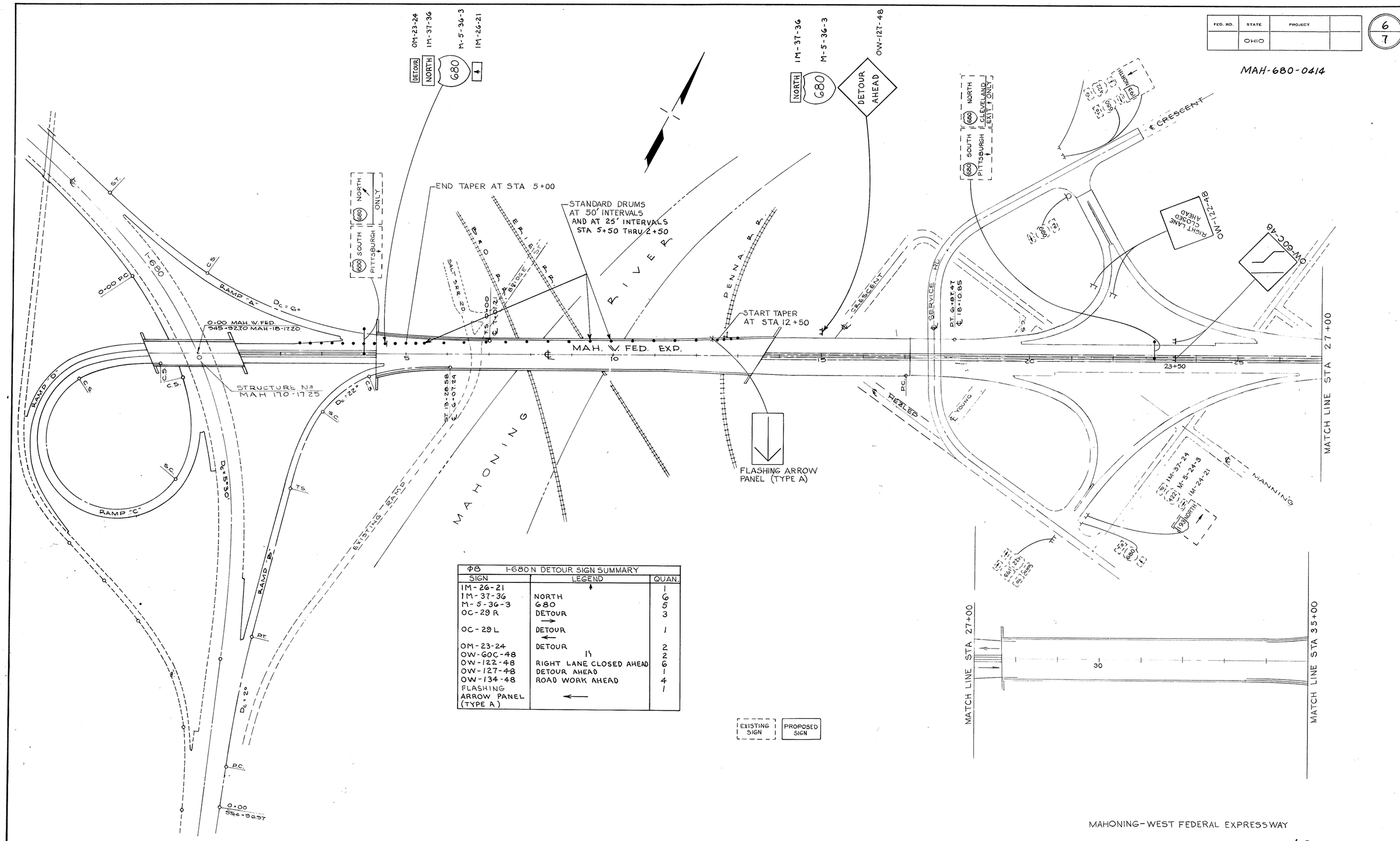

ØB I-680 N DETOUR SIGN SUMMARY		
SIGN	LEGEND	QUAN.
1M-26-21	↑	1
1M-37-36	NORTH	6
M-5-36-3	680	5
OC-29 R	DETOUR →	3
OC-29 L	DETOUR ←	1
OM-23-24	DETOUR	2
OW-60C-48	↑	2
OW-122-48	RIGHT LANE CLOSED AHEAD	6
OW-127-48	DETOUR AHEAD	1
OW-134-48	ROAD WORK AHEAD	4
FLASHING ARROW PANEL (TYPE A)	←	1

EXISTING SIGN | PROPOSED SIGN

MAHONING-WEST FEDERAL EXPRESSWAY

ØB I-680 NORTH DETOUR

FED. RD.	STATE	PROJECT	
	OHIO		

7/7

MAH-680-0414

THE ON RAMP FROM THE MAHONING-WEST FEDERAL EXPRESSWAY TO I-680 N IS TO BE CLOSED (SEE I-680 N DETOUR).

STANDARD DRUMS SHALL BE USED FOR LANE TAPERS. STANDARD DRUMS OR CONES MAY BE USED FOR LANE CLOSURES. DRUMS AND CONES SHALL BE SPACED AT 50' INTERVALS.

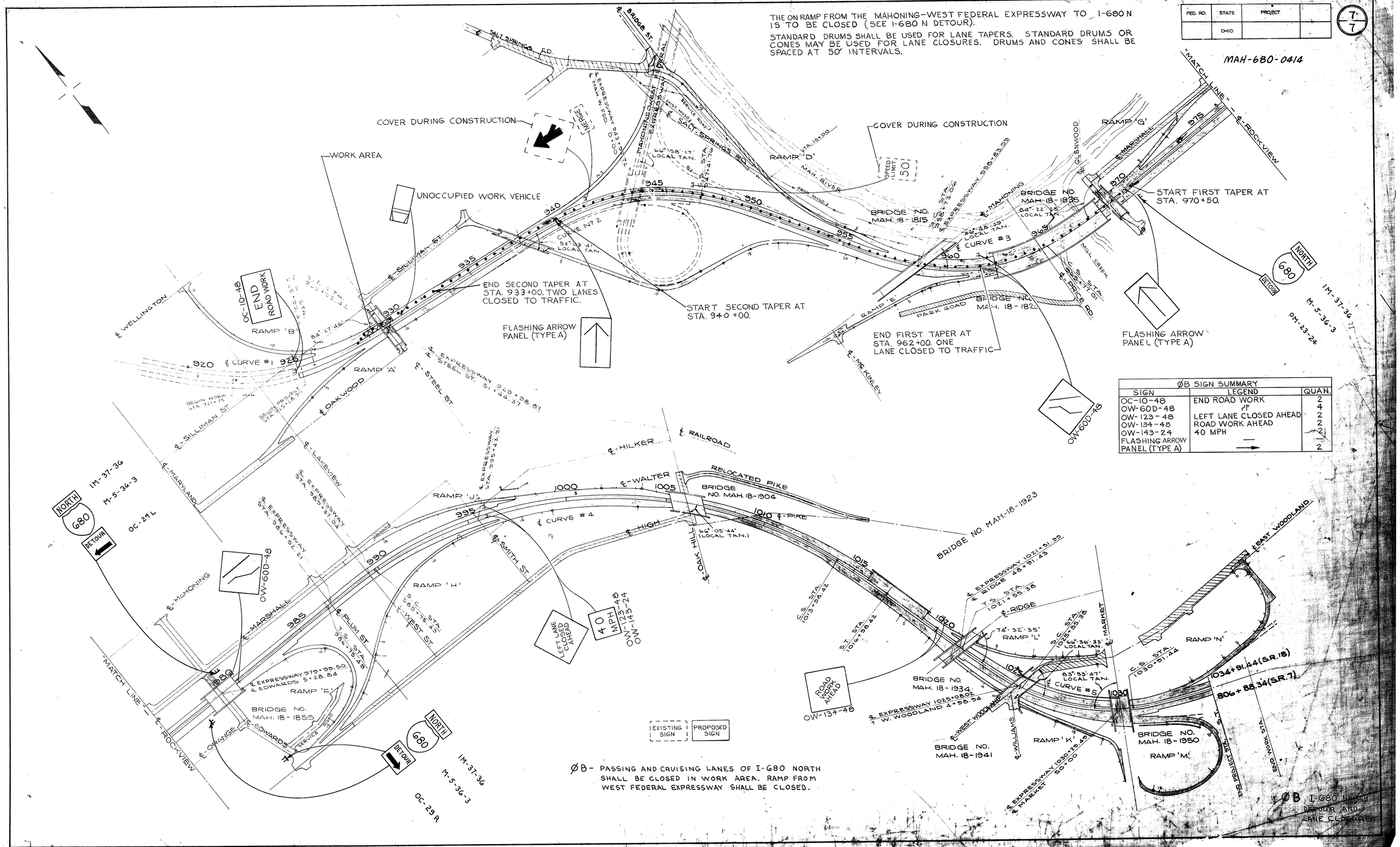

ØB SIGN SUMMARY		
SIGN	LEGEND	QUAN.
OC-10-48	END ROAD WORK	2
OW-60D-48		4
OW-123-48	LEFT LANE CLOSED AHEAD	2
OW-134-48	ROAD WORK AHEAD	2
OW-143-24	40 MPH	2
FLASHING ARROW PANEL (TYPE A)		2

ØB - PASSING AND CRUISING LANES OF I-680 NORTH SHALL BE CLOSED IN WORK AREA. RAMP FROM WEST FEDERAL EXPRESSWAY SHALL BE CLOSED.

ØB I-680 NORTH DETOUR AND LANE CLOSURE