| | | |
|---|---|---|
| MAH-680-(4.88)(6.03)<br>MAH-422-2.15<br>MAH-62-(17.51)(18.86) | OHIO<br>FHWA REGION 5 | 1<br>9 |
| F-65(28) ~ IR-680-9(32)237 | FEDERAL PROJECT | |

MAHONING – BRIDGE/SCREENING

F-65(28)

IR-680-9(32) 237

# STATE OF OHIO
# DEPARTMENT OF TRANSPORTATION
## SCREENING OF OVERPASS BRIDGES
## MAH-680-(4.88)(6.03)
## MAH-422-2.15
## MAH-62-(17.51)(18.86)
## CITY OF YOUNGSTOWN, MAHONING COUNTY, OHIO

### CONVENTIONAL SIGNS

County Line
Township Line
Section Line
Corporation Line — or
Fence Line (existing) — (proposed)
Center Line
Trees, Stumps, (to be removed)
Utility Poles: Telephone, Power, Light.

Limited Access (only) — LA
Right of Way (only) — RW
Limited Access & Right of Way — LA & RW
Existing Right of Way
Property Line — (in existing fence)
Railroad — or
Guardrail (existing) — (proposed)

### INDEX OF SHEETS


TITLE SHEET ____ 1
GENERAL NOTES ____ 2
TYPICAL LAYOUT, EXISTING AND ESTIMATED QUANTITIES ____ 3
TYPICAL FENCE DESIGN ____ 4
TRAFFIC CONTROL ____ 5-9


COVINGTON AVE.
MAH-422-0215
FR-65(28)

WICK AVE.
MAH-62-1886L
FR-65(28)

GLENWOOD AVE.
MAH-680-0488
IR-680-9(32)237

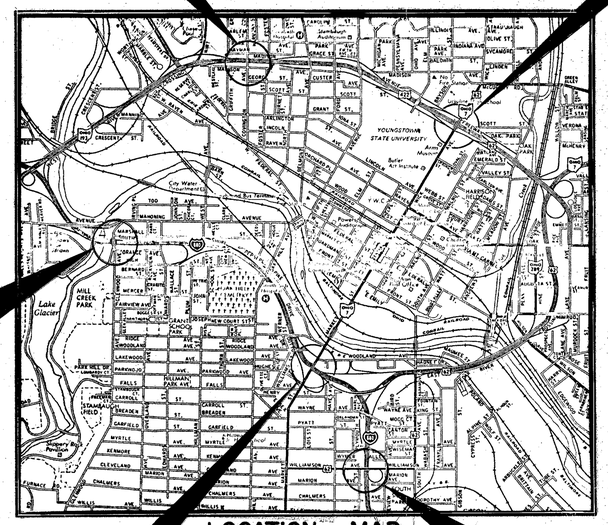

MARKET ST.
MAH-680-0603
IR-680-9(32)237

WILLIAMSON AVE.
MAH-62-1751
IR-680-9(32)237

**LOCATION MAP**
SCALE IN MILES
0 1/8 1/4 1/2 1

### 1983 SPECIFICATIONS

**The standard specifications of the State of Ohio, Department of Transportation, including changes and supplemental specifications listed in the proposal shall govern this improvement.**

**I hereby approve these plans and declare that the making of this improvement will** not require the closing to traffic of the highway under the work area and that provisions for maintenance and safety of traffic will be as set forth in these plans and estimates.

Approved Francis V. Fischer
Date 6-16-83 District Deputy Director of Transportation

Approved Robert B. Pfeifer
Date 6-28-83 Engineer, Bureau of Bridges and Structural Design

Approved Wayne H. Kaebler
Date 10-4-83 Chief Engineer, Planning and Design

Approved Warren G. Smith
Date 10-4-83 Director, Department of Transportation

### LINE DATA

OVERPASS BRIDGE SCREENING

| F-65(28) | | IR-680-9(32)237 | |
|---|---|---|---|
| MAH-422-0215 | ~ 223 L.F. | MAH-62-1751 | ~ 202 L.F. |
| MAH-62-1886L | ~ 175 L.F. | MAH-680-0488 | ~ 182 L.F. |
| | | MAH-680-0603 | ~ 139 L.F. |
| TOTALS | 398 L.F. | | 523 L.F. |

TOTAL WORK LENGTH = 398 + 523 = 921 Lin. Ft. or 0.174 Miles

PROJECT LENGTH = 0.00 Lin. Ft. or 0.00 Miles

UNDERGROUND UTILITIES
48 HOURS
**BEFORE YOU DIG**
Call ··· 800-362-2764 (Toll free)
OHIO UTILITIES PROTECTION SERVICE
NON-MEMBERS MUST BE CALLED DIRECTLY

Portion to be improved
State & Federal Routes
Other Roads

### SCALES

Plan
Profile: Horizontal, Vertical
Cross Section: Horizontal, Vertical

| SUPPLEMENTAL SPECIFICATIONS | |
|---|---|
| 803 5-27-83 | |

| SUPPLEMENTAL PRINTS OF STANDARD CONSTRUCTION DRAWINGS | | | | |
|---|---|---|---|---|
| MC-3 6-1-73 | | | | |

Plan Prepared By:
CITY OF YOUNGSTOWN, ENGINEERING DEPT.
EDWIN B. CAMPBELL P.E.
DEPUTY DIRECTOR OF PUBLIC WORKS.

SEAL

DEPARTMENT OF TRANSPORTATION
FEDERAL HIGHWAY ADMINISTRATION

APPROVED:

DIVISION ADMINISTRATOR — DATE

Project: MAH-680-(4.88)(6.03) MAH-422-2.15 MAH-62-(17.51)(18.86)
Date of Letting ____ 19__, Contract No. ____

LD 0300 Rev. 1-1-81

| FHWA REGION | STATE | PROJECT NO. | FUNDS |
|---|---|---|---|
| 5 | OHIO | | |

2/9

MAHONING - 5 BRIDGES/SCREENING

MAH-680-(4.88)(6.03)
MAH-422-2.15
MAH-62-(17.51)(18.86)

# GENERAL NOTES

SPECIFICATIONS

ALL CONSTRUCTION OR WORK PERFORMED ON THIS PROJECT SHALL BE IN ACCORDANCE WITH THE OHIO DEPARTMENT OF TRANSPORTATION CONSTRUCTION AND MATERIAL SPECIFICATIONS, DATED JANUARY 1, 1983; AND ALSO WITH THE DETAIL SHEET ENCLOSED WITH PLANS.

WORK DESCRIPTION:

THIS WORK WILL CONSIST OF SUPPLYING ALL EQUIPMENT, MATERIAL AND LABOR REQUIRED TO INSTALL CHAIN LINK SCREENING ON FIVE (5) OVER-PASS BRIDGES IN THE CITY OF YOUNGSTOWN. WORK WILL BE PERFORMED OVER EXISTING EXPRESSWAY SYSTEMS WITHOUT DISRUPTING TRAFFIC FLOW, THEREFORE, CONTRACTOR SHALL EXERCISE EXTREME CARE IN HANDLING MATERIAL AND ABIDE BY TRAFFIC MAINTENANCE INSTRUCTIONS AS WRITTEN IN GENERAL NOTES.

GALVANIZED BASE PLATES:

BASE PLATES ARE TO BE FABRICATED BY AN APPROVED FABRICATOR ACCORDING TO PLAN DIMENSIONS AND STATE OF OHIO CONSTRUCTION AND MATERIAL SPECIFICATIONS.

BASE PLATES SHALL BE FABRICATED WITH STEEL AND ALL WELDING SHALL BE COMPLETED IN THE SHOP. FABRICATED PLATES SHALL THEN BE THOROUGHLY CLEANED BEFORE GALVANIZING ACCORDING TO ASTM A-123.

BASE PLATES-INSTALLATIONS:

CONTRACTOR SHALL MARK BOLTS WHICH DO NOT HAVE A MINIMUM HALF INCH (1/2") PROJECTION ABOVE NUT WITH PAINT OR OTHER PERMANENT MARKING, THEN HE SHALL REMOVE EXISTING RAILING ARM SUPPORTS AND RAILING FROM THE PARAPET WALL OF BRIDGE AND STORE IT IN A SAFE PROTECTED MANNER FOR RE-INSTALLMENT.

THE BOLTS THAT WERE PREVIOUSLY MARKED WHICH DO NOT HAVE ADEQUATE EXTENSION OR WHICH ARE MISSING SHALL BE CUT OFF AT AN ADEQUATE HEIGHT TO ALLOW FOR STUD BOLTS TO BE WELDED THERETO, BY THE STICK ELECTRODE METHOD WITH THE MINIMUM STUD HEIGHT TO BE TWO AND ONE HALF INCHES (2 1/2") ABOVE THE PARAPET WALL. ALL BOLTS ARE THEN TO BE COATED WITH ALUMINUM-IMPREGNATED CHALKING COMPOUND AND THE SPACES BETWEEN THE BOLTS AND THE BASE AND SUPPORT ARM PLATES ARE TO BE FILLED WITH THE SAME MATERIAL AFTER THEY ARE SET IN PLACE.

THE BASE PLATES ARE THEN INSTALLED AS PER DETAIL DRAWING AND THE RAILING ARM SUPPORTS AND RAILINGS ARE INSTALLED WITH BOLTS TIGHTENED ACCORDING TO SPECIFIED TENSION AS PER O.D.O.T. SPECIFICATIONS.

TERMINAL AND LINE POSTS

CONTRACTOR SHALL INSTALL TERMINAL AND LINE POSTS AS PER SPECIFICATIONS, FASTENING POSTS TO BASE PIPE SLEEVES WITH TWO (2) 1/4" DIAMETER SET SCREWS, ALSO TO PREVENT ELECTROLYTIC CORROSION BETWEEN ALUMINUM & STEEL PARTS, SEE NOTE ON DETAIL DRAWINGS, AND ALSO REFER TO SECTION 517.05 OF STATE OF OHIO CONSTRUCTION AND MATERIAL SPECIFICATIONS.

SCREENING INSTALLATION:

LINE POST RAILS SHALL BE INSTALLED AS PER PLAN AND CHAIN LINK FABRIC SHALL BE STRETCHED AND SECURELY FASTENED TO TERMINAL AND LINE POSTS IN ACCORDANCE WITH PLAN DETAILS. GALVANIZED TIES SHALL BE USED FOR FASTENING FABRIC TO LINE POSTS AT 14" CENTERS AND STRETCHER BAR BANDS 1/8" x 1" FLAT AT 14" CENTERS SHALL BE USED FOR FASTENERS AT TERMINAL POSTS. ALL WORK TO CONFORM WITH ITEM 607 FENCE, TYPE CL, OF O.D.O.T. SPECIFICATIONS EXCEPT AS NOTED ON DETAIL PLAN.

ITEM 607 - FENCE, TYPE CL, AS PER PLAN:

INCLUDED IN THIS ITEM IS THE FURNISHING OF ALL MATERIALS, LABOR EQUIPMENT AND INCIDENTALS NECESSARY TO COMPLETE THE FENCING. CHAIN-LINK FENCE SHALL CONFORM TO THE CONSTRUCTION AND MATERIALS SPECIFICATIONS 710.03. FENCE POSTS AND RAILS SHALL BE OF NOMINAL INSIDE DIAMETER, STANDARD WEIGHT AND WALL THICKNESS PIPE, SCHEDULE 40. SPRING LOADED TOP RAIL EXPANSION SLEEVES SHALL BE PROVIDED AT APPROXIMATELY 100 FOOT INTERVALS IN ALL HORIZONTAL RAILS MORE THAN FOUR FEET ABOVE THE POST BASES. STRETCHER BARS AND MISCELLANEOUS HARDWARE SHALL BE THAT OF THE CHAIN-LINK FENCE INDUSTRY STANDARD. BASE PLATES AND MISCELLANEOUS BRACKETS FOR STEEL POSTS MAY BE OF ANY COMMERCIALLY WELDABLE STEEL HAVING A YIELD STRENGTH OF NOT LESS THAN 33,000 p.s.i. BASE PLATES SHALL HAVE HOLES ALMOST EQUAL TO THE PIPE INSIDE DIAMETER. TENSION BANDS SHALL BE A MINIMUM OF 12 GAUGE STEEL BY 7/8 INCHES WIDE ASSEMBLED WITH 5/16 INCH DIAMETER BY 1 1/4 INCH GALVANIZED OR CADMIUM PLATED BOLTS. ONE TENSION BAND SHALL BE REQUIRED FOR EACH FOOT OF FABRIC HEIGHT. FIELD WELDING SHALL NOT BE PERMITTED.

TRAFFIC MAINTENANCE

THE SAFETY OF THE TRAVELING PUBLIC AND MINIMIZING THE INCONVENIENCE TO HIGHWAY USERS SHALL BE OF THE UTMOST IMPORTANCE OF THE CONTRACTOR WHILE PERFORMING THE NECESSARY WORK.

THE FOLLOWING CONDITIONS AND RESTRICTIONS SHALL BE ENFORCED AND WILL BE ADHERED TO DURING THE SCOPE OF THIS PROJECT.

(a) A TWO WAY TRAFFIC SHALL BE MAINTAINED OVER BRIDGES AT ALL TIMES DURING CONSTRUCTION PERIOD, WITH PEDESTRIAN TRAFFIC BEING MAINTAINED ON ONE SIDE OF BRIDGE AT ALL TIMES.

(b) ALL TRAFFIC CONTROL DEVICES SHALL BE FURNISHED BY THE CONTRACTOR AND SHALL BE ERECTED AND MAINTAINED IN COMPLIANCE WITH THE STATE OF OHIO "MANUAL OF UNIFORM TRAFFIC CONTROL DEVICES FOR STREETS AND HIGHWAYS" CURRENT EDITION, LATEST REVISION.

(c) THE CONTRACTOR SHALL BE RESPONSIBLE AT ALL TIMES FOR PROVIDING AND MAINTAINING LIGHTS, SIGNS AND BARRICADES FOR THE MAINTENANCE OF TRAFFIC AND SAFETY OF HIS WORK AT LOCATIONS SHOWN ON THE PLAN OR AS DIRECTED BY THE ENGINEER.

(d) THE CONTRACTOR SHALL PROVIDE THE SERVICES OF A SPECIAL DUTY LAW ENFORCEMENT OFFICER WITH A PATROL CAR FOR THE PURPOSE OF CONTROLLING THROUGH TRAFFIC ON THE EXPRESSWAY DIRECTLY UNDER THE AREA OF THE BRIDGE ON WHICH SCREENING WORK IS BEING PERFORMED. THE PATROLMAN WITH A PATROL CAR SHALL ALSO BE UTILIZED DURING INSTALLATION AND REMOVAL OF TRAFFIC CONTROL DEVICES USED FOR LANE RESTRICTIONS UNDER WORK AREA AND DURING HOURS OF PEAK TRAFFIC AS AUTHORIZED BY THE PROJECT ENGINEER. THE OFFICER SHALL CONSTANTLY MOVE WITH BACK UP OF TRAFFIC SO THAT HE IS ALWAYS NEAR THE END OF THE STOPPED TRAFFIC TO ASSIST IN CONTROLLING TRAFFIC OF THE RESTRICTIONS AND INFORMING DRIVERS AS TO THE NATURE OF THE DELAY, PAYMENT FOR THE ABOVE SHALL BE ITEM: SPECIAL LAW ENFORCEMENT OFFICER WITH PATROL CAR.

(e) TRAFFIC ON EXPRESSWAYS UNDER BRIDGES SHALL BE MAINTAINED AT ALL TIMES BY USE OF THE EXISTING PAVEMENT AND SHOULDERS. NO MORE THAN ONE LANE OF TRAFFIC IN EACH DIRECTION CAN BE CLOSED AT ANY ONE TIME. ALL LANE CLOSURES SHALL BE IN ACCORDANCE WITH THE OHIO MANUAL OF UNIFORM TRAFFIC CONTROL DEVICES FOR STREETS AND HIGHWAYS, CURRENT EDITION, LATEST REVISION, AND AS SHOWN ON SHEET NOS. 5 thru 9

THE CONTRACTOR SHALL SUBMIT TO THE DIRECTOR A COMPLETE SCHEDULE OF CONSTRUCTION OPERATIONS AND A DETAILED MAINTENANCE OF TRAFFIC PLAN. THE MAINTENANCE OF TRAFFIC PLAN SHALL COVER THE VARIOUS PHASES OUTLINED IN HIS CONSTRUCTION SCHEDULE AND MUST BE SUBMITTED AND APPROVED PRIOR TO COMMENCING THE WORK. THAT PLAN MUST ALSO CONTAIN THE CONTRACTORS PROPOSED METHOD FOR PREVENTING DEBRIS FROM FALLING ON THE EXPRESSWAY.

THESE QUANTITIES ARE PROVIDED FOR THE OPERATIONS DESCRIBED ABOVE AND ARE CARRIED TO THE GENERAL SUMMARY.

ITEM 614 - MAINTAINING TRAFFIC . . . . . LUMP SUM

ITEM - SPECIAL-LAW ENFORCEMENT OFFICER WITH PATROL CAR 200 HOURS

ESTIMATED QUANTITIES

SPECIFIC LOCATIONS AND USAGE OF ESTIMATED QUANTITIES SET UP ON THIS PLAN TO BE USED AS DIRECTED BY THE ENGINEER SHALL BE MADE A MATTER OF RECORD BY INCORPORATION INTO THE FINAL CHANGE ORDER GOVERNING COMPLETION OF THIS PROJECT. ESTIMATED QUANTITIES OF MATERIALS SHALL NOT BE ORDERED FOR DELIVERY TO THE PROJECT UNLESS AUTHORIZED BY THE ENGINEER.

SCHEDULE OF OPERATIONS

It is imperative that structures no. MAH-680-0488, MAH-680-0603 and MAH-62-1751 [IR-680-9(32)237] shall be done prior to commencing the other structures because of the possible traffic maintenance conflict with the bridge deck overlay project, MAH-680-(2.06)(3.74)(4.76)(6.32)(6.93), which will be under contract concurrently with this project.

The Contractor shall co-operate with other Contractor(s) in accordance with section 105.07 of the Specifications.

STATE OF OHIO
DEPARTMENT OF TRANSPORTATION
DIVISION OF DESIGN AND CONSTRUCTION
BUREAU OF BRIDGES

1/3

GENERAL NOTES
FOR BRIDGE SCREENING

COVINGTON-MAH. 422-0217, WICK-MAH. 422-0313, GLENWOOD-MAH. 18-1835, MARKET-MAH. 18-1950 & WILLIAMSON-MAH. 7-1479

| DESIGNED | DRAWN | TRACED | CHECKED | REVIEWED | DATE | REVISED |
|---|---|---|---|---|---|---|
| | R.J.V. | | | | 3-21-88 | |

| FHWA REGION | STATE | PROJECT NO. | FUNDS |
|---|---|---|---|
| 5 | OHIO | | |

3/9

MAHONING - 5 BRIDGES / SCREENING

MAH-680-(4.88)(6.03)
MAH-422-2.15
MAH-62-(17.51)(18.86)

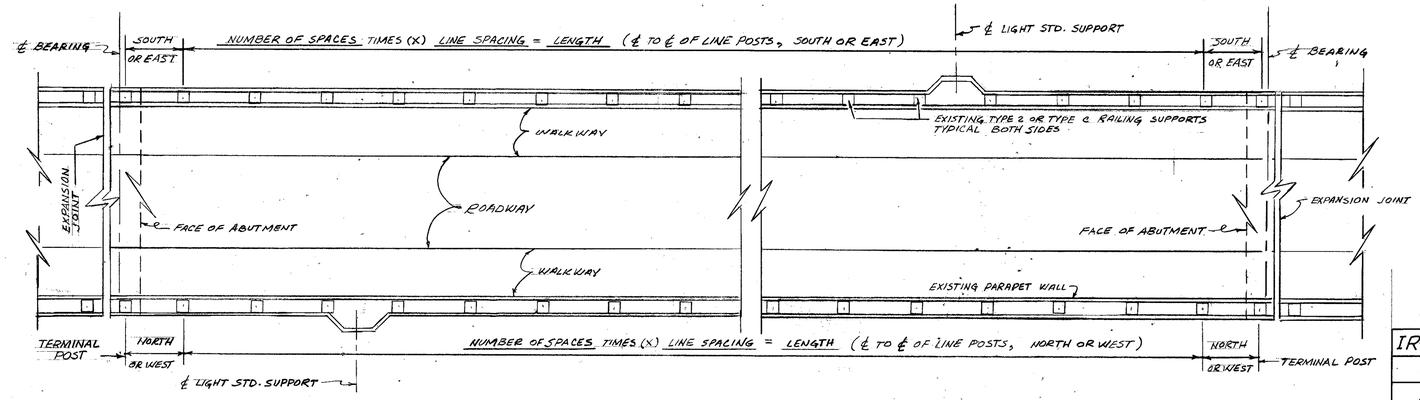


TYPICAL BRIDGE LAYOUT

NOT TO SCALE

## GENERAL SUMMARY OF ESTIMATED QUANTITIES

| IR-680-9(32)237 | F-65(28) | QUANTITY | UNIT | DESCRIPTION | ITEM |
|---|---|---|---|---|---|
| 1036.83 | 795.17 | 1,832 | LIN. FT. | REMOVE AND STORE BRIDGE RAILING | 202 |
| 1036.83 | 795.17 | 1,832 | LIN. FT. | INSTALL RAILING OVER NEW BASE PLATES | 517 |
| 4 | – | 4 | EACH | REPLACE BROKEN TYPE C RAILING SUPPORTS | 517 |
| | | | | | |
| 12 | 8 | 20 | EACH | BASE PLATES WITH SLEEVES FOR TERMINAL ENDS | 607 |
| 123 | 100 | 223 | EACH | BASE PLATES WITH SLEEVES FOR LINE POSTS | 607 |
| 12 | 8 | 20 | EACH | 3" TERMINAL POSTS | 607 |
| 123 | 100 | 223 | EACH | 2½" LINE POSTS | 607 |
| 1036.83 | 795.17 | 1,832 | LIN. FT. | Fence, Type CL as per plan | 607 |
| 3110.5 | 2385.5 | 5,496 | LIN. FT. | 1⅝" O.D. TOP & BRACE RAILS – 2.27 # / FT. | 607 |
| 12 | 8 | 20 | EACH | ⅜" O.D. X 8' LONG TENSION ROD WITH TURNBUCKLES | 607 |
| 8 | 84 | 92 | EACH | BOLTS TO BE CUT OFF AND STUD BOLTS WELDED | SPECIAL |
| LUMP | LUMP | LUMP | LUMP | TRAFFIC MAINTENANCE | 614 |
| 120 | 80 | 200 | HOURS | LAW ENFORCEMENT OFFICER WITH PATROL CAR | SPECIAL |
| LUMP | LUMP | LUMP | LUMP | MOBILIZATION | 624 |

## SUMMARY OF EXISTING QUANTITIES FOR EACH BRIDGE

| BRIDGE NAME AND NUMBER | BRIDGE SIDE | EXISTING RAILING | LINE SPACING OF EXISTING RAILING SUPPORTS | END SPACING | TOTAL LENGTH | NO. OF BASE & POSTS TERMINAL | NO. OF BASE & POSTS LINE | NUMBER OF BOLTS TO BE RAISED | RAILING SUPPORTS TO BE REPLACED | FUNDING |
|---|---|---|---|---|---|---|---|---|---|---|
| COVINGTON AVE. | EAST | TYPE 2 | 27 SPACES @ 7'-8¼" = 207'-6¾" | 2 @ 7'-7½" = 15'-2⅛" | 222'-8⅞" | 2 | 28 | 6 | 0 | F-65(28) |
| MAH-422-0215 | WEST | " " | " " " " " | 2 @ " " | 222'-8⅞" | 2 | 28 | 36 | 0 | |
| WICK AVE | EAST | TYPE 2 | 21 " " 7'-8¼" = 161'-5¼" | 2 @ 6'-8⅞" = 13'-4⅞" | 174'-10⅛" | 2 | 22 | 6 | 0 | |
| MAH-62-1886L * | WEST | " " | " " " " " | 2 @ " " | 174'-10⅛" | 2 | 22 | 36 | 0 | |
| GLENWOOD AVE. | EAST | TYPE C | 21 " " 7'-11" = 166'-3" | 2 @ 7'-11¾" = 15'-11½" | 182'-2½" | 2 | 22 | 2 | 2 | IR-680-9(32)237 |
| MAH-680-0488 | WEST | " " | " " " " " | 2 @ " " | 182'-2½" | 2 | 22 | 6 | 2 | |
| MARKET ST. | EAST | TYPE C | 15 " " 8'-2" = 122'-6" | 2 @ 8'-2⅞" = 16'-5¾" | 138'-11¾" | 2 | 16 | 0 | 0 | |
| MAH-680-0603 | WEST | " " | 14 " " 8'-2" = 114'-4" | 2 @ 7'-3½" = 14'-7" | 128'-11" | 2 | 15 | 0 | 0 | |
| WILLIAMSOM AVE. | NORTH | TYPE C | 23 " " 8'-1" = 185'-11" | 2 @ 8'-0" 16'-0" | 201'-11" | 2 | 24 | 0 | 0 | |
| MAH-62-1751 | SOUTH | " " | " " " " " | 2 @ " " | 201'-11" | 2 | 24 | 0 | 0 | |
| TOTALS | | | 1679'-2" | 152'-1¾" | 1831'-3¾" | 20 | 223 | 92 | 4 | |

* Wick Ave. structure carries one-way US 62 traffic south-bound.

STATE OF OHIO
DEPARTMENT OF TRANSPORTATION
DIVISION OF DESIGN AND CONSTRUCTION
BUREAU OF BRIDGES

2/3

TYPICAL BRIDGE LAYOUT, EXISTING QUANTITIES & ESTIMATED QUANTITIES
COVINGTON-MAH. 422-0217, WICK-MAH. 422-0313, GLENWOOD-MAH. 18-1835, MARKET-MAH. 18-1950 & WILLIAMSON-MAH. 7-1479

| DESIGNED | DRAWN | TRACED | CHECKED | REVISED | DATE | REVISED |
|---|---|---|---|---|---|---|
| | R.J.Y. | | | | 3-8-83 | |

| FHWA REGION | STATE | PROJECT NO. | FUNDS |
|---|---|---|---|
| 5 | OHIO | | |



MAHONING - 5 BRIDGES/SCREENING

MAH-680-(4.88)(6.03)
MAH-422-2.15
MAH-62-(17.51)(18.86)

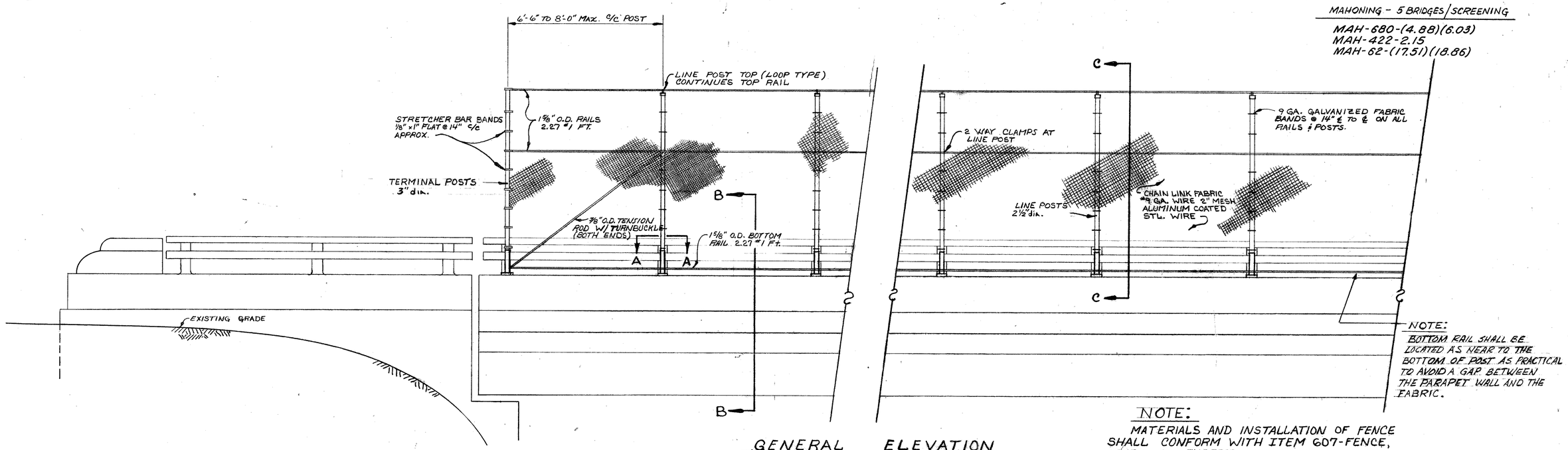


NOTE:
BOTTOM RAIL SHALL BE LOCATED AS NEAR TO THE BOTTOM OF POST AS PRACTICAL TO AVOID A GAP BETWEEN THE PARAPET WALL AND THE FABRIC.

## GENERAL ELEVATION

SCALE 1/8" = 1'-0"

NOTE:
MATERIALS AND INSTALLATION OF FENCE SHALL CONFORM WITH ITEM 607-FENCE, TYPE CL, EXCEPT AS NOTED.

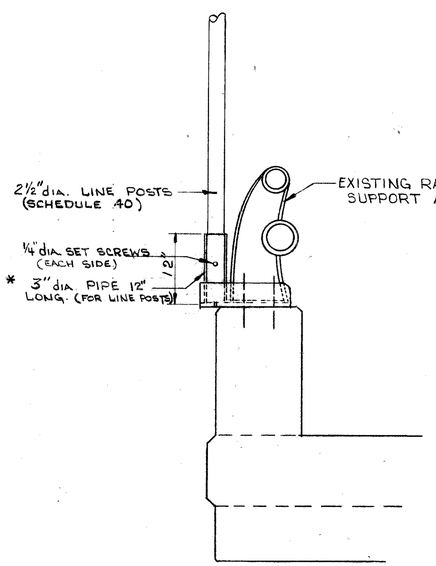


* USE 3 1/2" dia. PIPE 12" LONG FOR TERMINAL POSTS

## SECTION B-B

SCALE 3/4" = 1'-0"

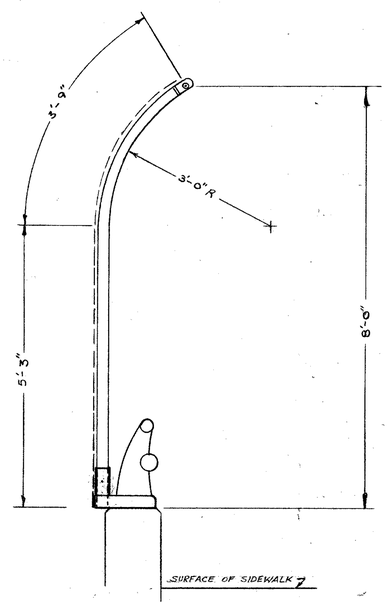


## SECTION C-C

NOTE:
MINIMUM BOLT PROJECTION TO BE AS SHOWN FOR ADEQUATE EXTENSION

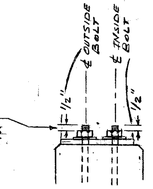


SECTION D-D

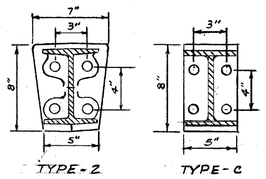


TYPE-2 TYPE-C
RAILING SUPPORTS

NOTE:
TO PREVENT ELECTROLYTIC CORROSION OF THE ALUMINUM RAILING POSTS, REFERENCE SHALL BE MADE TO SECTION 517.05 OF THE C.M.S. FOR ALUMINUM IMPREGNATED CAULKING OR HEAVY BITIMINOUS PAINT WHERE STEEL AND ALUMINUM PARTS ARE IN CONTACT.

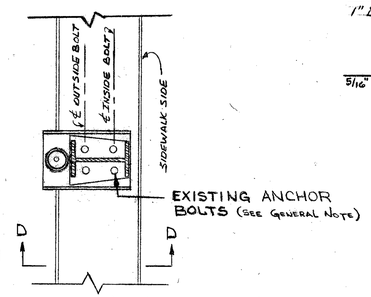


## SECTION A-A

SCALE 3/4" = 1'-0"

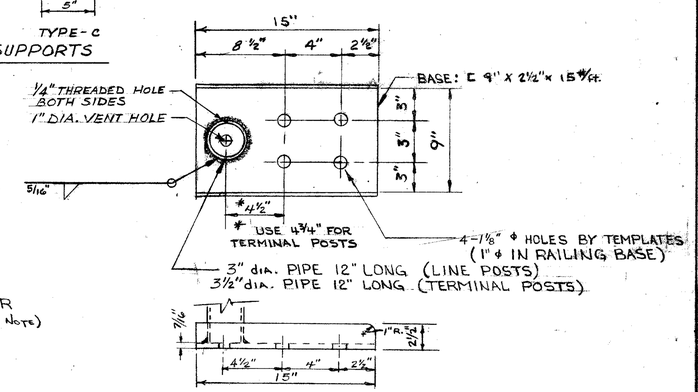


## BASE DETAIL

NOT TO SCALE

NOTE:
BASE PLATES SHALL BE GALVANIZED ACCORDING TO ASTM A-123

ITEM SPECIAL BOLT TO BE CUT OFF AND STUD BOLTS WELDED

ANY BOLTS WHICH DO NOT HAVE ADEQUATE EXTENSION SHALL BE CUT OFF AND STUD BOLTS WELDED THERE TO, BY THE STICK ELECTRODE METHOD. MINIMUM STUD HEIGHT OF WELDED BOLTS TO BE 2 1/2" ABOVE PARAPET WALL. STUD BOLTS TO CONFORM TO DIAMETER, THREAD SIZES AND SPECIFICATIONS OF EXISTING BOLTS. PAYMENT SHALL BE ON AN EACH BASIS AND SHALL INCLUDE ALL THE ABOVE.

USING A FULL PENETRATION WELD.

| DATE | REVISION |
|---|---|
| 5-20-82 | POSTS, BASE, SECT 'C' & NOTES |
| 6-4-82 | REVISED DETL. OF BASE |
| 11-1-82 | ADDED NOTES, CHANGED POST SIZES |
| 3-17-83 | ADD RAILING TYPES AND BOLT EXT. MIN. |

STATE OF OHIO
DEPARTMENT OF TRANSPORTATION
DIVISION OF DESIGN AND CONSTRUCTION
BUREAU OF BRIDGES

3/3

# TYPICAL FENCE DESIGN FOR FREEWAY OVERPASS

| DESIGNED | DRAWN | TRACED | CHECKED | REVIEWED | DATE | REVISED |
|---|---|---|---|---|---|---|
| | J.W. | | R.J.Y. | | 6-25-80 | |

MAH-680-(4.88)(6.03)
MAH-422-2.15
MAH-62-(17.51)(18.86)

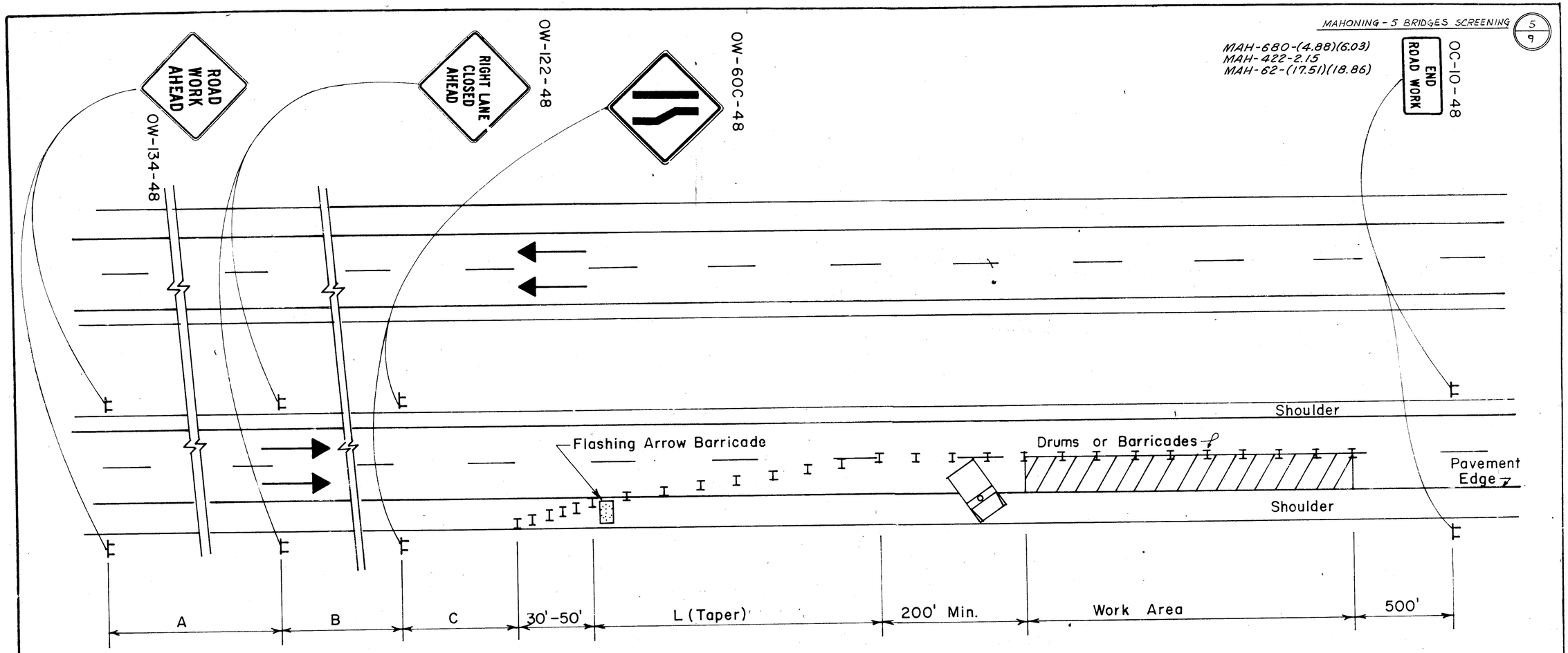


GENERAL NOTES

1. THIRTEEN (13) DRUMS OR BARRICADES SHALL BE USED TO FORM THE LANE TRANSITION TAPER IN ADVANCE OF THE WORK AREA. FIVE (5) CHANNELIZING DEVICES SHALL BE USED TO FORM THE TAPER ON THE SHOULDER. CONES, DRUMS, OR BARRICADES SHALL BE SPACED AT 50 FOOT CENTERS FOR THE FIRST 1000 FEET OF THE WORK AREA AND AT A MAXIMUM OF 100 FEET FOR THE BALANCE OF THE WORK AREA. CONES MAY BE SUBSTITUTED FOR THE BARRICADES OR STEEL DRUMS FOR THE LANE CLOSURES DURING DAYLIGHT HOURS ONLY.

2. WHEN WORK IS BEING PERFORMED IN THE LANE ADJACENT TO THE MEDIAN ON A DIVIDED HIGHWAY, "OW-123-48" SIGNS SHALL BE SUBSTITUTED FOR "OW-122-48" SIGNS AND THE OW-60D SIGNS SHALL BE SUBSTITUTED FOR THE OW-60C SIGNS.

3. THE WORK TRUCK SHOWN AT THE BEGINNING OF THE WORK AREA SHALL BE IN PLACE AND UNOCCUPIED WHENEVER MEN ARE WORKING WITHIN THE WORK AREA. THIS TRUCK SHALL BE MOVED FROM THE PAVEMENT WHENEVER WORKMEN ARE NOT IN THE WORK AREA. OTHER PROTECTIVE DEVICES MAY BE USED IN LIEU OF THE WORK TRUCK SHOWN WHEN APPROVED BY THE ENGINEER.

5. TYPE C STEADY BURNING BARRICADE WARNING LIGHTS SHALL BE ERECTED ON DRUMS OR BARRICADES FOR NIGHT LANE CLOSURES. MAXIMUM SPACING SHALL BE 50' CENTER TO CENTER IN ADVANCE OF THE WORK AREA AND 200' CENTER TO CENTER WITHIN THE LIMITS OF THE WORK AREA.

| DISTANCE | A | B | C | L |
|---|---|---|---|---|
| URBAN | 200 | 200 | 200 | 425 |
| MAJOR STANDARD | 500 | 500 | 500 | 600 |
| FREEWAY AND EXPRESSWAY | 2600 | 1600 | 1000 | 720 |

OHIO DEPARTMENT OF TRANSPORTATION

CLOSING ONE LANE OF A FOUR LANE DIVIDED HIGHWAY

DATE 4/77

DR. GRD CK. RLB.

MAH-680-(4.88)(6.03)
MAH-422-2.15
MAH-62-(17.51)(18.86)

PLAN NO. 6/9

MAHONING - 5 BRIDGES / SCREENING

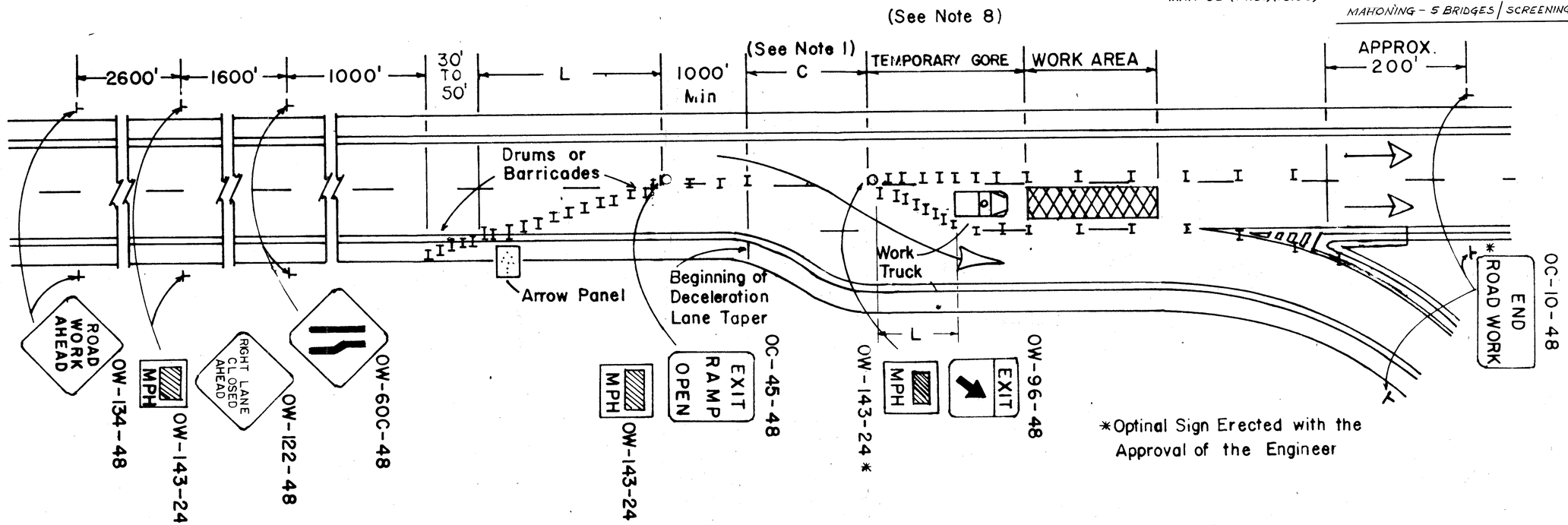


## GENERAL NOTES

1. **THIS WORK AREA TRAFFIC CONTROL APPLICATION SHALL ONLY BE USED WHEN THE DISTANCE "C" IS 100 FEET OR GREATER. WHEN "C" IS LESS THAN 100 FEET, THE TRAFFIC CONTROL SHOWN ON THE "LANE CLOSURE BEFORE EXIT GORE" DETAIL SHOULD BE USED, OR THE EXIT SHOULD BE CLOSED, OR THE TRAFFIC CONTROL ON THIS DRAWING MAY BE USED WITH APPROVAL OF THE ENGINEER. WHEN THE EXIT IS CLOSED, APPROPRIATE DETOUR SIGNS SHALL BE PROVIDED.**

2. WHEN WORK IS BEING PERFORMED IN ONLY THE LANE ADJACENT TO THE MEDIAN ON A DIVIDED HIGHWAY, REFER TO THE TYPICAL WORK AREA TRAFFIC CONTROL SHOWN IN FIGURE C-21 OF THE OHIO MANUAL OF UNIFORM TRAFFIC CONTROL DEVICES.

3. THE WORK TRUCK SHOWN AT THE BEGINNING OF THE WORK AREA SHALL BE IN PLACE AND UNOCCUPIED WHENEVER MEN ARE WORKING WITHIN THE WORK AREA. THIS TRUCK SHALL BE MOVED FROM THE PAVEMENT WHENEVER WORKMEN ARE NOT IN THE WORK AREA. OTHER PROTECTIVE DEVICES MAY BE USED IN LIEU OF THE WORK TRUCK SHOWN WHEN APPROVED BY THE ENGINEER. A TRUCK MOUNTED IMPACT ATTENUATOR MAY BE EMPLOYED.

4. THE FLASHING OR SEQUENCING ARROW PANEL SHALL BE IN ACCORDANCE WITH OMUTCD, SECTION 7G-**8**

5. THIRTEEN (13) DRUMS OR BARRICADES SHALL BE USED TO FORM THE LANE TRANSITION TAPER IN ADVANCE OF THE WORK AREA. FIVE (5) CHANNELIZING DEVICES SHALL BE USED TO FORM THE TAPER ON THE SHOULDER. CONES, DRUMS, OR BARRICADES SHALL BE SPACED AT 50 FOOT CENTERS. CONES MAY BE SUBSTITUTED FOR BARRICADES OR **DRUMS FOR THE LANE** CLOSURES DURING DAYLIGHT HOURS ONLY.

6. TYPE C STEADY BURNING BARRICADE WARNING LIGHTS SHALL BE ERECTED ON DRUMS OR BARRICADES FOR NIGHT LANE CLOSURES. MAXIMUM SPACING SHALL BE 50' CENTER TO CENTER IN ADVANCE OF THE WORK AREA AND 200' CENTER TO CENTER WITHIN THE LIMITS OF THE WORK AREA.

7. TAPER FORMULA SHALL BE IN ACCORDANCE WITH OMUTCD, SECTION 7F-17.

8. WHEN CREATING A TEMPORARY GORE, CHANNELIZING DEVICES SHOULD BE SPACED 25' CENTER TO CENTER SO AS TO CREATE A "SOLID GORE" **EFFECT.**

9. THE SPACINGS BETWEEN CONSTRUCTION AND MAINTENANCE SIGNS SHOWN ON THIS DETAIL MAY REQUIRE ADJUSTMENTS (INCREASES OR DECREASES) TO ASSURE THAT THEY ARE POSITIONED NO CLOSER THAN 200 FEET TO EXISTING SIGNS AS DETERMINED BY THE ENGINEER.

OHIO DEPARTMENT OF TRANSPORTATION

LANE CLOSURE AT EXIT GORE

DATE 8-3-79

| FED. RD. DIVISION | STATE | PROJECT | |
|---|---|---|---|
| 5 | OHIO | | |



MAHONING - 5 BRIDGES / SCREENING

MAH-680-(4.88)(6.03)
MAH-422-2.15
MAH-62-(17.51)(18.86)

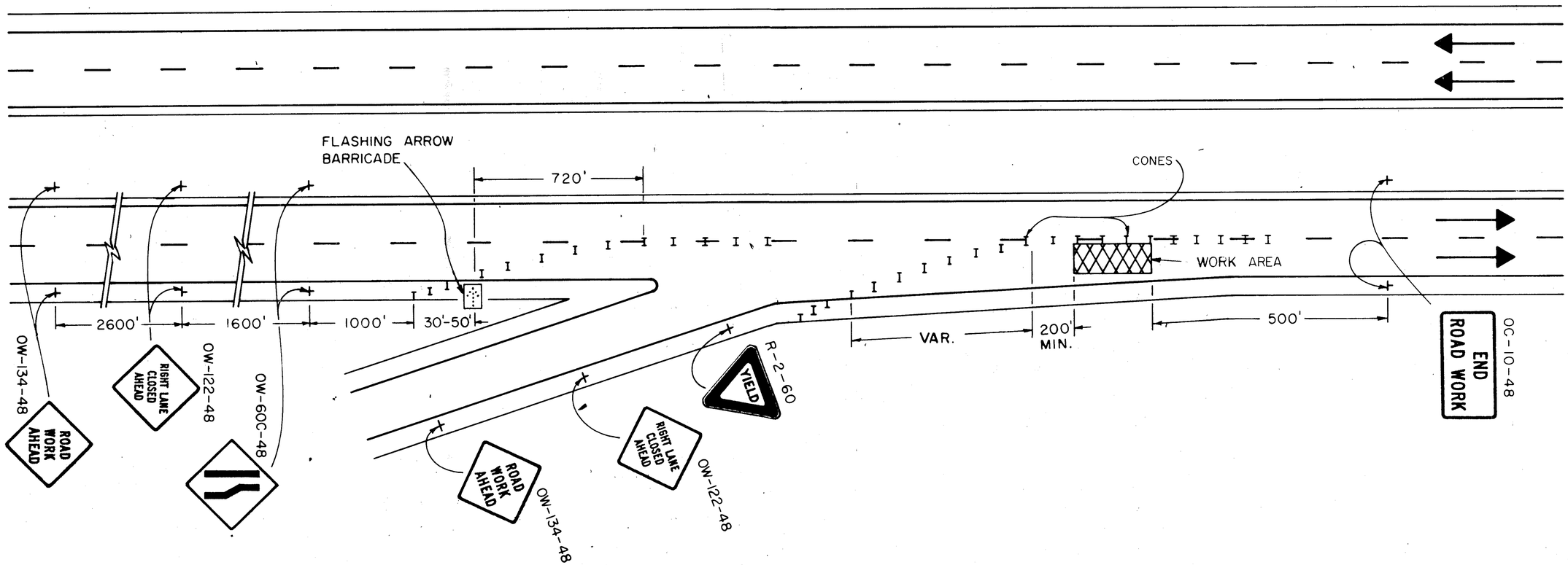


RAMP SIGNS SHALL BE DUAL MOUNTED ON MULTILANE RAMPS.
RAMP TRAFFIC SHALL BE MAINTAINED AT ALL TIMES.

THIRTEEN (13) CONES SHALL BE USED TO FORM THE LANE TRANSITION TAPER IN ADVANCE OF THE WORK AREA. FIVE (5) CONES SHALL BE USED TO FORM THE TAPER ON THE SHOULDER. CONES SHALL BE SPACED AT 50 FOOT CENTERS FOR THE FIRST 1000 FEET OF THE WORK AREA AND AT A MAXIMUM OF 100 FEET FOR THE BALANCE OF THE WORK AREA. ALL CONES SHALL BE A MINIMUM OF 36 INCHES IN HEIGHT.

| OHIO DEPARTMENT OF TRANSPORTATION | |
|---|---|
| LANE CLOSURE BEYOND ENTRANCE GORE | DATE 3/77 |
| DR. | CK. |

PLAN NO.

8/9

MAH-680-(4.88)(6.03)
MAH-422-2.15
MAH-62-(17.51)(18.86)

MAHONING - 5 BRIDGES
SCREENING

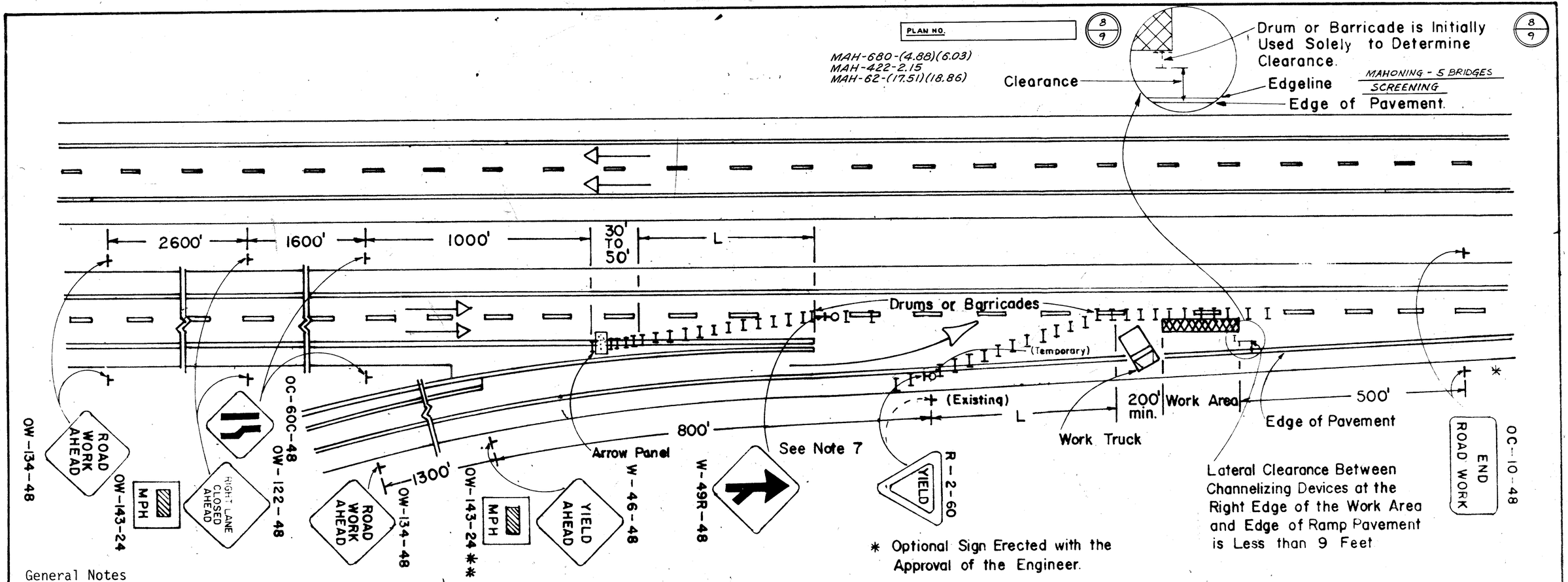


* Optional Sign Erected with the Approval of the Engineer.

General Notes

1. This work area traffic control application shall be employed when the lateral clearance between channelizing devices at the right edge of the work area and the edge of the ramp pavement is less than 9 feet. When the clearance is more than 9 feet, the traffic control on "Lane Closure at Entrance Ramp: Plan A" should be used, or the ramp should be closed. When the ramp is closed, appropriate detour signs shall be provided.

2. Thirteen (13) drums or barricades shall be used to form the lane transition taper in advance of the work area. Five (5) channelizing devices shall be used to form the taper on the shoulder. Cones, drums, or barricades shall be spaced at 50 foot centers. Cones may be substituted for barricades or drums for the lane closures during daylight hours only.

3. Ramp signs shall be dual mounted on multi-lane ramps. When the ramp is not long enough to allow placement as specified above, the signs may be spaced proportionately within the space available as determined by the Engineer (a 200' minimum spacing must be maintained).

4. The flashing or sequencing arrow panel shall be in accordance with OMUTCD, Section 7G-8.

5. The work truck shown at the beginning of the work area shall be in place and unoccupied whenever men are working within the work area. This truck shall be moved from the pavement whenever workmen are not in the work area. Other protective devices may be used in lieu of work truck shown when approved by the Engineer.

6. Type C steady burning barricade warning lights shall be erected on drums or barricades for night lane closures. Maximum spacing shall be 50' center to center in advance of the work area and 200' center to center within the limits of the work area.

7. It may be necessary to move the location of an existing Yield condition In these cases, the permanent R-2 sign installation shall be covered and the temporary installation shall be mounted upon a drive post which shall be banded to a drum with stainless steel strapping material or other techniques subject to the approval of the Engineer.

8. Taper Formula Shall Be In Accordance With OMUTCD, Section 7F-17.

9. THE SPACINGS BETWEEN CONSTRUCTION AND MAINTENANCE SIGNS SHOWN ON THIS DETAIL MAY REQUIRE ADJUSTMENTS (INCREASES OR DECREASES) TO ASSURE THAT THEY ARE POSITIONED NO CLOSER THAN 200 FEET TO EXISTING SIGNS AS DETERMINED BY THE ENGINEER.

OHIO DEPARTMENT OF TRANSPORTATION

LANE CLOSURE AT ENTRANCE RAMP PLAN B

DATE 8-3-79

| FHWA REGION | STATE | PROJECT NO. | FUNDS |
|---|---|---|---|
| 5 | OHIO | | |

9/9

MAHONING - 5 BRIDGES / SCREENING

MAH-680-(4.88)(6.03)
MAH-422-2.15
MAH-62-(17.51)(18.86)

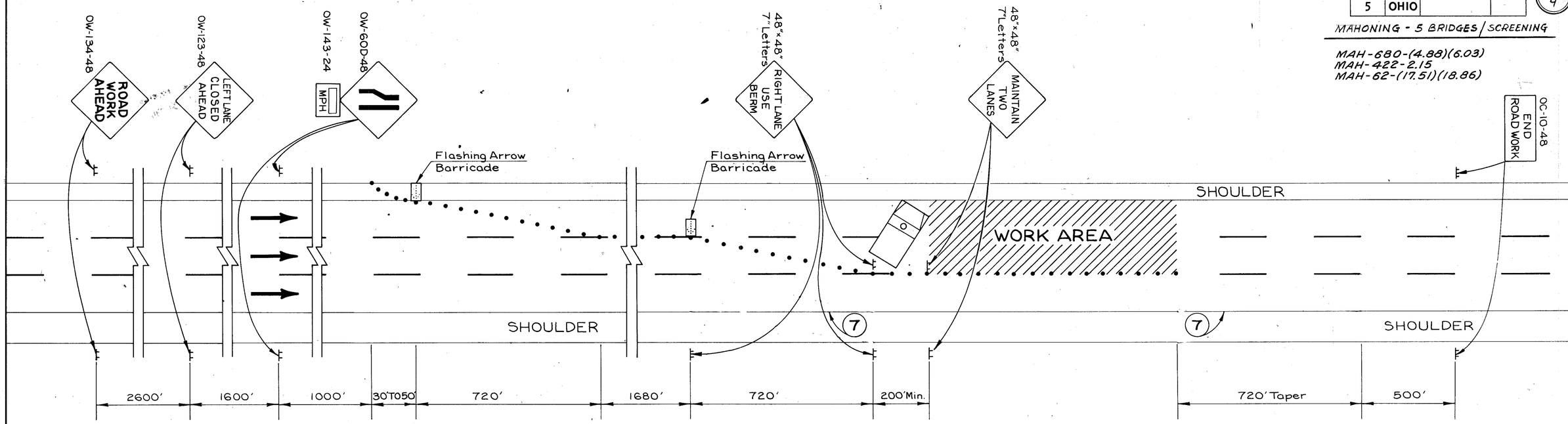


## GENERAL NOTES

1. Thirteen (13) Drums Or Barricades Shall Be Used To Form Each Lane Transition Taper In Advance Of The Work Area. Five (5) Channelizing Devices Shall Be Used To Form The Taper On The Shoulder. Cones, Drums Or Barricades Shall Be Spaced At 50 Foot Centers For The First 1,000 Feet Of The Work Area. Cones May Be Substituted For The Barricades Or Steel Drums For The Lane Closures During Daylight Hours Only.
2. Two (2) Lanes Of Traffic Shall Be Maintained At All Times.
3. The Work Truck Shown At The Beginning Of The Work Area Shall Be In Place And Unoccupied Whenever Men Are Working Within The Work Area. This Truck Shall Be Moved From The Pavement Whenever Workmen Are Not In The Work Area. Other Protective Devices May Be Used In Lieu Of The Work Truck Shown When Approved By The Engineer.
4. Type C Steady Burning Barricade Warning Lights Shall Be Erected On Drums Or Barricades For Night Lane Closures. Maximum Spacing Shall Be 50 Foot Center To Center In Advance Of The Work Area On 200 Foot Center To Center Within The Limits Of The Work Area.
5. ~~The Contractor Shall Provide The Services Of One (1) Special Duty State Highway Patrolman For The Exclusive Purpose Of Controlling Through Traffic For Each One Way Traffic Zone, Except That A Patrolman Will Not Be Required In The Area Of Pavement Removal And Replacement Areas, And Bridge Repair And Waterproofing Areas, When The Contractor Is Not Performing Work. Information Regarding Arrangements And Payments By The Contractor For Special Duty Patrol Services May Be Obtained By Contacting Ohio Highway Patrol, 660 East Main Street, Columbus, Ohio, Telephone 466-2660.~~ *See note, sheet 2*
6. ~~4" White Temporary Lane Lines Shall Be Installed And Maintained During Two Lane Closures And Removed When Traffic Is Returned To Work Area.~~
7. Remove Existing Edge Line During Work In This Area - Replace When Traffic Is Returned To Work Area.
8. The Contractor Shall Make Any Necessary Shoulder Repairs As Directed By The Engineer To Maintain Traffic On Shoulder.
9. Length Of Work Area Shall Not Exceed One (1) Mile Unless Directed By The Engineer.

CLOSING TWO LANES OF A SIX LANE DIVIDED HIGHWAY

08P-MAH-68