OHIO	1 / 54
FHWA REGION 5	
IR-680-9 (36) 238	FEDERAL PROJECT

MAH - 680 - 6.97

STATE OF OHIO
DEPARTMENT OF TRANSPORTATION
MAH - 680 - 6.97
CITY OF YOUNGSTOWN - BOARDMAN TOWNSHIP
MAHONING COUNTY

DESIGN DESIGNATION

CURRENT A.D.T. (1989)	=	38280
DESIGN YEAR A.D.T. (2009)	=	45936
D.H.V.	=	3828
D	=	51%
T	=	8%
V DESIGN SPEED	=	55 M.P.H.
LEGAL	=	55 M.P.H.

FUNCTIONAL CLASSIFICATION

RURAL/URBAN PRINCIPAL ARTERIAL

DESIGN EXCEPTION APPROVAL DATE

MEDIAN SHOULDER WIDTH

CONVENTIONAL SIGNS

County Line
Township Line
Section Line
Corporation Line or
Fence Line(existing) (proposed)
Center Line 352 353
Trees, Stumps (to be removed)
Utility Poles: Telephone, Power, Light

Limited Access (only) LA
Right of Way (only) RW
Limited Access & Right of Way LA & RW
Existing Right of Way
Property Line (in existing fence)
Railroad or
Guardrail (existing) (proposed)

INDEX OF SHEETS

TITLE SHEET	1
SCHEMATIC PLAN	2
TYPICAL SECTIONS	3-6
PAVEMENT DETAILS	7-13
GENERAL NOTES	14-17
MAINTENANCE OF TRAFFIC	18-30
CALCULATIONS	31
GENERAL SUMMARY	32-33
LINE SHEETS	34-38
GRADING AND FENCING PLAN	39
CROSS-SECTIONS	40
TRAFFIC CONTROL	41-46
BRIDGE REPAIRS	47-54, 54A, 54B

LINE DATA

BEGIN PROJECT: STA. 762+75
STA. EQUATION 637+76.04 AHEAD
= 638+00 BACK
END PROJECT: STA 526+75

TOTAL LENGTH OF PROJECT 23623.96 LIN.FT.
OR 4.474 MILES

BEGIN WORK: STA. 762+88
END WORK: STA. 526+00

TOTAL LENGTH OF WORK 23688 LIN.FT.
OR 4.486 MILES

Plan Prepared By :

OHIO Department of Transportation
District 4

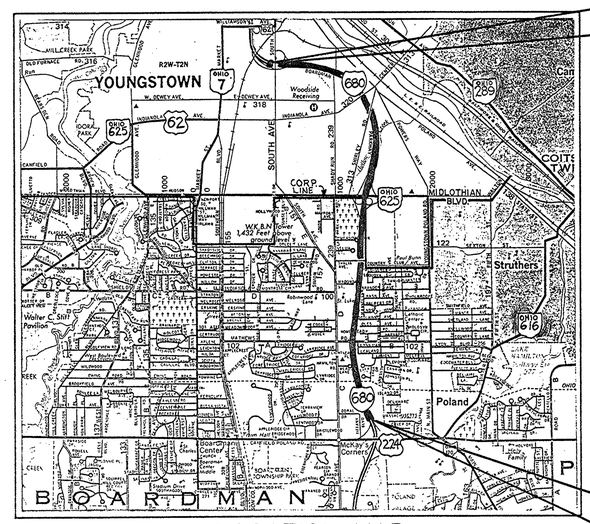

BEGIN PROJECT
STA. 762+75
S.L.M. 6.97

STA. EQUATION
STA. 637+76.04 AHD.
= 638+00 BK.

END PROJECT
STA. 526+75
S.L.M. 11.23

LOCATION MAP

SCALE IN MILES
0 1/4 1/2 3/4 1 2 3

UNDERGROUND UTILITIES
TWO WORKING DAYS
BEFORE YOU DIG
Call...800-362-2764 (Toll free)
OHIO UTILITIES PROTECTION SERVICE
NON-MEMBERS
MUST BE CALLED DIRECTLY

Portion to be improved
State & Federal Routes
Other Roads

SCALES

Plan 0 100 200

SUPPLEMENTAL SPECIFICATIONS		
802	5-4-88	
847	10-17-83	
850	5-31-88	
924	12-14-88	
947	10-17-83	
811	9-26-88	
905	5-2-89	

SUPPLEMENTAL PRINTS OF STANDARD CONSTRUCTION DRAWINGS						
BP-5	10-1-87	MT-99.10	11-14-86			
CB-8	11-10-83	MT-99.20	11-14-86			
GR-1	1-11-85					
GR-2B	2-5-82	TC-41.10	8-29-84			
GR-4	1-21-85	TC-42.10	8-19-77			
MC-9	1-30-84	TC-72.20	2-26-82			
MC-9A	1-11-85					
GR-4A	1-30-84	F1	11-10-83			
GR-6	2-5-82	F2	5-1-76			
		BP-8	10-1-87			

LIMITED ACCESS

This improvement is especially designed for through traffic and has been declared a limited access highway or freeway by action of the Director in accordance with the provisions of Section 5511.02 the Revised Code of Ohio.

1989 SPECIFICATIONS

The standard specification of the State of Ohio, Department of Transportation, including changes and supplemental specifications listed in the proposal shall govern this improvement.

I hereby approve these plans and declare that the making of this improvement will not require the closing to traffic of the highway and that provisions for the maintenance and safety of traffic will be as set forth on the plans and estimates.

Approved William Buckley
Date 01-23-90 District Deputy Director of Transportation

Approved
Date Engineer, Bureau of Bridges and Structural Design

Approved
Date Chief Engineer, Planning and Design

Approved
Date Director, Department of Transportation

DEPARTMENT OF TRANSPORTATION
FEDERAL HIGHWAY ADMINISTRATION

APPROVED:

DIVISION ADMINISTRATOR DATE

Project :
Date of Letting ,19 Contract No.

TITLE SHEET

ZFAI:C20,334LANE.CEL AS TITLE REV 10-24-88

SCHEMATIC PLAN

OHIO
FHWA REGION 5
FEDERAL PROJECT
MAH-680-6.97

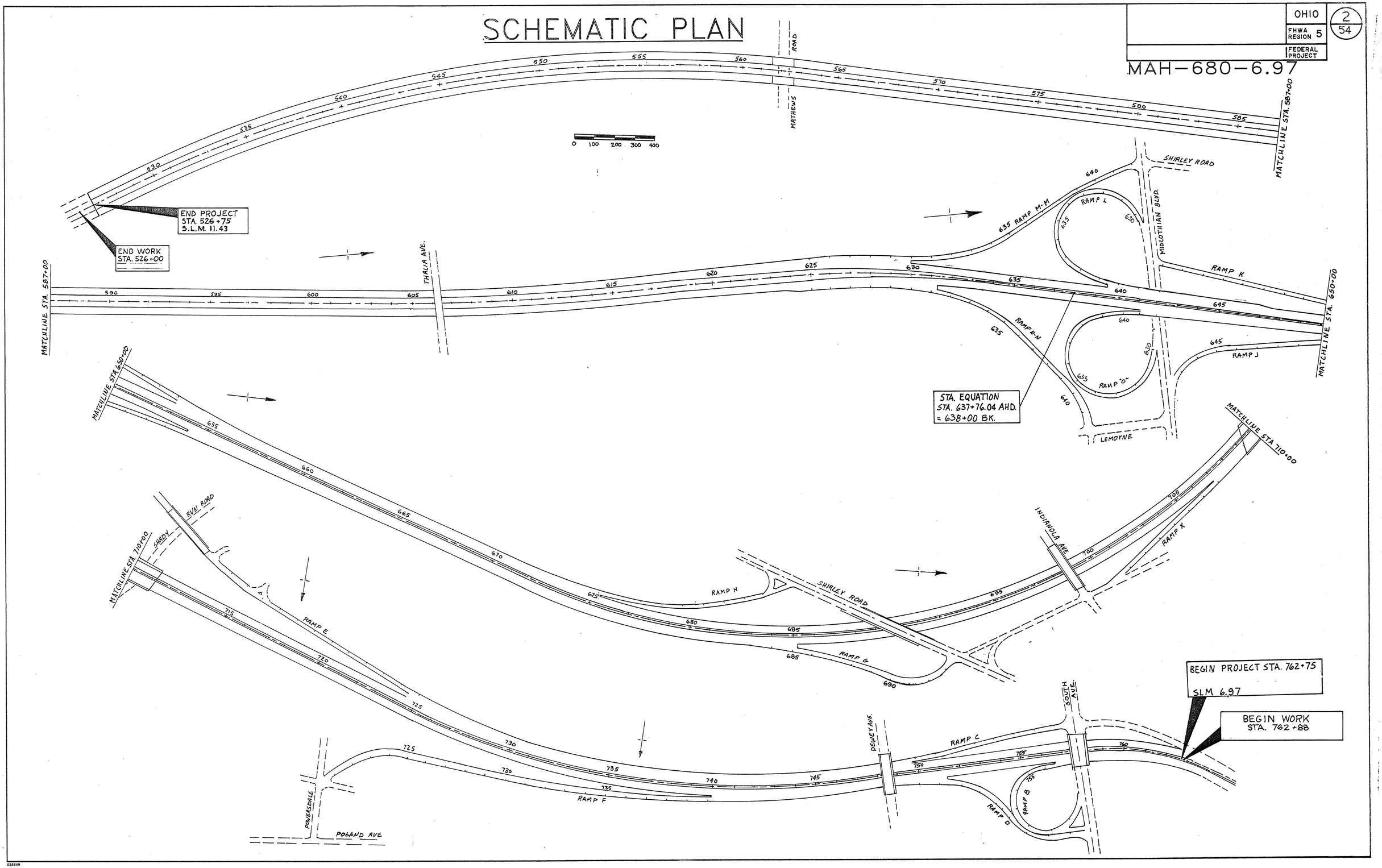

528849

F.H.W.A. REGION	STATE	PROJECT	
5	OHIO		

MAH-680-6.97

TYPICAL SECTIONS

TYPE OPEN GRADED ON 446

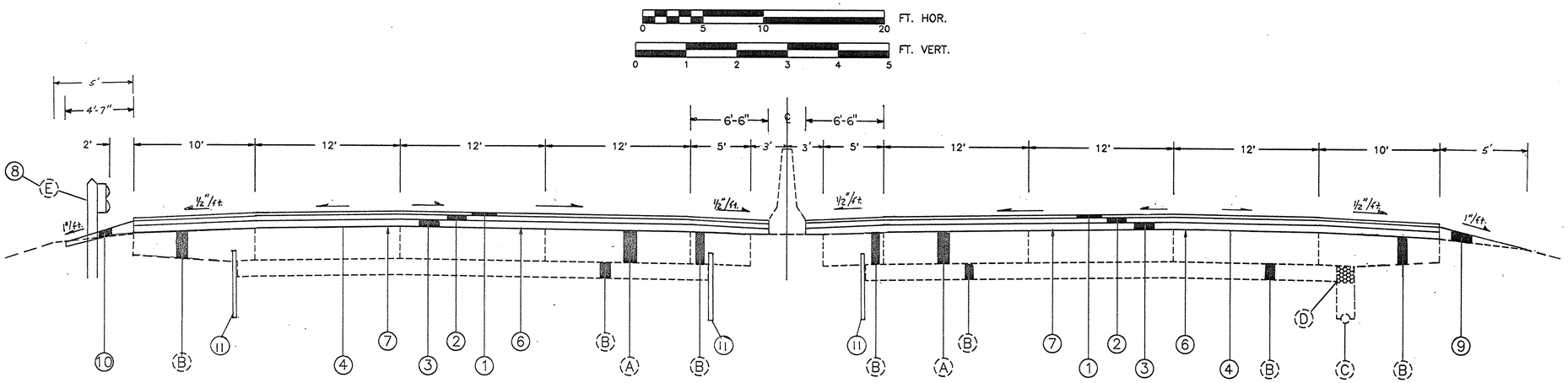

EXISTING PAVEMENT LEGEND

- (A) 8" CONTINUOUSLY REINFORCED CONCRETE PAVEMENT
- (B) 4" OR 6" BITUMINOUS AGGREGATE BASE
- (C) 6" PIPE UNDERDRAINS (IN CUT SECTIONS)
- (D) POROUS BACKFILL
- (E) GUARDRAIL, TYPE 5
- (G) CEMENT STABILIZED SUBBASE
- (H) AGGREGATE BASE
- (J) REINFORCED CONCRETE PAVEMENT

STATION FROM	STATION TO	LIN. FT.	REMARKS
637+76.04 AHD	641+10.90	334.86	NORMAL
641+10.90	642+96.02	185.12	BR.NO.MAH-680-0923
642+96.02	668+90.72	2594.7	NORMAL
668+90.72	709+42.40	4051.68	SUPERELEVATED
709+42.40	711+26.28	183.88	BR.NO.MAH-680-0794
711+26.28	714+36.37	310.09	SUPERELEVATED
714+36.37	721+61.76	725.39	NORMAL
721+61.76	749+06.86	2745.1	SUPERELEVATED
749+06.86	753+30.87	424.01	NORMAL
753+30.87	762+75.00	944.13	SUPERELEVATED
	TOTAL	12498.96	

SEE ORIGINAL CONSTRUCTION PLAN FOR CROSS SLOPE OF SUPERELEVATED SECTIONS. FOR LIST OF ORIGINAL CONSTRUCTION PLANS, SEE GENERAL NOTES SHEET No. 14

PROPOSED LEGEND

1	ITEM SPECIAL	– 3/4" RUBBERIZED OPEN GRADED ASPHALT FRICTION COURSE (SEE PROPOSAL NOTES)
2	ITEM 446	– 1 1/4" ASPHALT CONCRETE SURFACE COURSE, TYPE 1, AC-20
3	ITEM 446	– 1 3/4" ASPHALT CONCRETE INTERMEDIATE COURSE, TYPE 2, AC-20
4	ITEM 448	– 0" MIN. ASPHALT CONCRETE INTERMEDIATE COURSE, TYPE 1, AC-20 (SPOT LEVELING)
6	ITEM 407	– TACK COAT
7	ITEM 811	– ASPHALT UNDERSEALING OF EXISTING CONCRETE PAVEMENT
8	ITEM 606	– RAISING EXISTING GUARDRAIL, TYPE 5
9	ITEM 203	– LINEAR GRADING, METHOD 1 SEE SHEET NO. 5
10	ITEM 203	– LINEAR GRADING, METHOD 2,4 SEE SHEET NO. 5,6
11	ITEM 605	– SHALLOW UNDERDRAIN, AS PER PLAN

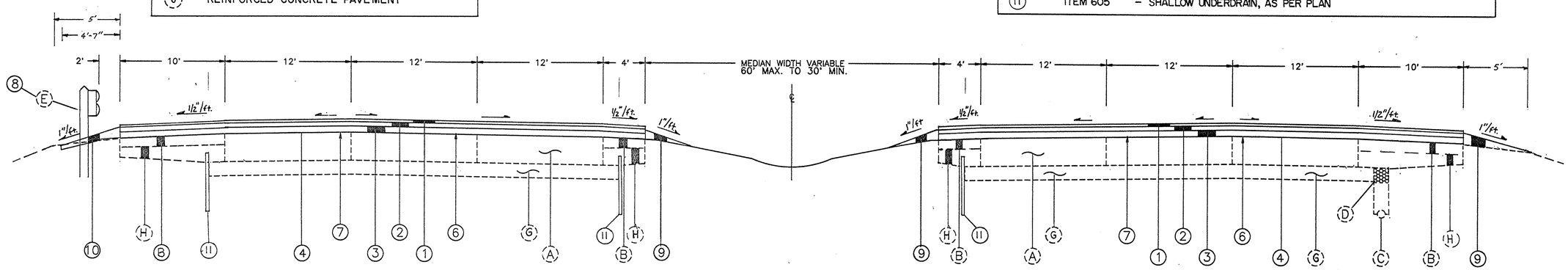

STATION FROM	STATION TO	LIN. FT.	REMARKS
526+75.00	561+69.80	3494.8	NORMAL
561+69.80	562+77.56	107.76	BR.NO.MAH-680-1075
562+77.56	621+60.02	5882.46	NORMAL
621+60.02	636+42.04	1482.02	SUPERELEVATED
636+42.04	638+00.00 BK	157.96	NORMAL
	TOTAL	11125	

TYPICAL SECTIONS
TYPE 446

MAH-680-6.97

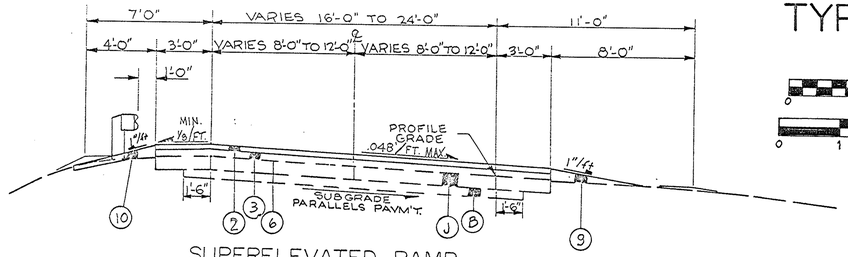

SUPERELEVATED RAMP

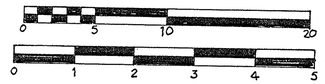

NOTE: SEE SHEETS 11,12,13 FOR ITEM 605 SHALLOW UNDERDRAIN, AS PER PLAN LOCATIONS AND DETAILS

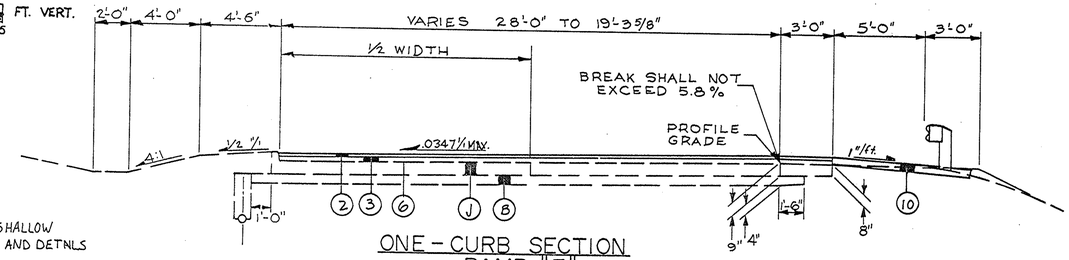

ONE-CURB SECTION
RAMP "F"

LIMITING STATIONS
STA. 733+14.04 TO STA. 734+25

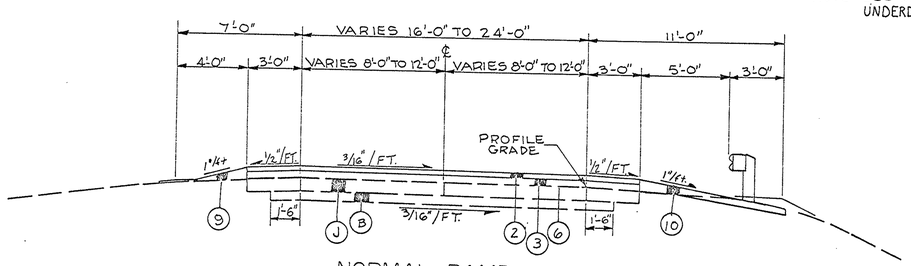

NORMAL RAMP

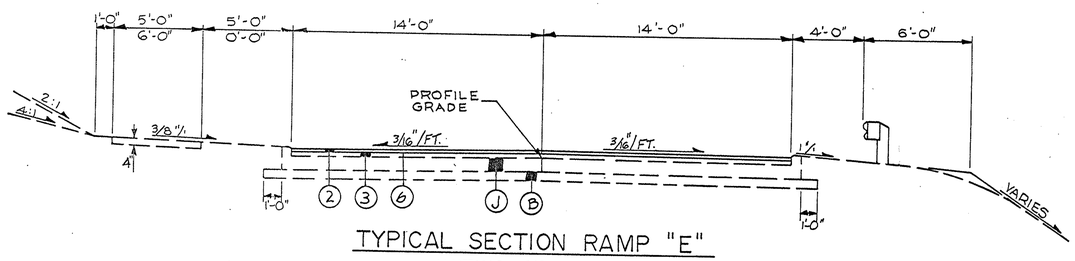

TYPICAL SECTION RAMP "E"

LIMITING STATIONS
STA. 709+73.96 TO STA. 709+85.75
STA. 712+78.25 TO STA. 715+43.19

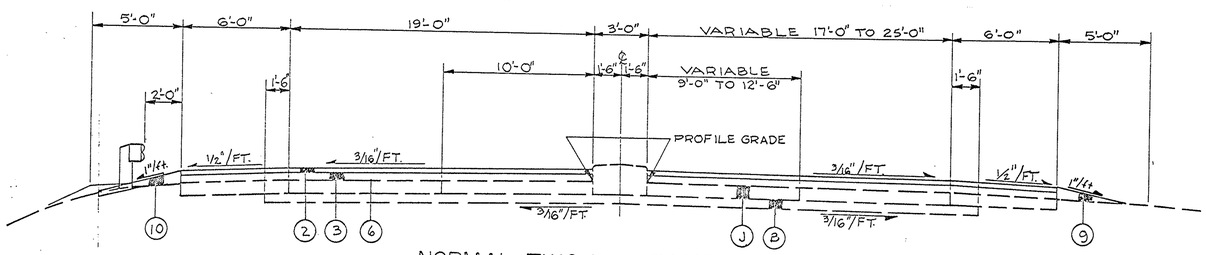

NORMAL TWO WAY RAMP

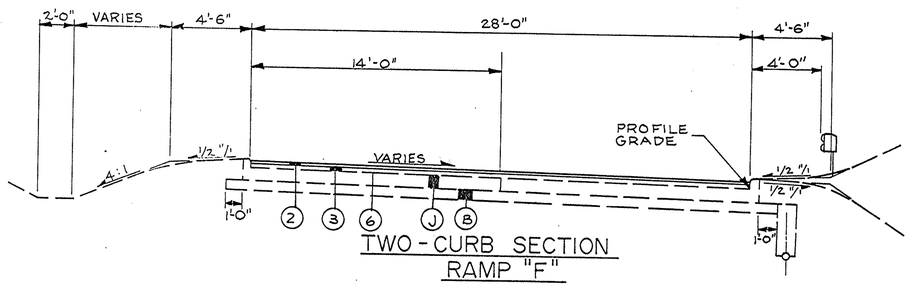

TWO-CURB SECTION
RAMP "F"

LIMITING STATIONS
STA. 720+80.92 TO STA. 733+14.04

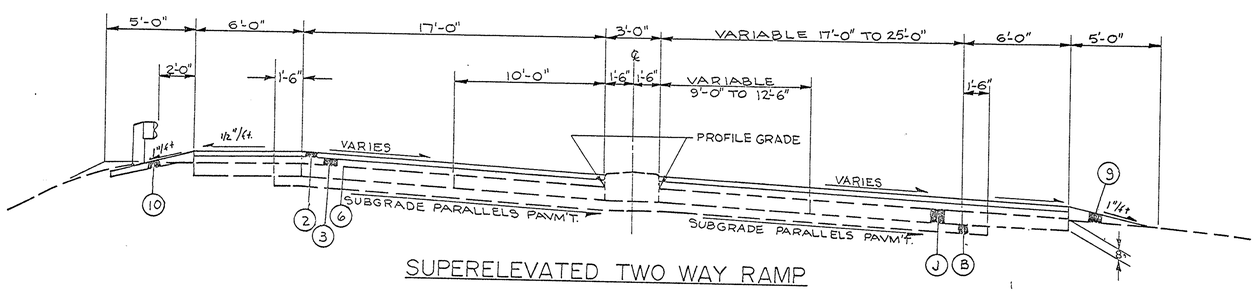

SUPERELEVATED TWO WAY RAMP

MEDIAN DETAIL
STA. 628+00 TO 633+00

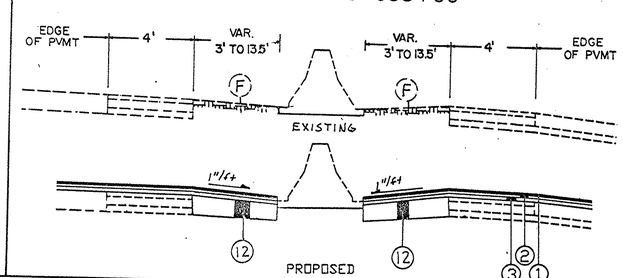

F GRASS MEDIAN

12 ITEM 301 -12" BITUMINOUS AGGREGATE BASE

ESTIMATED QUANTITIES

ITEM	DESCRIPTION	QUANTITY
203	EXCAVATION NOT INCLUDING EMBANKMENT CONSTRUCTION	153 C.Y.
301	BITUMINOUS AGGREGATE BASE	153 C.Y.

528649

LINEAR GRADING

F.H.W.A. REGION	STATE	PROJECT NO.	FUNDS
5	OHIO		

5/54

MAH - 680 - 6.97

METHOD 1

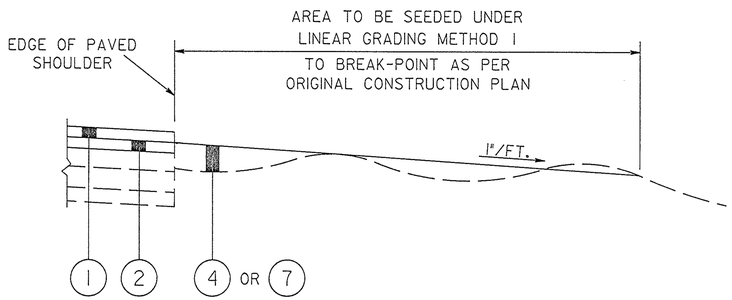

LEGEND

1	SPECIAL	3/4" OPEN GRADED ASPHALT CONCRETE FRICTION COURSE
2	446	ASPHALT CONCRETE, AC-20
3	408	BITUMINOUS PRIME COAT (SEE SPEC. THIS SHEET)
4	203	LINEAR GRADING, METHOD 1
5	203	LINEAR GRADING, METHOD 2
6	448	ASPHALT CONCRETE SURFACE COURSE, TYPE 1, AC-20
7	203	EMBANKMENT, AS PER PLAN (IF REQUIRED, SEE NOTE THIS SHEET)

METHOD 2

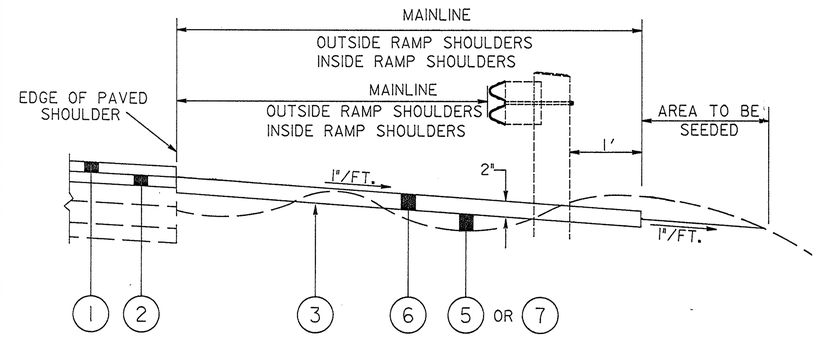

LINEAR GRADING - METHOD 1

THIS WORK SHALL CONSIST OF REGRADING THE EXISTING SHOULDER IN NON-GUARDRAIL AREAS ON THE MAINLINE OUTSIDE AND INSIDE SHOULDERS AND ON BOTH INSIDE AND OUTSIDE SHOULDERS OF THE RAMPS AS INDICATED IN THE SKETCH. REGRADING WILL BE ACCOMPLISHED BY REMOVING EXCESS TURF BETWEEN THE EDGES OF THE PAVED SHOULDER AND THE BREAK-OVER POINT USING A SLOPE OF APPROXIMATELY 1"/FT. EXCESS MATERIAL SHALL BE WINDROWED ON THE SHOULDER AND REMOVED BY THE CONTRACTOR. ANY VOIDS OR IRREGULARITIES BETWEEN THE EDGE OF PAVED SHOULDER AND BREAK-OVER POINT SHALL BE FILLED AND ADEQUATELY COMPACTED USING EXCESS MATERIAL. EXISTING RUTTED AREAS CAUSED BY SURFACE EROSION SHALL BE SCARIFIED PRIOR TO FILLING. ITEM 203 - EMBANKMENT, AS PER PLAN SHALL BE PROVIDED WHERE WINDROWED MATERIAL IS NOT AVALIABLE. ADEQUATE QUANTITY SHALL BE PROVIDED TO COMPLETE THE TYPICAL SECTION AS SHOWN. A DROP OF 3/4' INCHE SHALL BE MAINTAINED BETWEEN THE EDGE OF THE RESURFACED SHOULDER AND THE REGRADED SHOULDER. AFTER GRADING OPERATION IS COMPLETED THE DISTURBED AREA SHALL BE SEEDED AND MULCHED AS PER ITEM 659. ALL COMPACTION SHALL BE AS PER ITEM 203.

THE METHOD OF MEASUREMENT SHALL BE CONSIDERED AS ONE STATION EQUAL TO 100 LIN.FT. MEASURED SEPARATELY FOR EACH SIDE OF EACH DIRECTIONAL LANE AND SHALL INCLUDE ALL WORK REQUIRED AS DESCRIBED ABOVE INCLUDING THE NECESSARY SEEDING.
THERE MAY BE AREAS WHERE LINEAR GRADING MAY NOT BE REQUIRED IN THE FIELD. THE ENGINEER SHALL DETERMINE THESE LOCATIONS AND APPROPRIATE DEDUCTION MADE AS A RESULT OF THIS FIELD INVESTIGATION.

THE COST OF THE ABOVE OPERATION SHALL BE INCLUDED IN THE PRICE BID FOR ITEM 203 - LINEAR GRADING, METHOD 1

NOTE:

ITEM 203 - EMBANKMENT, AS PER PLAN SHALL MEET THE SPECIFICATIONS OF ITEM 203 EXCEPT THAT GRANULAR MATERIAL AS PER 203.02 SHALL BE EXCLUDED. THIS ITEM IS PROVIDED IN CASE WINDROWED MATERIAL IS NOT AVAILABLE NOR SUFFICIENT. EMBANKMENT MAY BE OBTAINED FROM WITHIN THE EXISTING R/W AS APPROVED BY THE ENGINEER.

A QUANTITY OF *100* CU.YDS. OF ITEM 203 EMBANKMENT, AS PER PLAN HAS BEEN PROVIDED AND CARRIED TO THE GENERAL SUMMARY TO BE USED AS DIRECTED BY THE ENGINEER, FOR LINEAR GRADING METHODS 1,2, AND 4.

ESTIMATED QUANTITIES

203 LINEAR GRADING, METHOD 1 = 425 STATIONS

LINEAR GRADING - METHOD 2

THIS WORK SHALL CONSIST OF GRADING THE EXISTING OUTSIDE AND INSIDE SHOULDER BETWEEN THE PAVED SHOULDER AND BREAK POINT OF THE SHOULDER IN AREAS WHERE GUARD RAIL EXISTS. IT SHALL CONSIST OF REMOVING THE EXCESS TURF IN THE VICINITY OF THE GUARD RAIL TO PROVIDE A POSITIVE SLOPE AWAY FROM THE PAVED SHOULDER. ITEM 203 EMBANKMENT, AS PER PLAN SHALL BE PROVIDED WHERE WINDROWED MATERIAL IS NOT AVAILABLE. QUANTITY SHALL BE AS REQUIRED TO COMPLETE THE TYPICAL SECTION AS SHOWN. A SLOPE OF APPROXIMATLY 1"/FT. SHALL BE PROVIDED IN THESE AREAS.

THE AREA BETWEEN THE PAVED SHOULDER AND 1FT. BEYOND THE REAR OF THE EXISTING GUARD RAIL POSTS SHALL BE EXCAVATED SUFFICIENTLY IN DEPTH TO PROVIDE A 2" COMPACTED COURSE OF ITEM 448.

EXCESS MATERIAL BEYOND THE EXISTING GUARD RAIL MAY BE WASTED OVER THE SLOPE AT THE DIRECTION OF THE ENGINEER. PRIOR TO PLACING THIS MATERIAL A SOIL STERILIZER USING EITHER OF THE FOLLOWING BRANDS SHALL BE APPLIED BETWEEN THE PAVED SHOULDER AND 1' BEYOND THE POST AT THE RATE AND METHOD RECOMMENDED BY THE MANUFACTURER:

1. PRIMITOL 25E BY CIBA-GEIGY

2. KOVAR BY DIAMOND SHAMROCK OR APPROVED EQUAL

A PRIME COAT SHALL BE APPLIED AT THE RATE OF 0.5 GAL./S.Y. BEFORE APPLYING THE ASPHALT CONCRETE.
AREAS DISTURBED BEYOND THE 448 LIMIT SHALL BE SEEDED AND MULCHED AS PER 659. COMPACTION SHALL BE AS PER ITEM 203. THE METHOD OF MEASUREMENT SHALL BE CONSIDERED AS ONE STATION EQUAL TO 100 LIN.FT. OF GUARD RAIL PAVED UNDER, AND SHALL INCLUDE ALL WORK REQUIRED AS DESCRIBED ABOVE EXCEPT FOR ITEM 448 ASPHALT CONCRETE, 408 PRIME COAT, AND 203 EMBANKMENT AS PER PLAN. THE COST FOR THE ABOVE OPERATION SHALL BE INCLUDED IN THE PRICE BID ITEM 203 LINEAR GRADING METHOD 2.

ESTIMATED QUANTITIES

203 LINEAR GRADING, METHOD 2	= 165	STATIONS
448 ASPHALT CONCRETE, SURFACE COURSE TYPE 1, AC-20	= 460	CU.YDS.
408 BITUMINOUS PRIME COAT	= 4200	GALLONS

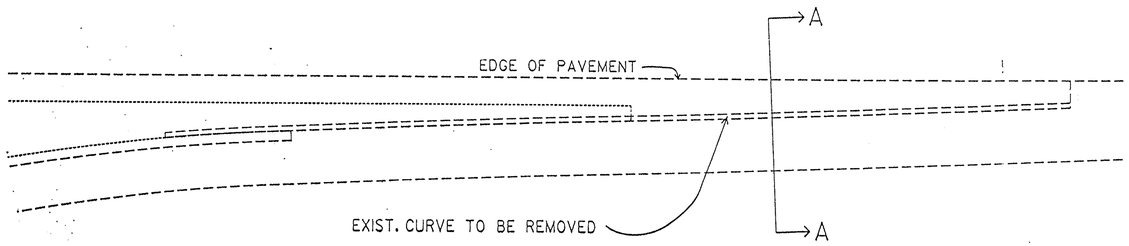

ENTRANCE TERMINAL CURB REMOVAL

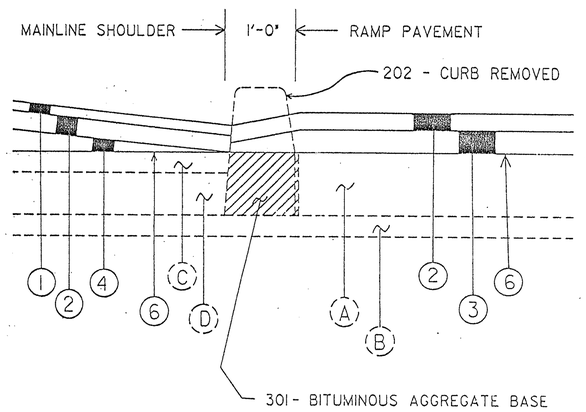

SECTION A-A

ITEM 202 - CURB REMOVED	710 L.F.
ITEM 301 - BITUMINOUS AGGREGATE BASE	30 C.Y.

LOCATIONS:

RAMP O	640+13 to 641+00 RT	117 L.F.
RAMP J	651+60 to 654+10 RT	250 L.F.
RAMP H	675+70 to 678+00 LT	230 L.F.
RAMP X	704+63 to 707+00 RT	237 L.F.
RAMP F	737+50 to 741+40 RT	390 L.F.
RAMP C	749+75 to 751+45 LT	170 L.F.
RAMP B	755+39 to 756+61 RT	150 L.F.
	TOTAL	710 L.F.

SEE SHEET No. 3 FOR PAVEMENT LEGEND

LINEAR GRADING
METHOD 4

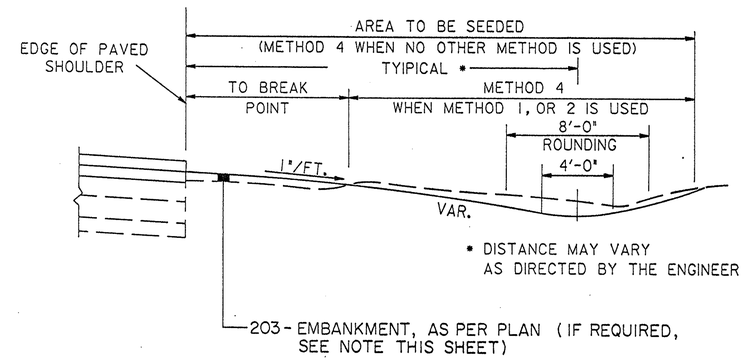

LINEAR GRADING - METHOD 4

THIS WORK SHALL CONSIST OF REGRADING THE EXISTING SHOULDER AND DITCH FROM THE EDGE OF THE EXISTING PAVED SHOULDER (FROM THE BREAK POINT AS DESCRIBED WHEN LINEAR GRADING METHOD 1, OR 2 IS USED IN THE SAME AREA.) THROUGH THE DITCH TO RE-ESTABLISH THE GRADE OF THE SHOULDER AND THE ORIGINAL DITCH FLOW LINE.

ANY VOIDS OR IRREGULARITIES BETWEEN THE EDGE OF PAVED SHOULDER AND BREAK POINT SHALL BE FILLED AND COMPACTED, AS PER 203, USING THE EXCESS MATERIAL.

EMBANKMENT, AS PER PLAN, SHALL BE PROVIDED IF NO EXCESS MATERIAL EXISTS. EMBANKMENT, AS PER PLAN, SHALL MEET THE SPECIFICATIONS OF ITEM 203 EXCEPT THAT GRANULAR MATERIAL AS PER 203.02 SHALL BE EXCLUDED. EMBANKMENT, AS PER PLAN MAY BE OBTAINED FROM WITHIN THE R/W AS APPROVED BY THE ENGINEER. WHERE AREAS ARE REGRADED, THEY SHALL BE SEEDED AND MULCHED AS PER ITEM 659.09. THE METHOD OF MEASUREMENT SHALL BE CONSIDERED AS ONE STATION EQUAL TO 100 LIN. FT. AND SHALL INCLUDE ALL WORK REQUIRED AS DESCRIBED ABOVE.

PAYMENT FOR ALL OF THE WORK LISTED ABOVE SHALL BE INCLUDED IN THE UNIT PRICE BID FOR ITEM 203-LINEAR GRADING, METHOD 4 STATIONS

SEE LINE SHEETS FOR LOCATIONS AND QUANTITIES

F.H.W.A. REGION	STATE	PROJECT NO.	FUNDS
5	OHIO		

MAH 680 6.97

PAVEMENT DETAILS

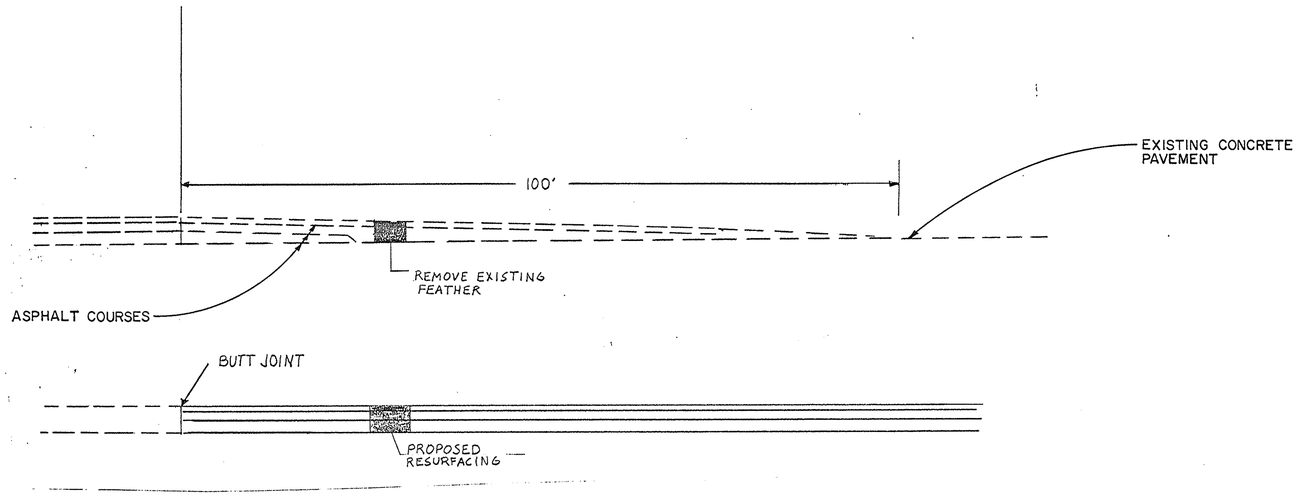

DETAIL No. 1 BEGIN/END WORK

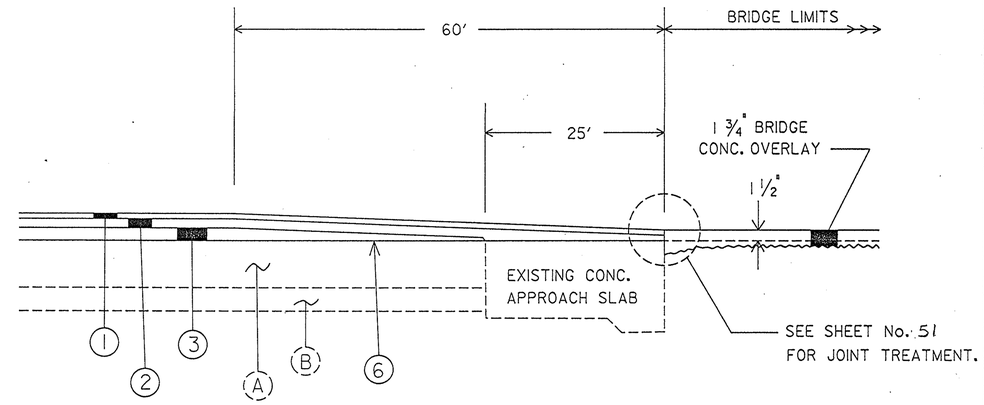

DETAIL No. 2 AT BRIDGE APPROACHES

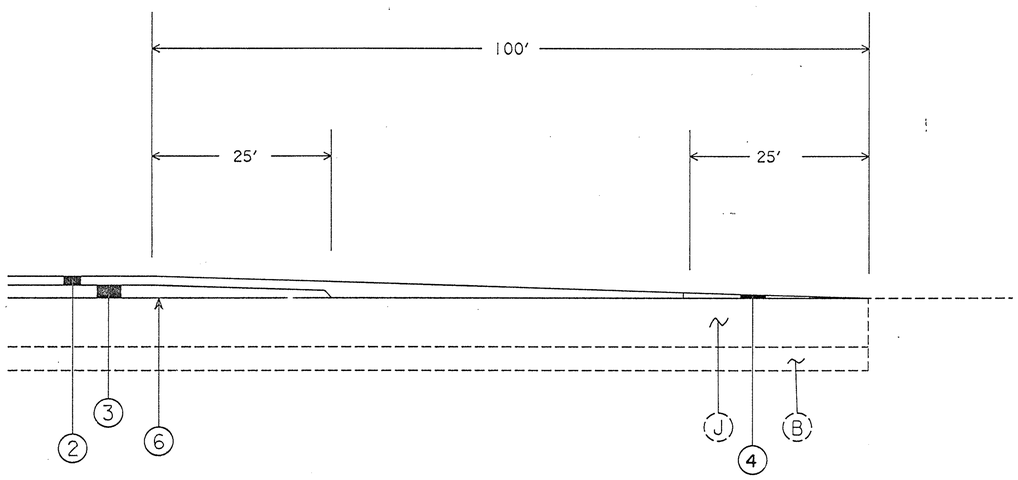

DETAIL No. 3 AT RAMP TERMINAL

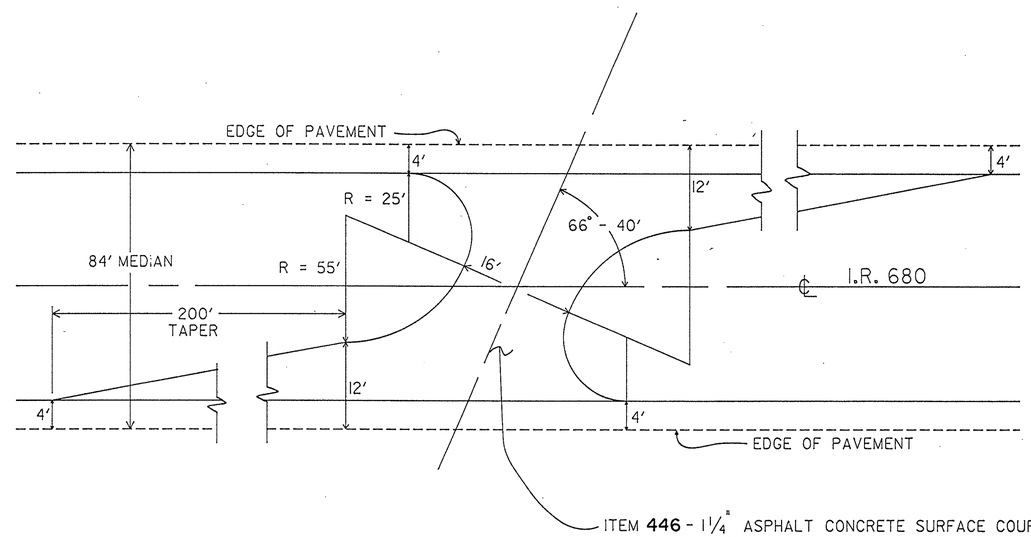

ITEM 446 - 1 1/4" ASPHALT CONCRETE SURFACE COURSE, TYPE 1, AC-20
ITEM 446 - 1 3/4" ASPHALT CONCRETE INTERMEDIATE COURSE, TYPE 2, AC-20
ITEM 407 - TACK COAT

TYPICAL U-TURN MEDIAN OPENING

(11) ITEM 448 - ASPHALT CONCRETE SURFACE COURSE, TYPE 1, AC - 20

SEE SHEET No. 3 FOR PAVEMENT LEGEND

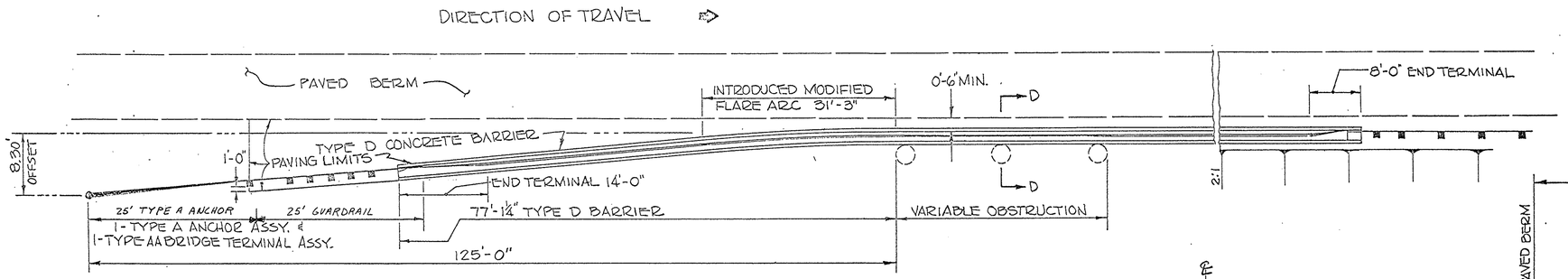

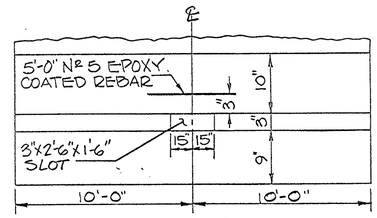

DETAIL A

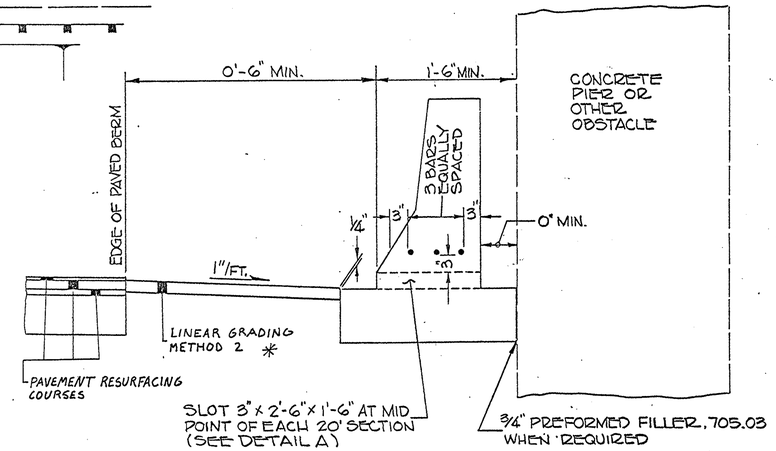

SECTION D-D

* LINEAR GRADING QUANTITY INCLUDED IN ESTIMATED QUANTITIES ON SHEET NO. 5

TYPE D CONCRETE BARRIER, AS PER PLAN:

THE 14' END TERMINAL WITH 50 FEET OF GUARDRAIL, AS SHOWN, SHALL BE USED AT THE APPROACH END OF A RUN OF TYPE D CONCRETE BARRIER. THE RUN SHALL HAVE A MINIMUM LENGTH OF 125 FEET SO THAT THE INTRODUCED MODIFIED FLARE ARC CAN BE USED PROVIDING AN OFFSET DISTANCE OF 8.30 FEET FROM THE NORMAL FACE.

WHEN THE PURPOSE FOR THE CONCRETE BARRIER IS FOR PIER PROTECTION OR OTHER OBSTACLES, THE LENGTH SHALL BE 125 FEET OF APPROACH, WHICH INCLUDES THE 50 FEET OF GUARDRAIL, PLUS THE LENGTH OF THE OBSTRUCTION.

THE 14' END TERMINAL WITH A TYPE "AA" BRIDGE TERMINAL ASSEMBLY, AS SHOWN, SHALL BE USED ON THE APPROACH END OF A RUN OF TYPE D CONCRETE BARRIER WHEN GUARDRAIL IS MET. THE 8' END TERMINAL WITH A TYPE "AT" BRIDGE TERMINAL ASSEMBLY, AS SHOWN, SHALL BE USED ON THE TRAILING END OF A RUN OF TYPE D CONCRETE BARRIER WHEN GUARDRAIL IS MET. THE COST OF THE APPROPRIATE BRIDGE TERMINAL ASSEMBLY SHALL BE PAID FOR UNDER THE PERTINENT 606 ITEM. THIS SHALL BE DONE IN ACCORDANCE WITH THE SPECIFICATIONS OF STANDARD DRAWING GR-3.

WHEN TYPE D CONCRETE BARRIER IS USED, LINEAR GRADING METHOD 2 , PAID FOR SEPERATELY, SHALL BE USED TO GRADE AND PAVE BETWEEN THE EDGE OF THE PAVED BERM AND THE EDGE OF THE BARRIER FOOTER. IF AN OPEN GRADED FRICTION COURSE IS USED ON THE PAVED BERM, THE FINISHED SURFACE OF THE PAVEMENT SHALL BE BELOW THE OPEN GRADED TO PROVIDE FREE DRAINAGE OF THE OPEN GRADED COURSE. ON THE APPROACH END OF A RUN OF BARRIER THE PAVING SHALL BE EXTEND PAST THE 14' END TERMINAL AND 1' BEHIND THE GUARDRAIL POSTS AND END BEFORE THE TYPE A ANCHOR ASSEMBLY, TO PREVENT WATER FROM ERODING THE GROUND AND EXPOSING THE FOOTER. WEEP HOLES SHALL BE CONSTRUCTED AT THE MIDPOINT OF EACH 20 FOOT SECTION, AS SHOWN ABOVE.

WHEN THE TYPE D CONCRETE BARRIER IS USED TO PROTECT PIERS OR OTHER OBSTACLES, A MINIMUM CLEARANCE OF 6 INCHES BETWEEN THE EDGE OF THE PAVED BERM AND THE FACE OF THE 3" CURB OF THE BARRIER IS REQUIRED THROUGHOUT THE LENGTH OF THE OBSTRUCTION. IF THE CONCRETE BARRIER IS EXTENDED PAST THE OBSTRUCTION TO MEET EXISTING GUARDRAIL, A TRANSITION MAY BE NEEDED TO ALIGN THE VERTICAL FACE OF THE 8' END TERMINAL SO THAT THE GUARDRAIL OFFSET OF 2 FEET FROM THE PAVED BERM CAN BE MET.

WHEN THE OUTSIDE 6 INCH STEP OF THE FOOTER ABUTS AN OBSTRUCTION OR WHEN THE STEP IS ELIMINATED AND THE VERTICAL WALL OF THE BARRIER ABUTS IT, A PREFORMED FILLER SHALL BE USED, AS PER SECTION 705.03 OF THE CONSTRUCTION AND MATERIAL SPECIFICATIONS.

PAYMENT FOR THE MATERIAL, LABOR AND EQUIPMENT INCIDENTAL TO THE ABOVE OPERATION, NOT INCLUDING THE APPROPRIATE BRIDGE TERMINAL ASSEMBLY AND LINEAR GRADING METHOD 2 , WILL BE AT THE CONTRACT UNIT PRICE BID FOR ITEM 622 CONCRETE BARRIER, TYPE D, AS PER PLAN.

FOR ADDITIONAL DETAILS SEE STANDARD DRAWINGS GR-3, GR-4, BR-1, MC-9.

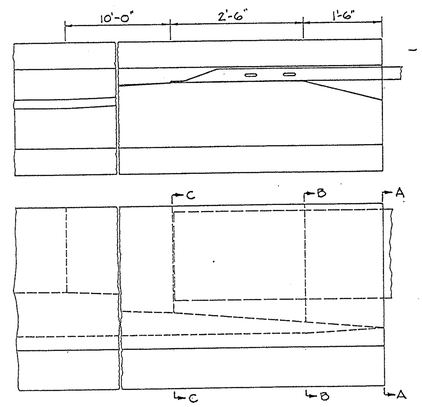

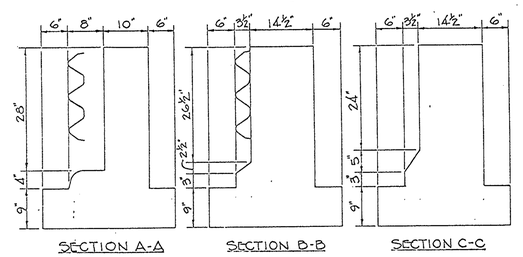

SECTION A-A SECTION B-B SECTION C-C

14' END TERMINAL

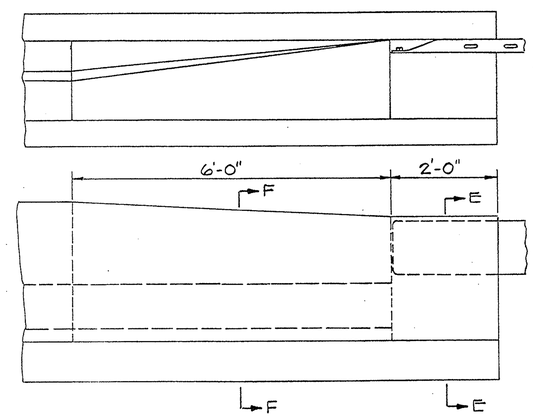

8' END TERMINAL

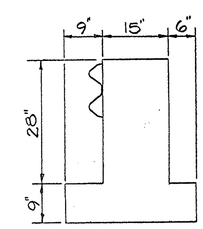

SECTION E-E

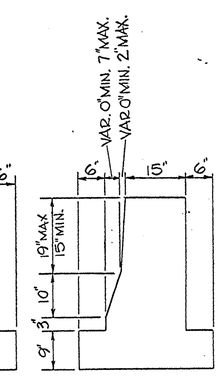

SECTION F-F

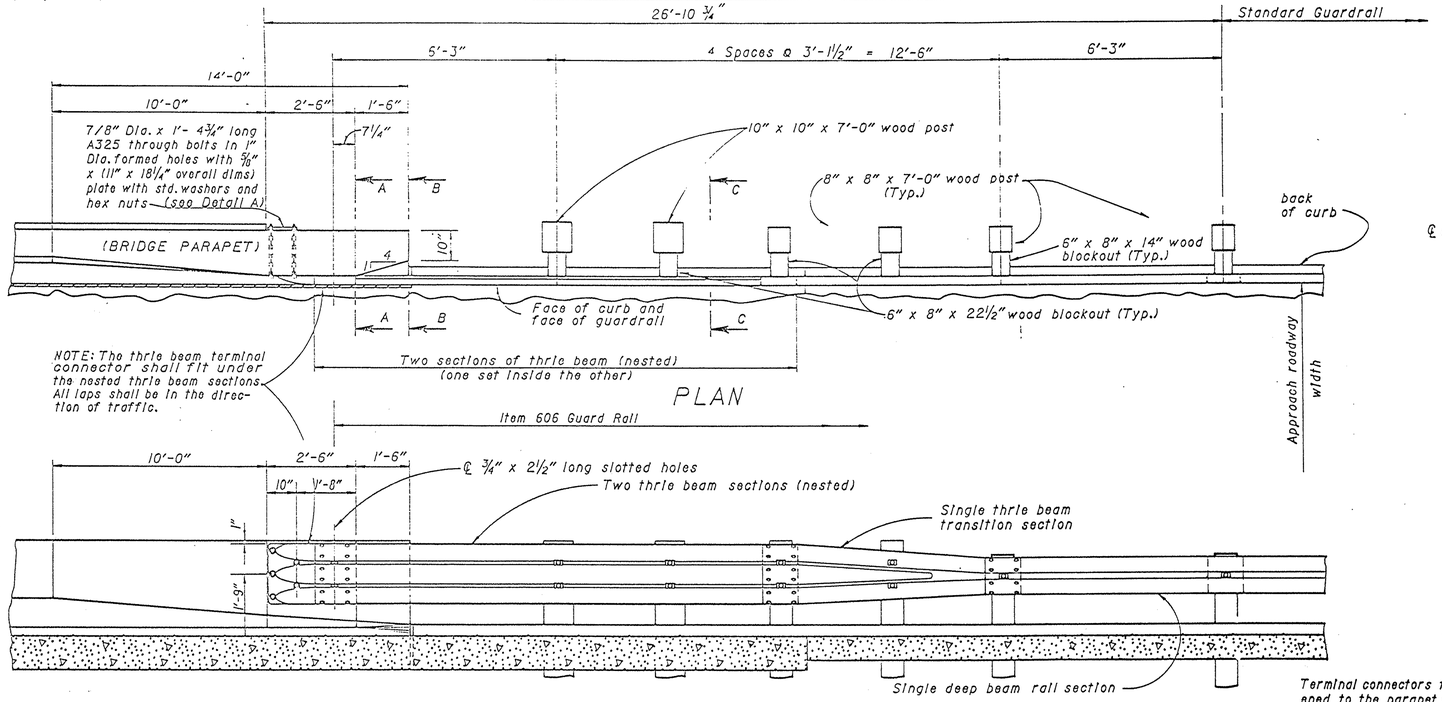

TYPE AA (APPROACH END)

ELEVATION

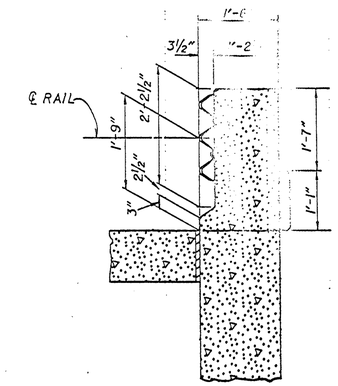

SECTION A - A

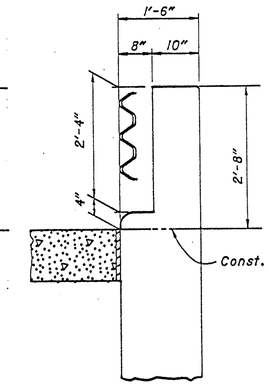

SECTION B - B

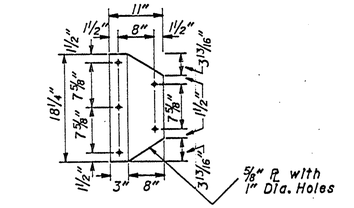

DETAIL A

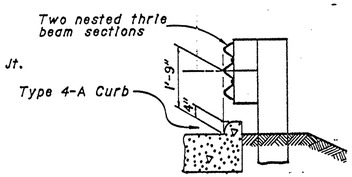

SECTION C - C

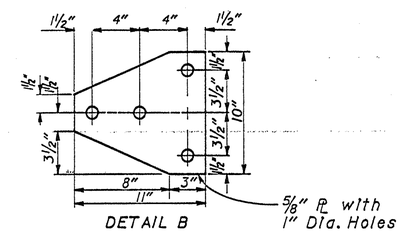

DETAIL B

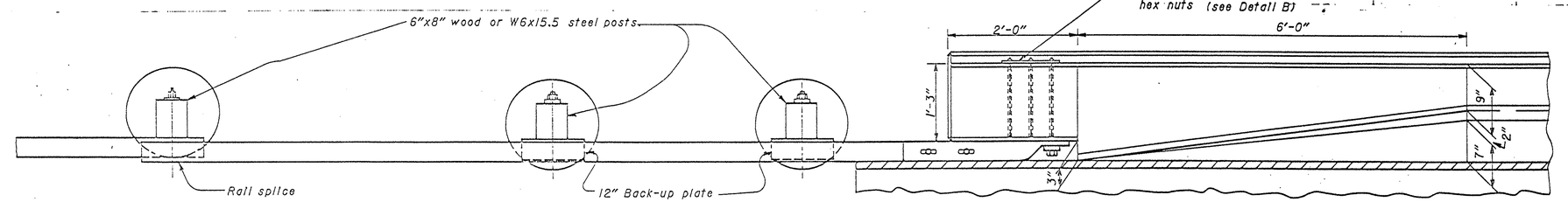

PLAN

FOR NOTES, SEE STD. DWG. GR-3, SHEET 2 OF 2

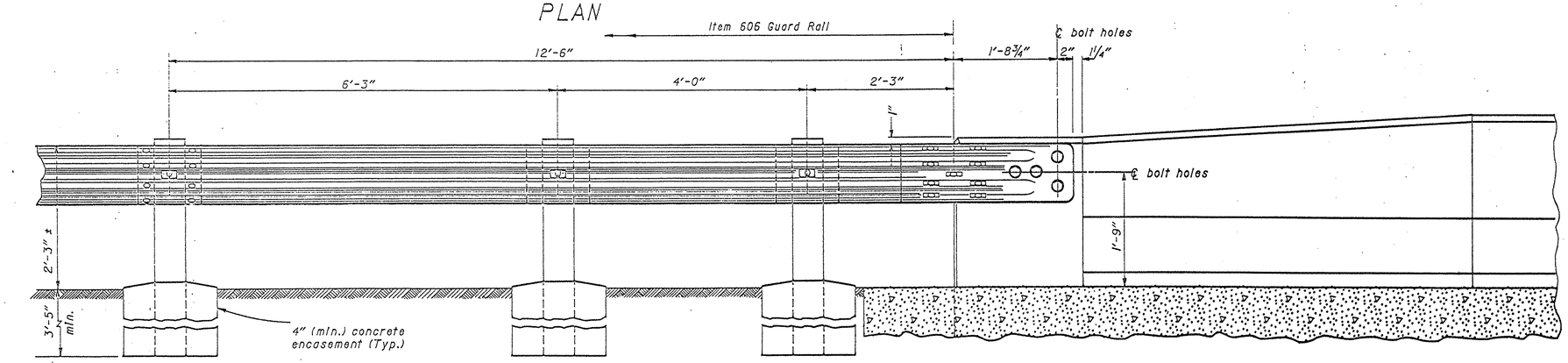

TYPE AT (TRAILING END)

ELEVATION

BRIDGE TERMINAL ASSEMBLIES

TYPES AA, AT, AND B

SHEET 1 OF 2

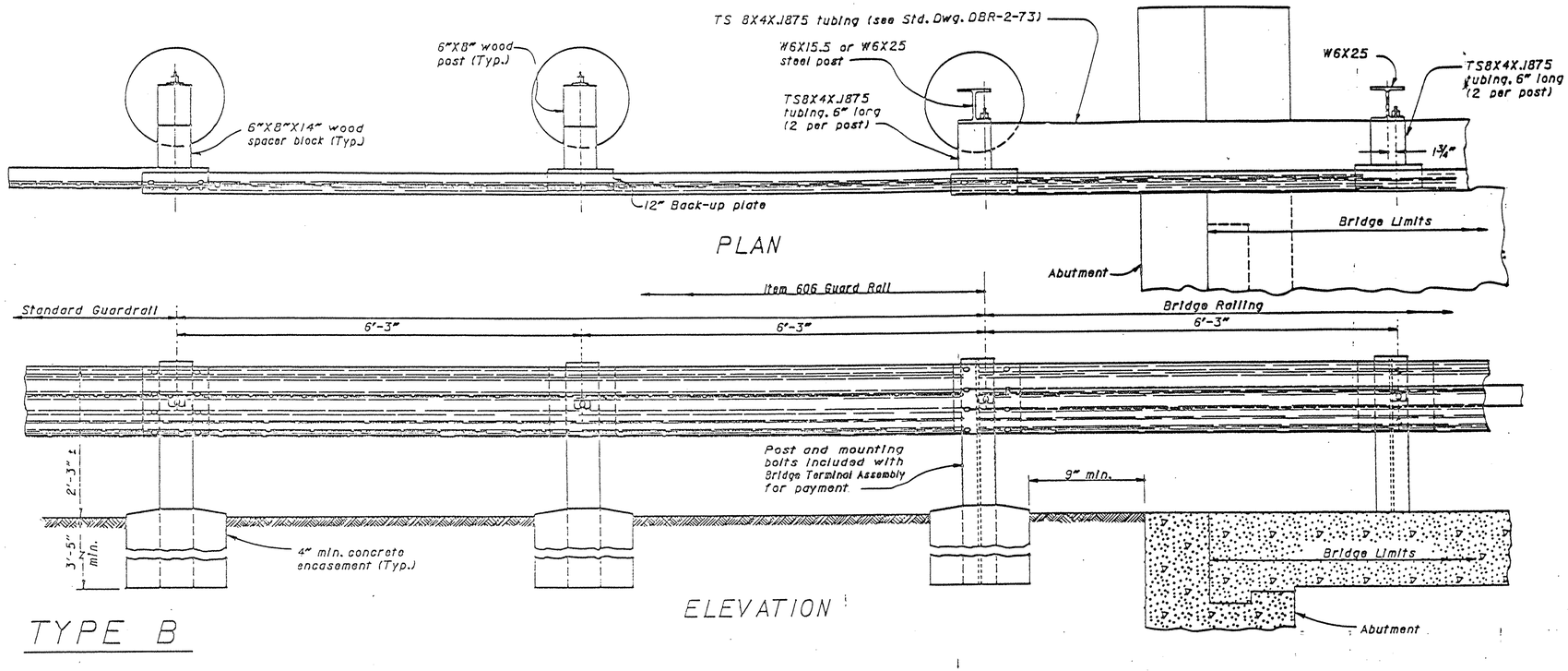

TYPE B

NOTES

GENERAL
For additional details, see Std. Dwg. GR-1 and other Standard Drawings pertaining to design of specific guardrail types.

APPLICATION
GENERAL- Types AA and AT Bridge Terminal Assemblies shall be used to connect guardrail runs to bridges having concrete deflector parapet railing. The Type B Bridge Terminal Assembly shall be used to connect guardrail runs to bridges having deep beam railing.

TYPE AA (APPROACH END)- The Type AA Bridge Terminal Assembly shall be used to connect guardrail runs to the approach end of bridges. It shall also be used to anchor guardrail runs to the trailing end of bridges where the horizontal distance to the near lane of opposing traffic flow is less than the clear zone width as defined in the Location and Design Manual.

TYPE AT (TRAILING END)- The Type AT Bridge Terminal Assembly shall be used to connect guardrail runs to the trailing end of bridges where the horizontal distance to the near lane of opposing traffic flow equals or exceeds the clear zone width as defined in the Location and Design Manual.

DETAIL INFORMATION
TYPE B- The first post off the bridge shall be steel (W6x15.5 or W6x25). All holes in the off structure end of the approach panel deep beam rail section that spans the abutment shall be slotted ¾" x 2½" and bolts shall be tightened as specified for expansion joints in 606.05.

POSTS
GENERAL- Posts may be set in drilled holes or driven to grade.

WOOD POSTS shall be square-sawed pressure treated wood as per 710.14 and fabricated with square ends. Bolt holes shall be bored and tops of posts trimmed, if required, after posts are set.

STEEL POSTS and blockouts for Types AA, AT and B Bridge Terminal Assemblies may be furnished as an alternate. The steel alternates for the wood posts are listed below.

WOOD	10"X10"	8"X8"	6"X8"
STEEL	W8X24	W6X25	W6X15.5

PAYMENT
TYPE AA- Payment for Item 606- Each, Bridge terminal assembly, Type AA, shall include the extra cost, in excess of normal guardrail cost, for additional and different type posts, nested thrie beam sections, terminal connector, thrie beam transition section, steel plate, bolts, hex nuts, washers, and other hardware.

TYPE AT- Payment for Item 606- Each, Bridge terminal assembly, Type AT shall include the extra cost, excess of normal guardrail cost, for additional posts, concrete encasements, terminal connector, steel plate, bolts, hex nuts, washers and other hardware.

TYPE B- Payment for Item 606- Each, Bridge terminal assembly, Type B shall include the extra cost, in in excess of normal guardrail cost, for heavier posts, concrete encasements, steel plate and other hardware. The TS 8x4 spacers and tubular back-up rail extending to the first post off the bridge shall be included with Item 517 - Railing for payment.

BRIDGE TERMINAL ASSEMBLIES

TYPES AA, AT, AND B

SHEET 2 OF 2

FHWA REGION	STATE	PROJECT	
5	OHIO		

MAH-680-6.97

ITEM SPECIAL - PRECAST REINFORCED CONCRETE OUTLET

The Concrete outlet shall meet the requirements of Item 604 in the Construction & Materials Specifications. Payment shall be made on an Each basis. Payment shall include the cost of the Sod & Wire Cloth.

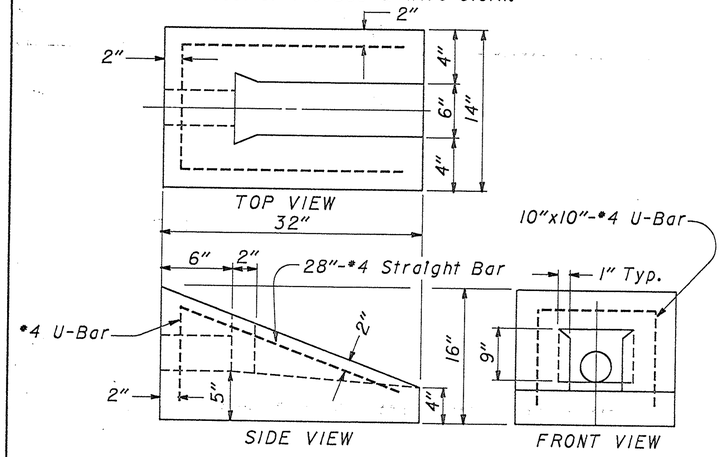

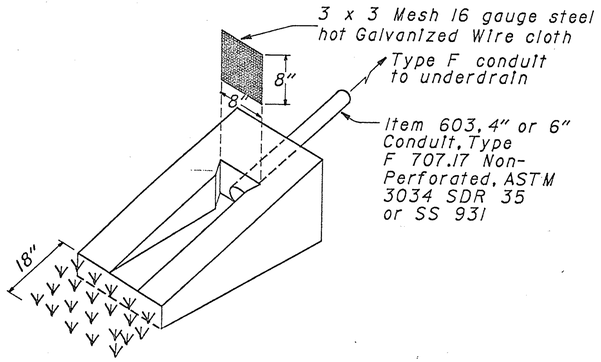

NOTE: The Sod shall be in accordance with Item 660 and staked at each corner approximately 3 inches in from the edge.

OUTLET DETAILS

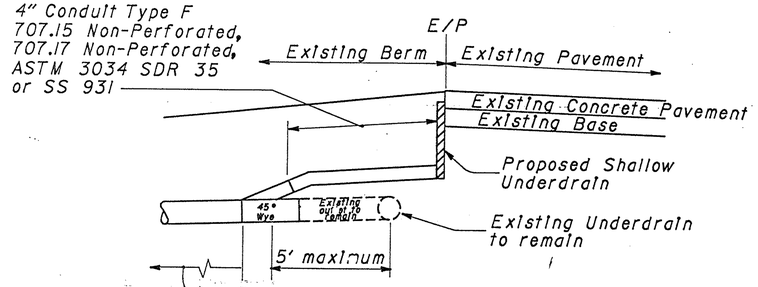

6" Conduit Type F 707.17 Non-Perforated, ASTM 3034 SDR 35, or Supl. Spec. 931, (outlet into catch basin or precast reinforced concrete outlet)

NOTE: The cost of the 4" conduit Type F and necessary pipe bends and branches needed to connect the existing and proposed underdrains shall be included with the cost of the 6" conduit Type F beyond the existing underdrain.

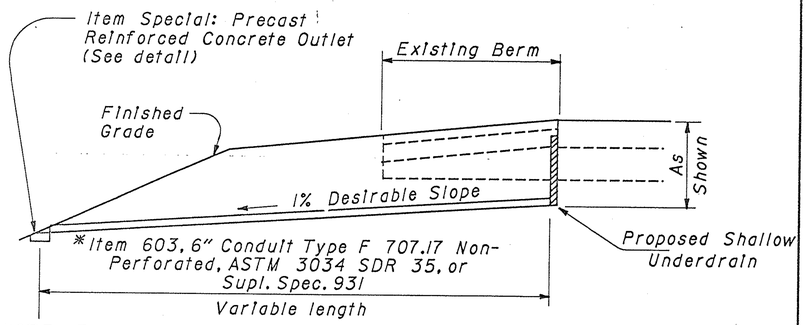

NOTE: For underdrain outlets into catch basins the above Type F Conduit shall be used entirely between the underdrain & catch basin.

* If prefabricated edge drain is used then 4" Conduit shall be used for the outlet in lieu of 6" Conduit. The 4" Conduit shall be paid at the unit price bid for the 6" Conduit.

DESCRIPTION: The item shall consist of furnishing and installing a pipe underdrain system or prefabricated edge drain system in accordance with the specifications, details as shown on the plans, and as directed by the Engineer.

MATERIALS: The underdrain shall be a pipe underdrain system per Item 605 or a prefabricated edge drain system meeting the following requirements. The prefabricated edge drain shall consist of a polymeric core with a minimum thickness of one inch wrapped in fabric meeting 712.09 Type A. The drain shall be flexible, rectangular in shape and of hollow construction. The core material shall be resistant to petroleum based chemicals, natural occuring soil chemicals, and road de-icing agents.

The core shall provide a minimum of 100 square inches unobstructed (one side only) drainage area per foot of width. Side walls of the core shall provide at least 5% open area to permit unobstructed flow through the filter and wall to the core.

The prefabricated edge drain shall have a minimum compressive strength of 6000 pounds per square foot with a maximum 20% compression in a parallel plate compression test (ASTM-D 695). The minimum (single side) core flow capacity shall be 10 gallons per minute per foot of width for a 0.1 gradient at 10 pounds per square inch bladder load per ASTM D 4716

In lieu of the above requirements the following products are acceptable prefabricated edge drains:

Hydraway Drain by Monsanto Company
PDS 30 by Prodrain Sytems
Strip Drain 100 by Contech Construction Products, Inc.

CONSTRUCTION: The prefabricated edge drain shall be installed in a trench as shown on the plans and in accordance with the manufacturer's recommendations. The trench shall be backfilled with the excavated trench material placed in two (2) layers and each layer compacted to a density of not less than 90% of the maximum dry weight density. The first layer of the backfill material shall be placed simultaneously with the trenching operation to hold the edge drain flush against the trench wall.

The prefabricated edge drain shall be spliced as required prior to placement in the trench, using material furnished by the manufacturer and in accordance with the manufacturer's directions. All material required for the splices will be supplied by the manufacturer, but any equipment required shall be furnished by the Contractor.

The underdrain outlets shall be placed in accordance with Item 603 as directed by the Engineer, using outlet fittings. The manufacturer shall supply outlet fittings which will make the transition between the prefabricated edge drain and the outlet pipe. Fittings shall be installed as recommended by the manufacturer.

The outlets for the underdrain system shall be constructed as soon as possible after placement of the underdrain. The outlets on crack & seat projects shall be in place and functional prior to cracking and seating the existing pavement.

METHOD OF MEASUREMENT: Completed and accepted underdrains will be measured by the linear foot in place.

BASIS OF PAYMENT: Work completed and accepted under this item and measured will be paid for at the contract unit price bid per linear foot for Item 605 - Shallow Underdrain, as per plan. Which price shall be full compensation for excavation and backfill; for furnishing materials, including material for splices; outlet fittings and Item 301; for all labor, tools equipment, and incidentals necessary to complete the work.

PIPE UNDERDRAIN SYSTEM

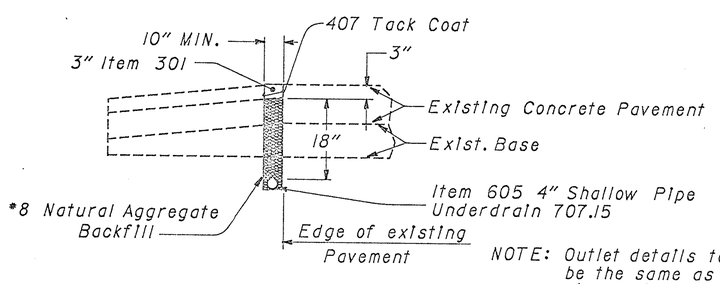

NOTE: Outlet details to be the same as shown above.

PREFABRICATED EDGE DRAIN SYSTEM

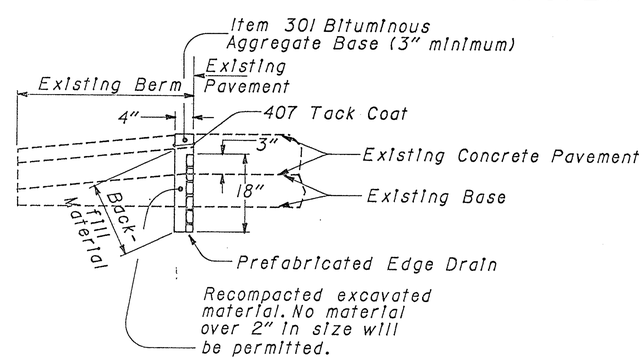

ITEM 605-SHALLOW UNDERDRAIN, AS PER PLAN

DATE 4-7-89

UNDERDRAIN PLAN

OHIO	12/54
FHWA REGION 5	
FEDERAL PROJECT	

MAH-680-6.97

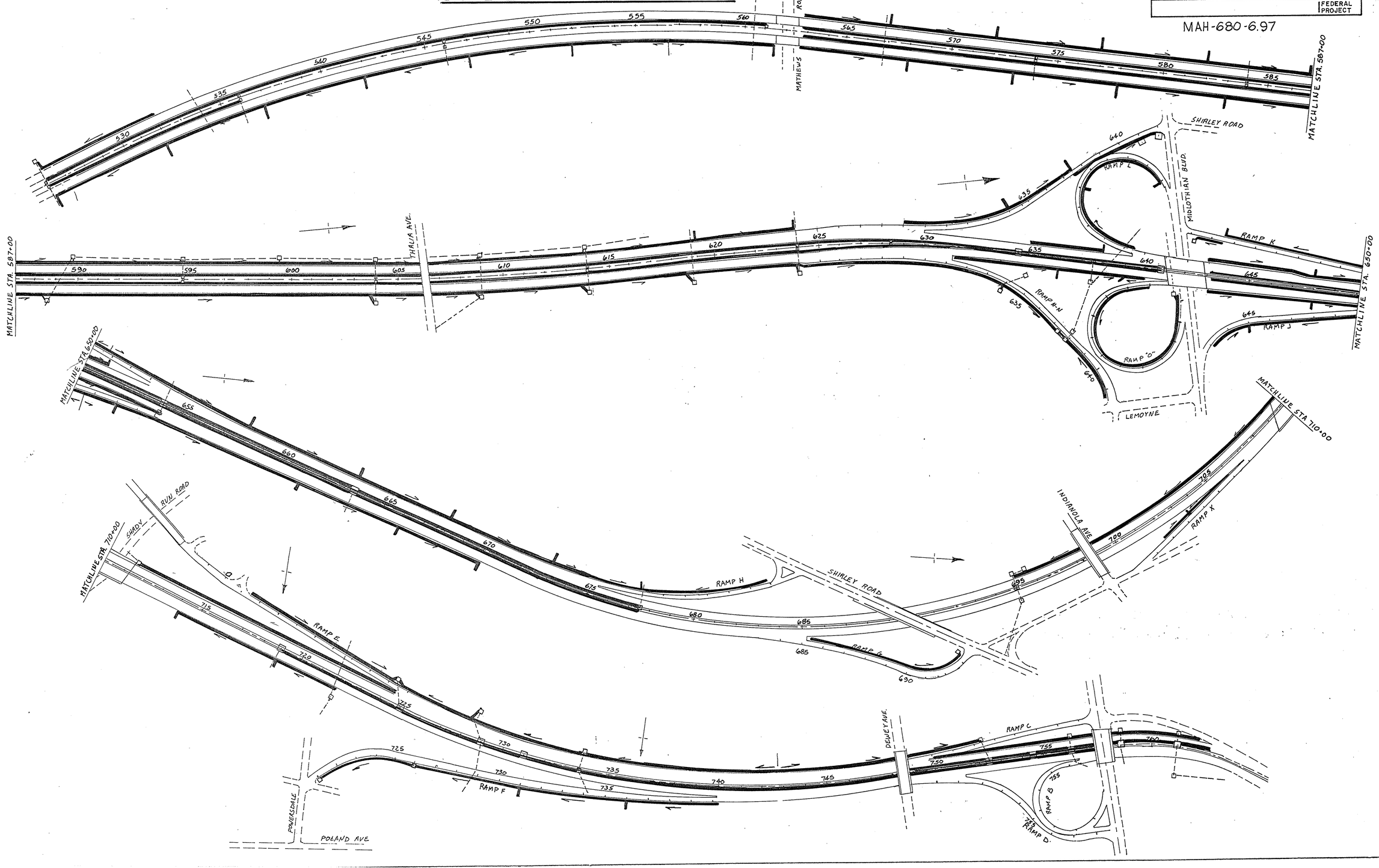

FHWA REGION	STATE	PROJECT NO.	FUNDS
5	OHIO		

MAH-680-6.97

SHALLOW UNDERDRAIN, AS PER PLAN DRAINAGE QUANTITIES

	605	603			SPEC	
STATIONS FROM — TO	SHALLOW UNDERDRAIN AS PER PLAN LIN. FT.	6" CONDUIT TYPE F. 707.17 NON-PERFORATED LIN. FT.	OUTLET INTO EXISTING CATCH BASIN STATION	OUTLET STATION	PRECAST REINFORCED CONCRETE OUTLET EACH	OUTLET INTO EXISTING MEDIAN INLET STATION
NORTHBOUND RT.						
526+00 to 556+50	3050	30		526+00	1	
		24		527+00	1	
		24		532+00	1	
		24		537+00	1	
		24		542+00	1	
		24		547+00	1	
		24		552+00	1	
556+50 to 561+69	519	24		561+69	1	
562+78 to 583+00	2022	16		568+00	1	
		24		573+00	1	
		24		578+00	1	
		24		583+00	1	
583+00 to 624+00	4100	30	588+65			
		26	604+00			
		30	609+00			
		30	614+00			
		30	619+00			
		28	624+00			
631+33 to 636+00	467	24		636+00	1	
636+00 to 640+00	400	24		639+00	1	
643+20 to 654+00	1080	24		648+00	1	
		10	654+00			
654+00 to 670+00	1600	24		661+00	1	
		24		666+00	1	
		24		670+00	1	
714+00 to 722+00		40		714+00	1	
		24		719+00	1	
NORTHBOUND MED.						
526+00 to 536+00	1000	16	526+00			
562+78 to 640+80	7802	16	574+00			
		16	584+00			
		16	595+00			
		16	604+00			
		16	614+00			
		16	624+00			
		12	628+56			
		8				640+80
643+00 to 677+50		8				654+00
		8				663+50
		8				677+50
719+00 to 758+25		8				719+00
		8				725+00
		8				729+00
		8				731+00
		8				733+50
		8				749+00
		8				752+50
		8				754+00
		8				756+25
		8				757+25
624+00 to 641+30	1730	16	634+00			
RAMP N-N		16	638+00			
628+70 to 640+00	1130	16	628+70			
RAMP O						
TOTAL	24900	962			20	

	605	603			SPEC	
STATIONS FROM — TO	SHALLOW UNDERDRAIN AS PER PLAN LIN. FT.	6" CONDUIT TYPE F. 707.17 NON-PERFORATED LIN. FT.	OUTLET INTO EXISTING CATCH BASIN STATION	OUTLET STATION	PRECAST REINFORCED CONCRETE OUTLET EACH	OUTLET INTO EXISTING MEDIAN INLET STATION
643+00 to 654+00	1100	24		645+00	1	
RAMP J		24		652+00	1	
SOUTHBOUND MED.						
526+00 to 561+00		16	526+00			
		16	536+00			
		16	546+00			
		16	561+00			
562+80 to 640+80		16	574+00			
		16	584+00			
		16	595+00			
		16	604+00			
		16	614+00			
		16	624+00			
		12	628+56			
						634+00
						638+00
						640+80
643+00 to 677+50		8				654+00
		8				663+50
		8				677+50
749+00 to 762+75		8				752+50
		8				754+50
		8				756+25
		8				757+25
		8				758+25
		8				761+00
SOUTHBOUND LT.						
526+00 to 532+00		20	532+00			
562+78 to 62+00		18		567+00	1	
		32		572+00	1	
		32		577+00	1	
		32		582+00	1	
		32		587+00	1	
		28	590+00			
		28	595+00			
		28	599+50			
		28	604+00			
		34	609+00			
		34	614+00			
		16		619+00	1	
		16		624+00	1	
635+00 to 638+00		32		638+00	1	
651+00 to 677+50		32		658+00	1	
		24		663+50	1	
		24		668+00	1	
		18		673+00	1	
		32		677+50	1	
695+00 to 709+70		22	695+00			
		24		709+70	1	
711+50 to 724+50		24	711+50			
724+50 to 752+25*		24	724+50			
		24	728+50			
		24	733+50			
		24	752+25*			
749+75 to 762+00		24	756+25			
		24	758+50			
TOTAL	1100	1046			16	

*-RAMP C STATION

	605	603			SPEC	
STATIONS FROM — TO	SHALLOW UNDERDRAIN AS PER PLAN LIN. FT.	6" CONDUIT TYPE F. 707.17 NON-PERFORATED LIN. FT.	OUTLET INTO EXISTING CATCH BASIN STATION	OUTLET STATION	PRECAST REINFORCED CONCRETE OUTLET EACH	
685+25 to 693+25	800	24	693+20			
RAMP G						
701+70 to 706+00	430	24		703+20	1	
RAMP X						
677+50 to 683+00	550	24		677+50	1	
RAMP H						
714+50 to 724+50	1000	8	724+50			
RAMP E						
721+00 to 740+20	1920	8	721+00			
		8	726+00			
		24		731+00	1	
		24		736+00	1	
TOTAL	470	144			4	
TOTAL TO GENERAL SUMMARY	26470	2152			40	

GENERAL NOTES

FIELD OFFICE

THE CONTRACTOR SHALL PROVIDE A SUITABLE FIELD OFFICE HAVING A MINIMUM OF 400 SQ. FT. OF FLOOR SPACE. PAYMENT SHALL BE AT THE LUMP SUM PRICE BID FOR ITEM 619 FIELD OFFICE.

ORIGINAL CONSTRUCTION PLANS

THIS PROJECT INCLUDES CONSTRUCTION PROJECTS AS LISTED BELOW, WITH COPIES ON FILE IN THE DISTRICT 4 OFFICE, 705 OAKWOOD STREET, RAVENNA, OHIO 44266.

MAH - 680 - 9.32 MAH - 680 - 6.98

STAGING AND STORAGE AREA

FOR SAFETY PURPOSES, NO MATERIAL OR EQUIPMENT SHALL BE STORED OR PARKED IN THE MEDIAN OR WITHIN FIFTY (50) FEET OF THE OUTSIDE EDGE OF PAVEMENT UNLESS BEHIND GUARDRAIL.

NO PRIVATE VEHICLES BELONGING TO THE CONTRACTOR'S EMPLOYEES AND TO ODOT PERSONNEL PERMANENTLY ASSIGNED TO THE PROJECT SHALL BE PARKED WITHIN THE LIMITS OF THE HIGHWAY PROJECT. ALL PARKING WILL BE DONE AT THE APPROVED CONTRACTOR'S STAGING AREA. THE CONTRACTOR WILL BE RESPONSIBLE FOR PROVIDING TRANSPORT VEHICLES TO TRANSPORT PERSONNEL FROM THE STAGING AREA TO THE WORK SITE.

UNDERGROUND UTILITIES:

THE LOCATION OF THE UNDERGROUND UTILITIES, SHOWN ON THE PLANS, ARE AS OBTAINED FROM THE OWNERS OF THE UTILTIY, AS REQUIRED BY SECTION 153.64 OF THE OHIO REVISED CODE.

CONTINGENCY QUANTITIES

THE CONTRACTOR SHALL NOT ORDER MATERIALS OR PERFORM WORK LISTED IN THE GENERAL SUMMARY FOR ITEMS DESIGNATED BY PLAN NOTE TO BE USED "AS DIRECTED BY THE ENGINEER" UNLESS AUTHORIZED BY THE ENGINEER. THE ACTUAL WORK LOCATIONS AND QUANTITIES USED AT THE ENGINEER'S DISCRETION SHALL BE MADE A MATTER OF RECORD BY INCORPORATION INTO THE FINAL CHANGE ORDER GOVERNING COMPLETION OF THIS PROJECT.

EMERGENCY PHONE NUMBERS

THE FOLLOWING PHONE NUMBERS CAN BE USED IN CASE OF AN EMERGENCY. THESE AGENCIES WILL PROVIDE INFORMATION RELATING TO CHEMICALS.

1. CHEMICAL TRANSPORTATION EMERGENCY CENTER
   1-800-424-9300

2. ENVIRONMENTAL PROTECTION AGENCY HOTLINE
   1-800-282-0272

GUARDRAIL REPLACEMENT

NO HAZARD SHALL BE LEFT UNPROTECTED EXCEPT FOR THE ACTUAL TIME NECESSARY TO REMOVE, GRADE AND REINSTALL GUARDRAIL IN A CONTINUOUS OPERATION. THE REMOVAL OF ALL GUARDRAIL SHALL AT ALL TIMES BE AS DIRECTED BY THE ENGINEER. NO GUARDRAIL SHALL BE REMOVED UNTIL THE REPLACEMENT MATERIAL IS ON THE SITE, READY FOR INSTALLATION. FAILURE TO COMPLY WITH THIS REQUIREMENT SHALL BE DEEMED SUFFICIENT CAUSE TO ORDER WORK SUSPENDED ON THIS PROJECT UNTIL SUCH TIME THAT THE ENGINEER IS ASSURED OF SAID COMPLIANCE.

LOCATION OF GUARDRAIL

THE LOCATION OF GUARDRAIL RUNS, AS SHOWN IN THESE PLANS, ARE SUBJECT TO ADJUSTMENT PRIOR TO FINAL ACCEPTANCE. THE ENGINEER SHALL BE SATISFIED THAT ALL INSTALLATIONS WILL AFFORD MAXIMUM PROTECTION FOR TRAFFIC.

PROFILE AND ALIGNMENT

THE PROPOSED PAVEMENT RESURFACING COURSE SHALL FOLLOW THE ALIGNMENT AND PROFILE OF THE EXISTING PAVEMENT. PREVIOUS CONSTRUCTION PLANS SHOWING THE ORIGINAL ALIGNMENT AND PROFILE GRADE ARE ON FILE FOR INSPECTION IF NECESSARY AT THE ODOT DIST.4 OFFICE AS PROJECT NO. MAH-680-9.32, MAH-680-6.97

THE PROPOSED PAVEMENT ASPHALT CONCRETE OVERLAY SHALL HAVE A UNIFORM THICKNESS OF APROXIMATELY 3¾ INCHES.

AN ADDITIONAL ESTIMATED QUANTITY OF 12 CU.YDS. OF ITEM 448 ASPHALT CONCRETE TYPE 1, AC-20, HAS BEEN INCLUDED IN THE GENERAL SUMMARY TO CORRECT THE DIP IN THE PROFILE GRADE AT APPROXIMATE STATIIONS 677+60 LT., TO 678+25 LT.

ITEM 448 ASPHALT CONCRETE TYPE 1, AC-20 12 CU.YDS.

ITEM 202, RAISED PAVEMENT MARKERS REMOVED FOR STORAGE

THE FOLLOWING ESTIMATED QUANTITY HAS BEEN INCLUDED IN THE GENERAL SUMMARY FOR REMOVING RAISED PAVEMENT MARKERS AS PER 202.071

ITEM 202-RAISED PAVEMENT MARKERS REMOVED FOR STORAGE....1100....EACH

MAINTENANCE OF TRAFFIC

SEE NOTES SHEET No..... 18-30

ITEM 448 – ASPHALT CONCRETE, TYPE 1, SPOT LEVELING

AN ESTIMATED QUANTITY OF 1700 CU. YDS. OF ITEM 448 – ASPHALT CONCRETE HAS BEEN INCLUDED IN THE GENERAL SUMMARY TO FILL IN DIPS IN THE PAVEMENT AND SHOULDERS FROM STA. 527+00 TO STA. 638+00. EXACT LOCATIONS SHALL BE DETERMINED BY THE ENGINEER.

ITEM 448 – ASPHALT CONCRETE, TYPE 1, SPOT LEVELING 1700 CU. YDS.

ITEM 407 - TACK COAT

THE RATE OF APPLICATION OF 407 TACK COAT SHALL BE SUBJECT TO ADJUSTMENT, AS DIRECTED BY THE ENGINEER. PLAN QUANTITIES INDICATE AVERAGE APPLICATION RATES OF 0.075 GALLONS PER SQUARE YARD OF TACK COAT FOR ESTIMATING PURPOSES ONLY.

ITEM 202 PORTIONS OF STRUCTURES REMOVED

THIS ITEM SHALL CONSIST OF REMOVING THE EXISTING CONCRETE SIGN FOUNDATIONS **AS PER SPECIFICATION 630.12 AT THE FOLLOWING LOCATIONS:**

STA. 537+00 20' LT., 80' LT.
STA. 575+00 85' LT.

AFTER REMOVAL, THE REMAINING HOLE SHALL BE FILLED WITH ACCEPTABLE SOIL, AND THE DISTURBED AREA SHALL BE SEEDED AND MULCHED AS PER ITEM 659. PAYMENT FOR THIS WORK, INCLUDING MATERIAL, LABOR, TOOLS AND EQUIPMENT INCIDENTAL TO THE ABOVE OPERATION WILL BE AT THE CONTRACT LUMP SUM BID FOR:

ITEM 202 PORTIONS OF STRUCTURES REMOVED LUMP SUM.

ELIMINATION OF EXISTING ILLEGAL CROSSOVERS

THE FOLLOWING ESTIMATED QUANTITIES HAVE BEEN CARRIED TO THE GENERAL SUMMARY FOR USE, AS DIRECTED BY THE ENGINEER, FOR ELIMINATING THE ILLEGAL CROSSOVER AT THE FOLLOWING APPROXIMATE STATION:

STA. 630+00

ADDITIONAL QUANTITIES ARE PROVIDED TO REPAIR AREAS WHERE OCCATIONAL TURN-AROUNDS OCCUR:

ITEM 654 –	RENOVATING EXISTING SOIL	5.4 M-SQ.FT.
ITEM 659 –	SEEDING AND MULCHING	600 S.Y.
ITEM 659 –	COMMERCIAL FERTILIZER	0.05 TON
ITEM 659 –	AGRICULTURAL LIMING	0.25 TON
ITEM 659 –	WATER	2 M-GAL

ITEM 251 PARTIAL DEPTH PAVEMENT REPAIR

THIS ITEM SHALL BE USED TO REPAIR TRANSVERSE AND LONGITUDINAL CRACKS IN THE PAVEMENT THAT HAVE SPALLED OUT, AND AREAS THAT HAVE BEEN PREVIOUSLY REPAIRED AND ARE UNSOUND. THE DEPTH OF REMOVAL SHALL BE SUCH THAT ALL UNSOUND AND LOOSE PAVEMENT OR UNSOUND PATCH IS REMOVED. IF THE AREA THAT IS BEING REPAIRED IS DETERMINED BY THE PROJECT ENGINEER TO BE UNSOUND MORE THAN THE TOP 3 INCHES OF THE PAVEMENT, THIS AREA SHALL BE TREATED AS A FULL DEPTH REPAIR AS DETAILED IN SHEET

AN ESTIMATED QUANTITY OF 200 S.Y. HAS BEEN INCLUDED IN THE GENERAL SUMMARY FOR THIS WORK.

UTILITY OWNERSHIP

THE FOLLOWING UTILITIES AND OWNERS ARE LOCATED WITHIN THE WORK LIMITS OF THIS PROJECT:

ELECTRIC:

OHIO EDISON CO.
730 SOUTH AVE.
YOUNGSTOWN, OHIO 44502
ATTN. ROBERT TEREK DIV. ENG.
PH. 216-747-2071

NATURAL GAS:

EAST OHIO GAS CO.
1165 W. RAYEN AVE.
YOUNGSTOWN, OHIO 44502
ATTN. TERRY FLEMING DIV. ENG.
PH.216-742-8140

TELEPHONE:

OHIO BELL TELEPHONE
CITY CENTRE ONE
P.O.BOX 1587
YOUNGSTOWN, OHIO 44501
ATTN. ROBERT McNELL DIST.MGR.
PH.216-744-6291

WATER:

CITY OF YOUNGSTOWN
WATER DEPT.
26 S.PHELPS ST.
YOUNGSTOWN, OHIO 44501
PH.216-742-8749

GENERAL NOTES

ITEM 811 – ASPHALT UNDERSEALING OF EXISTING CONCRETE PAVEMENT, AS PER PLAN

THIS WORK SHALL CONSIST OF DRILLING HOLES IN EXISTING CONTINUOUSLY REINFORCED CONCRETE PAVEMENT AS DIRECTED AT THE LISTED LOCATIONS, PUMPING ASPHALT THROUGH THE HOLES TO FILL VOIDS UNDER THE PAVEMENT, AND FILLING THE DRILLED HOLES WITH A HARDWOOD PLUG. THE REQUIREMENTS OF SUPPLEMENTAL SPECIFICATION 811 SHALL APPLY WITH THE FOLLOWING MODIFICATION; THE HOLES SHALL BE DRILLED USING THE HOLE PATTERN SHOWN.

AN ESTIMATED QUANTITY FOR THIS ITEM HAS BEEN CALCULATED ON SHEET NO. 31 WITH THE ASSUMPTION THAT EACH OF THE TWO INNER LANES WILL REQUIRE ONE HALF OF THE QUANTITY ESTIMATED FOR THE DRIVING LANE.

LOCATIONS:

NORTHBOUND STATIONS

FROM	TO	LIN. FT.
529+25	535+50	625
572+00	577+25	525
629+00	632+50	350
733+00	732+00	100
TOTAL		1600

HOLE PATTERN
(3) 12' LANES

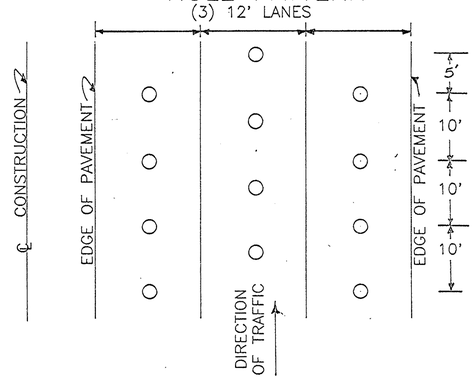

ITEM SPECIAL – PIPE CLEANOUT

CONDUIT RUNS AS SHOWN ON THE PLAN SHALL BE CLEANED AS DIRECTED BY THE ENGINEER. THIS WORK SHALL CONSIST OF REMOVING ALL MATERIAL FROM THE INSIDE OF THE EXISTING PIPE AND RELATED INLETS OR BASINS. THE MATERIAL SHALL BE DISPOSED OF IN ACCORDANCE WITH THE REQUIREMENTS OF SECTION 203.05.

THE FOOTAGE TO BE PAID FOR SHALL BE THE ACTUAL NUMBER OF LINEAR FEET OF EXISTING PIPE TO BE CLEANOUT AS DIRECTED BY THE ENGINEER. PAYMENT SHALL CONSTITUTE FULL COMPENSATION TO 1) DETERMINE EXACT SIZES AND LOCATIONS OF PIPE CONDUITS TO BE CLEANED; 2) REMOVAL AND DISPOSAL OF MATERIAL FOUND; AND 3) FURNISHING ALL LABOR, TOOLS AND INCIDENTALS NECESSARY TO COMPLETE THIS ITEM.

NONE OF THE ABOVE DESCRIBED WORK SHALL BE PERFORMED UNTIL AUTHORIZED IN WRITING BY THE ENGINEER. ESTIMATED QUANTITIES AND LOCATIONS FOR THIS ITEM ARE SHOWN ON THE LINE SHEETS.

PLACEMENT OF GUARDRAIL:

GUARDRAIL AT STRUCTURES SHALL BE PLACED STARTING AT THE STRUCTURE. THE PERTINENT BRIDGE TERMINAL ASSEMBLY SHALL BE PLACED AS PER THE STANDARD DRAWING. THE PANEL LENGTH, AFTER THE EXTREME ENCASED POST OF THE ASSEMBLY, SHALL BE ADJUSTED, IF NEEDED, TO PLACE THE NEXT GUARDRAIL POST BETWEEN THE EXISTING HOLES WHERE THE OLD GUARDRAIL POSTS WERE REMOVED. COST OF THE EXTRA PANEL LENGTH OF GUARDRAIL AND POST SHALL BE INCLUDED IN THE PERTINENT BRIDGE TERMINAL ASSEMBLY. ON GUARDRAIL NOT ATTACHED TO A STRUCTURE, THE NEW TYPE "A" ANCHOR ASSEMBLY SHALL BE PLACED SO THAT POST "A" WILL FALL BETWEEN THE EXISTING HOLES WHERE THE OLD GUARDRAIL POSTS WERE REMOVED.

AT LOCATIONS WHERE BRIDGE PIERS OR SIGN SUPPORTS ARE PROTECTED BY GUARDRAIL AND THE CLEARANCE BETWEEN THE FACE OF THE GUARDRAIL AND THE FACE OF THE OBSTACLE IS LESS THAN 5'-6", IT WILL BE NECESSARY TO PLACE POST SPACING AT 3'-11/2" FROM 12'-6" IN ADVANCE OF THE OBSTRUCTION TO THE END OF IT.

AT SOME OF THESE LOCATIONS THE DISTANCE BETWEEN THE FACE OF THE GUARDRAIL AND THE FACE OF THE OBSTACLE IS LESS THAN 3'-6". AT THESE LOCATIONS THE GUARDRAIL OFFSET SHALL BE ADJUSTED, USING A *MINIMUM TAPER OF 55 TO 1* TOWARDS THE PAVED BERM TO A MINIMUM DISTANCE OF 6" FROM THE PAVED BERM TO OBTAIN THE 3'-6" CLEARANCE.

IN THE AREAS WHERE THE POST SPACING IS 3'-11/2" THE NEW POSTS FALLING IN THE EXISTING HOLES SHALL BE ENCASED 4" MINIMUM IN CONCRETE AT A DEPTH OF 3'-5" MINIMUM.

PAYMENT FOR ITEM 606, TYPE 5 GUARDRAIL, SHALL INCLUDE THE ADDITIONAL COST TO PERFORM THE ABOVE WORK AT THE AFFECTED OBSTRUCTION LOCATIONS.

THE ABOVE WORK SHALL BE SUBJECT TO THE APPROVAL OF THE ENGINEER.

ITEM SPECIAL – SAWING AND SEALING ASPHALT CONCRETE JOINTS, 705.04 (SEE PROPOSAL NOTE)

A QUANTITY OF 3575 LIN. FT. OF ITEM SPECIAL – SAWING AND SEALING ASPHALT CONCRETE PAVEMENT JOINTS SHALL BE PROVIDED FOR USE ON LOCATIONS ON THE PROJECT WITH JOINTED PAVEMENT (RAMPS), AS DIRECTED BY THE ENGINEER. ALL WORK SHALL BE DONE IN ACCORDANCE WITH THE PROPOSAL NOTE ON SAWING AND SEALING ASPHALT CONCRETE PAVEMENT JOINTS. (SEE PROPOSAL NOTE).

FULL DEPTH PAVEMENT REPAIR FOR CONTINUOUSLY REINFORCED CONCRETE PAVEMENT

F.H.W.A. REGION	STATE	PROJECT NO.	FUNDS
5	OHIO		

MAH-680-6.97

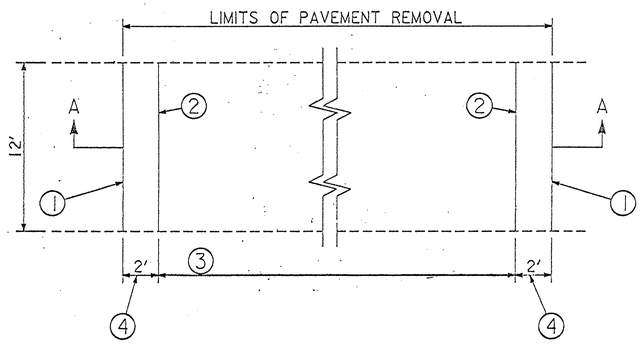

PAVEMENT REMOVAL DETAIL

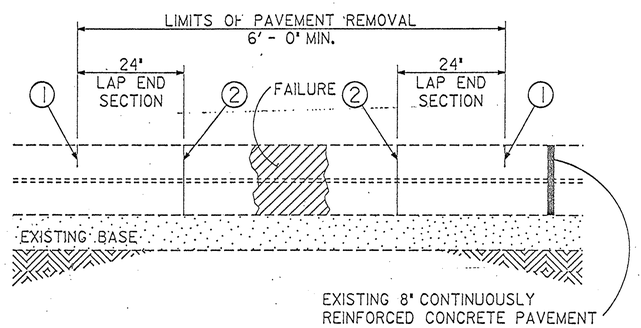

SECTION A-A
(FULL SAW CUT)

ITEM 202 – PAVEMENT REMOVED, AS PER PLAN

SEQUENCE OF OPERATION

(1) PARTIAL-DEPTH SAW CUTS (APPROX.DEPTH 1") SHALL BE MADE ALONG THE OUTER BOUNDARIES OF THE AREA TO BE REPAIRED, AS OUTLINED BY THE ENGINEER. THE PARTIAL-DEPTH SAW CUTS SHALL BE LOCATED AT LEAST 18 INCHES FROM THE NEAREST TIGHT TRANSVERSE CRACK AND SHALL NOT CROSS AN EXISTING CRACK. CARE SHALL BE TAKEN NOT TO CUT THE REINFORCEMENT.

(2) FULL-DEPTH SAW CUTS SHALL BE MADE PARALLEL TO AND 24" INSIDE OF THE PARTIAL-DEPTH SAW CUTS WHICH DEFINE THE BOUNDARIES.

(3) AFTER THE AREA IS SAWED COMPLETELY AROUND THE PERIMETER, THE SLAB SHALL BE REMOVED, USING THE LIFT-OUT METHOD ONLY.

(4) CONCRETE IN THE TWO END LAP AREAS SHALL BE CAREFULLY REMOVED BY USING ONLY JACKHAMMERS (MAX. 15 POUNDS CLASS), PRY BARS, PICKS, SHOVELS, AND OTHER HAND TOOLS.

THE REINFORCEMENT SHALL NOT BE BENT UP TO FACILITATE REMOVAL OF CONCRETE UNDERNEATH.

FOLLOWING THE REMOVAL OF PAVEMENT FROM THE AREA, THE EXISTING BASE AND SUBGRADE SHALL BE EXAMINED BY THE ENGINEER AND RESTORED TO GRADE AND COMPACTED IF NECESSARY. A QUANTITY OF 60 CU. YD. OF ITEM 301-BITUMINOUS AGGREGATE BASE HAS BEEN PROVIDED AND CARRIED TO THE GENERAL SUMMARY FOR THIS PURPOSE.

IT IS IMPORTANT THAT THE ENTIRE OPERATION IS EXECUTED IN THIS ORDER TO AVOID DISTURBING OR DAMAGING THE REMAINING GOOD PAVEMENT.

ALL THE ABOVE SHALL BE INCLUDED IN THE UNIT PRICE BID FOR ITEM 202-PAVEMENT REMOVED, AS PER PLAN.

ITEM 453 - CONTINUOUSLY REINFORCED CONCRETE PAVEMENT, AS PER PLAN

(A) SPLICE IN DEFORMED LOOSE BARS (709.01), BAR MAT (709.09), OR DEFORMED WIRE FABRIC (709.12) WITH EACH MEMBER OF REINFORCEMENT WHICH EXTENDS INTO THE PATCH AREA. THE TYPE OF NEW REINFORCEMENT USED SHALL MATCH THE ORIGINAL IN GRADE AND SIZE, ALL REQUIREMENTS SHALL BE AS PER STANDARD CONSTRUCTION DRAWING BP-8.

THE NEW REINFORCEMENT SHALL BE CUT SO THAT THEIR ENDS ARE AT LEAST 2 INCHES FROM THE JOINT FACES.

TIED SPLICES IN THE LAP END SECTIONS SHALL BE A MINIMUM OF 20 INCHES. THE LAP SHALL BE SECURED WITH WITH WIRE TIES. NO WELDING IS PERMITTED.

THE REINFORCEMENT SHALL BE FIRMLY SUPPORTED AT THE PROPER ELEVATION ABOVE THE BASE BY APPROVED METAL HIGH CHAIRS.

IF MOVEMENT OF THE PAVEMENT CAUSED BY EXPANSION CAUSES THE REINFORCEMENT TO BUCKLE, THIS SHALL BE CORRECTED JUST PRIOR TO PLACING CONCRETE BY REMOVING AND REPLACING THE WIRE TIE AT LAPS.

(B) THE USE OF SIDE FORMS AT THE EDGE OF PAVEMENT IS OPTIONAL UNLESS SHOULDER AREA IS EXCESSIVELY DISTURBED, OR AS REQUESTED BY THE ENGINEER. STANDARD LONGITUDINAL JOINT SIMILAR TO THE ONE IN THE ORIGINAL PAVEMENT SHALL BE USED. REFER TO STANDARD CONSTRUCTION DRAWING BP-3.

(C) IN FINAL PREPARATION FOR CONCRETE PLACEMENT, ALL LOOSE MATERIAL SHALL BE REMOVED FROM THE EXCAVATED AREA BY MEAN OF COMPRESSED AIR. THE BASE, JOINT FACES, AND STEEL SHALL BE WETTED IMMEDIATELY BEFORE CONCRETE PLACEMENT.

(D) PLACE CONCRETE IN PATCH AREA, USING EXTREME CARE TO CONSOLIDATE CONCRETE AROUND THE EDGES AND BENEATH THE REINFORCEMENT BY INTERNAL VIBRATION.

CONCRETE SHALL CONFORM TO THE REQUIREMENTS OF 453, EXCEPT THAT CLASS FS (SUPPLEMENTAL SPEC. 905, 5-2-89) CONCRETE SHALL BE USED THE SPECIFIED LOCATIONS AND QUANTITIES ARE APPROXIMATE; EXACT LOCATIONS AND QUANTITIES SHALL BE DETERMINED BY THE ENGINEER.

(E) FINISHING OF CONCRETE SURFACE SHALL BE IN ACCORDANCE WITH 451.09 EXCEPT THAT TEXTURING AND STENCILING OF STATION ARE NOT REQUIRED. CARE SHALL BE TAKEN NOT TO OVER-FINISH THE SURFACE.

ALL OF THE ABOVE SHALL BE INCLUDED IN THE UNIT PRICE BID FOR ITEM 453-CONTINUOUSLY REINFORCED CONCRETE PAVEMENT, AS PER PLAN.

LANE DESIGNATION

MEDIAN

PASSING

MIDDLE

DRIVING

SHOULDER

PAVEMENT REPLACEMENT QUANTITIES

	STATION FROM	STATION TO	LANE	WIDTH	LENGTH	202 PAVEMENT REMOVED AS PER PLAN S.Y.	453 CONTINUOUSLY REINFORCED CONCRETE AS PER PLAN S.Y.
SB	563+40	563+52	M	6	12	8	8
	670+90	672+05	RAMP H	14	115	179	179
	708+80	708+92	D	6	24	16	16
	720+70	721+70	P	12	100	133	133
	723+25	723+53	P	12	28	37	37
	757+10	757+25	M,D	24	15	40	40
NB	697+75	698+00	D,M,P	36	25	100	100
	749+70	750+30	RAMP D	12	60	80	80
TOTAL CARRIED TO GENERAL SUMMARY						593	593

TRAFFIC CONTROL GENERAL NOTES

CONTRACTOR'S EQUIPMENT-OPERATION AND STORAGE

THE CONTRACTOR'S EQUIPMENT SHALL BE IN THE DIRECTION OF TRAFFIC, WHERE PRACTICAL. A QUALIFIED FLAGMAN SHALL BE EMPLOYED WHERE THE CONTRACTOR'S EQUIPMENT MUST MERGE WITH THE TRAFFIC STREAM. THE CONTRACTOR'S EQUIPMENT SHALL BE EQUIPPED WITH AT LEAST ONE AMBER FLASHING LIGHT. PAVERS, ROLLERS AND OTHER EQUIPMENT MAY BE PARKED IN AREAS ALONG THE HIGHWAY WHEN PAVING OPERATIONS ARE SCHEDULED TO CONTINUE WITHIN THE NEXT WORKDAY: OTHERWISE THE EQUIPMENT SHALL BE STORED AT A STORAGE AREA, THE LOCATION OF WHICH SHALL HAVE PRIOR APPROVAL OF THE ENGINEER. WHEN PARKING ALONG THE HIGHWAY THE EQUIPMENT SHALL BE PARKED EITHER FIFTY (50) FEET FROM THE EDGE OF PAVEMENT OR SIX (6) FEET BEHIND GUARDRAIL WITH A MINIMUM OF 125 FEET OF GUARDRAIL PRECEDING THE EQUIPMENT. NO EQUIPMENT SHALL BE PARKED IN THE MEDIAN OF THE HIGHWAY.
ADEQUATE BARRICADES AND LIGHTS SHALL BE PLACED ON THE PAVEMENT SIDE OF THE EQUIPMENT TO IDENTIFY THE LIMITS OF THE EQUIPMENT. ALL OTHER EQUIPMENT, INCLUDING PRIVATE VEHICLES, SHALL BE STORED AT THE APPROVED CONTRACTOR'S STORAGE AREA.

MAINTENANCE OF TRAFFIC

THIS ITEM SHALL CONSIST OF MAINTENANCE OF TRAFFIC ON EXISTING ROADWAYS AND RAMPS IN ACCORDANCE WITH THE OHIO MANUAL OF UNIFORM TRAFFIC CONTROL DEVICES FOR STREETS AND HIGHWAYS, CURRENT EDITION LATEST REVISION, THE SPECIFICATIONS AND THE FOLLOWING:

1. TWO LANE DIRECTIONAL TRAFFIC SHALL BE MAINTAINED ON THE EXISTING PAVEMENT AT ALL TIMES WITHOUT INTERRUPTION DURING CONSTRUCTION OF THE WORK EXCEPT WHEN CONSTRUCTION WORK REQUIRES MEN AND EQUIPMENT TO OCCUPY A THROUGH LANE.

2. NO MORE THAN ONE LANE OF DIRECTIONAL TRAFFIC, IN EACH DIRECTION SHALL BE CLOSED AT ANY TIME. THE CONTRACTOR SHALL SET UP AND OPERATE HIS EQUIPMENT IN SUCH A MANNER AS TO ENCROACH UPON THE TRAVELLED WIDTH OF THE PAVEMENT TO A MINIMUM EXTENT.

3. NO WORK SHALL BE PERFORMED AND ALL EXISTING LANES SHALL BE OPEN TO TRAFFIC DURING THE FOLLOWING DESIGNATED HOLIDAYS OR EVENTS:

CHRISTMAS	NEW YEARS
MEMORIAL DAY	FOURTH OF JULY
LABOR DAY	THANKSGIVING

DAY OF THE WEEK	TIMES ALL LANES MUST BE OPEN TO TRAFFIC	
SUNDAY	12:00N FRIDAY	THROUGH 12:00 ON MONDAY
MONDAY	12:00N FRIDAY	THROUGH 12:00 ON TUESDAY
TUESDAY	12:00N MONDAY	THROUGH 12:00 ON WEDNESDAY
WEDNESDAY	12:00N TUESDAY	THROUGH 12:00 ON THURSDAY
THURSDAY	12:00N WEDNESDAY	THROUGH 12:00 ON MONDAY
FRIDAY	12:00N THURSDAY	THROUGH 12:00 ON MONDAY
SATURDAY	12:00N FRIDAY	THROUGH 12:00 ON MONDAY

THERE SHALL NOT BE ANY EXTENSIONS DUE TO WEATHER OR MATERIAL DELAYES WHATSOEVER.

SHALL THE CONTRACTOR FAIL TO MEET ANY OF THESE REQUIREMENTS, THE CONTRACTOR SHALL BE ASSESSED LIQUIDATED DAMAGES IN ACCORDANCE WITH 108.07 OF THE CONSTRUCTION AND MATERIAL SPECIFICATIONS.

4. LANE RESTRICTIONS OR LANE REDUCTIONS SHALL NOT BE PERMITTED AFTER NORMAL WORKING HOURS, EXCEPT WHEN THE WORK INVOLVES BRIDGE WORK, PARAPET WORK, OR AS REQUIRED FOR THE CURING OF CONCRETE USED IN JOINT REPAIRS OR REPLACEMENTS. NORMAL WORKING HOURS SHALL BE THOSE HOURS DURING WHICH THE CONTRACTOR HAS A FULL COMPLIMENT OF EMPLOYEES AND EQUIPMENT ACTIVELY REMOVING AND/OR PLACING PAVEMENT MATERIALS.

5. TRAFFIC SHALL NOT BE CROSSED OVER THE MEDIAN AT ANY TIME, EXCEPT AS NOTED ELSEWHERE IN THE PLAN. SEE SHEET FOR DETAILS.

6. THE CONTRACTOR SHALL DESIGNATE AN INDIVIDUAL, OTHER THAN THE SUPERINTENDENT AND SUBJECT TO THE APPROVAL OF THE ENGINEER, TO CONTINUOUSLY INSPECT ALL TRAFFIC CONTROL DEVICES WHENEVER CONSTRUCTION WORK IS BEING PERFORMED WITHIN THE WORK LIMITS OF THE PROJECT. THE DESIGNATED INDIVIDUAL SHALL ALSO INSPECT ALL TRAFFIC CONTROL DEVICES AT THE BEGINNING AND AT THE END OF EACH WORK DAY. THE DESIGNATED INDIVIDUAL SHALL ALSO BE AVAILABLE ON AN AROUND THE CLOCK BASIS TO REPAIR AND/OR REPLACE DAMAGED OR MISSING TRAFFIC CONTROL DEVICES. PAYMENT FOR THE SERVICES OF THE TRAFFIC CONTROL INSPECTOR SHALL BE INCLUDED IN THE LUMP SUM PRICE BID FOR ITEM 614 MAINTAINING TRAFFIC.

7. IN AREAS OF LANE CLOSURES THE CONTRACTOR SHALL BE RESPONSIBLE FOR GRADING THE EXISTING SHOULDER NEXT TO THE TRAVELLED LANE, TO AN ELEVATION NOT MORE THAN ONE (1) INCH BELOW EXISTING PAVEMENT ELEVATION AND MAINTAINING THE SHOULDERS IN A SAFE CONDITION FOR THE DURATION OF THE PROJECT.

8. NIGHTTIME LANE RESTRICTIONS SHALL NOT BE PERMITTED UNLESS THE CONTRACTOR IS EITHER REMOVING PAVEMENT MATERIAL, PLACING NEW PAVEMENT MATERIAL, LATEXING BRIDGE DECKS OR REPLACING PARAPET WALLS AT THE TIME OF THE LANE CLOSURE. NIGHTTIME LANE RESTRICTIONS SHALL ALSO BE PERMITTED AS REQUIRED FOR THE CURING OF JOINT REPAIR MATERIALS AND AS REQUIRED FOR CROSSING TRAFFIC OVER THE MEDIAN.
WHENEVER THE CONTRACTOR SUSPENDS HIS PAVEMENT REMOVAL OR PLACEMENT ACTTIVITIES FOR THE DAY, ALL LANE RESTRICTIONS SHALL BE REMOVED.

CONES SHALL NOT BE ACCEPTABLE TRAFFIC CONTROL DEVICES FOR LANE RESTRICTIONS OR LANE REDUCTIONS THAT ARE IN OPERATION ONE-HALF HOUR AFTER SUNSET OR ONE-HALF HOUR BEFORE SUNRISE. ALL NIGHTTIME LANE RESTRICTIONS OR LANE REDUCTIONS SHALL REQUIRE DRUMS OR BARRICADES AT A MAXIMUM SPACING OF FIFTY (50) FEET. TYPE C STEADY BURNING WARNING LIGHTS SHALL BE MOUNTED ON EACH AND EVERY DRUM OR BARRICADE USED FOR THE TAPER. TYPE C BARRICADE WARNING LIGHTS SHALL ALSO BE INSTALLED AT 100 FT. INTERVALS FOR THE FIRST 1000 FT. OF A LANE REDUCTION.

9. A FLASHING ARROW BARRICADE (TC 35.10) SHALL BE USED FOR TRAFFIC CONTROL WHENEVER THERE IS A LANE RESTRICTION, LANE REDUCTION, LANE SHIFT OR MEDIAN CROSSOVER OF ALL THROUGH TRAFFIC.

10. ALL TRAFFIC CONTROL DEVICES REQUIRED INSIDE THE WORK LIMITS, EXCEPT REGULATORY SIGNS SHALL BE FURNISHED, ERECTED, MAINTAINED AND SUBSEQUENTLY REMOVED BY THE CONTRACTOR.

11. THE CONTRACTOR SHALL FURNISH AND MAINTAIN ALL FLAGS, FLAGGERS, WATCHMEN, BARRICADES, SIGNS, SIGN SUPPORTS AND INCIDENTALS RELATED THERETO. THE ABOVE ITEMS SHALL BE UTILIZED IN CONFORMANCE WITH THE OHIO MANUAL OF UNIFORM TRAFFIC CONTROL DEVICES, CURRENT EDITION, LATEST REVISION.

12. IN ADDITION TO THE REQUIREMENTS OF 614 WORK ZONE PAVEMENT MARKINGS (MT-99.10). AT THE END OF EACH DAY OF WORK, THE CONTRACTOR SHALL REPLACE (WITH TEMPORARY PAVEMENT MARKINGS) ALL LANE LINES, EDGE LINES OR CHANNELIZING LINES THAT WERE REMOVED DURING THE PAVEMENT REMOVAL OPERATIONS. QUANTITIES FOR SUCH REPLACEMENT ARE CARRIED AS PART OF THE ITEMS LISTED UNDER 614 WORK ZONE PAVEMENT MARKINGS.

13. A QUANTITY OF 100 CU. YDS. OF 404 BITUMINOUS CONCRETE FOR MAINTAINING TRAFFIC SHALL BE PROVIDED FOR USE IN MAINTAINING PAVEMENT AND SHOULDERS PRIOR TO RESURFACING AS DIRECTED BY THE ENGINEER.

14. A QUANTITY OF 310 CU. YDS. OF 301 BITUMINOUS AGGREGATE BASE, AS PER PLAN SHALL BE PROVIDED FOR USE IN REPAIRING PAVEMENT SHOULDERS AS DESCRIBED BELOW. THE UNIT PRICE BID SHALL INCLUDE ALL COSTS FOR THE EXCAVATION AND REMOVAL OF THE EXISTING SHOULDER.

THE OUTSIDE SHOULDER (10 FEET WIDE) AND THE INSIDE SHOULDER (4 FEET WIDE) FROM 450 FEET BEFORE TO 150 FEET AFTER A STRUCTURE THAT IS TO BE RESTORED WITH LATEX MODIFED CONCRETE SHALL BE REMOVED AND REPLACED WITH LATEX MODIFED CONCRETE SHALL BE REMOVED AND REPLACED WITH A 6 INCH THICK COURSE OF ITEM 301 BITUMINOUS AGGREGATE BASE, AS PER PLAN BEFORE ANY LANE RESTRICTIONS ARE PERMITTED AT THE STRUCTURE.

15. AN ESTIMATED QUANTITY OF 1100 LIN. FT. OF ITEM 622 TEMPORARY CONCRETE BARRIER, AS PER PLAN SHALL BE FURNISHED, INSTALLED, MAINTAINED AND SUBSEQUENTLY REMOVED BY THE CONTRACTOR. THE TEMPORARY CONCRETE BARRIER SHALL BE USED TO CLOSE ONE LANE OF THE ROADWAY DURING THE RETROFITTING OF THE EXISTING PARAPETS WITH THE PROPOSED SAFETY SHAPE PARAPET, AND DURING THE BRIDGE DECK REPAIRS.
SEE SHEET 18, 19 FOR ADDITIONAL DETAILS.

THIS ITEM SHALL BE PAID FOR BY THE ACTUAL LINEAL FEET OF ITEM 622 TEMPORARY CONCRETE BARRIER, AS PER PLAN INSTALLED AT A PARTICULAR STRUCTURE ANY COSTS ASSOCIATED WITH REMOVING AND RESETTING THE TEMPORARY CONCRETE BARRIER AT A STRUCTURE, SO THAT THE CLOSED LANE MAY BE OPENED AND THE OPEN LANE CLOSED, SHALL BE INCLUDED IN THE UNIT PRICE BID.

16. A SAFETY NET OR PLATFORM SHALL BE REQUIRED TO PROTECT THE ROADWAY, RAILROAD OR STREAM DURING THE REMOVAL OF THE EXISTING CONCRETE PARAPET

THE CONTRACTOR SHALL PROVIDE A SAFETY NET OR PLATFORM OF SUITABLE STRENGTH ON THE UNDERSIDE OF THE DECK. THE DESIGN OF THE NET OR PLATFORM SHALL CONFORM WITH OSHA REQUIREMENTS AND THE APPROVAL OF THE ENGINEER AND SHALL REMAIN IN PLACE UNTIL THE WORK HAS BEEN COMPLETED AND ACCEPTED OR AS DIRCTED BY THE ENGINEER.

17. FOR ADDITIONAL MAINTENANCE OF TRAFFIC NOTES, DETAILS AND SKETCHES, SEE SHEET NOS. 20-30 . IN REFERENCE TO THESE SHEETS, WHERE EVER POSSIBLE THE WORK VEHICLE SHOWN PARKED ON THE ROADWAY SHALL BE REPLACED WITH AN ADDITIONAL 300 FEET OF PARALLEL WORK ZONE LENGTH PRIOR TO THE START OF THE WORK AREA.

18. UNDER NO CIRCUMSTANCES SHALL THE CONTRACTOR BE PERMITTED TO HAVE WORK ZONES THAT ALTERNATELY CLOSE BOTH THE PASSING LANE AND THE DRIVING LANE UNLESS THE DISTANCE BETWEEN THE DRUMS, BARRICADES OR CONES EXCEEDS TWO (2) MILES.

THE FOLLOWING QUANTITIES SHALL BE USED FOR THE MAINTENANCE OF TRAFFIC ON THIS PROJECT:

ITEM	614	MAINTAINING TRAFFIC		LUMP SUM
ITEM	404	BITUMINOUS CONCRETE FOR MAINTAINING TRAFFIC	100	CU. YD.
ITEM	622	TEMPORARY CONCRETE BARRIER, AS PER PLAN	1100	LIN. FT.
ITEM	301	BITUMINOUS AGGREGATE BASE, AS PER PLAN	310	CU. YD.
ITEM	614	BARRIER REFLECTORS TYPE B	460	EACH

F.H.W.A. REGION	STATE	PROJECT NO.	FUNDS
5	OHIO		

18/54

MAH-680-6.97

PROPOSED BARRIER DETAILS

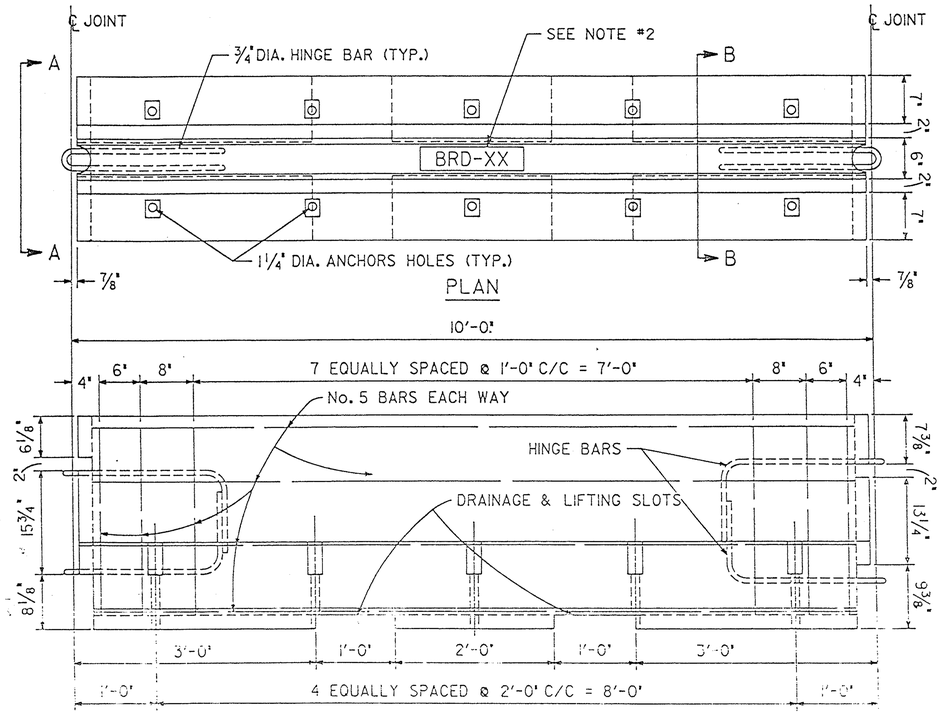

ELEVATION

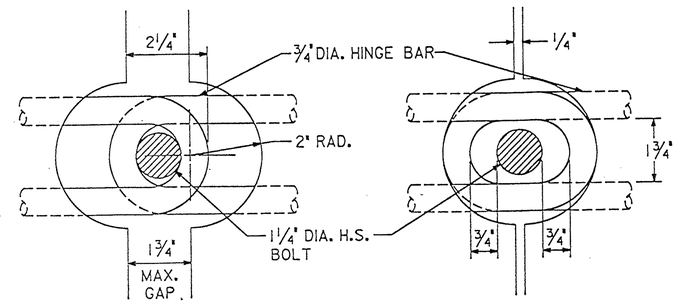

① OPEN JOINT ② CLOSED JOINT

JOINT CONNECTION DETAILS

① BARRIER JOINTS MUST BE FULLY OPEN BEFORE NUT IS TIGHTED ONTO BOLT AND OPENING IS EITHER GROUTED OR SHIMMED.

② BARRIERS SHOULD INITIALLY BE PLACED CLOSER TOGETHER SO THAT BOLTS CAN BE EASILY INSERTED THROUGH HINGE BAR LOOPS.

NOTES:

1. ALL ANCHORS SHALL BE 1" DIA., HIGH STRENGTH, THRU BOLTS OR APPROVED RESIN ANCHORS. WHEN RESIN ANCHORS ARE USED, THEY MUST BE EMBEDDED A MINIMUM OF 6" INTO FIRM CONCRETE. THE NUMBER OF ANCHORS SHALL BE AS SPECIFIED IN THE PLAN.

2. ALL NEW BARRIER SEGMENTS MADE ACCORDINGLY TO THE PROPOSED DESIGN, OR AN APPROVED EQUAL, SHALL BE CLEARLY MARKED, SUCH AS "BRD-XX". (WHERE XX = THE YEAR CAST)

3. PROPOSED BARRIER DESIGN DATA:

   1. THE STEEL ROD CONNECTOR LOOPS AND THE OTHER REINFORCING STEEL, SHALL HAVE A MINIMUM YIELD STRENGTH OF 60,000 psi.

   2. THE CONCRETE SHALL HAVE A MINIMUM COMPRESSIVE STRENGTH OF 4,000 psi.

4. THE DESIGNER MAY USE THIS BARRIER, OR ONE OF A SIMILAR DESIGN AS APPROVED BY THE DIRECTOR. ALL DESIGNS SHALL MEET OR EXCEED THE DESIGN REQUIREMENTS DESCRIBED IN THE REPORT, "DESIGN AND EVALUATION OF TEMPORARY PRECAST CONCRETE BARRIERS FOR USE ON OHIO BRIDGE DECKS"*. DESIGNS, AS SUBMITTED, SHALL BECOME THE PROPERTY OF THE STATE OF OHIO.

* COPIES OF THIS REPORT ARE AVAILABLE FROM THE OHIO DEPARTMENT OF TRANSPORTATION, BUREAU OF BRIDGES AND STRUCTURAL DESIGN.

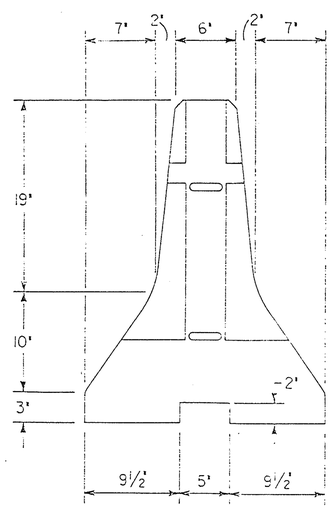

SECTION "A-A"

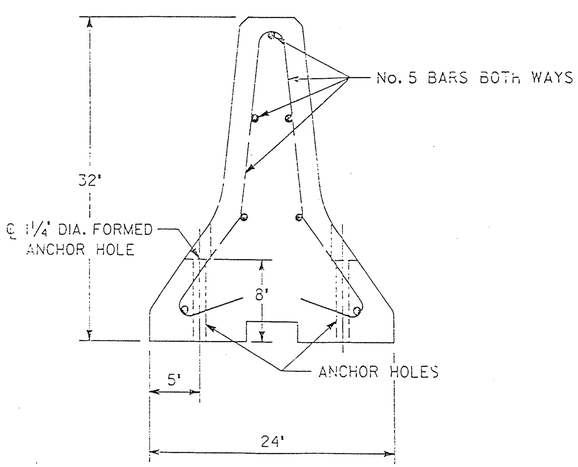

SECTION "B-B"

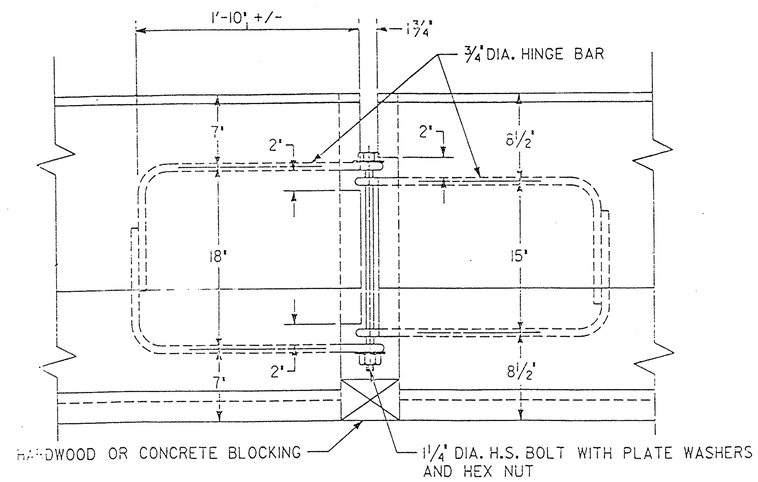

DETAIL AT HINGED CONNECTION

FHWA REGION	STATE	PROJECT	
5	OHIO		

19
54

MAH-680-6.97

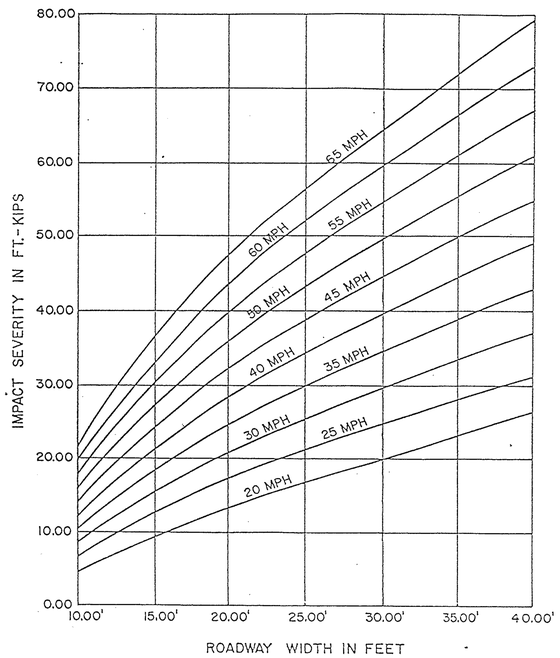

IMPACT SEVERITY VS ROADWAY WIDTH

FIGURE 1

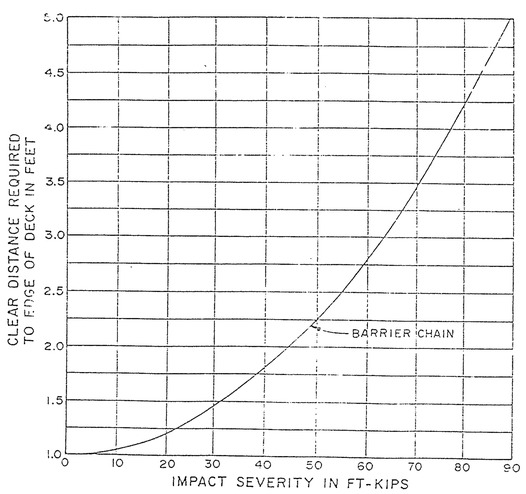

PLACEMENT VS IMPACT SEVERITY
OF AN UNANCHORED BARRIER CHAIN
COMPOSED OF 10' LONG SEGMENTS

FIGURE 2

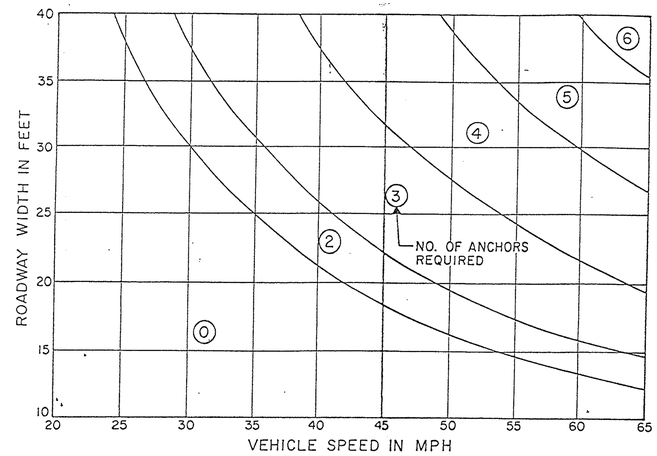

ANCHORS REQUIRED PER 10' BARRIER SEGMENT
FOR MODIFIED (EXISTING) BARRIERS

FIGURE 3

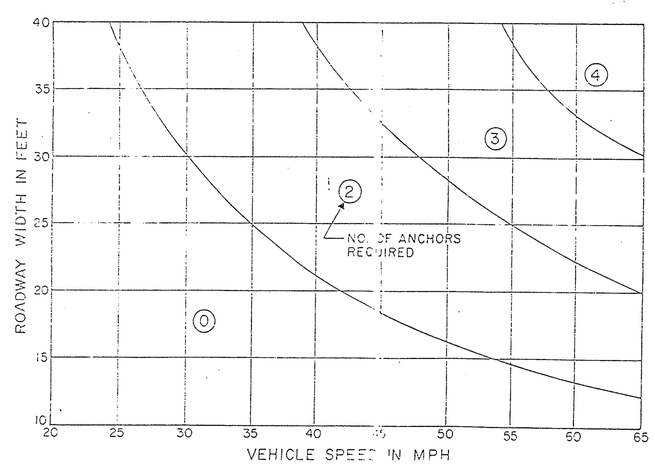

ANCHORS REQUIRED PER 10' BARRIER SEGMENT
FOR PROPOSED BARRIERS

FIGURE 4

NOTE:
"ROADWAY WIDTH" SHALL BE DEFINED AS THE CLEAR DISTANCE BETWEEN THE TRAFFIC FACE OF THE PRECAST TEMPORARY CONCRETE BARRIER CHAIN AND THE PERMANENT BRIDGE RAILING OR FACE OF SIDEWALK CURB.

GENERAL NOTES

BRIDGE DECK SURFACE PREPARATION:

THE PROCEDURES WHICH MUST BE FOLLOWED WHEN INSTALLING ALL TEMPORARY PRECAST CONCRETE BARRIERS, ON OHIO BRIDGE DECKS, ARE GIVEN BELOW.

A. THE BRIDGE DECK SURFACE AREA ON WHICH THE PRECAST CONCRETE BARRIERS WILL REST SHALL BE CLEARED OF ALL LOOSE SAND, GRAVEL, DIRT AND DEBRIS.

B. ANY IRREGULARITIES IN THE BRIDGE DECK AREA, UNLESS JUDGED BY THE ENGINEER TO BE INCONSEQUENTIAL, SHALL BE LEVELED WITH GROUT AND\OR ASPHALT.

C. ASPHALT ROLL ROOFING SHALL BE PLACED ON THOSE BRIDGE DECK AREAS, AS JUDGED BY THE ENGINEER, TO HAVE A SURFACE ROUGHNESS WHICH WOULD INHIBIT FRICTION CONTACT BETWEEN BARRIER SEGMENTS AND DECK.

BARRIER ANCHORAGE REQUIREMENTS:

THE ANCHORAGE REQUIREMENTS FOR TEMPORARY PRECAST CONCRETE BARRIERS CAN BE DETERMINED BY USING THE FOLLOWING PROCEDURES.

1. ENTER FIGURE 3 WITH THE KNOWN ROADWAY WIDTH AND THE POSTED SPEED LIMIT * AND FIND THE NUMBER OF ANCHORS REQUIRED WHEN THE MODIFIED (EXISTING) BARRIER DESIGN IS USED.

OR

ENTER FIGURE 4 WITH THE KNOWN ROADWAY WIDTH AND THE POSTED SPEED LIMIT * AND FIND THE NUMBER OF ANCHORS REQUIRED WHEN THE PROPOSED BARRIER DESIGN IS USED.

2. IF THE BARRIER INSTALLATION IS TO REMAIN UNANCHORED, EITHER BECAUSE OF LOW IMPACT SEVERITY OR THE AVAILABILITY OF SPACE BETWEEN THE BARRIER AND THE EDGE OF THE BRIDGE DECK, ENTER FIGURE 1 WITH THE KNOWN ROADWAY WIDTH AND THE POSTED SPEED LIMIT * AND FIND THE IMPACT SEVERITY. THEN, WITH THE KNOWN IMPACT SEVERITY, ENTER FIGURE 2 AND FIND THE MINIMUM CLEAR DISTANCE REQUIRED FROM THE EDGE OF THE BRIDGE DECK AT WHICH THE BARRIER (MODIFIED OR PROPOSED) CAN BE LOCATED.

* THE POSTED SPEED LIMIT SHALL BE DEFINED AS THE SPEED THAT IS ACTIVELY ENFORCED EITHER BY LEGAL MEANS OR TRAFFIC CONTROL DEVICES.

ALL BARRIER SEGMENTS SHALL, WHERE REQUIRED, BE FASTENED TO THE BRIDGE DECK USING ONE INCH DIAMETER HIGH STRENGTH THRU BOLTS OR APPROVED RESIN ANCHORS. WHEN RESIN ANCHORS ARE USED THEY MUST BE EMBEDDED A MINIMUM OF 6" INTO FIRM CONCRETE. GENERALLY, ALL ANCHORS SHALL BE PLACED ON THE TRAFFIC SIDE OF THE BARRIER WITH THE ANCHOR PATTERN SYMMETRICAL ABOUT THE CENTER OF EACH TEN FOOT SEGMENT. EVEN THOSE PRECAST CONCRETE BARRIER SEGMENTS NOT OTHERWISE REQUIRING ANCHORING SHALL, WHEN LOCATED ON BRIDGE DECKS CROSSING OVER ROADWAYS, RAILROADS, AND/OR RECREATIONAL AREAS, BE SECURED BY NO LESS THAN TWO ANCHORS **.

** UNLESS BARRIER SEGMENTS ARE TO BE INSTALLED 6' OR MORE (CLEAR DISTANCE) FROM THE EDGE OF DECK, EQUIPMENT, AND/OR PROBABLE WORK AREAS.

HILLS CO.—1000 210—7155—7-79

FHWA REGION	STATE	PROJECT	
5	OHIO		

20/54

MAH-680-6.97

TYPICAL APPLICATIONS OF TRAFFIC CONTROL DEVICES FOR CLOSING TWO LANES ON A 4-LANE UNDIVIDED HIGHWAY

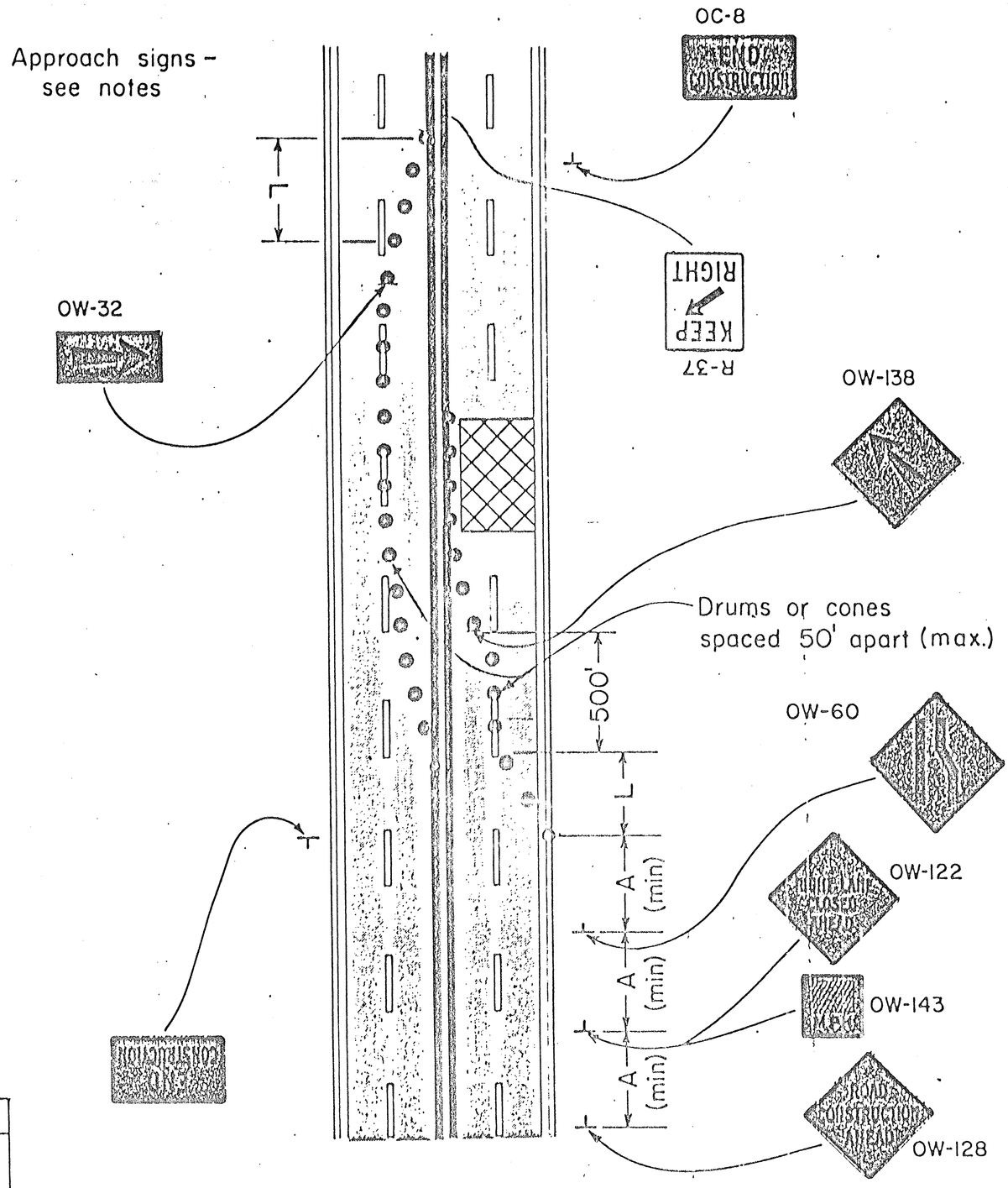

REF. SEC.
7D-3
7D-21

NOTES:

1. See Sec. 7F-17 for taper formulae
2. Use similar sign treatment for opposite approach.

Type of Roadway	Distance A - ft.
Urban	200
Standard	500

PLAN NO.	FED. RD. DIVISION	STATE	PROJECT	
	5	OHIO		

MAH-680-6.97

21
54

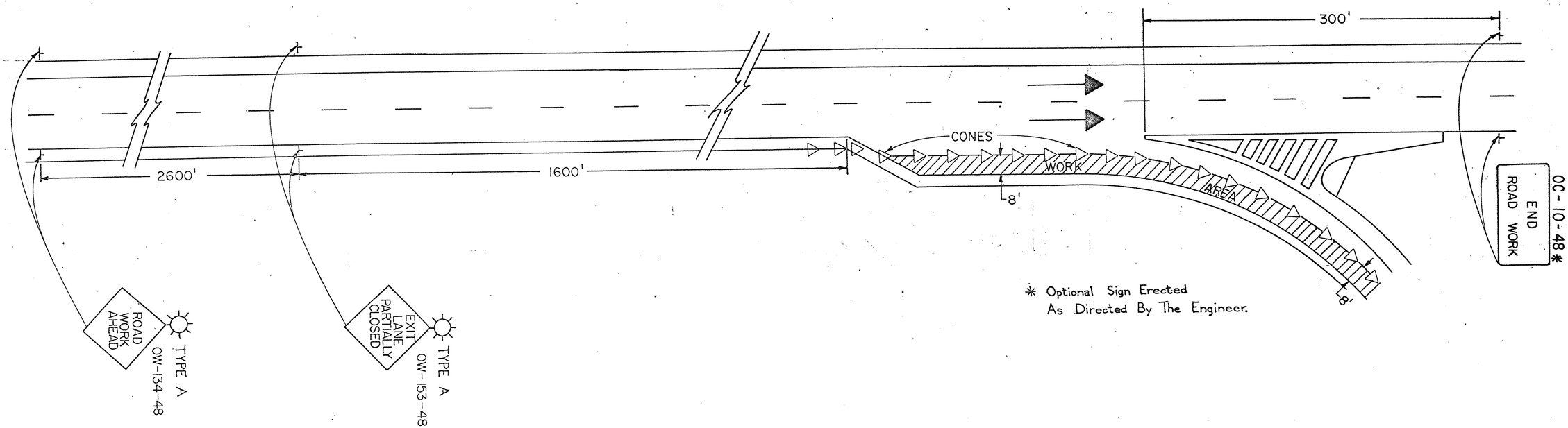

* Optional Sign Erected As Directed By The Engineer.

1. FOR THE FIRST 1000 FEET OF THE WORK AREA, CONES SHALL BE SPACED AT 50 FOOT CENTERS AND AT A MAXIMUM OF 100 FEET FOR THE BALANCE OF THE WORK AREA. ALL CONES SHALL BE A MINIMUM OF 36 INCHES IN HEIGHT.

2. RAMP TRAFFIC SHALL BE MAINTAINED AT ALL TIMES.

3. SEE SHEET___WHEN WORK CANNOT BE CONFINED TO 8 FEET FROM EDGE OF PAVEMENT.

4. TYPE A FLASHING BARRICADE WARNING LIGHTS SHOWN ON THE "ROAD WORK AHEAD" AND "EXIT LANE PARTIALLY CLOSED" SIGNS ARE REQUIRED WHENEVER A NIGHT LANE CLOSURE IS NECESSARY.

OHIO DEPARTMENT OF TRANSPORTATION

TYPICAL LANE CLOSURE IN DECELERATION LANE AND RAMP - FOR CLOSING INSIDE PORTION OF CURVE - DAYTIME CLOSING ONLY

DATE 11/77 11/86

PLAN NO.	FED. RD. DIVISION	STATE	PROJECT	
	5	OHIO		

MAH-680-6.97

22
54

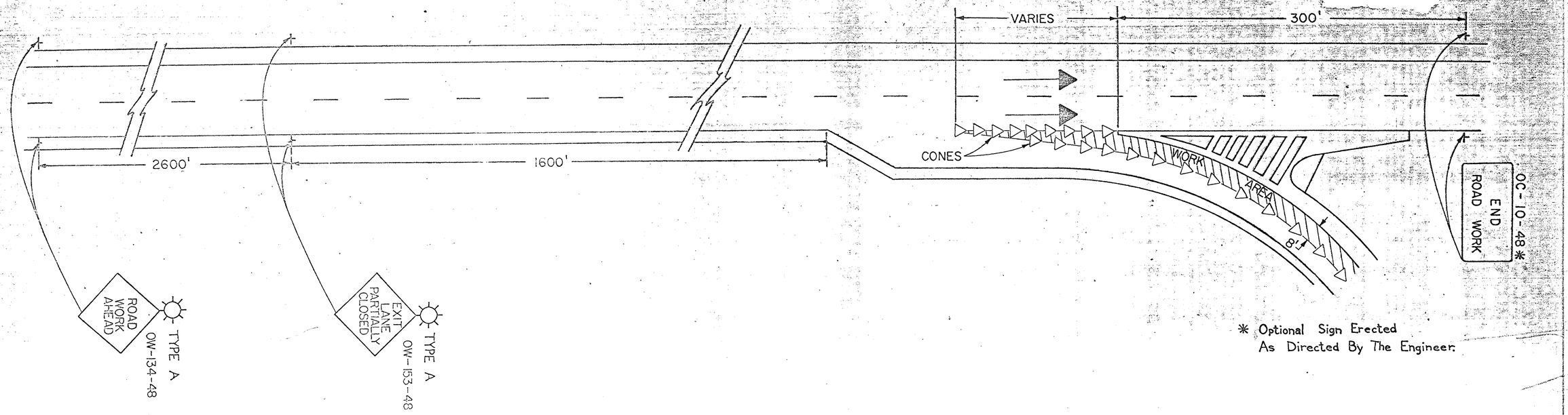

* Optional Sign Erected As Directed By The Engineer.

1. FOR THE FIRST 1000 FEET OF THE WORK AREA, CONES SHALL BE SPACED AT 50 FOOT CENTERS AND AT A MAXIMUM OF 100 FEET FOR THE BALANCE OF THE WORK AREA. ALL CONES SHALL BE A MINIMUM OF 36 INCHES IN HEIGHT.
2. RAMP TRAFFIC SHALL BE MAINTAINED AT ALL TIMES.
3. SEE SHEET WHEN THE WORK CAN NOT BE CONFINED TO 8' FROM EDGE OF PAVEMENT
4. TYPE A FLASHING BARRICADE WARNING LIGHTS SHOWN ON THE "ROAD WORK AHEAD" AND "EXIT LANE PARTIALLY CLOSED" SIGNS ARE REQUIRED WHENEVER A NIGHT LANE CLOSURE IS NECESSARY.

OHIO DEPARTMENT OF TRANSPORTATION

TYPICAL LANE CLOSURE
IN RAMP
- FOR CLOSING OUTSIDE PORTION OF CURVE-
DAYTIME CLOSING ONLY

DATE
11/77
11/86

PLAN NO.			
FHWA REGION	STATE	PROJECT	
5	OHIO		

23/54

MAH-680-6.97

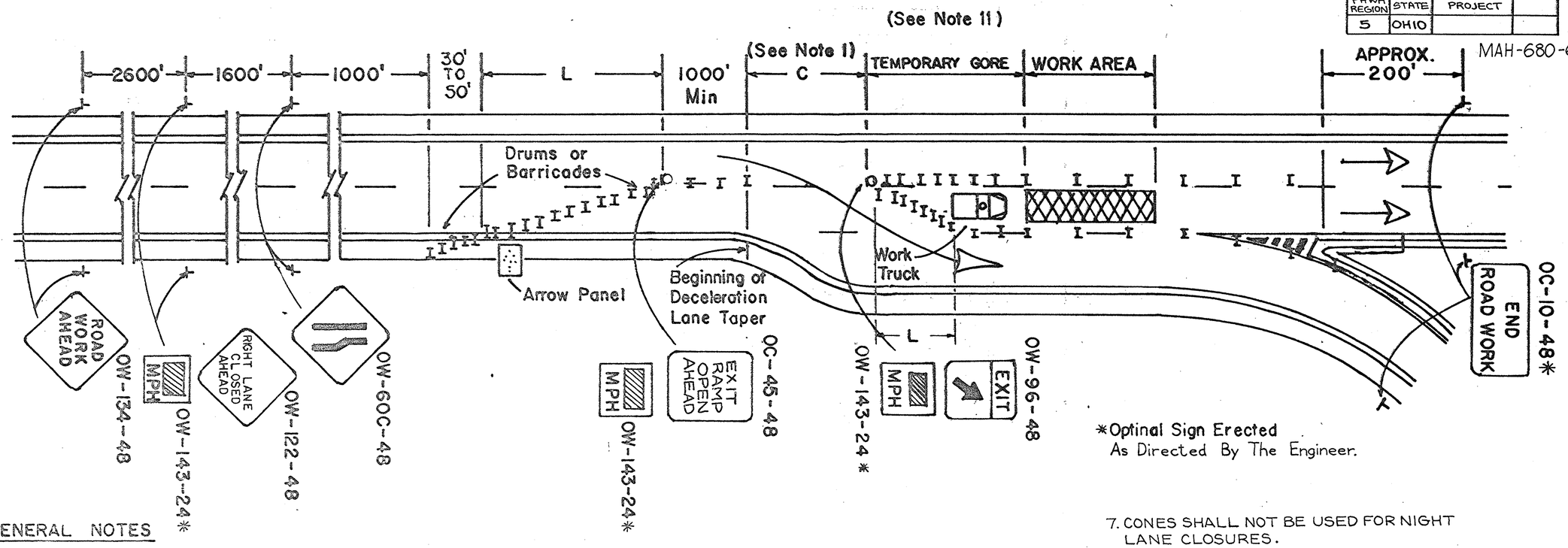

*Optional Sign Erected As Directed By The Engineer.

GENERAL NOTES *

1. THIS WORK AREA TRAFFIC CONTROL APPLICATION SHALL ONLY BE USED WHEN THE DISTANCE "C" IS 100 FEET OR GREATER. WHEN "C" IS LESS THAN 100 FEET, THE TRAFFIC CONTROL SHOWN ON THE "LANE CLOSURE BEFORE EXIT GORE" DETAIL SHOULD BE USED.

2. WHEN WORK IS BEING PERFORMED IN ONLY THE LANE ADJACENT TO THE MEDIAN ON A DIVIDED HIGHWAY, REFER TO THE TYPICAL WORK AREA TRAFFIC CONTROL SHOWN IN FIGURE C-21 OF THE OHIO MANUAL OF UNIFORM TRAFFIC CONTROL DEVICES.

3. THE WORK TRUCK SHOWN AT THE BEGINNING OF THE WORK AREA SHALL BE IN PLACE AND UNOCCUPIED WHENEVER MEN ARE WORKING WITHIN THE WORK AREA. THIS TRUCK SHALL BE MOVED FROM THE PAVEMENT WHENEVER WORKMEN ARE NOT IN THE WORK AREA. OTHER PROTECTIVE DEVICES MAY BE USED IN LIEU OF THE WORK TRUCK SHOWN WHEN APPROVED BY THE ENGINEER. A TRUCK MOUNTED IMPACT ATTENUATOR MAY BE EMPLOYED.

4. THE FLASHING ARROW PANEL SHALL BE IN ACCORDANCE WITH TC-35.10.

5. THIRTEEN (13) DRUMS OR BARRICADES SHALL BE USED TO FORM THE LANE TRANSITION TAPER IN ADVANCE OF THE WORK AREA. FIVE (5) CHANNELIZING DEVICES SHALL BE USED TO FORM THE TAPER ON THE SHOULDER. DRUMS OR BARRICADES SHALL BE SPACED AT 50 FOOT CENTERS. CONES MAY BE SUBSTITUTED FOR BARRICADES OR **DRUMS FOR THE LANE** CLOSURES DURING DAYLIGHT HOURS ONLY.

6. TYPE C STEADY BURNING BARRICADE WARNING LIGHTS SHALL BE ERECTED ON DRUMS OR BARRICADES FOR NIGHT LANE CLOSURES. MAXIMUM SPACING SHALL BE 50' CENTER TO CENTER IN ADVANCE OF THE WORK AREA AND 200' CENTER TO CENTER WITHIN THE LIMITS OF THE WORK AREA.

7. CONES SHALL NOT BE USED FOR NIGHT LANE CLOSURES.

8. FOR NIGHT CLOSURES EACH OF THE FIRST TWO SIGNS IN THE SEQUENCE (ROAD WORK AHEAD AND CENTER LANE CLOSED AHEAD) IS REQUIRED TO BE SUPPLEMENTED BY A TYPE A FLASHING BARRICADE WARNING LIGHT.

9. WORK VEHICLES SHALL BE EQUIPPED WITH A 360° ROTATING OR FLASHING AMBER BEACON CLEARLY VISIBLE A MINIMUM OF 1/4 MILE.

10. TAPER FORMULA SHALL BE IN ACCORDANCE WITH OMUTCD, SECTION 7F-17.

11. WHEN CREATING A TEMPORARY GORE, CHANNELIZING DEVICES SHOULD BE SPACED 25' CENTER TO CENTER SO AS TO CREATE A "SOLID GORE" **EFFECT.**

12. THE SPACINGS BETWEEN CONSTRUCTION AND MAINTENANCE SIGNS SHOWN ON THIS DETAIL MAY REQUIRE ADJUSTMENTS (INCREASES OR DECREASES) TO ASSURE THAT THEY ARE POSITIONED NO CLOSER THAN 200 FEET TO EXISTING SIGNS AS DETERMINED BY THE ENGINEER.

OHIO DEPARTMENT OF TRANSPORTATION

LANE CLOSURE AT EXIT GORE

DATE 8-3-79 11/86

FHWA REGION	STATE	PROJECT NO.	FUNDS
5	OHIO		

24/54

MAH-680-6.97

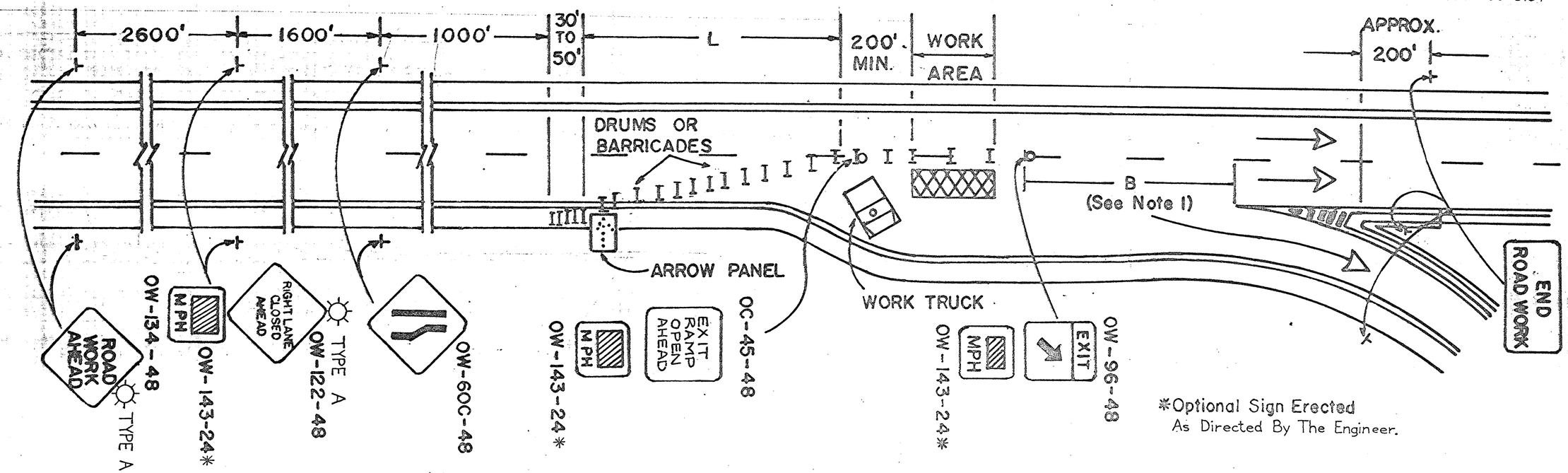

*Optional Sign Erected As Directed By The Engineer.

GENERAL NOTES

1. THIS WORK AREA TRAFFIC CONTROL APPLICATION SHALL ONLY BE USED WHEN THE DISTANCE "B" IS 100 FEET OR GREATER. WHEN "B" IS LESS THAN 100 FEET, THE TRAFFIC CONTROL SHOWN ON THE "LANE CLOSURE AT EXIT GORE" DETAIL SHOULD BE USED. WHENEVER POSSIBLE THE WORK VEHICLE SHALL BE REPLACED WITH AN ADDITIONAL 300 FEET OF PARALLEL WORK ZONE LENGTH PRIOR TO THE WORK AREA.

2. WHEN WORK IS BEING PERFORMED IN THE LANE ADJACENT TO THE MEDIAN ON A DIVIDED HIGHWAY, REFER TO THE TYPICAL WORK AREA TRAFFIC CONTROL SHOWN IN FIGURE C-21 OF THE OHIO MANUAL OF UNIFORM TRAFFIC CONTROL DEVICES.

3. THE WORK TRUCK SHOWN AT THE BEGINNING OF THE WORK AREA SHALL BE IN PLACE AND UNOCCUPIED WHENEVER MEN ARE WORKING WITHIN THE WORK AREA. THIS TRUCK SHALL BE MOVED FROM THE PAVEMENT WHENEVER WORKMEN ARE NOT IN THE WORK AREA. OTHER PROTECTIVE DEVICES MAY BE USED IN LIEU OF THE WORK TRUCK SHOWN WHEN APPROVED BY THE ENGINEER.

4. THE FLASHING ARROW PANEL SHALL BE IN ACCORDANCE WITH TC-35.10.

5. THIRTEEN (13) DRUMS OR BARRICADES SHALL BE USED TO FORM THE LANE TRANSITION TAPER IN ADVANCE OF THE WORK AREA. FIVE (5) CHANNELIZING DEVICES SHALL BE USED TO FORM THE TAPER ON THE SHOULDER. DRUMS OR BARRICADES SHALL BE SPACED AT 50 FOOT CENTERS. CONES MAY BE SUBSTITUTED FOR BARRICADES OR DRUMS FOR THE LANE CLOSURES DURING DAYLIGHT HOURS ONLY.

6. TYPE C STEADY BURNING BARRICADE WARNING LIGHTS SHALL BE ERECTED ON DRUMS OR BARRICADES FOR NIGHT LANE CLOSURES. MAXIMUM SPACING SHALL BE 50' CENTER TO CENTER IN ADVANCE OF THE WORK AREA AND 100' CENTER TO CENTER WITHIN THE LIMITS OF THE WORK AREA.

7. TAPER FORMULA SHALL BE IN ACCORDANCE WITH OMUTCD SECTION 7F-17.

8. THE SPACINGS BETWEEN CONSTRUCTION AND MAINTENANCE SIGNS SHOWN ON THIS DETAIL MAY REQUIRE ADJUSTMENTS (INCREASES OR DECREASES) TO ASSURE THAT THEY ARE POSITIONED NO CLOSER THAN 200 FEET TO EXISTING SIGNS AS DETERMINED BY THE ENGINEER.

9. CONES SHALL NOT BE USED FOR NIGHT LANE CLOSURES.

10. FOR NIGHT CLOSURES EACH OF THE FIRST TWO SIGNS IN THE SEQUENCE (ROAD WORK AHEAD AND CENTER LANE CLOSED AHEAD) IS REQUIRED TO BE SUPPLEMENTED BY A TYPE A FLASHING BARRICADE WARNING LIGHT.

11. WORK VEHICLES SHALL BE EQUIPPED WITH A 360° ROTATING OR FLASHING AMBER BEACON CLEARLY VISIBLE A MINIMUM OF 1/4 MILE.

OHIO DEPARTMENT OF TRANSPORTATION

LANE CLOSURE BEFORE EXIT GORE

DATE 8-3-79 11-86

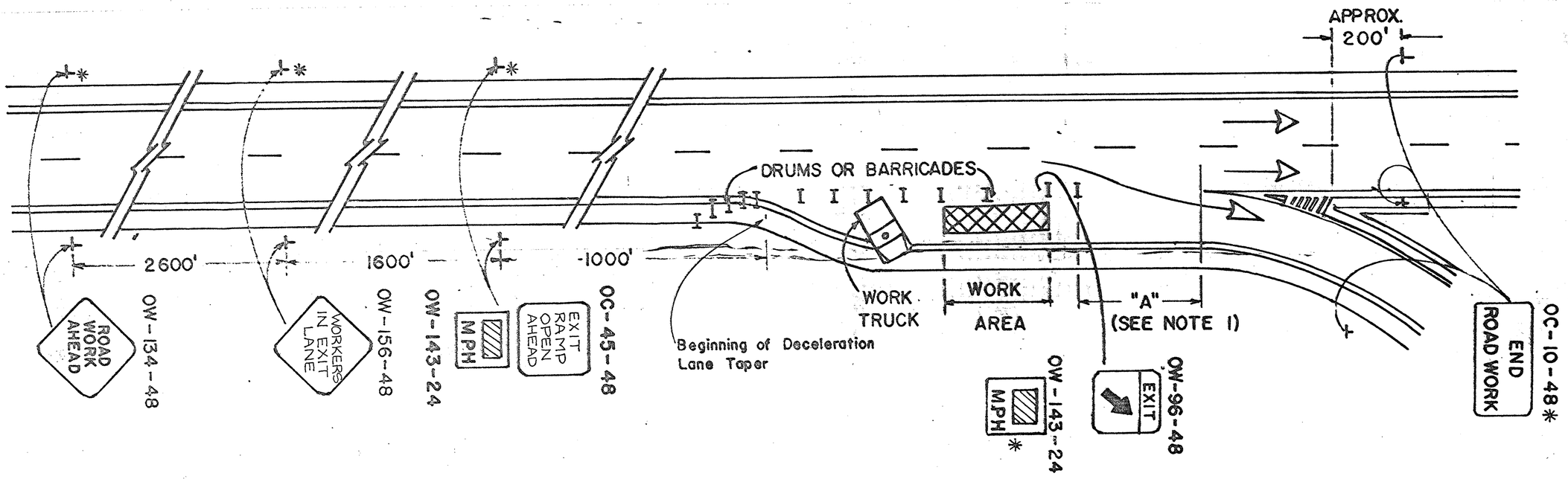

* OPTIONAL SIGN ERECTED AS DIRECTED BY THE ENGINEER.

GENERAL NOTES.

1. THIS WORK AREA TRAFFIC CONTROL APPLICATION SHALL ONLY APPLY WHEN THE DISTANCE "A" IS GREATER THAN 100'. WHEN DISTANCE "A" IS LESS THAN 100', THE RAMP SHALL BE CLOSED. WHEN THE RAMP IS CLOSED, THE TRAFFIC CONTROL SHALL INCLUDE DETOUR SIGNING FOR EXIT RAMP CLOSURES IN ACCORDANCE WITH OMUTCD.

2. DRUMS OR BARRICADES SHALL BE SPACED AT 50 FOOT CENTERS. CONES MAY BE SUBSTITUTED FOR BARRICADES OR DRUMS FOR THE LANE CLOSURES DURING DAYLIGHT HOURS ONLY.

3. TYPE C STEADY BURNING BARRICADE WARNING LIGHTS SHALL BE ERECTED ON DRUMS OR BARRICADES FOR NIGHT LANE CLOSURES. MAXIMUM SPACING SHALL BE 50' CENTER TO CENTER IN ADVANCE OF THE WORK AREA AND 200' CENTER TO CENTER WITHIN THE LIMITS OF THE WORK AREA.

4. THE WORK TRUCK SHOWN AT THE BEGINNING OF THE WORK AREA SHALL BE IN PLACE AND UNOCCUPIED WHENEVER MEN ARE WORKING WITHIN THE WORK AREA. THIS TRUCK SHALL BE MOVED FROM THE PAVEMENT WHENEVER WORKMEN ARE NOT IN THE WORK AREA. OTHER PROTECTIVE DEVICES MAY BE USED IN LIEU OF THE WORK TRUCK SHOWN WHEN APPROVED BY THE ENGINEER.

5. THE SPACINGS BETWEEN CONSTRUCTION AND MAINTENANCE SIGNS SHOWN ON THIS DETAIL MAY REQUIRE ADJUSTMENTS (INCREASES OR DECREASES) TO ASSURE THAT THEY ARE POSITIONED NO CLOSER THAN 200 FEET TO EXISTING SIGNS AS DETERMINED BY THE ENGINEER.

6. SEE SHEET____ WHEN WORK CAN BE CONFINED TO 8 FEET FROM EDGE OF PAVEMENT. LEAVING ADEQUATE PAVEMENT FOR TRAFFIC ON RAMP.

7. CONES SHALL NOT BE USED FOR NIGHT LANE CLOSURES.

8. FOR NIGHT CLOSURES, EACH OF THE FIRST TWO SIGNS IN THE SEQUENCE (ROAD WORK AHEAD AND WORKERS IN EXIT LANE) IS REQUIRED TO BE SUPPLEMENTED BY A TYPE A FLASHING BARRICADE WARNING LIGHT.

9. WORK VEHICLES SHALL BE EQUIPPED WITH A 360° ROTATING OR FLASHING AMBER BEACON CLEARLY VISIBLE A MINIMUM OF 1/4 MILE.

OHIO DEPARTMENT OF TRANSPORTATION

LANE CLOSURE IN DECELERATION LANE

DATE 8-3-79 11-86

ENTRANCE GORE TRAFFIC CONTROL

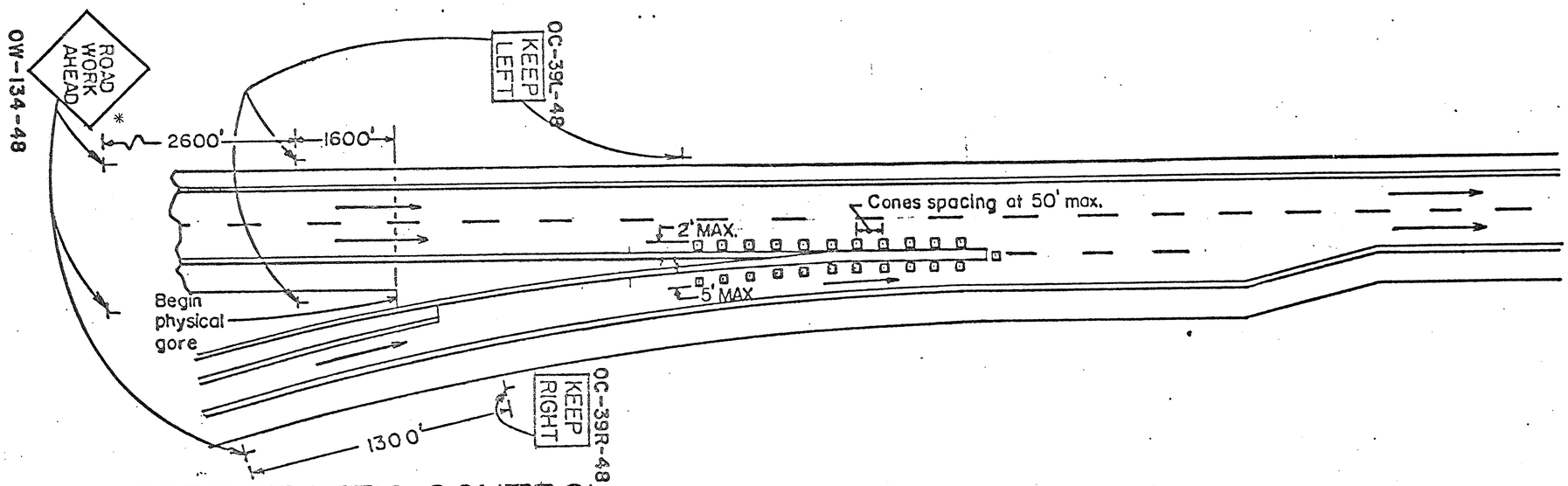

EXIT GORE TRAFFIC CONTROL

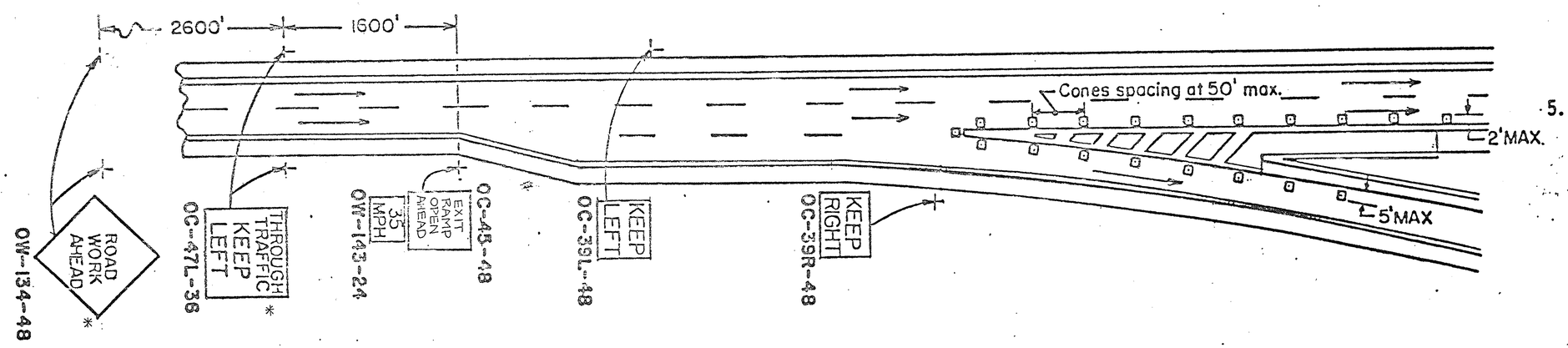

* FOR NIGHT CLOSURES THESE SIGNS ARE TO BE SUPPLEMENTED BY A TYPE A FLASHING BARRICADE WARNING LIGHT

GENERAL NOTES

1. WHERE THE ONLY WORK IN THE GORE AREA CONSISTS OF APPLICATION OF EDGELINE MARKINGS WITH FAST DRY PAVEMENT MARKING MATERIALS, THE TRAFFIC CONTROL FOR "EDGELINE PAVEMENT MARKING OPERATIONS" SHOULD BE EMPLOYED.
2. WHERE THE WORK IN THE GORE AREA REQUIRES MORE POSITIVE TRAFFIC CONTROL OR OVERNIGHT WORK AREA PROTECTION, THE TRAFFIC CONTROL FOR "LANE CLOSURE AT THE ENTRANCE RAMP" OR "LANE CLOSURE AT EXIT GORE" SHOULD BE EMPLOYED. SEE SHEET 23.
3. THE SPACING BETWEEN SIGNS SHOWN ON THIS DETAIL MAY BE ADJUSTED (INCREASED OR DECREASED) WITH THE APPROVAL OF THE ENGINEER TO POSITION THEM NO CLOSER THAN 200 FEET TO EXISTING SIGNS WHICH MUST REMAIN IN USE.
4. AT AN ISOLATED ENTRANCE GORE AREA, A FLASHING ARROW PANEL CONFORMING TO REQUIREMENTS IN SECTION 7G-8 OF THE OMUTCD MAY BE SUBSTITUTED FOR THE ADVANCE OC-39-48 SIGNS.
5. AT AN INTERCHANGE WHERE BOTH EXITS AND ENTRANCES ARE MARKED WITH TRAFFIC CONTROL IN PLACE AT THE SAME TIME, THE OW-134-48 SIGN ON THE ENTRANCE RAMP IS NOT REQUIRED.

OHIO DEPARTMENT OF TRANSPORTATION

TRAFFIC CONTROL FOR WORK IN GORE AREAS	DATE 1/81

PLAN NO.			
FHWA REGION	STATE	PROJECT	
5	OHIO		

MAH-680-6.97

27/54

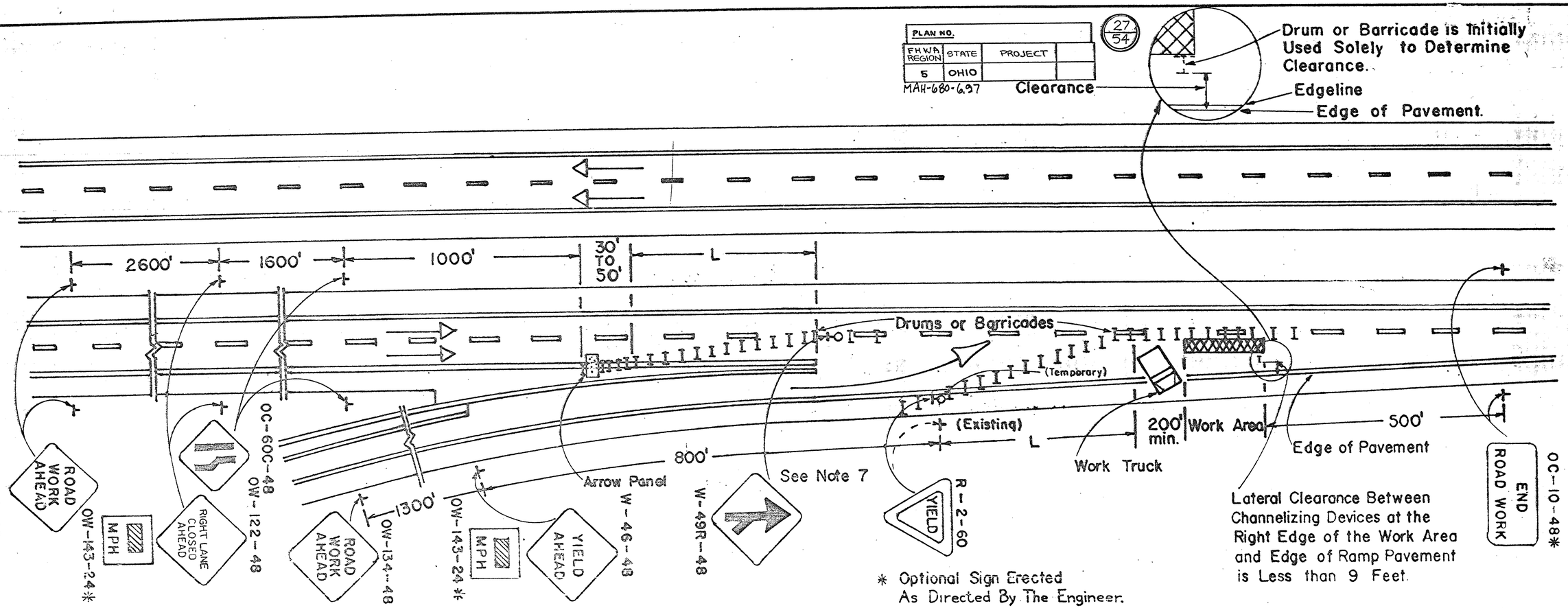

* Optional Sign Erected As Directed By The Engineer.

General Notes

1. This work area traffic control application shall be employed when the lateral clearance between channelizing devices at the right edge of the work area and the edge of the ramp pavement is less than 9 feet. When the clearance is more than 9 feet, the traffic control on "Lane Closure at Entrance Ramp: Plan A" should be used.

2. Thirteen (13) drums or barricades shall be used to form the lane transition taper in advance of the work area. Five (5) channelizing devices shall be used to form the taper on the shoulder. Cones, drums, or barricades shall be spaced at 50 foot centers. Cones may be substituted for barricades or drums for the lane closures during daylight hours only.

3. Ramp signs shall be dual mounted on multi-lane ramps. When the ramp is not long enough to allow placement as specified above, the signs may be spaced proportionately within the space available as determined by the Engineer (a 200' minimum spacing must be maintained).

4. The flashing arrow panel shall be in accordance with TC 35.10.

5. The work truck shown at the beginning of the work area shall be in place and unoccupied whenever men are working within the work area. This truck shall be moved from the pavement whenever workmen are not in the work area. Other protective devices may be used in lieu of work truck shown when approved by the Engineer.

6. Type C steady burning barricade warning lights shall be erected on drums or barricades for night lane closures. Maximum spacing shall be 50' center to center in advance of the work area and 100' center to center within the limits of the work area.

7. It may be necessary to move the location of an existing Yield condition In these cases, the permanent R-2 sign installation shall be covered and the temporary installation shall be mounted upon a drive post which shall be banded to a drum with stainless steel strapping material or other techniques subject to the approval of the Engineer.

8. Taper Formula Shall Be In Accordance With OMUTCD, Section 7F-17.

10. FOR NIGHT CLOSURES EACH OF THE FIRST TWO SIGNS IN THE SEQUENCE (ROAD WORK AHEAD AND CENTER LANE CLOSED AHEAD) IS REQUIRED TO BE SUPPLEMENTED BY A TYPE A FLASHING BARRICADE WARNING LIGHT.

11. THE SPACINGS BETWEEN CONSTRUCTION AND MAINTENANCE SIGNS SHOWN ON THIS DETAIL MAY REQUIRE ADJUSTMENTS (INCREASES OR DECREASES) TO ASSURE THAT THEY ARE POSITIONED NO CLOSER THAN 200 FEET TO EXISTING SIGNS AS DETERMINED BY THE ENGINEER.

12. WORK VEHICLES SHALL BE EQUIPPED WITH A 360° ROTATING OR FLASHING AMBER BEACON CLEARLY VISIBLE A MINIMUM OF 1/4 MILE.

OHIO DEPARTMENT OF TRANSPORTATION

LANE CLOSURE AT ENTRANCE RAMP PLAN B	DATE 8-3-79 11-86

PLAN NO.			
FHWA REGION	STATE	PROJECT	
5	OHIO		

MAH-680-6.97

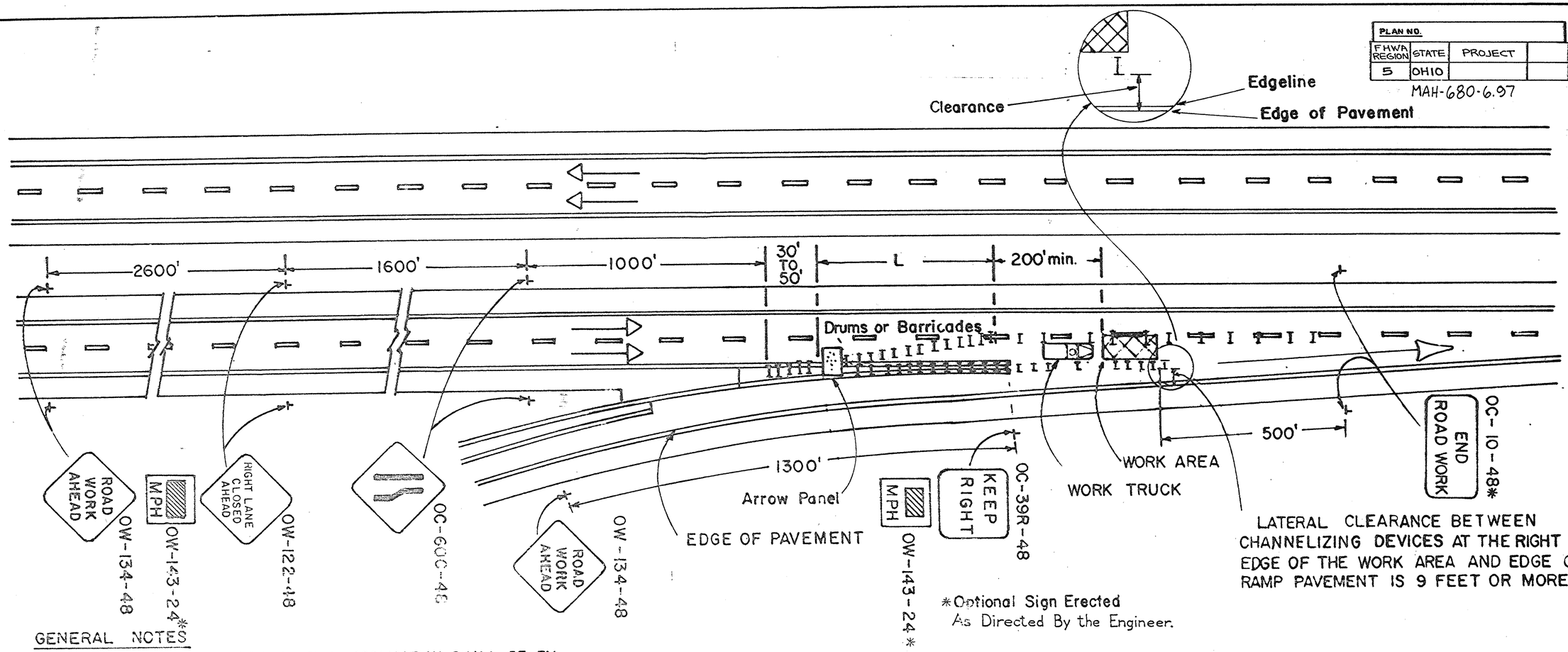

*Optional Sign Erected As Directed By the Engineer.

GENERAL NOTES

1. THIS WORK AREA TRAFFIC CONTROL APPLICATION SHALL BE EMPLOYED WHEN THE LATERAL CLEARANCE BETWEEN THE CHANNELIZING DEVICES AT THE RIGHT EDGE OF THE WORK AREA AND THE EDGE OF THE RAMP PAVEMENT IS 9 FEET OR MORE. WHEN THE CLEARANCE IS LESS THAN 9 FEET, THE TRAFFIC CONTROL ON "LANE CLOSURE AT ENTRANCE RAMP: PLAN B" SHOULD BE USED, OR ALLOWING RAMP TRAFFIC TO USE THE BERM SHOULD BE CONSIDERED PROVIDED THE OPERATION IS "SHORT" IN DURATION.

2. THIRTEEN (13) DRUMS OR BARRICADES SHALL BE USED TO FORM THE LANE TRANSITION TAPER IN ADVANCE OF THE WORK AREA. FIVE (5) CHANNELIZING DEVICES SHALL BE USED TO FORM THE TAPER ON THE SHOULDER. DRUMS, OR BARRICADES SHALL BE SPACED AT 50 FOOT CENTERS. CONES MAY BE SUBSTITUTED FOR BARRICADES OR DRUMS FOR THE LANE CLOSURES DURING DAYLIGHT HOURS ONLY.

3. RAMP SIGNS SHALL BE DUAL MOUNTED ON MULTILANE RAMPS.

4. THE FLASHING ARROW PANEL SHALL BE IN ACCORDANCE WITH TC 35.10.

5. THE WORK TRUCK SHOWN AT THE BEGINNING OF THE WORK AREA SHALL BE IN PLACE AND UNOCCUPIED WHENEVER MEN ARE WORKING WITHIN THE WORK AREA. THIS TRUCK SHALL BE MOVED FROM THE PAVEMENT WHENEVER WORKMAN ARE NOT IN THE WORK AREA. OTHER PROTECTIVE DEVICES MAY BE USED IN LIEU OF WORK TRUCK SHOWN WHEN APPROVED BY THE ENGINEER. A TRUCK MOUNTED IMPACT ATTENUATOR MAY BE EMPLOYED.

6. TYPE C STEADY BURNING BARRICADE WARNING LIGHTS SHALL BE ERECTED ON DRUMS OR BARRICADES FOR NIGHT LANE CLOSURES. MAXIMUM SPACING SHALL BE 50' CENTER TO CENTER IN ADVANCE OF THE WORK AREA AND 100' CENTER TO CENTER WITHIN THE LIMITS OF THE WORK AREA.

7. CONES SHALL NOT BE USED FOR NIGHT LANE CLOSURES.

8. FOR NIGHT CLOSURES EACH OF THE FIRST TWO SIGNS IN THE SEQUENCE (ROAD WORK AHEAD AND CENTER LANE CLOSED AHEAD) IS REQUIRED TO BE SUPPLEMENTED BY A TYPE A FLASHING BARRICADE WARNING LIGHT.

9. WORK VEHICLES SHALL BE EQUIPPED WITH A 360° ROTATING OR FLASHING AMBER BEACON CLEARLY VISIBLE A MINIMUM OF 1/4 MILE.

10. THE SPACINGS BETWEEN CONSTRUCTION AND MAINTENANCE SIGNS SHOWN ON THIS DETAIL MAY REQUIRE ADJUSTMENTS (INCREASES OR DECREASES) TO ASSURE THAT THEY ARE POSITIONED NO CLOSER TNAN 200 FEET TO EXISTING SIGNS AS DETERMINED BY THE ENGINEER.

OHIO DEPARTMENT OF TRANSPORTATION

LANE CLOSURE AT ENTRANCE RAMP: PLAN A	DATE 8-3-79 11/86

F.H.W.A. REGION	STATE	PROJECT NO.	FUNDS
5	OHIO		

MAH-680-6.97

29
54

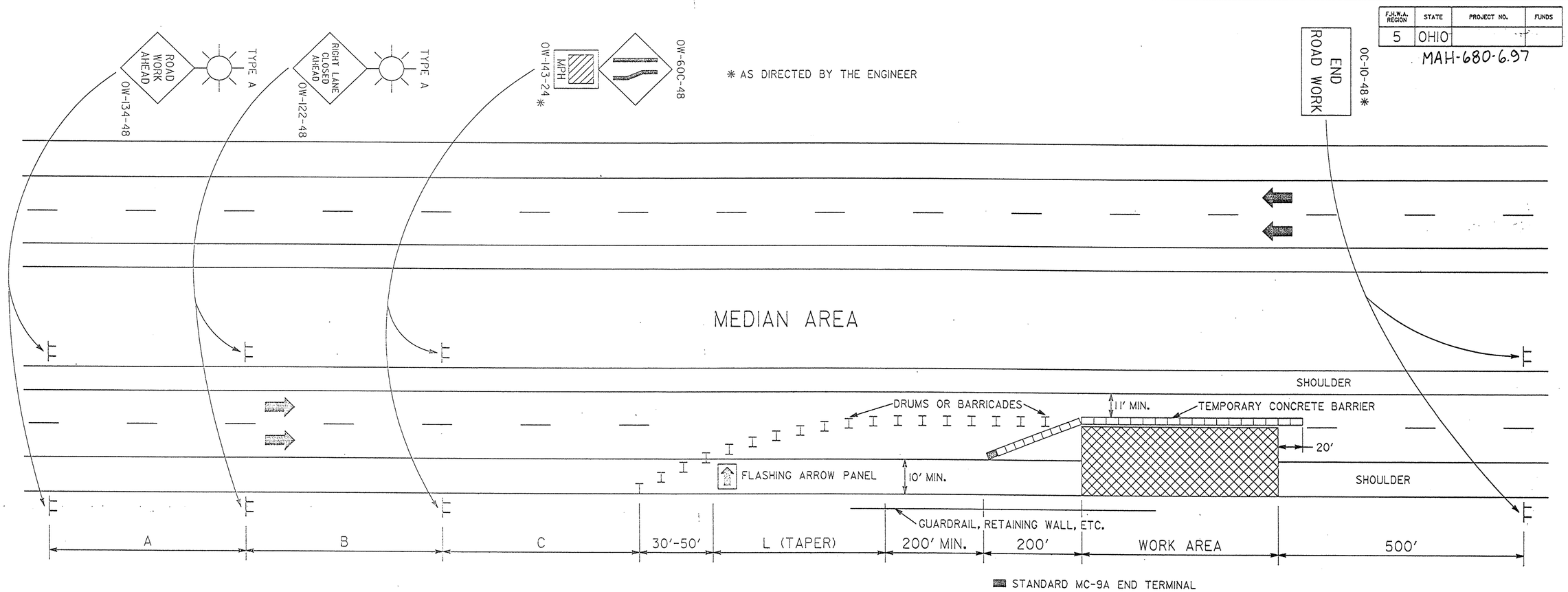

GENERAL NOTES:

1. THE TAPER LENGTH (L) SHALL BE IN ACCORDANCE WITH SECTION 7F-17 OF THE OMUTCD. THE LOCATION OF THE TRANSITION TAPER AND LOCATION OF THE ADVANCE WARNING SIGNS SHOULD BE ADJUSTED TO PROVIDE FOR ADEQUATE SIGHT DISTANCE FOR THE EXISTING VERTICAL AND HORIZONTAL ROADWAY ALIGNMENT. IN ORDER TO DETERMINE THE MINIMUM NUMBER OF CHANNELIZING DEVICES FOR THE TRANSITION TAPER, SEE TABLE 7-5 OMUTCD. FOR A 55 MPH PREVAILING SPEED AND A 12 FT. LANE, NOT LESS THAN THIRTEEN (13) DRUMS OR BARRICADES SHALL BE USED TO FORM THE LANE TRANSITION TAPER IN ADVANCE OF THE WORK AREA. NOT LESS THAN FIVE (5) DRUMS OR BARRICADES SHALL BE USED TO FORM THE TAPER ON THE SHOULDER. DRUMS OR BARRICADES SHALL BE SPACED APPROXIMATELY 50' CENTER TO CENTER. CONES SHALL NOT BE USED FOR NIGHT LANE CLOSURES.

2. WHEN WORK IS BEING PERFORMED, IN THE LANE ADJACENT TO THE MEDIAN ON A DIVIDED HIGHWAY, AN OW-123-48 SIGN(S) SHALL BE SUBSTITUTED FOR THE OW-122-48 SIGN(S) AND AN OW-60D-48 SIGN(S) SHALL BE SUBSTITUTED FOR THE OW-60C-48 SIGN(S).

3. THE FLASHING ARROW PANEL SHALL MEET REQUIREMENTS CONTAINED IN TC-35.10.

4. TYPE A, FLASHING BARRICADE WARNING LIGHTS, SHOWN ON THE "ROAD WORK AHEAD" AND THE "RIGHT LANE CLOSED AHEAD" SIGNS, ARE REQUIRED WHENEVER A NIGHT LANE CLOSURE IS NECESSARY.

5. ALL TEMPORARY CONCRETE BARRIER SECTIONS, WITHIN THE WORK AREA, SHALL BE PROVIDED WITH SIDE MOUNTED REFLECTORS AT 10 FT. SPACINGS, AS DESCRIBED IN SUPPLEMENTAL SPECIFICATION 802. 340

6. METAL DRUMS SHALL NOT BE USED FOR TRAFFIC CONTROL.

7. PAYMENT FOR THE REFLECTORS SHALL BE INCLUDED IN THE PRICE BID FOR ITEM 614 EACH BARRIER REFLECTOR, TYPE B. THE CONTRACTOR SHALL BE RESPONSIBLE FOR THE REPLACEMENT OF THE DAMAGED REFLECTORS AT NO ADDITIONAL COST TO THE STATE.

MINIMUM DISTANCE	A	B	C
MAJOR STANDARD	500'	500'	500'
URBAN FREEWAY & EXPRESSWAY	500' TO 1000'	500' TO 1000'	500' TO 1000'
RURAL FREEWAY & EXPRESSWAY	2600'	1600'	1000'

OHIO DEPARTMENT OF TRANSPORTATION

CLOSING ONE LANE OF A FOUR LANE DIVIDED HIGHWAY WITH TEMPORARY CONCRETE BARRIER

DATE

DR. SAJ | CK. JKP | MT4LDTCB

F.H.W.A. REGION	STATE	PROJECT NO.	FUNDS
5	OHIO		

MAH-680-6.97

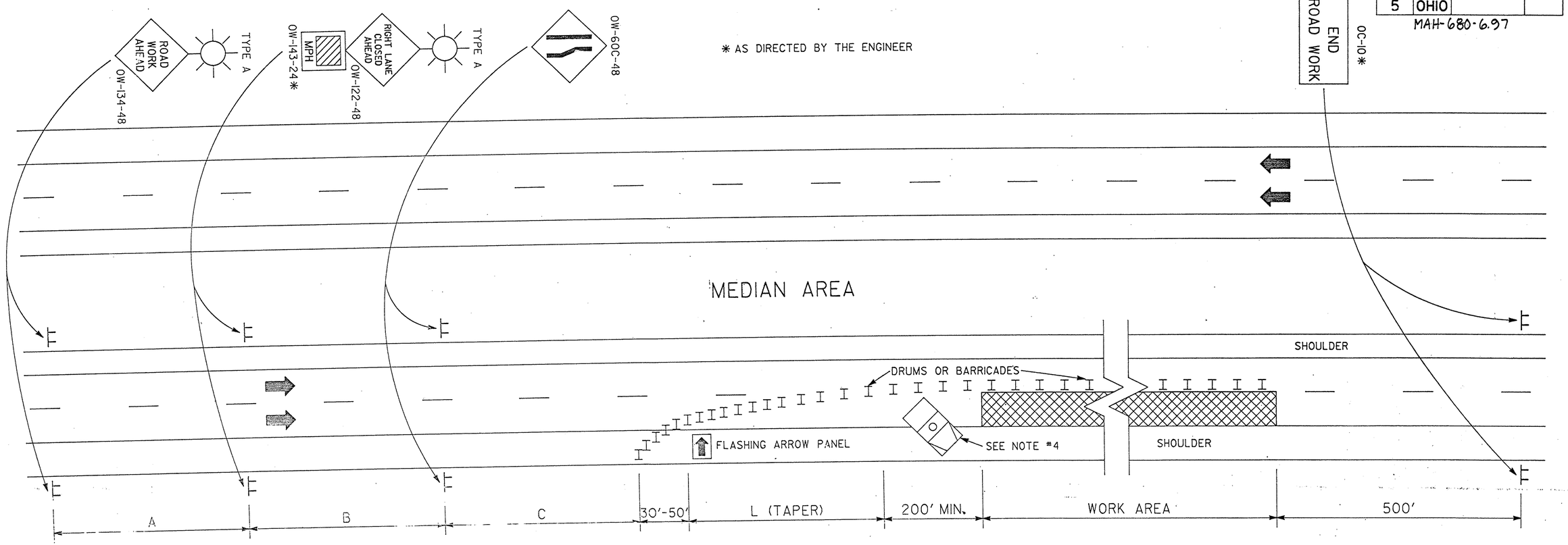

GENERAL NOTES:

1. THE TAPER LENGTH (L) SHALL BE IN ACCORDANCE WITH SECTION 7F-17 OF THE OMUTCD. THE LOCATION OF THE TRANSITION TAPER AND LOCATION OF THE ADVANCE WARNING SIGNS SHOULD BE ADJUSTED TO PROVIDE FOR ADEQUATE SIGHT DISTANCE FOR THE EXISTING VERTICAL AND HORIZONTAL ROADWAY ALIGNMENT. IN ORDER TO DETERMINE THE MINIMUM NUMBER OF CHANNELIZING DEVICES FOR THE TRANSITION TAPER, SEE TABLE 7-5 OMUTCD. FOR A 55 MPH PREVAILING SPEED AND A 12 FT. LANE, NOT LESS THAN THIRTEEN (13) DRUMS OR BARRICADES SHALL BE USED TO FORM THE LANE TRANSITION TAPER IN ADVANCE OF THE WORK AREA. NOT LESS THAN FIVE (5) DRUMS OR BARRICADES SHALL BE USED TO FORM THE TAPER ON THE SHOULDER. DRUMS OR BARRICADES SHALL BE SPACED APPROXIMATELY 50' TO 60' CENTER TO CENTER FOR THE FIRST 1000 FEET OF THE WORK AREA AND AT A MAXIMUM OF 100 TO 120 FEET FOR THE BALANCE OF THE WORK AREA. CONES MAY BE SUBSTITUTED FOR BARRICADES OR DRUMS FOR SHORT TERM LANE CLOSURES. CONES SHALL NOT BE USED FOR NIGHT LANE CLOSURES.

2. THE MAJOR STANDARD LEVEL WARNING SIGN SIZES MAY BE USED ON DIVIDED STREETS OR HIGHWAYS THAT ARE NOT CLASSIFIED AS FREEWAYS OR EXPRESSWAYS.

3. WHEN WORK IS BEING PERFORMED, IN THE LANE ADJACENT TO THE MEDIAN ON A DIVIDED HIGHWAY, AN OW-123-48 SIGN(S) SHALL BE SUBSTITUTED FOR THE OW-122-48 SIGN(S) AND AN OW-60D-48 SIGN(S) SHALL BE SUBSTITUTED FOR THE OW-60C-48 SIGN(S).

4. THE WORK VEHICLE, SHOWN AT THE BEGINNING OF THE WORK AREA, SHALL BE IN PLACE AND UNOCCUPIED WHENEVER WORKERS ARE IN THE WORK AREA. THIS WORK VEHICLE SHALL BE REMOVED FROM THE PAVEMENT WHENEVER WORKERS ARE NOT IN THE WORK AREA. OTHER PROTECTIVE DEVICES MAY BE USED IN LIEU OF THE WORK VEHICLE SHOWN, WHEN APPROVED BY THE ENGINEER. THE VEHICLE SHALL BE EQUIPPED WITH A 360° ROTATING OR FLASHING AMBER BEACON, CLEARLY VISIBLE FOR A MINIMUM OF 1/4 MILE. WHEREVER POSSIBLE, THE WORK VEHICLE SHALL BE REPLACED WITH AN ADDITIONAL 300 FEET OF PARALLEL WORK ZONE LENGTH PRIOR TO THE WORK AREA.

5. THE FLASHING ARROW PANEL SHALL MEET REQUIREMENTS CONTAINED IN TC-35.10.

6. TYPE C, STEADY BURNING BARRICADE WARNING LIGHTS, SHALL BE ERECTED ON DRUMS OR BARRICADES FOR NIGHT LANE CLOSURES. THE MAXIMUM SPACING SHALL BE IDENTICAL TO THE CHANNELIZING DEVICE SPACING REQUIREMENTS DESCRIBED IN NOTE 1, FOR THE TAPER LENGTH. SPACINGS SHALL BE AT 100 FT. INTERVALS FOR THE NEXT 1000 FEET. NO LIGHTS ARE REQUIRED BEYOND THAT POINT.

7. TYPE A, FLASHING BARRICADE WARNING LIGHTS, SHOWN ON THE "ROAD WORK AHEAD" AND THE "RIGHT LANE CLOSED AHEAD" SIGNS, ARE REQUIRED WHENEVER A NIGHT LANE CLOSURE IS NECESSARY.

8. SOME WORK AREA LOCATIONS MAY REQUIRE MORE THAN JUST STATIC OR CONVENTIONAL SIGNS TO ENHANCE COMMUNICATION WITH THE DRIVER. AT THESE LOCATIONS, PORTABLE CHANGEABLE MESSAGE SIGNS (PCMS) UNITS ARE RECOMMENDED. THESE DEVICES SHOULD BE LOCATED APPROXIMATELY 2000-4000 FT. IN ADVANCE OF A LANE CLOSURE OR OTHER POINT OF REQUIRED ACTION. SEE SECTION 7G-8.1, OMUTCD FOR FURTHER GUIDANCE ON USE OF PCMS UNITS.

MINIMUM DISTANCE	A	B	C
MAJOR STANDARD	500'	500'	500'
URBAN FREEWAY & EXPRESSWAY	500' TO 1000'	500' TO 1000'	500' TO 1000'
RURAL FREEWAY & EXPRESSWAY	2600'	1600'	1000'

OHIO DEPARTMENT OF TRANSPORTATION

CLOSING ONE LANE OF A FOUR LANE DIVIDED HIGHWAY

DATE: 12/82, 9/84, 11/86

DR. SAJ | CK. JKP | AS-71-1a

CALCULATIONS

PAVEMENT AREA

FROM PLAN MAH-680-9.32
ITEM 453

STA. 526+75 TO 638+00 BK.	87938 S.Y.
RAMP M-M	2676.2 S.Y.
RAMP N-N	2091.3 S.Y.
SPEED CHANGE LANES	3022.9 S.Y.

FROM PLAN MAH-680-6.97

STA. 637+76.04 AHD. TO 762+00 102613.7 S.Y.

RAMP B	2078.3 S.Y.	RAMP H	1912.4 S.Y.
RAMP C	1251.6 S.Y.	RAMP J	2289.8 S.Y.
RAMP D	1698.6 S.Y.	RAMP K	2062.1 S.Y.
RAMP E	2263.5 S.Y.	RAMP L	2113.8 S.Y.
RAMP F	5407.5 S.Y.	RAMP O	2442.2 S.Y.
RAMP G	2040.9 S.Y.	RAMP X	1150.3 S.Y.

RAMP TOTAL 26711 S.Y.

SPEED CHANGE LANES 9095.6 S.Y.

TOTAL PAVEMENT AREA 234149 S.Y.

SHOULDER AREAS

MAINLINE
FROM MAH-680-9.32 PLAN
ITEM 301

STA. 526+50 TO 638+00 BK.

NB OUTSIDE	11629.8 S.Y.
NB INSIDE	5345 S.Y.
SB OUTSIDE	12132.8 S.Y.
SB INSIDE	5345 S.Y.

FROM MAH-680-6.98 PLAN
OUTSIDE

NB 637+76.04 AHD. - 640+08.41	258.2 S.Y.
NB 640+08.41 - 640+98.41	150.0 S.Y.
NB 651+44.48 - 651+64.48	22.2 S.Y.
NB 651+64.48 - 654+10.92	410.7 S.Y.
NB 659+30.92 - 681+69.08	2507.5 S.Y.
NB 681+69.08 - 682+69.08	101.9 S.Y.
NB 685+18.27 - 704+68	2200.3 S.Y.
NB 704+68 - 707+00	386.7 S.Y.
NB 717+00 - 737+56	2303.1 S.Y.
NB 737+56 - 740+00	406.7 S.Y.
NB 745+20 - 748+52.88	373.4 S.Y.
NB 751+10.60 - 755+39	476.0 S.Y.
NB 755+39 - 756+61.33	135.9 S.Y.
SB 637+76.04 - 639+30.38	171.5 S.Y.
SB 647+30.38 - 653+07.54	641.3 S.Y.
SB 658+63.90 - 670+20.00	1284.6 S.Y.
SB 675+40.00 - 678+55	516.8 S.Y.
SB 678+55 - 709+68.45	3405.2 S.Y.
SB 711+36.81 - 724+50.14	1459.3 S.Y.
SB 730+98.60 - 744+55.10	1483.7 S.Y.
SB 749+75 - 751+96	368.3 S.Y.
SB 751+96 - 762+00	1128.8 S.Y.

MEDIAN

STA. 637+76.04 - 640+85.90	344.3 S.Y.
STA. 643+21.02 - 709+22.40	7334.9 S.Y.
STA. 711+46.28 - 762+00	5615.2 S.Y.

RAMP M-M	1001 S.Y.	RAMP N-N	1244 S.Y.
RAMP B	4154 S.Y.	RAMP H	1057 S.Y.
RAMP C	960 S.Y.	RAMP J	1195 S.Y.
RAMP D	722 S.Y.	RAMP K	1273 S.Y.
RAMP E	1173 S.Y.	RAMP L	1008 S.Y.
RAMP F	758 S.Y.	RAMP O	1477 S.Y.
RAMP G	764 S.Y.	RAMP X	698 S.Y.

RAMP TOTAL 17484 S.Y.

TOTAL SHOULDER AREA 85423 S.Y.

ITEM SPECIAL - 3/4" RUBBERIZED OPEN GRADED ASPHALT FRICTION COURSE

PAVEMENT AREA	234149 S.Y.
SHOULDER AREA	85423 S.Y.
TOTAL AREA	319572 S.Y.
DEDUCT RAMPS	31478.5 S.Y.
DEDUCT RAMP SHOULDERS	17484 S.Y.
TOTAL AREA	270610 S.Y.

270610 x 0.75 x 1/36 = 5638 C.Y.

ITEM SPECIAL TO SUMMARY 5638 C.Y.

ITEM 446 - ASPHALT CONCRETE SURFACE COURSE TYPE 1

THICKNESS = 1 1/4"

AREA FROM FRICTION COURSE	319572 S.Y.
U-TURN STA. 535+59	122 S.Y.
U-TURN STA. 595+44	122 S.Y.
	319816 S.Y.

319816 x 1.25 x 1/36 = 11105 C.Y.

ADJUSTMENTS FOR FEATHERINGS

AT RAMP TERMINALS
AREA TO DEDUCT 14 x 75 x 16 = 16800 S.F.
VOL. TO DEDUCT 16800 x 1.25/2 x 1/12 x 1/36 = 24.3 C.Y.

AT BRIDGE APPROACHES
AREA TO DEDUCT 2 x 25 x 5 x 4 = 10200 S.F.
VOL. TO DEDUCT 10200 x 1.25/2 x 1/12 x 1/36 = 14.7 C.Y.

11105 - 24.3 - 14.7 = 11066 C.Y.

ITEM 446 TYPE 1 TO SUMMARY 11066 C.Y.

ITEM 446 - ASPHALT CONCRETE INTERMEDIATE COURSE TYPE 2

THICKNESS = 1 3/4"

AREA FROM FROM FRICTION COURSE	319572 S.Y.
U-TURN AREAS	244 S.Y.
	319816 S.Y.

319816 x 1.75 x 1/36 = 15547 C.Y.

ADJUSTMENTS FOR FEATHERINGS

AT RAMP TERMINALS
AREA TO DEDUCT 14 x 75 x 16 = 16800 S.F.
VOL. TO DEDUCT 1/12 x 1.75/2 x 16800 x 1/27 = 45 C.Y.

AT BRIDGE APPROACHES
AREA TO DEDUCT (2) x 25 x 36 X 4 = 7200 S.F.
VOL. TO DEDUCT 1/12 x 1.75/2 x 7200 x 1/27 = 19 C.Y.

15547 - 45 - 19 = 15483 C.Y.

ITEM 446 TYPE 2 TO SUMMARY 15483 C.Y.

ITEM 407 - TACK COAT

AREA FROM FRICTION COURSE 319572 S.Y.

319572 x 0.10 GAL. = 31957 GAL
ITEM 407 TO GENERAL SUMMARY 31957 GAL

ITEM 811 - ASPHALT UNDERSEALING, AS PER PLAN

LENGTH FROM SHEET NO. 15 1600 L.F.

1600 FT./10 FT. x 18 GAL/HOLE x 9 LBS/GAL x 1/2000
= 13 TONS (DRIVING LANE)

ADD 13/2 + 13/2 FOR ADDITIONAL 2 LANES
= 26 TONS

ITEM 811 TO GENERAL SUMMARY 26 TONS

GENERAL SUMMARY

COMPLETED BY ____ DATE ____
CHECKED BY ____ DATE ____

F.H.W.A. REGION	STATE	PROJECT NO.	FUNDS
5	OHIO		

32/54

MAH - 680 - 6.97

SHEET NUMBER 4	5	6	13	14	15	16	31	34	35	36	37	38	39	47	PARTICIPATION	ITEM	ITEM EXT.	GRAND TOTAL	UNIT	DESCRIPTION
																				ROADWAY
				LUMP												202		LUMP		PORTIONS OF STRUCTURES REMOVED
				1100												202		1100	EACH	RAISED PAVEMENT MARKERS REMOVED FOR STORAGE
		710												6433		202		6433	SQ.YD.	WEARING COURSE REMOVED
								3500	1698	3561	4825	5823				202		710	LIN.FT.	CURB REMOVED
																202		19407	LIN.FT.	GUARDRAIL REMOVED
													600			202				
153													24			202		600	LIN.FT.	FENCE REMOVED
													1532			202		24	LIN.FT.	PIPE REMOVED, 24" AND UNDER
	425												98			203		1685	CU.YD.	EXCAVATION NOT INCLUDING EMBANKMENT CONSTRUCTION
	165															203		98	CU.YD.	EMBANKMENT
											33					203		425	STA.	LINEAR GRADING, METHOD 1
	100															203		165	STA.	LINEAR GRADING, METHOD 2
								2900	1313	3486	4000	5113				203		33	STA.	LINEAR GRADING, METHOD 4
								5	4	3	5	9				203		100	CU.YD.	EMBANKMENT AS PER PLAN
								2		2		1				606		16812	LIN.FT.	GUARDRAIL, TYPE 5
													620			606		26	EACH	BRIDGE TERMINAL ASSEMBLY, TYPE AA
								80	400	80	620	440				606		5	EACH	BRIDGE TERMINAL ASSEMBLY, TYPE AT
						593										607		620	LIN.FT.	FENCE, TYPE CL
								6	5	7	10	10				622		1620	LIN.FT.	CONCRETE BARRIER, TYPE D, AS PER PLAN
								3	1	7	4	4				202		593	SQ. YD.	PAVEMENT REMOVED, AS PER PLAN
																606		38	EACH	ANCHOR ASSEMBLY, TYPE A
	200															606		19	EACH	ANCHOR ASSEMBLY, TYPE T
153		30				60														PAVEMENT
																251		200	SQ.YD.	PARTIAL DEPTH PAVEMENT REPAIR
																301		243	CU.YD.	BITUMINOUS AGGREGATE BASE, AC-20
							31957													
	4200															407		31957	GAL.	TACK COAT
							11066									408		4200	GAL.	BITUMINOUS PRIME COAT
	460			12			15483									446		11066	CU.YD.	ASPHALT CONCRETE SURFACE COURSE, TYPE 1, AC-20
				1700												446		15483	CU.YD.	ASPHALT CONCRETE INTERMEDIATE COURSE, TYPE 2, AC-20
					3575											448		472	CU.YD.	ASPHALT CONCRETE INTERMEDIATE COURSE, TYPE 1, AC-20
																448		1700	CU.YD.	ASPHALT CONCRETE, TYPE 1, AC-20, SPOT LEVELING
							5638									SPEC.		3578	LIN.FT.	SAWING AND SEALING ASPHALT CONCRETE JOINTS
																SPEC.		5638	CU.FT.	RUBBERIZED OPEN GRADED ASPHALT FRICTION COURSE
							26													
						593										811		26	TONS	ASPHALT UNDERSEALING
			26470													453		593	SQ. YD.	8" CONTINUOUSLY REINFORCED CONCRETE PAVEMENT, AS PER PLAN
			2152																	DRAINAGE
																605		26470	LIN.FT.	SHALLOW UNDERDRAIN, AS PER PLAN
			40						1							603		2152	LIN.FT.	6" CONDUIT, TYPE F
																604		1	EACH	NO. 8 CATCH BASIN RECONSTRUCTED
											395				100% STATE	SPEC		40	EACH	PRECAST REINFORCED CONCRETE OUTLET
																SPEC.		395	LIN.FT.	PIPE CLEANOUT
				600																
				0.5									1747							EROSION CONTROL
				0.25									0.03			659		2347	SQ.YD.	SEEDING AND MULCHING
				5.4									0.16			659		0.08	TONS	COMMERCIAL FERTILIZER
				2												659		0.41	TONS	AGRICULTURAL LIMING
																654		5.4	M-SQ.FT.	RENOVATING EXISTING SOIL
																659		2	M-GAL	WATER
																				SEE SHEET NO. 47 FOR BRIDGE REPAIR QUANTITIES

ZFA4[1,5]MA6800006.DGN

GENERAL SUMMARY

CALC. BY		OHIO	33/54
DATE		FHWA REGION 5	
CHKD. BY			
DATE			

MAH-680-6.97

ITEM	SHEET NUMBER 17	34	35	36	37	38	41	46
621								24.04
621								19.01
621								8159
621								173
621								2076
621								
630							3.01	
630							21	
630							14	
630							5	
630							2	
630							3	
630							7	
802		36	17	53	51	70		
802		15	19	9	13	28		
614								57.03
614								24477
614								72.22
614								519
614								6228
614								LUMP
404	100							
622	1100							
301	310							
614	460							
621								
619								
623								
614	LUMP				LUMP			

ITEM	ITEM EXT.	QUANT.	UNIT	DESCRIPTION
				TRAFFIC CONTROL
621		24.04	MILES	EDGE LINES
621		19.01	MILES	LANE LINES
621		8159	LIN.FT.	CHANNELIZING LINES, WHITE
621		173	LIN.FT.	STOP LINES
621		2076	LIN.FT.	TRANSVERSE LINES, YELLOW
630		3.01	CU.YD.	CONCRETE FOR EMBEDDED FOUNDATIONS
630		21	LIN.FT.	GROUND-MOUNTED SUPPORTS, S4X77 BEAM
630		14	LIN.FT.	GROUND-MOUNTED SUPPORTS, W10X12 BEAM
630		5	EACH	BREAKAWAY BEAM CONNECTION
630		2	EACH	SIGN BACKING ASSEMBLY
630		3	EACH	REMOVAL OF GROUND MOUNTED MAJOR SIGN AND REERECTION
630		7	EACH	REMOVAL OF GROUND MOUNTED POST SUPPORT
802		227	EACH	BARRIER REFLECTOR, TYPE A
802		84	EACH	BARRIER REFLECTOR, TYPE B
				MAINTENANCE OF TRAFFIC
614		57.03	MILES	TEMPORARY LANE LINES, CLASS II, 621 PAINT
614		24,477	LIN.FT.	TEMPORARY CHANNELIZING LINES, CLASS I, 621 PAINT
614		72.12	MILES	TEMPORARY EDGE LINES, CLASS I, 621 PAINT
614		519	LIN.FT.	TEMPORARY STOP LINES, CLASS I, 621 PAINT
614		6228	LIN.FT.	TEMPORARY TRANSVERSE LINES, CLASS I, 621 PAINT
614		LUMP	LUMP	MAINTAINING TRAFFIC
404		100	CU.YD.	BITUMINOUS CONCRETE FOR MAINTAINING TRAFFIC
622		1100	LIN.FT.	TEMPORARY CONCRETE BARRIER, AS PER PLAN
301		310	CU.YD	BITUMINOUS AGGREGATE BASE, AS PER PLAN
614		460	EACH	BARRIER REFLECTOR, TYPE B
621	10008	LUMP	LUMP	MOBILIZATION
619	10007	LUMP	LUMP	FIELD OFFICE
623	10003	LUMP	LUMP	CONSTRUCTION LAYOUT STAKES
614	11000	LUMP	LUMP	MAINTAINING TRAFFIC

FHWA REGION	STATE	PROJECT NO.	FUNDS
5	OHIO		

34/54

MAH-680-6.97

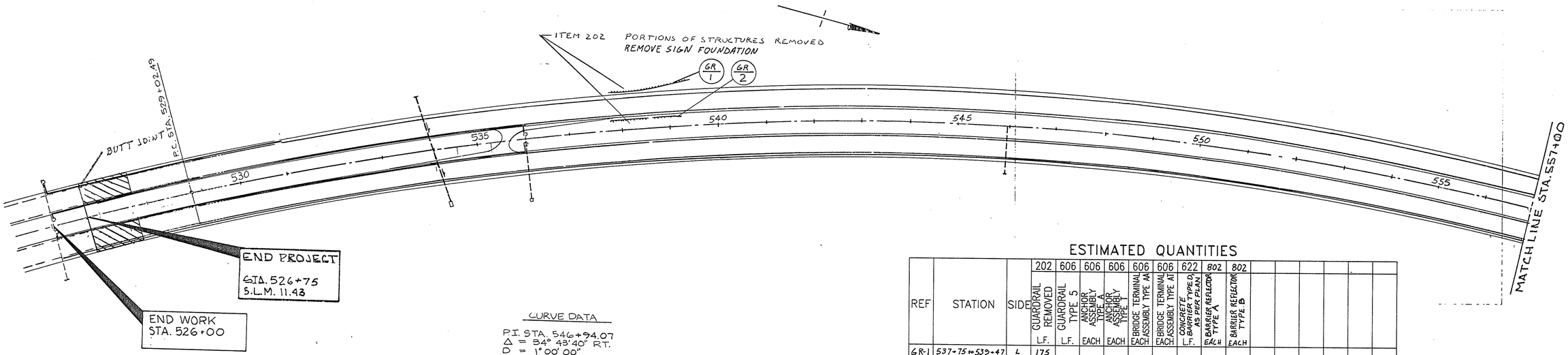

CURVE DATA

P.I. STA. 546+94.07
Δ = 34° 43' 40" RT.
D = 1° 00' 00"
R = 5729.53
T = 1791.58'
L = 3472.78'
E = 273.57

ESTIMATED QUANTITIES

REF	STATION	SIDE	202 GUARDRAIL REMOVED L.F.	606 GUARDRAIL TYPE 5 L.F.	606 ANCHOR ASSEMBLY TYPE A EACH	606 ANCHOR ASSEMBLY TYPE E EACH	606 BRIDGE TERMINAL ASSEMBLY TYPE AA EACH	606 BRIDGE TERMINAL ASSEMBLY TYPE AT EACH	622 CONCRETE BARRIER TYPE D1 AS PER PLAN L.F.	802 BARRIER REFLECTOR TYPE A EACH	802 BARRIER REFLECTOR TYPE B EACH
GR-1	537+75 to 539+47	L	175								
GR-2	537+75 to 539+25	L/C	175								
GR-3	557+05 to 561+53	L	450	450		1		1		5	
GR-4	556+55 to 561+63	R	500	500	1		1			6	
GR-5	558+26 to 559+75	L	150	150	1	1				3	
GR-6	559+59 to 561+60	R/C	200	200	1		1			4	
GR-7	562+83 to 568+49	L	575	575	1		1			6	
GR-8	562+97 to 569+97	R	800	800		1		1		9	
GR-9	562+12 to 564+12	L/C	200	200	1		1			3	
GR-10	574+75 to 576+47	L	175								
GR-11	575+53 to 577+25	R	100	25	1		1		80		3
B-1	561+70 to 562+77	L, R									12
	TOTAL		3500	2900	6	3	5	2	80	36	15

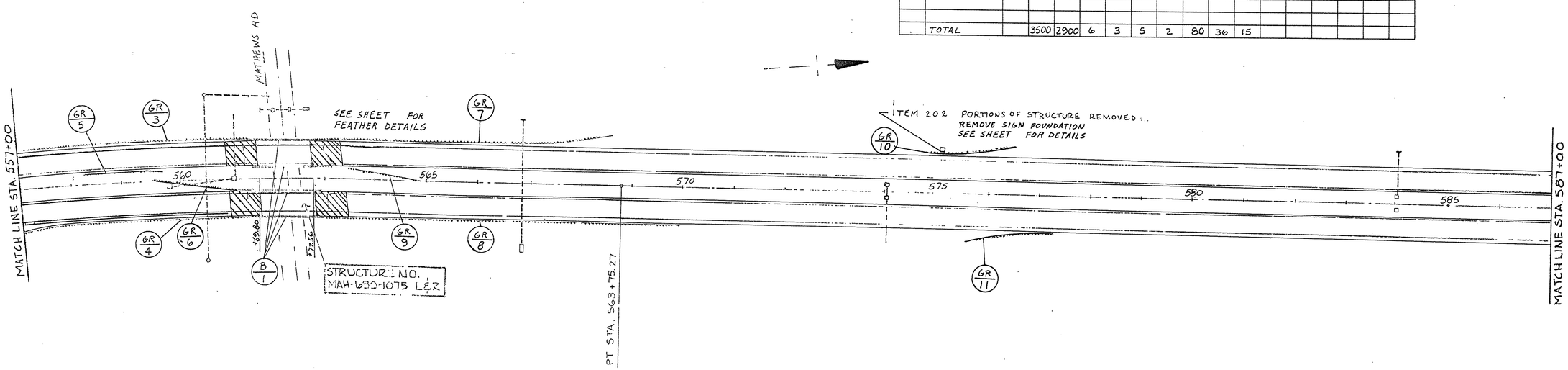

0 100 200 300

FHWA REGION	STATE	PROJECT NO.	FUNDS
5	OHIO		

35/54

MAH-680-6.97

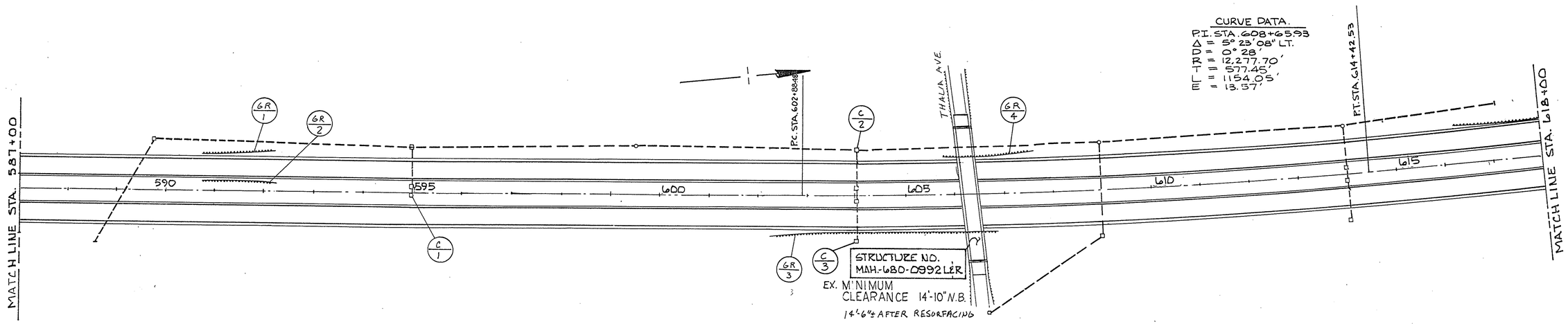

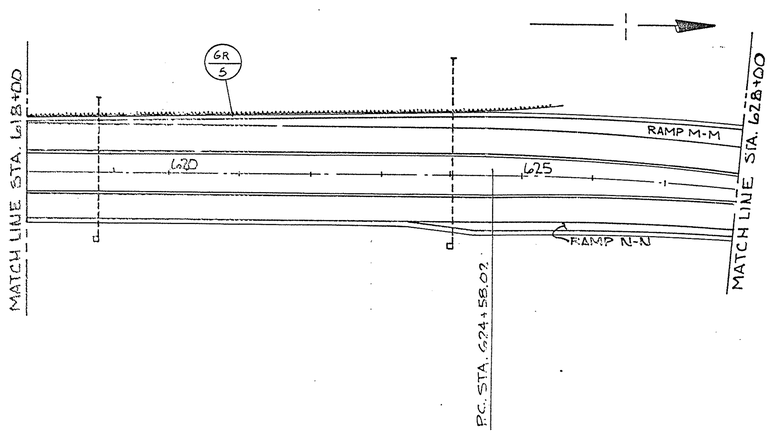

ESTIMATED QUANTITIES

REF	STATION	SIDE	202 GUARDRAIL REMOVED L.F.	606 GUARDRAIL TYPE 5 L.F.	606 ANCHOR ASSEMBLY TYPE A EACH	606 ANCHOR ASSEMBLY TYPE T EACH	606 BRIDGE TERMINAL ASSEMBLY TYPE AA EACH		622 CONCRETE BARRIER TYPE D, AS PER PLAN L.F.		604 NO. 8 CATCH BASIN RECONSTRUCT D EACH	802 BARRIER REFLECTOR TYPE A EACH	802 BARRIER REFLECTOR TYPE B EACH				
GR-1	590+75 to 592+25	L	100	25	1		1		80			1	2				
GR-2	590+75 to 592+25	R	100	25	1		1		80			1	2				
GR-3	602+25 to 606+85	R	460	300	1		1		120			4	2				
GR-4	605+77 to 607+65	L	100	25	1		1		120			1	3				
GR-5	616+23 to 625+56	L	938	938	1	1						10	10				
C-1	595+00	R/M									1						
C-2	604+00	R															
C-3	604+00	L															
	TOTAL		1698	1313	5	1	4		400		1	17	19				

0 100 200 300

FHWA REGION	STATE	PROJECT NO.	FUNDS
5	OHIO		

36/54

MAH-680-6.97

ESTIMATED QUANTITIES

REF	STATION	SIDE	202 GUARDRAIL REMOVED L.F.	606 GUARDRAIL TYPE 5 L.F.	606 ANCHOR ASSEMBLY TYPE A EACH	606 ANCHOR ASSEMBLY TYPE I EACH	606 BRIDGE TERMINAL ASSEMBLY TYPE AA EACH	606 BRIDGE TERMINAL ASSEMBLY TYPE AT EACH	622 CONCRETE BARRIER TYPE D AS PER PLAN L.F.	802 BARRIER REFLECTOR TYPE A EACH	802 BARRIER REFLECTOR TYPE B EACH
GR-1	628+60 to 630+12	R	100	25	1		1		80	1	3
GR-2	633+00-639+53 RAMP L		613	613	1	1				14	
GR-3	634+50-638+50 RAMP L		388	388		1		1		8	
GR-4	635+00-640+00 RAMP M-M		500	500	1	1				6	
GR-6	640+00-641+10 RAMP O		110	110	1		1			2	
GR-7	642+00-650+00 RAMP K		800	800		1				9	
GR-8	643+00 to 646+75	L	375	375	1		1			4	
GR-9	643+53 to 647+03	R	350	350		1		1		4	
GR-10	644+50 to 646+50	R	200	200	1	1				3	
GR-11	628+50-630+00 RAMP L		125	125	1	1				2	
B-1	641+00 to 643+00	L,R									6
	TOTAL		3561	3486	7	7	3	2	80	53	9

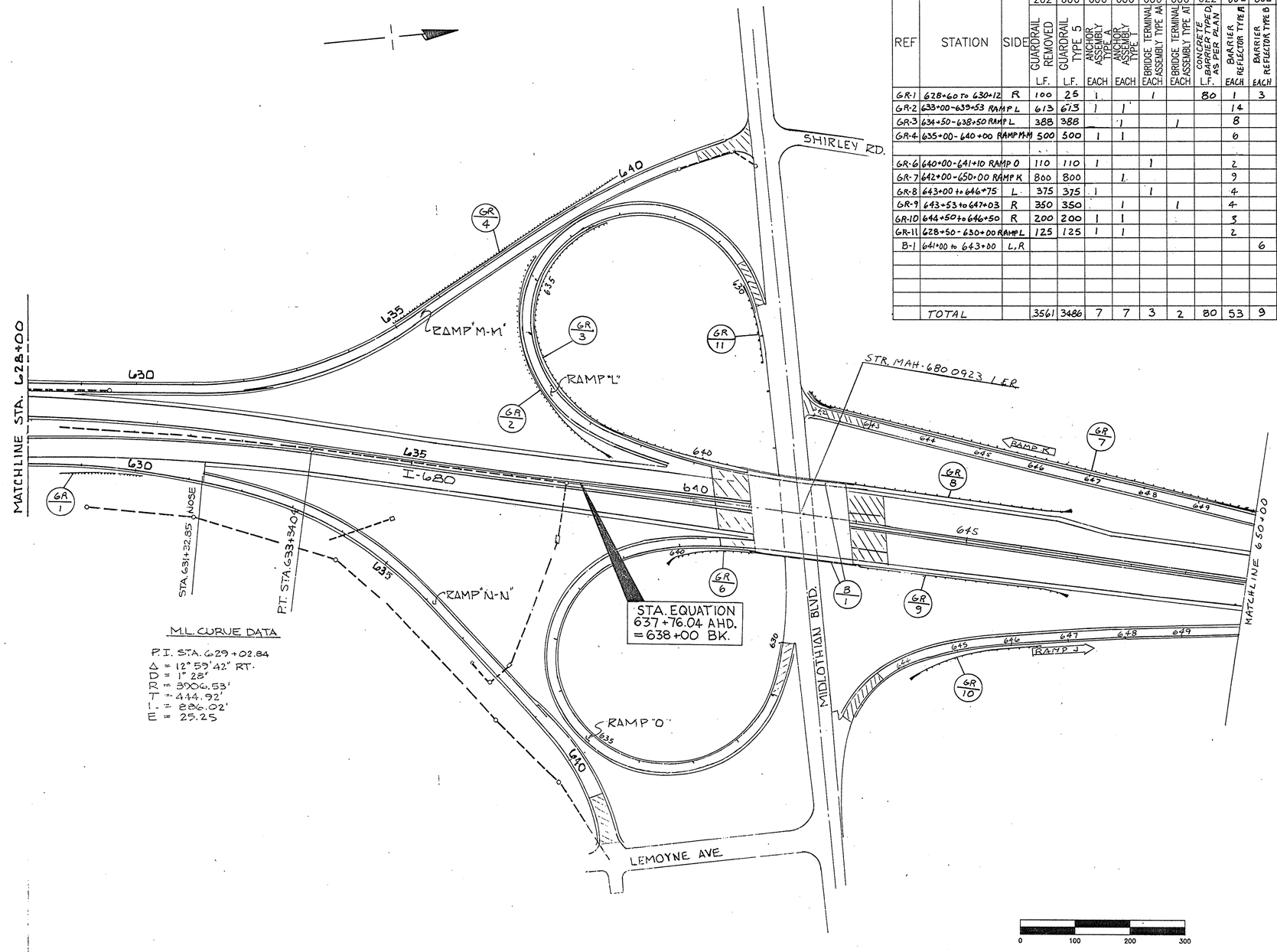

FHWA REGION	STATE	PROJECT NO.	FUNDS
5	OHIO		

37/54

MAH-680-6.97

ESTIMATED QUANTITIES

REF	STATION	SIDE	202 GUARDRAIL REMOVED L.F.	606 GUARDRAIL TYPE 5 L.F.	606 ANCHOR ASSEMBLY TYPE A EACH	606 ANCHOR ASSEMBLY TYPE 1 EACH	606 BRIDGE TERMINAL ASSEMBLY TYPE MA EACH	802 BARRIER REFLECTOR TYPE A EACH	622 CONCRETE BARRIER TYPE D AS PER PLAN L.F.	203 LINEAR GRADING METHOD 4 STA.	802 BARRIER REFLECTOR TYPE B EACH	SPECIAL PIPE CLEANOUT EACH
GR-1	665+25 to 675+00	L	975	950	1	1		11				
GR-2	664+00 to 677+50	R	1350	1350	1	1		15				
GR-3	679+50-681+50 RAMP H		150	150	1	1		3				
GR-4	682+75-684+25 RAMP G		100	100	1	1		3				
GR-5	688+75-690+25 RAMP G		100		1		1		80		2	
GR-6	688+07 to 691+32	L	325	25	1		1	1	200		3	
GR-7	688+86 to 691+36	R	250	25	1		1	1	200		3	
GR-8	698+10 to 700+10	L	175	25	1		1	1	140		3	
GR-9	707+42 to 708+67	R	150	125	1		1	2				
GR-10	650+00-662+50 RAMP K		1250	1250	1			14				
LG-1	676+00 to 709+00	L								33		
B-1	708+50 to 710+00	R									2	
PC-1	663+50	℄, R										95
PC-2	692+25 to 695+00	℄										275
PC-3	695+00 to 695+25	℄										25
TOTAL			4825	4000	10	4	5	51	620	33	18	395

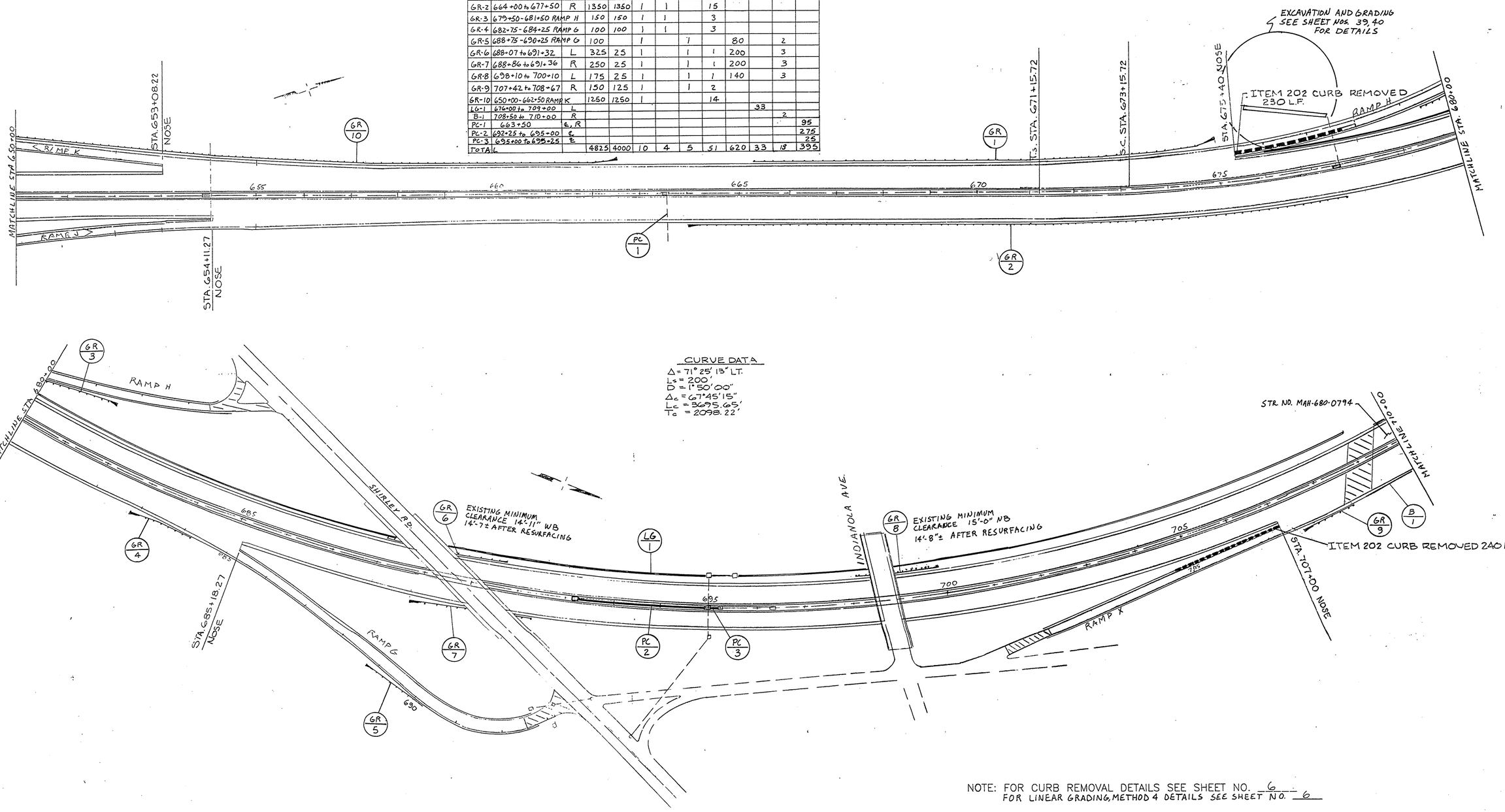

NOTE: FOR CURB REMOVAL DETAILS SEE SHEET NO. 6
FOR LINEAR GRADING, METHOD 4 DETAILS SEE SHEET NO. 6

0 100 200 300

FHWA REGION	STATE	PROJECT NO.	FUNDS
5	OHIO		

38/54

MAH-680-6.97

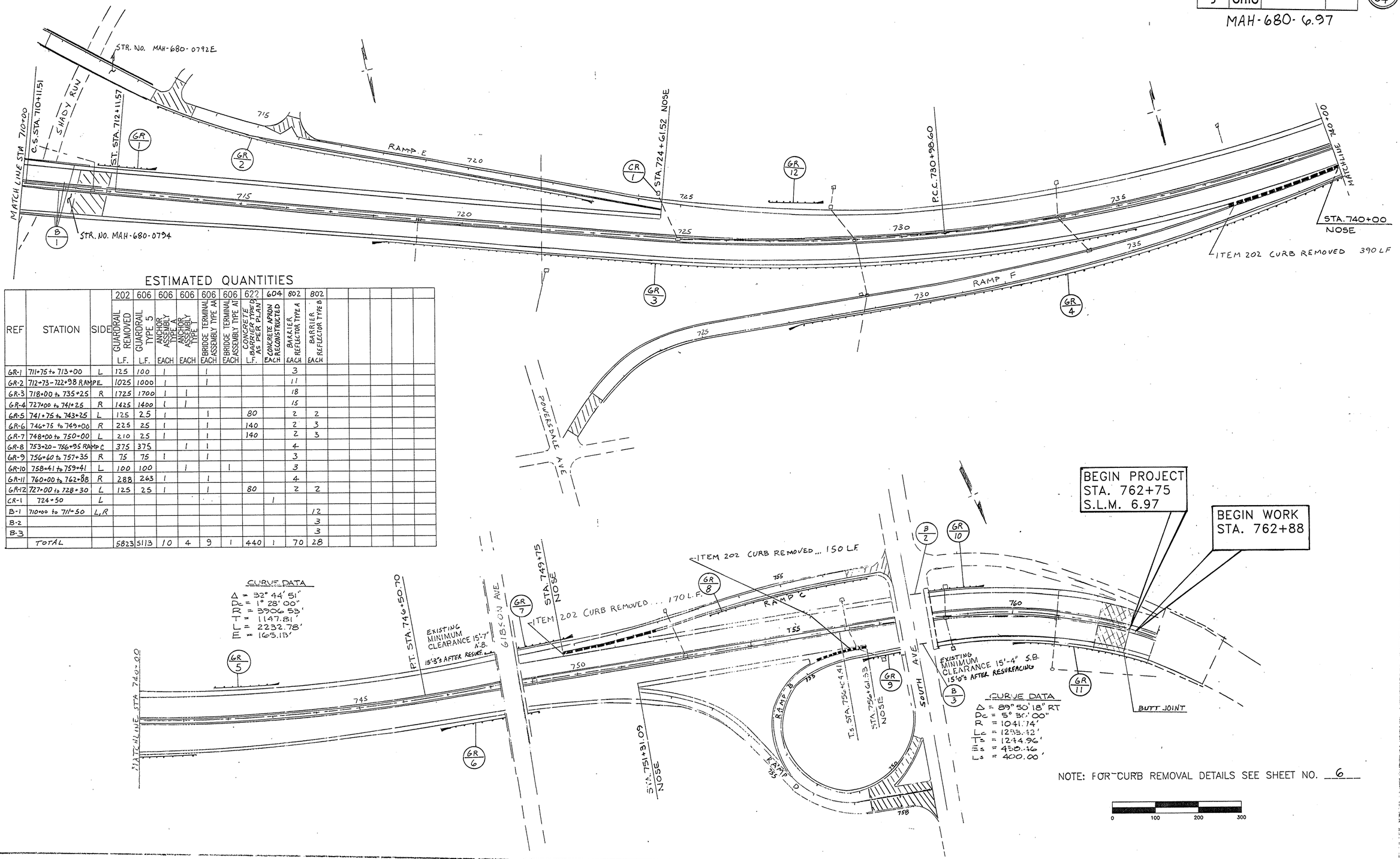

CURVE DATA

Δ = 32° 44' 51"
Dc = 1° 28' 00"
R = 3906.53'
T = 1147.81'
Lc = 2232.78'
E = 165.13'

CURVE DATA

Δ = 89° 50' 18" RT
Dc = 5° 30' 00"
R = 1041.74'
Lc = 1233.12'
Ts = 1244.96'
Es = 458.46'
Ls = 400.00'

NOTE: FOR CURB REMOVAL DETAILS SEE SHEET NO. 6

ESTIMATED QUANTITIES

REF	STATION	SIDE	202 GUARDRAIL REMOVED L.F.	606 GUARDRAIL TYPE 5 L.F.	606 ANCHOR ASSEMBLY TYPE A EACH	606 ANCHOR ASSEMBLY TYPE B EACH	606 BRIDGE TERMINAL ASSEMBLY TYPE AA EACH	606 BRIDGE TERMINAL ASSEMBLY TYPE AT EACH	622 CONCRETE BARRIER TYPE 9 AS PER PLAN L.F.	604 CONCRETE APRON RECONSTRUCTED EACH	802 BARRIER REFLECTOR TYPE A EACH	802 BARRIER REFLECTOR TYPE B EACH
GR-1	711+75 to 713+00	L	125	100	1		1				3	
GR-2	712+73-722+98 RAMP E		1025	1000	1		1				11	
GR-3	718+00 to 735+25	R	1725	1700	1	1					18	
GR-4	727+00 to 741+25	R	1425	1400	1	1					15	
GR-5	741+75 to 743+25	L	125	25	1		1		80		2	2
GR-6	746+75 to 749+06	R	225	25	1		1		140		2	3
GR-7	748+00 to 750+00	L	210	25	1		1		140		2	3
GR-8	753+20-756+95 RAMP C		375	375		1	1				4	
GR-9	756+60 to 757+35	R	75	75	1		1				3	
GR-10	758+41 to 759+41	L	100	100		1		1			3	
GR-11	760+00 to 762+88	R	288	263	1		1				4	
GR-12	727+00 to 728+30	L	125	25	1		1		80		2	2
CR-1	724+50	L								1		
B-1	710+00 to 711+50	L,R										12
B-2												3
B-3												3
	TOTAL		5823	5113	10	4	9	1	440	1	70	28

FHWA REGION	STATE	PROJECT NO.	FUNDS
5	OHIO		

MAH-680-6.97

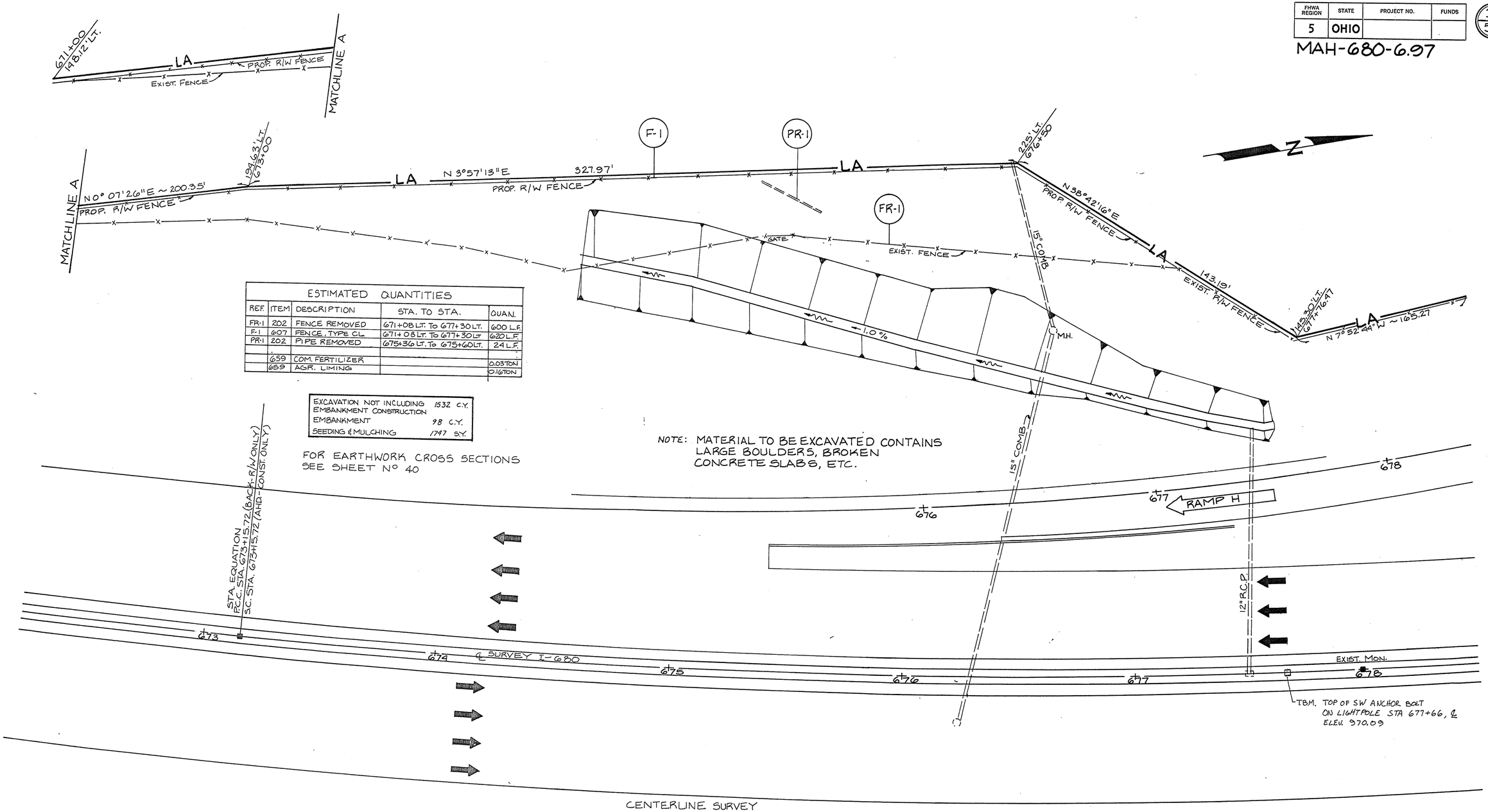

ESTIMATED QUANTITIES				
REF.	ITEM	DESCRIPTION	STA. TO STA.	QUAN.
FR-1	202	FENCE REMOVED	671+08 LT. To 677+30 LT.	600 L.F.
F-1	607	FENCE, TYPE CL	671+08 LT. To 677+30 LT	620 L.F.
PR-1	202	PIPE REMOVED	675+36 LT. To 675+60 LT.	24 L.F.
	659	COM. FERTILIZER		0.03 TON
	659	AGR. LIMING		0.16 TON

EXCAVATION NOT INCLUDING EMBANKMENT CONSTRUCTION	1532 C.Y.
EMBANKMENT	98 C.Y.
SEEDING & MULCHING	1747 S.Y.

FOR EARTHWORK CROSS SECTIONS SEE SHEET Nº 40

NOTE: MATERIAL TO BE EXCAVATED CONTAINS LARGE BOULDERS, BROKEN CONCRETE SLABS, ETC.

CENTERLINE SURVEY
CURVE Nº. 1 DATA
P.I. STA. 694+62.64

Δ=71°25'13" Lt.	P= 0.53'
Ls=200.00'	K=100.00'
Dc=1°50'00"	Xc=199.98'
R=3,125.22'	Yc=2.13'
θ=1°50'00"	Lt.=133.34'
Δc=67°45'13"	S.T.=66.67'
Lc=3,695.65	Ec=199.99'
Tc=2,098.2	Ts=2,346.92'
CH=3,484.0	Es=724.32'
Ec=639.03	

SUBSTITUTE CURVE DATA
FOR RIGHT OF WAY

1. P.I. STA. 672+49.06
2. P.I. STA. 710+78.04

Δ=1°50'00" Lt.
R=4166.82'
T=66.67'
L=133.33'
E=0.53'

0 20 40
SCALE IN FEET

FED RD DIVISION	STATE	PROJECT	
5	OHIO		

40
54

MAH-680-6.97

FINAL SURVEY	
NOTE BOOK NO.	SURVEYED ___ BY ___ DATE ___
	PLOTTED ___
	TEMPLATE ___
	AREAS ___
	AREAS CHECKED ___

ORIGINAL SURVEY	
NOTE BOOK NO.	SURVEYED ___ BY ___ DATE ___
	PLOTTED ___
	TEMPLATE ___
	AREAS ___
	AREAS CHECKED ___

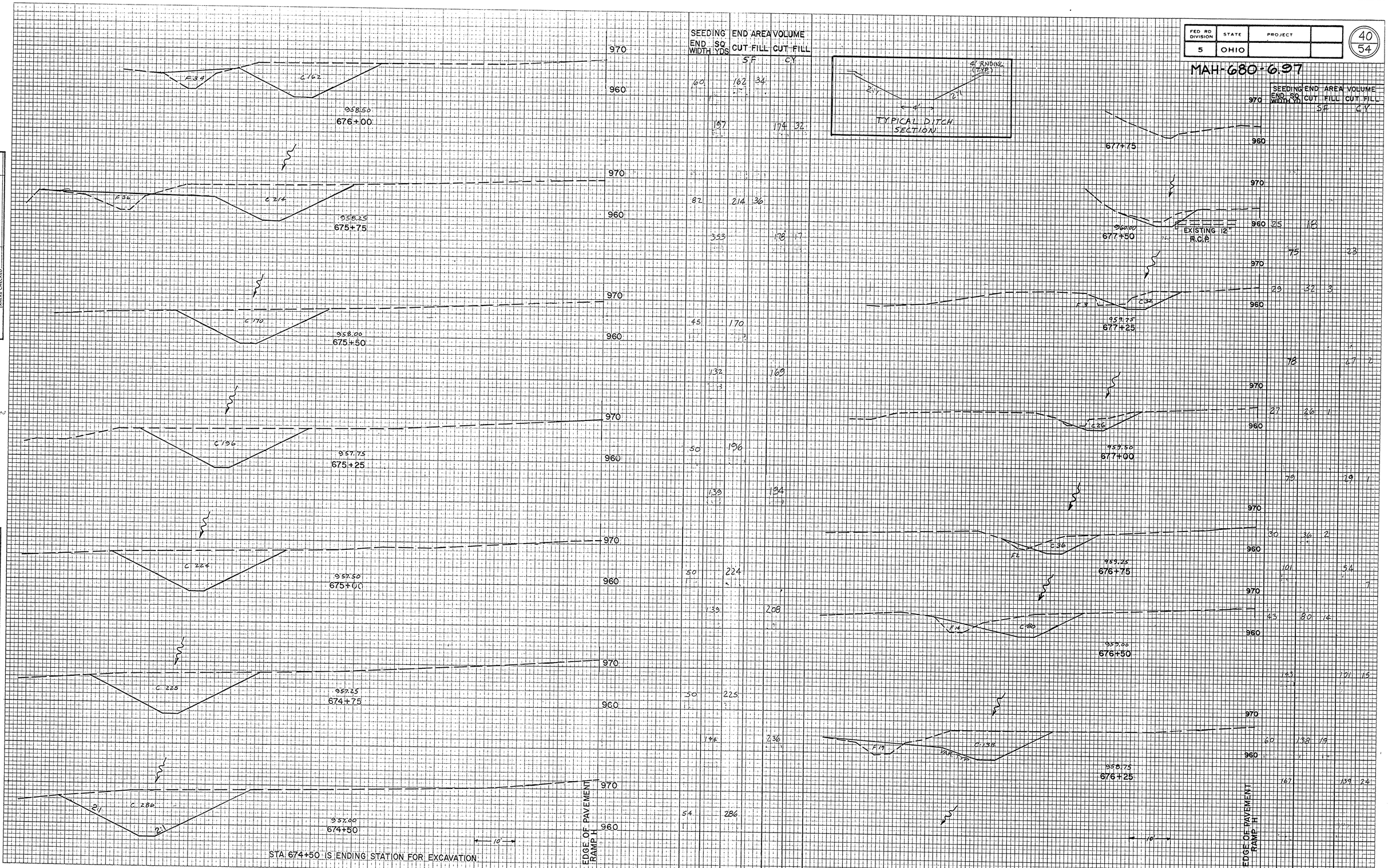

SEEDING END WIDTH	SQ YDS	END AREA VOLUME CUT SF	FILL SF	CUT CY	FILL CY
60		162	34		
	197		174	32	
82		214	36		
	333		178	17	
45		170			
	132		169		
50		196			
	139		194		
50		224			
	139		208		
50		225			
	144		236		
54		286			
				1747	1532 98

SEEDING END WIDTH	SQ YDS	END AREA VOLUME CUT SF	FILL SF	CUT CY	FILL CY
				25	18
				75	23
				29	32 3
				78	67 2
				27	26 1
				79	19 1
				30	36 2
				101	54 7
				43	80 14
				143	101 15
				60	138 19
				167	139 24

PLATE 3-FULL CROSS SECTION-FULL LINE

FHWA REGION	STATE	PROJECT NO.	FUNDS
5	OHIO		

MAH-680-6.97

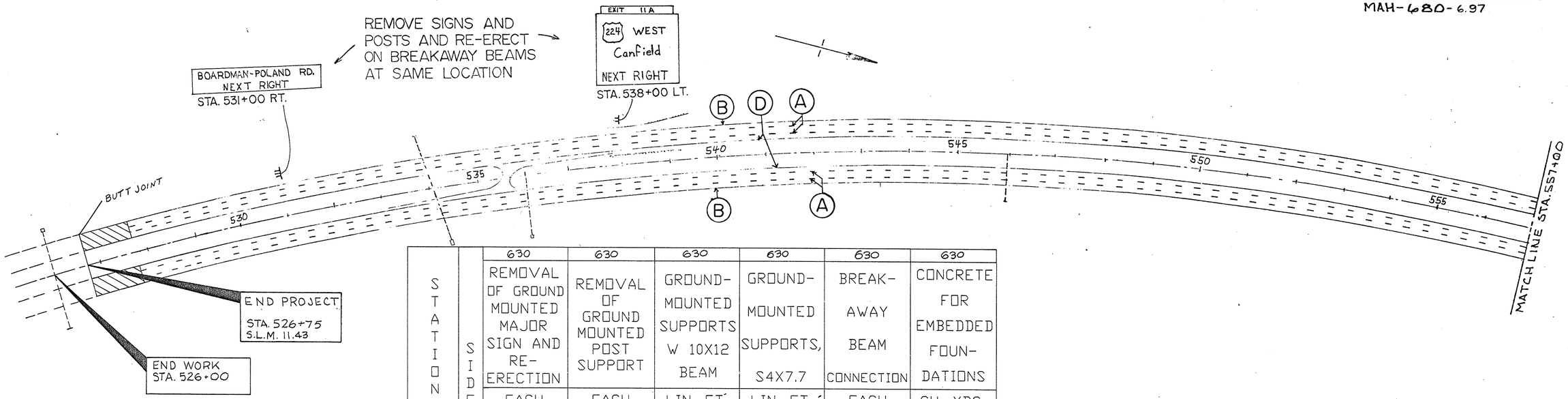

STATION	SIDE	630 REMOVAL OF GROUND MOUNTED MAJOR SIGN AND RE-ERECTION EACH	630 REMOVAL OF GROUND MOUNTED POST SUPPORT EACH	630 GROUND-MOUNTED SUPPORTS W 10X12 BEAM LIN. FT.	630 GROUND-MOUNTED SUPPORTS, S4X7.7 LIN. FT.	630 BREAK-AWAY BEAM CONNECTION EACH	630 CONCRETE FOR EMBEDDED FOUN-DATIONS CU. YDS.
531+00	RT.	2	3		21	3	0.81
538+00	RT.	1	4	14		2	2.2

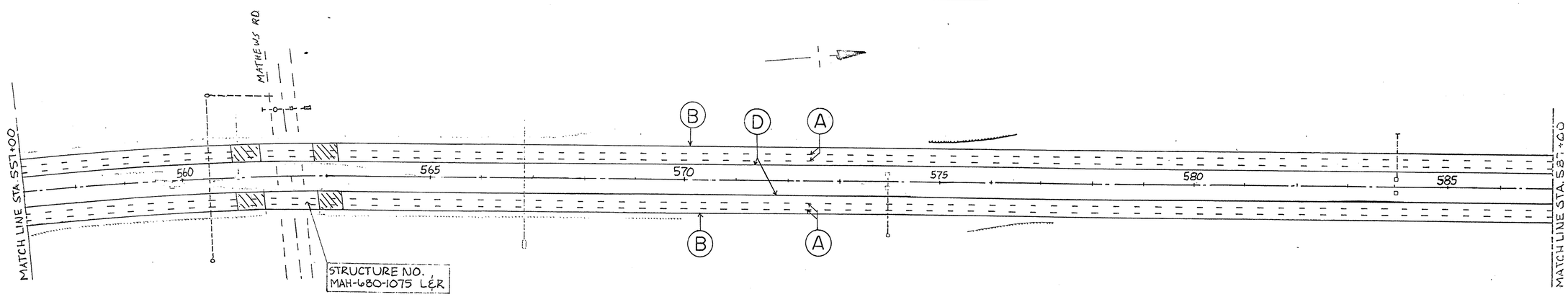

FHWA REGION	STATE	PROJECT NO.	FUNDS
5	OHIO		

MAH-680-6.97

FHWA REGION	STATE	PROJECT NO.	FUNDS
5	OHIO		

43/54

MAH-680-6.97

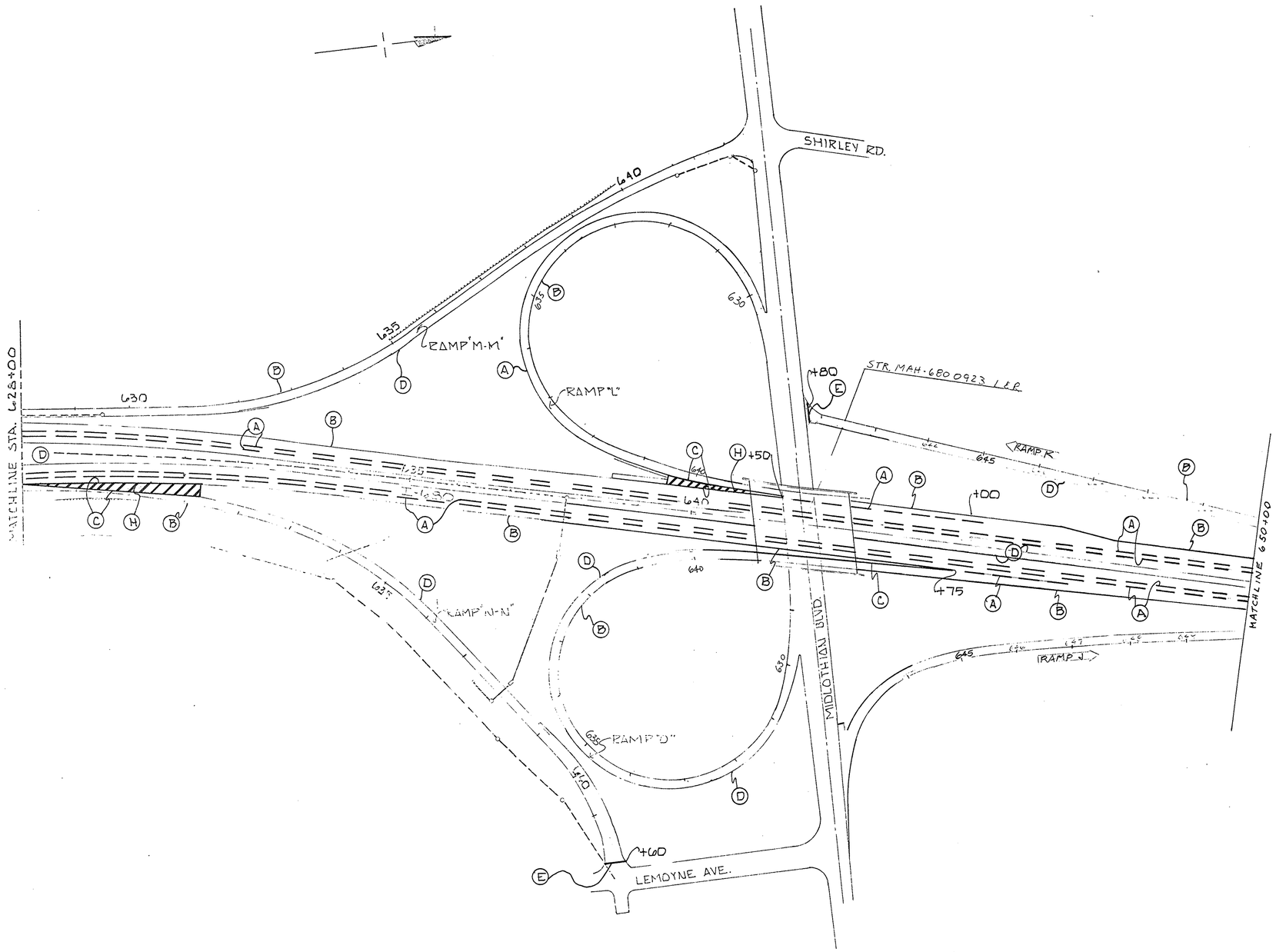

FHWA REGION	STATE	PROJECT NO.	FUNDS
5	OHIO		

MAH-680-6.97

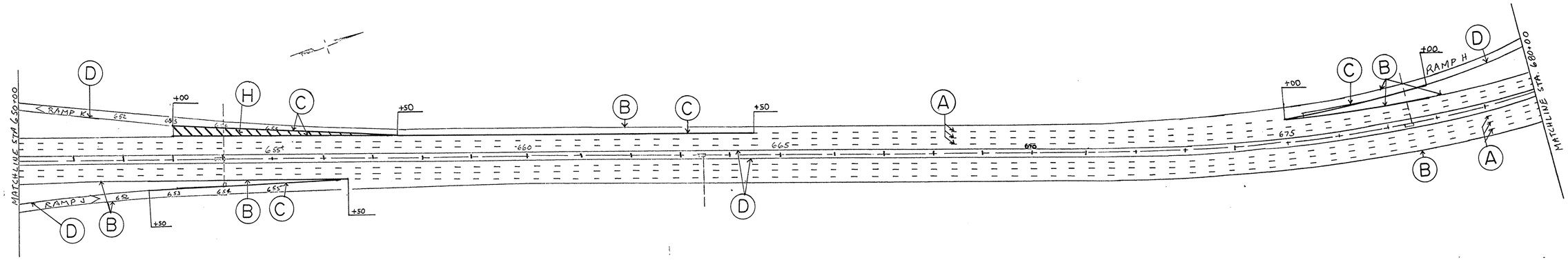

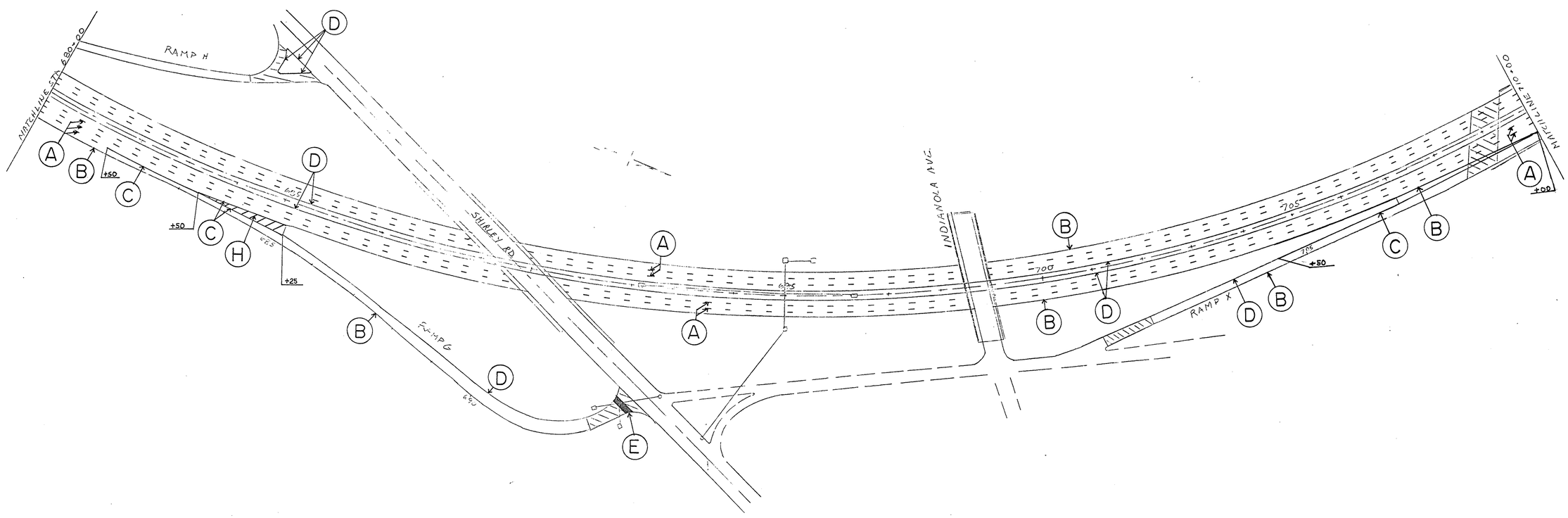

FHWA REGION	STATE	PROJECT NO.	FUNDS
5	OHIO		

MAH-680-6.97

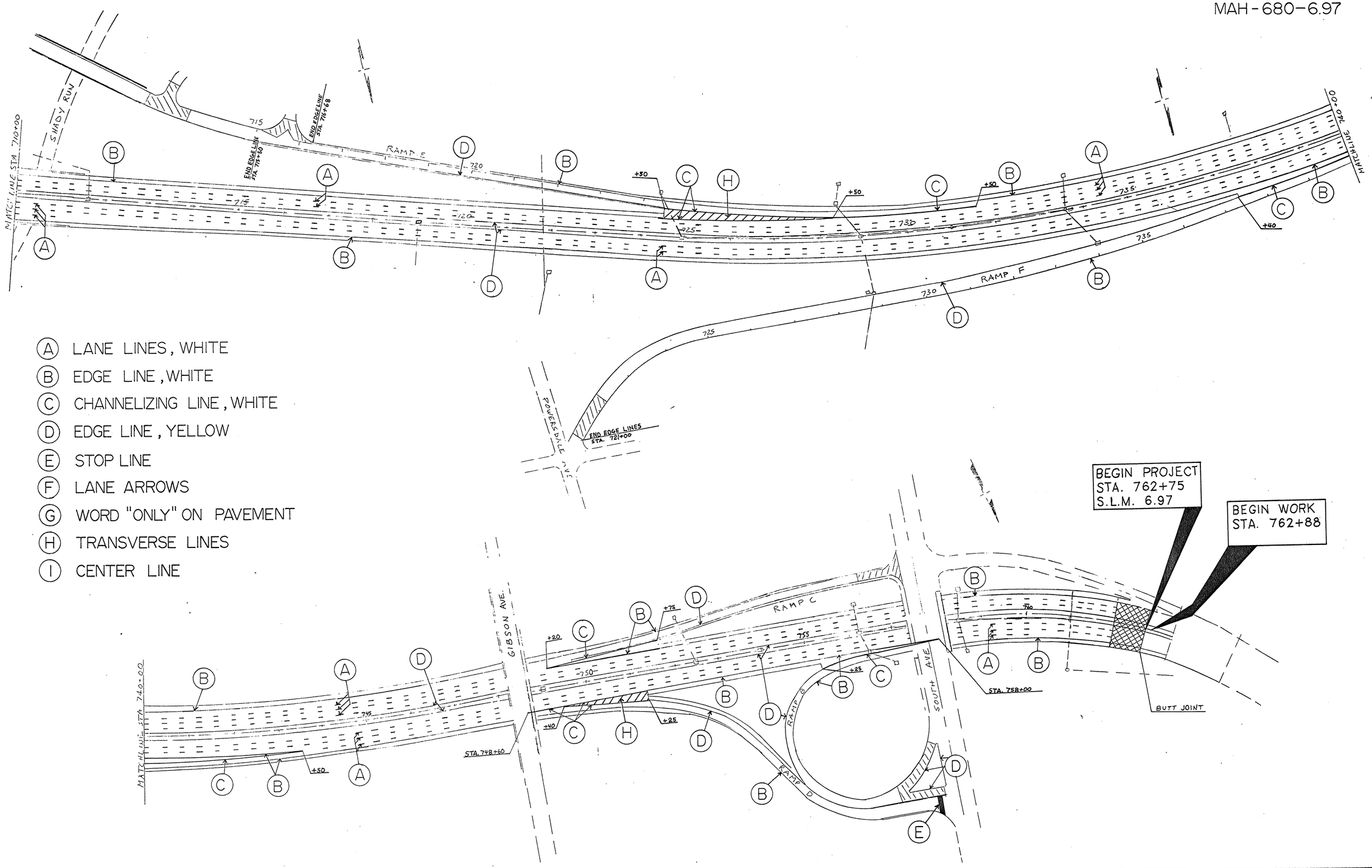

(A) LANE LINES, WHITE
(B) EDGE LINE, WHITE
(C) CHANNELIZING LINE, WHITE
(D) EDGE LINE, YELLOW
(E) STOP LINE
(F) LANE ARROWS
(G) WORD "ONLY" ON PAVEMENT
(H) TRANSVERSE LINES
(I) CENTER LINE

PAVEMENT MARKING SUB-SUMMARY

FHWA REGION	STATE	PROJECT NO.	FUNDS
5	OHIO		

Complete By____Date____
Checked By____Date____

LOCATION	SIDE	STATION FROM	STATION TO	Edge Lines, Yellow	Edge Lines, White	Lane Lines, 4 Inch			Channelizing Lines	Stop Lines	Transverse Lines, Yellow
				Lin. Ft.	Lin. Ft.	Lin. Ft.			Lin. Ft.	Lin. Ft.	Lin. Ft.
I 680											
M	RT	710+00	762+00	5,200	5,200	10,400					
RAMP "B"				575	840				275		
RAMP "D"				730	995				451	36	222
RAMP "F"				1630	2240				610		
M	LT	710+00	762+00	5,200	5,200	10,400					
M	LT	731+50	749+20			1770					
RAMP "C"				567	822				255		
RAMP "E"				900	782				1100		480
M	RT.	650+00	710+00	6,000	6,000	12,000					
M	RT.	656+50	685+25			2875					
RAMP "X"				481	1031				590		
RAMP "G"				830	830				551	67	210
RAMP "J"				900	1550				500		
M	LT	650+00	710+00	6,000	6,000	12,000					
M	LT.	664+50	675+00			1050					
RAMP "H"				833	958				300		
RAMP "K"				2880	2880				1600	30	540
M	RT.	628+00	650+00	2200	2200	4400					
M	RT.	644+25	646+50			175					
RAMP "O"				990	1475				485		
RAMP "N-N"				1060	1060				641	40	384
M	LT.	628+00	650+00	2200	2200	4400					
M	LT	641+50	645+00			350					
RAMP "L"				1000	1000				401		240
RAMP "M-M"				1450	1850				400		
M	RT.	587+00	628+00	4100	4100	8200					
M	RT.	644+75	646+80			205					
M	LT.	587+00	628+00	4100	4100	8200					
M	LT.	622+75	624+00			125					
M	RT.	527+50	587+00	5950	5950	11,900					
M	LT.	527+50	587+00	5950	5950	11,900					
			TOTAL	61,726	68,213	100,350			8159 FT	173	2076
				126,939							
				24.04 MI		19.01 MI.					

TEMPORARY PAVEMENT MARKING QUANTITIES ARE CALCULATED AS 3 X PERMANENT PAVEMENT MARKING QUANTITIES

TEMPORARY PAVEMENT QUANTIES				72.12		57.03			24477	519	6228

F.H.W.A. REGION	STATE	PROJECT NO.	FUNDS
5	OHIO		

MAH-680-6.97

BRIDGE GENERAL NOTES AND QUANTITIES

CALC. BY S.T.
DATE 7-25-89
CK'D BY
DATE

LONGITUDINAL JOINTS IN THE OVERLAY

LONGITUDINAL JOINTS IN THE CONCRETE OVERLAY ARE PERMITTED BUT ONLY TO THE EXTENT NECESSARY TO ACCOMMODATE THE WIDTH OF THE FINISHING MACHINE, TO FACILITATE CHANGES IN THE ROADWAY CROWN AND TO PERMIT MAINTENENCE OF VEHICULAR TRAFFIC, EXCEPT AS APPROVED BY THE DIRECTOR. JOINTS SHALL NOT BE USED ADJACENT TO RAISED CURBS, BARRIERS OR EDGE OF DECK.

FULL DEPTH REPAIR

A QUANTITY FOR THIS ITEM HAS BEEN INCLUDED FOR FULL DEPTH REPAIRS ON EVERY BRIDGE THAT REQUIRES CONCRETE OVERLAY WORK. THIS ITEM SHALL BE NON-PERFORMED IF FOUND NOT TO BE REQUIRED.

WEARING COURSE REMOVED

THIS ITEM IS TO BE USED FOR THE REMOVAL OF THE EXISTING ASPHALT CONCRETE WEARING COURSE OR ASPHALT PATCHES FROM BRIDGE DECKS.

ITEM SPECIAL-SEALING OF CONCRETE SURFACES (EPOXY)

THE EXPOSED SURFACE OF RETROFITTED PARAPETS

SHALL BE SEALED THROUGHOUT THE ENTIRE LENGTH OF THE BRIDGE INCLUDING WINGWALLS TO THE LIMITS AS SHOWN ON SHEET NO. 51. SEE PROPOSAL NOTE FOR COMPLETE SPECIFICATIONS.

EXISTING STRUCTURE VERIFICATION

DETAILS AND DIMENSIONS SHOWN ON THESE PLANS PERTAINING TO THE EXISTING STRUCTURE HAVE BEEN OBTAINED FROM PLANS OF THE EXISTING STRUCTURE AND/OR FROM FIELD OBSERVATIONS AND MEASUREMENTS. CONSEQUENTLY THEY ARE INDICATIVE OF THE EXISTING STRUCTURE AND THE PROPOSED WORK BUT THEY SHALL BE CONSIDERED TENTATIVE AND APPROXIMATE.

THE CONTRACTOR IS REFERED TO C.M.S. SECTIONS 102.05 AND 105.02. CONTRACT BID PRICES SHALL BE BASED UPON A RECOGNITION OF THE UNCERTAINTIES DESCRIBED ABOVE AND UPON A PRE-BID EXAMINATION OF THE EXISTING STRUCTURE BY THE CONTRACTOR. HOWEVER ALL PROJECT WORK SHALL BE BASED UPON THE ACTUAL DETAILS AND DIMENSIONS WHICH HAVE BEEN VERIFIED BY THE CONTRACTOR IN THE FIELD.

STRUCTURE No. MAH-680-0792E (RAMP E)

THE FOLLOWING ITEMS SHALL BE USED ON RAMP E STR. NO. MAH-680-0792E FROM FACE OF CURB TO FACE OF CURB. SEE PROPOSAL NOTE FOR COMPLETE SPECIFICATIONS.

ITEM SPEC. EPOXY WATERPROOFING OVERLAY (1/4" THICK) 786 S.Y.
ITEM SPEC. PATCHING CONCRETE BRIDGE DECKS, TYPE I 117 S.Y.

ITEM SPECIAL – FIELD PAINTING OF EXISTING STEEL, FINISH COAT, SYSTEM OZEU

FINISH COAT SHALL BE BLUE, FS-595A-15450

ESTIMATED QUANTITIES FOR BRIDGE REPAIRS

ITEM	DESCRIPTION	UNIT	STRUCTURE No. MAH 680 1075 LEFT	MAH 680 1075 RIGHT	MAH 680 0923 LEFT	MAH 680 0923 RIGHT	MAH 680 0794 LEFT	MAH 680 0794 RIGHT	MAH 680 0792E RAMP E		TOTAL
202	WEARING COURSE REMOVED *	S.Y.	593	593	1360	1360	1105	1422			6433
202	ALUMINUM BRIDGE RAILING REMOVED FOR STORAGE	L.F.			198	198	181	227	276		1080
202	VERTICAL EXTENSION OF STRUCTURAL EXPANSION JOINTS REMOVED	L.F.	102	102	128	148	111	143			734
510	DOWEL HOLES	Ea.			510	498	526	596	657		2787
511	CONCRETE SUPERSTRUCTURE, AS PER PLAN	C.Y.			28	28	25	32	40		153
516	VERTICAL EXTENSION OF STRUCTURAL EXPANSION JOINTS	L.F.	102	102	128	148	111	143			1489
516	HORIZONTAL EXTENSION OF STRUCTURAL EXPANSION JOINTS, AS PER PLAN	L.F.	3	3	3	3	3	3	3		21
519	PATCHING CONCRETE STRUCTURES	S.F.	200	200	200	200	200	200			1200
509	EPOXY COATED REINFORCING STEEL, GRADE 60	Lbs.			4705	4689	4483	4483	6373		24733
850	SUPERPLASTICIZED DENSE CONCRETE OVERLAY (1 3/4 IN. THICK) 40%	S.Y.	593	593	1360	1360	1105	1422			6433
850	SUPERPLASTICIZED DENSE CONCRETE OVERLAY (VAR. THICKNESS)	C.Y.	25	25	34	40	37	48			209
850	FULL DEPTH REPAIR	C.Y.	5	5	5	5	5	5			30
SPEC.	SEALING CONCRETE SURFACES (EPOXY)	S.Y.	178	178	120	120	122	153	296		1167
SPEC.	EPOXY WATERPROOFING OVERLAY (1/4" THICK)	S.Y.							786		786
SPEC.	PATCHING CONCRETE BRIDGE DECKS, TYPE I	S.Y.							117		117

ITEM	DESCRIPTION		UNIT
SPEC.	FIELD PAINTING OF EXISTING STEEL, SURFACE PREPARATION, SYSTEM OZEU	STRUCTURE NO. MAH-680-1075	LUMP SUM
SPEC.	FIELD PAINTING OF EXISTING STEEL, PRIME COAT, SYSTEM OZEU	STRUCTURE NO. MAH-680-1075	LUMP SUM
SPEC.	FIELD PAINTING OF EXISTING STEEL, INTERMEDIATE COAT, SYSTEM OZEU	STRUCTURE NO. MAH-680-1075	LUMP SUM
SPEC.	FIELD PAINTING OF EXISTING STEEL, FINISH COAT, SYSTEM OZEU	STRUCTURE NO. MAH-680-1075	LUMP SUM
SPEC.	FIELD PAINTING OF EXISTING STEEL, SURFACE PREPARATION, SYSTEM OZEU	STRUCTURE NO. MAH-680-0923	LUMP SUM
SPEC.	FIELD PAINTING OF EXISTING STEEL, PRIME COAT, SYSTEM OZEU	STRUCTURE NO. MAH-680-0923	LUMP SUM
SPEC.	FIELD PAINTING OF EXISTING STEEL, INTERMEDIATE COAT, SYSTEM OZEU	STRUCTURE NO. MAH-680-0923	LUMP SUM
SPEC.	FIELD PAINTING OF EXISTING STEEL, FINISH COAT, SYSTEM OZEU	STRUCTURE NO. MAH-680-0923	LUMP SUM
SPEC.	FIELD PAINTING OF EXISTING STEEL, SURFACE PREPARATION, SYSTEM OZEU	STRUCTURE NO. MAH-680-0794	LUMP SUM
SPEC.	FIELD PAINTING OF EXISTING STEEL, PRIME COAT, SYSTEM OZEU	STRUCTURE NO. MAH-680-0794	LUMP SUM
SPEC.	FIELD PAINTING OF EXISTING STEEL, INTERMEDIATE COAT, SYSTEM OZEU	STRUCTURE NO. MAH-680-0794	LUMP SUM
SPEC.	FIELD PAINTING OF EXISTING STEEL, FINISH COAT, SYSTEM OZEU	STRUCTURE NO. MAH-680-0794	LUMP SUM
SPEC.	FIELD PAINTING OF EXISTING STEEL, SURFACE PREPARATION, SYSTEM OZEU	STRUCTURE NO. MAH-680-0792E	LUMP SUM
SPEC.	FIELD PAINTING OF EXISTING STEEL, PRIME COAT, SYSTEM OZEU	STRUCTURE NO. MAH-680-0792E	LUMP SUM
SPEC.	FIELD PAINTING OF EXISTING STEEL, INTERMEDIATE COAT, SYSTEM OZEU	STRUCTURE NO. MAH-680-0792E	LUMP SUM
SPEC.	FIELD PAINTING OF EXISTING STEEL, FINISH COAT, SYSTEM OZEU	STRUCTURE NO. MAH-680-0792E	LUMP SUM

* CARRIED TO GENERAL SUMMARY

FHWA REGION	STATE	PROJECT NO.	FUNDS
5	OHIO		

48/54

MAH-680-6.97

BR. NO. MAH-680-0924

EXISTING STRUCTURE

TYPE: CONTINUOUS STEEL BEAMS WITH REINFORCED CONCRETE DECK AND SUBSTRUCTURE.
SPANS: 49'-3" x 82'-0' x 49'-3" ℄ OF BEARINGS.
ROADWAY WIDTH: AVERAGE ROADWAY WIDTH 137.3' f/f OF PARAPETS INCLUDING MEDIAN AND 1' SAFTY CURBS.
LOADING: HS20-44 AND INTERSTATE ALTERNATE LOADING.
SKEW: 13°31'19" RF.
WEARING SURFACE: 1" MONOLITHIC CONCRETE.
APPROACH SLAB: 25' LONG SPECIAL
ALIGNMENT: STRAIGHT.
SUPERELEVATION: NONE.

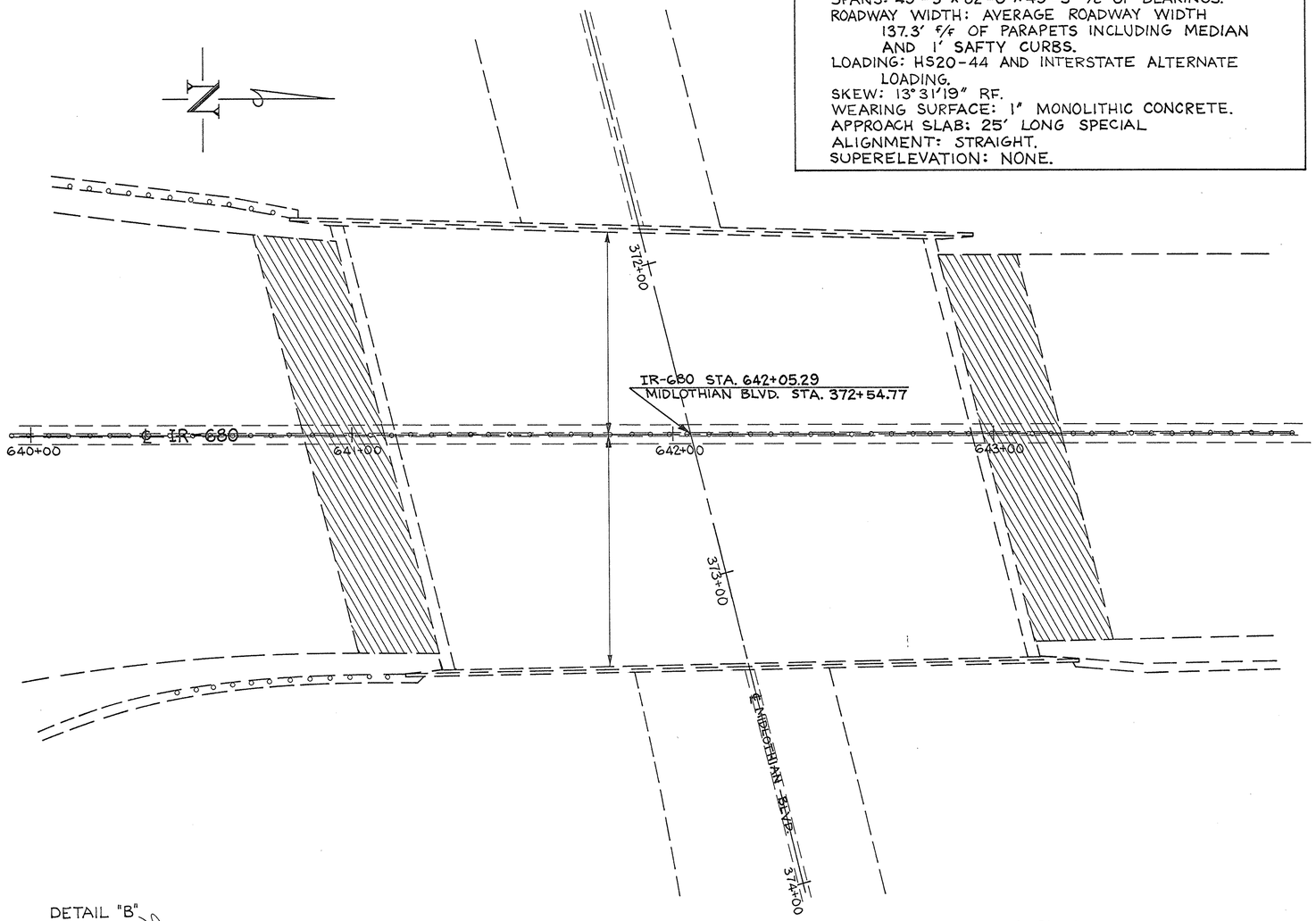

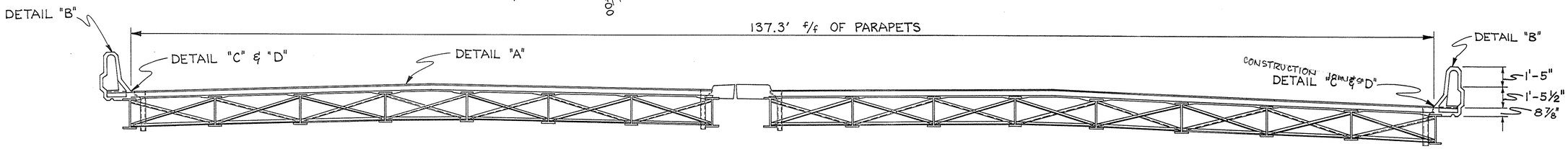

TYPICAL DECK SECTION

BRIDGE No. MAH-680-0924

FHWA REGION	STATE	PROJECT NO.	FUNDS
5	OHIO		

MAH-680-6.97

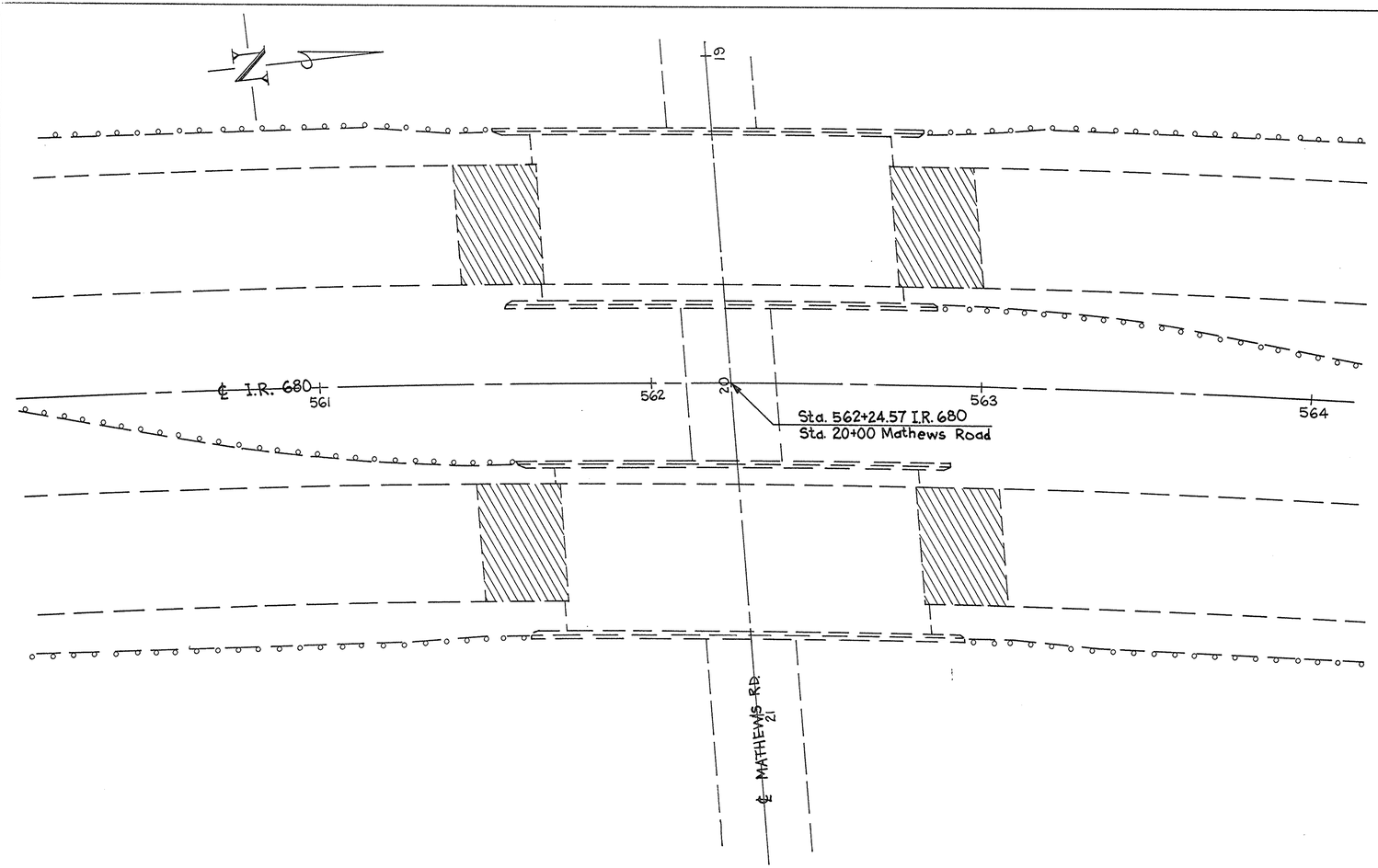

BRIDGE No. MAH-680-1078 L & R

EXISTING STRUCTURE

TYPE: CONTINUOUS STEEL BEAMS WITH REINFORCED CONCRETE DECK AND SUBSTRUCTURE.
SPANS: 30'-43.25-30' ℅ BEARINGS.
ROADWAY: 51' f/f OF 1'-0" CURBS.
LOAD FREQUENCY: CF-2000(57) ADEQUATE FOR A.A.S.H.O. ALTERNATE LOADING.
SKEW: 4°-37'-48" RT. FORWARD
WEARING SURFACE: 1" MONOLITHIC CONCRETE.
APPROACH SLABS: AS-1-67 (25' LONG)
ALIGNMENT: 1° CURVE RT.
SUPERELEVATION: 0.032' PER FT.

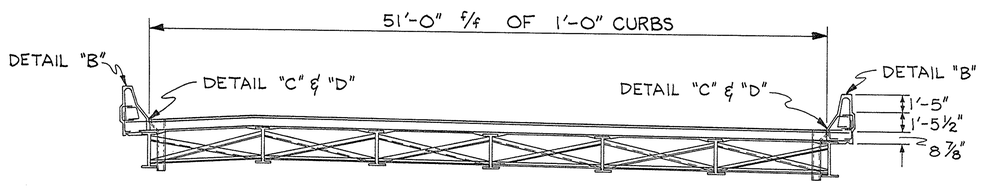

TYPICAL DECK SECTION-LEFT

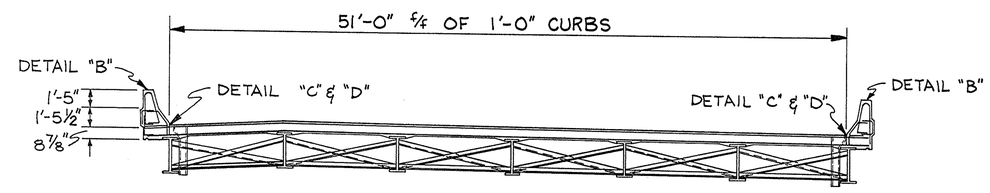

TYPICAL DECK SECTION-RIGHT

FHWA REGION	STATE	PROJECT NO.	FUNDS
5	OHIO		

MAH-680-6.97

50/54

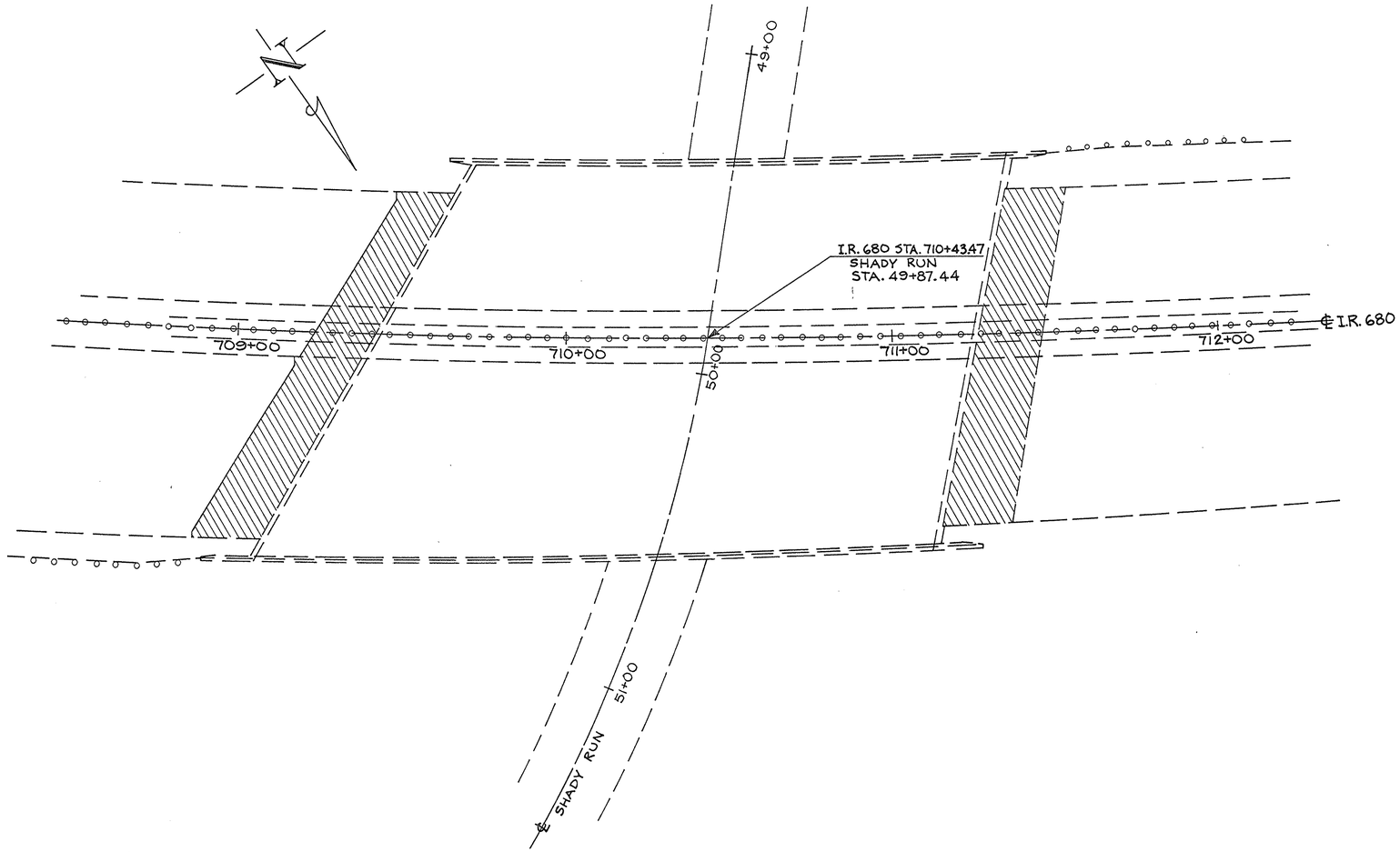

BRIDGE No. MAH-680-0794

EXISTING STRUCTURE

TYPE: CONTINOUS STEEL BEAM WITH REINFORCED CONCRETE DECK AND SUBSTRUCTURE.
SPANS: 56'-0" x 71'-0" x 52'-0" ℅ BEARINGS.
ROADWAY WIDTH: AVERAGE ROADWAY WIDTH 119'-3" f/f OF PARAPETS.
LOADING: HS20-44 & INTERSTATE ALTERNATE LOADING.
SKEW: VARIES AS SHOWN ON PLAN.
ALIGNMENT: 1°-50'-00" LT. & 200' SPIRAL.
SUPERELEVATION: VARIES (.0434 ft/ft TO C.S., .0156 ft/ft TO S.T.)
WEARING SURFACE: 1" MONOLITHIC CONCRETE.
APPROACH SLAB: 20' LONG SPECIAL.

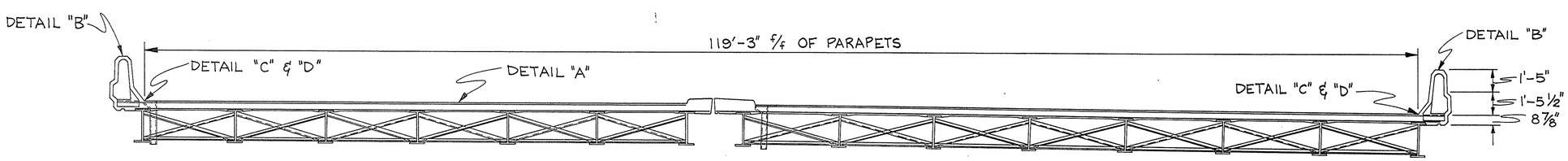

TYPICAL DECK SECTION

F.H.W.A. REGION	STATE	PROJECT	
5	OHIO		

51/54

MAH - 680 - 6.97

BRIDGE REPAIR DETAILS

DETAIL " A "

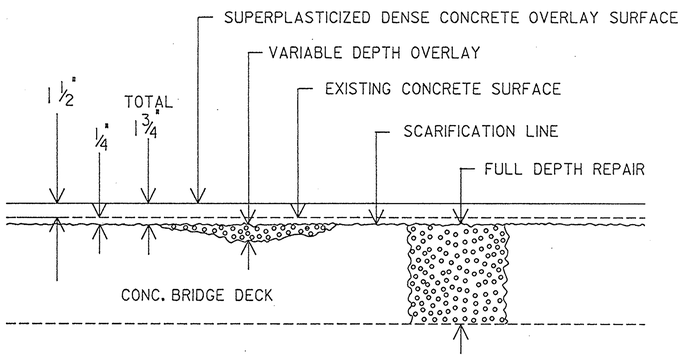

TYPICAL DECK SECTION
(Existing Reinforcing Steel not shown)

CONCRETE OVERLAY DETAIL

DETAIL " B "

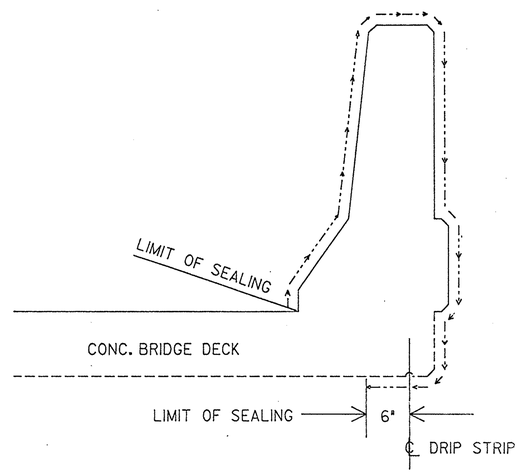

SEALING OF CONCRETE SURFACES

DETAIL " C "

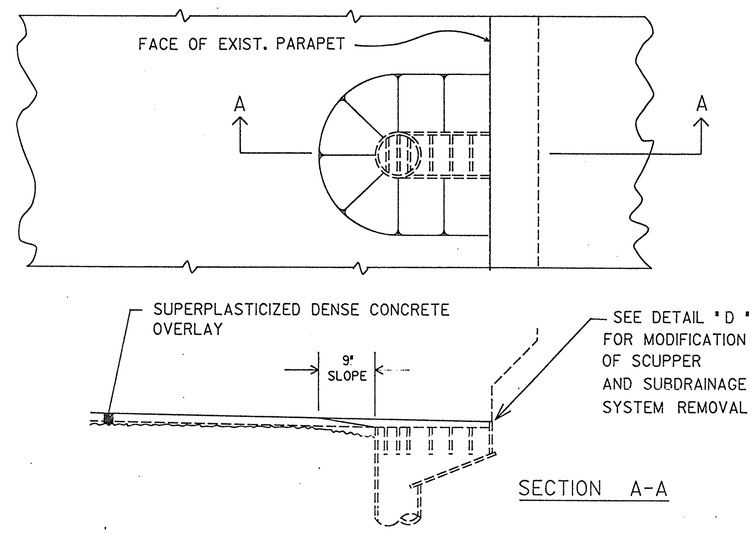

DETAIL AT SCUPPERS

DETAIL " D "

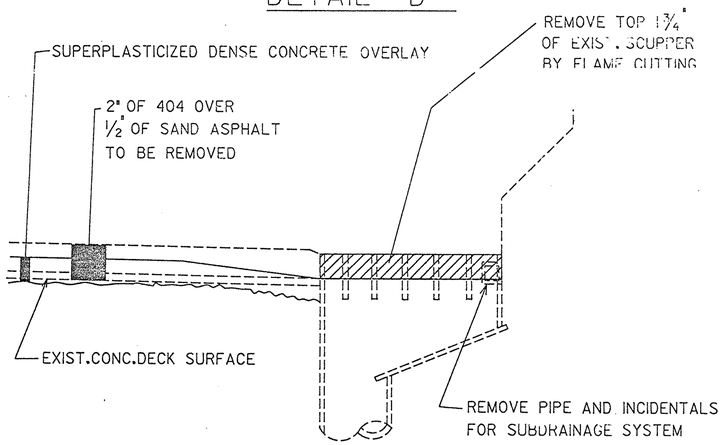

SCUPPER MODIFICATION AND
SUBDRAINAGE SYSTEM REMOVAL

DETAIL " E "

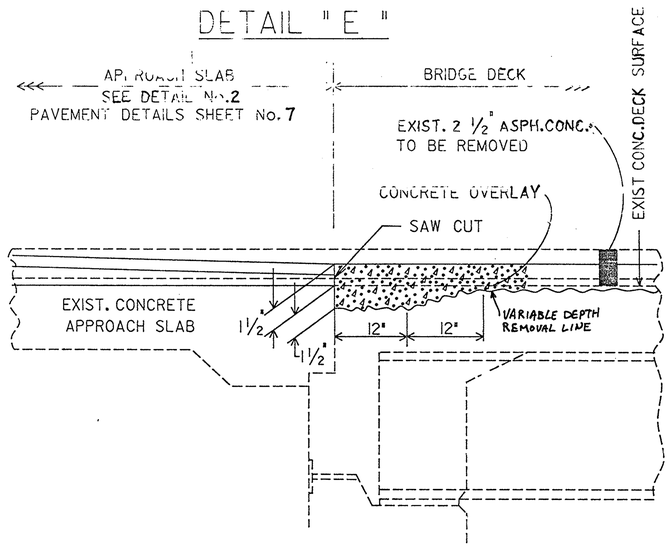

NOTE : CONCRETE OVERLAY SHALL BE PLACED ACROSS THE JOINT A MINIMUM OF 6" ON TO THE APPROACH SLAB AND SAW CUT AS SHOWN ,AFTER CURING

MA680II40.DGN

F.H.W.A. REGION	STATE	PROJECT NO.	FUNDS
5	OHIO		

52
54

MAH-680-697

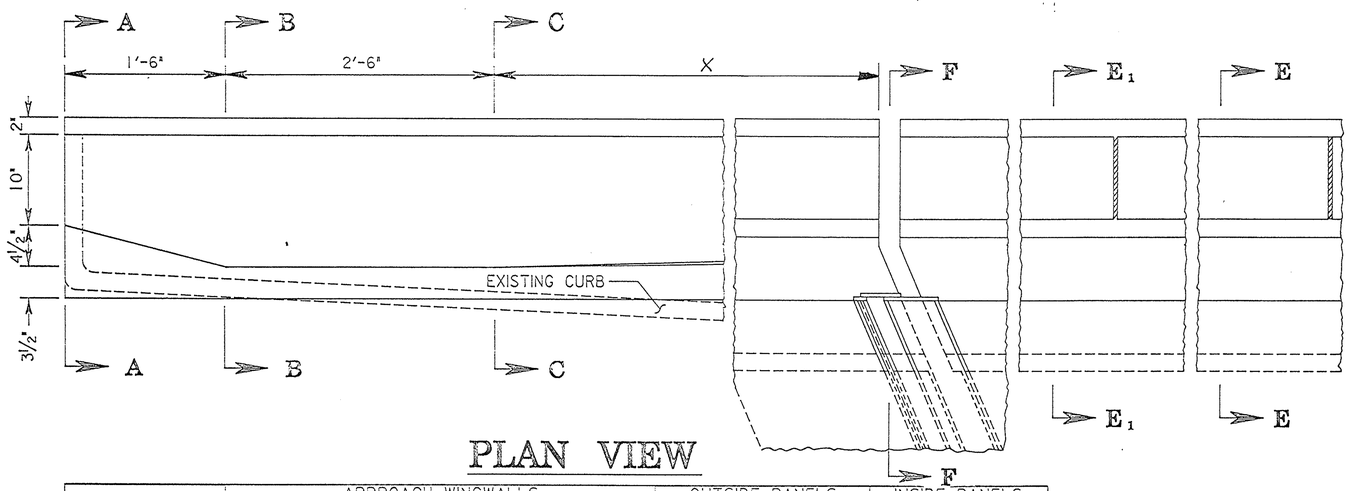

PLAN VIEW

STRUCTURE NO.	APPROACH WINGWALLS X	OUTSIDE PANELS REAR C	OUTSIDE PANELS REAR D	OUTSIDE PANELS FORWARD C	OUTSIDE PANELS FORWARD D	INSIDE PANELS NO.	INSIDE PANELS NO.	INSIDE PANELS E	INSIDE PANELS F
MAH-680-0924 LT	9'-0"	9'-8"	0	8'-10¼"	0'-1⅛"	16		10'-3½"	7¾"
MAH-680-0924 RT	9'-0"	8'-11⅜"	0'-1⅝"	8'-11⅜"	0'-1⅝"	16		10'-2⅜"	7⅛"
MAH-680-0794 LT	10'-7"	4'-10"	0'-8"	6'-2"	0'-3"	16		9'-4½"	8¼"
MAH-680-0794 RT	10'-7"	6'-8"	0'-0"	4'-1¼"	0'-6⅝"	20		9'-9½"	10¾"

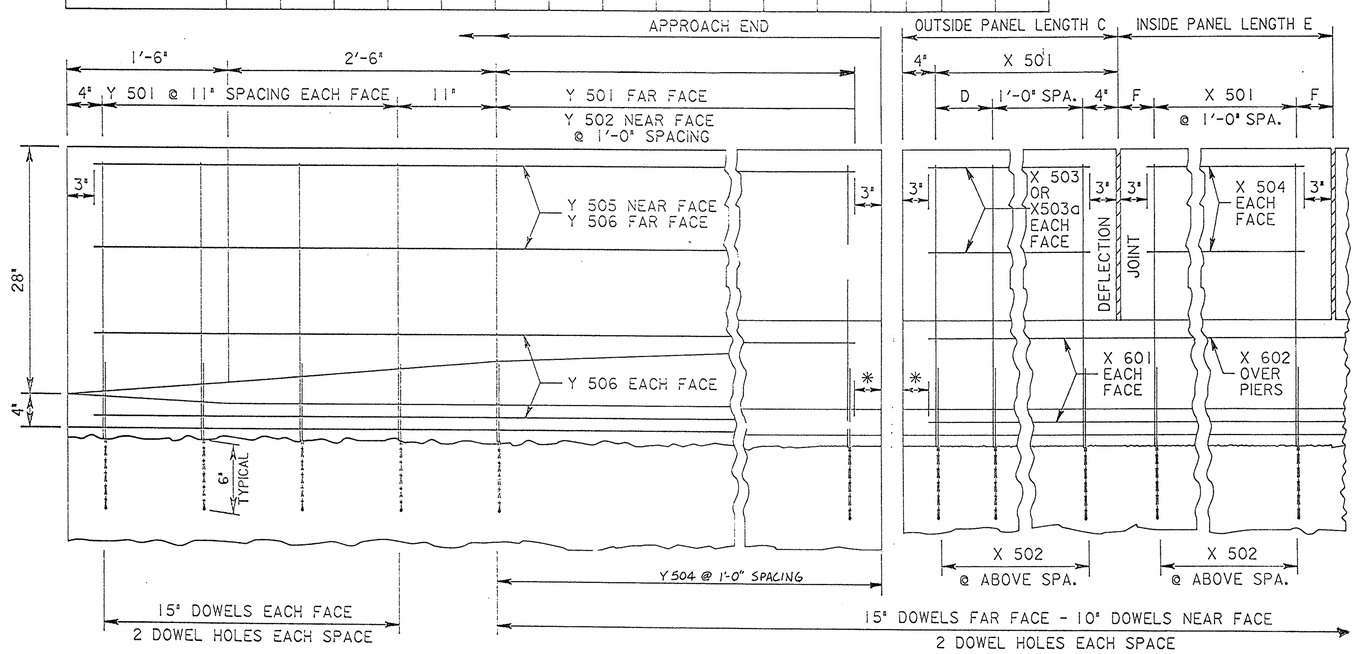

PROFILE VIEW

NOTE: FOR CONTINOUS SLAB DECKS ADD 3" TO DOWEL HOLES AND DOWEL LENGTHS.

* WHEN A SKEW IS ENCOUNTERED THE NEAR FACE Y 507 SERIES AND NEAR FACE X 601 BARS SHALL BE ADJUSTED AT THE LAP JOINT TO MEET THE 3" CLEARANCE.

ITEM 511 CLASS S CONCRETE SUPERSTRUCTURE, AS PER PLAN

DESCRIPTION

THIS ITEM SHALL BE USED TO RECONSTRUCT EXISTING PARAPETS USING CLASS S CONCRETE AS DETAILED ON SHEET NUMBERS 52, 53, 54, 54A. ALL COSTS OF REMOVAL SHALL BE INCLUDED UNDER ITEM 202 PORTIONS OF STRUCTURES REMOVED.

REMOVAL OF CONCRETE

IN ADDITION TO THE REMOVAL AREAS AS SHOWN ON THE STRUCTURE MODIFICATION DETAILS ALL LOOSE, SOFT, HONEYCOMBED AND DISINTERGRATED CONCRETE PLUS 1/4" DEPTH OF SOUND CONCRETE SHALL BE REMOVED. AFTER COMPLETION OF THE REMOVAL OPERATION, THE ENGINEER SHALL SOOND THE REMAINING CONCRETE TO ENSURE THAT ONLY SOUND CONCRETE REMAINS. ALL WORK SHALL BE DONE IN SUCH A MANER AS NOT TO DAMAGE OR SHATTER THE CONCRETE THAT IS TO REMAIN AND PREVENT THE REINFORCING STEEL THAT IS TO REMAIN FROM BEING CUT, ELONGATED OR DAMAGED IN ANY WAY. CONCRETE MAY BE REMOVED BY CHIPPING OR HAND DRESSING. CHIPPING HAMMERS SHALL NOT BE HEAVER THAN THE NOMINAL 35 POUND CLASS.

SURFACE PREPARATION

PRIOR TO PLACING THE NEW WALL, ALL SURFACES TO WHICH THE WALL IS TO BOND, INCLUDING EXPOSED REINFORCING AND STRUCTURAL STEEL, SHALL BE CLEANED BY ABRASIVE BLASTING OR AN APPROVED METHOD OF WATER BLASTING. THESE SURFACES SHALL BE MADE FREE OF SPALLS, LAITANCE AND ALL TRACES OF FOREIGN MATERIAL. IF NECESSARY, DETERGENT CLEANING SHALL PRECEDE BLAST CLEANING TO ENSURE THE REMOVAL OF CONTAMINANTS DETRIMENTAL TO ACHIEVING AN ADEQUATE BOND.

REINFORCING STEEL

ALL COSTS OF LABOR AND MATERIAL NECESSARY TO CUT THE EXISTING NUMBER 5 REBARS AS SHOWN ON THE PROPOSED PARAPET DETAILS SHALL BE INCLUDED UNDER THIS ITEM OF WORK. ALL OTHER STEEL SHALL BE EPOXY COATED AND WILL BE PAID FOR SEPARATELY UNDER ITEM 509 EPOXY COATED REINFORCING STEEL.

METHOD OF MEASUREMENT

THE FINAL AMOUNT SHALL BE THE CALCULATED NUMBER OF CUBIC YARDS.

MISCELLANEOUS NOTES

THE CONTRACTOR SHALL REMOVE THE ENTIRE BULB ANGLE. THE COST FOR THE WORK SHALL BE INCLUDED FOR PAYMENT UNDER ITEM 202 PORTIONS OF STRUCTURES REMOVED.

RAILINGS AND POSTS SHALL BE REMOVED AND DELIVERED TO THE DISTRICT 4 MAINTENANCE YARD AT 705 OAKWOOD STREET, RAVENNA, OHIO 44266.

INSTALL DEFLECTION JOINTS AS PER STANDARD BRIDGE DRAWING BR-1. EXCEPT THAT SPACING SHALL BE AS SHOWN ON THIS SHEET, (DIMENSION C), WHICH PROVIDES FOR A DEFLECTION JOINT IN THE NEGATIVE MOMENT REGION OVER PIERS.

FOR DETAILS OF THE THRIE BEAM GUARDRAIL BRIDGE TERMINAL TRANSITION AND CONNECTIONS TO THE PARAPET SEE STANDARD BRIDGE DRAWING BR-1 AND STANDARD CONSTRUCTION DRAWING GR-3 AND SHEET # 9 .

REFER TO STANDARD BRIDGE DRAWING BR-1 FOR DETAILS NOT SHOWN ON SHEETS 53, 54, 54A, 54B FOR THE PARAPET CONSTRUCTION.

THE 3/4" DOWEL BARS SHALL CONFORM TO STANDARDS AS PER SECTIONS 709.01, 709.03, 709.05, AND 709.13 OF THE CONSTRUCTION AND MATERIAL SPECIFICATIONS. GROUT SHALL MEET THE REQUIREMENTS OF ASTM C-881, TYPE I, GRADE 3, CLASS A, B OR C.

TRANSVERSE EXTENSION OF STRUCTURAL STEEL EXPANSION JOINTS

THE NEW CONCRETE BARRIER SAFETY SHAPE WILL RESULT IN A WIDER CLEAR ZONE WIDTH THAN THE EXISTING CURB AND PARAPET WALL. THIS WILL OCCURE ON ALL STRUCTURES GETTING THE NEW SAFETY SHAPE. AS A RESULT THE STRUCTURAL STEEL EXPANSION JOINTS SHALL BE EXTENDED TRANSVERSELY TO THE NEW CURB PLATES AS SHOWN IN PROPOSED SECTIONS F-F AND G-G, SHEET No. 54 . THE COST OF LABOR, MATERIALS AND INCIDENTALS TO PERFORM THE ABOVE WORK SHALL BE INCLUDED IN THE UNIT BID PRICE FOR ITEM 516 HORIZONTAL EXTENSION OF STRUCTURAL EXPANSION JOINTS, AS PER PLAN.

F.H.W.A. REGION	STATE	PROJECT NO.	FUNDS
5	OHIO		

53/54

MAH-680-6.97

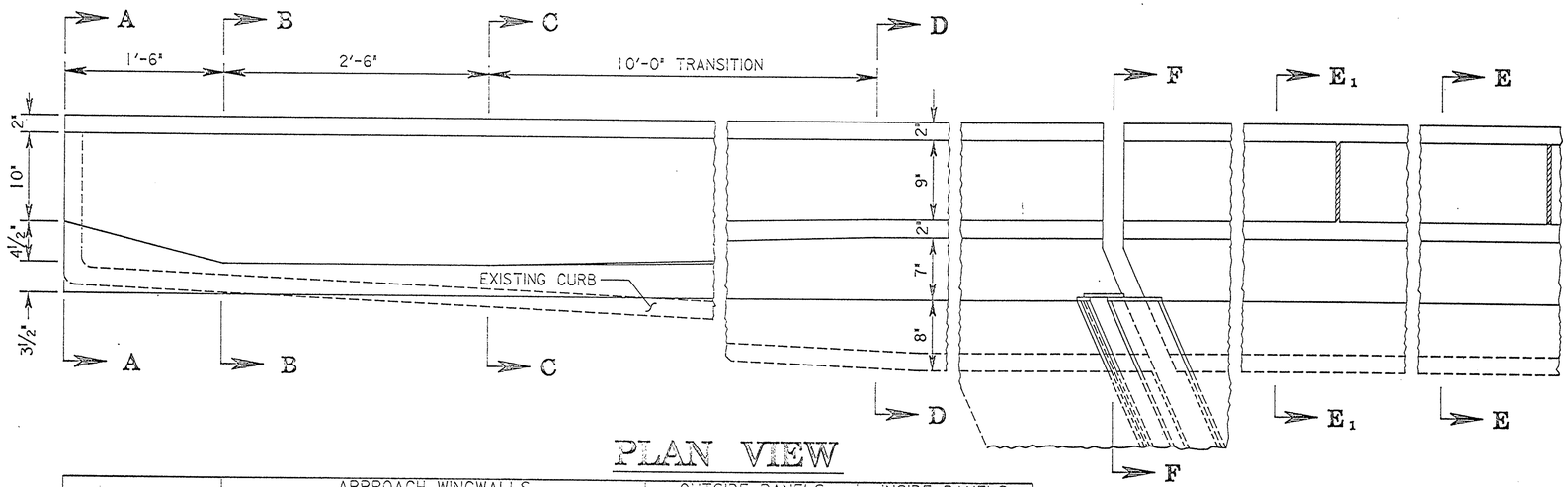

PLAN VIEW

STRUCTURE NO.	APPROACH WINGWALLS A	APPROACH WINGWALLS B	OUTSIDE PANELS REAR C	OUTSIDE PANELS REAR D	OUTSIDE PANELS FORWARD C	OUTSIDE PANELS FORWARD D	INSIDE PANELS NO.	INSIDE PANELS E	INSIDE PANELS F
MAH-680-0792 E (RAMP E)	4'-3"	0'-11"	12'-9½"	1'-0½"	12'-9½"	1'-0½"	21	10'-8"	4"

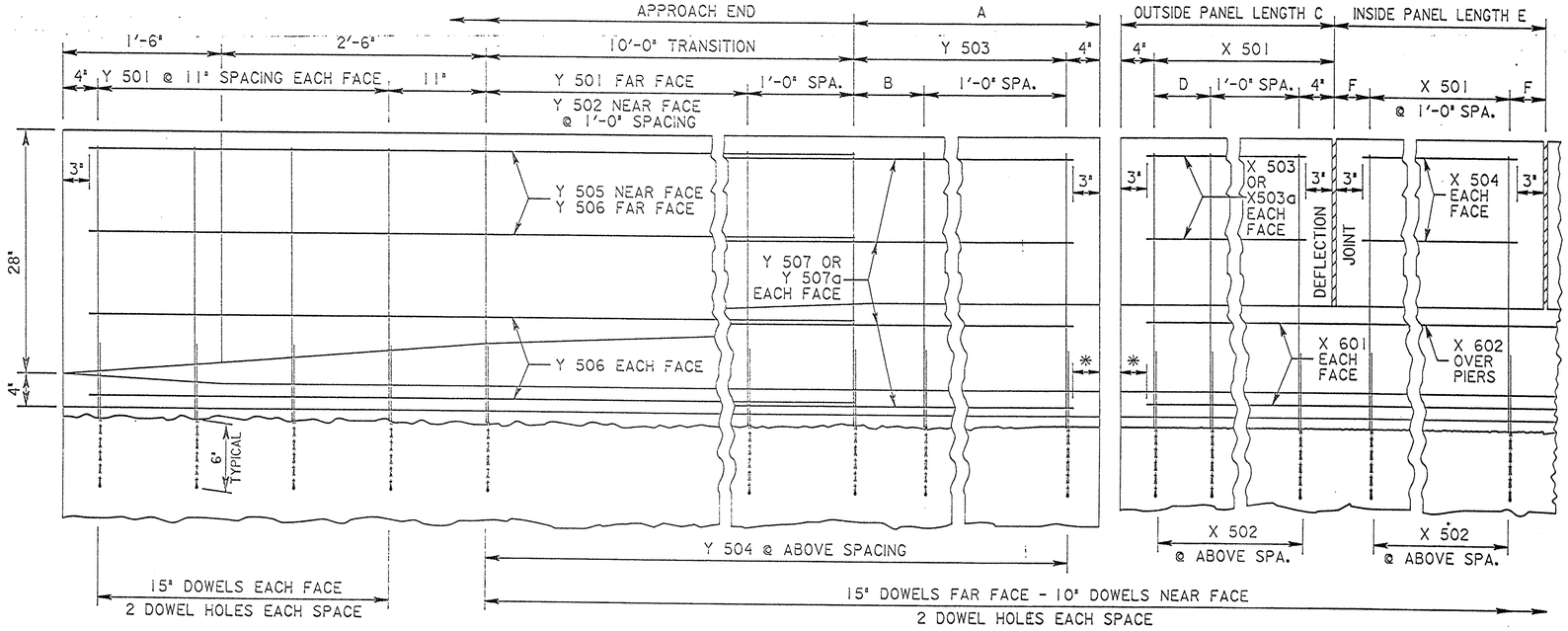

PROFILE VIEW

NOTE: FOR CONTINOUS SLAB DECKS ADD 3" TO DOWEL HOLES AND DOWEL LENGTHS.

* WHEN A SKEW IS ENCOUNTERED THE NEAR FACE Y 507 SERIES AND NEAR FACE X 601 BARS SHALL BE ADJUSTED AT THE LAP JOINT TO MEET THE 3" CLEARANCE.

F.H.W.A. REGION	STATE	PROJECT NO.	FUNDS
5	OHIO		

54/54

MAH-680-6.97

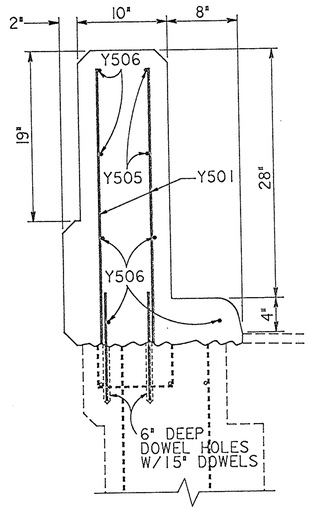

PROPOSED SECTION A-A

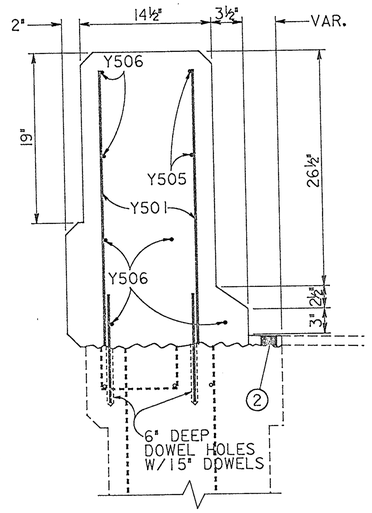

PROPOSED SECTION B-B

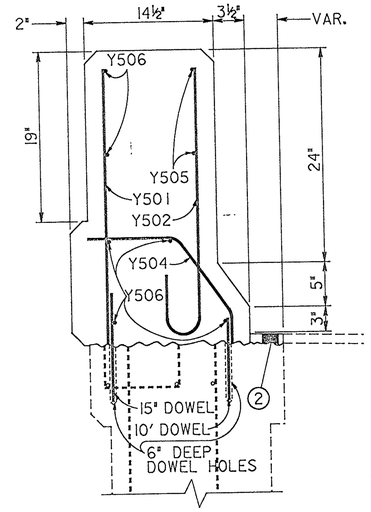

PROPOSED SECTION C-C

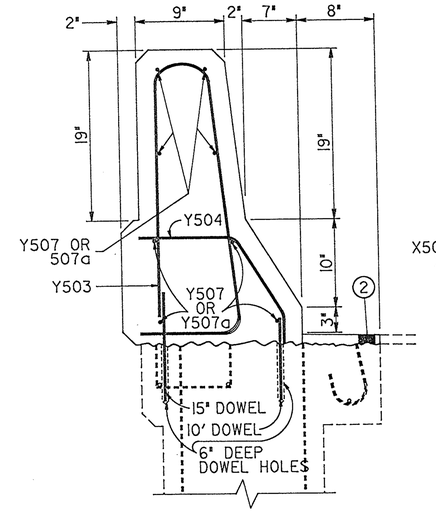

PROPOSED SECTION D-D

(STR. NO. MAH-680-0792E, RAMPE, ONLY)

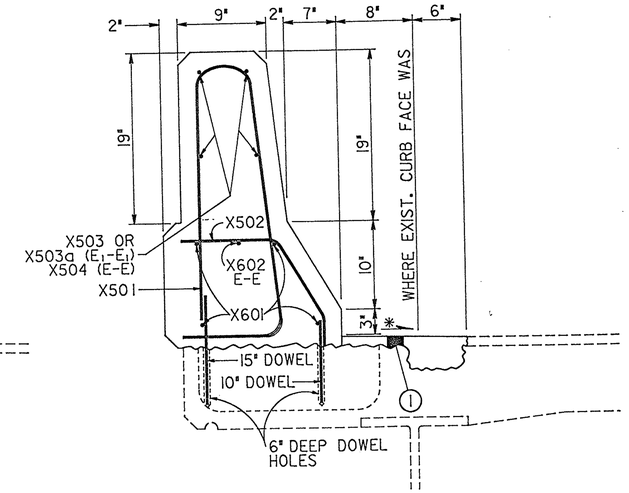

PROPOSED SECTION E-E & E_1-E_1

NOTE: ON EXISTING BRIDGE DECKS TO BE OVERLAYED ON THIS PROJECT THE PROPOSED OVERLAY SHALL EXTEND TO THE FACE OF CURBS OF THE RETROFITTED PARAPETS.

* SLOPE TO DRAIN

1 VARIABLE DEPTH (SAME MATERIAL AS EXISTING OVERLAY)

2 ITEM 511 CLASS S CONCRETE SUPERSTRUCTURE, AS PER PLAN (VARIABLE DEPTH)

REMOVAL AREA

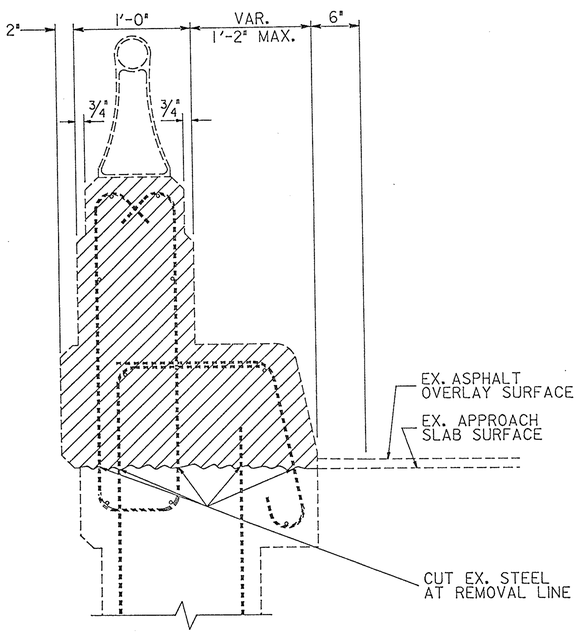

EXISTING SECTION A-A, B-B, C-C, D-D (SHT. #)

A_1-A_1, B_1-B_1, C_1-C_1, D_1-D_1 (SHT. #)

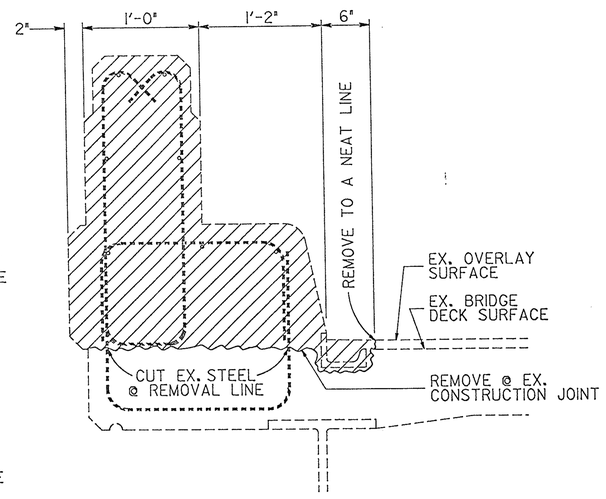

EXISTING SECTION E-E, E_1-E_1

EXISTING ALUMINUM RAILING NOT SHOWN

CURB PLATE DETAILS

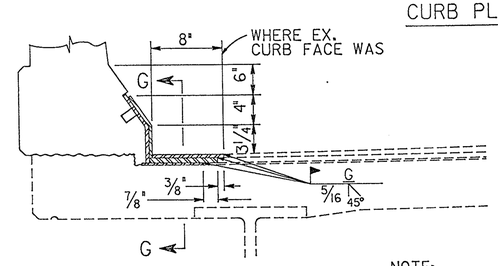

PROPOSED SECTION F-F

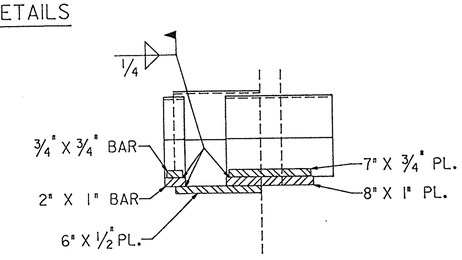

PROPOSED SECTION G-G

NOTE:
FOR ADDITIONAL DETAILS SEE STANDARD DRAWING SD-1-69. CURB PLATES SHALL BE INCLUDED WITH ITEM 516, HORIZONTAL EXTENSION OF STRUCTURAL EXPANSION JOINTS, AS PER PLAN FOR PAYMENT.

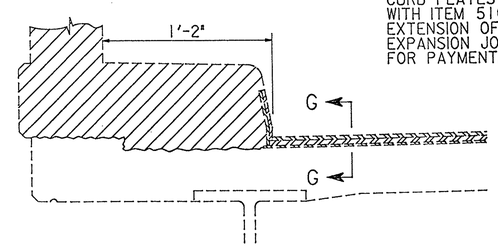

EXISTING SECTION F-F

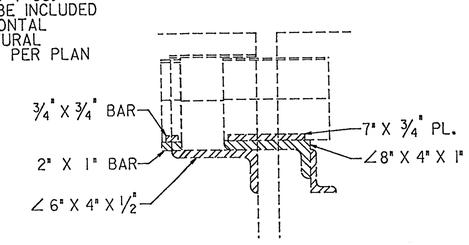

EXISTING SECTION G-G

PARAPET RETROFIT SECTIONS

F.H.W.A. REGION	STATE	PROJECT NO.	FUNDS
5	OHIO		

54A
54

MAH-680-6.97

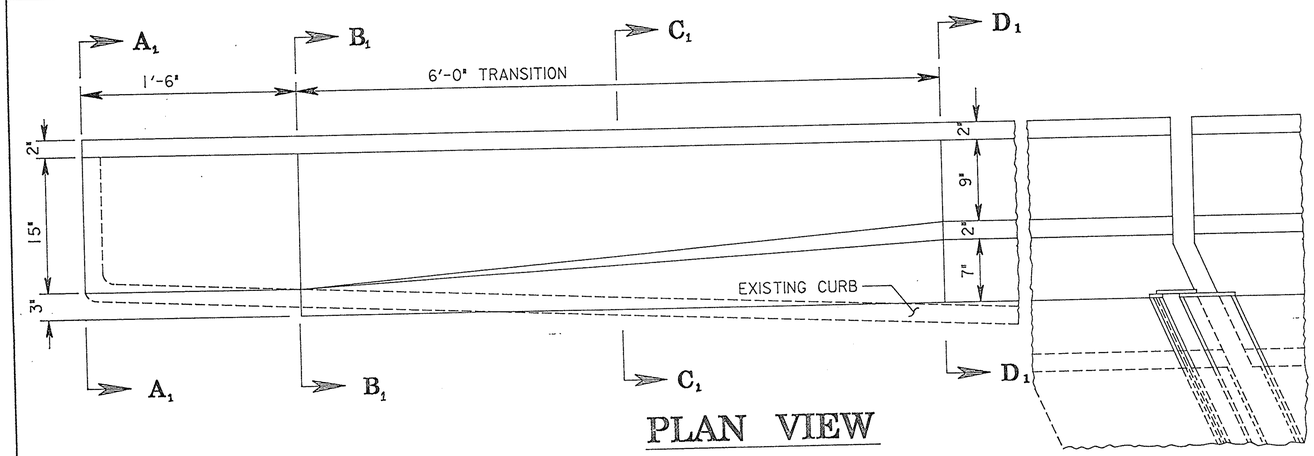

PLAN VIEW

STRUCTURE NO.	TRAILING WINGWALLS A	TRAILING WINGWALLS B
MAH-680-0924 LT	5'-0"	8"
MAH-680-0924 RT	5'-0"	8"
MAH-680-0794 LT	6'-7"	3"
MAH-680-0794 RT	6'-7"	3"
MAH-680-0792 E	10'-6"	2"

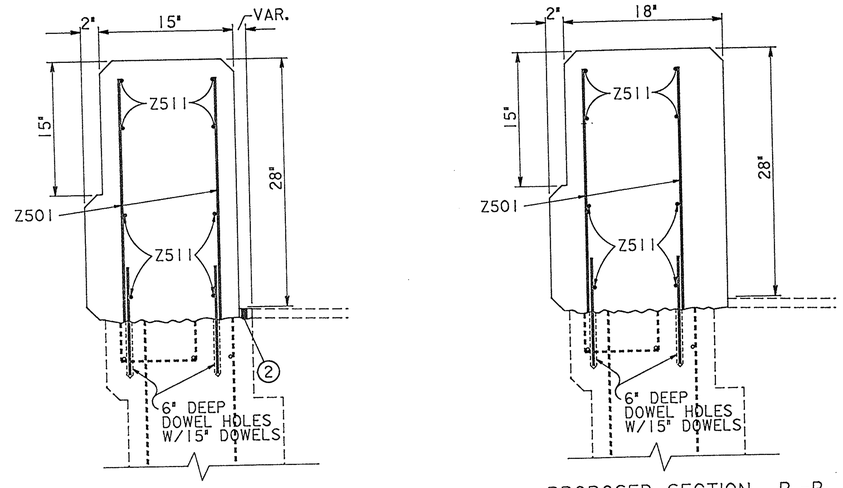

PROPOSED SECTION A1-A1

PROPOSED SECTION B1-B1

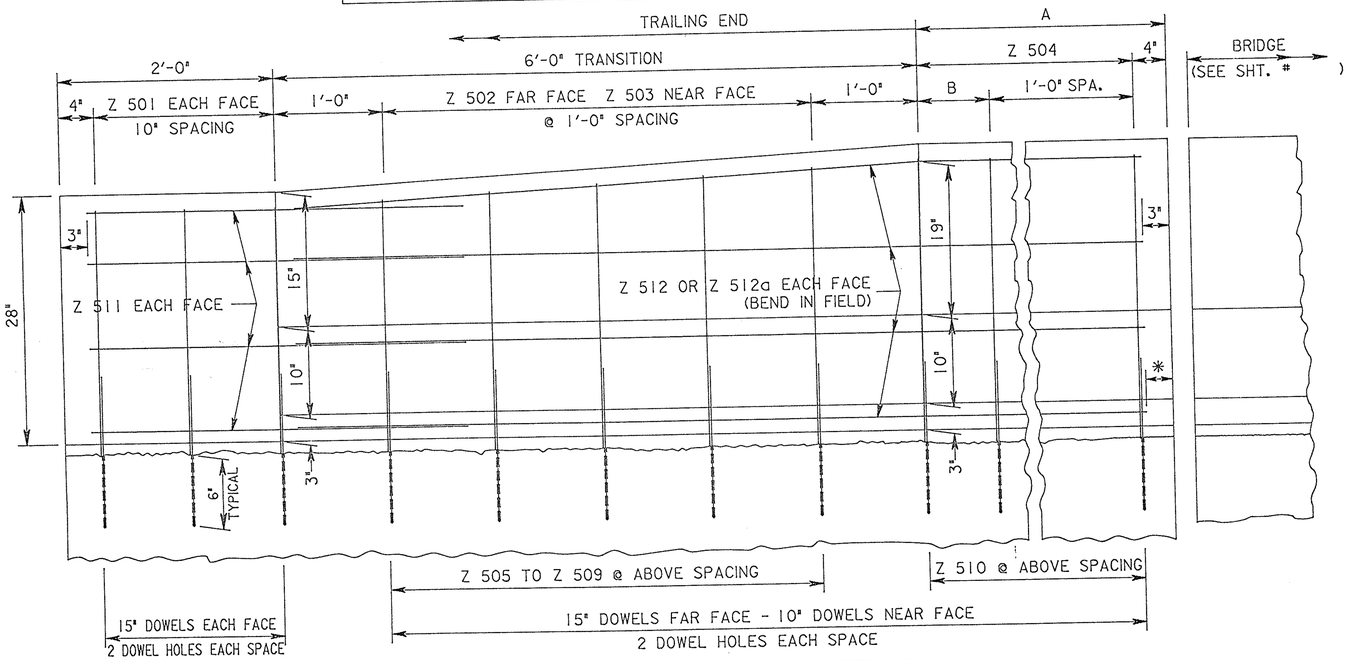

PROFILE VIEW

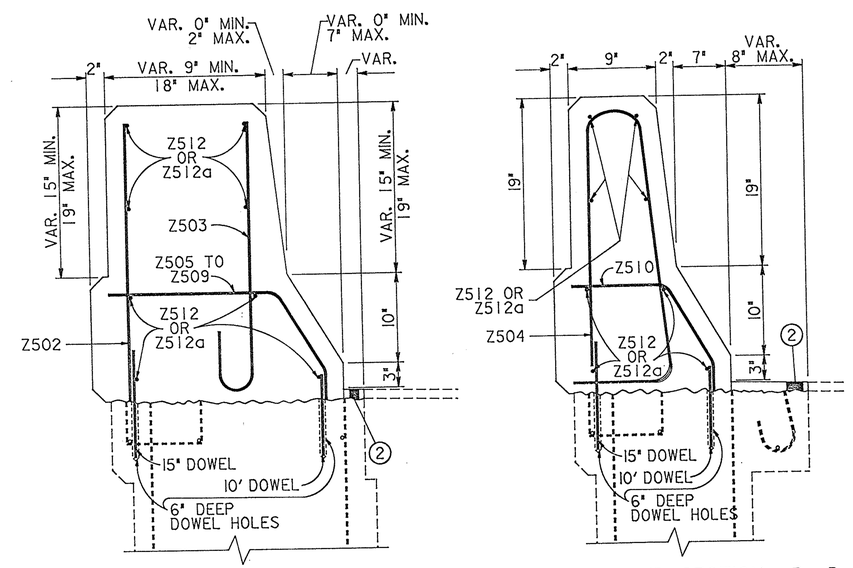

PROPOSED SECTION C1-C1

PROPOSED SECTION D1-D1

* WHEN A SKEW IS ENCOUNTERED THE NEAR FACE Z 512 SERIES BARS SHALL BE ADJUSTED AT THE LAP JOINT OR AS DIRECTED BY THE ENGINEER TO MEET THE 3" CLEARANCE.

PARAPET RETROFITTING SECTIONS & DETAILS

F.H.W.A. REGION	STATE	PROJECT NO.	FUNDS
5	OHIO		

54-B
54

MAH-680-6.97

STR. NO. MAH-680-0924 LT

LEFT SIDE

MARK	NO.	LENGTH	WEIGHT	SHAPE
Y 501	17	2'-6"	44	STRAIGHT
Y 502	9	3'-1"	29	BENT
Y 504	10	1'-10"	19	BENT
Y 505	2	12'-4"	26	BENT
Y 506	6	12'-4"	77	STRAIGHT
X 501	181	6'-5"	1211	BENT
X 502	181	1'-10"	346	BENT
X 503	2	9'-2"	19	STRAIGHT
X 503a	2	8'-2"	17	STRAIGHT
X 504	64	9'-9"	651	STRAIGHT
X 601	24	32'-0"	1154	STRAIGHT
X 602	2	35'-0"	105	STRAIGHT
Z 501	6	2'-2"	13	STRAIGHT
Z 502	5	2'-3½"	12	STRAIGHT
Z 503	5	2'-10½"	15	BENT
Z 504	5	6'-5"	33	BENT
Z 505	1	2'-1"	2	BENT
Z 506	1	2'-0"	2	BENT
Z 507	1	1'-11½"	2	BENT
Z 508	1	1'-11"	2	BENT
Z 509	1	1'-10½"	2	BENT
Z 510	5	1'-10"	10	BENT
Z 511	8	3'-6"	29	STRAIGHT
Z 512	8	10'-8"	89	STRAIGHT
DOWELS	258	10"	323	
DOWELS	252	15"	473	
TOTAL POUNDS			4705	
DOWEL HOLES 510 EACH				

STR. NO. MAH-680-0794 LT

LEFT SIDE

MARK	NO.	LENGTH	WEIGHT	SHAPE
Y 501	18	2'-6"	47	STRAIGHT
Y 502	10	3'-1"	32	BENT
Y 504	12	1'-10"	23	BENT
Y 505	2	13'-8"	29	BENT
Y 506	6	13'-7"	85	STRAIGHT
X 501	172	6'-5"	1151	BENT
X 502	172	1'-10"	329	BENT
X 503	2	4'-4"	9	STRAIGHT
X 503a	2	5'-8"	12	STRAIGHT
X 504	64	8'-10"	590	STRAIGHT
X 601	24	28'-6"	1027	STRAIGHT
X 602	2	31'-10"	93	STRAIGHT
Z 501	6	2'-2"	13	STRAIGHT
Z 502	5	2'-3½"	12	STRAIGHT
Z 503	5	2'-10½"	15	BENT
Z 504	7	6'-5"	47	BENT
Z 505	1	2'-1"	2	BENT
Z 506	1	2'-0"	2	BENT
Z 507	1	1'-11½"	2	BENT
Z 508	1	1'-11"	2	BENT
Z 509	1	1'-10½"	2	BENT
Z 510	7	1'-10"	13	BENT
Z 511	8	3'-6"	29	STRAIGHT
Z 512	8	12'-4"	103	STRAIGHT
DOWELS	277	10	347	
DOWELS	249	15	467	
TOTAL POUNDS			4483	
DOWEL HOLES 526 EACH				

STR. NO.

LEFT

MARK	NO.	LENGTH	WEIGHT	SHAPE
Y 501	36	2'-6"	94	STRAIGHT
Y 502	20	3'-1"	64	BENT
Y 503		6'-5"		BENT
Y 504		1'-10"		BENT
Y 505	4	13'-8"	57	BENT
Y 506	12	13'-7"	170	STRAIGHT
Y 507				STRAIGHT
Y 507a				STRAIGHT
X 501		6'-5"		BENT
X 502		1'-10"		BENT
X 503				STRAIGHT
X 503a				STRAIGHT
X 504				STRAIGHT
X 601				STRAIGHT
X 602				STRAIGHT
Z 501	12	2'-2"	27	STRAIGHT
Z 502	10	2'-3½"	24	STRAIGHT
Z 503	10	2'-10½"	30	BENT
Z 504		6'-5"		BENT
Z 505	2	2'-1"	4	BENT
Z 506	2	2'-0"	4	BENT
Z 507	2	1'-11½"	4	BENT
Z 508	2	1'-11"	4	BENT
Z 509	2	1'-10½"	4	BENT
Z 510		1'-10"		BENT
Z 511	16	3'-6"	58	STRAIGHT
Z 512				STRAIGHT
Z 512a				STRAIGHT
DOWELS				
DOWELS				
TOTAL POUNDS				
DOWEL HOLES EACH				

STR. NO.

LEFT

MARK	NO.	LENGTH	WEIGHT	SHAPE
Y 501	36	2'-6"	94	STRAIGHT
Y 502	20	3'-1"	64	BENT
Y 503		6'-5"		BENT
Y 504		1'-10"		BENT
Y 505	4	13'-8"	57	BENT
Y 506	12	13'-7"	170	STRAIGHT
Y 507				STRAIGHT
Y 507a				STRAIGHT
X 501		6'-5"		BENT
X 502		1'-10"		BENT
X 503				STRAIGHT
X 503a				STRAIGHT
X 504				STRAIGHT
X 601				STRAIGHT
X 602				STRAIGHT
Z 501	12	2'-2"	27	STRAIGHT
Z 502	10	2'-3½"	24	STRAIGHT
Z 503	10	2'-10½"	30	BENT
Z 504		6'-5"		BENT
Z 505	2	2'-1"	4	BENT
Z 506	2	2'-0"	4	BENT
Z 507	2	1'-11½"	4	BENT
Z 508	2	1'-11"	4	BENT
Z 509	2	1'-10½"	4	BENT
Z 510		1'-10"		BENT
Z 511	16	3'-6"	58	STRAIGHT
Z 512				STRAIGHT
Z 512a				STRAIGHT
DOWELS				
DOWELS				
TOTAL POUNDS				
DOWEL HOLES EACH				

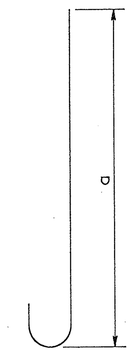

BAR	a
Y 502	2'-6"
Z 503	2'-3½"

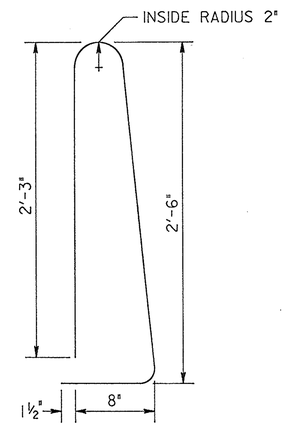

X 501
Y 503
Z 504

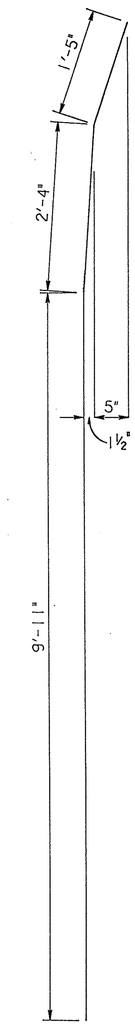

Y 505

STR. NO. MAH-680-0924 RT

RIGHT SIDE

MARK	NO.	LENGTH	WEIGHT	SHAPE
Y 501	17	2'-6"	44	STRAIGHT
Y 502	9	3'-1"	29	BENT
Y 504	10	1'-10"	19	BENT
Y 505	2	12'-4"	26	BENT
Y 506	6	12'-4"	77	STRAIGHT
X 501	180	6'-5"	1211	BENT
X 502	180	1'-10"	346	BENT
X 503	2	8'-5"	19	STRAIGHT
X 503a	2	8'-5"	17	STRAIGHT
X 504	64	9'-8"	651	STRAIGHT
X 601	24	32'-0"	1154	STRAIGHT
X 602	2	35'-0"	105	STRAIGHT
Z 501	6	2'-2"	13	STRAIGHT
Z 502	5	2'-3½"	12	STRAIGHT
Z 503	5	2'-10½"	15	BENT
Z 504	5	6'-5"	33	BENT
Z 505	1	2'-1"	2	BENT
Z 506	1	2'-0"	2	BENT
Z 507	1	1'-11½"	2	BENT
Z 508	1	1'-11"	2	BENT
Z 509	1	1'-10½"	2	BENT
Z 510	5	1'-10"	10	BENT
Z 511	8	3'-6"	29	STRAIGHT
Z 512	8	10'-8"	89	STRAIGHT
DOWELS	247	10"	309	
DOWELS	251	15"	471	
TOTAL POUNDS			4689	
DOWEL HOLES 498 EACH				

STR. NO. MAH-680-0794 RT

RIGHT SIDE

MARK	NO.	LENGTH	WEIGHT	SHAPE
Y 501	18	2'-6"	47	STRAIGHT
Y 502	10	3'-1"	32	BENT
Y 504	12	1'-10"	23	BENT
Y 505	2	13'-8"	29	BENT
Y 506	6	13'-7"	85	STRAIGHT
X 501	172	6'-5"	1151	BENT
X 502	172	1'-10"	329	BENT
X 503	2	4'-4"	9	STRAIGHT
X 503a	2	5'-8"	12	STRAIGHT
X 504	64	8'-10"	590	STRAIGHT
X 601	24	28'-6"	1027	STRAIGHT
X 602	2	31'-10"	93	STRAIGHT
Z 501	6	2'-2"	13	STRAIGHT
Z 502	5	2'-3½"	12	STRAIGHT
Z 503	5	2'-10½"	15	BENT
Z 504	7	6'-5"	47	BENT
Z 505	1	2'-1"	2	BENT
Z 506	1	2'-0"	2	BENT
Z 507	1	1'-11½"	2	BENT
Z 508	1	1'-11"	2	BENT
Z 509	1	1'-10½"	2	BENT
Z 510	7	1'-10"	13	BENT
Z 511	8	3'-6"	29	STRAIGHT
Z 512	8	12'-4"	103	STRAIGHT
DOWELS	277		347	
DOWELS	249		467	
TOTAL POUNDS			4483	
DOWEL HOLES 596 EACH				

RAMP E

RIGHT

MARK	NO.	LENGTH	WEIGHT	SHAPE
Y 501	18	2'-6"	47	STRAIGHT
Y 502	10	3'-1"	32	BENT
Y 503	5	6'-5"	33	BENT
Y 504	15	1'-10"	29	BENT
Y 505	2	13'-8"	29	BENT
Y 506	6	13'-7"	85	STRAIGHT
Y 507	8	15'-3"	44	STRAIGHT
X 501	257	6'-5"	1720	BENT
X 502	257	1'-10"	472	BENT
X 503	8	12'-4"	103	STRAIGHT
X 504	84	10'-2"	891	STRAIGHT
X 601	36	26'-7"	1437	STRAIGHT
X 602	2	38'-0"	114	STRAIGHT
Z 501	6	2'-2"	13	STRAIGHT
Z 502	5	2'-3½"	12	STRAIGHT
Z 503	5	2'-10½"	15	BENT
Z 504	11	6'-5"	74	BENT
Z 505	1	2'-1"	2	BENT
Z 506	1	2'-0"	2	BENT
Z 507	1	1'-11½"	2	BENT
Z 508	1	1'-11"	2	BENT
Z 509	1	1'-10½"	2	BENT
Z 510	11	1'-10"	21	BENT
Z 511	8	3'-6"	29	STRAIGHT
Z 512	8	16'-3"	136	STRAIGHT
DOWELS	330	10"	413	
DOWELS	327	15"	614	
TOTAL POUNDS			6373	
DOWEL HOLES 657 EACH				

RIGHT

MARK	NO.	LENGTH	WEIGHT	SHAPE
Y 501	36	2'-6"	94	STRAIGHT
Y 502	20	3'-1"	64	BENT
Y 503		6'-5"		BENT
Y 504		1'-10"		BENT
Y 505	4	13'-8"	57	BENT
Y 506	12	13'-7"	170	STRAIGHT
Y 507				STRAIGHT
Y 507a				STRAIGHT
X 501		6'-5"		BENT
X 502		1'-10"		BENT
X 503				STRAIGHT
X 503a				STRAIGHT
X 504				STRAIGHT
X 601				STRAIGHT
X 602				STRAIGHT
Z 501	12	2'-2"	27	STRAIGHT
Z 502	10	2'-3½"	24	STRAIGHT
Z 503	10	2'-10½"	30	BENT
Z 504		6'-5"		BENT
Z 505	2	2'-1"	4	BENT
Z 506	2	2'-0"	4	BENT
Z 507	2	1'-11½"	4	BENT
Z 508	2	1'-11"	4	BENT
Z 509	2	1'-10½"	4	BENT
Z 510		1'-10"		BENT
Z 511	16	3'-6"	58	STRAIGHT
Z 512				STRAIGHT
Z 512a				STRAIGHT
DOWELS				
DOWELS				
TOTAL POUNDS				
DOWEL HOLES EACH				

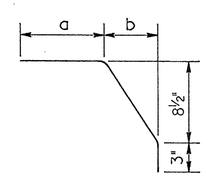

BAR	a	b
X 502	9"	6"
Y 504	9"	6"
Z 505	1'-2"	1"
Z 506	1'-1"	2"
Z 507	1'-0"	3"
Z 508	11"	4"
Z 509	10"	5"
Z 510	9"	6"