# OHIO DEPARTMENT OF TRANSPORTATION

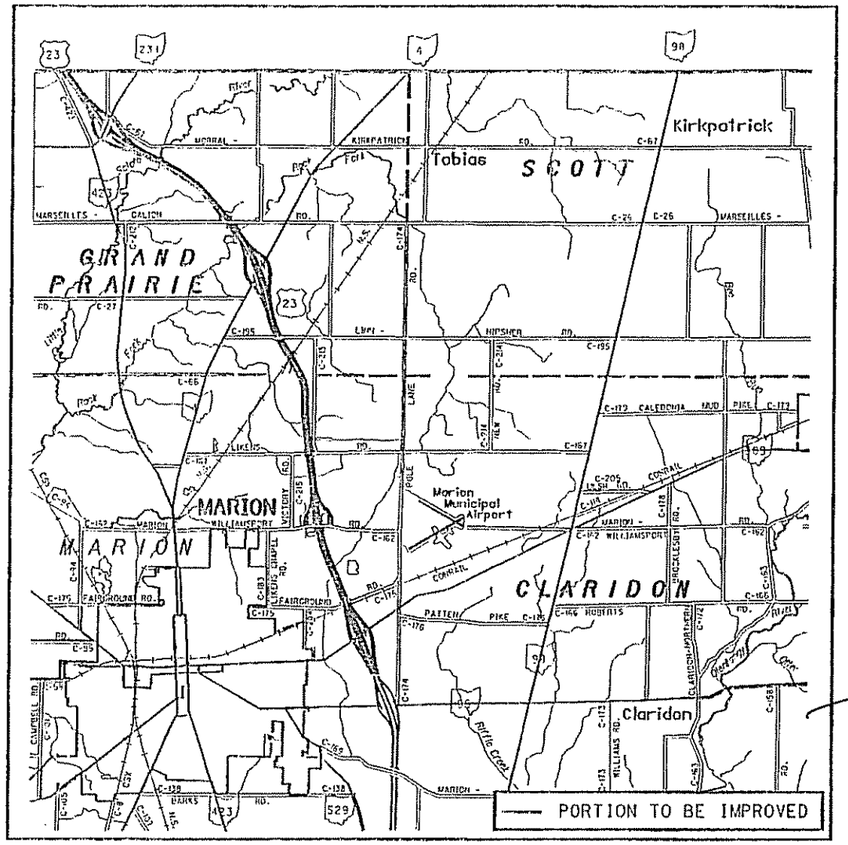


LAT: 40°39'23" LONG: 83°06'30"

| PART | COUNTY | ROUTE | SECTIONS | PROJECT TERMINII BEGIN | PROJECT TERMINII END | NET LENGTH MI | CITY |
|---|---|---|---|---|---|---|---|
| 1 | MAR | 23 | (10.63 - 19.91) | 10.63 | 19.97 | 9.34 | |

353-00

Production

INDEX OF SHEETS:


| | |
|---|---|
| TITLE | 1 |
| GENERAL SUMMARY | 2 |
| GENERAL NOTES | 3-5 |
| PAVEMENT SUBSUMMARY AND DETAILS | 6-12 |
| PAVEMENT MARKING SUBSUMMARY | 13 |
| AIR SPEED ZONE DETAILS | 14 |
| RAISED PAVEMENT MARKERS SUBSUMMARY | 15 |
| DROPOFFS IN WORK ZONES | 16 |
| PAVEMENT MARKING TYPICAL DETAILS | 17 |


MAR - 23 - 10.63
000353
DIST 06

PID# 19402
06/21/00

## PROJECT DESCRIPTION

RESURFACING OF 9.34 MI OF US-23 ~~FROM TO JUST NORTH OF THE~~ US-23 AND SR-95 INTERCHANGE TO THE WYANDOT COUNTY LINE.

## 1997 SPECIFICATIONS

I HEREBY APPROVE THESE PLANS AND DECLARE THAT THE MAKING OF THESE IMPROVEMENTS WILL NOT REQUIRE THE CLOSING TO TRAFFIC OF THE HIGHWAY AND THAT PROVISIONS FOR THE MAINTENANCE AND SAFETY OF TRAFFIC WILL BE AS SET FORTH ON THE PLANS AND ESTIMATES.

THE STANDARD SPECIFICATIONS OF THE STATE OF OHIO, DEPARTMENT OF TRANSPORTATION, INCLUDING CHANGES AND SUPPLEMENTAL SPECIFICATIONS LISTED IN THE PROPOSAL SHALL GOVERN THIS PROJECT.

DESIGN EXCEPTIONS: NONE
3 - R CRITERIA MET.

| STANDARD DRAWINGS | | | | | | SUPPLEMENTAL SPECIFICATIONS | |
|---|---|---|---|---|---|---|---|
| BP-3.1M | 10/28/94 | MT-98.12M | 06/24/93 | | | SS-806 | 09/09/97 |
| BP-9.1M | 04/29/99 | MT-98.13M | 06/24/93 | | | SS-842 | 01/06/99 |
| MT-35.10M | 01/30/95 | MT-98.14M | 06/24/93 | | | SS-858 | 07/13/99 |
| MT-35.11M | 01/30/95 | MT-98.15M | 06/24/93 | | | SS-863 | 10/12/99 |
| DM-4.4M | 04/29/99 | MT-98.16M | 06/24/93 | | | SS-870 | 08/10/99 |
| TC-41.20M | 07/01/94 | MT-98.17M | 04/25/94 | | | SS-877 | 04/13/99 |
| TC-52.10M | 07/29/94 | MT-98.18M | 04/25/94 | | | SS-887 | 08/10/99 |
| TC-52.20M | 07/29/94 | MT-99.20M | 01/30/95 | | | SS-899 | 10/21/98 |
| TC-65.10M | 11/01/95 | MT-105.10M | 04/25/94 | | | SS-905 | 04/01/98 |
| TC-65.11M | 11/01/95 | MT-105.11M | 04/25/94 | | | SS-906 | 01/06/99 |
| TC-65.12M | 11/01/95 | | | | | SS-907 | 10/21/98 |
| TC-72.20M | 09/01/93 | | | | | SS-908 | 01/06/99 |
| MT-95.30M | 04/25/94 | | | | | SS-1055 | 06/15/98 |
| MT-95.31M | 04/25/94 | | | | | SS-1082 | 06/15/99 |
| MT-95.32M | 04/25/94 | | | | | | |
| MT-97.10M | 04/25/94 | | | | | | |
| MT-97.11M | 01/30/95 | | | | | | |

STATE OF OHIO
DAVID P. POLING
56872
REGISTERED PROFESSIONAL ENGINEER

Signed: David P. Poling
Date: 3-16-00

PLAN PREPARED BY:
O.D.O.T. - DISTRICT SIX
IN-HOUSE DESIGN

UNDERGROUND UTILITIES
TWO WORKING DAYS
BEFORE YOU DIG
CALL 1-800-362-2764 (TOLL FREE)
OHIO UTILITIES PROTECTION SERVICE
NON-MEMBERS
MUST BE CALLED DIRECTLY

PLAN PREPARED BY:
O.D.O.T.
DISTRICT SIX
IN-HOUSE DESIGN

PLANS CERTIFIED BY:
NAME: Robert Miller DATE: 3/16/00
DISTRICT 6
OHIO DEPT. OF TRANSPORTATION

Approved [signature]
Date District Deputy Director of Transportation

Approved Gordon Proctor / pl.
Date 4-2-00 Director, Department of Transportation

FEDERAL PROJECT NO. TE-21 G000(324)
PID NO. 19402
CONSTRUCTION PROJECT NO.
RAILROAD INVOLVEMENT NONE
MAR-23-10.63
1/17

:\Projects\mar\023\063.000\DGN\gt101.dgn 16-MAR-2000 3:26PM dkinsell

| SHEET NUMBER | | | | | | | | | | | ITEM | ITEM EXT. | GRAND TOTAL | UNIT | DESCRIPTION | SEE SHEET NO. |
|---|---|---|---|---|---|---|---|---|---|---|---|---|---|---|---|---|
| 3/4/5 | 6 | 7 | 8 | 9 | 10 | 11/12 | 13/14/15 | | | | | | | | | |
| | | | | | | | 1519 | | | | 202 | 54100 | 1519 | EACH | RAISED PAVEMENT MARKER REMOVED FOR STORAGE | 15 |
| | | | | | | 644 | | | | | 203 | 12000 | 644 | CY | EXCAVATION NOT INCLUDING EMBANKMENT CONSTRUCTION | 12 |
| | | | | | | 1656 | | | | | 203 | 50000 | 1656 | SY | SUBGRADE COMPACTION | 12 |
| 260 | | | | | | | | | | | 251 | 01002 | 260 | CY | PARTIAL DEPTH PAVEMENT REPAIR | 3 |
| | 396,173 | 19,552 | 18,044 | 28,744 | 18430 | 2,544 | | | | | 254 | 01000 | 483487 | SY | PAVEMENT PLANING, BITUMINOUS | |
| | | | | | | 275 | | | | | 301 | 46010 | 275 | CY | BITUMINOUS AGGREGATE BASE, PG64-28 | 12 |
| | | | | | | 275 | | | | | 304 | 20000 | 275 | CY | AGGREGATE BASE | 12 |
| | 29,713 | 1,465 | 1,352 | 2,154 | 1,383 | 214 | | | | | 407 | 10000 | 36281 | GAL | TACK COAT | |
| | 19,808 | 971 | 469 | 1,438 | 883 | 297 | | | | | 407 | 14000 | 23886 | GAL | TACK COAT FOR INTERMEDIATE COURSE | |
| | 19,258 | 950 | 475 | 1,396 | 878 | 215 | | | | | 858 | 10100 | 23172 | CY | ASPHALT CONCRETE INTERMEDIATE COURSE, 19MM, TYPE A (446) | |
| | 16,508 | 809 | 754 | 1,212 | 731 | 186 | | | | | 858 | 10000 | 20200 | CY | ASPHALT CONCRETE SURFACE COURSE, 12.5MM, TYPE A (446) | |
| 10 | | | | | | | | | | | 604 | 09000 | 10 | EACH | CATCH BASIN ADJUSTED TO GRADE | 3 |
| 1200 | | | | | | | | | | | 614 | 11100 | 1200 | HOUR | LAW ENFORCEMENT OFFICER WITH PATROL CAR | 4 |
| 20 | | | | | | | | | | | 614 | 12460 | 20 | EACH | WORK ZONE MARKING SIGN | 3 |
| 6 | | | | | | | | | | | 614 | 18600 | 6 | SNMT | PORTABLE CHANGEABLE MESSAGE SIGN | 5 |
| 18.68 | | | | | | | | | | | 614 | 20400 | 18.68 | MILE | TEMPORARY LANE LINE, CLASS II | 3 |
| | 2,896 | 126 | 100 | 201 | 158 | 60 | | | | | 617 | 10100 | 3541 | CY | COMPACTED AGGREGATE, TYPE A | |
| 197,262 | | | | | | | | | | | 618 | 40100 | 197262 | LF | RUMBLE STRIPS, TYPE 2 (ASPHALT) | 5 |
| | | | | | | | 1234 | | | | 621 | 00200 | 1234 | EACH | RAISED PAVEMENT MARKER, INSTALLATION ONLY | 15 |
| | | | | | | | 1234 | | | | 621 | 00300 | 1234 | EACH | PRISMATIC RETROREFLECTOR | 15 |
| 104 | | | | | | | | | | | 630 | 80100 | 104 | SF | SIGN, FLAT SHEET | 5 |
| 120 | | | | | | | | | | | 630 | 03101 | 120 | LF | GROUND MOUNTED SUPPORT, NO. 3 POST, AS PER PLAN | 5 |
| 11,300 | | | | | | | | | | | 659 | 10000 | 11300 | SY | SEEDING AND MULCHING | 5 |
| 12 | | | | | | | | | | | 659 | 35000 | 12 | MGAL | WATER | 5 |
| 1.01 | | | | | | | | | | | 659 | 20000 | 1.01 | TON | COMMERCIAL FERTILIZER | 5 |
| 160 | | | | | | | | | | | 877 | 30100 | 160 | LF | TEMPORARY PERIMETER FILTER FABRIC FENCE | |
| | | | | | | | 408 | | | | 644 | 00500 | 408 | LF | STOP LINE | 13 |
| | | | | | | | 2690 | | | | 644 | 00700 | 2690 | LF | TRANSVERSE LINE | 13 |
| | | | | | | | 160 | | | | SPECIAL | 64440010 | 160 | SF | AIR SPEED ZONE MARKING | 14 |
| | | | | | | | 44.38 | | | | 887 | 20000 | 44.38 | MILE | EDGE LINE (5 YEAR WARRANTY) | 13 |
| | | | | | | | 19.49 | | | | 887 | 22000 | 19.49 | MILE | LANE LINE (5 YEAR WARRANTY) | 13 |
| | | | | | | | 5891 | | | | 887 | 26000 | 5891 | LF | CHANNELIZING LINE (5 YEAR WARRANTY) | 13 |
| | | | | | | | | | | | 614 | 11000 | LUMP | SUM | MAINTAINING TRAFFIC | |
| | | | | | | | | | | | 623 | 10001 | LUMP | SUM | CONSTRUCTION LAYOUT STAKES, AS PER PLAN | |
| | | | | | | | | | | | 624 | 10000 | LUMP | SUM | MOBILIZATION | |
| | | | | | | | | | | | 806 | 16010 | 6 | MNTH | FIELD OFFICE, TYPE B | |

CALCULATED

CHECKED

GENERAL SUMMARY

MAR-23-10.63



bklinsall 02-MAR-2000 3:12PM
4:\Projects\mar\023\1063.000\DGN\gsl.dgn

**CONSTRUCTION INITIATION:**
THE CONTRACTOR SHALL ADVISE THE DISTRICT OFFICE OF COMMUNICATIONS AT 740-363-1251, EXT. 469 OR BY FAX AT 740-369-7437 AND THE DISTRICT TRAFFIC MANAGEMENT ENGINEER AT 740-363-1251, EXT. 323, FOURTEEN (14) DAYS PRIOR TO THE START OF CONSTRUCTION ACTIVITIES. THE CONTRACTOR WILL IMMEDIATELY INFORM THE DISTRICT OFFICE OF COMMUNICATIONS AND THE DISTRICT TRAFFIC MANAGEMENT ENGINEER OF ANY AND ALL DELAYS AND/OR CHANGES REGARDING THE CONSTRUCTION PROJECT. THE PROJECT ENGINEER WILL PROVIDE CLARIFICATION FOR ANY QUESTIONS ABOUT THIS NOTIFICATION REQUIREMENT.

COORDINATION WITH O.D.O.T.'S CENTRAL OHIO TRAFFIC MANAGEMENT PROGRAM (COTMP):

THE CONTRACTOR SHALL NOTIFY THE PROJECT ENGINEER IN WRITING OF ALL TRAFFIC RESTRICTIONS AND UPCOMING MAINTENANCE OF TRAFFIC CHANGES ON A WEEKLY BASIS. WHEN DETOURS ARE PLANNED, THIS NOTIFICATION SHALL BE AT THE PRE CONSTRUCTION MEETING OR 30 DAYS IN ADVANCE ONCE CONSTRUCTION HAS BEGUN. LANE AND RAMP CLOSURES FOR 2 OR MORE WEEKS SHALL BE REPORTED 2 WEEKS IN ADVANCE OF CLOSURE. LANE AND RAMP CLOSURES OF LESS THAN 2 WEEKS DURATION AND MORE THAN 2 DAYS SHALL BE REPORTED AT LEAST 3 WORKING DAYS IN ADVANCE. FOR SHORT TERM LANE OR RAMP CLOSURES (2 DAYS OR LESS) NOTIFICATION SHALL BE MADE AT LEAST 1 WORKING DAY IN ADVANCE. INFORMATION SHALL INCLUDE BUT NOT BE LIMITED TO ALL CONSTRUCTION ACTIVITIES THAT IMPACT TRAFFIC AT PRESENT AND IN THE NEXT 30 DAYS. THE CONTRACTOR SHALL DESIGNATE AN INDIVIDUAL WHO WILL BE RESPONSIBLE FOR PREPARING THIS REPORT AT THE PRE-CONSTRUCTION MEETING. ANY UNFORESEEN IMPACTS TO TRAFFIC SHALL BE REPORTED TO THE PROJECT ENGINEER AS SOON AS POSSIBLE. THE PROJECT ENGINEER SHALL PROVIDE THIS INFORMATION TO COTMP. ALL CONSTRUCTION ACTIVITIES THAT INTERFERE WITH TRAFFIC SHALL BE REPORTED TO COTMP. THIS INFORMATION SHALL BE PROVIDED TO COTMP AT (740) 363-1251 (EXT. 323), OR BY FAX AT (740) 363-6831.

**GENERAL:**
THE CONTRACTOR SHALL SUBMIT IN WRITING A SCHEDULE OF OPERATIONS TO THE ENGINEER (SEE 101.18) AND RECEIVE APPROVAL IN WRITING BEFORE WORK IS STARTED ON THIS PROJECT. ALL TRAFFIC CONTROL DEVICES SHALL BE FURNISHED, ERECTED, MAINTAINED, AND REMOVED BY THE CONTRACTOR IN ACCORDANCE WITH THE OHIO MANUAL OF UNIFORM TRAFFIC CONTROL DEVICES.

**INTERIM COMPLETION DATE:**
AN INTERIM COMPLETION DATE OF OCTOBER 30, 2000 HAS BEEN ESTABLISHED FOR THIS PROJECT. THE MINIMUM AMOUNT OF WORK TO BE COMPLETED BY THIS INTERIM COMPLETION DATE IS THE PARTIAL DEPTH PAVEMENT REPAIR, PLANING, RESURFACING, FINAL PAVEMENT MARKINGS AND RAISED PAVEMENT MARKERS IN THE NORTHBOUND LANES FROM SLD 10.63 (BEGIN PROJECT) TO SLD 19.97

THE PARTIAL DEPTH PAVEMENT REPAIRS MAY BE PERFORMED IN OTHER AREAS OF THE PROJECT PRIOR TO THE INTERIM COMPLETION DATE; HOWEVER, ANY AREA RESURFACED SHALL HAVE ALL FINAL PAVEMENT MARKINGS IN PLACE BEFORE THE WINTER SHUT DOWN PERIOD.

ALL EXISTING LANES SHALL BE OPEN TO TRAFFIC BETWEEN OCTOBER 30, 2000 AND APRIL 15, 2000. OCTOBER 30, 2000 SHALL BE CONSIDERED TO CONSTITUTE AN INTERIM COMPLETION DATE AND LIQUIDATED DAMAGES SHALL BE ASSESSED IN ACCORDANCE WITH 108.07 FOR EACH CALENDAR DAY THAT ALL LANES NOT OPEN AND AVAILABLE TO TRAFFIC.

**UNDERGROUND UTILITIES:**
IT IS THE CONTRACTOR'S RESPONSIBILITY TO HAVE ANY UNDERGROUND UTILITIES MARKED.
OHIO UTILITY PROTECTION SERVICE 1-800-362-2764
NON-MEMBERS MUST BE CALLED DIRECTLY.

**ALIGNMENT AND PROFILE:**
THE WORK PROPOSED BY THIS PROJECT IS FOR THE RESURFACING OF THE EXISTING PAVEMENT. THE ALIGNMENT OF THE EXISTING PAVEMENT WILL NOT BE CHANGED, AND THE PROFILE OF THE PROPOSED SURFACE WILL BE SIMILAR TO THAT OF THE EXISTING PAVEMENT EXCEPT THAT IT MAY BE RAISED AN AMOUNT EQUAL TO THE THICKNESS OF THE RESURFACING COURSE OR COURSES SPECIFIED IN THESE PLANS.

**CONTRACTORS EQUIPMENT - OPERATION AND STORAGE:**
THE CONTRACTOR'S EQUIPMENT SHALL BE OPERATED IN THE DIRECTION OF TRAFFIC WHERE PRACTICAL. EQUIPMENT SHALL HAVE AT LEAST ONE AMBER FLASHING LIGHT. WHEN PARKED ALONG THE HIGHWAY, THE EQUIPMENT SHALL BE LOCATED EITHER A MINIMUM OF THIRTY FEET FROM THE EDGE OF PAVEMENT OR SIX FEET BEHIND GUARDRAIL WITH A MINIMUM OF 125 FEET OF GUARDRAIL PRECEDING THE EQUIPMENT. ALL OTHER EQUIPMENT, INCLUDING PRIVATE VEHICLES, SHALL BE STORED AT AN APPROVED CONTRACTOR'S STORAGE AREA.

**CONTINGENCY QUANTITIES:**
THE CONTRACTOR SHALL NOT ORDER MATERIALS OR PERFORM WORK FOR ITEMS DESIGNATED BY PLAN NOTE TO BE USED "AS DIRECTED BY THE ENGINEER" UNLESS AUTHORIZED BY THE ENGINEER. THE ACTUAL WORK LOCATIONS AND QUANTITIES USED FOR SUCH ITEMS SHALL BE INCORPORATED INTO THE FINAL CHANGE ORDER GOVERNING COMPLETION OF THIS PROJECT.

**PROPOSED NEW CROSSOVERS:**
GREAT CARE SHALL BE TAKEN SO THAT THE EXISTING DRAINAGE STRUCTURES IN THE AREA ADJACENT TO THE PROPOSED NEW CROSSOVERS SHALL NOT BE OBSTRUCT BY THE PLACEMENT OF THE PROPOSED NEW CROSSOVERS.

**EXISTING CROSSOVERS:**
THE DECELERATION TAPER SHALL BE PLANED AT A 1.5" DEPTH FROM THE BEGINNING OF THE TAPER TO AN AVERAGE WIDTH NO GREATER THAN 10'AND THEN TAPER BAKE TO A ZERO WIDTH AT THE END OF THE EXIT RADIUS. THIS AREA SHALL BE PAVED WITH ITEM 858 TYPE A ASPHALT INTERMEDIATE COURSE 19 MM.

ITEM 251 - PARTIAL DEPTH PAVEMENT REPAIR:
THIS ITEM SHALL BE USED WHERE DIRECTED. REPAIRS SHALL BE LOCATED BY THE ENGINEER AND PERFORMED PRIOR TO MILLING THE PAVEMENT. REPAIR AREAS SHALL BE A MINIMUM OF 3 FEET LONG AND THE WIDTH OF THE EXISTING PAVEMENT. THE DEPTH OF REPAIRS SHALL BE APPROXIMATELY 6 INCHES IN DEPTH. THE FOLLOWING QUANTITY HAS BEEN PROVIDED:

| | |
|---|---|
| 195 JOINTS X 24' X 3' X 0.5' / 27 | = 260 CU YARDS |
| ITEM 251 - PARTIAL DEPTH PAVEMENT REPAIR | = 260 CU YARDS |

**ITEM 254 - PAVEMENT PLANING, BITUMINOUS:**
THE CONTRACTOR SHALL BE TOTALLY RESPONSIBLE FOR ANY AND ALL DAMAGE THAT MAY RESULT FROM THE PLANING OPERATION, INCLUDING CASTINGS AND LOOP DETECTORS. THE DEPTH OF PLANING CLOSE TO THE CASTINGS SHALL BE AS DIRECTED, TO ACHIEVE A SMOOTH RIDING FINISHED PAVEMENT. ALL PLANED PAVEMENT SHALL BE RESURFACED WITH 1.75 INCHES OF ITEM 858 - ASPHALT CONCRETE INTERMEDIATE COURSE, 19MM, TYPE A BEFORE BEING REOPENED TO TRAFFIC.

PLANED PAVEMENT SHALL NOT BE EXPOSED TO TRAFFIC PRIOR TO PLACEMENT OF ITEM 858 - ASPHALT CONCRETE INTERMEDIATE COURSE, 19MM TYPE A, BEFORE BEING REOPENED TO TRAFFIC. FAILURE TO COMPLY SHALL SUBJECT THE CONTRACTOR TO LIQUIDATED DAMAGES AS PER SECTION 108.07 OF CMS.

APPROXIMATELY 5000 TONS OF THE GRINDINGS REMOVED BY THIS ITEM SHALL BE HAULED TO THE MARION COUNTY OUTPOST FOR STORAGE. THE EXACT PLACEMENT OF THE GRINDINGS SHALL BE AS DIRECTED BY THE DEPARTMENTS MARION COUNTY MANAGER. THE CONTRACTOR SHALL PROVIDE A MEANS OF CONTINUOUSLY PILING THE GRINDINGS AT THIS LOCATION DURING THE PAVEMENT PLANING OPERATIONS.

**ITEM 407 - TACK COAT:**
THE TACK COAT OPERATION SHALL BE AS DETERMINED AT A PRE-CONSTRUCTION CONFERENCE AS PER 407.05 AND APPLICATION RATES SHALL NOT EXCEED 0.075 GALLON PER SQ. YARD. A COVER AGGREGATE SHALL BE USED IF HEAVY TRACKING OF THE TACK COAT ON TO THE EXISTING PAVEMENT SHOULD ACCURE DURING THE PAVING OPERATIONS. THE COST OF THE COVER AGGREGATE SHALL BE INCLUDED IN THE COST OF THIS ITEM.





I:\Projects\mar\023\1063.000\DGN\gn101.dgn 02-MAR-2000 3:36PM bkinsell

**ITEM 604 - CATCH BASIN, ADJUSTED TO GRADE:**
THIS ITEM OF WORK WILL PROVIDE ALL MATERIAL, LABOR, EQUIPMENT, AND HARDWARE NECESSARY TO ADJUST TO GRADE THE EXISTING CATCH BASIN TO THE PROPOSED ASPHALT ELEVATION. THE FOLLOWING QUANTITY HAS BEEN PROVIDED:

| | |
|---|---|
| SR - 309 INTERCHANGE: | |
| RAMP A | 1 EACH |
| RAMP B | 1 EACH |
| RAMP C | 1 EACH |
| RAMP D | 1 EACH |
| SR - 4 INTERCHANGE: | |
| RAMP A | 1 EACH |
| RAMP B | 1 EACH |
| RAMP C | 1 EACH |
| RAMP D | 1 EACH |
| SR - 423 / 231 INTERCHANGE: | |
| RAMP A | 1 EACH |
| RAMP C | 1 EACH |
| ITEM 604 - CATCH BASIN, ADJUSTED TO GRADE: | = 10 EACH |

**ITEM 614 - WORK ZONE MARKING SIGN:**
THE FOLLOWING QUANTITIES HAVE BEEN PROVIDED:

| | |
|---|---|
| OW-167-36 "NO EDGE LINES" | = 20 EACH |
| ITEM 614 - WORK ZONE MARKING SIGN | = 20 EACH |

**ITEM 614 - TEMPORARY LANE LINE CLASS II:**
THE FOLLOWING QUANTITY HAS BEEN PROVIDED
FRA-23-10.63:

| | |
|---|---|
| SLM 10.63 - 19.97 = 9.34 MI X 2 APPLICATIONS | = 18.68 MI |
| ITEM 614 - TEMPORARY LANE LINE, CLASS II | = 18.68 MI |

**ITEM 614 - MAINTAINING TRAFFIC:**

**COOPERATION BETWEEN CONTRACTORS:**
THE CONTRACTOR'S ATTENTION SHALL BE DIRECTED TO SECTION 105.07 OF THE CMS. DURING THE DURATION OF THIS PROJECT, THERE WILL BE TWO ADDITIONAL ON GOING PROJECTS AT THE INTERCHANGES OF SR-95 (MAR-95-16.77), SR-4 (MAR-4-13.06) AND MAR-23-18.15 THAT WILL BE UNDER CONSTRUCTION.

ONE LANE OF TRAFFIC IN EACH DIRECTION SHALL BE MAINTAINED AT ALL TIMES BY USE OF THE EXISTING AND COMPLETED PAVEMENT. WORK ZONES SHALL BE LIMITED IN LENGTH TO THE AMOUNT OF WORK THAT CAN BE PERFORMED THAT DAY.

NO WORK SHALL BE PERFORMED AND ALL EXISTING LANES SHALL BE OPEN TO TRAFFIC DURING THE FOLLOWING DESIGNATED HOLIDAYS OR EVENTS:

MEMORIAL DAY
INDEPENDENCE DAY
LABOR DAY
THANKSGIVING DAY

THE PERIOD OF TIME THAT THE LANES ARE TO BE OPEN DEPENDS ON THE DAY OF THE WEEK ON WHICH THE HOLIDAY FALLS. THE FOLLOWING SCHEDULE SHALL BE USED TO DETERMINE THE PERIOD:

| DAY OF THE WEEK | TIME ALL LANES MUST BE OPEN TO TRAFFIC |
|---|---|
| SUNDAY | 12 NOON FRIDAY THRU 12 NOON MONDAY |
| MONDAY | 12 NOON FRIDAY THRU 12 NOON TUESDAY |
| TUESDAY | 12 NOON MONDAY THRU 12 NOON WEDNESDAY |
| WEDNESDAY | 12 NOON TUESDAY THRU 12 NOON THURSDAY |
| THURSDAY | 12 NOON WEDNESDAY THRU 12 NOON MONDAY |
| FRIDAY | 12 NOON THURSDAY THRU 12 NOON MONDAY |
| SATURDAY | 12 NOON FRIDAY THRU 12 NOON MONDAY |

SHOULD THE CONTRACTOR FAIL TO MEET ANY OF THESE REQUIREMENTS, THE CONTRACTOR SHALL BE ASSESSED LIQUIDATED DAMAGES IN ACCORDANCE WITH 108.07.

LENGTH AND DURATION OF LANE CLOSURES AND RESTRICTIONS SHALL BE AT THE APPROVAL OF THE ENGINEER. IT IS THE INTENT TO MINIMIZE THE IMPACT TO THE TRAVELING PUBLIC. LANE CLOSURES OR RESTRICTIONS OVER SEGMENTS OF THE PROJECT IN, WHICH NO WORK IS ANTICIPATED WITHIN A REASONABLE TIME FRAME, AS DETERMINED BY THE ENGINEER, SHALL NOT BE PERMITTED. THE LEVEL OF UTILIZATION OF MAINTENANCE OF TRAFFIC DEVICES SHALL BE COMMENSURATE WITH THE WORK IN PROGRESS.

FLOODLIGHTING FOR THE WORK SITE FOR OPERATIONS DURING NIGHTTIME PERIODS SHALL BE ACCOMPLISHED SO THAT THE LIGHTS DO NOT CAUSE GLARE TO THE DRIVERS ON THE HIGHWAY. TO ENSURE THE ADEQUACY OF THE FLOODLIGHT PLACEMENT, THE CONTRACTOR AND THE ENGINEER SHALL DRIVE THROUGH THE WORK SITE EACH NIGHT WHEN THE LIGHTING IN IS PLACE AND OPERATIVE AND PRIOR TO COMMENCING ANY WORK. IF GLARE IS DETECTED, THE LIGHT PLACEMENT AND SHIELDS SHALL BE ADJUSTED TO THE SATISFACTION OF THE ENGINEER BEFORE WORK PROCEEDS.

ALL WORK AND TRAFFIC CONTROL DEVICES SHALL BE IN ACCORDANCE WITH 614 AND OTHER APPLICABLE PORTIONS OF THE SPECIFICATIONS, AS WELL AS THE OHIO MANUAL OF UNIFORM TRAFFIC CONTROL DEVICES. PAYMENT FOR ALL LABOR, EQUIPMENT AND MATERIALS SHALL BE INCLUDED IN THE LUMP SUM CONTRACT PRICE FOR ITEM 614 - MAINTAINING TRAFFIC, UNLESS SEPARATELY ITEMIZED IN THE PLAN.

THE CONTRACTOR SHALL SUBMIT FOR APPROVAL, TO THE DISTRICT SIX MAINTENANCE OF TRAFFIC COORDINATOR, THE CONTRACTOR'S MAINTENANCE OF TRAFFIC PLAN WITH CONSTRUCTION PHASING DESCRIPTIONS, PRIOR TO BEGINNING WORK.

**ITEM - 614 - LAW ENFORCEMENT OFFICER WITH PATROL CAR:**
IN ADDITION TO THE REQUIREMENTS OF 614 AND THE LATEST EDITION OF THE OHIO MANUAL OF UNIFORM TRAFFIC CONTROL DEVICES (OMUTCD), A UNIFORMED LAW ENFORCEMENT OFFICER AND OFFICIAL PATROL CAR WITH WORKING TOP MOUNTED EMERGENCY FLASHING LIGHTS SHALL BE PROVIDED FOR CONTROLLING TRAFFIC FOR THE FOLLOWING TASKS:

1. FOR LANE CLOSURES: DURING INITIAL SET-UP AND TEAR DOWN PERIODS, SUBSTANTIAL SHIFTS OF A CLOSURE POINT OR WHEN NEW LANE CLOSURE ARRANGEMENTS ARE INITIATED.

2. DURING THE ENTIRE ADVANCE PREPARATION AND CLOSURE SEQUENCE WHERE COMPLETE BLOCKAGE OF TRAFFIC IS REQUIRED.

LAW ENFORCEMENT OFFICERS (L.E.O.) SHOULD NOT BE USED WHERE THE OMUTCD INTENDS THAT FLAGGERS BE USED. THE LAW ENFORCEMENT OFFICERS SHALL BE CONSIDERED AN EMPLOYEE OF THE CONTRACTOR AND THE CONTRACTOR SHALL BE RESPONSIBLE FOR THEIR ACTIONS. ALTHOUGH THE CONTRACTOR EMPLOYS THEM, THE PROJECT ENGINEER SHALL HAVE CONTROL OVER THEIR PLACEMENT. THE OFFICIAL PATROL CAR SHALL BE A PUBLIC SAFETY VEHICLE AS REQUIRED THE OHIO REVISED CODE.

THE CONTRACTOR SHALL MAKE ARRANGEMENTS FOR THESE SERVICES WITH:
THE OHIO HIGHWAY PATROL
614-466-2660

LAW ENFORCEMENT OFFICERS WITH PATROL CAR REQUIRED BY THE TRAFFIC MAINTENANCE TASKS ABOVE SHALL BE PAID FOR ON A UNIT PRICE HOURLY BASIS UNDER ITEM SPECIAL - LAW ENFORCEMENT OFFICER WITH PATROL CAR.

IF THE CONTRACTOR WISHES TO UTILIZE THE L.E.O. FOR FLAGGING AND TRAFFIC CONTROL OTHER THAN FOR THAT REQUIRED IN THESE PLANS, THE CONTRACTOR MAY DO SO AT THE CONTRACTOR'S OWN EXPENSE. PAYMENT FOR THE EXCESS HOURS ABOVE THE CONTRACT REQUIREMENTS WILL BE INCLUDED UNDER ITEM 614-MAINTAINING TRAFFIC.

THE FOLLOWING ESTIMATED QUANTITIES HAVE BEEN PROVIDED:
ITEM SPECIAL - L.E.O. WITH PATROL CAR = 1,200 HOURS

**ITEM 614 - PORTABLE CHANGEABLE MESSAGE SIGN, AS PER PLAN:**
THE CONTRACTOR SHALL FURNISH, INSTALL, MAINTAIN, AND REMOVE WHEN NO LONGER NEEDED, CHANGEABLE MESSAGE SIGNS, ON SITE, FOR THE DURATION OF THE PROJECT. THE SIGN SHALL BE OF A TYPE SHOWN ON A LIST OF APPROVED PCMS UNITS MAINTAINED BY THE DIRECTOR. ONLY CLASS I OR II SIGNS WILL BE PERMITTED.

EACH SIGN SHALL BE TRAILER MOUNTED AND EQUIPPED WITH A FUNCTIONAL DIMMING MECHANISM TO DIM THE SIGN DURING DARKNESS AND A TEMPER AND VANDAL PROOF ENCLOSURE. EACH SIGN SHALL BE PROVIDED WITH APPROPRIATE TRAINING AND OPERATION INSTRUCTIONS TO ENABLE ON-SITE PERSONNEL TO OPERATE AND TROUBLE SHOOT THE UNIT. THE SIGN SHALL ALSO BE CAPABLE OF BEING POWERED BY AN ELECTRICAL SERVICE DROP FROM A LOCAL UTILITY COMPANY.





bkinsell 02-MAR-2000 3:36PM
h:\Projects\mar\023\063.000\DGN\gn02.dgn

ONE PCMS SHALL BE PLACED ON US-23 ON EITHER SIDE OF US-23 AT BOTH ENDS OF THE PROJECT. THE EXACT PLACEMENT OF THE SIGNS SHALL BE AS DIRECTED BY THE ENGINEER. THE MESSAGES SHALL BE AS DIRECTED BY THE ENGINEER.

PLACEMENT, OPERATION, MAINTENANCE, AND ALL ACTIVATION OF THE SIGNS BY THE CONTRACTOR SHALL BE AS DIRECTED BY THE ENGINEER. THE PCMS SHALL BE LOCATED IN A HIGHLY VISIBLE POSITION YET PROTECTED FROM TRAFFIC. THE CONTRACTOR SHALL, AT THE DIRECTION OF THE ENGINEER, RELOCATE THE PCMS TO IMPROVE VISIBILITY OR ACCOMMODATE CHANGED CONDITIONS. WHEN NOT IN USE, THE PCMS WILL BE OFF, FACING AWAY FROM ALL TRAFFIC, AND SHALL DISPLAY ONE OR MORE HIGH INTENSITY YELLOW REFLECTIVE SHEETING SURFACES OF 9" BY 15" MINIMUM, FACING TRAFFIC.

THE ENGINEER SHALL BE PROVIDED ACCESS TO EACH SIGN UNIT AND SHALL BE PROVIDED WITH APPROPRIATE TRAINING AND OPERATION INSTRUCTIONS TO ENABLE ODOT PERSONNEL TO OPERATE AND TROUBLE SHOOT THE UNIT AND TO REVISE SIGN MESSAGES, IF NEEDED.
THE SIGN SHALL HAVE THE CAPABILITY TO STORE UP TO 99 MESSAGES. MESSAGE MEMORY OR PRE-PROGRAMMED DISPLAYS SHALL NOT BE LOST AS A RESULT OF POWER FAILURES TO THE ON BOARD COMPUTER. THE SIGN LEGEND SHALL BE CAPABLE OF BEING CHANGED IN THE FIELD. THREE-LINE PRESENTATION FORMATS WITH UP TO SIX MESSAGE PHASES SHOULD BE SUPPORTED, BUT NORMALLY, NOT MORE THAT TWO MESSAGE PHASES SHOULD BE EMPLOYED, ALTHOUGH THREE PHASES MAY BE USED IN UNUSUAL CONDITIONS. PCMS FORMAT SHALL PERMIT THE COMPLETE MESSAGE FOR EACH PHASE TO BE READ AT LEAST ONCE.

THE PCMS SHALL CONTAIN AN ACCURATE CLOCK AND PROGRAMMING LOGIC, WHICH WILL ALLOW THE SIGN TO BE ACTIVATED, DEACTIVATED, OR MESSAGES CHANGED AUTOMATICALLY AT DIFFERENT TIMES FOR DIFFERENT DAYS OF THE WEEK.

THE CONTRACTOR IN ACCORDANCE WITH THE PROVISIONS OF 614.03 SHALL MAINTAIN THE PCMS UNIT IN GOOD WORKING ORDER. THE CONTRACTOR SHALL, PRIOR TO ACTIVATING THE UNIT, MAKE ARRANGEMENTS WITH AN AUTHORIZED SERVICE AGENT FOR THE PCMS TO ASSURE PROMPT SERVICE IN THE EVENT OF A FAILURE. ANY FAILURE SHALL NOT RESULT IN AN ORDER TO STOP WORK AND OPEN ALL TRAFFIC LANES AND/OR IN THE DEPARTMENT TAKING APPROPRIATE ACTION TO SAFELY CONTROL TRAFFIC AND THE ENTIRE COST TO CONTROL TRAFFIC ACCRUED BY THE DEPARTMENT WILL BE DEDUCTED FROM MONEYS DUE, OR TO BECOME DUE THE CONTRACTOR ON THE CONTRACT.

THE CONTRACTOR SHALL BE RESPONSIBLE FOR 24 HOURS PER DAY OPERATIONS AND MAINTENANCE OF THESE SIGNS ON THE PROJECT FOR THE DURATION OF THE PHASES WHEN THE PLAN REQUIRES THEIR USE.

THE REQUIREMENT TO FURNISH, INSTALL, MAINTAIN, AND REMOVE A PCMS UNIT ON THIS PROJECT SHALL NOT IN ANY WAY RELIEVE THE CONTRACTOR OF ITS RESPONSIBILITIES AS OUTLINED IN 104.04.

PAYMENT FOR THE ABOVE DESCRIBED ITEM SHALL BE AT THE CONTRACT BID PRICE PER MONTH FOR EACH ITEM 614 - PORTABLE CHANGEABLE MESSAGE SIGN, AS PER PLAN AND SHALL INCLUDE ALL LABOR, MATERIALS, EQUIPMENT, FUELS, LUBRICATING OILS, SOFTWARE, HARDWARE, AND INCIDENTALS TO PERFORM THE ABOVE DESCRIBED WORK.

THE FOLLOWING QUANTITY HAS BEEN PROVIDED:
ITEM 614 - PORTABLE CHANGEABLE MESSAGE SIGN:
2 PCMS @ 6 MONTHS =12 SMTH

**ITEM 618 - RUMBLE STRIPS, TYPE 2:**
THE FOLLOWING QUANTITY HAS BEEN PROVIDED:
LENGTH OF PAVING FOR MAINLINE
EASTBOUND USR 23 = 49,315.5 LF
WESTBOUND USR 23 =49,315.5 LF
TOTAL = 98,631 LF
TOTAL LENGTH OF PAVING 98,631 LF X 2 SIDES = 197,262 LF
ITEM 618 - RUMBLE STRIPS, TYPE 2 = 197,262 LF

**ITEM 623 - CONSTRUCTION LAYOUT STAKES, AS PER PLAN:**
THIS ITEM SHALL CONSIST OF STATIONING USING 3 FT LATH STAKES. THE STAKES SHALL BE SPACED AT 100 FT INTERVALS AND SHALL EXTEND THROUGHOUT THE LENGTH OF THE PROJECT AND THROUGHOUT THE LENGTH OF ALL RAMPS. PLACEMENT OF THE STAKES SHALL BE AS DIRECTED BY THE ENGINEER. THE CONTRACTOR IS RESPONSIBLE FOR REPLACING ANY DAMAGED OR MISSING STAKES.

CONSTRUCTION LAYOUT STAKES, AS PER PLAN WILL BE PAID FOR AT THE CONTRACT LUMP SUM BID, WHICH PRICE SHALL BE FULL COMPENSATION FOR ALL SERVICES, MATERIALS, LABOR, EQUIPMENT, TOOLS, AND INCIDENTALS, INCLUDING THE REMOVAL, NECESSARY TO COMPLETE THIS ITEM.

**ITEM 630 - SIGNS / FLAT SHEET:**
THE FOLLOWING QUANTITIES HAVE BEEN PROVIDED.
R - 19 - 24 2@ EACH PROPOSED CROSSOVER (4 LOCATIONS) = 8
24 X 24 /144 X 8 =32 SF
R - 123 - 36 2@ EACH PROPOSED CROSSOVER (4 LOCATIONS) = 8
36 X 36 /144 X 8 =72 SF
ITEM 630 - SIGNS / FLAT SHEET =104 SF

**ITEM 630 - GROUND MOUNTED SUPPORT, NO. 3 POST, A.P.P.:**
THE POST SUPPORT SHALL BE THE TYPE S (SQUARE POST) WITH DIE CUT KNOCKOUTS WITH SQUARE POST ANCHOR BASE INSTALLATION, AS PER SCD TC - 41.20M.
20 LF @ 8 LOCATIONS = 120 LF

**ITEM 659 - SEEDING AND MULCHING:**
THE QUANTITIES FOR THIS ITEM ARE CALCULATED FOR THE SOIL AREAS BETWEEN THE NORTH BOUND AND SOUTH BOUND EDGE OF PAVEMENT AS SHOWN ON PLAN PAGE J2 / 17.

SEEDING AREA = (565 X 45) / 9 = 2,825 SY
2'825 SY X 4 LOCATIONS = 11,300 SY
ITEM 659 - SEEDING AND MULCHING = 11,300 SY

**ITEM 659 - COMMERCIAL FERTILIZER:**
SEEDING AREA = 11,300 SY X 9 / 1000 X 20 / 2000 = 1.01 TON
ITEM 659 - COMMERCIAL FERTILIZER 1.01 TON

**ITEM 659 - WATER:**
SEEDING AREA = 11,300 SY X 9 / 1000 X 120 GAL = 12,204 GAL
ITEM 659 - WATER 12 M/GAL

**ITEM 877 - TEMPORARY PERIMETER FILTER FABRIC FENCE:**
THE TEMPORARY PERIMETER FILTER FABRIC FENCE SHALL BE PLACED AS DIRECTED BY THE ENGINEER.

PROPOSED NEW CROSS-OVERS:
40 LF AT EACH PROPOSED CROSS-OVER (4 LOCATIONS) = 160 LF
ITEM 877 - TEMP. PERIMETER FILTER FABRIC FENCE = 160 LF

GENERAL NOTES

MAR-23-10.63



I:\Projects\mcr\023\061.000\DGN\gn03.dgn 02-MAR-2000 3:36PM bkinsell

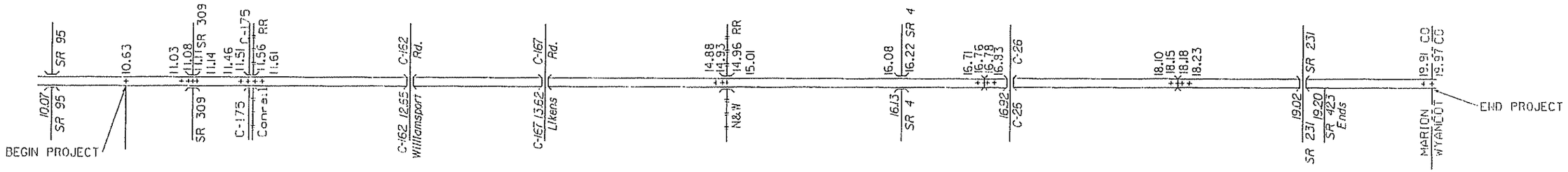


# MAINLINE TYPICAL # 1

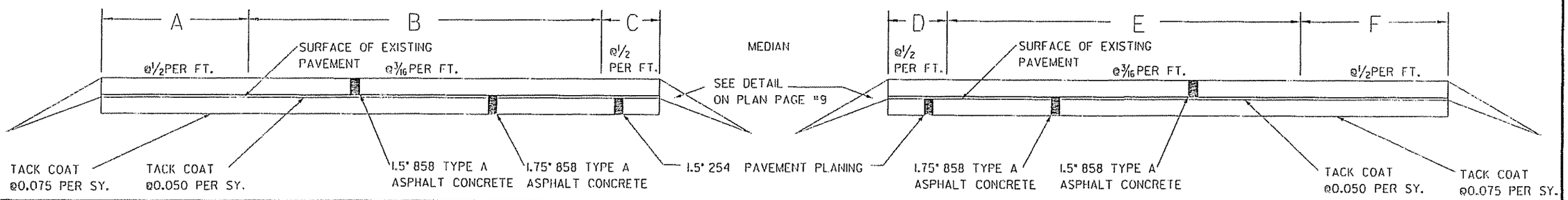


| LOCATION | | | | | | | | INTERMEDIATE PAVEMENT | | | | | | | | | | | | SURFACE PAVEMENT | | | | | | | | | | | | REMARKS |
|---|---|---|---|---|---|---|---|---|---|---|---|---|---|---|---|---|---|---|---|---|---|---|---|---|---|---|---|---|---|---|---|---|
| | | | | | | | | | | | | | | | 254 | | 407 | 858 | | | | | | | | | 407 | 858 | | 617 | | |
| PART | COUNTY | ROUTE | LOG BEG | LOG END | LENGTH | | TYPICAL | AVERAGE PAVEMENT WIDTHS | | | | | | AREA | PAVEMENT PLANING, BITUM. | | TACK COAT 0.075 GAL/SQ Y | AC INT COURSE 19 MM TYPE A | | AVERAGE PAVEMENT WIDTHS | | | | | | AREA | TACK COAT 0.050 GAL/SQ Y | AC SURF COURSE 12.5 MM TYPE A | | COMPACT AGG TYPE A | | |
| | | | | | | | | A | B | C | D | E | F | | AVG DEP | | | AVG THK | | A | B | C | D | E | F | | | AVG THK | | AVG THK | | |
| | | | MI | MI | MI | LF | | FT | FT | FT | FT | FT | FT | SY | IN | SY | GAL | IN | CY | FT | FT | FT | FT | FT | FT | SY | GAL | IN | CY | IN | CY | |
| 1 | MAR | 23 | 10.63 | 19.97 | 9.34 | 49315 | 1 | 10.0 | 24.0 | 4.0 | 4.0 | 24.0 | 10.0 | 416439 | 1.50 | 416439 | 31233 | 1.75 | 20244 | 10.0 | 24.0 | 4.0 | 4.0 | 24.0 | 10.0 | 416439 | 20822 | 1.50 | 17352 | 2.50 | 3044 | NORTH AND SOUTH BOUND MAINLINE |
| 1 | MAR | 23 | 11.08 | L/R | | 430 | 1 | 10.0 | 24.0 | 4.0 | 4.0 | 24.0 | 10.0 | 3631 | 1.50 | -3631 | -272 | 1.75 | -177 | 10.0 | 24.0 | 4.0 | 4.0 | 24.0 | 10.0 | 3631 | -182 | 1.50 | -151 | 2.50 | -28 | DEDUCT FOR MAR-23-11.08 L/R |
| 1 | MAR | 23 | 11.51 | L/R | | 668 | 1 | 10.0 | 24.0 | 4.0 | 4.0 | 24.0 | 10.0 | 5641 | 1.50 | -5641 | -423 | 1.75 | -274 | 10.0 | 24.0 | 4.0 | 4.0 | 24.0 | 10.0 | 5641 | -282 | 1.50 | -235 | 2.50 | -42 | DEDUCT FOR MAR-23-11.51 L/R |
| 1 | MAR | 23 | 14.93 | L/R | | 322 | 1 | 10.0 | 24.0 | 4.0 | 4.0 | 24.0 | 10.0 | 2719 | 1.50 | -2719 | -204 | 1.75 | -132 | 10.0 | 24.0 | 4.0 | 4.0 | 24.0 | 10.0 | 2719 | -136 | 1.50 | -113 | 2.50 | -20 | DEDUCT FOR MAR-23-14.93 L/R |
| 1 | MAR | 23 | 16.13 | L/R | | 412 | 1 | 10.0 | 24.0 | 4.0 | 4.0 | 24.0 | 10.0 | 3479 | 1.50 | -3479 | -261 | 1.75 | -169 | 10.0 | 24.0 | 4.0 | 4.0 | 24.0 | 10.0 | 3479 | -174 | 1.50 | -145 | 2.50 | -24 | DEDUCT FOR MAR-23-16.13 L/R |
| 1 | MAR | 23 | 16.76 | L/R | | 172 | 1 | 10.0 | 24.0 | 4.0 | 4.0 | 24.0 | 10.0 | 1452 | 1.50 | -1452 | -109 | 1.75 | -71 | 10.0 | 24.0 | 4.0 | 4.0 | 24.0 | 10.0 | 1452 | -73 | 1.50 | -61 | 2.50 | -10 | DEDUCT FOR MAR-23-16.76 L/R |
| 1 | MAR | 23 | 18.15 | L/R | | 396 | 1 | 10.0 | 24.0 | 4.0 | 4.0 | 24.0 | 10.0 | 3344 | 1.50 | -3344 | -251 | 1.75 | -163 | 10.0 | 24.0 | 4.0 | 4.0 | 24.0 | 10.0 | 3344 | -167 | 1.50 | -139 | 2.50 | -24 | DEDUCT FOR MAR-23-18.15 L/R |
| TOTALS | | | | | | | | | | | | | | 436705 | | 396173 | 29713 | | 19258 | | | | | | | 436705 | 19808 | | 16508 | | 2896 | |

PAVEMENT SUBSUMMARY AND DETAILS

MAR-23-10.63



bkinsell 02-MAR-2000 3:12PM
E:\Projects\mar\023\1063.000\DGN\gal01.dgn

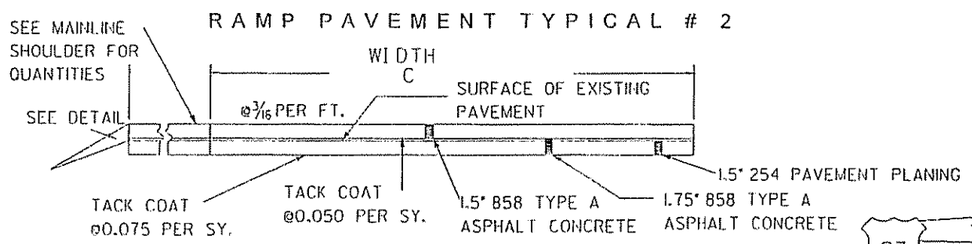


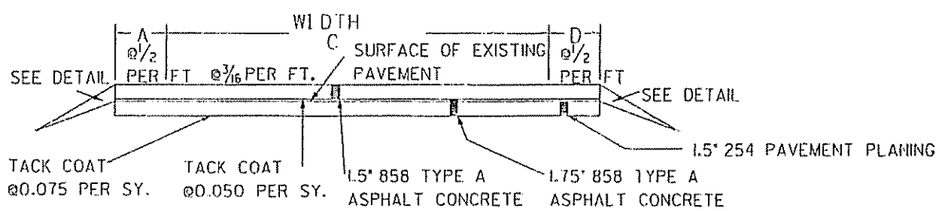


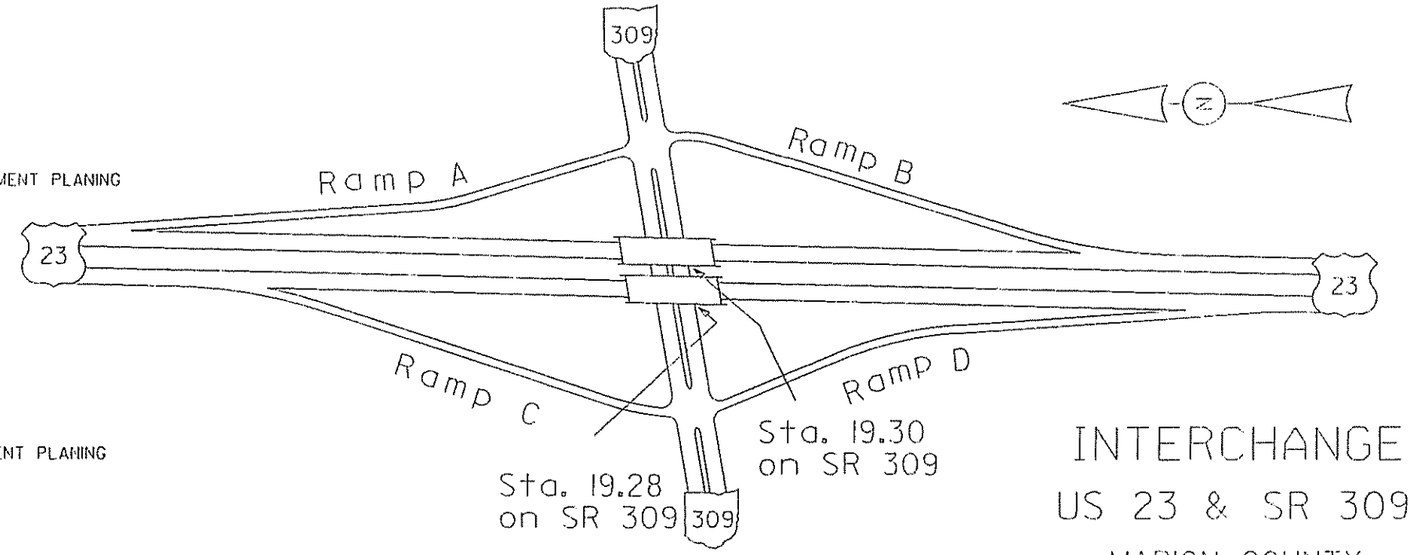


# INTERCHANGE
## US 23 & SR 309
MARION COUNTY

* B / C = VARYING WIDTH PAVEMENT *

| LOCATION | | | | | | | | INTERMEDIATE PAVEMENT | | | | | | | | | | | | | | | | SURFACE PAVEMENT | | | | | | | | | | | | REMARKS |
|---|---|---|---|---|---|---|---|---|---|---|---|---|---|---|---|---|---|---|---|---|---|---|---|---|---|---|---|---|---|---|---|---|---|---|---|---|
| PART | COUNTY | ROUTE | LENGTH | | | | TYPICAL | AVERAGE PAVEMENT WIDTHS | | | | | | AREA | 254 PAVEMENT PLANING, BITUM. | | 407 TACK COAT 0.075 GAL/SQ Y | 858 AC INT COURSE 19 MM TYPE A | | AVERAGE PAVEMENT WIDTHS | | | | | | AREA | 407 TACK COAT 0.050 GAL/SQ Y | 858 AC SURF COURSE 12.5 MM TYPE A | | 617 COMPACT AGG TYPE A | | |
| | | | | | | | | A | B | C | D | E | F | | AVG DEP | | | AVG THK | | A | B | C | D | E | F | | | AVG THK | | AVG THK | | |
| | | | MI | MI | MI | LF | | FT | FT | FT | FT | FT | FT | SY | IN | SY | GAL | IN | CY | FT | FT | FT | FT | FT | FT | SY | GAL | IN | CY | IN | CY | |
| 1 | MAR | 23 | RAMP A | 309 | | 111 | 9 | 3.0 | 16.0 | 18.0 | 3.0 | | | 284 | 1.50 | 284 | 21 | 1.75 | 14 | 3.0 | 16.0 | 18.0 | 3.0 | | | 284 | 14 | 1.50 | 12 | 2.50 | 4 | RAMP TAPER (INTERSECTION OF 309) |
| 1 | MAR | 23 | | | | 586 | 3 | 3.0 | | 16.0 | 3.0 | | | 1432 | 1.50 | 1432 | 107 | 1.75 | 70 | 3.0 | | 16.0 | 3.0 | | | 1432 | 72 | 1.50 | 60 | 2.50 | 18 | RAMP |
| 1 | MAR | 23 | | | | 150 | 9 | 3.0 | 16.0 | 19.0 | 3.0 | | | 392 | 1.50 | 392 | 29 | 1.75 | 19 | 3.0 | 16.0 | 19.0 | 3.0 | | | 392 | 20 | 1.50 | 16 | 2.50 | 4 | RAMP TAPER |
| 1 | MAR | 23 | | | | 300 | 8 | | 25.0 | 32.5 | | | | 958 | 1.50 | 958 | 72 | 1.75 | 47 | | 25.0 | 32.5 | | | | 958 | 48 | 1.50 | 40 | | | GORE AREA / ACCELERATION LANE |
| 1 | MAR | 23 | | | | 1389 | 8 | | 0.0 | 25.0 | | | | 1929 | 1.50 | 1929 | 145 | 1.75 | 94 | | 0.0 | 25.0 | | | | 1929 | 96 | 1.50 | 80 | | | ACCELERATION LANE |
| 1 | MAR | 23 | RAMP B | 309 | | 100 | 8 | | 0.0 | 12.0 | | | | 67 | 1.50 | 67 | 5 | 1.75 | 3 | | 0.0 | 12.0 | | | | 67 | 3 | 1.50 | 3 | | | DECELERATION LANE |
| 1 | MAR | 23 | | | | 700 | 8 | | 12.0 | 39.0 | | | | 1983 | 1.50 | 1983 | 149 | 1.75 | 96 | | 12.0 | 39.0 | | | | 1983 | 99 | 1.50 | 83 | | | GORE AREA / DECELERATION LANE |
| 1 | MAR | 23 | | | | 100 | 9 | 3.0 | 14.0 | 16.0 | 3.0 | | | 233 | 1.50 | 233 | 17 | 1.75 | 11 | 3.0 | 14.0 | 16.0 | 3.0 | | | 233 | 12 | 1.50 | 10 | 2.50 | 4 | RAMP TAPER |
| 1 | MAR | 23 | | | | 841 | 3 | 3.0 | | 16.0 | 3.0 | | | 2056 | 1.50 | 2056 | 154 | 1.75 | 100 | 3.0 | | 16.0 | 3.0 | | | 2056 | 103 | 1.50 | 86 | 2.50 | 26 | RAMP |
| 1 | MAR | 23 | | | | 100 | 9 | 3.0 | 16.0 | 18.0 | 3.0 | | | 256 | 1.50 | 256 | 19 | 1.75 | 12 | 3.0 | 16.0 | 18.0 | 3.0 | | | 256 | 13 | 1.50 | 11 | 2.50 | 4 | RAMP TAPER (INTERSECTION OF 309) |
| 1 | MAR | 23 | RAMP C | 309 | | 100 | 8 | | 0.0 | 12.0 | | | | 67 | 1.50 | 67 | 5 | 1.75 | 3 | | 0.0 | 12.0 | | | | 67 | 3 | 1.50 | 3 | | | DECELERATION LANE |
| 1 | MAR | 23 | | | | 245 | 2 | | | 12.0 | | | | 327 | 1.50 | 327 | 25 | 1.75 | 16 | | | 12.0 | | | | 327 | 16 | 1.50 | 14 | | | DECELERATION LANE |
| 1 | MAR | 23 | | | | 102 | 8 | | 12.0 | 14.0 | | | | 147 | 1.50 | 147 | 11 | 1.75 | 7 | | 12.0 | 14.0 | | | | 147 | 7 | 1.50 | 6 | | | GORE AREA / DECELERATION LANE |
| 1 | MAR | 23 | | | | 330 | 8 | | 14.0 | 39.0 | | | | 972 | 1.50 | 972 | 73 | 1.75 | 47 | | 14.0 | 39.0 | | | | 972 | 49 | 1.50 | 40 | | | GORE AREA / DECELERATION LANE |
| 1 | MAR | 23 | | | | 100 | 9 | 3.0 | 14.0 | 16.0 | 3.0 | | | 233 | 1.50 | 233 | 17 | 1.75 | 11 | 3.0 | 14.0 | 16.0 | 3.0 | | | 233 | 12 | 1.50 | 10 | 2.50 | 4 | RAMP TAPER |
| 1 | MAR | 23 | | | | 797 | 3 | 3.0 | | 16.0 | 3.0 | | | 1948 | 1.50 | 1948 | 146 | 1.75 | 95 | 3.0 | | 16.0 | 3.0 | | | 1948 | 97 | 1.50 | 81 | 2.50 | 24 | RAMP |
| 1 | MAR | 23 | | | | 100 | 9 | 3.0 | 16.0 | 18.0 | 3.0 | | | 256 | 1.50 | 256 | 19 | 1.75 | 12 | 3.0 | 16.0 | 18.0 | 3.0 | | | 256 | 13 | 1.50 | 11 | 2.50 | 4 | RAMP TAPER (INTERSECTION OF 309) |
| 1 | MAR | 23 | RAMP D | 309 | | 445 | 9 | 3.0 | 16.0 | 19.0 | 3.0 | | | 1162 | 1.50 | 1162 | 87 | 1.75 | 56 | 3.0 | 16.0 | 19.0 | 3.0 | | | 1162 | 58 | 1.50 | 48 | 2.50 | 14 | RAMP TAPER (INTERSECTION OF 309) |
| | | | | | | 628 | 3 | 3.0 | | 16.0 | 3.0 | | | 1535 | 1.50 | 1535 | 115 | 1.75 | 75 | 3.0 | | 16.0 | 3.0 | | | 1535 | 77 | 1.50 | 64 | 2.50 | 20 | RAMP |
| | | | | | | 450 | 9 | 3.0 | 16.0 | 18.0 | 3.0 | | | 1000 | 1.50 | 1000 | 75 | 1.75 | 49 | | 16.0 | 18.0 | | | | 850 | 43 | 1.50 | 35 | | | GORE AREA / ACCELERATION LANE |
| | | | | | | 1667 | 8 | | 0.0 | 25.0 | | | | 2315 | 1.50 | 2315 | 174 | 1.75 | 113 | | 0.0 | 25.0 | | | | 2315 | 116 | 1.50 | 96 | | | ACCELERATION LANE |
| TOTALS | | | | | | | | | | | | | | 19552 | | 19552 | 1465 | | 950 | | | | | | | 19402 | 971 | | 809 | | 126 | |

PAVEMENT SUBSUMMARY AND DETAILS

MAR-23-10.63

7/17

bkinsell 02-MAR-2000 3:12PM
E:\Projects\mar\023\1063.000\DGN\rgd02.dgn

## WILLIAIMSPORT RD RAMP PAVEMENT TYPICAL # 5

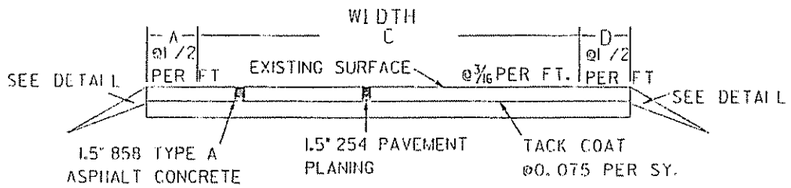


## WILLIAMSPORT RD. RAMP PAVEMENT TYPICAL # 6

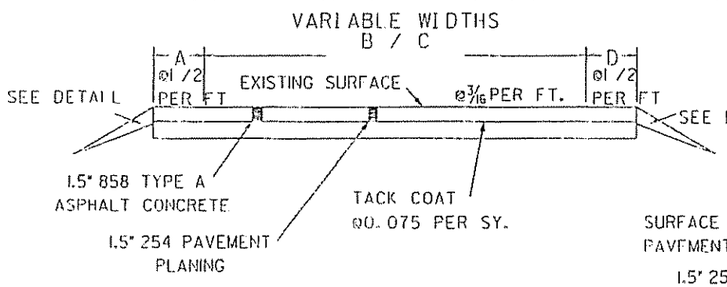


## WILLIAMSPORT RD. ACCELERATION & DECELERATION LANE DETAIL # 7

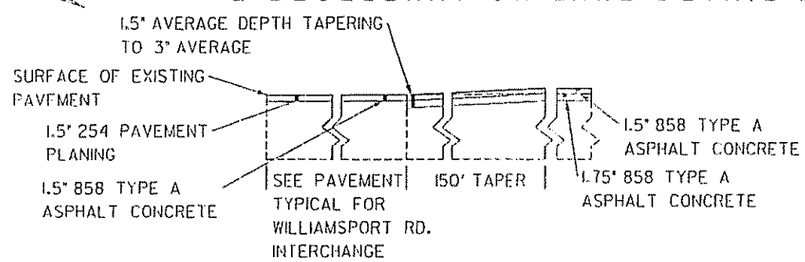


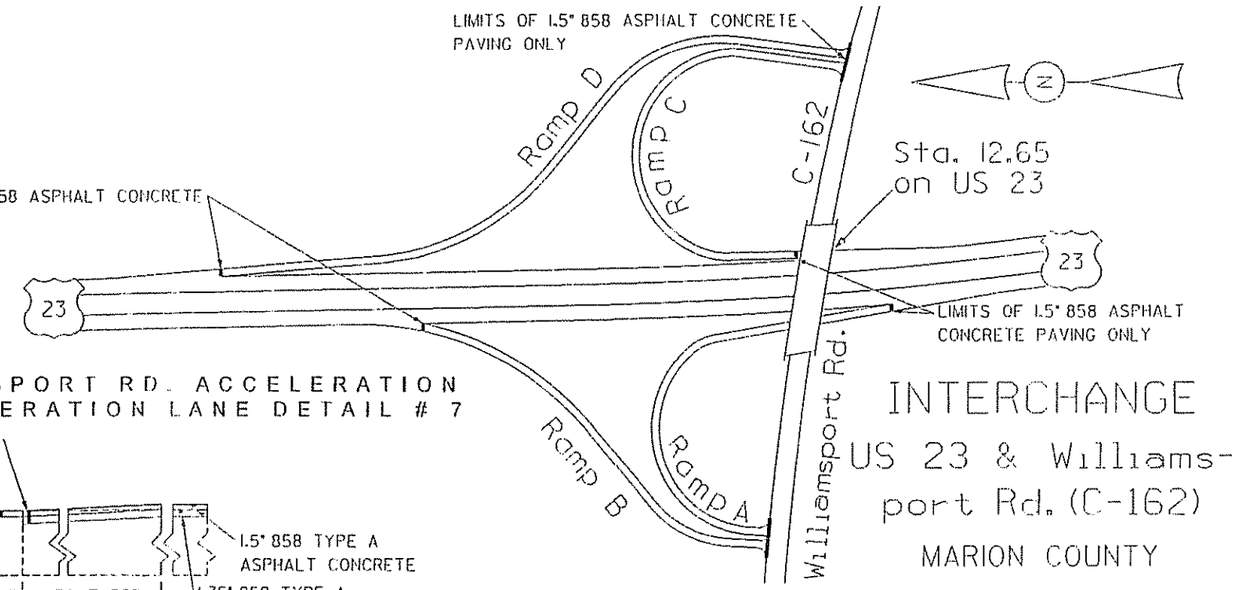


* B / C = VARYING WIDTH PAVEMENT *

| LOCATION | | | | | | | | INTERMEDIATE PAVEMENT | | | | | | | | | | | | SURFACE PAVEMENT | | | | | | | | | | | REMARKS |
|---|---|---|---|---|---|---|---|---|---|---|---|---|---|---|---|---|---|---|---|---|---|---|---|---|---|---|---|---|---|---|---|
| | | | | | | | | | | | | | | | 254 | | 407 | 858 | | | | | | | | | 407 | 858 | | 617 | | |
| PART | COUNTY | ROUTE | | | LENGTH | | TYPICAL | AVERAGE PAVEMENT WIDTHS | | | | | | AREA | PAVEMENT PLANING, BITUM. | | TACK COAT 0.075 GAL/SQ Y | AC INT COURSE 19 MM TYPE A | | AVERAGE PAVEMENT WIDTHS | | | | | | AREA | TACK COAT 0.050 GAL/SQ Y | AC SURF COURSE 12.5 MM TYPE A | | COMPACT AGG TYPE A | | |
| | | | | | | | | A | B | C | D | E | F | | AVG DEP | | | AVG THK | | A | B | C | D | E | F | | | AVG THK | | AVG THK | | |
| | | | MI | MI | MI | LF | | FT | FT | FT | FT | FT | FT | SY | IN | SY | GAL | IN | CY | FT | FT | FT | FT | FT | FT | SY | GAL | IN | CY | IN | CY | |
| 1 | MAR | 23 | RAMP A | C-162 | | 95 | 6 | 3.0 | 0.0 | 28.0 | 3.0 | | | 211 | 1.50 | 211 | 16 | | | 3.0 | 0.0 | 28.0 | 3.0 | | | 211 | | 1.50 | 9 | 2.50 | 2 | RAMP TAPER ( INTERSECTION OF C-162) |
| 1 | MAR | 23 | | | | 30 | 5 | 3.0 | | 18.5 | 3.0 | | | 82 | 1.50 | 82 | 6 | | | 3.0 | | 18.5 | 3.0 | | | 82 | | 1.50 | 3 | 2.50 | 0 | RAMP |
| 1 | MAR | 23 | | | | 252 | 5 | 3.0 | | 17.0 | 3.0 | | | 644 | 1.50 | 644 | 48 | | | 3.0 | | 17.0 | 3.0 | | | 644 | | 1.50 | 27 | 2.50 | 8 | RAMP |
| 1 | MAR | 23 | | | | 517 | 5 | 3.0 | | 16.0 | 3.0 | | | 1264 | 1.50 | 1264 | 95 | | | 3.0 | | 16.0 | 3.0 | | | 1264 | | 1.50 | 53 | 2.50 | 16 | RAMP |
| 1 | MAR | 23 | | | | 426 | 8/7 | | 14.0 | 18.0 | | | | 757 | 1.50 | 757 | 57 | 1.75 | 37 | | 14.0 | 18.0 | | | | 757 | 38 | 1.50 | 32 | | | RAMP TAPER |
| 1 | MAR | 23 | | | | 426 | 8 | | 11.0 | 20.0 | | | | 734 | 1.50 | 734 | 55 | 1.75 | 36 | | 11.0 | 20.0 | | | | 734 | 37 | 1.50 | 31 | | | GORE AREA / ACCELERATION LANE |
| 1 | MAR | 23 | | | | 1204 | 8 | | 0.0 | 25.0 | | | | 1672 | 1.50 | 1672 | 125 | 1.75 | 81 | | 0.0 | 25.0 | | | | 1672 | 84 | 1.50 | 70 | | | ACCELERATION LANE |
| 1 | MAR | 23 | RAMP B | C-162 | | 100 | 8 | | 0.0 | 12.0 | | | | 67 | 1.50 | 67 | 5 | 1.75 | 3 | | 0.0 | 12.0 | | | | 67 | 3 | 1.50 | 3 | | | DECELERATION LANE |
| 1 | MAR | 23 | | | | 246 | 2 | | | 12.0 | | | | 328 | 1.50 | 328 | 25 | 1.75 | 16 | | | 12.0 | | | | 328 | 16 | 1.50 | 14 | | | DECELERATION LANE |
| 1 | MAR | 23 | | | | 454 | 8/7 | | 12.0 | 39.0 | | | | 1286 | 1.50 | 1286 | 96 | 1.75 | 63 | | 12.0 | 39.0 | | | | 1286 | 64 | 1.50 | 54 | | | GORE AREA / DECELERATION LANE |
| 1 | MAR | 23 | | | | 870 | 5 | 3.0 | | 16.0 | 3.0 | | | 2127 | 1.50 | 2127 | 160 | | | 3.0 | | 16.0 | 3.0 | | | 2127 | | 1.50 | 89 | 2.50 | 26 | RAMP |
| 1 | MAR | 23 | | | | 268 | 5 | 3.0 | | 17.0 | 3.0 | | | 685 | 1.50 | 685 | 51 | | | 3.0 | | 17.0 | 3.0 | | | 685 | | 1.50 | 29 | 2.50 | 8 | RAMP |
| 1 | MAR | 23 | | | | 30 | 5 | 3.0 | | 18.5 | 3.0 | | | 82 | 1.50 | 82 | 6 | | | 3.0 | | 18.5 | 3.0 | | | 82 | | 1.50 | 3 | 2.50 | 1 | RAMP |
| 1 | MAR | 23 | | | | 55 | 6 | 3.0 | 0.0 | 45.0 | 3.0 | | | 174 | 1.50 | 174 | 13 | | | 3.0 | 0.0 | 45.0 | 3.0 | | | 174 | | 1.50 | 7 | 2.50 | 2 | RAMP TAPER ( INTERSECTION OF C-162) |
| 1 | MAR | 23 | RAMP C | C-162 | | 102 | 8 | | 0.0 | 12.0 | | | | 68 | 1.50 | 68 | 5 | 1.75 | 3 | | 0.0 | 12.0 | | | | 68 | 3 | 1.50 | 3 | | | DECELERATION LANE |
| 1 | MAR | 23 | | | | 250 | 2 | | | 12.0 | | | | 333 | 1.50 | 333 | 25 | 1.75 | 16 | | | 12.0 | | | | 333 | 17 | 1.50 | 14 | | | DECELERATION LANE |
| 1 | MAR | 23 | | | | 449 | 8/7 | | 12.0 | 39.0 | | | | 1272 | 1.50 | 1272 | 95 | 1.75 | 62 | | 12.0 | 39.0 | | | | 1272 | 64 | 1.50 | 53 | | | GORE AREA / DECELERATION LANE |
| 1 | MAR | 23 | | | | 667 | 5 | 3.0 | | 16.0 | 3.0 | | | 1630 | 1.50 | 1630 | 122 | | | 3.0 | | 16.0 | 3.0 | | | 1630 | | 1.50 | 68 | 2.50 | 20 | RAMP |
| 1 | MAR | 23 | | | | 426 | 5 | 3.0 | | 17.0 | 3.0 | | | 1089 | 1.50 | 1089 | 82 | | | 3.0 | | 17.0 | 3.0 | | | 1089 | | 1.50 | 45 | 2.50 | 14 | RAMP |
| 1 | MAR | 23 | | | | 30 | 5 | 3.0 | | 18.5 | 3.0 | | | 82 | 1.50 | 82 | 6 | | | 3.0 | | 18.5 | 3.0 | | | 82 | | 1.50 | 3 | 2.50 | 1 | RAMP |
| 1 | MAR | 23 | | | | 67 | 6 | 3.0 | 0.0 | 42.0 | 3.0 | | | 201 | 1.50 | 201 | 15 | | | 3.0 | 0.0 | 42.0 | 3.0 | | | 201 | | 1.50 | 8 | 2.50 | 2 | RAMP TAPER ( INTERSECTION OF C-162) |
| 1 | MAR | 23 | RAMP D | C-162 | | 1200 | 8 | | 0.0 | 25.0 | | | | 1667 | 1.50 | 1667 | 125 | 1.75 | 81 | | 0.0 | 25.0 | | | | 1667 | 83 | 1.50 | 69 | | | ACCELERATION LANE |
| 1 | MAR | 23 | | | | 300 | 8 | | 25.0 | 32.0 | | | | 950 | 1.50 | 950 | 71 | 1.75 | 46 | | 25.0 | 32.0 | | | | 950 | 48 | 1.50 | 40 | | | GORE AREA / ACCELERATION LANE |
| 1 | MAR | 23 | | | | 162 | 8/7 | | 32.0 | 39.0 | | | | 639 | 1.50 | 639 | 48 | 1.75 | 31 | | 32.0 | 39.0 | | | | 639 | 32 | 1.50 | 27 | | | GORE AREA / ACCELERATION LANE |
| TOTALS | | | | | | | | | | | | | | 18044 | | 18044 | 1352 | | 475 | | | | | | | 18044 | 489 | | 754 | | 100 | |

PAVEMENT SUBSUMMARY AND DETAILS

MAR-23-10.63

bkinsell 02-MAR-2000 3:12PM
H:\Projects\mar\023\063.000\DGN\gd03.dgn

## PAVEMENT DETAIL #8

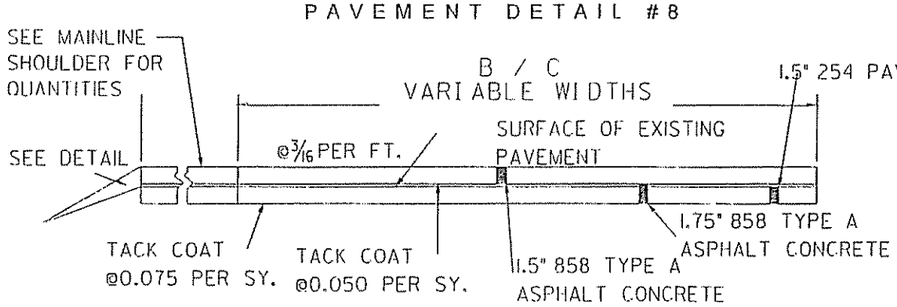


## PAVEMENT DETAIL #9

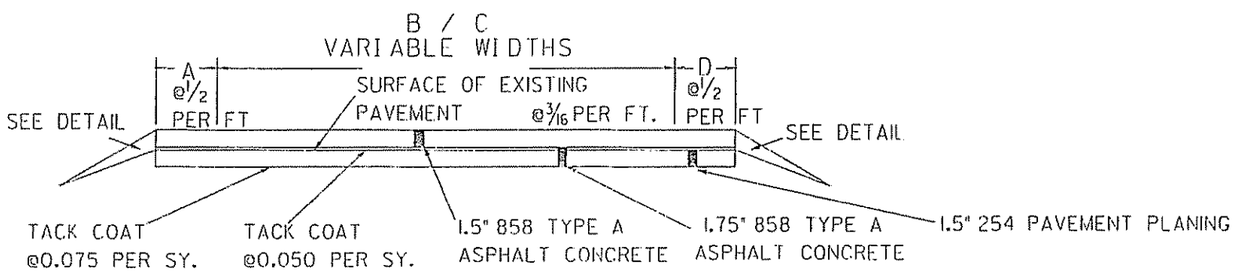


* B / C = VARYING WIDTH PAVEMENT *

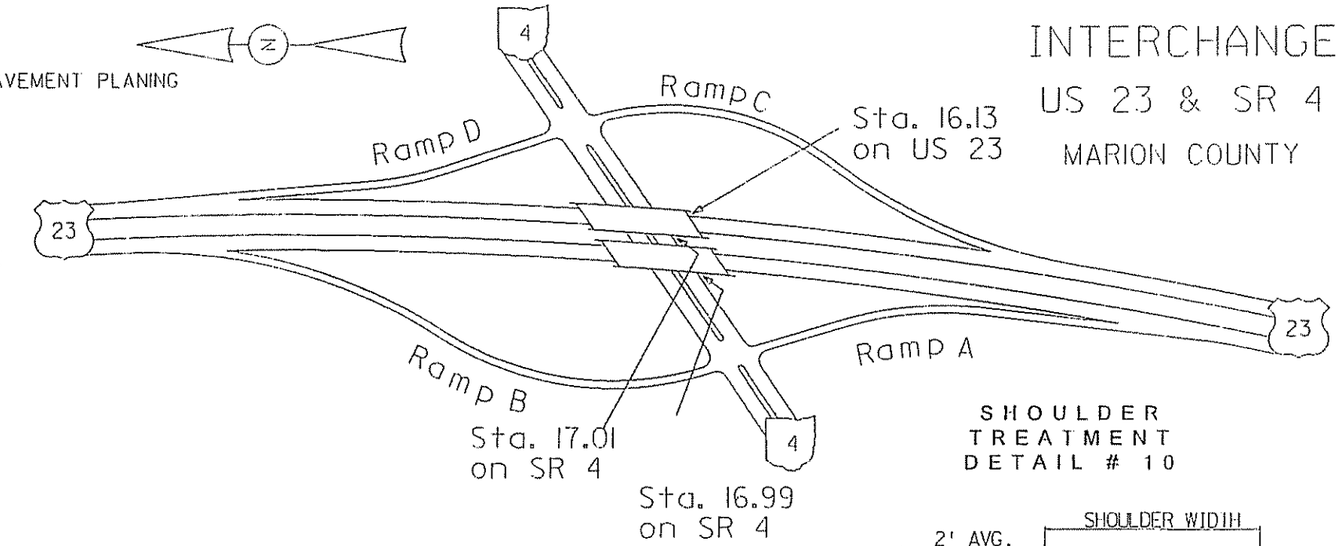


# INTERCHANGE
## US 23 & SR 4
## MARION COUNTY

## SHOULDER TREATMENT DETAIL # 10

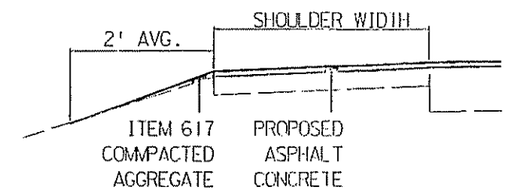


| LOCATION | | | | | | | | INTERMEDIATE PAVEMENT | | | | | | | | | | | | | | | | | | SURFACE PAVEMENT | | | | | | | | | | | | REMARKS |
|---|---|---|---|---|---|---|---|---|---|---|---|---|---|---|---|---|---|---|---|---|---|---|---|---|---|---|---|---|---|---|---|---|---|---|---|---|---|---|
| PART | COUNTY | ROUTE | | | LENGTH | | TYPICAL | AVERAGE PAVEMENT WIDTHS | | | | | | AREA | 254 PAVEMENT PLANING, BITUM. | | 407 TACK COAT 0.075 GAL/SQ Y | 858 AC INT COURSE 19 MM TYPE A | | AVERAGE PAVEMENT WIDTHS | | | | | | AREA | 407 TACK COAT 0.050 GAL/SQ Y | 858 AC SURF COURSE 12.5 MM TYPE A | | 617 COMPACT AGG TYPE A | | |
| | | | | | | | | A | B | C | D | E | F | | AVG DEP | | | AVG THK | | A | B | C | D | E | F | | | AVG THK | | AVG THK | | |
| | | | MI | MI | MI | LF | | FT | FT | FT | FT | FT | FT | SY | IN | SY | GAL | IN | CY | FT | FT | FT | FT | FT | FT | SY | GAL | IN | CY | IN | CY | |
| 1 | MAR | 23 | RAMP D | C-162 | | 907 | 5 | 3.0 | | 16.0 | 3.0 | | | 2217 | 1.50 | 2217 | 166 | 1.75 | 108 | 3.0 | | 16.0 | 3.0 | | | 2217 | 111 | 1.50 | 92 | 2.50 | 28 | RAMP |
| 1 | MAR | 23 | | | | 471 | 5 | 3.0 | | 17.0 | 3.0 | | | 1204 | 1.50 | 1204 | 90 | 1.75 | 59 | 3.0 | | 17.0 | 3.0 | | | 1204 | 60 | 1.50 | 50 | 2.50 | 14 | RAMP |
| 1 | MAR | 23 | | | | 30 | 5 | 3.0 | | 18.5 | 3.0 | | | 82 | 1.50 | 82 | 6 | 1.75 | 4 | 3.0 | | 18.5 | 3.0 | | | 82 | 4 | 1.50 | 3 | 2.50 | 1 | RAMP |
| 1 | MAR | 23 | | | | 100 | 6 | 3.0 | 0.0 | 30.0 | 3.0 | | | 233 | 1.50 | 233 | 17 | 1.75 | 11 | 3.0 | 0.0 | 30.0 | 3.0 | | | 233 | 12 | 1.50 | 10 | 2.50 | 4 | RAMP TAPER ( INTERSECTION OF C-162) |
| 1 | MAR | 23 | RAMP A | SR-4 | | 470 | 9 | 3.0 | | 16.0 | 3.0 | | | 1149 | 1.50 | 1149 | 86 | 1.75 | 56 | 3.0 | | 16.0 | 3.0 | | | 1149 | 57 | 1.50 | 48 | 2.50 | 14 | RAMP (INTERSECTION OF SR-4) |
| 1 | MAR | 23 | | | | 471 | 8 | | 25.0 | 38.0 | | | | 1649 | 1.50 | 1649 | 124 | 1.75 | 80 | | 25.0 | 38.0 | | | | 1649 | 82 | 1.50 | 69 | | | GORE AREA / ACCELERATION LANE |
| 1 | MAR | 23 | | | | 1200 | 8 | | 0.0 | 25.0 | | | | 1667 | 1.50 | 1667 | 125 | 1.75 | 81 | | 0.0 | 25.0 | | | | 1667 | 83 | 1.50 | 69 | | | ACCELERATION LANE |
| 1 | MAR | 23 | RAMP B | SR-4 | | 100 | 8 | | 0.0 | 12.0 | | | | 67 | 1.50 | 67 | 5 | 1.75 | 3 | | 0.0 | 12.0 | | | | 67 | 3 | 1.50 | 3 | | | DECELERATION LANE |
| 1 | MAR | 23 | | | | 370 | 8 | | 12.0 | 14.0 | | | | 534 | 1.50 | 534 | 40 | 1.75 | 26 | | 12.0 | 14.0 | | | | 534 | 27 | 1.50 | 22 | | | DECELERATION LANE |
| 1 | MAR | 23 | | | | 330 | 8 | | 14.0 | 39.0 | | | | 972 | 1.50 | 972 | 73 | 1.75 | 47 | | 14.0 | 39.0 | | | | 972 | 49 | 1.50 | 40 | | | GORE AREA / DECELERATION LANE |
| 1 | MAR | 23 | | | | 100 | 9 | 3.0 | 10.0 | 14.0 | 3.0 | | | 200 | 1.50 | 200 | 15 | 1.75 | 10 | 3.0 | 10.0 | 14.0 | 3.0 | | | 200 | 10 | 1.50 | 14 | 2.50 | 4 | RAMP TAPER |
| 1 | MAR | 23 | | | | 100 | 9 | 3.0 | 16.0 | 18.0 | 3.0 | | | 256 | 1.50 | 256 | 19 | 1.75 | 12 | 3.0 | 16.0 | 18.0 | 3.0 | | | 256 | 13 | 1.50 | 19 | 2.50 | 4 | RAMP (INTERSECTION OF SR-4) |
| 1 | MAR | 23 | | | | 75 | 3 | 3.0 | | 16.0 | 3.0 | | | 183 | 1.50 | 183 | 14 | 1.75 | 9 | 3.0 | | 16.0 | 3.0 | | | 183 | 9 | 1.50 | 8 | 2.50 | 2 | RAMP |
| 1 | MAR | 23 | | | | 2175 | 3 | 3.0 | | 16.0 | 3.0 | | | 5317 | 1.50 | 5317 | 399 | 1.75 | 258 | 3.0 | | 16.0 | 3.0 | | | 5317 | 266 | 1.50 | 222 | 2.50 | 68 | RAMP |
| 1 | MAR | 23 | RAMP C | SR-4 | | 100 | 8 | | 0.0 | 12.0 | | | | 67 | 1.50 | 67 | 5 | 1.75 | 3 | | 0.0 | 12.0 | | | | 67 | 3 | 1.50 | 3 | | | DECELERATION LANE |
| 1 | MAR | 23 | | | | 700 | 8 | | 12.0 | 39.0 | | | | 1983 | 1.50 | 1983 | 149 | 1.75 | 96 | | 12.0 | 39.0 | | | | 1983 | 99 | 1.50 | 83 | | | GORE AREA / DECELERATION LANE |
| 1 | MAR | 23 | | | | 100 | 8 | | 10.0 | 14.0 | | | | 133 | 1.50 | 133 | 10 | 1.75 | 6 | | 10.0 | 14.0 | | | | 133 | 7 | 1.50 | 6 | | | RAMP TAPER |
| 1 | MAR | 23 | | | | 1120 | 3 | 3.0 | | 16.0 | 3.0 | | | 2738 | 1.50 | 2738 | 205 | 1.75 | 133 | 3.0 | | 16.0 | 3.0 | | | 2738 | 137 | 1.50 | 114 | 2.50 | 34 | RAMP (INTERSECTION OF SR-4) |
| 1 | MAR | 23 | | | | 100 | 9 | 3.0 | 16.0 | 18.0 | 3.0 | | | 256 | 1.50 | 256 | 19 | 1.75 | 12 | 3.0 | 16.0 | 18.0 | 3.0 | | | 256 | 13 | 1.50 | 11 | 2.50 | 4 | RAMP (INTERSECTION OF SR-4) |
| 1 | MAR | 23 | RAMP D | SR-4 | | 498 | 3 | 3.0 | | 16.0 | 3.0 | | | 1217 | 1.50 | 1217 | 91 | 1.75 | 59 | 3.0 | | 16.0 | 3.0 | | | 1217 | 61 | 1.50 | 51 | 2.50 | 16 | RAMP |
| 1 | MAR | 23 | | | | 263 | 9 | 3.0 | 16.0 | 18.0 | 3.0 | | | 672 | 1.50 | 672 | 50 | 1.75 | 33 | 3.0 | 16.0 | 18.0 | 3.0 | | | 672 | 34 | 1.50 | 28 | 2.50 | 8 | RAMP TAPER |
| 1 | MAR | 23 | | | | 1090 | 8 | | 25.0 | 35.0 | | | | 3633 | 1.50 | 3633 | 272 | 1.75 | 177 | | 25.0 | 35.0 | | | | 3633 | 182 | 1.50 | 151 | | | GORE AREA / ACCELERATION LANE |
| 1 | MAR | 23 | | | | 1667 | 8 | | 0.0 | 25.0 | | | | 2315 | 1.50 | 2315 | 174 | 1.75 | 113 | | 0.0 | 25.0 | | | | 2315 | 116 | | 96 | | | ACCELERATION LANE |
| TOTALS | | | | | | | | | | | | | | 28744 | | 28744 | 2154 | | 1396 | | | | | | | 28744 | 1438 | | 1212 | | 201 | |

PAVEMENT SUBSUMMARY AND DETAILS

MAR-23-10.53



bkinsell 02-MAR-2000 3:12PM
4:\Projects\mar\023\1063.000\DGN\gd104.dgn

VERTICAL CLEARANCE DETAIL # 11
(MAR-23-12.65 L/R) (MAR-23-13.62 L/R)
(MAR-23-16.92 L/R) (MAR-23-19.02 L/R)

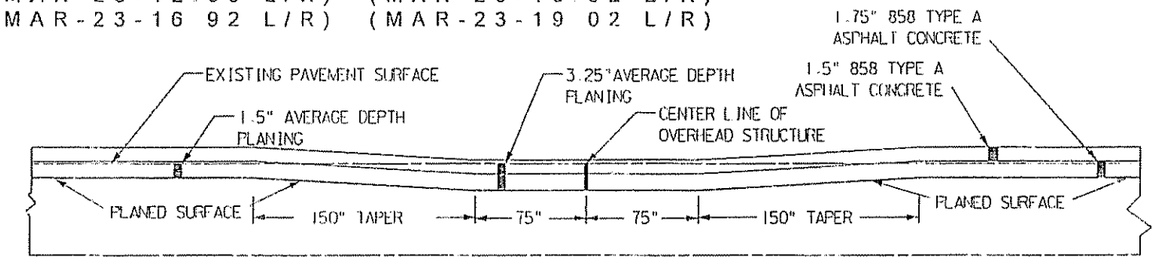


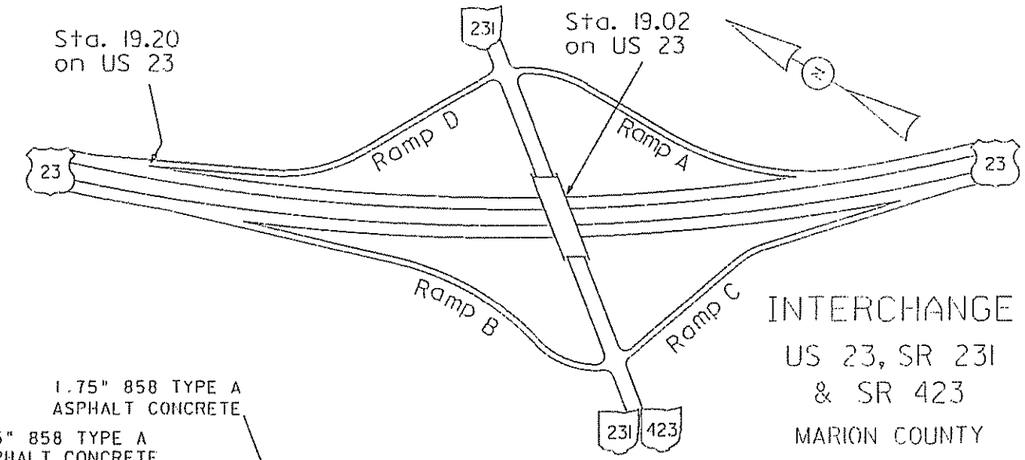


INTERCHANGE
US 23, SR 231
& SR 423
MARION COUNTY

EXPANSION JOINT AND APPROACH SLAB
DETAIL # 12
(MAR-23-11.08 L/R)
(MAR-23-11.51 L/R)
(MAR-23-18.15 L/R)

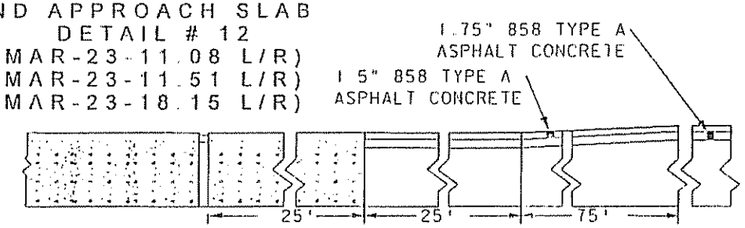


EXPANSION JOINT AND APPROACH SLAB
DETAIL # 13
(MAR-23-16.13)
(MAR-23-16.76)
(MAR-23-14.93 L / R)

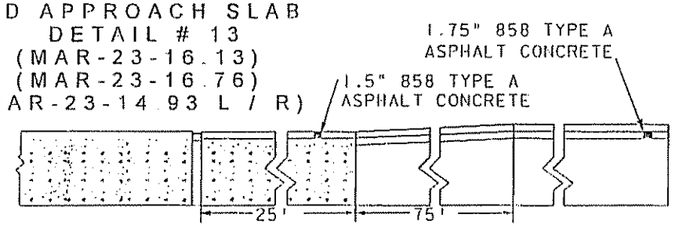


* B / C = VARYING WIDTH PAVEMENT *

| LOCATION | | | | | | | | INTERMEDIATE PAVEMENT | | | | | | | | | | | | | | | | | | SURFACE PAVEMENT | | | | | | | | | | REMARKS |
|---|---|---|---|---|---|---|---|---|---|---|---|---|---|---|---|---|---|---|---|---|---|---|---|---|---|---|---|---|---|---|---|---|---|---|---|---|
| PART | COUNTY | ROUTE | | | LENGTH | | TYPICAL | AVERAGE PAVEMENT WIDTHS | | | | | | AREA | 254 PAVEMENT PLANING, BITUM. | | 407 TACK COAT 0.075 GAL/SQ Y | 858 AC INT COURSE 19 MM TYPE A | | AVERAGE PAVEMENT WIDTHS | | | | | | AREA | 407 TACK COAT 0.050 GAL/SQ Y | 858 AC SURF COURSE 12.5 MM TYPE A | | 617 COMPACT AGG TYPE A | | |
| | | | | | | | | A | B | C | D | E | F | | AVG DEP | | | AVG THK | | A | B | C | D | E | F | | | AVG THK | | AVG THK | | |
| | | | MI | MI | MI | LF | | FT | FT | FT | FT | FT | FT | SY | IN | SY | GAL | IN | CY | FT | FT | FT | FT | FT | FT | SY | GAL | IN | CY | IN | CY | |
| 1 | MAR | 23 | RAMP A | 423 | | 100 | 8 | | 0.0 | 12.0 | | | | 67 | 1.50 | 67 | 5 | 1.75 | 3 | | 0.0 | 12.0 | | | | 67 | 3 | 1.50 | 3 | | | DECELERATION LANE |
| 1 | MAR | 23 | | | | 245 | 2 | | | 12.0 | | | | 327 | 1.50 | 327 | 25 | 1.75 | 16 | | | 12.0 | | | | 327 | 16 | 1.50 | 14 | | | DECELERATION LANE |
| 1 | MAR | 23 | | | | 454 | 8 | | 12.0 | 39.0 | | | | 1286 | 1.50 | 1286 | 96 | 1.75 | 63 | | 12.0 | 39.0 | | | | 1286 | 64 | 1.50 | 54 | | | GORE AREA / DECELERATION LANE |
| 1 | MAR | 23 | | | | 100 | 9 | 3.0 | 10.0 | 14.0 | 3.0 | | | 200 | 1.50 | 200 | 15 | 1.75 | 10 | 3.0 | 10.0 | 14.0 | 3.0 | | | 200 | 10 | 1.50 | 8 | 2.50 | 4 | RAMP TAPER |
| 1 | MAR | 23 | | | | 879 | 3 | 3.0 | | 16.0 | 3.0 | | | 2149 | 1.50 | 2149 | 161 | 1.75 | 104 | 3.0 | | 16.0 | 3.0 | | | 2149 | 107 | 1.50 | 90 | 2.50 | 28 | RAMP |
| 1 | MAR | 23 | | | | 100 | 9 | 3.0 | 16.0 | 18.0 | 3.0 | | | 256 | 1.50 | 256 | 19 | 1.75 | 12 | 3.0 | 16.0 | 18.0 | 3.0 | | | 256 | 13 | 1.50 | 11 | 2.50 | 4 | RAMP TAPER ( INTERSECTION OF SR-423 / 231 |
| 1 | MAR | 23 | RAMP B | 423 | | 100 | 8 | | 0.0 | 12.0 | | | | 67 | 1.50 | 67 | 5 | 1.75 | 3 | | 0.0 | 12.0 | | | | 67 | 3 | 1.50 | 3 | | | DECELERATION LANE |
| 1 | MAR | 23 | | | | 245 | 2 | | | 12.0 | | | | 327 | 1.50 | 327 | 25 | 1.75 | 16 | | | 12.0 | | | | 327 | 16 | 1.50 | 7 | | | DECELERATION LANE |
| 1 | MAR | 23 | | | | 453 | 8 | | 12.0 | 39.0 | | | | 1284 | 1.50 | 1284 | 96 | 1.75 | 62 | | 12.0 | 39.0 | | | | 1284 | 64 | 1.50 | 53 | | | GORE AREA / DECELERATION LANE |
| 1 | MAR | 23 | | | | 100 | 9 | 3.0 | 14.0 | 12.0 | 3.0 | | | 211 | 1.50 | 211 | 16 | 1.75 | 10 | 3.0 | 14.0 | 12.0 | 3.0 | | | 211 | 11 | 1.50 | 9 | 2.50 | 4 | RAMP TAPER |
| 1 | MAR | 23 | | | | 868 | 3 | 3.0 | | 16.0 | 3.0 | | | 2122 | 1.50 | 2122 | 159 | 1.75 | 103 | 3.0 | | 16.0 | 3.0 | | | 2122 | 106 | 1.50 | 88 | 2.50 | 26 | RAMP |
| 1 | MAR | 23 | | | | 100 | 9 | 3.0 | 16.0 | 18.0 | 3.0 | | | 256 | 1.50 | 256 | 19 | 1.75 | 12 | 3.0 | 16.0 | 18.0 | 3.0 | | | 256 | 13 | 1.50 | 11 | 2.50 | 4 | RAMP TAPER ( INTERSECTION OF SR-423 / 231 |
| 1 | MAR | 23 | RAMP C | 423 | | 605 | 3 | 3.0 | | 16.0 | 3.0 | | | 1479 | 1.50 | 1479 | 111 | 1.75 | 72 | 3.0 | | 16.0 | 3.0 | | | 1479 | 74 | 1.50 | 62 | 2.50 | 18 | RAMP TAPER ( INTERSECTION OF SR-423 / 231 |
| 1 | MAR | 23 | | | | 450 | 9 | 3.0 | 14.0 | 18.0 | 3.0 | | | 1100 | 1.50 | 1100 | 83 | 1.75 | 53 | 3.0 | 14.0 | 18.0 | 3.0 | | | 1100 | 55 | 1.50 | 46 | 2.50 | 14 | RAMP TAPER |
| 1 | MAR | 23 | | | | 233 | 9 | 3.0 | 11.0 | 19.0 | 3.0 | | | 544 | 1.50 | 544 | 41 | 1.75 | 26 | 3.0 | 11.0 | 19.0 | 3.0 | | | 544 | 27 | 1.50 | 23 | 2.50 | 8 | RAMP TAPER |
| 1 | MAR | 23 | | | | 1200 | 8 | | 0.0 | 25.0 | | | | 1667 | 1.50 | 1667 | 125 | 1.75 | 81 | | 0.0 | 25.0 | | | | 1667 | 83 | 1.50 | 69 | | | GORE AREA / ACCELERATION LANE |
| 1 | MAR | 23 | RAMP D | 423 | | 450 | 9 | 3.0 | 15.0 | 19.0 | 3.0 | | | 1000 | 1.50 | 1000 | 75 | 1.75 | 41 | | 15.0 | 19.0 | | | | 850 | 43 | 1.50 | 35 | 2.50 | 14 | RAMP TAPER ( INTERSECTION OF SR-423 / 231 |
| 1 | MAR | 23 | | | | 652 | 3 | 3.0 | | 16.0 | 3.0 | | | 1594 | 1.50 | 1594 | 120 | 1.75 | 77 | | | 16.0 | | | | 1159 | 58 | 1.50 | 48 | 2.50 | 20 | RAMP |
| 1 | MAR | 23 | | | | 438 | 9 | 3.0 | 10.0 | 18.0 | 3.0 | | | 827 | 1.50 | 827 | 62 | 1.75 | 33 | | 10.0 | 18.0 | | | | 681 | 34 | 1.50 | 28 | 2.50 | 14 | RAMP TAPER |
| 1 | MAR | 23 | | | | 1200 | 8 | | 0.0 | 25.0 | | | | 1667 | 1.50 | 1667 | 125 | 1.75 | 81 | | 0.0 | 25.0 | | | | 1667 | 83 | 1.50 | 69 | | | GORE AREA / ACCELERATION LANE |
| TOTALS | | | | | | | | | | | | | | 18430 | | 18430 | 1383 | | 878 | | | | | | | 17699 | 883 | | 731 | | 156 | |

PAVEMENT SUMMARY AND DETAILS

MAR-23-10.63



bkinsell 02-MAR-2000 3:12PM
N:\Projects\mar\023\063.000\DGN\rd05.dgn

PAVED X- OVERS
DETAIL # 14

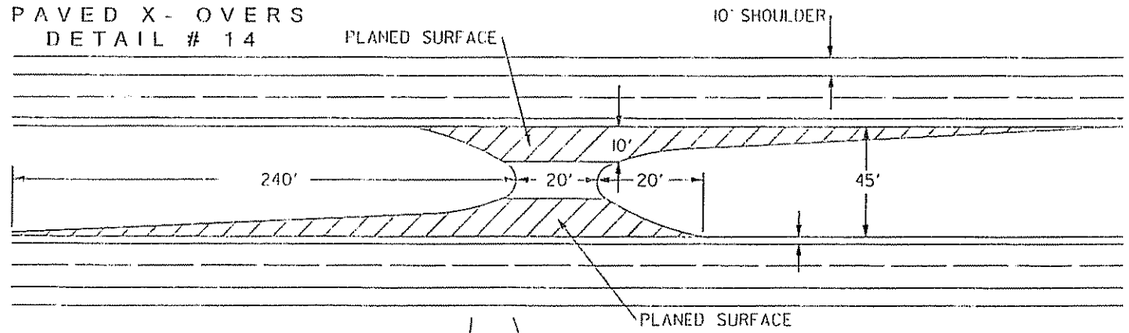


PAVED INTERSECTION
DETAIL # 15

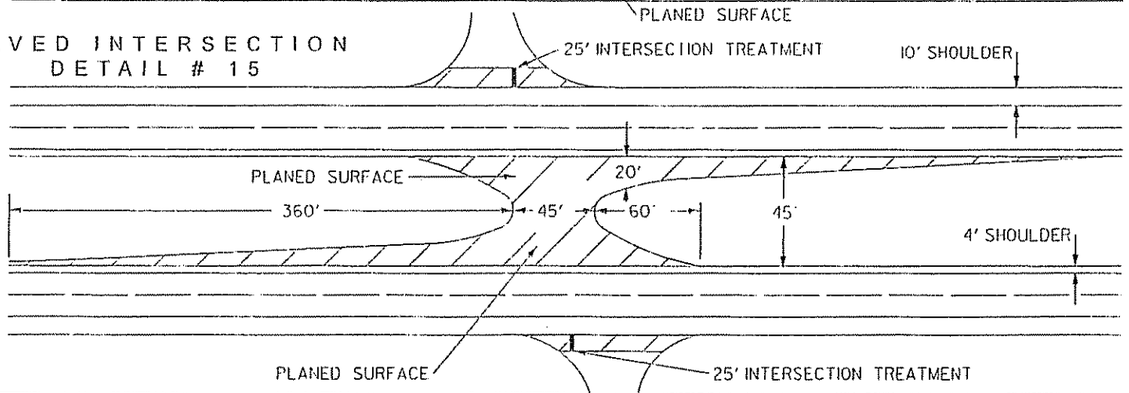


PAVED X- OVERS
CROSS SECTION
DETAIL # 14

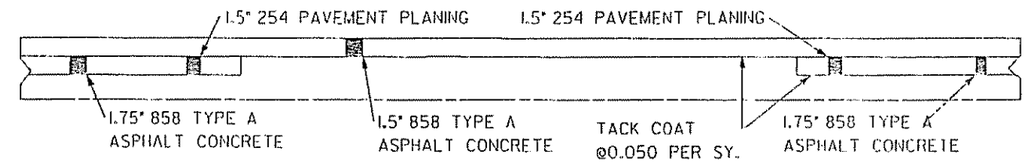


PAVED INTERSECTION
CROSS SECTION
DETAIL # 15

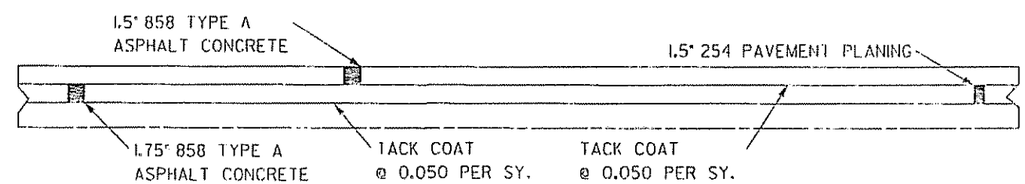


| LOCATION | | | | | | | | INTERMEDIATE PAVEMENT | | | | | | | | | | | | SURFACE PAVEMENT | | | | | | | | | | | | REMARKS |
|---|---|---|---|---|---|---|---|---|---|---|---|---|---|---|---|---|---|---|---|---|---|---|---|---|---|---|---|---|---|---|---|---|
| PART | COUNTY | ROUTE | | | LENGTH | | TYPICAL | AVERAGE PAVEMENT WIDTHS | | | | | | AREA | 254 PAVEMENT PLANING, BITUM. | | 407 TACK COAT 0.075 GAL/SQ Y | 858 AC INT COURSE 19 MM TYPE A | | AVERAGE PAVEMENT WIDTHS | | | | | | AREA | 407 TACK COAT 0.050 GAL/SQ Y | 858 AC SURF COURSE 12.5 MM TYPE A | | 617 COMPACT AGG TYPE A | | |
| | | | | | | | | A | B | C | D | E | F | | AVG DEP | | | AVG THK | | A | B | C | D | E | F | | | AVG THK | | AVG THK | | |
| | | | MI | MI | MI | LF | | FT | FT | FT | FT | FT | FT | SY | IN | SY | GAL | IN | CY | FT | FT | FT | FT | FT | FT | SY | GAL | IN | CY | IN | CY | |
| | | | | | | | | | | | | | | | | | | | | | | | | | | | | | | | | ESTIMATED QUANTITIES |
| 1 | MAR | 23 | 11.9 | | | 240 | 14 | | 0.0 | 10.0 | | | | 267 | 1.50 | 267 | 20 | 1.75 | 12 | | 0.0 | 10.0 | | | | 267 | 13 | 1.50 | 12 | 2.50 | 10 | DECELERATION TAPER |
| 1 | MAR | 23 | | | | 20 | 14 | | 0.0 | 10.0 | | | | 22 | 1.50 | 22 | 2 | 1.75 | 2 | | 0.0 | 10.0 | | | | 22 | 1 | 1.50 | 0 | | | EXIT RADIUS |
| 1 | MAR | 23 | | | | 45 | 14 | | | 20.0 | | | | 100 | 1.50 | 56 | 8 | 1.75 | 5 | | | 20.0 | | | | 100 | 3 | 1.50 | 4 | | | CROSS OVER |
| | | | | | | | | | | | | | | | | | | | | | | | | | | | | | | | | ESTIMATED QUANTITIES |
| 1 | MAR | 23 | 13.35 | | | 240 | 14 | | 0.0 | 10.0 | | | | 267 | 1.50 | 267 | 20 | 1.75 | 12 | | 0.0 | 10.0 | | | | 267 | 13 | 1.50 | 12 | 2.50 | 10 | DECELERATION TAPER |
| 1 | MAR | 23 | | | | 20 | 14 | | 0.0 | 10.0 | | | | 22 | 1.50 | 22 | 2 | 1.75 | 2 | | 0.0 | 10.0 | | | | 22 | 1 | 1.50 | 0 | | | EXIT RADIUS |
| 1 | MAR | 23 | | | | 45 | 14 | | | 20.0 | | | | 100 | 1.50 | 56 | 8 | 1.75 | 5 | | | 20.0 | | | | 100 | 5 | 1.50 | 4 | | | CROSS OVER |
| | | | | | | | | | | | | | | | | | | | | | | | | | | | | | | | | ESTIMATED QUANTITIES |
| 1 | MAR | 23 | 17.1 | | | 240 | 14 | | 0.0 | 10.0 | | | | 267 | 1.50 | 267 | 20 | 1.75 | 12 | | 0.0 | 10.0 | | | | 267 | 13 | 1.50 | 12 | 2.50 | 10 | DECELERATION TAPER |
| 1 | MAR | 23 | | | | 20 | 14 | | 0.0 | 10.0 | | | | 22 | 1.50 | 22 | 2 | 1.75 | 2 | | 0.0 | 10.0 | | | | 22 | 1 | 1.50 | 0 | | | EXIT RADIUS |
| 1 | MAR | 23 | | | | 45 | 14 | | | 20.0 | | | | 100 | 1.50 | 56 | 8 | 1.75 | 5 | | | 20.0 | | | | 100 | 5 | 1.50 | 4 | | | CROSS OVER |
| | | | | | | | | | | | | | | | | | | | | | | | | | | | | | | | | ESTIMATED QUANTITIES |
| 1 | MAR | 23 | 18.35 | | | 240 | 14 | | 0.0 | 10.0 | | | | 267 | 1.50 | 267 | 20 | 1.75 | 12 | | 0.0 | 10.0 | | | | 267 | 13 | 1.50 | 12 | 2.50 | 10 | DECELERATION TAPER |
| 1 | MAR | 23 | | | | 20 | 14 | | 0.0 | 10.0 | | | | 22 | 1.50 | 22 | 2 | 1.75 | 2 | | 0.0 | 10.0 | | | | 22 | 1 | 1.50 | 0 | | | EXIT RADIUS |
| 1 | MAR | 23 | | | | 45 | 14 | | | 20.0 | | | | 100 | 1.50 | 56 | 8 | 1.75 | 5 | | | 20.0 | | | | 100 | 5 | 1.50 | 4 | | | CROSS OVER |
| | | | | | | | | | | | | | | | | | | | | | | | | | | | | | | | | ESTIMATED QUANTITIES |
| 1 | MAR | 23 | C-195 | | | 360 | 15 | | 0.0 | 20.0 | | | | 800 | 1.50 | 756 | 60 | 1.75 | 38 | | 0.0 | 20.0 | | | | 800 | 40 | 1.50 | 34 | 2.50 | 20 | DECELERATION TAPER |
| 1 | MAR | 23 | | | | 20 | 15 | | 0.0 | 20.0 | | | | 44 | 1.50 | 0 | 3 | 1.75 | 2 | | 0.0 | 20.0 | | | | 44 | 2 | 1.50 | 2 | | | EXIT RADIUS |
| 1 | MAR | 23 | | | | 60 | 15 | | | 45.0 | | | | 300 | 1 50 | 300 | 23 | 1.75 | 15 | | | 45.0 | | | | 300 | 15 | 1.50 | 13 | | | CROSS OVER |
| 1 | MAR | 23 | | | | 40 | 15 | | | 25.0 | | | | 111 | 1.50 | 111 | 8 | 1.75 | 5 | | | 25.0 | | | | 111 | 6 | 1.50 | 5 | | | TRANSITION PAVEMENT |
| TOTALS | | | | | | | | | | | | | | 2811 | | 2544 | 214 | | 135 | | | | | | | 2811 | 137 | | 118 | | 60 | |

PAVEMENT SUBSUMMARY AND DETAILS

MAR-23-10.53



N:\Projects\mar\023\0653.000\DGN\ga106.dgn 02-MAR-2000 3:12PM bkinsell

PROPOSED PAVED X- OVERS
DETAIL # 16

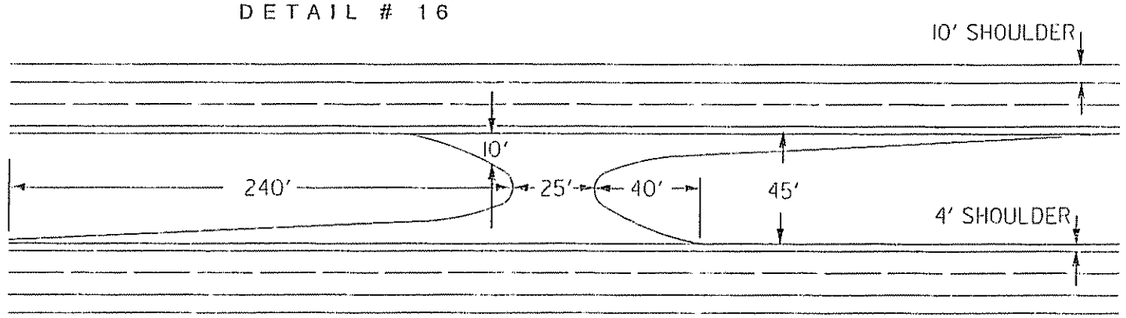


PROPOSED PAVED
CROSS - OVERS
DETAIL # 16

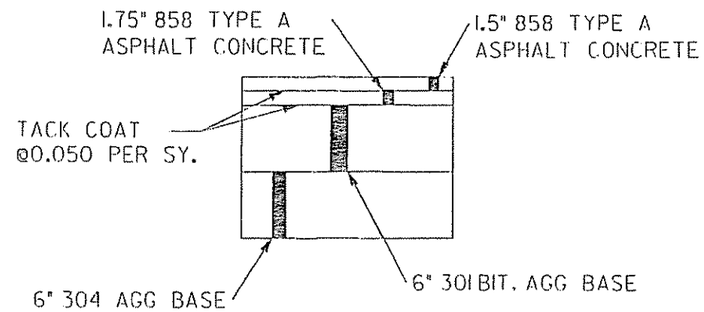


*GREAT CARE SHALL BE TAKEN SO THAT THE EXISTING DRAINAGE STRUCTURES SHALL NOT BE OBSTRUCTED BY THE PLACEMENT OF THE PROPOSED CROSS-OVERS

| LOCATION | | | | | | | | PAVEMENT QUANTITIES | | | | | | | | | | | | | | | | | | | REMARKS |
|---|---|---|---|---|---|---|---|---|---|---|---|---|---|---|---|---|---|---|---|---|---|---|---|---|---|---|---|
| | | | | | | | | | | | | | | | 304 | | | 301 | | 203 | | 203 | 407 | 858 | | 858 | | |
| PART | COUNTY | ROUTE | LOG BEG | LOG END | LENGTH | | TYPICAL | AVERAGE PAVEMENT WIDTHS | | | | | | AREA | AGG BASE | | | BIT. AGG BASE | | EXCAVATION NOT INCLUDING EMBANKMENT | | SUB GRADE COMP. | TACK COAT 0.050 GAL/SQ Y | AC SURF COURSE 19 MM TYPE A | | AC SURF COURSE 12.5 MM TYPE A | | |
| | | | | | | | | A | B | C | D | E | F | | AVG DEP | | | AVG THK | | AVG THK | | | | AVG THK | | AVG THK | | |
| | | | MI | MI | MI | LF | | FT | FT | FT | FT | FT | FT | SY | IN | SY | | IN | CY | IN | CY | SY | GAL | IN | CY | IN | CY | |
| | | | | | | | | | | | | | | | | | | | | | | | | | | | | ESTIMATED QUANTITIES |
| 1 | MAR | 23 | | 15.7 | | 240 | 16 | | 0.0 | 10.0 | | | | 267 | 6.00 | 44 | | 6.00 | 44 | 14.0 | 104 | 267 | 26 | 1.75 | 12 | 1.50 | 12 | DECELERATION TAPER |
| 1 | MAR | 23 | | | | 20 | 16 | | 0.0 | 10.0 | | | | 22 | 6.00 | 4 | | 6.00 | 4 | 14.0 | 8 | 22 | 2 | 1.75 | 2 | 1.50 | 0 | CROSS OVER |
| 1 | MAR | 23 | | | | 45 | 16 | | | 25.0 | | | | 125 | 6.00 | 21 | | 6.00 | 21 | 14.0 | 49 | 125 | 12 | 1.75 | 6 | 1.50 | 5 | EXIT RADIUS |
| | | | | | | | | | | | | | | | | | | | | | | | | | | | | ESTIMATED QUANTITIES |
| 1 | MAR | 23 | | 16.7 | | 240 | 16 | | 0.0 | 10.0 | | | | 267 | 6.00 | 44 | | 6.00 | 44 | 14.0 | 104 | 267 | 26 | 1.75 | 12 | 1.50 | 12 | DECELERATION TAPER |
| 1 | MAR | 23 | | | | 20 | 16 | | 0.0 | 10.0 | | | | 22 | 6.00 | 4 | | 6.00 | 4 | 14.0 | 8 | 22 | 2 | 1.75 | 2 | 1.50 | 0 | CROSS OVER |
| 1 | MAR | 23 | | | | 45 | 16 | | | 25.0 | | | | 125 | 6.00 | 21 | | 6.00 | 21 | 14.0 | 49 | 125 | 12 | 1.75 | 6 | 1.50 | 5 | EXIT RADIUS |
| | | | | | | | | | | | | | | | | | | | | | | | | | | | | ESTIMATED QUANTITIES |
| 1 | MAR | 23 | | 18.6 | | 240 | 16 | | 0.0 | 10.0 | | | | 267 | 6.00 | 44 | | 6.00 | 44 | 14.0 | 104 | 267 | 26 | 1.75 | 12 | 1.50 | 12 | DECELERATION TAPER |
| 1 | MAR | 23 | | | | 20 | 16 | | 0.0 | 10.0 | | | | 22 | 6.00 | 4 | | 6.00 | 4 | 14.0 | 8 | 22 | 2 | 1.75 | 2 | 1.50 | 0 | CROSS OVER |
| 1 | MAR | 23 | | | | 45 | 16 | | | 25.0 | | | | 125 | 6.00 | 21 | | 6.00 | 21 | 14.0 | 49 | 125 | 12 | 1.75 | 6 | 1.50 | 5 | EXIT RADIUS |
| | | | | | | | | | | | | | | | | | | | | | | | | | | | | ESTIMATED QUANTITIES |
| 1 | MAR | 23 | | 19.6 | | 240 | 16 | | 0.0 | 10.0 | | | | 267 | 6.00 | 44 | | 6.00 | 44 | 14.0 | 104 | 267 | 26 | 1.75 | 12 | 1.50 | 12 | DECELERATION TAPER |
| 1 | MAR | 23 | | | | 20 | 16 | | 0.0 | 10.0 | | | | 22 | 6.00 | 4 | | 6.00 | 4 | 14.0 | 8 | 22 | 2 | 1.75 | 2 | 1.50 | 0 | CROSS OVER |
| 1 | MAR | 23 | | | | 45 | 16 | | | 25.0 | | | | 125 | 6.00 | 21 | | 6.00 | 21 | 14.0 | 49 | 125 | 12 | 1.75 | 6 | 1.50 | 5 | EXIT RADIUS |
| TOTALS | | | | | | | | | | | | | | 1656 | | 275 | | | 275 | | 644 | 1656 | 160 | | 80 | | 68 | |

PAVEMENT SUBSUMMARY AND DETAILS

MAR-23-10.63

12/17

bkinsell 02-MAR-2000 3:12PM
:\Projects\mar\023\1063.000\DGN\qcl07.dgn

| LOCATION | | | | | | | | | LONG LINES | | | | | AUXILIARY MARKINGS | | | | | | | | | | | |
|---|---|---|---|---|---|---|---|---|---|---|---|---|---|---|---|---|---|---|---|---|---|---|---|---|---|
| | | | | | | | | | SS-887 | | | | | 644 | | | SS-887 | 644 | | | | | | |
| PART | COUNTY | ROUTE | LOG BEG | LOG END | LENGTH | | SIDE | DESCRIPTION | CENTER LINE | EQUIV SOLID LINE | EDGE LINE WHT | EDGE LINE YEL | LANE LINE | TRANSVERSE LINE WHT | TRANSVERSE LINE YEL | ISLAND (BULL-NOSE) | CHANL LINE | STOP LINE | CROSS WALK LINE | SCHOOL | 644 LT | 644 LT/STR | 644 STR | 644 RT STR | 644 RT | WORD ON PAVE |
| | | | MI | MI | MI | LF | | | MI | MI | MI | MI | MI | LF | LF | SF | LF | LF | LF | EACH | EACH | EACH | EACH | EACH | EACH | EACH |
| 1 | MAR | US-23 | 10.63 | 19.97 | 9.34 | 49315 | L/R | MAINLINE NB / SB | | | 18.68 | 18.68 | 18.68 | | | | | | | | | | | | | |
| 1 | MAR | US-23 | | | | | | SR-309 INTERCHANGE | | | | | | | | | | | | | | | | | | |
| 1 | APR | US-23 | | | | 845 | | RAMP A | | | 0.16 | 0.16 | 0.05 | | | | 120 | | | | | | | | | |
| 1 | MAR | US-23 | | | | 1003 | | RAMP B | | | 0.19 | 0.19 | 0.05 | 433 | | | 632 | 40 | | | | | | | | |
| 1 | MAR | US-23 | | | | 950 | | RAMP C | | | 0.18 | 0.18 | 0.06 | 247 | | | 471 | 30 | | | | | | | | |
| 1 | MAR | US-23 | | | | 1056 | | RAMP D | | | 0.20 | 0.20 | 0.05 | | | | 120 | | | | | | | | | |
| 1 | MAR | US-23 | | | | | | WILLIAMSPORT RD. INTER. | | | | | | | | | | | | | | | | | | |
| 1 | MAR | US-23 | | | | 845 | | RAMP A | | | 0.16 | 0.16 | 0.05 | | | | 240 | | | | | | | | | |
| 1 | MAR | US-23 | | | | 1214 | | RAMP B | | | 0.23 | 0.23 | 0.03 | 296 | | | 611 | 40 | | | | | | | | |
| 1 | MAR | US-23 | | | | 1162 | | RAMP C | | | 0.22 | 0.22 | 0.05 | 310 | | | 485 | 43 | | | | | | | | |
| 1 | MAR | US-23 | | | | 1478 | | RAMP D | | | 0.28 | 0.28 | 0.06 | | | | 240 | | | | | | | | | |
| 1 | MAR | US-23 | | | | | | SR-4 INTERCHANGE | | | | | | | | | | | | | | | | | | |
| 1 | MAR | US-23 | | | | 528 | | RAMP A | | | 0.10 | 0.10 | 0.06 | | | | 160 | | | | | | | | | |
| 1 | MAR | US-23 | | | | 2429 | | RAMP B | | | 0.46 | 0.46 | 0.05 | 316 | | | 651 | 37 | | | | | | | | |
| 1 | MAR | US-23 | | | | 1320 | | RAMP C | | | 0.25 | 0.25 | 0.05 | 304 | | | 551 | 34 | | | | | | | | |
| 1 | MAR | US-23 | | | | 739 | | RAMP D | | | 0.14 | 0.14 | 0.05 | | | | 120 | | | | | | | | | |
| 1 | MAR | US-23 | | | | | | SR-423 / 231 INTERCHANGE | | | | | | | | | | | | | | | | | | |
| 1 | MAR | US-23 | | | | 1056 | | RAMP A | | | 0.20 | 0.20 | 0.05 | 429 | | | 643 | 60 | | | | | | | | |
| 1 | MAR | US-23 | | | | 1056 | | RAMP B | | | 0.20 | 0.20 | 0.05 | 355 | | | 607 | 68 | | | | | | | | |
| 1 | MAR | US-23 | | | | 1320 | | RAMP C | | | 0.25 | 0.25 | 0.05 | | | | 120 | | | | | | | | | |
| 1 | MAR | US-23 | | | | 1531 | | RAMP D | | | 0.29 | 0.29 | 0.05 | | | | 120 | | | | | | | | | |
| 1 | MAR | US-23 | | | | | | LINN-HIPSHER RD. | | | | | | | | | | 56 | | | | | | | | |
| TOTALS | | | | | | | | | 0.00 | 0.00 | 22.19 | 22.19 | 19.49 | 2690 | | | 5891 | 408 | | | | | | | | |

PAVEMENT MARKING SUBSUMMARY

MAR-23-10.63

I:\Projects\mar\023\1063.000\DGN\ts02.dgn 02-MAR-2000 3:12PM bkinsell

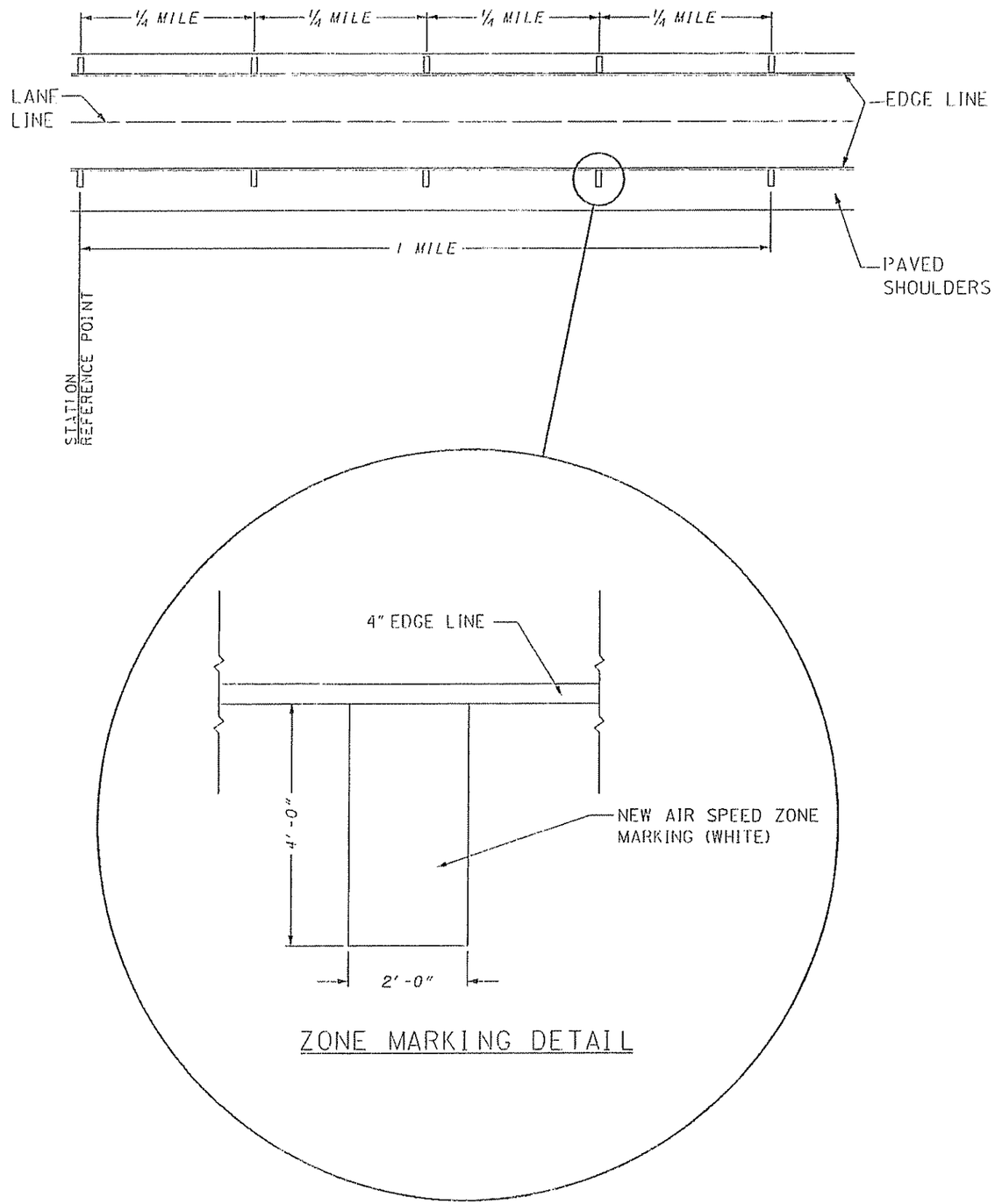


NOTES:

1. ON DIVIDED HIGHWAYS, MARKINGS ARE NOT REQUIRED TO BE ON BOTH ADJACENT ROADWAYS UNLESS SPECIFIED.

2. EACH AIR SPEED ZONE SHALL CONSIST OF TEN WHITE 24" X 48" TRANSVERSE PAVEMENT MARKINGS.

3. THE CONTRACTOR SHALL NOTIFY THE DISTRICT SURVEYOR AT 1-(740)363-1251, EXTENSION 250, FIVE WORKING DAYS PRIOR TO THE PLANNED PAINTING OF THE AIR SPEED ZONES.

4. THE MARKINGS SHALL BE LAID OUT BY A REGISTERED SURVEYOR.

5. THE QUARTER MILE SURFACE MEASUREMENTS (NOT HORIZONTAL PROJECTION) SHALL BE VERIFIED BY THE REGISTERED SURVEYOR.

6. A LETTER OF VERIFICATION SHALL BE FILED AT THE LOCAL OR NEAREST STATE HIGHWAY PATROL OFFICE WHICH OVERSEES SAID ZONES. A SAMPLE LETTER WILL BE PROVIDED AT THE PRE-CONSTRUCTION MEETING.

AIR SPEED ZONES

| PART | COUNTY | ROUTE | LOCATION SLM | SIDE | 644 SPECIAL AIR SPEED ZONE MARKING SF |
|---|---|---|---|---|---|
| 1 | MAR | 23 | 18.00 | NB | 80 |
| 1 | MAR | 23 | 18.00 | SB | 80 |
| TOTAL CARRIED TO GEN. SUM.: | | | | | 160 |

PLAN NO.

AIR SPEED ZONES DETAILS

MAR-23-10.63

14/17

t:\Projects\mar\023\063.000\DGN\asz4.dgn 02-MAR-2000 3:13PM bkinsell

MATERIALS SUPPLIED BY THE DEPARTMENT:
ALL MATERIALS ARE TO BE CONTRACTOR FURNISHED, EXCEPT THAT THE DEPARTMENT SHALL SUPPLY RPM MATERIALS IN THE QUANTITIES SHOWN HEREIN TO THE CONTRACTOR. PAY ITEMS FOR THE DEPARTMENT SUPPLIED MATERIALS SHALL BE INDICATED AS "INSTALLATION ONLY". THE QUANTITY AND TYPE OF DEPARTMENT SUPPLIED MATERIALS ARE SHOWN ON THIS SHEET.

THE CONTRACTOR SHALL PICK UP THE DEPARTMENT SUPPLIED RPM MATERIALS AT THE OPI WAREHOUSE, 315 PHILLIPI ROAD, COLUMBUS, OHIO 43228. FOR SOME PROJECTS HAVING QUANTITIES OF LESS THAN 20 RPMS, THE CONTRACTOR MAY PICK UP RPM MATERIALS AT THE DISTRICT OFFICES. QUANTITIES OVER 20 RPMS WILL BE PICKED UP AT THE RECYCLER'S WAREHOUSE OR AS ARRANGED WITH THE DISTRICT. THE CONTRACTOR SHALL PICK UP DEPARTMENT SUPPLIED RPM MATERIALS AT THE SPECIFIED LOCATION(S) FOR TRANSPORT TO THE WORK SITE OR TO THE CONTRACTOR'S STORAGE FACILITY. THE RECYCLED RAISED PAVEMENT MARKER (RPM) AUTHORIZATION FORM IS TO BE SIGNED BY THE DISTRICT CONSTRUCTION ENGINEER PRIOR TO PICK UP OF THE RPMS. THE CONTRACTOR SHALL NOTIFY THE DISTRICT AND/OR THE PARTIES LISTED ON THE AUTHORIZATION FORM IN WRITING AT LEAST FIVE (5) CALENDAR DAYS PRIOR TO PICK UP OF THE DEPARTMENT SUPPLIED MATERIALS. THE CONTRACTOR SHALL STORE THE RPMS WITHOUT DAMAGE OR CONTAMINATION WITH FOREIGN MATTER. A DEDUCTION IN THE AMOUNT OF THE ACTUAL COST TO THE DEPARTMENT SHALL BE MADE FOR MATERIALS DAMAGED BY THE CONTRACTOR OR FOR CASTINGS RECEIVED BY THE CONTRACTOR WHICH WERE NOT INSTALLED AND WERE NOT RETURNED TO THE DEPARTMENT.

RETURN OF NON-PERFORMED RAISED PAVEMENT MARKER MATERIALS SUPPLIED BY THE DEPARTMENT:
RAISED PAVEMENT MARKER MATERIALS SUPPLIED BY THE DEPARTMENT, THAT ARE NON-PERFORMED SHALL BE CAREFULLY REPACKED OR PACKED IN THE BOXES IN THE SAME STYLE AND QUANTITY AS ORIGINALLY RECEIVED FROM THE DEPARTMENT. CASTING STYLES SHALL NOT BE MIXED WITHIN ANY ONE CONTAINER. THE CONTRACTOR SHALL CLEARLY MARK ON THE OUTSIDE OF EACH CONTAINER, THE COLOR OF THE PRISMATIC RETRO-REFLECTOR, THE STYLE OF CASTING. BOXES SHALL BE PLACED ON SKIDS OR PALLETS IN THE SAME STYLE (LOW PROFILE OR CONVENTIONAL, REFLECTORISED OR NON REFLECTORISED) AND NO MORE THAN 420 RPMS (OR 21 BOXES) ON ONE SKID.

ONLY USE THE BOXES SUPPLIED BY THE RAISED PAVEMENT MARKER RECYCLER. BOXES MUST BE MARKED WITH THE RECYCLER'S PART OR CATALOG NUMBER AND THE PROJECT NUMBER. THE RECYCLER'S CATALOG OR PART NUMBERS MAY BE OBTAINED FROM THE OFFICE OF TRAFFIC ENGINEERING IN COLUMBUS, OHIO OR FROM THE RECYCLER. BOXES NOT MARKED WITH THE PROPER RECYCLER'S CATALOG OR PART NUMBERS, AND THE DEPARTMENT'S PROJECT NUMBER WILL NOT BE ACCEPTED AT THE RECYCLER'S WAREHOUSE.

NON PERFORMED MATERIALS WILL BE RETURNED TO THE LOCATION AS SPECIFIED BY THE DISTRICT CONSTRUCTION ENGINEER WITHIN 30 DAYS OF THE COMPLETION OF THE PROJECT.

THE ABOVE WORK INCLUDING ALL LABOR, EQUIPMENT AND MATERIAL NEEDED TO PERFORM THE WORK, SHALL BE CONSIDERED INCIDENTAL TO THE RESPECTIVE PAY ITEM.

IF THE DEPARTMENT HAS TO REPACKAGE THE RPMS CORRECTLY, THE CONTRACTOR WILL BE ASSESSED THE ACTUAL COST FOR REPACKAGING THE MATERIALS BY THE DEPARTMENT'S FORCES.

LOADING OF MATERIALS SUPPLIED BY THE DEPARTMENT AT THE RECYCLER'S WAREHOUSE:

TRUCKS SHALL HAVE A LOADING HEIGHT OF 48 INCHES AND BE ABLE TO BACK UP FLUSH TO THE LOADING DOCK.
TRUCKS SHALL NOT HAVE ANY OBSTRUCTIONS OR PROTRUSIONS THAT PREVENT THE LOADING BY A STANDARD FORKLIFT OR LIFT TRUCK.

SEMI TRUCKS OR 20 FOOT COMMERCIAL TRUCKS ARE THE MOST APPROPRIATE TRUCKS FOR LOADS IN EXCESS OF 4 PALLETS (ONE PALLET = 21 BOXES = 2100 LBS)

STAKE BODY TRUCKS ARE APPROPRIATE TO LOAD LESS THAN 4 PALLETS, PROVIDED THE TRUCK IS RATED FOR THE LOAD AND THE LOAD CAN BE SAFELY SECURED FOR TRANSPORT BY CHAINING OR STRAPPING DOWN AS NEEDED.

PICKUP TRUCKS ARE APPROPRIATE FOR LOADS OF APPROXIMATELY ONE PALLET, PROVIDED THE PICKUP TRUCK IS RATED FOR THE LOAD AND THE LOAD CAN BE SAFELY SECURED FOR TRANSPORT.

THE RECYCLERS WAREHOUSE WILL NOT LOAD DUMP TRUCKS, TILT BED TRUCKS, AND NON COMMERCIAL MOVING VANS.
THE WAREHOUSE SUPERVISOR WILL REFUSE TO LOAD ANY TRUCK THAT IS UNSAFE TO LOAD OR UNSUITABLE FOR THE LOAD BEING PLACED ON THE TRUCK.

| DETAIL | | DETAIL | |
|---|---|---|---|
| 1 | TYPICAL CENTER LINE | 7 | ONE LANE BRIDGE |
| 2 | ACCELERATION LANE | 8 | STOP APPROACH |
| 3 | DECELERATION LANE | 9 | TWO WAY LEFT TURN LANE |
| 4 | 4 LANE DIVIDED TO 2 LANE TRANSITION | 10 | APPROACH W/LEFT TURN LANE |
| 5 | 4 LANE UNIDIVIDED TO 2 LANE TRANSITION | 11 | HORIZONTAL CURVE W/RADIUS LESS THAN 1250' |
| 6 | MULTILANE DIVIDED-CONTROLLED ACCESS | 12 | HORIZONTAL CURVE W/RADIUS LESS THAN 820' |

| LOCATION | | | | | | REFLECTOR TYPE | | | | | | | | | | | | | TOTAL | | | REMARKS |
|---|---|---|---|---|---|---|---|---|---|---|---|---|---|---|---|---|---|---|---|---|---|---|
| | | | | | | ONE-WAY | | | | TWO-WAY | | | | | | | | | 202 | 621 | 621 | |
| | | | | | | WHITE | | | YELLOW | WHITE WHITE | WHITE RED | | | | YELLOW RED | YELLOW YELLOW | | | RAISED PVMT MARKER RMVD FOR STORAGE | RAISED PVMT MARKER INSTALL ONLY | PRIS-MATIC RETRO-REFLECT | |
| PART | COUNTY | ROUTE | LOG BEG | LOG END | DETAIL | RIGHT EDGE LINE | | LANE LINE | LEFT EDGE LINE | RIGHT EDGE LINE | RIGHT EDGE LINE | CHANNELIZING LINE | | LANE LINE | LEFT EDGE LINE | CENTER LINE | | | | | | |
| | | | MI | MI | | 40' | 80' | 120' | 80' | 40' | 80' | 40' | 80' | 80' | 80' | 20' | 40' | 80' | EACH | EACH | EACH | |
| 1 | MAR | 23 | 10.63 | 19.97 | 6 | | | 822 | | | | | | | | | | | 1519 | 822 | 822 | MAINLINE NB AND SB |
| | | | | | | | | | | | | | | | | | | | | | | SR-309 INTERCHANGE |
| | | | | | 2 | | | | | | | 17 | | | 13 | | | | | 30 | 30 | RAMP A |
| | | | | | 3 | | | | | | | 3 | | | 15 | | | | | 18 | 18 | RAMP B |
| | | | | | 3 | | | | | | | 13 | | | 13 | | | | | 26 | 26 | RAMP C |
| | | | | | 2 | | | | | | | 3 | | | 19 | | | | | 22 | 22 | RAMP D |
| | | | | | | | | | | | | | | | | | | | | | 0 | WILLIAMSPORT RD. INTERCHANGE |
| | | | | | 2 | | | | | | | 5 | | | 12 | | | | | 17 | 17 | RAMP A |
| | | | | | 3 | | | | | | | 17 | | | 16 | | | | | 33 | 33 | RAMP B |
| | | | | | 3 | | | | | | | 13 | | | 15 | | | | | 28 | 28 | RAMP C |
| | | | | | 2 | | | | | | | 6 | | | 19 | | | | | 25 | 25 | RAMP D |
| | | | | | | | | | | | | | | | | | | | | | | SR-4 INTERCHANGE |
| | | | | | 2 | | | | | | | 4 | | | 12 | | | | | 16 | 16 | RAMP A |
| | | | | | 3 | | | | | | | 17 | | | 31 | | | | | 48 | 48 | RAMP B |
| | | | | | 3 | | | | | | | 15 | | | 17 | | | | | 32 | 32 | RAMP C |
| | | | | | 2 | | | | | | | 3 | | | 10 | | | | | 13 | 13 | RAMP D |
| | | | | | | | | | | | | | | | | | | | | | | SR-423 / 231 INTERCHANGE |
| | | | | | 3 | | | | | | | 17 | | | 14 | | | | | 31 | 31 | RAMP A |
| | | | | | 3 | | | | | | | 17 | | | 14 | | | | | 31 | 31 | RAMP B |
| | | | | | 2 | | | | | | | 3 | | | 16 | | | | | 19 | 19 | RAMP C |
| | | | | | 2 | | | | | | | 3 | | | 20 | | | | | 23 | 23 | RAMP D |
| TOTALS | | | | | | | | | | | | | | | | | | | 1519 | 1234 | 1234 | |

PAVEMENT SUBSUMMARY AND DETAILS

MAR-23-10.63



bkinsell 02-MAR-2000 3:13PM
R:\Projects\mar\023\10063.000\DGN\tal03.dgn

## FREEWAY & EXPRESSWAY MAINLINE MARKINGS

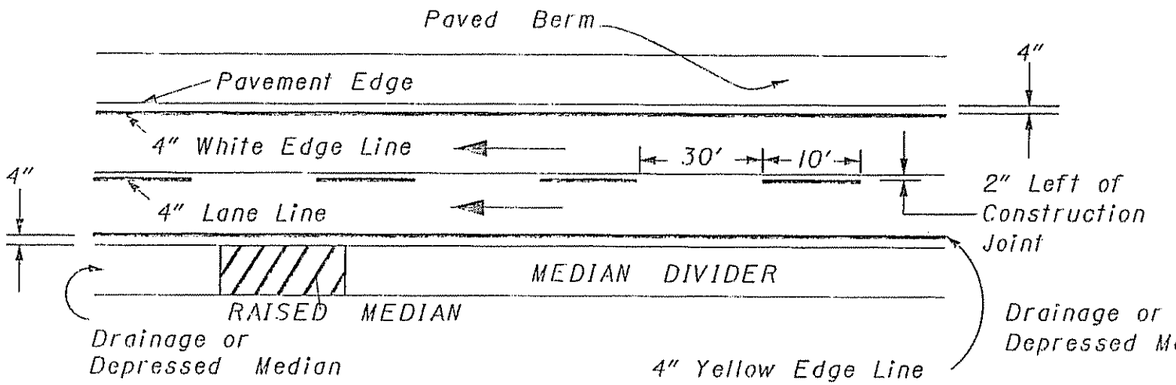


## MULTILANE DIVIDED & UNDIVIDED HIGHWAY MARKINGS

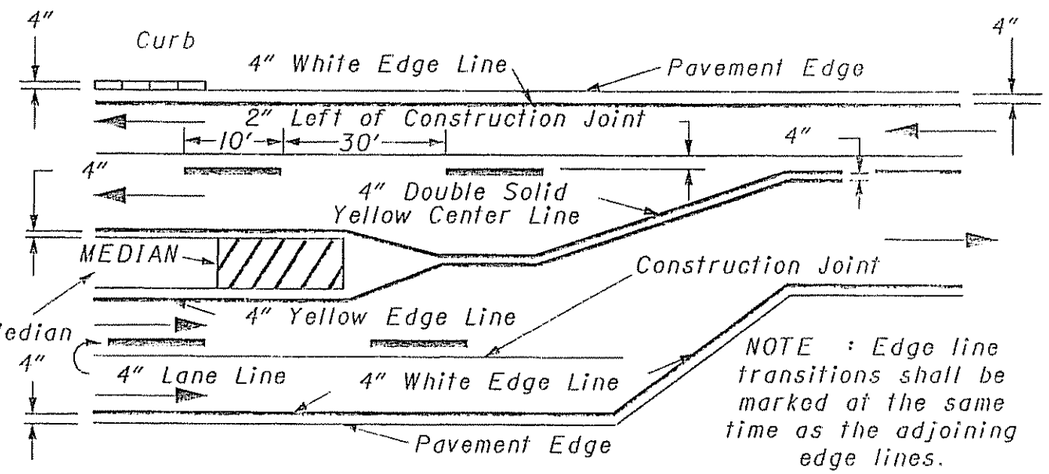


## TWO LANE MARKINGS

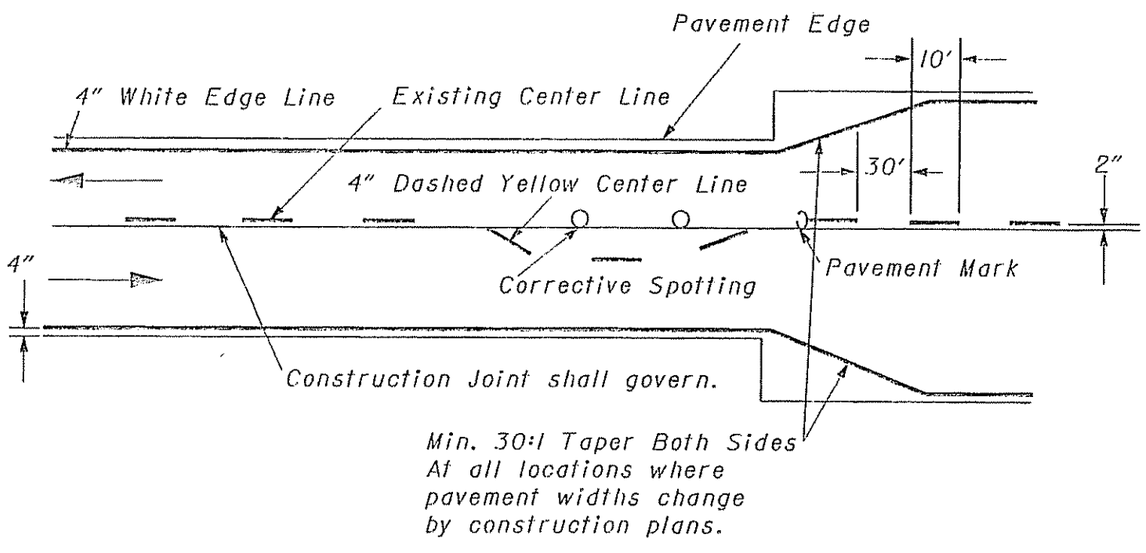


NOTES :

1. The distance from the pavement edge to the nearside edge of the edgeline may be increased with the approval of the engineer in order to maintain uniform lane width.
2. See TC-72.20M for entrance and exit ramp markings.
3. The cycle length for dashed lines shall be 10 feet plus or minus 6". The minimum length of dash shall be sufficiently long to maintain a 3:1 ratio between length of gap and length of dash.

PAVEMENT MARKING TYPICAL DETAILS

PLAN NO.

MAR-23-10.63

16/17

I:\Projects\mar\023\1063.000\DGN\pavmrktry.dgn 02-MAR-2000 3:13PM bkinsell