6QA-01
ELECTRICAL NOTES

1. POWER RECEPTACLE PEDESTAL

EQUAL TO SQUARE D #PAK 13P 60 INCH HIGH RAINPROOF PEDESTAL SET 25 INCHES IN THE GROUND AND CONCRETE ENCASED BELOW GRADE. PROVIDE A 30 AMPERE RECEPTACLE WITH A 30 AMPERE, 1 POLE GFI BREAKER. INCLUDE PROVISION FOR PADLOCKING. SEE LANDSCAPE ARCHITECTURE DRAWING 6F FOR LOCATION ADJACENT TO FLAGPOLE.

2. FLAGPOLE AND AREA LIGHTING

EXTEND 1½ CONDUIT BELOW FLAGPOLE FOUNDATION AND ENTER FROM BOTTOM (48" BELOW GRADE). EXTEND TO 45" ABOVE GRADE. MOUNT LIGHTS 10' ABOVE GRADE AS PER MANUFACTURER'S RECOMMENDATIONS. UTILIZE WINCH ENTRY FOR ACCESS.

3. TELEPHONE OUTLET MOUNTING HEIGHT

VERIFY TELEPHONE MOUNTING HEIGHT WITH LOCAL TELEPHONE COMPANY AND COORDINATE WITH TILE CONTRACTOR.

4. INSTALLATION OF ELECTRIC OUTLET BOXES AND CONDUIT

CONDUITS SHALL BE CONCEALED IN ALL AREAS EXCEPT ROOMS 104, 105, AND 108 WHERE CONDUITS AND DEVICES SHALL BE SURFACE MOUNTED.

5. DOOR SECURITY SWITCH - RM. 101, DDS-2

FURNISH & INSTALL EDWARDS NO. 502 DOOR SW. IN DOOR JAMB CUTOUT. EXTEND 1/2" CONDUIT TO SECURITY PANEL. USE 1/2" FLEXIBLE CONDUIT FOR CONNECTION TO JAMB SWITCH. ROUTED TO J.B. ABOVE CLG.

6. RAMP & PICNIC AREA LIGHTING

ALL RAMP & PICNIC AREA LIGHTING SHALL BE WIRED FOR 120/240 VOLT, 3-WIRE GROUNDED NEUTRAL CONNECTIONS. EXISTING LUMINAIRS WHICH ARE FOUND TO BE WIRED FOR 480 VOLTS SHALL BE REMOVED AND TURNED OVER TO AND REMAIN THE PROPERTY OF THE DISTRICT OFFICE OF THE OHIO DEPARTMENT OF TRANSPORTATION. THE 480 VOLT LUMINAIRS SHALL BE REPLACED IN LIKE KIND EXCEPT THEY SHALL BE FURNISHED W/240 VOLT BALLASTS AND WIRED FOR 120/240 VOLT, 3-WIRE GROUNDED NEUTRAL IN ACCORDANCE WITH 713.11.

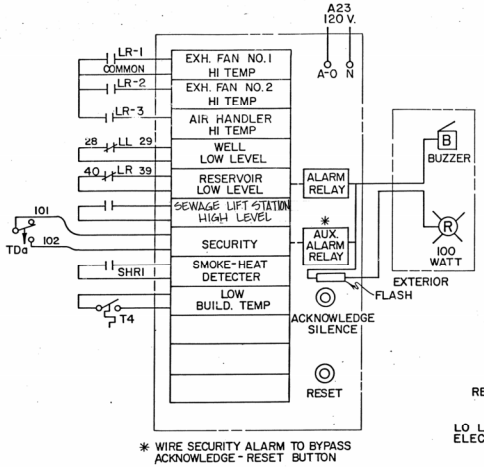

* WIRE SECURITY ALARM TO BYPASS ACKNOWLEDGE - RESET BUTTON

ALARM ANNUNCIATOR PANEL
NOT TO SCALE
6QA-02

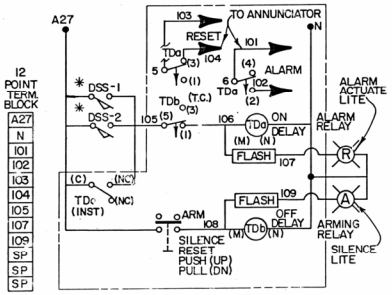

* SECURITY ALARM DOOR SWITCH CONTACTS CLOSE WHEN DOOR OPENS.

SECURITY PANEL
NOT TO SCALE
6QA-03

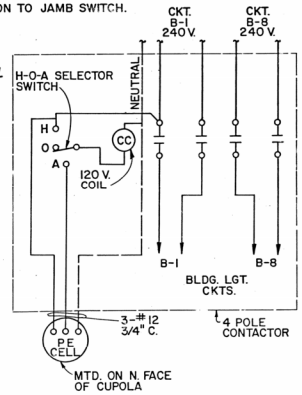

PE CONTROLLED BLDG. LGT. CKTS.
NOT TO SCALE
6QA-05

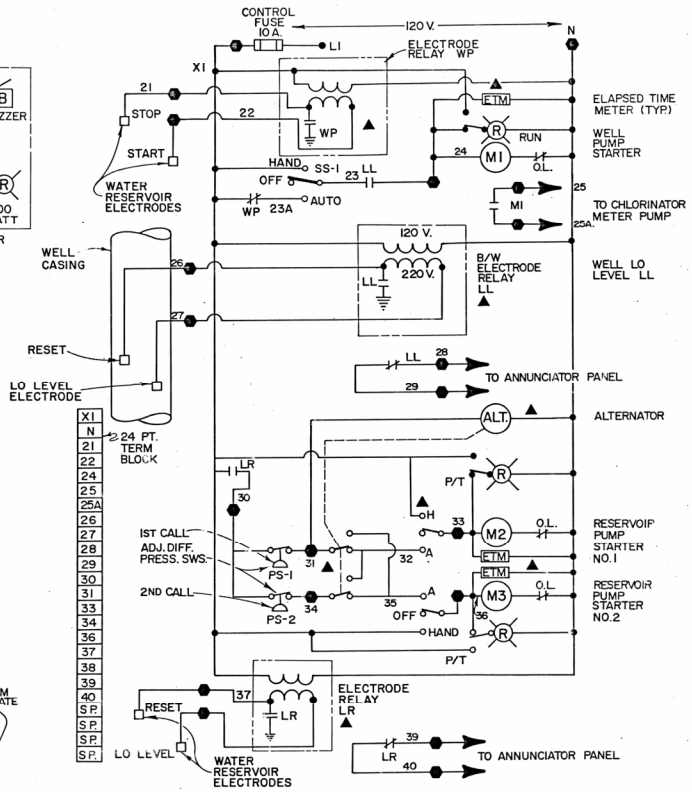

WELL RESERVOIR CONTROL PANEL
NOT TO SCALE
6QA-04

OHIO DEPARTMENT OF TRANSPORTATION DIVISION OF HIGHWAYS		
REVISIONS 8-3-84 11-1-84 1-28-85	MOTORIST SERVICES BUILDING AND STORAGE UNITS	SHEET NO. 6QA
	ARCHITECTS · WRIGHT/ KRITSCHGAU, ASSOCIATES, INC. 3600 TRABUE RD., COLUMBUS, OHIO ENGINEERS · JOHN E. FOSTER & ASSOCIATES, COLUMBUS, OHIO ENERGY TECHNOLOGIES · BATTELLE/ COLUMBUS LABORATORIES	DATE

PANEL "A" LITE SCHEDULE

225 AMP 42 POLE 120/240 VOLT 1 PHASE 60 HERTZ 3 WIRE S/N W/MAIN LUGS ONLY

CIRCUIT NO.	PANEL POSITION	BREAKER POLES/AMPS	DESCRIPTION	LOCATION	VOLTS	HP/FLA	WIRE SIZE	CONDUIT SIZE	CONNECTED WATTAGE	REMARKS
1	1-3	2-20	SPARE		240					
2	2-4	2-60	RAMP-AREA LITES	RM 105	240	41.5	6	1	10,000	CONTROL CONTACTOR
3	5-7	2-20	SPARE		240					
4	6-8	2-20	SPARE		240					
5	9	1-20	EXH. FAN #1	104	120	8.5	12	3/4"	720	TO H & V PANEL
6	10	1-20	EXH. FAN #2	108	120	8.5	12	3/4"	720	TO H & V PANEL
7	11	1-20	DAMPER	105	120V.	.5	12	3/4"	60	TO H & V PANEL
8	12	1-30	BLOWER	105	120V.	20	10	3/4"	2400	TO H & V PANEL
9	13-15	2-20	HAND DRYER	RM 103	240	10	12	3/4	2400	*
10	14-16	2-20	HAND DRYER	RM 107	240	10	12	3/4	2400	*
11	17	1-20	CHLORINATOR	RM 105	120	5.8	12	3/4	700	
12	18	1-20	SPARE		120					
13	19	1-20	CHILLER	RM 104	120	5.3	12	3/4	630	* FOR WATER FOUNTAIN
14	20	1-20	SPARE		120					
15	21	1-20	RECEPTACLE	RM 102, 103, 104	120	8.3	12	3/4	1000	*GFI BREAKER
16	22	1-20	RECEPTACLE	RM 106, 107, 108	120	8.3	12	3/4	1000	*GFI BREAKER
17	23	1-20	RECEPTACLE, DOOR	RM 105	120	8.3	12	3/4	1000	GFI BREAKER
18	24	1-20	RECEPTACLE	RM 101	120	8.3	12	3/4	1000	
19	25-27	2-20	HAND DRYER	RM 102	240	10	12	3/4	2400	*
20	26-28	2-20	HAND DRYER	RM 106	240	10	12	3/4	2400	*
21	29-31	2-20	HAND DRYER	RM 102	240	10	12	3/4	2400	*
22	30-32	2-20	HAND DRYER	RM 106	240	10	12	3/4	2400	*
23	33	1-20	SMOKE DETECTOR	RM 105	120	3	12	3/4	360	
24	34	1-30	RECEPTACLE	RM 101	120	8.3	10	3/4	1000	
25	35	1-30	RECEPTACLE, POWER PEDESTAL	EXTERIOR	120	13.3	10	3/4	1600	GFI BREAKER AT RECEPTACLE
26	36	1-15	SPARE		120					
27	37-39	2-30	SPARE		240					
28	38-40	2-30	SPARE		240					
29	41-42	2-30	SPARE		240					

* DENOTES CKTS. ROUTED IN RESTROOM SERVICE RACEWAYS

TOTAL CONNECTED WATTS 36,590

PANEL "B" LITE SCHEDULE

100 AMP 20 POLE 120/240 VOLT 1 PHASE 60 HERTZ 3 WIRE S/N W/MAIN LUGS ONLY

CIRCUIT NO.	PANEL POSITION	BREAKER POLES/AMPS	DESCRIPTION	LOCATION	VOLTS	HP/FLA	WIRE SIZE	CONDUIT SIZE	CONNECTED WATTAGE	REMARKS
1	1-3	2-20	OVERHANG	RM 101	240	7.3	10	3/4	1750	PE CONTROLLED
2	2	1-20	CEILING LITES	RM 104, 105 108	120	4.1	12	3/4	500	—
3	4	1-20	SPARE		120					—
4	5	1-20	SPARE		120					—
5	6	1-20	TOILET-LITES	RM 102, 106, 107	120	5.7	12	3/4	680	CONTINUOUS
6	7	1-20	TOILET-LITES	RM 102, 103 106	120	5.7	12	3/4	680	CONTINUOUS
7	8-9	2-20	CEILING LITES	RM 101	240	1.8	12	3/4	400	CONTINUOUS
8	10-11	2-20	CLG. GRD, FLAG	RM. 101 & EXTERIOR	240	10.0	12	3/4	2400	PE CONTROLLED
9	12	1-20	SPARE		120					
10	13	1-20	SPARE		120					
11	14-15	2-20	SPARE		120					
12	16	1-20	SPARE		120					
13	17	1-20	PEDESTAL BOOTHS	SEE UTILITY PLAN	120		10	1	200	
14	18-19	2-20	SPARE		240					
15	20	1-20	SPARE		120					

NOTE: FURNISH AND INSTALL ALL BREAKERS, SIZE AND POLES AS SHOWN FOR ALL PANELS.

TOTAL CONNECTED WATTS 6610

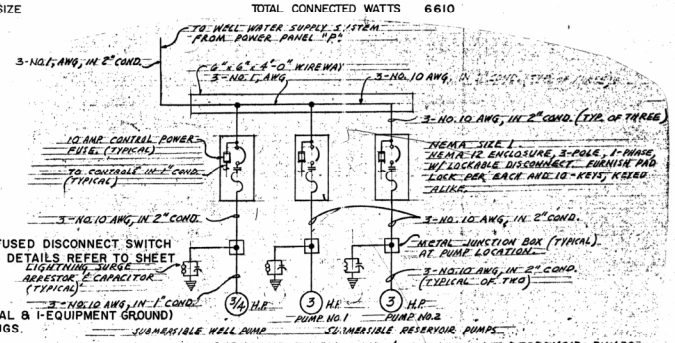

ONE LINE DIAGRAM SUBMERSIBLE WELL PUMP & SUBMERSIBLE RESERVOIR PUMPS

N.T.S.

6R-01

20 AMP., 2 BLADE 2FUSES, S/N, C/L FUSED DISCONNECT SWITCH FOR EXIT LIGHTS CIRCUIT ONLY. FOR DETAILS REFER TO SHEET NO. 6Q.

4 NO. 12 IN 3/4" COND. (2-HOT, 1-NEUTRAL & 1-EQUIPMENT GROUND) WIRE TO INCOMING MAIN SERVICE LUGS.

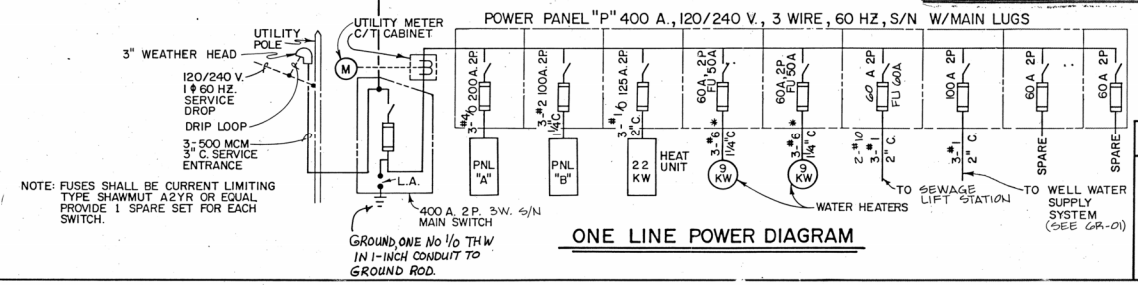

NOTE: FUSES SHALL BE CURRENT LIMITING TYPE SHAWMUT A2YR OR EQUAL. PROVIDE 1 SPARE SET FOR EACH SWITCH.

ONE LINE POWER DIAGRAM

OHIO DEPARTMENT OF TRANSPORTATION DIVISION OF HIGHWAYS		
REVISIONS 10-24-84 11-23-84 1-28-85	MOTORIST SERVICES BUILDING AND STORAGE UNITS	SHEET NO. 6R
	ARCHITECTS: WRIGHT / KRITSCHGAU ASSOCIATES, INC. 3600 TRABUE RD., COLUMBUS, OHIO ENGINEERS: JOHN E. FOSTER & ASSOCIATES, COLUMBUS, OHIO ENERGY TECHNOLOGIES: BATTELLE/COLUMBUS LABORATORIES	DATE

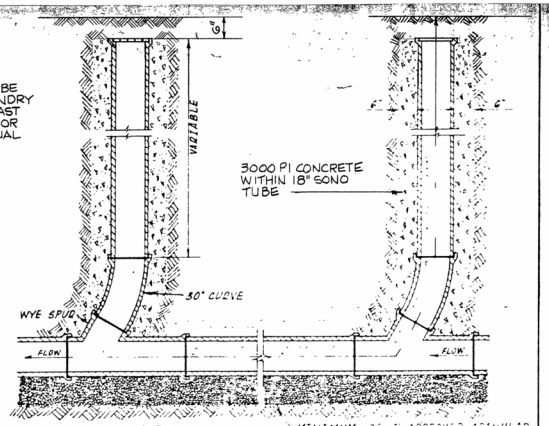

CLEANOUT

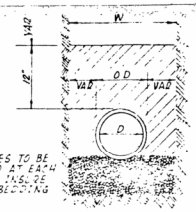

TYPICAL TRENCH SECTION

SCALE: 1" = 1'-0"

PIPE SIZE D	MAX TRENCH WIDTH W	PIPE SIZE D	MAX TRENCH WIDTH W
8" 15	3'-0"	60"	7'-6"
18"	3'-6"	66"	8'-0"
21"	3'-6"	72"	8'-6"
24"	4'-0"	84"	9'-6"
27"	4'-0"	90"	10'-0"
30"	4'-6"	96"	10'-6"
36"	5'-0"	102"	11'-0"
42"	5'-6"	108"	12'-0"
48"	6'-0"	114"	12'-6"
54"	7'-0"	120"	13'-0"

THIS STANDARD IS FOR VITRIFIED PIPE SANITARY SEWERS IN NON-PAVED AREAS ONLY. SEE GENERAL NOTES FOR ABS & PVC TRENCH CONDITIONS.

MEDINA COUNTY
MED-71-22.54 (S.B.)
IR-71-4(67)224 PART II

F.H.W.A. REGION	STATE	PROJECT	
5	OHIO	MED-71-22.54	

4 of 4

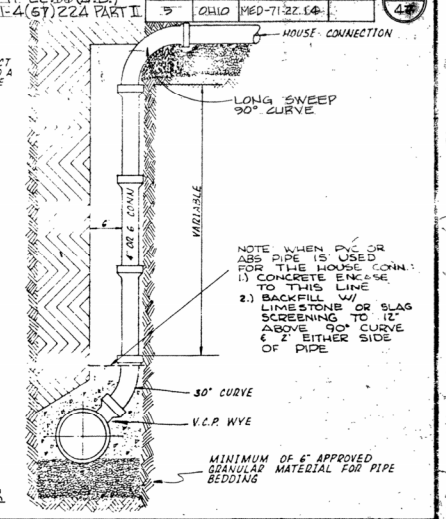

TYPICAL RISER

SCALE: 1" = 1'-0"

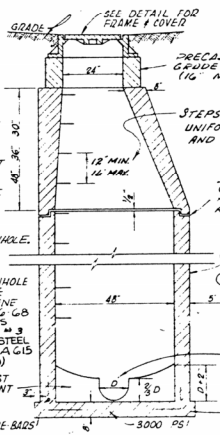

NOTE: MANHOLE STEPS SHOULD FACE THE STREET ON THE LARGEST PORTION OF THE SANITARY ESM'T. UNLESS AN INLET OR OUTLET PIPE INTERFERES, THEN STEPS SHOULD BE PLACE IN THE BEST LOCATION TO FACILITATE ENTRANCE OR EXIT TO THE MANHOLE.

NOTE ALL MANHOLE STEPS SHALL BE POLYPROPYLENE (ASTM D 2146 68 TYPE II CLASS 16900) AND #3 DEFORMED STEEL ROD (ASTM A615 GRADE 60)

STANDARD SANITARY MANHOLE

SCALE ¼" = 1'-0"

NOTE 4 FOOT PIPE SECTIONS MUST CONNECT INTO MANHOLE

MANHOLE COVER & FRAME

SCALE: 1" = 1'-0"

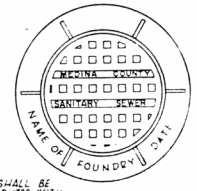

MANHOLE FRAME SHALL BE NEENAH FOUNDRY R-1782 WITH R-1780-3000T COVER OR EAST JORDAN 1100X WORKS FRAME #1710 WITH TYPE "A" COVER OR APPROVED EQUAL

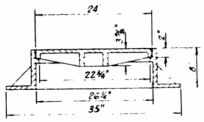

BELL HOLES

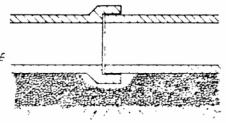

WYE DETAIL

SCALE: 1" = 10'

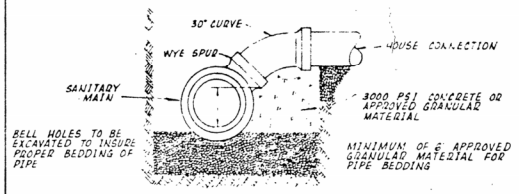

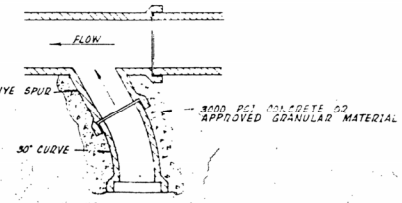

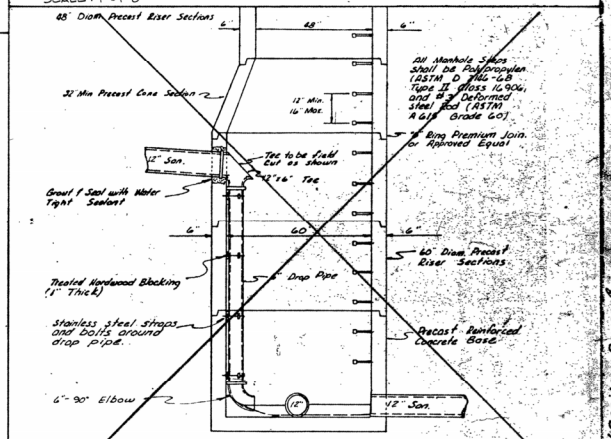

DELETE

INSIDE SANITARY DROP MANHOLE

(Scale: 1" = 2'-0")

ALTERNATE MANHOLE BASE

SCALE ¼" = 1'-0"

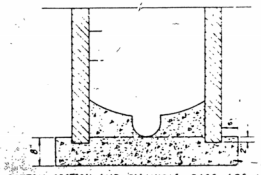

NOTE: IF BOTTOM SECTION AND MANHOLE BASE ARE NOT MONOLITHICALLY POURED AND TIED WITH #5 RE-BARS, THIS BASE IS REQUIRED.

STRAW BALE DIKE *

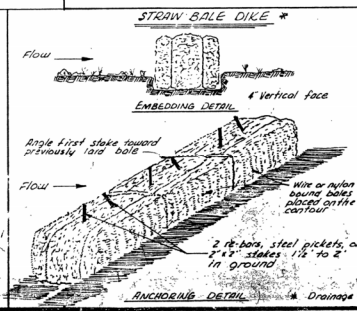

Construction Specifications

1. Bales shall be placed in a row with ends tightly abutting the adjacent bales.
2. Each Bale shall be embedded in the soil a minimum of 4".
3. Bales shall be securely anchored in place by stakes or re-bars driven through the bales. The first stake in each bale shall be angled toward previously laid bale to force bales together.
4. Inspection shall be frequent and repair or replacement shall be made promptly as needed
5. Bales shall be removed when they have served their usefulness so as not to block or impede storm flow or drainage.

* Drainage area less than ½ acre

MEDINA COUNTY SANITARY ENGINEERS
STANDARD DETAIL SHEET

SANITARY SEWER DETAILS

SCALES: AS SHOWN — MARCH, 1981

REVISIONS: MARCH, 1981; AUG. 1982 DROP M.H. DETAIL and Riser DETAIL

PROJECT NO. | SHEET NO. of

M.C.S.E. STANDARD DETAILS (Sanitary Sewers)

SANITARY SEWER DETAILS

F.H.W.A. REGION	STATE	PROJECT	
5	OHIO	MED 71-22.14 SB	

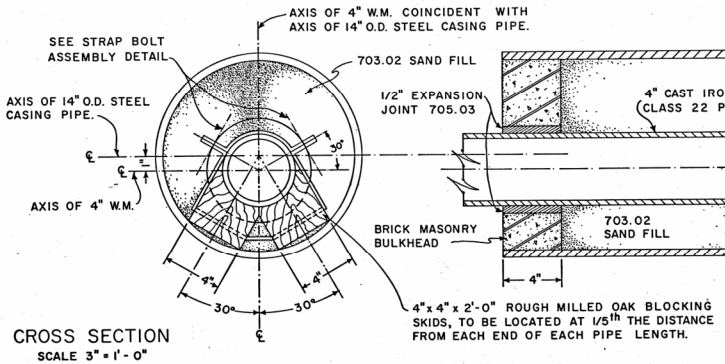

CROSS SECTION
SCALE 3" = 1'-0"

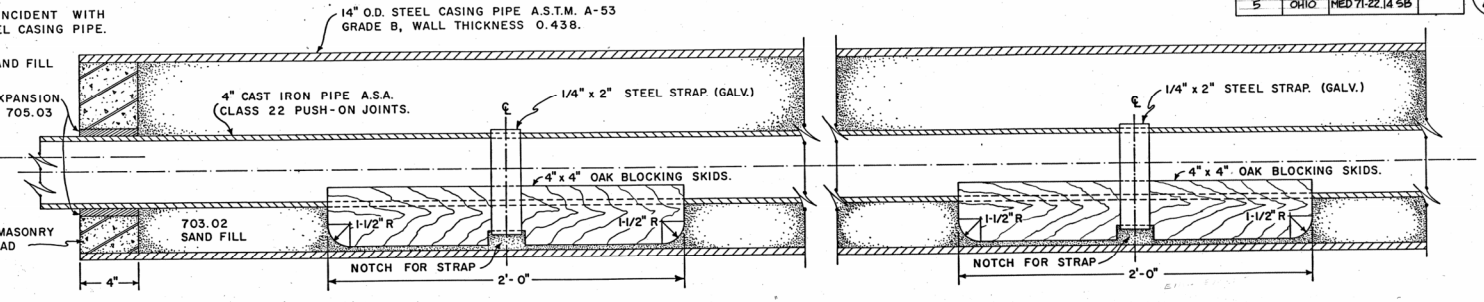

LONGITUDINAL ELEVATION
SCALE 3" = 1'-0"

SANITARY SEWER ENCASEMENT (SEE SHEET NO 17)

PAYMENT: THE 24-INCH O.D., A.S.T.M. A-53 GRADE "B" STEEL CASING PIPE, INCLUDING THE ROUGH MILLED OAK BLOCKING; 1/4-INCH STEEL STRAPS WITH BOLTS, NUTS AND WASHER ASSEMBLIES; MASONRY BULKHEADS AND 703.02 AGGREGATE SAND FILL, SHALL BE INCLUDED IN THE CONTRACT UNIT PRICE BID PER LINEAR FOOT FOR "ITEM SPEC.-24-INCH O.D.-0.594 INCH WALL CONDUIT, GRADE "B" STEEL CASING PIPE, JACKED AND BORED IN PLACE AS PER PLAN," WHICH PRICE AND PAYMENT SHALL INCLUDE THE FURNISHING OF ALL LABOR, MATERIALS, SMALL TOOLS AND EQUIPMENT REQUIRED TO COMPLETE THIS ITEM OF WORK. THE STEEL CASING PIPE SECTIONS SHALL BE JOINED BY BUTT WELDING IN ACCORDANCE WITH 513.17.

PAYMENT WILL BE MADE FOR THE SPECIFIED SANITARY SEWER INSTALLED IN CONDUIT GRADE "B" STEEL CASING PIPE AT THE CONTRACT UNIT PRICE BID PER LINEAR FOOT FOR "ITEM 603-15" SANITARY SEWER AS PER PLAN.

NOTE: NO TRENCH EXCAVATION OR EQUIPMENT SHALL BE CLOSER THAN 10-FEET TO THE EDGE OF PAVEMENT. TRENCHES SHALL BE ADEQUATELY SUPPORTED.

ALL STRAPS SHALL BE FABRICATED FROM AISI NO. C-1018, COLD FINISHED 1/4-INCH x 2-INCH FLAT BARS, WT. 1.700 LBS. PER FT. AND SHALL BE HOT-DIPPED GALVANIZED AFTER FABRICATION.

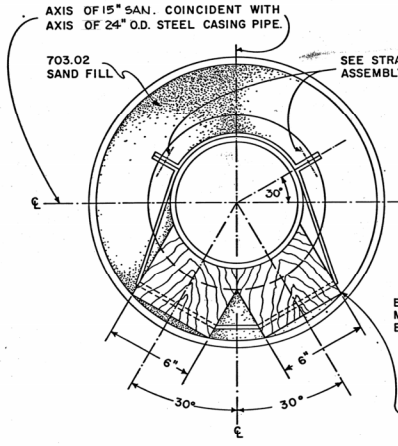

CROSS SECTION
SCALE 3" = 1'-0"

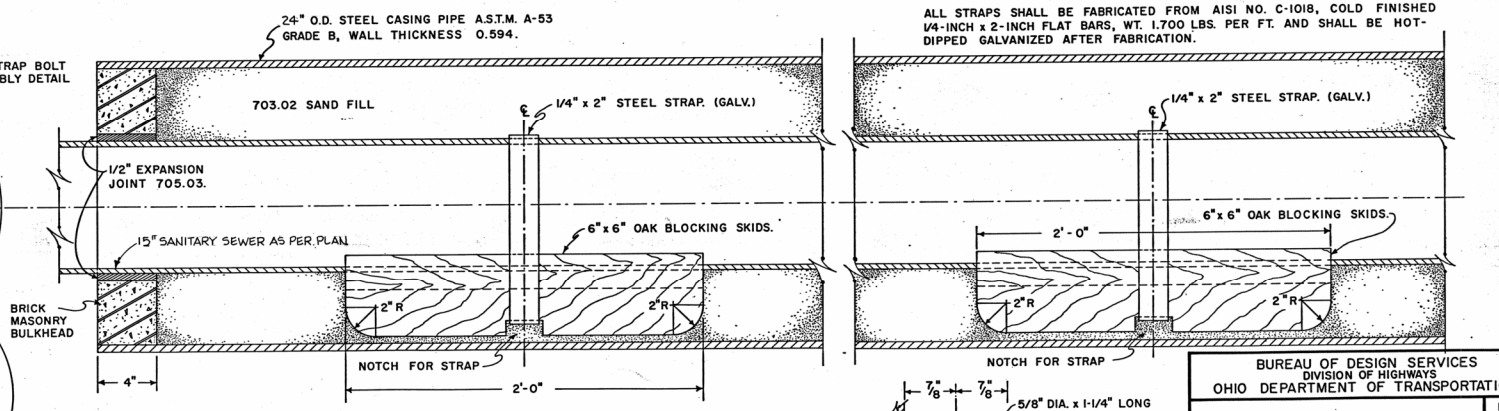

LONGITUDINAL ELEVATION
SCALE 3" = 1'-0"

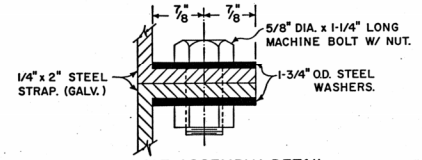

STRAP BOLT ASSEMBLY DETAIL
FULL SCALE

BUREAU OF DESIGN SERVICES
DIVISION OF HIGHWAYS
OHIO DEPARTMENT OF TRANSPORTATION

SANITARY SEWER ENCASEMENT

DATE

ORIGINAL

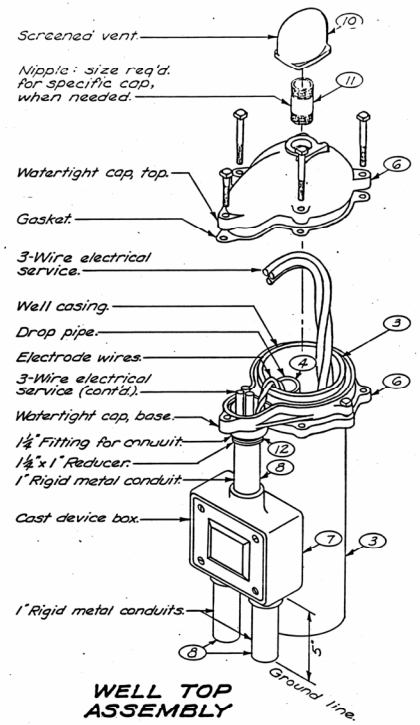

WELL TOP ASSEMBLY

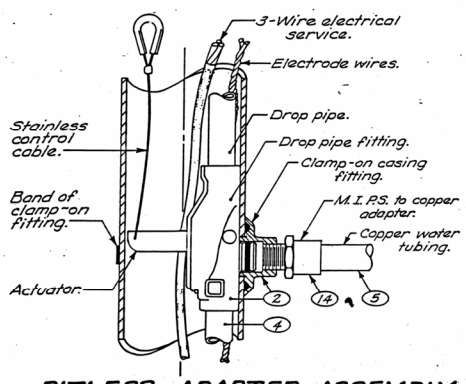

PITLESS ADAPTER ASSEMBLY

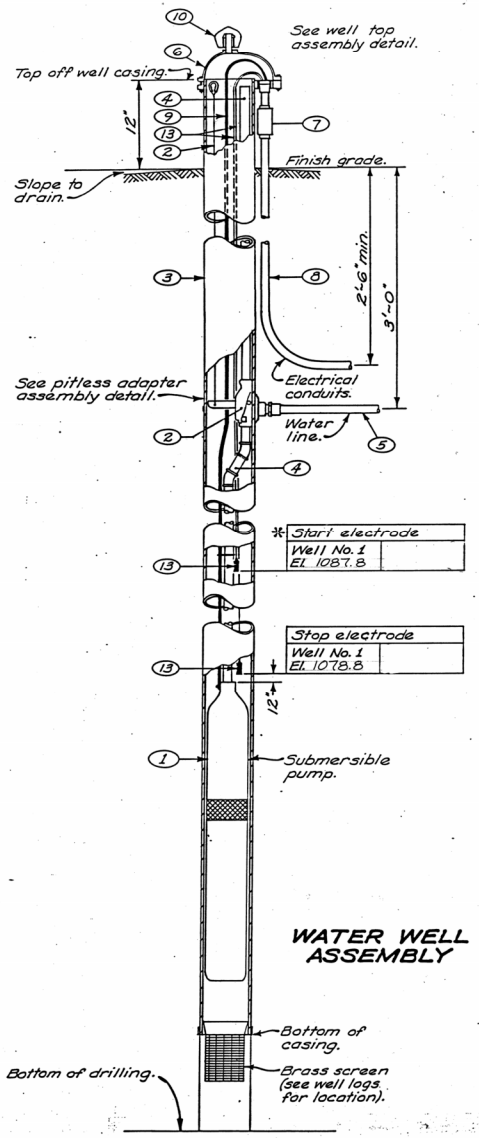

WATER WELL ASSEMBLY

WELL LOGS

WELL No. 1

South bound Rest Area No. 40.

Sta. 42 + 12.5, 32.5 ft. Lt. of ℄ S.B. R.A.

Field rate 11 GPM, by bail ( )/pump(✓)
Casing length 33.6 ft.
Strata at full depth gray sand & gravel
Recommended sieve size

Item		Elevation	Depth in feet below original grade
Top of casing	+1	1114.8	
Original grade		1113.8	
Finish grade		1113.8	
Static water level*		1092.8	21
Drawdown			15
Bottom of casing	38.6	1075.2	
stain. steel screen	Top	1076.8	
	Bottom	1066.8	
Total drilled depth		1066.8	47'

*If actual static water level is not as indicated, the start electrodes are to be set 5'-0" below measured level.

NOTES

1. SUBMERSIBLE PUMP SHALL BE R.E. MYERS CO., NO. 5J-32-J-511 OR APPROVED EQUAL BY CRANE CO. DEMING DIVISION: TAIT MFG. OR RAPIDAYTON. PUMP SHALL BE 3/4 H.P., 230 VOLTS, SINGLE PHASE, 60 HZ., AND HAVE A 3-WIRE MOTOR. EACH WELL PUMP INSTALLATION SHALL BE EQUIPPED WITH A LIGHTNING ARRESTOR, SUCH AS F.E. MYERS CO., NO. 12149 A10: GENERAL ELECTRIC CO., NO. 9L15BCC003 OR APPROVED EQUAL. CONNECT GROUND TO WELL CASING.

   WELL PUMPS NOT HAVING A CAPACITOR (3/4 H.P. & LARGER MOTOR) SHALL BE PROVIDED WITH A MAGNETIC ACROSS-THE-LINE STARTER AND SHALL BE INCLUDED IN THE CIRCUITRY OF THE WIRING DIAGRAM.

2. PITLESS ADAPTER ASSEMBLY WITH CLAMP-ON DISCHARGE FITTING BY BAKER MFG. CO., MONITOR DIVISION, NO. 5PL-6-1-U-C4 (FOR 1" DROP PIPE) OR NO. 5PL-6-1.2-U-C4 (FOR 1-1/4" DROP PIPE); OR APPROVED EQUAL BY DICKEN MFG. CO.; DUPLEX MFG. CO. OR WILLIAMS PRODUCT CO.

3. SIX INCH I.D. (6-5/8" O.D.) WELL CASING, ASTM A 53, GRADE B, STANDARD WEIGHT, SCHEDULE 40, GALVANIZED SEAMLESS STEEL PIPE AS PER 707.11.

4. ONE INCH I.D. DROP PIPE, ASTM A 53, GRADE B, STANDARD WEIGHT, SCHEDULE 40, GALVANIZED SEAMLESS STEEL PIPE AS PER 707.11.

5. TWO INCH (NOMINAL SIZE) TYPE "K" HARD DRAWN COPPER WATER TUBING PRESSURE LINE CONFORMING TO ASTM B 88. RUN IN 20 FOOT LENGTHS TO HYPO-CHLORINATOR IN BUILDING, THEN EXTEND TO RESERVIOR TANK IN LIKE MANNER. (SEE DRAWINGS RRA-8 AND RRA-9).

6. WATER-TIGHT CAP FOR 6" WELL CASING BY BAKER MFG. CO., MONITOR DIVISION NO. 6W; OR APPROVED EQUAL BY DICKEN MFG. CO.; DUPLEX MFG. CO. OR WILLIAMS PRODUCT CO.

7. CAST DEVICE BOX WITH FULL-FACE NEOPRENE GASKET AND BLANK COVER BY APPLETON ELECTRIC CO., NO. FDCC-1-100; OR APPROVED EQUAL BY KILLARK ELECTRIC MFG. CO., CROUSE-HINFS CO., KONDU CORP. OR ADALET MFG. CO.

8. ONE INCH DIAMETER RIGID FERROUS METAL ELECTRICAL CONDUITS PER 713.04.

9. THREE-WIRE ELECTRICAL SERVICE.

10. SCREENED WELL VENT TO MATCH CAP CHOSEN FROM NOTE 6 ABOVE.

11. NIPPLE, ASTM A 53, GRADE B, STANDARD WEIGHT, SCHEDULE 40, GALVANIZED SEAMLESS STEEL PIPE AS PER 707.11; IF REQUIRED FOR SPECIFIC CAP USED.

12. REDUCER (OF SIZE REQ'D.), IF NEEDED FOR FERROUS METAL ELECTRICAL CONDUITS AS PER 713.04.

13. ELECTRODES SHALL BE B/W CONTROLLER CORP., TYPE E-1P-SHIELDED, OR APPROVED EQUAL.

14. CAST BRASS MALE IRON PIPE SIZE TO COPPER ADAPTER AS PER ASTM B 16.18.

BUREAU OF DESIGN SERVICES
DIVISION OF HIGHWAYS
OHIO DEPARTMENT OF TRANSPORTATION

DATE 9/2/82

WATER WELL ASSEMBLY

RRA-7

APPROVED [signature] Engr. of Design Services

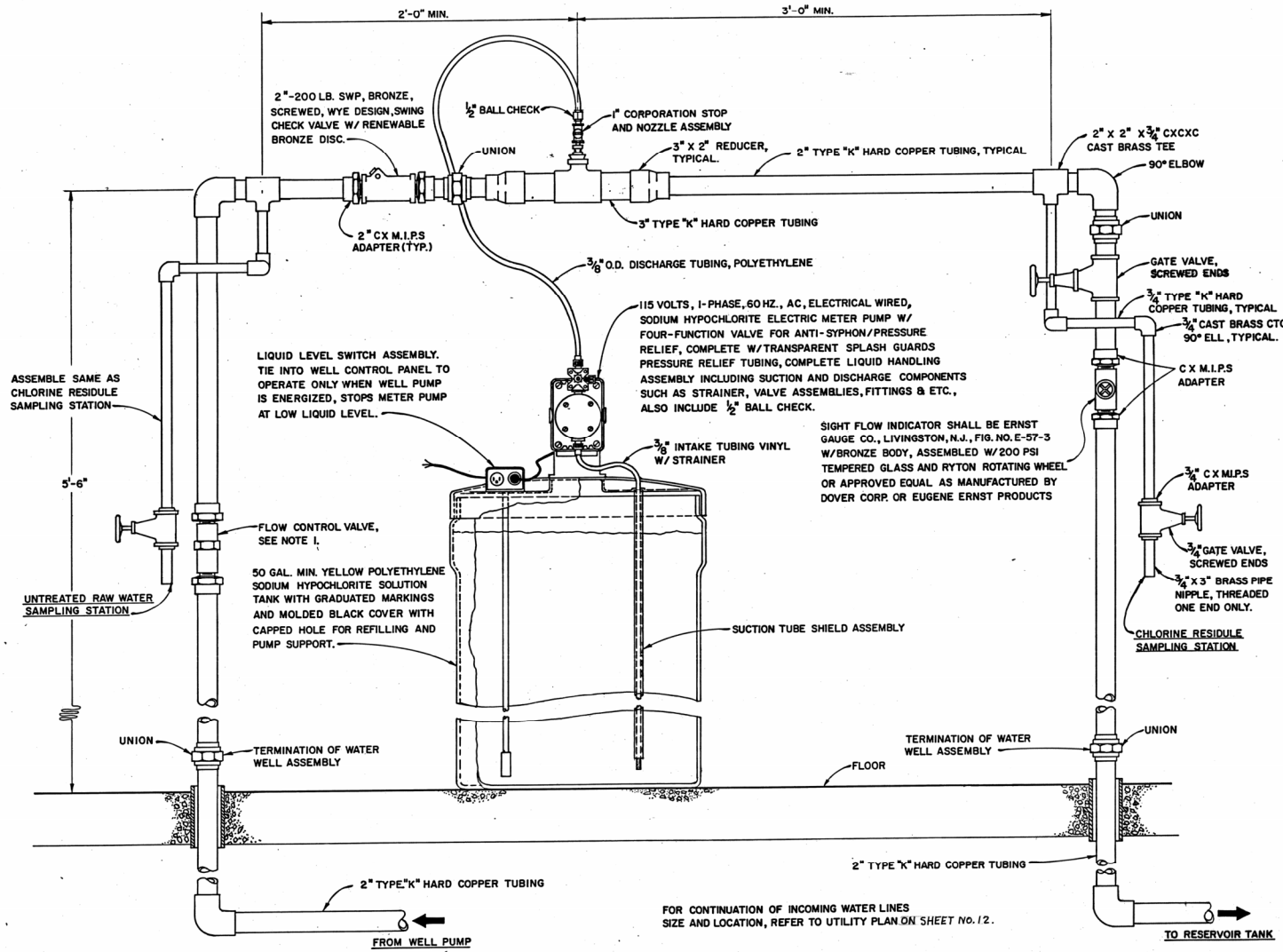

FOR CONTINUATION OF INCOMING WATER LINES SIZE AND LOCATION, REFER TO UTILITY PLAN ON SHEET No. 12.

NOTES

1. SOUTH BOUND REST AREA - INSTALL A DOLE VALVE CO. FLOW CONTROL VALVE NO. GX WITH 11 G.P.M. FLOW, 1" F.N.P.T. INLET AND OUTLET, FOR GENERAL USE, NICKEL PLATED.
2. ONLY 5 1/4% OR 15% UNDILUTED LIQUID, SODIUM HYPOCHLORITE SOLUTION SHALL BE USED IN THIS SYSTEM. THE SYSTEM MUST BE MAINTAINED AT A MINIMUM OF 1/3 FULL OR COMPLETLY FILLED (17 TO 50 GALLONS) TO FUNCTION PROPERLY.
3. THE PLUMBING CONTRACTOR SHALL FURNISH AND INSTALL 50 GALLONS OF UNDILUTED SODIUM HYPOCHLORITE SOLUTION AND REGULATE METER AND TEST FOR REQUIRED CHLORINE RESIDULE PER ENGINEERS APPROVAL.
4. THE SODIUM HYPOCHLORITE CHLORINATOR SYSTEM IS BASED ON ALL EQUIPMENT AND APPURTENANCES AS SPECIFIED AND/OR SHOWN ON PLANS, AS MANUFACTURED BY LIQUID METRONIC INCORPORATED. LIKE EQUIPMENT AND APPURTENANCES AS MANUFACTURED BY HVC COMPANY OF CINCINNATI (PROMINENT PUMP UNIT) OR APPROVED EQUAL MAY BE SUBMITTED, SUBJECT TO TO ENGINEERS APPROVAL.
5. M.I.P.S. X C. ADAPTER SHALL BE ADJACENT TO ALL VALVES, UNIONS AND SPECIAL DEVICES.

BUREAU OF DESIGN SERVICES
DIVISION OF HIGHWAYS
OHIO DEPARTMENT OF TRANSPORTATION

ROADWAY DEVELOPMENT | DATE 8-14-84

WATER SYSTEM
HYPOCHLORINATOR

RRA-8

APPROVED [signature] Engr. of Design Services

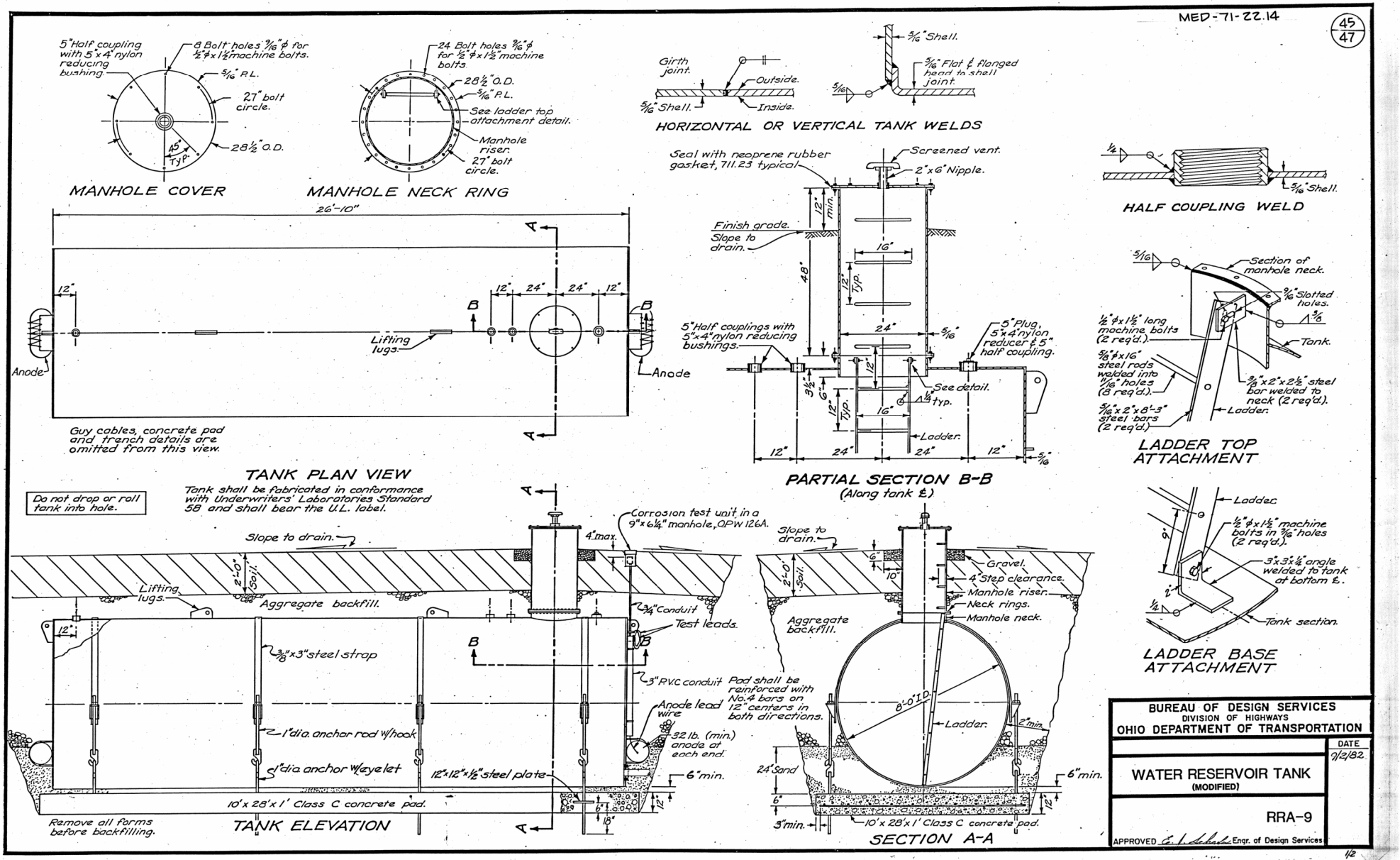

BUREAU OF DESIGN SERVICES DIVISION OF HIGHWAYS OHIO DEPARTMENT OF TRANSPORTATION	DATE
WATER RESERVOIR TANK (MODIFIED)	9/2/82
RRA-9	
APPROVED [signature] Engr. of Design Services	

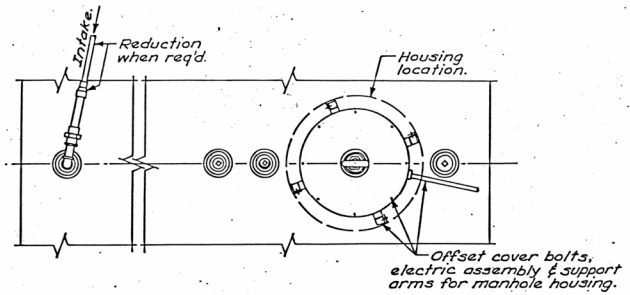

PLUMBING AND ELECTRIC ~ PLAN

MANHOLE HOUSING DETAILS

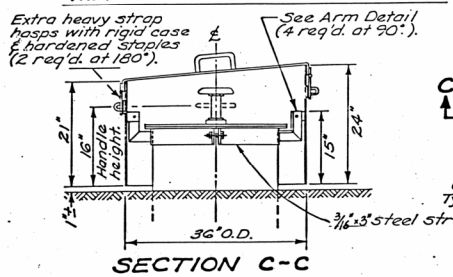

SECTION C-C

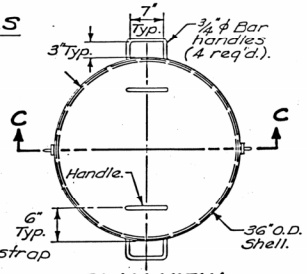

PLAN VIEW

WELDS: Arms, bar clips, handles, hasps and staples shall be fillet welded all around.

Shell and lid shall be coated inside and outside with red oxide primer (708.19) and green finish paint (708.09).

Arms shall be covered by the same outside coating required on the tank, manhole and manhole cover.

Two padlocks equal to Master No. 4BKA or Wilson Bohannon 660 and meeting the corrosion and keying requirements of 631.09 shall be furnished with each housing.

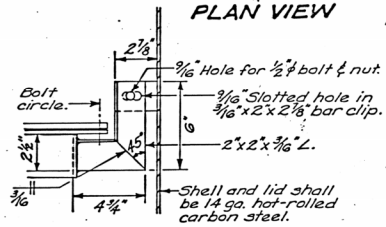

ARM DETAIL

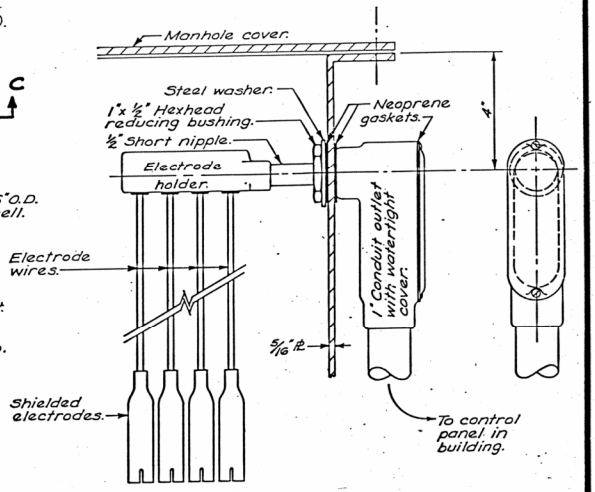

ELECTRICAL ASSEMBLY

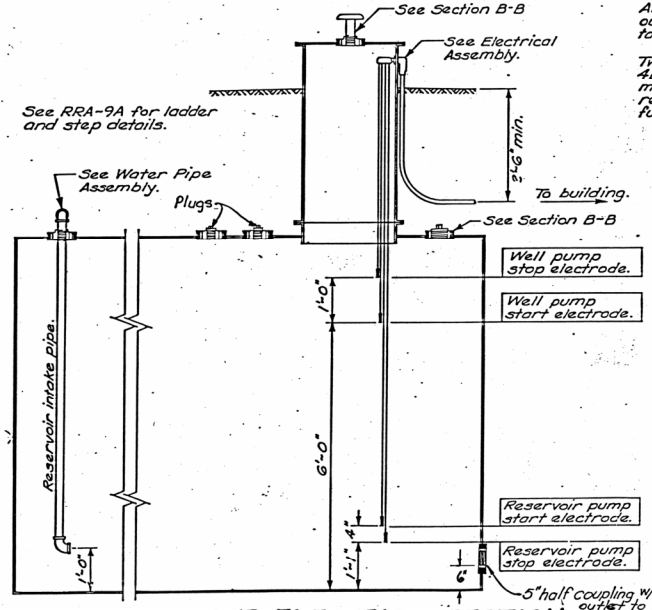

PLUMBING AND ELECTRIC ~ SECTION

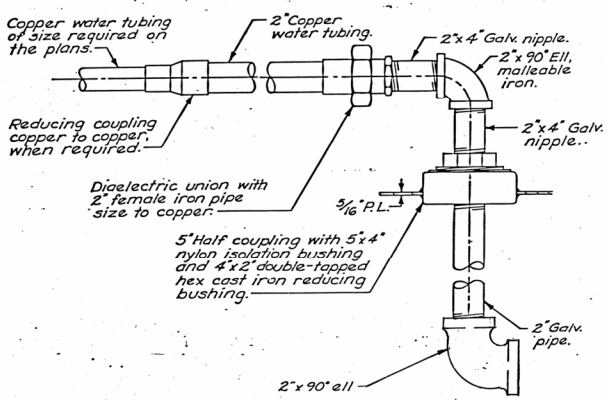

WATER PIPE ASSEMBLY

BUREAU OF DESIGN SERVICES
DIVISION OF HIGHWAYS
OHIO DEPARTMENT OF TRANSPORTATION

DATE 9/2/82

WATER RESERVOIR TANK
(MODIFIED)

RRA-9A

APPROVED C. L. Schafer Engr. of Design Services

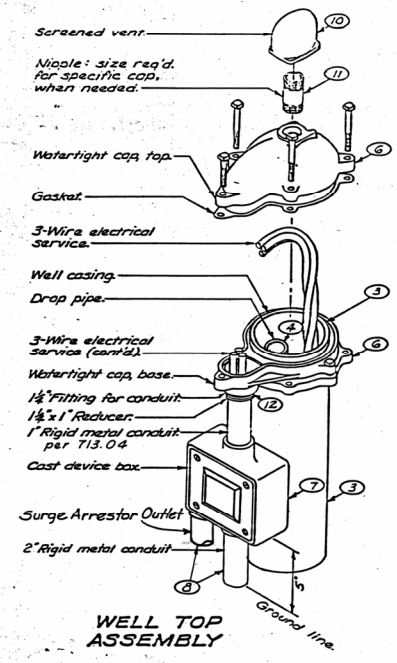

WELL TOP ASSEMBLY

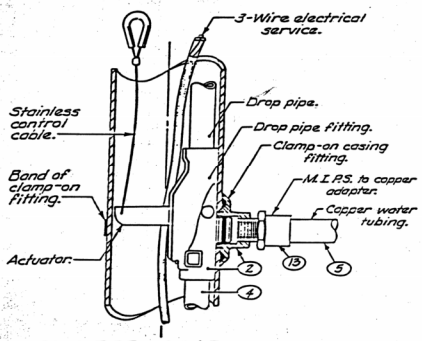

PITLESS ADAPTER ASSEMBLY

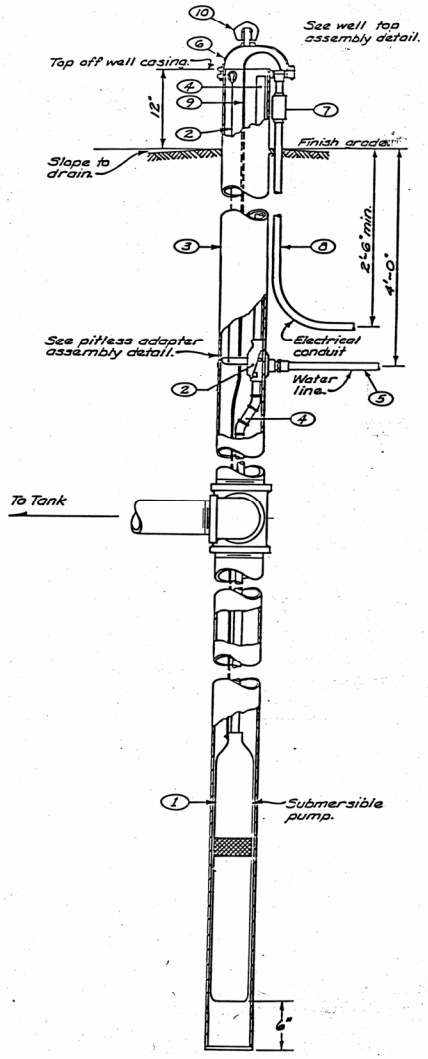

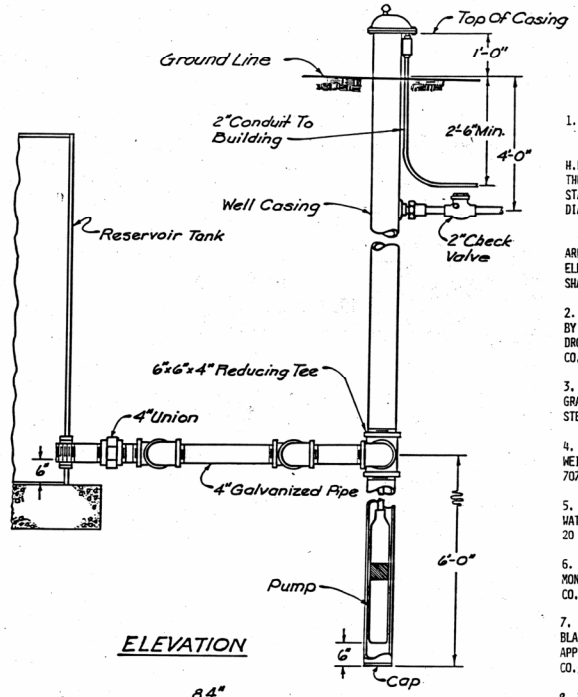

ELEVATION

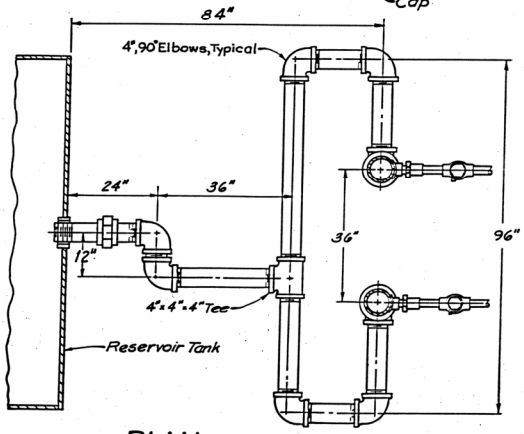

PLAN

NOTES

1. SUBMERSIBLE PUMP (2 REQ'D. PER REST AREA) SHALL BE F.E. MYERS CO. MODEL NO. SJF-3021-J3050 OR APPROVED EQUAL. PUMP SHALL BE 3 H.P., 230V., SINGLE PHASE, 60 HZ, AND HAVE 3-WIRE MOTOR. THE MOTOR SHALL BE PROVIDED WITH A MAGNETIC ACROSS-THE-LINE STARTER AND SHALL BE INCLUDED IN THE CIRCUITRY OF THE WIRING DIAGRAM.

EACH PUMP INSTALLATION SHALL BE EQUIPPED WITH A LIGHTING ARRESTOR, SUCH AS F.E. MYERS CO., NO. 12149A10; GENERAL ELECTRIC CO., NO. 9L15BCC003 OR APPROVED EQUAL. GROUND SHALL BE CONNECTED TO CASING.

2. PITLESS ADAPTER ASSEMBLY WITH CLAMP-ON DISCHARGE FITTING BY BAKER MFG. CO., MONITOR DIVISION, NO. SPL-6-U-C4 (FOR 1" DROP PIPE) OR APPROVED EQUAL BY DICKEN MFG. CO.; DUPLEX MFG. CO. OR WILLIAMS PRODUCT CO.

3. SIX INCH I.D. (6-5/8" O.D.) WELL CASING, ASTM A 53, GRADE B, STANDARD WEIGHT, SCHEDULE 40, GALVANIZED SEAMLESS STEEL PIPE AS PER 707.11.

4. 1" I.D. DROP PIPE, ASTM A 53, GRADE B, STANDARD WEIGHT, SCHEDULE 40, GALVANIZED SEAMLESS STEEL PIPE AS PER 707.11.

5. 2 INCH (NOMINAL SIZE) TYPE "K" HARD DRAWN COPPER WATER TUBING PRESSURE LINE CONFORMING TO ASTM B 88. RUN IN 20 FOOT LENGTHS TO HYDROPNEUMATIC PRESSURE TANK IN BUILDING.

6. WATER-TIGHT CAP FOR 6" WELL CASING BY BAKER MFG. CO., MONITOR DIVISION NO. 6W; OR APPROVED EQUAL BY DICKEN MFG. CO.; DUPLEX MFG. CO. OR WILLIAMS PRODUCT CO.

7. CAST DEVICE BOX WITH FULL-FACE NEOPRENE GASKET AND BLANK COVER BY APPLETON ELECTRIC CO., NO. FDCC-1-100; OR APPROVED EQUAL BY KILLARK ELECTRIC MFG. CO., CROUSE-HINES CO., KODU CORP. OR ADALET MFG. CO.

8. TWO INCH DIAMETER RIGID FERROUS METAL ELECTRICAL CONDUIT PER 713.04.

9. THREE-WIRE ELECTRICAL SERVICE.

10. SCREENED WELL VENT TO MATCH CHOSEN FROM NOTE 6 ABOVE.

11. NIPPLE, ASTM A 53, GRADE B, STANDARD WEIGHT, SCHEDULE 40, GALVANIZED SEAMLESS STEEL PIPE AS PER 707.11; IF REQUIRED FOR SPECIFIC CAP USED.

12. REDUCER (OF SIZE REQ'D.), IF NEEDED FOR FERROUS METAL ELECTRICAL CONDUIT AS PER 713.04.

13. CAST BRASS MALE IRON PIPE SIZE TO COPPER ADAPTER AS PER ASTM B 16.13.

BUREAU OF DESIGN SERVICES
DIVISION OF HIGHWAYS
OHIO DEPARTMENT OF TRANSPORTATION

ROADSIDE DEVELOPMENT

DATE 3/8/84

RESERVOIR PUMP DETAILS

RRA-10

APPROVED _____ Engr. of Design Services

CALC. BY	7106
DATE	1-10-84
CHKD. BY	
DATE	

MEDINA COUNTY
MED-71-22.14

OHIO

FHWA REGION 5

MEDINA COUNTY
MED-71-22.14 (S.B.)
IR-71-4(57)224 PART I

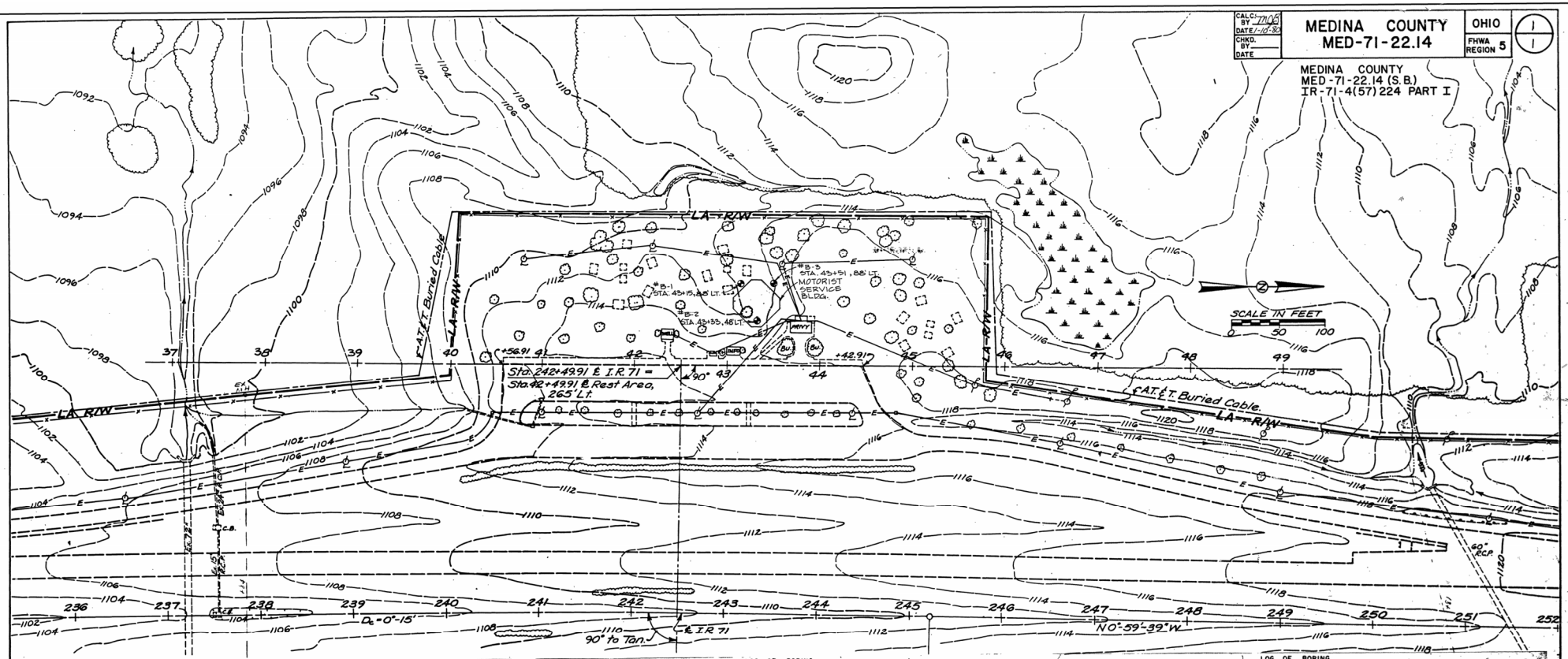

LOG OF BORING

Date Started 11-15-82 Sampler: Type SS Dia 1 3/8" Water Elev 1109.4'
Date Completed 11-15-82 Casing: Length Dia
Boring No. B-1 Station & Offset 43+15 88' LT. Surface Elev. 1111.9'
Project Identification: MEDINA MED - 71 - 22.14 (SB) SUBSURFACE INVESTIGATION RENOVATION TO MOTORIST FACILITIES

Elev	Depth	Std. Pen. (N)	Description	ALLOW. BEAR. CAP. TSF	Field No.	Lab Nos. So	% Agg.	% C.S.	% F.S.	% Silt	% Clay	L.L.	P.I.	W.C.	SHTL Class
1111.9	0														
1109.4	2														
1106.9	4	2/5/8	BROWN SANDY CLAYEY SILT	2.5	1	30899	7	6	12	40	35	32	8	20	A-4a
1104.4	6	6/7/13	BROWN SANDY CLAYEY SILT W/ ST. FRAG.S	3.0	2	30900	14	9	12	36	29	27	7	15	A-4a
1101.9	8	3/6/9	BROWN SANDY CLAYEY SILT	2.5	3	30901	4	6	9	44	37	28	7	17	A-4a
1099.4	10	4/8/9	GRAY SANDY CLAYEY SILT W/ ST. FRAG.S	2.5	4	30902	11	8	13	39	29	22	5	13	A-4a
1096.9	12	5/6/10	GRAY SANDY CLAYEY SILT	2.5	5	30903	8	5	12	43	32	26	7	14	A-4a
1094.4	14	4/7/12	GRAY SANDY CLAYEY SILT	3.0	6	30904	8	11	17	34	30	27	7	15	A-4a
1091.9	16	5/8/11	GRAY CLAYEY SILT WITH COBBLES	3.0	7	30905	11	1	3	30	55	25	6	18	A-4a
1089.4	18	8/18/13	GRAY CLAYEY SILT AND GRAVEL	4.0	8	30906	51	6	5	15	23	26	7	19	A-4a
	20		BOTTOM OF BORING												
	22														
	24														
	26														
	28														
	30														
	32														
	34														
	36														

LOG OF BORING

Date Started 11-15-82 Sampler: Type SS Dia 1 3/8" Water Elev 1105.9'
Date Completed 11-15-82 Casing: Length Dia
Boring No. B-2 Station & Offset 43+51 88' LT. Surface Elev. 1113.4'
Project Identification: MEDINA MED - 71 - 22.14 (SB) SUBSURFACE INVESTIGATION RENOVATION TO THE MOTORIST FACILITIES

Elev	Depth	Std. Pen. (N)	Description	ALLOW. BEAR. CAP. TSF	Field No	Lab Nos. So	% Agg.	% C.S.	% F.S.	% Silt	% Clay	L.L.	P.I.	W.C.	SHTL Class
1113.4	0														
1110.9	2														
1108.4	4	7/9/11	BROWN AND GRAY SANDY CLAYEY SILT	3.5	1	30907	9	5	12	40	34	33	10	18	A-4a
1105.9	6	9/10/12	BROWN CLAYEY SANDY SILT W/ ST. FRAG.S	3.5	2	30908	14	17	26	24	19	23	6	15	A-4a
1103.4	8	8/13/18	BROWN CLAYEY SANDY SILT W/ ST. FRAG.S	4.0	3	30909	10	11	17	37	25	25	7	15	A-4a
1100.9	10	8/15/23	BROWN SILTY SAND W/ ST. FRAG.S	4.0	4	30910	13	29	23	23	12	25	7	15	A-2-4
1098.4	12	10/18/23	GRAY SANDY CLAYEY SILT W/ ST. FRAG.S	4.5	5	30911	12	7	13	39	29	26	8	13	A-4a
1095.9	14	9/16/18	GRAY CLAYEY SILT	4.5	6	30912	0	0	1	56	43	28	8	22	A-4b
1093.4	16	13/18/20	GRAY SILT AND CLAY	4.5	7	30913	0	1	1	45	53	30	11	25	A-6a
1091.9	18	22/23/18	GRAY SILTY SANDY GRAVEL	5.0	8	30914	45	14	10	16	15	25	8	12	A-2-4
	20		BOTTOM OF BORING												
	22														
	24														
	26														
	28														
	30														
	32														
	34														
	36														

LOG OF BORING

Date Started 11-9-82 Sampler: Type SS Dia 1 3/8" Water Elev 1108.1'
Date Completed 11-10-82 Casing: Length Dia
Boring No. B-3 Station & Offset 43+33 48' LT. Surface Elev. 1112.3'
Project Identification: MEDINA MED - 71 - 22.14 (SB) SUBSURFACE INVESTIGATION RENOVATION TO MOTORIST FACILITIES

Elev	Depth	Std. Pen. (N)	Description	ALLOW. BEAR. CAP. TSF	Field No	Lab Nos. So	% Agg.	% C.S.	% F.S.	% Silt	% Clay	L.L.	P.I.	W.C.	SHTL Class
1112.3	0														
1109.8	2		BROWN CLAY AND SILT WITH 0.3' SOD												
1107.3	4	10/10/16	BROWN SANDY CLAYEY SILT WITH STONE FRAGMENTS	4.0 Q_u=	1	30773	11	7	9	41	32	26	7	16	A-4a
1104.8	6	P.S.	BROWN AND GRAY SANDY CLAYEY SILT	3.14 TSF	2	30808	7	5	10	50	28	28	7	15	A-4b
1102.3	8	8/12/19	BROWN SANDY CLAYEY SILT	4.0	3	30775	7	6	11	44	32	24	5	13	A-4a
1099.8	10	6/8/12	BROWN AND GRAY SANDY CLAYEY SILT	3.0	4	30776	3	10	27	32	28	20	4	23	A-4a
1097.3	12	P.S.	BROWN SANDY CLAYEY SILT	*	5	30809	7	5	9	37	42	28	9	19	A-4a
1094.8	14	P.S.	GRAY VARVED SILT AND CLAY	*	5A	30810	0	0	0	35	65	33	11	21	A-6a
1092.3	16	6/23/24	BROWN WITH GRAY SANDY CLAYEY SILT WITH STONE FRAGS.	5.0	6	30778	24	14	12	20	30	29	9	24	A-4a
	18	12/16/12	GRAY SANDY GRAVEL	4.0	7	30779	46	23	11	14	6	21	5	13	A-1-b
	20	6/7/13	BROWN WITH GRAY SANDY CLAYEY SILT WITH STONE FRAGMENTS	4.0	8	30780	15	7	10	39	29	24	6	14	A-4a
	22														
	24														
1087.3				3.0											
1085.8	26	6/9/11	BROWN AND GRAY SANDY CLAYEY SILT WITH STONE FRAGS.		9	30781	12	9	27	38	14	NP	NP	17	A-4a
	28		BOTTOM OF BORING												
	30														
	32		* NO STRENGTH TESTS PERFORMED												
	34														
	36														

SOIL BORING INFORMATION - SOUTHBOUND

MEDINA COUNTY MED-71-22.14 SB. REST AREA	OHIO FHWA REGION 5	1 47
IR-71-4(57)224	FEDERAL PROJECT	

STATE OF OHIO
DEPARTMENT OF TRANSPORTATION
MED-71-22.14
SAFETY REST AREA
MEDINA COUNTY
BRUNSWICK TOWNSHIP

IR-71-4(57)224 PART I

FOR PART II, SEE MED-71-22.50

LIMITED ACCESS

This improvement is especially designed for through traffic and has been declared a limited access highway or freeway by action of the Director of Transportation in accordance with the provisions of Section 5511.02 of the Revised Code of Ohio.

CONVENTIONAL SIGNS

County Line
Township Line
Section Line
Corporation Line
Fence Line (existing) (proposed)
Center Line 352 353
Trees, Stumps, (to be removed)
Utility Poles: Telephone, Power, Light

Limited Access (only) LA
Right of Way (only) RW
Limited Access & Right of Way LA & RW
Existing Right of Way
Property Line (in existing fence)
Railroad or
Guardrail (existing) (proposed)

INDEX OF SHEETS

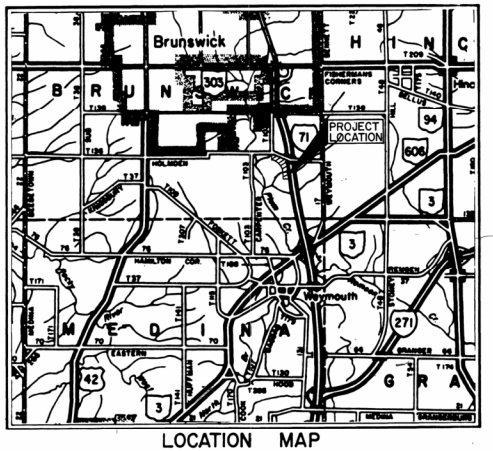

LOCATION MAP

SCALE IN MILES 0 1 2 3 4

Portion to be improved
State & Federal Routes
Other Roads

1983 SPECIFICATIONS

The standard specifications of the State of Ohio, Department of Transportation, including changes and supplemental specifications listed in the proposal shall govern this improvement.

I hereby approve these plans and declare that the making of this improvement will not require the closing of the highway, except for the affected rest area, and that provisions for maintenance and safety of traffic will be set forth in these plans and estimate.

Approved Gary M. Cross
Date 12/27/84 District Deputy Director of Transportation

Approved S. H. Henderson
Date 2/7/85 Engineer of Design Services

Approved Wayne H. Kaulle
Date 2-25-85 Chief Engineer, Planning and Design

Approved Warren J. Smith
Date 2-25-85 Director, Department of Transportation

SUPPLEMENTAL SPECIFICATIONS			
SPECIAL: STANDARD SPECIFICATIONS FOR MOTORIST SERVICES BUILDING AND STORAGE UNIT PART I 11-15-84			
839	11-25-70	803	5-27-83
814	1-1-69	824	10-8-82

LINE DATA

NET LENGTH OF PROJECT = 0.00 LIN. FT. OR 0.000 MILE

	I.R.-71	SLEEPY HOLLOW
BEGIN WORK	STA. 240+45	STA. 0+00
END WORK	STA. 261+77	STA. 23+88
LENGTH OF WORK	2132 LIN. FT. OR 0.404 MI.	2388 LIN. FT. OR 0.452 MI.

TOTAL NET LENGTH OF WORK = 4520 LIN. FT OR 0.856 MILE

SCALES

Plan Sewage Treatment Plant 0 5 10
Profile: S.T.P. Horizontal 0 5 10, Vertical 0 5 10
Site Plans: 0 20 40, and 0 50 100
PART I & PART II

STATE OF OHIO
JOHN DAVID JONES
21776
PROFESSIONAL ENGINEER

SUPPLEMENTAL PRINTS OF STANDARD CONSTRUCTION DRAWINGS							
BP-6	6-1-65	*MH-1	6-12-75	TC-41.10	8-29-84		
BP-7	12-6-76	*MH-3	6-12-75	TC-42.10	8-19-77		
BP-12	7-7-81	LA-1	6-1-79	TC-41.20	3-26-79		
CB-2-2-A&B	5-1-79	LA-10	6-1-79	TC-51.10	1-20-84		
HW-4B	4-1-80	LA-13	2-2-81	TC-51.11	1-20-84		
F-1	11-10-83	LA-14	12-22-82	TC-52.20	4-3-79		
F-2	5-1-76	LA-15	8-1-84	HL-1	9-6-73		
MC-4	7-26-76	LA-16	12-22-82	HL-2	7-27-73		
MC-9A	5-1-81	LA-2	6-1-79	HL-3	7-27-73		
MC-11	8-1-78	*MH-5	6-12-75	HL-11	6-1-79		
CB-3A	5-1-79	LA-11	6-1-79				
		*FOR REFERENCE ONLY					

Plan Prepared By:
JOHN DAVID JONES AND ASSOCIATES, INC.
CONSULTING ENGINEERS . . . . ARCHITECTS . . . . PLANNERS
2162 FRONT STREET CUYAHOGA FALLS, OHIO

Project: MED-71-22.14 SB.
Date of Letting _____ 19__, Contract No. _____

LD0300 Rev. 11-1-78

Rev. 1-28-85

DEPARTMENT OF TRANSPORTATION
FEDERAL HIGHWAY ADMINISTRATION

APPROVED:

DIVISION ADMINISTRATOR DATE

GENERAL NOTES

MEDINA COUNTY
MED-71-22.14 (S.B.)
IR-71-4(57)224 PART I

F.H.W.A. REGION	STATE	PROJECT
5	OHIO	MED.-71-22.14

3
47

	BY	DATE
DESIGNED BY	MAG	8/84
DRAWN BY		
CHECKED BY	JRO	8/84

ITEM 603 - JACKING PIPE

AS PART OF THIS CONTRACT, IT WILL BE NECESSARY TO INSTALL A 24" CONDUIT UNDER AN EXISTING 10 X 4.5 CONCRETE BOX CULVERT FROM STA 4+17 TO STA 4+47 SLEEPY HOLLOW ROAD BY THE METHOD OF BORING AND JACKING.

TRENCHES SHALL BE ADEQUATELY SUPPORTED AND THE SPECIFICATION REQUIREMENT FOR CLASS C BEDDING SHALL BE DISREGARDED. THE MATERIAL SHALL CONFORM TO ASTM A53, GRADE B. THE WORK SHALL BE PAID FOR UNDER:

ITEM 603 - 24" SCHEDULE 40 GALVANIZED STEEL, P.E. PIPE, ASTM A53, CLASS B, JACKED AS PER PLAN.

ITEM 603 - (4", 6", 8") DUCTILE IRON PIPE, AS PER PLAN

THE REQUIREMENTS OF 603 SHALL GOVERN THE FURNISHING AND INSTALLATION OF THIS PIPE EXCEPT AS HEREINAFTER MODIFIED. THE CONSTRUCTION REQUIREMENTS OF TYPE C CONDUIT SHALL GOVERN.

IN LIEU OF THE REQUIREMENTS OF 603.02, THE MATERIAL FURNISHED FOR THIS ITEM SHALL BE MECHANICAL JOINT DUCTILE CAST IRON PIPE, CONFORMING TO ANSI/AWWA-C151/A21.51/CLASS 53.

SANITARY WYES AND RISERS

INSTALLATION OF SANITARY WYES AND RISERS SHALL BE DONE IN ACCORDANCE WITH THE STANDARDS AND SPECIFICATIONS OF THE MEDINA COUNTY SANITARY ENGINEER.

AN APPROXIMATE LOCATION OF THE WYES AND RISERS IS SHOWN ON SHEET NO. ___ BY ___. THE EXACT LOCATION WILL BE DETERMINED BY THE MEDINA COUNTY SANITARY ENGINEER.

PAYMENT WILL BE INCLUDED IN THE CONTRACT UNIT PRICE BID PER LINEAR FOOT OF 8" SANITARY SEWER AS PER PLAN.

ITEM 603 - 8" OR 15" SANITARY SEWER AS PER PLAN

1. ALL SANITARY SEWERS AND APPURTENANCES SHALL BE CONSTRUCTED IN ACCORDANCE WITH THE MEDINA COUNTY SANITARY ENGINEERING (MCSE) DEPARTMENT'S RULES AND REGULATIONS.
2. MEDINA COUNTY SANITARY ENGINEERING DEPARTMENT REGULATIONS PROHIBIT ROOF DRAINS, FOUNDATION DRAINS, OR ANY OTHER CLEAR OR SURFACE WATER CONNECTIONS TO SANITARY SEWERS. THIS REGULATION IS STRICTLY ENFORCED BY MCSE.
3. SANITARY SEWER PIPES MAY BE COMPOSED OF ONE OF THE FOLLOWING MATERIALS:
   A. ACRYLONITRILE BUTADIENE STYRENE (ABS) COMPOSITE, ASTM D2680, WITH JOINTS AS PER ASTM D2680 CHEMICALLY WELDED USING A STANDARD ABS COUPLING AND LATERALS AS PER ASTM D2751 WITH MINIMUM PIPE STIFFNESS OR SDR EQUAL TO 200 PSI.
   B. POLYVINYL CHLORIDE (PVC), ASTM D3034, WITH JOINTS AS PER ASTM 3212 COMPRESSION TYPE AND LATERALS AS PER ASTM D3034 WITH MINIMUM PIPE STIFFNESS OR SDR EQUAL TO SDR 35, SDR 33.5 FOR LATERALS.
   C. VITRIFIED CLAY (VCP), ASTM C700, WITH JOINTS AS PER ASTM C425 AND LATERALS AS PER ASTM C700.
4. ALL ROAD SURFACES, EASEMENTS OR RIGHT-OF-WAYS DISTURBED BY CONSTRUCTION OR ANY PART OF THIS SANITARY IMPROVEMENT ARE TO BE RESTORED COMPLETELY TO THE BEFORE CONSTRUCTION CONDITION OR BETTER. FOR EXISTING SLEEPY HOLLOW ROAD TYPICAL SECTION SEE SHEET NO. 18.
4A. A STAMP TAX FEE OF $9.30 PER TAP SHALL BE PAID TO THE MEDINA COUNTY SANITARY DEPARTMENT IN ACCORDANCE WITH SEC. 107.02 OF THE SPECIFICATIONS.
5. THE CONTRACTOR SHALL KEEP OPEN AND CLEAN ALL DITCHES. RESTORE ALL DRAINAGE STRUCTURES WITHIN THE LIMITS OF CONSTRUCTION, REPLACE, IN KIND, ALL DRIVEWAY APPROACHES, AND FINE GRADE AND SEED ALL AREAS DISTURBED BY THIS CONSTRUCTION OTHER THAN PAVEMENT AND BERMS.
6. FOR VITRIFIED CLAY PIPE TRENCH CONDITIONS, SEE DETAIL SHEET NO. 41.
7. ABS AND PVC PIPE TRENCH CONDITIONS:
   A. USE CLASS "B" BEDDING PER ODOT SECTION 603.04. THE MATERIAL FOR THIS BEDDING SHALL MEET ODOT SPECIFICATIONS FOR NUMBERS 6, 67 OR 68 COARSE AGGREGATE AND SHALL BE GRAVEL, LIMESTONE OR SLAG.
   B. TRENCH WIDTHS SHALL BE PER MCSE STANDARD FOR VITRIFIED CLAY PIPE. (SEE DETAIL SHEET NO. 41.)
   C. TRENCHES IN PAVED AREAS OR PROPOSED PAVED AREAS SHALL BE BACKFILLED WITH EITHER LIMESTONE OR SLAG SCREENINGS TO PAVEMENT BASE, UNLESS OTHERWISE SPECIFIED BY THE AUTHORITY HAVING PAVEMENT MAINTENANCE RESPONSIBILITY.
   D. FOR ABS, MODIFY ODOT SECTION 603.04 TO CARRY THE BEDDING MATERIAL TO A MINIMUM OF SIX INCHES (6") ABOVE THE PIPE.
   E. FOR PVC, IN ADDITION TO ODOT CLASS "B" BEDDING, THE TRENCH SHALL BE BACKFILLED WITH COMPACTED LIMESTONE SCREENINGS TO A MINIMUM OF SIX INCHES (6") ABOVE THE TOP OF THE PIPE.
8. TESTING
   A. PHOTOGRAPHIC OR TV INSPECTION OF ALL SANITARY SEWERS AND PASSAGE OF A STANDARD INFILTRATION TEST SHALL BE REQUIRED BEFORE THE ACCEPTANCE OF THE SANITARY SEWER BY THE MEDINA COUNTY SANITARY ENGINEERING DEPARTMENT OR ODOT.
   B. DEFLECTION TESTS WILL BE RUN ON ALL PVC PIPE, NOT LESS THAN 30 DAYS AFTER FINAL FULL BACKFILL HAS BEEN PLACED. NO PIPE SHALL EXCEED A DEFLECTION OF 5%. THESE TESTS SHALL CONSIST OF PULLING A "GO-NO/GO" MANDREL THROUGH THE LINE. THE CONTRACTOR HAS THE OPTION OF:
      1. THE COUNTY PERFORMING SAID WORK (FEE REQUIRED).
      2. THE CONTRACTOR PERFORMING THE WORK UNDER COUNTY SUPERVISION.
   C. MAXIMUM ALLOWABLE LEAKAGE INWARD OR OUTWARD (INFILRATION OR EXFILTRATION) FOR ANY SANITARY SEWER SECTION TESTED, INCLUDING ALL MANHOLES, IS 200 GALLONS PER INCH OF DIAMETER PER MILE OF PIPE PER DAY. MANHOLES MAY BE TESTED SEPARATELY. THE ABOVE ALLOWABLE LEAKAGE RATE IS EQUIVALENT TO 0.16 GALLONS PER INCH OF DIAMETER PER 100 FEET OF PIPE PER HOUR.
9. MANHOLE TOP ELEVATIONS AS INDICATED ON THE PLAN AND PROFILE SHEETS ARE APPROXIMATE AND ARE TO BE USED FOR BIDDING PURPOSES ONLY. ACTUAL TOP ELEVATIONS WILL BE FIELD DETERMINED AT THE TIME OF CONSTRUCTION. NO INCREASE OR DEDUCTION IN BID PRICE WILL BE MADE FOR MANHOLES WHOSE AS-BUILT DEPTHS VARY FROM THOSE SHOWN ON THE PLANS.
10. SERVICE CONNECTION LOCATIONS MAY VARY DEPENDING ON FIELD CONDITIONS. FIELD LOCATIONS SHALL BE AS DIRECTED BY THE ENGINEER OR HIS AGENT.
11. PRIOR TO THE START OF WORK ON THE SANITARY SEWER ON SLEEPY HOLLOW ROAD, THE CONTRACTOR SHALL OBTAIN A "HIGHWAY USE PERMIT" FROM THE MEDINA COUNTY ENGINEER AT 791 WEST SMITH ROAD, MEDINA, OHIO. THIS PERMIT IS SIMILAR TO THE ODOT PERMIT AND REQUIRES THE PAYMENT OF A FEE.
12. PAYMENT FOR ALL OF THE ABOVE WILL BE INCLUDED IN THE CONTRACT UNIT PRICE BID PER LINEAR FOOT OF 8" OR 15" SANITARY SEWER AS PER PLAN.

SANITARY SEWER AS-BUILT DRAWINGS

UPON COMPLETION OF THE CONSTRUCTION OF THE SANITARY SEWER ALONG SLEEPY HOLLOW ROAD, THE STATE SHALL PROVIDE "AS-BUILT" DRAWINGS TO THE MEDINA COUNTY SANITARY ENGINEERING DEPARTMENT. THE STATE SHALL ALSO COMPLETE A 'SANITARY MANHOLE CASTING AS-BUILTS' CHART WHICH MUST BE CERTIFIED BY AN ENGINEER OR SURVEYOR.

MISCELLANEOUS

FOR ADDITIONAL NOTES, PAY ITEMS AND DESCRIPTIONS, SEE VARIOUS SPECIALTY ITEM SHEETS THROUGHOUT THE PLANS.

ITEM 608 - 4" CONCRETE WALK, AS PER PLAN

Subgrade under 4" concrete walks shall be compacted to a depth of 4 inches as described in 203.13. Excavation for the 4 inches of subgrade compaction shall be included in the Lump Sum price bid for Item 203 - Excavation Not Including Embankment Construction. Embankmentment for walk areas shall be included in the Lump Sum price bid for Item 203 - Embankment.

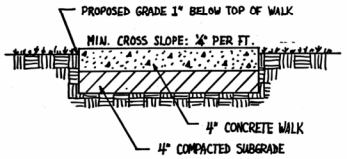

4" CONCRETE SIDEWALK DETAIL

Note: For details of 6" concrete entrance walks to Motorist Services Building see sheet No. 25.

ITEM SPECIAL - ALTERNATE SHELTER HOUSE DESIGN - "SHELTER HOUSE WITH SHINGLED ROOF"

THE CONTRACTOR MAY PROVIDE AN "IRON MOUNTAIN FORGE - PARK SHELTER" (AS MODIFIED BELOW) OR EQUAL AS A SHELTER HOUSE ON THIS PROJECT.

THE SHELTER HOUSE SHALL HAVE A MINIMUM SIZE OF 20' x 26' (ALT 20' x 28') AND SHALL BE MANUFACTURED FROM KILN-DRIED SOUTHERN PINE. THE STRUCTURAL, GLUED LAMINATED TIMBER SHALL CONFORM TO THE FOLLOWING SPECIFICATIONS: AITC-100, 117, 177, 200 AND PS-56-73. A CERTIFICATE OF CONFORMANCE SHALL BE FURNISHED AND THE AITC QUALITY MARK SHALL APPEAR ON ALL LAMINATED MEMBERS. THE ADHESIVE SHALL BE WATERPROOF AND CONFIRMING TO ASTM D-2559-70. THE ROOF DECK SHALL BE NOMINAL 2" x 6" AND BTR, SINGLE TONGUE AND GROOVE WITH V-JOINT FACE SIDE AND SHALL BE FACTORY FINISHED WITH A POTLATCH ACRYLIC POLYMER IN EARTH TONE. THE ASPHALT SHINGLE ROOF SHALL CONFORM TO STD. DRW. LA-16.

THE ROOF SYSTEM SHALL, IN ADDITION TO THE MANUFACTURERS LOADING, BE ABLE TO WITHSTAND 90 MPH WIND LOADS IN CONFORMANCE WITH ARTICLE 9 (OAC 4101: 2-9) OF THE OHIO BASIC BUILDING CODE. THE FABRICATOR SHALL FURNISH COMPLETE SHOP DRAWINGS, SHOWING ALL DETAILS AND CONNECTIONS OF THE COLUMNS AND ROOF SYSTEM, AS WELL AS CALCULATIONS VERIFYING THAT THE SYSTEM SATISFIES THE OHIO BUILDING CODE ARTICLE.

ALL MEMBERS SHALL BE INDIVIDUALLY WRAPPED FOR PROTECTION DURING SHIPPING AND STORAGE, THE COLUMNS AND FACIA SHALL BE TREATED BY THE CELLON (R) PROCESS IN ACCORDANCE WITH STD C-28 AWPA TO A RETENTION OF 0.6 # PER CU. FT. THE CONTRACTOR SHALL PROTECT THE SHELTER HOUSE MATERIALS ON THE JOB SITE. IF STORED TEMPORARILY, MEMBERS SHALL BE PLACED ON BLOCKS WELL OFF THE GROUND AND SEPARATED BY WOOD STRIPS SO THAT AIR CAN CIRCULATE AROUND EACH MEMBER. THE TOP AND BOTTOM SHALL BE COVERED WITH MOISTURE-RESISTANT PAPER. ALL ERECTION WORK SHALL BE PERFORMED USING NON-MARRING SLINGS WHEN MEMBERS ARE TO BE HANDLED.

PERMITS AND FEES

SEE SHT. No. 2 OF PART II.

SEEDING, SODDING AND TOPSOIL

To establish a good lawn in areas not covered under specific pay items such as 603 - Storm & Sanitary Sewers and 625 - Electrical Conduits & Cables, when directed by the Engineer, approved topsoil shall be spread 3" deep over all bare or disturbed soil and the lawn areas sodded or seeded. (See sheet No. 9 for estimated quantities.)

Finish grading shall be adjusted where necessary to maintain proper ground line where topsoil and sod are required.

CALC. BY JB	MEDINA COUNTY	OHIO	4
DATE 10/27/81	MED-71-22.14 (S.B.)	FHWA REGION 5	47
CHKD. BY JB	REST AREA		
DATE 10/28/81	I.R-71-4(57)224 PART I		

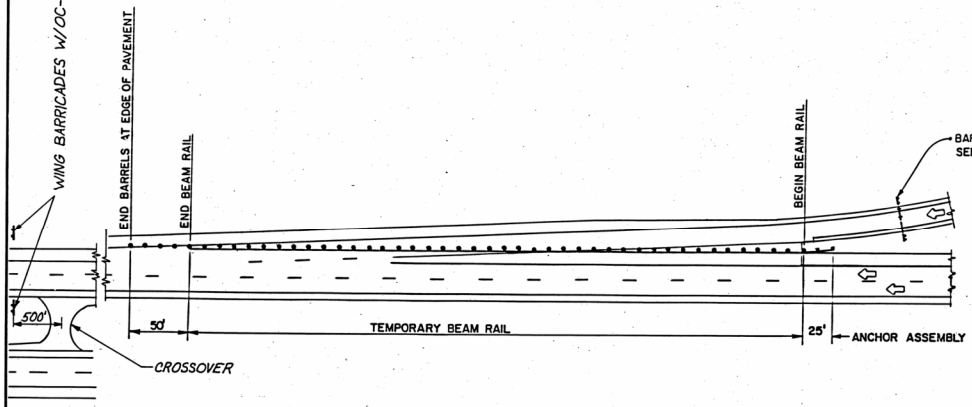

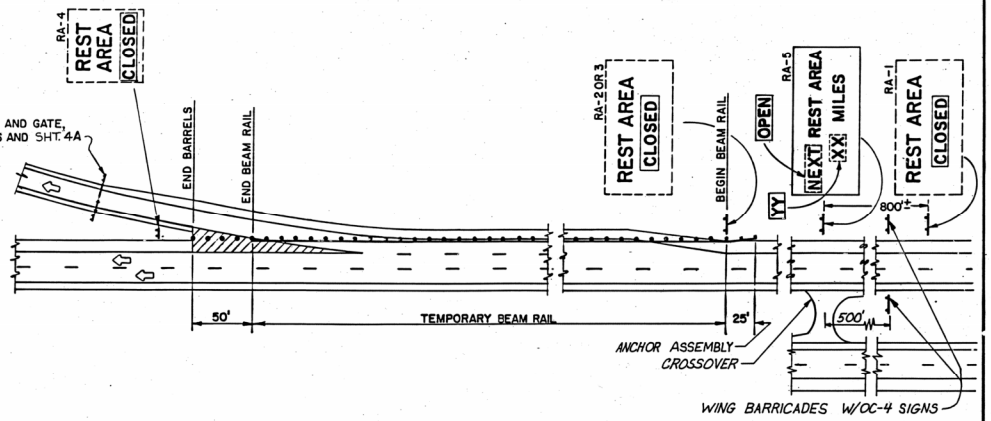

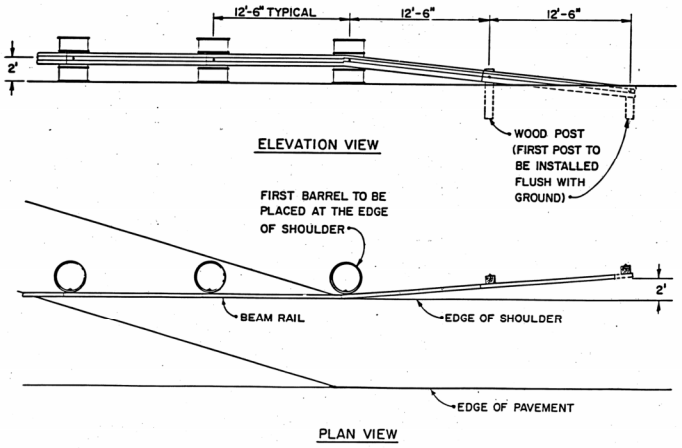

TEMPORARY ANCHOR ASSEMBLY

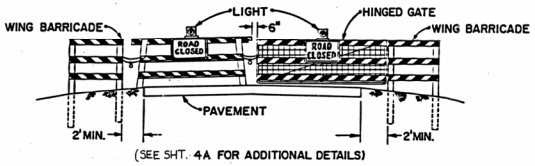

BARRICADES AND GATE

ESTIMATED QUANTITIES FOR EXTRU-SHEET SIGNS TO BE INCLUDED IN THE GENERAL SUMMARY, SHEET 5			
ITEM	DESCRIPTION	UNIT	QUANT.
630	SIGN, EXTRUSHEET TYPE G	SQ. FT.	58.5
630	GROUND MOUNTED SUPPORT, W10X11.5	L.F.	36
630	CONCRETE FOR EMBEDDED FOUNDATION	C.Y.	2.2
630	BREAKAWAY BEAM CONNECTIONS	EA.	2

THESE ITEMS AND QUANTITIES SHALL BE FIELD CHECKED AND APPROVED BY THE ENGINEER.

NOTES:

1. REST AREA SIGNS (RA-1 THRU RA-4) SHALL HAVE THE ACTION MESSAGE COVERED BY AN OVERLAY BEARING THE LEGEND "CLOSED". THIS PANEL SHALL HAVE A BLACK LEGEND ON A REFLECTORIZED ORANGE BACKGROUND. THE OVERLAY FOR THE RA-1, RA-2 AND RA-3 SIGNS SHALL BE 8' X 1½'. THE OVERLAY FOR THE RA-4 SIGNS SHALL BE 4' X 1½'.
2. SUPPLEMENTAL PANELS LOCATED UNDER MAINLINE REST AREA SIGNS SHALL BE REMOVED OR COVERED WHEN THE REST AREA IS CLOSED. (EXAMPLE: TELEPHONE, TOURIST INFO, HANDICAPPED SYMBOL SIGN).
3. TEMPORARY BEAM RAIL, IN ACCORDANCE WITH ODOT CONSTRUCTION AND MATERIAL SPECIFICATION 606.04, SHALL BE USED TO CLOSE THE ACCELERATION AND DECELERATION LANES FOR REST AREA CLOSURES EXCEEDING 7 DAYS. (FOR DETAILS ON ANCHOR ASSEMBLIES AND GUARDRAIL FLARES, SEE TEMPORARY ANCHOR ASSEMBLY DETAIL.) FOR REST AREA CLOSURES OF LESS THAN 7 DAYS, THE DECELERATION AND ACCELERATION LANES SHOULD BE CLOSED WITH REFLECTORIZED DRUMS PLACED 15' CENTER TO CENTER. THE EXISTING SHOULDER WIDTH SHALL BE MAINTAINED AT ALL TIMES. TEMPORARY CONCRETE BARRIER WITH END TERMINALS IN ACCORDANCE WITH MC-9A MAY BE USED AS AN ALTERNATE TO THE TEMPORARY BEAM RAIL AND ANCHOR ASSEMBLY.
4. WHERE REST AREA RAMP LIGHTING EXISTS, IT SHALL BE MAINTAINED IN PROPER CONDITION TO PROVIDE OPTIMUM ILLUMINATION.
5. REST AREA SIGN RA-5 SHALL BE ADDED WITH PROPER MILEAGE SHOWN. DURING CLOSURE THE WORDS "OPEN" AND APPLICABLE MILEAGE SHALL BE ADDED WITH BLACK ON ORANGE OVERLAYS. THE OVERLAY SIZE IS 3 1/2' X 1 1/2'. LOCATION TO BE APPROVED BY THE ENGINEER.
6. GATES AND BARRICADES, IN ACCORDANCE WITH SHT. 4A SHALL BE ERECTED ACROSS THE EXIT AND ENTRANCE RAMPS FOR THE REST AREA.
7. THE FOLLOWING MILEAGES SHALL BE INCLUDED ON THE RA-5 SIGNS ON THIS PROJECT:

58	RA-5	PERMANENT MILEAGE	27
		TEMPORARY MILEAGE	27
___	RA-5	PERMANENT MILEAGE	___
		TEMPORARY MILEAGE	___

1-19-82
12/31/81 [illegible]

REST AREA CLOSURE DETAILS AND NOTES

FED. RD. DIVISION	STATE	PROJECT	
5	OHIO	MED.-71-22.14	

4A
47

MOVABLE GATE

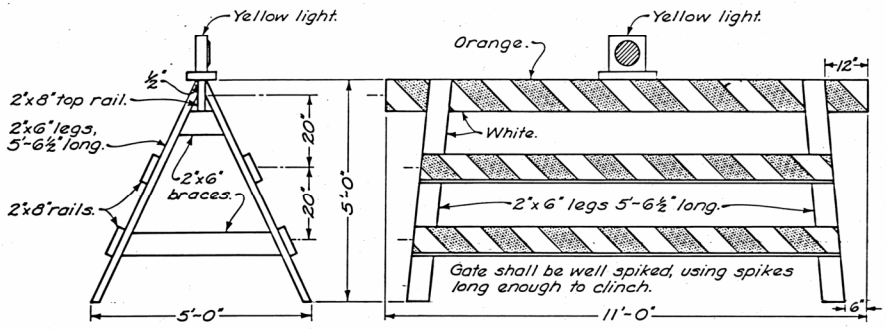

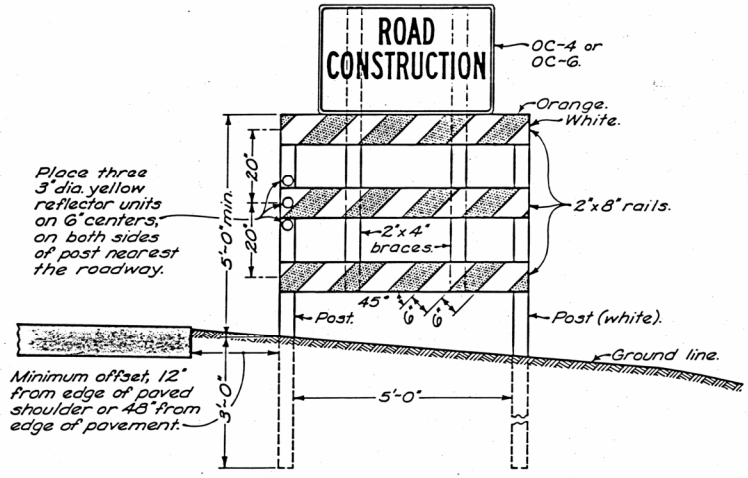

WING BARRICADE

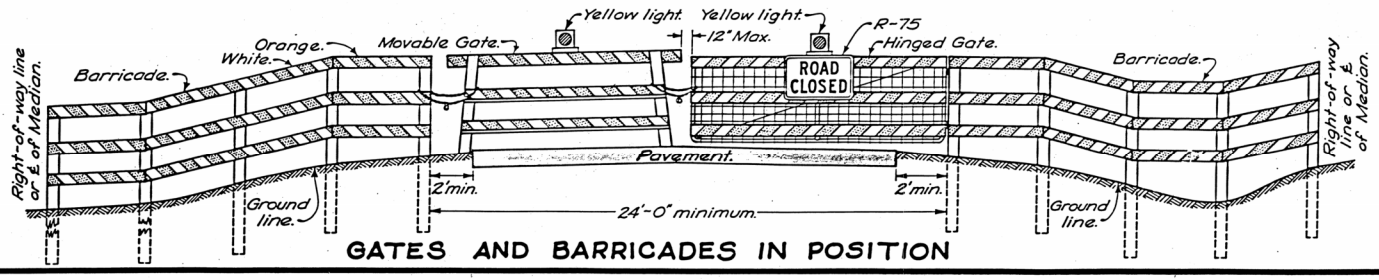

GATES AND BARRICADES IN POSITION

NOTES

BARRICADES shall be constructed according to details shown. Where traffic is maintained during construction, wing barricades shall be used on each shoulder: (1) at both ends of the project, (2) on all interchange entrance ramps or on the cross road preceeding the entrance ramp, (3) on all other major approach roads as directed by the Engineer. When the road is closed to traffic, barricades and gates shall be used to effectively close the entire roadway including the median of divided highways. In urban areas and at locations where it is impracticable to extend the barricade to the right-of-way line because of a sidewalk or other obstruction, the ends of the barricade shall be located as directed by the Engineer to effect the desired closing of the highway.

PAINTING AND REFLECTORIZATION: All rails of the barricades and gates shall be reflectorized with orange and white reflectorized sheeting in 6" wide alternate stripes which slope downward toward the center line of the road at an angle of 45°. All three rails of the Road Closed barricade shall be striped on the side facing traffic. All three rails of the wing barricade and all gate rails shall be striped on both sides. All posts, braces, gate legs and any unstriped rails shall be painted white.

GATES: One gate shall be erected for each traffic lane. Gates shall be chained and padlocked to one another and to adjacent posts of the barricades. Chains shall be ¼" stock or larger with welded links.

A hinged gate may be used and shall be an approved 12' by 4' steel frame farm type, or a type approved by the Engineer. The gate shall be hung on hinge screw hooks, or as otherwise approved. Striping similar to that used on the movable gate shall be accomplished with 1"x8" lumber or with metal strips fastened to the gate. The gate shall be supported at the center in an approved manner.

YELLOW LIGHT: Each gate shall be equipped with a steady burning yellow light, conspicuously visable at all distances up to 1000' under normal atmospheric conditions. The light, operated by battery, electric generator, commercial power or propane gas, shall be in operation at all times between sunset and sunrise during the period the highway is closed.

SIGNS: Where the road is closed to traffic by the erection of gates and barricades, a ROAD CLOSED sign (R-75) shall be mounted on the gate as shown. On three-lane pavement, the sign shall be mounted on the middle gate facing traffic.

Where traffic is maintained, a ROAD CONSTRUCTION TRAFFIC MAINTAINED sign (OC-4) shall be used on the right shoulder wing barricade on the approaches to major construction or maintenance jobs less than 2 miles in length. A ROAD CONSTRUCTION NEXT __ MILES sign (OC-6) shall be used on the right shoulder wing barricade on the approaches to any major construction or maintenance job of 2 miles or more in length. An END CONSTRUCTION sign (OC-8) shall be erected above the right hand wing barricade facing traffic leaving the construction section. The signs on the wing barricades shall be erected above the top rail of the wing barricade on braces, as detailed hereon.

LUMBER used in the construction of the gates and barricades shall be No. 1 common yellow pine or No. 1 common Douglas fir, surfaced on four sides standard, or other materials approved by the Engineer. All sizes are nominal.

POSTS shall be sound 4"x4" sawed or 4½" round. Rails of the barricade shall be bolted to the posts with ⅝" bolts.

	BY	DATE
CALC.	MAB	8/84
CHECKED	JRO	8/84

FHWA REGION	STATE	PROJECT	
5	OHIO	MED-71-22.14	

5
47

MEDINA COUNTY
MED-71-22.14 (S.B.)
IR-71-4(57)224 PART I

GENERAL SUMMARY

SHEET NUMBER

ITEM	2	3	4	8	9	10	11	12	13	14	15	16	17	18	19	25
201					LUMP											
202					3837											
202					457											
202					LUMP											
202					1											
203	LUMP															
202					6											
203	LUMP															
603													30			
452				143		302										12
602				0.2												
603				124							1245	390				
604												1				
603				118												
603				90												
603				245									440	1005	490	
601				5												
604				1												
604				1									3	4	1	
607				108												
608					2209	1809										
607				1												
608						1										
609					423											
609					34											
603													448			
653					300											
659					2000											
659					0.32											
659	LUMP															
660					1600											
630				3												
630			58.5													
630				25												
630			36													
630			2.2													
630			2													
663					3											
663																3
663					3											
663																4
663					3											
662																50
663					3											
661																4
662																42
662																18
662																12
662																28
SPEC.																2
SPEC.																4
SPEC.																115
SPEC.																6
608																875
SPEC.																
608																163

ITEM	TOTAL	UNIT	DESCRIPTION
			GENERAL CONTRACT
201	LUMP		CLEARING AND GRUBBING
202	3837	SQ. FT.	WALK REMOVED
202	457	LN. FT.	CURB REMOVED
202	LUMP		STRUCTURES REMOVED
202	1	EACH	PRIVY VAULT REMOVED, AS PER PLAN
203	LUMP		EXCAVATION NOT INCLUDING EMBANKMENT CONSTRUCTION
202	6	LIN. FT.	FENCE REMOVED
203	LUMP		EMBANKMENT
603	30	LN. FT.	24" SCHEDULE 40 GALANIZED STEEL P.E. PIPE JACKED, AS PER PLAN
452	463	SQ. YD.	7" PLAIN PORTLAND CEMENT CONCRETE PAVEMENT, AS PER PLAN.
602	0.2	C.Y.	CONCRETE MASONRY
603	1759	LN. FT.	4" DUCTILE CAST IRON PIPE, AS PER PLAN
604	1	EACH	MANHOLE RECONSTRUCTED, AS PER PLAN
603	118	LN. FT.	6" DUCTILE CAST IRON PIPE, AS PER PLAN
603	90	LN. FT.	8" DUCTILE CAST IRON PIPE, AS PER PLAN
603	2180	LN. FT.	8" SANITARY SEWER, AS PER PLAN
601	5	S.Y.	CRUSHED AGGREGATE SLOPE PROTECTION
604	1	EACH	CATCH BASIN, STANDARD NO. 2-2-B
604	9	EACH	MANHOLE MODIFIED, AS PER PLAN
607	108	LN. FT.	FENCE, TYPE CL (96")
608	4018	SQ. FT.	4" CONCRETE WALK, AS PER PLAN
607	1	EACH	GATE, TYPE CL, 96" x 12' WIDE, DOUBLE SWING
608	1	EACH	CURB RAMPS STANDARD TYPE 1
609	423	LN. FT.	CURB, STANDARD TYPE G
609	34	LN. FT.	CURB, STANDARD TYPE 7
603	448	LN. FT.	15" SANITARY SEWER, AS PER PLAN
653	300	CU. YD.	TOPSOIL FURNISHED AND PLACED
659	2000	SQ. YD.	SEEDING AND MULCHING
659	0.32	TON	COMMERCIAL FERTILIZER
659	LUMP		MOWING AS PER PLAN
660	1600	SQ. YD.	SODDING, AS PER PLAN
630	3	SQ. FT.	SIGNS, FLAT SHEET
630	58.5	SQ. FT.	SIGNS, EXTRUSHEET, TYPE G
630	25	LN. FT.	GROUND MOUNTED SUPPORTS, NO. 2 POSTS
630	36	LN. FT.	GROUND MOUNTED SUPPORTS, W10 x 11.5
630	2.2	CU. YD.	CONCRETE FOR EMBEDDED FOUNDATIONS
630	2	EACH	BREAKAWAY BEAM CONNECTIONS

PLANT LIST

ITEM	TOTAL	UNIT	BOTANICAL NAME	COMMON NAME	SIZE	COND.
663	3	EACH	ACER RUBURM 'RED SUNSET'	RED SUNSET RED MAPLE	3"-3½"	B&B 38"
663	3	EACH	FRAXINUS AMER. 'AUTUMN P.'	AUTUMN PURPLE WHITE ASH	3"-3½"	B&B 38"
663	3	EACH	LIQUIDAMBER STYRACIFLUA 'MORAINE	MORAINE SWEETGUM	3"-3½"	B&B 38"
663	4	EACH	PYRUS CALLERYANA 'ARISTOCRAT'	ARISTOCRAT CALLERY PEAR	2"-2½"	B&B 28"
663	3	EACH	QUERCUS RUBRA MAXIMA	EASTERN RED OAK	3"-3½"	B&B 38"
662	50	EACH	COTONEASTER DAMMERI 'C.B.'	CORAL BEAUTY COTONEASTER	15"-18"	2 CONT.
663	3	EACH	QUERCUS PHELLOS	WILLIOW OAK	3"-3½"	B&B 38"
661	4	EACH	PARTHENOCISSUS TRICUSPIDATA	BOSTON IVY	2 YR.	2 CONT.
662	42	EACH	PYRACANTHA ANG. 'GNOME'	GNOME FIRETHORN	2'-2½'	3 CONT.
662	18	EACH	VIBURNUM BURKWOODI	BURKWOOD VIBURNUM	2½'-3'	B&B 12"
662	12	EACH	FORSYTHIA VIR. BRONXENSIS	BRONX. FORSYTHIA	15"-18"	3 CONT.
662	28	EACH	TAXUS MEDIA DENSIFORMIS	DENSE YEW	2'-2½'	B&B 14"
SPEC.	2	EACH	4' WOOD BENCH			
SPEC.	4	EACH	6' WOOD BENCH			
SPEC.	115	LN. FT.	2"X4" WOOD EDGING & STAKES			
SPEC.	6	EACH	BOULDERS			
608	875	SQ. FT.	6' CONCRETE WALK, AS PER PLAN			
608	163	SQ. FT.	6" CONC. WALK W/PAVERS, AS PER PLAN			

GENERAL SUMMARY

	BY	DATE
CALC.	MAG	8/84
CHECKED	JRO	8/84

FHWA REGION	STATE	PROJECT	
5	OHIO	MED-71-22.14	

MEDINA COUNTY
MED-71-22.14 (S.B.)
IR-71-4(57)224 PART I

6/47

ITEM	2	3	4	8	9	10	11	12	13	14	15	16	17	18	19	24
	SHEET NUMBER															
SPEC.											1					
SPEC.						1										
SPEC.					1											
SPEC.				1												
SPEC.				1												
SPEC.					760											
SPEC.				18												
SPEC.					5											
SPEC.					2											
SPEC.					18											
SPEC.				80												
SPEC.					16											
614	LUMP															
619	LUMP															
623																
624																
SPEC.								1								
SPEC.								1								
SPEC.								1								
SPEC.								1								
SPEC.								180								
SPEC.								1								
624																
SPEC.								1								
624																

ITEM	TOTAL	UNIT	DESCRIPTION
			GENERAL CONTRACT (CONTINUED)
SPEC.	1	EACH	PRECAST CONCRETE SEWAGE WET WELL INCL. LIFT STATION (EXCEPT ELECTRICAL & PLUMBING WORK)
SPEC.	1	EACH	MOTORIST SERVICES BUILDING & STORAGE UNIT (EXCEPT HEATING ELECTRICAL, PLUMBING & VENTILATING WORK)
SPEC.	1	EACH	DRILLED WATER WELL ABANDONED
SPEC.	1	EACH	REST AREA RESERVOIR ASSEMBLY (EXCEPT ELECTRICAL & PLUMBING)
SPEC.	1	EACH	SHELTER HOUSE WITH ASPHALT SHINGLE ROOF
SPEC.	760	LN.FT.	SNOW FENCE - TREE PROTECTION
SPEC.	18	EACH	PICNIC TABLES
SPEC.	5	EACH	CONCRETE SLAB FOR PICNIC TABLE
SPEC.	2	EACH	CHARCOAL GRILL AND SERVING TABLE (W/ SLAB)
SPEC.	18	EACH	WASTE RECEPTACLE SLEEVE
SPEC.	80	S.Y.	NON-WOVEN FIBER MAT AND MULCH, AS PER PLAN.
SPEC.	16	EACH	WASTE RECEPTACLE SLAB
614	LUMP		MAINTAINING TRAFFIC
619	LUMP		FIELD OFFICE
623	LUMP		CONSTRUCTION LAYOUT STAKES
624	LUMP		MOBILIZATION
	TOTAL BID GENERAL CONTRACT		
			PLUMBING CONTRACT
SPEC.	1	EACH	MOTORIST SERVICES BUILDING & STORAGE UNIT (PLUMBING ONLY)
SPEC.	1	EACH	WATER WELL ASSEMBLY (EXCEPT ELECTRICAL WORK)
SPEC.	1	EACH	WATER SYSTEM HYPOCHLORINATOR (EXCEPT ELECTRICAL WORK)
SPEC.	1	EACH	REST AREA RESERVIOR ASSEMBLY (PLUMBING ONLY)
SPEC.	180	LN. FT.	1" TYPE "K" COPPER WATER LINE & HYDRANTS
SPEC.	1	EACH	LIFT STATION (PLUMBING ONLY)
624	LUMP		MOBILIZATION
	TOTAL BID PLUMBING CONTRACT		
			HEATING & VENTILATING CONTRACT
SPEC.	1	EACH	MOTORIST SERVICES BUILDING & STORAGE UNIT (HEATING & VENTILATING ONLY)
624	LUMP		MOBILIZATION
	TOTAL BID HEATING & VENTILATING CONTRACT		

	BY	DATE
CALC.	MAC	8/24
CHECKED	JZO	8/24

FHWA REGION	STATE	PROJECT	
5	OHIO	MED-71-22.14	

MEDINA COUNTY
MED-71-22.14 (S.B.)
IR-71-4(57)224 PART I

GENERAL SUMMARY

ITEM	SHEET NUMBER 2	3	4	8	9	10	11	12	13	14	15	16	17	18	19	24	ITEM	TOTAL	UNIT	DESCRIPTION
																				ELECTRICAL CONTRACT
SPEC.								1									SPEC.	1	EACH	MOTORIST SERVICES BUILDING & STORAGE UNIT (ELECTRICAL ONLY)
SPEC.								1									SPEC.	1	EACH	WATER WELL ASSEMBLY (ELECTRICAL ONLY)
SPEC								1									SPEC.	1	EACH	WATER SYSTEM HYPOCHLORINATOR (ELECTRICAL ONLY)
SPEC.								1									SPEC.	1	EACH	REST AREA RESERVOIR ASSEMBLY (ELECTRICAL ONLY)
SPEC.								1									SPEC.	1	EACH	PRECAST CONCRETE SEWAGE WET WELL INCL. LIFT STATION, (ELECTRICAL ONLY)
625									550								625	550	LN. FT.	2" CONDUIT, 713.04 (TELEPHONE)
625									878								625	878	LN. FT.	2" CONDUIT, 713.04 (ELECTRICAL)
625									674								625	674	LN. FT.	3" CONDUIT, 713.04 (SECONDARY)
625									14								625	14	EACH	PULL BOX 24" CONCRETE
625									340								625	340	LN. FT.	TRENCH, 36" AS PER PLAN (SECONDARY & TELEPHONE)
625									1172								625	1172	LN. FT.	NO. 4, AWG, U.L. TYPE MV-90 DRY, 5000 VOLT DISTRIBUTION CABLE
625									380								625	380	LN. FT.	3-1/C 500 MCM, UL TYPE USE 600 VOLT SECONDARY FEEDER CABLE
SPEC.									1								SPEC.	1	EACH	REMOVE EXISTING LIGHT POLE
SPEC.									1								SPEC.	1	EACH	REMOVE EXISTING LIGHT POLE FOUNDATION
SPEC.									1								SPEC.	1	EACH	RE-ERECT EXISTING LIGHT POLE
SPEC.									1								SPEC.	1	EACH	RECONNECT EXISTING LIGHT POLE
SPEC									1065								SPEC	1065	LN FT	PLASTIC CAUTION TAPE
625									1								625	1	EACH	METAL PULLBOX (PEDESTAL OUTLET)
625									212								625	212	LN. FT.	1" CONDUIT, 713.04 (ELECTRICAL)
625									725								625	725	LN. FT.	TRENCH, 24" DEEP
625									28								625	28	LN. FT.	1 1/4" CONDUIT, 713.04 (ELECTRICAL)
625									804								625	804	LN. FT.	NO. 1 THWN
625									1582								625	1582	LN. FT.	NO. 10 THWN
625									14								625	14	EACH	CONNECTOR KIT TYPE II
625									84								625	84	LN. FT.	NO. 12 THWN
625									3								625	3	EACH	GROUND ROD
625									25								625	25	~~LN. FT.~~	POLE & BRACKET CABLE
839									LUMP								839	LUMP		HIGH VOLTAGE TEST
625									9								625	9	EACH	CABLE SPLICING KIT
624																	624	LUMP		MOBILIZATION
																	TOTAL BID ELECTRICAL CONTRACT			

SM-1
CONST. MANHOLE MOD. AS PER PLAN
STA. 43+57, 97' LT. ℄ S.B. REST AREA
INV. 1111.25 - 8" N.E. & S.E.
TOP 1116.00

CB-1
CONST. STD. No 2-2B C.B.
STA. 43+75, 95' LT. ℄ S.B. REST AREA
INV. 1111.90 - 8" SW.
INV. 1112.07 - 6" S.E.
INV. 1112.34 - 4" S.E.
INV. 1112.60 E
TOP. 1114.25

CALC.	BY	DATE
CHECKED		

F.H.W.A.	STATE	PROJECT
5	OHIO	MED-71-22.14

8
47

MEDINA COUNTY
MED-71-22.14 (S.B.)
IR-71-4(57)224 PART I

SCALE: 1" = 20'
0 10 20 40

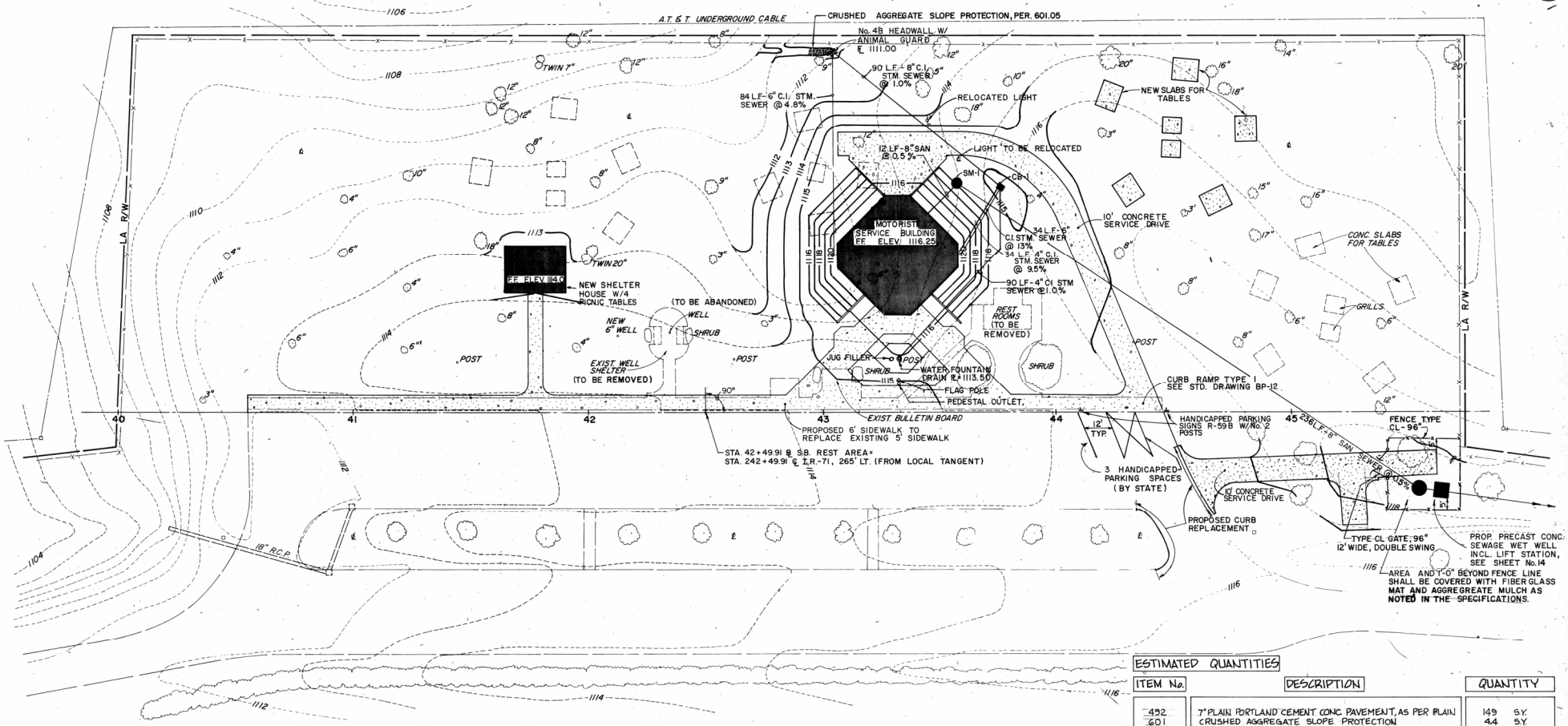

ESTIMATED QUANTITIES

ITEM No.	DESCRIPTION	QUANTITY	
432	7" PLAIN PORTLAND CEMENT CONC. PAVEMENT, AS PER PLAN	149	S.Y.
601	CRUSHED AGGREGATE SLOPE PROTECTION	4.4	S.Y.
602	STANDARD HW-4B HEADWALL W/ANIMAL GUARD	0.2	C.Y.
603	4" DUCTILE CAST IRON PIPE, AS PER PLAN	124	L.F.
603	6" DUCTILE CAST IRON PIPE, AS PER PLAN	118	L.F.
603	8" DUCTILE CAST IRON PIPE, AS PER PLAN	90	L.F.
603	8" SANITARY SEWER AS PER PLAN	245	L.F.
604	MANHOLE, MODIFIED AS PER PLAN	1	EACH
604	STANDARD 2-2B CATCH BASIN	1	EACH
607	FENCE, TYPE CL (96")	108	L.F.
607	GATE, TYPE CL, 12' WIDE, DOUBLE SWING (96")	1	EACH
630	SIGNS, FLAT SHEETS	3	S.F.
630	GROUND MOUNTED SUPPORTS, No. 2 POSTS	25	L.F.
SPEC.	SHELTER HOUSE WITH ASPHALT SHINGLE ROOF	1	EACH
SPEC.	PICNIC TABLES	18	EACH
SPEC.	REST AREA RESERVOIR ASSEMBLY (EXCEPT ELECTRICAL & PLUMBING WORK)	1	EACH
SPEC.	NON-WOVEN FIBER MAT AND MULCH, AS PER PLAN.	80	S.Y.

NOTE: FOR STORM AND SANITARY SEWER PROFILES SEE SHEET No. 14

BENCH MARK:
CHISELED "+" @ S.E. CORNER OF INLET @ S.B. REST AREA ℄ STA. 41+00, 40' RT.
ELEV. = 1112.56

SITE PLAN - SOUTHBOUND

	BY	DATE
CALC.	PAB	8/84
CHECKED	JRO	8/84

F.H.W.A.	STATE	PROJECT
5	OHIO	MED-71-22.14

SCALE: 1"=20'

0 10 20 40

MEDINA COUNTY
MED-71-22.14 (S.B.)
IR-71-4(57)224 PART I

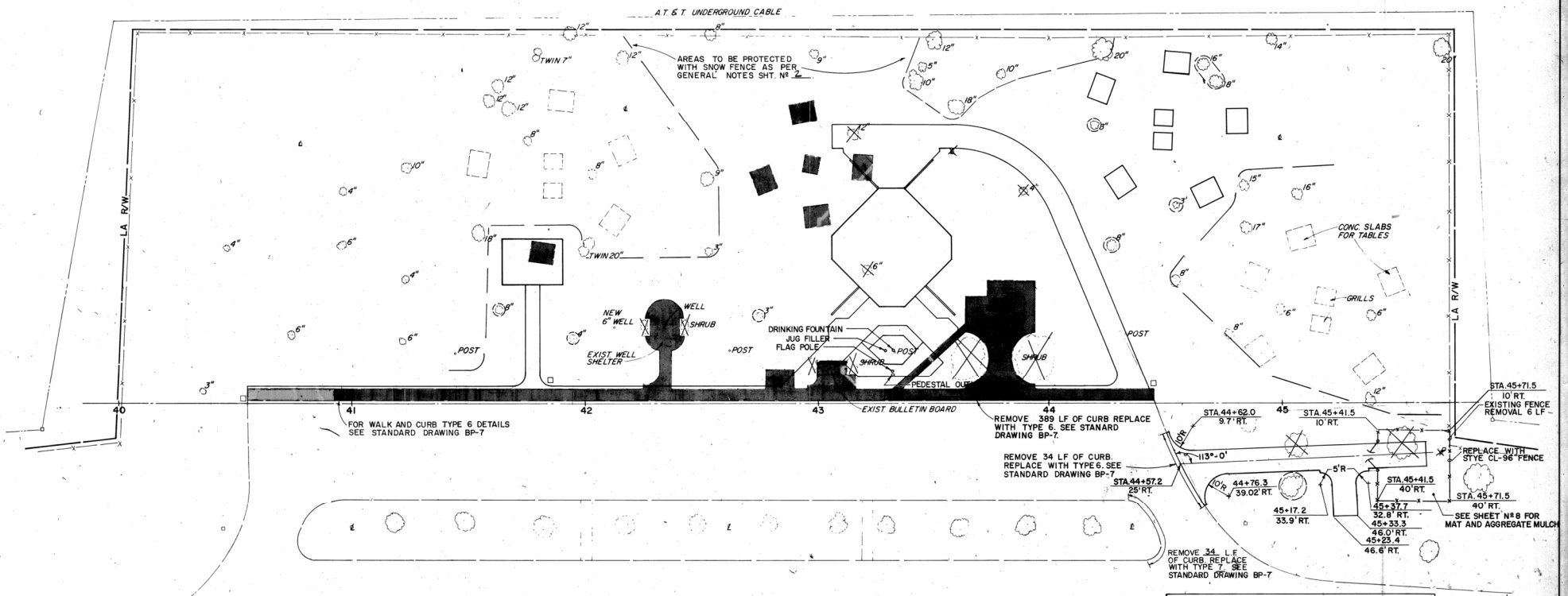

LEGEND

ITEMS TO BE REMOVED

AREAS TO BE PROTECTED WITH SNOW FENCE AS PER GENERAL NOTES SHT. Nº 2

WASTE RECEPTACLE WITH SLAB
*LOCATION AS DIRECTED BY ENGINEER

POST & SIGN (TO BE REMOVED BY STATE)

Δ Seeding, Sodding and Topsoil, furnished and placed as directed by the Engineer. (See note on Sheet No. 3.)

(*) NEW TREES TO BE PLANTED AS DIRECTED BY THE HORTICULTURIST

ITEM No.	DESCRIPTION	QUANTITY	
	GENERAL CONTRACT		
(*) 663	ACER RUBRUM 'RED SUNSET'- RED SUNSET RED MAPLE 3"- 3 1/2" CAL. B & B 38".	3	EACH
(*) 663	LIQUIDAMBAR STYRACIFLUA 'MORAINE'- MORAINE SWEET-GUM 3"- 3 1/2" CAL. B & B 38".	3	EACH
(*) 663	QUERCUS RUBRA MAXIMA- EASTERN RED OAK 3"- 3 1/2" CAL. B & B 38".	3	EACH
(*) 663	QUERCUS PHELLOS- WILLOW OAK 3"- 3 1/2" CAL. B & B 38"	3	EACH
202	FENCE REMOVED	6	L.F.
SPEC.	DRILLED WATER WELL ABANDONED	1	EACH
201	CLEARING & GRUBBING		LUMP
202	STRUCTURES REMOVED		LUMP
202	PRIVY VAULT REMOVED, AS PER PLAN	1	EACH
202	WALK REMOVED	1987	S. F.
202	WALK REMOVED (WALK ADJACENT TO PARKING LOT ONLY)	1950	S. F.
202	CURB REMOVED	457	L. F.
608	4" CONCRETE WALK (WALK ADJACENT TO PARKING LOT ONLY)	2209	S. F.
609	CURB, TYPE 6	423	L. F.
609	CURB, TYPE 7	34	L. F.
SPEC.	CONCRETE SLAB FOR PICNIC TABLE	5	EACH
SPEC.	SNOW FENCE (FOR TREE PROTECTION)	760	L. F.
* SPEC.	WASTE RECEPTACLE SLEEVE	18	EACH
* SPEC.	WASTE RECEPTACLE SLAB	16	EACH
SPEC.	CHARCOAL GRILL AND SERVING TABLE (W/ SLABS)	2	EACH
Δ 659	SEEDING & MULCHING	2,000	S.Y.
Δ 659	COMMERCIAL FERTILIZER	0.32	TON
Δ 660	SODDING, AS PER PLAN	1,600	S.Y.
Δ 653	TOPSOIL FURNISHED AND PLACED	300	C.Y.

REMOVAL AND TREE PROTECTION PLAN - SOUTHBOUND

F. H. W. A. REGION	STATE	PROJECT
5	OHIO	MED-71-22.14

10/47

MEDINA COUNTY
MED-71-22.14 (S.B.)
IR-71-4(57)224 PART I

	BY	DATE
CALC.	MAB	8/84
CHECKED	JRO	8/84

SCALE: 1" = 10'

0 5 10 20

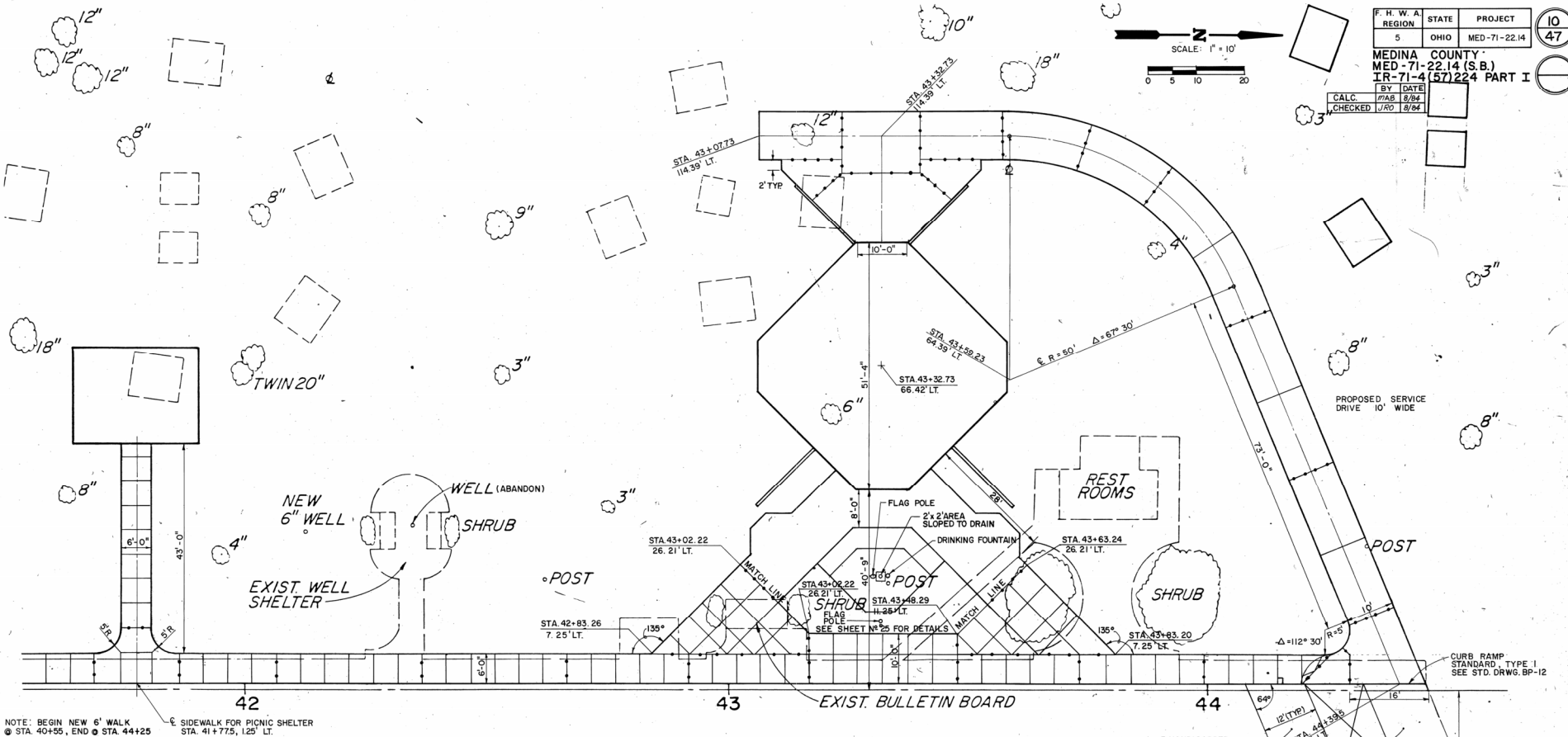

ESTIMATED QUANTITIES

ITEM No.	DESCRIPTION	QUANTITY	
	GENERAL CONTRACT		
452	7" PLAIN PORTLAND CEMENT CONCRETE PAVEMENT, AS PER PLAN	302	S.Y.
608	4" CONCRETE WALK (DOES NOT INCLUDE WALK ADJACENT TO PARKING LOT)	1809	S.F.
608	CURB RAMP, STANDARD TYPE I	1	EACH
SPEC.	MOTORIST SERVICES BUILDING & STORAGE UNIT (EXCEPT ELECTRICAL, PLUMBING, HEATING & VENTILATING)	1	EACH

LAYOUT PLAN – SOUTHBOUND

F.H.W.A.	STATE	PROJECT
5	OHIO	MED-71-22.14

11
47

MEDINA COUNTY
MED-71-22.14 (S.B.)
IR-71-4(57)224 PART I

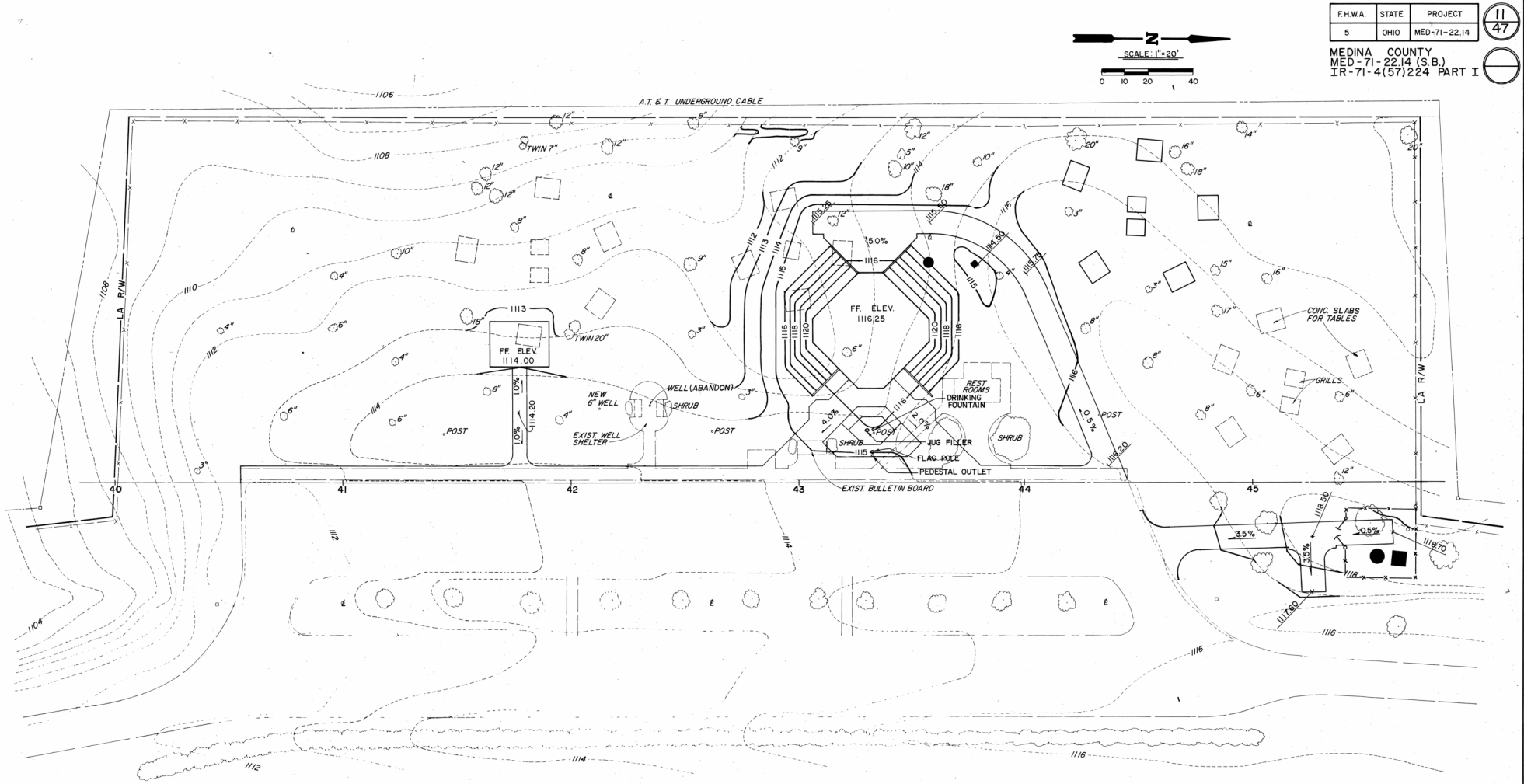

GRADING PLAN - SOUTHBOUND

	BY	DATE
CALC.	MAB	8/84
CHECKED	JRO	8/84

F.H.W.A.	STATE	PROJECT
5	OHIO	MED-71-22.14

12
47

SCALE: 1" = 20'

0 10 20 40

MEDINA COUNTY
MED-71-22.14 (S.B.)
IR-71-4(57)224 PART I

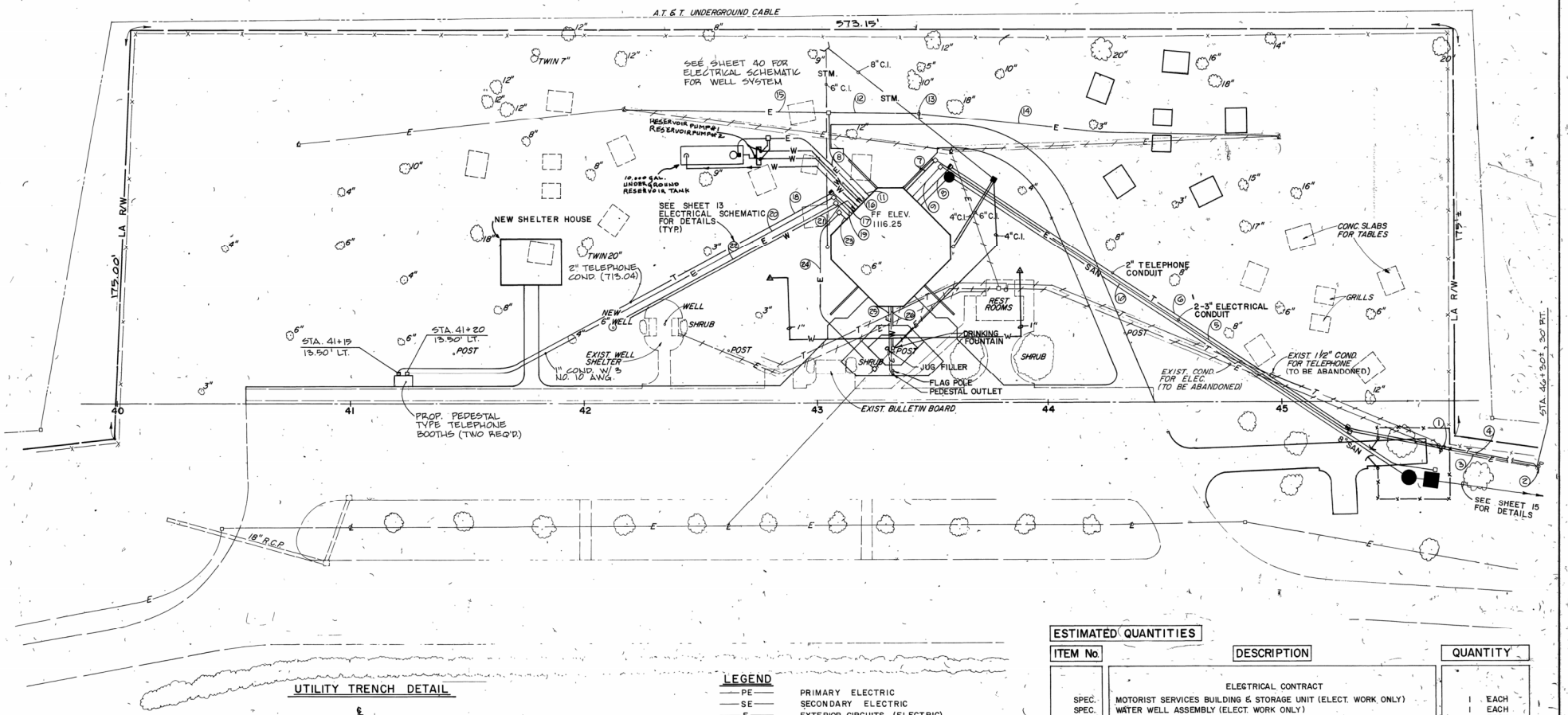

UTILITY TRENCH DETAIL

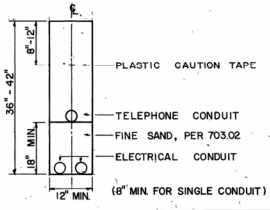

△- Flush box hydrant with Watts No. 8 vacuum breaker & key, Mardock Cat. No. V-477-3/4" bronze box and lid, with brass pipe, 4 ft. bury, anti-freezing. Approved equal by Wade, Josam or Zurn. (See Sheets No. 25 & 31 for drinking fountain & jug filler)

LEGEND

—PE—	PRIMARY ELECTRIC
—SE—	SECONDARY ELECTRIC
—E—	EXTERIOR CIRCUITS (ELECTRIC)
—T—	TELEPHONE
—W—	WATER
—SAN—	SANITARY SEWERS
—STM—	STORM SEWER
□	PULL BOX – ELECTRIC
■	PULL BOX – TELEPHONE
●	MANHOLE
■	CATCH BASIN
	EXISTING TERMINATION POLE
	EXISTING LIGHT POLES CONDUIT OR CABLE
—E OR T—	TO BE ABANDONED
△	FLUSH BOX HYDRANT (SEE NOTE THIS SHEET)

ESTIMATED QUANTITIES

ITEM No.	DESCRIPTION	QUANTITY	
	ELECTRICAL CONTRACT		
SPEC.	MOTORIST SERVICES BUILDING & STORAGE UNIT (ELECT. WORK ONLY)	1	EACH
SPEC.	WATER WELL ASSEMBLY (ELECT. WORK ONLY)	1	EACH
SPEC.	WATER SYSTEM HYPOCHLORINATOR (ELECT. WORK ONLY)	1	EACH
SPEC.	REST AREA RESERVOIR ASSEMBLY (ELECT. WORK ONLY)	1	EACH
SPEC.	LIFT STATION (ELECT. WORK ONLY)		
	PLUMBING CONTRACT		
SPEC.	MOTORIST SERVICES BUILDING & STORAGE UNIT (PLUMBING WORK ONLY)	1	EACH
SPEC.	1" TYPE "K" COPPER WATER LINE & HYDRANTS	180	LN. FT.
SPEC.	WATER WELL ASSEMBLY (EXCEPT ELECT. WORK)	1	EACH
SPEC.	WATER SYSTEM HYPOCHLORINATOR (EXCEPT ELECT. WORK)	1	EACH
SPEC.	REST AREA RESERVOIR ASSEMBLY (PLUMBING WORK ONLY)	1	EACH
SPEC.	LIFT STATION (PLUMBING WORK ONLY)	1	EACH
	HEATING & VENTILATING CONTRACT		
SPEC.	MOTORIST SERVICES BUILDING & STORAGE UNIT (HEAT. & VENT. WORK ONLY)	1	EACH

UTILITIES PLAN - SOUTHBOUND

UTILITY NOTES

MEDINA COUNTY
MED-71-22.14 (S.B.)
IR-71-4(57)224 PART I

F. H. W. A. REGION	STATE	PROJECT
5	OHIO	MED.-71-22.14

13
47

	BY	DATE
DESIGNED BY	MAG	8/84
DRAWN BY		
CHECKED BY	JZO	8/84

ELECTRICAL SPECIFICATIONS

1. GENERAL

A. WHERE A MATERIAL OR METHOD IS DESCRIBED BY PERFORMANCE DATA ONLY, ANY PRODUCT OR METHOD MEETING SUCH REQUIREMENTS MAY BE USED. WHERE MORE THAN ONE BRAND NAME IS SPECIFIED, THE FIRST NAMED IS THE PRODUCT WHOSE DIMENSIONS AND PERFORMANCE CHARACTERISTICS WERE USED IN THE DESIGN. OTHER PRODUCTS MAY BE USED BUT WITH THE UNDERSTANDING THAT IF CHANGES TO THE BUILDING ARE REQUIRED BECAUSE OF DIMENSIONS OR CHARACTERISTICS OF THAT PRODUCT, NO ADDITIONAL PAYMENT WILL BE ALLOWED.

B. IN MOST INSTANCES, AN ATTEMPT HAS BEEN MADE TO MENTION THREE MANUFACTURERS. HOWEVER, GENERALLY, ONLY ONE MANUFACTURER'S FIGURE NUMBER IS GIVEN. IF THE CONTRACTOR CHOOSES TO FURNISH A PRODUCT LISTED, BUT WITHOUT FIGURE NUMBER, IT SHALL BE THE CONTRACTOR'S RESPONSIBILITY TO FURNISH AN ITEM EQUIVALENT IN DESIGN AND QUALITY TO THAT SPECIFIED BY NUMBER AND THE SELECTIONS SHALL MEET WITH THE ENGINEER'S APPROVAL.

C. CONDUIT LAYOUT IS SCHEMATIC ONLY. CONDUIT SHALL BE RUN AS SHOWN ON THE DRAWINGS UNLESS STRUCTURAL OR OTHER CONDITIONS MAKE IT IMPOSSIBLE TO DO SO. FOR ANY SUCH CASE, THE ENGINEER SHALL BE CONSULTED AND ANY CHANGE NECESSARY SHALL BE APPROVED BY HIM.

D. THE ELECTRICAL WORK SHALL INCLUDE THE CONNECTION ELECTRICALLY, READY TO OPERATE, OF ALL ELECTRICALLY OPERATED EQUIPMENT INSTALLED UNDER THE OTHER SECTIONS OF THESE NOTES AND SPECIFICATIONS. THIS SHALL INCLUDE WIRING AND CONNECTIONS OF LINE VOLTAGE FROM PANEL BOARDS, ETC., TO SWITCHES, MOTOR STARTERS AND MOTORS, AND THE FURNISHING AND INSTALLING OF DISCONNECT SWITCHES AND STARTERS FOR ALL MOTORS AND EQUIPMENT REQUIRING SAME. THIS SHALL ALSO INCLUDE CONTROL WIRING, CONTROL RELAYS AND ETC. REQUIRED FROM CONTROL PANEL TO VARIOUS DEVICES REQUIRED. READY TO OPERATE, OPERATING TESTING INCLUDED.

E. ALL WORK SHALL BE DONE IN STRICT ACCORDANCE WITH THE LATEST EDITION OF THE NATIONAL ELECTRICAL CODE AND SPECIAL REGULATIONS OF THE STATE FIRE MARSHAL AND THE OHIO DEPARTMENT OF INDUSTRIAL RELATIONS, DIVISION OF FACTORIES AND BUILDINGS.

F. ALL MATERIAL SHALL BE NEW AND CONFORM WITH THE STANDARDS OF THE UNDERWRITERS LABORATORIES, INC. WHEREVER SUCH STANDARDS HAVE BEEN ESTABLISHED AND SHALL FULFILL THE NORMAL REQUIREMENTS FOR SATISFACTORY WORKMANSHIP.

2. INSPECTION

A. ALL ELECTRICAL WORK SHALL CONFORM TO THE REQUIREMENTS OF ARTICLE 20 (OAC 4101:2-20) AND NEC, NFPA STANDARD NO. 70 AND IS SUBJECT TO THE APPROVAL OF THE DISTRICT ELECTRICAL INSPECTOR ASSIGNED BY THE DIVISION OF FACTORY AND BUILDING INSPECTION.

B. UPON COMPLETION OF THE WORK, THE CONTRACTOR SHALL FURNISH TO THE ENGINEER A CERTIFICATE OF INSPECTION AND APPROVAL FROM SAID BUREAU OR AGENCY BEFORE FINAL PAYMENT ON CONTRACT WILL BE ALLOWED.

3. CONDUIT

A. CONDUIT SHALL BE MADE OF RIGID STANDARD WEIGHT MILD STEEL, HOT DIPPED GALVANIZED AS PER OHS ITEM 713.04. EACH LENGTH SHALL BEAR THE UL LABEL.

B. BENDS AND OFFSETS SHALL BE AVOIDED WHERE POSSIBLE. HOWEVER, WHEN BENDS ARE MADE, AN APPROVED HICKEY OR CONDUIT BENDING MACHINE SHALL BE USED.

C. CONDUIT DEFORMED OR CRUSHED SHALL NOT BE INSTALLED.

D. CONDUIT SHALL BE CUT SQUARE AND SECURELY FASTENED TO OUTLET BOXES WITH APPROVED LOCKNUTS AND BUSHINGS. CARE SHALL BE EXERCISED TO SEE THAT A FULL NUMBER OF THREADS PROJECT THROUGH TO ALLOW THE BUSHING TO BUTT UP TIGHT AGAINST THE ENDS OF THE CONDUIT, AFTER WHICH THE LOCKNUT SHALL BE SCREWED TIGHT ENOUGH TO DRAW THE BUSHING INTO FIRM CONTACT WITH THE BOX. CONDUITS SHALL BE JOINED BY APPROVED COUPLINGS. WHERE CONDUITS CANNOT BE JOINED BY STANDARD COUPLINGS, APPROVED UNIONS SHALL BE USED. ALL COUPLINGS AND UNIONS SHALL BE MECHANICALLY STRONG AND SHALL MAKE PERFECT ELECTRIC GROUNDS BETWEEN THE CONDUITS CONNECTED.

E. EACH LENGTH OF CONDUIT SHALL BE CAREFULLY INSPECTED ON THE INSIDE AND ALL MUD, CONCRETE, PLASTER AND OTHER OBJECTS SHALL BE ENTIRELY REMOVED BEFORE THE CONDUIT IS INSTALLED.

F. CAPPED BUSHINGS SHALL BE USED THROUGHOUT TO PREVENT FOREIGN OBJECTS FROM ENTERING CONDUIT.

G. ALL JOINTS BELOW GRADE AND IN CONCRETE IN CONTACT WITH THE EARTH SHALL BE PAINTED WITH RED LEAD.

H. ALL CONDUIT SHALL BE CONCEALED.

I. ENDS OF CONDUIT SHALL BE REAMED TO REMOVE ALL BURRS.

J. WHERE THE LOCATION OF HEATING AND PLUMBING LINES CONFLICT WITH THE LOCATION OF LINES OF CONDUIT, THE FORMER SHALL HAVE PREFERENCE.

K. ALL CONDUIT SHALL BE SWABBED FREE OF MOISTURE BEFORE WIRE IS INSTALLED.

L. CONDUITS SHALL BE SIZED IN ACCORDANCE WITH THE NATIONAL ELECTRIC CODE TO MAKE THE NUMBER OF WIRES SHOWN OR REQUIRED.

4. WIRING SYSTEM

A. MINIMUM WIRE SIZE SHALL BE NO. 12 AWG.

B. HOME RUNS OVER 100 FEET LONG SHALL BE NO. 10 AWG OR LARGER.

C. THE SPLICING OF WIRES IN OTHER THAN OUTLET OR JUNCTION BOXES IS PROHIBITED.

D. WHERE WIRES ARE SPLICED IN OUTLET BOXES AND WHERE FIXTURE WIRES ARE CONNECTED TO SUPPLY AND SWITCH WIRES, ALL JOINTS SHALL BE CAREFULLY MADE, PROPERLY CLEANED, AND SOLDERED AND TAPED WITH SCOTCH NO. 33 ELECTRICAL TAPE.

E. SCOTCHLOCK PRE-INSULATED SPRING CONNECTORS MAY BE USED FOR FIXTURE CONNECTIONS.

F. CARE SHALL BE EXERCISED IN INSTALLING WIRES IN CONDUIT SO THAT INSULATION WILL NOT BE DAMAGED. NOTHING EXCEPT UL APPROVED WIRE LUBRICANT SHALL BE USED TO ASSIST IN WIRE INSTALLATION.

G. AT EACH OUTLET BOX LEAVE 12 INCHES OF WIRE PROJECTING FOR FUTURE CONNECTIONS. EXPOSED ENDS OF WIRES SHALL BE TAPED.

H. ALL CONDUITS, IN WHICH CONDUCTORS ARE NOT REQUIRED, SHALL HAVE FISH WIRES NO. 10 OR LARGER TO FACILITATE PULLING IN FUTURE WIRES.

I. FURNISH CORD AND PLUGS OF PROPER SIZE AND TYPE AND HOOK-UP ALL EQUIPMENT.

5. FLEXIBLE STEEL CONDUIT

A. FLEXIBLE STEEL CONDUIT SHALL BE FULL WEIGHT STANDARD INTERLOCKING EQUAL TO FEDERAL SPECIFICATION WW-C-566, MINIMUM SIZE 1/2 INCH. USE OF FLEXIBLE CONDUIT SHALL BE LIMITED TO MAKING MOTOR CONNECTIONS AND/OR USE AS APPROVED BY THE ENGINEER.

6. OUTLET BOXES AND FITTINGS

A. ALL LIGHT RECEPTACLES AND SWITCH OUTLET BOXES SHALL BE OF HEAVY PRESSED STEEL GALVANIZED OF A STANDARD MAKE AND OF A SIZE AND SHAPE FOR THE USAGE AND CONDUIT CONNECTIONS.

B. WHERE CONDUIT FITTINGS ARE SPECIFIED, SAME SHALL BE CROUSE-HINDS, APPLETON, OR ADAPTI CO. FITTING, OR APPROVED EQUAL.

7. WIRE

A. ALL WIRE SHALL BE TYPE THW BEARING THE UL LABEL.

B. FEEDERS SHALL BE TYPE THWN.

C. ALL WIRE NO. 8 OR LARGER SHALL BE STRANDED.

D. ALL WIRE SHALL BE BROUGHT TO THE JOB IN NEW ROLLS.

E. ALL WIRE SHALL BE COPPER, STRANDED, UNLESS NOTED OTHERWISE.

ELECTRICAL SCHEMATIC

SEE SHEET 12 FOR APPROXIMATE LOCATIONS.

1.) EXISTING ELECTRICAL SERVICE DROP POLE AND METER LOCATION WITH TELEPHONE SERVICE SHALL BE ABANDONED AND REMOVED. ALL ITEMS REMOVED SHALL REMAIN THE PROPERTY OF THE STATE OF OHIO.

2.) OHIO EDISON WILL PROVIDE A NEW 120/240 VOLT, 1 PHASE, 3-WIRE, 60 HZ, 400 AMP SERVICE LINE FROM THE EXISTING OHIO EDISON POLE TO THE SERVICE DROP CONDUCTORS. NEW SERVICE DROP CONNECTORS, WEATHER HEAD, 3 - 500 MCM, 3" C SERVICE ENTRANCE, STAND OFFS, GROUNDING RODS, AND ALL OTHER APPURTENANCES AS REQUIRED SHALL BE PROVIDED BY THE ELECTRICAL CONTRACTOR. UNDERGROUND CONDUIT SHALL BE FURNISHED AND INSTALLED BY THE ELECTRICAL CONTRACTOR FOR THE 400 AMP ELECTRICAL SERVICE TO THE ELECTRICAL MAIN DISCONNECT IN THE MOTORIST SERVICES BUILDING AS SHOWN ON THE PLANS.
THE ELECTRICAL CONTRACTOR SHALL ALSO PROVIDE A NEW TELEPHONE SERVICE DROP AND CONTINUE SAID TELEPHONE SERVICE UNDERGROUND TO THE MOTORIST SERVICES BUILDING AS SHOWN ON THE PLANS.

3.) 2 - 3" CONDUITS AS PER 713.04 (ELECTRICAL SERVICE, SECONDARY).

4.) 1 - 2" CONDUIT AS PER 713.04 WITH NO. 12 PULL WIRE (TELEPHONE).

5.) 2 - 3" CONDUITS AS PER 713.04 (ELECTRICAL SERVICE, SECONDARY).

6.) 1 - 2" CONDUIT AS PER 713.04 WITH NO. 12 PULL WIRE (TELEPHONE).

7.) 2 - 3" CONDUITS AS PER 713.04 (ELECTRICAL SERVICE, SECONDARY).

8.) 1 - 2" CONDUIT AS PER 713.04 WITH NO. 12 PULL WIRE (TELEPHONE).

9.) 1 - 2" CONDUIT WITH 3 - NO. 1 THWN, 2 - NO. 10 THWN, AND HIGH LEVEL ALARM (TO LIFT STATION).

10.) 1 - 2" CONDUIT WITH 3 - NO. 1 THWN, 2 - NO. 10 THWN, AND HIGH LEVEL ALARM (TO LIFT STATION).

11.) 1 - 2" CONDUIT AS PER 713.04 WITH 2 NO. 4 AWG, U.L. TYPE MV-90 DRY, 5000 VOLT CONDUCTORS AS PER 713.02 (TO AREA LIGHTING).

12.) 1 - 2" CONDUIT AS PER 713.04 WITH 2 NO. 4 AWG, U.L. TYPE MV-90 DRY, 5000 VOLT CONDUCTORS AS PER 713.02 (TO AREA LIGHTING).

13.) RE-ERECT EXISTING LIGHT POLE INCLUDING TRANSFORMER BASE, LIGHT POLE AND LUMINAIRE ONTO NEW FOUNDATION AND INSTALL NEW GROUNDING ROD AND WIRE.
THE CONCRETE FOUNDATION SHALL BE 24" SQUARE AND EXTEND A MINIMUM OF 5' BELOW FINISHED GRADE. THE POLE SHALL BE ATTACHED BY USING FOUR 1" X 40" BENT ANCHOR BOLTS OR LARGER IN ACCORDANCE WITH POLE DIAMETER AND GAUGE. BOLTS TO PROJECT ABOVE CONCRETE IN ACCORDANCE WITH MANUFACTURER'S REQUIREMENTS. GALVANIZE EXPOSED ENDS AND NUTS.

14.) 1 - 2" CONDUIT AS PER 713.04 WITH 2 NO. 4 AWG, U.L. TYPE MV-90 DRY, 5000 VOLT CONDUCTORS AS PER 713.02 (TO AREA LIGHTING).

15.) 1 - 2" CONDUIT AS PER 713.04 WITH 2 NO. 4 AWG, U.L. TYPE MV-90 DRY, 5000 VOLT CONDUCTORS AS PER 713.02 (TO AREA LIGHTING).

16.) 1 - 2" CONDUIT AS PER 713.04 WITH 6 NO. 10 THWN AWG CONDUCTORS, 2 B/W LEADS, AND 1 NO. 10 THW GROUND (TO RESERVOIR PUMPS START/STOP CONTROLS IN RESERVOIR).

17.) 1 - 2" CONDUIT AS PER 713.04 WITH NO. 12 PULL WIRE (TELEPHONE).

18.) 1 - 2" CONDUIT AS PER 713.04 WITH NO. 12 PULL WIRE (TELEPHONE).

19.) 1 - 1" CONDUIT AS PER 713.04 WITH 3 NO. 10 THWN (TO PEDESTAL TELEPHONE BOOTHS).

20.) 1 - 1" CONDUIT AS PER 713.04 WITH 3 NO. 10 THWN (TO PEDESTAL TELEPHONE BOOTHS).

21.) 1 - 2" CONDUIT AS PER 713.04 WITH 3 NO. 4 THWN CONDUCTORS AND 2 B/W LEADS AND 1 NO. 10 THW GROUND WIRE (TO WELL PUMP MOTOR).

22.) 1 - 2" CONDUIT AS PER 713.04 WITH 3 NO. 4 THWN CONDUCTORS AND 2 B/W LEADS AND 1 NO. 10 THW GROUND WIRE (TO WELL PUMP MOTOR).

23.) 1 - 2" CONDUIT AS PER 713.04 WITH 2 NO. 4 AWG, U.L. TYPE MV-90 DRY, 5000 VOLT CONDUCTORS AS PER 713.02 (TO RAMP LIGHTING).

24.) 1 - 2" CONDUIT AS PER 713.04 WITH 2 NO. 4 AWG, U.L. TYPE MV-90 DRY, 5000 VOLT CONDUCTORS AS PER 713.02 (TO RAMP LIGHTING).

25.) 1 - 2" CONDUIT WITH 3 NO. 10 THWN (TO PEDESTAL OUTLET).

26.) 1 - 1-1/4" CONDUIT WITH 3 NO. 12 THWN (TO FLAG POLE).

SUB - SUMMARY

QUANTITIES FROM SHEET 12.

ITEM	DESCRIPTION	QUANTITY
625	2" CONDUIT, 713.04 (TELEPHONE)	550 L.F.
625	2" CONDUIT, 713.04 (ELECTRICAL)	878 L.F.
625	3" CONDUIT, 713.04 (SECONDARY)	674 L.F.
625	PULL BOX, 24" CONCRETE	14 EACH
625	TRENCH, 36" AS PER PLAN (SECONDARY & TELEPHONE)	340 L.F.
625	No. 4 AWG, U.L. TYPE MV-90 DRY, 5000 VOLT DISTRIBUTION CABLE	1172 L.F.
625	3-1/C 500 MCM, UL TYPE USE 600 VOLT SECONDARY FEEDER CABLE	380 L.F.
625	1" CONDUIT, 713.04 (ELECTRICAL)	212 L.F.
SPEC.	REMOVE EXISTING LIGHT POLE	1 EACH
SPEC.	REMOVE EXISTING LIGHT POLE FOUNDATION	1 EACH
SPEC.	RE-ERECT EXISTING LIGHT POLE	1 EACH
SPEC.	RECONNECT EXISTING LIGHT POLE	1 EACH
625	METAL PULLBOX (PEDESTAL OUTLET)	1 EACH
625	TRENCH, 24" DEEP	725 L.F.
625	CONNECTOR KIT TYPE II	14 EACH
625	GROUND ROD	3 EACH
625	POLE & BRACKET CABLE	25 L.F.
625	CABLE SPLICING KIT	9 EACH
SPEC.	PLASTIC CAUTION TAPE	1065 L.F.
625	1/4" CONDUIT 713.04 (ELECTRICAL)	28 L.F.
625	Nº 1 THWN	806 L.F.
625	Nº 10 THWN	1592 L.F.
625	Nº 12 THWN	84 L.F.
839	HIGH VOLTAGE TEST	LUMP

QUANTITIES CARRIED TO GENERAL SUMMARY

FED. RD. DIVISION	STATE	PROJECT	
5	OHIO	MED-71-22.14	

14
47

MEDINA COUNTY
MED-71-22.14 (S.B.)
IR-71-4(57)224 PART I

SEWAGE WET WELL AND LIFT STATION DETAILS

FOR NOTES SEE SHT. 14A

NOTES:

1. 4" SCH. 40 BLK. STEEL PIPE, ASTM A53 W/ SCH. 40 180° BEND, WELD FITTING. FURNISH 4" VENT W/ A FINE MESH, STAINLESS STEEL, REMOVABLE FLANGED ASSEMBLY SCREEN COVER ON EXTERIOR OPENING.
2. PROVIDE RUBBER GASKETS ON PIPES WHERE THEY GO THROUGH WALLS, GROUT IN PLACE W/ NON SHRINK GROUT.
3. ALL ELECTRICAL WORK TO BE IN ACCORDANCE W/ STATE AND NATIONAL ELECTRIC CODES.
4. ALL POWER & CONTROL CABLES TO BE CONTINUOUS (ONE PIECE) FROM CONTROL PANEL TO PUMP MOTOR OR FLOATS.

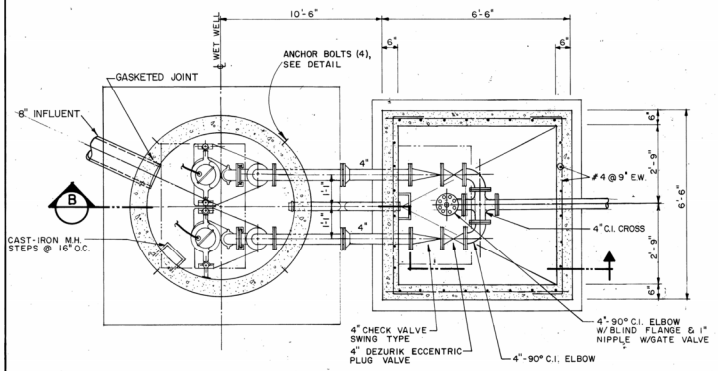

SECTIONAL PLAN (A)

SCALE: 1/2" = 1'-0"

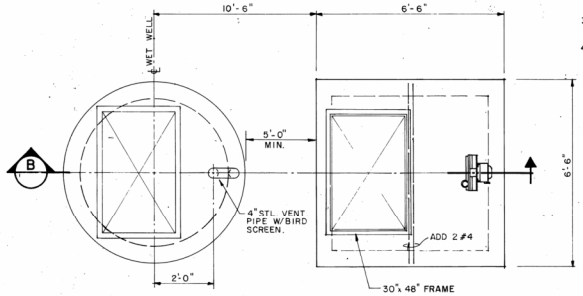

TOP PLAN

SCALE: 1/2" = 1'-0"

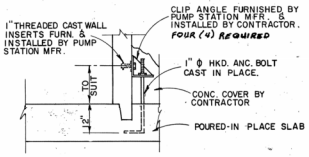

TYP. ANCHOR DETAIL

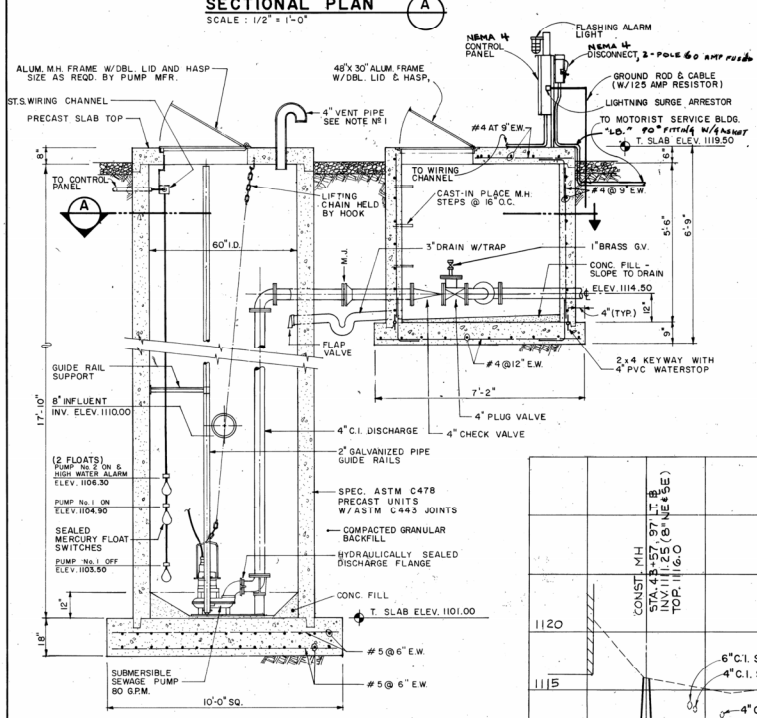

SECTION (B)

SCALE: 1/2" = 1'-0"

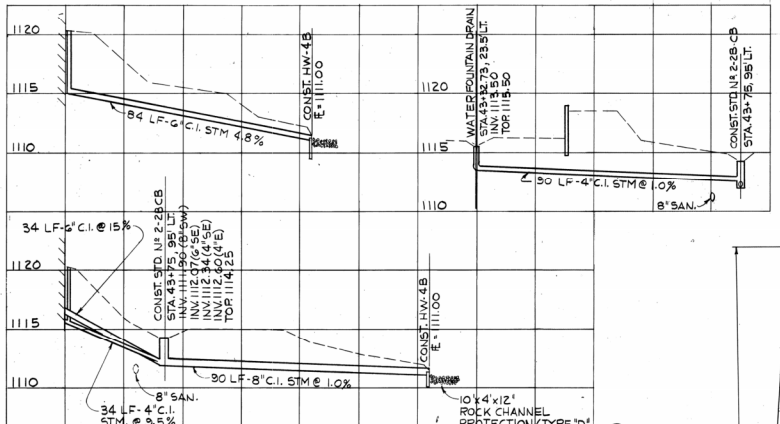

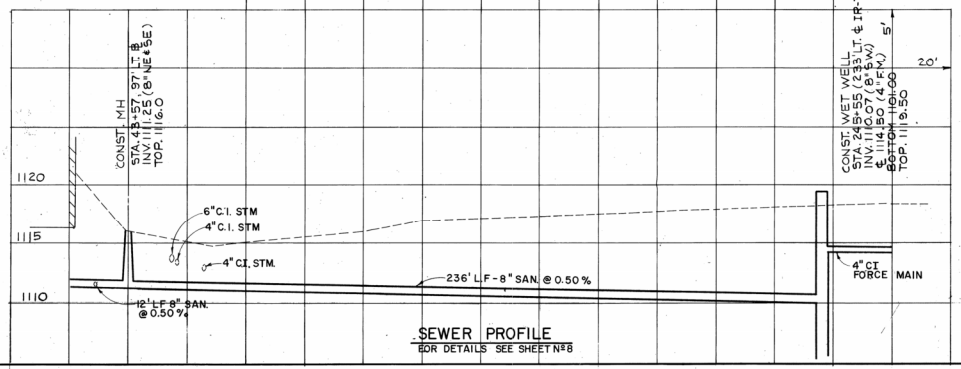

SEWER PROFILE

FOR DETAILS SEE SHEET Nº 8

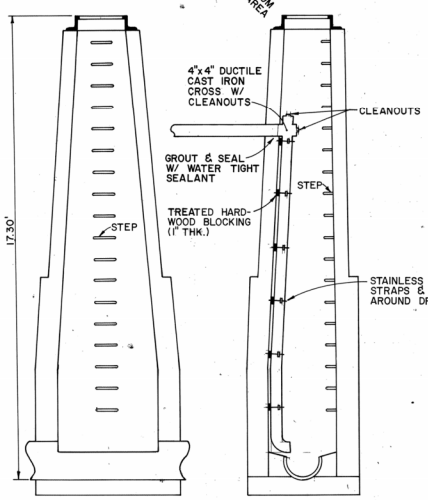

MANHOLE RECONSTRUCTION DETAIL

CONSTRUCT 4" C.I. INSIDE DROP IN EXISTING ODOT STD. MH-2 MANHOLE N.T.S.

UTILITY DETAILS

FED. RD. DIVISION	STATE	PROJECT	
5	OHIO	MED-71-22.14	

15
47

MEDINA COUNTY
MED-71-22.14 (S.B.)
IR-71-4(57)224 PART I

BENCH MARK:
CHISELED "+" @ S.E. CORNER OF INLET @ S.B. REST AREA ℄ STA. 41+00, 40' RT.
ELEV. = 1112.56

N

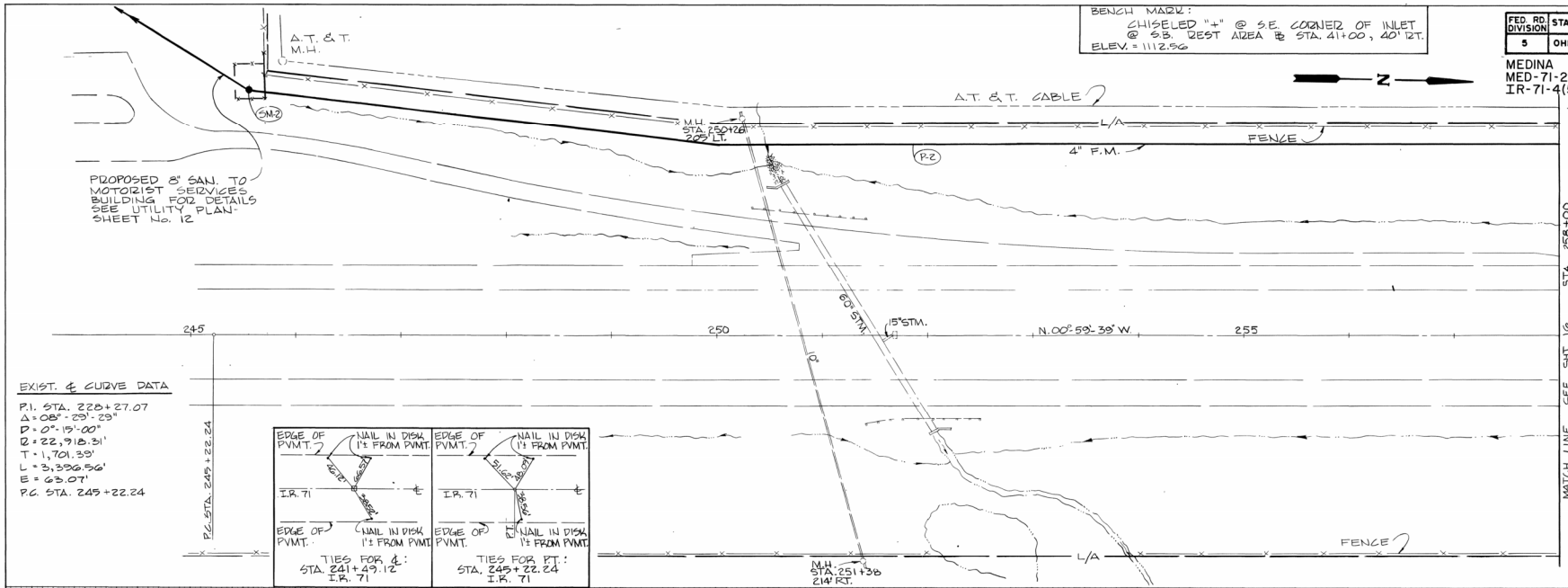

EXIST. ℄ CURVE DATA

P.I. STA. 228+27.07
Δ = 08°-29'-29"
D = 0°-15'-00"
R = 22,918.31'
T = 1,701.39'
L = 3,396.56'
E = 63.07'
P.C. STA. 245+22.24

MARK	SIDE	STATION FROM	STATION TO	603 4" DUCTILE CAST IRON PIPE AS PER PLAN LIN. FT.	SPEC. PRECAST CONC. WET WELL INCL. LIFT STATION EACH
P.M. & P.2	LT.	245+55	258+00	1245	1
	LT.	245+55			
		TOTALS		1245	1

CALC. BY MAG 8/84
CHECK JRO 9/84

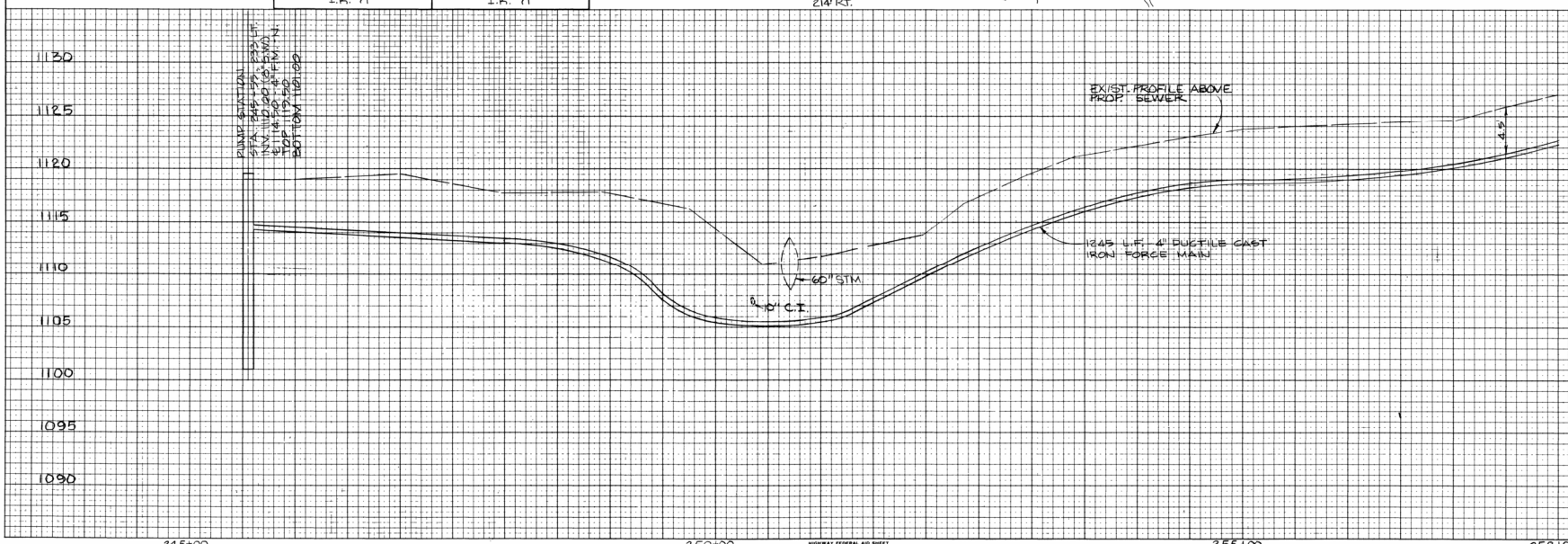

FINAL SURVEY — SURVEYED / PLOTTED / TEMPLATE / AREAS / AREAS CHECKED / NOTE BOOK NO. / BY / DATE

ORIGINAL SURVEY — SURVEYED / PLOTTED / TEMPLATE / AREAS / AREAS CHECKED / NOTE BOOK NO. / BY / DATE

HIGHWAY FEDERAL AID SHEET
PLATE 4-SINGLE PLAN AND CROSS SECTION-FULL LINE
"M"-TELETYPE
PRINTED IN U.S.A.

I-71 STA. 245+00 to STA. 258+00

FED. RD. DIVISION	STATE	PROJECT	
5	OHIO	MED-71-22.14	

16
47

MEDINA COUNTY
MED-71-22.14 (S.B.)
IR-71-4(57)224 PART I

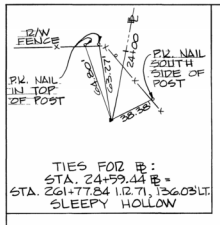

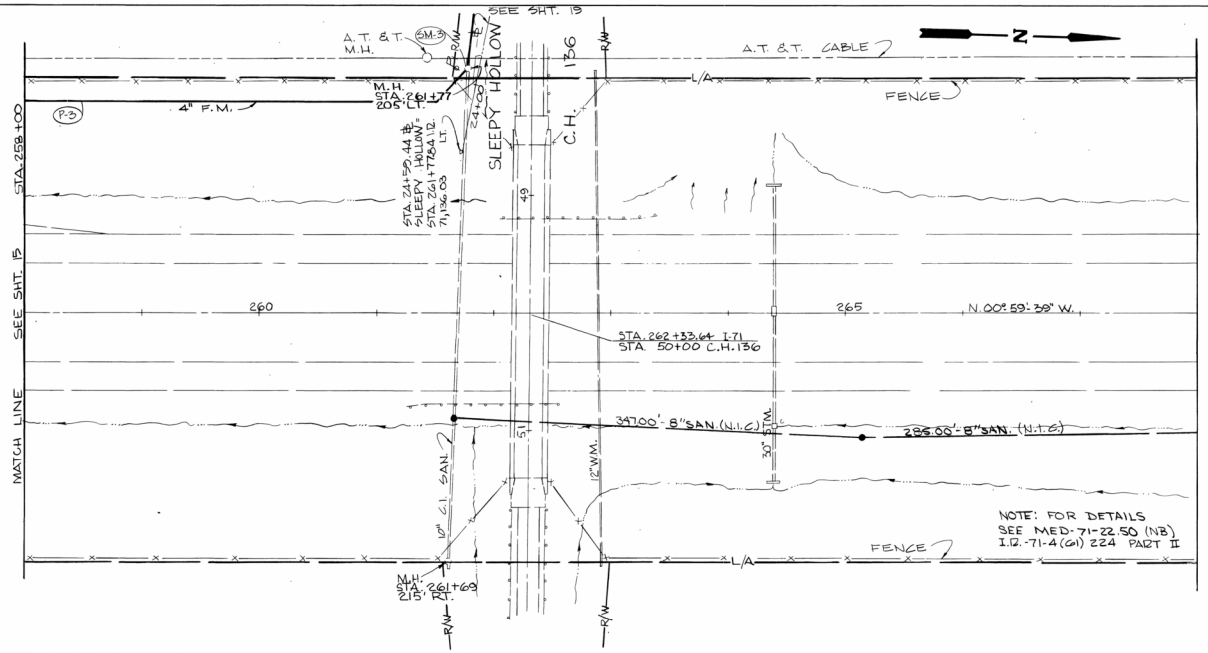

MARK	SIDE	STATION FROM	STATION TO	603 4" DUCTILE CAST IRON PIPE AS PER PLAN	604 RECONST. MANHOLE AS PER PLAN
				LIN. FT.	EACH
P-3	LT.	258+00	261+77	350	
SM-3	LT.	261+77			1
TOTALS				350	1

	BY	DATE
CALC.	MAS	8/64
CHECKED	JTEO	2/84

BENCH MARK:
CHISELED "+" @ S.E. CORNER OF INLET @ S.B. REST AREA ℄ STA. 41+00, 40' RT.
ELEV. = 1112.56

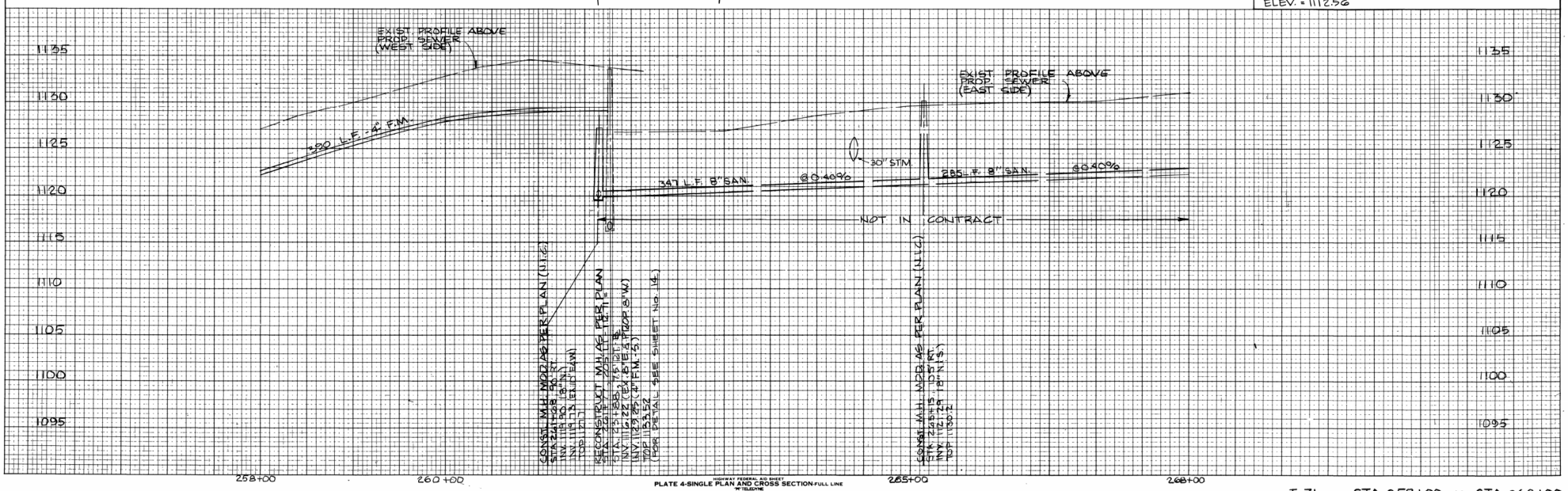

FINAL SURVEY		BY	DATE
NOTE BOOK NO.	SURVEYED		
	PLOTTED		
	TEMPLATE		
	AREAS		
	AREAS CHECKED		

ORIGINAL SURVEY		BY	DATE
NOTE BOOK NO.	SURVEYED		
	PLOTTED		
	TEMPLATE		
	AREAS		
	AREAS CHECKED		

	BY	DATE
CALC	MMG	8/84
CHECKED	RRS	8/84
REV.	DWG	10-26-84

FED. RD. DIVISION	STATE	PROJECT	
5	OHIO	MED-71-22.14	

17/47

MEDINA COUNTY
MED-71-22.14 (S.B.)
IR-71-4(57)224 PART I

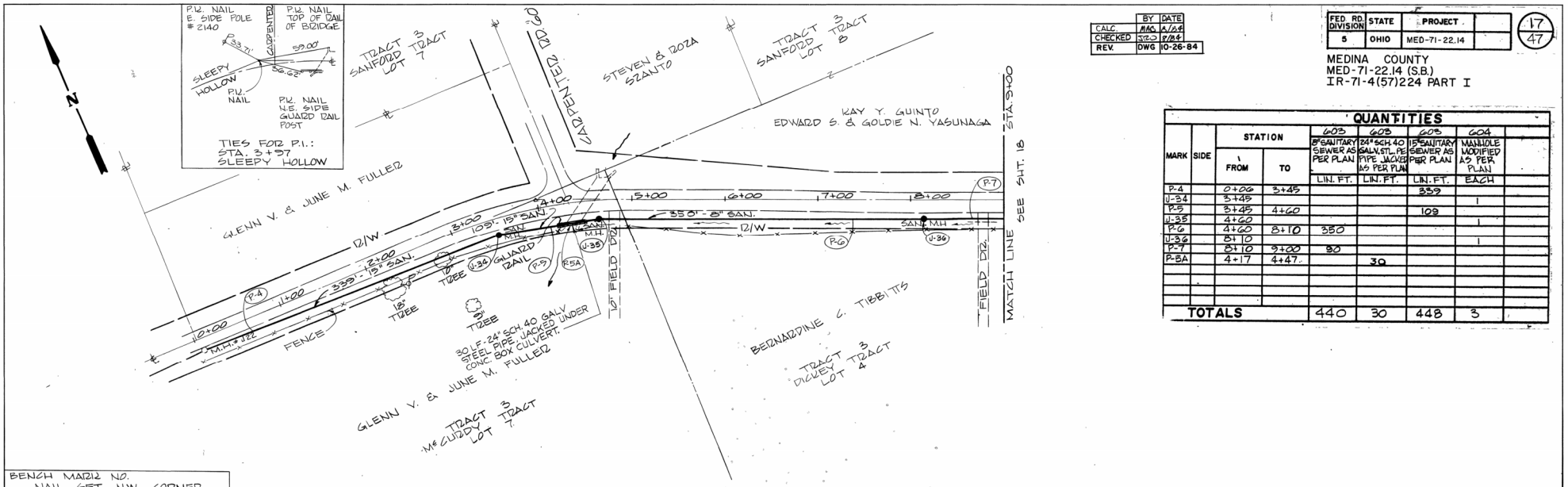

BENCH MARK NO.
NAIL SET N.W. CORNER
BRIDGE RAILING AT STA.
4+50
ELEV. 1084.30

SLEEPY HOLLOW RD. 60' (C.H. 136)

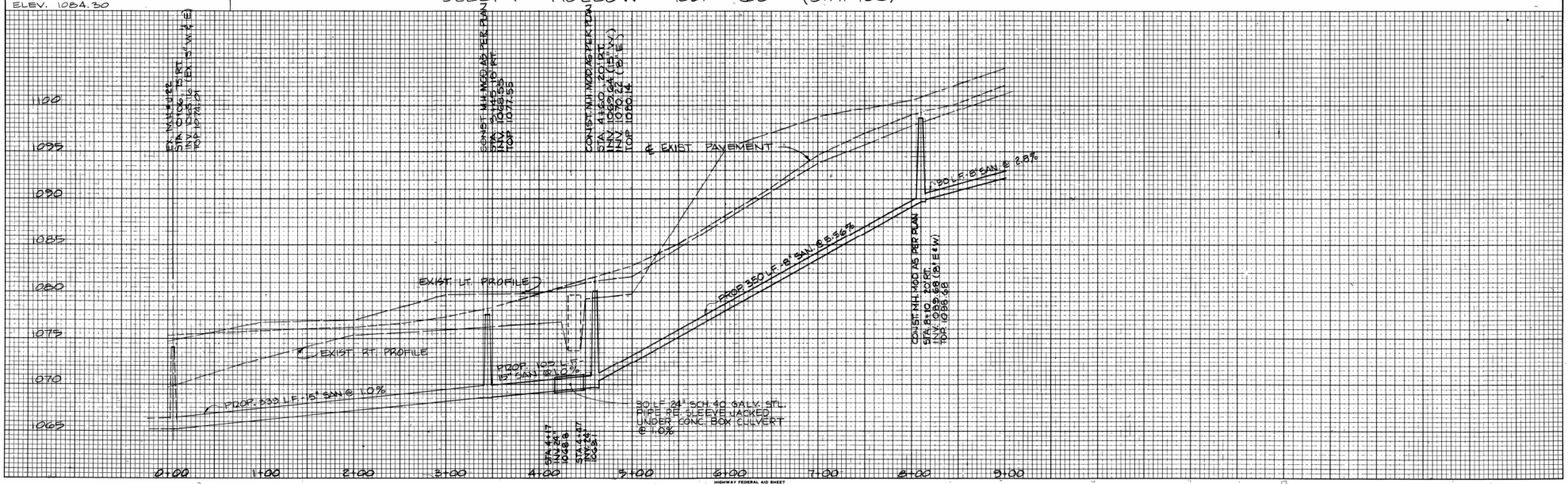

PLATE 4-SINGLE PLAN AND CROSS SECTION-FULL LINE
HIGHWAY FEDERAL AID SHEET
WITLEDWG
PRINTED IN U.S.A.

PLAN & PROFILE STA. 0+00 TO STA. 3+00

QUANTITIES							
MARK	SIDE	STATION FROM	STATION TO	603 8" SANITARY SEWER AS PER PLAN	603 24" SCH. 40 GALV. STL. PE PIPE JACKED AS PER PLAN	603 15" SANITARY SEWER AS PER PLAN	604 MANHOLE MODIFIED AS PER PLAN
				LIN. FT.	LIN. FT.	LIN. FT.	EACH
P-4		0+00	3+45			339	
U-34		3+45					1
P-5		3+45	4+60			105	
U-35		4+60					1
P-6		4+60	8+10	350			
U-36		8+10					1
P-7		8+10	9+00	90			
P-5A		4+17	4+47		30		
TOTALS				440	30	448	3

FINAL SURVEY — SURVEYED, PLOTTED, TEMPLATE, AREAS, AREAS CHECKED; NOTE BOOK, NO.; BY; DATE

ORIGINAL SURVEY — SURVEYED, PLOTTED, TEMPLATE, AREAS, AREAS CHECKED; NOTE BOOK, NO.; BY; DATE

	BY	DATE
CALC.	MRC	8/84
CHECKED	JRO	8/84
REV.	DWG	10-26-84

FED. RD. DIVISION	STATE	PROJECT	
5	OHIO	MED-71-22.14	

18
47

MEDINA COUNTY
MED-71-22.14 (S.B.)
IR-71-4(57)224 PART I

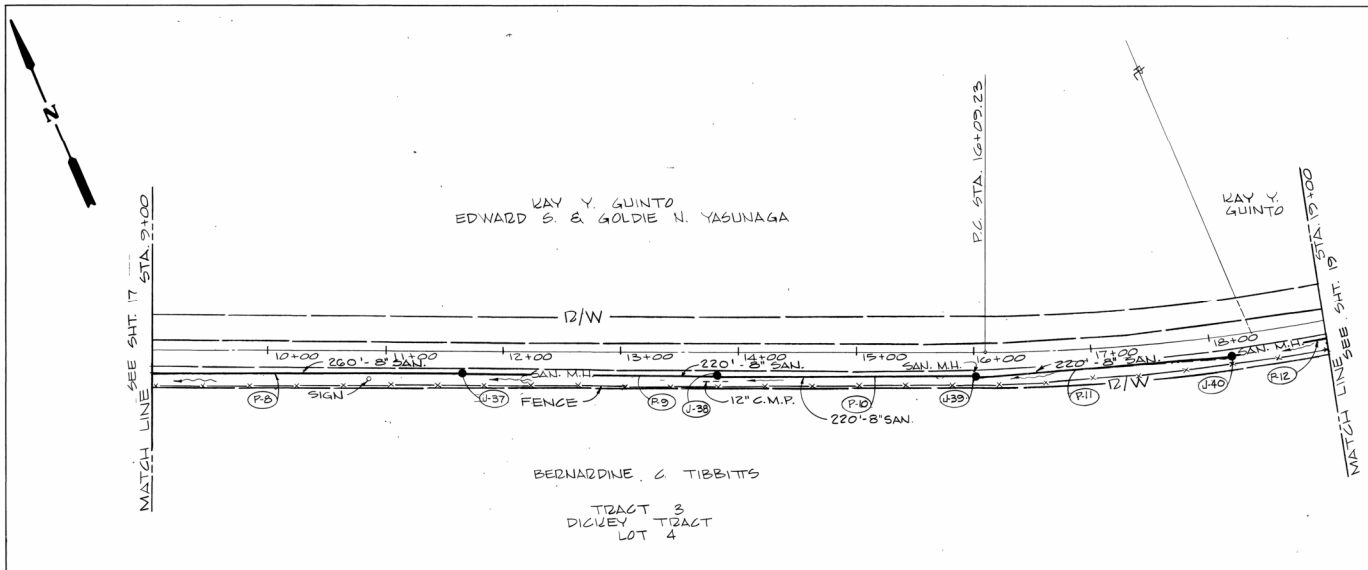

MARK	SIDE	STATION FROM	STATION TO	604 MANHOLE MODIFIED AS PER PLAN EACH	603 SANITARY SEWER AS PER PLAN LIN. FT.
P-8		9+00	11+60		260
J-37		11+60		1	
P-9		11+60	13+80		220
J-38		13+80		1	
P-10		13+80	16+00		220
J-39		16+00		1	
P-11		16+00	18+15		200
J-40		18+15		1	
P-12		18+15	19+00		85
TOTALS				4	1005

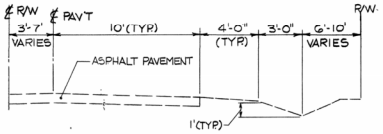

SLEEPY HOLLOW RD.
TYPICAL SECTION

BENCH MARK NO.
NAIL SET N.W. CORNER
BRIDGE RAILING AT STA.
4+50
ELEV. 1084.30

SLEEPY HOLLOW RD. 60' (C.H. 136)

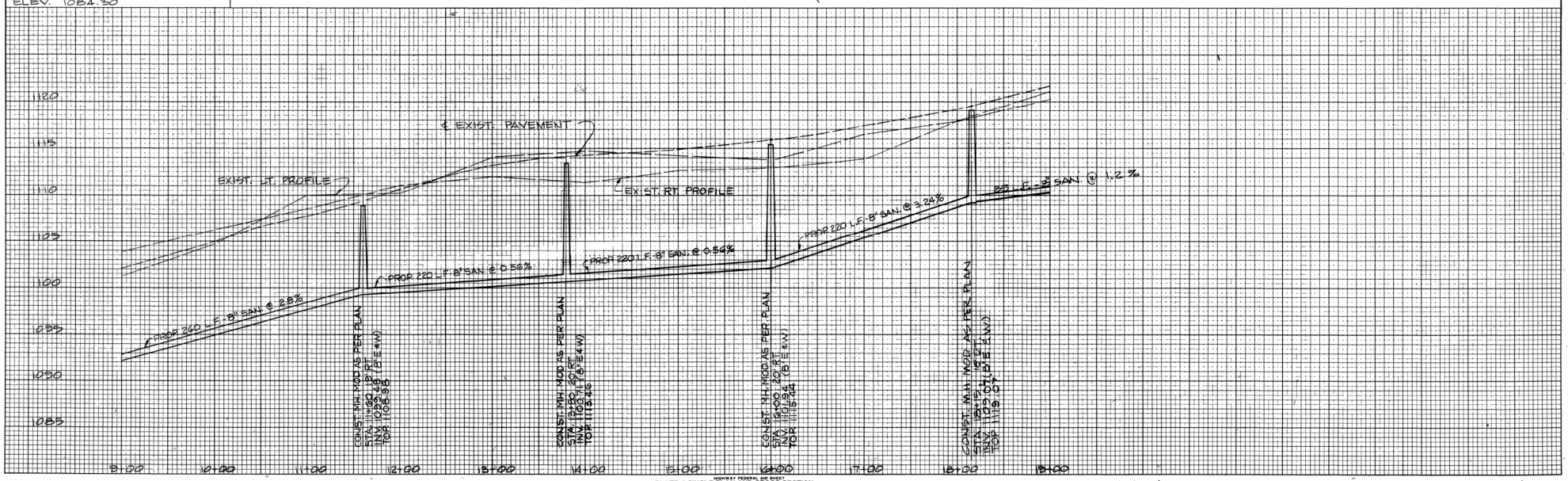

PLAN & PROFILE STA. 9+00 TO STA. 19+00

FINAL SURVEY — NOTE BOOK NO. — SURVEYED, PLOTTED, TEMPLATE, AREAS, AREAS CHECKED — BY — DATE

ORIGINAL SURVEY — NOTE BOOK NO. — SURVEYED, PLOTTED, TEMPLATE, AREAS, AREAS CHECKED — BY — DATE

FED. RD. DIVISION	STATE	PROJECT	
5	OHIO	MED-71-22.14	

19
47

MEDINA COUNTY
MED-71-22.14 (S.B.)
IR-71-4(57)224 PART I

	BY	DATE
CALC.	MAG	8/84
CHECKED	JTCO	8/84
REV.	DWG	10-26-84

BENCH MARK NO.
NAIL SET N.W. CORNER BRIDGE RAILING AT STA. 4+50.
ELEV. 1084.30

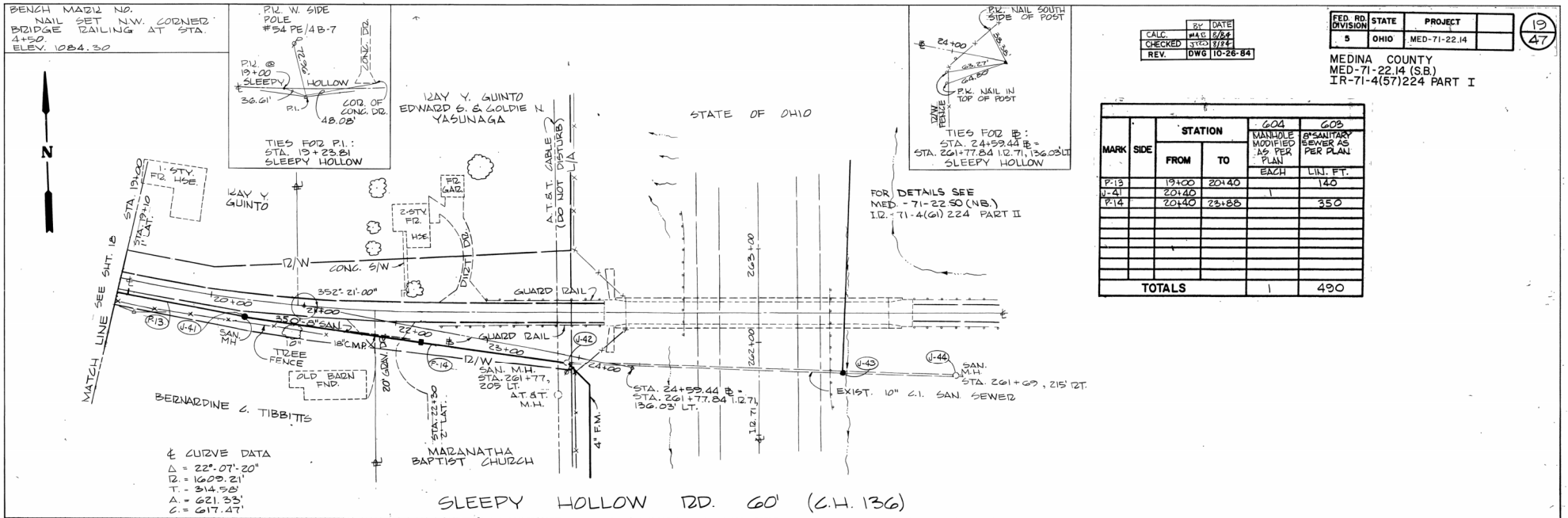

MARK	SIDE	STATION FROM	STATION TO	604 MANHOLE MODIFIED AS PER PLAN EACH	603 8" SANITARY SEWER AS PER PLAN LIN. FT.
P-13		19+00	20+40		140
J-41		20+40		1	
P-14		20+40	23+88		350
TOTALS				1	490

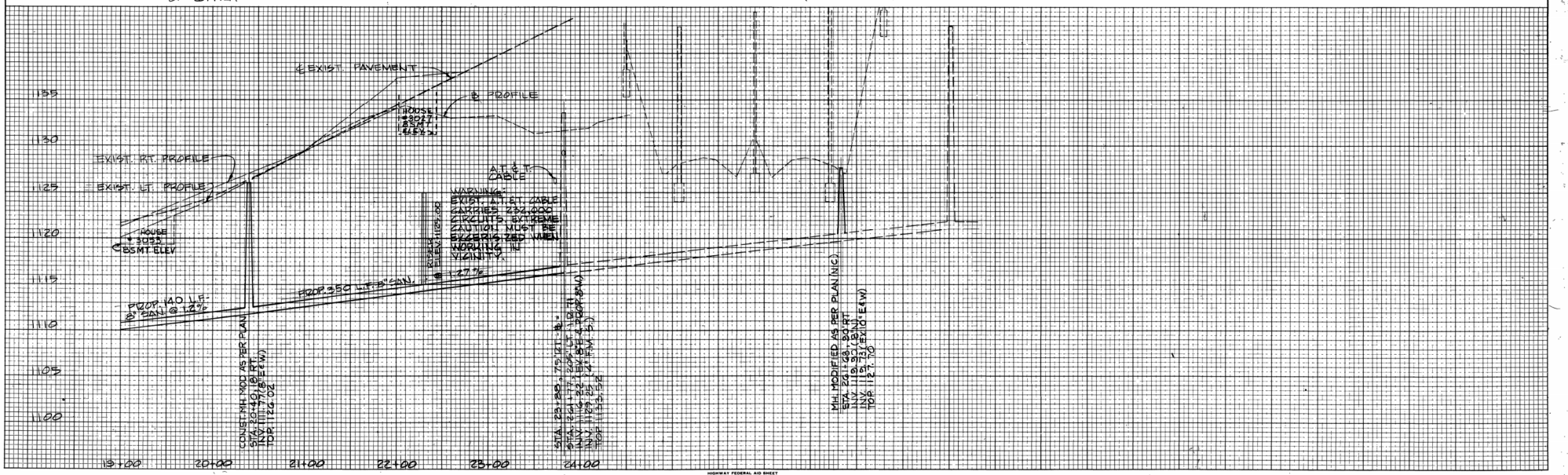

PLATE 4-SINGLE PLAN AND CROSS SECTION-FULL LINE
HIGHWAY FEDERAL AID SHEET
WITLDONE
PRINTED IN U.S.A.

PLAN & PROFILE STA. 19+00 TO STA. 24+59.44

FINAL SURVEY	DATE	BY
NOTE BOOK	SHEETED	
NO.	PLOTTED	
	TEMPLATE	
	AREAS	
	AREAS CHECKED	

ORIGINAL SURVEY	DATE	BY
NOTE BOOK	SHEETED	
NO.	PLOTTED	
	TEMPLATE	
	AREAS	
	AREAS CHECKED	

MED-71-22.14 (S.B.)

OHIO FHWA REGION 5

20 / 47

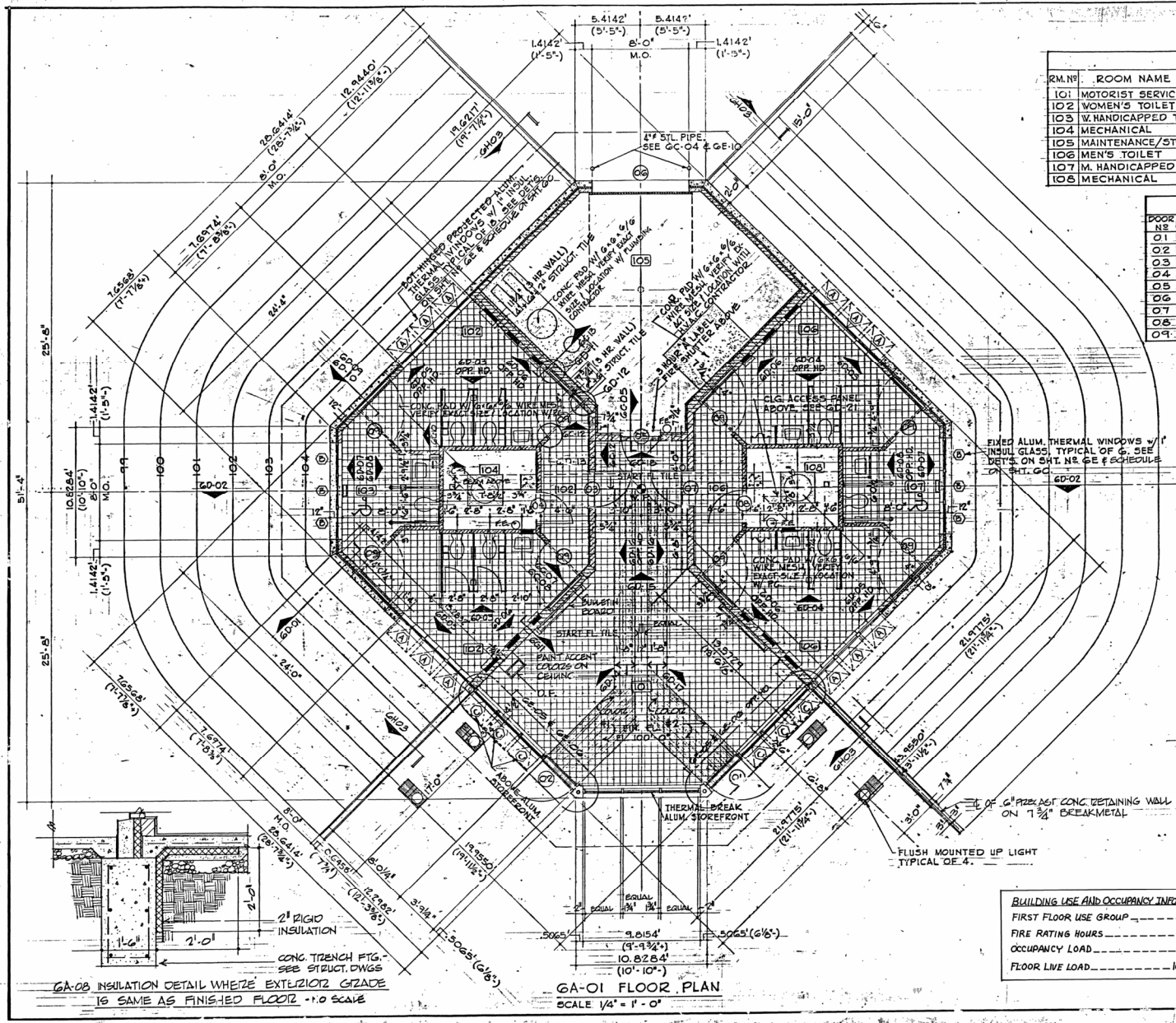

GA-01 FLOOR PLAN
SCALE 1/4" = 1' - 0"

GA-08 INSULATION DETAIL WHERE EXTERIOR GRADE IS SAME AS FINISHED FLOOR - 1:0 SCALE

ROOM FINISH SCHEDULE

RM. Nº	ROOM NAME	FLOOR	BASE	WALLS	CEILING	CLG. HT.	REMARKS
101	MOTORIST SERVICES	QUARRY TILE [1]	QUARRY TILE [2]	GLAZED TILE	CONC. PAINTED	9'-1¼"	1. THIN-SET. 2. 5" COVE
102	WOMEN'S TOILET	Do	Do	Do	Do	Do	Do
103	W. HANDICAPPED T.	Do	Do	Do	Do	Do	Do
104	MECHANICAL	CONC. w/ HRDNR.	NONE	UNGLAZED TILE [1]	Do	Do	1. PAINTED
105	MAINTENANCE/STOR.	Do	Do	Do	Do	Do	Do
106	MEN'S TOILET	QUARRY TILE [1]	QUARRY TILE [2]	GLAZED TILE	Do	Do	1. THIN-SET. 2. 5" COVE
107	M. HANDICAPPED T.	Do	Do	Do	Do	Do	Do
108	MECHANICAL	CONC. w/ HRDNR.	NONE	UNGLAZED TILE [1]	Do	Do	1. PAINTED

DOOR SCHEDULE

DOOR Nº	TYPE	SIZE	HARDWR.	JAMB DET.	REMARKS
01	GA-02	3'-5" x 6'-11" x 1¾"	A	GE-06	FURNISH W/ NOMINAL 4½" HIGH CENTER CROSS RAIL ⚠
02	GA-02	3'-5" x 6'-11" x 1¾"	A	GE-06	" DITTO ABOVE "
03	GD-16	3'-0" x 6'-11" x 1¾"	B	GA-05	1 HR. "B" LABEL DOOR & FR. W/ V.P. SEE GD-16
04	GA-03	2'-8" x 6'-11" x 1¾"	C	GA-06	
05	GA-03	3'-0" x 6'-11" x 1¾"	C	GA-07	3 HOUR "A" LABEL DOOR & FR. SEE GC-05
06	GA-04	8'-2" x 5'-1" x 2"	—	GE-10	2" REGULAR CLEARANCE TRACK
07	GD-16	3'-0" x 6'-11" x 1¾"	B	GA-05	1 HR. "B" LABEL DOOR & FR. W/ V.P. SEE GD-16
08	GA-03	2'-8" x 6'-11" x 1¾"	C	GA-06	
09	GA-03	3'-7¾" x 7'-2" x 1¾"	D	SHT. GD	8 REQ'D W/ SPECIAL FRAME. SEE SHT. Nº. GD

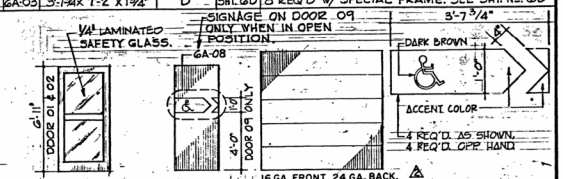

WIDE STILE ALUMINUM — 16 GA. FLUSH HOLLOW MTL.

GA-02 GA-03 GA-04 UNCFD SIGNAGE DTL. GA-08

SCALE: 3/4" = 1'-0"

DOOR TYPES

NO SCALE

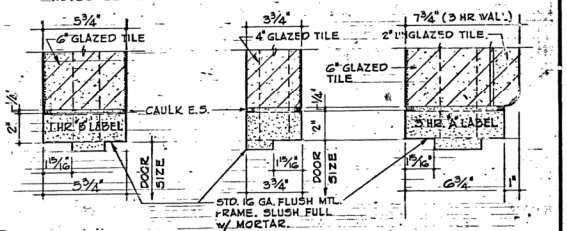

GA-05 GA-06 GA-07

DOOR JAMB FRAMING DETAILS - HEADS SIMILAR

SCALE 3" = 1' - 0"

BUILDING USE AND OCCUPANCY INFORMATION

FIRST FLOOR USE GROUP ——— B
FIRE RATING HOURS ——— 2
OCCUPANCY LOAD ——— 49
FLOOR LIVE LOAD ——— 100 P.S.F.

OHIO DEPARTMENT OF TRANSPORTATION
DIVISION OF HIGHWAYS

REVISIONS
FOOT/A REV. 1/84
FOOT/A REV. 10-19-84
11-23-84

MOTORIST SERVICES BUILDING AND STORAGE UNITS

SHEET NO. 6A

ARCHITECTS • WRIGHT / KRITSCHGAU, ASSOCIATES, INC. 3600 TRABUE RD., COLUMBUS, OHIO
ENGINEERS • JOHN E. FOSTER & ASSOCIATES, COLUMBUS, OHIO
ENERGY TECHNOLOGIES • BATTELLE COLUMBUS LABORATORIES

DATE

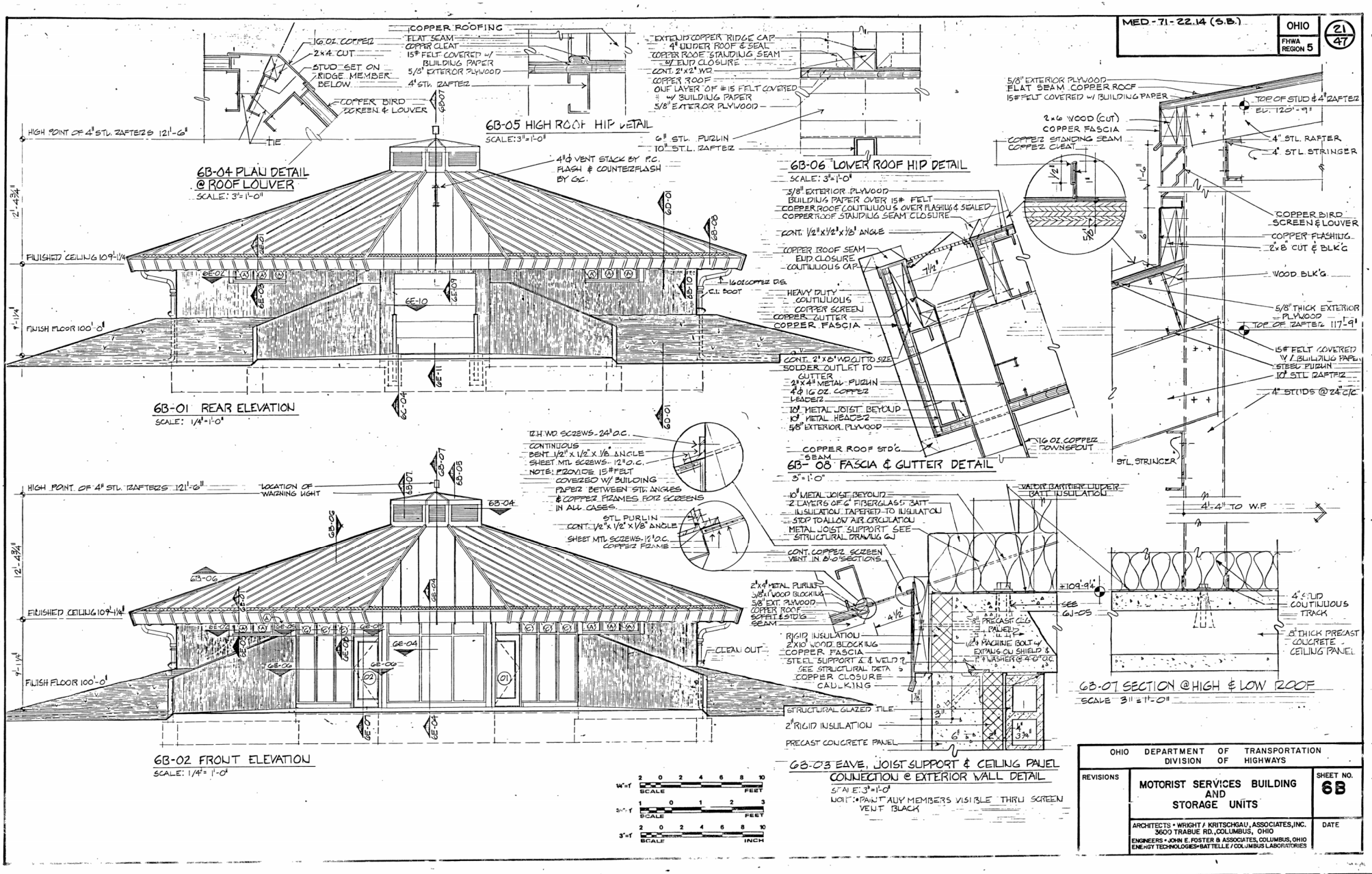

OHIO DEPARTMENT OF TRANSPORTATION
DIVISION OF HIGHWAYS

REVISIONS

MOTORIST SERVICES BUILDING AND STORAGE UNITS

SHEET NO. **6B**

ARCHITECTS • WRIGHT / KRITSCHGAU, ASSOCIATES, INC. 3600 TRABUE RD., COLUMBUS, OHIO
ENGINEERS • JOHN E. FOSTER & ASSOCIATES, COLUMBUS, OHIO
ENERGY TECHNOLOGIES • BATTELLE / COLUMBUS LABORATORIES

DATE

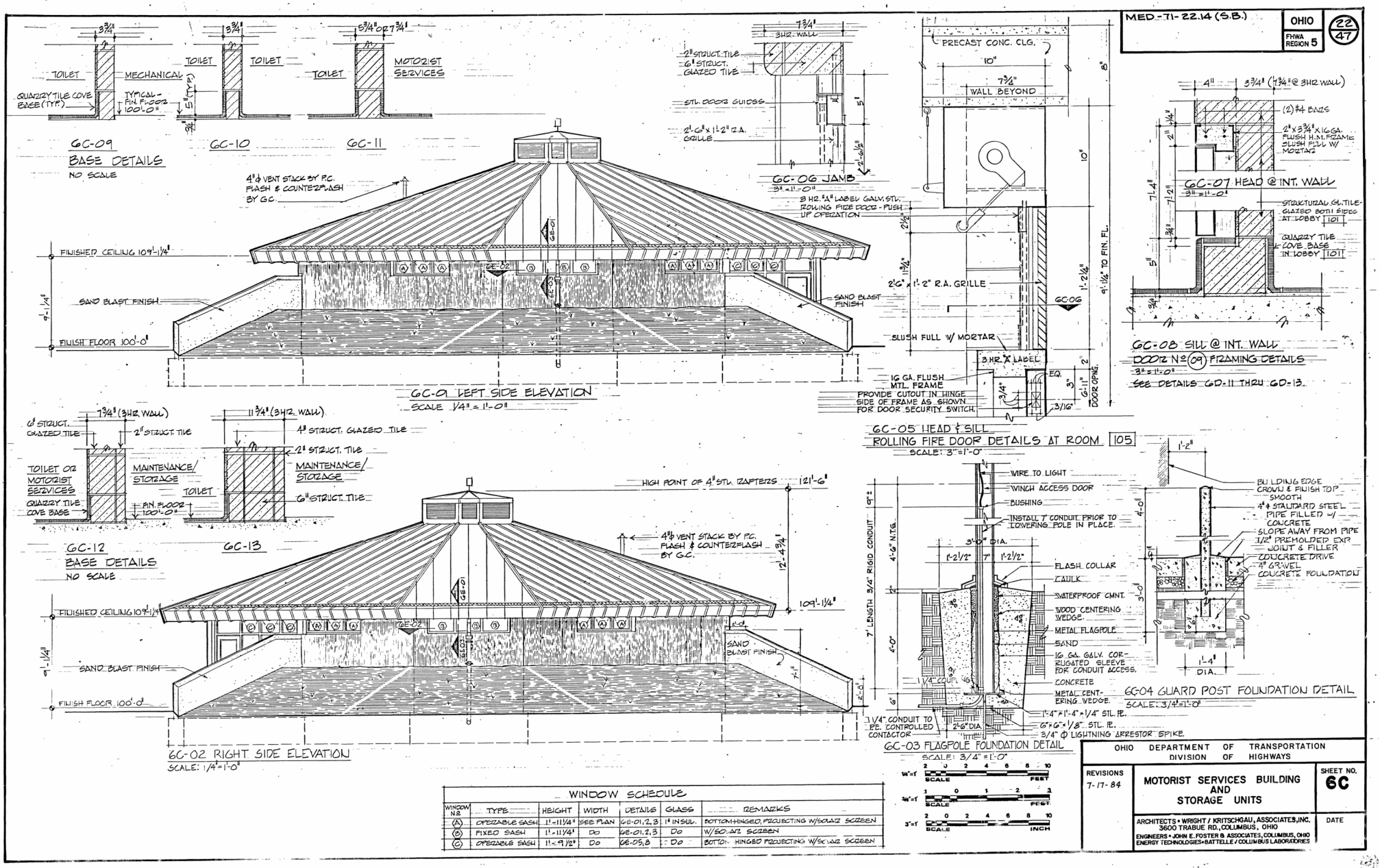

WINDOW SCHEDULE

WINDOW Nº	TYPE	HEIGHT	WIDTH	DETAILS	GLASS	REMARKS
(A)	OPERABLE SASH	1'-11¼"	SEE PLAN	6E-01,2,3	1" INSUL.	BOTTOM-HINGED, PROJECTING W/SCREEN SCREEN
(B)	FIXED SASH	1'-11¼"	DO	6E-01,2,3	DO	W/SCREEN SCREEN
(C)	OPERABLE SASH	1'-9½"	DO	6E-05,8	DO	BOTTOM HINGED PROJECTING W/SCREEN SCREEN

OHIO DEPARTMENT OF TRANSPORTATION
DIVISION OF HIGHWAYS

REVISIONS
7-17-84

MOTORIST SERVICES BUILDING AND STORAGE UNITS

SHEET NO. 6C

DATE

ARCHITECTS • WRIGHT / KRITSCHGAU, ASSOCIATES, INC.
3600 TRABUE RD., COLUMBUS, OHIO
ENGINEERS • JOHN E. FOSTER & ASSOCIATES, COLUMBUS, OHIO
ENERGY TECHNOLOGIES • BATTELLE / COLUMBUS LABORATORIES

MED-71-22.14 (S.B.)

OHIO FHWA REGION 5

23 / 47

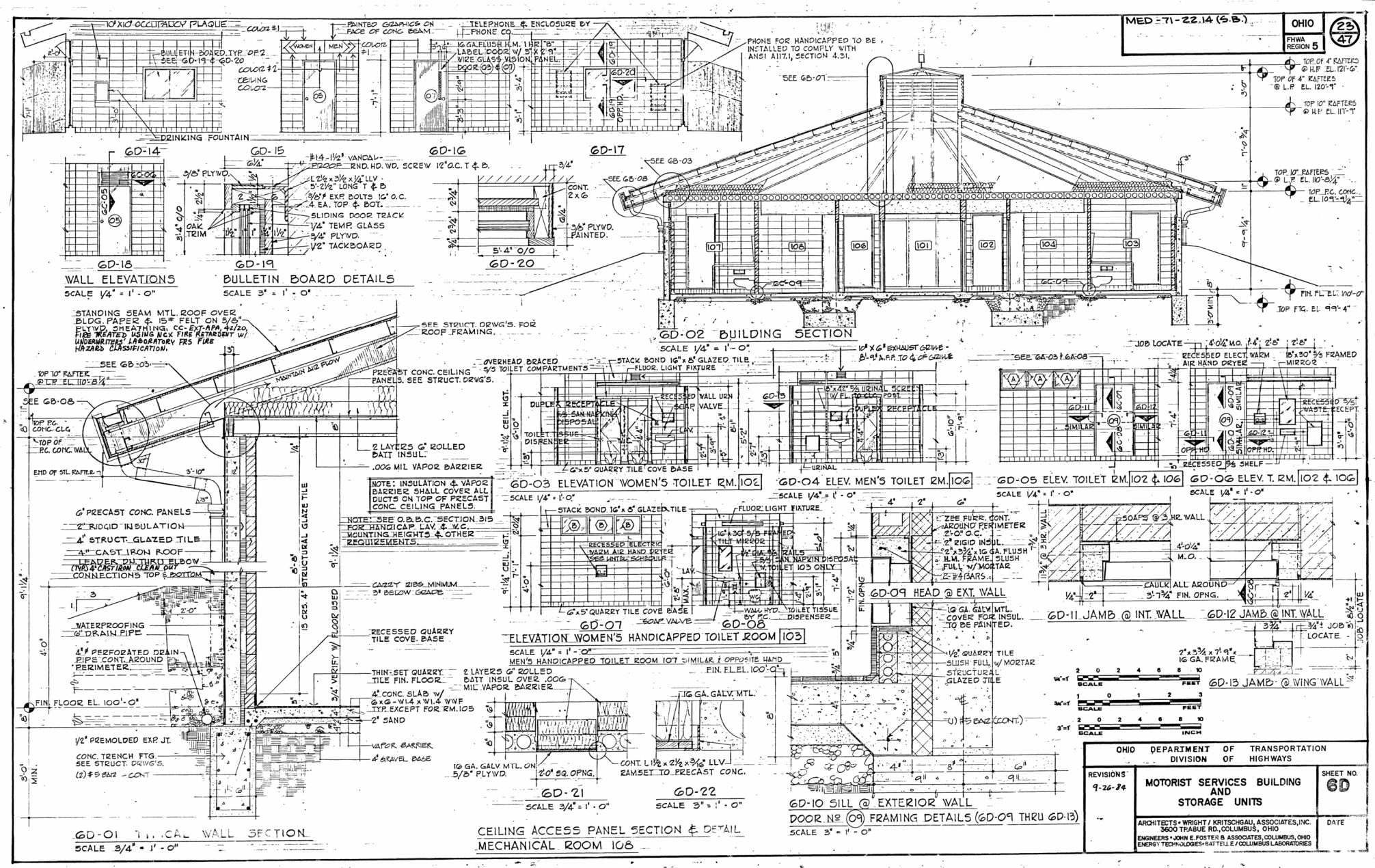

OHIO DEPARTMENT OF TRANSPORTATION
DIVISION OF HIGHWAYS

REVISIONS 9-26-84

MOTORIST SERVICES BUILDING AND STORAGE UNITS

SHEET NO. 6D

ARCHITECTS • WRIGHT / KRITSCHGAU, ASSOCIATES, INC. 3600 TRABUE RD., COLUMBUS, OHIO
ENGINEERS • JOHN E. FOSTER & ASSOCIATES, COLUMBUS, OHIO
ENERGY TECHNOLOGIES • BATTELLE / COLUMBUS LABORATORIES

DATE

MED-71-22.14 (S.B.)

OHIO

FHWA REGION 5

24/47

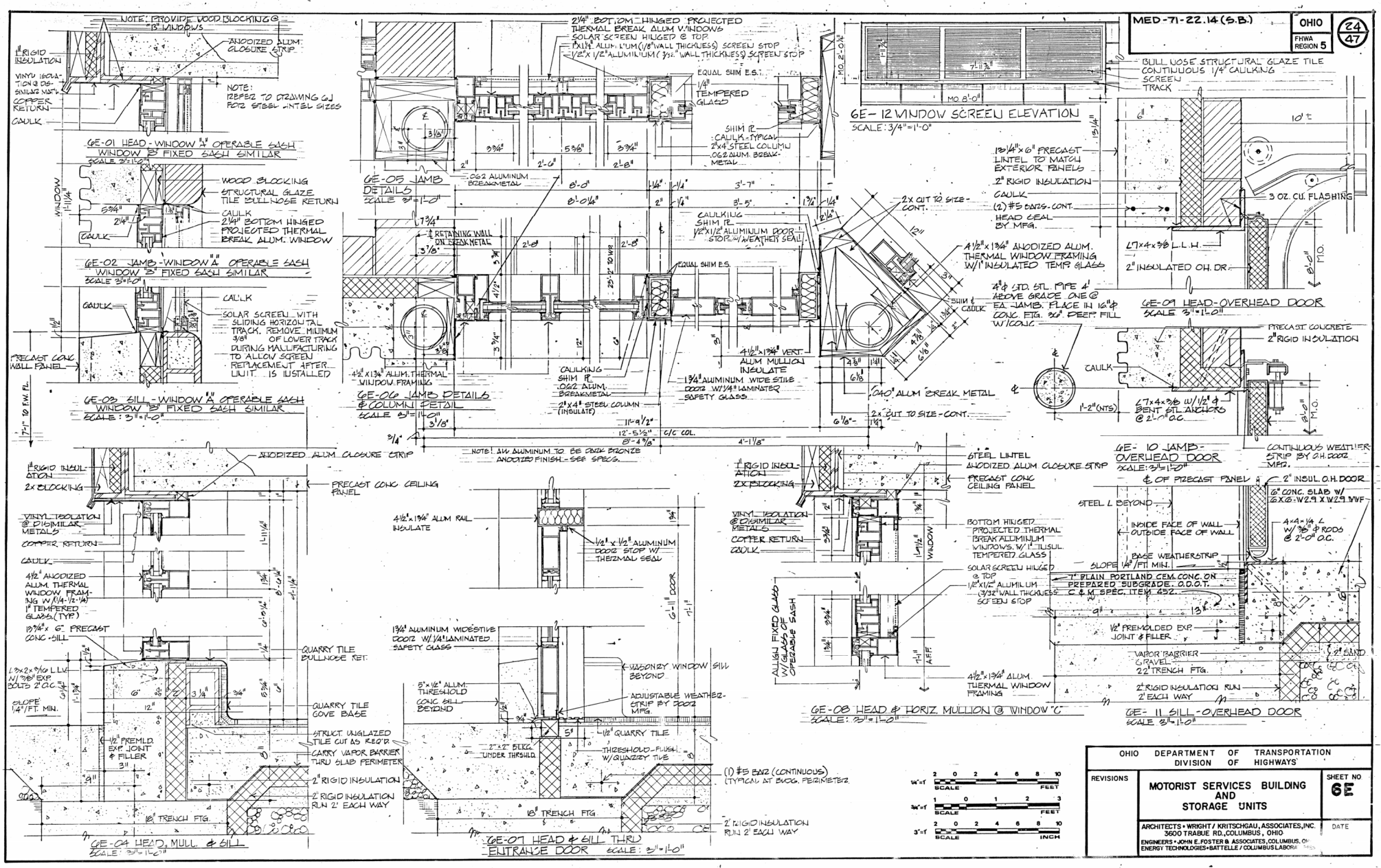

OHIO DEPARTMENT OF TRANSPORTATION
DIVISION OF HIGHWAYS

REVISIONS

MOTORIST SERVICES BUILDING AND STORAGE UNITS

SHEET NO. **6E**

DATE

ARCHITECTS • WRIGHT / KRITSCHGAU, ASSOCIATES, INC.
3600 TRABUE RD., COLUMBUS, OHIO
ENGINEERS • JOHN E. FOSTER & ASSOCIATES, COLUMBUS, OH.
ENERGY TECHNOLOGIES • BATTELLE / COLUMBUS LABORA

MED-71-22.14(S.B.)

OHIO FHWA REGION 5

25/47

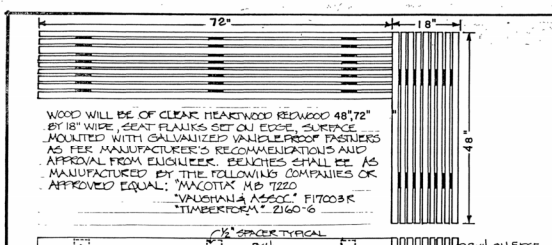

WOOD BENCH PLAN & SECTION SCALE: 3/4" = 1'-0"

The cost of all of the above shall be included in the price bid for each Item Special - 4', 6' Wood Bench.

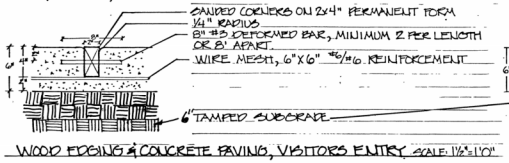

WOOD EDGING & CONCRETE PAVING, VISITORS ENTRY SCALE: 1 1/2" = 1'-0"

WOOD WILL BE 2"x4" DIMENSION LUMBER, SMOOTH TOP SIDE, WOLMANIZED OR EQUIVALENT. 40 PSI, YELLOW PINE. WHERE SHOWN IT WILL REPLACE O.D.O.T. 451.06 C. CONCRETE WILL MEET OR EXCEED O.D.O.T. 451 CONCRETE PAVEMENT.

The cost of all of the above shall be included in the unit price bid for Item 608 - 6" Concrete Walk, As Per Plan.

GENERAL NOTES:

1. FOR GENERAL NOTES ON PLANTING, REFER TO STATE OF OHIO, DEPT. OF TRANSPORTATION GENERAL NOTES.
2. FOR PLANTING DETAILS SEE BUREAU OF DESIGN SERV. STANDARD CONSTRUCTION DRAWING LA-2. RECOMMEND CHANGING WIRE ON ALL TREES UNDER 3" CALIPER TO BE NO. 14 WIRE.
3. THIS PLANT LIST WAS SELECTED TO PERFORM WELL IN ALL REGIONS OF THE STATE. SUBSTITUTIONS SHOULD BE ALLOWED ONLY IF EVIDENCE IS GIVEN TO SHOW THAT RECOMMENDED PLANTS WILL NOT PERFORM ON A PARTICULAR SITE.
4. SOD WITHIN BUILDING CONSTRUCTION LIMITS WILL BE COMPOSED OF AN APPROVED MIXTURE OF DISEASE RESISTANT AND DROUGHT TOLERANT GRASSES: IMPROVED KENTUCKY BLUEGRASSES, FINE PERENNIAL RYES, & IMPROVED CREEPING RED FESCUES.

GRASSES NO TALLER THAN 2" WHEN INSTALLED. INSTALLATION WILL BE AS SPECIFIED IN O.D.O.T. CONSTRUCTION AND MATERIAL SPECIFICATIONS 660.04 TO 660.08.

5. NOTES ON PLANTING PLAN ONLY. WHEN BLDG FRONT FACES EE, - INDICATES CARDINAL ORIENTATIONS FOR INCLUSION OF EACH TREE. WHEN BUDGET CONSTRAINTS REQUIRE DELETIONS, SEE BID SCHEDULE ON SITE PLAN.

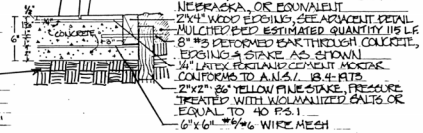

THIN SET PAVERS/WOOD EDGING PLANTING BED SCALE: 1 1/2" = 1'-0"

The cost of all of the above shall be included in the unit price bid for Item 608 - 6" Concrete Walk With Pavers, As Per Plan.

PLANT LIST

ITEM	KEY	QTY.	BOTANICAL NAME	COMMON NAME	SIZE	COND.	SPACE	REMARKS/ALTERN.
663	FA	3	FRAXINUS AMER. 'AUTUMN PURPLE'	AUTUMN PURPLE ASH	3"-3 1/2"	B&B 88	A.S.	CLEO T. I. SKYLINE
663	PC	4	PYRUS CALLERYANA 'ARISTOCRAT'	ARISTOCRAT CALLERY PEAR	2"-2 1/2"	B&B 28	A.S.	BRADFORD; MALUS SELECTA
662	CB	50	COTONEASTER DAMMERI 'CB-'	CORAL BEAUTY COTONEASTER	15"-18"	2 CONT.	4'O.C.	— FULL 2 YR. PLANTS
662	PT	4	PARTHENOCISSUS TRICUSPIDATA	BOSTON IVY	2 YR.	2 CONT.	A.S.	—
662	PA	42	PYRACANTHA ANG. 'GNOME'	GNOME FIRETHORN	2'-2 1/2"	3 CONT.	3'O.C.	ALT. JUNIPERUS C. PFITZERIANA, COMPACT VAR.
662	VB	18	VIBURNUM BURKWOODI	BURKWOOD VIBURNUM	2 1/2'-3'	B&B 12	5'O.C.	ALT. CHEALANT, PYRACANTHA
662	FB	12	FORSYTHIA VIR. BRONXENSIS	BRONX FORSYTHIA	15"-18"	15 CONT.	42"O.C.	ALT. COTON. HORIZONTALIS
662	TD	28	TAXUS MEDIA DENSIFORMIS	DENSE YEW	2'-2 1/2"	B&B 14	36"O.C.	ALT. BUNTON, BERRYHILL

CALC BY MAB DATE 8/84
CHKD BY JCO DATE 8/84

ESTIMATED QUANTITIES:

ITEM	DESCRIPTION	QUANTITY
SPEC.	4' WOOD BENCH	2
SPEC.	6' WOOD BENCH	4
SPEC.	BOULDER	6
608	6" CONCRETE WALK, AS PER PLAN	875 SQ.FT.
SPEC.	2"x4" WOOD EDGING & STAKES	115 LN.FT.
608	6" CONC. WALK W/PAVERS, AS PER PLAN	163 SQ.FT.
452	7" PLAIN PORT. CEMENT CONC. PAVMT.	12 SQ.YD.

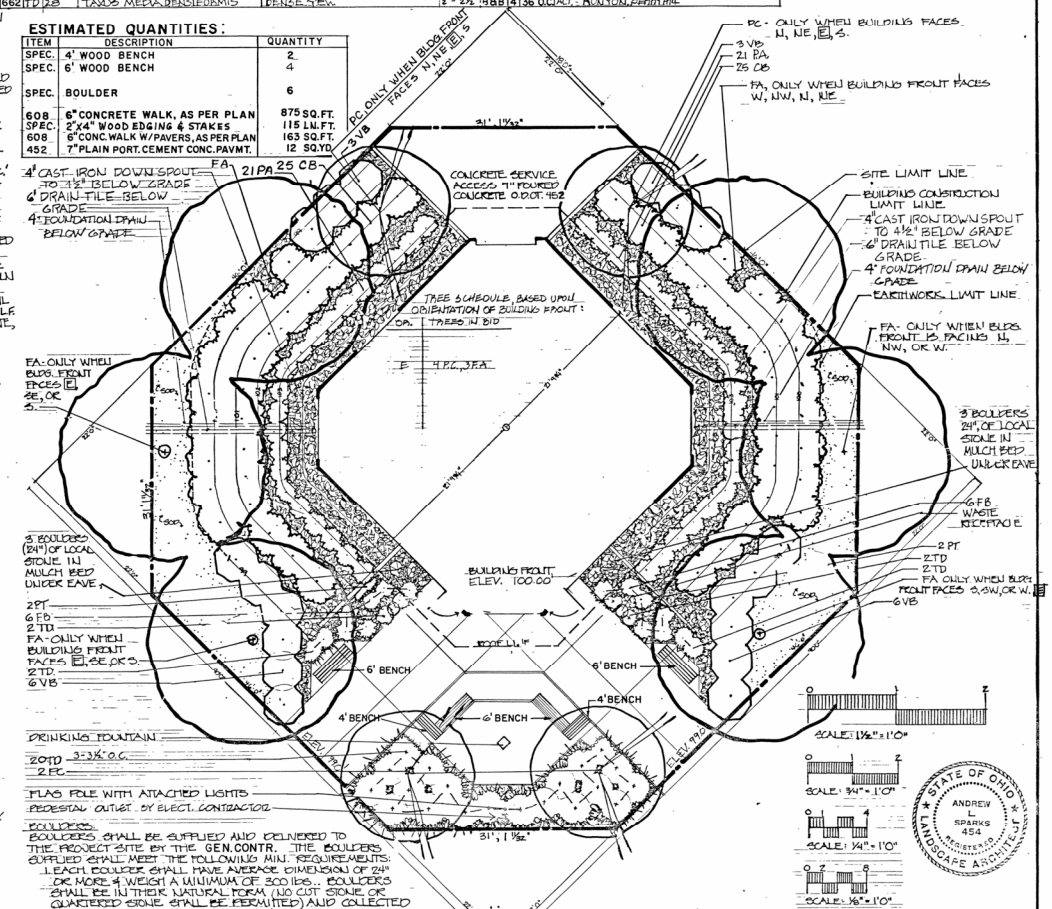

BOULDERS:
BOULDERS SHALL BE SUPPLIED AND DELIVERED TO THE PROJECT SITE BY THE GEN. CONTR. THE BOULDERS SUPPLIED SHALL MEET THE FOLLOWING MIN. REQUIREMENTS:
1. EACH BOULDER SHALL HAVE AVERAGE DIMENSION OF 24" OR MORE & WEIGH A MINIMUM OF 300 LBS.. BOULDERS SHALL BE IN THEIR NATURAL FORM (NO CUT STONE OR QUARTERED STONE SHALL BE PERMITTED) AND COLLECTED AS LOCALLY AS POSSIBLE
2. NO BOULDERS COMPOSED OF SHALE, LOOSELY COMPACTED SANDSTONE OR OTHER HIGHLY ERODIBLE FORMATION SHALL BE PERMITTED.

PLACEMENT OF BOULDERS SHALL BE AS DIRECTED BY THE ENGINEER & DIST. HORT. OR LANDSCAPE ARCH. WITHIN THE OUTLINES OF THE BED LINE AND EAVE LINES. BOULDERS SHALL BE BURIED TO A DEPTH OF APPROXIMATELY ONE THIRD (1/3) OF TOTAL HEIGHT BELOW THE FINAL SOIL GRADE. NO BOULDERS SHALL BE OVER 8 FEET IN HEIGHT ABOVE FINISHED GRADE.

* SITE PLAN NOTE:
AN IRREGULAR OCTAGON WITH SIDE DIMENSIONS OF 46'0" AND 31'1 1/32", INSCRIBED INTO A 90'0" X 90'0" SQUARE WILL BE ORIENTED ON SPECIFIC SITE BY STATE REGIONAL PROFESSIONALS. THEY WILL BE RESPONSIBLE FOR SPECIFIC SITE WORK [illegible] TO FACILITATE THIS SITE PLAN, AND TRANSITION TO REST OF SITE.

SITE PLAN* SCALE: 1/8" = 1'-0"

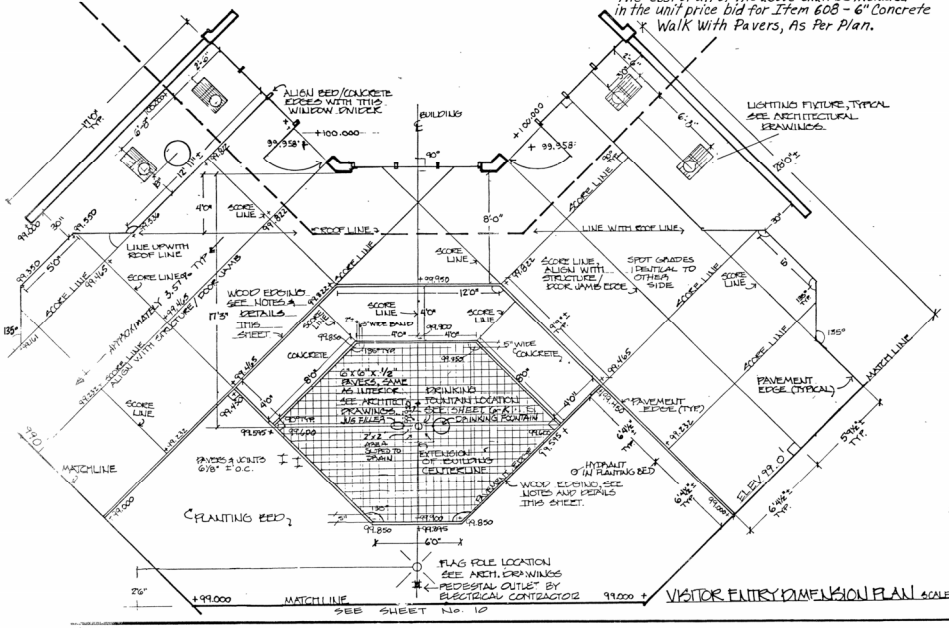

VISITOR ENTRY DIMENSION PLAN SCALE: 1/4" = 1'-0"

STATE OF OHIO
ANDREW L. SPARKS
454
REGISTERED
LANDSCAPE ARCHITECT

OHIO DEPARTMENT OF TRANSPORTATION
DIVISION OF HIGHWAYS

REVISIONS 4-28-83

MOTORIST SERVICES BUILDING AND STORAGE UNITS

SHEET NO. 6F

DATE

ARCHITECTS • WRIGHT / KRITSCHGAU, ASSOCIATES, INC. 3500 TRABUE RD., COLUMBUS, OHIO
ENGINEERS • JOHN E. FOSTER & ASSOCIATES, COLUMBUS, OHIO
ENERGY TECHNOLOGIES • BATTELLE / COLUMBUS LABORATORIES
LANDSCAPE ARCHITECTS: LAND TECHNIQUES, DELA., OHIO

GENERAL NOTES

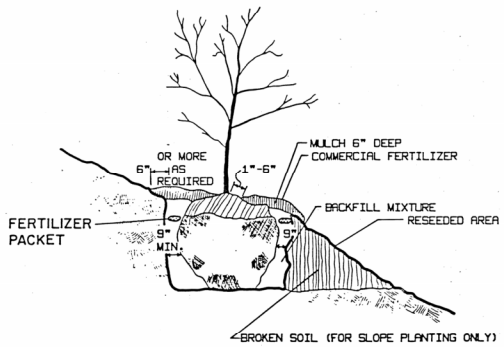

THE TOP OF THE ROOT BALL SHALL BE 1 INCH ABOVE THE NORMAL GROUND LINE IN AVERAGE SOILS, 3 INCHES IN HEAVY CLAY SOILS AND 6 INCHES WHERE IMPERMEABILITY IS ENCOUNTERED.

ON SLOPES WHERE HEAVY CLAY AND IMPERMEABLE SOILS ARE PRESENT THE DOWN HILL SIDE OF THE POCKET HOLE SHALL BE BROKEN OR LOOSENED AND RETURNED TO ITS NATURAL GRADE TO PROVIDE DRAINAGE FOR THE HOLE.

PLANTING HOLE AND BED PREPARATION

AFTER THE LAYOUT IS APPROVED BY THE ENGINEER, SHRUB AND GROUNDCOVER BEDS SHALL BE CULTIVATED TO A MINIMUM DEPTH OF SIX (6) INCHES BY A PLOW, HARROW OR DISC, OR OTHER METHOD APPROVED BY THE ENGINEER. THE CULTIVATION SHALL TAKE PLACE AS FAR IN ADVANCE OF THE PLANTING OPERATION AS POSSIBLE. WHERE SHRUBS ARE SHOWN, INDIVIDUAL HOLES SHALL BE DUG ON CENTERS AS SHOWN ON THE PLANS. THESE HOLES SHALL ALLOW FOR A MINIMUM OF NINE (9) INCHES OF BACKFILL MIXTURE AROUND THE SIDES OF THE BALLS. THE BOTTOM OF THE HOLE SHALL BE NO DEEPER THAN THE BALL TO BE PLANTED. THE MATERIAL REMOVED FROM THE HOLES SHALL BE TAKEN FROM THE PROJECT IF IT IS FOUND TO BE UNACCEPTABLE FOR USE AS BACKFILL AS DETERMINED BY THE ENGINEER. THE PLANT SHALL THEN BE SET AND THE HOLE FILLED WITH BACKFILL MIXTURE, AND THE PLANTING OPERATION PERFORMED AS SPECIFIED IN ITEMS 662.17 AND 662.18. ALL EXCESS DIRT SHALL BE REMOVED FROM THE SITE.

EXISTING TREES AND SHRUBS SHALL TAKE PRIORITY OVER PROPOSED PLANTINGS. THE LOCATIONS OF THE PROPOSED TREES AND SHRUBS ARE APPROXIMATE AND MAY BE REARRANGED AT THE DIRECTION OF THE ENGINEER WHEN OBSTRUCTIONS ARE ENCOUNTERED.

IF AN AUGER IS USED IN DIGGING POCKET HOLES AND POLISHED (SHINY) SIDES OCCUR IN CLAY OR HEAVY SOILS, THE USE OF SUCH AN AUGER SHALL BE DISCONTINUED AND THE HOLES SHALL BE DUG WITH A BACKHOE OR ANOTHER APPROVED METHOD.

BACKFILL NO. 1 - THE BACKFILL MIXTURE USED TO FILL POCKET HOLES IN LIGHT AND MEDIUM SOILS (SAND & AVERAGE) SHALL CONSIST BY VOLUME OF: 2 PARTS *SOIL CONDITIONER, 2 PARTS COMPRESSED SPHAGNUM PEAT OR 3 PARTS SEDGE PEAT, AND 2 PARTS APPROVED TOPSOIL.

BACKFILL NO. 2 - THE BACKFILL MIXTURE USED TO FILL POCKET HOLES IN HEAVY SOILS (CLAY & SHALE) SHALL CONSIST BY VOLUME OF: 1 PART*SOIL CONDITIONER, 1 PART COMPRESSED SPHAGNUM PEAT OR 2 PARTS SEDGE PEAT, AND 2 PARTS APPROVED TOPSOIL.

INCORPORATE THOROUGHLY INTO THE BACKFILL MIXTURES 5 LBS. OF COMMERCIAL FERTILIZER (0-20-20) PER CUBIC YARD. THE ENGINEER, AFTER CONSULTATION WITH THE DIST. HORT. OR L.A. SHALL DETERMINE THE LOCATIONS WHERE THE BACKFILL MIXTURES SHALL BE USED.

SCHEDULING

ALL DIGGING AND PLANTING OF DECIDUOUS PLANTS SHALL BE DONE AFTER OCTOBER 1, AND BEFORE JUNE 1. EVERGREENS SHALL BE DUG AND PLANTED AFTER MARCH 15, AND BEFORE JUNE 1.

ITEMS 662 & 663

ALL TREES AND SHRUBS SHALL BE SPECIMEN (NO.1 GRADE) PLANTS WITH GROWTH AND BRANCHING HABIT TYPICAL OF THE SPECIES SPECIFIED. NO PARK GRADE (NO. 2 OR 3 GRADE) PLANTS WILL BE ACCEPTED.

FERTILIZER

FOUR OUNCE (8 YEAR) COMMERCIAL FERTILIZER PACKETS USED IN PLANTING OPERATION SHALL BE DELIVERED DRY IN ORIGINAL, UNOPENED CONTAINERS. FERTILIZER ANALYSIS SHALL BE 16% NITROGEN, 8% PHOSPHORIC ACID AND 16% POTASH. FERTILIZER SHALL BE OF A SLOW RELEASE TYPE IN A POLYETHYLENE PERFORATED PACKET WITH MICROPORE HOLES.

THE PACKETS SHALL BE PLACED 6 TO 8 INCHES DEEP AND EVENLY SPACED AROUND THE PERIMETER OF THE PLANTING HOLE, ADJACENT TO THE BALL OR ROOT MASS BUT NOT IN DIRECT CONTACT WITH THE ROOTS. THE PACKETS SHALL NOT BE CUT, RIPPED OR DAMAGED.

EACH SHRUB OR TREE SHALL BE FERTILIZED ACCORDING TO THE FOLLOWING SCHEDULE:

VINES	1'-2'	1 PACKET
SHRUBS	1'-3'	2 PACKETS
SHRUBS	3'-4'	3 PACKETS
TREES	5'-6'	3 PACKETS
TREES	6'-8'	4 PACKETS
TREES	1½"-2" CAL.	2 PACKETS
TREES	2'-2½" CAL.	3 PACKETS
TREES	2½-3" CAL.	4 PACKETS
TREES	3"-3½" CAL.	5 PACKETS

IF IT BECOMES NECESSARY TO REMOVE AND REPLACE MISSING, DEAD OR UNHEALTHY PLANTS, ALL OLD (USED) PACKETS SHALL BE REPLACED WITH NEW PACKETS.

THE FOUR OUNCE 16-8-16 FERTILIZER PACKETS SHALL BE DESIGNATED BY THE MANUFACTURER TO BE EFFECTIVE FOR EIGHT YEARS. PACKETS SUCH AS "EEESY GROW", "THE UNIQUE FEEDER" OR AN APPROVED EQUAL SHALL BE USED.

ITEM 661.21 WATERING

WATER SHALL BE FURNISHED BY THE CONTRACTOR AND ALL PLANT MATERIAL SHALL BE WATERED THOROUGHLY AT THE TIME OF PLANTING REGARDLESS OF AMPLE MOISTURE CONTENT OF THE SURROUNDING SOIL. SUSPENSION OF WATERING OPERATIONS BECAUSE OF RAINFALL WILL BE DETERMINED BY THE ENGINEER IN CONSULTATION WITH THE DISTRICT HORTICULTURIST OR L.A. AN AVERAGE OF ONE INCH OF RAINFALL PER WEEK SHALL BE CONSIDERED ADEQUATE. DETERMINATION OF RAINFALL SHALL BE BASED UPON THE USE OF A RAIN GAUGE APPROVED BY THE PROJECT ENGINEER & PROVIDED BY THE CONTRACTOR.

MULCH

MULCH SHALL BE AS PER ITEM 661.04 WITH THE FOLLOWING EXCEPTIONS: WOOD SHAVINGS OR PEAT MOSS OR CORN COBS SHALL NOT BE USED AS A TOP MULCH. WOOD CHIPS SHALL BE AGED (STOCKPILED) AT LEAST 6 MONTHS PRIOR TO PLACEMENT AROUND PLANTS. MULCH SHALL BE SIX INCHES LOOSE MEASUREMENT. AFTER MULCHING, COMMERCIAL FERTILIZER (12-12-12) SHALL BE APPLIED AS SPECIFIED IN ITEM 662.18.

PRUNING

ALL PLANTS SHALL BE PRUNED WITHIN SEVEN DAYS AFTER PLANTING. THE PRUNING SHALL BE DONE ACCORDING TO SELECTED TYPICAL PLANTS OF EACH SPECIES PRUNED AND USED AS A SAMPLE AS DIRECTED BY THE ENGINEER.

ANY CANDLE GROWTH ON NEEDLE EVERGREENS WHICH EXCEED 3 INCHES AT PLANTING TIME SHALL BE CUT BACK TO THAT LENGTH IMMEDIATELY.

STORAGE AREAS

THE CONTRACTOR MAY STORE PLANT MATERIALS AND EQUIPMENT 30 FEET FROM PAVEMENT, BEHIND GUARDRAIL AND WITHIN OR ADJACENT TO THE PROJECT LIMITS BY OBTAINING OFFICAL PERMISSION OF THE ENGINEER. NO PEDESTRIAN OF VEHICULAR TRAFFIC MAY BE IMPEDED NOR HAZARDOUS CONDITION CREATED AS A RESULT OF SUCH STORAGE.

THE STORAGE OF ALL DUG PLANTS SHALL CONFORM TO 661.14 WHETHER WITHIN THE PROJECT LIMITS, ADJACENT THERETO, OR AT SOME OTHER LOCATION. THESE AREAS SHALL BE DESIGNATED PRIOR TO ACTUAL PLANT STORAGE AND SHALL BE OPEN TO INSPECTION UPON REQUEST OF THE ENGINEER.

STAKING MATERIALS

ALL TREES SHALL BE STAKED AS SHOWN IN THE STANDARD DRAWING LA-2. STAKING OF SMALL ORNAMENTAL TREES SHALL BE SIMILAR TO THAT OF EVERGREENS. ALL DECIDUOUS TREE TRUNKS ARE TO BE TREATED WITH LINDANE SPRAY BEFORE WRAPPING.

TOPSOIL TESTING

TOPSOIL FAILING CURRENT TEST STANDARDS MAY BE ALTERED, UPON APPROVAL OF THE ENGINEER, BY ADDING APPROVED CONDITIONERS TO CORRECT THE DEFICIENCIES. TOPSOIL SHALL BE FREE OF JOHNSON GRASS AND CONFORM TO ITEM 653 AS DETERMINED BY THE ENGINEER.

PLANTING PERIOD OF ESTABLISHMENT

BEFORE FINAL INSPECTION, ALL PLANTINGS SHALL BE IN PLACE AND UNDER THE CARE OF THE CONTRACTOR FOR A PERIOD OF ESTABLISHMENT. THIS PERIOD SHALL BEGIN IMMEDIATELY UPON COMPLETION OF THE PLANTING OPERATION FOR ANY PLANT OR SPECIES GROUP AND CONTINUE UNTIL OCTOBER 1. IN NO CASE SHALL IT BE LESS THAN ONE GROWING SEASON, JUNE 1 TO OCTOBER 1.

DURING THIS PERIOD OF ESTABLISHMENT, IT SHALL BE THE CONTRACTOR'S RESPONSIBILITY TO FOLLOW SUCH HORTICULTURAL PRACTICES AS REQUIRED TO ASSURE THE VIGOR AND GROWTH OF THE TRANSPLANTED MATERIAL. THIS CARE SHALL INCLUDE WATERING, REMULCHING, RESTAKING, GUYING AND CULTIVATING. THERE SHALL BE A MINIMUM OF TWO WEEDING AND MOWING (BED EDGES, AROUND TREES AND GUY STAKES) PROGRAMS OF SUCH INTENSITY AS TO COMPLETELY RID THE PLANTED AND MULCHED AREAS OF WEEDS AND GRASSES. THE FIRST PROGRAM SHALL BEGIN ON OR ABOUT JUNE 15 AND THE OTHER APPROXIMATELY 8 WEEKS LATER.

EACH PLANT SHALL HAVE SUFFICIENT WATER TO KEEP IT IN A HEALTHY, GROWING CONDITION. IF LOCAL WEATHER CONDITIONS WARRANT, THE ENGINEER MAY REQUIRE WEEKLY WATERING. WHEN WATERING IS REQUIRED, A SCHEDULE FOR WATERING EACH PLANT SHALL BE SUPPLIED TO AND APPROVED BY THE ENGINEER. THE WATER SHALL BE APPLIED IN SUCH A MANNER AS TO SATURATE THE ROOT AND MULCHED AREA OF EACH PLANT WITHOUT CAUSING RUNOFF (SEE WATERING TABLE). IN CASE OF FALL PLANTINGS, THESE WATERINGS SHALL CONTINUE UNTIL SOIL FREEZE-UP AND RECOMMENCE AFTER THE SPRING THAW UNLESS OTHERWISE DIRECTED.

ON OR ABOUT SEPTEMBER 15, THE ENGINEER SHALL INSPECT THE PLANTING AND SUPPLY THE CONTRACTOR WITH A LISTING OF THOSE PLANTS HAVING DIED, DIED BACK BEYOND NORMAL PRUNING LINES OR ARE MISSING FROM THE PLANTING. THE CONTRACTOR SHALL MAKE THE REPLANTING AS REQUIRED AND IN ACCORDANCE WITH THE SPECIFICATIONS FOR THE ORIGINAL MATERIAL. THESE REPLACEMENTS ARE NOT SUBJECT TO THE PERIOD OF ESTABLISHMENT. HOWEVER, PLANTS PLANTED INITIALLY IN THE FALL WHICH HAVE DIED BEFORE THE SPRING PLANTING SEASON SHALL BE REPLACED IMMEDIATELY AND ARE SUBJECT TO THE ESTABLISHMENT PERIOD.

AFTER REPLACEMENTS HAVE BEEN PLANTED, THE FINAL INSPECTION SHALL BE MADE AND THE ACTUAL COUNT OF LIVE PLANTS OF EACH VARIETY AND SPECIES LISTED FOR PAYMENT.

WATERING TABLE

VINES 1'-2' SIZE	2 GALLON PER PLANT
SHRUBS 1'-3' SIZE	4 GALLONS PER PLANT
SHRUBS 4'-5' SIZE	7 GALLONS PER PLANT
TREES 5'-6' SIZE	10 GALLONS PER PLANT
TREES 1-1/4" - 1-1/2" CAL.	15 GALLONS PER PLANT
TREES 1-1/2" - 2" CAL.	20 GALLONS PER PLANT
TREES 2"-3" CAL.	25 GALLONS PER PLANT
TREES 3"-4" CAL.	30 GALLONS PER PLANT

THE METHOD OF MEASUREMENT FOR SUMMER WATERING SHALL BE BY APPROVED METERING FROM TANKS OR BY INDIVIDUALLY MEASURED CONTAINERS TO EACH PLANT TO BE WATERED. PAYMENT FOR PLANTING PERIOD OF ESTABLISHMENT SHALL BE INCLUDED IN THE UNIT PRICE BID FOR ITEMS 661, 662 AND 663.

*SOIL CONDITIONER

A SOIL CONDITIONER SUCH AS HORTICULTURAL PERLITE OR AN APPROVED EQUAL SHALL BE USED. THE PARTICLE SIZE GRADATION OF THE SOIL CONDITION SHALL BE AT LEAST 80% PASSING A NO. 6 SIEVE AND NOT MORE THAN 5% PASSING A NO. 50 SIEVE. ALTERNATE SHALL BE "TURFAGE", "LUSOIL" OR "TERRAGREEN".

HERBICIDES

AFTER PLANTING AND FERTILIZING HAVE BEEN COMPLETED AND APPROVED, THE AREA OF THE BED SHALL BE TREATED WITH SIMAZINE, DYMID OR AN APPROVED EQUAL HERBICIDE. RATE AND METHOD OF APPLICATION SHALL BE IN STRICT CONFORMANCE WITH MANUFACTURER'S INSTRUCTIONS AND UNDER THE DIRECT SUPERVISION OF A PESTICIDE APPLICATOR LICENSED BY THE STATE OF OHIO.

INSTALLATION

TREES AND SHRUBS SHALL BE INSTALLED IN ACCORDANCE WITH THIS SHEET AND O.D.O.T. STD. DRWG. LA-2.

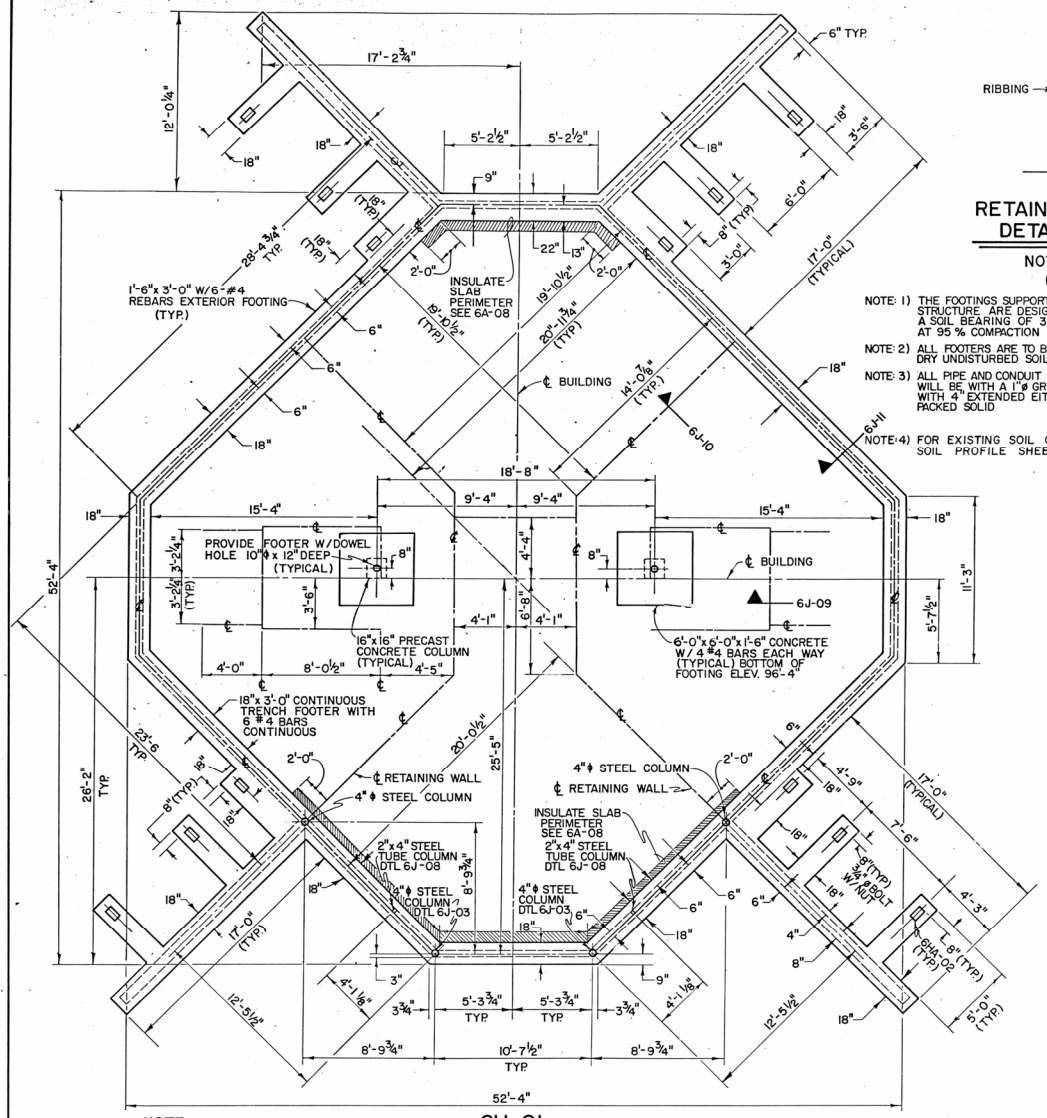

NOTE:
PROVIDE 4-¾ ANCHOR BOLTS 8" LONG W/3" BEND 6" O.C. FOR EACH OF THE 4" ϕ STEEL COLUMNS.

6H-01 FOUNDATION PLAN

0 1 2 4 6 8
SCALE IN FEET

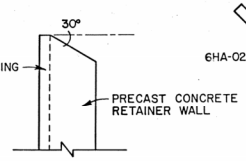

RETAINER WALL TOP DETAIL-TYPICAL

NOT TO SCALE
6H-03

NOTE: 1) THE FOOTINGS SUPPORTING THIS STRUCTURE ARE DESIGNED FOR A SOIL BEARING OF 3000 PSF AT 95 % COMPACTION OR BETTER

NOTE: 2) ALL FOOTERS ARE TO BEAR ON FIRM DRY UNDISTURBED SOIL FREE OF ORGANICS

NOTE: 3) ALL PIPE AND CONDUIT FOOTER PENETRATIONS WILL BE WITH A 1"ϕ GREATER SLEEVE WITH 4" EXTENDED EITHER SIDE AND PACKED SOLID

NOTE: 4) FOR EXISTING SOIL CONDITIONS SEE SOIL PROFILE SHEET

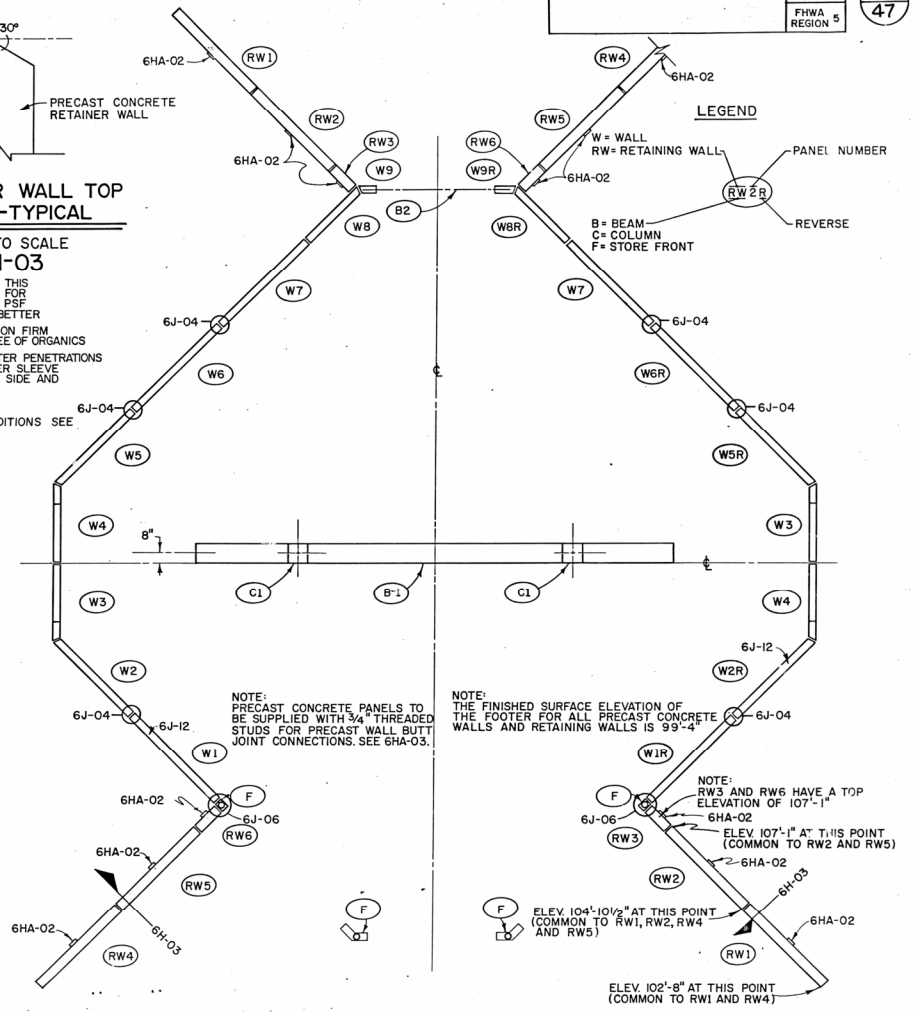

6H-02 PRECAST CONCRETE ERECTION PLAN

0 1 2 4 6 8
SCALE IN FEET

OHIO DEPARTMENT OF TRANSPORTATION DIVISION OF HIGHWAYS		
REVISIONS 11-1-84	MOTORIST SERVICES BUILDING AND STORAGE UNITS	SHEET NO. 6H
	ARCHITECTS-WRIGHT/KRITSCHGAU, ASSOCIATES, INC. 3600 TRABUE ROAD, COLUMBUS, OHIO ENGINEERS-JOHN E. FOSTER & ASSOCIATES, COLUMBUS, OHIO ENERGY TECHNOLOGIES-BATTELLE/COLUMBUS LABORATORIES	DATE

NOTE: THE COMPLETED ASSEMBLY WILL RECEIVE A 1/4" COAT OF ROOFING TAR OVER ENTIRE ASSEMBLY AND BEARING

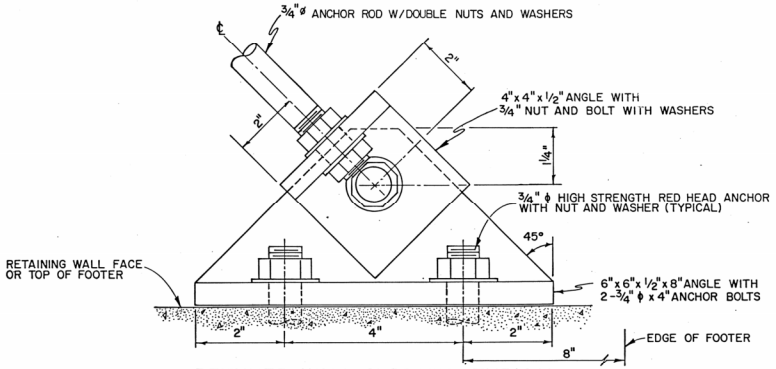

RETAINER WALL SUPPORT - TYPICAL

NOT TO SCALE

6HA-02

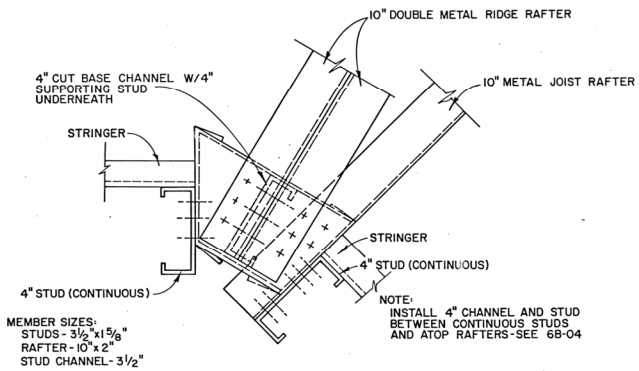

ROOF RAFTER FRAMING PLAN DETAIL - TYPICAL

NOT TO SCALE

6HA-01

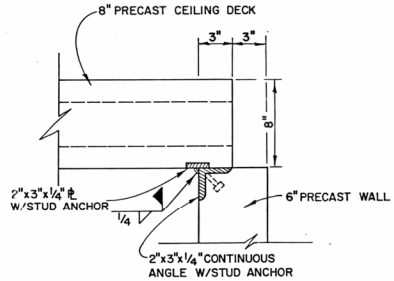

BEARING WALL / PRECAST DECK JOINT CONNECTION

NOT TO SCALE

6HA-05

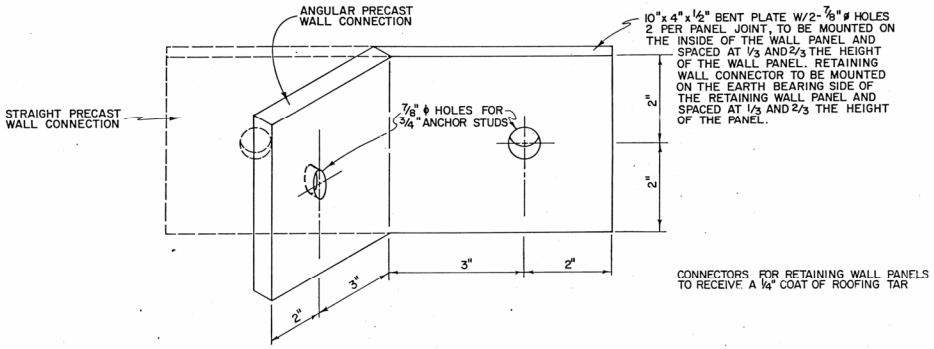

PRECAST WALL BUTT JOINT CONNECTOR - TYPICAL

NOT TO SCALE

6HA-03

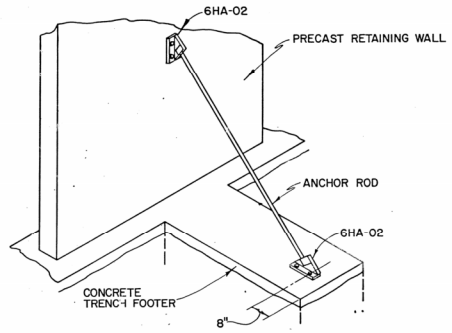

RETAINER WALL SUPPORT ASSEMBLY - TYPICAL

NOT TO SCALE

6HA-04

OHIO DEPARTMENT OF TRANSPORTATION DIVISION OF HIGHWAYS		
REVISIONS	MOTORIST SERVICES BUILDING AND STORAGE UNITS	SHEET NO. 6HA
	ARCHITECTS - WRIGHT / KRITSCHGAU, ASSOCIATES, INC. 3600 TRABUE RD., COLUMBUS, OHIO ENGINEERS - JOHN E. FOSTER & ASSOCIATES, COLUMBUS, OHIO ENERGY TECHNOLOGIES - BATTELLE / COLUMBUS LABORATORIES	DATE

NOTE 1 STEEL LINTELS AT PRECAST CONC. OPENINGS WILL BE PROVIDED BY PRECAST FABRICATOR.

NOTE 2 ALL OPENINGS AROUND CEILING PENETRATIONS SHALL BE FORMED AND POURED WITH CONCRETE

NOTE 3 ALL WALL OPENINGS WILL HAVE LINTELS OF 2-#4 BARS EXTENDING 8" BEYOND THE FRAME EACH SIDE.

NOTE 4 ALL PRECAST STRUCTURES WILL BE ASSEMBLED AS PER MANUFACTURERS INSTRUCTIONS.

NOTE 5 ALL PRECAST CONCRETE CEILING DECK OPENINGS WILL BE BY FABRICATOR

NOTE 6 PRECAST CONCRETE DECK WILL BE DESIGNED TO SUPPORT A LIVE LOAD OF 52 PSF AT MAXIMUM SPAN

NOTE 7 ALL PRECAST ASSEMBLIES WILL HAVE A MINIMUM 2-HOUR FIRE RATING

NOTE 8 THE BUILDING AS DESIGNED BY THE ARCHITECT AND ENGINEER WAS DESIGNED TO HANDLE A 25 POUND-FORCE PER SQUARE FOOT (PSF) SNOW LOAD.

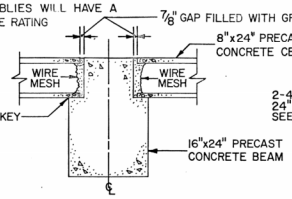

6I-03
16"x24" PRECAST CONCRETE BEAM

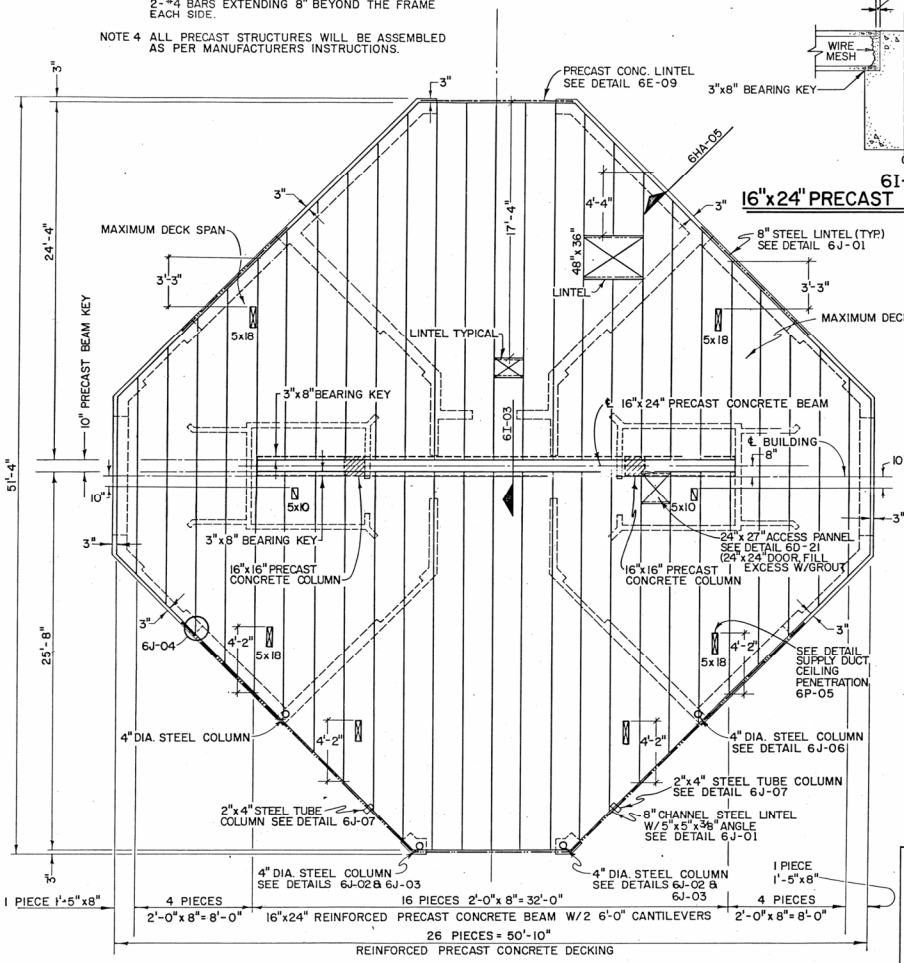

6I-01
CEILING DECK PLAN

0 1 2 4 6 8
SCALE IN FEET

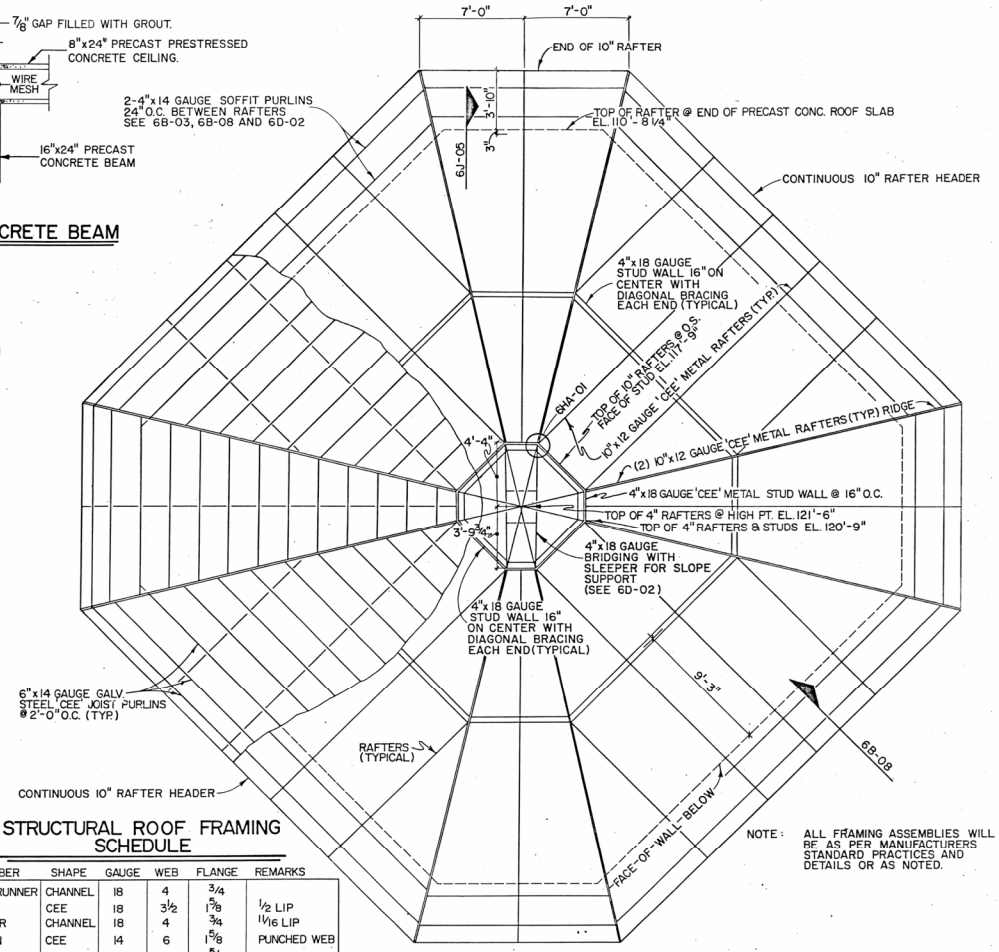

NOTE: ALL FRAMING ASSEMBLIES WILL BE AS PER MANUFACTURERS STANDARD PRACTICES AND DETAILS OR AS NOTED.

STRUCTURAL ROOF FRAMING SCHEDULE

MEMBER	SHAPE	GAUGE	WEB	FLANGE	REMARKS
BASE RUNNER	CHANNEL	18	4	3/4	
STUD	CEE	18	3 1/2	1 5/8	1/2 LIP
HEADER	CHANNEL	18	4	3/4	11/16 LIP
PURLIN	CEE	14	6	1 5/8	PUNCHED WEB
STRINGER	CHANNEL	14	4	1 5/16	
STRINGER	CHANNEL	14	10	1 5/16	
RAFTER	CEE	12	10	2	11/16 LIP
RAFTER	CEE	14	4	1 5/8	PUNCHED WEB
X-BRACING		18			STRIPS

NOTE: ALL METAL FRAMING JOINTS WILL HAVE A MINIMUM OF TWO FASTENERS OR MORE TO ASSURE STABILITY

6I-02
ROOF FRAMING PLAN

0 1 2 4 6 8
SCALE IN FEET

OHIO DEPARTMENT OF TRANSPORTATION
DIVISION OF HIGHWAYS

REVISIONS 4/28/83

MOTORIST SERVICES BUILDING AND STORAGE UNITS

SHEET NO. 6I

ARCHITECTS-WRIGHT / KRITSCHGAU, ASSOCIATES, INC. 3600 TRABUE RD., COLUMBUS, OHIO
ENGINEERS-JOHN E. FOSTER & ASSOCIATES, COLUMBUS, OHIO
ENERGY TECHNOLOGIES-BATTELLE / COLUMBUS LABORATORIES

DATE

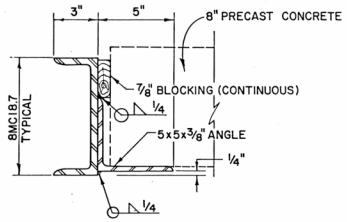

LINTEL-TYPICAL SECTION

NOT TO SCALE

6J-01

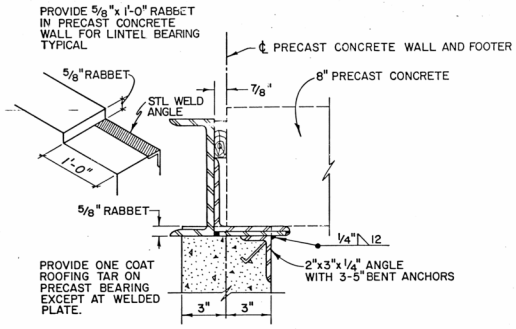

STEEL LINTEL / PRECAST BEARING DETAIL-TYPICAL

NOT TO SCALE

6J-04

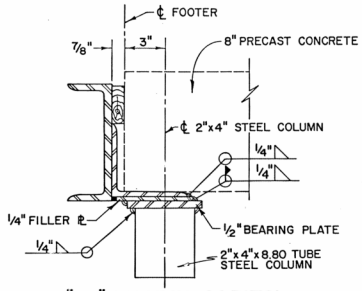

2"x4" COLUMN CAPITOL ASSEMBLY-TYPICAL

NOT TO SCALE

6J-07

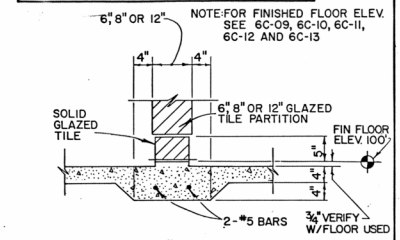

6", 8" OR 12" GLAZED TILE WALL FOOTER-TYPICAL

NOT TO SCALE

6J-10

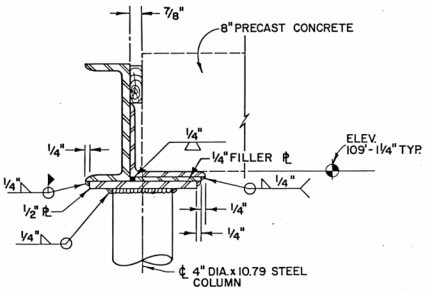

COLUMN CAPITOL ASSEMBLY-TYPICAL

NOT TO SCALE

6J-02

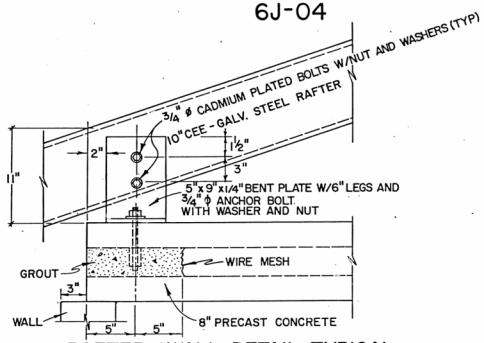

RAFTER / WALL DETAIL-TYPICAL

6J-05 NOT TO SCALE

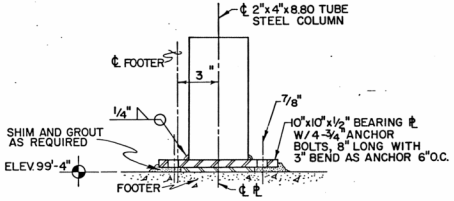

2"x4" COLUMN BEARING PLATE ASSEMBLY-TYPICAL

NOT TO SCALE

6J-08

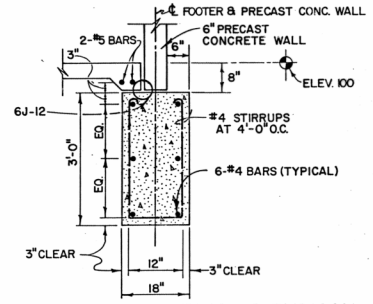

EXTERIOR WALL FOOTING-TYPICAL

NOT TO SCALE

6J-11

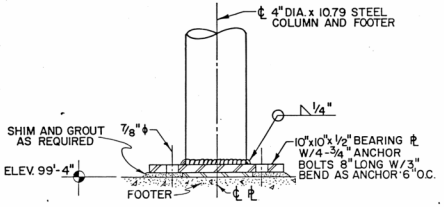

COLUMN BEARING PLATE ASSEMBLY-TYPICAL

NOT TO SCALE

6J-03

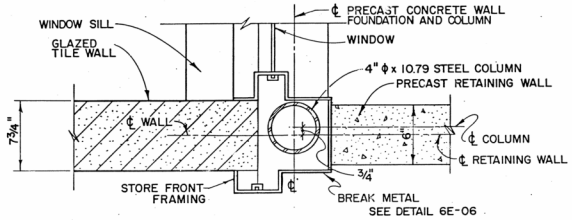

COLUMN / WALL DETAIL-TYPICAL

NOT TO SCALE

6J-06

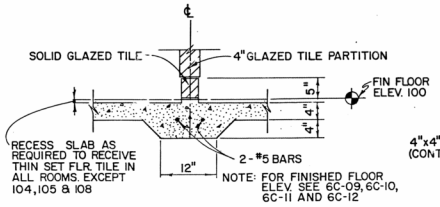

4" GLAZED TILE WALL FOOTER-TYPICAL

NOT TO SCALE

6J-09

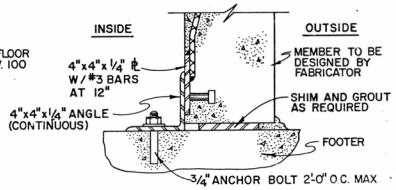

PRECAST CONCRETE WALL BASE DETAIL

6J-12 NOT TO SCALE

STRUCTURAL DETAILS

NOT TO SCALE

NOTE: PROVIDE A COATING OF ROOFING TAR BETWEEN ALL STEEL TO PRE-CAST JOINTS AND BEARING POINTS UNLESS OTHERWISE NOTED

OHIO DEPARTMENT OF TRANSPORTATION DIVISION OF HIGHWAYS		
REVISIONS	MOTORIST SERVICES BUILDING AND STORAGE UNITS	SHEET NO. 6J
	ARCHITECTS: WRIGHT / KRITSCHGAU, ASSOCIATES, INC. 3600 TRABUE RD., COLUMBUS, OHIO ENGINEERS: JOHN E. FOSTER & ASSOCIATES, COLUMBUS, OHIO ENERGY TECHNOLOGIES: BATTELLE / COLUMBUS LABORATORIES	DATE

MED-71-22.14 (S.B.)

OHIO | FHWA REGION 5

31/47

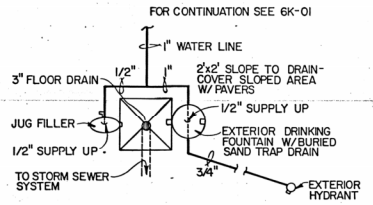

NOTE: SEE SHEET 6F FOR SITE LOCATION

6K-03
EXTERIOR DRINKING FOUNTAIN, JUG FILLER AND HYDRANT PIPING PLAN

NOT TO SCALE

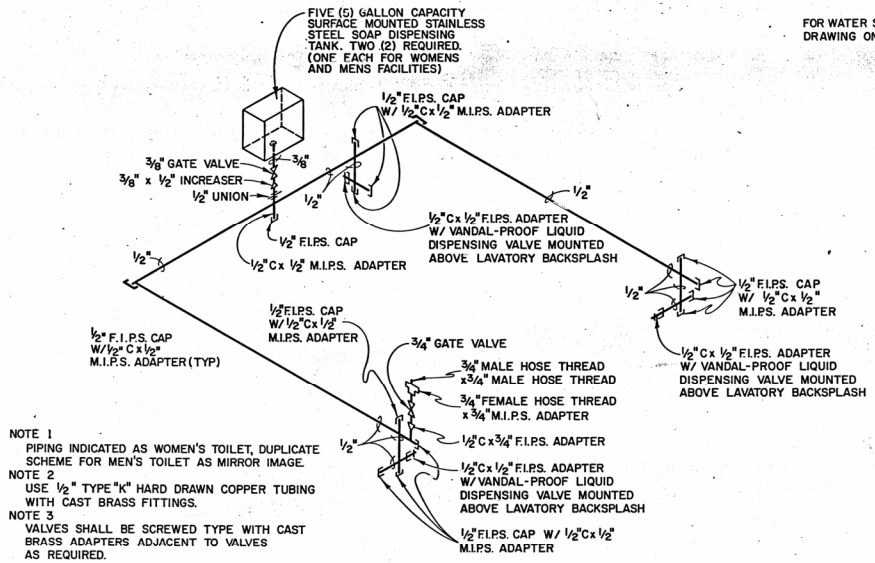

NOTE 1
PIPING INDICATED AS WOMEN'S TOILET, DUPLICATE SCHEME FOR MEN'S TOILET AS MIRROR IMAGE.
NOTE 2
USE 1/2" TYPE "K" HARD DRAWN COPPER TUBING WITH CAST BRASS FITTINGS.
NOTE 3
VALVES SHALL BE SCREWED TYPE WITH CAST BRASS ADAPTERS ADJACENT TO VALVES AS REQUIRED.
NOTE 4
MOUNT SOAP TANK AND PIPING ON WALLS ABOVE BACK VENT PIPING IN ROOMS 104 AND 108.

6K-02
LIQUID SOAP DISPENSING UNIT ISOMETRIC

NOT TO SCALE

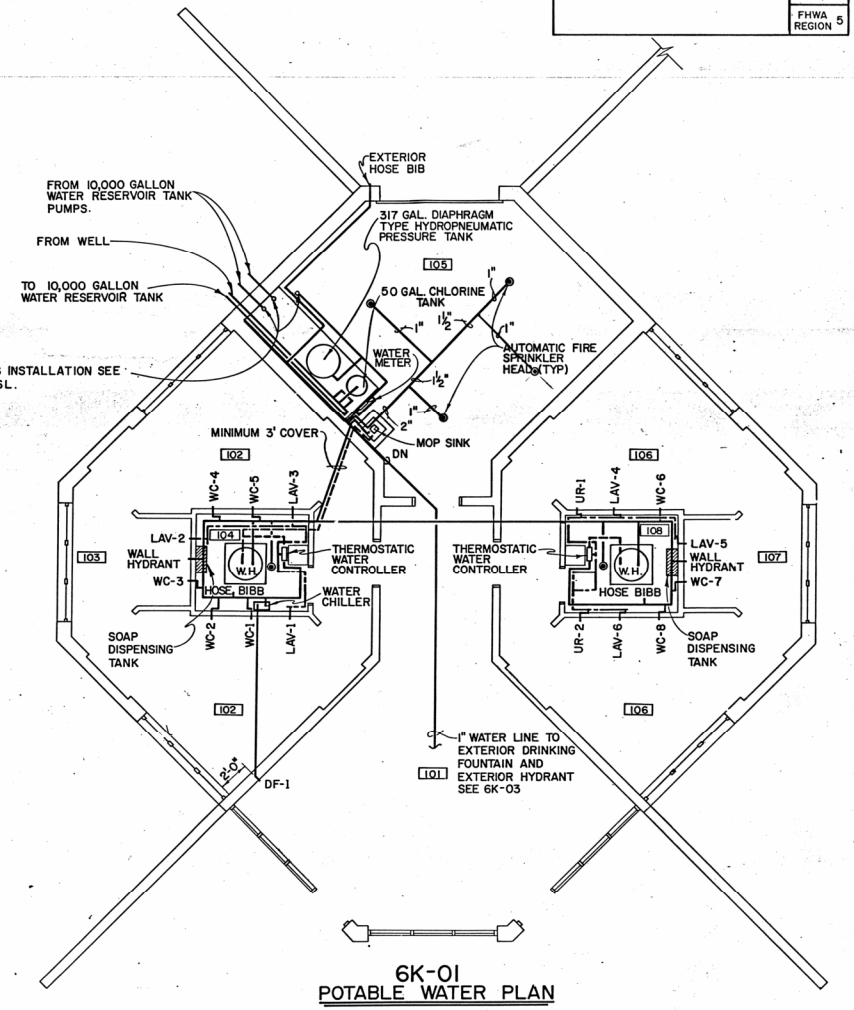

6K-01
POTABLE WATER PLAN

0 1 2 4 6 8
SCALE IN FEET

OHIO DEPARTMENT OF TRANSPORTATION
DIVISION OF HIGHWAYS

REVISIONS 10-19-84

MOTORIST SERVICES BUILDING AND STORAGE UNITS

SHEET NO. 6K

ARCHITECTS - WRIGHT / KRITSCHGAU, ASSOCIATES, INC. 3600 TRABUE RD., COLUMBUS, OHIO
ENGINEERS - JOHN E. FOSTER & ASSOCIATES, COLUMBUS, OHIO
ENERGY TECHNOLOGIES - BATTELLE / COLUMBUS LABORATORIES

DATE

MED-71-22.14(S.B.) | OHIO | FHWA REGION 5 | 32/47

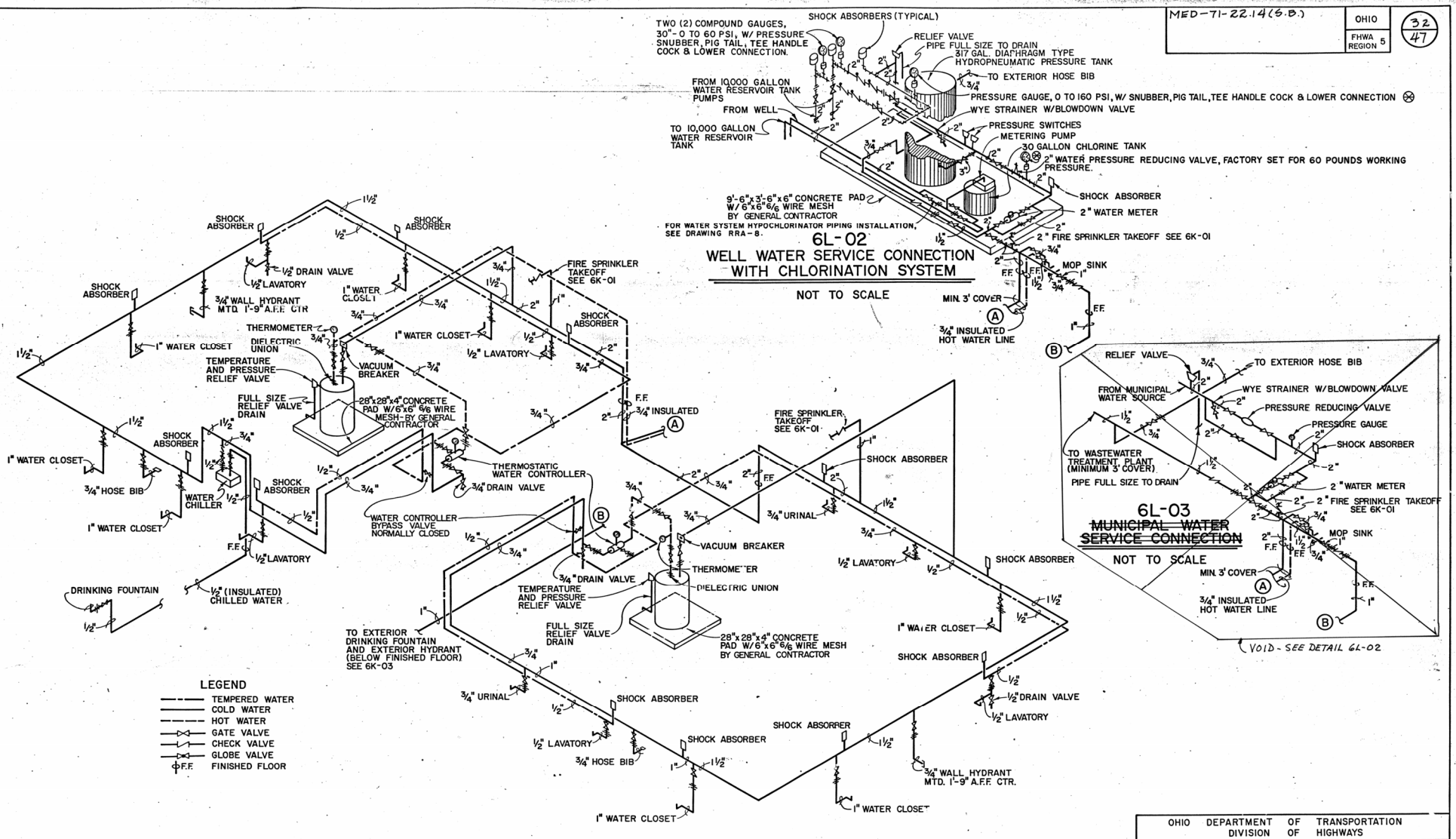

OHIO DEPARTMENT OF TRANSPORTATION
DIVISION OF HIGHWAYS

REVISIONS 10-19-84 11-2-84

MOTORIST SERVICES BUILDING AND STORAGE UNITS

SHEET NO. 6 L

ARCHITECTS · WRIGHT / KRITSCHGAU, ASSOCIATES, INC. 3600 TRABUE RD., COLUMBUS, OHIO
ENGINEERS · JOHN E. FISTER ASSOCIATES, COLUMBUS, OHIO
ENERGY TECHNOLOGIES · BATTELLE / COLUMBUS LABORATORIES

DATE

MED-71-22.14 (S.B.)

OHIO

FHWA REGION 5

33/47

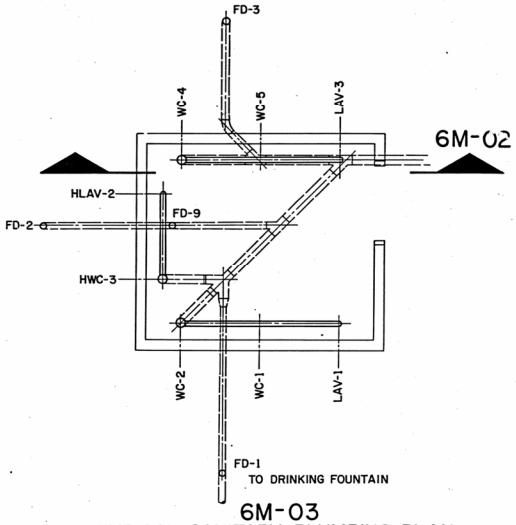

6M-03
TYPICAL SANITARY PLUMBING PLAN

NOT TO SCALE

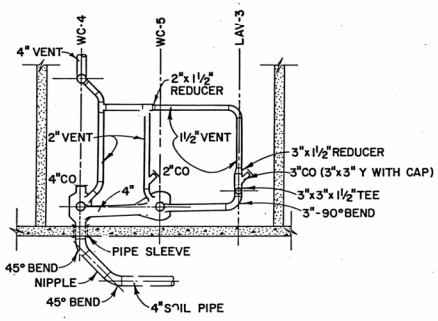

6M-02
TYPICAL SANITARY PLUMBING SECTION

NOT TO SCALE

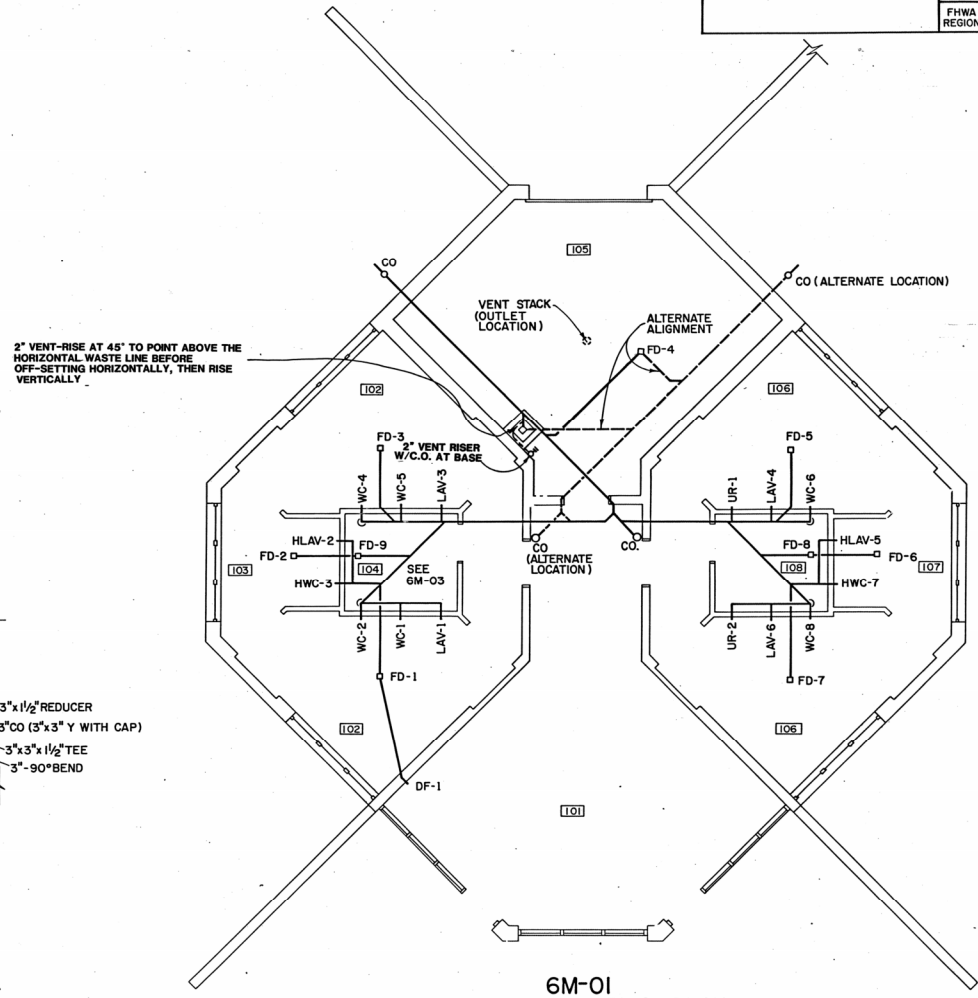

6M-01
SANITARY PLUMBING PLAN

0 1 2 4 6 8
SCALE IN FEET

OHIO DEPARTMENT OF TRANSPORTATION
DIVISION OF HIGHWAYS

REVISIONS
10-5-84

MOTORIST SERVICES BUILDING AND STORAGE UNITS

SHEET NO.
6 M

ARCHITECTS · WRIGHT / KHITSCHGAU, ASSOCIATES, INC.
3600 TRABUE RD., COLUMBUS, OHIO
ENGINEERS · JOHN E. FOSTER & ASSOCIATES, COLUMBUS, OHIO
ENERGY TECHNOLOGIES · BATTELLE/COLUMBUS LABORATORIES

DATE

NOTE 1
ALL LAVATORIES SHALL HAVE 1½" TRAPS.

NOTE 2
ALL URINALS SHALL HAVE 2" WASTE OUTLETS.

NOTE 3
ALL SOIL, WASTE AND VENT PIPING SHALL BE CAST IRON, NO HUB.

NOTE 4
ALL WATER TO HAND WASHING AND BATHING FACILITIES SHALL NOT EXCEED 120°F.

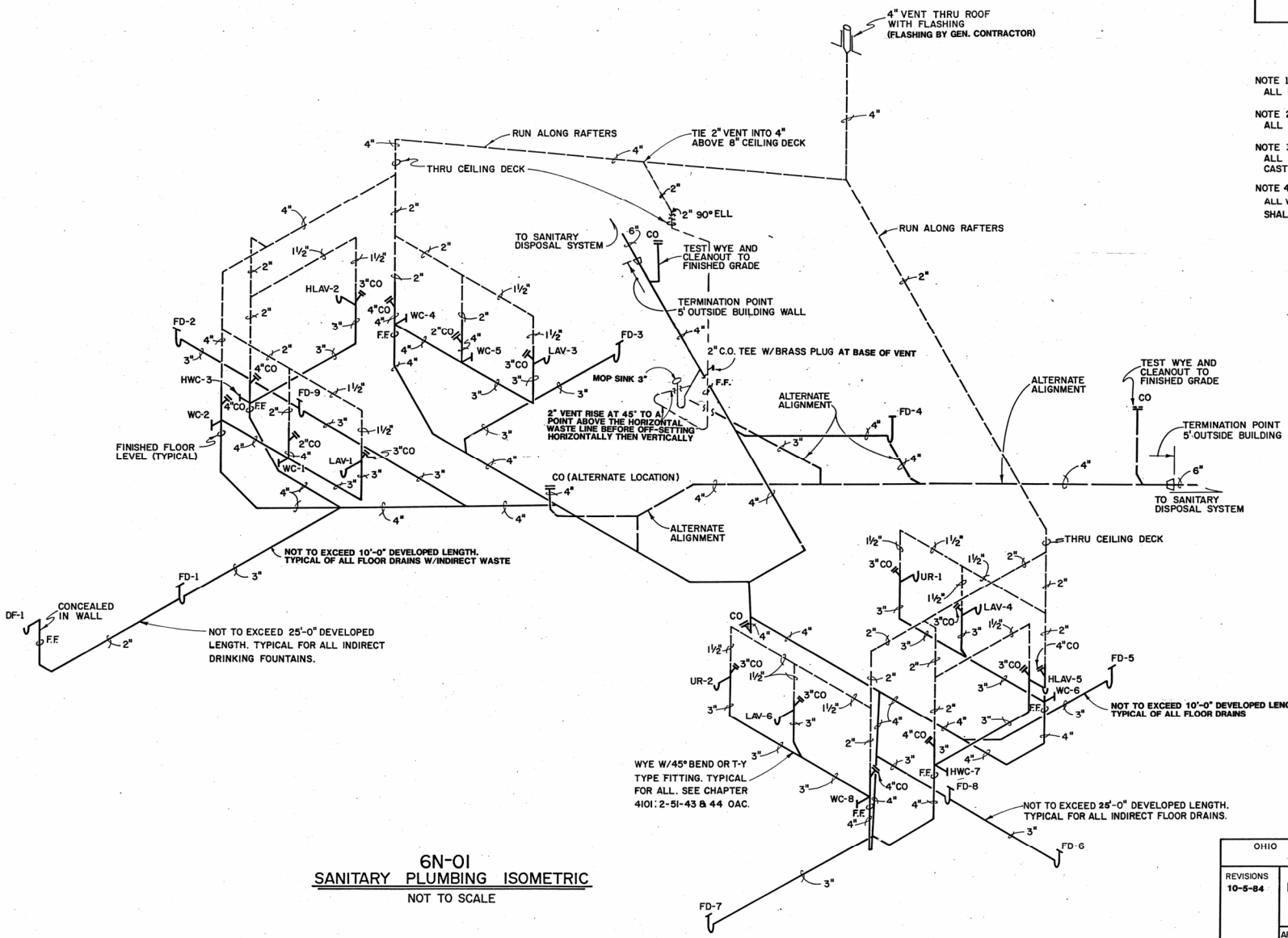

6N-01
SANITARY PLUMBING ISOMETRIC

NOT TO SCALE

OHIO DEPARTMENT OF TRANSPORTATION DIVISION OF HIGHWAYS		
REVISIONS 10-5-84	MOTORIST SERVICES BUILDING AND STORAGE UNITS	SHEET NO. 6N
	ARCHITECTS-WRIGHT / KRITSCHGAU, ASSOCIATES, INC. 3600 TRABUE RD., COLUMBUS, OHIO ENGINEERS-JOHN E. FOSTER & ASSOCIATES, COLUMBUS, OHIO ENERGY TECHNOLOGIES-BATTELLE / COLUMBUS LABORATORIES	DATE

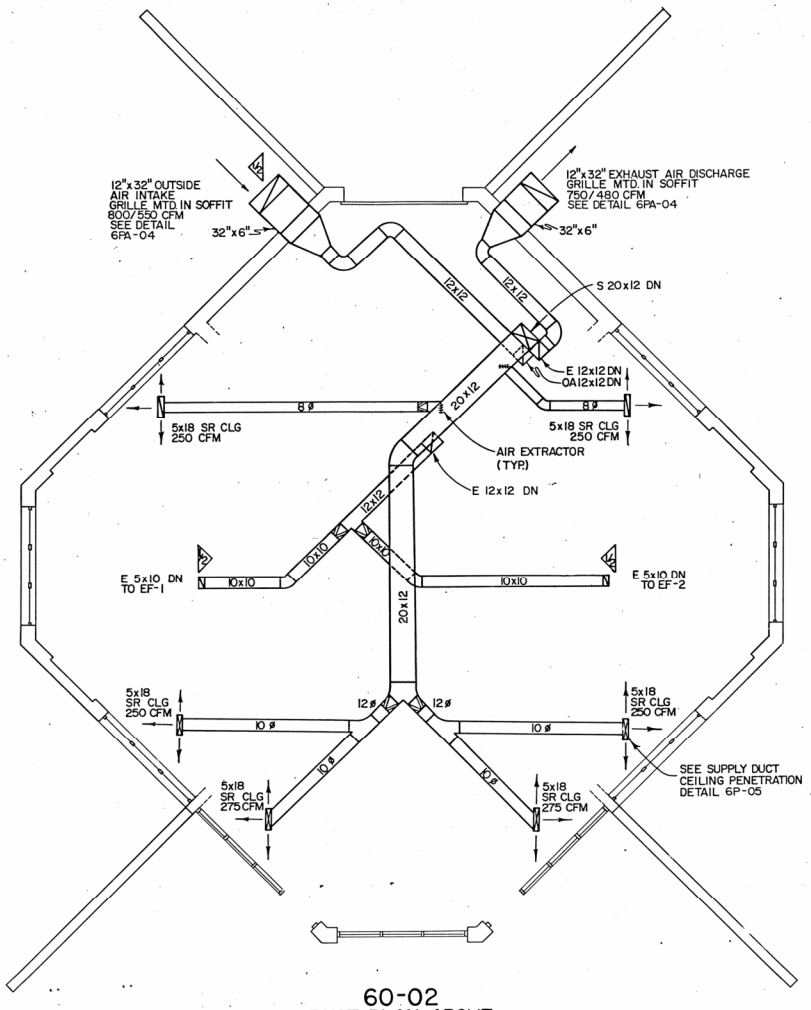

60-02
DUCT PLAN ABOVE CEILING DECK

0 1 2 4 6 8
SCALE IN FEET

NOTE: 10"x6" EXHAUST REGISTERS IN MENS AND WOMENS TOILET ROOMS SHALL BE MOUNTED 8'-9" CENTER. A.F.F. - ABOVE LIGHT FIXTURES

NOTE: ALL DUCTS PENETRATING THE CEILING DECK IN THE MAINTENANCE STORAGE ROOM 105 SHALL HAVE FIRE DAMPERS

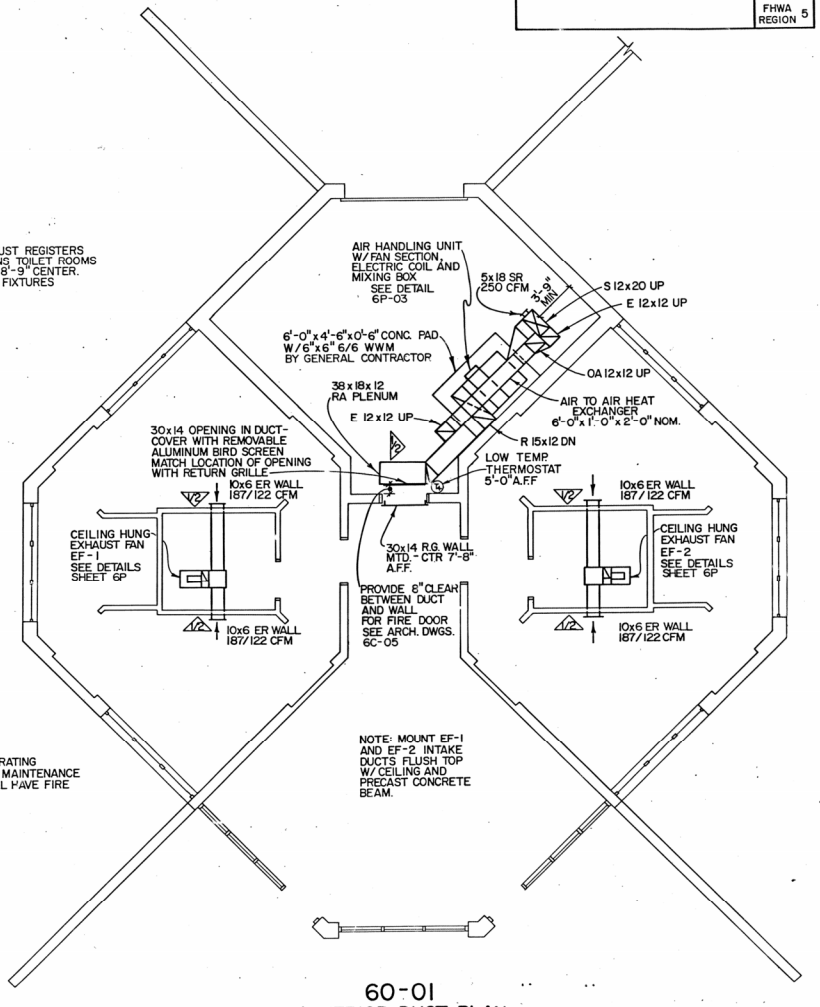

NOTE: MOUNT EF-1 AND EF-2 INTAKE DUCTS FLUSH TOP W/ CEILING AND PRECAST CONCRETE BEAM.

60-01
INTERIOR DUCT PLAN

0 1 2 4 6 8
SCALE IN FEET

OHIO DEPARTMENT OF TRANSPORTATION
DIVISION OF HIGHWAYS

REVISIONS 7-17-84

MOTORIST SERVICES BUILDING AND STORAGE UNITS

SHEET NO. 60

ARCHITECTS - WRIGHT / KRITSCHGAU, ASSOCIATES, INC. 3600 TRABUE RD., COLUMBUS, OHIO
ENGINEERS - JOHN E. FOSTER & ASSOCIATES, COLUMBUS, OHIO
ENERGY TECHNOLOGIES - BATTELLE / COLUMBUS LABORATORIES

DATE

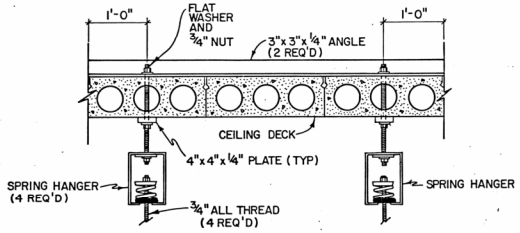

EXHAUST FAN HANGER DETAIL

NOT TO SCALE

6P-01

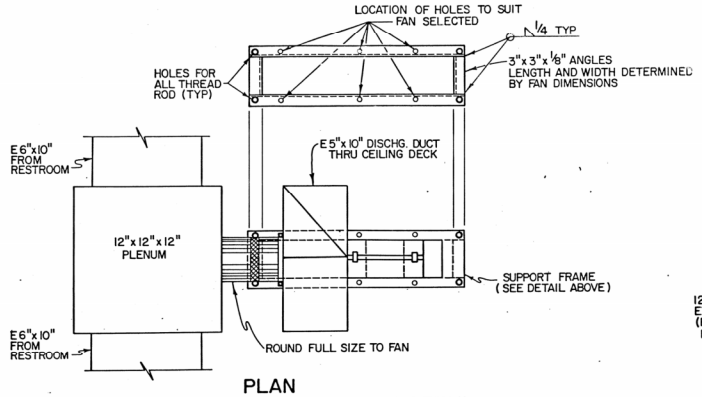

PLAN

EXHAUST FAN AND SUPPORT FRAME DETAIL

NOT TO SCALE

6P-02

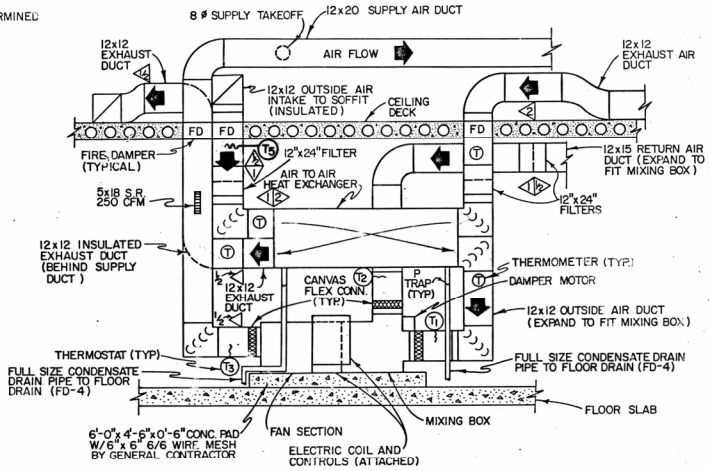

HEATING SYSTEM ELEVATION

6P-03 NOT TO SCALE

NOTE:
1.) MOUNT FAN SECTION, ELECTRIC COIL AND MIXING BOX ON VIBRATION ISOLATORS AS SPECIFIED.
2.) HANG AIR TO AIR HEAT EXCHANGER AS PER MANUFACTURERS RECOMMENDATIONS AND EXHAUST FAN HANGER DETAIL (THIS SHT.)
3.) CEILING DECK VAPOR BARRIER AND INSULATION SHALL BE PLACED OVER THE DUCTWORK
4.) MOUNT AIR TO AIR HEAT EXCHANGER TO DUCT USING COMPANION FLANGES W/BOLTS.
5.) EXPAND DUCT AT FILTER SECTIONS TO ACCOMODATE 12"x24" FILTER. PROVIDE ACCESS DOOR PER SMACNA STANDARDS FOR EACH FILTER.

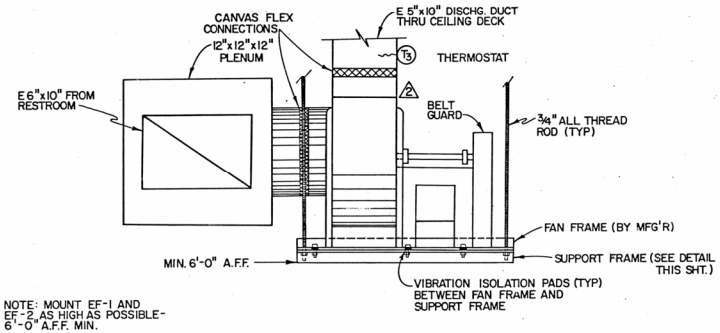

NOTE: MOUNT EF-1 AND EF-2 AS HIGH AS POSSIBLE-6'-0" A.F.F. MIN.

ELEVATION EXHAUST FAN DETAIL

NOT TO SCALE

6P-04

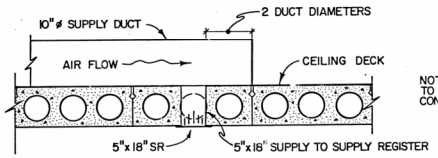

NOTE: CEILING DECK OPENINGS TO BE PROVIDED BY PRECAST CONCRETE SUPPLIER

TYPICAL SUPPLY DUCT CEILING PENETRATION

NOT TO SCALE

6P-05

OHIO DEPARTMENT OF TRANSPORTATION DIVISION OF HIGHWAYS		
REVISIONS 1-28-85	MOTORIST SERVICES BUILDING AND STORAGE UNITS	SHEET NO. 6P
	ARCHITECTS · WRIGHT / KRITSCHGAU, ASSOCIATES, INC. 3600 TRABUE RD., COLUMBUS, OHIO ENGINEERS · JOHN E. FOSTER & ASSOCIATES, COLUMBUS, OHIO ENERGY TECHNOLOGIES · BATTELLE / COLUMBUS LABORATORIES	DATE

HEATING & VENTILATING AND ELECTRICAL SPECIFICATION REVISIONS

1. UNDER SECTION 14, HEATING AND VENTILATING, PAGE I-64, ITEM 2. AIR HANDLING UNIT, PARAGRAPH (b), DELETE THE FOLLOWING: MOTOR SHALL BE 120 VOLT, 1 PHASE, 60 HERTZ. FAN SHALL HAVE AN ADJUSTABLE V-BELT DRIVE WITH AN EXPANDED METAL BELT GUARD WITH TACHOMETER HOLES. PROVIDE ONE SPARE SET OF V-BELTS. FAN SHALL PROVIDE 1800 CFM @ 1.75 IN. W.G.S.P. INSERT THE FOLLOWING: MOTOR SHALL BE 1 1/2 H.P., 1530 RPM; 120 VOLT, 1 PHASE, 60 HERTZ, FAN SHALL HAVE V-BELT DRIVE UNITS WITH VARIABLE SHEAVES FOR +10%, - 10% ADJUSTMENT WITH AN EXPANDED METAL GUARD WITH TACHOMETER HOLES. PROVIDE ONE SPARE SET OF V-BELTS. FAN SHALL PROVIDE 1800 CFM @ 1.50 IN. W.G.S.P.

2. UNDER SECTION 14, HEATING AND VENTILATING, PAGE I-65, ITEM 3. AIR TO AIR HEAT EXCHANGER, PARAGRAPH (a), DELETE ALL OF PARAGRAPH (a) EXCEPT THE LAST FOUR (4) SENTENCES AND INSERT THE FOLLOWING: (a) FURNISH AND INSTALL AS SHOWN ON THE DRAWINGS ONE (1) FIXED PLATE AIR TO AIR HEAT EXCHANGER. THE HEAT TRANSFER SURFACE SHALL BE A CONTINUOUS SHEET OF DIE FORMED AND FOLDED 1100-1 ALUMINUM THAT CREATES SEPARATE AND DISTINCT AIR FLOW PASSAGES PROVIDING MINIMUM AIR RESISTANCE AND MAXIMUM HEAT TRANSFER. THE DIE FORMED SURFACE SHALL HAVE EMBOSSED RIBS AND HAVE RAISED AND DEPRESSED TRUNCATED CONICAL DIMPLES THAT BEAR ON EACH ADJACENT PLATE, THE DIE FORMING SHALL CREATE ADDITIONAL SURFACE AREA, ENSURE HIGH DIFFERENTIAL PRESSURE CAPABILITY WITHOUT PLATE SURFACE COLLAPSE, AND INCREASE HEAT TRANSFER COEFFICIENTS. THE ENDS OF THE HEAT TRANSFER SURFACE SHALL BE MECHANICALLY SEALED. THE MODULE HOUSING SHALL BE CONSTRUCTED OF 18 GAUGE GALVANEAL STEEL WITH INTEGRAL DOUBLE FLANGED DUCT CONNECTIONS. THE CASING MATERIAL SHALL HAVE PROVISIONS FOR 7 IN. HIGH X 18 IN. WIDTH TRANSITION DUCT CONNECTIONS. THE HEAT EXCHANGER SHALL BE CAPABLE OF 750 SCFM EXHAUST, 800 SCFM SUPPLY, WITH 0.5" W.C.S.P. DROP ACROSS EACH SIDE OF THE HEAT EXCHANGER, WITH 55 DEG. F DRY BULB AND 46 DEG. F WET BULB HOT AIRSTREAM AT A MINIMUM EFFICIENCY OF 65%. AIR FLOW THROUGH THE HEAT EXCHANGER SHALL BE OF THE COUNTERFLOW CONFIGURATION AND BOTH AIR STREAMS SHALL BE HORIZONTAL IN FLOW. THE HEAT EXCHANGER SIZE SHALL BE 22 IN. WIDE X 20 IN. HIGH X 66 IN. LONG. HEAT EXCHANGER SHALL BE MODEL NO. 79ML-1618-.49/.49 AS MANUFACTURED BY DES CHAMPS LABORATORIES, INC. - Z DUCT. EQUAL HEAT EXCHANGERS AS MANUFACTURED BY UNITED AIR SPECIALISTS, INC. OR APPROVED EQUAL. SHOP DRAWINGS OF SELECTED HEAT EXCHANGER MUST INCLUDE FACTORY THERMODYNAMIC ANALYSIS PRINT READOUTS TO OBTAIN COMPLETE SHOP DRAWING APPROVAL.

3. UNDER SECTION 14, HEATING AND VENTILATING, PAGE I-67, ITEM 5. EXHAUST FANS (EF-1 AND EF-2), PARAGRAPH (a) DELETE ALL OF PARAGRAPH (a) AND INSERT THE FOLLOWING:

   (a) FURNISH AND INSTALL TWO (2) EXHAUST FANS AS SHOWN ON THE DRAWINGS. FANS SHALL BE MODEL NO. 8B AS MANUFACTURED BY PEERLESS ELECTRIC-PORTER ELECTRICAL DIVISION, H. K. PORTER CO. INC. OR EQUAL FANS MANUFACTURED BY TRANE CO., POWER LINE FANS, OR APPROVED EQUAL. FANS SHALL HAVE V-BELT DRIVE UNITS WITH VARIBLE SHEAVES FOR +15%,-10% ADJUSTMENT, UTILITY SET TYPE WITH FORWARD CURVED WHEEL. PROVIDE BELT GUARD, COMPLETE DRIVE ASSEMBLY AND FAN AS A PACKAGE UNIT. FAN SHALL BE RATED IN ACCORDANCE WITH AMCA STANDARD 210. MOTORS SHALL BE 1/4 H.P., 120 VOLT, 1-PHASE, 60 HERTZ, TWO (2) SPEED TYPE. EACH FAN SHALL PROVIDE 375 CFM @ 0.875 IN. (7/8") W.G.S.P., 1430 RPM (HI-SPEED) AND 240 CFM @ 0.40 IN. W.G.S.P, (LO-SPEED). PROVIDE ONE SPARE SET OF V-BELTS.

4. UNDER SECTION 15 ELECTRICAL, ITEM 28. SECURITY ALARM SYSTEM, PAGE I-84, PARAGRAPH (d) 1), DELETE AGASTAT MODEL DEL-R-12 OR APPROVED EQUAL. INSERT THE FOLLOWING: AGASTAT TIMING RELAYS 7000 SERIES, MODEL NO. 7012-AKL, OR APPROVED EQUAL. DELETE 10 SECONDS TO 3 1/2 MINUTES AND INSERT 1 TO 300 SECONDS.

5. UNDER SECTION 15 ELECTRICAL, ITEM 28, SECURITY ALARM SYSTEM, PAGE I-84, PARAGRAPH (d) 2), DELETE AGASTAT MODEL DE-R-22. INSERT THE FOLLOWING: AGASTAT TIMING RELAYS 7000 SERIES, MODEL NO. 7022-AK, OR APPROVED EQUAL.

Rev. (Added) 1-28-85

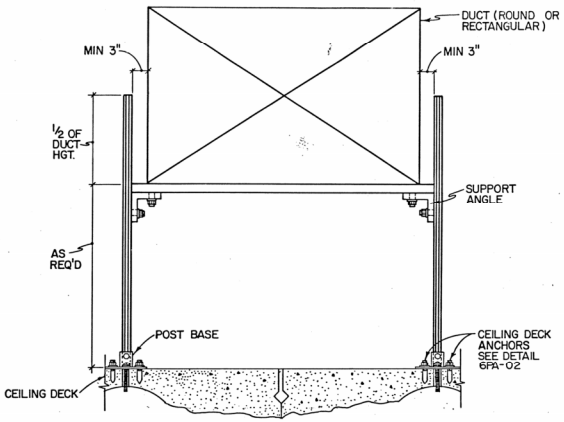

TYPICAL DUCT SUPPORT DETAIL

NOT TO SCALE
6PA-01

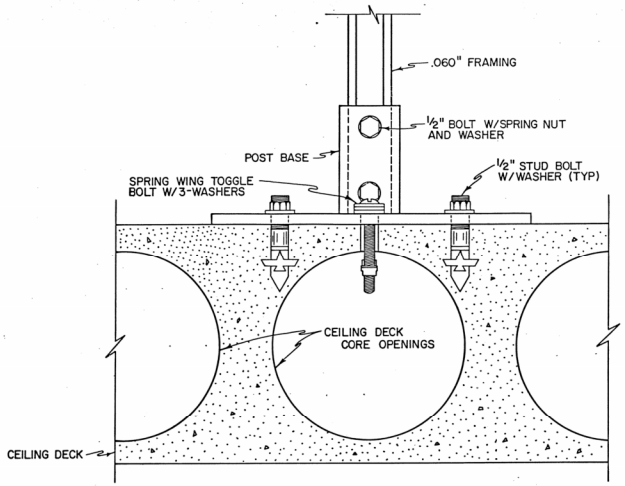

TYPICAL CEILING DECK ANCHOR DETAIL

NOT TO SCALE
6PA-02

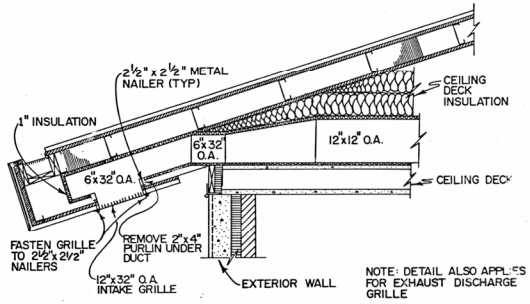

OUTSIDE AIR INTAKE DETAIL

NOT TO SCALE
6PA-04

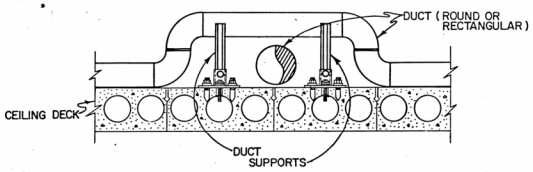

TYPICAL DUCT INTERSECTION SUPPORT DETAIL

NOT TO SCALE
6PA-03

NOTE: 1) CEILING DECK INSULATION SHALL BE PLACED OVER ALL DUCT WORK
2) WHENEVER POSSIBLE REST DUCT DIRECTLY ON CEILING DECK.
3) PROVIDE DUCT SUPPORTS EVERY 8'-0" ON DUCTS THAT DO NOT REST ON CEILING DECK
4) PROVIDE DUCT SUPPORTS AS DETAILED FOR INTERSECTING DUCTS

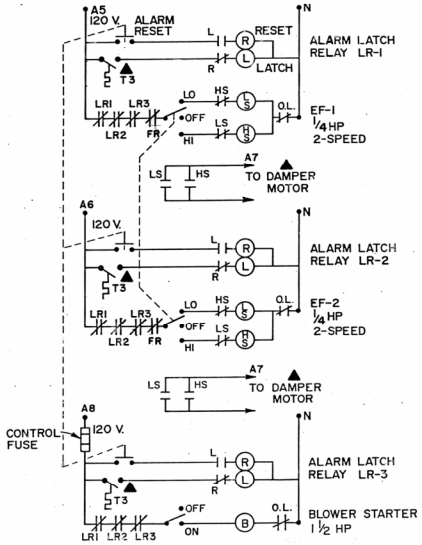

NOTE: 1) HEAT-VENT CONTROL PANEL FURNISHED UNDER ELECTRICAL WORK

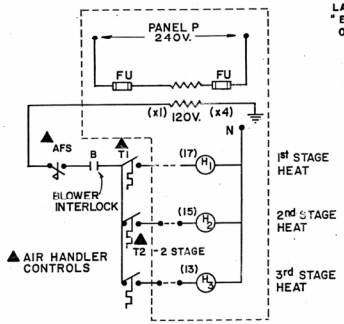

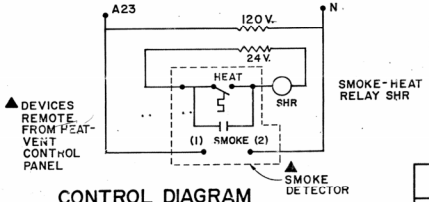

CONTROL DIAGRAM HEAT-VENT CONTROL PANEL

NOT TO SCALE
6PA-06

LABEL SHALL READ "EXHAUST FANS OFF-O.A. DAMPER CLOSED."

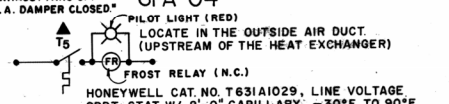

HONEYWELL CAT. NO. T631A1029, LINE VOLTAGE SPDT STAT W/ 8'-0" CAPILLARY, -30°F TO 90°F RANGE, 3°F TO 12°F DIFFERENTIAL OR APPROVED EQUAL MANUFACTURES, REFER TO SPECIFICATIONS.

AUTOMATIC FROST CONTROL

NOT TO SCALE
6PA-07

TO AUTOMATICALLY PREVENT FROST PROBLEMS IN THE HEAT EXCHANGER, WHEN THE TEMPERATURE OF THE OUTSIDE AIR REACHES APPROXIMATELY 10°F AT THE HEAT EXCHANGER, THE LINE VOLTAGE THERMOSTAT SHALL OPEN THE NORMALLY CLOSED CONTACTS (N.C.) OF THE RELAY, THEREBY STOPPING THE EXHAUST FANS AND CLOSING THE OUTSIDE AIR DAMPER. THIS SYSTEM CAN BE OVERRIDDEN BY LOWERING THE THERMOSTAT SETTING OR JUMPING ITS CONTACTS. IN THE OPERATING MODE NOTED ABOVE, THE RETURN AIR DAMPER SHALL BE IN THE OPEN POSITION, TO PERMIT ONLY RETURN AIR TO ENTER THE AIR HANDLING UNIT. WHEN THE EXHAUST AIR TEMPERATURE GOES ABOVE THE CUT OFF SET POINT OF THE T_5 THERMOSTAT, IT SHALL CAUSE THE FR RELAY TO CLOSE AND PUT THE HEATING SYSTEM BACK TO ITS ORIGINAL MODE.

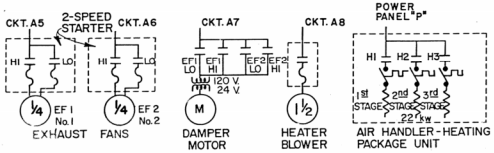

H & V POWER DIAGRAM 6PA-05

OHIO DEPARTMENT OF TRANSPORTATION DIVISION OF HIGHWAYS		
REVISIONS 1-28-85	MOTORIST SERVICES BUILDING AND STORAGE UNITS	SHEET NO. 6PA
	ARCHITECTS-WRIGHTV KRITSCHGAU, ASSOCIATES, INC. 3600 TRABUE RD., COLUMBUS, OHIO ENGINEERS-JOHN E. FOSTER & ASSOCIATES, COLUMBUS, OHIO ENERGY TECHNOLOGIES-BATTELLE/COLUMBUS LABORATORIES	DATE

MED-71-22.14 (S.B.)

OHIO FHWA REGION 5

38/47

FIXTURE DEVICE SYMBOL SCHEDULE

MARK	SYMBOL	FIXTURE/DEVICE	MANUFACTURE-NUMBER	MOUNTING HEIGHT	REMARKS
A		FLUSH UP LITE	HYDREL 6062 MV 175/240 HPF	FLUSH AT GRADE	W/ 6111 AND ,6174, SEE NOTE 175 W. MV.
B		RECESS-SOFFIT LITE	MARCO HN 633 404/06/35 S 240	SOFFIT	VANDAL RESISTANT 150W HIGH-55 VOLT LAMP
C		SURFACE-CEILING LITE	MARCO LN 708004/35/40 D 240	9'-1"	175 W. MH.
D		FLUORESCENT LITE	LITHONIA WA 240 A	9'-1"	2-40 WATT, WATT-MISER II & ENERGY SAVING BALLAST
E		FLUORESCENT LITE	KENALL 7170-DW-9518	8'-1"	1-40 WATT, WATT-MISER II & ENERGY SAVING BALLAST
F		FLAGPOLE UP/DN	NL DK-1210/175/LTFP-240 V.	10'-0" AFG	2 REQ'D. R-40 LAMP
	$ $3	SWITCH-3 WAY		4'-6" AFF	SURFACE MOUNTED
		SWITCH-RAISE/LOWER		4'-6" AFF	
G		EXIT LIGHTS	KENALL 6590 GW-EM	CEILING	2-20W-T6 1/2, GREEN ON WHITE W/ TUNGSTEN HALOGEN EMERGENCY LIGHT PACK (PROVIDES 90 MINUTES OF LIGHT AFTER POWER INTERRUPTION)
		DUPLEX RECEPTACLE		2'-0" AFF	
		JUNCTION BOX			
		TELEPHONE OUTLET		4'-6" AFF	HANDICAPPED 30" AFF
	DSS	DOOR SECURITY SWITCH			
	ST	SMOKE & HEAT DETECTOR		CEILING	
	----	CONDUIT-UNDERGROUND			
	———	CONDUIT-SURFACE			
	----	CONDUIT-OVERHEAD		ABOVE CEILING DECK	

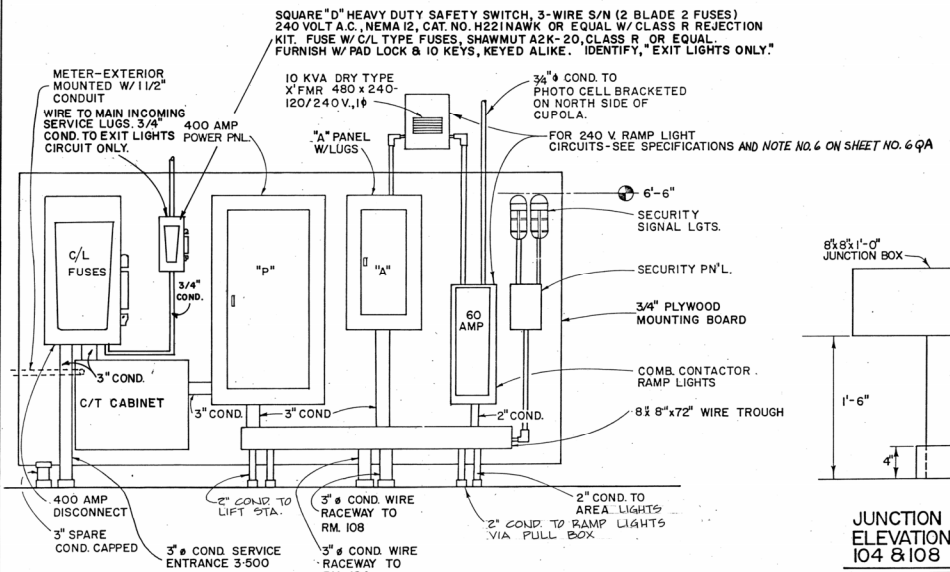

ELECTRICAL PANEL ELEVATION

NOT TO SCALE

6Q-01

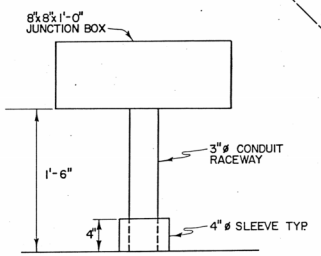

JUNCTION BOX ELEVATION ROOMS 104 & 108 (TYP)

NOT TO SCALE

6Q-02

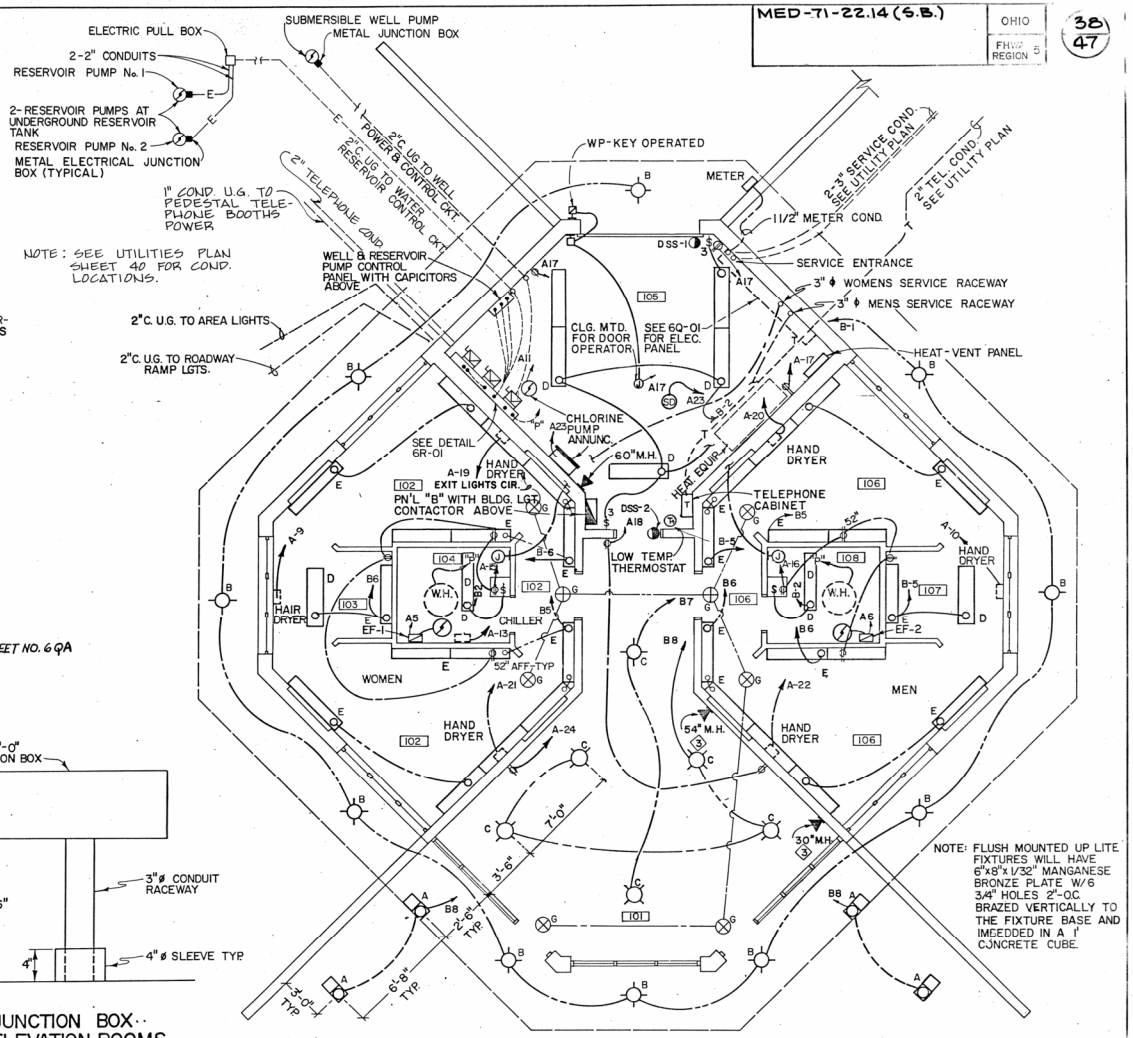

6Q-03 LIGHTING PLAN

0 1 2 4 6 8
SCALE IN FEET

FLAG POLE W/ LIGHTS (4)

POWER PEDESTAL W/ RECEPTACLE

OHIO DEPARTMENT OF TRANSPORTATION DIVISION OF HIGHWAYS		
REVISIONS 4/28/83 10-24-84 1-28-85	MOTORIST SERVICES BUILDING AND STORAGE UNITS	SHEET NO. 6Q
	ARCHITECTS: WRIGHT, KRITSCHGAU, ASSOCIATES, INC. 3600 TRABUE RD., COLUMBUS, OHIO ENGINEERS: JOHN E. FOSTER & ASSOCIATES, COLUMBUS, OHIO ENERGY TECHNOLOGIES: BATTELLE/COLUMBUS LABORATORIES	DATE