MICROFILMED
DEC 22 1986

| FED. RD. DIVISION | STATE | PROJECT | |
|---|---|---|---|
| 2 | OHIO | | |

406
407

MEIGS 7 - 6.15
7 Miles East at Rutland

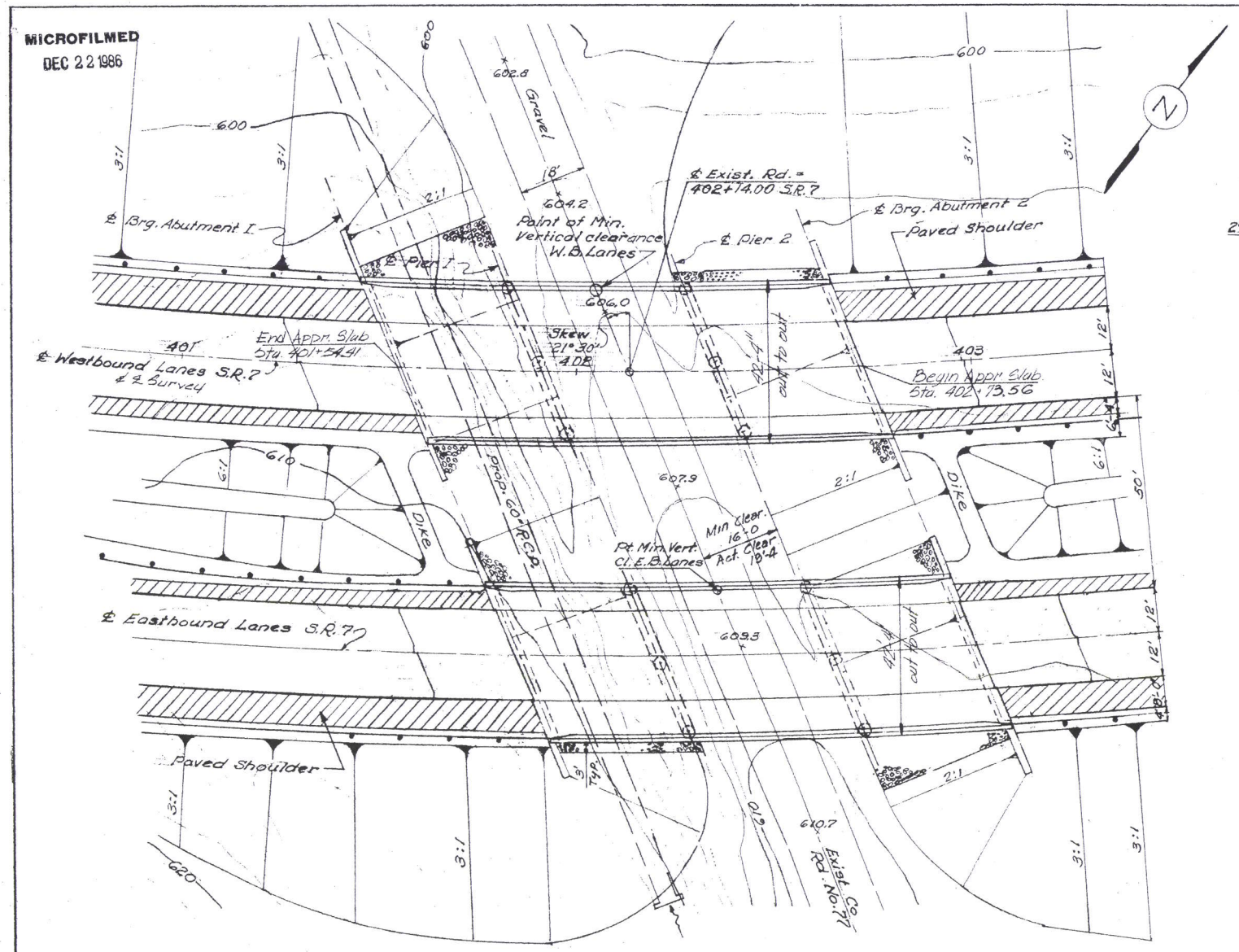


PLAN

NOTE Earthwork limits shown are schematic. Actual slopes shall conform to plan cross-sections.

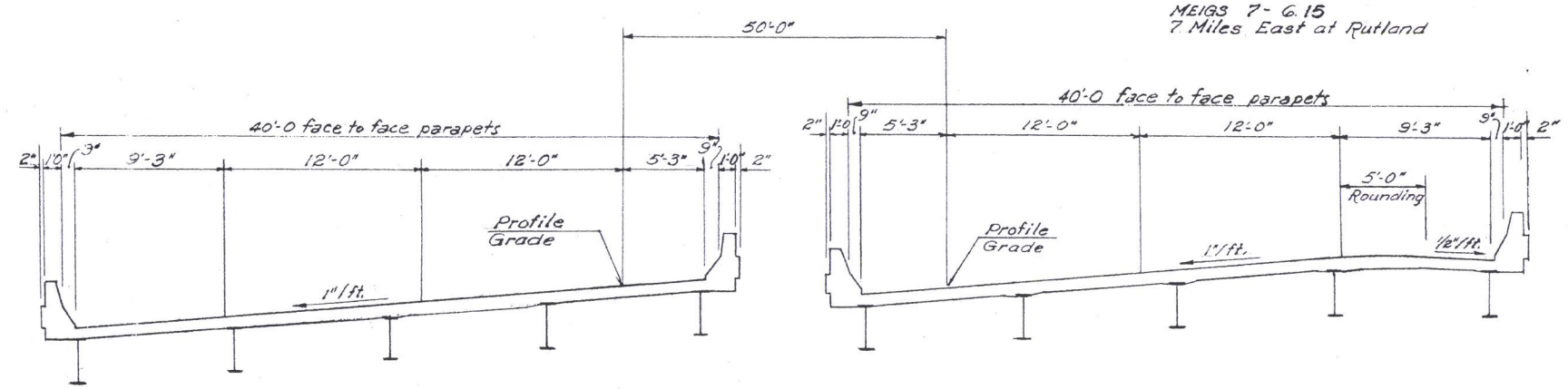


SECTION THRU BRIDGE

117' = 35.661 m

36 m x 24 m

22.5 24

℄ = 32.19 m

℄ WESTBOUND LANES CURVE DATA

| | | | |
|---|---|---|---|
| Curve | # 5 | L.C. = | 375.94' |
| P.I. Sta. | 402+35.58 | L.S. = | 400.00' |
| Δ | 31° 02' 15" | T.S. Sta. = | 396+36.68' |
| Dc. | 4° 00' 00" | S.T. Sta. = | 408+12.61' |
| R | 1,432.39' | | |

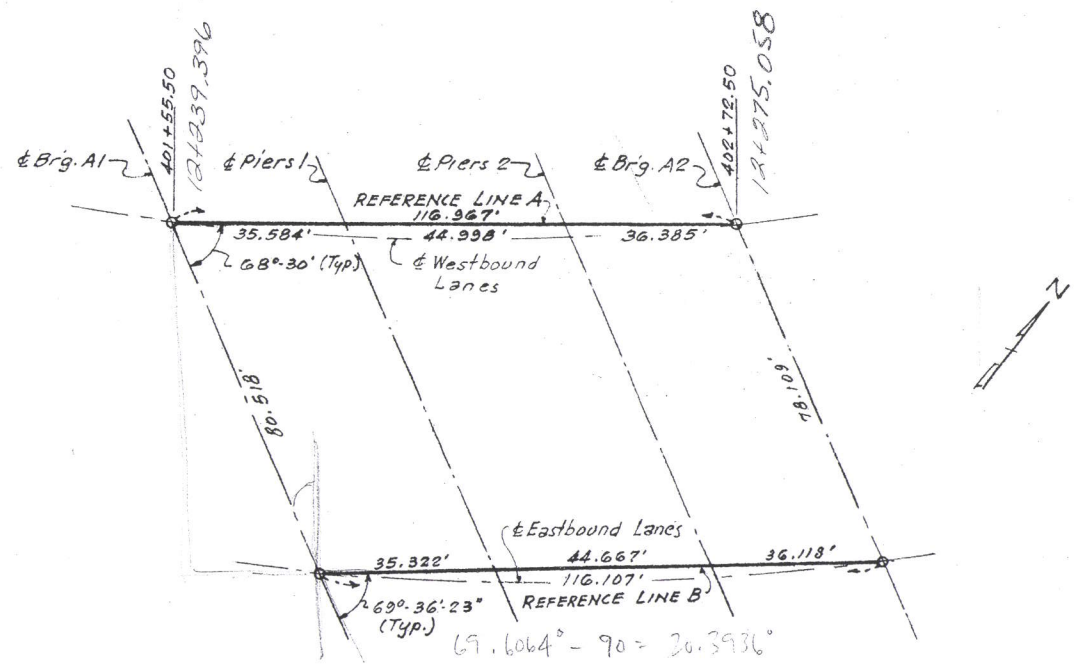


REFERENCE LINE LAYOUT

20.4°
SKEW

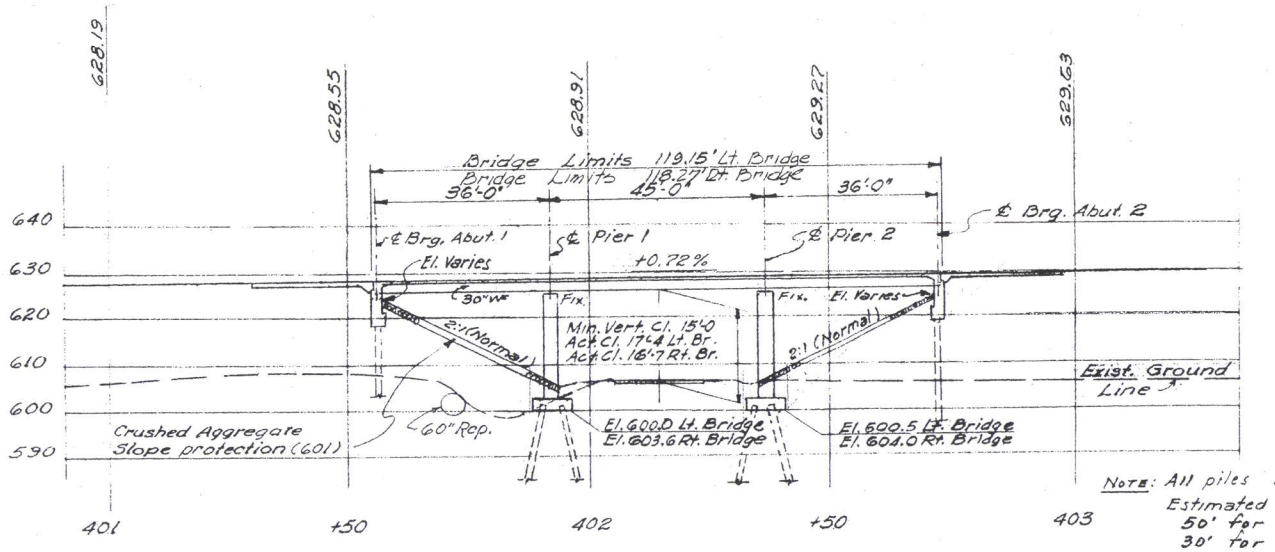


PROFILE ON ℄ WESTBOUND LANES

NOTE: All piles HP10X42 Steel Piles
Estimated Ave pay Lengths:
50' for Abutments
30' for Piers

A.D.T - 1990 - 5030

PROPOSED STRUCTURE

TYPE: Continuous rolled beam with reinforced concrete deck and substructure.
SPANS: 36'-0", 45'-0", 36'-0"
ROADWAY: Two with 40'-0" face to face of Parapets.
WEARING SURFACE: 1" Monolithic Concrete.
LOADING: AASHO HS 20-44

SKEW: 21°30' R.F.
ALIGNMENT: 4°-0' Curve left.
SUPERELEVATION: 0.083 ft/ft.
APPROACH SLABS: AS 1-67 (25'-0 long)

AUBLE - MITCHELL - BURGESS & ASSOC.
ENGINEERS & ARCHITECT | 1 | 15

SITE PLAN 0761

BRIDGE No. MEIGS-7-~~0768~~ 1/2

S.R. 7 over CO. Road No. 77

MEIGS County Sta. 401+54.41
Sta. 402+73.56

PROPOSED WORK

| DESIGNED | DRAWN | TRACED | CHECKED | REVISION |
|---|---|---|---|---|
| | | | ERB | |

MICROFILMED
DEC 22 1986

| FED. RD. DIVISION | STATE | PROJECT | |
|---|---|---|---|
| 2 | OHIO | | |

407/467

MEG-7-6.15

# ESTIMATED QUANTITIES (TOTAL FOR TWO BRIDGES)

| ITEM | TOTAL | UNIT | DESCRIPTION | ABUTMENTS | PIERS | SUPER-STRUCTURE | GENERAL | CHECKED BY & DATE | | | |
|---|---|---|---|---|---|---|---|---|---|---|---|
| 503 | 892 | Cu. Yd | Unclassified Excavation | 685 | 207 | | | LEN | 9-70 | | |
| 505 | Lump | Lump Sum | Test pile | | | | Lump | | | | |
| 507 | 3,690 | Lin. Ft. | Steel piles HP10x42 | 2,250 | 1,440 | | | LEN | 9-70 | | |
| 509 | 153,837 | Lb. | Reinforcing Steel | 19,426 | 34,139 | 100,272 | | LEN | 9-70 | | |
| | | | | | | | | | | | |
| 511 | 437 | Cu. Yd. | Class C concrete superstructure | | | 437 | | LEN | 9-70 | | |
| 511 | 190 | Cu. Yd. | Class C concrete, pier caps & columns | | 190 | | | LEN | 9-70 | | |
| 511 | 180 | Cu. Yd. | Class C concrete, abutments above footings | 180 | | | | LEN | 9-70 | | |
| 511 | 164 | Cu. Yd | Class C concrete, footings | 93 | 71 | | | LEN | 9-70 | | |
| 512 | 211 | Lin. Ft. | Premolded Sealing strip | 211 | | | | LEN | 9-70 | | |
| | | | | | | | | | | | |
| 513 | 147,250 | Lb | Structural steel | | | 147,250 | | LEN | 9-70 | | |
| 514 | 147,250 | Lb | Field painting of structural steel | | | 147,250 | | | | | |
| | | | | | | | | | | | |
| 516 | 123 | Sq. ft. | 1 in. preformed expansion joint filler | 123 | | | | LEN | 9-70 | | |
| 516 | 170 | Sq. ft. | 1/4 in. preformed expansion joint filler | 170 | | | | LEN | 9-70 | | |
| 516 | 29 | Sq. ft. | 3/4" thick elastomeric bearing pad | | | 29 | | LEN | 9-70 | | |
| 518 | 131 | Cu. Yd | Porous backfill | 131 | | | | LEN | 9-70 | | |
| 518 | 255 | Lin. ft. | 6 in. perforated, helical C.M.P. including specials, 707.01 | 255 | | | | LEN | 9-70 | | |
| 518 | 224 | Lin. ft. | 6 in. non-perforated, helical C.M.P. 707.01 | 224 | | | | LEN | 9-70 | | |
| | | | | | | | | | | | |
| | | | | | | | | | | | |
| 601 | 1175 | Sq. Yd. | Crushed aggregate slope protection | | | | 1175 | LEN | 10-70 | | |
| 808 | 437 | Units | Chemical admixtures for concrete Type A, B or D | | | 437 | | | | | |
| | | | | | | | | | | | |
| | | | | | | | | | | | |
| 503 | Lump | Lump Sum | Cofferdams, cribs, & Sheeting | | | | Lump | | | | |

# GENERAL NOTES

REFERENCE SHALL BE MADE TO THE FOLLOWING:

STANDARD DRAWINGS BR-1-67 revised 1-1-71
SD-1-69 DATED 6-12-69
AS-1-67 REVISED 6-12-69

SUPPLEMENTAL SPECIFICATIONS 808 DATED 1-1-71
836 DATED 1-1-71

DESIGN SPECIFICATIONS: THIS STRUCTURE CONFORMS TO "STANDARD SPECIFICATIONS FOR HIGHWAY BRIDGES" ADOPTED BY THE AMERICAN ASSOCIATION OF STATE HIGHWAY OFFICIALS, 1965, INCLUDING THE OHIO "SUPPLEMENT" TO THESE SPECIFICATIONS.

DESIGN DATA:

DESIGN LOADING - HS 20-44

CONCRETE CLASS C - UNIT STRESS 1200 P.S.I. FOR SUPERSTRUCTURE
- UNIT STRESS 1333 P.S.I. FOR SUBSTRUCTURE

STRUCTURAL STEEL - ASTM A36 - UNIT STRESS 20,000 P.S.I.

REINFORCING STEEL - ASTM A615, A616, OR A617 - UNIT STRESS 20,000 P.S.I. SPIRAL REINFORCEMENT BE PLAIN BARS ASTM A306, A499, A82 or A615.

EMBANKMENT CONSTRUCTION: THE EMBANKMENTS SHALL BE CONSTRUCTED TO THE LEVEL OF THE SUBGRADE FOR A MINIMUM DISTANCE OF 200 FEET BACK OF THE ABUTMENTS. EXCAVATION SHALL THEN BE MADE FOR THE PIERS. AFTER A 60 DAY WAITING PERIOD EXCAVATION MAY PROCEED FOR THE ABUTMENTS.

PILES SHALL BE DRIVEN TO FIRM CONTACT WITH BEDROCK. IF THE LENGTH OF PENETRATION IS APPROXIMATELY EQUAL TO THE DEPTH OF BEDROCK ACCORDING TO THE BRIDGE FOUNDATION INVESTIGATION REPORT, THE FIRM CONTACT SHALL BE CONSIDERED AS ATTAINED WHEN THE CAPACITY ACCORDING TO THE FORMULA IN 507.05 IS NOT LESS THAN THE FOLLOWING VALUE FOR A PILE HAMMER OF THE INDICATED ENERGY RATING:

FOR THE ABUTMENT PILES

50 TONS PER PILE USING A 7000 FT. LB. HAMMER
38 TONS PER PILE USING AN 11000 FT. LB. HAMMER
35 TONS PER PILE USING A 15000 FT. LB. OR GREATER HAMMER

FOR THE PIER PILES

55 TONS PER PILE USING A 7000 FT. LB. HAMMER
52 TONS PER PILE USING AN 11000 FT. LB. HAMMER
48 TONS PER PILE USING A 15000 FT. LB. OR GREATER HAMMER

IF THE ENERGY RATING OF THE HAMMER IS BETWEEN THE RATINGS AS SHOWN ABOVE, THE REQUIRED FORMULA CAPACITY SHALL BE DETERMINED BY INTERPOLATION. THE DESIGN LOAD IS 35 TONS PER PILE FOR THE ABUTMENT PILES AND 40 TONS PER PILE FOR THE PIER PILES.

MAINTENANCE OF TRAFFIC: TWO LANES OF TRAFFIC WITH A MINIMUM HORIZONTAL WIDTH OF 22'-0" AND A MINIMUM VERTICAL CLEARANCE OF 12'-9" SHALL BE MAINTAINED ON C.R. 77 AT ALL TIMES.

WELDS ON NON-STRESS CARRYING MEMBERS ARE SHOWN THUS:

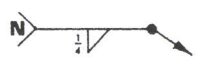


AUBLE-MITCHELL-BURGESS & ASSOC. ENGINEERS AND ARCHITECTS CINCINNATI, OHIO 2/15

ESTIMATED QUANTITIES & GENERAL NOTES

BRIDGE NO. MEG.-7-0762 L/R
S.R. 7 OVER CO. ROAD NO. 77

MEIGS COUNTY STA. 401 + 54.41 TO STA. 402 + 73.56

| Designed | Drawn | Traced | Checked | Reviewed | Date | Revised |
|---|---|---|---|---|---|---|
| | | | | LEN | 10-70 | |

MICROFILMED
DEC 22 1986

| FED. RD. DIVISION | STATE | PROJECT | |
|---|---|---|---|
| 2 | OHIO | | |

408/467

MEG-7-6.15

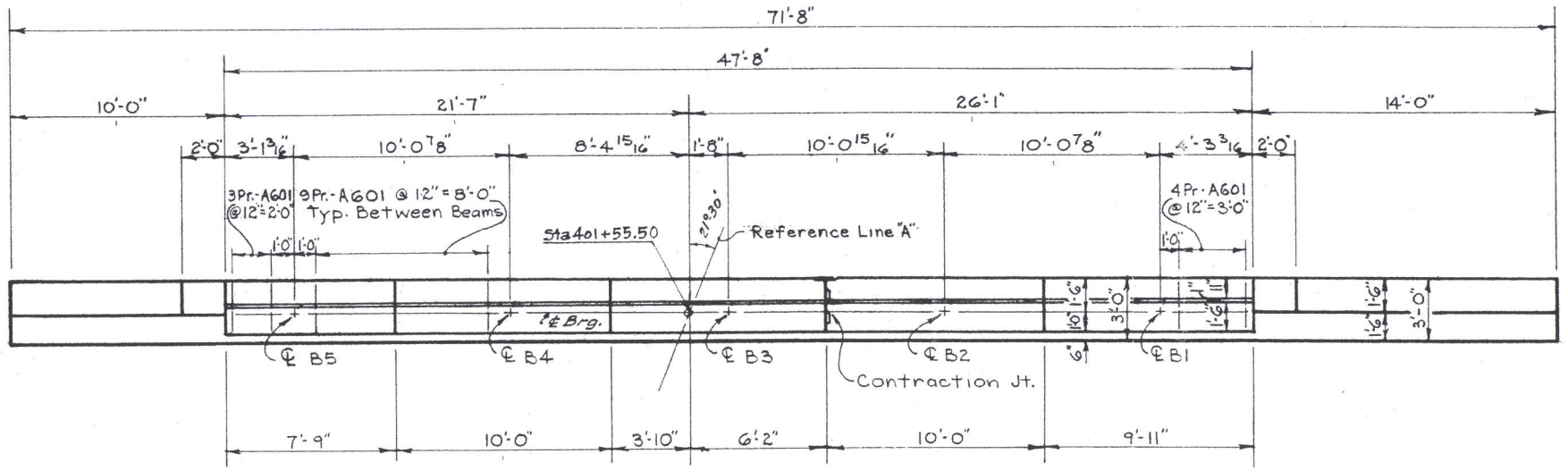


PLAN

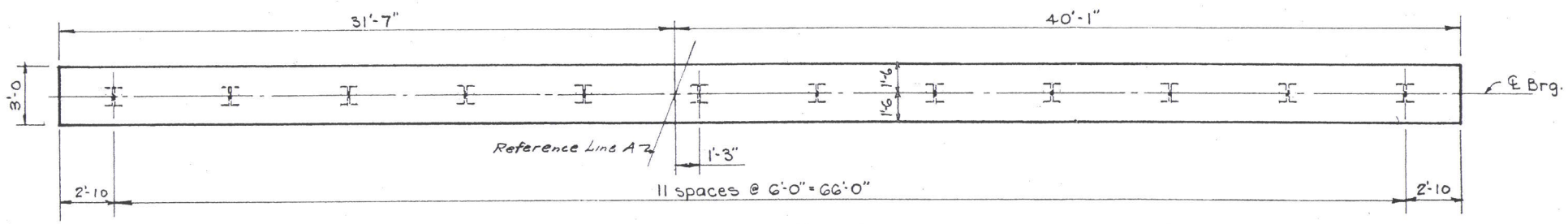


FOOTING PLAN

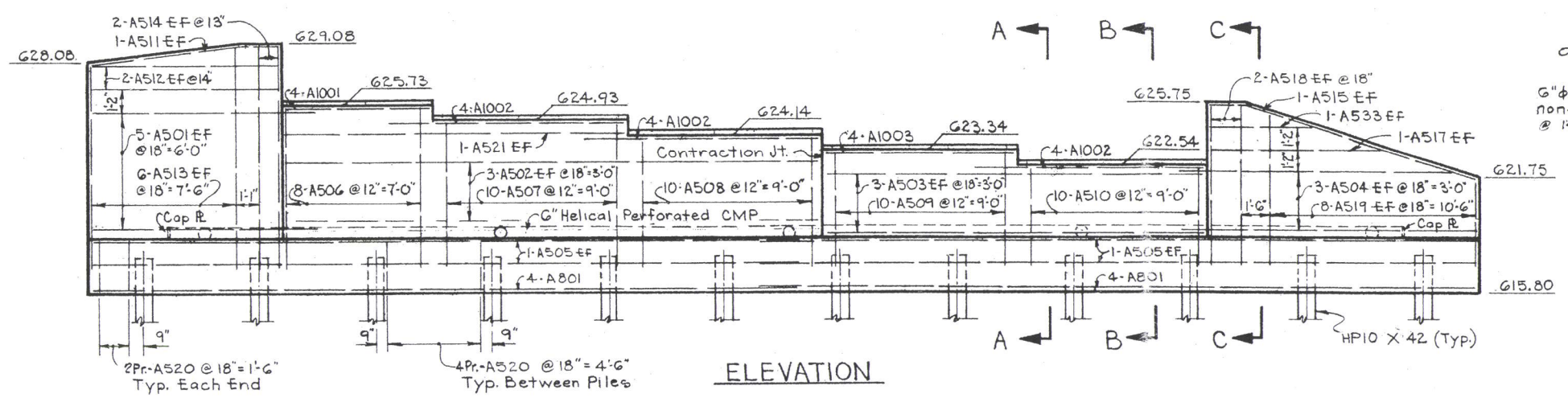


ELEVATION

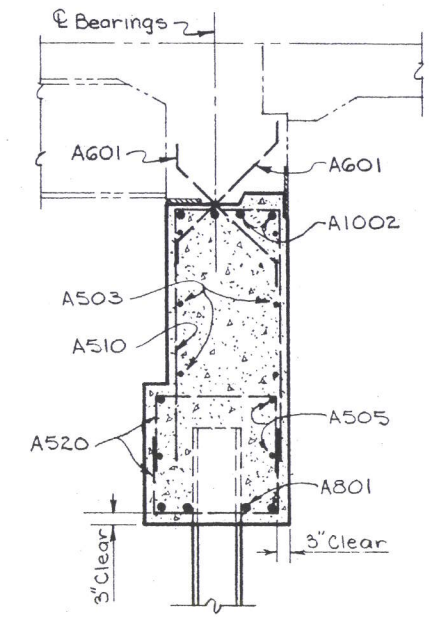


SECTION B-B

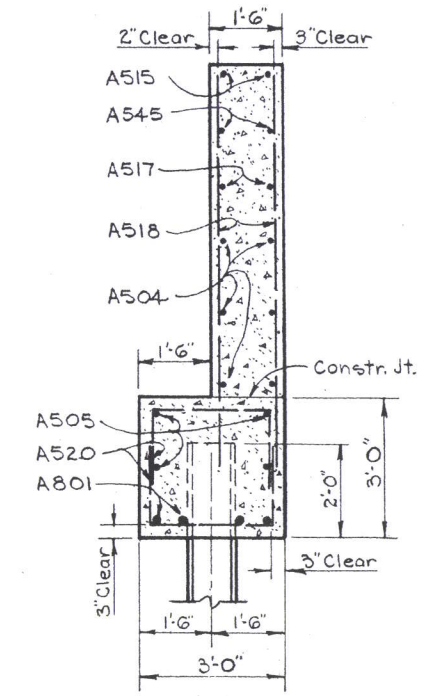


SECTION C-C

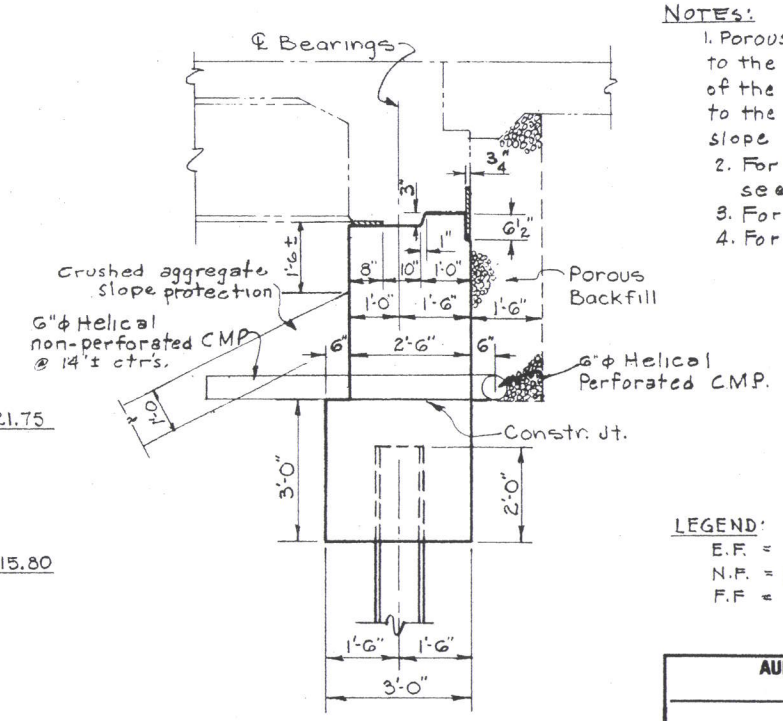


SECTION A-A

NOTES:

1. Porous backfill shall extend upward to the subgrade and to the surface of the earth shoulders, and outward to the surface of the embankment slope
2. For contraction joint detail see Sh. 4
3. For Reference Line Layout see Sh. 1
4. For Reinforcing Steel List see Sh. 14

LEGEND:

E.F. = Each Face
N.F. = Near Face
F.F. = Far Face

AUBLE-MITCHELL-BURGESS & ASSOC. 3/15
ENGINEERS AND ARCHITECTS
CINCINNATI, OHIO

ABUTMENT 1
LEFT BRIDGE

BRIDGE NO. MEG.-7-0762 L/R
S.R. 7 OVER CO. ROAD NO. 77

MEIGS COUNTY

STA. 401 + 54.41 TO
STA. 402 + 73.56

| Designed | Drawn | Traced | Checked | Reviewed | Date | Revised |
|---|---|---|---|---|---|---|
| RBK | RBK | | ERB | LEN | 10-70 | |

MICROFILMED
DEC 22 1986

| FED. RD DIVISION | STATE | PROJECT | |
|---|---|---|---|
| 2 | OHIO | | |

409/467

MEG-7-6.15

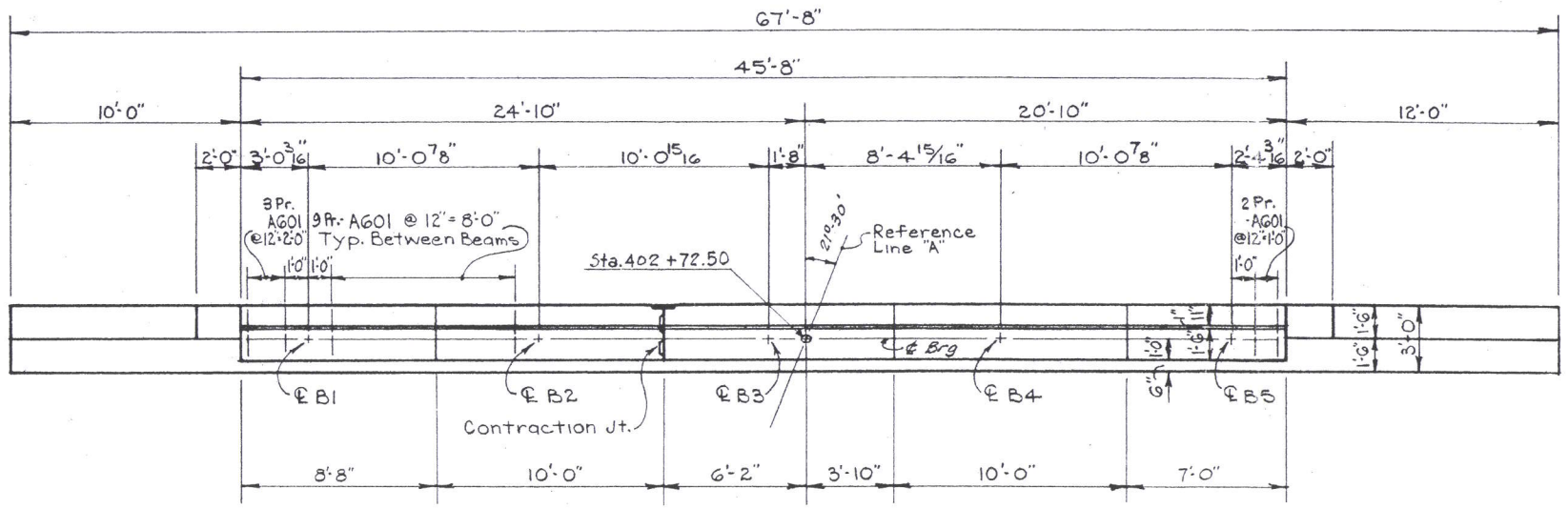


PLAN

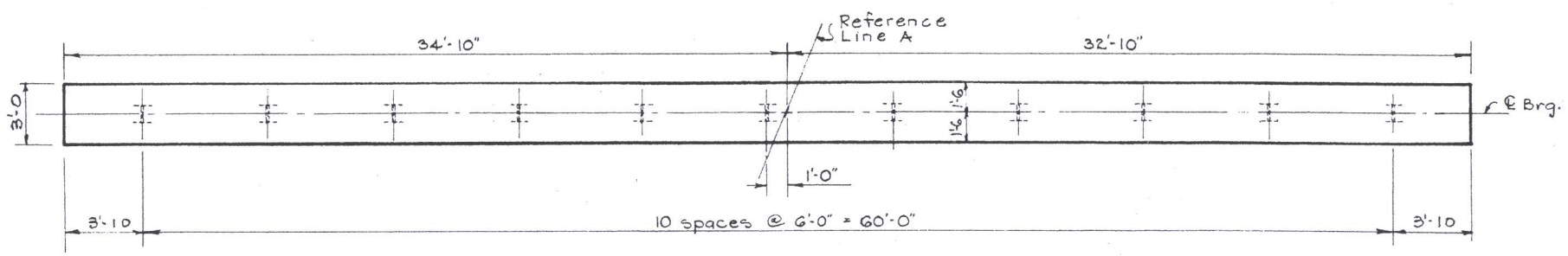


FOOTING PLAN

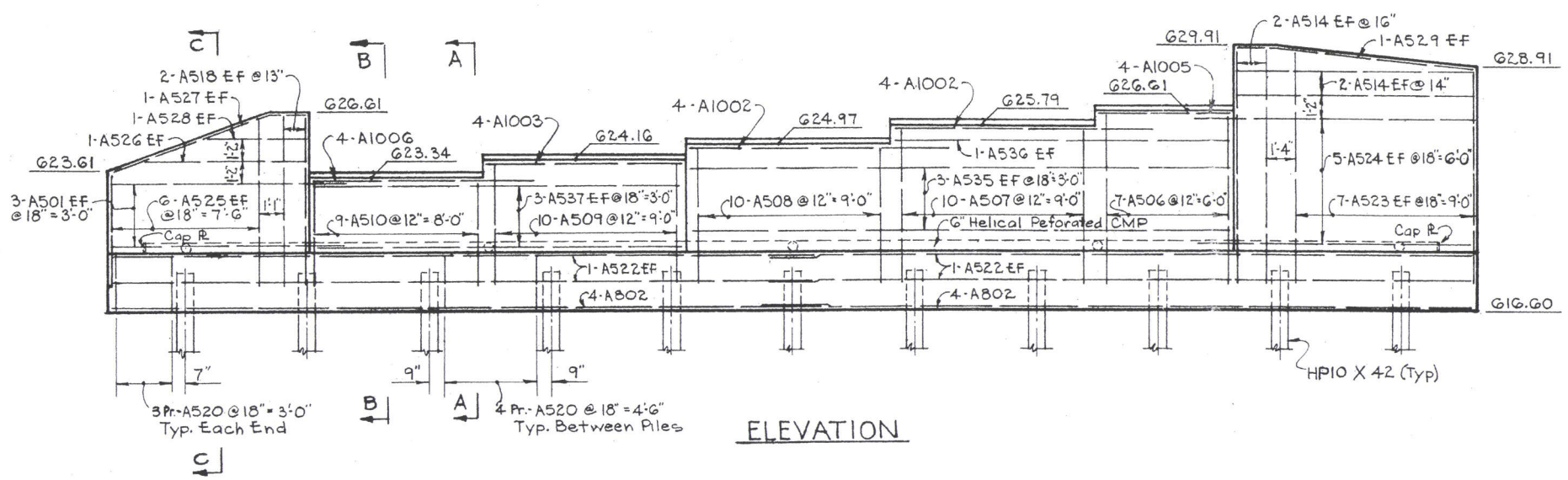


ELEVATION

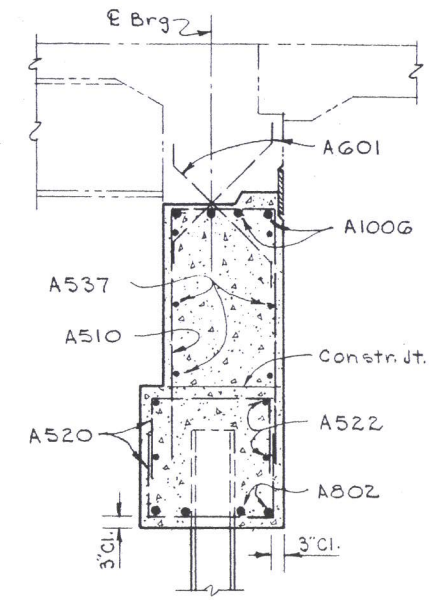


SECTION B-B

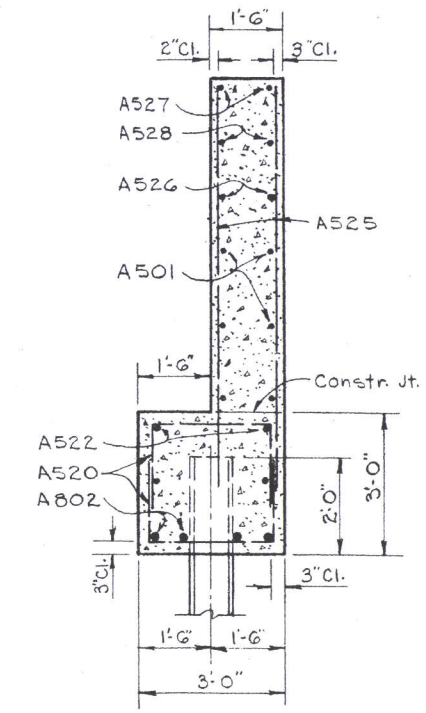


SECTION C-C

Waterproofing: 12"x1/2" Premolded Sealing Strip in 13"x34" recess shall extend from the top of the footing to the bottom of the premolded strip shown in Section A-A

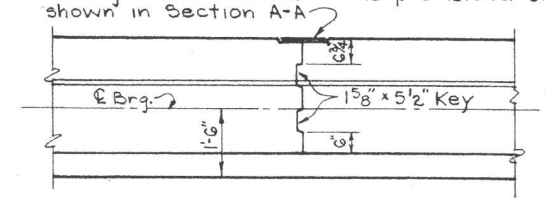


CONTRACTION JOINT DETAIL

NOTES:

1. Porous Backfill shall extend upward to the subgrade and to the surface of the earth shoulders, and outward to the surface of the embankment slope.
2. For Section A-A see Sh. 3
3. For Reference Line Layout see Sh. 1
4. For Reinforcing Steel List see Sh. 14

LEGEND:

E.F. = Each Face
N.F. = Near Face
F.F. = Far Face

AUBLE-MITCHELL-BURGESS & ASSOC. ENGINEERS AND ARCHITECTS CINCINNATI, OHIO | 4/15

ABUTMENT 2
LEFT BRIDGE

BRIDGE NO. MEG.-7-0762 L/R
S.R. 7 OVER CO. ROAD NO. 77

MEIGS COUNTY

STA. 401 + 54.41 TO STA. 402 + 73.56

| Designed | Drawn | Traced | Checked | Reviewed | Date | Revised |
|---|---|---|---|---|---|---|
| RBK | REK | | ERB | LEN | 10-70 | |

MICROFILMED
DEC 22 1986

| FED. RD. DIVISION | STATE | PROJECT | |
|---|---|---|---|
| 2 | OHIO | | |

410/467

MEG-7-6.15

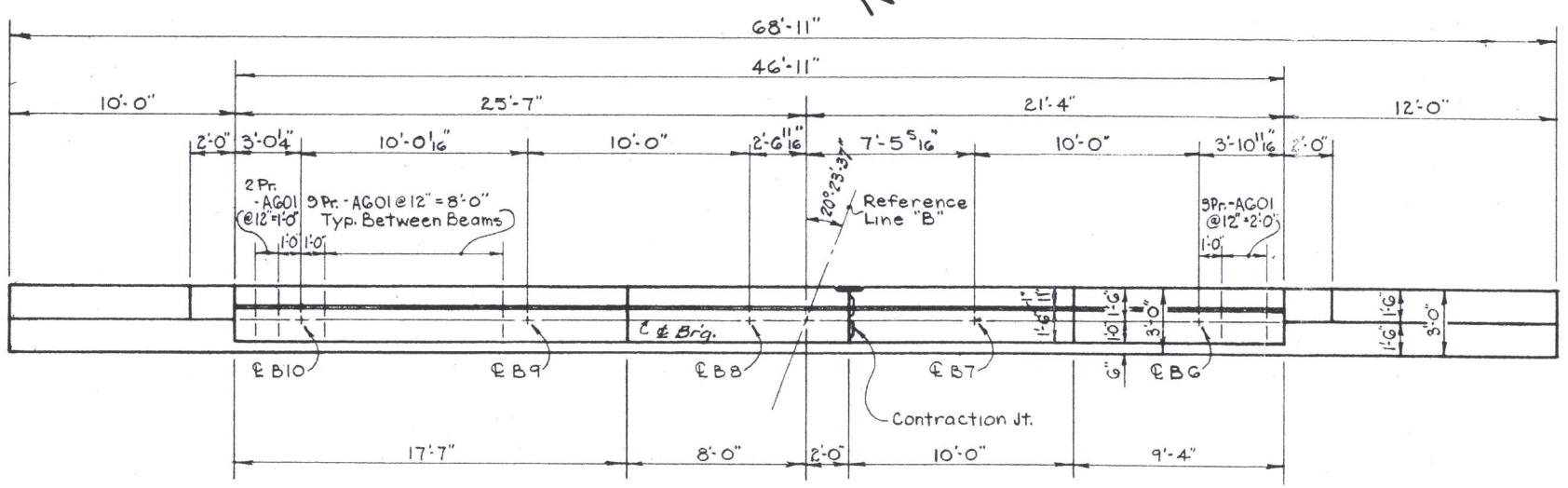


PLAN

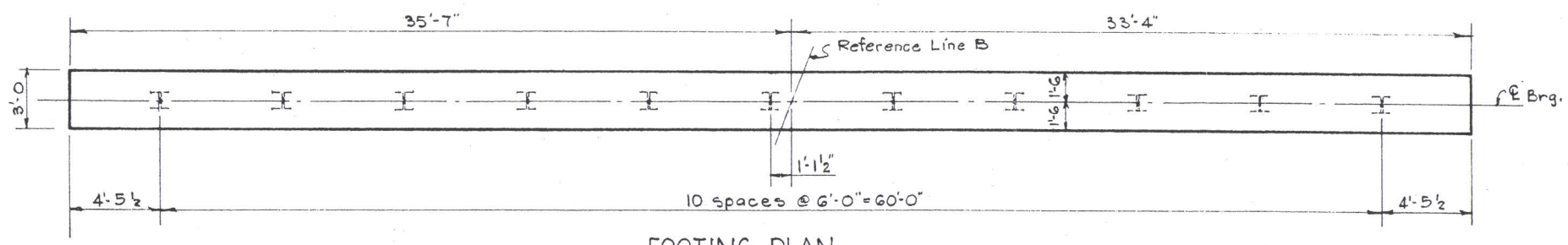


FOOTING PLAN

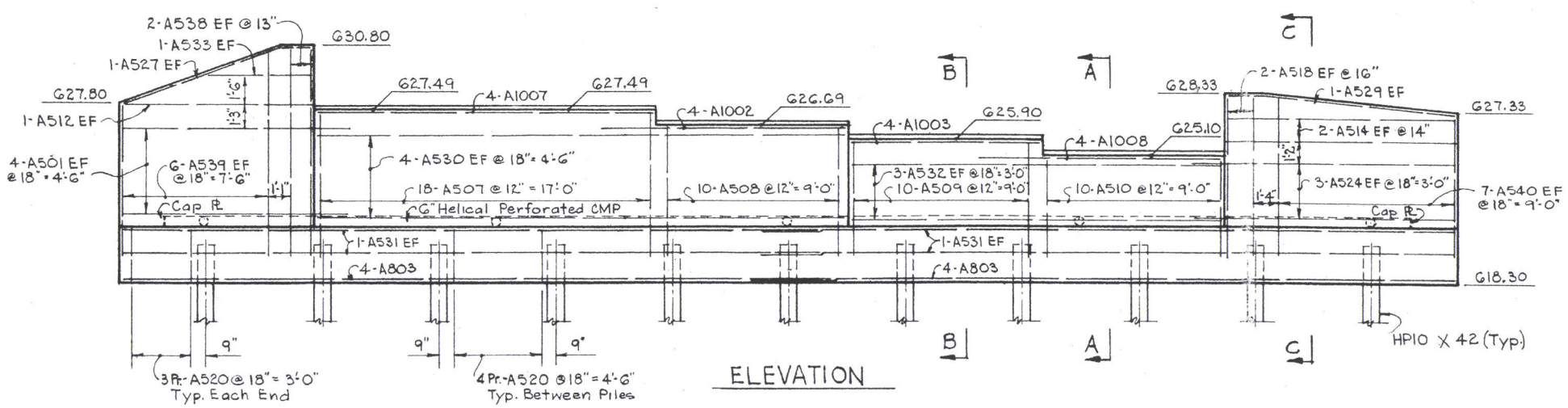


ELEVATION

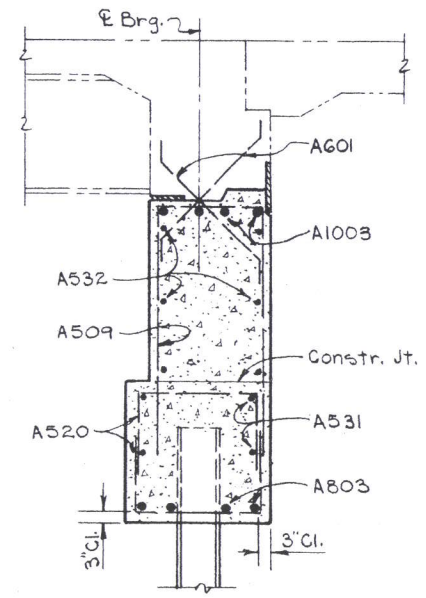


SECTION B-B

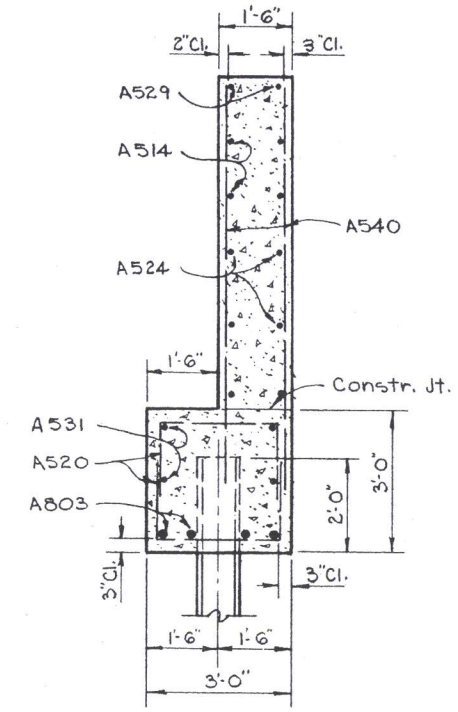


SECTION C-C

Notes:

1. Porous Backfill shall extend upward to the subgrade and to the surface of the earth shoulders, and outward to the surface of the embankment slope
2. For Section A-A see Sh. 3
3. For Contraction Joint Detail see Sh. 4
4. For Reference Line Layout see Sh. 1
5. For Reinforcing Steel List see Sh. 14

LEGEND:
E.F. = Each Face
N.F. = Near Face
F.F. = Far Face

AUBLE-MITCHELL-BURGESS & ASSOC. 5/15
ENGINEERS AND ARCHITECTS
CINCINNATI, OHIO

ABUTMENT 1
RIGHT BRIDGE
BRIDGE NO. MEG.-7-0762 L/R
S.R. 7 OVER CO. ROAD NO. 77
MEIGS COUNTY
STA. 401 + 54.41 TO
STA. 402 + 73.56

| Designed | Drawn | Traced | Checked | Reviewed | Date | Revised |
|---|---|---|---|---|---|---|
| RBK | FGL | | ERB | LEN | 10-70 | |

MICROFILMED
DEC 22 1986

| FED. RD. DIVISION | STATE | PROJECT | |
|---|---|---|---|
| 2 | OHIO | | |

411/467

MEG-7-6.15

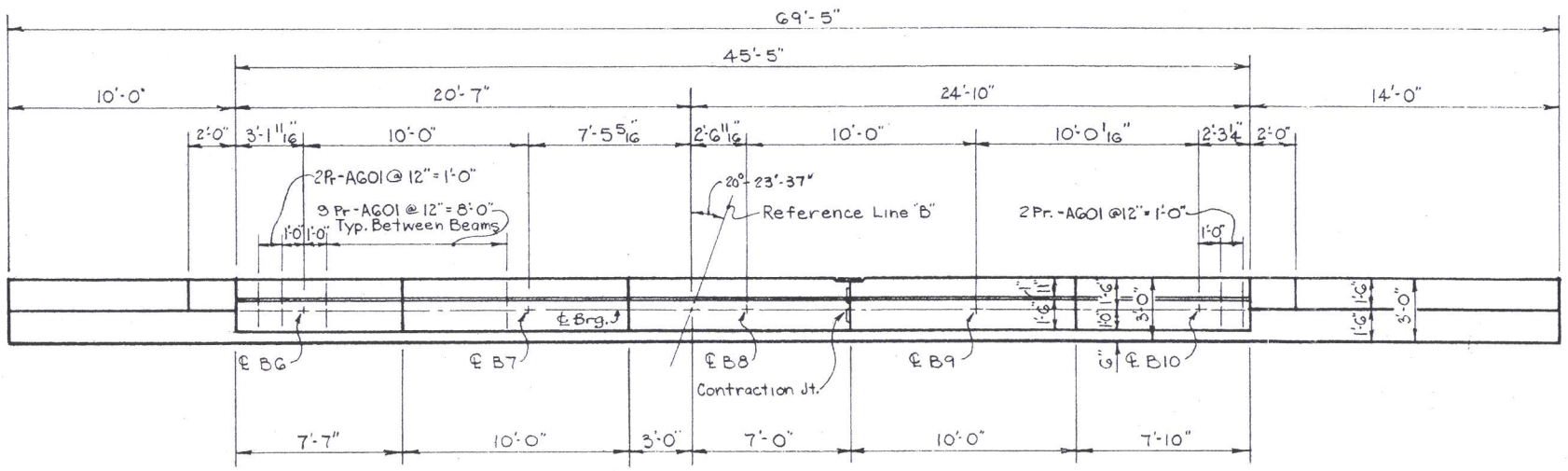


PLAN

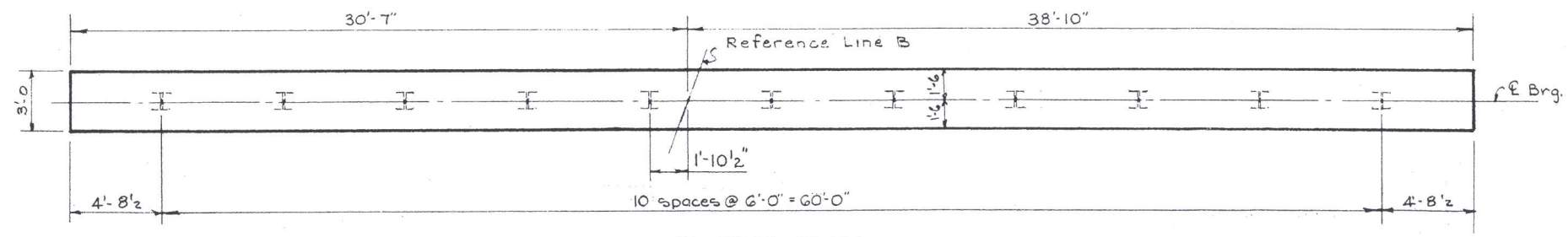


FOOTING PLAN

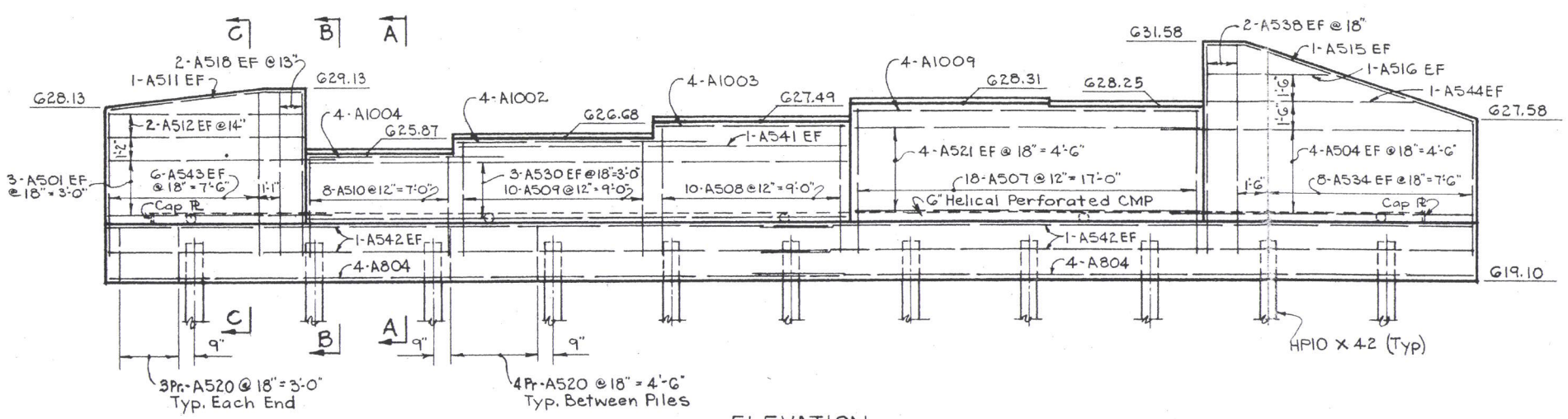


ELEVATION

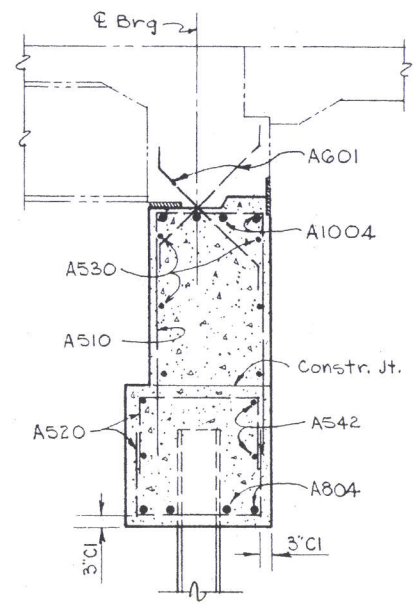


SECTION B-B

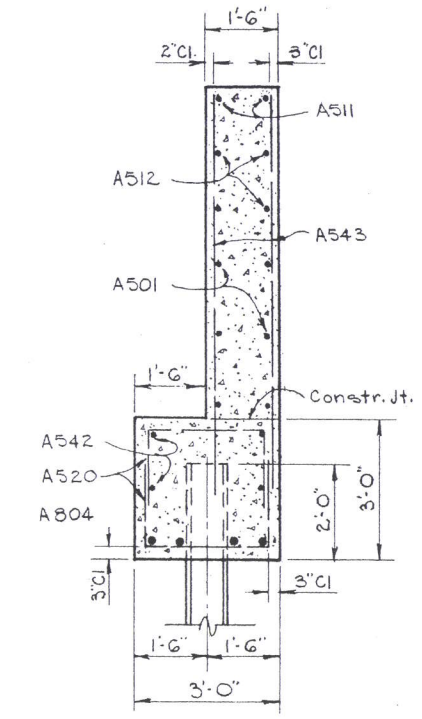


SECTION C-C

NOTES
1. Porous Backfill shall extend upward to the subgrade and to the surface of the earth shoulders, and outward to the surface of the embankment slope.
2. For Section A-A see Sh. 3
3. For Contraction Joint Detail see Sh. 4
4. For Reference Line Layout see Sh. 1
5. For Reinforcing Steel List see Sh. 14

LEGEND:
EF = Each Face
NF = Near Face
FF = Far Face

AUBLE-MITCHELL-BURGESS & ASSOC. 6/15
ENGINEERS AND ARCHITECTS
CINCINNATI, OHIO

ABUTMENT 2
RIGHT BRIDGE
BRIDGE NO. MEG.-7-0762 L/R
S.R. 7 OVER CO. ROAD NO. 77
MEIGS COUNTY
STA. 401 + 54.41 TO
STA. 402 + 73.56

| Designed | Drawn | Traced | Checked | Reviewed | Date | Revised |
|---|---|---|---|---|---|---|
| RBK | RBK | | E.R.B. | LEN | 10-70 | |

MICROFILMED
DEC 22 1986

| STATE | PROJECT |
|---|---|
| OHIO | |

2

412 / 467

MEG-7-G.15

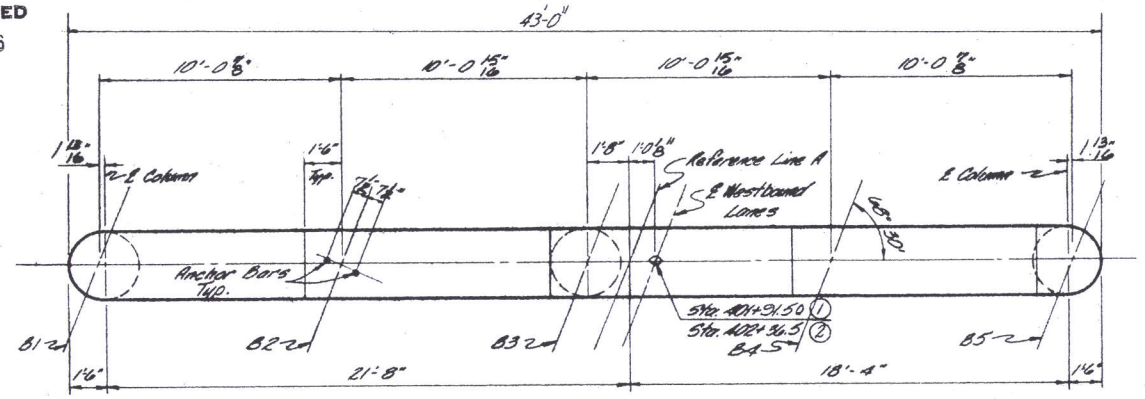


PLAN PIERS 1L & 2L

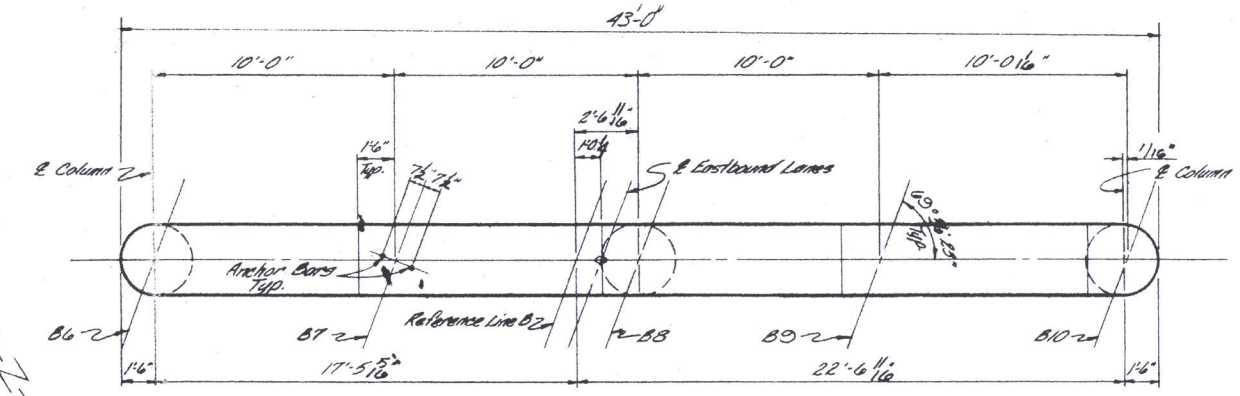


PLAN PIERS 1R & 2R

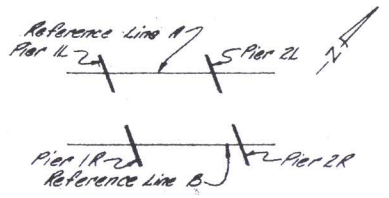


KEY PLAN

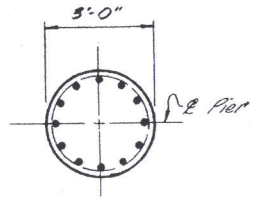


SECTION A-A
TYPICAL COLUMN

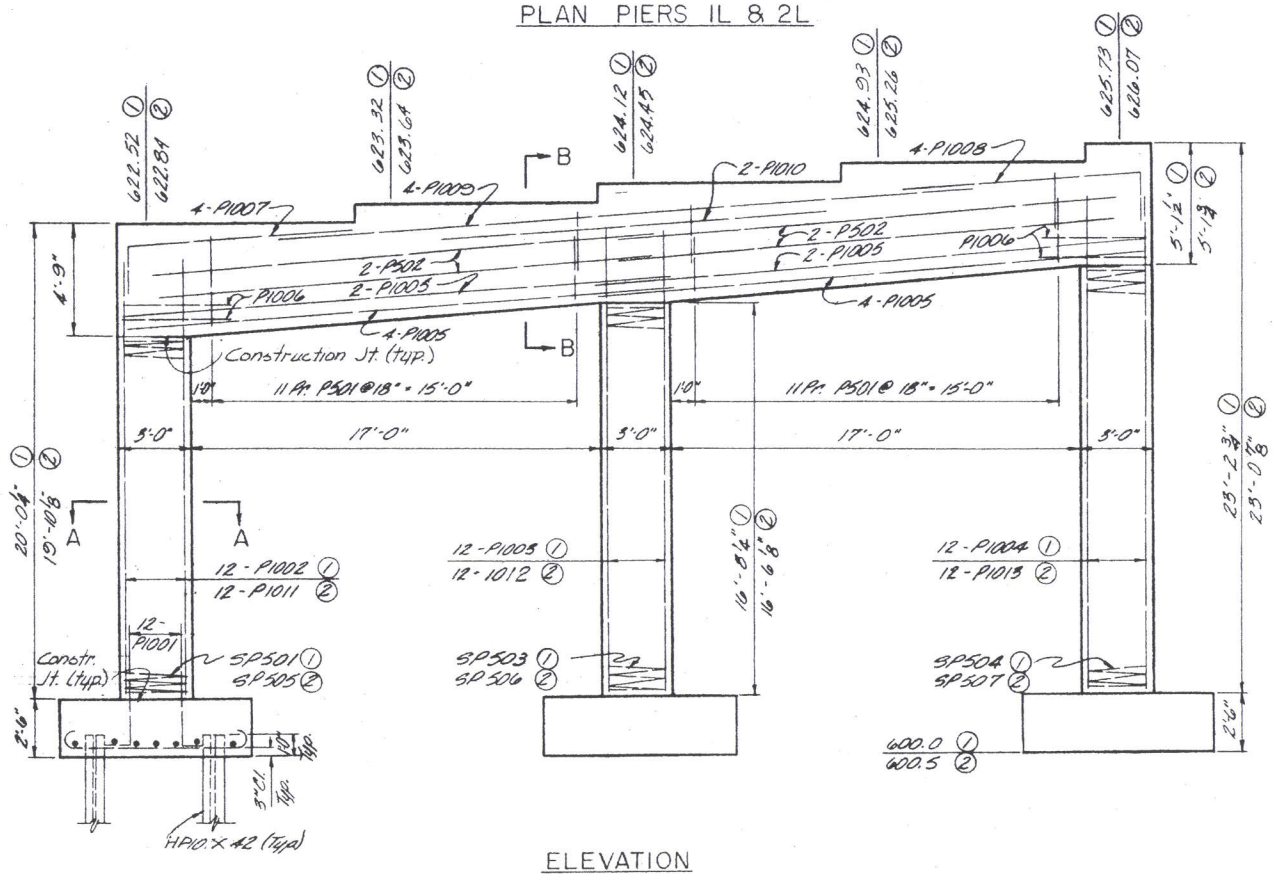


ELEVATION

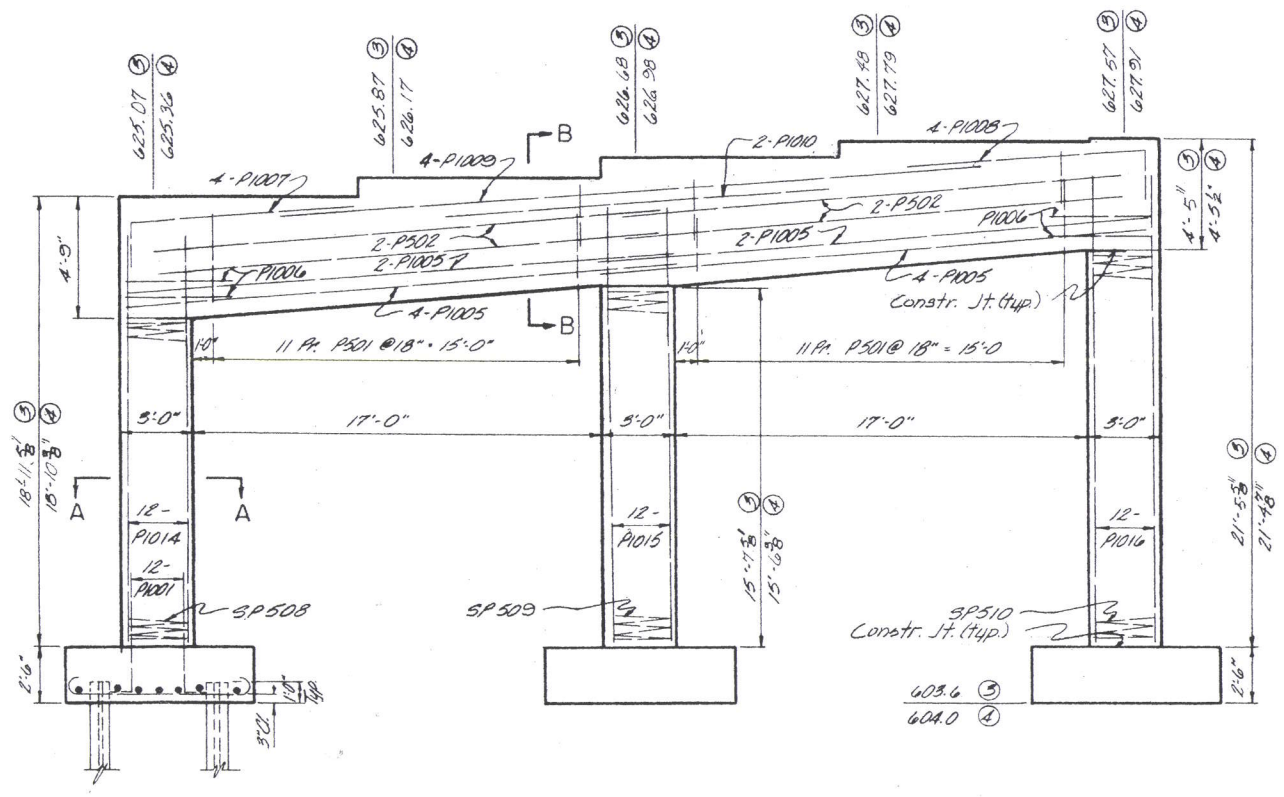


ELEVATION

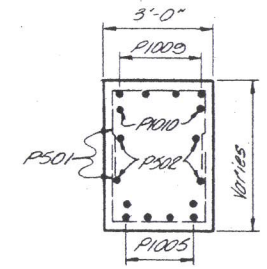


SECTION B-B

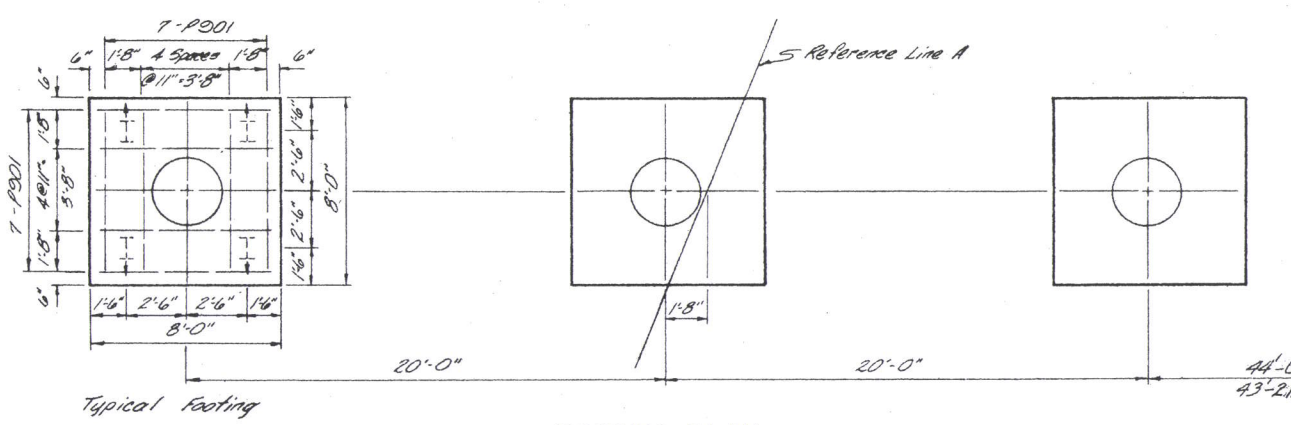


FOOTING PLAN

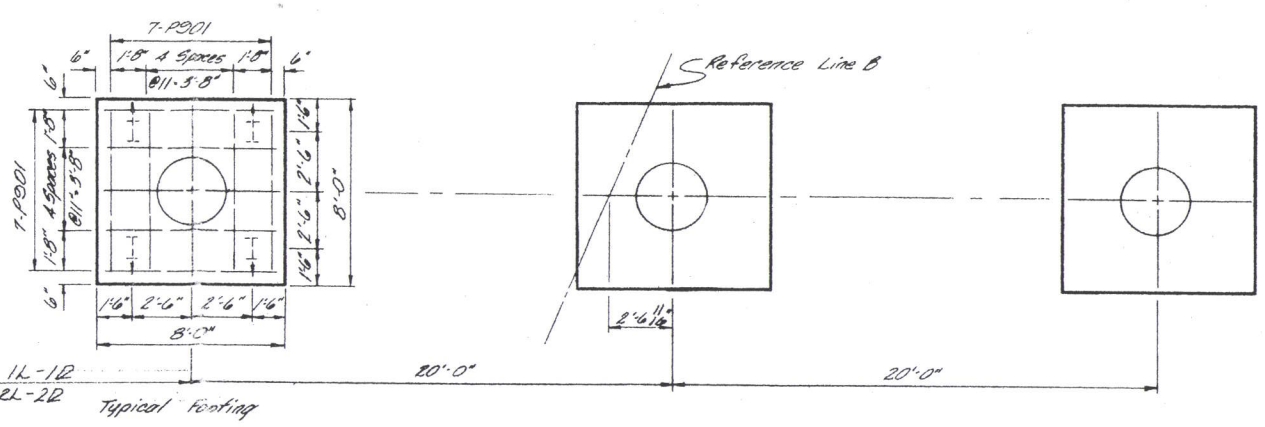


FOOTING PLAN

NOTES:

1. Special care shall be taken in placing reinforcing steel in the vicinity of the bridge seat so as to avoid interference with the drilling of Anchor Bar holes.
2. For Reinforcing Steel List, see Sheet 14.
3. For Reference Line Layout, see Sheet 1.

LEGEND

- (1) Pier 1L
- (2) Pier 2L
- (3) Pier 1R
- (4) Pier 2R
- Indicates piles battered 1:4 in direction shown.

AUBLE-MITCHELL-BURGESS & ASSOC.
ENGINEERS AND ARCHITECTS
CINCINNATI, OHIO

7 / 15

# PIERS

BRIDGE NO. MEG.-7-0762 L/R
S.R. 7 OVER CO. ROAD NO. 77
MEIGS COUNTY
STA. 401 + 54.41 TO
STA. 402 + 73.56

| Designed | Drawn | Traced | Checked | Reviewed | Date | Revised |
|---|---|---|---|---|---|---|
| ERB | DAC | | ERB | LEN | 10-70 | |

MICROFILMED
DEC 22 1986

| FED. RD. DIVISION | STATE | PROJECT | |
|---|---|---|---|
| 2 | OHIO | | |

MEG-7-6.15



NOTES:
1. Work Points are given at top of beam (WP)
2. Working Lines are straight lines between indicated Work Points.
3. The Base Line is a horizontal line originating at WP4.
4. Tabulated Values in the Deflection & Camber Table shall be measured from the Working Line.

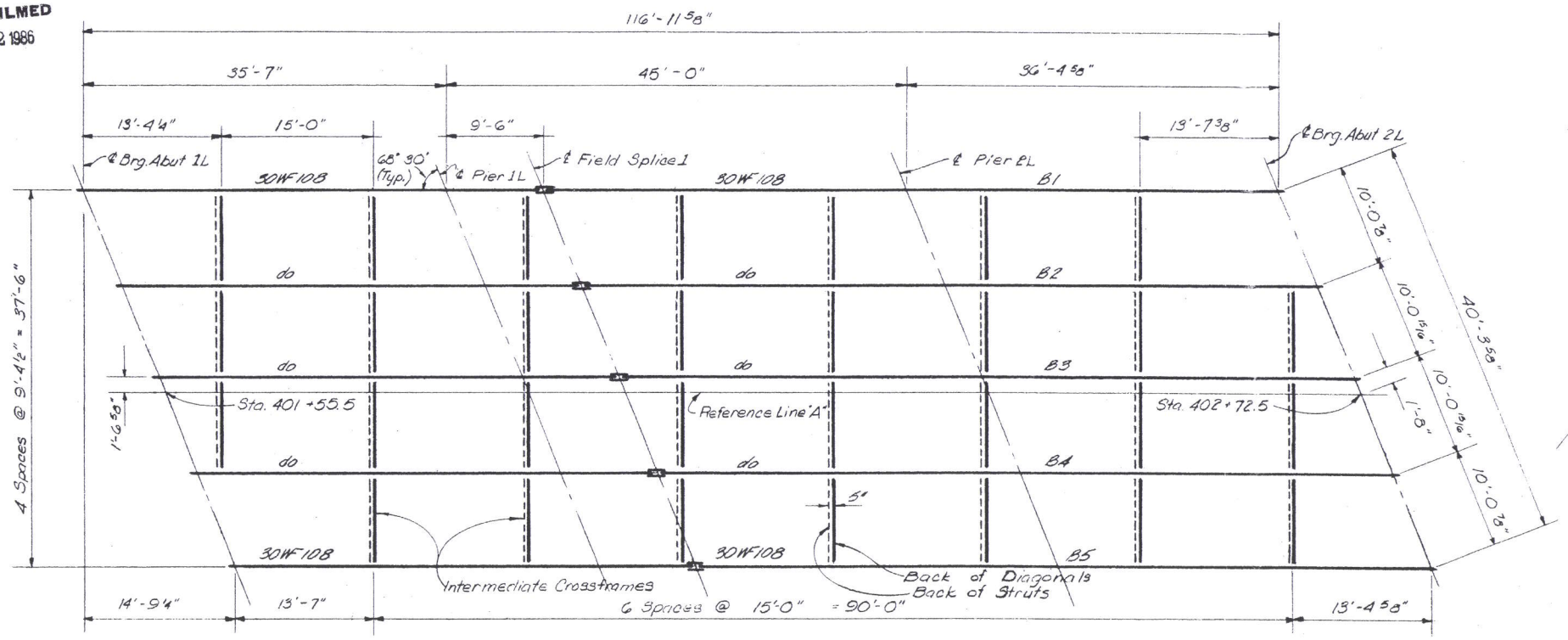


PLAN

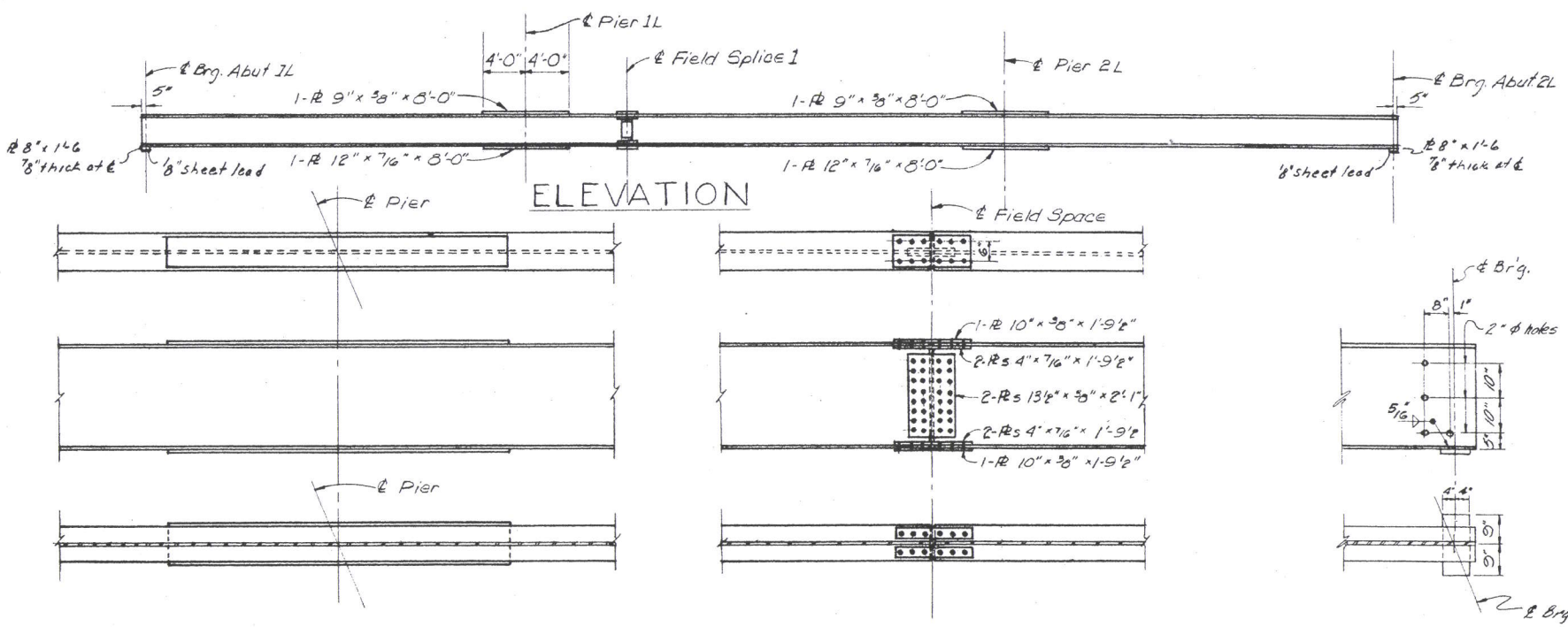


* Theoretical extension of roadway slab when ℄ Beam is outside gutter line.

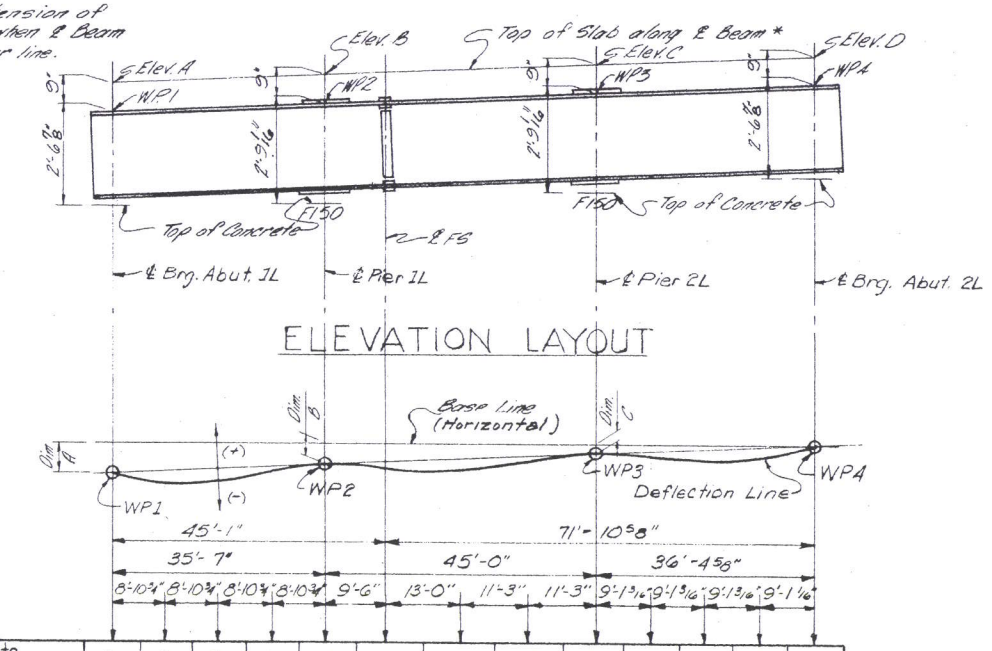


| | | | | | | | | | | | | | |
|---|---|---|---|---|---|---|---|---|---|---|---|---|---|
| Deflection due to Weight of Steel | 0 | 0 | 0 | 0 | 0 | 0 | 0 | 0 | 0 | 0 | 0 | 0 | 0 |
| Deflection due to remaining dead load | 0 | -1/8 | -1/8 | -1/16 | 0 | -1/16 | -1/8 | -1/16 | 0 | -1/16 | -1/8 | -1/8 | 0 |
| Adjustment required for Horizontal Curve | 0 | -1/16 | -1/8 | -1/16 | 0 | -1/8 | -3/16 | -1/8 | 0 | -1/16 | -1/8 | -1/16 | 0 |
| Required Shop Camber | 0 | +1/16 | 0 | 0 | 0 | -1/16 | -1/16 | -1/16 | 0 | 0 | 0 | +1/16 | 0 |

DEFLECTION & CAMBER

TABLE OF ELEVATIONS & DIMENSIONS

| BEAM | ELEV. A | ELEV. B | ELEV. C | ELEV. D | DIM. A | DIM. B | DIM. C |
|---|---|---|---|---|---|---|---|
| B1 | 625.865 | 626.023 | 626.351 | 626.665 | 9 7/8" | 7 11/16" | 3 7/8" |
| B2 | 626.661 | 626.826 | 627.140 | 627.481 | 9 13/16" | 7 7/8" | 4 1/16" |
| B3 | 627.458 | 627.629 | 627.951 | 628.297 | 10 1/16" | 8" | 4 1/8" |
| B4 | 628.255 | 628.433 | 628.762 | 629.114 | 10 5/16" | 8 3/16" | 4 1/4" |
| B5 | 629.058 | 629.237 | 629.574 | 629.931 | 10 5/16" | 8 1/8" | 4 1/16" |

NOTES:
1. For Crossframe Details & F150 Bearing Plate Detail, see Sheet 9
2. For additional notes see sheet 9
3. For screed elevations see sheet 10

AUBLE-MITCHELL-BURGESS & ASSOC. 8/15
ENGINEERS AND ARCHITECTS
CINCINNATI, OHIO

FRAMING PLAN
LEFT BRIDGE

BRIDGE NO. MEG.-7-0762 L/R
S.R. 7 OVER CO. ROAD NO. 77
MEIGS COUNTY
STA. 401+54.41 TO
STA. 402+28.53

| Designed | Drawn | Traced | Checked | Reviewed | Date | Revised |
|---|---|---|---|---|---|---|
| ERB | DAC | | ERB | LEN | 10-70 | |

MICROFILMED
DEC 22 1986

| FED. RD. DIVISION | STATE | PROJECT | |
|---|---|---|---|
| 2 | OHIO | | |

MEG-7-615

414/467

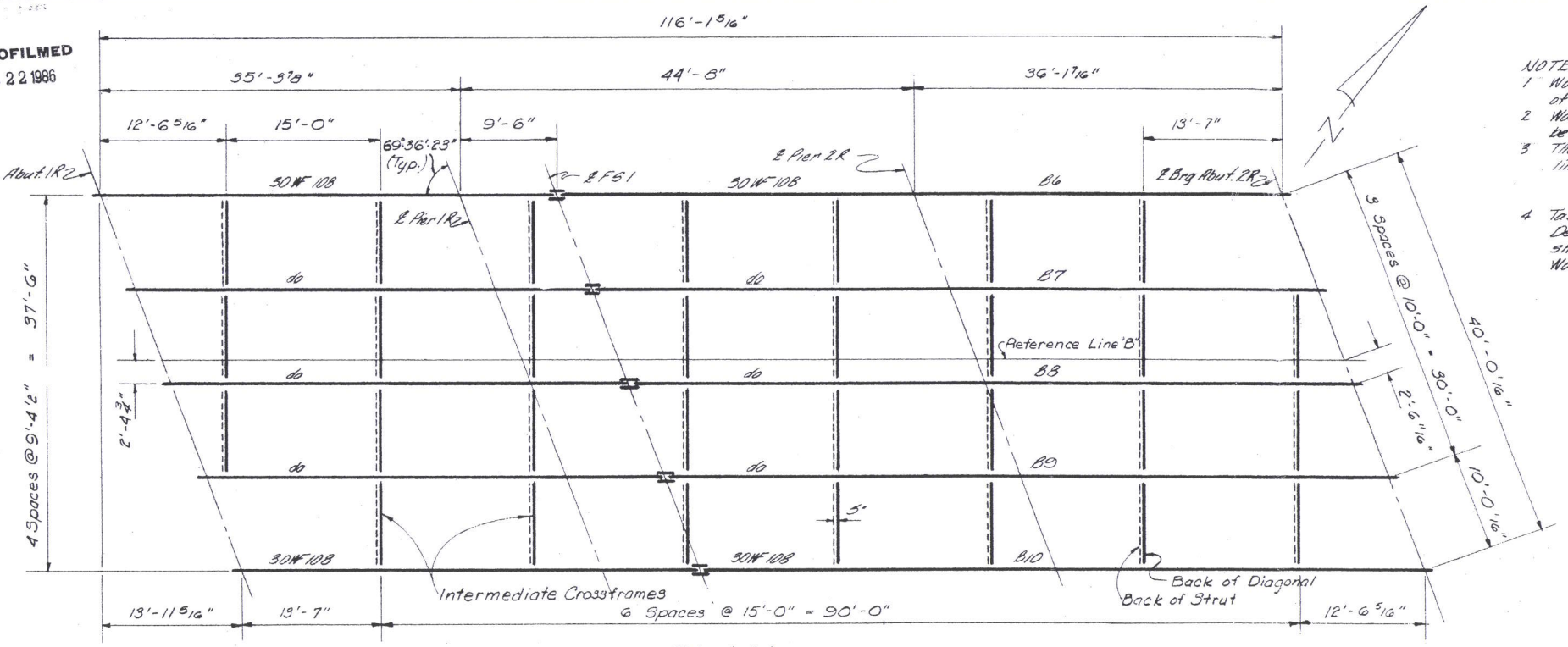


PLAN

NOTES:
1. Work Points are given at top of beam. (WP)
2. Working Lines are straight lines between indicated Work Points.
3. The Base Line is a horizontal line originating at W.P. A.
4. Tabulated Values in the Deflection & Camber Table shall be measured from the Working Lines.

* Theoretical extention of roadway slab when ℄ Beam is outside gutter line.

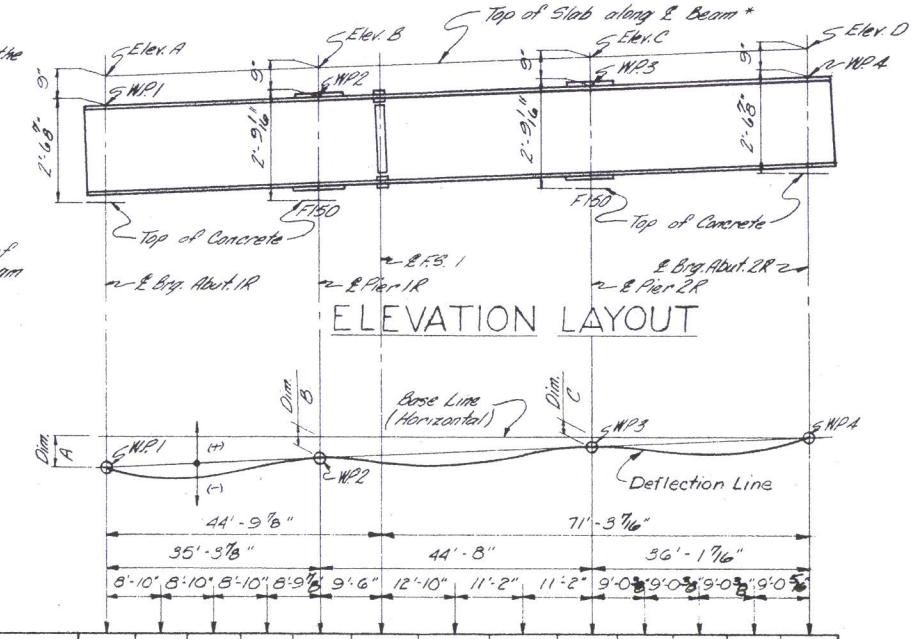


ELEVATION LAYOUT

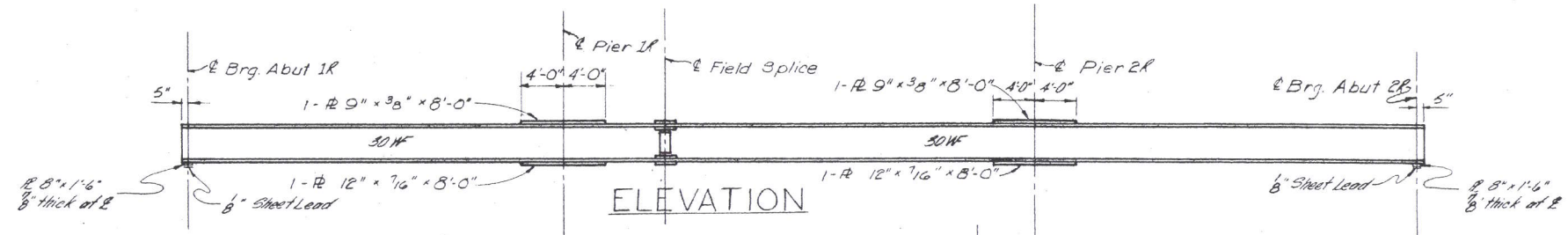


ELEVATION

| | | | | | | | | | | | | | |
|---|---|---|---|---|---|---|---|---|---|---|---|---|---|
| Deflection due to Weight of Steel | | 0 | 0 | 0 | 0 | 0 | 0 | 0 | 0 | 0 | 0 | 0 | 0 | 0 |
| Deflection due to remaining dead load | | 0 | -1/8 | -1/8 | -1/16 | 0 | -1/16 | -1/8 | -1/16 | 0 | -1/16 | -1/8 | -1/8 | 0 |
| Adjustment required for Horizontal Curve | B6-B9 | 0 | -1/16 | -1/8 | -1/16 | 0 | -1/8 | -3/16 | -1/8 | 0 | -1/16 | -1/8 | -1/16 | 0 |
| Required Shop Camber | B6-B9 | 0 | +1/16 | 0 | 0 | 0 | -1/16 | -1/16 | -1/16 | 0 | 0 | 0 | +1/16 | 0 |
| Adjustment required for Horizontal Curve | B10 | 0 | 0 | +1/16 | 0 | 0 | +1/16 | +1/16 | +1/16 | 0 | 0 | +1/16 | 0 | 0 |
| Required Shop Camber | B10 | 0 | +1/8 | +3/16 | +1/16 | 0 | +1/8 | +3/16 | +1/8 | 0 | +1/16 | +3/16 | +1/8 | 0 |

DEFLECTION & CAMBER

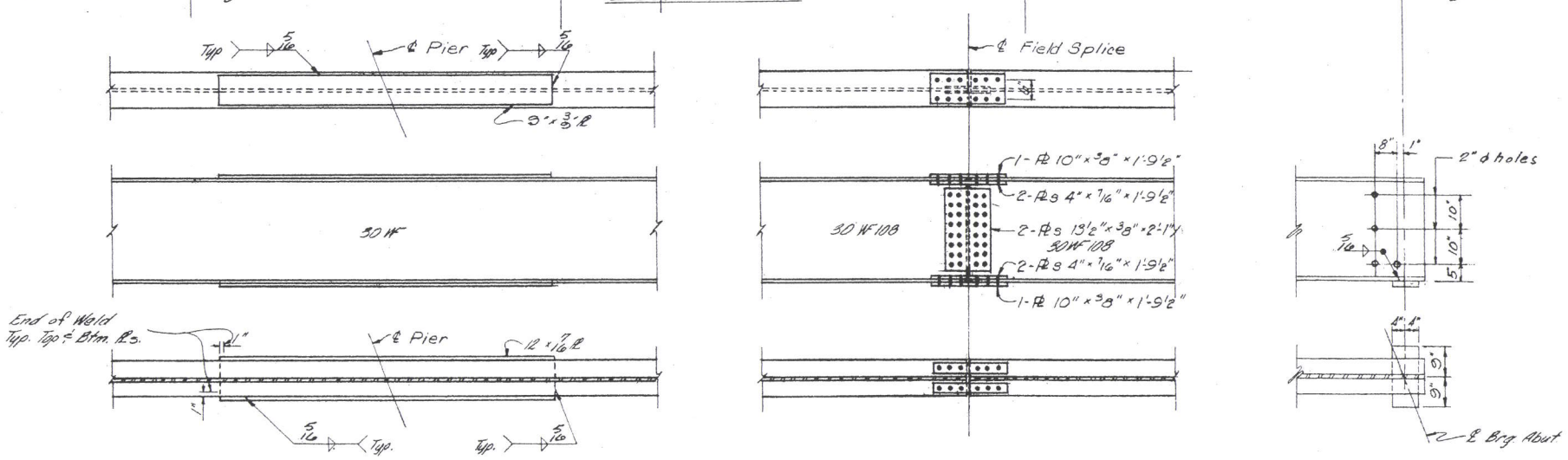


TABLE OF ELEVATIONS & DIMENSIONS

| BEAM | ELEV. A | ELEV. B | ELEV. C | ELEV. D | DIM. A | DIM. B | DIM. C |
|---|---|---|---|---|---|---|---|
| B6 | 628.425 | 628.578 | 628.871 | 629.189 | 9 3/16" | 7 5/16" | 3 1/16" |
| B7 | 629.220 | 629.378 | 629.678 | 630.002 | 9 3/8" | 7 1/2" | 3 3/8" |
| B8 | 630.015 | 630.180 | 630.486 | 630.815 | 9 5/8" | 7 1/2" | 3 9/16" |
| B9 | 630.811 | 630.981 | 631.295 | 631.628 | 9 13/16" | 7 3/4" | 4" |
| B10 | 630.813 | 631.075 | 631.417 | 631.574 | 9 3/16" | 6 1/16" | 2" |

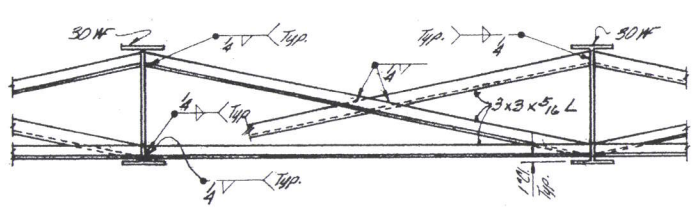


TYPICAL INTERMEDIATE CROSSFRAME

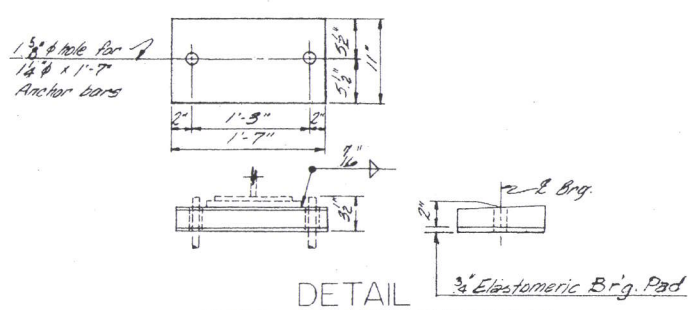


DETAIL F150 PLATE BEARING

NOTES

1. For Screed Elevations, see Sheet 11
2. All centerline bearings, field splice & crossframes are normal to baseline.
3. For additional details of Field Splice, see Std. Dwg. SD-1-69, Sheet 4 of 4.
4. For Field Splice, all holes shall be 1 1/4" ϕ for 1" ϕ High Strength Bolts.
5. For Reference Line layout, see Sheet 1

AUBLE-MITCHELL-BURGESS & ASSOC.
ENGINEERS AND ARCHITECTS
CINCINNATI, OHIO

9/15

FRAMING PLAN
RIGHT BRIDGE

BRIDGE NO. MEG.-7-0762 L/R
S.R. 7 OVER CO. ROAD NO. 77

MEIGS COUNTY

STA. 401 + 54.41 TO
STA. 402 + 73.56

| Designed | Drawn | Traced | Checked | Reviewed | Date | Revised |
|---|---|---|---|---|---|---|
| ERB | DAC | | ERB | LEN | 10-70 | |

MICROFILMED
DEC 22 1986

| FED. RD. DIVISION | STATE | PROJECT | |
|---|---|---|---|
| 2 | OHIO | | |

415/467

MEG-7-6.15

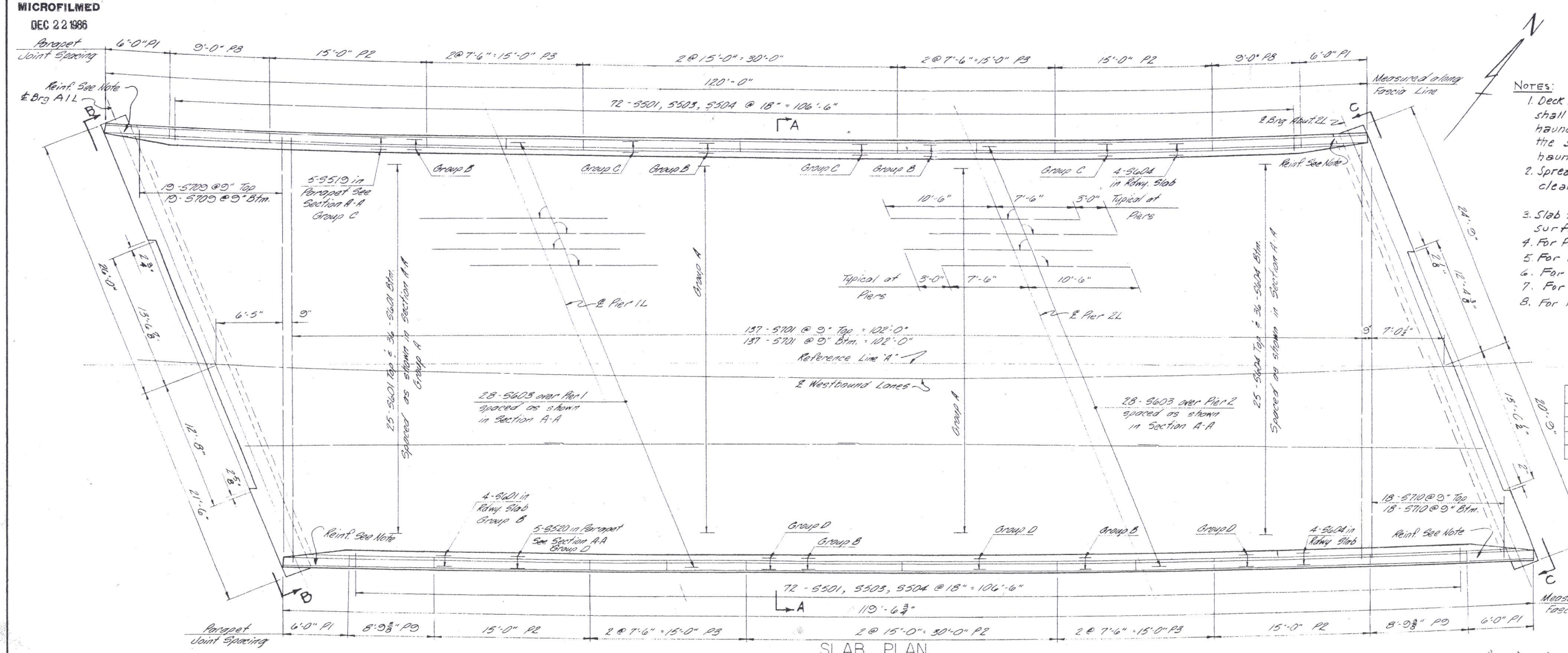


SLAB PLAN

42'-4" Out to Out of Bridge

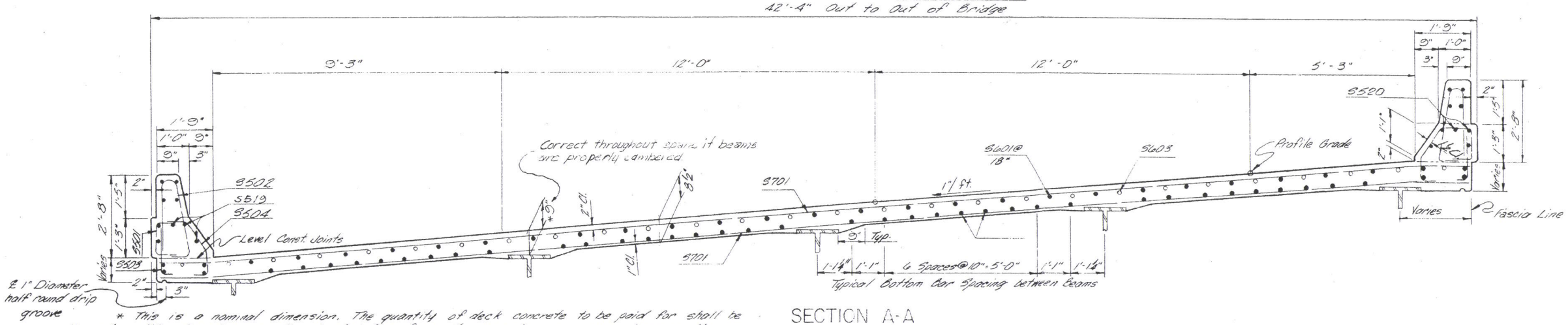


SECTION A-A
TYPICAL SECTION

* This is a nominal dimension. The quantity of deck concrete to be paid for shall be based on this dimension even though deviation from it may be necessary because the top flange of the girder may not have the exact Camber or Conformation required to place it parallel to the finished grade. Deductions shall be made for volume of encased steel plates as per Sec. 511.18 of the Construction and Material Specifications.

| STATION | Profile Grade | Left Curb Line | Right Curb Line |
|---|---|---|---|
| 401+50 | 628.55 | 625.78 | 628.99 |
| +75 | 628.73 | 625.96 | 629.17 |
| 402+00 | 628.91 | 626.14 | 629.35 |
| +25 | 629.09 | 626.32 | 629.53 |
| +50 | 629.27 | 626.50 | 629.71 |
| +75 | 629.45 | 626.68 | 629.89 |
| | | | |
| | | | |

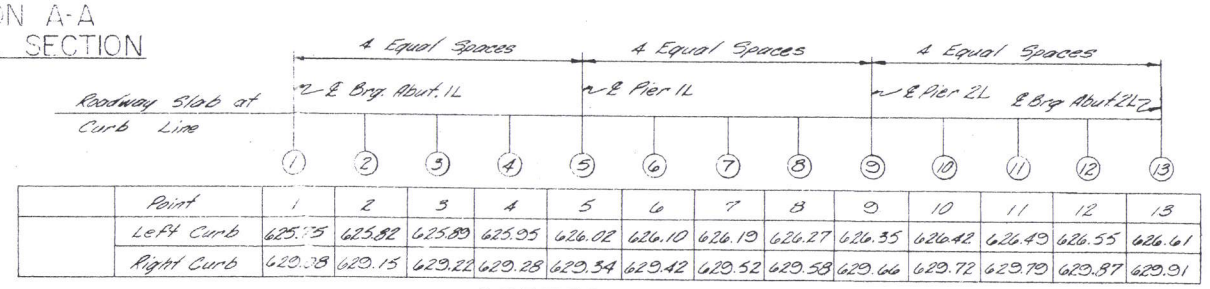


| | Point | 1 | 2 | 3 | 4 | 5 | 6 | 7 | 8 | 9 | 10 | 11 | 12 | 13 |
|---|---|---|---|---|---|---|---|---|---|---|---|---|---|---|
| | Left Curb | 625.78 | 625.82 | 625.89 | 625.95 | 626.02 | 626.10 | 626.19 | 626.27 | 626.35 | 626.42 | 626.49 | 626.55 | 626.61 |
| | Right Curb | 628.98 | 629.15 | 629.22 | 629.28 | 629.34 | 629.42 | 629.52 | 629.58 | 629.66 | 629.72 | 629.79 | 629.87 | 629.91 |

SCREED ELEVATIONS
(Adjusted For Slab Deflections)

Notes:

1. Deck Slab Haunch: A typical haunch width of 9" shall be used for computing quantities. However, the haunch width may vary between 6" & 12" provided that the slope shall not be more than 1:4 for a haunch less than 9" in width.
2. Spread or cut reinforcing steel in slab to clear scuppers
3. Slab thickness includes 1" for monolithic wearing surface
4. For Parapet joint details see Std. Dwg BR-1-67 Sh 1 of 3
5. For details of parapet panels P1 see Sh. 12
6. For Views B-B & C-C see Sh. 12
7. For Reinforcing Steel List see Sh. 14
8. For Reference Line Layout see Sheet. 1

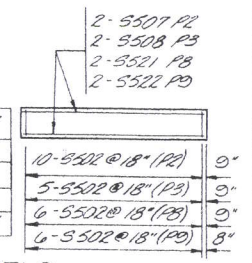


| PANEL | NO. REQ'D | LENGTH |
|---|---|---|
| P2 | 8 | 15'-0" |
| P3 | 8 | 7'-6" |
| P8 | 2 | 9'-0" |
| P9 | 2 | 8'-9⅜" |

PARAPET PANELS

Note: For Panels P1 see Detail, Sheet 12.

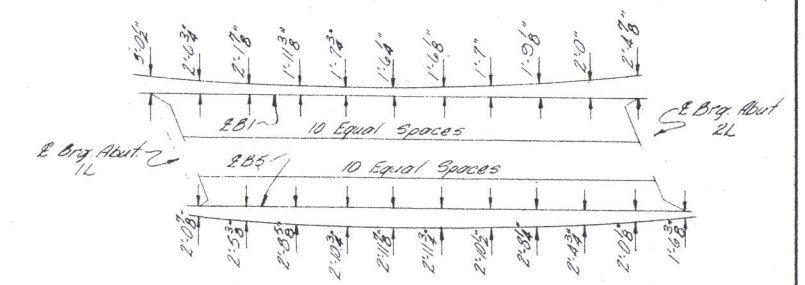


FASCIA OFFSETS

AUBLE-MITCHELL-BURGESS & ASSOC. 10/15
ENGINEERS AND ARCHITECTS
CINCINNATI, OHIO

SUPERSTRUCTURE
ROADWAY SLAB LT. BRIDGE
BRIDGE NO. MEG.-7-0762 L/R
S.R. 7 OVER CO. ROAD NO. 77
MEIGS COUNTY
STA. 401 + 54.41 TO
STA. 402 + 73.56

| Designed | Drawn | Traced | Checked | Reviewed | Date | Revised |
|---|---|---|---|---|---|---|
| ERB | DAC | | ERB | LEN | 10-70 | |

| FED. RD. DIVISION | STATE | PROJECT | |
|---|---|---|---|
| 2 | OHIO | | |

416/467

MEG-7-6.15

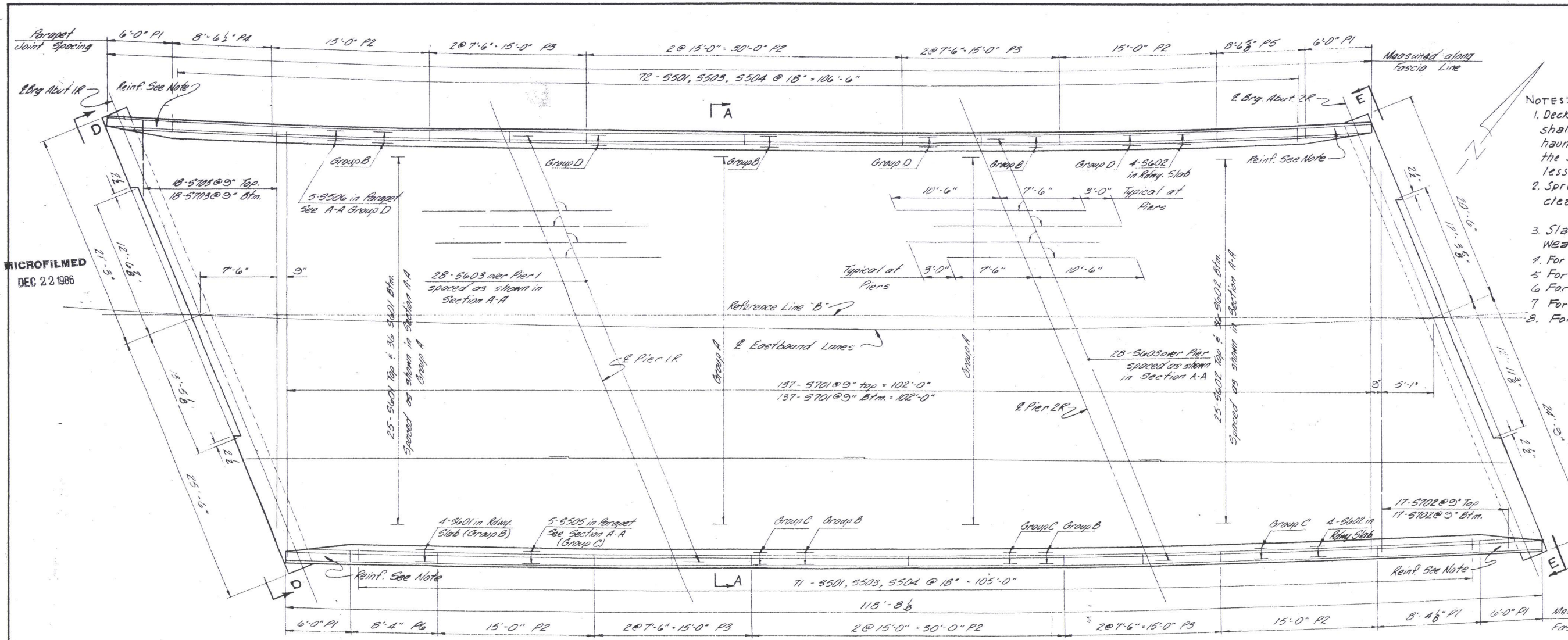


SLAB PLAN

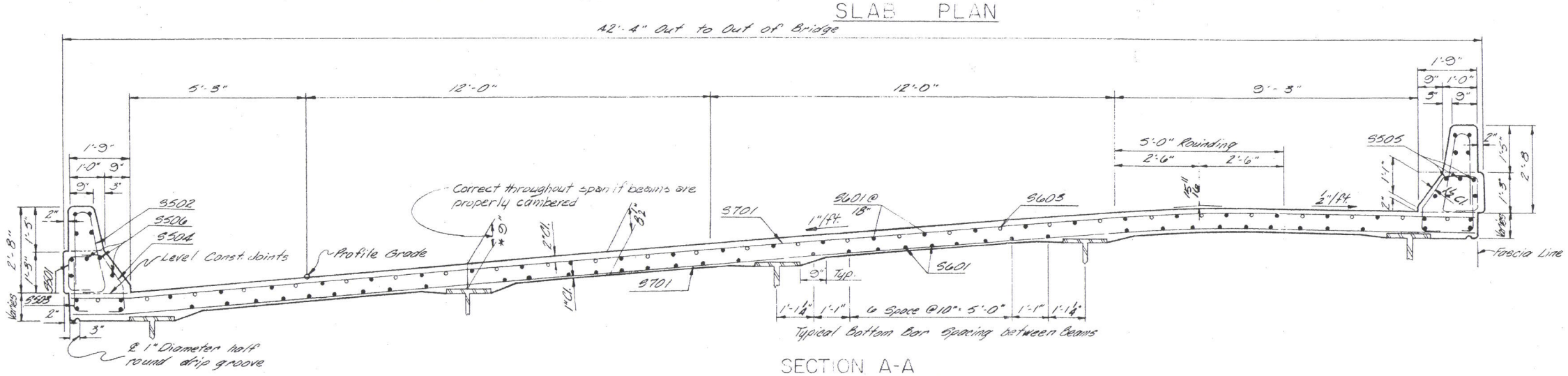


SECTION A-A
TYPICAL SECTION

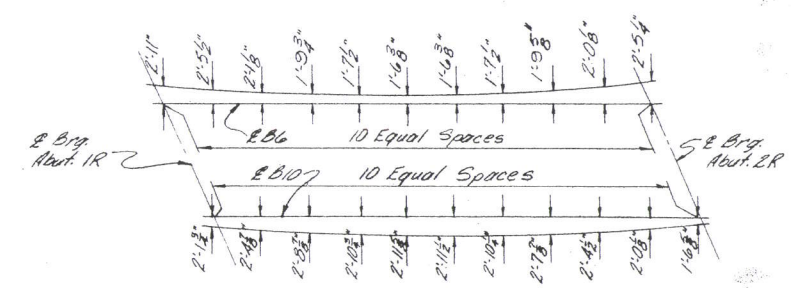


FASCIA OFFSETS

NOTES:

1. Deck Slab Haunch: A typical haunch width of 9" shall be used for computing quantities. However, the haunch width may vary between 6" & 12" provided that the slope shall not be more than 1:4 for a haunch less than 9" in width.
2. Spread or cut reinforcing steel in slab to clear scuppers.
3. Slab thickness includes 1" for monolithic wearing surface.
4. For Parapet joint details see Std. Dwg BR-1-67 Sh 1 of 3
5. For details of parapet panel P1 see Sh. 12
6. For Views D-D & E-E see Sh. 13
7. For Reinforcing Steel List see Sh. 14
8. For Reference Line Layout see Sh. 1

| PANEL | NO. REQ'D | LENGTH |
|---|---|---|
| P2 | 8 | 15'-0" |
| P3 | 8 | 7'-6" |
| P4 | 1 | 8'-6½" |
| P5 | 1 | 8'-6⅝" |
| P6 | 1 | 8'-4" |
| P7 | 1 | 8'-4½" |

2-S507 P2, 2-S508 P3
2-S509 P4, 2-S509 P5
2-S510 P6, 2-S510 P7

| | |
|---|---|
| 10-S502@18" (P2) | 9" |
| 5-S502@18" (P3) | 9" |
| 6-S502@18" (P4) | 6" |
| 6-S502@18" (P5) | 6" |
| 6-S502@18" (P6) | 5" |
| 6-S502@18" (P7) | 5" |

PARAPET PANELS

Note: For Panels P1 see Detail Sheet 12

MICROFILMED
DEC 22 1986

* This is a nominal dimension. The quantity of deck concrete to be paid for shall be based on this dimension even though deviation from it may be necessary because the top flange of the girder may not have the exact Camber or Conformation required to place it parallel to the finished grade. Deductions shall be made for volume of encased steel plates, as per Sec. 511.18 of the Construction and Material Specifications.

| STATION | Profile Grade | Left Curb Line | Right Curb Line |
|---|---|---|---|
| 401+75 | 628.73 | 628.29 | 630.66 |
| 402+00 | 628.91 | 628.47 | 630.84 |
| +25 | 629.09 | 628.65 | 631.02 |
| +50 | 629.27 | 628.83 | 631.20 |
| +75 | 629.45 | 629.01 | 631.38 |
| 403+00 | 629.63 | 629.19 | 631.56 |
| | | | |
| | | | |

4 Equal Spaces — ℄ Brg. Abut 1R
4 Equal Spaces — ℄ Pier 1R
4 Equal Spaces — ℄ Pier 2R — ℄ Brg. Abut 2R

Roadway Slab at Curb Line

| | Point | 1 | 2 | 3 | 4 | 5 | 6 | 7 | 8 | 9 | 10 | 11 | 12 | 13 |
|---|---|---|---|---|---|---|---|---|---|---|---|---|---|---|
| | Left Curb | 628.33 | 628.40 | 628.46 | 628.52 | 628.57 | 628.66 | 628.74 | 628.81 | 628.83 | 628.95 | 629.02 | 629.08 | 629.13 |
| | Right Curb | 630.80 | 630.87 | 630.93 | 630.98 | 631.04 | 631.12 | 631.20 | 631.27 | 631.34 | 631.40 | 631.47 | 631.53 | 631.58 |

SCREED ELEVATIONS
(Adjusted for Slab Deflections)

AUBLE-MITCHELL-BURGESS & ASSOC. | 11 | 15
ENGINEERS AND ARCHITECTS
CINCINNATI, OHIO

SUPERSTRUCTURE
ROADWAY SLAB RT. BRIDGE
BRIDGE NO. MEG.-7-0762 L/R
S.R. 7 OVER CO. ROAD NO. 77
MEIGS COUNTY
STA. 401+54.41 TO
STA. 402+73.56

| Designed | Drawn | Traced | Checked | Reviewed | Date | Revised |
|---|---|---|---|---|---|---|
| ERB | DAC | | ERB | LEN | 10-70 | |

MICROFILMED
DEC 22 1986

| FED. RD. DIVISION | STATE | PROJECT | |
|---|---|---|---|
| 2 | OHIO | | |

417
467

MEG-7-6.13

PARAPET TRANSITIONS shall be as shown on Std. Drwg. BR-1-67 revised 1-1-71. Reinforcing steel shall be field bent or cut to fit the revised shape.

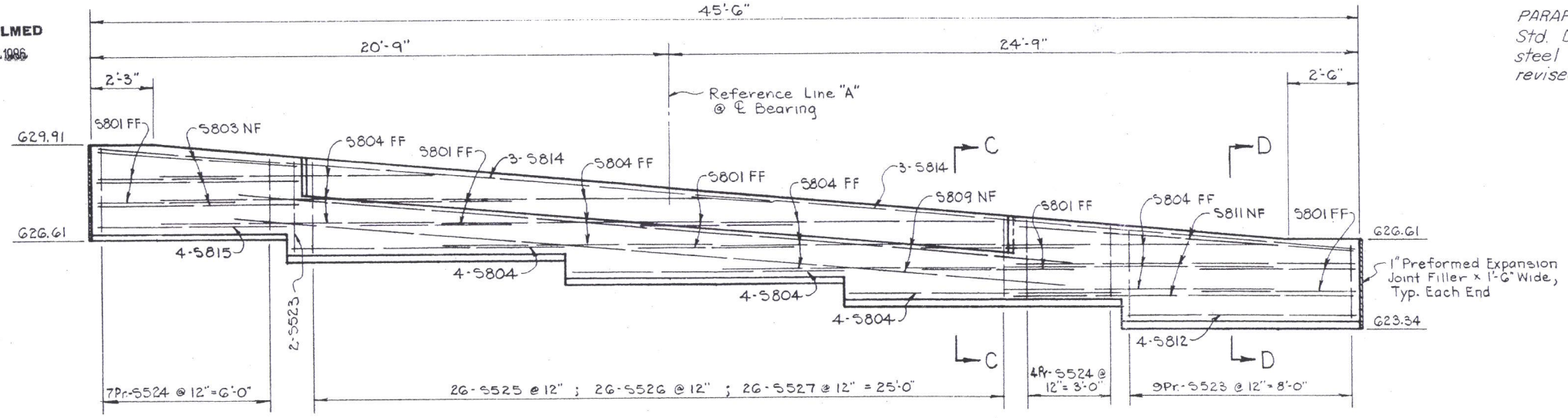


VIEW C-C
At ABUTMENT 2, LEFT BRIDGE

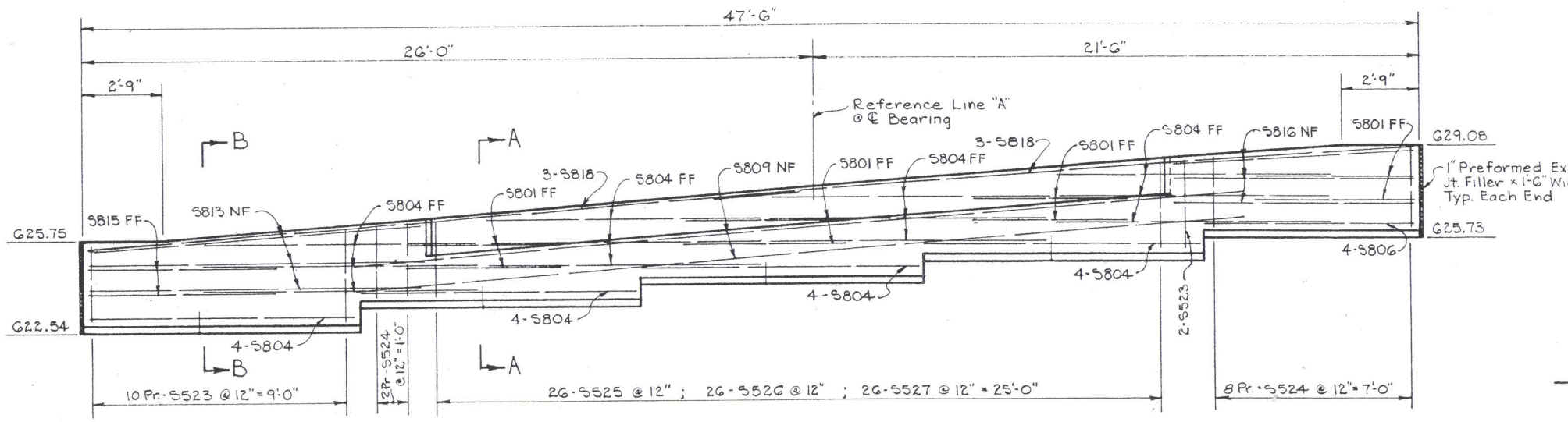


VIEW B-B
At ABUTMENT 1, LEFT BRIDGE

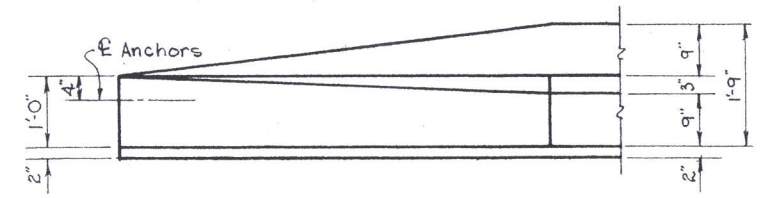


PLAN

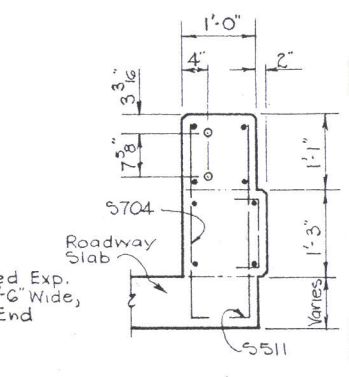


END VIEW 1-1

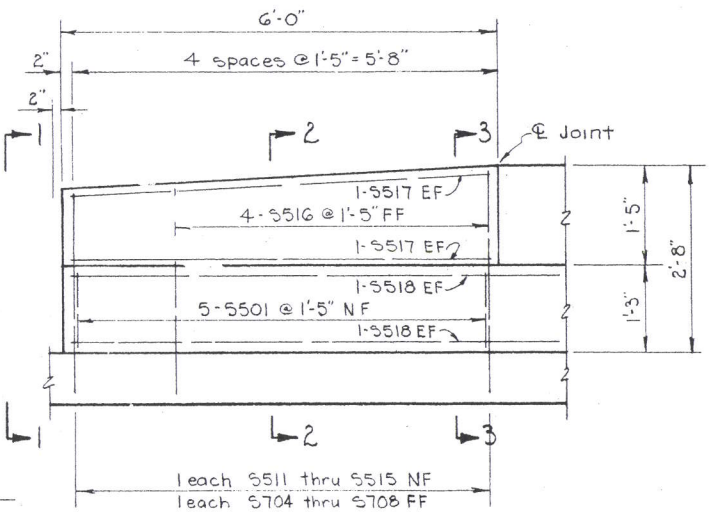


ELEVATION

DETAILS - PARAPET PANELS P1 - END TRANSITION SECTION

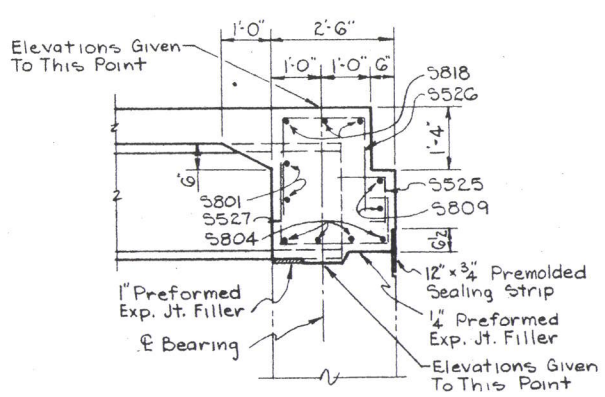


SECTION A-A

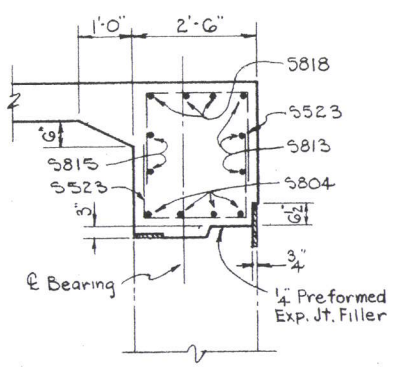


SECTION B-B

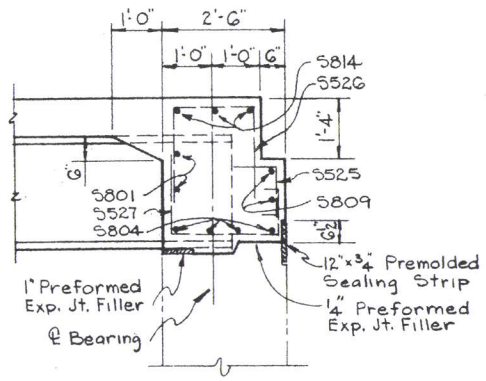


SECTION C-C

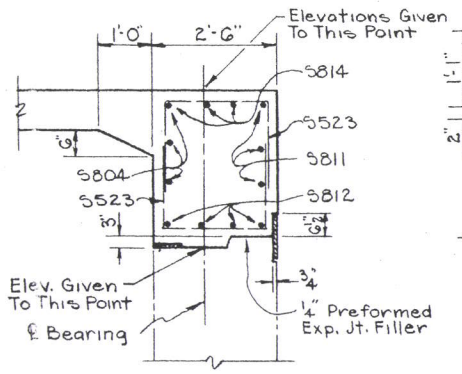


SECTION D-D

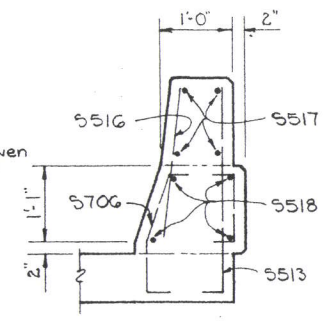


SECTION 2-2

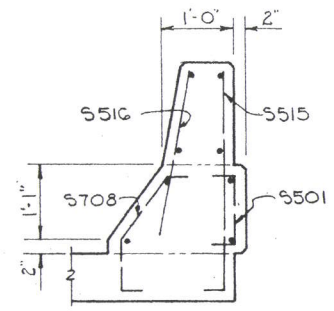


SECTION 3-3

NOTES:
For location of Views B-B & CC see Sh. 10
For reinforcing steel list see Sh 14
For additional railing details see Std. Dwg BR-1-67

LEGEND
E.F = Each Face
N.F = Near Face
F.F. = Far Face

AUBLE-MITCHELL-BURGESS & ASSOC. 12 15
ENGINEERS AND ARCHITECTS
CINCINNATI, OHIO

SUPERSTRUCTURE
ROADWAY SLAB DETAILS
BRIDGE NO. MEG-7-0762 L/R
S.R. 7 OVER CO. ROAD NO. 77
MEIGS COUNTY
STA. 401 + 54.41 TO
STA. 402 + 73.56

| Designed | Drawn | Traced | Checked | Reviewed | Date | Revised |
|---|---|---|---|---|---|---|
| ERB | RBK | | ERB | LEN | 10-70 | |

MICROFILMED
DEC 22 1986

| FED. RD. DIVISION | STATE | PROJECT | |
|---|---|---|---|
| 2 | OHIO | | |

418/467

MEG-7-6.15

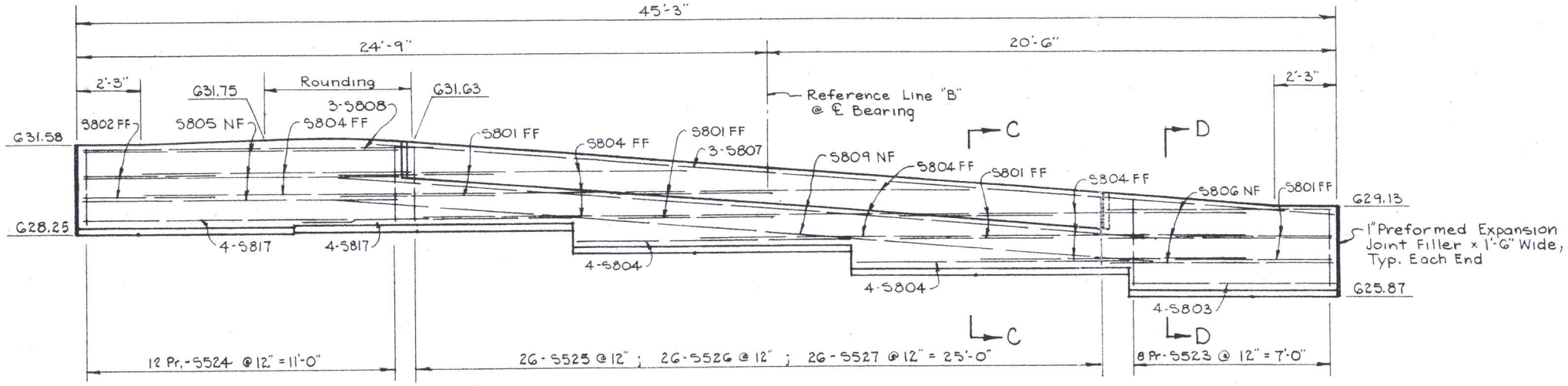


VIEW E-E
At ABUTMENT 2, RIGHT BRIDGE

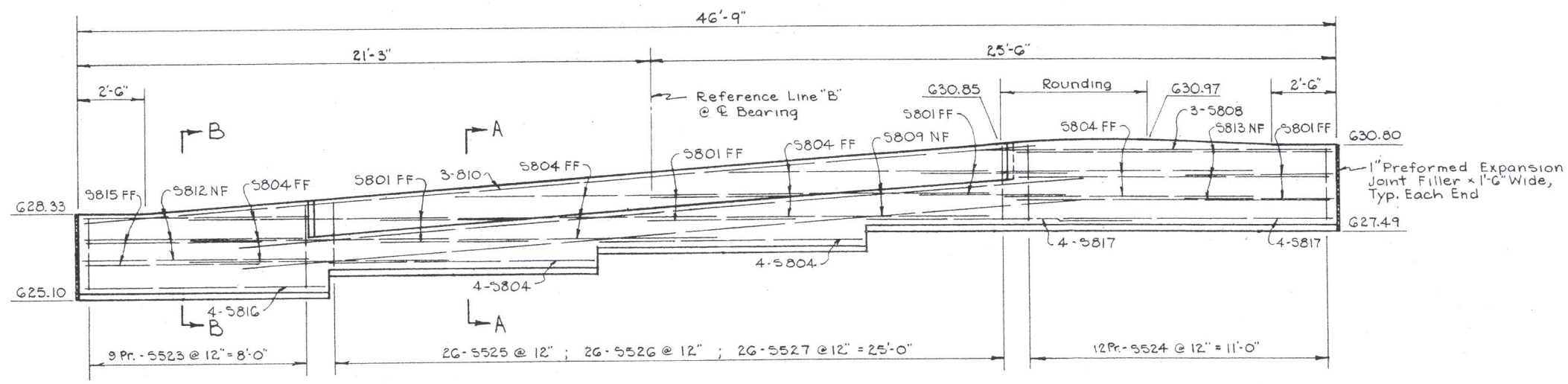


VIEW D-D
At ABUTMENT 1, RIGHT BRIDGE

NOTES:
For location of views E-E & D-D see Sh. 11
For reinforcing steel list see Sh. 14

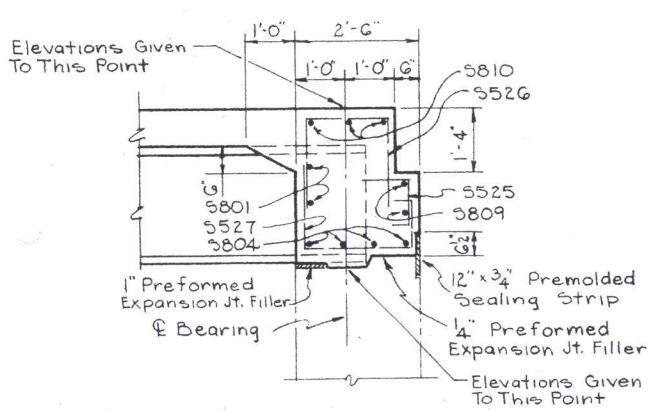


SECTION A-A

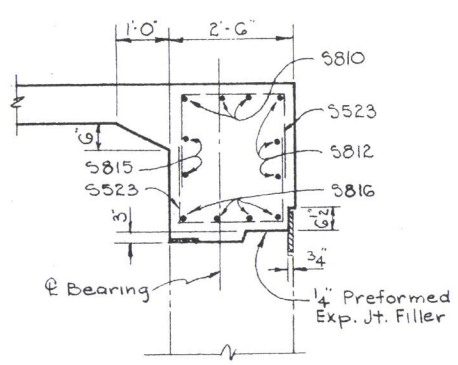


SECTION B-B

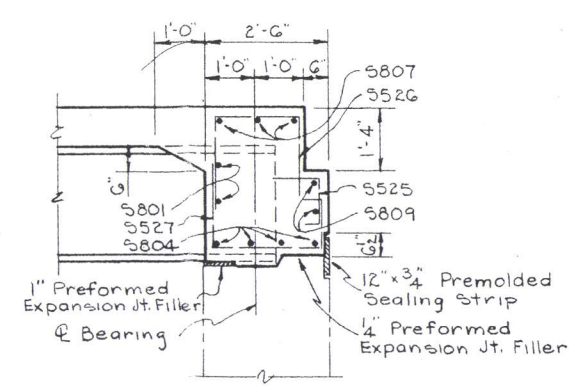


SECTION C-C

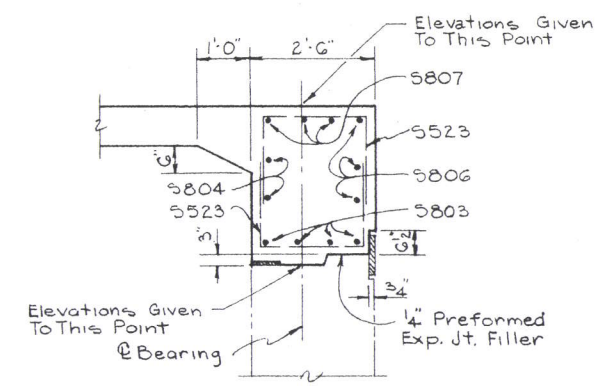


SECTION D-D

LEGEND:
EF = Each Face
NF = Near Face
FF = Far Face

AUBLE-MITCHELL-BURGESS & ASSOC.
ENGINEERS AND ARCHITECTS
CINCINNATI, OHIO

13/15

SUPERSTRUCTURE
ROADWAY SLAB DETAILS
BRIDGE NO. MEG.- 7-0762 L/R
S.R. 7 OVER CO. ROAD NO. 77
MEIGS COUNTY
STA. 401 + 54.41 TO
STA. 402 + 73.56

| Designed | Drawn | Traced | Checked | Reviewed | Date | Revised |
|---|---|---|---|---|---|---|
| ERB | RBK | | ERB | LEN | 10-70 | |

MICROFILMED
DEC 22 1986

| FED. RD. DIVISION | STATE | PROJECT | |
|---|---|---|---|
| 2 | OHIO | | |



MEG-7-6.15

## ABUTMENTS

| MARK | NO. | LENGTH | TYPE | WEIGHT |
|---|---|---|---|---|
| A501 | 30 | 11' - 5" | Str. | 357 |
| A502 | 6 | 27' - 6" | Str. | 172 |
| A503 | 6 | 19' - 7" | Str. | 123 |
| A504 | 14 | 15' - 5" | Str. | 225 |
| A505 | 8 | 36' - 6" | Str. | 305 |
| A506 | 15 | 18' - 9" | S3 | 293 |
| A507 | 56 | 17' - 1" | S3 | 994 |
| A508 | 40 | 15' - 5" | S3 | 643 |
| A509 | 40 | 15' - 9" | S3 | 574 |
| A510 | 37 | 12' - 1" | S3 | 466 |
| A511 | 4 | 9' - 8" | 9 | 40 |
| A512 | 10 | 9' - 8" | Str. | 101 |
| A513 | 12 | 10'-8" to 11'-6" Dia. 2" Crs. | Str. | 139 |
| A514 | 16 | 11' - 8" | Str. | 195 |
| A515 | 4 | 14' - 4" | 9 | 60 |
| A516 | 2 | 6' - 3" | Str. | 13 |
| A517 | 2 | 9' - 0" | Str. | 19 |
| A518 | 16 | 8' - 4" | Str. | 139 |
| A519 | 16 | 4'-6" to 8'-0" Dia. 6" Crs. | Str. | 104 |
| A520 | 372 | 6' - 3" | S3 | 2425 |
| A521 | 10 | 17' - 6" | Str. | 183 |
| A522 | 8 | 34' - 5" | S3 | 287 |
| A523 | 14 | 10'-6" to 11'-8" Dia. 2" Crs. | Str. | 161 |
| A524 | 16 | 13' - 5" | Str. | 224 |
| A525 | 12 | 5'-4" to 8'-3" Dia. 2" Crs. | Str. | 87 |
| A526 | 2 | 8' - 0" | Str. | 17 |
| A527 | 4 | 10' - 2" | 9 | 42 |
| A528 | 2 | 5' - 0" | Str. | 10 |
| A529 | 4 | 11' - 9" | 9 | 25 |
| A530 | 14 | 27 - 5" | Str. | 398 |
| A531 | 8 | 35' - 1" | Str. | 293 |
| A532 | 6 | 19' - 0 | Str. | 119 |
| A533 | 4 | 5' - 6" | Str. | 23 |
| A534 | 16 | 6'-11" to 10'-5" Dia. 6" Crs. | Str. | 145 |
| A535 | 6 | 26' - 8" | Str. | 167 |
| A536 | 2 | 16' - 8" | Str. | 36 |
| A537 | 6 | 18' - 4" | Str. | 115 |
| A538 | 8 | 10' - 11" | Str. | 91 |
| A539 | 12 | 7'-11" to 10'-10" Dia. 6" Crs. | Str. | 117 |
| A540 | 14 | 7'-4" to 9'-9" Dia. 2" Crs. | Str. | 117 |
| A541 | 2 | 19' - 8" | Str. | 41 |
| A542 | 8 | 35' - 3" | Str. | 294 |
| A543 | 12 | 7'-8" to 9'-3" Dia. 2" Crs. | Str. | 98 |
| A544 | 2 | 10' - 9 | Str. | 22 |
| A601 | 328 | 4' - 5" | 6 | 2167 |
| A801 | 8 | 37' - 4" | Str. | 797 |
| A802 | 8 | 34' - 11" | Str. | 746 |
| A803 | 8 | 35' - 7" | Str. | 760 |
| A804 | 8 | 35' - 10" | Str. | 765 |
| A1001 | 4 | 7' - 5" | Str. | 128 |
| A1002 | 28 | 13' - 1" | Str. | 1576 |
| A1003 | 16 | 9' - 8" | Str. | 666 |
| A1004 | 4 | 10' - 8" | Str. | 184 |
| A1005 | 4 | 6' - 8" | Str. | 115 |
| A1006 | 4 | 11' - 9" | Str. | 202 |
| A1007 | 4 | 17' - 3" | Str. | 297 |
| A1008 | 4 | 12' - 5" | Str. | 214 |
| A1009 | 4 | 17' - 6" | Str. | 301 |

## PIERS

| MARK | NO. | LENGTH | TYPE | WEIGHT |
|---|---|---|---|---|
| P501 | 176 | 9' - 7" | S3 | 1759 |
| P502 | 32 | 20' - 10" | Str. | 685 |
| P501 | 168 | 10' - 0" | 1 | 571 |
| P1001 | 144 | 6' - 7" | 2 | 4079 |
| P1002 | 12 | 18' - 7" | Str. | 960 |
| P1003 | 12 | 20' - 0" | Str. | 1033 |
| P1004 | 12 | 21' - 5" | Str. | 1106 |
| P1005 | 48 | 21' - 8" | Str. | 4475 |
| P1006 | 16 | 10' - 8" | 10 | 734 |
| P1007 | 16 | 12' - 11" | 8 | 889 |
| P1008 | 16 | 12' - 11" | 8 | 889 |
| P1009 | 16 | 29' - 0" | Str. | 1998 |
| P1010 | 8 | 16' - 0" | Str. | 551 |
| P1011 | 12 | 18' - 5" | Str. | 951 |
| P1012 | 12 | 19' - 10" | Str. | 1024 |
| P1013 | 12 | 21' - 3" | Str. | 1097 |
| P1014 | 24 | 17' - 6" | Str. | 1807 |
| P1015 | 24 | 18' - 11" | Str. | 1954 |
| P1016 | 24 | 20' - 4" | Str. | 2100 |

## SUPERSTRUCTURE

| MARK | NO. | LENGTH | TYPE | WEIGHT |
|---|---|---|---|---|
| S501 | 327 | 2' - 0" | 2 | 682 |
| S502 | 288 | 5' - 4" | R1 | 1602 |
| S503 | 287 | 2' - 1" | 2 | 624 |
| S504 | 287 | 3' - 2" | 9 | 948 |
| S505 | 20 | 27' - 4" | Str. | 570 |
| S506 | 20 | 27' - 5" | Str. | 572 |
| S507 | 64 | 14' - 8" | Str. | 979 |
| S508 | 64 | 7' - 2" | Str. | 478 |
| S509 | 8 | 8' - 2" | Str. | 68 |
| S510 | 8 | 8' - 0" | Str. | 67 |
| S511 | 8 | 3' - 2" | 2 | 26 |
| S512 | 8 | 3' - 3" | 2 | 27 |
| S513 | 8 | 3' - 4" | 2 | 28 |
| S514 | 8 | 3' - 5" | 2 | 29 |
| S515 | 8 | 3' - 6" | 2 | 29 |
| S516 | 32 | 2' - 3" | Str. | 75 |
| S517 | 32 | 5' - 8" | Str. | 189 |
| S518 | 32 | 7' - 5" | Str. | 248 |
| S519 | 20 | 28' - 2" | Str. | 588 |
| S520 | 20 | 28' - 11" | Str. | 586 |
| S521 | 8 | 8' - 8" | Str. | 72 |
| S522 | 8 | 8' - 5" | Str. | 70 |
| S523 | 76 | 6' - 8" | S3 | 528 |
| S524 | 90 | 6' - 2" | S3 | 579 |
| S525 | 104 | 3' - 0" | S3 | 325 |
| S526 | 104 | 6' - 3" | S3 | 678 |
| S527 | 104 | 5' - 5" | S2 | 588 |
| S601 | 414 | 30' - 0" | Str. | 18655 |
| S602 | 60 | 33' - 3" | Str. | 3446 |
| S603 | 112 | 18' - 0" | Str. | 3028 |
| S604 | 60 | 34' - 1" | Str. | 3532 |
| S801 | 1 | 15' - 4" | SP1 | 573 |
| S802 | 1 | 16' - 9" | SP1 | 623 |
| S803 | 1 | 18' - 2" | SP1 | 674 |
| S804 | 1 | 15' - 2" | SP1 | 567 |
| S805 | 1 | 16' - 7" | SP1 | 617 |
| S806 | 1 | 18' - 0" | SP1 | 668 |
| S807 | 2 | 14' - 2" | SP1 | 531 |
| S808 | 2 | 15' - 7" | SP1 | 582 |
| S809 | 2 | 17' - 0 | SP1 | 632 |
| S701 | 548 | 41' - 8" | Str. | 46671 |
| S702 | 34 | 31'-7" to 33'-6" Dia. 2" Crs. | Str. | 1581 |
| S703 | 36 | 31'-3" to 31'-0" Dia. 2" Crs. | Str. | 1766 |
| S704 | 8 | 3' - 2" | 2 | 52 |
| S705 | 8 | 3' - 0" | 9 | 49 |
| S706 | 8 | 3' - 0" | 9 | 49 |
| S707 | 8 | 3' - 1" | 9 | 50 |
| S708 | 8 | 3' - 2" | 9 | 52 |
| S709 | 38 | 9'-10" to 11'-7" Dia. 2" Crs. | Str. | 1845 |
| S710 | 36 | 9'-10" to 11'-7" Dia. 2" Crs. | Str. | 1751 |
| S801 | 84 | 5' - 6" | Str. | 499 |
| S802 | 4 | 4' - 6" | Str. | 24 |
| S803 | 7 | 7' - 3" | Str. | 130 |
| S804 | 90 | 9' - 6" | Str. | 2283 |
| S805 | 3 | 11' - 3" | Str. | 90 |
| S806 | 7 | 7' - 9" | Str. | 145 |
| S807 | 3 | 34' - 0" | Str. | 182 |
| S808 | 6 | 13' - 6" | Str. | 216 |
| S809 | 8 | 31' - 6" | Str. | 673 |
| S810 | 3 | 35' - 0" | Str. | 280 |
| S811 | 3 | 12' - 3" | Str. | 98 |
| S812 | 7 | 8' - 3" | Str. | 154 |
| S813 | 6 | 11' - 10" | Str. | 190 |
| S814 | 6 | 24' - 0" | Str. | 384 |
| S815 | 8 | 6' - 9" | Str. | 144 |
| S816 | 7 | 8' - 9" | Str. | 164 |
| S817 | 10 | 10' - 0" | Str. | 427 |
| S818 | 6 | 25' - 0" | Str. | 401 |

## REPLACEMENT BARS

| MARK | NO. | LENGTH | TYPE | WEIGHT |
|---|---|---|---|---|
| RE5 | 2 | 6' - 7 | Str. | |
| RE6 | 2 | 6' - 11 | Str. | |
| RE7 | 3 | 7' - 3 | Str. | |
| RE8 | 1 | 7' - 6 | Str. | |
| RE9 | 1 | 7' - 10 | Str. | |
| RE10 | 2 | 8' - 3 | Str. | |

## NOTES

1. BAR SIZE IS INDICATED IN THE BAR MARK. THE FIRST DIGIT WHERE THREE DIGITS ARE USED AND THE FIRST TWO DIGITS WHERE FOUR ARE USED, INDICATE THE BAR SIZE NUMBER.
2. SPIRAL REINFORCING BARS: THE "LENGTH" SHOWN IN THE STEEL LIST FOR THE SPIRAL BARS IS THE DISTANCE FROM TOP OF THE FOOTING TO THE BOTTOM OF CAP, OR TO WITHIN 2" (+) OF THE TOP OF COLUMN FOR PIERS WITHOUT CAPS, TO THE NEAREST INCH.

   FOUR STEEL CHANNEL, TEE OR ANGLE SPACERS, WEIGHTING APPROXIMATELY 0.80 LB. PER LIN. FT. OF SPACER, SHALL BE PROVIDED FOR EACH SPIRAL UNIT. THEY SHALL BE EQUALLY SPACED ALONG THE PERIPHERY OF THE COIL. THE NUMBER OF POUNDS OF THESE SPACERS, BASED ON 0.80LB. PER LIN. FT., WILL BE PAID FOR AS REINFORCING STEEL AND IS INCLUDED IN THE TABULATED QUANTITY OF SPIRAL BARS.
3. SEE SHEET 15 FOR BENDING DETAILS.

AUBLE-MITCHELL-BURGESS & ASSOC. 14 / 15
ENGINEERS AND ARCHITECTS
CINCINNATI, OHIO

# REINFORCING STEEL LIST

BRIDGE NO MEG - 7-0762 L/R
S.R. 7 OVER CO. ROAD NO. 77
MEIGS COUNTY
STA. 401 + 54.41 TO
STA. 402 + 73.56

| Designed | Drawn | Traced | Checked | Reviewed | Date | Revised |
|---|---|---|---|---|---|---|
| | | | | LEN | 10-70 | |

MICROFILMED
DEC 22 1986

| FED. RD. DIVISION | STATE | PROJECT | |
|---|---|---|---|
| 2 | OHIO | | |

420
467

MEG-7-6.15

DIMENSIONS FOR BENDING

| MARK | TYPE | A | B | C | D | E | F | G | H | J | K | R | O |
|---|---|---|---|---|---|---|---|---|---|---|---|---|---|
| A506 | 53 | | 8' - 6" | 2' - 0" | 8' - 6" | | | | | | | | |
| A507 | 53 | | 7' - 8" | 2' - 0" | 7' - 8" | | | | | | | | |
| A508 | 53 | | 6' - 10" | 2' - 0" | 6' - 10" | | | | | | | | |
| A509 | 53 | | 6' - 0" | 2' - 0" | 6' - 0" | | | | | | | | |
| A510 | 53 | | 5' - 2" | 2' - 0" | 5' - 2" | | | | | | | | |
| A511 | 3 | - | 7' - 10" | 1' - 10" | - | | | | 0' - 3" | 1' - 10" | | | |
| A515 | 3 | - | 12' - 6" | 1' - 10" | - | | | | 0' - 7" | 1' - 9" | | | |
| A520 | 53 | | 2' - 0" | 2' - 6" | 2' - 0" | | | | | | | | |
| A527 | 3 | - | 8' - 4" | 1' - 10" | - | | | | 0' - 8" | 1' - 9" | | | |
| A529 | 3 | - | 0' - 11" | 1' - 10" | - | | | | 0' - 3" | 1' - 10" | | | |
| A601 | 6 | | 0' - 8" | 2' - 11" | 0' - 8" | | | | 0' - 6" | | 0' - 6" | | 3' - 11" |
| P501 | 53 | | 3' - 7 | 2' - 8" | 3' - 7 | | | 1' - 3" | | | | | |
| P001 | 1 | 1' - 3" | 7' - 6" | | | | | | | | | | |
| P101 | 2 | 1' - 1" | 5' - 6" | | | | | – | | | | | |
| P106 | 10 | | 5' - 3" | 4' - 2" | 5' - 3" | | | | | | | 1' - 4" | 2' - 8" |
| P107 | 8 | | – | 3' - 3' | 10' - 0" | | | | 3' - 3" | | 0' - 3" | | |
| P108 | 8 | | 10' - 0" | 3' - 3" | – | | | | 3' - 3" | | 0' - 3 | | |
| S501 | SP1 | | 3¼" | 15' - 4" | 60 | | | | | | | | |
| S503 | SP1 | | 3¼" | 16' - 3" | 65 | | | | | | | | |
| S521 | SP1 | | 3¼" | 18' - 2" | 70 | | | | | | | | |
| S525 | SP1 | | 3¼" | 15' - 2" | 59 | | | | | | | | |
| S526 | SP1 | | 3¼" | 16' - 7" | 64 | | | | | | | | |
| S527 | SP1 | | 3¼" | 18' - 0" | 69 | | | | | | | | |
| S528 | SP1 | | 3¼" | 14' - 2" | 55 | | | | | | | | |
| S529 | SP1 | | 3¼" | 15' - 7" | 61 | | | | | | | | |
| S530 | SP1 | | 3¼" | 17' - 0" | 66 | | | | | | | | |
| S501 | 2 | 0' - 6" | 1' - 0" | | | | | 0' - 6" | | | | | |
| S502 | P1 | | | | | | | – | | | | | |
| S503 | 2 | 0' - 6" | 1' - 7" | | | | | – | | | | | |
| S504 | 3 | 0' - 6" | 0' - 10" | 1' - 2½ | 0' - 9" | | | | 0' - 9" | | 0' - 11½" | | |
| S511 | 2 | 0' - 6" | 2' - 8 | | | | | – | | | | | |
| S512 | 2 | 0' - 6" | 2' - 9" | | | | | – | | | | | |
| S513 | 2 | 0' - 6" | 2' - 10" | | | | | – | | | | | |
| S514 | 2 | 0' - 6" | 2' - 11 | | | | | – | | | | | |
| S515 | 2 | 0' - 6" | 3' - 0" | | | | | – | | | | | |
| S523 | 53 | | 2' - 5" | 2' - 1" | 2' - 5" | | | | | | | | |
| S524 | 53 | | 2' - 2" | 2' - 1" | 2' - 2" | | | | | | | | |
| S525 | 53 | | 0' - 6" | 1' - 1" | 1' - 6" | | | | | | | | |
| S526 | 53 | | 2' - 5" | 1' - 8" | 2' - 5" | | | | | | | | |
| S527 | 52 | | 2' - 5" | 2' - 2" | 1' - 1" | | | 0' - 6" | | | | | |
| S704 | 2 | 0' - 6" | 2' - 8" | | | | | – | | | | | |
| S705 | 3 | 0' - 6" | 0' - 9" | 1' - 0" | 0' - 9" | | | | 0' - 2½" | | 0' - 11½" | | |
| S706 | 3 | 0' - 6" | 0' - 9" | 1' - 0" | 0' - 9" | | | | 0' - 4" | | 0' - 11½" | | |
| S707 | 3 | 0' - 6" | 0' - 9" | 1' - 1" | 0' - 9" | | | | 0' - 6" | | 0' - 11½" | | |
| S708 | 3 | 0' - 6" | 0' - 9" | 1' - 2" | 0' - 9" | | | | 0' - 9" | | 0' - 11½" | | |

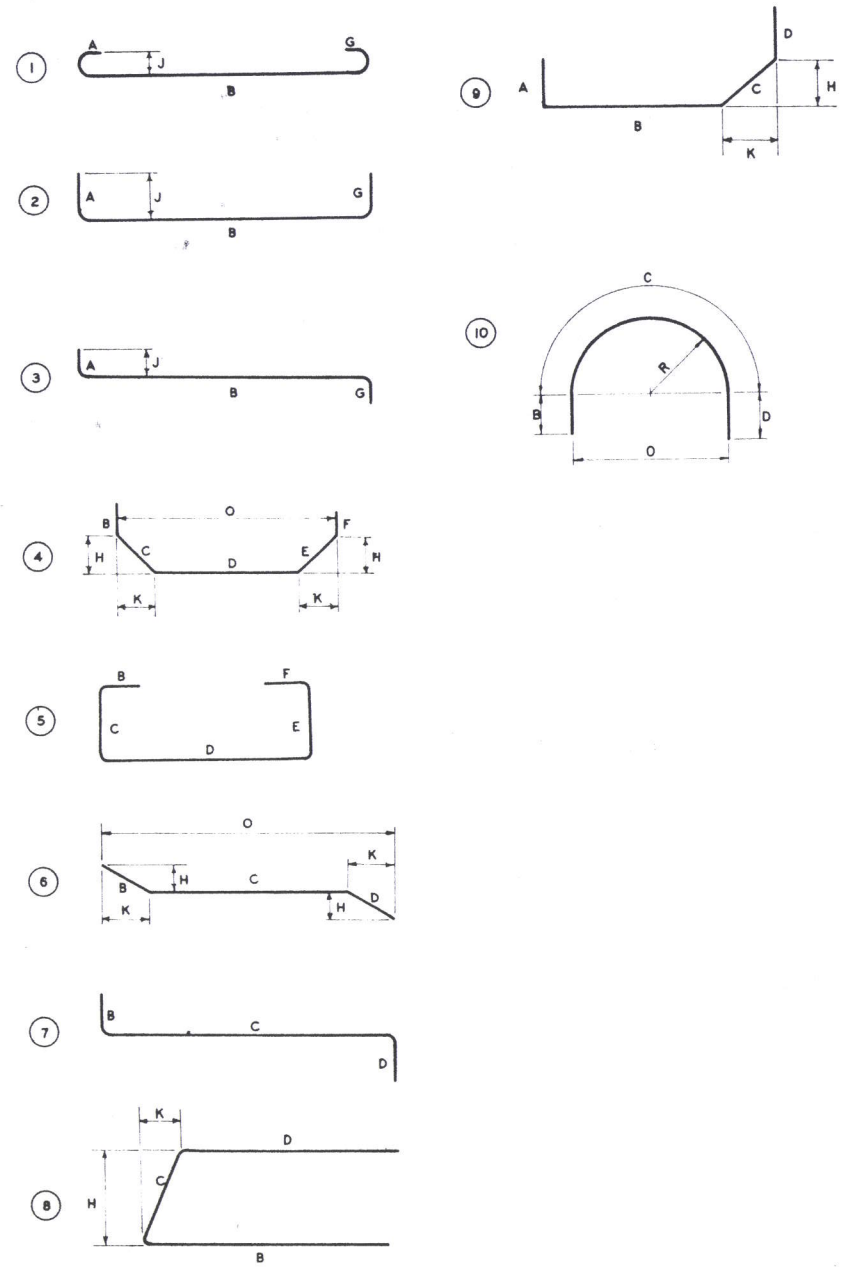


## NOTES

1. FIGURES IN CIRCLES SHOW BAR TYPES.
2. ALL DIMENSIONS ARE OUT TO OUT OF BAR.
3. "J" DIMENSION ON HOOKS TO BE SHOWN ONLY WHERE NECESSARY TO RESTRICT HOOK SIZE, OTHERWISE STANDARD HOOKS ARE TO BE USED.
4. "H" DIMENSION ON STIRRUPS TO BE SHOWN WHERE NECESSARY TO RESTRICT HOOKS.
5. ALL BENDS SHOWN ARE BENT AROUND A STANDARD MANDREL, EXCEPT SPIRALS SP1, AND WHERE RADIUS "R" IS INDICATED.
6. RADIUS DIMENSION "R" IS TO OUTSIDE OF BAR.
7. THE LENGTH OF BENT BARS IS MEASURED ALONG THE CENTERLINE.
8. FOR STANDARD HOOK DIMENSIONS, SEE SECT. 509.05 OF THE SPECIFICATIONS.
9. FOR BAR TYPE SP1, THE NO OF TURNS "D" IS THE LENGTH "C" DIVIDED BY THE PITCH "B", PLUS 3 TURNS (TOTAL NUMBER OF CLOSED COILS), EXPRESSED AS THE NEAREST WHOLE NUMBER. 1½ CLOSED COILS SHALL BE PROVIDED AT THE ENDS OF EACH SPIRAL UNIT.

AUBLE-MITCHELL-BURGESS & ASSOC. 15/15
ENGINEERS AND ARCHITECTS
CINCINNATI, OHIO

# BAR BENDING DETAILS

BRIDGE NO. MEG.-7-0762 L/R
S.R. 7 OVER CO. ROAD NO. 77
STA. 401 + 54.41 TO
STA. 402 + 73.56
MEIGS COUNTY

| Designed | Drawn | Traced | Checked | Reviewed | Date | Revised |
|---|---|---|---|---|---|---|
| | | | | LEN | 10-70 | |