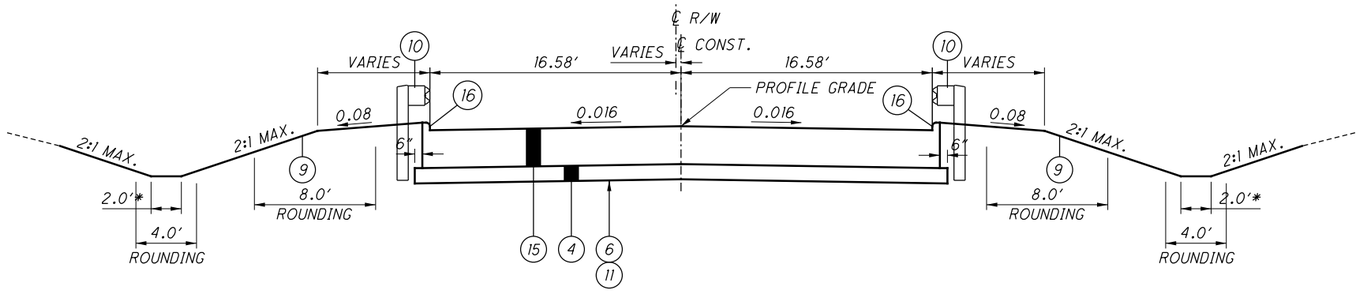

APPROACH SLAB SECTION - CHAMBERSBURG RD., S.R. 235

LIMITING STATIONS
STA. 13+52.66 TO STA. 13+77.66 = 25.00 L.F.
STA. 16+22.16 TO STA. 16+47.16 = 25.00 L.F.

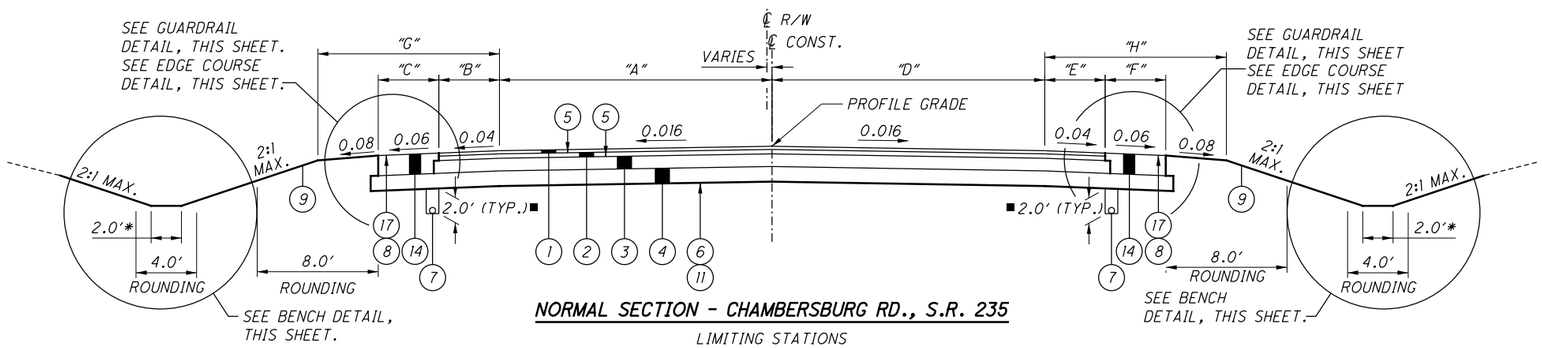

NORMAL SECTION - CHAMBERSBURG RD., S.R. 235

LIMITING STATIONS
STA. 5+00.00 TO STA. 13+52.66 = 852.66 L.F.
STA. 16+47.16 TO STA. 27+00.00 = 1052.84 L.F.

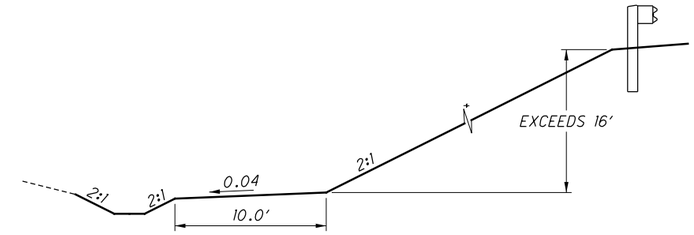

BENCH DETAIL

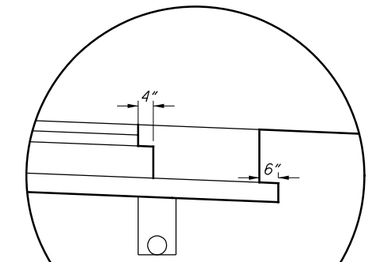

ASPHALT PAVEMENT EDGE COURSE DETAIL

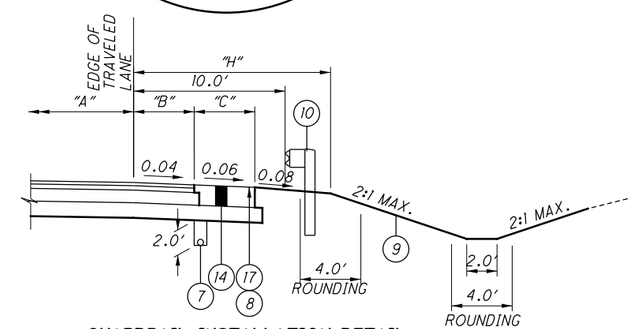

GUARDRAIL INSTALLATION DETAIL

CHAMBERSBURG RD., S.R. 235
RIGHT SIDE SHOWN, LEFT SIDE SYMMETRICAL
ABOUT EDGE OF TRAVELED LANE

LEGEND

1. ITEM 441 - 1 1/2″ ASPHALT CONCRETE SURFACE COURSE, TYPE 1, (446), PG64-22
2. ITEM 441 - 1 3/4″ ASPHALT CONCRETE INTERMEDIATE COURSE, TYPE 2, (446)
3. ITEM 301 - 5″ ASPHALT CONCRETE BASE, PG64-22
4. ITEM 304 - 6″ AGGREGATE BASE
5. ITEM 407 - NON-TRACKING TACK COAT (0.04 GAL/S.Y.)
6. ITEM 204 - SUBGRADE COMPACTION
7. ITEM 605 - 6″ SHALLOW PIPE UNDERDRAINS WITH GEOTEXTILE FABRIC
8. ITEM 422 - EMULSION, CHIP SEAL
9. ITEM 659 - SEEDING AND MULCHING
10. ITEM 606 - GUARDRAIL, TYPE MGS
11. ITEM 204 - PROOF ROLLING
12. ITEM 452 - 8″ NON-REINFORCED CONCRETE PAVEMENT, CLASS QC1
13. ITEM 609 - 6″ CONCRETE MEDIAN 4
14. ITEM 304 - 8 1/4″ AGGREGATE BASE
15. ITEM 526 - REINFORCED CONCRETE APPROACH SLAB, (T=15″), AS PER PLAN
16. ITEM 609 - CURB, TYPE 2-A **
17. ITEM 422 - AGGREGATE, SINGLE CHIP SEAL, TYPE A

- (A) EXISTING ASPHALT PAVEMENT (T=6″±)
- (B) EXISTING REINFORCED CONCRETE BASE (T=9″±)
- (C) EXISTING AGGREGATE BASE (T=6″±)
- (D) EXISTING ASPHALT PAVEMENT (T=9″±)
- (E) EXISTING AGGREGATE BASE (T=12″±)
- (F) EXISTING GUARDRAIL
- (G) CONCRETE MEDIAN

REVISIONS		
NO.	DATE	DESCRIPTION
4	11/03/20	ITEM REVISED

* OR AS SHOWN ON CROSS SECTIONS

** TO BE PAID FOR UNDER ITEM 15 EXCEPT RAMPS A AND B

■ 2.0′ UD DEPTH TYPICAL, EXCEPT AS NOTED IN UNDERCUT DETAIL ON SHEET 9

DIMENSION TABLE - CHAMBERSBURG RD./S.R. 235

LEFT SIDE DIMENSIONS														RIGHT SIDE DIMENSIONS											
"G" WIDTH			"C" WIDTH			"B" WIDTH			"A" WIDTH			BEGINNING STATION	ENDING STATION	"D" WIDTH			"E" WIDTH			"F" WIDTH			"H" WIDTH		
8.00′	TO	8.00′	4.00′	TO	4.00′	4.00′	TO	4.00′	19.24′	TO	19.24′	5+00.00	7+63.36	16.76′	TO	16.76′	4.00′	TO	4.00′	-8.76′	TO	-8.76′	8.00′	TO	13.00′
8.00′	TO	8.00′	4.00′	TO	4.00′	4.00′	TO	4.00′	19.24′	TO	25.20′	7+63.36	8+22.97	16.76′	TO	16.76′	4.00′	TO	4.00′	-8.76′	TO	-8.76′	13.00′	TO	13.00′
			INTERSECTION									8+22.97	9+62.46	16.76′	TO	16.76′	4.00′	TO	4.00′	-8.76′	TO	-8.76′	13.00′	TO	13.00′
12.00′	TO	12.00′	4.00′	TO	4.00′	4.00′		4.00′	32.99′	TO	28.99′	9+62.46	10+02.46	16.76′	TO	16.76′	4.00′	TO	4.00′	-8.76′	TO	-8.76′	13.00′	TO	13.00′
12.00′	TO	13.00′	4.00′	TO	4.00′	4.00′	TO	4.00′	28.99′	TO	24.00′	10+02.46	12+76.89												
												9+62.46	10+41.29	16.76′	TO	16.76′	4.00′	TO	4.00′	-8.76′	TO	-8.76′	13.00′	TO	13.00′
												10+41.29	12+76.89	16.76′	TO	12.96′	4.00′	TO	4.00′	-8.76′	TO	-4.96′	13.00′	TO	13.00′
13.00′	TO	13.00′	4.00′	TO	4.00′	4.00′	TO	4.00′	24.00′	TO	12.00′	12+76.89	13+26.89	12.96′	TO	12.00′	4.00′	TO	4.00′	-4.96′	TO	-4.00′	13.00′	TO	13.00′
13.00′	TO	13.00′	4.00′	TO	3.42′	4.00′	TO	4.58′	12.00′	TO	12.00′	13+26.89	13+52.66	12.00′	TO	12.00′	4.00′	TO	4.58′	-4.00′	TO	-4.00′	13.00′	TO	13.00′
13.00′	TO	13.00′	3.42′	TO	4.00′	4.58′	TO	4.00′	12.00′	TO	12.00′	16+47.16	16+71.30	12.00′	TO	12.00′	4.58′	TO	4.00′	-4.00′	TO	-4.00′	13.00′	TO	13.00′
13.00′	TO	13.00′	4.00′	TO	4.00′	4.00′	TO	4.00′	12.00′	TO	12.00′	16+71.30	17+49.20	12.00′	TO	12.00′	4.00′	TO	4.00′	-4.00′	TO	-4.00′	13.00′	TO	13.00′
13.00′	TO	13.00′	4.00′	TO	4.00′	4.00′	TO	4.00′	12.00′	TO	16.00′	17+49.20	18+29.26	12.00′	TO	12.00′	4.00′	TO	4.00′	-4.00′	TO	-4.00′	13.00′	TO	16.00′
			INTERSECTION									18+29.26	18+87.91	INTERSECTION											
13.00′	TO	13.00′	4.00′	TO	4.00′	4.00′	TO	4.00′	12.00′	TO	12.00′	18+87.91	19+22.77	INTERSECTION											
13.00′	TO	13.00′	4.00′	TO	4.00′	4.00′	TO	4.00′	12.00′	TO	12.00′	19+22.77	20+02.77	20.00′	TO	12.00′	4.00′	TO	4.00′	-12.00′	TO	-4.00′	15.55′	TO	13.00′
13.00′	TO	12.00′	4.00′	TO	4.00′	4.00′	TO	4.00′	12.00′	TO	12.00′	20+02.77	22+88.05	12.00′	TO	12.00′							13.00′	TO	8.00′
									12.00′	TO	12.00′	22+88.05	24+77.34	12.00′	TO	12.00′									
									12.00′	TO	12.00′	24+77.34	25+47.23	24.91′	TO	23.91′	6.00′	TO	4.00′	-16.91′	TO	-15.91′	8.00′	TO	8.00′
12.00′	TO	12.00′	2.00′	TO	4.00′	6.00′	TO	4.00′	14.96′	TO	14.93′	25+47.23	25+57.25	23.91′	TO	23.76′	4.00′	TO	4.00′	-15.91′	TO	-15.76′	8.00′	TO	8.00′
12.00′	TO	12.00′	4.00′	TO	4.00′	4.00′	TO	4.00′	14.93′	TO	14.43′	25+57.25	27+00.00	23.76′	TO	21.72′	4.00′	TO	4.00′	-15.76′	TO	-13.72′	8.00′	TO	8.00′

TYPICAL SECTIONS

MOT-235-0.22L

0:\2017\2017056\Project Data\MOT\99860\Design\Roadway\Sheets\99860_GY001.dgn Sheet 1 11/3/2020 2:03:41PM pfry

SHEET NUM.										PART.		ITEM	ITEM EXT	GRAND TOTAL	UNIT	DESCRIPTION	SEE SHEET NO.
OFFICE CALCS	7	8	9	26	27	28	29	30	106	01/NHS/BR	02/NHS/BR						
																ROADWAY	
	LS									LS		201	11000	LS		CLEARING AND GRUBBING	
12,515										12,515		202	23000	12,515	SY	PAVEMENT REMOVED	
				104						104		202	32000	104	FT	CURB REMOVED	
						165				165		202	34900	165	FT	PIPE REMOVED	
						1				1		202	58100	1	EACH	CATCH BASIN REMOVED	
				160						160		202	75000	160	FT	FENCE REMOVED	
				2,498						2,498		202	38000	2,498	FT	GUARDRAIL REMOVED	
					19,589					19,589		203	10000	19,589	CY	EXCAVATION	
					20,625					20,625		203	20000	20,625	CY	EMBANKMENT	
13,432										13,432	4	204	10000	13,432	4 SY	SUBGRADE COMPACTION	
			2,619							2,619		204	13000	2,619	CY	EXCAVATION OF SUBGRADE	
			2,619							2,619		204	21001	2,619	CY	GRANULAR EMBANKMENT, AS PER PLAN	9
		7								7		204	45000	7	HOUR	PROOF ROLLING	8
			3,152							3,152		204	50000	3,152	SY	GEOTEXTILE FABRIC	
				2,261						2,261		606	15050	2,261	FT	GUARDRAIL, TYPE MGS	
				3						3		606	20050	3	EACH	ROUNDED END SECTION	
				3						3		606	26150	3	EACH	ANCHOR ASSEMBLY, MGS TYPE E (MASH 2016)	7
				9						9		606	26550	9	EACH	ANCHOR ASSEMBLY, MGS TYPE T	
				4						4		606	35002	4	EACH	MGS BRIDGE TERMINAL ASSEMBLY, TYPE 1	
				92						92		607	15000	92	FT	FENCE, TYPE 47	
				64						64		607	23000	64	FT	FENCE, TYPE CLT	
																EROSION CONTROL	
		4					14			18		601	21050	18	SY	TIED CONCRETE BLOCK MAT WITH TYPE 1 UNDERLAYMENT	
						214				214		601	21060	214	SY	TIED CONCRETE BLOCK MAT WITH TYPE 2 UNDERLAYMENT	
		5				10				15		601	32200	15	CY	ROCK CHANNEL PROTECTION, TYPE C WITH FILTER	
									137	137		601	20000	137	SY	CRUSHED AGGREGATE SLOPE PROTECTION	
	1									1		659	00100	1	EACH	SOIL ANALYSIS TEST	
	4,487				593					5,080		659	00300	5,080	CY	TOPSOIL	
	39,189									39,189		659	10000	39,189	SY	SEEDING AND MULCHING	
	1,959									1,959		659	14000	1,959	SY	REPAIR SEEDING AND MULCHING	
	1,959									1,959		659	15000	1,959	SY	INTER-SEEDING	
	5.29									5.29		659	20000	5.29	TON	COMMERCIAL FERTILIZER	
	8.1									8.1		659	31000	8.1	ACRE	LIME	
	212									212		659	35000	212	MGAL	WATER	
	88									88		659	40000	88	MSF	MOWING	
					3,483					3,483		670	00500	3,483	SY	SLOPE EROSION PROTECTION	
						336				336		670	00700	336	SY	DITCH EROSION PROTECTION	
						163				163		670	00710	163	SY	DITCH EROSION PROTECTION MAT, TYPE A	
								LS		LS		832	15000	LS		STORM WATER POLLUTION PREVENTION PLAN	
								LS		LS		832	15002	LS		STORM WATER POLLUTION PREVENTION INSPECTIONS	
								LS		LS		832	15010	LS		STORM WATER POLLUTION PREVENTION INSPECTION SOFTWARE	
								46,500		46,500		832	30000	46,500	EACH	EROSION CONTROL	
						86				86		836	10000	86	SY	SEEDING AND EROSION CONTROL WITH TURF REINFORCING MAT, TYPE 1	
																DRAINAGE	
						2				2		602	20000	2	CY	CONCRETE MASONRY	
							5,013			5,013		605	11110	5,013	FT	6" SHALLOW PIPE UNDERDRAINS WITH GEOTEXTILE FABRIC	
		10					569			579		605	13410	579	FT	6" UNCLASSIFIED PIPE UNDERDRAINS WITH GEOTEXTILE FABRIC	
							146			146		611	00510	146	FT	6" CONDUIT, TYPE F FOR UNDERDRAIN OUTLETS	
		500					159			659		611	00900	659	FT	6" CONDUIT, TYPE B	
		500								500		611	01400	500	FT	6" CONDUIT, TYPE E	
		530								530		611	01500	530	FT	6" CONDUIT, TYPE F	
						16				16		611	07200	16	FT	18" CONDUIT, TYPE A	
						80				80		611	07900	80	FT	18" CONDUIT, TYPE D	
						40				40		611	10200	40	FT	24" CONDUIT, TYPE A	
		2					9			11		611	99710	11	EACH	PRECAST REINFORCED CONCRETE OUTLET	

REVISIONS		
NO.	DATE	DESCRIPTION
4	11/03/20	OFFICE CALCS REVISED

CALCULATED LRK
CHECKED PJF

GENERAL SUMMARY

MOT-235-0.22L

O:\2017\2017056\ProjectData\MOT\99860\Design\Roadway\Sheets\99860_GG00.dgn Sheet 1 11/3/2020 3:22:34 PM pfry

SHEET NUM.												PART.		ITEM	ITEM EXT	GRAND TOTAL	UNIT	DESCRIPTION	SEE SHEET NO.
OFFICE CALCS		26				76	78	82		101		01/NHS/BR	02/NHS/BR						
																		PAVEMENT	
248												248	4	252	01500	248	4 FT	FULL DEPTH PAVEMENT SAWING	
1,538												1,538		301	46000	1,538	CY	ASPHALT CONCRETE BASE, PG64-22	
2,686												2,686		304	20000	2,686	CY	AGGREGATE BASE	
873												873		407	20000	873	GAL	NON-TRACKING TACK COAT	
1,215												1,215		422	11000	1,215	SY	AGGREGATE, SINGLE CHIP SEAL, TYPE A	
486												486		422	25000	486	GAL	EMULSION, CHIP SEAL	
455												455	4	441	10000	455	4 CY	ASPHALT CONCRETE SURFACE COURSE, TYPE 1, (446), PG64-22	
530												530		441	10200	530	CY	ASPHALT CONCRETE INTERMEDIATE COURSE, TYPE 2, (446)	
9												9		452	10010	9	SY	6" NON-REINFORCED CONCRETE PAVEMENT, CLASS QC IP (RESIDENTIAL DRIVEWAYS)	
1,450												1,450	4	452	12010	1,450	4 SY	8" NON-REINFORCED CONCRETE PAVEMENT, CLASS QC IP	
27												27		452	12010	27	SY	8" NON-REINFORCED CONCRETE PAVEMENT, CLASS QC IP (COMMERCIAL DRIVEWAYS)	
37												37		609	72000	37	SY	CONCRETE MEDIAN 3	
		332										332		609	14000	332	FT	CURB, TYPE 2-A	
		25										25		609	24510	25	FT	CURB, TYPE 4-C	
																		LIGHTING	
										2		2		625	00450	2	EACH	CONNECTION, FUSED PULL APART	
										2		2		625	00460	2	EACH	CONNECTION, UNFUSED PULL APART	
										678		678		625	23302	678	FT	NO. 6 AWG 2400 VOLT DISTRIBUTION CABLE	
										348		348		625	23400	348	FT	NO. 10 AWG POLE AND BRACKET CABLE	
										81		81		625	25408	81	FT	CONDUIT, 2", 725.051	
										83		83		625	25500	83	FT	CONDUIT, 3", 725.04	
										2		2		625	26253	2	EACH	LUMINAIRE, CONVENTIONAL, SOLID STATE (LED), AS PER PLAN, IES-II, 17,000-19,000 LUMENS	100
										164		164		625	29000	164	FT	TRENCH	
										3		3		625	30700	3	EACH	PULL BOX, 725.08, 18"	
										164		164		625	36010	164	FT	UNDERGROUND WARNING/MARKING TAPE	
																		TRAFFIC CONTROL	
						104						104		621	00100	104	EACH	RPM	
						30						30		621	54000	30	EACH	RAISED PAVEMENT MARKER REMOVED	
		34										34		626	00112	34	EACH	BARRIER REFLECTOR, TYPE 3, BI-DIRECTIONAL	
								553.9				553.9		630	03100	553.9	FT	GROUND MOUNTED SUPPORT, NO. 3 POST	
								36.5				36.5		630	06500	36.5	FT	GROUND MOUNTED STRUCTURAL BEAM SUPPORT, W6X9	
								45.3				45.3		630	08004	45.3	FT	ONE WAY SUPPORT, NO. 3 POST	
								29				29		630	08600	29	EACH	SIGN POST REFLECTOR	
								388.7				388.7		630	80100	388.7	SF	SIGN, FLAT SHEET	
								27				27		630	80200	27	SF	SIGN, GROUND MOUNTED EXTRUSHEET	
								2				2		630	84500	2	EACH	GROUND MOUNTED STRUCTURAL BEAM SUPPORT FOUNDATION	
								61				61		630	84900	61	EACH	REMOVAL OF GROUND MOUNTED SIGN AND DISPOSAL	
								33				33		630	86002	33	EACH	REMOVAL OF GROUND MOUNTED POST SUPPORT AND DISPOSAL	
								2				2		630	86102	2	EACH	REMOVAL OF GROUND MOUNTED STRUCTURAL BEAM SUPPORT AND DISPOSAL	
								2				2		630	86310	2	EACH	REMOVAL OF STRUCTURE MOUNTED SIGN AND DISPOSAL	
								1				1		630	87500	1	EACH	REMOVAL OF POLE MOUNTED SIGN AND DISPOSAL	
							0.63					0.63		644	00100	0.63	MILE	EDGE LINE, 4"	
							0.17					0.17		644	00104	0.17	MILE	EDGE LINE, 6"	
							0.45					0.45		644	00300	0.45	MILE	CENTER LINE	
							1,097					1,097		644	00400	1,097	FT	CHANNELIZING LINE, 8"	
							79					79		644	00500	79	FT	STOP LINE	
							198					198		644	00700	198	FT	TRANSVERSE/DIAGONAL LINE	
							52					52		644	00900	52	SF	ISLAND MARKING	
							7					7		644	01300	7	EACH	LANE ARROW	
							4					4		644	01360	4	EACH	WRONG WAY ARROW	
							0.14					0.14		646	10000	0.14	MILE	EDGE LINE, 4"	
							0.19					0.19		646	10010	0.19	MILE	EDGE LINE, 6"	
							0.04					0.04		646	10200	0.04	MILE	CENTER LINE	
							45					45		646	10400	45	FT	STOP LINE	

REVISIONS		
NO.	DATE	DESCRIPTION
4	11/03/20	OFFICE CALCS REVISED

CALCULATED LRK
CHECKED PJF

GENERAL SUMMARY

MOT-235-0.22L

G:\2017\2017056\ProjectData\MOT\99860\Design\Roadway\Sheets\99860_GG002.dgn Sheet1 11/3/2020 3:42:54 PM pfry