MICROFILMED
NOV 1 91984

FHWA REGION	STATE	PROJECT	
5	OHIO	BRF-62( )	

8/13

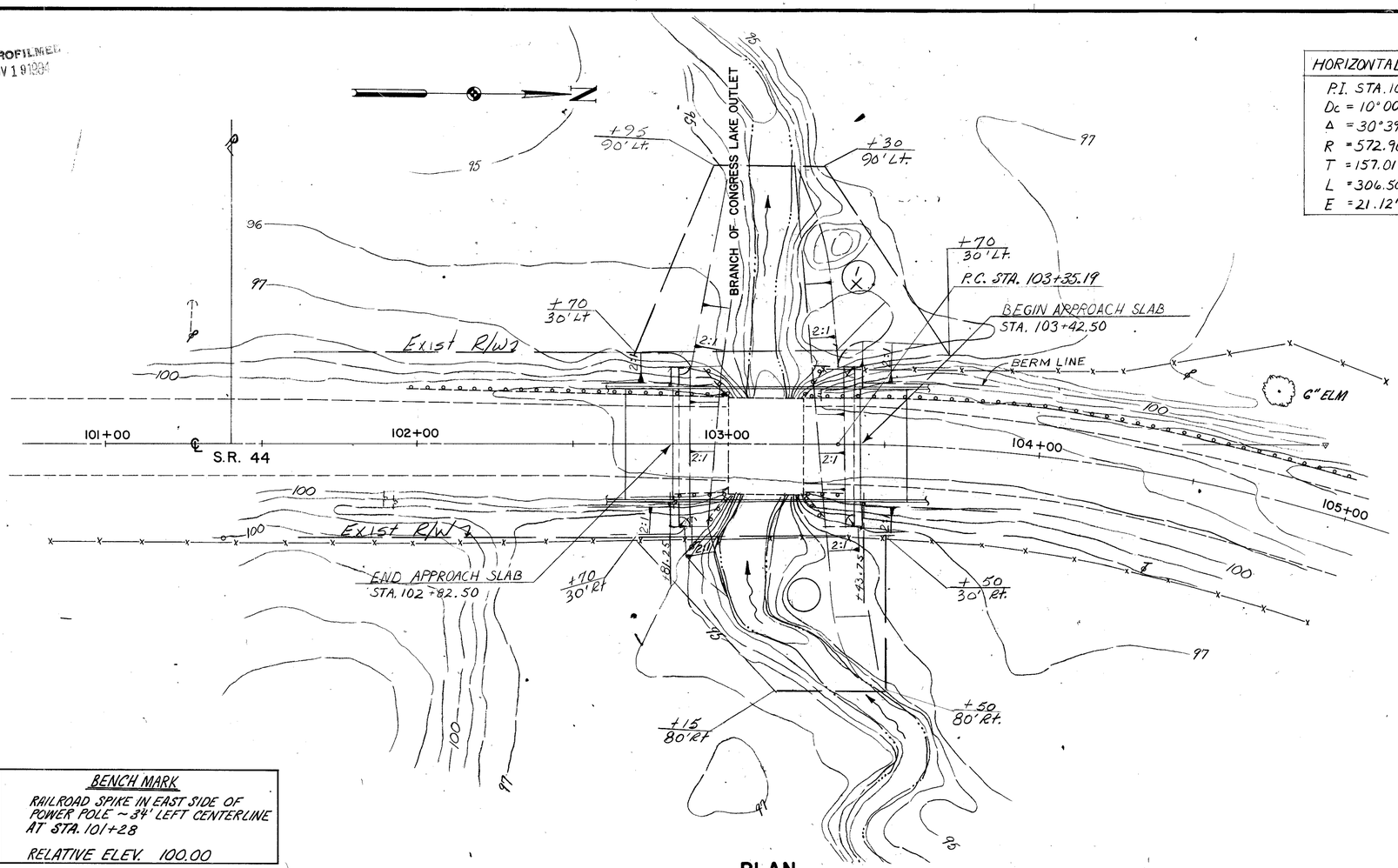

PLAN

HORIZONTAL CURVE DATA
P.I. STA. 104+92.20
Dc = 10°00'
Δ = 30°39'
R = 572.96'
T = 157.01'
L = 306.50'
E = 21.12'

BENCH MARK

RAILROAD SPIKE IN EAST SIDE OF POWER POLE ~ 34' LEFT CENTERLINE AT STA. 101+28

RELATIVE ELEV. 100.00

FOUNDATION DATA: ALL PILES SHALL BE 12 INCH CAST-IN-PLACE REINFORCED CONCRETE PILES HAVING AN ESTIMATED AVERAGE PAY LENGTH OF 50 FEET.

EARTHWORK LIMITS SHOWN ARE APPROXIMATE. ACTUAL SLOPES SHALL CONFORM TO PLAN CROSS-SECTIONS.

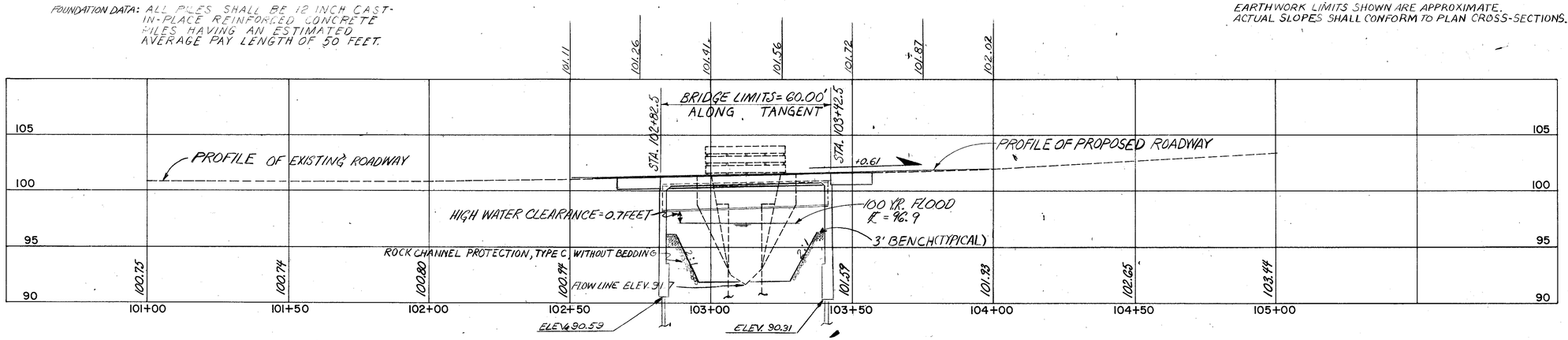

ELEVATION

DESIGN INFORMATION

ADT =

ADT =

ADTT =

DESIGN SPEED =

EXISTING STRUCTURE

TYPE: SINGLE SPAN STEEL BEAM WITH WOOD STRIP DECK ON CONCRETE ABUTMENTS WITH TIMBER EXTENSIONS AND TIMBER WINGWALLS

SPAN: 24' OVERALL

ROADWAY: 29' f/f GUARD RAIL

SKEW: NONE

LOADING: UNKNOWN

DATE BUILT: 1932

WEARING SURFACE: ASPHALT CONCRETE

APPROACH SLABS: NONE

ALIGNMENT: TANGENT

SUPERELEVATION: 4% (1/2" PER FT.)

DRAINAGE AREA: 2000 ACRES

WATERWAY AREA: 137.5 S.F.

CONDITION: POOR, LEGAL LIMIT REDUCED 25% DUE TO LOSS IN SECTION OF BEAMS

PROPOSED STRUCTURE

TYPE: SINGLE SPAN COMPOSITE STEEL BEAM WITH REINFORCED CONC. DECK ON INTEGRAL CAPPED PILE ABUTMENTS.

SPAN: 56' f/f ABUTMENTS

ROADWAY: 36' f/f GUARD RAIL

SIDEWALKS: NONE

LOADING: HS 20-44 AND THE ALTERNATE MILITARY LOADING, CASE II

SKEW: NONE

WEARING SURFACE: 1" MONOLITHIC CONCRETE

APPROACH SLABS: AS-1-81 (15' LONG)

ALIGNMENT: TANGENT (BRIDGE LIMITS OVERLAP CURVE BY 7.31')

SUPERELEVATION: VARIES, SEE ROADWAY GEOMETRICS

DESIGN FREQUENCY:

Q_{100} DISCHARGE: 401 C.F.S.

Q_{100} VELOCITY: 2.1 F.P.S.

Q_{100} HIGH WATER: ELEV. 96.9

DESCRIPTION	DATE	BY
REVISIONS		

1/6

SITE PLAN

BRIDGE NO. POR-44-5.01

OVER BRANCH OF CONGRESS LAKE OUTLET

RANDOLPH TOWNSHIP, PORTAGE COUNTY, OHIO

HAMMONTREE & ASSOCIATES, LTD.
CONSULTING ENGINEERING & SURVEYING
CANTON & AKRON, OHIO

DESIGNED	DRAWN	CHECKED
JWF	RKD	CFH
REVIEWED RAK	DRAWING NO.	

N34823

AA B/P 100 9-78 68703*

MICROFILMED
NOV 19 1985

FHWA REGION	STATE	PROJECT	
5	OHIO	BRF-62( )	

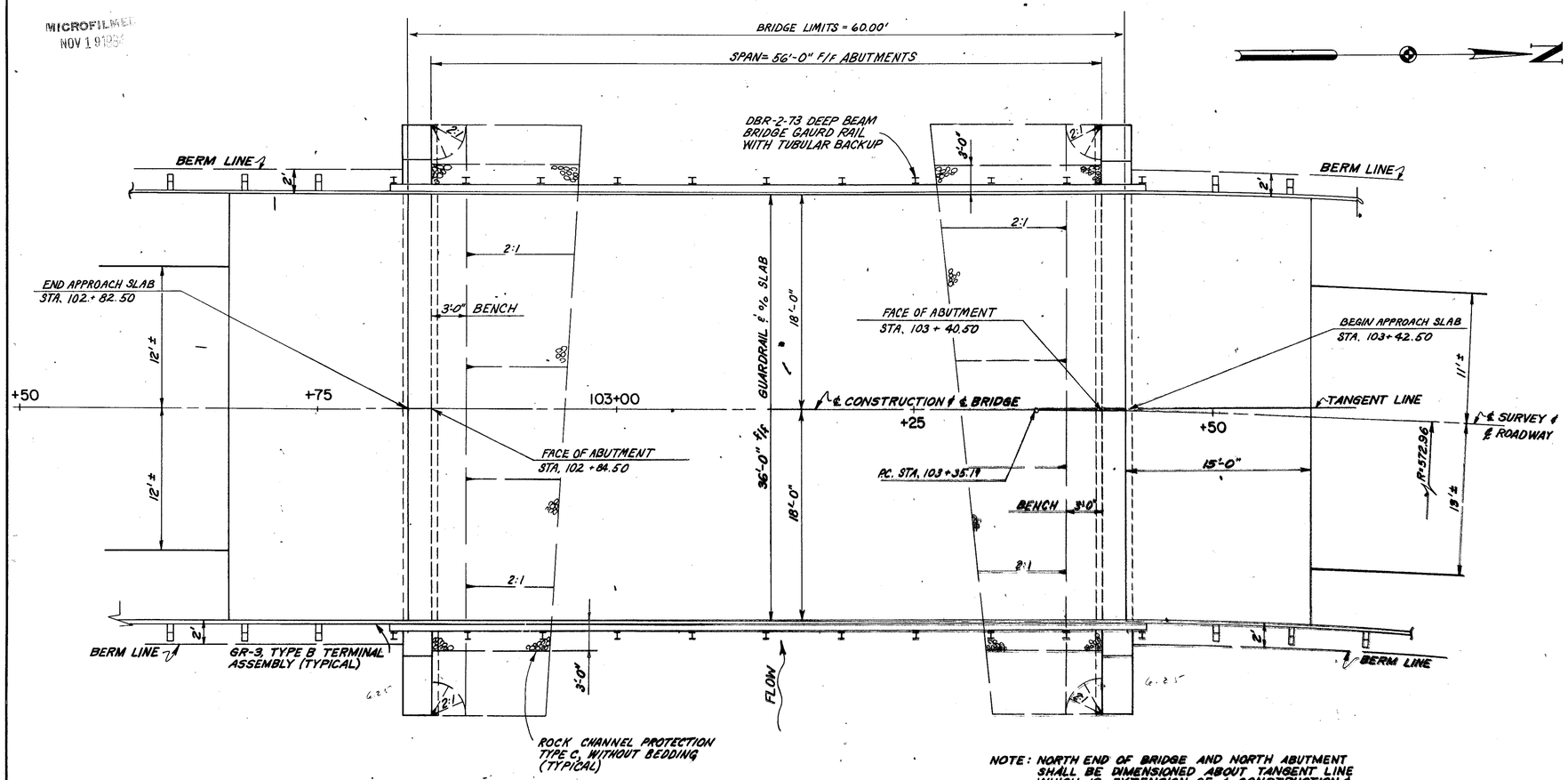

NOTE: NORTH END OF BRIDGE AND NORTH ABUTMENT SHALL BE DIMENSIONED ABOUT TANGENT LINE WHICH IS EXTENSION OF ℄ CONSTRUCTION ℄ ℄ BRIDGE.
EDGES OF NORTH APPROACH SLAB SHALL BE CONSTRUCTED ON CURVE SYMMETRICAL ABOUT ℄ ROADWAY.

GENERAL PLAN

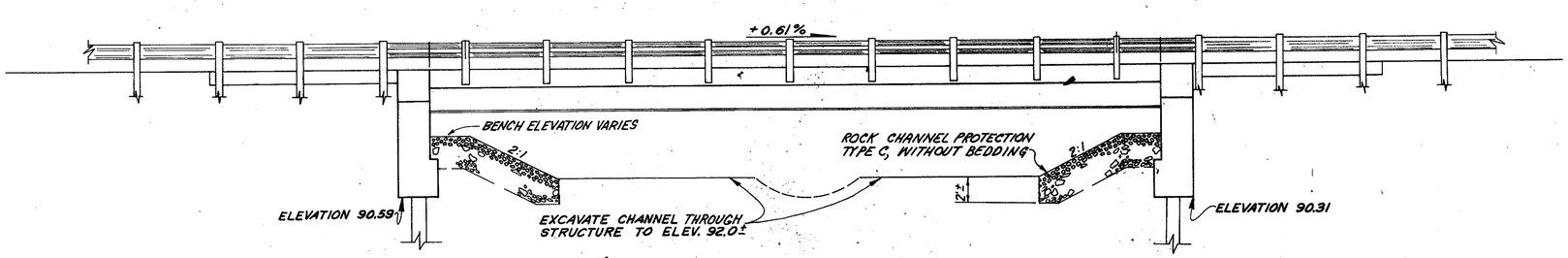

ELEVATION

GENERAL NOTES

STANDARD DRAWINGS AND SUPPLEMENTAL SPECIFICATIONS
REFERENCE SHALL BE MADE TO STANDARD DRAWINGS:

AS-1-81	DATED	11-27-81
DBR-2-73	DATED	4-10-73
TS-ICD-1-82	DATED	11-15-82 SHEETS 3, 4 AND 5

AND TO SUPPLEMENTAL SPECIFICATIONS:

824	DATED	10- 8-82
852	DATED	6- 8-79

DESIGN SPECIFICATIONS
THIS STRUCTURE CONFORMS TO "STANDARD SPECIFICATIONS FOR HIGHWAY BRIDGES" ADOPTED BY THE AMERICAN ASSOCIATION OF STATE HIGHWAY AND TRANSPORTATION OFFICIALS, 1977. INCLUDING THE 1978,1979, 1980, 1981 AND 1982 INTERIM SPECIFICATIONS AND THE OHIO "SUPPLEMENT" TO THESE SPECIFICATIONS.

DESIGN DATA

DESIGN LOADING -	HS20-44 CASE II AND THE ALTERNATE MILITARY LOADING
CONCRETE CLASS S -	COMPRESSIVE STRENGTH 4500 P.S.I.
CONCRETE CLASS C -	COMPRESSIVE STRENGTH 4000 P.S.I.
STRUCTURAL STEEL -	ASTM A36 - YIELD STRENGTH 36,000 P.S.I.
REINFORCING STEEL-	ASTM A615,A616, A617 - GRADE 60 MINIMUM YIELD STRENGTH 60,000 P.S.I.
DECK PROTECTION METHOD -	EPOXY COATED REINFORCING STEEL, -TOP MAT ONLY

MONOLITHIC WEARING SURFACE THICKNESS IS ASSUMED TO BE ONE INCH

REMOVAL OF EXISTING STRUCTURE
WHEN NO LONGER NEEDED TO MAINTAIN TRAFFIC THE EXISTING STRUCTURE SHALL BE REMOVED.

PILE DESIGN LOADS (BEARING CAPACITY)
THE DESIGN LOAD FOR THE ABUTMENT PILES IS 40 TONS PER PILE.

UTILITY LINES
ALL EXPENSE INVOLVED IN RELOCATING THE AFFECTED UTILITY LINES SHALL BE BORNE BY THE OWNER. THE CONTRACTOR AND OWNER ARE REQUESTED TO COOPERATE BY ARRANGING THEIR WORK IN SUCH A MANNER THAT INCONVENIENCE TO EITHER WILL BE HELD TO A MINIMUM.

PENETRATING EPOXY TREATMENT
ALL EXPOSED CONCRETE SURFACES INCLUDING THE EDGE AND BOTTOM OF THE DECK OVERHANG SHALL BE TREATED WITH PENETRATING EPOXY COMPOUND ACCORDING TO SUPPLEMENTAL SPECIFICATION 852.

DESCRIPTION	DATE	BY
REVISIONS		

GENERAL PLAN, ELEVATION & GENERAL NOTES
BRIDGE NO. POR-44-5.01
OVER BRANCH OF CONGRESS LAKE OUTLET
RANDOLPH TOWNSHIP, PORTAGE COUNTY, OHIO

HAMMONTREE & ASSOCIATES, LTD.
CONSULTING ENGINEERING & SURVEYING
CANTON — AKRON, OHIO

DESIGNED	DRAWN	CHECKED
CFH	EAK	RAK
REVIEWED JWF	DRAWING NO.	

MICROFILMED
NOV 19 1984
MICROFILMED
NOV 19 1984

FHWA REGION	STATE	PROJECT	
5	OHIO	BRF - 62( )	

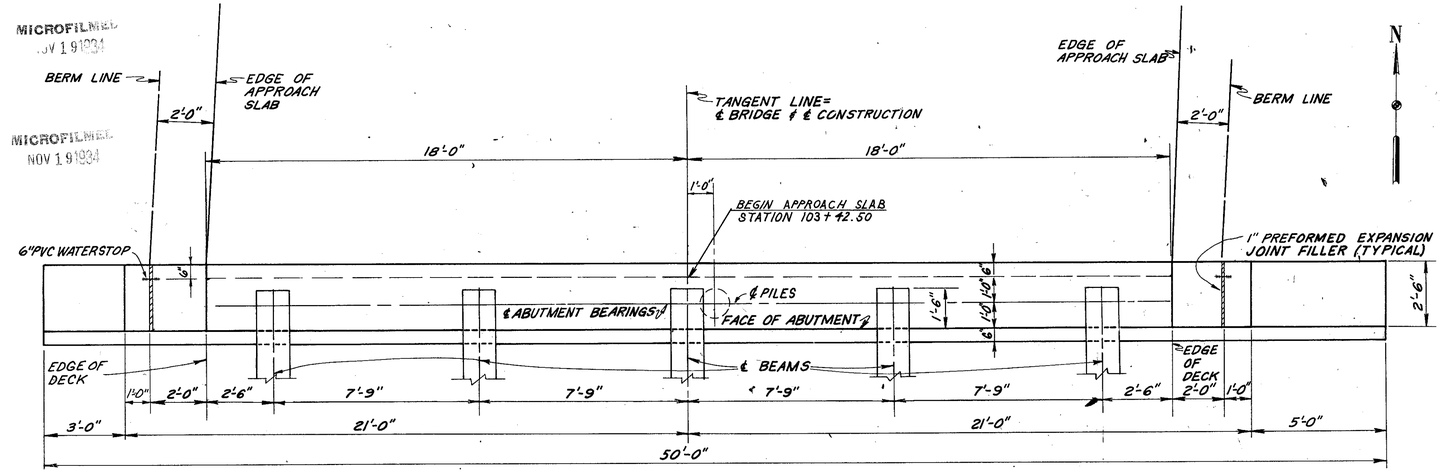

PLAN
NORTH ABUTMENT

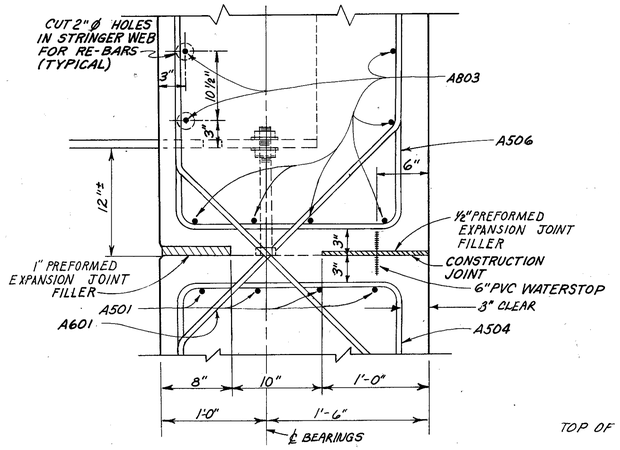

DETAIL A

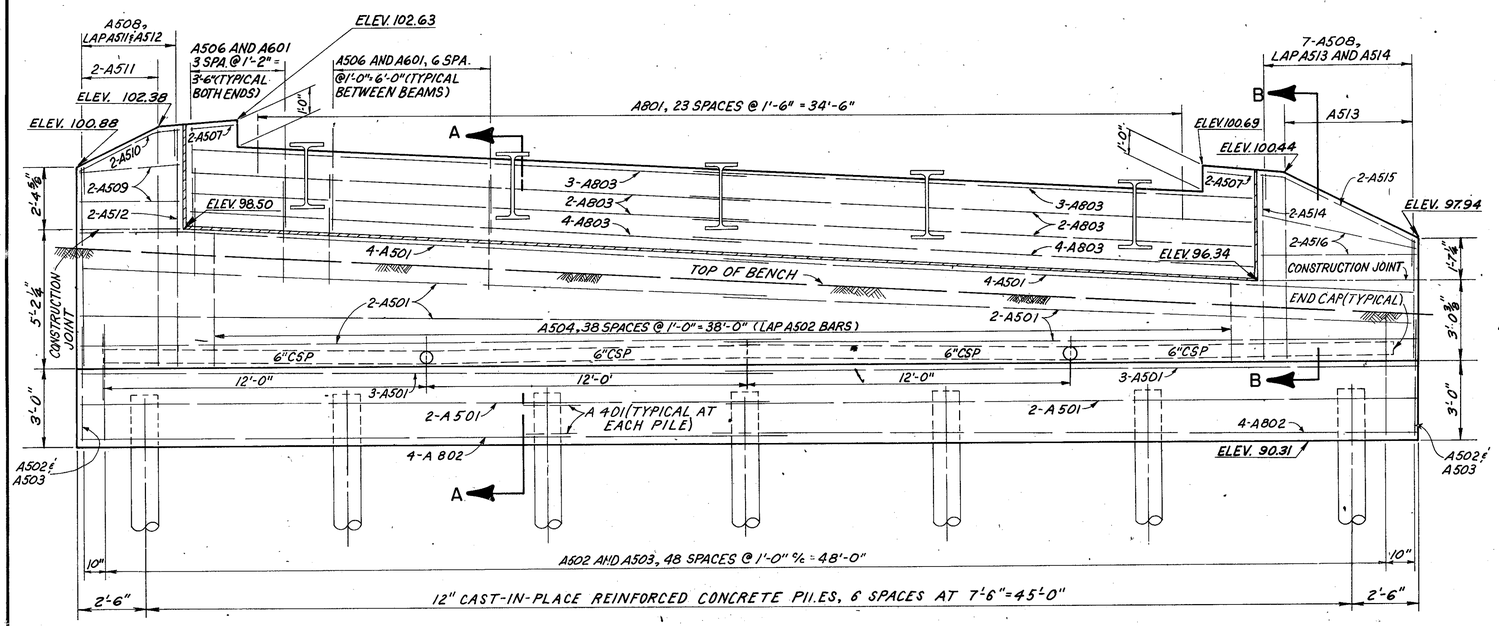

ELEVATION

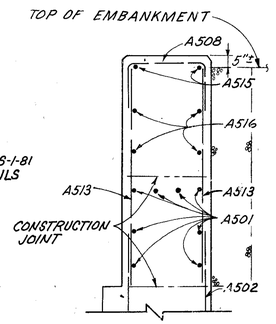

SECTION B-B

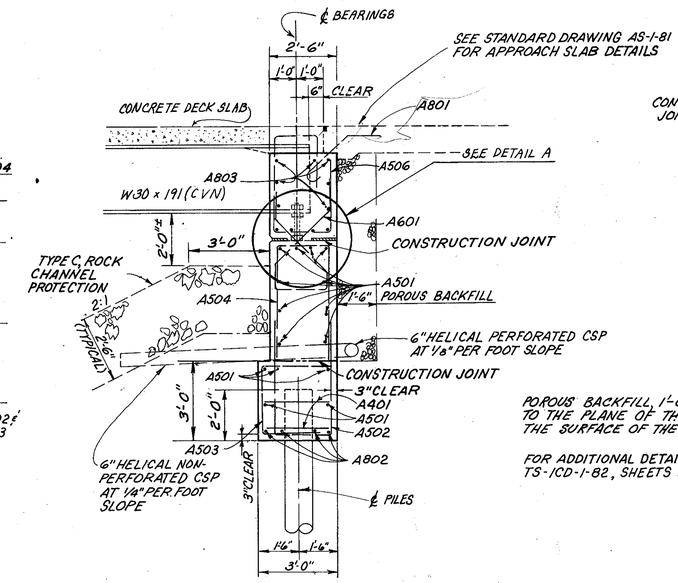

SECTION A-A

POROUS BACKFILL, 1'-6" THICK, SHALL EXTEND UPWARD TO THE PLANE OF THE SUBGRADE AND LATERALLY TO THE SURFACE OF THE EMBANKMENT SLOPES.

FOR ADDITIONAL DETAILS SEE STANDARD DRAWING TS-ICD-1-82, SHEETS 3, 4 AND 5.

3 / 6

DESCRIPTION	DATE	BY
REVISIONS		

NORTH ABUTMENT DETAILS
BRIDGE NO. POR-44-5.01
OVER BRANCH OF CONGRESS LAKE OUTLET
RANDOLPH TOWNSHIP, PORTAGE COUNTY, OHIO

HAMMONTREE & ASSOCIATES, LTD.
CONSULTING ENGINEERING & SURVEYING
CANTON & AKRON, OHIO

DESIGNED	DRAWN	CHECKED
CFH	EAK	RAK
REVIEWED JWF	DRAWING NO.	

AA IB P 100 9-78 68203+

MICROFILMED
NOV 19 1984

FHWA REGION	STATE	PROJECT	
5	OHIO	BRF-62( )	

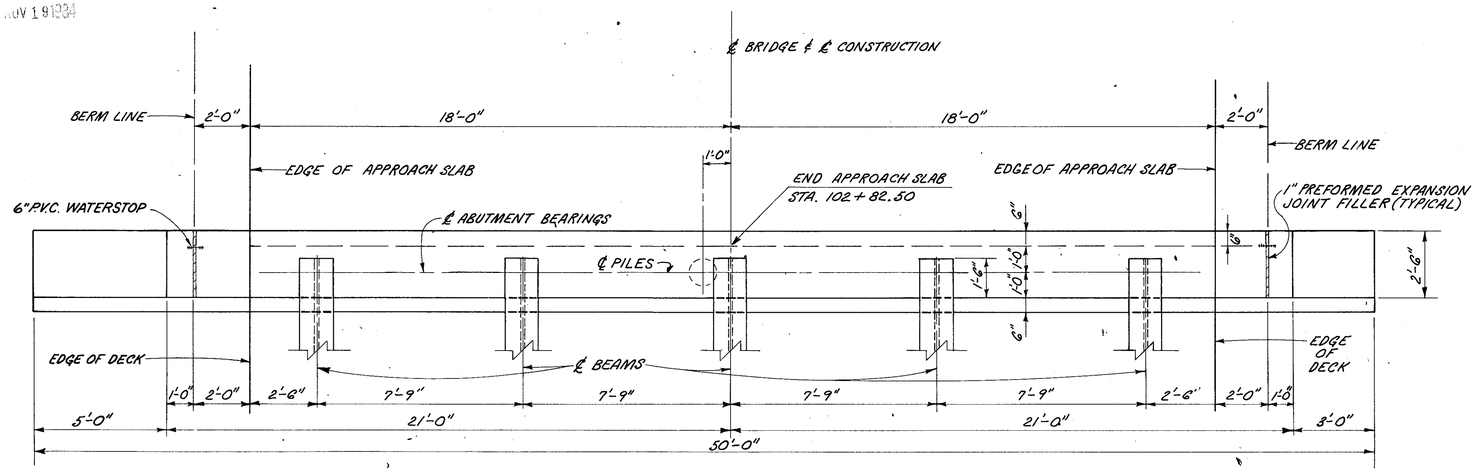

PLAN
SOUTH ABUTMENT

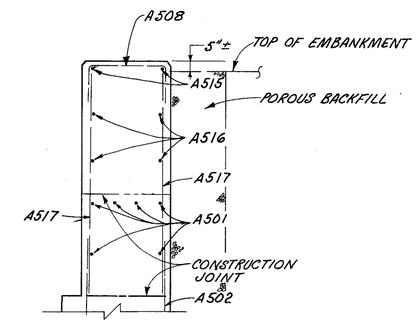

SECTION B–B

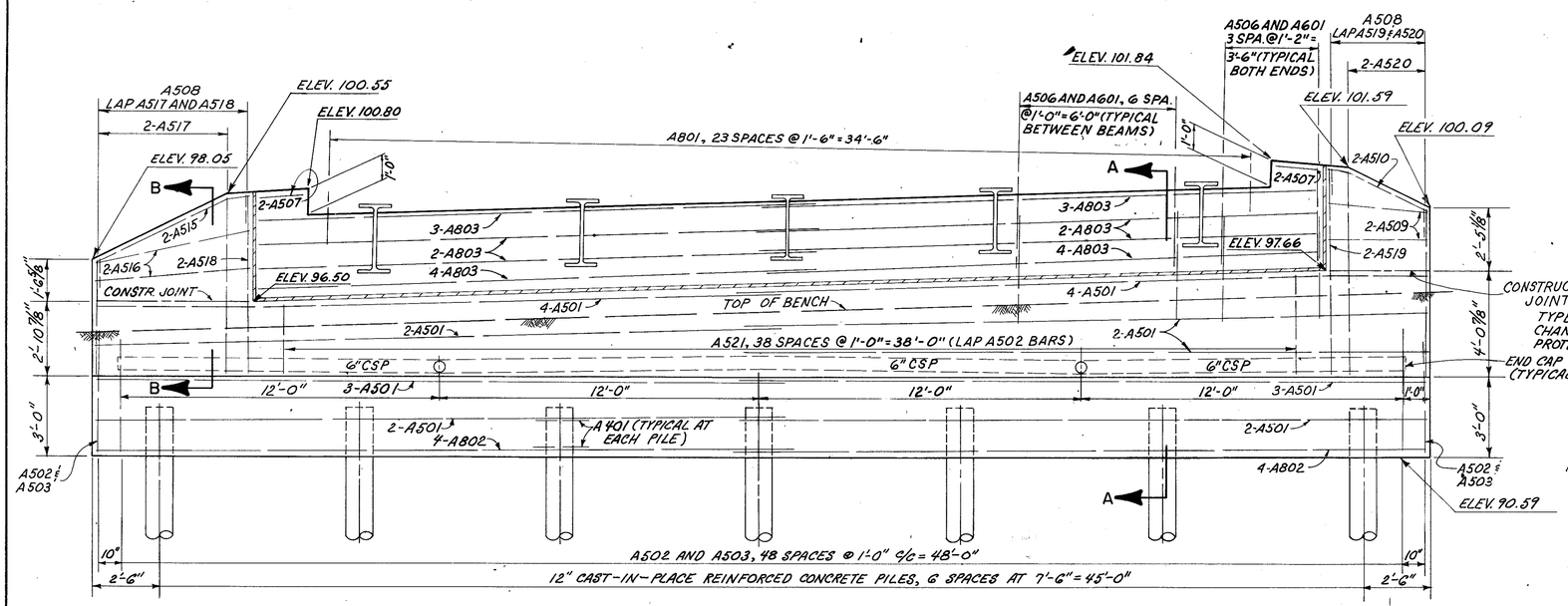

ELEVATION

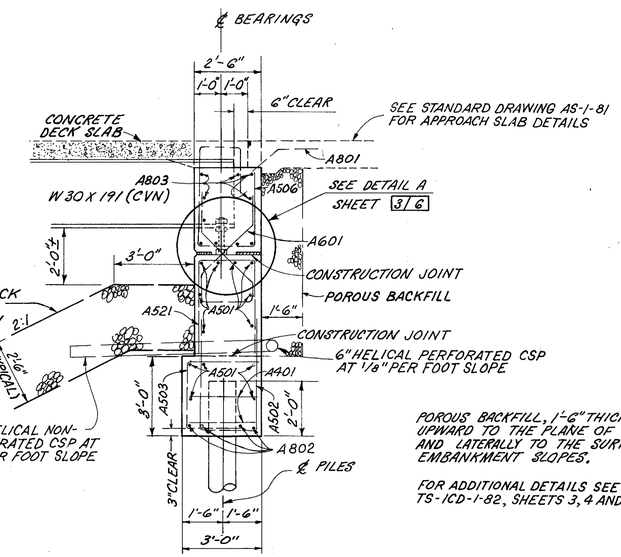

SECTION A–A

POROUS BACKFILL, 1'-6" THICK, SHALL EXTEND UPWARD TO THE PLANE OF THE SUBGRADE AND LATERALLY TO THE SURFACE OF THE EMBANKMENT SLOPES.

FOR ADDITIONAL DETAILS SEE STANDARD DRAWING TS-ICD-1-82, SHEETS 3, 4 AND 5.

DESCRIPTION	DATE	BY
REVISIONS		

SOUTH ABUTMENT DETAILS
BRIDGE NO. POR-44-5.01
OVER BRANCH OF CONGRESS LAKE OUTLET
RANDOLPH TOWNSHIP, PORTAGE COUNTY, OHIO

HAMMONTREE & ASSOCIATES, LTD.
CONSULTING ENGINEERING & SURVEYING
CANTON — AKRON, OHIO

DESIGNED	DRAWN	CHECKED
CFH	RKD	RAK
REVIEWED	DRAWING NO.	
JWF		

AA B.P 100 9-72 68703*

MICROFILMED
NOV 19 1974

FHWA REGION	STATE	PROJECT	
5	OHIO	BRF-62( )	

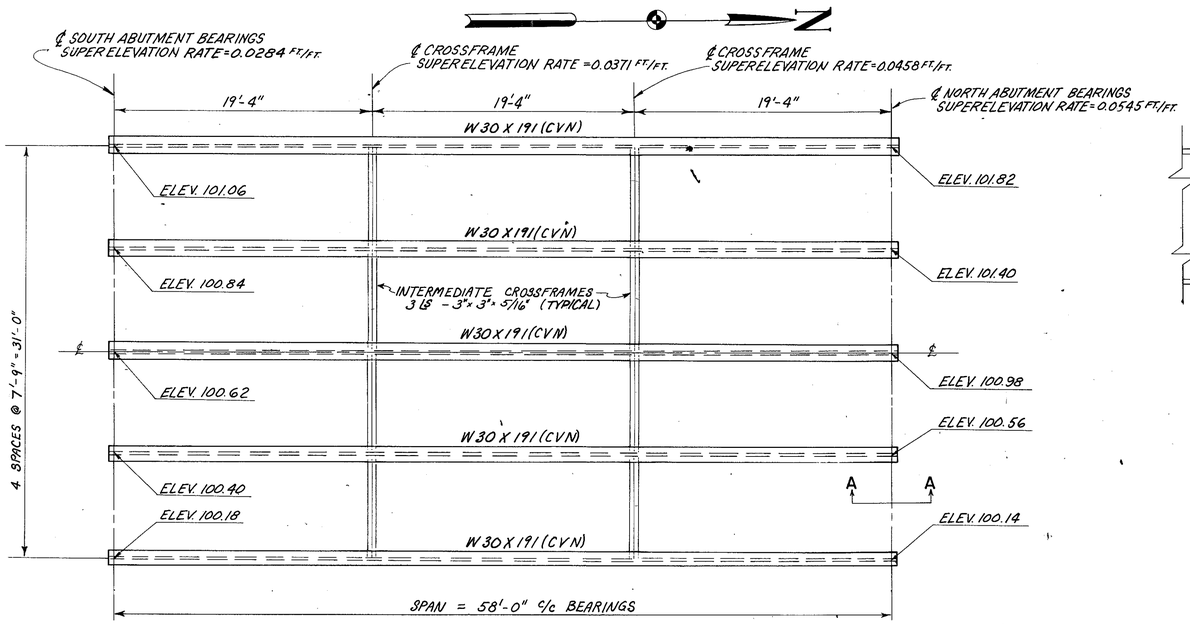

STEEL FRAMING PLAN

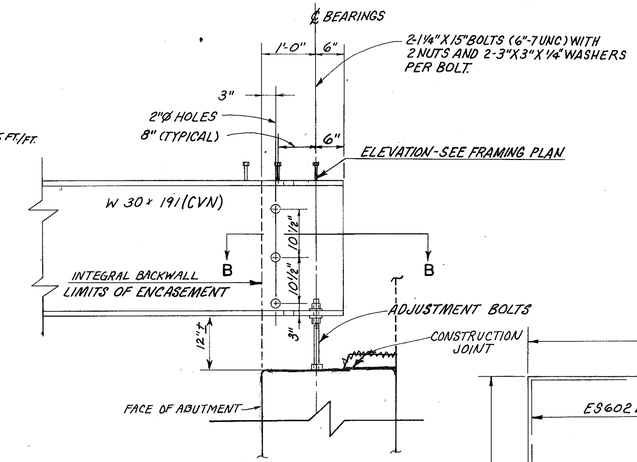

SECTION A–A

DEFLECTION AND CAMBER			
	1/4 POINT	CENTER POINT	3/4 POINT
DEFLECTION DUE TO WEIGHT OF STEEL	1/8"	3/16"	1/8"
DEFLECTION DUE TO REMAINING DEAD LOAD	5/8"	13/16"	5/8"
REQUIRED SHOP CAMBER	3/4"	1"	3/4"

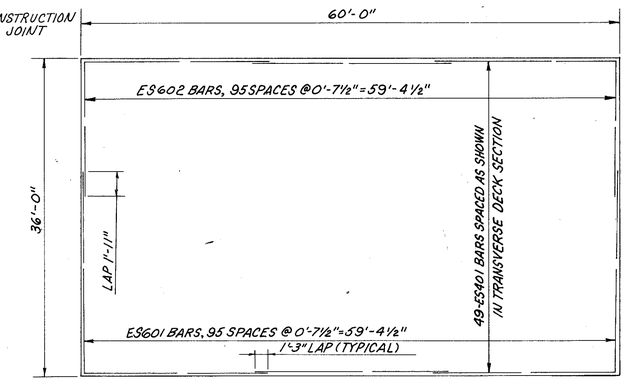

TOP REINFORCING STEEL

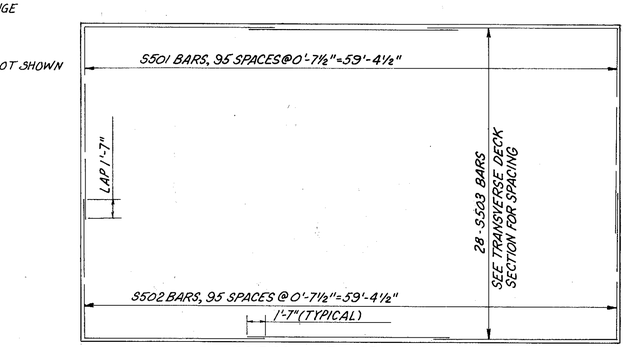

BOTTOM REINFORCING STEEL

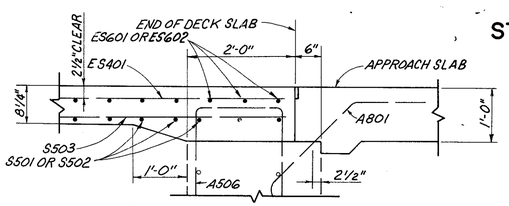

END OF SLAB DETAIL

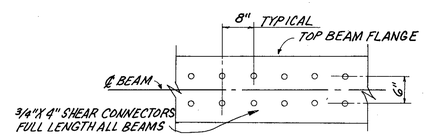

SHEAR CONNECTOR DETAIL

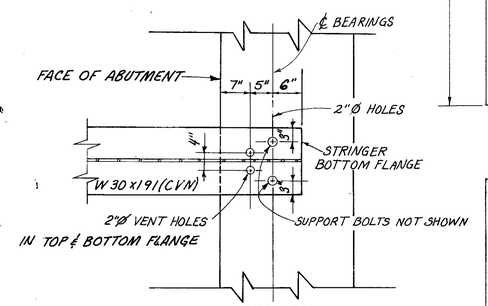

SECTION B–B

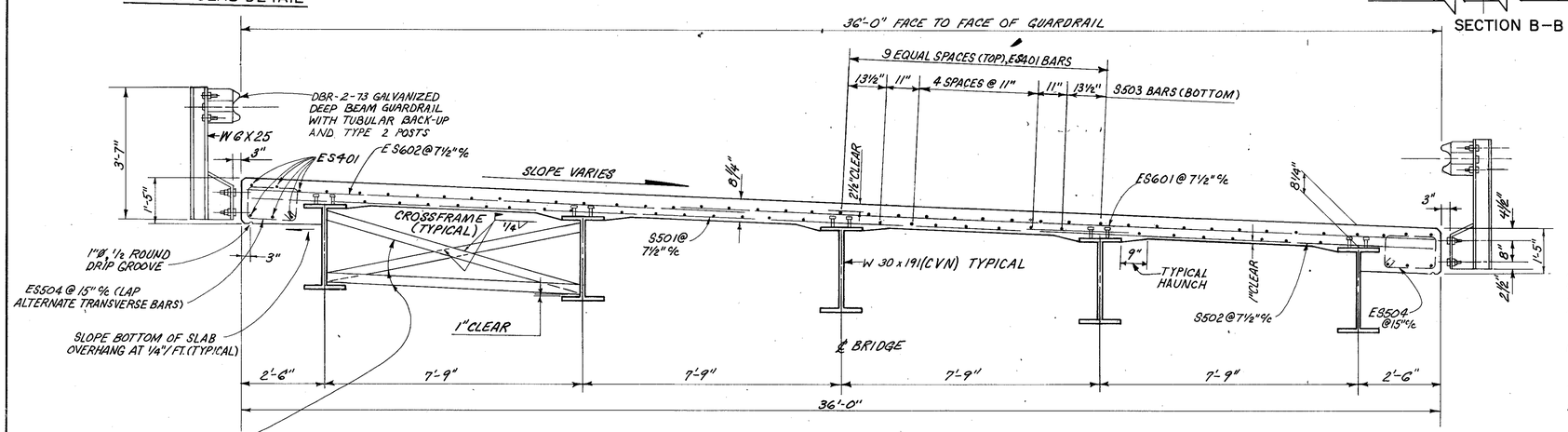

CROSSFRAME ∡S-3X3X5/16. WELD BOTH SIDES OF VERTICAL LEG AND TOP SIDE OF HORRIZONTAL LEG TO BEAM WITH ¼" CONTINUOUS FILLET WELD.

TRANSVERSE DECK SECTION

NOTES

BAR MARKS FOR REINFORCING BARS WHICH ARE TO BE EPOXY COATED INCLUDE A LETTER PREFIX E.

A HAUNCH WIDTH OF 9" SHALL BE USED FOR COMPUTING QUANTITY OF CONCRETE. HOWEVER, THE HAUNCH WIDTH MAY VARY BETWEEN 6" AND 12" (PROVIDED THAT THE SLOPE SHALL BE NOT MORE THAN 1:4 FOR A HAUNCH LESS THAN 9" WIDTH.)

WHERE A SHAPE OR PLATE IS DESIGNATED (CVN) THE MATERIAL SHALL MEET SPECIFIED MINIMUM NOTCH TOUGHNESS REQUIREMENTS AS SPECIFIED IN 711.02 OF CMS.

SEE SHEET 6/6 FOR DECK SCREED ELEVATIONS

DECK SLAB DEPTH: THE DISTANCE SHOWN FROM TOP OF DECK SLAB TO TOP OF STEEL BEAM IS THE DESIGN DIMENSION, AND INCLUDES 1" MONOLITHIC WEARING SURFACE. THE QUANTITY OF DECK CONCRETE TO BE PAID FOR SHALL BE BASED ON THIS DIMENSION, EVEN THOUGH DEVIATION FROM IT MAY BE NECESSARY BECAUSE THE TOP FLANGE OF THE BEAM MAY NOT HAVE THE EXACT CAMBER OR CONFORMATION REQUIRED TO PLACE IT PARALLEL TO THE FINISHED GRADE.

5/6

DESCRIPTION	DATE	BY
REVISIONS		

SUPERSTRUCTURE DETAILS
BRIDGE NO. POR-44-5.01
OVER BRANCH OF CONGRESS LAKE OUTLET
RANDOLPH TOWNSHIP, PORTAGE COUNTY, OHIO

HAMMONTREE & ASSOCIATES, LTD.
CONSULTING ENGINEERING & SURVEYING
CANTON – AKRON, OHIO

DESIGNED	DRAWN	CHECKED
CFH	EAK	RAK
REVIEWED	DRAWING NO.	
JWF		

MICROFILMED
NOV 1 9 1993

FHWA REGION	STATE	PROJECT	
5	OHIO	BRF-62( )	

REINFORCING STEEL LIST

BENDING DIAGRAMS

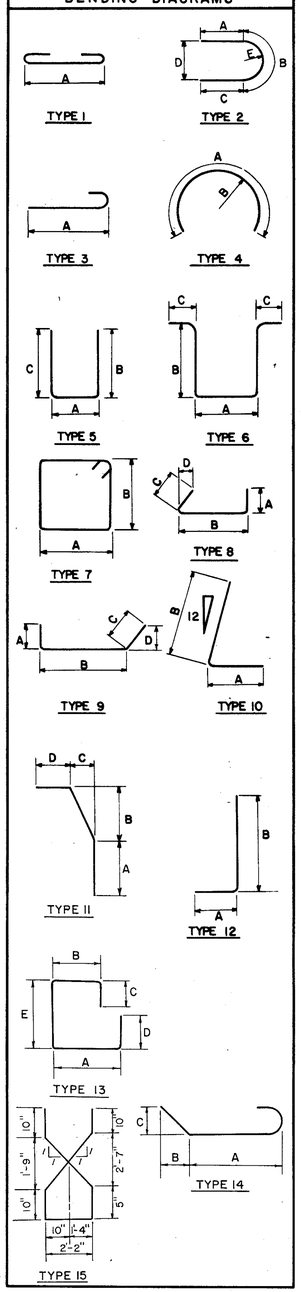

MARK	NO.	LENGTH	WEIGHT	TYPE	A	B	C	D	E
SUPERSTRUCTURE									
S501	96	26'-4"	2637	S					
S502	96	10'-10"	1085	S					
S503	84	20'-11"	1833	S					
EPOXY COATED REINFORCING STEEL									
ES601	96	22'-7"	3256	S					
ES602	96	14'-10"	2139	6					
ES504	90	5'-5 1/2"	512	7	1'-6"	1'-0"			
ES401	147	20'-8"	2029	S					
ABUTMENTS									
A801	48	4'-9"	609	14	2'-3"	1'-0"	1'-0"		
A802	16	26'-1"	1114	S					
A803	44	21'-0"	2467	S					
A601	72	10'-9"	1163	15	SEE BENDING DIAGRAM				
A501	52	25'-8"	1392	S					
A502	102	10'-6"	1117	5	2'-1"	4'-4"	4'-4"		
A503	102	7'-1"	754	5	2'-7"	2'-8"	2'-1"		
A504	39	7'-6" TO 11'-5 1/2"	389	5	2'-1"	VARY B AND C BY 5/8"			
						INCREMENTS FROM 2'-10" TO 4'-9 3/4"			
A506	72	10'-9"	807	13	2'-1"	1'-7"	1'-9"	2'-5"	3'-5"
A507	8	1'-7"	13	S					
A508	24	3'-10"	96	5	2'-1"	1'-0"	1'-0"		
A509	8	3'-8"	31	S					
A510	4	4'-0"	17	9	0	3'-2"	0'-10"	0'-6"	
A511	8	7'-5" TO 8'-11"	68	S	2 SERIES OF 4, VARY BY 6" INCREMENTS				
A512	2	9'-0"	19	S					
A513	12	4'-5" TO 6'-11"	71	S	2 SERIES OF 6, VARY BY 6" INCREMENTS				
A514	2	7'-0"	15	S					
A515	4	6'-3"	26	9	0	5'-5"	0'-10"	0'-6"	
A516	8	5'-9"	48	S					
A517	12	4'-3" TO 6'-9"	69	S	2 SERIES OF 6, VARY BY 6" INCREMENTS				
A518	2	6'-10"	14	S					
A519	2	7'-11"	17	S					
A520	8	6'-4" TO 7'-10"	59	S	2 SERIES OF 4, VARY BY 6" INCREMENTS				
A521	39	7'-2 1/2" TO 9'-7"	342	5	2'-1"	VARY B AND C BY 3/8"			
						INCREMENTS FROM 2'-8 1/4" TO 3'-10 1/2"			
A401	28	8'-11"	167	7	1'-9"	2'-5 1/2"			
		TOTAL	24,375						

REINFORCING STEEL SAMPLES: REFER TO CMS SECTIONS 106.03, 700, 709.01 THROUGH 709.05 AND 709.08. SUFFICIENT ADDITIONAL REINFORCING STEEL SHALL BE PROVIDED FOR SAMPLING. RANDOM SAMPLES SHALL BE REPLACED IN THE STRUCTURES BY THE ADDITIONAL STEEL, SPLICED IN ACCORDANCE WITH 509.08.

ESTIMATED QUANTITIES

ITEM	TOTAL	UNIT	DESCRIPTION	ABUT.	PIERS	SUPER.	GEN.
202	LUMP		STRUCTURE REMOVED				LUMP
503	LUMP		COFFERDAMS, CRIBS AND SHEETING				LUMP
503	208	CU. YD.	UNCLASSIFIED EXCAVATION	208			
505	LUMP		PILE DRIVING EQUIPMENT MOBILIZATION				LUMP
507	700	LIN. FT.	12" CAST-IN-PLACE REINFORCED CONCRETE PILES	700			
509	16,439	LB.	REINFORCING STEEL, GRADE 60	10,884		5,555	
511	99	CU. YD.	CLASS C CONCRETE, ABUTMENTS	99			
511	66	CU. YD.	CLASS S CONCRETE, SUPERSTRUCTURE			66	
513	57,600	LB.	STRUCTURAL STEEL (AISC CATEGORY I) ASTM A-36			57,600	
513	880	EACH	WELDED STUD SHEAR CONNECTORS (SEE PROPOSAL NOTE)			880	
514	57,600	LB.	FIELD PAINTING OF NEW STRUCTURAL STEEL, SYSTEM A			57,600	
516	94	SQ. FT.	1" PREFORMED EXPANSION JOINT FILLER	94			
516	74	SQ. FT.	1/2" PREFORMED EXPANSION JOINT FILLER	74			
516	95	LIN. FT.	P.V.C. WATER STOP, AS PER PLAN	95			
517	120	LIN. FT.	RAILING (DEEP BEAM RAIL WITH STEEL TUBULAR BACKUP AND STEEL POSTS AND BOLTS)			120	
518	39	CU. YD.	POROUS BACKFILL	39			
518	96	LIN. FT.	6" PERFORATED, HELICAL CORRUGATED STEEL PIPE, INCLUDING SPECIALS, 707.01	96			
518	36	LIN. FT.	6" NON-PERFORATED HELICAL CORRUGATED STEEL PIPE, INCLUDING SPECIALS, 707.01	36			
601	124	CU. YD.	ROCK CHANNEL PROTECTION, TYPE C Without Filter				124
824	7,936	LB.	EPOXY COATED REINFORCING STEEL, GRADE 60			7,936	
852	289	SQ. YD.	SURFACE PREPARATION			289	
852	18	GAL.	PENETRATING EPOXY COMPOND			18	
852	LUMP		TEST SECTIONS				LUMP

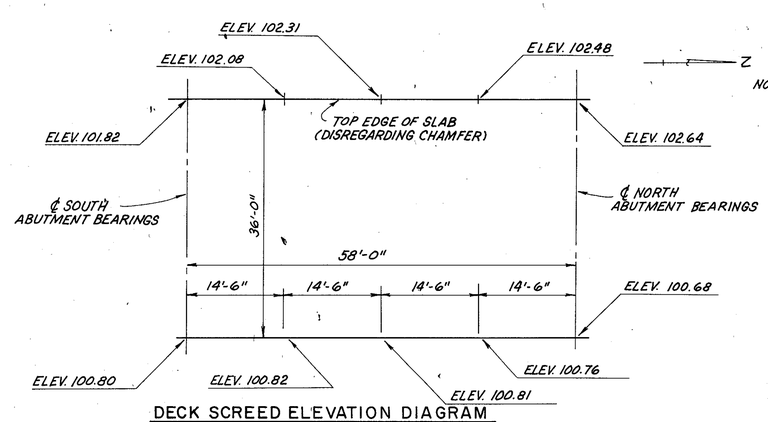

NOTE: WELDS FOR ATTACHMENT OF FINISHING MACHINE SUPPORTS SHALL NOT BE CLOSER THAN ONE INCH TO EDGE OF BEAM FLANGE, NOR LONGER THAN TWO INCHES IN LENGTH.

DECK SCREED ELEVATION DIAGRAM

ELEVATIONS SHOWN ARE THOSE REQUIRED BEFORE CONCRETE IS PLACED

6/6

DESCRIPTION	DATE	BY
REVISIONS		

REINFORCING STEEL & EST. QUANTITIES

BRIDGE NO. POR-44-5.01

OVER BRANCH OF CONGRESS LAKE OUTLET

RANDOLPH TOWNSHIP, PORTAGE COUNTY, OHIO

HAMMONTREE & ASSOCIATES, LTD.
CONSULTING ENGINEERING & SURVEYING
CANTON – AKRON, OHIO

DESIGNED	DRAWN	CHECKED
C.F.H.	C.K.C.	R.A.K.
REVIEWED	DRAWING NO.	
J.W.F.		