MAH - /POR MCRO FY2017
160623 PID - 100298
Dist 4 12/15/2016

Contract Proposal Available @ www.
Contracts.dot.state.oh.us/home

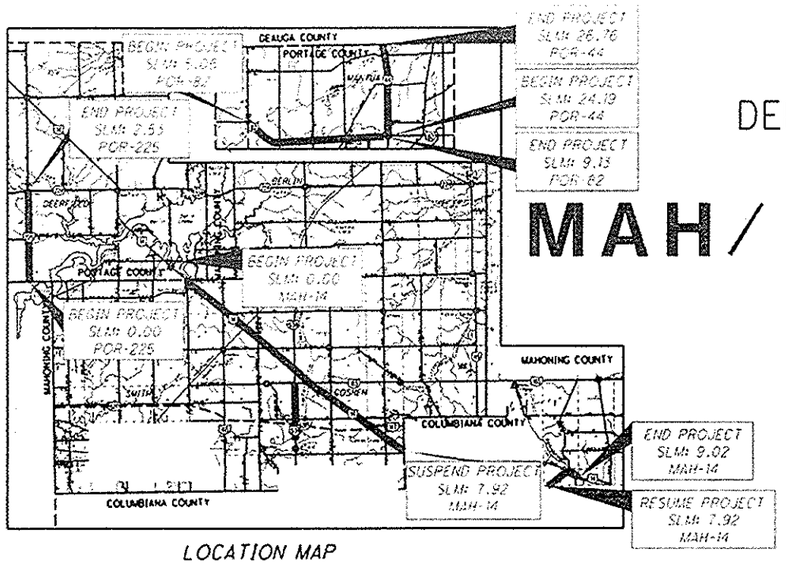

LOCATION MAP

LATITUDE: 41°06'31" LONGITUDE: 81°03'03"

SCALE IN MILES

0 1 2 3 4

N

PORTION TO BE IMPROVED
INTERSTATE HIGHWAY
FEDERAL ROUTES
STATE ROUTES
COUNTY & TOWNSHIP ROADS
OTHER ROADS

STATE OF OHIO

DEPARTMENT OF TRANSPORTATION

MAH/POR-MCRO-FY2017

CITY OF SALEM
DEERFIELD TOWNSHIP
GOSHEN TOWNSHIP
GREEN TOWNSHIP
MANTUA TOWNSHIP
SMITH TOWNSHIP

MAHONING COUNTY
PORTAGE COUNTY

PROJECT DESCRIPTION

SINGLE COURSE MICROSURFACING OF VARIOUS SECTIONS (16.59 MILES) OF SR 14 IN MAHONING COUNTY AND SR-44, SR 82 & SR 225 IN PORTAGE COUNTY.

PROJECT EARTH DISTURBED AREA: N/A (MAINTENANCE PORJECT)
ESTIMATED CONTRACTOR EARTH DISTURBED AREA: N/A (MAINTENANCE PORJECT)
NOTICE OF INTENT EARTH DISTURBED AREA: N/A (MAINTENANCE PORJECT)

INDEX OF SHEETS:

TITLE SHEET	1
TYPICAL SECTION	2
GENERAL NOTES	3
MAINTENANCE OF TRAFFIC	4
GENERAL SUMMARY	5
PAVEMENT CALCULATIONS	6-10
RAISED PAVEMENT MARKERS	11
PAVEMENT MARKING SUBSUMMARY	12

2016 SPECIFICATIONS

THE STANDARD SPECIFICATIONS OF THE STATE OF OHIO, DEPARTMENT OF TRANSPORTATION, INCLUDING CHANGES AND SUPPLEMENTAL SPECIFICATIONS LISTED IN THE PROPOSAL SHALL GOVERN THIS IMPROVEMENT.

I HEREBY APPROVE THESE PLANS AND DECLARE THAT THE MAKING OF THIS IMPROVEMENT WILL NOT REQUIRE THE CLOSING TO TRAFFIC OF THE HIGHWAY AND THAT PROVISIONS FOR THE MAINTENANCE AND SAFETY OF TRAFFIC WILL BE AS SET FORTH ON THE PLANS AND ESTIMATES.

DESIGN DESIGNATION

DESIGN FUNCTIONAL CLASSIFICATION:
RURAL MINOR ARTERIAL MAH-14 (0.00-7.92)
URBAN MAJOR COLLECTOR MAH-14 (7.92-9.02)
RURAL MINOR ARTERIAL POR-44 (24.19-26.76)
RURAL MAJOR COLLECTOR POR-82 (5.06-9.13)
RURAL MINOR ARTERIAL POR-225 (0.00-2.53)

NHS PROJECT ..... NO MAH-14 (0.00-7.92)
YES MAH-14 (7.92-9.02)
NO POR-44 (24.19-26.76)
NO POR-82 (5.06-9.13)
NO POR-225 (0.00-2.53)

DESIGN EXCEPTIONS

NONE

UNDERGROUND UTILITIES

CONTACT BOTH SERVICES TWO WORKING DAYS BEFORE YOU DIG.

OHIO Utilities Protection SERVICE — Call Before You Dig 1-800-362-2764

(Non-members must be called directly)

OIL & GAS PRODUCERS UNDERGROUND PROTECTION SERVICE 1-800-925-0988

PLAN PREPARED BY:
ODOT DISTRICT 4, PLANNING & ENGINEERING
2088 S. ARLINGTON ROAD
AKRON, OH 44306

ENGINEERS SEAL:

STATE OF OHIO REBECCA M. BISESI E-68469 REGISTERED PROFESSIONAL ENGINEER

SIGNED: Rebecca Bisesi
DATE: 9-6-16

STANDARD CONSTRUCTION DRAWINGS							SUPPLEMENTAL SPECIFICATIONS	SPECIAL PROVISIONS
DM-4.3	1/15/16	TC-41.20	10/18/13				800-2016 10/21/16	
DM-4.4	1/15/16	TC-52.10	10/18/13				832 1/17/14	
		TC-52.20	7/15/16					
MT-97.10	7/18/14	TC-64.10	7/17/15					
MT-97.12	7/18/14	TC-65.10	1/17/14					
MT-99.20	7/19/13	TC-65.11	7/15/16					
MT-101.90	7/17/15	TC-71.10	7/15/16					
MT-105.10	7/19/13							

APPROVED
DATE 9-7-16 DISTRICT DEPUTY DIRECTOR

APPROVED Jerry Wray Jr.
DATE 10-4-16 DIRECTOR, DEPARTMENT OF TRANSPORTATION

FEDERAL PROJECT NO. E160(374)

PID NO. 100298

CONSTRUCTION PROJECT NO.

RAILROAD INVOLVEMENT NONE

MAH/POR-MCRO-FY2017

I:\Project Data\MAH\100298_MCRO-FY2017\Design\Roadway\Sheets\100298_GT001.dgn

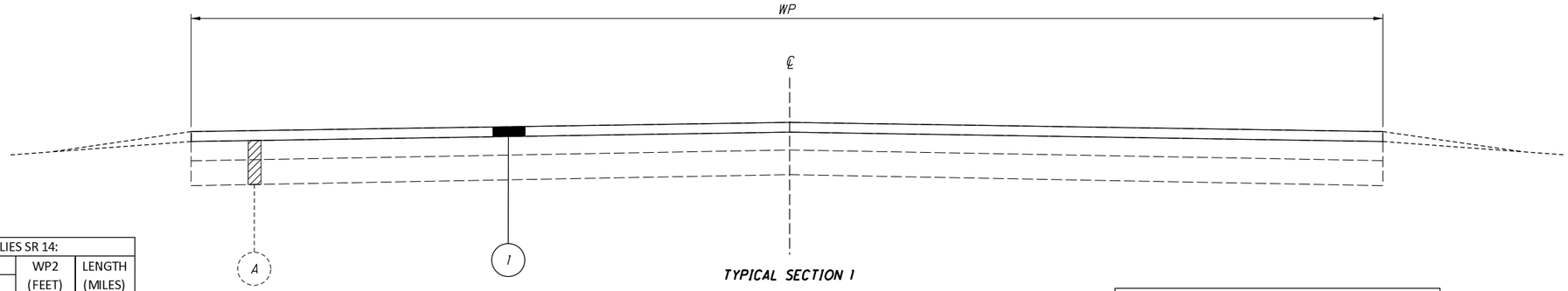

TYPICAL SECTION 1

SECTION 1 APPLIES SR 14:				
ROUTE	SLM		WP2	LENGTH
	FROM	TO	(FEET)	(MILES)
MAH 14	0.00	0.34	24	0.34
MAH 14	0.34	0.38	36	0.04
MAH 14	0.38	4.53	24	4.15
MAH 14	4.53	4.58	32	0.05
MAH 14	4.60	4.64	32	0.04
MAH 14	4.64	6.63	24	1.99
MAH 14	6.63	6.73	31.5	0.10
MAH 14	6.73	6.76	39	0.03
MAH 14	6.76	6.86	31.5	0.10
MAH 14	6.86	7.11	23	0.25
MAH 14	7.11	7.14	31.5	0.03
MAH 14	7.18	7.21	31.5	0.03
MAH 14	7.21	7.92	23	0.71

SECTION 1 APPLIES SR 14:				
ROUTE	SLM		WP2	LENGTH
	FROM	TO	(FEET)	(MILES)
MAH 14	8.02	8.04	55	0.02
MAH 14	8.04	8.05	48.25	0.01
MAH 14	8.05	8.08	36.75	0.03
MAH 14	8.08	8.80	32	0.72
MAH 14	8.80	8.82	37	0.02
MAH 14	8.82	8.84	44	0.02
MAH 14	8.88	8.91	44	0.03
MAH 14	8.91	9.02	28	0.11

SECTION 1 APPLIES SR 44:				
ROUTE	SLM		WP2	LENGTH
	FROM	TO	(FEET)	(MILES)
POR 44	24.31	26.60	28	2.29
POR 44	26.60	26.76	30	0.16

SECTION 1 APPLIES SR 82:				
ROUTE	SLM		WP2	LENGTH
	FROM	TO	(FEET)	(MILES)
POR 82	5.06	9.13	31	4.07

SECTION 1 APPLIES SR 225:				
ROUTE	SLM		WP2	LENGTH
	FROM	TO	(FEET)	(MILES)
POR 225	0.00	2.47	31	2.47
POR 225	2.47	2.53	43.5	0.06

**SLM 2.41-2.53 NORTHBOUND LANE
ITEM 421 MICROSURFACING, RUT FILL COURSE
UNDER SINGLE COURSE MICROSURACING
(SEE SHEET 11 FOR QUANTITY)

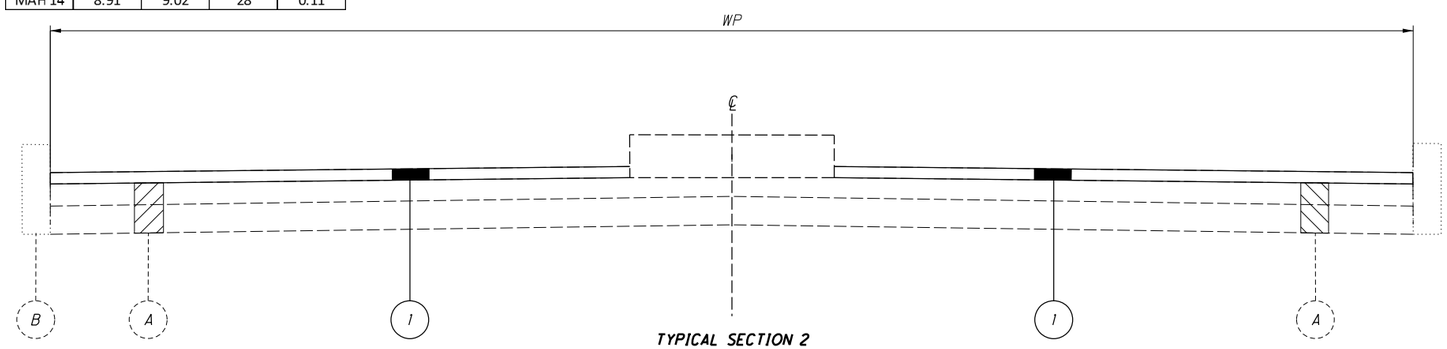

TYPICAL SECTION 2

SECTION 1 APPLIES SR 14:				
ROUTE	SLM		WP2	LENGTH
	FROM	TO	(FEET)	(MILES)
MAH 14	7.14	7.18	17.5	0.04

SECTION 1 APPLIES SR 14:				
ROUTE	SLM		WP2	LENGTH
	FROM	TO	(FEET)	(MILES)
MAH 14	7.14	7.18	17.5	0.04

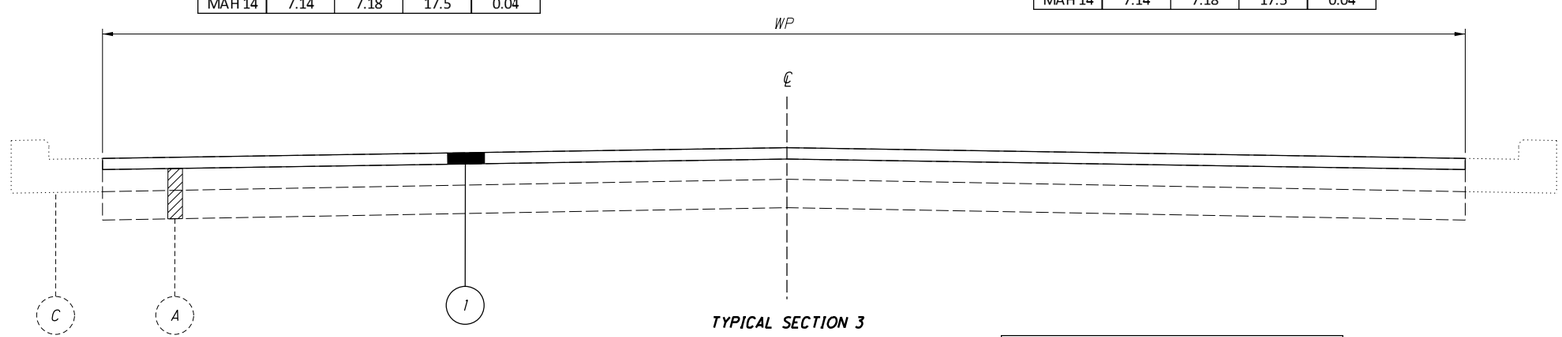

TYPICAL SECTION 3

SECTION 3 APPLIES SR 44:				
ROUTE	SLM		WP2	LENGTH
	FROM	TO	(FEET)	(MILES)
POR 44	24.19	24.23	35.5	0.04
POR 44	24.23	24.31	32	0.08

SECTION 3 APPLIES SR 14:				
ROUTE	SLM		WP2	LENGTH
	FROM	TO	(FEET)	(MILES)
MAH 14	7.92	7.98	49	0.06
MAH 14	7.98	7.99	55.5	0.01
MAH 14	7.99	8.01	62	0.02
MAH 14	8.01	8.02	58.5	0.01

LEGEND

- (1) 421, MICROSURFACING, SURFACE COURSE
- (A) EXISTING PAVEMENT ASPHALT
- (B) EXISTING CURB
- (C) EXISTING CURB AND GUTTER

TYPICAL SECTIONS

MAH/POR-MCRO-FY2017

I:\ProjectData\MAH\100298_MCRO-FY2017\Design\Roadway\Sheets\100298_GY001.dgn Sheet 9/9/2016 3:55:19 PM crees

THE CONTRACTOR SHALL USE THE FOLLOWING PROCEDURE AT EACH LOCATION WHERE WORK IS PERFORMED, IN ACCORDANCE WITH SECTIONS 105.07 AND 107.16 IN THE CONSTRUCTION AND MATERIALS SPECIFICATIONS.

THE CONTRACTOR SHALL NOTIFY THE PROJECT ENGINEER, THE OHIO UTILITIES PROTECTION SERVICE (OUPS), THE OHIO & GAS PROCEDURES UNDERGROUND PROTECTION SERVICE (OGPUPS), THE OHIO DEPARTMENT OF TRANSPORTATION DISTRICT 4 HEAD-QUARTERS AND ALL NON REGISTERED UTILITY OWNERS AT LEAST TWO (2) WORKING DAYS PRIOR TO COMMENCING CONSTRUCTION IN ALL AREAS.

OUPS 1-800-362-2764 (CONTACT LIMITED BASIS PARTICIPANTS DIRECTLY)
OGPUPS 1-800-925-0988
ODOT 330-786-3145 KEN GREENE

THE LOCATION OF EXISTING UNDERGROUND UTILITIES ARE NOT SHOWN ON THE PLANS, BUT CAN BE OBTAINED FROM THE OWNERS OF THE UTILITIES. THE CONTRACTOR IS RESPONSIBLE FOR ANY DAMAGE TO UTILITIES.

WORK LIMITS

THE WORK LIMITS SHOWN ON THESE PLANS ARE FOR PHYSICAL CONSTRUCTION ONLY. PROVIDE THE INSTALLATION AND OPERATION OF ALL WORK ZONE TRAFFIC CONTROL AND WORK ZONE TRAFFIC CONTROL DEVICES REQUIRED BY THESE PLANS WHETHER INSIDE OR OUTSIDE THESE WORK LIMITS.

PAVEMENT MARKING LANE WIDTHS

THE NORMAL LANE WIDTH FOR THE PAVEMENT MARKINGS ON THIS PROJECT SHALL BE AS FOLLOWS:

ROUTE	S.L.M. TO	S.L.M.	LANE WIDTH
SR 14	0.00	0.40	10'
SR 14	0.40	4.53	11'
SR 14	4.53	7.92	10'
SR 14	7.92	9.02	12'
SR 44	24.19	26.76	12'
SR 82	5.06	9.13	12'
SR 225	0.00	2.53	12'

PAVEMENT MARKING DETAILS

THE PAVEMENT MARKING DETAIL SHEETS WILL BE SUPPLIED TO THE CONTRACTOR AT THE PRE-CONSTUCTION MEETING.

PROFILE AND ALIGNMENT

PLACE THE PROPOSED PAVEMENT TO FOLLOW THE ALIGNMENT AND PROFILE OF THE EXISTING PAVEMENT. PLACE THE PROPOSED ASPHALT CONCRETE OVERLAY AS SHOWN ON THE TYPICAL SECTIONS.

ITEM 202 - WEARING COURSE REMOVED, AS PER PLAN (MAH-14)

A QUANTITY OF THIS ITEM SHALL BE PROVIDED FOR USE AS DIRECTED BY THE ENGINEER TO ADDRESS/GRIND PAVEMENT PROTUBERANCE AT THE TRANSVERSE JOINTS AND AT THE PAVEMENT JOINTS AT THE RAILROAD. THE FOLLOWING QUANTITY HAS BEEN CARRIED TO THE GENERAL SUMMARY.

202, WEARING COURSE REMOVED, 180 SQ. YD.

ITEM 251 - PARTIAL DEPTH PAVEMENT REPAIR (441)

A QUANTITY OF THIS ITEM SHALL BE PROVIDED FOR USE AS DIRECTED BY THE ENGINEER. THE ITEM SHALL CONSIST OF REPAIRING EXISTING LOCATIONS EXHIBITING SURFACE DETERIORATION AND PLACING ITEM 441 ASPHALT CONCRETE, TYPE 1. THE ASPHALT CONCRETE SHALL BE COMPACTED WITH A TYPE I PNEUMATIC TIRE ROLLER AND A STEEL WHEEL ROLLER AS PER 401.13. IT IS NOT THE INTENT TO REPAIR EVERY DETERIORATED AREA WITHIN THE PROJECT. THE ENGINEER SHALL DETERMINE WHICH AREAS ARE TO BE REPAIRED. UNLESS OTHERWISE DIRECTED BY THE ENGINEER, THIS ITEM SHALL BE PERFORMED BEFORE THE COMPLETION OF MAINLINE PAVING. PAYMENT SHALL BE BASED ON THE ACTUAL NUMBER OF SQUARE YARDS OF PAVEMENT REPAIR. THE FOLLOWING ESTIMATED QUANTITY HAS BEEN CARRIED TO THE GENERAL SUMMARY:

251, PARTIAL DEPTH PAVEMENT REPAIR (441), 3,000 SQ. YD.

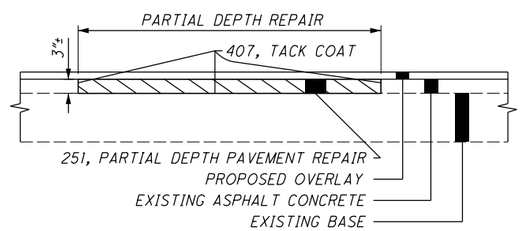

COMMUNITY NOTIFICATION

THE CONTRACTOR WILL ADVISE THE ODOT PROJECT ENGINEER A MINIMUM OF TWENTY-ONE (21) DAYS PRIOR TO THE START OF CONSTRUCTION ACTIVITIES. THE CONTRACTOR MUST ALSO PROVIDE NOTIFICATION TO THE ODOT PROJECT ENGINEER A MINIMUM OF TWENTY-ONE (21) DAYS PRIOR TO ANY LANE RESTRICTIONS OR CLOSURES. THE ODOT PROJECT ENGINEER WILL FORWARD THIS INFORMATION TO THE ODOT, DISTRICT 4 OFFICE OF PUBLIC INFORMATION FOR USE TO NOTIFY EMERGENCY SERVICES AND COMMUNITIES A MINIMUM OF FIFTEEN (15) DAYS PRIOR TO THE START OF PROJECT CONSTRUCTION. INCLUDED IN THIS NOTIFICATION WILL BE THE PROJECTED DATES OF ANY LANE RESTRICTIONS OR CLOSURES REQUIRED BY THE PROJECT.

ITEM 618 - EDGE LINE, RUMBLE STRIPS

THE RUMBLE STRIPS CAN BE MICROSURFACED AS LONG AS THEY ARE IN THE CONDITION THEY WERE IN BEFORE MICROSURFACING UPON COMPLETION OF THE WORK. OTHERWISE THE CONTRACTOR SHALL PLACE RUMBLE STRIPS AT THE BELOW LOCATION:

POR 225: SLM - 0.00-2.53

THE FOLLOWING QUANTITY HAS BEEN CARRIED TO THE GENERAL SUMMARY TO BE USED IN ACCORDANCE WITH THE ENGINEER.

ITEM 618, RUMBLE STRIPS, 5.06 MILES

ITEM 646 - REMOVAL OF PAVEMENT MARKING

THE FOLLOWING QUANTITY HAS BEEN CARRIED TO THE GENERAL SUMMARY TO BE USED IN ACCORDANCE WITH THE ENGINEER.

TOTALS

ITEM 644, REMOVAL OF PAVEMENT MARKING, 1,058 FEET
ITEM 644, REMOVAL OF PAVEMENT MARKING, 57 SQ. FT.
ITEM 644, REMOVAL OF PAVEMENT MARKING, 15 EACH
ITEM 644, REMOVAL OF PAVEMENT MARKING, 54.14 MILE

MAINTENANCE OF TRAFFIC

THIS ITEM SHALL CONSIST OF MAINTENANCE OF TRAFFIC ON EXISTING ROADWAYS AND RAMPS IN ACCORDANCE WITH THE OHIO MANUAL OF UNIFORM TRAFFIC CONTROL DEVICES FOR STREETS AND HIGHWAYS, CURRENT EDITION, LATEST REVISION, THE SPECIFICATIONS AND THE FOLLOWING:

1. ON 2-LANE SECTIONS: A MINIMUM OF ONE TEN FOOT BI-DIRECTIONAL LANE SHALL BE MAINTAINED ON THE EXISTING PAVEMENT AND COMPLETED PAVEMENT DURING CONSTRUCTION OF THE WORK.

2. THE CONTRACTOR SHALL INFORM THE DISTRICT OFFICE (330) 786-2208, EIGHTEEN (18) DAYS PRIOR TO THE BEGINNING OF WORK.

3. LANE RESTRICTIONS OR LANE REDUCTIONS SHALL NOT BE PERMITTED AFTER NORMAL WORKING HOURS. NORMAL WORKING HOURS SHALL BE THOSE HOURS DURING WHICH THE CONTRACTOR HAS A FULL COMPLEMENT OF EMPLOYEES AND EQUIPMENT ACTIVELY REMOVING AND/OR PLACING PAVEMENT MATERIALS.

4. UNDER NO CIRCUMSTANCES SHALL THE CONTRACTOR BE PERMITTED TO HAVE SUCCESSIVE WORK ZONES UNLESS THE DISTANCE BETWEEN THE DRUMS, BARRICADES OR CONES EXCEEDS TWO (1) MILE.

5. ONLY DURING OFF-PEAK PERIODS (ie ANY PERIOD OTHER THAN 6-8AM AND 3-6PM) SHALL THE CONTRACTOR INSTALL AND SUBSEQUENTLY RESET ALL TRAFFIC CONTROL NECESSARY FOR THE WORK ZONE FOR EACH CONSTRUCTION PHASE.

6. IN ADDITION TO THE REQUIREMENTS OF 614.11 WORK ZONE PAVEMENT MARKINGS, AT THE END OF EACH DAY OF WORK, THE CONTRACTOR SHALL REPLACE (WITH WORK ZONE MARKINGS) ALL LANE, CENTER, STOP OR CHANNELIZING LINES THAT WERE REMOVED OR COVERED DURING THE PAVEMENT REMOVAL OR PLACEMENT OPERATIONS. QUANTITIES FOR SUCH PLACEMENT ARE CARRIED AS PART OF THE ITEMS LISTED UNDER 614 WORK ZONE PAVEMENT MARKINGS.

7. A QUANTITY OF 10 CU. YDS. OF ITEM 614 ASPHALT CONCRETE FOR MAINTAINING TRAFFIC SHALL BE PROVIDED FOR USE IN MAINTAINING PAVEMENT, SHOULDERS AND OTHER LOCATIONS AS DIRECTED BY THE ENGINEER.

8. PRIOR TO OPENING TO TRAFFIC EACH LANE SHALL BE IN A SAFE, PASSABLE CONDITION. ALL TRANSVERSE JOINTS SHALL EXTEND ACROSS THE FULL LANE AND SHOULDER WIDTH AND EACH LANE SHALL BE FREE FROM UNEVEN LONGITUDINAL JOINTS. THE CONTRACTOR SHALL PROVIDE ASPHALT WEDGES FOR TRANSVERSE JOINTS WHEREVER THERE ARE PAVEMENT ELEVATION DIFFERENCES.

9. A QUANTITY OF ITEM 614 WORK ZONE MARKING SIGN HAS BEEN INCLUDED IN THE PLAN. THIS QUANTITY SHALL INCLUDE, BUT NOT BE LIMITED TO, THE FOLLOWING SIGNS: W8-1 [BUMP], W6-3 [TWO-WAY TRAFFIC], W8-H13 [NO EDGE LINES], R4-1 [DO NOT PASS], R4-2 [PASS WITH CARE], W8-11 [UNEVEN LANES]. THESE QUANTITIES SHALL BE AS PER 614.04.

THE FOLLOWING QUANTITIES SHALL BE USED FOR THE MAINTENANCE OF TRAFFIC ON THIS PROJECT:

PHASE I - OVERLAY SURFACE - MAH 14:
614, WORK ZONE CENTER LINE, CLASS III, 642 PAINT, 9.02 MILE
614, WORK ZONE CHANNELIZING LINE, CLASS III, 642 PAINT, 665 FT
614, WORK ZONE LANE LINE, CLASS III, 642 PAINT, 0.05 MILE
614, WORK ZONE STOP LINE, CLASS III, 642 PAINT, 60 FT
614, WORK ZONE MARKING SIGN, 30 EACH

PHASE I - OVERLAY SURFACE - POR 44:
614, WORK ZONE CENTER LINE, CLASS III, 642 PAINT, 2.57 MILE
614, WORK ZONE CHANNELIZING LINE, CLASS III, 642 PAINT, 200 FT
614, WORK ZONE STOP LINE, CLASS III, 642 PAINT, 28 FT
614, WORK ZONE MARKING SIGN, 10 EACH

PHASE I - OVERLAY SURFACE - POR 82:
614, WORK ZONE CENTER LINE, CLASS III, 642 PAINT, 4.07 MILE
614, WORK ZONE MARKING SIGN, 15 EACH

PHASE I - OVERLAY SURFACE - POR 225:
614, WORK ZONE CENTER LINE, CLASS III, 642 PAINT, 2.53 MILE
614, WORK ZONE STOP LINE, CLASS III, 642 PAINT, 35 FT
614, WORK ZONE MARKING SIGN, 10 EACH

TO BE USED AS DIRECTED BY THE ENGINEER
614, WORK ZONE EDGE LINE, CLASS III, 642 PAINT, 35.90 MILE

ADVANCED NOTICE TO PAVE

THE CONTRACTOR SHALL SUBMIT FOR APPROVAL TO THE DISTRICT CONSTRUCTION ENGINEER A DETAILED SCHEDULE 15 DAYS PRIOR TO THE PLACEMENT OF THE OVERLAY COURSES, ON HOW THEY PROPOSE TO PROSECUTE THE PAVING OPERATIONS. THE DETAILS SHALL SHOW THE ORDER OF PERFORMANCE OF EACH STAGE (START TO FINISH) OF THE WORK INCLUDING THE MAINTENANCE OF TRAFFIC THAT WILL BE USED.

TRAFFIC CONTROL INSPECTOR

THE CONTRACTOR SHALL DESIGNATE AN INDIVIDUAL OTHER THAN THE SUPERINTENDENT AND SUBJECT TO THE APPROVAL OF THE ENGINEER, TO CONTINUOUSLY INSPECT ALL TRAFFIC CONTROL DEVICES WHENEVER CONSTRUCTION WORK IS BEING PERFORMED WITHIN THE WORK LIMITS OF THE PROJECT. THE DESIGNATED INDIVIDUAL SHALL ALSO INSPECT ALL TRAFFIC DEVICES AT THE BEGINNING AND AT THE END OF EACH WORK DAY. THE DESIGNATED INDIVIDUAL OR A QUALIFIED REPRESENTATIVE SHALL ALSO BE AVAILABLE ON AN AROUND THE CLOCK BASIS TO REPAIR AND/OR REPLACE DAMAGED OR MISSING TRAFFIC CONTROL DEVICES. THESE INDIVIDUALS SHALL BE EQUIPPED WITH CELLULAR PHONES AND THEIR NAMES AND PHONE NUMBERS SHALL BE GIVEN TO THE PROJECT ENGINEER AT THE PRE-CONSTRUCTION MEETING. THE DESIGNATED INDIVIDUAL MAY HAVE OTHER CONSTRUCTION RELATED DUTIES AS LONG AS IMMEDIATE ATTENTION IS GIVEN TO TRAFFIC CONTROL. PAYMENT FOR THE SERVICES OF THE TRAFFIC CONTROL INSPECTOR SHALL BE INCLUDED IN THE LUMP SUM PRICE BID FOR ITEM 614 MAINTAINING TRAFFIC.

ITEM 614, MAINTAINING TRAFFIC (LANES OPEN DURING HOLIDAYS OR SPECIAL EVENTS)

NO WORK SHALL BE PERFORMED AND ALL EXISTING LANES SHALL BE OPEN TO TRAFFIC DURING THE FOLLOWING DESIGNATED HOLIDAYS OR EVENTS:

CHRISTMAS	FOURTH OF JULY
NEW YEARS	LABOR DAY
MEMORIAL DAY	THANKSGIVING

THE PERIOD OF TIME THAT THE LANES ARE TO BE OPEN DEPENDS ON THE DAY OF THE WEEK ON WHICH THE HOLIDAY OR EVENT FALLS. THE FOLLOWING SCHEDULE SHALL BE USED TO DETERMINE THIS PERIOD:

DAY OF HOLIDAY OR EVENT	TIME ALL LANES MUST BE OPEN TO TRAFFIC
SUNDAY	12:00N FRIDAY THROUGH 6:00 AM MONDAY
MONDAY	12:00N FRIDAY THROUGH 6:00 AM TUESDAY
TUESDAY	12:00N MONDAY THROUGH 6:00 AM WEDNESDAY
WEDNESDAY	12:00N TUESDAY THROUGH 6:00 AM THURSDAY
THURSDAY	12:00N WEDNESDAY THROUGH 6:00 AM FRIDAY
THURSDAY (THANKSGIVING ONLY)	6:00 AM WEDNESDAY THROUGH 6:00 AM MONDAY
FRIDAY	12:00N THURSDAY THROUGH 6:00 AM MONDAY
SATURDAY	12:00N FRIDAY THROUGH 6:00 AM MONDAY

SHOULD THE CONTRACTOR FAIL TO MEET ANY OF THESE REQUIREMENTS, THE CONTRACTOR SHALL BE ASSESSED A DISINCENTIVE IN THE AMOUNT OF $3,000 FOR EACH HOUR THE ABOVE DESCRIBED LANE CLOSURE RESTRICTIONS ARE VIOLATED.

CALCULATED CMR
CHECKED XXX

MAINTENANCE OF TRAFFIC GENERAL NOTES

MAH/POR-MCRO-FY2017

I:\ProjectData\MAH\100298_MCRO-FY2017\Design\MOT\Sheets\100298_MN001.dgn Sheet 9/9/2016 3:55:23 PM crees

SHEET NUM.											PART.			ITEM	ITEM EXT	GRAND TOTAL	UNIT	DESCRIPTION	SEE SHEET NO.
3	4		6	7	8	9	10	11	12		01/STR/PV	02/S<2/PV	03/S<2/PV/SALE						
																		ROADWAY	
180											180			202	23501	180	SY	WEARING COURSE REMOVED, AS PER PLAN	3
																		EROSION CONTROL	
											944	51	5	832	30000	1,000	EACH	EROSION CONTROL	
																		PAVEMENT	
3,000											2,798	173	29	251	01000	3,000	SY	PARTIAL DEPTH PAVEMENT REPAIR (441)	
			113,603	21,829	42,768	72,082	46,453				274,905	18,708	3,122	421	10010	296,735	SY	MICROSURFACING, SURFACE COURSE	
							13				13			421	10030	13	TON	MICROSURFACING, RUT FILL COURSE	
5.06											5.06			618	41000	5.06	MILE	EDGE LINE, RUMBLE STRIPE (ASPHALT CONCRETE)	
																		TRAFFIC CONTROL	
								1,272			1,165	88	19	621	00100	1,272	EACH	RPM	
								1,022			937	70	15	621	54000	1,022	EACH	RAISED PAVEMENT MARKER REMOVED	
1,058											458		600	644	30000	1,058	FT	REMOVAL OF PAVEMENT MARKING	
57											57			644	30010	57	SF	REMOVAL OF PAVEMENT MARKING	
15											7		8	644	30020	15	EACH	REMOVAL OF PAVEMENT MARKING	
54.14											51.03	2.96	0.15	644	30030	54.14	MILE	REMOVAL OF PAVEMENT MARKING	
									35.9		33.94	1.96		646	10010	35.9	MILE	EDGE LINE, 6"	
									0.05				0.05	646	10110	0.05	MILE	LANE LINE, 6"	
									18.19		17.09	1	0.1	646	10200	18.19	MILE	CENTER LINE	
									865		305		560	646	10300	865	FT	CHANNELIZING LINE, 8"	
									123		83		40	646	10400	123	FT	STOP LINE	
									70		70			646	10600	70	FT	TRANSVERSE/DIAGONAL LINE	
									57		57			646	10800	57	SF	ISLAND MARKING	
									2		2			646	20000	2	EACH	RAILROAD SYMBOL MARKING	
									13		5		8	646	20300	13	EACH	LANE ARROW	
																		MAINTENANCE OF TRAFFIC	
	65										61	3	1	614	12460	65	EACH	WORK ZONE MARKING SIGN	
	10										10			614	13000	10	CY	ASPHALT CONCRETE FOR MAINTAINING TRAFFIC	
	0.05												0.05	614	20550	0.05	MILE	WORK ZONE LANE LINE, CLASS III, 642 PAINT	
	18.19										17.09	1	0.1	614	21550	18.19	MILE	WORK ZONE CENTER LINE, CLASS III, 642 PAINT	
	35.9										33.94	1.96		614	22350	35.9	MILE	WORK ZONE EDGE LINE, CLASS III, 642 PAINT	
	865										305		560	614	23680	865	FT	WORK ZONE CHANNELIZING LINE, CLASS III, 642 PAINT	
	123										63		60	614	26610	123	FT	WORK ZONE STOP LINE, CLASS III, 642 PAINT	
																		INCIDENTALS	
											LS			614	11000	LS		MAINTAINING TRAFFIC	
											LS			623	10000	LS		CONSTRUCTION LAYOUT STAKES AND SURVEYING	
											LS			624	10000	LS		MOBILIZATION	

CALCULATED CMR
CHECKED RMB

GENERAL SUMMARY

MAH/POR-MCRO-FY2017

I:\ProjectData\MAH\100298_MCRO-FY2017\Design\Roadway\Sheets\100298_GG001.dgn Sheet 9/9/2016 3:55:24 PM crees

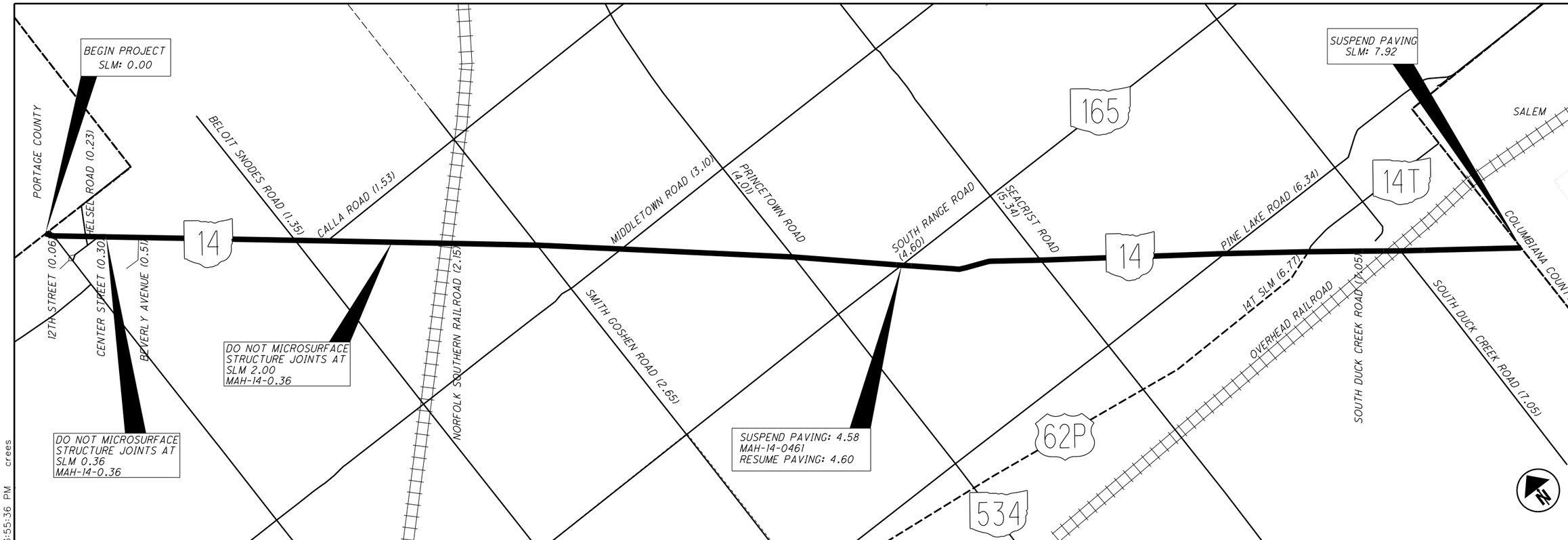

SLM RANGE			TYPICAL SECTION	SIDE	DISTANCE (D)	AVERAGE WIDTH (W)	SURFACE AREA (A) A=DxW/9	CADD GENERATED AREA		421 MICROSURFACING, SURFACE COURSE		421 MICROSURFACING, RUT FILL COURSE														
					FT	FT	SY	SY		SY		TON														
SR 14																										
0.00	TO	0.34	1		1795.20	24.00	4787.20			4787.20																
0.34	TO	0.38	1		211.20	36.00	844.80			844.80																
0.38	TO	4.53	1		21912.00	24.00	58432.00			58432.00																
4.53	TO	4.58	1		264.00	32.00	938.67			938.67																
4.60	TO	4.64	1		211.20	32.00	750.93			750.93																
4.64	TO	6.63	1		10507.20	24.00	28019.20			28019.20																
6.63	TO	6.73	1		528.00	31.50	1848.00			1848.00																
6.73	TO	6.76	1		158.40	39.00	686.40			686.40																
6.76	TO	6.86	1		528.00	31.50	1848.00			1848.00																
6.86	TO	7.11	1		1320.00	24.00	3520.00			3520.00																
7.11	TO	7.14	1		158.40	31.50	554.40			554.40																
7.18	TO	7.21	1		158.40	31.50	554.40			554.40																
7.21	TO	7.92	1		3748.80	24.00	9996.80			9996.80																
7.14	TO	7.18	2		211.20	17.50	410.67			410.67																
7.14	TO	7.18	2		211.20	17.50	410.67			410.67																
								SUBTOTALS	0.00	113602.13	0.00	0.00	0.00	0.00	0.00	0.00	0.00	0.00	0.00	0.00	0.00	0.00	0.00	0.00	0.00	0.00
								TOTALS CARRIED TO GENERAL SUMMARY	0	113603	0	0	0	0	0	0	0	0	0	0	0	0	0	0	0	0

CALCULATED CMR
CHECKED RMB

PAVEMENT CALCULATIONS (MAH-14)

MAH/POR-MCRO-FY2017

I:\ProjectData\MAH\100298_MCRO-FY2017\Design\Roadway\Sheets\100298_GC001.dgn Sheet 9/9/2016 3:55:36 PM crees

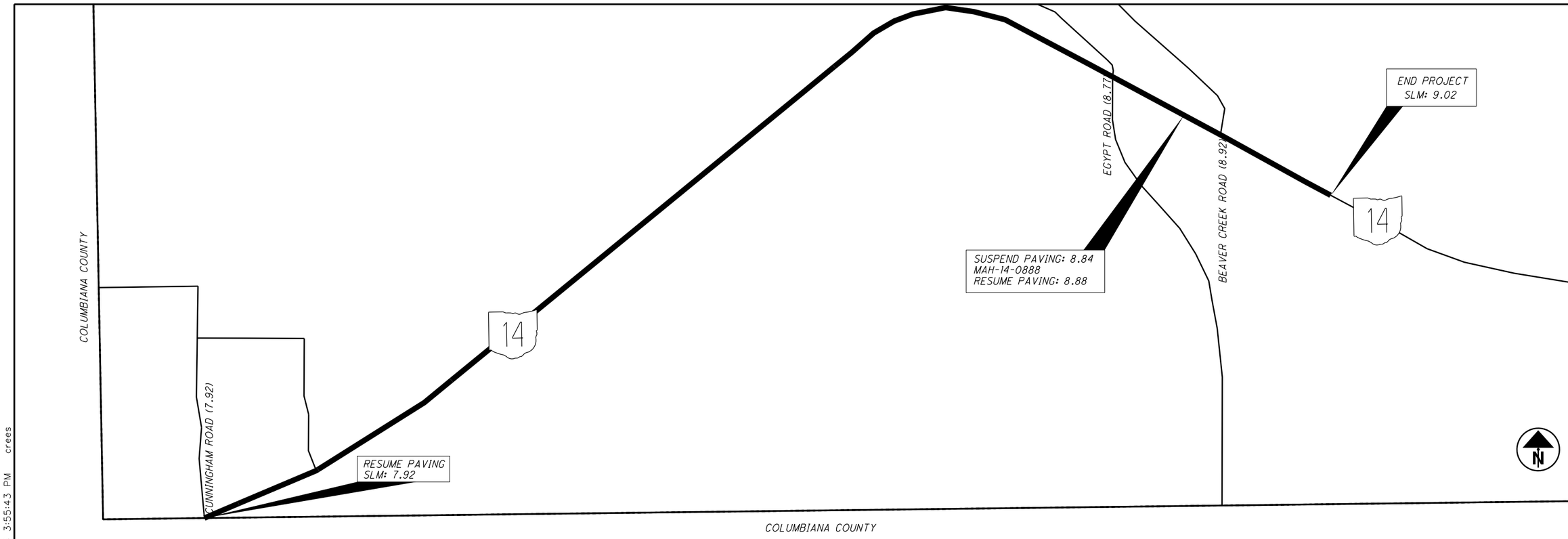

SLM RANGE			TYPICAL SECTION	SIDE	DISTANCE (D)	AVERAGE WIDTH (W)	SURFACE AREA (A) A=DxW/9	CADD GENERATED AREA		MICROSURFACING, SURFACE COURSE	MICROSURFACING, RUT FILL COURSE														
										421	421														
					FT	FT	SY	SY		SY	TON														
SR 14																									
7.92	TO	7.98	1		316.80	49.00	1724.80			1724.80															
7.98	TO	7.99	1		52.80	55.50	325.60			325.60															
7.99	TO	8.01	1		105.60	62.00	727.47			727.47															
8.01	TO	8.02	1		52.80	58.50	343.20			343.20															
8.02	TO	8.04	1		105.60	55.00	645.33			645.33															
8.04	TO	8.05	1		52.80	48.25	283.07			283.07															
8.05	TO	8.08	1		158.40	36.75	646.80			646.80															
8.08	TO	8.80	1		3801.60	32.00	13516.80			13516.80															
8.80	TO	8.82	1		105.60	37.00	434.13			434.13															
8.82	TO	8.84	1		105.60	44.00	516.27			516.27															
8.88	TO	8.91	1		158.40	44.00	774.40			774.40															
8.91	TO	9.02	1		580.80	28.00	1806.93			1806.93															
MAILBOX APPROACHES										83.33															
								SUBTOTALS	0.00	21828.13	0.00	0.00	0.00	0.00	0.00	0.00	0.00	0.00	0.00	0.00	0.00	0.00	0.00	0.00	0.00
								TOTALS CARRIED TO GENERAL SUMMARY	0	21829	0	0	0	0	0	0	0	0	0	0	0	0	0	0	0

CALCULATED CMR
CHECKED RMB

PAVEMENT CALCULATIONS (MAH-14)

MAH/POR-MCRO-FY2017

I:\ProjectData\MAH\100298_MCRO-FY2017\Design\Roadway\Sheets\100298_GC001.dgn Sheet 2 9/9/2016 3:55:43 PM crees

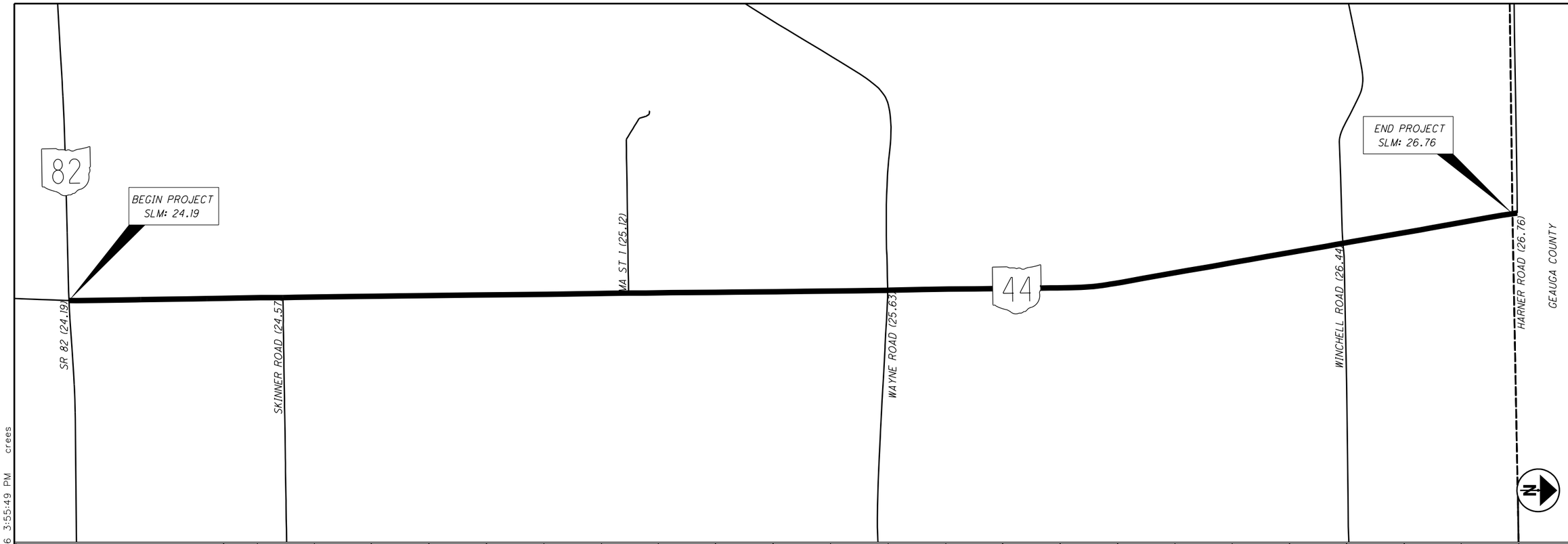

SLM RANGE			TYPICAL SECTION	SIDE	DISTANCE (D)	AVERAGE WIDTH (W)	SURFACE AREA (A) A=DxW/9	CADD GENERATED AREA		421 MICROSURFACING, SURFACE COURSE		421 MICROSURFACING, RUT FILL COURSE													
					FT	FT	SY	SY		SY		TON													
SR 44																									
24.19	TO	24.23	1		211.20	35.50	833.07			833.07															
24.23	TO	24.31	1		422.40	32.00	1501.87			1501.87															
24.31	TO	26.60	1		12091.20	28.00	37617.07			37617.07															
26.60	TO	26.76	1		844.80	30.00	2816.00			2816.00															
								SUBTOTALS	0.00	42768.00	0.00	0.00	0.00	0.00	0.00	0.00	0.00	0.00	0.00	0.00	0.00	0.00	0.00	0.00	0.00
								TOTALS CARRIED TO GENERAL SUMMARY	0	42768	0	0	0	0	0	0	0	0	0	0	0	0	0	0	0

CALCULATED CMR
CHECKED RMB

PAVEMENT CALCULATIONS (POR-44)

MAH/POR-MCRO-FY2017

I:\ProjectData\MAH\100298_MCRO-FY2017\Design\Roadway\Sheets\100298_GC001.dgn Sheet 3 9/9/2016 3:55:49 PM crees

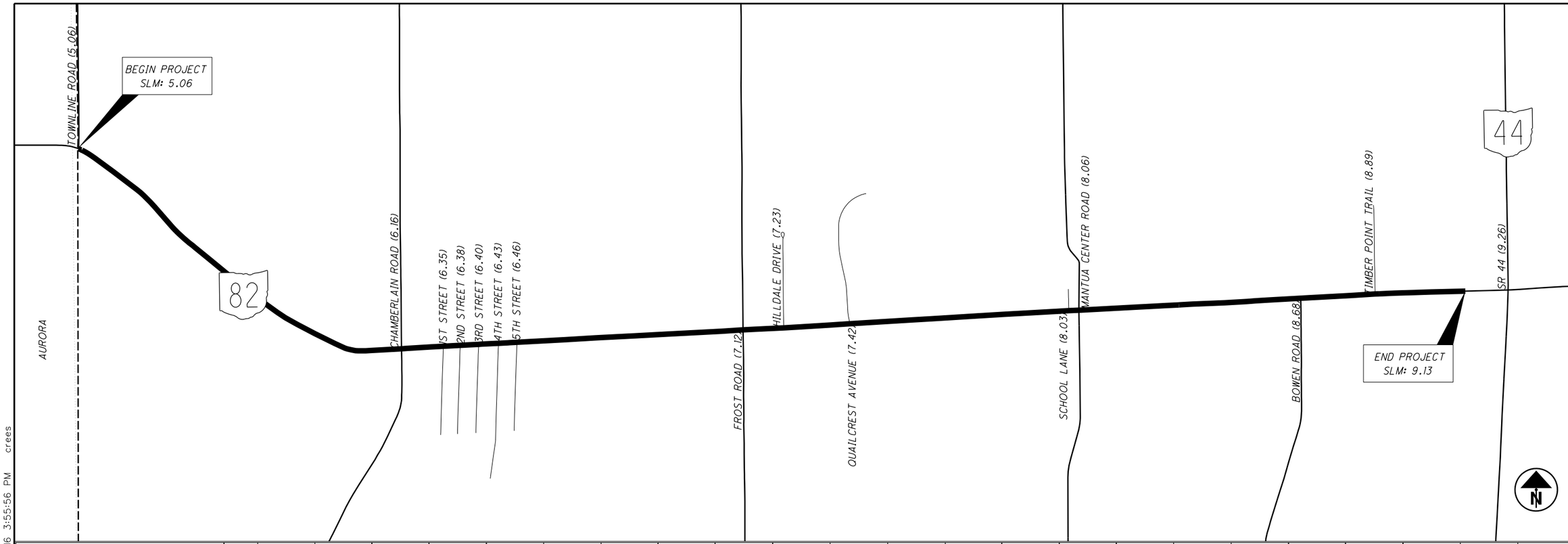

SLM RANGE			TYPICAL SECTION	SIDE	DISTANCE (D)	AVERAGE WIDTH (W)	SURFACE AREA (A) A=DxW/9	CADD GENERATED AREA		MICROSURFACING, SURFACE COURSE		MICROSURFACING, RUT FILL COURSE
										421		421
					FT	FT	SY	SY		SY		TON
SR 82												
5.06	TO	9.13	1		21489.60	30.00	71632.00			71632.00		
INTERSECTION (IF NEEDED AT TOWNLINE RD)										450.00		
								SUBTOTALS	0.00	72082.00	0.00	0.00
								TOTALS CARRIED TO GENERAL SUMMARY	0	72082	0	0

CALCULATED CMR
CHECKED RMB

PAVEMENT CALCULATIONS (POR-82)

MAH/POR-MCRO-FY2017

I:\ProjectData\MAH\100298_MCRO-FY2017\Design\Roadway\Sheets\100298_GC001.dgn Sheet 4 9/9/2016 3:55:56 PM crees

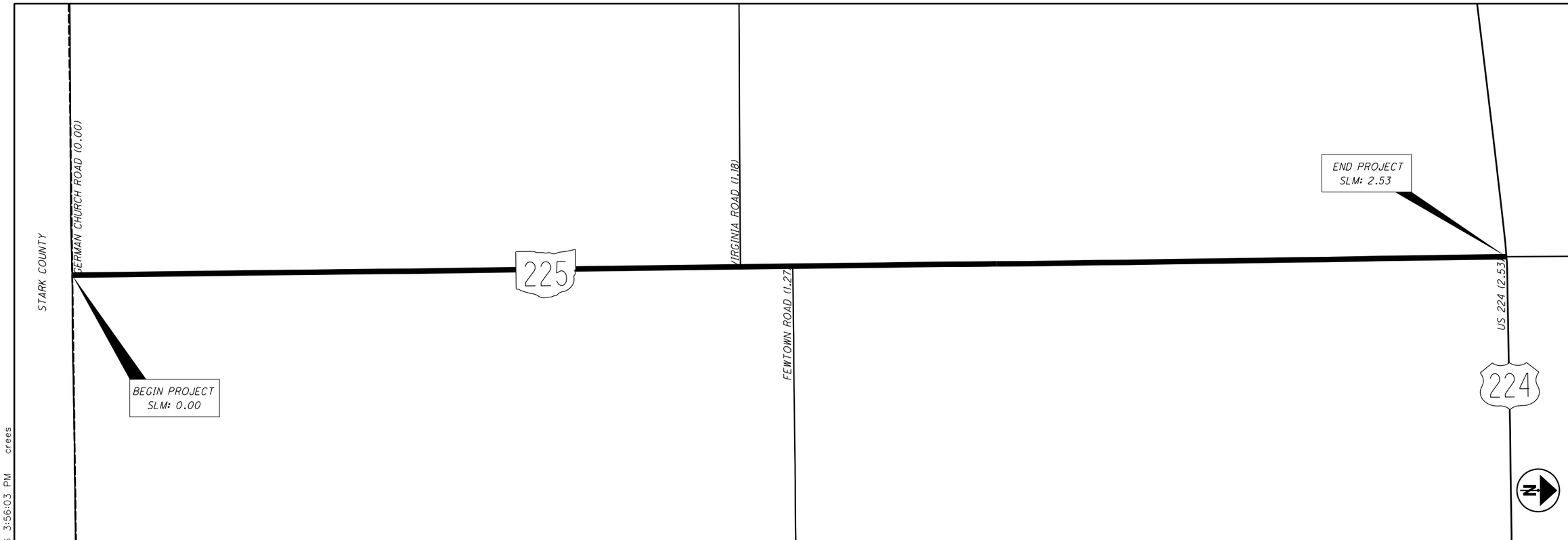

SLM RANGE			TYPICAL SECTION	SIDE	DISTANCE (D)	AVERAGE WIDTH (W)	SURFACE AREA (A) A=DxW/9	CADD GENERATED AREA		421 MICROSURFACING, SURFACE COURSE		421 MICROSURFACING, RUT FILL COURSE
					FT	FT	SY	SY		SY		TON
SR 225												
0.00	TO	2.47	1		13041.60	31.00	44921.07			44921.07		
2.47	TO	2.53	1		316.80	43.50	1531.20			1531.20		
2.14	TO	2.53	1									12.25
								SUBTOTALS	0.00	46452.27	0.00	12.25
								TOTALS CARRIED TO GENERAL SUMMARY	0	46453	0	13

SUBTOTALS	0.00	0.00	0.00	0.00	0.00	0.00	0.00	0.00	0.00	0.00	0.00
TOTALS CARRIED TO GENERAL SUMMARY	0	0	0	0	0	0	0	0	0	0	0

CALCULATED CMR
CHECKED RMB

PAVEMENT CALCULATIONS (POR-225)

MAH/POR-MCRO-FY2017

I:\ProjectData\MAH\100298_MCRO-FY2017\Design\Roadway\Sheets\100298_GC001.dgn Sheet 5 9/9/2016 3:56:03 PM crees

LOCATION								621	621	621	621		621	
COUNTY	ROUTE	SECTION (S.L.M.)						RPM (YELLOW/YELLOW)	RPM (WHITE/RED)	RPM (WHITE)	RPM (YELLOW/RED)		RAISED PAVEMENT MARKER REMOVED	REMARKS
		FROM	TO					EACH	EACH	EACH	EACH		EACH	
MAH	14	0.00	6.65					439					351	
MAH	14	6.65	6.86					28	3				25	
MAH	14	6.86	7.10					10					8	
MAH	14	7.10	7.92					54					43	
MAH	14	7.92	8.02					6	13				15	
MAH	14	8.02	9.02					80	8				70	
POR	44	24.19	24.31					12	5				19	
POR	44	24.31	26.76					162					129	
POR	82	5.06	9.13					269					215	
POR	225	0.00	2.37					156					125	
POR	225	2.37	2.53					11		16			22	
SUBTOTALS				0	0	0	0	1227	29	16	0	0	1022	
TOTALS CARRIED TO GENERAL SUMMARY				0	0	0	0	1272				0	1022	

CALCULATED CMR
CHECKED RMB

RAISED PAVEMENT MARKERS

MAH/POR-MCRO-FY2017

I:\ProjectData\MAH\100298_MCRO-FY2017\Design\Roadway\Sheets\100298_RPM001.dgn Sheet 9/9/2016 3:56:09 PM crees

GENERAL SPEC:	640
MATERIAL TYPE:	646

CALCULATED CMR
CHECKED RMB

PAVEMENT MARKING QUANTITIES

EDGE LINE

CTY	ROUTE	TRUE LOG	FROM	TRUE LOG	TO	WHITE EDGE LINE TOTAL	WHITE EDGE LINE HIGHWAY	WHITE EDGE LINE RAMP	YELLOW EDGE LINE TOTAL	YELLOW EDGE LINE HIGHWAY	YELLOW EDGE LINE RAMP	COMMENTS
MAH	14	0.00	PORTAGE COUNTY LINE	7.92	COLUMBIANA COUNTY LINE	15.84	15.84					
MAH	14	8.02	WALMART/THE HOME DEPOT INTERSECTION	9.02	0.10 MILES EAST OF BEAVER CREEK ROAD	1.96	1.96					
POR	44	24.19	SR 82	26.76	HARNER ROAD	4.90	4.90					
POR	82	5.06	TOWNLINE ROAD	9.13	0.13 MILES WEST OF SR 44	8.14	8.14					
POR	225	0.00	GERMAN CHURCH ROAD	2.53	US 224	5.06	5.06					
TOTAL						35.90	35.90		0			

LANE LINE

CTY	ROUTE	TRUE LOG	FROM	TRUE LOG	TO	TOTAL MILES	6" LANE LINE DASHED	6" LANE LINE SOLID	COMMENTS
MAH	14	7.96	0.04 MILES EAST OF CUNNINGHAM ROAD	8.01	WALMART/THE HOME DEPOT INTERSECTION	0.05	0.05		
TOTAL						0.05	0.05		

CENTER LINE

CTY	ROUTE	TRUE LOG	FROM	TRUE LOG	TO	TOTAL MILES	EQUIVALENT SOLID LINE	COMMENTS
MAH	14	0.00	PORTAGE COUNTY LINE	7.92	COLUMBIANA COUNTY LINE	7.92	11.86	
MAH	14	7.92	CUNNINGHAM ROAD	8.02	WALMART/THE HOME DEPOT INTERSECTION	0.10	0.24	
MAH	14	8.02	WALMART/THE HOME DEPOT INTERSECTION	9.02	0.10 MILES EAST OF BEAVER CREEK ROAD	1.00	1.94	
POR	44	24.19	SR 82	26.76	HARNER ROAD	2.57	3.68	
POR	82	5.06	TOWNLINE ROAD	9.13	0.13 MILES WEST OF SR 44	4.07	7.27	
POR	225	0.00	GERMAN CHURCH ROAD	2.53	US 224	2.53	2.19	
TOTAL						18.19	27.17	

AUXILIARY

CTY	ROUTE LOCATION	TRUE LOG	CHANNEL LINE	STOP LINE	CROSS WALK LINES	TRANSVERSE DIAGONAL LINES WHITE	TRANSVERSE DIAGONAL LINES YELLOW	ISLAND MARKING	SYMBOL MARKINGS RxR	SYMBOL MARKINGS SCHOOL 72"	SYMBOL MARKINGS SCHOOL 96"	LANE ARROWS TURN LEFT	LANE ARROWS TURN RIGHT	LANE ARROWS THRU	LANE ARROWS COMB.	WORD ON PVMT ONLY 72"	WORD ON PVMT ONLY 96"	DOTTED LINES	COMMENTS
			FT	FT	FT	FT	FT	SF	EACH	EACH	EACH	EACH	EACH	EACH	EACH	EACH	EACH	FT	
MAH	SR 14	1.982		20					1										750 FT WEST OF NORFOLK SOUTHERN RAILROAD
MAH	SR 14	2.292							1										750 FT EAST OF NORFOLK SOUTHERN RAILROAD
MAH	SR 14 @ 14T	6.770	105					57				2							
MAH	SR 14 @ RR UNDERPASS	7.150					70												
MAH	SR 14 @ CUNNINGHAM ROAD	7.920	240	40								2							
MAH	SR 14	8.010	320									3	3						WALMART/THE HOME DEPOT INTERSECTION
POR	SR 44 @ SR 82	24.190	200	28								3							
POR	SR 225 @ US 224	2.530		35															
TOTAL			865	123			70	57	2			10	3						

MAH / POR-MCRO-FY2017

I:\ProjectData\MAH\100298_MCRO-FY2017\Design\Roadway\Sheets\100298_PM001.dgn Sheet 9/9/2016 3:56:21 PM crees