STATE OF OHIO
DEPARTMENT OF TRANSPORTATION

GEA-422-18.31
POR-422-0.00

PARKMAN TOWNSHIP
NELSON TOWNSHIP
GEAUGA COUNTY
PORTAGE COUNTY

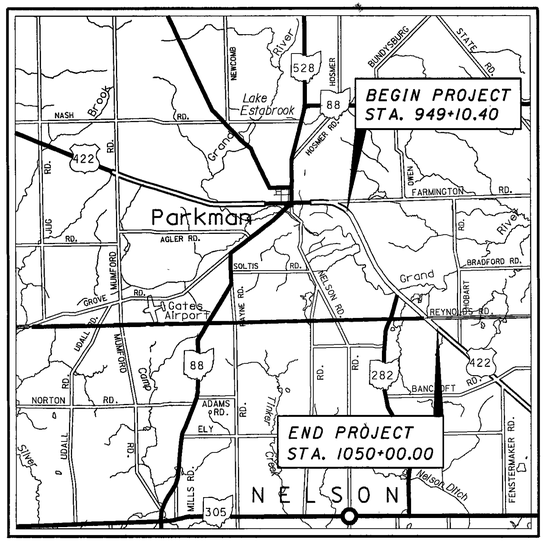

LOCATION MAP

LATITUDE: 41°04'30" LONGITUDE: 81°30'30"

SCALE IN MILES

0 1 2 3 4

N

PORTION TO BE IMPROVED
INTERSTATE & DIVIDED HIGHWAY
UNDIVIDED STATE & FEDERAL ROUTES
OTHER ROADS

DESIGN DESIGNATIONS

CURRENT ADT (2005)	14460
DESIGN YEAR ADT (2025)	17920
DESIGN HOURLY VOLUME	986
DIRECTIONAL DISTRIBUTION	55%
TRUCKS (24 HOUR)	19%
DESIGN SPEED	60 MPH
LEGAL SPEED	55 MPH

DESIGN FUNCTIONAL CLASSIFICATION - RURAL ARTERIAL

DESIGN EXCEPTIONS - NONE

DESIGN FEATURE	APPROVAL DATE	SHEET NO.
GRADE	09/14/04	69 - 76

INDEX OF SHEETS:

PROJECT DESCRIPTION

RECONSTRUCTION OF 1.9 MILES OF UNITED STATES ROUTE 422 IN PARKMAN TOWNSHIP. CONSTRUCTION/RECONSTRUCTION OF PAVEMENT, DRAINAGE FACILITIES, AND GRADING. RECONSTRUCTION OF STRUCTURES OVER THE GRAND RIVER AND A TRIBUTARY OF THE GRAND RIVER.

EARTH DISTURBED AREAS

PROJECT EARTH DISTURBED AREA: 33.46 Ac.
ESTIMATED CONTRACTOR EARTH DISTURBED AREA: 1.0 Ac.
NOTICE OF INTENT EARTH DISTURBED AREA: 34.46 Ac.

2005 SPECIFICATIONS

THE STANDARD SPECIFICATIONS OF THE STATE OF OHIO, DEPARTMENT OF TRANSPORTATION, INCLUDING CHANGES AND SUPPLEMENTAL SPECIFICATIONS LISTED IN THE PROPOSAL SHALL GOVERN THIS IMPROVEMENT.

I HEREBY APPROVE THESE PLANS AND DECLARE THAT THE MAKING OF THIS IMPROVEMENT WILL NOT REQUIRE THE CLOSING TO TRAFFIC OF THE HIGHWAY AND THAT PROVISIONS FOR THE MAINTENANCE AND SAFETY OF TRAFFIC WILL BE AS SET FORTH ON THE PLANS AND ESTIMATES.

UNDER AUTHORITY OF SECTION 4511.21, DIVISION (H) OF THE OHIO REVISED CODE, THE REVISED PRIMA FACIE SPEED LIMITS AS INDICATED HEREIN ARE DETERMINED TO BE REASONABLE AND SAFE, AND ARE HEREBY ESTABLISHED FOR THE DURATION OF THIS PROJECT. THE PRIMA FACIE SPEED LIMIT OR LIMITS HEREBY ESTABLISHED SHALL BECOME EFFECTIVE WHEN APPROPRIATE SIGNS GIVING NOTICE THEREOF ARE ERECTED.

UNDERGROUND UTILITIES
TWO WORKING DAYS
BEFORE YOU DIG
CALL 1-800-362-2764 (TOLL FREE)
OHIO UTILITIES PROTECTION SERVICE
NON-MEMBERS
MUST BE CALLED DIRECTLY

PLAN PREPARED BY:

DLZ OHIO, INC.
1000 Rockefeller Bldg.
614 W. Superior Ave.
Cleveland, Ohio 44113

ENGINEERS SEAL:

STATE OF OHIO
VICKIE L. WILDEMAN
E-55836
REGISTERED
PROFESSIONAL ENGINEER

SIGNED: Vicki L. Wildeman
DATE: September 25, 2006

STANDARD CONSTRUCTION DRAWINGS

BP-1.1	7/28/00	CB-1.1	7/19/02	DM-4.1	7/19/02	MT-35.10	4/20/01	AS-1-81	7/19/02	800	1/19/07
BP-2.1	7/16/04	CB-1.2	7/19/02	DM-4.2	1/21/05	MT-95.30	7/16/04	GSD-1-96	7/19/02	802	4/15/05
BP-2.2	7/16/04	CB-2.1	7/19/02	DM-4.3	7/19/02	MT-95.31M	7/16/04	SBR-1-99	7/19/02	832	4/25/06
BP-2.3	7/16/04	CB-2.2	7/19/02	DM-4.4	7/19/02	MT-95.32	7/16/04	ICD-1-82	7/19/02		
BP-4.1	7/16/04	CB-3.3	7/19/02			MT-95.82	4/19/02			836	4/15/05
BP-5.1	7/28/00	CB-4.2	7/19/02	RM-7.1	4/15/05	MT-101.60	10/18/02			846	10/15/04
						MT-102.20	10/18/02			846	7/11/00
GR-1.1	7/16/04	MH-1.1	7/19/02	TC-16.20	1/19/01	MT-105.10	10/18/02			895	4/16/04
GR-2.1	1/16/04	MH-1.2	7/19/02	TC-21.20	1/19/01	MT-105.11	10/18/02			954	9/9/97
GR-3.1	4/18/03	HW-1.1	1/21/05	TC-41.20	1/19/01						
GR-3.2	4/18/03	HW-2.1	7/19/02	TC-41.40	7/16/04						
GR-4.2	10/17/03	HW-2.2	7/19/02	TC-42.20	7/16/04						
GR-5.1	4/18/03			TC-52.10	4/20/01						
GR-5.2	1/16/04	DM-1.1	1/21/05	TC-52.20	4/20/01						
GR-5.3	1/16/04	DM-1.2	1/21/05	TC-71.10	1/21/05						
		DM-1.4	1/21/05	TC-73.10	1/19/01						

SUPPLEMENTAL SPECIFICATIONS

SPECIAL PROVISIONS

WATERWAY PERMIT 4-23-2005

APPROVED [signature]
DATE 3 OCT 2006 DISTRICT DEPUTY DIRECTOR

APPROVED Gordon Proctor Jr.
DATE 12-15-06 DIRECTOR, DEPARTMENT OF TRANSPORTATION

FEDERAL PROJECT NO. E 032 (937)

PID NO. 19181

CONSTRUCTION PROJECT NO.

RAILROAD INVOLVEMENT NONE

GEA/POR-422-18.31/0.00

1/332

GEA-422-18.31/POR-422-0.00
070080
PID - 19181
DIST 12
3/07/2007

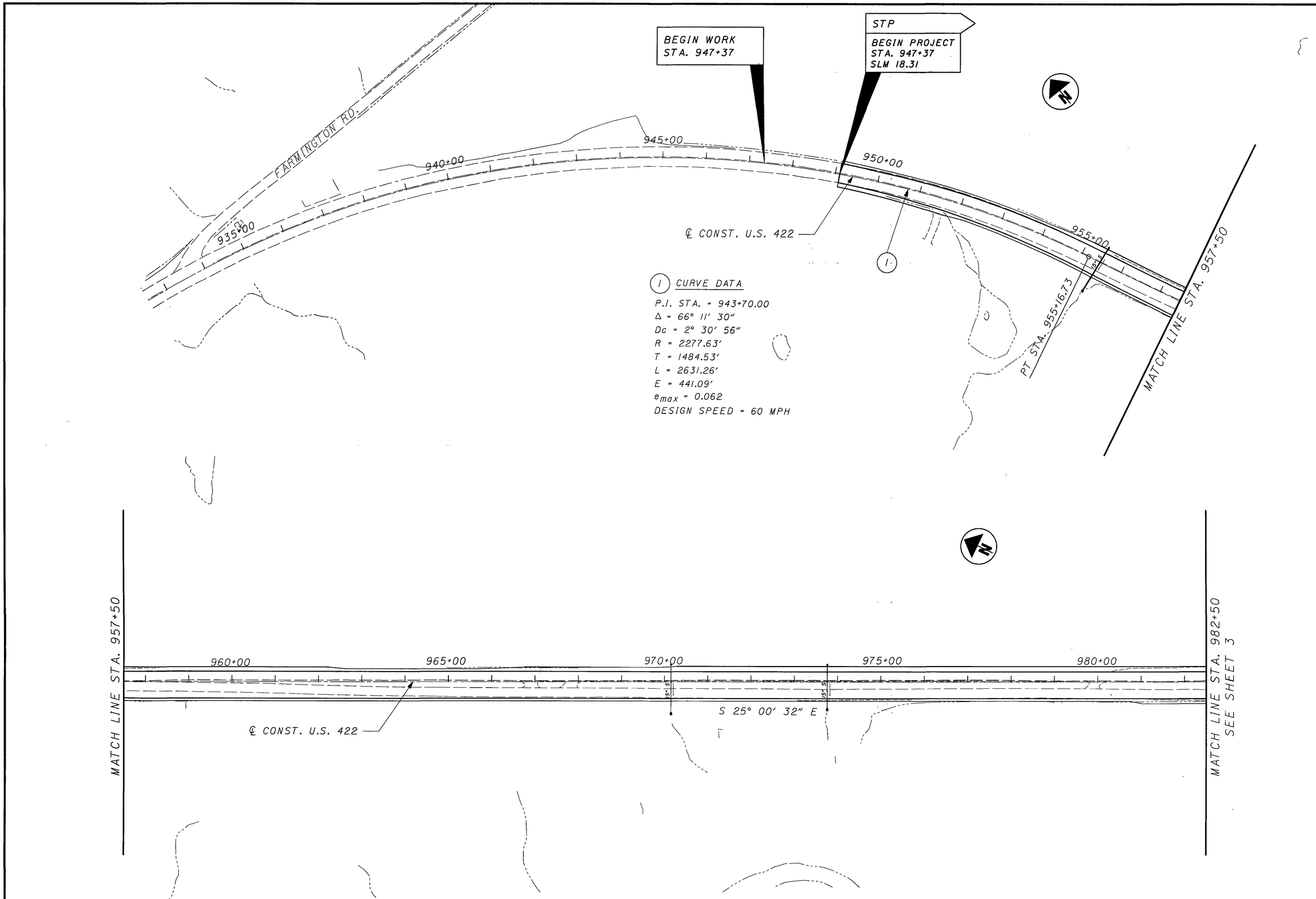

SCHEMATIC PLAN
STA. 932+50 TO STA. 982+50

GEA/POR-422-18.31/0.00

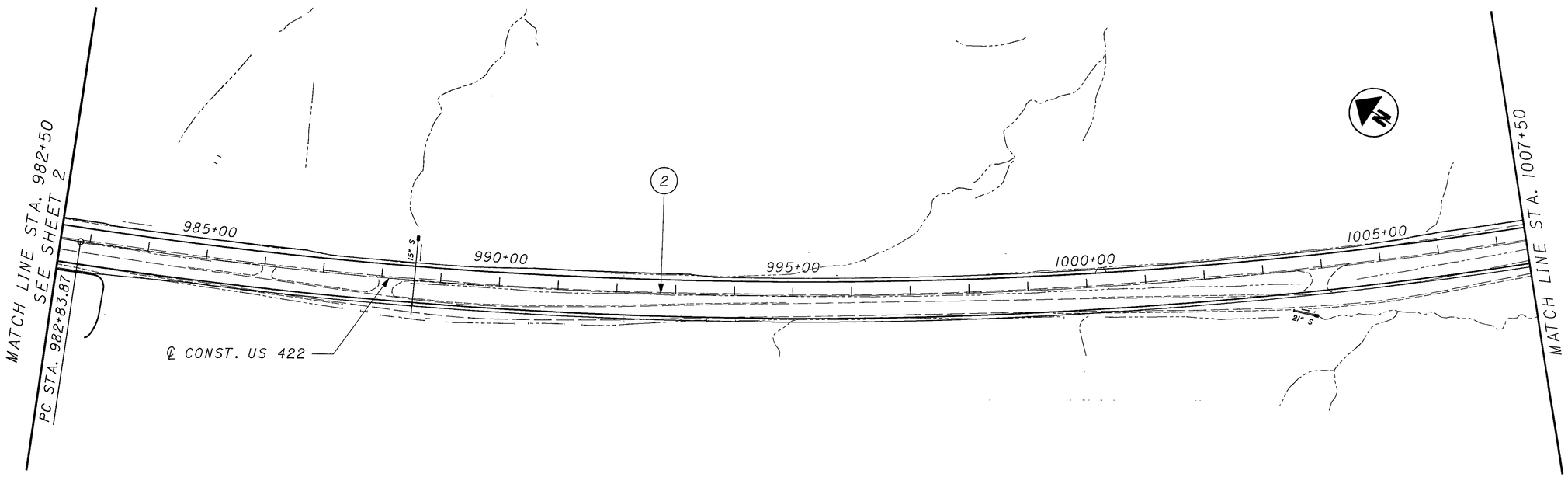

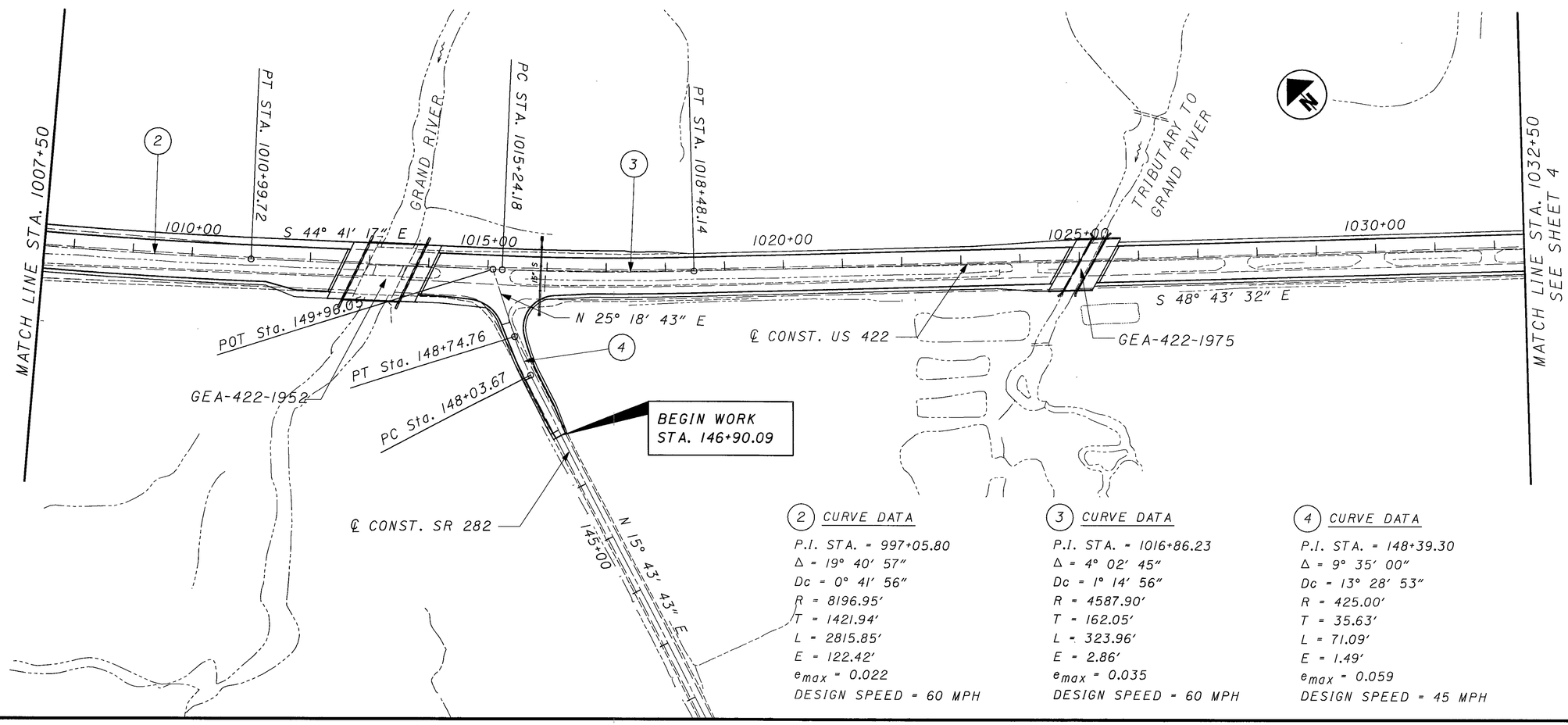

(2) CURVE DATA

P.I. STA. = 997+05.80
Δ = 19° 40' 57"
Dc = 0° 41' 56"
R = 8196.95'
T = 1421.94'
L = 2815.85'
E = 122.42'
e_{max} = 0.022
DESIGN SPEED = 60 MPH

(3) CURVE DATA

P.I. STA. = 1016+86.23
Δ = 4° 02' 45"
Dc = 1° 14' 56"
R = 4587.90'
T = 162.05'
L = 323.96'
E = 2.86'
e_{max} = 0.035
DESIGN SPEED = 60 MPH

(4) CURVE DATA

P.I. STA. = 148+39.30
Δ = 9° 35' 00"
Dc = 13° 28' 53"
R = 425.00'
T = 35.63'
L = 71.09'
E = 1.49'
e_{max} = 0.059
DESIGN SPEED = 45 MPH

0 50 100 200
HORIZONTAL SCALE IN FEET

CALCULATED
CHECKED

SCHEMATIC PLAN
STA. 982+50 TO STA. 1032+50

GEA/POR-422-18.31/0.00

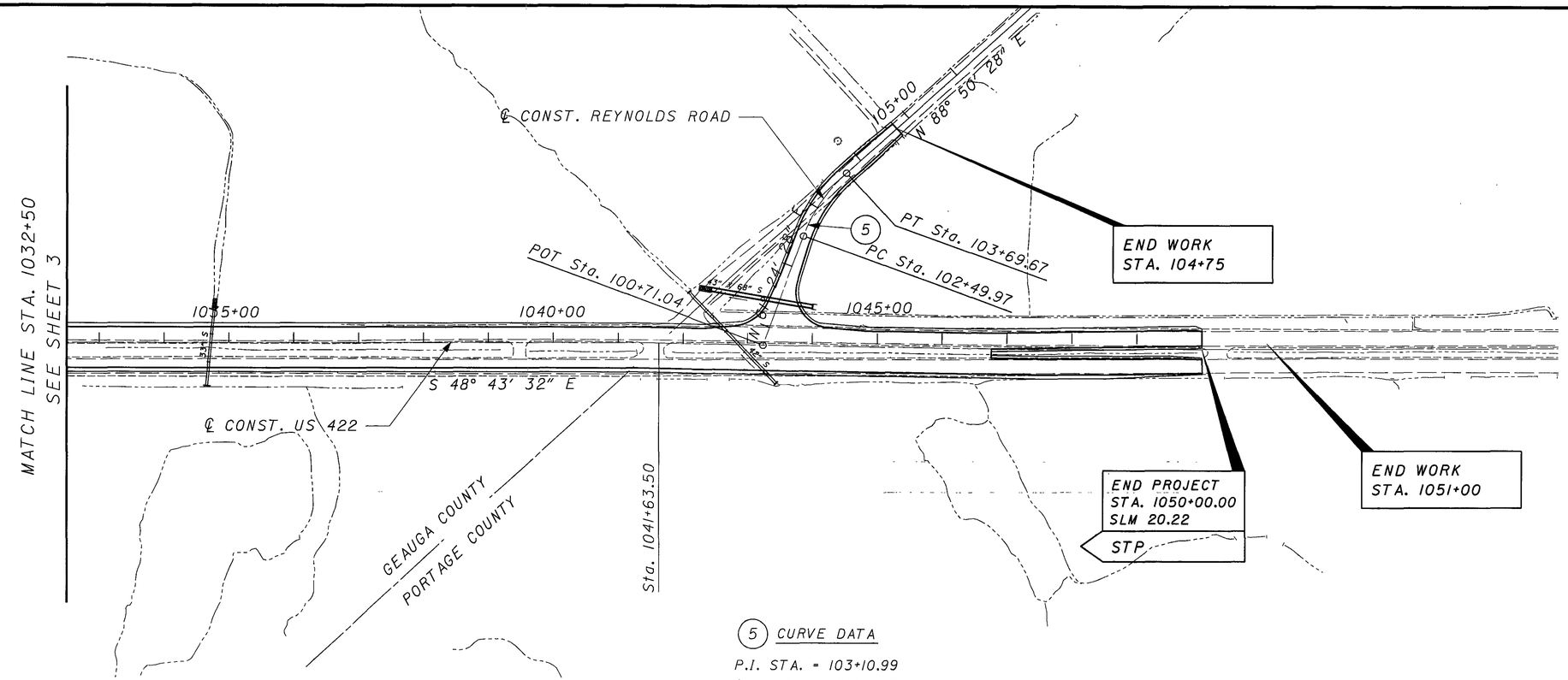

5 CURVE DATA

P.I. STA. = 103+10.99
Δ = 27° 26' 00" (RT)
Dc = 22° 55' 06"
R = 250.00'
T = 61.02'
L = 119.70'
E = 7.34'
e_{max} = 0.076
DESIGN SPEED = 30 MPH

HORIZONTAL SCALE IN FEET
0 50 100 200

CALCULATED
CHECKED

SCHEMATIC PLAN
STA. 1032+50 TO STA. 1050+00

GEA/POR-422-18.31/0.00

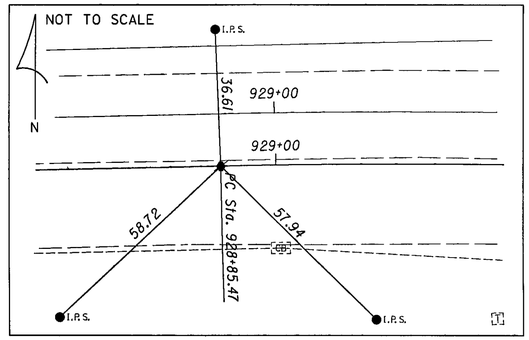

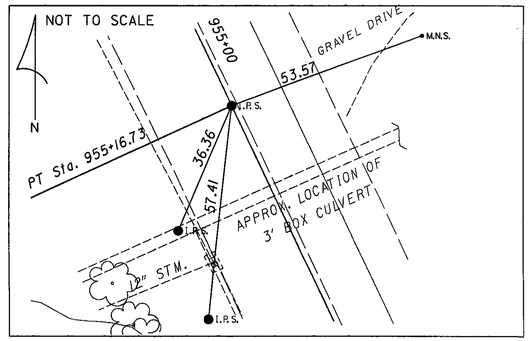

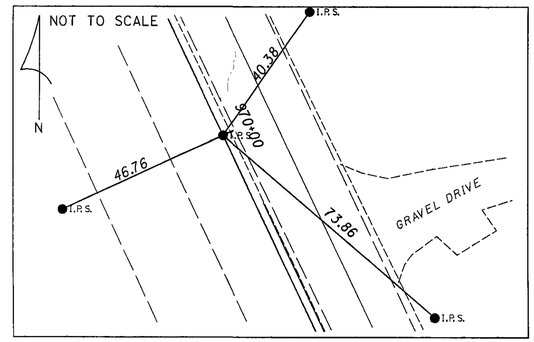

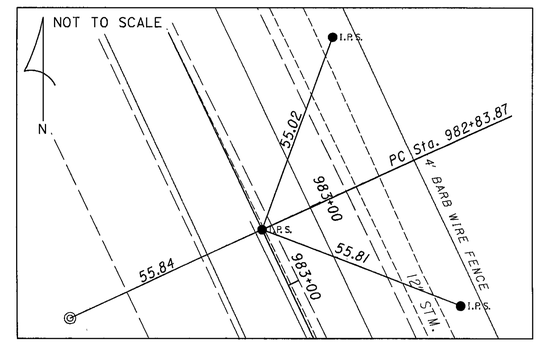

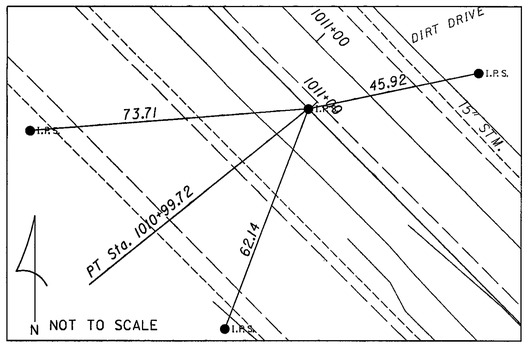

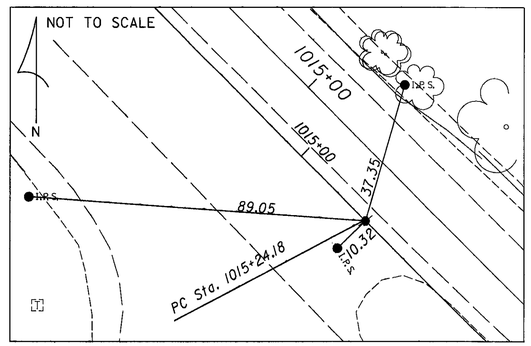

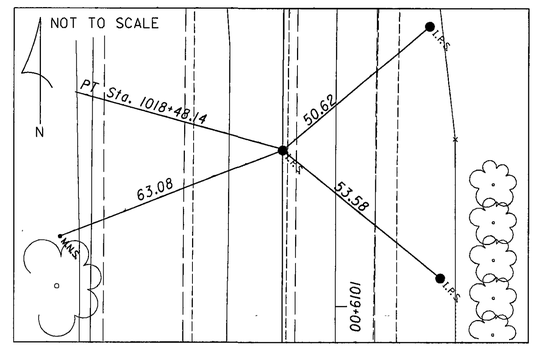

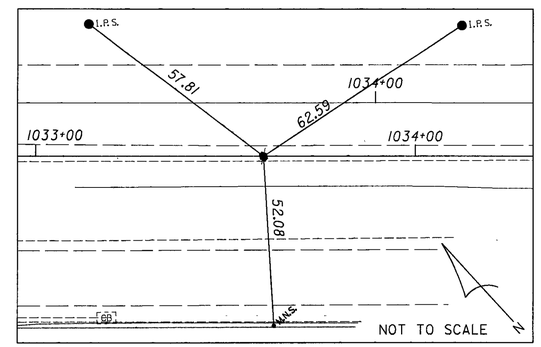

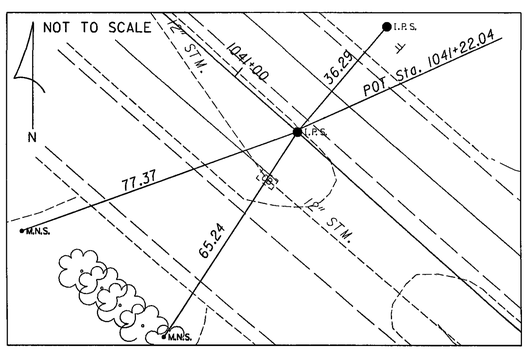

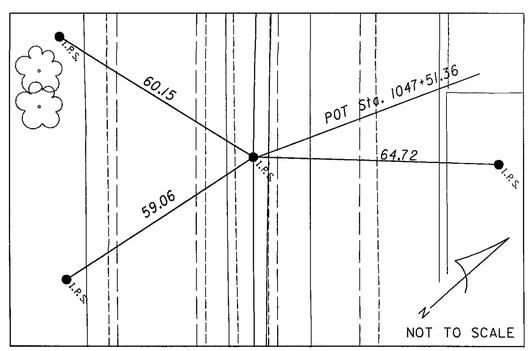

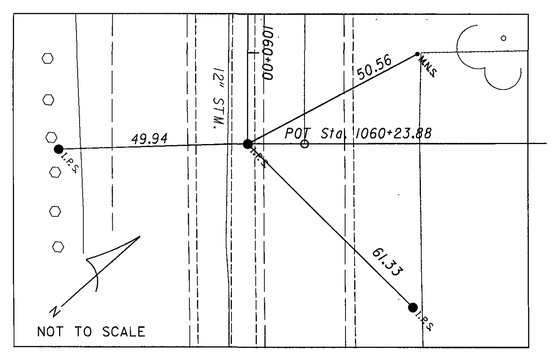

CALCULATED

CHECKED

CENTERLINE REFERENCES

GEA/POR-422-18.31/0.00

BENCHMARK #1
ODOT GEA-422-A010 MONUMENT
STA 1041+69.82, 21.66' LT.
ELEVATION = 917.56'

BENCHMARK #2
GEAUGA COUNTY MONUMENT 1574
STA 1041+87.98, 30.35' LT.
ELEVATION = 916.48'

BENCHMARK #3
RR SPIKE IN POLE #44-AG-3 24
STA 1038+14.63, 38.78' LT.
ELEVATION = 915.96'

BENCHMARK #4
CHS. SQ. ON NE CORNER OF HEAD WALL
STA 1034+80.38, 38.28' LT.
ELEVATION = 907.37'

BENCHMARK #5
CHS. SQ. ON SW COR. OF OLD CONCRETE
SIGN BASE, STA 1032+01.32, 40.22' LT.
ELEVATION = 913.59'

BENCHMARK #6
CHS. SQ. ON NW CORNER OF CONC. INLET
STA 1028+23.44, 14.40' LT.
ELEVATION = 912.17'

BENCHMARK #7
CHS. SQ. ON NE CORNER OF ABUTMENT
STA 1025+49.83, 16.12' LT.
ELEVATION = 910.91'

BENCHMARK #8
RR SPIKE IN POLE #44AG3-6
STA 1020+21.51, 86.93' RT.
ELEVATION = 911.77

BENCHMARK #9
CHS. SQ. ON NW COR. OF IRON GRATE
INLET, STA 1015+98.79, 91.11' RT.
ELEVATION = 906.08'

BENCHMARK #10
CHS. SQ. IN WALL ON W. SIDE OF BRIDGE
STA 1013+04.74, 24.88' RT.
ELEVATION = 912.52

BENCHMARK #11
RR SPIKE IN POLE #44AG3-10
STA 1009+18.05, 104.58' RT.
ELEVATION = 916.76'

BENCHMARK #12
RR SPIKE IN POLE #44AG3-19
STA 1005+63.43, 34.06' LT.
ELEVATION = 946.23'

BENCHMARK #13
GEAUGA COUNTY MONUMENT 896
STA 1003+81.90, 113.84' RT.
ELEVATION = 961.31'

BENCHMARK #14
CHS. SQ. ON NW CORNER OF CONCRETE
INLET, STA 1000+10.15, 61.68' RT.
ELEVATION = 983.25'

BENCHMARK #15
CHS. SQ. ON NW CORNER OF CONCRETE
INLET, STA 997+18.47, 14.33' LT.
ELEVATION = 1000.63'

BENCHMARK #16
RR SPIKE IN POLE #44AH1-34
STA 993+03.97, 77.62' RT.
ELEVATION = 1035.77'

BENCHMARK #17
GEAUGA COUNTY MONUMENT 1804
STA 988+30.42, 50.25' LT.
ELEVATION = 1037.77'

BENCHMARK #18
CHS. SQ. ON NE CORNER OF CONCRETE
INLET, STA 984+52.69, 14.36' LT.
ELEVATION = 1048.78'

BENCHMARK #19
CHS. CROSS IN BOLT AT SE END OF
GUARDRAIL, STA 980+76.58, 19.04' LT.
ELEVATION = 1051.74'

BENCHMARK #20
CHS. SQ. IN NW CORNER OF CONCRETE
INLET, STA 976+97.55, 14.17' LT.
ELEVATION = 1050.33'

BENCHMARK #21
CHS. SQ. IN MIDDLE OF CONRETE
INLET, STA 973+93.21, 13.73' LT.
ELEVATION = 1047.00'

BENCHMARK #22
RR SPIKE IN POLE#43AH4-26
STA 969+94.21, 84.98' RT.
ELEVATION = 1033.94'

BENCHMARK #23
RR SPIKE IN POLE#43AH4-21
STA 966+33.10, 84.81' RT.
ELEVATION = 1045.96'

BENCHMARK #24
RR SPIKE IN POLE#43AH4-29
STA 962+34.01, 27.03' LT.
ELEVATION = 1037.81'

BENCHMARK #25
RR SPIKE IN POLE#43AH4-22
STA 958+24.10, 85.99' RT.
ELEVATION = 1032.25'

BENCHMARK #26
RR SPIKE IN POLE#43AH4-20
STA 953+27.32, 73.54' RT.
ELEVATION = 1045.08'

BENCHMARK #27
CHS. SQ. IN MIDDLE OF CONCRETE DRIVE
CULVERT, STA 951+75.55, 42.30' RT.
ELEVATION = 1053.12'

BENCHMARK #28
RR SPIKE IN 8" WHITE PINE
STA 947+67.29, 55.30' RT.
ELEVATION = 1072.71'

BENCHMARK #29
SE CORNER OF CONC. SLAB IN FRONT OF
HOUSE #16560, STA 943+59.00, 65.39' LT.
ELEVATION = 1079.61'

BENCHMARK #30
NAIL IN POLE #43AH3-17
STA 940+15.20, 49.30' LT.
ELEVATION = 1080.25'

BENCHMARK #31
SW COR. OF WALK & CURB RAMP AT SW
COR. OF BLD., STA 936+69.30, 37.36' LT.
ELEVATION = 1083.36'

BENCHMARK #32
GEAUGA COUNTY MONUMENT #1592
STA 932+47.43, 66.76' LT.
ELEVATION = 1076.74'

BENCHMARK #33
RR SPIKE IN POLE #3001-015
STA 928+23.08, 39.44' LT.
ELEVATION = 1084.04'

BENCHMARK #34
NAIL IN POLE#43H3-8
STA 923+68.53, 39.11' LT.
ELEVATION = 1093.27'

BENCHMARK #35
CHS. SQ. ON SW COR. OF OLD CONC. SIGN
BASE, STA 921+12.87' LT.
ELEVATION = 1097.66'

BENCHMARK #36
NE CORNER OF CONC. FLAG POLE BASE
STA 916+64.16, 53.71' RT.
ELEVATION = 1097.11'

BENCHMARK #37
SW COR. OF CONC. WALK AT GRAHAM'S
COUNTY STORE, STA 911+31.40, 55.76' LT.
ELEVATION = 1091.89'

BENCHMARK #38
CHS. CROSS IN SOUTH BOLT OF STRAIN
POLE, STA 906+93.33, -51.15' LT.
ELEVATION = 1091.17'

BENCHMARK #39
ODOT GEA-422-09 MONUMENT
STA 906+35.32, 393.25' RT.
ELEVATION = 1077.29'

CALCULATED
CHECKED

BENCHMARKS

GEA/POR-422-18.31/0.00

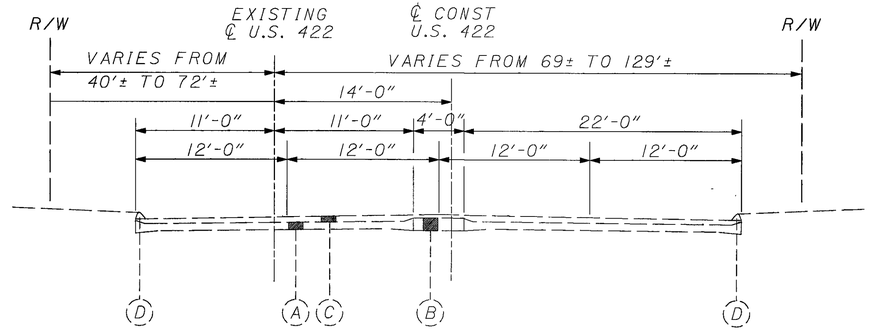

NORMAL SECTION

STA. 949+10.40 TO STA. 956+83.68 = 773.28 FT

EXISTING LEGEND

- (A) 7" CONCRETE BASE
- (B) 10" CONCRETE BASE
- (C) ASPHALT WEARING COURSE (VARIABLE THICKNESS)
- (D) ASPHALT CURB
- (E) COMBINATION CURB AND GUTTER
- (F) BITUMINOUS AGGREGATE BASE
- (G) MACADAM BASE
- (H) GUARDRAIL
- (I) INTEGRAL CURB
- (J) AGGREGATE BASE

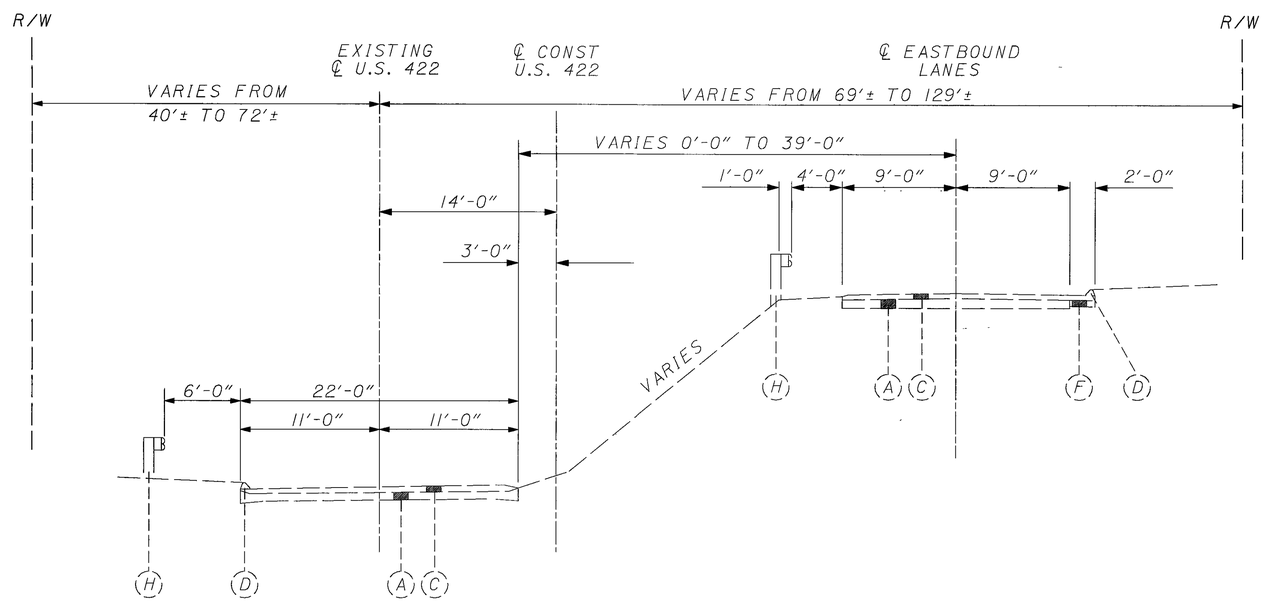

NORMAL SECTION

(EASTBOUND PROFILE GRADE SHOWN HIGHER)

STA. 956+83.68 TO STA. 1012+62.49 = 5578.81 FT

STA. 1013+98.49 TO STA. 1024+89.72 = 1091.23 FT

TYPICAL SECTIONS - U.S. 422

EXISTING

GEA/POR-422-18.31/0.00

I:\PROJECTS\9922010\CIVIL\TYPICALSECTIONS\EXISTING\GY01.DGN

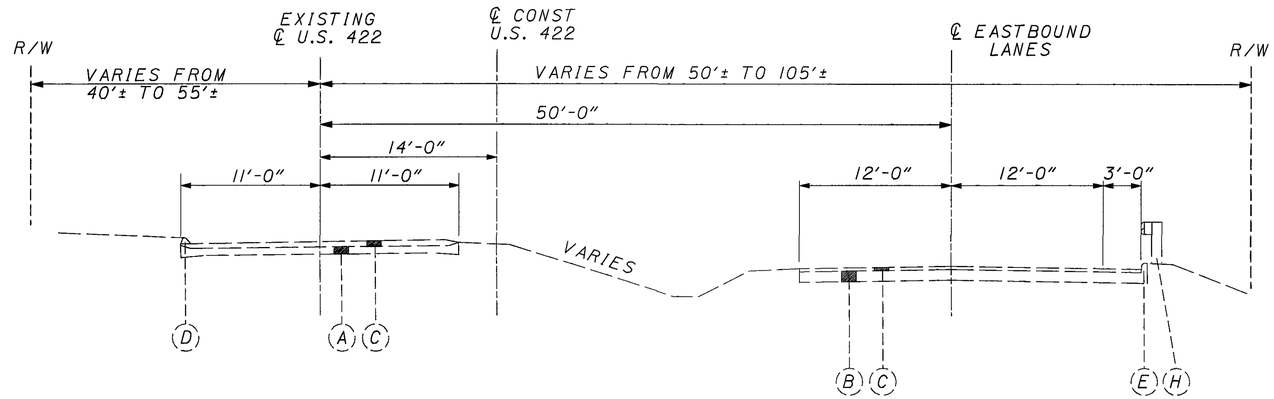

NORMAL SECTION

(WESTBOUND PROFILE GRADE SHOWN HIGHER)

STA. 1025+49.47 TO STA. 1041+63.30 = 1613.83 FT

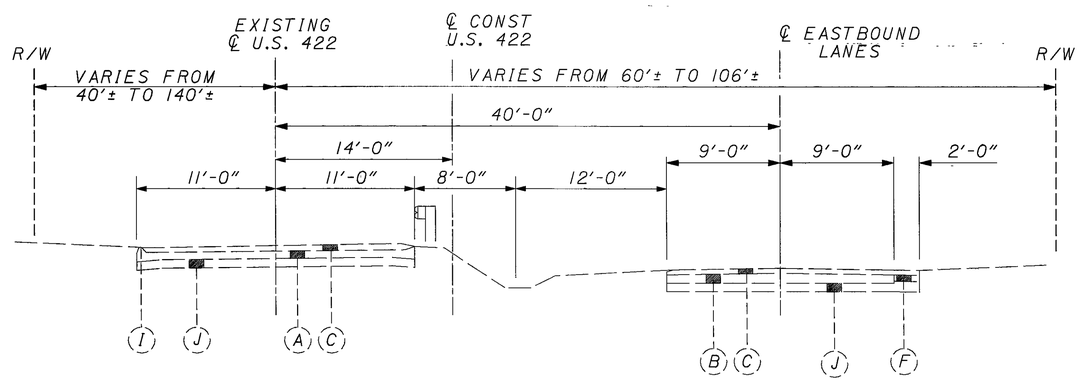

NORMAL SECTION - PORTAGE COUNTY

(WESTBOUND PROFILE GRADE SHOWN HIGHER)

STA. 1041+63.30 TO STA. 1050+00 = 836.70 FT

FOR LEGEND, SEE SHEET 7.

EXISTING TYPICAL SECTIONS - U.S. 422

GEA/POR-422-18.31/0.00

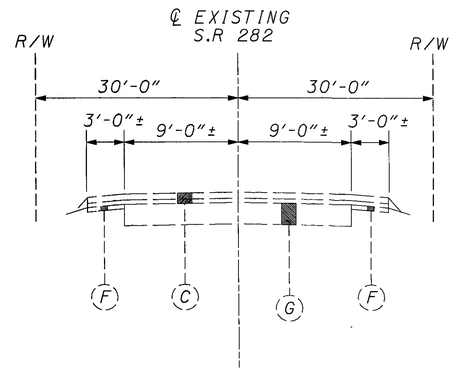

NORMAL SECTION

STA. 146+90.09 TO STA. 149+94.03 = 303.94 FT

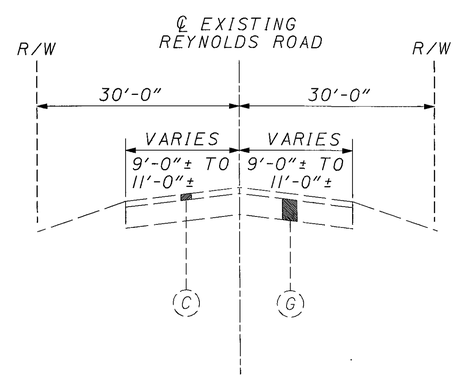

NORMAL SECTION

STA. 100+00.00 TO STA. 104+75.00 = 475.00 FT

FOR LEGEND, SEE SHEET 7.

EXISTING TYPICAL SECTIONS
S.R. 282 AND REYNOLDS ROAD

GEA/POR-422-18.31/0.00

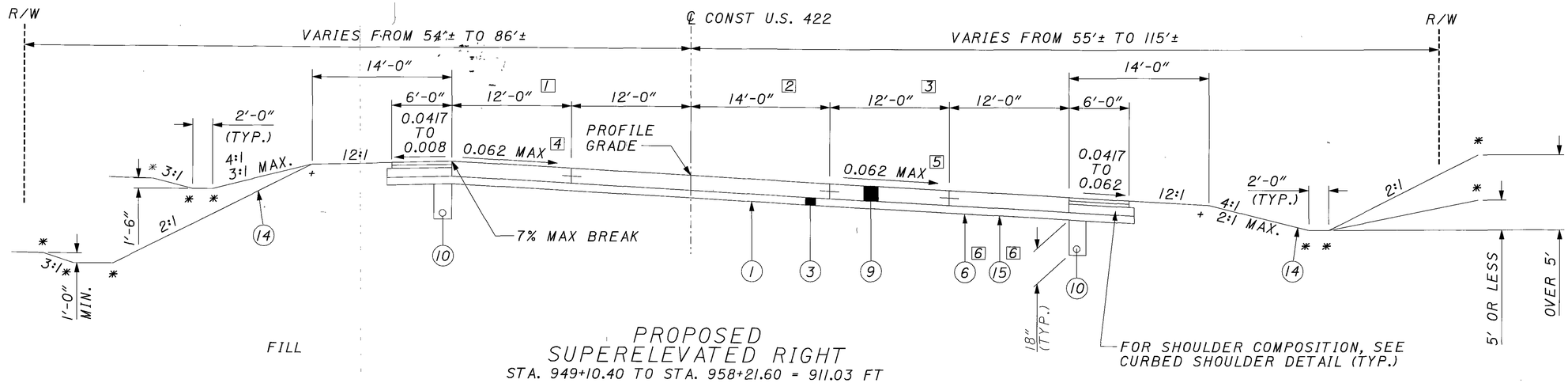

PROPOSED SUPERELEVATED RIGHT

STA. 949+10.40 TO STA. 958+21.60 = 911.03 FT

1. VARIES FROM 13.88' AT STA. 949+10.40 TO 12.00' AT STA. 950+04.52.
2. 0.00' FROM STA. 949+10.40 TO STA. 950+96.90. VARIES FROM 0.00' AT STA. 50+96+90 TO 14.00' AT STA. 9557+96.90.
3. VARIES FROM 8.27' AT STA. 949+10.40 TO 12.00' AT STA. 950+96.90. 12.00' FROM STA. 950+96.90 TO STA. 957+96.90
4. VARIES FROM 0.052 AT STA. 949+10.40 TO 0.062 AT STA. 949+63.95. 0.062 FROM STA. 949+63.95 TO STA. 954+06.08. VARIES FROM 0.062 AT STA. 954+06.08 TO 0.0156 AT STA. 958+21.60.
5. VARIES FROM 0.052 AT STA. 949+10.40 TO 0.062 AT STA. 949+63.95. 0.062 FROM STA. 949+63.95 TO STA. 954+06.08. VARIES FROM 0.062 AT STA. 954+06.08 TO 0.0156 AT STA. 956+54.53.
6. CEMENT STABILIZED SUBGRADE FROM STA. 953+90.00 TO STA. 958+21.60

* 2' ROUNDING
\+ 4' ROUNDING

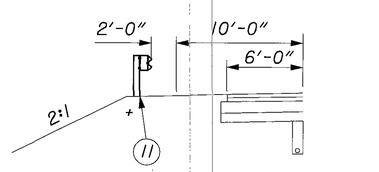

GUARDRAIL SECTION WITHOUT CURB
(SEE PLANS FOR LOCATIONS)

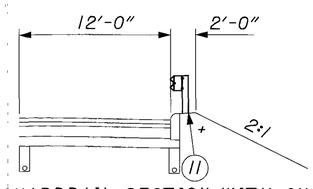

GUARDRAIL SECTION WITH CURB
(SEE PLANS FOR LOCATIONS)

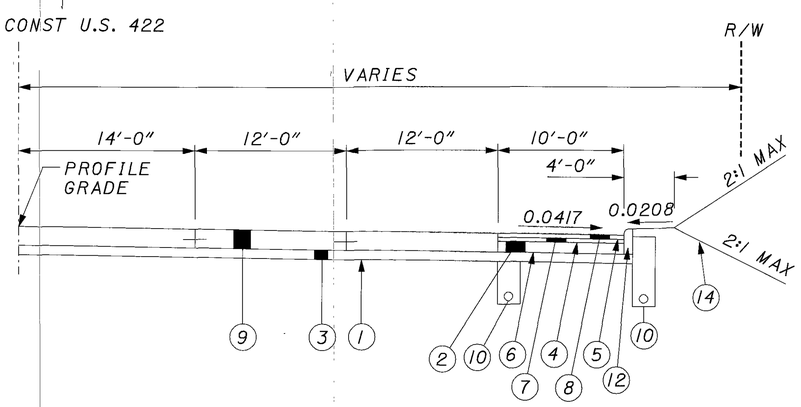

CURBED SHOULDER DETAIL

(SEE PLAN FOR LOCATIONS)

LEGEND

1. ITEM 203 - SUBGRADE COMPACTION
2. ITEM 301 - 8" BITUMINOUS AGGREGRATE BASE, PG64-22
3. ITEM 304 - 6" AGGREGATE BASE, AS PER PLAN
4. ITEM 407 - TACK COAT
5. ITEM 407 - TACK COAT FOR INTERMEDIATE COURSE
6. ITEM 408 - BITUMINOUS PRIME COAT
7. ITEM 448 - 1¾" ASPHALT CONCRETE, INTERMEDIATE COURSE TYPE I, PG64-22
8. ITEM 448 - 1¼" ASPHALT CONCRETE, SURFACE COURSE TYPE I, PG64-22
9. ITEM 884 - 11" PORTLAND CEMENT CONCRETE PAVEMENT (7 YEAR WARRANTY)
10. ITEM 605 - 6" BASE PIPE UNDERDRAIN WITH FABRIC WRAP
11. ITEM 606 - GUARDRAIL, TYPE 5
12. ITEM 609 - CURB, TYPE 6
13. ITEM 526 - REINFORCED CONCRETE APPROACH SLAB (T = 15")
14. ITEM 659 - SEEDING AND MULCHING
15. ITEM 804 - CEMENT STABILIZED SUBGRADE

PROPOSED TYPICAL SECTIONS - U.S. 422

GEA/POR-422-18.31/0.00

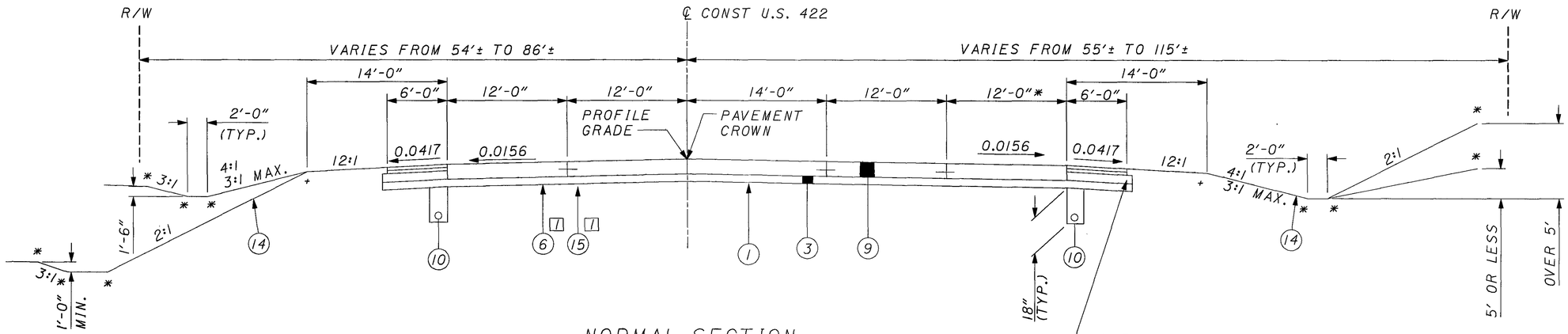

FILL

NORMAL SECTION

STA. 958+21.60 TO STA. 981+21.76 = 2300.16 FT
STA. 1019+94.13 TO STA. 1024+75.43 = 481.30 FT
STA. 1025+49.37 TO STA. 1046+76.00 = 2126.63 FT

FOR SHOULDER COMPOSITION, SEE SHEET 10 (TYP.)

CUT

[7] CEMENT STABILIZED SUBGRADE FROM STA. 958+21.60 TO STA. 970+64.00, STA. 1021+52.00 TO STA. 1024+75.43 AND STA. 1025+49.37 TO STA. 1046+76.00.

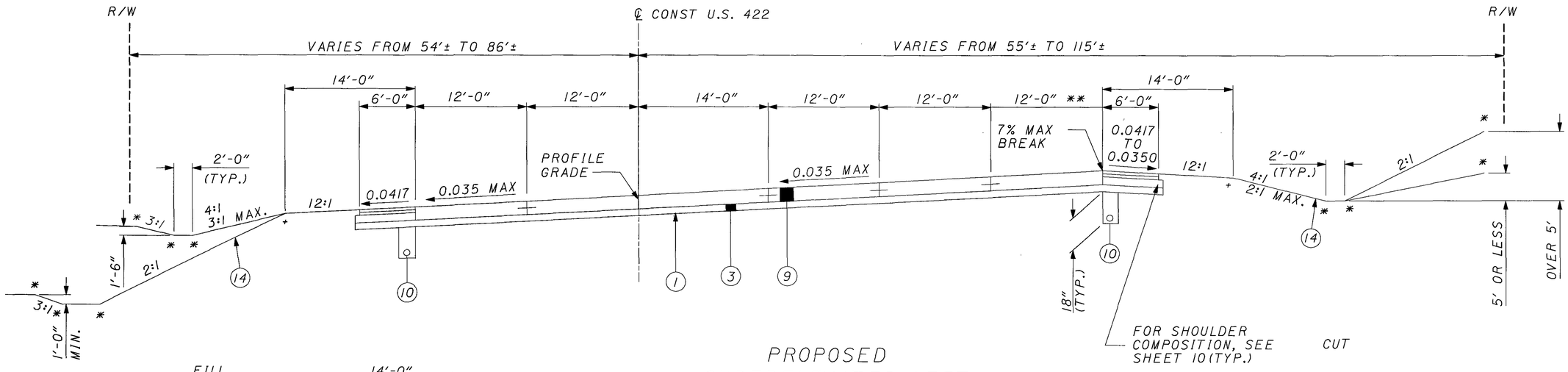

FILL

FOR SHOULDER COMPOSITION, SEE SHEET 10 (TYP.)

CUT

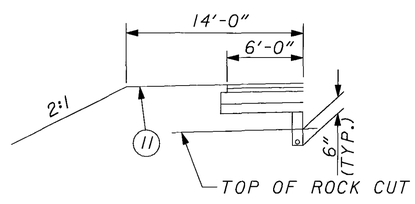

SECTION WITH UNDERDRAIN CUT INTO ROCK (APPROX. STA 991+50 TO STA 998+50)

PROPOSED SUPERELEVATED LEFT

STA. 981+21.76 TO STA. 1012+56.89 = 3135.13 FT
STA. 1014+05.61 TO STA. 1019+94.13 = 588.52 FT

** VARIES FROM 0' @ STA. 1011+25.82 TO 12.00' @ STA. 1011+75.82. 12.00' FROM STA. 1011+75.82 TO STA. 1012+61.83.

* 2' ROUNDING
\+ 4' ROUNDING

FOR LEGEND AND GUARDRAIL DETAILS, SEE SHEET 10

PROPOSED TYPICAL SECTIONS - U.S. 422

GEA/POR-422-18.31/0.00

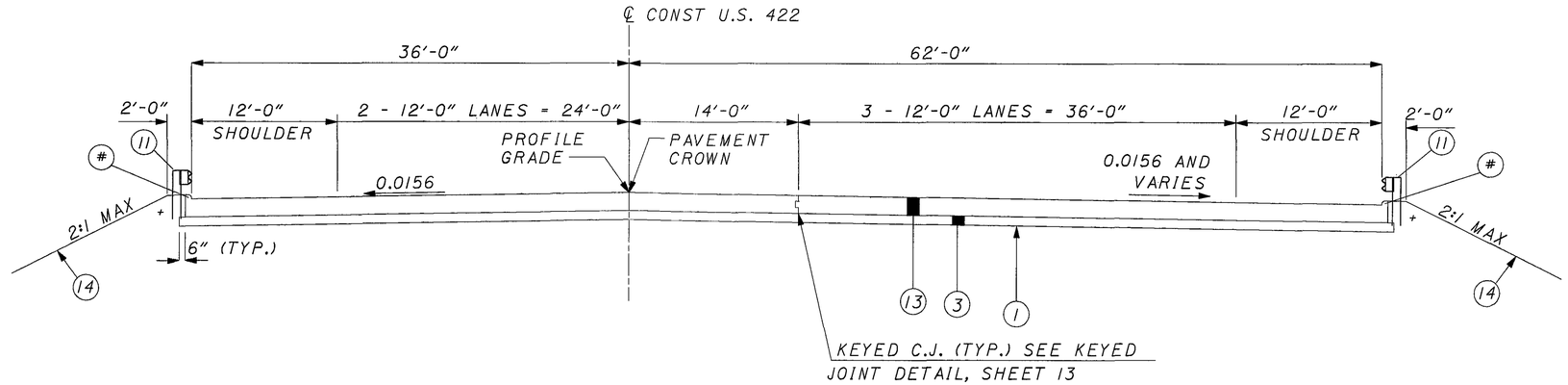

APPROACH SLAB SECTION - U.S. 422

STA. 1012+57.16 TO STA. 1012+82.16 = 25.00 FT

STA. 1013+80.34 TO STA. 1014+05.34 = 25.00 FT

(#) CURB, TYPE 4 - PAYMENT INCLUDED WITH ITEM 526, REINFORCED CONCRETE APPROACH SLAB.

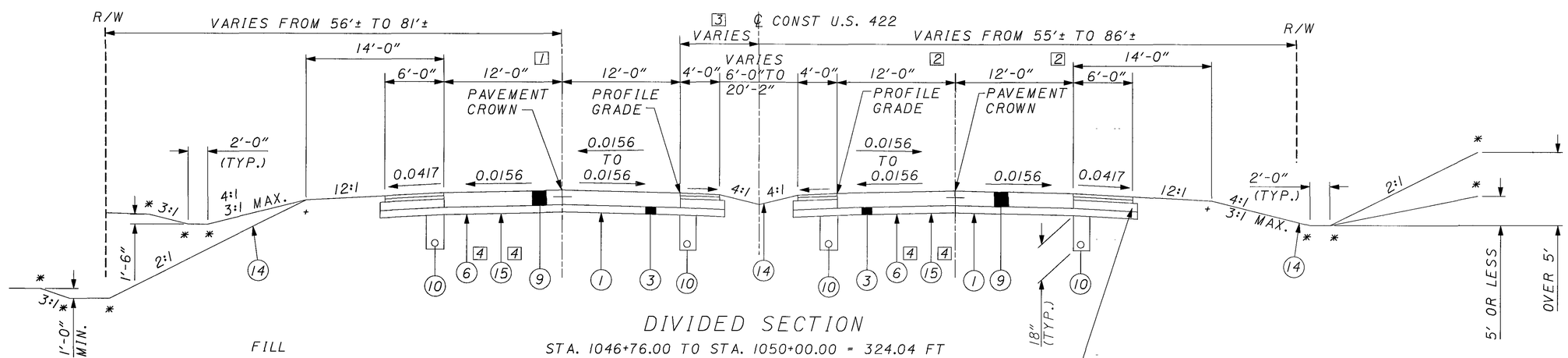

DIVIDED SECTION

STA. 1046+76.00 TO STA. 1050+00.00 = 324.04 FT

[1] 12'-0" FROM STA. 1046+76.00 TO STA. 1049+90.09. VARIES FROM 12'-0" AT STA. 1049+90.09 TO 10.18' AT STA. 1050+00.00.

[2] 12'-0" FROM STA. 1046+76.00 TO STA. 1047+51.36. VARIES FROM 12'-0" AT STA. 1047+51.36 TO 10.37' AT STA. 1050.00.00.

[3] VARIES FROM 0'0" AT STA. 1046+76.00 TO 5.41' AT STA. 1050+00.00.

[4] CEMENT STABILIZED SUBGRADE FROM STA. 1046+76.00 TO STA. 1049+65.00.

* 2' ROUNDING
\+ 4' ROUNDING

FOR LEGEND SEE SHEET 10

PROPOSED TYPICAL SECTIONS - U.S. 422

GEA/POR-422-18.31/0.00

I:\PROJECTS\992210\0\CIVIL\TYPICALSECTIONS\UNDIVIDE5\GY01.DGN

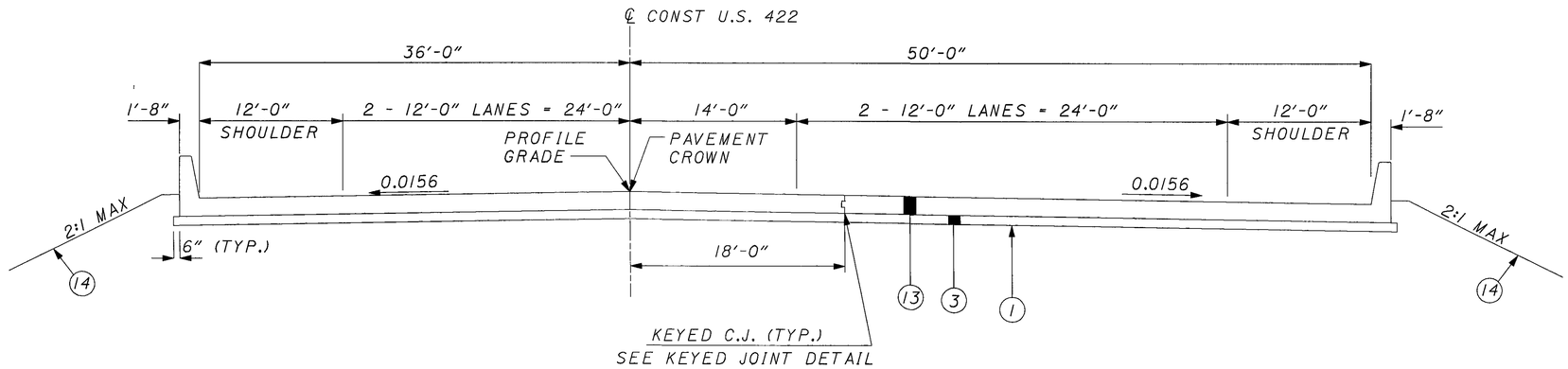

APPROACH SLAB SECTION - U.S. 422

STA. 1024+75.43 TO STA. 1025+00.43 = 25.00 FT

STA. 1025+24.37 TO STA. 1025+49.37 = 25.00 FT

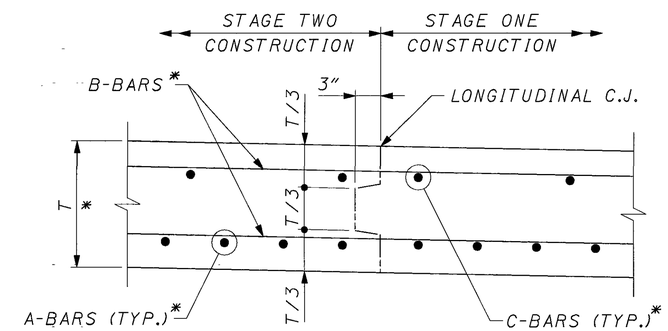

KEYED JOINT DETAIL

* SEE STD. DWG. AS-1-81

FOR LEGEND SEE SHEET 10

PROPOSED TYPICAL SECTIONS - U.S. 422

GEA/POR-422-18.31/0.00

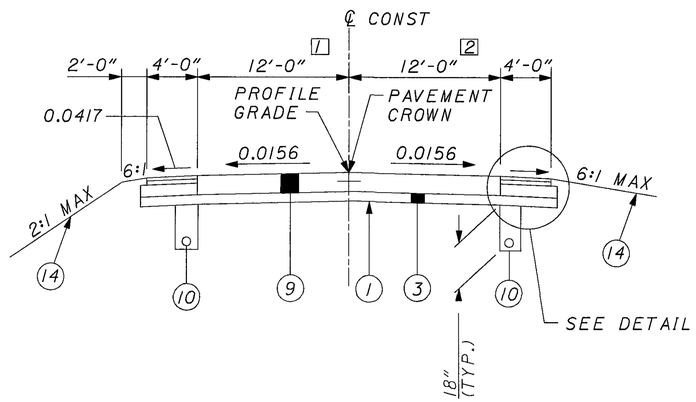

NORMAL SECTION

* STA. 146+90.09 TO STA. 147+29.28 = 39.19 FT
* STA. 149+52.15 TO STA. 149+96.05 = 43.90 FT
** STA. 100+71.04 TO STA. 101+58.28 = 87.24 FT
** STA. 104+62.78 TO STA. 104+75.00 = 12.22 FT

1 VARIES FROM 9.95' AT STA. 146+90.19 TO 12.00' AT STA. 147+12.61. 12.00' FROM STA. 147+12.61 TO STA. 147+29.28.

2 VARIES FROM 7.70' AT STA 146+90.19 TO 11.09' AT STA. 147+29.28.

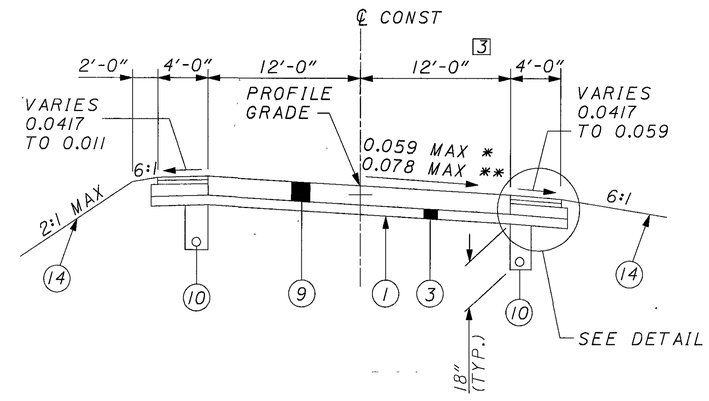

SUPERELEVATED RIGHT

* STA. 147+29.28 TO STA. 149+52.15 = 222.87 FT
** STA. 101+58.28 TO STA. 104+62.78 = 304.50 FT

3 VARIES FROM 11.09' AT STA. 147+29.28 12.00' AT STA. 147+39.75. 12'00' FROM STA. 147+39.75 TO STA. 149+52.15.

* SR 282
** REYNOLDS ROAD

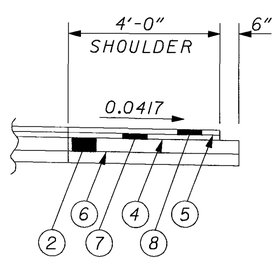

DETAIL

FOR LEGEND SEE SHEET 10

PROPOSED TYPICAL SECTIONS
S.R. 282 AND REYNOLDS ROAD

GEA/POR-422-18.31/0.00

GENERAL

ROUNDING

THE ROUNDING AT SLOPE BREAKPOINTS SHOWN ON THE TYPICAL SECTIONS APPLY TO ALL CROSS-SECTIONS EVEN THOUGH OTHERWISE SHOWN.

UTILITIES

LISTED BELOW ARE ALL UTILITIES LOCATED WITHIN THE PROJECT CONSTRUCTION LIMITS TOGETHER WITH THEIR RESPECTIVE OWNERS:

THE EAST OHIO GAS
COMPANY-GSO DIVISION
715 FREEDOM AVENUE NW
N. CANTON, OHIO 44720-7381
(330) 497-5136

STAR CABLE
4720 MAHONING AVENUE
YOUNGSTOWN, OHIO 44515
(800)-569-0200

BRAINARD GAS CORP.
4369 BRAINARD ROAD
ORANGE VILLAGE, OHIO 44022
(216) 591-9110

TIME WARNER CABLE
1655 BRITTAIN ROAD
AKRON OHIO 44310
(330) 633-9203

WESTERN RESERVE
TELEPHONE (ALLTEL)
450 NORTH MAIN ST.
HUDSON, OHIO 44236
(440) 993-1621

OHIO EDISON
730 SOUTH AVENUE
YOUNGSTOWN, OHIO 44646
(330) 740-7635

GEAUGA COUNTY ENGINEERS
WATER RESOURCES
470 CENTER STREET
CHARDON, OHIO 44024
(440) 285-2222 EXT 6335

THE LOCATION OF THE UNDERGROUND UTILITIES SHOWN ON THE PLANS ARE AS OBTAINED FROM THE OWNERS AS REQUIRED BY SECTION 153.64 O.R.C.

CONTINGENCY QUANTITIES

THE CONTRACTOR SHALL NOT ORDER MATERIALS OR PERFORM WORK FOR ITEMS DESIGNATED BY PLAN NOTE TO BE USED "AS DIRECTED BY THE ENGINEER" UNLESS AUTHORIZED BY THE ENGINEER. THE ACTUAL WORK LOCATIONS AND QUANTITIES USED FOR SUCH ITEMS SHALL BE INCORPORATED INTO THE FINAL CHANGE ORDER GOVERNING COMPLETION OF THIS PROJECT.

ELEVATION DATUM

ALL ELEVATIONS ARE BASED ON U.S.G.S. DATUM.

WORK LIMITS

THE WORK LIMITS SHOWN ON THESE PLANS ARE FOR PHYSICAL CONSTRUCTION ONLY. THE INSTALLATION AND OPERATION OF ALL TEMPORARY TRAFFIC CONTROL AND TEMPORARY TRAFFIC CONTROL DEVICES REQUIRED BY THESE PLANS SHALL BE PROVIDED BY THE CONTRACTOR WHETHER INSIDE OR OUTSIDE THESE WORK LIMITS.

PAVEMENT

CONTRACTION AND/OR EXPANSION JOINTS

ALTHOUGH SPECIFIC LOCATIONS OF CERTAIN CONTRACTION AND EXPANSION JOINTS HAVE BEEN DETAILED ON THIS PLAN, NO WAIVER OF THE SPECIFICATIONS IS INTENDED. PROVISION OF EXPANSION JOINTS AT ALL MAJOR STRUCTURES AND THE MAXIMUM SPACING BETWEEN CONTRACTION JOINTS SHALL, IN ALL CASES, BE IN ACCORDANCE WITH STANDARD CONSTRUCTION DRAWING BP-2.2 AND THE SPECIFICATIONS.

MEDIAN AND/OR CURBING ON APPROACH SLABS

THE SHAPE OF THE MEDIAN AND/OR CURBING ON APPROACH SLABS SHALL BE TRANSITIONED, FROM THE STANDARD SECTION ON THE APPROACHES TO THE SECTION USED ON THE BRIDGE, WITHIN THE LIMITS OF THE APPROACH SLAB.

ITEM 884 - PORTLAND CEMENT CONCRETE PAVEMENT

ALL REFERENCES TO ITEM 451 - REINFORCED CONCRETE PAVEMENT FOUND IN THESE PLANS SHALL READ ITEM 884 - PORTLAND CEMENT CONCRETE PAVEMNT (7 YEAR WARRANTY).

ITEM 617 - COMPACTED AGGREGATE, AS PER PLAN

THIS ITEM SHALL BE USED ALONG THE PROPOSED SHOULDERS. MATERIAL SHALL BE LIMITED TO ASPHALT GRINDINGS WHERE 100% SHALL PASS THE 1" SIEVE.

THE WIDTH OF ITEM 617 SHALL BE TWO FEET AT A DEPTH OF FOUR INCHES. WATER, IF NEEDED, IS TO BE APPLIED AS PER 617 AND INCLUDED UNDER ITEM 617, COMPACTED AGGREGATE, AS PER PLAN.

THE FOLLOWING ESTIMATED QUANTITY HAS BEEN CARRIED TO THE GENERAL SUMMARY:

ITEM 617-COMPACTED AGGREGATE, AS PER PLAN . . 500 CU YD

ROADWAY

MONUMENTS

MONUMENTS SHALL BE CONSTRUCTED IN ACCORDANCE WITH DETAILS AS SHOWN ON THE STANDARD CONSTRUCTION DRAWINGS AND AT THE LOCATIONS SHOWN ON SHEET NOS. 60, 62, 64, 67, 71, 73, 76, 77, 78, 79, 81, 83 AND 85.

ITEM 204 - PROOF ROLLING

AN ESTIMATED QUANTITY FOR THIS ITEM HAS BEEN PROVIDED IN THE GENERAL SUMMARY FOR USE AS DIRECTED BY THE ENGINEER.

CEMENT STABILIZED SUBGRADE

THE SUBGRADE SHALL BE CEMENT STABILIZED IN THE AREAS SHOWN ON THE TYPICAL SECTIONS. THE SUBGRADE SHALL BE STABILIZED TO A DEPTH OF 12 INCHES AND 18 INCHES BEYOND THE EDGE OF SHOULDERS.

UNSUITABLE SOILS

IF UNSUITABLE SOILS, OTHER THAN THOSE SPECIFIED TO BE CEMENT STABILIZED, ARE ENCOUNTERED IN THE AREAS OF THE PROPOSED ROADBED, THEY SHALL BE REMOVED AND REPLACED WITH SUITABLE MATERIAL MEETING THE REQUIREMENTS OF 203.02.R. THE LOCATIONS AND DIMENSIONS WILL BE DETERMINED BY THE ENGINEER.

CONSTRUCT THE SUBGRADE AS FOLLOWS AND IN THE FOLLOWING SEQUENCE:

IF THERE IS UNSUITABLE MATERIAL IN A SHALLOW FILL LOCATION, THEN REMOVE AND REPLACE THE UNSUITABLE MATERIAL ACCORDING TO STEP 2 PRIOR TO CONSTRUCTING THE SHALLOW FILL AND SHAPING THE SUBGRADE.

1. CONSTRUCT THE SUBGRADE TO WITHIN 0.2 OF A FOOT OF THE PLAN SUBGRADE ELEVATION.

2. REMOVE AND REPLACE THE UNSUITABLE MATERIALS (e.g., A-4b, A-2-5, A-5, A-7-5, COAL, SHALE, ROCK). THESE MATERIALS ARE TO BE REMOVED PRIOR TO PROOF ROLLING. THE QUANTITIES FOR THE UNSUITABLE SOILS ARE PAID UNDER ITEM 204 EXCAVATION OF SUBGRADE.

3. CONSTRUCT AND COMPACT THE SUBGRADE TO 204.03.

4. PROOF ROLL THE COMPACTED SUBGRADE ACCORDING TO 204.06 TO DETERMINE THE ACTUAL LIMITS OF THE SOFT SOILS AND TO VERIFY THE UNIFORMITY OF THE SUBGRADE COMPACTION.

5. THE ENGINEER WILL IDENTIFY THE ACTUAL LOCATIONS OF THESE SOFT SOILS BASED ON THE PROOF ROLLING RESULTS. AFTER THE SOIL AREAS HAVE BEEN DETERMINED, THE ENGINEER WILL ADJUST THE PLAN WIDTH AND DEPTH BY UTILIZING TEST PITS ACCORDING TO THE "CONSTRUCTION INSPECTION MANUAL". THE QUANTITIES FOR THE SOFT SOILS ARE PAID FOR UNDER ITEM 204 EXCAVATION OF SUBGRADE.

6. UNDERCUT THE AREAS DETERMINED BY THE ENGINEER AND REPLACE WITH THE SPECIFIED MATERIALS ACCORDING TO 204.07. THE UNDERCUTS WILL EXTEND 18 INCHES BEYOND THE EDGE OF THE SURFACE OF THE PAVEMENT, PAVED SHOULDERS, OR PAVED MEDIANS.

7. PROOF ROLL THE UNDERCUT AREAS ACCORDING TO 204.06 TO VERIFY THE UNDERCUT STABILITY.

8. FINE GRADE THE SUBGRADE TO THE SPECIFIED GRADE.

THE FOLLOWING CONTINGENCY QUANTITIES HAVE BEEN INCLUDED IN THE GENERAL SUMMARY TO BE USED AS DIRECTED BY THE ENGINEER:

ITEM 204 - SUBGRADE COMPACTION	2000 SQ YD
ITEM 204 - PROOF ROLLING	1 HOUR
ITEM 204 - EXCAVATION OF SUBGRADE	1000 CU YD
ITEM 204 - EMBANKMENT	1000 CU YD

CALCULATED
CHECKED

GENERAL NOTES

GEA/POR-422-18.31/0.00

ITEM 606 - ANCHOR ASSEMBLY, TYPE E-98

THIS ITEM SHALL CONSIST OF FURNISHING AND INSTALLING EITHER OF THE FOLLOWING GUARDRAIL END TERMINALS.

1) THE ET-2000 (1997) MANUFACTURED BY TRINITY INDUSTRY, 1170 N. STATE STREET, GIRARD, OHIO 44420 (TELEPHONE: 330-545-4373).

THE LENGTH OF THE ET-2000 (1997) SYSTEM IS CONSIDERED TO BE 50'-0", INCLUSIVE OF TWO 25'-0" LONG RAIL ELEMENTS. INSTALLATION SHALL BE AT THE LOCATIONS SPECIFIED IN THE PLANS, IN ACCORDANCE WITH THE MANUFACTURER'S SPECIFICATIONS AS DETAILED ON THE FOLLOWING PRE-APPROVED SHOP DRAWINGS:

DWG. NO.	DRAWING NAME	DWG./ REV. DATE	ODOT APPROVAL DATE
SSS265M	ET-2000 (1997) PLAN, ELEVATION AND SECTIONS	6/20/97	3/6/98
SS142	ET2000 PLUS 50'-0" PLAN, ELEVATION AND SECTION 25'-0" RAIL, SLEEVE W/PL POSTS 1-4	4/12/00	7/31/00
SS141	ET2000 PLUS PLAN, ELEVATION AND SECTION 25'-0" RAIL, HBA POSTS 1-4	2/29/00	7/31/00
SS158	ET2000 PLUS 50'-0" WITH 12'-6" PANELS AND HBA POSTS 1-4 PLAN, ELEVATION AND SECTION	5/22/00	7/31/00

2) THE SKT-350 MANUFACTURED BY ROAD SYSTEMS, INC., 2516 MALLORY LANE, STOW, OHIO, 44224, (TELEPHONE: 330-346-0721).

THE LENGTH OF THE SKT-350 SYSTEM IS CONSIDERED TO BE 50'-0", INCLUSIVE OF FOUR 12'-6" LONG RAIL ELEMENTS. INSTALLATION SHALL BE AT THE LOCATIONS SPECIFIED IN THE PLANS, IN ACCORDANCE WITH THE MANUFACTURER'S SPECIFICATIONS AS DETAILED ON THE FOLLOWING PRE-APPROVED SHOP DRAWINGS:

DWG. NO.	DRAWING NAME	DWG./ REV. DATE	ODOT APPROVAL DATE
SKT-4M	SEQUENTIAL KINKING TERMINAL (SKT-350) ASSEMBLY WITH 4 FOUNDATION TUBES	12/11/97	3/6/98

THE FACE OF THE TYPE E-98 IMPACT HEAD SHALL BE COVERED WITH A SHEET OF TYPE G REFLECTIVE SHEETING, PER CMS 730.19, APPROXIMATELY 18" X 18".

REFER TO THE MANUFACTURER'S INSTRUCTION REGARDING THE INSTALLATION OF, AND THE GRADING AROUND, THE FOUNDATION TUBES AND GROUND STRUT. THE TOP OF ANY FOUNDATION TUBE SHOULD BE LESS THAN 4-INCHES ABOVE THE GROUND. THE PLACEMENT OF THE FOUNDATION TUBES SHOULD BE AN APPROPRIATE DEPTH BELOW THE LEVEL LINE IN ORDER TO MAINTAIN THE FINISHED GUARDRAIL HEIGHT OF 27-3/4-INCHES FROM THE EDGE OF THE SHOULDER.

ON-SITE GRADING IS REQUIRED IF THE TOP OF THE FOUNDATION TUBES OR TOP OF THE GROUND STRUT DOES PROJECT MORE THAN 4-INCHES ABOVE THE GROUND LINE.

PAYMENT FOR THE ABOVE WORK SHALL BE MADE AT THE UNIT PRICE BID FOR ITEM 606, ANCHOR ASSEMBLY, TYPE E-98, EACH, AND SHALL INCLUDE ALL LABOR, TOOLS, EQUIPMENT AND MATERIALS NECESSARY TO CONSTRUCT A COMPLETE AND FUNCTIONAL ANCHOR ASSEMBLY SYSTEM, INCLUDING ALL RELATED TRANSITIONS, REFLECTIVE SHEETING, HARDWARE, GRADING, EMBANKMENT AND EXCAVATION NOT SEPARATELY SPECIFIED, AS REQUIRED BY THE MANUFACTURER.

ITEM SPECIAL - MAILBOX SUPPORT

THIS WORK SHALL CONSIST OF FURNISHING AND ERECTING MAILBOX SUPPORTS AND ANY ASSOCIATED MOUNTING HARDWARE IN ACCORDANCE WITH PLAN DETAILS, AND ATTACHING AN OWNER-SUPPLIED MAILBOX AT LOCATIONS SPECIFIED IN THE PLAN, OR OTHERWISE ESTABLISHED BY THE ENGINEER.

WOOD POSTS SHALL BE NOMINAL 4" BY 4" SQUARE OR 4½" DIAMETER ROUND, AND CONFORM TO 710.14.

STEEL POSTS SHALL BE NOMINAL PIPE SIZE 2" I.D., AND CONFORM TO AASHTO M 181.

HARDWARE (PLATES, SCREWS, BOLTS, ETC.) SHALL BE COMMERCIAL-GRADE GALVANIZED STEEL.

POSTS SHALL BE SET PER THE FIRST PARAGRAPH OF 606.03, AND SHALL IN NO INSTANCE BE ENCASED IN CONCRETE.

SUPPORT HARDWARE SHALL ACCOMMODATE EITHER A SINGLE OR A DOUBLE MAILBOX INSTALLATION, AND NO MORE THAN TWO BOXES MAY BE MOUNTED ON A SINGLE POST.

THE MAILBOX SHALL BE SECURELY AND NEATLY ATTACHED BY THE CONTRACTOR TO THE NEW SUPPORT. THE CONTRACTOR SHALL FURNISH ALL NECESSARY ATTACHMENT HARDWARE (NUTS, BOLTS, PLATES, SPACERS, AND WASHERS) AS NECESSARY TO ACCOMMODATE THE COMPLETE INSTALLATION.

IN THE ABSENCE OF A NEW BOX SUPPLIED BY THE OWNER, THE CONTRACTOR SHALL SALVAGE THE EXISTING BOX AND PLACE IT ON THE NEW SUPPORT. DUE CARE SHALL BE EXERCISED IN SUCH AN OPERATION, AND THE CONTRACTOR SHALL BE RESPONSIBLE FOR REPAIRING OR REPLACING ANY BOX DAMAGED BY IMPROPER HANDLING ON HIS PART, AS JUDGED AND DIRECTED BY THE ENGINEER.

THE CONTRACTOR SHALL BE RESPONSIBLE FOR COORDINATING WITH THE LOCAL POST MASTER REGARDING THE TIMING OF THE MOVEMENT OF ANY MAILBOX TO A NEW LOCATION.

PAYMENT UNDER THIS ITEM SHALL BE LIMITED TO THE REMOVAL AND FINAL PERMANENT INSTALLATIONS. REMOVAL AND TEMPORARY INSTALLATIONS SHALL BE IN ACCORDANCE WITH 107.10. HOWEVER, THE SAME MATERIAL AND SIZE LIMITATIONS AS FOR PERMANENT INSTALLATIONS SHALL APPLY.

MAILBOX SUPPORTS, COMPLETE IN PLACE, WILL BE PAID FOR AT THE CONTRACT UNIT PRICE PER EACH, FOR ITEM SPECIAL - MAILBOX SUPPORT, SINGLE AND ITEM SPECIAL - MAILBOX SUPPORT, DOUBLE. NO SEPARATE PAYMENT WILL BE MADE FOR THE REMOVAL OF THE MAILBOXES. PAYMENT FOR THE RELOCATION SHALL BE INCLUDED IN ITEM 614 - MAINTAINING TRAFFIC.

ITEM SPECIAL - PRESSURE RELIEF JOINT, TYPE A

THIS ITEM SHALL BE CONSTRUCTED AS SHOWN ON STANDARD CONSTRUCTION DRAWING BP-2.3.

ITEM 206 - CHEMICALLY STABILIZED SUBGRADE

THE SUBRADE FROM STATION 953+90.00 TO STATION 970+64.00 AND FROM STATION 1021+52.00 TO STATION 1049+65.00 SHALL BE STABILIZED WITH CEMENT TO A DEPTH OF 12 INCHES AND 18 INCHES BEYOND THE EDGE OF THE PAVED SHOULDERS. PAYMENT FOR TEST ROLLING SHALL BE INCLUDED IN THE CONTRACT PRICE FOR ITEM 204 - PROOF ROLLING.

CLEARING AND GRUBBING

ALTHOUGH THERE ARE NO TREES OR STUMPS SPECIFICALLY MARKED FOR REMOVAL WITHIN THE LIMITS OF THE PROJECT, A LUMP SUM QUANTITY HAS BEEN INCLUDED IN THE GENERAL SUMMARY FOR ITEM 201, CLEARING AND GRUBBING. ALL PROVISIONS AS SET FORTH IN THE SPECIFICATIONS UNDER THIS ITEM SHALL BE INCLUDED IN THE LUMP SUM PRICE BID FOR ITEM 201, CLEARING AND GRUBBING.

EROSION CONTROL

SEEDING AND MULCHING

QUANTITIES HAVE BEEN CALCULATED ELSEWHERE IN THE PLANS TO PROMOTE GROWTH AND CARE OF PERMANENT SEEDED AREAS:

659, SOIL ANALYSIS TEST

659, TOPSOIL

659, SEEDING AND MULCHING

659, REPAIR SEEDING AND MULCHING

659, INTER-SEEDING

659, COMMERCIAL FERTILIZER

659, LIME

659, WATER

659, MOWING

SEEDING AND MULCHING SHALL BE APPLIED TO ALL AREAS OF EXPOSED SOIL BETWEEN THE RIGHT-OF-WAY LINES, AND WITHIN THE CONSTRUCTION LIMITS FOR AREAS OUTSIDE THE RIGHT-OF-WAY LINES COVERED BY WORK AGREEMENT OR SLOPE EASEMENT. QUANTITY CALCULATIONS FOR SEEDING AND MULCHING ARE BASED ON THESE LIMITS.

CALCULATED | CHECKED

GENERAL NOTES

GEA/POR-422-18.31/0.00

DRAINAGE

CROSSINGS AND CONNECTIONS TO EXISTING PIPES AND UTILITIES

WHERE PLANS PROVIDE FOR A PROPOSED CONDUIT TO BE CONNECTED TO, OR CROSS OVER OR UNDER AN EXISTING SEWER OR UNDERGROUND UTILITY, THE CONTRACTOR SHALL LOCATE THE EXISTING PIPES OR UTILITIES BOTH AS TO LINE AND GRADE BEFORE STARTING TO LAY THE PROPOSED CONDUIT.

IF IT IS DETERMINED THAT THE ELEVATION OF THE EXISTING CONDUIT, OR EXISTING APPURTENANCE TO BE CONNECTED, DIFFERS FROM THE PLAN ELEVATION OR RESULTS IN A CHANGE IN THE PLAN CONDUIT SLOPE, THE ENGINEER SHALL BE NOTIFIED BEFORE STARTING CONSTRUCTION OF ANY PORTION OF THE PROPOSED CONDUIT WHICH WILL BE AFFECTED BY THE VARIANCE IN THE EXISTING ELEVATIONS.

IF IT IS DETERMINED THAT THE PROPOSED CONDUIT WILL INTERSECT AN EXISTING SEWER OR UNDERGROUND UTILITY IF CONSTRUCTED AS SHOWN ON THE PLAN, THE ENGINEER SHALL BE NOTIFIED BEFORE STARTING CONSTRUCTION OF ANY PORTION OF THE PROPOSED CONDUIT WHICH WOULD BE AFFECTED BY THE INTERFERENCE WITH AN EXISTING FACILITY.

PAYMENT FOR ALL THE OPERATIONS DESCRIBED ABOVE SHALL BE INCLUDED IN THE CONTRACT PRICE FOR THE PERTINENT 603 CONDUIT ITEM.

FARM DRAINS

ALL FARM DRAINS, WHICH ARE ENCOUNTERED DURING CONSTRUCTION, SHALL BE PROVIDED WITH UNOBSTRUCTED OUTLETS. EXISTING COLLECTORS WHICH ARE LOCATED BELOW THE ROADWAY DITCH ELEVATIONS, AND WHICH CROSS THE ROADWAY, SHALL BE REPLACED WITHIN THE CONSTRUCTION LIMITS BY ITEM 603 CONDUIT, TYPE B, ONE COMMERCIAL SIZE LARGER THAN THE EXISTING CONDUIT.

EXISTING COLLECTORS AND ISOLATED FARM DRAINS, WHICH ARE ENCOUNTERED ABOVE THE ELEVATION OF ROADWAY DITCHES, SHALL BE OUTLETTED INTO THE ROADWAY DITCH BY 603 TYPE F CONDUIT. THE OPTIMUM OUTLET ELEVATION SHALL BE ONE FOOT ABOVE THE FLOWLINE ELEVATION OF THE DITCH. LATERAL FIELD TILES WHICH CROSS THE ROADWAY SHALL BE INTERCEPTED BY 603, TYPE E CONDUIT, AND CARRIED IN A LONGITUDINAL DIRECTION TO AN ADEQUATE OUTLET OR ROADWAY CROSSING.

THE LOCATION, TYPE, SIZE AND GRADE OF REPLACEMENTS SHALL BE DETERMINED BY THE ENGINEER AND PAYMENT SHALL BE MADE ON FINAL MEASUREMENTS.

EROSION CONTROL PADS AND ANIMAL GUARDS SHALL BE PROVIDED AT THE OUTLET END OF ALL FARM DRAINS AS PER STANDARD CONSTRUCTION DRAWING DM-1.1, EXCEPT WHEN THEY OUTLET INTO A DRAINAGE STRUCTURE. PAYMENT FOR THE EROSION CONTROL PADS AND ANIMAL GUARDS AND ANY NECESSARY BENDS OR BRANCHES SHALL BE INCLUDED FOR PAYMENT IN THE PERTINENT CONDUIT ITEMS.

FARM DRAINS (CONT)

THE FOLLOWING ESTIMATED QUANTITIES HAVE BEEN INCLUDED IN THE GENERAL SUMMARY FOR THE WORK NOTED ABOVE:

603, 8" CONDUIT, TYPE B 250 FT.

603, 8" CONDUIT, TYPE E 250 FT.

603, 8" CONDUIT, TYPE F 250 FT.

601, ROCK CHANNEL PROTECTION TYPE C WITH FABRIC FILTER 10 CU. YD.

UNTREATED SEPTIC CONNECTIONS

THIS PLAN MAKES NO PROVISION FOR CONNECTING, NOR SHALL THE ENGINEER OR CONTRACTOR CONNECT, ANY UNTREATED SEPTIC DRAINAGE INTO THE HIGHWAY DRAINAGE SYSTEM. ANY PIPE CARRYING UNTREATED SEPTIC FLOW SHALL BE PLUGGED WITH CLASS C CONCRETE AT THE RIGHT OF WAY LINE. PAYMENT FOR PLUGGING SHALL BE INCLUDED IN THE CONTRACT PRICE FOR THE PERTINENT 202 AND 203 ITEM.

REVIEW OF DRAINAGE FACILITIES

BEFORE ANY WORK IS STARTED ON THE PROJECT AND AGAIN BEFORE FINAL ACCEPTANCE BY THE STATE, REPRESENTATIVES OF THE STATE AND THE CONTRACTOR, ALONG WITH LOCAL REPRESENTATIVES, SHALL MAKE AN INSPECTION OF ALL EXISTING SEWERS WHICH ARE TO REMAIN IN SERVICE AND WHICH MAY BE AFFECTED BY THE WORK. THE CONDITION OF THE EXISTING CONDUITS AND THEIR APPURTENANCE SHALL BE DETERMINED FROM FIELD OBSERVATIONS. RECORDS OF THE INSPECTION SHALL BE KEPT IN WRITING BY THE STATE.

ALL NEW CONDUITS, INLETS, CATCH BASINS, AND MANHOLES CONSTRUCTED AS A PART OF THE PROJECT SHALL BE FREE OF ALL FOREIGN MATTER AND IN A CLEAN CONDITION BEFORE THE PROJECT WILL BE ACCEPTED BY THE STATE.

ALL EXISTING SEWERS INSPECTED INITIALLY BY THE ABOVE MENTIONED PARTIES SHALL BE MAINTAINED AND LEFT IN A CONDITION REASONABLY COMPARABLE TO THAT DETERMINED BY THE ORIGINAL INSPECTION. ANY CHANGE IN THE CONDITION RESULTING FROM THE CONTRACTOR'S OPERATIONS SHALL BE CORRECTED BY THE CONTRACTOR TO THE SATISFACTION OF THE ENGINEER.

PAYMENT FOR ALL OPERATIONS DESCRIBED ABOVE SHALL BE INCLUDED IN THE CONTRACT PRICE FOR THE PERTINENT 603 CONDUIT ITEMS.

RESIDENTIAL AND COMMERCIAL DRAINAGE CONNECTIONS

EXISTING ROOF DRAINS, FOOTER DRAINS, OR YARD DRAINS, DISTURBED BY THE WORK, SHALL BE PROVIDED WITH UNOBSTRUCTED OUTLETS BY CONNECTING A CONDUIT THROUGH THE CURB OR INTO A DRAINAGE STRUCTURE. THE LOCATION, TYPE, SIZE AND GRADE OF THE NEW CONDUIT REQUIRED TO REPLACE OR EXTEND THE EXISTING DRAIN WILL BE DETERMINED BY THE ENGINEER.

RESIDENTIAL AND COMMERCIAL DRAINAGE CONNECTIONS (CONT)

THE FOLLOWING CONDUIT TYPES MAY BE USED: 707.33, 707.41, NON-PERFORATED, 707.42, 707.43, 707.45, 707.46, 707.47, 707.51, 707.52 SDR35.

THE FOLLOWING ESTIMATED QUANTITIES HAVE BEEN INCLUDED IN THE GENERAL SUMMARY FOR USE AS DIRECTED BY THE ENGINEER FOR THE WORK NOTED ABOVE:

603, 6" CONDUIT, TYPE B, FOR DRAINAGE CONNECTION 100 FT.

603, 6" CONDUIT, TYPE C, FOR DRAINAGE CONNECTION 100 FT.

603, 6" CONDUIT, TYPE E, FOR DRAINAGE CONNECTION 100 FT.

603, 6" CONDUIT, TYPE F, FOR DRAINAGE CONNECTION 100 FT.

WATER QUALITY

POST CONSTRUCTION STORM WATER TREATMENT

THIS PLAN UTILIZES STRUCTURAL BEST MANAGEMENT PRACTICES (BMP'S) FOR POST CONSTRUCTION STORM WATER TREATMENT.

VEGETATED STRIPS (& SWALES)

VEGETATED STRIPS (& SWALES) HAVE BEEN USED IN THIS PLAN. TAKE CARE TO GRADE THESE AREAS AS THE PLAN INDICATES. STABILIZE THE STRIP (& SWALE) WITH THE PERMANENT EROSION PROTECTION UPON FINAL GRADING. PAYMENT SHALL BE INCLUDED IN THE PERMANENT EROSION PROTECTION ITEMS. THE FOLLOWING TABLE IDENTIFIES THE LOCATIONS OF THESE BMPS.

STATION		SIDE	BMP TYPE
FROM	TO		
US 422			
949+50	954+83	LT	VEGETATED STRIP
966+50	962+50	LT	VEGETATED STRIP
969+50	968+50	LT	VEGETATED SWALE
982+50	983+50	LT	VEGETATED SWALE
986+74	988+56	LT	VEGETATED STRIP
988+94	991+25	LT	VEGETATED STRIP
993+50	996+00	LT	VEGETATED STRIP
997+50	1005+50	LT	VEGETATED STRIP
1023+90.22	1018+50	LT	VEGETATED STRIP
1024+18.4	1025+21.30	LT	VEGETATED STRIP
1032+50	1025+66	LT	VEGETATED STRIP
1032+50	1034+75	LT	VEGETATED STRIP
1039+30	1034+80	LT	VEGETATED STRIP
1039+58	1042+16	LT	VEGETATED STRIP
1043+00	1042+33	LT	VEGETATED STRIP
1050+50	1044+05.33	LT	VEGETATED STRIP
953+00	954+00	RT	VEGETATED STRIP
969+00	955+36	RT	VEGETATED STRIP
983+00	975+00	RT	VEGETATED STRIP
983+50	988+90	RT	VEGETATED STRIP
989+00	994+77	RT	VEGETATED STRIP
995+00	1003+50	RT	VEGETATED STRIP
1024+50	1015+89	RT	VEGETATED STRIP
1032+40.57	1024+87	RT	VEGETATED STRIP
1040+40	1034+67	RT	VEGETATED STRIP
1040+63	1043+46.7	RT	VEGETATED STRIP
1050+00	1043+46.7	RT	VEGETATED STRIP
SR 282			
146+50	148+00	LT	VEGETATED STRIP
147+00	148+97.72	RT	VEGETATED SWALE
REYNOLDS ROAD			
105+50	101+26	LT	VEGETATED SWALE
105+00	101+58	RT	VEGETATED SWALE

MANUFACTURED WATER QUALITY STRUCTURE

THIS PLAN UTILIZES MANUFACTURED WATER QUALITY STRUCTURES FOR WATER QUALITY TREATMENT. AREAS HAVE BEEN SHOWN IN THE PLANS FOR PLACEMENT OF AN OFF-LINE SYSTEM. PAYMENT FOR THESE DEVICES SHALL BE MADE AT THE CONTRACT UNIT PRICE FOR ITEM 895, MANUFACTURED WATER QUALITY STRUCTURE, TYPE 1 OR TYPE 2.

STATION		SIDE	STRUCTURE TYPE
FROM	TO		
US 422			
955+41	955+61	RT	TYPE 2
970+15		LT	TYPE 1
973+76		LT	TYPE 1
986+30		LT	TYPE 1
1009+47		LT	TYPE 1
1015+85	1016+01	LT	TYPE 1

ENDANGERED SPECIES HABITAT

THIS PROJECT IS WITHIN THE KNOWN RANGE OF THE FEDERALLY ENDANGERED INDIANA BAT. INDIANA BAT HABITAT INCLUDES ANY LIVING OR DEAD STANDING TREE. ANY UNAVOIDABLE CUTTING OF TREES WITH SUITABLE ROOSTING AND BROOD-REARING HABITAT FOR THE INDIANA BAT (LIVING OR STANDING DEAD TREES OR SNAGS WITH EXFOLIATING, PEELING OR LOOSE BARK, SPLIT TRUNKS AND/OR BRANCHES, OR CAVITIES) WILL BE PERFORMED ONLY BEFORE APRIL 15 OR AFTER SEPTEMBER 15 WHEN THE SPECIES WOULD NOT BE USING SUCH HABITAT.

ITEM SPECIAL - DRILLED WATER WELL ABANDONED

THE EXISTING CONCRETE OR STONE SLAB WELL COVER AND PUMPING EQUIPMENT SHALL BE REMOVED AND DISPOSED OF. THE CASING SHALL BE CUT OFF AT LEAST 3 FEET BELOW THE PROPOSED FINISHED GRADE OUTSIDE PROPOSED PAVEMENT AREAS OR AT LEAST 3 FEET BELOW THE PROPOSED SUBGRADE ELEVATION INSIDE PROPOSED PAVEMENT AREAS. THE WELL SHALL BE FILLED FROM BOTTOM TO TOP WITH BENTONITE SLURRY PELLETS, CHIPS OR CONCRETE MEETING ASTM C 150 TYPE 1 PORTLAND CEMENT WITH NO AIR ENTRAINMENT, AND THEN CAPPED IN ACCORDANCE WITH THE DETAIL SHOWN ON SHEET 164.

THE CONTRACTOR SHALL FILE WELL LOG AND ABANDONMENT FORMS WITH THE OHIO DEPARTMENT OF NATURAL RESOURCES (ODNR) AS REQUIRED BY THE OHIO REVISED CODE. ANY ADDITIONAL MATERIALS REQUIRED BY ODNR SHALL BE CONSIDERED INCIDENTAL. ODNR'S ADDRESS IS AS FOLLOWS:

OHIO DEPARTMENT OF NATURAL RESOURCES
DIVISION OF WATER
1939 FOUNTAIN SQUARE, BUILDING E
COLUMBUS, OHIO 43224
TELEPHONE (614) 265-6739

A COUNTY ISSUED PLUGGING PERMIT MAY ALSO BE REQUIRED.

THE CONTRACT UNIT PRICE FOR ITEM SPECIAL, DRILLED WATER WELL ABANDONED, SHALL INCLUDE PAYMENT FOR ALL LABOR, TOOLS, MATERIALS AND INCIDENTALS NECESSARY TO COMPLETE THIS ITEM.

ITEM 614 - MAINTAINING TRAFFIC

ONE LANE OF TRAFFIC EASTBOUND SHALL BE MAINTAINED AT ALL TIMES ON U.S. 422. TWO LANES OF TRAFFIC SHALL BE MAINTAINED AT ALL TIMES ON S.R. 282. REYNOLDS ROAD MAY BE CLOSED TO THROUGH TRAFFIC FOR A LIMITED TIME DURING PHASE 2.

PRE PHASE 1

1. CONSTRUCT THE TEMPORARY CROSSOVER AT STATION 1058+25 AS DETAILED ON SHEET 28. MAINTAIN TRAFFIC USING STANDARD DRAWING MT-95.30
2. PRIOR TO DETOURING U.S. 422 TRAFFIC, THE CONTRACTOR SHALL REPAIR AND RESURFACE HOBART ROAD FROM U.S. 422 TO FARMINGTON ROAD AS DETAILED ON SHEET 24. THE CONTRACTOR SHALL MAINTAIN THIS DETOUR ROUTE IN A CONDITION, WHICH IS REASONABLY SMOOTH AND FREE FROM HOLES, RUTS RIDGES, BUMPS DUST AND STANDING WATER DURING THE TIME THAT TRAFFIC IS DETOURED.
3. PRIOR TO DIVERTING EASTBOUND U.S. 422 TRAFFIC TO THE WESTBOUND LANES, EXISTING GUARDRAIL IN THE WESTBOUND LANES SHALL BE MODIFIED AS PER STANDARD DRAWING MT-95.82. SEE MODIFICATION OF EXISTING GUARDRAIL NOTE.
4. PRIOR TO DIVERTING EASTBOUND U.S. 422 TRAFFIC, A TEMPORARY MAILBOX AND SUPPORT SYSTEM SHALL BE PROVIDED FOR ALL EXISTING MAILBOX AND SUPPORT SYSTEMS ON U.S. ROUTE 422 WITHIN THE PROJECT LIMITS. SEE TEMPORARY MAILBOX AND SUPPORT SYSTEM NOTE.
5. PRIOR TO CONSTRUCTION OF THE PROPOSED S.R. 282 PAVEMENT, THE CONTRACTOR SHALL CONSTRUCT THE WORK ZONE PAVEMENT ALONG THE WESTERLY PAVEMENT EDGE AS SHOWN ON SHEET 30.

PHASE 1

1. DETOUR WESTBOUND U.S. 422 TRAFFIC AS SHOWN ON SHEET 23.
2. CLOSE THE WESTBOUND LANES OF U.S. 422 AT HOBART ROAD AND DETOUR WESTBOUND LOCAL MAIN MARKET ROAD TRAFFIC TO HOBART ROAD AND FARMINGTON ROAD AS SHOWN ON SHEET 24.
3. REDUCE EASTBOUND U.S. 422 TRAFFIC TO ONE LANE AND SHIFT TO THE EXISTING WESTBOUND OUTSIDE LANE.
4. SHIFT S.R. 282 TRAFFIC TO THE EXISTING SOUTHBOUND LANE AND THE WORK ZONE PAVEMENT CONSTRUCTED PRIOR TO PHASE 1.
5. CONSTRUCT THE TWO EASTBOUND THRU LANES ON U.S. 422. ON S.R. 282, CONSTRUCT THE PROPOSED NORTHBOUND PAVEMENT AND WORK ZONE PAVEMENT ALONG THE EASTERLY EDGE.
6. ACCESS DRIVES SHALL BE MAINTAINED AT ALL TIMES.

PRE PHASE 2

1. U.S. 422 TRAFFIC TO BE MAINTAINED AS PER PHASE 1.
2. SHIFT S.R. 282 TRAFFIC TO THE NEW NORTHBOUND LANE AND WORK ZONE PAVEMENT CONSTRUCTED IN PHASE 1.
3. COMPLETE THE INTERSECTION PAVEMENT AT U.S. 422 AND S.R. 282.

PHASE 2

1. WESTBOUND U.S. 422 AND MAIN MARKET ROAD TRAFFIC TO REMAIN DETOURED AS PER PHASE 1.
2. CLOSE REYNOLDS ROAD TO THROUGH TRAFFIC AND DETOUR TRAFFIC TO HOBART ROAD AS SHOWN ON SHEET 24.
3. REDUCE EASTBOUND U.S. 422 TRAFFIC TO ONE LANE AND SHIFT TO THE NEW OUTSIDE EASTBOUND LANE CONSTRUCTED IN PHASE 1.
4. SHIFT U.S. 282 TRAFFIC TO THE NEW NORTHBOUND LANE AND WORK ZONE PAVEMENT CONSTRUCTED IN PHASE 1.
5. CONSTRUCT THE CENTER TURN LANE AND TWO WESTBOUND LANES ON U.S. 422. REMOVE THE CROSSOVER CONSTRUCTED IN PHASE 1.
6. CONSTRUCT THE PROPOSED REYNOLDS ROAD PAVEMENT.
7. CONSTRUCT THE SOUTHBOUND S.R. 282 PAVEMENT.
8. ACCESS TO DRIVES SHALL BE MAINTAINED AT ALL TIMES..

ALL WORK AND TRAFFIC CONTROL DEVICES SHALL BE IN ACCORDANCE WITH 614 AND OTHER APPLICABLE PORTIONS OF THE SPECIFICATIONS, AS WELL AS THE OHIO MANUAL OF UNIFORM TRAFFIC CONTROL DEVICES. PAYMENT FOR ALL LABOR, EQUIPMENT AND MATERIALS SHALL BE INCLUDED IN THE LUMP SUM CONTRACT PRICE FOR 614, MAINTAINING TRAFFIC, UNLESS SEPARATELY ITEMIZED IN THE PLAN

LANES OPEN DURING HOLIDAYS OR SPECIAL EVENTS

NO WORK SHALL BE PERFORMED AND ALL SPECIFIED LANES SHALL BE OPEN TO TRAFFIC DURING THE FOLLOWING DESIGNATED HOLIDAYS OR EVENTS:

CHRISTMAS	NEW YEARS
MEMORIAL DAY	FOURTH OF JULY
LABOR DAY	THANKSGIVING
(OTHER HOLIDAY OR EVENT)	

THE PERIOD OF TIME THAT THE LANES ARE TO BE OPEN DEPENDS ON THE DAY OF THE WEEK ON WHICH THE HOLIDAY OR EVENT FALLS. THE FOLLOWING SCHEDULE SHALL BE USED TO DETERMINE THIS PERIOD:

DAY OF THE WEEK	TIME ALL LANES MUST BE OPEN TO TRAFFIC
SUNDAY	12:00N FRIDAY THROUGH 12:00N MONDAY
MONDAY	12:00N FRIDAY THROUGH 12:00N TUESDAY
TUESDAY	12:00N MONDAY THROUGH 12:00N WEDNESDAY
WEDNESDAY	12:00N TUESDAY THROUGH 12:00N THURSDAY
THURSDAY	12:00N WEDNESDAY THROUGH 12:00N MONDAY
FRIDAY	12:00N THURSDAY THROUGH 12:00N MONDAY
SATURDAY	12:00N FRIDAY THROUGH 12:00N MONDAY

NO EXTENSIONS OF TIME SHALL BE GRANTED FOR DELAYS IN MATERIAL DELIVERIES, UNLESS SUCH DELAYS ARE INDUSTRY-WIDE, OR FOR LABOR STRIKES, UNLESS SUCH STRIKES ARE AREA-WIDE.

SHOULD THE CONTRACTOR FAIL TO MEET ANY OF THESE REQUIREMENTS, THE CONTRACTOR SHALL BE ASSESSED LIQUIDATED DAMAGES IN ACCORDANCE WITH 108.07.

NOTICE OF CLOSURE SIGN

NOTICE OF CLOSURE SIGNS, AS DETAILED IN THESE PLANS, SHALL BE ERECTED BY THE CONTRACTOR AT LEAST ONE WEEK IN ADVANCE OF THE SCHEDULED ROAD CLOSURE. THE SIGNS SHALL BE ERECTED ON THE RIGHT HAND SIDE OF THE ROAD FACING TRAFFIC. THEY SHALL BE PLACED SO AS NOT TO INTERFERE WITH THE VISIBILITY OF ANY OTHER TRAFFIC CONTROL SIGNS. ON ROADWAYS, THEY SHOULD BE ERECTED AT THE POINT OF CLOSURE.

W20-113-60

SIGNS AND BARRICADES

THE CONTRACTOR SHALL PROVIDE, ERECT AND MAINTAIN SIGNS AND SIGN SUPPORTS, AS DETAILED IN THE OHIO MANUAL OF UNIFORM TRAFFIC CONTROL DEVICES, AND TYPE III BARRICADES OF THE TYPE AND LOCATION AS FOLLOWS:

PHASES 1 AND 2 - U.S. ROUTE 422 WESTBOUND AT S.R. 18
PHASES 1 AND 2 - U.S. ROUTE 422 WESTBOUND AT S.R. 305
PHASES 1 AND 2 - U.S. ROUTE 422 AT HOBART ROAD
PHASE 2 - REYNOLDS ROAD AT U.S. ROUTE 422
PHASE 2 - REYNOLDS ROAD AT HOBART ROAD

LANE CLOSURE/REDUCTION REQUIRED

LENGTH AND DURATION OF LANE CLOSURES AND RESTRICTIONS SHALL BE AT THE APPROVAL OF THE ENGINEER. IT IS THE INTENT TO MINIMIZE THE IMPACT TO THE TRAVELING PUBLIC. LANE CLOSURES OR RESTRICTIONS OVER SEGMENTS OF THE PROJECT IN WHICH NO WORK IS ANTICIPATED WITHIN A REASONABLE TIME FRAME, AS DETERMINED BY THE ENGINEER, SHALL NOT BE PERMITTED. THE LEVEL OF UTILIZATION OF MAINTENANCE OF TRAFFIC DEVICES SHALL BE COMMENSURATE WITH THE WORK IN PROGRESS.

ITEM 614 - REPLACEMENT SIGN

FLAT SHEET SIGNS FURNISHED BY THE CONTRACTOR IN ACCORDANCE WITH THE REQUIREMENTS OF THE PLANS, SPECIFICATIONS AND PROPOSAL WHICH BECOME DAMAGED BY TRAFFIC FOR REASONS BEYOND THE CONTROL TO THE CONTRACTOR SHALL BE REPLACED IN KIND WHEN ORDERED BY THE ENGINEER. REPLACEMENT SIGNS SHALL BE NEW. OTHER MATERIALS MAY BE IN USED BUT GOOD CONDITION SUBJECT TO APPROVAL BY THE ENGINEER.

PAYMENT FOR THE NEW SIGNS SHALL BE MADE AT THE CONTRACT PRICE PER SQUARE METER FOR ITEM 614, REPLACEMENT SIGN, AND SHALL INCLUDE THE COST OF REMOVING AND DISPOSING OF DAMAGED SIGNS, HARDWARE AND SUPPORTS, AND PROVIDING THE NECESSARY REPLACEMENT HARDWARE, SUPPORTS, ETC.

AN ESTIMATED QUANTITY OF 380 SQUARE FEET HAS BEEN PROVIDED IN THE GENERAL SUMMARY.

ITEM 614, REPLACEMENT DRUM

DRUMS FURNISHED BY THE CONTRACTOR IN ACCORDANCE WITH THE REQUIREMENTS OF THE PLANS, SPECIFICATIONS AND PROPOSAL WHICH BECOME DAMAGED BY TRAFFIC FOR REASONS BEYOND THE CONTROL OF THE CONTRACTOR SHALL BE REPLACED IN KIND WHEN ORDERED BY THE ENGINEER. REPLACEMENT DRUMS SHALL BE NEW.

PAYMENT FOR THE NEW DRUMS SHALL BE MADE AT THE CONTRACT PRICE PER EACH FOR ITEM 614, REPLACEMENT DRUM, AND SHALL INCLUDE THE COST OF REMOVING AND DISPOSING OF THE DAMAGED DRUM, AND PROVIDING AND MAINTAINING THE REPLACEMENT DRUM IN ACCORDANCE WITH THE CONTRACT REQUIREMENTS FOR THE ORIGINAL DRUM.

AN ESTIMATED QUANTITY OF 25 EACH HAS BEEN PROVIDED IN THE GENERAL SUMMARY.

DUST CONTROL

THE CONTRACTOR SHALL FURNISH AND APPLY WATER FOR DUST CONTROL AS DIRECTED BY THE ENGINEER. THE FOLLOWING CONTINGENCY QUANTITY HAS BEEN INCLUDED FOR DUST CONTROL PURPOSES:

616, WATER 400 M. GAL.

CALCULATED | CHECKED

MAINTENANCE OF TRAFFIC GENERAL NOTES

GEA/POR-422-18.31/0.00

WORK ZONE SPEED LIMIT SIGN (CONTINUED)

THE CONTRACTOR SHALL ERECT A WORK ZONE SPEED LIMIT SIGN IN ADVANCE OF ANY LANE RESTRICTION EXPECTED TO LAST AT LEAST 30 CONSECUTIVE CALENDAR DAYS, OR AS DIRECTED BY THE ENGINEER. THE SIGN SHALL BE MOUNTED ON BOTH SIDES OF A DIRECTIONAL ROADWAY OF DIVIDED HIGHWAYS. THE FIRST WORK ZONE SPEED LIMIT SIGN SHALL BE PLACED 500 FEET IN ADVANCE OF THE LANE REDUCTION OR SHIFT TAPER OR AT A POINT WHEREVER CONSTRUCTION BEGINS, WHICHEVER COMES FIRST. ON UNDIVIDED HIGHWAYS THE SIGN SHALL BE MOUNTED ON THE RIGHT SIDE, 250 FEET IN ADVANCE OF THE TAPER. THE SIGN SHALL BE REPEATED, ON THE SIDE NEAREST TRAFFIC, EVERY 1 MILE FOR 55 MPH ZONES AND EVERY ONE-HALF MILE FOR 50 MPH AND 45 MPH ZONES. THESE SIGNS SHALL ALSO BE ERECTED IMMEDIATELY AFTER EACH OPEN ENTRANCE RAMP WITHIN THE ZONE.

REDUCED SPEED AHEAD SIGNS SHALL BE ERECTED IN ADVANCE OF THE SPEED REDUCTION, APPROXIMATELY 1300 FEET ON MULTI-LANE HIGHWAYS AND 500 FEET ON 2-LANE HIGHWAYS.

A SIGN(S) TO INDICATE THE RESUMPTION OF THE STATUTORY SPEED LIMIT SHALL BE ERECTED AT THE END OF ANY REDUCED SPEED ZONE. R-1 (SPEED LIMIT) SIGNS SHALL BE USED ON UNDIVIDED ROADWAYS. R2-1 (SPEED LIMIT) AND R2-H2a SIGNS SHALL BE USED ON DIVIDED ROADWAYS. WHEN USED THE R2-1 AND R2-H2a SIGNS SHALL BE MOUNTED SIDE-BY-SIDE ON SEPARATE SUPPORTS. THE CONTRACTOR MAY USE SIGNS AND SUPPORTS IN USED, BUT GOOD, CONDITION PROVIDED THE SIGNS MEET CURRENT ODOT SPECIFICATIONS. SIGN FACES SHALL BE REFLECTORIZED WITH TYPE G SHEETING COMPLYING WITH THE REQUIREMENTS OF CMS 730.19.

WORK ZONE SPEED LIMIT SIGNS SHALL BE MOUNTED ON TWO ITEM 630, GROUND MOUNTED SUPPORTS, NO. 3 POSTS.

WORK ZONE SPEED LIMIT SIGNS AND SUPPORTS WILL BE MEASURED AS THE NUMBER OF SIGN INSTALLATIONS, INCLUDING THE SIGNS AND NECESSARY SUPPORTS. IF A SIGN AND SUPPORT COMBINATION IS REMOVED AND REERECTED AT ANOTHER LOCATION WITHIN THE PROJECT DUE TO CHANGES IN THE SPEED ZONE DIRECTED BY THE ENGINEER, IT SHALL BE CONSIDERED ANOTHER UNIT.

PAYMENT FOR ACCEPTED QUANTITIES, COMPLETE IN PLACE, WILL BE MADE AT THE CONTRACT UNIT PRICE. PAYMENT SHALL BE FULL COMPENSATION FOR ALL MATERIALS, LABOR, INCIDENTALS AND EQUIPMENT FOR FURNISHING, ERECTING, MAINTAINING, COVERING DURING SUSPENSION OF WORK, AND REMOVING THE SIGNS AND SUPPORTS. THE FOLLOWING ESTIMATED QUANTITY HAS BEEN CARRIED TO THE GENERAL SUMMARY.

ITEM 614, WORK ZONE SPEED LIMIT SIGN 14 EACH

ITEM 614, BARRIER REFLECTORS AND/OR OBJECT MARKERS

BARRIER REFLECTORS AND/OR OBJECT MARKERS SHALL BE INSTALLED ON ALL PORTABLE CONCRETE BARRIER USED FOR TRAFFIC CONTROL. BARRIER REFLECTORS, OBJECT MARKERS AND THEIR INSTALLATION SHALL CONFORM TO CMS 626, EXCEPT THAT THE SPACING SHALL BE 50 FEET.

MODIFICATION OF EXISTING GUARDRAIL

PRIOR TO PHASE 1, EXISTING GUARDRAIL IN THE WESTBOUND LANES SHALL BE MODIFIED AS PER STANDARD DRAWING MT-95.82. MODIFICATION SHALL INCLUDE, BUT NOT BE LIMITED TO ADDITIONAL LENGTHS OF TEMPORARY GUARDRAIL, E-98 ANCHOR ASSEMBLIES, AND GUARDRAIL TO BRIDGE PARAPET CONNECTIONS. BARRIER REFLECTORS SHALL BE INSTALLED AS SHOWN ON STANDARD DRAWING MT-95.82. BARRIER REFLECTORS AND THEIR INSTALLATION SHALL CONFORM TO CMS 626 EXCEPT THAT THE SPACING SHALL BE 25 FEET.

AN ESTIMATE OF 150 EACH OF ITEM 614 BARRIER REFLECTORS, TYPE A AND 10 EACH OF ITEM 614 BARRIER REFLECTORS, TYPE B HAVE BEEN PROVIDED AND CARRIED TO THE GENERAL SUMMARY.

WORK ZONE INCREASED PENALTIES SIGN (R11-H5a)

R11-H5A-48 SIGNS SHALL BE FURNISHED, ERECTED, AND MAINTAINED IN GOOD CONDITION AND/OR REPLACED AS NECESSARY AND SUBSEQUENTLY REMOVED BY THE CONTRACTOR. SIGNS SHALL BE MOUNTED AT THE APPROPRIATE OFFSETS AND ELEVATIONS AS PRESCRIBED BY THE OHIO MANUAL OF UNIFORM TRAFFIC CONTROL DEVICES. THEY SHALL BE MAINTAINED ON SUPPORTS MEETING CURRENT SAFETY CRITERIA.

THE SIGNS MAY BE ERECTED OR UNCOVERED NO MORE THAN FOUR HOURS BEFORE THE ACTUAL START OF WORK. THE SIGNS SHALL BE REMOVED OR COVERED NO LATER THAN FOUR HOURS FOLLOWING RESTORATION OF ALL LANES TO TRAFFIC WITH NO RESTRICTIONS, OR SOONER AS DIRECTED BY THE ENGINEER. TEMPORARY SIGN COVERING AND UNCOVERING DUE TO TEMPORARY LANE RESTORATIONS SHALL BE GUIDED BY THE FOUR-HOUR LIMITATIONS STATED ABOVE. SUCH LANE RESTORATIONS SHOULD BE EXPECTED TO REMAIN IN EFFECT FOR 30 OR MORE CONSECUTIVE CALENDAR DAYS, SUCH AS DURING WINTER SHUT-DOWNS.

THE CONTRACTOR MAY USE SIGNS AND SUPPORTS IN USED, BUT GOOD, CONDITION PROVIDED THE SIGNS MEET CURRENT ODOT SPECIFICATIONS. SIGN FACES SHALL BE REFLECTORIZED WITH TYPE G SHEETING COMPLYING WITH THE REQUIREMENTS OF CMS 730.19.

WORK ZONE INCREASED PENALITIES SIGNS AND SUPPORTS WILL BE MEASURED AS THE NUMBER OF SIGN INSTALLATIONS,INCLUDING THE SIGN AND NECESSARY SUPPORTS. IF A SIGN AND SUPPORT COMBINATION IS REMOVED AND REERECTED AT ANOTHER LOCATION AS DIRECTED BY THE ENGINEER, IT SHALL BE CONSIDERED ANOTHER UNIT.

PAYMENT FOR ACCEPTED QUANTITIES, COMPLETE, IN PLACE WILL BE MADE AT THE CONTRACT UNIT PRICE. PAYMENT SHALL BE FULL COMPENSATION FOR ALL MATERIALS, LABOR, INCIDENTALS AND EQUIPMENT FOR FURNISHING, ERECTING, MAINTAINING, COVERING DURING SUSPENSION OF WORK AND REMOVAL OF THE SIGN AND SUPPORT.

ITEM 614, WORK ZONE INCREASED PENALITIES SIGN 4 EACH

EARTHWORK FOR MAINTAINING TRAFFIC

THE FOLLOWING QUANTITIES HAVE BEEN INCLUDED IN THE PLAN FOR INFORMATION ONLY:

EXCAVATION FOR MAINTAINING TRAFFIC	410	CU. YD.
EMBANKMENT FOR MAINTAINING TRAFFIC	230	CU. YD.

WHEN UNDERCUTS ARE NECESSARY FOR MAINLINE PAVEMENT OR EMBANKMENT CONSTRUCTION, EVALUATE THE NEED FOR TEMPORARY ROAD UNDERCUTS IF WITHIN A CLOSE PROXIMITY TO THE MAINLINE UNDERCUTS. A GEOTECHNICAL EVALUATION SHOULD BE CONSIDERED TO DETERMINE IF THE EXISTING SOIL CONDITIONS ARE ADEQUATE TO SUPPORT THE TEMPORARY ROAD. ADDITIONAL SOIL BORINGS ALONG THE TEMPORARY ROAD ARE NOT NORMALLY REQUIRED.

ITEM 614, MAINTAINING TRAFFIC (ESTIMATED QUANTITIES)

THE FOLLOWING ESTIMATED QUANTITIES HAVE BEEN INCLUDED IN THE GENERAL SUMMARY FOR USE AS DIRECTED BY THE ENGINEER FOR THE MAINTENANCE OF TRAFFIC.

ITEM 410, TRAFFIC COMPACTED SURFACE, TYPE A OR B	250	CU. YD.
ITEM 614, ASPHALT CONCRETE FOR MAINTAINING TRAFFIC	100	CU. YD.
ITEM 616, WATER	50	M. GAL.

ITEM 614 - LAW ENFORCEMENT OFFICER (WITH PATROL CAR)

IN ADDITION TO THE REQUIREMENTS OF CMS 614 AND THE OHIO MANUAL OF UNIFORM TRAFFIC CONTROL DEVICES (OMUTCD), A UNIFORMED LAW ENFORCEMENT OFFICER (AND OFFICIAL PATROL CAR WITH WORKING TOP-MOUNTED EMERGENCY FLASHING LIGHTS) SHALL BE PROVIDED FOR CONTROLLING TRAFFIC FOR THE FOLLOWING TASKS:

FOR LANE CLOSURES: DURING INITIAL SET-UP PERIODS, TEAR DOWN PERIODS, SUBSTANTIAL SHIFTS OF A CLOSURE POINT OR WHEN NEW LANE CLOSURE ARRANGEMENTS ARE INITIATED.

DURING THE ENTIRE ADVANCE PREPARATION AND CLOSURE SEQUENCE WHERE COMPLETE BLOCKAGE OF TRAFFIC IS REQUIRED.

LAW ENFORCEMENT OFFICERS (LEOS) SHOULD NOT BE USED WHERE THE OMUTCD INTENDS THAT FLAGGERS BE USED. THE LEOS ARE CONSIDERED TO BE EMPLOYED BY THE CONTRACTOR AND THE CONTRACTOR SHALL BE RESPONSIBLE FOR THEIR ACTIONS. ALTHOUGH THEY ARE EMPLOYED BY THE CONTRACTOR, THE ENGINEER SHALL HAVE CONTROL OVER THEIR PLACEMENT. THE OFFICIAL PATROL CAR SHALL BE A PUBLIC SAFETY VEHICLE AS REQUIRED BY THE OHIO REVISED CODE. THE CONTRACTOR SHALL MAKE ARRANGEMENTS FOR THESE SERVICES WITH: (LIST LAW ENFORCEMENT AGENCY, ADDRESS AND TELEPHONE NUMBER).

LAW ENFORCEMENT OFFICERS (WITH PATROL CAR) REQUIRED BY THE TRAFFIC MAINTENANCE TASKS ABOVE SHALL BE PAID FOR ON A UNIT PRICE (HOURLY) BASIS UNDER ITEM 614, LAW ENFORCEMENT OFFICER (WITH PATROL CAR). THE FOLLOWING ESTIMATED QUANTITIES HAVE BEEN CARRIED TO THE GENERAL SUMMARY.

ITEM 614, LAW ENFORCEMENT OFFICER WITH PATROL CAR	120	HOURS

THE HOURS PAID SHALL INCLUDE MINIMUM SHOW-UP TIME REQUIRED BY THE LAW ENFORCEMENT AGENCY INVOLVED.

IF CONTRACTORS WISH TO UTILIZE LEOS FOR FLAGGING AND TRAFFIC CONTROL OTHER THAN FOR THAT REQUIRED IN THESE PLANS, THEY MAY DO SO AT THEIR OWN EXPENSE. PAYMENT FOR THE EXCESS ABOVE THE CONTRACT REQUIREMENTS WILL BE INCLUDED UNDER ITEM 614, MAINTAINING TRAFFIC.

TRENCH FOR WIDENING

TRENCH EXCAVATION FOR BASE WIDENING SHALL BE ONLY ON ONE SIDE OF THE PAVEMENT AT A TIME. THE OPEN TRENCH SHALL BE ADEQUATELY MAINTAINED AND PROTECTED WITH DRUMS OR BARRICADES AT ALL TIMES. PLACEMENT OF PROPOSED SUB-BASE AND BASE MATERIAL SHALL FOLLOW AS CLOSELY AS POSSIBLE BEHIND EXCAVATION OPERATIONS. THE LENGTH OF WIDENING TRENCH WHICH IS OPEN AT ANY ONE TIME SHALL BE HELD TO A MINIMUM AND SHALL AT ALL TIMES BE SUBJECT TO APPROVAL OF THE ENGINEER.

TEMPORARY MAILBOX AND SUPPORT SYSTEM

THE TEMPORARY MAILBOX AND SUPPORT SYSTEMS WILL BE LOCATED IN THE PARKING AREA OF THE PARKMAN COMMUNITY CENTER AT 16295 MAIN MARKET STREET AS DIRECTED BY THE ENGINEER. THE CONTRACTOR SHALL INSTALL NEW MAILBOXES AND SUPPORT SYSTEMS AT THE TEMPORARY LOCATION DESIGNATED AND SUBSEQUENTLY REMOVE AND DISPOSE OF THE EXISTING MAILBOX AND/OR SUPPORT SYSTEM. AT LEAST TWO (2)WEEKS IN ADVANCE OF THE REMOVAL, THE ENGINEER SHALL GIVE WRITTEN NOTICE TO THE OWNER OF THE OWNER'S OPTION TO REMOVE THE EXISTING MAILBOX AND/OR SUPPORT SYSTEM FOR SALVAGE. TEMPORARY MAILBOX AND SUPPORT SYSTEM SHALL COMPLY WITH ITEM SPECIAL MAILBOX SUPPORT SYSTEM. TEMPORARY MAILBOX AND SUPPORT SYSTEMS SHALL BE REMOVED WHEN BIDIRECTIONAL TRAFFIC IS RESTORED TO U.S. 422 AND THE PERMANENT MAILBOX AND SUPPORT SYSTEMS ARE IN PLACE.

ALL LABOR, MATERIALS, EQUIPMENT AND INCIDENTALS REQUIRED TO COMPLETE THE WORK AS DESCRIBED ABOVE SHALL BE INCLUDED IN THE LUMP SUM BID FOR ITEM 614 MAINTAINING TRAFFIC.

ITEM 614, WORK ZONE IMPACT ATTENUATOR FOR 24" WIDE HAZARDS (UNIDIRECTIONAL OR BIDIRECTIONAL)

THIS ITEM SHALL CONSIST OF FURNISHING AND INSTALLING ONE OF THE FOLLOWING IMPACT ATTENUATORS:

1. THE QUADGUARD CZ, (24 INCHES WIDE SIX-BAY) WORK ZONE IMPACT ATTENUATOR MANUFACTURED BY ENERGY ABSORPTION SYSTEMS, INC., ONE EAST WACKER DRIVE, CHICAGO, IL 60601 (TELEPHONE: 312-467-6750).

   THE LENGTH OF THE SIX-BAY QUADGUARD CZ IS 20'-9". INSTALLATION SHALL BE AT THE LOCATIONS SPECIFIED IN THE PLANS, IN ACCORDANCE WITH THE MANUFACTURER'S SPECIFICATIONS AS DETAILED ON THE FOLLOWING PRE-APPROVED SHOP DRAWINGS:

DRAWING NUMBER: QSCZCVR-T4
DRAWING NAME : QUADGUARD CZ SYSTEM FOR CONSTRUCTION ZONES
REVISION DATE : 5/13/99 REV. J
ODOT APPROVAL DATE: 8/27/99

DRAWING NUMBER: 35-40-10
DRAWING NAME : QUADGUARD SYSTEM CONCRETE PAD, CZ, QG
REVISION DATE : 11/19/97 REV. D
ODOT APPROVAL DATE: 8/27/99

DRAWING NUMBER: 35-40-16
DRAWING NAME : QUADGUARD SYSTEM BACKUP ASSEMBLY, CZ, QG
REVISION DATE : 7/30/99 REV. F
ODOT APPROVAL DATE: 8/27/99

DRAWING NUMBER: 354051Z
DRAWING NAME : QUADGUARD CZ SYSTEM NOSE ASSEMBLY, CZ, QG, 24, 30, 36
REVISION DATE : 5/17/99
ODOT APPROVAL DATE: 8/27/99

DRAWING NUMBER: 35-40-18
DRAWING NAME : TRANSITION ASSEMBLY, 4 OFFSET, QG
REVISION DATE : 6/25/99 REV. F
ODOT APPROVAL DATE: 8/27/99

DRAWING NUMBER: 35400260
DRAWING NAME : QUADGUARD SYSTEM PCMB ANCHOR ASSEMBLY
REVISION DATE : 11/19/97 REV. C
ODOT APPROVAL DATE: 8/27/99

2. THE TRACC (TRINITY ATTENUATING CRASH CUSHION) MANUFACTURED BY TRINITY INDUSTRY, 1170 N. STATE STREET, GIRARD, OHIO 44420 (TELEPHONE: 330-545-4373).

   THE TRACC IS 21'-0" LONG AND 2'-7" WIDE. INSTALLATION SHALL BE AT THE LOCATIONS SPECIFIED IN THE PLANS, IN ACCORDANCE WITH THE MANUFACTURER'S SPECIFICATIONS AS DETAILED ON THE FOLLOWING PRE- APPROVED SHOP DRAWINGS:

DRAWING NUMBER: SS450
DRAWING NAME : CRASH-CUSHION ATTENUATING TERMINAL PLAN, ELEVATION & SECTIONS
REVISION DATE : 3/12/99 REV. 1
ODOT APPROVAL DATE: 8/27/99

DRAWING NUMBER: SS455
DRAWING NAME : TRACC TRANSITION TO W-BEAM MEDIAN BARRIER PLAN, ELEVATION & SECTIONS
REVISION DATE : 2/18/99
ODOT APPROVAL DATE: 8/27/99

DRAWING NUMBER: SS461
DRAWING NAME : TRACC TRANSITION TO CONCRETE SAFETY SHAPE BARRIER PLAN, ELEVATION & SECTIONS
REVISION DATE : 6/30/99 REV. 1
ODOT APPROVAL DATE: 8/27/99

DRAWING NUMBER: SS462
DRAWING NAME : TRACC TRANSITION TO CONCRETE BARRIER SINGLE SLOPE PLAN, ELEVATION & SECTIONS
REVISION DATE : 6/30/99
ODOT APPROVAL DATE: 8/27/99

IMPACT ATTENUATOR (CONTINUED)

3. THE BARRIER SYSTEMS, INC. TAU-II IMPACT ATTENUATOR, DISTRIBUTED BY ROAD SYSTEMS INC., SALES SUPPORT, 2183 ELM TRACE, AUSTINTOWN, OH 44515, (TELEPHONE 330-799-9291)

   THE TAU-II FOR THIS NOTE IS A PARALLEL 8-BAY UNIT (24' LONG AND 35" WIDE). INSTALLATION SHALL BE AT THE LOCATIONS SPECIFIEDIN THE PLANS, IN ACCORDANCE WITH THE MANUFACTURER'S SPECIFICATIONS AS DETAILED ON THE FOLLOWING PRE-APPROVED SHOP DRAWINGS:

DRAWING NUMBER: A040416
DRAWING NAME: UNIVERSAL TAU-II PARTS LIST
REVISION DATE : 4/22/04
ODOT APPROVAL DATE: 10/16/04

DRAWING NUMBER: A040420
DRAWING NAME: UNIVERSAL TAU-II FOUNDATION, FLUSH MOUNT BACKSTOP
REVISION DATE: 4/28/04
ODOT APPROVAL DATE: 10/16/04

DRAWING NUMBER: 4040105
DRAWING NAME: UNIVERSAL TAU-II FOUNDATION, PCB BACKSTOP (REFERENCED ON A04020)
REVISION DATE: 1/07/04
ODOT APPROVAL DATE: 10/16/04

DRAWING NUMBER: B040239
DRAWING NAME: APPLICATION, FLUSH MOUNT BACKSTOP (TYPICAL FOR PARALLEL 60 MPH UNIT)
REVISION DATE: 4/21/04
ODOT APPROVAL DATE: 10/16/04

4. THE GREAT CZ IMPACT ATTENUATOR MANUFACTURED BY ENERGY ABSORPTION SYSTEMS, INC.

   THIS ATTENUATOR MAY BE USED UNTIL JANUARY 1, 2007 IF THE ITEM WAS PURCHASED BEFORE OCTOBER 1, 1998 AND IS IN THE CONTRACTOR'S INVENTORY.

THE CONTRACTOR SHALL PROVIDE A REPLACEMENT UNIT WHEN AN IMPACT IS SEVERE ENOUGH TO REQUIRE COMPLETE REPLACEMENT OF THE ATTENUATOR. THE CONTRACTOR SHALL HAVE A SPARE PARTS PACKAGE AVAILABLE ON THE PROJECT SITE AT ALL TIMES WHEN AN ATTENUATOR IS IN PLACE. THE CONTRACTOR SHALL PROVIDE A MINIMUM OF ONE COMPLETE SPARE PARTS PACKAGE FOR EVERY ONE TO SIX UNITS INSTALLED ON THE PROJECT SITE. FOR EXAMPLE, FIVE INSTALLED UNITS REQUIRE ONE SPARE PARTS PACKAGE AND SEVEN INSTALLED UNITS REQUIRE TWO SPARE PARTS PACKAGES.

WHEN BIDIRECTIONAL DESIGNS ARE SPECIFIED, THE CONTRACTOR SHALL SUPPLY APPROPRIATE TRANSITIONS. PAYMENT FOR THE ABOVE WORK SHALL BE MADE AT THE UNIT PRICE BID AND SHALL INCLUDE ALL LABOR, TOOLS, EQUIPMENT AND MATERIALS NECESSARY TO CONSTRUCT, MAINTAIN, REPAIR, REPLACE OR RELOCATE A COMPLETE AND FUNCTIONAL IMPACT ATTENUATOR SYSTEM, INCLUDING ALL RELATED BACKUPS, TRANSITIONS, LEVELING PADS, HARDWARE AND GRADING, NOT SEPARATELY SPECIFIED, AS REQUIRED BY THE MANUFACTURER.

DETOUR NOTIFICATION

THE CONTRACTOR SHALL ADVISE THE ODOT DISTRICT 12 OFFICE, THE ODOT DISTRICT 4 OFFICE, THE GEAUGA COUNTY ENGINEER, THE PORTAGE COUNTY ENGINEER, THE CARDINAL LOCAL SCHOOL DISTRICT, THE GEAUGA COUNTY SHERIFF DEPARTMENT, THE GEAUGA REGIONAL HOSPITAL AND TOWNSHIP OFFICIALS EIGHTEEN (18)DAYS IN ADVANCE OF WHEN THE DETOUR ROUTE SHOULD BE IN EFFECT. THE CONTRACTOR SHALL PROVIDE ALL SIGNS, SUPPORTS AND HARDWARE REQUIRED FOR THE DETOUR ROUTE. ALL TRAFFIC CONTROL DEVICES REQUIRED FOR THE DETOUR SHALL BE FURNISHED, ERECTED, MAINTAINED AND SUBSEQUENTLY REMOVED BY THE CONTRACTOR.

ITEM 614, WORK ZONE SPEED LIMIT SIGN

THE CONTRACTOR SHALL FURNISH, INSTALL, MAINTAIN, COVER DURING SUSPENSION OF WORK, AND SUBSEQUENTLY REMOVE WORK ZONE SPEED LIMIT R2-1 (45 MPH SPEED LIMIT SIGNS) AND SUPPORTS WITHIN THE WORK LIMITS IN ACCORDANCE WITH THE FOLLOWING REQUIREMENTS:

THE CONTRACTOR SHALL COVER OR REMOVE ANY EXISTING SPEED LIMIT SIGNS WITHIN THE REDUCED SPEED LIMIT. THESE SIGNS SHALL BE RESTORED DURING SUSPENSION OR TERMINATION OF THE REDUCED SPEED LIMIT. THE EXPENSE OF COVERING OR REMOVAL AND RESTORATION OF EXISTING SPEED LIMIT OR MINIMUM SPEED LIMIT SIGNS SHALL BE INCLUDED IN THE PAY ITEM FOR THE WORK ZONE SPEED LIMIT SIGNS.

THE WORK ZONE SPEED LIMIT SIGNS MAY BE ERECTED OR UNCOVERED NO MORE THAN FOUR HOURS BEFORE THE ACTUAL START OF WORK. THE SIGNS SHALL BE REMOVED OR COVERED NO LATER THAN FOUR HOURS FOLLOWING RESTORATION OF ALL LANES TO TRAFFIC WITH NO RESTRICTIONS, OR SOONER AS DIRECTED BY THE ENGINEER. TEMPORARY SIGN COVERING AND UNCOVERING DUE TO TEMPORARY LANE RESTORATIONS SHALL BE GUIDED BY THE FOUR-HOUR LIMITATIONS STATED ABOVE. SUCH LANE RESTORATIONS SHOULD BE EXPECTED TO REMAIN IN EFFECT FOR 30 OR MORE DAYS, SUCH AS DURING WINTER SHUTDOWNS.

CONSTRUCTION AND MATERIALS SPECIFICATIONS, ITEM 614, PARAGRAPH 614.02(B) INDICATES THAT THE TWO DIRECTIONS OF A DIVIDED HIGHWAY ARE CONSIDERED SEPARATE HIGHWAY SECTIONS. THEREFORE, IF THE WORK ON A MULTI-HIGHWAY IS LIMITED TO ONLY ONE DIRECTION, SPEED REDUCTION IN THE DIRECTION OF THE WORK DOES NOT AUTOMATICALLY CONSTITUTE SPEED REDUCTION IN THE OPPOSITE DIRECTION. SPEED LIMIT REDUCTION IN THE OPPOSITE DIRECTION, IN SUCH CASE, IS APPROPRIATE ONLY IF CONDITIONS ARE EXPECTED TO HAVE AN IMPACT ON THE DIRECTIONAL TRAFFIC FLOW, AS DIRECTED BY THE ENGINEER.

LOCATION	FROM STATION	TO STATION	411	614															615	622
			STABILIZED CRUSHED AGGREGATE		BARRIER REFLECTOR, TYPE B	OBJECT MARKER, ONE WAY		WORK ZONE LANE LINE, CLASS I, 740.06 TYPE I	WORK ZONE CENTERLINE, CLASS I (DOUBLE SOLID)	WORK ZONE CENTER-LINE, CLASS I, 740.06 TYPE I (DOUBLE SOLID)	WORK ZONE EDGE LINE, CLASS I (WHITE)	WORK ZONE EDGE LINE, CLASS I, (YELLOW)	WORK ZONE EDGE LINE, CLASS I, 740.06 TYPE I (WHITE)	WORK ZONE EDGE LINE, CLASS I 740.06 TYPE I (YELLOW)	WORK ZONE CHANNELIZING LINE, CLASS I, 740.06 TYPE I	WORK ZONE STOP LINE, CLASS I	WORK ZONE STOP LINE, CLASS I, 740.06 TYPE I		PAVEMENT FOR MAINTAINING TRAFFIC, CLASS A	PORTABLE CONCRETE BARRIER, 32"
			CU YD		EACH	EACH		FT	FT	FT	FT	FT	FT	FT	FT	FT	FT		SQ YD	FT
US 422 - PHASE 1	920+00	933+95						360							1035					
	922+25	943+25								2760										
	922+25	949+10									2080		2720	605						
	949+10	1050+00									10090	10090								
	1050+00	1062+34											1237	1237						
	1056+75	1059+96	12																318	
SR 282 - PHASE 1	143+25	146+90								365	365		365							
	146+90	149+96							311		619					32				
	143+25	149+55	27																647	
US 422 - PHASE 2	937+95	949+10.00									1625			1625						
	944+80	951+00			13	13														620
	949+10	1011+25									6215			6215						
	1011+25	1016+75											550	550						
	1016+75	1051+00									3425			3425						
SR 282																				
PRE-PHASE 2	148+75	149+90								115			230				32			
PHASE 2	143+75	149+35								560			1156				32			
	143+75	149+00	19																428	
SUBTOTAL			58		13	13		360	311	3800	24419	10090	6258	13657	1035	32	64		1393	620
GRAND TOTAL CARRIED TO GENERAL SUMMARY			58		13	13		0.07 MI.	0.06 MI.	0.72 MI.	6.54 MI.		3.77 MI.		1035	32	64		1393	620

CALCULATED SB
CHECKED TRB

MAINTENANCE OF TRAFFIC SUBSUMMARY

GEA / POR-422-18.31 / 0.00

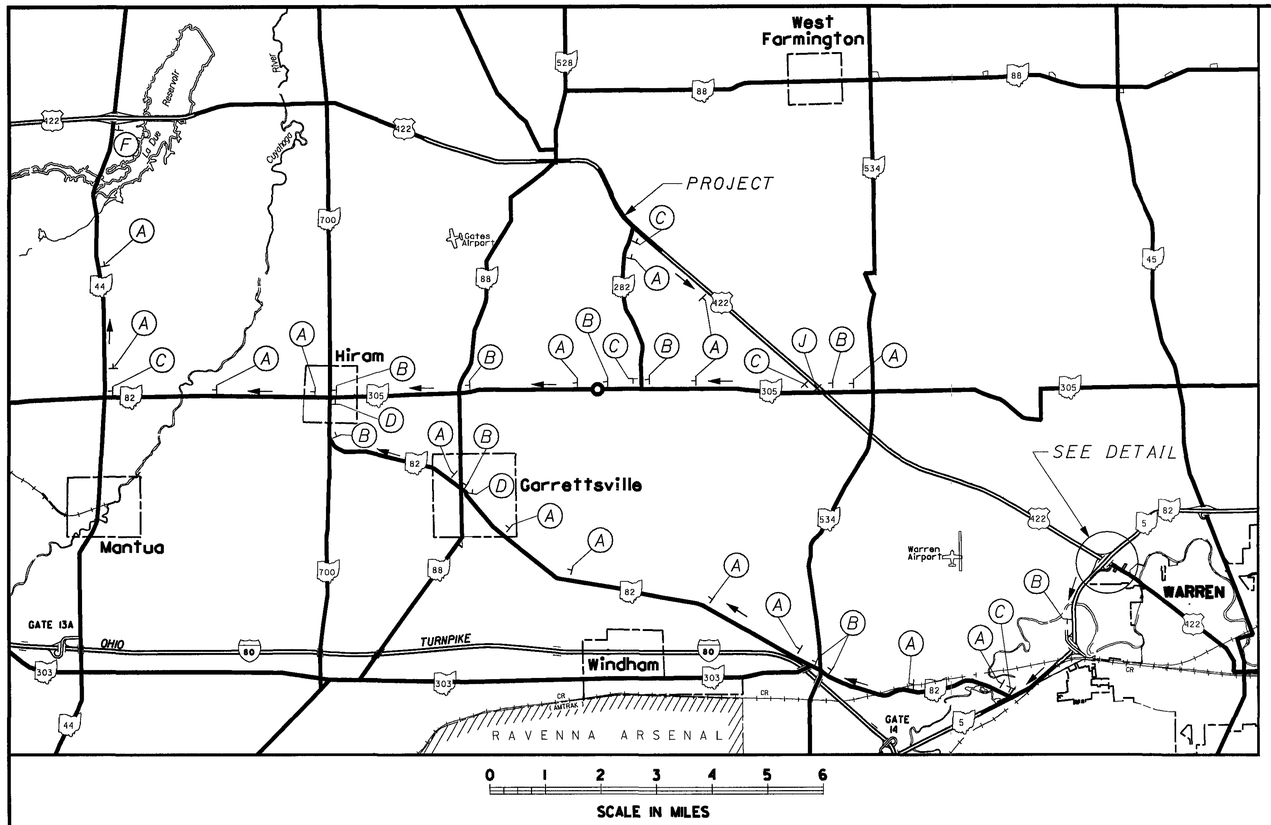

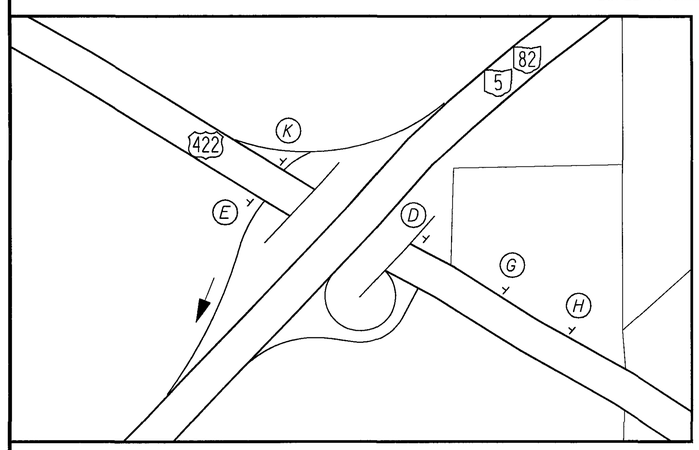

DETAIL - NTS

SIGN (A)

DETOUR M4-8-24
WEST M3-4-24
422 M1-4-30

SIGN (B)

DETOUR M4-8-24
WEST M3-4-24
422 M1-4-30
M6-3-21

SIGN (C)

DETOUR M4-8-24
WEST M3-4-24
422 M1-4-30
M5-1R-21

SIGN (D)

DETOUR M4-8-24
WEST M3-4-24
422 M1-4-30
M5-1L-21

SIGN (E)

DETOUR M4-8-24
WEST M3-4-24
422 M1-4-30
M6-1-21

SIGN (F)

END M4-86-24
DETOUR M4-8-24
WEST M3-4-24
422 M1-4-30

SIGN (G)

DETOUR 1000 FT AHEAD W20-2-48

SIGN (H)

ROAD CLOSED 1500 FT AHEAD W20-3-48

SIGN (J)

DETOUR M4-10L-48
ROAD CLOSED 3.5 MILES AHEAD
LOCAL TRAFFIC ONLY R11-3A-60
ON TYPE III BARRICADE

SIGN (K)

DETOUR M4-10L-48
ROAD CLOSED 9 MILES AHEAD
LOCAL TRAFFIC ONLY R11-3A-60
ON TYPE III BARRICADE

CALCULATED
CHECKED

MAINTENANCE OF TRAFFIC - PHASES 1 AND 2
U.S. 422 WEST DETOUR

GEA/POR-422-18.31/0.00

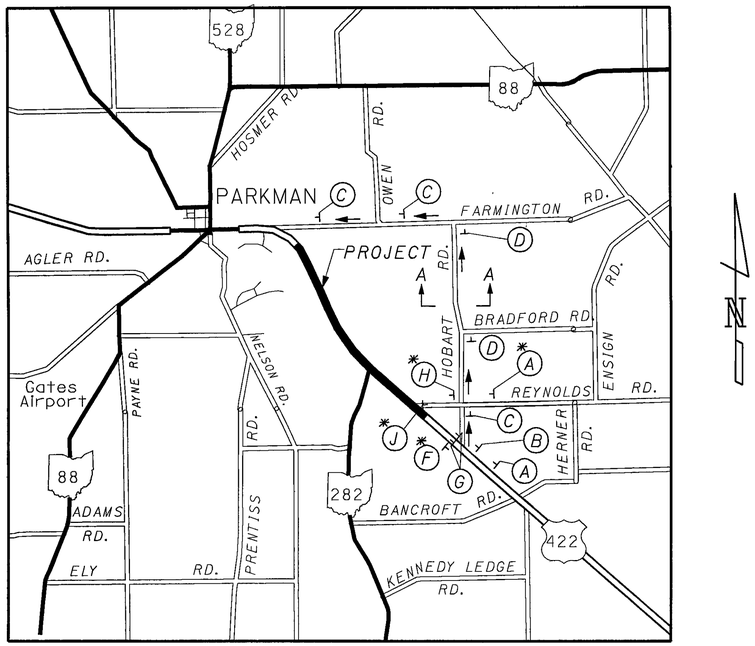

0 1 2 3

SCALE IN MILES

* PHASE 2 ONLY

SIGN (A)

W20-3-48

SIGN (B)

W20-2-48

SIGN (C)

M3-4-24
D-3-36
M4-9-36

SIGN (D)

M3-4-24
D-3-36
M4-9L-36

SIGN (E)

M3-4-24
D-3-36
M4-9R-36

SIGN (F)

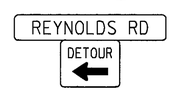

D-3-36
M4-9L-36

SIGN (G)

M4-10R-48

R11-4-60
ON TYPE III
BARRICADE

SIGN (H)

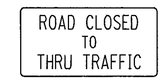

R11-4-60
ON TYPE III
BARRICADE

SIGN (J)

M4-10R-48

R11-4-60
ON TYPE III
BARRICADE

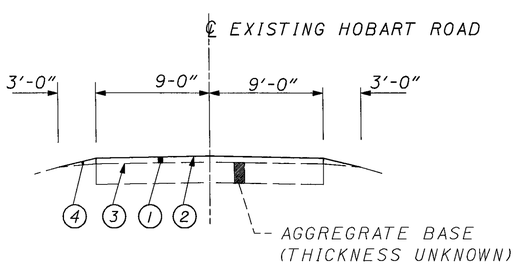

SECTION A - A
REYNOLDS ROAD TO FARMINGTON ROAD

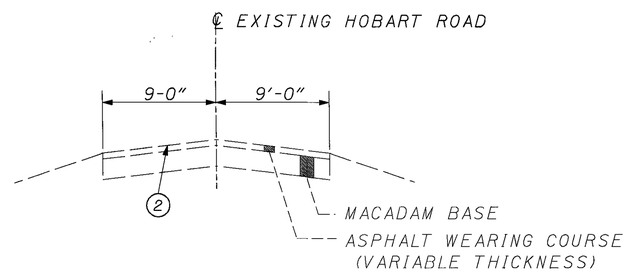

SECTION A - A
U. S. 422 TO REYNOLDS ROAD

LEGEND

1. ITEM 301 - 3" ASPHALT CONCRETE BASE
2. ITEM 422 - SINGLE CHIP SEAL WITH POLYMER BINDER
3. ITEM 204 - SUBGRADE COMPACTION
4. ITEM 209 - LINEAR GRADING

CALCULATED | CHECKED

MAINTENANCE OF TRAFFIC - PHASES 1 AND 2
WESTBOUND MAIN MARKET ROAD DETOUR

GEA / POR-422-18.31/ 0.00

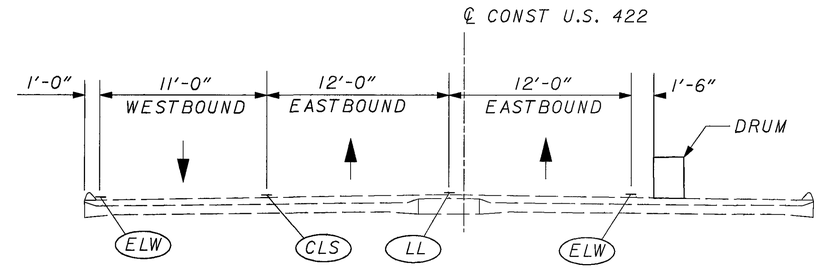

SECTION A - A

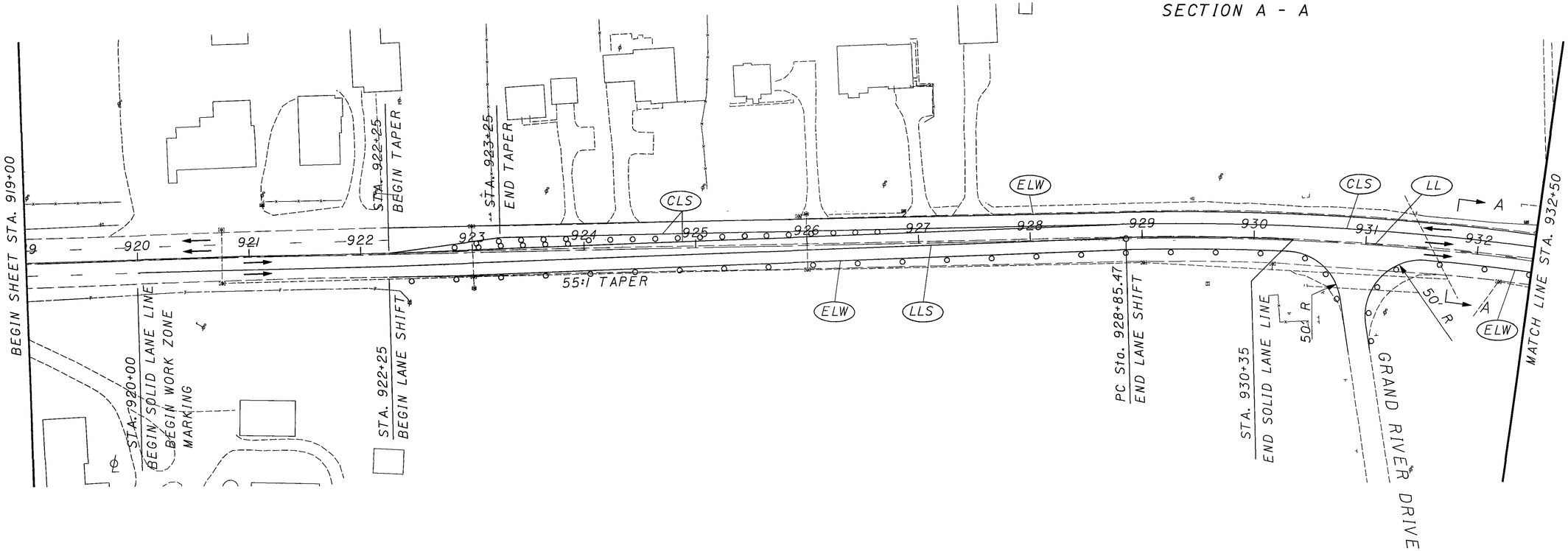

LEGEND

- (ELW) WORK ZONE EDGE LINE (WHITE)
- (ELY) WORK ZONE EDGE LINE (YELLOW)
- (LL) WORK ZONE LANE LINE
- (LLS) WORK ZONE LANE LINE (SOLID)
- (CLS) WORK ZONE CENTER LINE, DOUBLE SOLID
- PAVEMENT FOR MAINTAINING TRAFFIC
- PERMANENT PAVEMENT
- WORK AREA
- DIRECTION OF TRAFFIC ARROW

NOTE:
SEE STANDARD CONSTRUCTION DRAWING MT-102.20 FOR ADDITIONAL NOTES, SIGNS AND DETAILS NOT SHOWN.

N

HORIZONTAL SCALE IN FEET 0 50 100

CALCULATED

CHECKED

MAINTENANCE OF TRAFFIC - PHASE 1
STA 919+00 TO STA 932+50

GEA/POR-422-18.31/0.00

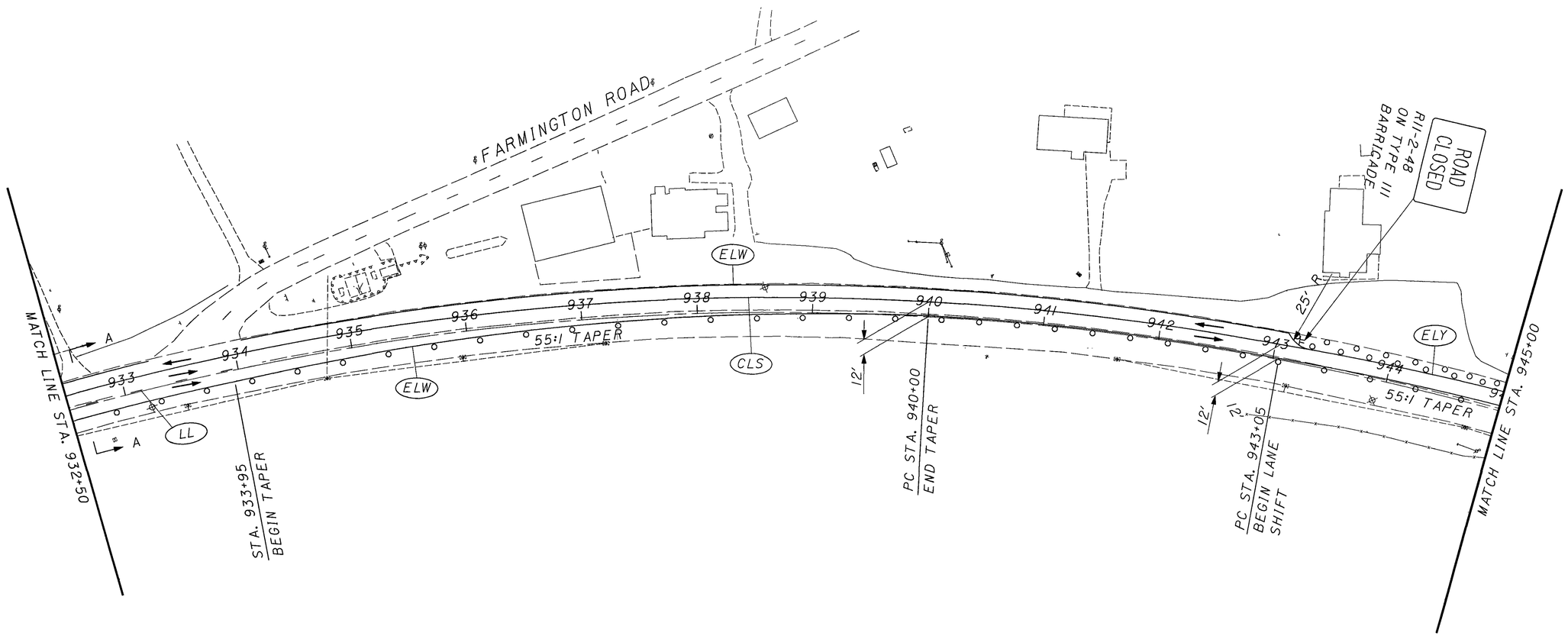

LEGEND

- (ELW) WORK ZONE EDGE LINE (WHITE)
- (ELY) WORK ZONE EDGE LINE (YELLOW)
- (LL) WORK ZONE LANE LINE
- (CLS) WORK ZONE CENTER LINE, DOUBLE SOLID
- (DLW) DOTTED LINE (WHITE)
- PAVEMENT FOR MAINTAINING TRAFFIC
- PERMANENT PAVEMENT
- WORK AREA
- DIRECTION OF TRAFFIC ARROW

NOTE:
SEE STANDARD CONSTRUCTION DRAWINGS MT-95.31 AND MT-102.20 FOR ADDITIONAL NOTES, SIGNS AND DETAILS NOT SHOWN.

FOR SECTION A - A SEE SHEET NO. 25

HORIZONTAL SCALE IN FEET
0 50 100

MAINTENANCE OF TRAFFIC - PHASE 1
STA 932+50 TO STA 945+00

GEA/POR-422-18.31/0.00

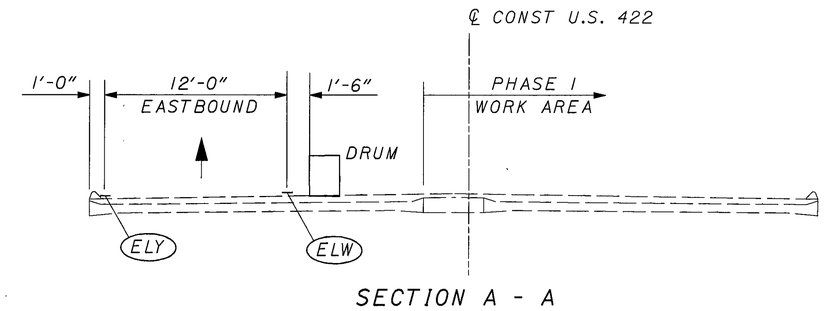

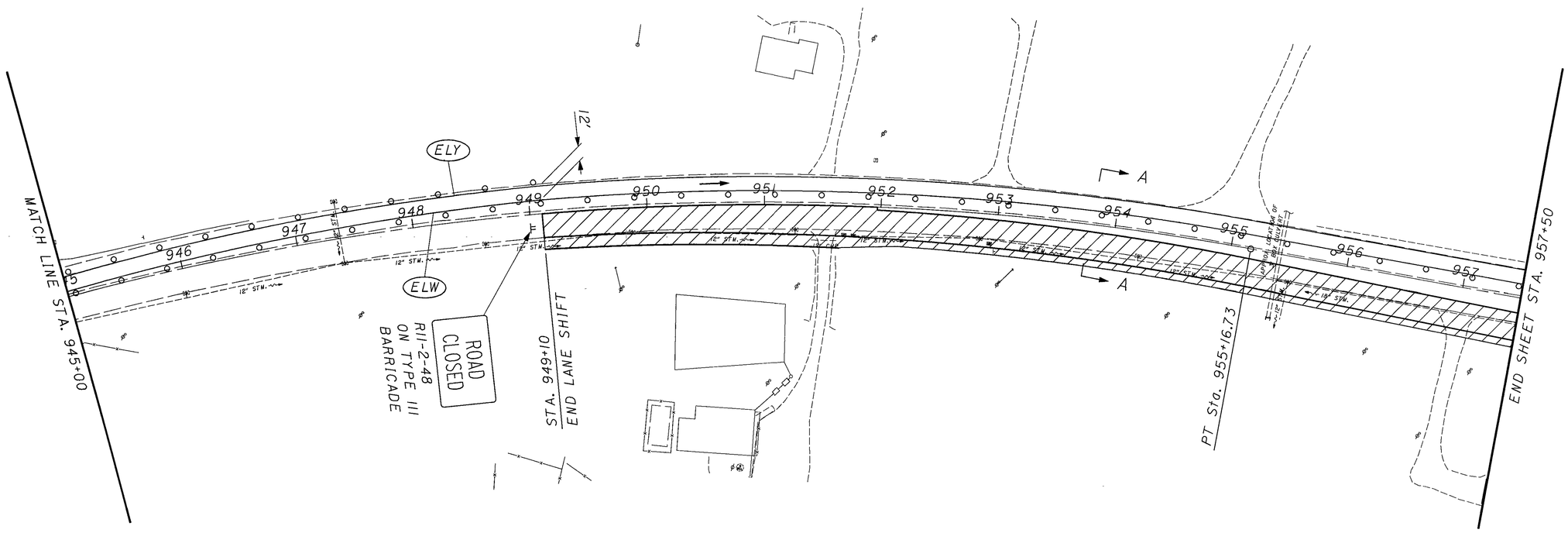

LEGEND

- (ELW) WORK ZONE EDGE LINE (WHITE)
- (ELY) WORK ZONE EDGE LINE (YELLOW)
- (LL) WORK ZONE LANE LINE
- (CLS) WORK ZONE CENTER LINE, DOUBLE SOLID
- (PCB) PORTABLE CONCRETE BARRIER
- PAVEMENT FOR MAINTAINING TRAFFIC
- PERMANENT PAVEMENT
- WORK AREA
- DIRECTION OF TRAFFIC ARROW

NOTE:
SEE STANDARD CONSTRUCTION DRAWING MT-102.20 FOR ADDITIONAL NOTES, SIGNS AND DETAILS NOT SHOWN.

HORIZONTAL SCALE IN FEET 0 50 100

CALCULATED

CHECKED

MAINTENANCE OF TRAFFIC - PHASE 1
STA 945+00 TO STA 957+50

GEA/POR-422-18.31/0.00

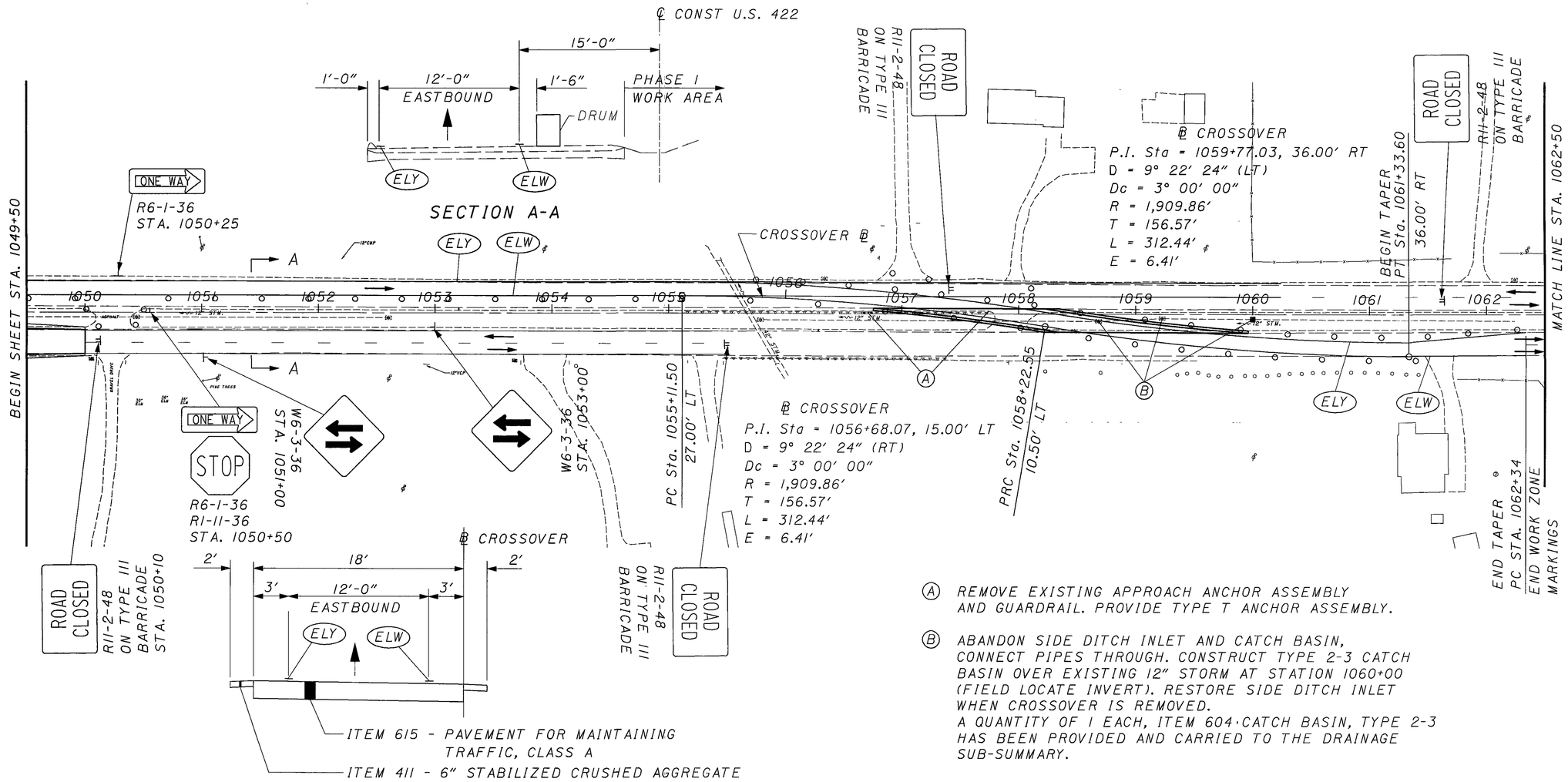

(A) REMOVE EXISTING APPROACH ANCHOR ASSEMBLY AND GUARDRAIL. PROVIDE TYPE T ANCHOR ASSEMBLY.

(B) ABANDON SIDE DITCH INLET AND CATCH BASIN, CONNECT PIPES THROUGH. CONSTRUCT TYPE 2-3 CATCH BASIN OVER EXISTING 12" STORM AT STATION 1060+00 (FIELD LOCATE INVERT). RESTORE SIDE DITCH INLET WHEN CROSSOVER IS REMOVED.
A QUANTITY OF 1 EACH, ITEM 604·CATCH BASIN, TYPE 2-3 HAS BEEN PROVIDED AND CARRIED TO THE DRAINAGE SUB-SUMMARY.

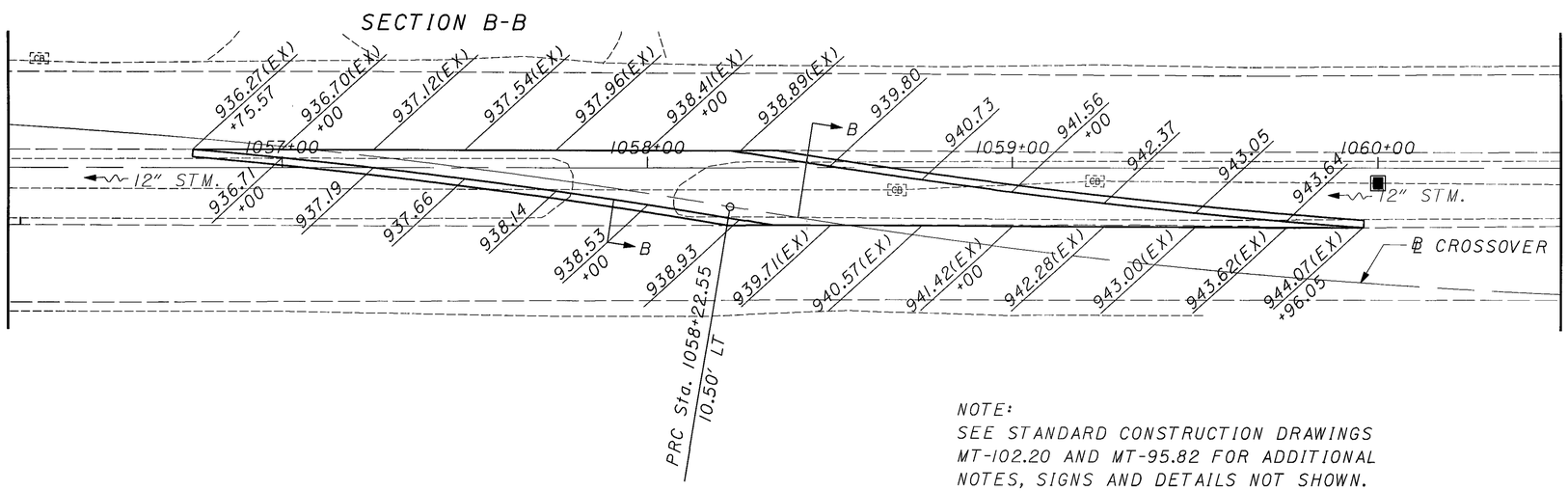

NOTE:
SEE STANDARD CONSTRUCTION DRAWINGS MT-102.20 AND MT-95.82 FOR ADDITIONAL NOTES, SIGNS AND DETAILS NOT SHOWN.

LEGEND

- (ELW) WORK ZONE EDGE LINE (WHITE)
- (ELY) WORK ZONE EDGE LINE (YELLOW)
- (LL) WORK ZONE LANE LINE
- (CLS) WORK ZONE CENTER LINE, DOUBLE SOLID
- (PCB) PORTABLE CONCRETE BARRIER
- PAVEMENT FOR MAINTAINING TRAFFIC
- PERMANENT PAVEMENT
- WORK AREA
- DIRECTION OF TRAFFIC ARROW

HORIZONTAL SCALE IN FEET 0 50 100

CALCULATED
CHECKED

MAINTENANCE OF TRAFFIC - PHASE 1
STA 1049+00 TO STA 1061+00

GEA/POR-422-18.31/0.00

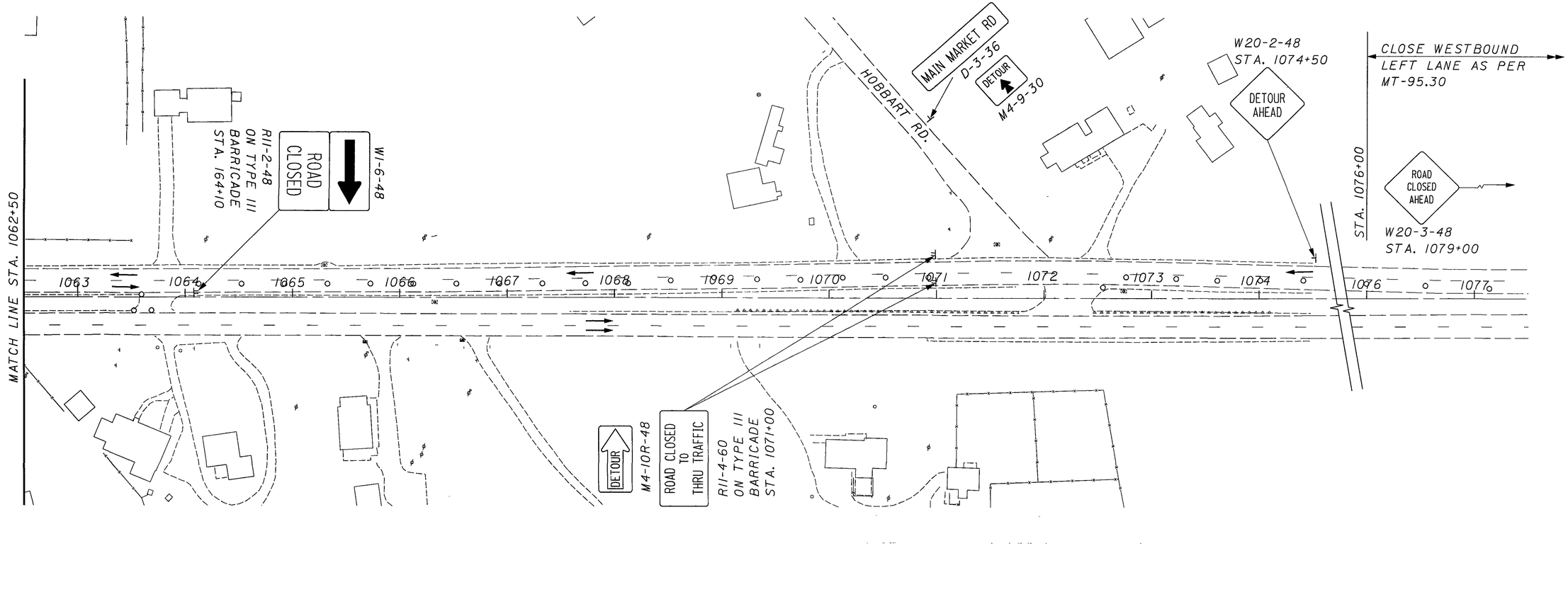

LEGEND

- (ELW) WORK ZONE EDGE LINE (WHITE)
- (ELY) WORK ZONE EDGE LINE (YELLOW)
- (LL) WORK ZONE LANE LINE
- (CH) WORK ZONE CHANNELIZING LINE
- (PCB) PORTABLE CONCRETE BARRIER
- PAVEMENT FOR MAINTAINING TRAFFIC
- PERMANENT PAVEMENT
- WORK AREA
- DIRECTION OF TRAFFIC ARROW

NOTE:
SEE STANDARD CONSTRUCTION DRAWINGS MT-95.30 FOR ADDITIONAL NOTES, SIGNS AND DETAILS NOT SHOWN.

HORIZONTAL SCALE IN FEET 0 50 100

CALCULATED
CHECKED

MAINTENANCE OF TRAFFIC - PHASE 1
STA 1062+50 TO STA 1077+50

GEA/POR-422-18.31/0.00

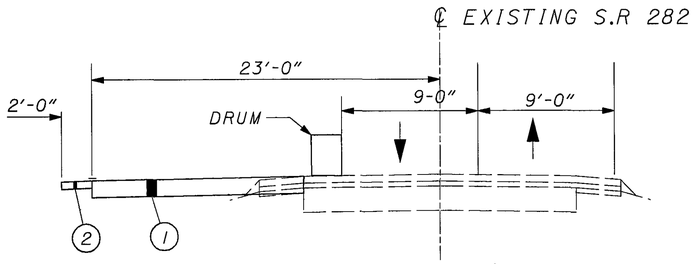

SECTION A - A
PRE-PHASE I

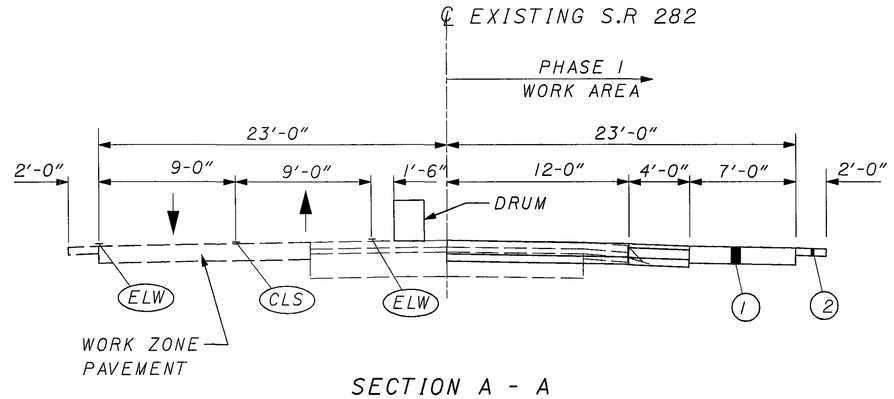

SECTION A - A
PHASE I

LEGEND

1. ITEM 615 - PAVEMENT FOR MAINTAINING TRAFFIC, CLASS A
2. ITEM 411 - 6" STABILIZED CRUSHED AGGREGATE

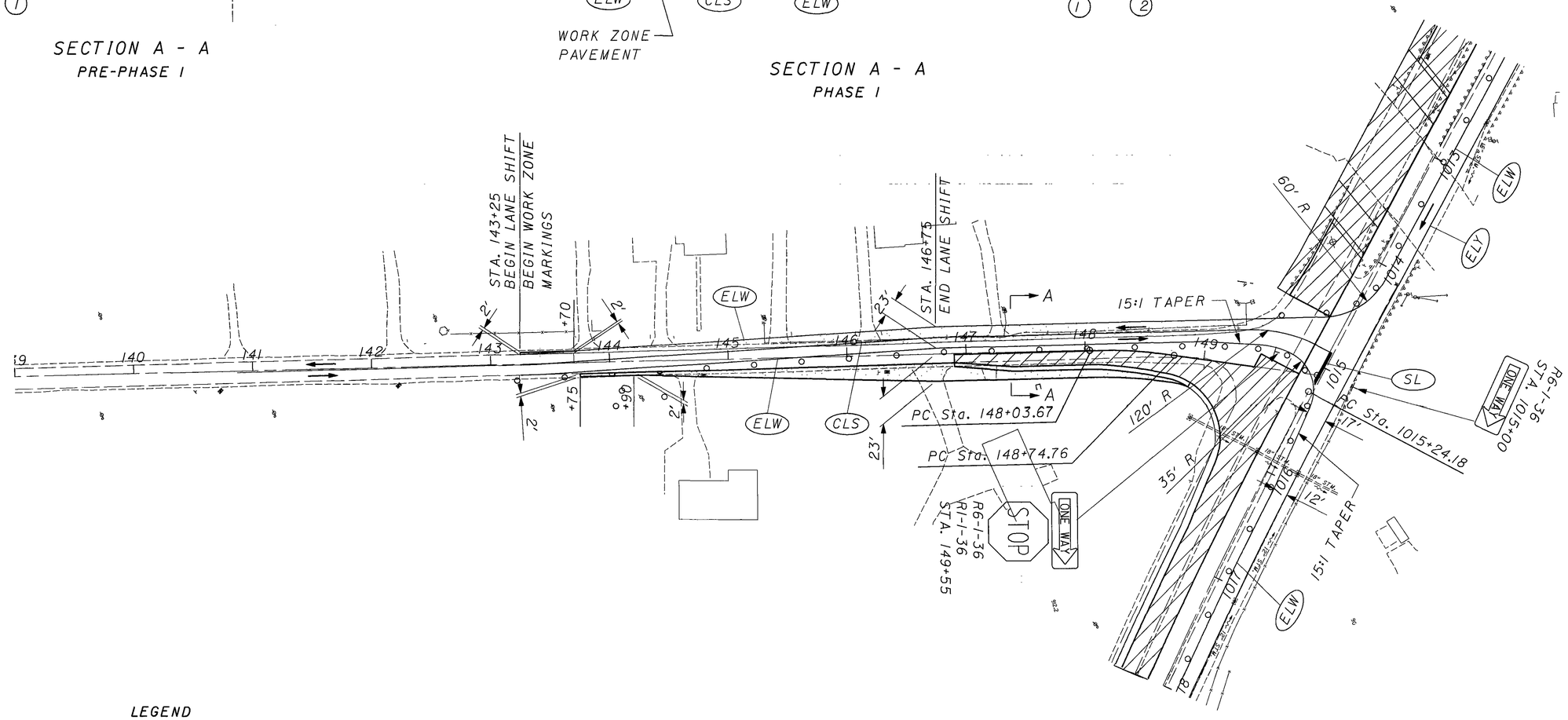

LEGEND

- (ELW) WORK ZONE EDGE LINE (WHITE)
- (ELY) WORK ZONE EDGE LINE (YELLOW)
- (LL) WORK ZONE LANE LINE
- (CLS) WORK ZONE CENTER LINE, DOUBLE SOLID
- (SL) WORK ZONE STOP LINE
- PAVEMENT FOR MAINTAINING TRAFFIC
- PERMANENT PAVEMENT
- WORK AREA
- → DIRECTION OF TRAFFIC ARROW

NOTE:
SEE STANDARD CONSTRUCTION DRAWING MT-102.20 FOR ADDITIONAL NOTES, SIGNS AND DETAILS NOT SHOWN.

HORIZONTAL SCALE IN FEET
0 50 10

CALCULATED
CHECKED

MAINTENANCE OF TRAFFIC - PHASE 1
SR 282 STA 139+00 TO STA 149+96

GEA/POR-422-18.31/0.00

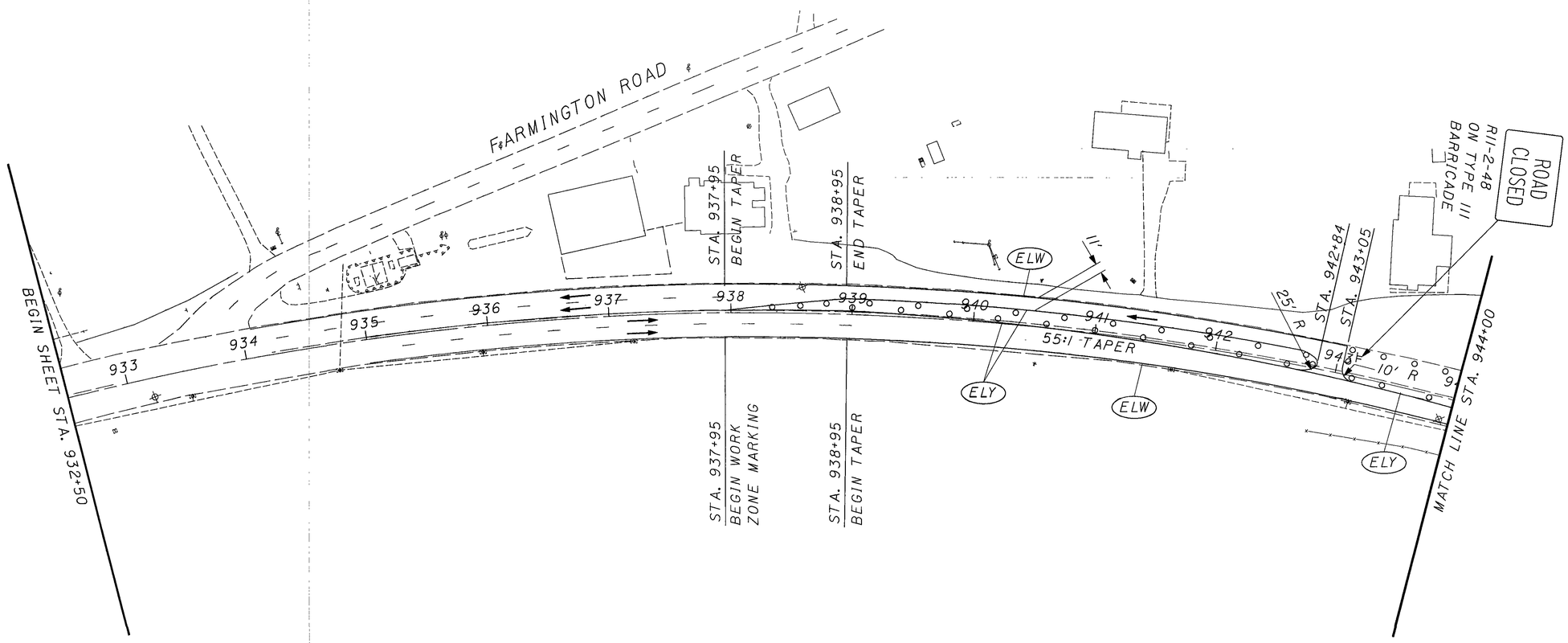

LEGEND

- (ELW) WORK ZONE EDGE LINE (WHITE)
- (ELY) WORK ZONE EDGE LINE (YELLOW)
- (LL) WORK ZONE LANE LINE
- (CLS) WORK ZONE CENTER LINE, DOUBLE SOLID
- (PCB) PORTABLE CONCRETE BARRIER
- PAVEMENT FOR MAINTAINING TRAFFIC
- PERMANENT PAVEMENT
- WORK AREA
- DIRECTION OF TRAFFIC ARROW

NOTE:
SEE STANDARD CONSTRUCTION DRAWINGS MT-95.32 FOR ADDITIONAL NOTES, SIGNS AND DETAILS NOT SHOWN.

HORIZONTAL SCALE IN FEET
0 50 100

CALCULATED
CHECKED

MAINTENANCE OF TRAFFIC - PHASE 2
STA 932+50 TO STA 944+00

GEA/POR-422-18.31/0.00

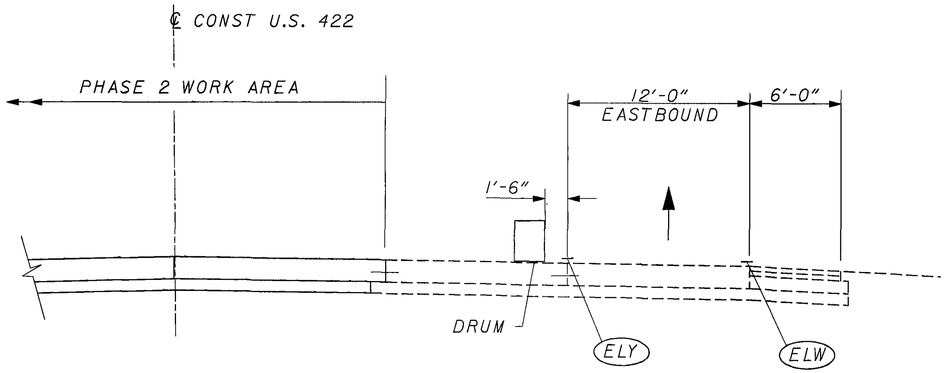

SECTION A - A

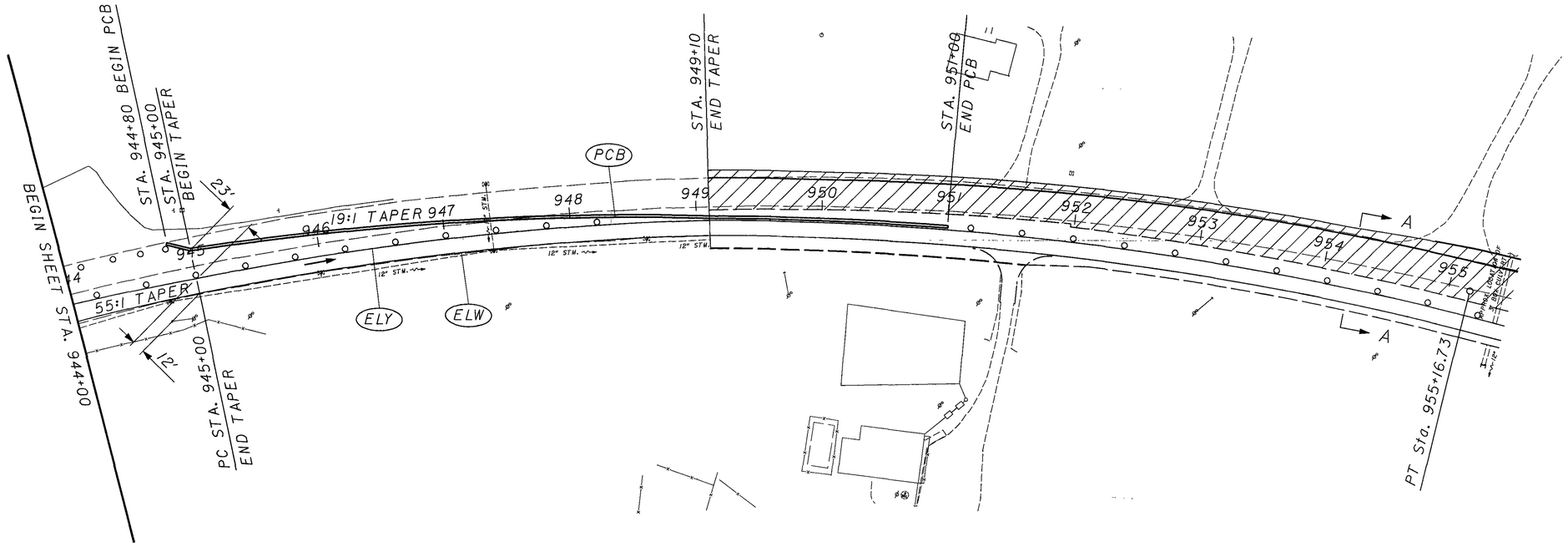

LEGEND

- (ELW) WORK ZONE EDGE LINE (WHITE)
- (ELY) WORK ZONE EDGE LINE (YELLOW)
- (LL) WORK ZONE LANE LINE
- (CLS) WORK ZONE CENTER LINE, DOUBLE SOLID
- (PCB) PORTABLE CONCRETE BARRIER
- PAVEMENT FOR MAINTAINING TRAFFIC
- PERMANENT PAVEMENT
- WORK AREA
- DIRECTION OF TRAFFIC ARROW

HORIZONTAL SCALE IN FEET 0 50 100

CALCULATED

CHECKED

MAINTENANCE OF TRAFFIC - PHASE 2
STA 944+00 TO STA955+50

GEA/POR-422-18.31/0.00

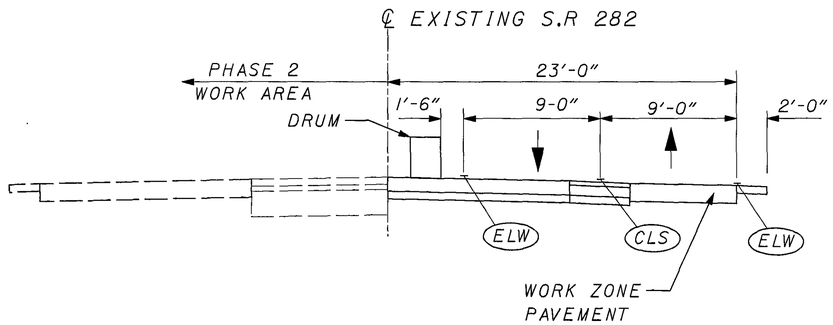

SECTION A - A

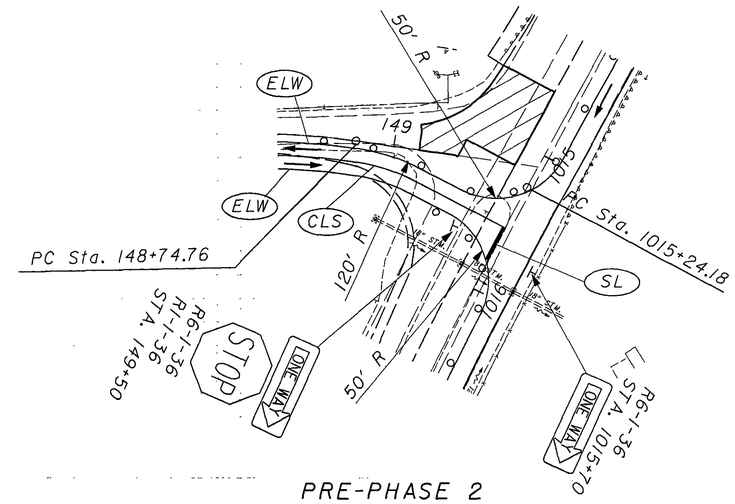

PRE-PHASE 2

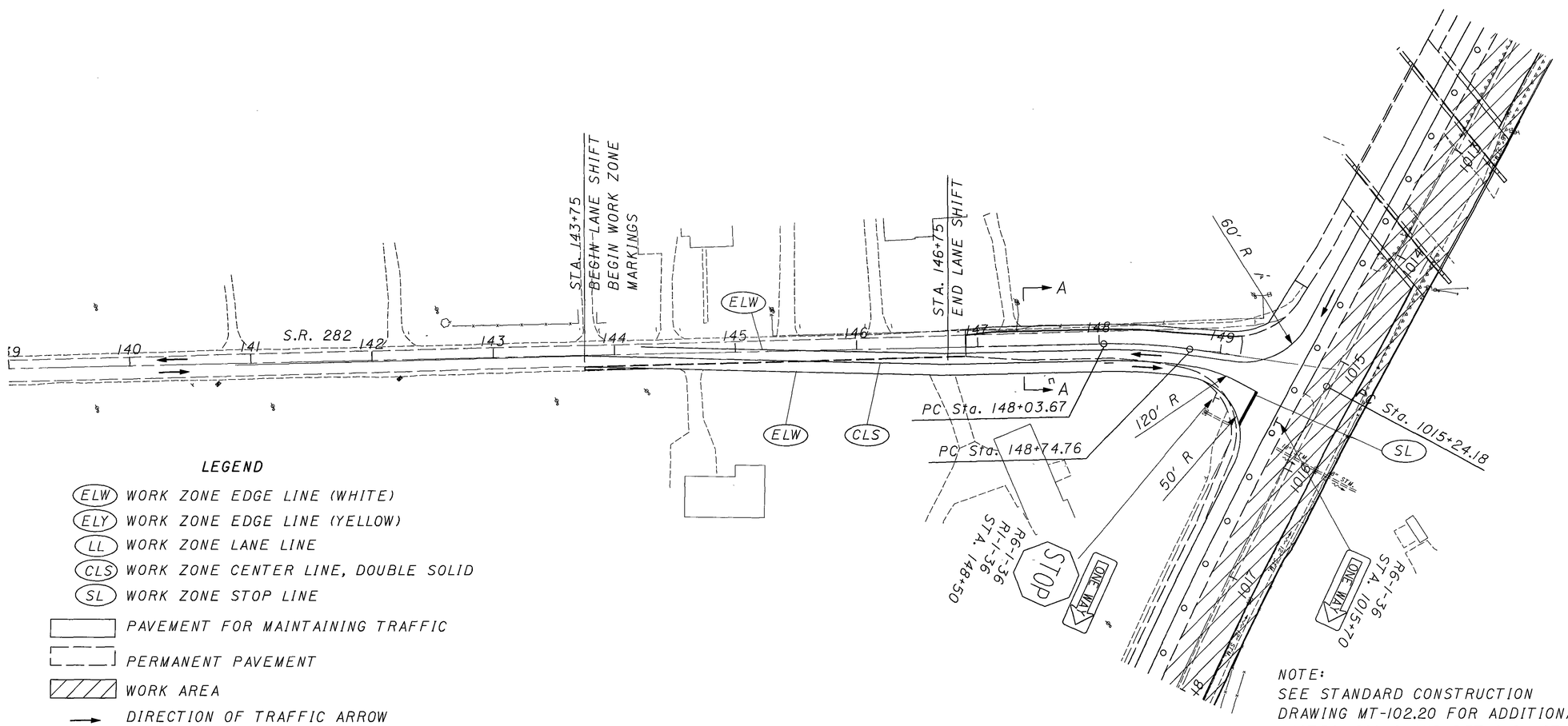

LEGEND

- (ELW) WORK ZONE EDGE LINE (WHITE)
- (ELY) WORK ZONE EDGE LINE (YELLOW)
- (LL) WORK ZONE LANE LINE
- (CLS) WORK ZONE CENTER LINE, DOUBLE SOLID
- (SL) WORK ZONE STOP LINE
- PAVEMENT FOR MAINTAINING TRAFFIC
- PERMANENT PAVEMENT
- WORK AREA
- → DIRECTION OF TRAFFIC ARROW

NOTE:
SEE STANDARD CONSTRUCTION DRAWING MT-102.20 FOR ADDITIONAL NOTES, SIGNS AND DETAILS NOT SHOWN.

N

HORIZONTAL SCALE IN FEET 0 50 100

CALCULATED

CHECKED

MAINTENANCE OF TRAFFIC - PHASE 2
SR 282 STA 139+00 TO STA 149+96

GEA/POR-422-18.31/0.00

SHEET NUMBER											ITEM	ITEM EXT.	GRAND TOTAL	UNIT	DESCRIPTION	SEE SHEET NO.
15	17	43	49	50	51	56	137	195	196	197						
															ROADWAY	
LUMP											201	11001	LUMP		CLEARING AND GRUBBING, AS PER PLAN	15
		LUMP									202	11000	LUMP		STRUCTURE REMOVED	
		3									202	20010	3	EACH	HEADWALL REMOVED	
		46546					183				202	23000	46729	SQ YD	PAVEMENT REMOVED	
		2933					142				202	23010	3075	SQ YD	PAVEMENT REMOVED, ASPHALT	
		45									202	30000	45	SQ FT	WALK REMOVED	
		LUMP									202	30204	LUMP		STEPS REMOVED	
		1136									202	32000	1136	FT	CURB REMOVED	
		1957									202	32600	1957	FT	GUTTER REMOVED	
		10154									202	35100	10154	FT	PIPE REMOVED, 24" AND UNDER	
		213									202	35200	213	FT	PIPE REMOVED, OVER 24"	
		5455									202	38000	5455	FT	GUARDRAIL REMOVED	
		27									202	42206	27	EACH	ANCHOR ASSEMBLY REMOVED	
		12									202	47000	12	EACH	BRIDGE TERMINAL ASSEMBLY REMOVED	
		3									202	58000	3	EACH	MANHOLE REMOVED	
		67									202	58100	67	EACH	CATCH BASIN REMOVED	
		2									SPECIAL	20266000	2	EACH	SPECIAL-DRILLED WATER WELL ABANDONED	18
		1728									202	75000	1728	FT	FENCE REMOVED	
		2									202	75250	2	EACH	GATE REMOVED	
		LUMP									202	98000	LUMP		REMOVAL MISC.: WALL REMOVED	
		3									202	98100	3	EACH	REMOVAL MISC.: GATE POST REMOVED	
		3									202	98100	3	EACH	REMOVAL MISC.: SIGN REMOVED	
					89955		4492				203	10000	94447	CU YD	EXCAVATION	
					28829		28				203	20000	28857	CU YD	EMBANKMENT	
2000						88242					204	10000	90242	SQ YD	SUBGRADE COMPACTION	
1						44					204	45000	45	HOUR	PROOF ROLLING	
1000											204	13000	1000	CU YD	EXCAVATION OF SUBGRADE	
1000											204	20000	1000	CU YD	EMBANKMENT	
						950					206	10500	950	TON	CEMENT	
						12115					206	11000	12115	SQ YD	CURING COAT	
						40383					206	15000	40383	SQ YD	CEMENT STABILIZED SUBGRADE, 12 INCHES DEEP	
			14								604	38500	14	EACH	MONUMENT ASSEMBLY	
			3525.0								606	13000	3525.0	FT	GUARDRAIL, TYPE 5	
			9								606	22010	9	EACH	ANCHOR ASSEMBLY, TYPE E-98	
			14								606	26500	14	EACH	ANCHOR ASSEMBLY, TYPE T	
			5								606	35000	5	EACH	BRIDGE TERMINAL ASSEMBLY, TYPE 1	
			4								606	35100	4	EACH	BRIDGE TERMINAL ASSEMBLY, TYPE 2	
			210								622	10160	210	FT	CONCRETE BARRIER, SINGLE SLOPE, TYPE D	
			21								SPECIAL	69050100	21	EACH	SPECIAL - MAILBOX SUPPORT SYSTEM, SINGLE	165
			4								SPECIAL	69050200	4	EACH	SPECIAL - MAILBOX SUPPORT SYSTEM, DOUBLE	165
															EROSION CONTROL	
									4	4	601	11000	8	SQ YD	RIPRAP USING 6" REINFORCED CONCRETE SLAB	
				6							601	32004	6	CU YD	ROCK CHANNEL PROTECTION, TYPE A WITH FABRIC FILTER	
								7	11	12	601	32104	30	CU YD	ROCK CHANNEL PROTECTION, TYPE B WITH FABRIC FILTER	
	10			8							601	32204	18	CU YD	ROCK CHANNEL PROTECTION, TYPE C WITH FABRIC FILTER	
					2						659	00100	2	EACH	SOIL ANALYSIS TEST	
					77931						659	10000	77931	SQ YD	SEEDING AND MULCHING	
					3897						659	14000	3897	SQ YD	REPAIR SEEDING AND MULCHING	
					3897						659	15000	3897	SQ YD	INTER-SEEDING	

CALCULATED BF
CHECKED VLW

GENERAL SUMMARY

GEA/POR-422-18.31/0.00

SHEET NUMBER											ITEM	ITEM EXT.	GRAND TOTAL	UNIT	DESCRIPTION	SEE SHEET NO.
17		46		50	51	54	57	195	196	197						
															EROSION CONTROL (CON'T)	
					12						659	20000	12	TON	COMMERCIAL FERTILIZER	
					2						659	31000	2	ACRE	LIME	
					431						659	35000	431	M GAL	WATER	
					19483						659	40000	19483	M SQ FT	MOWING	
				42							660	20000	42	SQ YD	SODDING REINFORCED	
				2790							670	00700	2790	SQ YD	DITCH EROSION PROTECTION	
							1				832	15000	LUMP		STORM WATER POLLUTION PREVENTION PLAN	
											832	30000	15000	EACH	EROSION CONTROL	
				3248							836	10000	3248	SQ YD	SEEDING AND EROSION CONTROL WITH TURF REINFORCING MAT, TYPE 1	
				593							836	10020	593	SQ YD	SEEDING AND EROSION CONTROL WITH TURF REINFORCING MAT, TYPE 2	
															DRAINAGE	
		2.4						1.6	2.2	2.0	602	20000	8.2	CU YD	CONCRETE MASONRY	
						874					603	00510	874	FT	6" CONDUIT, TYPE F FOR UNDERDRAIN OUTLETS	
100						72					603	00900	172	FT	6" CONDUIT, TYPE B	
100											603	01100	100	FT	6" CONDUIT, TYPE C	
100											603	01400	100	FT	6" CONDUIT, TYPE E	
100											603	01500	100	FT	6" CONDUIT, TYPE F	
250											603	01800	250	FT	8" CONDUIT, TYPE B	
250											603	02500	250	FT	8" CONDUIT, TYPE E	
250											603	02600	250	FT	8" CONDUIT, TYPE F	
		1751									603	04600	1751	FT	12" CONDUIT, TYPE C	
		771									603	04900	771	FT	12" CONDUIT, TYPE D	
		938									603	05900	938	FT	15" CONDUIT, TYPE B	
		1291									603	06100	1291	FT	15" CONDUIT, TYPE C	
		81									603	07400	81	FT	18" CONDUIT, TYPE B	
		669									603	07600	669	FT	18" CONDUIT, TYPE C	
		229									603	08900	229	FT	21" CONDUIT, TYPE B	
		123									603	09100	123	FT	21" CONDUIT, TYPE C	
		53									603	09400	53	FT	21" CONDUIT, TYPE D	
								120			603	14700	120	FT	33" CONDUIT, TYPE A 706.02, OR 42" CONDUIT TYPE A 707.01	
									150		603	20700	150	FT	48" CONDUIT, TYPE A, 706.02	
										96	603	53100	96	FT	43"X68" CONDUIT, TYPE A, 706.04	
		2									604	00400	2	EACH	CATCH BASIN, NO. 3	
		8									604	00800	8	EACH	CATCH BASIN, NO. 3A	
		11									604	02800	11	EACH	CATCH BASIN, NO. 8	18
		2									604	04500	2	EACH	CATCH BASIN, NO. 2-2B	
		1									604	04900	1	EACH	CATCH BASIN, NO. 2-3	
		12									604	31500	12	EACH	MANHOLE, NO. 3	
		6									604	31501	6	EACH	MANHOLE, NO.3, AS PER PLAN	194A
						21					604	36600	21	EACH	PRECAST REINFORCED CONCRETE OUTLET	
						1482					605	13510	1482	FT	6" ROCK CUT UNDERDRAIN WITH FABRIC WRAP	
						26587					605	14020	26587	FT	6" BASE PIPE UNDERDRAINS WITH FABRIC WRAP	
		5									895	10010	5	EACH	MANUFACTURED WATER QUALITY STRUCTURE, TYPE 1	
		1									895	10020	1	EACH	MANUFACTURED WATER QUALITY STRUCTURE, TYPE 2	

CALCULATED BF
CHECKED VLW

GENERAL SUMMARY

GEA/POR-422-18.31/0.00

SHEET NUMBER											ITEM	ITEM EXT.	GRAND TOTAL	UNIT	DESCRIPTION	SEE SHEET NO.
15	49			56		137		222								
															PAVEMENT	
				3483							301	46000	3483	CU YD	ASPHALT CONCRETE BASE, PG64-22	
						280					301	48000	280	CU YD	ASPHALT CONCRETE BASE, PG64-22 (DRIVEWAYS)	
				14183		572					304	20000	14755	CU YD	AGGREGATE BASE	
				627							407	10000	627	GALLON	TACK COAT	
				11757		182					407	14000	11939	GALLON	TACK COAT FOR INTERMEDIATE COURSE	
				6270							408	10000	6270	GALLON	PRIME COAT	
				762							448	46020	762	CU YD	ASPHALT CONCRETE INTERMEDIATE COURSE, TYPE I PG64-22	
				544							448	47020	544	CU YD	ASPHALT CONCRETE SURFACE COURSE, TYPE I, PG64-22	
						84					448	48020	84	CU YD	ASPHALT CONCRETE SURFACE COURSE, TYPE I, PG64-22 (DRIVEWAYS)	
	304										SPECIAL	45130000	304	FT	SPECIAL - PRESSURE RELIEF JOINT, TYPE A	16
						89					452	10000	89	SQ YD	6" NON-REINFORCED CONCRETE PAVEMENT	
	3961										609	26000	3961	FT	CURB, TYPE 6	
500											617	10101	500	CU YD	COMPACTED AGGREGATE, AS PER PLAN	15
				69425							884	10150	69425	SQ YD	11" PORTLAND CEMENT CONCRETE PAVEMENT (7 YEAR WARRANTY)	
															TRAFFIC CONTROL, SEE SHEET 198	
															RETAINING WALLS	
								1624			503	21100	1624	CU YD	UNCLASSIFIED EXCAVATION	
								29656			509	10000	29656	POUND	EPOXY COATED REINFORCING STEEL	
								225			511	46000	225	CU YD	CLASS C CONCRETE	
								205			511	46500	205	CU YD	CLASS C CONCRETE, FOOTING	
								385			512	10100	385	SQ YD	SEALING OF CONCRETE SURFACES (EPOXY-URETHANE)	
								63			516	13600	63	SQ FT	1" PREFORMED EXPANSION JOINT FILLER	
								270			518	21200	270	CU YD	POROUS BACKFILL WITH FILTER FABRIC	
								322			518	40000	322	FT	6" PERFORATED CORRUGATED PLASTIC PIPE	
								8			518	40010	8	FT	6" NON-PERFORATED CORRUGATED PLASTIC PIPE, INCLUDING SPECIALS	
								2821			SPECIAL	53013000	2821	SQ FT	SPECIAL - FORM LINER	222

CALCULATED BF CHECKED VLW

GENERAL SUMMARY

GEA / POR-422-18.31/ 0.00

SHEET NUMBER 19	SHEET NUMBER 20	SHEET NUMBER 22	ITEM	ITEM EXT.	GRAND TOTAL	UNIT	DESCRIPTION	SEE SHEET NO.
							STRUCTURE, SEE SHEETS 224 AND 243	
							MAINTENANCE OF TRAFFIC	
	250		410	12000	250	CU YD	TRAFFIC COMPACTED SURFACE, TYPE A OR B	
		58	411	10000	58	CU YD	STABILIZED CRUSHED AGGREGATE	
	120		614	11100	120	HOUR	LAW ENFORCEMENT OFFICER WITH PATROL CAR	
	14		614	12470	14	EACH	WORK ZONE SPEED LIMIT SIGN	
	4		614	12484	4	EACH	WORK ZONE INCREASED PENALTIES SIGN	
380			614	12510	380	SQ FT	REPLACEMENT SIGN	
25			614	12600	25	EACH	REPLACEMENT DRUM	
	100		614	13000	100	CU YD	ASPHALT CONCRETE FOR MAINTAINING TRAFFIC	
	150		614	13200	150	EACH	BARRIER REFLECTORS, TYPE A	
	10	13	614	13300	23	EACH	BARRIER REFLECTORS, TYPE B	
		13	614	13350	13	EACH	OBJECT MARKER, ONE WAY	
		0.07	614	20200	0.07	MILE	WORK ZONE LANE LINE, CLASS I, 740.06, TYPE I	
		0.06	614	21000	0.06	MILE	WORK ZONE CENTER LINE, CLASS I	
		0.72	614	21200	0.72	MILE	WORK ZONE CENTER LINE, CLASS I, 740.06, TYPE I	
		6.54	614	22000	6.54	MILE	WORK ZONE EDGE LINE, CLASS I	
		3.77	614	22200	3.77	MILE	WORK ZONE EDGE LINE, CLASS I, 740.06, TYPE I	
		1035	614	23400	1035	FT	WORK ZONE CHANNELIZING LINE, CLASS I, 740.06, TYPE I	
		32	614	26000	32	FT	WORK ZONE STOP LINE, CLASS I	
		64	614	26400	64	FT	WORK ZONE STOP LINE, CLASS I, 740.06, TYPE I	
		1393	615	20000	1393	SQ YD	PAVEMENT FOR MAINTAINING TRAFFIC, CLASS A	
400	50		616	10000	450	MGAL	WATER	
		620	622	40020	620	FT	PORTABLE CONCRETE BARRIER, 32"	
			614	11000	LUMP		MAINTAINING TRAFFIC	
			619	16020	18	MONTH	FIELD OFFICE, TYPE C	
			623	10000	LUMP		CONSTRUCTION LAYOUT STAKES	
			624	10000	LUMP		MOBILIZATION	

CALCULATED BF
CHECKED VLW

GENERAL SUMMARY

GEA/POR-422-18.31/0.00

REF NO.	SHEET NO.	STATION		SIDE	202 HEADWALL REMOVED EACH	202 PAVEMENT REMOVED SQ. YD.	202 PAVEMENT REMOVED, ASPHALT SQ. YD.	202 WALK REMOVED SQ. FT.	202 CURB REMOVED FT.	202 STEPS REMOVED LUMP	202 GUTTER REMOVED FT.	202 PIPE REMOVED, 24" AND UNDER FT.	202 PIPE REMOVED, OVER 24" FT.	202 GUARDRAIL REMOVED FT.	202 ANCHOR ASSEMBLY REMOVED EACH	202 BRIDGE TERMINAL ASSEMBLY REMOVED EACH	202 STRUCTURE REMOVED LUMP	202 MANHOLE REMOVED EACH	202 CATCH BASIN REMOVED EACH	202 SPECIAL - DRILLED WATER WELL ABANDONED EACH	202 FENCE REMOVED FT.	202 GATE REMOVED EACH	202 REMOVAL MISC.: WALL REMOVED LUMP	202 REMOVAL MISC.: GATE POST REMOVED EACH	202 REMOVAL MISC.: SIGN REMOVED EACH
1-R	60	947+37.55	948+59.82	RT								122													
2-R		948+59.82	949+86.16	RT								126													
3-R		949+10.40	950+00.00	RT/LT		478																			
4-R		949+86.16	950+00.00	RT								15							1						
1-R	61	950+00.00	951+26.77	RT								127													
2-R		951+44.70	951+45.00	RT																			LUMP		
3-R		951+61.92	951+62.49	RT																			LUMP		
4-R		951+40.73	951+62.20	RT								21													
5-R		951+26.77	952+85.82	RT								159							1						
6-R		950+00.00	954+00.00	RT/LT		2133																			
7-R		952+85.82	954+00.00	RT								114							1						
1-R	62	954+00.00	954+22.55	RT								22													
2-R		954+22.55	955+52.77	RT								130							1						
3-R		955+41.44	955+42.39	RT/LT													LUMP								
4-R		955+51.38	955+52.77	RT								33							1						
5-R		954+00.00	956+83.68	RT/LT		1513																			
6-R		955+52.77	958+00.00	RT								257													
7-R		956+83.68	958+00.00	RT/LT		517																			
8-R		955+21.5	955+21.5	LT																				1	
9-R		954+85	955+21.5	LT																		1		1	
1-R	63	958+00.00	958+60.75	RT								61							1						
2-R		958+61.31	958+77.93	RT								17							1						
3-R		958+60.75	958+61.31	RT								52							1						
4-R		958+60.75	958+61.49	RT								20							1						
5-R		958+60.75	962+00.00	RT								339													
6-R		958+00.00	962+00.00	LT		978																			
7-R		958+00.00	962+00.00	RT		800	178																		
1-R	64	962+00.00	962+07.29	RT								7							1						
2-R		962+07.29	962+08.49	RT/LT								59							1						
3-R		962+08.00	962+20.18	LT								12							1						
4-R		962+20.18	965+57.22	LT								337							1						
5-R		962+00.00	966+00.00	LT		978																			
6-R		962+00.00	966+00.00	RT		800	178																		
7-R		965+57.22	965+58.02	RT/LT								62							1						
8-R		965+57.22	966+00.00	LT								43													
1-R	65	966+00.00	969+07.76	LT								308							1						
2-R		966+00.00	970+00.00	LT		978																			
3-R		966+00.00	970+00.00	RT		800	178																		
4-R		968+24.12	968+24.12	LT																		1			
5-R		968+07.12	968+07.12	LT																				1	
6-R		969+07.16	969+07.76	RT/LT								60							1						
7-R		969+07.76	970+00.00	LT								92													
SUBTOTALS CARRIED TO SHEET 43					0	9974	533	0	0	0	0	2595	0	0	0	0	LUMP	0	16	0	0	2	LUMP	3	0

CALCULATED RDC
CHECKED VLW

REMOVAL SUBSUMMARY

GEA/POR-422-18.31/0.00

REF NO.	SHEET NO.	STATION		SIDE	202 HEADWALL REMOVED EACH	202 PAVEMENT REMOVED SQ. YD.	202 PAVEMENT REMOVED, ASPHALT SQ. YD.	202 WALK REMOVED SQ. FT.	202 CURB REMOVED FT.	202 STEPS REMOVED LUMP	202 GUTTER REMOVED FT.	202 PIPE REMOVED, 24" AND UNDER FT.	202 PIPE REMOVED, OVER 24" FT.	202 GUARDRAIL REMOVED FT.	202 ANCHOR ASSEMBLY REMOVED EACH	202 BRIDGE TERMINAL ASSEMBLY REMOVED EACH	202 STRUCTURE REMOVED LUMP	202 MANHOLE REMOVED EACH	202 CATCH BASIN REMOVED EACH	202 SPECIAL - DRILLED WATER WELL ABANDONED EACH	202 FENCE REMOVED FT.	202 GATE REMOVED EACH	202 REMOVAL MISC.: WALL REMOVED LUMP	202 REMOVAL MISC.: GATE POST REMOVED EACH	202 REMOVAL MISC.: SIGN REMOVED EACH
1-R	66	971+00.00	971+39.93	LT								140							1						
2-R		970+21.54	974+00.00	LT										353	1										
3-R		970+00.00	974+00.00	LT		978																			
4-R		970+00.00	974+00.00	RT		800	178																		
5-R		973+66.33	974+00.00	LT										34	1										
6-R		973+74.36	973+75.37	RT/LT								40							1						
7-R		973+75.37	973+75.42	RT								42							1						
8-R		973+74.36	974+00.00	LT								26													
1-R	67	974+00.00	977+86.00	LT										386	1										
2-R		974+00.00	976+82.78	LT								283							1						
3-R		974+00.00	978+00.00	LT										400											
4-R		974+00.00	978+00.00	LT		978																			
5-R		974+00.00	978+00.00	RT		800	178																		
1-R	68	978+07.50	980+60.00	LT										253											
2-R		978+00.00	982+00.00	LT		978																			
3-R		978+00.00	982+00.00	RT		800	178																		
4-R		981+46.11	982+00.00	RT										54	1										
5-R		981+60.02	982+00.00	LT																	65				
1-R	69	982+00.00	983+51.21	LT																	173				
2-R		982+08.43	984+35.02	LT								226							1						
3-R		982+00.00	984+67.46	RT										268	1										
4-R		982+00.00	986+00.00	LT		978																			
5-R		984+01.22	986+00.00	LT																	220				
6-R		984+33.88	984+35.02	LT								30							1						
7-R		984+35.02	986+00.00	LT								164							1						
8-R		982+79.24		LT				45																	
9-R		985+56.03		LT						LUMP															
10-R		982+00.00	986+00.00	RT		800	178																		
1-R	70	986+00.00	986+21.24	LT																	43				
2-R		986+00.00	986+80.97	LT								81													
3-R		986+00.00	990+00.00	LT		978																			
4-R		986+80.50	986+80.50	LT																	16				
5-R		986+00.00	990+00.00	RT		800	178																		
6-R		986+80.97	988+81.37	LT								200							1						
7-R		988+20.34	988+22.26	LT																	8				
8-R		987+80.10	988+81.37	RT/LT								105							1						
9-R		988+81.37	988+83.37	RT/LT								88													
10-R		988+57.13	988+81.37	LT								72							1						
11-R		989+07.41	990+00.00	RT																	95				
SUBTOTALS CARRIED TO SHEET 43					0	8889	889	45	0	LUMP	0	1497	0	1748	5	0	0	0	10	0	620	0	0	0	0

CALCULATED RDC
CHECKED VLW

REMOVAL SUBSUMMARY

GEA/POR-422-18.31/0.00

REF NO.	SHEET NO.	STATION		SIDE	202 HEADWALL REMOVED EACH	202 PAVEMENT REMOVED SQ. YD.	202 PAVEMENT REMOVED, ASPHALT SQ. YD.	202 WALK REMOVED SQ. FT.	202 CURB REMOVED FT.	202 STEPS REMOVED LUMP	202 GUTTER REMOVED FT.	202 PIPE REMOVED, 24" AND UNDER FT.	202 PIPE REMOVED, OVER 24" FT.	202 GUARDRAIL REMOVED FT.	202 ANCHOR ASSEMBLY REMOVED EACH	202 BRIDGE TERMINAL ASSEMBLY REMOVED EACH	202 STRUCTURE REMOVED LUMP	202 MANHOLE REMOVED EACH	202 CATCH BASIN REMOVED EACH	202 SPECIAL - DRILLED WATER WELL ABANDONED EACH	202 FENCE REMOVED FT.	202 GATE REMOVED EACH	202 REMOVAL MISC.: WALL REMOVED LUMP	202 REMOVAL MISC.: GATE POST REMOVED EACH	202 REMOVAL MISC.: SIGN REMOVED EACH
																									1
1-R	71	990+00.00	990+22.67	RT																	51				
2-R		990+94.75	994+00.00	RT										280	1										
3-R		990+00.00	994+00.00	LT		978																			
4-R		990+00.00	994+00.00	RT		800	178																		
5-R		991+60.37	994+00.00	LT								239							1						
6-R		991+88.94	994+00.00	LT							210														
1-R	72	994+00.00	994+35.37	LT								35													
2-R		994+35.37	995+20.30	LT								85							1						
3-R		994+87.64	994+87.93	RT								38							1						
4-R		994+87.93	995+34.02	LT								63							1						
5-R		994+00.00	998+00.00	LT		978																			
6-R		994+00.00	998+00.00	RT		800	178																		
7-R		994+00.00	996+24.88	LT							227														
8-R		994+00.00	996+92.17	RT										293	1										
9-R		997+10.08	998+00.00	LT								90							1						
1-R	73	998+00.00	999+62.71	LT								162													
2-R		998+00.00	1002+00.00	LT		978																			
3-R		998+00.00	1002+00.00	RT		800	178																		
4-R		999+62.60	999+62.71	RT/LT								31							1						
5-R		999+62.71	1002+00.00	LT								236							1						
6-R		998+23.06	1002+00.00	LT							376														
7-R		999+56.40	999+98.24	RT								42													
8-R		999+98.24	1001+60.67	RT								162							1						
9-R		1001+60.67	1002+00.00	RT								40							1						
1-R	74	1002+00.00	1003+61.24	LT								161													
2-R		1002+00.00	1005+52.50	LT							353														
3-R		1002+00.00	1006+00.00	LT		978																			
4-R		1002+00.00	1006+00.00	RT		800	178																		
5-R		1003+59.50	1003+61.24	RT/LT								50							1						
6-R		1003+61.24	1006+00.00	LT								238							1						
7-R		1003+70.32	1006+00.00	RT										232	2										
8-R		1005+78.17	1006+00.00	LT										22	1										
1-R	75	1006+00.00	1006+51.50	LT								51													
2-R		1006+51.15	1006+51.50	RT/LT								41							1						
3-R		1006+00.00	1010+00.00	LT		978																			
4-R		1006+00.00	1010+00.00	RT		800	178																		
5-R		1006+00.00	1010+00.00	LT										398											
6-R		1006+51.50	1010+00.00	LT								349							1						
SUBTOTALS CARRIED TO SHEET 43					0	8889	889	0	0	0	1166	2113	0	1225	5	0	0	0	13	0	51	0	0	0	1

CALCULATED RDC
CHECKED VLW

REMOVAL SUBSUMMARY

GEA/POR-422-18.31/0.00

REF NO.	SHEET NO.	STATION		SIDE	202 HEADWALL REMOVED EACH	202 PAVEMENT REMOVED SQ. YD.	202 PAVEMENT REMOVED, ASPHALT SQ. YD.	202 WALK REMOVED SQ. FT.	202 CURB REMOVED FT.	202 STEPS REMOVED LUMP	202 GUTTER REMOVED FT.	202 PIPE REMOVED, 24" AND UNDER FT.	202 PIPE REMOVED, OVER 24" FT.	202 GUARDRAIL REMOVED FT.	202 ANCHOR ASSEMBLY REMOVED EACH	202 BRIDGE TERMINAL ASSEMBLY REMOVED EACH	202 STRUCTURE REMOVED LUMP	202 MANHOLE REMOVED EACH	202 CATCH BASIN REMOVED EACH	202 SPECIAL - DRILLED WATER WELL ABANDONED EACH	202 FENCE REMOVED FT.	202 GATE REMOVED EACH	202 REMOVAL MISC.: WALL REMOVED LUMP	202 REMOVAL MISC.: GATE POST REMOVED EACH	202 REMOVAL MISC.: SIGN REMOVED EACH
1-R	76	1010+00.00	1012+53.56	LT								253													
2-R		1010+00.00	1010+77.00	LT										79	1										
3-R		1010+00.00	1012+62.49	LT		642																			
4-R		1010+00.00	1012+62.49	RT		525	117																		
5-R		1011+41.71	1012+89.22	RT										149	1	1									
6-R		1011+31.49	1012+80.81	RT										150	1	1									
7-R		1011+51.02	1012+99.00	LT										150	1	1									
8-R		1011+18.26	1012+68.79	RT										150	1	1									
9-R		1012+53.56	1013+15.16	LT								62							1						
10-R		1013+82.46	1014+00.00	LT										18		1									
11-R		1013+67.40	1400+00.00	LT										35		1									
12-R		1013+66.35	1014+00.00	RT										34		1									
13-R		1013+51.77	1014+00.00	RT										48		1									
14-R		1013+74.08	1014+00.00	RT		63																			
15-R		1013+49.72	1014+00.00	RT		101	22																		
1-R	77	1014+00.00	1015+34.07	LT										134	1										
2-R		1014+00.00	1014+14.42	RT										15	1										
3-R		1014+00.00	1014+10.56	RT										11	1										
4-R		1014+00.00	1014+51.89	RT										52	1										
5-R		1014+69.65	1014+69.65	RT																					1
6-R		1014+00.00	1018+00.00	LT		978																			
7-R		1014+00.00	1018+00.00	RT		800	178																		
8-R		1015+89.99	1015+89.88	LT								38							1						
9-R		1015+89.88	1015+89.88	RT/LT								39							1						
10-R		1015+89.88	1015+89.29	RT								63							1						
11-R		1015+89.88	1017+10.79	LT								120							1						
12-R		1017+10.79	1018+00.00	LT								89													
13-R		1015+32.08	1018+00.00	LT																	266				
14-R		1017+64.00	1018+00.00	LT																	31				
1-R	78	1018+00.00	1018+43.94	LT																	44				
2-R		1018+00.00	1021+44.39	LT																	346				
3-R		1018+00.00	1018+98.58	LT								98							1						
4-R		1018+98.58	1019+01.27	RT/LT								41							1						
5-R		1018+98.58	1021+99.68	LT								301							1						
6-R		1018+00.00	1022+00.00	LT		978																			
7-R		1018+00.00	1022+00.00	RT		800	178																		
8-R		1021+99.68	1021+99.68	RT/LT								39							1						
1-R	79	1022+00.00	1025+09.76	LT		757																			
2-R		1022+00.00	1024+86.20	RT		572	127																		
3-R		1022+00.00	1022+19.64	RT								20													
4-R		1023+64.45	1024+43.92	RT								79													
5-R		1024+56.46	1025+09.87	LT										56	1	1									
6-R		1023+17.84	1024+70.11	RT										152	1	1									
7-R		1025+37.71	1026+00.00	LT										62		1									
8-R		1025+34.36	1025+55.50	LT								20							1						
9-R		1025+55.50	1026+00.00	LT								45													
10-R		1025+28.89	1026+00.00	LT		230																			
SUBTOTALS CARRIED TO SHEET 43					0	6446	622	0	0	0	0	1307	0	1295	11	11	0	0	10	0	687	0	0	0	1

CALCULATED RDC CHECKED VLW

REMOVAL SUBSUMMARY

GEA/POR-422-18.31/0.00

REF NO.	SHEET NO.	STATION		SIDE	202 HEADWALL REMOVED EACH	202 PAVEMENT REMOVED SQ. YD.	202 PAVEMENT REMOVED, ASPHALT SQ. YD.	202 WALK REMOVED SQ. FT.	202 CURB REMOVED FT.	202 STEPS REMOVED LUMP	202 GUTTER REMOVED FT.	202 PIPE REMOVED, 24" AND UNDER FT.	202 PIPE REMOVED, OVER 24" FT.	202 GUARDRAIL REMOVED FT.	202 ANCHOR ASSEMBLY REMOVED EACH	202 BRIDGE TERMINAL ASSEMBLY REMOVED EACH	202 STRUCTURE REMOVED LUMP	202 MANHOLE REMOVED EACH	202 CATCH BASIN REMOVED EACH	202 SPECIAL - DRILLED WATER WELL ABANDONED EACH	202 FENCE REMOVED FT.	202 GATE REMOVED EACH	202 REMOVAL MISC.: WALL REMOVED LUMP	202 REMOVAL MISC.: GATE POST REMOVED EACH	202 REMOVAL MISC.: SIGN REMOVED EACH
11-R	79	1025+05.71	1026+00.00	RT		213																			
12-R		1024+91.00	1025+80.50	RT										89	1	1									
1-R	80	1026+00.00	1026+85.06	LT										86	1										
2-R		1026+00.00	1028+00.42	LT								200						1							
3-R		1026+00.00	1030+00.00	LT		952																			
4-R		1026+00.00	1030+00.00	RT		1168																			
5-R		1027+73.69	1027+73.69	LT																					1
6-R		1028+00.36	1028+01.37	LT																10					
7-R		1028+00.42	1028+00.42	RT/LT								47							1						
8-R		1028+00.42	1028+14.32	LT								14							1						
9-R		1028+14.32	1030+00.00	LT								186													
10-R		1029+60.19	1030+00.00	LT																40					
11-R		1029+89.47	1030+00.00	RT					11																
1-R	81	1030+00.00	1031+90.10	LT																190					
2-R		1030+00.00	1030+99.03	LT								99							1						
3-R		1030+00.00	1034+00.00	RT					400																
4-R		1030+99.03	1030+99.42	RT/LT								38							1						
5-R		1030+99.42	1031+00.29	RT								39							1						
6-R		1031+00.29	1033+18.95	RT								218							1						
7-R		1030+00.00	1034+00.00	LT		978																			
8-R		1030+00.00	1034+00.00	RT		1200																			
9-R		1032+74.00	1034+00.00	RT										126	1										
10-R		1032+70.75	1034+00.00	RT																130					
11-R		1030+42.91	1030+60.74	LT								136						2			1				
1-R	82	1034+00.00	1038+00.00	LT		978																			
2-R		1034+00.00	1038+00.00	RT		1200																			
3-R		1034+00.00	1038+00.00	RT					400																
4-R		1034+00.00	1037+75.45	RT										269	1										
5-R		1034+66.14	1034+66.88	RT	1							17													
6-R		1034+66.88	1034+66.88	RT								42							1						
7-R		1034+66.88	1034+67.19	RT/LT								32							1						
8-R		1034+67.19	1034+74.87	LT	1							28							1						
9-R		1034+66.88	1036+56.92	RT								190							1						
10-R		1034+67.19	1037+99.72	LT								333							1						
1-R	83	1038+00.00	1041+25.38	LT		976																			
2-R		1038+00.00	1041+25.38	RT		795																			
3-R		1038+00.00	1041+25.22	RT					325																
4-R		1040+47.09	1041+24.33	LT/RT								79							1						
5-R		1041+24.33	1042+00.00	RT								76							1						
6-R		1041+33.94	1041+59.15	RT								25													
7-R		1041+25.38	1042+00.00	LT		182																			
8-R		1041+25.38	1042+00.00	RT		149																			
SUBTOTALS CARRIED TO SHEET 43					2	8792	0	0	1136	0	0	1799	0	570	4	1	0	3	13	1	370	0	0	0	1

CALCULATED RDC CHECKED VLW

REMOVAL SUBSUMMARY

GEA/POR-422-18.31/0.00

REF NO.	SHEET NO.	STATION		SIDE	202 HEADWALL REMOVED EACH	202 PAVEMENT REMOVED SQ. YD.	202 PAVEMENT REMOVED, ASPHALT SQ. YD.	202 WALK REMOVED SQ. FT.	202 CURB REMOVED FT.	202 STEPS REMOVED LUMP	202 GUTTER REMOVED FT.	202 PIPE REMOVED, 24" AND UNDER FT.	202 PIPE REMOVED, OVER 24" FT.	202 GUARDRAIL REMOVED FT.	202 ANCHOR ASSEMBLY REMOVED EACH	202 BRIDGE TERMINAL ASSEMBLY REMOVED EACH	202 STRUCTURE REMOVED LUMP	202 MANHOLE REMOVED EACH	202 CATCH BASIN REMOVED EACH	202 SPECIAL - DRILLED WATER WELL ABANDONED EACH	202 FENCE REMOVED FT.	202 GATE REMOVED EACH	202 REMOVAL MISC.: WALL REMOVED LUMP	202 REMOVAL MISC.: GATE POST REMOVED EACH	202 REMOVAL MISC.: SIGN REMOVED EACH
1-R	84	1042+00.00	1046+00.00	LT		978																			
2-R		1042+00.00	1046+00.00	RT		800																			
3-R		1042+10.48	1046+00.00	LT										390	1										
4-R		1042+00.00	1043+01.83	RT								101													
5-R		1042+57.85	1046+00.00	LT							342														
6-R		1043+01.83	1043+44.44	RT	1								63												
7-R		1042+38.96	1043+01.83	RT/LT									86						1						
8-R		1042+08.07	1042+38.96	LT									46						1						
9-R		1042+38.96	1042+56.48	LT									18												
10-R		1043+01.83	1046+00.00	RT								298													
1-R	85	1046+00.00	1048+26.60	LT										227	1										
2-R		1046+00.00	1046+25.01	RT								25							1						
3-R		1046+25.01	1048+24.05	RT								199							1						
4-R		1046+00.00	1050+00.00	LT		978																			
5-R		1046+00.00	1050+00.00	RT		800																			
6-R		1048+24.05	1050+44.10	RT								220							1						
7-R		1046+00.00	1050+50.00	LT							449														
1-R	130	147+59.85		RT																1					
			SUBTOTAL SHEET 38		0	9974	533	0	0	0	0	2595	0	0	0	0	LUMP	0	16	0	0	2	LUMP	3	0
			SUBTOTAL SHEET 39		0	8889	889	45	0	LUMP	0	1497	0	1748	5	0	0	0	10	0	620	0	0	0	0
			SUBTOTAL SHEET 40		0	8889	889	0	0	0	1166	2113	0	1225	5	0	0	0	13	0	51	0	0	0	1
			SUBTOTAL SHEET 41		0	6446	622	0	0	0	0	1307	0	1295	11	11	0	0	10	0	687	0	0	0	1
			SUBTOTAL SHEET 42		2	8792	0	0	1136	0	0	1799	0	570	4	1	0	3	13	1	370	0	0	0	1
			SUBTOTAL THIS SHEET		1	3556	0	0	0	0	791	843	213	617	2	0	0	0	5	1	0	0	0	0	0
TOTALS CARRIED TO GENERAL SUMMARY					3	46546	2933	45	1136	LUMP	1957	10154	213	5455	27	12	LUMP	3	67	2	1728	2	LUMP	3	3

CALCULATED RDC
CHECKED VLW

REMOVAL SUBSUMMARY

GEA/POR-422-18.31/0.00

REF. NO.	SHEET NO.	STATION TO STATION FROM	STATION TO STATION TO	SIDE	602 CONCRETE MASONRY	603 12" CONDUIT, TYPE C	603 12" CONDUIT, TYPE D	603 15" CONDUIT, TYPE B	603 15" CONDUIT, TYPE C	603 18" CONDUIT, TYPE B	603 18" CONDUIT, TYPE C	603 21" CONDUIT, TYPE B	603 21" CONDUIT, TYPE C	603 21" CONDUIT, TYPE D	604 CATCH BASIN, NO. 3	604 CATCH BASIN, NO. 3A	604 CATCH BASIN, NO. 8	604 CATCH BASIN, NO. 2-2B	604 CATCH BASIN, NO. 2-3	604 MANHOLE, NO. 3	604 MANHOLE NO. 3, AS PER PLAN	895 MANUFACTURED WATER QUALITY SYSTEM, TYPE 1	895 MANUFACTURED WATER QUALITY SYSTEM, TYPE 2
					CU YD	FT	FT	FT	FT	FT	FT	FT	FT	FT	EACH	EACH	EACH	EACH	EACH	EACH	EACH	EACH	EACH
B	28	1060+00																	1				
1-D	60	947+37	948+60	RT					121														
2-D		948+60		RT		6																	
3-D		948+60	950+00	RT					142											1			
1-D	61	950+00	951+00	RT					101														
2-D		951+00		RT		4										1							
3-D		951+00	953+00	RT				203												1			
4-D		951+44	951+68	LT			24																
5-D		952+88	953+11	LT			29																
6-D		953+00	954+00	RT				102												1			
1-D	62	954+00	955+41	RT				144															
2-D		954+83	955+50	LT					68									1					
3-D		955+50	955+41	LT/RT						81										1			
4-D		955+41	955+38	RT	0.37								32								1		
5-D		955+50	957+21	LT							171									1			
6-D		956+97	958+22	RT			23																
7-D		957+21		LT		4										1							
8-D		957+21	958+00	LT							79												
9-D		955+61	955+41	RT					20														
10-D		955+41	955+61	RT					20														1
1-D	63	958+00	959+60	LT							160									1			
2-D		959+60		LT		4									1								
3-D		959+60	962+00	LT					240														
4-D		961+02	961+26	RT			22																
1-D	64	962+00	962+50	LT					50								1						
2-D		963+88	964+12	RT			23																
1-D	65	966+79	967+03	RT			23																
2-D		968+50	970+00	LT		150											1						
1-D	66	970+00	970+15	LT		15																	
2-D		970+15	970+15.5	LT/RT	0.25			112													1		
3-D		970+15	970+60	LT		45										1							
4-D		972+90	973+76	LT		86										1							
5-D		973+76		LT/RT	0.25			104													1		
6-D		973+76	974+00	LT		24																	
7-D		970+15	970+15	LT		20																	
8-D		970+15	970+15	LT		20																1	
9-D		973+76	973+76	LT		20																	
10-D		973+76	973+76	LT		20																1	
				LT																			
1-D	67	974+00	976+76	LT		276														1			
2-D		976+76	976+90			15										1							
				RT																			
1-D	68	978+92	979+18				24																
				LT/RT																			
1-D	69	983+32	983+50	LT				103										1					
2-D		983+50	986+00						250								1						
SUBTOTAL					0.9	709	168	768	1012	81	410	0	32	0	1	5	3	2	1	7	3	2	1

CALCULATED SB
CHECKED KME

DRAINAGE SUBSUMMARY

GEA/POR-422-18.31/0.00

REF. NO.	SHEET NO.	STATION TO STATION FROM	STATION TO STATION TO	SIDE	602 CONCRETE MASONRY	603 12" CONDUIT, TYPE C	603 12" CONDUIT, TYPE D	603 15" CONDUIT, TYPE B	603 15" CONDUIT, TYPE C	603 18" CONDUIT, TYPE B	603 18" CONDUIT, TYPE C	603 21" CONDUIT, TYPE B	603 21" CONDUIT, TYPE C	603 21" CONDUIT, TYPE D	604 CATCH BASIN, NO. 3	604 CATCH BASIN, NO. 3A	604 CATCH BASIN, NO. 8	604 CATCH BASIN, NO. 2-2B	604 CATCH BASIN, NO. 2-3	604 MANHOLE, NO. 3	604 MANHOLE NO. 3, AS PER PLAN	895 MANUFACTURED WATER QUALITY SYSTEM, TYPE 1	895 MANUFACTURED WATER QUALITY SYSTEM, TYPE 2
					CU YD	FT	FT	FT	FT	FT	FT	FT	FT	FT	EACH	EACH	EACH	EACH	EACH	EACH	EACH	EACH	EACH
1-D	70	986+00	986+29	LT					28														
2-D		986+29		LT		4										1							
3-D		986+29	988+56	LT					226												1		
4-D		987+38	987+66	RT			26																
5-D		987+70	987+93	LT			23																
6-D		987+84	988+12	RT			26																
7-D		988+56		LT/RT				109									1						
8-D		988+56		LT	0.25				25								1						
9-D		986+30	986+30	LT		20																	
10-D		986+30	986+30	LT		20																	
																						1	
1-D	71	990+32	990+56	RT			23																
2-D		990+57	990+71	LT			23																
3-D		991+18	991+42	RT			25																
4-D		991+25	993+14	LT		189											1						
5-D		993+14	994+00	LT		88														1			
6-D		993+72	994+00	RT			26																
1-D	72	994+00	995+26	LT		128																	
2-D		994+76	995+26	LT/RT								110					1						
3-D		995+26	995+75	LT									50							1			
4-D		995+75	995+92	LT	0.37								21							1			
1-D	74	1003+46	1003+90	RT										53			1						
1-D	75	1009+47		LT		4										1							
2-D		1009+47	1010+00	LT		51															1		
3-D		1009+47	1009+47	LT		20																	
4-D		1009+47	1009+47	LT		20																1	
1-D	76	1010+00	1012+51	LT		254																	
2-D		1012+51	1013+15	LT	0.20	65														1			
1-D	77	1014+50	1015+90	LT		139										1							
2-D		1015+89	1015+90	LT/RT								119					1						
3-D		1015+90	1015+85	LT	0.37								10							1			
4-D		1017+07.26	1015+90	LT							119				1								
5-D		1017+07.26	1018+00	LT							90												
6-D		1015+85	1015+79	LT									10								1		
7-D		1015+85	1016+01			20																	
8-D		1016+01	1015+85			20																1	
1-D	78	1018+00	1018+50	LT							50						1						
1-D	79	1021+95.7	1022+22.70	RT			27																
1-D	80	1025+98	1026+21	RT			23																
2-D		1026+41	1026+64	RT			23																
3-D		1027+50	1027+97	LT			47																
1-D	81	1030+49	1030+72	RT			23																
SUBTOTAL					1.2	1042	315	109	279	0	259	229	91	53	1	3	7	0	0	5	3	3	0

CALCULATED SB
CHECKED KME

DRAINAGE SUBSUMMARY

GEA/POR-422-18.31/0.00

REF. NO.	SHEET NO.	STATION TO STATION FROM	STATION TO STATION TO	SIDE	602 CONCRETE MASONRY	603 12" CONDUIT, TYPE C	603 12" CONDUIT, TYPE D	603 15" CONDUIT, TYPE B	603 15" CONDUIT, TYPE C	603 18" CONDUIT, TYPE B	603 18" CONDUIT, TYPE C	603 21" CONDUIT, TYPE A, 706.02	603 21" CONDUIT, TYPE B	603 21" CONDUIT, TYPE C	604 CATCH BASIN, NO. 3	604 CATCH BASIN, NO. 3A	604 CATCH BASIN, NO. 8	604 CATCH BASIN, NO. 2-2B	604 CATCH BASIN, NO. 2-3	604 MANHOLE, NO. 3	604 MANHOLE NO. 3, AS PER PLAN	895 MANUFACTURED WATER QUALITY STRUCTURE, TYPE 1	895 MANUFACTURED WATER QUALITY STRUCTURE, TYPE 2
					CU YD	FT	FT	FT	FT	FT	FT	FT	FT	FT	EACH	EACH	EACH	EACH	EACH	EACH	EACH	EACH	EACH
1-D	83	1041+35	1041+59	RT			24																
1-D	84	1042+47	1042+72	RT			26																
1-D	85	1047+00	1047+00	LT	0.3			61									1						
2-D		1048+34	1048+55	RT			22																
1-D	130	147+14	147+38	LT			24																
1-D	133	103+34	103+67	LT			36																
2-D		103+67	104+00	RT			33																
3-D		104+39	104+75	LT			36																
4-D		102+01	102+43	LT			42																
SUBTOTALS THIS SHEET					0.3	0	243	61	0	0	0	0	0	0	0	0	1	0	0	0	0	0	0
SUBTOTALS SHEET 44					0.9	709	168	768	1012	81	410	0	32	0	1	5	3	2	1	7	3	2	1
SUBTOTALS SHEET 45					1.2	1042	360	109	279	0	259	229	91	53	1	3	7	0	0	5	3	3	0
TOTALS CARRIED TO GENERAL SUMMARY					2.4	1751	771	938	1291	81	669	229	123	53	2	8	11	2	1	12	6	5	1

CALCULATED SB
CHECKED KME

DRAINAGE SUBSUMMARY

GEA/POR-422-18.31/0.00

REF NO.	SHEET NO.	STATION FROM	STATION TO	SIDE	451 SPECIAL - PRESSURE RELEIF JOINT, TYPE A (FEET)	604 MONUMENT ASSEMBLY (EACH)	606 GUARDRAIL, TYPE 5 (FEET)	606 ANCHOR ASSEMBLY, TYPE E-98 (EACH)	606 ANCHOR ASSEMBLY, TYPE T (EACH)	606 BRIDGE TERMINAL ASSEMBLY, TYPE 1 (EACH)	606 BRIDGE TERMINAL ASSEMBLY, TYPE 2 (EACH)	609 CURB, TYPE 6 (FEET)	622 CONCRETE BARRIER, SINGLE SLOPE, TYPE D (FEET)	690 SPECIAL - MAILBOX SUPPORT SYSTEM, SINGLE (EACH)	690 SPECIAL - MAILBOX SUPPORT SYSTEM, DOUBLE (EACH)
1-C	60	949+10.40	950+00.00	RT								90			
1-M		950+00.00		CL		1									
1-C	61	950+00.00	951+64.80	RT								165			
1-GR		952+37.50	954+00.00	RT			112.50	1							
1-MB		951+68.86		RT											1
2-MB		952+79.47		RT										1	
3-MB		952+91.56		RT										1	
1-C	62	954+81.20	958+00.00	LT								319			
1-GR		954+00.00	956+62.50	RT			250.00		1						
1-M		955+16.73		CL		1									
1-C	63	958+00.00	962+00.00	LT								400			
1-C	64	962+00.00	962+23.75	LT								24			
1-M		965+00.00		CL		1									
1-C	65	966+75.00	968+28.65	LT								154			
1-GR		967+37.50	970+00.00	RT			212.50	1							
1-MB		968+03.49		RT										1	
1-C	66	970+27.79	974+00.00	LT								373			
1-GR		970+00.00	974+00.00	RT			400.00								
2-GR		970+57.08	974+00.00	LT			330.42		1						
1-C	67	974+00.00	978+00.00	LT								400			
1-GR		974+00.00	977+69.58	LT			382.08		1						
2-GR		974+00.00	975+12.50	RT			100.00		1						
1-M		975+00.00		CL		1									
1-C	68	978+00.00	982+00.00	LT								400			
1-GR		978+19.58	982+00.00	LT			392.92		1						
2-GR		980+24.85	981+06.10	RT				1		1					
1-B		981+04.00	982+00.00	RT									96		
1-MB		979+25.43		RT										1	
2-MB		979+83.50		RT										1	
1-C	69	982+00.00	986+00.00	LT								400			
1-GR		982+00.00	983+07.08	LT			57.08	1							
1-B		982+00.00	983+14.30	RT									114		
1-M		982+83.87		CL		1									
1-MB		983+59.67		RT										1	
1-C	70	986+00.00	986+70.33	LT								70			
1-MB		987+74.24		RT											1
2-MB		988+20.04		RT											2
3-MB		989+25.95		RT										1	
TOTALS CARRIED TO SHEET 49					0	5	2237.50	4	5	1	0	2795	210	7	4

CALCULATED BF
CHECKED RDC

ROADWAY SUBSUMMARY

GEA/POR-422-18.31/0.00

REF NO.	SHEET NO.	STATION FROM	STATION TO	SIDE	451 SPECIAL - PRESSURE RELEIF JOINT, TYPE A (FEET)	604 MONUMENT ASSEMBLY (EACH)	606 GUARDRAIL, TYPE 5 (FEET)	606 ANCHOR ASSEMBLY, TYPE E-98 (EACH)	606 ANCHOR ASSEMBLY, TYPE T (EACH)	606 BRIDGE TERMINAL ASSEMBLY, TYPE 1 (EACH)	606 BRIDGE TERMINAL ASSEMBLY, TYPE 2 (EACH)	609 CURB, TYPE 6 (FEET)	622 CONCRETE BARRIER, SINGLE SLOPE, TYPE D (FEET)	690 SPECIAL - MAILBOX SUPPORT SYSTEM, SINGLE (EACH)	690 SPECIAL - MAILBOX SUPPORT SYSTEM, DOUBLE (EACH)
1-C	71	990+56.72	993+24.98	LT								268			
1-M		992+00.00		CL		1									
1-MB		991+50.02		RT										1	
2-MB		993+63.00		RT										1	
1-M	73	1002+00.00				1									
1-C	74	1005+58.62	1006+00.00	LT								41			
1-C	75	1006+00.00	1010+00.00	LT								400			
1-GR		1006+11.40	1010+00.00	LT			376.10		1						
2-GR		1008+95.45	1010+00.00	RT			54.55	1							
1-C	76	1010+00.00		LT											
2-C		1013+79.02	1013+84.02	RT								5			
1-GR		1010+00.00	1010+73.90	LT			86.40		1						
2-GR		1010+00.00	1012+57.95	RT			226.70			1					
3-GR		1011+24.44	1012+99.44	LT			162.50		1		1				
4-GR		1013+52.02	1013+89.52	RT					1		1				
1-M		1010+99.72		CL		1									
1-J		1012+82.17		LT/RT	80										
2-J		1013+80.34		LT/RT	80										
1-C	77	1014+00.00	1018+00.00	LT								400			
1-GR		1013+93.51	1017+31.01	LT			256.25	1		1					
1-M		1015+24.18		CL		1									
1-M	78	1018+48.14		CL		1									
1-C	79	1024+20.56	1024+46.56	RT								26			
2-C		1024+70.21	1024+96.21	LT								26			
1-GR		1023+23.66	1024+48.66	RT			43.75	1		1					
2-GR		1024+60.71	1024+98.21	LT					1		1				
3-GR		1025+18.50	1025+56.00	RT					1		1				
4-GR		1025+68.06	1026+00.00	LT			0.69			1					
1-M		1024+00.00		CL		1									
1-J		1025+00.95		LT/RT	72										
2-J		1025+23.84		LT/RT	72										
1-GR	80	1026+00.00	1026+93.06	LT			43.06	1							
1-MB		1026+29.06		RT										1	
1-M	81	1034+00.00		CL		1									
1-MB		1030+79.96		RT										1	
TOTALS CARRIED TO SHEET 49					304	7	1250.00	4	6	4	4	1166	0	4	0

CALCULATED BF
CHECKED RDC

ROADWAY SUBSUMMARY

GEA/POR-422-18.31/0.00

REF NO.	SHEET NO.	STATION FROM	STATION TO	SIDE	451 SPECIAL - PRESSURE RELEIF JOINT, TYPE A (FEET)	604 MONUMENT ASSEMBLY (EACH)	606 GUARDRAIL, TYPE 5 (FEET)	606 ANCHOR ASSEMBLY, TYPE E-98 (EACH)	606 ANCHOR ASSEMBLY, TYPE T (EACH)	606 BRIDGE TERMINAL ASSEMBLY, TYPE 1 (EACH)	606 BRIDGE TERMINAL ASSEMBLY, TYPE 2 (EACH)	609 CURB, TYPE 6 (FEET)	622 CONCRETE BARRIER, SINGLE SLOPE, TYPE D (FEET)	690 SPECIAL - MAILBOX SUPPORT SYSTEM, SINGLE (EACH)	690 SPECIAL - MAILBOX SUPPORT SYSTEM, DOUBLE (EACH)
1-MB	82	1037+43.00		LT										1	
1-GR	83	1041+58.46	1041+92.50	RT			12.5		2						
1-M		1041+62.64		CL		1									
1-MB		1038+08.84		RT										1	
2-MB		1039+20.91		LT										1	
3-MB		1041+68.44		RT										1	
1-GR	84	1041+87.50	1042+75.00	LT			25.0	1	1						
1-M	85	1047+51.36		CL		1									
1-MB		1048+64.08		RT										1	
1-MB	130	147+06.25		LT										1	
1-MB	133	103+30.06		LT										1	
2-MB		104+03.13		RT										1	
3-MB		104+36.50		LT										1	
4-MB		101+98.95		LT										1	
SUBTOTAL SHEET 47					0	5	2237.5	4	5	1	0	2795	210	7	4
SUBTOTAL SHEET 48					304	7	1250.0	4	6	4	4	1166	0	4	0
					0	2	37.5	1	3	0	0	0	0	10	0
TOTALS CARRIED TO GENERAL SUMMARY					304	14	3525.0	9	14	5	4	3961	210	21	4

CALCULATED BF
CHECKED RDC

ROADWAY SUBSUMMARY

GEA/POR-422-18.31/0.00

REF NO.	SHEET NO.	STATION TO STATION FROM	STATION TO STATION TO	LOCATION (US 422)	601 ROCK CHANNEL PROTECTION, TYPE A WITH FABRIC FILTER PROTECTION CU.YD.	601 ROCK CHANNEL PROTECTION, TYPE C WITH FABRIC FILTER PROTECTION CU.YD.	660 SODDING REINFORCED SQ.YD.	670 DITCH EROSION PROTECTION CU.YD.	836 SEEDING AND EROSION CONTROL WITH TURF REINFORCING MAT, TYPE 1 SQ.YD.	836 SEEDING AND EROSION CONTROL WITH TURF REINFORCING MAT, TYPE 2 SQ.YD.
1-E	60	949+50	950+00	LT					42	
1-E	61	950+00	951+44	LT					120	
2-E		951+68	952+88	LT					100	
3-E		953+00	954+00	RT				83		
4-E		953+11	954+00	LT					74	
1-E	62	954+00	954+83	LT					69	
2-E		954+00	954+50	RT				42		
3-E		955+36		RT		1				
4-E		955+36	956+00	RT					54	
1-E	64	962+52	964+02	RT				125		
1-E	65	968+52	969+50	RT					83	
1-E	66	970+15		RT		1				
2-E		973+76		RT		1				
1-E	67	974+75	975+50	RT					64	
2-E		975+50	976+00	RT					43	
3-E		976+00	976+50	RT					42	
4-E		976+50	977+00	RT				42		
1-E	68	981+00	981+50	RT					42	
1-E	69	982+00	983+50	LT				125		
2-E		983+54	986+00	RT				205		
1-E	70	986+00	987+38	RT				115		
2-E		986+74	987+70	LT				80		
3-E		987+66	987+84	RT				15		
4-E		987+93	988+74	LT				68		
5-E		988+12	988+90	RT				65		
6-E		988+56		LT		2				
7-E		988+94	990+00	LT				88		
8-E		989+19	990+00	RT					68	
1-E	71	990+00	990+57	LT				48		
2-E		990+00	990+32	RT					27	
3-E		990+56	991+18	RT					52	
4-E		990+71	991+25	LT				45		
5-E		991+42	993+72	RT					192	
6-E		993+50	994+00	LT				42		
1-E	72	994+00	994+50	LT				42		
2-E		994+00	994+77	RT					64	
3-E		994+50	995+50	RT					83	
4-E		995+05	997+00	RT					163	
5-E		995+50	996+15	LT						55
6-E		995+92		LT	6					
7-E		997+00	998+00	LT						83
1-E	73	998+00	1000+50	LT				208		
2-E		998+00	1002+00	RT						333
3-E		1000+50	1002+00	LT					125	
1-E	74	1002+00	1005+50	LT					292	
2-E		1002+00	1003+46	RT						122
			SUBTOTAL 1		6	5	0	1438	1799	593	0

REF NO.	SHEET NO.	STATION TO STATION FROM	STATION TO STATION TO	LOCATION (US 422)	601 ROCK CHANNEL PROTECTION, TYPE A WITH FABRIC FILTER PROTECTION CU.YD.	601 ROCK CHANNEL PROTECTION, TYPE C WITH FABRIC FILTER PROTECTION CU.YD.	660 SODDING REINFORCED SQ.YD.	670 DITCH EROSION PROTECTION CU.YD.	836 SEEDING AND EROSION CONTROL WITH TURF REINFORCING MAT, TYPE 1 SQ.YD.	836 SEEDING AND EROSION CONTROL WITH TURF REINFORCING MAT, TYPE 2 SQ.YD.
				US 422						
1-E	76	1013+12		LT		1				
2-E		1013+88		RT			30			
1-E	77	1015+90		LT		1				
2-E		1014+00	1015+90	LT				161		
3-E		1015+93	1017+43	RT				125		
1-E	78	1018+52	1020+02	LT				125		
1-E	79	1024+17		RT			6			
2-E		1024+67		LT			6			
1-E	82	1036+00	1036+50	LT				42		
2-E		1037+10	1037+77	RT				56		
1-E	83	1040+63	1041+35	RT				60		
2-E		1041+59	1042+00	RT				34		
1-E	84	1042+00	1042+47	RT				39		
2-E		1042+72	1043+46	RT				73		
3-E		1043+46	1046+00	RT					361	
4-E		1044+05	1046+00	LT					304	
1-E	85	1046+00	1046+59	RT					79	
2-E		1046+00	1050+50	LT					650	
3-E		1046+59	1048+34	RT				146		
4-E		1047+00		LT		1				
5-E		1048+55	1049+50	RT				79		
6-E		1049+50	1050+00	RT				43		
7-E		1047+02	1048+52	RT				135		
			REYNOLDS	ROAD						
1-E	133	102+42	103+00	LT					55	
2-E		102+50	103+67	RT				87		
3-E		104+00	105+00	RT				84		
4-E		104+75	105+50	LT				63		
		SUBTOTAL	2		0	3	42	1352	1449	0	0
		SUBTOTAL	1		6	5	0	1438	1799	593	0
TOTALS CARRIED TO GENERAL SUMMARY					6	8	42	2790	3248	593	

CALCULATED SJB
CHECKED KME

EROSION CONTROL SUBSUMMARY

GEA/POR-422-18.31/0.00

SHEET NO.	STATION TO STATION FROM	STATION TO STATION TO	LOCATION	EXCAVATION (203) CU. YD.	EMBANKMENT (203) CU. YD.	SEEDING AND MULCHING (659) SQ. YD.		
87	948+50	950+00	U.S. 422	836	0	661		
88	950+50	952+00		2132	0	1628		
89	952+50	954+00		1578	16	1431		
90	954+50	956+50		795	752	1967		
91	957+00	959+00		505	791	1595		
92	959+50	961+50		1164	65	1236		
93	962+00	963+50		3174	0	1753		
94	964+00	966+00		5446	0	2683		
95	966+50	968+50		4007	0	2130		
96	969+00	970+50		1284	842	1268		
97	971+00	972+50		769	2567	1246		
98	973+00	974+00		781	3255	1116		
99	974+550	976+00		877	4023	1345		
100	976+50	978+50		1372	1654	1321		
101	979+00	980+50		1287	106	980		
102	981+00	982+50		3325	3	1183		
103	983+00	984+50		4583	0	1452		
104	985+00	987+00		3126	10	1799		
105	987+50	989+50		1770	11	2019		
106	990+00	991+50		2598	13	1525		
107	992+00	993+50		4979	9	1663		
108	994+00	995+50		6666	78	2363		
109	996+00	997+50		5118	109	2006		
110	998+00	999+50		3166	14	1826		
111	1000+00	1001+50		1842	101	1865		
112	1002+00	1003+50		1003	437	1741		
113	1004+00	1006+00		581	1585	1861		
114	1006+50	1008+50		896	2502	1648		
115	1009+00	1011+00		498	1125	1464		
116	1011+50	1013+50		237	392	865		
117	1014+00	1016+00		1048	384	1732		
118	1016+50	1018+50		1262	199	1593		
119	1019+00	1021+50		2283	4	2283		
120	1022+00	1024+50		1703	0	1953		
121	1025+00	1027+50		1457	137	1659		
122	1028+00	1030+50		2406	0	2246		
123	1031+00	1033+50		2250	15	2008		
124	1034+00	1036+50		1379	257	1918		
125	1037+00	1039+50		2540	0	2084		
126	1040+00	1042+50		2128	302	2285		
127	1043+00	1045+00		1095	2130	2027		
128	1045+50	1047+50		864	2478	2339		
129	1048+00	1050+50		871	1986	2482		

SHEET NO.	STATION TO STATION FROM	STATION TO STATION TO	LOCATION	EXCAVATION (203) CU. YD.	EMBANKMENT (203) CU. YD.	SEEDING AND MULCHING (659) SQ. YD.		
131	145+00	147+00	S.R. 282	18	1	30		
132	147+50	149+50		202	239	1094		
134	101+00	103+00	REYNOLDS RD	1495	200	1553		
135	103+50	106+50		559	37	1005		
TOTALS CARRIED TO GENERAL SUMMARY				89955	28829	77931		

SEEDING AND MULCHING CALCULATIONS (QUANTITIES CARRIED TO GENERAL SUMMARY)

ITEM 659 - SOIL ANALYSIS TEST

77931 / 48400 = 2 EACH

ITEM 659 - REPAIR SEEDING AND MULCHING

77931 X 5% = 3897 SQ. YD.

ITEM 659 - INTER-SEEDING

77931 X 5% = 3897 SQ. YD.

ITEM 659 - COMMERCIAL FERTILIZER

77931 X 9 X 30 / 1000 / 2000 = 11
3897 X 9 X 20 / 1000 / 2000 = 1
TOTAL 12 TON

ITEM 659 - LIME

77931 X 9 / 43560 = 2 ACRE

ITEM 659 - WATER

77931 X 9 X 300 X 2 /1000 / 1000 = 421
3897 X 9 X 300 X /1000 / 1000 = 11
TOTAL 431 M. GAL.

ITEM 659 - MOWING

77931 X 9 / 1000 X 25% = 19483 M. SQ. FT.

CALCULATED BF
CHECKED RDC

EARTHWORK SUBSUMMARY

GEA/POR-422-18.31/0.00

REF NO.	SHEET NO.	STATION FROM	STATION TO	LOCATION CODE	BEGINNING ELEVATION	END ELEVATION	603 6" CONDUIT, TYPE B	603 6" CONDUIT, TYPE F, FOR UNDERDRAIN OUTLETS	604 PRECAST REINFORCED CONC. OUTLET	605 6" BASE PIPE UNDERDRAIN W/FABRIC WRAP	605 6" ROCK CUT UNDERDRAIN W/FABRIC WRAP	BENDS AND BRANCHES FOR INFORMATION ONLY: OUTLETS TO ANOTHER UNDERDRAIN	OUTLETS TO CATCH BASIN	OUTLETS TO MANHOLE	6" X 6" TEE	6" X 30° BEND	6" X 45° BEND	6" X 45° WYE	6" X 45° BEND/ WYE	6" X 90° BEND	OUTLET STATION	OUTLET FLOWLINE ELEVATION	OFFSET FROM ℄	NOTES
		FROM	TO				FT	FT	EACH	FT	FT													
1-U	166	949+10.40	950+00.00	OLL	1061.70	1058.22				90											950+00.00	1058.22	24.1'LT	
2-U		949+10.40	950+00.00	OLR	1059.30	1058.28				90											950+00.00	1058.28	22.3'RT	
3-U		949+10.40	950+00.00	OSR	1058.78	1057.66				90											950+00.00	1057.66	32.3'RT	
1-U	167	950+00.00	954+00.00	OLL	1058.22	1042.04				400			1								954+00.00	1042.04	24' LT	
2-U		950+00.00	951+00.00	OLR	1055.36	1050.77		10		100			1							1	951+00.00	1050.77	34.5'RT	OUTLET TO CATCH BASIN
3-U		950+00.00	951+00.00	OSR	1054.74	1050.77		10		90											951+00.00	1050.77	34.5'RT	OUTLET TO CATCH BASIN
4-U		951+05.00	954+00.00	OLR	1050.98	1038.69				295											954+00.00	1038.69	30.4'RT	
1-U	168	954+00.00	957+21.00	OLL	1042.04	1031.11		10		321			1							1	957+21.00	1031.11	34' LT	OUTLET TO CATCH BASIN
2-U		954+00.00	954+50.00	OLR	1038.69	1036.90		21	1	50										1	954+50.00	1036.90	52.8'RT	OUTLET TO DITCH
3-U		954+55.00	958+00.00	OLR	1036.83	1029.74				345			1								958+00.00	1029.74	38' RT	
4-U		954+65.88	957+21.00	OSL	1039.16	1031.11		10		245											957+21.00	1031.11	34' LT	OUTLET TO CATCH BASIN
5-U		957+26.00	958+00.00	OLL	1031.42	1030.05				74											958+00.00	1030.05	34' LT	
6-U		957+26.00	958+00.00	OSL	1031.00	1029.63				74											958+00.00	1029.63	24' LT	
1-U	169	958+00.00	959+60.00	OSL	1029.63	1028.63		10		150			1								959+60.00	1028.63	34' LT	OUTLET TO CATCH BASIN
2-U		958+00.00	959+55.00	OLL	1030.05	1028.63		10		155		1	1							1	959+55.00	1028.63	34' LT	OUTLET TO 1-U
3-U		958+00.00	959+60.00	OLR	1029.74	1028.47	72			160			1		1						959+60.00	1028.47	34' LT	OUTLET TO CATCH BASIN
4-U		962+00.00	959+60.00	OSL	1030.24	1028.63		10		230					1						959+60.00	1028.63	34' LT	OUTLET TO CATCH BASIN
5-U		962+00.00	959+65.00	OLL	1030.66	1028.63		10		235		1								1	959+65.00	1028.63	34' LT	OUTLET TO 4-U
6-U		962+00.00	959+60.00	OLR	1030.44	1028.83				240		1									959+60.00	1028.83	38' RT	OUTLET TO 3-U
1-U	170	962+58.75	962+00.00	OLL	1031.20	1030.66				59			1								962+00.00	1030.66	24' LT	
2-U		966+00.00	962+50.00	OSL	1034.04	1030.91		20		336									1		962+50.00	1030.91	43.5'LT	OUTLET TO CATCH BASIN
3-U		966+00.00	962+63.75	OLL	1034.34	1031.00		6		336		1								1	962+63.75	1031.00	30' LT	OUTLET TO 2-U
4-U		966+00.00	962+00.00	OLR	1034.12	1030.44				400											962+00.00	1030.44	38' RT	
1-U	171	970+00.00	966+00.00	OSL	1037.57	1034.04				400											966+00.00	1034.04	31' LT	
2-U		970+00.00	966+00.00	OLL	1038.02	1034.34				400											966+00.00	1034.34	24' LT	
3-U		969+45.00	966+00.00	OLR	1037.29	1034.12				345											966+00.00	1034.12	38' RT	
4-U		970+00.00	969+50.00	OLR	1037.80	1037.24		23	1	50										1	969+50.00	1037.24	62' RT	OUTLET TO SLOPE
1-U	172	970+55.00	970+00.00	OSL	1038.03	1037.57				55											970+00.00	1037.57	34.9'LT	
2-U		970+55.00	970+00.00	OLL	1038.53	1038.02				55											970+00.00	1038.02	24' LT	
3-U		974+00.00	970+00.00	OLR	1041.48	1037.80				400			1								970+00.00	1037.80	38' RT	
4-U		972+85.00	970+60.00	OSL	1040.14	1038.07		10		215					1						970+60.00	1038.07	36' LT	OUTLET TO CATCH BASIN
5-U		972+85.00	970+65.00	OLL	1040.64	1038.12		12		220		1	1							1	970+65.00	1038.12	36' LT	OUTLET TO 4-U
6-U		974+00.00	972+90.00	OSL	1041.20	1040.19		10		100					1						972+90.00	1040.19	36' LT	OUTLET TO CATCH BASIN
7-U		974+00.00	972+95.00	OLL	1041.70	1040.23		12		105		1								1	972+95.00	1040.23	36' LT	OUTLET TO 6-U
1-U	173	976+85.00	974+00.00	OSL	1043.82	1041.20				285											974+00.00	1041.20	36' LT	
2-U		976+85.00	974+00.00	OLL	1044.32	1041.70				285											974+00.00	1041.70	24' LT	
3-U		974+45.00	974+00.00	OLR	1041.89	1041.48				45											974+00.00	1041.48	38' RT	
4-U		978+00.00	974+50.00	OLR	1045.16	1041.87		18	1	350			1							1	974+50.00	1041.87	57' RT	OUTLET TO SLOPE
5-U		978+00.00	976+90.00	OSL	1044.88	1043.87		10		100					1						976+90.00	1043.87	36' LT	OUTLET TO CATCH BASIN
6-U		978+00.00	976+95.00	OLL	1045.38	1043.91		12		105		1								1	976+95.00	1043.91	36' LT	
7-U		978+00.00	976+50.00	OLR	1044.91	1043.92		10	1	144						1					976+50.00	1043.92	63' RT	OUTLET TO SLOPE
1-U	174	980+85.00	978+00.00	OSL	1046.43	1044.88				285											978+00.00	1044.88	36' LT	
2-U		980+85.00	978+00.00	OLL	1046.93	1045.38				285											978+00.00	1045.38	24' LT	
3-U		980+85.00	978+00.00	OLR	1046.71	1045.16				285											978+00.00	1045.16	38' RT	
4-U		980+85.00	978+00.00	OSR	1046.46	1044.91				285											978+00.00	1044.91	44' RT	
SUBTOTALS CARRIED TO SHEET 54							72	244	4	9363	0	7	11	0	6	1	0	0	1	11	* INDICATES SIDE ROAD STATIONING			

CALCULATED RDC
CHECKED SJB

UNDERDRAIN SUBSUMMARY

GEA/POR-422-18.31/0.00

REF NO.	SHEET NO.	STATION FROM	STATION TO	LOCATION CODE	BEGINNING ELEVATION	END ELEVATION	603 6" CONDUIT, TYPE B	603 6" CONDUIT, TYPE F, FOR UNDERDRAIN OUTLETS	604 PRECAST REINFORCED CONC. OUTLET	605 6" BASE PIPE UNDERDRAIN W/FABRIC WRAP	605 6" ROCK CUT UNDERDRAIN W/FABRIC WRAP	BENDS AND BRANCHES FOR INFORMATION ONLY: OUTLETS TO ANOTHER UNDERDRAIN	OUTLETS TO CATCH BASIN	OUTLETS TO MANHOLE	6" X 6" TEE	6" X 30° BEND	6" X 45° BEND	6" X 45° WYE	6" X 45° BEND/ WYE	6" X 90° BEND	OUTLET STATION	OUTLET FLOWLINE ELEVATION	OFFSET FROM ℄	NOTES
		FROM	TO				FT	FT	EACH	FT	FT													
5-U		980+90.00	982+00.00	OSL	1046.43	1046.27				110											982+00.00	1046.27	34' LT	
6-U		980+90.00	982+00.00	OLL	1046.93	1046.68				110											982+00.00	1046.68	24' LT	
7-U		980+90.00	982+00.00	OLR	1046.71	1047.02				110											982+00.00	1047.02	38' RT	
8-U		980+90.00	982+00.00	OSR	1046.46	1046.53				110											982+00.00	1046.53	49.8'RT	
1-U	175	982+00.00	986+00.00	OSL	1046.26	1041.27				400											986+00.00	1041.27	34' LT	
2-U		982+00.00	986+00.00	OLL	1046.68	1041.69				400											986+00.00	1041.69	24' LT	
3-U		982+00.00	986+00.00	OLR	1047.02	1043.05				400											986+00.00	1043.05	38' RT	
4-U		982+00.00	983+30.34	OSR	1046.53	1046.49		10		121			1				1				983+30.34	1046.49	57.4'RT	OUTLET TO CATCH BASIN
1-U	176	986+00.00	986+28.90	OSL	1041.27	1040.68		10		19			1		1						986+28.90	1040.68	34' LT	OUTLET TO CATCH BASIN
2-U		986+00.00	986+23.90	OLL	1041.69	1040.78		10		24		1								1	986+23.90	1040.78	34' LT	OUTLET TO 1-U
3-U		986+00.00	988+54.50	OLR	1043.05	1036.64		19		255			1							1	988+54.50	1036.64	57.5'RT	OUTLET TO CATCH BASIN
4-U		986+33.90	990+00.00	OLL	1040.99	1030.65				366											990+00.00	1030.65	24' LT	
5-U		988+59.50	990+00.00	OLR	1036.60	1032.01				141											990+00.00	1032.01	38' RT	
1-U	177	990+00.00	991+25.05	OLL	1030.65	1025.50		10		125		1								1	991+25.05	1025.50	34' LT	OUTLET TO 3-U
2-U		990+00.00	994+00.00	OLR	1032.01	1014.27				250	150										994+00.00	1014.27	38' RT	
3-U		990+29.80	991+25.05	OSL	1029.15	1025.46		10		32			1		1						991+25.05	1025.46	43.5'LT	OUTLET TO CATCH BASIN
4-U		991+30.05	993+14.14	OSL	1024.80	1016.69		10			174			1						1	993+14.14	1016.69	38' LT	OUTLET TO MANHOLE
5-U		991+30.05	994+00.00	OLL	1025.22	1012.91					270										994+00.00	1012.91	24' LT	
1-U	178	994+00.00	996+50.00	OLL	1012.91	998.87		22	1		250									1	996+50.00	998.87	47.19'LT	OUTLET TO SLOPE
2-U		994+00.00	994+77.25	OLR	1014.27	1009.46		22			75		1							1	994+77.25	1009.46	57.5'RT	OUTLET TO CATCH BASIN
3-U		994+82.25	998+00.00	OLR	1008.59	990.88					318										998+00.00	990.88	38' RT	
4-U		996+55.00	998+00.00	OLL	998.68	989.52					145										998+00.00	989.52	24' LT	
1-U	179	998+00.00	1002+00.00	OLL	989.52	964.26				350	50										1002+00.00	964.26	24' LT	
2-U		998+00.00	1002+00.00	OLR	990.88	965.62				350	50										1002+00.00	965.62	34' RT	
1-U	180	1002+00.00	1006+00.00	OLL	964.26	938.02		12		400		1								1	1006+00.00	938.02	24' LT	OUTLET TO 4-U
2-U		1002+00.00	1004+00.00	OLR	965.62	952.56		36	1	201										1	1004+00.00	952.56	74.7'RT	OUTLET TO DITCH
3-U		1004+05.00	1006+00.00	OLR	952.42	939.88				195											1006+00.00	939.88	38' RT	
4-U		1005+00.00	1006+00.00	OSL	944.61	937.96		12	1	100					1						1006+00.00	937.96	35.6'LT	OUTLET TO DITCH
1-U	181	1006+05.00	1009+50.25	OSL	937.70	919.45		10		327			1		1						1009+50.25	919.45	36' LT	OUTLET TO CATCH BASIN
2-U		1006+05.00	1009+45.25	OLL	938.20	919.45		12		337		1								1	1009+45.25	919.45	36' LT	OUTLET TO 1-U
3-U		1006+00.00	1009+00.00	OLR	939.88	923.46		21	1	301										1	1009+00.00	923.46	60' RT	OUTLET TO SLOPE
4-U		1009+05.00	1010+00.00	OLR	923.31	919.23				95											1010+00.00	919.23	38' RT	
5-U		1009+55.25	1010+00.00	OSL	919.23	917.37				45											1010+00.00	917.37	36' LT	
6-U		1009+55.25	1010+00.00	OLL	919.73	917.87				45											1010+00.00	917.87	24' LT	
1-U	182	1010+00.00	1012+51.00	OSL	917.37	909.32		10		249				1					1		1012+51.00	909.32	42.8'LT	OUTLET TO MANHOLE
2-U		1010+00.00	1012+45.67	OLL	917.87	909.36		12		246		1								1	1012+45.67	909.36	36' LT	OUTLET TO 1-U
3-U		1010+00.00	1012+00.00	OLR	919.23	910.79		12		201		1								1	1012+00.00	910.79	62' RT	OUTLET TO 4-U
4-U		1011+75.82	1012+00.00	OSR	911.73	910.74		8	1	24					1						1012+00.00	910.74	71.3'RT	OUTLET TO SLOPE
5-U		1013+84.38	1014+00.00	OLR	906.44	906.27				16											1014+00.00	906.27	50' RT	
1-U	183	1014+30.62	1014+50.00	OSL	905.47	905.17		19					1		1						1014+50.00	905.17	36' LT	OUTLET TO CATCH BASIN
2-U		1014+25.31	1014+45.00	OLL	906.06	905.25		12		20		1								1	1014+45.00	905.25	36' LT	OUTLET TO 1-U
3-U		1014+00.00	1015+00.00	OLR	906.27	905.00		21	1	102					1						1015+00.00	905.00	81.5'RT	OUTLET TO SLOPE
4-U		1014+55.00	1017+07.63	OSL	905.10	902.90		10		243			1								1017+07.63	902.90	34' LT	OUTLET TO CATCH BASIN
SUBTOTALS CARRIED TO SHEET 54							0	330	6	6817	1482	7	8	2	7	0	1	0	1	13	* INDICATES SIDE ROAD STATIONING			

CALCULATED RDC
CHECKED SJB

UNDERDRAIN SUBSUMMARY

GEA/POR-422-18.31/0.00

REF NO.	SHEET NO.	STATION FROM	STATION TO	LOCATION CODE	BEGINNING ELEVATION	END ELEVATION	603 6" CONDUIT, TYPE B	603 6" CONDUIT, TYPE F, FOR UNDERDRAIN OUTLETS	604 PRECAST REINFORCED CONC. OUTLET	605 6" BASE PIPE UNDERDRAIN W/FABRIC WRAP	605 6" ROCK CUT UNDERDRAIN W/FABRIC WRAP	BENDS AND BRANCHES FOR INFORMATION ONLY: OUTLETS TO ANOTHER UNDERDRAIN	OUTLETS TO CATCH BASIN	OUTLETS TO MANHOLE	6" X 6" TEE	6" X 30° BEND	6" X 45° BEND	6" X 45° WYE	6" X 45° BEND/ WYE	6" X 90° BEND	OUTLET STATION	OUTLET FLOWLINE ELEVATION	OFFSET FROM ℄	NOTES
		FROM	TO				FT	FT	EACH	FT	FT													
5-U		1014+55.00	1017+07.63	OLL	905.60	902.90		10		253			1		1						1017+07.63	902.90	34' LT	OUTLET TO CATCH BASIN
6-U		149+00.00*	149+39.48*	OLL*	905.73	905.67				43		1									149+39.48*	905.67	63.3'RT	OUTLET TO 3-U
7-U		1016+22.29	149+00.00*	OLR*	905.61	902.75		24		67			1		1						149+00.00*	902.75	75.4'RT	OUTLET TO CATCH BASIN
8-U		1016+27.29	1017+07.63	OLR	905.61	905.39		20	1	80					1						1017+07.63	905.39	59' RT	OUTLET TO DITCH
9-U		1018+00.00	1017+07.63	OSL	903.47	902.90		10		82			1								1017+07.63	902.90	34' LT	OUTLET TO CATCH BASIN
10-U		1018+00.00	1017+07.63	OLL	903.89	903.32				92		1									1017+07.63	903.32	24' LT	OUTLET TO 5-U
11-U		1018+00.00	1017+07.63	OLR	905.17	905.49				92		1									1017+07.63	905.49	38' RT	OUTLET TO 8-U
1-U	184	1022+00.00	1018+00.00	OLL	905.55	903.89				400											1018+00.00	903.89	24' LT	
2-U		1022+00.00	1018+00.00	OLR	905.33	905.17				400											1018+00.00	905.17	38' RT	
1-U	185	1024+84.37	1022+00.00	OLL	906.64	905.55				284											1022+00.00	905.55	24' LT	
2-U		1024+47.42	1022+00.00	OLR	906.27	905.33				247											1022+00.00	905.33	38' RT	
3-U		1026+00.00	1025+61.00	OLL	907.08	906.00			1	47							1				1025+61.00	906.00	50.1'LT	OUTLET TO SLOPE
4-U		1026+00.00	1024+94.33	OLR	906.86	906.00		61	1	39							1				1024+94.33	906.00	64.1'RT	OUTLET TO SLOPE
1-U	186	1030+00.00	1026+00.00	OLL	908.61	907.08				400											1026+00.00	907.08	24' LT	
2-U		1030+00.00	1026+00.00	OLR	908.39	906.86				400											1026+00.00	906.86	38' RT	
1-U	187	1033+45.00	1030+00.00	OLL	909.93	908.61				345											1030+00.00	908.61	24' LT	
2-U		1033+45.00	1030+00.00	OLR	909.71	908.39				345											1030+00.00	908.39	38' RT	
3-U		1034+00.00	1033+50.00	OLL	910.14	909.83		22	1	51										1	1033+50.00	909.83	47.2'LT	OUTLET TO DITCH
4-U		1034+00.00	1033+50.00	OLR	909.92	909.59		28	1	51										1	1033+50.00	909.59	66.6'RT	OUTLET TO DITCH
1-U	188	1038+00.00	1034+00.00	OLL	911.68	910.14				400											1034+00.00	910.14	24' LT	
2-U		1038+00.00	1034+00.00	OLR	911.46	909.92				400											1034+00.00	909.92	38' RT	
1-U	189	1042+00.00	1038+00.00	OLL	913.21	911.68				400											1038+00.00	911.68	24' LT	
2-U		1041+95.00	1038+00.00	OLR	912.99	911.46				395											1038+00.00	911.46	38' RT	
3-U		1042+00.00	1042+00.00	OLR	912.99	912.87		23	1											1	1042+00.00	912.87	62.2'RT	OUTLET TO DITCH
1-U	190	1042+83.70	1042+00.00	OLL	913.45	913.21				84											1042+00.00	913.21	24' LT	
2-U		1046+00.00	1042+00.00	OLR	916.42	912.99				400											1042+00.00	912.99	38' RT	
3-U		100+88.89*	101+50*	OLL*	913.45	912.69				70											101+50*	912.69	14.7'LT*	
4-U		1046+00.00	101+50*	OLL	916.64	912.82				239											101+50*	912.82	27.4'RT	
1-U	191	1047+95.00	1046+00.00	OLL	919.60	916.64				195											1046+00.00	916.64	24' LT	
2-U		1047+95.00	1046+00.00	OLR	919.60	916.42				195											1046+00.00	916.42	38' RT	
3-U		1050+00.00	1046+76.00	ILL	922.59	917.90				300		1									1046+76.00	917.90	24' LT	OUTLET TO 1-U
4-U		1050+00.00	1046+76.00	ILR	922.44	917.68				300		1									1046+76.00	917.68	38' RT	OUTLET TO 2-U
5-U		1050+00.00	1048+00.00	OLL	922.59	919.56		22	1	201										1	1048+00.00	919.56	50.1'LT	
6-U		1050+00.00	1048+00.00	OLR	922.44	919.56		22	1	201										1	1048+00.00	919.56	61.2'RT	
1-U	192	146+90.09*	149+00.00*	OLL*	910.27	905.73				210											149+00.00*	905.73	14.7'LT	
2-U		146+90.09*	149+00.00*	OLR*	910.31	905.28				203											149+00.00*	905.28	26.0'RT	
1-U	193	101+50.00*	101+90.00*	OLL	912.69	912.22		14	1	90					1						101+90.00*	912.22	76' LT	OUTLET TO SLOPE
2-U		101+50.00*	102+16.03*	OLR	912.82	912.17				69											102+16.03*	912.17	14.6'RT	OUTLET TO 4-U
3-U		104+75.00*	101+90.00*	OLL	914.19	912.53				285											101+90.00*	912.53	13' LT	OUTLET TO 1-U
4-U		104+75.00*	102+16.03*	OLR	914.19	910.57		17	1	313								1			102+16.03*	910.57	54' RT	OUTLET TO DITCH
SUBTOTAL SHEET 52							72	244	4	9363	0	7	11	0	6	1	0	0	1	11				
SUBTOTAL SHEET 53							0	330	6	6817	1482	7	8	2	7	0	1	0	1	13				
SUBTOTAL THIS SHEET							0	300	11	9315	0	5	5	0	6	0	2	2	0	5				
TOTALS CARRIED TO GENERAL SUMMARY							72	874	21	26587	1482	19	24	2	19	1	3	2	2	29	* INDICATES SIDE ROAD STATIONING			

CALCULATED RDC
CHECKED SJB

UNDERDRAIN SUBSUMMARY

GEA/POR-422-18.31/0.00

LOCATION	STATION FROM	STATION TO	SIDE	LENGTH FT.	WIDTH FT.	AREA SQ.FT.	204 SUBGRADE COMPACTION SQ.YD.	204 PROOF ROLLING [A/2000] HOUR	301 8" ASPHALT CONCRETE BASE, PG 64-22 [A(8/12)/27] CU.YD.	304 6" AGGREGATE BASE AS PER PLAN [A(0.5)/9] CU.YD.	407 TACK COAT [A(0.04)/9] GALLON	407 TACK COAT FOR INTERMEDIATE COURSE [A(0.75)/9] GALLON	408 PRIME COAT [A(0.40)/9] GALLON	448 1¼" ASPHALT CONCRETE SURFACE COURSE TYPE I PG64-22 [A(1.25/12)/27] CU.YD.	448 1¾" ASPHALT CONCRETE INTERMEDIATE COURSE TYPE I PG64-22 [A(1.75/12)/27] CU.YD.	884 11" PORTLAND CEMENT CONCRETE PAVEMENT (7 YEAR WARRANTY) [A/9] SQ.YD.	206 CURINGE COAT [A(0.30)/9] GALLON	206 CEMENT STABALIZED SUBGRADE [SUBGRADE COMPACTION/9] SQ.YD.	206 CEMENT [AREAX12X110%X 6%X59.4LB/SY/2000] TON
US 422 (RT SIDE)	949+10.40	957+96.90	RT	886.5	29.14	25833	2870	1.4		478						2870			
	949+10.40	951+64.80	RT	254.4	10.00	2544	325	0.2	63	47	11	212	113	10	14				
	951+64.80	952+14.80	RT	50.0	8.00	400	53	0.0	10	7	2	33	18	2	2				
	952+14.80	957+96.90	RT	582.1	6.00	3493	485	0.2	86	65	16	291	155	13	19				
	957+96.90	1011+25.82	RT	5328.9	38.00	202499	22500	11.2		3750						22500			
	957+96.90	980+74.00	RT	2277.1	6.00	13663	1898	0.9	337	253	61	1139	607	53	74				
	980+74.00	981+04.00	RT	30.0	9.00	270	35	0.0	7	5	1	23	12	1	1				
	981+04.00	983+14.30	RT	210.3	12.00	2524	315	0.2	62	47	11	210	112	10	14				
	983+14.30	984+64.30	RT	150.0	9.00	1350	175	0.1	33	25	6	113	60	5	7				
	984+64.30	1011+25.82	RT	2661.5	6.00	15969	2218	1.1	394	296	71	1331	710	62	86				
	1011+25.82	1011+75.82	RT	50.0	44.00	2200	244	0.1		41						244			
	1011+25.82	1011+75.82	RT	50.0	9.00	450	58	0.0	11	8	2	38	20	2	2				
	1011+75.82	1012+42.20	RT	66.4	50.00	3319	369	0.2		61						369			
	1011+75.82	1012+33.76	RT	57.9	12.00	695	87	0.0	17	13	3	58	31	3	4				
	1013+99.34	1014+24.78	RT	25.4	50.00	1272	141	0.1		24						141			
	1014+24.78	1014+69.70	RT	44.9	51.50	2313	257	0.1		43						257			
	1013+79.29	1014+69.70	RT	90.4	12.00	1085	136	0.1	27	20	5	90	48	4	6				
	1016+13.46	1016+73.46	RT	60.0	40.00	2400	267	0.1		44						267			
	1016+73.46	1024+59.84	RT	786.4	38.00	29882	3320	1.7		553						3320			
	1016+13.46	1023+60.56	RT	747.1	6.00	4483	623	0.3	111	83	20	374	199	17	24				
	1023+60.56	1024+20.56	RT	60.0	9.00	540	70	0.0	13	10	2	45	24	2	3				
	1024+20.56	1024+50.02	RT	29.5	12.00	354	44	0.0	9	7	2	29	16	1	2				
	1025+43.02	1046+75.64	RT	2132.6	38.00	81040	9004	4.5		1501						9004			
	1025+25.70	1048+50.00	RT	2324.3	6.00	13946	1937	1.0	344	258	62	1162	620	54	75				
	1046+75.64	1048+50.00	RT	174.4	24.00	4185	465	0.2		77						465			
	1048+50.00	1049+50.00	RT	100.0	12.00	1200	133	0.1		22						133			
	1049+50.00	1050+00.00	RT	50.0	11.18	559	62	0.0		10						62			
	1048+50.00	1050+00.00	RT	150.0	11.18	1677	186	0.1		31						186			
	1048+50.00	1050+00.00	RT	150.0	2.95	443	74	0.0	11	8	2	37	20	2	2				
	1046+75.64	1049+50.00	RT	274.4	4.00	1097	168	0.1	27	20	5	91	49	4	6				
	1049+50.00	1050+00.00	RT	50.0	3.05	153	25	0.0	4	3	1	13	7	1	1				
US 422 (LT SIDE)	949+10.40	950+04.52	LT	94.1	24.94	2347	261	0.1		43						261			
	950+04.52	1012+57.91	LT	6253.4	24.00	150081	16676	8.3		2779						16676			
	949+10.40	954+16.12	LT	505.7	6.00	3034	421	0.2	75	56	13	253	135	12	16				
	954+16.12	955+16.12	LT	100.0	8.00	800	106	0.1	20	15	4	67	36	3	4				
	955+16.12	962+23.75	LT	707.6	10.00	7076	904	0.5	175	131	31	590	315	27	38				
	962+23.75	962+63.75	LT	40.0	8.00	320	42	0.0	8	6	1	27	14	1	2				
	962+63.75	965+75.00	LT	311.3	6.00	1868	259	0.1	46	35	8	156	83	7	10				
	965+75.00	966+75.00	LT	100.0	8.00	800	106	0.1	20	15	4	67	36	3	4				
	966+75.00	969+77.79	LT	302.8	10.00	3028	387	0.2	75	56	13	252	135	12	16				
	969+77.79	970+27.79	LT	50.0	11.00	550	69	0.0	14	10	2	46	24	2	3				
	970+27.79	983+19.58	LT	1291.8	12.00	15501	1938	1.0	383	287	69	1292	689	60	84				
	983+19.58	983+39.58	LT	20.0	11.00	220	28	0.0	5	4	1	18	10	1	1				
	983+39.58	986+70.33	LT	330.8	10.00	3308	423	0.2	82	61	15	276	147	13	18				
	986+70.33	987+10.33	LT	40.0	8.00	320	42	0.0	8	6	1	27	14	1	2				
	987+10.33	989+56.72	LT	246.4	6.00	1478	205	0.1	37	27	7	123	66	6	8				
	989+56.72	990+56.72	LT	100.0	8.00	800	106	0.1	20	15	4	67	36	3	4				
	990+56.72	993+24.98	LT	268.3	10.00	2683	343	0.2	66	50	12	224	119	10	14				
	993+24.98	993+64.98	LT	40.0	8.00	320	36	0.0	8	6	1	27	14	1	2				
SUBTOTALS CARRIED TO SHEET 56							70896	35	2606	11414	469	8797	4692	407	570	56756	0	0	0

CALCULATED RDC
CHECKED BF

PAVEMENT CALCULATIONS

GEA / POR-422-18.31/ 0.00

LOCATION	STATION FROM	STATION TO	SIDE	LENGTH FT.	WIDTH FT.	AREA SQ.FT.	204 SUBGRADE COMPACTION SQ.YD.	204 PROOF ROLLING [A/2000] HOUR	301 8" ASPHALT CONCRETE BASE, PG 64-22 [A(8/12)/27] CU.YD.	304 6" AGGREGATE BASE AS PER PLAN [A(0.5)/9] CU.YD.	407 TACK COAT [A(0.04)/9] GALLON	407 TACK COAT FOR INTERMEDIATE COURSE [A(0.75)/9] GALLON	408 PRIME COAT [A(0.40)/9] GALLON	448 1¼" ASPHALT CONCRETE SURFACE COURSE TYPE I PG64-22 [A(1.25/12)/27] CU.YD.	448 1¾" ASPHALT CONCRETE INTERMEDIATE COURSE TYPE I PG64-22 [A(1.75/12)/27] CU.YD.	884 11" PORTLAND CEMENT CONCRETE PAVEMENT (7 YEAR WARRANTY) [A/9] SQ.YD.	206 CURING COAT [AREA/9] SQ.YD.	206 CEMENT STABALIZED SUBGRADE, 12 INCHES DEEP [AREA/9] SQ.YD.	206 CEMENT [AREAX12X110%X 6%X59.4LB/SY/2000] TON
US 422 (LT SIDE)	993+64.98	1004+61.23	LT	1096.3	6.00	6578	731	0.4	162	122	29	548	292	25	36				
	1004+61.23	1006+11.23	LT	150.0	9.00	1350	150	0.1	33	25	6	113	60	5	7				
	1006+11.23	1012+69.89	LT	658.7	12.00	7904	878	0.4	195	146	35	659	351	30	43				
	1014+15.05	1024+77.74	LT	1062.7	24.00	25505	2834	1.4		472						2834			
	1014+18.34	1017+31.01	LT	312.7	12.00	3752	417	0.2	93	69	17	313	167	14	20				
	1017+31.01	1017+41.01	LT	10.0	11.00	110	12	0.0	3	2	0	9	5	0	1				
	1017+41.01	1018+00.00	LT	59.0	10.00	590	66	0.0	15	11	3	49	26	2	3				
	1018+00.00	1018+40.00	LT	40.0	8.00	320	36	0.0	8	6	1	27	14	1	2				
	1018+40.00	1023+20.21	LT	480.2	6.00	2881	320	0.2	71	53	13	240	128	11	16				
	1023+20.21	1024+70.21	LT	150.0	9.00	1350	150	0.1	33	25	6	113	60	5	7				
	1024+70.21	1024+92.75	LT	22.5	12.00	270	30	0.0	7	5	1	23	12	1	1				
	1025+60.92	1042+31.53	LT	1670.6	24.00	40095	4455	2.2		742						4455			
	1025+66.69	1042+76.53	LT	1709.8	6.00	10259	1140	0.6	253	190	46	855	456	40	55				
	1042+31.53	1042+76.53	LT	45.0	26.00	1170	130	0.1		22						130			
	1044+24.29	1044+84.29	LT	60.0	26.00	1560	173	0.1		29						173			
	1044+24.29	1049+90.09	LT	565.8	6.00	3395	377	0.2	84	63	15	283	151	13	18				
	1044+84.29	1049+90.09	LT	505.8	24.00	12139	1349	0.7		225						1349			
	1049+90.09	1050+00.00	LT	9.9	23.10	229	25	0.0		4						25			
	1049+90.09	1050+00.00	LT	9.9	3.48	34	4	0.0	1	1	0	3	2	0	0				
	1049+90.09	1050+00.00	LT	9.9	3.74	37	4	0.0	1	1	0	3	2	0	0				
US 422 (LT & RT SIDE)	953+90.00	970+64.00	LT/RT	1674.0	78.00	135594											4520	15066	354
	1021+52.00	1049+65.00	LT/RT	2813.0	78.00	227853											7595	25317	596
SR 282	146+90.09	147+12.61	LT	22.5	10.97	247	27	0.0		5						27			
	147+12.61	148+59.34	LT	146.7	12.00	1761	196	0.1		33						196			
	146+90.09	147+39.75	RT	49.7	9.85	489	54	0.0		9						54			
	147+39.75	148+11.41	RT	71.7	12.00	860	96	0.0		16						96			
	146+90.09	147+12.61	LT	22.5	4.31	97	11	0.0	2	2	0	8	4	0	1				
	147+12.61	148+59.34	LT	146.7	4.00	587	65	0.0	14	11	3	49	26	2	3				
	146+90.09	147+39.75	RT	49.7	3.52	175	19	0.0	4	3	1	15	8	1	1				
	147+39.75	148+11.41	RT	71.7	4.00	287	32	0.0	7	5	1	24	13	1	2				
US 422 & SR 282	1014+69.70	1016+13.46	PAVEMENT - BY CADD			11572	1286	0.6		214						1286			
	1014+69.70	148+59.34	SHOULDER - BY CADD			613	68	0.0		11						68			
	148+11.41	1016+13.46	SHOULDER - BY CADD			625	69	0.0		12						69			
REYNOLDS ROAD	101+80.30	104+25.00	LT	244.7	12.00	2936	326	0.2		54						326			
	102+39.97	104+25.00	RT	185.0	12.00	2220	247	0.1		41						247			
	104+25.00	104+75.00	LT	50.0	11.04	552	61	0.0		10						61			
	104+25.00	104+75.00	RT	50.0	11.13	557	62	0.0		10						62			
	101+80.30	104+75.00	LT	294.7	4.00	1179	131	0.1	29	22	5	98	52	5	6				
	102+39.97	104+75.00	RT	235.0	4.00	940	104	0.1	23	17	4	78	42	4	5				
US 422 & REYNOLDS	1042+76.53	1044+24.29	PAVEMENT - BY CADD			9158	1018	0.5		170						1018			
	1042+76.53	101+80.30	SHOULDER - BY CADD			465	52	0.0		9						52			
						633	70	0.0		12						70			
						633	70	0.0		12						70			
			SUBTOTAL SHEET 55				70896	35	2606	11414	469	8797	4692	407	570	56756	0	0	0
							17346	8	877	2769	158	2960	1579	137	192	12669	12115	40383	950
SUBTOTALS CARRIED TO GENERAL SUMMARY							88242	44	3483	14183	627	11757	6270	544	762	69425	12115	40383	950

CALCULATED RDC
CHECKED BF

PAVEMENT CALCULATIONS

GEA/POR-422-18.31/0.00

USGS QUADRANT NO. N4115-W8100/7.5
GARRETTSVILLE, OHIO
LATITUDE: 41°04'30"
LONGITUDE: 81°30'30"

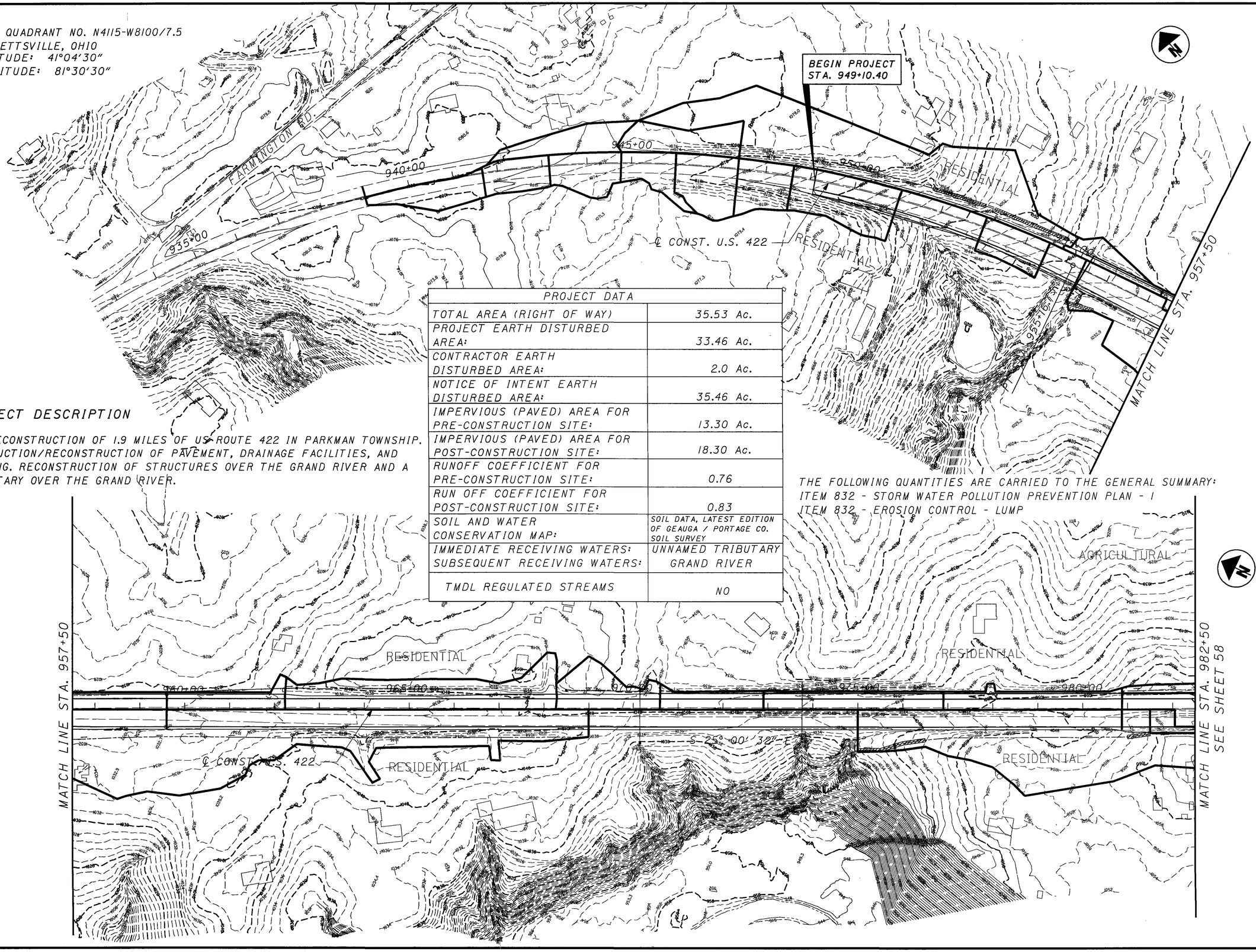

PROJECT DATA	
TOTAL AREA (RIGHT OF WAY)	35.53 Ac.
PROJECT EARTH DISTURBED AREA:	33.46 Ac.
CONTRACTOR EARTH DISTURBED AREA:	2.0 Ac.
NOTICE OF INTENT EARTH DISTURBED AREA:	35.46 Ac.
IMPERVIOUS (PAVED) AREA FOR PRE-CONSTRUCTION SITE:	13.30 Ac.
IMPERVIOUS (PAVED) AREA FOR POST-CONSTRUCTION SITE:	18.30 Ac.
RUNOFF COEFFICIENT FOR PRE-CONSTRUCTION SITE:	0.76
RUN OFF COEFFICIENT FOR POST-CONSTRUCTION SITE:	0.83
SOIL AND WATER CONSERVATION MAP:	SOIL DATA, LATEST EDITION OF GEAUGA / PORTAGE CO. SOIL SURVEY
IMMEDIATE RECEIVING WATERS:	UNNAMED TRIBUTARY
SUBSEQUENT RECEIVING WATERS:	GRAND RIVER
TMDL REGULATED STREAMS	NO

PROJECT DESCRIPTION

RECONSTRUCTION OF 1.9 MILES OF US ROUTE 422 IN PARKMAN TOWNSHIP. CONTRUCTION/RECONSTRUCTION OF PAVEMENT, DRAINAGE FACILITIES, AND GRADING. RECONSTRUCTION OF STRUCTURES OVER THE GRAND RIVER AND A TRIBUTARY OVER THE GRAND RIVER.

THE FOLLOWING QUANTITIES ARE CARRIED TO THE GENERAL SUMMARY:
ITEM 832 - STORM WATER POLLUTION PREVENTION PLAN - 1
ITEM 832 - EROSION CONTROL - LUMP

0 50 100 200
HORIZONTAL SCALE IN FEET

CALCULATED
CHECKED

PROJECT SITE PLAN
STA. 932+50 TO STA. 982+50

GEA/POR-422-18.31/0.00

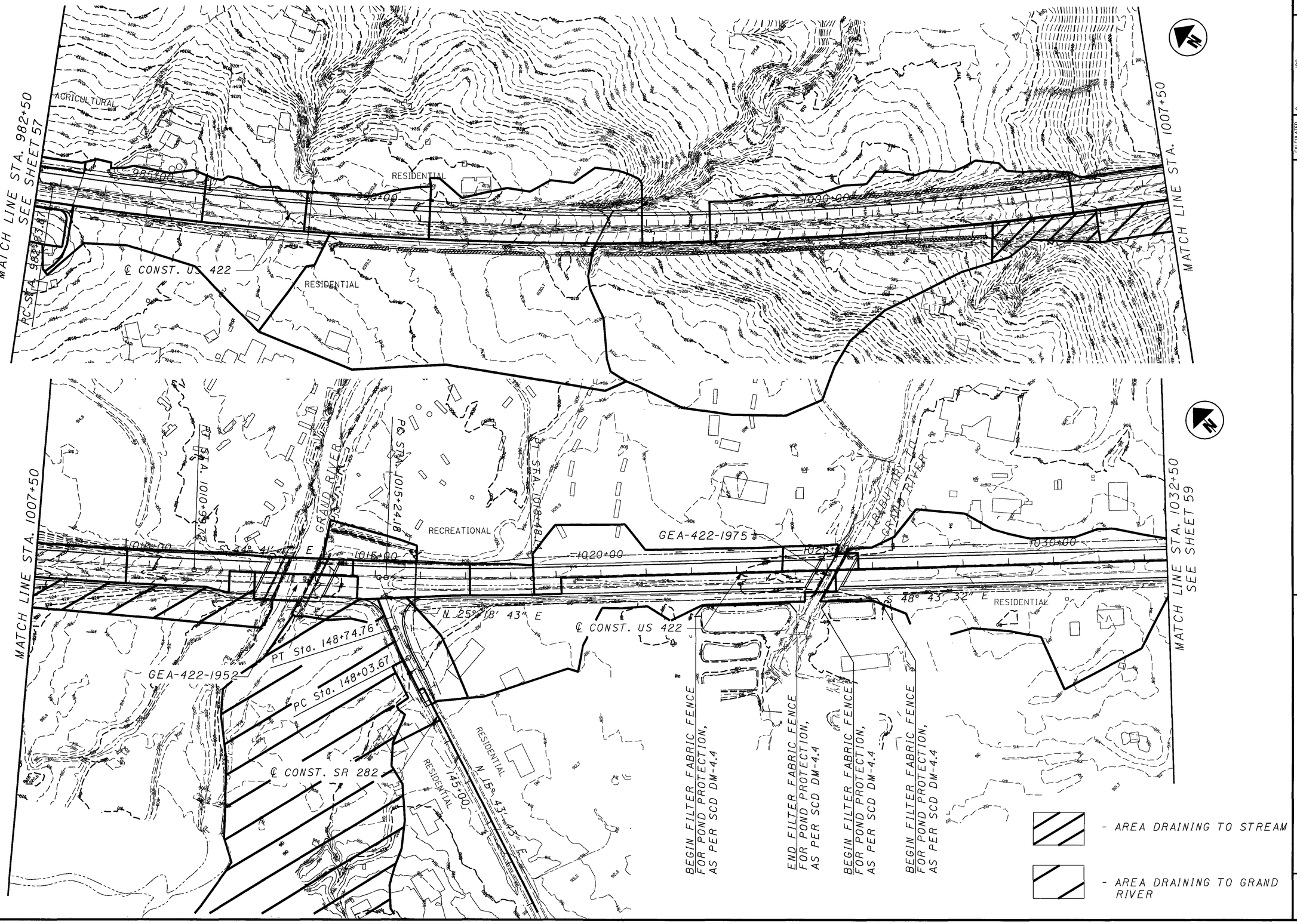

CALCULATED

CHECKED

0 50 100 200
HORIZONTAL
SCALE IN FEET

PROJECT SITE PLAN
STA. 982+50 TO STA. 1032+50

GEA/POR-422-18.31/0.00

MATCH LINE STA. 1032+50
SEE SHEET 58

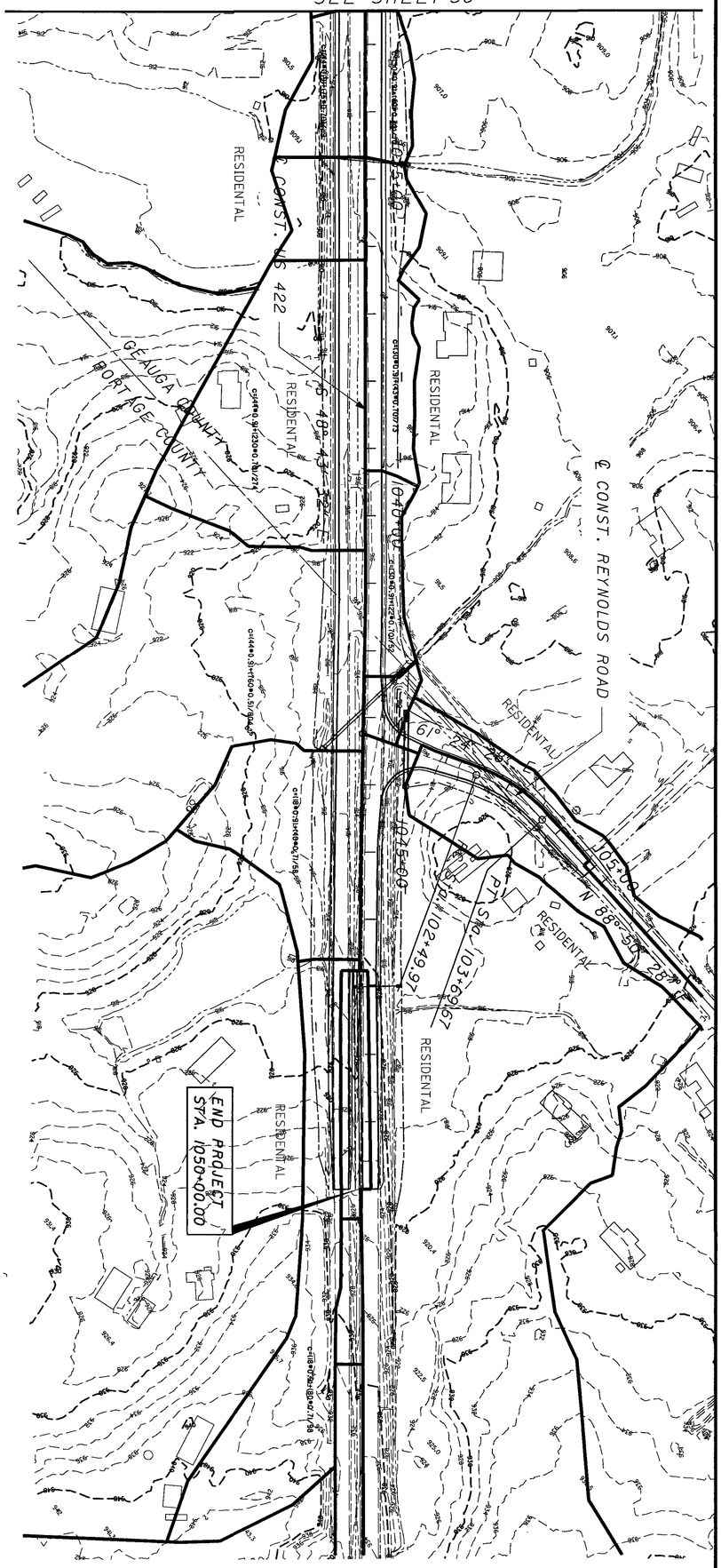

59 / 332	GEA/POR-422-18.31/0.00	PROJECT SITE PLAN STA. 1032+50 TO STA. 1050+00	CALCULATED CHECKED 0 100 50 200 HORIZONTAL SCALE IN FEET

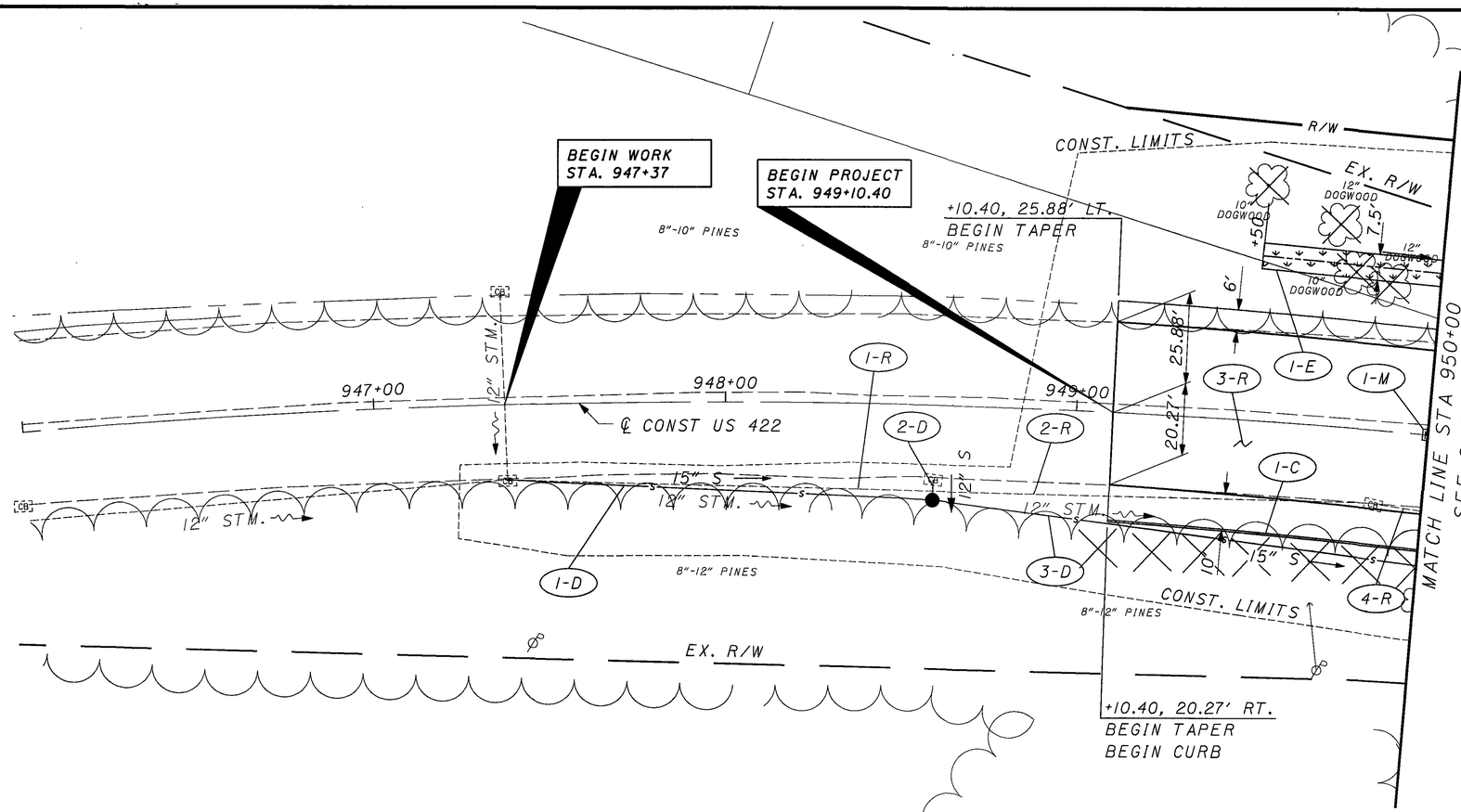

CURVE DATA

P.I. STA. = 943+70.00
Δ = 66° 11' 30"
Dc = 2° 30' 56"
R = 2277.63'
T = 1484.53'
L = 2631.26'
E = 441.09'
e_{max} = 0.062

= TEMPORARY MAT

= PERMANENT MAT TYPE 1

= PERMANENT MAT TYPE 2

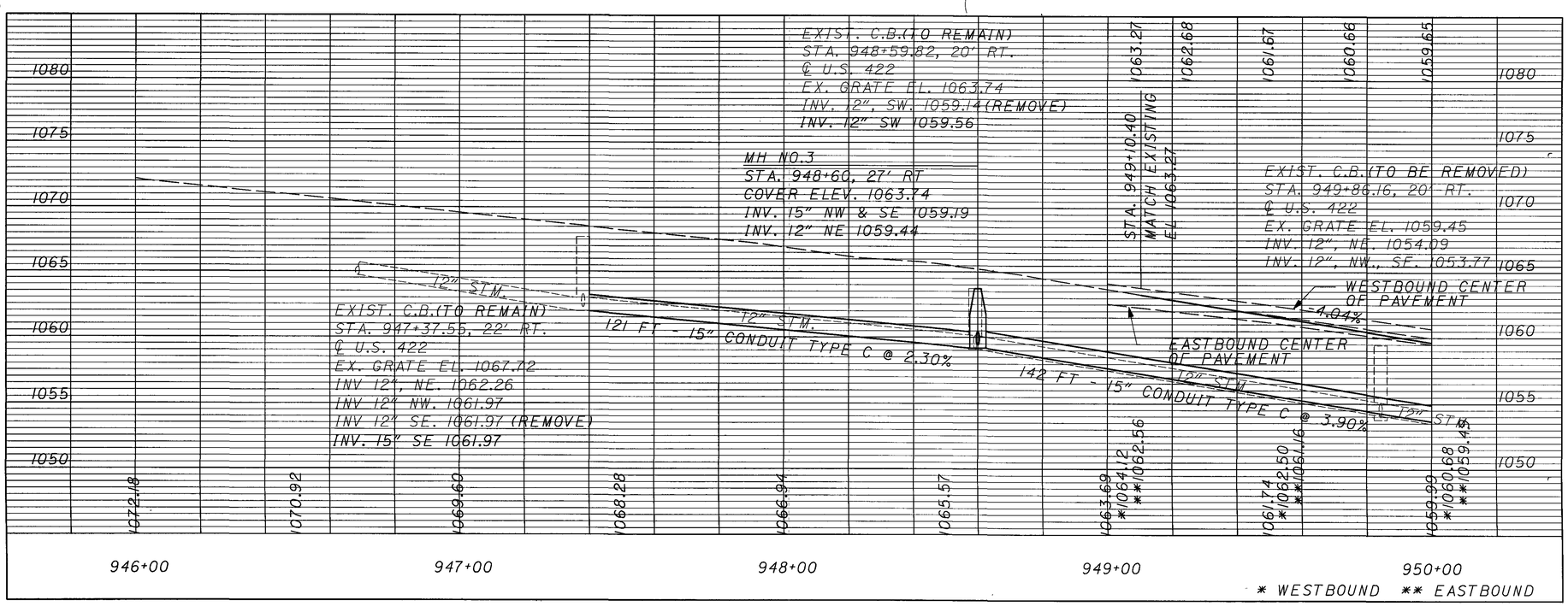

CROSS REFERENCES

SHEET NO	DESCRIPTION
6	BENCHMARKS
5	CENTERLINE REFERENCE
7-13	TYPICAL SECTIONS
38-43	REMOVAL SUBSUMMARY
44-45	DRAINAGE SUBSUMMARY
47-48	ROADWAY SUBSUMMARY
50	EROSION SUBSUMMARY
51	EARTHWORK SUBSUMMARY
52-54	UNDERDRAIN SUBSUMMARY
55-56	PAVEMENT CALCULATIONS
87	CROSS SECTIONS
148	SUPERELEVATION TABLE
152	PAVEMENT DETAILS
158	JOINT DETAILS
166	UNDERDRAIN PLANS
203	S&PM PLANS

0 10 20 40
HORIZONTAL SCALE IN FEET

CALCULATED
CHECKED

PLAN AND PROFILE US 422
STA 946+00 TO STA 950+00

GEA/POR-422-18.31/0.00

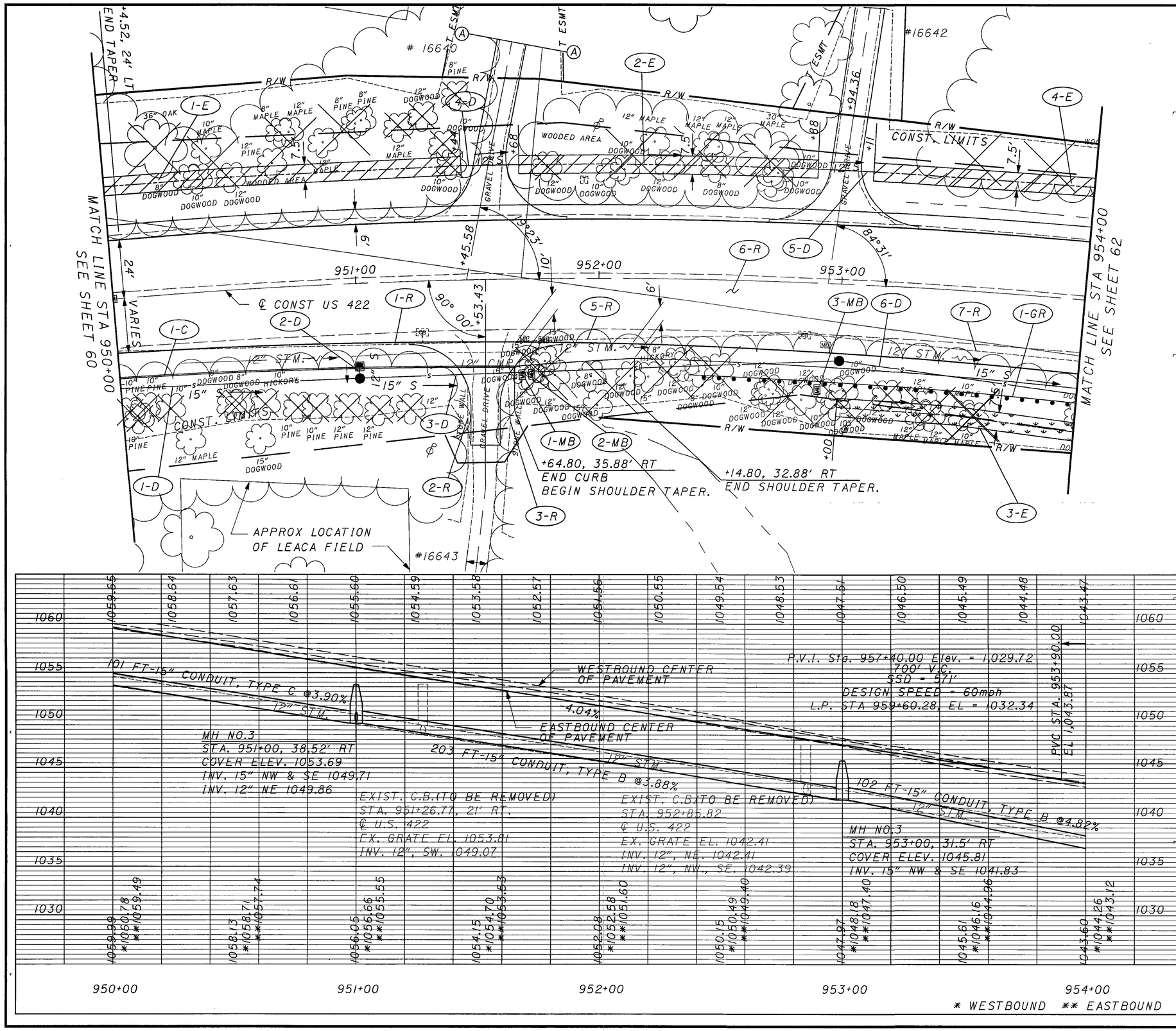

CURVE DATA

P.I. STA. = 943+70.00
Δ = 66° 11' 30"
Dc = 2° 30' 56"
R = 2277.63'
T = 1484.53'
L = 2631.26'
E = 441.09'
e_{max} = 0.062

= TEMPORARY MAT

= PERMANENT MAT TYPE 1

= PERMANENT MAT TYPE 2

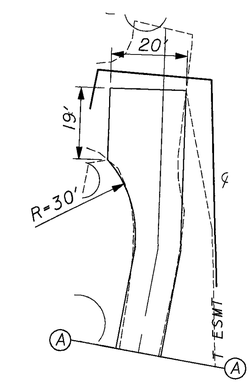

DRIVE ℄
PI STA 951+70.9, 125.7' LT
Δ = 8° 39' LT
NO CURVE

CROSS REFERENCES

SHEET NO	DESCRIPTION
6	BENCHMARKS
5	CENTERLINE REFERENCE
7-13	TYPICAL SECTIONS
38-43	REMOVAL SUBSUMMARY
44-46	DRAINAGE SUBSUMMARY
47-49	ROADWAY SUBSUMMARY
50	EROSION SUBSUMMARY
51	EARTHWORK SUBSUMMARY
52-54	UNDERDRAIN SUBSUMMARY
55-56	PAVEMENT CALCULATIONS
87-89	CROSS SECTIONS
148	SUPERELEVATION TABLE
152-153	PAVEMENT DETAILS
158-159	JOINT DETAILS
167	UNDERDRAIN PLANS
88	PIPE PROFILES
138	DRIVE PROFILES
203	S&PM PLANS

HORIZONTAL SCALE IN FEET 0 10 20 40

CALCULATED

CHECKED

PLAN AND PROFILE US 422 STA. 950+00 STA. 954+00

GEA/POR-422-18.31/0.00

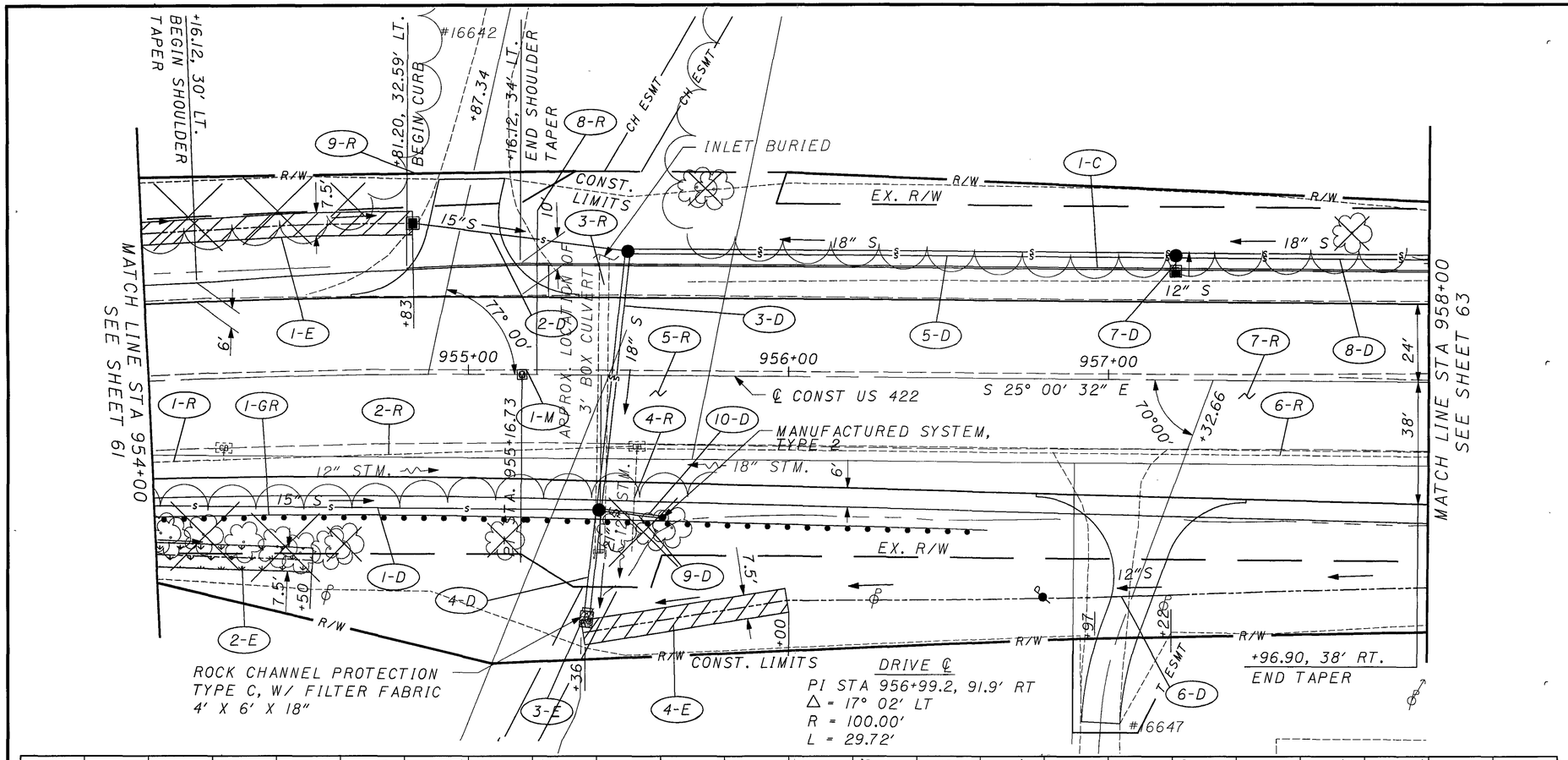

CURVE DATA

P.I. STA. = 943+70.00
Δ = 66° 11' 30"
Dc = 2° 30' 56"
R = 2277.63'
T = 1484.53'
L = 2631.26'
E = 441.09'
e_{max} = 0.062

= TEMPORARY MAT

= PERMANENT MAT TYPE 1

= PERMANENT MAT TYPE 2

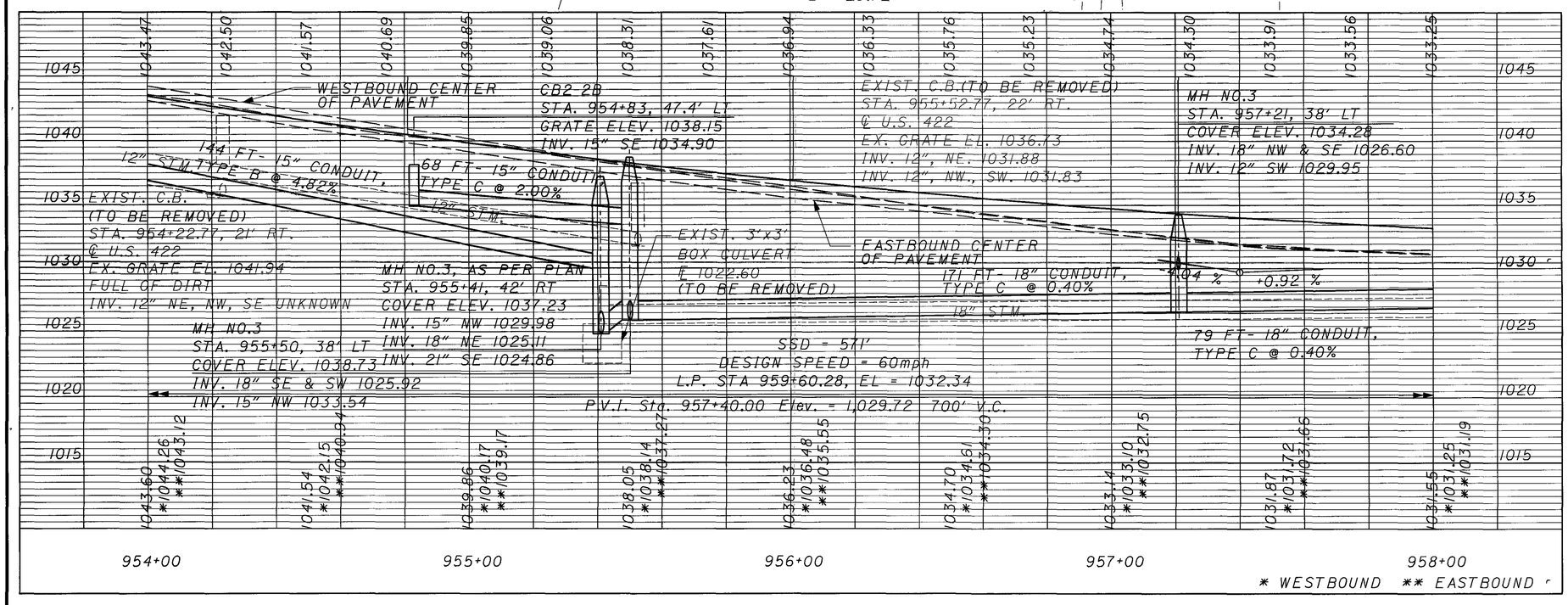

CROSS REFERENCES

SHEET NO	DESCRIPTION
6	BENCHMARKS
5	CENTERLINE REFERENCE
7-13	TYPICAL SECTIONS
38-43	REMOVAL SUBSUMMARY
44-46	DRAINAGE SUBSUMMARY
47-49	ROADWAY SUBSUMMARY
50	EROSION SUBSUMMARY
51	EARTHWORK SUBSUMMARY
52-54	UNDERDRAIN SUBSUMMARY
55-56	PAVEMENT CALCULATIONS
89-91	CROSS SECTIONS
148	SUPERELEVATION TABLE
153	PAVEMENT DETAILS
159	JOINT DETAILS
168	UNDERDRAIN PLANS
90-91	PIPE PROFILES
139	DRIVE PROFILES
203-204	S&PM PLANS

HORIZONTAL SCALE IN FEET 0 10 20 40

CALCULATED

CHECKED

PLAN AND PROFILE US 422 STA 954+00 TO STA 958+00

GEA/POR-422-18.31/0.00

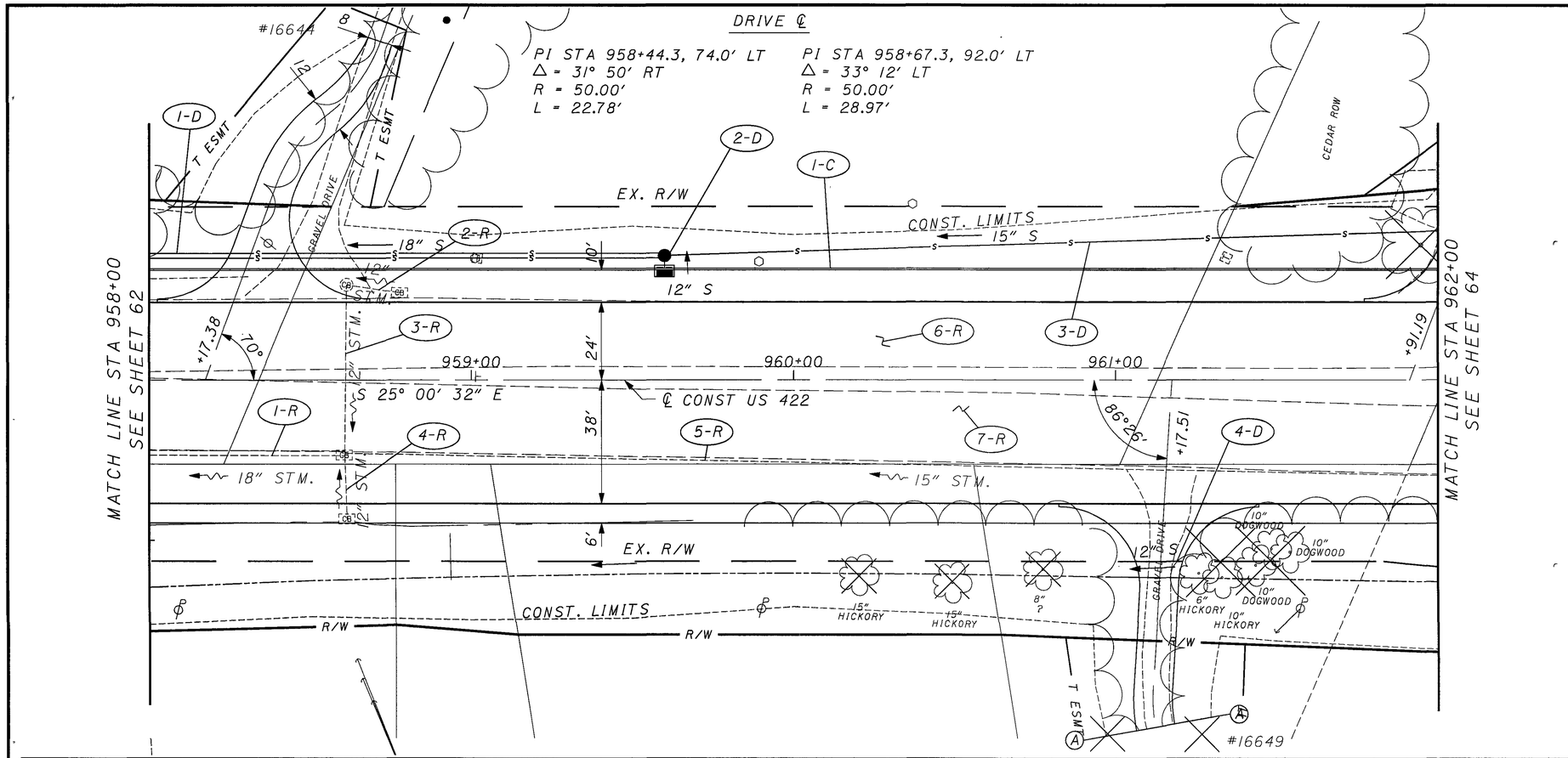

- TEMPORARY MAT
- PERMANENT MAT TYPE 1
- PERMANENT MAT TYPE 2

HORIZONTAL SCALE IN FEET 0 10 20 40

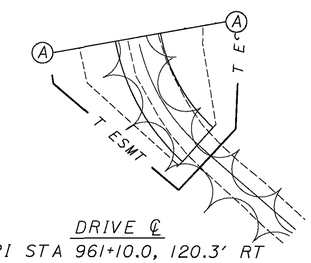

DRIVE ℄
PI STA 961+10.0, 120.3' RT
Δ = 52° 24' LT
R = 50.00'
L = 45.72'

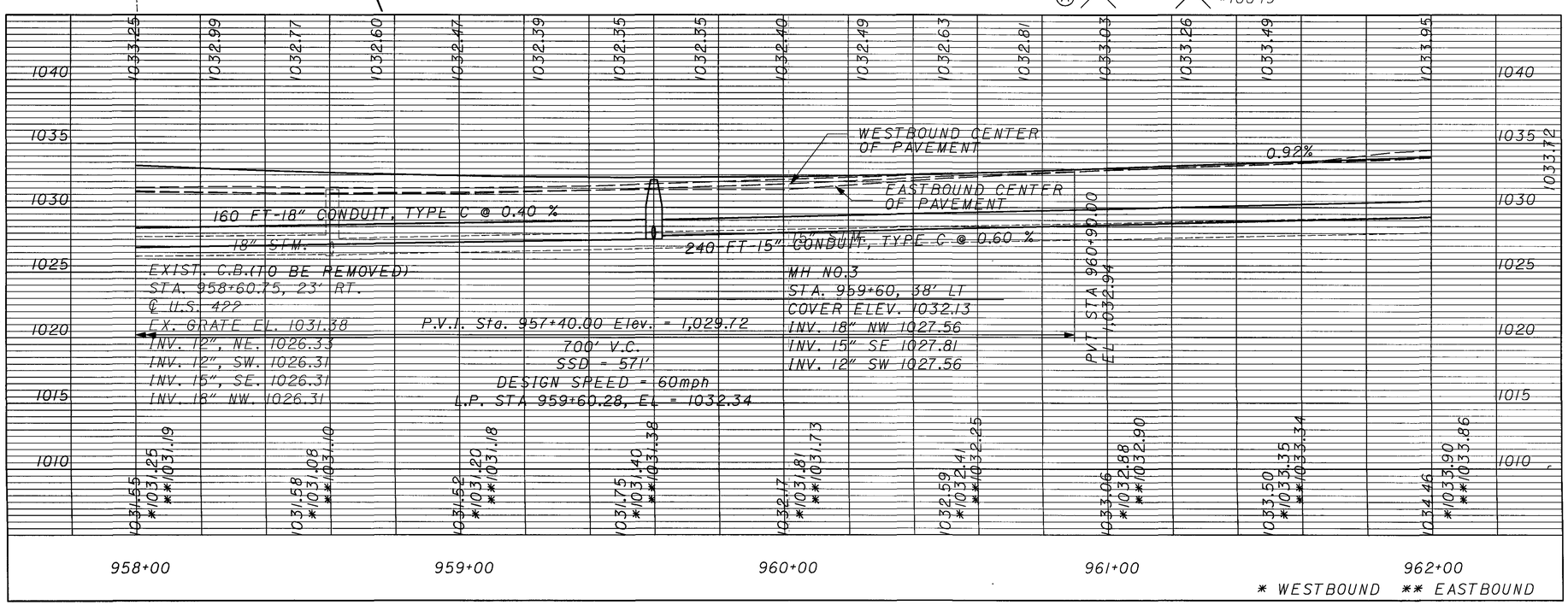

CROSS REFERENCES

SHEET NO	DESCRIPTION
6	BENCHMARKS
5	CENTERLINE REFERENCE
7 - 13	TYPICAL SECTIONS
38-43	REMOVAL SUBSUMMARY
44 - 46	DRAINAGE SUBSUMMARY
47 - 49	ROADWAY SUBSUMMARY
50	EROSION SUBSUMMARY
51	EARTHWORK SUBSUMMARY
52-54	UNDERDRAIN SUBSUMMARY
55-56	PAVEMENT CALCULATIONS
91 -93	CROSS SECTIONS
169	UNDERDRAIN PLANS
92	PIPE PROFILES
139	DRIVE PROFILES
204	S&PM PLANS

CALCULATED
CHECKED

PLAN AND PROFILE US 422
STA 958+00 TO STA 962+00

GEA/POR-422-18.31/0.00

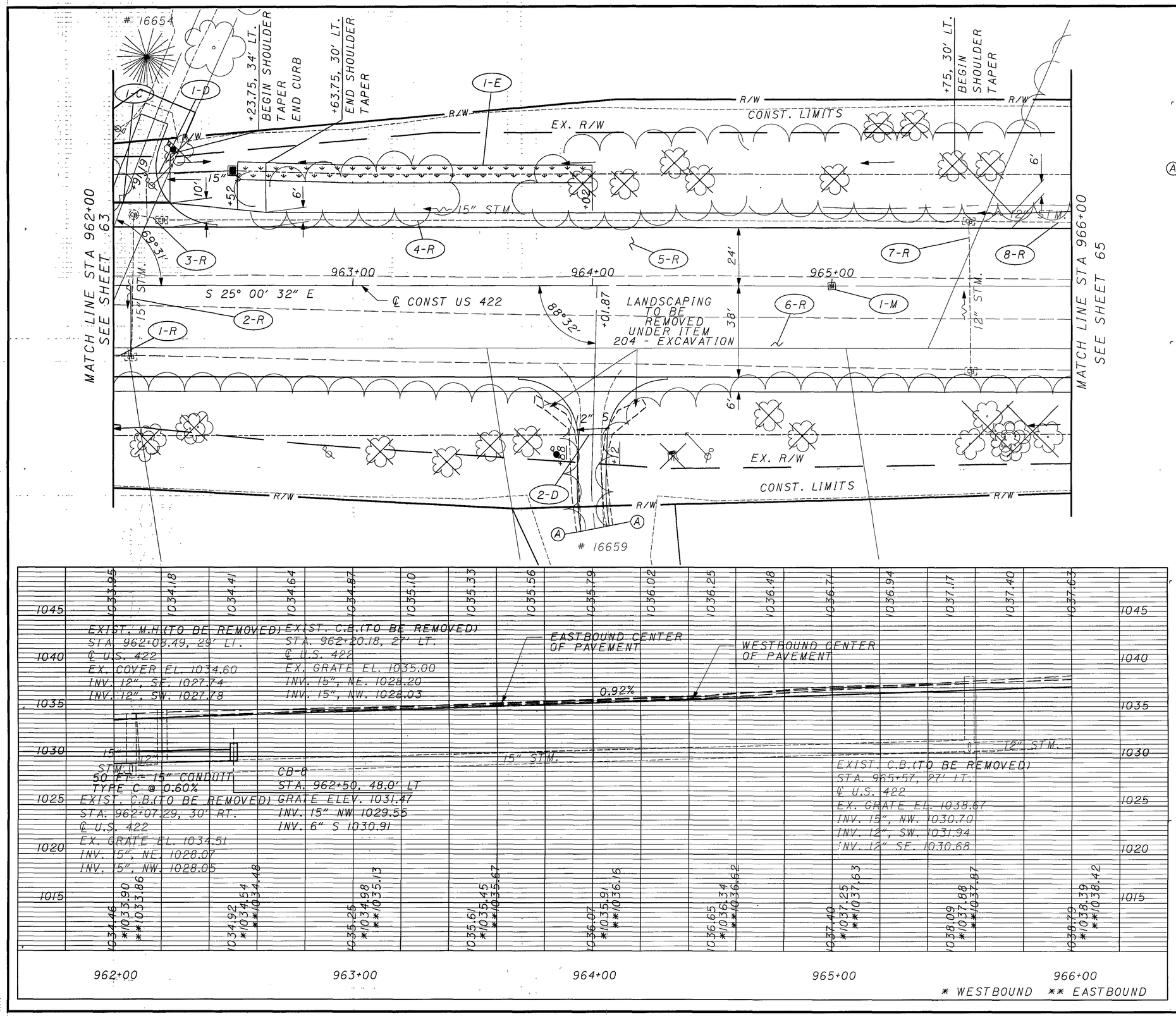

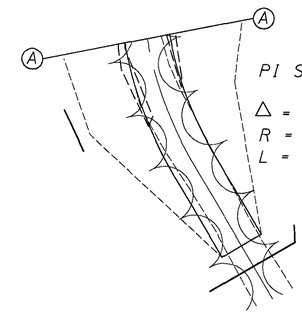

= TEMPORARY MAT

= PERMANENT MAT TYPE 1

= PERMANENT MAT TYPE 2

CROSS REFERENCES

SHEET NO	DESCRIPTION
6	BENCHMARKS
5	CENTERLINE REFERENCE
7 - 13	TYPICAL SECTIONS
38-43	REMOVAL SUBSUMMARY
44-46	DRAINAGE SUBSUMMARY
47-49	ROADWAY SUBSUMMARY
50	EROSION SUBSUMMARY
51	EARTHWORK SUBSUMMARY
52-54	UNDERDRAIN SUBSUMMARY
55-56	PAVEMENT CALCULATIONS
93-94	CROSS SECTIONS
170	UNDERDRAIN PLANS
139	DRIVE PROFILES
204-205	S&PM PLANS

HORIZONTAL SCALE IN FEET 0 10 20 40

CALCULATED

CHECKED

PLAN AND PROFILE US 422
STA 962+00 TO STA 966+00

GEA/POR-422-18.31/0.00

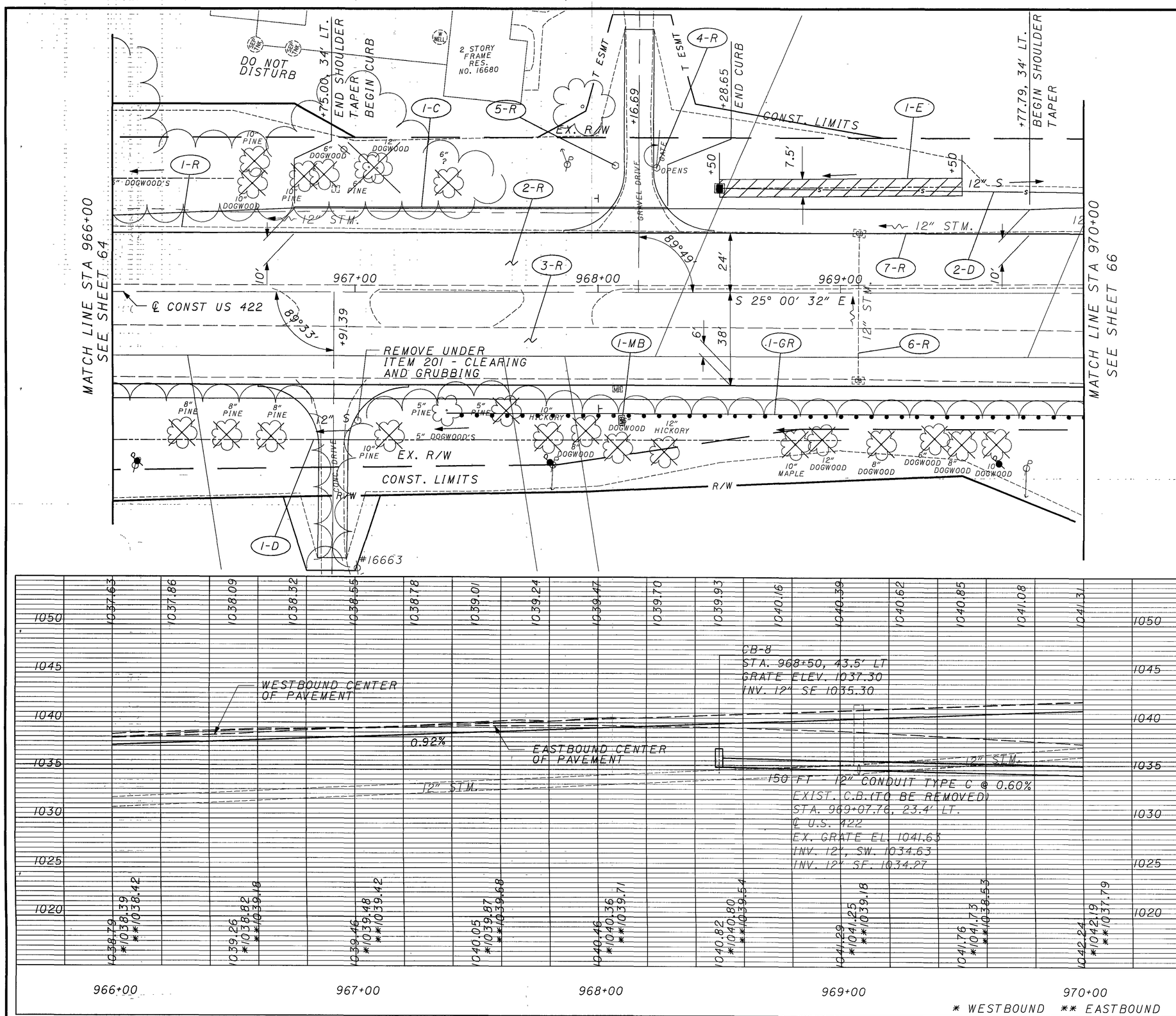

CROSS REFERENCES

SHEET NO	DESCRIPTION
6	BENCHMARKS
5	CENTERLINE REFERENCE
7 - 13	TYPICAL SECTIONS
38-43	REMOVAL SUBSUMMARY
44-46	DRAINAGE SUBSUMMARY
47-49	ROADWAY SUBSUMMARY
50	EROSION SUBSUMMARY
51	EARTHWORK SUBSUMMARY
52-54	UNDERDRAIN SUBSUMMARY
55-56	PAVEMENT CALCULATIONS
94 -96	CROSS SECTIONS
171	UNDERDRAIN PLANS
140	DRIVE PROFILES
205	S&PM PLANS

CALCULATED

CHECKED

PLAN AND PROFILE US 422
STA 966+00 TO STA 970+00

GEA/POR-422-18.31/0.00

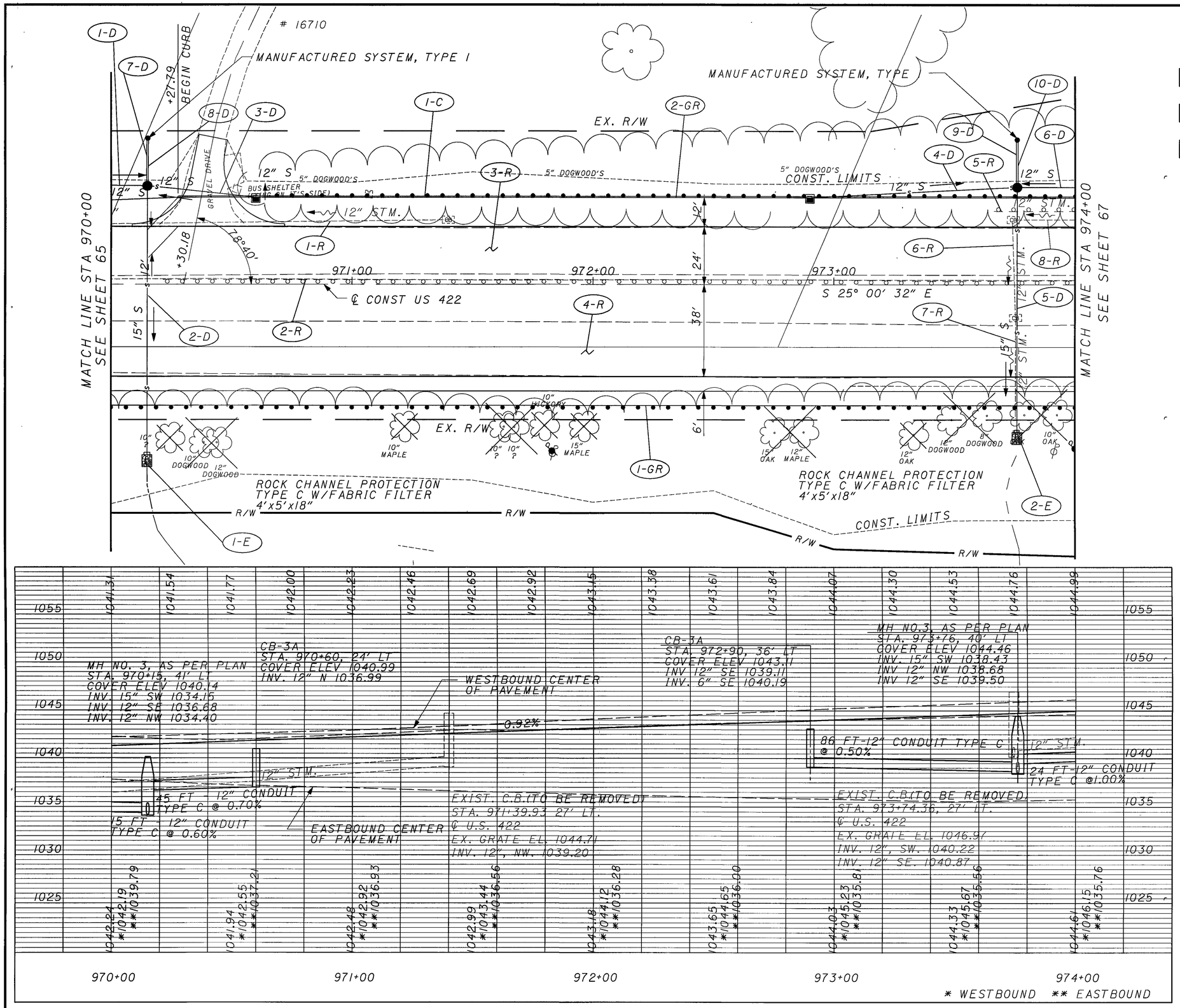

- TEMPORARY MAT
- PERMANENT MAT TYPE 1
- PERMANENT MAT TYPE 2

HORIZONTAL SCALE IN FEET 0 10 20 40

CALCULATED

CHECKED

CROSS REFERENCES

SHEET NO	DESCRIPTION
6	BENCHMARKS
5	CENTERLINE REFERENCE
7-13	TYPICAL SECTIONS
38-43	REMOVAL SUBSUMMARY
44-46	DRAINAGE SUBSUMMARY
47-49	ROADWAY SUBSUMMARY
50	EROSION SUBSUMMARY
51	EARTHWORK SUBSUMMARY
52-54	UNDERDRAIN SUBSUMMARY
55-56	PAVEMENT CALCULATIONS
96-98	CROSS SECTIONS
98	PIPE PROFILES
140	DRIVE PROFILES
172	UNDERDRAIN PLANS
205	S&PM PLANS

PLAN AND PROFILE US 422
STA 970+00 TO STA 974+00

GEA/POR-422-18.31/0.00

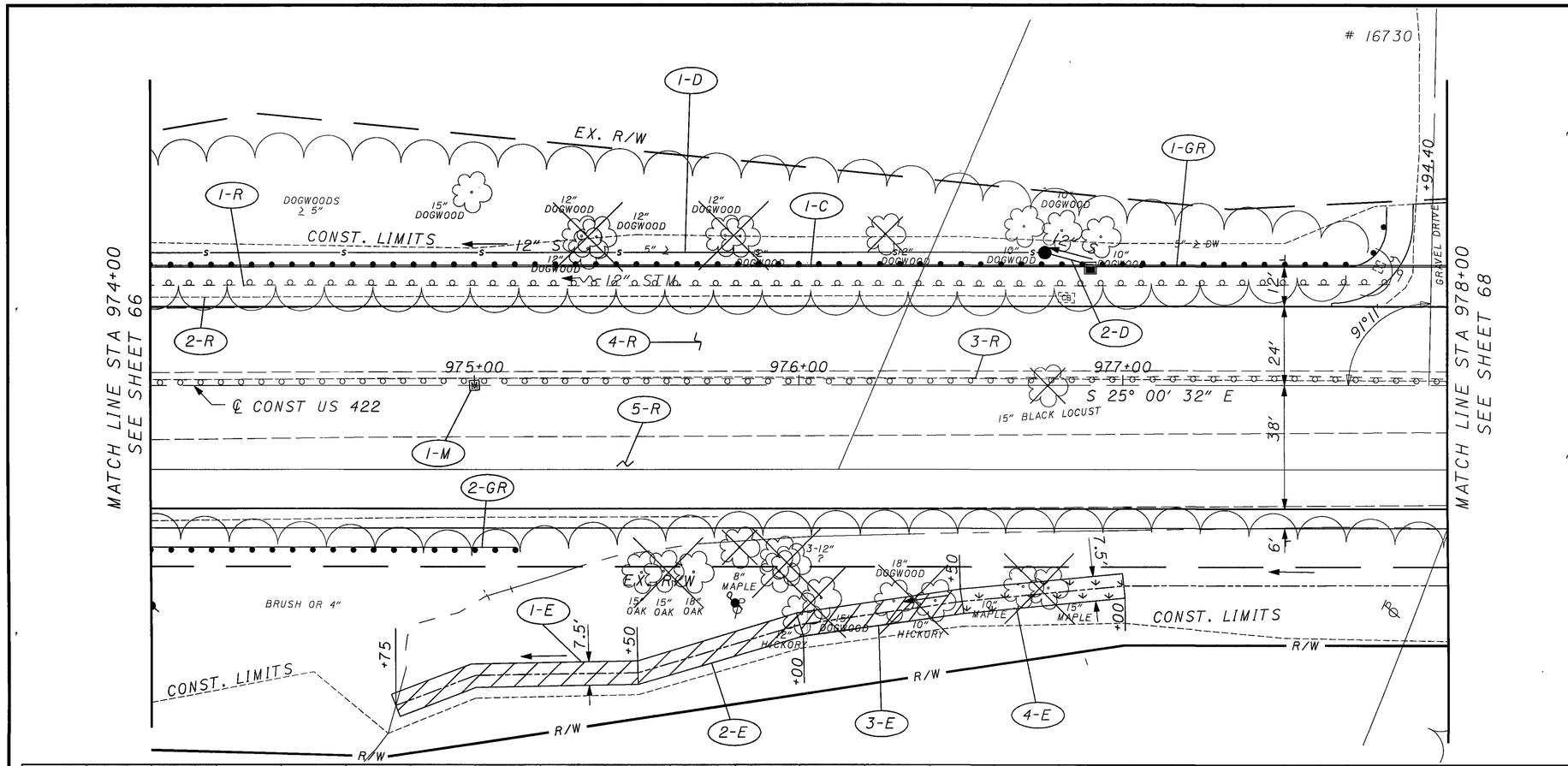

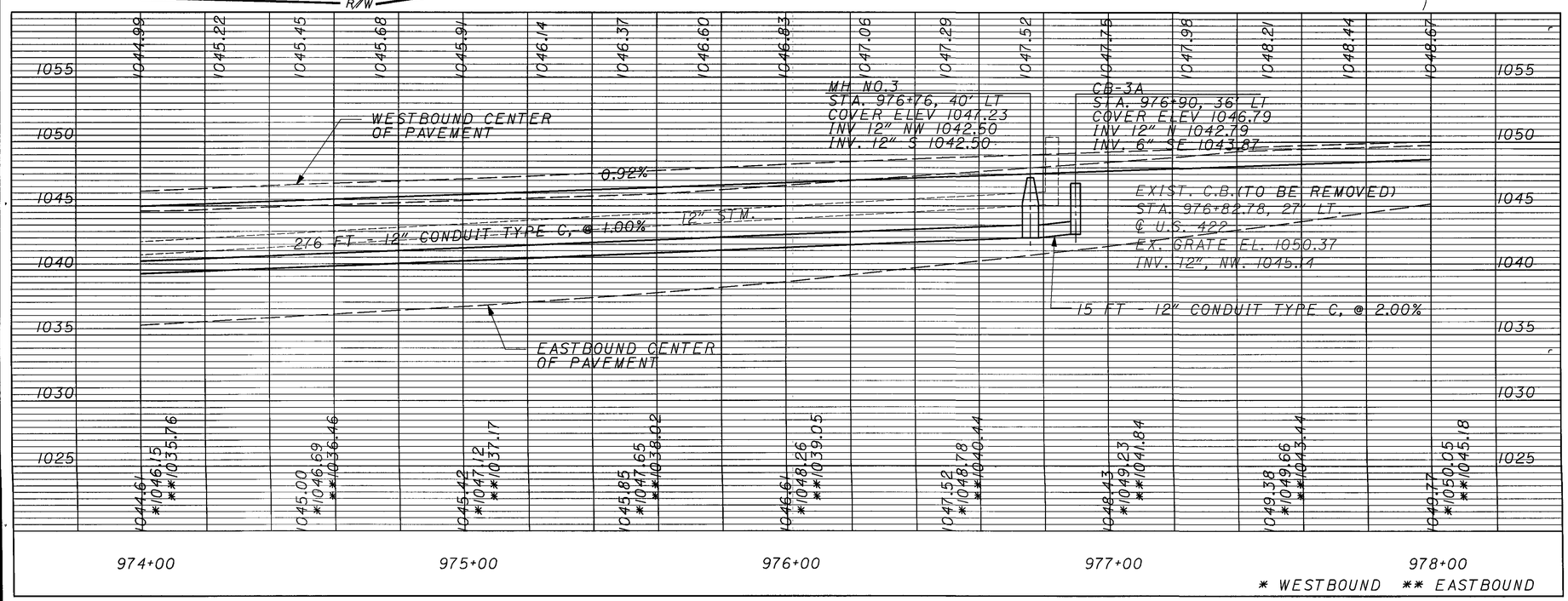

CROSS REFERENCES

SHEET NO	DESCRIPTION
6	BENCHMARKS
5	CENTERLINE REFERENCE
7 - 13	TYPICAL SECTIONS
38-43	REMOVAL SUBSUMMARY
44-46	DRAINAGE SUBSUMMARY
47-49	ROADWAY SUBSUMMARY
50	EROSION SUBSUMMARY
51	EARTHWORK SUBSUMMARY
52-54	UNDERDRAIN SUBSUMMARY
55-56	PAVEMENT CALCULATIONS
98 -100	CROSS SECTIONS
173	UNDERDRAIN PLANS
140	DRIVE PROFILES
205-206	S&PM PLANS

CALCULATED

CHECKED

PLAN AND PROFILE US 422
STA 974+00 TO STA 978+00

GEA/POR-422-18.31/0.00

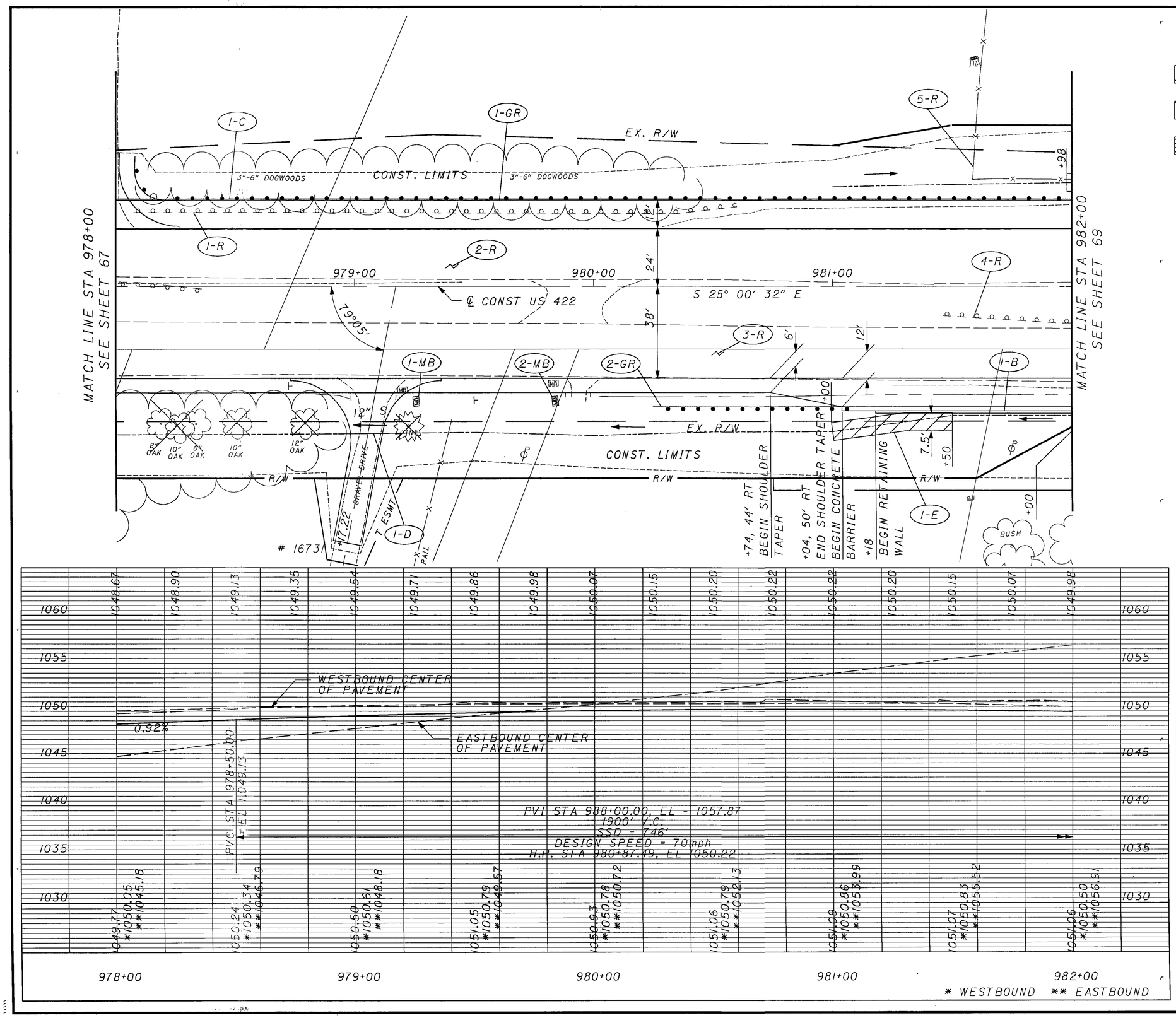

= TEMPORARY MAT

= PERMANENT MAT TYPE 1

= PERMANENT MAT TYPE 2

0 10 20 40
HORIZONTAL SCALE IN FEET

CALCULATED

CHECKED

CROSS REFERENCES

SHEET NO	DESCRIPTION
6	BENCHMARKS
5	CENTERLINE REFERENCE
7 - 13	TYPICAL SECTIONS
38-43	REMOVAL SUBSUMMARY
44 - 46	DRAINAGE SUBSUMMARY
47 - 49	ROADWAY SUBSUMMARY
50	EROSION SUBSUMMARY
51	EARTHWORK SUBSUMMARY
52-54	UNDERDRAIN SUBSUMMARY
55-56	PAVEMENT CALCULATIONS
100-102	CROSS SECTIONS
148	SUPERELEVATION TABLE
174	UNDERDRAIN PLANS
140	DRIVE PROFILES
206	S&PM PLANS

PLAN AND PROFILE US 422
STA 978+00 TO STA 982+00

GEA/POR-422-18.31/0.00

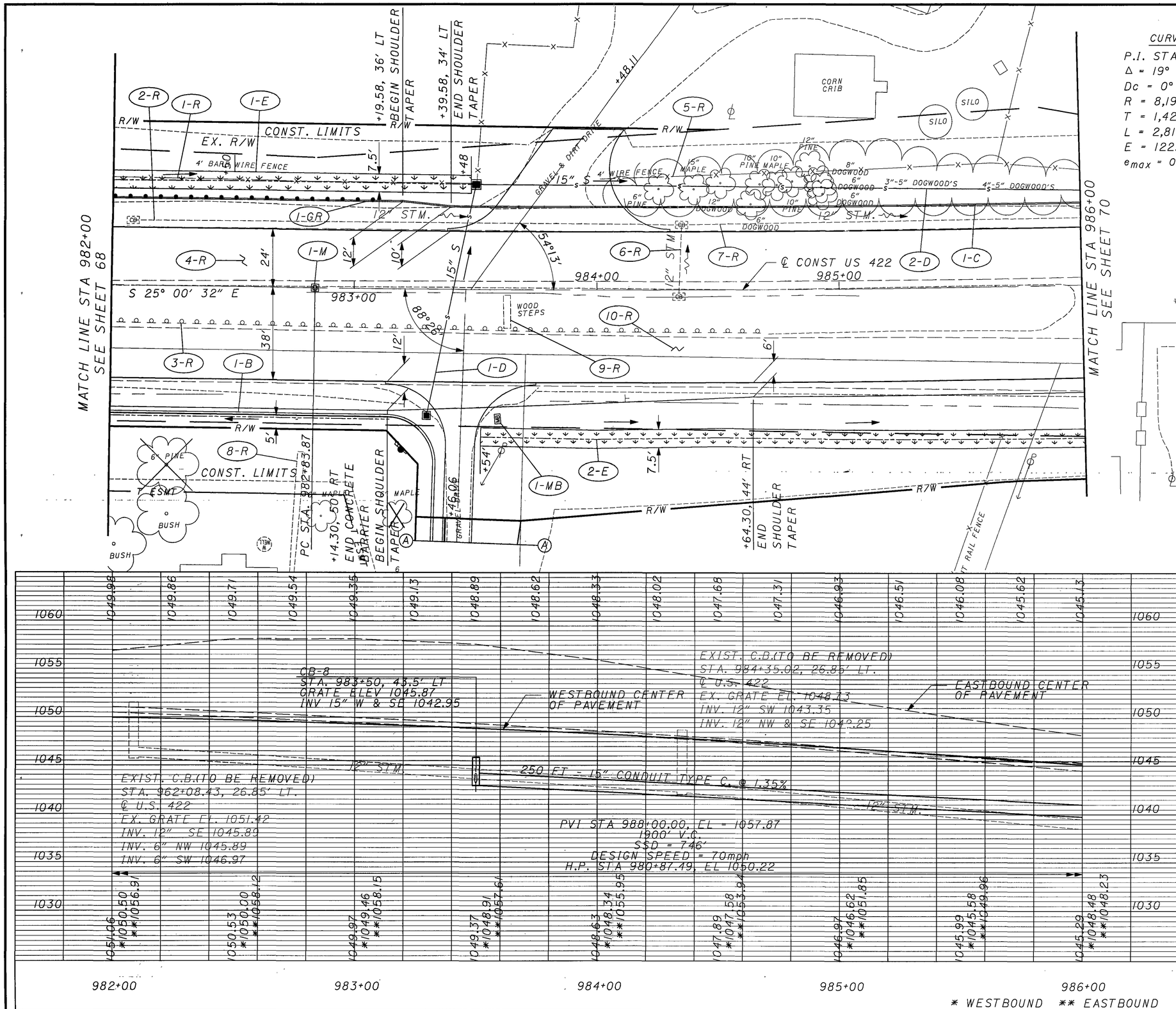

CROSS REFERENCES

SHEET NO	DESCRIPTION
6	BENCHMARKS
5	CENTERLINE REFERENCE
7 - 13	TYPICAL SECTIONS
38 - 43	REMOVAL SUBSUMMARY
44 - 46	DRAINAGE SUBSUMMARY
47 - 49	ROADWAY SUBSUMMARY
50	EROSION SUBSUMMARY
51	EARTHWORK SUBSUMMARY
52-54	UNDERDRAIN SUBSUMMARY
55-56	PAVEMENT CALCULATIONS
102-104	CROSS SECTIONS
148-149	SUPERELEVATION TABLE
175	UNDERDRAIN PLANS
103	PIPE PROFILES
141	DRIVE PROFILES
206-207	S&PM PLANS

PLAN AND PROFILE US 422
STA 982+00 TO STA 986+00

GEA/POR-422-18.31/0.00

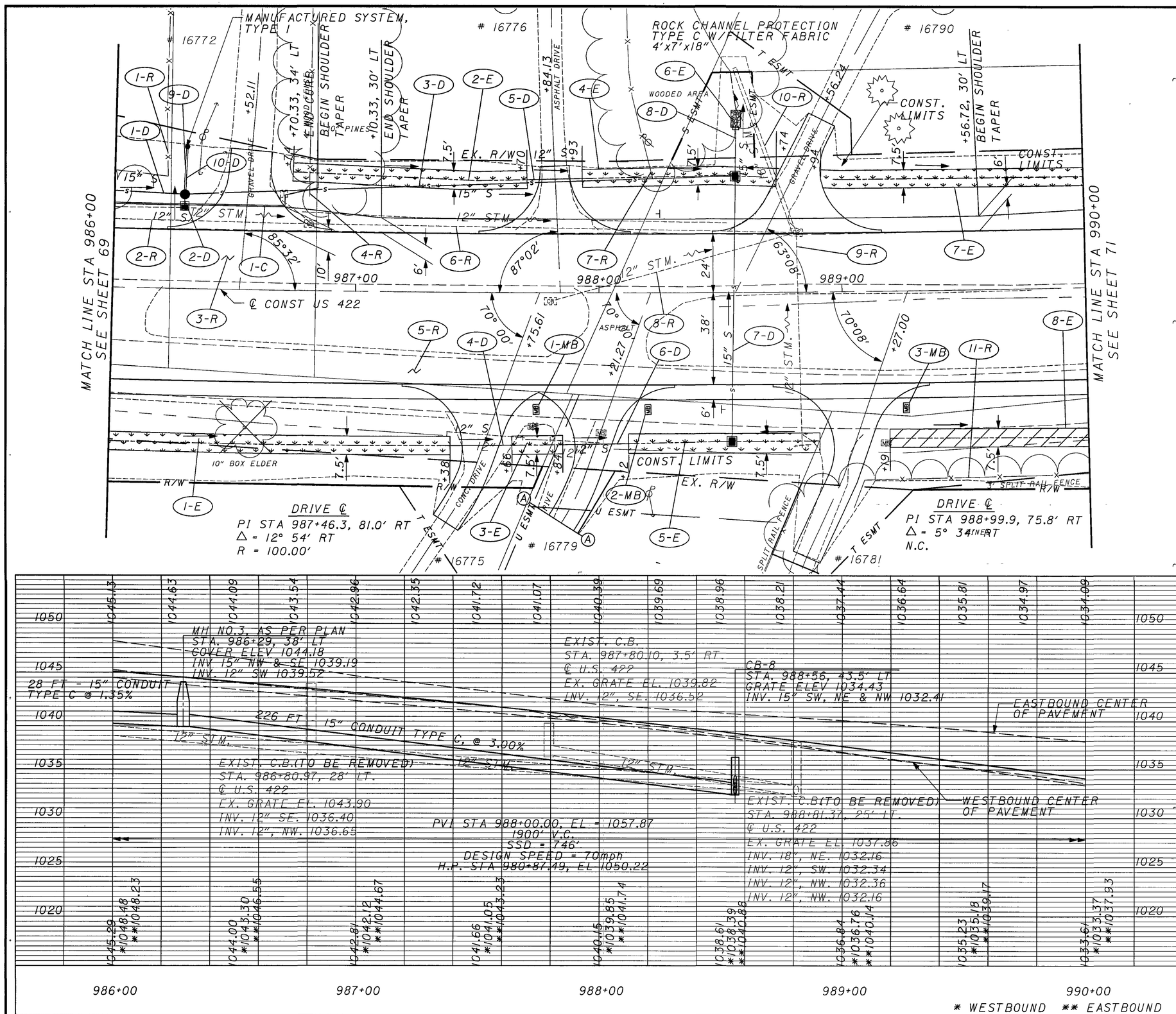

CURVE DATA

P.I. STA. = 997+05.80
Δ = 19° 40' 57" (LT)
Dc = 0° 41' 56"
R = 8,196.95'
T = 1,421.94'
L = 2,815.85'
E = 122.42'
e_{max} = 0.022

= TEMPORARY MAT

= PERMANENT MAT TYPE 1

= PERMANENT MAT TYPE 2

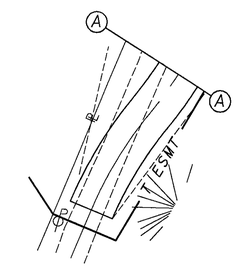

DRIVE ℄
PI STA 987+88.8, 90.6' RT
Δ = 19° 42' LT
R = 100.00
L = 35.24'
PI STA 987+66.7, 117.5 RT
Δ = 17°03' LT
R = 100.00'
L = 29.77'

CROSS REFERENCES

SHEET NO	DESCRIPTION
6	BENCHMARKS
5	CENTERLINE REFERENCE
7 - 13	TYPICAL SECTIONS
38-43	REMOVAL SUBSUMMARY
44-46	DRAINAGE SUBSUMMARY
47-49	ROADWAY SUBSUMMARY
50	EROSION SUBSUMMARY
51	EARTHWORK SUBSUMMARY
52-54	UNDERDRAIN SUBSUMMARY
55-56	PAVEMENT CALCULATIONS
104-106	CROSS SECTIONS
185-186	SUPERELEVATION TABLE
176	UNDERDRAIN PLANS
105	PIPE PROFILES
141 -142	DRIVE PROFILES
207	S&PM PLANS

HORIZONTAL SCALE IN FEET 0 10 20 40

CALCULATED

CHECKED

PLAN AND PROFILE US 422 STA 986+00 TO STA 990+00

GEA/POR-422-18.31/0.00

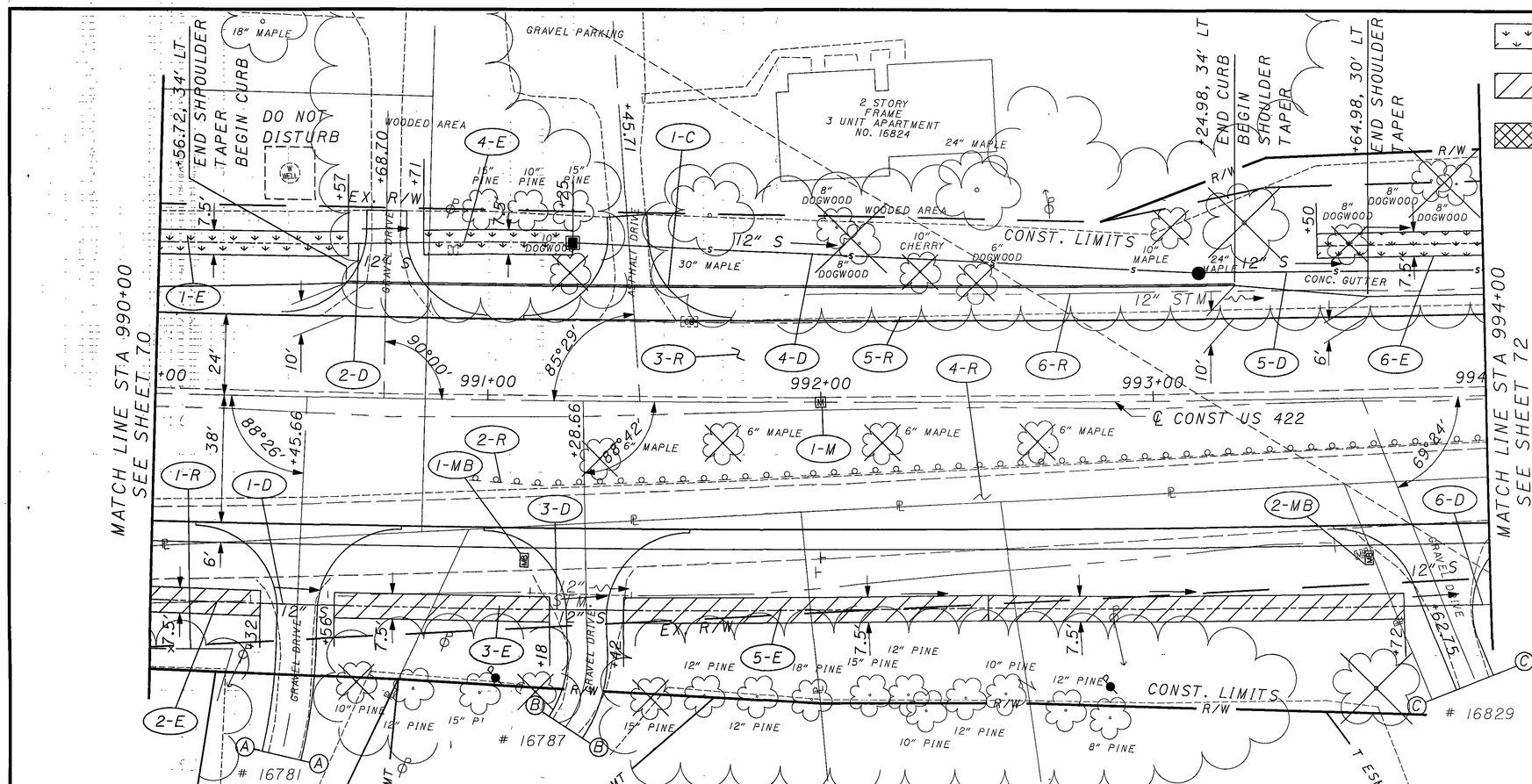

= TEMPORARY MAT

= PERMANENT MAT TYPE 1

= PERMANENT MAT TYPE 2

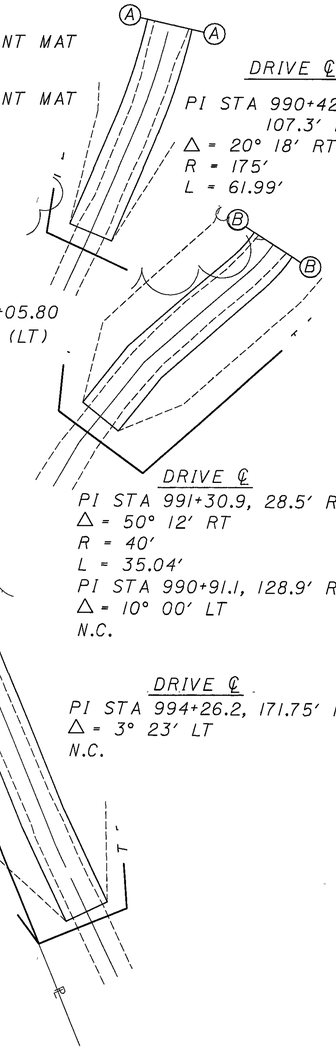

CURVE DATA

P.I. STA. = 997+05.80
Δ = 19° 40' 57" (LT)
Dc = 0° 41' 56"
R = 8,196.95'
T = 1,421.94'
L = 2,815.85'
E = 122.42'
e_{max} = 0.022

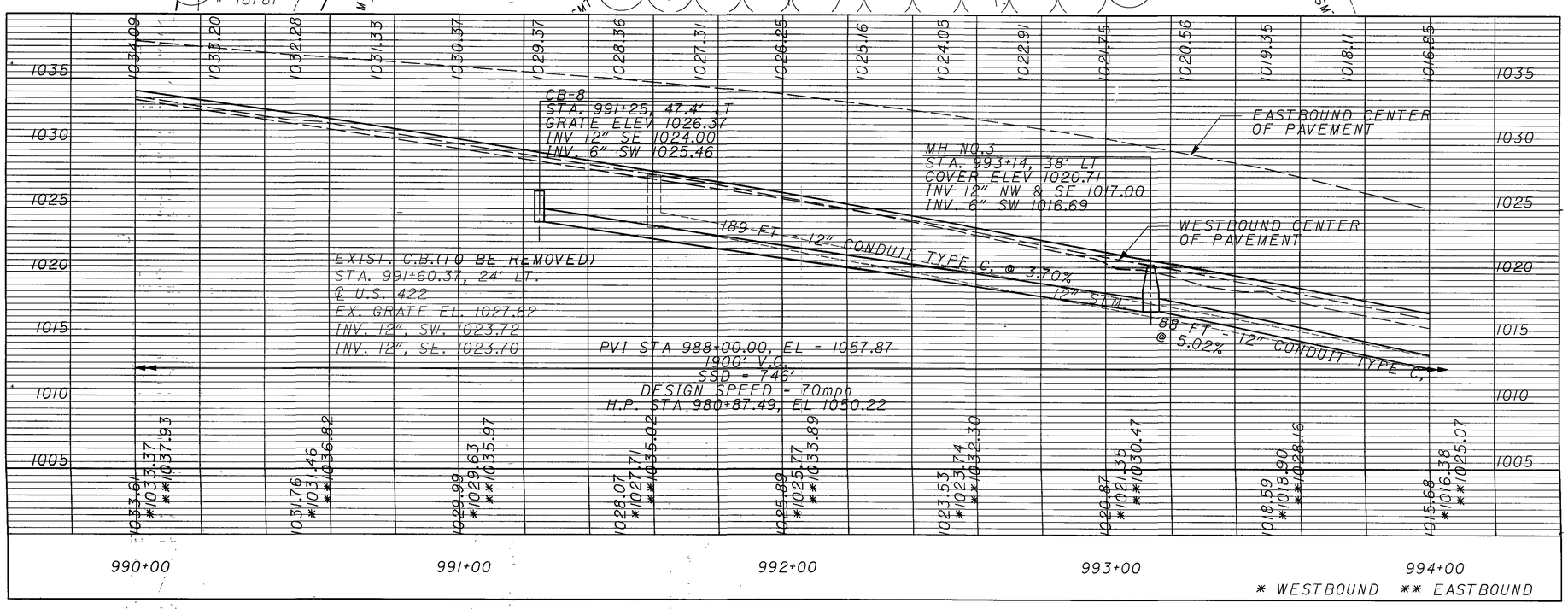

CROSS REFERENCES

SHEET NO	DESCRIPTION
6	BENCHMARKS
5	CENTERLINE REFERENCE
7 - 13	TYPICAL SECTIONS
38-43	REMOVAL SUBSUMMARY
44-46	DRAINAGE SUBSUMMARY
47-49	ROADWAY SUBSUMMARY
50	EROSION SUBSUMMARY
51	EARTHWORK SUBSUMMARY
52-54	UNDERDRAIN SUBSUMMARY
55-56	PAVEMENT CALCULATIONS
106-108	CROSS SECTIONS
148-149	SUPERELEVATION TABLE
177	UNDERDRAIN PLANS
142-143	DRIVE PROFILES
207	S&PM PLANS

HORIZONTAL SCALE IN FEET 0 10 20 40

CALCULATED

CHECKED

PLAN AND PROFILE US 422
STA 990+00 TO STA 994+00

GEA/POR-422-18.31/0.00

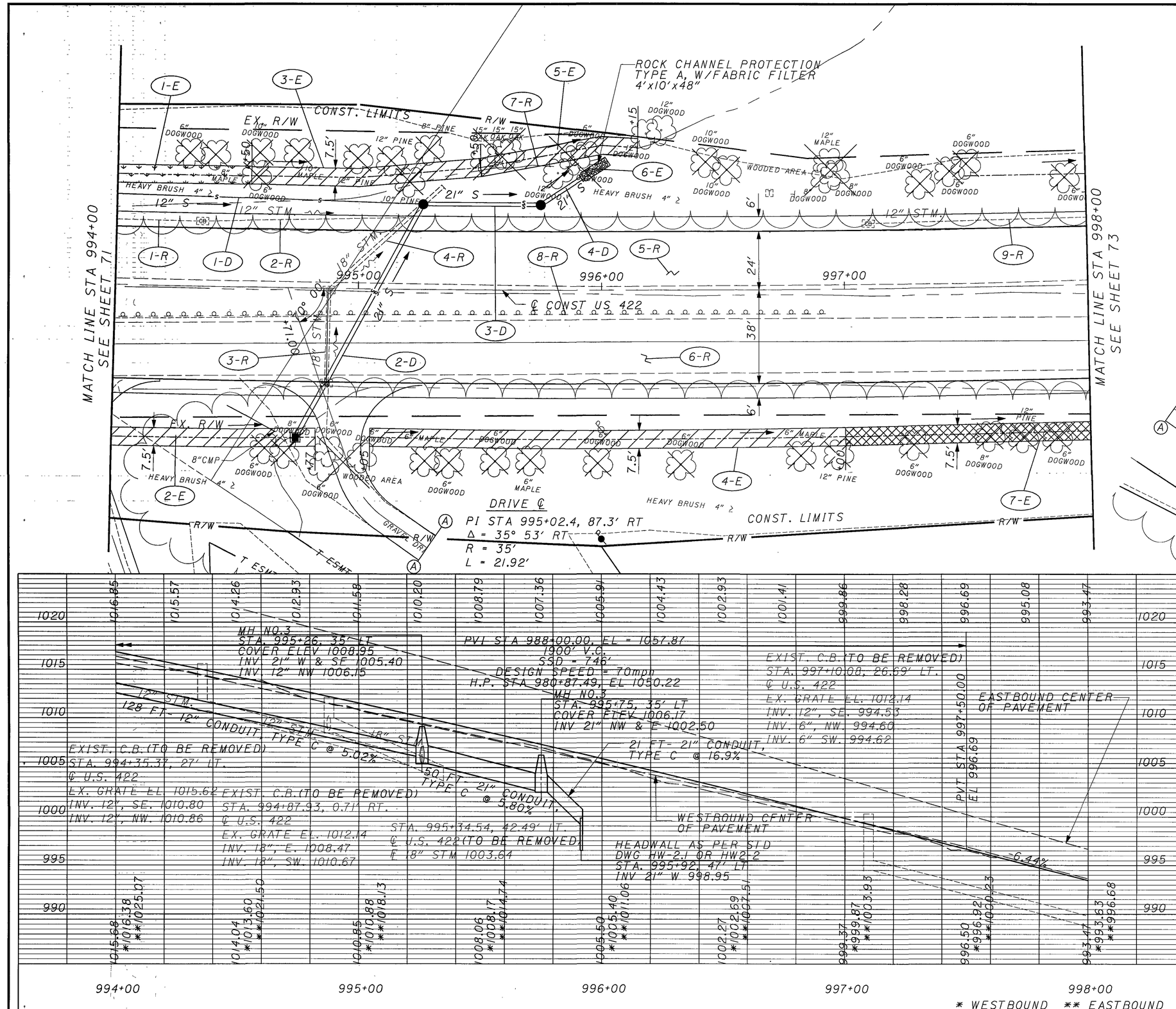

CROSS REFERENCES

SHEET NO	DESCRIPTION
6	BENCHMARKS
5	CENTERLINE REFERENCE
7 - 13	TYPICAL SECTIONS
38-43	REMOVAL SUBSUMMARY
44-46	DRAINAGE SUBSUMMARY
47 - 49	ROADWAY SUBSUMMARY
50	EROSION SUBSUMMARY
51	EARTHWORK SUBSUMMARY
52-54	UNDERDRAIN SUBSUMMARY
55-56	PAVEMENT CALCULATIONS
108-110	CROSS SECTIONS
143	DRIVE PROFILES
148-149	SUPERELEVATION TABLE
178	UNDERDRAIN PLANS
207-208	S&PM PLANS

PLAN AND PROFILE US 422
STA 994+00 TO STA 998+00

GEA/POR-422-18.31/0.00

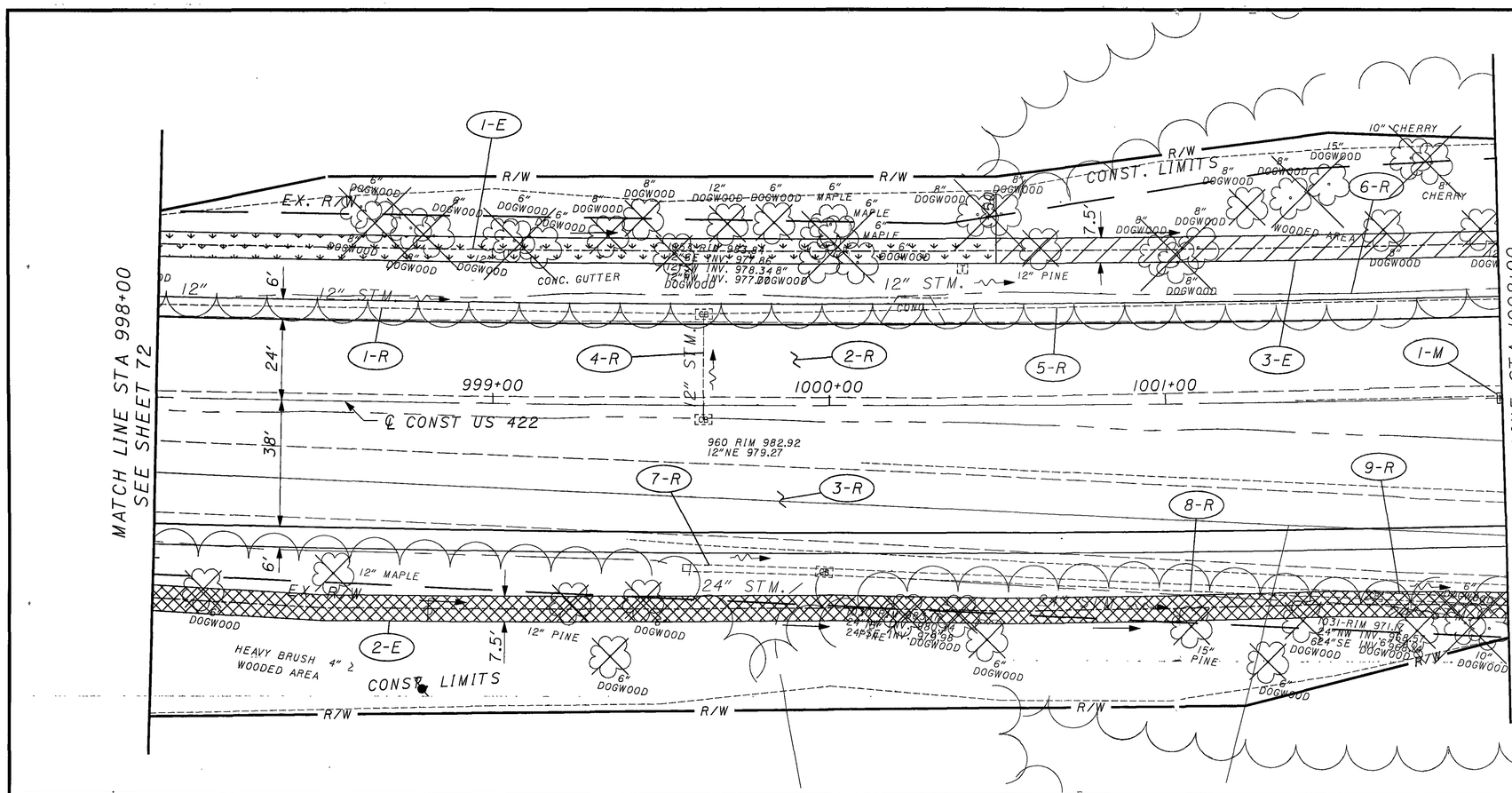

CURVE DATA

P.I. STA. = 997+05.80
Δ = 19° 40′ 57″ (LT)
Dc = 0° 41′ 56″
R = 8,196.95′
T = 1,421.94′
L = 2,815.85′
E = 122.42′
e_{max} = 0.022

= TEMPORARY MAT

= PERMANENT MAT TYPE 1

= PERMANENT MAT TYPE 2

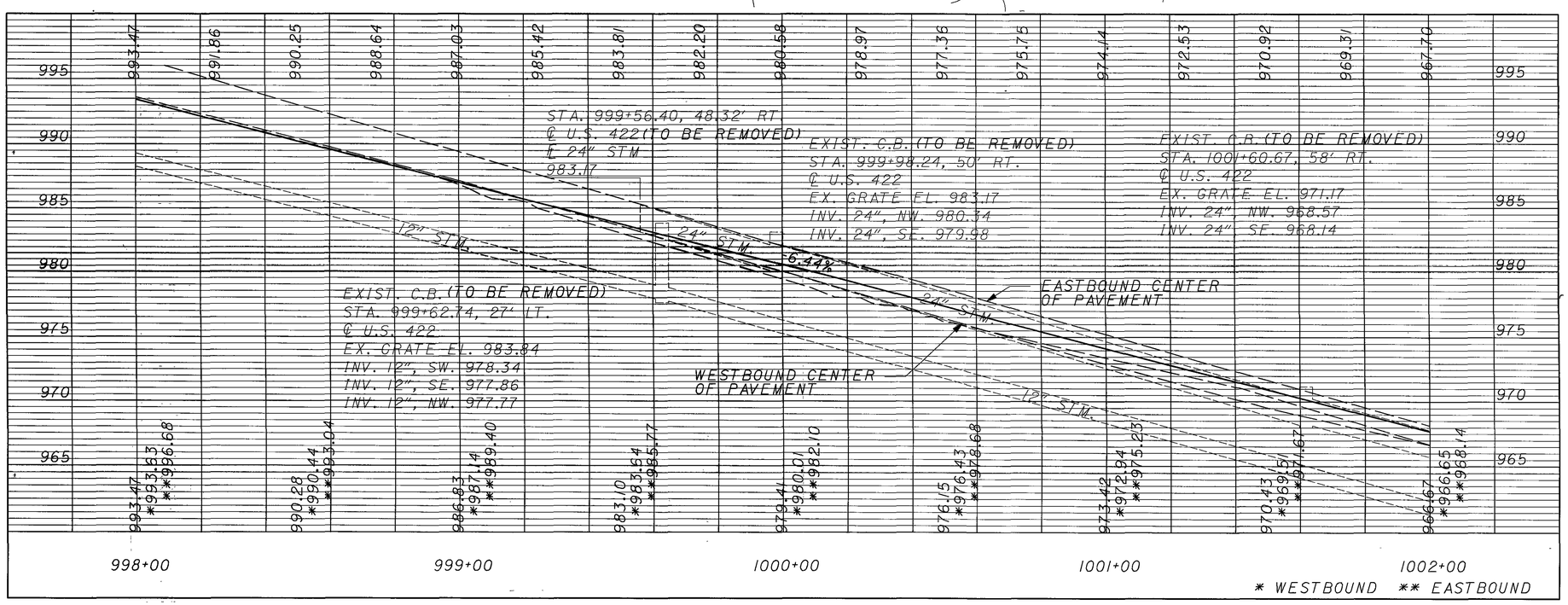

CROSS REFERENCES

SHEET NO	DESCRIPTION
6	BENCHMARKS
5	CENTERLINE REFERENCE
7 - 13	TYPICAL SECTIONS
38-43	REMOVAL SUBSUMMARY
44-46	DRAINAGE SUBSUMMARY
47-49	ROADWAY SUBSUMMARY
50	EROSION SUBSUMMARY
51	EARTHWORK SUBSUMMARY
52-54	UNDERDRAIN SUBSUMMARY
55-56	PAVEMENT CALCULATIONS
110-112	CROSS SECTIONS
149	SUPERELEVATION TABLE
179	UNDERDRAIN PLANS
208	S&PM PLANS

HORIZONTAL SCALE IN FEET 0 10 20 40

CALCULATED

CHECKED

PLAN AND PROFILE US 422
STA 998+00 TO STA 1002+00

GEA/POR-422-18.31/0.00

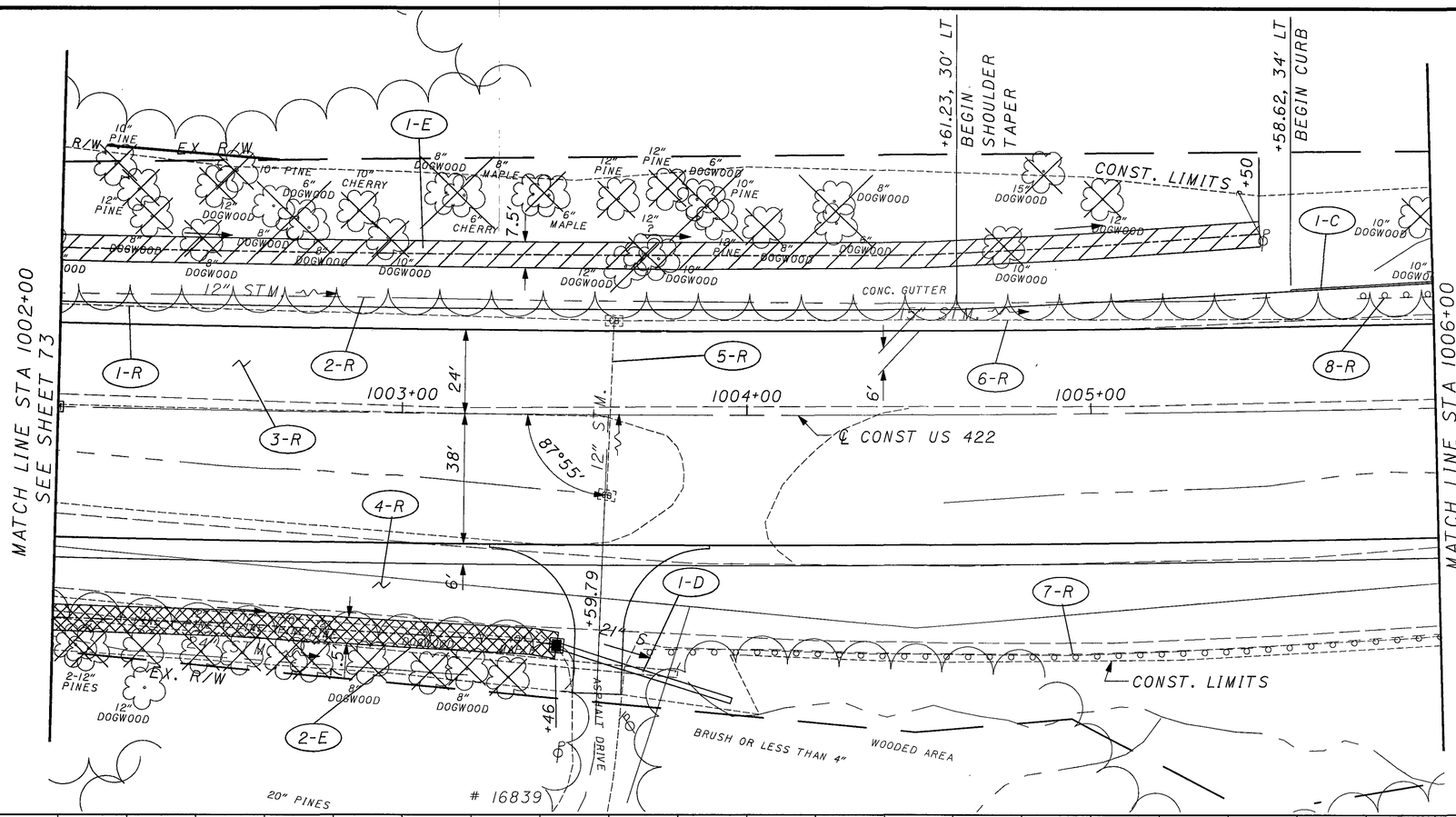

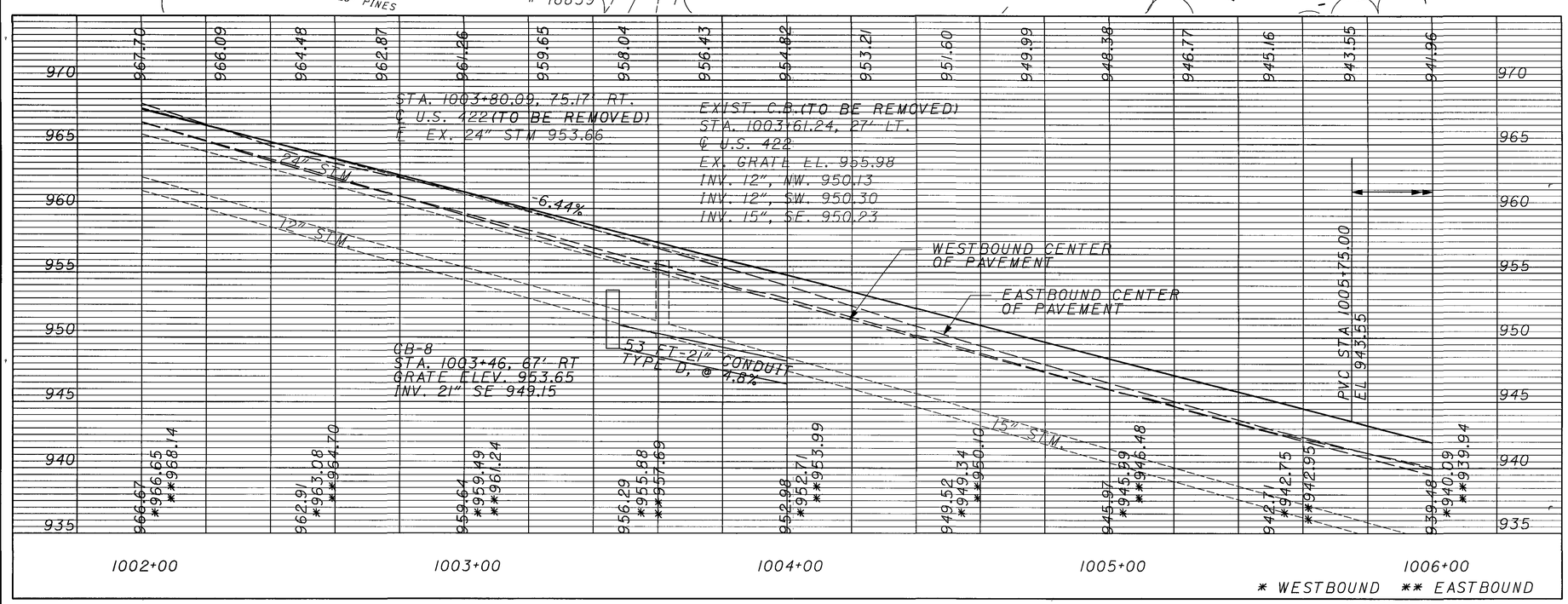

CURVE DATA

P.I. STA. = 997+05.80
Δ = 19° 40' 57" (LT)
Dc = 0° 41' 56"
R = 8,196.95'
T = 1,421.94'
L = 2,815.85'
E = 122.42'
e_{max} = 0.022

= TEMPORARY MAT

= PERMANENT MAT TYPE 1

= PERMANENT MAT TYPE 2

CROSS REFERENCES

SHEET NO	DESCRIPTION
6	BENCHMARKS
5	CENTERLINE REFERENCE
7 - 13	TYPICAL SECTIONS
38-43	REMOVAL SUBSUMMARY
44 - 46	DRAINAGE SUBSUMMARY
47 - 49	ROADWAY SUBSUMMARY
50	EROSION SUBSUMMARY
51	EARTHWORK SUBSUMMARY
52-54	UNDERDRAIN SUBSUMMARY
55-56	PAVEMENT CALCULATIONS
112 -113	CROSS SECTIONS
148-149	SUPERELEVATION TABLE
180	UNDERDRAIN PLANS
143	DRIVE PROFILES
208-209	S&PM PLANS

HORIZONTAL SCALE IN FEET 0 10 20 40

CALCULATED

CHECKED

PLAN AND PROFILE US 422
STA 1002+00 TO STA 1006+00

GEA/POR-422-18.31/0.00

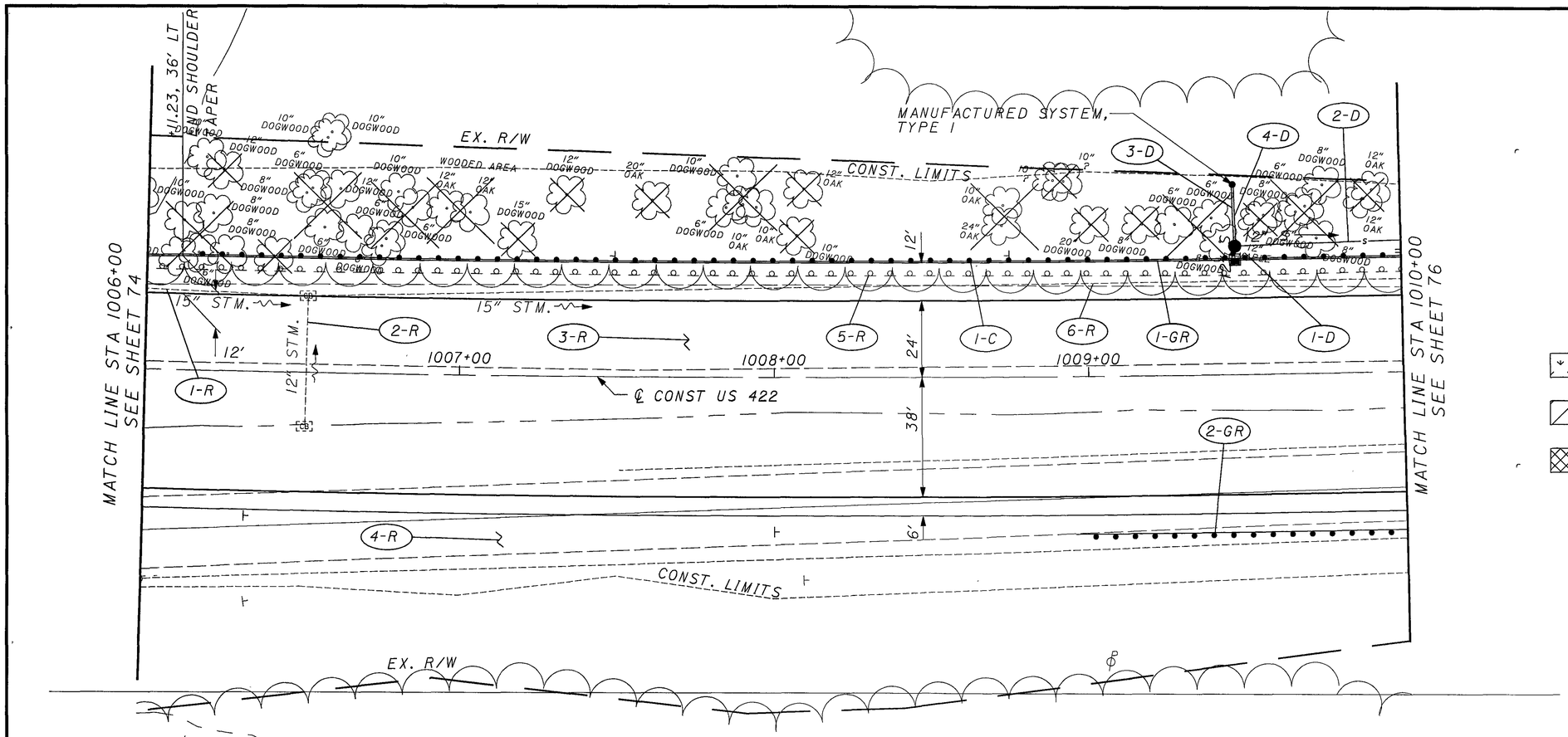

CURVE DATA

P.I. STA. = 997+05.80
Δ = 19° 40′ 57″ (LT)
Dc = 0° 41′ 56″
R = 8,196.95′
T = 1,421.94′
L = 2,815.85′
E = 122.42′
e_{max} = 0.022

= TEMPORARY MAT

= PERMANENT MAT TYPE 1

= PERMANENT MAT TYPE 2

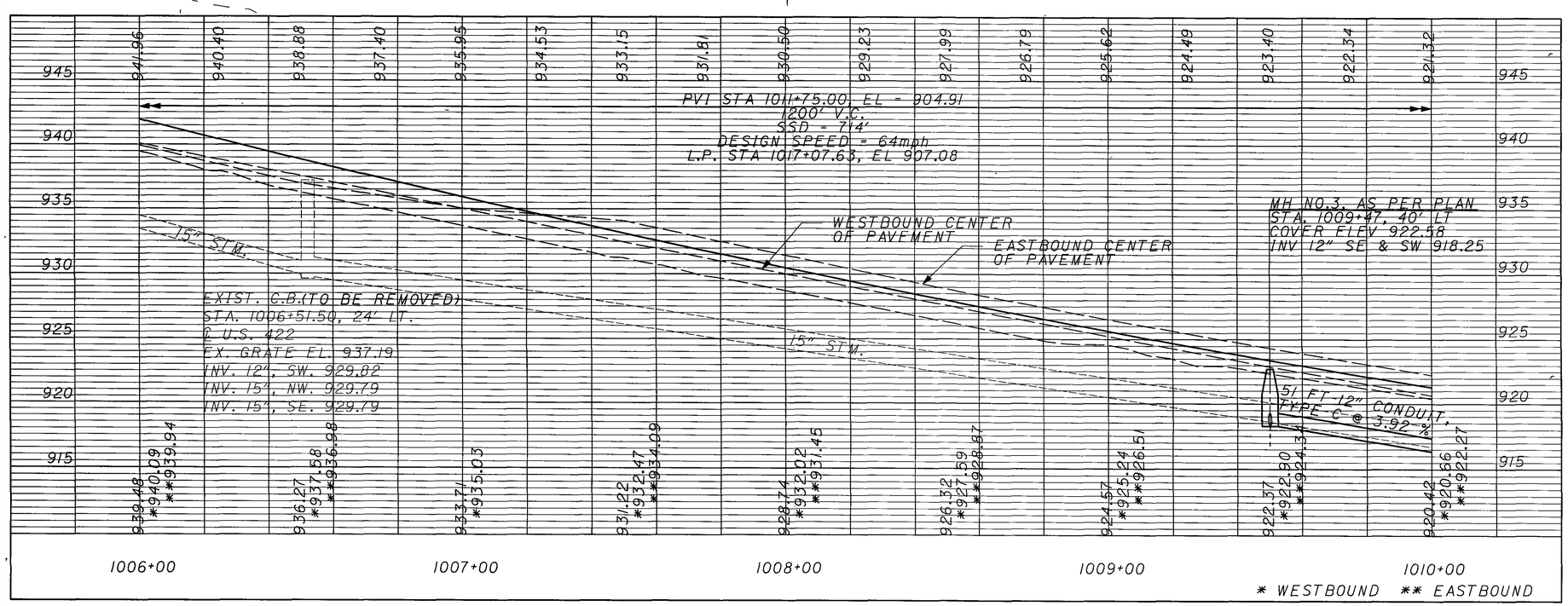

CROSS REFERENCES

SHEET NO	DESCRIPTION
6	BENCHMARKS
5	CENTERLINE REFERENCE
7 - 13	TYPICAL SECTIONS
38-43	REMOVAL SUBSUMMARY
44-46	DRAINAGE SUBSUMMARY
47-49	ROADWAY SUBSUMMARY
50	EROSION SUBSUMMARY
51	EARTHWORK SUBSUMMARY
52-54	UNDERDRAIN SUBSUMMARY
55-56	PAVEMENT CALCULATIONS
113-115	CROSS SECTIONS
149	SUPERELEVATION TABLE
181	UNDERDRAIN PLANS
115	PIPE PROFILES
209	S&PM PLANS

HORIZONTAL SCALE IN FEET 0 10 20 40

CALCULATED

CHECKED

PLAN AND PROFILE US 422
STA 1006+00 TO STA 1010+00

GEA/POR-422-18.31/0.00

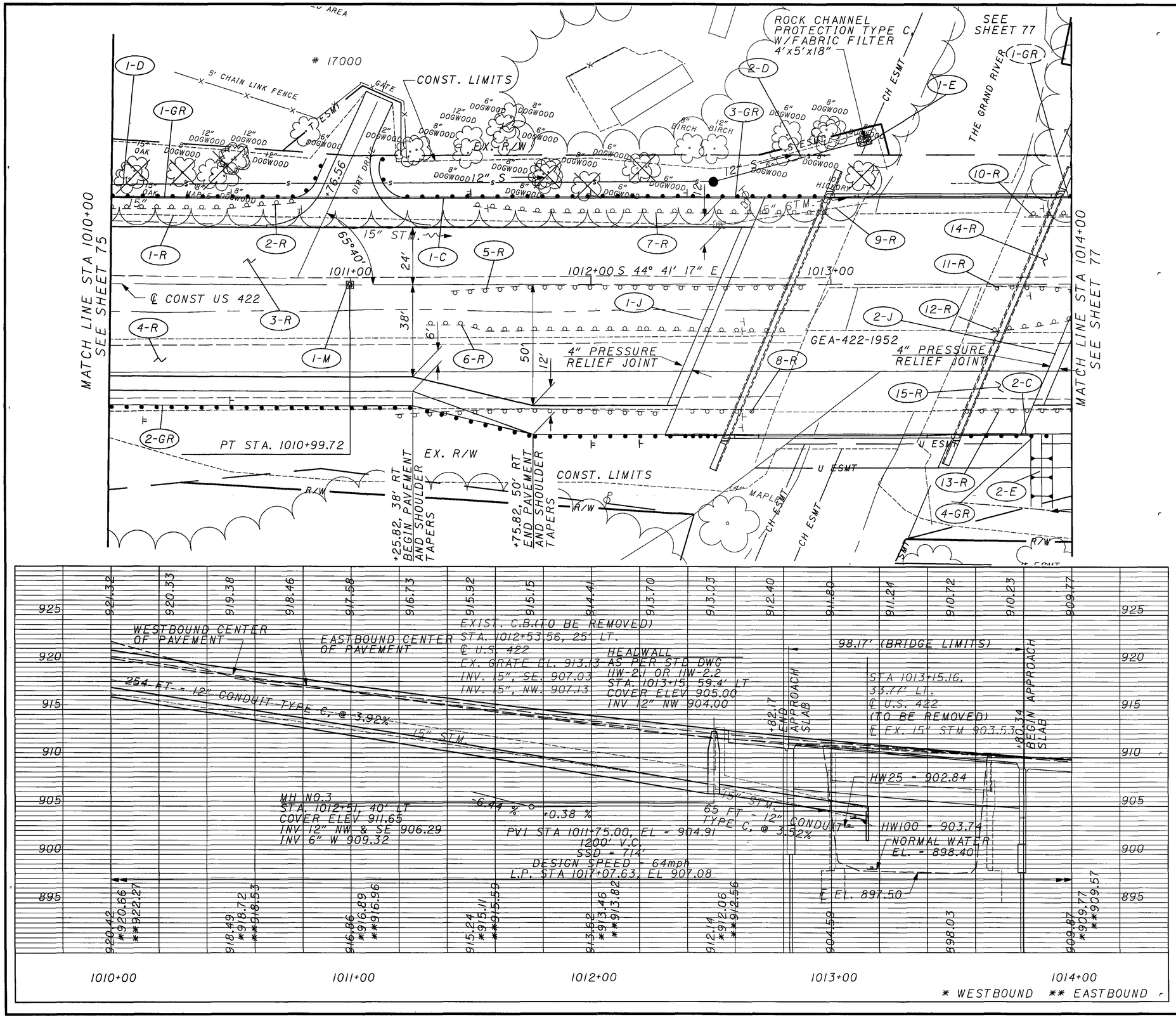

CURVE DATA

P.I. STA. = 997+05.80
Δ = 19° 40' 57" (LT)
Dc = 0° 41' 56"
R = 8,196.95'
T = 1,421.94'
L = 2,815.85'
E = 122.42'
e_{max} = 0.022

= TEMPORARY MAT

= PERMANENT MAT TYPE 1

= PERMANENT MAT TYPE 2

CROSS REFERENCES

SHEET NO	DESCRIPTION
6	BENCHMARKS
5	CENTERLINE REFERENCE
7-13	TYPICAL SECTIONS
38-43	REMOVAL SUBSUMMARY
44-46	DRAINAGE SUBSUMMARY
47-49	ROADWAY SUBSUMMARY
50	EROSION SUBSUMMARY
51	EARTHWORK SUBSUMMARY
52-54	UNDERDRAIN SUBSUMMARY
55-56	PAVEMENT CALCULATIONS
115-117	CROSS SECTIONS
148-150	SUPERELEVATION TABLE
154	PAVEMENT DETAILS
160	JOINT DETAILS
182	UNDERDRAIN PLANS
144	DRIVE PROFILES
209	S&PM PLANS

HORIZONTAL SCALE IN FEET 0 10 20 40

CALCULATED | CHECKED

PLAN AND PROFILE US 422
STA 1010+00 TO STA 1014+00

GEA/POR-422-18.31/0.00

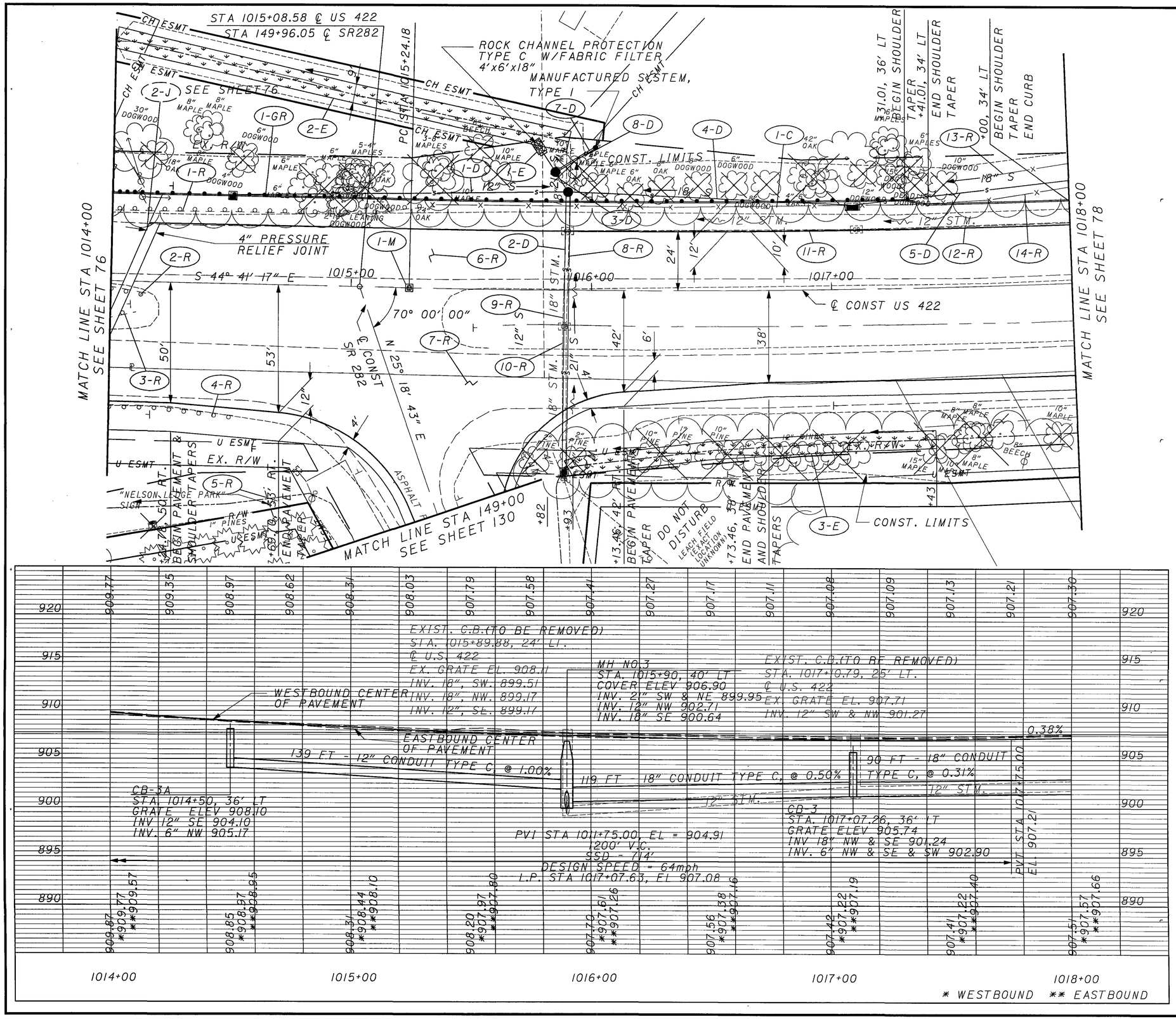

CURVE DATA

P.I. STA. = 1016+86.23
Δ = 4° 02' 45" (LT)
Dc = 1° 14' 56"
R = 4587.90'
T = 162.05'
L = 323.96'
E = 2.86'
e_{max} = 0.035

= TEMPORARY MAT

= PERMANENT MAT TYPE 1

= PERMANENT MAT TYPE 2

CROSS REFERENCES

SHEET NO	DESCRIPTION
6	BENCHMARKS
5	CENTERLINE REFERENCE
7 - 13	TYPICAL SECTIONS
38-43	REMOVAL SUBSUMMARY
44-46	DRAINAGE SUBSUMMARY
47-49	ROADWAY SUBSUMMARY
50	EROSION SUBSUMMARY
51	EARTHWORK SUBSUMMARY
52-54	UNDERDRAIN SUBSUMMARY
55-56	PAVEMENT CALCULATIONS
130	PLAN AND PROFILE SR 282
117-118	CROSS SECTIONS
150	SUPERELEVATION TABLE
155	PAVEMENT DETAILS
161	JOINT DETAILS
183	UNDERDRAIN PLANS
117	PIPE PROFILES
209-210	S&PM PLANS

HORIZONTAL SCALE IN FEET 0 10 20 40

CALCULATED

CHECKED

PLAN AND PROFILE US 422 STA 1014+00 TO STA 1018+00

GEA/POR-422-18.31/0.00

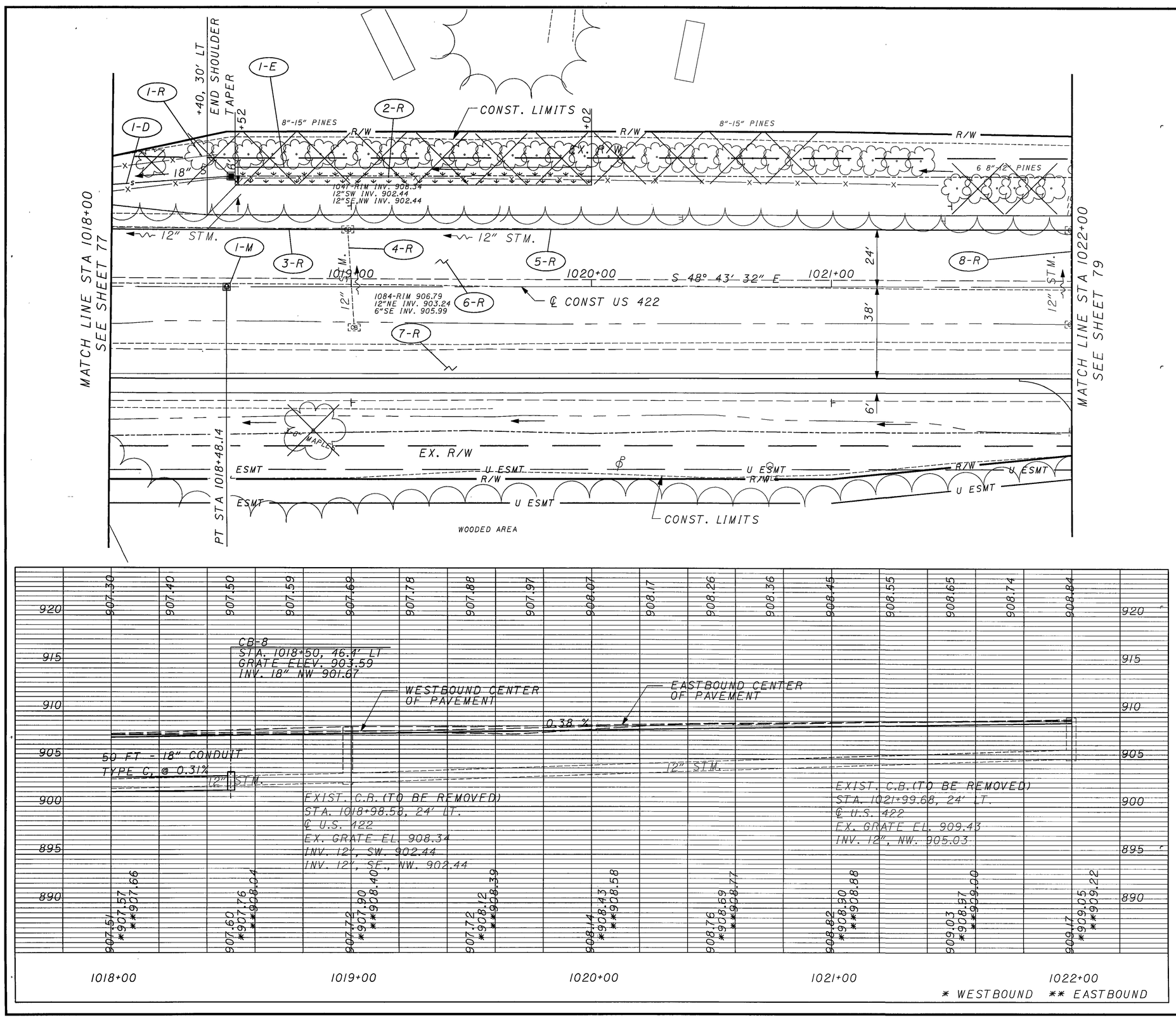

CURVE DATA

P.I. STA. = 1016+86.23
Δ = 4° 02′ 45″ (LT)
Dc = 1° 14′ 56″
R = 4587.90′
T = 162.05′
L = 323.96′
E = 2.86′
e_{max} = 0.035

= TEMPORARY MAT

= PERMANENT MAT TYPE 1

= PERMANENT MAT TYPE 2

CROSS REFERENCES

SHEET NO	DESCRIPTION
6	BENCHMARKS
5	CENTERLINE REFERENCE
7 - 13	TYPICAL SECTIONS
38-43	REMOVAL SUBSUMMARY
44-46	DRAINAGE SUBSUMMARY
47-49	ROADWAY SUBSUMMARY
50	EROSION SUBSUMMARY
51	EARTHWORK SUBSUMMARY
52-54	UNDERDRAIN SUBSUMMARY
55-56	PAVEMENT CALCULATIONS
118 -120	CROSS SECTIONS
150	SUPERELEVATION TABLE
184	UNDERDRAIN PLANS
210	S&PM PLANS

0 10 20 40
HORIZONTAL SCALE IN FEET

CALCULATED
CHECKED

PLAN AND PROFILE US 422
STA 1018+00 TO STA 1022+00

GEA/POR-422-18.31/0.00

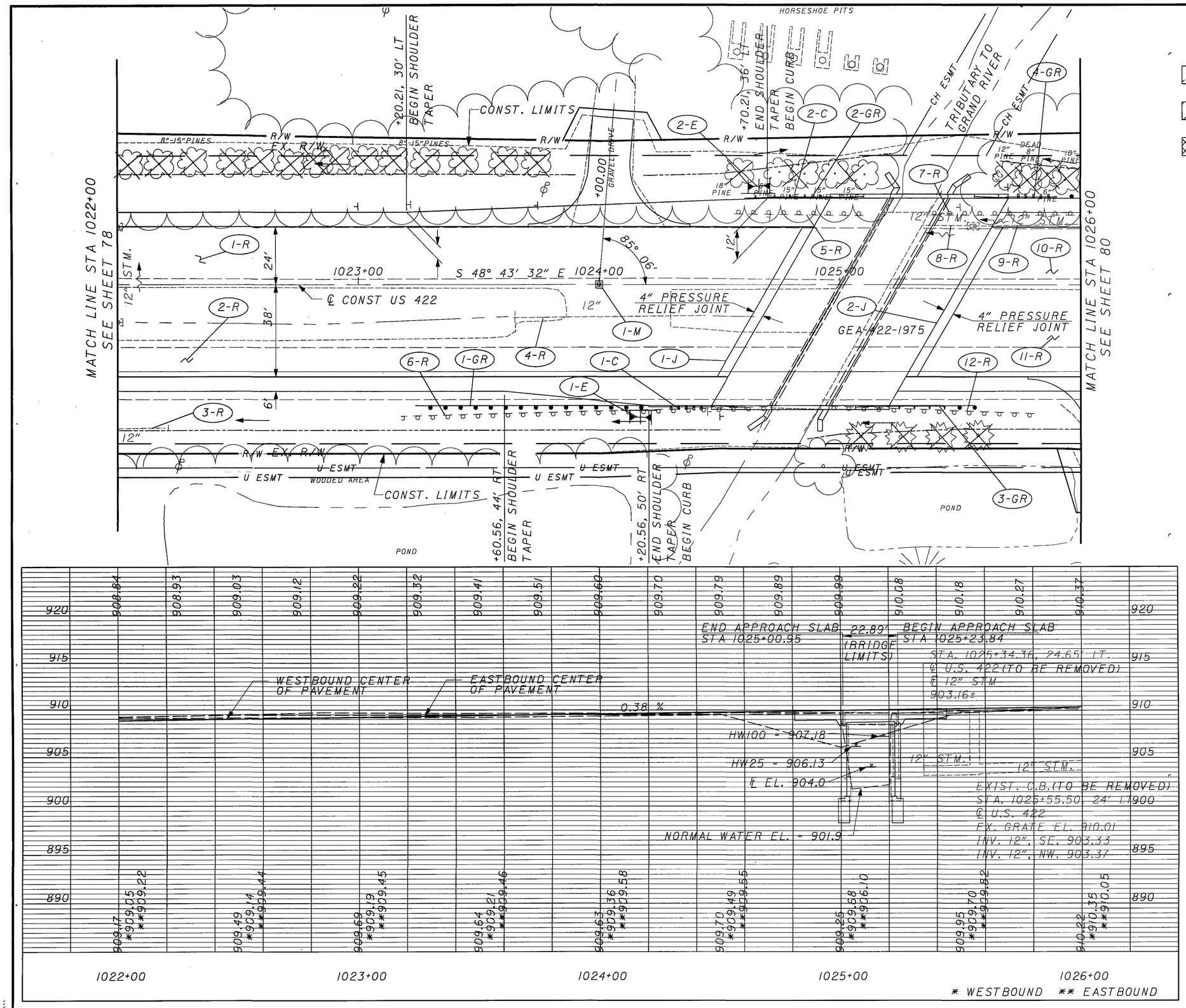

CROSS REFERENCES

SHEET NO	DESCRIPTION
6	BENCHMARKS
5	CENTERLINE REFERENCE
7 - 13	TYPICAL SECTIONS
38-43	REMOVAL SUBSUMMARY
44-46	DRAINAGE SUBSUMMARY
47-49	ROADWAY SUBSUMMARY
50	EROSION SUBSUMMARY
51	EARTHWORK SUBSUMMARY
52-54	UNDERDRAIN SUBSUMMARY
55-56	PAVEMENT CALCULATIONS
120-121	CROSS SECTIONS
185	UNDERDRAIN PLANS
210-211	S&PM PLANS
144	DRIVE PROFILES

PLAN AND PROFILE US 422
STA 1022+00 TO STA 1026+00

GEA/POR-422-18.31/0.00

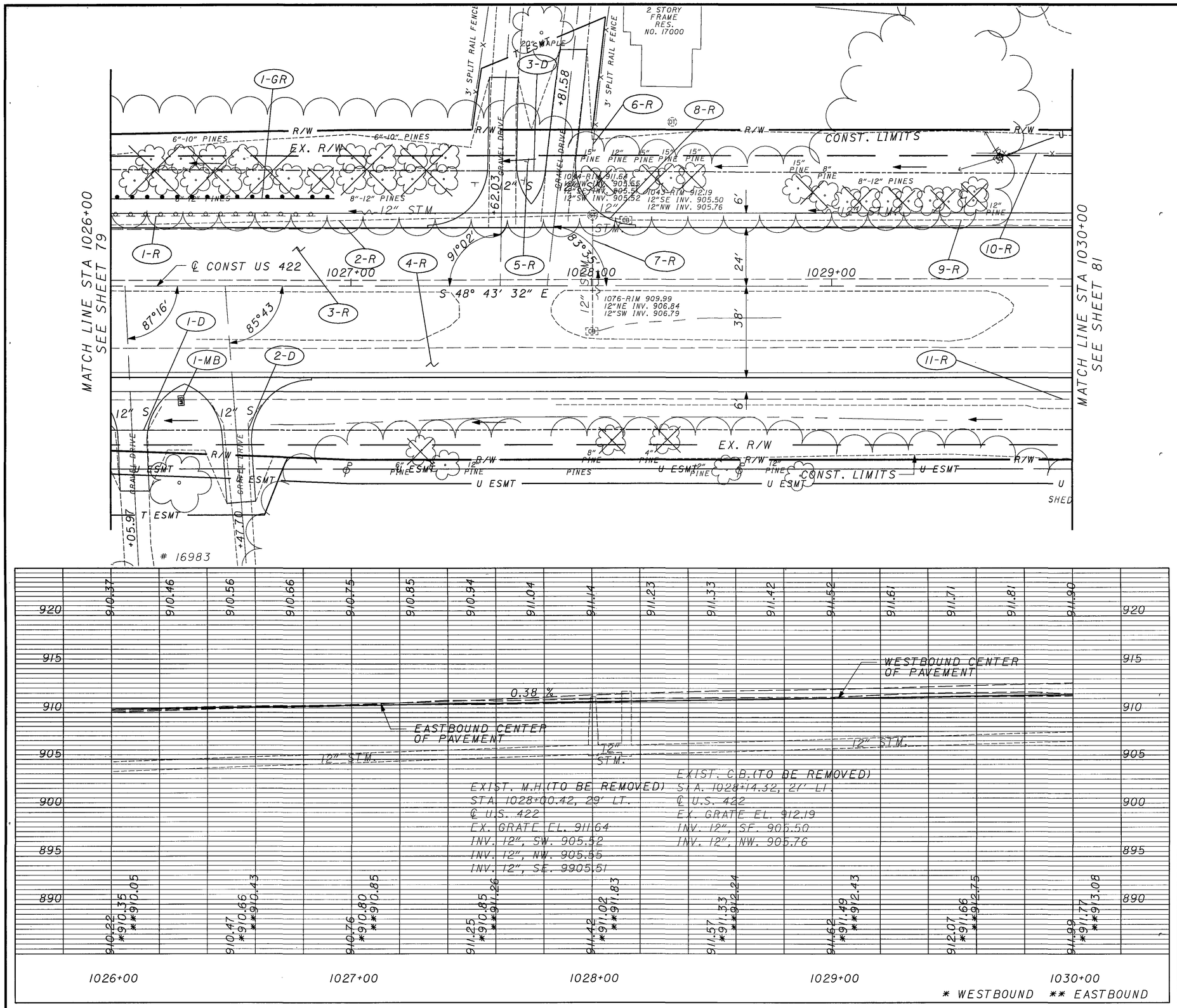

CROSS REFERENCES

SHEET NO	DESCRIPTION
6	BENCHMARKS
5	CENTERLINE REFERENCE
7 - 13	TYPICAL SECTIONS
38-43	REMOVAL SUBSUMMARY
44-46	DRAINAGE SUBSUMMARY
47-49	ROADWAY SUBSUMMARY
50	EROSION SUBSUMMARY
51	EARTHWORK SUBSUMMARY
52-54	UNDERDRAIN SUBSUMMARY
55-56	PAVEMENT CALCULATIONS
121 -122	CROSS SECTIONS
186	UNDERDRAIN PLANS
144-145	DRIVE PROFILES
211	S&PM PLANS

HORIZONTAL SCALE IN FEET 0 10 20 40

CALCULATED

CHECKED

PLAN AND PROFILE US 422 STA 1026+00 TO STA 1030+00

GEA/POR-422-18.31/0.00

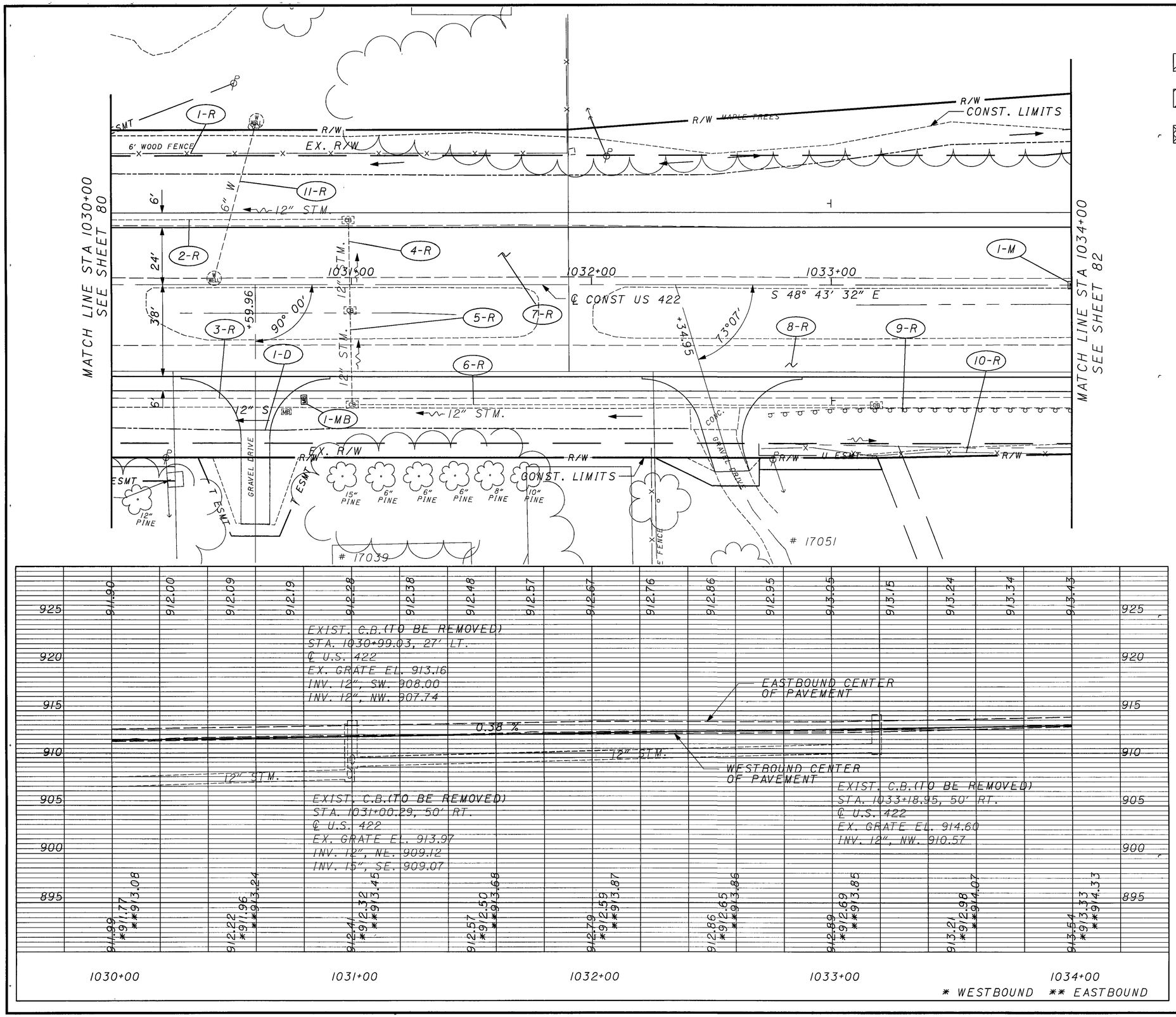

CROSS REFERENCES

SHEET NO	DESCRIPTION
6	BENCHMARKS
5	CENTERLINE REFERENCE
7-13	TYPICAL SECTIONS
38-43	REMOVAL SUBSUMMARY
44-46	DRAINAGE SUBSUMMARY
47-49	ROADWAY SUBSUMMARY
50	EROSION SUBSUMMARY
51	EARTHWORK SUBSUMMARY
52-54	UNDERDRAIN SUBSUMMARY
55-56	PAVEMENT CALCULATIONS
122-124	CROSS SECTIONS
187	UNDERDRAIN PLANS
145	DRIVE PROFILES
211	S&PM PLANS

CALCULATED

CHECKED

PLAN AND PROFILE US 422
STA 1030+00 TO STA 1034+00

GEA/POR-422-18.31/0.00

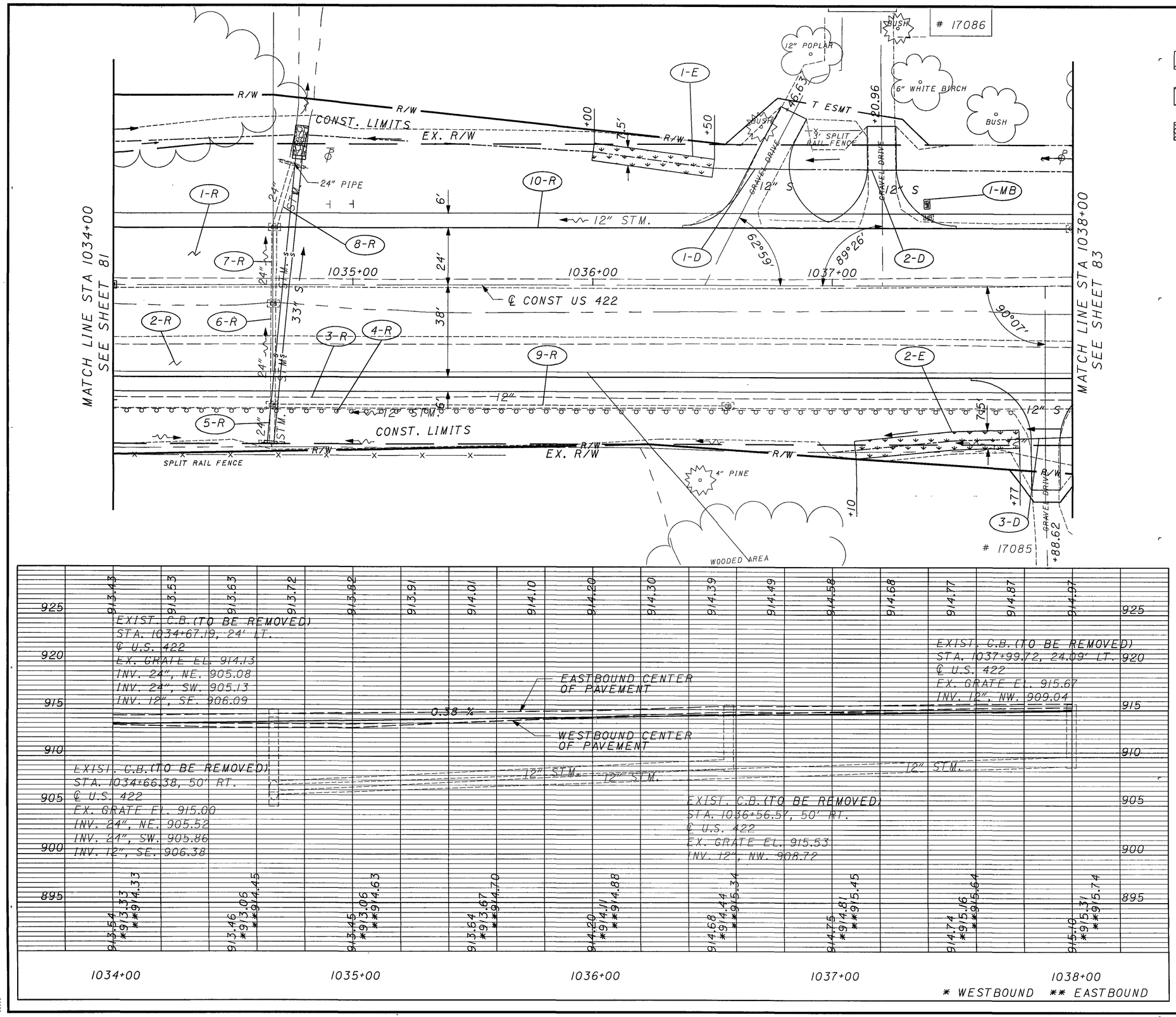

CROSS REFERENCES

SHEET NO	DESCRIPTION
6	BENCHMARKS
5	CENTERLINE REFERENCE
7 - 13	TYPICAL SECTIONS
38-43	REMOVAL SUBSUMMARY
44-46	DRAINAGE SUBSUMMARY
47 - 49	ROADWAY SUBSUMMARY
50	EROSION SUBSUMMARY
51	EARTHWORK SUBSUMMARY
52-54	UNDERDRAIN SUBSUMMARY
55-56	PAVEMENT CALCULATIONS
124-125	CROSS SECTIONS
188	UNDERDRAIN PLANS
145	DRIVE PROFILES
211 -212	S&PM PLANS
195	CULVERT DETAIL

CALCULATED

CHECKED

PLAN AND PROFILE US 422
STA 1034+00 TO STA 1038+00

GEA/POR-422-18.31/0.00

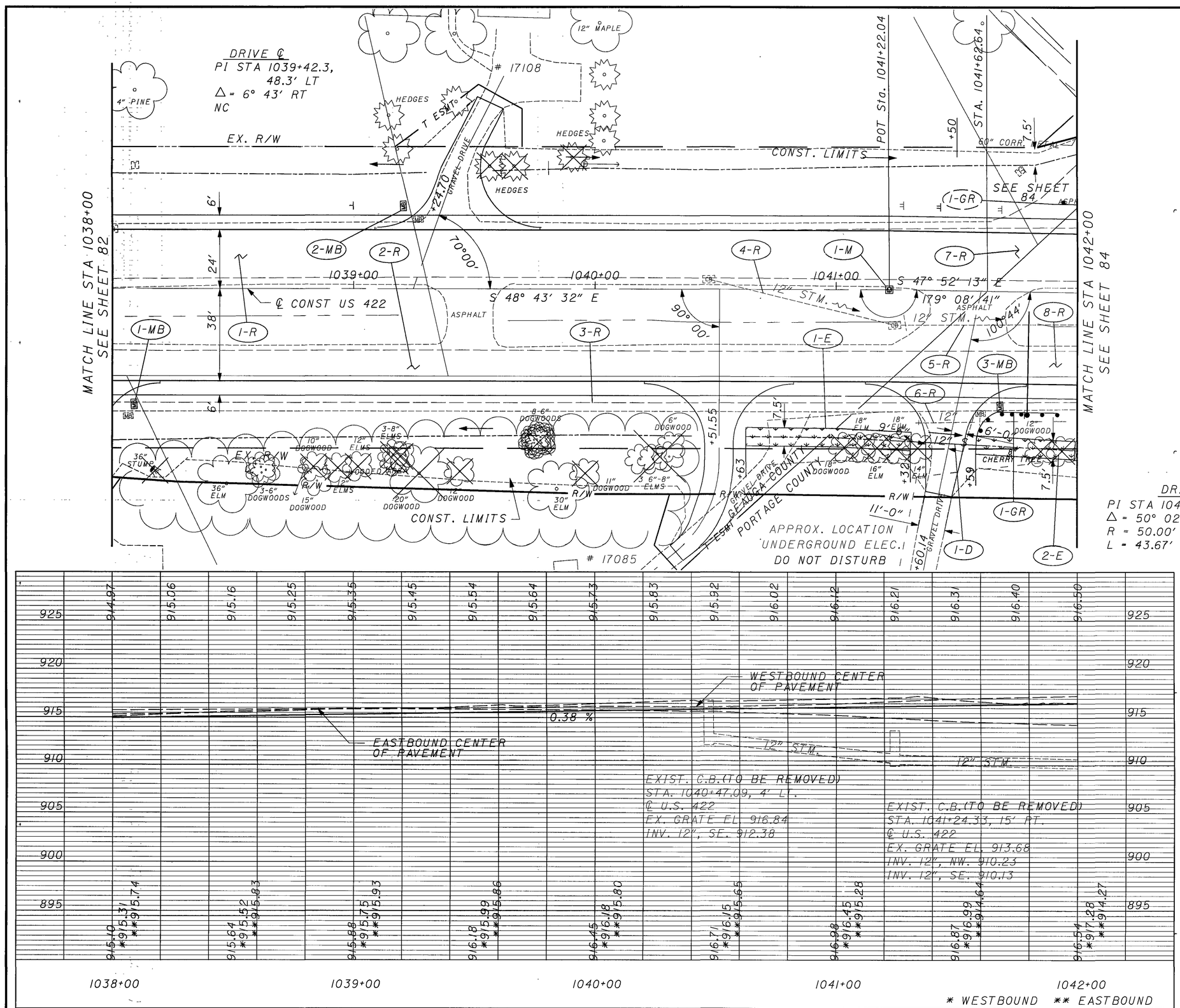

CROSS REFERENCES

SHEET NO	DESCRIPTION
6	BENCHMARKS
5	CENTERLINE REFERENCE
7-13	TYPICAL SECTIONS
38-43	REMOVAL SUBSUMMARY
44-46	DRAINAGE SUBSUMMARY
47-49	ROADWAY SUBSUMMARY
50	EROSION SUBSUMMARY
51	EARTHWORK SUBSUMMARY
52-54	UNDERDRAIN SUBSUMMARY
55-56	PAVEMENT CALCULATIONS
125-126	CROSS SECTIONS
156	PAVEMENT DETAILS
162	JOINT DETAILS
189	UNDERDRAIN PLANS
146	DRIVE PROFILES
212	S&PM PLANS

CALCULATED
CHECKED

PLAN AND PROFILE US 422
STA 1038+00 TO STA 1042+00

GEA/POR-422-18.31/0.00

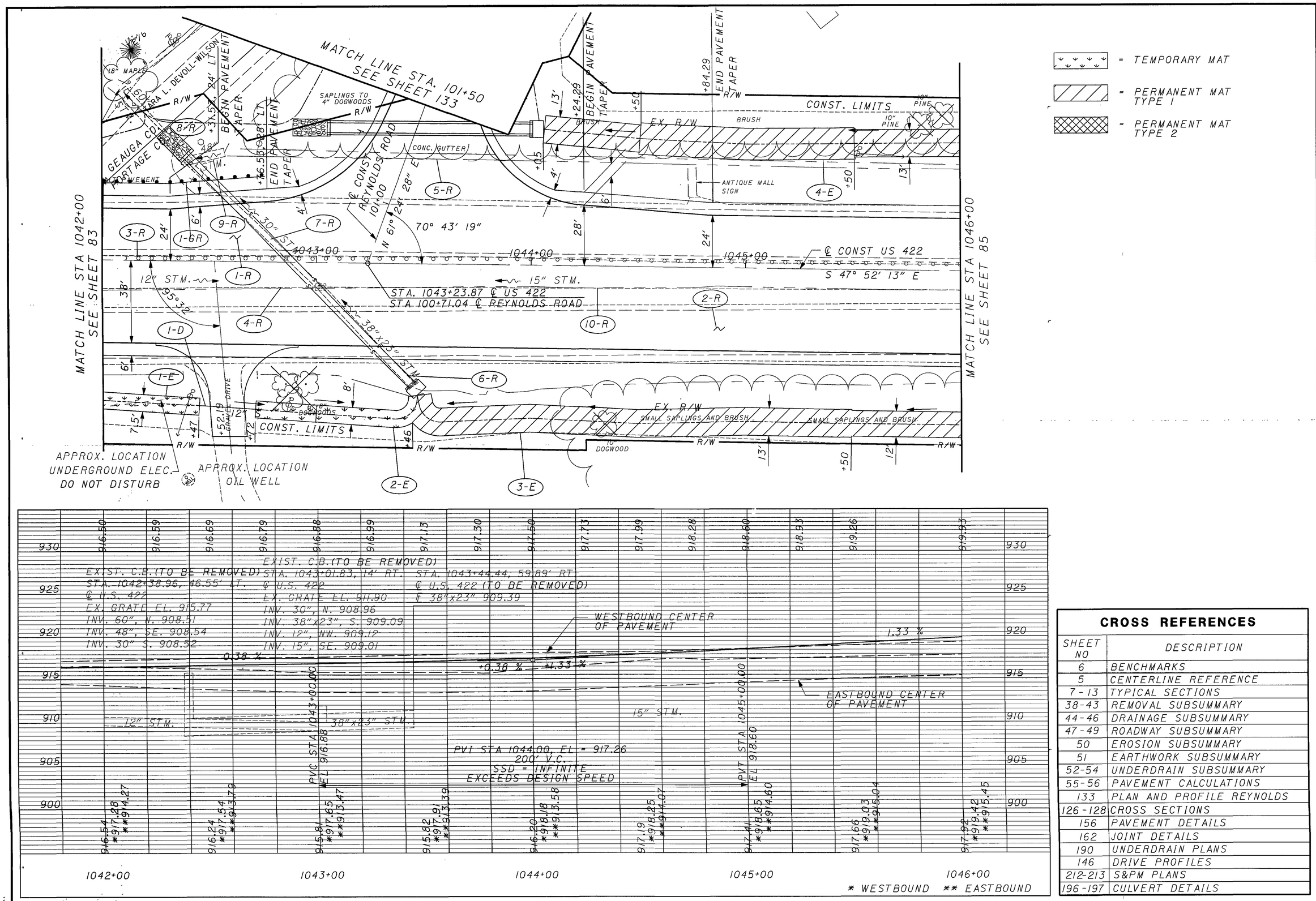

CROSS REFERENCES

SHEET NO	DESCRIPTION
6	BENCHMARKS
5	CENTERLINE REFERENCE
7 - 13	TYPICAL SECTIONS
38-43	REMOVAL SUBSUMMARY
44-46	DRAINAGE SUBSUMMARY
47-49	ROADWAY SUBSUMMARY
50	EROSION SUBSUMMARY
51	EARTHWORK SUBSUMMARY
52-54	UNDERDRAIN SUBSUMMARY
55-56	PAVEMENT CALCULATIONS
133	PLAN AND PROFILE REYNOLDS
126-128	CROSS SECTIONS
156	PAVEMENT DETAILS
162	JOINT DETAILS
190	UNDERDRAIN PLANS
146	DRIVE PROFILES
212-213	S&PM PLANS
196-197	CULVERT DETAILS

CALCULATED

CHECKED

PLAN AND PROFILE US 422
STA 1042+00 TO STA 1046+00

GEA/POR-422-18.31/0.00

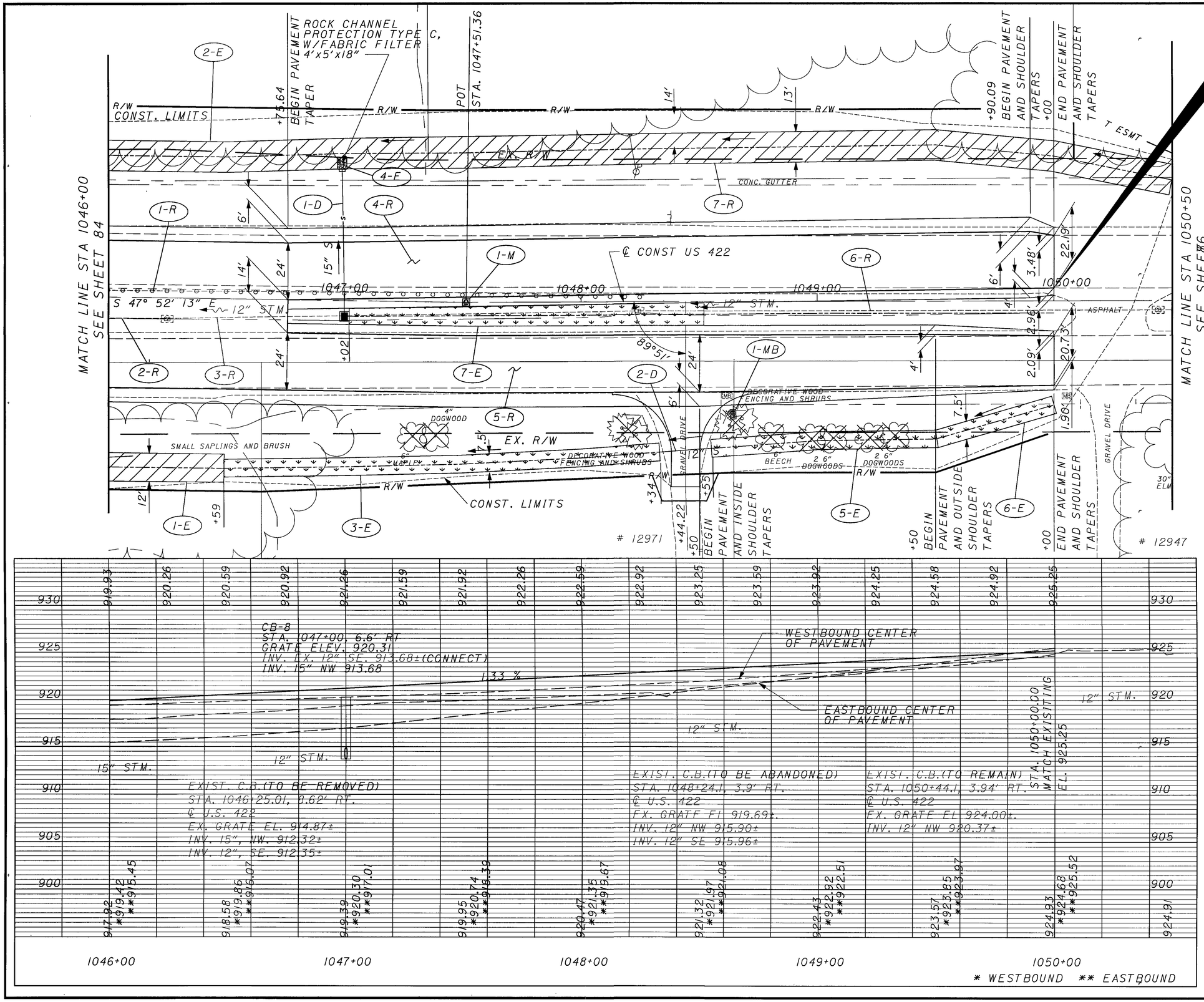

CROSS REFERENCES

SHEET	DESCRIPTION
133	PLAN AND PROFILE REYNOLDS
126-128	CROSS SECTIONS
157	PAVEMENT DETAILS
162	JOINT DETAILS
190	UNDERDRAIN PLANS
146	DRIVE PROFILES
212-213	S&PM PLANS

CROSS REFERENCES

SHEET NO	DESCRIPTION
6	BENCHMARKS
5	CENTERLINE REFERENCE
7-13	TYPICAL SECTIONS
38-43	REMOVAL SUBSUMMARY
44-46	DRAINAGE SUBSUMMARY
47-49	ROADWAY SUBSUMMARY
50	EROSION SUBSUMMARY
51	EARTHWORK SUBSUMMARY
52-54	UNDERDRAIN SUBSUMMARY
55-56	PAVEMENT CALCULATIONS

PLAN AND PROFILE US 422
STA 1046+00 TO STA 1050+00

GEA/POR-422-18.31/0.00

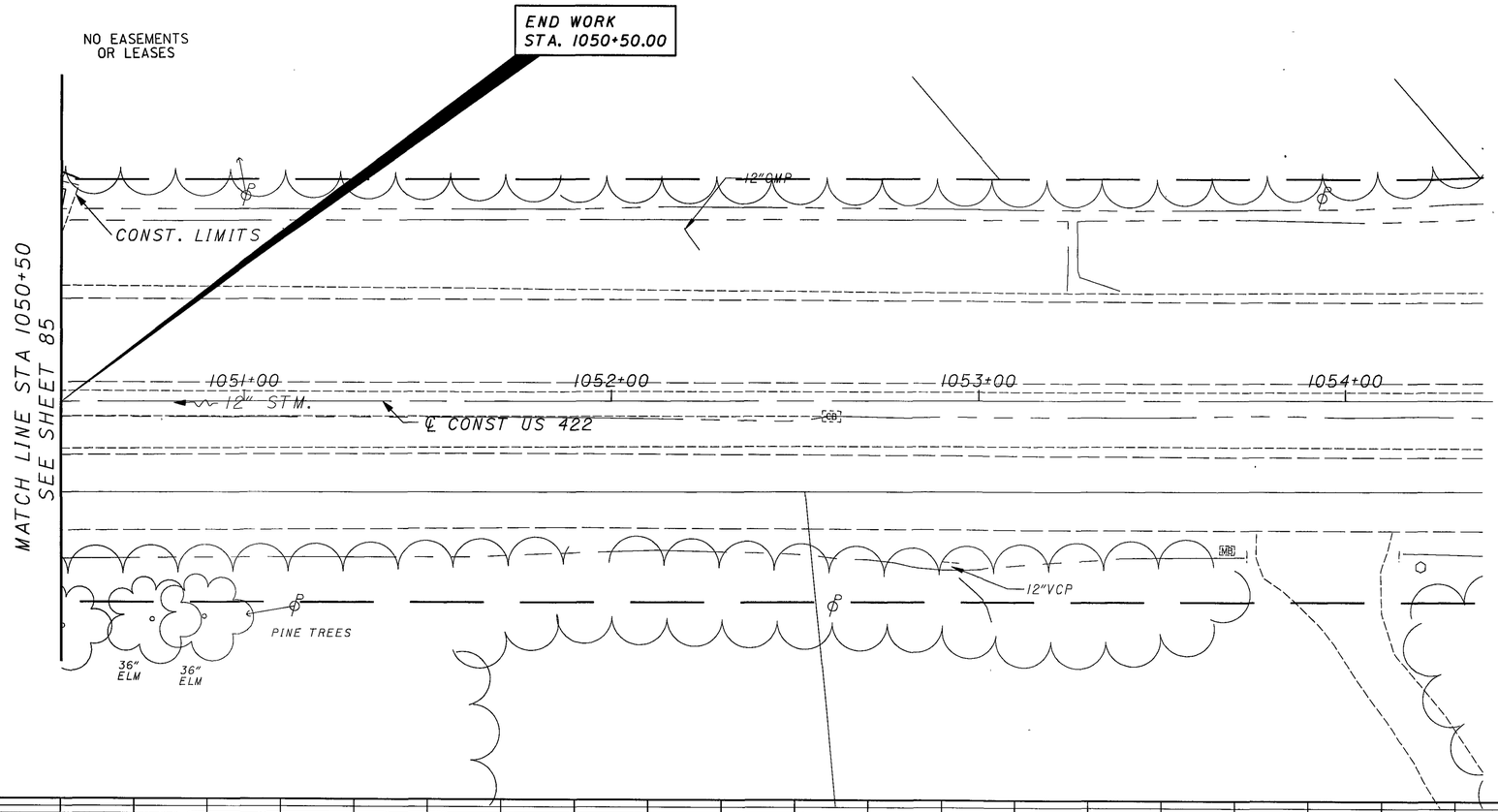

= TEMPORARY MAT

= PERMANENT MAT TYPE 1

= PERMANENT MAT TYPE 2

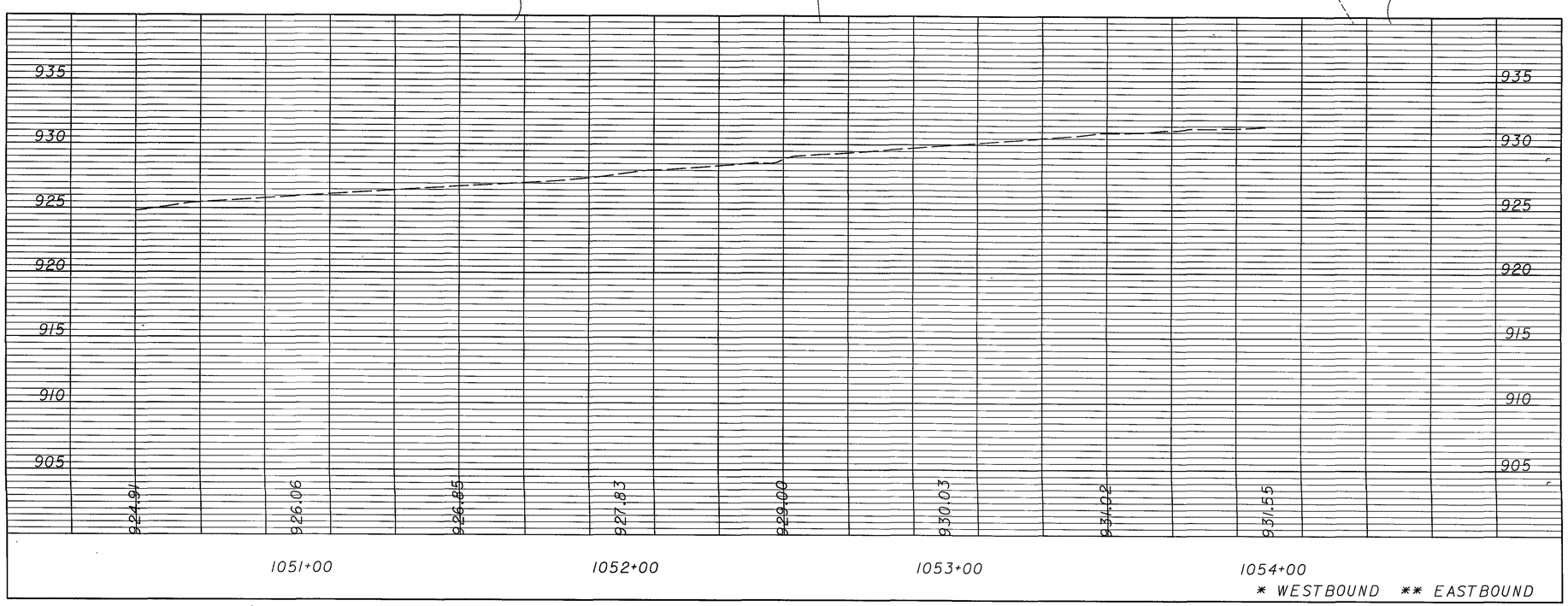

CROSS REFERENCES

SHEET NO	DESCRIPTION
6	BENCHMARKS
5	CENTERLINE REFERENCE
7 - 13	TYPICAL SECTIONS

HORIZONTAL SCALE IN FEET 0 10 20 40

CALCULATED

CHECKED

PLAN AND PROFILE US 422
STA 1050+00 TO STA 1054+00

GEA / POR-422-18.31/ 0.00

SEEDING END WIDTH	SEEDING SQ. YDS.	END AREA CUT	END AREA FILL	VOLUME CUT	VOLUME FILL
82		326	0		
	44			569	0
78		288	0		
	217			267	0
0		0	0		
661	SHEET TOTAL			836	0

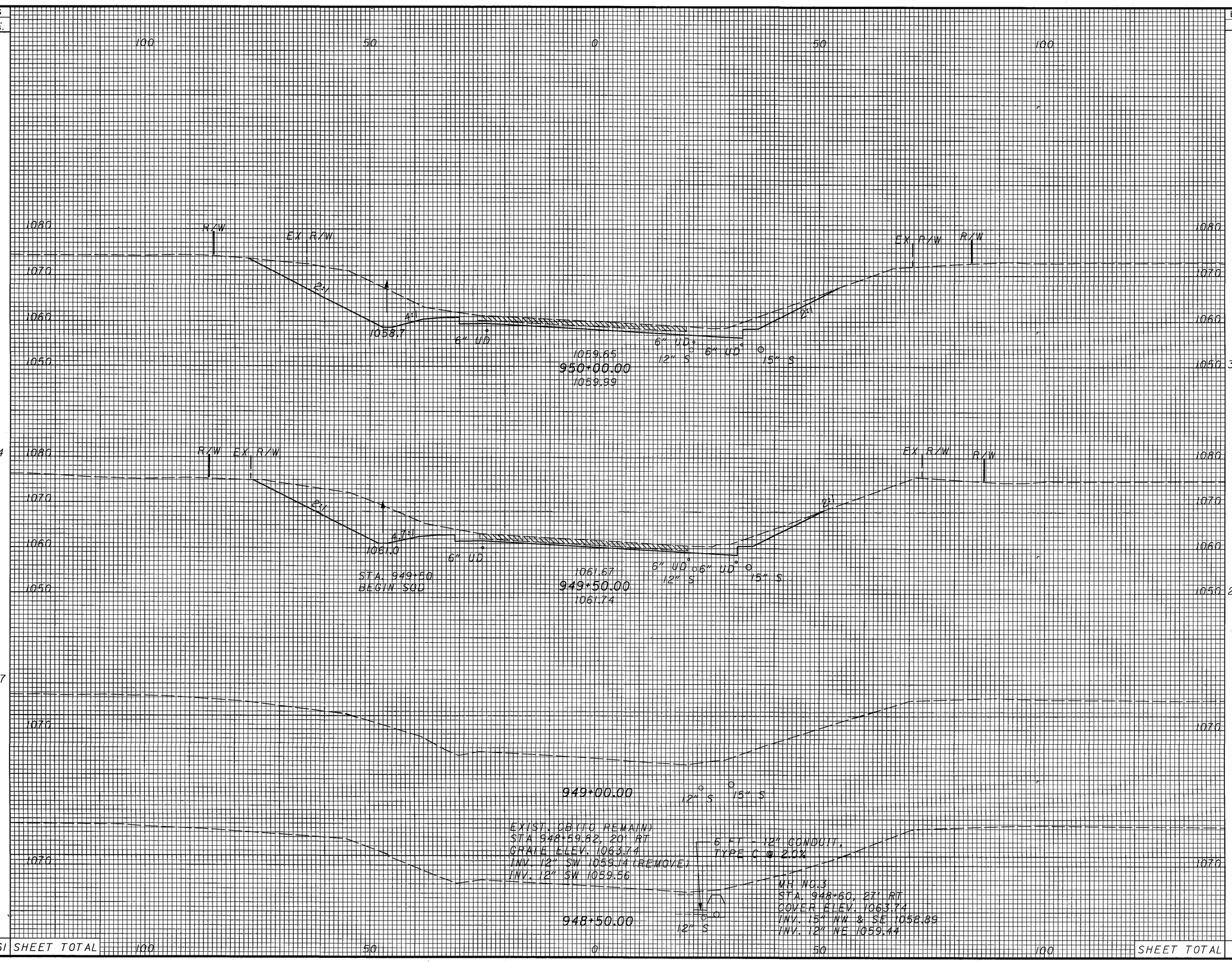

CALCULATED BF
CHECKED SB

CROSS SECTIONS - U.S. 422
STA. 948+50 TO STA. 950+00

GEA/POR-422-18.31/0.00

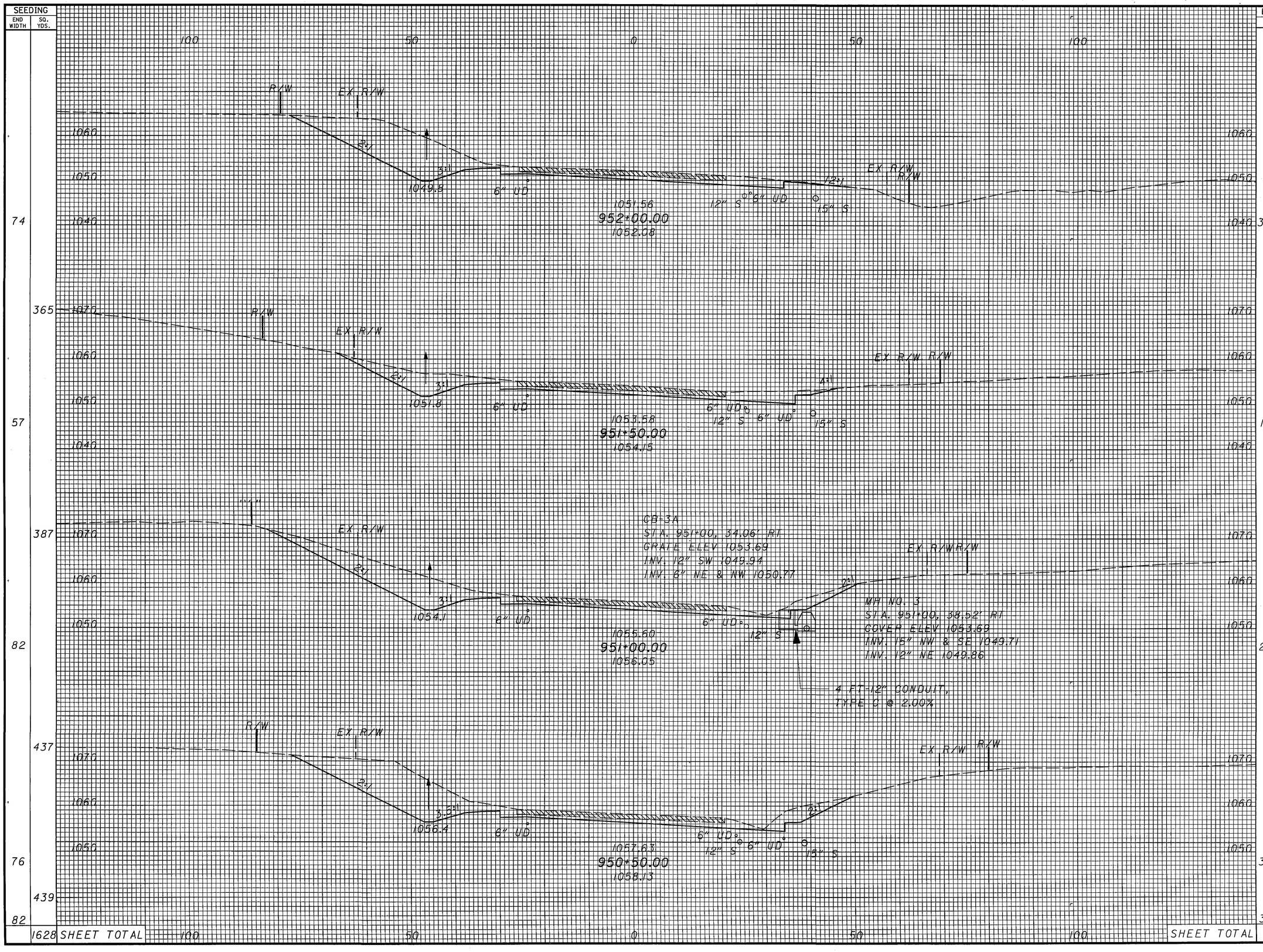

SEEDING END WIDTH	SEEDING SQ. YDS.	END AREA CUT	END AREA FILL	VOLUME CUT	VOLUME FILL
74	365	335	0	476	0
57	387	179	0	425	0
82	437	280	0	594	0
76	439	362	0	637	0
82		326	0		
1628	SHEET TOTAL			2132	0

CALCULATED BF
CHECKED SB

CROSS SECTIONS - U.S. 422
STA. 950+50 TO STA. 952+00

GEA/POR-422-18.31/0.00

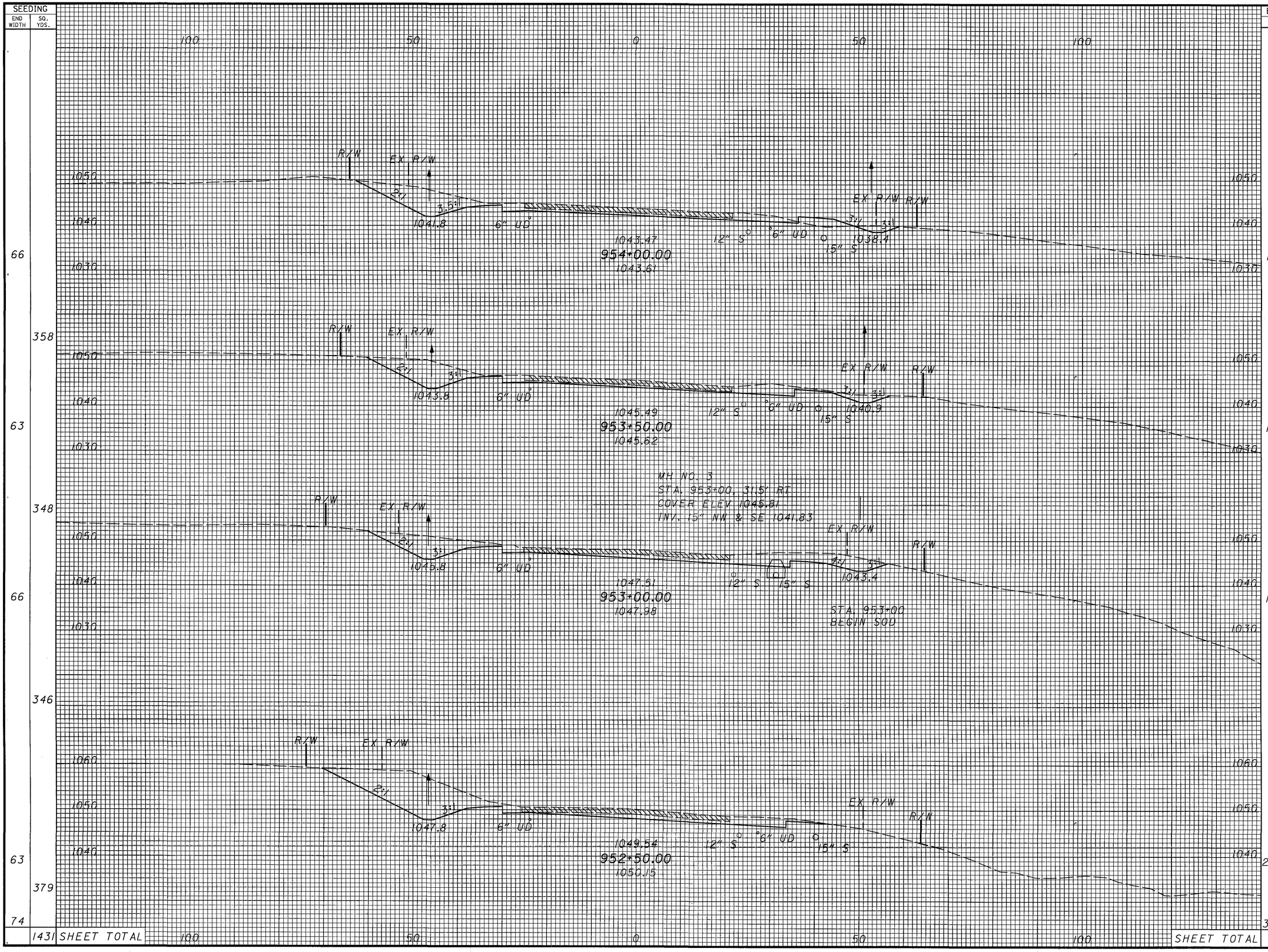

SEEDING END WIDTH	SEEDING SQ. YDS.	END AREA CUT	END AREA FILL	VOLUME CUT	VOLUME FILL
66	358	152	17	282	16
63	348	153	0	319	0
66	346	192	0	422	0
63	379	264	0	555	0
74		335	0		
	1431 SHEET TOTAL		SHEET TOTAL	1578	16

CALCULATED BF
CHECKED SB

CROSS SECTIONS - U.S. 422
STA. 952+50 TO STA. 954+00

GEA/POR-422-18.31/0.00

SEEDING END WIDTH	SEEDING SQ. YDS.	END AREA CUT	END AREA FILL	VOLUME CUT	VOLUME FILL
74	418	97	41	189	99
76	418	107	66	131	240
74	402	35	194	67	260
70	370	39	87	152	109
63	359	125	30	256	44
66	1967 SHEET TOTAL	202	17	795	752

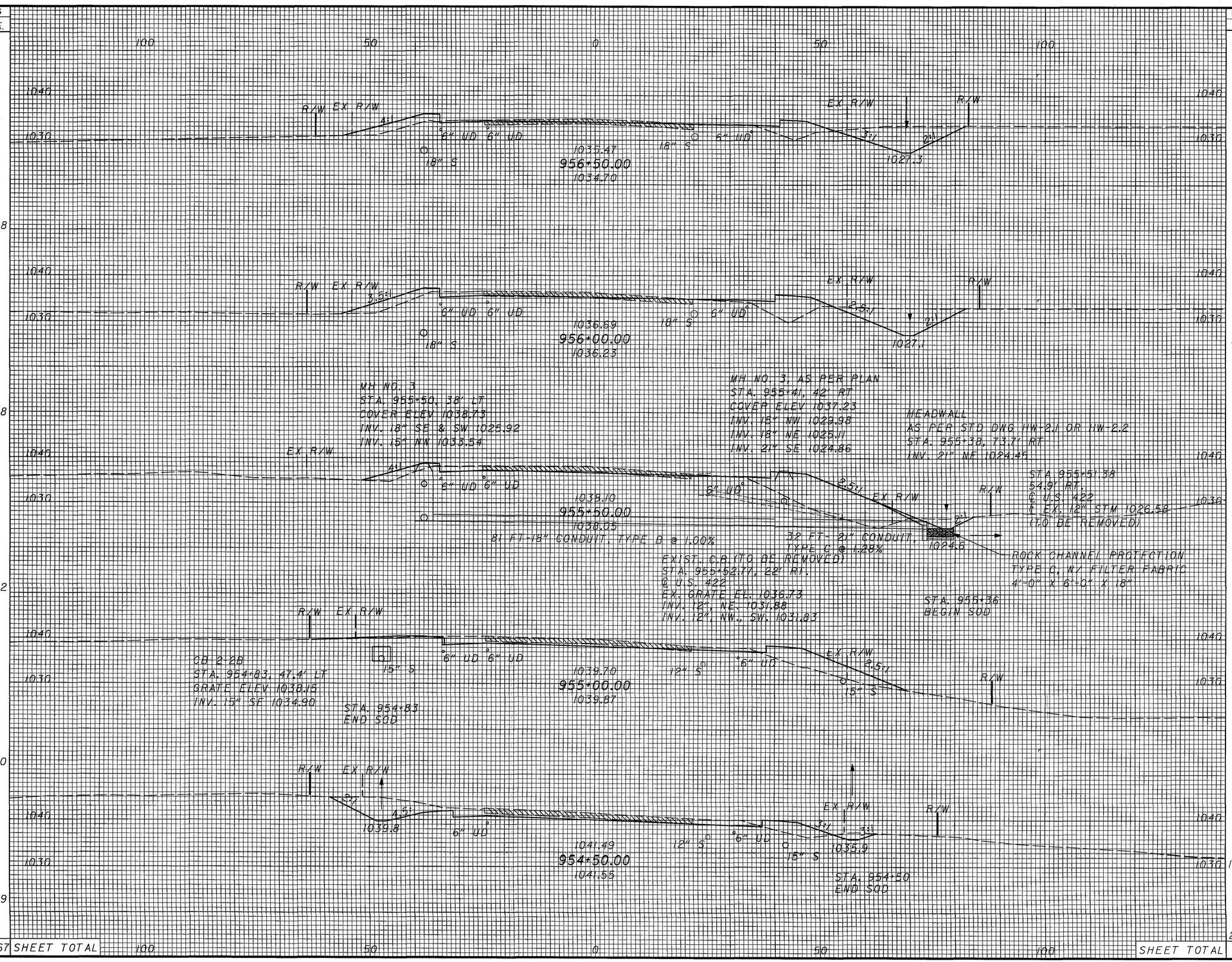

CALCULATED BF
CHECKED SB

CROSS SECTIONS - U.S. 422
STA. 954+50 TO STA. 956+50

GEA/POR-422-18.31/0.00

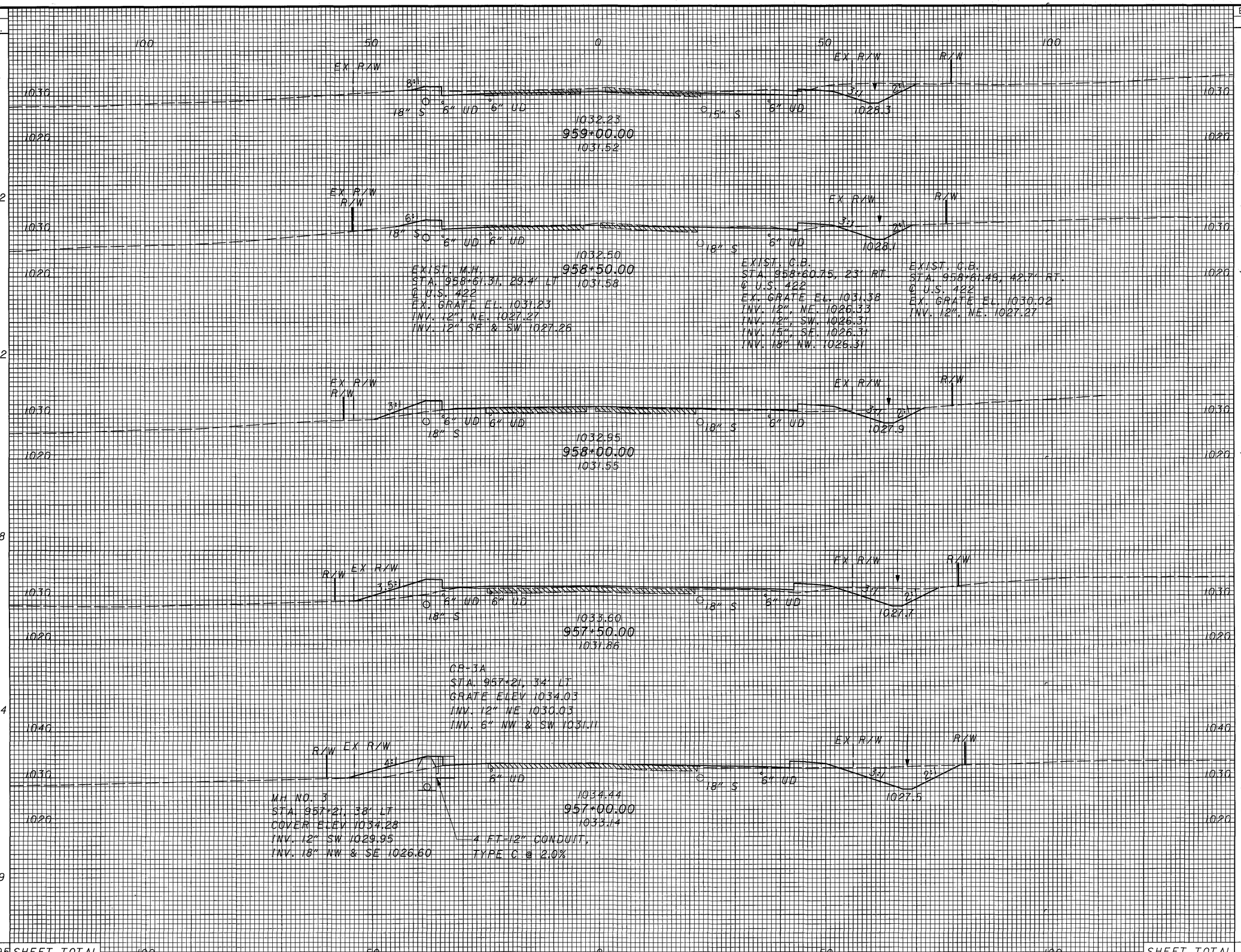

SEEDING END WIDTH	SEEDING SQ. YDS.	END AREA CUT	END AREA FILL	VOLUME CUT	VOLUME FILL
42		80	27		
	242			106	77
45		35	56		
	272			60	143
53		30	98		
	318			72	212
62		48	131		
	364			111	221
69		72	108		
	399			156	138
74		97	41		
	1595 SHEET TOTAL		SHEET TOTAL	505	791

CALCULATED BF
CHECKED SB

CROSS SECTIONS - U.S. 422
STA. 957+00 TO STA. 959+00

GEA/POR-422-18.31/0.00

SEEDING END WIDTH	SEEDING SQ. YDS.	END AREA CUT	END AREA FILL	VOLUME CUT	VOLUME FILL
62	299	250	0	382	0
46	244	163	0	254	3
42	222	112	4	187	7
38	230	90	4	175	17
45	241	99	14	166	38
42		80	27		
	1236 SHEET TOTAL			1164	65

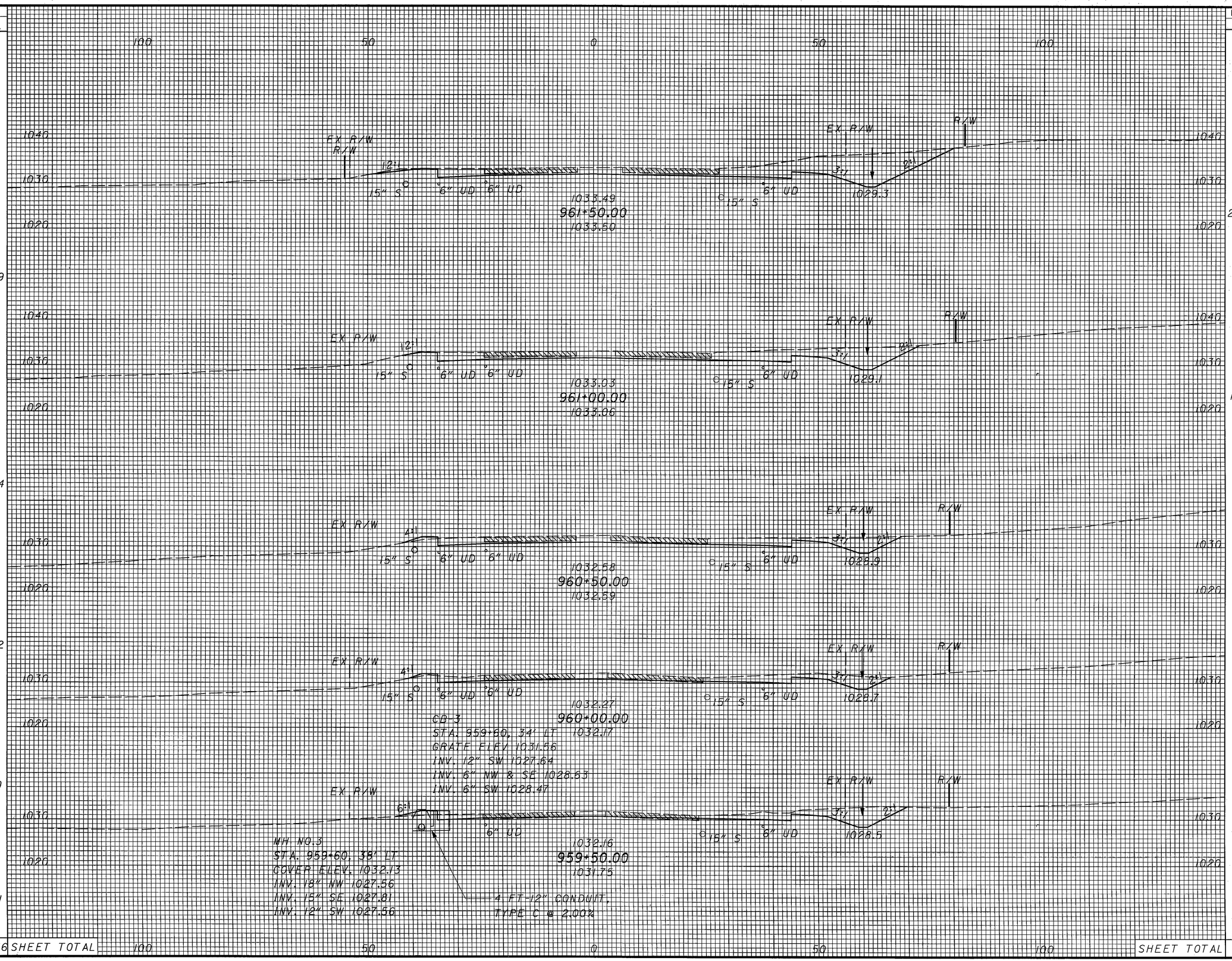

CALCULATED BF

CHECKED SB

CROSS SECTIONS - U.S. 422
STA. 959+50 TO STA. 961+50

GEA/POR-422-18.31/0.00

SEEDING END WIDTH	SEEDING SQ. YDS.	END AREA CUT	END AREA FILL	VOLUME CUT	VOLUME FILL
100	521	606	0	1038	0
88		515	0		
80	465	441	0	885	0
68	409	330	0	714	0
62	358	250	0	537	0
	1753 SHEET TOTAL			3174	0

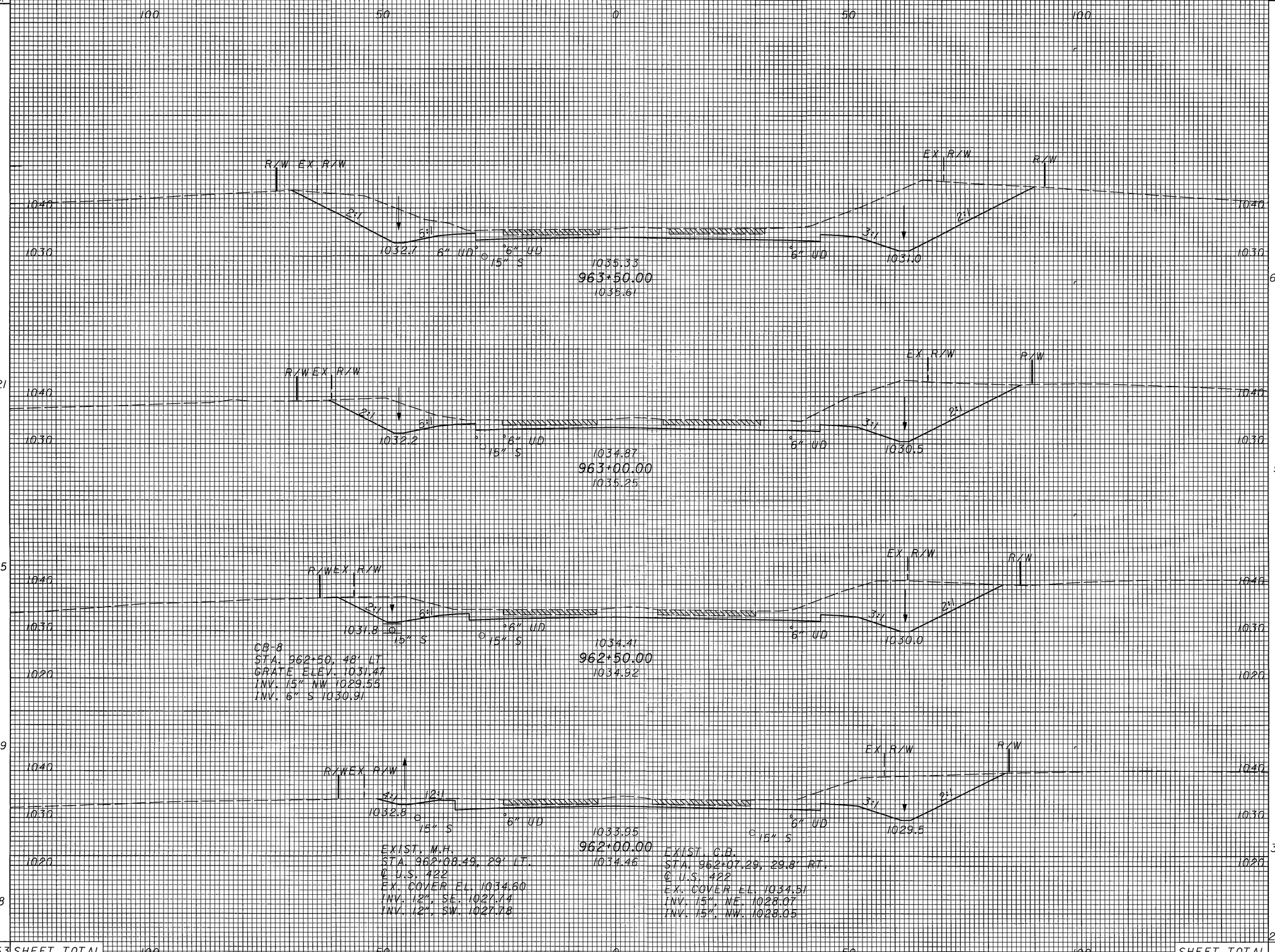

CALCULATED BF
CHECKED SB

CROSS SECTIONS - U.S. 422
STA. 962+00 TO STA. 963+50

GEA/POR-422-18.31/0.00

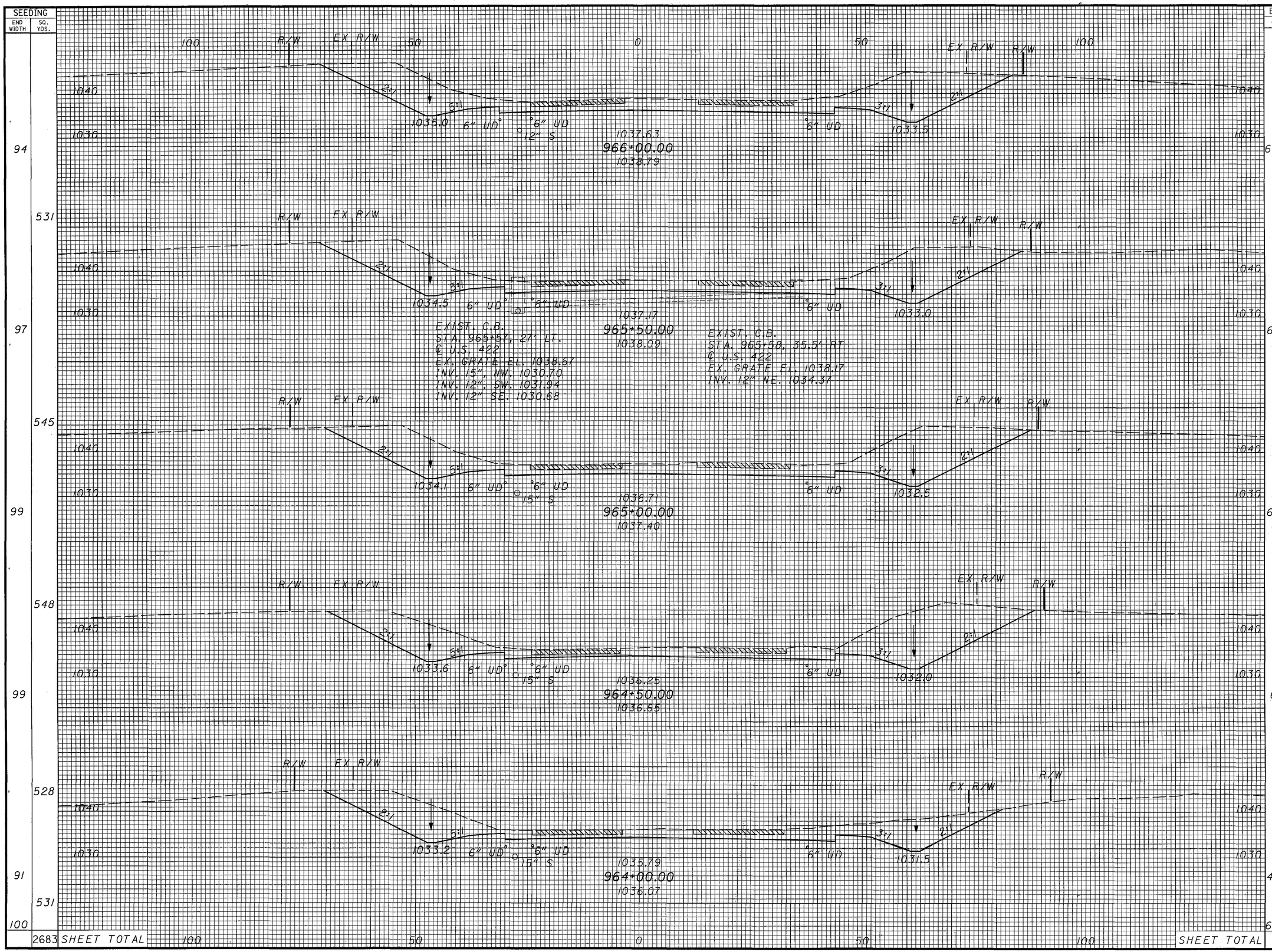
SEEDING
END WIDTH
SQ. YDS.
100
50
0
50
100
R/W
EX R/W
1040
1030
2:1
5:1
3:1
1035.0
6" UD
6" UD
12" S
1037.63
966+00.00
1038.79
1033.5
94
606
0
531
1034.5
1037.17
965+50.00
1038.09
1033.0
97
628
1142
EXIST. C.B.
STA. 965+51, 27' LT.
℄ U.S. 422
EX. GRATE EL. 1038.51
INV. 15", NW. 1030.70
INV. 12", SW. 1031.94
INV. 12" SE. 1030.68
EXIST. C.B.
STA. 965+58, 35.5' RT.
℄ U.S. 422
EX. GRATE EL. 1038.17
INV. 12" NE. 1034.37
545
638
1172
1034.1
15" S
1036.71
965+00.00
1037.40
1032.5
99
548
619
1164
1033.6
1036.25
964+50.00
1036.55
1032.0
528
450
990
1033.2
1035.79
964+00.00
1036.07
1031.5
91
531
978
100
606
2683
SHEET TOTAL
5446
END AREA
VOLUME
CUT
FILL
CALCULATED BF
CHECKED SB
CROSS SECTIONS - U.S. 422
STA. 964+00 TO STA. 966+00
GEA/POR-422-18.31/0.00
94
332

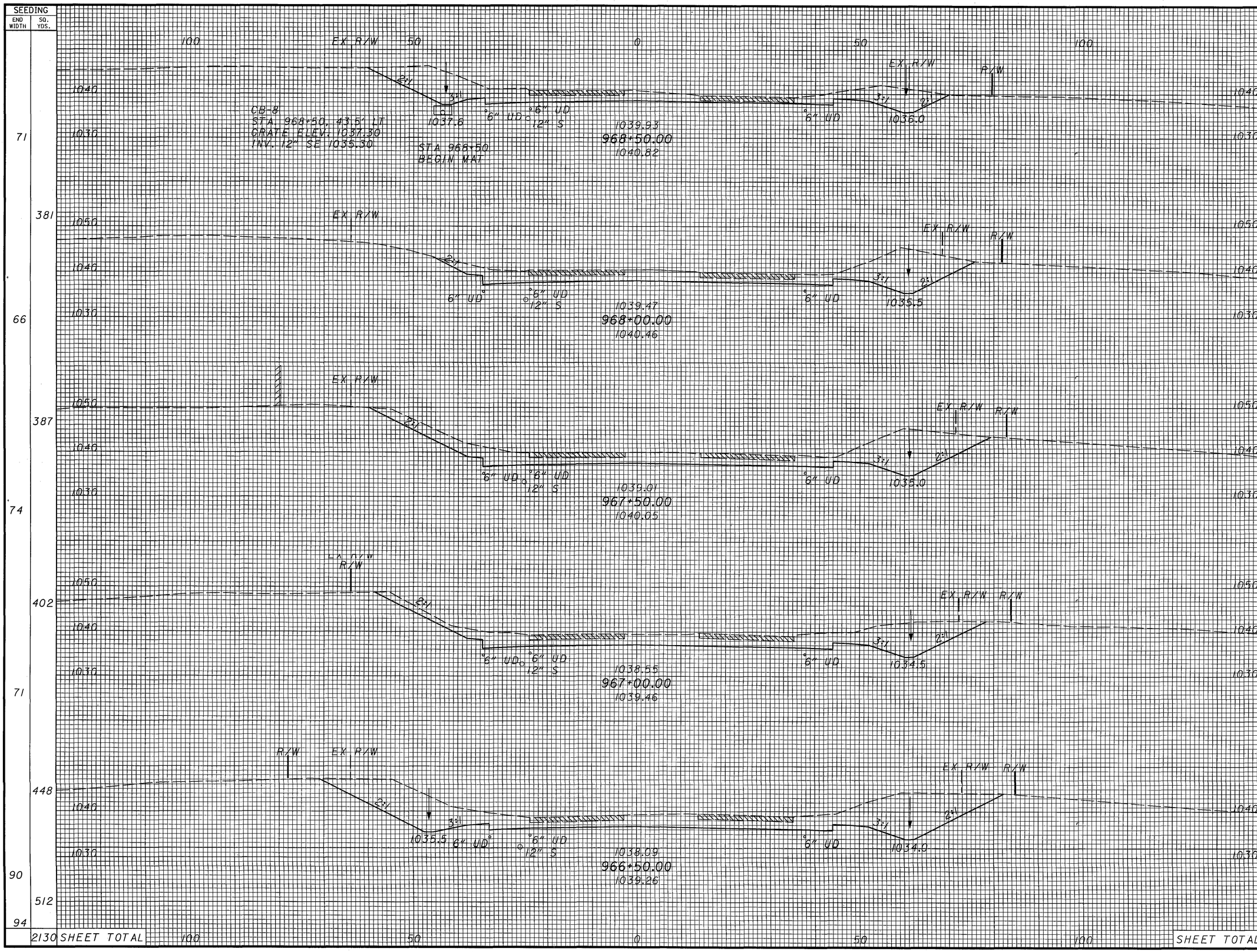

END AREA CUT	END AREA FILL	VOLUME CUT	VOLUME FILL
364	0		
		646	0
334	0		
		687	0
408	0		
		706	0
355	0		
		868	0
582	0		
		1100	0
606	0		
		4007	0

CALCULATED BF
CHECKED SB

CROSS SECTIONS - U.S. 422
STA. 966+50 TO STA. 968+50

GEA/POR-422-18.31/0.00

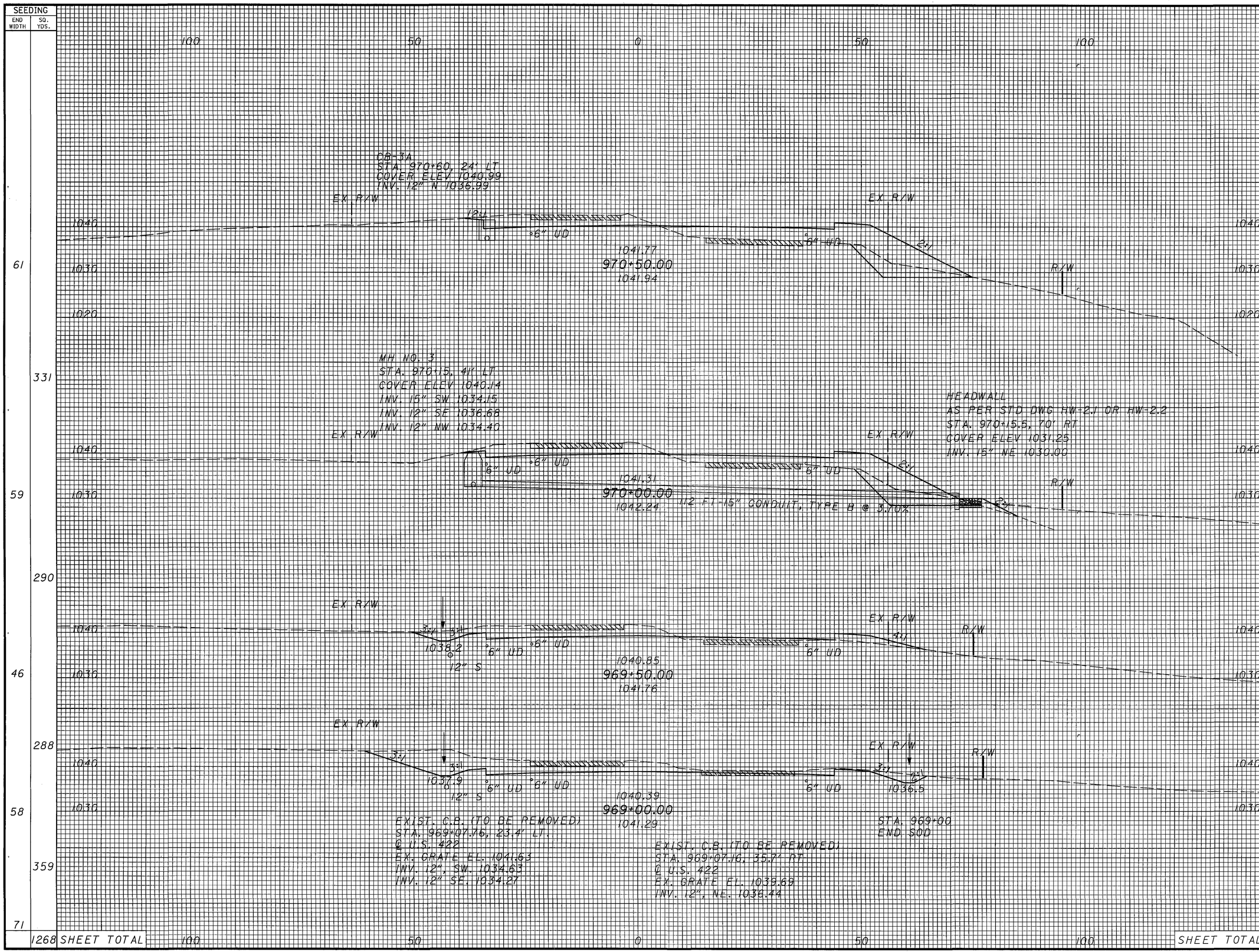

SEEDING END WIDTH	SEEDING SQ. YDS.	END AREA CUT	END AREA FILL	VOLUME CUT	VOLUME FILL
61	331	124	292	242	491
59	290	137	238	223	276
46	288	104	60	289	65
58	359	209	11	530	10
71	1268 SHEET TOTAL	364	0	1284	842

CALCULATED BF
CHECKED SB

CROSS SECTIONS - U.S. 422
STA. 969+00 TO STA. 970+50

GEA/POR-422-18.31/0.00

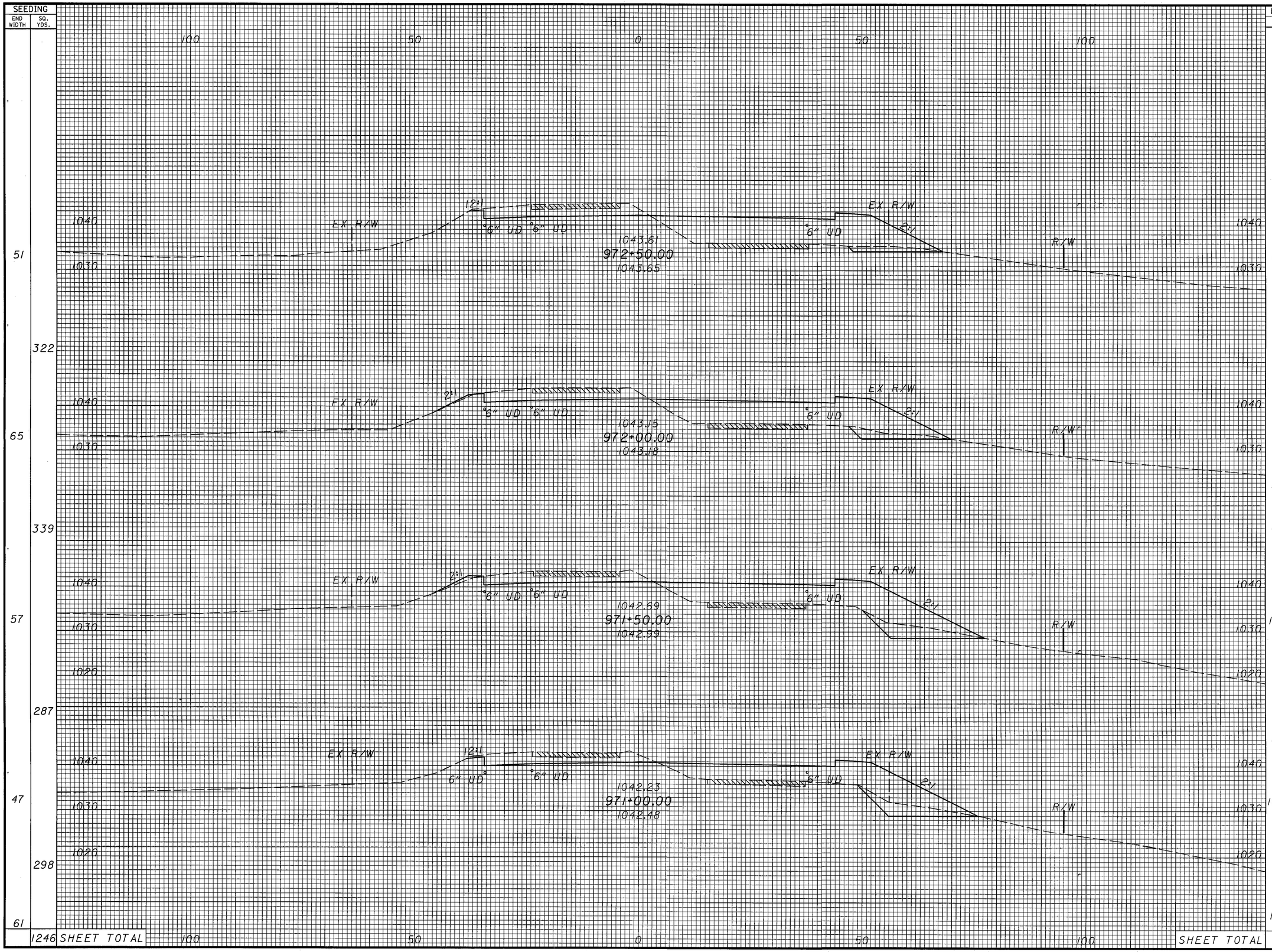

SEEDING END WIDTH	SEEDING SQ. YDS.	END AREA CUT	END AREA FILL	VOLUME CUT	VOLUME FILL
51		87	360		
	322			164	659
65		91	352		
	339			186	682
57		108	385		
	287			203	659
47		109	327		
	298			216	567
61		124	292		
	1246 SHEET TOTAL		SHEET TOTAL	769	2567

CALCULATED BF
CHECKED SB

CROSS SECTIONS - U.S. 422
STA. 971+00 TO STA. 972+50

GEA/POR-422-18.31/0.00

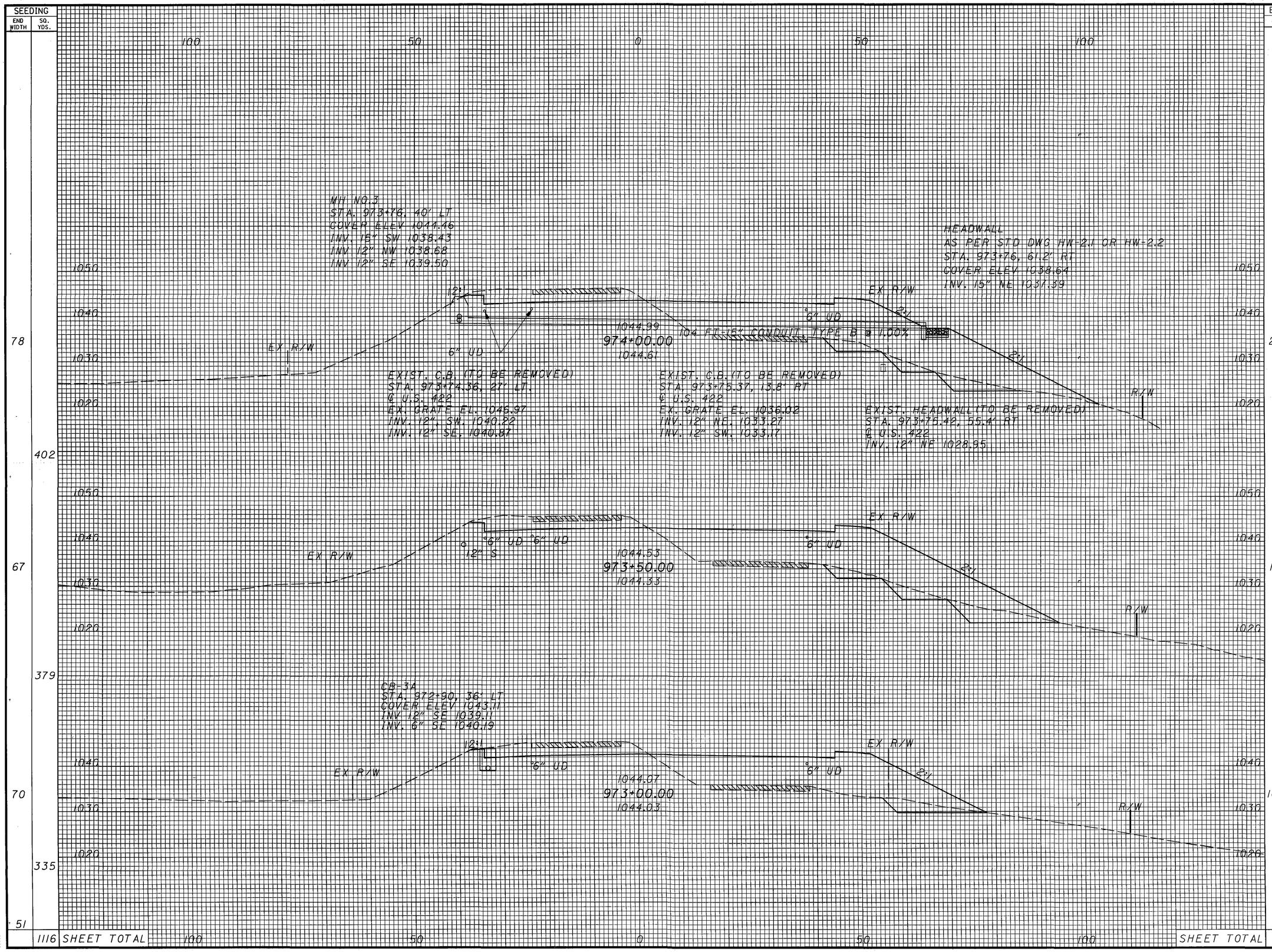
SEEDING
END WIDTH
SQ. YDS.
100
50
0
50
100
MH NO.3
STA. 973+76, 40' LT
COVER ELEV 1041.46
INV. 15" SW 1038.43
INV 12" NW 1038.68
INV 12" SE 1039.50
HEADWALL
AS PER STD DWG HW-2.1 OR HW-2.2
STA. 973+76, 61.2' RT
COVER ELEV 1038.64
INV. 15" NE 1031.39
EX R/W
6" UD
1044.99
974+00.00
1044.61
104 FT-15" CONDUIT TYPE B @ 1.00%
EXIST. C.B. (TO BE REMOVED)
STA. 973+74.36, 27' LT.
℄ U.S. 422
EX. GRATE EL. 1046.97
INV. 12" SW. 1040.22
INV. 12" SE. 1040.87
EXIST. C.B. (TO BE REMOVED)
STA. 973+75.37, 13.8' RT
℄ U.S. 422
EX. GRATE EL. 1036.02
INV. 12" NE. 1033.27
INV. 12" SW. 1033.17
EXIST. HEADWALL (TO BE REMOVED)
STA. 973+75.42, 55.4' RT
℄ U.S. 422
INV. 12" NE 1028.95
R/W
12" S
1044.53
973+50.00
1044.33
CB-3A
STA. 972+90, 36' LT
COVER ELEV 1043.11
INV 12" SE 1039.11
INV. 6" SE 1040.19
1044.07
973+00.00
1044.03
1050
1040
1030
1020
78
402
67
379
70
335
51
1116
SHEET TOTAL
END AREA
CUT
FILL
VOLUME
CUT
FILL
210 782
348 1372
166 700
253 1099
107 487
180 784
87 360
781 3255
SHEET TOTAL
CALCULATED BF
CHECKED SB
CROSS SECTIONS - U.S. 422
STA. 973+00 TO STA. 974+00
GEA/POR-422-18.31/0.00
98
332

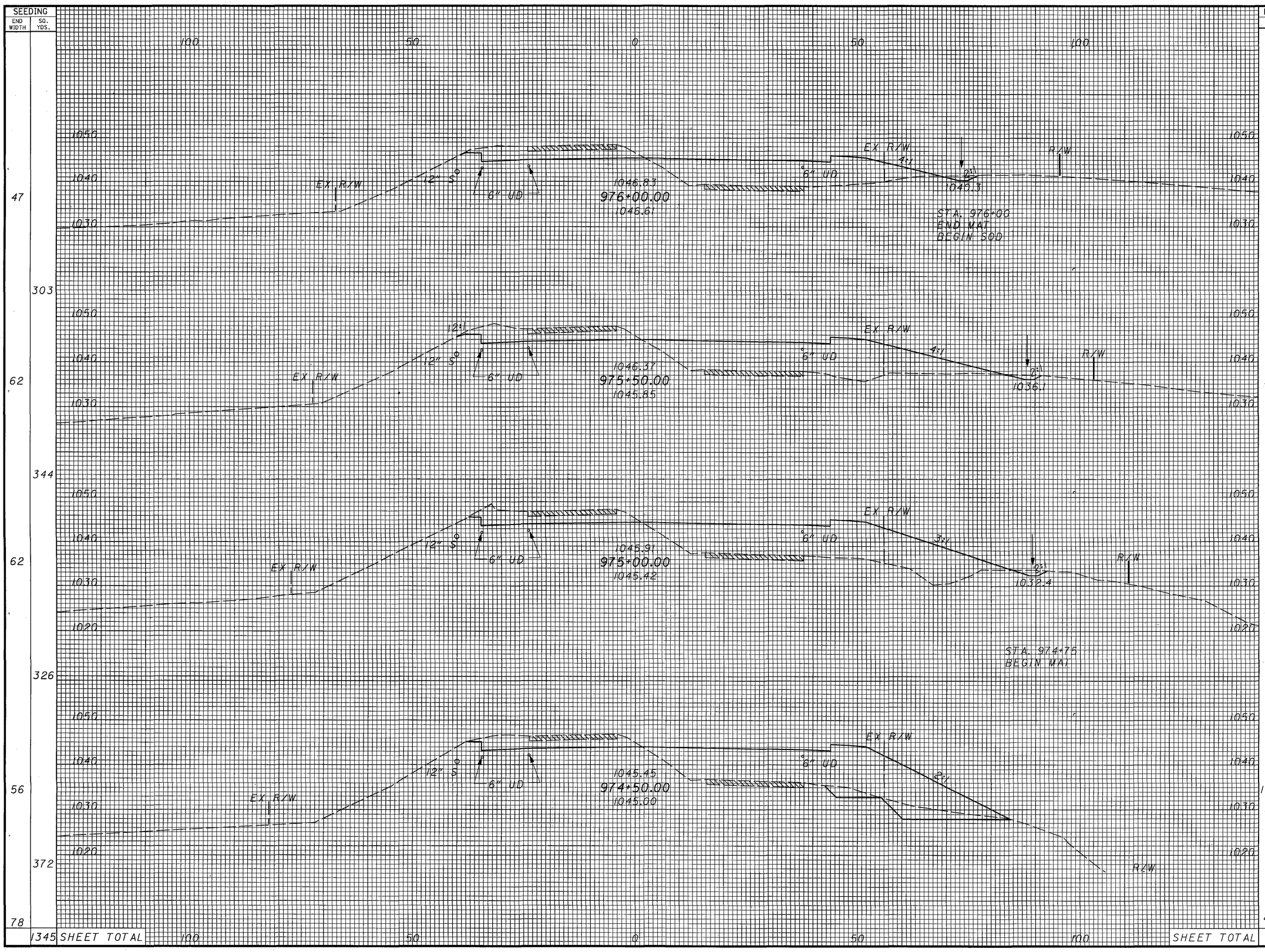

SEEDING END WIDTH	SEEDING SQ. YDS.	END AREA CUT	END AREA FILL	VOLUME CUT	VOLUME FILL
47		90	336		
	303			169	732
62		92	455		
	344			167	924
62		88	543		
	326			214	1073
56		143	616		
	372			327	1294
78		210	782		
	1345 SHEET TOTAL			877	4023 SHEET TOTAL

CALCULATED BF
CHECKED SB

CROSS SECTIONS - U.S. 422
STA. 974+50 TO STA. 976+00

GEA/POR-422-18.31/0.00

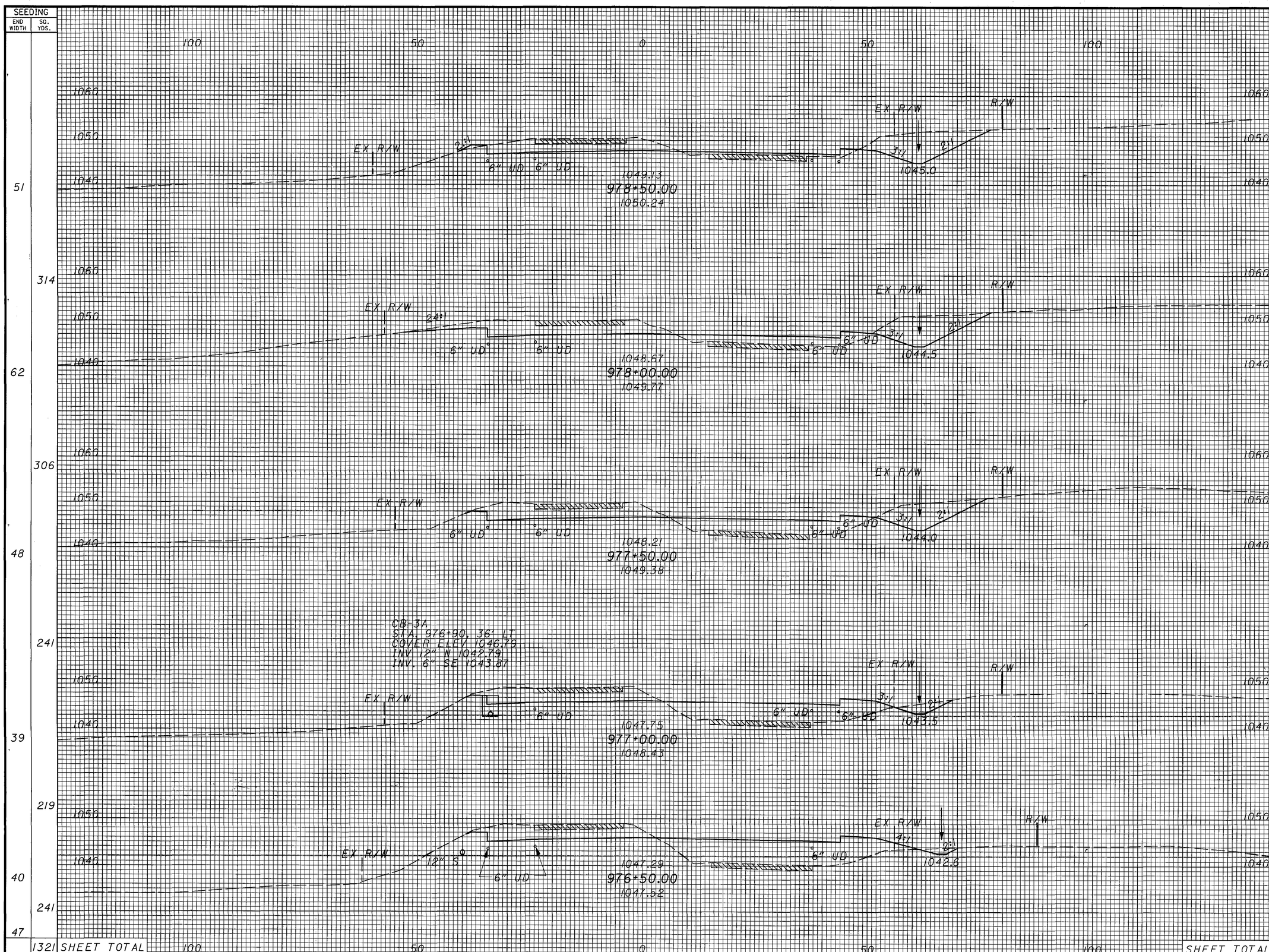
SEEDING
END WIDTH
SQ. YDS.
100
50
0
50
100
1060
1050
1040
EX R/W
R/W
2:1
3:1
6" UD
1049.13
978+50.00
1050.24
1045.0
1048.67
978+00.00
1049.77
1044.5
1048.21
977+50.00
1049.38
1044.0
CB-3A
STA. 976+90, 36' LT
COVER ELEV 1046.79
INV. 12" W 1042.79
INV. 6" SE 1043.87
1047.75
977+00.00
1048.43
1043.5
1047.29
976+50.00
1047.52
1042.6
12" S
4:1
51
314
62
306
48
241
39
219
40
241
47
1321
SHEET TOTAL
END AREA
CUT
FILL
VOLUME
CUT
FILL
197 48
375 132
208 95
360 221
181 144
270 323
111 205
193 428
98 258
174 550
90 336
1372 1654
CALCULATED BF
CHECKED SB
CROSS SECTIONS - U.S. 422
STA. 976+50 TO STA. 978+50
GEA/POR-422-18.31/0.00
100
332

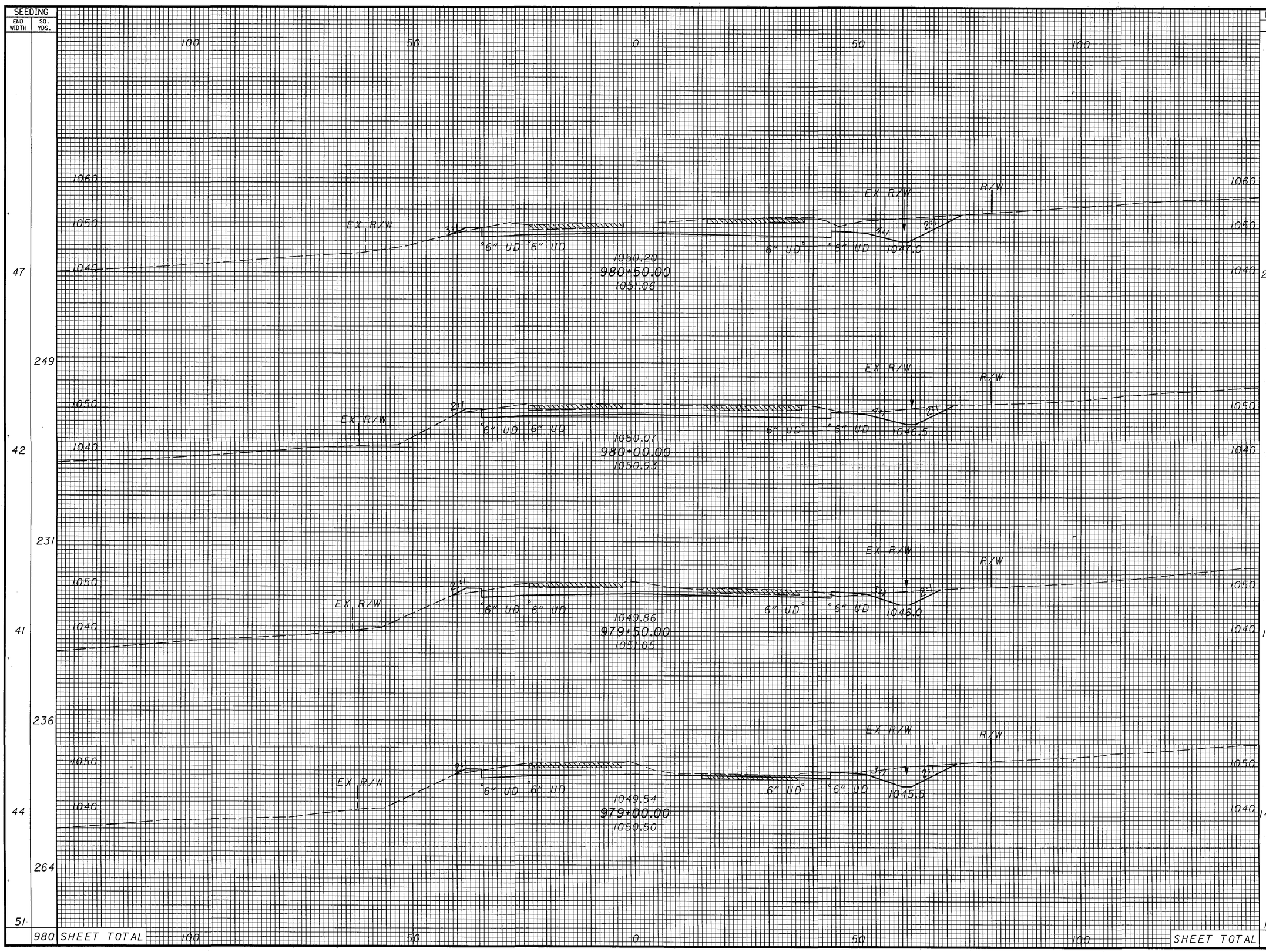
SEEDING
END WIDTH
SQ. YDS.
100
50
0
50
100
1060
1050
1040
EX R/W
R/W
3:1
4:1
2:1
6" UD
1050.20
980+50.00
1051.06
1047.0
1050.07
980+00.00
1050.33
1046.5
1049.86
979+50.00
1051.05
1046.0
1049.54
979+00.00
1050.50
1045.5
47
249
42
231
41
236
44
264
51
980
SHEET TOTAL
END AREA
CUT
FILL
VOLUME
CUT
FILL
270 3
420 5
184 2
296 11
136 9
257 27
142 20
314 63
197 48
1287 106
CALCULATED BF
CHECKED SB
CROSS SECTIONS - U.S. 422
STA. 979+00 TO STA. 980+50
GEA/POR-422-18.31/0.00
101
332

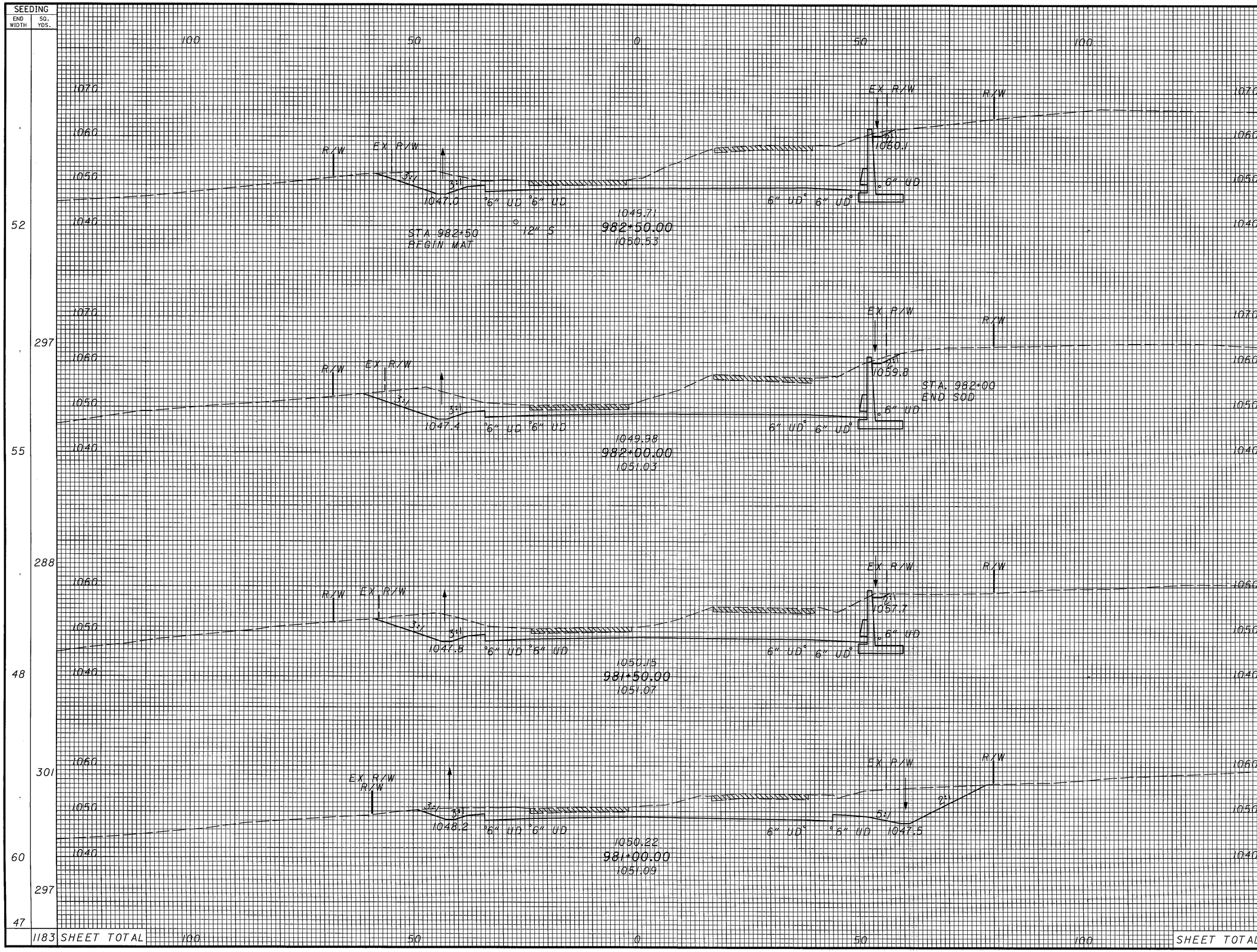

SEEDING END WIDTH	SEEDING SQ. YDS.	END AREA CUT	END AREA FILL	VOLUME CUT	VOLUME FILL
52		520	0		
	297			967	0
55		524	0		
	288			896	0
48		444	0		
	301			812	0
60		433	0		
	297			650	3
47		270	3		
	1183 SHEET TOTAL			3325	3

CALCULATED BF
CHECKED SB

CROSS SECTIONS - U.S. 422
STA. 981+00 TO STA. 982+50

GEA/POR-422-18.31/0.00

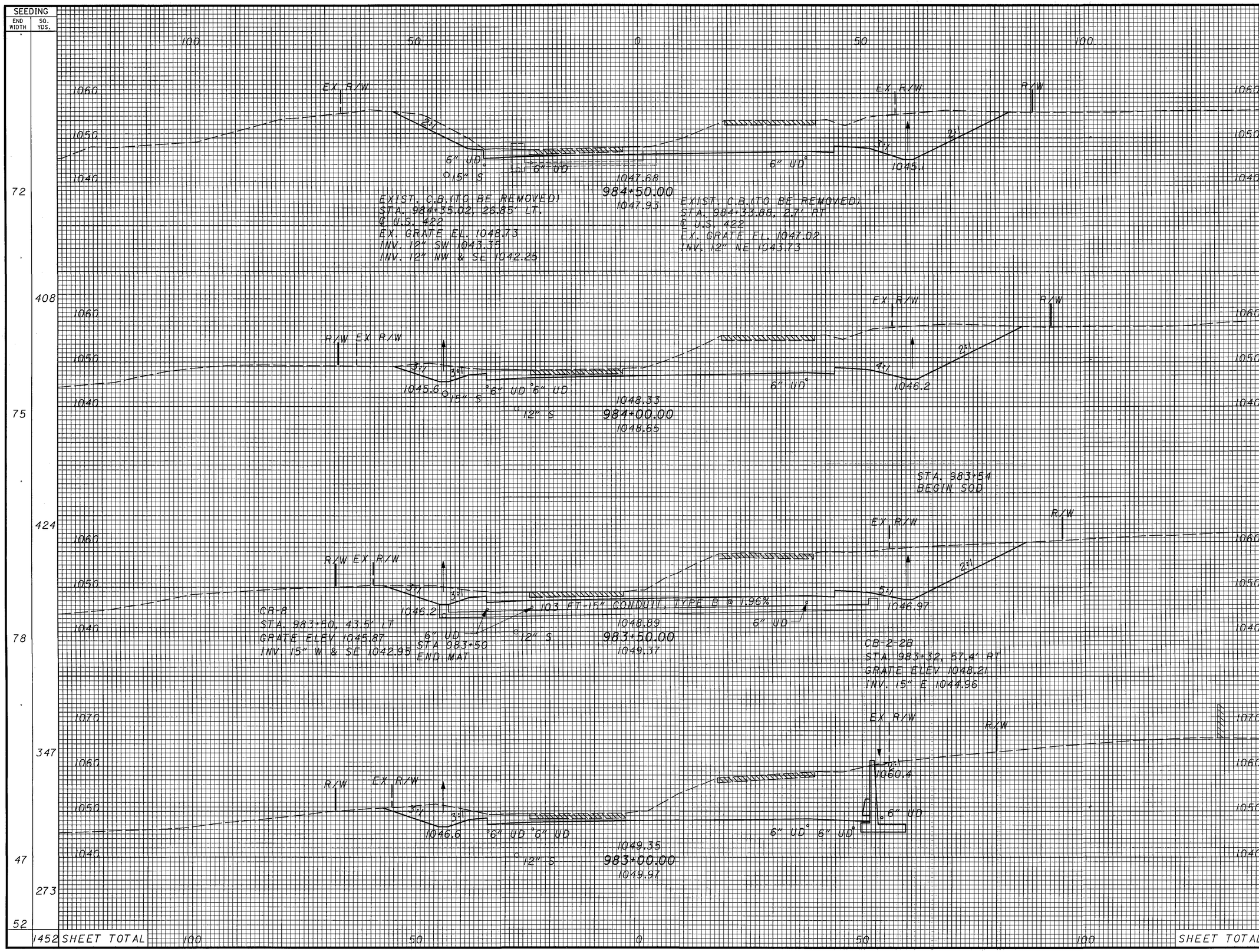

SEEDING END WIDTH	SEEDING SQ. YDS.	END AREA CUT	END AREA FILL	VOLUME CUT	VOLUME FILL
72		552	0		
	408			1140	0
75		680	0		
	424			1312	0
78		738	0		
	347			1167	0
47		522	0		
	273			964	0
52		520	0		
	1452 SHEET TOTAL	SHEET TOTAL		4583	0

CALCULATED BF
CHECKED SB

CROSS SECTIONS - U.S. 422
STA. 983+00 TO STA. 984+50

GEA/POR-422-18.31/0.00

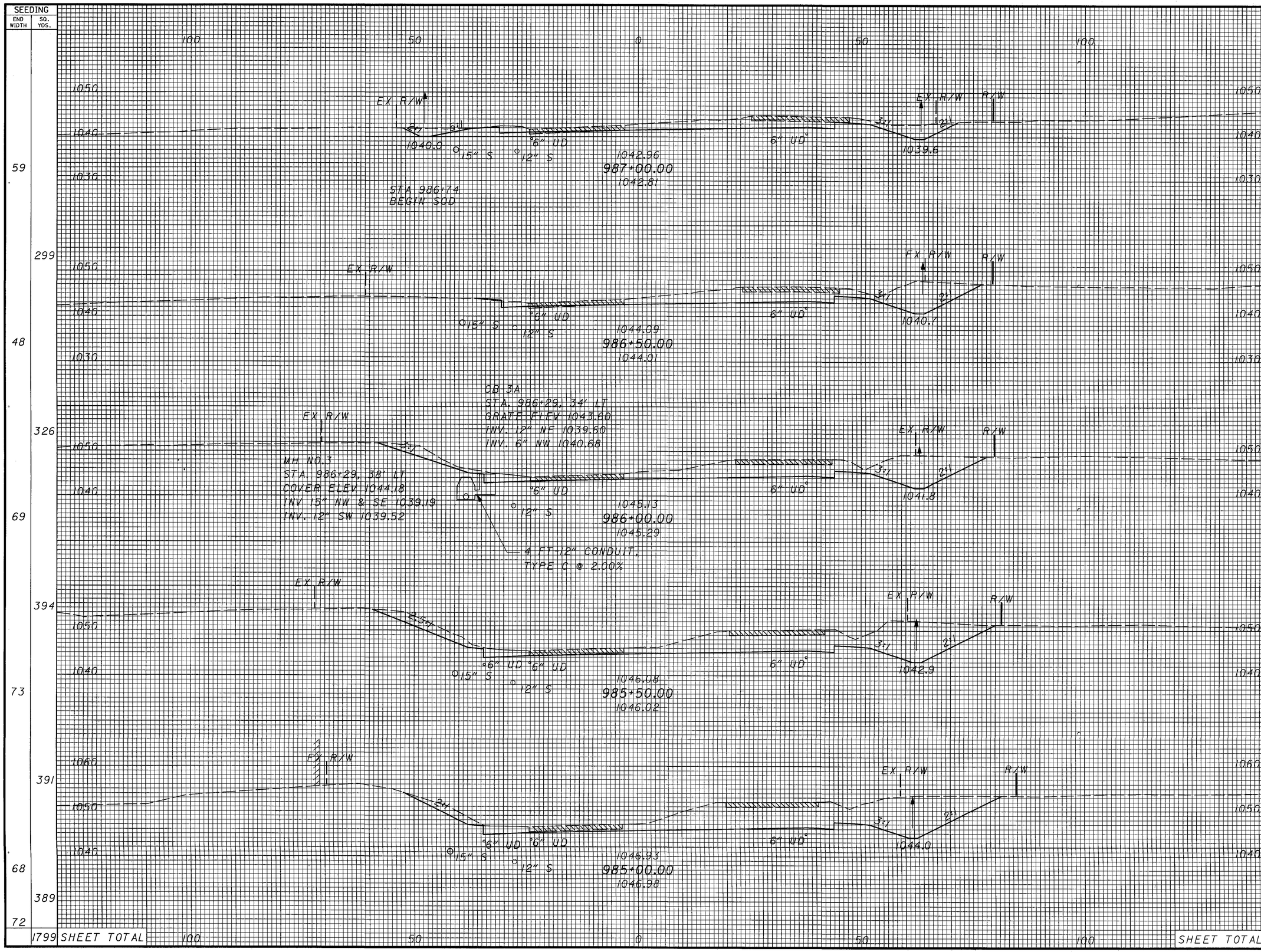
SEEDING
END WIDTH
SQ. YDS.
EX R/W
R/W
1040.0
15" S
12" S
6" UD
1042.96
987+00.00
1042.81
STA 986+74
BEGIN SOD
1039.6
1044.09
986+50.00
1044.01
1040.7
CB 3A
STA. 986+29, 34' LT
GRATE ELEV 1043.60
INV. 12" NE 1039.60
INV. 6" NW 1040.68
MH NO.3
STA. 986+29, 38' LT
COVER ELEV 1044.18
INV 15" NW & SE 1039.19
INV. 12" SW 1039.52
1045.13
986+00.00
1045.29
1041.8
4 FT-12" CONDUIT,
TYPE C @ 2.00%
1046.08
985+50.00
1046.02
1042.9
1046.93
985+00.00
1046.98
1044.0
END AREA
VOLUME
CUT
FILL
CALCULATED BF
CHECKED SB
SHEET TOTAL
CROSS SECTIONS - U.S. 422
STA. 985+00 TO STA. 987+00
GEA/POR-422-18.31/0.00
104
332

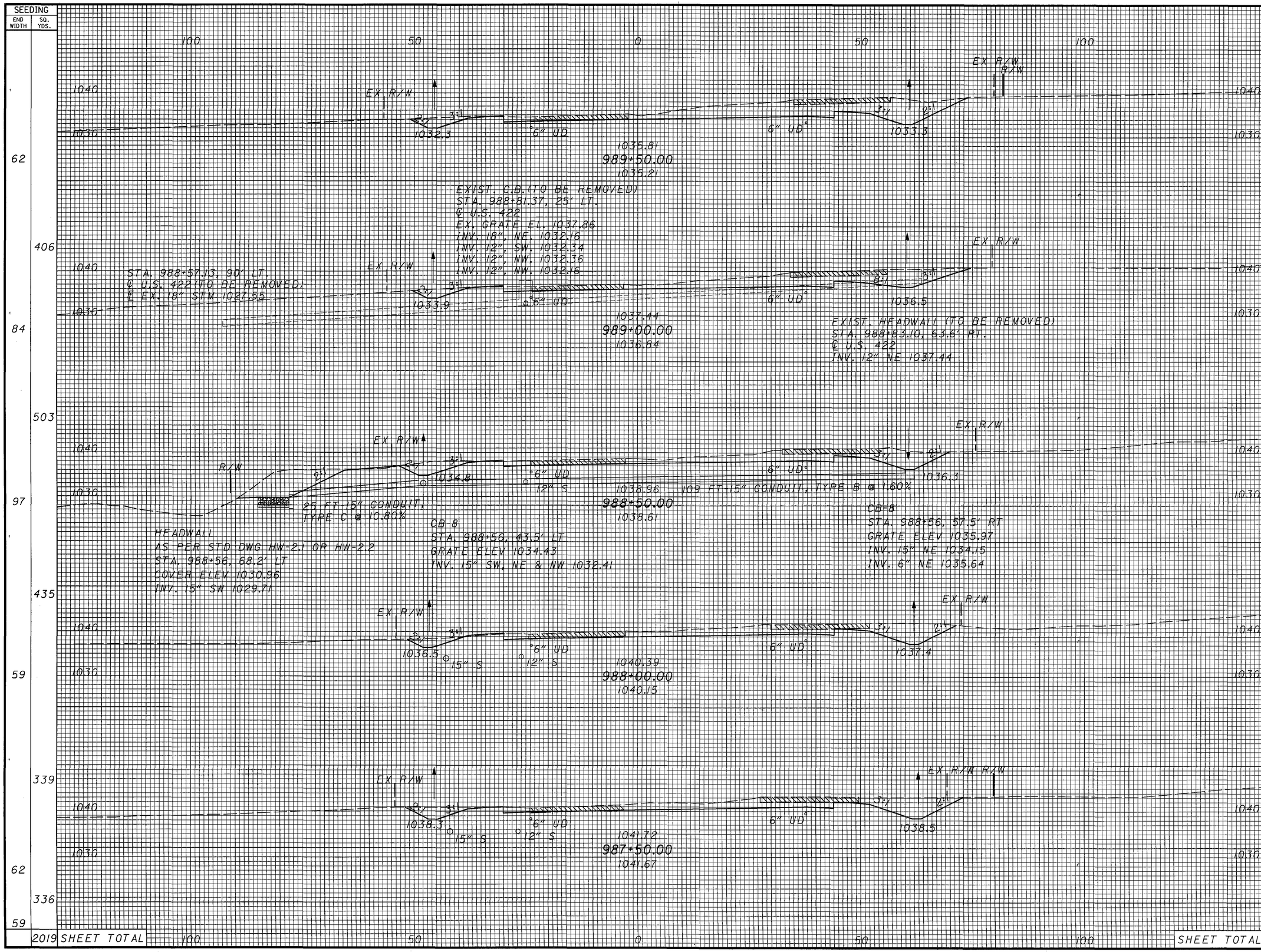

SEEDING END WIDTH	SEEDING SQ. YDS.	END AREA CUT	END AREA FILL	VOLUME CUT	VOLUME FILL
62	406	230	0	422	1
84	503	226	1	432	4
97	435	241	3	358	4
59	339	146	2	280	2
62	336	156	0	278	3
59	2019 SHEET TOTAL	145	3	1770	14

CALCULATED BF
CHECKED SB

CROSS SECTIONS - U.S. 422
STA. 987+50 TO STA. 989+50

GEA/POR-422-18.31/0.00

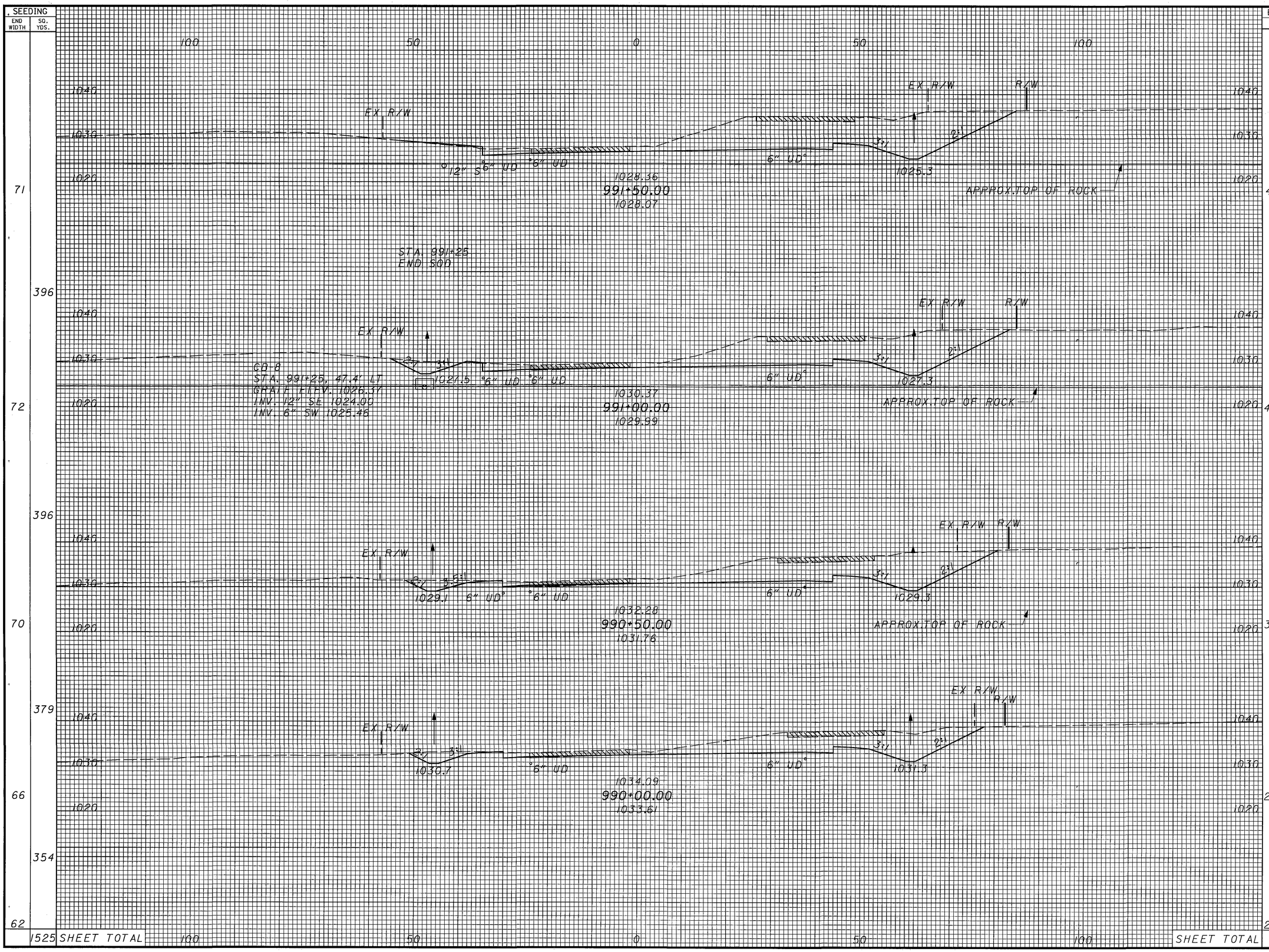
SEEDING
END WIDTH
SQ. YDS.
100
50
0
50
100
1040
1030
1020
EX R/W
R/W
3:1
2:1
6" UD
12" S
1028.36
991+50.00
1028.07
1025.3
APPROX.TOP OF ROCK
STA. 991+25
END SOD
CB 8
STA. 991+25, 47.4' LT
GRATE ELEV. 1026.37
INV. 12" SE 1024.00
INV. 6" SW 1025.46
1021.5
1027.3
1030.37
991+00.00
1029.99
1029.1
1029.3
1032.28
990+50.00
1031.76
1030.7
1031.3
1034.09
990+00.00
1033.61
71
72
70
66
62
396
379
354
1525
SHEET TOTAL
END AREA
CUT
FILL
VOLUME
488
4
429
3
343
1
272
1
230
0
849
6
715
4
569
2
465
1
2598
13
CALCULATED BF
CHECKED SB
CROSS SECTIONS - U.S. 422
STA. 990+00 TO STA. 991+50
GEA/POR-422-18.31/0.00
106
332

SEEDING END WIDTH	SEEDING SQ. YDS.	END AREA CUT	END AREA FILL	VOLUME CUT	VOLUME FILL
102		964	1		
72	482	748	0	1585	1
71	397	650	0	1294	0
70	393	565	2	1125	2
71	391	488	4	975	6
	1663 SHEET TOTAL			4979	9

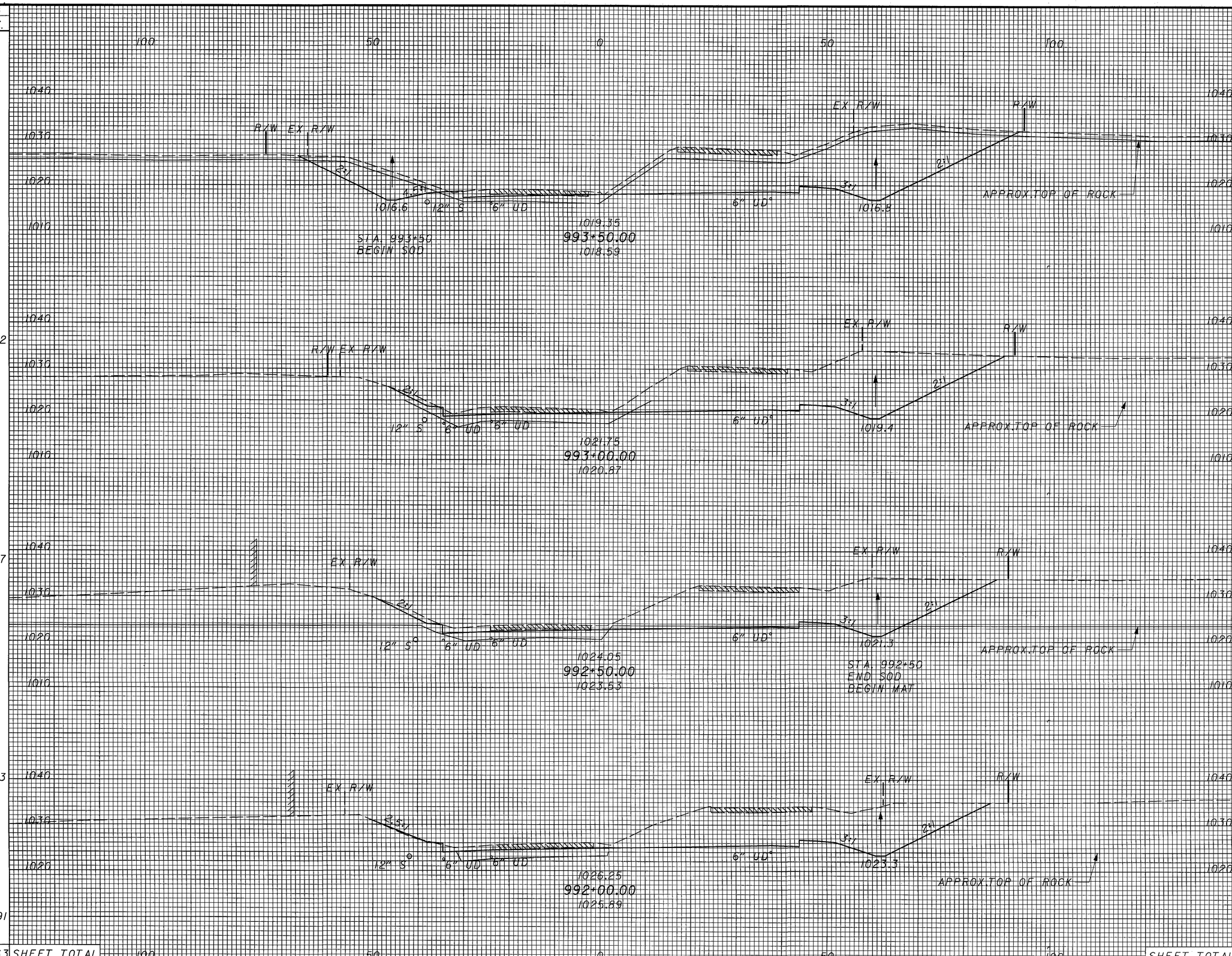

CALCULATED BF

CHECKED SB

CROSS SECTIONS - U.S. 422
STA. 992+00 TO STA. 993+50

GEA/POR-422-18.31/0.00

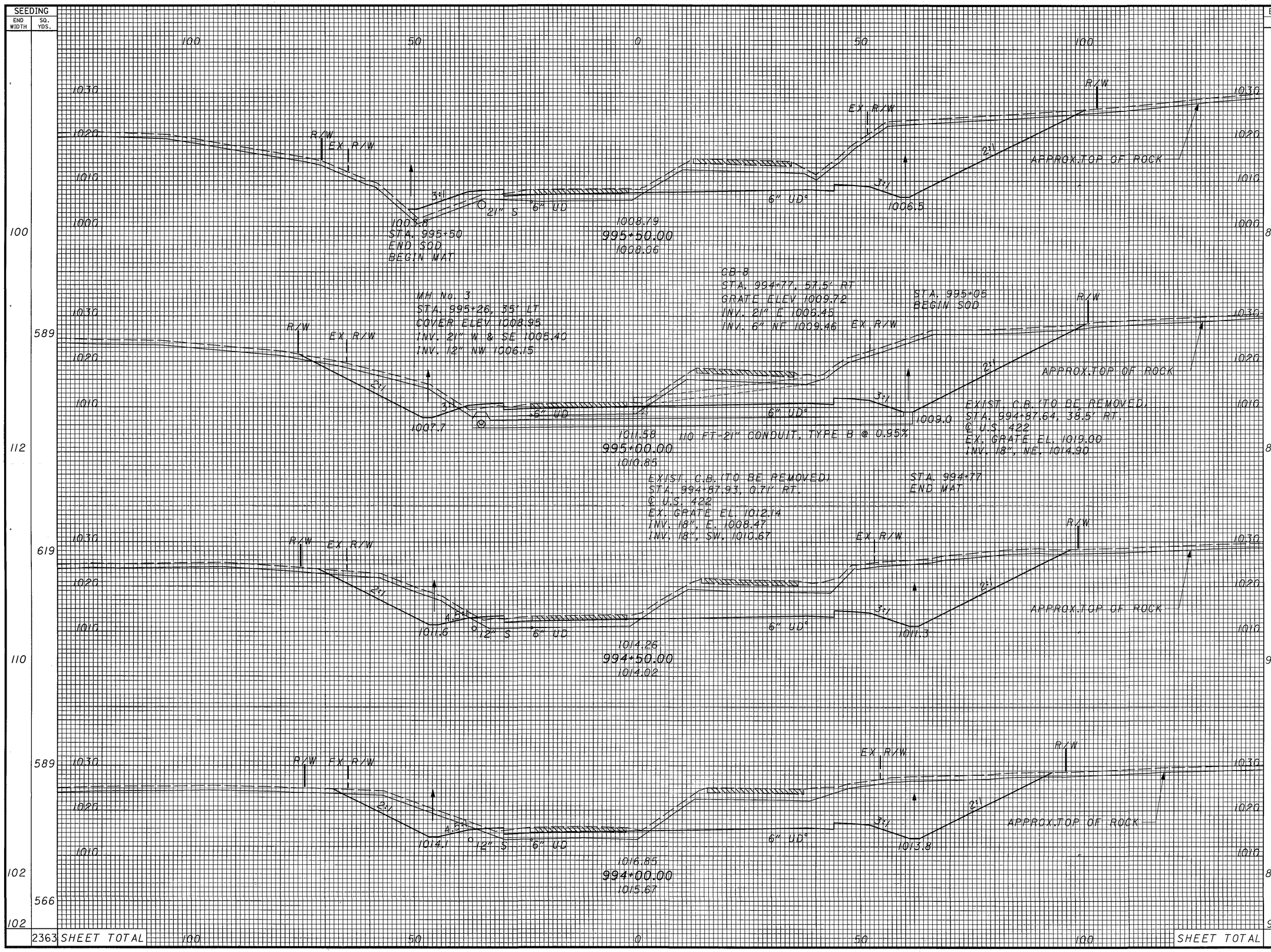
SEEDING
END WIDTH
SQ. YDS.
100
50
0
50
100
1030
1020
1010
1000
R/W
EX R/W
3:1
2:1
21" S
6" UD
1008.28
STA. 995+50
END SOD
BEGIN MAT
1008.79
995+50.00
1008.06
6" UD
1006.5
APPROX.TOP OF ROCK
MH No. 3
STA. 995+26, 35' LT
COVER ELEV 1008.95
INV. 21" W & SE 1005.40
INV. 12" NW 1006.15
CB-8
STA. 994+77, 57.5' RT
GRATE ELEV 1009.72
INV. 21" E 1006.45
INV. 6" NE 1009.46
STA. 995+05
BEGIN SOD
1007.7
1009.0
EXIST. C.B. (TO BE REMOVED)
STA. 994+87.64, 38.5' RT.
℄ U.S. 422
EX. GRATE EL. 1019.00
INV. 18", NE. 1014.90
1011.58
110 FT-21" CONDUIT, TYPE B @ 0.95%
995+00.00
1010.85
EXIST. C.B. (TO BE REMOVED)
STA. 994+87.93, 0.71' RT.
℄ U.S. 422
EX. GRATE EL. 1012.14
INV. 18", E. 1008.47
INV. 18", SW. 1010.67
STA. 994+77
END MAT
4.5:1
1011.6
12" S
1014.26
994+50.00
1014.02
1011.3
1014.1
1013.8
1016.85
994+00.00
1015.67
END AREA
CUT
FILL
VOLUME
CUT
FILL
820 61
1592 62
899 7
1705 9
943 3
1675 5
866 2
1694 2
964 1
2363 SHEET TOTAL
6666 78
SHEET TOTAL
CALCULATED BF
CHECKED SB
CROSS SECTIONS - U.S. 422
STA. 994+00 TO STA. 995+50
GEA/POR-422-18.31/0.00
108
332

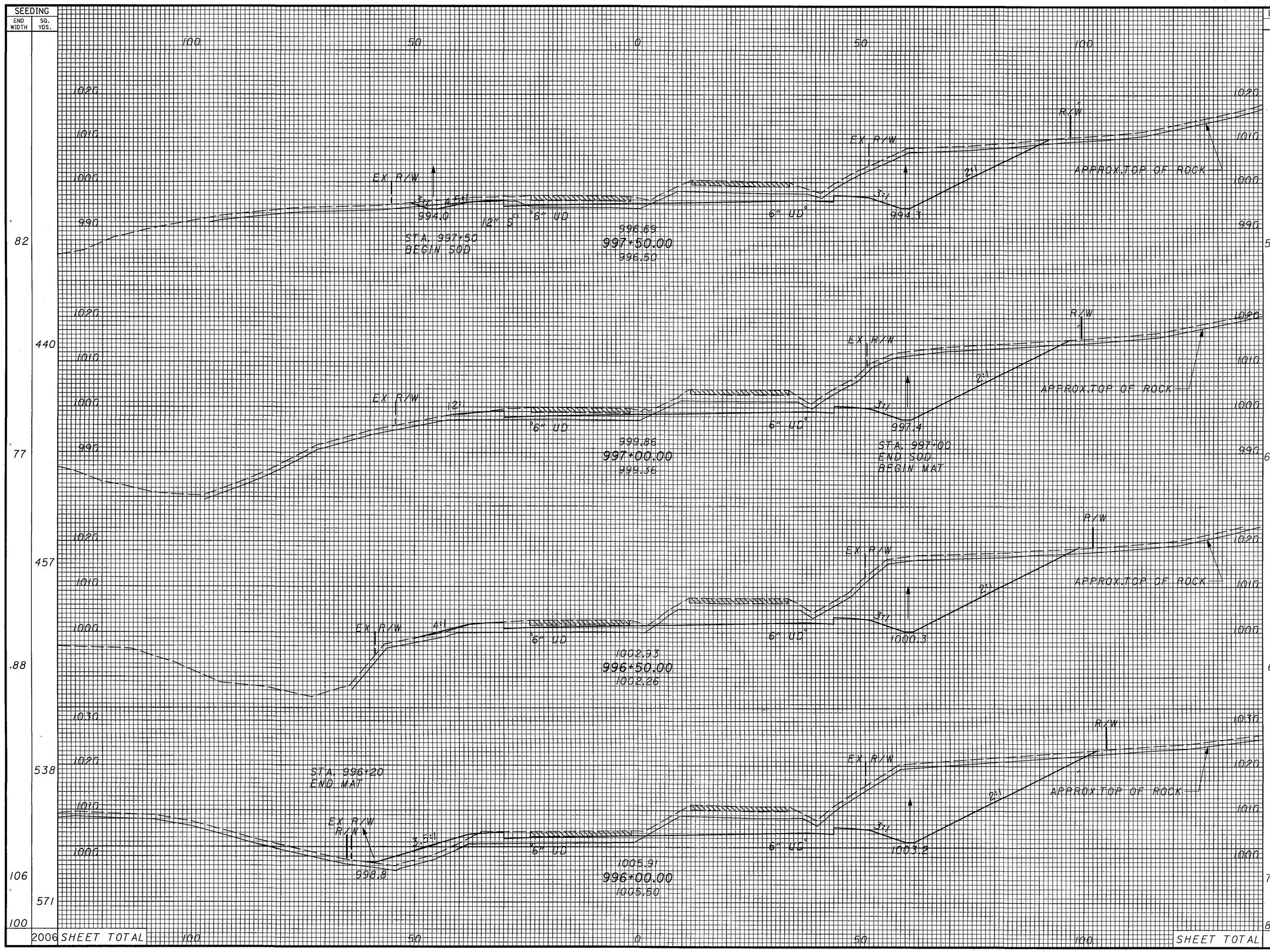

SEEDING END WIDTH	SEEDING SQ. YDS.	END AREA CUT	END AREA FILL	VOLUME CUT	VOLUME FILL
82	440	533	0	1077	0
77	457	630	0	1214	3
88	538	681	3	1349	26
106	571	776	26	1478	80
100	2006 SHEET TOTAL	820	61	5118	109

CALCULATED BF
CHECKED SB

CROSS SECTIONS - U.S. 422
STA. 996+00 TO STA. 997+50

GEA/POR-422-18.31/0.00

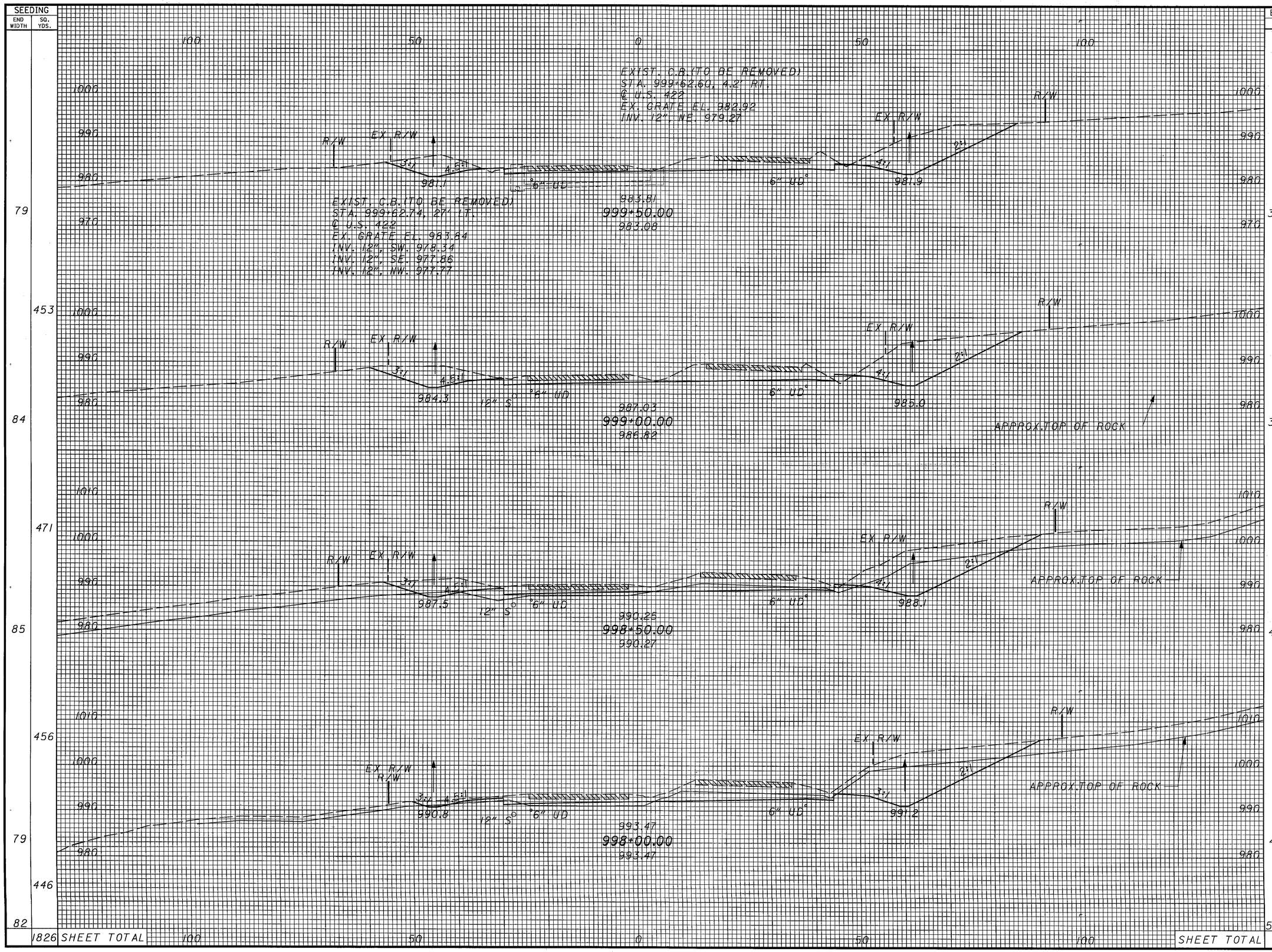

SEEDING END WIDTH	SEEDING SQ. YDS.	END AREA CUT	END AREA FILL	VOLUME CUT	VOLUME FILL
79		340	3		
	453			668	7
84		381	5		
	471			761	6
85		441	1		
	456			826	1
79		451	0		
	446			911	0
82		533	0		
	1826 SHEET TOTAL			3166	14 SHEET TOTAL

CALCULATED BF
CHECKED SB

CROSS SECTIONS - U.S. 422
STA. 998+00 TO STA. 999+50

GEA/POR-422-18.31/0.00

110
332

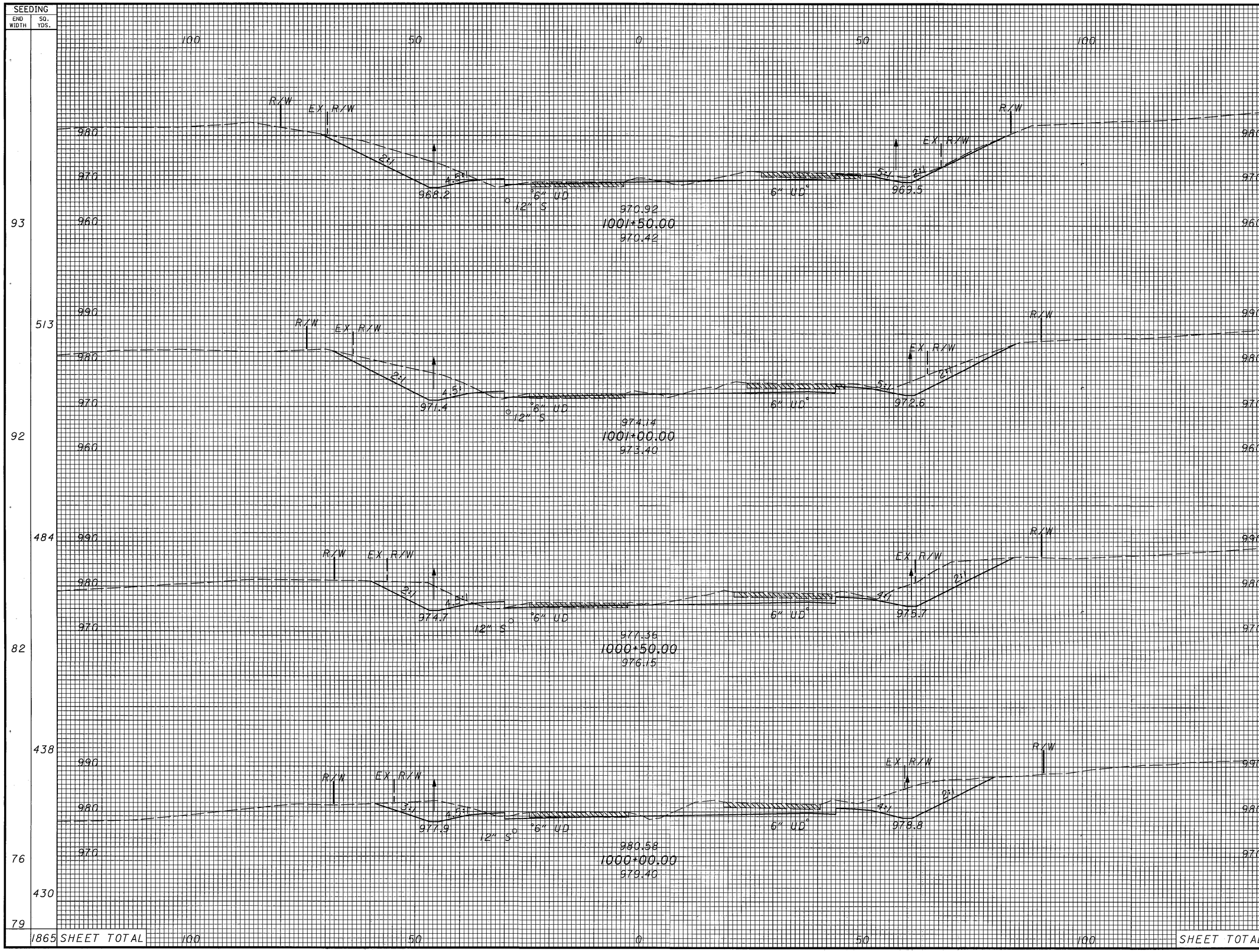

SEEDING END WIDTH	SEEDING SQ. YDS.		END AREA CUT	END AREA FILL	VOLUME CUT	VOLUME FILL
93			165	28		
	513				343	44
92			205	20		
	484				420	32
82			249	15		
	438				475	18
76			264	4		
	430				604	7
79			340	3		
	1865	SHEET TOTAL			1842	101

CALCULATED BF
CHECKED SB

CROSS SECTIONS - U.S. 422
STA. 1000+00 TO STA. 1001+50

GEA/POR-422-18.31/0.00

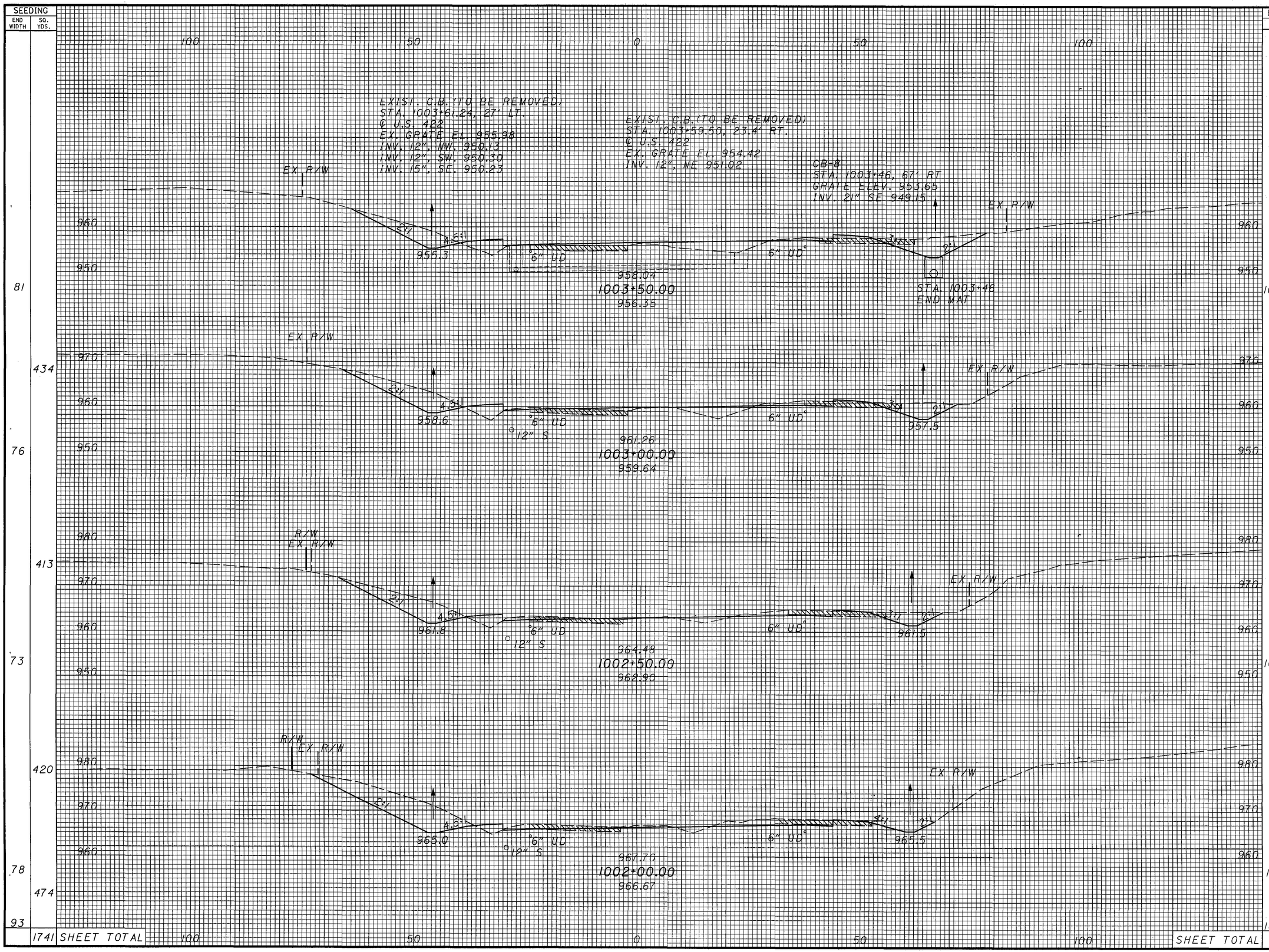
EXIST. C.B. (TO BE REMOVED)
STA. 1003+61.24, 27' LT.
℄ U.S. 422
EX. GRATE EL. 955.98
INV. 12", NW. 950.13
INV. 12", SW. 950.30
INV. 15", SE. 950.23
EXIST. C.B. (TO BE REMOVED)
STA. 1003+59.50, 23.4' RT.
℄ U.S. 422
EX. GRATE EL. 954.42
INV. 12", NE 951.02
CB-8
STA. 1003+46, 67' RT
GRATE ELEV. 953.65
INV. 21" SE 949.15
EX R/W
R/W
955.3
958.04
1003+50.00
956.35
STA. 1003+46
END MAT
958.6
961.26
1003+00.00
959.64
961.8
964.48
1002+50.00
962.90
965.0
967.70
1002+00.00
966.67
6" UD
12" S
2:1
4:1
SEEDING
END WIDTH
SQ. YDS.
81
434
76
413
73
420
78
474
93
1741
SHEET TOTAL
END AREA
CUT
FILL
VOLUME
CUT
FILL
103 111
198 181
111 85
204 123
109 48
275 76
188 34
326 57
165 28
1003 437
SHEET TOTAL
CALCULATED BF
CHECKED SB
CROSS SECTIONS - U.S. 422
STA. 1002+00 TO STA. 1003+50
GEA/POR-422-18.31/0.00
112
332

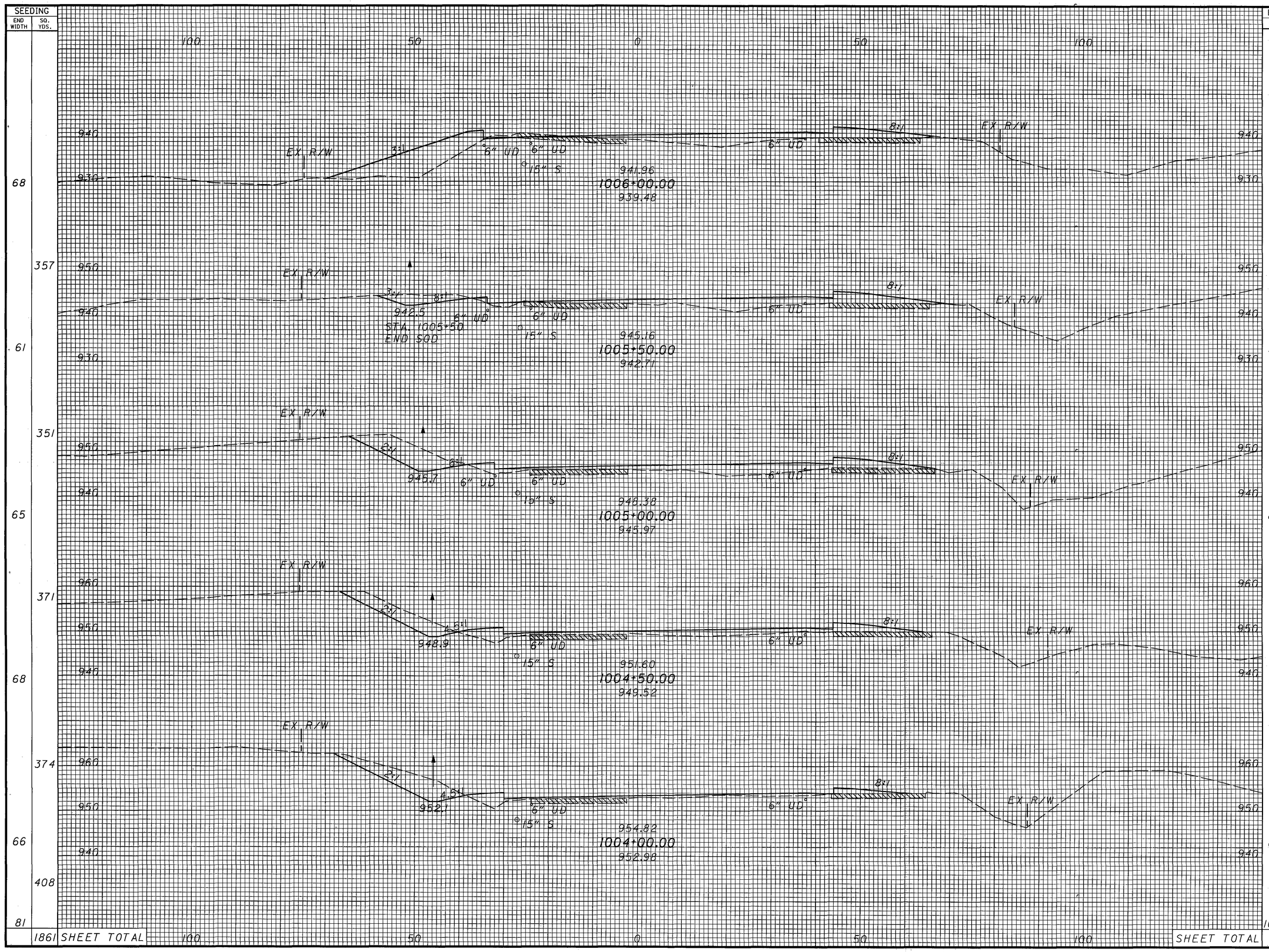

SEEDING END WIDTH	SEEDING SQ. YDS.	END AREA CUT	END AREA FILL	VOLUME CUT	VOLUME FILL
68		5	310		
	357			32	463
61		30	190		
	351			104	350
65		83	188		
	371			136	319
68		64	156		
	374			137	247
66		83	111		
	408			172	206
81		103	111		
	1861 SHEET TOTAL			581	1585 SHEET TOTAL

CALCULATED BF
CHECKED SB

CROSS SECTIONS - U.S. 422
STA. 1004+00 TO STA. 1006+00

GEA/POR-422-18.31/0.00

SEEDING END WIDTH	SEEDING SQ. YDS.	END AREA CUT	END AREA FILL	VOLUME CUT	VOLUME FILL
56		102	184		
	325			213	395
61		128	243		
	317			225	467
53		115	261		
	318			208	504
61		110	283		
	334			174	577
60		78	294		
	354			76	559
68		5	310		
	1648 SHEET TOTAL		SHEET TOTAL	896	2502

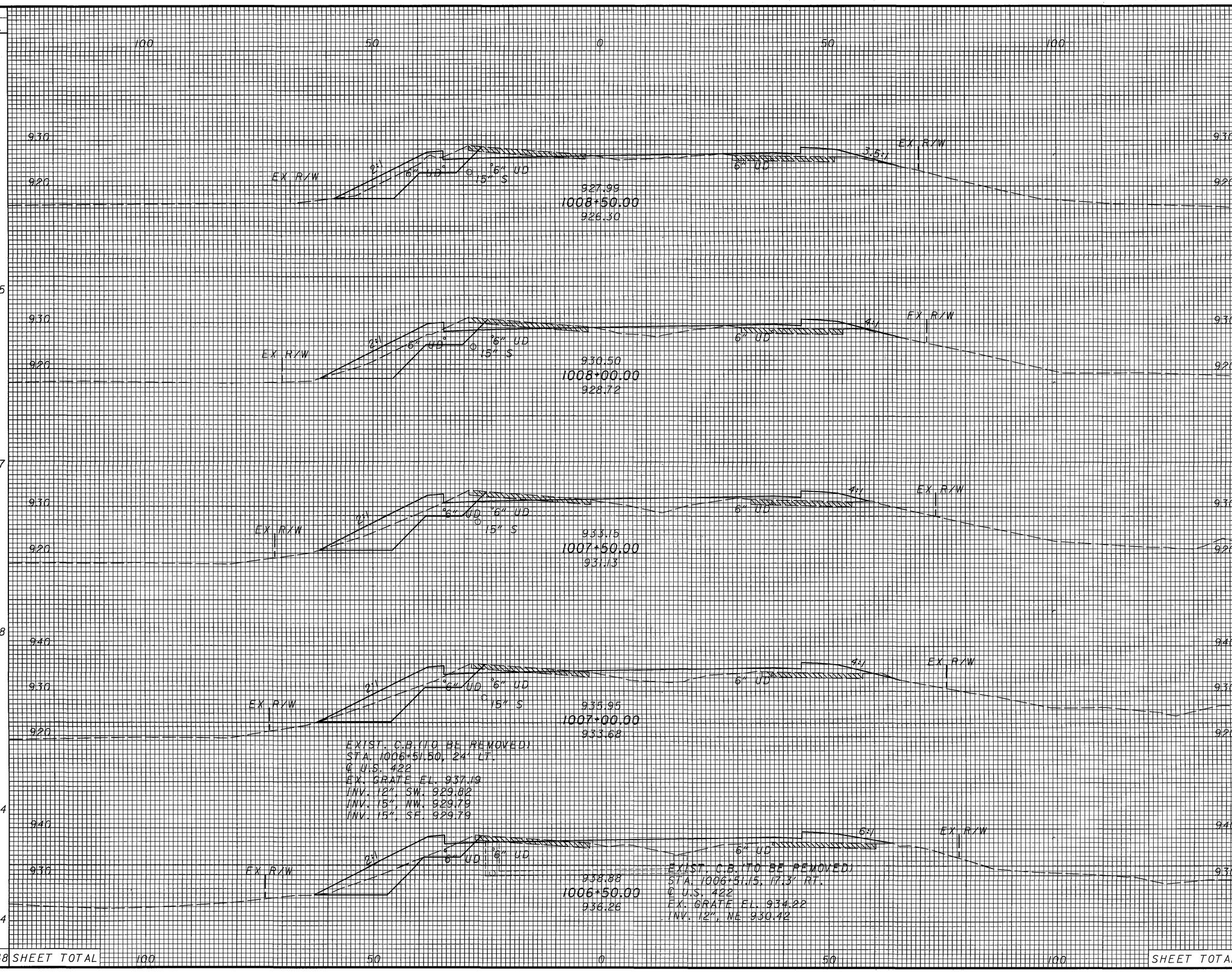

CALCULATED BF
CHECKED SB

CROSS SECTIONS - U.S. 422
STA. 1006+50 TO STA. 1008+50

GEA/POR-422-18.31/0.00

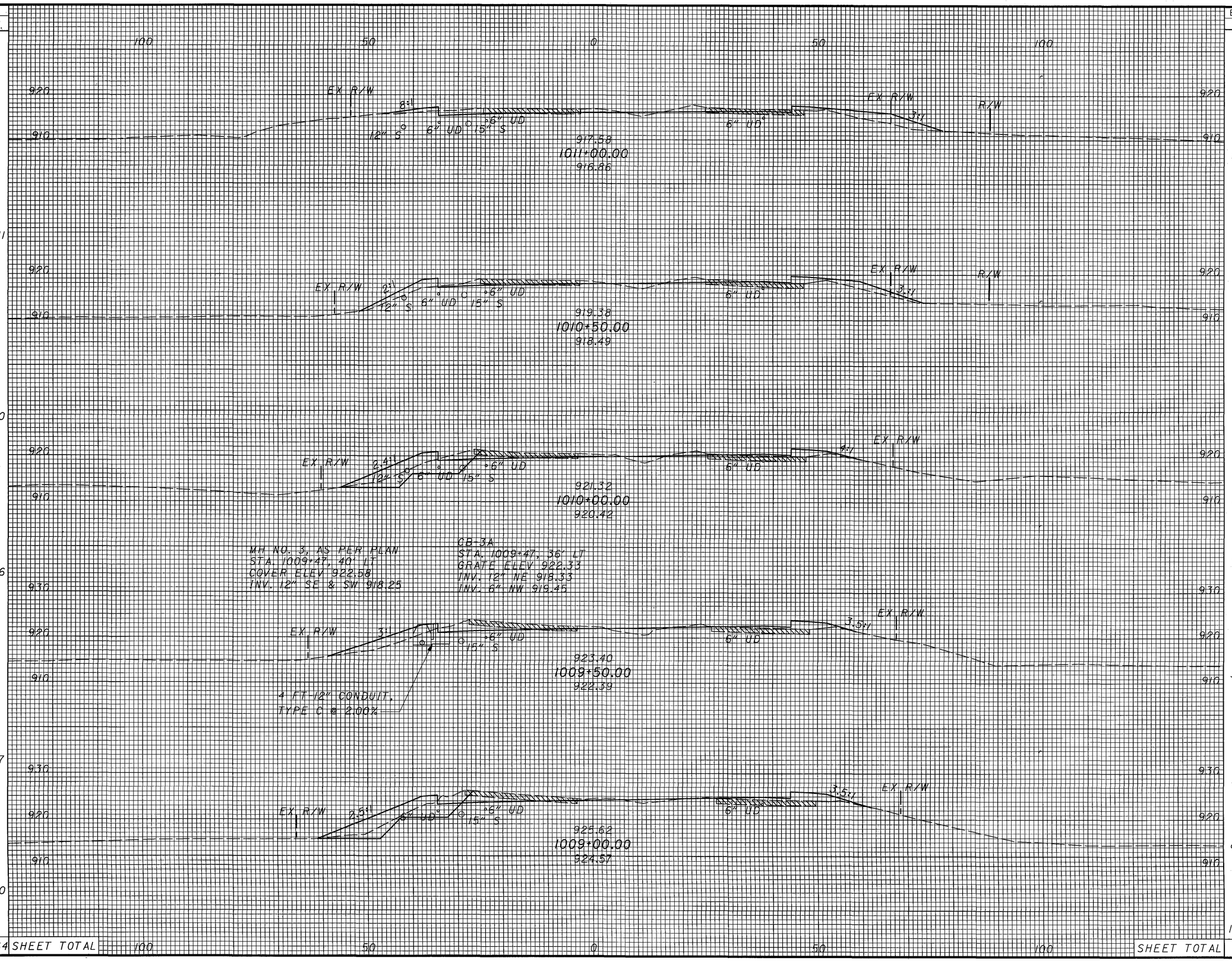

SEEDING END WIDTH	SEEDING SQ. YDS.	END AREA CUT	END AREA FILL	VOLUME CUT	VOLUME FILL
55		24	68		
	311			38	139
57		17	82		
	290			89	207
47		79	142		
	266			101	220
48		30	96		
	287			101	239
55		80	162		
	310			169	320
56		102	184		
1464	SHEET TOTAL		SHEET TOTAL	498	1125

CALCULATED BF
CHECKED SB

CROSS SECTIONS - U.S. 422
STA. 1009+00 TO STA. 1011+00

GEA/POR-422-18.31/0.00

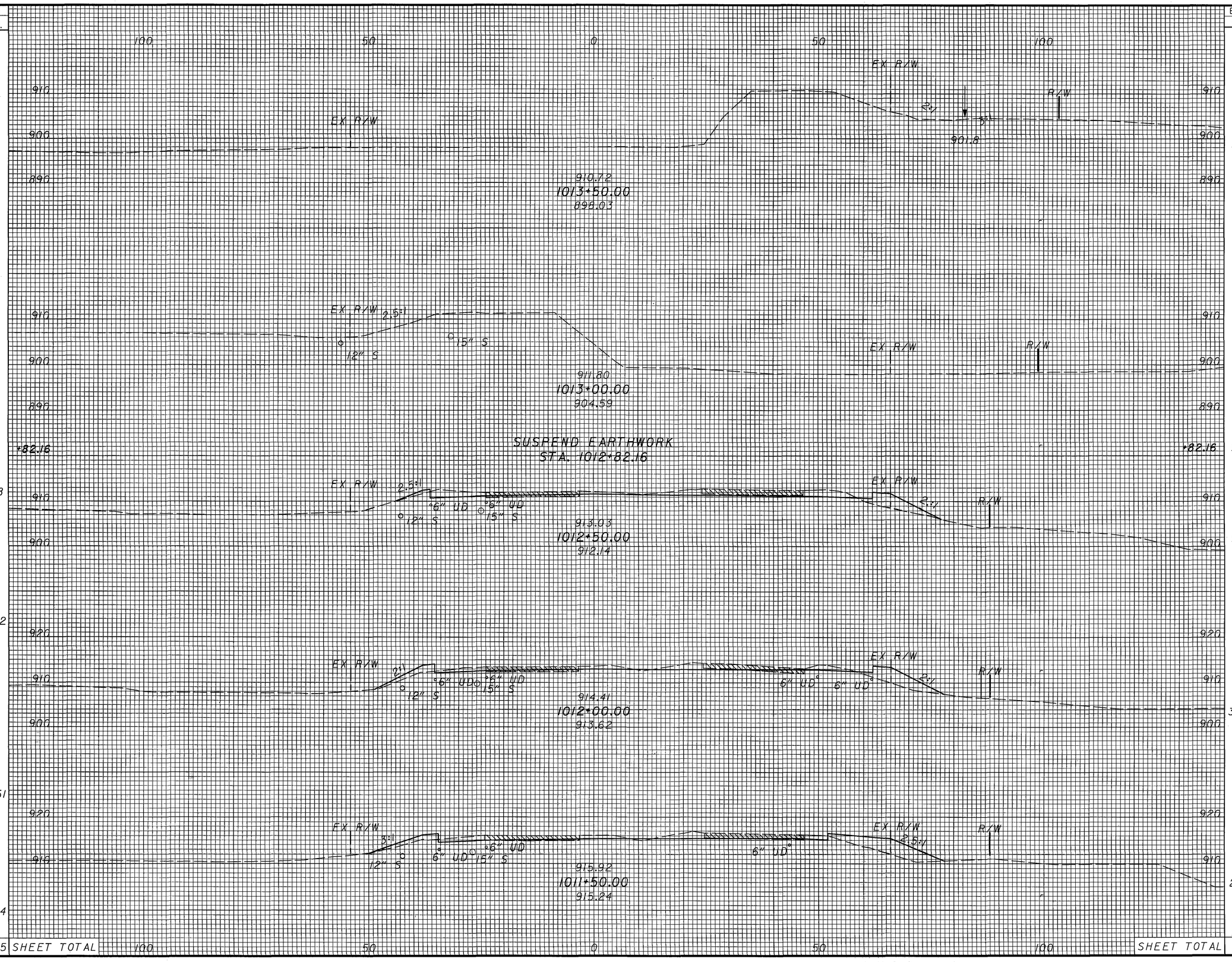

SEEDING END WIDTH	SEEDING SQ. YDS.	END AREA CUT	END AREA FILL	VOLUME CUT	VOLUME FILL
33		50	42		
118		50	42	60	50
202		32	62	76	96
251		27	68	54	120
294		24	68	47	126
55	865 SHEET TOTAL			237	392

CALCULATED BF
CHECKED SB

CROSS SECTIONS - U.S. 422
STA. 1011+50 TO STA. 1013+50

GEA/POR-422-18.31/0.00

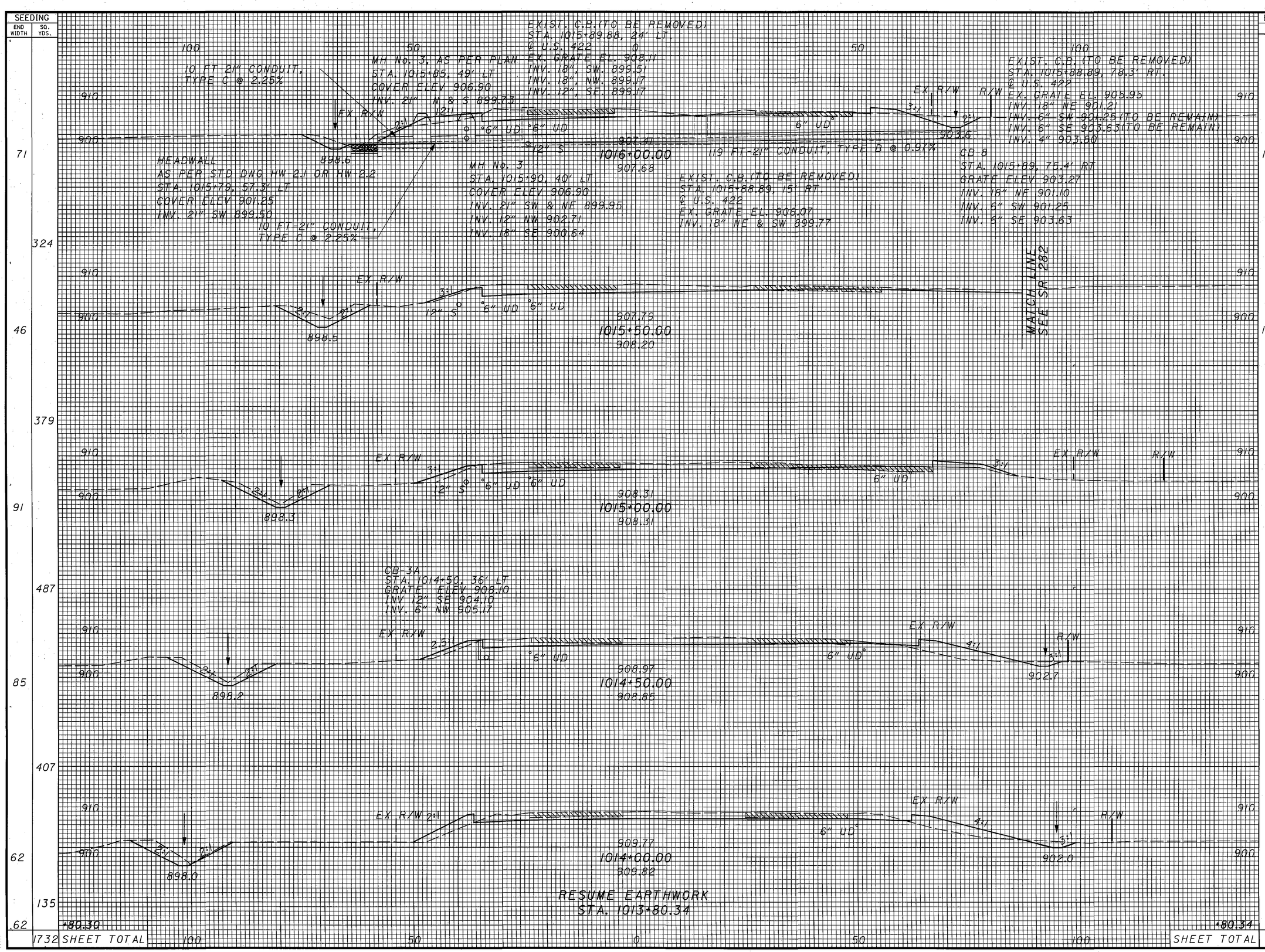

SEEDING END WIDTH	SEEDING SQ. YDS.	END AREA CUT	END AREA FILL	VOLUME CUT	VOLUME FILL
71	324	135	30	249	44
46	379	134	17	232	69
91	487	118	58	217	109
85	407	116	60	188	115
62	135	87	65	161	47
.62	+80.30	87	65	1048	384
1732	SHEET TOTAL				

CALCULATED BF
CHECKED SB

CROSS SECTIONS - U.S. 422
STA. 1014+00 TO STA. 1016+00

GEA / POR-422-18.31 / 0.00

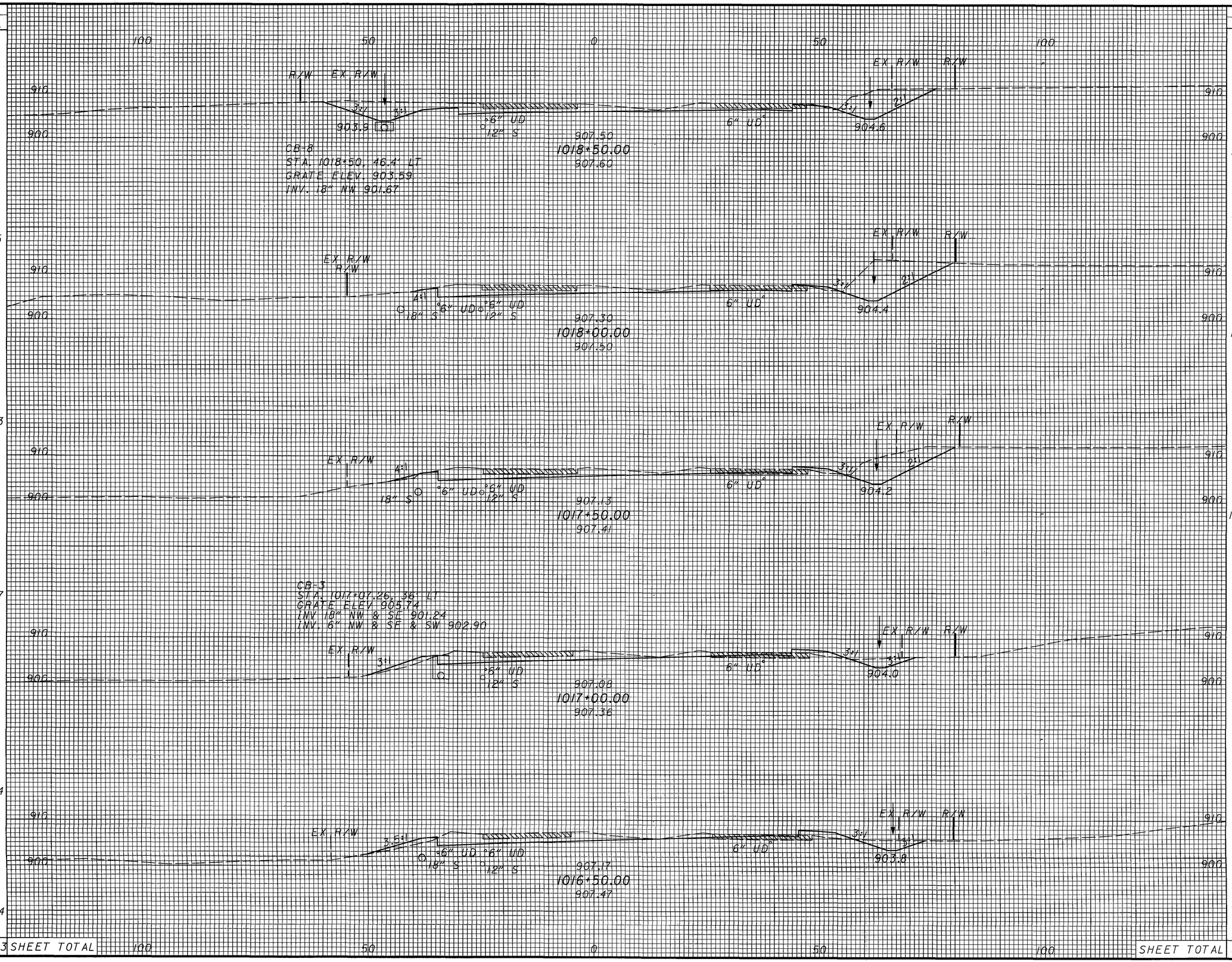

SEEDING END WIDTH	SEEDING SQ. YDS.	END AREA CUT	END AREA FILL	VOLUME CUT	VOLUME FILL
73		214	4		
	345			370	10
51		186	7		
	303			313	20
58		152	15		
	307			220	45
53		86	34		
	294			157	64
53		84	35		
	344			202	60
71		165	30		
	1593 SHEET TOTAL	SHEET TOTAL		1262	135

CALCULATED BF
CHECKED SB

CROSS SECTIONS - U.S. 422
STA. 1016+50 TO STA. 1018+50

GEA/POR-422-18.31/0.00

SEEDING END WIDTH	SEEDING SQ. YDS.		END AREA CUT	END AREA FILL	VOLUME CUT	VOLUME FILL
63		1021+50.00	180	0		
	354				351	0
64		1021+00.00	199	0		
	365				389	0
67		1020+50.00	221	0		
	382				420	0
71		1020+00.00	233	0		
	388				385	0
69		1019+50.00	183	0		
	391				354	0
72		1019+00.00	200	0		
	403				384	4
73			214	4		
	2283	SHEET TOTAL			2283	4

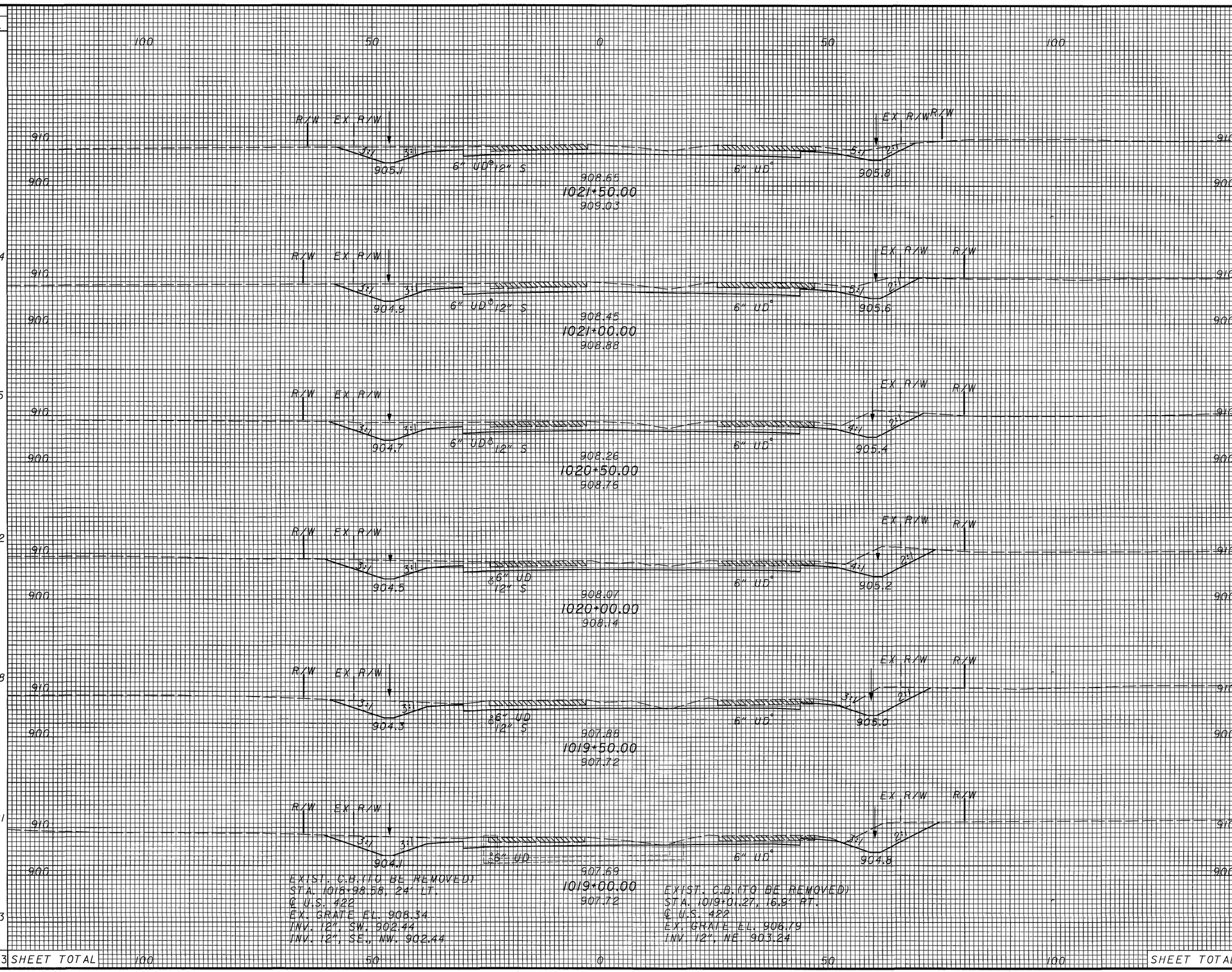

CALCULATED BF
CHECKED SB

CROSS SECTIONS - U.S. 422
STA. 1019+00 TO STA. 1021+50

GEA/POR-422-18.31/0.00

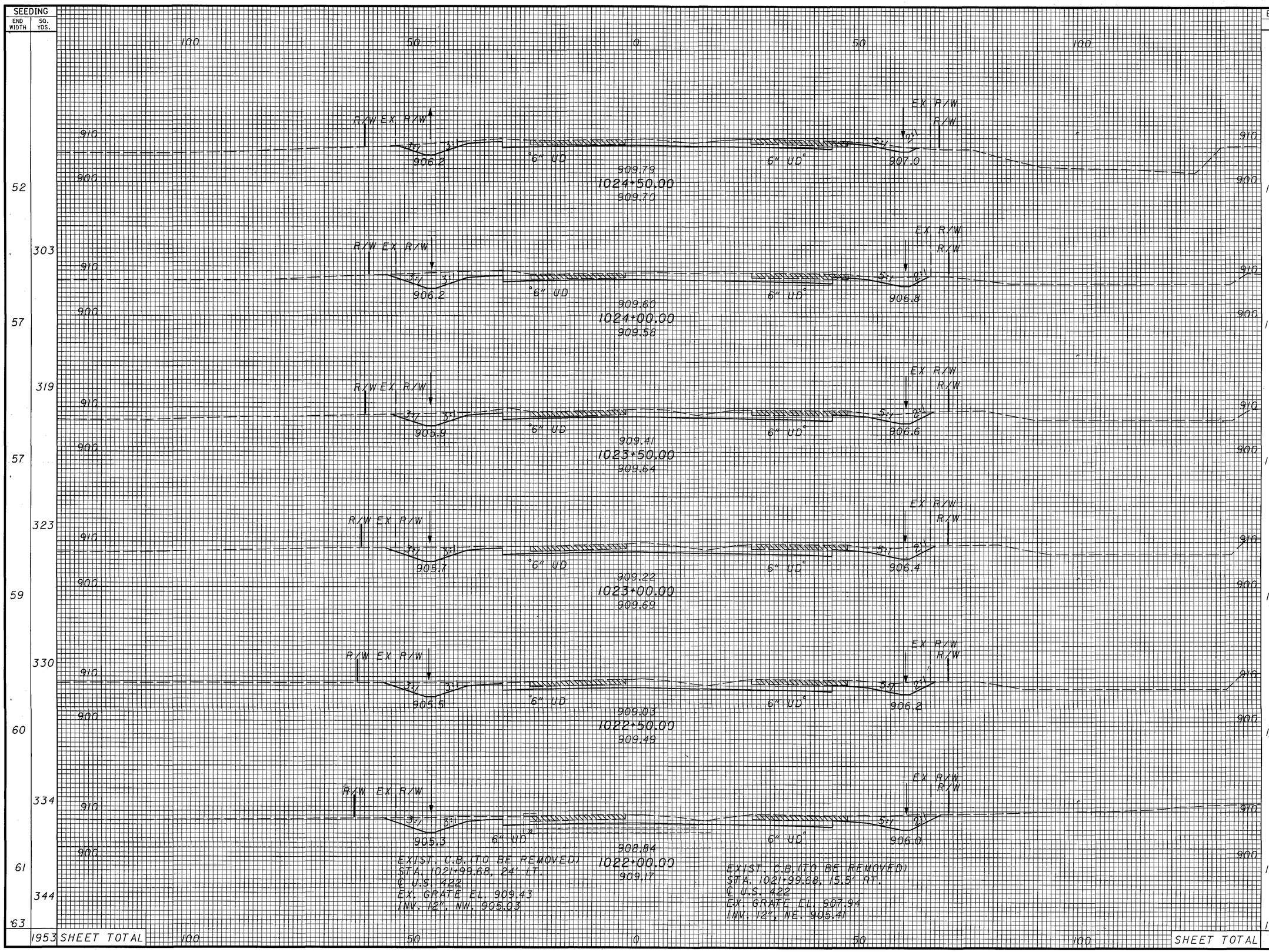

END AREA CUT	END AREA FILL	VOLUME CUT	VOLUME FILL
100	0		
		230	0
148	0		
		263	0
137	0		
		267	0
151	0		
		292	0
164	0		
		318	0
180	0		
		333	0
180	0		
SHEET TOTAL		1703	0

CALCULATED BF
CHECKED SB

CROSS SECTIONS - U.S. 422
STA. 1022+00 TO STA. 1024+50

GEA/POR-422-18.31/0.00

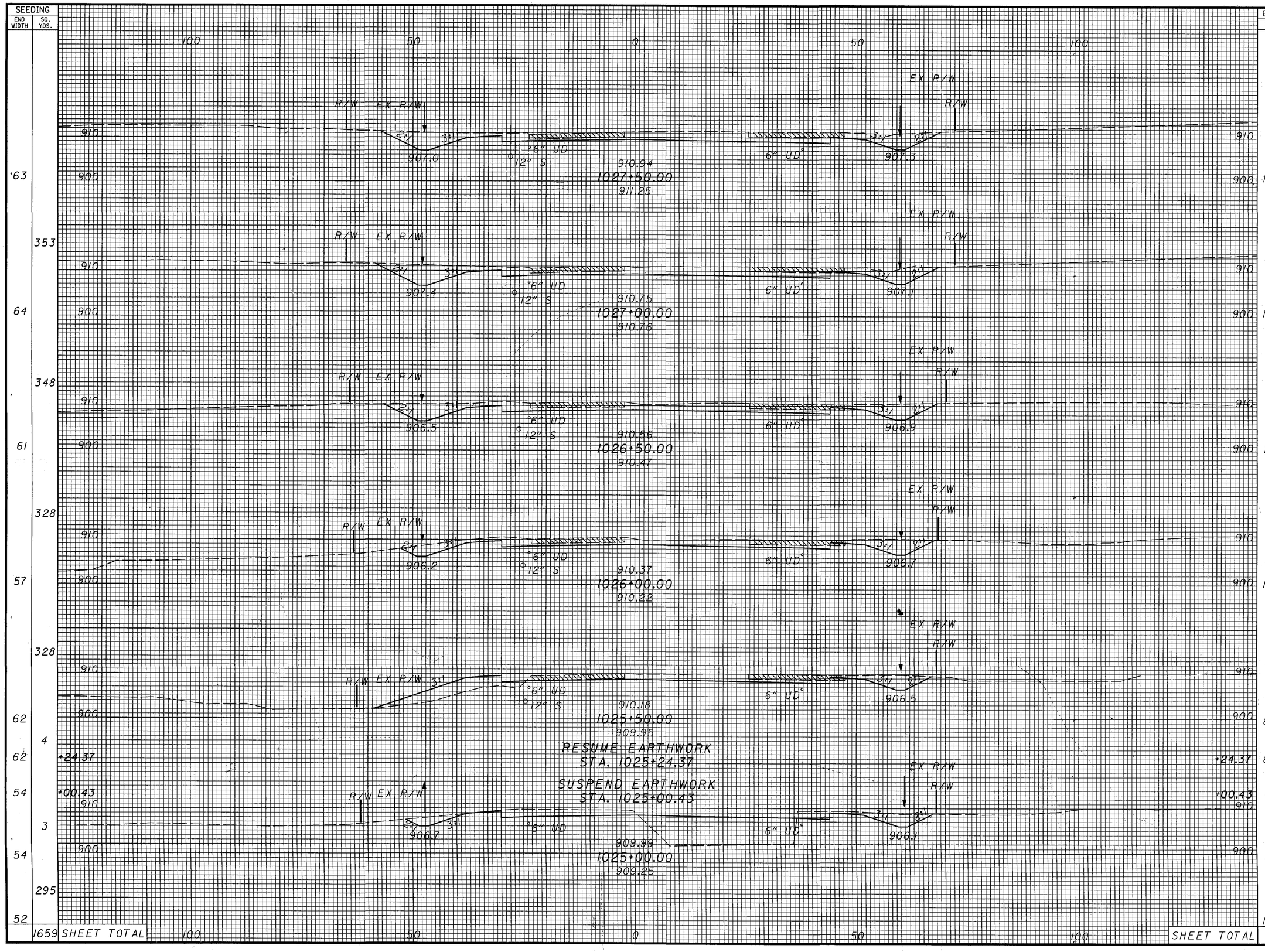
SEEDING
END WIDTH
SQ. YDS.
END AREA
CUT
FILL
VOLUME
CUT
FILL
100
50
0
50
100
R/W
EX R/W
2:1
3:1
907.0
6" UD
12" S
910.94
1027+50.00
911.25
907.3
6" UD
910
900
63
353
907.4
910.75
1027+00.00
910.76
907.1
64
348
906.5
910.56
1026+50.00
910.47
906.9
61
328
906.2
910.37
1026+00.00
910.22
906.7
57
328
910.13
1025+50.00
909.95
906.5
62
4
+24.37
RESUME EARTHWORK
STA. 1025+24.37
SUSPEND EARTHWORK
STA. 1025+00.43
+00.43
906.7
909.99
1025+00.00
909.25
906.1
3
295
52
1659
SHEET TOTAL
198 0
367 0
198 0
346 1
176 1
294 3
142 2
207 67
82 70
78 66
82 70
77 0
1 0
77 0
164 0
100 0
1457 137
CALCULATED BF
CHECKED SB
CROSS SECTIONS - U.S. 422
STA. 1025+00 TO STA. 1027+50
GEA/POR-422-18.31/0.00
121
332

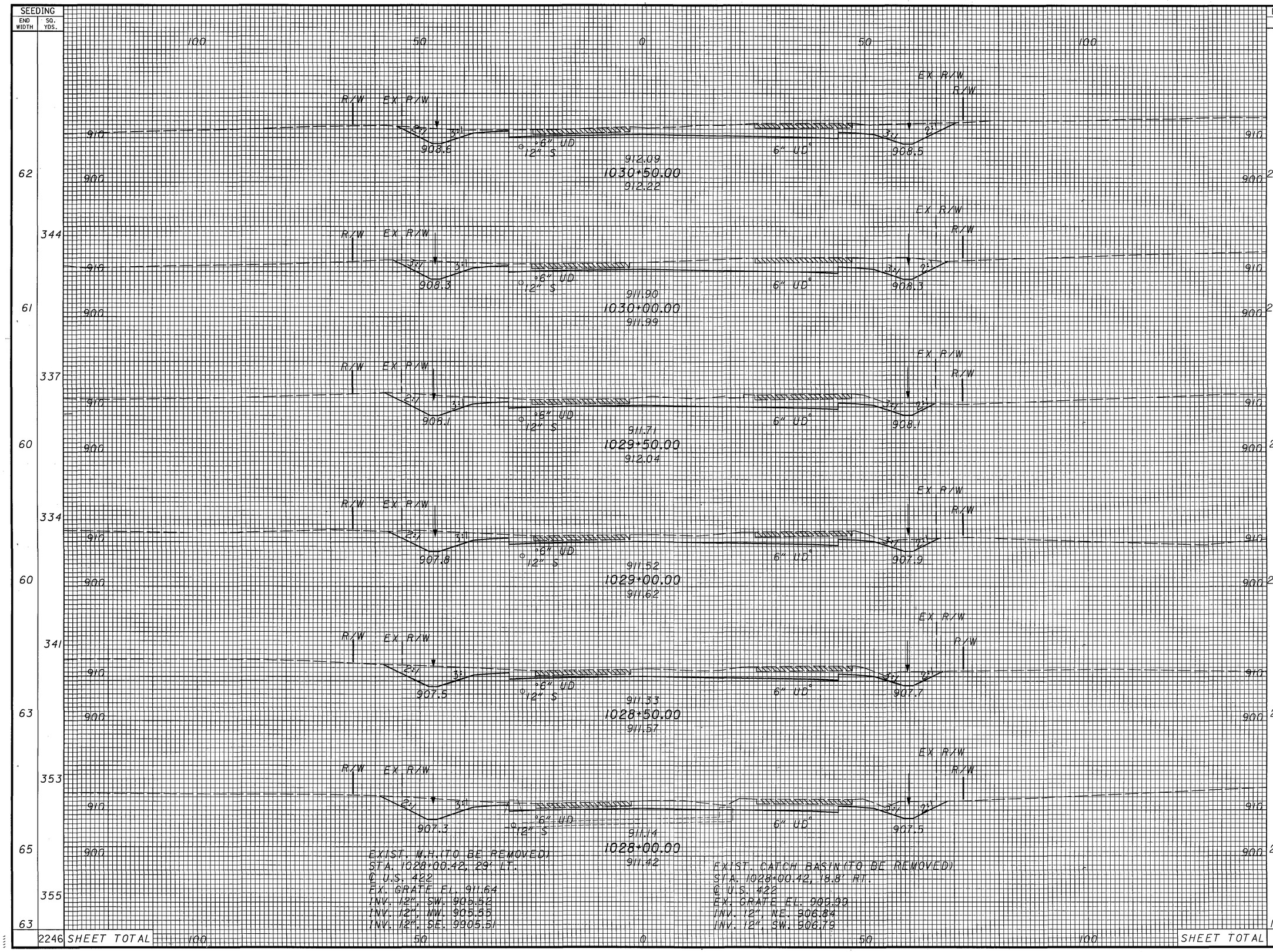
SEEDING
END WIDTH
SQ. YDS.
100
50
0
50
100
R/W
EX R/W
910
900
2:1
3:1
6" UD
12" S
912.09
1030+50.00
912.22
908.8
908.5
62
226
0
344
911.90
1030+00.00
911.99
908.3
61
236
428
337
911.71
1029+50.00
912.04
908.1
60
215
418
334
911.52
1029+00.00
911.62
907.8
907.9
60
208
392
341
911.33
1028+50.00
911.57
907.5
907.7
63
215
392
353
911.14
1028+00.00
911.42
907.3
907.5
65
213
396
355
63
198
380
EXIST. M.H. (TO BE REMOVED)
STA. 1028+00.42, 29' LT.
℄ U.S. 422
EX. GRATE EL. 911.64
INV. 12", SW. 905.52
INV. 12", NW. 905.55
INV. 12", SE. 9905.51
EXIST. CATCH BASIN (TO BE REMOVED)
STA. 1028+00.42, 18.8' RT.
℄ U.S. 422
EX. GRATE EL. 909.99
INV. 12" NE. 906.84
INV. 12", SW. 906.79
2246
SHEET TOTAL
SHEET TOTAL
2406
0
END AREA
CUT
FILL
VOLUME
CUT
FILL
CALCULATED BF
CHECKED SB
CROSS SECTIONS - U.S. 422
STA. 1028+00 TO STA. 1030+50
GEA/POR-422-18.31/0.00
122
332

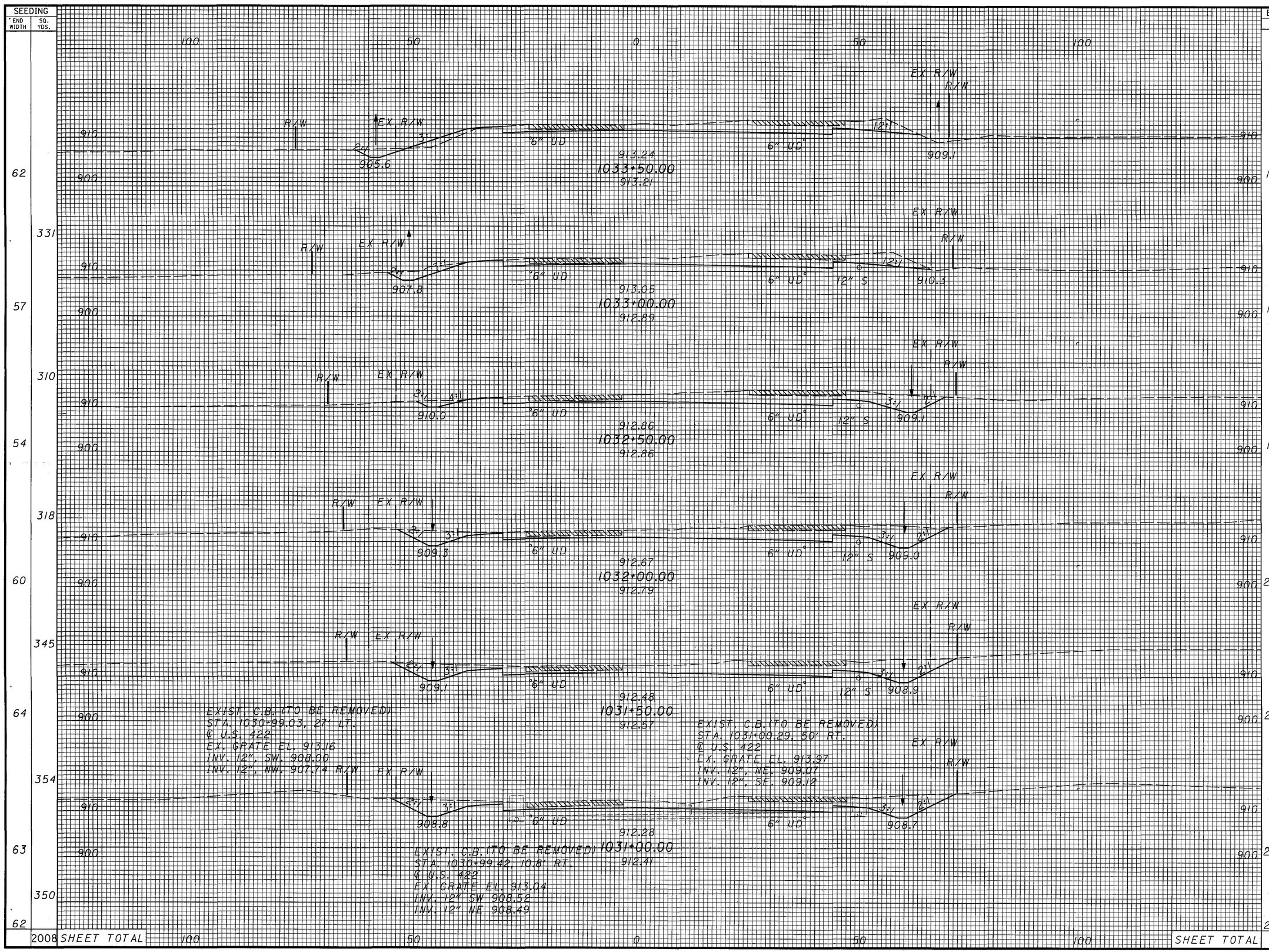

CALCULATED BF
CHECKED SB

CROSS SECTIONS - U.S. 422
STA. 1031+00 TO STA. 1033+50

GEA/POR-422-18.31/0.00

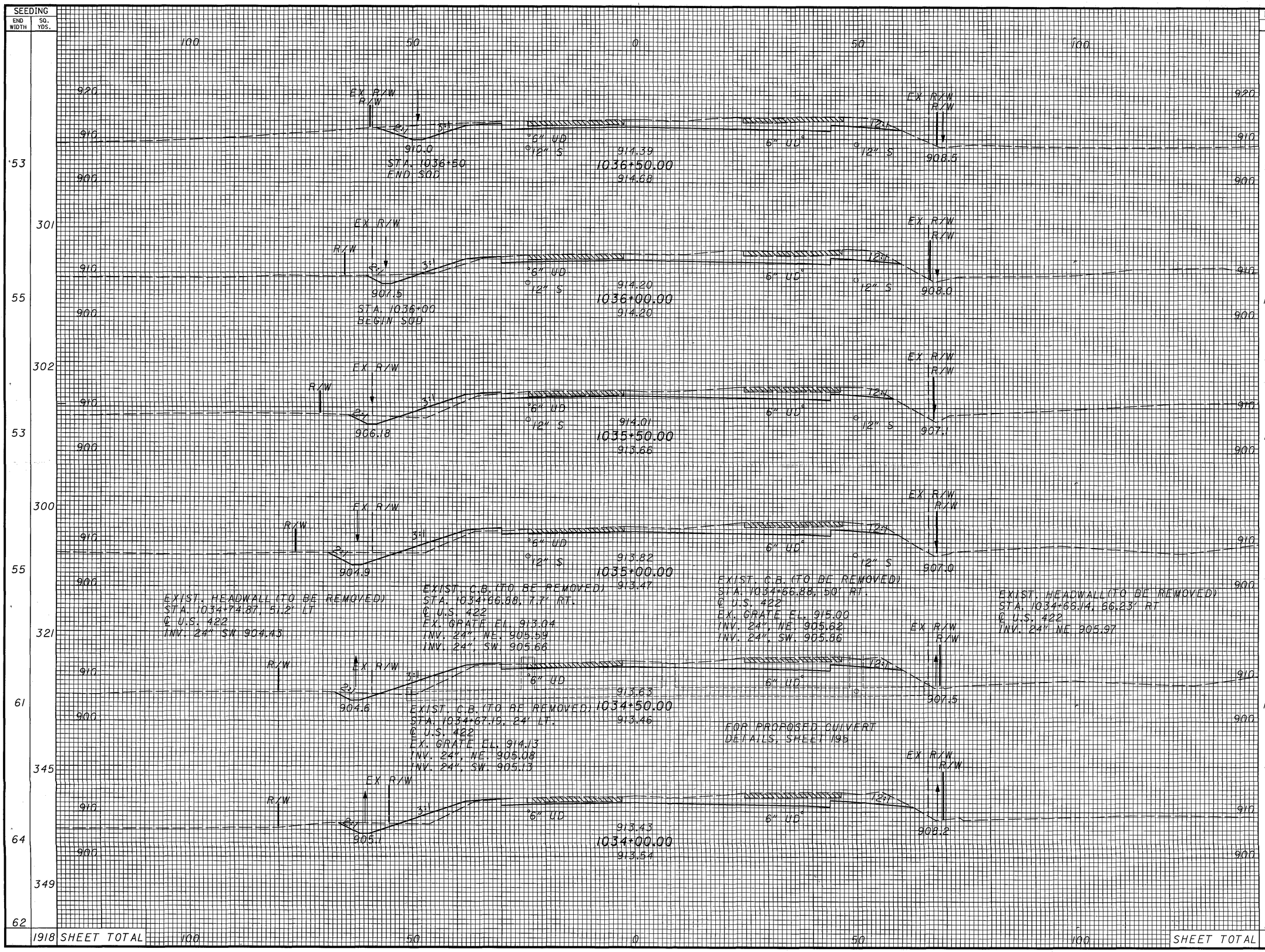

SEEDING END WIDTH	SEEDING SQ. YDS.	END AREA CUT	END AREA FILL	VOLUME CUT	VOLUME FILL
53		178	0		
	301			291	11
55		136	12		
	302			222	39
53		104	30		
	300			185	52
55		96	27		
	321			189	60
61		108	38		
	345			230	58
64		141	24		
	349			262	37
62		142	16		
1918	SHEET TOTAL	SHEET TOTAL		1379	257

CALCULATED BF
CHECKED SB

CROSS SECTIONS - U.S. 422
STA. 1034+00 TO STA. 1036+50

GEA/POR-422-18.31/0.00

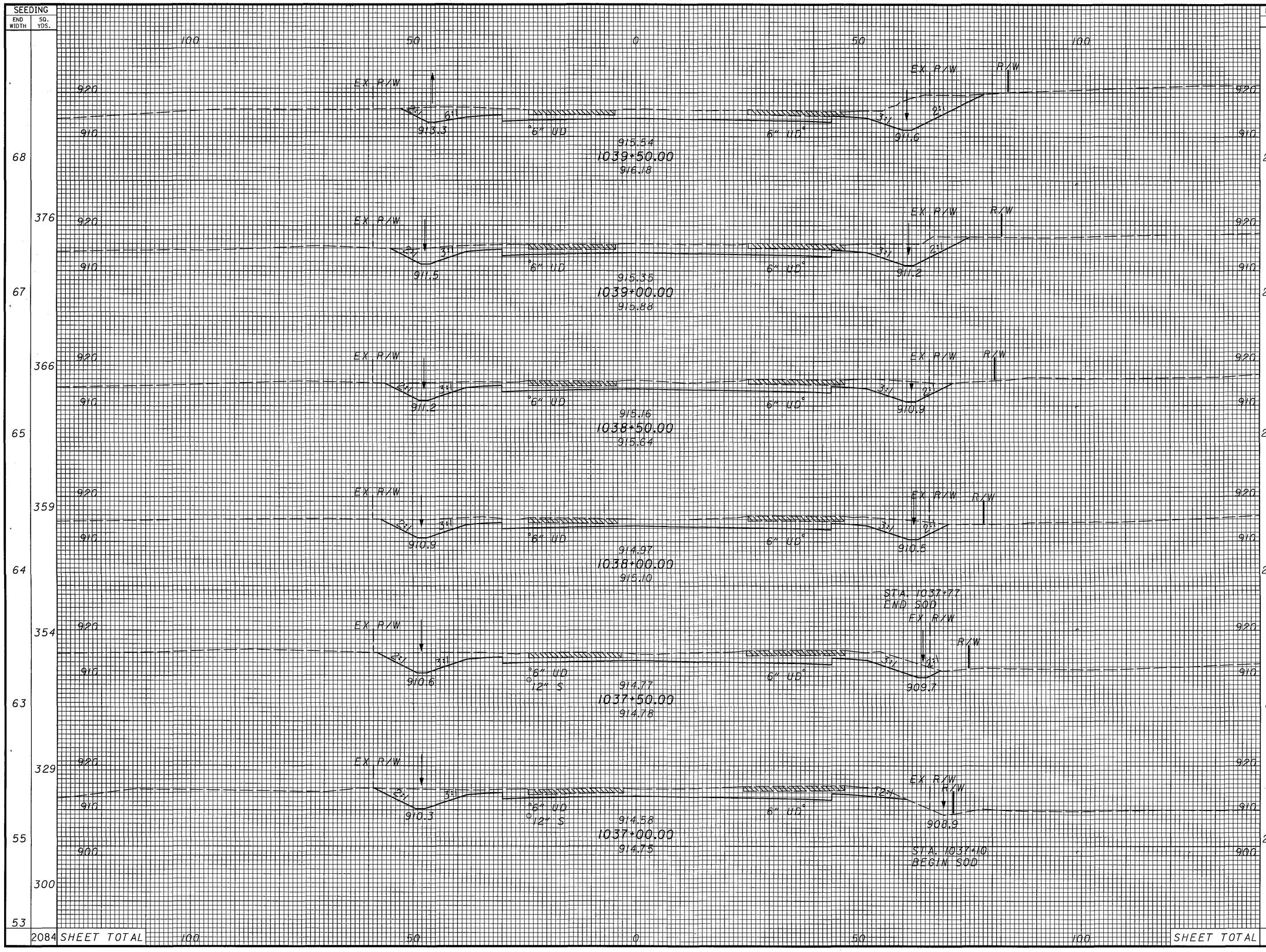

CALCULATED BF

CHECKED SB

CROSS SECTIONS - U.S. 422
STA. 1037+00 TO STA. 1039+50

GEA/POR-422-18.31/0.00

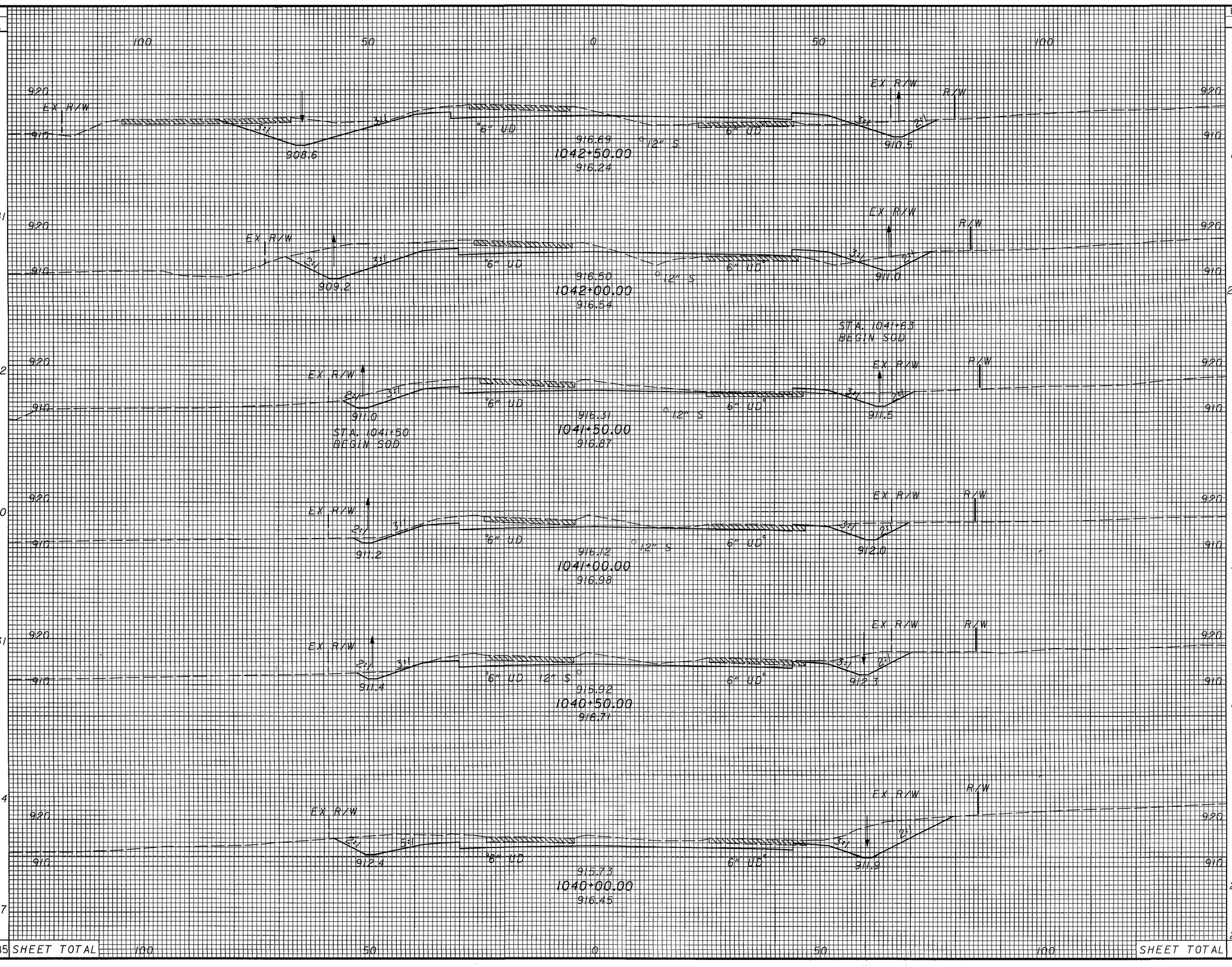

SEEDING END WIDTH	SEEDING SQ. YDS.	END AREA CUT	END AREA FILL	VOLUME CUT	VOLUME FILL
77		140	94		
	441			345	160
81		233	79		
	402			363	100
63		159	29		
	340			258	31
59		120	5		
	331			243	8
60		143	3		
	374			398	3
75		287	0		
	397			521	0
68		276	0		
	2285 SHEET TOTAL			2128	302 SHEET TOTAL

CALCULATED BF
CHECKED SB

CROSS SECTIONS - U.S. 422
STA. 1040+00 TO STA. 1042+50

GEA/POR-422-18.31/0.00

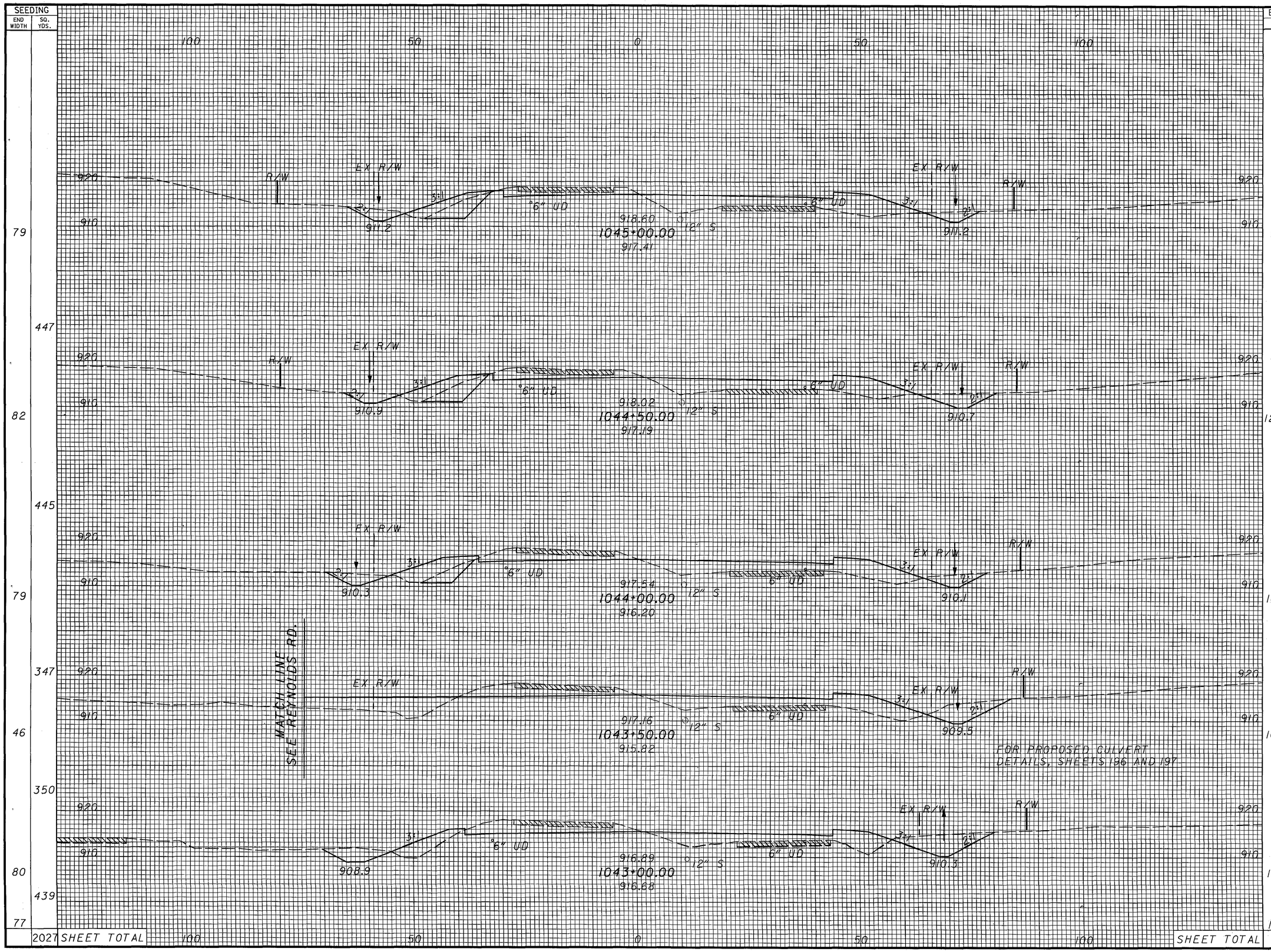

SEEDING END WIDTH	SEEDING SQ. YDS.	END AREA CUT	END AREA FILL	VOLUME CUT	VOLUME FILL
79	447	95	257	199	459
82	445	120	239	212	449
79	347	109	246	199	493
46	350	106	287	227	454
80	439	139	203	258	275
77	2027 SHEET TOTAL	140	94	1095	2130
		SHEET TOTAL			

CALCULATED BF
CHECKED SB

CROSS SECTIONS - U.S. 422
STA. 1043+00 TO STA. 1045+00

GEA/POR-422-18.31/0.00

SEEDING END WIDTH	SEEDING SQ. YDS.	END AREA CUT	END AREA FILL	VOLUME CUT	VOLUME FILL
86		80	282		
	486			157	481
89		90	237		
	480			165	481
84		88	282		
	465			175	517
84		101	276		
	460			186	508
82		100	273		
	448			181	491
79		95	257		
	2339 SHEET TOTAL			864	2478 SHEET TOTAL

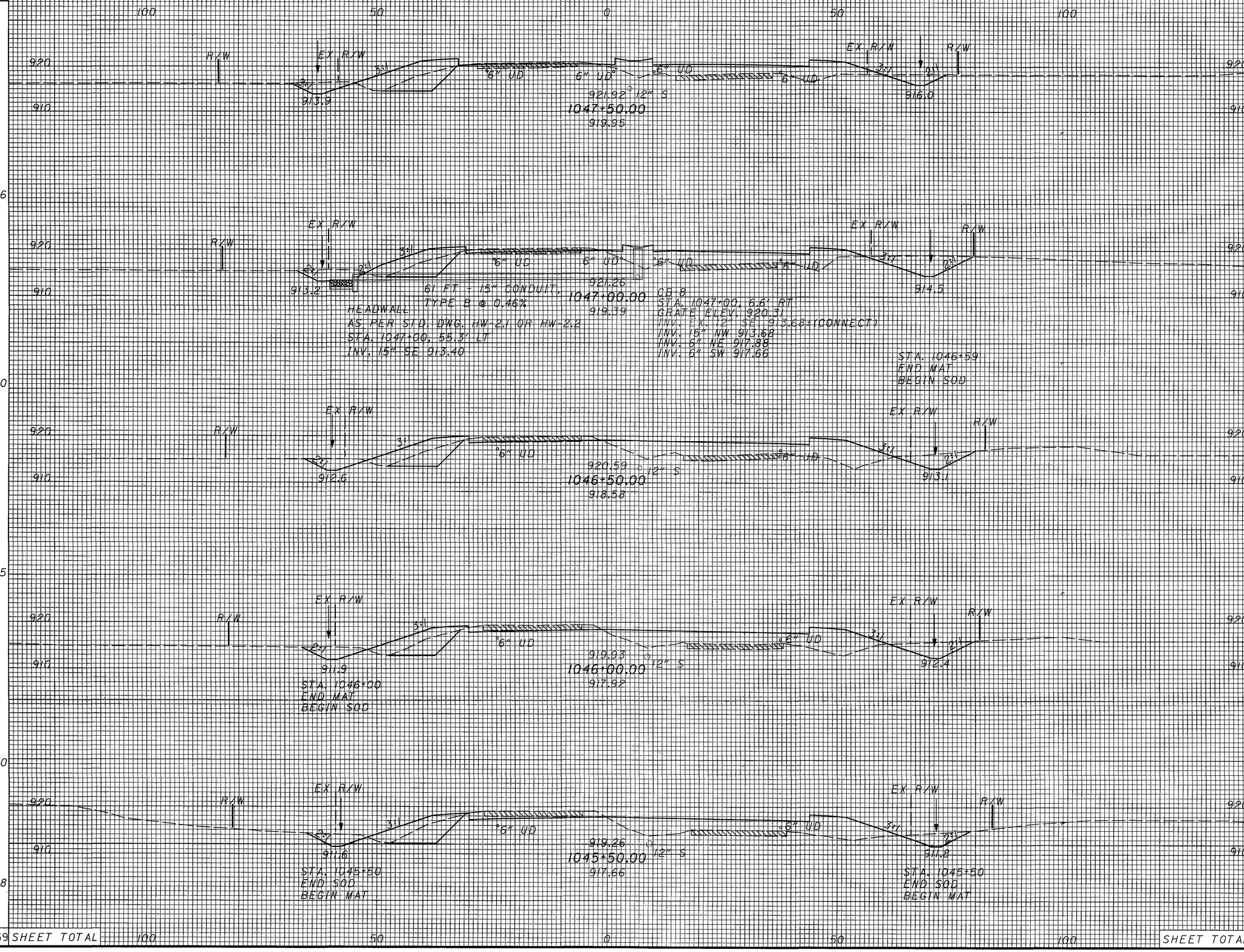

CALCULATED BF
CHECKED SB

CROSS SECTIONS - U.S. 422
STA. 1045+50 TO STA. 1047+50

GEA/POR-422-18.31/0.00

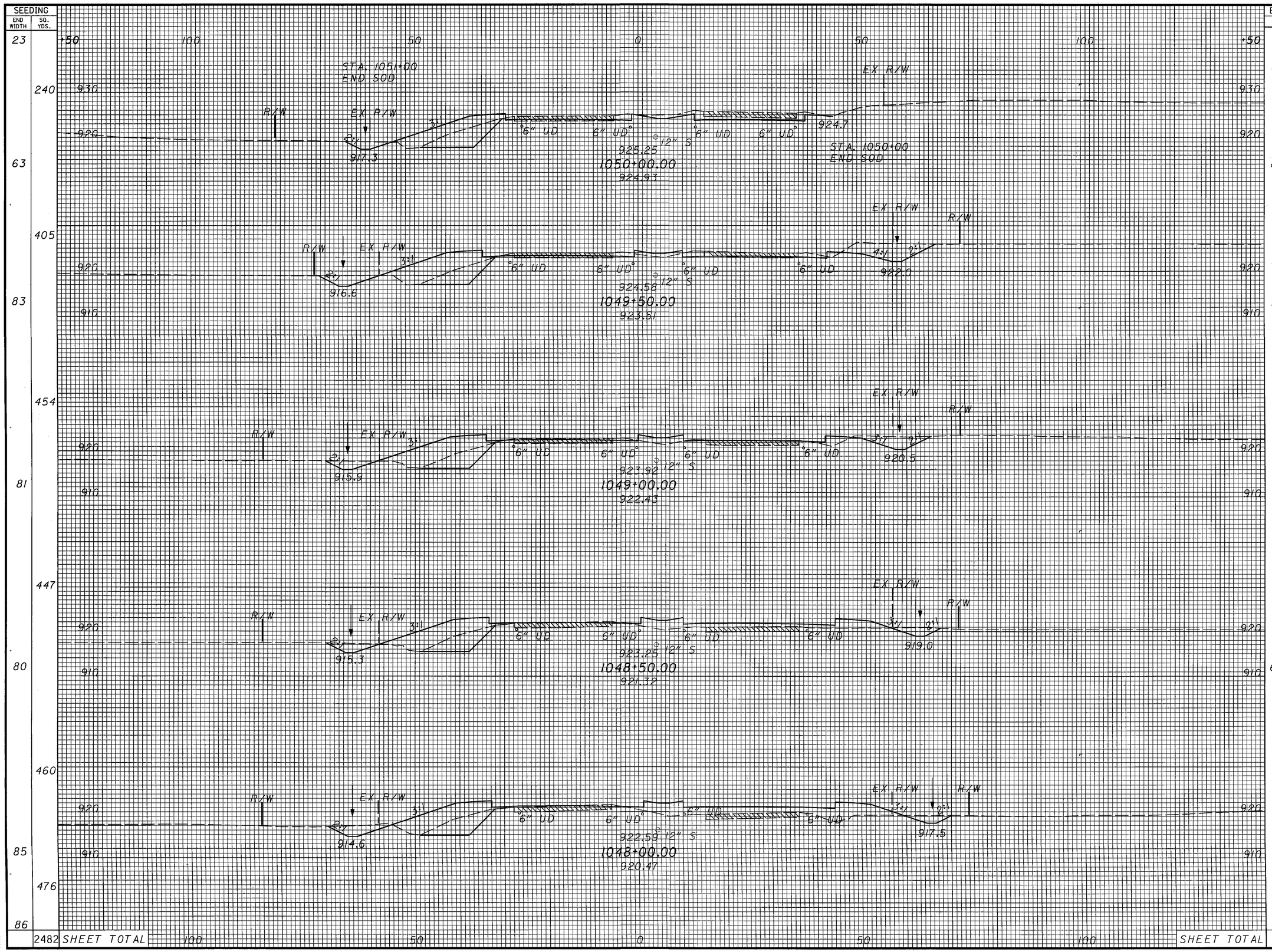

SEEDING END WIDTH	SEEDING SQ. YDS.	END AREA CUT	END AREA FILL	VOLUME CUT	VOLUME FILL
23		1	0		
	240			80	98
63		85	106		
	405			191	231
83		121	143		
	454			189	301
81		83	182		
	447			139	380
80		67	228		
	460			130	463
85		73	272		
	476			142	513
86		80	282		
	2482 SHEET TOTAL			871	1986

CALCULATED BF
CHECKED SB

CROSS SECTIONS - U.S. 422
STA. 1048+00.50 TO STA. 1050+00

GEA/POR-422-18.31/0.00

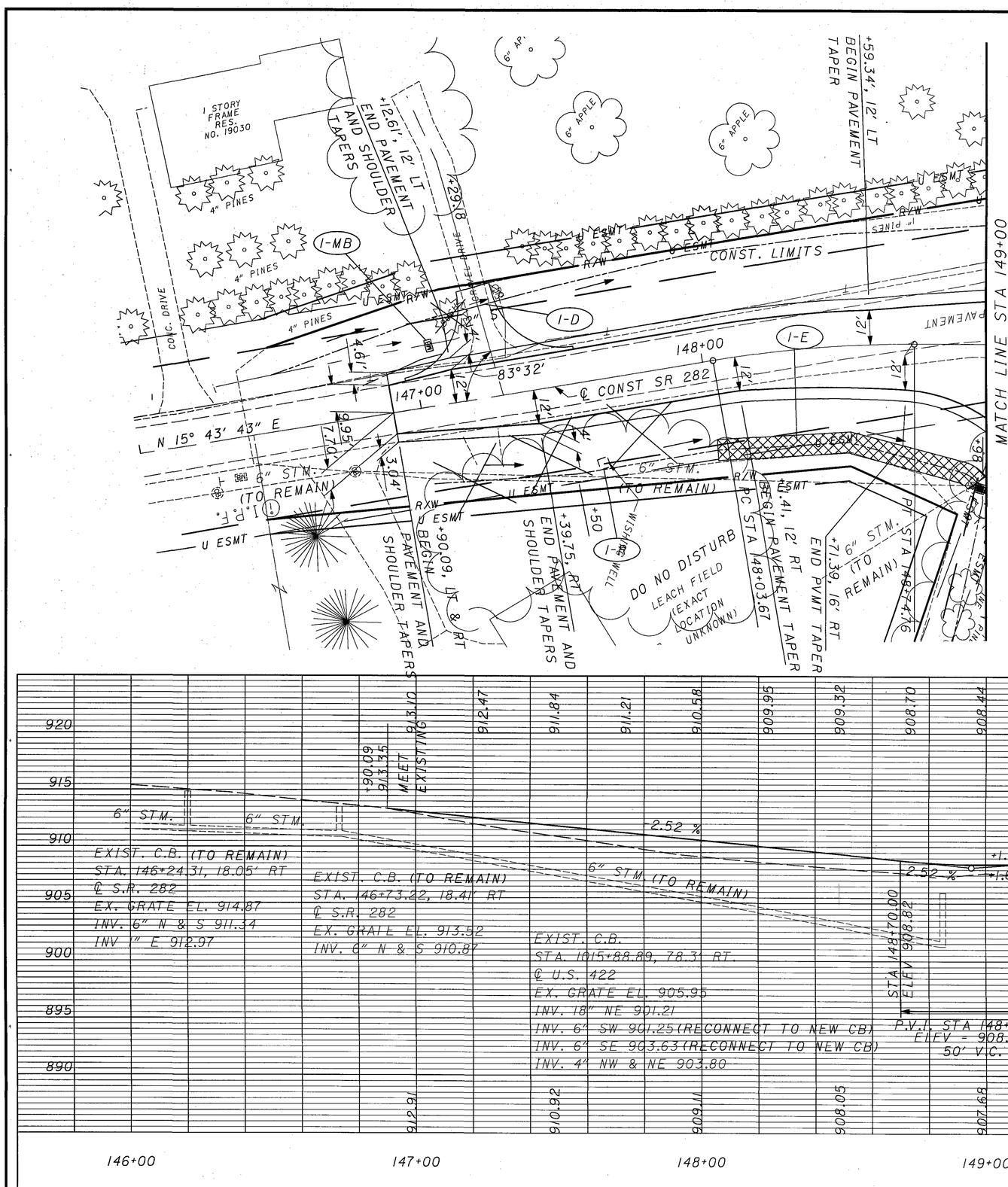

CURVE DATA
P.I. Sta = 148+39.30
D = 9° 35' 00"
Dc = 13° 28' 53"
R = 425.00'
T = 35.63'
L = 35.63'
E = 71.09'
e_{max} = 0.059

= TEMPORARY MAT

= PERMANENT MAT TYPE 1

= PERMANENT MAT TYPE 2

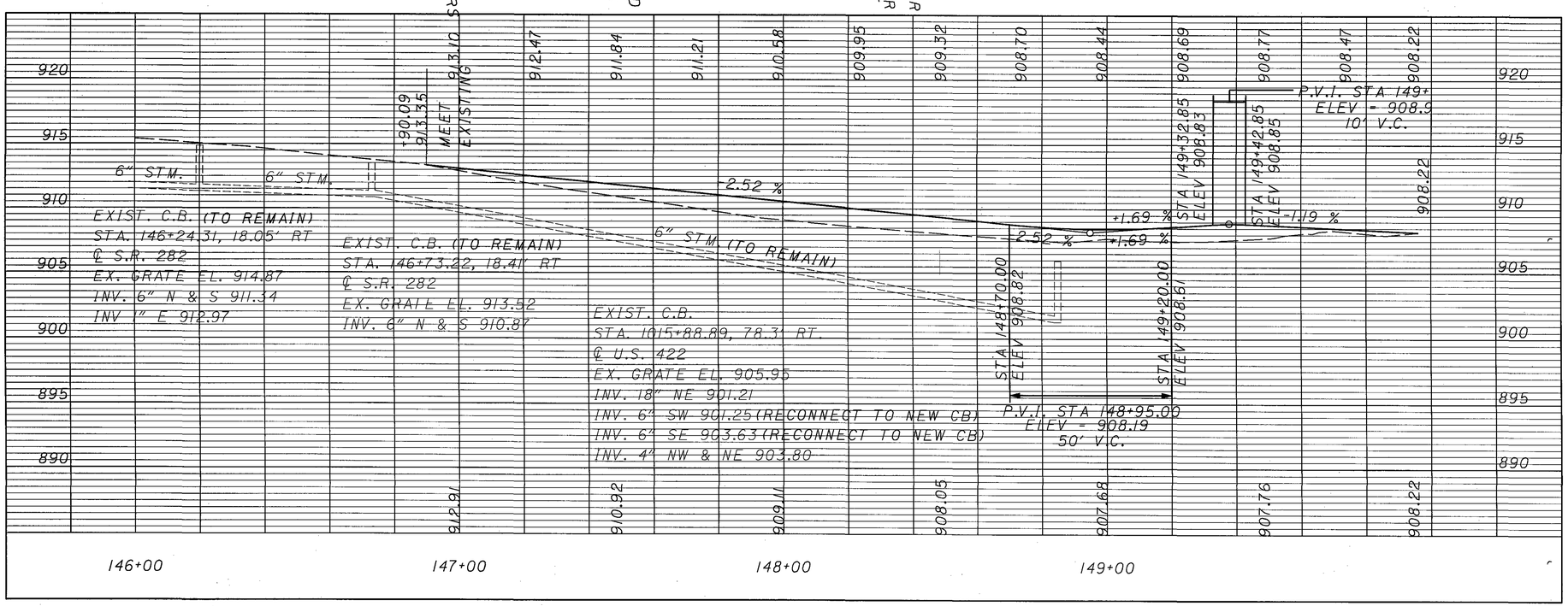

CROSS REFERENCES

SHEET NO	DESCRIPTION
6	BENCH MARKS
5	CENTERLINE REFERENCE
7-13	TYPICAL SECTIONS
38-43	REMOVAL SUBSUMMARY
44-46	DRAINAGE SUBSUMMARY
47-49	ROADWAY SUBSUMMARY
50	EROSION SUBSUMMARY
51	EARTHWORK SUBSUMMARY
52-54	UNDERDRAIN SUBSUMMARY
55-56	PAVEMENT CALCULATIONS
77	PLAN AND PROFILE US 422
131-132	CROSS SECTIONS
151	SUPERELEVATION TABLE
155	PAVEMENT DETAILS
161	JOINT DETAILS
183,192	UNDERDRAIN PLANS
147	DRIVE PROFILES
210	S&PM PLANS

0 10 20 40 HORIZONTAL SCALE IN FEET

CALCULATED
CHECKED

PLAN AND PROFILE SR 282
STA 146+90.09 TO STA 149+96.05

GEA/POR-422-18.31/0.00

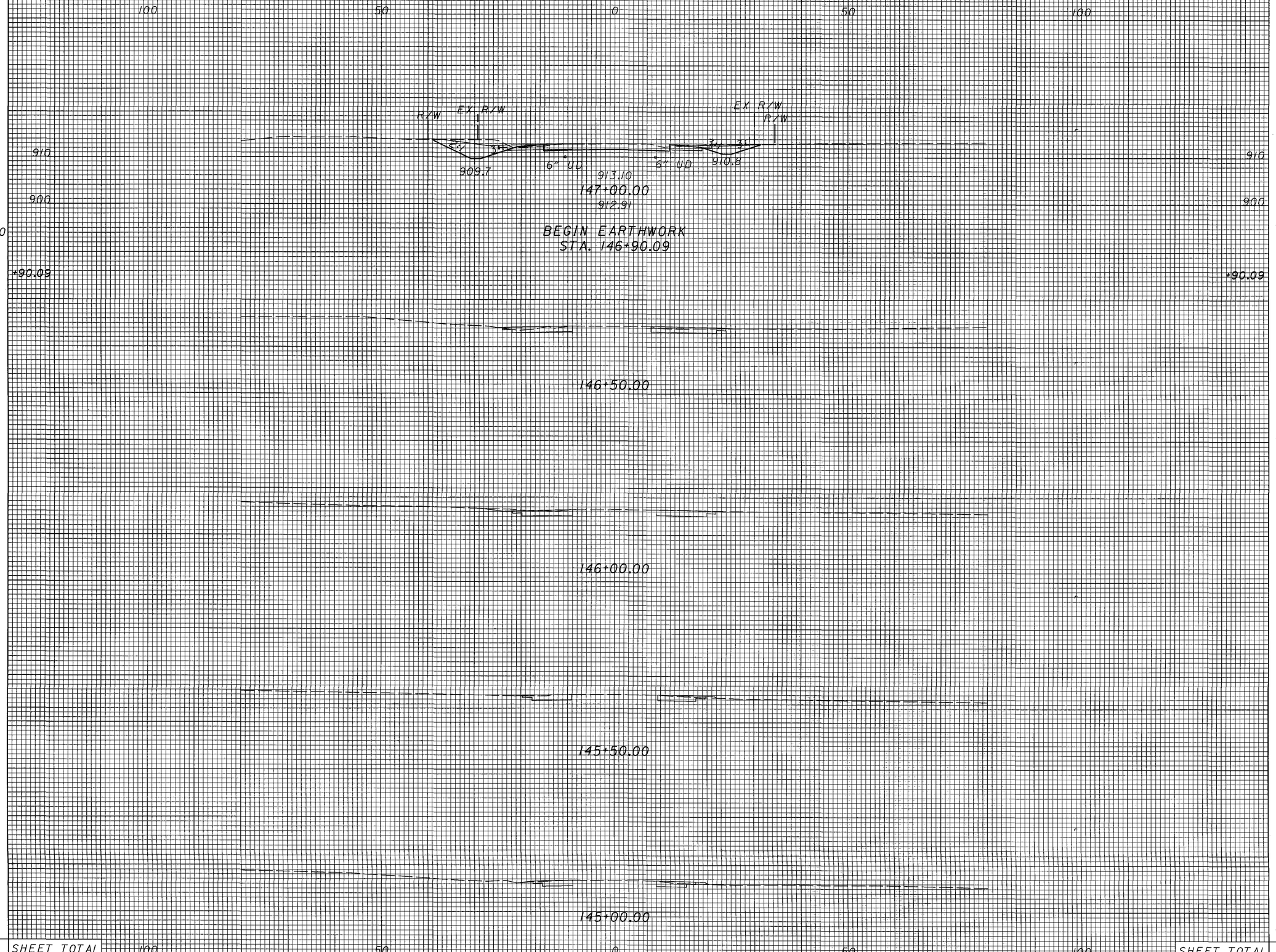

SEEDING END WIDTH	SEEDING SQ. YDS.		END AREA CUT	END AREA FILL	VOLUME CUT	VOLUME FILL
54			96	3		
	30				18	1
0		+90.09	0	0		
	30	SHEET TOTAL			18	1

CALCULATED BF
CHECKED SB

CROSS SECTIONS - S.R. 282
STA. 145+00 TO STA. 147+00

GEA/POR-422-18.31/0.00

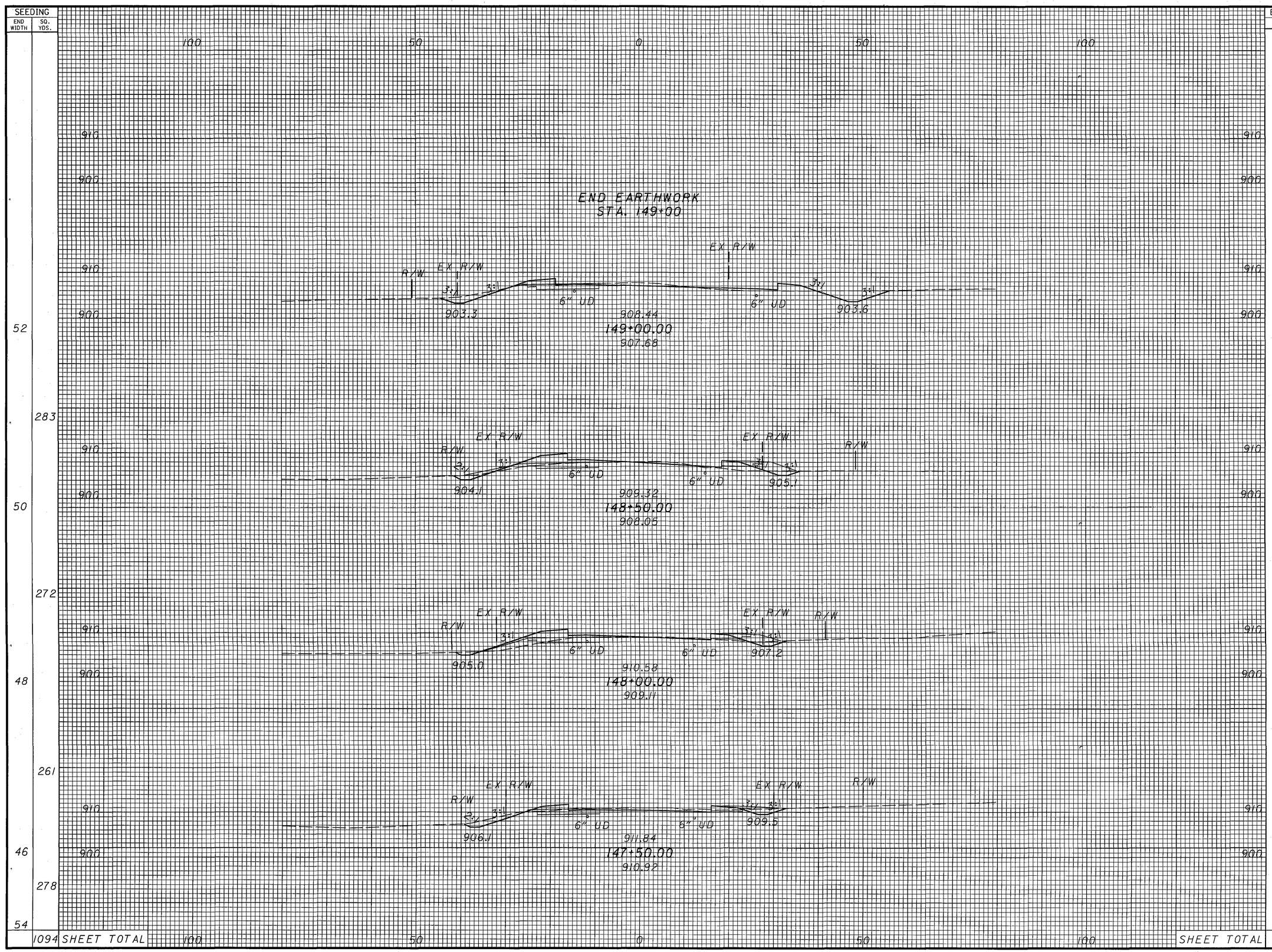

SEEDING END WIDTH	SEEDING SQ. YDS.	END AREA CUT	END AREA FILL	VOLUME CUT	VOLUME FILL
52		33	26		
	283			39	72
50		9	52		
	272			15	94
48		7	50		
	261			33	58
46		28	13		
	278			115	15
54		96	3		
	1094 SHEET TOTAL		SHEET TOTAL	202	239

CALCULATED BF
CHECKED SB

CROSS SECTIONS - S.R. 282
STA. 147+50 TO STA. 149+50

GEA/POR-422-18.31/0.00

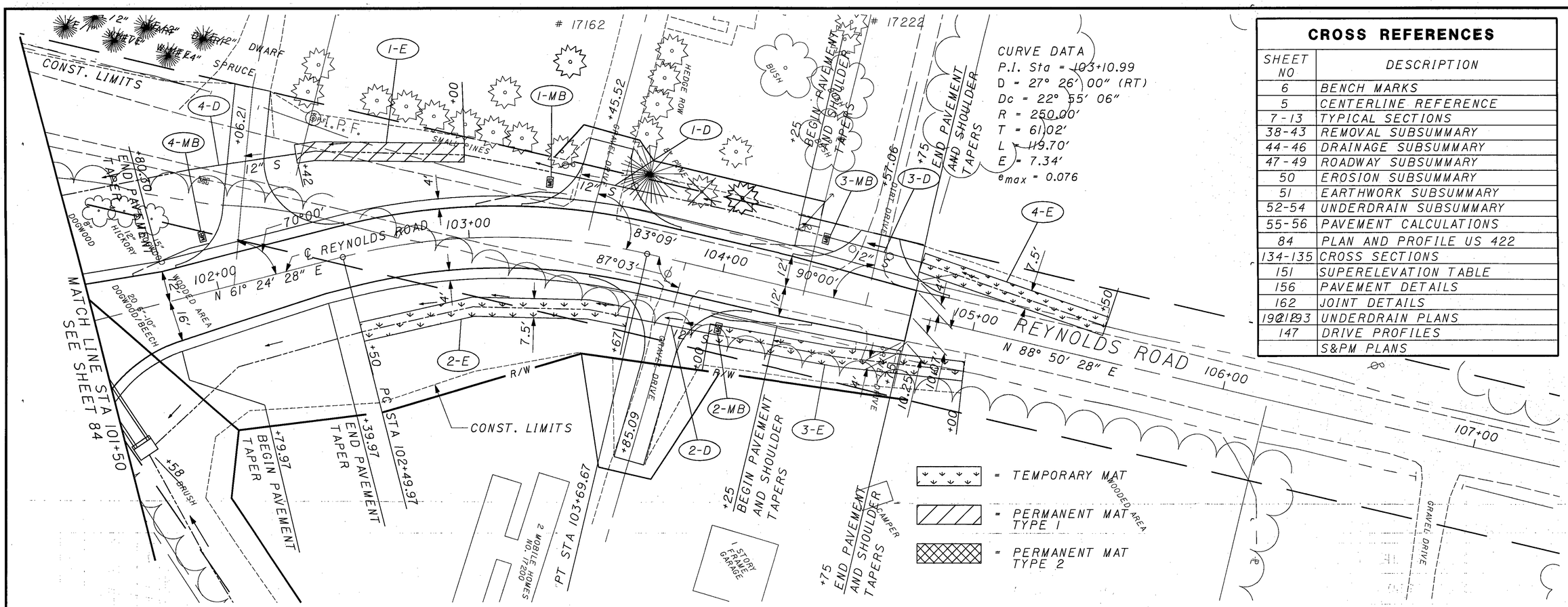

CROSS REFERENCES

SHEET NO	DESCRIPTION
6	BENCH MARKS
5	CENTERLINE REFERENCE
7-13	TYPICAL SECTIONS
38-43	REMOVAL SUBSUMMARY
44-46	DRAINAGE SUBSUMMARY
47-49	ROADWAY SUBSUMMARY
50	EROSION SUBSUMMARY
51	EARTHWORK SUBSUMMARY
52-54	UNDERDRAIN SUBSUMMARY
55-56	PAVEMENT CALCULATIONS
84	PLAN AND PROFILE US 422
134-135	CROSS SECTIONS
151	SUPERELEVATION TABLE
156	PAVEMENT DETAILS
162	JOINT DETAILS
192-193	UNDERDRAIN PLANS
147	DRIVE PROFILES
	S&PM PLANS

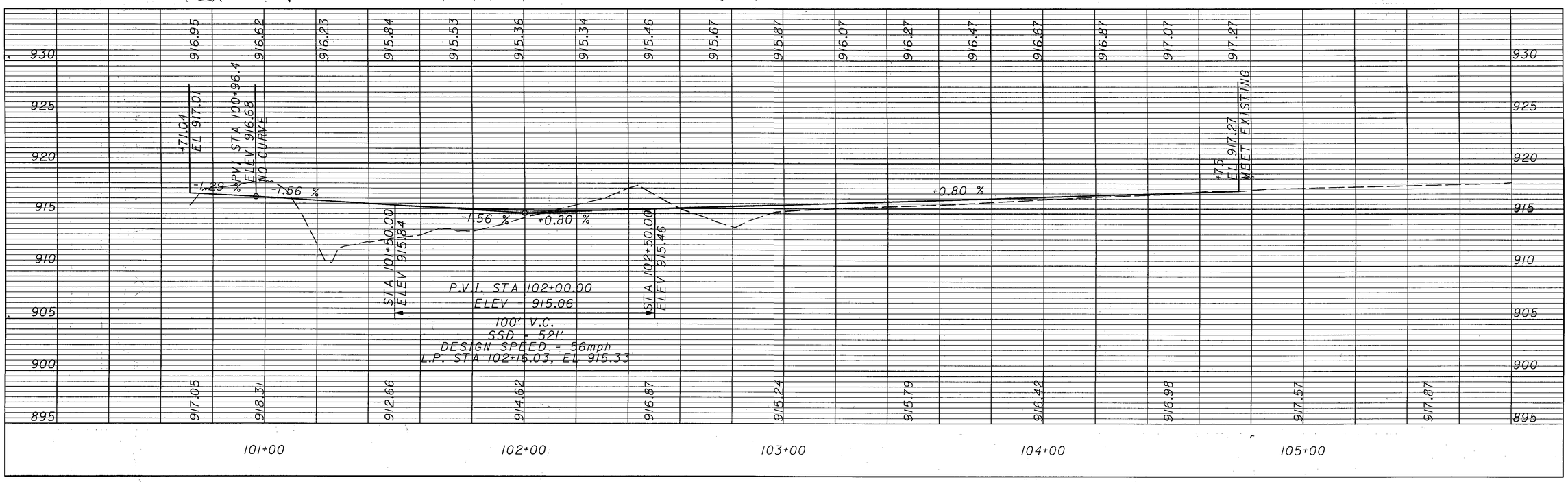

HORIZONTAL SCALE IN FEET 0 10 20 40

CALCULATED

CHECKED

PLAN AND PROFILE - REYNOLDS ROAD
STA 101+50 TO STA 107+00

GEA-422-18.31

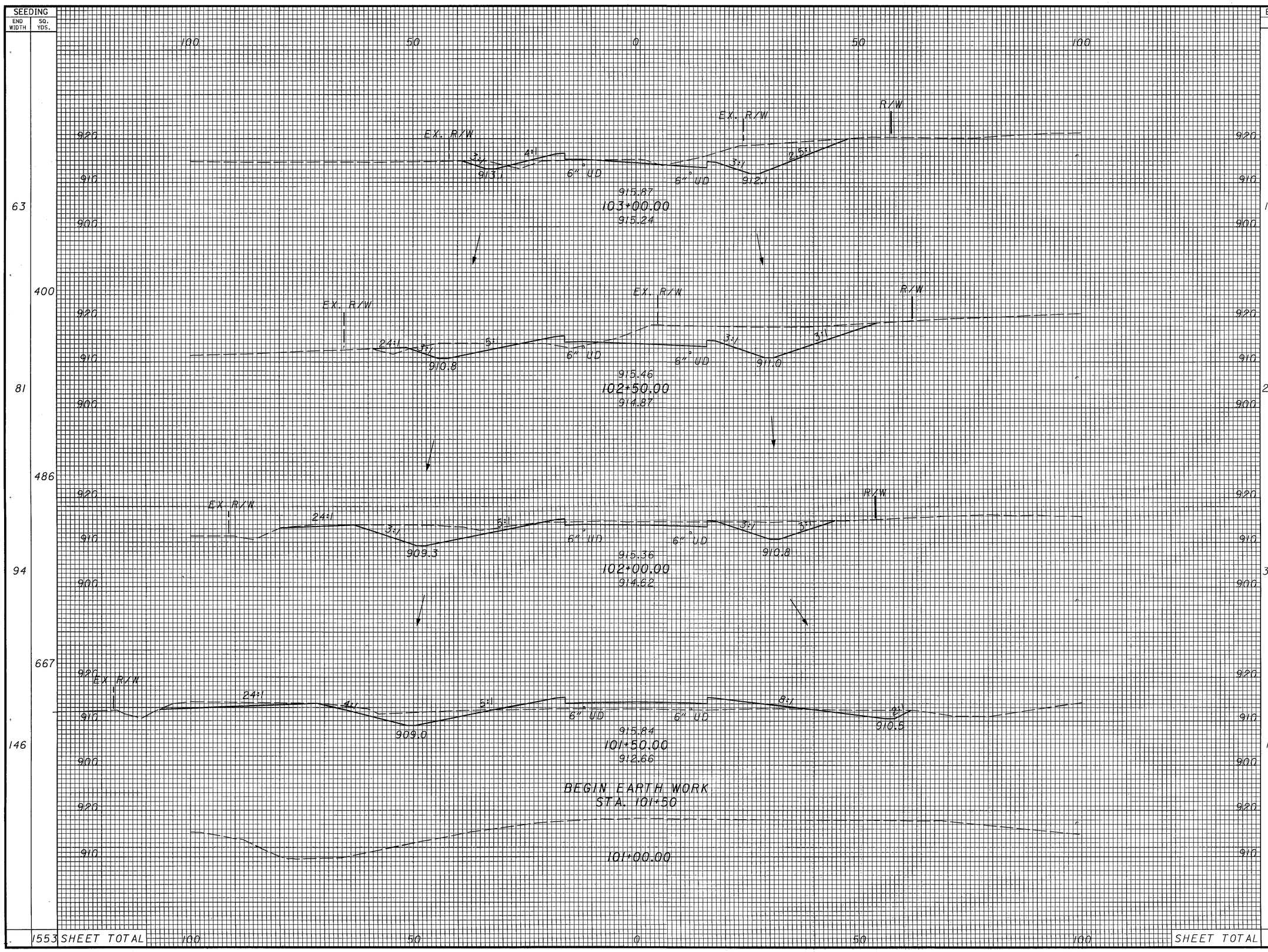

SEEDING END WIDTH	SEEDING SQ. YDS.	END AREA CUT	END AREA FILL	VOLUME CUT	VOLUME FILL
63		135	22		
	400			368	38
81		262	19		
	486			594	20
94		380	3		
	667			533	142
146		196	150		
	1553 SHEET TOTAL			1495	200

CALCULATED BF
CHECKED SB

CROSS SECTIONS - REYNOLDS ROAD
STA. 101+00 TO STA. 103+00

GEA/POR-422-18.31/0.00

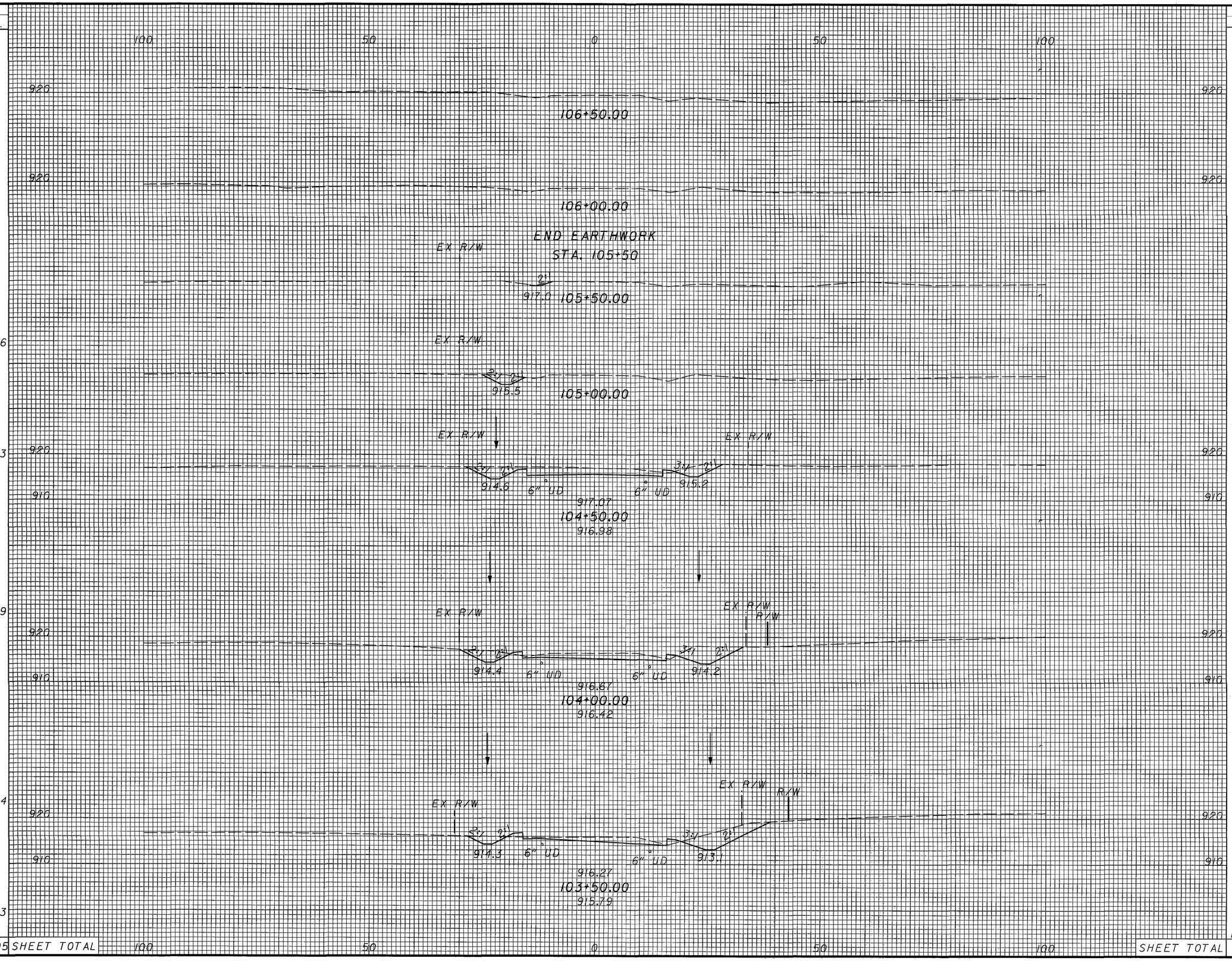

SEEDING END WIDTH	SEEDING SQ. YDS.	END AREA CUT	END AREA FILL	VOLUME CUT	VOLUME FILL
13		1	0		
	86			11	0
18		12	0		
	153			85	1
37		80	1		
	219			135	4
42		66	3		
	244			132	7
46		77	5		
	303			196	25
63	1005 SHEET TOTAL	135	22	559	37

CALCULATED BF
CHECKED SB

CROSS SECTIONS - REYNOLDS ROAD
STA. 103+50 TO STA. 106+50

GEA/POR-422-18.31/0.00

135
332

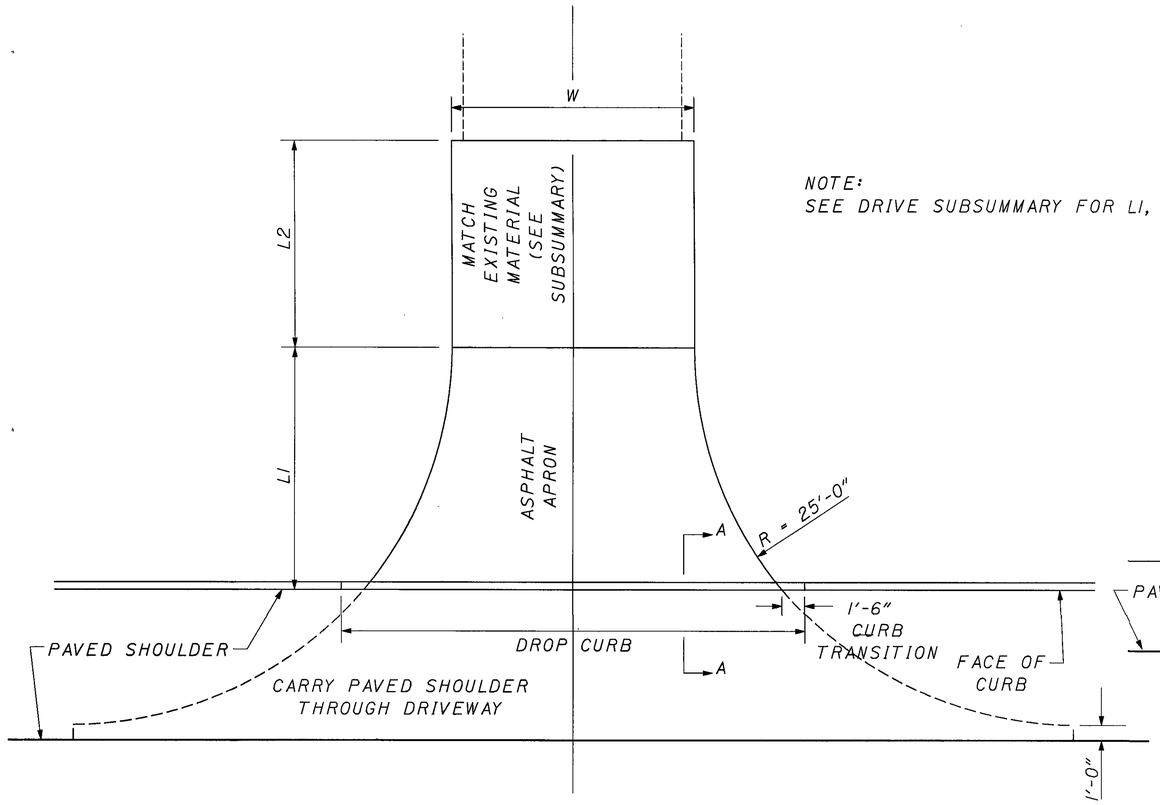

NOTE:
SEE DRIVE SUBSUMMARY FOR L1, L2 AND W

DRIVE DETAIL - CURBED SHOULDER

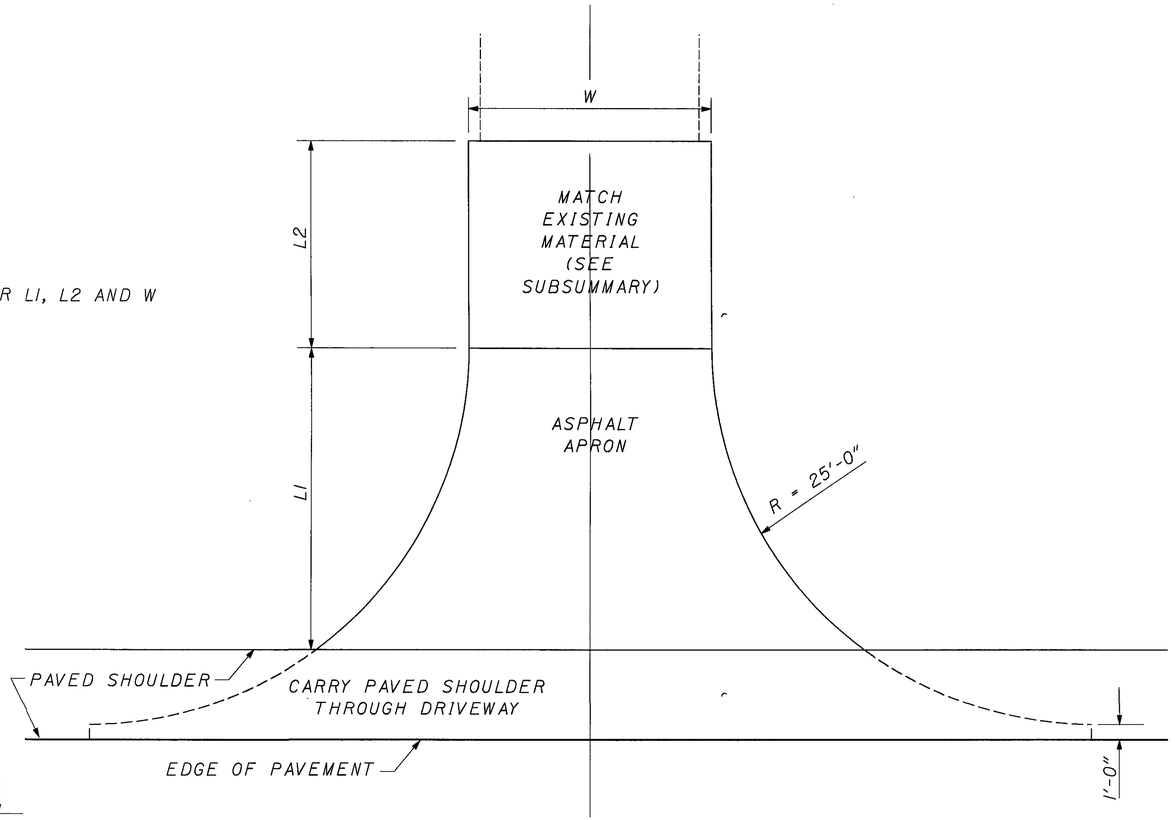

DRIVE DETAIL

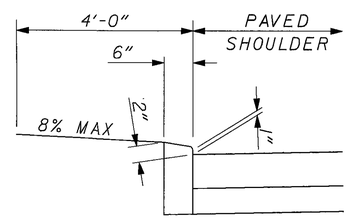

DROP CURB
SECTION A-A

COMMERCIAL DRIVE

ASPHALT:
ITEM 448 - 1¼" ASPHALT CONCRETE, SURFACE COURSE, TYPE 1, PG64-22 (DRIVEWAYS)
ITEM 301 - 4¾" BITUMINOUS AGGREGATE BASE, PG64-22 (DRIVEWAYS)

AGGREGATE:
ITEM 304 - 10" AGGREGATE BASE

RESIDENTIAL DRIVES

CONCRETE:
ITEM 452 - 6" NON-REINFORCED CONCRETE PAVEMENT

ASPHALT:
ITEM 448 - 1¼" ASPHALT CONCRETE, SURFACE COURSE, TYPE 1, PG64-22 (DRIVEWAYS)
ITEM 301 - 3¾" BITUMINOUS AGGREGATE BASE, PG64-22 (DRIVEWAYS)

AGGREGATE:
ITEM 304 - 8" AGGREGATE BASE

NOTE: FOR DETAILS NOT SHOWN, SEE STANDARD CONSTRUCTION DRAWING BP-4.1

DRIVEWAY DETAILS

GEA/POR-422-18.31/0.00

	STATION	SIDE	DRIVE TYPE	APRON LENGTH "L1"	DRIVEWAY LENGTH "L2"	WIDTH "W"	202 PAVEMENT REMOVED	202 PAVEMENT REMOVED, ASPHALT		203 EXCAVATION	203 EMBANKMENT		301 ASPHALT CONCRETE BASE, PG64-22 (DRIVEWAYS)	304 AGGREGATE BASE	407 TACK COAT @ 0.07 GAL/SY	448 ASPHALT CONCRETE, SURFACE COURSE, TYPE I, PG64-22 (DRIVEWAYS)	452 6" NON-REINFORCED CONCRETE PAVEMENT
				FT	FT	FT	SY	SY		CY	CY		CY	CY	GAL	CY	SY
	951+45.58	LT	RES	26.7	112.7	12				370.6			5.3	38.4	3.8	1.8	
	951+53.43	RT	RES	15.7	16.2	12				13.1			2.8	4.8	2.0	0.9	
	952+94.36	LT	RES	23.5	61.2	12				88.1			4.7	18.1	3.4	1.6	
	954+87.34	LT	RES	24.5	4.0	20				10.7			6.6	2.0	4.7	2.2	
	957+32.66	RT	COM	31.7	35.8	12				6.3			8.2	13.3	4.6	2.2	
	958+17.38	LT	RES	27.8	56.8	*VAR					3.2		5.0	15.4	3.6	1.7	
	961+17.51	RT	RES	19.9	77.0	12				110.9			4.2	22.8	3.0	1.4	
	961+91.19	LT	RES	28.1	9.7	12				9.7			5.1	2.9	3.7	1.7	
	964+01.87	RT	RES	20.8	91.5	12				290.1			4.3	27.1	3.1	1.4	
	966+91.39	RT	RES	20.0	45.7	12	98.7			58.7			4.2				60.9
	968+16.69	LT	RES	15.4	59.1	12				48.5			2.8	17.5	2.0	0.9	
	970+30.18	LT	RES	20.0	5.3	12				6.0			3.3	1.6	2.4	1.1	
	977+94.90	LT	RES	13.0	6.5	12				4.9			2.2	1.9	1.6	0.7	
	979+17.22	RT	RES	26.4	37.8	12				38.1			5.3	11.2	3.8	1.8	
	983+46.06	RT	RES	14.4	140.6	12			**	656.0			2.6	51.7	1.9	0.9	
	983+48.11	LT	COM	41.5	0.0	29.4				22.0			17.4	0.0	9.9	4.6	
	986+52.11	LT	RES	18.1	4.9	17				7.7			4.2	2.1	3.0	1.4	
	987+75.61	RT	RES	34.5	20.7	12	84.1			16.5			7.0				27.6
	987+84.13	LT	RES	20.3	1.6	12		53.3		5.9			4.5		3.2	1.5	
	988+21.27	RT	RES	32.6	64.2	12				57.5			6.6	19.0	4.8	2.2	
	988+56.24	LT	COM	38.2	7.7	12				15.9			10.3	2.9	5.9	2.7	
	989+27.00	RT	RES	35.3	35.2	12				50.4			7.0	10.4	5.0	2.3	
	990+45.66	RT	COM	20.8	100.2	12				176.3			5.4	37.1	3.1	1.4	
	990+68.70	LT	COM	15.5	6.5	12				6.8			3.5	2.4	2.0	0.9	
	991+28.66	RT	RES	22.3	92.7	12				183.7			4.5	27.5	3.2	1.5	
	991+45.71	LT	RES	18.0	3.4	12		45.7		4.8			3.6		2.6	1.2	
	993+62.75	RT	RES	32.7	123.3	12				559.1			6.7	36.5	4.8	2.2	
	994+71.00	RT	RES	32.4	177.8	12				1194.2			6.6	52.7	4.8	2.2	
	1003+59.79	RT	RES	21.1	15.9	14		43.1		9.8			7.4		5.3	2.5	
	1010+76.56	LT	COM	28.9	17.1	12				18.5			6.6	6.3	3.8	1.7	
	1022+09.20	RT	RES	20.0	6.0	12				12.2				17.3			
	1024+00.00	LT	COM	20.8	19.1	17				30.5			7.0	10.0	4.0	1.8	
	1026+05.97	RT	RES	21.5	19.4	12				18.2			4.4	5.7	3.2	1.5	
	1026+47.70	RT	RES	22.4	23.5	12				20.9			4.5	7.0	3.3	1.5	
	1027+62.03	LT	COM	20.6	36.4	12				37.0			5.3	13.5	3.0	1.4	
	1027+81.58	LT	COM	23.6	44.8	12				47.7			5.9	16.6	3.4	1.6	
	1030+60.00	RT	RES	20.0	36.0	12				45.0			4.2	10.7	3.0	1.4	
	1032+34.95	RT	RES	30.6	4.5	14				10.7			6.9	1.6	5.0	2.3	
	1036+46.63	LT	RES	38.3	11.0	12				14.1			8.1	3.3	5.9	2.7	
	1037+20.96	LT	RES	20.3	16.7	12				17.2			4.2	4.9	3.0	1.4	
	1037+88.62	RT	RES	20.0	21.0	12				21.5			4.2	6.2	3.0	1.4	
	1039+24.70	LT	RES	37.0	15.1	12				18.2			7.8	4.5	5.6	2.6	
	1040+51.55	RT	RES	20.0	50.4	*VAR				42.6			4.2	13.8	3.0	1.4	
	1041+60.14	RT	RES	21.8	19.4	*VAR				13.5			5.3	6.4	3.9	1.8	
	1042+52.19	RT	RES	20.9	16.9	16				13.8			5.3	6.7	3.8	1.8	
	1048+44.22	RT	RES	20.1	13.9	12				11.9			4.2	4.1	3.0	1.4	
SR 282	147+29.18	LT	RES	22.9	0.0	12				7.5			5.2	0.0	3.5	1.6	
REYNOLDS RD	102+06.21	LT	RES	52.1	9.9	14				13.1	25.1		6.6	3.4	4.6	2.1	
	103+45.52	LT	RES	24.0	0.0	17.2				9.6			6.6	0.0	4.6	2.1	
	103+85.09	RT	RES	27.4	36.6	12				37.0			6.2	10.8	4.2	2.0	
	104+57.06	LT	RES	23.2	0.0	12				8.5			5.8	0.0	4.0	1.9	
TOTALS CARRIED TO GENERAL SUMMARY							183	142		4492	28		280	572	182	84	89

* SEE PLAN AND PROFILE SHEETS FOR VARIABLE WIDTH

CALCULATED TRB
CHECKED SB

DRIVEWAY SUBSUMMARY

GEA/POR-422-18.31/0.00

SEEDING	
END WIDTH	SQ. YDS.

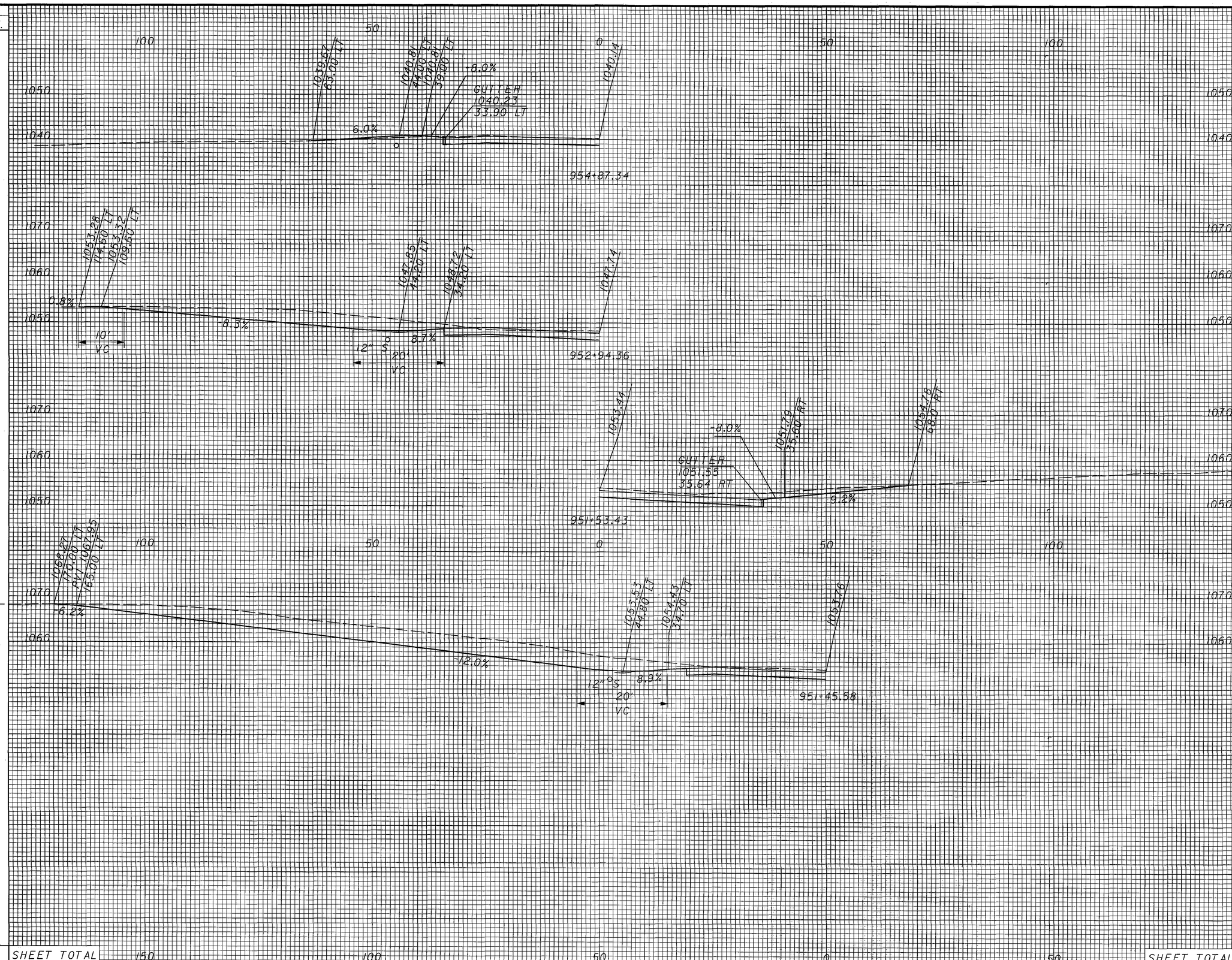

END AREA		VOLUME	
CUT	FILL	CUT	FILL

CALCULATED

CHECKED

DRIVE PROFILES U.S. 422
STA 951+00 TO STA 957+00

GEA/POR-422-18.31/0.00

SEEDING	
END WIDTH	SQ. YDS.

END AREA		VOLUME	
CUT	FILL	CUT	FILL

CALCULATED

CHECKED

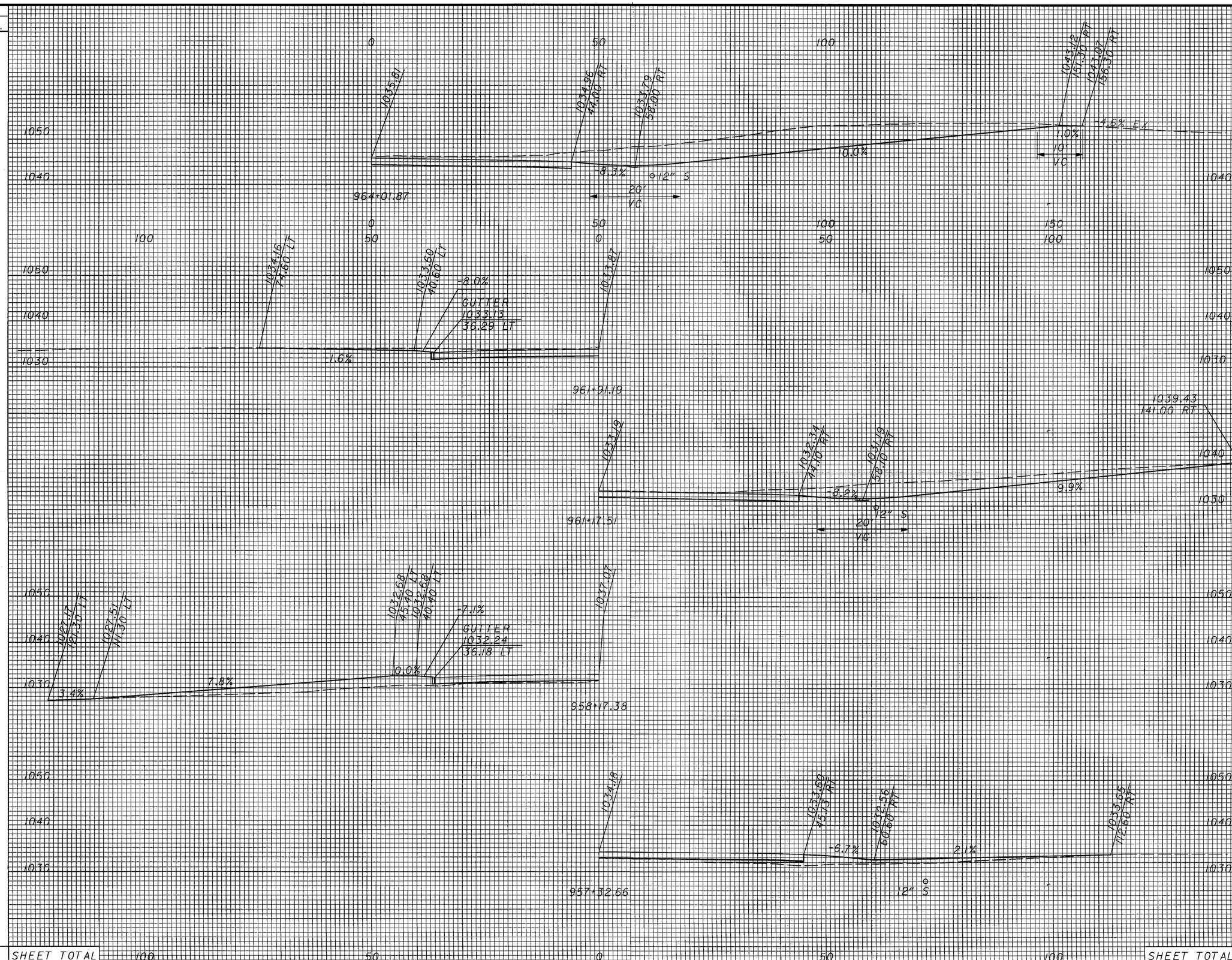

DRIVE PROFILES U.S. 422
STA 957+00 TO STA 966+00

GEA/POR-422-18.31/0.00

SEEDING	
END WIDTH	SQ. YDS.

END AREA		VOLUME	
CUT	FILL	CUT	FILL

CALCULATED

CHECKED

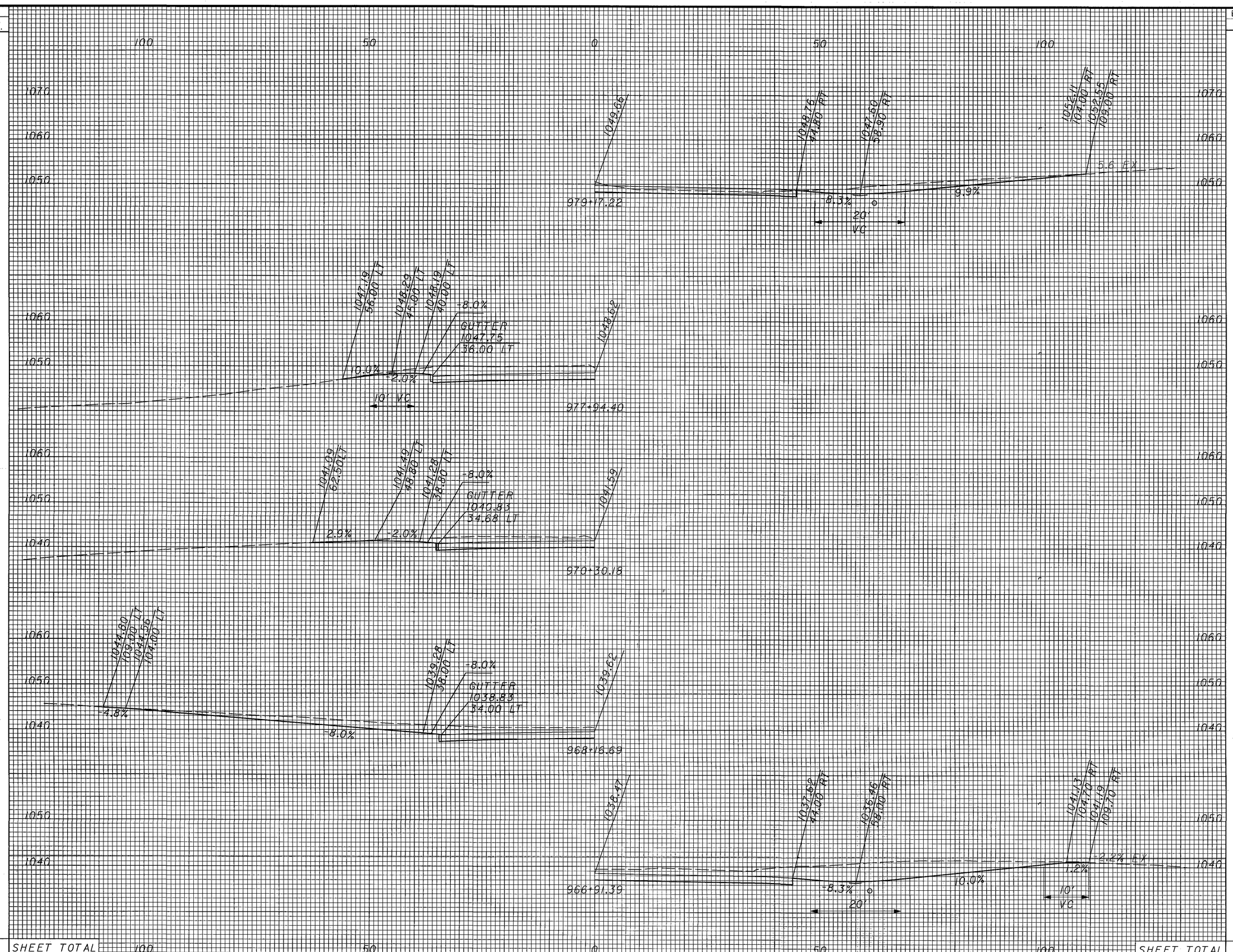

DRIVE PROFILES U.S. 422
STA 966+00 TO STA 982+00

GEA/POR-422-18.31/0.00

SEEDING		END AREA		VOLUME		
END WIDTH	SQ. YDS.	CUT	FILL	CUT	FILL	CALCULATED / CHECKED

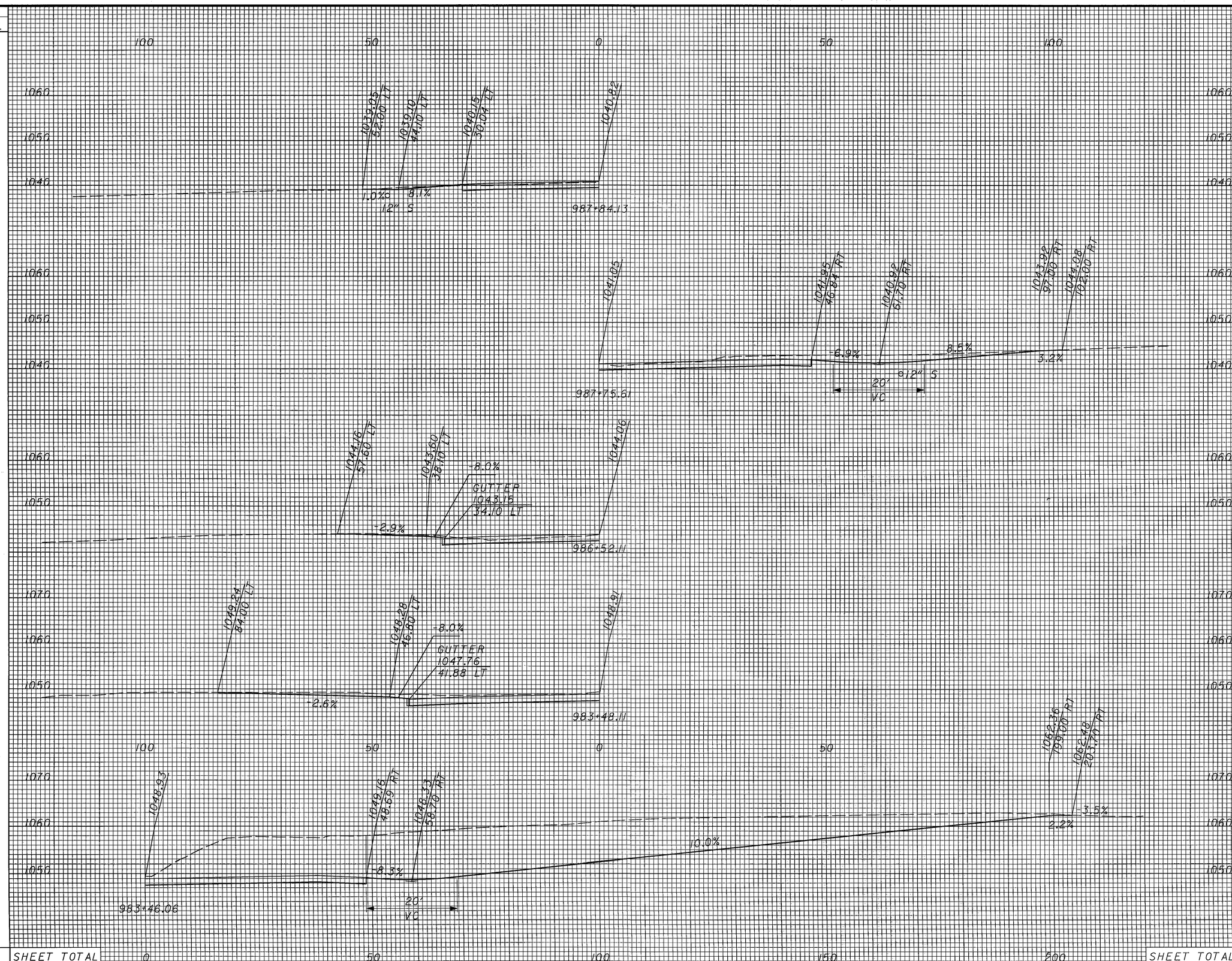

DRIVE PROFILES U.S. 422
STA 982+00 TO STA 988+00

GEA/POR-422-18.31/0.00

SEEDING	
END WIDTH	SQ. YDS.

END AREA		VOLUME	
CUT	FILL	CUT	FILL

CALCULATED

CHECKED

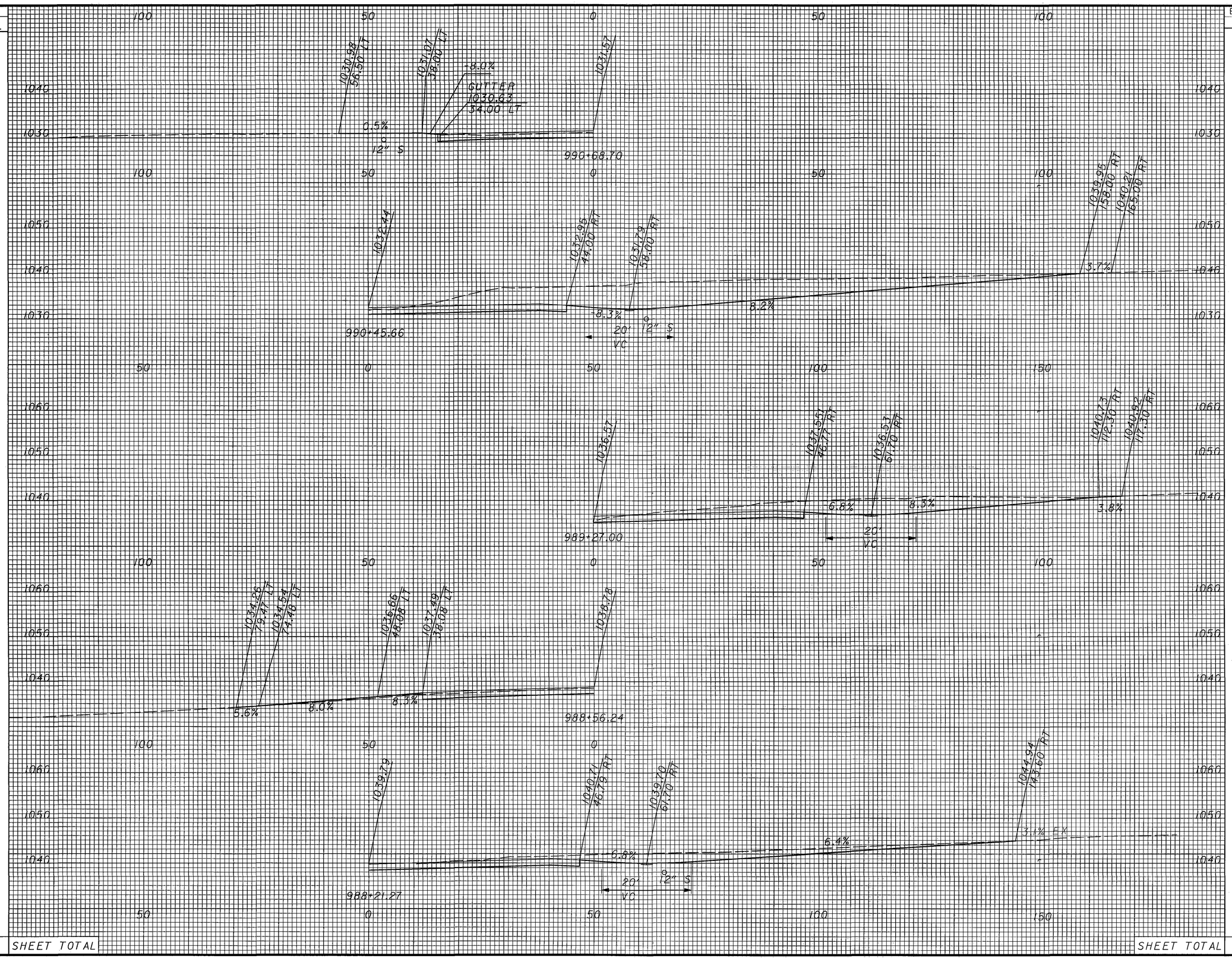

DRIVE PROFILES U.S. 422
STA 988+00 TO STA 991+00

GEA/POR-422-18.31/0.00

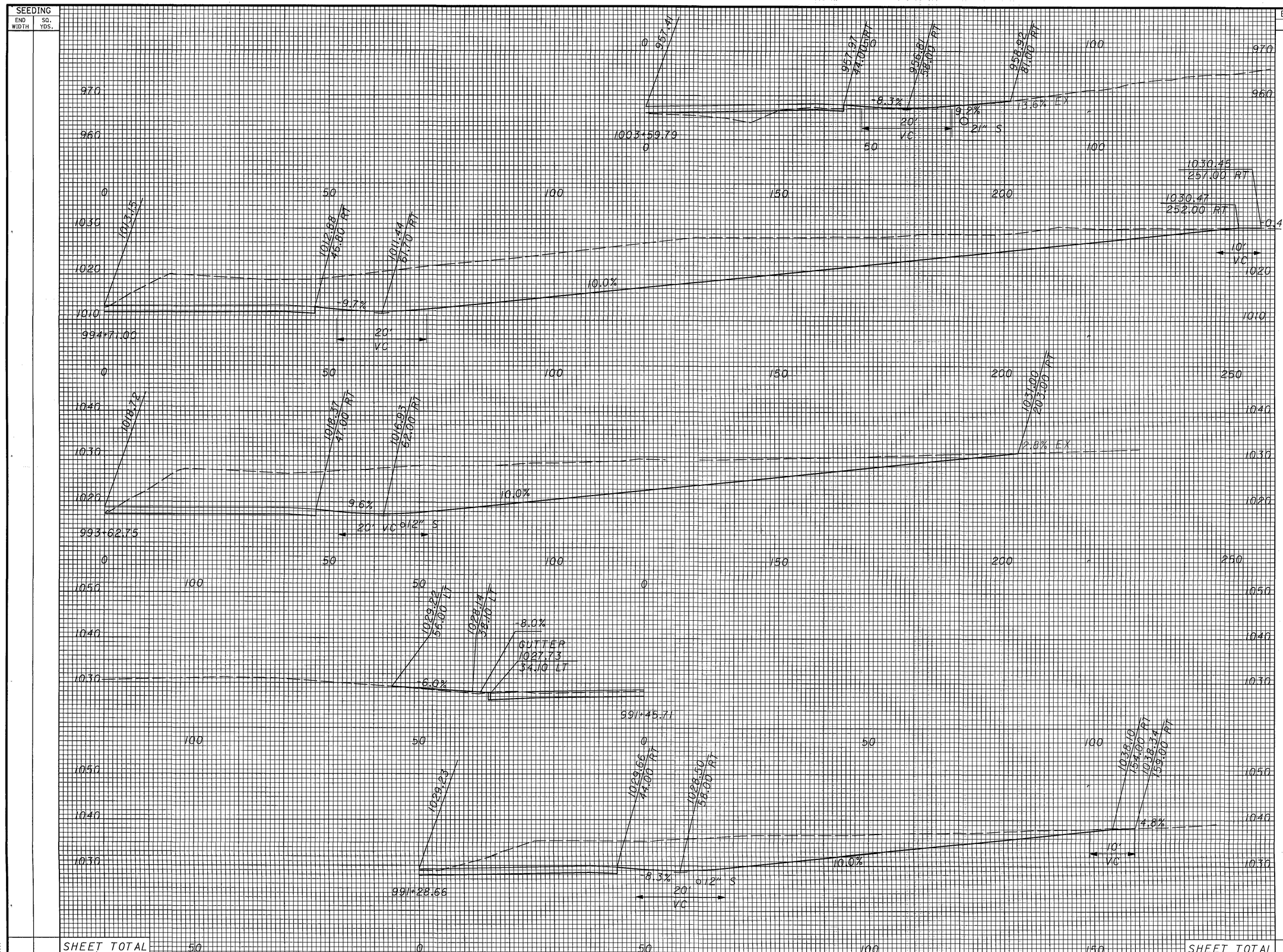

DRIVE PROFILES U.S. 422
STA 991+00 TO STA 1006+00

GEA/POR-422-18.31/0.00

SEEDING	
END WIDTH	SQ. YDS.

END AREA		VOLUME	
CUT	FILL	CUT	FILL

CALCULATED

CHECKED

DRIVE PROFILES U.S. 422

STA 1006+00 TO STA 1027+75

GEA/POR-422-18.31/0.00

SEEDING	
END WIDTH	SQ. YDS.

END AREA		VOLUME	
CUT	FILL	CUT	FILL

CALCULATED

CHECKED

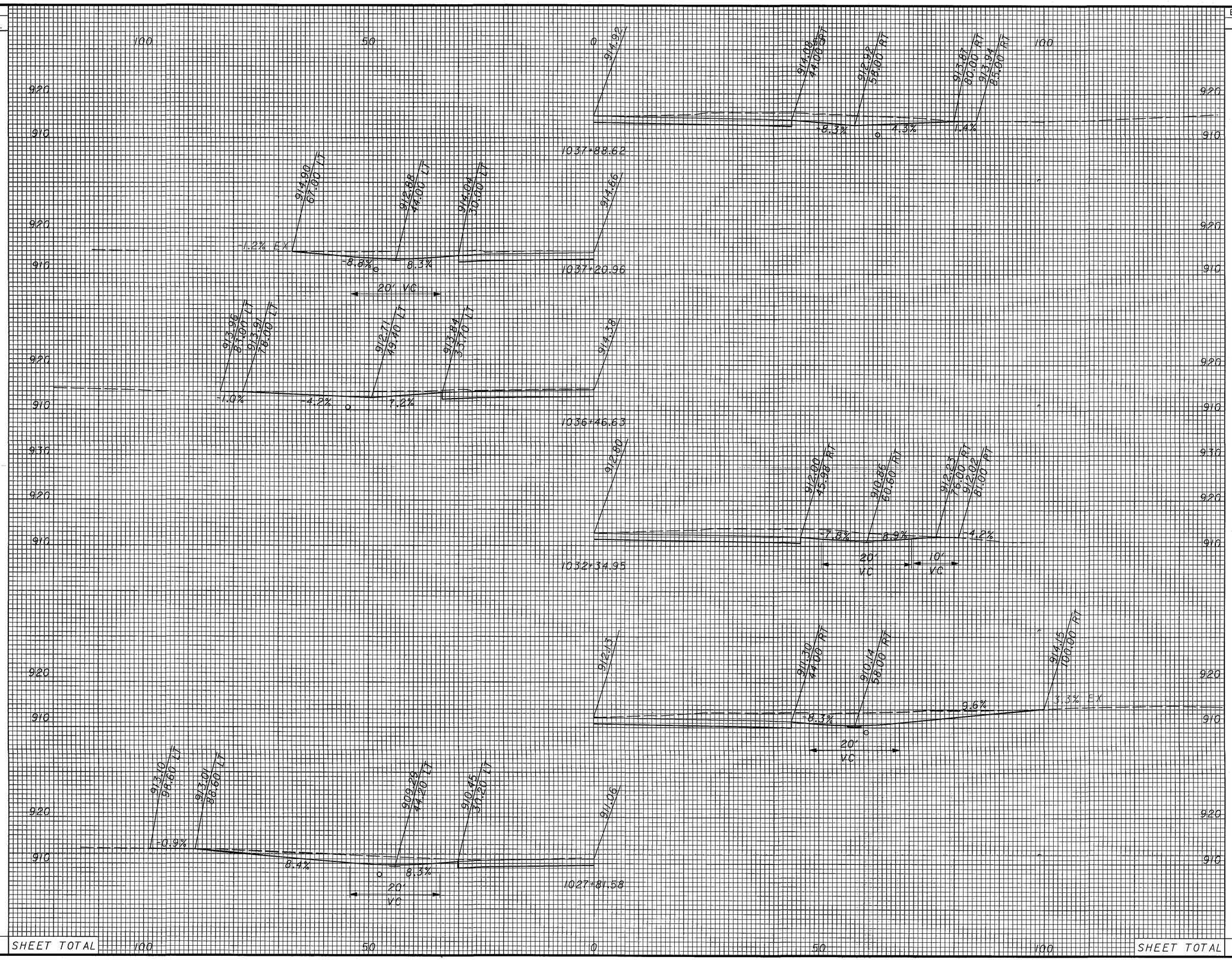

DRIVE PROFILES U.S. 422
STA 1027+75 TO STA 1039+00

GEA/POR-422-18.31/0.00

SEEDING	
END WIDTH	SQ. YDS.

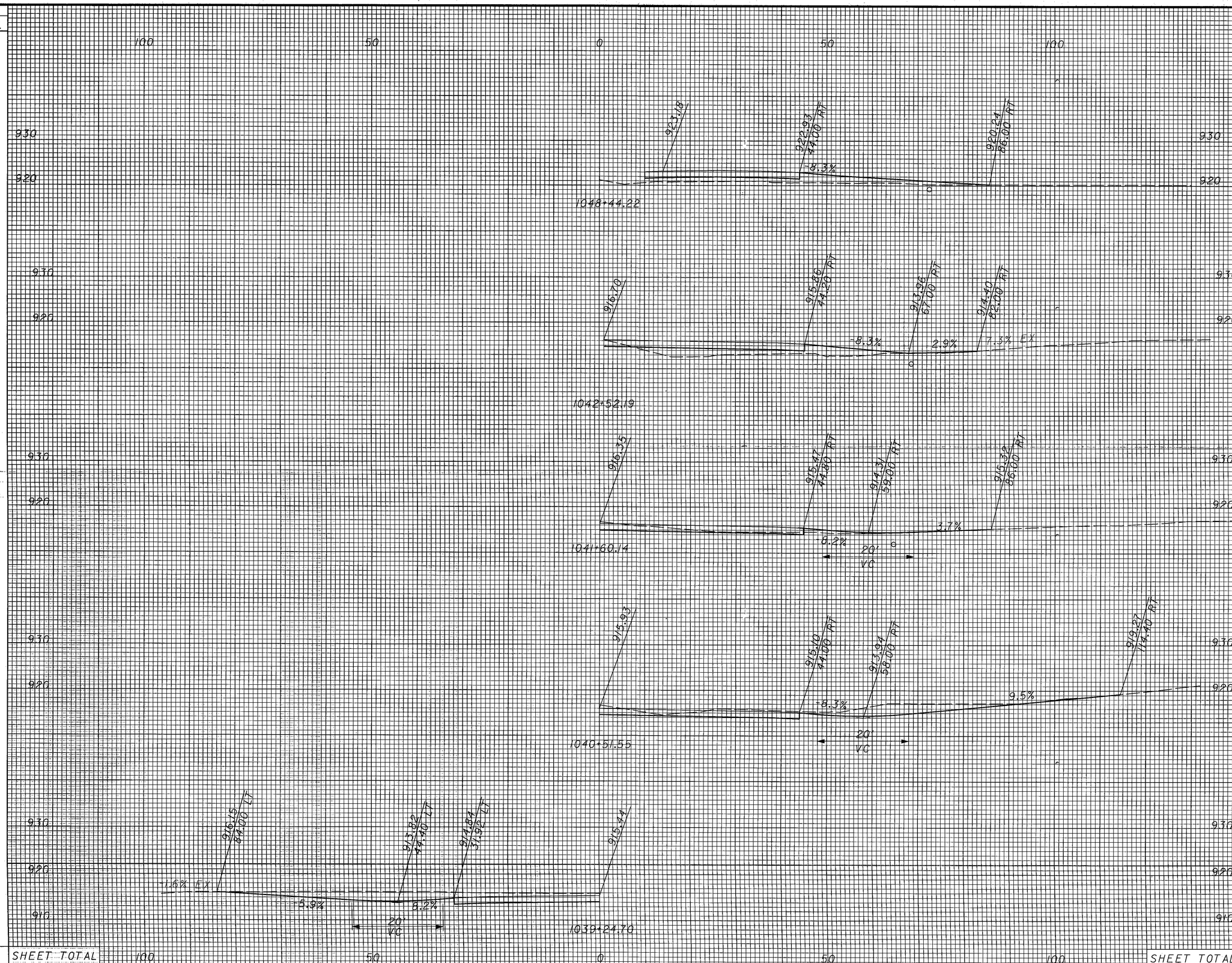

END AREA		VOLUME	
CUT	FILL	CUT	FILL

CALCULATED

CHECKED

DRIVE PROFILES U.S. 422
STA 1039+00 TO STA 1049+00

GEA/POR-422-18.31/0.00

SEEDING	
END WIDTH	SQ. YDS.

END AREA		VOLUME	
CUT	FILL	CUT	FILL

CALCULATED

CHECKED

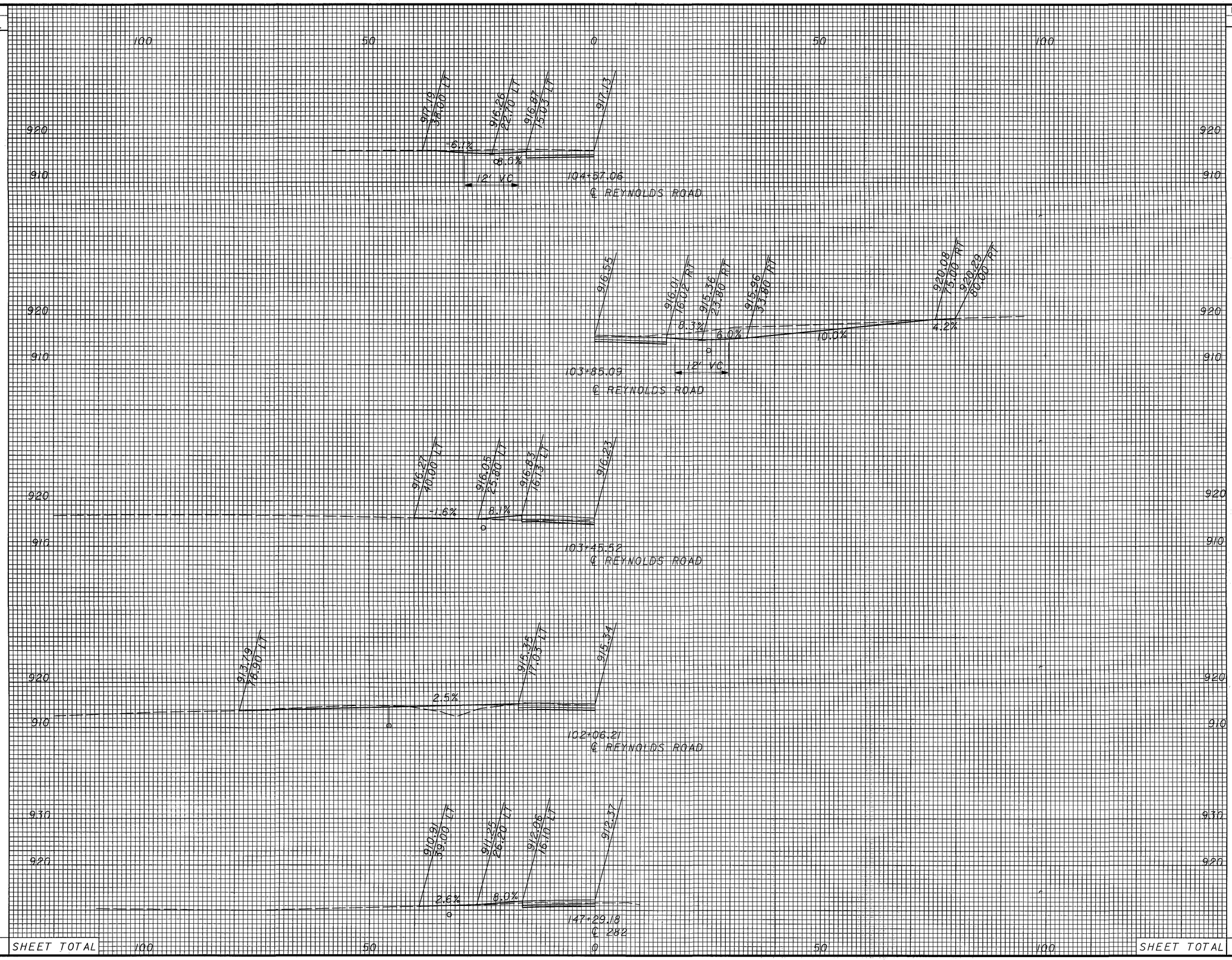

DRIVE PROFILES
S.R. 282 AND REYNOLDS ROAD

GEA/POR-422-18.31/0.00

SUPERELEVATION TABLE

P.I. STA. 943+70.00 | DC = 2° 30′ 56″

REMARKS	LEFT SIDE EDGE ELEVATION	TRANSITION RATE	ELEVATION CORRECTION	CROSS SLOPE	WIDTH	CENTERLINE CONTROL STATION	PROFILE GRADE	RIGHT SIDE WIDTH	CROSS SLOPE	ELEVATION CORRECTION	TRANSITION RATE	EDGE ELEVATION	REMARKS
	1064.62	222:1	1.35	0.0520	25.88	949+10.40	1063.27	20.27	-0.0520	-1.05		1062.22	
	1064.08	222:1	1.40	0.0547	25.59	949+25	1062.68	20.56	-0.0547	-1.13		1061.56	
	1063.16	222:1	1.49	0.0594	25.09	949+50	1061.67	21.06	-0.0594	-1.25		1060.42	
F.S.	1062.64	222:1	1.54	0.0620	24.81	949+63.95	1061.11	21.34	-0.0620	-1.32		1059.78	
	1062.18	222:1	1.52	0.0620	24.59	949+75	1060.66	21.56	-0.0620	-1.34		1059.32	
	1061.14	222:1	1.49	0.0620	24.09	950+00	1059.65	22.06	-0.0620	-1.37		1058.28	
	1060.96	222:1	1.49	0.0620	24.00	950+04.52	1059.47	22.15	-0.0620	-1.37		1058.09	
	1060.13	222:1	1.49	0.0620	24.00	950+25	1058.64	22.56	-0.0620	-1.40		1057.24	
	1059.11	222:1	1.49	0.0620	24.00	950+50	1057.63	23.06	-0.0620	-1.43		1056.20	
	1058.10	222:1	1.49	0.0620	24.00	950+75	1056.62	23.56	-0.0620	-1.46		1055.15	
	1057.09	222:1	1.49	0.0620	24.00	951+00	1055.60	24.06	-0.0620	-1.49		1054.11	
	1056.08	222:1	1.49	0.0620	24.00	951+25	1054.59	24.56	-0.0620	-1.52		1053.07	
	1055.07	222:1	1.49	0.0620	24.00	951+50	1053.58	25.06	-0.0620	-1.55		1052.03	
	1054.06	222:1	1.49	0.0620	24.00	951+75	1052.57	25.56	-0.0620	-1.58		1050.99	
	1053.05	222:1	1.49	0.0620	24.00	952+00	1051.56	26.06	-0.0620	-1.62		1049.94	
	1052.04	222:1	1.49	0.0620	24.00	952+25	1050.55	26.56	-0.0620	-1.65		1048.90	
	1051.02	222:1	1.49	0.0620	24.00	952+50	1049.54	27.06	-0.0620	-1.68		1047.86	
	1050.01	222:1	1.49	0.0620	24.00	952+75	1048.53	27.56	-0.0620	-1.71		1046.82	
	1049.00	222:1	1.49	0.0620	24.00	953+00	1047.51	28.06	-0.0620	-1.74		1045.77	
	1047.99	222:1	1.49	0.0620	24.00	953+25	1046.50	28.56	-0.0620	-1.77		1044.73	
	1046.98	222:1	1.49	0.0620	24.00	953+50	1045.49	29.06	-0.0620	-1.80		1043.69	
	1045.97	222:1	1.49	0.0620	24.00	953+75	1044.48	29.56	-0.0620	-1.83		1042.65	
	1044.96	222:1	1.49	0.0620	24.00	954+00	1043.47	30.06	-0.0620	-1.86		1041.61	
F.S.	1044.72	222:1	1.49	0.0620	24.00	954+06.08	1043.23	30.18	-0.0620	-1.87	222:1	1041.36	
	1043.91	222:1	1.40	0.0585	24.00	954+25	1042.50	30.56	-0.0585	-1.79	222:1	1040.72	
	1042.87	222:1	1.29	0.0538	24.00	954+50	1041.58	31.06	-0.0538	-1.67	222:1	1039.90	
	1041.87	222:1	1.18	0.0491	24.00	954+75	1040.69	31.56	-0.0491	-1.55	222:1	1039.14	
	1040.92	222:1	1.07	0.0445	24.00	955+00	1039.85	32.06	-0.0445	-1.43	222:1	1038.43	
P.T.	1040.31	222:1	0.99	0.0413	24.00	955+16.73	1039.32	32.40	-0.0413	-1.34	222:1	1037.98	
	1040.01	222:1	0.95	0.0398	24.00	955+25	1039.06	32.56	-0.0398	-1.30	222:1	1037.76	
	1039.15	222:1	0.84	0.0351	24.00	955+50	1038.31	33.06	-0.0351	-1.16	222:1	1037.15	
	1038.34	222:1	0.73	0.0305	24.00	955+75	1037.61	33.56	-0.0305	-1.02	222:1	1036.58	
	1037.56	222:1	0.62	0.0258	24.00	956+00	1036.94	34.06	-0.0258	-0.88	222:1	1036.07	
	1036.83	222:1	0.51	0.0211	24.00	956+25	1036.33	34.56	-0.0211	-0.73	222:1	1035.60	
	1036.15	222:1	0.39	0.0164	24.00	956+50	1035.76	35.06	-0.0164	-0.58	222:1	1035.18	
R.C.	1036.03	222:1	0.37	0.0156	24.00	956+54.53	1035.66	35.15	-0.0156	-0.55	222:1	1035.11	
	1035.51	222:1	0.28	0.0118	24.00	956+75	1035.23	35.56	-0.0156	-0.55		1034.67	
	1034.91	222:1	0.17	0.0071	24.00	957+00	1034.74	36.06	-0.0156	-0.56		1034.18	
	1034.36	222:1	0.06	0.0024	24.00	957+25	1034.30	36.56	-0.0156	-0.57		1033.73	
L.S.	1034.21	222:1	0.03	0.0011	24.00	957+32.19	1034.19	36.71	-0.0156	-0.57		1033.61	
	1033.86	222:1	-0.05	-0.0022	24.00	957+50	1033.91	37.06	-0.0156	-0.58		1033.33	
	1033.39	222:1	-0.17	-0.0069	24.00	957+75	1033.56	37.56	-0.0156	-0.59		1032.97	
	1033.02	222:1	-0.26	-0.0110	24.00	957+96.90	1033.29	38.00	-0.0156	-0.59		1032.70	
	1032.97	222:1	-0.28	-0.0116	24.00	958+00	1033.25	38.00	-0.0156	-0.59		1032.66	
N.C.	1032.65	222:1	-0.37	-0.0156	24.00	958+21.60	1033.02	38.00	-0.0156	-0.59		1032.43	
	1032.62		-0.37	-0.0156	24.00	958+25	1032.99	38.00	-0.0156	-0.59		1032.40	
	1032.40		-0.37	-0.0156	24.00	958+50	1032.77	38.00	-0.0156	-0.59		1032.18	
	1032.22		-0.37	-0.0156	24.00	958+75	1032.60	38.00	-0.0156	-0.59		1032.01	
	1032.10		-0.37	-0.0156	24.00	959+00	1032.47	38.00	-0.0156	-0.59		1031.88	
	1032.01		-0.37	-0.0156	24.00	959+25	1032.39	38.00	-0.0156	-0.59		1031.79	
	1031.97		-0.37	-0.0156	24.00	959+50	1032.35	38.00	-0.0156	-0.59		1031.75	

SUPERELEVATION TABLE

P.I. STA. 997+05.80 | DC = 0° 41′ 56″

REMARKS	LEFT SIDE EDGE ELEVATION	TRANSITION RATE	ELEVATION CORRECTION	CROSS SLOPE	WIDTH	CENTERLINE CONTROL STATION	PROFILE GRADE	RIGHT SIDE WIDTH	CROSS SLOPE	ELEVATION CORRECTION	TRANSITION RATE	EDGE ELEVATION	REMARKS
	1049.70		-0.37	-0.0156	24.00	980+00	1050.07	38.00	-0.0156	-0.59		1049.48	
	1049.77		-0.37	-0.0156	24.00	980+25	1050.15	38.00	-0.0156	-0.59		1049.55	
	1049.82		-0.37	-0.0156	24.00	980+50	1050.20	38.00	-0.0156	-0.59		1049.60	
	1049.84		-0.37	-0.0156	24.00	980+75	1050.22	38.00	-0.0156	-0.59		1049.63	
	1049.84		-0.37	-0.0156	24.00	981+00	1050.22	38.00	-0.0156	-0.59		1049.63	
	1049.83		-0.37	-0.0156	24.00	981+21.76	1050.20	38.00	-0.0156	-0.59	222:1	1049.61	N.C.
	1049.82		-0.37	-0.0156	24.00	981+25	1050.20	38.00	-0.0150	-0.57	222:1	1049.63	
	1049.77		-0.37	-0.0156	24.00	981+50	1050.15	38.00	-0.0103	-0.39	222:1	1049.75	
	1049.70		-0.37	-0.0156	24.00	981+75	1050.07	38.00	-0.0057	-0.21	222:1	1049.86	
	1049.60		-0.37	-0.0156	24.00	982+00	1049.98	38.00	-0.0010	-0.04	222:1	1049.94	
	1049.57		-0.37	-0.0156	24.00	982+05.30	1049.94	38.00	0.0000	0.00	222:1	1049.94	L.S.
	1049.48		-0.37	-0.0156	24.00	982+25	1049.86	38.00	0.0037	0.14	222:1	1050.00	
	1049.34		-0.37	-0.0156	24.00	982+50	1049.71	38.00	0.0083	0.32	222:1	1050.03	
	1049.17		-0.37	-0.0156	24.00	982+75	1049.54	38.00	0.0130	0.49	222:1	1050.04	
P.C.	1049.10		-0.37	-0.0156	24.00	982+83.87	1049.48	38.00	0.0147	0.56	222:1	1050.03	P.C.
N.C.	1049.06	222:1	-0.37	-0.0156	24.00	982+88.83	1049.44	38.00	0.0156	0.59	222:1	1050.03	R.C.
	1048.92	222:1	-0.42	-0.0177	24.00	983+00	1049.35	38.00	0.0177	0.67	222:1	1050.02	
F.S.	1048.64	222:1	-0.53	-0.0220	24.00	983+23.10	1049.17	38.00	0.0220	0.84	222:1	1050.00	F.S.
	1048.60		-0.53	-0.0220	24.00	983+25	1049.13	38.00	0.0220	0.84		1049.97	
	1048.36		-0.53	-0.0220	24.00	983+50	1048.89	38.00	0.0220	0.84		1049.72	
	1048.09		-0.53	-0.0220	24.00	983+75	1048.62	38.00	0.0220	0.84		1049.46	
	1047.80		-0.53	-0.0220	24.00	984+00	1048.33	38.00	0.0220	0.84		1049.17	
	1047.49		-0.53	-0.0220	24.00	984+25	1048.02	38.00	0.0220	0.84		1048.85	
	1047.15		-0.53	-0.0220	24.00	984+50	1047.68	38.00	0.0220	0.84		1048.51	
	1046.79		-0.53	-0.0220	24.00	984+75	1047.31	38.00	0.0220	0.84		1048.15	
	1046.40		-0.53	-0.0220	24.00	985+00	1046.93	38.00	0.0220	0.84		1047.76	
	1045.99		-0.53	-0.0220	24.00	985+25	1046.52	38.00	0.0220	0.84		1047.35	
	1045.55		-0.53	-0.0220	24.00	985+50	1046.08	38.00	0.0220	0.84		1046.92	
	1045.09		-0.53	-0.0220	24.00	985+75	1045.62	38.00	0.0220	0.84		1046.46	
	1044.61		-0.53	-0.0220	24.00	986+00	1045.14	38.00	0.0220	0.84		1045.97	
	1044.10		-0.53	-0.0220	24.00	986+25	1044.63	38.00	0.0220	0.84		1045.46	
	1043.57		-0.53	-0.0220	24.00	986+50	1044.09	38.00	0.0220	0.84		1044.93	
	1043.01		-0.53	-0.0220	24.00	986+75	1043.54	38.00	0.0220	0.84		1044.37	
	1042.43		-0.53	-0.0220	24.00	987+00	1042.96	38.00	0.0220	0.84		1043.79	
	1041.82		-0.53	-0.0220	24.00	987+25	1042.35	38.00	0.0220	0.84		1043.19	
	1041.19		-0.53	-0.0220	24.00	987+50	1041.72	38.00	0.0220	0.84		1042.56	
	1040.54		-0.53	-0.0220	24.00	987+75	1041.07	38.00	0.0220	0.84		1041.90	
	1039.86		-0.53	-0.0220	24.00	988+00	1040.39	38.00	0.0220	0.84		1041.23	
	1039.16		-0.53	-0.0220	24.00	988+25	1039.69	38.00	0.0220	0.84		1040.52	
	1038.43		-0.53	-0.0220	24.00	988+50	1038.96	38.00	0.0220	0.84		1039.80	
	1037.68		-0.53	-0.0220	24.00	988+75	1038.21	38.00	0.0220	0.84		1039.05	
	1036.91		-0.53	-0.0220	24.00	989+00	1037.44	38.00	0.0220	0.84		1038.27	
	1036.11		-0.53	-0.0220	24.00	989+25	1036.64	38.00	0.0220	0.84		1037.47	
	1035.29		-0.53	-0.0220	24.00	989+50	1035.81	38.00	0.0220	0.84		1036.65	
	1034.44		-0.53	-0.0220	24.00	989+75	1034.97	38.00	0.0220	0.84		1035.80	
	1033.57		-0.53	-0.0220	24.00	990+00	1034.09	38.00	0.0220	0.84		1034.93	
	1032.67		-0.53	-0.0220	24.00	990+25	1033.20	38.00	0.0220	0.84		1034.03	
	1031.75		-0.53	-0.0220	24.00	990+50	1032.28	38.00	0.0220	0.84		1033.11	
	1030.81		-0.53	-0.0220	24.00	990+75	1031.33	38.00	0.0220	0.84		1032.17	
	1029.84		-0.53	-0.0220	24.00	991+00	1030.37	38.00	0.0220	0.84		1031.20	
	1028.84		-0.53	-0.0220	24.00	991+25	1029.37	38.00	0.0220	0.84		1030.21	
	1027.83		-0.53	-0.0220	24.00	991+50	1028.36	38.00	0.0220	0.84		1029.19	
	1026.79		-0.53	-0.0220	24.00	991+75	1027.31	38.00	0.0220	0.84		1028.15	
	1025.72		-0.53	-0.0220	24.00	992+00	1026.25	38.00	0.0220	0.84		1027.09	
	1024.63		-0.53	-0.0220	24.00	992+25	1025.16	38.00	0.0220	0.84		1026.00	

CALCULATED BF
CHECKED GLP

SUPERELEVATION TABLE

GEA/POR-422-18.31/0.00

SUPERELEVATION TABLE

P.I. STA. 997+05.80 | DC = 0° 41′ 56″

REMARKS	LEFT SIDE EDGE ELEVATION	LEFT SIDE TRANSITION RATE	LEFT SIDE ELEVATION CORRECTION	LEFT SIDE CROSS SLOPE	LEFT SIDE WIDTH	CENTERLINE CONTROL STATION	CENTERLINE CONTROL PROFILE GRADE	RIGHT SIDE WIDTH	RIGHT SIDE CROSS SLOPE	RIGHT SIDE ELEVATION CORRECTION	RIGHT SIDE TRANSITION RATE	RIGHT SIDE EDGE ELEVATION	REMARKS
	1023.52		-0.53	-0.0220	24.00	992+50	1024.05	38.00	0.0220	0.84		1024.88	
	1022.38		-0.53	-0.0220	24.00	992+75	1022.91	38.00	0.0220	0.84		1023.74	
	1021.22		-0.53	-0.0220	24.00	993+00	1021.75	38.00	0.0220	0.84		1022.58	
	1020.03		-0.53	-0.0220	24.00	993+25	1020.56	38.00	0.0220	0.84		1021.40	
	1018.82		-0.53	-0.0220	24.00	993+50	1019.35	38.00	0.0220	0.84		1020.19	
	1017.59		-0.53	-0.0220	24.00	993+75	1018.11	38.00	0.0220	0.84		1018.95	
	1016.33		-0.53	-0.0220	24.00	994+00	1016.86	38.00	0.0220	0.84		1017.69	
	1015.04		-0.53	-0.0220	24.00	994+25	1015.57	38.00	0.0220	0.84		1016.41	
	1013.74		-0.53	-0.0220	24.00	994+50	1014.26	38.00	0.0220	0.84		1015.10	
	1012.40		-0.53	-0.0220	24.00	994+75	1012.93	38.00	0.0220	0.84		1013.77	
	1011.05		-0.53	-0.0220	24.00	995+00	1011.58	38.00	0.0220	0.84		1012.41	
	1009.67		-0.53	-0.0220	24.00	995+25	1010.20	38.00	0.0220	0.84		1011.03	
	1008.26		-0.53	-0.0220	24.00	995+50	1008.79	38.00	0.0220	0.84		1009.63	
	1006.84		-0.53	-0.0220	24.00	995+75	1007.36	38.00	0.0220	0.84		1008.20	
	1005.38		-0.53	-0.0220	24.00	996+00	1005.91	38.00	0.0220	0.84		1006.75	
	1003.91		-0.53	-0.0220	24.00	996+25	1004.43	38.00	0.0220	0.84		1005.27	
	1002.41		-0.53	-0.0220	24.00	996+50	1002.93	38.00	0.0220	0.84		1003.77	
	1000.88		-0.53	-0.0220	24.00	996+75	1001.41	38.00	0.0220	0.84		1002.24	
	999.33		-0.53	-0.0220	24.00	997+00	999.86	38.00	0.0220	0.84		1000.69	
	997.76		-0.53	-0.0220	24.00	997+25	998.28	38.00	0.0220	0.84		999.12	
	996.16		-0.53	-0.0220	24.00	997+50	996.69	38.00	0.0220	0.84		997.52	
	994.55		-0.53	-0.0220	24.00	997+75	995.08	38.00	0.0220	0.84		995.91	
	992.94		-0.53	-0.0220	24.00	998+00	993.47	38.00	0.0220	0.84		994.30	
	991.33		-0.53	-0.0220	24.00	998+25	991.86	38.00	0.0220	0.84		992.69	
	989.72		-0.53	-0.0220	24.00	998+50	990.25	38.00	0.0220	0.84		991.08	
	988.11		-0.53	-0.0220	24.00	998+75	988.64	38.00	0.0220	0.84		989.47	
	986.50		-0.53	-0.0220	24.00	999+00	987.03	38.00	0.0220	0.84		987.86	
	984.89		-0.53	-0.0220	24.00	999+25	985.42	38.00	0.0220	0.84		986.25	
	983.28		-0.53	-0.0220	24.00	999+50	983.81	38.00	0.0220	0.84		984.64	
	981.67		-0.53	-0.0220	24.00	999+75	982.20	38.00	0.0220	0.84		983.03	
	980.06		-0.53	-0.0220	24.00	1000+00	980.59	38.00	0.0220	0.84		981.42	
	978.45		-0.53	-0.0220	24.00	1000+25	978.97	38.00	0.0220	0.84		979.81	
	976.84		-0.53	-0.0220	24.00	1000+50	977.36	38.00	0.0220	0.84		978.20	
	975.23		-0.53	-0.0220	24.00	1000+75	975.75	38.00	0.0220	0.84		976.59	
	973.62		-0.53	-0.0220	24.00	1001+00	974.14	38.00	0.0220	0.84		974.98	
	972.01		-0.53	-0.0220	24.00	1001+25	972.53	38.00	0.0220	0.84		973.37	
	970.40		-0.53	-0.0220	24.00	1001+50	970.92	38.00	0.0220	0.84		971.76	
	968.79		-0.53	-0.0220	24.00	1001+75	969.31	38.00	0.0220	0.84		970.15	
	967.18		-0.53	-0.0220	24.00	1002+00	967.70	38.00	0.0220	0.84		968.54	
	965.57		-0.53	-0.0220	24.00	1002+25	966.09	38.00	0.0220	0.84		966.93	
	963.96		-0.53	-0.0220	24.00	1002+50	964.48	38.00	0.0220	0.84		965.32	
	962.35		-0.53	-0.0220	24.00	1002+75	962.87	38.00	0.0220	0.84		963.71	
	960.74		-0.53	-0.0220	24.00	1003+00	961.26	38.00	0.0220	0.84		962.10	
	959.13		-0.53	-0.0220	24.00	1003+25	959.65	38.00	0.0220	0.84		960.49	
	957.52		-0.53	-0.0220	24.00	1003+50	958.04	38.00	0.0220	0.84		958.88	
	955.91		-0.53	-0.0220	24.00	1003+75	956.43	38.00	0.0220	0.84		957.27	
	954.30		-0.53	-0.0220	24.00	1004+00	954.82	38.00	0.0220	0.84		955.66	
	952.69		-0.53	-0.0220	24.00	1004+25	953.21	38.00	0.0220	0.84		954.05	
	951.08		-0.53	-0.0220	24.00	1004+50	951.60	38.00	0.0220	0.84		952.44	
	949.47		-0.53	-0.0220	24.00	1004+75	949.99	38.00	0.0220	0.84		950.83	
	947.86		-0.53	-0.0220	24.00	1005+00	948.38	38.00	0.0220	0.84		949.22	
	946.24		-0.53	-0.0220	24.00	1005+25	946.77	38.00	0.0220	0.84		947.61	
	944.63		-0.53	-0.0220	24.00	1005+50	945.16	38.00	0.0220	0.84		946.00	
	943.02		-0.53	-0.0220	24.00	1005+75	943.55	38.00	0.0220	0.84		944.39	
	941.43		-0.53	-0.0220	24.00	1006+00	941.96	38.00	0.0220	0.84		942.80	

SUPERELEVATION TABLE

P.I. STA. 997+05.80 | DC = 0° 41′ 56″

REMARKS	LEFT SIDE EDGE ELEVATION	LEFT SIDE TRANSITION RATE	LEFT SIDE ELEVATION CORRECTION	LEFT SIDE CROSS SLOPE	LEFT SIDE WIDTH	CENTERLINE CONTROL STATION	CENTERLINE CONTROL ROFILE GRADE	RIGHT SIDE WIDTH	RIGHT SIDE CROSS SLOPE	RIGHT SIDE ELEVATION CORRECTION	RIGHT SIDE TRANSITION RATE	RIGHT SIDE EDGE ELEVATION	REMARKS
	939.88		-0.53	-0.0220	24.00	1006+25	940.40	38.00	0.0220	0.84		941.24	
	938.35		-0.53	-0.0220	24.00	1006+50	938.88	38.00	0.0220	0.84		939.72	
	936.87		-0.53	-0.0220	24.00	1006+75	937.40	38.00	0.0220	0.84		938.23	
	935.42		-0.53	-0.0220	24.00	1007+00	935.95	38.00	0.0220	0.84		936.78	
	934.00		-0.53	-0.0220	24.00	1007+25	934.53	38.00	0.0220	0.84		935.37	
	932.62		-0.53	-0.0220	24.00	1007+50	933.15	38.00	0.0220	0.84		933.99	
	931.28		-0.53	-0.0220	24.00	1007+75	931.81	38.00	0.0220	0.84		932.65	
	929.97		-0.53	-0.0220	24.00	1008+00	930.50	38.00	0.0220	0.84		931.34	
	928.70		-0.53	-0.0220	24.00	1008+25	929.23	38.00	0.0220	0.84		930.06	
	927.46		-0.53	-0.0220	24.00	1008+50	927.99	38.00	0.0220	0.84		928.83	
	926.26		-0.53	-0.0220	24.00	1008+75	926.79	38.00	0.0220	0.84		927.63	
	925.10		-0.53	-0.0220	24.00	1009+00	925.62	38.00	0.0220	0.84		926.46	
	923.97		-0.53	-0.0220	24.00	1009+25	924.49	38.00	0.0220	0.84		925.33	
	922.87		-0.53	-0.0220	24.00	1009+50	923.40	38.00	0.0220	0.84		924.24	
	921.81		-0.53	-0.0220	24.00	1009+75	922.34	38.00	0.0220	0.84		923.18	
	920.79		-0.53	-0.0220	24.00	1010+00	921.32	38.00	0.0220	0.84		922.15	
	919.80		-0.53	-0.0220	24.00	1010+25	920.33	38.00	0.0220	0.84		921.16	
	918.85		-0.53	-0.0220	24.00	1010+50	919.38	38.00	0.0220	0.84		920.21	
F.S.	918.46	222:1	-0.53	-0.0220	24.00	1010+60.49	918.99	38.00	0.0220	0.84	222:1	919.82	F.S.
	918.00	222:1	-0.46	-0.0193	24.00	1010+75	918.46	38.00	0.0193	0.73	222:1	919.19	
N.C.	917.38	222:1	-0.37	-0.0156	24.00	1010+94.76	917.76	38.00	0.0156	0.59	222:1	918.35	R.C.
P.T.	917.21		-0.37	-0.0156	24.00	1010+99.72	917.59	38.00	0.0147	0.56	222:1	918.14	P.T.
	917.20		-0.37	-0.0156	24.00	1011+00	917.58	38.00	0.0146	0.56	222:1	918.13	
	916.36		-0.37	-0.0156	24.00	1011+25	916.73	38.00	0.0100	0.38	222:1	917.11	
	915.55		-0.37	-0.0156	24.00	1011+50	915.92	38.00	0.0053	0.20	222:1	916.12	
	914.77		-0.37	-0.0156	24.00	1011+75	915.15	38.00	0.0006	0.02	222:1	915.17	
	914.67		-0.37	-0.0156	24.00	1011+78.29	915.05	38.00	0.0000	0.00	222:1	915.05	L.S.
	914.03		-0.37	-0.0156	24.00	1012+00	914.41	38.00	-0.0041	-0.15	222:1	914.25	
	913.33		-0.37	-0.0156	24.00	1012+25	913.70	38.00	-0.0087	-0.33	222:1	913.37	
	912.66		-0.37	-0.0156	24.00	1012+50	913.03	38.00	-0.0134	-0.51	222:1	912.53	
	912.36		-0.37	-0.0156	24.00	1012+61.83	912.73	38.00	-0.0156	-0.59	222:1	912.14	N.C.
	912.03		-0.37	-0.0156	24.00	1012+75	912.40	38.00	-0.0156	-0.59		911.81	
	911.43		-0.37	-0.0156	24.00	1013+00	911.80	38.00	-0.0156	-0.59		911.21	

CALCULATED BF
CHECKED GLP

SUPERELEVATION TABLE

GEA/POR-422-18.31/0.00

SUPERELEVATION TABLE

P.I. STA. 1016+86.23 | DC = 1° 14′ 56″

REMARKS	LEFT SIDE					CENTERLINE CONTROL		RIGHT SIDE					REMARKS
	EDGE ELEVATION	TRANSITION RATE	ELEVATION CORRECTION	CROSS SLOPE	WIDTH	STATION	PROFILE GRADE	WIDTH	CROSS SLOPE	ELEVATION CORRECTION	TRANSITION RATE	EDGE ELEVATION	
	911.43		-0.37	-0.0156	24.00	1013+00	911.80	38.00	-0.0156	-0.59		911.21	
	910.87		-0.37	-0.0156	24.00	1013+25	911.24	38.00	-0.0156	-0.59		910.65	
	910.34		-0.37	-0.0156	24.00	1013+50	910.72	38.00	-0.0156	-0.59		910.12	
	909.85		-0.37	-0.0156	24.00	1013+75	910.23	38.00	-0.0156	-0.59		909.63	
	909.79		-0.37	-0.0156	24.00	1013+78.18	910.17	38.00	-0.0156	-0.59	222:1	909.57	N.C.
	909.40		-0.37	-0.0156	24.00	1014+00	909.77	38.00	-0.0115	-0.44	222:1	909.33	
	909.39		-0.37	-0.0156	24.00	1014+00.49	909.76	38.00	-0.0114	-0.43	222:1	909.33	
	908.98		-0.37	-0.0156	24.00	1014+25	909.35	38.00	-0.0069	-0.26	222:1	909.09	
	908.59		-0.37	-0.0156	24.00	1014+50	908.97	38.00	-0.0022	-0.08	222:1	908.88	
	908.42		-0.37	-0.0156	24.00	1014+61.72	908.80	38.00	0.0000	0.00	222:1	908.80	L.S.
	908.24		-0.37	-0.0156	24.00	1014+75	908.62	38.00	0.0025	0.09	222:1	908.71	
	907.93		-0.37	-0.0156	24.00	1015+00	908.31	38.00	0.0071	0.27	222:1	908.58	
P.C.	907.66		-0.37	-0.0156	24.00	1015+24.18	908.04	38.00	0.0117	0.44	222:1	908.48	P.C.
	907.65		-0.37	-0.0156	24.00	1015+25	908.03	38.00	0.0118	0.45	222:1	908.48	
N.C.	907.45	222:1	-0.37	-0.0156	24.00	1015+45.25	907.83	38.00	0.0156	0.59	222:1	908.42	R.C.
	907.30	222:1	-0.49	-0.0203	24.00	1015+50	907.79	38.00	0.0165	0.63	222:1	908.41	
	906.98	222:1	-0.60	-0.0249	24.00	1015+75	907.58	38.00	0.0212	0.80	222:1	908.38	
	906.70	222:1	-0.71	-0.0296	24.00	1016+00	907.41	38.00	0.0258	0.98	222:1	908.39	
	906.45	222:1	-0.82	-0.0343	24.00	1016+25	907.27	38.00	0.0305	1.16	222:1	908.43	
F.S.	906.34	222:1	-0.84	-0.0350	24.00	1016+49.13	907.18	38.00	0.0350	1.33	222:1	908.51	F.S.
	906.33		-0.84	-0.0350	24.00	1016+50	907.17	38.00	0.0350	1.33		908.50	
	906.27		-0.84	-0.0350	24.00	1016+75	907.11	38.00	0.0350	1.33		908.44	
	906.24		-0.84	-0.0350	24.00	1017+00	907.08	38.00	0.0350	1.33		908.41	
F.S.	906.25	222:1	-0.84	-0.0350	24.00	1017+23.19	907.09	38.00	0.0350	1.33	222:1	908.42	F.S.
	906.26	222:1	-0.83	-0.0347	24.00	1017+25	907.09	38.00	0.0347	1.32	222:1	908.41	
	906.41	222:1	-0.72	-0.0300	24.00	1017+50	907.13	38.00	0.0300	1.14	222:1	908.27	
	906.60	222:1	-0.61	-0.0253	24.00	1017+75	907.21	38.00	0.0253	0.96	222:1	908.17	
	906.81	222:1	-0.50	-0.0207	24.00	1018+00	907.30	38.00	0.0207	0.78	222:1	908.09	
	907.02	222:1	-0.38	-0.0160	24.00	1018+25	907.40	38.00	0.0160	0.61	222:1	908.01	
N.C.	907.03	222:1	-0.37	-0.0156	24.00	1018+27.07	907.41	38.00	0.0156	0.59	222:1	908.00	R.C.
P.T.	907.11		-0.37	-0.0156	24.00	1018+48.14	907.49	38.00	0.0117	0.44	222:1	907.93	P.T.
	907.12		-0.37	-0.0156	24.00	1018+50	907.50	38.00	0.0113	0.43	222:1	907.93	
	907.22		-0.37	-0.0156	24.00	1018+75	907.59	38.00	0.0066	0.25	222:1	907.84	
	907.31		-0.37	-0.0156	24.00	1019+00	907.69	38.00	0.0020	0.08	222:1	907.76	
	907.35		-0.37	-0.0156	24.00	1019+10.60	907.73	38.00	0.0000	0.00	222:1	907.73	L.S.
	907.41		-0.37	-0.0156	24.00	1019+25	907.78	38.00	-0.0027	-0.10	222:1	907.68	
	907.50		-0.37	-0.0156	24.00	1019+50	907.88	38.00	-0.0074	-0.28	222:1	907.60	
	907.60		-0.37	-0.0156	24.00	1019+75	907.98	38.00	-0.0120	-0.46	222:1	907.52	
	907.67		-0.37	-0.0156	24.00	1019+94.13	908.05	38.00	-0.0156	-0.59	222:1	907.46	N.C.
	907.70		-0.37	-0.0156	24.00	1020+00	908.07	38.00	-0.0156	-0.59		907.48	
	907.79		-0.37	-0.0156	24.00	1020+25	908.17	38.00	-0.0156	-0.59		907.57	
	907.89		-0.37	-0.0156	24.00	1020+50	908.26	38.00	-0.0156	-0.59		907.67	
	907.98		-0.37	-0.0156	24.00	1020+75	908.36	38.00	-0.0156	-0.59		907.77	
	908.08		-0.37	-0.0156	24.00	1021+00	908.45	38.00	-0.0156	-0.59		907.86	
	908.17		-0.37	-0.0156	24.00	1021+25	908.55	38.00	-0.0156	-0.59		907.96	
	908.27		-0.37	-0.0156	24.00	1021+50	908.65	38.00	-0.0156	-0.59		908.05	

SUPERELEVATION TABLE

REMARKS	LEFT SIDE					CENTERLINE CONTROL		RIGHT SIDE					REMARKS
	EDGE ELEVATION	TRANSITION RATE	ELEVATION CORRECTION	CROSS SLOPE	WIDTH	STATION	PROFILE GRADE	WIDTH	CROSS SLOPE	ELEVATION CORRECTION	TRANSITION RATE	EDGE ELEVATION	

CALCULATED BF
CHECKED GLP

SUPERELEVATION TABLE

GEA/POR-422-18.31/0.00

SUPERELEVATION TABLE

P.I. STA. 148+39.30 | DC = 13° 28′ 53″

REMARKS	LEFT SIDE EDGE ELEVATION	LEFT SIDE TRANSITION RATE	LEFT SIDE ELEVATION CORRECTION	LEFT SIDE CROSS SLOPE	LEFT SIDE WIDTH	CENTERLINE CONTROL STATION	CENTERLINE CONTROL PROFILE GRADE	RIGHT SIDE WIDTH	RIGHT SIDE CROSS SLOPE	RIGHT SIDE ELEVATION CORRECTION	RIGHT SIDE TRANSITION RATE	RIGHT SIDE EDGE ELEVATION	REMARKS
	913.19		-0.16	-0.0156	9.95	146+90.09	913.35	7.07	-0.0156	-0.11		913.24	
	912.93		-0.17	-0.0156	10.85	147+00	913.10	8.56	-0.0156	-0.13		912.97	
	912.59		-0.19	-0.0156	12.00	147+12.61	912.78	9.65	-0.0156	-0.15		912.63	
	912.28		-0.19	-0.0156	12.00	147+25	912.47	10.72	-0.0156	-0.17		912.30	
N.C.	912.17	143:1	-0.19	-0.0156	12.00	147+29.28	912.36	11.09	-0.0156	-0.17		912.19	
	911.91	143:1	-0.19	-0.0156	12.00	147+39.75	912.10	12.00	-0.0156	-0.19		911.91	
	911.80	143:1	-0.04	-0.0035	12.00	147+50	911.84	12.00	-0.0156	-0.19		911.65	
L.S.	911.69	143:1	0.00	0.0000	12.00	147+56.05	911.69	12.00	-0.0156	-0.19		911.50	
	911.34	143:1	0.13	0.0110	12.00	147+75	911.21	12.00	-0.0156	-0.19		911.02	
R.C.	911.20	143:1	0.19	0.0156	12.00	147+82.82	911.01	12.00	-0.0156	-0.19	143:1	910.82	N.C.
	910.89	143:1	0.31	0.0256	12.00	148+00	910.58	12.00	-0.0256	-0.31	143:1	910.27	
P.C.	910.82	143:1	0.33	0.0278	12.00	148+03.67	910.49	12.00	-0.0277	-0.33	143:1	910.16	P.C.
	910.68	143:1	0.39	0.0323	12.00	148+11.41	910.29	12.00	-0.0322	-0.39	143:1	909.90	
	910.43	143:1	0.48	0.0402	12.00	148+25	909.95	12.91	-0.0402	-0.52	143:1	909.43	
F.S.	910.14	143:1	0.59	0.0493	12.00	148+40.71	909.55	13.95	-0.0493	-0.69	143:1	908.86	F.S.
	909.85	143:1	0.53	0.0439	12.00	148+50	909.32	14.57	-0.0439	-0.64	143:1	908.68	
	909.55	143:1	0.46	0.0385	12.00	148+59.34	909.09	15.20	-0.0384	-0.58	143:1	908.51	
	909.18	143:1	0.40	0.0315	12.77	148+71.39	908.78	16.00	-0.0314	-0.50	143:1	908.28	
P.T.	909.09	143:1	0.38	0.0295	13.05	148+74.76	908.71	16.00	-0.0295	-0.47	143:1	908.24	P.T.
	909.08	143:1	0.38	0.0294	13.07	148+75	908.70	16.00	-0.0293	-0.47	143:1	908.23	
R.C.	908.67	143:1	0.23	0.0156	14.64	148+98.61	908.44	16.00	-0.0156	-0.25	143:1	908.19	N.C.
	908.66	143:1	0.22	0.0148	14.73	149+00	908.44	16.00	-0.0156	-0.25		908.19	
	908.64	143:1	0.19	0.0124	15.00	149+04.02	908.45	16.00	-0.0156	-0.25		908.20	
	908.69	143:1	0.00	0.0002	15.00	149+25	908.69	16.00	-0.0156	-0.25		908.44	
L.S.	908.70	143:1	0.00	0.0000	15.00	149+25.38	908.70	16.00	-0.0156	-0.25		908.45	
	908.55	143:1	-0.22	-0.0144	15.00	149+50	908.77	16.00	-0.0156	-0.25		908.52	
N.C.	908.51	143:1	-0.23	-0.0156	15.00	149+52.15	908.74	16.00	-0.0156	-0.25		908.49	
	908.24		-0.23	-0.0156	15.00	149+75	908.47	16.00	-0.0156	-0.25		908.22	
	907.99		-0.23	-0.0156	15.00	149+96.05	908.22	16.00	-0.0156	-0.25		907.97	

SUPERELEVATION TABLE

P.I. STA. 103+10.99 | DC = 22° 55′ 06″

REMARKS	LEFT SIDE EDGE ELEVATION	LEFT SIDE TRANSITION RATE	LEFT SIDE ELEVATION CORRECTION	LEFT SIDE CROSS SLOPE	LEFT SIDE WIDTH	CENTERLINE CONTROL STATION	CENTERLINE CONTROL PROFILE GRADE	RIGHT SIDE WIDTH	RIGHT SIDE CROSS SLOPE	RIGHT SIDE ELEVATION CORRECTION	RIGHT SIDE TRANSITION RATE	RIGHT SIDE EDGE ELEVATION	REMARKS
	916.76		-0.25	-0.0156	16.00	100+71.04	917.01	16.00	-0.0156	-0.25		916.76	
	916.70		-0.25	-0.0156	16.00	100+75	916.95	16.00	-0.0156	-0.25		916.70	
	916.37		-0.25	-0.0156	16.00	101+00	916.62	16.00	-0.0156	-0.25		916.37	
	915.98		-0.25	-0.0156	16.00	101+25	916.23	16.00	-0.0156	-0.25		915.98	
	915.82		-0.25	-0.0156	16.00	101+35.30	916.07	16.00	-0.0156	-0.25		915.82	
	915.61		-0.23	-0.0156	14.69	101+50	915.84	16.00	-0.0156	-0.25		915.59	
N.C.	915.50	143:1	-0.22	-0.0156	13.96	101+58.28	915.72	16.00	-0.0156	-0.25		915.47	
	915.46	143:1	-0.07	-0.0059	12.47	101+75	915.53	16.00	-0.0156	-0.25		915.28	
	915.44	143:1	-0.04	-0.0030	12.03	101+79.97	915.48	16.00	-0.0156	-0.25		915.23	
	915.45	143:1	-0.03	-0.0028	12.00	101+80.30	915.48	15.98	-0.0156	-0.25		915.23	
L.S.	915.44	143:1	0.00	0.0000	12.00	101+85.05	915.44	15.66	-0.0156	-0.24		915.20	
	915.46	143:1	0.10	0.0087	12.00	102+00	915.36	14.66	-0.0156	-0.23		915.13	
R.C.	915.52	143:1	0.19	0.0156	12.00	102+11.82	915.33	13.88	-0.0156	-0.22	143:1	915.11	N.C.
	915.62	143:1	0.28	0.0233	12.00	102+25	915.34	13.00	-0.0233	-0.30	143:1	915.04	
	915.78	143:1	0.38	0.0320	12.00	102+39.97	915.40	12.00	-0.0320	-0.38	143:1	915.02	
P.C.	915.91	143:1	0.45	0.0378	12.00	102+49.97	915.46	12.00	-0.0378	-0.45	143:1	915.01	P.C.
	915.91	143:1	0.45	0.0378	12.00	102+50	915.46	12.00	-0.0378	-0.45	143:1	915.01	
	916.30	143:1	0.63	0.0524	12.00	102+75	915.67	12.00	-0.0524	-0.63	143:1	915.04	
	916.67	143:1	0.80	0.0670	12.00	103+00	915.87	12.00	-0.0670	-0.80	143:1	915.07	
F.S.	916.83	143:1	0.88	0.0731	12.00	103+10.53	915.95	12.00	-0.0731	-0.88	143:1	915.07	F.S.
	916.85	143:1	0.78	0.0647	12.00	103+25	916.07	12.00	-0.0647	-0.78	143:1	915.29	
	916.87	143:1	0.60	0.0501	12.00	103+50	916.27	12.00	-0.0501	-0.60	143:1	915.67	
P.T.	916.89	143:1	0.46	0.0387	12.00	103+69.67	916.43	12.00	-0.0387	-0.46	143:1	915.97	P.T.
	916.90	143:1	0.43	0.0356	12.00	103+75	916.47	12.00	-0.0356	-0.43	143:1	916.04	
	916.92	143:1	0.25	0.0210	12.00	104+00	916.67	12.00	-0.0210	-0.25	143:1	916.42	
R.C.	916.93	143:1	0.19	0.0156	12.00	104+09.24	916.74	12.00	-0.0156	-0.19	143:1	916.55	N.C.
	916.95	143:1	0.08	0.0064	12.00	104+25	916.87	12.00	-0.0156	-0.19		916.68	
L.S.	916.96	143:1	0.00	0.0000	11.57	104+36.01	916.96	11.62	-0.0156	-0.18		916.78	
	916.98	143:1	-0.09	-0.0081	11.03	104+50	917.07	11.13	-0.0156	-0.17		916.90	
N.C.	917.01	143:1	-0.16	-0.0156	10.54	104+62.78	917.17	10.68	-0.0156	-0.17		917.00	
	917.11		-0.16	-0.0156	10.07	104+75	917.27	10.25	-0.0156	-0.16		917.11	

CALCULATED BF
CHECKED GLP

SUPERELEVATION TABLE

GEA/POR-422-18.31/0.00

CURVE DATA

P.I. STA. = 943+70.00
Δ = 66° 11′ 30″
Dc = 2° 30′ 56″
R = 2277.63′
T = 1484.53′
L = 2631.26′
E = 441.09′
e_{max} = 0.062

N

0 10 20 40
HORIZONTAL SCALE IN FEET

CALCULATED
CHECKED

PAVEMENT DETAILS
STA. 948+00 TO STA. 953+00

GEA/POR-422-18.31/0.00

CURVE DATA

P.I. STA. = 943+70.00
Δ = 66° 11′ 30″
Dc = 2° 30′ 56″
R = 2277.63′
T = 1484.53′
L = 2631.26′
E = 441.09′
e_{max} = 0.062

HORIZONTAL SCALE IN FEET
0 10 20 40

CALCULATED
CHECKED

PAVEMENT DETAILS
STA. 953+00 TO STA. 958+00

GEA/POR-422-18.31/0.00

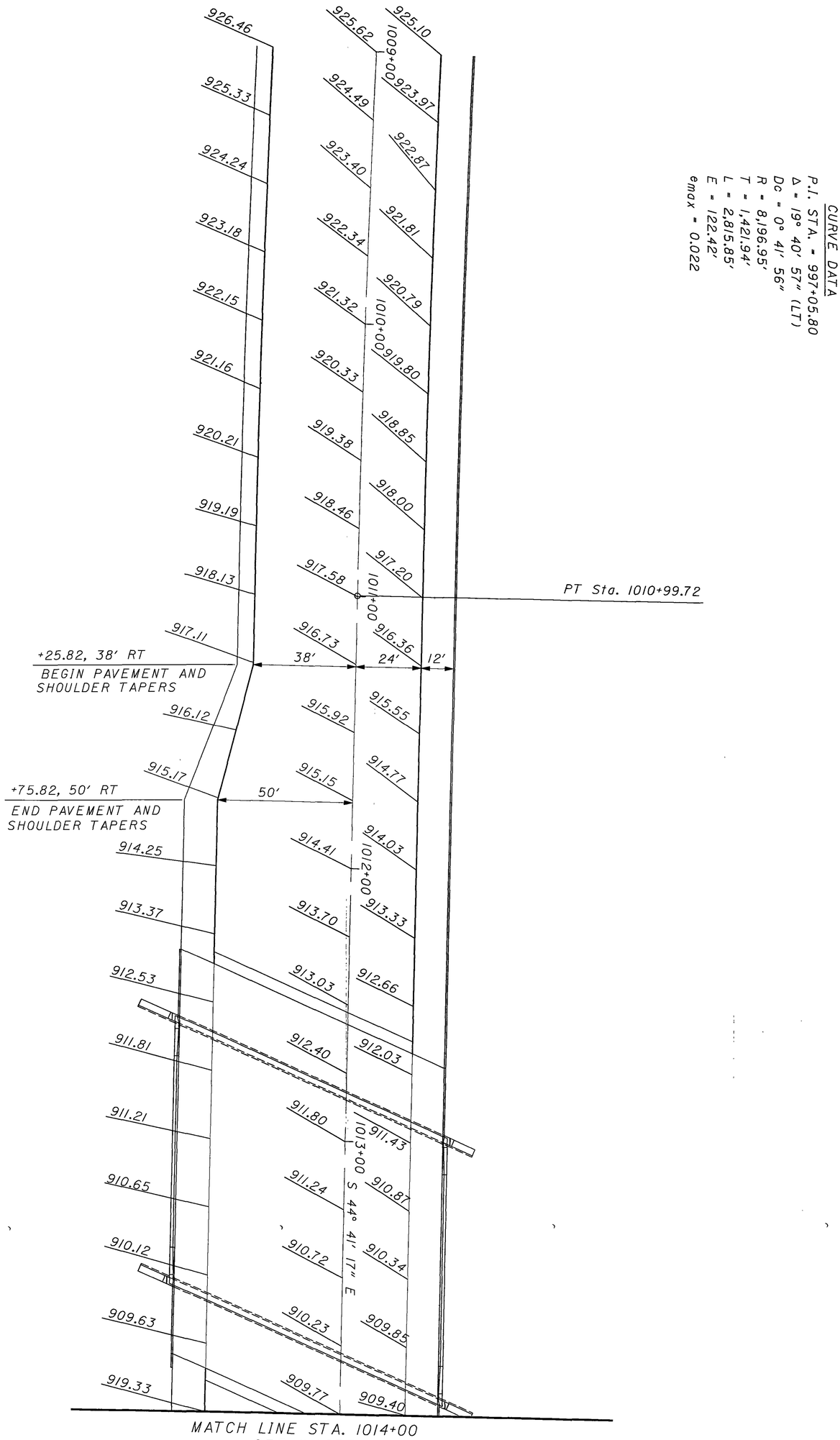

154 / 332	GEA/POR-422-18.31/0.00	**PAVEMENT DETAILS** **STA. 1009+00 TO STA. 1014+00**	CALCULATED CHECKED 0 10 20 40 HORIZONTAL SCALE IN FEET

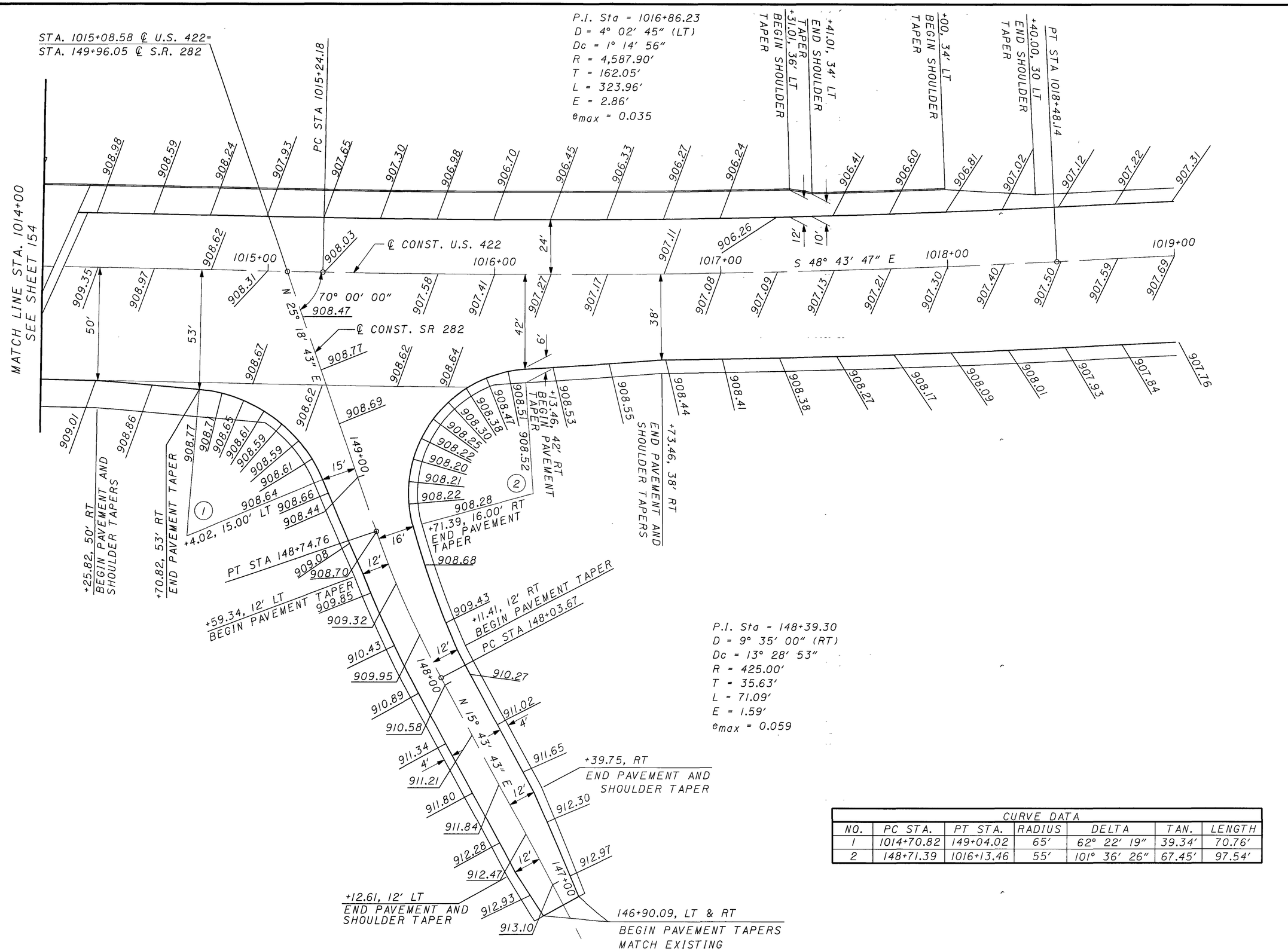

CURVE DATA						
NO.	PC STA.	PT STA.	RADIUS	DELTA	TAN.	LENGTH
1	1014+70.82	149+04.02	65′	62° 22′ 19″	39.34′	70.76′
2	148+71.39	1016+13.46	55′	101° 36′ 26″	67.45′	97.54′

HORIZONTAL SCALE IN FEET
0 10 20 40

PAVEMENT DETAILS
STA. 1014+00 TO STA. 1019+00

GEA/POR-422-18.31/0.00

CURVE DATA						
NO.	PC STA.	PT STA.	RADIUS	DELTA	TAN.	LENGTH
1	1042+76.53	101+35.30	65′	60° 33′ 46″	37.95′	68.71′
2	101+79.97	1044+24.29	55′	101° 38′ 59″	67.50′	97.58′

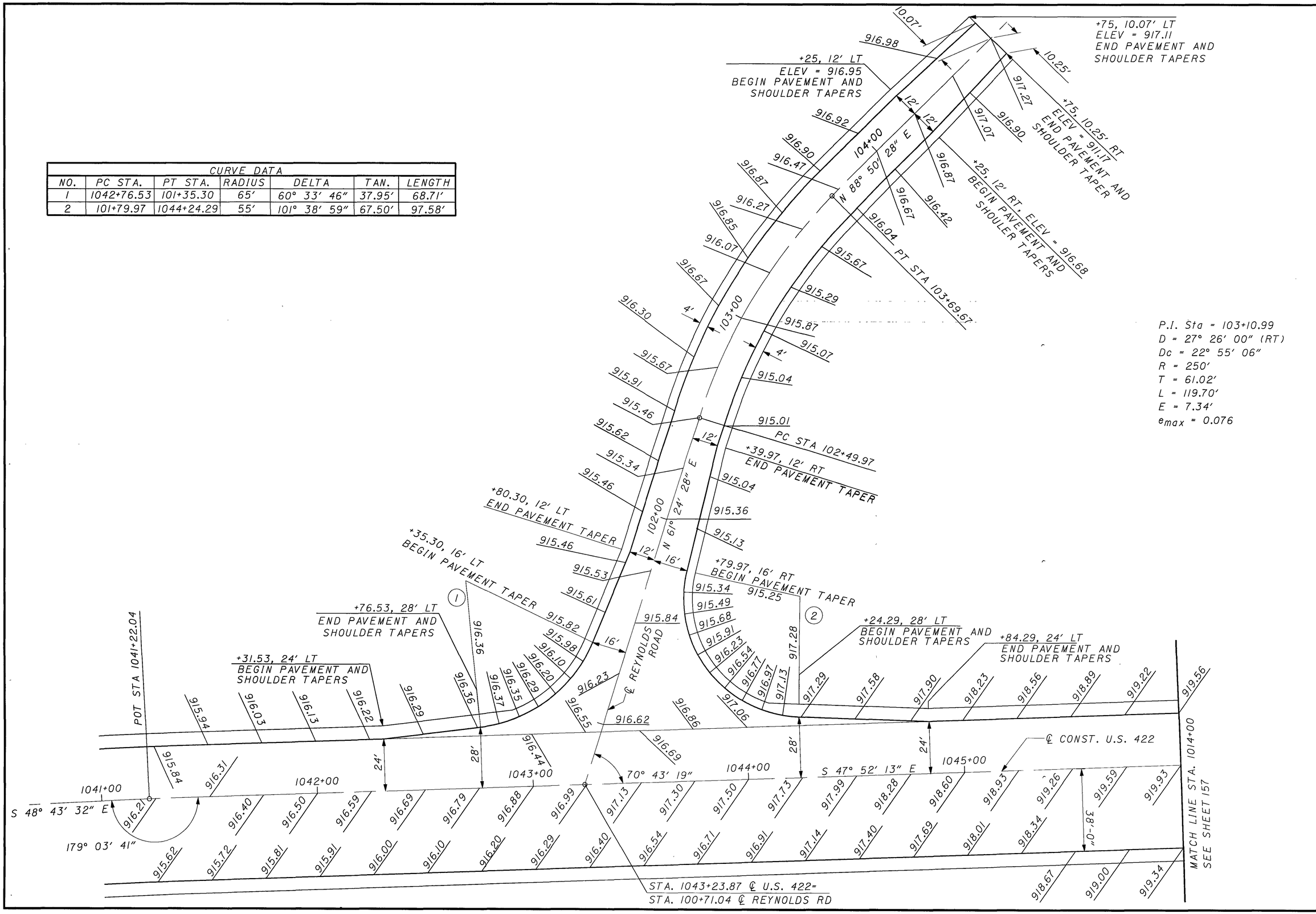

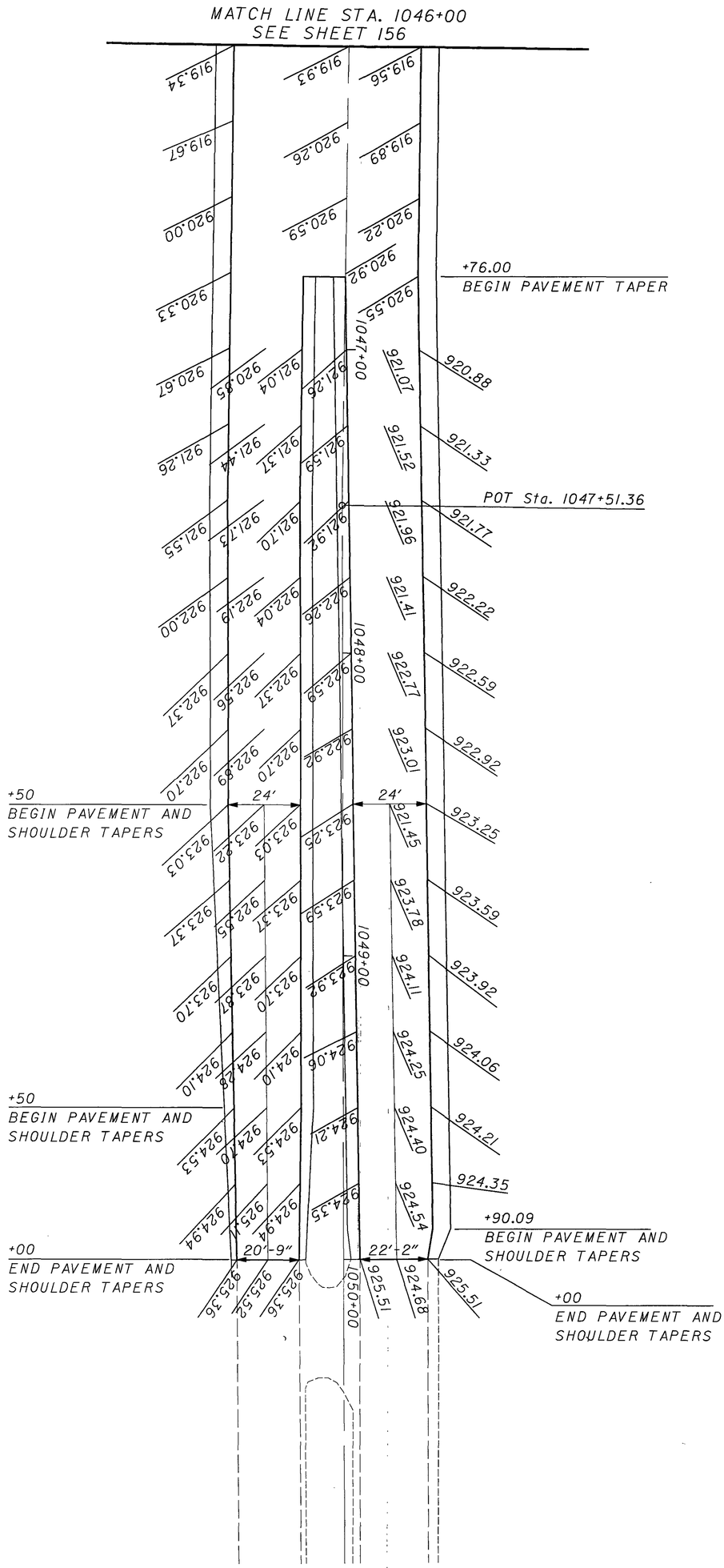

157
332

GEA/POR-422-18.31/0.00

PAVEMENT DETAILS
STA. 1046+00 TO STA. 1051+00

CALCULATED
CHECKED

0 10 20 40
HORIZONTAL SCALE IN FEET

N

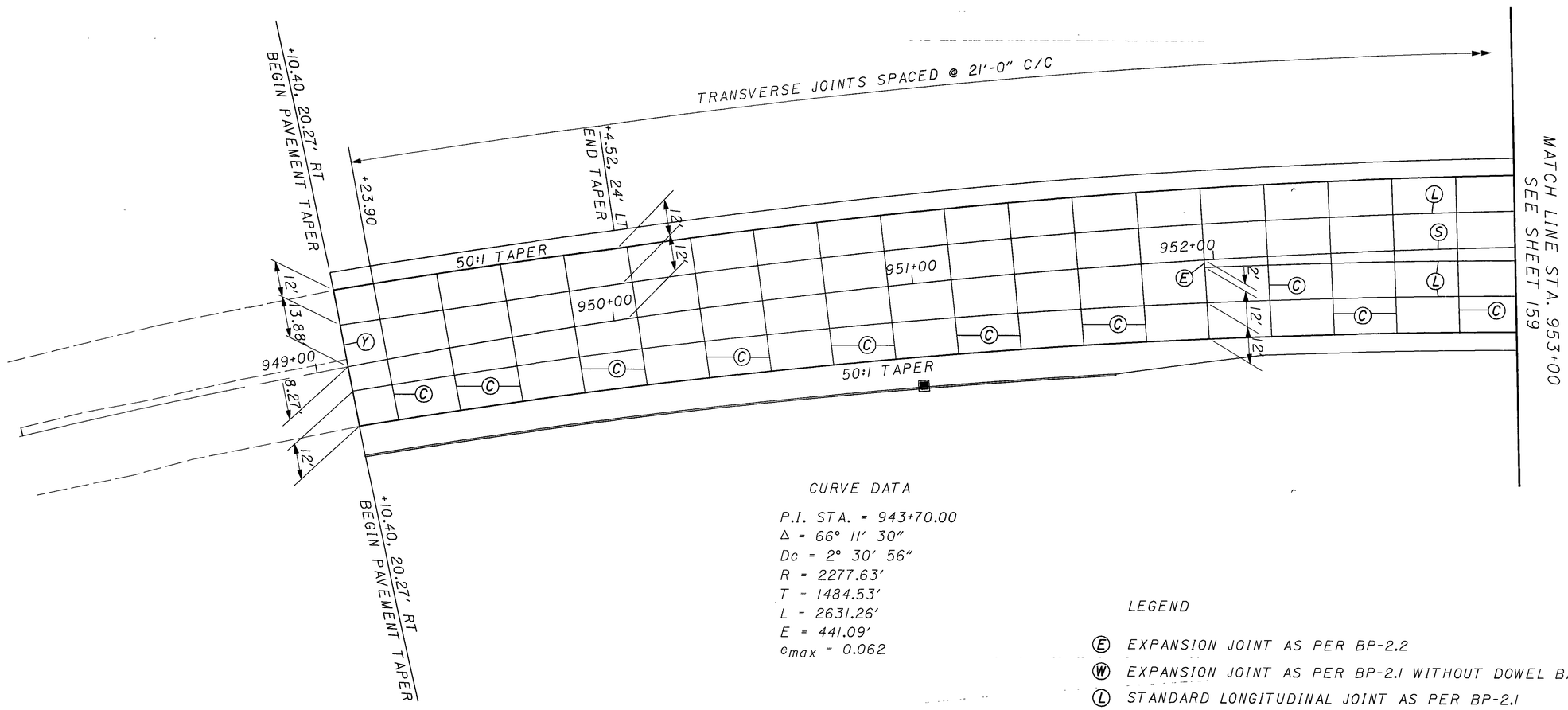

CURVE DATA

P.I. STA. = 943+70.00
Δ = 66° 11' 30"
Dc = 2° 30' 56"
R = 2277.63'
T = 1484.53'
L = 2631.26'
E = 441.09'
e_{max} = 0.062

LEGEND

- (E) EXPANSION JOINT AS PER BP-2.2
- (W) EXPANSION JOINT AS PER BP-2.1 WITHOUT DOWEL BARS
- (L) STANDARD LONGITUDINAL JOINT AS PER BP-2.1
- (S) STANDARD LONGITUDINAL JOINT AS PER BP-2.1 WITHOUT TIE BARS
- (C) CONTRACTION JOINT AS PER BP-2.1
- (Y) BUTT JOINT AS PER BP-3.1

N

0 10 20 40
HORIZONTAL SCALE IN FEET

CALCULATED
CHECKED

JOINT DETAILS
STA. 948+00 TO STA. 953+00

GEA/POR-422-18.31/0.00

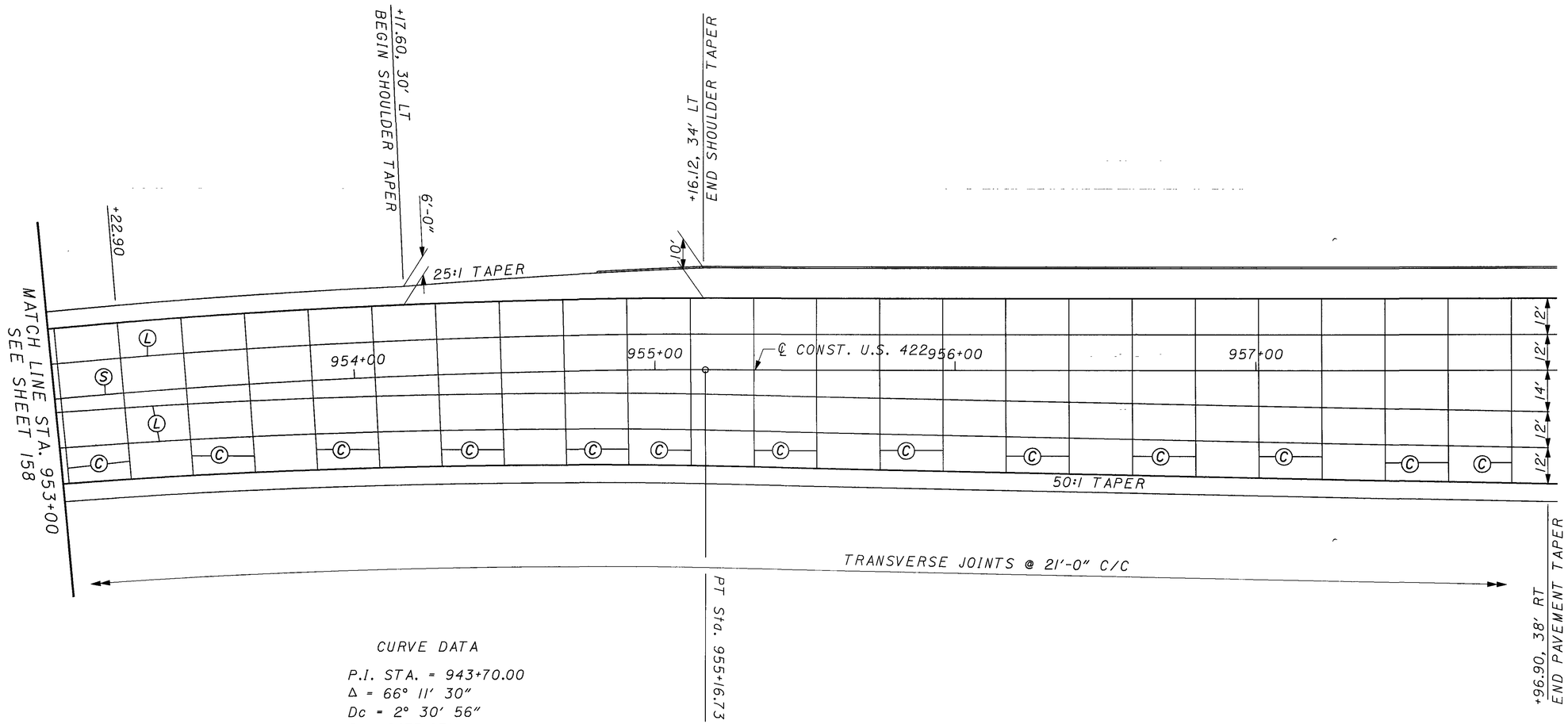

CURVE DATA

P.I. STA. = 943+70.00
Δ = 66° 11' 30"
Dc = 2° 30' 56"
R = 2277.63'
T = 1484.53'
L = 2631.26'
E = 441.09'
e_{max} = 0.062

FOR JOINT LEGEND, SEE SHEET 158

N

0 10 20 40
HORIZONTAL SCALE IN FEET

CALCULATED
CHECKED

JOINT DETAILS
STA. 953+00 TO STA. 958+00

GEA/POR-422-18.31/0.00

CURVE DATA
P.I. STA. = 997+05.80
Δ = 19° 40′ 57″ (LT)
Dc = 0° 41′ 56″
R = 8,196.95′
T = 1,421.94′
L = 2,815.85′
E = 122.42′
e_{max} = 0.022

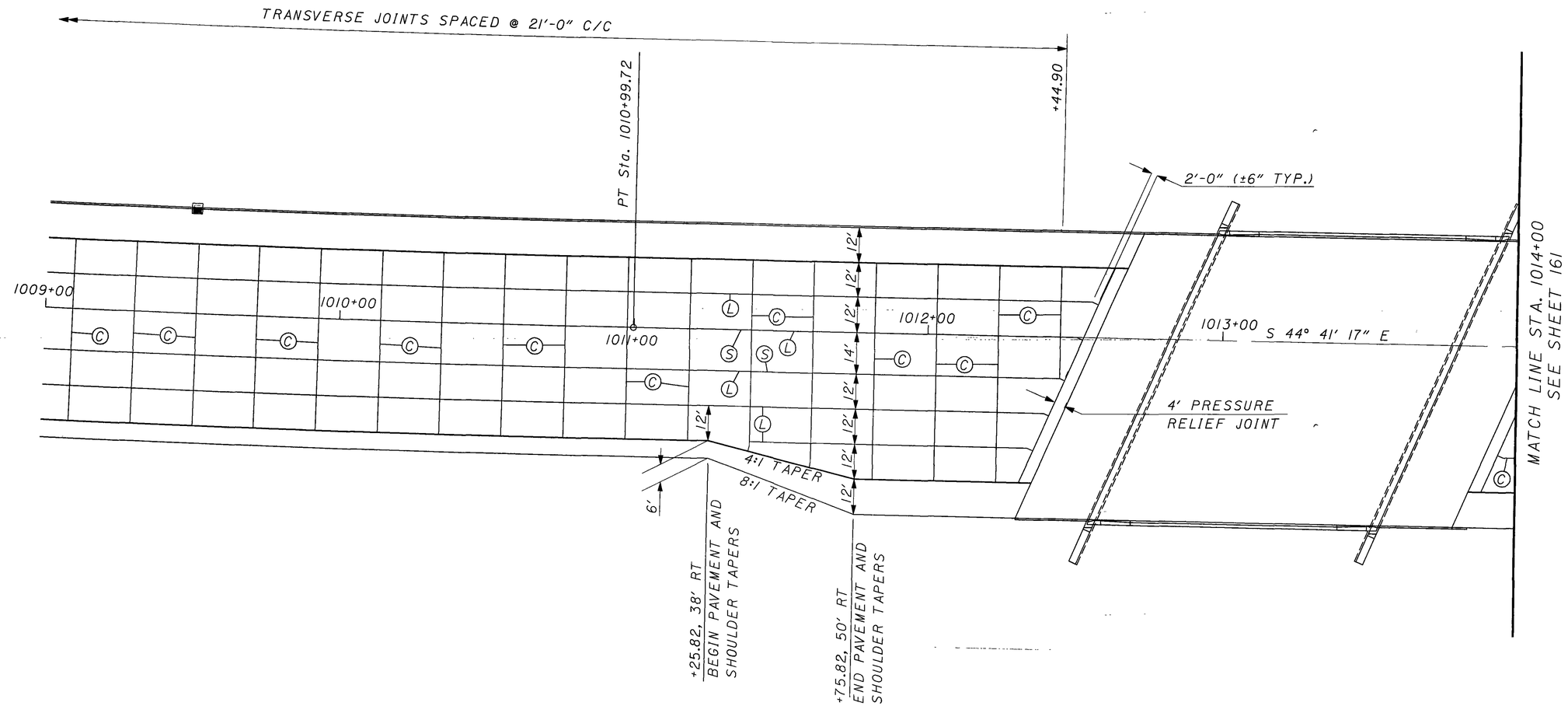

FOR JOINT LEGEND, SEE SHEET 158

HORIZONTAL SCALE IN FEET
0 10 20 40

CALCULATED
CHECKED

JOINT DETAILS
STA. 1009+00 TO STA. 1014+00

GEA/POR-422-18.31/0.00

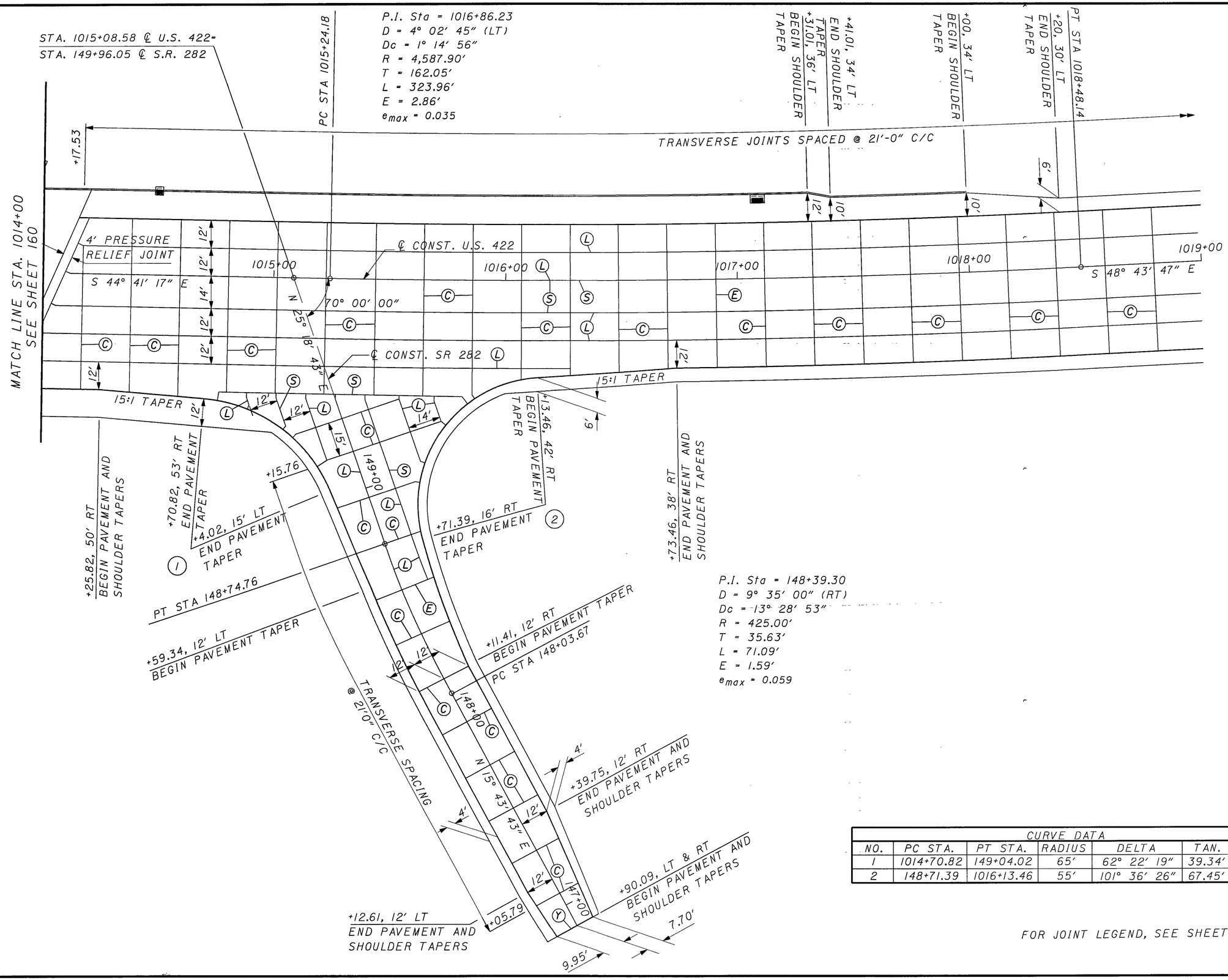

CURVE DATA						
NO.	PC STA.	PT STA.	RADIUS	DELTA	TAN.	LENGTH
1	1014+70.82	149+04.02	65′	62° 22′ 19″	39.34′	70.76′
2	148+71.39	1016+13.46	55′	101° 36′ 26″	67.45′	97.54′

FOR JOINT LEGEND, SEE SHEET 158

HORIZONTAL SCALE IN FEET 0 10 20 40

JOINT DETAILS - SR 282
STA. 1014+00 TO STA. 1019+00

GEA/POR-422-18.31/0.00

NOTE: JOINT DETAILS ARE SUBJECT TO FIELD VERIFICATION BY THE ENGINEER.

CURVE DATA						
NO.	PC STA.	PT STA.	RADIUS	DELTA	TAN.	LENGTH
1	1042+76.53	1101+35.30	65'	60° 33' 46"	37.95'	68.71'
2	1101+79.97	1044+24.29	55'	101° 38' 59"	67.50'	97.58'

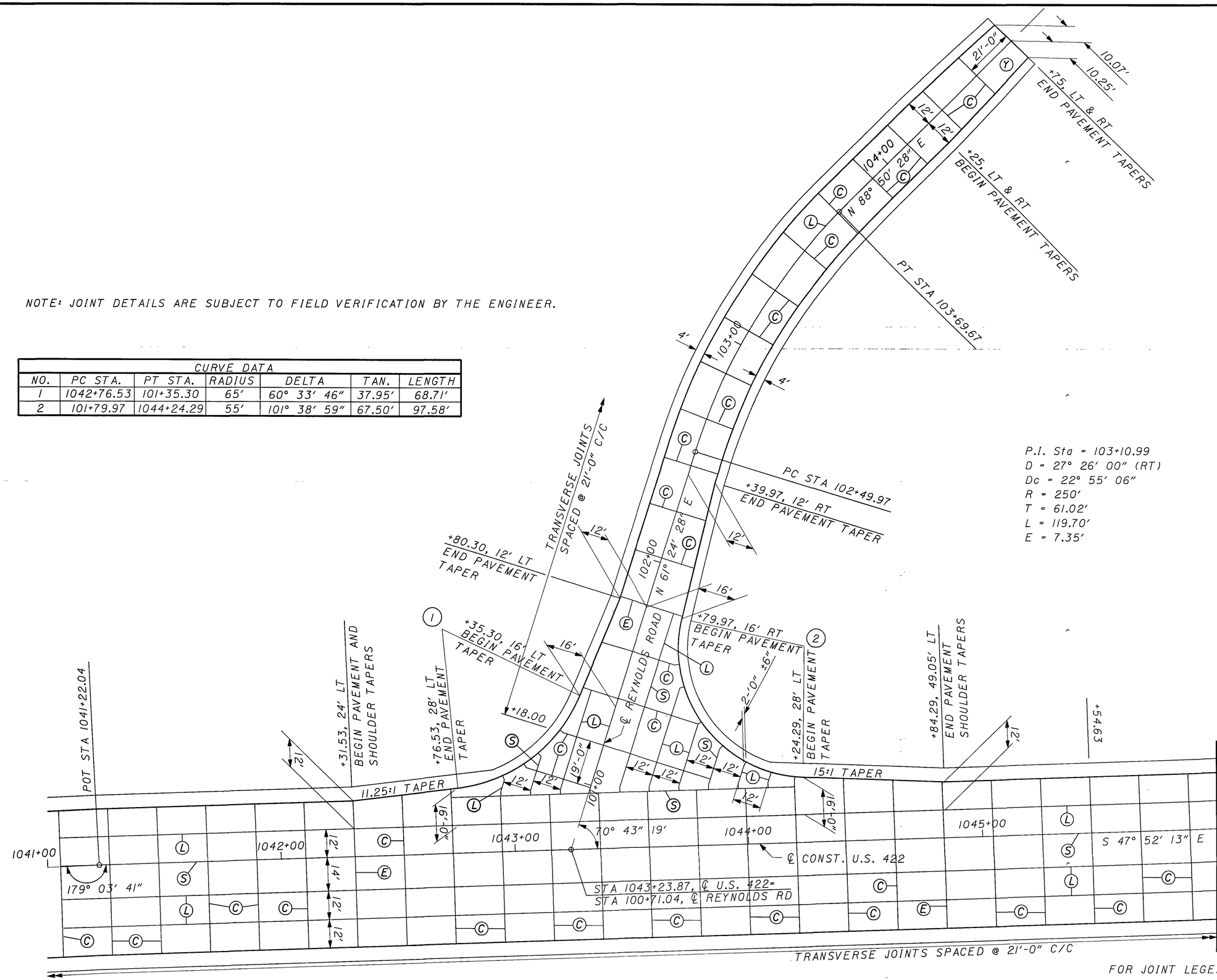

FOR JOINT LEGEND, SEE SHEET 158

HORIZONTAL SCALE IN FEET 0 10 20 40

CALCULATED

CHECKED

JOINT DETAIL - REYNOLDS ROAD STA. 100+71.04 TO STA. 104+75

GEA/POR-422-18.31/0.00

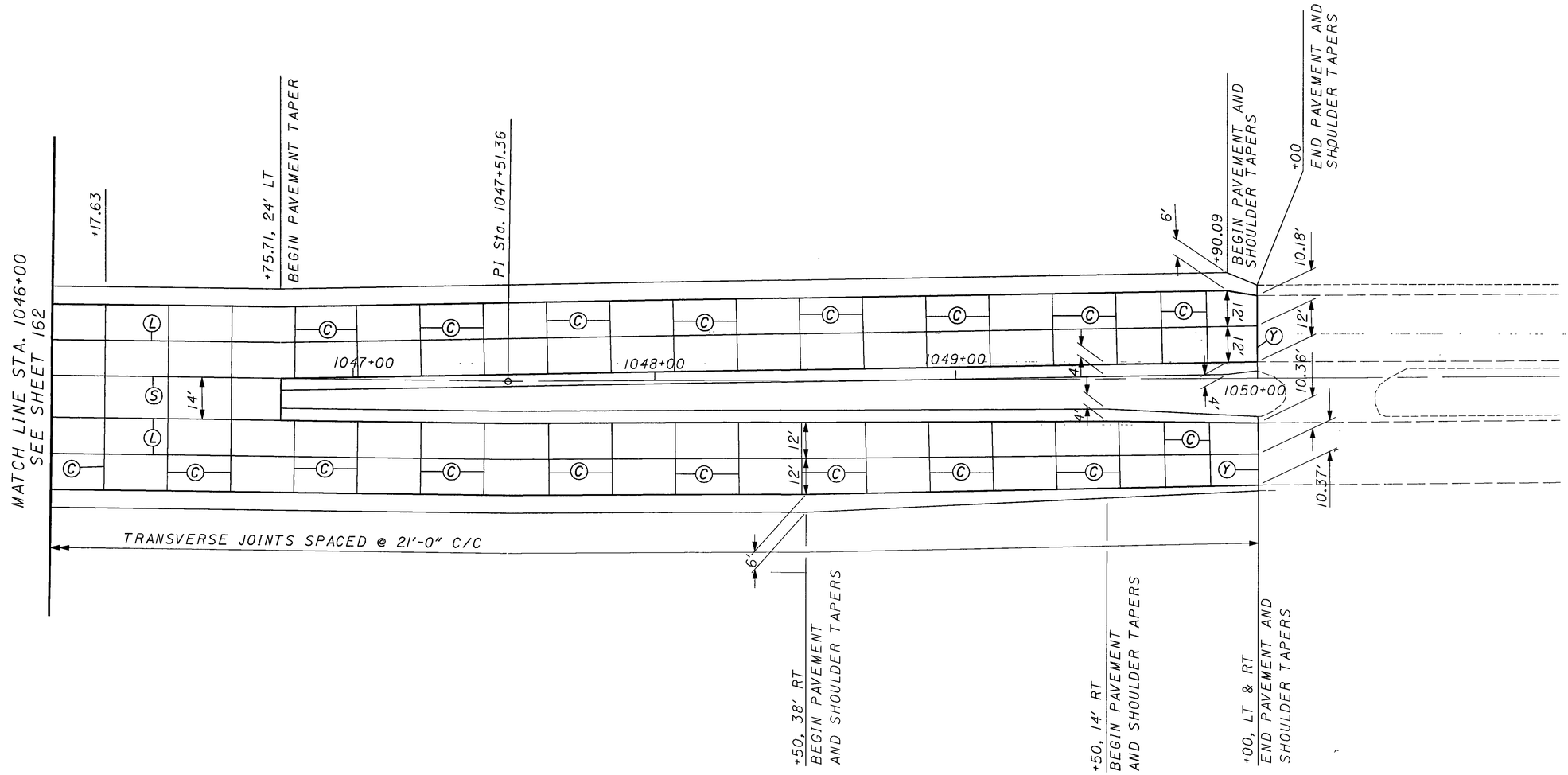

FOR JOINT LEGEND, SEE SHEET 158

HORIZONTAL SCALE IN FEET
0 10 20 40

CALCULATED
CHECKED

JOINT DETAILS
STA. 1046+00 TO STA. 1051+00

GEA/POR-422-18.31/0.00

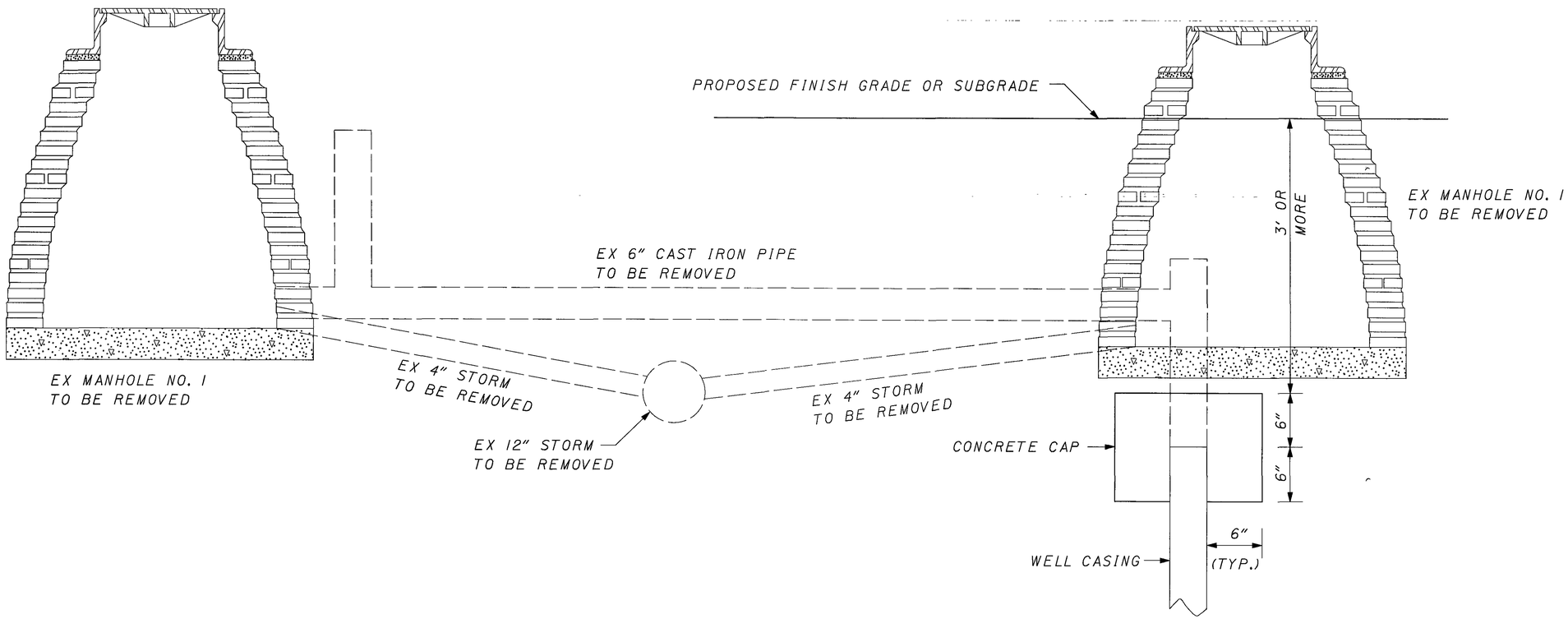

STA 1030+42.91 TO STA 1030+60.74

NOTES: 1. THE CONTRACTOR MAY WELD A CAP ON THE CASING OR OTHER APPROVED METHOD IN LIEU OF USING THE CONCRETE CAP AS SHOWN.
2. FOR ADDITIONAL NOTES AND DETAILS, SEE STD. CONST. DWG. RM-7.1.

WATER WELL CAP DETAIL

N.T.S.

CALCULATED

CHECKED

MISCELLANEOUS DETAILS

GEA/POR-422-18.31/0.00

164
332

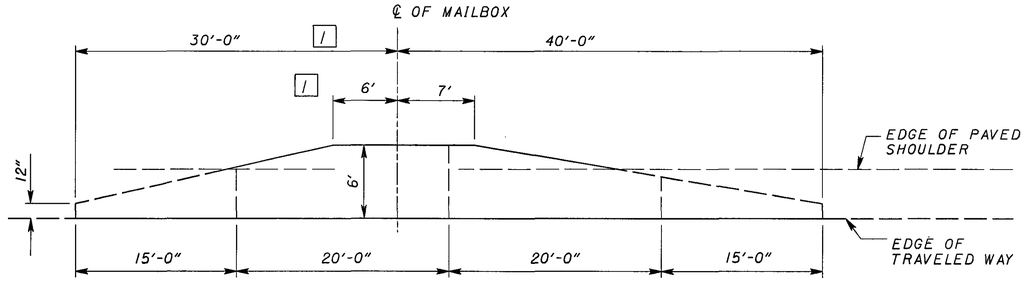

TYPICAL MAIL BOX APPROACH

1 ADD 3' FOR EACH ADDITIONAL MAILBOX

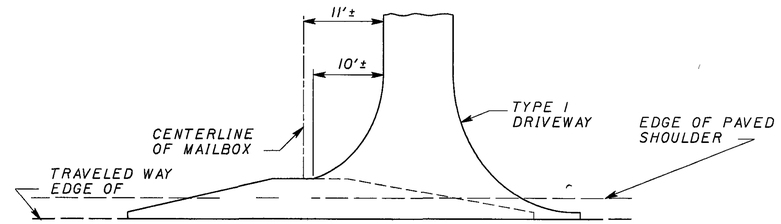

COMBINED DRIVEWAY & MAIL BOX APPROACH*

* COMBINED DRIVEWAY AND MAILBOX APPROACHES ARE LOCATED ON REYNOLDS ROAD AND SR 282.

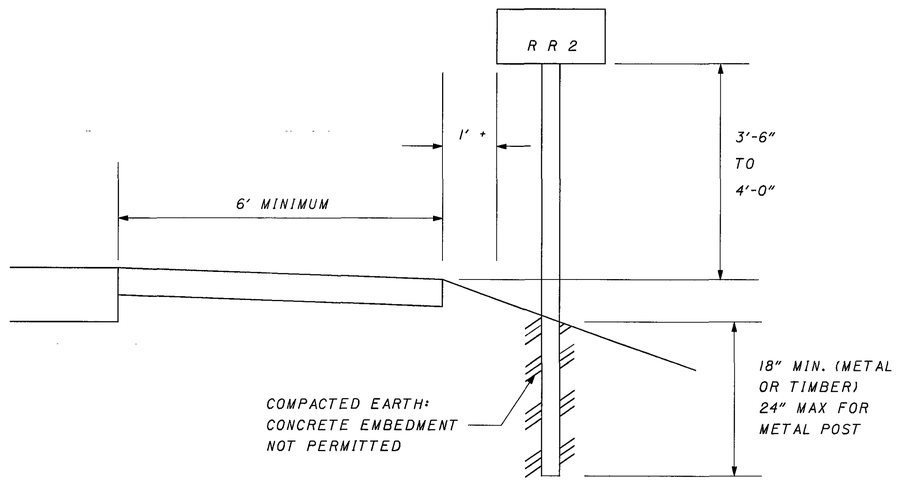

MAILBOX INSTALLATION DETAILS NO CURB

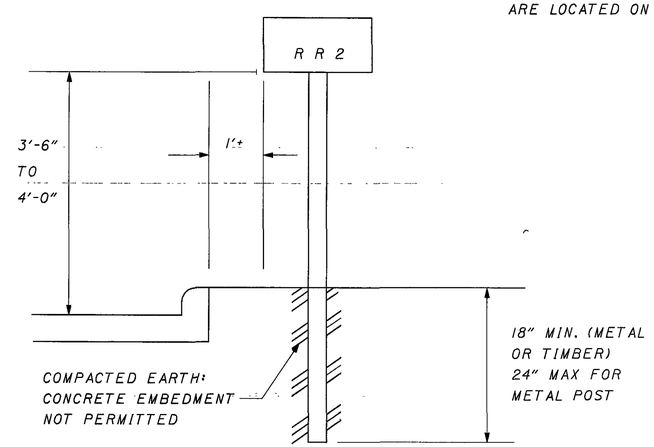

MAILBOX INSTALLATION DETAILS WITH CURB

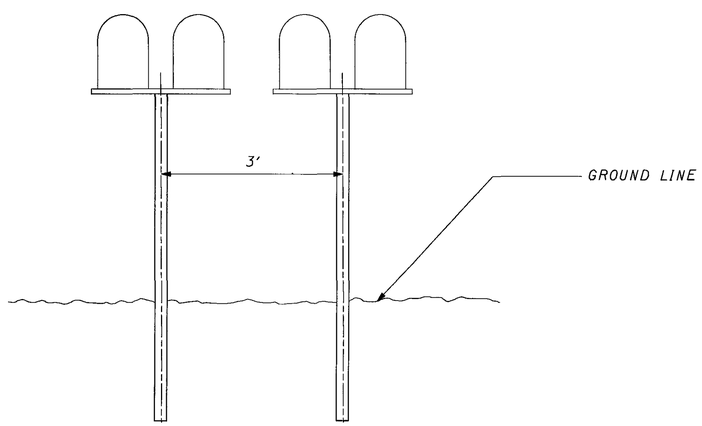

GOUP MAILBOX INSTALLATION

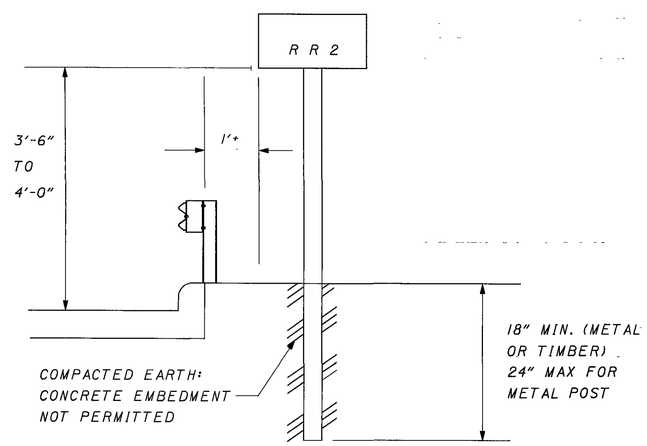

MAILBOX INSTALLATION DETAILS WITH CURB AND GUARDRAIL

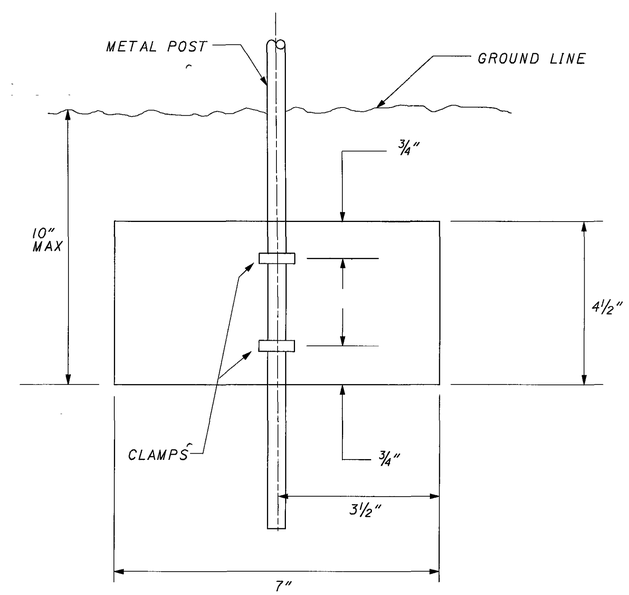

ANTI-TWIST PLATE

CALCULATED

CHECKED

MAILBOX DETAILS

GEA/POR-422-18.31/0.00

CURVE DATA

P.I. STA. = 943+70.00
Δ = 66° 11′ 30″
Dc = 2° 30′ 56″
R = 2277.63′
T = 1484.53′
L = 2631.26′
E = 441.09′
e_{max} = 0.062

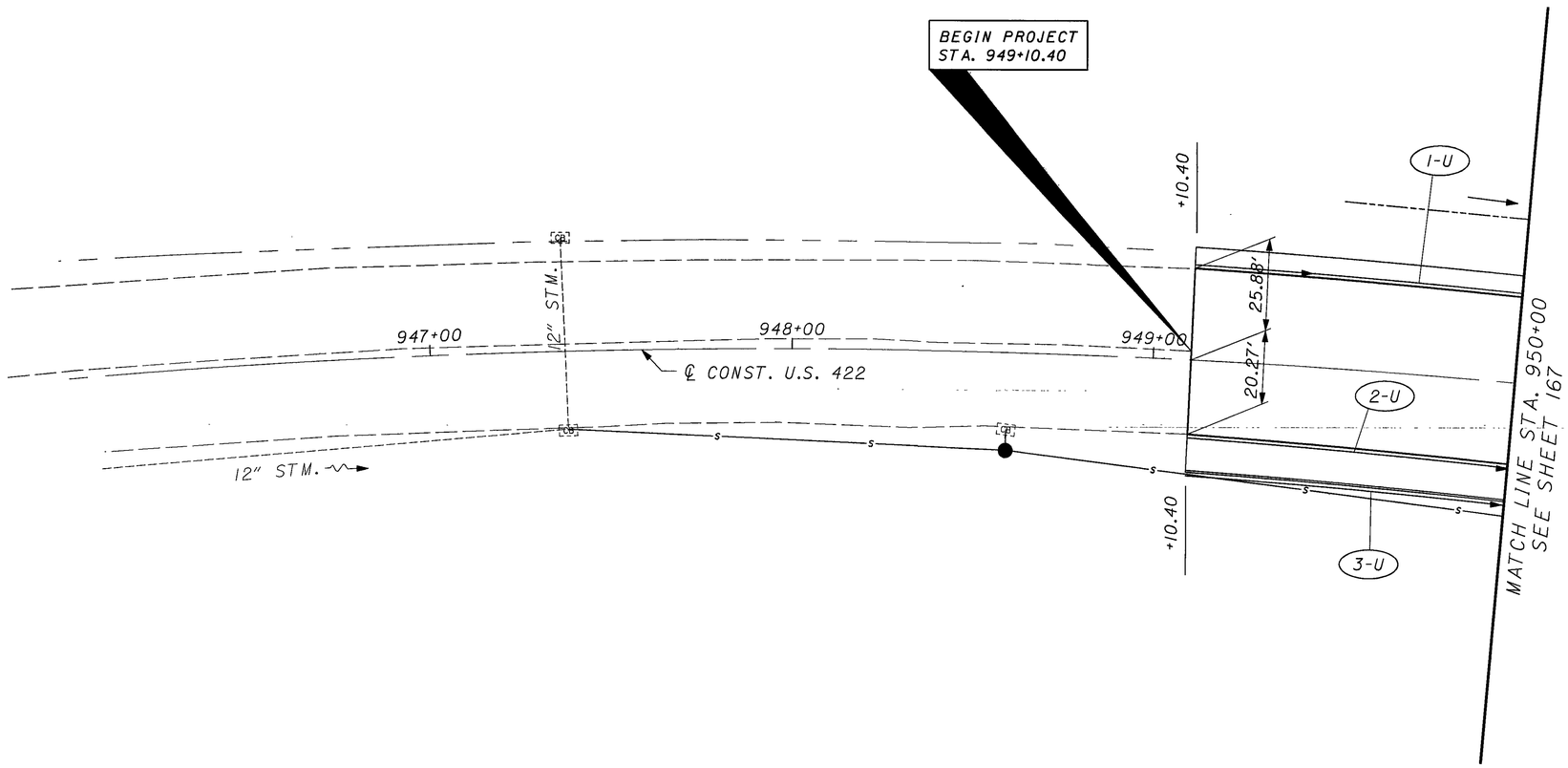

CROSS REFERENCES

SHEET NO.	DESCRIPTION
52	UNDERDRAIN SUBSUMMARY
60	PLAN AND PROFILE

HORIZONTAL SCALE IN FEET
0 10 20 40

CALCULATED
CHECKED

UNDERDRAIN PLAN U.S. 422
STA. 946+00 TO STA. 950+00

GEA/POR-422-18.31/0.00

CURVE DATA

P.I. STA. = 943+70.00
Δ = 66° 11′ 30″
Dc = 2° 30′ 56″
R = 2277.63′
T = 1484.53′
L = 2631.26′
E = 441.09′
e_{max} = 0.062

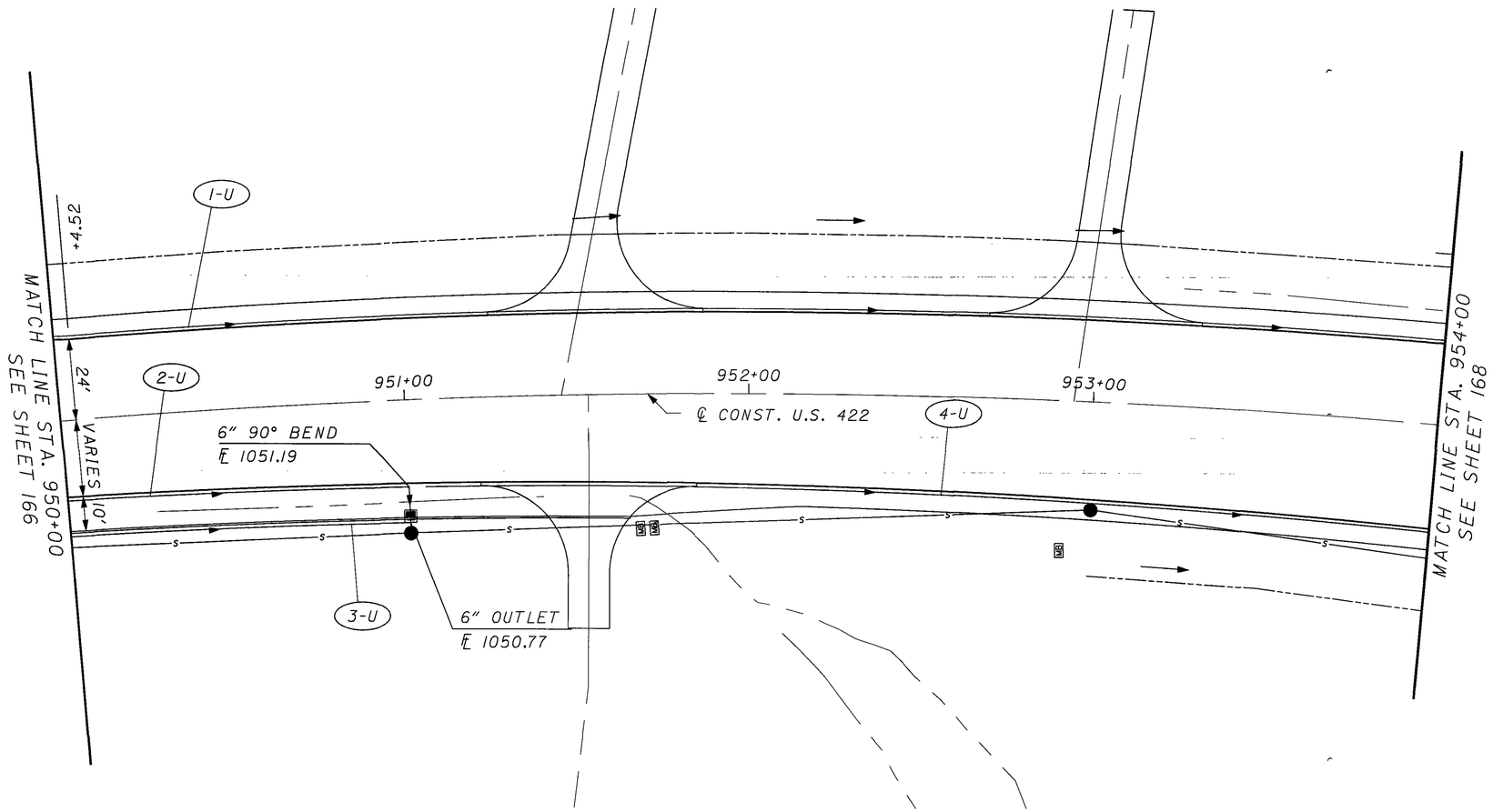

CROSS REFERENCES

SHEET NO.	DESCRIPTION
52	UNDERDRAIN SUBSUMMARY
61	PLAN AND PROFILE

HORIZONTAL SCALE IN FEET
0 10 20 40

CALCULATED
CHECKED

UNDERDRAIN PLAN U.S. 422
STA. 950+00 STA. 954+00

GEA/POR-422-18.31/0.00

CURVE DATA

P.I. STA. = 943+70.00
Δ = 66° 11′ 30″
Dc = 2° 30′ 56″
R = 2277.63′
T = 1484.53′
L = 2631.26′
E = 441.09′
e_{max} = 0.062

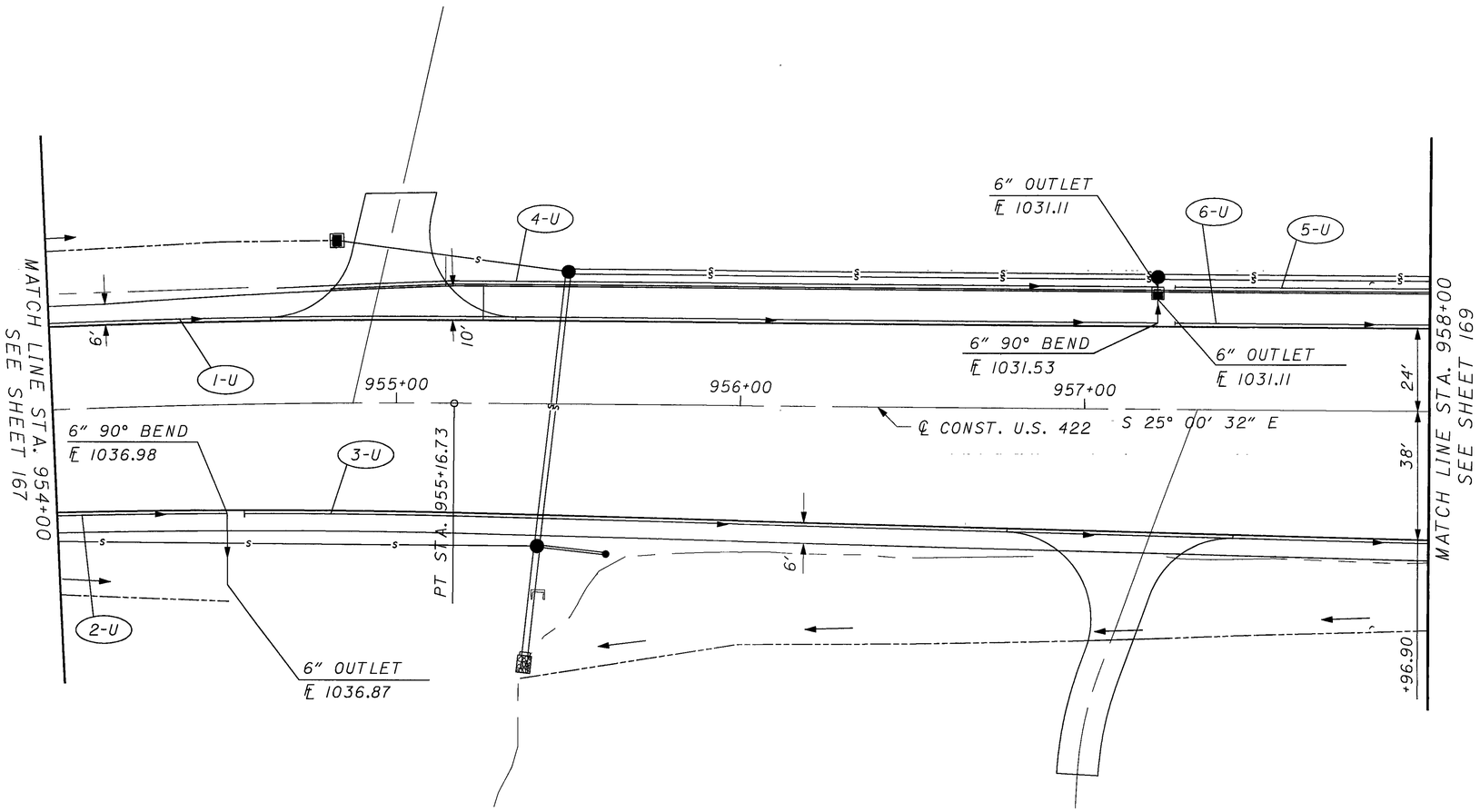

CROSS REFERENCES	
SHEET NO.	DESCRIPTION
52	UNDERDRAIN SUBSUMMARY
62	PLAN AND PROFILE

HORIZONTAL SCALE IN FEET
0 10 20 40

CALCULATED
CHECKED

UNDERDRAIN PLAN U.S. 422
STA. 954+00 TO STA. 958+00

GEA/POR-422-18.31/0.00

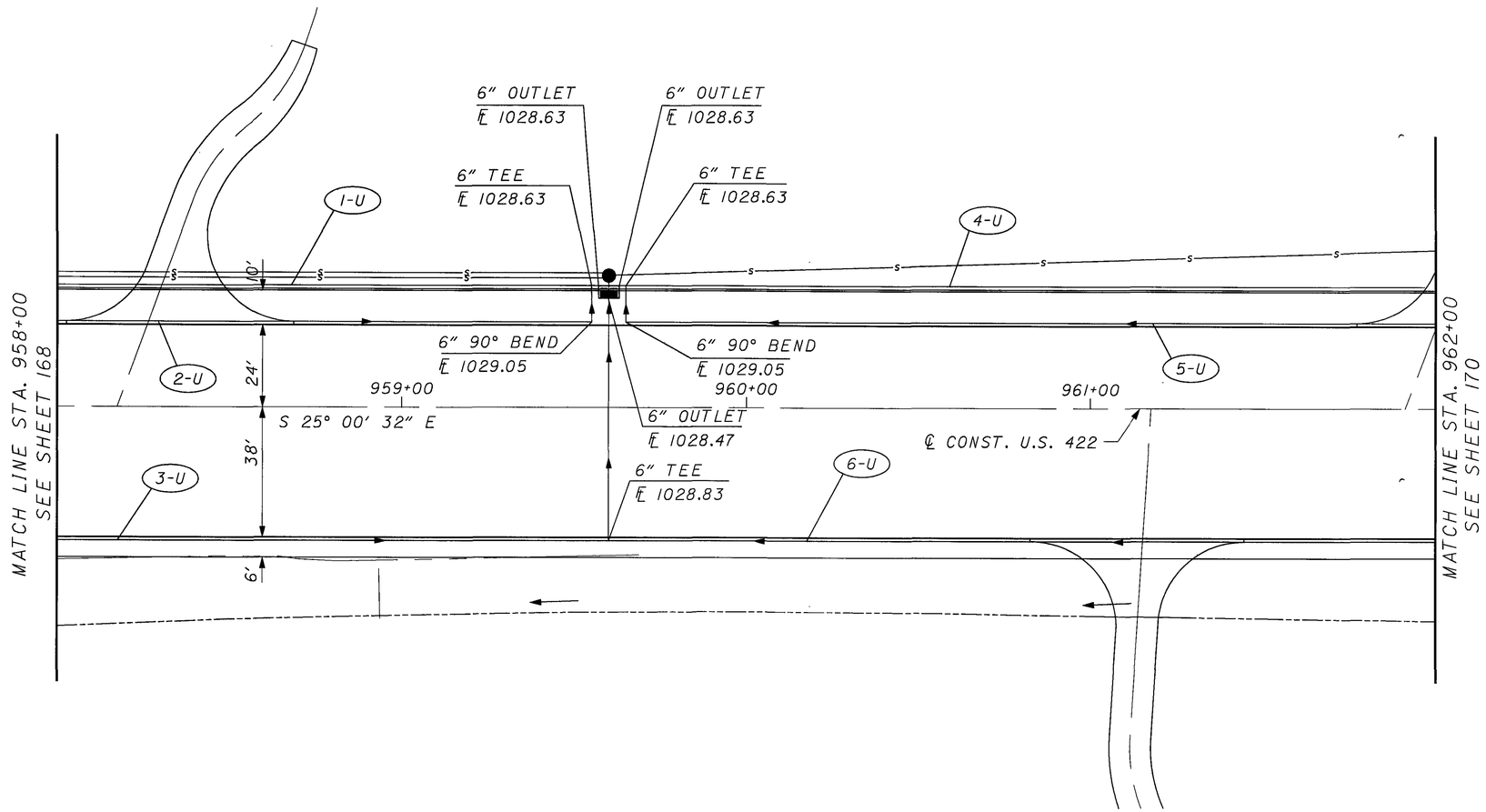

CROSS REFERENCES

SHEET NO.	DESCRIPTION
52	UNDERDRAIN SUBSUMMARY
63	PLAN AND PROFILE

HORIZONTAL SCALE IN FEET
0 10 20 40

CALCULATED
CHECKED

UNDERDRAIN PLAN U.S. 422
STA. 958+00 TO STA. 962+00

GEA/POR-422-18.31/0.00

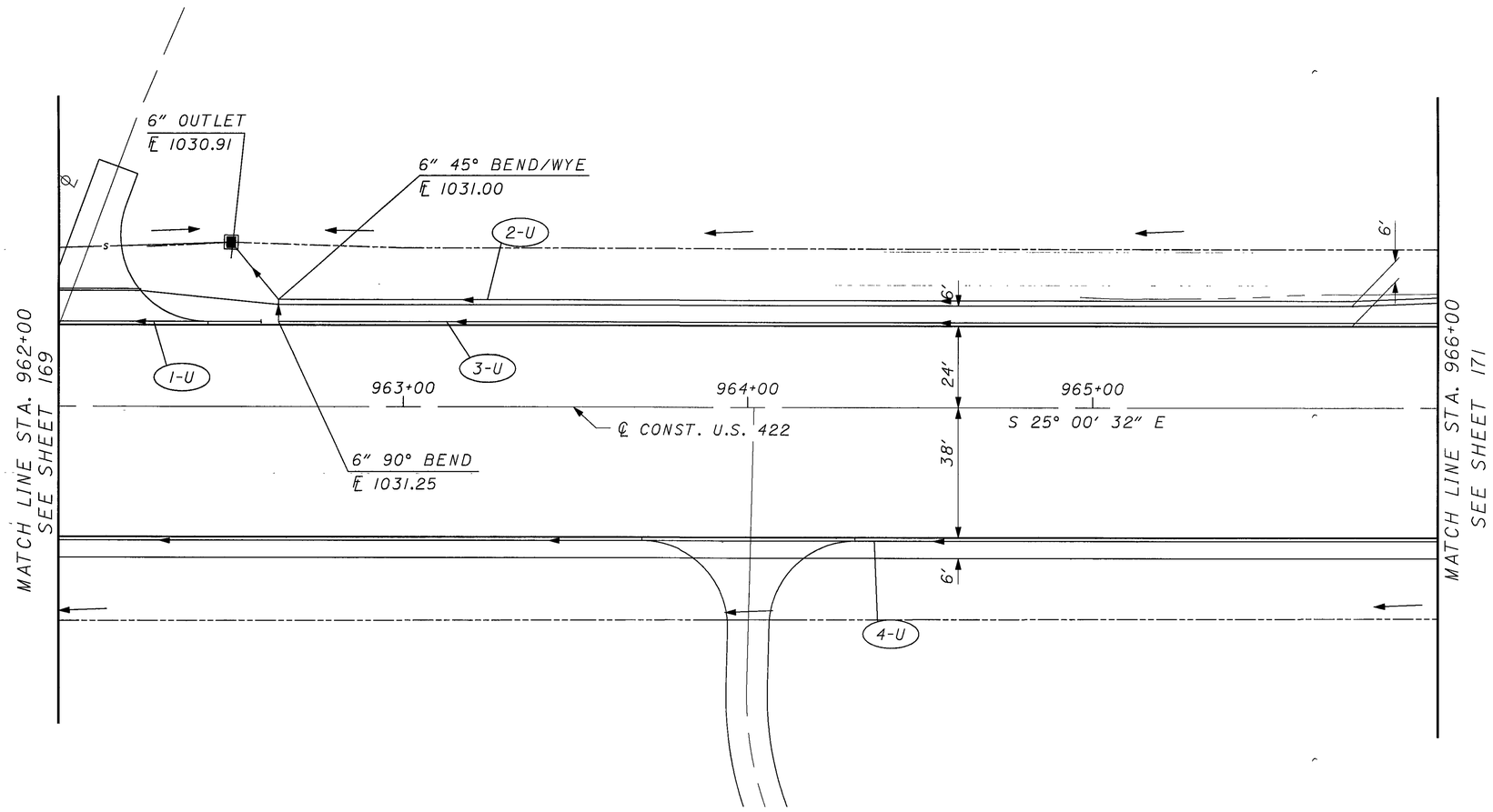

CROSS REFERENCES

SHEET NO.	DESCRIPTION
52	UNDERDRAIN SUBSUMMARY
64	PLAN AND PROFILE

HORIZONTAL SCALE IN FEET
0 10 20 40

CALCULATED
CHECKED

UNDERDRAIN PLAN U.S. 422
STA. 962+00 TO STA. 966+00

GEA/POR-422-18.31/0.00

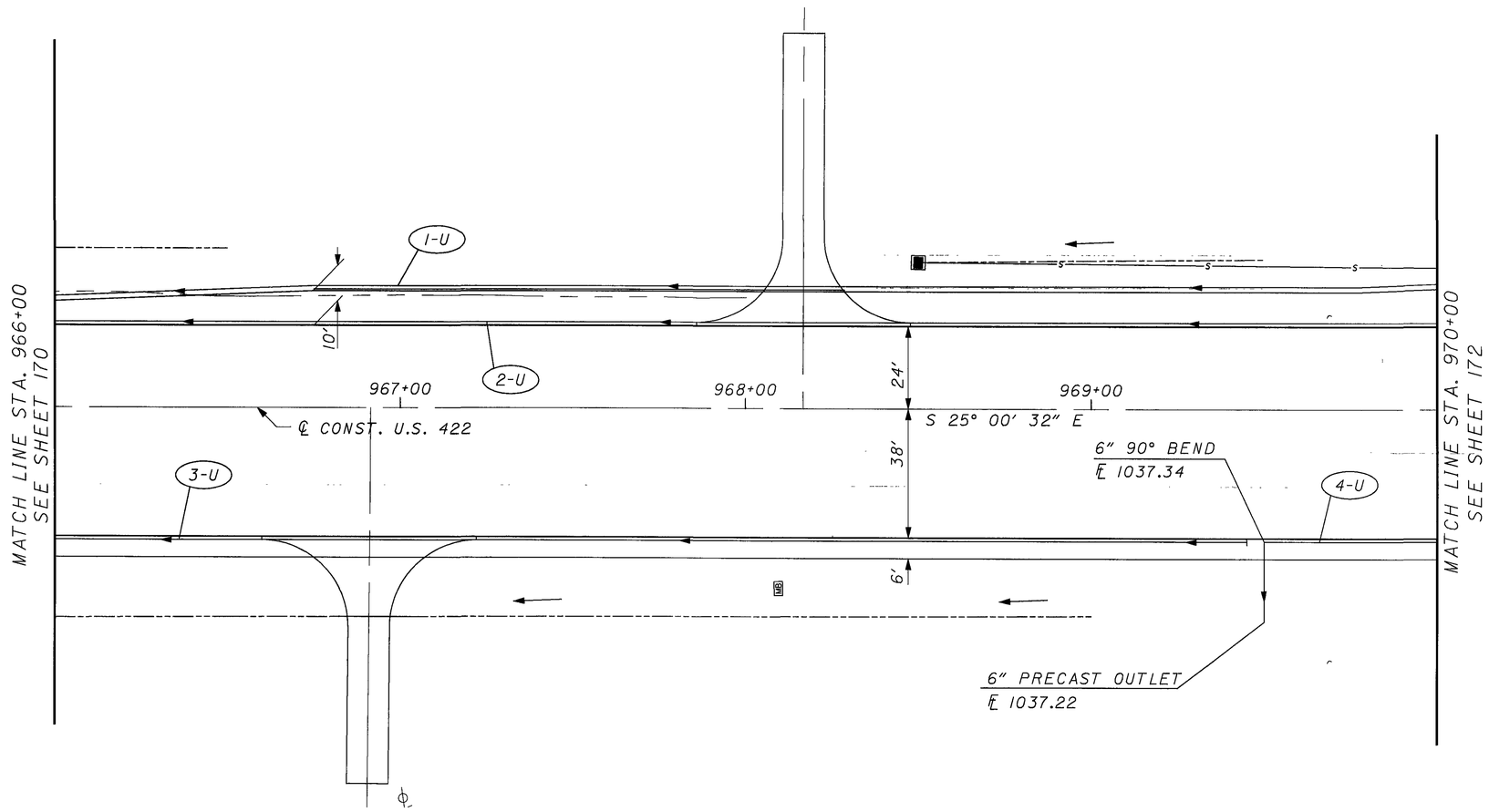

CROSS REFERENCES

SHEET NO.	DESCRIPTION
52	UNDERDRAIN SUBSUMMARY
65	PLAN AND PROFILE

N

0 10 20 40
HORIZONTAL SCALE IN FEET

CALCULATED
CHECKED

UNDERDRAIN PLAN U.S. 422
STA.966+00 TO STA.970+00

GEA/POR-422-18.31/0.00

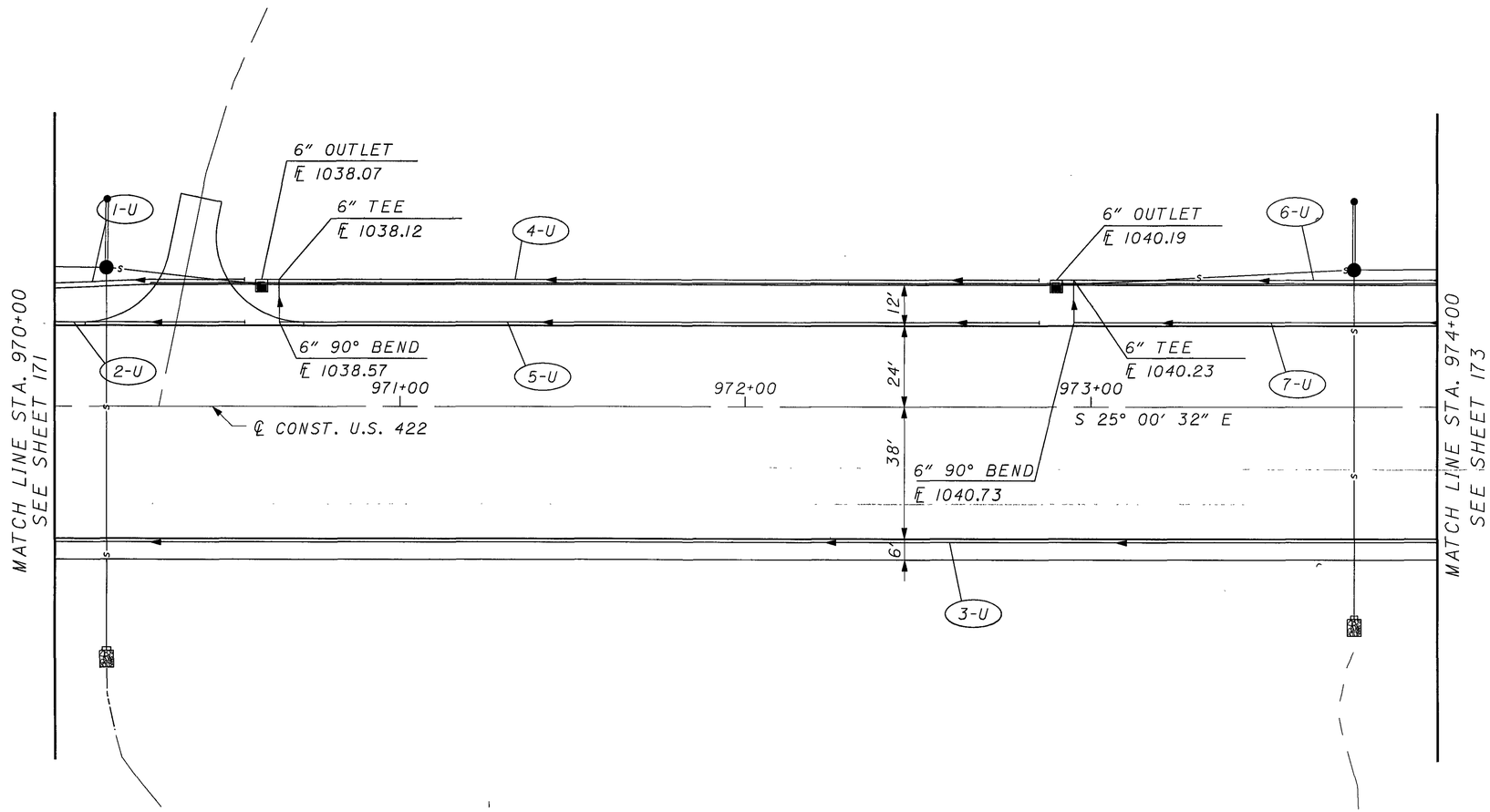

CROSS REFERENCES	
SHEET NO.	DESCRIPTION
52	UNDERDRAIN SUBSUMMARY
66	PLAN AND PROFILE

HORIZONTAL SCALE IN FEET
0 10 20 40

CALCULATED
CHECKED

UNDERDRAIN PLAN U.S. 422
STA. 970+00 TO STA. 974+00

GEA/POR-422-18.31/0.00

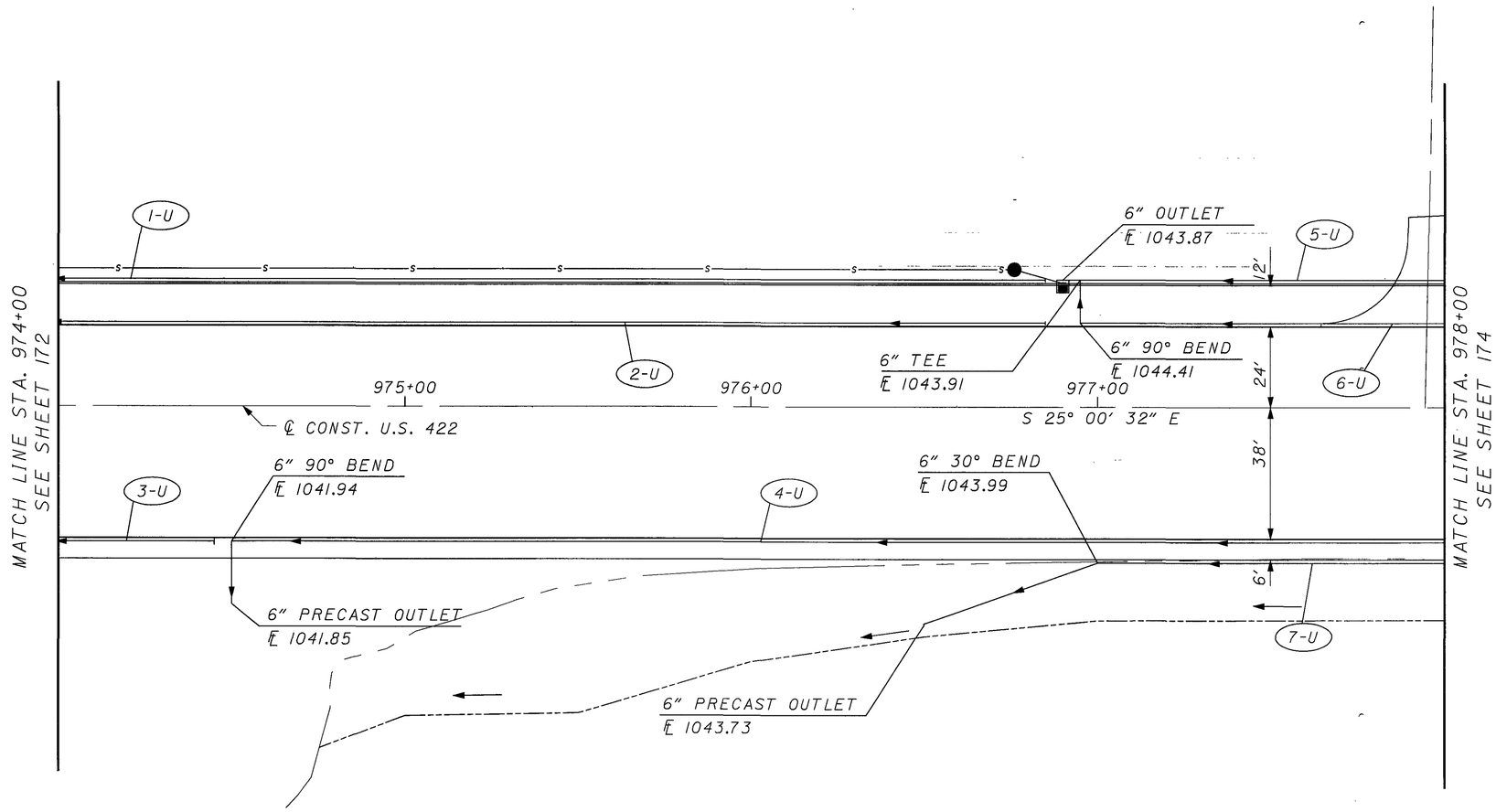

CROSS REFERENCES

SHEET NO.	DESCRIPTION
52	UNDERDRAIN SUBSUMMARY
67	PLAN AND PROFILE

HORIZONTAL SCALE IN FEET
0 10 20 40

CALCULATED
CHECKED

UNDERDRAIN PLAN U.S. 422
STA. 974+00 TO STA. 978+00

GEA/POR-422-18.31/0.00

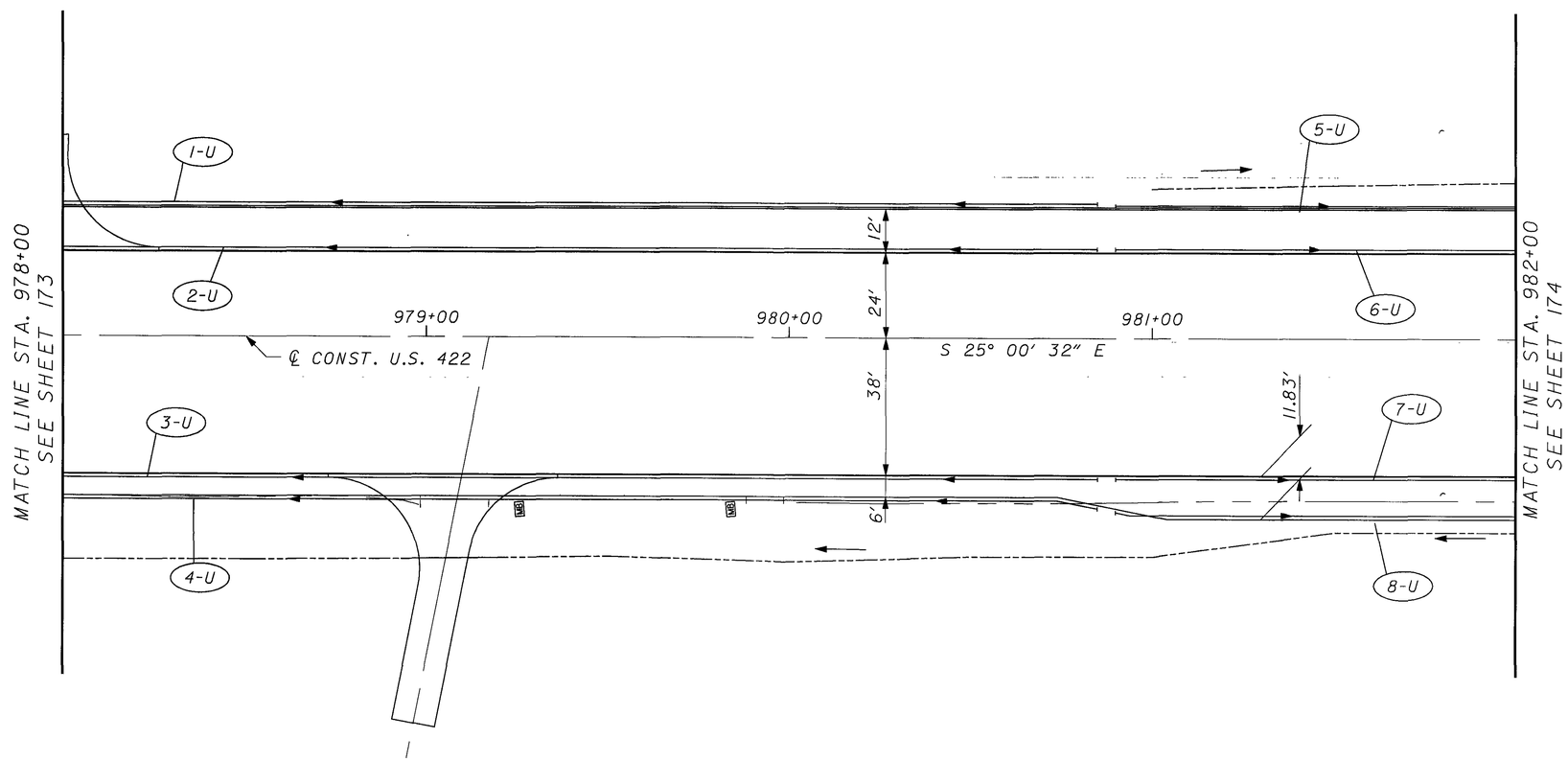

CROSS REFERENCES	
SHEET NO.	DESCRIPTION
52	UNDERDRAIN SUBSUMMARY
68	PLAN AND PROFILE

HORIZONTAL SCALE IN FEET
0 10 20 40

CALCULATED
CHECKED

UNDERDRAIN U.S. 422
STA. 978+00 TO STA. 982+00

GEA/POR-422-18.31/0.00

CURVE DATA

P.I. STA. = 997+05.80
Δ = 19° 40′ 57″ (LT)
Dc = 0° 41′ 56″
R = 8,196.95′
T = 1,421.94′
L = 2,815.85′
E = 122.42′
e_{max} = 0.022

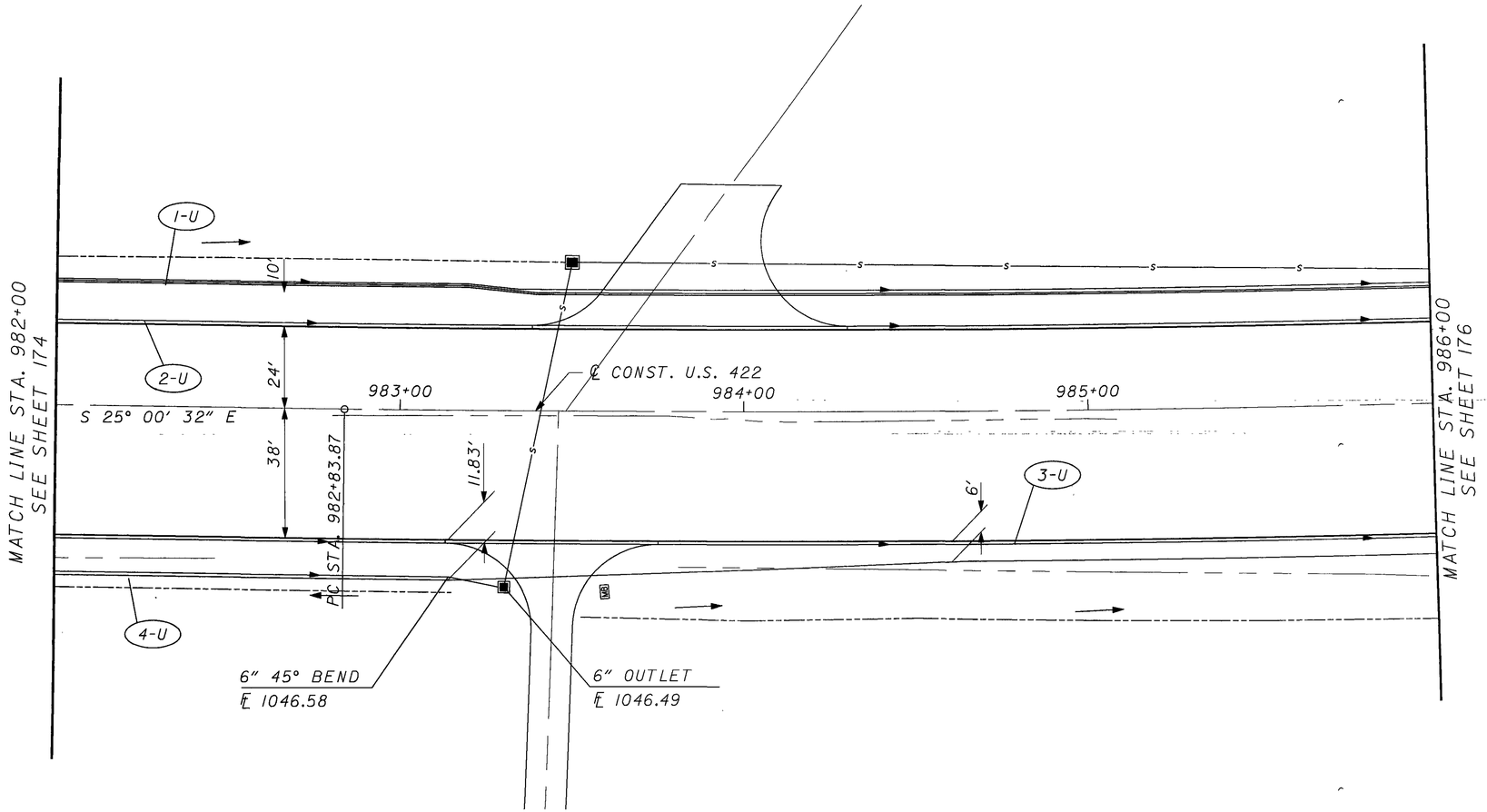

CROSS REFERENCES	
SHEET NO.	DESCRIPTION
53	UNDERDRAIN SUBSUMMARY
69	PLAN AND PROFILE

0 10 20 40
HORIZONTAL SCALE IN FEET

CALCULATED
CHECKED

UNDERDRAIN PLAN U.S. 422
STA. 982+00 TO STA. 986+00

GEA/POR-422-18.31/0.00

CURVE DATA

P.I. STA. = 997+05.80
Δ = 19° 40′ 57″ (LT)
Dc = 0° 41′ 56″
R = 8,196.95′
T = 1,421.94′
L = 2,815.85′
E = 122.42′
e_{max} = 0.022

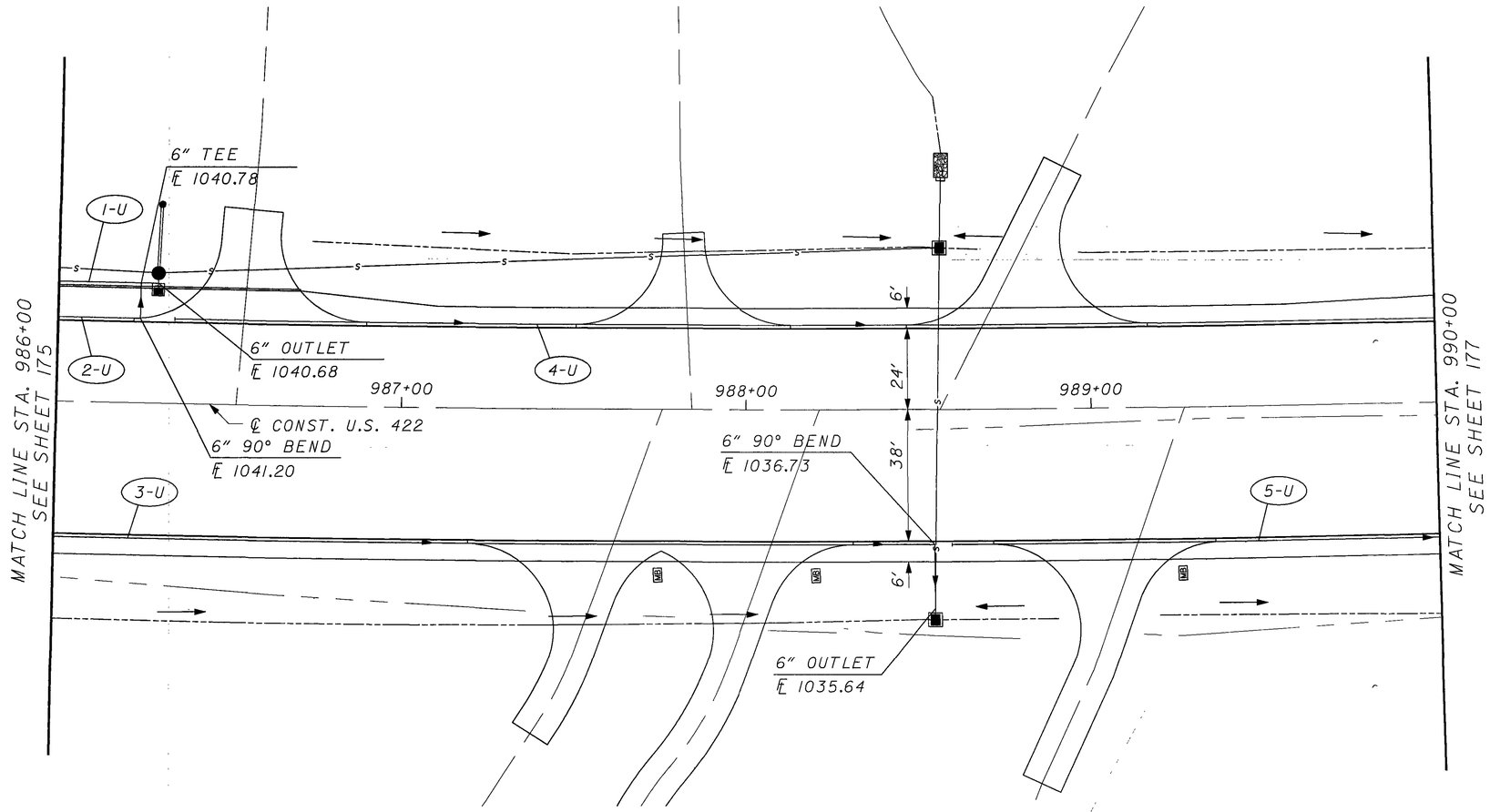

CROSS REFERENCES	
SHEET NO.	DESCRIPTION
53	UNDERDRAIN SUBSUMMARY
70	PLAN AND PROFILE

0 10 20 40
HORIZONTAL SCALE IN FEET

CALCULATED
CHECKED

UNDERDRAIN PLAN U.S. 422
STA. 986+00 TO STA. 990+00

GEA/POR-422-18.31/0.00

CURVE DATA

P.I. STA. = 997+05.80
Δ = 19° 40′ 57″ (LT)
Dc = 0° 41′ 56″
R = 8,196.95′
T = 1,421.94′
L = 2,815.85′
E = 122.42′
e_{max} = 0.022

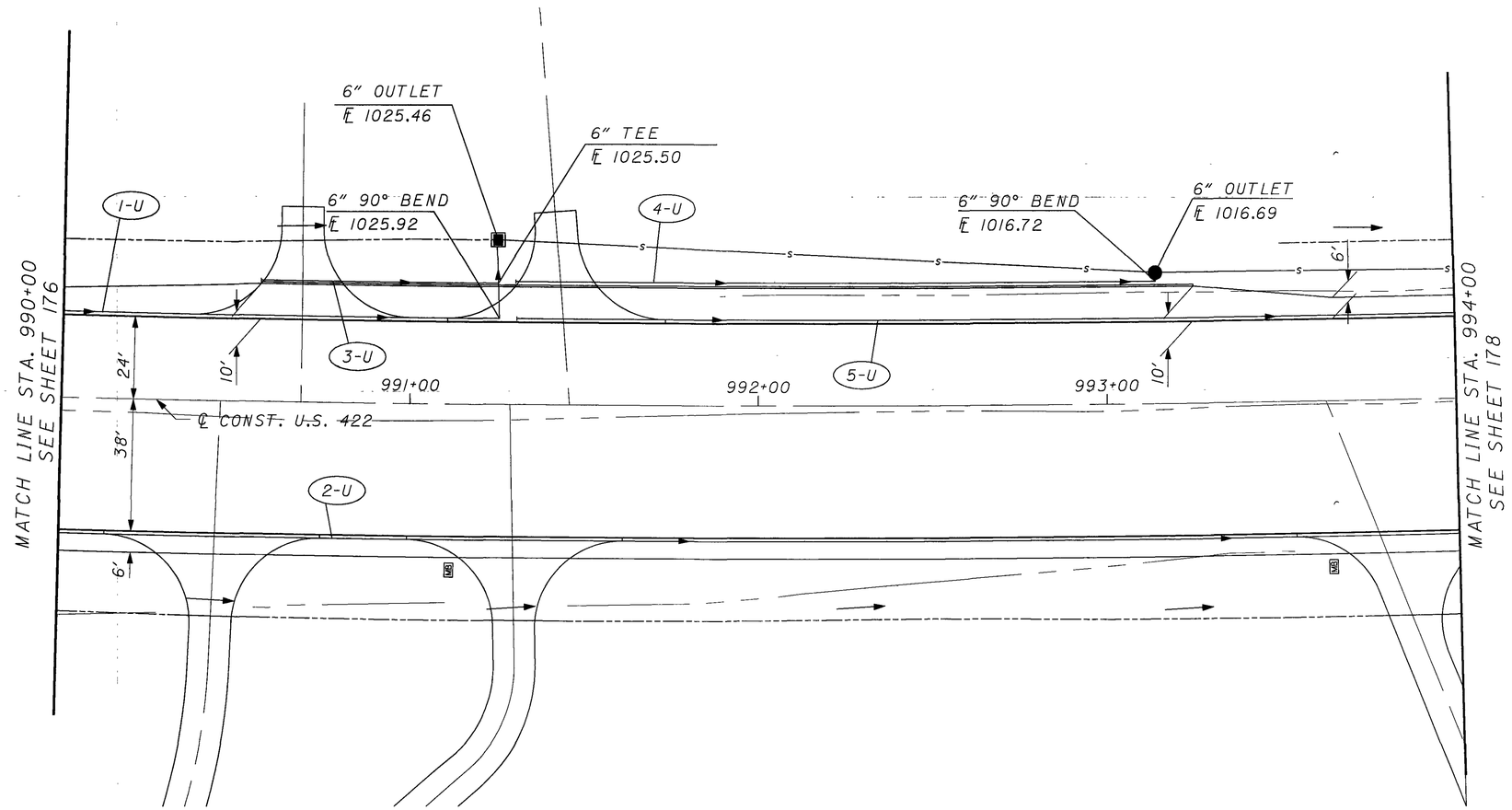

CROSS REFERENCES	
SHEET NO.	DESCRIPTION
53	UNDERDRAIN SUBSUMMARY
71	PLAN AND PROFILE

HORIZONTAL SCALE IN FEET
0 10 20 40

CALCULATED
CHECKED

UNDERDRAIN PLAN U.S. 422
STA. 990+00 TO STA. 994+00

GEA/POR-422-18.31/0.00

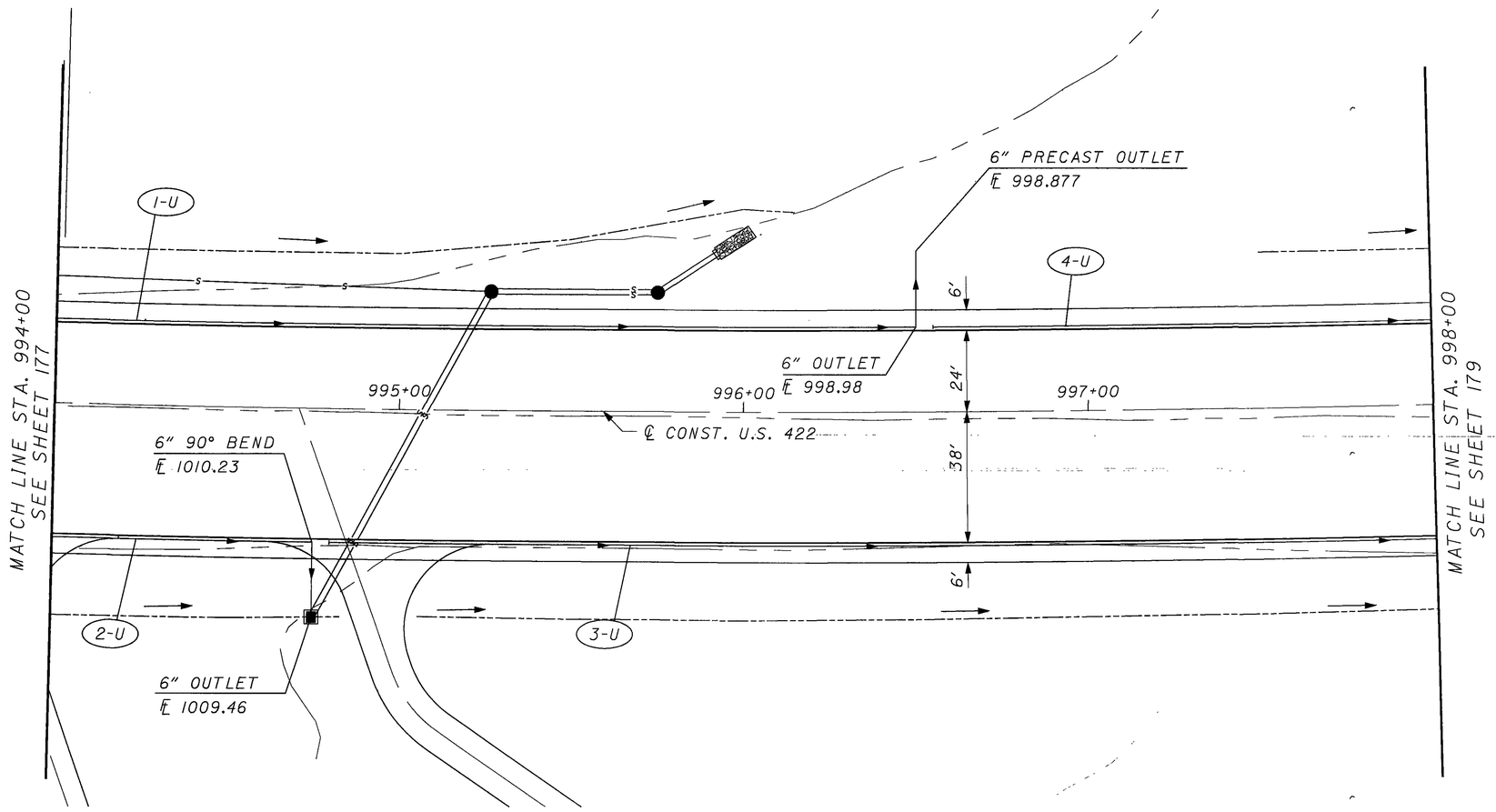

CURVE DATA

P.I. STA. = 997+05.80
Δ = 19° 40′ 57″ (LT)
Dc = 0° 41′ 56″
R = 8,196.95′
T = 1,421.94′
L = 2,815.85′
E = 122.42′
e_{max} = 0.022

CROSS REFERENCES

SHEET NO.	DESCRIPTION
53	UNDERDRAIN SUBSUMMARY
72	PLAN AND PROFILE

0 10 20 40
HORIZONTAL SCALE IN FEET

CALCULATED
CHECKED

UNDERDRAIN PLAN U.S. 422
STA. 994+00 TO STA. 998+00

GEA/POR-422-18.31/0.00

CURVE DATA

P.I. STA. = 997+05.80
Δ = 19° 40′ 57″ (LT)
Dc = 0° 41′ 56″
R = 8,196.95′
T = 1,421.94′
L = 2,815.85′
E = 122.42′
e_{max} = 0.022

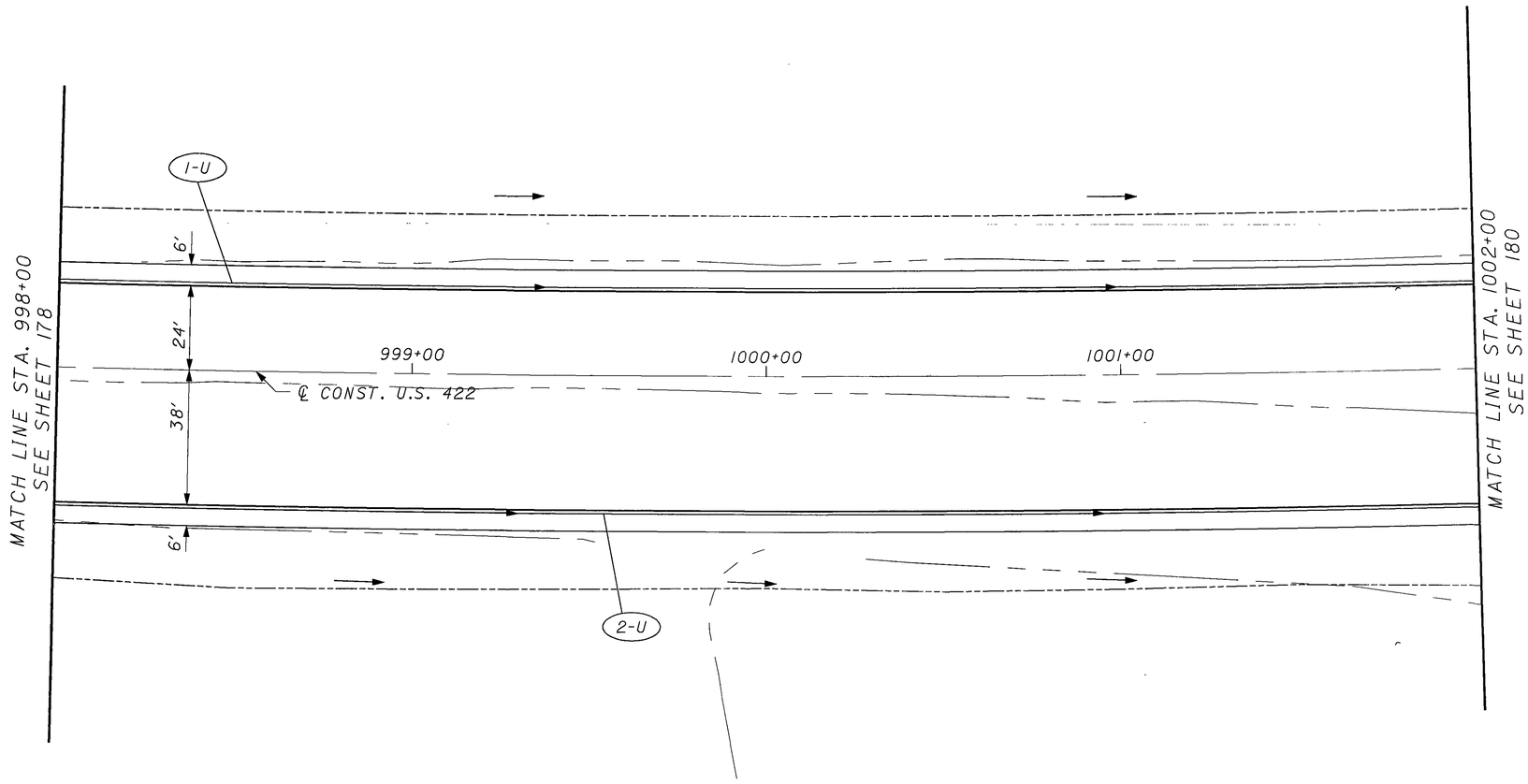

CROSS REFERENCES	
SHEET NO.	DESCRIPTION
53	UNDERDRAIN SUBSUMMARY
73	PLAN AND PROFILE

0 10 20 40
HORIZONTAL SCALE IN FEET

CALCULATED
CHECKED

UNDERDRAIN PLAN U.S. 422
STA. 998+00 TO STA. 1002+00

GEA/POR-422-18.31/0.00

CURVE DATA

P.I. STA. = 997+05.80
Δ = 19° 40′ 57″ (LT)
Dc = 0° 41′ 56″
R = 8,196.95′
T = 1,421.94′
L = 2,815.85′
E = 122.42′
e_{max} = 0.022

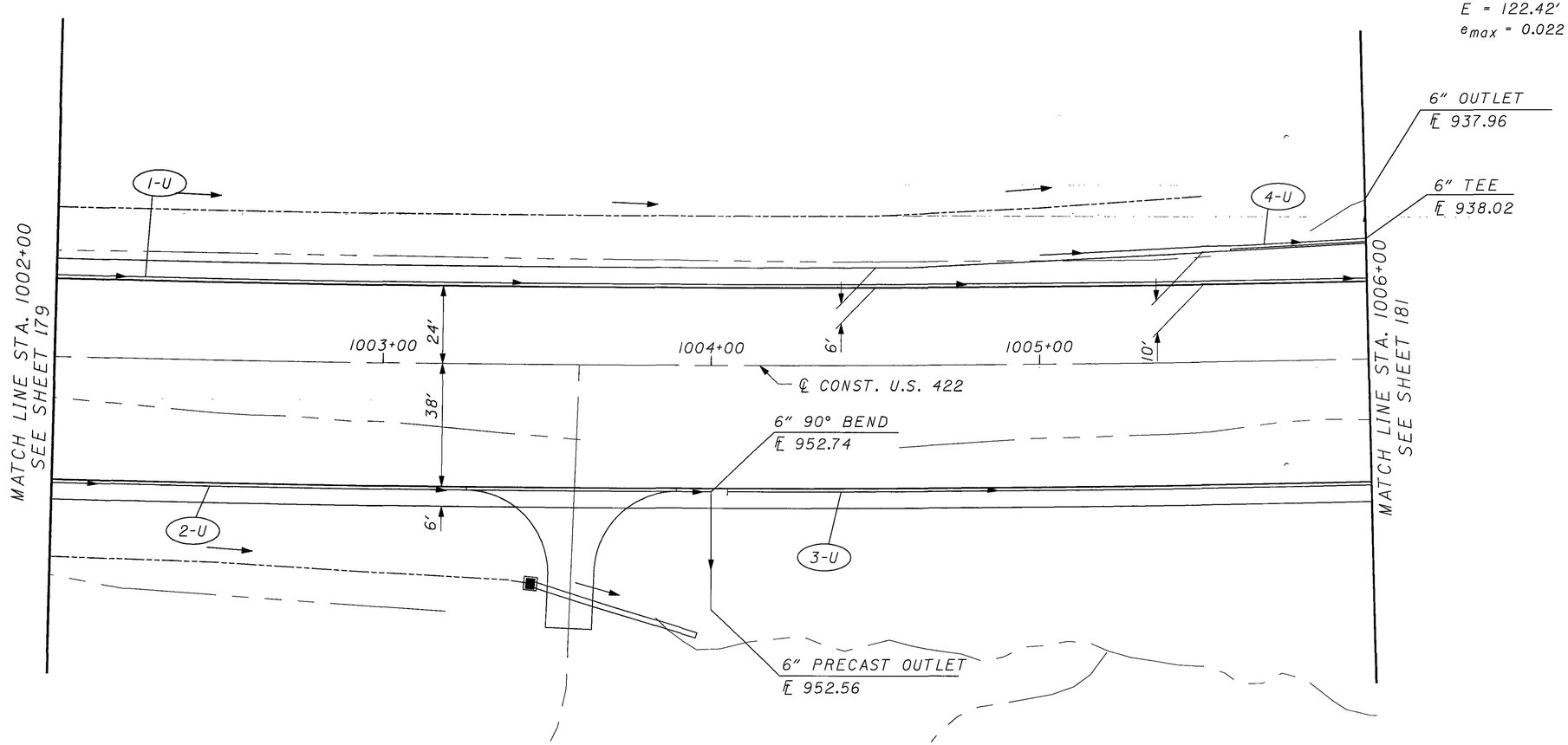

CROSS REFERENCES	
SHEET NO.	DESCRIPTION
53	UNDERDRAIN SUBSUMMARY
74	PLAN AND PROFILE

HORIZONTAL SCALE IN FEET
0 10 20 40

CALCULATED
CHECKED

UNDERDRAIN PLAN U.S. 422
STA. 1002+00 TO STA. 1006+00

GEA/POR-422-18.31/0.00

CURVE DATA

P.I. STA. = 997+05.80
Δ = 19° 40′ 57″ (LT)
Dc = 0° 41′ 56″
R = 8,196.95′
T = 1,421.94′
L = 2,815.85′
E = 122.42′
e_{max} = 0.022

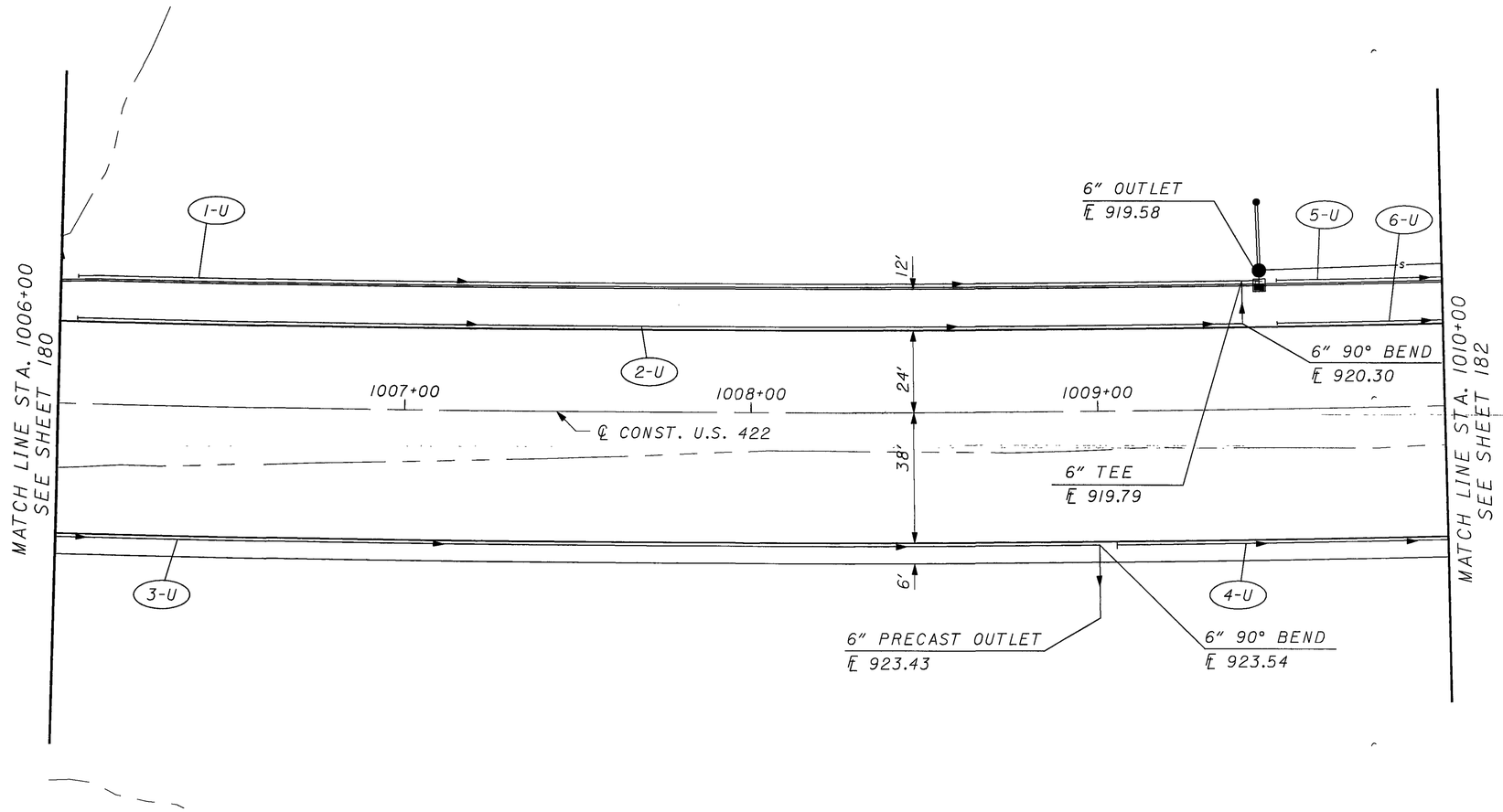

CROSS REFERENCES	
SHEET NO.	DESCRIPTION
53	UNDERDRAIN SUBSUMMARY
75	PLAN AND PROFILE

0 10 20 40
HORIZONTAL SCALE IN FEET

CALCULATED
CHECKED

UNDERDRAIN PLAN U.S. 422
STA. 1006+00 TO STA. 1010+00

GEA/POR-422-18.31/0.00

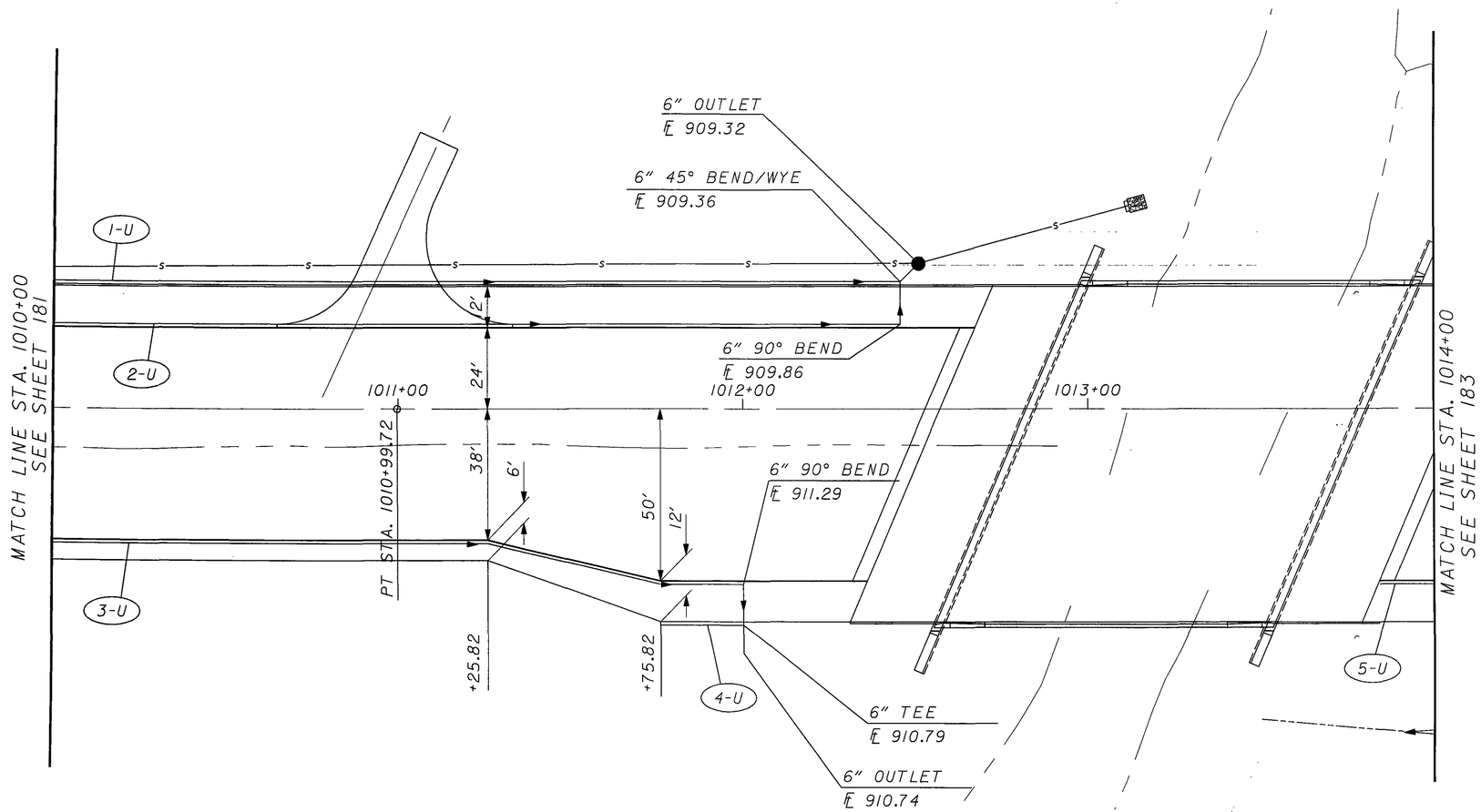

CURVE DATA

P.I. STA. = 997+05.80
Δ = 19° 40' 57" (LT)
Dc = 0° 41' 56"
R = 8,196.95'
T = 1,421.94'
L = 2,815.85'
E = 122.42'
e_{max} = 0.022

HORIZONTAL SCALE IN FEET
0 10 20 40

CALCULATED
CHECKED

UNDERDRAIN PLAN U.S. 422
STA. 1010+00 TO STA. 1014+00

GEA/POR-422-18.31/0.00

CROSS REFERENCES

SHEET NO.	DESCRIPTION
53	UNDERDRAIN SUBSUMMARY
76	PLAN AND PROFILE

CURVE DATA

P.I. STA. = 1016+86.23
Δ = 4° 02′ 45″ (LT)
Dc = 1° 14′ 56″
R = 4587.90′
T = 162.05′
L = 323.96′
E = 2.86′
e_{max} = 0.035

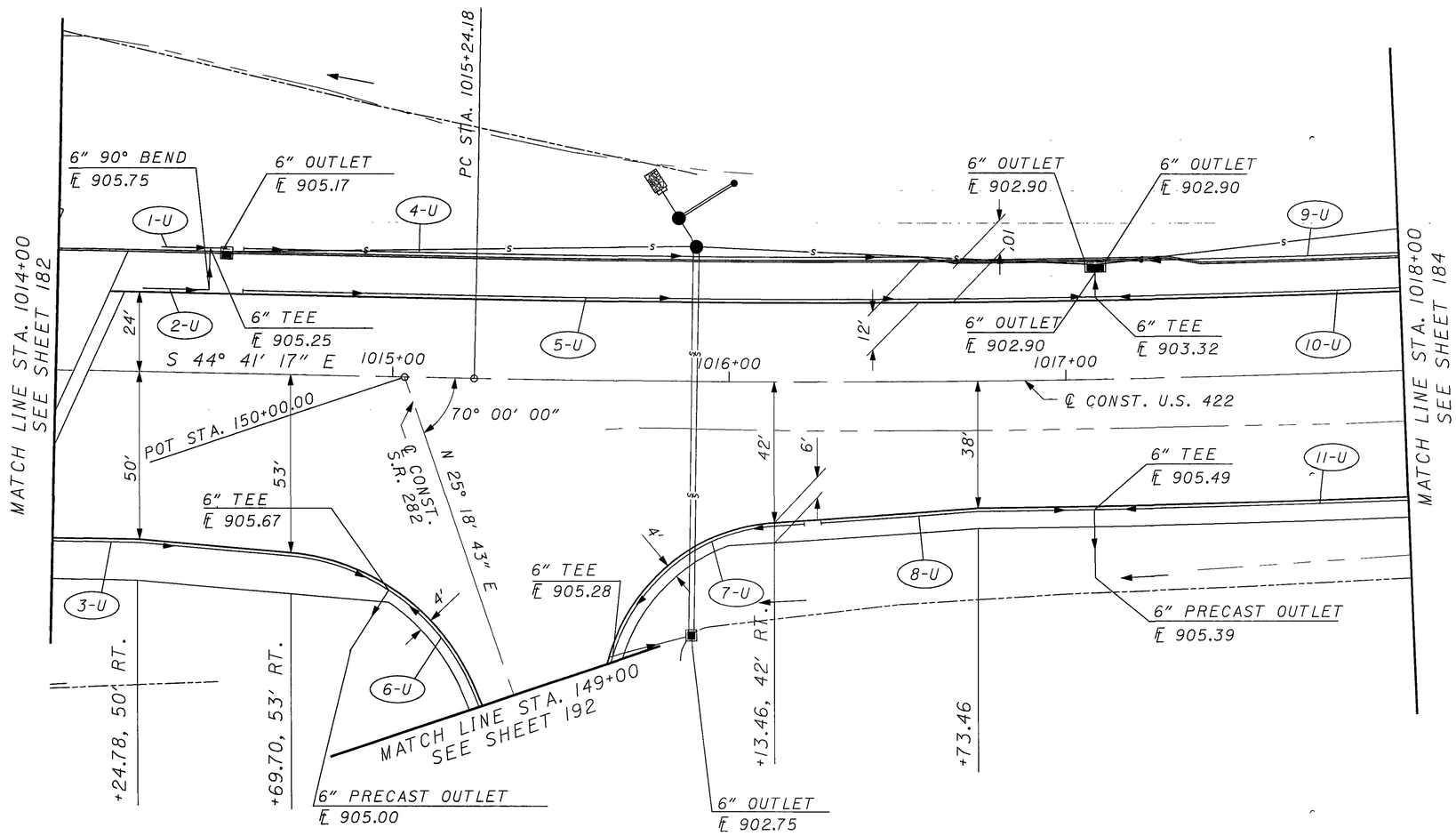

CROSS REFERENCES	
SHEET NO.	DESCRIPTION
53	UNDERDRAIN SUBSUMMARY
77	PLAN AND PROFILE

0 10 20 40
HORIZONTAL SCALE IN FEET

CALCULATED
CHECKED

UNDERDRAIN PLAN U.S. 422
STA. 1014+00 TO STA. 1018+00

GEA/POR-422-18.31/0.00

CURVE DATA

P.I. STA. = 1016+86.23
Δ = 4° 02′ 45″ (LT)
Dc = 1° 14′ 56″
R = 4587.90′
T = 162.05′
L = 323.96′
E = 2.86′
e_{max} = 0.035

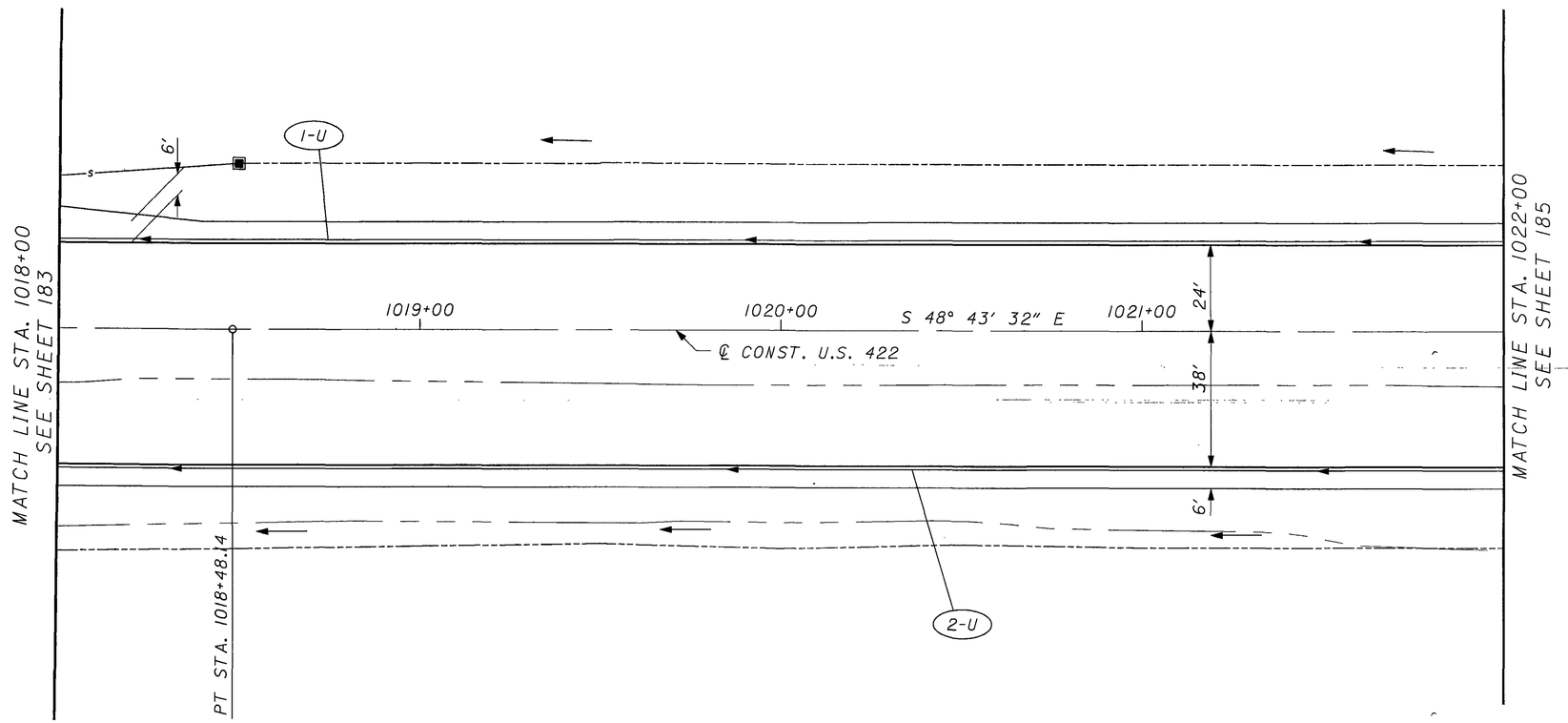

CROSS REFERENCES

SHEET NO.	DESCRIPTION
54	UNDERDRAIN SUBSUMMARY
78	PLAN AND PROFILE

HORIZONTAL SCALE IN FEET
0 10 20 40

CALCULATED
CHECKED

UNDERDRAIN PLAN U.S. 422
STA. 1018+00 TO STA. 1022+00

GEA/POR-422-18.31/0.00

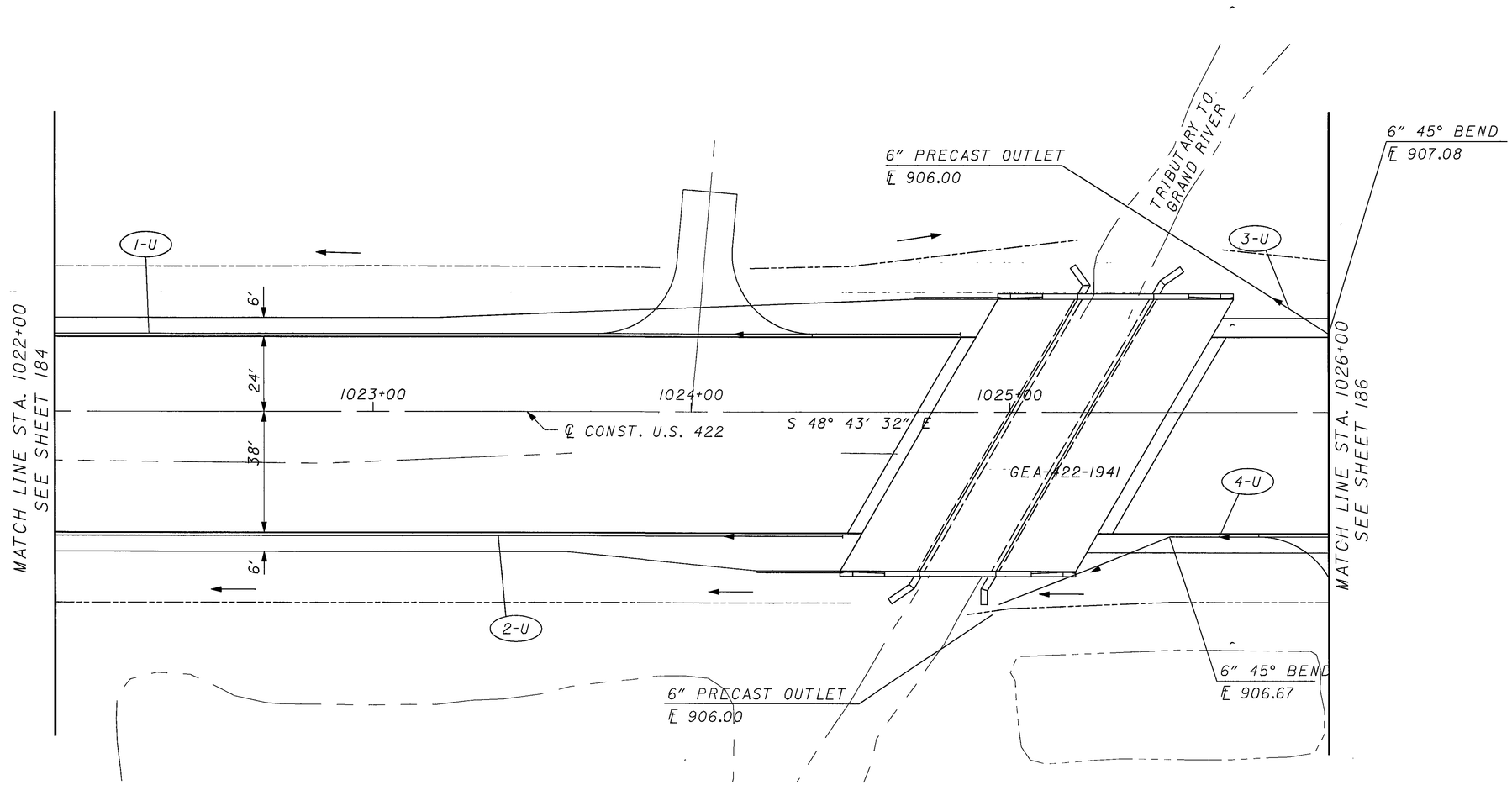

CROSS REFERENCES	
SHEET NO.	DESCRIPTION
54	UNDERDRAIN SUBSUMMARY
79	PLAN AND PROFILE

0 10 20 40
HORIZONTAL SCALE IN FEET

CALCULATED
CHECKED

UNDERDRAIN PLAN U.S. 422
STA. 1022+00 TO STA. 1026+00

GEA/POR-422-18.31/0.00

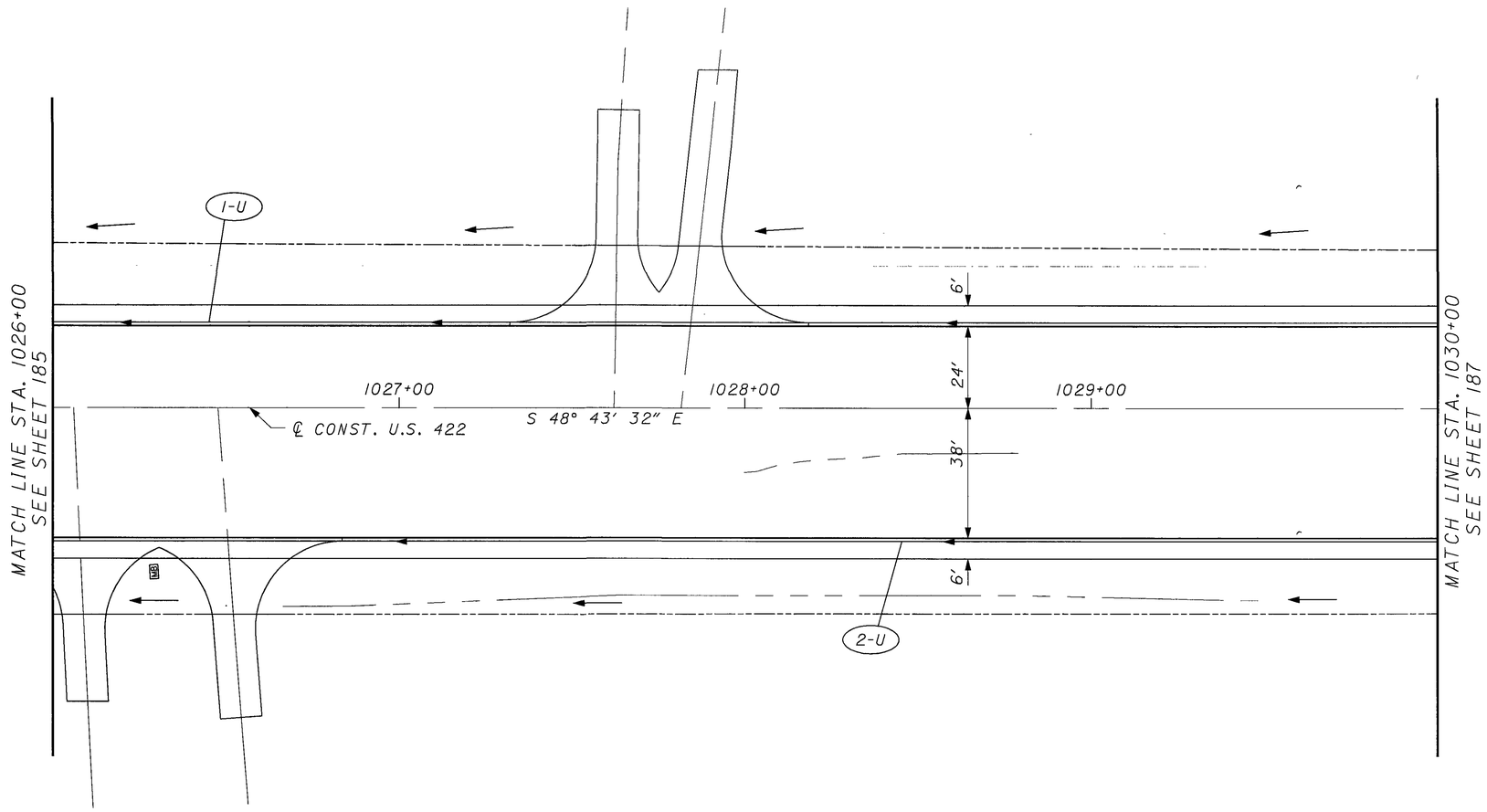

CROSS REFERENCES

SHEET NO.	DESCRIPTION
54	UNDERDRAIN SUBSUMMARY
80	PLAN AND PROFILE

0 10 20 40
HORIZONTAL SCALE IN FEET

CALCULATED
CHECKED

UNDERDRAIN PLAN U.S. 422
STA. 1026+00 TO STA. 1030+00

GEA/POR-422-18.31/0.00

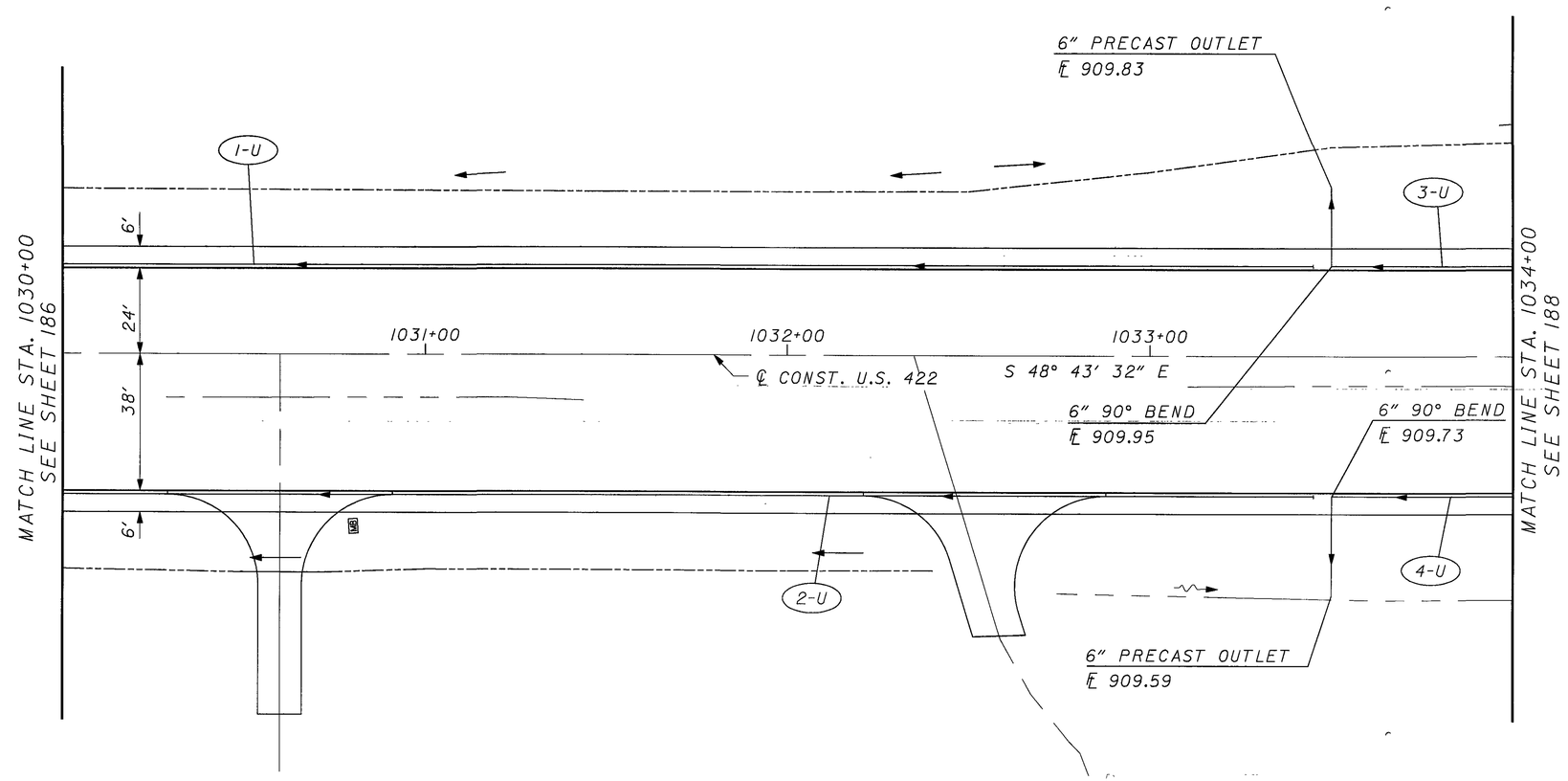

CROSS REFERENCES	
SHEET NO.	DESCRIPTION
54	UNDERDRAIN SUBSUMMARY
81	PLAN AND PROFILE

0 10 20 40
HORIZONTAL SCALE IN FEET

CALCULATED
CHECKED

UNDERDRAIN PLAN U.S. 422
STA. 1030+00 TO STA. 1034+00

GEA/POR-422-18.31/0.00

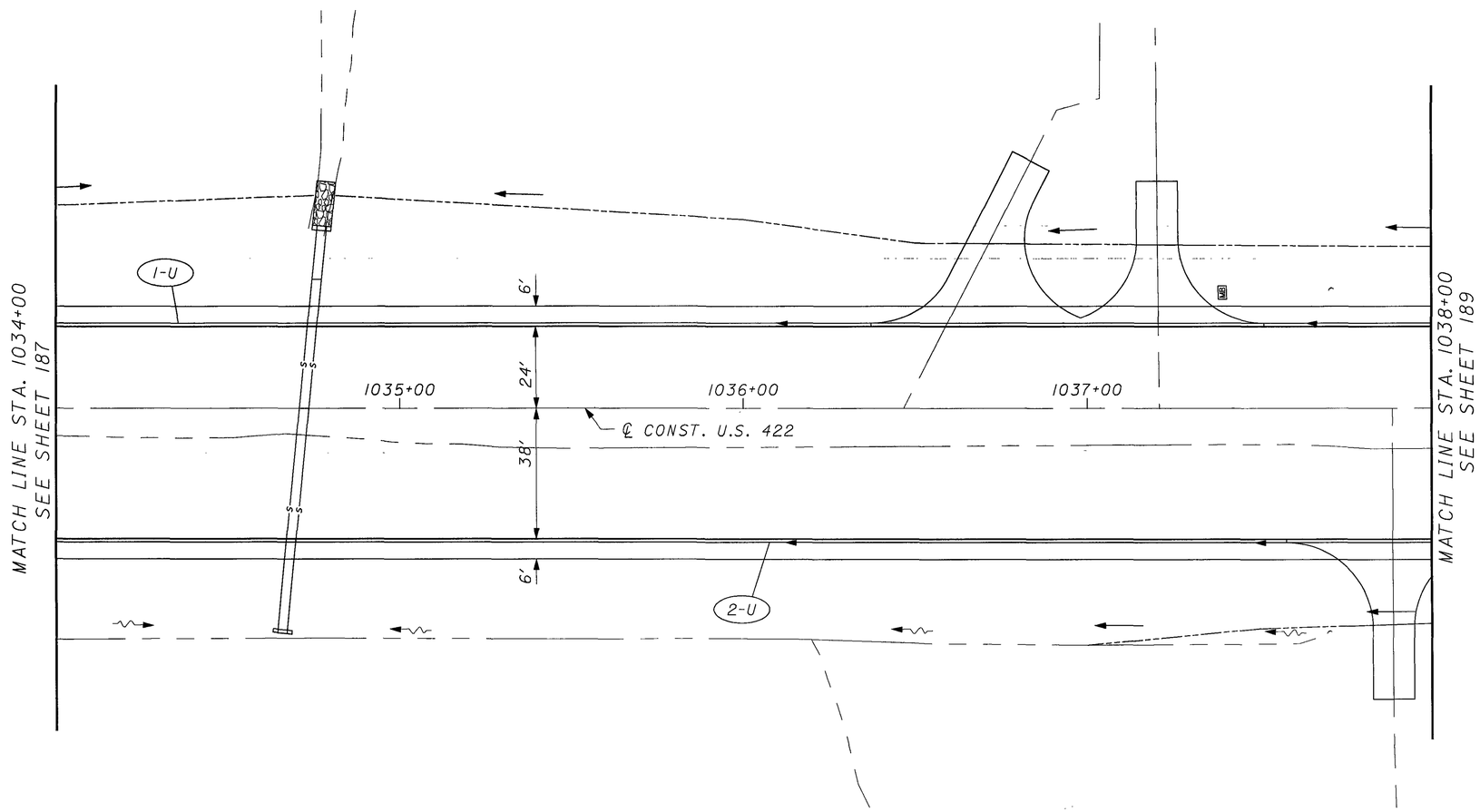

CROSS REFERENCES	
SHEET NO.	DESCRIPTION
54	UNDERDRAIN SUBSUMMARY
82	PLAN AND PROFILE

0 10 20 40
HORIZONTAL SCALE IN FEET

CALCULATED
CHECKED

UNDERDRAIN PLAN U.S. 422
STA. 1034+00 TO STA. 1038+00

GEA/POR-422-18.31/0.00

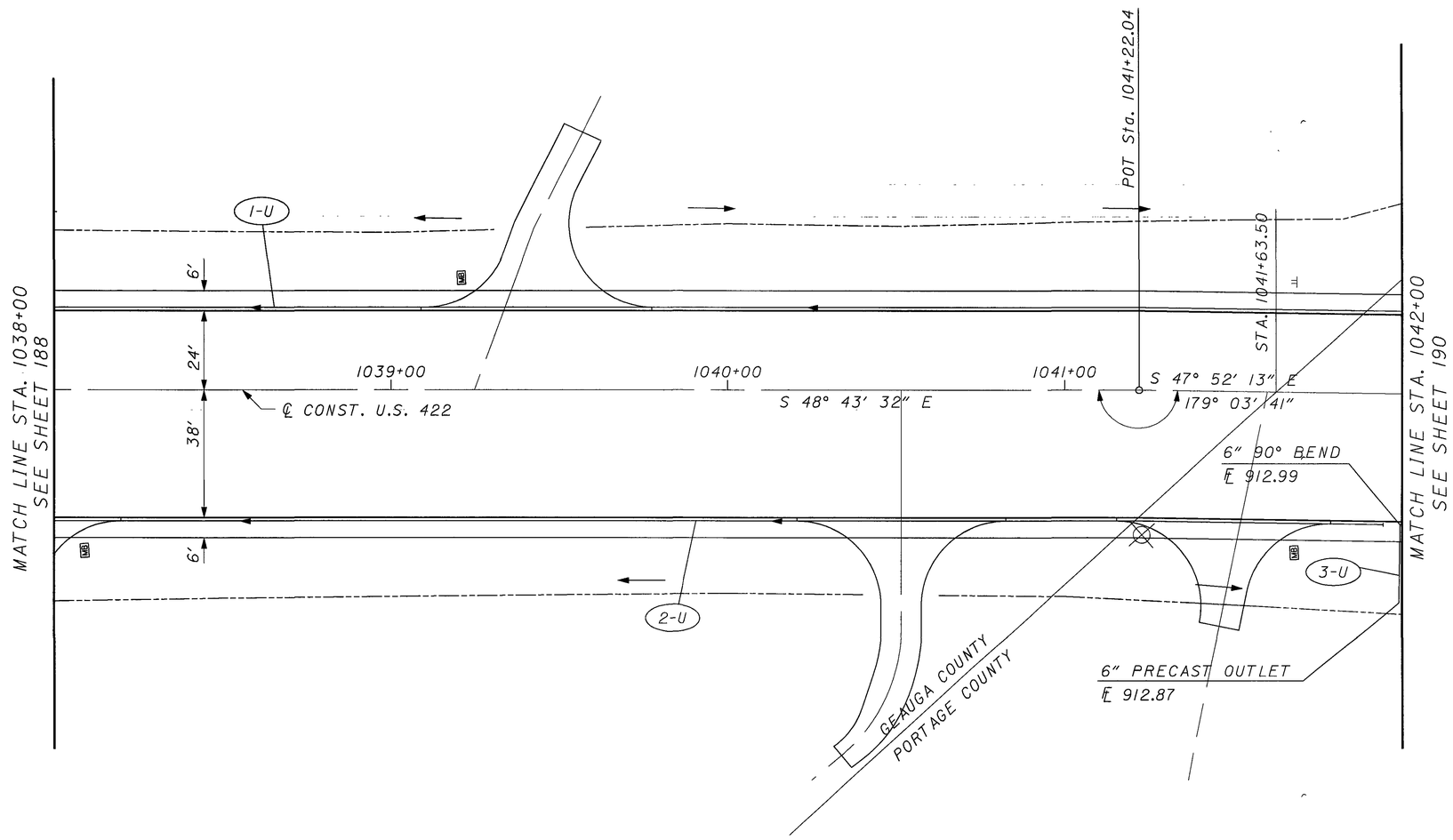

CROSS REFERENCES

SHEET NO.	DESCRIPTION
54	UNDERDRAIN SUBSUMMARY
83	PLAN AND PROFILE

0 10 20 40
HORIZONTAL SCALE IN FEET

CALCULATED
CHECKED

UNDERDRAIN PLAN U.S. 422
STA. 1038+00 TO STA. 1042+00

GEA/POR-422-18.31/0.00

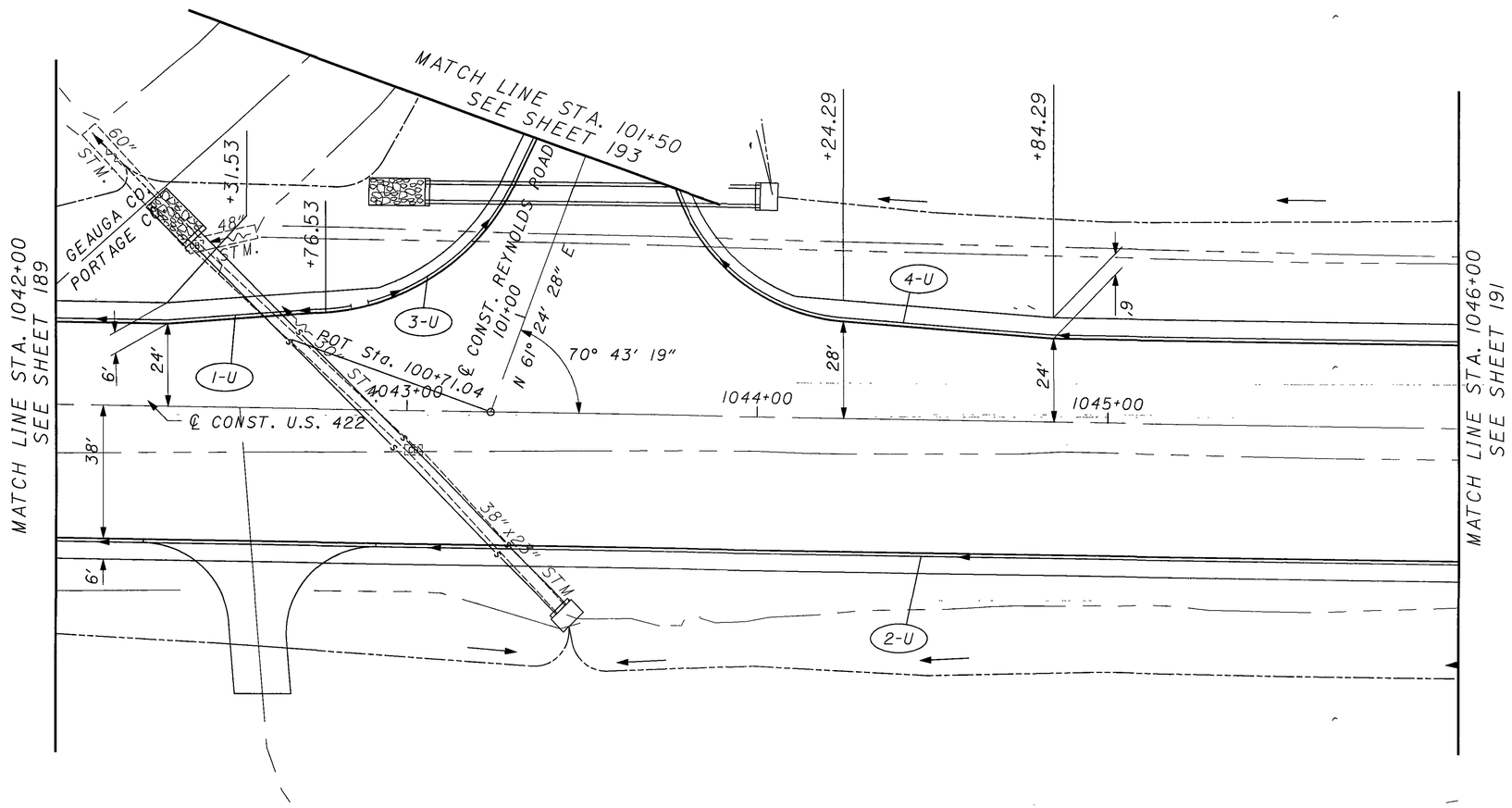

CROSS REFERENCES	
SHEET NO.	DESCRIPTION
54	UNDERDRAIN SUBSUMMARY
84	PLAN AND PROFILE

CALCULATED

CHECKED

HORIZONTAL SCALE IN FEET
0 10 20 40

UNDERDRAIN PLAN U.S. 422
STA. 1042+00 TO STA. 1046+00

GEA/POR-422-18.31/0.00

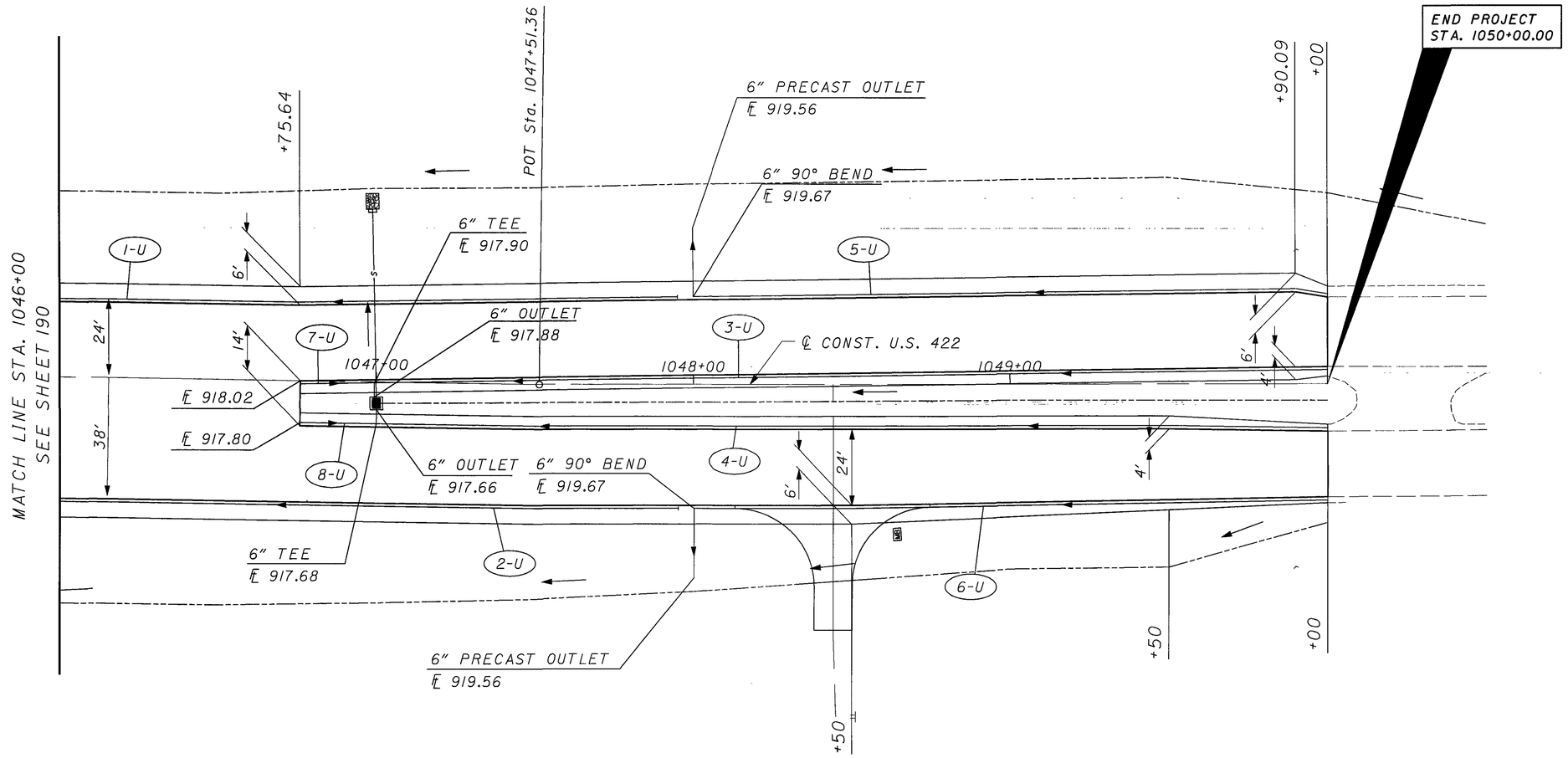

CROSS REFERENCES	
SHEET NO.	DESCRIPTION
54	UNDERDRAIN SUBSUMMARY
85	PLAN AND PROFILE

HORIZONTAL SCALE IN FEET
0 10 20 40

CALCULATED
CHECKED

UNDERDRAIN PLAN U.S. 422
STA. 1046+00 TO STA. 1050+00

GEA/POR-422-18.31/0.00

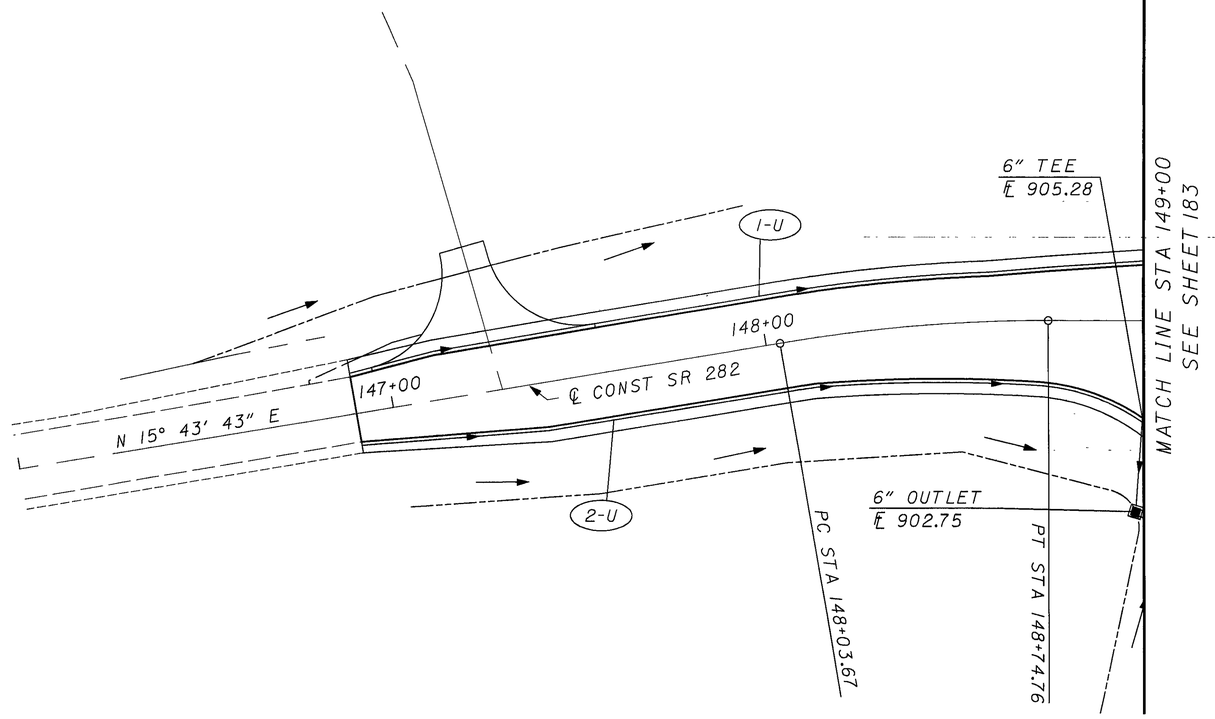

CURVE DATA
P.I. Sta = 148+39.30
D = 9° 35′ 00″
Dc = 13° 28′ 53″
R = 425.00′
T = 35.63′
L = 35.63′
E = 71.09′
e_{max} = 0.059

CROSS REFERENCES

SHEET NO.	DESCRIPTION
54	UNDERDRAIN SUBSUMMARY
77	PLAN AND PROFILE

0 10 20 40
HORIZONTAL SCALE IN FEET

CALCULATED
CHECKED

UNDERDRAIN PLAN SR 282
STA 146+00.00 TO STA 149+00.00

GEA/POR-422-18.31/0.00

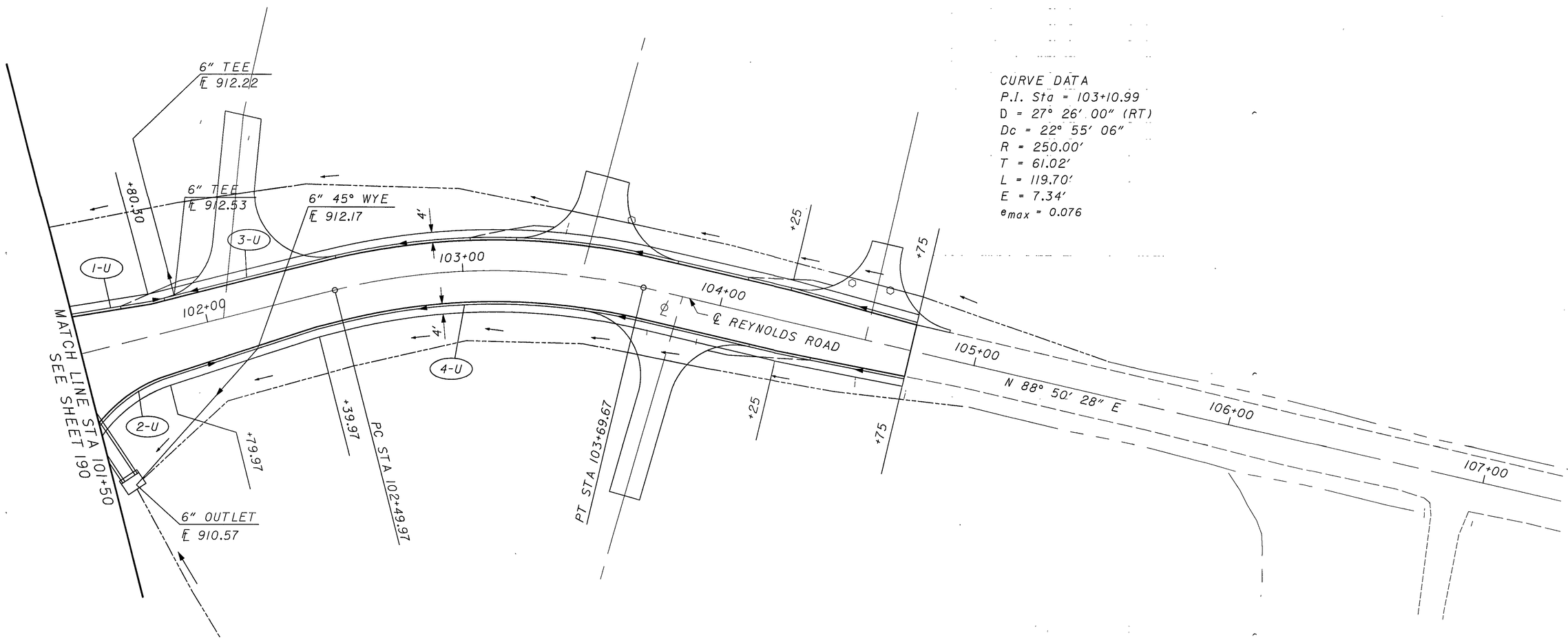

CURVE DATA
P.I. Sta = 103+10.99
D = 27° 26' 00" (RT)
Dc = 22° 55' 06"
R = 250.00'
T = 61.02'
L = 119.70'
E = 7.34'
e_{max} = 0.076

CROSS REFERENCES

SHEET NO.	DESCRIPTION
54	UNDERDRAIN SUBSUMMARY
133	PLAN AND PROFILE

0 10 20 40
HORIZONTAL SCALE IN FEET

CALCULATED
CHECKED

UNDERDRAIN - REYNOLDS ROAD
STA 101+50 TO STA 107+00

GEA/POR-422-18.31/0.00

℄ DRIVE STA.	SIDE	PIPE SIZE	PIPE LENGTH (L)	⅊ UPSTREAM	⅊ DOWNSTREAM
951+45.58	LT	12	24	1052.20	1051.20
951+53.43	RT	-	-	-	-
952+94.36	LT	12	29	1046.24	1045.37
954+87.34	LT	-	-	-	-
957+32.66	RT	12	23	1027.58	1027.48
958+17.38	LT	-	-	-	-
961+17.51	RT	12	22	1029.20	1029.11
961+91.19	LT	-	-	-	-
964+01.87	RT	12	23	1031.61	1031.39
966+91.39	RT	12	23	1034.52	1034.30
968+16.69	LT	-	-	-	-
970+30.18	LT	-	-	-	-
977+94.90	LT	-	-	-	-
979+17.22	RT	12	24	1045.67	1045.43
983+46.06	RT	-	-	-	-
983+48.11	LT	-	-	-	-
986+52.11	LT	-	-	-	-
987+75.61	RT	12	26	1038.74	1038.18
987+84.13	LT	12	23	1037.57	1036.75
988+21.27	RT	12	26	1037.73	1037.16
988+56.24	LT	-	-	-	-
989+27.00	RT	-	-	-	-
990+45.66	RT	12	23	1029.99	1029.10
990+68.70	LT	12	23	1028.87	1028.14
991+28.66	RT	12	25	1026.53	1025.65
991+45.71	LT	-	-	-	-
993+62.75	RT	12	26	1015.10	1013.80
1003+57.26	RT	21	47	951.15	950.03
1010+76.56	LT	-	-	-	-
1022+09.20	RT	12	27	906.05	905.95
1024+00.00	LT	-	-	-	-
1026+05.97	RT	12	23	906.82	906.73
1026+47.70	RT	12	23	906.99	906.90
1027+62.03	LT	12	47	-	906.96
1027+81.58	LT	12	-	907.21	-
1030+59.96	RT	12	23	908.59	908.49
1032+34.95	RT	-	-	-	-
1036+46.63	LT	12	28	910.22	910.06
1037+20.96	LT	12	22	910.48	910.35
1037+88.62	RT	12	22	910.5	910.16
1039+24.70	LT	-	-	-	-
1040+51.55	RT	-	-	-	-
1041+60.14	RT	12	28	911.65	911.39
1042+52.19	RT	12	26	910.53	910.28
1048+44.22	RT	12	22	919.15	918.82
S.R. 282					
147+29.18	LT	12	24	909.08	908.05
REYNOLDS RD.					
102+06.21	LT	12	42	909.82	910.57
103+45.52	LT	12	36	914.33	914.20
103+85.09	RT	12	33	914.17	913.48
104+57.06	LT	12	36	914.70	914.57

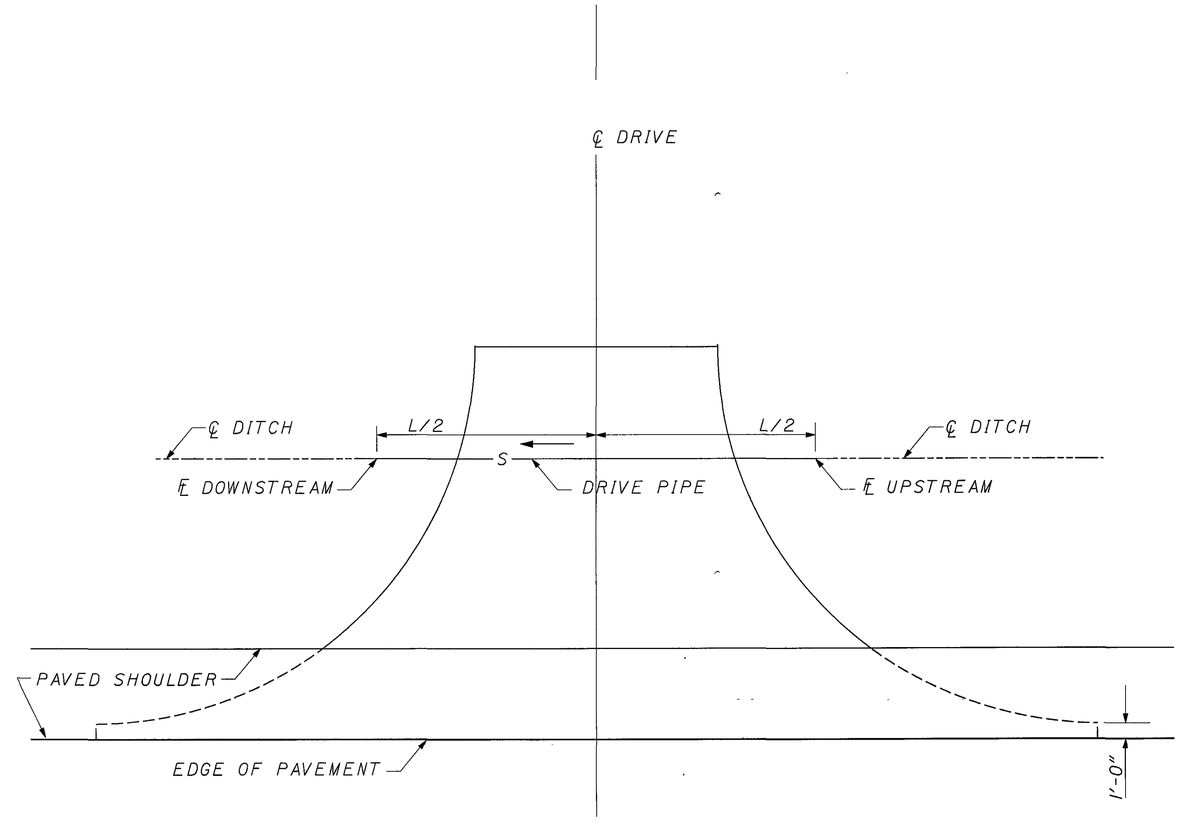

DRIVE DETAIL

DRIVEWAY PIPE DETAILS

GEA/POR-422-18.31/0.00

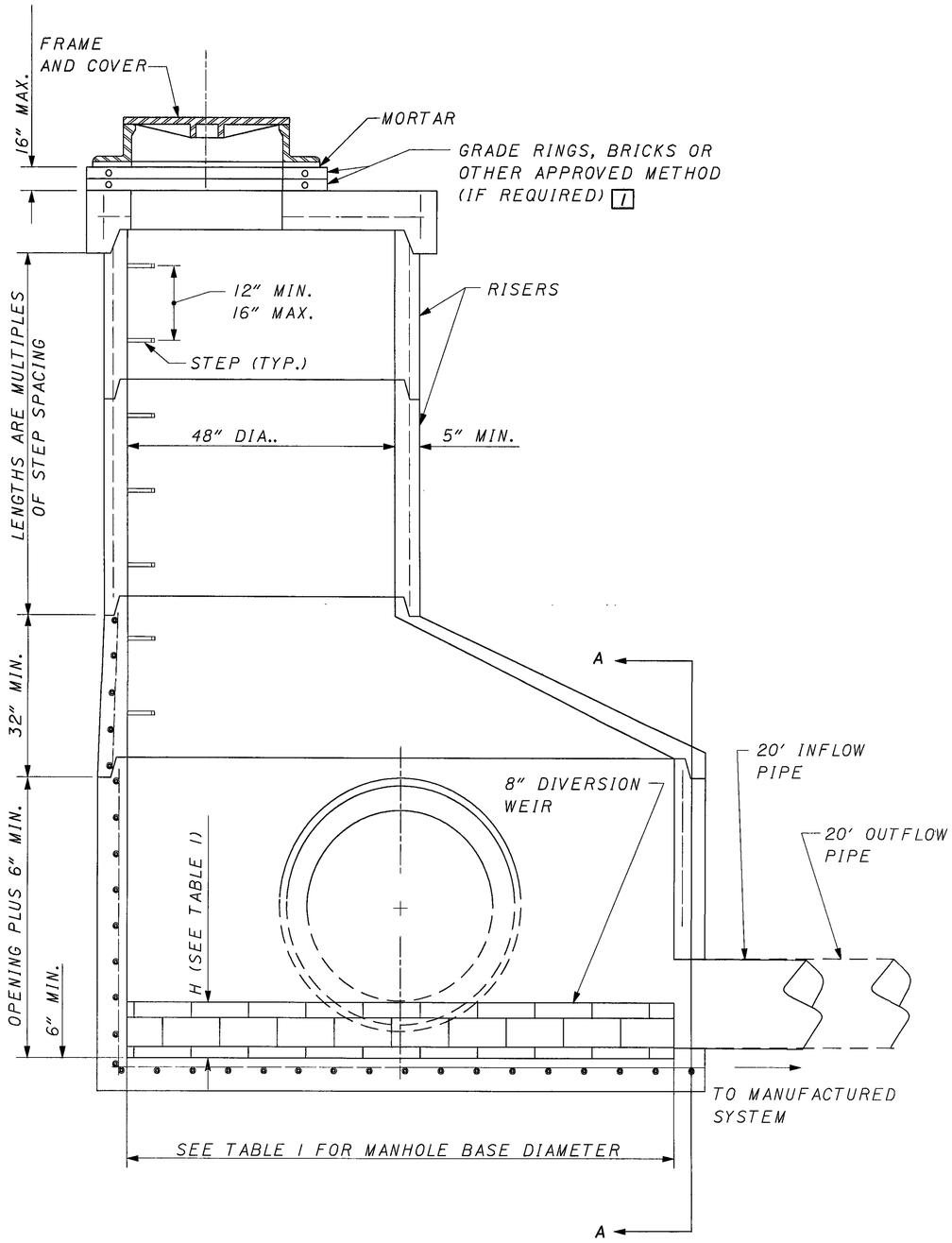

TABLE 1

MANUFACTURED SYSTEMS				
STATION	WQf (cfs)	INFLOW/OUTFLOW PIPE DIAMETER (in.)	WEIR HEIGHT (in.)	MANHOLE #3 BASE DIAMETER (in.)
955+41	1.92	15"	8"	90"
970+15	0.12	12"	2"	84"
973+76	0.44	12"	4"	84"
986+30	0.03	12"	1"	84"
1009+50	1.41	12"	4"	84"
1016+01	0.77	12"	5"	84"

SECTION A-A

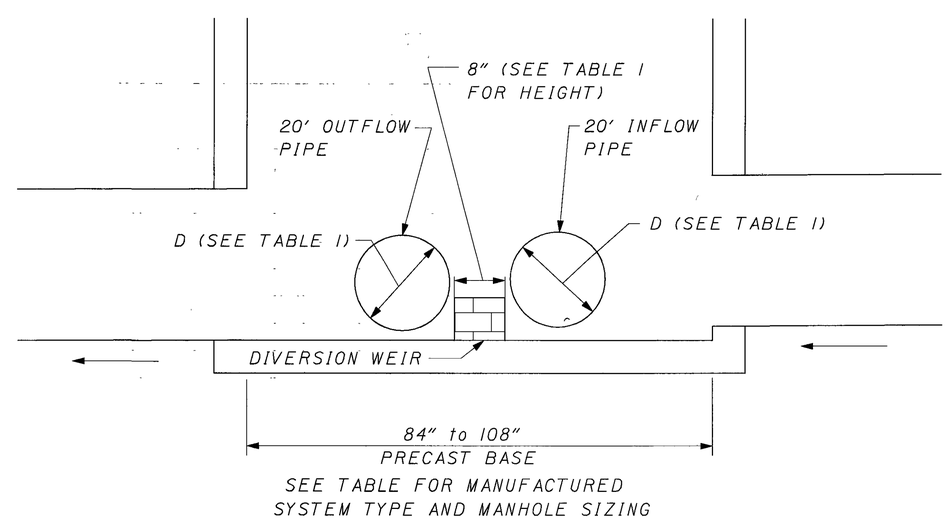

SEE TABLE FOR MANUFACTURED
SYSTEM TYPE AND MANHOLE SIZING

CALCULATED
CHECKED

DRAINAGE DETAILS
MANUFACTURED SYSTEMS - MANHOLE NO. 3, A.P.P.

GEA/POR-422-18.31/0.00

194A
332

ESTIMATED QUANTITIES			
ITEM	QTY.	UNIT	DESCRIPTION
601	7	CU YD	ROCK CHANNEL PROTECTION, TYPE B
			WITH FABRIC FILTER
602	1.6	CU YD	CONCRETE MASONRY
603	120	FT	33" CONDUIT, TYPE A 706.02 OR
			42" CONDUIT, TYPE A 707.01

NOTE: THESE QUANTITIES CARRIED TO THE GENERAL SUMMARY.

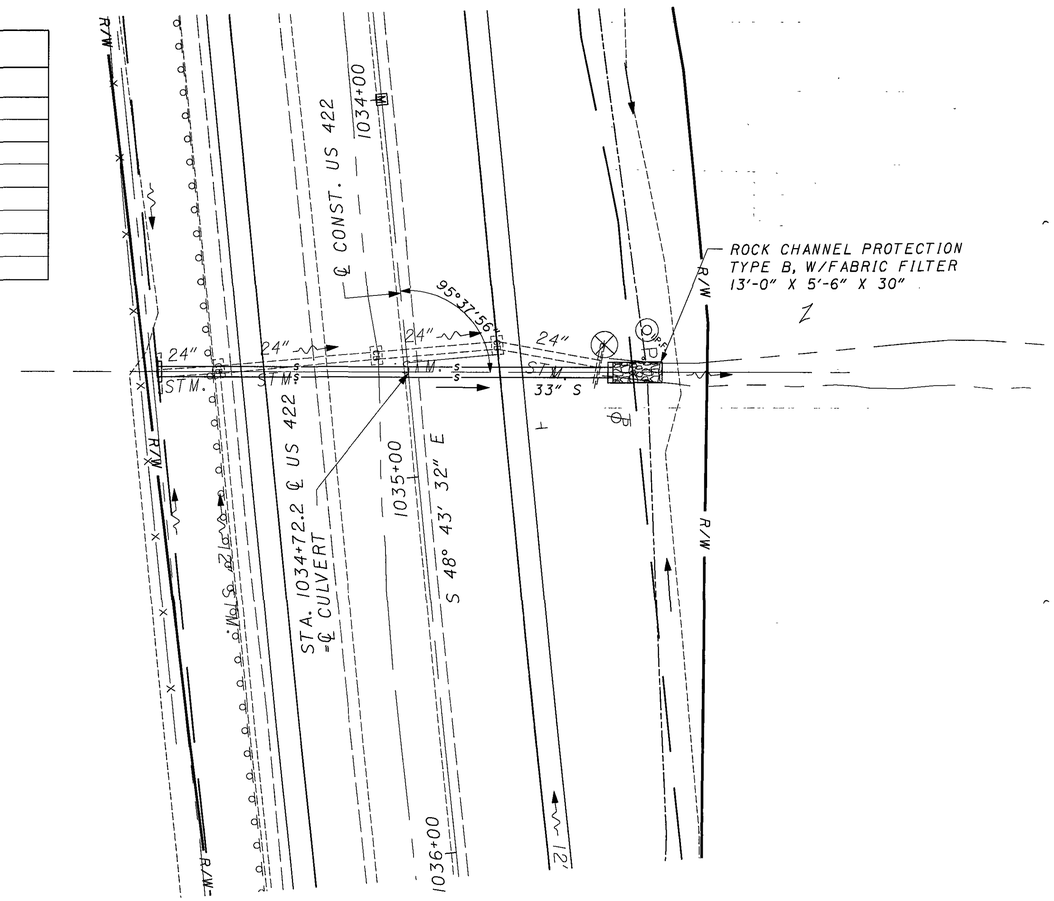

PLAN

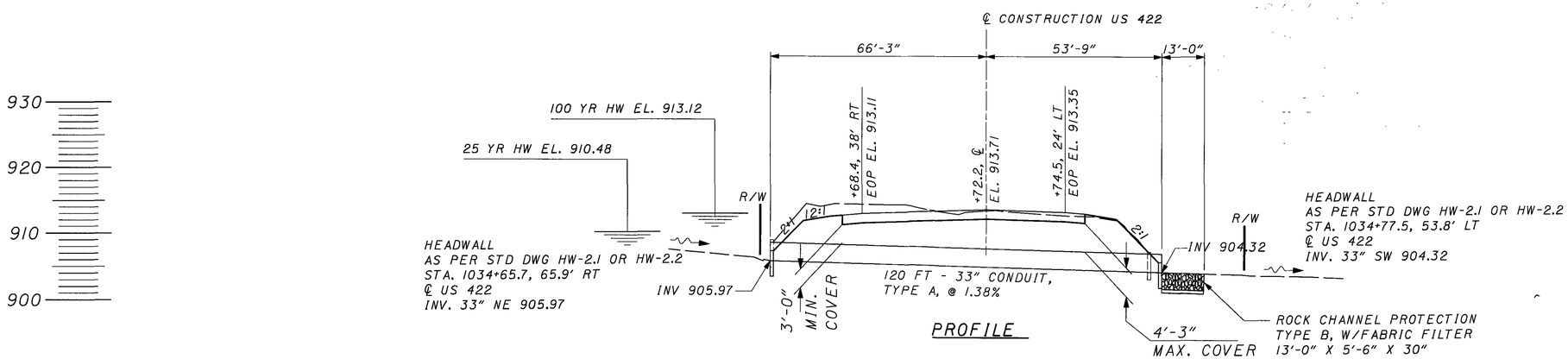

PROFILE

EXISTING STRUCTURE
TYPE: REINFORCED CONCRETE SIZE: 24" CIRCULAR ALIGNMENT: TANGENT

PROPOSED STRUCTURE
TYPE: REINFORCED CONCRETE SIZE: 33" CIRCULAR ALIGNMENT: TANGENT SKEW: 05°37'56" L.F.

HYDRAULIC DESIGN DATA			
DRAINAGE AREA = 0.036 SQ. MI.			
STORM	Q (CFS)	V (FPS)	HIGH WATER
25-YEAR	54.4	12.59	910.48
100-YEAR	77.4	13.01	913.12

HORIZONTAL SCALE IN FEET 0 10 20 40

CALCULATED RDC
CHECKED KME

CULVERT DETAIL
U.S. 422 STA. 1034+72.2

GEA/POR-422-18.31/0.00

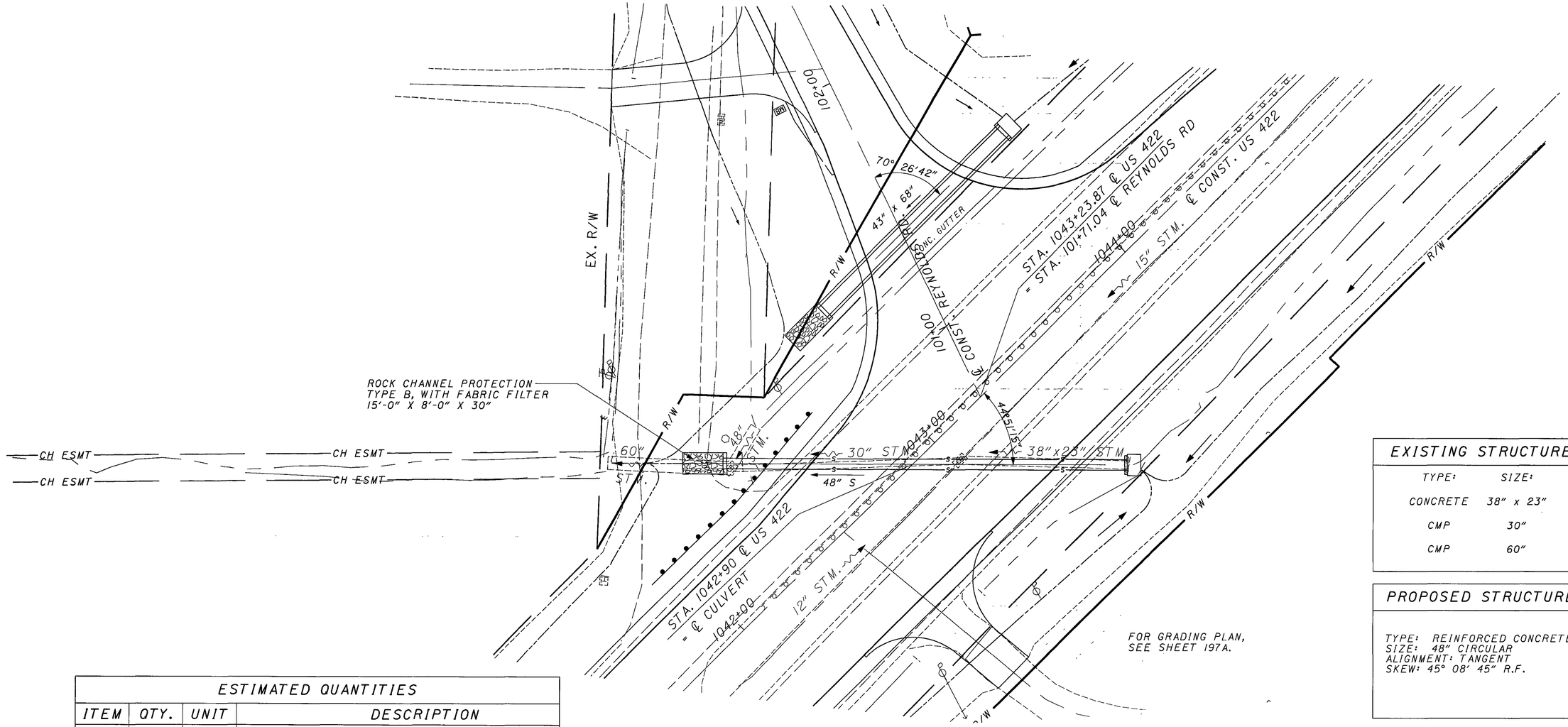

PLAN

EXISTING STRUCTURE	
TYPE:	SIZE:
CONCRETE	38" x 23"
CMP	30"
CMP	60"

PROPOSED STRUCTURE

TYPE: REINFORCED CONCRETE
SIZE: 48" CIRCULAR
ALIGNMENT: TANGENT
SKEW: 45° 08' 45" R.F.

HYDRAULIC DESIGN DATA			
DRAINAGE AREA = 0.059 SQ. MI.			
STORM	Q (CFS)	V (FPS)	HIGH WATER
25-YEAR	95.44	11.28	914.08
100-YEAR	119.24	11.70	915.07

ESTIMATED QUANTITIES			
ITEM	QTY.	UNIT	DESCRIPTION
601	3.8	SQ YD	RIPRAP USING 6" REINFORCED CONCRETE SLAB
601	11.1	CU YD	ROCK CHANNEL PROTECTION, TYPE B WITH FABRIC
			FILTER
602	2.2	CU YD	CONCRETE MASONRY
603	150	FT	48" CONDUIT, TYPE A, 706.02

NOTE: THESE QUANTITIES CARRIED TO THE GENERAL SUMMARY.

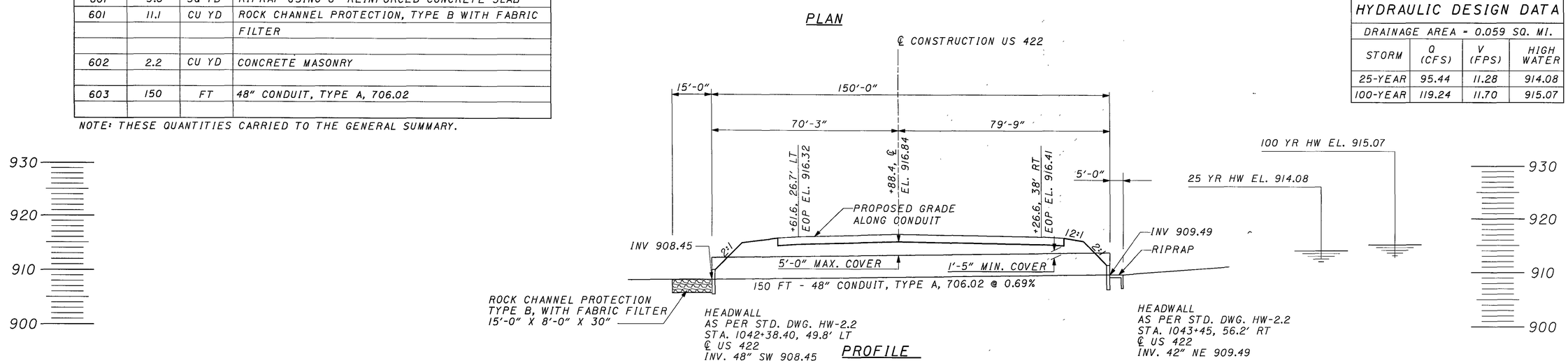

PROFILE

HORIZONTAL SCALE IN FEET 0 10 20 40

CALCULATED RDC
CHECKED KME

CULVERT DETAIL
U.S. 422 STA. 1042+90

GEA/POR-422-18.31/0.00

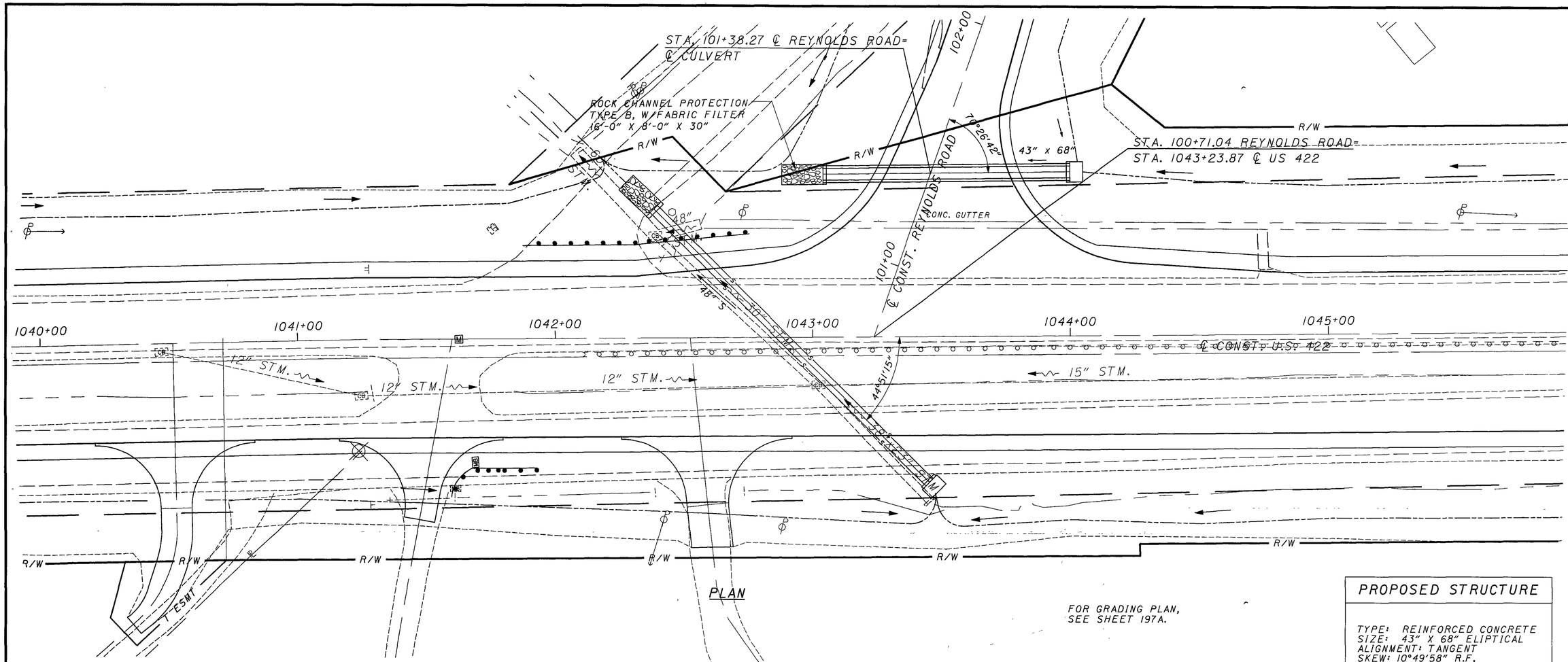

ESTIMATED QUANTITIES			
ITEM	QTY.	UNIT	DESCRIPTION
601	4.4	SQ YD	RIPRAP USING 6" REINFORCED CONCRETE SLAB
601	11.9	CU YD	ROCK CHANNEL PROTECTION, TYPE B WITH FABRIC
			FILTER
602	2.0	CU YD	CONCRETE MASONRY
603	96	FT	43" x 68" CONDUIT, TYPE A, 706.04

NOTE: THESE QUANTITIES CARRIED TO THE GENERAL SUMMARY.

PROPOSED STRUCTURE
TYPE: REINFORCED CONCRETE SIZE: 43" X 68" ELIPTICAL ALIGNMENT: TANGENT SKEW: 10°49'58" R.F.

HYDRAULIC DESIGN DATA			
DRAINAGE AREA = 0.23 SQ. MI.			
STORM	Q (CFS)	V (FPS)	HIGH WATER
25-YEAR	111.20	14.91	914.17
100-YEAR	155.50	16.42	915.49

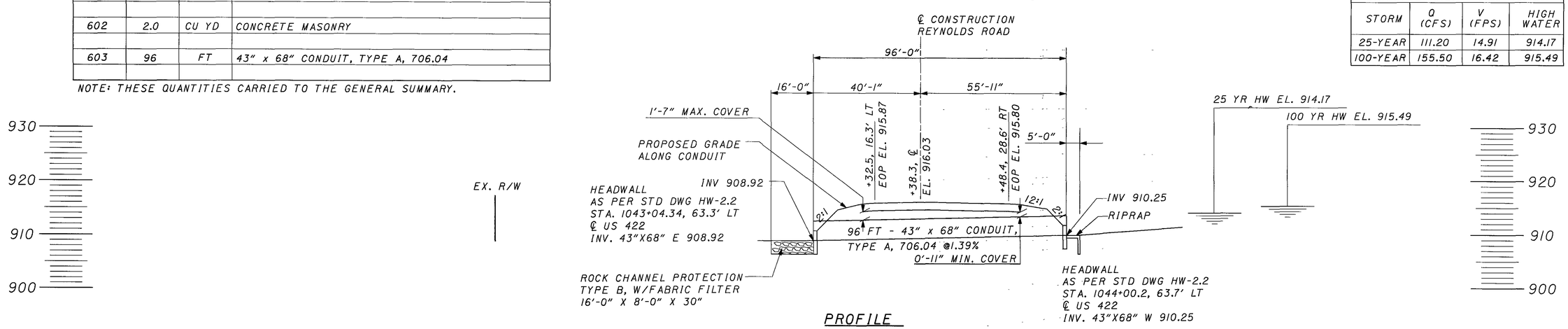

PROFILE

N

HORIZONTAL SCALE IN FEET 0 10 20 40

CALCULATED RDC
CHECKED KME

CULVERT DETAIL
REYNOLDS ROAD

GEA/POR-422-18.31/0.00

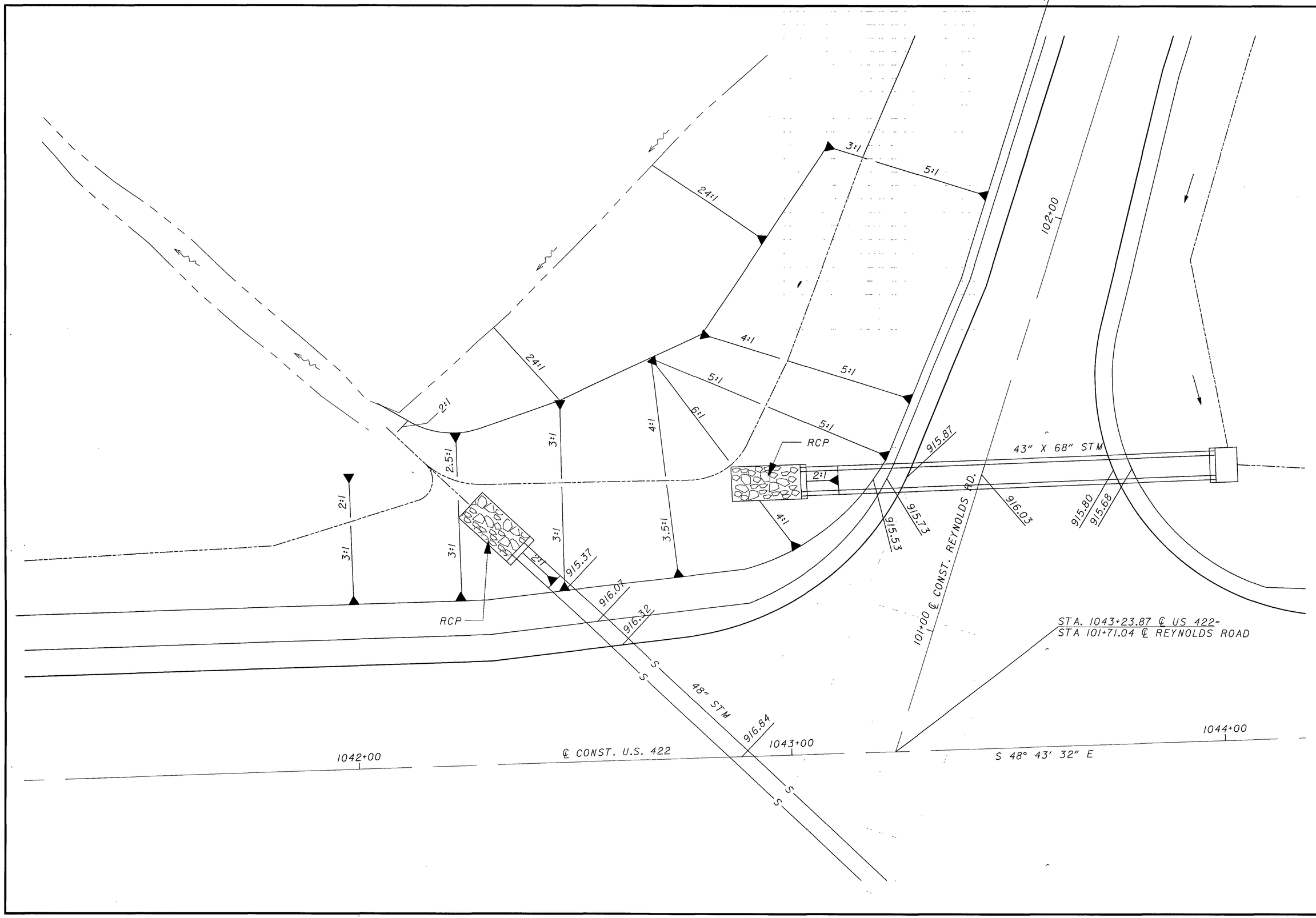

GRADING DETAIL
U.S. 422 AND REYNOLDS ROAD

GEA/POR-422-18.31/0.00

197A
332

SHEET NUMBER								PARTICIPATION			ITEM	ITEM EXT.	GRAND TOTAL	UNIT	DESCRIPTION	SEE SHEET NO.
				201		202										
				2							625	32000	2	EACH	GROUND ROD	
				53							626	00100	53	EACH	BARRIER REFLECTOR, TYPE A	
				6							626	00200	6	EACH	BARRIER REFLECTOR, TYPE B	
				695							630	03100	695	FEET	GROUND MOUNTED SUPPORT, NO. 3 POST	
				2							630	10400	2	EACH	OVERHEAD SIGN SUPPORT, TYPE TC-16.20, DESIGN 4, 43'-0" ARM	
				4							630	79100	4	EACH	SIGN HANGER ASSEMBLY, MAST ARM	
				2							630	79500	2	EACH	SIGN SUPPORT ASSEMBLY, POLE MOUNTED	
				380							630	80100	380	SQ. FT.	SIGN, FLAT SHEET, TYPE G	
				2							630	84510	2	EACH	RIGID OVERHEAD SIGN SUPPORT FOUNDATION	
				43							630	84900	43	EACH	REMOVAL OF GROUND MOUNTED SIGN AND DISPOSAL	
				2							630	85000	2	EACH	REMOVAL OF GROUND MOUNTED SIGN AND STORAGE	
				1							630	85100	1	EACH	REMOVAL OF GROUND MOUNTED SIGN AND REERECTION	
				37							630	86002	37	EACH	REMOVAL OF GROUND MOUNTED POST SUPPORT AND DISPOSAL	
				4							630	86204	4	EACH	REMOVAL OF GROUND MOUNTED BEAM SUPPORT AND STORAGE	
						4.16					642	00102	4.16	MILE	EDGE LINE, TYPE 2	
						3.83					642	00202	3.83	MILE	LANE LINE, TYPE 2	
						3.68					642	00302	3.68	MILE	CENTER LINE, TYPE 2	
						500					642	00402	500	FEET	CHANNELIZING LINE, TYPE 2	
						47					642	00502	47	FEET	STOP LINE, TYPE 2	
						1510					642	00702	1510	FEET	TRANSVERSE/DIAGONAL LINE, TYPE 2	
						77					642	00902	77	SQ. FT.	ISLAND MARKING, TYPE 2, YELLOW	
						16					642	01302	16	EACH	LANE ARROW, TYPE 2	
						1					642	01402	1	EACH	WORD ON PAVEMENT, 72", TYPE 2	

CALCULATED BF
CHECKED VLW

TRAFFIC CONTROL GENERAL SUMMARY

GEA/POR-422-18.31/0.00

SHEET NO.	REFERENCE NO.	LOCATION	STATION	SIDE	CODE	SIZE (INCHES)	625 GROUND ROD EACH		630 RIGID SIGN SUPPORT FOUNDATION EACH	630 GROUND MOUNTED SUPPORT, NO. 3 POST FEET	630 OVERHEAD SIGN SUPPORT, TYPE TC-16.20, DESIGN 4, 43' ARM EACH	630 SIGN SUPPORT ASSEMBLY, MAST ARM EACH	630 SIGN HANGER ASSEMBLY, POLE MOUNTED EACH	630 SIGN FLATSHEET, TYPE G SQ. FT.		630 REMOVAL OF GROUND MOUNTED SIGN AND DISPOSAL EACH	630 REMOVAL OF GROUND MOUNTED SIGN AND STORAGE EACH	630 REMOVAL OF GROUND MOUNTED SIGN AND REERECTION EACH	630 REMOVAL OF GROUND MOUNTED POST SUPPORT AND DISPOSAL EACH	630 REMOVAL OF GROUND MOUNTED BEAM SUPPORT AND STORAGE EACH
203		US 422	950+00	RT	R2-1-24	24X36				12.0				6						
			952+89	RT												1			1	
204			958+00	LT	R3-H9k-24	24X36				12.5				6						
					R3-9b-24	24X6								1						
			958+00	RT	R3-H9j-24	24X36				12.5				6						
					R3-9b-24	24X6								1						
			959+01	RT												1			1	
205			968+00	LT	R3-9b-24	24X36				12.5				6						
			968+00	RT	R3-9b-24	24X36				12.5				6						
206			977+50	LT	R3-9b-24	24X36				12.5				6						
			977+50	RT	R3-9b-24	24X36				12.5				6						
			978+66													1			1	
			979+50	RT	W79-36	36X36				13.0				9						
			984+12	RT	W1-2L-36	36X36				13.0				9		1			1	
207			988+25	LT	R3-9b-24	24X36				12.5				6						
			988+50	RT	R3-9b-24	24X36				12.5				6						
			992+00	RT	R16-H4-24	24X36				12.5				6		1			1	
208			966+80	LT												1			1	
			998+00	LT	R3-9b-24	24X36				12.5				6						
			998+00	RT	R3-9b-24	24X36				12.5				6						
209			1006+00	LT	W11-H14a-36	36X36				13.0				9						
			1006+32	RT	W2-2R-36	36X36				13.0				9		1			1	
			1007+50	LT	R4-3-24	24X36				12.5				6						
			1008+00	RT	M2-1-21	21X15				13.0				2						
					M1-H5-30	30X30								6						
			1008+09													2			1	
			1008+75	LT	W11-H14A-36	36X36				15.0				9						
					W5-H6p-24	24X18								3						
			1009+00	RT	D9-3a-18	18X18				11.0				2						
					I-H12-24	24X6								1						
			1010+00	LT	I-H14-60	60X36				33.5				13						
			1010+14	RT	72												1			2
			1010+50	LT	R3-H9j-24	24X36				12.5				6						
					R3-9b-24	24X6								1						
			1010+50	RT	R3-H9k-24	24X36				12.5				6						
					R3-9b-24	24X6								1						
			1010+79	LT												1			1	
			1011+50	LT	D12-H14-60	60X36				33.5				13						
			1011+57	LT												3			2	
			1012+00	LT	M3-2-24	24x12				12.5				2						
					M1-H5-30	30X30								6						
			1012+00	RT	R3H-H8CB-48	48x30				23.5				10						
			1012+20	RT	OM-3R-36	12x36				12.0				3						
TOTALS CARRIED TO SHEET 201							0		0	393	0	0	0	200		13	1	0	11	2

CALCULATED BF
CHECKED VLW

SIGNING SUBSUMMARY

GEA/POR-422-18.31/0.00

SHEET NO.	REFERENCE NO.	LOCATION	STATION	SIDE	CODE	SIZE (INCHES)	625 GROUND ROD EACH		630 RIGID SIGN SUPPORT FOUNDATION EACH	630 GROUND MOUNTED SUPPORT, NO. 3 POST FEET	630 OVERHEAD SIGN SUPPORT, TYPE TC-16.20, DESIGN 4, 43' ARM EACH	630 SIGN HANGER ASSEMBLY, MAST ARM EACH	630 SIGN SUPPORT ASSEMBLY, POLE MOUNTED EACH	630 SIGN FLATSHEET, TYPE G SQ. FT.		630 REMOVAL OF GROUND MOUNTED SIGN AND DISPOSAL EACH	630 REMOVAL OF GROUND MOUNTED SIGN AND STORAGE EACH	630 REMOVAL OF GROUND MOUNTED SIGN AND REERECTION EACH	630 REMOVAL OF GROUND MOUNTED POST SUPPORT AND DISPOSAL EACH	630 REMOVAL OF GROUND MOUNTED BEAM SUPPORT AND STORAGE EACH
209		US 422	1012+40	LT	R2-1-36	24X36				12.0				6						
			1012+63	CL												1			1	
			1012+63	CL												1			1	
			1012+63	RT												1			1	
			1012+63	RT												1			1	
			1013+83	CL												1			1	
			1013+88	LT												1			1	
			1014+00	RT	M1-H5-30	30X30														
					1-H12-24	24x														
			1014+08	CL												1			1	
			1014+17	RT												1			1	
			1014+18	RT	R3H-H8CB-48	48x30				23.5				10						
			1014+25	LT	OM-3R-36	12x36				12.0				3						
			1014+90	LT												2			1	
210		SR 282	149+01	CL												2			1	
			149+05	RT	R1-1-36	36x36				12.5				9						
			149+25	LT												2			1	
		US 422	1015+51	RT												1			1	
			1016+00	LT	M1-H5-30	30X30								6						
					1-H12-24	24X6				12.0				1						
			1016+36	RT												2			1	
			1017+00	RT	M3-2-24	24x12				12.5				2						
					M1-H5-30	30X30								6						
			1019+00	LT	R3-H9k-24	24X36				12.5				6						
					R3-9b-24	24X6								1						
			1019+00	RT	R3-H9j-24	24X36				12.5				6						
					R3-9b-24	24X6								1						
			1020+38	LT													1			2
			1021+00	RT	R2-1-36	24X36				12.0				6						
			1021+47	LT												2			1	
			1021+50	LT	D9-3a-24	18X18				11.0				2						
					1-H12-24	24X6								1						
			1023+00	LT	M2-1-21	21X15				13.0				2						
					72	30X30								6						
			1023+22	LT												2			1	
			1024+00	LT	W2-2L-36	36X36				13.0				9						
			1024+45	RT												1			1	
			1024+50	RT	OM-3R-36	12x36				12.0				3						
			1024+71	LT												1			1	
211			1025+50	LT												1			1	
			1025+70	LT	OM-3R-36	12x36				12.0				3						
			1027+52	LT												1			1	
			1027+72	LT												1			1	
			1033+00	LT	R3-9b-24	24X36				12.5				6						
TOTALS CARRIED TO SHEET 201							0		0	195	0	0	0	96		26	1	0	20	2

CALCULATED BF
CHECKED VLW

SIGNING SUBSUMMARY

GEA/ POR-422-18.31/ 0.00

SHEET NO.	REFERENCE NO.	LOCATION	STATION	SIDE	CODE	SIZE (INCHES)	625 GROUND ROD EACH		630 RIGID SIGN SUPPORT FOUNDATION EACH	630 GROUND MOUNTED SUPPORT, NO. 3 POST FEET	630 OVERHEAD SIGN SUPPORT, TYPE TC-16.20, DESIGN 4, 43' ARM EACH	630 SIGN HANGER ASSEMBLY, MAST ARM EACH	630 SIGN SUPPORT ASSEMBLY, POLE MOUNTED EACH	630 SIGN FLATSHEET, TYPE G SQ. FT.		630 REMOVAL OF GROUND MOUNTED SIGN AND DISPOSAL EACH	630 REMOVAL OF GROUND MOUNTED SIGN AND STORAGE EACH	630 REMOVAL OF GROUND MOUNTED SIGN AND REERECTION EACH	630 REMOVAL OF GROUND MOUNTED POST SUPPORT AND DISPOSAL EACH	630 REMOVAL OF GROUND MOUNTED BEAM SUPPORT AND STORAGE EACH
211		US 422	1033+00	RT	R3-9b-24	24X36				12.5				6						
			1034+00	RT	W2-2L-36	36X36				13.0				9						
			1034+90	LT												1			1	
212			1039+00	LT	R2-1-24	24X36				12.0				6						
			1041+28	LT												1			2	
			1041+43	LT	I-H2f-40	40x20				22.0				6						
			1041+77	LT												1			1	
	OH-1		1041+80	RT	R3-H9k-30	30x12	1		1		1	1		3						
					R3-9a-30	30x36								8						
					R3-H9k-24	24X36							1	6						
					R3-9b-24	24X6							1	1						
	OH-2		1042+00	LT	R3-H9j-30	30x12	1		1		1	1		3						
					R3-9a-30	30x36								8						
					R3-H9j-24	24X36							1	6						
					R3-9b-24	24X6							1	1						
			1042+42	LT														1	1	
		REYNOLDS ROAD	101+29	LT	R1-1-36	36x36				12.5				9						
		US 422	1044+00	RT	I-H2f-40	40x20				22.0				6						
213			1048+38	LT	W2-2R-36	36X36				13.0				9		1			1	
					72															
							0		0	393	0	0	0	200		13	1	0	11	2
							0		0	195	0	0	0	96		26	1	0	20	2
							2		2	107	2	2	4	84		4	0	1	6	0
TOTALS CARRIED TO SHEET 198							2		2	695	2	2	4	380		43	2	1	37	4

CALCULATED BF CHECKED VLW

SIGNING SUBSUMMARY

GEA/POR-422-18.31/0.00

SHEET NO.	REFERENCE NO.	LOCATION	STATION FROM	STATION TO	SIDE	626 BARRIER REFLECTOR, TYPE A EACH	626 BARRIER REFLECTOR, TYPE B EACH		642 EDGE LINE, WHITE, TYPE 2 MILE	642 EDGE LINE, YELLOW, TYPE 2 MILE	642 LANE LINE, TYPE 2 MILE	642 CENTER LINE, DOUBLE SOLID TYPE 2 MILE	642 CENTER LINE, SOLID AND BROKEN TYPE 2 MILE		642 CHANNELIZING LINE, TYPE 2 FEET	642 STOP LINE, TYPE 2 FEET	642 TRANSVERSE LINE, TYPE 2 FEET		642 ISLAND MARKING, TYPE 2 SQ. FT.	642 LANE ARROW, TYPE 2 EACH	642 WORD ON PAVEMENT, 72", TYPE 2 EACH	
203		US 422	949+10	955+00	LT/RT				0.22			0.19			1		270					
			952+37.50	955+00	RT	2																
204			955+00	965+00	LT/RT				0.38			0.11	0.27				550			2		
			955+00	956+62.50	RT	2																
205			965+00	975+00	LT/RT				0.38				0.38							2		
			967+37.50	975+12.50	RT	8																
			970+62.50	975+00	LT	5																
206			975+00	985+00	LT/RT				0.38				0.38							2		
			975+00	983+19.58	LT.	8																
			980+24.76	983+14.39	RT	1	2															
207			985+00	995+00	LT/RT				0.38				0.38							2		
208			995+00	1005+00	LT/RT				0.38				0.38							2		
209			1005+00	1015+00	LT/RT				0.38			0.11	0.25		269		690		77	2	1	
			1006+11.23	1015+00	LT	9	1															
			1008+95.45	1013+89.52	RT	4	1															
210			1015+00	1025+00	LT/RT				0.38			0.07	0.23		230							
		SR 282	146+90	1049+05	LT/RT				0.08			0.04				30						
		US 422	1015+00	1016+56.01	LT	3																
			1023+36.16	1025+00	RT	2	1															
			1024+60.71	1025+00	LT	1																
211		US 422	1025+00	1035+00	LT/RT				0.38				0.38							2		
			1025+00	1025+56	RT	1																
			1025+00	1026+93.06	LT	2	1															
212			1035+00	1045+00	LT/RT				0.38			0.01	0.37							2		
		REYNOLDS ROAD	101+29	104+75	LT/RT				0.13			0.07				17						
			1041+58.46	1041+92.50	RT	2																
			1041+87.50	1042+75.00	LT	3																
213		US 422	1045+00	1050+00	LT/RT				0.19	0.12		0.03	0.03									
					SUBTOTAL				4.04	0.12		0.63	3.05									
					TOTALS CARRIED TO SHEET 198	53	6		4.16			3.68			500	47	1510		77	16	1	

CALCULATED BF
CHECKED VLW

PAVEMENT MARKING SUBSUMMARY

GEA/POR-422-18.31/0.00

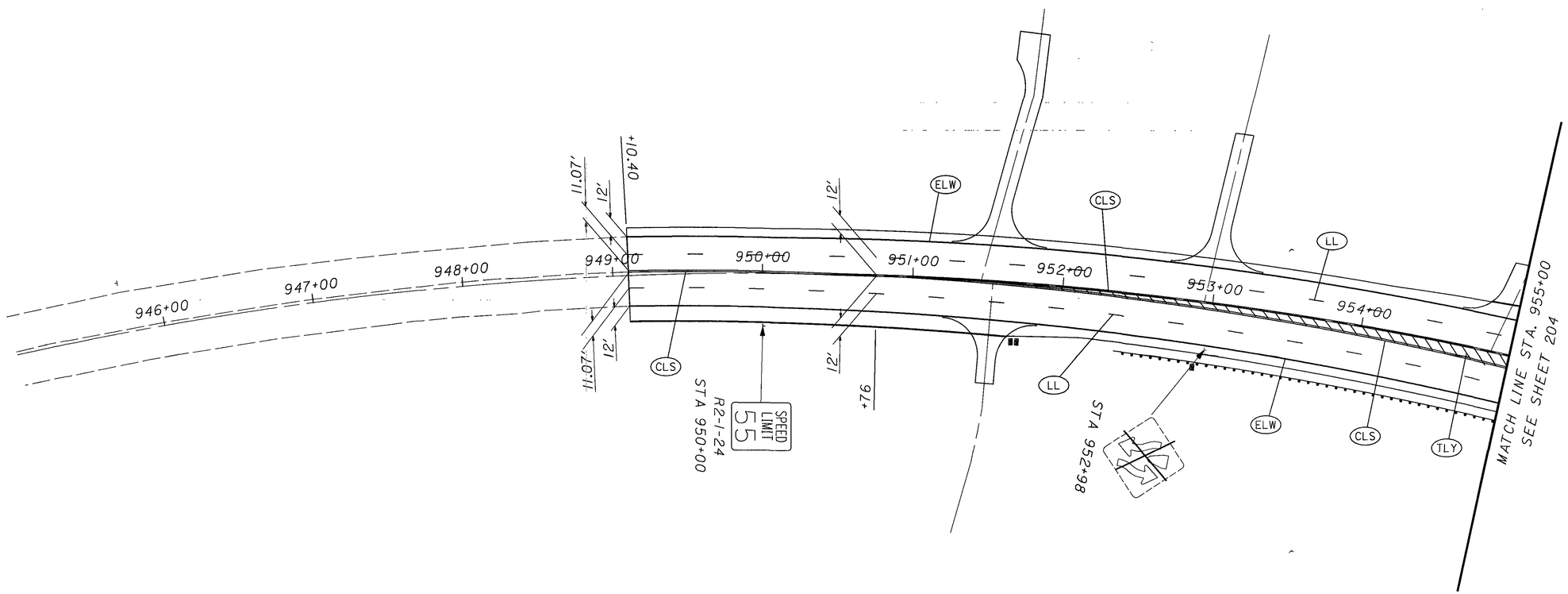

LEGEND

- EXISTING SIGN TO REMAIN
- EXISTING SIGN TO BE REMOVED
- NEW SIGN
- EXISTING SIGN - REMOVE AND REERECT (REMOVE & REERECT)

- (CH) CHANNELIZING LINE
- (CLS) CENTER LINE - DOUBLE SOLID
- (CLB) CENTER LINE - DOUBLE, SOLID & BROKEN
- (ELW) EDGE LINE (WHITE)
- (ELY) EDGE LINE (YELLOW)
- (IM) ISLAND MARKING
- (LL) LANE LINE
- (SL) STOP LINE
- (TLY) TRANSVERSE LINE (YELLOW)

CROSS REFERENCES

SHEET NO.	DESCRIPTION
199	SIGNING SUBSUMMARY
202	PAVEMENT MARKING SUBSUMMARY

HORIZONTAL SCALE IN FEET 0 20 40 80

CALCULATED

CHECKED

SIGNING AND PAVEMENT MARKING PLAN
STA 945+00 TO STA 955+00

GEA/POR-422-18.31/0.00

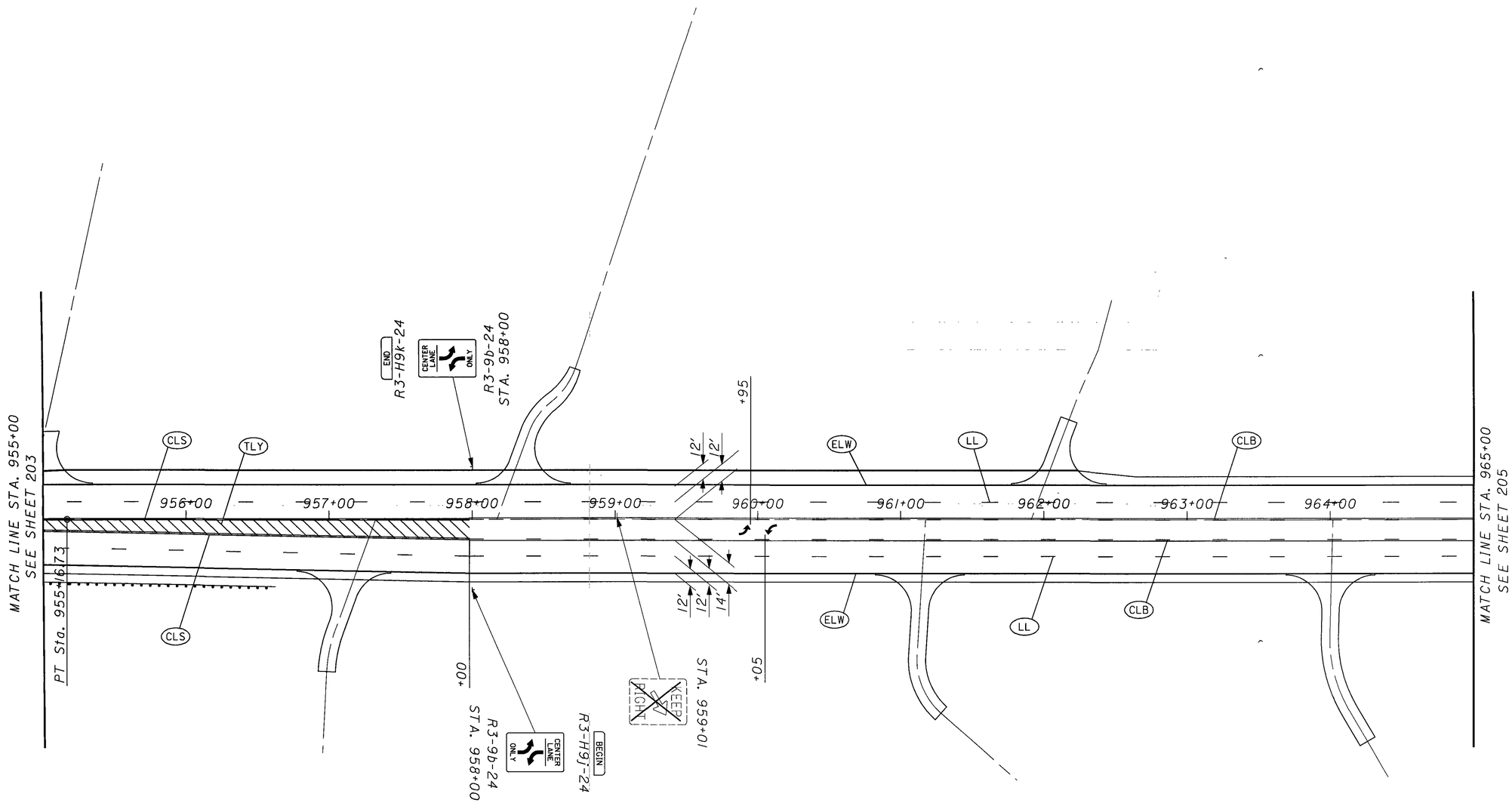

CROSS REFERENCES	
SHEET NO.	DESCRIPTION
199	SIGNING SUBSUMMARY
202	PAVEMENT MARKING SUBSUMMARY

FOR SIGNING AND PAVEMENT MARKING LEGEND, SEE SHEET 203.

HORIZONTAL SCALE IN FEET
0 20 40 80

CALCULATED
CHECKED

SIGNING AND PAVEMENT MARKING PLAN
STA 955+00 TO STA 965+00

GEA/POR-422-18.31/0.00

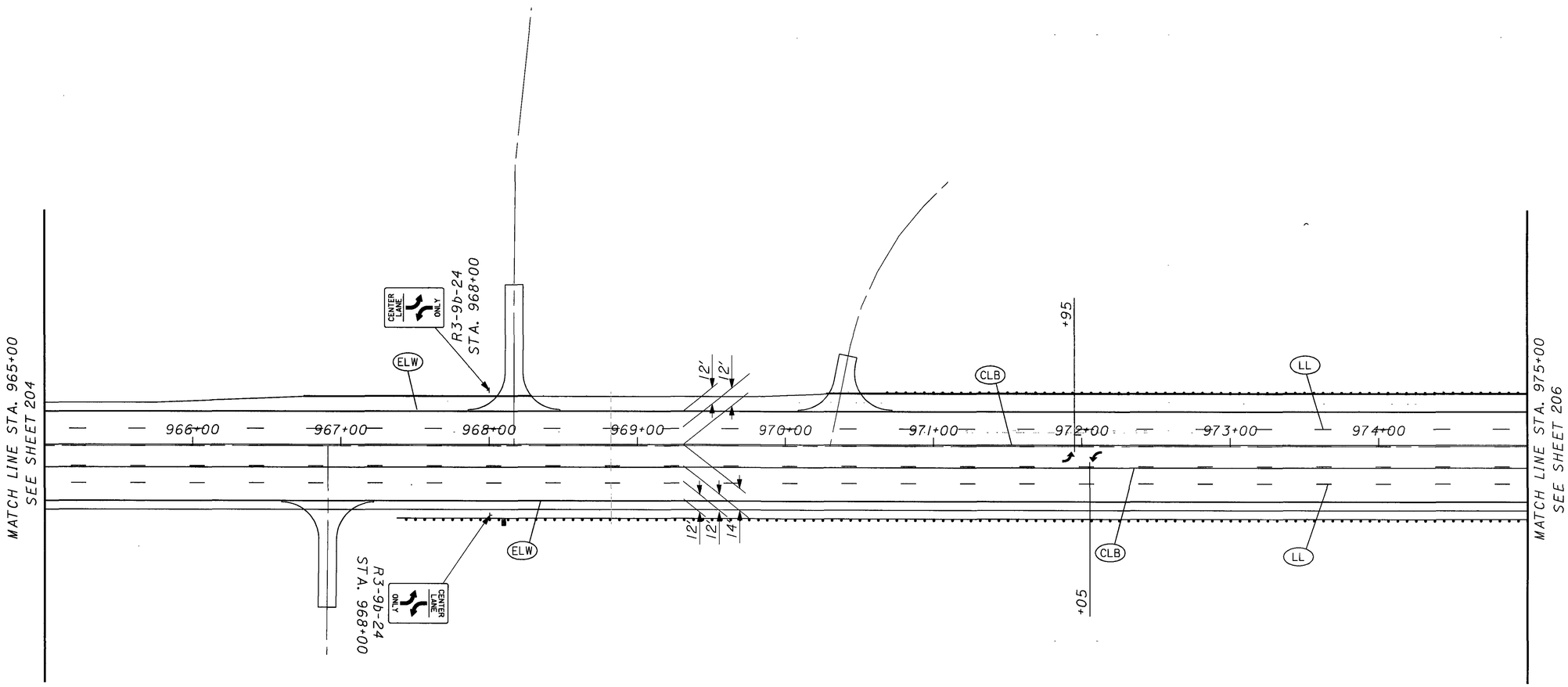

CROSS REFERENCES

SHEET NO.	DESCRIPTION
199	SIGNING SUBSUMMARY
202	PAVEMENT MARKING SUBSUMMARY

FOR SIGNING AND PAVEMENT MARKING LEGEND, SEE SHEET 203.

0 20 40 80
HORIZONTAL SCALE IN FEET

CALCULATED
CHECKED

SIGNING AND PAVEMENT MARKING PLAN
STA 965+00 TO STA 975+00

GEA/POR-422-18.31/0.00

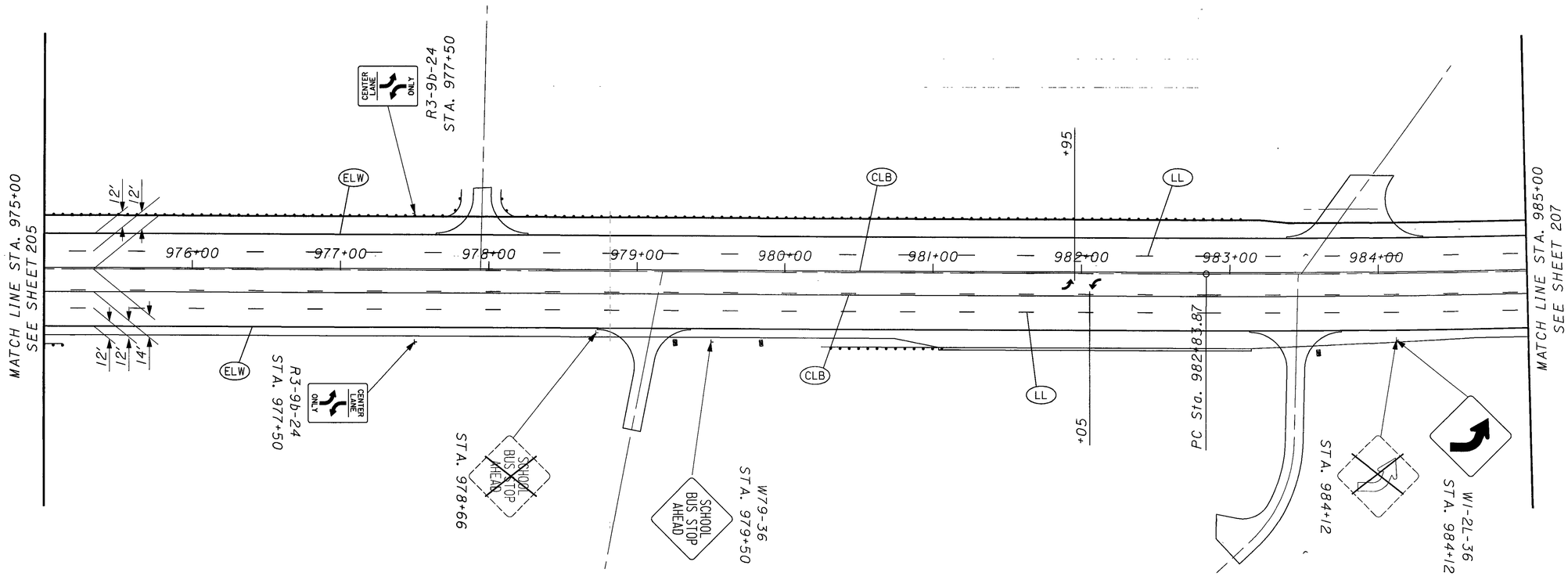

CROSS REFERENCES

SHEET NO.	DESCRIPTION
199	SIGNING SUBSUMMARY
202	PAVEMENT MARKING SUBSUMMARY

FOR SIGNING AND PAVEMENT MARKING LEGEND, SEE SHEET 203.

0 20 40 80
HORIZONTAL SCALE IN FEET

CALCULATED
CHECKED

SIGNING AND PAVEMENT MARKING PLAN
STA 975+00 TO STA 985+00

GEA/POR-422-18.31/0.00

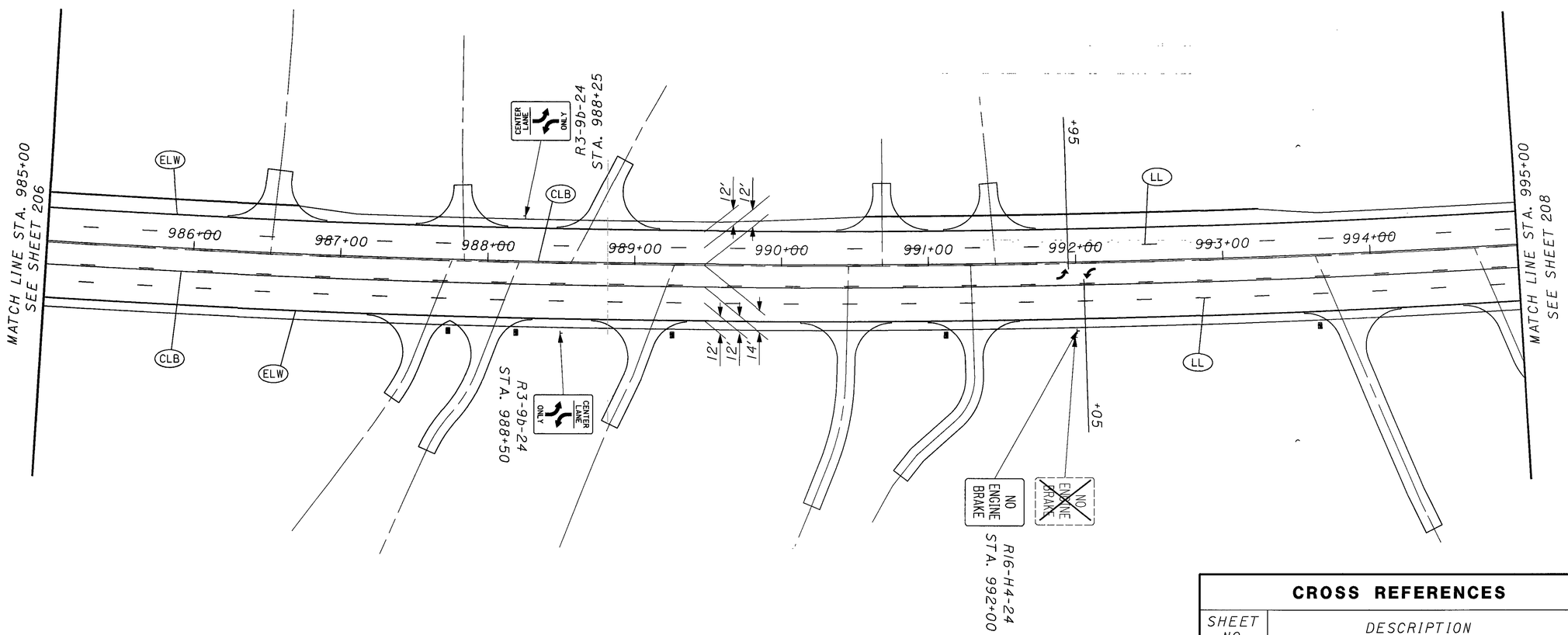

CROSS REFERENCES

SHEET NO.	DESCRIPTION
199	SIGNING SUBSUMMARY
202	PAVEMENT MARKING SUBSUMMARY

FOR SIGNING AND PAVEMENT MARKING LEGEND, SEE SHEET 203.

HORIZONTAL SCALE IN FEET
0 20 40 80

CALCULATED
CHECKED

SIGNING AND PAVEMENT MARKING PLAN
STA 985+00 TO STA 995+00

GEA/POR-422-18.31/0.00

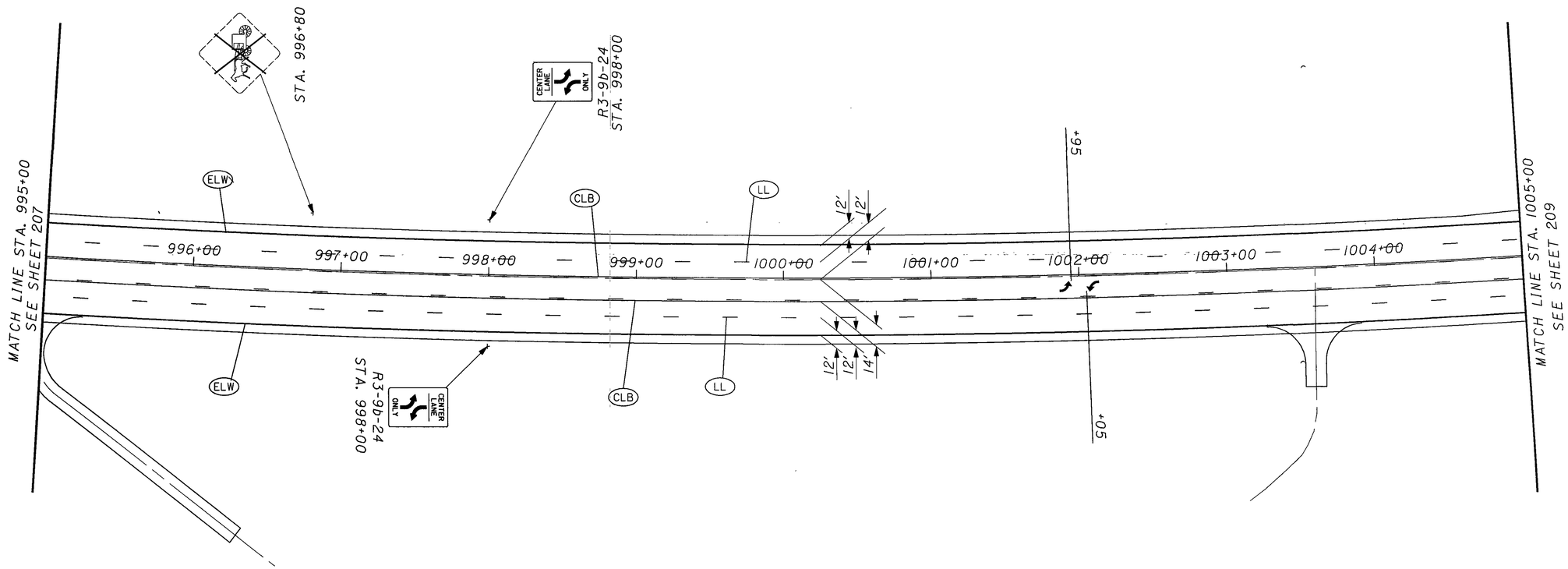

CROSS REFERENCES	
SHEET NO.	DESCRIPTION
199	SIGNING SUBSUMMARY
202	PAVEMENT MARKING SUBSUMMARY

FOR SIGNING AND PAVEMENT MARKING LEGEND, SEE SHEET 203.

0 20 40 80
HORIZONTAL SCALE IN FEET

CALCULATED
CHECKED

SIGNING AND PAVEMENT MARKING PLAN
STA 995+00 TO STA 1005+00

GEA/POR-422-18.31/0.00

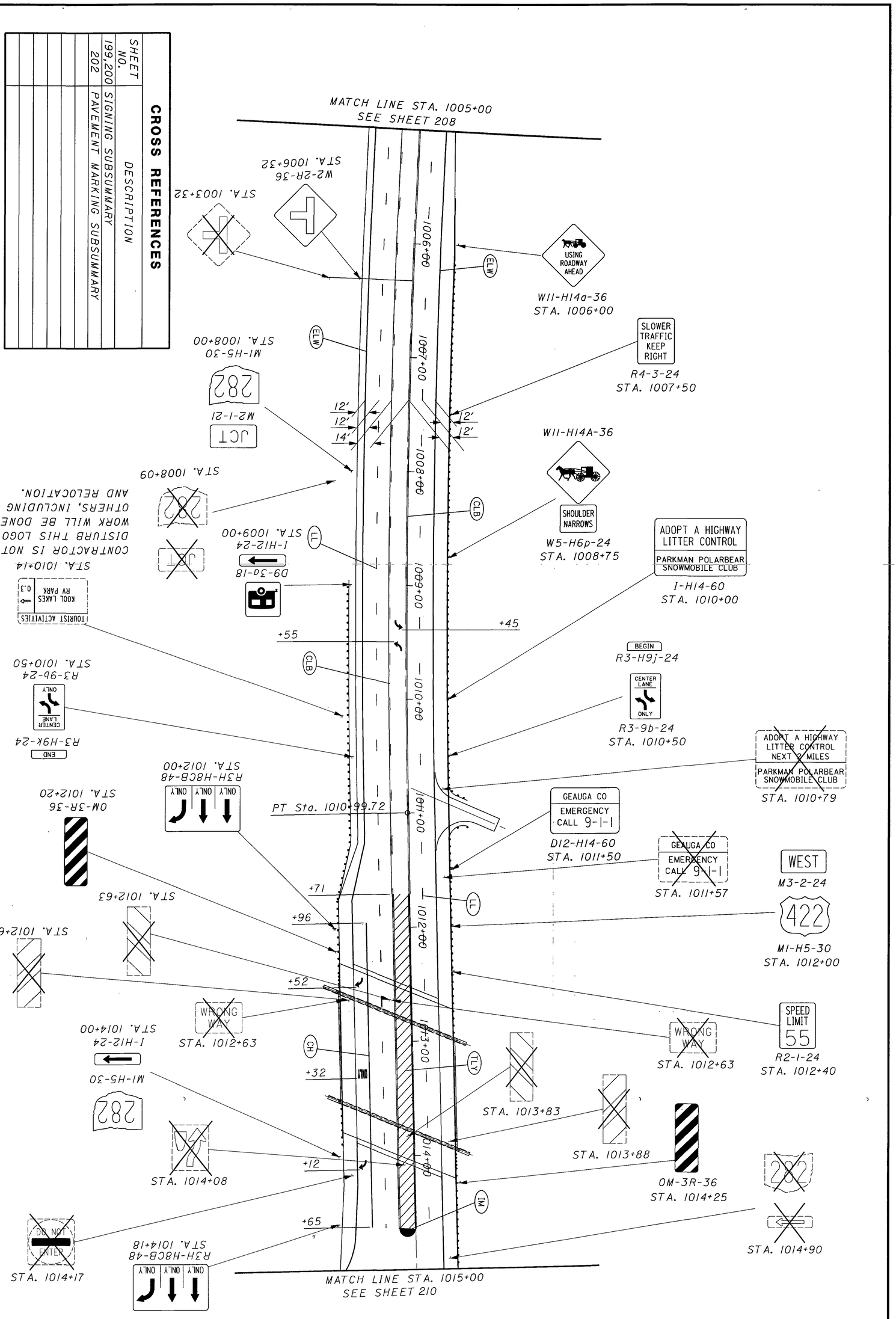

209/332

GEA/POR-422-18.31/0.00

SIGNING AND PAVEMENT MARKING PLAN
STA 1005+00 TO STA 1015+00

CALCULATED
CHECKED

0 20 40 80
HORIZONTAL SCALE IN FEET

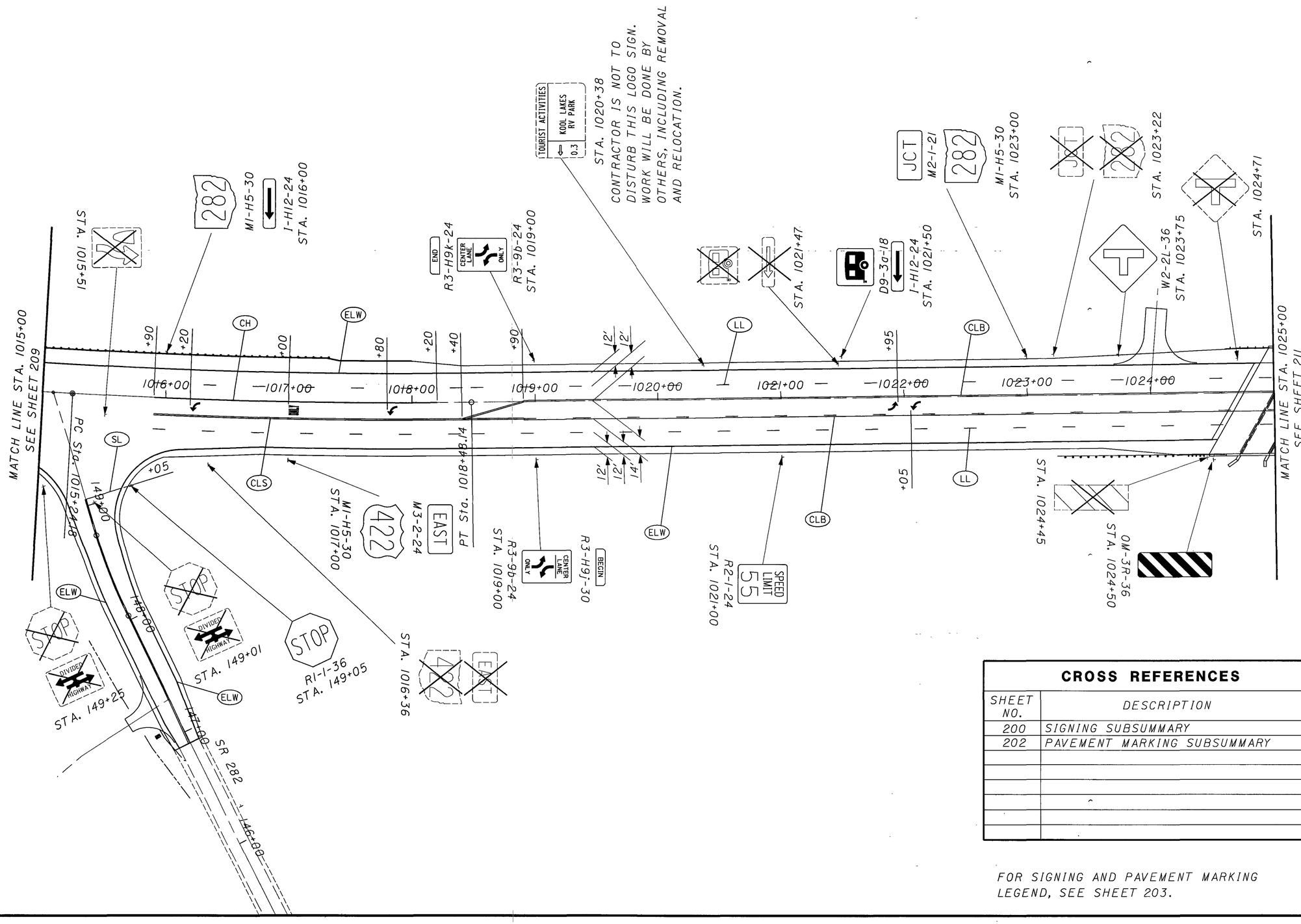

CROSS REFERENCES

SHEET NO.	DESCRIPTION
200	SIGNING SUBSUMMARY
202	PAVEMENT MARKING SUBSUMMARY

FOR SIGNING AND PAVEMENT MARKING LEGEND, SEE SHEET 203.

HORIZONTAL SCALE IN FEET

CALCULATED

CHECKED

SIGNING AND PAVEMENT MARKING PLAN
STA 1015+00 TO STA 1025+00

GEA/POR-422-18.31/0.00

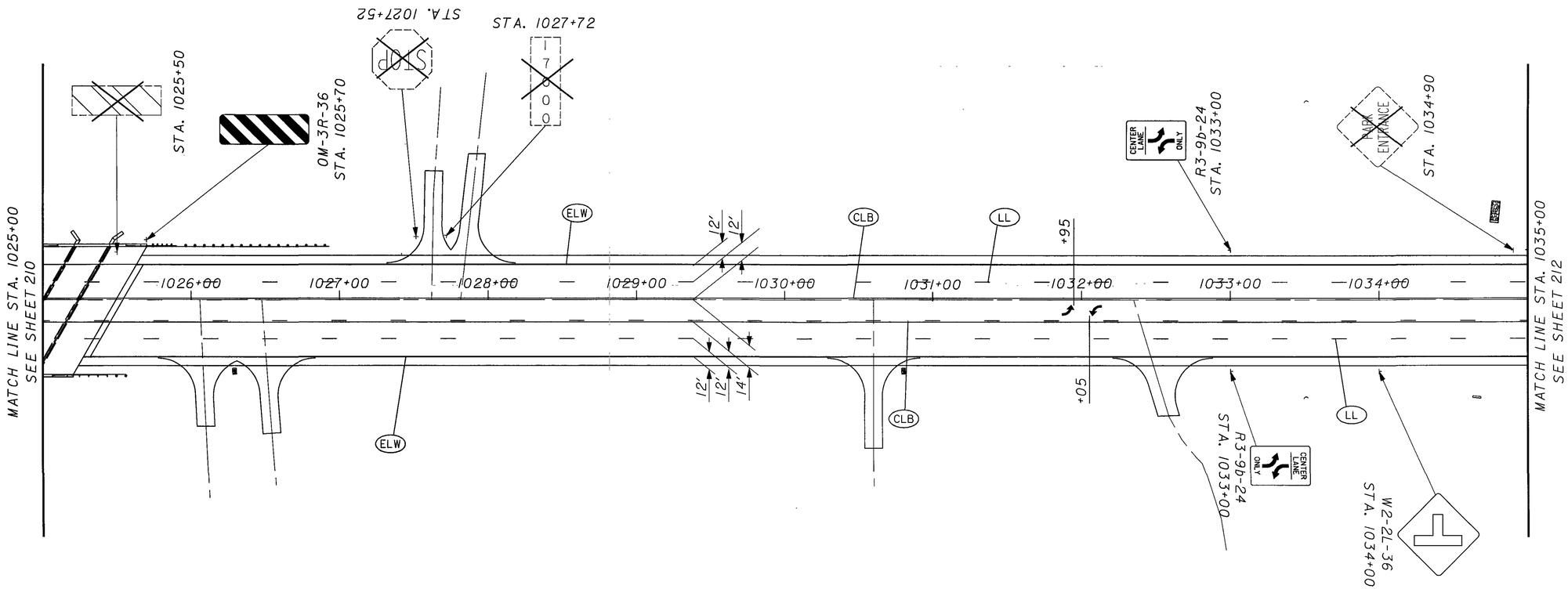

CROSS REFERENCES

SHEET NO.	DESCRIPTION
200	SIGNING SUBSUMMARY
202	PAVEMENT MARKING SUBSUMMARY

FOR SIGNING AND PAVEMENT MARKING LEGEND, SEE SHEET 203.

HORIZONTAL SCALE IN FEET
0 20 40 80

CALCULATED
CHECKED

SIGNING AND PAVEMENT MARKING PLAN
STA 1025+00 TO STA 1035+00

GEA/POR-422-18.31/0.00

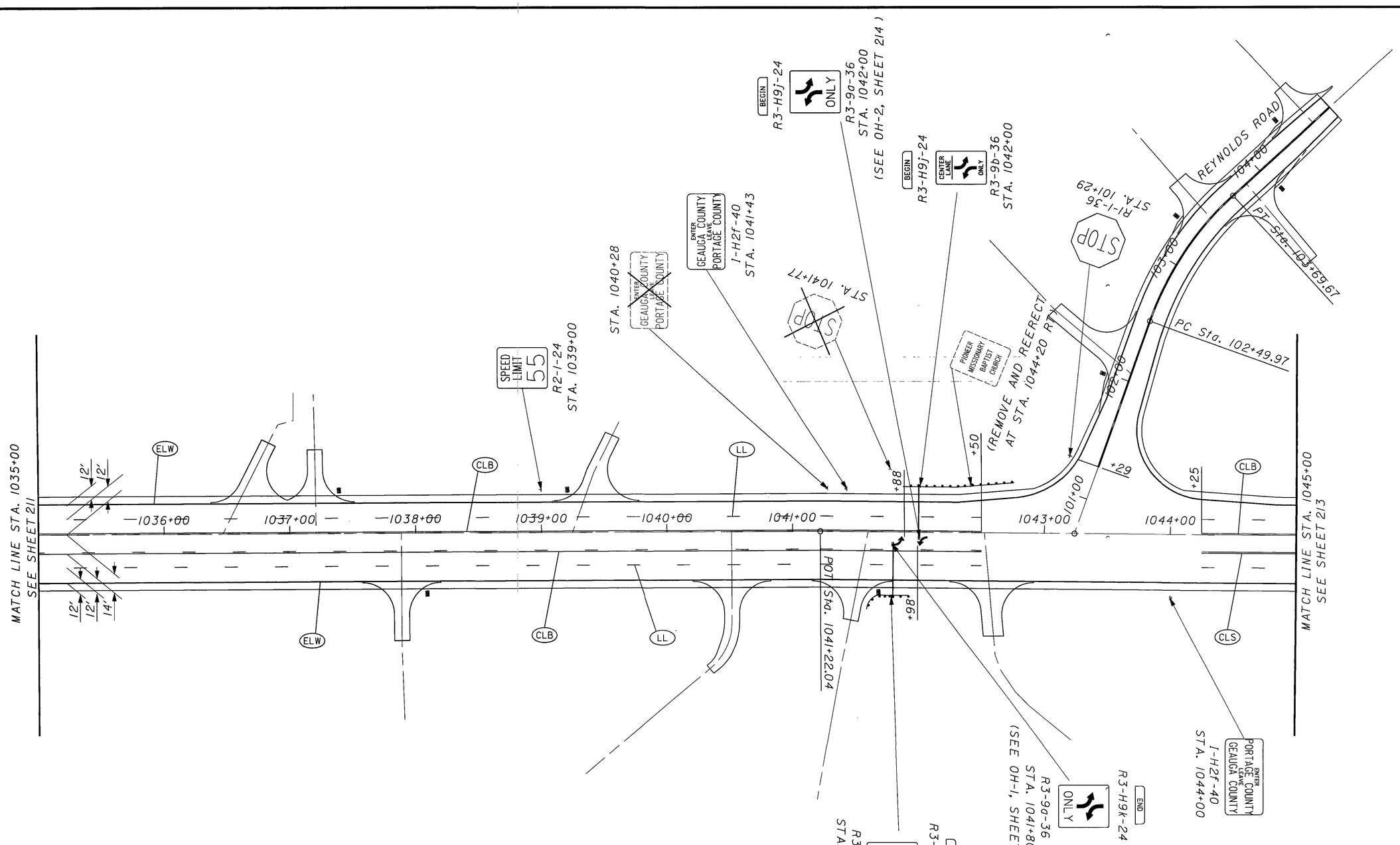

CROSS REFERENCES

SHEET NO.	DESCRIPTION
201	SIGNING SUBSUMMARY
202	PAVEMENT MARKING SUBSUMMARY

FOR SIGNING AND PAVEMENT MARKING LEGEND, SEE SHEET 203.

CALCULATED

CHECKED

0 20 40 80
HORIZONTAL SCALE IN FEET

SIGNING AND PAVEMENT MARKING PLAN
STA 1035+00 TO STA 1045+00

GEA/POR-422-18.31/0.00

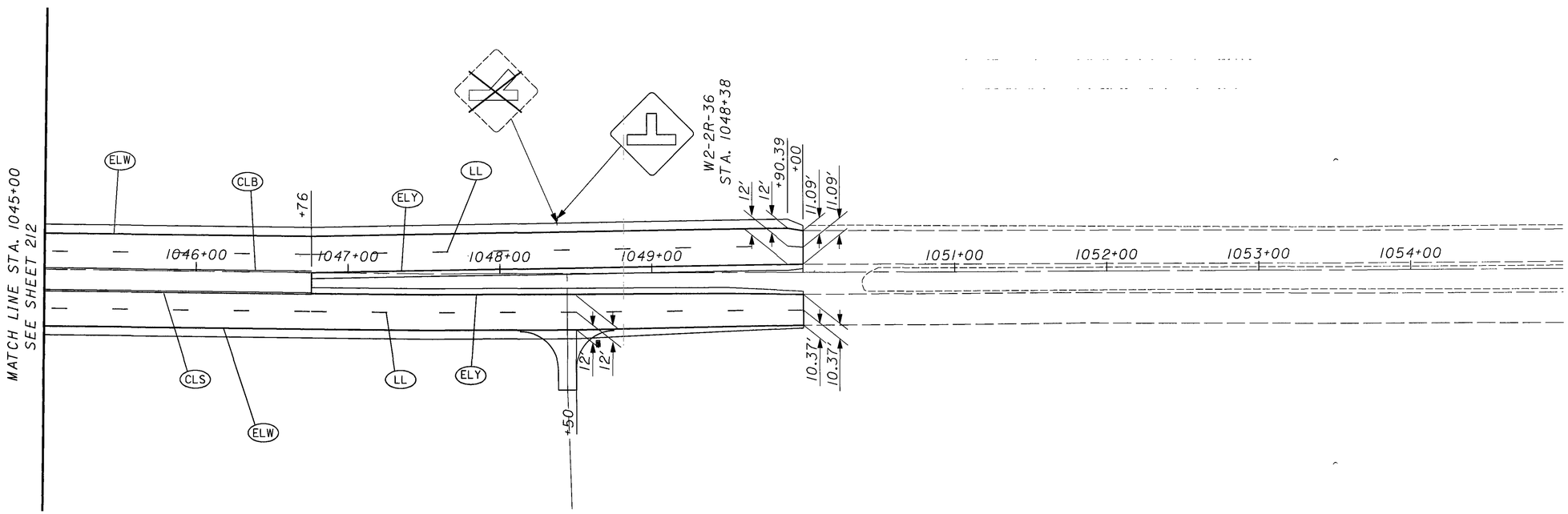

CROSS REFERENCES	
SHEET NO.	DESCRIPTION
201	SIGNING SUBSUMMARY
202	PAVEMENT MARKING SUBSUMMARY

FOR SIGNING AND PAVEMENT MARKING LEGEND, SEE SHEET 203.

0 20 40 80
HORIZONTAL SCALE IN FEET

CALCULATED
CHECKED

SIGNING AND PAVEMENT MARKING PLAN
STA 1045+00 TO STA 1055+00

GEA/POR-422-18.31/0.00

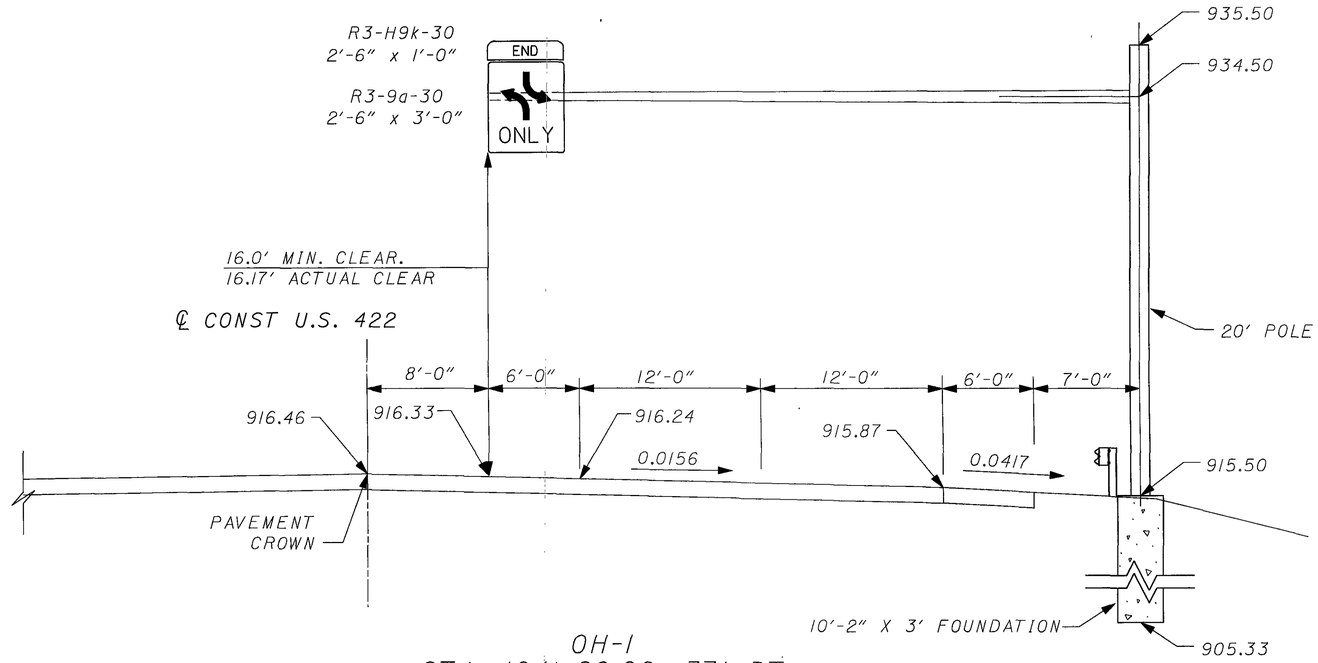

OH-1
STA. 1041+80.00, 37' RT

PROPOSED OVERHEAD SIGN
SUPPORT TC-16.20, DESIGN 4
43'-0" ARM

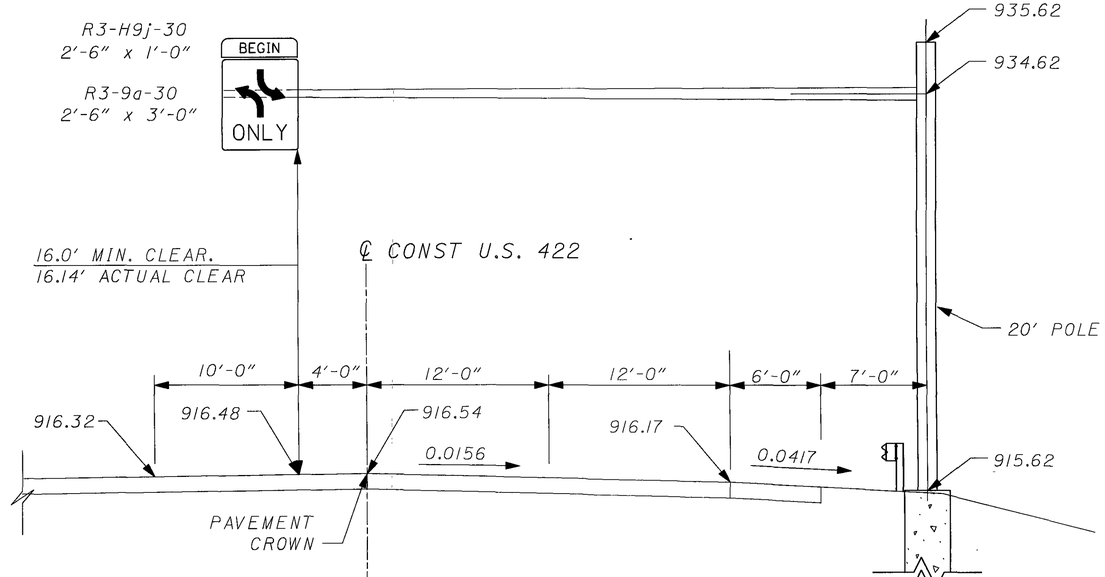

OH-2
STA. 1042+00.00, 37' LT

PROPOSED OVERHEAD SIGN
SUPPORT TC-16.20, DESIGN 4
43'-0" ARM

CALCULATED
CHECKED

OVERHEAD SIGN DETAILS

GEA / POR-422-18.31/ 0.00

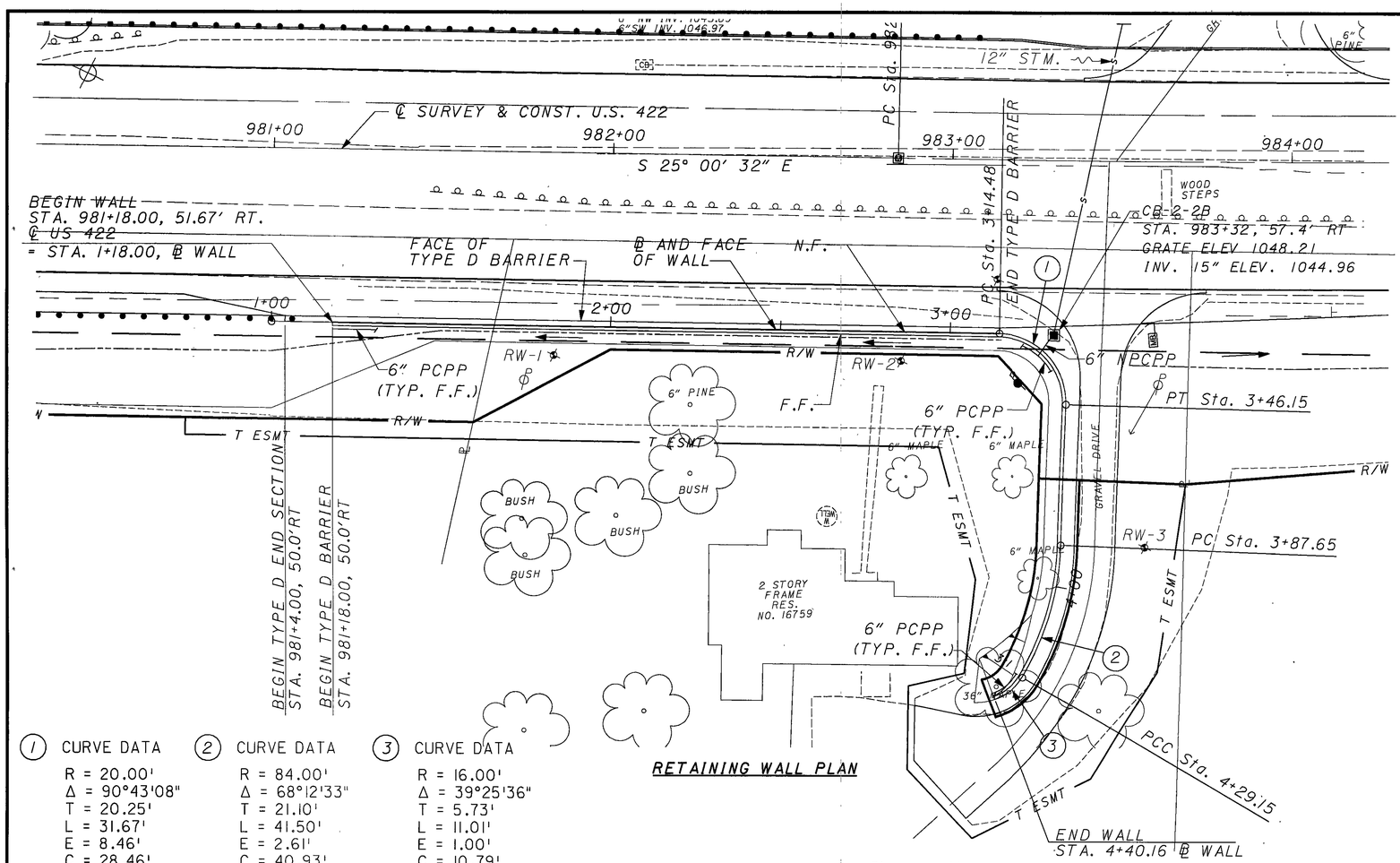

RETAINING WALL PLAN

① CURVE DATA	② CURVE DATA	③ CURVE DATA
R = 20.00'	R = 84.00'	R = 16.00'
Δ = 90°43'08"	Δ = 68°12'33"	Δ = 39°25'36"
T = 20.25'	T = 21.10'	T = 5.73'
L = 31.67'	L = 41.50'	L = 11.01'
E = 8.46'	E = 2.61'	E = 1.00'
C = 28.46'	C = 40.93'	C = 10.79'

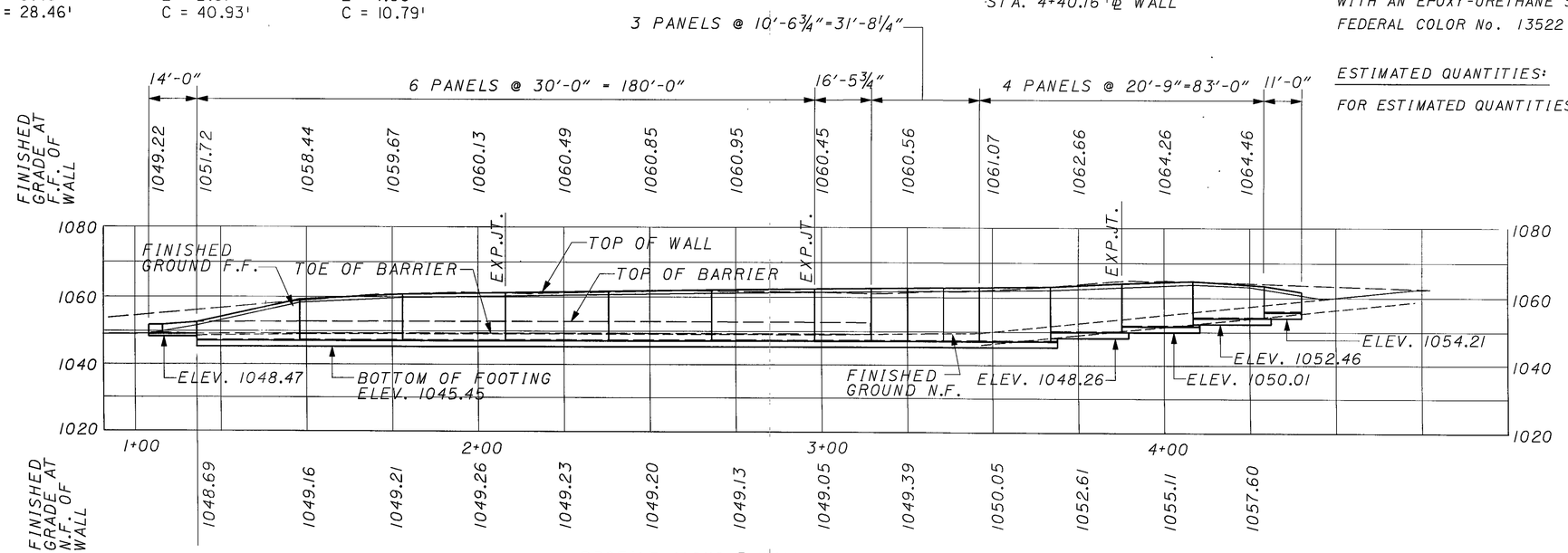

PROFILE ALONG ℄ WALL

GENERAL NOTES:

DESIGN SPECIFICATIONS

THIS STRUCTURE CONFORMS TO "STANDARD SPECIFICATIONS FOR HIGHWAY BRIDGES" ADOPTED BY THE AMERICAN ASSOCIATION OF STATE HIGHWAY AND TRANSPORTATION OFFICIALS, 2002, AND THE ODOT BRIDGE DESIGN MANUAL.

DESIGN DATA

CONCRETE CLASS C - COMPRESSIVE STRENGTH 4000 psi.
REINFORCING STEEL - ASTM A615, A616, OR A617
GRADE 60, MINIMUM YIELD STRENGTH 60,000 psi.

FOUNDATION BEARING PRESSURE

RETAINING WALL FOOTINGS, AS DESIGNED, PRODUCE A MAXIMUM BEARING PRESSURE OF 2650 psf. THE ALLOWABLE BEARING PRESSURE IS 3000 psf.

ITEM SPECIAL - FORM LINER

THIS ITEM SHALL CONSIST OF PROVIDING A FORM LINER FOR THE EXTERIOR SURFACE OF THE REINFORCED CONCRETE RETAINING WALL WHERE SHOWN ON THE PLANS. THE FORM LINER SHALL PROVIDE A FINISHED APPEARANCE OF DRY STACKED STONE WITH A MAX RELIEF OF 2".

ACCEPTABLE FORM LINERS ARE #1203 NEW ENGLAND DRY STACK AS MANUFACTURED BY CUSTOM ROCK INTERNATIONAL, 2020 WEST 7 TH ST., ST. PAUL, MINNESOTA 55116; 651-699-1345 ; ANTIETAM DRYSTACK #17910 AS MANUFACTURED BY FITZGERALD FORMLINERS, 1500 E. CHESTNUT AVE., SANTA ANA, CA 92701, 714-547-6710, OR AN APPROVED EQUAL.

THE CONTRACTOR SHALL SUBMIT PRODUCT INFORMATION FOR THE PROPOSED FORM LINER AND A SAMPLE CAST CONCRETE PANEL TO THE ENGINEER FOR APPROVAL. PAYMENT FOR ALL LABOR, MATERIALS, EQUIPMENT AND INCIDENTALS NECESSARY FOR APPLICATION OF THE FORM LINER WHERE SHOWN ON THE PLANS SHALL BE MADE AT THE CONTRACT UNIT PRICE PER SQ. FT. FOR ITEM SPECIAL - FORM LINER.

ITEM 512, SEALING OF CONCRETE SURFACES (EPOXY-URETHANE)

CONCRETE SURFACES AS DETAILED IN THE PLANS SHALL BE SEALED WITH AN EPOXY-URETHANE SEALER OF A COLOR CONFORMING TO FEDERAL COLOR No. 13522 - BUFF.

ESTIMATED QUANTITIES:

FOR ESTIMATED QUANTITIES, SEE SHEET 8/8.

LEGEND

℄	BASELINE
BOT.	BOTTOM
℄	CENTERLINE
CONST.	CONSTRUCTION
C.J	CONSTRUCTION JOINT
CONTR. JT.	CONTRACTION JOINT
E.F.	EACH FACE
EL.	ELEVATION
EXP. JT.	EXPANSION JOINT
F.F.	FAR FACE
INV.	INVERT
MIN.	MINIMUM
N.F.	NEAR FACE
NPCPP	NON-PERFORATED CORRUGATED PLASTIC PIPE
PCPP	PERFORATED CORRUGATED PLASTIC PIPE
PROP.	PROPOSED
⊕	SOIL BORING
SPA.	SPACES
STA.	STATION
ST.	STREET
TYP.	TYPICAL
U.N.O.	UNLESS NOTED OTHERWISE

HORIZONTAL SCALE IN FEET 0 10 20 40

DESIGNED	DRAWN	REVIEWED	DATE
GLC	GLC	AJM	09/05/05
CHECKED	REV'SED	STRUCTURE FILE NUMBER	
PAT		NA	

PLAN AND PROFILE
PROPOSED RETAINING WALL

GEA/POR-422-18.31/0.00

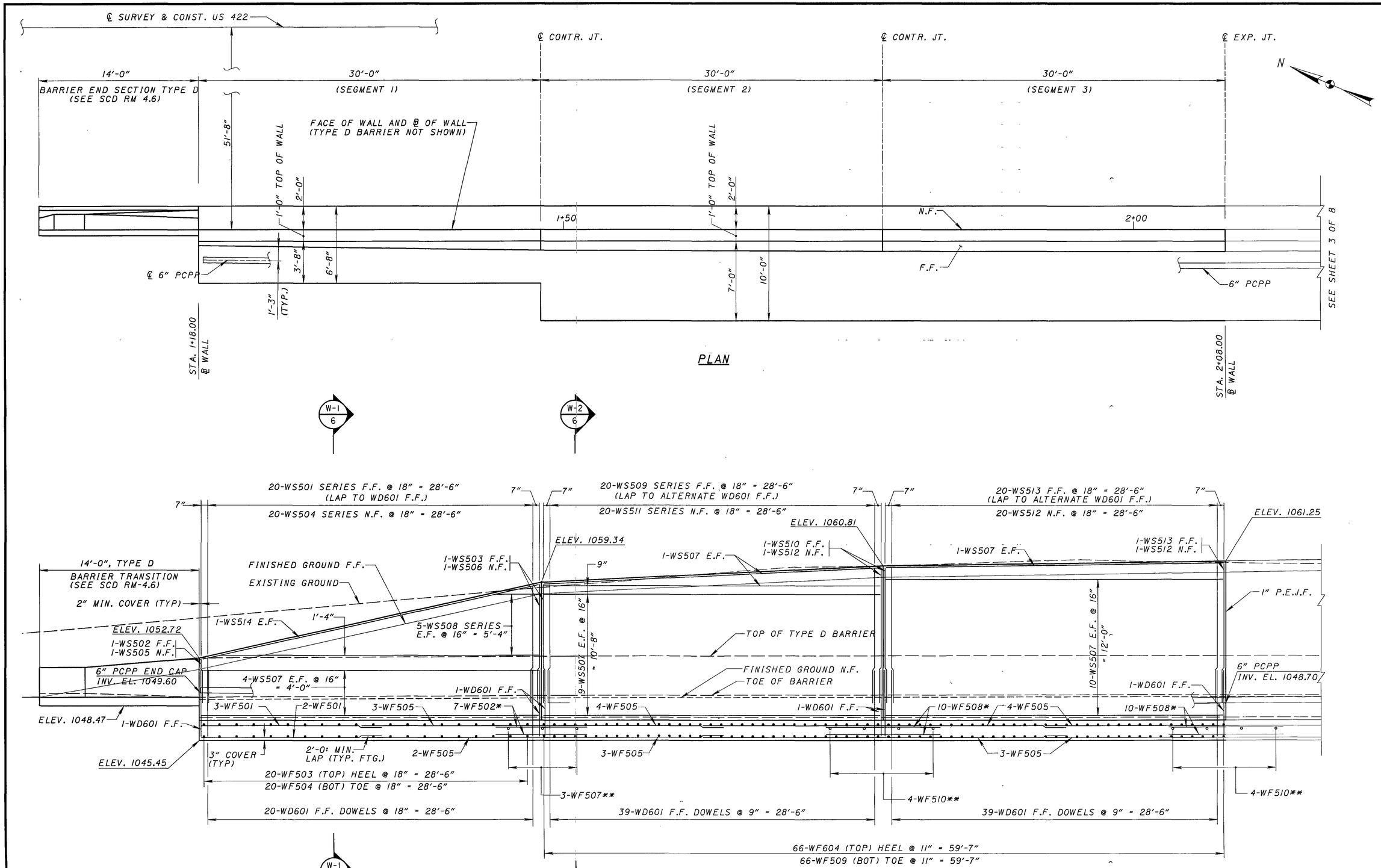

* - CENTERED UNDER JOINT

** - NO. 5 BARS @ EQ. SPA. TO SUPPORT ADDITIONAL LONGITUDINAL REINFORCEMENT AT JOINTS

DESIGN AGENCY
DLZ
6121 HUNTLEY ROAD • COLUMBUS, OHIO 43229

DATE	REVIEWED	DRAWN	REVISED
09/08/05	AJM	GLC	

DESIGNED	CHECKED
GLC	PAT

RETAINING WALL DETAILS
SEGMENTS 1 THRU 3

GEA/POR-422-18.31/0.00

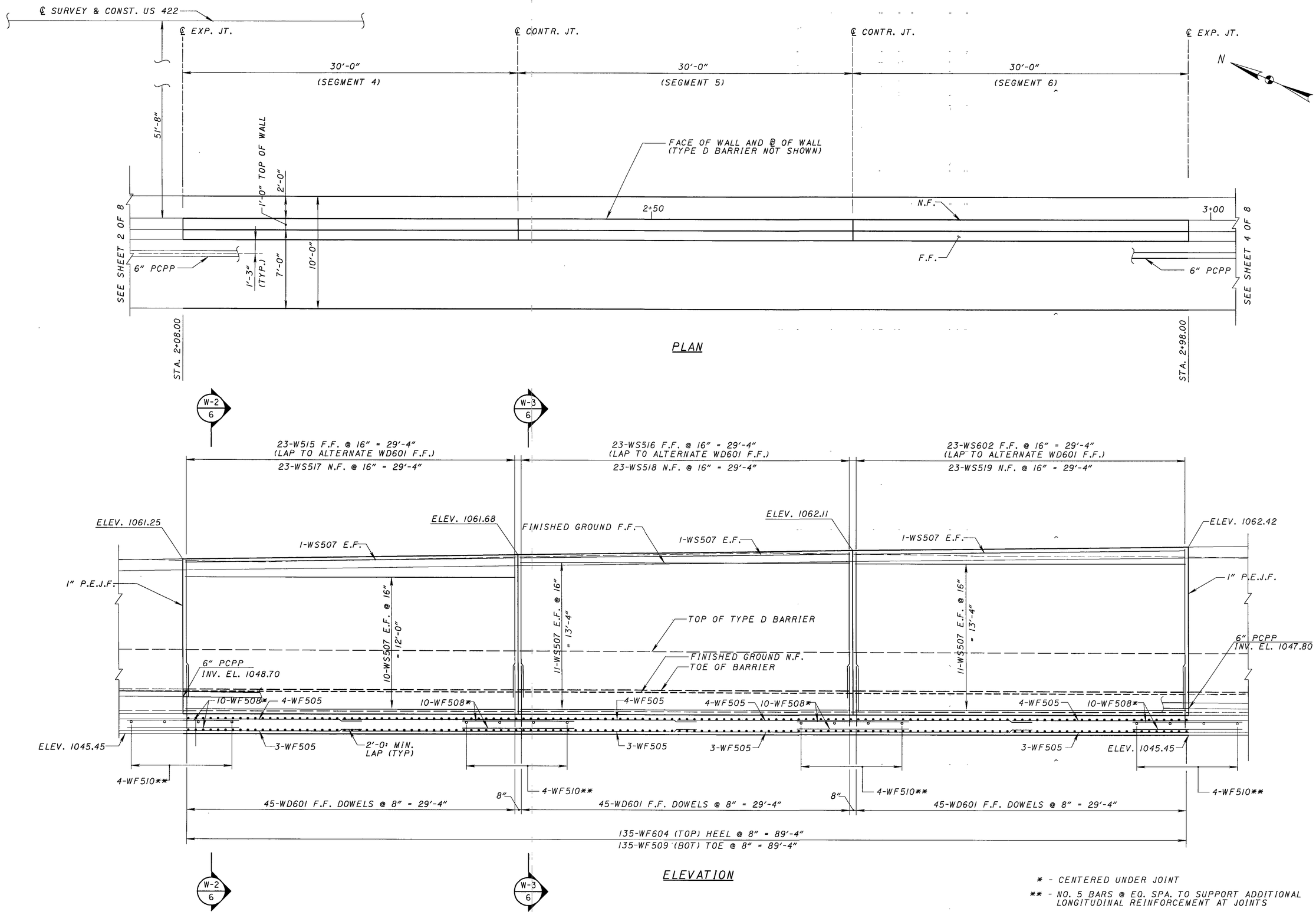

* - CENTERED UNDER JOINT

** - NO. 5 BARS @ EQ. SPA. TO SUPPORT ADDITIONAL LONGITUDINAL REINFORCEMENT AT JOINTS

DESIGN AGENCY
DLZ
601 HUNTLEY ROAD • COLUMBUS, OHIO 43229

REVIEWED	DATE
AJM	09/08/05
DRAWN GLC	REVISED
DESIGNED GLC	CHECKED PAT

RETAINING WALL DETAILS
SEGMENTS 4 THRU 6

GEA/POR-422-18.31/0.00

3 / 8

217 / 332

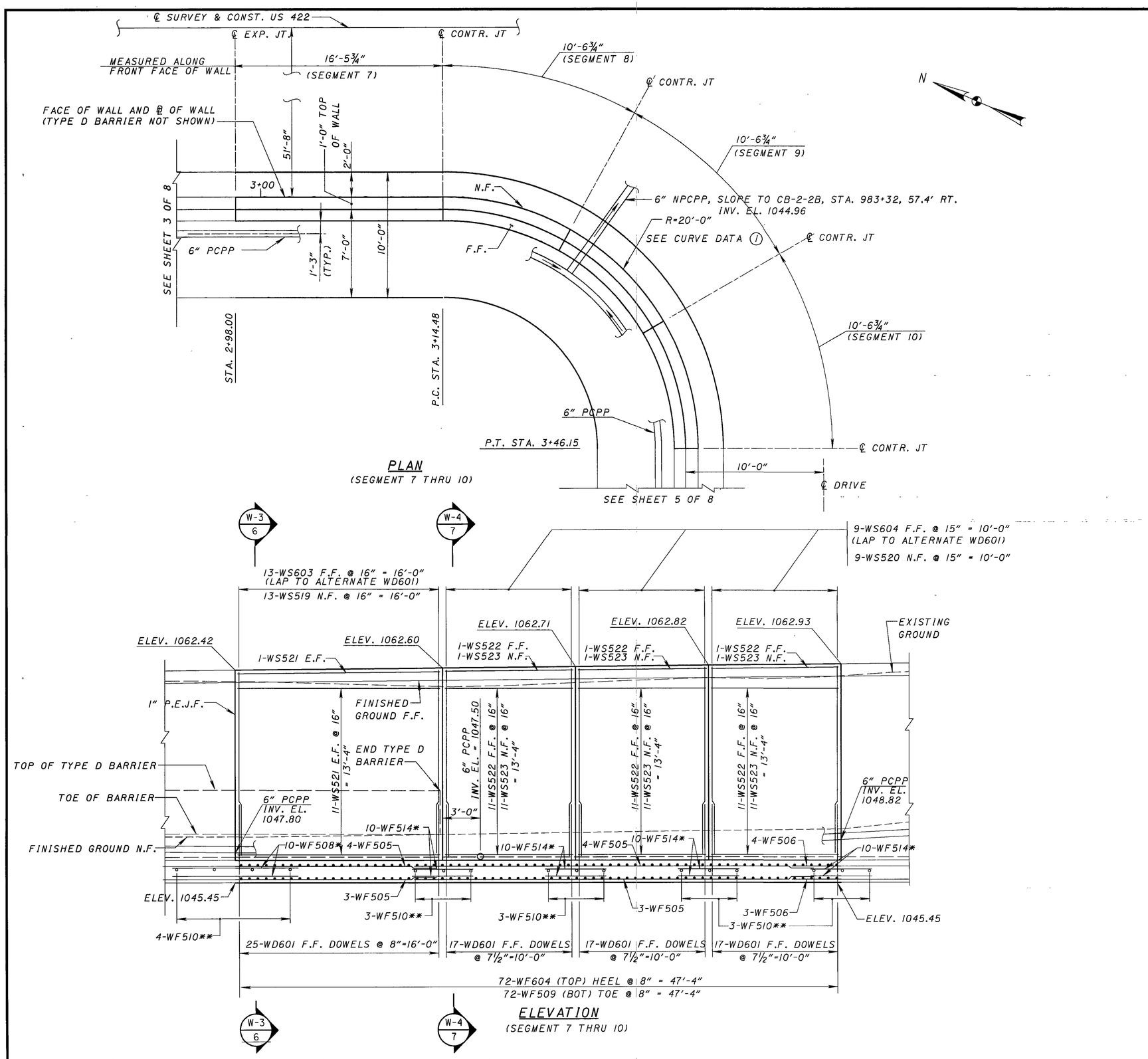

* - CENTERED UNDER JOINT

** - NO. 5 BARS @ EQ. SPA. TO SUPPORT ADDITIONAL LONGITUDINAL REINFORCEMENT AT JOINTS

DESIGN AGENCY
DLZ
601 MARTLET ROAD • COLUMBUS, OHIO 43229

DESIGNED	DRAWN	REVIEWED	DATE
GLC	GLC	AJM	09/08/05
CHECKED	REVISED		
PAT			

RETAINING WALL DETAILS
SEGMENTS 7 THRU 10

GEA/POR-422-18.31/0.00

4/8

218/332

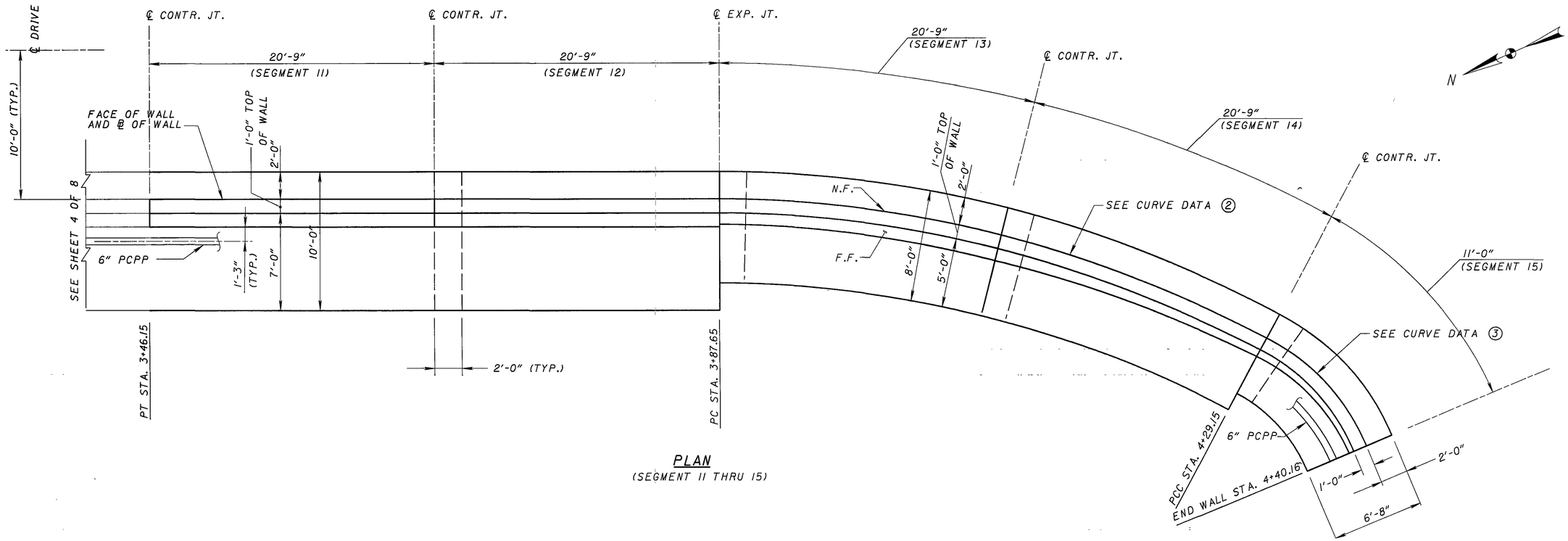

PLAN
(SEGMENT 11 THRU 15)

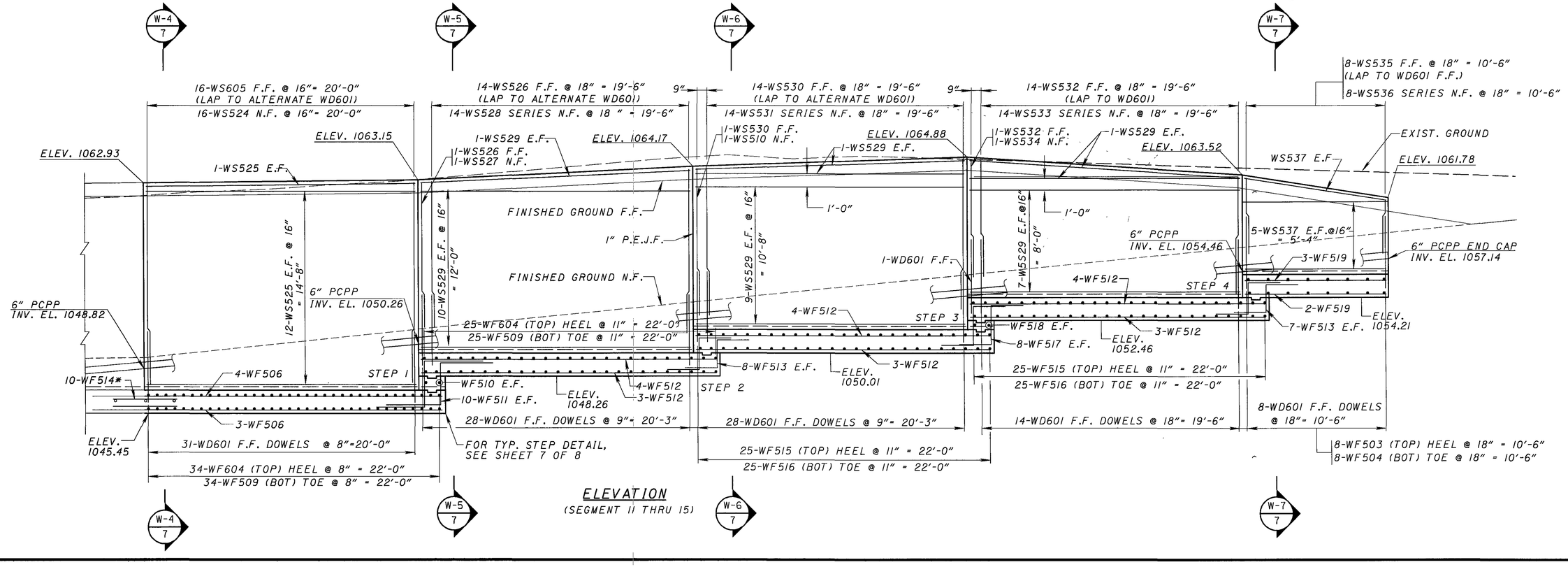

ELEVATION
(SEGMENT 11 THRU 15)

DESIGN AGENCY
DLZ
8101 HUNTLEY ROAD • COLUMBUS, OHIO 43229

DESIGNED	DRAWN	REVIEWED	DATE
GLC	GLC	AJM	09/08/05
CHECKED	REVISED		
PAT			

RETAINING WALL DETAILS
SEGMENTS 11 THRU 15

GEA/POR-422-
18.31/0.00

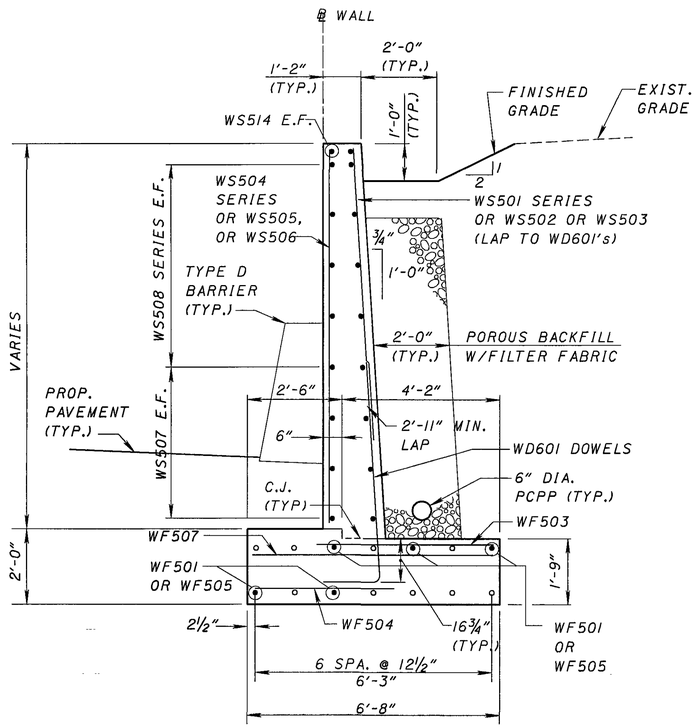

○ - INDICATES WF502 (TOP & BOT.) CENTERED UNDER JOINT

SECTION W-1/2
SEGMENT 1

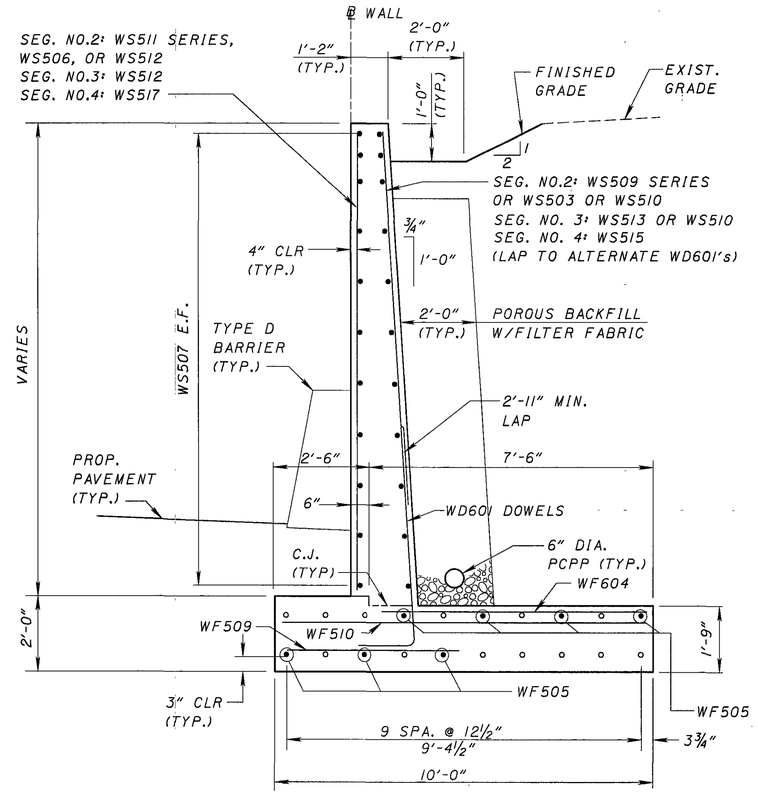

○ - INDICATES WF508 (TOP & BOT.) CENTERED UNDER JOINT

SECTION W-2/2-3
SEGMENT 2-4

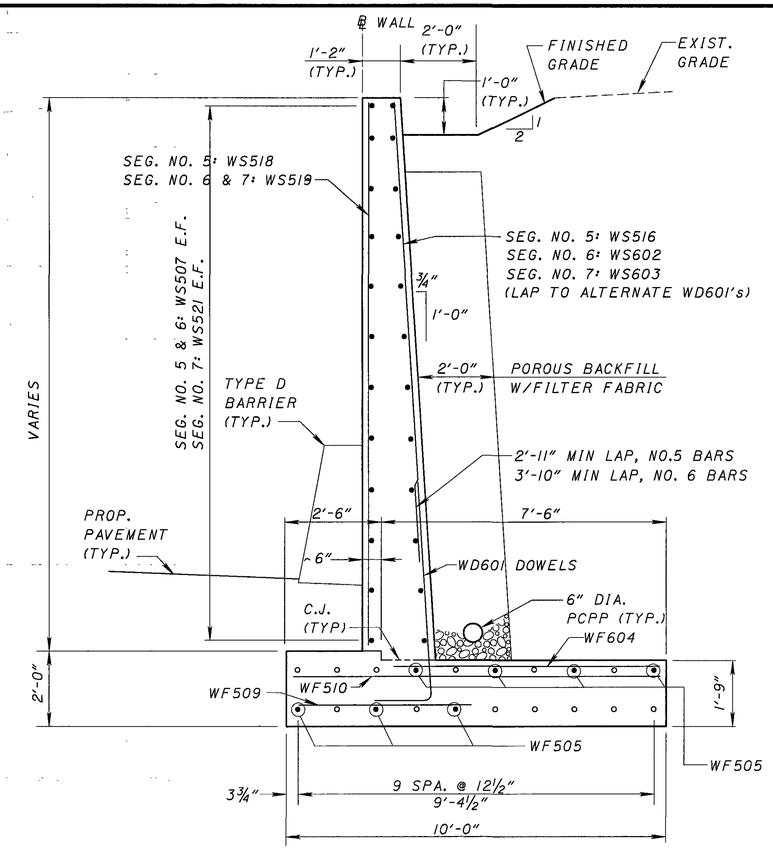

○ - INDICATES WF508 (TOP & BOT.) CENTERED UNDER JOINT

SECTION W-3/3-4
SEGMENT 5-7

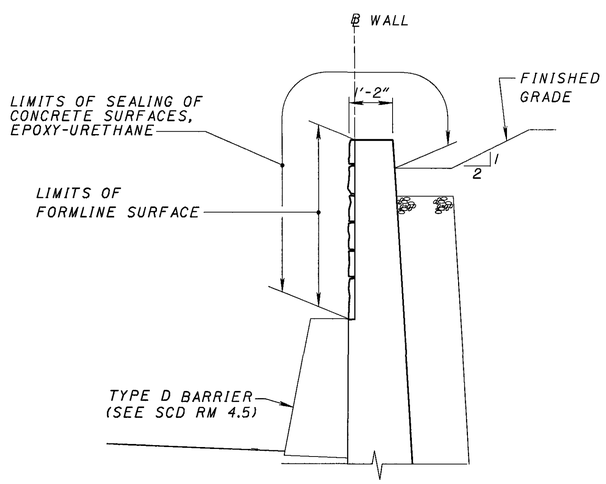

FORM LINER AND SEALING OF CONCRETE SURFACES

AT TYPE D BARRIER

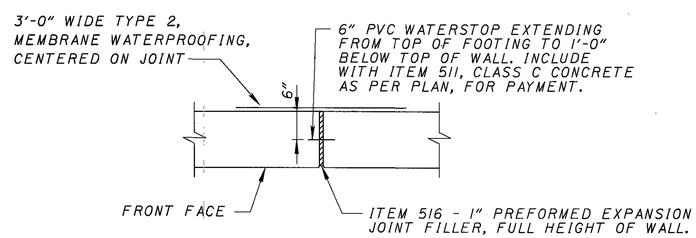

EXPANSION JOINT DETAIL

PVC WATERSTOP

A PVC WATERSTOP, NOMINAL DIMENSIONS 6" x 1/8" THICK AND CAPABLE OF PROVIDING 1½" MOVEMENT, SHALL BE PROVIDED AT CONTRACTION AND EXPANSION JOINTS.

THE WATERSTOP SHALL EXTEND FROM THE TOP OF FOOTING TO 1'-0" BELOW TOP OF WALL.

THE WATERSTOP SHALL BE SECURELY HELD IN PLACE DURING CONCRETE PLACEMENT.

INCLUDE WITH ITEM 511, CLASS C CONCRETE, AS PER PLAN, FOR PAYMENT.

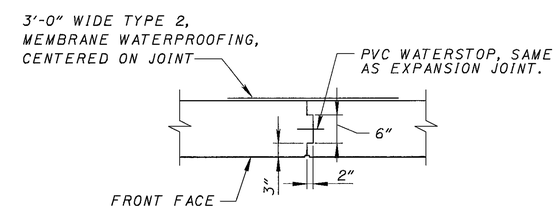

CONTRACTION JOINT DETAIL

NOTES

1. POROUS BACKFILL WITH FILTER FABRIC, 2 FEET THICK, SHALL EXTEND UP TO 1 FOOT BELOW THE EMBANKMENT SURFACE AND LATERALLY FOR THE FULL LENGTH OF THE RETAINING WALL.
2. MEMBRANE WATERPROOFING, TYPE 2, SHALL BE INSTALLED IN ACCORDANCE WITH ITEM 512. ALL COSTS SHALL BE INCLUDED FOR PAYMENT WITH ITEM 511, CLASS C CONCRETE, AS PER PLAN.
3. THE SURFACE OF THE THE CLAY SHALL BE ROUGHENED BEFORE THE FOOTING CONCRETE IS PLACED.

DESIGN AGENCY DLZ
601 HARTLEY ROAD • COLUMBUS, OHIO 43228

DESIGNED	DRAWN	REVIEWED	DATE
GLC	GLC	AJM	09/08/05
CHECKED	REVISED		
PAT			

RETAINING WALL SECTIONS

GEA/POR-422-18.31/0.00

6/8

220/332

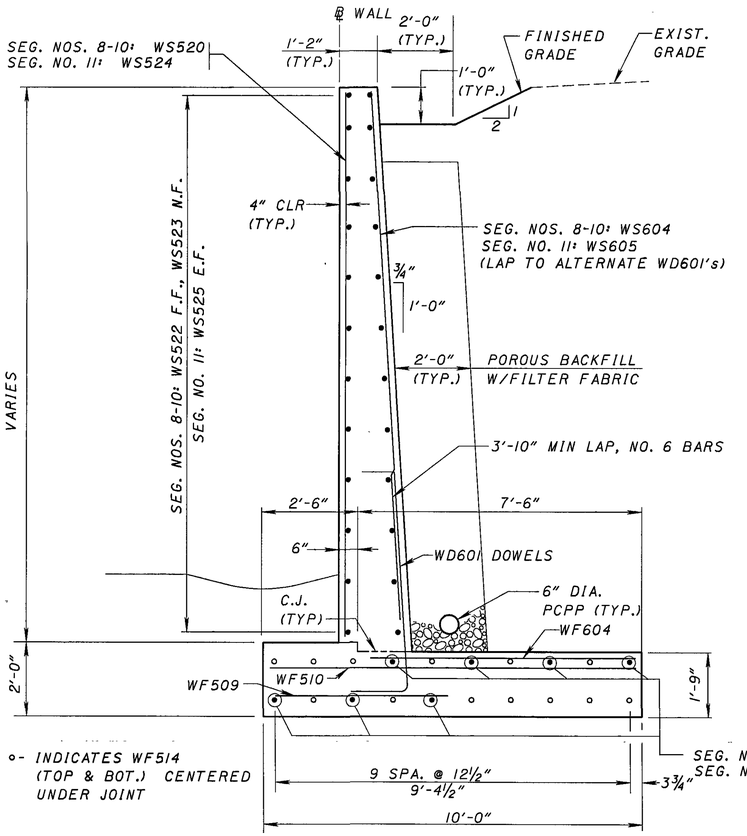

SECTION W-4 / 4-5
SEGMENT 8-11

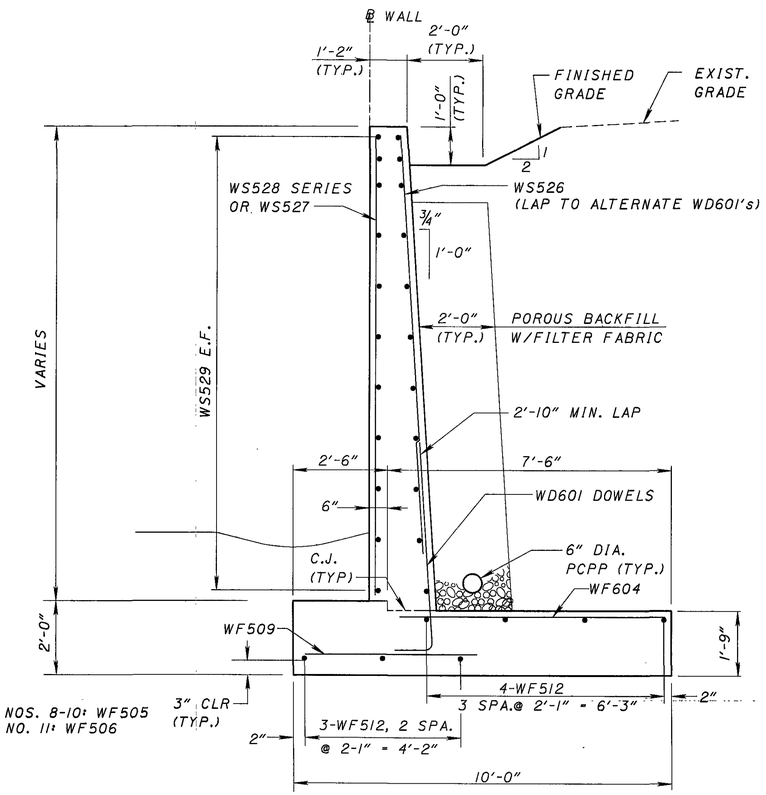

SECTION W-5 / 5
SEGMENT 12

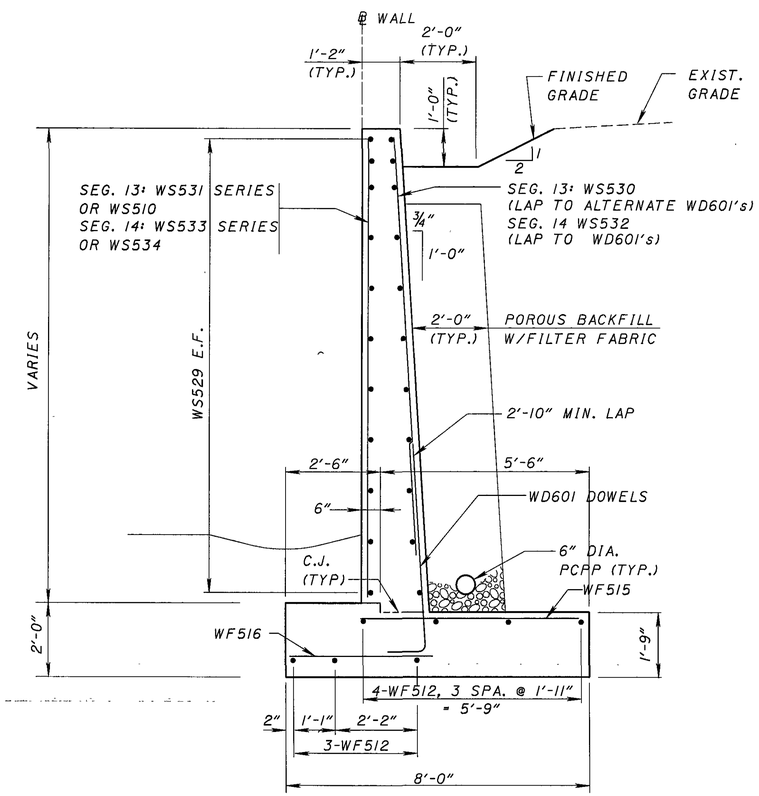

SECTION W-6 / 5
SEGMENT 13-14

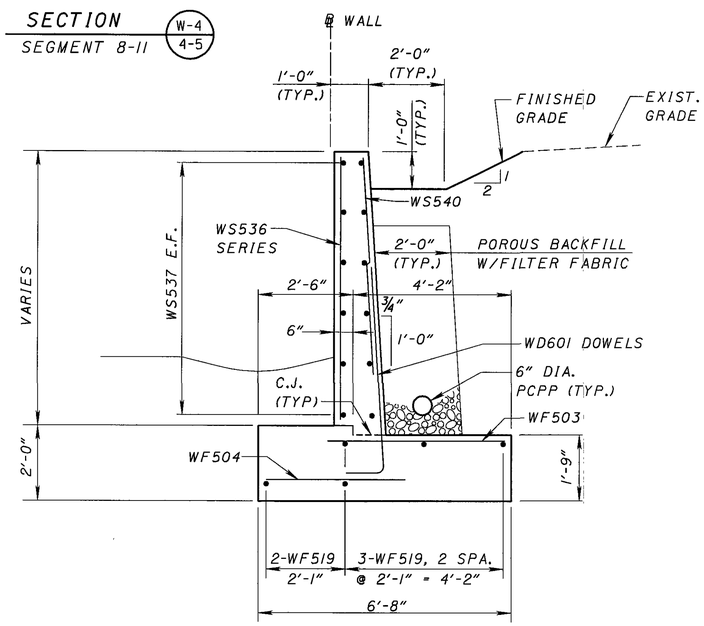

SECTION W-7 / 5
SEGMENT 15

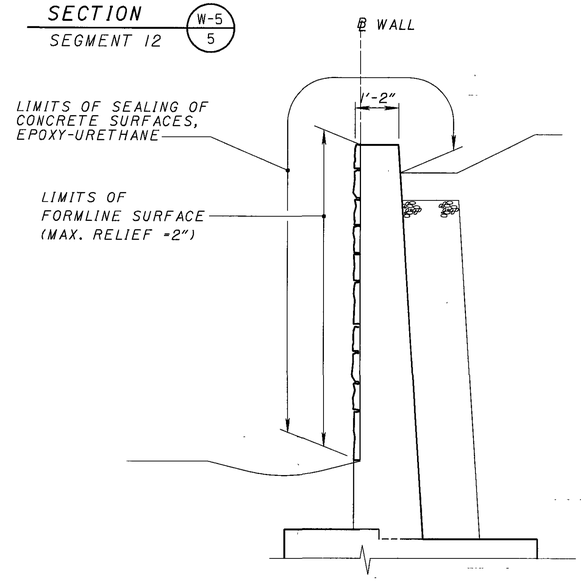

FORM LINER AND SEALING OF CONCRETE SURFACES

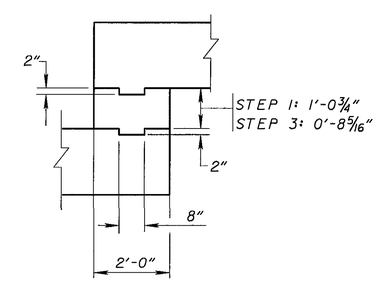

FOOTING STEP DETAIL

DESIGN AGENCY
DLZ
661 HUTTLEY ROAD • COLUMBUS, OHIO 43229

DATE	REVIEWED	DRAWN	REVISED	DESIGNED	CHECKED
09/08/05	AJM	GLC		GLC	PAT

RETAINING WALL SECTIONS

GEA/POR-422-18.31/0.00

7 / 8

221 / 332

REINFORCING STEEL LIST

MARK	NO.	LENGTH	WEIGHT (LBS.)	TYPE	DIMENSIONS A	B	C	R		SER INC.
WALL STEM										
	1	4'-0"								
WS501	SER		149	ST						0'-4"
	20	10'-4"								
WS502	1	4'-0"	4	ST						
WS503	2	10'-5"	22	ST						
	1	5'-3"								
WS504	SER		175	ST						0'-4"
	20	11'-6"								
WS505	1	5'-1"	5	ST						
WS506	2	11'-8"	24	ST						
WS507	122	29'-8"	3775	ST						
	1	3'-9"								
WS508	SER	2 SETS	165	ST						6'-0½"
	5	27'-11"								
	1	10'-5"								
WS509	SER		234	ST						0'-1"
	20	12'-0"								
WS510	3	12'-0"	38	ST						
	1	11'-8"								
WS511	SER		260	ST						0'-1"
	20	13'-3"								
WS512	23	13'-2"	316	ST						
WS513	21	12'-4"	270	ST						
WS514	2	30'-4"	63	ST						
WS515	23	12'-0"	288	ST						
WS516	23	13'-3"	318	ST						
WS517	23	13'-10"	332	ST						
WS518	23	14'-3"	342	ST						
WS519	36	14'-9"	554	ST						
WS520	27	15'-0"	442	ST						
WS521	24	16'-0"	401	ST						
WS522	36	10'-2"	382	12				19'-10"		
WS523	36	9'-8"	363	12				19'-2"		
WS524	16	15'-3"	254	ST						
WS525	26	20'-5"	554	ST						
WS526	15	12'-5"	194	ST						
WS527	1	12'-8"	13	ST						
	1	12'-9"								
WS528	SER		192	ST						0'-0¾"
	14	13'-7"								
WS529	62	20'-4"	1315	ST						
WS530	15	11'-4"	177	ST						
	1	12'-0"								
WS531	SER		180	ST						0'-0⅝"
	14	12'-8"								
WS532	15	8'-11"	140	ST						
	1	10'-2"								
WS533	SER		139	ST						-0'-1⅛"
	14	8'-11"								
WS534	1	10'-2"	11	ST						
WS535	8	5'-8"	47	ST						
	1	7'-0"								
WS536	SER		51	ST						-0'-3"
	8	5'-3"								
WS537	12	10'-8"	134	ST						
WS602	23	14'-6"	501	ST						
WS603	13	14'-8"	286	ST						
WS604	27	15'-0"	608	ST						
WS605	16	15'-2"	364	ST						

REINFORCING STEEL LIST

MARK	NO.	LENGTH	WEIGHT (LBS.)	TYPE	DIMENSIONS A	B	C			SER INC.
FOOTING										
WF501	5	15'-10"	83	ST						
WF502	14	8'-0"	117	ST						
WF503	28	4'-8"	136	ST						
WF504	28	3'-8"	107	ST						
WF505	54	32'-0"	1802	ST						
WF506	7	26'-5"	193	ST						
WF507	3	6'-4"	20	ST						
WF508	100	10'-0"	1043	ST						
WF509	332	4'-6"	1558	ST						
WF510	34	9'-8"	343	ST						
WF511	20	7'-1"	148	8	2'-5"	2'-6"	2'-5"			
WF512	21	22'-5"	491							
WF513	30	6'-1"	190	8	2'-5"	1'-6"	2'-5"			
WF514	80	4'-10"	403	ST						
WF515	50	5'-9"	300	ST						
WF516	50	3'-9"	196	ST						
WF517	16	6'-9"	113	8	2'-5"	2'-2"	2'-5"			
WF518	2	7'-8"	16	ST						
WF519	5	10'-8"	56	ST						
WF604	332	7'-0"	3491	ST						
DOWELS										
WD601	425	7'-6"	4788	11	0'-4"	5'-10"	1'-6"			
TOTAL WT. =			29656							

BENDING DIAGRAMS

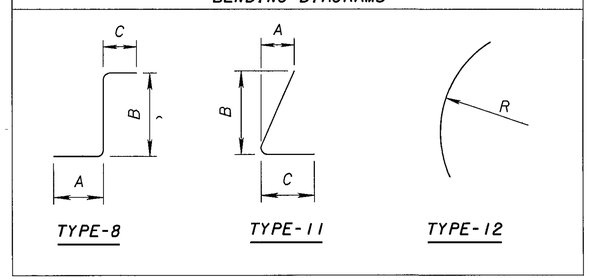

REINFORCING STEEL NOTES

1. SERIES BARS - EACH BAR VARIES BY TABULATED AMOUNT.
2. ALL DIMENSIONS ARE OUT TO OUT
3. TYPE 'STR' INDICATES A STRAIGHT BAR.
4. THE BAR SIZE NUMBER IS SPECIFIED IN THE 'MARK' COLUMN. THE FIRST DIGIT INDICATES THE BAR SIZE NUMBER. FOR EXAMPLE, A501 IS A #5 BAR SIZE.
5. ALL BARS SHALL BE EPOXY COATED UNLESS NOTED OTHERWISE.

ESTIMATED QUANTITIES

CALCULATED BY: PAT 02/28/05
CHECKED BY: GLC 02/28/05

ITEM	ITEM EXTENSION	TOTAL	UNIT	DESCRIPTION	REF. SHT. NO.
503	21100	1624	CU YD	UNCLASSIFIED EXCAVATION	
509	10000	29656	POUND	EPOXY COATED REINFORCING STEEL	
511	46001	225	CU YD	CLASS C CONCRETE, AS PER PLAN	7
511	46500	205	CU YD	CLASS C CONCRETE, FOOTING	
512	10100	385	SQ YD	SEALING OF CONCRETE SURFACES (EPOXY-URETHANE)	
516	13600	63	SQ FT	1" PREFORMED EXPANSION JOINT FILLER	
518	21200	270	CU YD	POROUS BACKFILL WITH FILTER FABRIC	
518	40000	322	FT	6" PERFORATED CORRUGATED PLASTIC PIPE	
518	40010	8	FT	6" NON-PERFORATED CORRUGATED PLASTIC PIPE, INCLUDING SPECIALS	
530	13000	2821	SQ FT	SPECIAL - FORM LINER	

DLZ
1000 ROCKEFELLER BLDG • 614 W SUPERIOR AVE • CLEVELAND, OH 44113

DESIGNED GLC | CHECKED PAT | DRAWN PAT | REVISED | REVIEWED AJM | DATE 09/08/05 | STRUCTURE FILE NUMBER MA

ESTIMATED QUANTITIES & REINFORCING STEEL LIST
RETAINING WALL

GEA/POR-422-18.31/0.00

* SEEDING	
END WIDTH	SQ. YDS.

END AREA		VOLUME	
CUT	FILL	CUT	FILL

CALCULATED GLC
CHECKED KMR

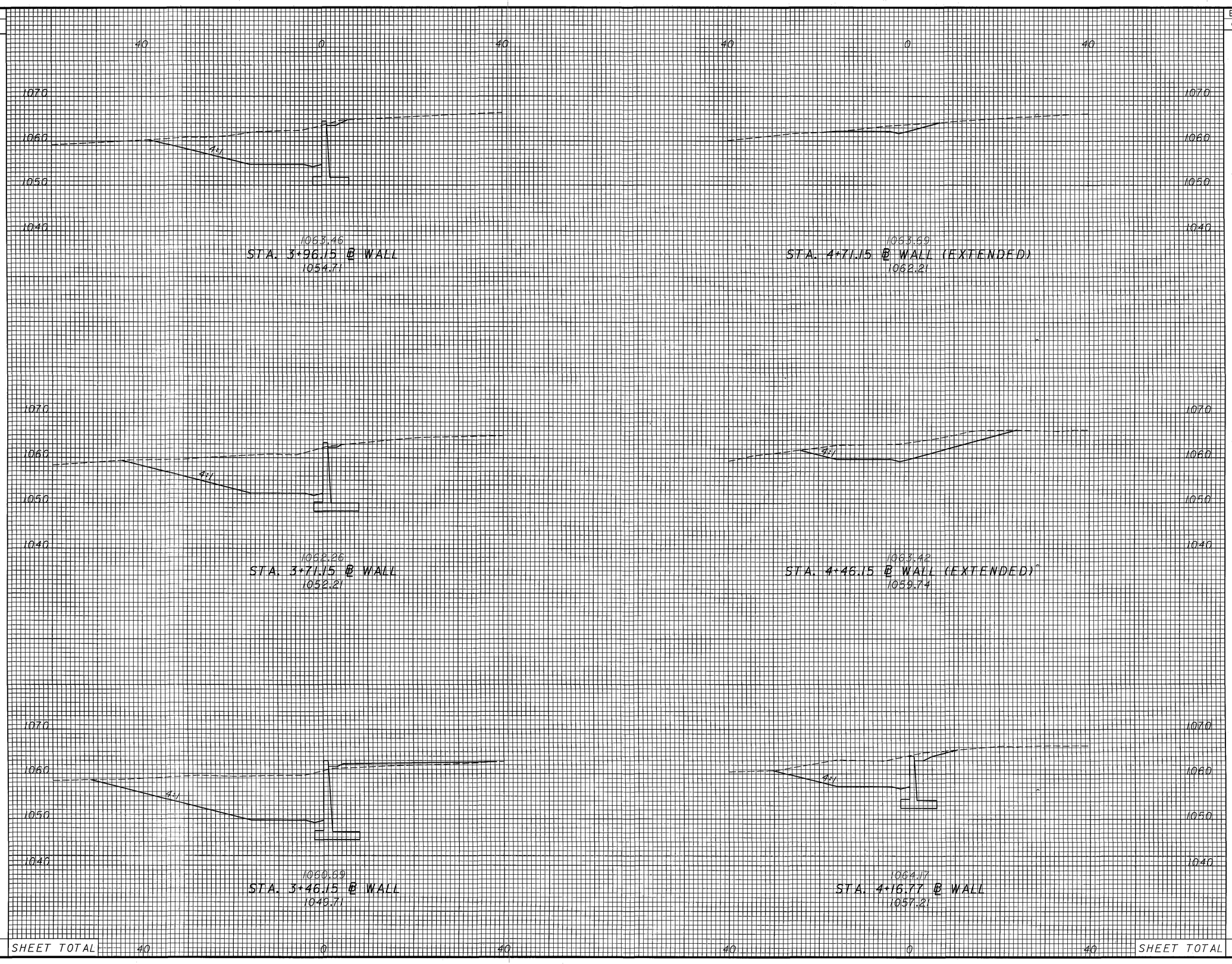

CROSS SECTIONS - RETAINING WALL
STA. 3+46.15 TO STA. 4+40.16

GEA/POR-422-18.31/0.00

221B
332

REFER TO THE FOLLOWING STANDARD BRIDGE DRAWINGS:

AS-1-81	REVISED	7/19/02
GSD-1-96	REVISED	7/19/02
ICD-1-82	REVISED	7/19/02
SBR-1-99	REVISED	7/19/02

DESIGN SPECIFICATIONS

THIS STRUCTURE CONFORMS TO "STANDARD SPECIFICATIONS FOR HIGHWAY BRIDGES" ADOPTED BY THE AMERICAN ASSOCIATION OF STATE HIGHWAY AND TRANSPORTATION OFFICIALS, 2002, AND THE ODOT BRIDGE DESIGN MANUAL.

DESIGN LOADING

HS25, CASE I, AND THE ALTERNATE MILITARY LOADING.
FUTURE WEARING SURFACE OF 60 psf

DESIGN STRESSES

CONCRETE CLASS HP - COMPRESSIVE STRENGTH 4500 psi (SUPERSTRUCTURE)
CONCRETE CLASS C - COMPRESSIVE STRENGTH 4000 psi (SUBSTRUCTURE)

REINFORCING STEEL - ASTM A615 OR A996 GRADE 60, MINIMUM YIELD STRENGTH 60,000 PSI

STRUCTURAL STEEL - ASTM A588, Fy = 50,000 PSI

DECK PROTECTION METHOD

EPOXY COATED REINFORCING STEEL
2 1/2 " CONCRETE COVER
CLASS HP CONCRETE

MONOLITHIC WEARING SURFACE IS ASSUMED, FOR DESIGN PURPOSES, TO BE 1" THICK.

MAINTENANCE OF TRAFFIC

MAINTENANCE OF TRAFFIC FOR THE STRUCTURE WORK SHALL BE COORDINATED WITH THE OVERALL PROJECT. REFER TO MAINTENANCE OF TRAFFIC NOTES AND DETAILS ELSEWHERE IN THE PLANS.

PLANS OF EXISTING BRIDGES

PLANS OF THE EXISTING BRIDGES MAY BE EXAMINED AT THE DISTRICT 12 OFFICE OF THE OHIO DEPARTMENT OF TRANSPORTATION, 5500 TRANSPORTATION BOULEVARD, GARFIELD HEIGHTS, OHIO, 44125-5396.

ITEM 202, STRUCTURE REMOVED, AS PER PLAN

WHEN NO LONGER NEEDED TO MAINTAIN TRAFFIC, THE EXISTING STRUCTURE SHALL BE REMOVED WITH THE CONCURRENCE OF THE ENGINEER. THE USE OF EXPLOSIVES AND/OR HEADACHE BALLS WILL NOT BE PERMITTED.

THE CONTRACTOR SHALL TAKE PRECAUTIONS TO AVOID AND/OR LIMIT DEMOLITION DEBRIS FROM ENTERING THE STREAM. ANY MATERIAL THAT DOES FALL INTO THE STREAM SHALL BE REMOVED AS SOON AS POSSIBLE.

PILE DESIGN LOADS (ULTIMATE BEARING VALUE) - BRIDGE NO. GEA-422-1952

THE ULTIMATE BEARING VALUE IS 80 TONS PER PILE FOR THE ABUTMENT PILES.

ABUTMENT PILES:
73 PILES, 14" DIAMETER, 80 FEET LONG, ORDER LENGTH
1 DYNAMIC LOAD TESTING ITEM

PILE DESIGN LOADS (ULTIMATE BEARING VALUE) - BRIDGE NO. GEA-422-1975

THE ULTIMATE BEARING VALUE IS 59 TONS PER PILE FOR THE ABUTMENT PILES.

ABUTMENT PILES:
68 PILES, 12" DIAMETER, 55 FEET LONG, ORDER LENGTH
1 DYNAMIC LOAD TESTING ITEMS

BATTERED PILES

THE BLOW COUNT FOR BATTERED PILES SHALL BE THE BLOW COUNT DETERMINED FOR VERTICAL PILES OF THE SAME ULTIMATE BEARING CAPACITY DIVIDED BY AN EFFICIENCY FACTOR (D). COMPUTE THE EFFICIENCY FACTOR (D) AS FOLLOWS:

$$D = \frac{1-UG}{\sqrt{1+G^2}}$$

U = COEFFICIENT OF FRICTION, WHICH IS ESTIMATED AT 0.05 FOR DOUBLE-ACTING AIR OPERATED OR DIESEL HAMMERS; 0.10 FOR SINGLE-ACTING AIR OPERATED OR DIESEL HAMMERS; AND 0.2 FOR DROP HAMMERS.

G = RATE OF BATTER (1/4)

ITEM 503, COFFERDAMS, CRIBS AND SHEETING, AS PER PLAN

WORK FOR THIS ITEM SHALL CONSIST OF PROVIDING TEMPORARY SHORING AT THE EXISTING AND PROPOSED ABUTMENTS TO ALLOW PHASED CONSTRUCTION OF THE NEW BRIDGES. ALL WORK SHALL CONFORM TO THE REQUIREMENTS OF CMS ITEM 503.

BRIDGE NO. GEA-422-1952
A SUGGESTED LOCATION, METHOD AND STRUCTURAL MEMBER SECTION REQUIREMENTS FOR TEMPORARY SHORING OF THE BRIDGE OVER THE GRAND RIVER ARE SHOWN ON SHEETS 227 & 228/333.

BRIDGE NO. GEA-422-1975
A SUGGESTED LOCATION, METHOD AND STRUCTURAL MEMBER SECTION REQUIREMENTS FOR TEMPORARY SHORING OF THE BRIDGE OVER THE GRAND RIVER TRIBUTARY ARE SHOWN ON SHEETS 246 & 247/333.

ITEM 503, UNCLASSIFIED EXCAVATION, AS PER PLAN

UNCLASSIFIED EXCAVATION SHALL BE IN ACCORDANCE WITH CMS ITEM 503 EXCEPT THAT THE BACKFILL MATERIAL SHALL BE MATERIAL CONFORMING TO CMS 703.17 (CMS 304 MATERIAL) AND MEET THE COMPACTION REQUIREMENTS OF CMS 304.05. IN ADDITION, THE BACKFILL MATERIAL SHALL BE PLACED AND COMPACTED IN 6" LIFTS.

REINFORCING STEEL MECHANICAL CONNECTORS

MECHANICAL SPLICES FOR REINFORCING STEEL SHALL BE MADE USING THREADED MECHANICAL CONNECTORS SUCH AS RICHMOND SCREW ANCHOR THREADED DOWEL BAR ASSEMBLY, LENTON REBAR SPLICING MECHANISM OR AN APPROVED EQUAL. USE STRAIGHT BARS LAPPED WITH REINFORCEMENT ON EITHER SIDE OF THE PROPOSED JOINT TO MAKE THE MECHANICAL SPLICE. SEE DETAIL NOTE ON SHEET 17/19.

THE COST OF ADDITIONAL REINFORCING STEEL AND MECHANICAL CONNECTORS REQUIRED TO MAKE A MECHANICAL SPLICE AS OUTLINED ABOVE SHALL BE CONSIDERED INCIDENTAL TO THE UNIT PRICE BID FOR ITEM 509, EPOXY COATED REINFORCING STEEL.

STREAM CHANNEL EXCAVATION

THE CONTRACTOR SHALL TAKE ALL PRECAUTIONS NECESSARY TO PREVENT ANY INCIDENTAL DISCHARGES ASSOCIATED WITH THE EXCAVATION AND HAULING OF MATERIAL FROM THE STREAM CHANNEL. THIS PERTAINS TO ANY EXCAVATION OPERATIONS SUCH AS FOUNDATION, PIER OR ABUTMENT EXCAVATION; CHANNEL CLEANOUT; EXCAVATION FOR ROCK CHANNEL PROTECTION; AND REMOVAL OF ANY TEMPORARY FILL ASSOCIATED WITH CONSTRUCTION OPERATIONS.

ITEM 511, CLASS HP CONCRETE, BRIDGE DECK, AS PER PLAN
ITEM 511, CLASS HP CONCRETE, BRIDGE DECK (PARAPET), AS PER PLAN

GENERAL REQUIREMENTS:
THE PROVISIONS OF ITEM 511 SHALL APPLY EXCEPT AS NOTED BELOW.

MIX OPTIONS:
ALL SUPERSTRUCTURE, BRIDGE DECK, AND PARAPET CONCRETE SHALL BE THIS MIX (HP4, AS PER PLAN). ALL OTHER STRUCTURE CONCRETE SHALL BE THIS MIX OR MIX 2 CONCRETE.

THE FOLLOWING PROPORTIONS WILL BE USED AS A STARTING MIX DESIGN.

CONCRETE TABLE
QUANTITIES PER CUBIC YARD
AGGREGATES (SSD)

HP4, AS PER PLAN (GGBF SLAG + MICROSILICA)

AGGREGATE TYPE	FINE AGGRE. (LB)	**#8 COARSE AGGRE. (LB)	**#57 COARSE AGGRE. (LB)	TOTAL (LB)	CEMENT CONTENT (LB)	GGBF SLAG (LB)	MICRO-SILICA (LB)	WATER TO CEMENTITIOUS RATIO ±0.01	AIR CONTENT ±2%
GRAVEL	1245	360	1315	2920	400	170	30	0.43	7
LIMESTONE	1245	360	1335	2940	400	170	30	0.43	7
SLAG	1245	315	1155	2715	400	170	30	0.43	7

** ALL COARSE AGGREGATE SHALL HAVE AN ABSORPTION OF 1.00% OR GREATER AS DEFINED PER ASTM C127.

THE WEIGHTS SPECIFIED IN THE CONCRETE TABLE WERE CALCULATED FOR MATERIALS OF THE FOLLOWING BULK SPECIFIC GRAVITIES (SSD): NATURAL SAND AND GRAVEL 2.62, LIMESTONE SAND 2.68, LIMESTONE 2.65, SLAG 2.30, FLY ASH 2.65, GGBF SLAG 2.90, MICROSILICA SOLIDS 2.20, AND PORTLAND CEMENT 3.15. FOR AGGREGATES OF SPECIFIC GRAVITIES DIFFERING MORE THAN PLUS OR MINUS 0.02 FROM THESE, THE WEIGHTS IN THE TABLE WILL BE CORRECTED.

PARAPET CONSTRUCTION (FORMED AND POURED):
FORMS SHALL NOT BE REMOVED UNTIL AT LEAST 2 HOURS AFTER THE FINAL SET. DETERMINATION OF THE FINAL SET SHALL BE AS PER ASTM C266 (GILLMORE NEEDLE). TESTING SHALL BE PERFORMED BY THE CONTRACTOR AT NO COST TO THE STATE.

THE MINIMUM CONCRETE SLUMP DURING PLACEMENT OF FORMED CONCRETE PARAPETS SHALL BE 6 INCHES, WITH A MAXIMUM SLUMP OF 8 INCHES.

PARAPET CONSTRUCTION (SLIP FORMED):
SLIP FORMING SHALL NOT BE PERFORMED DIRECTLY OVER AREAS WHERE THERE IS OR WILL BE VEHICULAR OR PEDESTRIAN TRAFFIC (WHICH INCLUDES RAILROADS AND WATER CRAFTS). AT THESE LOCATIONS, THE PARAPETS SHALL BE FORMED AND POURED.

THE CONTRACTOR IS ONLY ALLOWED THE OPTION OF SLIP FORMING BRIDGE PARAPETS OVER NON TRAVELED WAYS, AND ONLY AFTER THE SUCCESSFUL COMPLETION OF A TEST SECTION TWENTY FEET LONG. A MINIMUM OF 3 DAYS AFTER PLACING THE TEST SECTION, THE CONTRACTOR SHALL CORE THE TEST SECTION (A MINIMUM OF 3 CORES) AT LOCATIONS AS DIRECTED BY THE ENGINEER. APPROVAL TO SLIP FORM SHALL NOT BE GRANTED UNTIL AFTER THE CORING AND AFTER A SUCCESSFUL SLIP FORMING RESULT IS OBTAINED.

IN ADDITION TO THE REQUIREMENTS OF THE LAST PARAGRAPH OF 511.11 THE ENGINEER WILL INSPECT THE SLIP FORMED SURFACE FOR HORIZONTAL CRACKING 6 MONTHS AFTER COMPLETION OF THE SLIP FORMING OPERATION. ANY ADDITIONAL CRACKS FOUND SHALL BE REPAIRED AS PER THE SPECIFICATIONS AT NO ADDITIONAL COST TO THE STATE.

ALL ANCHOR BOLTS FOR FENCE POSTS SHALL BE CAST IN PLACE.

THE MINIMUM CONCRETE SLUMP DURING PLACEMENT OF SLIP FORMED CONCRETE PARAPETS SHALL BE 1 INCH, WITH A MAXIMUM SLUMP OF 1½ INCHES.

THE WATER CEMENT RATIO FOR SLIP FORMED PARAPETS SHALL NOT BE LESS THAN THE WATER CEMENT RATIO USED FOR THE DECK CONCRETE. REDUCE SLUMP BY LIMITING THE USE OF SUPERPLASTICIZERS.

CRACK CONTROL JOINTS:
FOR BOTH SLIP FORMED AND FORMED AND POURED PARAPETS, THE CONTRACTOR SHALL CONSTRUCT 1½" DEEP AND ¼" WIDE CRACK CONTROL JOINTS SPACED AT A MINIMUM OF 6 FT AND A MAXIMUM OF 8 FT ON CENTER. THE CRACK CONTROL JOINTS SHALL BE MADE IN THE COMPLETE CIRCUMFERENCE OF THE PARAPET, STARTING AND ENDING AT THE ELEVATION OF THE TOP OF THE CONCRETE DECK. THE CONTRACTOR MAY EITHER FORM THE CRACK CONTROL JOINTS IN WITH FORM LINERS, OR, WITHIN 24 HOURS OF PLACEMENT, SAW CUT THE CRACK CONTROL JOINTS IN WITH THE USE OF AN EDGE GUIDE, FENCE, OR JIG WHICH IS REQUIRED TO ENSURE THAT THE CUT JOINT IS STRAIGHT, TRUE, AND ALIGNED ON ALL FACES OF THE PARAPET. THE ENTIRE LENGTH OF EACH CONTROL JOINT SHALL BE SEALED TO A MINIMUM DEPTH OF 1½" WITH POLYURETHANE OR POLYMERIC MATERIAL CONFORMING TO ASTM C920, TYPE S.

BASIS OF PAYMENT. PAYMENT FOR THE ABOVE COMPLETED AND ACCEPTED QUANTITIES WILL BE MADE AT THE CONTRACT BID PRICE FOR:

ITEM	UNITS	DESCRIPTION
511E50001	CUBIC YARD	CLASS HP CONCRETE, BRIDGE DECK, AS PER PLAN
511E50101	CUBIC YARD	CLASS HP CONCRETE, BRIDGE DECK (PARAPET), AS PER PLAN

ITEM 516, INTEGRAL ABUTMENT EXPANSION JOINT SEAL, AS PER PLAN

INSTALL A 3 FOOT WIDE NEOPRENE SHEET AT LOCATIONS SHOWN IN THE PLANS. SECURE THE NEOPRENE SHEETING TO THE CONCRETE WITH 1-1/4" X #10 GAGE (LENGTH X SHANK DIAMETER) GALVANIZED BUTTON HEAD SPIKES THROUGH A 1 INCH OUTSIDE DIAMETER, #10 GAGE GALVANIZED WASHER. MAXIMUM FASTENER SPACING IS 9 INCHES. USE OF OTHER SIMILAR GALVANIZED DEVICES, WHICH WILL NOT DAMAGE EITHER THE NEOPRENE OR THE CONCRETE WILL BE SUBJECT TO THE APPROVAL OF THE ENGINEER.

CENTER THE NEOPRENE STRIPS ON ALL JOINTS. FOR HORIZONTAL JOINTS, SECURE THE HORIZONTAL NEOPRENE STRIP BY USING A SINGLE LINE OF FASTENERS, STARTING AT 6 INCHES(±) FROM THE TOP OF THE NEOPRENE STRIP. FOR THE VERTICAL JOINTS SECURE THE VERTICAL NEOPRENE STRIP BY USING A SINGLE VERTICAL LINE OF FASTENERS, STARTING AT 6 INCHES(±) FROM THE VERTICAL EDGE OF THE NEOPRENE STRIP NEAREST TO THE CENTERLINE OF ROADWAY. FOR VERTICAL JOINTS, INSTALL 2 ADDITIONAL FASTENERS AT 6 INCHES, CENTER TO CENTER, ACROSS THE TOP OF THE NEOPRENE STRIP ON THE SAME SIDE OF THE VERTICAL JOINT AS THE SINGLE VERTICAL ROW OF FASTENERS IS LOCATED.

THE VERTICAL NEOPRENE STRIPS SHALL COMPLETELY OVERLAP THE HORIZONTAL STRIPS. LAP LENGTHS OF THE HORIZONTAL STRIPS THAT ARE NOT VULCANIZED OR ADHESIVE BONDED, SHALL BE AT LEAST 1 FOOT IN LENGTH, OR 6 INCHES IN LENGTH IF THE LAP IS VULCANIZED OR ADHESIVE BONDED. NO LAPS ARE ACCEPTABLE IN VERTICALLY INSTALLED NEOPRENE STRIPS.

THE NEOPRENE SHEETING SHALL BE 3/32" THICK GENERAL PURPOSE, HEAVY DUTY NEOPRENE SHEET WITH NYLON FABRIC REINFORCEMENT. THE SHEETING SHALL BE "FAIRPRENE NUMBER NN-0003", BY E. I. DUPONT DE NEMOURS AND COMPANY, INC., "WINGPRENE" BY THE GOODYEAR TIRE AND RUBBER COMPANY, OR AN APPROVED ALTERNATE. THE NEOPRENE SHEETING SHALL CONFORM TO THE FOLLOWING:

DESCRIPTION OF TEST	ASTM METHOD	REQUIREMENT
THICKNESS, INCHES	D751	0.094 +/- 0.01
BREAKING STRENGTH, GRAB, LBS, MINIMUM (LONG. X TRANS.)	D751	700 X 700
ADHESIVE STRIP, 1" WIDE X 2" LONG, LBS MINIMUM	D751	9
BURST STRENGTH, PSI MINIMUM	D751	1400
HEAT AGING, 70 HR, 212 DEGREES F, 180 DEGREES BEND WITHOUT CRACKING	D2136	NO CRACKING OF COATING
LOW TEMP. BRITTLENESS, 1 HR, -40 DEGREES F, BEND AROUND ¼" MANDREL	D2136	NO CRACKING OF COATING

METHOD OF MEASUREMENT: THE DEPARTMENT WILL MEASURE THE TOTAL LENGTH OF JOINT TO BE SEALED BY THE NUMBER OF FEET.

BASIS OF PAYMENT: THE DEPARTMENT WILL PAY FOR ACCEPTED QUANTITIES AT THE CONTRACT PRICE FOR ITEM 516, INTEGRAL ABUTMENT EXPANSION JOINT SEAL, AS PER PLAN.

DLZ
1000 ROCKEFELLER BLDG • 614 W SUPERIOR AVE • CLEVELAND, OH 44113

DESIGNED	DRAWN	REVIEWED	DATE
PAT	PAT	GWM	03/01/05
CHECKED	REVISED	STRUCTURE FILE NUMBER	
DJP		2801906/2801922	

STRUCTURE GENERAL NOTES
BRIDGE NO. GEA-422-1952 / GEA-422-1975
U.S. 422 OVER GRAND RIVER / GRAND RIVER TRIBUTARY

GEA/POR-422-18.31/0.00

ITEM 526, REINFORCED CONCRETE APPROACH SLABS (T=15"), AS PER PLAN

CONCRETE FOR APPROACH SLABS SHALL BE CLASS HP CONCRETE, MIX HP 4, AS PER PLAN. ALL ADDITIONAL CONCRETE AND REINFORCING STEEL REQUIRED FOR CURBS OR PARAPETS ON APPROACH SLABS SHALL BE INCLUDED FOR PAYMENT WITH ITEM 526.

ITEM 530, SPECIAL - FORM LINER

THIS ITEM SHALL CONSIST OF PROVIDING A FORM LINER FOR THE EXTERIOR SURFACES OF THE REINFORCED CONCRETE BRIDGE PARAPETS AND DECKS WHERE SHOWN ON THE PLANS. THE FORM LINER SHALL PROVIDE A FINISHED APPEARANCE OF DRY STACKED STONE.

ACCEPTABLE FORM LINERS ARE #12003 NEW ENGLAND DRY STACK AS MANUFACTURED BY CUSTOM ROCK INTERNATIONAL, 1156 HOMER STREET, ST. PAUL, MINNESOTA 55116; #17910 ANTIETAM DRYSTACK AS MANUFACTURED BY FITZGERALD FORMLINERS, 1341 EAST PAMONA STREET, SANTA ANA, CALIFORNIA 92705; OR AN APPROVED EQUAL.

THE CONTRACTOR SHALL SUBMIT PRODUCT INFORMATION FOR THE PROPOSED FORM LINER AND A SAMPLE CAST CONCRETE PANEL TO THE ENGINEER FOR APPROVAL. PAYMENT FOR ALL LABOR, MATERIALS, EQUIPMENT AND INCIDENTALS NECESSARY TO USE FORM LINER WHERE SHOWN ON THE PLANS SHALL BE MADE AT THE CONTRACT UNIT PRICE PER SQUARE FOOT FOR ITEM 530, SPECIAL - FORM LINER.

PLAN ABBREVIATIONS

ABUT.	ABUTMENT
APPROX.	APPROXIMATE
BOT.	BOTTOM
BRG.	BEARING
c/c	CENTER-TO-CENTER
CONST.	CONSTRUCTION
C.J.	CONSTRUCTION JOINT
CL.	CLEAR COVER
CONC.	CONCRETE
DIA.	DIAMETER
DWG.	DRAWING
EXIST.	EXISTING
E.F.	EACH FACE
EL.	ELEVATION
F.A.	FORWARD ABUTMENT
F.F.	FAR FACE
FWD.	FORWARD
HMWM	HIGH MOLECULAR WEIGHT METHACRYLATE
INV.	INVERT
LONG.	LONGITUDINAL
MAX.	MAXIMUM
MIN.	MINIMUM
N.P.C.P.P.	NON-PERFORATED CORRUGATED PLASTIC PIPE
N.F.	NEAR FACE
P.C.P.P.	PERFORATED CORRUGATED PLASTIC PIPE
PEJF	PREFORMED EXPANSION JOINT FILLER
PROP.	PROPOSED
R.A.	REAR ABUTMENT
SPA.	SPACE, SPACES
STA.	STATION
STD.	STANDARD
REINF.	REINFORCING, REINFORCED
TYP.	TYPICAL
U.N.O.	UNLESS NOTED OTHERWISE

DLZ
600 ROCKEFELLER BLDG • 614 W SUPERIOR AVE • CLEVELAND, OH 44113

DESIGNED	DRAWN	REVIEWED	DATE
PAT	PAT	GWM	03/01/05
CHECKED	REVISED	STRUCTURE FILE NUMBER	
DJP		2801906/2801922	

STRUCTURE GENERAL NOTES
BRIDGE NO. GEA-422-1952 / GEA-422-1975
U.S. 422 OVER GRAND RIVER / GRAND RIVER TRIBUTARY

GEA/POR-422-18.31/0.00

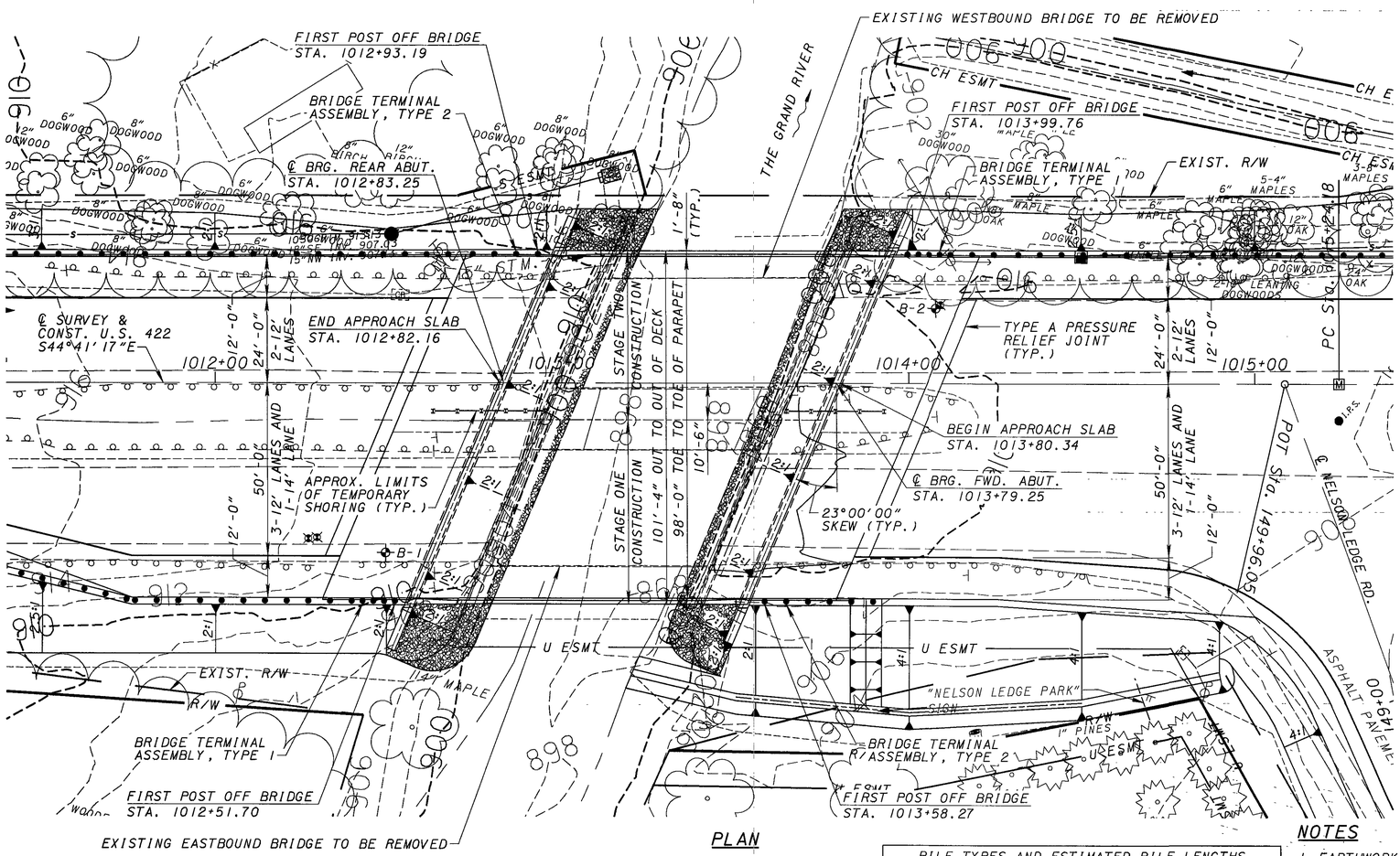

PLAN

BORING	STATION	OFFSET
B-1	1012+49	49.0' RT
B-2	1014+08	21.1' LT

BENCHMARK #9

STA. 1015+98.79, 91.11' RT. - CHISELED SQUARE ON NORTHWEST CORNER OF IRON GRATE INLET

ELEV: 906.08'

BENCHMARK #10

STA. 1013+04.74, 24.88' RT. - CHISELED SQUARE IN CONCRETE WALL ON WEST SIDE OF EXISTING BRIDGE

ELEV: 912.52'

HYDRAULIC DATA

DRAINAGE AREA = 15.3 SQ MI
Q25 = 2270 CFS
HW25 = 902.84
V25 = 8.86 FPS
CLEARANCE ABOVE HW25 = 1.45 FT
Q100 = 3110 CFS
HW100 = 903.74
V100 = 9.86 FPS
CLEARANCE ABOVE HW100 = 0.55 FT
NORMAL WATER ELEVATION = 898.4
FLOW LINE ELEVATION = 897.5

TRAFFIC DATA

U.S. 422

CURRENT ADT (2005) = 14,460
CURRENT ADTT (2005) = 2,747
DESIGN ADT (2025) = 17,920
DESIGN ADTT (2025) = 3,405

EXISTING STRUCTURE

TYPE: SINGLE SPAN STEEL BEAMS WITH REINFORCED CONCRETE DECK AND SUBSTRUCTURE (WESTBOUND & EASTBOUND)

SPAN: 65'-0"(±) c/c BEARINGS (WESTBOUND & EASTBOUND)

ROADWAY: 28'-0"(±) FACE/FACE PARAPETS (WESTBOUND)
30'-8"(±) FACE/FACE PARAPETS (EASTBOUND)

SKEW: 23°00'00" (±) LEFT FORWARD (WESTBOUND & EASTBOUND)

ALIGNMENT: TANGENT (WESTBOUND & EASTBOUND)

LOADING: H-20-33 (WESTBOUND)
CF-400 (EASTBOUND)

WEARING SURFACE: MONOLITHIC CONCRETE (WESTBOUND)
CONCRETE OVERLAY (EASTBOUND)

APPROACH SLABS: AS-1-72, 25'-0"(±) LONG (WESTBOUND)
AS-1-72, 15'-0"(±) LONG (EASTBOUND)

CROWN: 3/16"/FT.(±) (EASTBOUND & WESTBOUND)

DATE BUILT: 1940 WESTBOUND, 1955 EASTBOUND

STRUCTURE FILE NUMBER: 2801833 (WESTBOUND)
2801868 (EASTBOUND)

PROPOSED STRUCTURE

TYPE: SINGLE SPAN A588 STEEL PLATE GIRDER COMPOSITE WITH REINFORCED CONCRETE DECK AND INTEGRAL TYPE ABUTMENTS

SPAN: 96'-0" c/c BEARINGS

ROADWAY: 98'-0" TOE-TO-TOE OF PARAPETS

SKEW: 23°00'00" LEFT FORWARD

ALIGNMENT: TANGENT

LOADING: HS 25 CASE I AND THE ALTERNATE MILITARY LOADING

WEARING SURFACE: MONOLITHIC CONCRETE

APPROACH SLABS: AS-1-81, 25' LONG

SUPERELEVATION: VARIES, SEE SUPERELEVATION TABLE

LATITUDE: N 41°21'10"

LONGITUDE: W 81°02'18"

LEGEND

SOIL BORING

ROCK CHANNEL PROTECTION, TYPE B WITH FABRIC FILTER

NOTES

1. EARTHWORK LIMITS SHOWN ARE APPROXIMATE. ACTUAL SLOPES SHALL CONFORM TO PLAN CROSS-SECTIONS.
2. FOR SUPERELEVATION TRANSITION DIAGRAM, SEE SHEET 2/19.

PILE TYPES AND ESTIMATED PILE LENGTHS

LOCATION	PILE TYPE	PILE LENGTH
REAR ABUTMENT	14" DIA. CIP	75'
FORWARD ABUTMENT	14" DIA. CIP	75'

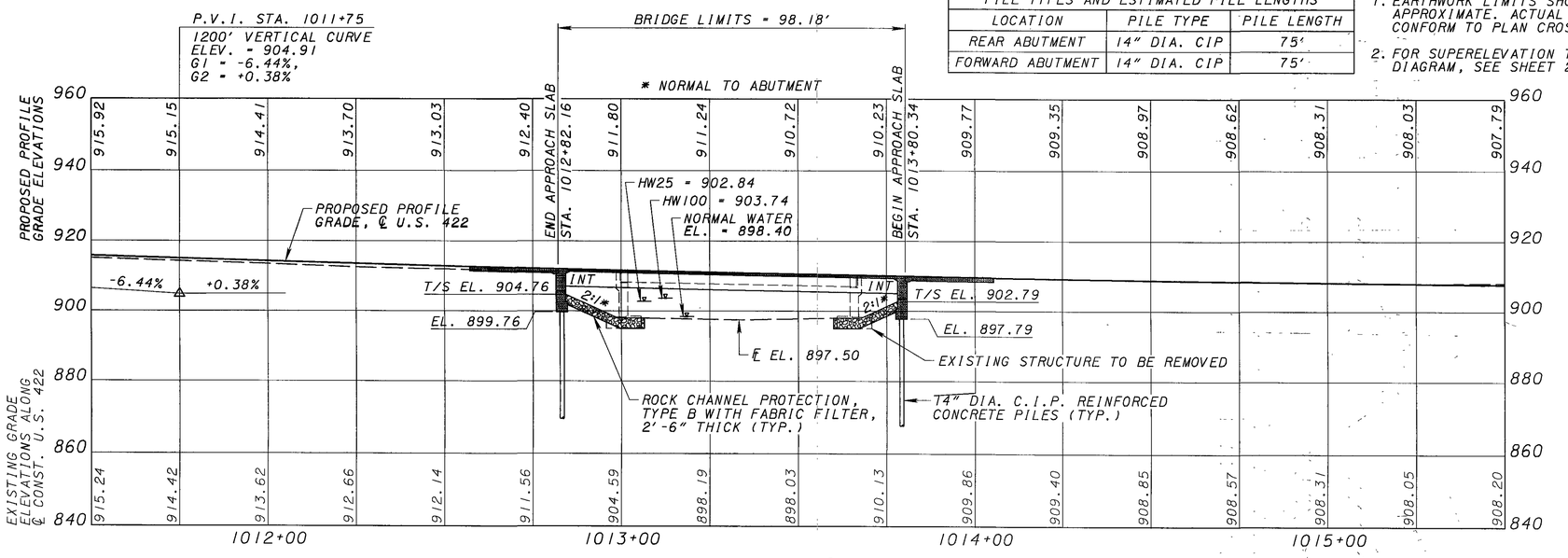

PROFILE ALONG ℄ U.S. 422

DLZ
6000 ROCKEFELLER BLDG • 614 W. SUPERIOR AVE • CLEVELAND, OH 44113

DESIGNED	DRAWN	REVIEWED	DATE
PAT	PAT	GWM	03/01/05
CHECKED	REVISED	STRUCTURE FILE NUMBER	
AJM		2801906	

GEAUGA COUNTY
STA. 1012+82.16
STA. 1013+80.34

SITE PLAN
BRIDGE NO. GEA-422-1952
U.S. 422 OVER GRAND RIVER

GEA/POR-422-18.31/0.00

ESTIMATED QUANTITIES

CALCULATED BY: PAT 02/01/05
CHECKED BY: DJP 02/01/05

ITEM	ITEM EXTENSION	TOTAL	UNIT	DESCRIPTION	REAR ABUTMENT	FORWARD ABUTMENT	SUPER.	GENERAL	REF. SHT. NO.
202	11001	LUMP		STRUCTURE REMOVED, AS PER PLAN				LUMP	222
503	11101	LUMP		COFFERDAMS, CRIBS, AND SHEETING, AS PER PLAN				LUMP	228
503	21101	2,181	CU YD	UNCLASSIFIED EXCAVATION, AS PER PLAN	1,248	933			222
505	11100	LUMP		PILE DRIVING EQUIPMENT MOBILIZATION				LUMP	
507	00600	5,475	FT	14" CAST-IN-PLACE REINFORCED CONCRETE PILES, DRIVEN	2,775	2,700			
507	00650	5,840	FT	14" CAST-IN-PLACE REINFORCED CONCRETE PILES, FURNISHED	2,960	2,880			
509	10000	119,731	POUND	EPOXY COATED REINFORCING STEEL	9,424	9,329	100,978		
511	43500	176	CU YD	CLASS C CONCRETE, ABUTMENT INCLUDING FOOTING	90	86			
511	50001	404	CU YD	CLASS HP CONCRETE, BRIDGE DECK, AS PER PLAN			404		
511	50101	34	CU YD	CLASS HP CONCRETE, BRIDGE DECK (PARAPET), AS PER PLAN			34		
512	10100	262	SQ YD	SEALING OF CONCRETE SURFACES (EPOXY-URETHANE)	20	19	223		
512	33000	11	SQ YD	TYPE 2 WATERPROOFING	2	2	7		
513	10280	238,625	POUND	STRUCTURAL STEEL MEMBERS, LEVEL 4			238,625		
513	20000	2,475	EACH	WELDED STUD SHEAR CONNECTORS			2,475		
516	13200	225	SQ FT	½" PREFORMED EXPANSION JOINT FILLER			225		
516	13600	218	SQ FT	1" PREFORMED EXPANSION JOINT FILLER			218		
516	13900	3	SQ FT	2" PREFORMED EXPANSION JOINT FILLER			3		
516	14015	255	FT	INTEGRAL ABUTMENT EXPANSION JOINT SEAL, AS PER PLAN			255		222
518	21200	211	CU YD	POROUS BACKFILL WITH FILTER FABRIC	106	105			
518	40000	276	FT	6" PERFORATED CORRUGATED PLASTIC PIPE	142	134			
518	40010	24	FT	6" NON-PERFORATED CORRUGATED PLASTIC PIPE, INCLUDING SPECIALS	12	12			
523	20000	1	EACH	DYNAMIC LOAD TESTING				1	
526	25001	550	SQ YD	REINFORCED CONCRETE APPROACH SLABS (T=15"), AS PER PLAN				550	222
530	13000	687	SQ FT	SPECIAL - FORM LINER			687		222
601	32104	563	CU YD	ROCK CHANNEL PROTECTION, TYPE B WITH FABRIC FILTER				563	

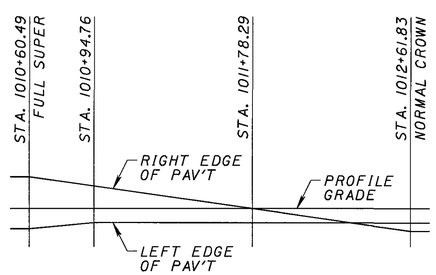

SUPERELEVATION TRANSITION DIAGRAM

DLZ
1000 ROCKEFELLER BLDG • 614 W SUPERIOR AVE • CLEVELAND, OH 44113

DESIGNED	DRAWN	REVIEWED	DATE
PAT	PAT	GWM	03/01/05
CHECKED	REVISED	STRUCTURE FILE NUMBER	
DJP		280/906	

ESTIMATED QUANTITIES
BRIDGE NO. GEA-422-1952
U.S. 422 OVER GRAND RIVER

GEA/POR-422-18.31/0.00

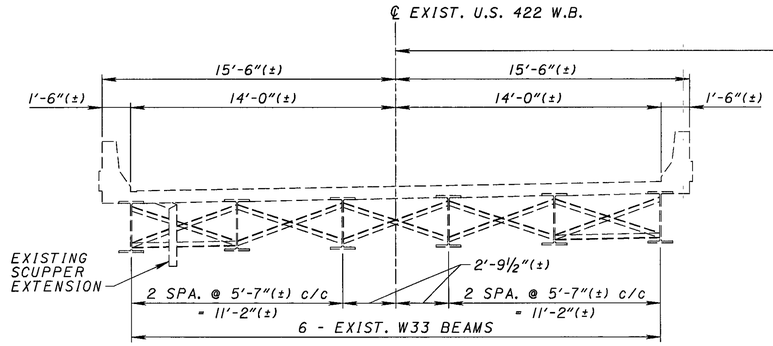

EXISTING TRANSVERSE SECTION - WESTBOUND

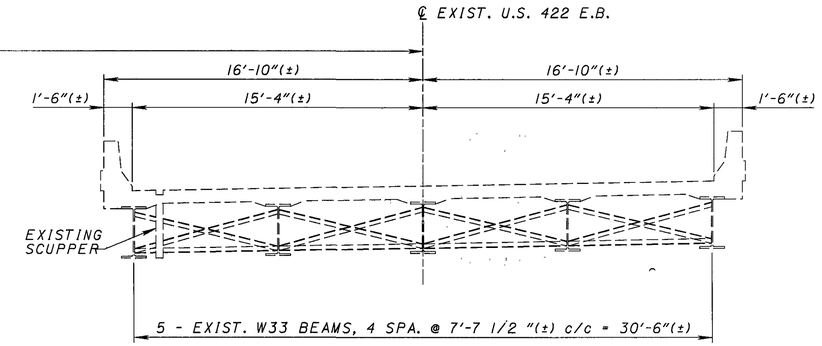

EXISTING TRANSVERSE SECTION - EASTBOUND

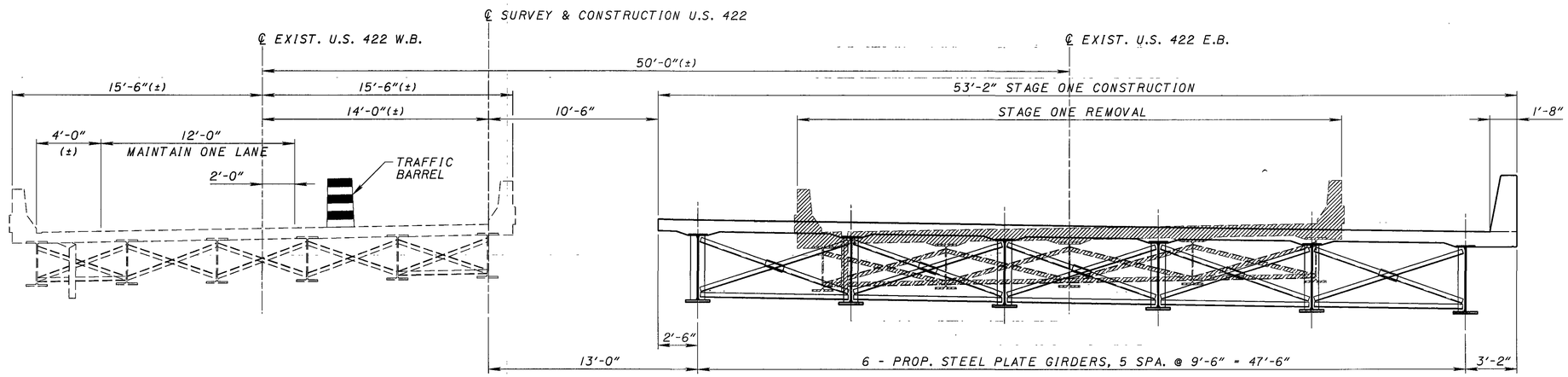

STAGE ONE CONSTRUCTION

INDICATES PORTIONS OF EXISTING STRUCTURES TO BE REMOVED

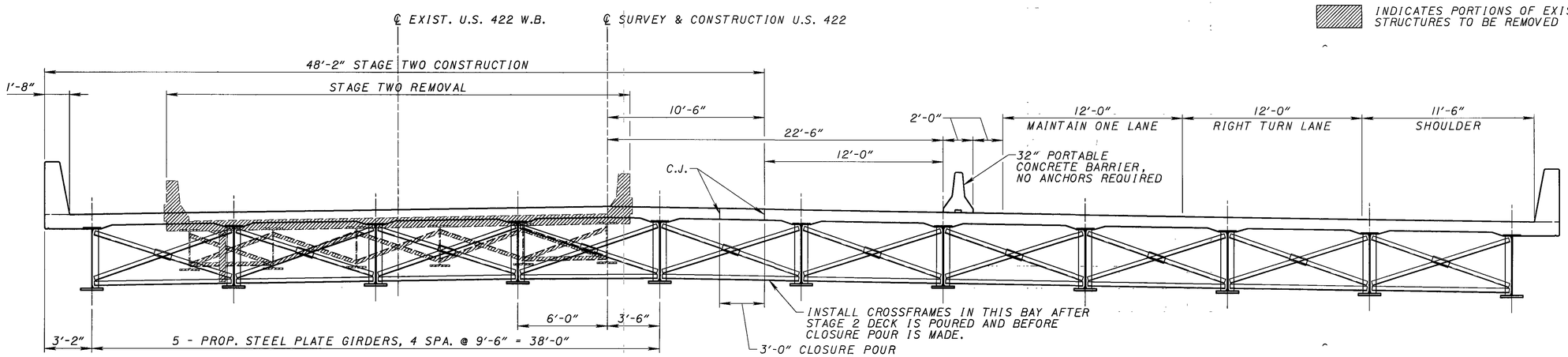

STAGE TWO CONSTRUCTION

NOTE:

SEE SUGGESTED CONSTRUCTION PROCEDURE ON SHEET 4/19.

DLZ
6000 ROCKEFELLER BLDG • 614 W SUPERIOR AVE • CLEVELAND, OH 44113

DESIGNED AJM	DRAWN PAT
CHECKED PAT	REVISED
REVIEWED GWM	DATE 03/01/05
STRUCTURE FILE NUMBER 2801906	

STAGE CONSTRUCTION DETAILS
BRIDGE NO. GEA-422-1952
U.S. 422 OVER GRAND RIVER

GEA/POR-422-18.31/0.00

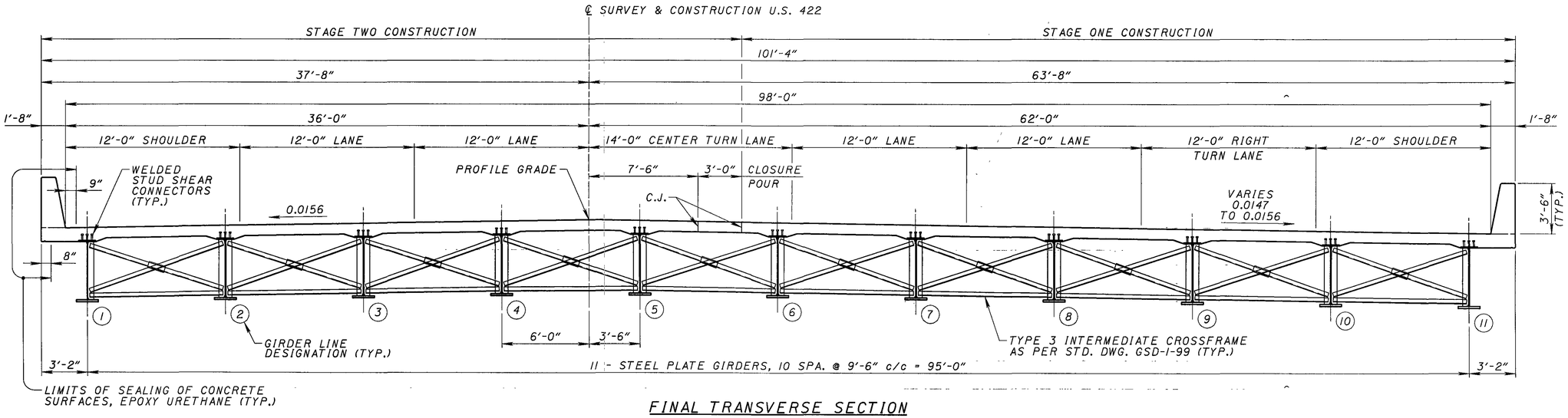

FINAL TRANSVERSE SECTION

REINFORCING STEEL NOT SHOWN
SEE SHEET XX/XX

SUGGESTED CONSTRUCTION PROCEDURE

1. IMPLEMENT PHASE ONE MAINTAINENCE OF TRAFFIC. CLOSE THE EASTBOUND LANES OF U.S. 422, AND MAINTAIN ONE LANE OF TRAFFIC ON THE EXISTING WESTBOUND BRIDGE.
2. INSTALL TEMPORARY SHEETING.
3. REMOVE THE EXISTING EASTBOUND BRIDGE.
4. CONSTRUCT STAGE ONE OF THE PROPOSED BRIDGE.
5. IMPLEMENT PHASE TWO MAINTENANCE OF TRAFFIC. CLOSE THE WESTBOUND LANES OF U.S. 422 AND MAINTAIN ONE LANE OF TRAFFIC PLUS A RIGHT TURN LANE ON THE PORTION OF THE PROPOSED BRIDGE COMPLETED IN STAGE ONE.
6. REMOVE THE EXISTING WESTBOUND BRIDGE.
7. CONSTRUCT STAGE TWO OF THE PROPOSED BRIDGE.
8. INSTALL CROSSFRAMES IN BAY BENEATH CLOSURE POUR.
9. PLACE CLOSURE POUR.
10. REMOVE TEMPORARY SHEETING.
11. OPEN BRIDGE TO FULL TRAFFIC.

THE ABOVE IS A SUGGESTED CONSTRUCTION PROCEDURE. THE CONTRACTOR SHALL SUBMIT HIS PROPOSED CONSTRUCTION PROCEDURE AND SCHEDULE TO THE DIRECTOR FOR APPROVAL BEFORE BEGINNING CONSTRUCTION. NO CONSTRUCTION OPERATIONS WILL BE PERMITTED WITHOUT PRIOR APPROVAL.

DLZ
1000 ROCKEFELLER BLDG. • 614 W. SUPERIOR AVE. • CLEVELAND, OH 44113

DESIGNED	DRAWN	REVIEWED	DATE
AJM	PAT	GWM	03/01/05
CHECKED	REVISED	STRUCTURE FILE NUMBER	
PAT		2801906	

STAGE CONSTRUCTION DETAILS
BRIDGE NO. GEA-422-1952
U.S. 422 OVER GRAND RIVER

GEA/POR-422-18.31/0.00

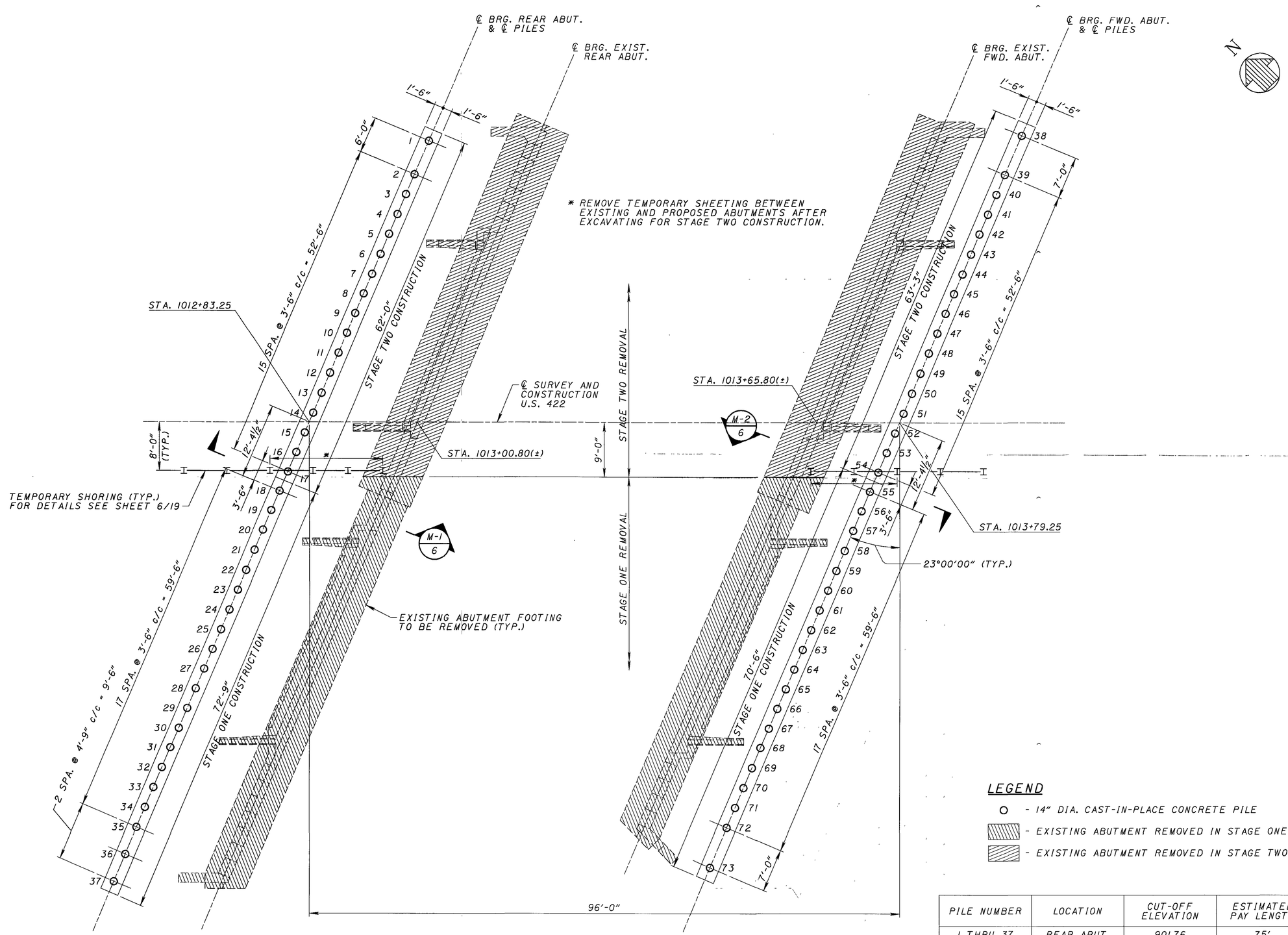

SUBSTRUCTURE LOCATION AND PILE PLAN

LEGEND

- ○ - 14" DIA. CAST-IN-PLACE CONCRETE PILE
- - EXISTING ABUTMENT REMOVED IN STAGE ONE
- - EXISTING ABUTMENT REMOVED IN STAGE TWO

PILE NUMBER	LOCATION	CUT-OFF ELEVATION	ESTIMATED PAY LENGTH
1 THRU 37	REAR ABUT.	901.76	75'
38 THRU 73	FWD. ABUT.	899.79	75'

DLZ
1000 ROCKEFELLER BLDG. • 614 W. SUPERIOR AVE. • CLEVELAND, OH 44113

DESIGNED	DRAWN	REVIEWED	DATE
PAT	PAT	GWM	03/01/05
CHECKED	REVISED	STRUCTURE FILE NUMBER	
DJP		2801906	

SUBSTRUCTURE LOCATION AND PILE PLAN
BRIDGE NO. GEA-422-1952
U.S. 422 OVER GRAND RIVER

GEA/POR-422-18.31/0.00

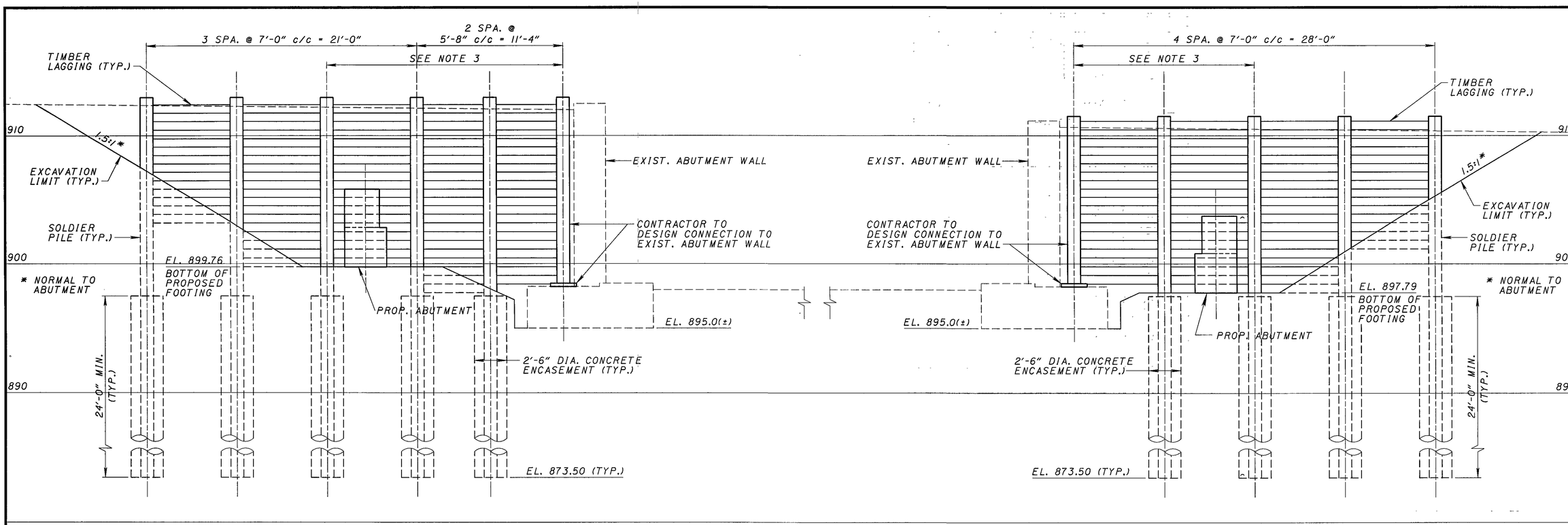

ELEVATION - TEMPORARY SHORING

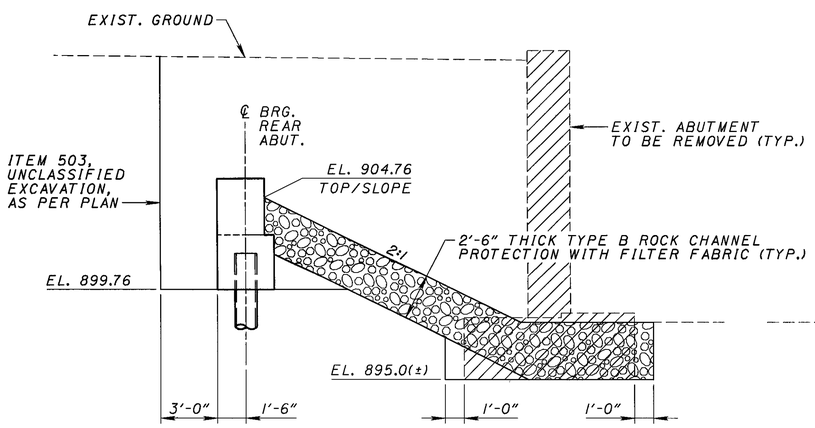

SECTION M-1 / 5

SECTION AT REAR ABUTMENT

SHOWING LIMITS OF EXCAVATION AND ROCK CHANNEL PROTECTION

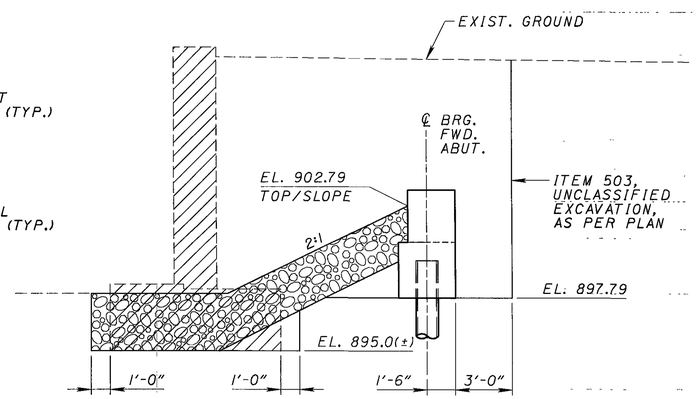

SECTION M-2 / 5

SECTION AT FORWARD ABUTMENT

SHOWING LIMITS OF EXCAVATION AND ROCK CHANNEL PROTECTION

NOTES

1. THE MINIMUM SECTION MODULUS FOR TEMPORARY CANTILEVERED SOLDIER PILES (FOR YIELD STRENGTH 50 ksi) SHALL BE 200 in^3.
2. TIMBER LAGGING SHALL BE 8"x8" TIMBERS, WITH A MINIMUM ALLOWABLE BENDING STRESS OF 1000 psi.
3. TEMPORARY SHORING SHALL BE PROVIDED TO SUPPORT THE APPROACH ROADWAY FOR BOTH STAGES OF CONSTRUCTION. THE PORTION OF THE SHORING BETWEEN THE EXISTING AND PROPOSED ABUTMENTS SHALL BE REMOVED DURING STAGE TWO CONSTRUCTION AFTER EXCAVATION WITHIN THIS AREA IS COMPLETE.
4. THE SHORING PLAN OUTLINED IN THE NOTES AND DETAILS ON THIS SHEET IS A SUGGESTED PROCEDURE. THE CONTRACTOR SHALL BE RESPONSIBLE FOR DESIGNING, INSTALLING, MAINTAINING, AND ABANDONING/REMOVING A MEANS OF TEMPORARY SHORING FOR STAGED CONSTRUCTION IN ACCORDANCE WITH ITEM 503. DESIGN CALCULATIONS AND DRAWINGS SHALL BE PREPARED BY AN OHIO REGISTERED PROFESSIONAL ENGINEER AND SUBMITTED TO THE DIRECTOR FOR APPROVAL.
5. ALL MATERIALS, EQUIPMENT, LABOR AND INCIDENTALS NECESSARY TO DESIGN, INSTALL, MAINTAIN, AND REMOVE/ABANDON THE TEMPORARY SHORING SHALL BE INCLUDED FOR PAYMENT IN THE LUMP SUM PRICE BID FOR ITEM 503, COFFERDAMS, CRIBS, AND SHEETING, AS PER PLAN.

DLZ
1000 ROCKEFELLER BLDG • 614 W SUPERIOR AVE • CLEVELAND, OH 44113

DESIGNED	DRAWN	REVIEWED	DATE
PAT	PAT	GWM	03/01/05
CHECKED	REVISED	STRUCTURE FILE NUMBER	
AJM		2801906	

TEMPORARY SHORING FOR STAGE CONSTRUCTION
BRIDGE NO. GEA-422-1952
U.S. 422 OVER GRAND RIVER

GEA/POR-422-18.31/0.00

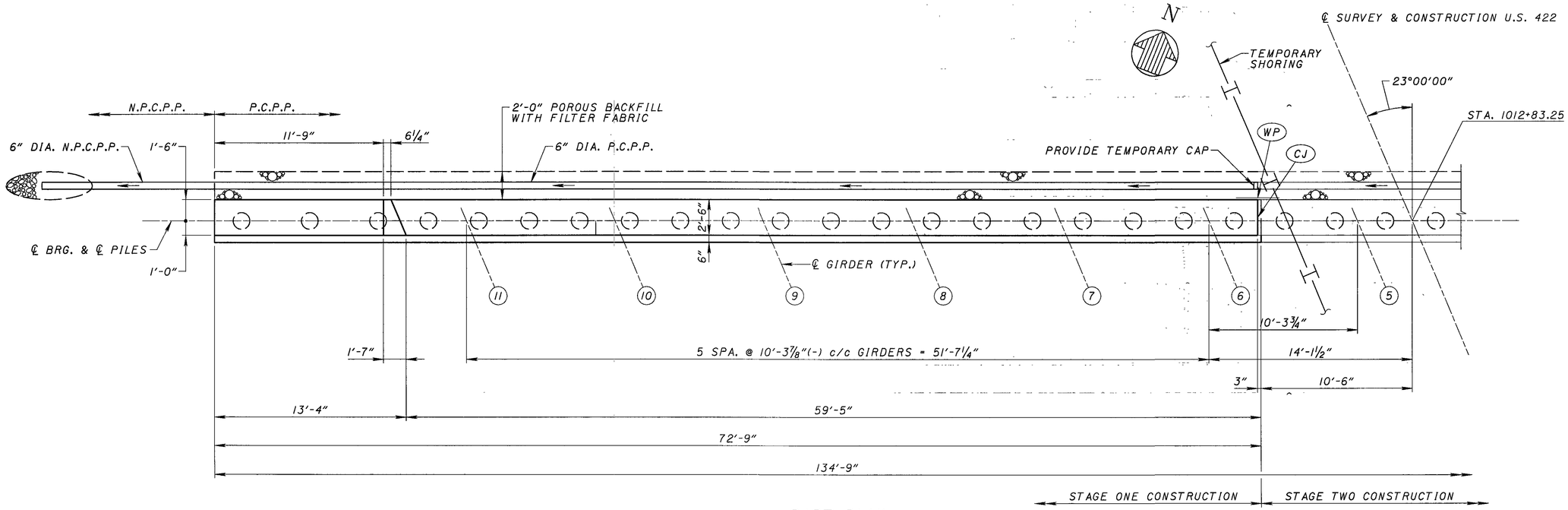

PART PLAN

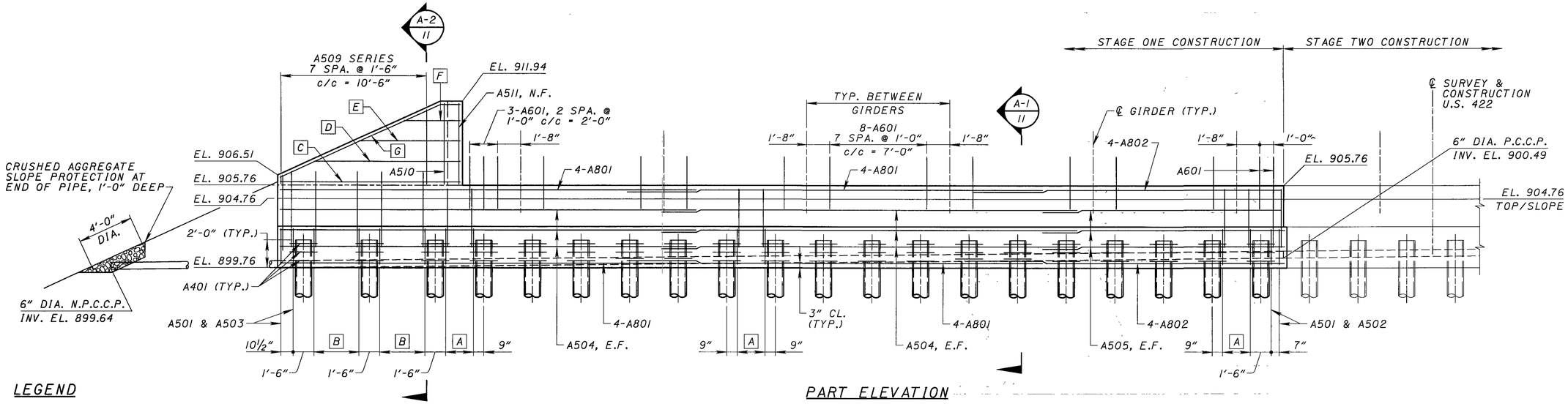

PART ELEVATION

LEGEND

(CJ) CONTRACTION JOINT

(WP) TYPE 2 WATERPROOFING, 3'-0" WIDE, CENTERED OVER THE JOINT, EXTENDING FROM THE BOTTOM OF THE FOOTING TO THE BEAM SEAT

[A] 3-A501 & 3-A502, 2 SPA. @ 1'-0" c/c = 2'-0" TYP. BETWEEN PILES UNLESS OTHERWISE SHOWN

[B] 4-A501 & 4-A503, 3 SPA. @ 1'-1" c/c = 3'-3"

[C] A521, N.F. & A522, F.F.

[D] A523, N.F. & A524, F.F.

[E] A525, N.F. & A526, F.F.

[F] A527, N.F. & A528, F.F.

[G] A529, N.F. & A530, F.F.

NOTES

1. ALL REINFORCING STEEL SHALL BE PLACED TO PROVIDE A MINIMUM CLEAR COVER OF 2" UNLESS OTHERWISE SHOWN.
2. MINIMUM LAP LENGTHS, UNLESS NOTED OTHERWISE, SHALL BE AS FOLLOWS:
   #5 BARS - 2'-11"
   #8 BARS - 5'-8"
3. POROUS BACKFILL WITH FILTER FABRIC, 2 FEET THICK, SHALL EXTEND UP TO THE PLANE OF THE SUBGRADE, TO 1 FOOT BELOW THE EMBANKMENT SURFACE, AND LATERALLY TO THE ENDS OF THE WINGWALLS.
4. FOR SUBSTRUCTURE LOCATION AND PILE PLAN, SEE SHEET 5/19.

DLZ
1000 ROCKEFELLER BLDG • 614 W SUPERIOR AVE • CLEVELAND, OH 44113

DESIGNED	DRAWN	REVIEWED	DATE
PAT	PAT	GWM	03/01/05
CHECKED	REVISED	STRUCTURE FILE NUMBER	
AJM		2801906	

REAR ABUTMENT - STAGE ONE
BRIDGE NO. GEA-422-1952
U.S. 422 OVER GRAND RIVER

GEA/POR-422-18.31/0.00

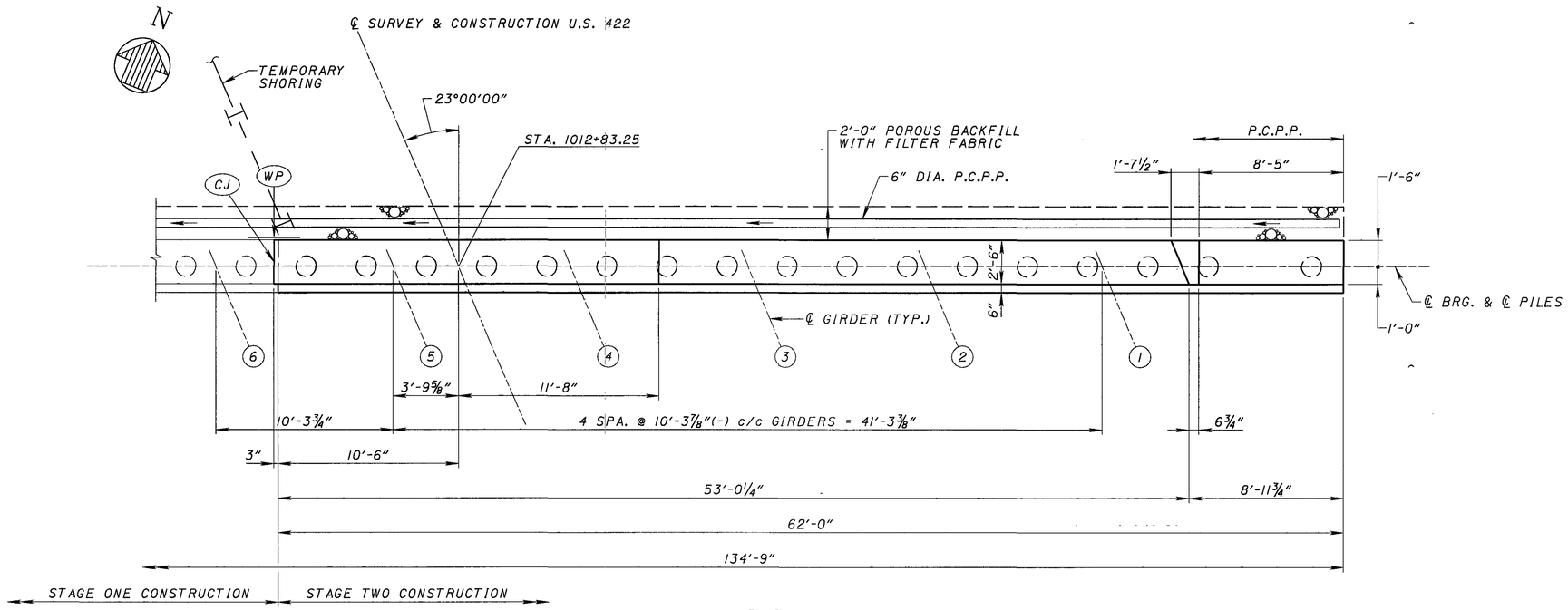

PART PLAN

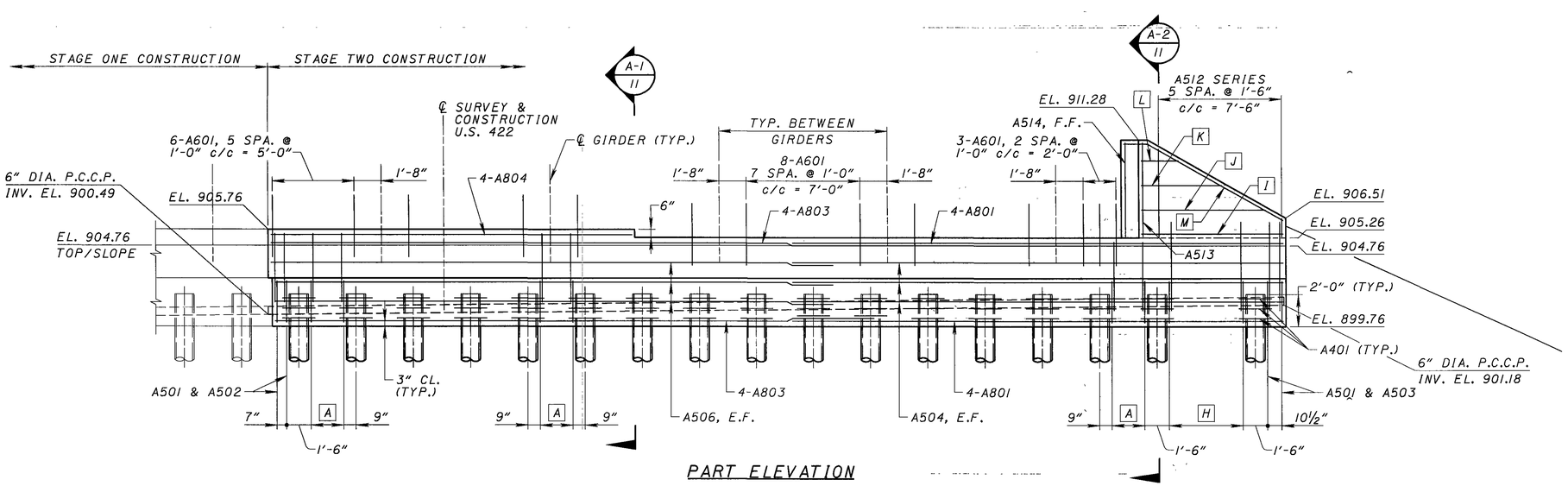

PART ELEVATION

LEGEND

(CJ) CONTRACTION JOINT

(WP) TYPE 2 WATERPROOFING, 3'-0" WIDE, CENTERED OVER THE JOINT, EXTENDING FROM THE BOTTOM OF THE FOOTING TO THE BEAM SEAT

[A] 3-A501 & 3-A502, 2 SPA. @ 1'-0" c/c = 2'-0" TYP. BETWEEN PILES UNLESS OTHERWISE SHOWN

[H] 4-A501 & 4-A503, 3 SPA. @ 1'-6" c/c = 4'-6"

[I] A531, N.F. & A532, F.F.

[J] A533, N.F. & A534, F.F.

[K] A535, N.F. & A536, F.F.

[L] A537, N.F. & A538, F.F.

[M] A539, N.F. & A540, F.F.

NOTES

1. ALL REINFORCING STEEL SHALL BE PLACED TO PROVIDE A MINIMUM CLEAR COVER OF 2" UNLESS OTHERWISE SHOWN.
2. MINIMUM LAP LENGTHS, UNLESS NOTED OTHERWISE, SHALL BE AS FOLLOWS:
   #5 BARS - 2'-11"
   #8 BARS - 5'-8"
3. POROUS BACKFILL WITH FILTER FABRIC, 2 FEET THICK, SHALL EXTEND UP TO THE PLANE OF THE SUBGRADE, TO 1 FOOT BELOW THE EMBANKMENT SURFACE, AND LATERALLY TO THE ENDS OF THE WINGWALLS.
4. FOR SUBSTRUCTURE LOCATION AND PILE PLAN, SEE SHEET 5/19.

DLZ
1000 ROCKEFELLER BLDG • 614 W SUPERIOR AVE • CLEVELAND, OH 44113

DESIGNED	DRAWN	REVIEWED	DATE
PAT	PAT	GWM	03/01/05
CHECKED	REVISED	STRUCTURE FILE NUMBER	
AJM		2801906	

REAR ABUTMENT - STAGE TWO
BRIDGE NO. GEA-422-1952
U.S. 422 OVER GRAND RIVER

GEA/POR-422-18.31/0.00

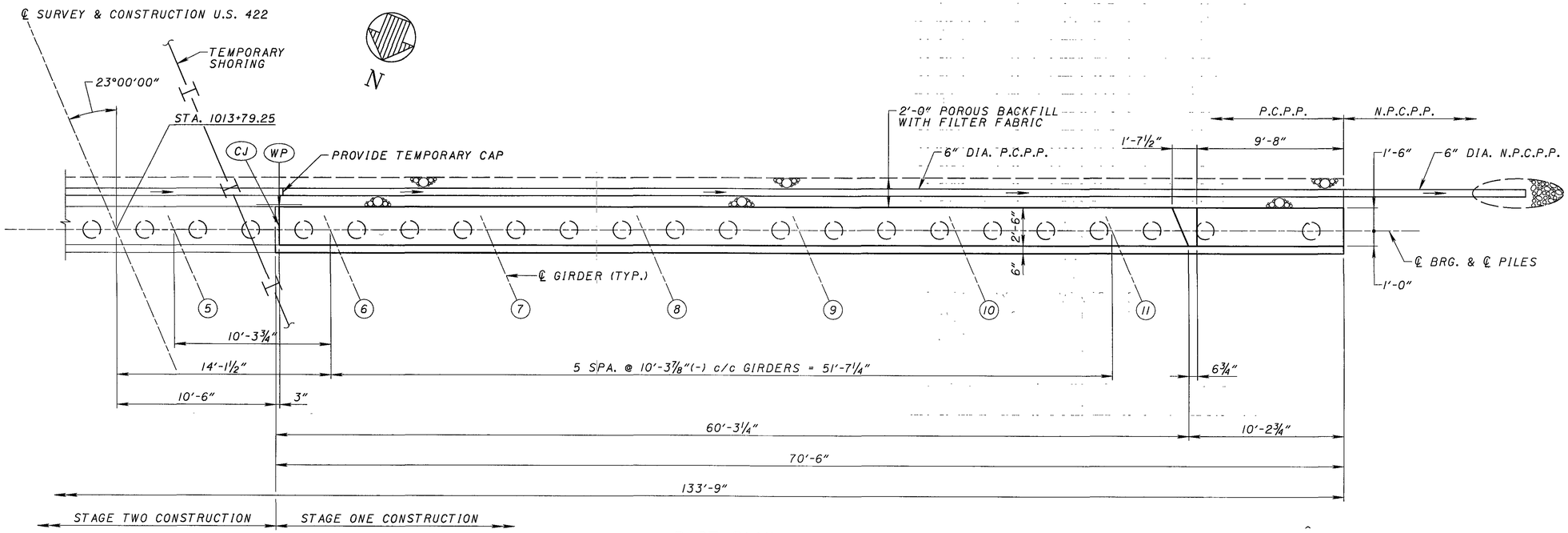

PART PLAN

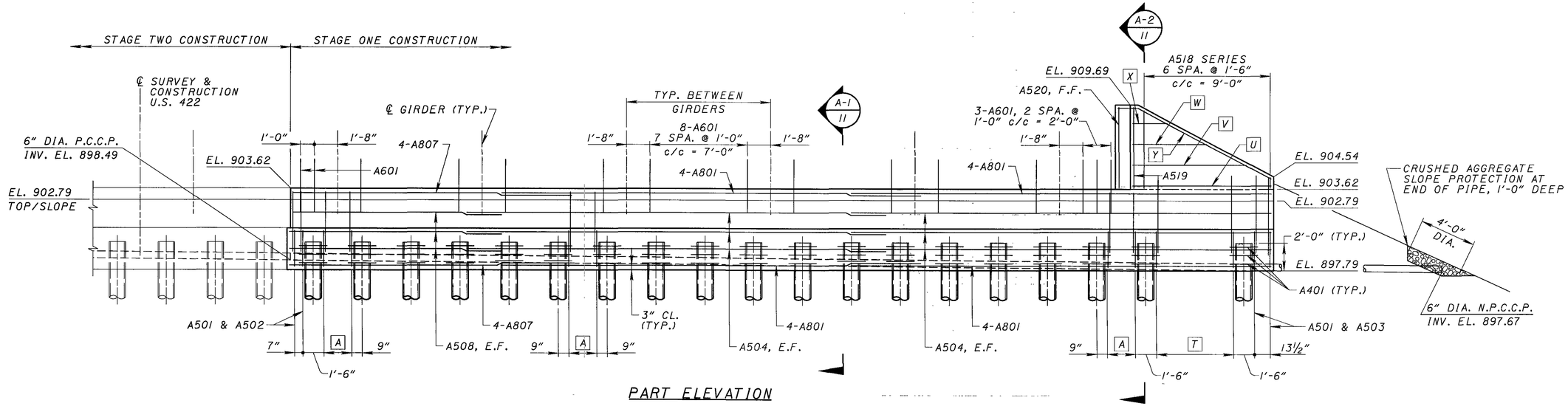

PART ELEVATION

LEGEND

(CJ) CONTRACTION JOINT

(WP) TYPE 2 WATERPROOFING, 3'-0" WIDE, CENTERED OVER THE JOINT, EXTENDING FROM THE BOTTOM OF THE FOOTING TO THE BEAM SEAT

[A] 3-A501 & 3-A502, 2 SPA. @ 1'-0" c/c = 2'-0" TYP. BETWEEN PILES UNLESS OTHERWISE SHOWN

[T] 5-A501 & 5-A503, 4 SPA. @ 1'-4½" c/c = 5'-6"

[U] A551, N.F. & A552, F.F.

[V] A553, N.F. & A554, F.F.

[W] A555, N.F. & A556, F.F.

[X] A557, N.F. & A558, F.F.

[Y] A559, N.F. & A560, F.F.

NOTES

1. ALL REINFORCING STEEL SHALL BE PLACED TO PROVIDE A MINIMUM CLEAR COVER OF 2" UNLESS OTHERWISE SHOWN.
2. MINIMUM LAP LENGTHS, UNLESS NOTED OTHERWISE, SHALL BE AS FOLLOWS:
   #5 BARS - 2'-11"
   #8 BARS - 5'-8"
3. POROUS BACKFILL WITH FILTER FABRIC, 2 FEET THICK, SHALL EXTEND UP TO THE PLANE OF THE SUBGRADE, TO 1 FOOT BELOW THE EMBANKMENT SURFACE, AND LATERALLY TO THE ENDS OF THE WINGWALLS.
4. FOR SUBSTRUCTURE LOCATION AND PILE PLAN, SEE SHEET 5/19.

DLZ
1000 ROCKEFELLER BLDG • 614 ■ SUPERIOR AVE • CLEVELAND, OH 44115

DESIGNED	DRAWN	REVIEWED	DATE
PAT	PAT	GWM	03/01/05
CHECKED	REVISED	STRUCTURE FILE NUMBER	
AJM		2801906	

FORWARD ABUTMENT - STAGE ONE
BRIDGE NO. GEA-422-1952
U.S. 422 OVER GRAND RIVER

GEA/POR-422-18.31/0.00

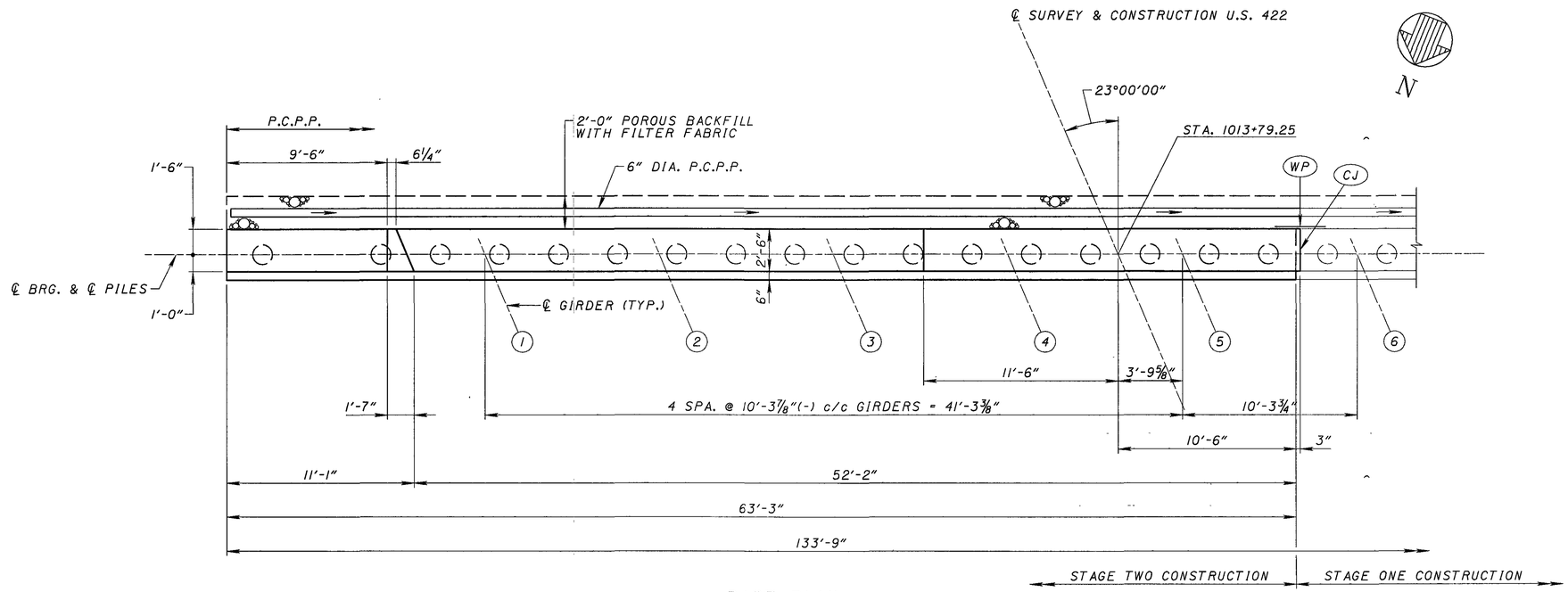

PART PLAN

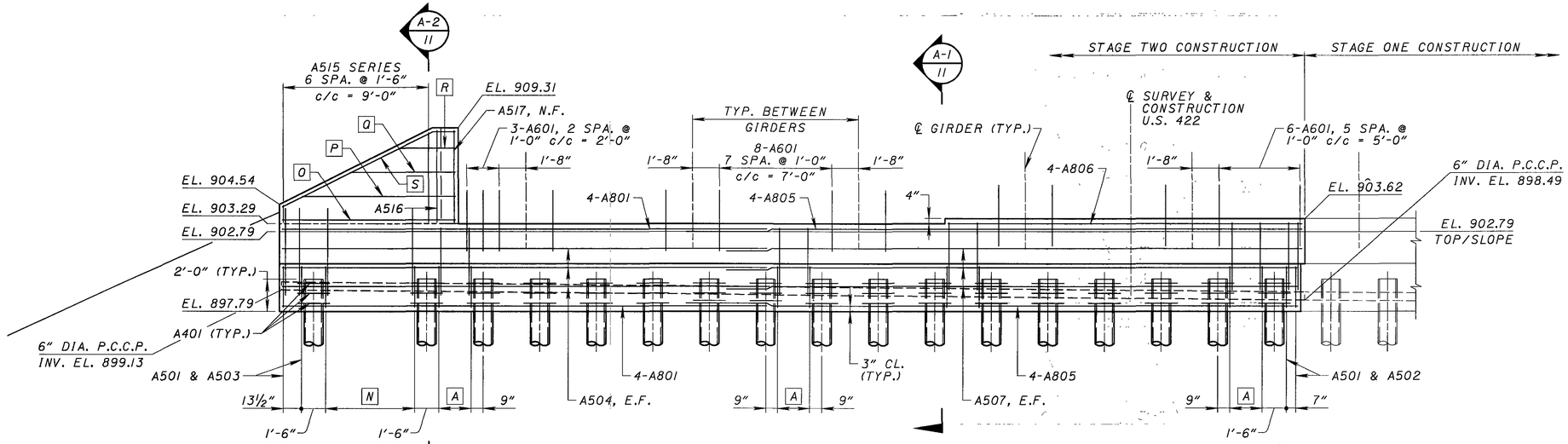

PART ELEVATION

LEGEND

(CJ) CONTRACTION JOINT

(WP) TYPE 2 WATERPROOFING, 3'-0" WIDE, CENTERED OVER THE JOINT, EXTENDING FROM THE BOTTOM OF THE FOOTING TO THE BEAM SEAT

[A] 3-A501 & 3-A502, 2 SPA. @ 1'-0" c/c = 2'-0" TYP. BETWEEN PILES UNLESS OTHERWISE SHOWN

[N] 5-A501 & 5-A503, 4 SPA. @ 1'-4½" c/c = 5'-6"

[O] A541, N.F. & A542, F.F.

[P] A543, N.F. & A544, F.F.

[Q] A545, N.F. & A546, F.F.

[R] A547, N.F. & A548, F.F.

[S] A549, N.F. & A550, F.F.

NOTES

1. ALL REINFORCING STEEL SHALL BE PLACED TO PROVIDE A MINIMUM CLEAR COVER OF 2" UNLESS OTHERWISE SHOWN.
2. MINIMUM LAP LENGTHS, UNLESS NOTED OTHERWISE, SHALL BE AS FOLLOWS:
   #5 BARS - 2'-11"
   #8 BARS - 5'-8"
3. POROUS BACKFILL WITH FILTER FABRIC, 2 FEET THICK, SHALL EXTEND UP TO THE PLANE OF THE SUBGRADE, TO 1 FOOT BELOW THE EMBANKMENT SURFACE, AND LATERALLY TO THE ENDS OF THE WINGWALLS.
4. FOR SUBSTRUCTURE LOCATION AND PILE PLAN, SEE SHEET 5/19.

DLZ
800 ROCKEFELLER BLDG • 614 W SUPERIOR AVE • CLEVELAND, OH 44113

DESIGNED PAT	DRAWN PAT	REVIEWED GWM	DATE 03/01/05
CHECKED AJM	REVISED	STRUCTURE FILE NUMBER 2801906	

FORWARD ABUTMENT - STAGE TWO
BRIDGE NO. GEA-422-1952
U.S. 422 OVER GRAND RIVER

GEA/POR-422-18.31/0.00

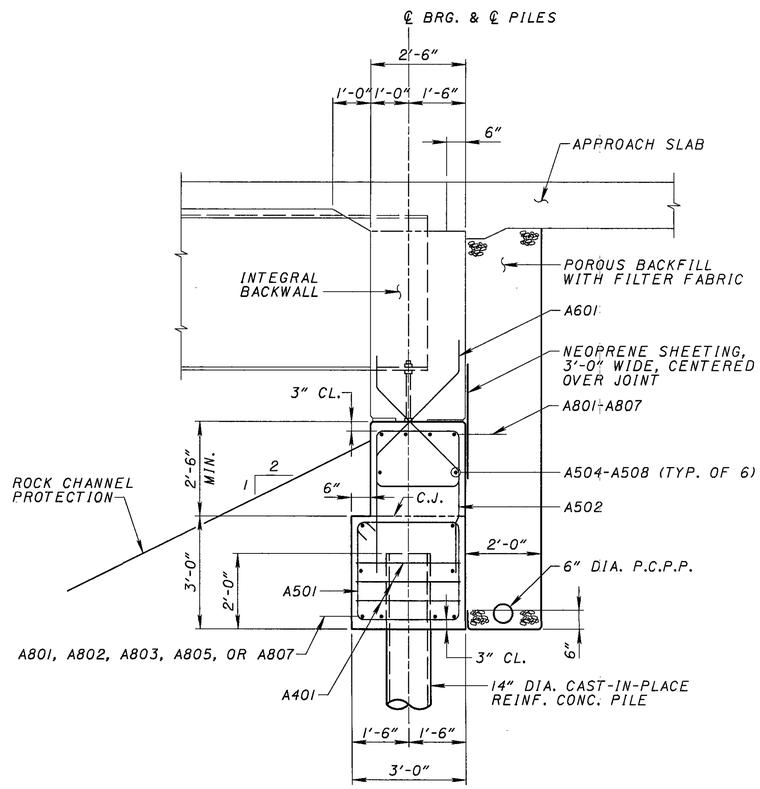

SECTION A-1 / 7

ALSO SEE SHEETS 7, 8, 9, AND 10/19

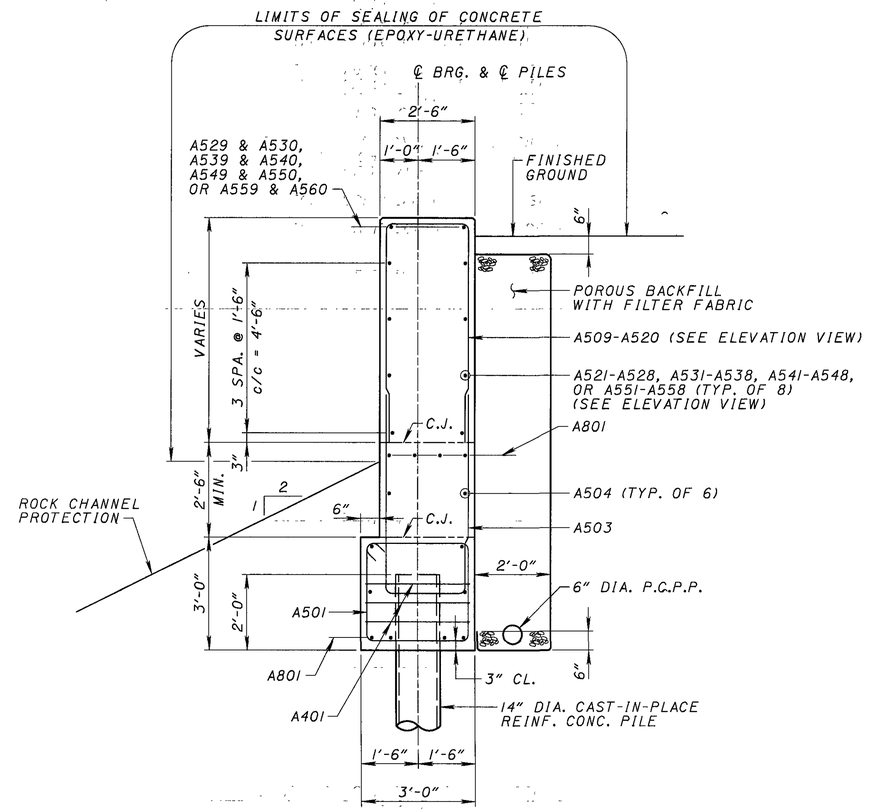

SECTION A-2 / 7

ALSO SEE SHEETS 7, 8, 9, AND 10/19

DLZ
1000 ROCKEFELLER BLDG. • 614 W. SUPERIOR AVE. • CLEVELAND, OH 44113

DESIGNED	DRAWN	REVIEWED	DATE
PAT	PAT	GWM	03/01/05
CHECKED	REVISED	STRUCTURE FILE NUMBER	
AJM		2801906	

ABUTMENT DETAILS
BRIDGE NO. GEA-422-1952
U.S. 422 OVER GRAND RIVER

GEA/POR-422-18.31/0.00

11/19

233/332

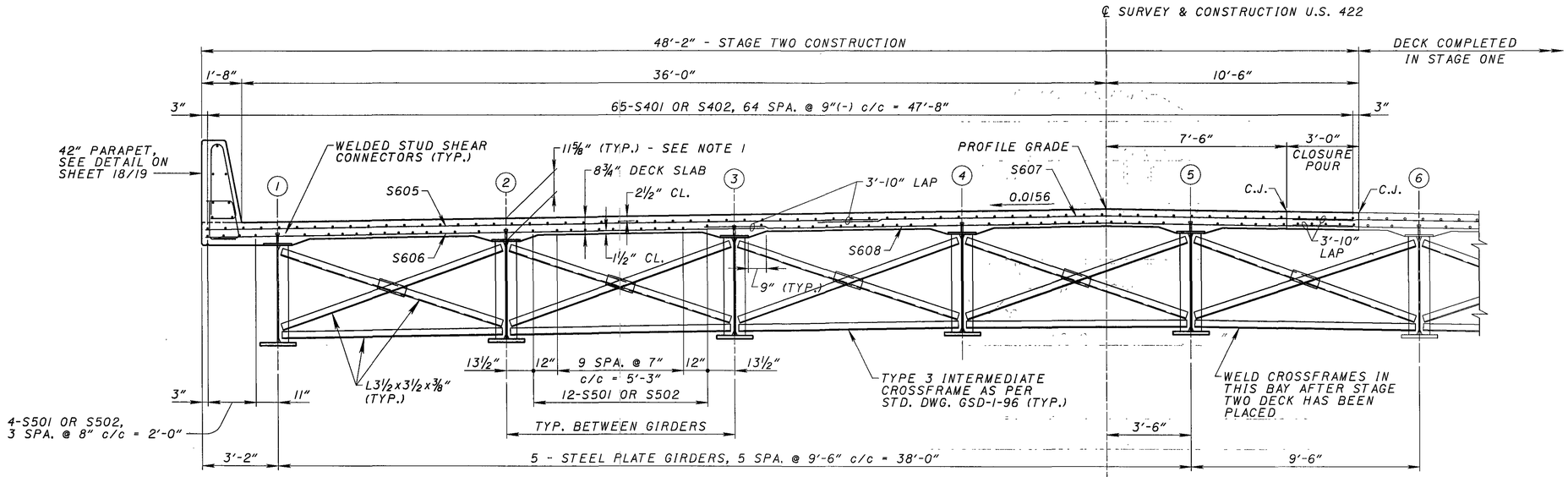

PART TRANSVERSE SECTION

STAGE TWO CONSTRUCTION

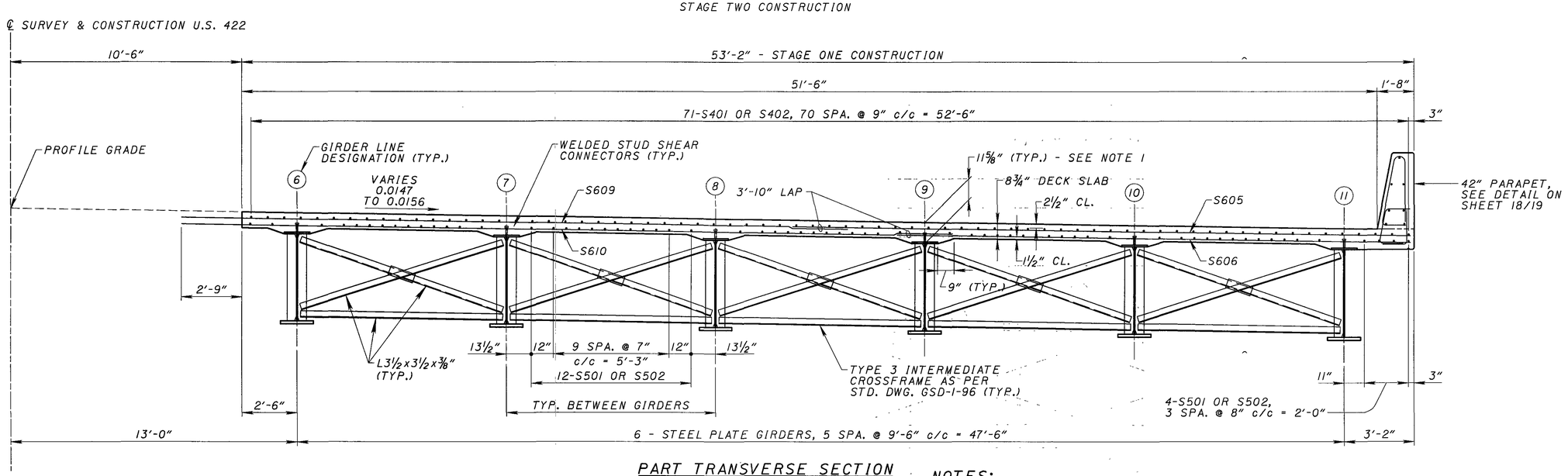

PART TRANSVERSE SECTION

STAGE ONE CONSTRUCTION

NOTE: EACH RUN OF LONGITUDINAL DECK SLAB REINFORCING SHALL BE COMPRISED OF THE FOLLOWING:

TOP BARS: 2-S401 & 2-S402, LAP 2'-0" MIN.
BOTTOM BARS: 2-S501 & 2-S502, LAP 2'-7" MIN.

NOTES:

1. DECK SLAB CONCRETE QUANTITY: THE ESTIMATED QUANTITY OF DECK SLAB CONCRETE IS BASED ON THE CONSTANT DECK SLAB THICKNESS, AS SHOWN, PLUS THE QUANTITY OF CONCRETE THAT FORMS EACH GIRDER HAUNCH. THE ESTIMATE ASSUMES A CONSTANT HAUNCH WIDTH OUTSIDE THE EDGE OF EACH GIRDER FLANGE OF 9 INCHES. DEVIATE FROM THIS HAUNCH AS NECESSARY TO PLACE THE DECK SURFACE AT THE FINISHED GRADE. THE ALLOWABLE TOLERANCE FOR THE HAUNCH WIDTH OUTSIDE THE EDGE OF EACH GIRDER FLANGE IS ±3 INCHES.

   THE HAUNCH THICKNESS WAS MEASURED AT THE CENTERLINE OF THE GIRDER, FROM THE SURFACE OF THE DECK TO THE BOTTOM OF THE TOP FLANGE, MINUS THE DECK SLAB THICKNESS. THE AREA OF ALL EMBEDDED STEEL PLATES HAS BEEN DEDUCTED FROM THE HAUNCH QUANTITY IN ACCORDANCE WITH 511.24.

2. SEAL THE LONGITUDINAL CONSTRUCTION JOINTS IN THE DECK AND AT THE TOE OF PARAPETS WITH HIGH MOLECULAR WEIGHT METHACRYLATE. THE WIDTH OF SEALING SHALL BE 2 FEET, CENTERED OVER THE JOINT.

3. FOR DECK SLAB PLAN, SEE SHEET 15/19.

4. FOR PHASE CONSTRUCTION DETAILS, SEE SHEETS 3/19 & 4/19.

DLZ
3000 ROCKEFELLER BLDG • 614 W SUPERIOR AVE • CLEVELAND, OH 44113

DESIGNED	DRAWN	REVIEWED	DATE
AJM	PAT	GWM	03/01/05
CHECKED	REVISED	STRUCTURE FILE NUMBER	
PAT		2801906	

TRANSVERSE SECTION
BRIDGE NO. GEA-422-1952
U.S. 422 OVER GRAND RIVER

GEA/POR-422-18.31/0.00

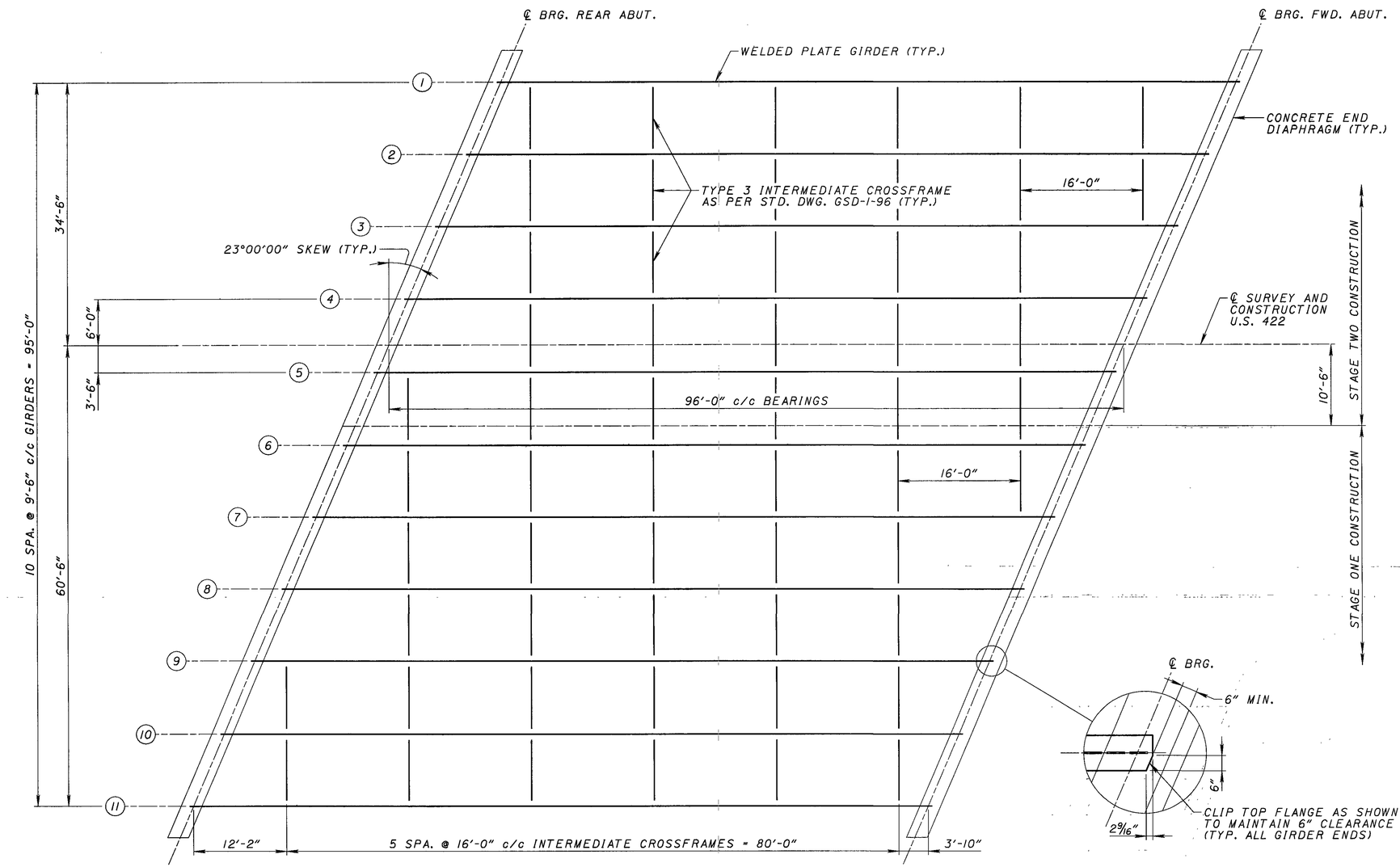

FRAMING PLAN

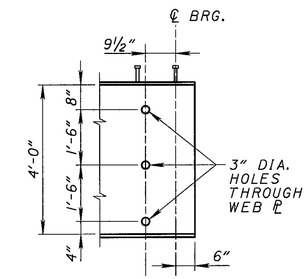

GIRDER END DETAIL

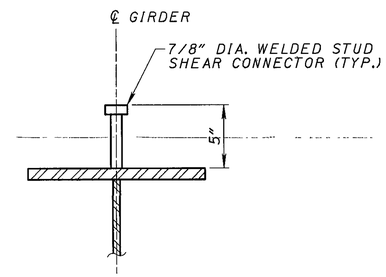

TYPICAL SHEAR CONNECTOR DETAIL

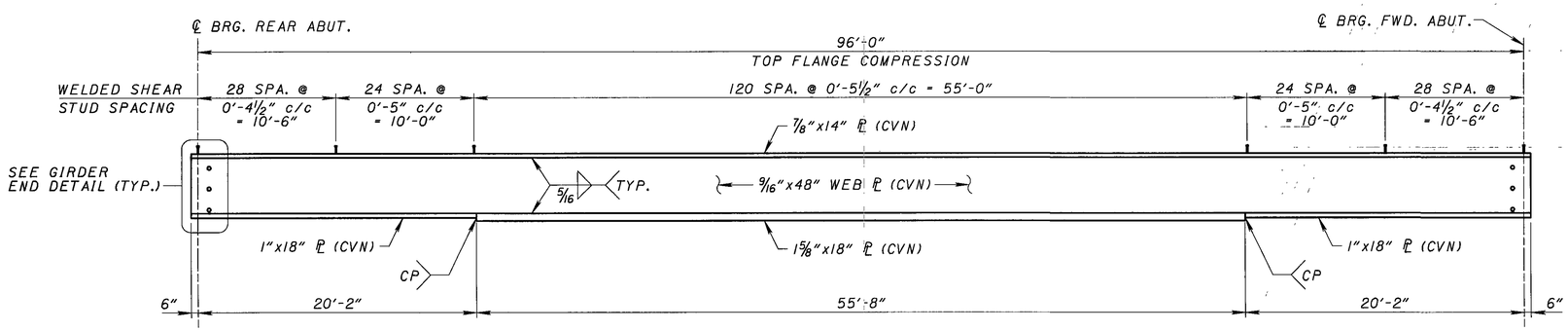

TYPICAL GIRDER ELEVATION

NOTES

1. CVN: WHERE A SHAPE OR PLATE IS DESIGNATED (CVN), FURNISH MATERIAL THAT MEETS THE MINIMUM NOTCH TOUGHNESS REQUIREMENTS AS SPECIFIED IN 711.01.
2. WELDED STUD SHEAR CONNECTORS SHALL CONFORM TO AASHTO M-169 AND ITEM 513.
3. WELDING OF ATTACHMENTS FOR SUPPORTS OF THE CONCRETE DECK FINISHING MACHINE TO THE TOP FLANGE IS NOT PERMITTED, EVEN IN COMPRESSION AREAS. THE CONTRACTOR MAY SHOOT SHEAR CONNECTORS AT LOCATIONS OF NECESSARY SUPPORT AT ANY LOCATION AT LEAST 4 INCHES FROM ADJACENT SHEAR STUDS ALONG THE CENTERLINE OF A FLANGE PLATE, INCLUDING TENSION AREAS. THE CONTRACTOR MAY THEN WELD ATTACHMENTS FOR SUPPORT OF THE CONCRETE FINISHING MACHINE TO THE SHEAR CONNECTORS.
4. PROVIDE COMPLETE JOINT PENETRATION WELD FOR ALL FLANGE AND WEB BUTT WELDED SPLICES. WELDED WEB SPLICE AND WELDED FLANGE SPLICE SHALL BE AT LEAST 12 INCHES APART.
5. TRANSITION OF THICKNESS AT BUTT JOINTS: REFER TO SECTION 9.20 OF THE AMERICAN WELDING SOCIETY (AWS) BRIDGE WELDING CODE AS AMENDED BY SUPPLEMENTAL SPECIFICATION 1011 WHICH PROVIDES TRANSITION DETAILS OF THICKNESSES AT COMPLETE PENETRATION BUTT JOINTS.

DLZ
6000 ROCKEFELLER BLDG • 614 W SUPERIOR AVE • CLEVELAND, OH 44113

DESIGNED	DRAWN	REVIEWED	DATE
PAT	PAT	GWM	03/01/05
CHECKED	REVISED	STRUCTURE FILE NUMBER	
DJP		2801906	

FRAMING PLAN
BRIDGE NO. GEA-422-1952
U.S. 422 OVER GRAND RIVER

GEA/POR-422-18.31/0.00

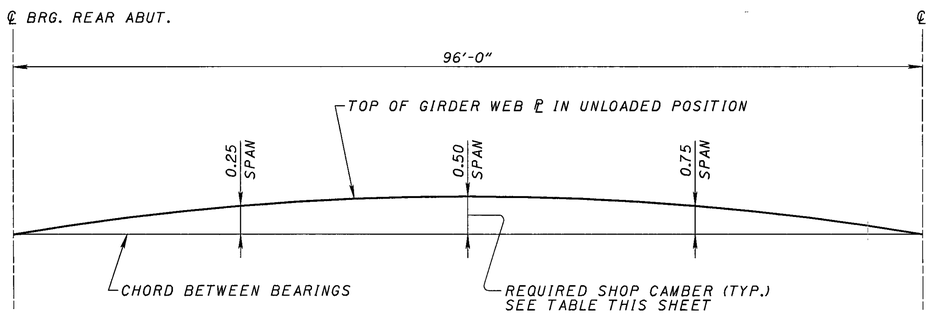

CAMBER DIAGRAM

DEFLECTION AND CAMBER (INCHES)

GIRDER NO.	CAMBER DESCRIPTION	0.25 SPAN	0.50 SPAN	0.75 SPAN	GIRDER NO.	CAMBER DESCRIPTION	0.25 SPAN	0.50 SPAN	0.75 SPAN
1	DEFLECTION DUE TO WEIGHT OF STEEL	7/16	9/16	7/16	10	DEFLECTION DUE TO WEIGHT OF STEEL	7/16	9/16	7/16
	DEFLECTION DUE TO REMAINING DEAD LOAD	1 1/2	2 1/8	1 1/2		DEFLECTION DUE TO REMAINING DEAD LOAD	1 15/16	2 3/4	1 15/16
	ADJUSTMENT FOR VERTICAL CURVATURE	-9/16	-13/16	-9/16		ADJUSTMENT FOR VERTICAL CURVATURE	-5/8	-13/16	-5/8
	REQUIRED SHOP CAMBER	1 3/8	1 7/8	1 3/8		REQUIRED SHOP CAMBER	1 3/4	2 1/2	1 3/4
2 THROUGH 9	DEFLECTION DUE TO WEIGHT OF STEEL	7/16	9/16	7/16	11	DEFLECTION DUE TO WEIGHT OF STEEL	7/16	9/16	7/16
	DEFLECTION DUE TO REMAINING DEAD LOAD	1 15/16	2 3/4	1 15/16		DEFLECTION DUE TO REMAINING DEAD LOAD	1 1/2	2 1/8	1 1/2
	ADJUSTMENT FOR VERTICAL CURVATURE	-9/16	-13/16	-9/16		ADJUSTMENT FOR VERTICAL CURVATURE	-1 0/16	-1 1/16	-3/4
	REQUIRED SHOP CAMBER	1 13/16	2 1/2	1 13/16		REQUIRED SHOP CAMBER	15/16	1 5/8	1 3/16

NOTE: POSITIVE DIMENSIONS INDICATE DOWNWARD DEFLECTION AND UPWARD CAMBER.

SCREED ELEVATIONS (FEET)

LOCATION			℄ BRG. REAR ABUT.	0.25 SPAN	0.50 SPAN	0.75 SPAN	℄ BRG. FWD. ABUT.
TOE/LEFT PARAPET	36.00' LT	STATION	1012+98.53	1013+22.53	1013+46.53	1013+70.53	1013+94.53
		ELEVATION	911.28	910.86	910.40	909.88	909.31
GIRDER 1	34.50' LT	STATION	1012+97.89	1013+21.89	1013+45.89	1013+69.89	1013+93.89
		ELEVATION	911.31	910.90	910.44	909.91	909.34
GIRDER 2	25.00' LT	STATION	1012+93.86	1013+17.86	1013+41.86	1013+65.86	1013+89.86
		ELEVATION	911.56	911.17	910.72	910.17	909.56
GIRDER 3	15.50' LT	STATION	1012+89.83	1013+13.83	1013+37.83	1013+61.83	1013+85.83
		ELEVATION	911.80	911.41	910.95	910.40	909.78
GIRDER 4	6.00' LT	STATION	1012+85.80	1013+09.80	1013+33.80	1013+57.80	1013+81.80
		ELEVATION	912.05	911.65	911.18	910.63	910.00
CROWN	0.00'	STATION	1012+83.25	1013+07.25	1013+31.25	1013+55.25	1013+79.25
		ELEVATION	912.20	911.80	911.33	910.77	910.15
GIRDER 5	3.50' RT	STATION	1012+81.76	1013+05.76	1013+29.76	1013+53.76	1013+77.76
		ELEVATION	912.18	911.78	911.31	910.75	910.12
C.J. #1	7.50' RT	STATION	1012+80.07	1013+04.07	1013+28.07	1013+52.07	1013+76.07
		ELEVATION	912.16	911.75	911.28	910.72	910.09
C.J. #2	10.50' RT	STATION	1012+78.79	1013+02.79	1013+26.79	1013+50.79	1013+74.79
		ELEVATION	912.14	911.74	911.26	910.70	910.07
GIRDER 6	13.00' RT	STATION	1012+77.73	1013+01.73	1013+25.73	1013+49.73	1013+73.73
		ELEVATION	912.13	911.72	911.25	910.68	910.05
GIRDER 7	22.50' RT	STATION	1012+73.70	1012+97.70	1013+21.70	1013+45.70	1013+69.70
		ELEVATION	912.08	911.67	911.19	910.61	909.98
GIRDER 8	32.00' RT	STATION	1012+69.67	1012+93.67	1013+17.67	1013+41.67	1013+65.67
		ELEVATION	912.03	911.61	911.13	910.55	909.91
GIRDER 9	41.50' RT	STATION	1012+65.63	1012+89.63	1013+13.63	1013+37.63	1013+61.63
		ELEVATION	911.99	911.56	911.07	910.49	909.84
GIRDER 10	51.00' RT	STATION	1012+61.60	1012+85.60	1013+09.60	1013+33.60	1013+57.60
		ELEVATION	911.94	911.51	911.01	910.42	909.77
GIRDER 11	60.50' RT	STATION	1012+57.57	1012+81.57	1013+05.57	1013+29.57	1013+53.57
		ELEVATION	911.94	911.42	910.91	910.33	909.70
TOE/RIGHT PARAPET	62.00' RT	STATION	1012+56.93	1012+80.93	1013+04.93	1013+28.93	1013+52.93
		ELEVATION	911.94	911.42	910.90	910.32	909.69

NOTE: SCREED ELEVATIONS SHOWN ARE FOR DECK SLAB SURFACE PRIOR TO CONCRETE PLACEMENT. ALLOWANCE HAS BEEN MADE FOR ANTICIPATED CALCULATED DEAD LOAD DEFLECTIONS.

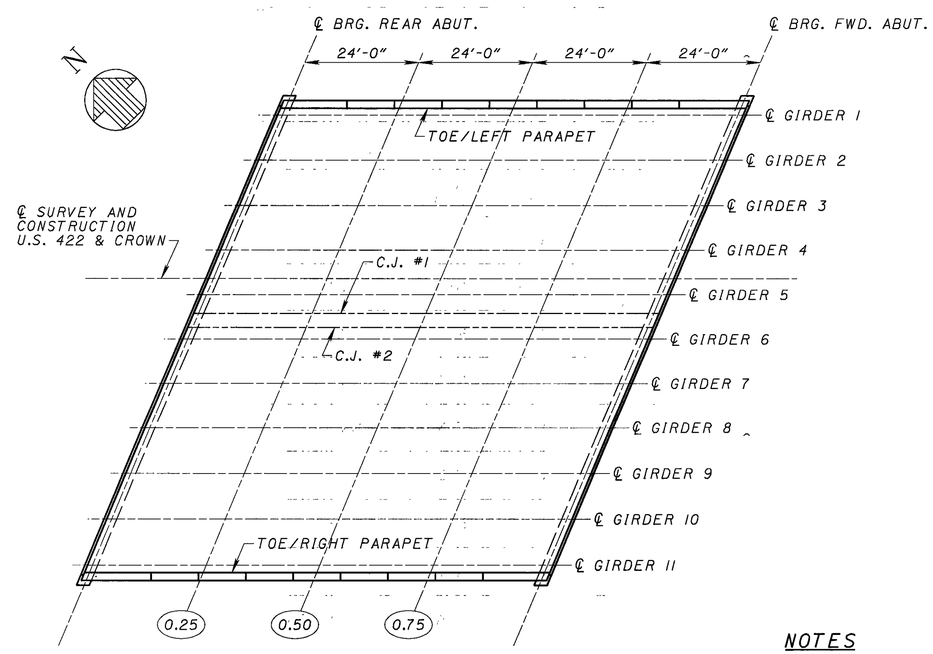

SCREED ELEVATION LOCATION DIAGRAM

NOTES

1. FOR FRAMING PLAN AND TYPICAL GIRDER ELEVATION, SEE SHEET 13/19.
2. FOR DECK SLAB PLAN, SEE SHEET 15/19.

DLZ
6000 ROCKEFELLER BLDG. • 614 W. SUPERIOR AVE. • CLEVELAND, OH 44113

DESIGNED	DRAWN	REVIEWED	DATE
PAT	PAT	GWM	03/01/05
CHECKED	REVISED	STRUCTURE FILE NUMBER	
DJP		2801906	

SUPERSTRUCTURE DETAILS
BRIDGE NO. GEA-422-1952
U.S. 422 OVER GRAND RIVER

GEA/POR-422-18.31/0.00

SERIES BAR LEGEND

- [A] S611 SERIES, TOP & S611 SERIES, BOTTOM 16 SPA. @ 7" c/c = 9'-4"
- [B] S612 SERIES, TOP & S613 SERIES, BOTTOM 14 SPA. @ 7" c/c = 8'-2"
- [C] S614 SERIES, TOP & S615 SERIES, BOTTOM 18 SPA. @ 7" c/c = 10'-6"
- [D] S616 SERIES, TOP & S616 SERIES, BOTTOM 22 SPA. @ 7" c/c = 12'-10"
- [E] S617 SERIES, TOP & S617 SERIES, BOTTOM 16 SPA. @ 7" c/c = 9'-4"
- [F] S618 SERIES, TOP & S619 SERIES, BOTTOM 12 SPA. @ 7" c/c = 7'-0"

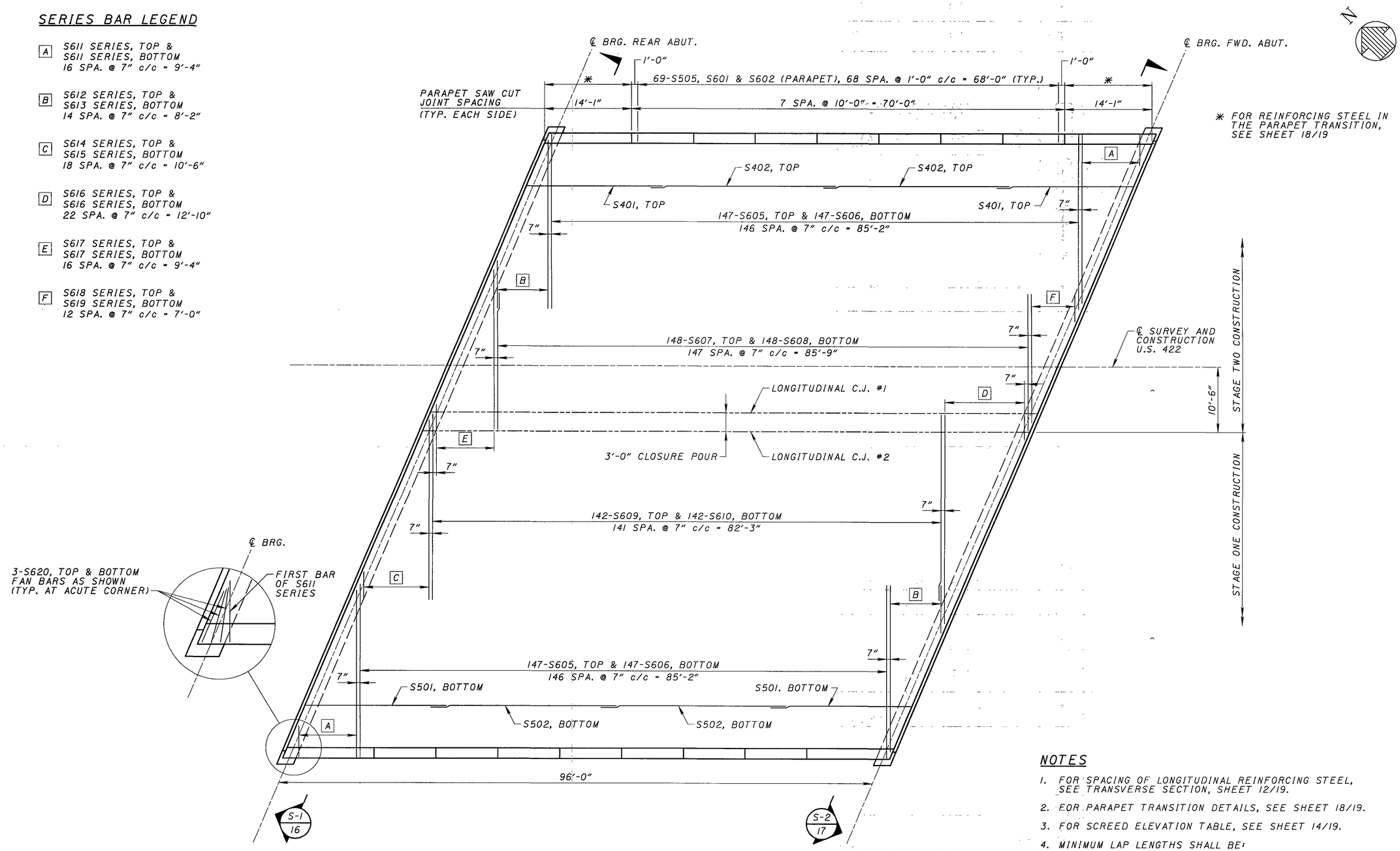

DECK SLAB PLAN

NOTES

1. FOR SPACING OF LONGITUDINAL REINFORCING STEEL, SEE TRANSVERSE SECTION, SHEET 12/19.
2. FOR PARAPET TRANSITION DETAILS, SEE SHEET 18/19.
3. FOR SCREED ELEVATION TABLE, SEE SHEET 14/19.
4. MINIMUM LAP LENGTHS SHALL BE:

#4 BARS	2'-0"
#5 BARS	2'-7"
#6 BARS	3'-10"

DLZ
1000 ROCKEFELLER BLDG. • 614 W. SUPERIOR AVE. • CLEVELAND, OH 44113

DESIGNED	DRAWN	REVIEWED	DATE
PAT	PAT	AJM	03/01/05
CHECKED	REVISED	STRUCTURE FILE NUMBER	
DJP		2801906	

DECK SLAB PLAN
BRIDGE NO. GEA-422-1952
U.S. 422 OVER GRAND RIVER

GEA/POR-422-18.31/0.00

15/19

237/332

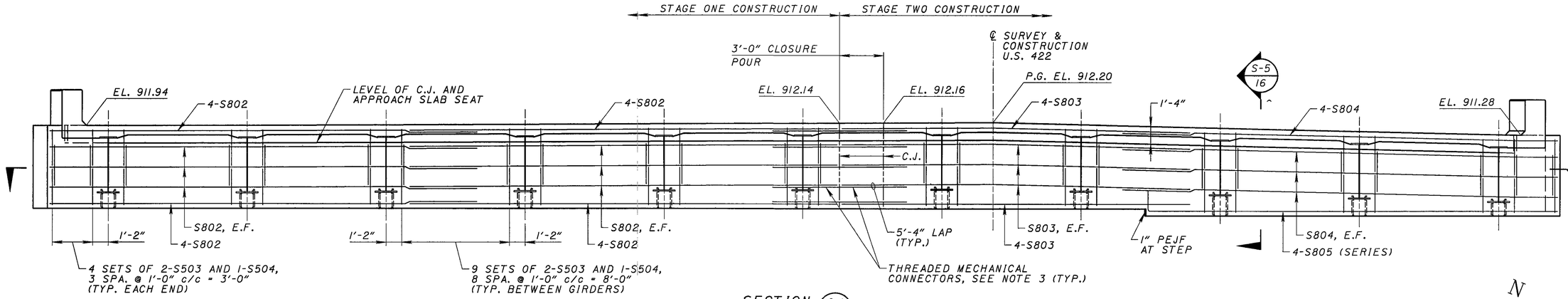

SECTION S-1 / 15

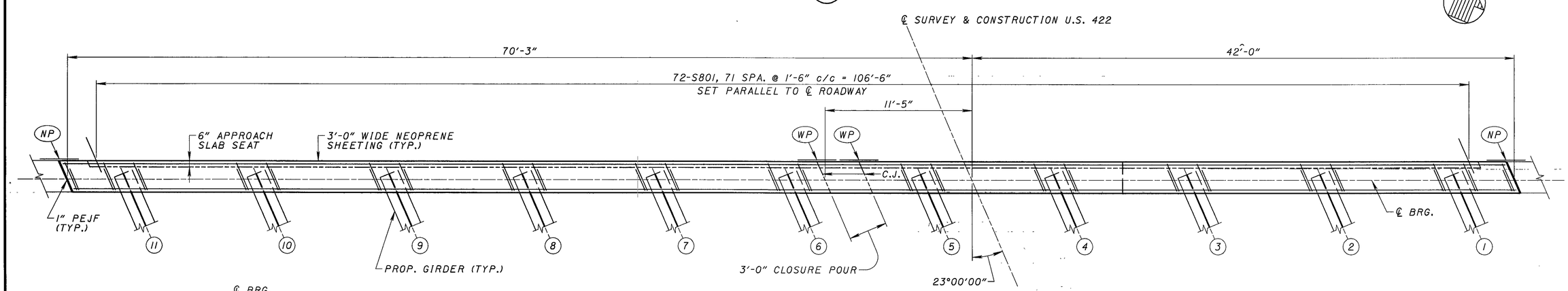

SECTION S-3 / 16

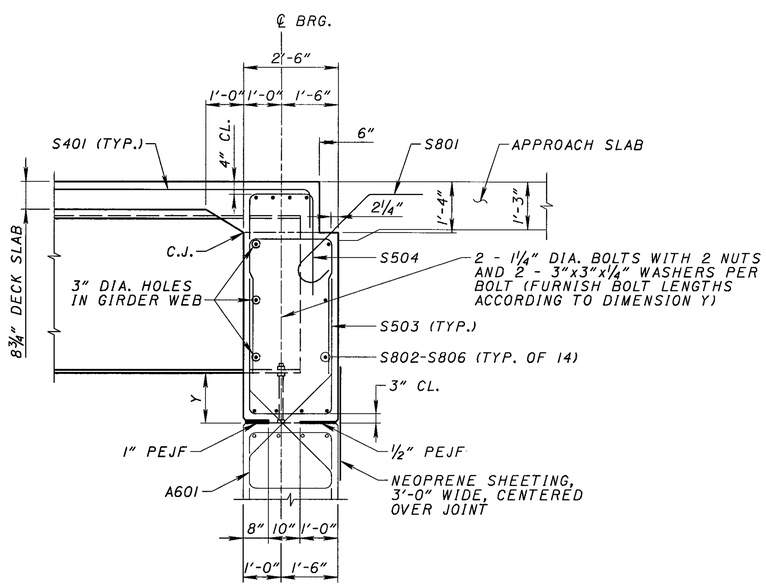

SECTION S-5 / 16

DIMENSION Y (INCHES)											
GIRDER NO.	1	2	3	4	5	6	7	8	9	10	11
REAR ABUT.	12	14 15/16	17 13/16	14 3/4	16 3/8	15 13/16	15 3/16	14 5/8	14 1/16	13 9/16	13 9/16
FWD. ABUT.	12	14 5/8	17 5/16	16	17 3/8	16 1/2	15 5/8	14 13/16	13 15/16	13 1/8	12 5/16

LEGEND

(WP) TYPE 2 WATERPROOFING, 3'-0" WIDE, CENTERED OVER THE JOINT, EXTENDING FROM THE BEAM SEAT TO THE APPROACH SLAB SEAT

(NP) VERTICAL NEOPRENE SHEETING, 3'-0" WIDE, CENTERED OVER THE JOINT, SECURED AS SHOWN ON STD. DWG. ICD-1-82

NOTES

1. ALL VERTICAL REINFORCING BARS IN THE INTEGRAL BACKWALL SHALL BE PLACED PARALLEL TO THE GIRDERS.
2. APPROACH SLAB SEAT AND CONSTRUCTION JOINT SHALL BE 1'-4" BELOW TOP OF GRADE ELEVATION.
3. THREADED MECHANICAL CONNECTORS SHALL BE RICHMOND SCREW ANCHOR THREADED DOWEL BAR ASSEMBLY, LENTON REBAR SPLICING MECHANISM, OR APPROVED EQUAL. COST SHALL BE INCLUDED FOR PAYMENT WITH ITEM 509 - EPOXY COATED REINFORCING STEEL.
4. ABUTMENT DIAPHRAGM CONCRETE, STEEL SUPERSTRUCTURE: PLACE THE CONCRETE ENCASING THE STRUCTURAL STEEL MEMBERS WITH THE DECK CONCRETE OR AT LEAST 48 HOURS BEFORE PLACEMENT OF THE DECK CONCRETE.
5. FOR REAR ABUTMENT DETAILS, SEE SHEETS 7/19 AND 8/19.

DLZ
1000 ROCKEFELLER BLDG. • 614 W. SUPERIOR AVE. • CLEVELAND, OH 44113

DESIGNED	DRAWN	REVIEWED	DATE
PAT	PAT	GWM	03/01/05
CHECKED	REVISED	STRUCTURE FILE NUMBER	
AJM		2801906	

REAR DIAPHRAGM DETAILS
BRIDGE NO. GEA-422-1952
U.S. 422 OVER GRAND RIVER

GEA/POR-422-18.31/0.00

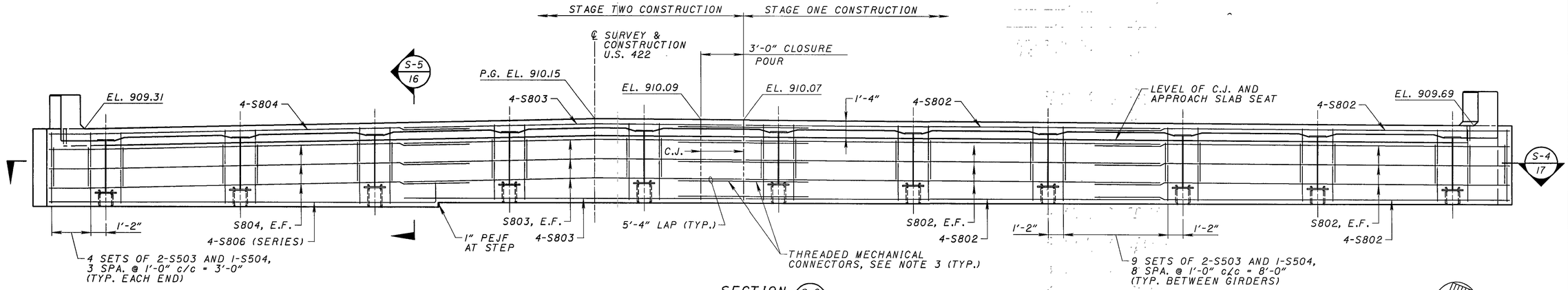

SECTION (S-2 / 15)

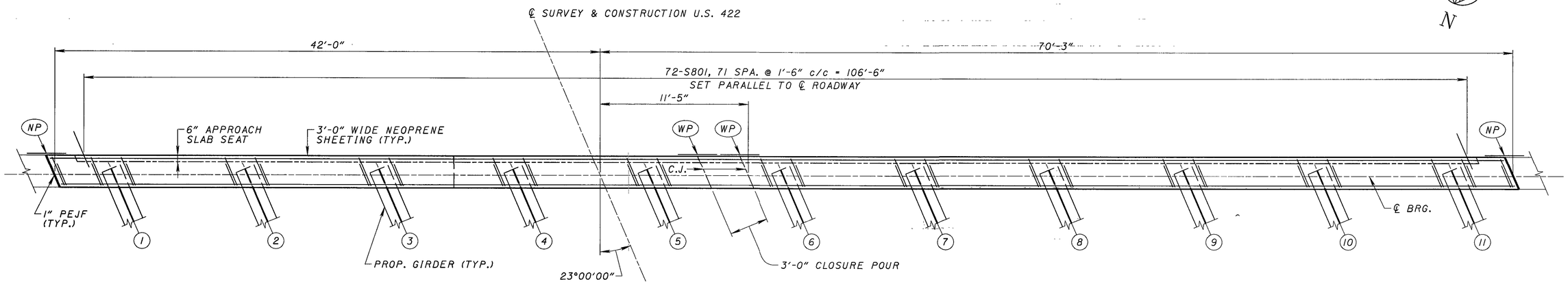

SECTION (S-4 / 17)

LEGEND

(WP) TYPE 2 WATERPROOFING, 3'-0" WIDE, CENTERED OVER THE JOINT, EXTENDING FROM THE BEAM SEAT TO THE APPROACH SLAB SEAT

(NP) VERTICAL NEOPRENE SHEETING, 3'-0" WIDE, CENTERED OVER THE JOINT, SECURED AS SHOWN ON STD. DWG. ICD-1-82

NOTES

1. ALL VERTICAL REINFORCING BARS IN THE INTEGRAL BACKWALL SHALL BE PLACED PARALLEL TO THE GIRDERS.
2. APPROACH SLAB SEAT AND CONSTRUCTION JOINT SHALL BE 1'-4" BELOW TOP OF GRADE ELEVATION.
3. THREADED MECHANICAL CONNECTORS SHALL BE RICHMOND SCREW ANCHOR THREADED DOWEL BAR ASSEMBLY, LENTON REBAR SPLICING MECHANISM, OR APPROVED EQUAL. COST SHALL BE INCLUDED FOR PAYMENT WITH ITEM 509 - EPOXY COATED REINFORCING STEEL.
4. ABUTMENT DIAPHRAGM CONCRETE, STEEL SUPERSTRUCTURE: PLACE THE CONCRETE ENCASING THE STRUCTURAL STEEL MEMBERS WITH THE DECK CONCRETE OR AT LEAST 48 HOURS BEFORE PLACEMENT OF THE DECK CONCRETE.
5. FOR FORWARD ABUTMENT DETAILS, SEE SHEET 9/19 AND 10/19.

DLZ
1000 ROCKEFELLER BLDG. • 614 W. SUPERIOR AVE. • CLEVELAND, OH 44113

DESIGNED	DRAWN	REVIEWED	DATE
PAT	PAT	GWM	03/01/05
CHECKED	REVISED	STRUCTURE FILE NUMBER	
AJM		2801906	

FORWARD DIAPHRAGM DETAILS
BRIDGE NO. GEA-422-1952
U.S. 422 OVER GRAND RIVER

GEA/POR-422-18.31/0.00

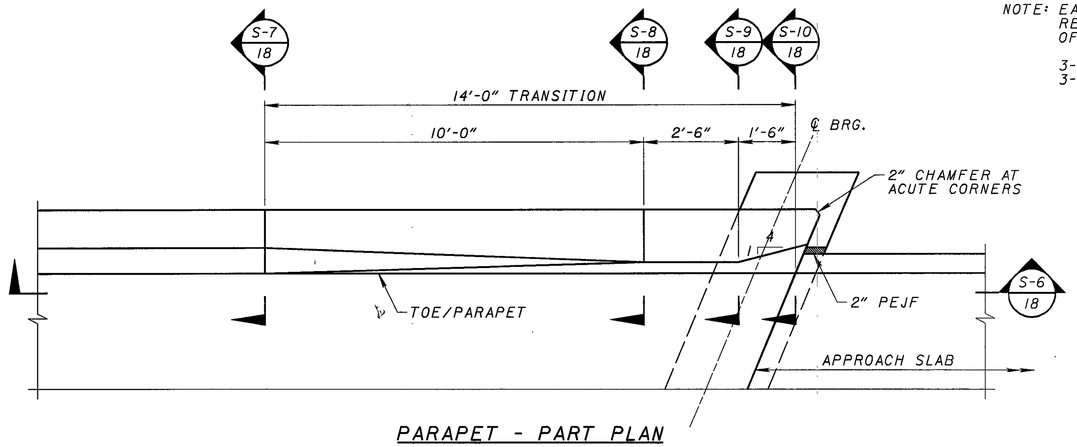

PARAPET - PART PLAN

LEFT FORWARD / RIGHT REAR CORNER SHOWN
RIGHT FORWARD / LEFT REAR CORNER SIMILAR

NOTE: EACH RUN OF LONGITUDINAL PARAPET REINFORCING SHALL BE COMPRISED OF THE FOLLOWING:

3-S506 (TYP. OF 6), LAP 2'-11" MIN.
3-S621, LAP 3'-4" MIN.

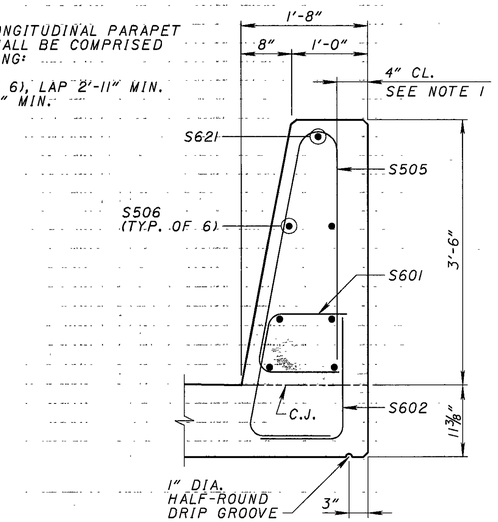

SECTION S-7 / 18

TYPICAL PARAPET DETAIL

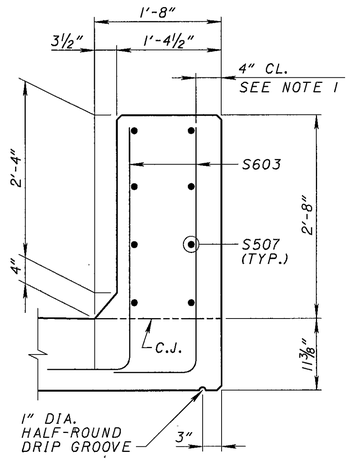

SECTION S-8 / 18

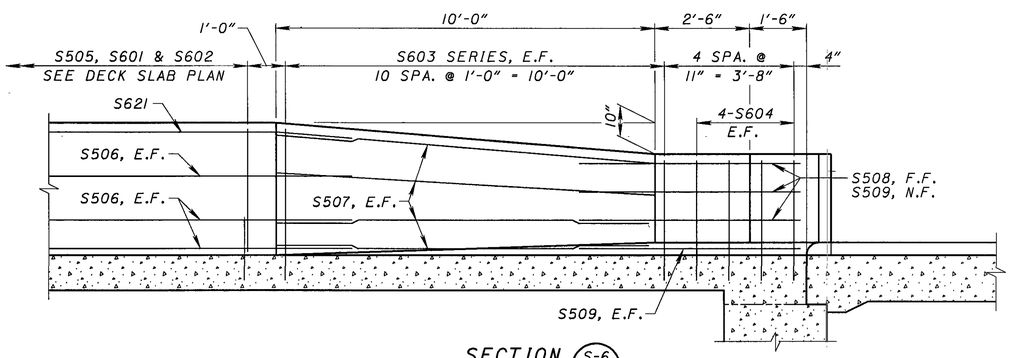

SECTION S-6 / 18

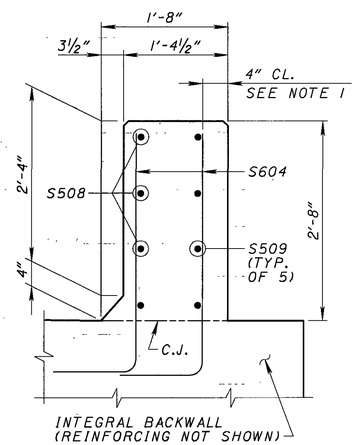

SECTION S-9 / 18

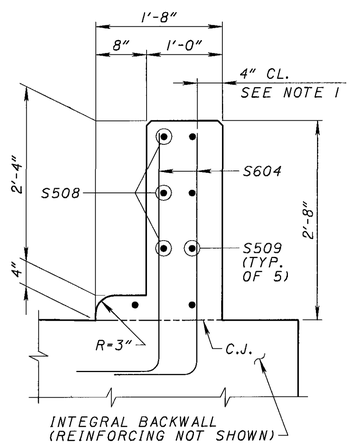

SECTION S-10 / 18

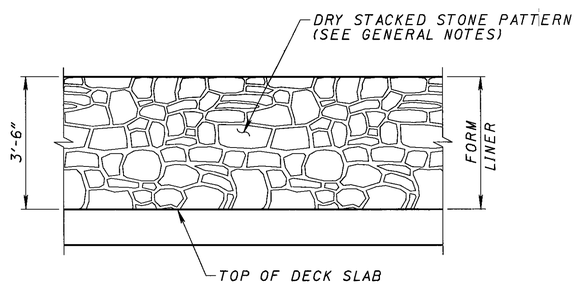

TYPICAL PARAPET ELEVATION

OUTBOARD VIEW, SHOWING FORM LINER

NOTES

1. CLEAR COVER OF 4" ON THE OUTSIDE FACE OF PARAPETS IS PROVIDED TO PERMIT THE USE OF FORM LINER WITH A MAXIMUM PATTERN DEPTH OF 2".
2. GUARDRAIL, BRIDGE TERMINAL ASSEMBLY, AND APPROACH PAVEMENT IS NOT SHOWN. REFER TO STANDARD DRAWING SBR-1-99 FOR ADDITIONAL DETAILS.
3. FOR TRANSVERSE SECTION, SEE SHEET 12/19.
4. FOR DECK SLAB PLAN, SEE SHEET 15/19.

DLZ
2000 ROCKEFELLER BLDG • 614 W SUPERIOR AVE • CLEVELAND, OH 44113

DESIGNED	DRAWN	REVIEWED	DATE
PAT	PAT	GWM	03/01/05
CHECKED	REVISED	STRUCTURE FILE NUMBER	
AJM		2801906	

SUPERSTRUCTURE DETAILS
BRIDGE NO. GEA-422-1952
U.S. 422 OVER GRAND RIVER

GEA/POR-422-18.31/0.00

REINFORCING STEEL LIST

MARK	NUMBER REAR	NUMBER FWD.	NUMBER TOTAL	LENGTH	WEIGHT (LBS.)	TYPE	DIMENSIONS A	DIMENSIONS B	DIMENSIONS C	DIMENSIONS D	DIMENSIONS E	SER INC.
ABUTMENTS												
A401	111	108	219	9'-6"	1390	3	2'-6"	2'-0"				
A501	116	114	230	11'-0"	2639	3	2'-8"	2'-7"				
A502	100	100	200	10'-5"	2173	2	2'-2"	4'-3"				
A503	16	14	30	13'-5"	420	2	2'-2"	5'-9"				
A504	18	18	36	30'-0"	1126	STR						
A505	6		6	18'-3"	114	STR						
A506	6		6	34'-10"	218	STR						
A507		6	6	36'-1"	226	STR						
A508		6	6	16'-0"	100	STR						
	1		1	3'-3"				0'-8"				
A509	SER OF		SER OF		67	2	2'-2"					8¼"
	8		8	12'-11"				5'-6"				
A510	1		1	13'-11"	15	2	2'-2"	6'-0"				
A511	1		1	6'-0"	6	STR						
	1		1	4'-3"				1'-2"				
A512	SER OF		SER OF		53	2	2'-2"					10¼"
	6		6	12'-9"				5'-5"				
A513	1		1	13'-7"	14	2	2'-2"	5'-10"				
A514	1		1	5'-10"	6	STR						
		1	1	4'-3"				1'-2"				
A515		SER OF	SER OF		64	2	2'-2"					9"
		7	7	13'-3"				5'-8"				
A516		1	1	13'-7"	14	2	2'-2"	5'-10"				
A517		1	1	5'-10"	6	STR						
		1	1	3'-7"				0'-10"				
A518		SER OF	SER OF		61	2	2'-2"					9½"
		7	7	13'-1"				5'-7"				
A519		1	1	13'-7"	14	2	2'-2"	5'-10"				
A520		1	1	5'-10"	6	STR						
A521	1		1	13'-0"	14	STR						
A522	1		1	11'-11"	12	STR						
A523	1		1	10'-6"	11	STR						
A524	1		1	9'-5"	10	STR						
A525	1		1	7'-3"	8	STR						
A526	1		1	6'-2"	6	STR						
A527	1		1	4'-0"	4	STR						
A528	1		1	2'-11"	3	STR						
A529	1		1	14'-2"	15	19	12'-9"	1'-3"	0'-7"			
A530	1		1	13'-1"	14	19	12'-9"	0'-4"	0'-2"			
A531	1		1	8'-7"	9	STR						
A532	1		1	9'-8"	10	STR						
A533	1		1	7'-7"	8	STR						
A534	1		1	8'-8"	9	STR						
A535	1		1	4'-11"	5	STR						
A536	1		1	6'-0"	6	STR						
A537	1		1	2'-3"	2	STR						
A538	1		1	3'-4"	3	STR						
A539	1		1	9'-9"	10	19	9'-5"	0'-4"	0'-2"			
A540	1		1	10'-10"	11	19	9'-5"	1'-3"	0'-9"			
A541		1	1	10'-9"	11	STR						
A542		1	1	9'-8"	10	STR						
A543		1	1	9'-6"	10	STR						
A544		1	1	8'-5"	9	STR						
A545		1	1	6'-6"	7	STR						
A546		1	1	5'-5"	6	STR						
A547		1	1	3'-6"	4	STR						
A548		1	1	2'-5"	3	STR						
A549		1	1	11'-10"	12	19	10'-5"	1'-3"	0'-8"			
A550		1	1	10'-9"	11	19	10'-5"	0'-4"	0'-2"			
A551		1	1	9'-10"	10	STR						
A552		1	1	10'-11"	11	STR						
A553		1	1	8'-1"	8	STR						
A554		1	1	9'-2"	10	STR						
A555		1	1	5'-3"	5	STR						
A556		1	1	6'-4"	7	STR						
A557		1	1	2'-5"	3	STR						
A558		1	1	3'-6"	4	STR						
A559		1	1	11'-1"	12	19	10'-9"	0'-4"	0'-2"			
A560		1	1	12'-2"	13	19	10'-9"	1'-3"	0'-8"			
A601	86	86	172	10'-9"	2777	28	2'-2"	0'-5"	2'-7"	0'-10"	1'-9"	
A801	24	24	48	30'-0"	3845	STR						
A802	8		8	23'-6"	502	STR						
A803	8		8	37'-7"	803	STR						

REINFORCING STEEL LIST

MARK	NUMBER REAR	NUMBER FWD.	NUMBER TOTAL	LENGTH	WEIGHT (LBS.)	TYPE	DIMENSIONS A	DIMENSIONS B	DIMENSIONS C	DIMENSIONS D	DIMENSIONS E	SER INC.
ABUTMENTS												
A804	4		4	22'-1"	236	STR						
A805		8	8	38'-10"	829	STR						
A806		4	4	21'-11"	234	STR						
A807		8	8	21'-6"	459	STR						
				TOTAL:	18,753	LBS						
SUPERSTRUCTURE												
S401			272	22'-10"	4149	1	1'-0"	21'-11"				
S402			272	30'-0"	5451	STR						
S501			256	22'-10"	6097	STR						
S502			256	30'-0"	8010	STR						
S503			392	9'-1"	3714	2	2'-4"	3'-6"				
S504			196	6'-11"	1414	2	1'-10"	2'-8"				
S505			138	7'-5"	1068	23	1'-1"	3'-2"	3'-0"			
S506			36	26'-9"	1004	STR						
S507			32	10'-0"	334	STR						
S508			12	5'-6"	69	STR						
S509			20	5'-6"	115	25	1'-8"	2'-5"	1'-5"	0'-1½"	0'-5"	
S601			138	3'-7"	743	24	1'-1"	1'-7"				
S602			138	2'-6"	518	1	1'-1"	1'-7"				
			4	4'-9"	0	0		4'-0"				
S603			SER OF		286	1	1'-1"					
			11	3'-11"	0	0		3'-2"				
S604			32	4'-1"	196	1	1'-1"	3'-2"				
S605			294	28'-8"	12659	STR						
S606			294	24'-7"	10,856	STR						
S607			148	23'-7"	5242	STR						
S608			148	28'-4"	6298	STR						
S609			142	31'-7"	6736	STR						
S610			142	36'-4"	7749	STR						
			4	5'-0"	0	0						
S611			SER OF		1634	STR						16½"
			17	27'-0"	0	0						
			2	7'-9"	0	0						
S612			SER OF		783	STR						16½"
			15	27'-0"	0	0						
			2	3'-0"	0	0						
S613			SER OF		569	STR						16½"
			15	22'-3"	0	0						
			1	4'-6"	0	0						
S614			SER OF		482	STR						16½"
			19	29'-3"	0	0						
			1	9'-3"	0	0						
S615			SER OF		617	STR						16½"
			19	34'-0"	0	0						
			2	4'-0"	0	0						
S616			SER OF		1321	STR						16½"
			23	34'-3"	0	0						
			2	4'-0"	0	0						
S617			SER OF		766	STR						16½"
			17	26'-0"	0	0						
			1	4'-6"	0	0						
S618			SER OF		249	STR						16½"
			13	21'-0"	0	0						
			1	9'-3"	0	0						
S619			SER OF		342	STR						16½"
			13	25'-9"	0	0						
S620			12	4'-6"	81	STR						
S621			6	27'-4"	246	STR						
S801			144	5'-4"	2051	18	3'-0"	1'-0"	1'-0"			
S802			56	32"-0"	4785	STR						
S803			28	26'-2"	1956	STR						
S804			20	32'-5"	1731	STR						
			1	31'-1"				30'-4"				
S805			SER OF		327	1	1'-0"					4"
			4	30'-1"				29'-4"				
			1	31'-5"				30'-8"				
S806			SER OF		330	1	1'-0"					4"
			4	30'-5"				29'-8"				
				TOTAL:	100,978	LBS						

BENDING DIAGRAMS

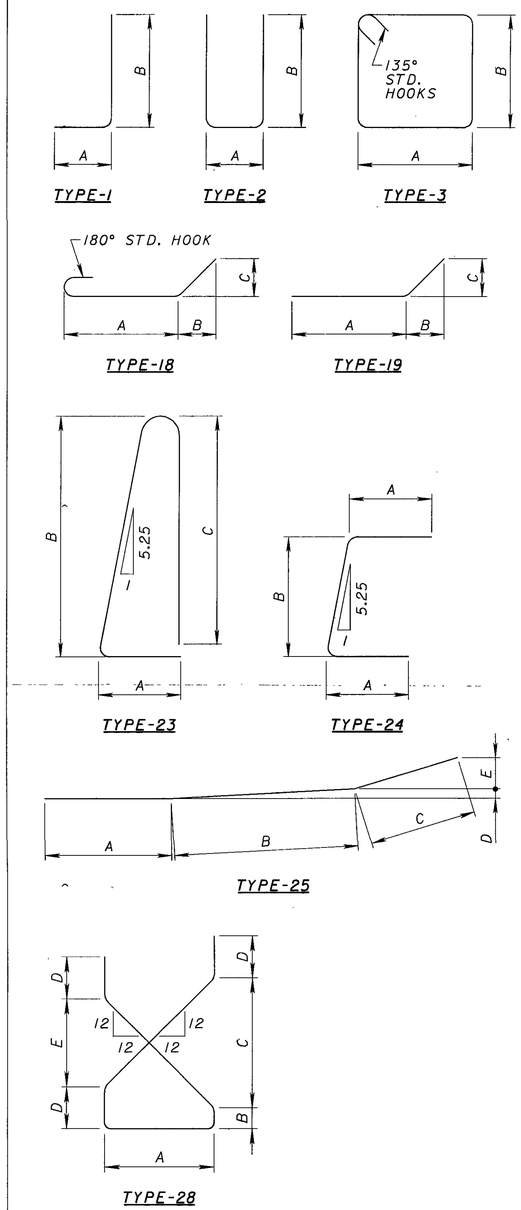

REINFORCING STEEL NOTES

1. SERIES BARS - EACH BAR VARIES BY TABULATED AMOUNT.
2. ALL DIMENSIONS ARE OUT TO OUT
3. TYPE 'STR' INDICATES A STRAIGHT BAR.
4. THE BAR SIZE NUMBER IS SPECIFIED IN THE 'MARK' COLUMN. THE FIRST DIGIT INDICATES THE BAR SIZE NUMBER. FOR EXAMPLE, A501 IS A #5 BAR SIZE.
5. ALL BARS SHALL BE EPOXY COATED UNLESS NOTED OTHERWISE.

DLZ
8000 ROCKEFELLER BLDG. • 614 W. SUPERIOR AVE. • CLEVELAND, OH 44113

DESIGNED	DRAWN	REVIEWED	DATE
PAT	PAT	AJM	03/01/05
CHECKED	REVISED	STRUCTURE FILE NUMBER	
DJP		280 1906	

REINFORCING STEEL LIST
BRIDGE NO. GEA-422-1952
U.S. 422 OVER GRAND RIVER

GEA/POR-422-18.31/0.00

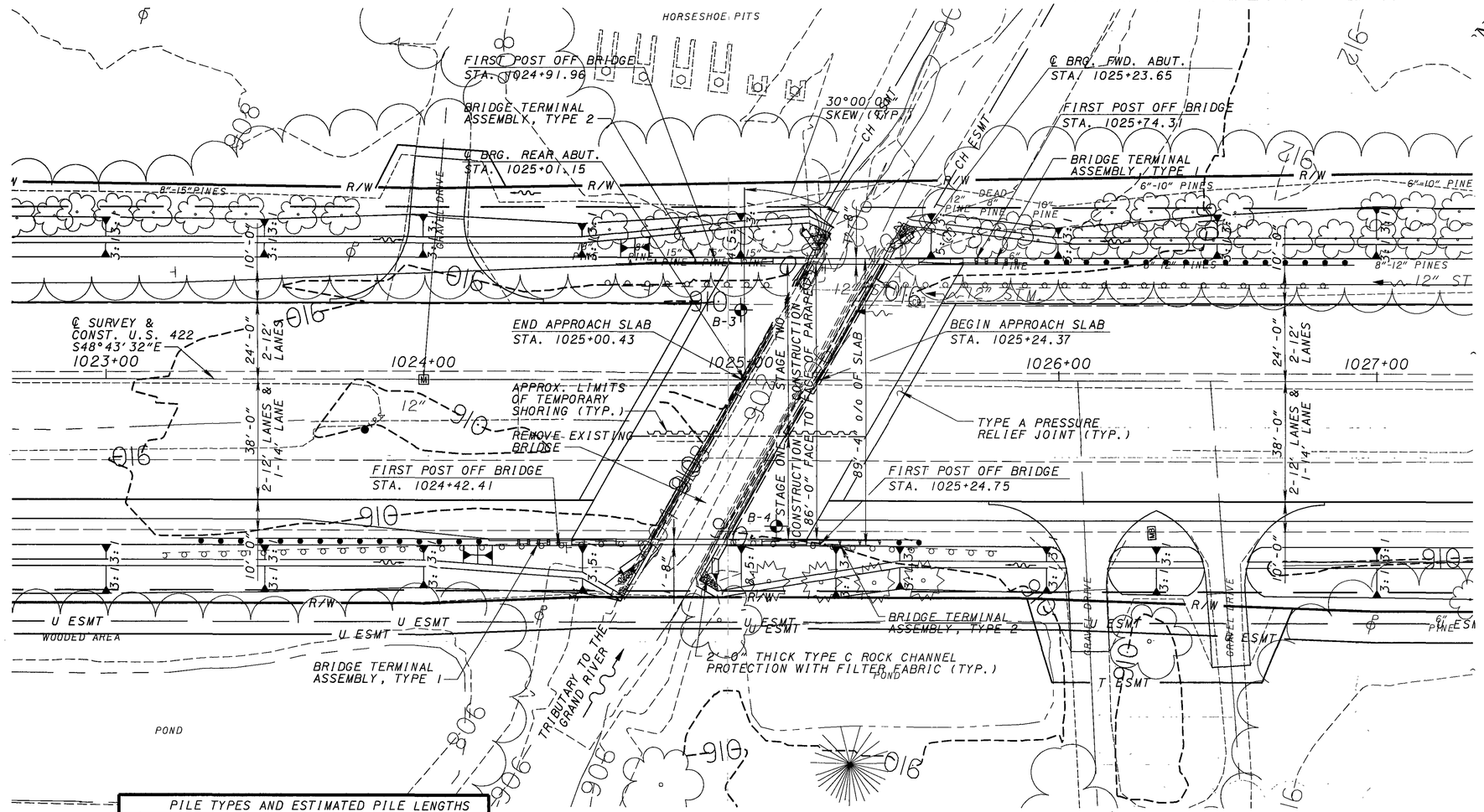

BORING	STATION	OFFSET
B-3	1025+00	21.8' LEFT
B-4	1025+11	46.0' RIGHT

LEGEND

- ℄ CENTERLINE
- BRG. BEARING
- ℄ FLOW LINE
- FWD. FORWARD
- ⌖ SOIL BORING

PILE TYPES AND ESTIMATED PILE LENGTHS		
LOCATION	PILE TYPE	PILE LENGTH
REAR ABUTMENT	12" DIA. CIP	50'
FORWARD ABUTMENT	12" DIA. CIP	50'

PLAN

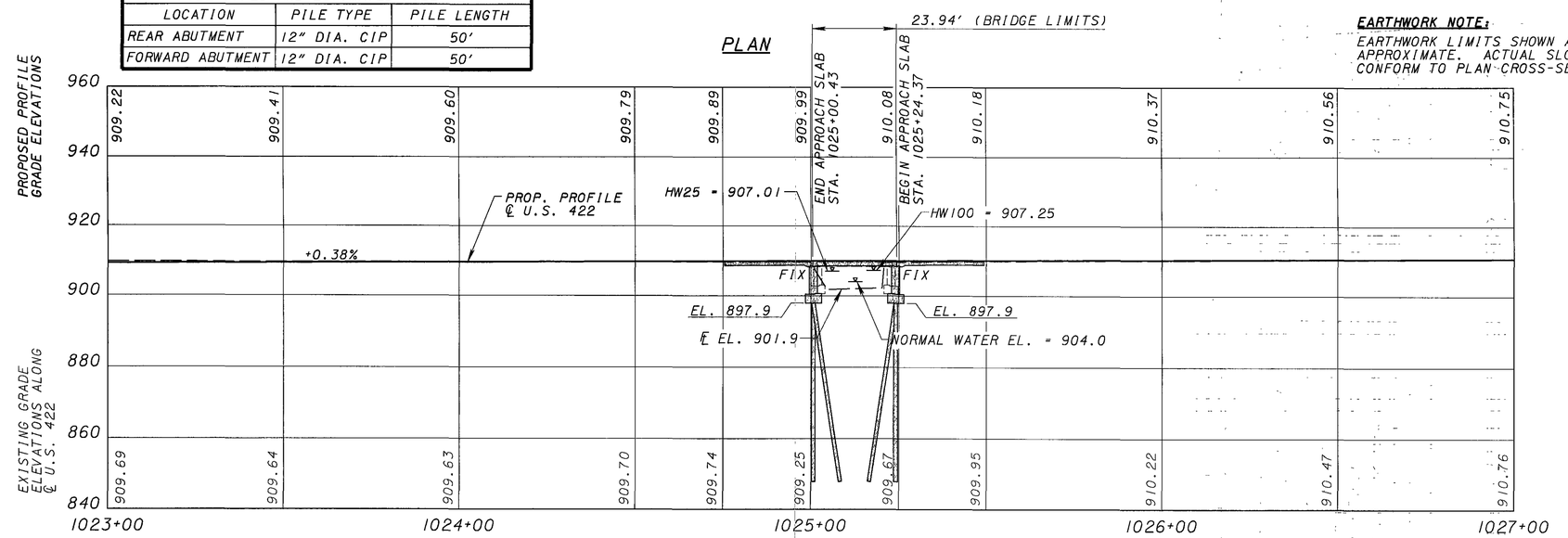

PROFILE ALONG ℄ U.S. 422

EARTHWORK NOTE:

EARTHWORK LIMITS SHOWN ARE APPROXIMATE. ACTUAL SLOPES SHALL CONFORM TO PLAN CROSS-SECTIONS.

BENCHMARK #7

STA. 1025+49.83, 16.12' LT. - CHISELED SQUARE ON NORTHEAST CORNER OF ABUTMENT

ELEV: 910.91'

BENCHMARK #9

STA. 1015+98.79, 91.11' RT. - CHISELED SQUARE ON NORTHWEST CORNER OF IRON GRATE INLET

ELEV: 906.08'

HYDRAULIC DATA

DRAINAGE AREA = 0.94 SQ MI
Q25 = 179 CFS
HW25 = 907.01
V25 = 3.08 FPS
CLEARANCE ABOVE HW25 = 0.59 FT
Q100 = 242 CFS
HW100 = 907.25
V100 = 3.88 FPS
CLEARANCE ABOVE HW100 = 0.35 FT
NORMAL WATER ELEVATION = 904.0
FLOW LINE ELEVATION = 901.9

TRAFFIC DATA

U.S. 422
CURRENT ADT (2005) = 14,460
CURRENT ADTT (2005) = 2,747
DESIGN ADT (2025) = 17,920
DESIGN ADTT (2025) = 3,405

EXISTING STRUCTURE

TYPE: SINGLE SPAN CONCRETE SLAB BRIDGE (WESTBOUND). STANDARD CONCRETE SLAB BRIDGE (EASTBOUND)
SPAN: 18'-5¾"(±) FACE/FACE OF ABUTMENTS
ROADWAY: 28'-0"(±) FACE/FACE CURB (WESTBOUND)
28'-0"(±) FACE/FACE CURB (EASTBOUND)
SKEW: 30°00'00"(±) LEFT FORWARD
ALIGNMENT: TANGENT
LOADING: H-15
WEARING SURFACE: ASPHALT CONCRETE
APPROACH SLABS: 15'-0"(±) LONG
CROWN: 3/16"/FT.(±)
DATE BUILT: c. 1939 (WESTBOUND)
c. 1947 (EASTBOUND)
STRUCTURE FILE NUMBER: 2801892

PROPOSED STRUCTURE

TYPE: SINGLE SPAN REINFORCED CONCRETE SLAB BRIDGE WITH REINFORCED CONCRETE FULL-HEIGHT ABUTMENTS ON 12" DIA. CIP CONCRETE PILES
SPAN: 22'-6" c/c BEARINGS
ROADWAY: 86-0" FACE/FACE OF RAILING
SKEW: 30°00'00" LEFT FORWARD
ALIGNMENT: TANGENT
LOADING: HS 25 AND THE ALTERNATE MILITARY LOADING
WEARING SURFACE: MONOLITHIC CONCRETE
APPROACH SLABS: AS-1-81, 25' LONG
CROWN: 3/16"/FT.
LATITUDE: N 41°21'02"
LONGITUDE: W 81°02'07"

DLZ
2000 ROCKEFELLER BLDG • 614 W SUPERIOR AVE • CLEVELAND, OH 44113

DATE	REVIEWED	STRUCTURE FILE NUMBER
3/1/05	GWM	2801922
DRAWN DJP	REVISED	
DESIGNED DJP	CHECKED AJM	

GEAUGA COUNTY
STA. 1025+00.43
STA. 1025+24.37

SITE PLAN
BRIDGE NO. GEA-422-1975
U.S. 422 OVER GRAND RIVER TRIBUTARY

GEA/POR-422-18.31/0.00

ESTIMATED QUANTITIES

CALCULATED BY: DJP 02/18/05
CHECKED BY: KMR 08/02/05

ITEM	ITEM EXTENSION	TOTAL	UNIT	DESCRIPTION	REAR ABUTMENT	FORWARD ABUTMENT	SUPER.	GENERAL	REF. SHT. NO.
202	11001	LUMP		STRUCTURE REMOVED, AS PER PLAN				LUMP	223
503	11101	LUMP		COFFERDAMS, CRIBS, AND SHEETING, AS PER PLAN				LUMP	223
503	21101	1054	CU YD	UNCLASSIFIED EXCAVATION, AS PER PLAN	528	526			223
505	11100	LUMP		PILE DRIVING EQUIPMENT MOBILIZATION				LUMP	
507	00500	3400	FT	12" CAST-IN-PLACE REINFORCED CONCRETE PILES, DRIVEN	1,700	1,700			
507	00550	3740	FT	12" CAST-IN-PLACE REINFORCED CONCRETE PILES, FURNISHED	1,870	1,870			
509	10000	51,113	POUND	EPOXY COATED REINFORCING STEEL	14,223	14,175	20,131	2,584	
511	43500	243	CU YD	CLASS C CONCRETE, ABUTMENT INCLUDING FOOTING	121	122			
511	50001	120	CU YD	CLASS HP CONCRETE, BRIDGE DECK, AS PER PLAN			120		
511	50101	8	CU YD	CLASS HP CONCRETE, BRIDGE DECK (PARAPET), AS PER PLAN			8		
512	10100	332	SQ YD	SEALING OF CONCRETE SURFACES (EPOXY-URETHANE)	84	83	58	107	
512	33000	16	SQ YD	TYPE 2 WATERPROOFING	8	8			
516	13600	85	SQ FT	1" PREFORMED EXPANSION JOINT FILLER	33	33	19		
518	21200	76	CU YD	POROUS BACKFILL WITH FILTER FABRIC	38	38			
518	40000	246	FT	6" PERFORATED CORRUGATED PLASTIC PIPE	123	123			
518	40010	26	FT	6" NON-PERFORATED CORRUGATED PLASTIC PIPE, INCLUDING SPECIALS	13	13			
523	20000	1	EACH	DYNAMIC LOAD TESTING				1	
526	25001	496	SQ YD	REINFORCED CONCRETE APPROACH SLABS (T=15"), AS PER PLAN				496	223
530	13000	518	SQ FT	SPECIAL - FORM LINER			518		223
601	32204	9	CU YD	ROCK CHANNEL PROTECTION, TYPE C WITH FABRIC FILTER				9	

DLZ
2000 ROCKEFELLER BLDG • 614 W SUPERIOR AVE • CLEVELAND, OH 44113

DESIGNED	DRAWN	REVIEWED	DATE
DJP	DJP	GWM	3/1/05
CHECKED	REVISED	STRUCTURE FILE NUMBER	
AJM		2801922	

ESTIMATED QUANTITIES
BRIDGE NO. GEA-422-1975
U.S. 422 OVER GRAND RIVER TRIBUTARY

GEA/POR-422-18.31/0.00

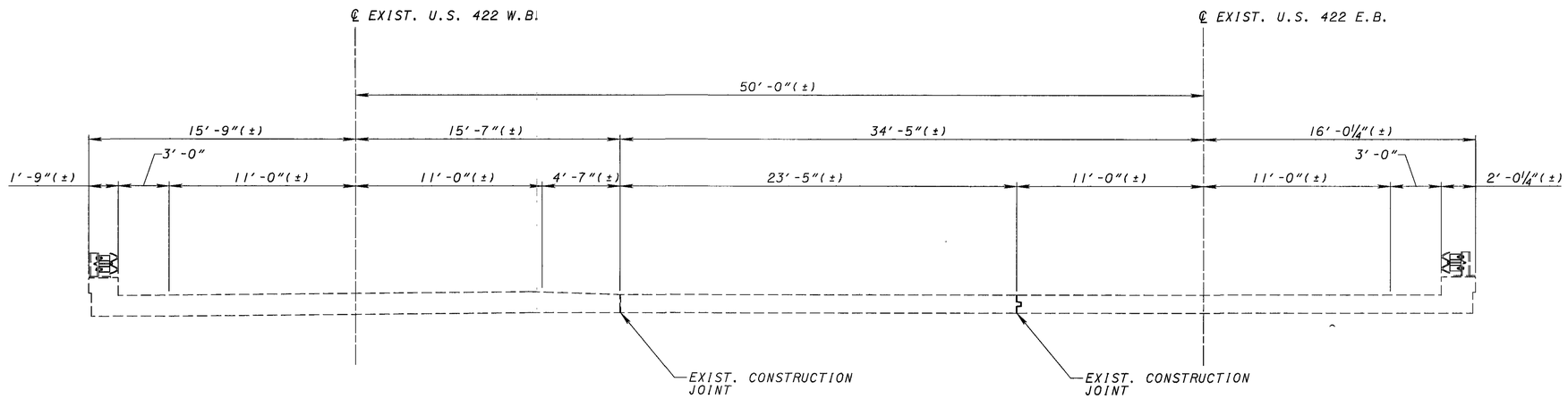

EXISTING TRANSVERSE SECTION

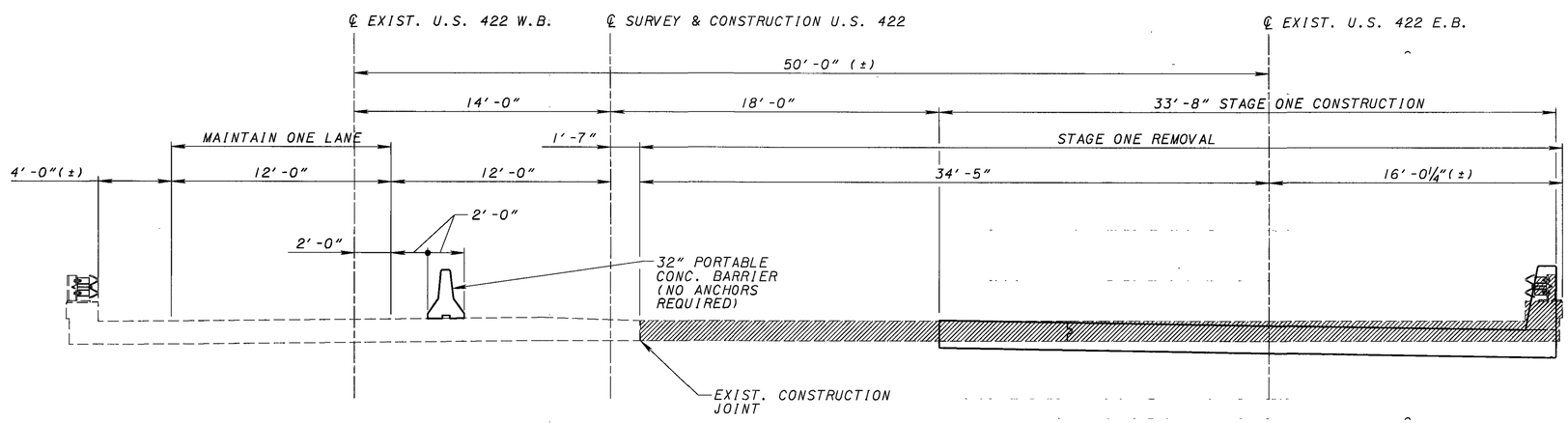

STAGE ONE CONSTRUCTION

DLZ
1000 ROCKEFELLER BLDG • 614 W SUPERIOR AVE • CLEVELAND, OH 44113

DESIGNED	DRAWN	REVIEWED	DATE
DJP	DJP	GWM	3/1/05
CHECKED	REVISED	STRUCTURE FILE NUMBER	
AJM		2801922	

STAGE CONSTRUCTION DETAILS
BRIDGE NO. GEA-422-1975
U.S. 422 OVER GRAND RIVER TRIBUTARY

GEA/POR-422-18.31/0.00

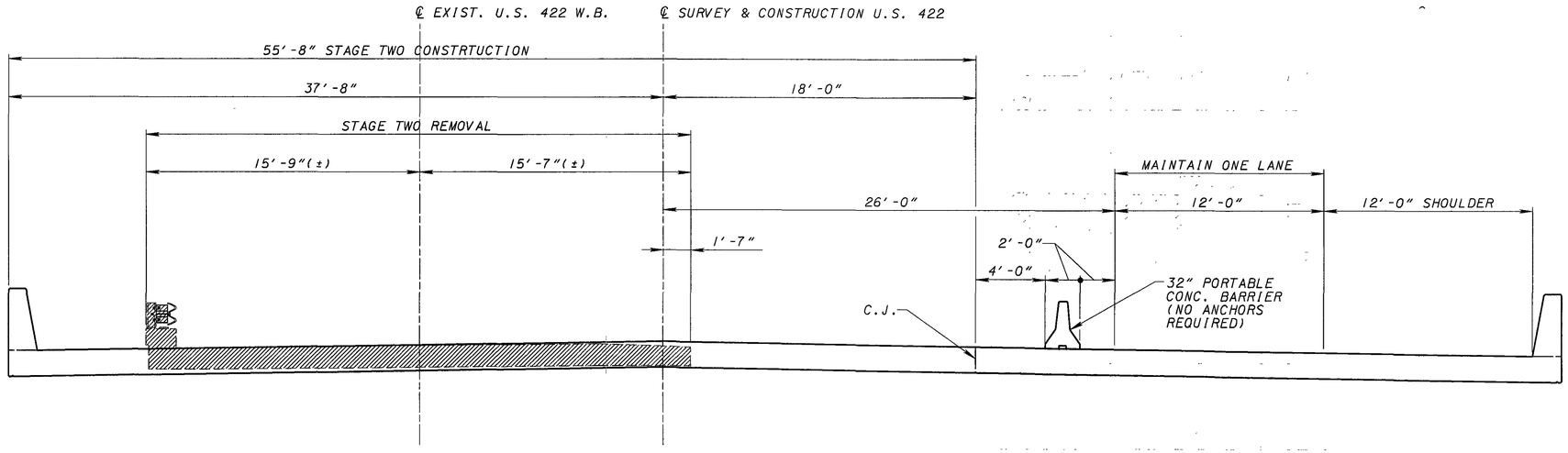

STAGE TWO CONSTRUCTION

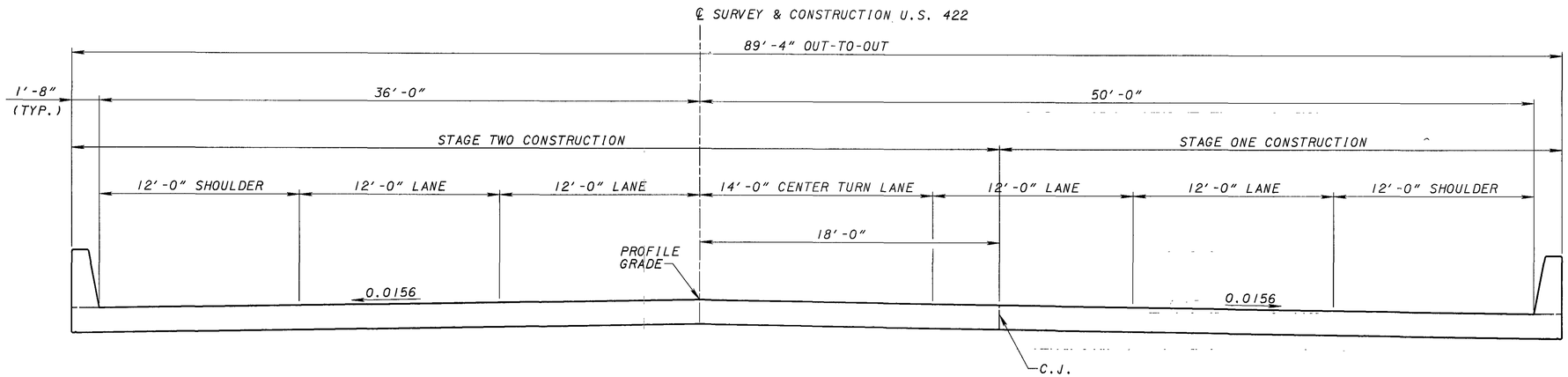

FINAL TRANSVERSE SECTION

SUGGESTED CONSTRUCTION PROCEDURE

1. IMPLEMENT PHASE ONE MAINTAINENCE OF TRAFFIC. CLOSE THE EASTBOUND LANES OF U.S. 422, AND MAINTAIN ONE LANE OF TRAFFIC ON THE LEFT SIDE OF THE EXISTING BRIDGE.
2. INSTALL TEMPORARY SHEETING.
3. REMOVE THE RIGHT PORTION OF THE EXISTING BRIDGE.
4. CONSTRUCT STAGE ONE OF THE PROPOSED BRIDGE.
5. IMPLEMENT PHASE TWO MAINTENANCE OF TRAFFIC. CLOSE THE WESTBOUND LANES OF U.S. 422 AND MAINTAIN ONE LANE OF TRAFFIC ON THE PORTION OF THE PROPOSED BRIDGE COMPLETED IN STAGE ONE.
6. REMOVE THE REMAINDER OF THE EXISTING BRIDGE.
7. CONSTRUCT STAGE TWO OF THE PROPOSED BRIDGE.
8. REMOVE TEMPORARY SHEETING.
9. OPEN BRIDGE TO FULL TRAFFIC.

THE ABOVE IS A SUGGESTED CONSTRUCTION PROCEDURE. THE CONTRACTOR SHALL SUBMIT HIS PROPOSED CONSTRUCTION PROCEDURE AND SCHEDULE TO THE DIRECTOR FOR APPROVAL BEFORE BEGINNING CONSTRUCTION. NO CONSTRUCTION OPERATIONS WILL BE PERMITTED WITHOUT PRIOR APPROVAL.

DLZ
1000 ROCKEFELLER BLDG. • 614 W. SUPERIOR AVE. • CLEVELAND, OH 44113

DESIGNED	DRAWN	REVIEWED	DATE
DJP	DJP	GWM	3/1/05
CHECKED	REVISED	STRUCTURE FILE NUMBER	
AJM		280/922	

STAGE CONSTRUCTION DETAILS
BRIDGE NO. GEA-422-1975
U.S. 422 OVER GRAND RIVER TRIBUTARY

GEA/POR-422-18.31/0.00

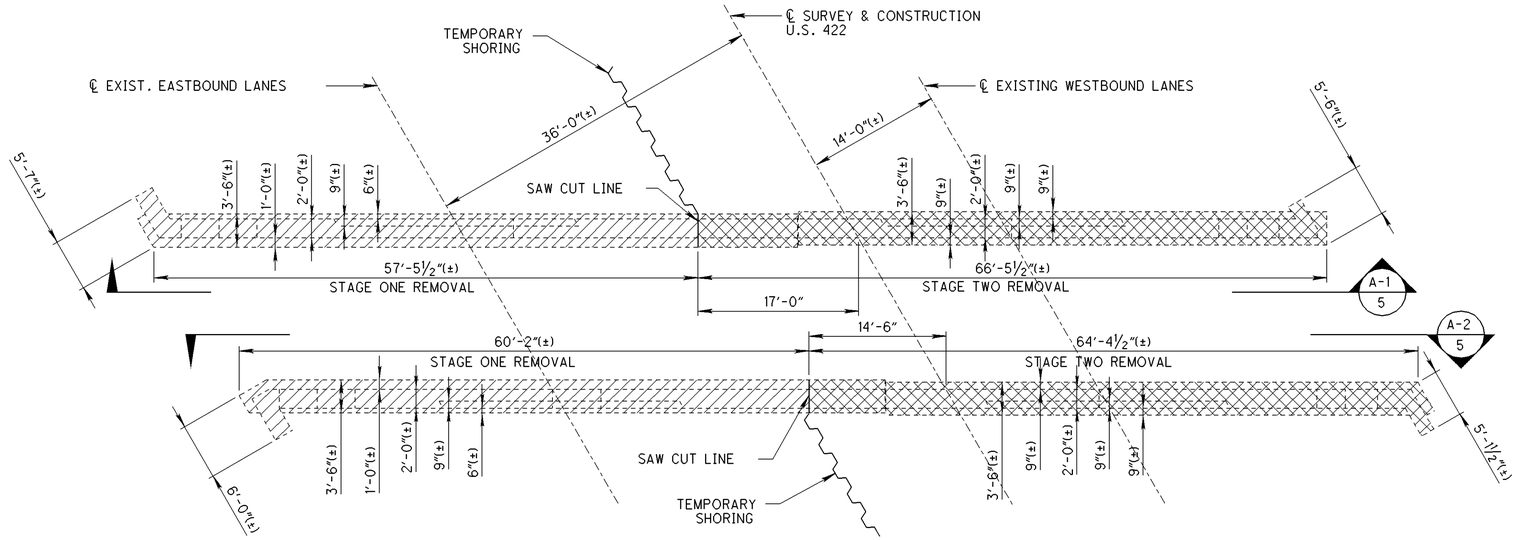

PLAN

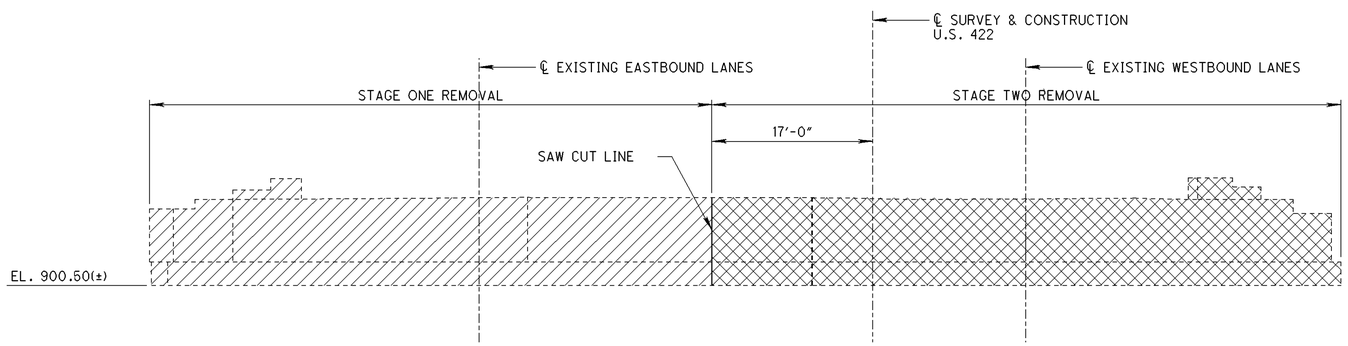

SECTION A-1 / 5

ELEVATION - REAR ABUTMENT

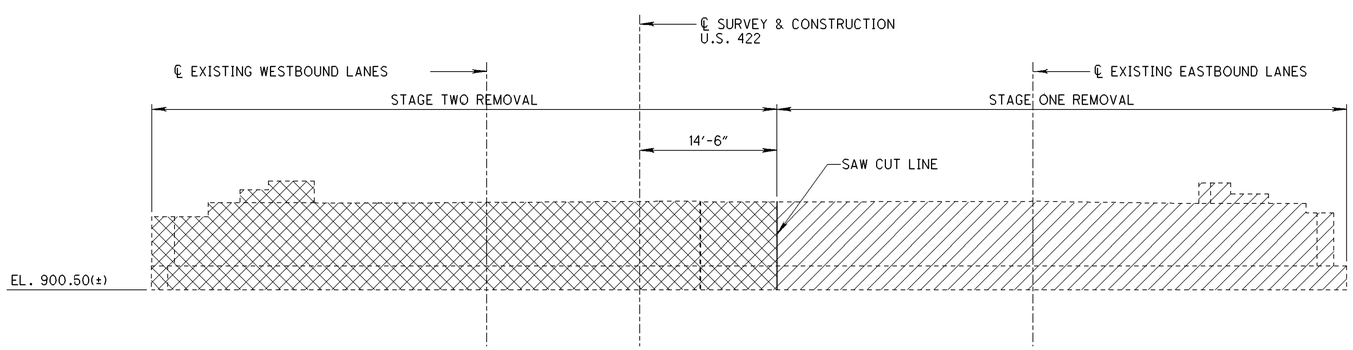

SECTION A-2 / 5

ELEVATION - FORWARD ABUTMENT

NOTES:

1. FOR SUPERSTRUCTURE REMOVAL, SEE SHEETS 4 & 5/17.

LEGEND:

INDICATES PORTIONS OF STRUCTURE REMOVED - STAGE ONE

INDICATES PORTIONS OF STRUCTURE REMOVED - STAGE TWO

DLZ
1000 ROCKEFELLER BLDG • 614 W SUPERIOR AVE • CLEVELAND, OH 44113

DESIGNED	DRAWN	REVIEWED	DATE
DJP	DJP	GWM	3/1/05
CHECKED	REVISED	STRUCTURE FILE NUMBER	
AJM		2801922	

ABUTMENT REMOVAL DETAILS
BRIDGE NO. GEA-422-1975
U.S. 422 OVER GRAND RIVER TRIBUTARY

GEA/POR-422-18.31/0.00

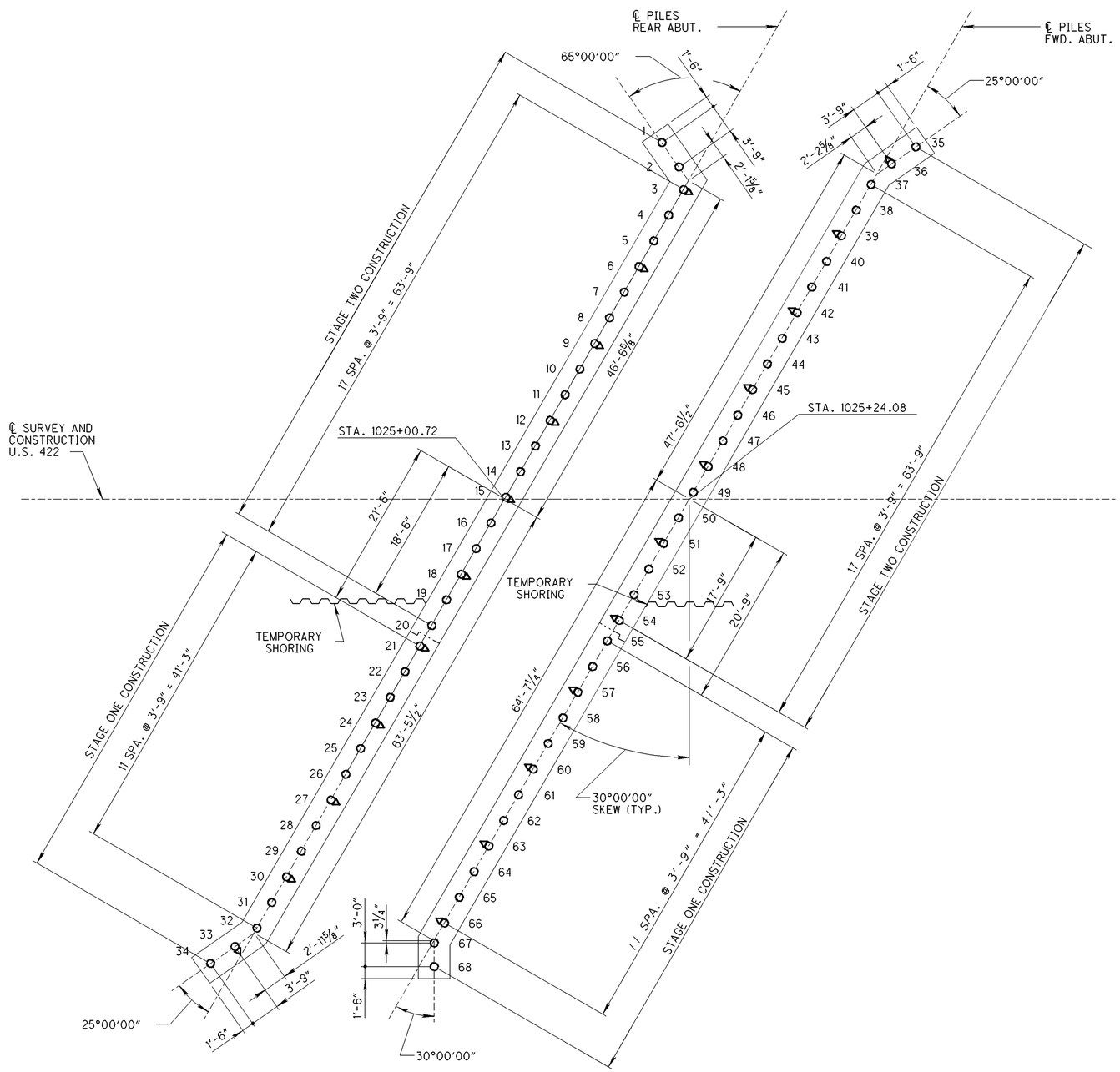

SUBSTRUCTURE LOCATION AND PILE PLAN

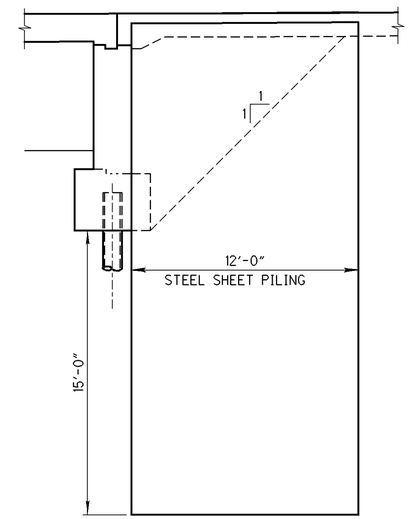

TEMPORARY SHORING DETAIL

NOTES:

1. FOR MORE INFORMATION ON THE ABUTMENTS, SEE SHEETS 7 THRU 12/16.
2. MINIMUM REQUIRED SECTION MODULUS FOR CANTILEVER SHEET PILE WALL (ASTM 572 GRADE 50) S = 25 CU.IN./FT.

LEGEND

○ 12" DIA. CAST-IN-PLACE CONCRETE PILE

12" DIA. CAST-IN-PLACE CONCRETE PILE, BATTERED 1:4 IN THE DIRECTION SHOWN

PILE NUMBER	LOCATION	CUT-OFF ELEVATION	ESTIMATED PAY LENGTH
1 THRU 34	REAR ABUT.	899.90	50'
35 THRU 68	FWD. ABUT.	899.90	50'

DLZ
1000 ROCKEFELLER BLDG • 614 W SUPERIOR AVE • CLEVELAND, OH 44113

DESIGNED	DRAWN	REVIEWED	DATE
DJP	DJP	GWM	3/1/05
CHECKED	REVISED	STRUCTURE FILE NUMBER	
AJM		2801922	

SUBSTRUCTURE LOCATION AND PILE PLAN
BRIDGE NO. GEA-422-1975
U.S. 422 OVER GRAND RIVER TRIBUTARY

GEA/POR-422-18.31/0.00

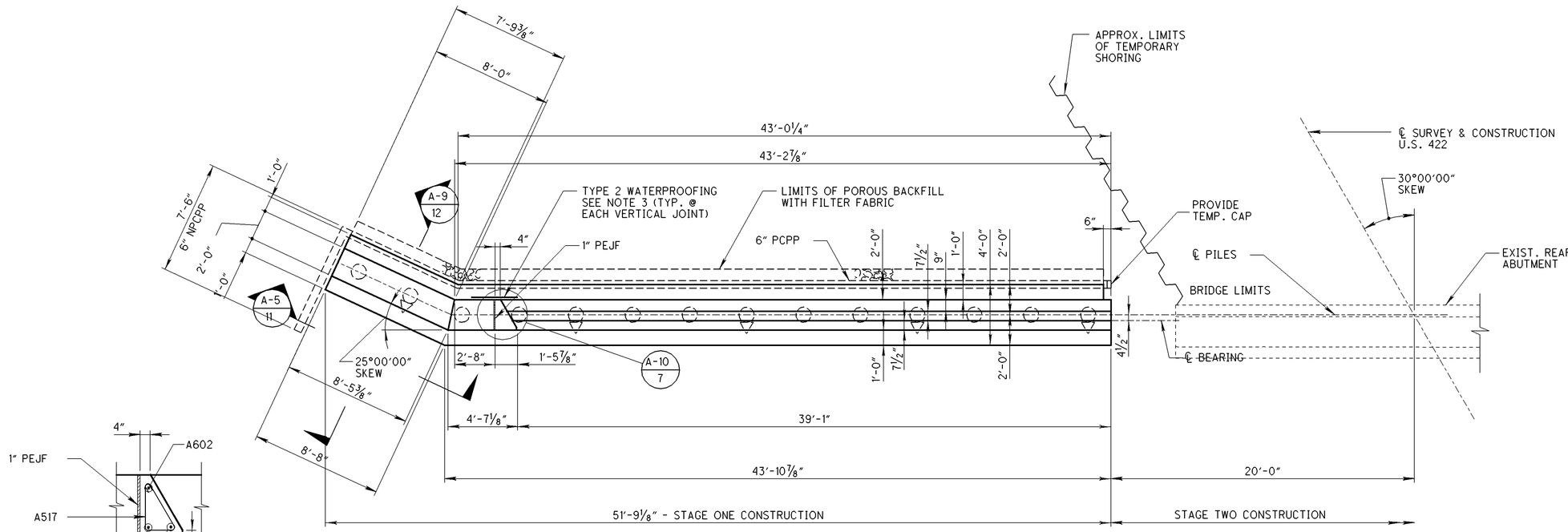

PART PLAN

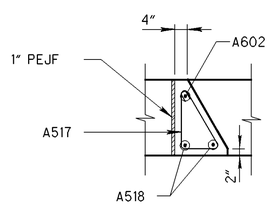

DETAIL A-10/7

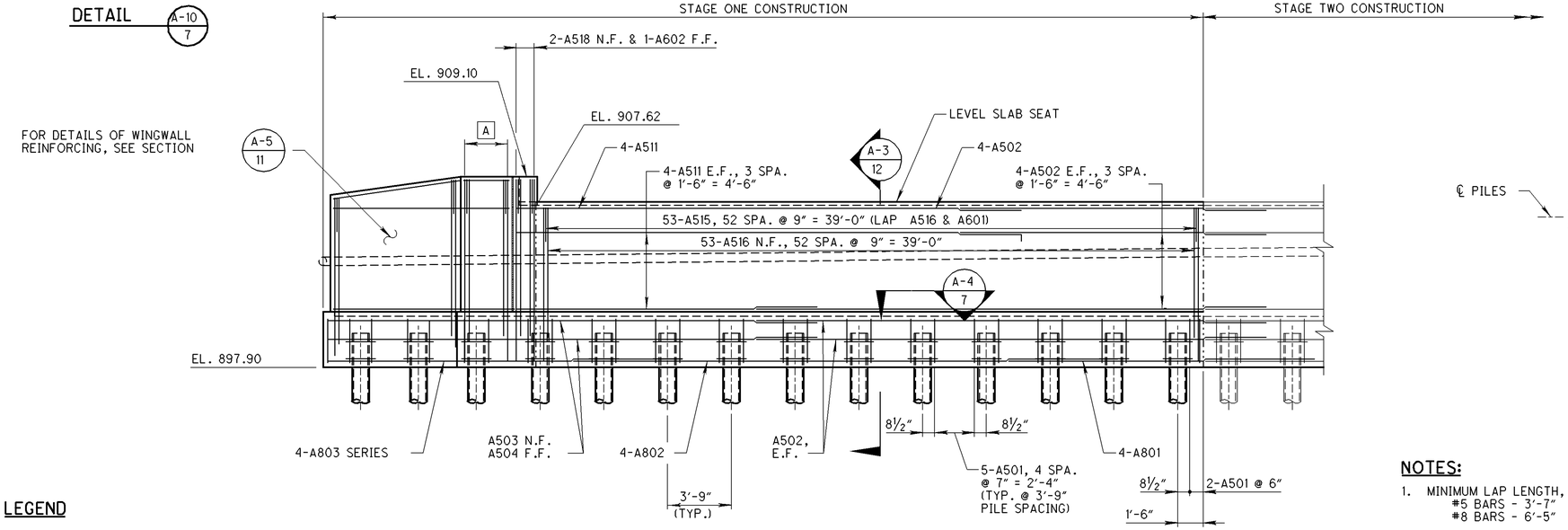

PART ELEVATION

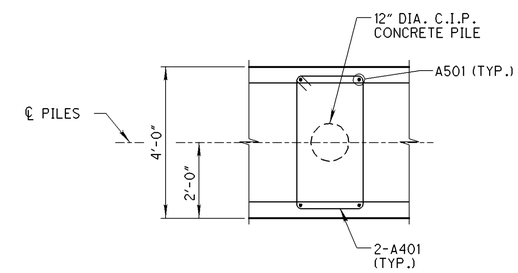

SECTION A-4/7

LEGEND

[A] 4-A518 N.F., 4-A602 F.F., & 4-A515 (LAP A515 TO A518 & A602), 3 SPA. @ 9" = 2'-3"

NOTES:

1. MINIMUM LAP LENGTH, UNLESS NOTED OTHERWISE, SHALL BE AS FOLLOWS:
   #5 BARS - 3'-7"
   #8 BARS - 6'-5"
2. POROUS BACKFILL WITH FILTER FABRIC, 2 FEET THICK, SHALL EXTEND UP TO THE PLANE OF THE SUBGRADE, TO 1 FOOT BELOW THE EMBANKMENT SURFACE, AND LATERALLY TO THE ENDS OF THE WINGWALLS.
3. ALL VERTICAL JOINTS IN THE BREASTWALL SHALL BE SEALED WITH TYPE 2 MEMBRANE WATERPROOFING, 3'-0" WIDE, CENTERED ON THE JOINT. WATERPROOFING SHALL EXTEND THE FULL LENGTH OF THE JOINT TO THE TOP OF THE FOOTING.
4. FOR PILE LOCATIONS, SEE SHEET 6/16.

DLZ
1000 ROCKEFELLER BLDG • 614 W SUPERIOR AVE • CLEVELAND, OH 44113

DESIGNED	DRAWN	REVIEWED	DATE
DJP	DJP	GWM	3/1/05
CHECKED	REVISED	STRUCTURE FILE NUMBER	
AJM		2801922	

REAR ABUTMENT - STAGE ONE
BRIDGE NO. GEA-422-1975
U.S. 422 OVER GRAND RIVER TRIBUTARY

GEA/POR-422-18.31/0.00

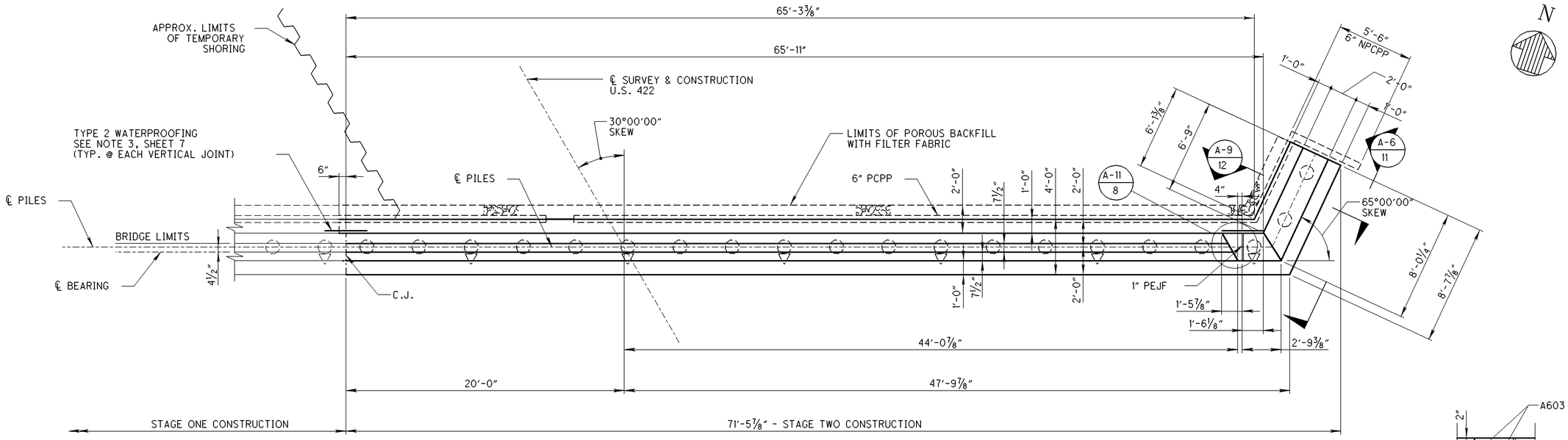

PART PLAN

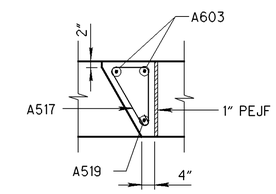

DETAIL A-11 / 8

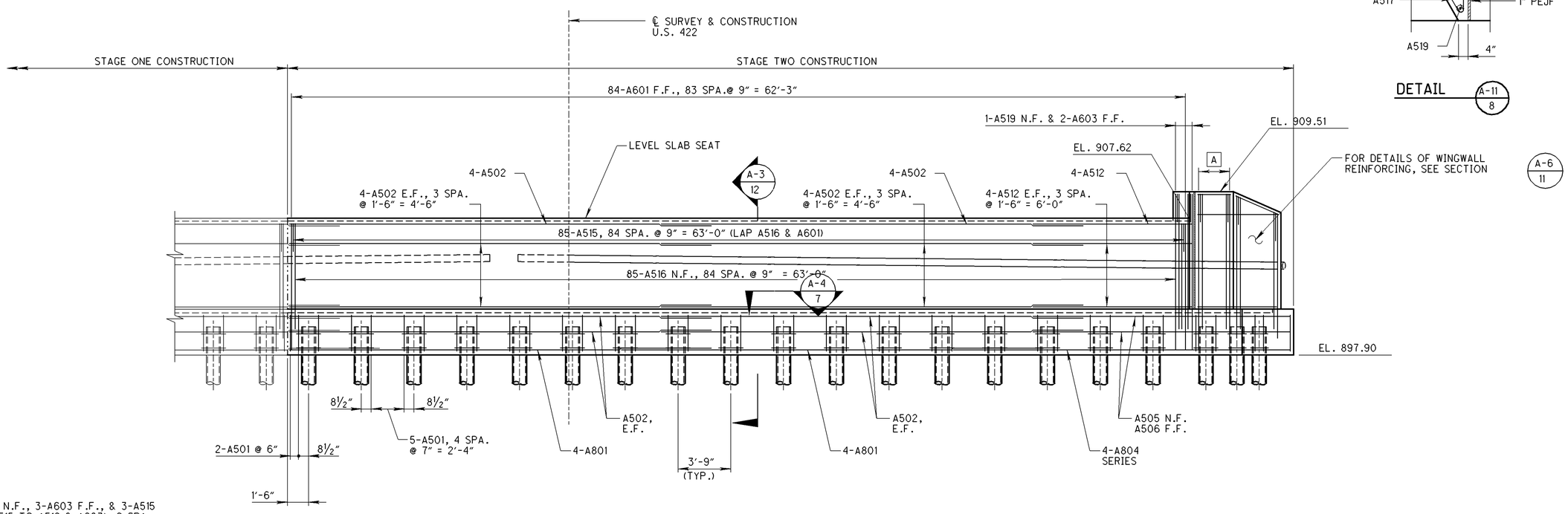

PART ELEVATION

LEGEND

A — 3-A519 N.F., 3-A603 F.F., & 3-A515 (LAP A515 TO A519 & A603), 2 SPA. @ 6½″ = 1′-1″

FOR NOTES SEE SHEET 7/16.

DLZ
1000 ROCKEFELLER BLDG • 614 W SUPERIOR AVE • CLEVELAND, OH 44113

DESIGNED	DRAWN	REVIEWED	DATE
DJP	DJP	GWM	3/1/05
CHECKED	REVISED	STRUCTURE FILE NUMBER	
AJM		2801922	

REAR ABUTMENT - STAGE TWO
BRIDGE NO. GEA-422-1975
U.S. 422 OVER GRAND RIVER TRIBUTARY

GEA/POR-422-18.31/0.00

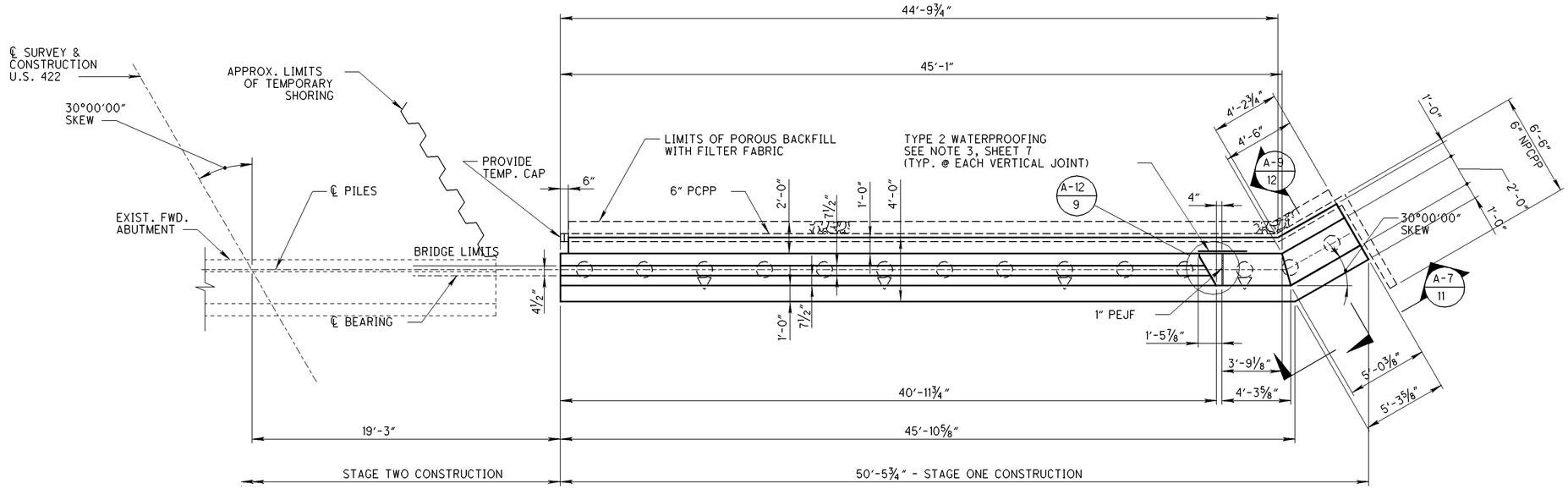

PART PLAN

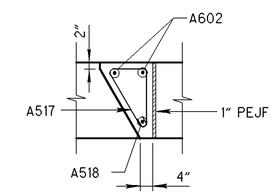

DETAIL A-12 / 9

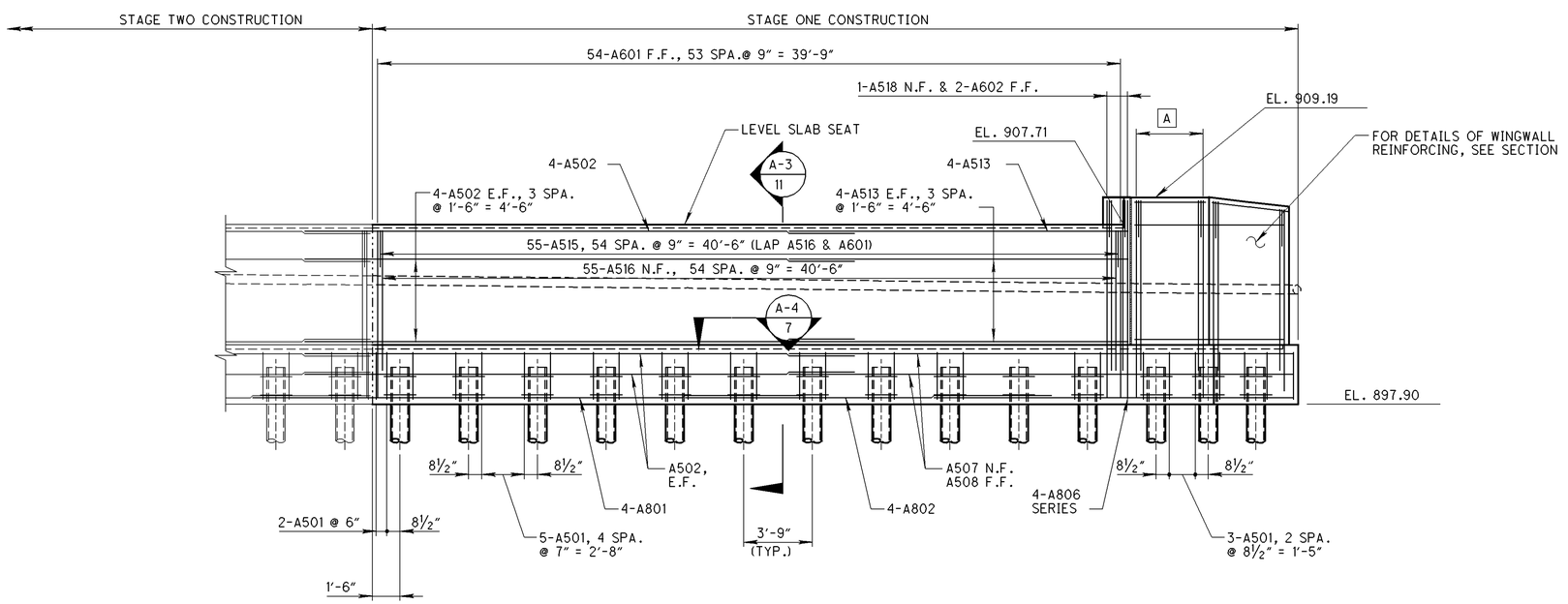

PART ELEVATION

LEGEND

A — 6-A518 N.F., 6-A602 F.F., & 6-A515 (LAP A515 TO A518 & A602), 5 SPA. @ 8" = 3'-4"

FOR NOTES SEE SHEET 7/16.

DLZ — 1000 ROCKEFELLER BLDG • 614 W SUPERIOR AVE • CLEVELAND, OH 44113

DESIGNED	DRAWN	REVIEWED	DATE
DJP	DJP	GWM	3/1/05
CHECKED	REVISED	STRUCTURE FILE NUMBER	
AJM		2801922	

FORWARD ABUTMENT - STAGE ONE
BRIDGE NO. GEA-422-1975
U.S. 422 OVER GRAND RIVER TRIBUTARY

GEA/POR-422-18.31/0.00

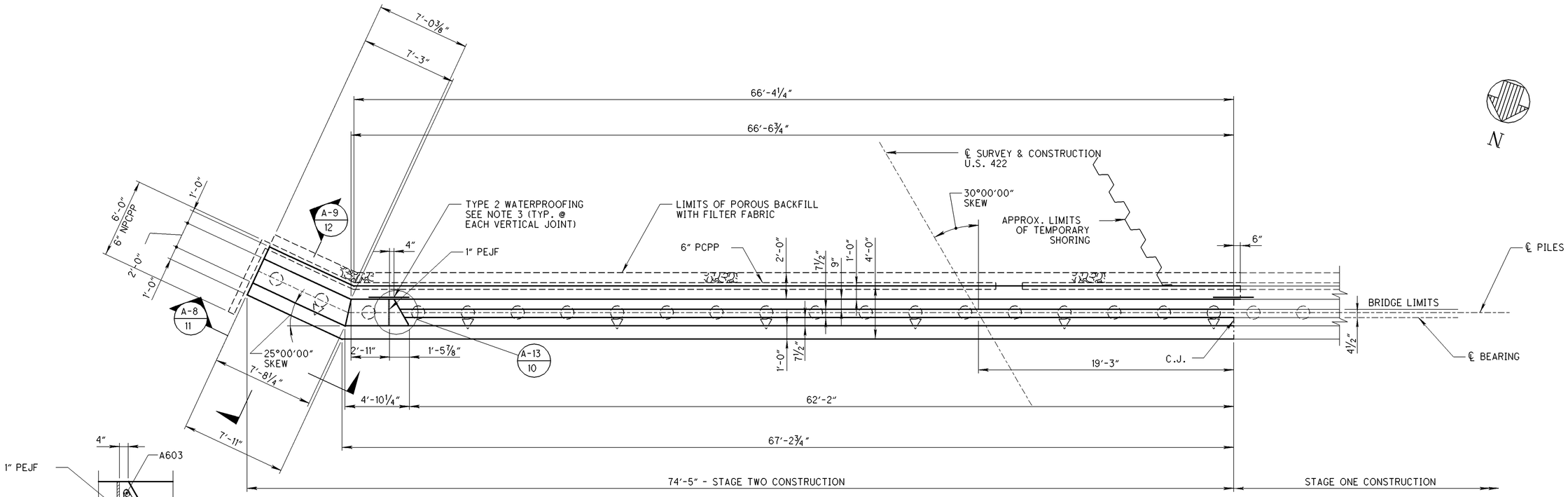

PART PLAN

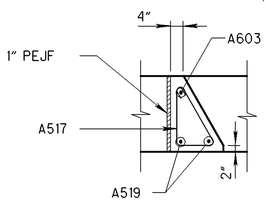

DETAIL A-13/11

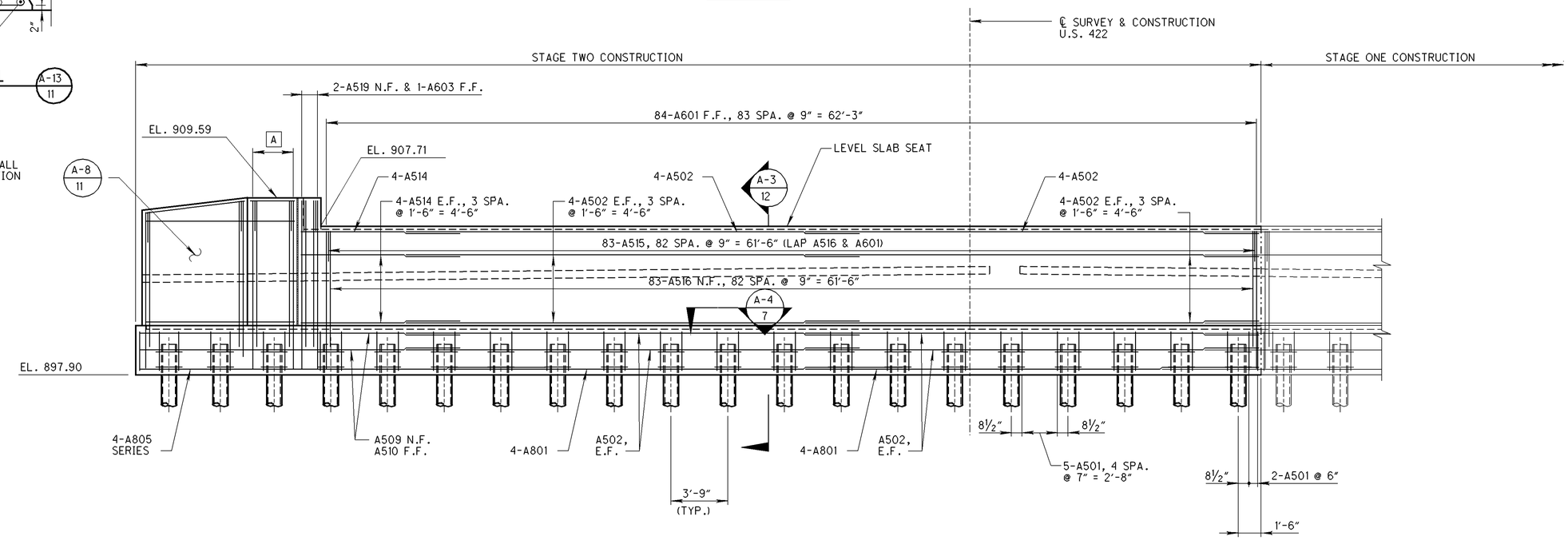

LEGEND

A 6-A519 N.F., 6-A603 F.F., & 6-A515 (LAP A515 TO A519 & A603), 5 SPA. @ 6" = 2'-6"

PART ELEVATION

FOR NOTES SEE SHEET 7/16.

DLZ
1000 ROCKEFELLER BLDG • 614 W SUPERIOR AVE • CLEVELAND, OH 44113

DESIGNED	DRAWN	REVIEWED	DATE
DJP	DJP	GWM	3/1/05
CHECKED	REVISED	STRUCTURE FILE NUMBER	
AJM		2801922	

FORWARD ABUTMENT - STAGE TWO
BRIDGE NO. GEA-422-1975
U.S. 422 OVER GRAND RIVER TRIBUTARY

GEA/POR-422-18.31/0.00

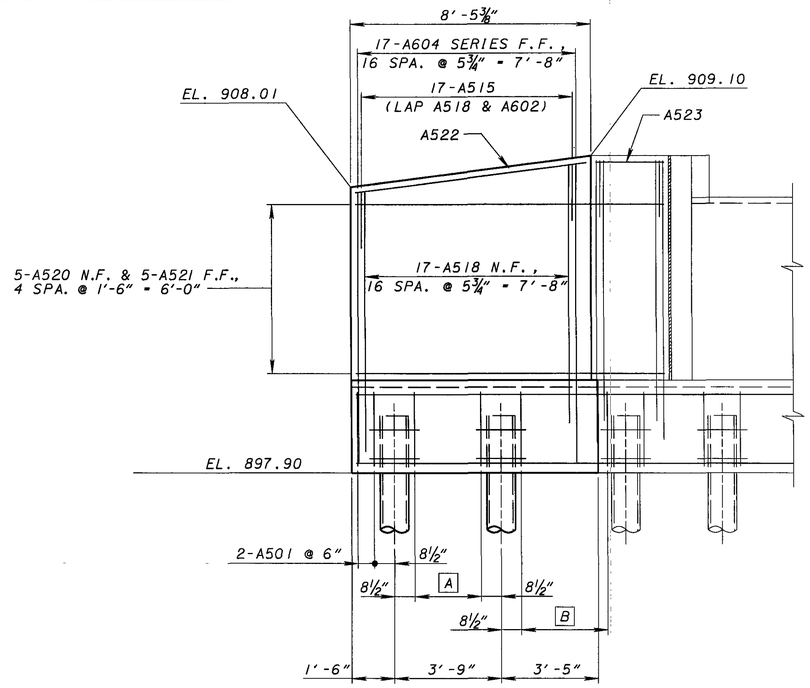

SECTION A-5 / 7

REAR ABUTMENT - EASTBOUND

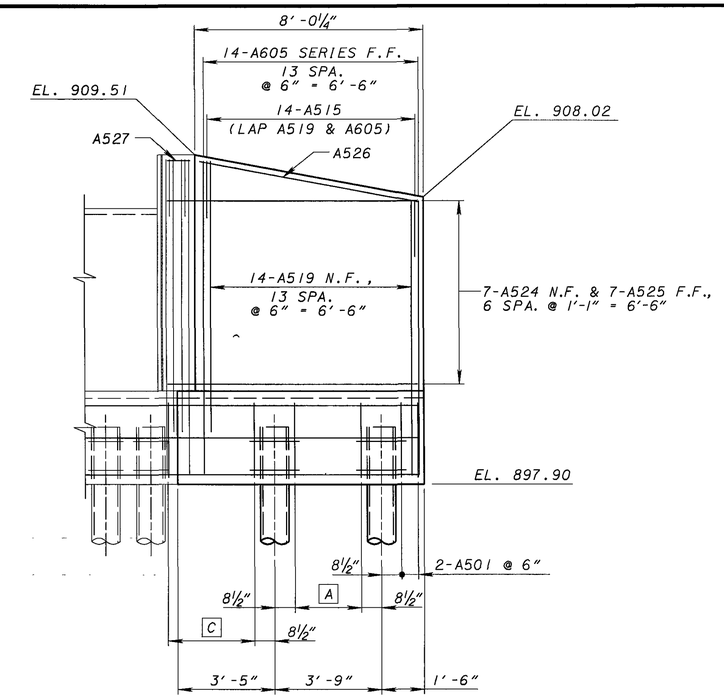

SECTION A-6 / 8

REAR ABUTMENT - WESTBOUND

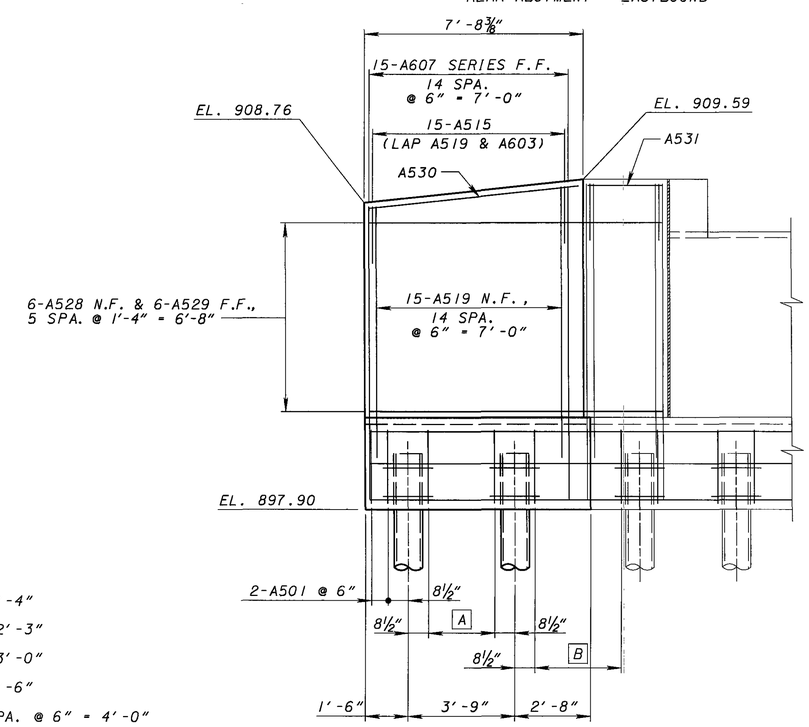

SECTION A-8 / 10

FORWARD ABUTMENT - WESTBOUND

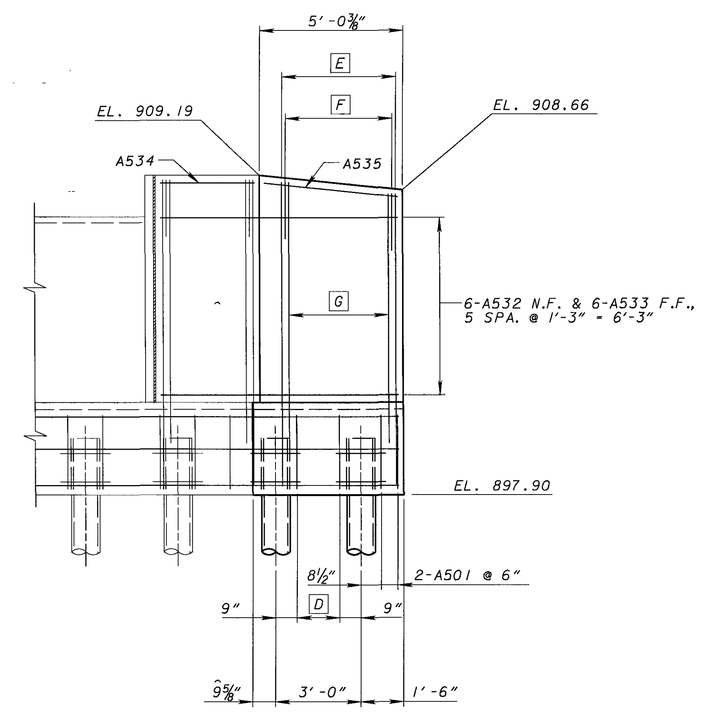

SECTION A-7 / 9

FORWARD ABUTMENT - EASTBOUND

LEGEND

- A 5-A501, 4 SPA. @ 7" = 2'-4"
- B 5-A501, 4 SPA. @ 6 3/4" = 2'-3"
- C 4-A501, 3 SPA. @ 12" = 3'-0"
- D 4-A501, 3 SPA. @ 6" = 1'-6"
- E 9-A606 SERIES F.F., 8 SPA. @ 6" = 4'-0"
- F 9-A515, 8 SPA. @ 6" = 4'-0" (LAP A518 & A606)
- G 9-A518 N.F., 8 SPA. @ 6" = 4'-0"

DLZ
2000 ROCKEFELLER BLDG • 614 W SUPERIOR AVE • CLEVELAND, OH 44113

DESIGNED	DRAWN	REVIEWED	DATE
DJP	DJP	GWM	3/1/05
CHECKED	REVISED	STRUCTURE FILE NUMBER	
AJM		2801922	

WINGWALL DETAILS
BRIDGE NO. GEA-422-1975
U.S. 422 OVER GRAND RIVER TRIBUTARY

GEA/POR-422-18.31/0.00

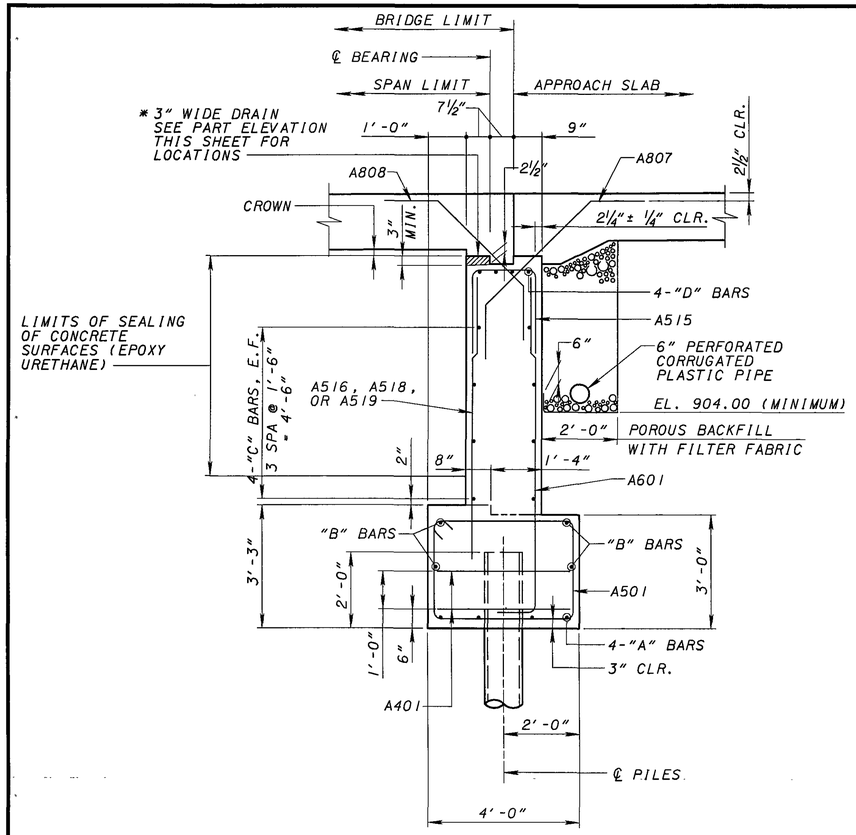

SECTION A-3 / 7-10

TABLE OF ABUTMENT REINFORCING STEEL		
BAR	DESIGNATION	LOCATION
"A"	A801, A802, A803 SERIES, A804 SERIES	REAR ABUTMENT
	A801, A802, A805 SERIES, OR A806 SERIES	FWD. ABUTMENT
"B"	A502, A503, A504, A505, OR A506	REAR ABUTMENT
	A502, A507, A508, A509, OR A510	FWD. ABUTMENT
"C"	A502, A511, OR A512	REAR ABUTMENT
	A502, A513, OR A514	FWD. ABUTMENT
"D"	A502, A511, OR A512	REAR ABUTMENT
	A502, A513, OR A514	FWD. ABUTMENT

TABLE OF WINGWALL REINFORCING STEEL		
BAR	DESIGNATION	LOCATION
"E"	A803 SERIES OR A804 SERIES	REAR ABUTMENT
	A805 SERIES OR A806 SERIES	FWD. ABUTMENT
"F"	A503, A504, A505, OR A506	REAR ABUTMENT
	A507, A508, A509, OR A510	FWD. ABUTMENT
"G"	A520, A521, A524, OR A525	REAR ABUTMENT
	A528, A529, A532, OR A533	FWD. ABUTMENT
"H"	A522, A523, A526, OR A527	REAR ABUTMENT
	A530, A531, A534, OR A535	FWD. ABUTMENT

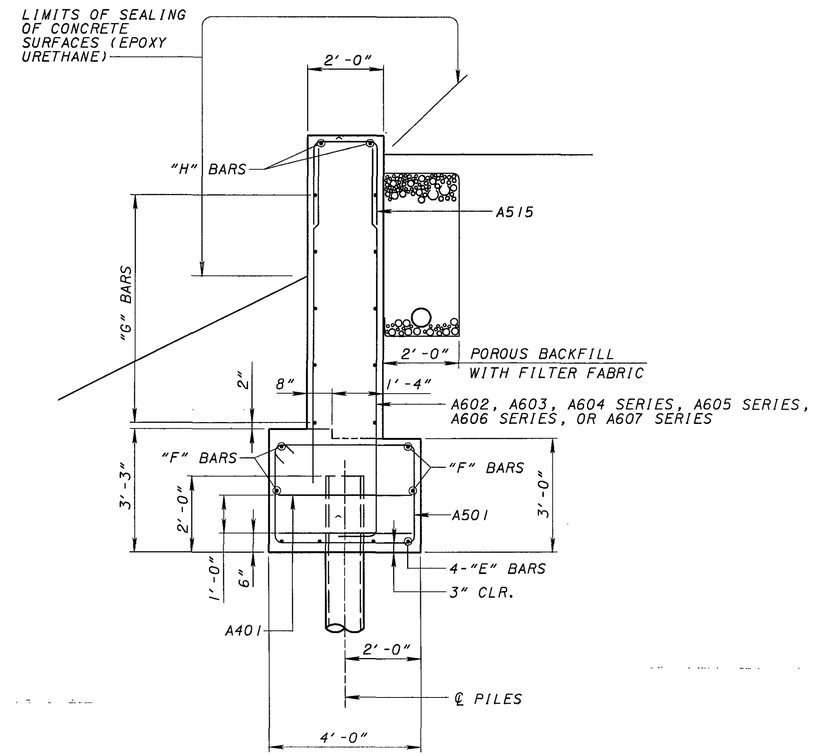

SECTION A-9 / 7-10

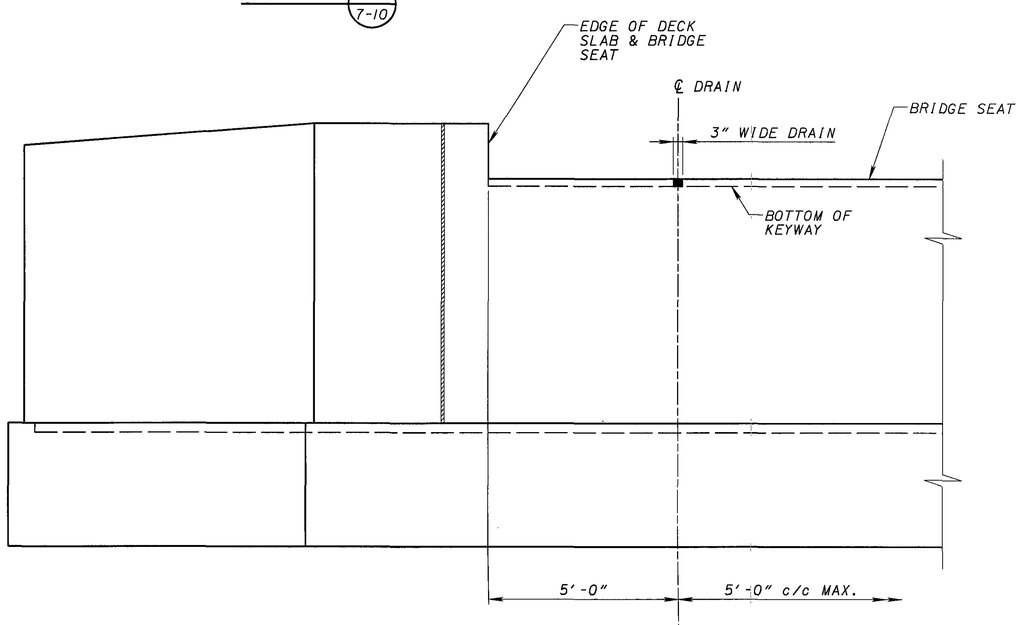

PART ELEVATION

SEE SECTION A-3 THIS SHEET FOR ADDITIONAL DETAILS

DLZ
1000 ROCKEFELLER BLDG. • 614 W. SUPERIOR AVE. • CLEVELAND, OH 44113

DESIGNED	DRAWN	REVIEWED	DATE
DJP	DJP	GWM	3/1/05
CHECKED	REVISED	STRUCTURE FILE NUMBER	
AJM		280/922	

ABUTMENT & WINGWALL DETAILS
BRIDGE NO. GEA-422-1975
U.S. 422 OVER GRAND RIVER

GEA/POR-422-18.31/0.00

12/16

253/332

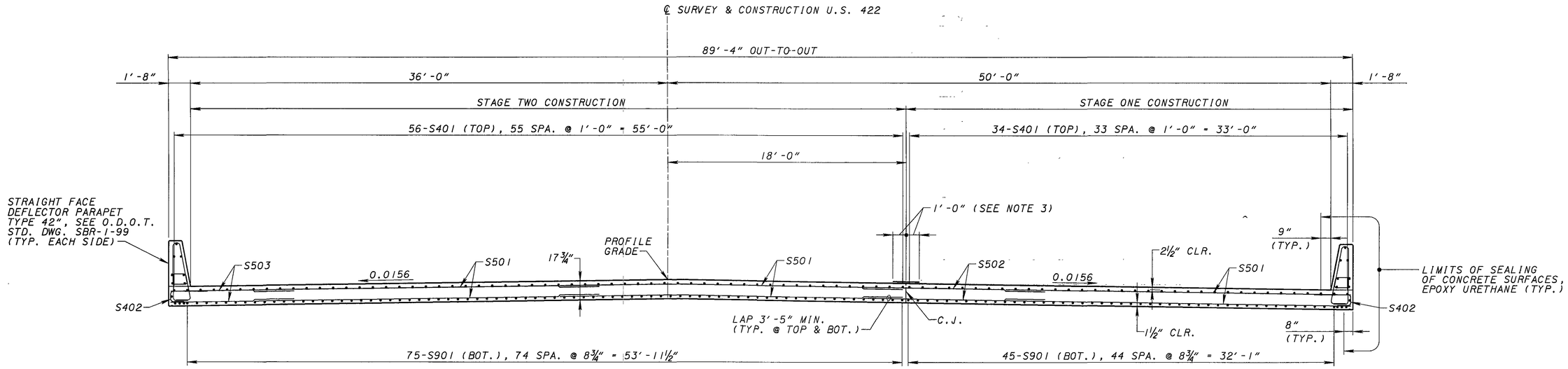

TRANSVERSE SECTION

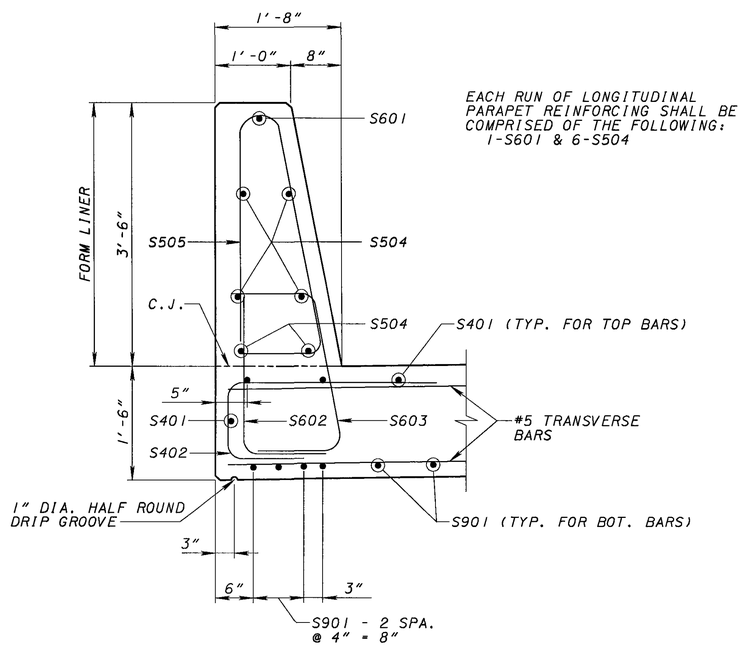

TYPICAL PARAPET & EDGE BEAM DETAIL

NOTES:

1. FOR STAGE CONSTRUCTION DETAILS, SEE SHEETS 3 AND 4/16.
2. FOR SLAB PLAN, SEE SHEET 14/16.
3. SEAL LONGITUDINAL CONSTRUCTION JOINTS WITH HIGH MOLECULAR WEIGHT METHACRYLATE (HMWM) (TYP.)

DLZ
1000 ROCKEFELLER BLDG. • 614 W. SUPERIOR AVE. • CLEVELAND, OH 44113

DESIGNED	DRAWN	REVIEWED	DATE
DJP	DJP	GWM	3/1/05
CHECKED	REVISED	STRUCTURE FILE NUMBER	
AJM		2801922	

TRANSVERSE SECTION
BRIDGE NO. GEA-422-1975
U.S. 422 OVER GRAND RIVER TRIBUTARY

GEA/POR-422-18.31/0.00

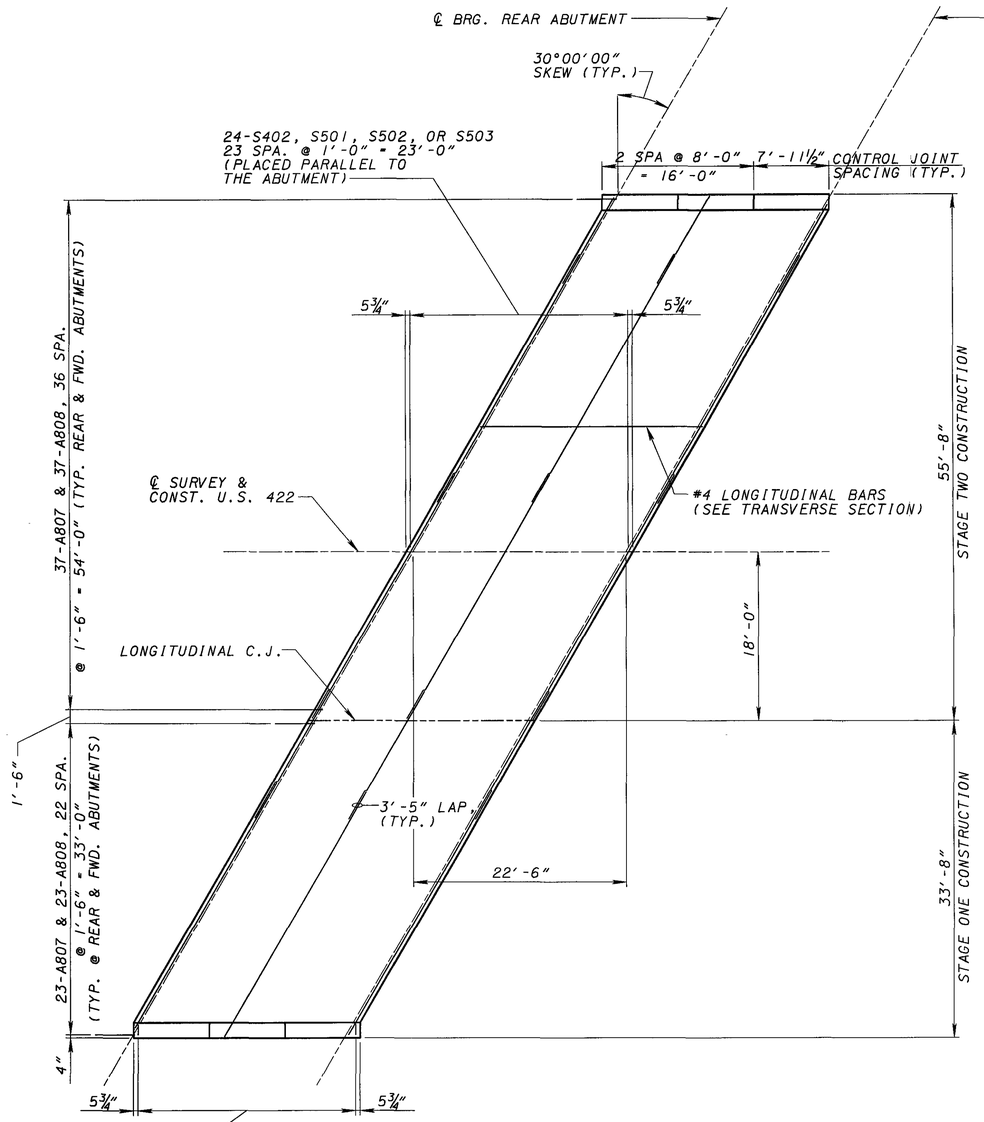

PLAN - TOP MAT

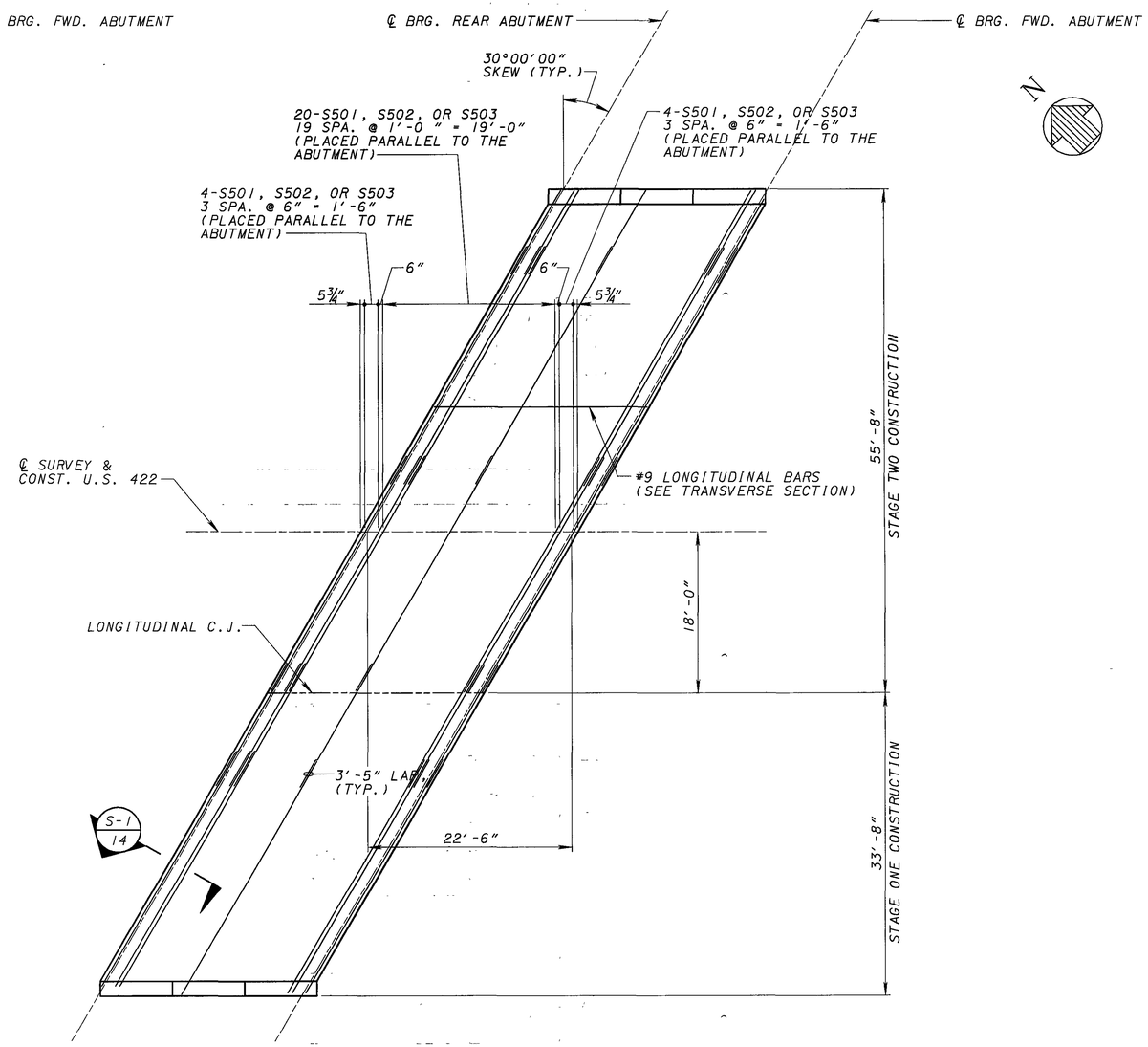

PLAN - BOTTOM MAT

FINISHED PAVEMENT ELEVATIONS (FEET)					
LOCATION			℄ BRG. REAR ABUT.	0.50 SPAN	℄ BRG. FWD. ABUT.
TOE/LEFT PARAPET	36.00' LT	STATION	1025+21.93	1025+33.18	1025+44.43
		ELEVATION	909.51	909.55	909.59
CROWN	0.00'	STATION	1025+01.15	1025+12.40	1025+23.65
		ELEVATION	909.99	910.03	910.08
LONG. C.J.	18.00' RT	STATION	1024+90.76	1025+02.01	1025+13.26
		ELEVATION	909.67	909.71	909.76
TOE/RIGHT PARAPET	50.00' RT	STATION	1024+72.28	1024+83.53	1024+94.78
		ELEVATION	909.10	909.14	909.19

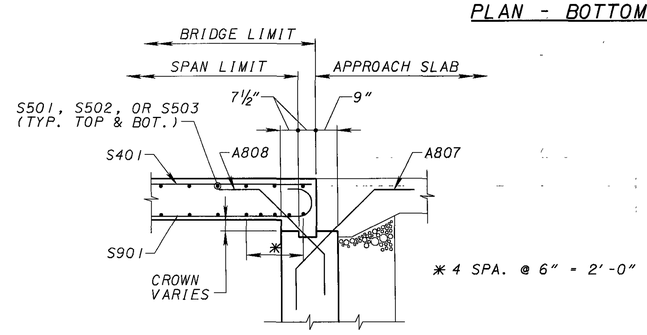

SECTION S-1 / 14

NOTES:

1. FOR TRANSVERSE SECTION SEE SHEET 13/16.
2. TRANSVERSE DECK REINFORCEMENT SPACING MEASURED ALONG ℄ SURVEY AND CONSTRUCTION U.S. 422.

DLZ
1000 ROCKEFELLER BLDG • 614 W SUPERIOR AVE • CLEVELAND, OH 44113

DESIGNED	DRAWN	REVIEWED	DATE
DJP	DJP	GWM	3/1/05
CHECKED	REVISED	STRUCTURE FILE NUMBER	
AJM		2801922	

DECK PLAN
BRIDGE NO. GEA-422-1975
U.S. 422 OVER GRAND RIVER TRIBUTARY

GEA/POR-422-18.31/0.00

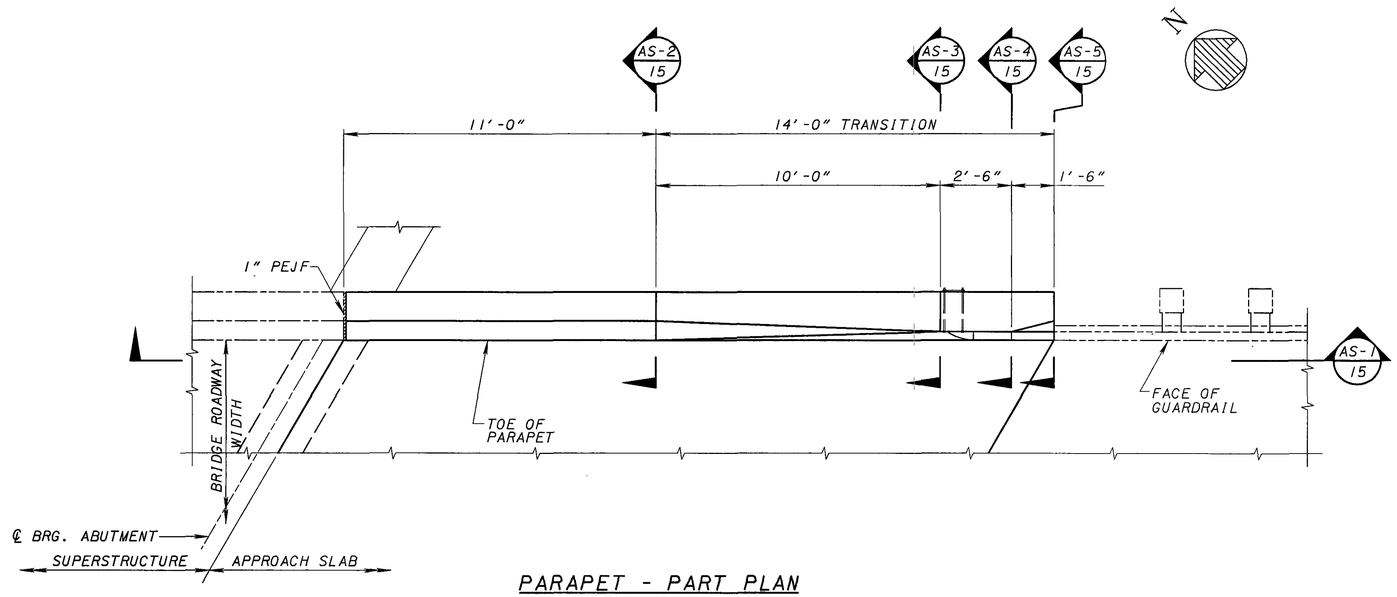

PARAPET - PART PLAN

NORTHEAST CORNER SHOWN
SOUTHWEST CORNER SIMILAR
NORTHWEST & SOUTHEAST CORNERS OPPOSITE

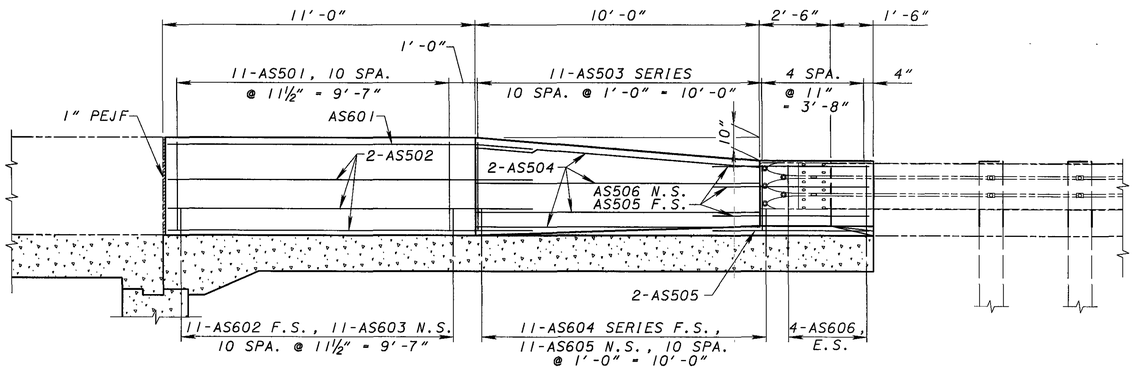

SECTION AS-1 / 15

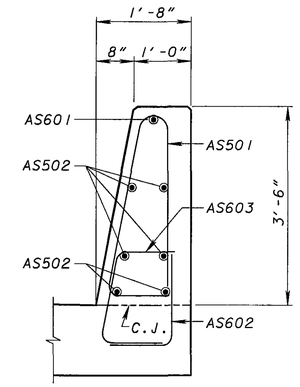

SECTION AS-2 / 15

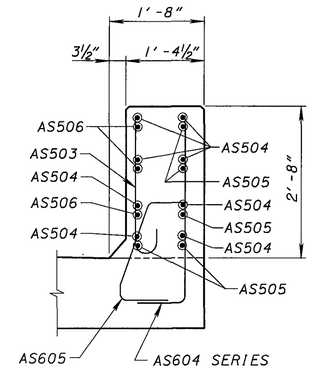

SECTION AS-3 / 15

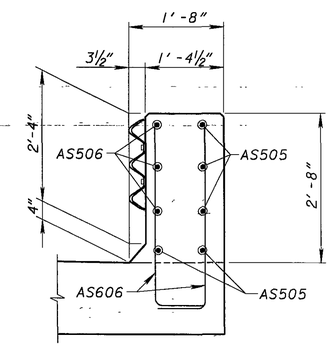

SECTION AS-4 / 15

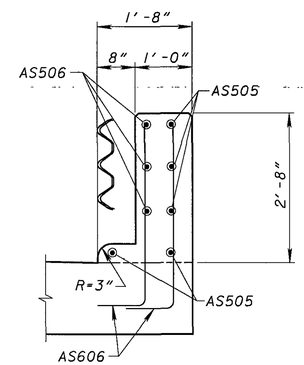

SECTION AS-5 / 15

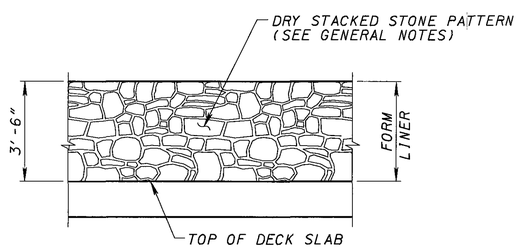

TYPICAL PARAPET ELEVATION

OUTBOARD VIEW, SHOWING FORM LINER

NOTES

1. CLEAR COVER OF 4" ON THE OUTSIDE FACE OF PARAPETS IS PROVIDED TO PERMIT THE USE OF FORM LINER WITH A MAXIMUM PATTERN DEPTH OF 2".
2. FOR TRANSVERSE SECTION, SEE SHEET 13/16.
3. FOR DECK SLAB PLAN, SEE SHEET 14/16.

DLZ
1000 ROCKEFELLER BLDG • 614 W SUPERIOR AVE • CLEVELAND, OH 44113

DESIGNED	DRAWN	REVIEWED	DATE
DJP	DJP	GWM	3/1/05
CHECKED	REVISED	STRUCTURE FILE NUMBER	
AJM		2801922	

APPROACH SLAB DETAILS
BRIDGE NO. GEA-422-1975
U.S. 422 OVER GRAND RIVER TRIBUTARY

GEA/POR-422-18.31/0.00

REINFORCING STEEL LIST

MARK	NUMBER REAR	NUMBER FWD.	NUMBER TOTAL	LENGTH	WEIGHT (LBS.)	TYPE	DIMENSIONS A	DIMENSIONS B	DIMENSIONS C	DIMENSIONS D	DIMENSIONS E	SER INC.
ABUTMENTS												
A401	68	68	136	11'-0"	999	3	1'-9"	3'-6"				
A501	167	165	332	13'-0"	4502	3	3'-8"	2'-7"				
A502	48	48	96	30'-0"	3004	STR						
A503	2		2	29'-2"	61	19	8'-1"	19'-2"	8'-11"			
A504	2		2	28'-9"	60	19	7'-8"	19'-2"	8'-11"			
A505	2		2	23'-0"	48	19	8'-4"	6'-3"	13'-4"			
A506	2		2	20'-9"	43	19	6'-1"	6'-3"	13'-4"			
A507		2	2	28'-3"	59	19	5'-1"	20'-1"	11'-7"			
A508		2	2	27'-6"	57	19	4'-4"	20'-1"	11'-7"			
A509		2	2	21'-11"	46	19	7'-8"	12'-11"	6'-0"			
A510		2	2	21'-2"	44	19	6'-11"	12'-11"	6'-0"			
A511	12		12	17'-8"	221	STR						
A512	12		12	11'-3"	141	STR						
A513		14	14	18'-6"	270	STR						
A514		14	14	10'-6"	153	STR						
A515	169	162	331	5'-5"	1870	2	2'-0"	1'-8"	2'-0"			
A516	138	138	276	7'-8"	2207	STR						
A517	2	2	4	9'-3"	39	30	3'-1"	1'-11"				
A518	30	21	51	9'-3"	492	STR						
A519	18	23	41	9'-8"	413	STR						
A520	5		5	11'-0"	57	19	8'-3"	2'-6"	1'-2"			
A521	5		5	10'-8"	56	19	7'-11"	2'-6"	1'-2"			
A522	1		1	17'-0"	18	2	7'-8"	1'-6"	8'-1"			
A523	1		1	6'-2"	6	2	2'-3"	1'-6"	2'-8"			
A524	7		7	10'-1"	74	19	7'-9"	1'-0"	2'-2"			
A525	7		7	8'-0"	58	19	6'-8"	7"	1'-3"			
A526	1		1	15'-3"	16	2	6'-6"	1'-6"	7'-6"			
A527	1		1	4'-8"	5	2	1'-2"	1'-6"	2'-3"			
A528		6	6	10'-6"	66	19	7'-6"	2'-9"	1'-4"			
A529		6	6	9'-9"	61	19	7'-1"	2'-5"	1'-2"			
A530		1	1	15'-5"	16	2	7'-3"	1'-6"	6'-11"			
A531		1	1	6'-8"	7	2	2'-11"	1'-6"	2'-6"			
A532		6	6	8'-9"	55	19	4'-10"	3'-5"	2'-0"			
A533		6	6	7'-10"	49	19	4'-4"	3'-1"	1'-9"			
A534		1	1	8'-5"	9	2	3'-10"	1'-6"	3'-4"			
A535		1	1	10'-0"	10	2	4'-7"	1'-6"	4'-2"			
A601	138	138	276	9'-11"	4111	1	1'-0"	9'-1"				
A602	5	8	13	11'-5"	223	1	1'-0"	10'-7"				
A603	5	7	12	11'-9"	470	1	1'-0"	11'-1"				
	1		1					9'-7"				
A604	SER		SER	10'-11"	279	1	1'-0"					3/4"
	17		17					10'-7"				
	1		1					8'-11"				
A605	SER		SER	10'-3"	216	1	1'-0"					1"
	14		14					10'-0"				
		1	1					10'-3"				
A606		SER	SER	11'-3"	152	1	1'-0"					1/2"
		9	9					10'-7"				
		1	1					10'-4"				
A607		SER	SER	11'-1"	250	1	1'-0"					1/2"
		15	15					10'-11"				
A801	12	12	24	30'-0"	1922	STR						
A802	4	4	8	20'-0"	427	STR						
	1		1				7'-8"					
A803	SER		SER	21'-3"	227	19		12'-0"	5'-7"			3"
	4		4				8'-5"					
	1		1				6'-1"					
A804	SER		SER	27'-7"	295	19		8'-8"	18'-6"			9"
	4		4				8'-4"					
		1	1				6'-11"					
A805		SER	SER	27'-2"	290	19		18'-0"	8'-5"			3"
		4	4				7'-8"					
		1	1				4'-1"					
A806		SER	SER	19'-10"	212	19		13'-3"	7'-8"			4"
		4	4				5'-1"					
A807	60	60	120	6'-8"	2136	20	1'-0"	1'-0"	3'-11"	1'-0"	1'-0"	
A808	60	60	120	5'-11"	1896	20	1'-0"	1'-0"	3'-2"	1'-0"	1'-0"	
		ABUTMENTS TOTAL:			28398	LBS						

REINFORCING STEEL LIST

MARK	NUMBER REAR	NUMBER FWD.	NUMBER TOTAL	LENGTH	WEIGHT (LBS.)	TYPE	DIMENSIONS A	DIMENSIONS B	DIMENSIONS C	DIMENSIONS D	DIMENSIONS E	SER INC.
SUPERSTRUCTURE												
S401			92	23'-6"	1444	STR						
S402			48	4'-8"	150	2	2'-9"	1'-0 1/2"	1'-0"			
S501			156	30'-0"	4881	STR						
S502			52	15'-9"	854	STR						
S503			52	10'-9"	583	STR						
S504			12	23'-7"	295	STR						
S505			48	7'-5"	371	23	1'-1"	3'-2"	3'-0"	2 3/4"		
S601			2	23'-7"	71	STR						
S602			48	3'-1"	222	1	1'-1"	2'-2"				
S603			48	3'-7"	300	24	1'-1"	2'-2"				
S901			126	25'-7"	10960	17	23'-4"					
	SUPERSTRUCTURE TOTAL:				20131	LBS						
APPROACH SLAB PARAPET												
AS501	22	22	44	7'-5"	340	23	1'-1"	3'-2"	3'-0"	2 3/4"		
AS502	12	12	24	12'-10"	321	STR						
	2	2	4	2'-11"			2'-4"					
AS503	SER	SER	SER		153	16						1"
	11	11	11	3'-9"			3'-2"					
AS504	16	16	32	10'-0"	334	STR						
AS505	10	10	20	5'-6"	115	STR						
AS506	6	6	12	5'-6"	69	25	1'-8"	2'-5"	1'-5"	1 1/2"	5"	
AS601	2	2	4	12'-10"	77	STR						
AS602	22	22	44	3'-1"	204	1	1'-1"	2'-2"				
AS603	22	22	44	4'-2"	275	24	1'-1"	2'-2"				
	2	2	4	4'-2"				3'-6"				
AS604	SER	SER	SER		303	1	10"					1"
	11	11	11	5'-0"				4'-4"				
AS605	22	22	44	2'-11"	193	14	10"	3"	1'-5"	6"	8"	
AS606	16	16	32	4'-2"	200	1	10"	3'-6"				
	APPROACH SLAB PARAPET TOTAL:				2584	LBS						

REINFORCING STEEL NOTES

1. SERIES BARS - EACH BAR VARIES BY TABULATED AMOUNT.
2. ALL DIMENSIONS ARE OUT TO OUT.
3. TYPE 'STR' INDICATES A STRAIGHT BAR.
4. THE BAR SIZE NUMBER IS SPECIFIED IN THE 'MARK' COLUMN. THE FIRST DIGIT INDICATES THE BAR SIZE NUMBER. FOR EXAMPLE, A501 IS A #5 BAR SIZE.
5. ALL BARS SHALL BE EPOXY COATED UNLESS NOTED OTHERWISE.
6. APPROACH SLAB REINFORCING: THE BARS LISTED ARE REQUIRED IN ADDITION TO THE REINFORCING SHOWN ON THE STANDARD DRAWING. SUBTOTALS AND TOTAL WEIGHTS ARE PROVIDED FOR INFORMATIONAL PURPOSES ONLY. ALL REINFORCING STEEL REQUIRED FOR APPROACH SLABS SHALL BE INCLUDED FOR PAYMENT IN THE APPLICABLE 526 ITEM. FOR ADDITIONAL DETAILS, REFER TO ODOT STANDARD DRAWING AS-1-81.

BENDING DIAGRAMS

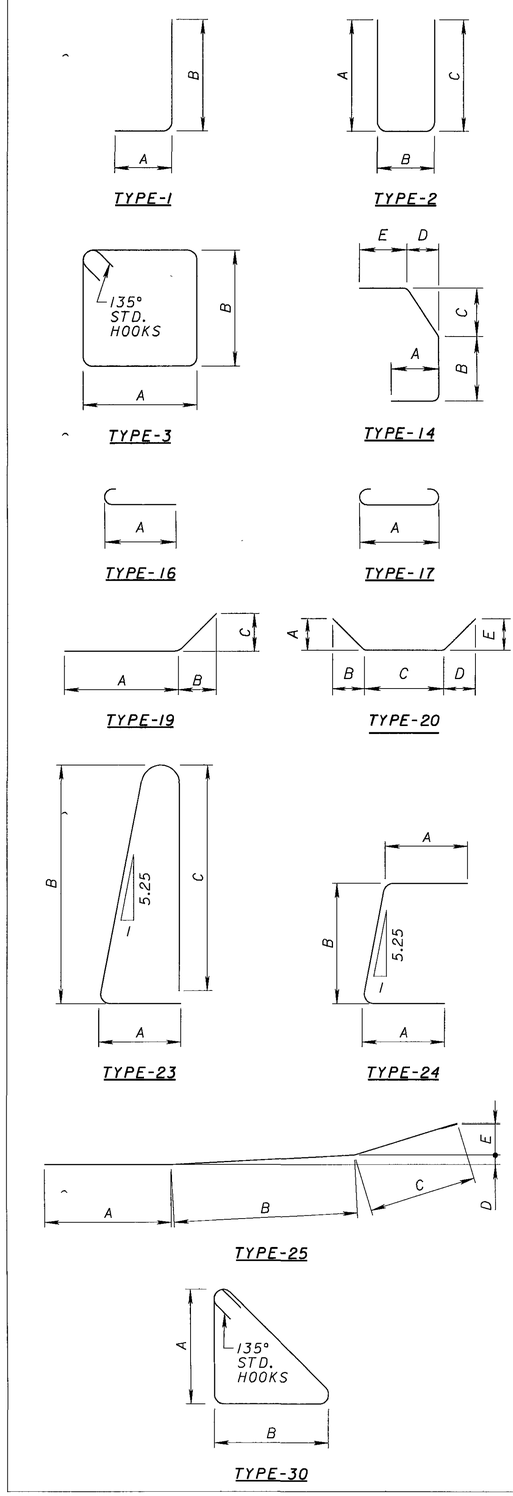

DLZ
1000 ROCKEFELLER BLDG • 614 • SUPERIOR AVE. • CLEVELAND, OH 44113

DESIGNED	DRAWN	REVIEWED	DATE
DJP	DJP	GWM	3/1/05
CHECKED	REVISED	STRUCTURE FILE NUMBER	
PAT		2801922	

REINFORCING STEEL LIST
BRIDGE NO. GEA-422-1975
U.S. 422 OVER GRAND RIVER TRIBUTARY

GEA/POR-422-18.31/0.00

16/16

257/332

GEA/POR-422-18.31/0.00

TOWNSHIP 6 NORTH, RANGE 6 WEST
SECTION 18, PARKMAN TOWNSHIP
GEAUGA COUNTY

℄ S.H. 325 CURVE DATA (EXISTING)

P.I. STA. = 943+79.28
Δ = 66° 11′ 30″
Dc = 2° 30′ 01″
R = 2291.63′
T = 1493.65′
L = 2647.43′
E = 443.80′

℄ CONST. & R/W CURVE DATA

P.I. STA. = 943+70.00
Δ = 66° 11′ 30″
Dc = 2° 30′ 56″
R = 2277.63′
T = 1484.53′
L = 2631.26′
E = 441.09′

NOTE:
THE EXISTING RIGHT OF WAY WIDTH AND LOCATION WERE DETERMINED USING DOCUMENTATION ON FILE FROM THE OHIO DEPARTMENT OF TRANSPORTATION, DISTRICT 12. OFFICE, GARFIELD HEIGHTS, OHIO. WARREN BURTON ROAD, S.H. 325, SECTION F (PART)

BASIS OF BEARING:

THE PROJECT (GROUND LEVEL) COORDINATE VALUES ARE RELATIVE TO THE OHIO NORTH ZONE STATE PLANE COORDINATES, NAD 83 (95), BY A PROJECT ADJUSTMENT FACTOR (PAF) OF 1.00009089 AND ARE FROM AN ACTUAL GPS SURVEY MADE BY ODOT IN 1999.

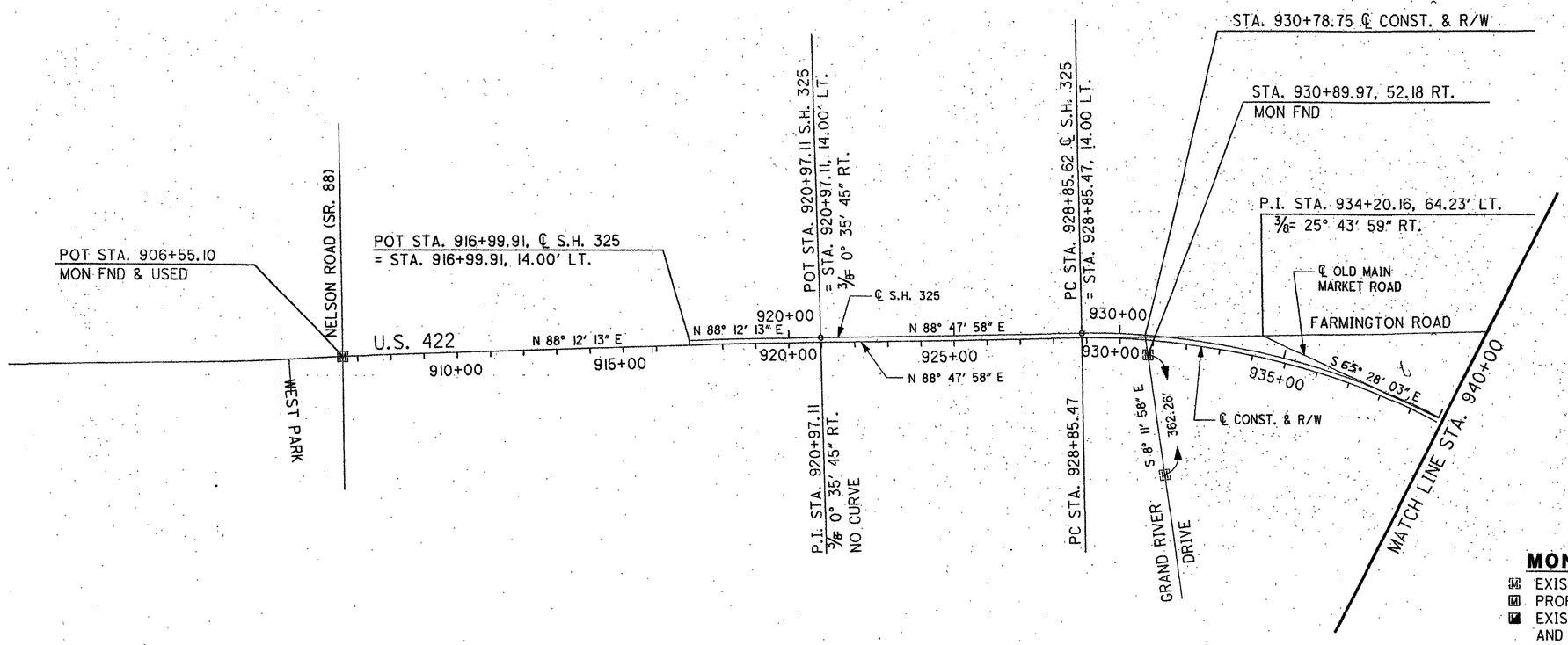

MONUMENT LEGEND

- EXISTING ℄ MONUMENT
- PROPOSED ℄ MONUMENT
- EXISTING ℄ MONUMENT REMOVED AND REPLACED
- EXISTING RIGHT OF WAY MONUMENT
- PROPOSED RIGHT OF WAY MONUMENT
- RAILROAD SPIKE FOUND
- RAILROAD SPIKE SET
- I.R.F. IRON PIN FOUND
- I.R.F. IRON PIN FOUND W/ ID CAP
- I.R.S. IRON PIN SET W/ ID CAP
- P.F. IRON PIPE FOUND
- P.S. IRON PIPE SET
- P.K.F. P.K. NAIL FOUND
- P.K.S. P.K. NAIL SET

THE PROPOSED RIGHT OF WAY SHALL BE REFERENCED FROM THE CENTERLINE OF THE RIGHT OF WAY.

ADJUSTABLE CENTERLINE MONUMENTS, REFERENCE MONUMENTS AND RIGHT OF WAY MONUMENTS ARE SHOWN ON STANDARD CONSTRUCTION DRAWING RM 1.1M (REV. 4-29-99) OF THE OHIO DEPARTMENT OF TRANSPORTATION. THE PLACING OF THE MONUMENTS SHALL BE UNDER THE DIRECTION OF A REGISTERED SURVEYOR AND ARE TO BE SET, AS SHOWN BY THE HIGHWAY CONTRACTOR AT THE TIME OF CONSTRUCTION. ANY ALTERATIONS, WITH PRIOR APPROVAL OF THE OHIO DEPARTMENT OF TRANSPORTATION, SHALL BE NOTED AND O.D.O.T. SHALL BE NOTIFIED OF THE NEW LOCATIONS.

Received for Record June 1, 2006 @ 1:17pm
in Plat Vol. 39 Pages 41-44
Mary Margaret McBride
Geauga County Recorder

200600742352
Filed for Record in
GEAUGA COUNTY, OHIO
MARY MARGARET MCBRIDE
06-01-2006 At 01:17 pm.
PLAT 160.00
OR Book 39 Page 41 - 44

NO TRANSFER NECESSARY
6-1-06
Tracy A. Jemain AK

RECEIVED June 1, 2006 @ 1:17pm
RECORDED June 1, 2006 @ 1:17pm
BOOK 39 PAGE 41-44
Mary Margaret McBride
COUNTY RECORDER

I HEREBY CERTIFY THAT THIS PLAT IS A TRUE DELINEATION OF A SURVEY MADE FOR THE OHIO DEPARTMENT OF TRANSPORTATION IN 2001 BY DLZ OHIO, INC.

V39·P41

THE ESTABLISHMENT OF THE PROPERTY LINES AND EXISTING RIGHT OF WAY LINES SHOWN ON THIS PLAN AS OF THIS DATE WERE PERFORMED BY ME OR UNDER MY DIRECT SUPERVISION.

BY Adam D. Treat
ADAM D. TREAT
SURVEYOR NO. 8058 DATE 12-05-2005

STATE OF OHIO
ADAM D. TREAT
8058
REGISTERED SURVEYOR

HORIZONTAL SCALE IN FEET 0 100 200 400

PID NO. 19181

R/W DESIGNER A.D.T.
R/W REVIEWER T.R.B.

CENTERLINE PLAT

GEA/POR-422-18.31/0.00

1/4
1/75
258/332

GEA/POR-422-18.31/0.00

TOWNSHIP 6 NORTH, RANGE 6 WEST
SECTIONS 18 AND 23, PARKMAN TOWNSHIP
GEAUGA COUNTY

NOTE:
THE EXISTING RIGHT OF WAY WIDTH AND LOCATION WERE DETERMINED USING DOCUMENTATION ON FILE FROM THE OHIO DEPARTMENT OF TRANSPORTATION, DISTRICT 12. OFFICE, GARFIELD HEIGHTS, OHIO. WARREN BURTON ROAD, S.H. 325, SECTION F (PART)

BASIS OF BEARING:

THE PROJECT (GROUND LEVEL) COORDINATE VALUES ARE RELATIVE TO THE OHIO NORTH ZONE STATE PLANE COORDINATES, NAD 83 (95), BY A PROJECT ADJUSTMENT FACTOR (PAF) OF 1.00009089 AND ARE FROM AN ACTUAL GPS SURVEY MADE BY ODOT IN 1999.

℄ S.H. 325 CURVE DATA (EXISTING)

P.I. STA. = 943+79.28
Δ = 66° 11′ 30″
Dc = 2° 30′ 01″
R = 2291.63′
T = 1493.65′
L = 2647.43′
E = 443.80′

℄ OLD MAIN MARKET ROAD CURVE DATA

P.I. STA. = 946+62.72, 142.12′ LT.
Δ = 40° 27′ 31″
Dc = 20° 00′ 06″
R = 286.45′
T = 105.56′
L = 202.27′
E = 18.83′

℄ CONST. & R/W CURVE DATA

P.I. STA. = 943+70.00
Δ = 66° 11′ 30″
Dc = 2° 30′ 56″
R = 2277.63′
T = 1484.53′
L = 2631.26′
E = 441.09′

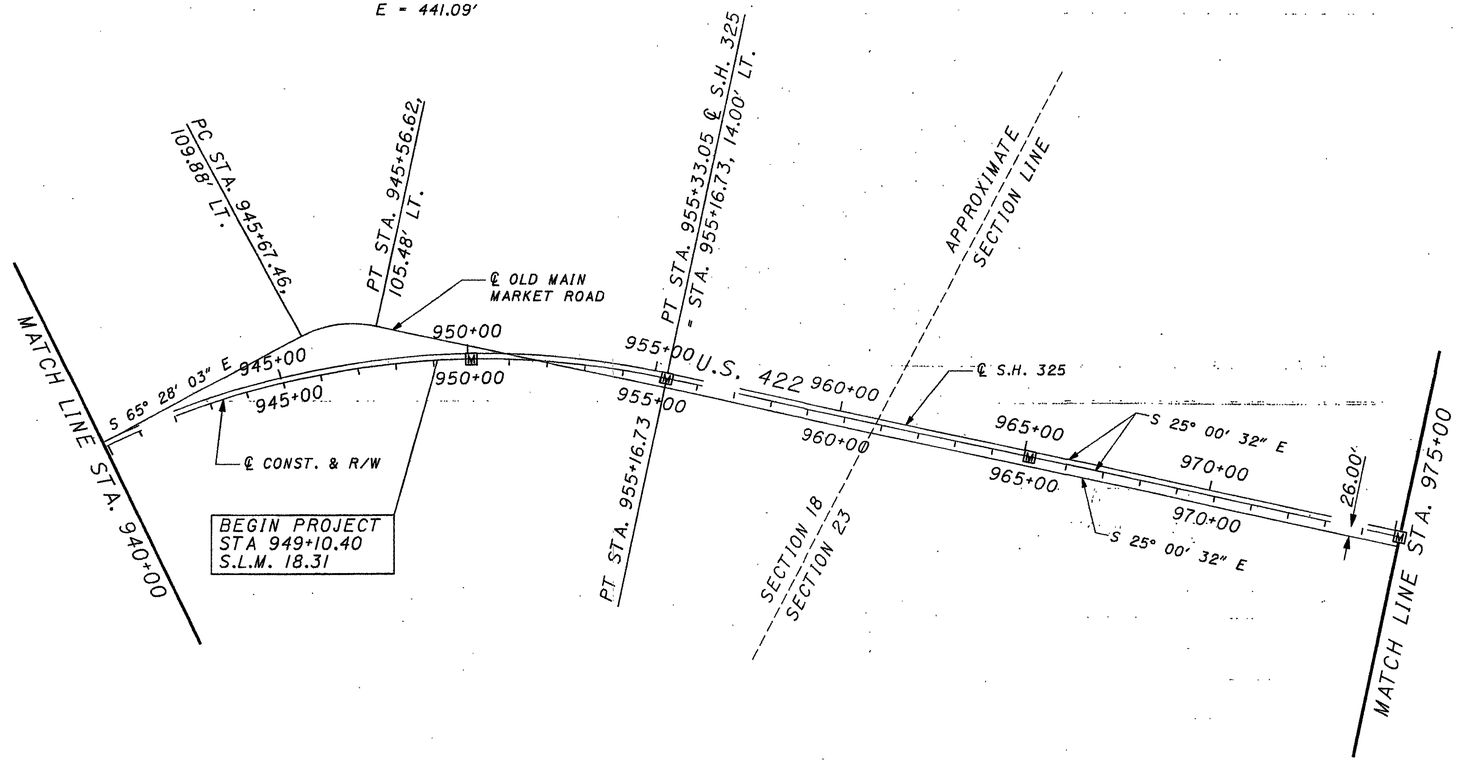

ADJUSTABLE CENTERLINE MONUMENTS TO BE SET DURING CONSTRUCTION				
STATION	DIST FROM ℄ OF SURVEY		STATE PLANE COORDINATES METRIC UNITS	
	LEFT	RIGHT	NORTHING (Y)	EASTING (X)
S.R. 57				
P.O.C. 950+00.00	ON ℄	ON ℄	189928.9303	721289.8835
P.T. 955+16.73	ON ℄	ON ℄	189794.9521	721372.0120
P.O.T. 965+00.00	ON ℄	ON ℄	189523.3743	721498.7021
P.O.T. 975+00.00	ON ℄	ON ℄	189247.1762	721627.5476
TOTAL			4	

MONUMENT LEGEND

- EXISTING ℄ MONUMENT
- PROPOSED ℄ MONUMENT
- EXISTING ℄ MONUMENT REMOVED AND REPLACED
- EXISTING RIGHT OF WAY MONUMENT
- PROPOSED RIGHT OF WAY MONUMENT
- RAILROAD SPIKE FOUND
- RAILROAD SPIKE SET
- I.P.F. IRON PIN FOUND
- I.P.F. IRON PIN FOUND W/ ID CAP
- I.P.S. IRON PIN SET W/ ID CAP
- P.F. IRON PIPE FOUND
- P.S. IRON PIPE SET
- P.K.F. P.K. NAIL FOUND
- P.K.S. P.K. NAIL SET

V39.P42

RECEIVED _____, 20___
RECORDED _____, 20___
BOOK _____ PAGE _____
COUNTY RECORDER

HORIZONTAL SCALE IN FEET 0 100 200 400

PID NO. 19181

R/W DESIGNER A.D.T.
R/W REVIEWER T.R.B.

CENTERLINE PLAT

GEA/POR-422-18.31/0.00

2/4
2/75
259/332

GEA/POR-422-18.31/0.00

TOWNSHIP 6 NORTH, RANGE 6 WEST
SECTION 23 AND 24, PARKMAN TOWNSHIP
GEAUGA COUNTY

NOTE:
THE EXISTING RIGHT OF WAY WIDTH AND LOCATION WERE DETERMINED USING DOCUMENTATION ON FILE FROM THE OHIO DEPARTMENT OF TRANSPORTATION, DISTRICT 12. OFFICE, GARFIELD HEIGHTS, OHIO. WARREN BURTON ROAD, S.H. 325, SECTION F (PART)

BASIS OF BEARING:

THE PROJECT (GROUND LEVEL) COORDINATE VALUES ARE RELATIVE TO THE OHIO NORTH ZONE STATE PLANE COORDINATES, NAD 83 (95), BY A PROJECT ADJUSTMENT FACTOR (PAF) OF 1.00009089 AND ARE FROM AN ACTUAL GPS SURVEY MADE BY ODOT IN 1999.

℄ S.H. 325 CURVE DATA (EXISTING)	℄ CONST. & R/W CURVE DATA
P.I. STA. = 997+19.70	P.I. STA. = 997+05.80
Δ = 19° 40′ 57″	Δ = 19° 40′ 57″
Dc = 0° 42′ 01″	Dc = 0° 41′ 56″
R = 8182.96′	R = 8196.95′
T = 1419.51′	T = 1421.94′
L = 2811.04′	L = 2815.85′
E = 122.21′	E = 122.42′

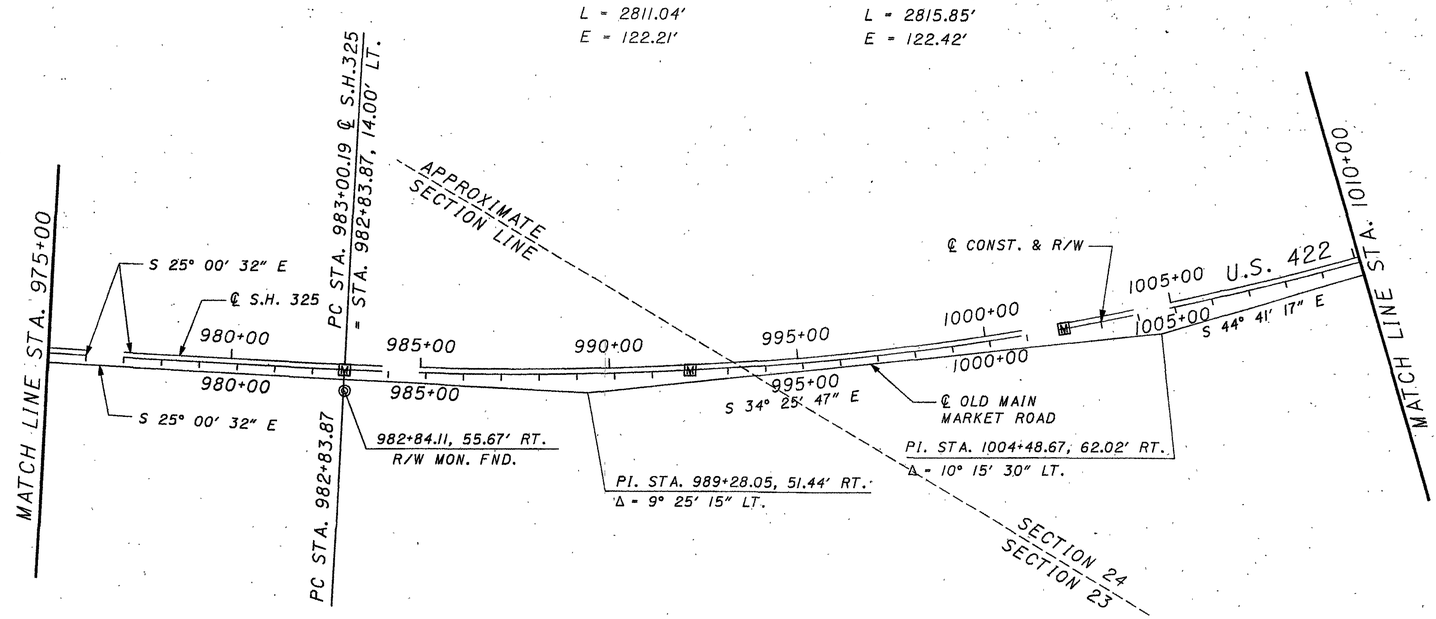

MONUMENT LEGEND

- EXISTING ℄ MONUMENT
- PROPOSED ℄ MONUMENT
- EXISTING ℄ MONUMENT REMOVED AND REPLACED
- EXISTING RIGHT OF WAY MONUMENT
- PROPOSED RIGHT OF WAY MONUMENT
- RAILROAD SPIKE FOUND
- RAILROAD SPIKE SET
- I.R.F. IRON PIN FOUND
- I.R.F. IRON PIN FOUND W/ ID CAP
- I.R.S. IRON PIN SET W/ ID CAP
- R.F. IRON PIPE FOUND
- R.S. IRON PIPE SET
- R.K.F. P.K. NAIL FOUND
- P.K. NAIL SET

ADJUSTABLE CENTERLINE MONUMENTS TO BE SET DURING CONSTRUCTION				
STATION	DIST FROM ℄ OF SURVEY		STATE PLANE COORDINATES METRIC UNITS	
	LEFT	RIGHT	NORTHING (Y)	EASTING (X)
S.R. 57				
P.C. 982+83.87	ON ℄	ON ℄	189030.6738	721728.5452
P.O.C. 992+00.00	ON ℄	ON ℄	188784.7513	721860.4570
P.O.C. 1002+00.00	ON ℄	ON ℄	188534.9636	722034.7483
TOTAL				3

ADJUSTABLE CENTERLINE MONUMENTS TO BE SET DURING CONSTRUCTION				
STATION	DIST FROM ℄ OF SURVEY		STATE PLANE COORDINATES METRIC UNITS	
	LEFT	RIGHT	NORTHING (Y)	EASTING (X)
U.S. 422				
P.T. 1010+99.72	ON ℄	ON ℄	188329.8387	722216.5157
P.C. 1015+24.18	ON ℄	ON ℄	188237.8680	722307.4903
P.T. 1018+48.14	ON ℄	ON ℄	188170.1766	722379.3398
P.O.T. 1024+00.00	ON ℄	ON ℄	188059.2258	722505.7460
P.O.T. 1034+00.00	ON ℄	ON ℄	187858.1772	722734.8005
P.I. 1041+22.04	ON ℄	ON ℄	187713.0125	722900.1865
P.I 1047+51.36	ON ℄	ON ℄	187584.3507	723042.4307
TOTAL				7

V39.P43

RECEIVED _____, 20____
RECORDED _____, 20____
BOOK _____ PAGE _____

COUNTY RECORDER

HORIZONTAL SCALE IN FEET 0 100 200 400

PID NO. 19181

R/W DESIGNER A.D.T.
R/W REVIEWER T.R.B.

CENTERLINE PLAT

GEA/POR-422-18.31/0.00

3/4
3/75
260/332

NOTE:
THE EXISTING RIGHT OF WAY WIDTH AND LOCATION WERE DETERMINED USING DOCUMENTATION ON FILE FROM THE OHIO DEPARTMENT OF TRANSPORTATION, DISTRICT 12. OFFICE, GARFIELD HEIGHTS, OHIO. WARREN BURTON ROAD, S.H. 325, SECTION F (PART)

BASIS OF BEARING:

THE PROJECT (GROUND LEVEL) COORDINATE VALUES ARE RELATIVE TO THE OHIO NORTH ZONE STATE PLANE COORDINATES, NAD 83 (95), BY A PROJECT ADJUSTMENT FACTOR (PAF) OF 1.00009089 AND ARE FROM AN ACTUAL GPS SURVEY MADE BY ODOT IN 1999.

GEA/POR-422-18.31/0.00

TOWNSHIP 6 NORTH, RANGE 6 WEST
PARKMAN TOWNSHIP, GEAUGA COUNTY
SECTION 24, TOWNSHIP 5 NORTH, RANGE 6 WEST
NELSON TOWNSHIP, PORTAGE COUNTY

℄ S.H. 325 CURVE DATA (EXISTING)
P.I. STA. = 1043+53.74
Δ = 2° 23′ 16″ T = 119.41′
Dc = 1° 00′ 00″ L = 238.78′
R = 5729.49′ E = 1.24′
P.C. STA. = 1042+34.33
= STA 1042+23.58, 15.77 LT.
P.R.C. STA 1044+73.11
= STA 1044+62.34, 14.95 LT.

℄ S.H. 325 CURVE DATA (EXISTING)
P.I. STA. = 1045+92.52
Δ = 2° 23′ 16″ T = 119.41′
Dc = 1° 00′ 00″ L = 238.76′
R = 5729.55′ E = 1.24′
PRC STA 1044+73.11
= STA 1044+62.34, 14.95 LT.
P.T. STA. = 1047+11.89
= STA 1047+10.01, 14.13′ LT.

℄ S.H. 325 CURVE DATA (EXISTING)
P.I. STA. = 1016+97.25
Δ = 4° 02′ 44″
Dc = 1° 15′ 09″
R = 4574.28′
T = 161.55′
L = 322.97′
E = 2.85′

℄ CONST. & R/W CURVE DATA
P.I. STA. = 1016+86.23
Δ = 4° 02′ 45″
Dc = 1° 14′ 56″
R = 4587.90′
T = 162.05′
L = 323.96′
E = 2.86′

℄ CONST. & R/W REYNOLDS RD. CURVE DATA
P.I. STA. = 103+10.99
Δ = 27° 26′ 00″
Dc = 22° 55′ 06″
R = 250.00′
T = 61.02′
L = 119.70′
E = 7.34′

℄ CONST. & R/W CURVE DATA
P.I. STA. = 997+05.80
Δ = 19° 40′ 57″
Dc = 0° 41′ 56″
R = 8196.95′
T = 1421.94′
L = 2815.85′
E = 122.42′

℄ S.H. 325 CURVE DATA (EXISTING)
P.I. STA. = 997+19.70
Δ = 19° 40′ 57″
Dc = 0° 42′ 01″
R = 8182.96′
T = 1419.51′
L = 2811.04′
E = 122.21′

℄ CONST. S.R. 282 CURVE DATA
P.I. STA. = 148+39.30
Δ = 9° 35′ 00″
Dc = 13° 28′ 53″
R = 425.00′
T = 35.63′
L = 71.09′
E = 1.49′

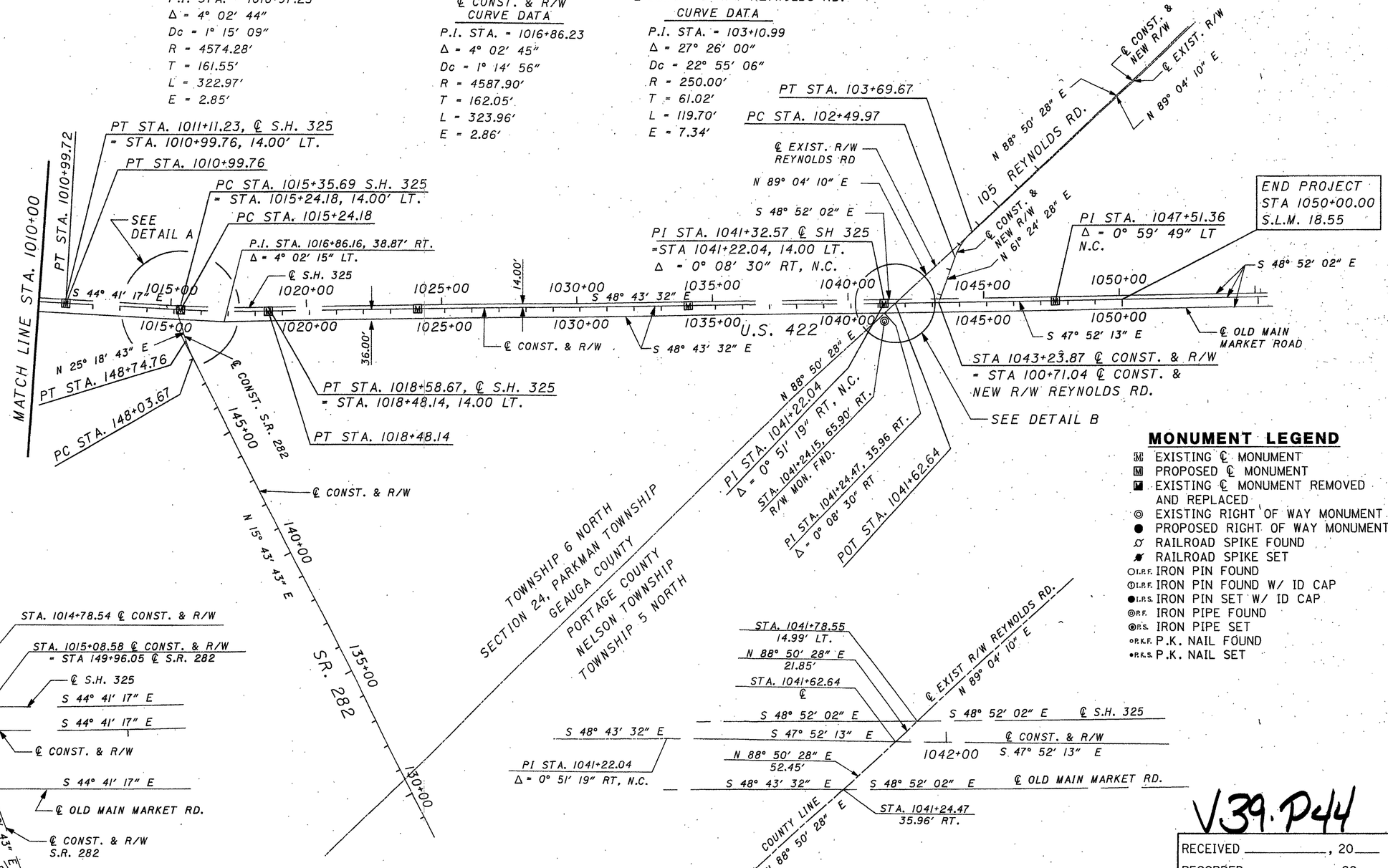

MONUMENT LEGEND

- EXISTING ℄ MONUMENT
- PROPOSED ℄ MONUMENT
- EXISTING ℄ MONUMENT REMOVED AND REPLACED
- EXISTING RIGHT OF WAY MONUMENT
- PROPOSED RIGHT OF WAY MONUMENT
- RAILROAD SPIKE FOUND
- RAILROAD SPIKE SET
- I.R.F. IRON PIN FOUND
- I.R.F. IRON PIN FOUND W/ ID CAP
- I.R.S. IRON PIN SET W/ ID CAP
- R.F. IRON PIPE FOUND
- R.S. IRON PIPE SET
- P.K.F. P.K. NAIL FOUND
- P.K.S. P.K. NAIL SET

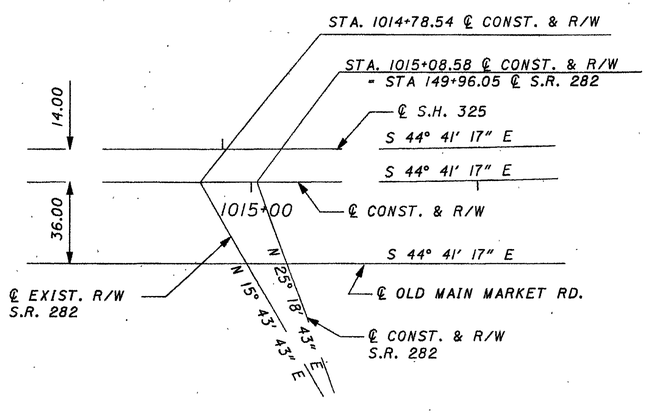

DETAIL A
N.T.S.

NOTE: FOR MONUMENT TABLE SEE SHEET 3/4.

DETAIL B
N.T.S.

V39.P44

RECEIVED _____, 20____
RECORDED _____, 20____
BOOK _____ PAGE _____
COUNTY RECORDER

HORIZONTAL SCALE IN FEET 0 100 200 400

PID NO. 19181
R/W DESIGNER ADT
R/W REVIEWER TRB

CENTERLINE PLAT

GEA/POR-422-18.31/0.00

4/4
4/75
261/332

CONVENTIONAL SIGNS

County Line
Township Line
Section Line
Corporation Line or
Fence Line (existing) (proposed)
Center Line
Trees ,Stumps (to be removed)
Utility Poles: Telephone , Power , Light
Limited Access (only) LA
Right of Way (only) R/W
Limited Access & Right of Way LA-R/W
Exist. Right of Way R/W
Temp. Right of Way T ESMT
Slope Easement SL ESMT
Utility Easement U ESMT
Property Line (in existing fence)
Railroad or
Guardrail (existing) (proposed)
Construction Limits Construction Limits

TOWNSHIP 6 NORTH, RANGE 6 WEST
SECTIONS 18 AND 23, PARKMAN TOWNSHIP
GEAUGA COUNTY

STRUCTURE KEY:
- RESIDENTIAL BUILDING
- COMMERCIAL BUILDING
- OUTBUILDING

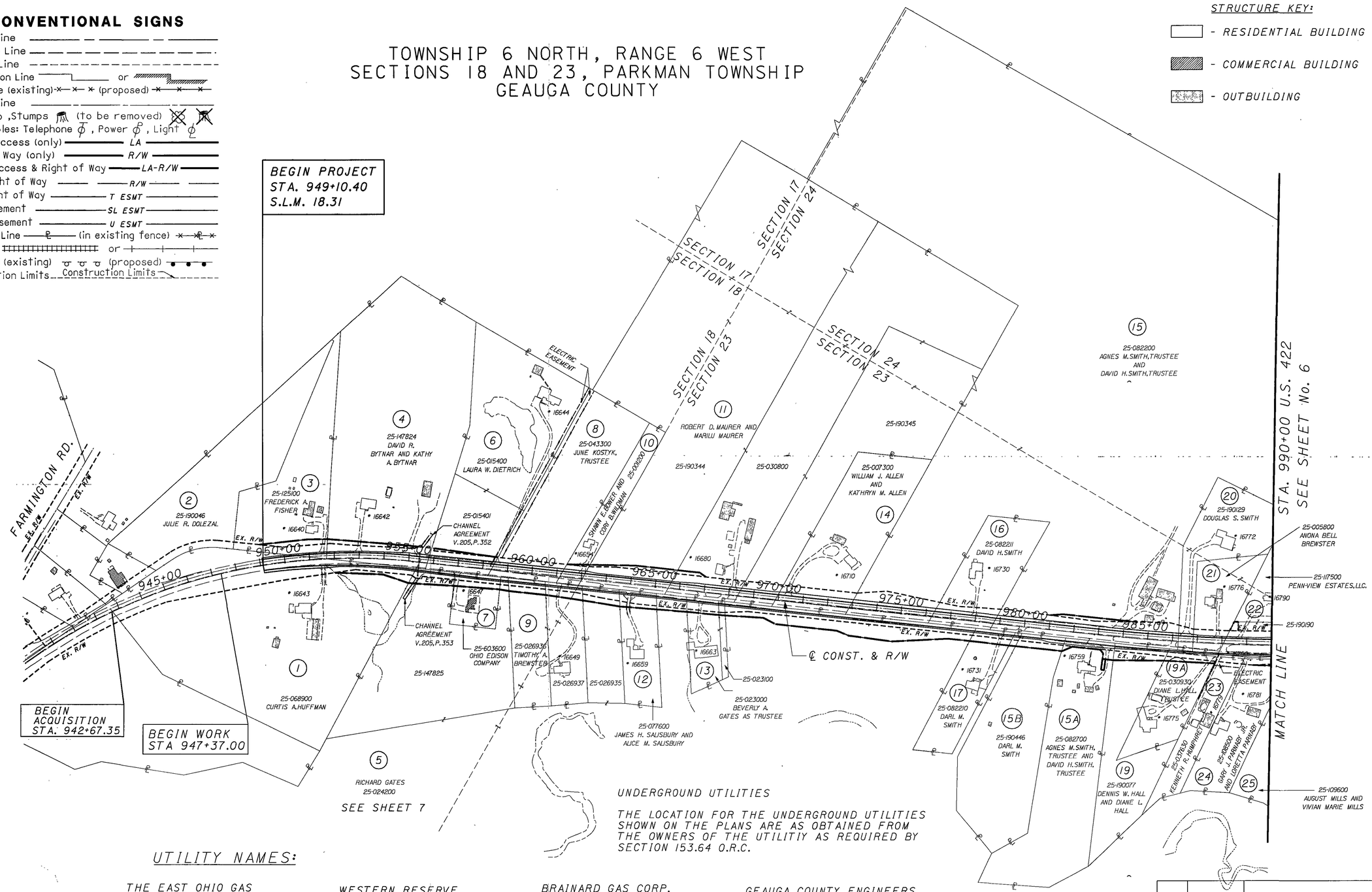

UNDERGROUND UTILITIES

THE LOCATION FOR THE UNDERGROUND UTILITIES SHOWN ON THE PLANS ARE AS OBTAINED FROM THE OWNERS OF THE UTILITIY AS REQUIRED BY SECTION 153.64 O.R.C.

UTILITY NAMES:

THE EAST OHIO GAS COMPANY-GSO DIVISION
715 FREEDOM AVENUE NW
N. CANTON, OHIO 44720-7381
(330) 497-5136

STAR CABLE
4720 MAHONING AVENUE
YOUNGSTOWN, OHIO 44515
(800)-569-0200

WESTERN RESERVE TELEPHONE (ALLTEL)
450 NORTH MAIN ST.
HUDSON, OHIO 44236
(440) 993-1621

OHIO EDISON
730 SOUTH AVENUE
YOUNGSTOWN, OHIO 44646
(330) 740-7635

BRAINARD GAS CORP.
4369 BRAINARD ROAD
ORANGE VILLAGE, OHIO 44022
(216) 591-9110

TIME WARNER CABLE
1655 BRITTAIN ROAD
AKRON OHIO 44310
(330) 633-9203

GEAUGA COUNTY ENGINEERS
WATER RESOURCES
470 CENTER STREET
CHARDON, OHIO 44024
(440) 285-2222 EXT 6335

REV.	DATE	DESCRIPTION
TRB	4-10-06	OWNERS NAME PARCEL 1
TRB	11-18-05	SPLIT PARCEL 15A TO 15A AND 15B
TRB	9-26-05	REVISED PARCEL 5 AUDITOR NO.
TRB	5-18-05	REVISED PARCELS 21 AND 22 OWNER
TRB	5-18-05	SPLIT PARCEL 15 TO 15 AND 15A

DATE OF COMPLETION

HORIZONTAL SCALE IN FEET 0 100 200 400

PID NO. 19181

R/W DESIGNER ADT
R/W REVIEWER TRB

PROPERTY MAP
STA 940+00 TO STA 990+00

GEA/POR-422-18.31/0.00

5/75

262/332

i:\projects\992100\civildsc3.dgn

TOWNSHIP 6 NORTH, RANGE 6 WEST
SECTION 23 AND 24 PARKMAN TOWNSHIP, GEAUGA COUNTY,
TOWNSHIP 5 NORTH, RANGE 6 WEST
NELSON TOWNSHIP, PORTAGE COUNTY.

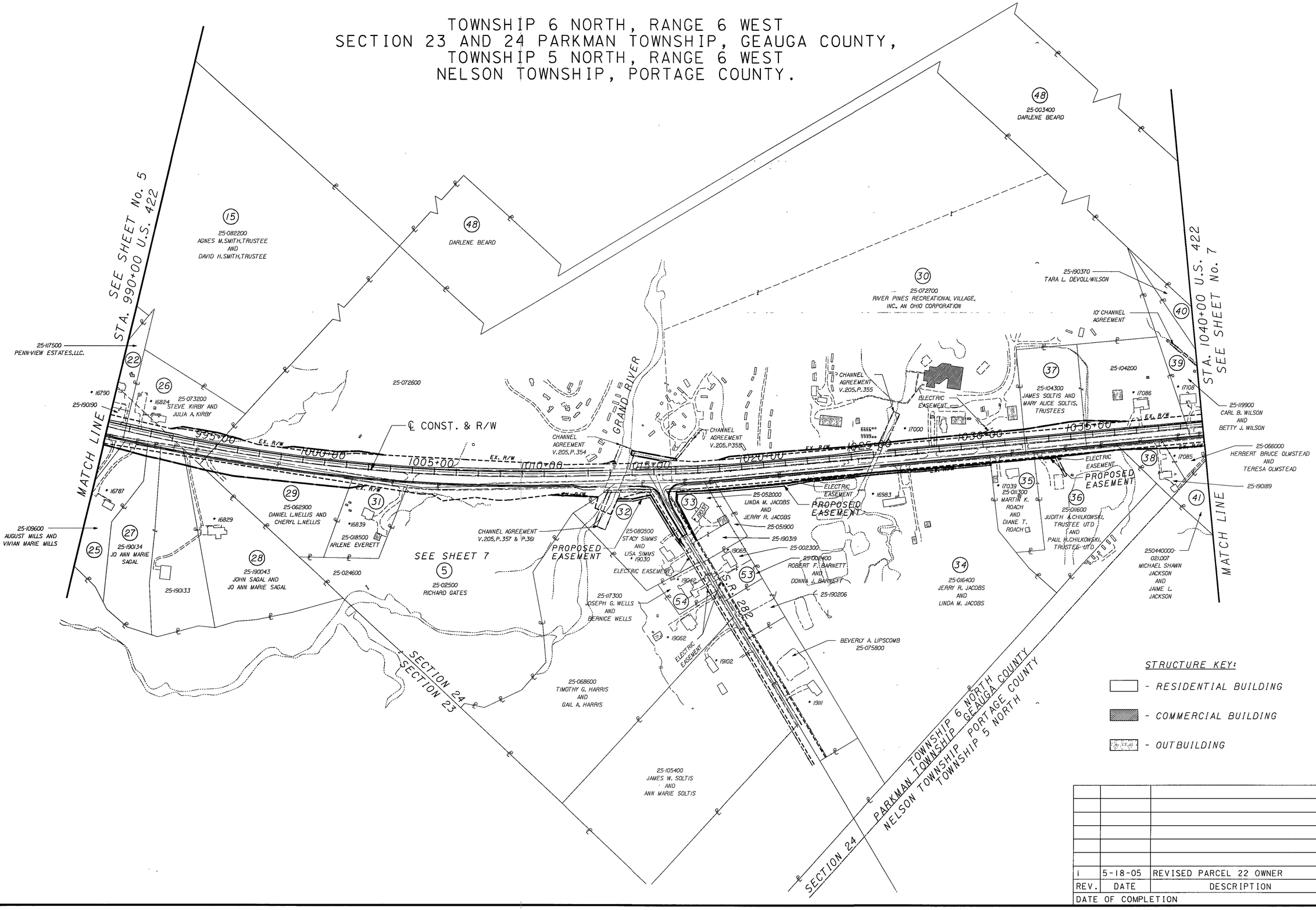

STRUCTURE KEY:

- RESIDENTIAL BUILDING
- COMMERCIAL BUILDING
- OUTBUILDING

REV.	DATE	DESCRIPTION
i	5-18-05	REVISED PARCEL 22 OWNER

DATE OF COMPLETION

0 100 200 400
HORIZONTAL SCALE IN FEET

PID NO. 19181

R/W DESIGNER ADT
R/W REVIEWER TRB

PROPERTY MAP
STA 990+00 TO STA 1040+00

GEA/POR-422-18.31/0.00

I:\projects\99221001\civildsc3.dgn

TOWNSHIP 6 NORTH, RANGE 6 WEST
SECTION 24, PARKMAN TOWNSHIP GEAUGA COUNTY,
TOWNSHIP 5 NORTH, RANGE 6 WEST,
NELSON TOWNSHIP, PORTAGE COUNTY.

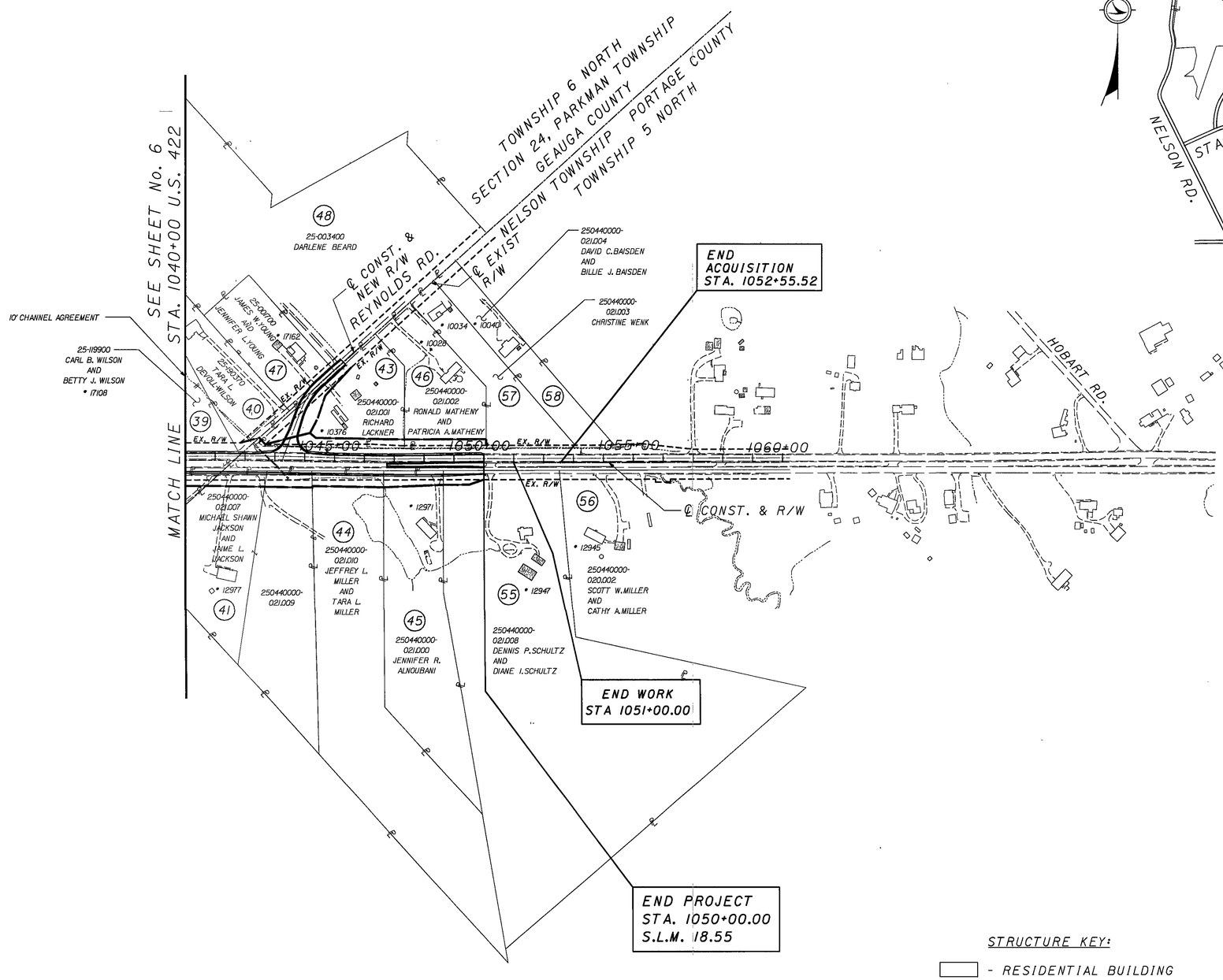

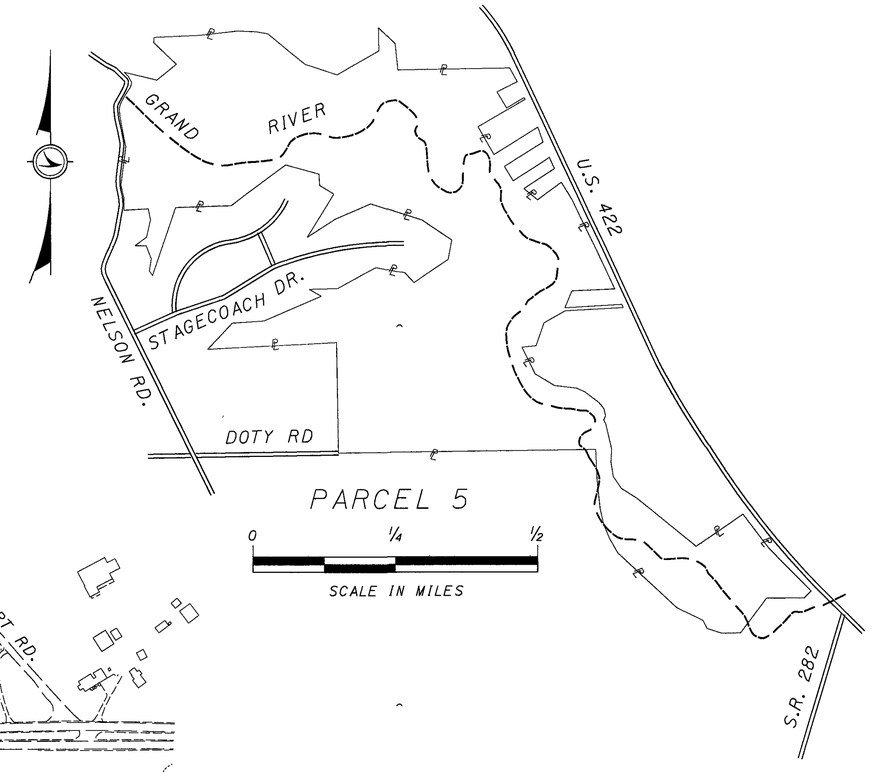

STRUCTURE KEY:

- RESIDENTIAL BUILDING
- COMMERCIAL BUILDING
- OUTBUILDING

REV.	DATE	DESCRIPTION
3	2/06/06	EX ℄ & EX R/W REYNOLDS, P/L 43,46 & 47
2	7/25/05	ADDED HOUSE & DRIVE TO PAR. 40
1	5-18-05	REVISED PARCEL 57 OWNER

DATE OF COMPLETION

HORIZONTAL SCALE IN FEET 0 100 200 400

PID NO. 19181

R/W DESIGNER ADT
R/W REVIEWER TRB

PROPERTY MAP
STA 1040+00 TO STA 1060+00

GEA/POR-422-18.31/0.00

7/75

264/332

i:\projects\9922100\civildsc3.dgn

TOTAL NUMBER OF :

OWNERSHIPS 46 OWNERSHIPS WITH STRUCTURES INVOLVED 0
PARCELS 101 OWNERSHIPS WITH "P" ITEMS 0
TOTAL TAKES 0

NET RESIDUE = RECORD AREA - TOTAL PRO - NET TAKE

ALL AREAS IN ACRES

GRANTEE:
ALL RIGHT-OF-WAY ACQUIRED IN THE NAME OF THE STATE OF OHIO DEPARTMENT OF TRANSPORTATION UNLESS OTHERWISE SHOWN.

PARCEL NO.	OWNER	SHEET NO.	OWNERS RECORD BOOK	OWNERS RECORD PAGE	AUDITOR'S PARCEL	RECORD AREA	TOTAL P.R.O.	GROSS TAKE	P.R.O. IN TAKE	NET TAKE	STRUCTURE	NET RESIDUE LEFT	NET RESIDUE RIGHT	TYPE FUND	REMARKS AND PERSONALTY	AS ACQUIRED BOOK	AS ACQUIRED PAGE
1WD	CURTIS A. HUFFMAN	16-23	1777	3049	25-068900	13.170	2.108	2.211	2.108	0.103	NO		10.959	STATE	OHIO EDISON V. 205, P. 304 (BLANKET EASEMENT)		
1T			(200500728894)												OVERLAPS 1WD BY 0.103 ACRES		
								0.008	0	0.008					DRIVE RECONSTRUCTION		
															OIL AND GAS LEASE V. 715 P. 372		
															AND V.722 P. 215		
															* STONE WALL AND WIRE FENCE		
2	JULIE R. DOLEZAL	16-19	865	488	25-190046	5.550									NO R/W REQUIRED		
3WD	FREDERICK A. FISHER,	18-21	1129	697	25-125100	4.130	0.328	0.441	0.328	0.113	NO	3.689					
	AKA FRED A. FISHER		865	486													
3T			715	877				0.072		0.072					DRIVE RECONSTRUCTION		
4WD	DAVID R. BYTNAR AND	20-23	1129	691	25-147824	12.360	0.699	0.818	0.699	0.119	NO	11.542			CHANNEL AGREEMENT V. 205, P.352		
	KATHY A. BYTNAR,		1129	693											* WIRE FENCE		
4T	FKA KATHY A. BOLYARD		720	1298				0.010	0	0.010					GRADING		
4T1								0.039	0	0.039					DRIVE RECONSTRUCTION		
5WD	RICHARD GATES	22-23	678	192	25-147825	5.800	0.141	0.229	0.119	0.110	NO				CHANNEL AGREEMENT V. 205, P.353		
5WD1		24-25			25-147825	-	-	0.040	0.022	0.018					OHIO EDISON V. 452, P. 805 (BLANKET EASEMENT)		
	25-147825 TOTAL					5.800	0.141	0.269	0.141	0.128			5.531		OVERLAPS 5WD, 5WD1 5WD2, 5WD3, 5WD4 AND 5WD5		
															BY A TOTAL OF 1.128 ACRES		
5WD2		26-27	629	436	25-026935	1.590	0.137	0.217	0.137	0.080			1.373				
5WD3		26-29	678	193	25-024200	43.790	0.868	0.175	0.138	0.037							
5WD4		28-33			25-024200	-	-	1.580	0.712	0.868							
5WD5		34-35			25-024200	-	-	0.033	0.018	0.015							
	25-024200 TOTAL					43.790	0.868	1.788	0.868	0.920			42.002				
5WD6		46-51	678	193	25-025000	14.600	1.063	1.087	1.063	0.024			13.513				
					25-024800	13.000	0	0	0	0			13.000				
					25-024600	1.000	0	0	0	0			1.000				
					25-024900	20.690	0	0	0	0			20.690				
					25-023700	8.380	0	0	0	0			8.380				
	GRAND TOTAL					108.850	2.209	3.361	2.209	1.152			105.489				
6WD	LAURA W. DIETRICH,	22-25	1117	1294	25-015401	2.000	0.484	0.514	0.484	0.030	NO	1.486			OHIO EDISON V. 255, P. 256 (UNDEFINED WIDTH)		
	AKA LAURA DIETRICH		613	73	25-015400	5.600	0	0	0	0		5.600			OVERLAPS 6WD BY 0.000 ACRES		
			245	295		7.600	0.484	0.514	0.484	0.030		7.086					
6T								0.056	0	0.056					DRIVE RECONSTRUCTION		
7WD	OHIO EDISON COMPANY	22-25	331	598	25-603600	0.900	0.129	0.225	0.129	0.096	NO		0.675				
7T								0.019	0	0.019				STATE	DRIVE RECONSTRUCTION		

* DENOTES RIGHT OF WAY ENCROACHMENT

NOTE:
ALL TEMPORARY PARCELS TO BE OF 24 MONTHS DURATION.

NOTE:
UNDER NO CIRCUMSTANCES ARE TEMPORARY EASEMENTS TO BE USED FOR STORAGE OF MATERIAL OR EQUIPMENT BY THE CONTRACTOR UNLESS NOTED OTHERWISE.

REV.	DATE	DESCRIPTION
TRB	4-10-06	OWNERS NAME PARCEL 1
TRB	9-26-05	PARCEL 5 RECORD AREA, PRO & RESIDUE
TRB	9-26-05	5WD1, 5WD3, 5WD4 & 5WD5 AUDITOR NO.

FIELD REVIEW BY DATE
OWNERSHIP VERIFIED BY DATE
DATE OF COMPLETION DATE

FEDERAL PROJECT NO.

PID NO. 19181

STATE JOB NO.

R/W DESIGNER ADT
R/W REVIEWER TRB

SUMMARY OF ADDITIONAL RIGHT OF WAY

GEA/POR-422-18.31/0.00

NET RESIDUE = RECORD AREA - TOTAL PRO - NET TAKE

GRANTEE:
ALL RIGHT-OF-WAY ACQUIRED IN THE NAME OF THE STATE OF OHIO DEPARTMENT OF TRANSPORTATION UNLESS OTHERWISE SHOWN.

ALL AREAS IN ACRES

PARCEL NO.	OWNER	SHEET NO.	OWNERS RECORD BOOK	OWNERS RECORD PAGE	AUDITOR'S PARCEL	RECORD AREA	TOTAL P.R.O.	GROSS TAKE	P.R.O. IN TAKE	NET TAKE	STRUCTURE	NET RESIDUE LEFT	NET RESIDUE RIGHT	TYPE FUND	REMARKS AND PERSONALTY	AS ACQUIRED BOOK	AS ACQUIRED PAGE
8WD	JUNE KOSTYK, TRUSTEE OF THE	24-25	485	348	25-043300	4.940	0.513	0.513	0.513	0.00	NO	4.427		STATE			
8T	JUNE KOSTYK 1998 TRUST DATED		1623	221											GRADING		
	DECEMBER 16, 1998														OHIO EDISON V. 430, P. 349 NO OVERLAP		
								0.008	0	0.008							
9WD	TIMOTHY A. BREWSTER	24-25	943	1109	25-026936	1.750	0.103	0.182	0.103	0.079	NO		1.568		OHIO EDISON V. 452, P. 805 (BLANKET EASEMENT)		
			790	358	25-026937	1.660	0.104	0.193	0.104	0.089			1.467		OVERLAPS 9WD BY 0.207 ACRES		
						3.410	0.207	0.375	0.207	0.168			3.035				
9T								0.064	0	0.064					DRIVE RECONSTRUCTION		
10WD	SHAWN E. BOWER AND	24-25	1306	1177	25-001200	0.700	0.165	0.173	0.165	0.008	NO	0.527					
	CORY B. WILDMAN																
10T								0.017	0	0.017					DRIVE RECONSTRUCTION		
11WD	ROBERT D. MAURER,	26-29	1278	551	25-190344	41.390	0.708	0.800	0.708	0.092	NO	40.590			OIL AND GAS LEASE V. 925, P. 776		
	AKA ROBERT D. MAURER, JR.		845	580	25-030800	33.130	0.585	0.619	0.585	0.034		32.511			* GATE AND POST		
	MARILU MAURER		698	914	25-190345	7.220	0.317	0.317	0.317	0.000		6.903					
						81.740	1.610	1.736	1.610	0.126		80.004					
11T																	
					25-030800			0.052	0	0.052					DRIVE RECONSTRUCTION		
					25-190345			0.006	0	0.006							
								0.058	0	0.058							
12WD	JAMES H. SALISBURY AND	26-27	477	988	25-077600	1.570	0.167	0.224	0.167	0.057	NO	1.346			OHIO EDISON V. 452, P. 805 (BLANKET EASEMENT)		
	ALICE M. SALISBURY														OVERLAPS 12WD BY 0.057 ACRES		
12T								0.092	0	0.092					DRIVE RECONSTRUCTION		
															* LANDSCAPE ROCKS		
13WD	BEVERLY A. GATES AS TRUSTEE OF	28-29	1107	1008	25-023000	1.050	0.138	0.172	0.138	0.034	NO	0.878			* PLANTER		
	THE BEVERLY A. GATES REVOCABLE				25-023100	0.180	0.026	0.033	0.026	0.007		0.147					
	TRUST DATED JUNE 6, 1997					1.230	0.164	0.205	0.164	0.041		1.025					
13T								0.021	0	0.021					DRIVE RECONSTRUCTION		
14WD	WILLIAM J. ALLEN AND	30-31	717	1151	25-007300	5.000	0.620	0.620	0.620	0.000		4.380			* BUS SHELTER		
	KATHRYN M. ALLEN																
														STATE			

NOTE:
ALL TEMPORARY PARCELS TO BE OF 24 MONTHS DURATION.

* DENOTES RIGHT OF WAY ENCROACHMENT

NOTE:
UNDER NO CIRCUMSTANCES ARE TEMPORARY EASEMENTS TO BE USED FOR STORAGE OF MATERIAL OR EQUIPMENT BY THE CONTRACTOR UNLESS NOTED OTHERWISE.

REV.	DATE	DESCRIPTION
1	6-15-05	11T AUDITOR'S PARCEL NUMBERS ADDED

FIELD REVIEW BY DATE
OWNERSHIP VERIFIED BY DATE
DATE OF COMPLETION DATE

FEDERAL PROJECT NO.
PID NO. 19181
STATE JOB NO.
R/W DESIGNER ADT
R/W REVIEWER TRB

SUMMARY OF ADDITIONAL RIGHT OF WAY

GEA/POR-422-18.31/0.00

NET RESIDUE = RECORD AREA - TOTAL PRO - NET TAKE

GRANTEE:
ALL RIGHT-OF-WAY ACQUIRED IN THE NAME OF THE STATE OF OHIO DEPARTMENT OF TRANSPORTATION UNLESS OTHERWISE SHOWN.

ALL AREAS IN ACRES

PARCEL NO.	OWNER	SHEET NO.	OWNERS RECORD BOOK	OWNERS RECORD PAGE	AUDITOR'S PARCEL	RECORD AREA	TOTAL P.R.O.	GROSS TAKE	P.R.O. IN TAKE	NET TAKE	STRUCTURE	NET RESIDUE LEFT	NET RESIDUE RIGHT	TYPE FUND	REMARKS AND PERSONALTY	AS ACQUIRED BOOK	AS ACQUIRED PAGE
15WD1	AGNES M. SMITH, TRUSTEE OF	34-39	1550	1160				1.590	1.520	0.070	NO			STATE	* SILOS (2), BARB WIRE FENCE AND WIRE FENCE		
15WD2	THE AGNES M. SMITH REVOCABLE	30-33	1550	1167				0.765	0.765	0.000					PIPELINE EASEMENT V. 585, P. 1041		
	TRUST AGREEMENT DATED JANUARY		1376	468	25-082200	211.790	2.285	2.355	2.285	0.070		209.435			OVERLAPS 15 WD1 BY 0.070 ACRES		
	13, 1997. AGNES M. SMITH NON-														OVERLAPS 15A-WD BY 0.057 ACRES		
15A-WD	INDEPENDENT TRUSTEE AND DAVID	34-37						0.197	0.140	0.057					OHIO EDISON V. 189, P. 448 (BLANKET EASEMENT)		
15A-SH	H. SMITH INDEPENDENT TRUSTEE OF	36-37						0.020	0.000	0.020					OVERLAPS 15A-WD BY 0.057 ACRES		
	THE STANLEY B. SMITH REVOCABLE		1376	468	25-082700	6.050	0.140	0.217	0.140	0.077			5.833		OVERLAPS 15A-SH BY 0.020 ACRES		
	TRUST AGREEMENT DATED JANUARY		1550	1173													
	13, 1997. GRAND TOTAL					217.840	2.425	2.572	2.425	0.147		209.435	5.833				
15A-T								0.213	0	0.213					GRADING, CONSTRUCT RETAINING WALL AND		
															DRIVE RECONSTRUCTION		
15B-WD	DARL M. SMITH	34-35	1550	1189	25-190446	5.130	0.124	0.226	0.124	0.102			4.904		PIPELINE EASEMENT V. 585, P. 1041		
															OVERLAPS 15B-WD BY 0.102 ACRES		
15B-T								0.010	0	0.010					GRADING		
16WD	DAVID H. SMITH	32-33	1271	431	25-082211	2.640	0.483	0.483	0.483	0.000		2.157			PIPELINE EASEMENT V. 585, P. 1041		
	OLIVIA SMITH																
17WD	DARL M. SMITH,	32-35	804	594	25-082210	2.000	0.110	0.198	0.110	0.088	NO		1.802		OHIO EDISON V. 189, P. 448 (BLANKET EASEMENT)		
	AKA DARL SMITH		609	325											PIPELINE EASEMENT V. 585, P. 1041		
															OVRLAPS 17WD BY 0.110 ACRES		
17T								0.022	0	0.022					DRIVE RECONSTRUCTION		
															* SPLIT RAIL FENCE		
18	NOT USED																
19WD	DENNIS W. HALL AND	36-37	936	291	25-190077	3.380	0.148	0.284	0.148	0.136	NO		3.096		PIPELINE EASEMENT V. 585, P. 1041		
	DIANE L. HALL														OVERLAPS 19 WD BY 0.136 ACRES		
															OHIO EDISON V. 189, P. 448 (BLANKET EASEMENT)		
															OVERLAPS 19WD BY 0.136 ACRES		
19AWD	DIANE L. HALL, TRUSTEE	36-39	1254	81	25-030930	1.920	0.138	0.202	0.138	0.064			1.718		PIPELINE EASEMENT V. 585, P. 1041		
															OVERLAPS 19 AWD BY 0.064 ACRES		
19AT								0.032	0	0.032					DRIVE RECONSTRUCTION		
															OHIO EDISON V. 189, P. 448 (BLANKET EASEMENT)		
															OVERLAPS 19AWD BY 0.064 ACRES		
20WD	DOUGLAS S. SMITH	38-39	995	767	25-190129	2.630	0.130	0.130	0.130	0.000		2.500					
															PIPELINE EASEMENT V. 585, P. 1041		
															* WOOD FENCE		
21WD	ANONA BELL BREWSTER	38-39	690	62	25-005800	1.680	0.267	0.267	0.267	0.000		1.413					
			603	130											* SPLIT RAIL FENCE		
			257	165													
														STATE			

NOTE:
ALL TEMPORARY PARCELS TO BE OF 24 MONTHS DURATION.

NOTE:
UNDER NO CIRCUMSTANCES ARE TEMPORARY EASEMENTS TO BE USED FOR STORAGE OF MATERIAL OR EQUIPMENT BY THE CONTRACTOR UNLESS NOTED OTHERWISE.

* DENOTES RIGHT OF WAY ENCROACHMENT

REV.	DATE	DESCRIPTION
2	11-18-05	SPLIT PARCEL 15A TO 15A AND 15B
1	5-18-05	REVISED PARCEL 21 OWNER, SPLIT PARCEL 15 TO 15 AND 15A

FIELD REVIEW BY DATE
OWNERSHIP VERIFIED BY DATE
DATE OF COMPLETION DATE

FEDERAL PROJECT NO.

PID NO. 19181

STATE JOB NO.

R/W DESIGNER ADT
R/W REVIEWER TRB

SUMMARY OF ADDITIONAL RIGHT OF WAY

GEA/POR-422-18.31/0.00

NET RESIDUE = RECORD AREA - TOTAL PRO - NET TAKE

GRANTEE:
ALL RIGHT-OF-WAY ACQUIRED IN THE NAME OF THE STATE OF OHIO DEPARTMENT OF TRANSPORTATION UNLESS OTHERWISE SHOWN.

ALL AREAS IN ACRES

PARCEL NO.	OWNER	SHEET NO.	OWNERS RECORD BOOK	OWNERS RECORD PAGE	AUDITOR'S PARCEL	RECORD AREA	TOTAL P.R.O.	GROSS TAKE	P.R.O. IN TAKE	NET TAKE	STRUCTURE	NET RESIDUE LEFT	NET RESIDUE RIGHT	TYPE FUND	REMARKS AND PERSONALTY	AS ACQUIRED BOOK	AS ACQUIRED PAGE
22WD	PENN-VIEW ESTATES, LLC.	38-41	200500	10784	25-117500	1.300	0				NO	1.300		STATE			
					25-190190	0.900	0.642	0.642	0.642	0.000		0.258					
						2.200	0.642	0.642	0.642	0.000		1.558					
22S								0.021	0	0.021							
22T					25-117500			0.006	0	0.006					DRIVE RECONSTRUCTION AND CULVERT REMOVAL		
					25-190190			0.026	0	0.026							
								0.032	0	0.032							
23WD	KENNETH R. HUMPHREY	38-39	657	194	25-037630	1.500	0.074	0.074	0.074	0.000	NO		1.426		OHIO EDISON V. 189, P. 448 AND		
															V. 426, P. 757 (UNDEFINED WIDTH) NO OVERLAP		
23T								0.037	0	0.037					DRIVE RECONSTRUCTION		
24WD	GARY J. PARNABY JR, AND LORETTA PARNABY	38-41	1412	954	25-108500	2.500	0.138	0.163	0.138	0.025	NO		2.337		* SPLIT RAIL FENCE		
24T								0.029	0	0.029					DRIVE RECONSTRUCTION		
24T1								0.082	0	0.082					DRIVE RECONSTRUCTION		
25WD	AUGUST MILLS AND VIVIAN MARIE MILLS	40-41	1000	964	25-109600	3.000	0.075	0.133	0.075	0.058	NO		2.867				
25T								0.096	0	0.096					DRIVE RECONSTRUCTION		
26WD	STEVE KIRBY AND JULIA A. KIRBY	40-43	1082	420	25-073200	3.390	0.863	0.912	0.863	0.049	NO	2.478					
27WD	JO ANN MARIE SAGAL	40-43	1289	1140	25-190134	3.000	0.042	0.083	0.042	0.041	NO		2.917		OHIO EDISON V. 886, P. 257 (10' EASEMENT)		
					25-190133	3.910	0.074	0.168	0.074	0.094			3.742		LOCATION UNKNOWN		
						6.910	0.116	0.251	0.116	0.135			6.659				
27T								0.039	0	0.039					GRADING		
28WD	JOHN SAGAL AND JO ANN MARIE SAGAL	40-43	858	1143	25-190043	5.820	0.072	0.148	0.072	0.076	NO		5.672		OHIO EDISON V. 873, P. 741 (10' EASEMENT)		
															LOCATION UNKNOWN		
28T								0.133	0	0.133					GRADING AND DRIVE RECONSTRUCTION		
														STATE			

NOTE:
ALL TEMPORARY PARCELS TO BE OF 24 MONTHS DURATION.

* DENOTES RIGHT OF WAY ENCROACHMENT

NOTE:
UNDER NO CIRCUMSTANCES ARE TEMPORARY EASEMENTS TO BE USED FOR STORAGE OF MATERIAL OR EQUIPMENT BY THE CONTRACTOR UNLESS NOTED OTHERWISE.

REV.	DATE	DESCRIPTION
2	6-15-05	22T AUDITOR'S PARCEL NUMBERS ADDED
1	5-18-05	REVISED PARCEL 22 OWNER

FIELD REVIEW BY DATE
OWNERSHIP VERIFIED BY DATE
DATE OF COMPLETION DATE

FEDERAL PROJECT NO.
PID NO. 19181
STATE JOB NO.
R/W DESIGNER ADT
R/W REVIEWER TRB

SUMMARY OF ADDITIONAL RIGHT OF WAY

GEA/POR-422-18.31/0.00

NET RESIDUE = RECORD AREA - TOTAL PRO - NET TAKE

GRANTEE:
ALL RIGHT-OF-WAY ACQUIRED IN THE NAME OF THE STATE OF OHIO DEPARTMENT OF TRANSPORTATION UNLESS OTHERWISE SHOWN.

ALL AREAS IN ACRES

PARCEL NO.	OWNER	SHEET NO.	OWNERS RECORD BOOK	OWNERS RECORD PAGE	AUDITOR'S PARCEL	RECORD AREA	TOTAL P.R.O.	GROSS TAKE	P.R.O. IN TAKE	NET TAKE	STRUCTURE	NET RESIDUE LEFT	NET RESIDUE RIGHT	TYPE FUND	REMARKS AND PERSONALTY	AS ACQUIRED BOOK	AS ACQUIRED PAGE
29WD	DANIEL L. NELLIS AND	42-45	200400	689828	25-062900	4.100	0.460	1.106	0.460	0.646	NO		2.994	STATE			
	CHERYL L. NELLIS																
29T								0.179	0	0.179					DRIVE RECONSTRUCTION		
30WD	RIVER PINES RECREATIONAL	42-61	1145	548	25-072700	60.170	3.349	3.659	3.349	0.310	NO		56.511		OHIO EDISON V. 196, P. 115 (WIDTH UNKNOWN)		
	VILLAGE, INC. AN OHIO				25-072600	83.220	4.771	4.879	4.771	0.108			78.341		OHIO EDISON V. 693, P. 928 (BLANKET EASEMENT)		
	CORPORATION					143.390	8.120	8.538	8.120	0.418			134.852		PIPELINE EASEMENT V. 700, P. 808		
															OIL AND GAS LEASE V. 946, P. 81 AND V.700,		
30S								0.008	0	0.008					P. 809 (OVERLAPS 30WD BY 0.418 ACRES)		
30CH								0.088	0	0.088					CHANNEL AGREEMENTS (3) V. 205, P. 354 & P. 355		
30T								0.021	0	0.021					DRIVE RECONSTRUCTION		
30T1								0.010	0	0.010					DRIVE RECONSTRUCTION		
30T2								0.041	0	0.041					DRIVE RECONSTRUCTION (2)		
															* FENCE AND SIGN		
31WD	ARLENE EVERETT	44-47	1291	1196	25-018500	2.000	0.172	0.192	0.172	0.020	NO		1.808				
			734	754													
			495	884													
32WD	STACY SIMMS AND LISA SIMMS	50-53	1044	388	25-080500	3.630	0.669	0.777	0.669	0.108	S		2.853		OHIO EDISON V. 189, P. 447		
		72-73													OVERLAP 32WD BY 0.084 ACRES		
															CHANNEL AGREEMENT V. 205, P. 357 & P. 361		
32U								0.091	0	0.091					TO BE ACQUIRED IN THE NAME OF OHIO EDISON		
															* SIGN		
33WD	JERRY R. JACOBS AND	52-55	1001	209	25-052000	1.240	0.374	0.473	0.374	0.099	NO		0.767		OHIO EDISON V. 189, P. 447 AND		
	LINDA M. JACOBS,	72-73	607	443	25-190319	0.460	0.069	0.069	0.069	0			0.391		V. 196, P. 115 OVERLAPS 33WD BY 0.081 ACRES		
	FKA LINDA M. McGRANAHAN		513	1134	25-051900	0.280	0.031	0.045	0.031	0.014			0.235				
						1.980	0.474	0.587	0.474	0.113			1.393				
33U								0.068	0	0.068					TO BE ACQUIRED IN THE NAME OF OHIO EDISON		
34WD	JERRY R. JACOBS AND	54-61	962	1114	25-016400	27.920	0.861	1.065	0.861	0.204	NO		26.855		OHIO EDISON V. 189, P. 447		
	LINDA M. JACOBS		1059	1155	25-190206	0.920	0.138	0	0	0			0.782		OVERLAPS 34WD BY 0.174 ACRES		
						28.840	0.999	1.065	0.861	0.204			27.637		OIL AND GAS LEASE V. 942, P. 154 (BLANKET		
															LEASE)OVERLAPS 34WD BY 0.204 ACRES		
															CHANNEL EASEMENT V. 225, P. 417		
34T								0.044	0	0.044					DRIVE RECONSTRUCTION		
34U								0.172	0	0.172					TO BE ACQUIRED IN THE NAME OF OHIO EDISON		
															34T OVERLAPS 34U BY 0.006 ACRES		
35WD	MARTIN K. ROACH AND	60-61	1259	1187	25-011300	2.000	0.138	0.165	0.138	0.027	NO		1.835				
	DIANE T. ROACH																
35T								0.026	0	0.026				STATE	DRIVE RECONSTRUCTION		

NOTE:
ALL TEMPORARY PARCELS TO BE OF 24 MONTHS DURATION.

* DENOTES RIGHT OF WAY ENCROACHMENT

NOTE:
UNDER NO CIRCUMSTANCES ARE TEMPORARY EASEMENTS TO BE USED FOR STORAGE OF MATERIAL OR EQUIPMENT BY THE CONTRACTOR UNLESS NOTED OTHERWISE.

REV.	DATE	DESCRIPTION
1	5-18-05	REVISED PARCEL 29 OWNER'S RECORD

FIELD REVIEW BY DATE
OWNERSHIP VERIFIED BY DATE
DATE OF COMPLETION DATE

FEDERAL PROJECT NO.

PID NO. 19181

STATE JOB NO.

R/W DESIGNER ADT
R/W REVIEWER TRB

SUMMARY OF ADDITIONAL RIGHT OF WAY

GEA/POR-422-18.31/0.00

NET RESIDUE = RECORD AREA - TOTAL PRO - NET TAKE

GRANTEE:
ALL RIGHT-OF-WAY ACQUIRED IN THE NAME OF THE STATE OF OHIO DEPARTMENT OF TRANSPORTATION UNLESS OTHERWISE SHOWN.

ALL AREAS IN ACRES

PARCEL NO.	OWNER	SHEET NO.	OWNERS RECORD BOOK	OWNERS RECORD PAGE	AUDITOR'S PARCEL	RECORD AREA	TOTAL P.R.O.	GROSS TAKE	P.R.O. IN TAKE	NET TAKE	STRUCTURE	NET RESIDUE LEFT	NET RESIDUE RIGHT	TYPE FUND	REMARKS AND PERSONALTY	AS ACQUIRED BOOK	AS ACQUIRED PAGE
36WD	JUDITH A. CHILKOWSKI,	60-63	1030	532	25-011600	5.190	0.265	0.299	0.265	0.034	NO		4.891	STATE	OHIO EDISON V. 711, P. 726		
	TRUSTEE UTD SEPTEMBER 28, 1995														OVERLAPS 36WD BY 0.008 ACRES		
	PAUL H. CHILKOWSKI,		1030	535											PIPELINE EASEMENT V. 698, P. 669		
	TRUSTEE UTD SEPTEMBER 28, 1995														OIL AND GAS LEASE V. 698, P. 667		
															OVERLAPS 36WD BY 0.034 ACRES		
36U								0.006	0	0.006					TO BE ACQUIRED IN THE NAME OF OHIO EDISON		
36T								0.009	0	0.009					DRIVE RECONSTRUCTION		
37WD	JAMES SOLTIS AND MARY ALICE	60-65	1036	627	25-104300	2.970	0.577	0.699	0.577	0.122	NO	2.271					
	SOLTIS, TRUSTEES, OR THEIR				25-104200	4.500	1.007	1.052	1.007	0.045		3.448					
	SUCCESSORS IN TRUST, UNDER THE					7.470	1.584	1.751	1.584	0.167		5.719					
	JAMES AND MARY ALICE SOLTIS																
	LIVING TRUST DATED NOVEMBER 30,																
	1995 AND ANY AMENDMENTS THERETO																
37T								0.025	0	0.025					DRIVE RECONSTRUCTION (2)		
38WD	HERBERT OLMSTEAD,	62-65	710	357	25-066000	0.930	0.203	0.305	0.203	0.102	NO		0.625				
	AKA HERBERT BRUCE OLMSTEAD,		508	134	25-190189	0.570	0.140	0.171	0.140	0.031			0.399				
	AKA HERBERT B. OLMSTEAD		246	215		1.500	0.343	0.476	0.343	0.133			1.024				
	THERESA OLMSTEAD																
38T								0.006	0	0.006					DRIVE RECONSTRUCTION		
38T1								0.018	0	0.018					DRIVE RECONSTRUCTION		
39WD	CARL B. WILSON AND	64-65	635	831	25-119900	2.730	0.509	0.509	0.509	0.000	NO	2.221			10' CHANNEL AGREEMENT		
	BETTY J. WILSON		232	310													
39T								0.019	0	0.019					DRIVE RECONSTRUCTION		
40WD	TARA L. DEVOLL-WILSON	64-67	1320	62			0.040	0.040	0.040	0.000					10' CHANNEL AGREEMENT		
40WDV	**						0.115	0.115	0.115	0.000							
					25-190370	2.350	0.155	0.155	0.155	0.000		2.195					
41WD	MICHAEL SHAWN JACKSON,	64-67	0095	32	250440000-021.007	3.457	0.113	0.202	0.113	0.089	NO		3.255				
	AKA MICHAEL S. JACKSON																
	JAIME L. JACKSON		202	296	250440000-021.009	4.000	0.105	0.190	0.105	0.085			3.810				
						7.457	0.218	0.392	0.218	0.174			7.065				
42	NOT USED																
														STATE			

NOTE:
ALL TEMPORARY PARCELS TO BE OF 24 MONTHS DURATION.

** ACQUIRED IN THE NAME OF GEAUGA COUNTY COMMISSIONERS

* DENOTES RIGHT OF WAY ENCROACHMENT

NOTE:
UNDER NO CIRCUMSTANCES ARE TEMPORARY EASEMENTS TO BE USED FOR STORAGE OF MATERIAL OR EQUIPMENT BY THE CONTRACTOR UNLESS NOTED OTHERWISE.

REV.	DATE	DESCRIPTION

FIELD REVIEW BY DATE
OWNERSHIP VERIFIED BY DATE
DATE OF COMPLETION DATE

FEDERAL PROJECT NO.

PID NO. 19181

STATE JOB NO.

R/W DESIGNER ADT
R/W REVIEWER TRB

SUMMARY OF ADDITIONAL RIGHT OF WAY

GEA/POR-422-18.31/0.00

NET RESIDUE = RECORD AREA - TOTAL PRO - NET TAKE

GRANTEE:
ALL RIGHT-OF-WAY ACQUIRED IN THE NAME OF THE STATE OF OHIO DEPARTMENT OF TRANSPORTATION UNLESS OTHERWISE SHOWN.

ALL AREAS IN ACRES

PARCEL NO.	OWNER	SHEET NO.	OWNERS BOOK	RECORD PAGE	AUDITOR'S PARCEL	RECORD AREA	TOTAL P.R.O.	GROSS TAKE	P.R.O. IN TAKE	NET TAKE	STRUC-TURE	NET RESIDUE LEFT	NET RESIDUE RIGHT	TYPE FUND	REMARKS AND PERSONALTY	AS ACQUIRED BOOK	AS ACQUIRED PAGE
43WD	RICHARD LACKNER	66-69	0978	65	25-0440000-			0.217	0.000	0.217	NO			STATE			
43WDV	***	74-75			021.001			0.619	0.361	0.258							
						2.500	0.361	0.836	0.361	0.475		1.664					
43T								0.038	0	0.038					GRADING AND DRIVE RECONSTRUCTION		
44WD	JEFFREY L. MILLER AND	66-69	0425	94	25-0440000-	9.194	0.166	0.289	0.166	0.123	NO		8.905				
	TARA L. MILLER				021.010												
45WD	JENNIFER R. ALNOUBANI	68-69	200220536		25-0440000-	5.000	0.138	0.233	0.138	0.095	NO		4.767		* WOOD FENCE		
					021.000												
45T								0.006	0	0.006					DRIVE RECONSTRUCTION		
46WD	RONALD MATHENY AND	68-69	200433072		25-0440000-	2.420	0.107	0.133	0.000	0.133	NO	2.180					
	PATRICIA A. MATHENY				021.002												
47WDV	** JAMES W. YOUNG AND	66-67	1700	509	25-001700	2.000	0.140	0.140	0.140	0.000	NO	1.860			OHIO EDISON V. 205, P. 567 (BLANKET EASEMENT)		
	JENNIFER L. YOUNG	74-75													NO OVERLAP		
47T								0.023	0	0.023					DRIVE RECONSTRUCTION		
48	DARLENE BEARD	74-75	1289	155	25-003400	65.480									NO R/W REQUIRED		
			1216	595											OHIO EDISON V. 205, P. 562 (BLANKET EASEMENT)		
															PIPELINE EASEMENT V. 696, P. 492		
															AND V. 727, P.595		
															OIL AND GAS LEASE V. 696, P. 493		
															AND V. 727, P. 593		
49	NOT USED																
														STATE			

NOTE:
ALL TEMPORARY PARCELS TO BE OF 24 MONTHS DURATION.

** ACQUIRED IN THE NAME OF GEAUGA COUNTY COMMISSIONERS

*** ACQUIRED IN THE NAME OF PORTAGE COUNTY COMMISSIONER

* DENOTES RIGHT OF WAY ENCROACHMENT

NOTE:
UNDER NO CIRCUMSTANCES ARE TEMPORARY EASEMENTS TO BE USED FOR STORAGE OF MATERIAL OR EQUIPMENT BY THE CONTRACTOR UNLESS NOTED OTHERWISE.

REV.	DATE	DESCRIPTION
TRB	4/14/06	DELETED 48T
TRB	2/06/06	REV 43WD, 43WDV, 46WD, 47T & 48T

FIELD REVIEW BY DATE
OWNERSHIP VERIFIED BY DATE
DATE OF COMPLETION DATE

FEDERAL PROJECT NO.

PID NO. 19181

STATE JOB NO.

R/W DESIGNER ADT
R/W REVIEWER TRB

SUMMARY OF ADDITIONAL RIGHT OF WAY

GEA/POR-422-18.31/0.00

NET RESIDUE = RECORD AREA - TOTAL PRO - NET TAKE

GRANTEE:
ALL RIGHT-OF-WAY ACQUIRED IN THE NAME OF THE STATE OF OHIO DEPARTMENT OF TRANSPORTATION UNLESS OTHERWISE SHOWN.

ALL AREAS IN ACRES

PARCEL NO.	OWNER	SHEET NO.	OWNERS RECORD BOOK	OWNERS RECORD PAGE	AUDITOR'S PARCEL	RECORD AREA	TOTAL P.R.O.	GROSS TAKE	P.R.O. IN TAKE	NET TAKE	STRUC-TURE	NET RESIDUE LEFT	NET RESIDUE RIGHT	TYPE FUND	REMARKS AND PERSONALTY	AS ACQUIRED BOOK	AS ACQUIRED PAGE
50	NOT USED													STATE			
51	NOT USED																
52	NOT USED																
53	ROBERT F. BARNETT AND	72-73	1045	1125	25-002300	0.460									NO R/W REQUIRED		
	DONNA J. BARNETT AKA		1085	352	25-002400	0.460									OHIO EDISON V. 196, P. 115 (BLANKET EASEMENT)		
	DONNA JEAN BARNETT					0.920											
54	JOSEPH G. WELLS AND	72-73	0736	107	25-117300	0.780									NO R/W REQUIRED		
	BERNICE WELLS														OHIO EDISON V. 189, P. 447		
55WD	DENNIS P. SCHULTZ AND	68-71	0150	247	25-0440000-	21.000	0.268	0.311	0.268	0.043	NO		20.689				
	DIANE I. SCHULTZ				021.008												
56	SCOTT W. MILLER AND	70-71	0156	640	25-0440000-	3.472									NO R/W REQUIRED		
	CATHY A. MILLER				020.002												
57T	CHRISTINE WENK	68-71	200503853		25-0440000-	2.010	0.084	0.011	0	0.011	NO				GRADING		
					021.003												
58	DAVID C. BAISDEN AND	70-71	1040	323	25-0440000-	2.070									NO R/W REQUIRED		
	BILLIE J. BAISDEN				021.004												
														STATE			

NOTE:
ALL TEMPORARY PARCELS TO BE OF 24 MONTHS DURATION.

* DENOTES RIGHT OF WAY ENCROACHMENT

NOTE:
UNDER NO CIRCUMSTANCES ARE TEMPORARY EASEMENTS TO BE USED FOR STORAGE OF MATERIAL OR EQUIPMENT BY THE CONTRACTOR UNLESS NOTED OTHERWISE.

REV.	DATE	DESCRIPTION
2	2-6-06	REVISED 57T TAKE
1	5-18-05	REVISED PARCEL 57 OWNER

FIELD REVIEW BY DATE
OWNERSHIP VERIFIED BY DATE
DATE OF COMPLETION DATE

FEDERAL PROJECT NO.
PID NO. 19181
STATE JOB NO.
R/W DESIGNER ADT
R/W REVIEWER TRB

SUMMARY OF ADDITIONAL RIGHT OF WAY

GEA/POR-422-18.31/0.00

T-6-N, R-6-W
SECTION 18, PARKMAN TOWNSHIP
GEAUGA COUNTY

STRUCTURE KEY:

- RESIDENTIAL BUILDING
- COMMERCIAL BUILDING
- OUTBUILDING

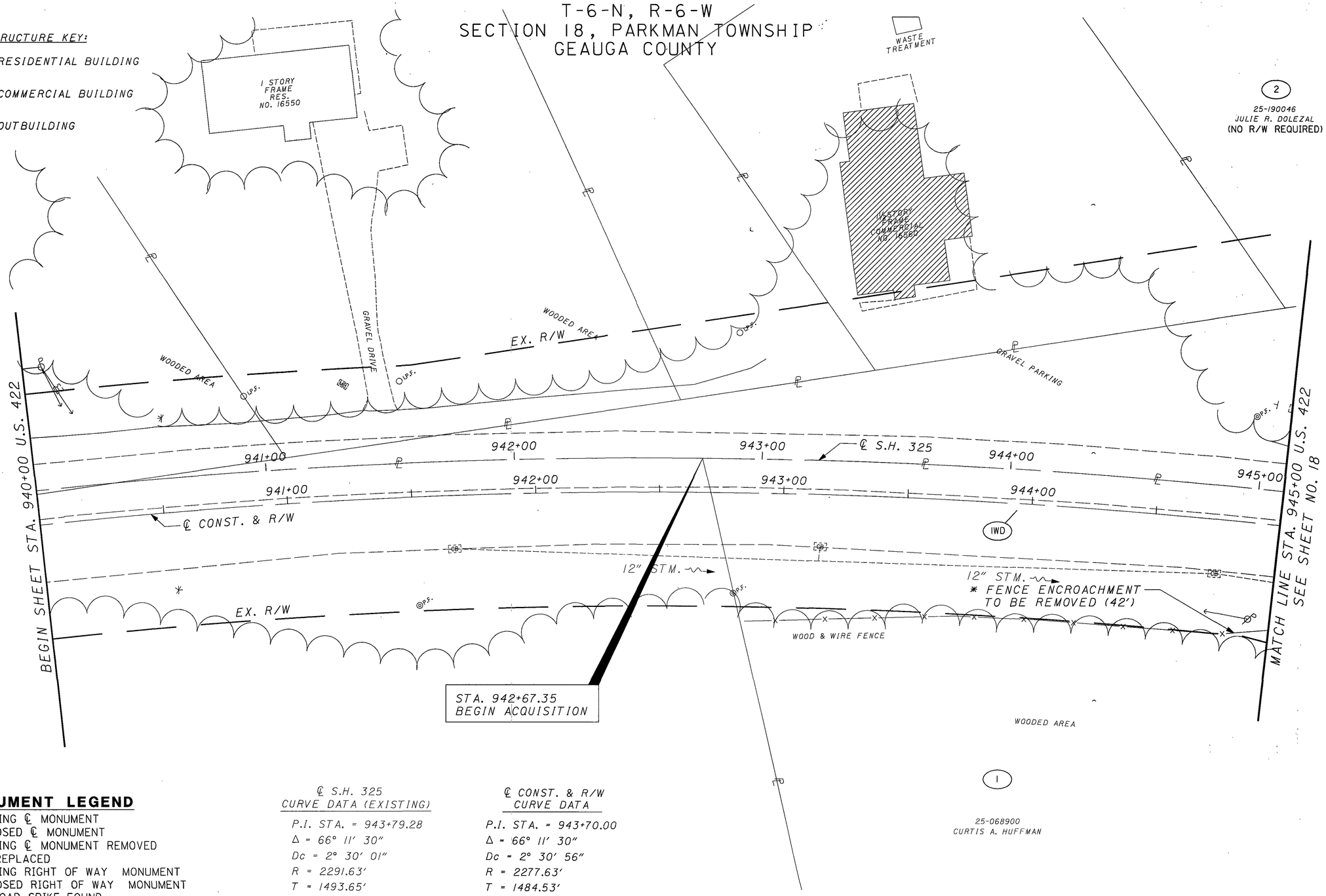

MONUMENT LEGEND

- EXISTING ℄ MONUMENT
- PROPOSED ℄ MONUMENT
- EXISTING ℄ MONUMENT REMOVED AND REPLACED
- EXISTING RIGHT OF WAY MONUMENT
- PROPOSED RIGHT OF WAY MONUMENT
- RAILROAD SPIKE FOUND
- RAILROAD SPIKE SET
- I.R.F. IRON PIN FOUND
- I.R.F. IRON PIN FOUND W/ ID CAP
- I.R.S. IRON PIN SET W/ ID CAP
- R.F. IRON PIPE FOUND
- R.S. IRON PIPE SET
- R.K.F. P.K. NAIL FOUND
- R.K.S. P.K. NAIL SET

℄ S.H. 325 CURVE DATA (EXISTING)	℄ CONST. & R/W CURVE DATA
P.I. STA. = 943+79.28	P.I. STA. = 943+70.00
Δ = 66° 11′ 30″	Δ = 66° 11′ 30″
Dc = 2° 30′ 01″	Dc = 2° 30′ 56″
R = 2291.63′	R = 2277.63′
T = 1493.65′	T = 1484.53′
L = 2647.43′	L = 2631.26′
E = 443.80′	E = 441.09′

NOTE:
THE EXISTING RIGHT OF WAY WIDTH AND LOCATION WERE DETERMINED USING DOCUMENTATION ON FILE FROM THE OHIO DEPARTMENT OF TRANSPORTATION, DISTRICT 12. OFFICE, GARFIELD HEIGHTS, OHIO. WARREN BURTON ROAD, S.H. 325, SECTION F (PART)

REV. BY	DATE	DESCRIPTION
TRB	4-10-06	OWNERS NAME PARCEL 1

DATE COMPLETED

HORIZONTAL SCALE IN FEET 0 10 20 40

PID NO. 19181

R/W DESIGNER ADT
R/W REVIEWER TRB

RIGHT OF WAY PLAN
STA. 940+00 TO STA. 945+00

GEA/POR-422-18.31/0.00

16/75

273/332

T-6-N, R-6-W
SECTION 18, PARKMAN TOWNSHIP
GEAUGA COUNTY

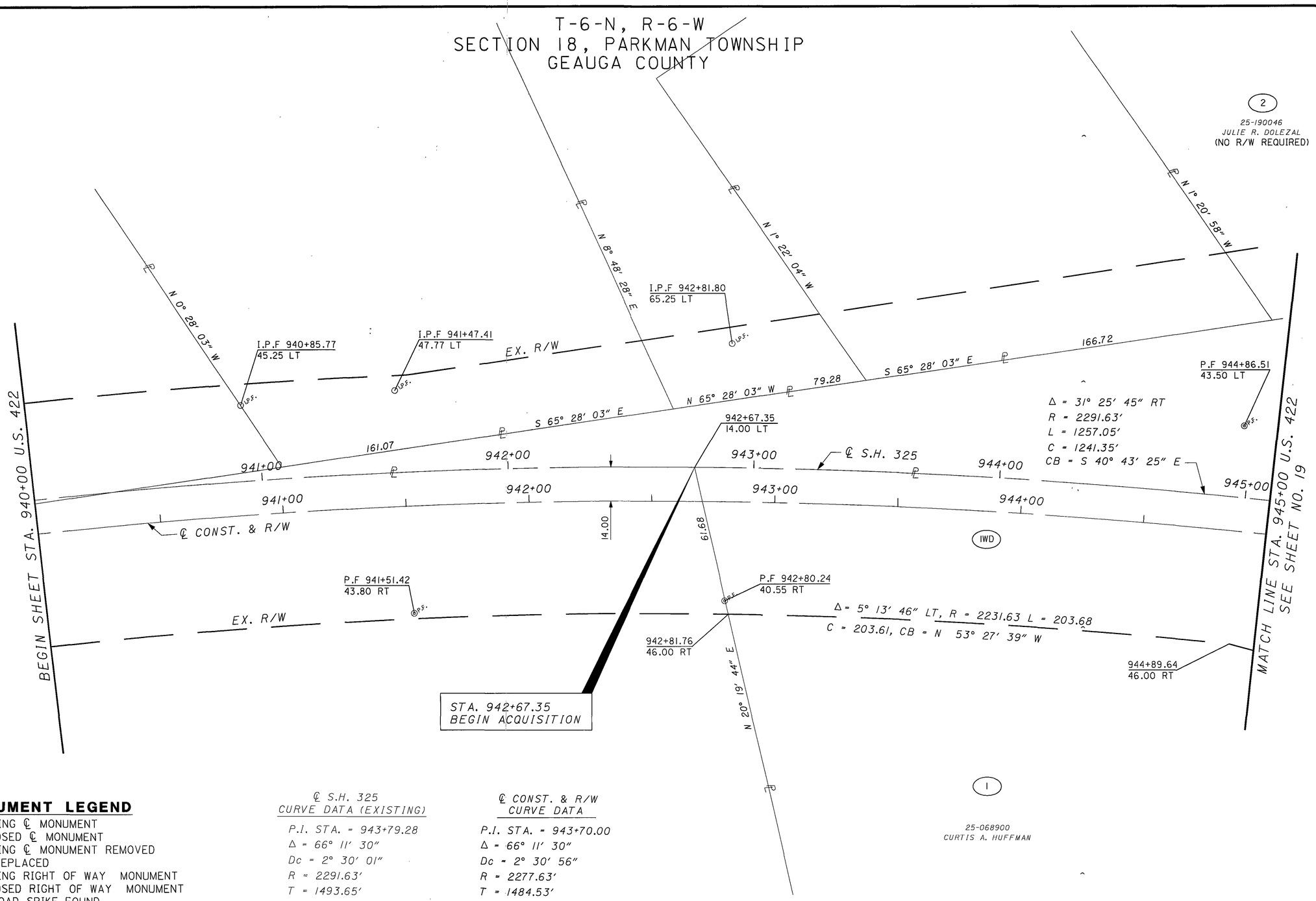

MONUMENT LEGEND

- EXISTING ℄ MONUMENT
- PROPOSED ℄ MONUMENT
- EXISTING ℄ MONUMENT REMOVED AND REPLACED
- EXISTING RIGHT OF WAY MONUMENT
- PROPOSED RIGHT OF WAY MONUMENT
- RAILROAD SPIKE FOUND
- RAILROAD SPIKE SET
- I.P.F. IRON PIN FOUND
- I.P.F. IRON PIN FOUND W/ ID CAP
- I.P.S. IRON PIN SET W/ ID CAP
- P.F. IRON PIPE FOUND
- P.S. IRON PIPE SET
- P.K.F. P.K. NAIL FOUND
- P.K.S. P.K. NAIL SET

℄ S.H. 325
CURVE DATA (EXISTING)

P.I. STA. = 943+79.28
Δ = 66° 11' 30"
Dc = 2° 30' 01"
R = 2291.63'
T = 1493.65'
L = 2647.43'
E = 443.80'

℄ CONST. & R/W
CURVE DATA

P.I. STA. = 943+70.00
Δ = 66° 11' 30"
Dc = 2° 30' 56"
R = 2277.63'
T = 1484.53'
L = 2631.26'
E = 441.09'

NOTE:
THE EXISTING RIGHT OF WAY WIDTH AND LOCATION WERE DETERMINED USING DOCUMENTATION ON FILE FROM THE OHIO DEPARTMENT OF TRANSPORTATION, DISTRICT 12. OFFICE, GARFIELD HEIGHTS, OHIO. WARREN BURTON ROAD, S.H. 325, SECTION F (PART)

REV. BY	DATE	DESCRIPTION
TRB	4-10-06	OWNERS NAME PARCEL 1

DATE COMPLETED

HORIZONTAL SCALE IN FEET 0 10 20 40

PID NO. 19181

R/W DESIGNER ADT
R/W REVIEWER TRB

RIGHT OF WAY PLAN
STA. 940+00 TO STA. 945+00

GEA/POR-422-18.31/0.00

T-6-N, R-6-W
SECTION 18, PARKMAN TOWNSHIP
GEAUGA COUNTY

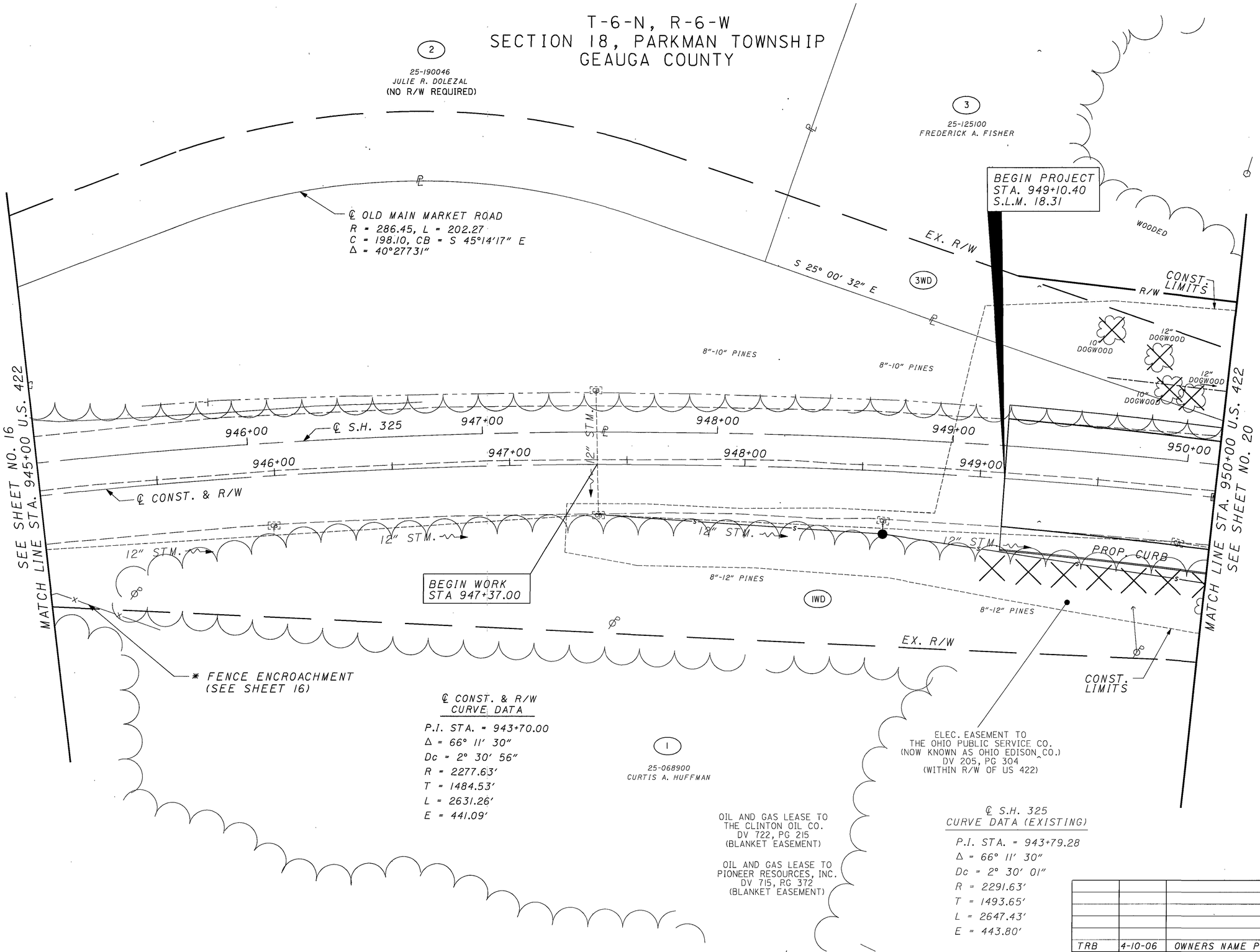

REV. BY	DATE	DESCRIPTION
TRB	4-10-06	OWNERS NAME PARCEL 1

DATE COMPLETED

HORIZONTAL SCALE IN FEET 0 10 20 40

PID NO. 19181

R/W DESIGNER ADT

R/W REVIEWER TRB

RIGHT OF WAY PLAN
STA. 945+00 TO STA. 950+00

GEA/POR-422-18.31/0.00

18/75

275/332

T-6-N, R-6-W
SECTION 18, PARKMAN TOWNSHIP
GEAUGA COUNTY

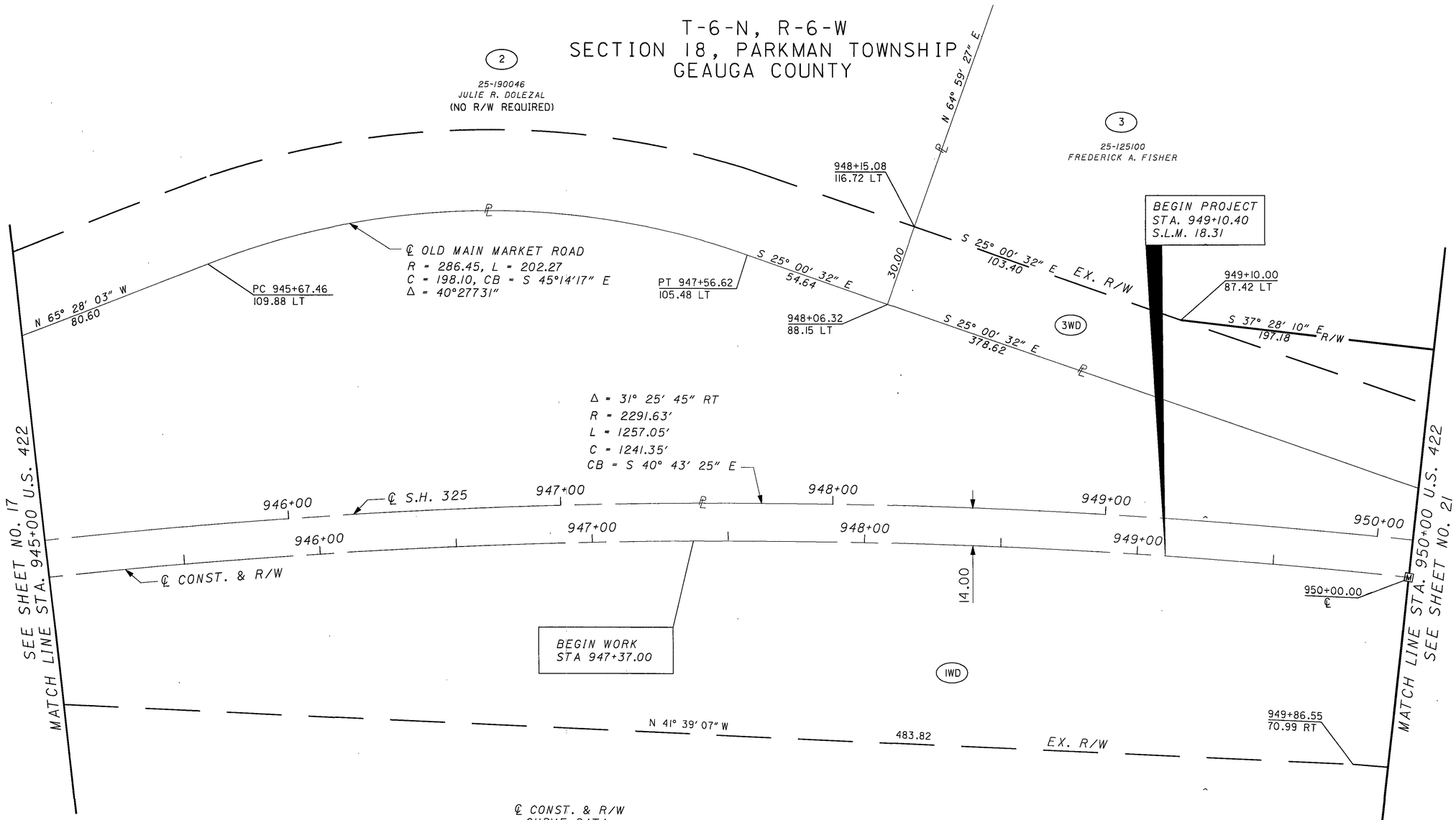

MONUMENT LEGEND

- EXISTING ℄ MONUMENT
- PROPOSED ℄ MONUMENT
- EXISTING ℄ MONUMENT REMOVED AND REPLACED
- EXISTING RIGHT OF WAY MONUMENT
- PROPOSED RIGHT OF WAY MONUMENT
- RAILROAD SPIKE FOUND
- RAILROAD SPIKE SET
- I.R.F. IRON PIN FOUND
- I.R.F. IRON PIN FOUND W/ ID CAP
- I.R.S. IRON PIN SET W/ ID CAP
- R.F. IRON PIPE FOUND
- R.S. IRON PIPE SET
- P.K.F. P.K. NAIL FOUND
- P.K.S. P.K. NAIL SET

℄ CONST. & R/W CURVE DATA

P.I. STA. = 943+70.00
Δ = 66° 11′ 30″
Dc = 2° 30′ 56″
R = 2277.63′
T = 1484.53′
L = 2631.26′
E = 441.09′

1
25-068900
CURTIS A. HUFFMAN

℄ S.H. 325 CURVE DATA (EXISTING)

P.I. STA. = 943+79.28
Δ = 66° 11′ 30″
Dc = 2° 30′ 01″
R = 2291.63′
T = 1493.65′
L = 2647.43′
E = 443.80′

REV. BY	DATE	DESCRIPTION
TRB	4-10-06	OWNERS NAME PARCEL 1

DATE COMPLETED

HORIZONTAL SCALE IN FEET 0 10 20 40

PID NO. 19181

R/W DESIGNER ADT
R/W REVIEWER TRB

RIGHT OF WAY PLAN
STA. 945+00 TO STA. 950+00

GEA/POR-422-18.31/0.00

T-6-N, R-6-W
SECTION 18, PARKMAN TOWNSHIP
GEAUGA COUNTY

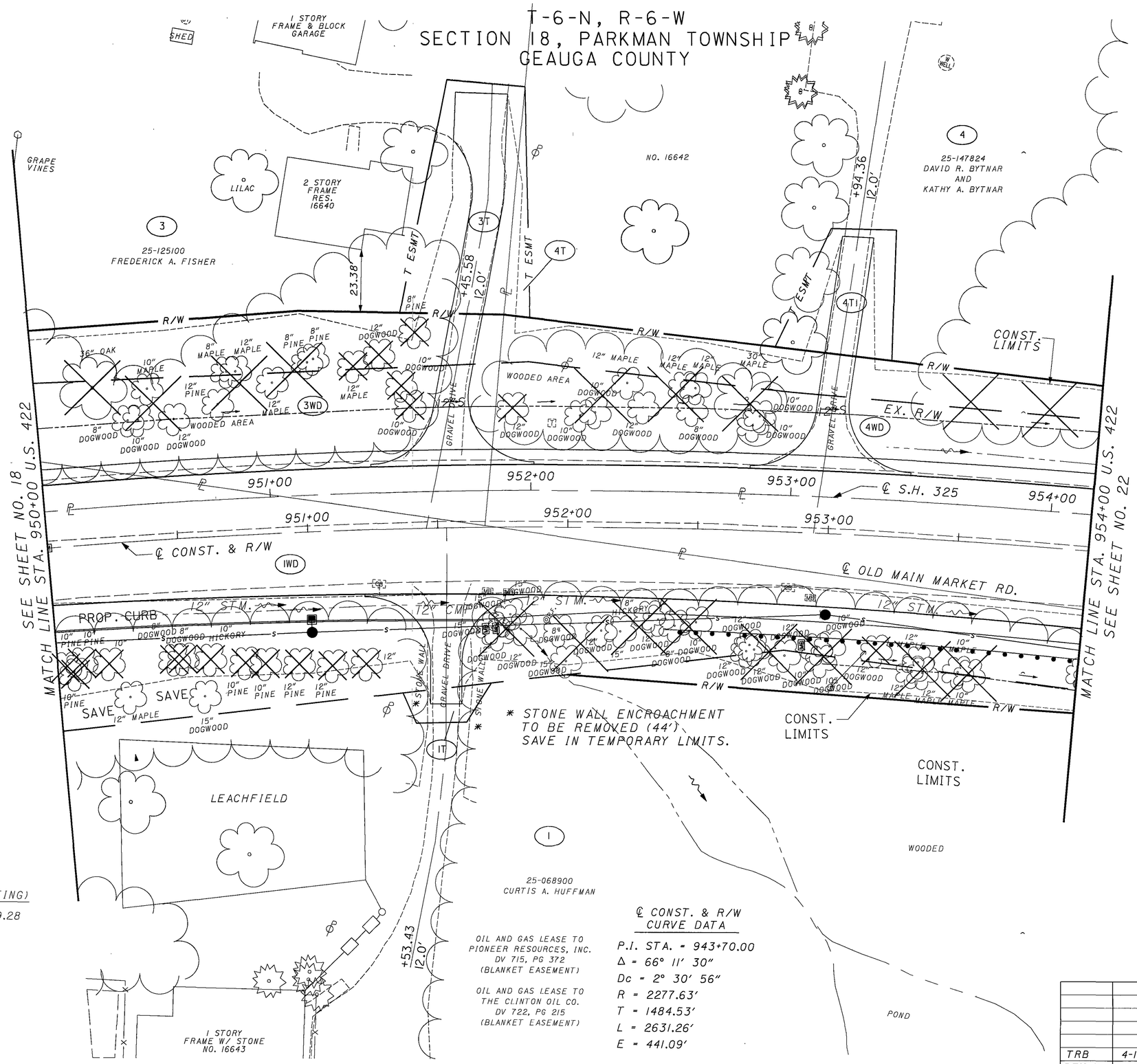

℄ S.H. 325
CURVE DATA (EXISTING)

P.I. STA. = 943+79.28
Δ = 66° 11' 30"
Dc = 2° 30' 01"
R = 2291.63'
T = 1493.65'
L = 2647.43'
E = 443.80'

℄ CONST. & R/W
CURVE DATA

P.I. STA. = 943+70.00
Δ = 66° 11' 30"
Dc = 2° 30' 56"
R = 2277.63'
T = 1484.53'
L = 2631.26'
E = 441.09'

REV. BY	DATE	DESCRIPTION
TRB	4-10-06	OWNERS NAME PARCEL 1

DATE COMPLETED

HORIZONTAL SCALE IN FEET 0 10 20 40

PID NO. 19181

R/W DESIGNER ADT
R/W REVIEWER TRB

RIGHT OF WAY PLAN
STA. 950+00 TO STA. 954+00

GEA/POR-422-18.31/0.00

T-6-N, R-6-W
SECTION 18, PARKMAN TOWNSHIP
GEAUGA COUNTY

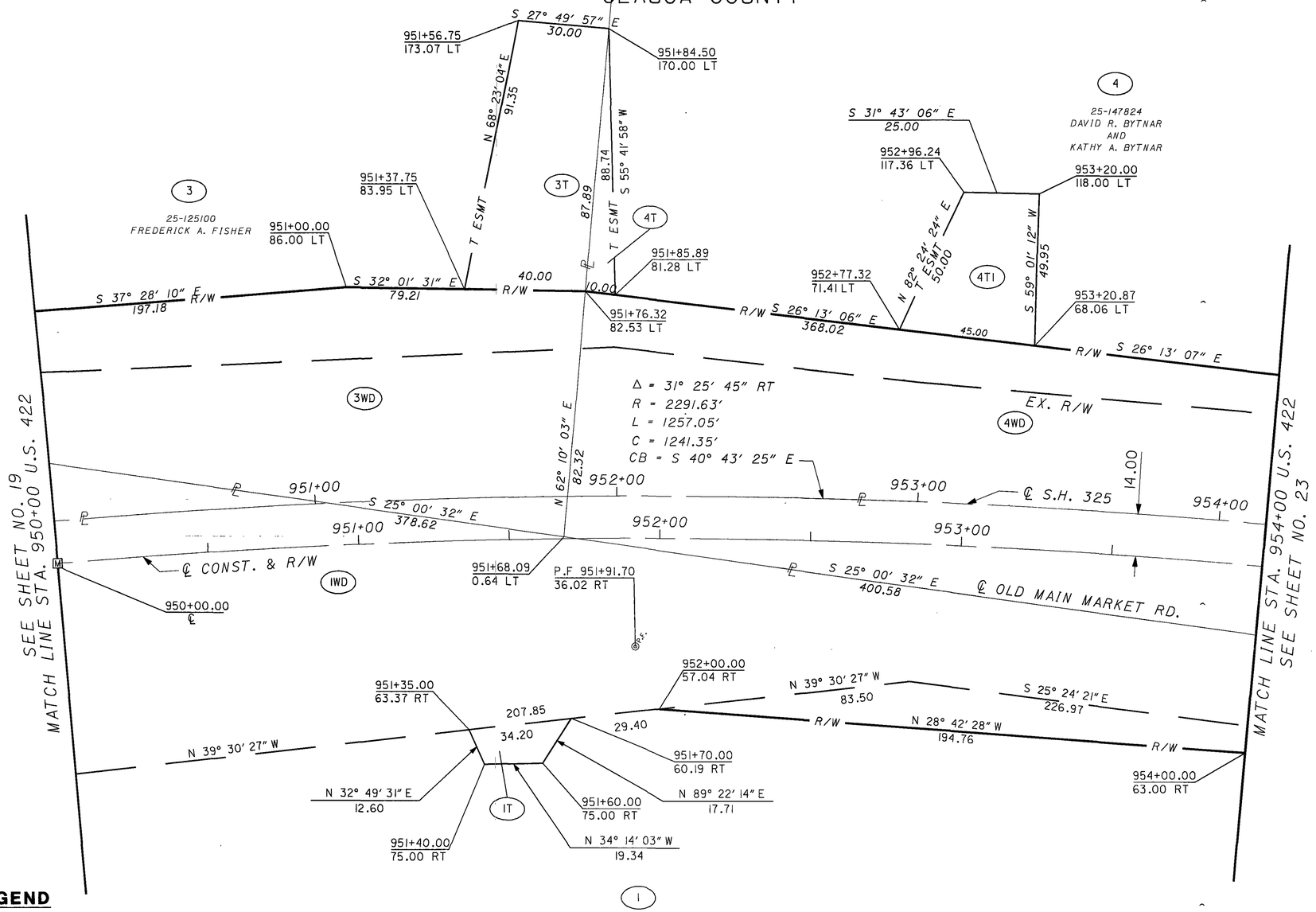

MONUMENT LEGEND

- EXISTING ℄ MONUMENT
- PROPOSED ℄ MONUMENT
- EXISTING ℄ MONUMENT REMOVED AND REPLACED
- EXISTING RIGHT OF WAY MONUMENT
- PROPOSED RIGHT OF WAY MONUMENT
- RAILROAD SPIKE FOUND
- RAILROAD SPIKE SET
- I.R.F. IRON PIN FOUND
- I.R.F. IRON PIN FOUND W/ ID CAP
- I.R.S. IRON PIN SET W/ ID CAP
- P.F. IRON PIPE FOUND
- P.S. IRON PIPE SET
- P.K.F. P.K. NAIL FOUND
- P.K.S. P.K. NAIL SET

℄ S.H. 325 CURVE DATA (EXISTING)

P.I. STA. = 943+79.28
Δ = 66° 11′ 30″
Dc = 2° 30′ 01″
R = 2291.63′
T = 1493.65′
L = 2647.43′
E = 443.80′

℄ CONST. & R/W CURVE DATA

P.I. STA. = 943+70.00
Δ = 66° 11′ 30″
Dc = 2° 30′ 56″
R = 2277.63′
T = 1484.53′
L = 2631.26′
E = 441.09′

REV. BY	DATE	DESCRIPTION
TRB	8-25-06	4WD ℄ DISTANCE
TRB	4-10-06	OWNERS NAME PARCEL 1

DATE COMPLETED

HORIZONTAL SCALE IN FEET 0 10 20 40

PID NO. 19181

R/W DESIGNER ADT
R/W REVIEWER TRB

RIGHT OF WAY PLAN
STA. 950+00 TO STA. 954+00

GEA/POR-422-18.31/0.00

T-6-N, R-6-W
SECTION 18, PARKMAN TOWNSHIP
GEAUGA COUNTY

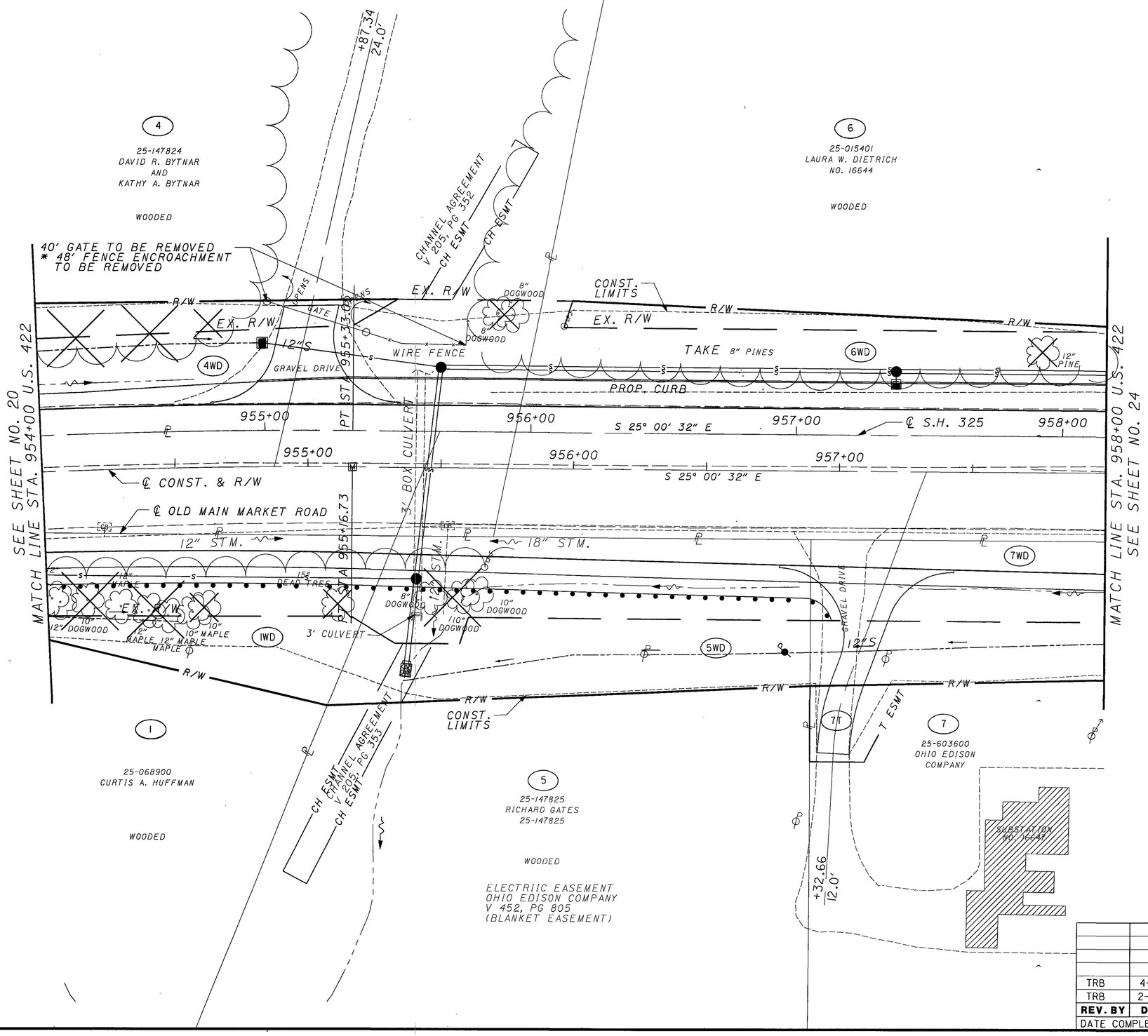

℄ S.H. 325
CURVE DATA (EXISTING)

P.I. STA. = 943+79.28
Δ = 66° 11' 30"
Dc = 2° 30' 01"
R = 2291.63'
T = 1493.65'
L = 2647.43'
E = 443.80'

℄ CONST. & R/W
CURVE DATA

P.I. STA. = 943+70.00
Δ = 66° 11' 30"
Dc = 2° 30' 56"
R = 2277.63'
T = 1484.53'
L = 2631.26'
E = 441.09'

REV. BY	DATE	DESCRIPTION
TRB	4-10-06	OWNERS NAME PARCEL 1
TRB	2-6-06	RELOCATED POLE PARCEL 5

DATE COMPLETED

HORIZONTAL SCALE IN FEET 0 10 20 40

PID NO. 19181

R/W DESIGNER ADT
R/W REVIEWER TRB

RIGHT OF WAY PLAN
STA. 954+00 TO STA. 958+00

GEA/POR-422-18.31/0.00

T-6-N, R-6-W
SECTION 18, PARKMAN TOWNSHIP
GEAUGA COUNTY

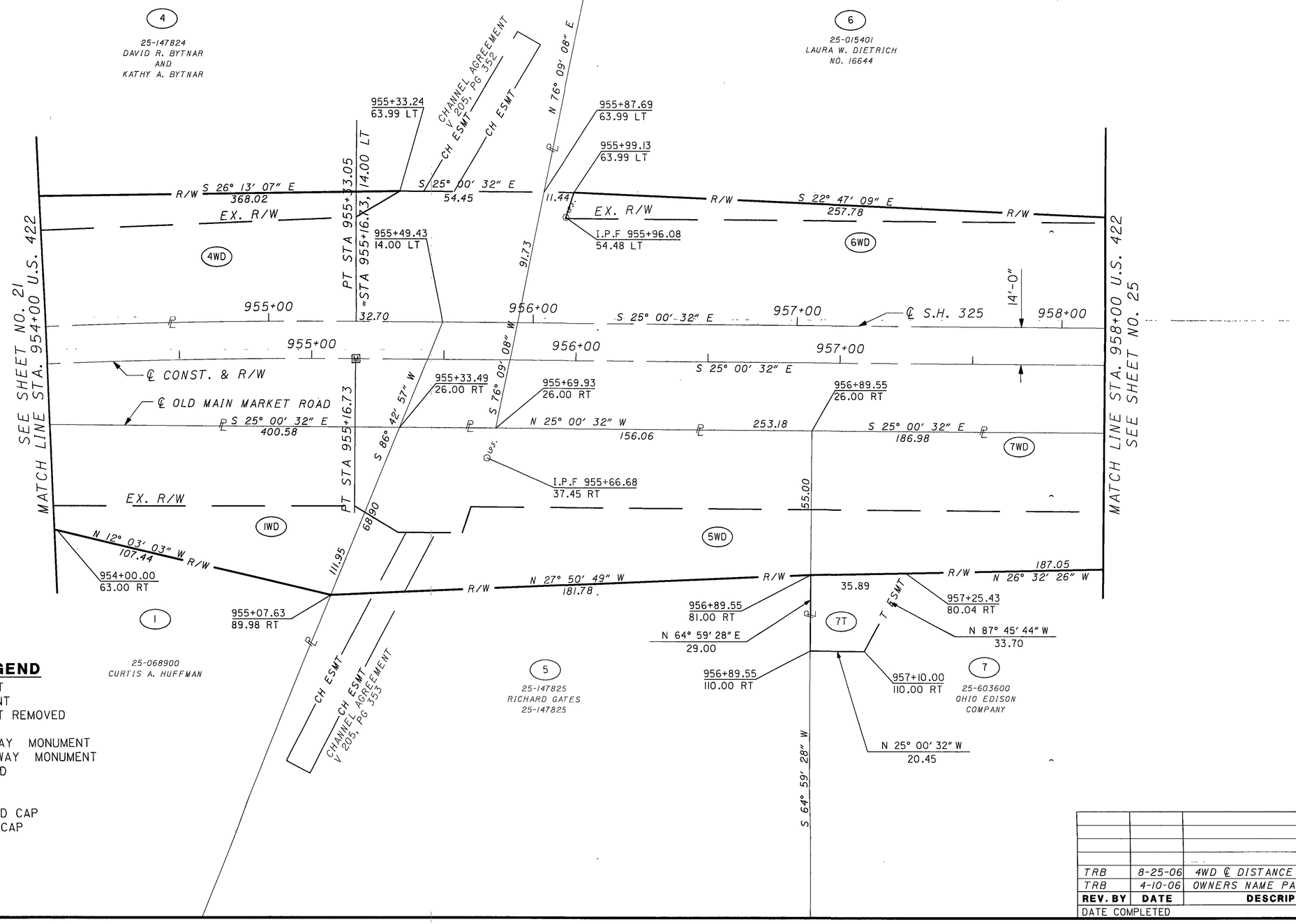

℄ CONST. & R/W CURVE DATA

P.I. STA. = 943+70.00
Δ = 66° 11' 30"
Dc = 2° 30' 56"
R = 2277.63'
T = 1484.53'
L = 2631.26'
E = 441.09'

℄ S.H. 325 CURVE DATA (EXISTING)

P.I. STA. = 943+79.28
Δ = 66° 11' 30"
Dc = 2° 30' 01"
R = 2291.63'
T = 1493.65'
L = 2647.43'
E = 443.80'

MONUMENT LEGEND

- EXISTING ℄ MONUMENT
- PROPOSED ℄ MONUMENT
- EXISTING ℄ MONUMENT REMOVED AND REPLACED
- EXISTING RIGHT OF WAY MONUMENT
- PROPOSED RIGHT OF WAY MONUMENT
- RAILROAD SPIKE FOUND
- RAILROAD SPIKE SET
- I.R.F. IRON PIN FOUND
- I.R.F. IRON PIN FOUND W/ ID CAP
- I.R.S. IRON PIN SET W/ ID CAP
- R.F. IRON PIPE FOUND
- R.S. IRON PIPE SET
- P.K.F. P.K. NAIL FOUND
- P.K.S. P.K. NAIL SET

REV. BY	DATE	DESCRIPTION
TRB	8-25-06	4WD ℄ DISTANCE
TRB	4-10-06	OWNERS NAME PARCEL 1

DATE COMPLETED

HORIZONTAL SCALE IN FEET 0 10 20 40

PID NO. 19181

R/W DESIGNER ADT
R/W REVIEWER TRB

RIGHT OF WAY PLAN
STA. 954+00 TO STA. 958+00

GEA/POR-422-18.31/0.00

T-6-N, R-6-W
SECTION 18 & 23, PARKMAN TOWNSHIP
GEAUGA COUNTY

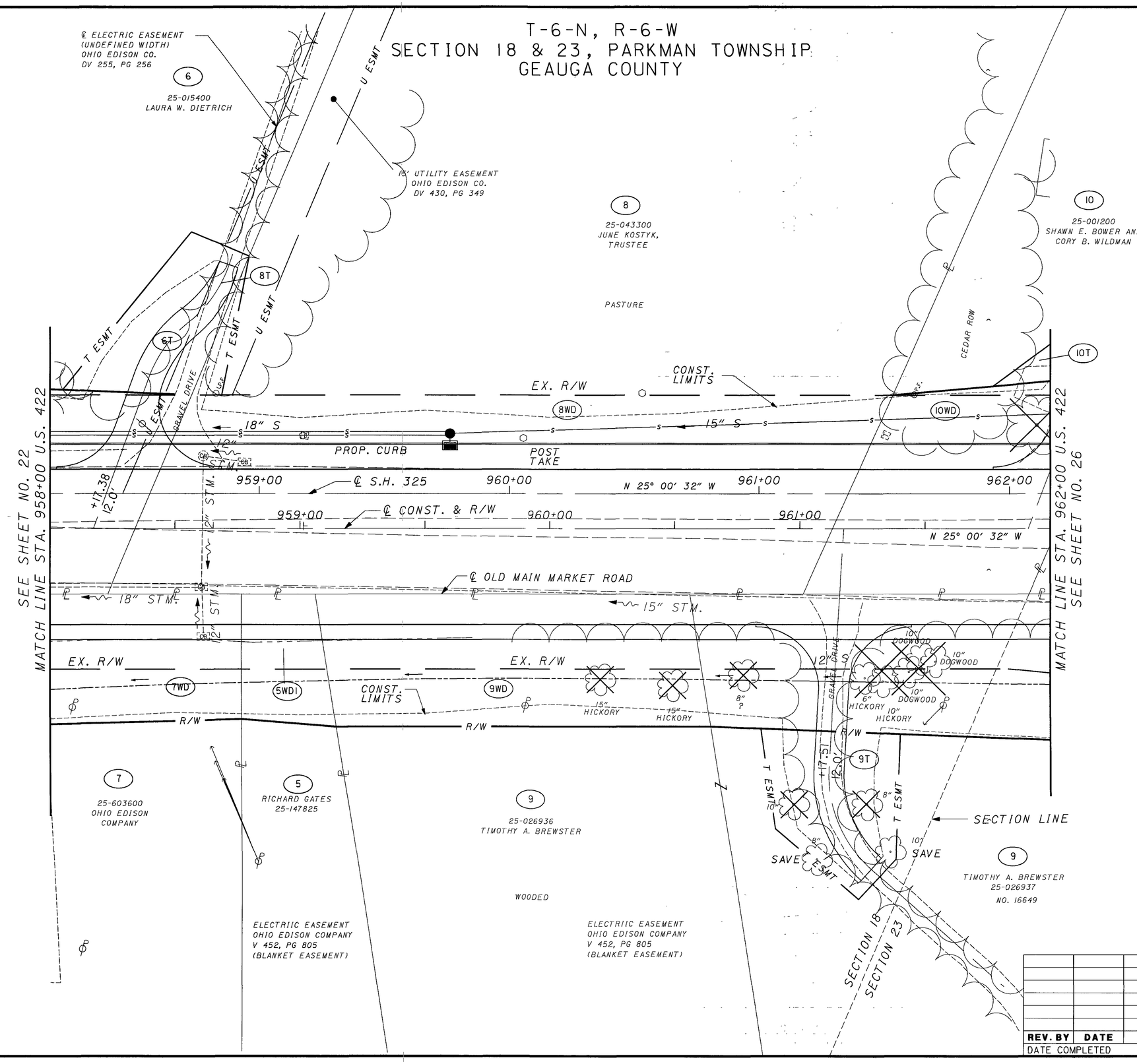

REV. BY	DATE	DESCRIPTION

DATE COMPLETED

HORIZONTAL SCALE IN FEET 0 10 20 40

PID NO. 19181

R/W DESIGNER ADT

R/W REVIEWER TRB

RIGHT OF WAY PLAN

STA. 958+00 TO STA. 962+00

GEA/POR-422-18.31/0.00

24/75

281/332

T-6-N, R-6-W
SECTION 18 & 23, PARKMAN TOWNSHIP
GEAUGA COUNTY

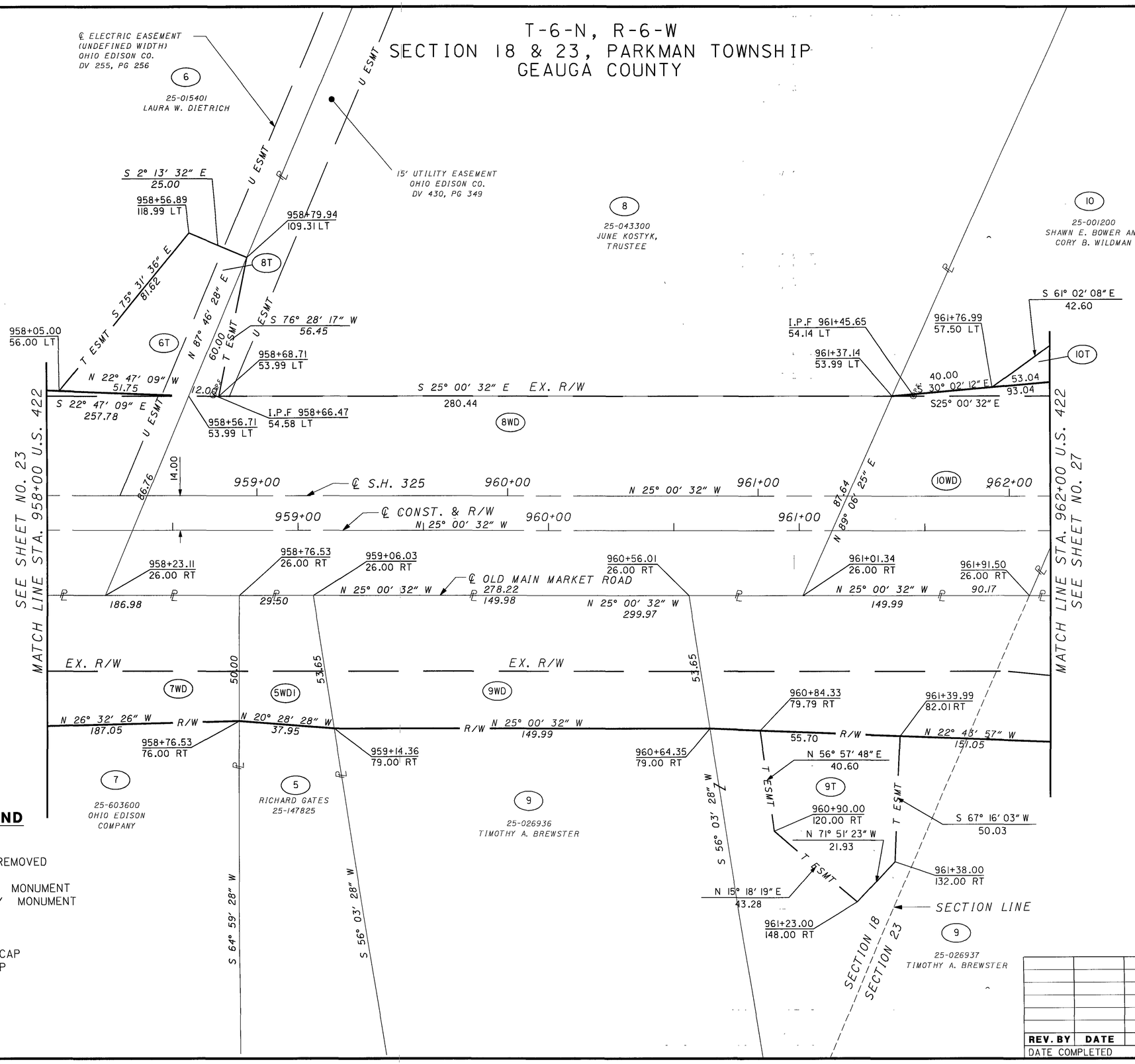

MONUMENT LEGEND

- EXISTING ℄ MONUMENT
- PROPOSED ℄ MONUMENT
- EXISTING ℄ MONUMENT REMOVED AND REPLACED
- EXISTING RIGHT OF WAY MONUMENT
- PROPOSED RIGHT OF WAY MONUMENT
- RAILROAD SPIKE FOUND
- RAILROAD SPIKE SET
- I.R.F. IRON PIN FOUND
- I.R.F. IRON PIN FOUND W/ ID CAP
- I.P.S. IRON PIN SET W/ ID CAP
- R.F. IRON PIPE FOUND
- R.S. IRON PIPE SET
- P.K.F. P.K. NAIL FOUND
- P.K.S. P.K. NAIL SET

REV. BY	DATE	DESCRIPTION

DATE COMPLETED

HORIZONTAL SCALE IN FEET 0 10 20 40

PID NO. 19181

R/W DESIGNER ADT

R/W REVIEWER TRB

RIGHT OF WAY PLAN
STA. 958+00 TO STA. 962+00

GEA/POR-422-18.31/0.00

T-6-N, R-6-W
SECTION 18 & 23, PARKMAN TOWNSHIP
GEAUGA COUNTY

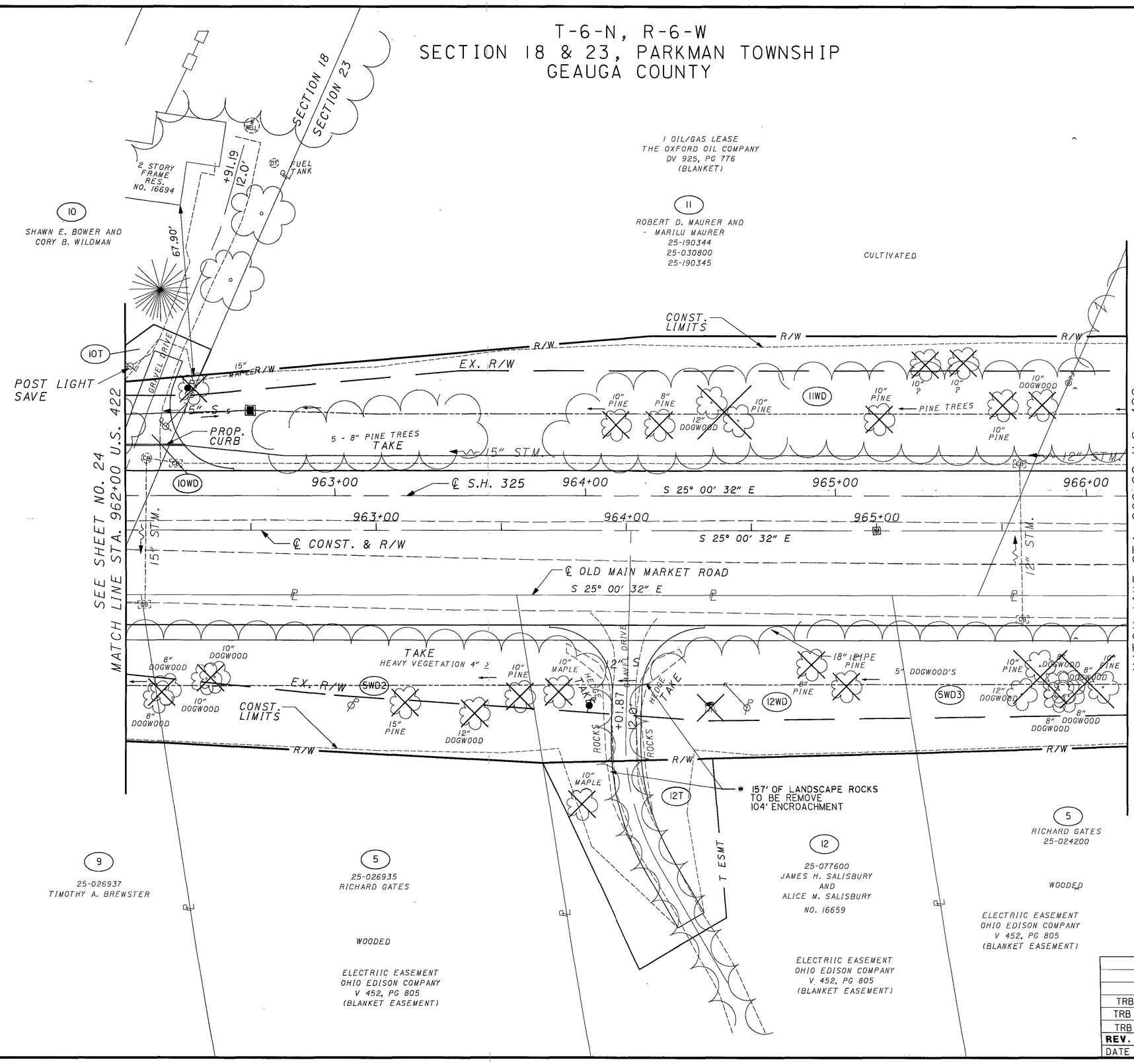

REV. BY	DATE	DESCRIPTION
TRB	3/15/06	ADDED EXIST. POLE PARCEL 5
TRB	2-6-06	RELOCATED POLE PARCELS 10 & 12
TRB	9-26-05	5WD3 AUDITOR NO.

DATE COMPLETED

HORIZONTAL SCALE IN FEET 0 10 20 40

PID NO. 19181

R/W DESIGNER ADT
R/W REVIEWER TRB

RIGHT OF WAY PLAN
STA. 962+00 TO STA. 966+00

GEA/POR-422-18.31/0.00

T-6-N, R-6-W
SECTION 18 & 23, PARKMAN TOWNSHIP
GEAUGA COUNTY

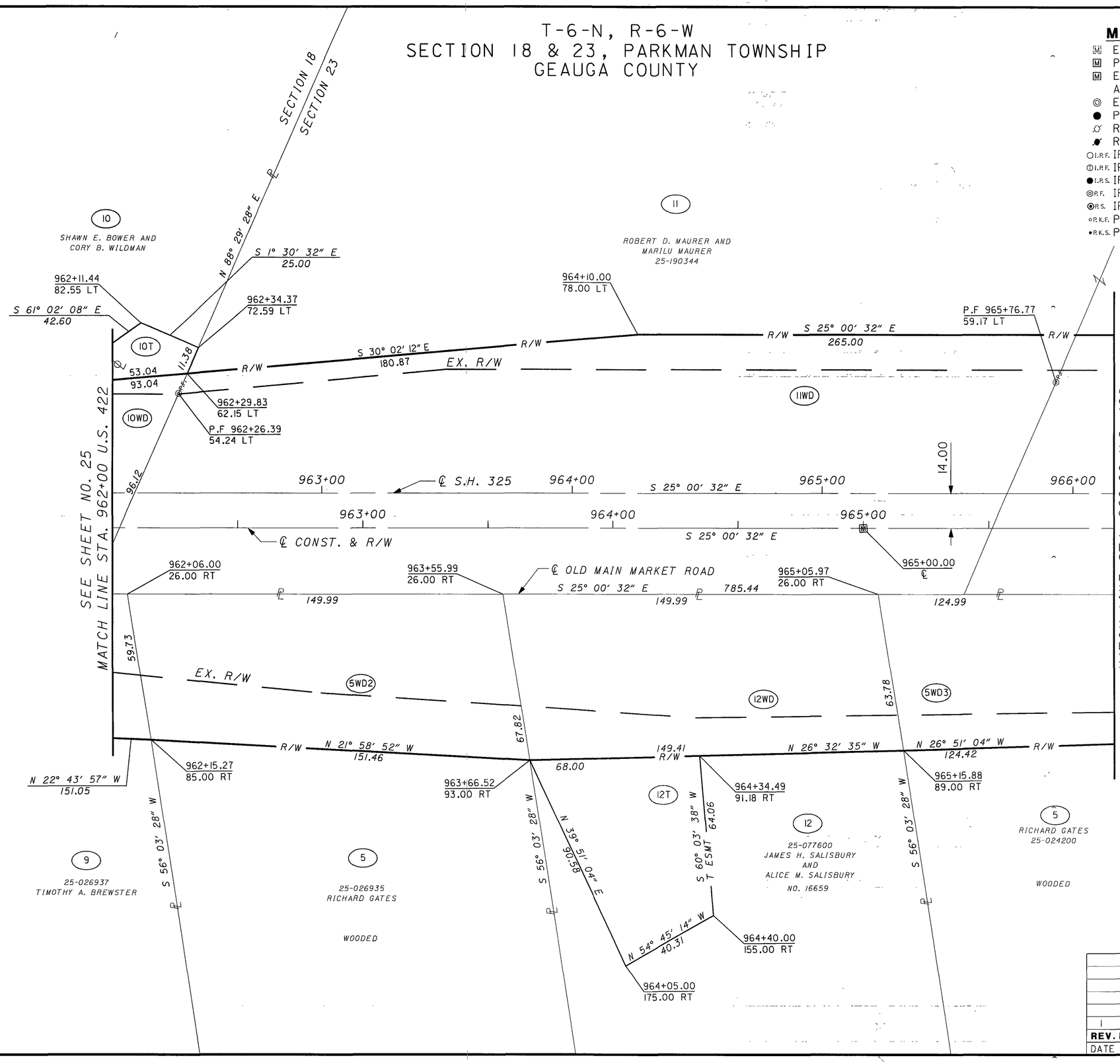

MONUMENT LEGEND

- EXISTING ℄ MONUMENT
- PROPOSED ℄ MONUMENT
- EXISTING ℄ MONUMENT REMOVED AND REPLACED
- EXISTING RIGHT OF WAY MONUMENT
- PROPOSED RIGHT OF WAY MONUMENT
- RAILROAD SPIKE FOUND
- RAILROAD SPIKE SET
- I.R.F. IRON PIN FOUND
- I.R.F. IRON PIN FOUND W/ ID CAP
- I.R.S. IRON PIN SET W/ ID CAP
- P.F. IRON PIPE FOUND
- P.S. IRON PIPE SET
- P.K.F. P.K. NAIL FOUND
- P.K.S. P.K. NAIL SET

HORIZONTAL SCALE IN FEET 0 10 20 40

REV. BY	DATE	DESCRIPTION
1	9-26-05	5WD3 AUDITOR NO.

DATE COMPLETED

PID NO. 19181

R/W DESIGNER ADT
R/W REVIEWER TRB

RIGHT OF WAY PLAN
STA. 962+00 TO STA. 966+00

GEA/POR-422-18.31/0.00

T-6-N, R-6-W
SECTION 23, PARKMAN TOWNSHIP
GEAUGA COUNTY

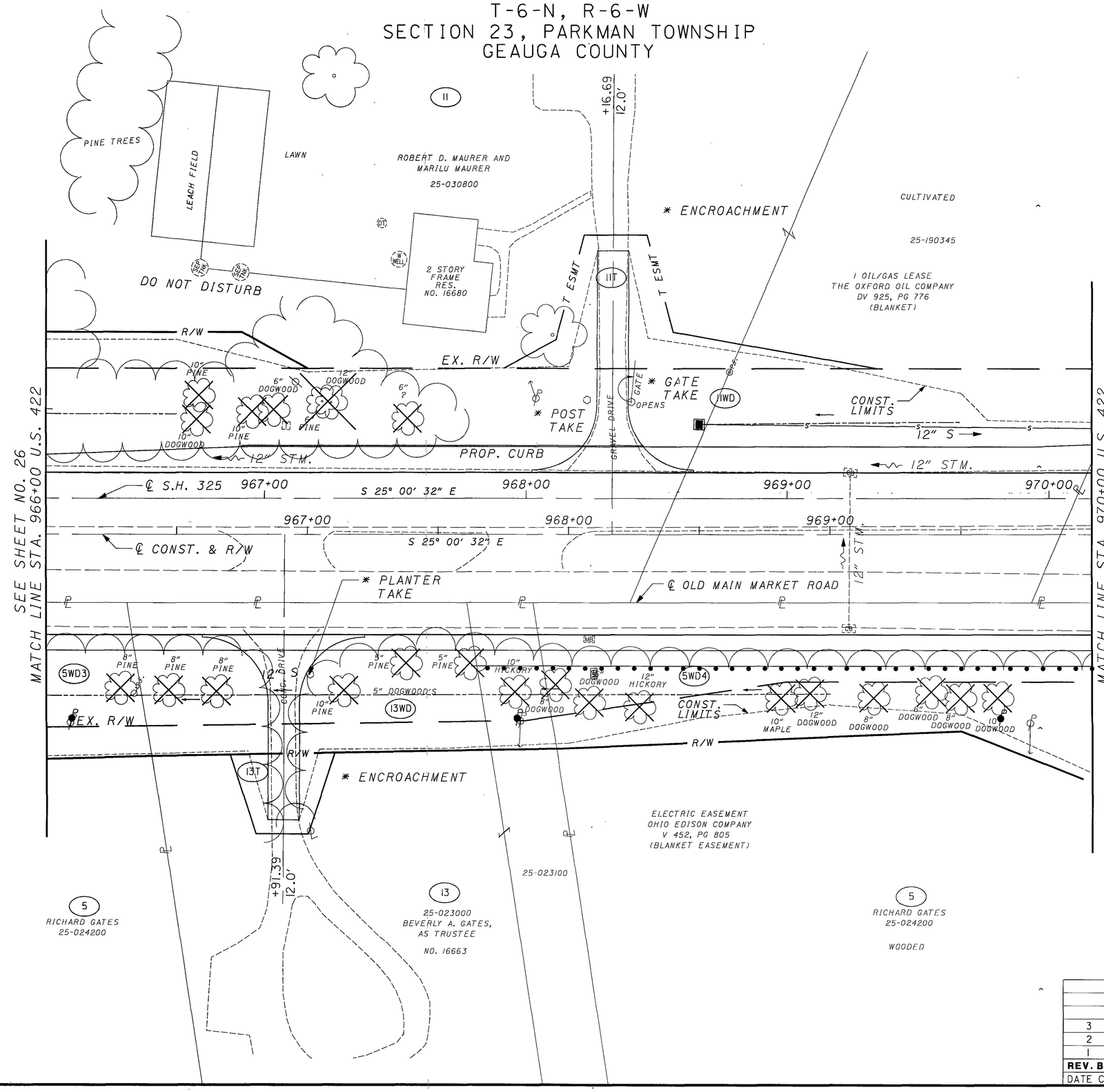

REV. BY	DATE	DESCRIPTION
3	2-6-06	RELOCATED POLES PARCELS 5 & 13
2	1-16-06	ADDED WELL & SEPTIC SYSTEM TO PARCEL II
1	9-26-05	5WD3 & 5WD4 AUDITOR NO.

DATE COMPLETED

HORIZONTAL SCALE IN FEET 0 10 20 40

PID NO. 19181

R/W DESIGNER ADT
R/W REVIEWER TRB

RIGHT OF WAY PLAN
STA. 966+00 TO STA. 970+00

GEA/POR-422-18.31/0.00

T-6-N, R-6-W
SECTION 23, PARKMAN TOWNSHIP
GEAUGA COUNTY

MONUMENT LEGEND

- EXISTING ℄ MONUMENT
- PROPOSED ℄ MONUMENT
- EXISTING ℄ MONUMENT REMOVED AND REPLACED
- EXISTING RIGHT OF WAY MONUMENT
- PROPOSED RIGHT OF WAY MONUMENT
- RAILROAD SPIKE FOUND
- RAILROAD SPIKE SET
- I.P.F. IRON PIN FOUND
- I.P.F. IRON PIN FOUND W/ ID CAP
- I.P.S. IRON PIN SET W/ ID CAP
- P.F. IRON PIPE FOUND
- P.S. IRON PIPE SET
- P.K.F. P.K. NAIL FOUND
- P.K.S. P.K. NAIL SET

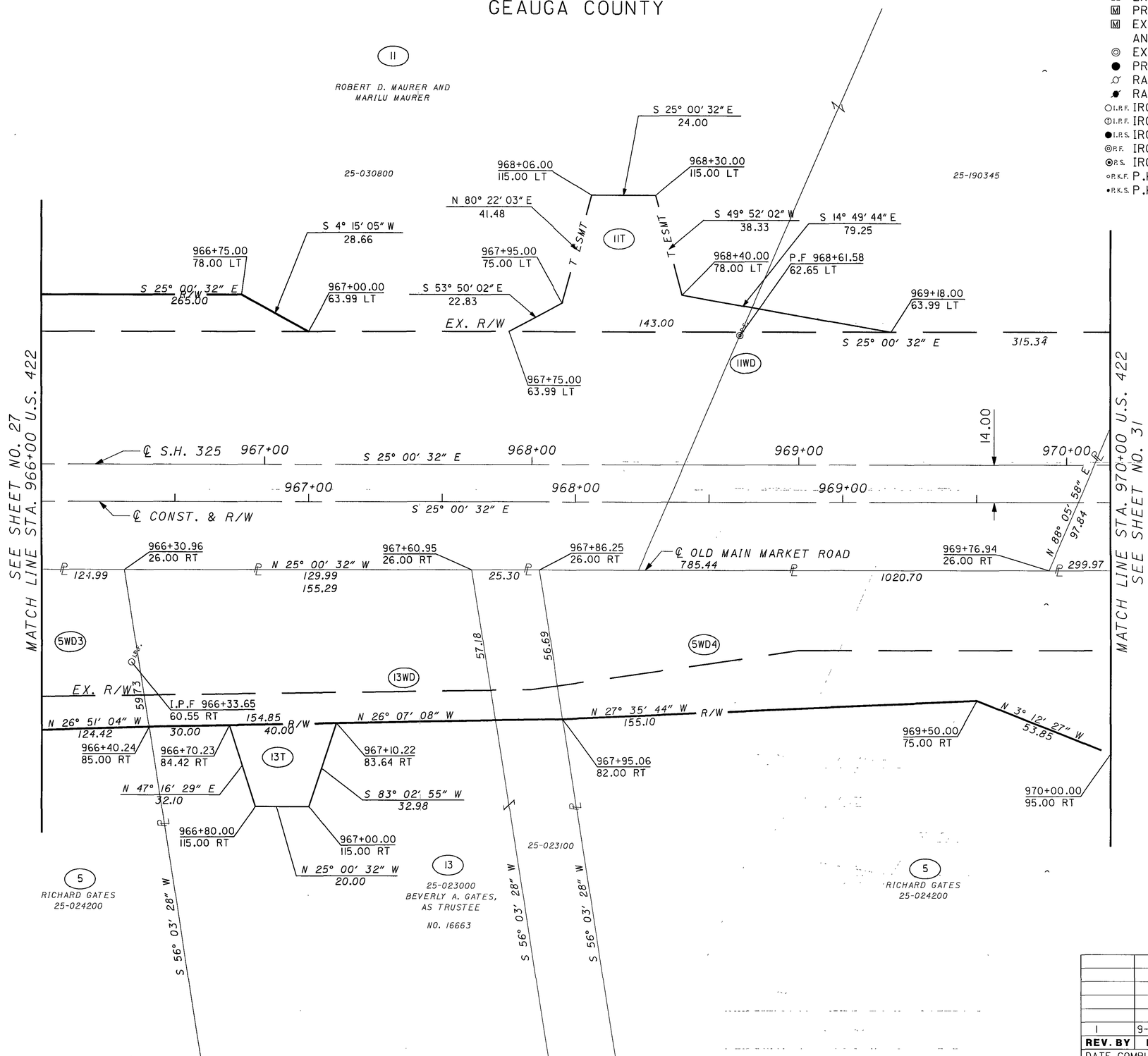

REV. BY	DATE	DESCRIPTION
I	9-26-05	5WD3 & 5WD4 AUDITOR NO.

DATE COMPLETED

HORIZONTAL SCALE IN FEET 0 10 20 40

PID NO. 19181

R/W DESIGNER ADT

R/W REVIEWER TRB

RIGHT OF WAY PLAN
STA. 966+00 TO STA. 970+00

GEA/POR-422-18.31/0.00

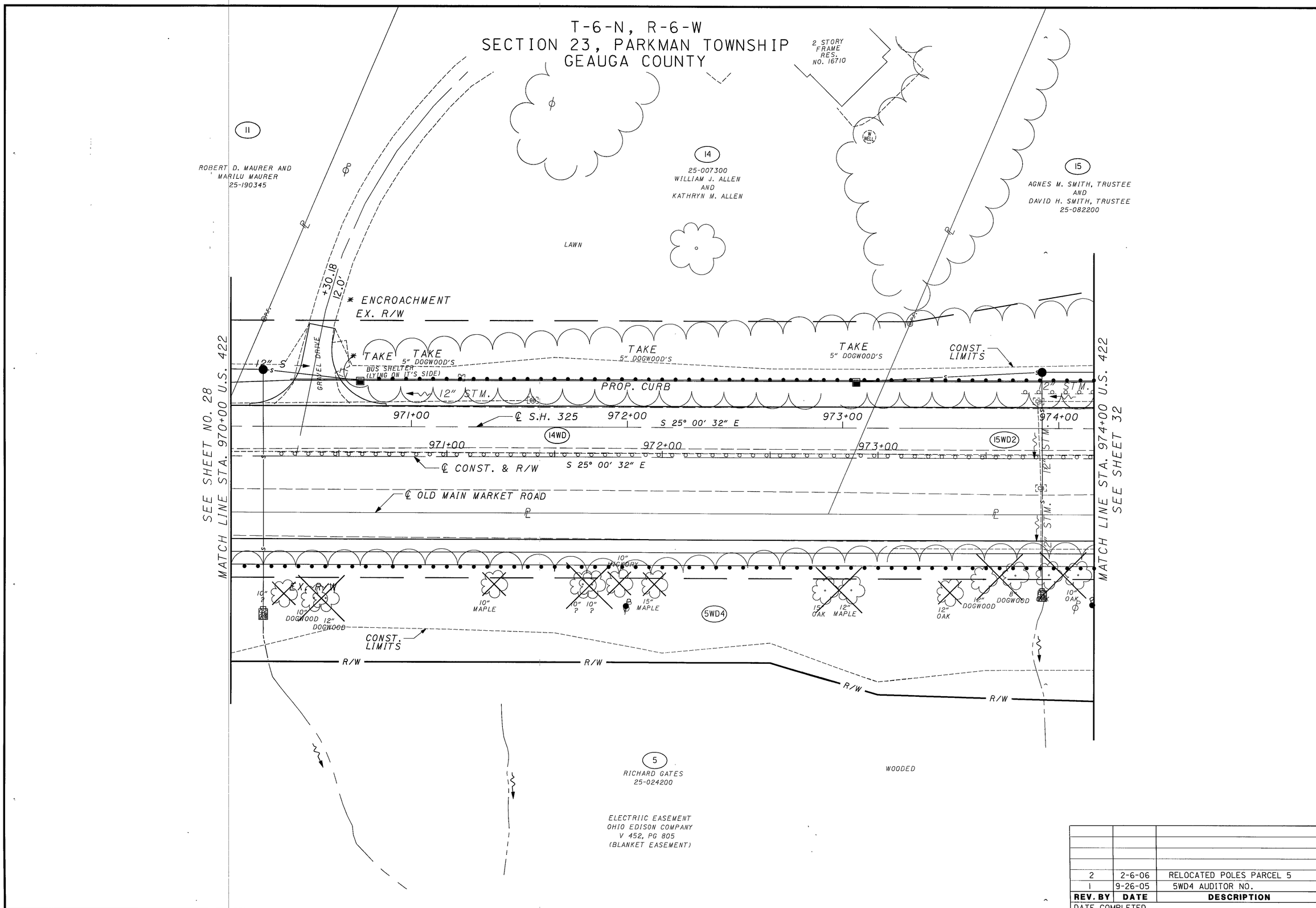

REV. BY	DATE	DESCRIPTION
2	2-6-06	RELOCATED POLES PARCEL 5
1	9-26-05	5WD4 AUDITOR NO.

DATE COMPLETED

HORIZONTAL SCALE IN FEET 0 10 20 40

PID NO. 19181

R/W DESIGNER ADT

R/W REVIEWER TRB

RIGHT OF WAY PLAN
STA. 970+00 TO STA. 974+00

GEA/POR-422-18.31/0.00

T-6-N, R-6-W
SECTION 23, PARKMAN TOWNSHIP
GEAUGA COUNTY

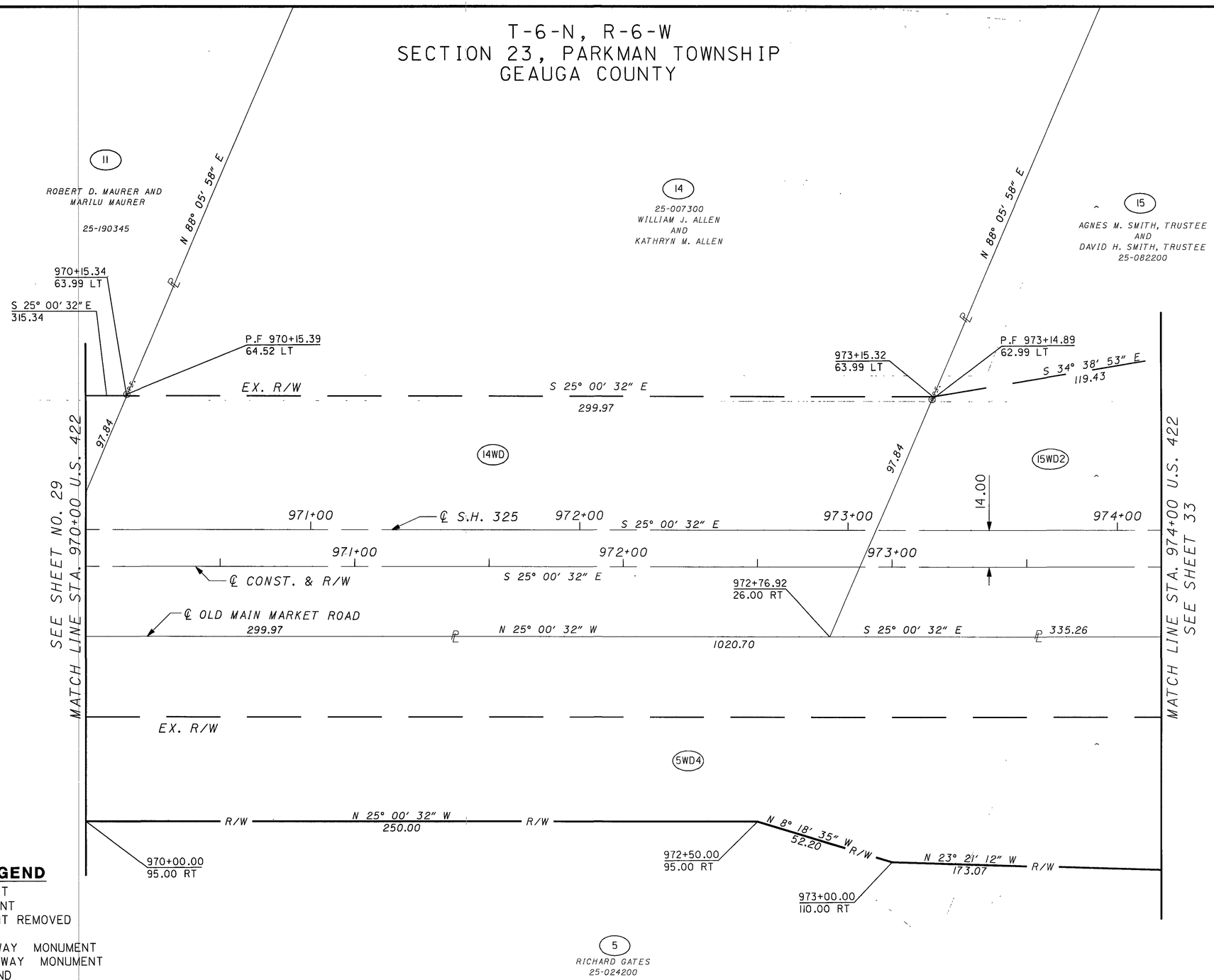

MONUMENT LEGEND

- EXISTING ℄ MONUMENT
- PROPOSED ℄ MONUMENT
- EXISTING ℄ MONUMENT REMOVED AND REPLACED
- EXISTING RIGHT OF WAY MONUMENT
- PROPOSED RIGHT OF WAY MONUMENT
- RAILROAD SPIKE FOUND
- RAILROAD SPIKE SET
- I.R.F. IRON PIN FOUND
- I.R.F. IRON PIN FOUND W/ ID CAP
- I.R.S. IRON PIN SET W/ ID CAP
- P.F. IRON PIPE FOUND
- P.S. IRON PIPE SET
- P.K.F. P.K. NAIL FOUND
- P.K.S. P.K. NAIL SET

REV. BY	DATE	DESCRIPTION
1	9-26-05	5WD4 AUDITOR NO.

DATE COMPLETED

HORIZONTAL SCALE IN FEET 0 10 20 40

PID NO. 19181

R/W DESIGNER ADT
R/W REVIEWER TRB

RIGHT OF WAY PLAN
STA. 970+00 TO STA. 974+00

GEA/POR-422-18.31/0.00

T-6-N, R-6-W
SECTION 23, PARKMAN TOWNSHIP
GEAUGA COUNTY

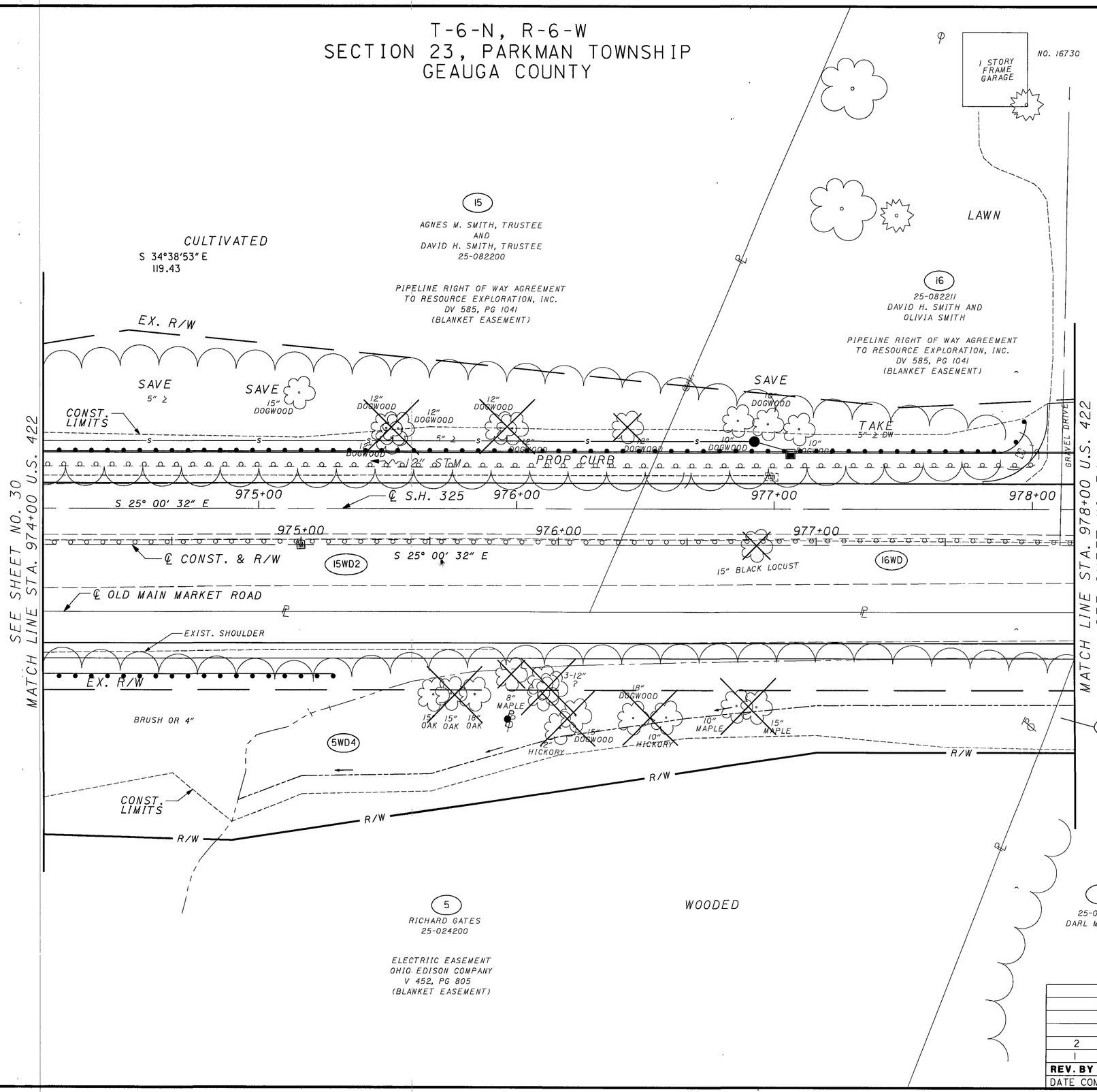

REV. BY	DATE	DESCRIPTION
2	2-6-06	RELOCATED POLE PARCEL 5
1	9-26-05	5WD4 AUDITOR NO.

DATE COMPLETED

HORIZONTAL SCALE IN FEET 0 10 20 40

PID NO. 19181

R/W DESIGNER ADT

R/W REVIEWER TRB

RIGHT OF WAY PLAN
STA. 974+00 TO STA. 978+00

GEA/POR-422-18.31/0.00

T-6-N, R-6-W
SECTION 23, PARKMAN TOWNSHIP
GEAUGA COUNTY

MONUMENT LEGEND

- EXISTING ℄ MONUMENT
- PROPOSED ℄ MONUMENT
- EXISTING ℄ MONUMENT REMOVED AND REPLACED
- EXISTING RIGHT OF WAY MONUMENT
- PROPOSED RIGHT OF WAY MONUMENT
- RAILROAD SPIKE FOUND
- RAILROAD SPIKE SET
- I.R.F. IRON PIN FOUND
- I.R.F. IRON PIN FOUND W/ ID CAP
- I.R.S. IRON PIN SET W/ ID CAP
- R.F. IRON PIPE FOUND
- R.S. IRON PIPE SET
- P.K.F. P.K. NAIL FOUND
- P.K.S. P.K. NAIL SET

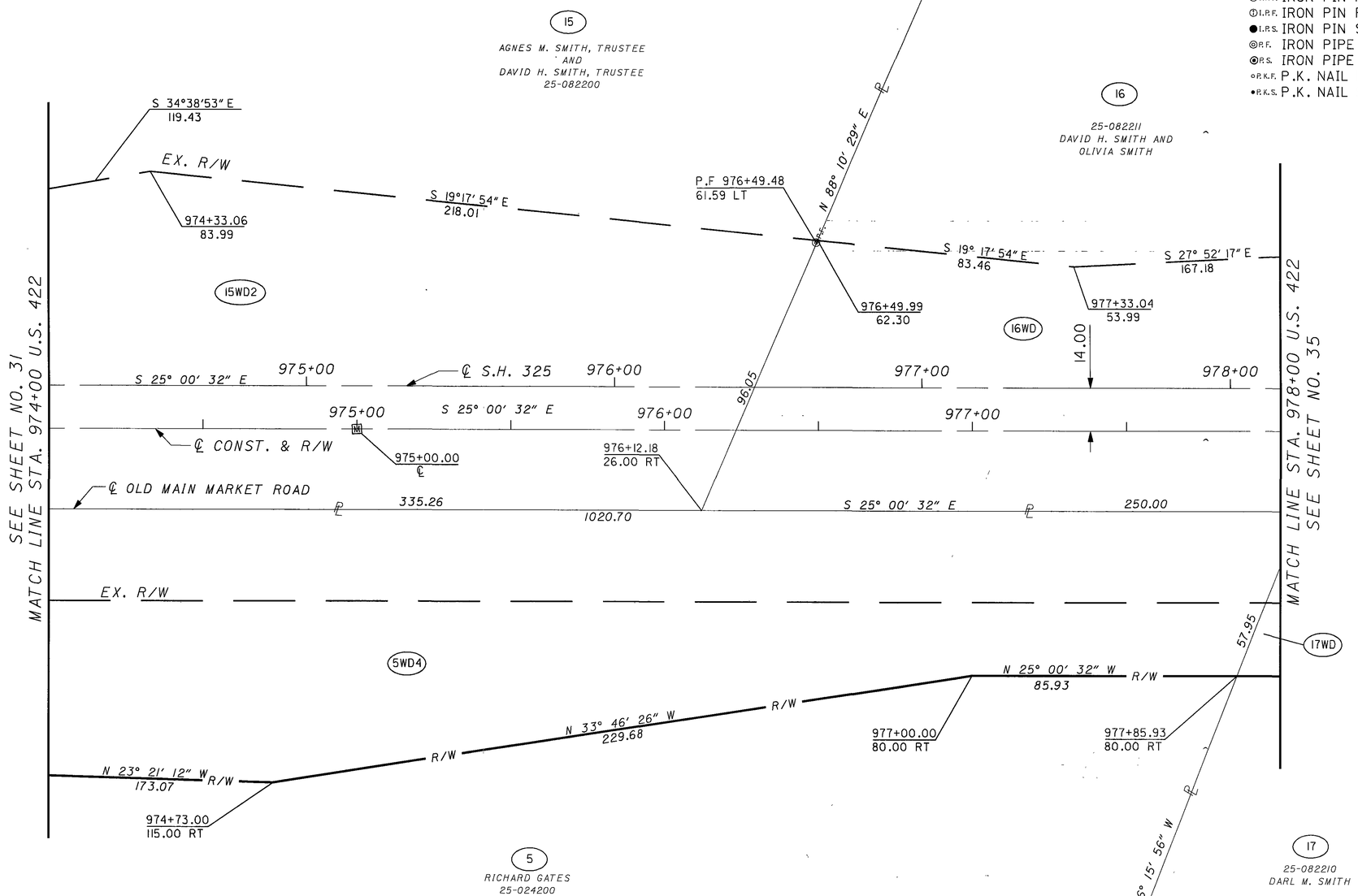

REV. BY	DATE	DESCRIPTION
1	9-26-05	5WD4 AUDITOR NO.

DATE COMPLETED

HORIZONTAL SCALE IN FEET 0 10 20 40

PID NO. 19181

R/W DESIGNER ADT
R/W REVIEWER TRB

RIGHT OF WAY PLAN
STA. 974+00 TO STA. 978+00

GEA/POR-422-18.31/0.00

T-6-N, R-6-W
SECTION 23, PARKMAN TOWNSHIP
GEAUGA COUNTY

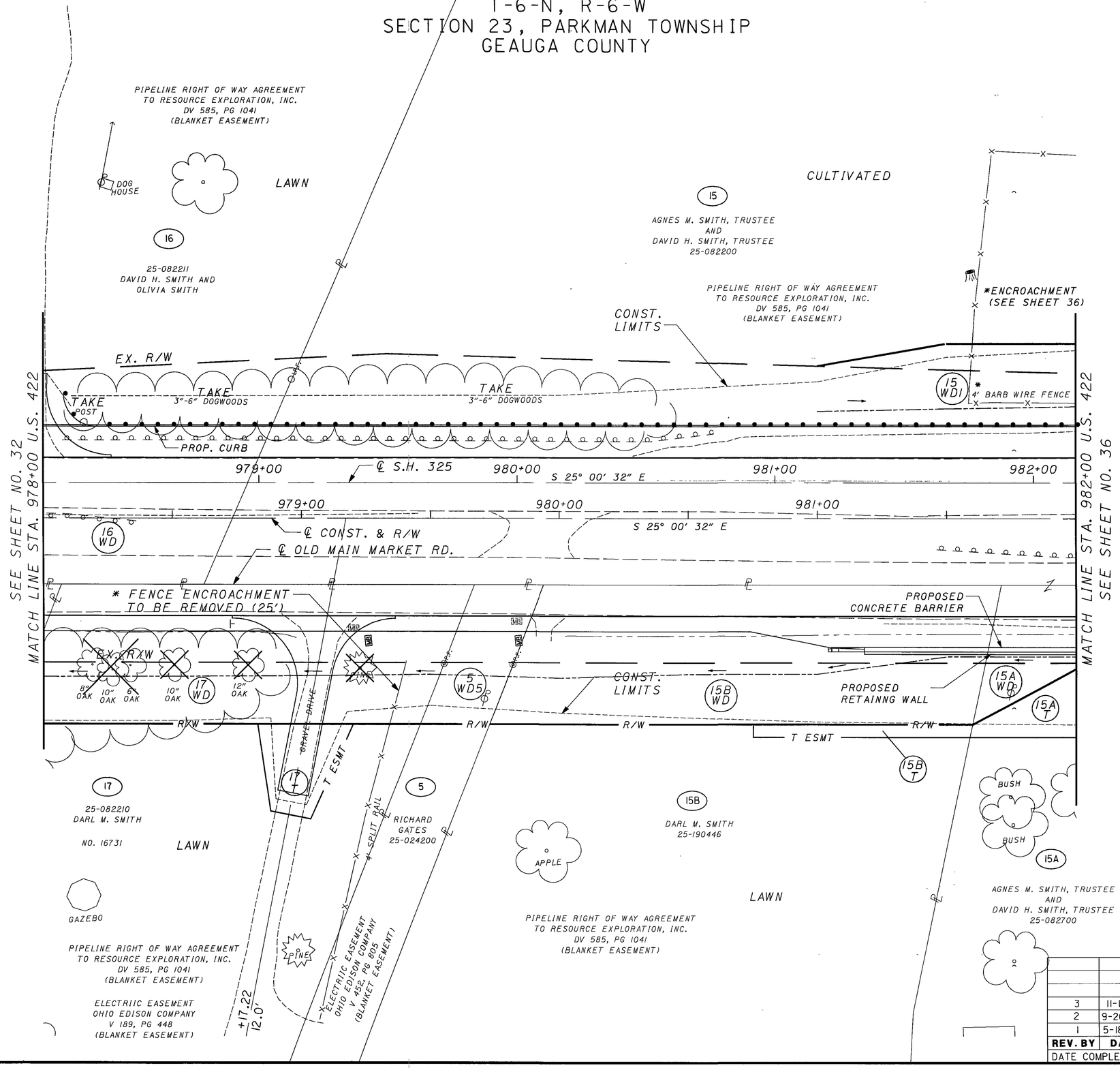

REV. BY	DATE	DESCRIPTION
3	11-18-05	SPLIT PARCEL 15A TO 15A AND 15B
2	9-26-05	5WD5 AUDITOR NO.
1	5-18-05	SPLIT PARCEL 15 TO 15 AND 15A

DATE COMPLETED

HORIZONTAL SCALE IN FEET 0 10 20 40

PID NO. 19181

R/W DESIGNER ADT
R/W REVISER TRB

RIGHT OF WAY PLAN
STA. 978+00 TO STA. 982+00

GEA/POR-422-18.31/0.00

T-6-N, R-6-W
SECTION 23, PARKMAN TOWNSHIP
GEAUGA COUNTY

MONUMENT LEGEND

- EXISTING ℄ MONUMENT
- PROPOSED ℄ MONUMENT
- EXISTING ℄ MONUMENT REMOVED AND REPLACED
- EXISTING RIGHT OF WAY MONUMENT
- PROPOSED RIGHT OF WAY MONUMENT
- RAILROAD SPIKE FOUND
- RAILROAD SPIKE SET
- I.R.F. IRON PIN FOUND
- I.R.F. IRON PIN FOUND W/ ID CAP
- I.R.S. IRON PIN SET W/ ID CAP
- P.F. IRON PIPE FOUND
- P.R.S. IRON PIPE SET
- P.K.F. P.K. NAIL FOUND
- P.K.S. P.K. NAIL SET

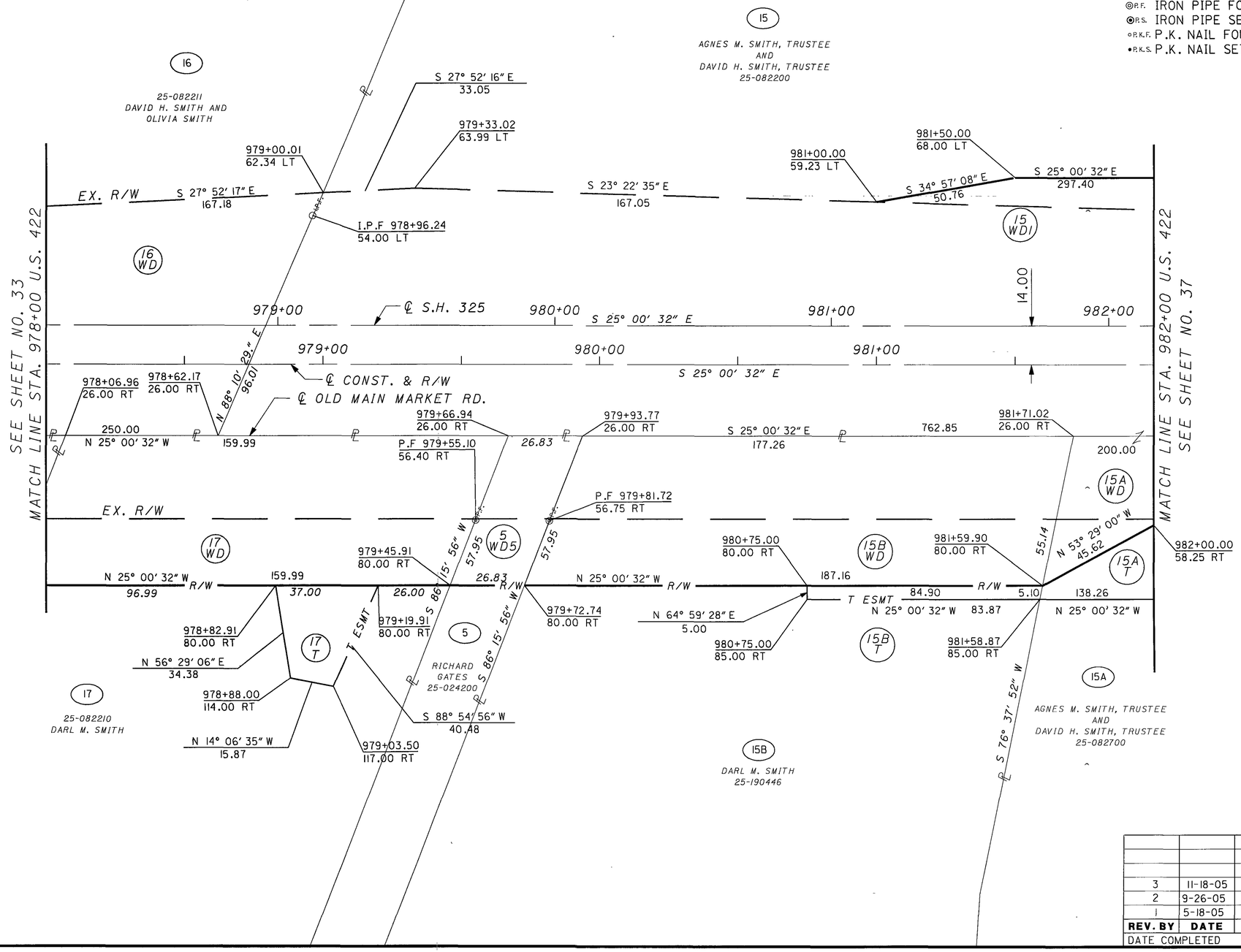

REV. BY	DATE	DESCRIPTION
3	11-18-05	SPLIT PARCEL 15A TO 15A AND 15B
2	9-26-05	5WD5 AUDITOR NO.
1	5-18-05	SPLIT PARCEL 15 TO 15 AND 15A

DATE COMPLETED

0 10 20 40 HORIZONTAL SCALE IN FEET

PID NO. 19181

R/W DESIGNER ADT
R/W REVIEWER TRB

RIGHT OF WAY PLAN
STA. 978+00 TO STA. 982+00

GEA/POR-422-18.31/0.00

℄ S.H. 325
CURVE DATA (EXISTING)

P.I. STA. = 997+19.70
Δ = 19° 40′ 57″
Dc = 0° 42′ 01″
R = 8182.96′
T = 1419.51′
L = 2811.04′
E = 122.21′

℄ CONST. & R/W
CURVE DATA

P.I. STA. = 997+05.80
Δ = 19° 40′ 57″
Dc = 0° 41′ 56″
R = 8196.95′
T = 1421.94′
L = 2815.85′
E = 122.42′

T-6-N, R-6-W
SECTION 23, PARKMAN TOWNSHIP
GEAUGA COUNTY

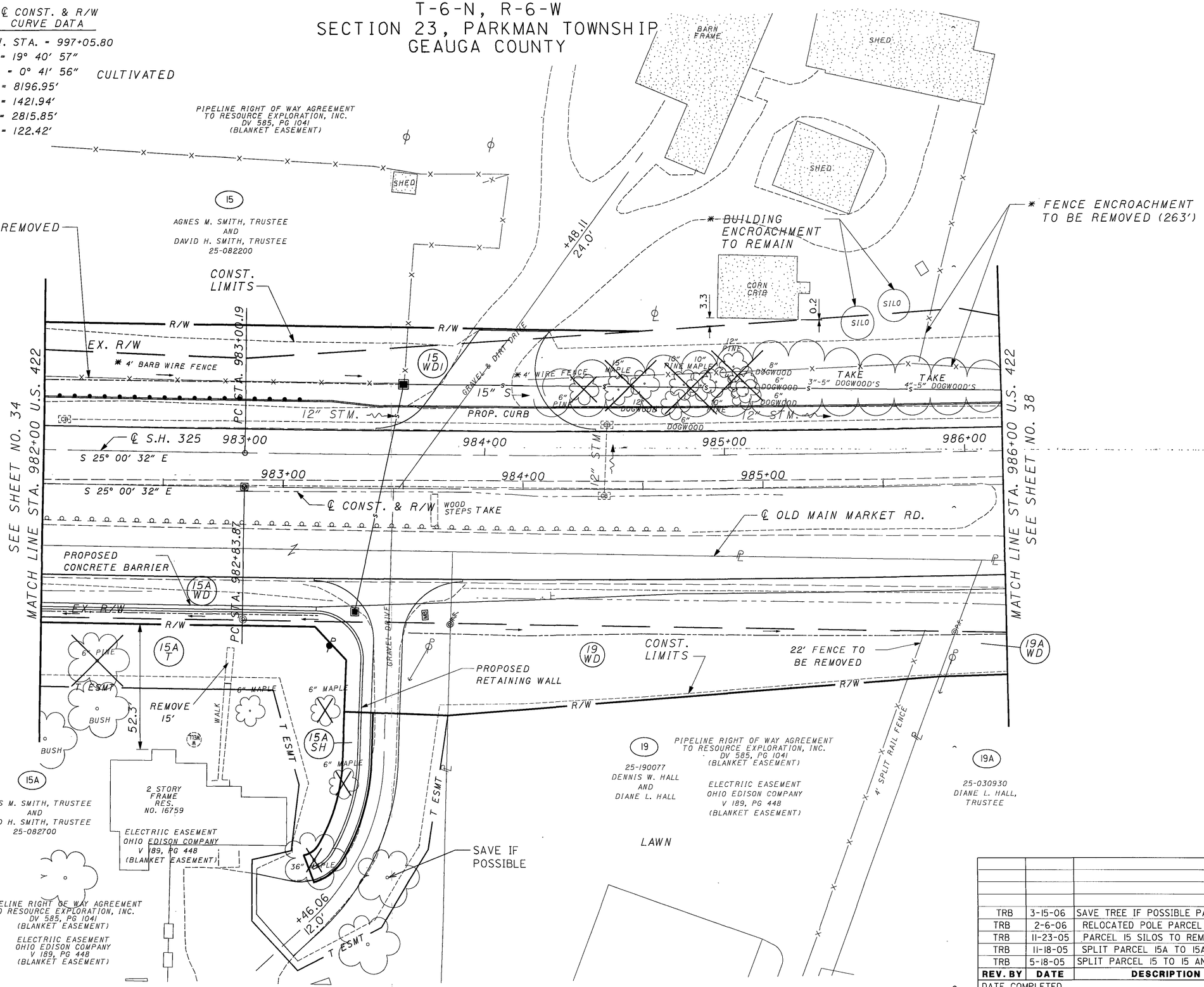

REV. BY	DATE	DESCRIPTION
TRB	3-15-06	SAVE TREE IF POSSIBLE PARCEL 15A
TRB	2-6-06	RELOCATED POLE PARCEL 15
TRB	11-23-05	PARCEL 15 SILOS TO REMAIN
TRB	11-18-05	SPLIT PARCEL 15A TO 15A AND 15B
TRB	5-18-05	SPLIT PARCEL 15 TO 15 AND 15A

DATE COMPLETED

HORIZONTAL SCALE IN FEET 0 10 20 40

PID NO. 19181

R/W DESIGNER ADT
R/W REVIEWER TRB

RIGHT OF WAY PLAN
STA. 982+00 TO STA. 986+00

GEA/POR-422-18.31/0.00

T-6-N, R-6-W
SECTION 23, PARKMAN TOWNSHIP
GEAUGA COUNTY

℄ S.H. 325
CURVE DATA (EXISTING)

P.I. STA. = 997+19.70
Δ = 19° 40′ 57″
Dc = 0° 42′ 01″
R = 8182.96′
T = 1419.51′
L = 2811.04′
E = 122.21′

℄ CONST. & R/W
CURVE DATA

P.I. STA. = 997+05.80
Δ = 19° 40′ 57″
Dc = 0° 41′ 56″
R = 8196.95′
T = 1421.94′
L = 2815.85′
E = 122.42′

MONUMENT LEGEND

- EXISTING ℄ MONUMENT
- PROPOSED ℄ MONUMENT
- EXISTING ℄ MONUMENT REMOVED AND REPLACED
- EXISTING RIGHT OF WAY MONUMENT
- PROPOSED RIGHT OF WAY MONUMENT
- RAILROAD SPIKE FOUND
- RAILROAD SPIKE SET
- I.R.F. IRON PIN FOUND
- I.R.F. IRON PIN FOUND W/ ID CAP
- I.R.S. IRON PIN SET W/ ID CAP
- P.F. IRON PIPE FOUND
- P.S. IRON PIPE SET
- P.K.F. P.K. NAIL FOUND
- P.K.S. P.K. NAIL SET

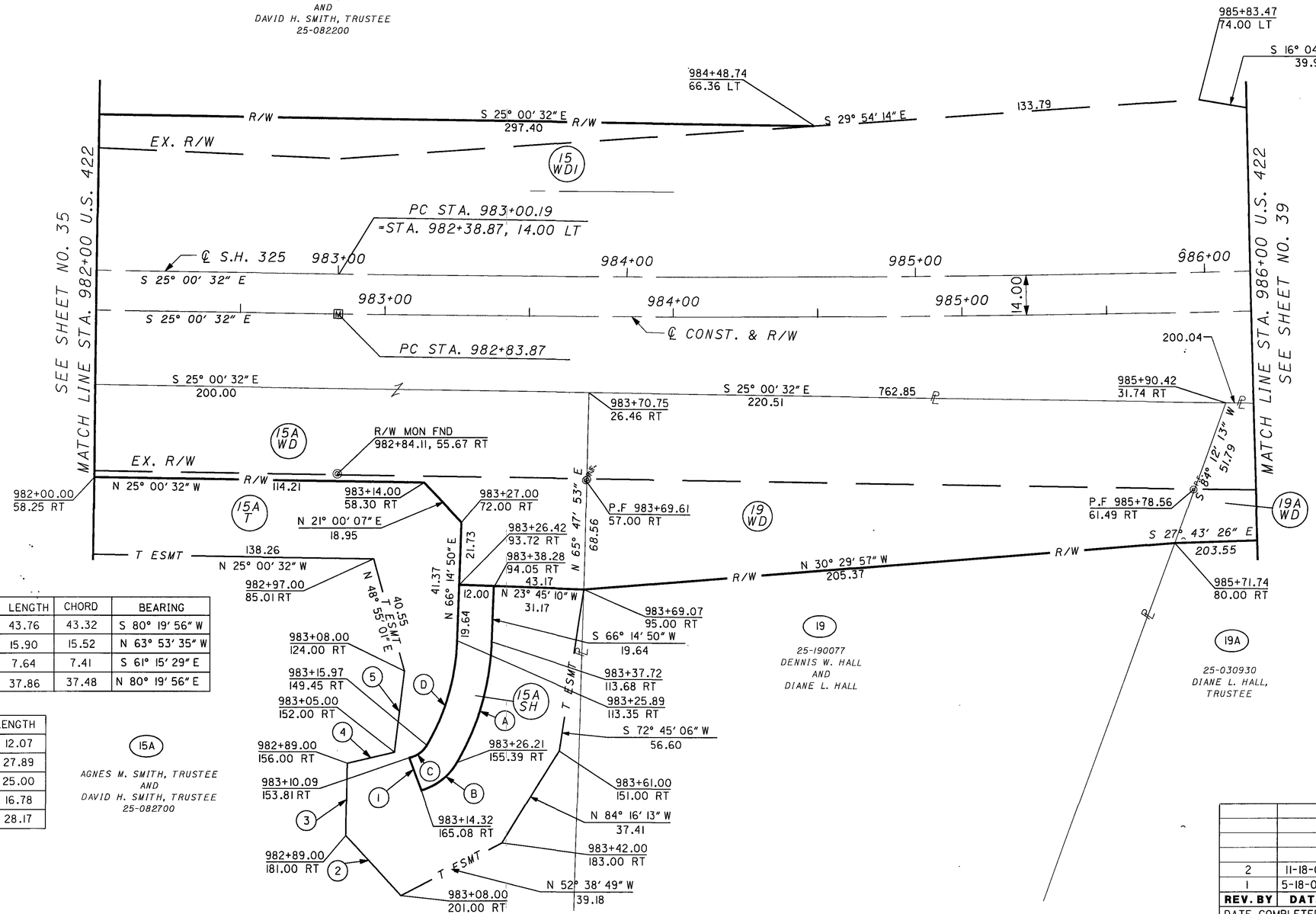

CURVE	ANGLE	RADIUS	LENGTH	CHORD	BEARING
A	28° 10′ 13″	89.00	43.76	43.32	S 80° 19′ 56″ W
B	43° 22′ 45″	21.00	15.90	15.52	N 63° 53′ 35″ W
C	48° 38′ 56″	9.00	7.64	7.41	S 61° 15′ 29″ E
D	28° 10′ 13″	77.00	37.86	37.48	N 80° 19′ 56″ E

NO.	BEARING	LENGTH
1	N 43° 52′ 06″ E	12.07
2	N 20° 42′ 00″ E	27.89
3	N 64° 57′ 25″ E	25.00
4	S 38° 53′ 11″ E	16.78
5	N 71° 03′ 09″ E	28.17

REV. BY	DATE	DESCRIPTION
2	11-18-05	SPLIT PARCEL 15A TO 15A AND 15B
1	5-18-05	SPLIT PARCEL 15 TO 15 AND 15A

DATE COMPLETED

HORIZONTAL SCALE IN FEET 0 10 20 40

PID NO. 19181

R/W DESIGNER ADT
R/W REVIEWER TRB

RIGHT OF WAY PLAN
STA. 982+00 TO STA. 986+00

GEA/POR-422-18.31/0.00

37/75

294/332

T-6-N, R-6-W
SECTION 23, PARKMAN TOWNSHIP
GEAUGA COUNTY

℄ S.H. 325 CURVE DATA (EXISTING)	℄ CONST. & R/W CURVE DATA
P.I. STA. = 997+19.70	P.I. STA. = 997+05.80
Δ = 19° 40′ 57″	Δ = 19° 40′ 57″
Dc = 0° 42′ 01″	Dc = 0° 41′ 56″
R = 8182.96′	R = 8196.95′
T = 1419.51′	T = 1421.94′
L = 2811.04′	L = 2815.85′
E = 122.21′	E = 122.42′

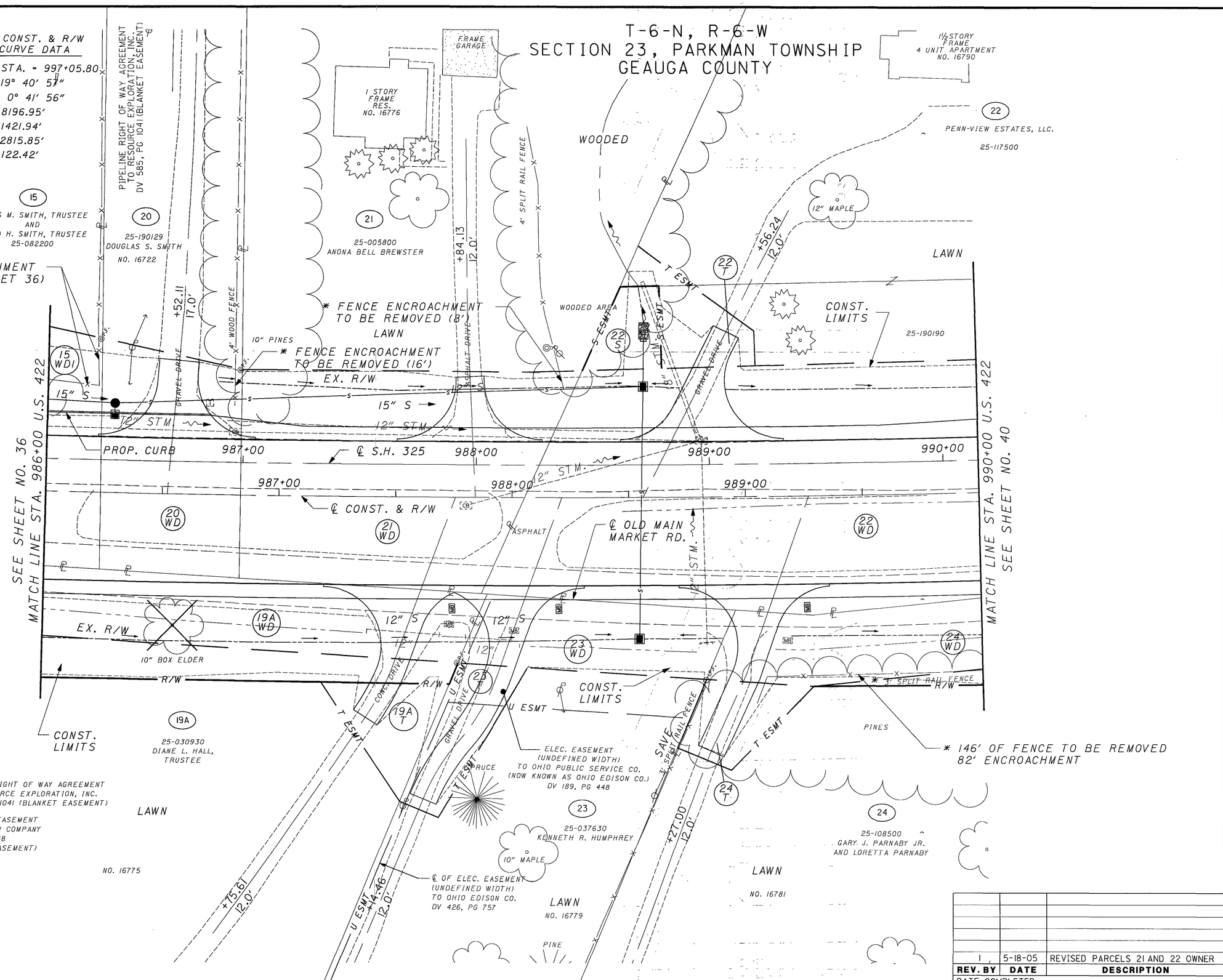

REV. BY	DATE	DESCRIPTION
1	5-18-05	REVISED PARCELS 21 AND 22 OWNER

DATE COMPLETED

HORIZONTAL SCALE IN FEET 0 10 20 40

PID NO. 19181

R/W DESIGNER ADT
R/W REVIEWER TRB

RIGHT OF WAY PLAN
STA. 986+00 TO STA. 990+00

GEA/POR-422-18.31/0.00

38/75

295/332

T-6-N, R-6-W
SECTION 23, PARKMAN TOWNSHIP
GEAUGA COUNTY

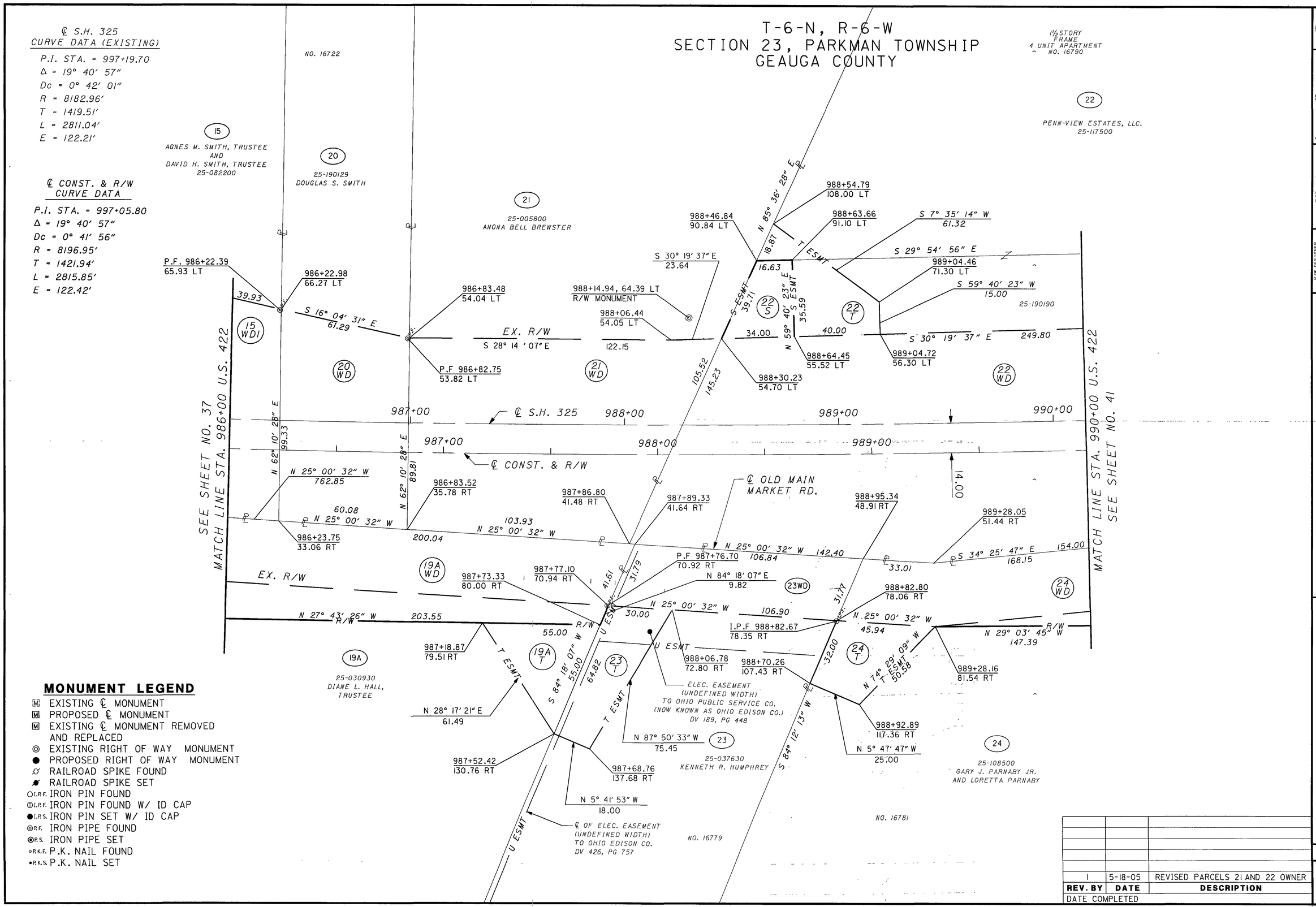

REV. BY	DATE	DESCRIPTION
1	5-18-05	REVISED PARCELS 21 AND 22 OWNER

DATE COMPLETED

HORIZONTAL SCALE IN FEET 0 10 20 40

PID NO. 19181

R/W DESIGNER ADT
R/W REVIEWER TRB

RIGHT OF WAY PLAN
STA. 986+00 TO STA. 990+00

GEA/POR-422-18.31/0.00

T-6-N, R-6-W
SECTION 23 & 24, PARKMAN TOWNSHIP
GEAUGA COUNTY

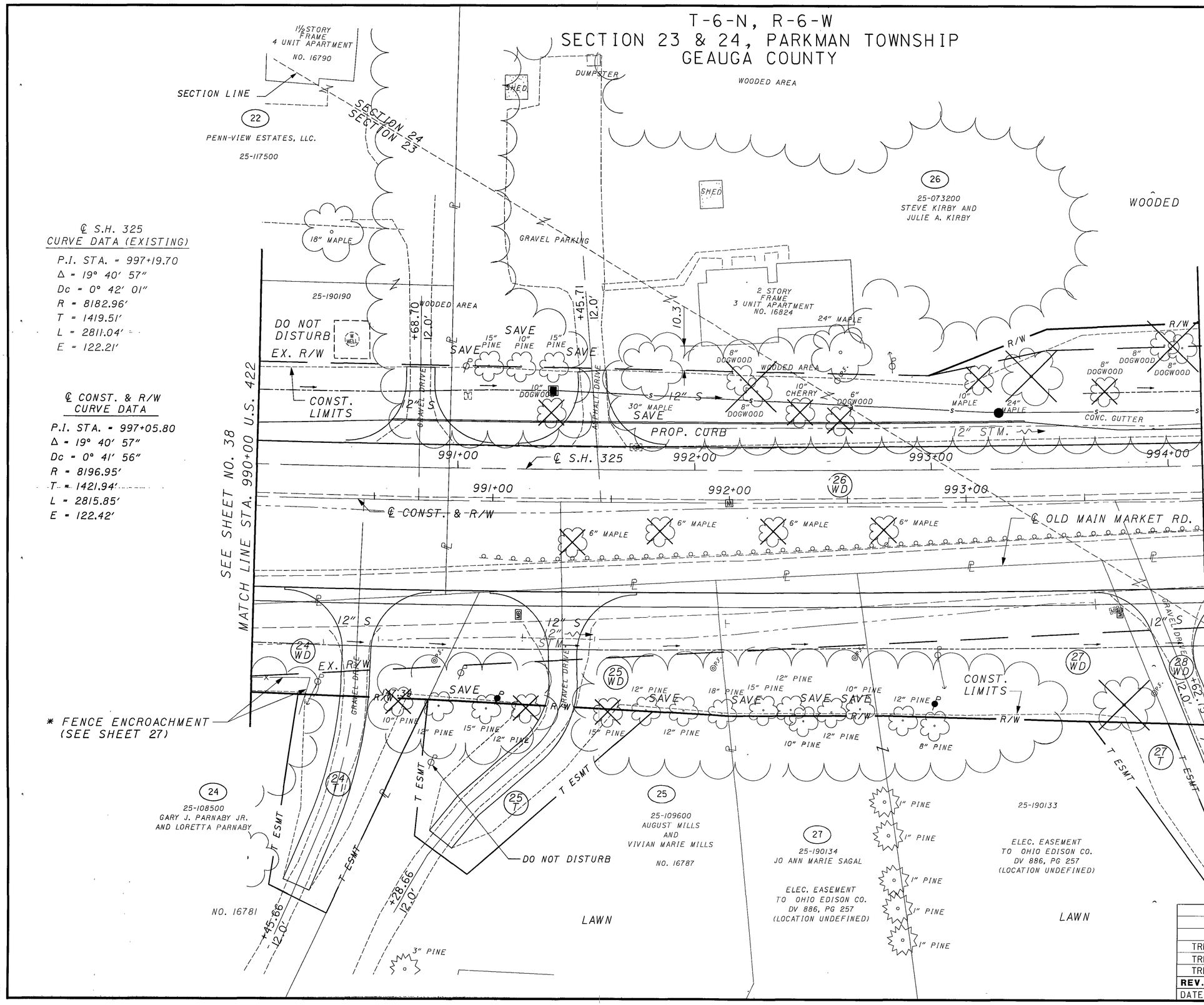

℄ S.H. 325
CURVE DATA (EXISTING)

P.I. STA. = 997+19.70
Δ = 19° 40′ 57″
Dc = 0° 42′ 01″
R = 8182.96′
T = 1419.51′
L = 2811.04′
E = 122.21′

℄ CONST. & R/W
CURVE DATA

P.I. STA. = 997+05.80
Δ = 19° 40′ 57″
Dc = 0° 41′ 56″
R = 8196.95′
T = 1421.94′
L = 2815.85′
E = 122.42′

REV. BY	DATE	DESCRIPTION
TRB	3-15-06	ADDED EXIST. WELL PARCEL 22
TRB	2-6-06	RELOCATED POLES PARCELS 25 & 2
TRB	5-18-05	REVISED PARCEL 22 OWNER

DATE COMPLETED

HORIZONTAL SCALE IN FEET 0 10 20 40

PID NO. 19181

R/W DESIGNER ADT
R/W REVIEWER TRB

RIGHT OF WAY PLAN
STA. 990+00 TO STA. 994+00

GEA/POR-422-18.31/0.00

T-6-N, R-6-W
SECTION 23 & 24, PARKMAN TOWNSHIP
GEAUGA COUNTY

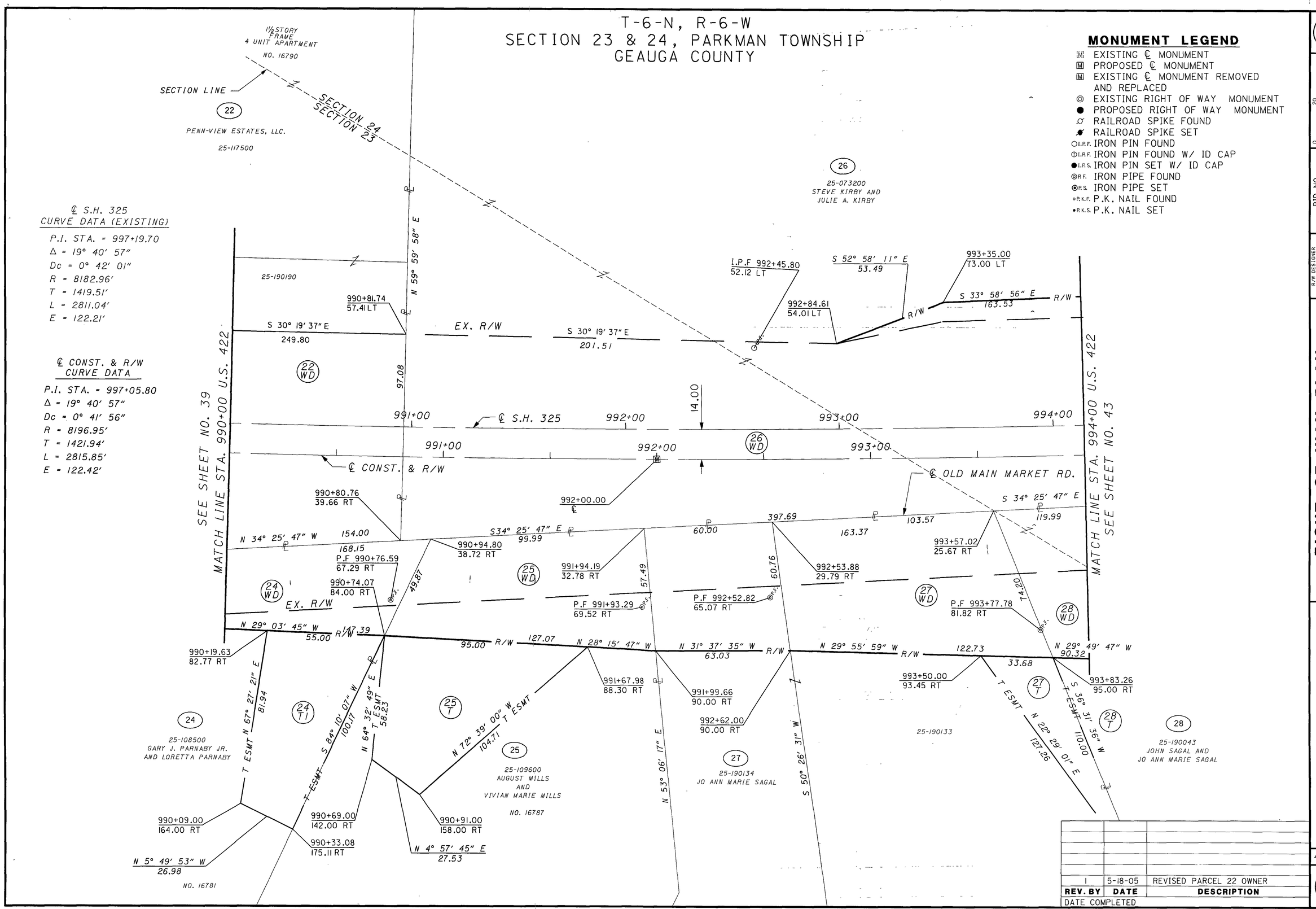

MONUMENT LEGEND

- EXISTING ℄ MONUMENT
- PROPOSED ℄ MONUMENT
- EXISTING ℄ MONUMENT REMOVED AND REPLACED
- EXISTING RIGHT OF WAY MONUMENT
- PROPOSED RIGHT OF WAY MONUMENT
- RAILROAD SPIKE FOUND
- RAILROAD SPIKE SET
- I.R.F. IRON PIN FOUND
- I.R.F. IRON PIN FOUND W/ ID CAP
- I.R.S. IRON PIN SET W/ ID CAP
- P.F. IRON PIPE FOUND
- P.S. IRON PIPE SET
- P.K.F. P.K. NAIL FOUND
- P.K.S. P.K. NAIL SET

HORIZONTAL SCALE IN FEET 0 10 20 40

REV. BY	DATE	DESCRIPTION
1	5-18-05	REVISED PARCEL 22 OWNER

DATE COMPLETED

PID NO. 19181

R/W DESIGNER ADT
R/W REVIEWER TRB

RIGHT OF WAY PLAN
STA. 990+00 TO STA. 994+00

GEA/POR-422-18.31/0.00

T-6-N, R-6-W
SECTION 23 & 24, PARKMAN TOWNSHIP
GEAUGA COUNTY

℄ S.H. 325
CURVE DATA (EXISTING)

P.I. STA. = 997+19.70
Δ = 19° 40′ 57″
Dc = 0° 42′ 01″
R = 8182.96′
T = 1419.51′
L = 2811.04′
E = 122.21′

℄ CONST. & R/W
CURVE DATA

P.I. STA. = 997+05.80
Δ = 19° 40′ 57″
Dc = 0° 41′ 56″
R = 8196.95′
T = 1421.94′
L = 2815.85′
E = 122.42′

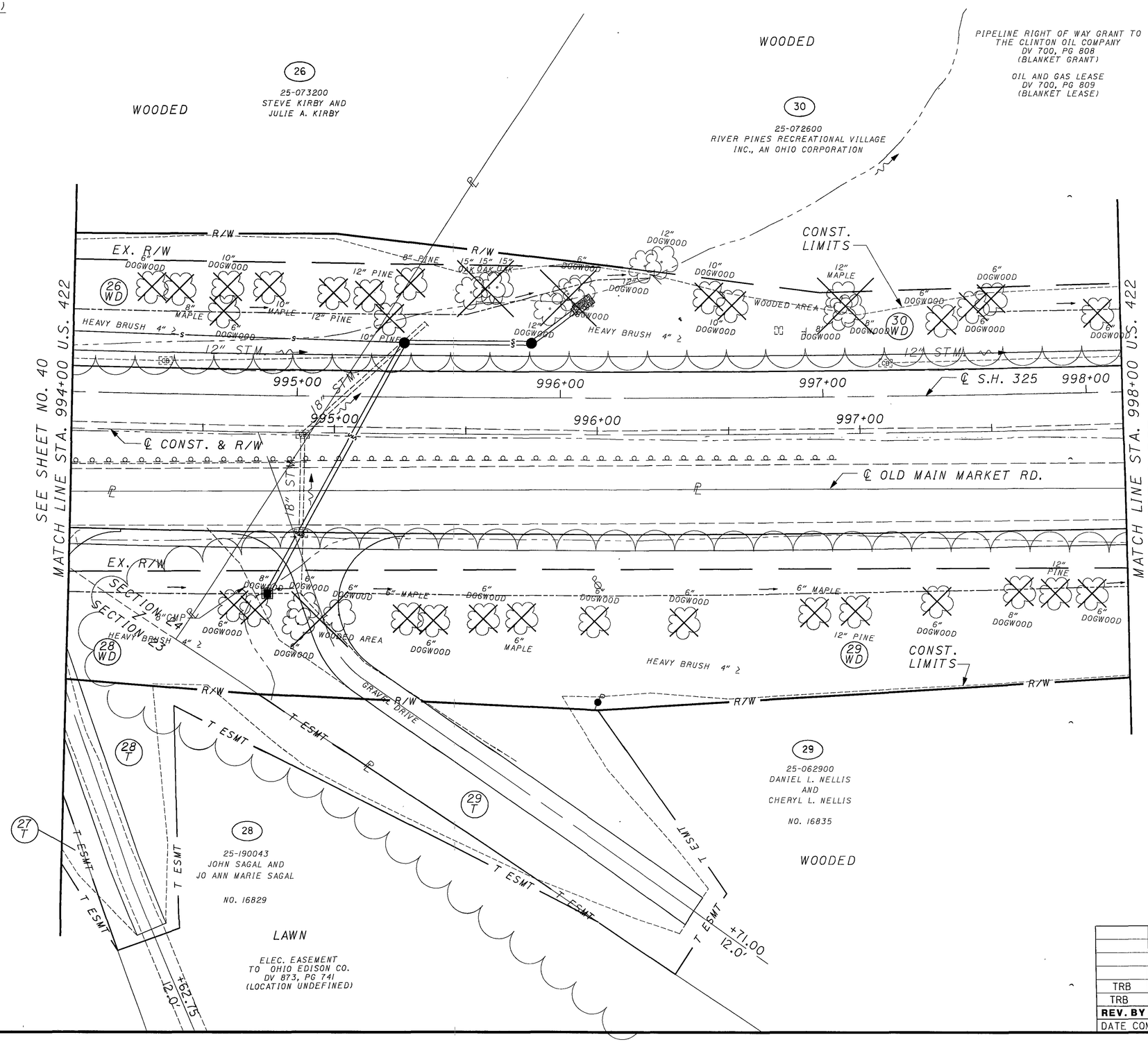

REV. BY	DATE	DESCRIPTION
TRB	3/15/06	ADDED EXIST. POLE PARCEL 29
TRB	2-6-06	RELOCATED POLE PARCEL 29

DATE COMPLETED

HORIZONTAL SCALE IN FEET 0 10 20 40

PID NO. 19181

R/W DESIGNER ADT
R/W REVIEWER TRB

RIGHT OF WAY PLAN
STA. 994+00 TO STA. 998+00

GEA/POR-422-18.31/0.00

T-6-N, R-6-W
SECTION 23 & 24, PARKMAN TOWNSHIP
GEAUGA COUNTY

℄ S.H. 325 CURVE DATA (EXISTING)

P.I. STA. = 997+19.70
Δ = 19° 40′ 57″
Dc = 0° 42′ 01″
R = 8182.96′
T = 1419.51′
L = 2811.04′
E = 122.21′

℄ CONST. & R/W CURVE DATA

P.I. STA. = 997+05.80
Δ = 19° 40′ 57″
Dc = 0° 41′ 56″
R = 8196.95′
T = 1421.94′
L = 2815.85′
E = 122.42′

MONUMENT LEGEND

- EXISTING ℄ MONUMENT
- PROPOSED ℄ MONUMENT
- EXISTING ℄ MONUMENT REMOVED AND REPLACED
- EXISTING RIGHT OF WAY MONUMENT
- PROPOSED RIGHT OF WAY MONUMENT
- RAILROAD SPIKE FOUND
- RAILROAD SPIKE SET
- I.R.F. IRON PIN FOUND
- I.R.F. IRON PIN FOUND W/ ID CAP
- I.R.S. IRON PIN SET W/ ID CAP
- P.F. IRON PIPE FOUND
- P.S. IRON PIPE SET
- P.K.F. P.K. NAIL FOUND
- P.K.S. P.K. NAIL SET

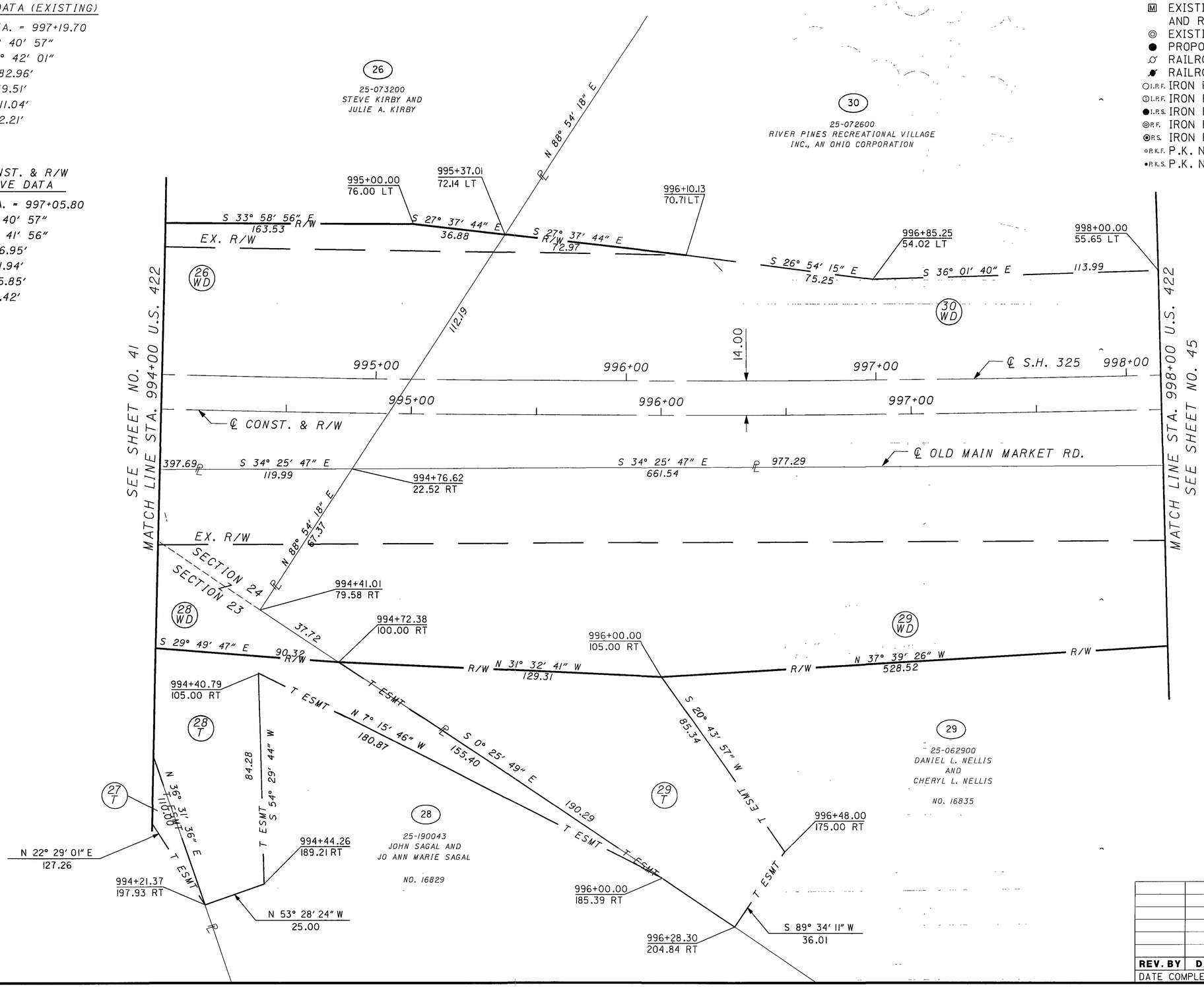

REV. BY	DATE	DESCRIPTION

DATE COMPLETED

HORIZONTAL SCALE IN FEET 0 10 20 40

PID NO. 19181

R/W DESIGNER ADT
R/W REVIEWER TRB

RIGHT OF WAY PLAN
STA. 994+00 TO STA. 998+00

GEA/POR-422-18.31/0.00

T-6-N, R-6-W
SECTION 24, PARKMAN TOWNSHIP
GEAUGA COUNTY

℄ S.H. 325
CURVE DATA (EXISTING)

P.I. STA. = 997+19.70
Δ = 19° 40′ 57″
Dc = 0° 42′ 01″
R = 8182.96′
T = 1419.51′
L = 2811.04′
E = 122.21′

℄ CONST. & R/W
CURVE DATA

P.I. STA. = 997+05.80
Δ = 19° 40′ 57″
Dc = 0° 41′ 56″
R = 8196.95′
T = 1421.94′
L = 2815.85′
E = 122.42′

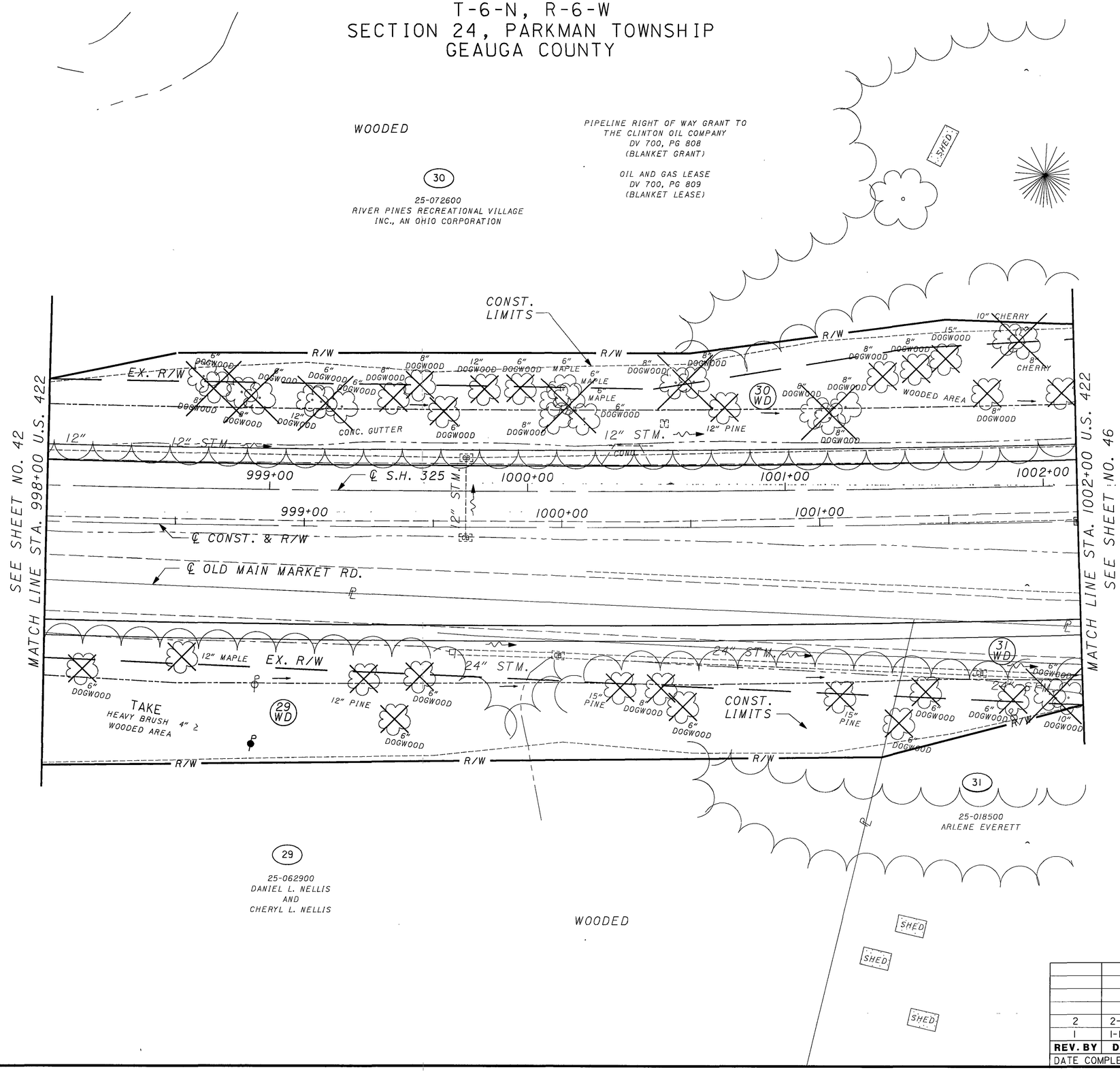

REV. BY	DATE	DESCRIPTION
2	2-6-06	RELOCATED POLE PARCEL 29
1	1-10-06	POWER POLE ADDED TO PARCEL 31

DATE COMPLETED

HORIZONTAL SCALE IN FEET 0 10 20 40

PID NO. 19181

R/W DESIGNER ADT
R/W REVIEWER TRB

RIGHT OF WAY PLAN
STA. 998+00 TO STA. 1002+00

GEA/POR-422-18.31/0.00

T-6-N, R-6-W
SECTION 24, PARKMAN TOWNSHIP
GEAUGA COUNTY

℄ S.H. 325
CURVE DATA (EXISTING)

P.I. STA. = 997+19.70
Δ = 19° 40′ 57″
Dc = 0° 42′ 01″
R = 8182.96′
T = 1419.51′
L = 2811.04′
E = 122.21′

℄ CONST. & R/W
CURVE DATA

P.I. STA. = 997+05.80
Δ = 19° 40′ 57″
Dc = 0° 41′ 56″
R = 8196.95′
T = 1421.94′
L = 2815.85′
E = 122.42′

MONUMENT LEGEND

- EXISTING ℄ MONUMENT
- PROPOSED ℄ MONUMENT
- EXISTING ℄ MONUMENT REMOVED AND REPLACED
- EXISTING RIGHT OF WAY MONUMENT
- PROPOSED RIGHT OF WAY MONUMENT
- RAILROAD SPIKE FOUND
- RAILROAD SPIKE SET
- I.R.F. IRON PIN FOUND
- I.R.F. IRON PIN FOUND W/ ID CAP
- I.R.S. IRON PIN SET W/ ID CAP
- P.F. IRON PIPE FOUND
- P.S. IRON PIPE SET
- P.K.F. P.K. NAIL FOUND
- P.K.S. P.K. NAIL SET

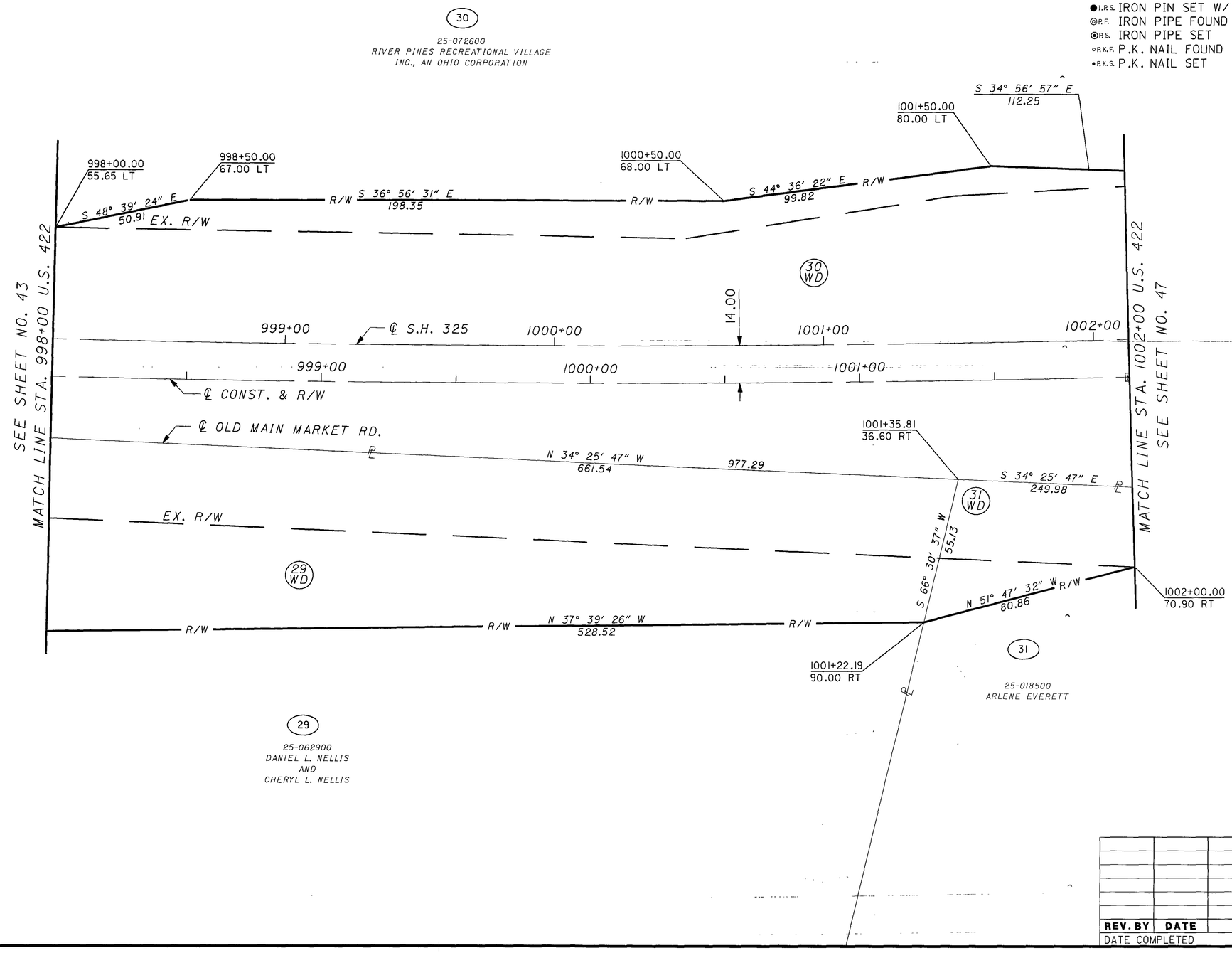

REV. BY	DATE	DESCRIPTION

DATE COMPLETED

HORIZONTAL SCALE IN FEET 0 10 20 40

PID NO. 19181

R/W DESIGNER ADT
R/W REVIEWER TRB

RIGHT OF WAY PLAN
STA. 998+00 TO STA. 1002+00

GEA/POR-422-18.31/0.00

T-6-N, R-6-W
SECTION 24, PARKMAN TOWNSHIP
GEAUGA COUNTY

℄ S.H. 325
CURVE DATA (EXISTING)

P.I. STA. = 997+19.70
Δ = 19° 40′ 57″
Dc = 0° 42′ 01″
R = 8182.96′
T = 1419.51′
L = 2811.04′
E = 122.21′

℄ CONST. & R/W
CURVE DATA

P.I. STA. = 997+05.80
Δ = 19° 40′ 57″
Dc = 0° 41′ 56″
R = 8196.95′
T = 1421.94′
L = 2815.85′
E = 122.42′

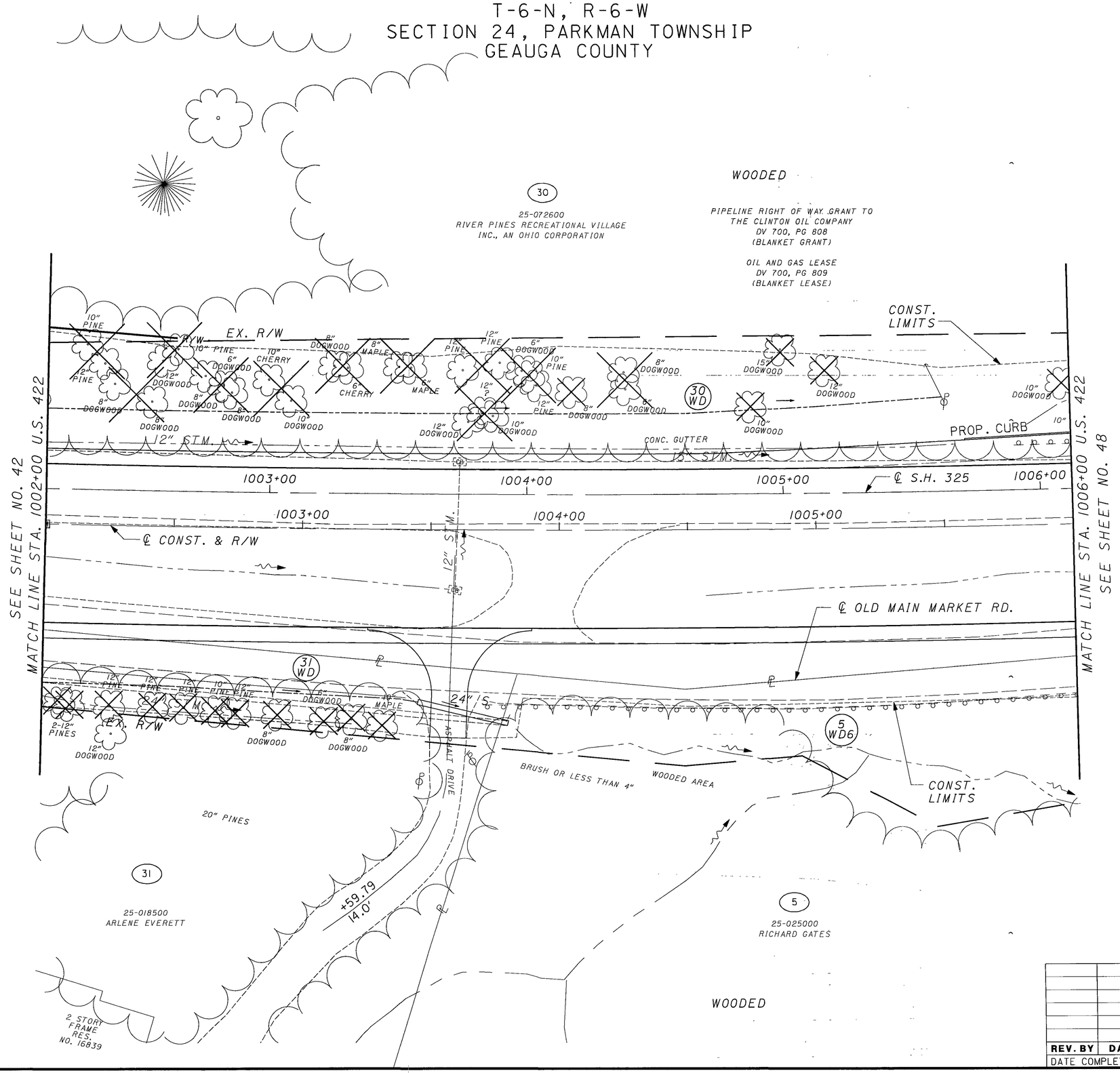

REV. BY	DATE	DESCRIPTION

DATE COMPLETED

HORIZONTAL SCALE IN FEET 0 10 20 40

PID NO. 19181

R/W DESIGNER ADT
R/W REVIEWER TRB

RIGHT OF WAY PLAN
STA. 1002+00 TO STA. 1006+00

GEA/POR-422-18.31/0.00

T-6-N, R-6-W
SECTION 24, PARKMAN TOWNSHIP
GEAUGA COUNTY

℄ S.H. 325
CURVE DATA (EXISTING)

P.I. STA. = 997+19.70
Δ = 19° 40′ 57″
Dc = 0° 42′ 01″
R = 8182.96′
T = 1419.51′
L = 2811.04′
E = 122.21′

℄ CONST. & R/W
CURVE DATA

P.I. STA. = 997+05.80
Δ = 19° 40′ 57″
Dc = 0° 41′ 56″
R = 8196.95′
T = 1421.94′
L = 2815.85′
E = 122.42′

MONUMENT LEGEND

- EXISTING ℄ MONUMENT
- PROPOSED ℄ MONUMENT
- EXISTING ℄ MONUMENT REMOVED AND REPLACED
- EXISTING RIGHT OF WAY MONUMENT
- PROPOSED RIGHT OF WAY MONUMENT
- RAILROAD SPIKE FOUND
- RAILROAD SPIKE SET
- I.R.F. IRON PIN FOUND
- I.R.F. IRON PIN FOUND W/ ID CAP
- I.R.S. IRON PIN SET W/ ID CAP
- P.F. IRON PIPE FOUND
- P.S. IRON PIPE SET
- P.K.F. P.K. NAIL FOUND
- P.K.S. P.K. NAIL SET

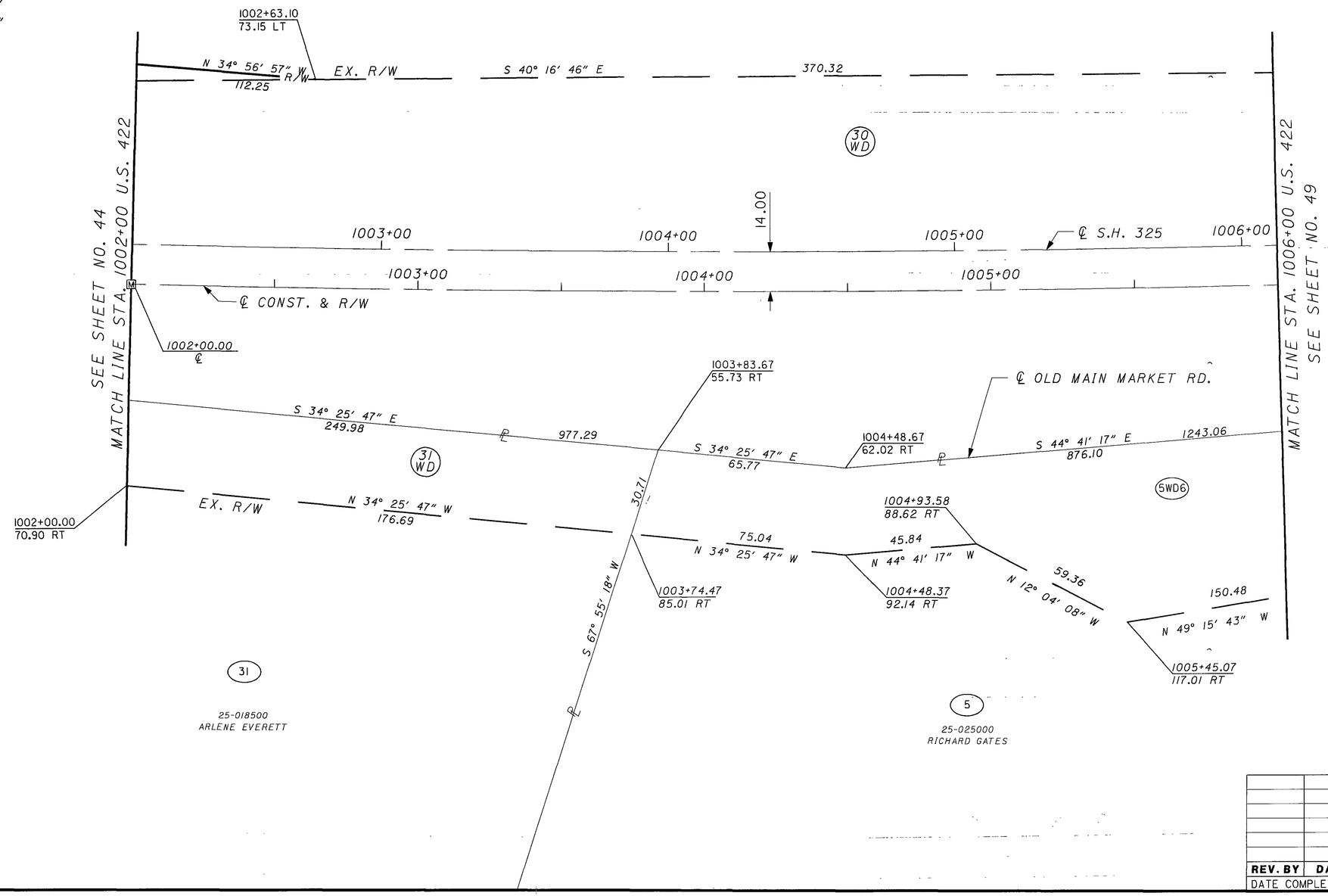

REV. BY	DATE	DESCRIPTION

DATE COMPLETED

HORIZONTAL SCALE IN FEET 0 10 20 40

PID NO. 19181

R/W DESIGNER ADT
R/W REVIEWER TRB

RIGHT OF WAY PLAN
STA. 1002+00 TO STA. 1006+00

GEA/POR-422-18.31/0.00

T-6-N, R-6-W
SECTION 24, PARKMAN TOWNSHIP
GEAUGA COUNTY

℄ S.H. 325
CURVE DATA (EXISTING)

P.I. STA. = 997+19.70
Δ = 19° 40′ 57″
Dc = 0° 42′ 01″
R = 8182.96′
T = 1419.51′
L = 2811.04′
E = 122.21′

℄ CONST. & R/W
CURVE DATA

P.I. STA. = 997+05.80
Δ = 19° 40′ 57″
Dc = 0° 41′ 56″
R = 8196.95′
T = 1421.94′
L = 2815.85′
E = 122.42′

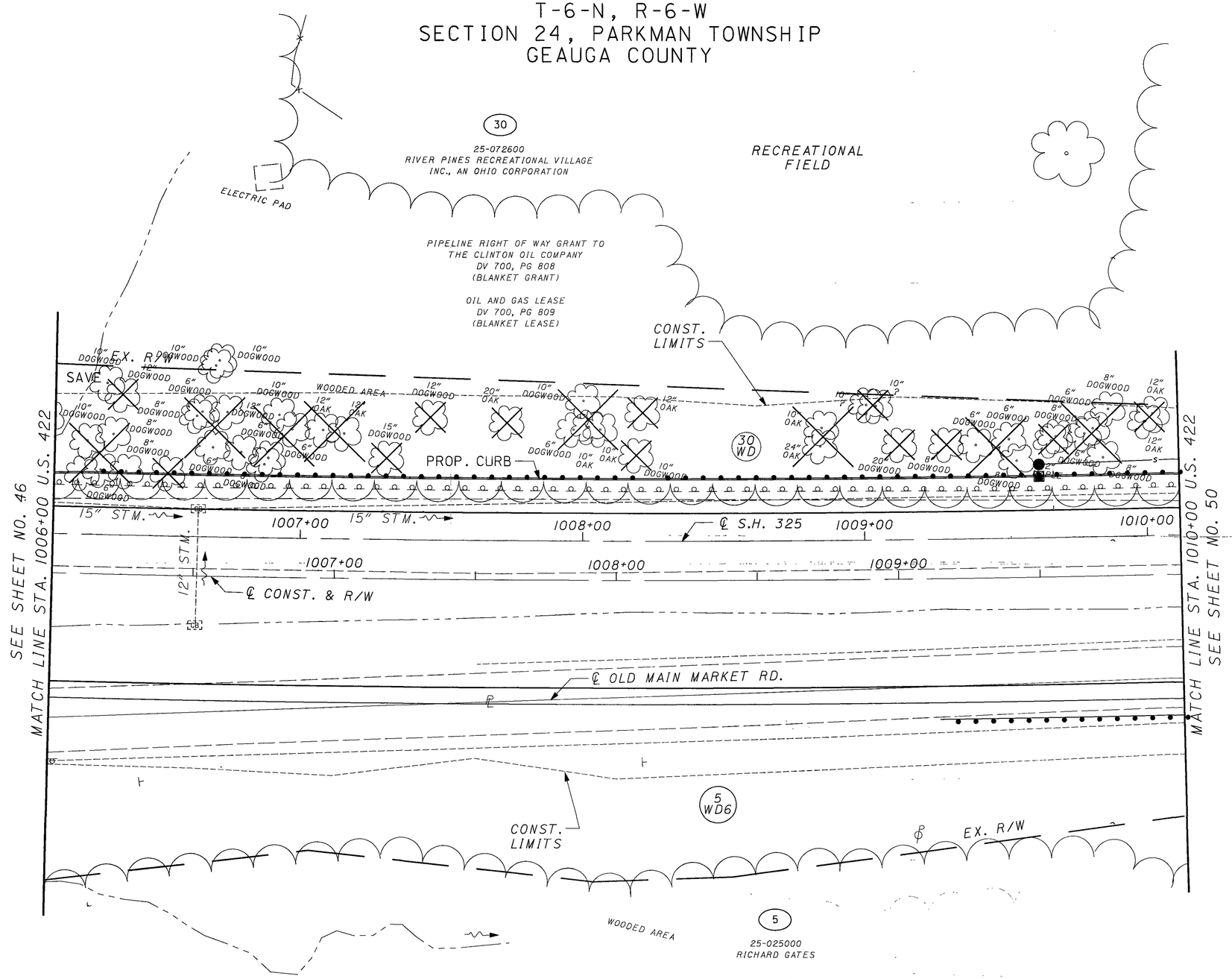

REV. BY	DATE	DESCRIPTION

DATE COMPLETED

0 10 20 40
HORIZONTAL
SCALE IN FEET

PID NO. 19181

R/W DESIGNER ADT
R/W REVIEWER TRB

RIGHT OF WAY PLAN
STA. 1006+00 TO STA. 1010+00

GEA/POR-422-18.31/0.00

48/75

305
332

T-6-N, R-6-W
SECTION 24, PARKMAN TOWNSHIP
GEAUGA COUNTY

℄ S.H. 325
CURVE DATA (EXISTING)

P.I. STA. = 997+19.70
Δ = 19° 40′ 57″
Dc = 0° 42′ 01″
R = 8182.96′
T = 1419.51′
L = 2811.04′
E = 122.21′

℄ CONST. & R/W
CURVE DATA

P.I. STA. = 997+05.80
Δ = 19° 40′ 57″
Dc = 0° 41′ 56″
R = 8196.95′
T = 1421.94′
L = 2815.85′
E = 122.42′

MONUMENT LEGEND

- EXISTING ℄ MONUMENT
- PROPOSED ℄ MONUMENT
- EXISTING ℄ MONUMENT REMOVED AND REPLACED
- EXISTING RIGHT OF WAY MONUMENT
- PROPOSED RIGHT OF WAY MONUMENT
- RAILROAD SPIKE FOUND
- RAILROAD SPIKE SET
- I.R.F. IRON PIN FOUND
- I.R.F. IRON PIN FOUND W/ ID CAP
- I.R.S. IRON PIN SET W/ ID CAP
- P.F. IRON PIPE FOUND
- P.S. IRON PIPE SET
- P.K.F. P.K. NAIL FOUND
- P.K.S. P.K. NAIL SET

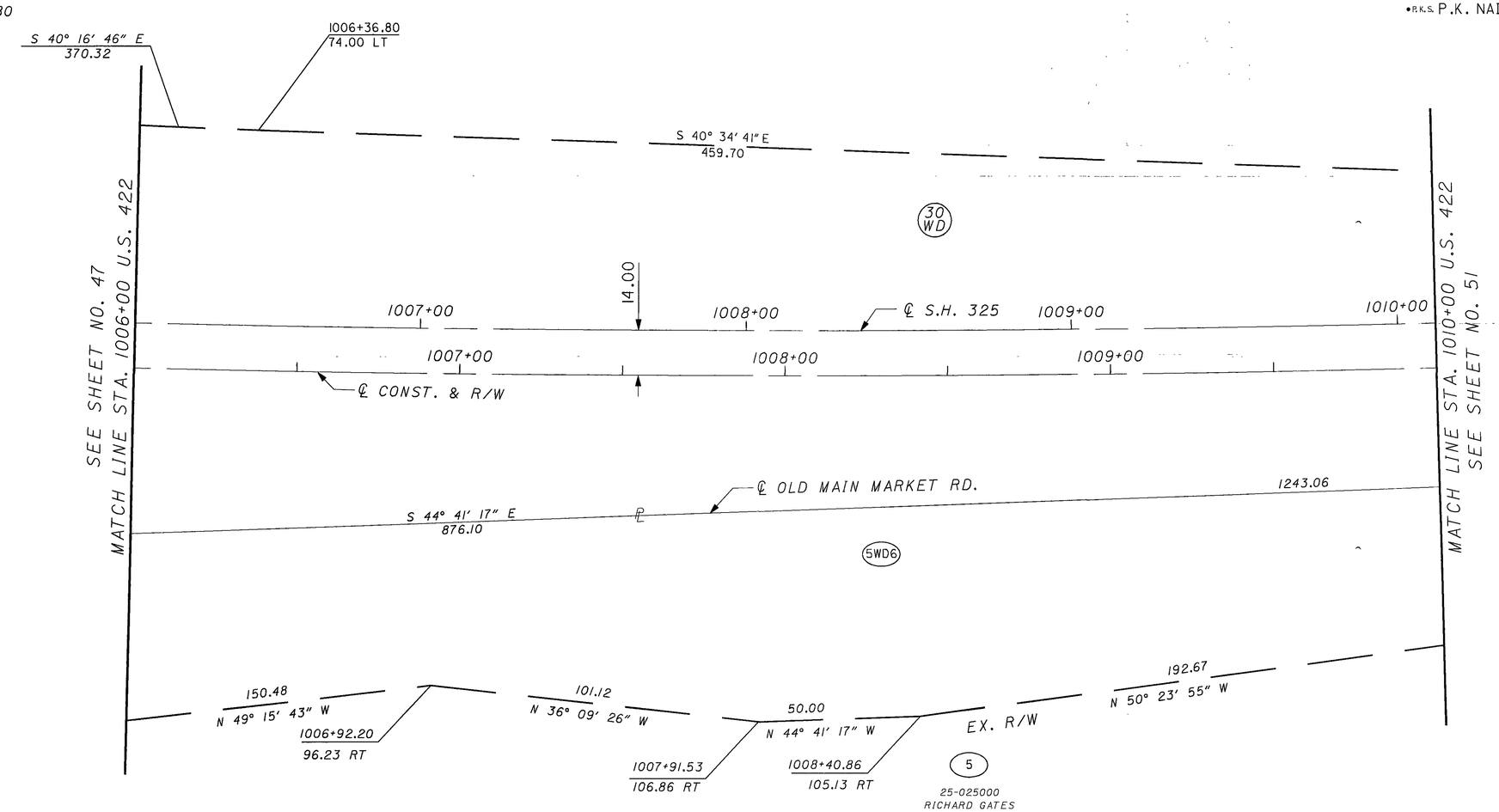

REV. BY	DATE	DESCRIPTION

DATE COMPLETED

0 10 20 40 HORIZONTAL SCALE IN FEET

PID NO. 19181

R/W DESIGNER ADT
R/W REVIEWER TRB

RIGHT OF WAY PLAN
STA. 1006+00 TO STA. 1010+00

GEA/POR-422-18.31/0.00

T-6-N, R-6-W
SECTION 24, PARKMAN TOWNSHIP
GEAUGA COUNTY

℄ S.H. 325
CURVE DATA (EXISTING)

P.I. STA. = 997+19.70
Δ = 19° 40′ 57″
Dc = 0° 42′ 01″
R = 8182.96′
T = 1419.51′
L = 2811.04′
E = 122.21′

℄ CONST. & R/W
CURVE DATA

P.I. STA. = 997+05.80
Δ = 19° 40′ 57″
Dc = 0° 41′ 56″
R = 8196.95′
T = 1421.94′
L = 2815.85′
E = 122.42′

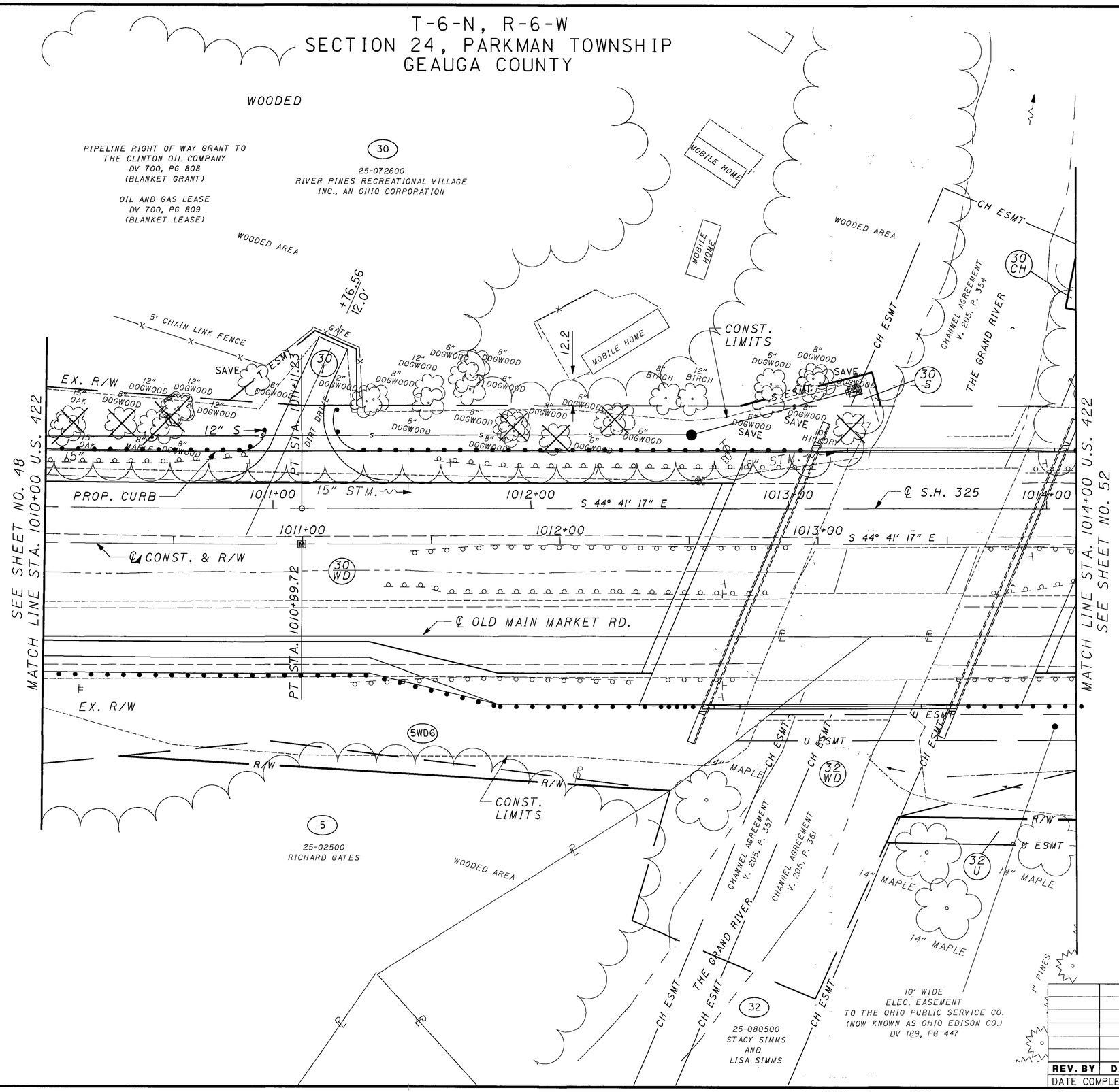

REV. BY	DATE	DESCRIPTION

DATE COMPLETED

0 10 20 40
HORIZONTAL SCALE IN FEET

PID NO. 19181

R/W DESIGNER ADT
R/W REVIEWER TRB

RIGHT OF WAY PLAN
STA. 1010+00 TO STA. 1014+00

GEA/POR-422-18.31/0.00

50/75

307/332

T-6-N, R-6-W
SECTION 24, PARKMAN TOWNSHIP
GEAUGA COUNTY

℄ S.H. 325
CURVE DATA (EXISTING)

P.I. STA. = 997+19.70
Δ = 19° 40′ 57″
Dc = 0° 42′ 01″
R = 8182.96′
T = 1419.51′
L = 2811.04′
E = 122.21′

℄ CONST. & R/W
CURVE DATA

P.I. STA. = 997+05.80
Δ = 19° 40′ 57″
Dc = 0° 41′ 56″
R = 8196.95′
T = 1421.94′
L = 2815.85′
E = 122.42′

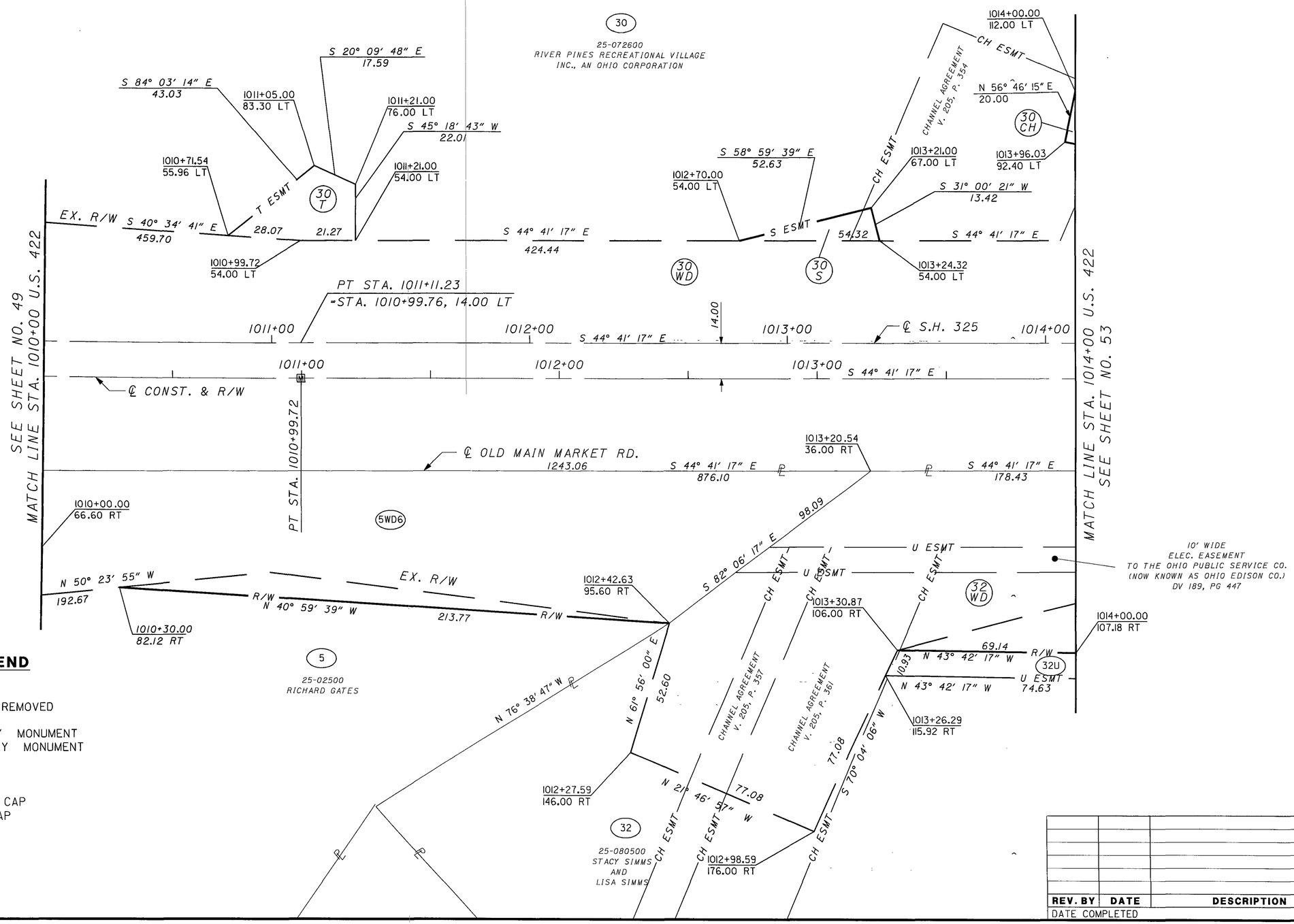

MONUMENT LEGEND

- EXISTING ℄ MONUMENT
- PROPOSED ℄ MONUMENT
- EXISTING ℄ MONUMENT REMOVED AND REPLACED
- EXISTING RIGHT OF WAY MONUMENT
- PROPOSED RIGHT OF WAY MONUMENT
- RAILROAD SPIKE FOUND
- RAILROAD SPIKE SET
- I.R.F. IRON PIN FOUND
- I.R.F. IRON PIN FOUND W/ ID CAP
- I.R.S. IRON PIN SET W/ ID CAP
- P.F. IRON PIPE FOUND
- P.S. IRON PIPE SET
- P.K.F. P.K. NAIL FOUND
- P.K.S. P.K. NAIL SET

REV. BY	DATE	DESCRIPTION

DATE COMPLETED

HORIZONTAL SCALE IN FEET 0 10 20 40

PID NO. 19181

R/W DESIGNER ADT
R/W REVIEWER TRB

RIGHT OF WAY PLAN
STA. 1010+00 TO STA. 1014+00

GEA/POR-422-18.31/0.00

T-6-N, R-6-W
SECTION 24, PARKMAN TOWNSHIP
GEAUGA COUNTY

℄ S.H. 325 CURVE DATA (EXISTING)

P.I. STA. = 1016+97.25
Δ = 4° 02′ 44″
Dc = 1° 15′ 09″
R = 4574.28′
T = 161.55′
L = 322.97′
E = 2.85′

℄ CONST. & R/W CURVE DATA

P.I. STA. = 1016+86.23
Δ = 4° 02′ 45″
Dc = 1° 14′ 56″
R = 4587.90′
T = 162.05′
L = 323.96′
E = 2.86′

℄ CONST. S.R. 282 CURVE DATA

P.I. STA. = 147+57.82
Δ = 12° 49′ 57″
Dc = 13° 28′ 53″
R = 425.00′
T = 47.79′
L = 95.19′
E = 2.68′

℄ CONST. S.R. 282 CURVE DATA

P.I. STA. = 144+29.26
Δ = 3° 14′ 57″
Dc = 3° 30′ 00″
R = 1637.00′
T = 46.43′
L = 92.83′
E = 0.66′

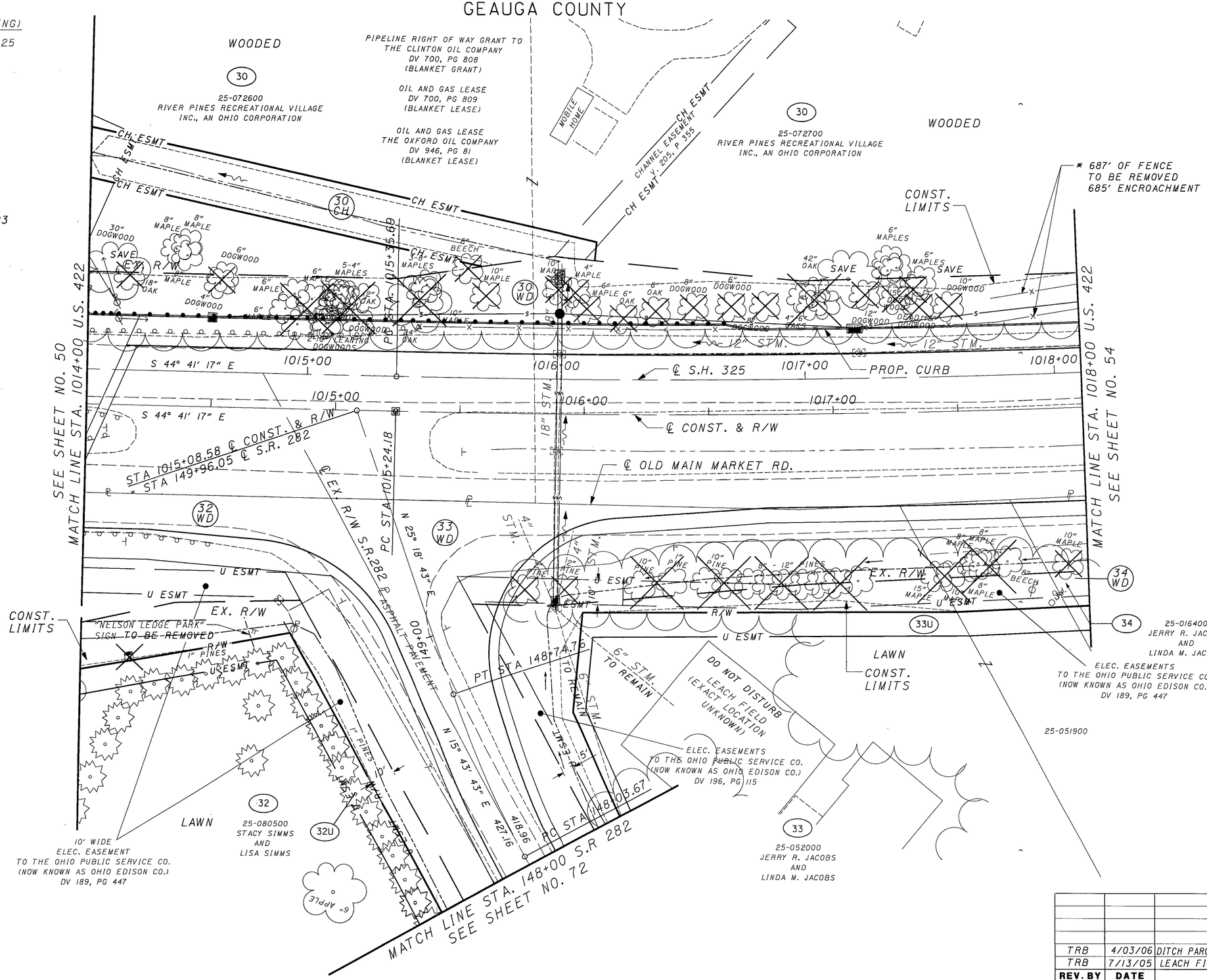

REV. BY	DATE	DESCRIPTION
TRB	4/03/06	DITCH PARCEL 32 & 6″ STMS PARCEL 33
TRB	7/13/05	LEACH FIELD ADDED TO PARCEL 33

DATE COMPLETED

HORIZONTAL SCALE IN FEET 0 10 20 40

PID NO. 19181

R/W DESIGNER ADT
R/W REVIEWER TRB

RIGHT OF WAY PLAN
STA. 1014+00 TO STA. 1018+00

GEA/POR-422-18.31/0.00

52/75

309/332

T-6-N, R-6-W
SECTION 24, PARKMAN TOWNSHIP
GEAUGA COUNTY

℄ S.H. 325 CURVE DATA (EXISTING)

P.I. STA. = 1016+97.25
Δ = 4° 02′ 44″
Dc = 1° 15′ 09″
R = 4574.28′
T = 161.55′
L = 322.97′
E = 2.85′

℄ CONST. & R/W CURVE DATA

P.I. STA. = 1016+86.23
Δ = 4° 02′ 45″
Dc = 1° 14′ 56″
R = 4587.90′
T = 162.05′
L = 323.96′
E = 2.86′

℄ CONST. S.R. 282 CURVE DATA

P.I. STA. = 147+57.82
Δ = 12° 49′ 57″
Dc = 13° 28′ 53″
R = 425.00′
T = 47.79′
L = 95.19′
E = 2.68′

℄ CONST. S.R. 282 CURVE DATA

P.I. STA. = 144+29.26
Δ = 3° 14′ 57″
Dc = 3° 30′ 00″
R = 1637.00′
T = 46.43′
L = 92.83′
E = 0.66′

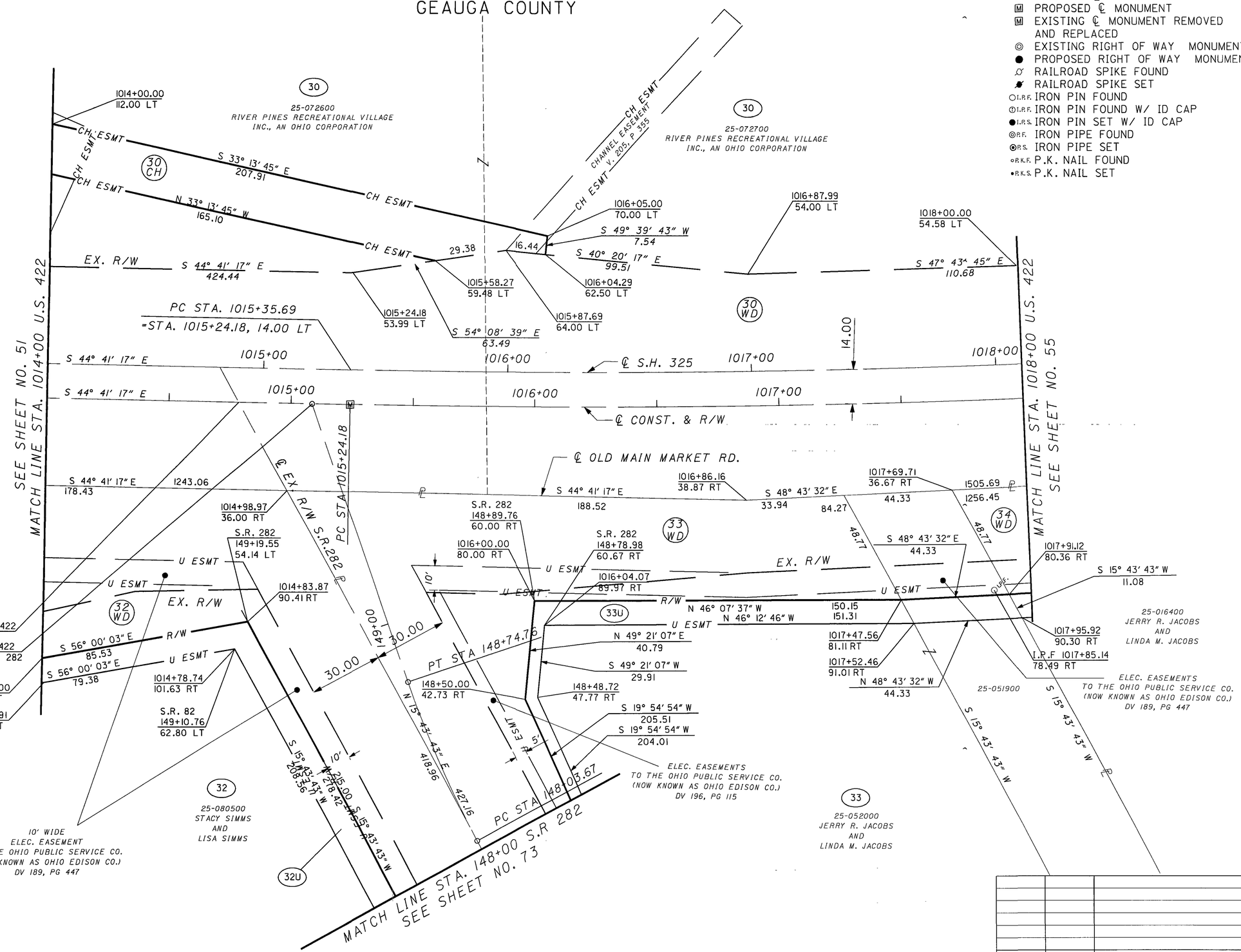

MONUMENT LEGEND

- EXISTING ℄ MONUMENT
- PROPOSED ℄ MONUMENT
- EXISTING ℄ MONUMENT REMOVED AND REPLACED
- EXISTING RIGHT OF WAY MONUMENT
- PROPOSED RIGHT OF WAY MONUMENT
- RAILROAD SPIKE FOUND
- RAILROAD SPIKE SET
- I.R.F. IRON PIN FOUND
- I.R.F. IRON PIN FOUND W/ ID CAP
- I.R.S. IRON PIN SET W/ ID CAP
- R.F. IRON PIPE FOUND
- R.S. IRON PIPE SET
- P.K.F. P.K. NAIL FOUND
- P.K.S. P.K. NAIL SET

HORIZONTAL SCALE IN FEET 0 10 20 40

PID NO. 19181

R/W DESIGNER ADT
R/W REVIEWER TRB

RIGHT OF WAY PLAN
STA. 1014+00 TO STA. 1018+00

GEA/POR-422-18.31/0.00

53/75

310/332

REV. BY	DATE	DESCRIPTION

DATE COMPLETED

T-6-N, R-6-W
SECTION 24, PARKMAN TOWNSHIP
GEAUGA COUNTY

℄ S.H. 325
CURVE DATA (EXISTING)

P.I. STA. = 1016+97.25
Δ = 4° 02′ 44″
Dc = 1° 15′ 09″
R = 4574.28′
T = 161.55′
L = 322.97′
E = 2.85′

℄ CONST. & R/W
CURVE DATA

P.I. STA. = 1016+86.23
Δ = 4° 02′ 45″
Dc = 1° 14′ 56″
R = 4587.90′
T = 162.05′
L = 323.96′
E = 2.86′

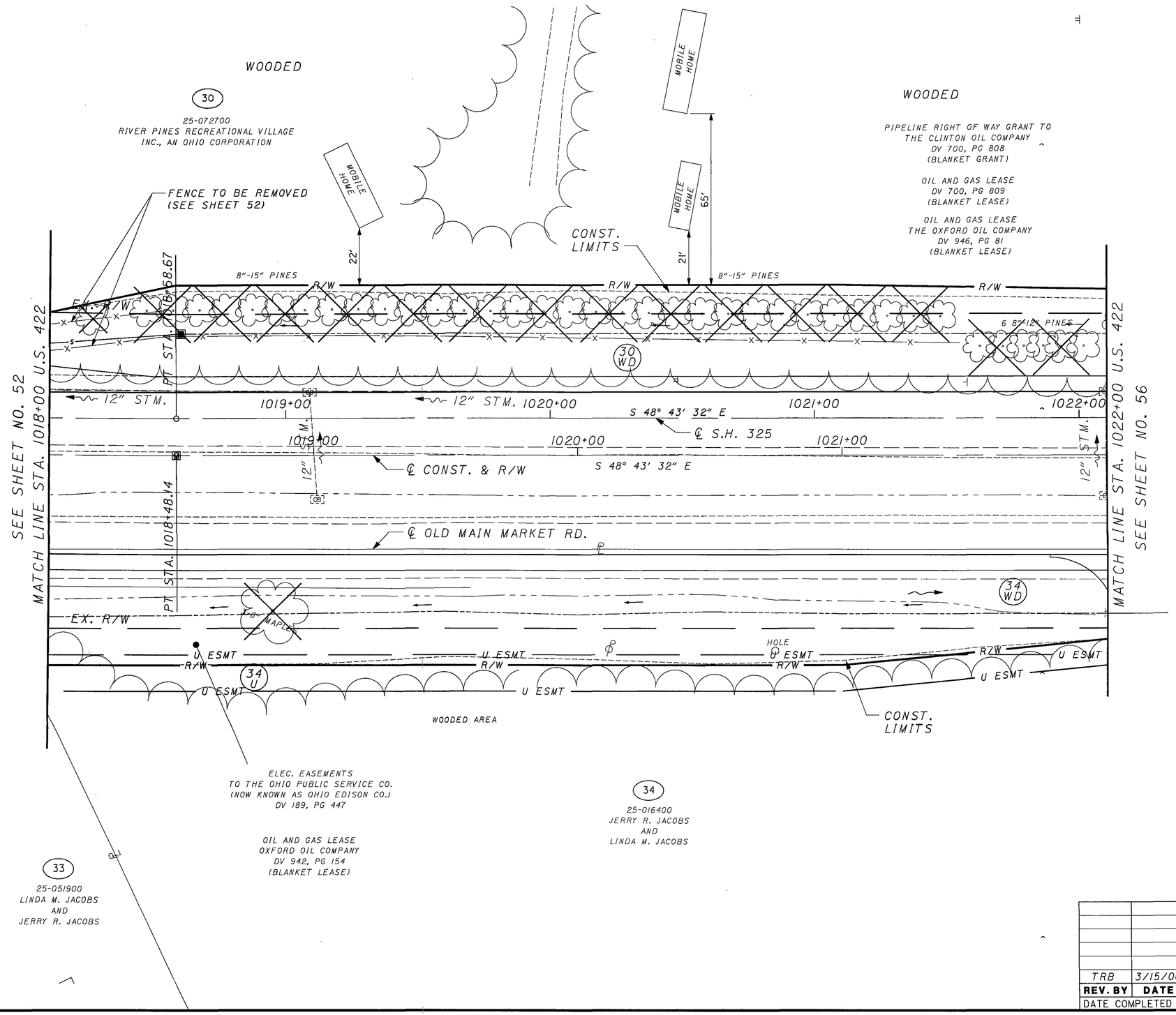

REV. BY	DATE	DESCRIPTION
TRB	3/15/06	ADDED DRIVE PARCEL 34

DATE COMPLETED

HORIZONTAL SCALE IN FEET 0 10 20 40

PID NO. 19181

R/W DESIGNER ADT
R/W REVIEWER TRB

RIGHT OF WAY PLAN
STA. 1018+00 TO STA. 1022+00

GEA/POR-422-18.31/0.00

54/75

311/332

T-6-N, R-6-W
SECTION 24, PARKMAN TOWNSHIP
GEAUGA COUNTY

℄ S.H. 325
CURVE DATA (EXISTING)

P.I. STA. = 1016+97.25
Δ = 4° 02′ 44″
Dc = 1° 15′ 09″
R = 4574.28′
T = 161.55′
L = 322.97′
E = 2.85′

℄ CONST. & R/W
CURVE DATA

P.I. STA. = 1016+86.23
Δ = 4° 02′ 45″
Dc = 1° 14′ 56″
R = 4587.90′
T = 162.05′
L = 323.96′
E = 2.86′

MONUMENT LEGEND

- EXISTING ℄ MONUMENT
- PROPOSED ℄ MONUMENT
- EXISTING ℄ MONUMENT REMOVED AND REPLACED
- EXISTING RIGHT OF WAY MONUMENT
- PROPOSED RIGHT OF WAY MONUMENT
- RAILROAD SPIKE FOUND
- RAILROAD SPIKE SET
- I.R.F. IRON PIN FOUND
- I.R.F. IRON PIN FOUND W/ ID CAP
- I.R.S. IRON PIN SET W/ ID CAP
- P.F. IRON PIPE FOUND
- P.S. IRON PIPE SET
- P.K.F. P.K. NAIL FOUND
- P.K.S. P.K. NAIL SET

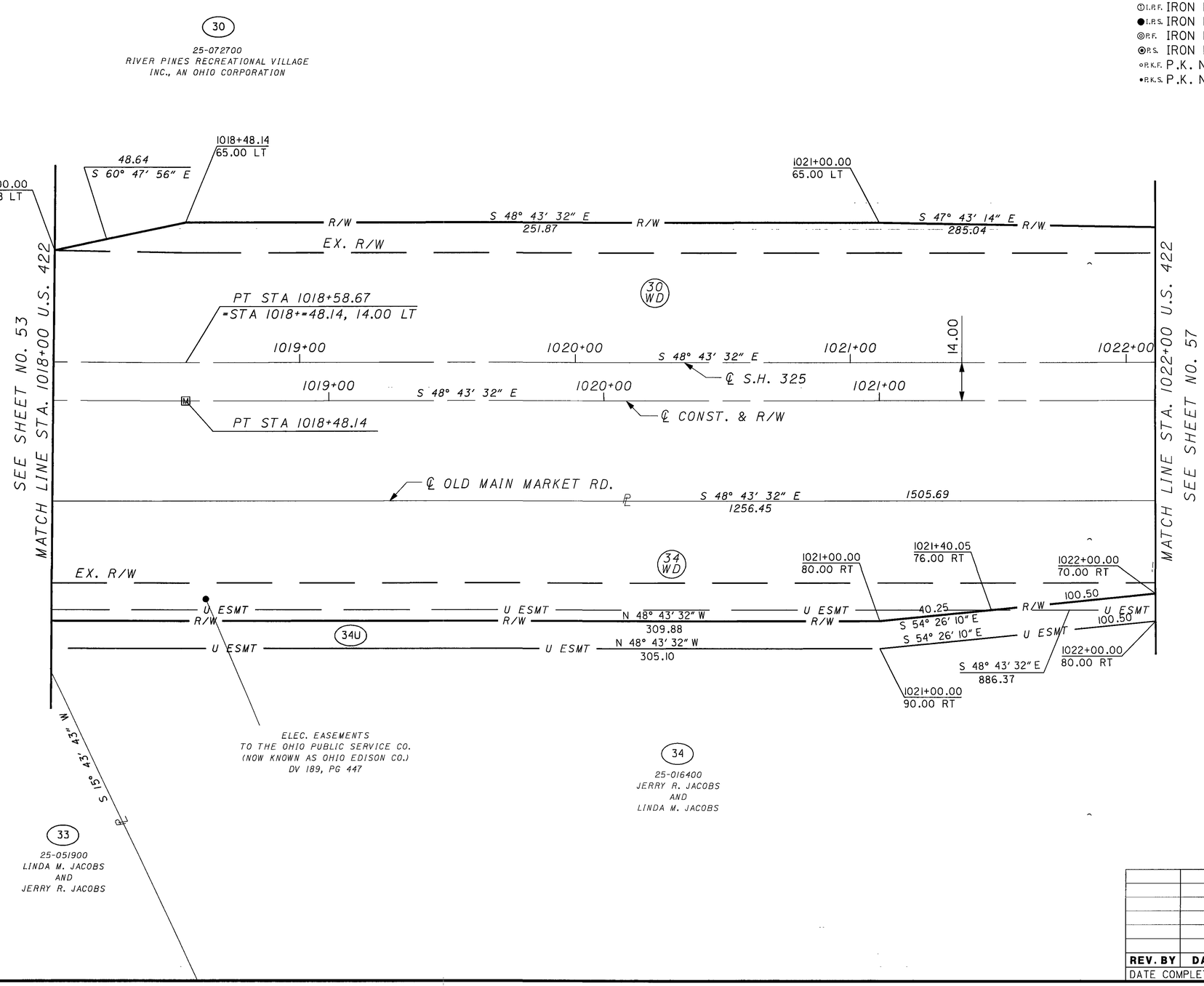

REV. BY	DATE	DESCRIPTION

DATE COMPLETED

HORIZONTAL SCALE IN FEET 0 10 20 40

PID NO. 19181

R/W DESIGNER ADT
R/W REVIEWER TRB

RIGHT OF WAY PLAN
STA. 1018+00 TO STA. 1022+00

GEA/POR-422-18.31/0.00

55/75

312/332

T-6-N, R-6-W
SECTION 24, PARKMAN TOWNSHIP
GEAUGA COUNTY

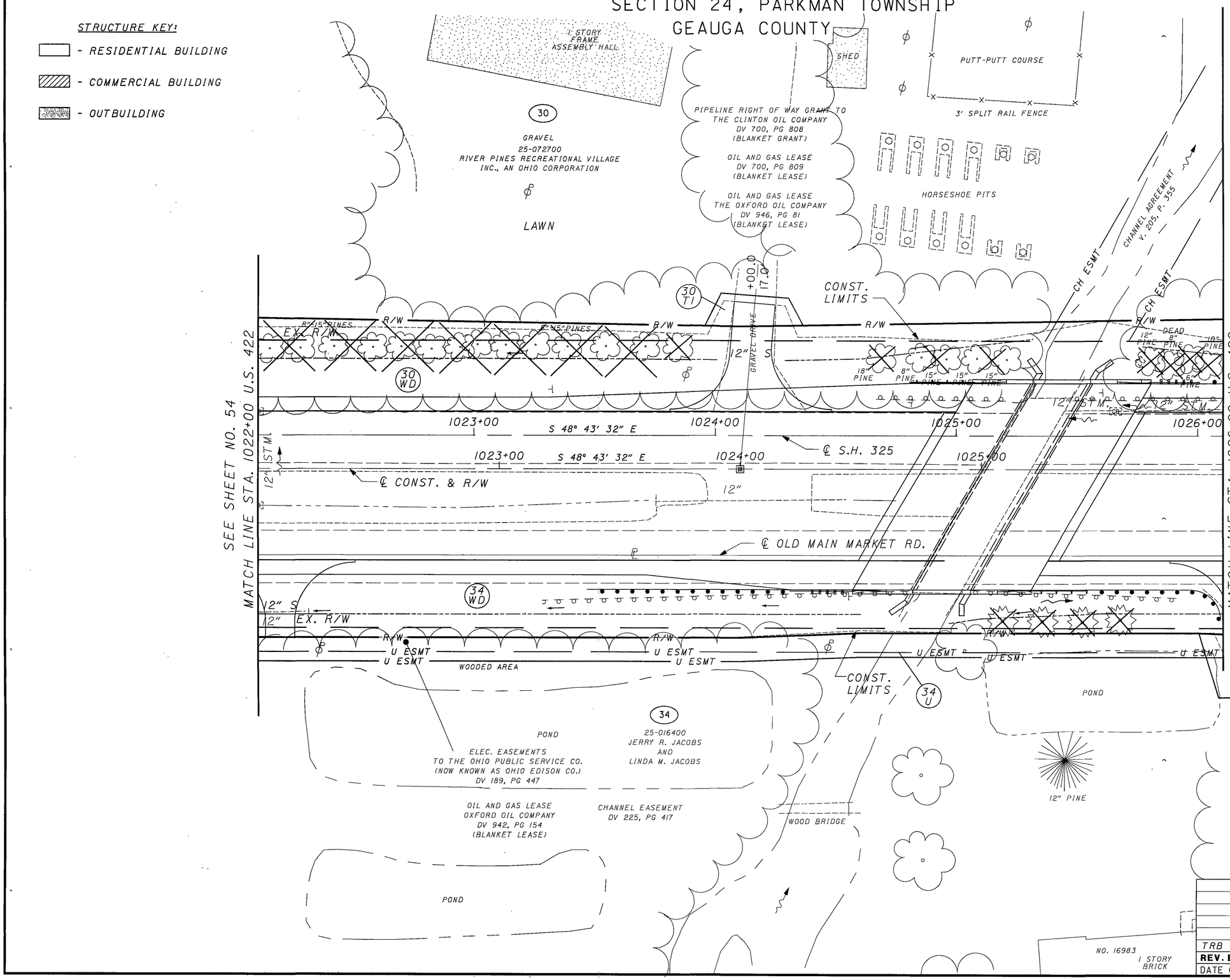

REV. BY	DATE	DESCRIPTION
TRB	3/15/06	ADDED DRIVE PARCEL 34

DATE COMPLETED

HORIZONTAL SCALE IN FEET 0 10 20 40

PID NO. 19181

R/W DESIGNER ADT
R/W REVIEWER TRB

RIGHT OF WAY PLAN
STA. 1022+00 TO STA. 1026+00

GEA/POR-422-18.31/0.00

T-6-N, R-6-W
SECTION 24, PARKMAN TOWNSHIP
GEAUGA COUNTY

MONUMENT LEGEND

- EXISTING ℄ MONUMENT
- PROPOSED ℄ MONUMENT
- EXISTING ℄ MONUMENT REMOVED AND REPLACED
- EXISTING RIGHT OF WAY MONUMENT
- PROPOSED RIGHT OF WAY MONUMENT
- RAILROAD SPIKE FOUND
- RAILROAD SPIKE SET
- I.R.F. IRON PIN FOUND
- I.R.F. IRON PIN FOUND W/ ID CAP
- I.R.S. IRON PIN SET W/ ID CAP
- R.F. IRON PIPE FOUND
- R.S. IRON PIPE SET
- P.K.F. P.K. NAIL FOUND
- P.K.S. P.K. NAIL SET

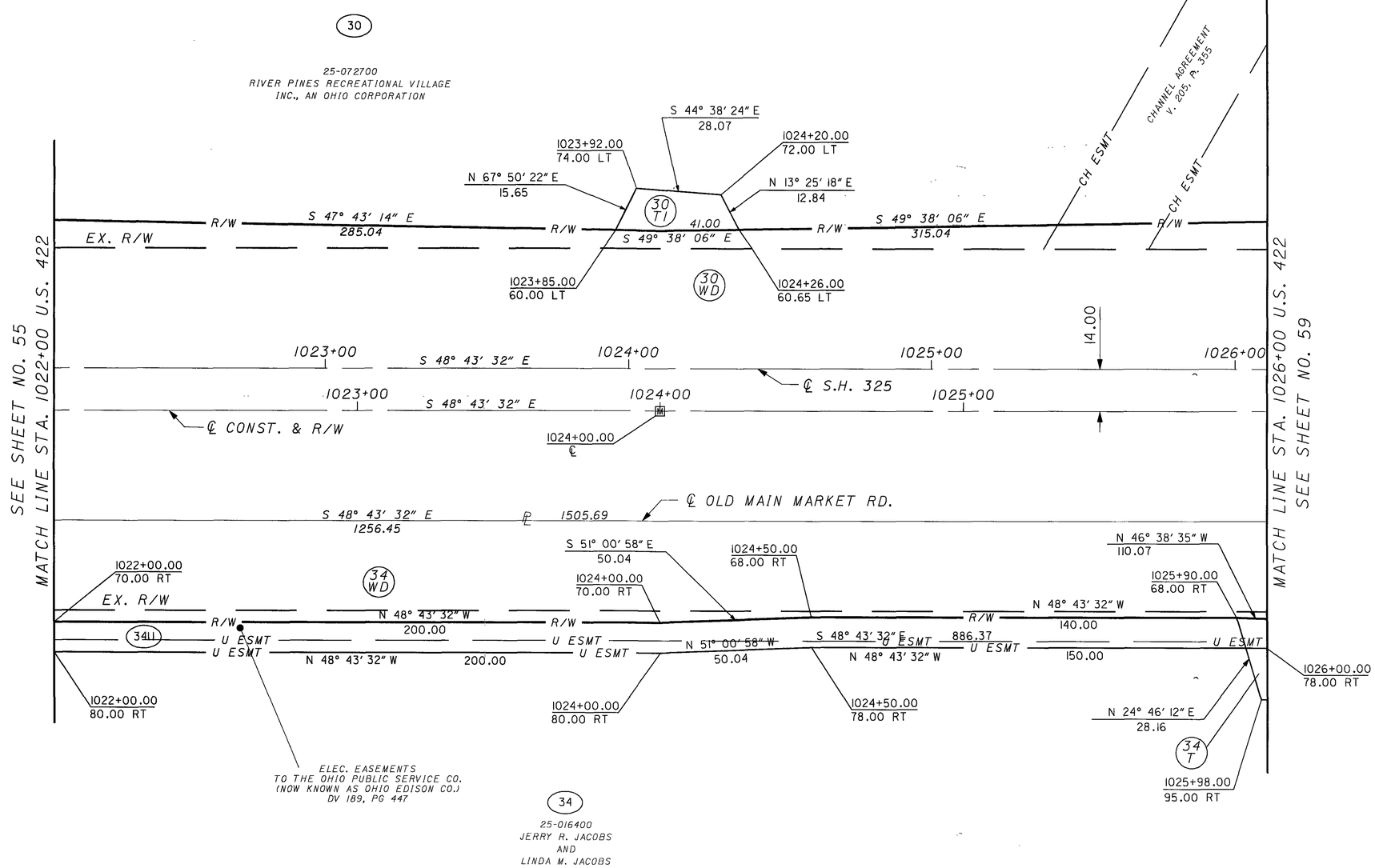

REV. BY	DATE	DESCRIPTION

DATE COMPLETED

HORIZONTAL SCALE IN FEET 0 10 20 40

PID NO. 19181

R/W DESIGNER ADT
R/W REVIEWER TRB

RIGHT OF WAY PLAN
STA. 1022+00 TO STA. 1026+00

GEA/POR-422-18.31/0.00

T-6-N, R-6-W
SECTION 24, PARKMAN TOWNSHIP
GEAUGA COUNTY

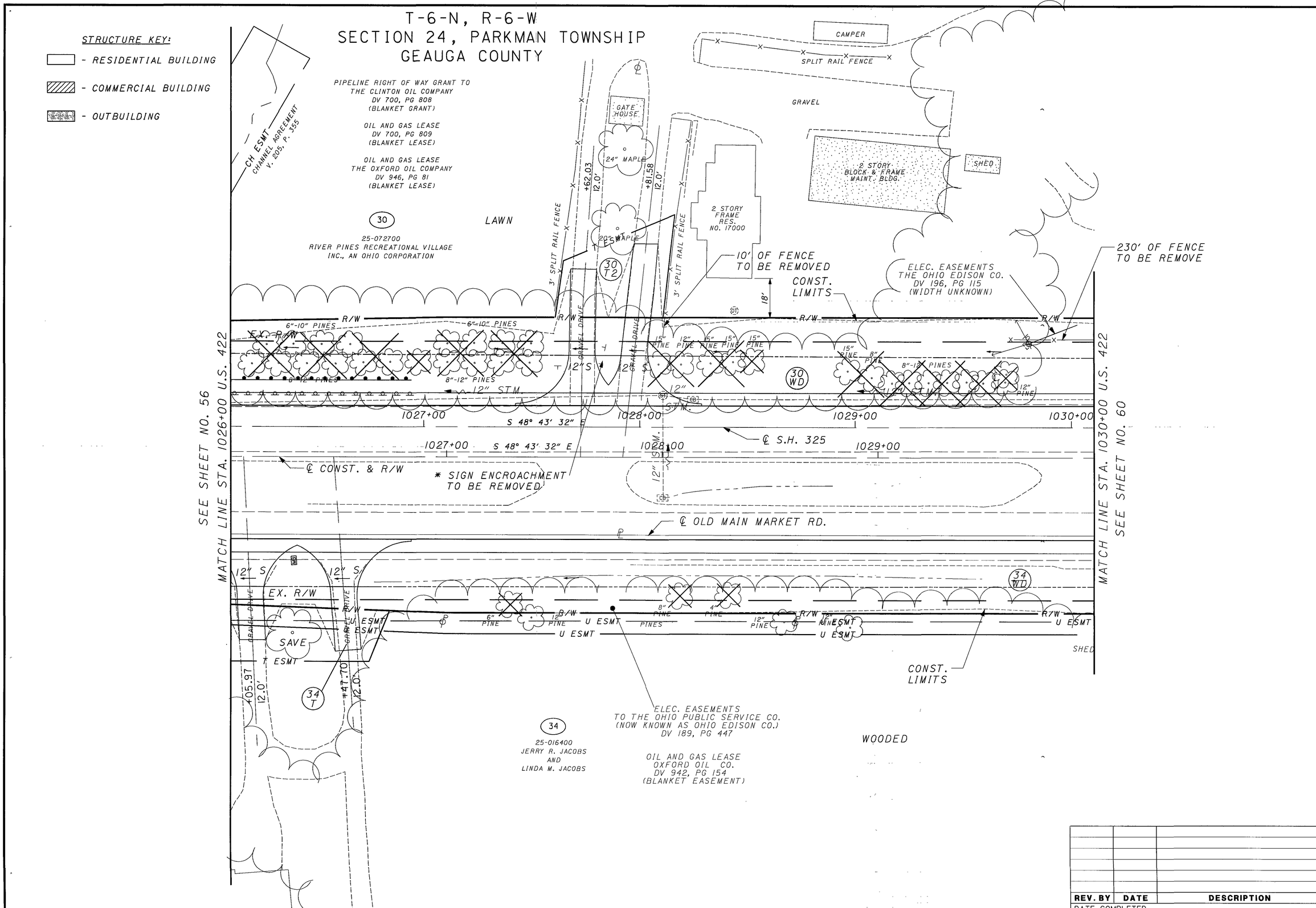

REV. BY	DATE	DESCRIPTION

DATE COMPLETED

HORIZONTAL SCALE IN FEET 0 10 20 40

PID NO. 19181

R/W DESIGNER ADT
R/W REVIEWER TRB

RIGHT OF WAY PLAN
STA. 1026+00 TO STA. 1030+00

GEA/POR-422-18.31/0.00

T-6-N, R-6-W
SECTION 24, PARKMAN TOWNSHIP
GEAUGA COUNTY

MONUMENT LEGEND

- EXISTING ℄ MONUMENT
- PROPOSED ℄ MONUMENT
- EXISTING ℄ MONUMENT REMOVED AND REPLACED
- EXISTING RIGHT OF WAY MONUMENT
- PROPOSED RIGHT OF WAY MONUMENT
- RAILROAD SPIKE FOUND
- RAILROAD SPIKE SET
- I.R.F. IRON PIN FOUND
- I.R.F. IRON PIN FOUND W/ ID CAP
- I.R.S. IRON PIN SET W/ ID CAP
- R.F. IRON PIPE FOUND
- R.S. IRON PIPE SET
- P.K.F. P.K. NAIL FOUND
- P.K.S. P.K. NAIL SET

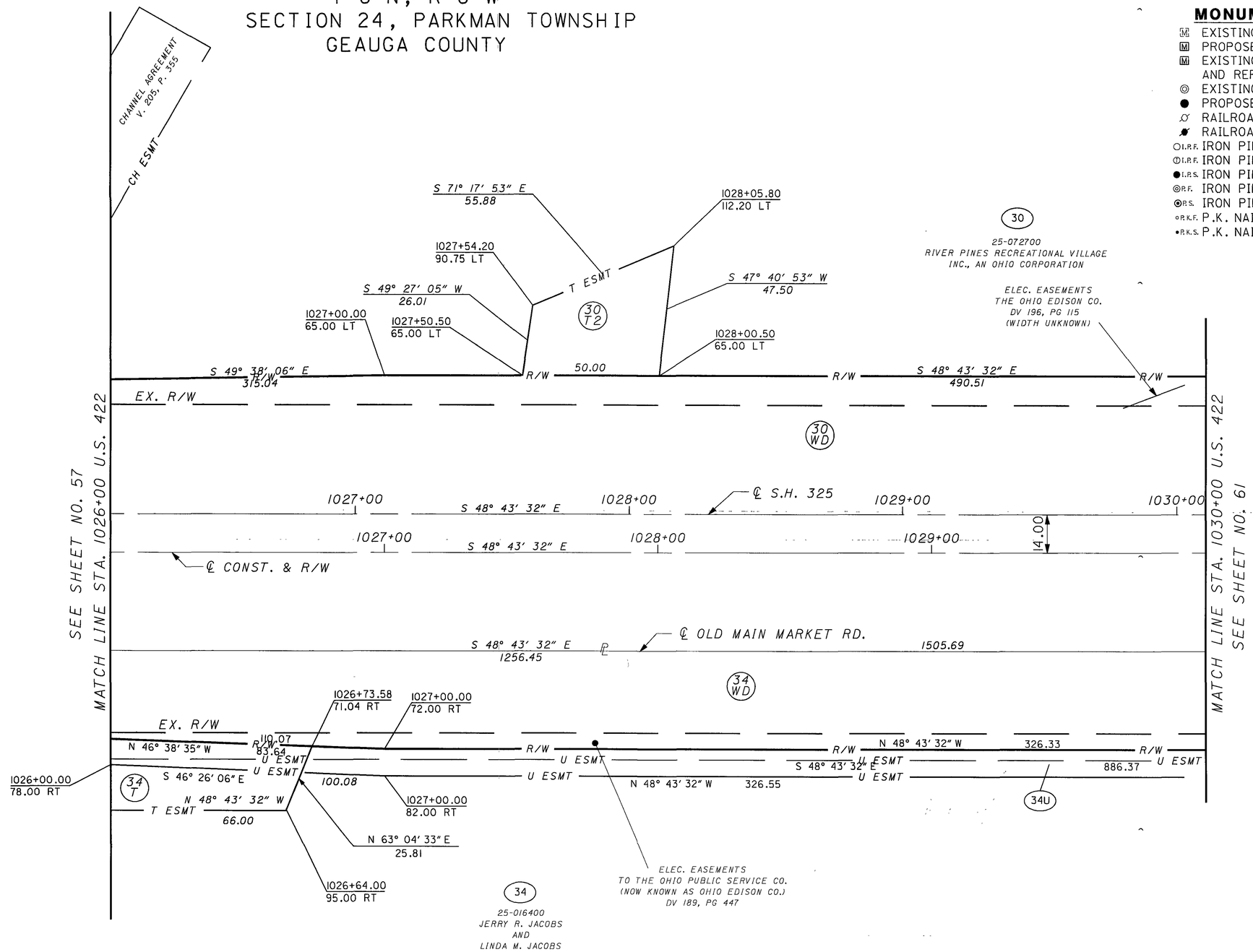

REV. BY	DATE	DESCRIPTION

DATE COMPLETED

HORIZONTAL SCALE IN FEET 0 10 20 40

PID NO. 19181

R/W DESIGNER ADT
R/W REVIEWER TRB

RIGHT OF WAY PLAN
STA. 1026+00 TO STA. 1030+00

GEA/POR-422-18.31/0.00

T-6-N, R-6-W
SECTION 24, PARKMAN TOWNSHIP
GEAUGA COUNTY

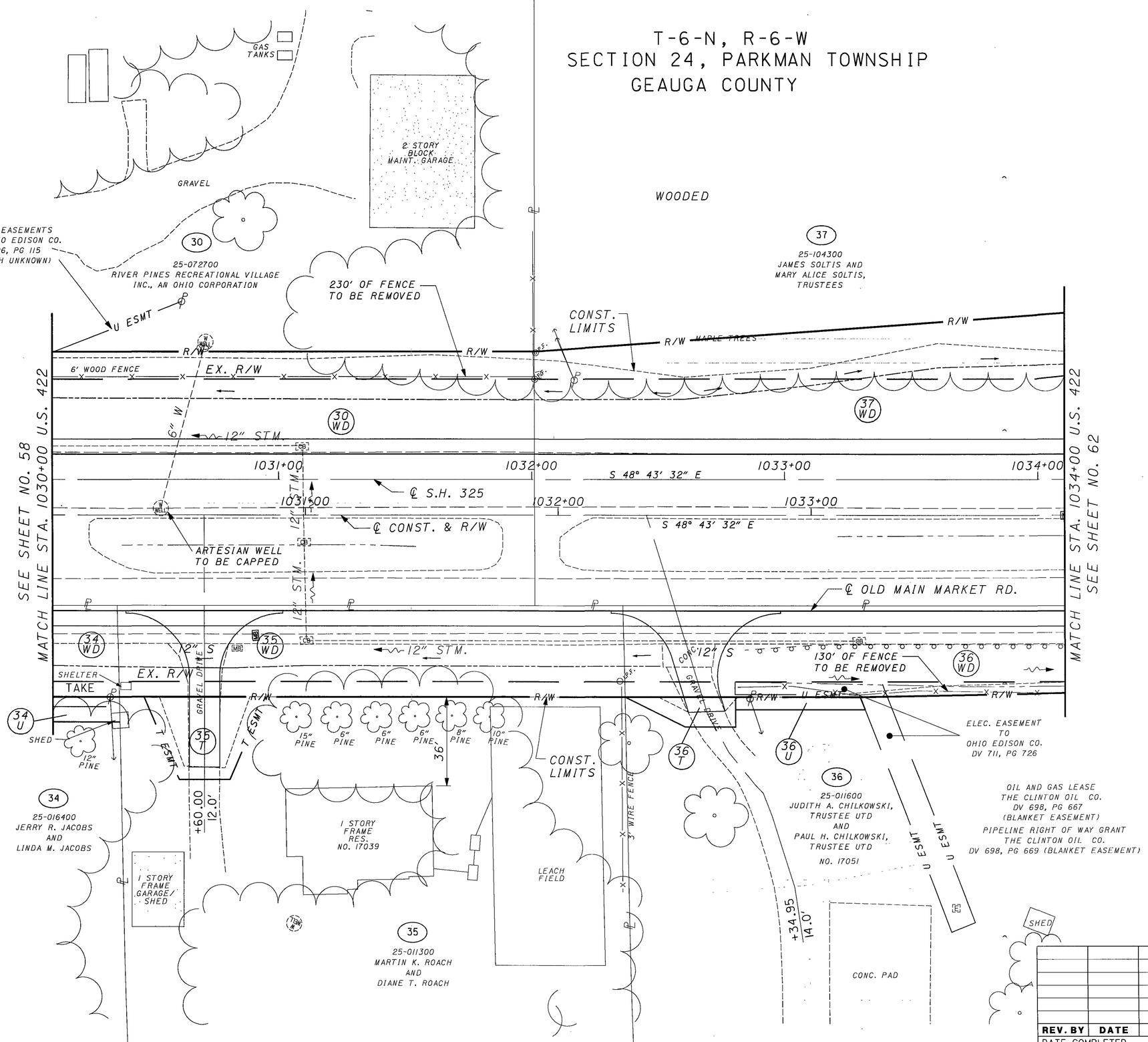

REV. BY	DATE	DESCRIPTION

DATE COMPLETED

HORIZONTAL SCALE IN FEET 0 10 20 40

PID NO. 19181

R/W DESIGNER ADT
R/W REVIEWER TRB

RIGHT OF WAY PLAN
STA. 1030+00 TO STA. 1034+00

GEA/POR-422-18.31/0.00

T-6-N, R-6-W
SECTION 24, PARKMAN TOWNSHIP
GEAUGA COUNTY

MONUMENT LEGEND

- EXISTING ℄ MONUMENT
- PROPOSED ℄ MONUMENT
- EXISTING ℄ MONUMENT REMOVED AND REPLACED
- EXISTING RIGHT OF WAY MONUMENT
- PROPOSED RIGHT OF WAY MONUMENT
- RAILROAD SPIKE FOUND
- RAILROAD SPIKE SET
- I.P.F. IRON PIN FOUND
- I.P.F. IRON PIN FOUND W/ ID CAP
- I.P.S. IRON PIN SET W/ ID CAP
- P.F. IRON PIPE FOUND
- P.S. IRON PIPE SET
- P.K.F. P.K. NAIL FOUND
- P.K.S. P.K. NAIL SET

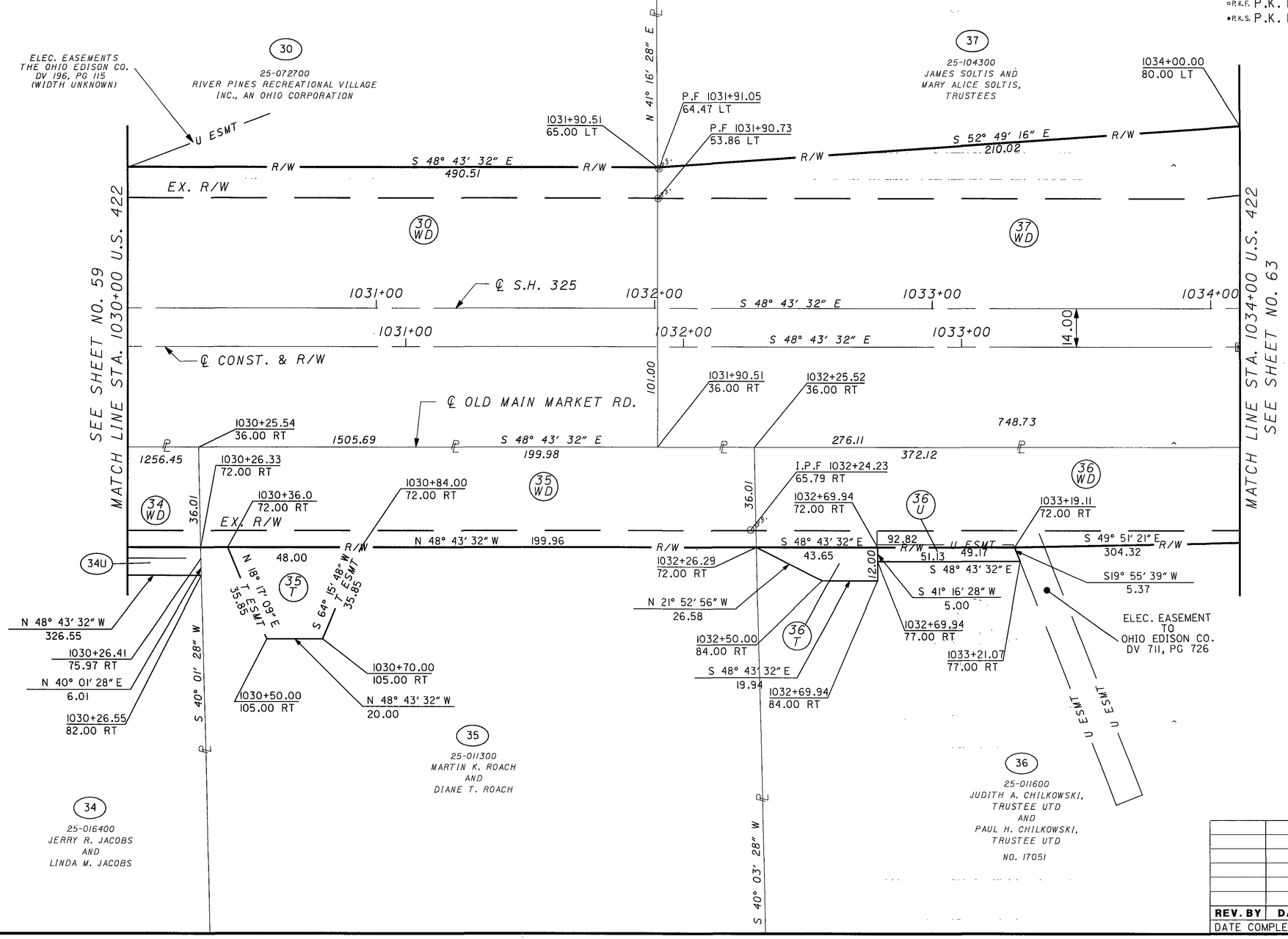

REV. BY	DATE	DESCRIPTION

DATE COMPLETED

HORIZONTAL SCALE IN FEET 0 10 20 40

PID NO. 19181

R/W DESIGNER ADT

R/W REVIEWER TRB

RIGHT OF WAY PLAN
STA. 1030+00 TO STA. 1034+00

GEA/POR-422-18.31/0.00

61/75

318/332

T-6-N, R-6-W
SECTION 24, PARKMAN TOWNSHIP
GEAUGA COUNTY

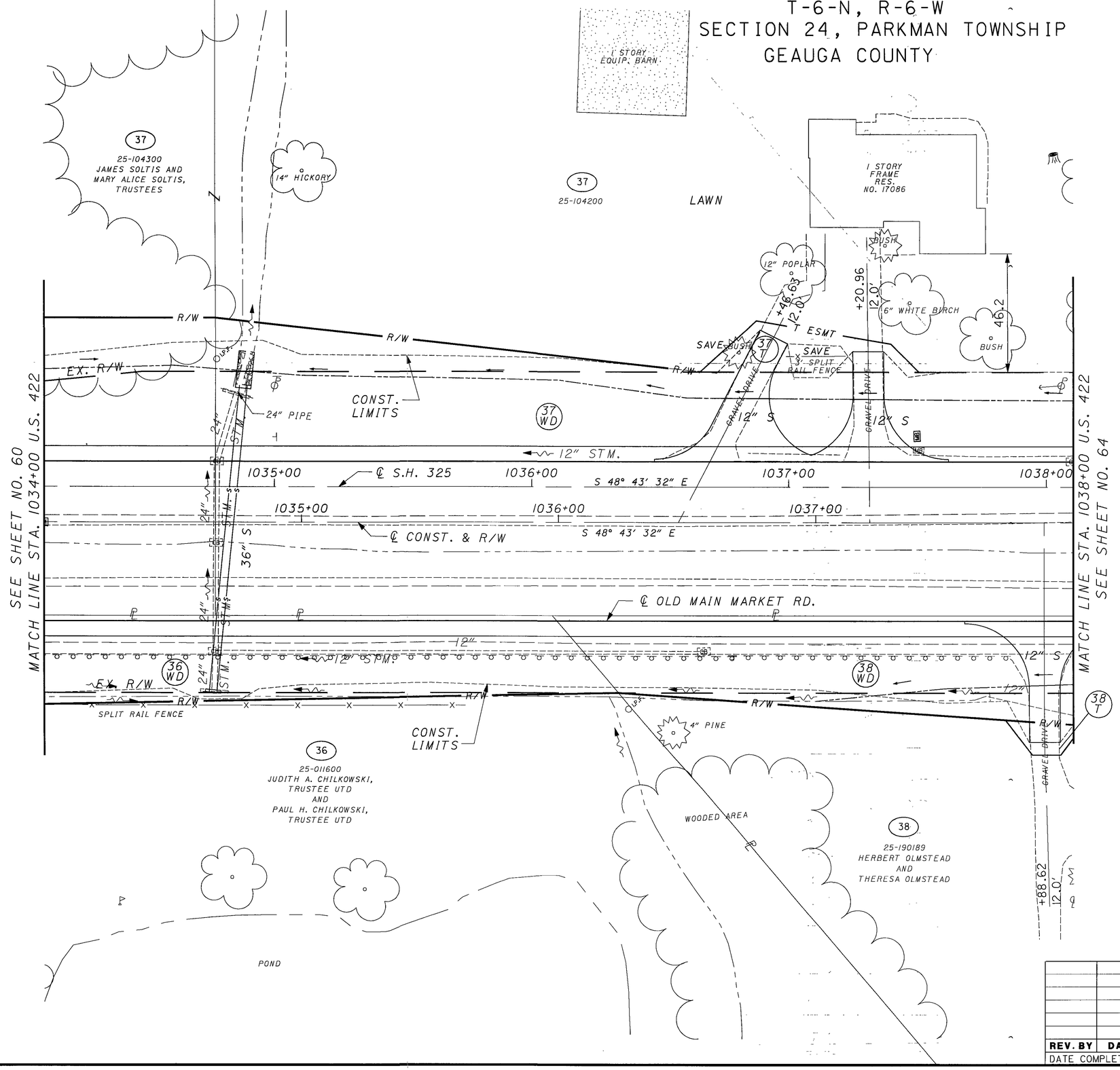

REV. BY	DATE	DESCRIPTION

DATE COMPLETED

HORIZONTAL SCALE IN FEET
0 10 20 40

PID NO. 19181

R/W DESIGNER ADT
R/W REVIEWER TRB

RIGHT OF WAY PLAN
STA. 1034+00 TO STA. 1038+00

GEA/POR-422-18.31/0.00

62/75

319/332

T-6-N, R-6-W
SECTION 24, PARKMAN TOWNSHIP
GEAUGA COUNTY

MONUMENT LEGEND

- EXISTING ℄ MONUMENT
- PROPOSED ℄ MONUMENT
- EXISTING ℄ MONUMENT REMOVED AND REPLACED
- EXISTING RIGHT OF WAY MONUMENT
- PROPOSED RIGHT OF WAY MONUMENT
- RAILROAD SPIKE FOUND
- RAILROAD SPIKE SET
- I.P.F. IRON PIN FOUND
- I.P.F. IRON PIN FOUND W/ ID CAP
- I.P.S. IRON PIN SET W/ ID CAP
- P.F. IRON PIPE FOUND
- P.S. IRON PIPE SET
- P.K.F. P.K. NAIL FOUND
- P.K.S. P.K. NAIL SET

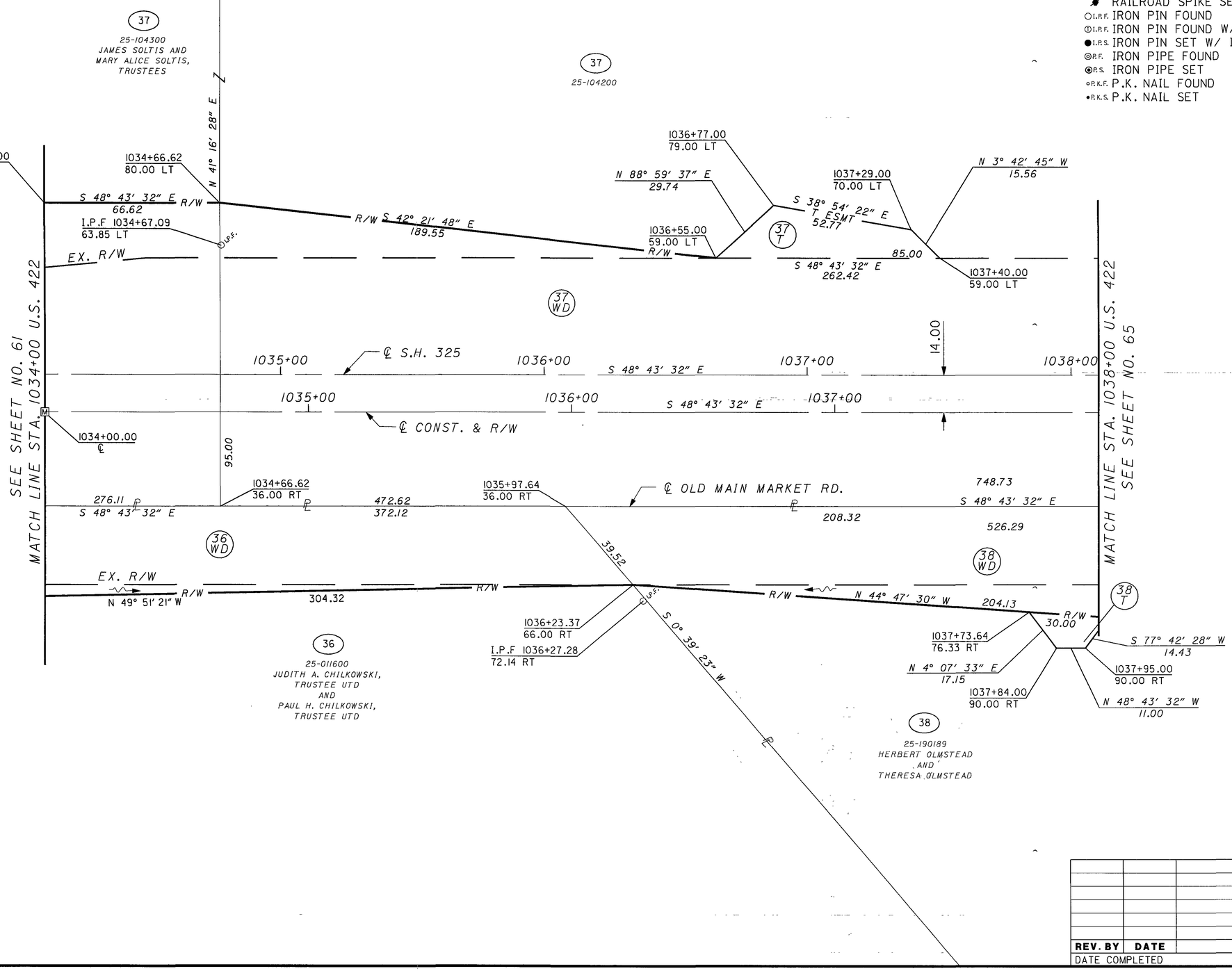

REV. BY	DATE	DESCRIPTION

DATE COMPLETED

HORIZONTAL SCALE IN FEET 0 10 20 40

PID NO. 19181

R/W DESIGNER ADT

R/W REVIEWER TRB

RIGHT OF WAY PLAN
STA. 1034+00 TO STA. 1038+00

GEA/POR-422-18.31/0.00

T-6-N, R-6-W
SECTION 24, PARKMAN TOWNSHIP
GEAUGA COUNTY
T-5-N, R-6-W
NELSON TOWNSHIP
PORTAGE COUNTY

℄ S.H. 325
CURVE DATA (EXISTING)
P.I. STA. = 1041+32.57
= 0° 08′ 30″ RT
N.C.

℄ CONST. & R/W
CURVE DATA
P.I. STA. = 1041+22.04
Δ = 0° 51′ 19″ RT
N.C.

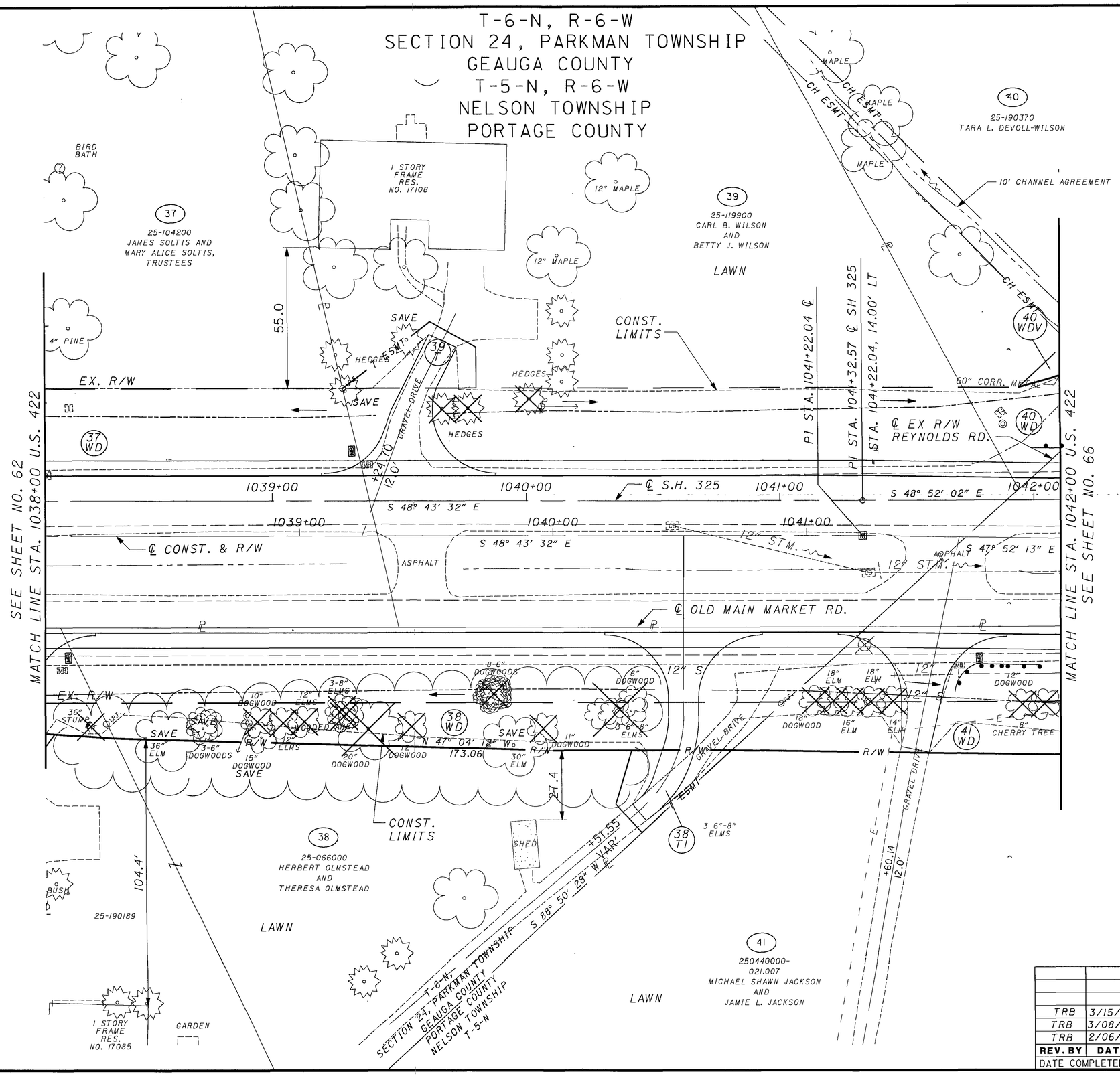

HORIZONTAL SCALE IN FEET 0 10 20 40

PID NO. 19181

R/W DESIGNER ADT
R/W REVIEWER TRB

RIGHT OF WAY PLAN
STA. 1038+00 TO STA. 1042+00

GEA/POR-422-18.31/0.00

REV. BY	DATE	DESCRIPTION
TRB	3/15/06	REV. DRIVE & ADD U.G. ELEC. PAR. 41
TRB	3/08/06	REV. PROP. MONUMENT LOCATION
TRB	2/06/06	EX ℄ & EX R/W REYNOLDS RD.

DATE COMPLETED

T-6-N, R-6-W
SECTION 24, PARKMAN TOWNSHIP
GEAUGA COUNTY
T-5-N, R-6-W
NELSON TOWNSHIP
PORTAGE COUNTY

MONUMENT LEGEND

- EXISTING ℄ MONUMENT
- PROPOSED ℄ MONUMENT
- EXISTING ℄ MONUMENT REMOVED AND REPLACED
- EXISTING RIGHT OF WAY MONUMENT
- PROPOSED RIGHT OF WAY MONUMENT
- RAILROAD SPIKE FOUND
- RAILROAD SPIKE SET
- I.R.F. IRON PIN FOUND
- I.R.F. IRON PIN FOUND W/ ID CAP
- I.R.S. IRON PIN SET W/ ID CAP
- P.F. IRON PIPE FOUND
- P.S. IRON PIPE SET
- P.K.F. P.K. NAIL FOUND
- P.K.S. P.K. NAIL SET

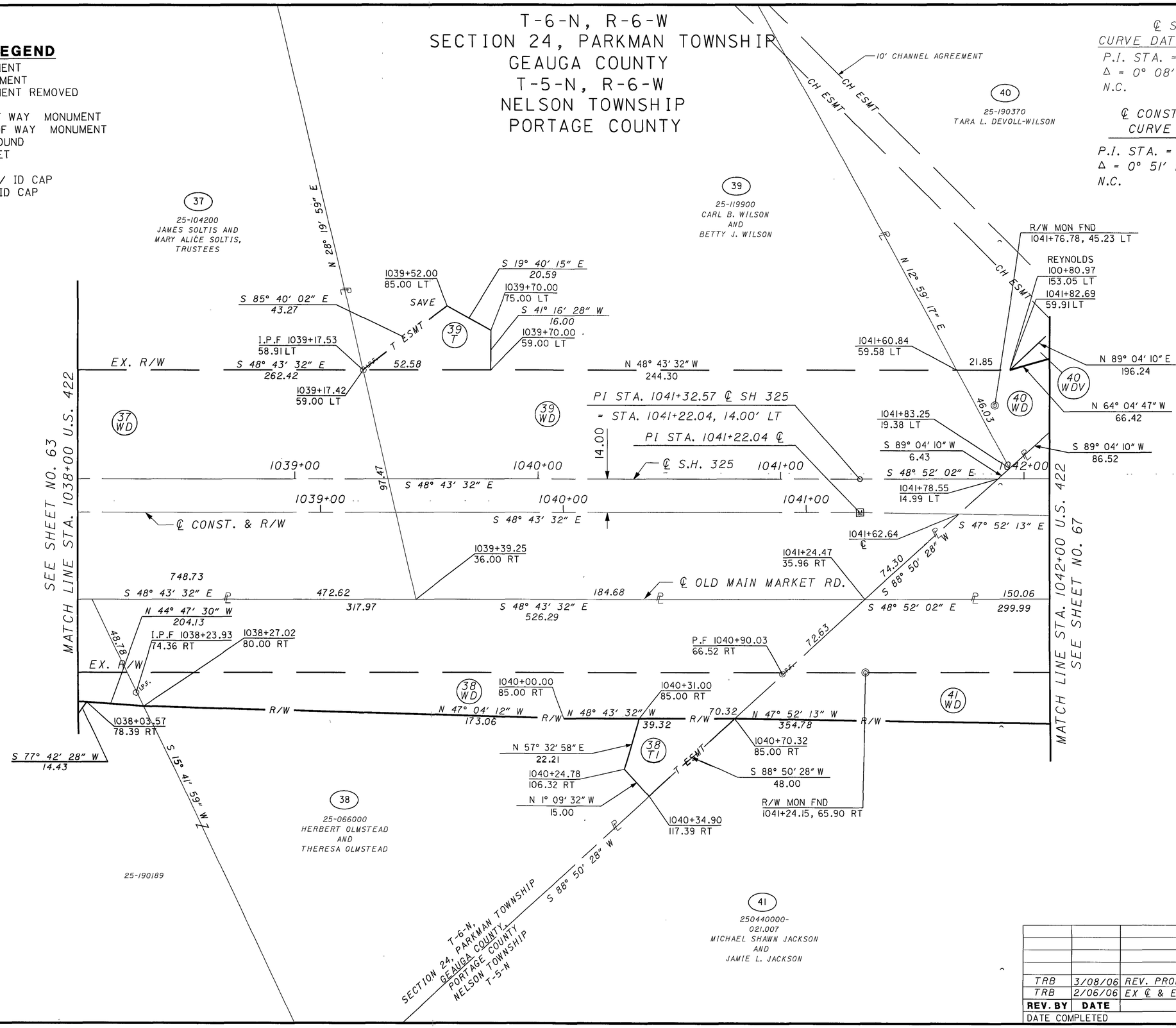

REV. BY	DATE	DESCRIPTION
TRB	3/08/06	REV. PROP. MONUMENT LOCATION
TRB	2/06/06	EX ℄ & EX R/W REYNOLDS RD.

DATE COMPLETED

HORIZONTAL SCALE IN FEET 0 10 20 40

PID NO. 19181

R/W DESIGNER ADT
R/W REVIEWER TRB

RIGHT OF WAY PLAN
STA. 1038+00 TO STA. 1042+00

GEA/POR-422-18.31/0.00

T-6-N, R-6-W
SECTION 24, PARKMAN TOWNSHIP
GEAUGA COUNTY
T-5-N, R-6-W
NELSON TOWNSHIP
PORTAGE COUNTY

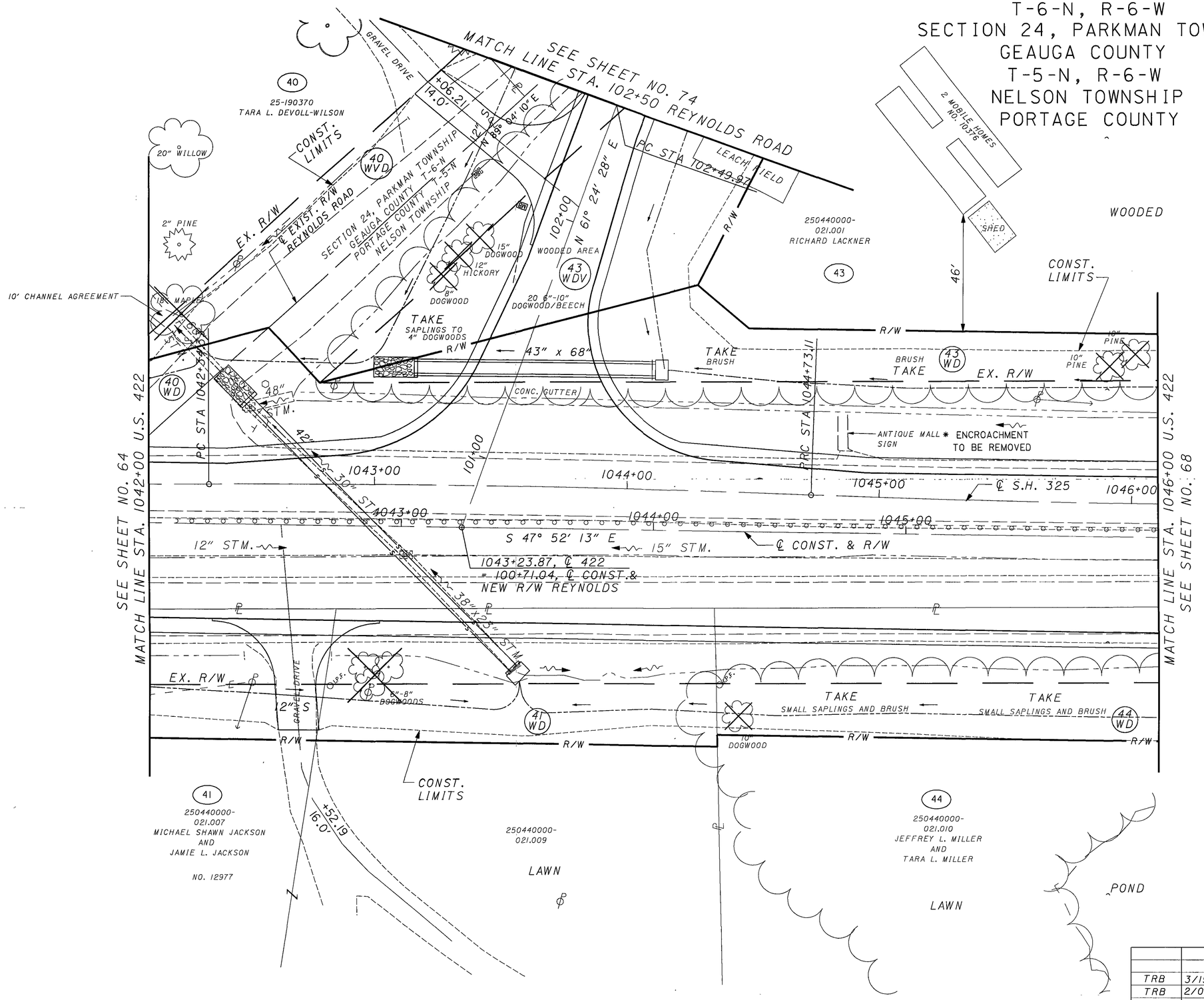

℄ S.H.325
CURVE DATA (EXISTING)

P.I. STA. = 1043+53.41
Δ = 2° 23' 16" RT
Dc = 1° 00' 00"
R = 5729.49
T = 119.41'
L = 238.78
E = 1.24

℄ S.H.325
CURVE DATA (EXISTING)

P.I. STA. = 1045+92.52
Δ = 2° 23' 16" LT
Dc = 1° 00' 00"
R = 5729.55'
T = 119.41'
L = 238.76
E = 1.24

REV. BY	DATE	DESCRIPTION
TRB	3/15/06	ADDED U.G. ELEC. PARCEL 41
TRB	2/06/06	EX ℄ & EX R/W REYNOLDS RD
TRB	7/25/05	ADDED DRIVE PAR. 40 - REV. CULVERTS
TRB	7/13/05	LEACH FIELD ADDED TO PARCEL 43

DATE COMPLETED

HORIZONTAL SCALE IN FEET 0 10 20 40

PID NO. 19181

R/W DESIGNER ADT
R/W REVIEWER TRB

RIGHT OF WAY PLAN
STA. 1042+00 TO STA. 1046+00

GEA/POR-422-18.31/0.00

T-6-N, R-6-W
SECTION 24, PARKMAN TOWNSHIP
GEAUGA COUNTY
T-5-N, R-6-W
NELSON TOWNSHIP
PORTAGE COUNTY

MONUMENT LEGEND

- EXISTING ℄ MONUMENT
- PROPOSED ℄ MONUMENT
- EXISTING ℄ MONUMENT REMOVED AND REPLACED
- EXISTING RIGHT OF WAY MONUMENT
- PROPOSED RIGHT OF WAY MONUMENT
- RAILROAD SPIKE FOUND
- RAILROAD SPIKE SET
- I.R.F. IRON PIN FOUND
- I.R.F. IRON PIN FOUND W/ ID CAP
- I.R.S. IRON PIN SET W/ ID CAP
- R.F. IRON PIPE FOUND
- R.S. IRON PIPE SET
- P.K.F. P.K. NAIL FOUND
- P.K.S. P.K. NAIL SET

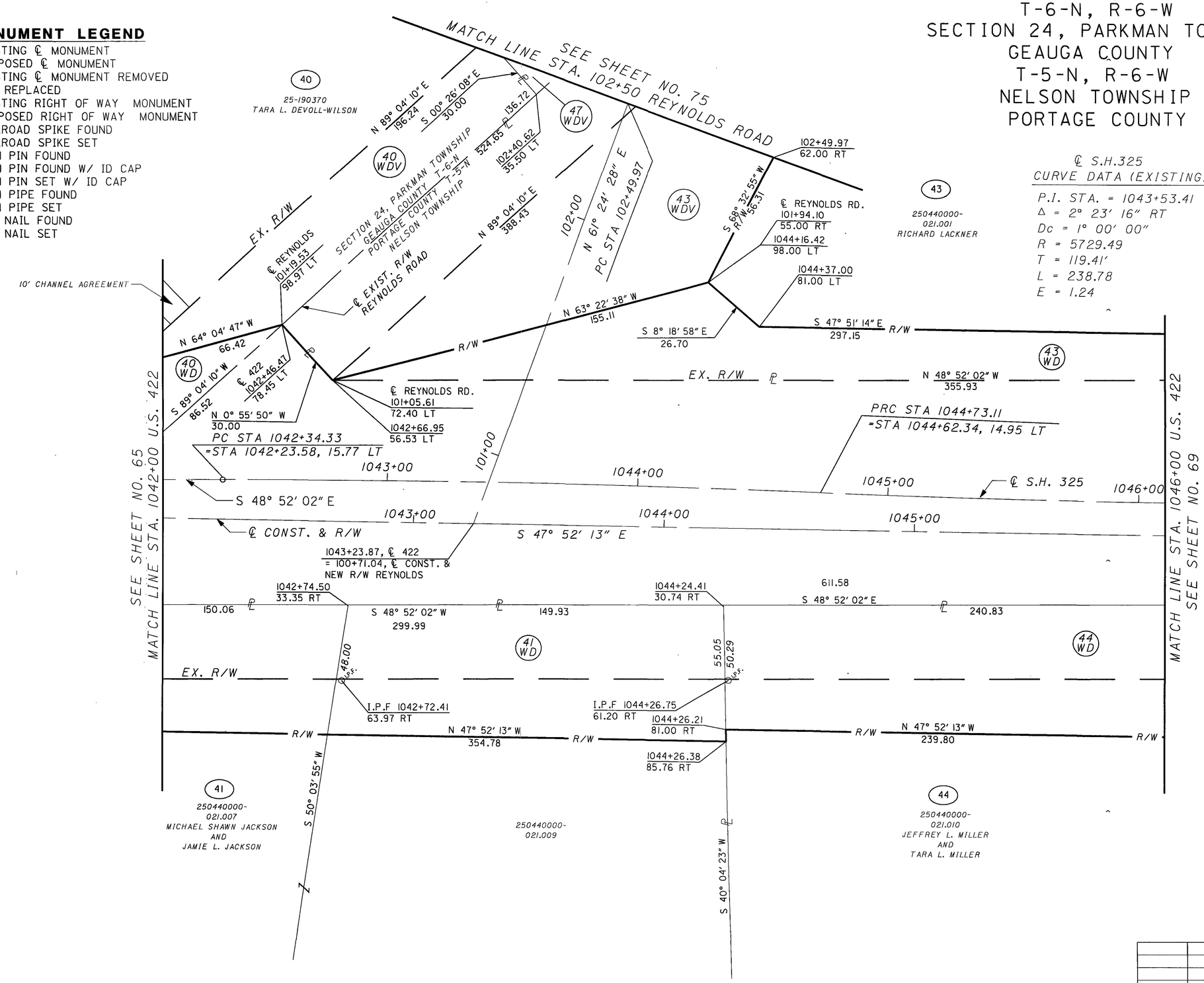

℄ S.H.325
CURVE DATA (EXISTING)

P.I. STA. = 1043+53.41
Δ = 2° 23' 16" RT
Dc = 1° 00' 00"
R = 5729.49
T = 119.41'
L = 238.78
E = 1.24

℄ S.H.325
CURVE DATA (EXISTING)

P.I. STA. = 1045+92.52
Δ = 2° 23' 16" LT
Dc = 2° 00' 00"
R = 5729.55'
T = 119.41'
L = 238.76
E = 1.24

REV. BY	DATE	DESCRIPTION
1	2/06/06	EX ℄ & EX R/W REYNOLDS RD.

DATE COMPLETED

HORIZONTAL SCALE IN FEET 0 10 20 40

PID NO. 19181

R/W DESIGNER ADT
R/W REVIEWER TRB

RIGHT OF WAY PLAN
STA. 1042+00 TO STA. 1046+00

GEA/POR-422-18.31/0.00

℄ S.H.325
CURVE DATA (EXISTING)

P.I. STA. = 1045+92.52
Δ = 2° 23′ 16″ LT
Dc = 1° 00′ 00″
R = 5729.55′
T = 119.41′
L = 238.76
E = 1.24

T-6-N, R-6-W
NELSON TOWNSHIP
PORTAGE COUNTY

℄ CONST. & R/W
CURVE DATA
PI STA 1047+51.36
Δ = 0° 59′ 49″ LT
N.C.

43
250440000-
021.001
RICHARD LACKNER

WOODED

46
250440000-
021.002
RONALD MATHENY AND
PATRICIA A. MATHENY

57
250440000-
021.003
CHRISTINE WENK

END WORK
STA 1051+00.00

CONST.
LIMITS

R/W

43 WD

46 WD

57 T

T ESMT

EX. R/W

CONC. GUTTER

PT STA 1047+11.89

PI STA 1047+51.36

1047+00

1048+00

1049+00

1050+00

1051+00

S 48° 52′ 02″ E

℄ S.H. 325

℄ CONST. & R/W

S 47° 52′ 13″ E

12″ STM.

ASPHALT

SEE SHEET NO. 66
MATCH LINE STA. 1046+00 U.S. 422

SEE SHEET NO. 70
MATCH LINE STA. 1051+00 U.S. 422

* TAKE
DECORATIVE WOOD
FENCING AND SHRUBS

4″
DOGWOOD

6″
MAPLE

6″
BEECH

2.6″
DOGWOODS

GRAVEL DRIVE

30″
ELM

36″
ELM

36″
ELM

EX. R/W

SMALL SAPLINGS AND BRUSH

44 WD

45 WD

55 WD

12′

S

R/W

* ENCROACHMENT

CONST.
LIMITS

45T

55

44
250440000-
021.010
JEFFREY L. MILLER
AND
TARA L. MILLER

POND

45
250440000-
021.000
JENNIFER R. ALNOUBANI
NO. 12971

LAWN

LAWN

250440000-
021.008
DENNIS P. SCHULTZ
AND
DIANE I. SCHULTZ
NO. 12947

+44.22
12.0′

WIND MILL

END PROJECT
STA. 1050+00.00
S.L.M. 18.55

REV. BY	DATE	DESCRIPTION
2	2-06-06	REV P/L 43, 46 & 57, ADDED IPF 46
1	5-18-05	REVISED PARCEL 57 OWNER

DATE COMPLETED

HORIZONTAL SCALE IN FEET
0 10 20 40

PID NO. 19181

R/W DESIGNER ADT
R/W REVIEWER TRB

RIGHT OF WAY PLAN
STA. 1046+00 TO STA. 1051+00

GEA/POR-422-18.31/0.00

MONUMENT LEGEND

- EXISTING ℄ MONUMENT
- PROPOSED ℄ MONUMENT
- EXISTING ℄ MONUMENT REMOVED AND REPLACED
- EXISTING RIGHT OF WAY MONUMENT
- PROPOSED RIGHT OF WAY MONUMENT
- RAILROAD SPIKE FOUND
- RAILROAD SPIKE SET
- I.R.F. IRON PIN FOUND
- I.R.F. IRON PIN FOUND W/ ID CAP
- I.R.S. IRON PIN SET W/ ID CAP
- P.F. IRON PIPE FOUND
- P.S. IRON PIPE SET
- P.K.F. P.K. NAIL FOUND
- P.K.S. P.K. NAIL SET

℄ S.H.325
CURVE DATA (EXISTING)

P.I. STA. = 1045+92.52
Δ = 2° 23′ 16″ LT
Dc = 1° 00′ 00″
R = 5729.55′
T = 119.41′
L = 238.76
E = 1.24

T-6-N, R-6-W
NELSON TOWNSHIP
PORTAGE COUNTY

℄ CONST. & R/W
CURVE DATA

P.I. STA. = 1047+51.36
Δ = 0° 59′ 49″ LT
N.C.

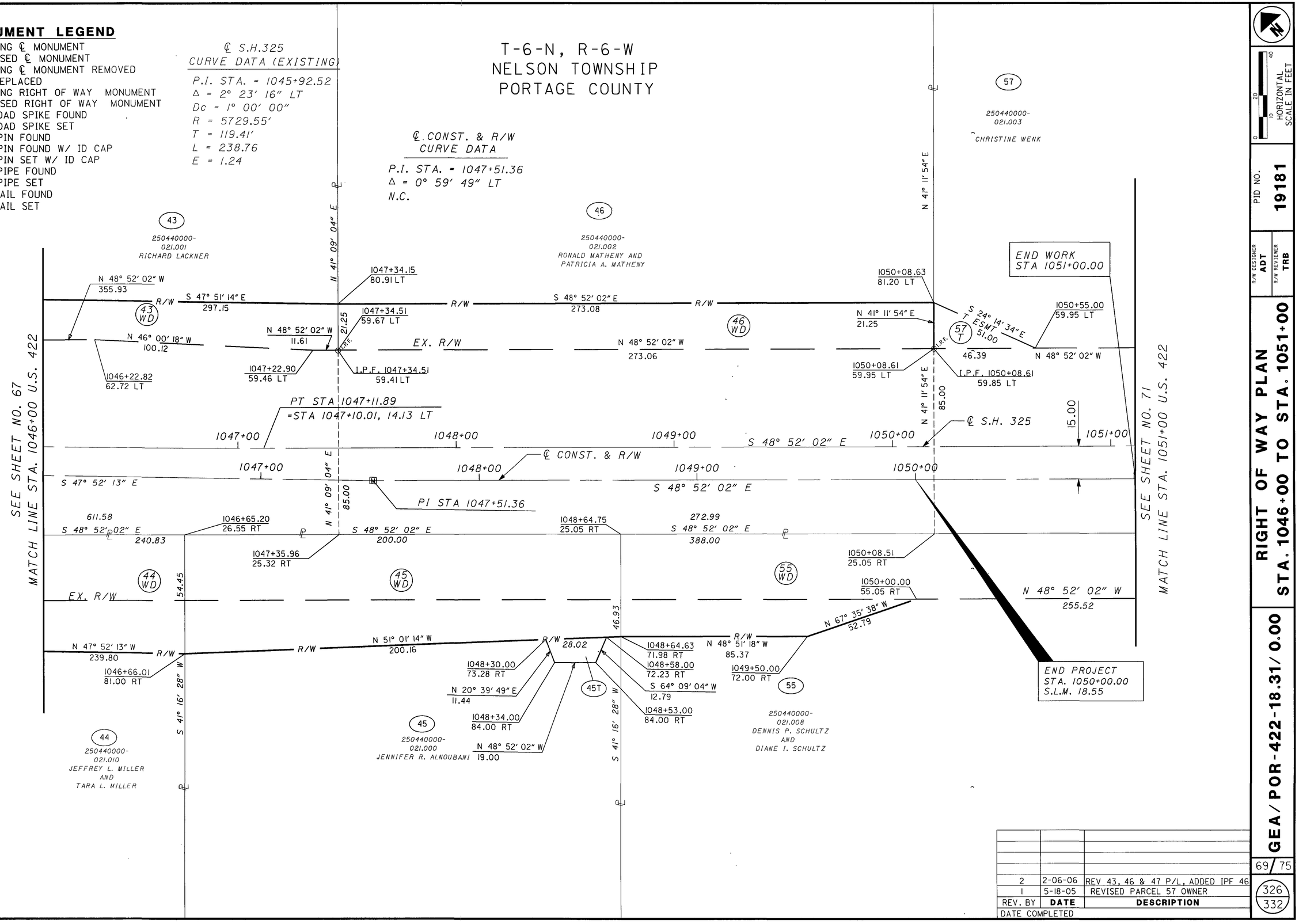

REV. BY	DATE	DESCRIPTION
2	2-06-06	REV 43, 46 & 47 P/L, ADDED IPF 46
1	5-18-05	REVISED PARCEL 57 OWNER

DATE COMPLETED

HORIZONTAL SCALE IN FEET 0 10 20 40

PID NO. 19181

R/W DESIGNER ADT
R/W REVIEWER TRB

RIGHT OF WAY PLAN
STA. 1046+00 TO STA. 1051+00

GEA/POR-422-18.31/0.00

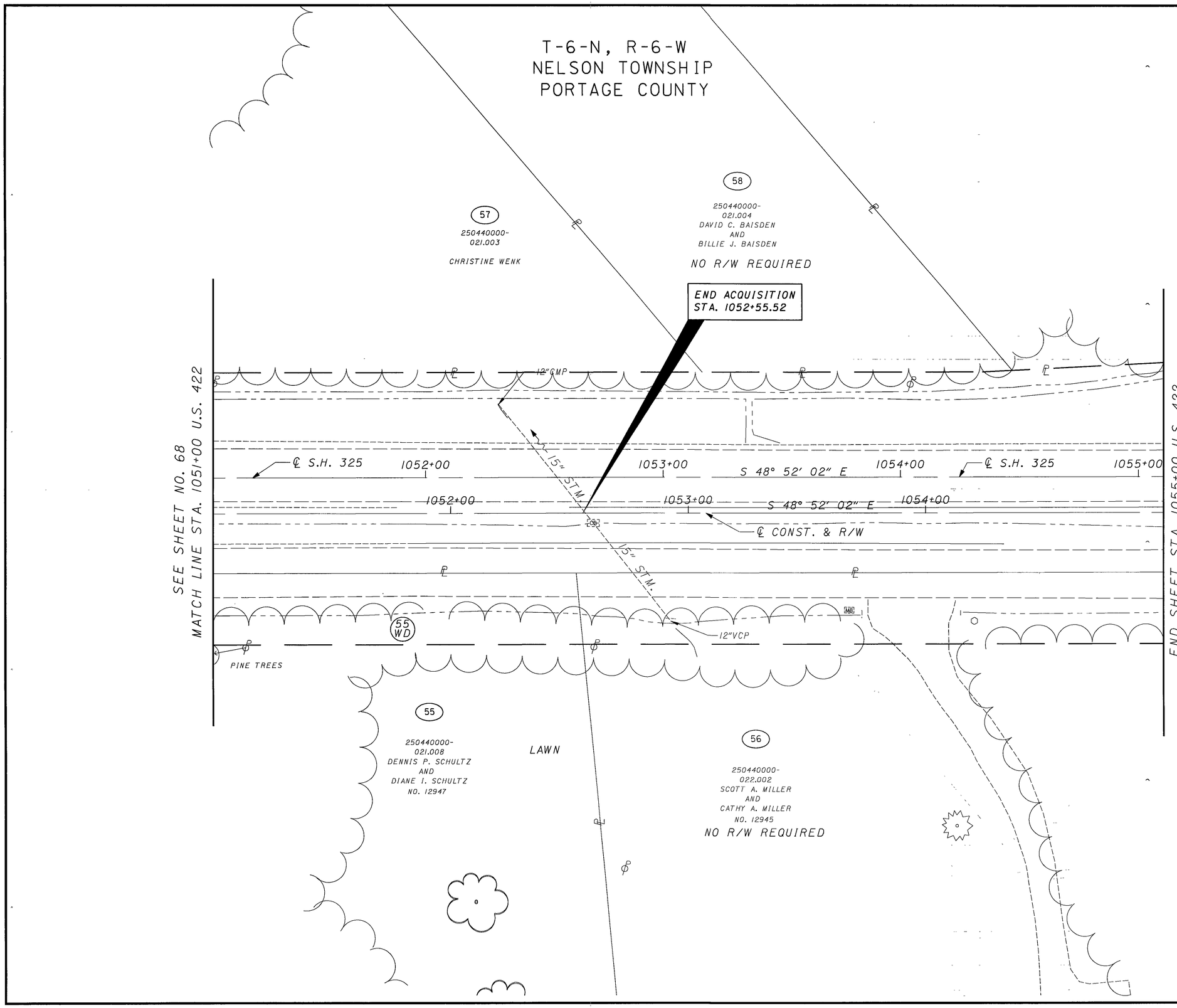

REV. BY	DATE	DESCRIPTION
1	5-18-05	REVISED PARCEL 57 OWNER

DATE COMPLETED

HORIZONTAL SCALE IN FEET 0 10 20 40

PID NO. 19181

R/W DESIGNER ADT
R/W REVIEWER TRB

RIGHT OF WAY PLAN
STA. 1051+00 TO STA. 1055+00

GEA/POR-422-18.31/0.00

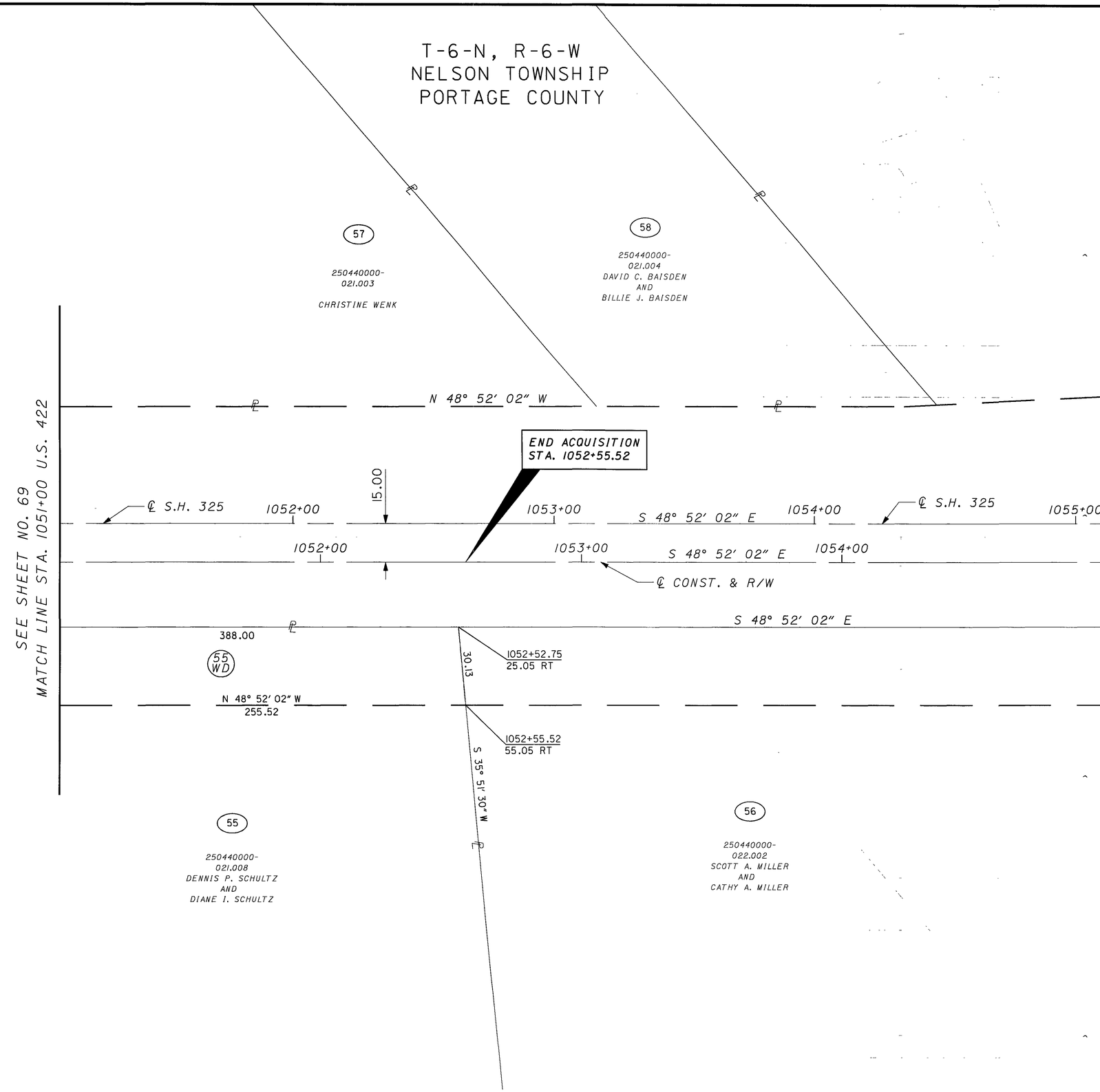

MONUMENT LEGEND

- EXISTING ℄ MONUMENT
- PROPOSED ℄ MONUMENT
- EXISTING ℄ MONUMENT REMOVED AND REPLACED
- EXISTING RIGHT OF WAY MONUMENT
- PROPOSED RIGHT OF WAY MONUMENT
- RAILROAD SPIKE FOUND
- RAILROAD SPIKE SET
- I.R.F. IRON PIN FOUND
- I.R.F. IRON PIN FOUND W/ ID CAP
- I.R.S. IRON PIN SET W/ ID CAP
- P.R.F. IRON PIPE FOUND
- P.R.S. IRON PIPE SET
- P.K.F. P.K. NAIL FOUND
- P.K.S. P.K. NAIL SET

HORIZONTAL SCALE IN FEET 0 10 20 40

PID NO. 19181

R/W DESIGNER ADT
R/W REVIEWER TRB

RIGHT OF WAY PLAN
STA. 1051+00 TO STA. 1055+00

GEA/POR-422-18.31/0.00

71/75

328/332

REV. BY	DATE	DESCRIPTION
1	5-18-05	REVISED PARCEL 57 OWNER

DATE COMPLETED

T-6-N, R-6-W
SECTION 24, PARKMAN TOWNSHIP
GEAUGA COUNTY

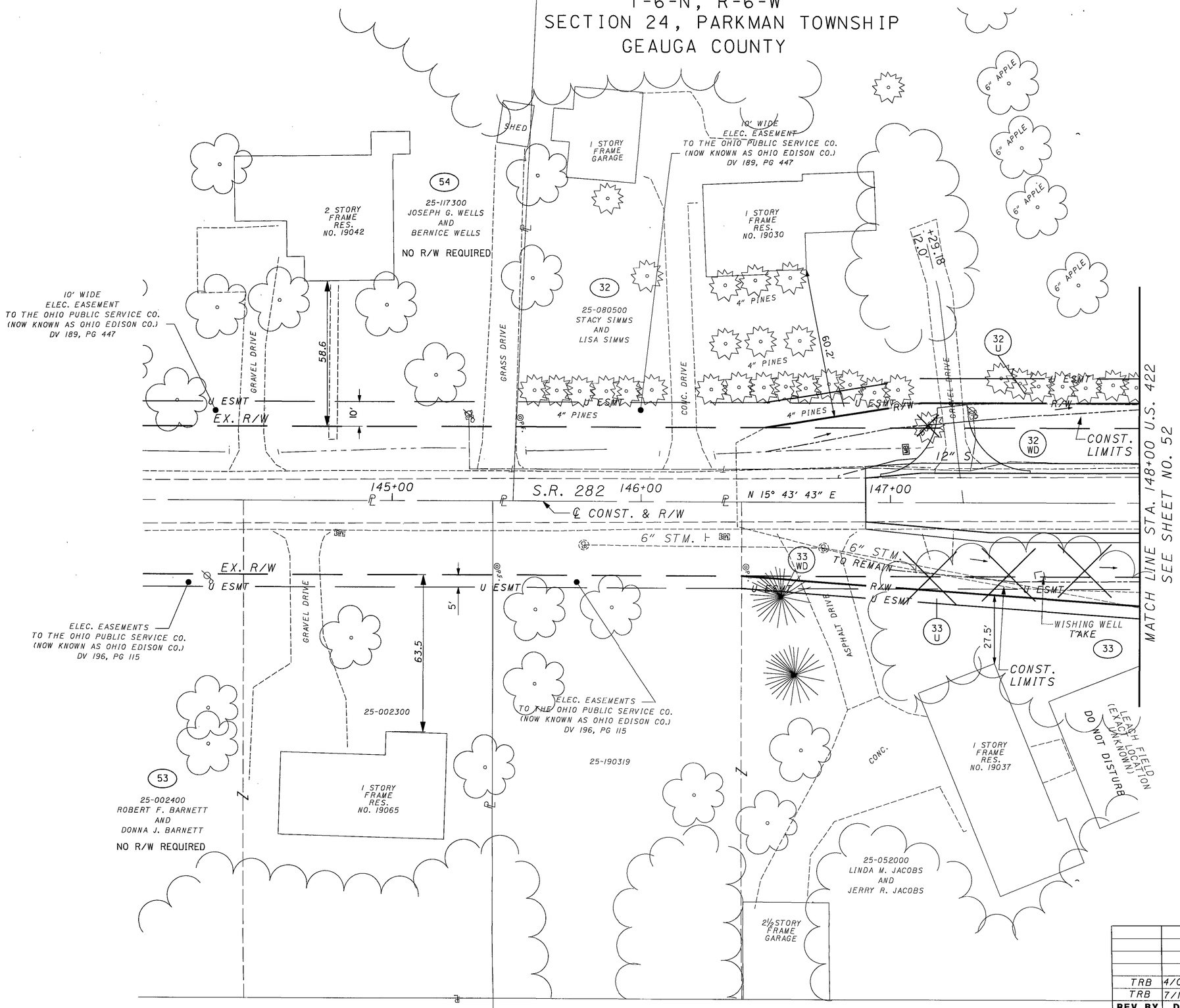

REV. BY	DATE	DESCRIPTION
TRB	4/03/06	EX. CB & 6" STM PARCELS 33
TRB	7/13/05	LEACH FIELD ADDED TO PARCEL 33

DATE COMPLETED

HORIZONTAL SCALE IN FEET 0 10 20 40

PID NO. 19181

R/W DESIGNER ADT
R/W REVIEWER TRB

S.R. 282 RIGHT OF WAY PLAN
STA. 144+00 TO STA. 148+00

GEA/POR-422-18.31/0.00

72/75

329/332

T-6-N, R-6-W
SECTION 24, PARKMAN TOWNSHIP
GEAUGA COUNTY

MONUMENT LEGEND

- EXISTING ℄ MONUMENT
- PROPOSED ℄ MONUMENT
- EXISTING ℄ MONUMENT REMOVED AND REPLACED
- EXISTING RIGHT OF WAY MONUMENT
- PROPOSED RIGHT OF WAY MONUMENT
- RAILROAD SPIKE FOUND
- RAILROAD SPIKE SET
- I.R.F. IRON PIN FOUND
- I.R.F. IRON PIN FOUND W/ ID CAP
- I.R.S. IRON PIN SET W/ ID CAP
- P.F. IRON PIPE FOUND
- P.S. IRON PIPE SET
- P.K.F. P.K. NAIL FOUND
- P.K.S. P.K. NAIL SET

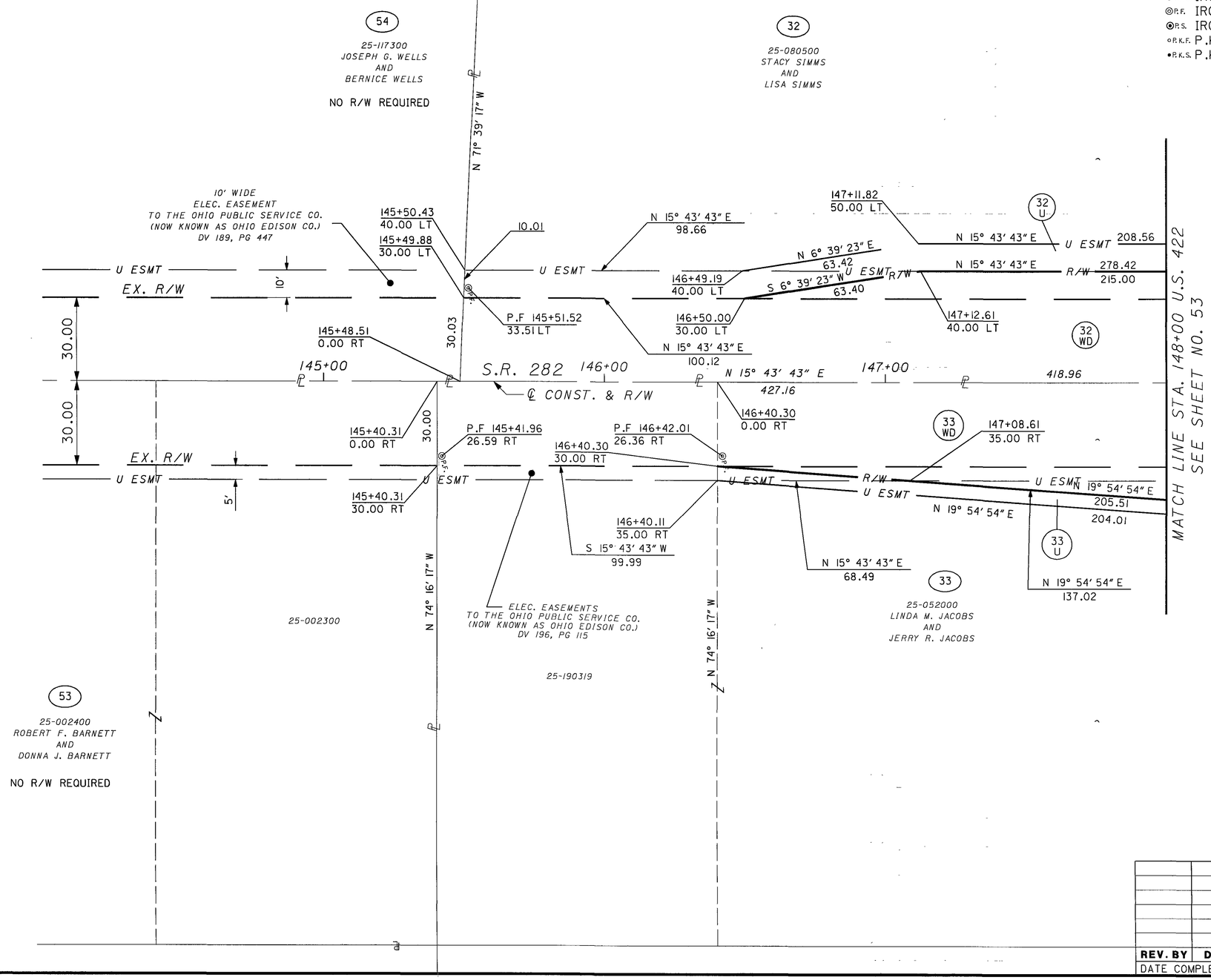

REV. BY	DATE	DESCRIPTION

DATE COMPLETED

HORIZONTAL SCALE IN FEET 0 10 20 40

PID NO. 19181

R/W DESIGNER ADT
R/W REVIEWER TRB

S.R. 282 RIGHT OF WAY PLAN
STA. 144+00 TO STA. 148+00

GEA/POR-422-18.31/0.00

T-6-N, R-6-W
SECTION 24, PARKMAN TOWNSHIP
GEAUGA COUNTY
T-5-N, R-6-W
NELSON TOWNSHIP
PORTAGE COUNTY

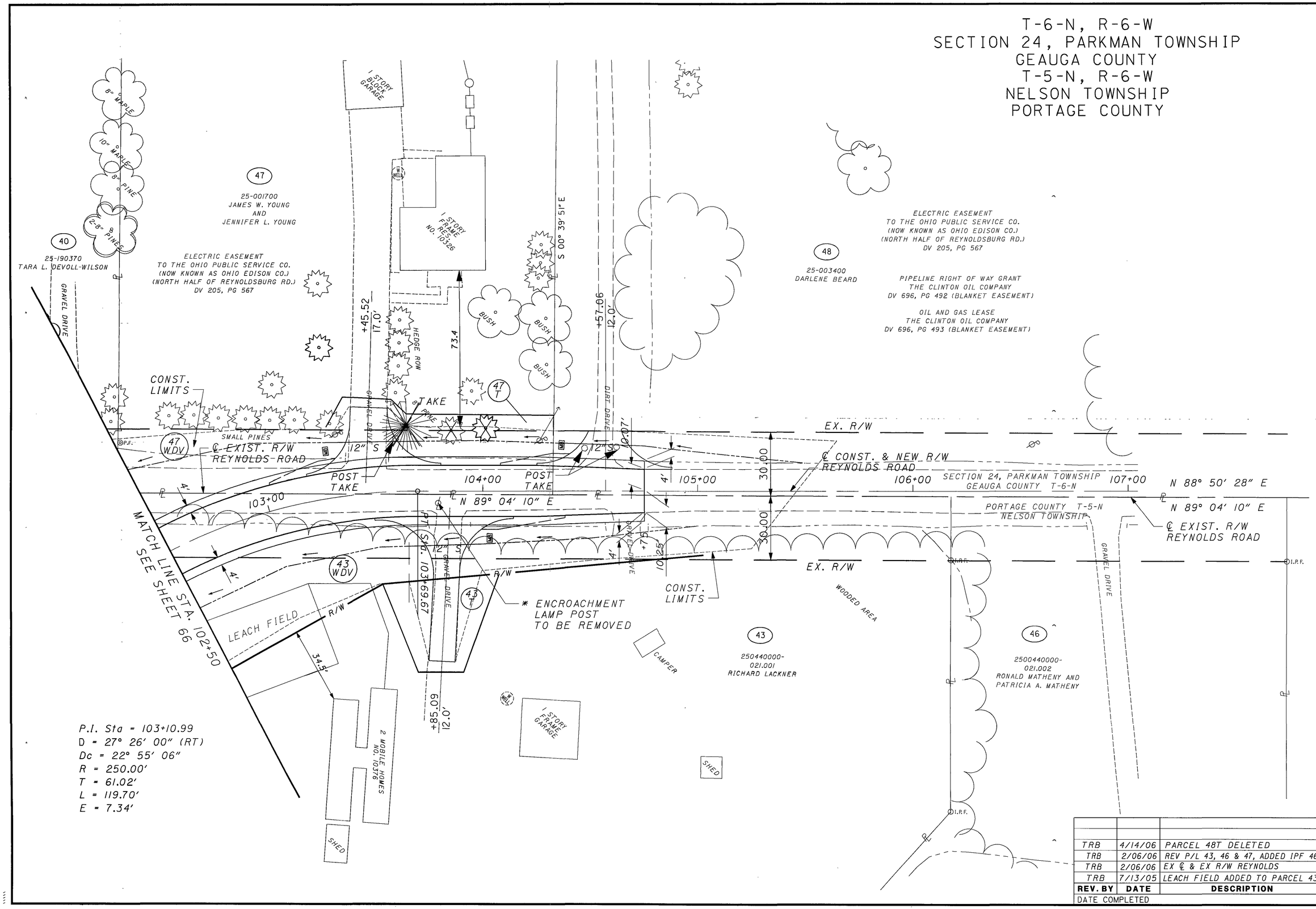

REV. BY	DATE	DESCRIPTION
TRB	4/14/06	PARCEL 48T DELETED
TRB	2/06/06	REV P/L 43, 46 & 47, ADDED IPF 46
TRB	2/06/06	EX ℄ & EX R/W REYNOLDS
TRB	7/13/05	LEACH FIELD ADDED TO PARCEL 43

DATE COMPLETED

HORIZONTAL SCALE IN FEET 0 10 20 40

PID NO. 19181

R/W DESIGNER ADT
R/W REVIEWER TRB

RIGHT OF WAY PLAN
STA. 102+50 TO 107+00

GEA/POR-422-18.31/0.00

T-6-N, R-6-W
SECTION 24, PARKMAN TOWNSHIP
GEAUGA COUNTY
T-5-N, R-6-W
NELSON TOWNSHIP
PORTAGE COUNTY

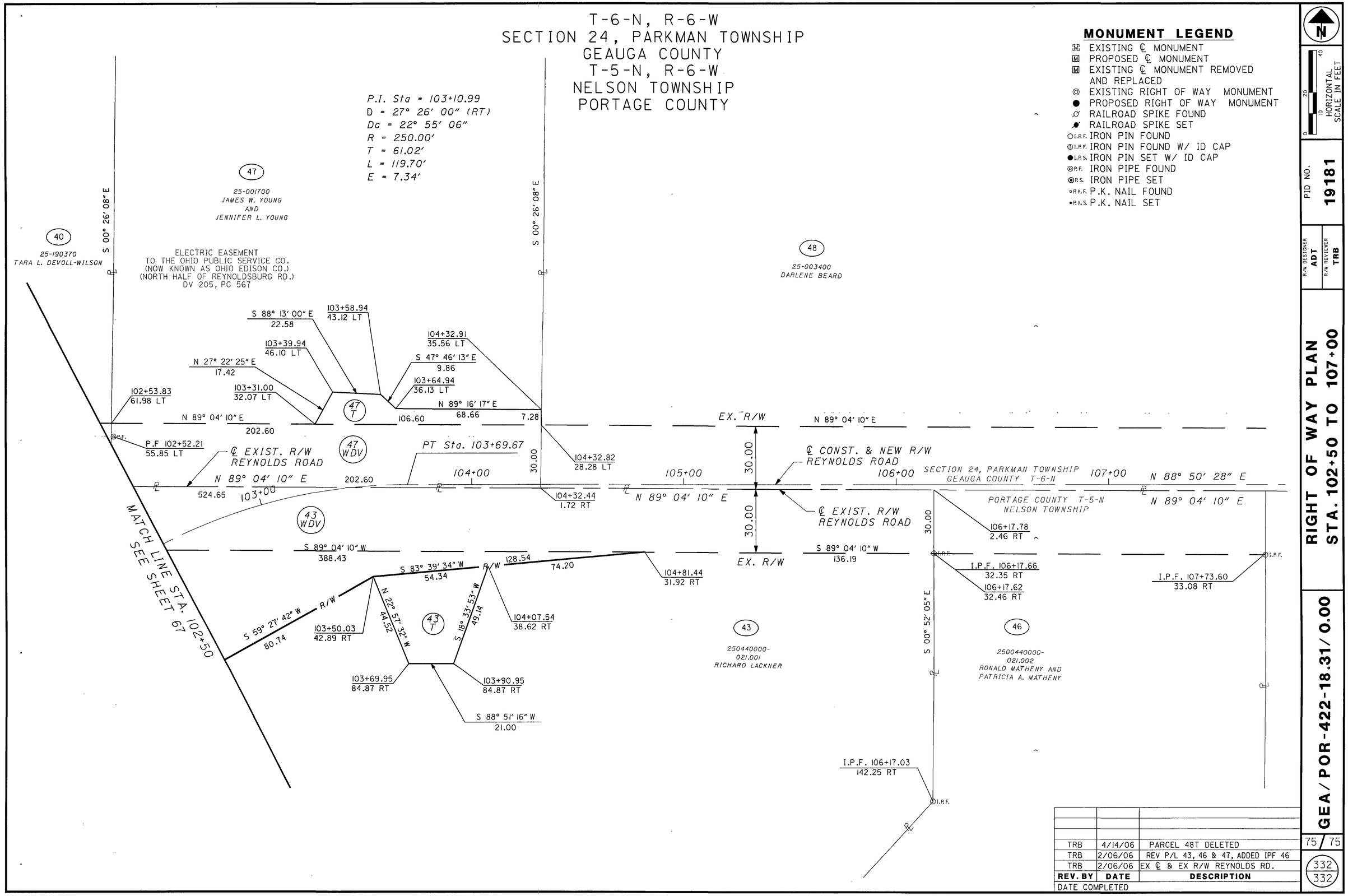

REV. BY	DATE	DESCRIPTION
TRB	4/14/06	PARCEL 48T DELETED
TRB	2/06/06	REV P/L 43, 46 & 47, ADDED IPF 46
TRB	2/06/06	EX ℄ & EX R/W REYNOLDS RD.

DATE COMPLETED

PID NO. 19181

R/W DESIGNER ADT
R/W REVIEWER TRB

RIGHT OF WAY PLAN
STA. 102+50 TO 107+00

GEA/POR-422-18.31/0.00

75/75

332/332

GENERAL INFORMATION

INTRODUCTION

THIS PROJECT CONSISTS OF THE IMPROVEMENT OF U.S. ROUTE 422 FROM APPROXIMATELY 1500 FEET SOUTHEAST OF THE U.S. ROUTE 422/FARMINGTON ROAD INTERSECTION TO APPROXIMATELY 800 FEET SOUTHEAST OF THE PORTAGE COUNTY / GEAUGA COUNTY LINE.

GEOLOGY AND OBSERVATIONS

GENERALIZED GEOLOGIC REFERENCES REPORT THAT THE SITE WAS GLACIATED BY THE WISCONSINAN GLACIER. THE OVERBURDEN, IN GENERAL, IS RELATIVELY THICK, BUT VARIABLE, REPORTEDLY RANGING FROM 20 TO 100 FEET. HOWEVER, ROCK OUTCROPS ARE PRESENT WITHIN THE AREA, NOTABLY THE NELSON-KENNEDY LEDGES STATE PARK. THE BEDROCK IN THE AREA CONSISTS OF PENNSYLVANIAN AGE SANDSTONE, SHALE AND CONGLOMERATE ON THE HIGHLANDS AND OLDER, DEVONIAN-MISSISSIPIAN SHALES AND SANDSTONES IN BURIED VALLEYS. SANDSTONE OUTCROPS WERE OBSERVED BETWEEN STATIONS 993+00 AND 999+00, AT ADJACENT DRIVEWAYS, WITHIN THE BIFURCATED MEDIAN AND AT THE BOTTOM OF THE DRAINAGE DITCH ALONG THE EASTBOUND LANES.

EXPLORATION

THE ROADWAY EXPLORATION CONSISTED OF DRILLING THIRTY-ONE BORINGS, DESIGNATED R-1 TO R-31 LOCATED ON US 422 AND SR 282. THE DRILLING WAS COMPLETED IN PHASES. TWENTY-EIGHT BORINGS, R-1 TO R-28, WERE DRILLED IN THE FIRST PHASE TO DEPTHS RANGING FROM 10 TO 20 FEET BETWEEN JANUARY 31, 2000 AND FEBRUARY 8, 2000. AN ADDITIONAL THREE ROADWAY BORINGS, R-29 TO R-31, AND FOUR BRIDGE BORINGS, B-1 TO B-4, WERE DRILLED TO DEPTHS OF 10 TO 75 FEET BETWEEN AUGUST 13 AND 15, 2002. BORINGS B-1 AND B-2 WERE EXTENDED TO DEPTHS OF 102 FEET EACH BETWEEN OCTOBER 6 AND 8, 2004. THREE RETAINING WALL BORINGS, RW-1 TO RW-3, WERE DRILLED TO DEPTHS OF 40 TO 41 FEET BETWEEN MAY 19 AND 21, 2004.

IN ADDITION, PAVEMENT CORES WERE TAKEN TO THE FULL DEPTH OF THE PAVEMENT. A TOTAL OF 6 CORES, PC-1 TO PC-6, WERE TAKEN ON DECEMBER 4, 2002.

INVESTIGATIONAL FINDINGS

THE ROADWAY BORINGS GENERALLY ENCOUNTERED SILT AND CLAY (A-6a) SUBGRADE SOILS. HOWEVER, GRAVEL WITH SAND (A-1-b), GRAVEL WITH SAND, AND SILT (A-2-4), COARSE AND FINE SAND (A-3a) AND SANDY SILT (A-4a) WERE ALSO ENCOUNTERED.

THE STRUCTURE BORINGS GENERALLY ENCOUNTERED SILT AND CLAY (A-6a), SILTY CLAY (A-6b), COARSE AND FINE SAND (A-3a), AND SILT (A-4b). HOWEVER, GRAVEL WITH SAND (A-1-b), GRAVEL WITH SAND, AND SILT (A-2-4), AND SANDY SILT (A-4a) WERE ALSO ENCOUNTERED.

FILL WAS ENCOUNTERED IN NUMEROUS BORINGS. THE FILL CONSISTED OF GRAVEL (A-1-a), GRAVEL WITH SAND AND SILT (A-2-4), SANDY SILT (A-4a), AND SILT AND CLAY (A-6a).

WEATHERED BEDROCK WAS ENCOUNTERED EIGHT FEET BELOW EXISTING GRADE IN BORINGS AT STATIONS 990+47 AND 993+06.
IN ADDITION, BEDROCK OUTCROPS ARE PRESENT ALONG THE ALIGNMENT BETWEEN STATIONS 993+00 AND 999+00.

LEGEND FOR PROJECT - AVERAGE RESULTS OF TESTS - 38 SAMPLES TESTED

DESCRIPTION	ODOT CLASS	% AGG.	% C. SAND	% F. SAND	% SILT	% CLAY	LIQUID LIMIT	PLASTICITY INDEX	WATER CONTENT	SAMPLES TESTED
GRAVEL	A-1-a(0)	64	23	10	3		---	---	10	1
GRAVEL WITH SAND	A-1-b(0)	35	34	16	11	6	20	1	19	3
GRAVEL WITH SAND AND SILT	A-2-4(0)	13	22	37	21	8	17	1	13	2
GRAVEL W/ SAND, SILT AND CLAY	A-2-6(0)	32	22	13	21	12	33	11	25	1
COARSE AND FINE SAND					VISUAL	CLASSIFICATION				
SANDY SILT	A-4a(3)	14	10	20	36	20	24	8	14	15
SILT	A-4b(8)	0	1	2	71	26	23	6	19	1
SILT AND CLAY	A-6a(7)	10	8	14	38	30	29	13	15	12
SILTY CLAY	A-6b(15)	1	2	7	41	49	38	19	18	3
WEATHERED SANDSTONE					VISUAL	CLASSIFICATION				
INTERBEDDED SANDSTONE / SILTSTONE					VISUAL	CLASSIFICATION				
RANDOM FILL					VISUAL	CLASSIFICATION				

BORING/PAVEMENT CORE - PLAN VIEW

DRIVE SAMPLE AND/OR CORE BORING - PROFILE VIEW

W FREE WATER

STATIC WATER LEVEL

WATER CONTENT NEARLY EQUAL TO OR GREATER THAN LIQUID LIMIT

INDICATES A NON PLASTIC MATERIAL WITH A HIGH WATER CONTENT

X/Y/Z NUMBER OF BLOWS FOR "STANDARD PENETRATION" TEST
X=NUMBER OF BLOWS FOR FIRST 6 INCHES
Y=NUMBER OF BLOWS FOR SECOND 6 INCHES
Z=NUMBER OF BLOWS FOR THIRD 6 INCHES

W.O.H. WEIGHT OF HAMMER

NOTE: FIGURES BESIDE BORINGS INDICATE WATER CONTENT IN PERCENT e.g. 15

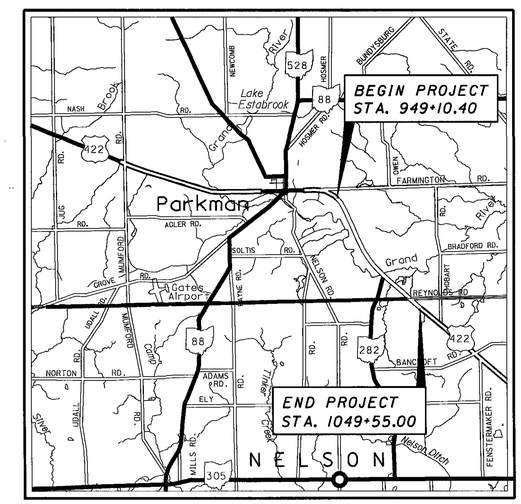

PROJECT INDEX					
STATIONS FROM	TO	PLAN VIEW SHEET	PROFILE SHEET	CUT MAX.(FT.)	FILL EMB. MAX.(FT.)
US 422 945+00	970+00	5	5	10.0	7.0
US 422 970+00	995+00	6	6	15.0	10.0
US 422 995+00	1020+00	7	8	16.0	7.0
US 422 1020+00	1045+00	9	9	7.0	4.5
US 422 1045+00	1050+18	10	10	4.0	5.5
SR 282 146+90	149+96	11	11	--	2.0

NOTES

ALL AVAILABLE SOIL AND BEDROCK INFORMATION WHICH CAN BE CONVENIENTLY SHOWN ON THE SOIL PROFILE SHEETS HAS BEEN SO REPORTED. ADDITIONAL SUBSURFACE INVESTIGATIONS, SOIL TESTS, AND BEDROCK BORINGS MAY HAVE BEEN MADE TO STUDY SOME SPECIAL ASPECT OF THE PROJECT. COPIES OF THIS DATA, IF ANY, MAY BE INSPECTED IN THE DISTRICT DEPUTY DIRECTOR'S OFFICE, THE OFFICE OF GEOTECHNICAL ENGINEERING AT 1600 WEST BROAD STREET, THE OFFICE OF ROADWAY ENGINEERING OR THE OFFICE OF STRUCTURAL ENGINEERING AT 1980 WEST BROAD STREET.

DLZ
1000 ROCKEFELLER BLDG. • 614 W. SUPERIOR AVE. • CLEVELAND, OH 44113

DRAWN BY RJH
CHECKED BEW

SOIL PROFILE

GEA\POR-422-18.31\0.00

SUMMARY OF SOIL TEST DATA

NOTE: NP SHOWN IN LIQUID LIMIT AND PLASTICITY INDEX COLUMNS INDICATES THAT THE MATERIAL IS NON-PLASTIC.

* DENOTES SAMPLE TAKEN AT OR NEAR GRADE

US 422

Station & Offset	Depth From	Depth To	% Agg	% C.S.	% F.S.	% Silt	% Clay	LL	PI	% W.C.	ODOT Class
949+61	0.0	0.4	ASPHALT (VISUAL)								VISUAL
22 ft Lt	0.4	1.0	CONCRETE (VISUAL)								VISUAL
	1.0	3.0	11	15	30	31	13	21	6	10	A-4a *
	3.0	10.0	BROWN SANDY SILT (VISUAL)								VISUAL
953+90	0.0	0.5	ASPHALT (VISUAL)								VISUAL
19 ft Rt	0.5	1.3	CONCRETE (VISUAL)								VISUAL
	1.3	3.0	18	15	22	31	14	27	9	15	A-4a *
	3.0	10.0	DARK BROWN SILT AND CLAY (VISUAL)								A-6a
960+08	0.0	0.4	ASPHALT (VISUAL)								VISUAL
22 ft Lt	0.4	1.1	CONCRETE (VISUAL)								VISUAL
	1.1	3.0	5	9	15	44	27	27	10	16	A-4a *
	3.0	10.0	GRAYISH BROWN SILT AND CLAY (VISUAL)								A-6a
964+70	0.0	0.4	ASPHALT (VISUAL)								VISUAL
29 ft Rt	0.4	1.0	CONCRETE (VISUAL)								VISUAL
	1.0	3.0	GRAY COARSE AND FINE SAND (VISUAL)								A-3a
	3.0	5.5	0	1	2	71	26	23	6	19	A-4b *
	5.5	9.0	BROWN SILT AND CLAY (VISUAL)								A-6a
	9.0	9.7	BROWN COARSE AND FINE SAND (VISUAL)								A-3a
	9.7	10.0	BROWN SILT AND CLAY (VISUAL)								A-6a
970+64	0.0	0.4	ASPHALT (VISUAL)								VISUAL
21 ft Lt	0.4	1.0	CONCRETE (VISUAL)								VISUAL
	1.0	8.0	BROWN SILT AND CLAY (VISUAL)								A-6a
	8.0	20.0	2	5	9	39	45	36	18	14	A-6b *
972+68	0.0	0.4	ASPHALT (VISUAL)								VISUAL
34 ft Rt	0.4	1.1	CONCRETE (VISUAL)								VISUAL
	1.1	3.0	FILL: ASPHALT FRAGMENTS								VISUAL
	3.0	10.0	4	6	11	41	38	32	14	14	A-6a *
977+11	0.0	1.6	ASPHALT (VISUAL)								VISUAL
34 ft Lt	1.6	1.8	CONCRETE (VISUAL)								VISUAL
978+69	0.0	0.7	ASPHALT (VISUAL)								VISUAL
22 ft Rt	0.7	1.2	CONCRETE (VISUAL)								VISUAL
980+44	0.0	0.4	ASPHALT (VISUAL)								VISUAL
22 ft Lt	0.4	1.0	CONCRETE (VISUAL)								VISUAL
	1.0	5.5	17	9	18	35	21	28	12	13	A-6a *
	5.5	8.0	MOTTLED BROWN AND GRAY SILT AND CLAY (VISUAL)								A-6a
	8.0	10.0	BROWN SILT AND CLAY (VISUAL)								A-6a
981+83	0.0	1.3	TOPSOIL (VISUAL)								VISUAL
60 ft Rt	1.3	5.0	BROWN SANDY SILT (VISUAL)								A-4a
	5.0	19.5	1	5	14	45	35	28	11	15	A-6a
	19.5	33.5	3	5	12	40	40	29	14	17	A-6a
	33.5	35.0	DECOMPOSED SANDSTONE (VISUAL)								VISUAL
	35.0	40.0	INTERBEDDED SANDSTONE AND SILTSTONE (VISUAL)								VISUAL
982+86	0.0	1.3	TOPSOIL (VISUAL)								VISUAL
60 ft Rt	1.3	9.5	13	12	18	41	16	21	6	14	A-4a
	9.5	31.8	3	6	12	42	37	25	10	16	A-6a
	31.8	34.5	BROWN SANDY SILT (VISUAL)								A-4a
	34.5	35.0	WEATHERED SILTSTONE (VISUAL)								VISUAL
	35.0	40.0	INTERBEDDED SANDSTONE AND SILTSTONE (VISUAL)								VISUAL
983+14	0.0	0.5	ASPHALT (VISUAL)								VISUAL
36 ft Rt	0.5	1.3	CONCRETE (VISUAL)								VISUAL
	1.3	3.0	BROWN COARSE AND FINE SAND (VISUAL)								A-3a
	3.0	5.5	BROWN SANDY SILT (VISUAL)								A-4a
	5.5	10.5	3	9	17	40	31	27	11	14	A-6a *
	10.5	17.0	GRAY SILT AND CLAY (VISUAL)								A-6a
	17.0	18.0	GRAY GRAVEL WITH SAND (VISUAL)								A-1-b
	18.0	20.0	GRAY SILT AND CLAY (VISUAL)								A-6a
985+59	0.0	0.8	ASPHALT (VISUAL)								VISUAL
23 ft Lt	0.8	1.0	CONCRETE (VISUAL)								VISUAL
990+47	0.0	0.4	ASPHALT (VISUAL)								VISUAL
21 ft Lt	0.4	1.0	CONCRETE (VISUAL)								VISUAL
	1.0	8.0	5	8	17	42	28	29	13	14	A-6a *
	8.0	8.8	WEATHERED SANDSTONE (VISUAL)								VISUAL
993+06	0.0	0.6	ASPHALT (VISUAL)								VISUAL
36 ft Rt	0.6	0.9	CONCRETE (VISUAL)								VISUAL
	0.9	8.0	42	7	6	34	11	31	11	7	A-6a *
	8.0	18.6	WEATHERED SHALE (VISUAL)								VISUAL
994+48	0.0	0.5	ASPHALT (VISUAL)								VISUAL
22 ft Lt	0.5	1.1	CONCRETE (VISUAL)								VISUAL
1001+08	0.0	0.4	ASPHALT (VISUAL)								VISUAL
20 ft Lt	0.4	1.0	CONCRETE (VISUAL)								VISUAL
	1.0	3.0	5	6	14	45	30	26	10	14	A-4a *
	3.0	10.0	GRAY SILT AND CLAY (VISUAL)								A-6a
1004+79	0.0	0.9	ASPHALT (VISUAL)								VISUAL
62 ft Rt	0.9	1.3	CONCRETE (VISUAL)								VISUAL
	1.3	3.0	16	28	28	20	8	17	3	11	A-3a *
	3.0	5.5	BROWNISH GRAY SILT AND CLAY (VISUAL)								A-6a
	5.5	10.0	BROWN SILT AND CLAY (VISUAL)								A-6a
1011+14	0.0	0.4	ASPHALT (VISUAL)								VISUAL
22 ft Lt	0.4	1.1	CONCRETE (VISUAL)								VISUAL
	1.1	5.5	29	9	15	26	21	30	14	13	A-6a *
	5.5	8.0	BROWN COARSE AND FINE SAND (VISUAL)								A-3a
	8.0	10.0	GRAYISH BROWN SILT AND CLAY (VISUAL)								A-6a
1012+49	0.0	2.0	ASPHALT CONCRETE (VISUAL)								VISUAL
44 ft Rt	2.0	3.5	FILL: GRAY GRAVEL WITH SAND AND SILT (VISUAL)								A-2-4
	3.5	5.0	FILL: BROWN SILT AND CLAY (VISUAL)								A-6a
	5.0	6.5	FILL: SANDY SILT (VISUAL)								A-4a
	6.5	9.5	FILL: GRAVEL WITH SAND AND SILT (VISUAL)								A-2-4
	9.5	11.0	51	6	19	16	8	NP	NP	12	A-1-b
	11.0	12.5	33	9	16	24	18	NP	NP	13	A-4a
	12.5	34.6	0	1	87	12		NP	NP	26	A-3a
	34.6	41.8	GRAY SILT AND CLAY (VISUAL)								A-6a
	41.8	56.8	GRAY SILTY CLAY (VISUAL)								A-6b
	56.8	61.8	GRAY SILT AND CLAY (VISUAL)								A-6a
	61.8	102.0	GRAY AND REDDISH GRAY SILTY CLAY (VISUAL)								A-6b

DLZ
5000 ROCKEFELLER BLDG • 614 W SUPERIOR AVE • CLEVELAND, OH 44113

DRAWN BY RJH
CHECKED BEW

SOIL PROFILE

GEA\POR-422-18.31\0.00

2/13

2/22

SUMMARY OF SOIL TEST DATA

NOTE: NP SHOWN IN LIQUID LIMIT AND PLASTICITY INDEX COLUMNS INDICATES THAT THE MATERIAL IS NON-PLASTIC.

* DENOTES SAMPLE TAKEN AT OR NEAR GRADE

US 422

Station & Offset	Depth From	Depth To	% Agg	% C.S.	% F.S.	% Silt	% Clay	LL	PI	% W.C.	ODOT Class
101 4+03	0.0	-0.5	ASPHALT (VISUAL)								VISUAL
42 ft Rt	0.5	-1.1	CONCRETE (VISUAL)								VISUAL
	1.1	-2.4	25	45	24		6	NP	NP	40	A-1-b
	2.4	-5.5	BROWN SILT AND CLAY (VISUAL)								A-6a
	5.5	-8.0	DARK BROWN SILT AND CLAY (VISUAL)								A-6a
	8.0	-10.0	BROWN GRAVEL WITH SAND (VISUAL)								A-1-b
101 4+08	0.0	-0.5	ASPHALT (VISUAL)								VISUAL
21 ft Lt	0.5	-1.2	CONCRETE (VISUAL)								VISUAL
	1.2	-6.0	FILL: BROWN SILT AND CLAY (VISUAL)								A-6a
	6.0	-7.5	0	4	55	28	13	-	-	14	A-4a
	7.5	-9.0	39	16	16		29	-	-	8	A-2-4
	9.0	-22.3	0	2	77		21	NP	NP	24	A-3a
	22.3	-31.8	GRAY SILT AND CLAY (VISUAL)								A-6a
	31.8	-36.8	GRAY GRAVEL WITH SAND AND SILT (VISUAL)								A-2-4
	36.8	-75.0	0	0	7	30	63	38	19	27	A-6a
	75.0	-102.0	GRAY SILTY CLAY (VISUAL)								A-6b
101 6+34	0.0	-1.0	ASPHALT CONCRETE (VISUAL)								VISUAL
262 ft Rt	1.0	-5.5	38	12	18	20	12	NP	NP	10	A-2-4 *
	5.5	-8.0	FILL: RANDOM FILL								VISUAL
	8.0	-10.0	FILL: GRAYISH BROWN COARSE AND FINE SAND (VISUAL)								A-3a
1021 +52	0.0	-0.4	ASPHALT (VISUAL)								VISUAL
20 ft Lt	0.4	-1.0	CONCRETE (VISUAL)								VISUAL
	1.0	-8.0	30	13	17	25	15	30	9	13	A-4a *
	8.0	-10.0	GRAY SILT AND CLAY (VISUAL)								A-6a
1023+64	0.0	-0.6	ASPHALT (VISUAL)								VISUAL
44 ft Rt	0.6	-1.2	CONCRETE (VISUAL)								VISUAL
	1.2	-1.9	FILL: RANDOM FILL								VISUAL
	1.9	-3.0	64	23	10		3	NP	NP	7	A-1-a *
	3.0	-5.5	LIGHT GRAY COARSE AND FINE SAND (VISUAL)								A-3a
	5.5	-8.0	REDDISH BROWN COARSE AND FINE SAND (VISUAL)								A-3a
	8.0	-10.0	GRAY COARSE AND FINE SAND (VISUAL)								A-3a
1025+00	0.0	-1.2	TOPSOIL (VISUAL)								VISUAL
22 ft Lt	1.2	-4.0	FILL: BROWN AND GRAY SILT AND CLAY (VISUAL)								A-6a
	4.0	-8.5	0	8	43	31	18	-	-	20	A-4a
	8.5	-10.0	GRAY SILT AND CLAY (VISUAL)								A-6a
	10.0	-13.0	0	0	27	65	8	NP	NP	26	A-4b
	13.0	-21.3	0	0	1	35	64	36	16	25	A-6b
	21.3	-26.5	GRAY SILT (VISUAL)								A-4b
	26.5	-28.5	GRAY SILT AND CLAY (VISUAL)								A-6a
	28.5	-32.3	GRAY SILT (VISUAL)								A-4b
	32.3	-46.8	GRAY SILT AND CLAY (VISUAL)								A-6a
	46.8	-51.8	GRAY SILTY CLAY (VISUAL)								A-6b
	51.8	-56.8	GRAY SILT (VISUAL)								A-4b
	56.8	-75.0	GRAY SILTY CLAY (VISUAL)								A-6b
1025+11	0.0	-0.3	ASPHALT (VISUAL)								VISUAL
46 ft Rt	0.3	-0.9	CONCRETE (VISUAL)								VISUAL
	0.9	-4.0	FILL: MOTTLED BROWN AND GRAY SILT AND CLAY								A-6a
	4.0	-5.5	FILL: BROWN GRAVEL WITH SAND (VISUAL)								A-1-b
	5.5	-7.0	39	33	16		12	NP	NP	9	A-3a
	7.0	-7.4	FILL: GRAY SANDY SILT (VISUAL)								A-4a
	7.4	-8.5	49	17	18		16	NP	NP	20	A-3a
	8.5	-10.0	GRAY SANDY SILT (VISUAL)								A-4a
	10.0	-20.0	0	0	2	31	67	39	18	23	A-6b
	20.0	-23.5	GRAY SILT (VISUAL)								A-4b
	23.5	-36.8	GRAY SILTY CLAY (VISUAL)								A-6b
	36.8	-41.8	GRAY SILT (VISUAL)								A-4b
	41.8	-44.5	GRAY SILTY CLAY (VISUAL)								A-6b
	44.5	-46.8	GRAY SILT (VISUAL)								A-4b
	46.8	-51.8	GRAY SILT AND CLAY (VISUAL)								A-6a
	51.8	-56.8	GRAY SILT (VISUAL)								A-4b
	56.8	-75.0	GRAY SILT AND CLAY (VISUAL)								A-6a
1031 +44	0.0	-0.4	ASPHALT (VISUAL)								VISUAL
22 ft Lt	0.4	-1.0	CONCRETE (VISUAL)								VISUAL
	1.0	-3.0	51	20	11		14	4	20	3	8	A-1-b *
	3.0	-5.5	BROWN COARSE AND FINE SAND (VISUAL)								A-3a
	5.5	-8.0	BROWN GRAVEL WITH SAND (VISUAL)								A-1-b
	8.0	-10.0	BROWN GRAVEL WITH SAND AND SILT (VISUAL)								A-2-4
1033+10	0.0	-0.4	ASPHALT (VISUAL)								VISUAL
44 ft Rt	0.4	-0.8	CONCRETE (VISUAL)								VISUAL
	0.8	-8.0	5	10	15	33	37	31	14	15	A-6a *
	8.0	-10.0	BROWN GRAVEL WITH SAND (VISUAL)								A-1-b
1041 +07	0.0	-0.4	ASPHALT (VISUAL)								VISUAL
22 ft Lt	0.4	-1.0	CONCRETE (VISUAL)								VISUAL
	1.0	-5.5	1	1	4	43	51	39	19	20	A-6b *
	5.5	-10.0	MOTTLED BROWN AND GRAY SILT AND CLAY (VISUAL)								A-6a
1041 +23	0.0	-0.6	ASPHALT (VISUAL)								VISUAL
43 ft Rt	0.6	-1.0	CONCRETE (VISUAL)								VISUAL
	1.0	-3.0	32	22	13	21	12	33	11	25	A-2-6 *
	3.0	-8.0	MOTTLED BROWN AND GRAY SILT AND CLAY (VISUAL)								A-6a
	8.0	-10.0	BROWNISH GRAY SILT AND CLAY (VISUAL)								A-6a
1043+97	0.0	-1.1	ASPHALT (VISUAL)								VISUAL
21 ft Lt	1.1	-1.7	CONCRETE (VISUAL)								VISUAL
1045+52	0.0	-1.1	ASPHALT CONCRETE (VISUAL)								VISUAL
27 ft Lt	1.1	-3.0	1	1	6	40	52	38	19	21	A-6b *
	3.0	-5.5	FILL: BROWN SANDY SILT (VISUAL)								A-4a
	5.5	-10.0	MOTTLED BROWN AND GRAY SILT AND CLAY (VISUAL)								A-6a
1049+65	0.0	-1.2	ASPHALT CONCRETE (VISUAL)								VISUAL
35 ft Rt	1.6	-8.0	FILL: BROWN SANDY SILT (VISUAL)								A-4a
	8.0	-10.0	BROWN AND GRAY SANDY SILT (VISUAL)								A-4a

DLZ
1000 ROCKEFELLER BLDG • 614 W SUPERIOR AVE • CLEVELAND, OH 44113

DRAWN BY RJH
CHECKED BEW

SOIL PROFILE

GEA\POR-422-18.31\0.00

SUMMARY OF SOIL TEST DATA

NOTE: NP SHOWN IN LIQUID LIMIT AND PLASTICITY INDEX COLUMNS INDICATES THAT THE MATERIAL IS NON-PLASTIC.
* DENOTES SAMPLE TAKEN AT OR NEAR GRADE

SR 282

Station & Offset	Depth From	Depth To	% Agg	% C.S.	% F.S.	% Silt	% Clay	LL	PI	% W.C.	ODOT Class
1016+34	0.0	1.0	ASPHALT CONCRETE								VISUAL
262 ft Rt	1.0	5.5	38	12	18	20	12	NP	NP	10	A-6b*
	5.5	8.0	FILL: RANDOM FILL								VISUAL
	8.0	10.0	FILL: GRAYISH BROWN COARSE AND FINE SAND (VISUAL)								A-3a

DRAWN BY RJH
CHECKED BEW

SOIL PROFILE

GEA\POR-422-18.31\0.00

4/13

4
22

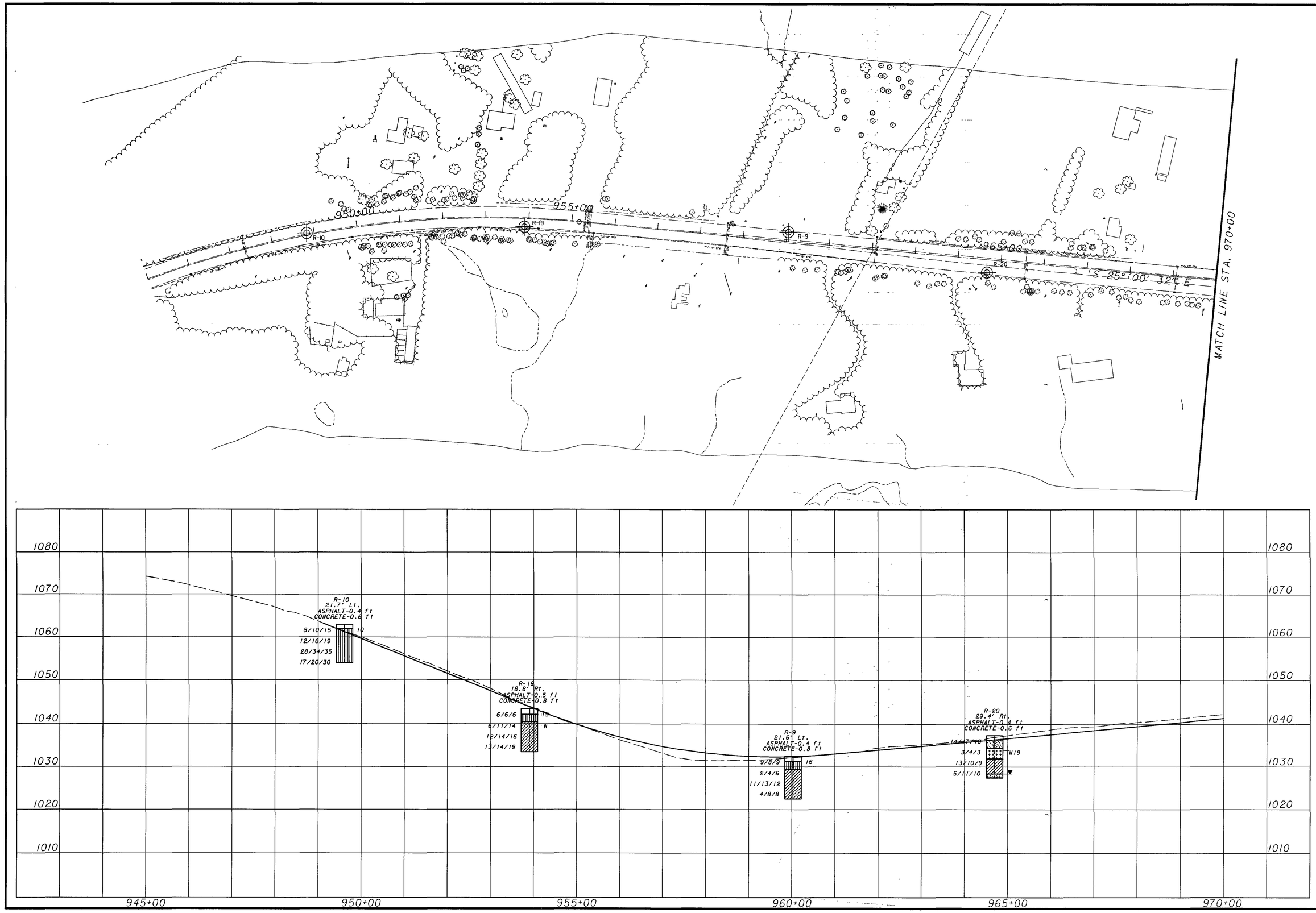

0 50 100 200
HORIZONTAL SCALE IN FEET

DRAWN BY R.JH
CHECKED BEW

SOIL PROFILE
STA. 945+00 TO STA. 970+00

GEA\POR-422-18.31\0.00

5/13

5/22

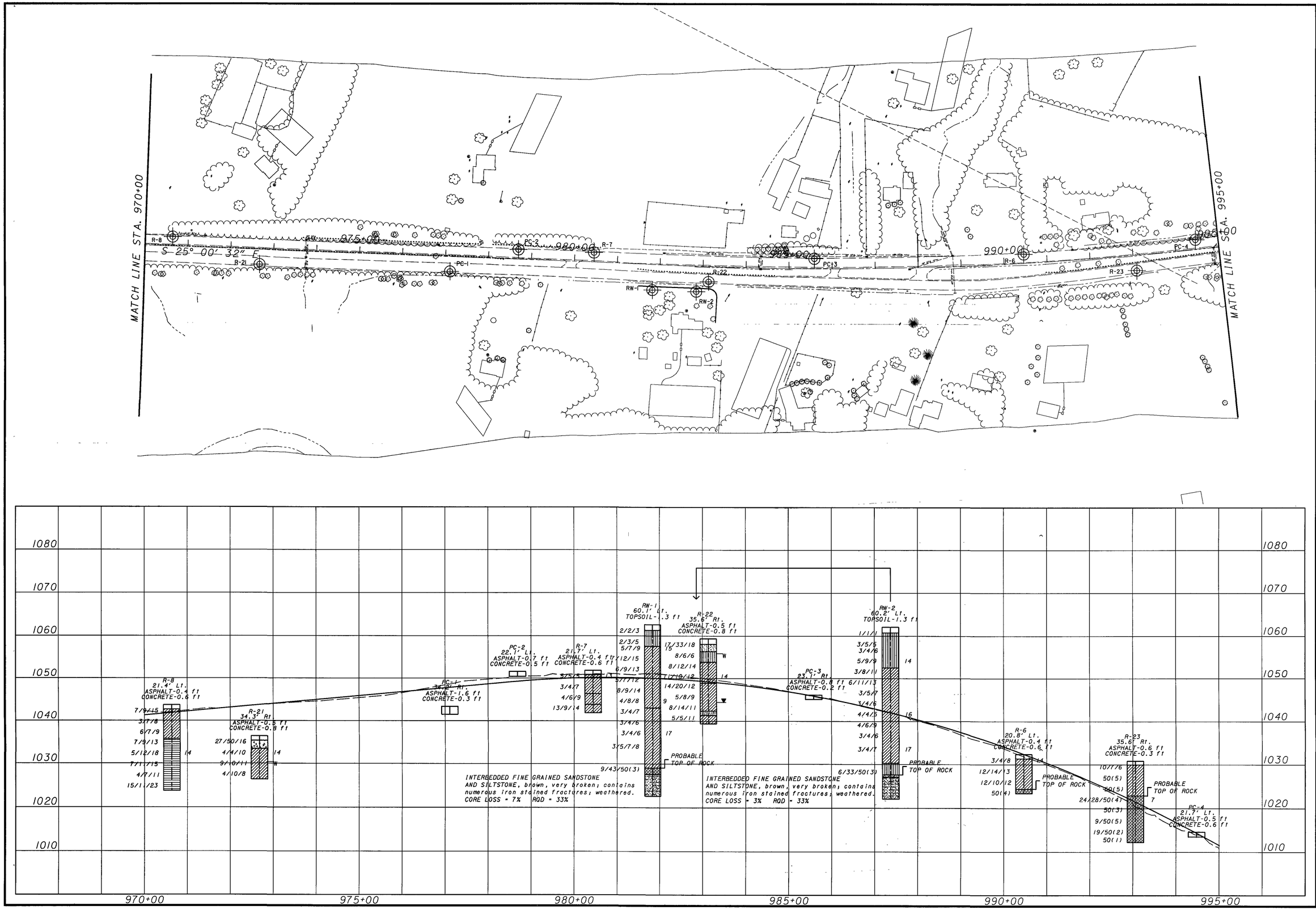

SOIL PROFILE
STA. 970+00 TO STA. 995+00

GEA\POR-422-18.31\0.00

6/13

6/22

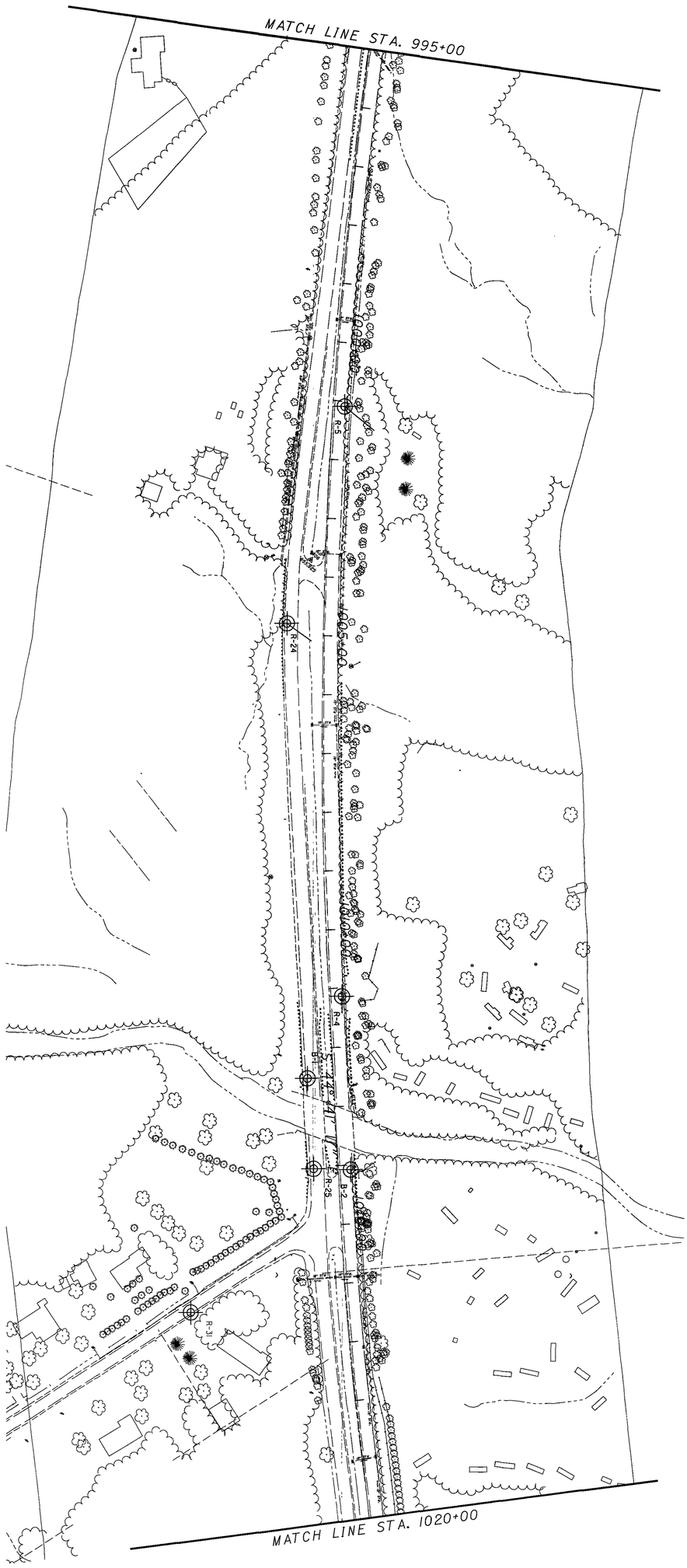

7/22	7/13	GEA/POR-422-18.31/0.00	**SOIL PROFILE** **STA. 995+00 TO STA. 1020+00**	DRAWN BY RJH CHECKED BEW	0 100 50 200 HORIZONTAL SCALE IN FEET

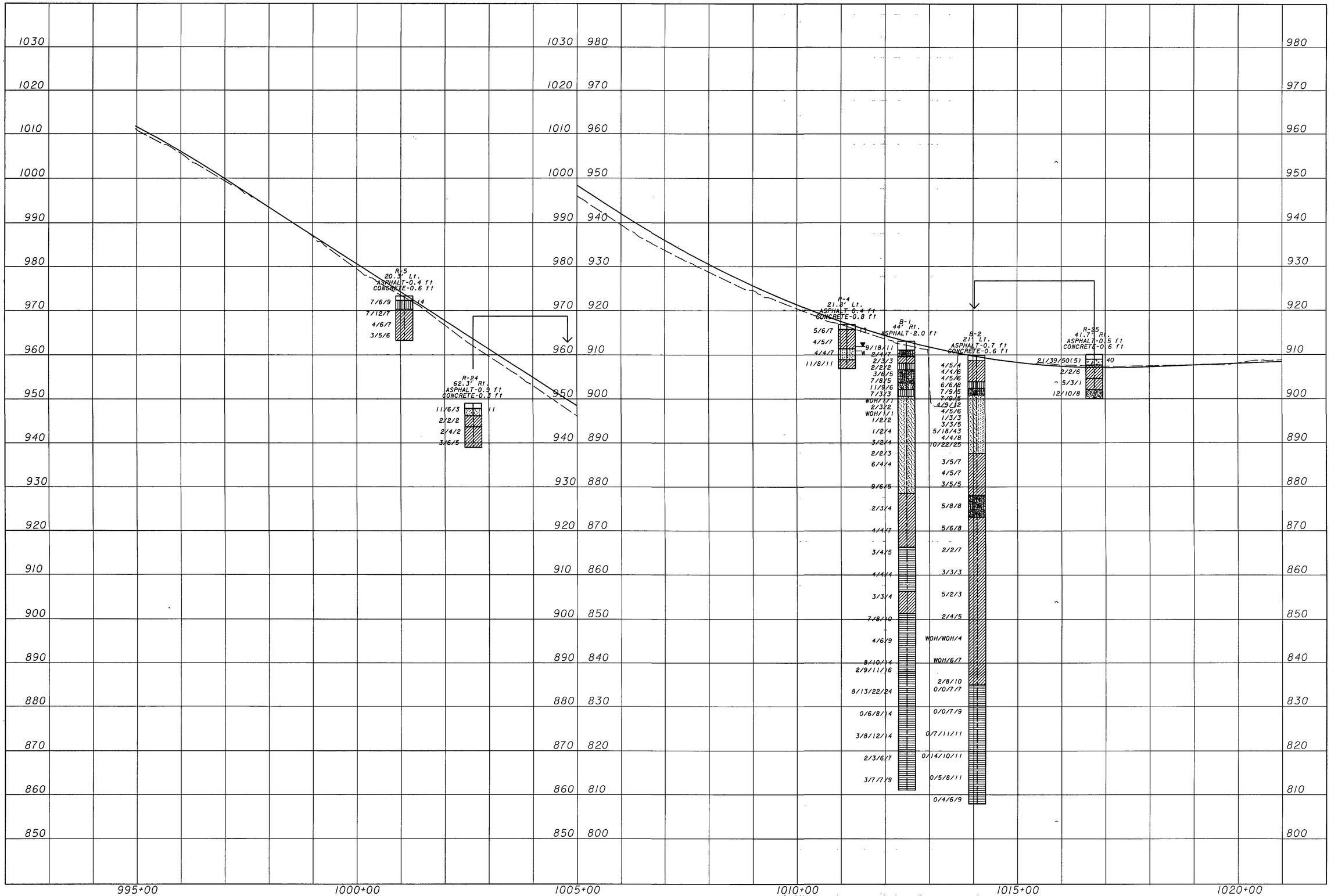

0 50 100 200
HORIZONTAL SCALE IN FEET

DRAWN BY RJH
CHECKED BEW

SOIL PROFILE
STA. 995+00 TO STA. 1020+00

GEA/POR-422-18.31/0.00

8/13

8/22

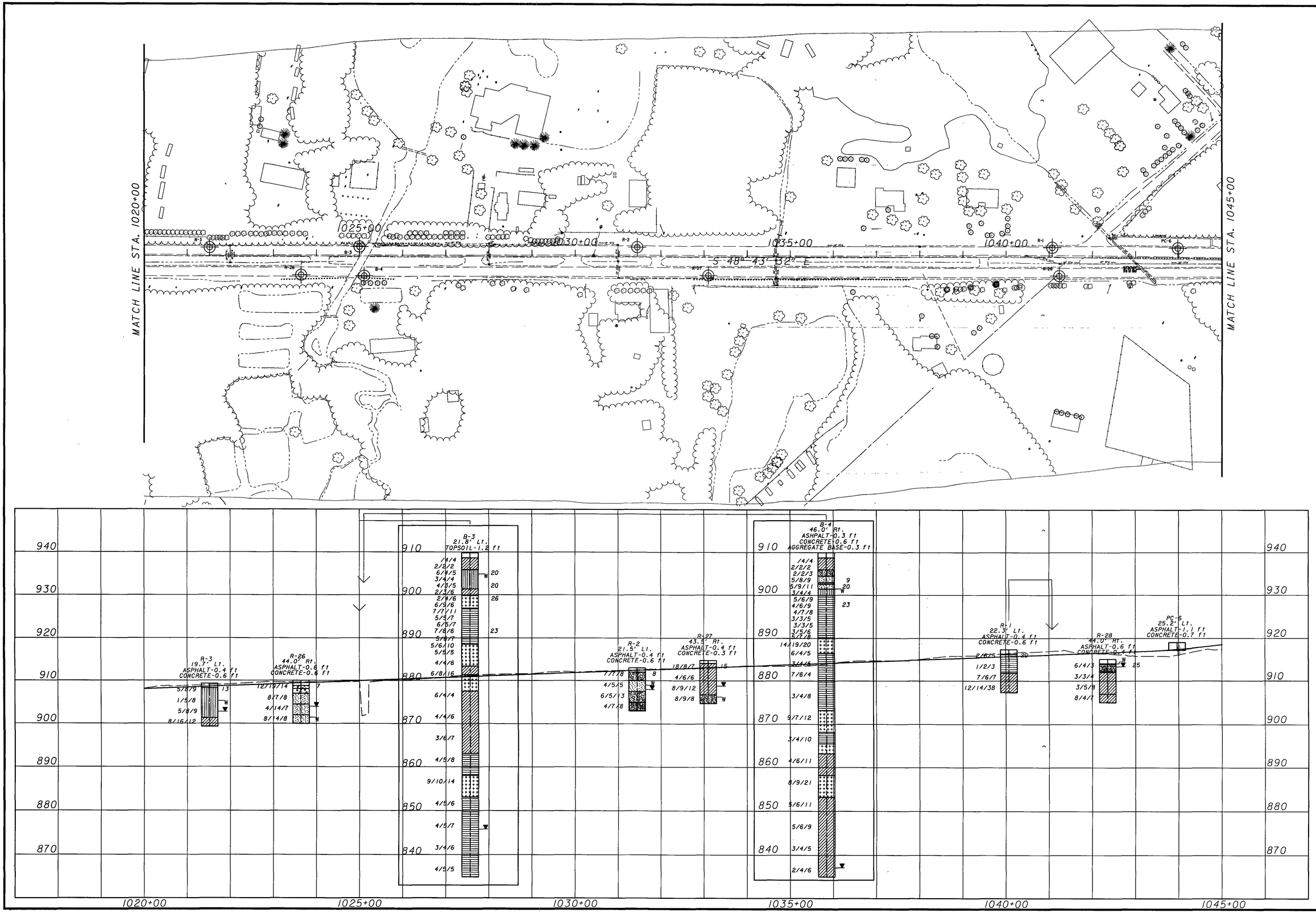
MATCH LINE STA. 1020+00
MATCH LINE STA. 1045+00
1025+00
1030+00
1035+00
1040+00
S 48° 43' 32" E
R-3
B-3
R-26
B-4
R-2
R-27
R-1
R-28
PC-6
HORIZONTAL SCALE IN FEET
0 50 100 200
DRAWN BY RJH
CHECKED BEW
SOIL PROFILE
STA. 1020+00 TO STA. 1045+00
GEA/POR-422-18.31/0.00
9/13
9/22
R-3 19.7' Lt. ASPHALT-0.4 ft CONCRETE-0.6 ft
5/8/9 1/5/8 5/8/9 8/16/12
R-26 44.0' Rt. ASPHALT-0.6 ft CONCRETE-0.6 ft
12/19/14 8/7/8 4/14/7 8/14/8
B-3 21.8' Lt. TOPSOIL-1.2 ft
1/4/4 2/2/2 6/4/5 3/4/4 4/3/5 2/3/6 2/4/6 6/9/6 7/7/11 5/5/7 6/5/7 7/8/6 5/8/7 5/6/10 5/5/5 4/4/6 6/8/16 6/4/4 4/4/6 3/6/7 4/5/8 9/10/14 4/5/6 4/5/7 3/4/6 4/5/5
R-2 21.5' Lt. ASPHALT-0.4 ft CONCRETE-0.6 ft
7/7/8 4/5/5 6/5/13 4/7/8
R-27 43.5' Rt. ASPHALT-0.4 ft CONCRETE-0.3 ft
18/8/7 4/6/6 8/9/12 8/9/8
B-4 46.0' Rt. ASPHALT-0.3 ft CONCRETE-0.6 ft AGGREGATE BASE-0.3 ft
1/4/4 2/2/2 2/2/3 5/8/9 5/9/11 3/4/4 5/6/9 4/6/9 4/7/8 3/3/5 3/3/5 3/5/6 5/7/8 14/19/20 6/4/5 3/4/5 7/6/4 3/4/8 9/7/12 3/4/10 4/6/11 8/9/21 5/6/11 5/6/9 3/4/5 2/4/6
R-1 22.3' Lt. ASPHALT-0.4 ft CONCRETE-0.6 ft
2/6/5 1/2/3 7/6/7 12/14/38
R-28 44.0' Rt. ASPHALT-0.6 ft CONCRETE-0.4 ft
6/4/3 3/3/4 3/5/8 8/4/7
PC-6 25.2' Lt. ASPHALT-1.1 ft CONCRETE-0.7 ft
940 930 920 910 900 890 880 870
910 900 890 880 870 860 850 840
1020+00 1025+00 1030+00 1035+00 1040+00 1045+00

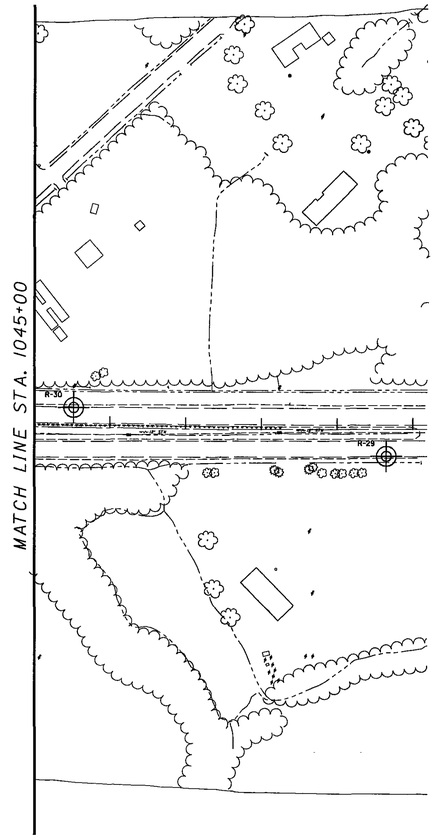

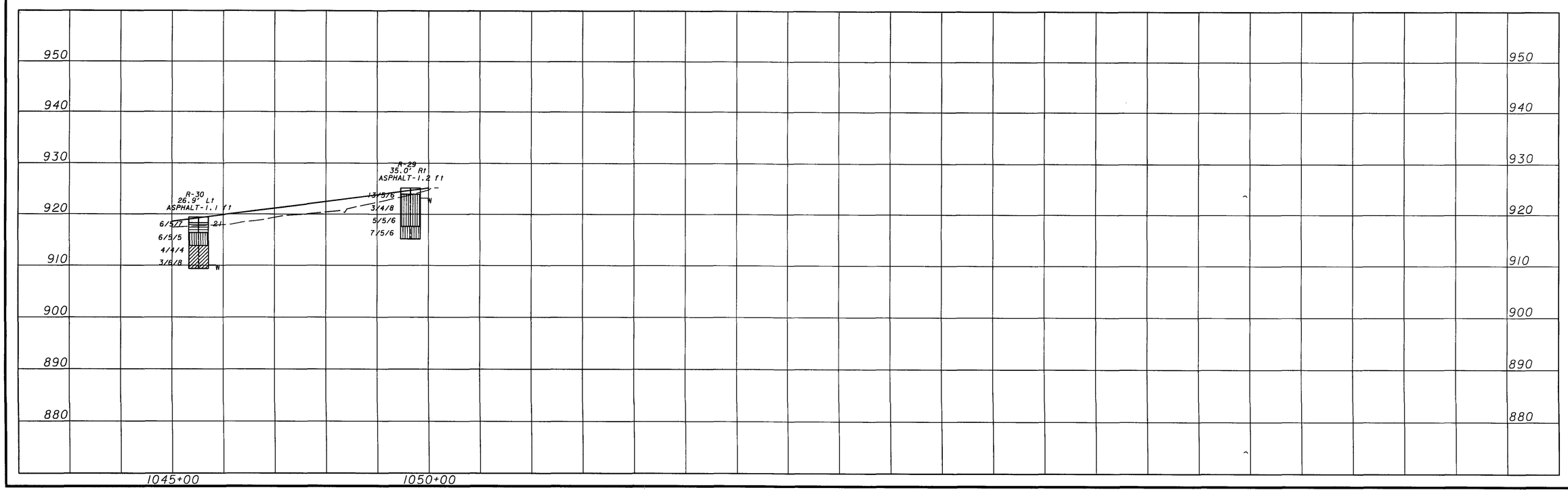

0 50 100 200
HORIZONTAL SCALE IN FEET

DRAWN BY RJH
CHECKED BEW

SOIL PROFILE
STA. 1045+00 TO STA. 1050+18

GEA\POR-422-18.31\0.00

10/13

10/22

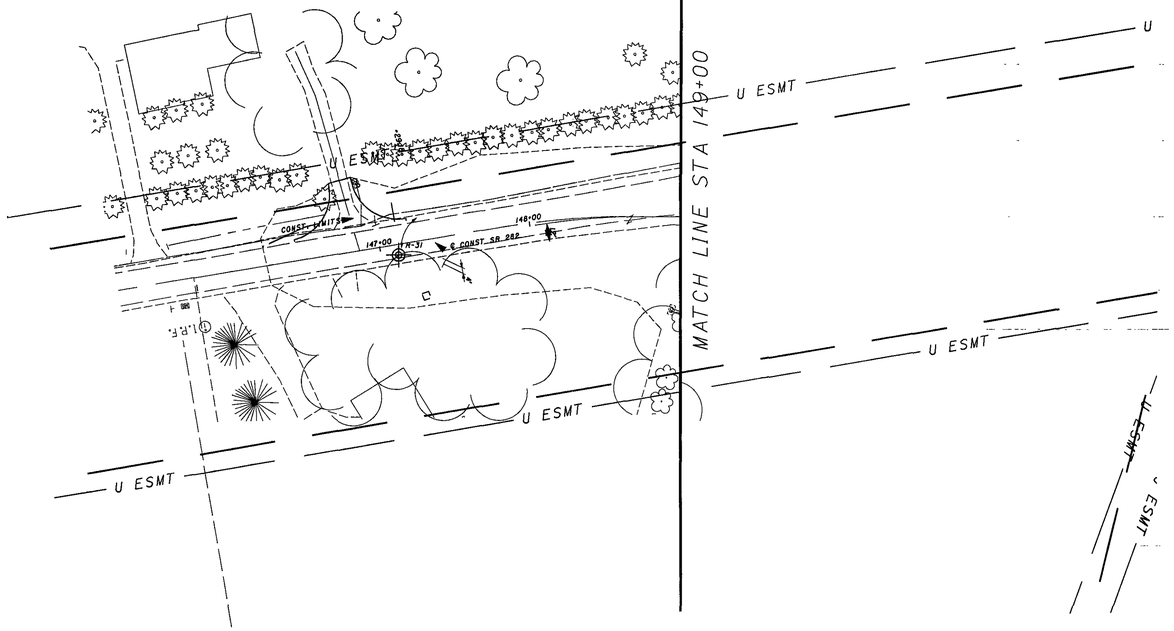

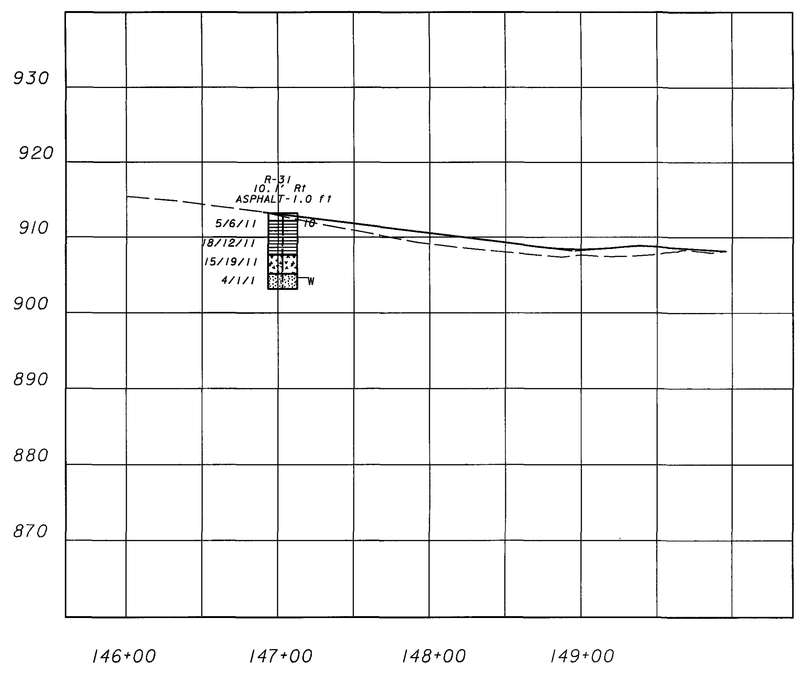

HORIZONTAL SCALE IN FEET
0 12.5 25 50

CALCULATED RJH
CHECKED BEW

PLAN AND PROFILE SR 282
STA 146+90.09 TO STA 149+96.05

GEA/POR-422-18.31/0.00

11/13

11/22

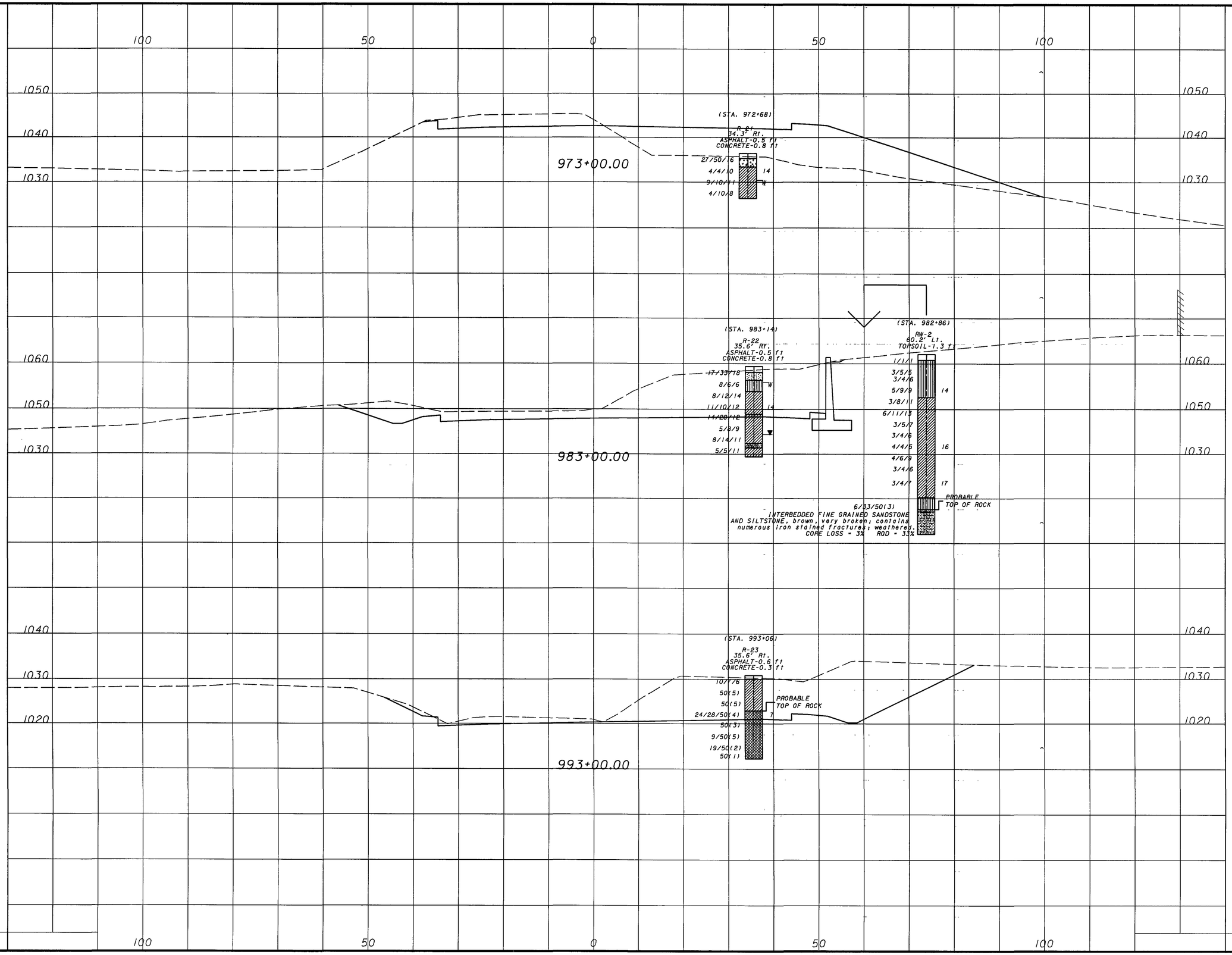

CALCULATED RJH
CHECKED BEW

CROSS SECTIONS - U.S. 422

GEA/POR-422-18.31/0.00

12/13

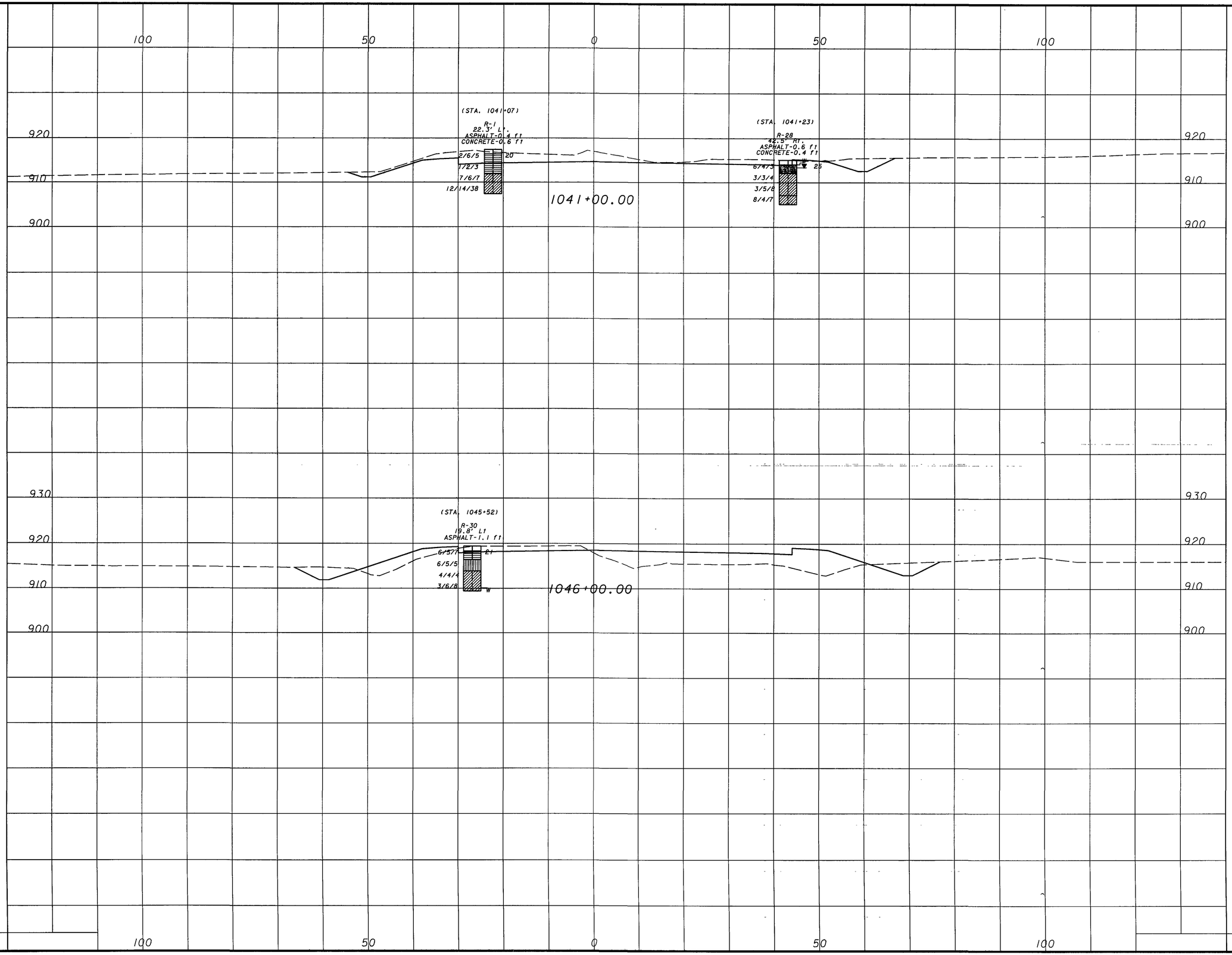

CALCULATED RJH
CHECKED BEW

CROSS SECTIONS - U.S. 422

GEA/POR-422-18.31/0.00

13/13

13
22

GEOLOGY OF THE SITE

GENERALIZED GEOLOGIC REFERENCES REPORT THAT THE SITE WAS GLACIATED BY THE WISCONSINAN GLACIER. THE OVERBURDEN IS RELATIVELY THICK, BUT VARIABLE, REPORTEDLY RANGING FROM 20 TO MORE THAN 100 FEET IN OLD BURIED VALLEYS. THE BEDROCK IN THE AREA CONSISTS OF PENNSYLVANIAN AGE SANDSTONE, SHALE AND CONGLOMERATE ON THE HIGHLANDS AND OLDER, DEVONIAN-MISSISSIPIAN SHALES AND SANDSTONES IN THE BURIED VALLEYS.

EXPLORATION

THE EXPLORATION CONSISTED OF DRILLING TWO BORINGS, B-1 AND B-2. THE BORINGS WERE DRILLED ON AUGUST 13 AND 14, 2002 USING A TRUCK-MOUNTED ROTARY DRILL RIG. THE BORINGS WERE ADVANCED TO A DEPTH OF 75.0 FEET EACH. SUBSEQUENT DRILLING, EXTENDING THE BORINGS TO 102.0 FEET IN DEPTH WAS PERFORMED ON OCTOBER 6 THROUGH 8, 2004.

INVESTIGATIONAL FINDINGS AND OBSERVATIONS

1. SOILS

BORING B-1 ENCOUNTERED 24 INCHES OF ASPHALT CONCRETE. BORING B-2 ENCOUNTERED 8 INCHES OF ASPHALT CONCRETE OVERLYING 6 INCHES OF PORTLAND CEMENT CONCRETE.

BENEATH THE PAVEMENT MATERIALS, THE BORINGS ENCOUNTERED STIFF TO HARD COHESIVE FILL AND MEDIUM DENSE GRANULAR FILL TO DEPTHS OF 11.0 AND 9.0 FEET IN BORINGS B-1 AND B-2, RESPECTIVELY. UNDERLYING THE FILL MATERIAL, THE BORINGS ENCOUNTERED INTERBEDDED LAYERS OF VERY LOOSE TO MEDIUM DENSE GRANULAR SOILS AND VERY SOFT TO VERY STIFF COHESIVE SOILS. THE GRANULAR MATERIALS WERE GENERALLY LOOSE TO MEDIUM DENSE AND THE COHESIVE MATERIALS WERE GENERALLY MEDIUM STIFF TO STIFF.

2. GROUNDWATER

SEEPAGE WAS ENCOUNTERED AT DEPTHS OF 13.0 AND 13.5 FEET IN BORINGS B-1 AND B-2, RESPECTIVELY. THE WATER LEVELS UPON COMPLETION OF DRILLING WERE 13.0 AND 63.4 FEET IN BORINGS B-1 AND B-2, RESPECTIVELY. IT SHOULD BE NOTED THAT THESE OBSERVATIONS WERE MADE INSIDE THE HOLLOWSTEM AUGERS, AND CONSEQUENTLY, DO NOT REPRESENT ACTUAL GROUNDWATER CONDITIONS AT THE SITE.

3. SCOUR

D_{15}, D_{50} AND D_{85} VALUES WHICH HAVE BEEN CALCULATED FOR THE SCOUR ANALYSIS CAN BE FOUND ON PAGE NO. 5.

SYMBOLS OF ROCK TYPES

PARTICLE SIZE DEFINITIONS

12"	3"	2.0 mm		0.42 mm		0.074 mm	0.005 mm
Boulders	Cobbles	Gravel	Coarse Sand		Fine Sand	Silt	Clay
		No. 10 SIEVE		No. 40 SIEVE		No. 200 SIEVE	

NOTES

ALL AVAILABLE SOIL AND BEDROCK INFORMATION WHICH CAN BE CONVENIENTLY SHOWN ON THE STRUCTURE FOUNDATION INVESTIGATION SHEETS HAS BEEN SO REPORTED. ADDITIONAL SUBSURFACE INVESTIGATION MAY HAVE BEEN MADE TO STUDY SOME SPECIAL ASPECT OF THE PROJECT. COPIES OF THIS DATA, IF ANY, MAY BE INSPECTED IN THE DISTRICT DEPUTY DIRECTOR'S OFFICE, OR THE OFFICE OF GEOTECHNICAL ENGINEERING AT 1600 WEST BROAD STREET, COLUMBUS, OHIO 43223 OR THE OFFICE OF STRUCTURAL ENGINEERING AT 1980 WEST BROAD STREET, COLUMBUS, OHIO 43223.

INFORMATION SHOWN BY THIS SUBSURFACE INVESTIGATION WAS OBTAINED SOLELY FOR USE IN ESTABLISHING DESIGN CONTROLS FOR THE PROJECT. THE STATE OF OHIO DOES NOT GUARANTEE THE ACCURACY OF THIS DATA AND IT IS NOT TO BE CONSTRUED AS A PART OF THE PLAN GOVERNING CONSTRUCTION OF THIS PROJECT.

GENERAL INFORMATION

DRIVE SAMPLES

DRIVE SAMPLE BORINGS ARE MADE BY MEANS OF A MECHANICALLY-POWERED, ROTARY-TYPE DRILL RIG EMPLOYING A 2" O.D., 1-3/8" I.D., SPLIT-SPOON SAMPLER, AT CONTINUOUS, 2-1/2' AND/OR 5' DEPTH INTERVALS, DRIVEN BY MEANS OF A 140 lb HAMMER WITH A FREE FALL OF 30 INCHES. THE NUMBER OF BLOWS REQUIRED TO DRIVE THE SAMPLER THREE 6-INCH INCREMENTS IS CONSIDERED THE STANDARD PENETRATION TEST.

PRESS SAMPLES

PRESS SAMPLES ARE TAKEN BY MEANS OF A MECHANICALLY POWERED, ROTARY-TYPE DRILL RIG, EMPLOYING A 3-INCH O.D. THIN-WALL PRESSSAMPLING TUBE. THE PRESS SAMPLING TUBE IS ADVANCED BY CONTINUOUS UNIFORM PRESSURE APPLIED BY THE DRILL RIG.

CORE BORINGS

CORE BORINGS ARE MADE BY MEANS OF A MECHANICALLY-POWERED, ROTARY-TYPE DRILL RIG, EMPLOYING A NQ2 OR NXM CORE BARREL WITH AN INDUSTRIAL DIAMOND CUTTING HEAD.

SAMPLING AND TESTING

THE BORING LOG SHEETS SHOW A GRAPHIC PLOT OF THE INFORMATION OBTAINED, INCLUDING DEPTH AND ELEVATION OF THE SAMPLE, TYPE OF SAMPLE, NUMBER OF BLOWS FOR THE STANDARD PENETRATION TEST IN THREE 6-INCH INCREMENTS, AND A SAMPLE DESCRIPTION BASED ON LABORATORY TEST RESULTS, UTILIZING THE ODOT CLASSIFICATION SYSTEM. RESULTS OF STRENGTH AND CONSOLIDATION TESTING, IF PERFORMED ON UNDISTURBED SAMPLES, APPEAR GRAPHICALLY ON SEPARATE ENCLOSURES. ROCK SAMPLES ARE DISPLAYED ON THE LOG SHEETS, INCLUDING DEPTH AND ELEVATION OF THE SAMPLE, AMOUNT OF RECOVERY, AND A VISUAL CLASSIFICATION BASED ON TYPE, COLOR, DEGREE OF HARDNESS, GRAIN SIZE, DETERIORATION, BEDDING, ACID REACTION, AND OTHER QUALIFYING FACTORS.

AT DEPTHS WHERE MATERIALS ARE BOULDERY OR GRAVELLY TO THE EXTENT THAT A SAMPLER CANNOT BE UTILIZED, A WASH SAMPLE IS PROCURED AND VISUALLY CLASSIFIED, IN ORDER TO DETERMINE THE GENERAL CHARACTERISTICS OF THE MATERIAL. THESE SAMPLES ARE NOT CONSIDERED SUFFICIENTLY REPRESENTATIVE TO WARRANT LABORATORY TESTING.

LEGEND

PRESS SAMPLE, DRIVE SAMPLE, AND/OR CORE BORING LOCATION

W —— INDICATES FREE WATER ELEVATION

▼—— INDICATES STATIC WATER ELEVATION

X/Y/Z — FIGURES BESIDE THE BORING IN PROFILE INDICATE THE NUMBER OF BLOWS FOR STANDARD PENETRATION TEST
- X = NUMBER OF BLOWS FOR FIRST 6 INCHES
- Y = NUMBER OF BLOWS FOR SECOND 6 INCHES
- Z = NUMBER OF BLOWS FOR THIRD 6 INCHES

50(n) — INDICATES NUMBER OF BLOWS (50) TO DRIVE A SPLIT-BARREL SAMPLER A DEPTH OF (n) INCHES OTHER THAN THE NORMAL 6 INCH INCREMENT.

WOH — WEIGHT OF HAMMER

DLZ
1000 ROCKEFELLER BLDG • 614 • SUPERIOR AVE • CLEVELAND, OH 44113

DRAWN BY RJH
CHECKED BEW

STRUCTURE FOUNDATION INVESTIGATION
BRIDGE NO. GEA-422-1952
US 422 OVER GRAND RIVER

GEA\POR-422-18.31\0.00

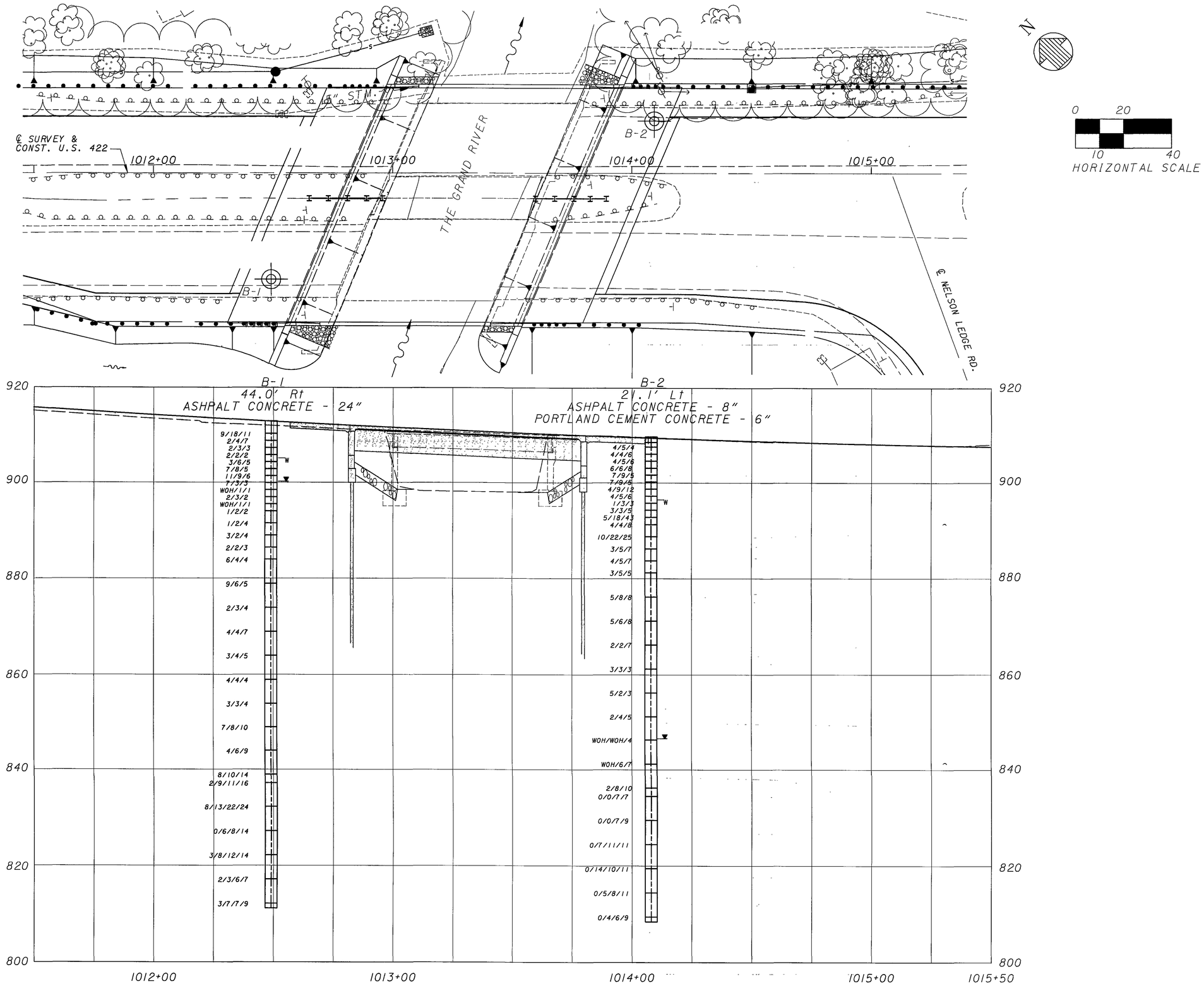

DLZ
1000 ROCKEFELLER BLDG • 614 W. SUPERIOR AVE • CLEVELAND, OH 44113

DRAWN BY RJH
CHECKED BEW

STRUCTURE FOUNDATION INVESTIGATION
BRIDGE NO. GEA-422-1952
U.S. 422 OVER GRAND RIVER

GEA\POR-422-18.31\0.00

2/5

15/22

Client: ODOT | Project: GEA-422-1 9.52 | Job No. 9921-3232.00

LOG OF: Boring B-1 | Location: Station 10+49 44.0' Right | Date Drilled: 8/13/02 + 10/7/8/04

Water observations: Water seepage at 13.0'; Water level at completion: 13.0' (inside hollow stem augers)

Depth (ft)	Elev. (ft)	Blows per 6"	Recovery (in)	Sample No. Drive	Sample No. Press	Hand Penetrometer (tsf)	Description	% Aggregate	% C. Sand	% M. Sand	% F. Sand	% Silt	% Clay
0	913.3						Asphalt Concrete Pavement - 24"						
2.0	911.3												
3.5	909.6	9 18 11 14		S-1			FILL: Medium dense gray GRAVEL WITH SAND AND SILT (A-2-4); contains asphalt; damp.						
5	908.3	2 4 7 16		S-2		1.25	FILL: Stiff mottled brown and gray SILT AND CLAY (A-6a), little fine to coarse sand; damp.						
6.5	906.6	2 3 3 14		S-3		1.75	FILL: Stiff mottled brown and gray SANDY SILT (A-4a), little fine to coarse sand, organic odor; damp.						
		2 2 2 15		S-4			FILL: Very loose to loose brown GRAVEL WITH SAND AND SILT (A-2-4), some gravel; damp.						
		3 6 5 4		S-5			@ 8.0'; medium dense, little gravel.						
9.5	903.6												
10		7 8 5 9		S-6			FILL: Medium dense reddish brown GRAVEL WITH SAND (A-1-b), little silty clay; damp.	5	6	—	19	16	8
11.0	902.3												
		11 9 6 13		S-7			Stiff to very stiff gray SANDY SILT (A-4a), some fine to coarse sand, little gravel; damp.	33	9	—	16	24	18
12.5	900.6												
		7 3 3 16		S-8			Very loose to loose brown COARSE AND FINE SAND (A-3a), trace silty clay; damp.						
15		WOH 1 1 18		S-9			@ 14.0'; wet						
		2 3 2 18		S-10			@ 15.5'; grayish brown.	0	1	—	87	12	
		WOH 1 1 18		S-11									
		2 2 2 18		S-12									
20													
		2 2 4 18		S-13			@ 21.0'; 1' sand heave.						
		3 2 4 12		S-14									
25	888.3												

Standard Penetration (N) — Blows per foot: 10 20 30 40

Moisture Content-% — PL X — Natural ● — LL X; 10 20 30 40

Client: ODOT | Project: GEA-422-1 9.52 | Job No. 9921-3232.00

LOG OF: Boring B-1 | Location: Station 10+49 44.0' Right | Date Drilled: 8/13/02 + 10/7/8/04

Water observations: Water seepage at 13.0'; Water level at completion: 13.0' (inside hollow stem augers)

Depth (ft)	Elev. (ft)	Blows per 6"	Recovery (in)	Sample No. Drive	Sample No. Press	Hand Penetrometer (tsf)	Description	% Aggregate	% C. Sand	% M. Sand	% F. Sand	% Silt	% Clay
25	888.3						Loose grayish brown COARSE AND FINE SAND (A-3a), trace silty clay; damp.						
		2 2 3 13		S-15									
		6 4 4 10		S-16									
30													
							@ 33.5'; 1' sand heave.						
34.6	878.5												
35		3 6 5 18		S-17			Stiff gray SILT AND CLAY (A-6a), trace fine sand; moist						
							@ 38.5'; 1.5' sand heave.						
		2 3 4 10		S-18		1.25	@ 39.1'-39.5'; silty sand seam.						
40													
							@ 43.5'; 2.0' sand heave.						
							@ 43.5'; some fine sand.						
		4 4 7 18		S-19		1.25							
45													
48.8	871.3												
							Stiff gray SILTY CLAY (A-6b), trace fine sand; damp.						
							@ 48.5'; 8' sand heave.						
		3 4 5 18		S-20		1.25							
50	863.3												

Standard Penetration (N) — Blows per foot: 10 20 30 40

Moisture Content-% — PL X — Natural ● — LL X; 10 20 30 40

Client: ODOT | Project: GEA-422-1 9.52 | Job No. 9921-3232.00

LOG OF: Boring B-1 | Location: Station 10+49 44.0' Right | Date Drilled: 8/13/02 + 10/7/8/04

Water observations: Water seepage at 13.0'; Water level at completion: 13.0' (inside hollow stem augers)

Depth (ft)	Elev. (ft)	Blows per 6"	Recovery (in)	Sample No. Drive	Sample No. Press	Hand Penetrometer (tsf)	Description	% Aggregate	% C. Sand	% M. Sand	% F. Sand	% Silt	% Clay
50	863.3						Medium stiff gray SILTY CLAY (A-6b), trace fine sand; damp.						
		4 4 4 18		S-21		0.75	@ 53.5'; 2' sand heave.						
55													
56.8	856.3												
		3 3 4 18		S-22		1.25	Medium stiff to stiff gray SILT AND CLAY (A-6a), little fine sand, contains silt seams; damp. @ 58.5'; 2' sand heave.						
60													
61.8	851.3												
		7 8 10 16		S-23		1.0	Medium stiff to stiff gray and reddish gray SILTY CLAY (A-6b), some fine to coarse sand, little gravel; damp. @ 63.5'; 2' sand heave.						
65													
							@ 68.5'; 2' sand heave.						
							@ 68.5'; gray, little fine to coarse sand, trace gravel; moist						
		4 6 9 18		S-24		1.0		4	2	—	6	29	59
70													
							@ 73.5'; 2' sand heave.						
75	838.3	8 10 14 18		S-25		1.25							

Standard Penetration (N) — Blows per foot: 10 20 30 40

Moisture Content-% — PL X — Natural ● — LL X; 10 20 30 40

Client: ODOT | Project: GEA-422-1 9.52 | Job No. 9921-3232.00

LOG OF: Boring B-1 | Location: Station 10+49 44.0' Right | Date Drilled: 8/13/02

Water observations: Water seepage at 13.0'; Water level at completion: 13.0' (inside hollow stem augers)

Depth (ft)	Elev. (ft)	Blows per 6"	Recovery (in)	Sample No. Drive	Sample No. Press	Hand Penetrometer (tsf)	Description	% Aggregate	% C. Sand	% M. Sand	% F. Sand	% Silt	% Clay
75	838.3												
		2 9 11 16 24		S-26		1.0	Medium stiff to stiff gray SILTY CLAY (A-6b), trace fine to coarse sand, trace gravel; moist						
80													
		8 13 22 24 24		S-27		0.75							
85													
		0 6 8 14 24		S-28		1.0	@ 86.0'-87.0'; contains 1" to 2" sand seams.						
90							@ 90.0'; 8' sand heave.						
		3 8 12 14 22		S-29		0.75							
95							@ 95.0'; contains very thin sand seams.						
		2 3 6 7 24		S-30		—							
100	813.3												

Standard Penetration (N) — Blows per foot: 10 20 30 40

Moisture Content-% — PL X — Natural ● — LL X; 10 20 30 40

DLZ
1000 ROCKEFELLER BLDG • 614 W. SUPERIOR AVE • CLEVELAND, OH 44113

DRAWN BY RJH
CHECKED BEW

STRUCTURE FOUNDATION INVESTIGATION
BRIDGE NO. GEA-422-1952
US 422 OVER GRAND RIVER

GEA\POR-422-18.31\0.00

3/5

16/22

Client: ODOT | Project: GEA-422-1 9.52 | Job No. 9921-3232.00

LOG OF: Boring B-1 | Location: Station 101+49 44.0' Right | Date Drilled: 8/13/02

WATER OBSERVATIONS: Water seepage at 13.0'; Water level at completion: 13.0' (inside hollow stem augers)

Depth (ft)	Elev. (ft)	Blows per 6"	Recovery (in)	Sample No. (Drive)	Sample No. (Press)	Hand Penetrometer (tsf)	DESCRIPTION	% Approx. Depth	% C. Sand	% M. Sand	% F. Sand	% Silt	% Clay	Moisture Content-% (Natural)
100	891.1													
		3 7 9	24	S-31		—	Medium stiff to stiff gray SILTY CLAY (A-6b), trace fine to coarse sand, trace gravel; moist							
102.0	881.1						Bottom of Boring = 102.0'							
105														
110														
115														
120														
125														

STANDARD PENETRATION (N) Blows per foot: 10 20 30 40

Moisture Content-% Natural: PL X — ● — X LL; 10 20 30 40

Client: ODOT | Project: GEA-422-1 9.52 | Job No. 9921-3232.00

LOG OF: Boring B-2 | Location: Station 101+08, 21.1' Left | Date Drilled: 8/14,02 + 10/6,04

WATER OBSERVATIONS: Water seepage at 13.5'; Water level at completion: 11.0' (inside hollow stem augers)

Depth (ft)	Elev. (ft)	Blows per 6"	Recovery (in)	Sample No. (Drive)	Sample No. (Press)	Hand Penetrometer (tsf)	DESCRIPTION	% Approx. Depth	% C. Sand	% M. Sand	% F. Sand	% Silt	% Clay	Moisture Content-% (Natural)
25	884.3													
		4 5 7	18	S-15		0.5	Soft to medium stiff gray SILT AND CLAY (A-6a), trace fine sand; moist							
30		3 5 5	18	S-16		0.5								
31.8	878.2													
35		5 8 8	18	S-17			Medium dense gray GRAVEL WITH SAND AND SILT (A-2-4); moist							
36.8	873.2													
40		5 6 8	18	S-18		0.5	Soft to medium stiff gray SILT AND CLAY (A-6a), little fine to coarse sand; moist							
45		2 2 7	18	S-19		0.75	@ 43.5'; sand heave.	0	0	—	7	30	63	
50	859.3	3 3 3	18	S-20		0.75	@ 48.5'; sand heave.							

STANDARD PENETRATION (N) Blows per foot: 10 20 30 40

Moisture Content-% Natural: PL X — ● — X LL; 10 20 30 40

Client: ODOT | Project: GEA-422-1 9.52 | Job No. 9921-3232.00

LOG OF: Boring B-2 | Location: Station 101+08, 21.1' Left | Date Drilled: 8/14,02 + 10/6,04

WATER OBSERVATIONS: Water seepage at 13.5'; Water level at completion: 11.0' (inside hollow stem augers)

Depth (ft)	Elev. (ft)	Blows per 6"	Recovery (in)	Sample No. (Drive)	Sample No. (Press)	Hand Penetrometer (tsf)	DESCRIPTION	% Approx. Depth	% C. Sand	% M. Sand	% F. Sand	% Silt	% Clay	Moisture Content-% (Natural)
0	909.9						Asphaltic concrete Pavement - 8"; Portland Cement Concrete - 6"							
1.2		4 5 4	10	S-1		4.5+	FILL: Hard brown SILT AND CLAY (A-6a), some fine to coarse sand; damp.							
		4 4 6	12	S-2		4.5+								
5		4 5 6	0											
6.0	903.9													
7.5	902.4	6 6 8	15	S-4			FILL: Medium dense gray SANDY SILT (A-4a), trace fine to coarse sand; damp.	0	4	—	55	28	13	
9.0	900.9	7 9 5	14	S-5			FILL: Medium dense brown GRAVEL WITH SAND AND SILT (A-2-4); damp.	39	16	—	16	29		
10		7 9 5	12	S-6			Medium dense light gray COARSE AND FINE SAND (A-3a), trace silty clay; damp.							
		4 9 12	0											
		4 5 6	10	S-8			@ 12.0'; gray; wet	0	2	—	77	21		Non-plastic
		3 3 3	13	S-9			@ 13.5'; loose.							
15		3 3 5	12	S-10			@ 15.0' - 18.0'; contains clumps of silt and clay.							
		5 18 43	18	S-11			@ 18.0'; little gravel, trace silty clay.							
		4 4 8	18	S-12										
20		10 22 25	18	S-13			@ 19.5'; contains silt and clay clump.							
22.3	887.7													
		3 5 7	18	S-14		0.25	@ 23.5'; sand heave. Very soft to soft gray SILT AND CLAY (A-6a), trace fine sand; moist							
25	884.9													

STANDARD PENETRATION (N) Blows per foot: 10 20 30 40

Moisture Content-% Natural: PL X — ● — X LL; 10 20 30 40

Client: ODOT | Project: GEA-422-1 9.52 | Job No. 9921-3232.00

LOG OF: Boring B-2 | Location: Station 101+08, 21.1' Left | Date Drilled: 8/14,02 + 10/6,04

WATER OBSERVATIONS: Water seepage at 13.5'; Water level at completion: 11.0' (inside hollow stem augers)

Depth (ft)	Elev. (ft)	Blows per 6"	Recovery (in)	Sample No. (Drive)	Sample No. (Press)	Hand Penetrometer (tsf)	DESCRIPTION	% Approx. Depth	% C. Sand	% M. Sand	% F. Sand	% Silt	% Clay	Moisture Content-% (Natural)
50	859.9						Medium stiff to stiff gray SILT AND CLAY (A-6a), little fine to coarse sand; moist							
55		5 2 3	18	S-21		1.0	@ 53.5'; sand heave.							
60		2 4 5	18	S-22		1.0	@ 58.5'; sand heave.							
65		WOH WOH 4	18	S-23		0.75	@ 63.5'; contains silt seams.							
70		WOH 6 7	18	S-24		1.25	@ 68.5'; some fine to coarse sand, little gravel.							
75	834.9	2 8 10	18	S-25		1.75	@ 73.5'; little fine to coarse sand, trace gravel.							

DLZ
6100 ROCKEFELLER BLDG • 614 W. SUPERIOR AVE. • CLEVELAND, OH 44113

DRAWN BY: RJH
CHECKED: BEW

STRUCTURE FOUNDATION INVESTIGATION
BRIDGE NO. GEA-422-1952
US 422 OVER GRAND RIVER

GEA\POR-422-18.31\0.00

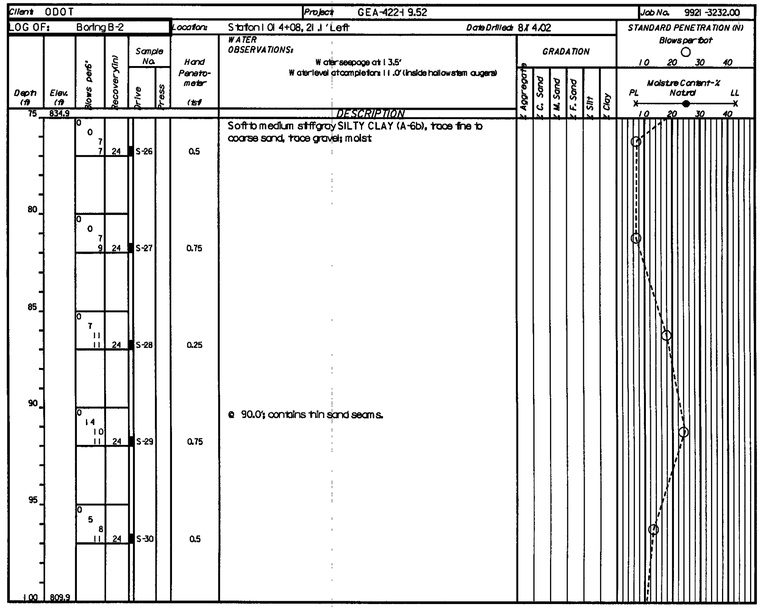

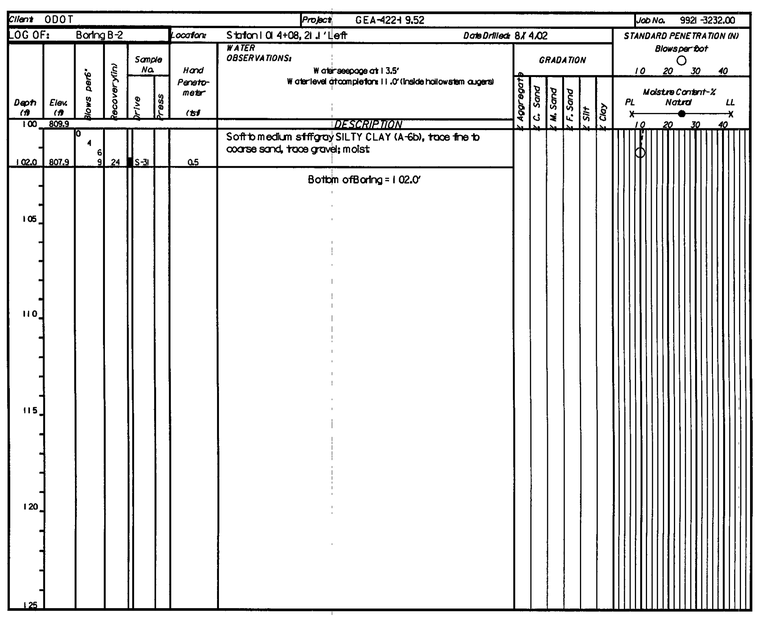

D_{15} VALUES	
TEST BORING B-1	TEST BORING B-2
SAMPLE NO. 6 = 0.0239mm	SAMPLE NO. 4 = 0.0083mm
SAMPLE NO. 7 = <0.005mm	SAMPLE NO. 5 = <0.005mm
SAMPLE NO. 9 = 0.107mm	SAMPLE NO. 8 = <0.005mm

D_{50} VALUES	
TEST BORING B-1	TEST BORING B-2
SAMPLE NO. 6 = 2.54mm	SAMPLE NO. 4 = 0.107mm
SAMPLE NO. 7 = 0.162mm	SAMPLE NO. 5 = 0.6mm
SAMPLE NO. 9 = 0.225mm	SAMPLE NO. 8 = 0.203mm

D_{85} VALUES	
TEST BORING B-1	TEST BORING B-2
SAMPLE NO. 6 = 20.7mm	SAMPLE NO. 4 = 0.313mm
SAMPLE NO. 7 = 7.83mm	SAMPLE NO. 5 = 15.3mm
SAMPLE NO. 9 = 0.338mm	SAMPLE NO. 8 = 0.319mm

DLZ
1000 ROCKEFELLER BLDG • 614 W. SUPERIOR AVE • CLEVELAND, OH 44113

DRAWN BY: RJH
CHECKED: BEW

STRUCTURE FOUNDATION INVESTIGATION
BRIDGE NO. GEA-422-1952
US 422 OVER GRAND RIVER

GEA\POR-422-18.31\0.00

GEOLOGY OF THE SITE

GENERALIZED GEOLOGIC REFERENCES REPORT THAT THE SITE WAS GLACIATED BY THE WISCONSINAN GLACIER. THE OVERBURDEN IS RELATIVELY THICK, BUT VARIABLE, REPORTEDLY RANGING FROM 20 TO MORE THAN 100 FEET IN OLD BURIED VALLEYS. THE BEDROCK IN THE AREA CONSISTS OF PENNSYLVANIAN AGE SANDSTONE, SHALE AND CONGLOMERATE ON THE HIGHLANDS AND OLDER, DEVONIAN-MISSISSIPIAN SHALES AND SANDSTONES IN THE BURIED VALLEYS.

EXPLORATION

THE EXPLORATION CONSISTED OF DRILLING TWO BORINGS. THE BORINGS WERE DRILLED ON AUGUST 14 AND 15, 2002 USING A TRUCK-MOUNTED ROTARY DRILL RIG. THE BORINGS WERE ADVANCED TO A DEPTH OF 75.0 FEET EACH.

INVESTIGATIONAL FINDINGS AND OBSERVATIONS

1. SOILS

BORING B-4 ENCOUNTERED 4 INCHES OF ASPHALT OVERLYING 7 INCHES OF PORTLAND CEMENT CONCRETE AND 3 INCHES OF AGGREGATE BASE. BORING B-3 WAS LOCATED ON THE EXISTING SHOULDER AND ENCOUNTERED 14 INCHES OF TOPSOIL.

BENEATH THE SURFICIAL MATERIALS, THE BORINGS ENCOUNTERED VARYING LAYERS OF MEDIUM STIFF TO STIFF COHESIVE FILL AND LOOSE TO MEDIUM DENSE GRANULAR FILL TO A DEPTH OF 8.5 FEET. UNDERLYING THE FILL MATERIAL, THE BORINGS ENCOUNTERED INTERBEDDED LAYERS OF VERY LOOSE TO MEDIUM DENSE SILTS AND MEDIUM STIFF TO VERY STIFF COHESIVE SOILS.

2. GROUNDWATER

SEEPAGE WAS ENCOUNTERED IN BOTH BORINGS AT DEPTHS OF 5.0 AND 8.5 FEET IN BORINGS B-3 AND B-4, RESPECTIVELY. WATER LEVELS UPON COMPLETION OF DRILLING WERE 64.0 AND 73.0 FEET IN BORINGS B-3 AND B-4, RESPECTIVELY. IT SHOULD BE NOTED THAT THESE OBSERVATIONS WERE MADE INSIDE THE HOLLOWSTEM AUGERS, AND CONSEQUENTLY, DO NOT REPRESENT ACTUAL GROUNDWATER CONDITIONS AT THE SITE.

3. SCOUR

D_{15} , D_{50} AND D_{85} VALUES WHICH HAVE BEEN CALCULATED FOR THE SCOUR ANALYSIS CAN BE FOUND ON PAGE NO. 4.

SYMBOLS OF ROCK TYPES

PARTICLE SIZE DEFINITIONS

12"	3"	2.0 mm		0.42 mm		0.074 mm	0.005 mm
Boulders	Cobbles	Gravel	Coarse Sand		Fine Sand	Silt	Clay
		No. 10 SIEVE		No. 40 SIEVE		No. 200 SIEVE	

NOTES

ALL AVAILABLE SOIL AND BEDROCK INFORMATION WHICH CAN BE CONVENIENTLY SHOWN ON THE STRUCTURE FOUNDATION INVESTIGATION SHEETS HAS BEEN SO REPORTED. ADDITIONAL SUBSURFACE INVESTIGATION MAY HAVE BEEN MADE TO STUDY SOME SPECIAL ASPECT OF THE PROJECT. COPIES OF THIS DATA, IF ANY, MAY BE INSPECTED IN THE DISTRICT DEPUTY DIRECTOR'S OFFICE, OR THE OFFICE OF GEOTECHNICAL ENGINEERING AT 1600 WEST BROAD STREET, COLUMBUS, OHIO 43223 OR THE OFFICE OF STRUCTURAL ENGINEERING AT 1980 WEST BROAD STREET, COLUMBUS, OHIO 43223.

INFORMATION SHOWN BY THIS SUBSURFACE INVESTIGATION WAS OBTAINED SOLELY FOR USE IN ESTABLISHING DESIGN CONTROLS FOR THE PROJECT. THE STATE OF OHIO DOES NOT GUARANTEE THE ACCURACY OF THIS DATA AND IT IS NOT TO BE CONSTRUED AS A PART OF THE PLAN GOVERNING CONSTRUCTION OF THIS PROJECT.

GENERAL INFORMATION

DRIVE SAMPLES

DRIVE SAMPLE BORINGS ARE MADE BY MEANS OF A MECHANICALLY-POWERED, ROTARY-TYPE DRILL RIG EMPLOYING A 2" O.D., 1-3/8" I.D., SPLIT-SPOON SAMPLER, AT CONTINUOUS, 2-1/2' AND/OR 5' DEPTH INTERVALS, DRIVEN BY MEANS OF A 140 lb HAMMER WITH A FREE FALL OF 30 INCHES. THE NUMBER OF BLOWS REQUIRED TO DRIVE THE SAMPLER THREE 6-INCH INCREMENTS IS CONSIDERED THE STANDARD PENETRATION TEST.

PRESS SAMPLES

PRESS SAMPLES ARE TAKEN BY MEANS OF A MECHANICALLY POWERED, ROTARY-TYPE DRILL RIG, EMPLOYING A 3-INCH O.D. THIN-WALL PRESSSAMPLING TUBE. THE PRESS SAMPLING TUBE IS ADVANCED BY CONTINUOUS UNIFORM PRESSURE APPLIED BY THE DRILL RIG.

CORE BORINGS

CORE BORINGS ARE MADE BY MEANS OF A MECHANICALLY-POWERED, ROTARY-TYPE DRILL RIG, EMPLOYING A NQ2 OR NXM CORE BARREL WITH AN INDUSTRIAL DIAMOND CUTTING HEAD.

SAMPLING AND TESTING

THE BORING LOG SHEETS SHOW A GRAPHIC PLOT OF THE INFORMATION OBTAINED, INCLUDING DEPTH AND ELEVATION OF THE SAMPLE, TYPE OF SAMPLE, NUMBER OF BLOWS FOR THE STANDARD PENETRATION TEST IN THREE 6-INCH INCREMENTS, AND A SAMPLE DESCRIPTION BASED ON LABORATORY TEST RESULTS, UTILIZING THE ODOT CLASSIFICATION SYSTEM. RESULTS OF STRENGTH AND CONSOLIDATION TESTING, IF PERFORMED ON UNDISTURBED SAMPLES, APPEAR GRAPHICALLY ON SEPARATE ENCLOSURES. ROCK SAMPLES ARE DISPLAYED ON THE LOG SHEETS, INCLUDING DEPTH AND ELEVATION OF THE SAMPLE, AMOUNT OF RECOVERY, AND A VISUAL CLASSIFICATION BASED ON TYPE, COLOR, DEGREE OF HARDNESS, GRAIN SIZE, DETERIORATION, BEDDING, ACID REACTION, AND OTHER QUALIFYING FACTORS.

AT DEPTHS WHERE MATERIALS ARE BOULDERY OR GRAVELLY TO THE EXTENT THAT A SAMPLER CANNOT BE UTILIZED, A WASH SAMPLE IS PROCURED AND VISUALLY CLASSIFIED, IN ORDER TO DETERMINE THE GENERAL CHARACTERISTICS OF THE MATERIAL. THESE SAMPLES ARE NOT CONSIDERED SUFFICIENTLY REPRESENTATIVE TO WARRANT LABORATORY TESTING.

LEGEND

PRESS SAMPLE, DRIVE SAMPLE, AND/OR CORE BORING LOCATION

W —— INDICATES FREE WATER ELEVATION

▼—— INDICATES STATIC WATER ELEVATION

X/Y/Z — FIGURES BESIDE THE BORING IN PROFILE INDICATE THE NUMBER OF BLOWS FOR STANDARD PENETRATION TEST
X = NUMBER OF BLOWS FOR FIRST 6 INCHES
Y = NUMBER OF BLOWS FOR SECOND 6 INCHES
Z = NUMBER OF BLOWS FOR THIRD 6 INCHES

50(n) — INDICATES NUMBER OF BLOWS (50) TO DRIVE A SPLIT-BARREL SAMPLER A DEPTH OF (n) INCHES OTHER THAN THE NORMAL 6 INCH INCREMENT.

DLZ
1000 ROCKEFELLER BLDG • 614 • SUPERIOR AVE • CLEVELAND, OH 44113

DRAWN BY RJH
CHECKED BEW

STRUCTURE FOUNDATION INVESTIGATION
BRIDGE NO. GEA-422-1975
US 422 OVER GRAND RIVER TRIBUTARY

GEA\POR-422-18.31\0.00

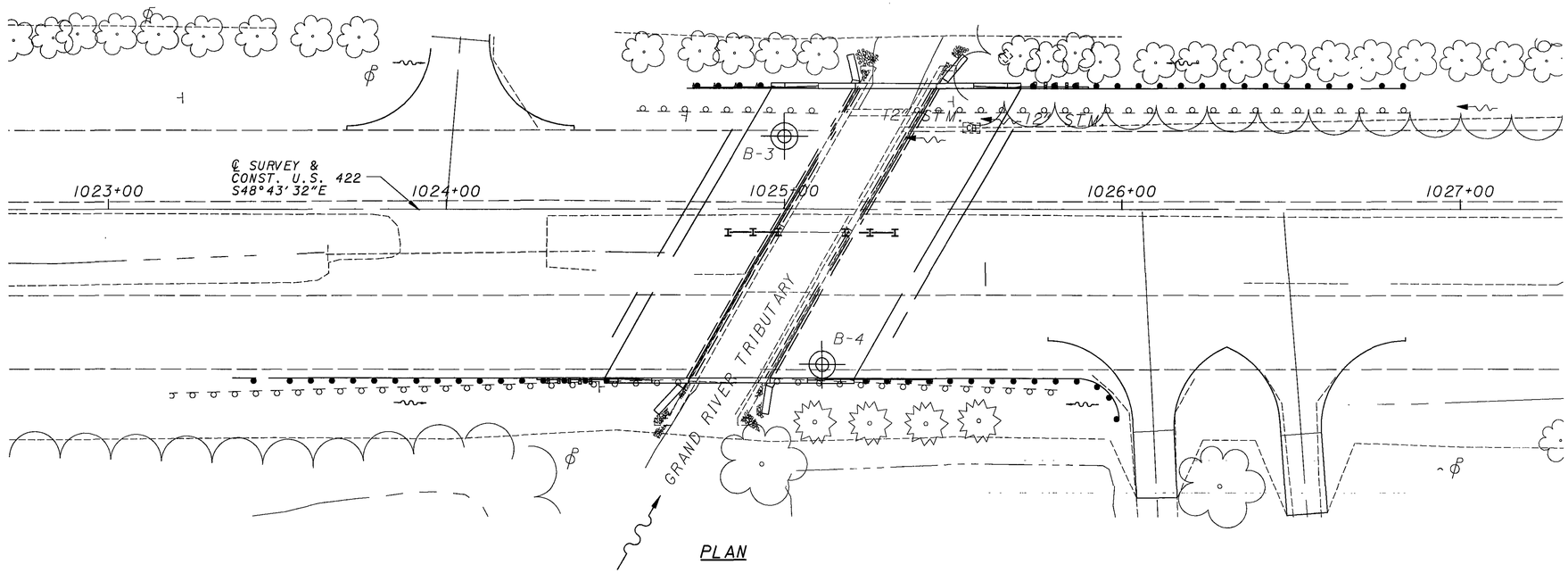

PLAN

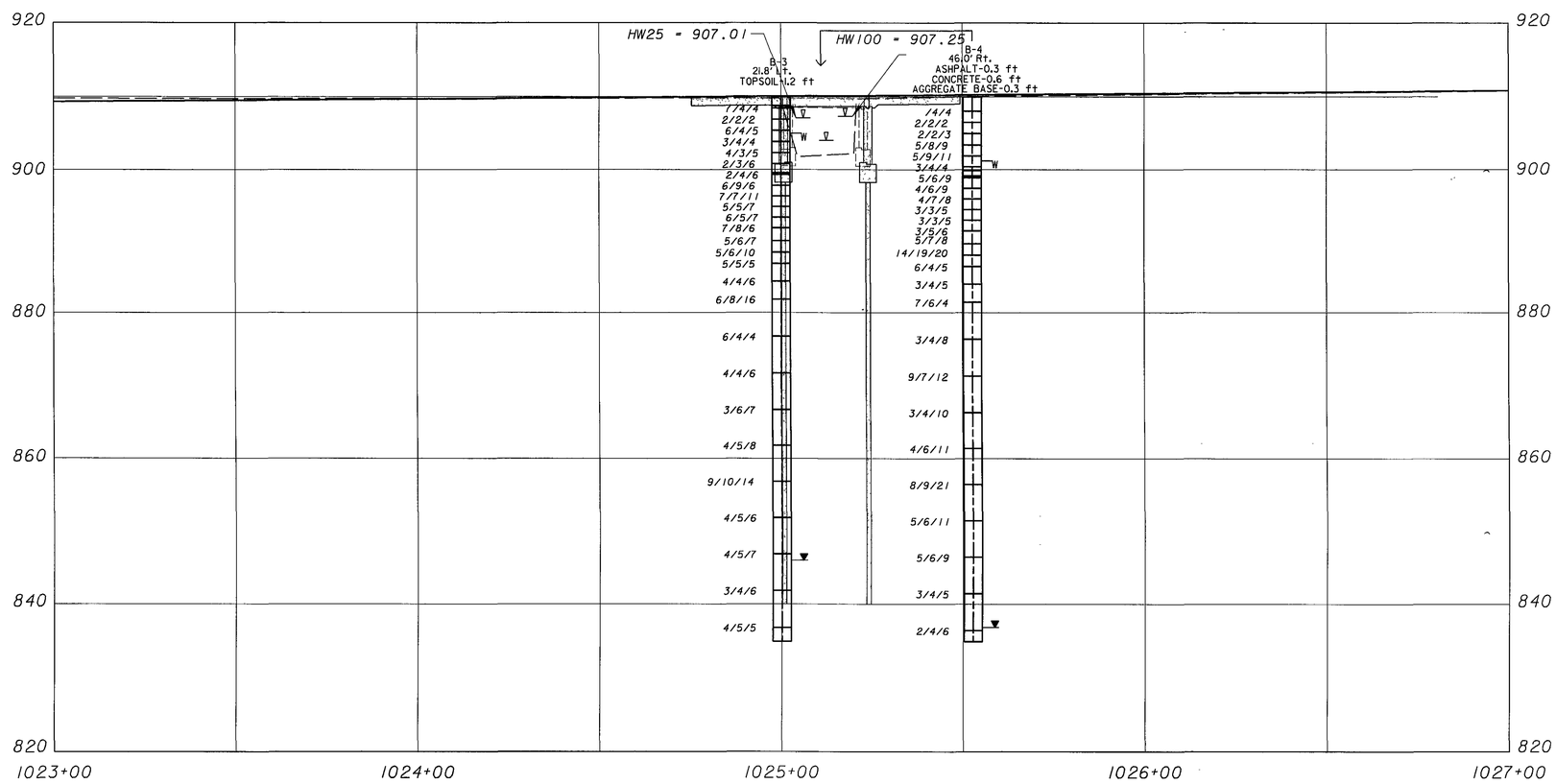

PROFILE ALONG ℄ U.S. 422

DLZ
1000 ROCKEFELLER BLDG • 614 W SUPERIOR AVE • CLEVELAND, OH 44113

DRAWN BY RJH
CHECKED BEW

STRUCTURE FOUNDATION INVESTIGATION
BRIDGE NO. 6EA-422-1975
U.S. 422 OVER GRAND RIVER TRIBUTARY

GEA\POR-422-18.31\0.00

2/4

20/22

Client: ODOT | Project: GEA-422-1 9.75 | Job No. 9921-3232.00

LOG OF: Boring B-3 | Location: Station 1 025+00, 21.8' Left | Date Drilled: 8.1.4.02

WATER OBSERVATIONS: Water seepage at 5.0', 11.5', 22.0'; Water level at completion 64.0'

Depth (ft)	Elev. (ft)	Blows per 6"	Recovery (in)	Sample No. (Drive)	Sample No. (Press)	Hand Penetrometer (tsf)	DESCRIPTION	% Aggregate	% C. Sand	% M. Sand	% F. Sand	% Silt	% Clay
0	909.9						Topsoil - 1'4"						
1.2	908.7	7 4 4	7	S-1		1.5	FILL: Medium stiff to stiff brown and gray SILT AND CLAY (A-6a), some fine to coarse sand; damp.						
4.0	905.9	2 2 2	10	S-2		0.75							
5		6 4 5	9	S-3		1.75	FILL: Stiff gray SANDY SILT (A-4a), trace fine to coarse sand; damp.	0	8	—	43	31	18
		3 4 4	0										
8.5	901.4	4 3 5	4	S-5		—		1	8	—	45	29	17
10	899.9	2 3 6	13	S-6		1.25	Stiff gray SILT AND CLAY (A-6a), trace fine sand; moist						
		2 4 6	14	S-7			Loose to medium dense gray SILT (A-4b), little fine sand, trace clay; moist	0	0	—	27	65	8
		6 9 6	15	S-8									
13.0	896.9	7 11 11	17	S-9		1.75	Stiff gray SILT AND CLAY (A-6a), trace fine sand; damp to moist						
15		5 5 7	15	S-10		1.25							
		6 5 7	16	S-11		1.5							
		7 8 6	12	S-12		1.25		0	0	—	1	35	64
20		5 6 7	0										
21.3	888.6	5 6 10	18	S-14			Loose to medium dense gray SILT (A-4b), little fine sand, trace clay; damp.						
25	884.9	5					@ 24.5': wet						

STANDARD PENETRATION (N) Blows per foot: 10 20 30 40

Moisture Content-% Natural: PL X — ● — X LL; 10 20 30 40

Client: ODOT | Project: GEA-422-1 9.75 | Job No. 9921-3232.00

LOG OF: Boring B-3 | Location: Station 1 025+00, 21.8' Left | Date Drilled: 8.1.4.02

WATER OBSERVATIONS: Water seepage at 5.0', 11.5', 22.0'; Water level at completion 64.0'

Depth (ft)	Elev. (ft)	Blows per 6"	Recovery (in)	Sample No. (Drive)	Sample No. (Press)	Hand Penetrometer (tsf)	DESCRIPTION	% Aggregate	% C. Sand	% M. Sand	% F. Sand	% Silt	% Clay
25	884.9	5 5	18	S-15			Loose to medium dense gray SILT (A-4b), little fine sand, trace clay; wet						
26.5	883.4	4 4 6	18	S-16		1.0	Medium stiff to stiff gray SILT AND CLAY (A-6a), trace fine sand; moist						
28.5	881.4												
30		6 8 16	18	S-17			Medium dense gray SILT (A-4b), little fine sand, little clay; wet						
32.3	877.6												
35		6 4 4	18	S-18		1.0	Medium stiff to stiff gray SILT AND CLAY (A-6a), trace fine sand; moist						
40		4 4 6	18	S-19		1.25							
45		3 6 7	18	S-20		1.75							
46.8	863.1												
50	859.9	4 5 8	18	S-21		2.75	Very stiff gray SILTY CLAY (A-6b), trace fine sand; contains silt seams; damp.						

STANDARD PENETRATION (N) Blows per foot: 10 20 30 40

Moisture Content-% Natural: PL X — ● — X LL; 10 20 30 40

Client: ODOT | Project: GEA-422-1 9.75 | Job No. 9921-3232.00

LOG OF: Boring B-3 | Location: Station 1 025+00, 21.8' Left | Date Drilled: 8.1.4.02

WATER OBSERVATIONS: Water seepage at 5.0', 11.5', 22.0'; Water level at completion 64.0'

Depth (ft)	Elev. (ft)	Blows per 6"	Recovery (in)	Sample No. (Drive)	Sample No. (Press)	Hand Penetrometer (tsf)	DESCRIPTION	% Aggregate	% C. Sand	% M. Sand	% F. Sand	% Silt	% Clay
50	859.9												
51.8	858.1												
		9 10 14	18	S-22			Medium dense gray SILT (A-4b), little clay, trace fine sand; wet						
55													
56.8	853.1												
		4 5 6	18	S-23		1.75	Medium stiff to stiff gray SILTY CLAY (A-6b), trace fine sand; contains silt seams; damp.						
60													
65		4 5 7	18	S-24		0.75	@ 63.5': moist						
70		3 4 6	18	S-25		0.75							
75	834.9	4 5 5	18	S-26		1.25	Bottom of Boring - 75.0'						

STANDARD PENETRATION (N) Blows per foot: 10 20 30 40

Moisture Content-% Natural: PL X — ● — X LL; 10 20 30 40

DLZ
1000 ROCKEFELLER BLDG • 614 W. SUPERIOR AVE. • CLEVELAND, OH 44113

DRAWN BY: RJH
CHECKED: BEW

STRUCTURE FOUNDATION INVESTIGATION
BRIDGE NO. GEA-422-1975
U.S. 422 OVER GRAND RIVER TRIBUTARY

GEA\POR-422-18.31\0.00

3 / 4

21 / 22

Client: ODOT | Project: GEA-422-1 9.75 | Job No. 9921-3232.00

LOG OF: Boring B-4 | Location: Station 1025+11, 46.0' Right | Date Drilled: 8/5.02

Water observations: Water seepage at 8.5'; Water level at completion: 73.0' (inside hollowstem augers)

Depth (ft)	Elev. (ft)	Blows per 6"	Recovery (in)	Sample No.	Drive	Press	Hand Penetrometer (tsf)	Description	% Aggregate	% C. Sand	% M. Sand	% F. Sand	% Silt	% Clay	Moisture Content-% (PL / Natural / LL)	Standard Penetration (N) Blows per foot
0	909.3							Asphalt Concrete Pavement - 4"; Portland Cement Concrete - 7"; Aggregate Base - 3"								
1.2	908.8	4 4 4	18	S-1			1.0	FILL: Medium stiff to stiff mottled brown and gray SILT AND CLAY (A-6a), some fine to coarse sand, trace gravel; contains roots; moist								
		2 2 6	18	S-2			1.0									
4.0	905.9	2 2 3	18	S-3				FILL: Loose brown GRAVEL WITH SAND (A-1-b), little fine to coarse sand, trace silty clay; contains rock fragments; damp.								
5.5	904.4	5 8 9	18	S-4				FILL: Medium dense brown and gray COARSE AND FINE SAND (A-3a), little gravel, trace silty clay; moist	39	33	—	16	12		Non-plastic	
7.0	902.9	5 9 11	18	S-5A			2.0	FILL: Medium dense gray SANDY SILT (A-4a), some fine to coarse sand, trace gravel; damp.								
7.4	902.5			S-5B					49	17	—	18	16		Non-plastic	
8.5	901.4	3 4 7	18	S-6			—	FILL: Medium dense gray COARSE AND FINE SAND (A-3a), some silty clay, little gravel; contains twigs; moist. Loose gray SANDY SILT (A-4a), little fine sand, little clay; wet								
10	899.9	5 6 9 8	18	S-7			3.0	Very stiff gray SILT AND CLAY (A-6a), little fine sand, little gravel; contains silt seams; damp.								
		4 6 9 11	18	S-8			2.75		0	0	—	2	31	67		
		4 7 8 14	18	S-9			2.0	@ 13.0'; stiff to very stiff; trace fine sand; no silt seams.								
15		3 3 5 15	18	S-10			1.25	@ 14.5'; moist								
		3 3 5 18	18	S-11			1.0	@ 16.0' - 17.5'; medium stiff to stiff								
		3 5 6 18	18	S-12			1.25									
20	889.9	5 7 8 18	18	S-13A			1.5	@ 19.0'; contains silt seams.								
				S-13B												
		14 19 20 18	18	S-14				Medium dense gray SILT (A-4b), little clay, trace fine sand; wet								
21.5	886.4	8 4						Stiff gray SILTY CLAY (A-6b), trace fine sand; moist								
25	884.9															

Client: ODOT | Project: GEA-422-1 9.75 | Job No. 9921-3232.00

LOG OF: Boring B-4 | Location: Station 1025+11, 46.0' Right | Date Drilled: 8/5.02

Water observations: Water seepage at 8.5'; Water level at completion: 73.0' (inside hollowstem augers)

Depth (ft)	Elev. (ft)	Blows per 6"	Recovery (in)	Sample No.	Drive	Press	Hand Penetrometer (tsf)	Description	% Aggregate	% C. Sand	% M. Sand	% F. Sand	% Silt	% Clay	Moisture Content-% (PL / Natural / LL)	Standard Penetration (N) Blows per foot
50	859.9															
51.8	858.2							Medium stiff to stiff gray SILT AND CLAY (A-6a), trace fine sand; moist								
55		8 9 21	18	S-22				Medium dense to dense gray SILT (A-4b), little fine sand, trace clay; wet								
56.8	853.2															
60		5 6 11	18	S-23			1.0	Medium stiff to stiff gray SILT AND CLAY (A-6a), trace fine sand; moist								
65		5 6 9	18	S-24			1.25	@ 63.5' - 65.0'; contains silt seams.								
70		3 4 5	18	S-25			1.25									
75	834.9	2 4 6	18	S-26			1.0	Bottom of Boring - 75.0'								

Client: ODOT | Project: GEA-422-1 9.75 | Job No. 9921-3232.00

LOG OF: Boring B-4 | Location: Station 1025+11, 46.0' Right | Date Drilled: 8/5.02

Water observations: Water seepage at 8.5'; Water level at completion: 73.0' (inside hollowstem augers)

Depth (ft)	Elev. (ft)	Blows per 6"	Recovery (in)	Sample No.	Drive	Press	Hand Penetrometer (tsf)	Description	% Aggregate	% C. Sand	% M. Sand	% F. Sand	% Silt	% Clay	Moisture Content-% (PL / Natural / LL)	Standard Penetration (N) Blows per foot
25	884.9	5 8	18	15			1.25	Medium stiff to stiff gray SILTY CLAY (A-6b), trace fine sand; moist								
		3 4 5	18	S-16			0.75									
30		7 6 4	18	S-17			1.25									
35		3 4 8	18	S-18			1.5	@ 33.5'; contains silt seams.								
36.8	873.2															
40		9 7 12	18	S-19				Medium dense gray SILT (A-4b), little fine sand, trace clay; wet								
41.8	868.2															
44.5	865.4	3 4 10	18	S-20A			1.25	Stiff gray SILTY CLAY (A-6b), little fine sand; moist								
45				S-20B				Medium dense gray SILT (A-4b), little fine sand, trace clay; damp.								
46.8	863.2															
50	859.9	4 6 11	18	S-21			1.0	Medium stiff to stiff gray SILT AND CLAY (A-6a), trace fine sand; moist								

D_{15} VALUES	
TEST BORING B-3	TEST BORING B-4
SAMPLE NO. 3 = <0.005mm	SAMPLE NO. 4 = 0.138mm
SAMPLE NO. 5 = <0.005mm	SAMPLE NO. 5B = <0.005mm
SAMPLE NO. 7 = 0.01mm	-

D_{50} VALUES	
TEST BORING B-3	TEST BORING B-4
SAMPLE NO. 3 = 0.0783mm	SAMPLE NO. 4 = 1.34mm
SAMPLE NO. 5 = 0.0894mm	SAMPLE NO. 5B = 1.86mm
SAMPLE NO. 7 = 0.0349mm	-

D_{85} VALUES	
TEST BORING B-3	TEST BORING B-4
SAMPLE NO. 3 = 0.303mm	SAMPLE NO. 4 = 3.75mm
SAMPLE NO. 5 = 0.318mm	SAMPLE NO. 5B = 16.6mm
SAMPLE NO. 7 = 0.138mm	-

DLZ
1000 ROCKEFELLER BLDG • 614 W. SUPERIOR AVE • CLEVELAND, OH 44113

DRAWN BY RJH
CHECKED BEW

STRUCTURE FOUNDATION INVESTIGATION
BRIDGE NO. GEA-422-1975
U.S. 422 OVER GRAND RIVER TRIBUTARY

GEA\POR-422-18.31\0.00

4/4

22/22