MICROFILMED
APR 16 1985

FED. ROAD DIV NO	STATE	FEDERAL AID PROJECT NO	TYPE FUNDS
2	OHIO		

STARK COUNTY
STA-30-15.04
STA-77-9.22

Note:
Parapet transitions shall be as shown on Standard Drawing BR-1-67 revised 10-15-71. Reinforcing steel shall be field bent or cut the revised shape.

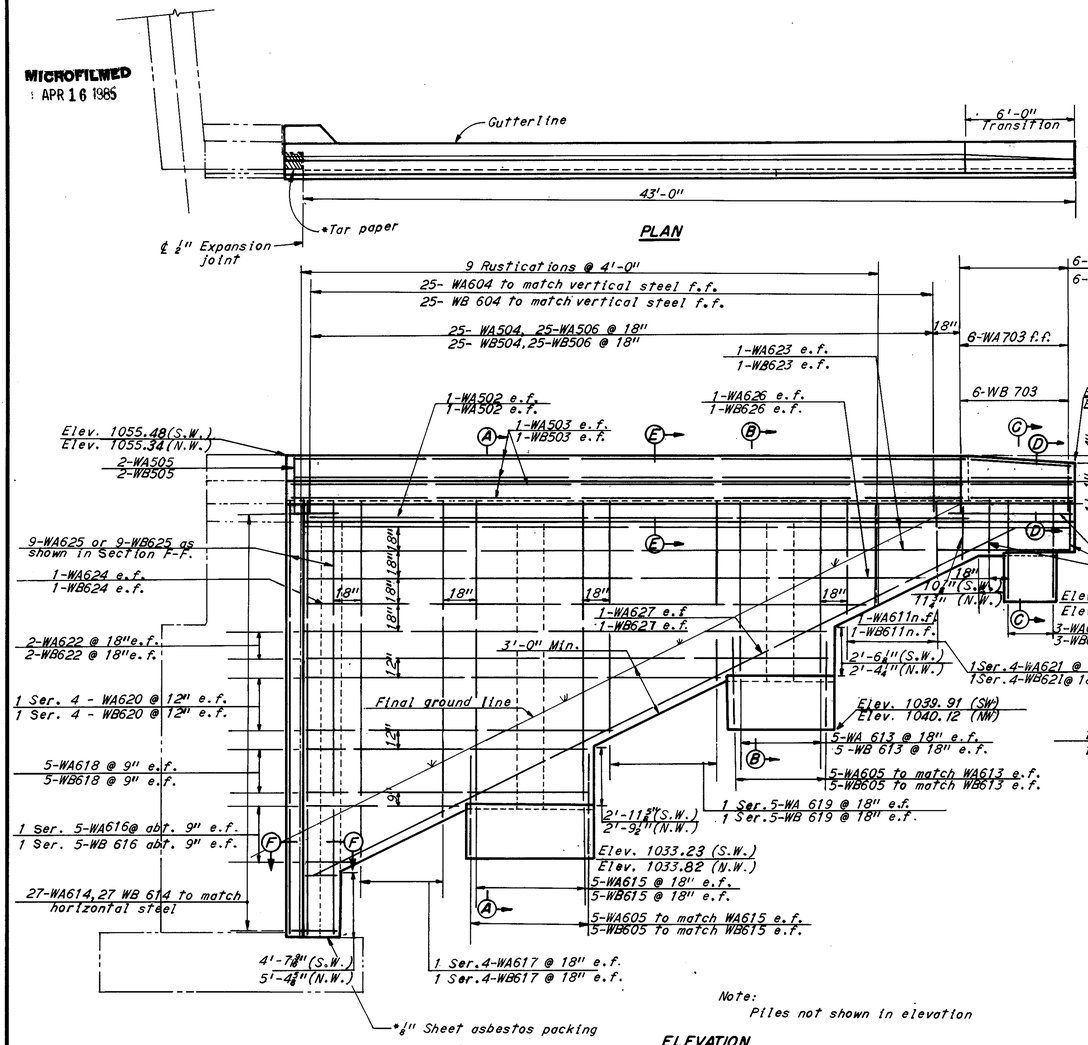

Note:
Piles not shown in elevation

ELEVATION

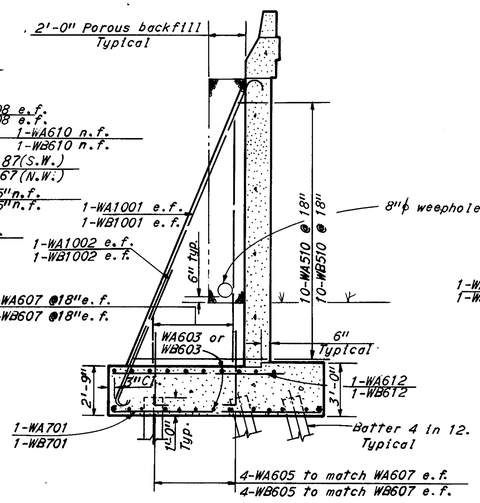

SECTION A-A

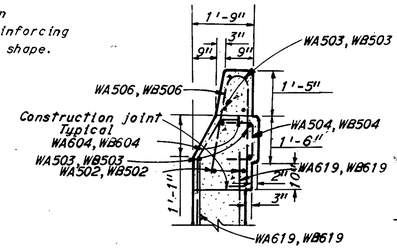

SECTION E-E

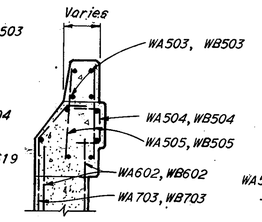

SECTION D-D

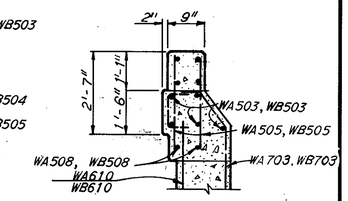

VIEW G-G

PILE NUMBER DESIGNATION							
SOUTHWEST WINGWALL				NORTHWEST WINGWALL			
A	1			A	114		
B	2			B	115		
C	3			C	116		
D	4			D	117		
E	5			E	118		
F	6			F	119		
G	7			G	120		
H	8			H	121		
J	9			J	122		
K	10			K	123		

Piles under the Southwest Wingwall shall be numbered 1-1 thru 1-10, under the West Abutment 1-11 thru 1-113, and under the Northwest Wingwall, 1-114 thru 1-123.

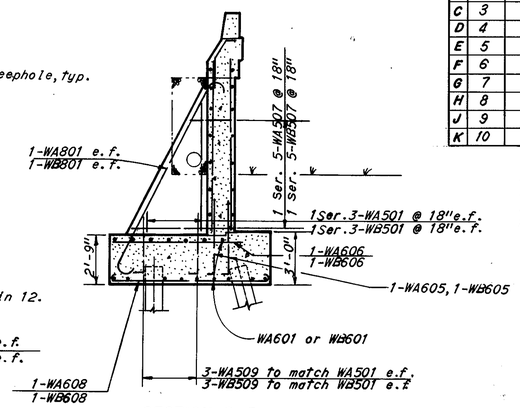

SECTION B-B

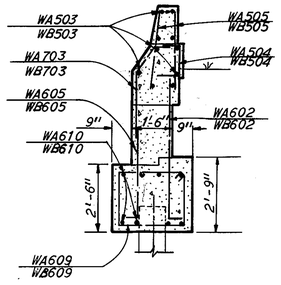

SECTION C-C

Notes:
For notes not shown see Sheet 8/13
S.W. denotes Southwest.
N.W. denotes Northwest.
WA. bars and WB-bars are for Southwest and Northwest wingwalls, respectively.

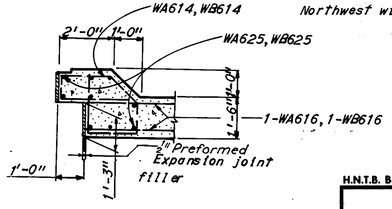

SECTION F-F

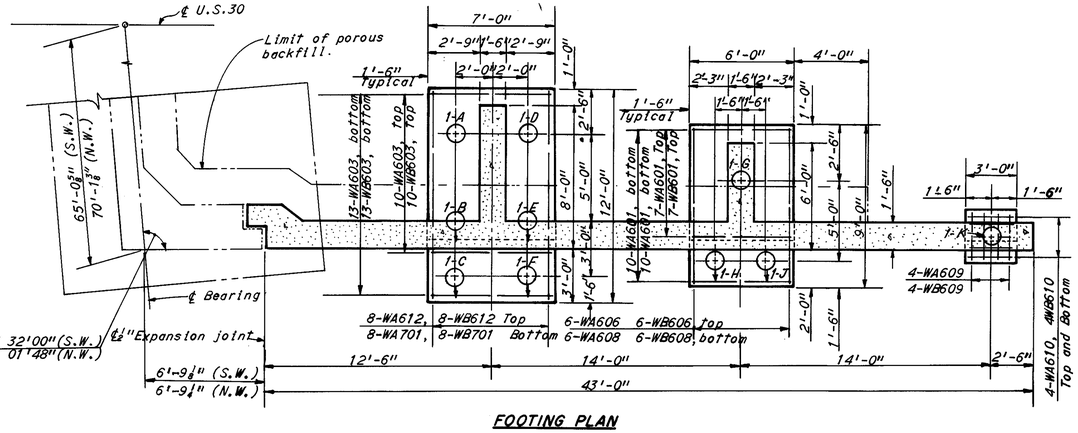

FOOTING PLAN

H.N.T.B. BRIDGE NO. 16 | Revised 12-5-75 | By RAS

HOWARD, NEEDLES, TAMMEN & BERGENDOFF
CONSULTING ENGINEERS
KANSAS CITY CLEVELAND NEW YORK

7/13

SOUTHWEST AND NORTHWEST WINGWALLS
U.S. 30 OVER CHERRY AVENUE
BR. NO. STA. 30-15.60 STA. 998+28.29
SCALE: 1/4"=1'-0" STA. 999+26.26
RELOCATED U.S. 30
CANTON STARK COUNTY OHIO

DRAWN DAP DATE 9-1-70	TRACED DATE	CHECKED CYK DATE 10-2-70	REVIEWED H.J.K. DATE 11-24-71	REVISED

1668

MICROFILMED
APR 16 1985

FED ROAD DIV NO	STATE	FEDERAL AID PROJECT NO	TYPE FUNDS
2	OHIO		

STARK COUNTY
STA-30-15.04
STA-77-9.22

Note:
Parapet transitions shall be as shown on Standard Drawing BR-1-67 revised 10-15-71. Reinforcing steel shall be field bent or cut the revised shape.

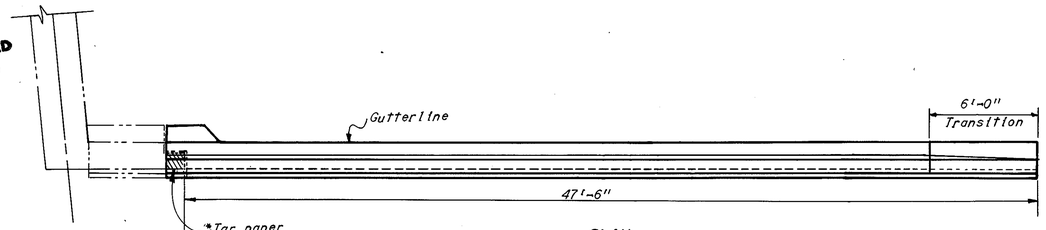

PLAN

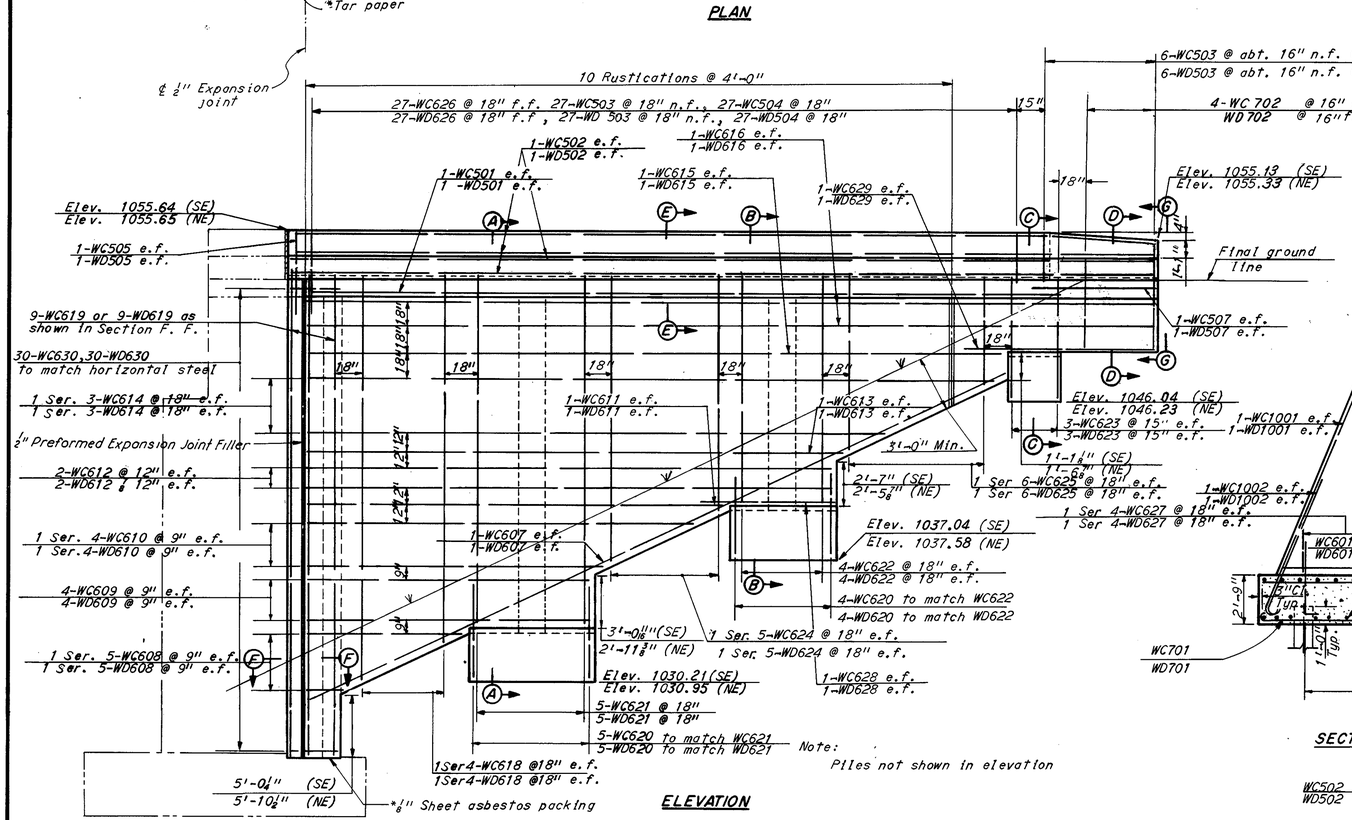

ELEVATION

Note:
Piles not shown in elevation

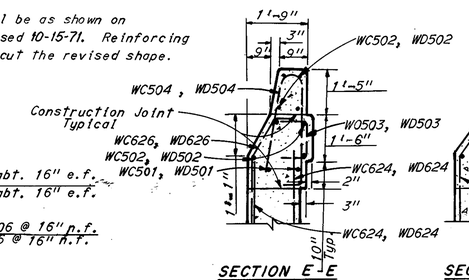

SECTION E-E

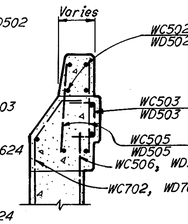

SECTION D-D

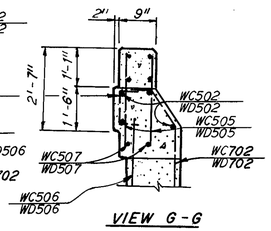

VIEW G-G

Notes:
S.E. denotes Southeast
N.E. denotes Northeast
WC-bars and WD-bars are for Southeast and Northeast wingwalls respectively.
Denotes battered piles and direction of batter. Piles are battered 4 in 12.
All piles are 12" ϕ cast-in-place Concrete.
e.f. denotes each face. f.f. denotes for face. n.f. denotes near face.
* To be included with "Item 511, Class "C" Concrete and wingwalls above footings" for payment.
Pile dimensions are measured along bottom of footing.
For rustication detail see Sheet 203.
For reinforcement schedule see Sheet 12/13

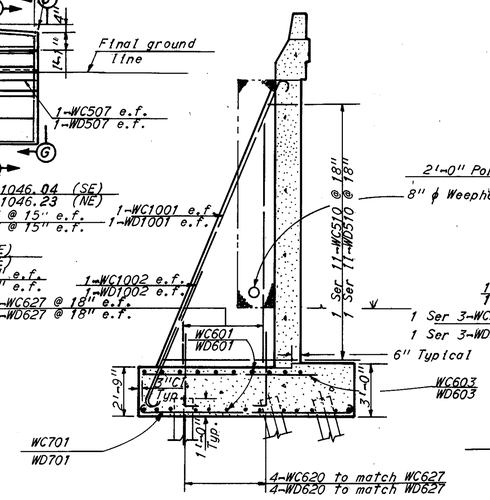

SECTION A-A

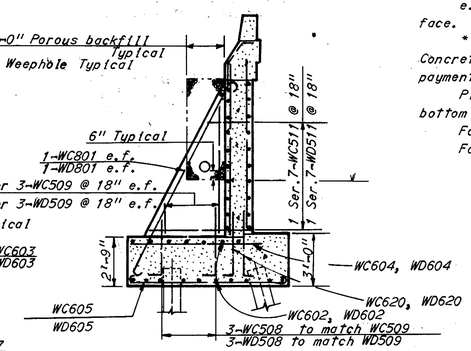

SECTION B-B

PILE NUMBER DESIGNATION							
NORTHEAST WW				SOUTHEAST WW			
A	1			A	129		
B	2			B	130		
C	3			C	131		
D	4			D	132		
E	5			E	133		
F	6			F	134		
G	7			G	135		
H	8			H	136		
J	9			J	137		
K	10			K	138		

Piles under the Northeast Wingwall shall be numbered 2-1 thru 2-10, under the East Abutment 2-11 thru 2-128, and under the Southeast Wingwall, 2-129 thru 2-138.

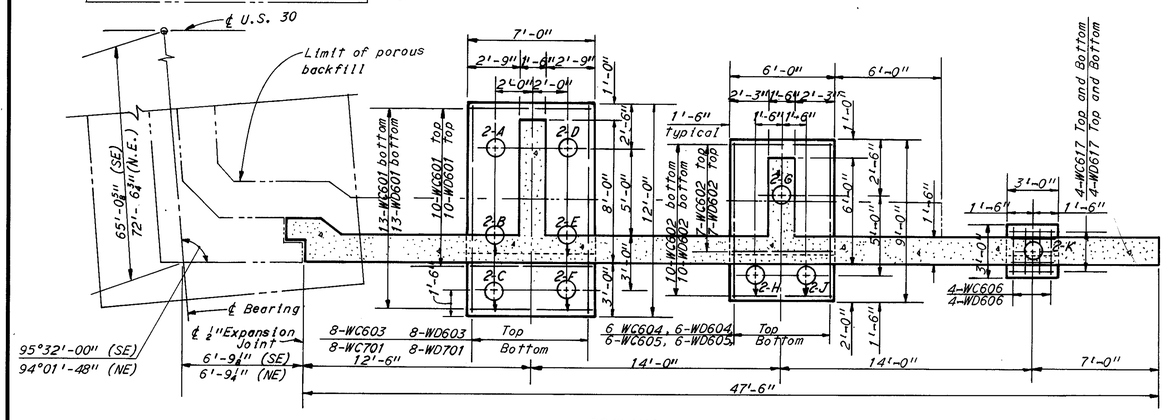

FOOTING PLAN

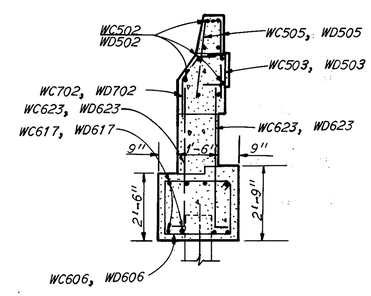

SECTION C-C

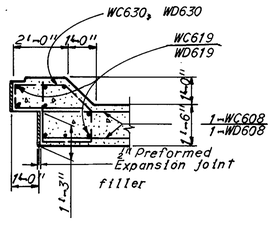

SECTION F-F

H.N.T.B. BRIDGE NO. 16 | Revised 12-5-75 | By RAS

HOWARD, NEEDLES, TAMMEN & BERGENDOFF 8/13
CONSULTING ENGINEERS
KANSAS CITY CLEVELAND NEW YORK

SOUTHEAST AND NORTHEAST WINGWALLS
U.S. 30 OVER CHERRY AVENUE
BR. NO. STA. 30-15.60 STA. 998+28.29
SCALE: 1/4"=1'-0" STA. 999+26.26
RELOCATED U.S. 30
CANTON STARK COUNTY OHIO

DRAWN DAP DATE 9-1-70	TRACED DATE	CHECKED CYK DATE 10-2-70	REVIEWED M.J.K. DATE 11-24-71	REVISED

1668

MICROFILMED
APR 16 1985

FED. ROAD DIV. NO.	STATE	FEDERAL AID PROJECT NO.	TYPE FUNDS
2	OHIO		

275
299

STARK COUNTY
STA-30-15.04
STA-77-9.22

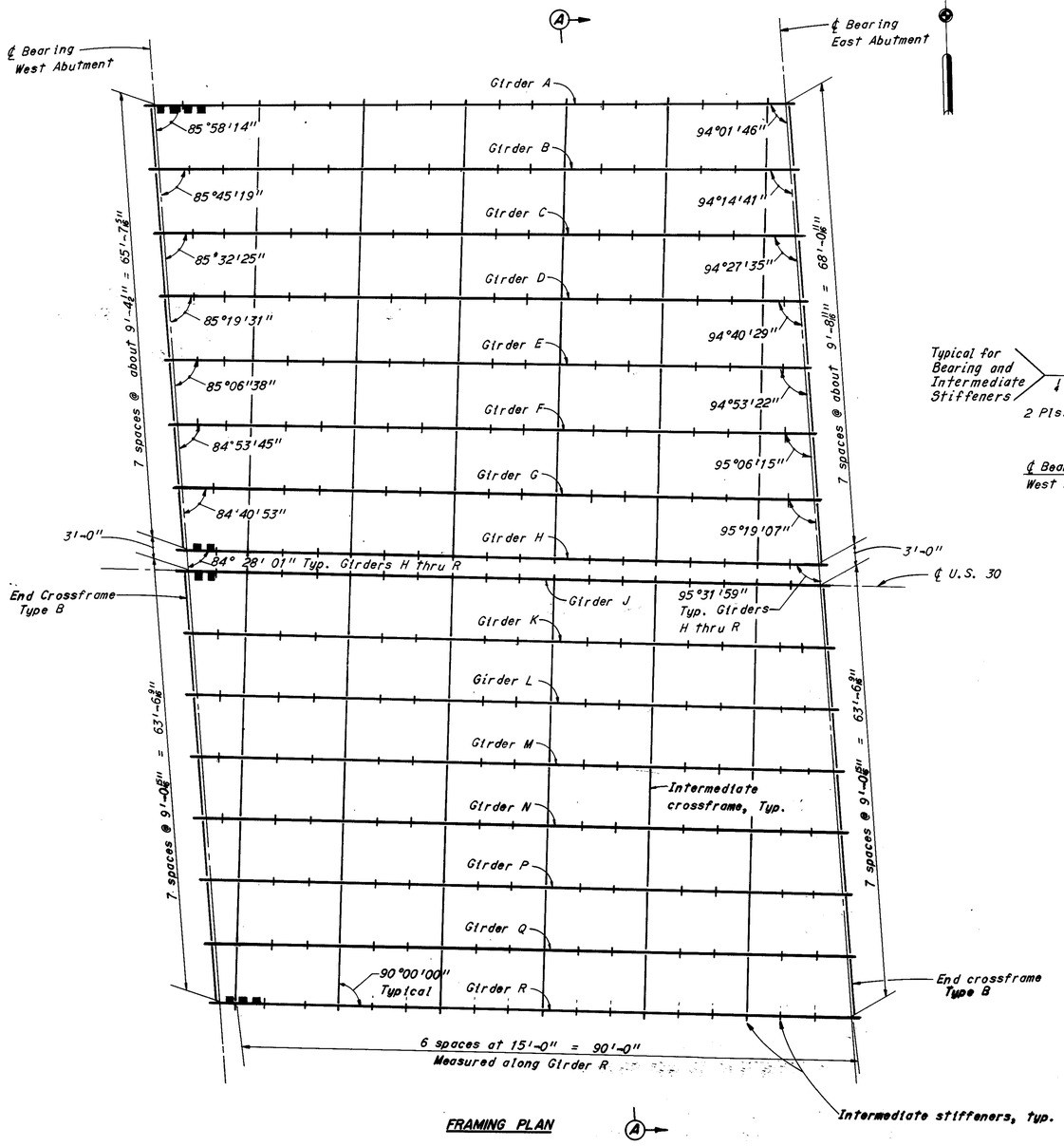

FRAMING PLAN

TABLE OF DIMENSIONS									
Girder	A	B	C	D	E	F	G	H	J Thru R
a	1'-0"	1'-0"	1'-0 1/16"	←				→	1'-0 1/16"
b	23'-1 1/2"	23'-1 5/8"	23'-1 15/16"	23'-1 15/16"	23'-2 1/8"	23'-2 5/16"	23'-2 1/4"	23'-2 11/16"	23'-2 11/16"

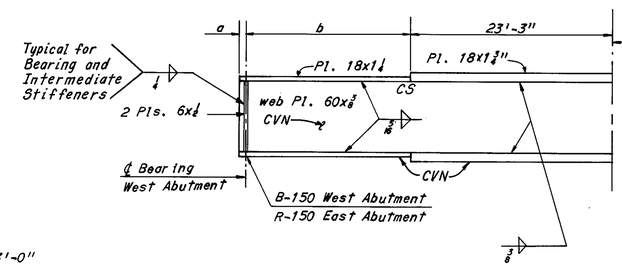

Note:
There are no restrictions for welded attachments to the exterior girders.

CVN-See sheet 200
CS-indicates flange butt weld subject to compressive stress only.

GIRDER ELEVATION

DEFLECTION AND CAMBER		W.Abut	.25	.50	.75	E.Abut.
Girders A thru N	1	0	3/16	1/4	3/16	0
	2	0	3/4	1	3/4	0
	3	0	5/16	7/16	5/16	0
	4	0	1 1/4	1 11/16	1 1/4	0
Girder P	1	0	3/16	1/4	3/16	0
	2	0	3/4	1	3/4	0
	3	0	5/16	7/16	5/16	0
	4	0	1 1/4	1 11/16	1 1/4	0
Girder Q	1	0	3/16	1/4	3/16	0
	2	0	3/4	1	3/4	0
	3	0	1/2	13/16	3/4	0
	4	0	1 7/16	2 1/16	1 11/16	0
Girder R	1	0	3/16	1/4	3/16	0
	2	0	3/4	1	3/4	0
	3	0	11/16	1 1/8	1 1/16	0
	4	0	1 5/8	2 3/8	2	0

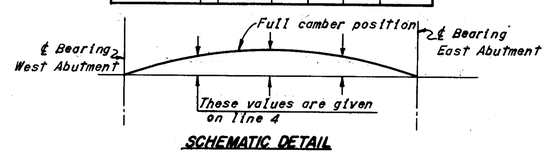

SCHEMATIC DETAIL

Notes:
Line 1. Deflection due to weight of steel.
Line 2. Deflection due to remaining dead load.
Line 3. Adjustment required for vertical curve and superelevation.
Line 4. Required shop camber.
Values are given to nearest 1/16 inch.

Notes:

All stiffeners shall be placed normal to girder flanges.

All intermediate stiffener to web welds shall be 1/4" continuous fillets on both sides of stiffeners.

All intermediate stiffeners shall be Pls. 5x5/16

For top of portland cement concrete elevations see sheet 10/13

Intermediate stiffeners shall be placed as shown on framing plan, equally spaced between crossframes or crossframes and bearing stiffeners. See Note, Sheet 200.

For intermediate crossframe details see Sheet 202.

All crossframes are intermediate crossframes unless shown otherwise.

For details of roadway end dam see Ohio Standard Drawing SD-1-69, Sheet 1 of 4, and Sheet 203.

For details at rockers and bolsters see Ohio Standard Drawing RB-1-55.

The girders shall be fabricated to lines parallel to profiles formed by top of pavement elevations directly over girders, plus the camber required to compensate for dead load deflection.

The allowance to be made in screed settings to compensate for dead load deflections due to concrete and wearing course are to be made above or below the top of the pavement elevations as required. Screeds may require further adjustment due to irregularities in fabricated steel.

For details of curb plates at concrete bridge railing see Ohio Standard Drawing SD-1-69, Sheet 2 of 4 and Sheet 203.

For Section A-A see Sheet 10/13

All structural steel shall be A-36.

For drainage details see Sheet 204.

H.N.T.B. BRIDGE NO. 16 | Revised 12-5-75 | By RAS

HOWARD, NEEDLES, TAMMEN & BERGENDOFF
CONSULTING ENGINEERS
KANSAS CITY CLEVELAND NEW YORK

9/13

FRAMING PLAN

U.S. 30 OVER CHERRY AVENUE
BR. NO. STA. 30-15.60 STA. 998+28.29
SCALE: 1" = 10'-0" STA. 999+26.26

RELOCATED U.S. 30

CANTON STARK COUNTY OHIO

DRAWN DAP DATE 7-21-70	TRACED DATE	CHECKED KSS DATE 8-14-70	REVIEWED MJK DATE 11-24-71	REVISED

1668

MICROFILMED
APR 16 1985

FED. ROAD DIV. NO	STATE	FEDERAL AID PROJECT NO	TYPE FUNDS
2	OHIO		

STARK COUNTY
STA-30-15.04
STA-77-9.22

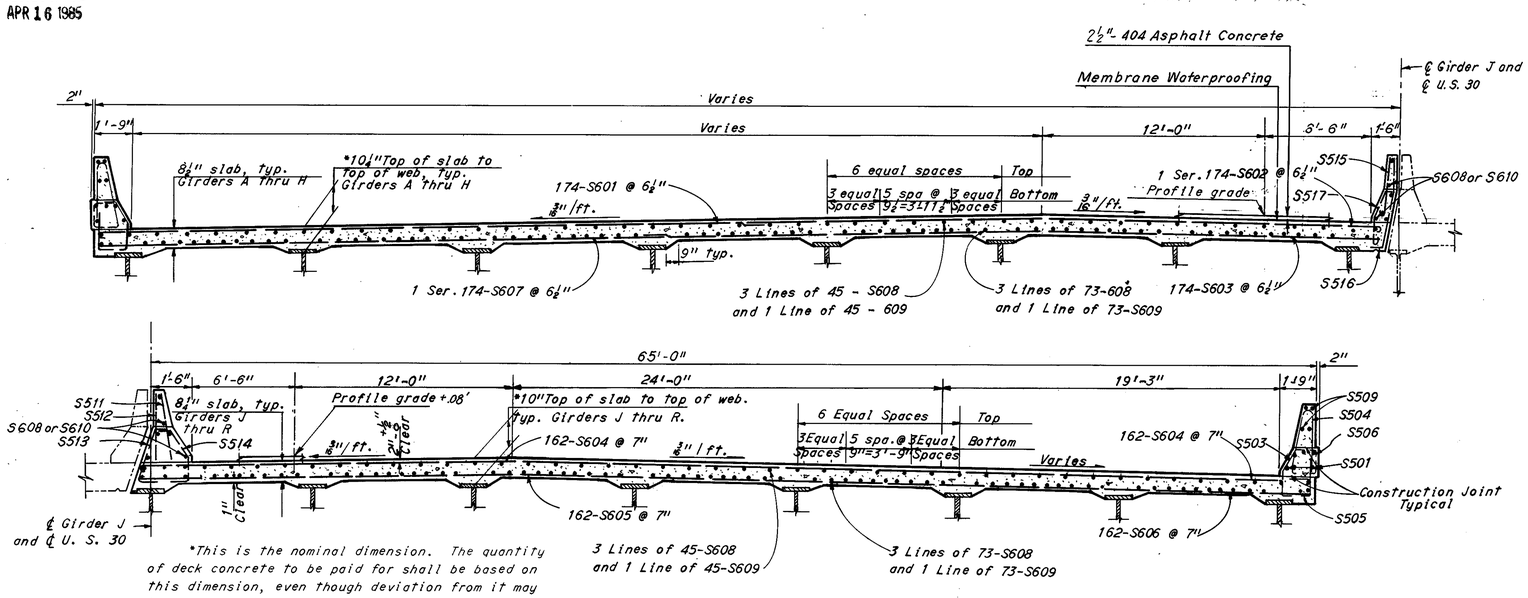

*This is the nominal dimension. The quantity of deck concrete to be paid for shall be based on this dimension, even though deviation from it may be necessary because the top flange of the girder may not have the exact camber or conformation required to place it parallel to the finished grade. Deduction shall be made for volume of encased steel plates as per Sec. 511.18 of the Construction and Materials Specifications.

SECTION A-A

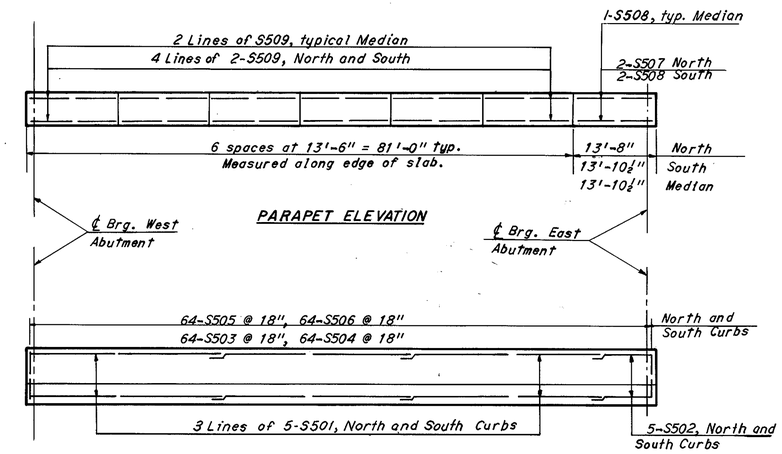

PARAPET ELEVATION

CURB PLAN

TOP OF PORTLAND CEMENT CONCRETE ELEVATIONS					
Girder	℄ Brg. W. Abut.	.25	.50	.75	℄ Brg. E. Abut.
A	1052.46	1052.55	1052.63	1052.69	1052.73
B	1052.61	1052.70	1052.78	1052.84	1052.88
C	1052.76	1052.86	1052.93	1052.99	1053.04
D	1052.91	1053.01	1053.08	1053.15	1053.19
E	1053.06	1053.16	1053.24	1053.30	1053.34
F	1053.21	1053.31	1053.39	1053.45	1053.49
G	1053.12	1053.22	1053.30	1053.37	1053.42
H	1052.98	1053.08	1053.16	1053.22	1053.27
J	1052.95	1053.05	1053.13	1053.20	1053.24
K	1053.08	1053.18	1053.26	1053.32	1053.36
L	1053.22	1053.32	1053.40	1053.46	1053.51
M	1053.15	1053.24	1053.32	1053.38	1053.43
N	1053.01	1053.11	1053.18	1053.24	1053.29
P	1052.87	1052.97	1053.05	1053.10	1053.14
Q	1052.73	1052.83	1052.91	1052.95	1052.95
R	1052.60	1052.69	1052.77	1052.80	1052.75

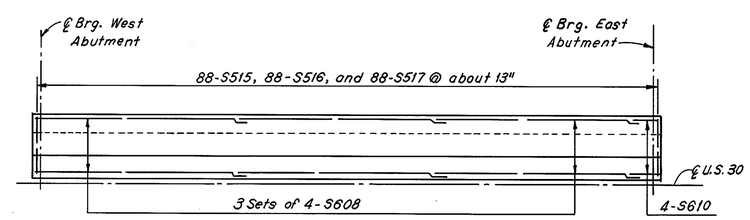

WESTBOUND MEDIAN CURB PLAN

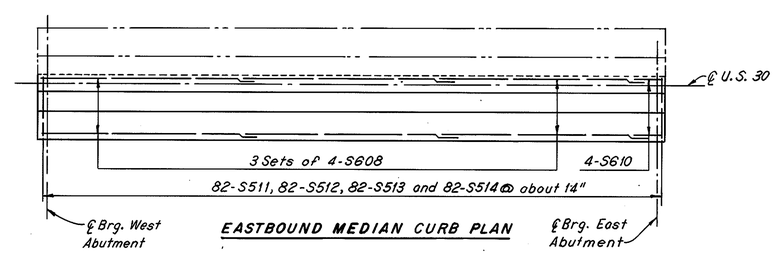

EASTBOUND MEDIAN CURB PLAN

TOP OF PORTLAND CEMENT CONCRETE ELEVATIONS AT GUTTERLINE					
Gutterline	℄ Brg. W. Abut.	.25	.50	.75	℄ Brg. E. Abut.
North	1052.46	1052.62	1052.72	1052.76	1052.73
N. Median	1052.95	1053.12	1053.22	1053.27	1053.24
S. Median	1052.95	1053.12	1053.22	1053.27	1053.24
South	1052.60	1052.76	1052.86	1052.87	1052.75

Note:
The gutterline elevations shown have been adjusted for the dead load deflections caused by the weight of the concrete and wearing course and are the elevations required before the concrete deck is placed.

Notes:
Reinforcing steel shall be adjusted as required to clear scuppers.
A typical haunch width of 9" shall be used for computing quantity of concrete. However, the haunch width may vary between 6" and 12" provided that the slope shall be not more than 1:4 for a haunch less than 9" in width.
For concrete railing details see Sheet 203.
For deflection joint details see Sheet 203.
For reinforcement schedule see Sheet 13/13
Transverse reinforcing steel shall be placed parallel to ℄ bearing of abutments.
For median details see sheet 203.
For Location of Section A-A see Sheet 9/13
For curb and parapet dimensions see Sheet 203
For subdrainage details, see Sheet 204A.

H.N.T.B. BRIDGE NO. 16 — Revised 12-20-75 By RAS

HOWARD, NEEDLES, TAMMEN & BERGENDOFF — 10/13
CONSULTING ENGINEERS
KANSAS CITY CLEVELAND NEW YORK

DECK PLAN

U.S. 30 OVER CHERRY AVENUE
BR. NO. STA-30-15.60 — STA. 998+28.29
SCALE: NONE — STA. 999+26.26

RELOCATED U.S. 30

CANTON — STARK COUNTY — OHIO

DRAWN DAF DATE 7-28-70	TRACED DATE	CHECKED K.S.S. DATE 8-18-70	REVIEWED MJH DATE 11-24-71	REVISED 10-14-77

1668

MICROFILMED
APR 16 1985

MARK	NUMBER	LENGTH	TYPE	DIMENSIONS A	DIMENSIONS B	DIMENSIONS C	SERIES INCRE.	WEIGHT POUNDS
			WEST ABUTMENT					
AA401	96	3'-11"	105	1'-0"	2'-2"			251
AA501	4	4'-0"	168	9"	2'-7"			17
AA502	4	3'-4"	143	9"				14
AA505	15	17'-0"	Str.					266
AA507	50	28'-2"	Str.					1,469
AA508	19	41'-6"	Str.					822
AA509	5	42'-6"	Str.					222
AA510	111	13'-10"	Str.					1,610
AA511	1 Ser. 40	16'-10" to 17'-4"	Str.				1/8"	711
AA512	54	17'-2"	Str.					966
AA513	9 Ser. 10	11'-8" to 21'-8"	121	4'-6" to 9'-6"	1'-2"		1 5/16"	1,570
AA514	287	5'-9"	104	4'-10"	1'-0"			1,720
AA515	8	2'-3"	105	7 1/2"	1'-3"			19
AA516	8	7'-2"	114	3'-3"				60
AA517	10	6'-2"	104	4'-2"	2'-1 1/4"			64
AA518	10	5'-11"	104	4'-2"	1'-10 1/4"			62
AA519	5	8'-5"	104	6'-8"	1'-10 1/2"			44
AA520	10	8'-3"	104	6'-3"	2'-2"			86
AA521	6	23'-10"	Str.					149
AA522	8	1'-6"	Str.					12
AA523	9 Ser. 3	14'-0" to 4'-9"	Str.				4'-7 1/2"	264
AA526	19	36'-0"	Str.					713
AA527	24	17'-3"	Str.					432
AA528	37	16'-8"	Str.					644
AA529	5	35'-0"	Str.					183
AA530	91	5'-8"	105	1'-0"	3'-11"			537
AA531	6	23'-9"	Str.					148
AA532	3	16'-9"	Str.					52
AA533	36	16'-10"	Str.					634
AA534	16	4'-2"	Str.					70
AA535	5	8'-6"	157	6'-9"	1'-11"	6 3/4"		64
AA536	8	22'-3"	Str.					185
AA601	139	12'-6"	Str.					2,620
AA602	26	12'-7"	106	11"	9'-0"	3'-0"		491
AA604	106	13'-1"	106	11"	9'-6"	3'-0"		2,080
AA605	1 Ser. 39	12'-5" to 13'-1"	108	7'-10" to 8'-6"	4'-7"	3'-3"	3/16"	747
AA606	1 Ser. 28	12'-10" to 13'-1"	108	8'-3" to 8'-6"	4'-7"	3'-3"	1/8"	545
AA608	48	27'-2"	Str.					1,950
AA609	24	41'-6"	Str.					1,495
AA610	107	9'-1"	104	8'-3"	1'-0"			1,460
AA611	36	10'-1"	133					545
AA612	36	3'-10"	104	1'-11"	2'-1"			208
AA613	80	5'-9"	105	2'-7"	11"			691
AA614	8	4'-11"	115	3'-3"	9"			59
AA615	24	8'-3"	104	6'-3"	2'-2"			298
AA616	12	8'-5"	104	6'-8"	1'-11"			152
AA617	12	8'-8"	108	6'-9"	1'-11"	1'-4"		156
AA618	55	12'-7"	108	8'-0"	4'-7"	3'-3"		1,040
AA619	7	12'-2"	108	7'-7"	4'-7"	3'-3"		128
AA620	5	9'-0"	Str.					68
AA621	24	35'-0"	Str.					1,260
AA622	12	8'-11"	108	7'-0"	1'-11"	1'-3"		161
AA623	12	8'-6"	157	6'-9"	1'-11"	6 3/4"		153
DA801	90	5'-5"	141	3'-4"				1302
AA801	164	15'-10"	100	14'-0"				6,933

MARK	NUMBER	LENGTH	TYPE	DIMENSIONS A	DIMENSIONS B	DIMENSIONS C	SERIES INCRE.	WEIGHT POUNDS
-								
AA901	54	60'-0"	Str.					11,000
AA902	27	24'-9"	Str.					2,270
AA1101	2	23'-11"	Str.					254
AA1102	4	11'-9"	104	11'-0"	1'-0"			250
AA1103	6	7'-3"	104	6'-6"	1'-0"			231
AA1104	2	23'-9"	Str.					252
AA1105	36	25'-4"	139	19'-6"	6 3/8"			4,840
AA1106	36	12'-10"	101	11'-3"				2,450
AA1107	1	22'-6"	Str.					120
AA1108	1	22'-3"	Str.					121
							Total	60,390
			EAST ABUTMENT					
AB401	96	3'-11"	105	1'-0"	2'-2"			251
AB501	18 Ser. 3	15'-3" to 4'-9"	Str.				5'-3"	570
AB502	25	28'-2"	Str.					734
AB503	113	16'-9"	Str.					1,970
AB504	36	19'-11"	Str.					746
AB505	39	20'-3"	Str.					825
AB506	6	37'-3"	Str.					234
AB507	19	38'-0"	Str.					753
AB510	40	19'-9"	Str.					825
AB511	30	20'-5"	Str.					639
AB512	4	3'-10"	168	9"	2'-7"			16
AB513	4	3'-4"	143	9"				14
AB514	93	5'-8"	105	1'-0"	3'-11"			551
AB515	290	5'-9"	104	4'-10"				1,740
AB516	12	27'-0"	Str.					338
AB517	8	1'-6"	Str.					12
AB518	16	4'-0"	Str.					67
AB519	5	8'-6"	104	6'-8 1/2"	1'-11"			44
AB520	10	8'-7"	104	6'-6"	2'-2"			89
AB521	8	2'-3"	105	7 1/2"	1'-3"			19
AB522	8	7'-2"	114	3'-3"				60
AB523	19	31'-3"	Str.					619
AB526	9 Ser. 12	11'-2" to 21'-8"	121	4'-3" to 9'-6"	1'-2"		5 3/4"	1,850
AB527	19	38'-6"	Str.					763
AB529	6	33'-3"	Str.					209
AB530	6	37'-6"	Str.					235
AB531	28	20'-6"	Str.					598
AB532	39	20'-0"	Str.					814
AB533	10	6'-1"	104	4'-0 1/2"	2'-2"			63
AB534	10	5'-10"	104	4'-0 1/2"	1'-11"			61
AB535	5	8'-6"	157	6'-9"	1'-11"	6 3/4"		44
AB536	8	25'-6"	Str.					213
AB601	142	12'-6"	Str.					2,675
AB602	109	8'-10"	104	8'-0"	1'-0"			1,440
AB603	32	27'-2"	Str.					1,310
AB604	108	12'-7"	106	11"	9'-0"	3'-0"		2,040
AB605	76	12'-10"	108	8'-3"	4'-7"	3'-3"		1,465
AB606	32	37'-3"	Str.					1,790
AB607	29	12'-4"	108	7'-9"	4'-7"	3'-3"		538
AB608	27	12'-0"	108	7'-5"	4'-7"	3'-3"		487
AB609	27	12'-5"	106	11"	8'-10"	3'-0"		504
AB610	6	9'-0"	Str.					81

MARK	NUMBER	LENGTH	TYPE	DIMENSIONS A	DIMENSIONS B	DIMENSIONS C	SERIES INCRE.	WEIGHT POUNDS
AB611	16	8'-6"	104	6'-9"	1'-11"			205
AB612	32	8'-3"	104	6'-3"	2'-2"			397
AB613	16	8'-5"	108	6'-6"	1'-11"	1'-4"		203
AB614	48	3'-10"	104	1'-11"	2'-1"			281
AB615	100	5'-9"	105	2'-7"	11"			864
AB616	8	4'-11"	115	3'-3"	9"			59
AB617	48	10'-1"	133					726
AB618	32	31'-3"	Str					1,500
AB619	32	37'-6"	Str					1,800
AB620	16	8'-11"	108	7'-0"	1'-11"	1'-3"		215
AB621	16	8'-6"	157	6'-9"	1'-11"	6 3/4"		204
DB801	91	5'-5"	141	3'-4"				1,317
AB801	184	15'-10"	100	14'-0"				7,779
AB901	54	60'-0"	Str					11,000
AB902	27	27'-0"	Str					2,480
AB1101	4	27'-0"	Str					574
AB1102	4	11'-9"	104	11'-0"	1'-0"			250
AB1103	6	7'-3"	104	6'-6"	1'-0"			229
AB1104	36	27'-8"	139	21'-10"	6 3/8"			5,300
AB1105	36	18'-1"	101	16'-6"				3,460
AB1106	18	10'-10"	101	9'-3"				1,035
AB1107	2	25'-6"	Str					271
							Total	68,445
			SOUTHWEST WINGWALL					
WA501	2 Ser. 3	2'-0" to 8'-0"	Str				3'-0"	32
WA502	2	36'-6"	Str					76
WA503	8	43'-6"	Str					364
WA504	31	2'-3"	105	7 1/2"	1'-3"			73
WA505	12	2'-9"	Str					34
WA506	25	7'-3"	114	3'-5"				189
WA507	1 Ser. 5	8'-2" to 13'-8"	121	2'-9" to 5'-6"	1'-2"		1'-4 1/4"	57
WA508	2	7'-3"	Str					15
WA509	6	4'-11"	104	4'-0 1/4"	1'-0"			31
WA510	1 Ser. 10	6'-8" to 17'-8"	121	2'-0" to 7'-6"	1'-2"		1'-2 3/8"	123
WA601	17	5'-6"	Str					140
WA602	3	5'-11"	104	5'-6 1/2"	6"			27
WA603	23	6'-6"	Str					234
WA604	25	4'-1"	115	2'-3"	9"	9"		153
WA605	31	5'-2"	104	4'-3 1/4"	1'-0"			240
WA606	6	7'-6"	Str					68
WA607	2 Ser. 4	3'-3" to 14'-0"	Str				3'-7"	104
WA608	6	9'-10"	100	8'-6"				89
WA609	4	9'-6"	109	2'-6"	2'-1"			57
WA610	10	2'-6"	Str					38
WA611	1	3'-0"	Str					5
WA612	8	9'-6"	Str					114
WA613	10	9'-9"	Str					146
WA614	27	10'-1"	133					409
WA615	10	16'-6"	Str					248
WA616	2 Ser. 5	3'-6" to 8'-5"	Str				1'-2 3/4"	89
WA617	2 Ser. 4	19'-9" to 15'-9"	Str				1'-4"	213
WA618	10	15'-6"	Str					232
WA619	2 Ser. 5	12'-9" to 9'-6"	Str				9 3/4"	167

FED ROAD DIV NO	STATE	FEDERAL AID PROJECT NO	TYPE FUNDS
2	OHIO		

277
299

STARK COUNTY
STA-30-15.04
STA-77-9.22

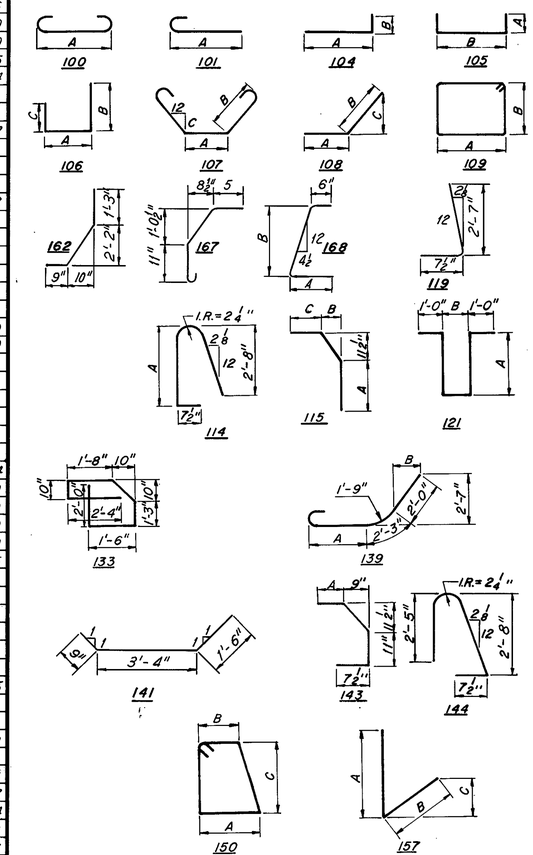

BENDING DIAGRAMS

Notes:
All bar dimensions are given out to out.
All bars of a series shall vary in length by a constant increment.
For replacement reinforcement schedule see Sheet 224.

H.N.T.B. BRIDGE NO. 16 — Revised 12-8-75 By RAS

HOWARD, NEEDLES, TAMMEN & BERGENDOFF — 11 / 13
CONSULTING ENGINEERS
KANSAS CITY CLEVELAND NEW YORK

REINFORCEMENT SCHEDULE

U.S. 30 OVER CHERRY AVENUE
BR. NO. STA -30-15 60 — STA. 998 + 28.29
SCALE: — STA. 999 + 26.26

RELOCATED U.S. 30

CANTON — STARK COUNTY — OHIO

DRAWN	TRACED	CHECKED	REVIEWED	REVISED
BDB DATE 11-5-70	DATE	CJK DATE 11-5-70	MJK DATE 11-24-71	1668

MICROFILMED
APR 16 1985

FED. ROAD DIV. NO.	STATE	FEDERAL AID PROJECT NO	TYPE FUNDS
2	OHIO		

272
299

STARK COUNTY
STA-30-15.04
STA-77-9.22

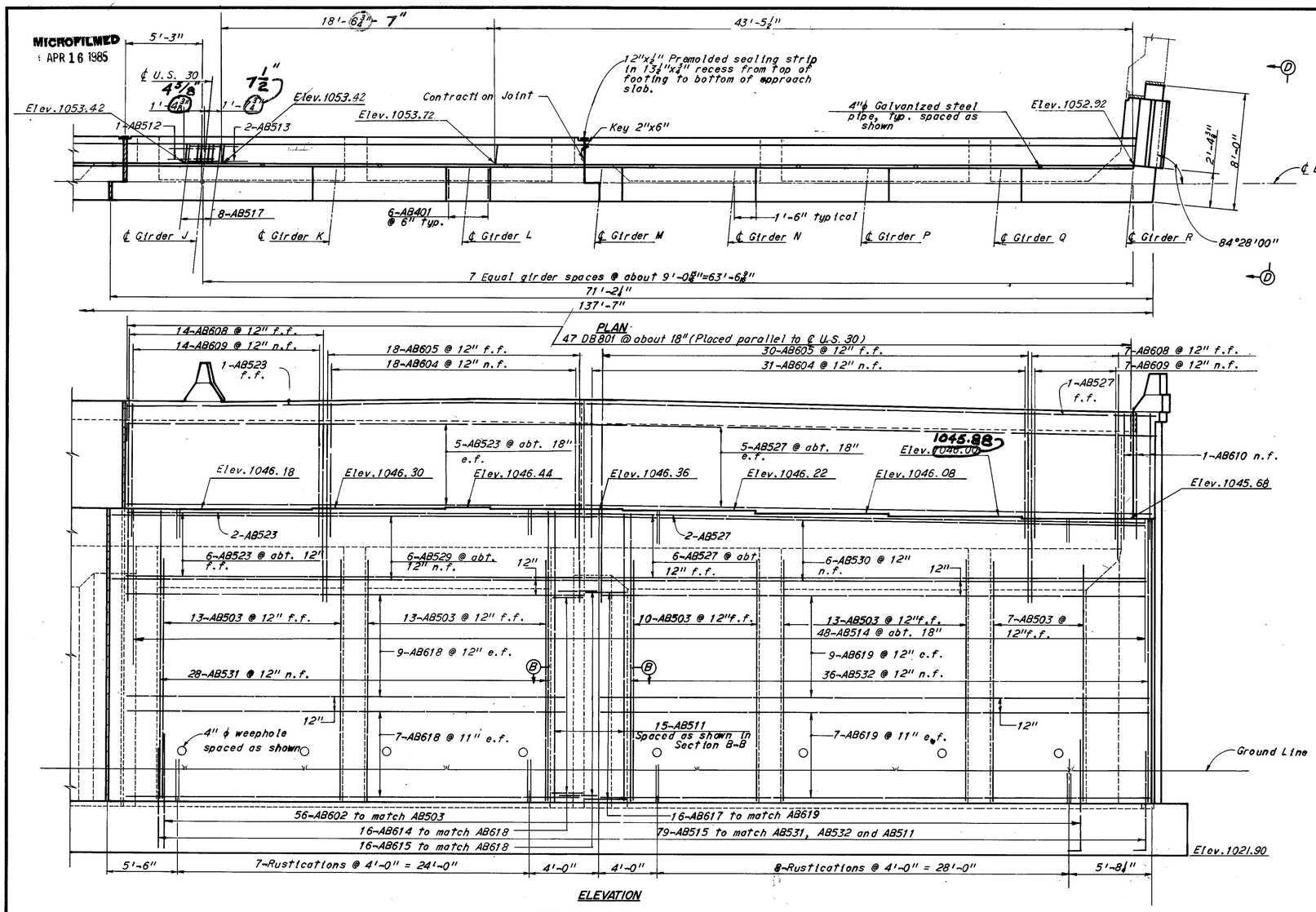

ELEVATION

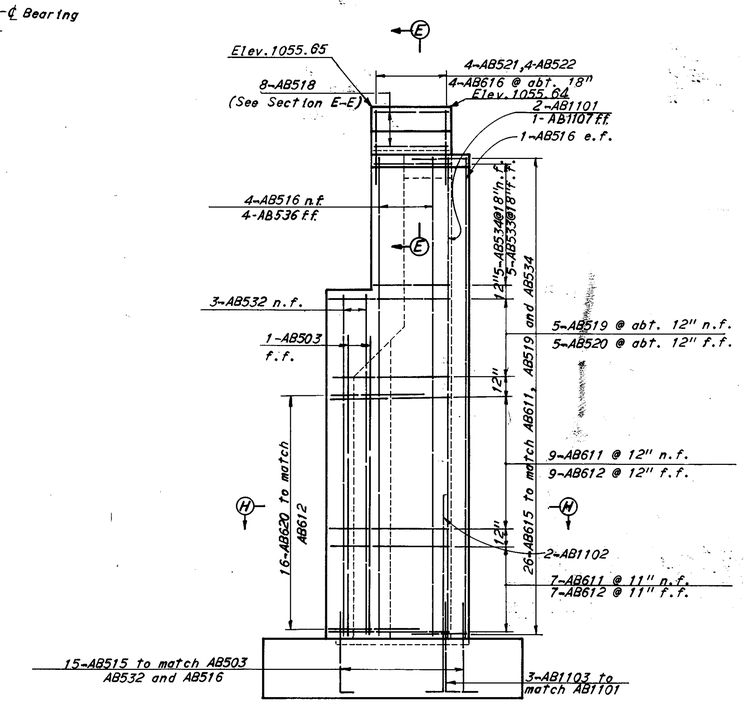

VIEW D-D

For notes and sections see Sheet 4/13

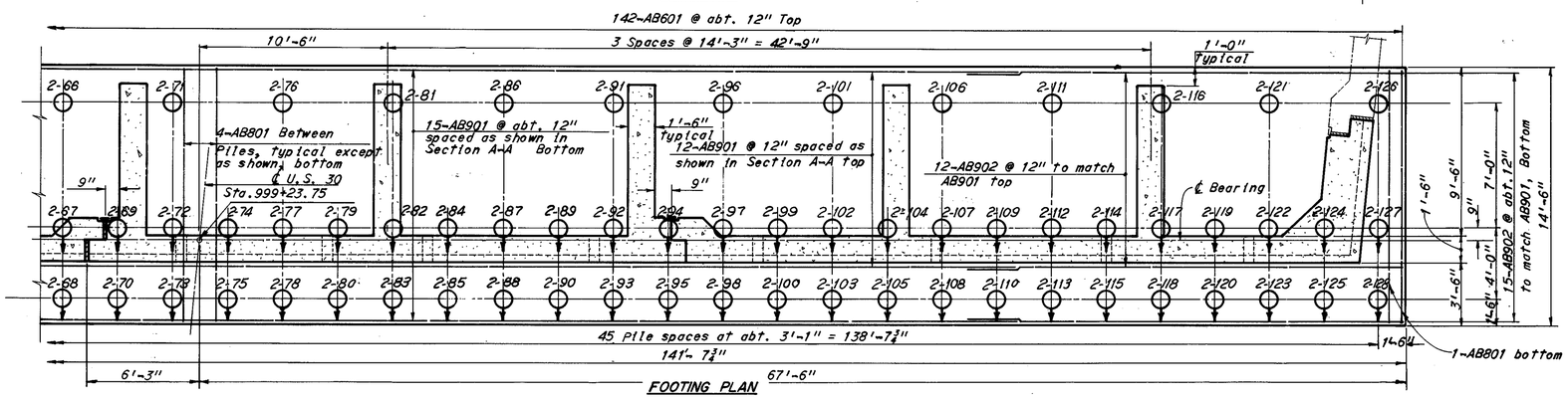

FOOTING PLAN

Revised
3-1-78
3-10-78

H.N.T.B. BRIDGE NO. 16 | Revised 12-5-75 | By RAS

HOWARD, NEEDLES, TAMMEN & BERGENDOFF 6/13
CONSULTING ENGINEERS
KANSAS CITY CLEVELAND NEW YORK

EAST ABUTMENT

U.S. 30 OVER CHERRY AVENUE
BR. NO. STA.30-15.60 STA. 998+28.29
SCALE: 1/4"=1'-0" STA. 999+26.26

RELOCATED U.S. 30

CANTON STARK COUNTY OHIO

DRAWN BM	TRACED	CHECKED CYK	REVIEWED MJK	REVISED 10-14-77
DATE 7/28/70	DATE	DATE 8-12-70	DATE 11-24-71	1668

MARK	NUMBER	LENGTH	TYPE	DIMENSIONS A	DIMENSIONS B	DIMENSIONS C	SERIES INCRE.	WEIGHT POUNDS
SOUTHWEST WINGWALL (CON'T)								
WA620	2 Ser. 4	17'-6" to 23'-0"	Str.				1'-10"	243
WA621	2 Ser. 4	6'-6" to 5'-6"	Str.				2⅜"	72
WA622	4	29'-0"	Str.					174
WA623	4	42'-6"	Str.					255
WA624	2	31'-5"	Str.					95
WA625	9	24'-9"	Str.					335
WA626	2	34'-6"	Str.					104
WA627	2	43'-6"	Str.					131
WA701	8	13'-2"	100	11'-6"				213
WA703	6	5'-2"	115	3'-6"	9"	7½"		63
WA801	2	14'-4"	100	12'-6"				76
WA1001	2	21'-10"	100	19'-0"				188
WA1002	2	9'-0"	101	7'-7"				76
							Total	5,792
NORTHWEST WINGWALL								
WB501	2 Ser. 3	2'-0" to 8'-0"	Str.				3'-0"	32
WB502	2	36'-6"	Str.					76
WB503	8	43'-6"	Str.					364
WB504	31	2'-3"	105	7½"	1'-3"			73
WB505	12	2'-9"	Str.					34
WB506	25	7'-3"	114	3'-5"				189
WB507	1 Ser. 5	8'-2" to 13'-8"	121	2'-9" to 5'-6"	1'-2"		1'-4¼"	57
WB508	2	7'-3"	Str.					15
WB509	6	4'-11"	104	4'-0¼"	1'-0"			31
WB510	1 Ser. 10	6'-8" to 17'-8"	121	2'-0" to 7'-6"	1'-2"		1'-2⅜"	123
WB601	17	5'-6"	Str.					140
WB602	3	5'-11"	104	5'-6½"	6"			27
WB603	23	6'-6"	Str.					234
WB604	25	4'-1"	115	2'-3"	9"	9"		153
WB605	31	5'-2"	104	4'-3½"	1'-0"			240
WB606	6	7'-6"	Str.					68
WB607	2 Ser. 4	2'-9" to 13'-6"	Str.				3'-7"	101
WB608	6	9'-10"	100	8'-6"				89
WB609	4	9'-6"	109	2'-6"	2'-1"			57
WB610	10	2'-9"	Str.					41
WB611	1	3'-0"	Str.					5
WB612	8	9'-6"	Str.					114
WB613	10	9'-6"	Str.					143
WB614	27	10'-1"	133					409
WB615	10	15'-9"	Str.					237
WB616	2 Ser. 5	3'-6" to 8'-5"	Str.				1'-2⅜"	89
WB617	2 Ser. 4	18'-9" to 15'-1	Str.				1'-2⅜"	203
WB618	10	15'-6"	Str.					232
WB619	2 Ser. 5	12'-3" to 9'-3"	Str.				9"	161
WB620	2 Ser. 4	17'-6" to 23'-0"	Str.				1'-10"	243
WB621	2 Ser. 4	6'-6" to 5'-6"	Str.				2⅜"	72
WB622	4	29'-0"	Str.					174
WB623	4	42'-6"	Str.					255
WB624	2	31'-5"	Str.					95
WB625	9	24'-9"	Str.					335
WB626	2	34'-6"	Str.					104
WB627	2	43'-6"	Str.					131
WB701	8	13'-2"	100	11'-6"				213
WB703	6	5'-2"	115	3'-6"	9"	7½"		63
WB801	2	14'-4"	100	12'-6"				76
WB1001	2	21'-6"	100	18'-8"				185
WB1002	2	9'-0"	101	7'-7"				76
							Total	5,759
SOUTHEAST WINGWALL								
WC501	2	41'-4"	Str.					87
WC502	8	48'-0"	Str.					402
WC503	33	2'-3"	105	7½"	1'-3"			77
WC504	27	7'-3"	114	3'-5"				204
WC505	14	2'-9"	Str.					40
WC506	4	4'-3"	Str.					18
WC507	2	7'-3"	Str.					15
WC508	6	4'-11"	104	4'-0¼"	1'-0"			31
WC509	2 Ser. 3	2'-0" to 10'-0"	Str.				4'-0"	38
WC510	1 Ser. 11	17'-8" to 7'-8"	121	7'-6" to 2'-6"	1'-2"		1'-0"	145
WC511	1 Ser. 7	6'-8" to 13'-8"	121	5'-6" to 2'-0"	1'-2"		1'-2"	74
WC601	23	6'-6"	Str.					225
WC602	17	5'-6"	Str.					140
WC603	8	9'-6"	Str.					114
WC604	6	7'-6"	Str.					68
WC605	6	9'-10"	100	8'-6"				89
WC606	4	9'-6"	109	2'-6"	2'-1"			57
WC607	2	43'-0"	Str.					129
WC608	2 Ser. 5	2'-0" to 8'-6"	Str.				1'-7½"	77
WC609	8	15'-8"	Str.					188
WC610	2 Ser. 4	16'-6" to 21'-4"	Str.				1'-7⅜"	226
WC611	2	23'-0"	Str.					69
WC612	4	29'-0"	Str.					174
WC613	2	29'-0"	Str.					89
WC614	2 Ser. 3	32'-0" to 38'-3"	Str.				3'-1½"	319
WC615	2	38'-6"	Str.					115
WC616	4	47'-0"	Str.					288
WC617	8	2'-6"	Str.					30
WC618	2 Ser. 4	20'-3" to 22'-3"	Str.				8"	255
WC619	9	28'-0"	Str.					379
WC620	26	5'-2"	104	4'-3½"	1'-0"			201
WC621	10	19'-6"	Str.					293
WC622	8	12'-8"	Str.					152
WC623	6	6'-9"	104	6'-4½"	6"			61
WC624	2 Ser. 5	13'-0" to 16'-0"	Str.				9"	218
WC625	2 Ser. 6	5'-9" to 9'-9"	Str.				9⅜"	140
WC626	27	4'-1"	115	2'-3"	9"	9"		165
WC627	2 Ser. 4	4'-0" to 17'-3"	Str.				4'-5"	123
WC628	2	8'-0"	Str.					24
WC629	2	10'-6"	Str.					32
WC630	30	10'-1"	133					450
WC701	8	13'-2"	100	11'-6"				213
WC702	4	5'-1"	115	3'-5"	9"	7½"		43
WC801	2	16'-7"	100	14'-9"				89
WC1001	2	24'-10"	100	22'-0"				210
WC1002	2	9'-0"	101	7'-7"				78
							Total	6,654
NORTHEAST WINGWALL								
WD501	2	41'-4"	Str.					87
WD502	8	48'-0"	Str.					402
WD503	33	2'-3"	105	7½"	1'-3"			77
WD504	27	7'-3"	114	3'-5"				204
WD505	14	2'-9"	Str.					40
WD506	4	4'-3"	Str.					18
WD507	2	7'-3"	Str.					15
WD508	6	4'-11"	104	4'-0¼"	1'-0"			31
WD509	2 Ser. 3	2'-0" to 10'-0"	Str.				4'-0"	38
WD510	1 Ser. 11	17'-8" to 7'-8"	121	7'-6" to 2'-6"	1'-2"		1'-0"	145
WD511	1 Ser. 7	6'-8" to 13'-8"	121	5'-6" to 2'-0"	1'-2"		1'-2"	74
WD601	23	6'-6"	Str.					225
WD602	17	5'-6"	Str.					140
WD603	8	9'-6"	Str.					114
WD604	6	7'-6"	Str.					68
WD605	6	9'-10"	100	8'-6"				89
WD606	4	9'-6"	109	2'-6"	2'-1"			57
WD607	2	43'-0"	Str.					129
WD608	2 Ser. 5	2'-0" to 8'-3"	Str.				1'-6¾"	77
WD609	8	15'-8"	Str.					188
WD610	2 Ser. 4	16'-6" to 21'-6"	Str.				1'-8"	228
WD611	2	23'-0"	Str.					69
WD612	4	29'-0"	Str.					174
WD613	2	29'-6"	Str.					89
WD614	2 Ser. 3	31'-9" to 38'-3"	Str.				3'-3"	316
WD615	2	38'-6"	Str.					115
WD616	4	47'-0"	Str.					288
WD617	8	2'-6"	Str.					30
WD618	2 Ser. 4	19'-3" to 22'-3"	Str.				1'-0"	249
WD619	9	28'-0"	Str.					379
WD620	26	5'-2"	104	4'-3½"	1'-0"			201
WD621	10	19'-9"	Str.					282

MICROFILMED
APR 16 1985

FED ROAD DIV NO	STATE	FEDERAL AID PROJECT NO	TYPE FUNDS
2	OHIO		

278
299

STARK COUNTY
STA-30-15.04
STA-77-9.22

For bending diagrams see Sheet 11/13

H.N.T.B. BRIDGE NO. 16 — Revised 12-8-75 By RAS

HOWARD, NEEDLES, TAMMEN & BERGENDOFF — 12/13
CONSULTING ENGINEERS
KANSAS CITY CLEVELAND NEW YORK

REINFORCEMENT SCHEDULE

U.S. 30 OVER CHERRY AVENUE
BR. NO. STA-30-15.60 — STA. 998+28.29
SCALE: — STA. 999+26.26

RELOCATED U.S. 30

CANTON — STARK COUNTY — OHIO

DRAWN	TRACED	CHECKED	REVIEWED	REVISED
BDB DATE 11-6-70	DATE	CYK DATE 11-6-70	MJK DATE 11-24-71	1668

MARK	NUMBER	LENGTH	TYPE	DIMENSIONS A	DIMENSIONS B	DIMENSIONS C	SERIES INCRE.	WEIGHT POUNDS
NORTHEAST WINGWALL (CON'T)								
WD622	8	12'-0"	Str.					144
WD623	6	6'-6"	104	6'-1½"	6"			59
WD624	2 Ser. 5	12'-6" to 15'-3"	Str.				8¼"	208
WD625	2 Ser. 6	5'-6" to 9'-3"	Str.				9"	133
WD626	27	4'-1"	115	2'-3"	9"	9"		159
WD627	2 Ser. 4	4'-0" to 17'-3"	Str.				4'-5"	123
WD628	2	8'-0"	Str.					24
WD629	2	10'-6"	Str.					32
WD630	30	10'-1"	133					450
WD701	8	13'-2"	100	11'-6"				213
WD702	4	5'-1"	115	3'-5"	9"	7½"		43
WD801	2	16'-7"	100	14'-9"				89
WD1001	2	24'-4"	100	21'-6"				210
WD1002	2	9'-2"	101	7'-9"				78
							Total	6,603
DECK								
S501	30	30'-0"	Str.					939
S502	10	9'-0"	Str.					94
S503	128	3'-4"	143					445
S504	128	5'-10"	144					779
S505	128	2'-5"	104	1'-11"	7½"			323
S506	128	2'-3"	105	7½"	1'-3"			300
S507	4	13'-4"	Str.					56
S508	8	13'-6"	Str.					113
S509	72	13'-2"	Str.					989
S511	82	3'-1"	119					263
S512	82	2'-6"	Str.					214
S513	82	2'-11"	168	5"	1'-11"			250
S514	82	2'-10"	143	5"				242
S515	88	3'-3"	101	2'-8"				298
S516	88	4'-2"	162					383
S517	88	3'-0"	167					275
S601	174	36'-8"	101	36'-0"				9,600
S602	1 Ser. 174	35'-8" to 38'-2"	101	35'-0" to 37'-6"			3"	9,650
S603	174	40'-0"	Str.					10,450
S604	324	34'-8"	101	34'-0"				16,870
S605	162	29'-9"	Str.					7,230
S606	162	38'-3"	Str.					9,300
S607	1 Ser. 174	30'-6" to 33'-0"	Str.				3"	8,300
S608	732	30'-0"	Str.					32,984
S609	236	10'-6"	Str.					3,744
S610	8	8'-9"	Str.					105
							Total	114,196

MARK	NUMBER	LENGTH	TYPE	DIMENSIONS A	DIMENSIONS B	DIMENSIONS C	SERIES INCRE.	WEIGHT POUNDS

MARK	NUMBER	LENGTH	TYPE	DIMENSIONS A	DIMENSIONS B	DIMENSIONS C	SERIES INCRE.	WEIGHT POUNDS

MICROFILMED
APR 16 1985

FED ROAD DIV NO	STATE	FEDERAL AID PROJECT NO	TYPE FUNDS
2	OHIO		

279
299

STARK COUNTY
STA-30-15.04
STA-77-9.22

For bending diagrams see Sheet 11/13

H.N.T.B. BRIDGE NO. 16 — Revised 12-20-75 By RAS

HOWARD, NEEDLES, TAMMEN & BERGENDOFF
CONSULTING ENGINEERS
KANSAS CITY CLEVELAND NEW YORK

13/13

REINFORCEMENT SCHEDULE

U.S. 30 OVER CHERRY AVENUE
BR. NO. STA-30-15.60 STA. 998+28.29
SCALE: STA. 999+26.26

RELOCATED U.S. 30

CANTON STARK COUNTY OHIO

DRAWN	TRACED	CHECKED	REVIEWED	REVISED
BDB DATE 11-6-70	DATE	CYK DATE 11-6-70	JJK DATE 11-24-71	1668

FED. ROAD DIV. NO	STATE	FEDERAL AID PROJECT NO	TYPE FUNDS
2	OHIO		

267
299

STARK COUNTY
STA-30-15.04
STA-77-9.22

MICROFILMED
APR 16 1985

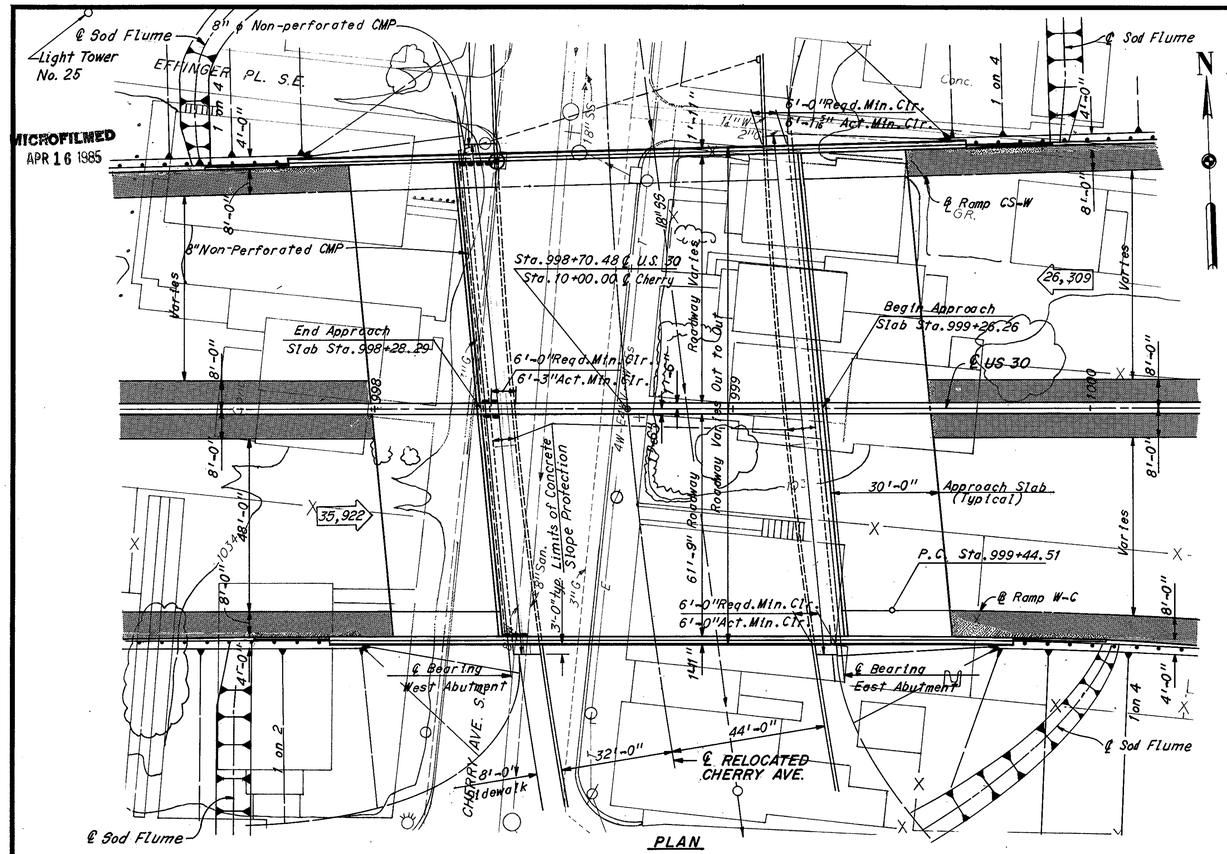

PLAN

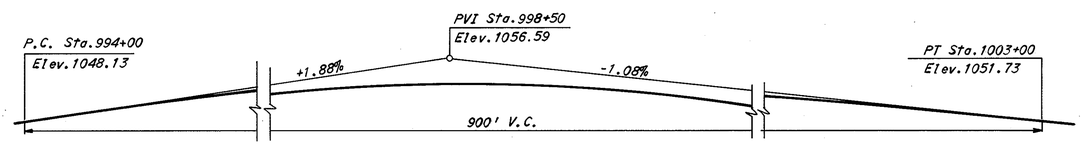

PROFILE GRADE U.S. 30

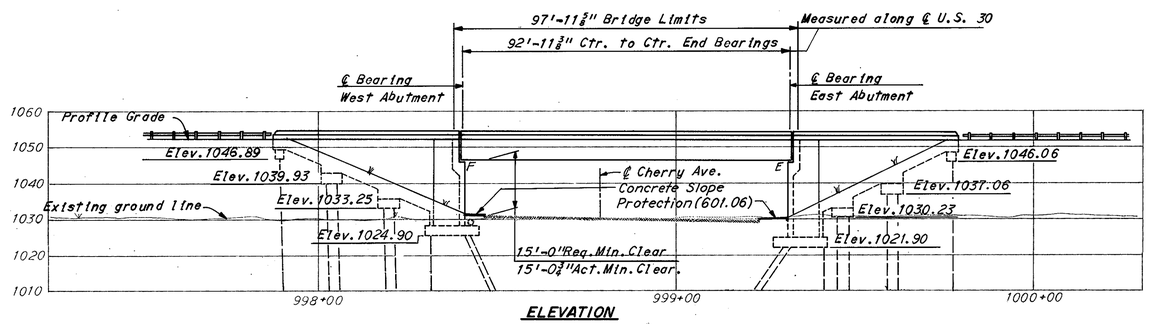

ELEVATION

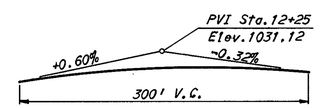

PROFILE GRADE – CHERRY AVE.

PROPOSED STRUCTURE

Type: Simple Span Welded Girder with Reinforced Concrete Slab.
Span: 92'-11¾" Ctr. to Ctr. End Bearings.
Roadway: Varies.
Loading: HS20-44, Case I and the Alternate Military Loading
Skew: 5°37'53" Rt.
Wearing Surface: 2½" Asphalt Concrete
Approach Slabs: AS-1-72 (30' Long) (Modified)
Alignment: Tangent

Modify Standard Drawing AS-1-72 by providing 3" Clear over the top reinforcing bars instead of the 2" shown on the Standard Drawing. The jacking holes as called out for on Standard Drawing AS-1-72 are not required.

EXISTING UTILITY LEGEND

----G----	Gas
——W——	Water
—SS———	Storm Sewer
—S———	Sanitary Sewer
——T——	Telephone
——E——	Power Lines
4W-E4KV	4 Wire, Primary 4 Kilovolt
3W-Es	3 Wire, Secondary
	Water Hydrant
	Manhole
	Catch Basin

Notes: The following items are not included in the bridge plans. See roadway plans for details.

1. Relocation or removal of existing utilities.
2. Approach grading, pavement and slabs.
3. Guardrails

26,309 Denotes one way average daily traffic.

Earthwork limits shown are schematic. Actual slopes shall conform to plan cross-sections.

◉ Denotes point of minimum vertical clearance.

■ Denotes Standard Scupper

All piles shall be 12" ϕ cast-in-place concrete with an estimated average pay length of 70'-0" for both East and West abutments and an average estimated length of 85'-0" for wingwall footings. These estimates are based on boring data and are approximate only. The contractor shall assume full responsibility for the length of the piling selected for driving.

For lighting details see Lighting plans.

For Quantity Table See Sheet 201A.

The vertical curve data does not apply to elevations on the bridge or in the transition areas. Bridge elevations are 1 in. above the elevations obtained from the vertical curve data. A uniform transition shall be provided within the 50 ft. from the end of the bridge.

H.N.T.B. BRIDGE NO. 16 | Revised 12-4-75 | By RAS

HOWARD, NEEDLES, TAMMEN & BERGENDOFF 1 / 13
CONSULTING ENGINEERS
KANSAS CITY CLEVELAND NEW YORK

SITE PLAN

U.S. 30 OVER CHERRY AVENUE
BR. NO. STA-30-15.60 STA. 998+28.29
SCALE: 1" = 20' STA. 999+26.26

RELOCATED U.S. 30

CANTON STARK COUNTY OHIO

DRAWN ELH	TRACED	CHECKED BM	REVIEWED HJK	REVISED 10-19-77
DATE 8-10-70	DATE	DATE 9-4-70	DATE 11-24-71	1668

FED. ROAD DIV. NO	STATE	FEDERAL AID PROJECT NO	TYPE FUNDS
2	OHIO		

268
299

STARK COUNTY
STA-30-15.04
STA-77-9.22

MICROFILMED
APR 16 1985

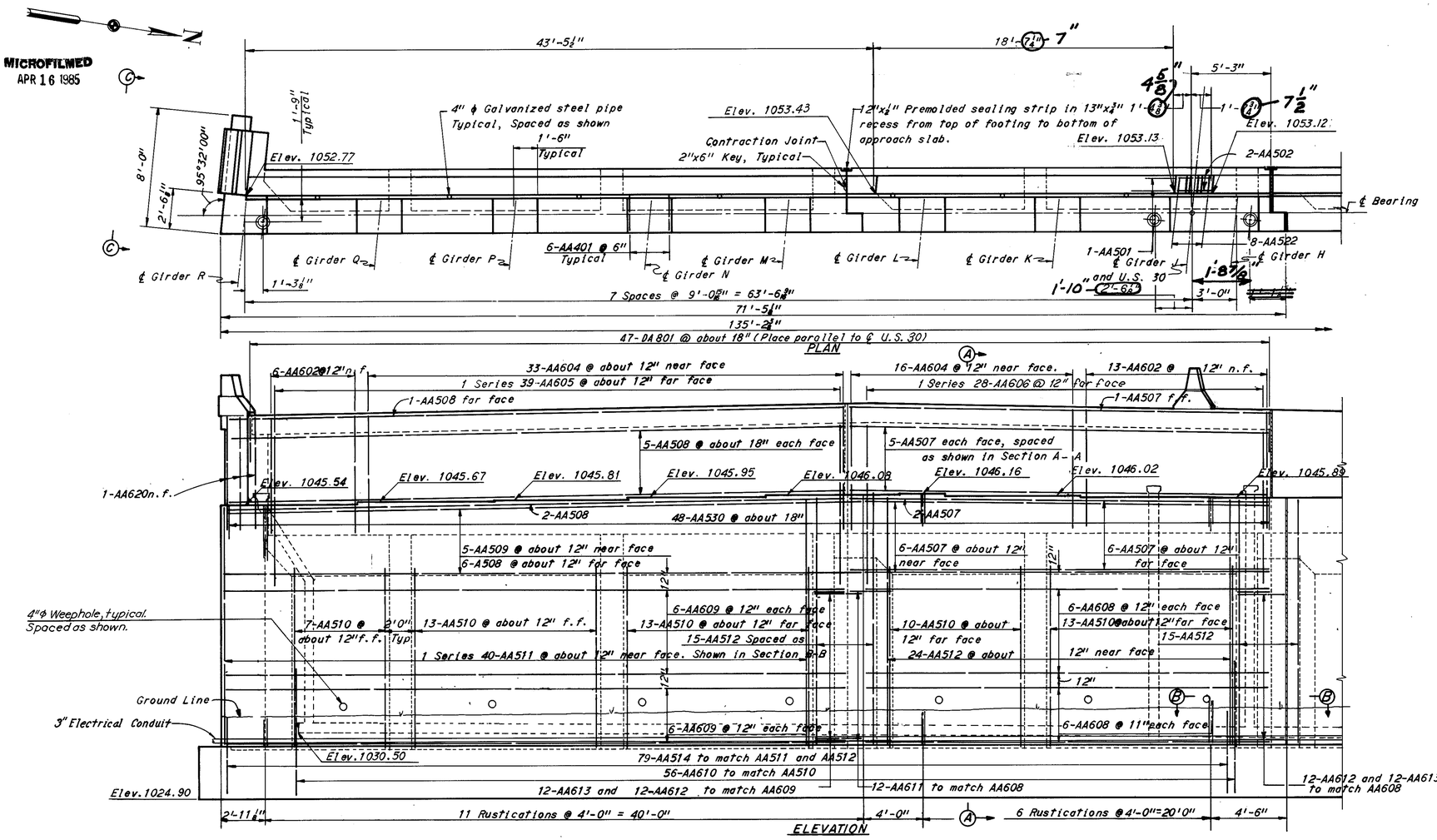

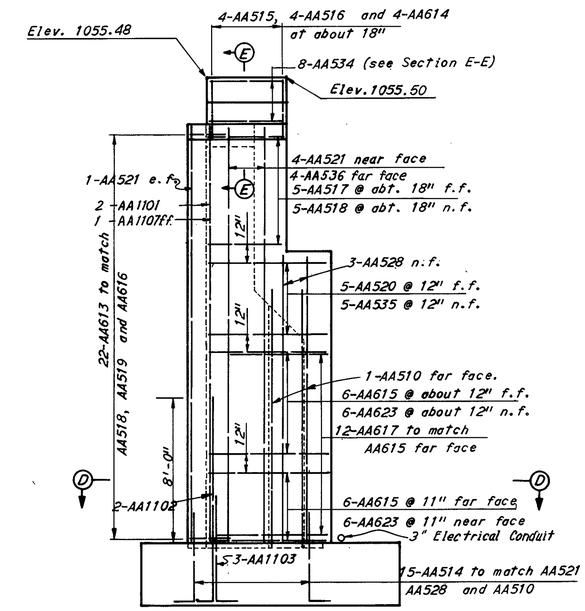

For notes and sections see Sheet 4/13
Special care shall be taken when placing reinforcing steel so as not be interfere with anchor bolt setting.

Revised 5-11-78

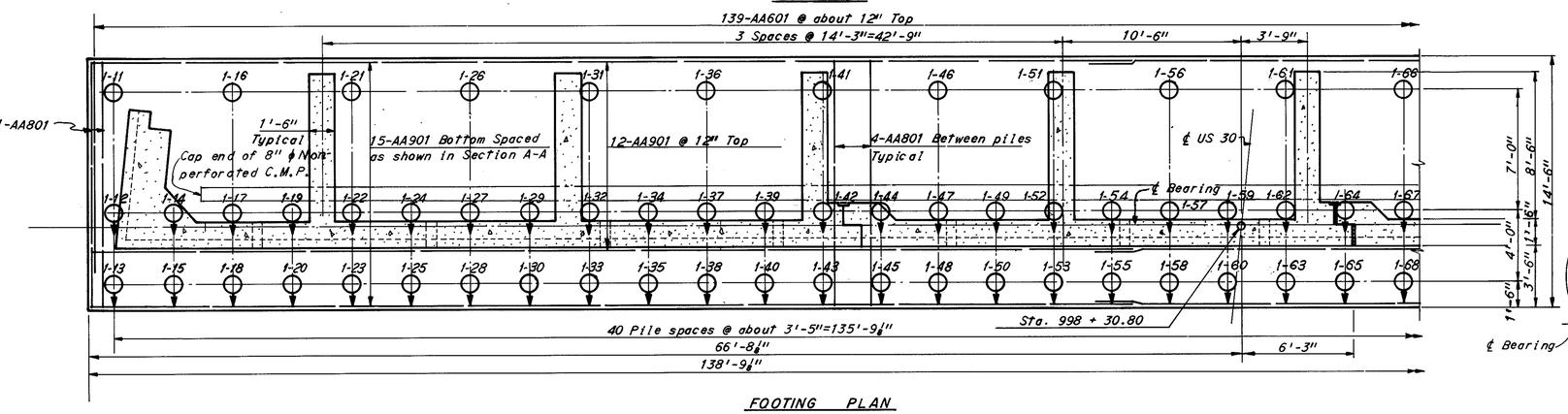

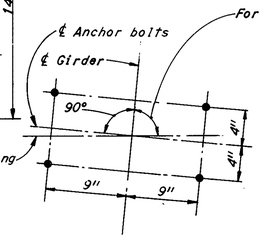

For girder angles see Sheet 10/14

H.N.T.B. BRIDGE NO. 16 — Revised 12-5-75 By. RAS

HOWARD, NEEDLES, TAMMEN & BERGENDOFF — 2/13
CONSULTING ENGINEERS
KANSAS CITY CLEVELAND NEW YORK

WEST ABUTMENT

U.S. 30 OVER CHERRY AVENUE
BR. NO. STA. 30-15.60 — STA. 998+28.29
SCALE: 1/4" = 1'-0" — STA. 999+26.26

RELOCATED U.S. 30

CANTON — STARK COUNTY — OHIO

DRAWN MAG DATE 5-14-70	TRACED DATE	CHECKED CYK DATE 8-10-70	REVIEWED M.J.K. DATE 11-24-71	REVISED 10-14-71 3-10-78 1668

MICROFILMED
APR 16 1985

FED. ROAD DIV. NO	STATE	FEDERAL AID PROJECT NO	TYPE FUNDS
2	OHIO		

269
299

STARK COUNTY
STA-30-15.04
STA-77-9.22

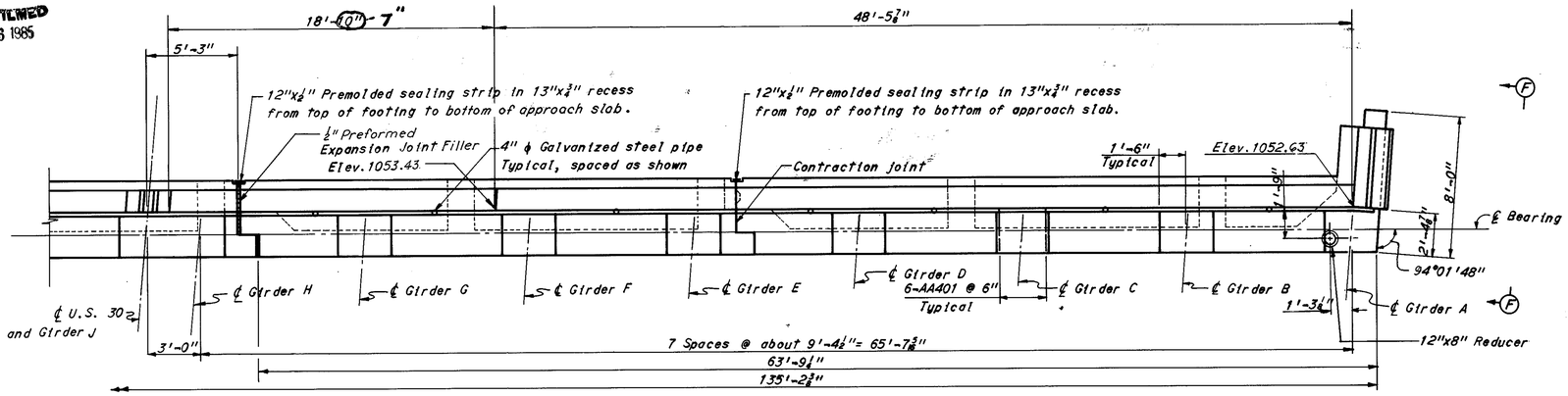

PLAN

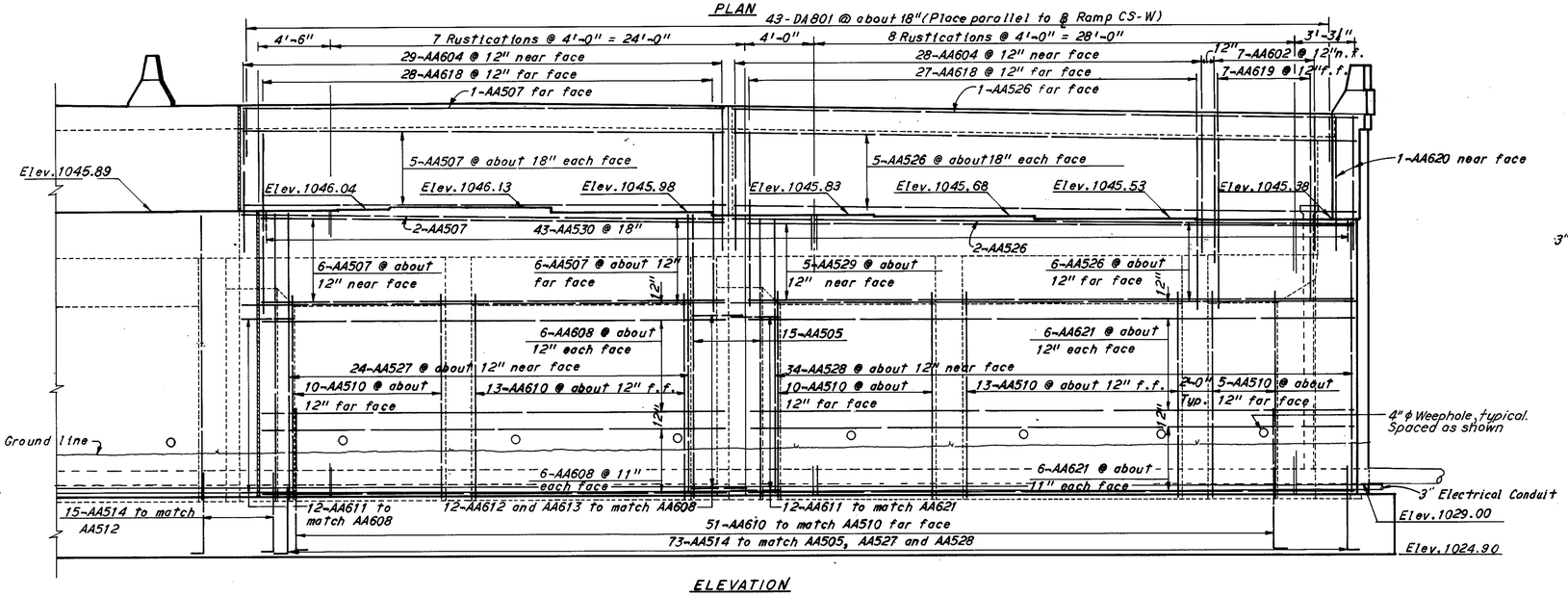

ELEVATION

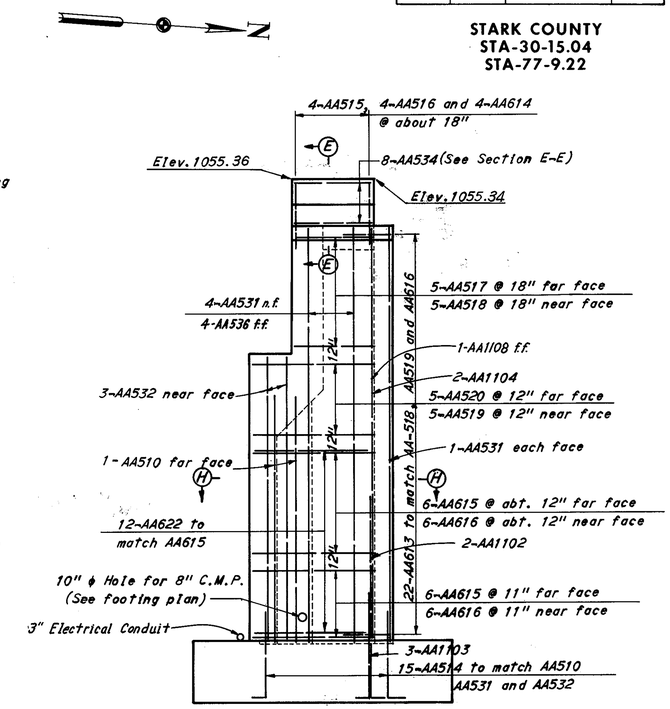

VIEW F-F

For notes and sections see Sheet 4/13

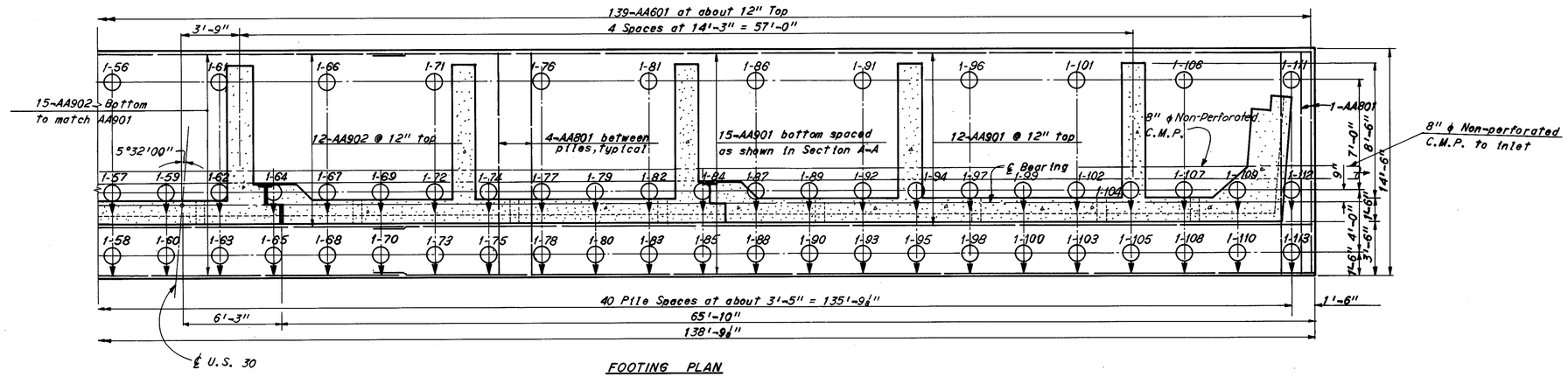

FOOTING PLAN

H.N.T.B. BRIDGE NO. 16 | Revised 12-5-75 By RAS | 3/13

HOWARD, NEEDLES, TAMMEN & BERGENDOFF
CONSULTING ENGINEERS
KANSAS CITY CLEVELAND NEW YORK

WEST ABUTMENT

U.S. 30 OVER CHERRY AVENUE
BR. NO. STA. 30-15.60 STA. 998+28.29
SCALE: 1/4" = 1'-0" STA. 999+26.26

RELOCATED U.S. 30

CANTON STARK COUNTY OHIO

DRAWN MAG. DATE 5-15-70	TRACED DATE	CHECKED CYK DATE 8-10-70	REVIEWED MJK DATE 11-24-71	REVISED 10-17-77 3-10-78 1668

MICROFILMED
APR 16 1985

FED ROAD DIV NO	STATE	FEDERAL AID PROJECT NO	TYPE FUNDS
2	OHIO		

STARK COUNTY
STA-30-15.04
STA-77-9.22

Backwall Concrete :

In addition to the provisions of 511.08, backwall concrete or backwall concrete above the optional construction joint at the approach slab seat shall not be placed until after the deck concrete in the span adjacent to the abutment has been placed.

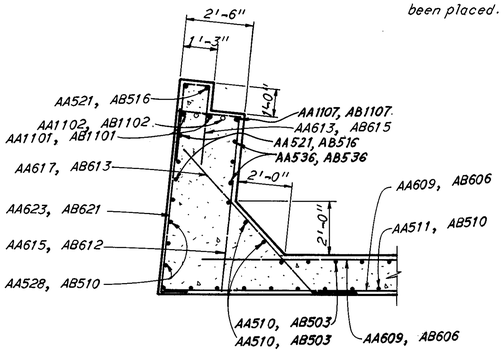

SECTION D-D

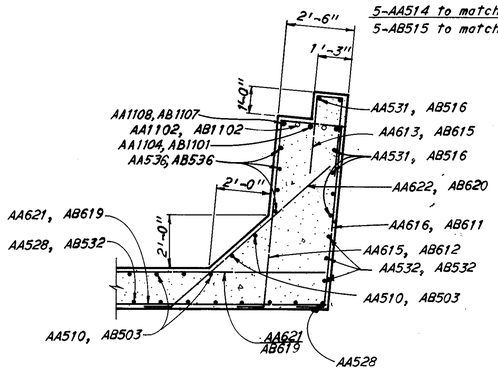

SECTION H-H

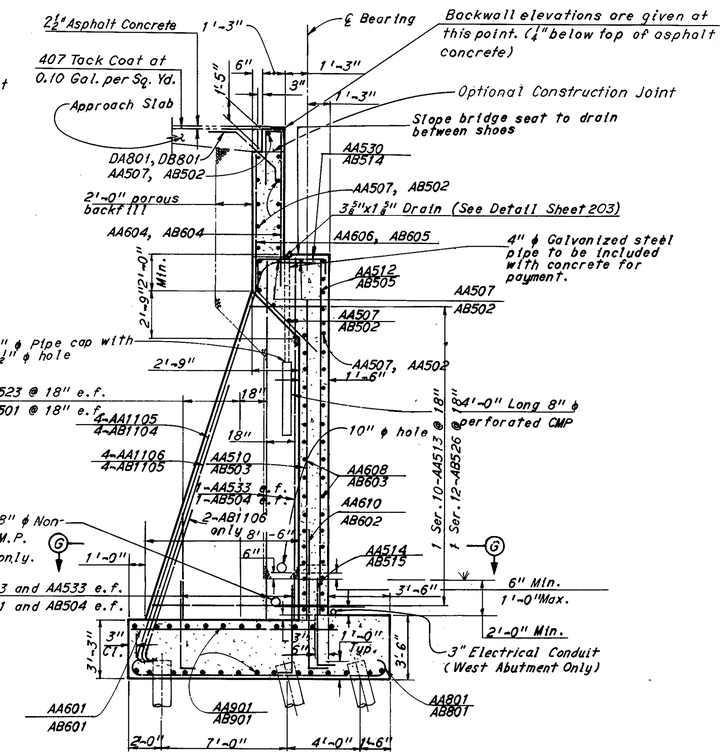

SECTION A-A

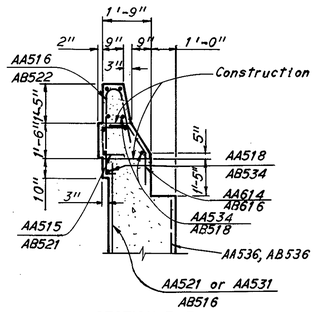

SECTION E-E

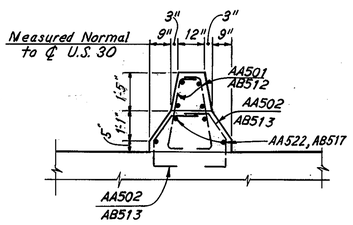

MEDIAN CURB ELEVATION

Notes:

For roadway end dam details see Ohio Standard Drawing SD-1-69, Sheets 1 and 2 of 4, and Sheet 203.

AA401 and AB401 bars shall be placed 2½"± below top of bridge seat.

n.f. denotes near face, f.f. denotes far face, and e.f. denotes each face.

For reinforcement schedule see Sheet 11/13

**** To be included with "Item 511, Class C concrete and abutments above footing" for payment.***

All battered piles are battered 4 in 12.

Pile dimensions are measured along bottom of footing.

All piles are 12" ϕ cast-in-place concrete.

For median curb detail, see Sheet 203.

Piles not shown in elevation.

O→ Denotes battered piles.

For rustication detail see Sheet 203.

For lighting details see Lighting plans.

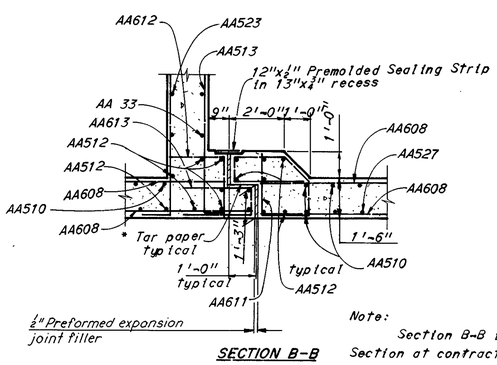

SECTION B-B

Note:

Section B-B is shown at expansion joint. Section at contraction joint is similar except for expansion joint filler, tar paper and bar marks. Section B-B for East Abutment is similar except for bar marks.

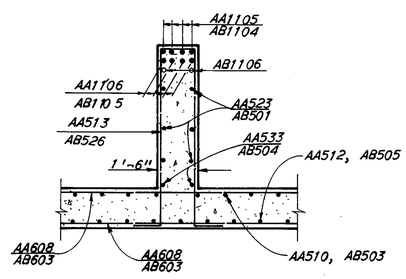

SECTION G-G

H.N.T.B. BRIDGE NO. 16 | Revised 12-5-75 | By RAS

HOWARD, NEEDLES, TAMMEN & BERGENDOFF
CONSULTING ENGINEERS
KANSAS CITY CLEVELAND NEW YORK

4 / 13

ABUTMENT DETAILS

U.S. 30 OVER CHERRY AVENUE

BR. NO. STA. 30-15.60 STA. 998+28.29
SCALE: 1/4" = 1'-0" STA. 999+26.26

RELOCATED U.S. 30

CANTON STARK COUNTY OHIO

DRAWN B.M.	TRACED	CHECKED CYK	REVIEWED M.J.K.	REVISED 10-14-77
DATE 8/3/70	DATE	DATE 8-11-70	DATE 11-24-71	1668

MICROFILMED
APR 16 1985

FED ROAD DIV NO	STATE	FEDERAL AID PROJECT NO	TYPE FUNDS
2	OHIO		

271
299

STARK COUNTY
STA-30-15.04
STA-77-9.22

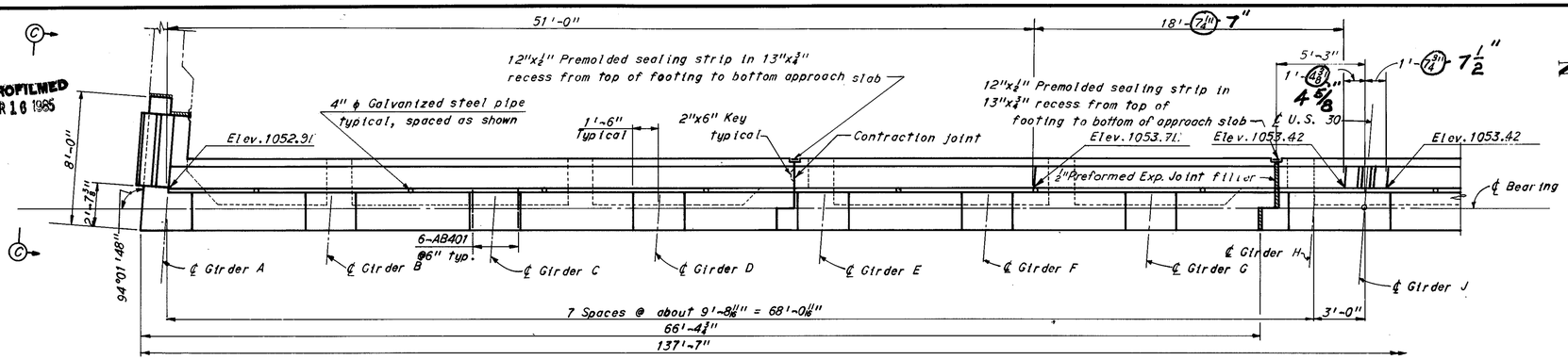

PLAN

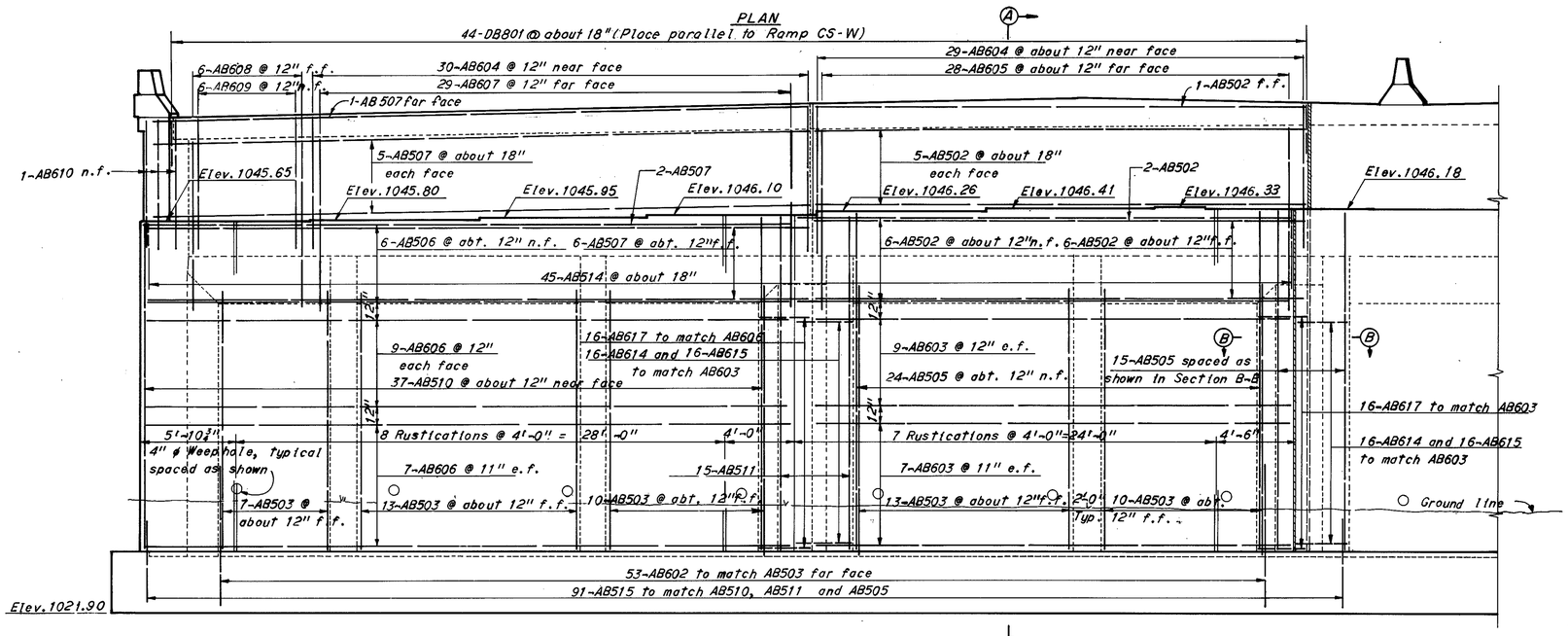

ELEVATION

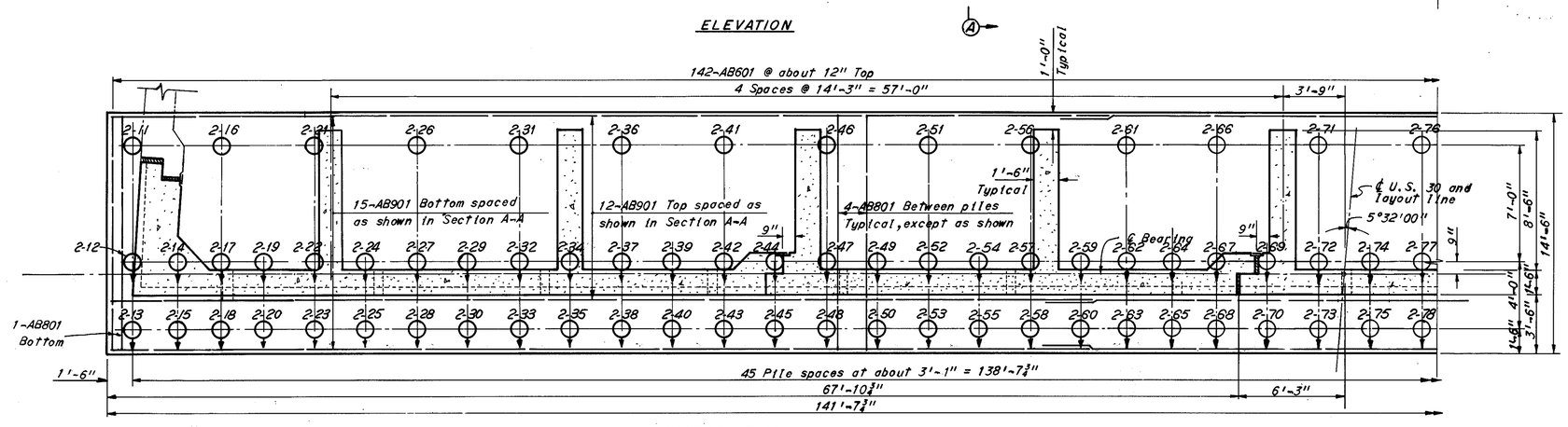

FOOTING PLAN

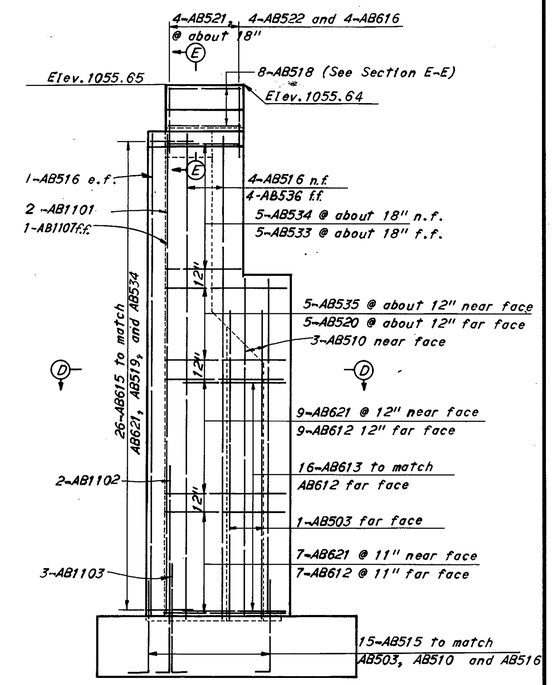

VIEW C-C

For Sections and Notes see Sheet 4/13

H.N.T.B. BRIDGE NO. 16 — Revised 12-5-75 By RAS

HOWARD, NEEDLES, TAMMEN & BERGENDOFF — 5/13
CONSULTING ENGINEERS
KANSAS CITY CLEVELAND NEW YORK

EAST ABUTMENT

U.S. 30 OVER CHERRY AVENUE
BR. NO. STA.-30-15.60 STA. 998+28.29
SCALE: 1/4" = 1'-0" STA. 999+26.26

RELOCATED U.S. 30

CANTON STARK COUNTY OHIO

DRAWN MAG DATE 5-18-70	TRACED DATE	CHECKED CYK DATE 8-12-70	REVIEWED MJK DATE 11-24-71	REVISED 10-14-77 3-10-78 1668