FED. ROAD DIV. NO.	STATE	FEDERAL AID PROJECT NO.	TYPE FUNDS	200 / 328
2	OHIO			

STARK COUNTY
STA-30-15.66

MICROFILMED
FEB 14 1985

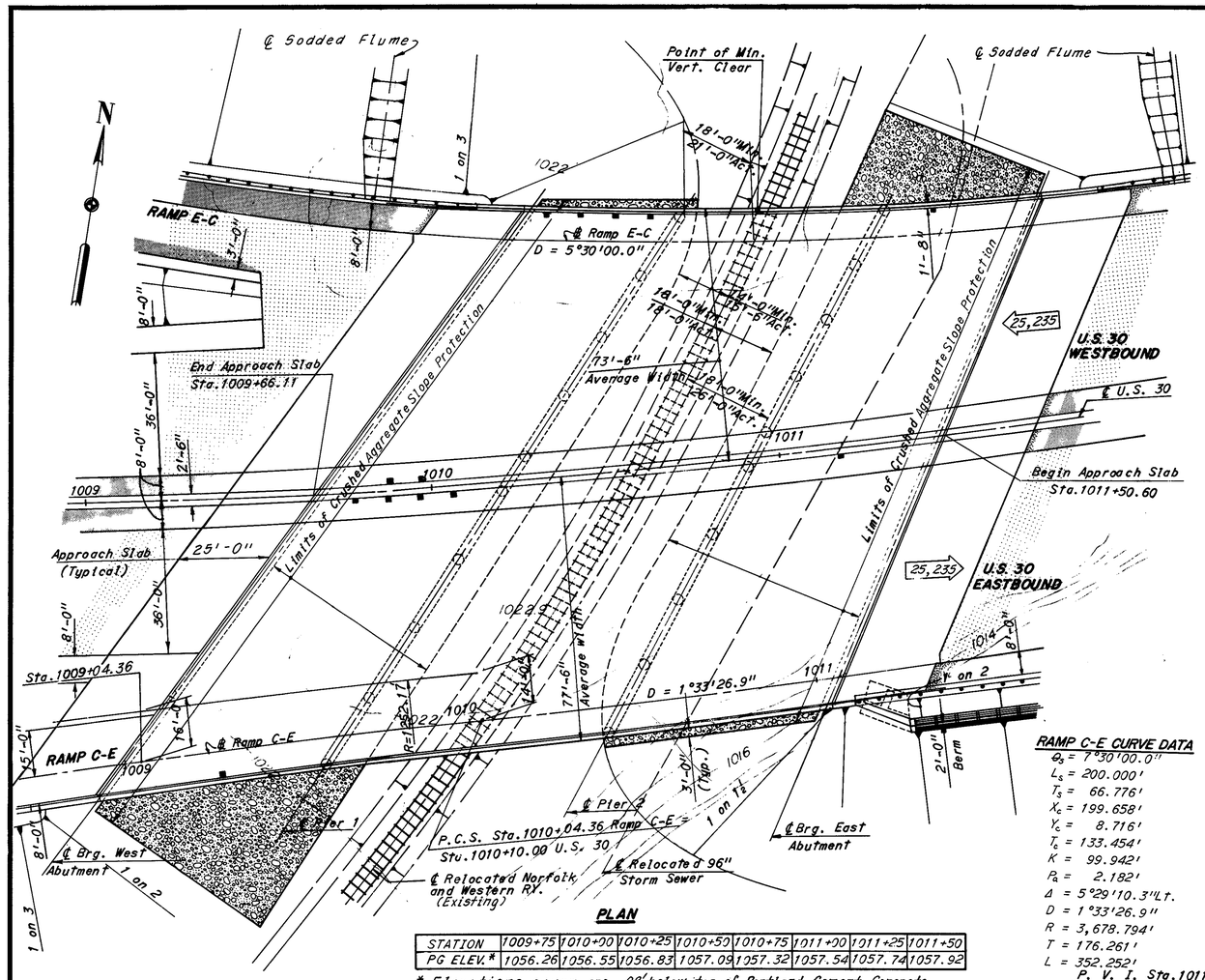

PLAN

STATION	1009+75	1010+00	1010+25	1010+50	1010+75	1011+00	1011+25	1011+50
PG ELEV.*	1056.26	1056.55	1056.83	1057.09	1057.32	1057.54	1057.74	1057.92

* Elevations given are .08' below top of Portland Cement Concrete.

RAMP C-E CURVE DATA

Φ_s = 7°30'00.0"
L_s = 200.000'
T_s = 66.776'
X_c = 199.658'
Y_c = 8.716'
T_c = 133.454'
K = 99.942'
P_s = 2.182'
Δ = 5°29'10.3"Lt.
D = 1°33'26.9"
R = 3,678.794'
T = 176.261'
L = 352.252'

U.S. 30 CURVE DATA

Dc = 3°00'00.0"
Δ = 22°23'10.4" Lt.
Δc = 8°53'10.4"
Rc = 1909.859'
Ts = 603.693'
Tc = 148.401'
Ls = 450.000'
Lc = 290.207'

RAMP E-C CURVE DATA

D = 14°28'20.7"Lt.
Δ = 5°30'00.0"
R = 1041.741'
T = 132.271'
L = 263.135'

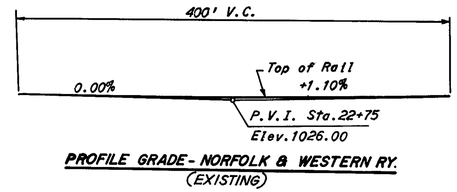

PROFILE GRADE - NORFOLK & WESTERN RY.
(EXISTING)

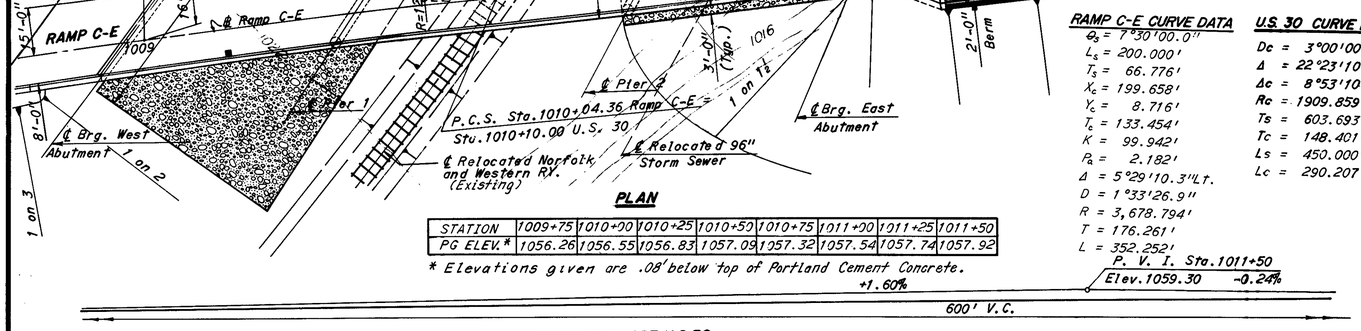

PROFILE GRADE U.S.30

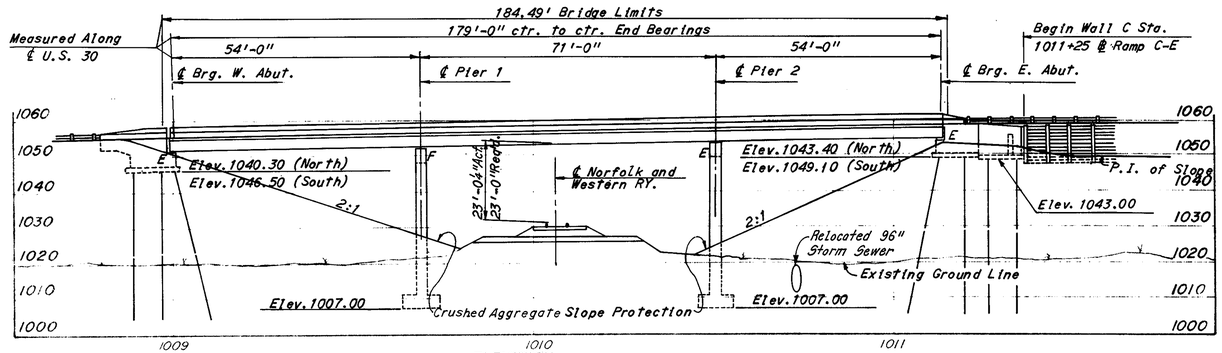

ELEVATION

Note:
Profile grade is 1" below top of Portland Cement Concrete on the bridge deck and approach slabs. The Contractor shall, in a length of 75 feet, make a vertical adjustment in the finished surface of the approach roadway in order to provide a 3½" vertical transition to the higher asphalt concrete roadway surface on the structure and approach slabs.

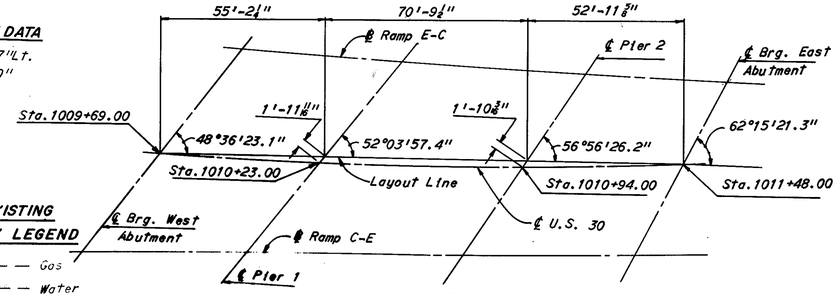

LAYOUT SKETCH

EXISTING UTILITY LEGEND

4" G	Gas
4" W	Water
16" Storm	Storm Sewer
8" San	Sanitary Sewer
T	Telephone
E	Power Lines
4W-E4KV	4 Wire, Primary 4 Kilovolt
3W-E_S	3 Wire, Secondary
○	Manhole
	Catch Basin

*Modify Std. Drwg. AS-1-72 by providing 3" clear over the top rebars instead of the 2" shown on the Std. Drwg. The jacking holes as called for on Std. Drwg. AS-1-72 are not required.

PROPOSED STRUCTURE

Type: Continuous Rolled Beams with Reinforced concrete slab.
Spans: 54'-0", 71'-0", 54'-0" = 179'-0" ctr. to ctr. end bearings.
Roadway: Varies; face to face of parapets including 2'-6" median barrier.
Loading: HS20-44, Case I and the Alternate Military Loading.
Skew: Varies.
Wearing Surface: 2½" Asphalt Concrete
Approach Slab: 25'-0" (AS-1-72) (*Modified)
Alignment: 3° Curve to a 450' Spiral (Right) on ℄ U.S. 30.

Notes:
The following items are not included in the bridge plans. See roadway plans for details.
1. Relocation or removal of existing utilities.
2. Approach grading, pavements and slabs.
3. Guardrails

25,235 Denotes one way 1987 average daily traffic.
Earthwork limits shown are schematic. Actual slope shall conform to plan cross-sections.
For Quantity Table see Sheet E1/ .
■ Denotes standard scupper.
○ Denotes point of minimum vertical clearance.
All piles shall be HP10x42 with an estimated average pay length of 42'-0" for the West Abutment, and 44'-0" for the East Abutment. These estimates are based on boring data and are approximate only. The contractor shall assume full responsibility for the length of pile selected for driving.

Revised 2-19-79 By R.H.W.

H.N.T.B. BRIDGE NO. 17

HOWARD, NEEDLES, TAMMEN & BERGENDOFF 1/20
CONSULTING ENGINEERS
KANSAS CITY CLEVELAND NEW YORK

SITE PLAN

U.S. 30, RAMP E-C AND RAMP C-E
OVER N.&W. R.R.

BR. NO. STA-30-15 81 STA. 1009+ 66.11
SCALE: 1"=20'-0" STA. 1011+ 50.60

RELOCATED U.S. 30

CANTON STARK COUNTY OHIO

DRAWN J.D.A.	TRACED	CHECKED	REVIEWED	REVISED
DATE 8/13/70	DATE	DATE 9-28-70 OPK	DATE 11-22-71 MJK	1668

FED. ROAD DIV. NO.	STATE	FEDERAL AID PROJECT NO.	TYPE FUNDS
2	OHIO		

STARK COUNTY
STA-30-15.66

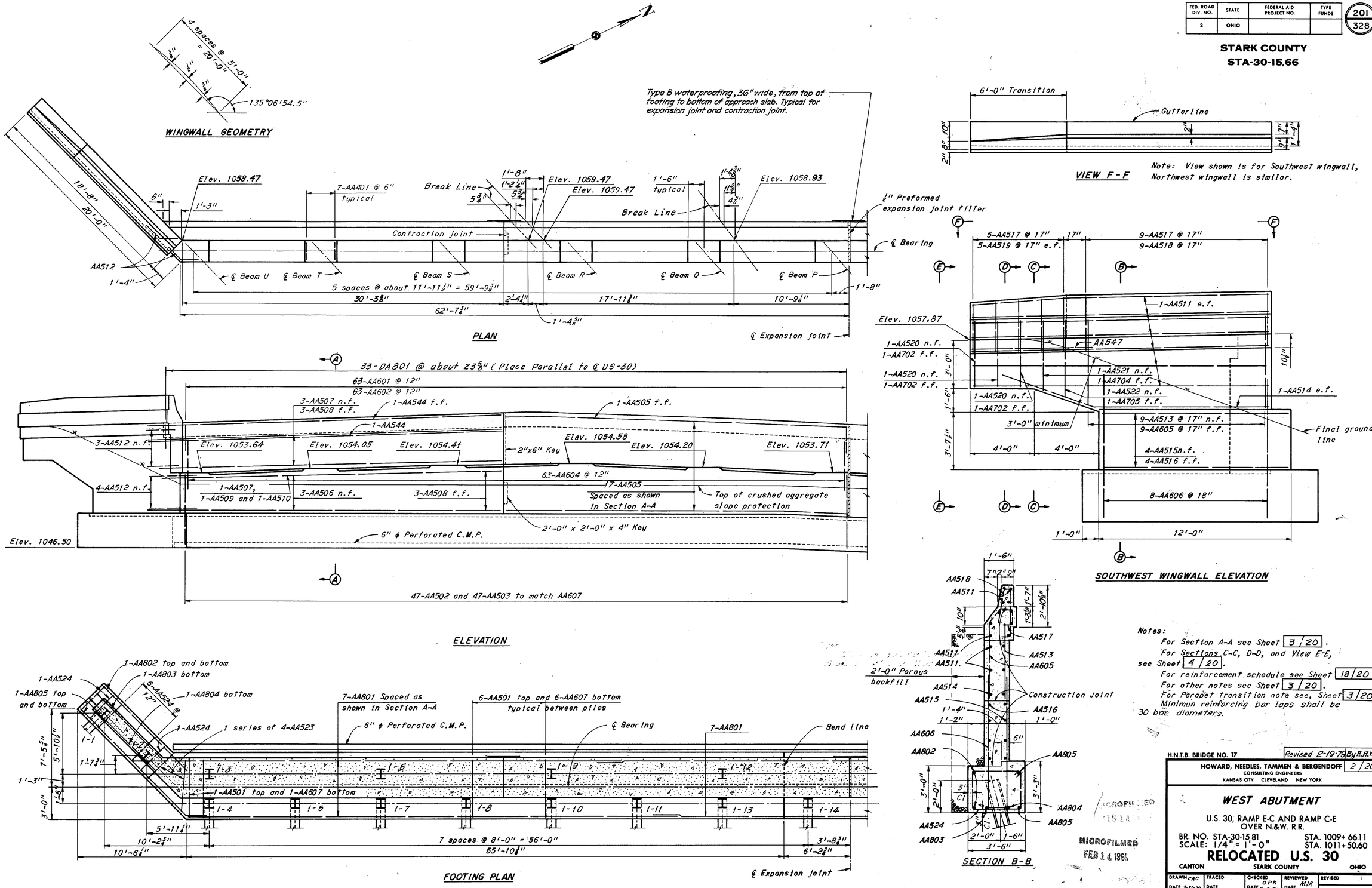

FED. ROAD DIV. NO.	STATE	FEDERAL AID PROJECT NO.	TYPE FUNDS
2	OHIO		

202 / 328

STARK COUNTY
STA-30-15.66

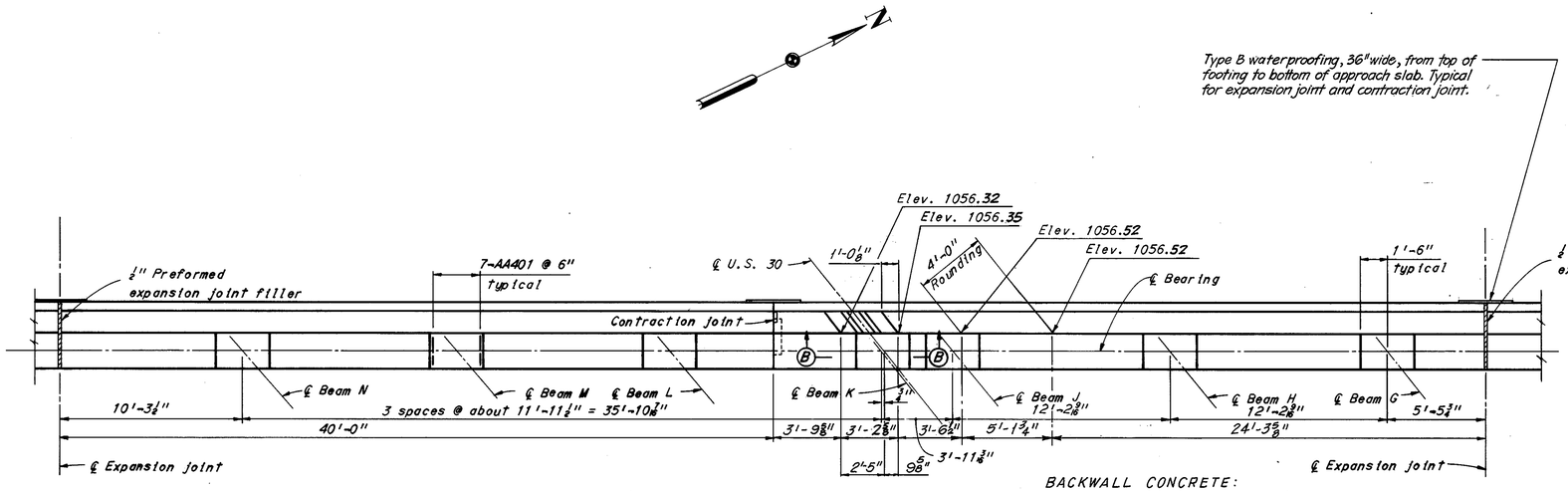

PLAN

BACKWALL CONCRETE:
In addition to the provisions of 511.08, backwall concrete above the optional construction joint at the approach slab seat shall not be placed until after the deck concrete in the span adjacent to the abutment has been placed.

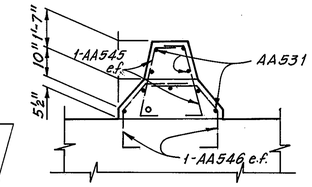

VIEW B-B

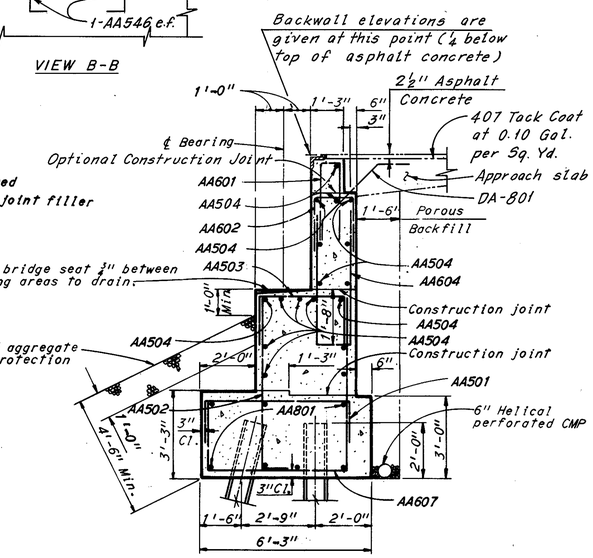

SECTION A-A

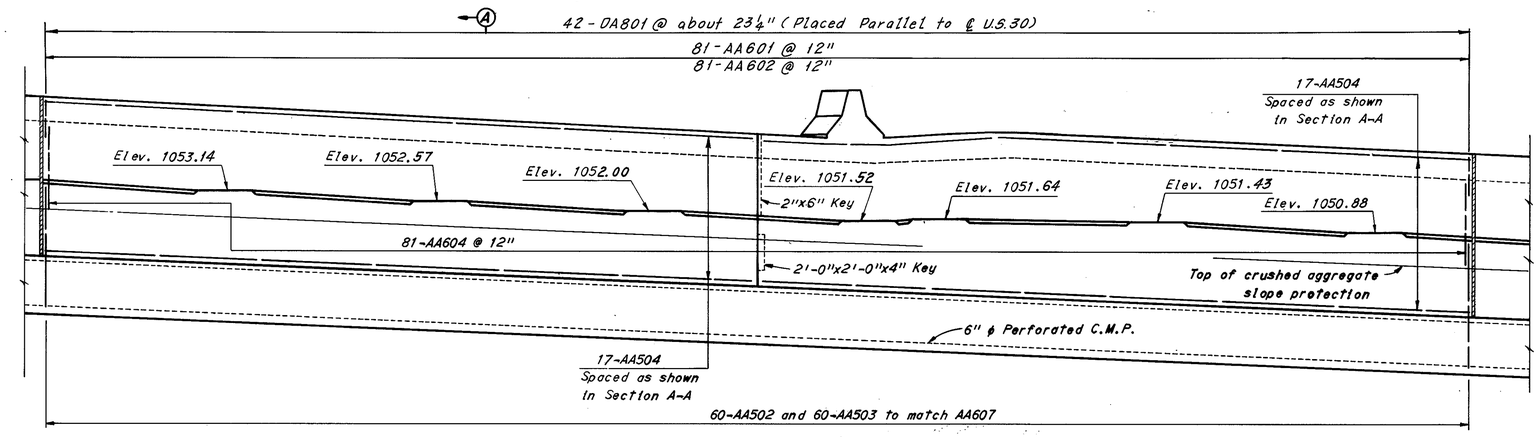

ELEVATION

Note:
Minimum reinforcing bar Laps shall be 30 bar diameters.

Notes:

For roadway end dam details see Ohio Standard Drawing SD-1-69, Sheets 1 and 2 of 4, and Sheet CD5.

AA401 bars shall be placed 2 1/2"± below top of bridge seat.

n.f. denotes near face, f.f. denotes far face, and e.f. denotes each face.

For reinforcement schedule see Sheet 18/20.

Shear keys at contraction joints shall be centered between front and back faces.

All battered piles are battered 3 in 12.

Pile dimensions are measured along bottom of footing.

Piles not shown in elevation.

All piles are HP10x42 piles

For modified support angle at end dam see Sheet CD5.

Sections C-C, D-D and View E-E shown are for Northwest Wingwall, Southwest Wingwall similar except for bar marks.

For median dimensions see Sheet CD5.

Parapet transitions shall be as shown on these sheets. Reinforcing steel shall be field bent or cut to fit the revised shape.

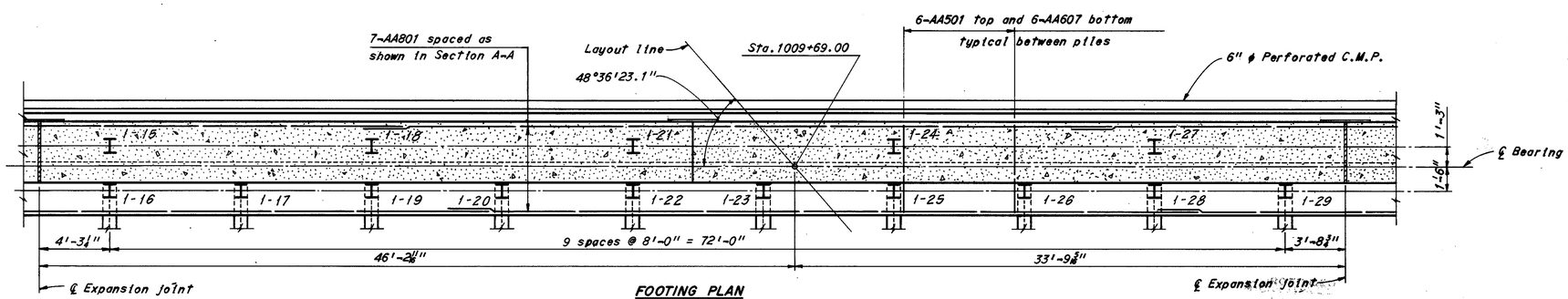

FOOTING PLAN

H.N.T.B. BRIDGE NO. 17 — Revised 2-19-79 By R.H.W. — 3/20

HOWARD, NEEDLES, TAMMEN & BERGENDOFF
CONSULTING ENGINEERS
KANSAS CITY CLEVELAND NEW YORK

WEST ABUTMENT

U.S. 30, RAMP E-C AND RAMP C-E
OVER N.&W. R.R.

BR. NO. STA. 30-15.81 — STA. 1009+66.11
SCALE: 1/4" = 1'-0" — STA. 1011+50.60

RELOCATED U.S. 30

CANTON — STARK COUNTY — OHIO

DRAWN CAC	TRACED	CHECKED DPK	REVIEWED MJK	REVISED
DATE 4-8-70	DATE	DATE 8-6-70	DATE 11-22-71	1668

MICROFILMED
FEB 14 1985

FED. ROAD DIV. NO.	STATE	FEDERAL AID PROJECT NO.	TYPE FUNDS
2	OHIO		

203 / 328

STARK COUNTY
STA-30-15,66

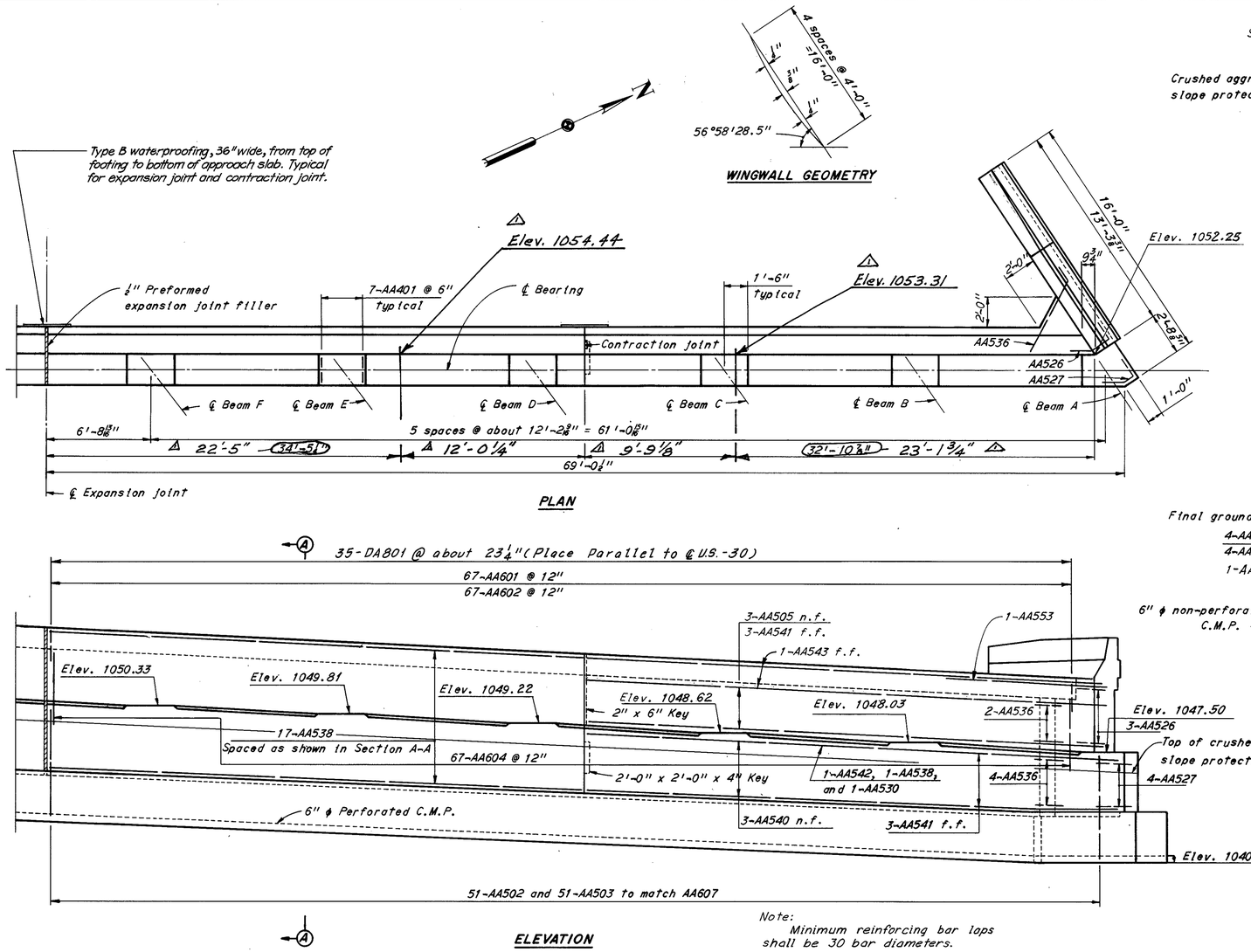

PLAN

ELEVATION

Note:
Minimum reinforcing bar laps shall be 30 bar diameters.

WINGWALL GEOMETRY

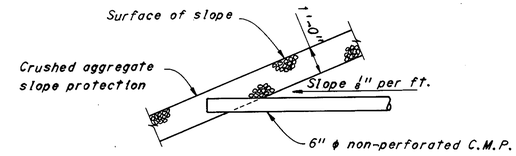

METHOD OF TERMINATING 6" CMP AT THE FRONT SLOPE

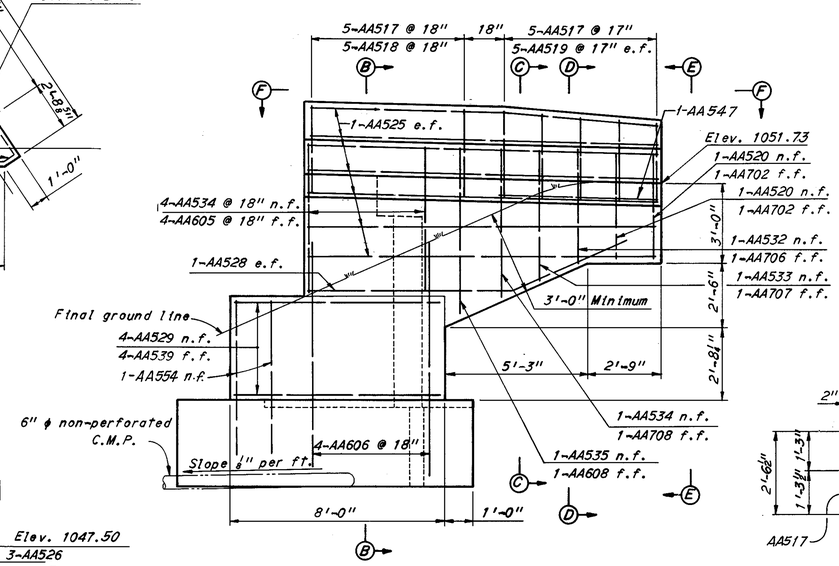

NORTHWEST WINGWALL ELEVATION

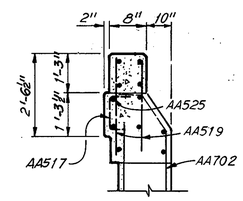

VIEW E-E
(Northwest Wingwall shown, Southwest Wingwall similar)

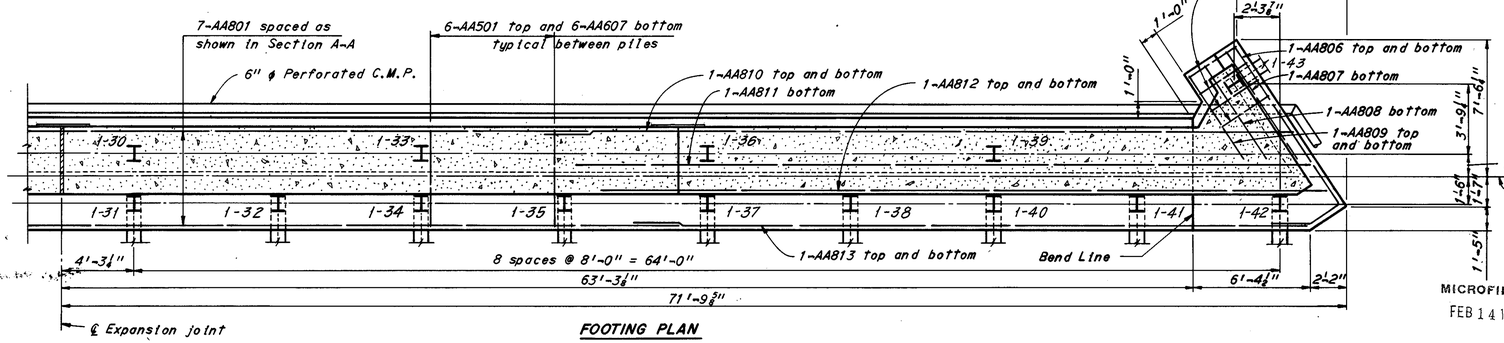

FOOTING PLAN

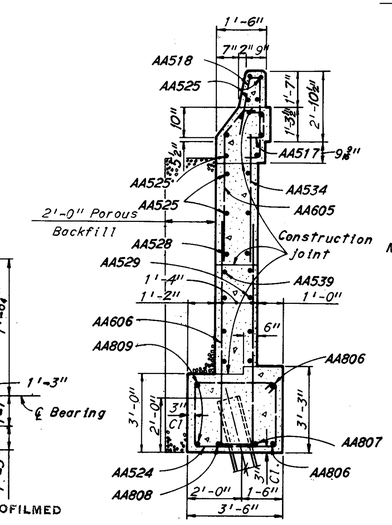

SECTION B-B

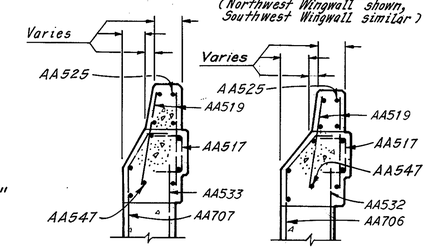

SECTION C-C SECTION D-D

Notes:
For View F-F see Sheet 2/20.
For Section A-A see Sheet 3/20.
For reinforcement schedule see Sheet 18/20.
For other notes see Sheet 3/20.

H.N.T.B. BRIDGE NO. 17 — Revised 2-19-79 By R.H.W.

HOWARD, NEEDLES, TAMMEN & BERGENDOFF — 4/20
CONSULTING ENGINEERS
KANSAS CITY CLEVELAND NEW YORK

WEST ABUTMENT

U.S. 30, RAMP E-C AND RAMP C-E
OVER N.&W. R.R.

BR. NO. STA. 30-15 81 — STA. 1009+66.11
SCALE: 1/4" = 1'-0" — STA. 1011+50.60

RELOCATED U.S. 30

CANTON — STARK COUNTY — OHIO

DRAWN CAC	TRACED	CHECKED DPK	REVIEWED MJK	REVISED
DATE 4-18-70	DATE	DATE 5-4-70	DATE 11-22-71	1668

MICROFILMED
FEB 14 1985

Revised 8-23-82

FED. ROAD DIV. NO.	STATE	FEDERAL AID PROJECT NO.	TYPE FUNDS
2	OHIO		

204 / 328

STARK COUNTY
STA-30-15.66

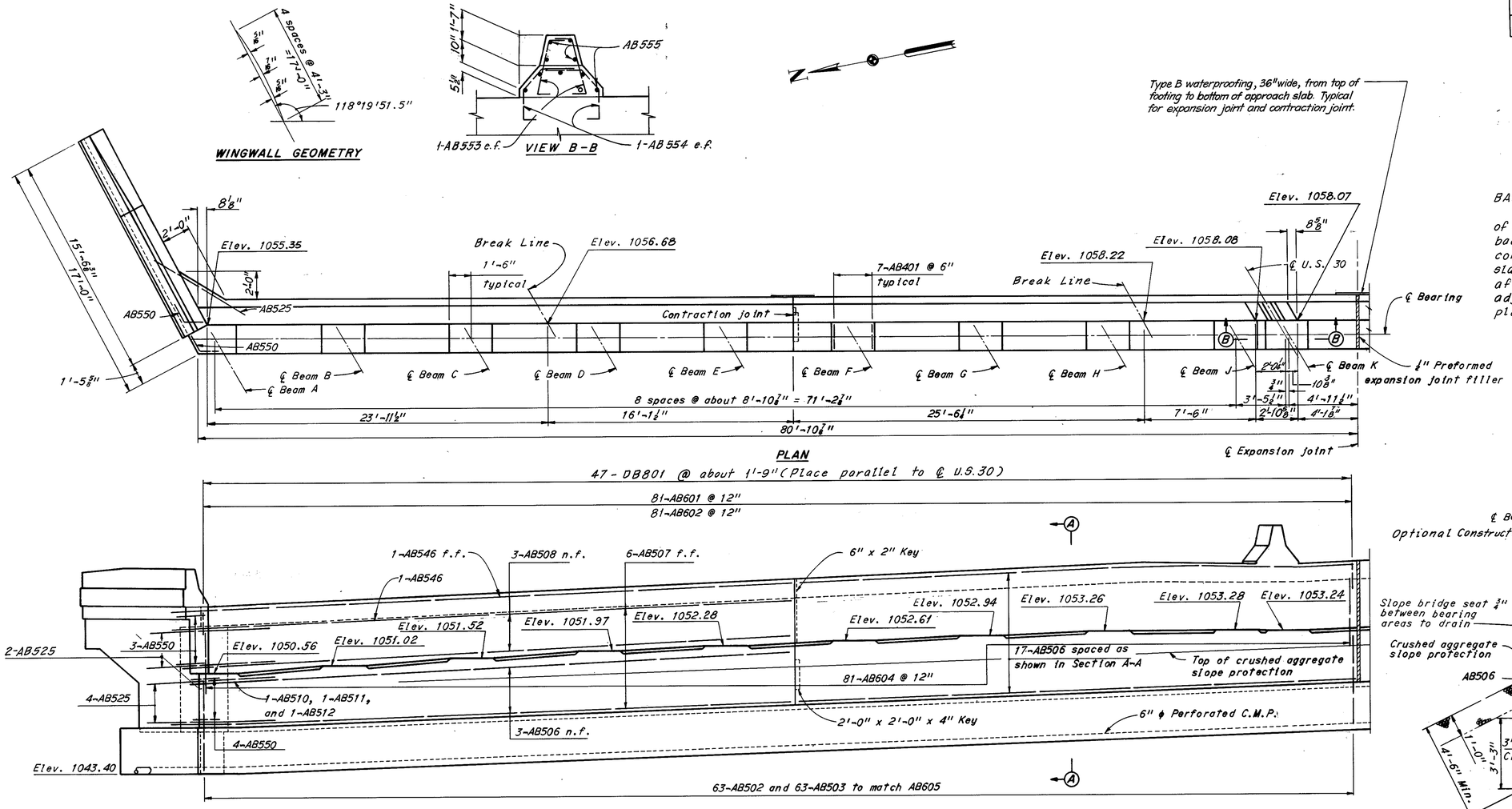

BACKWALL CONCRETE:
In addition to the provisions of 511.08, backwall concrete above the optional construction joint at the approach slab seat shall not be placed until after the deck concrete in the span adjacent to the abutment has been placed.

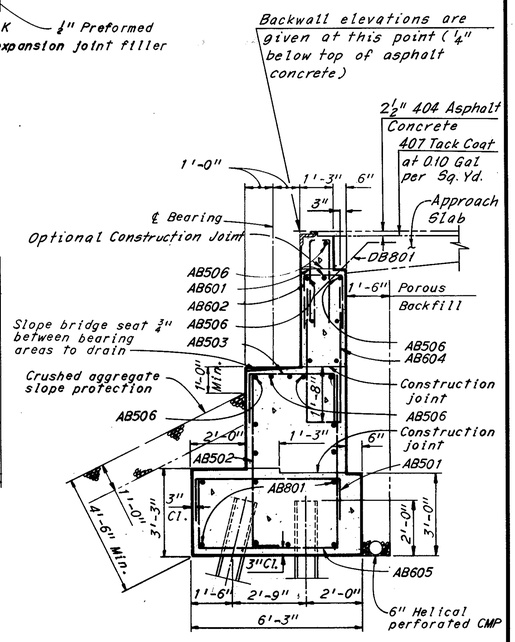

Notes:
For reinforcement schedule see Sheet 18/20.
For notes see Sheet 7/20.
Minimum reinforcing bar laps shall be 30 bar diameters.

H.N.T.B. BRIDGE NO. 17 — Revised 2-19-79 By R.H.W. — 5/20

HOWARD, NEEDLES, TAMMEN & BERGENDOFF
CONSULTING ENGINEERS
KANSAS CITY CLEVELAND NEW YORK

EAST ABUTMENT

U.S. 30, RAMP E-C AND RAMP C-E OVER N.&W. R.R.

BR. NO. STA-30-15.81 — STA. 1009+66.11
SCALE: 1/4" = 1'-0" — STA. 1011+50.60

RELOCATED U.S. 30

CANTON — STARK COUNTY — OHIO

DRAWN CAC	TRACED	CHECKED OPK	REVIEWED MJK	REVISED
DATE 4-24-70	DATE	DATE 8-11-70	DATE 11-22-71	1668

MICROFILMED
FEB 14 1985

MARK	NUMBER	LENGTH	TYPE	DIMENSIONS A	B	C	SERIES INCRE.	WEIGHT POUNDS
PC604	4	3'-0"	113	1'-11"	4'-2"	2'-8"		48
PC901	55	8'-6"	Str					1,589
PC1001	45	9'-6"	Str					1,839
PC1101	3	34'-4"	111	29'-9"	2'-3"			547
PC1102	2	29'-9"	Str					316
PC1103	5	22'-9"	Str					605
PC1104	5	38'-10"	104	35'-9"	3'-6"			1,034
PC1105	8	11'-0"	Str					467
PC1106	2	11'-3"	Str					120
PC1107	2	42'-0"	Str					446
PC1108	5	41'-3"	Str					1,097
PC1109	3	43'-0"	Str					685
PC1401	35	7'-8"	104	6'-7"	1'-6"			2,055
PC1402	35	12'-8"	104	11'-7"	1'-6"			3,395
PC1403	35	16'-0"	Str					4,280
PC1404	7	29'-6"	Str					1,579
PC1405	7	30'-3"	Str					1,618
PC1406	7	31'-0"	Str					1,660
PC1407	7	31'-9"	Str					1,700
PC1408	7	32'-6"	Str					1,740
							Total	31,791

PIER-2S

MARK	NUMBER	LENGTH	TYPE	DIMENSIONS A	B	C	SERIES INCRE.	WEIGHT POUNDS
SPD401	1	861'-9"	112	104.4	38'-2"			698
SPD402	1	882'-6"	112	106.9	39'-1"			715
SPD403	1	902'-3"	112	109.3	40'-0"			731
SPD404	1	921'-3"	112	111.6	40'-10"			746
SPD405	1	926'-3"	112	112.2	41'-1"			750
PD501	57	13'-2"	109	2'-8"	3'-8"			784
PD502	50	11'-4"	109	1'-9"	3'-8"			592
PD503	67	4'-5"	105	1'-0"	2'-8"			309
PD504	1	4'-3"	105	1'-0"	2'-6"			4
PD505	1	3'-7"	105	1'-0"	1'-10"			4
PD601	4	34'-0"	Str.					204
PD602	4	24'-0"	Str.					144
PD603	4	37'-0"	Str.					222
PD604	4	6'-0"	105	1'-11"	2'-6"			36
PD605	4	8'-0"	113	1'-11"	4'-2"	2'-8"		48

MARK	NUMBER	LENGTH	TYPE	DIMENSIONS A	B	C	SERIES INCRE.	WEIGHT POUNDS
PD901	33	8'-6"	Str.					954
PD902	44	9'-6"	Str					1,421
PD1001	30	9'-6"	Str.					1,227
PD1101	5	44'-2"	104	40'-9"	3'-9"			1,173
PD1102	5	23'-9"	Str					631
PD1103	2	35'-0"	Str					372
PD1104	3	39'-7"	111	35'-0	2'-3"			631
PD1105	2	11'-3"	Str					120
PD1106	3	14'-0"	Str					223
PD1107	3	11'-0"	Str					175
PD1108	3	13'-6"	Str					215
PD1109	5	30'-9"	Str					817
PD1110	5	24'-9"	Str					657
PD1111	2	41'-3"	Str.					438
PD1112	3	16'-3"	Str					259
PD1113	3	42'-3"	Str.					674
PD1401	40	7'-8"	104	6'-7"	1'-6"			2,345
PD1402	40	12'-8"	104	11'-7"	1'-6"			3,875
PD1403	40	16'-0"	Str					4,890
PD1404	8	32'-6"	Str					1,988
PD1405	8	33'-3"	Str					2,035
PD1406	8	34'-3"	Str					2,095
PD1407	8	35'-0"	Str					2,145
PD1408	8	35'-3"	Str.					2,155
							Total	37,502

EPOXY COATED REINFORCING STEEL

MARK	NUMBER	LENGTH	TYPE	DIMENSIONS A	B	C	SERIES INCRE.	WEIGHT POUNDS
ESA501	244	5'-6"	144					1400
ESA502	244	2'-0"	105	7½"	11"			509
ESA503	244	2'-1"	104	7½"	1'-7"			531
ESA504	244	2'-11"	143	6"	8"	7½"		743
ESA505	5	6'-0"	Str.					31
ESA506	24	12'-6"	Str.					366
ESA508	60	30'-0"	Str.					1877
ESA509	2	13'-3"	Str.					28
ESA510	5	5'-0"	Str.					26
ESA511	18	12'-3"	Str.					230
ESA512	20	12'-9"	Str.					266
ESA513	40	6'-9"	Str.					282
ESA514	56	7'-3"	Str.					424
ESA515	8	14'-6"	Str.					121
ESA516	8	14'-9"	Str.					123
ESA517	8	15'-3"	Str.					127
ESA518	12	13'-9"	Str.					172
ESA519	8	13'-0"	Str.					108
ESA601	1-Ser. 28	6'-2" to 33'-8"	101	5'-6" to 33'-0"			1'-0⅛"	837
ESA602	1-Ser. 46	31'-8" to 35'-8"	101	31'-0" to 35'-0"			5/16"	7,390
ESA603	1-Ser. 99	35'-8" to 38'-2"	101	35'-0" to 37'-6"			5/16"	5,490
ESA604	1-Ser. 58	6'-5" to 36'-2"	101	5'-9" to 35'-6"			6⅝"	1,852
ESA605	1-Ser. 29	5'-8" to 36'-3"	101	5'-0" to 35'-0"			1'-0⅞"	901
ESA606	1-Ser. 117	36'-9" to 40'-6"	101	36'-1" to 39'-10"			3/8"	6,788
ESA607	1-Ser. 157	41'-3" to 46'-7"	101	40'-7" to 45'-11"			3/8"	10,356
ESA608	1-Ser. 75	6'-6" to 46'-3"	101	5'-10" to 45'-7"			6⅜"	2,971
ESA617	703	30'-0"	Str.					31677
ESA618	1-Ser. 37	7'-6" to 30'-0"	Str.				7½"	1,042
ESA621	4	4'-8"	101	4'-0"				28
ESA622	1-Ser. 16	5'-0" to 10'-9"	Str.				4⅝"	189
ESA624	8	46'-0"	Str.					552
ESA625	4	46'-0"	101	45'-4"				276
ESA626	1	31'-6"	101	30'-10"				47
ESA627	104	28'-6"	Str.					4,452
ESA628	1-Ser. 40	5'-11" to 45'-3"	101	5'-3" to 44'-7"			1'-0⅛"	1,537
ESA629	1-Ser. 262	39'-11" to 43'-5"	101	39'-3" to 42'-9"			5/16"	16,397
ESA630	1-Ser. 56	8'-8" to 43'-8"	101	8'-0" to 43'-0"			7⅜"	2,200
ESA631	1-Ser. 27	9'-2" to 38'-5"	101	8'-6" to 37'-9"			1'-1½"	964
ESA632	1-Ser. 291	38'-8" to 40'-5"	101	38'-0" to 39'-9"			7/16"	17,290
ESA633	1-Ser. 66	5'-8" to 46'-0"	101	5'-0" to 45'-4"			7 7/16"	2,560
ESA640	1-Ser. 32	11'-0" to 28'-0"	Str.				6 9/16"	937
ESA642	1-Ser. 5	3'-11" to 4'-8"	101	3'-3" to 4'-0"			2¼"	32
ESA644	1-Ser. 26	5'-0" to 16'-3"	Str.				5⅜"	415
ESA646	1	43'-8"	101	43'-0"				66
ESA647	1	22'-2"	101	21'-6"				33
ESA649	1-Ser. 8	5'-3" to 6'-6"	101	4'-7" to 5'-10"			2⅛"	71
ESA651	1	15'-3"	101	14'-7"				23
ESA652	112	32'-9"	Str.					5,509
ESA655	1-Ser. 7	4'-5" to 5'-5"	101	3'-9" to 4'-9"			2"	52
ESA658	4	9'-9"	Str.					59
ESA659	4	10'-3"	Str.					62
ESA660	308	4'-1"	150					1889
ESA661	308	3'-1"	152					1426
ESA662	308	3'-1"	151					1426
ESA663	308	3'-4"	119	2'-8"	10"	1¼"		1542
ESA664	308	3'-1"	119	2'-3"	10"	5"		1426
							Total	138,128

DECK

MARK	NUMBER	LENGTH	TYPE	DIMENSIONS A	B	C	SERIES INCRE.	WEIGHT POUNDS
SA609	1-Ser. 31	5'-6" to 37'-0"	Str.				1'-0⅛"	990
SA610	1-Ser. 143	35'-3" to 39'-3"	Str.				5/16"	8,000
SA611	1-Ser. 99	39'-6" to 41'-6"	Str.				¼"	6,020
SA612	1-Ser. 61	5'-0" to 41'-6"	Str.				7 5/16"	2,130
SA613	1-Ser. 26	5'-0" to 31'-0"	Str.				1'-0"	703
SA614	1-Ser. 117	32'-9" to 35'-9"	Str.				5/16"	6,019
SA615	1-Ser. 165	34'-6" to 39'-6"	Str.				3/8"	9,170
SA616	1-Ser. 67	5'-9" to 42'-6"	Str.				6 7/16"	2,428
SA619	1-Ser. 61	7'-6" to 30'-0"	Str.				4½"	1,718
SA620	4	4'-0"	Str.					24
SA623	1-Ser. 29	5'-0" to 10'-6"	Str.				3"	268
SA634	1-Ser. 40	5'-6" to 44'-9"	Str.				1'-0 7/16"	1,510
SA635	1-Ser. 262	35'-3" to 38'-3"	Str.				⅛"	14,462
SA636	1-Ser. 56	5'-0" to 38'-6"	Str.				7 5/16"	1,830
SA637	1-Ser. 27	13'-0" to 42'-0"	Str.				1'-1 3/8"	1,116
SA638	1-Ser. 291	44'-6" to 46'-0"	Str.				7/16"	19,770
SA639	1-Ser. 66	5'-0" to 45'-6"	Str.				7½"	2,500
SA641	1-Ser. 49	11'-0" to 28'-0"	Str.				4¼"	1,434
SA643	1-Ser. 5	3'-6" to 4'-3"	Str.				2¼"	29
SA645	1-Ser. 44	5'-0" to 16'-3"	Str.				3¼"	701
SA648	1	21'-0"	Str.					32
SA650	1-Ser. 8	4'-6" to 5'-9"	Str.				2⅛"	62
SA653	1	13'-6"	Str.					20
SA654	1	30'-6"	Str.					46
SA656	1-Ser. 7	3'-9" to 4'-9"	Str.				2"	45
SA657	1	42'-6"	Str.					64
SA665	1045	30'-0"	Str.					47088
							Total	128,179

FED ROAD DIV NO	STATE	FEDERAL AID PROJECT NO	TYPE FUNDS
2	OHIO		

219
328

STARK COUNTY
STA-30-15.66

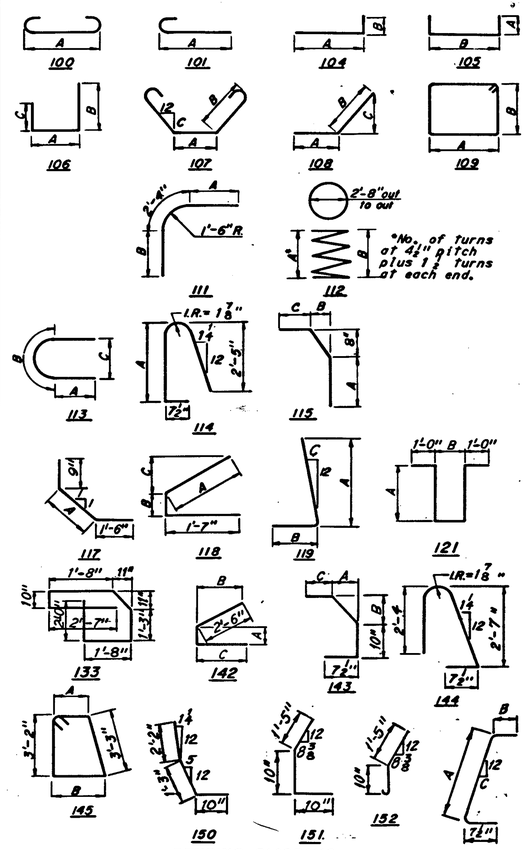

BENDING DIAGRAMS

Notes:

All bar dimensions are given out to out.

All bars of a series shall vary in length by a constant increment.

For replacement reinforcement note see Sheet 19/20.

Four steel channels, tee or angle spacers, weighing approximately 0.80 pounds per linear foot shall be provided for each spiral unit. They shall be equally spaced along the periphery of the coil. An allowance of 0.80 pounds per linear foot for spacers is included with the weight of the spiral bars and paid for as reinforcing steel.

Splices in No. 14 or No. 18 size reinforcing bars shall be made by an approved positive mechanical method designed to develop 125% of the specified yield strength of the bar.

H.N.T.B. BRIDGE NO. 17

Revised 2-19-79 By R.H.W.

HOWARD, NEEDLES, TAMMEN & BERGENDOFF 20/20
CONSULTING ENGINEERS
KANSAS CITY CLEVELAND NEW YORK

REINFORCEMENT SCHEDULE

U.S. 30, RAMP E-C AND RAMP C-E
OVER N.&W. R.R.

BR. NO. STA-30-15 81 STA. 1009+66.11
SCALE: NONE STA. 1011+50.60

RELOCATED U.S. 30

CANTON STARK COUNTY OHIO

DRAWN LJF	TRACED	CHECKED JDA	REVIEWED MJK	REVISED
DATE 10-8-70	DATE	DATE 11-6-70	DATE 11-22-71	1668

MICROFILMED
FEB 15 1985

FED. ROAD DIV. NO.	STATE	FEDERAL AID PROJECT NO.	TYPE FUNDS
2	OHIO		

205 / 328

STARK COUNTY
STA-30-15.66

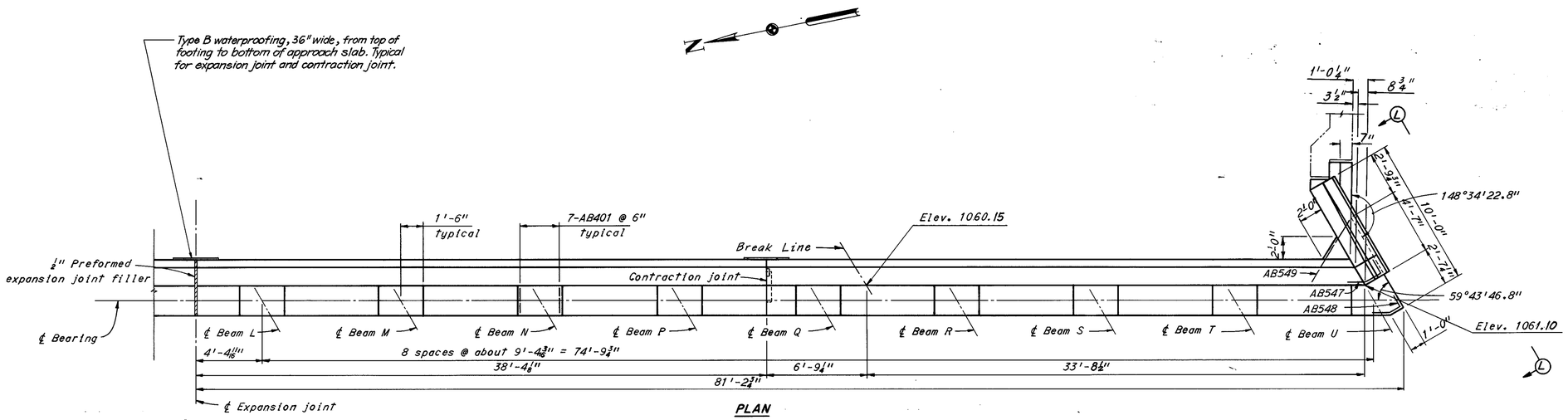

PLAN

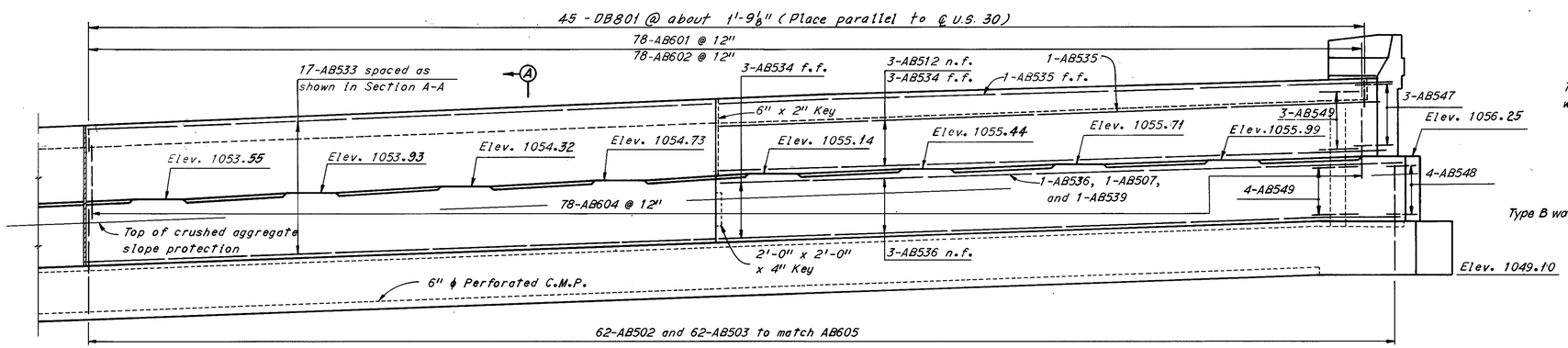

ELEVATION

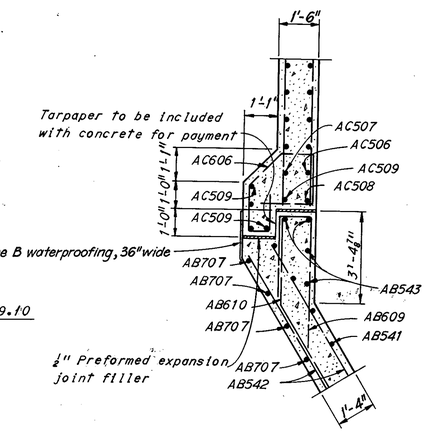

SECTION F-F

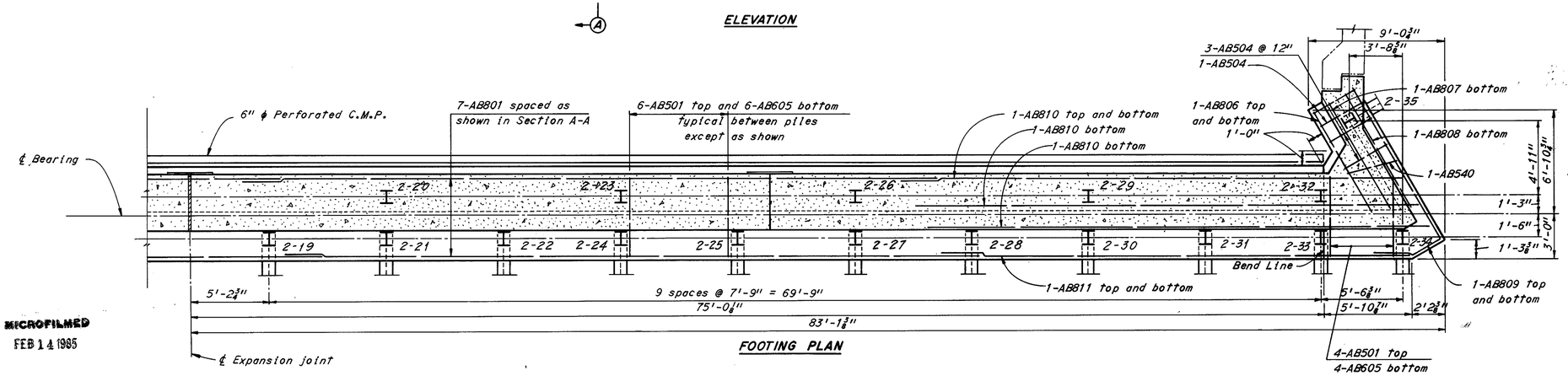

FOOTING PLAN

Notes:
For reinforcement schedule see Sheet 18/20.
For Section A-A see Sheet 5/20.
For location of Section F-F see Sheet 7/20.
For View L-L see Sheet 7/20.
For other notes see Sheet 7/20.
Minimum reinforcing bar laps shall be 30 bar diameters.

H.N.T.B. BRIDGE NO. 17 — Revised 2-19-79 By R.H.W. — 6/20

HOWARD, NEEDLES, TAMMEN & BERGENDOFF
CONSULTING ENGINEERS
KANSAS CITY CLEVELAND NEW YORK

EAST ABUTMENT

U.S. 30, RAMP E-C AND RAMP C-E
OVER N.&W. R.R.

BR. NO. STA. 30-15.81 — STA. 1009+66.11
SCALE: 1/4" = 1'-0" — STA. 1011+50.60

RELOCATED U.S. 30

CANTON — STARK COUNTY — OHIO

DRAWN CAC	TRACED	CHECKED OPK	REVIEWED MJK	REVISED
DATE 4-28-70	DATE	DATE 8-13-70	DATE 11-22-71	1668

MICROFILMED
FEB 14 1985

FED. ROAD DIV. NO.	STATE	FEDERAL AID PROJECT NO.	TYPE FUNDS
2	OHIO		

206 / 328

STARK COUNTY
STA-30-15,66

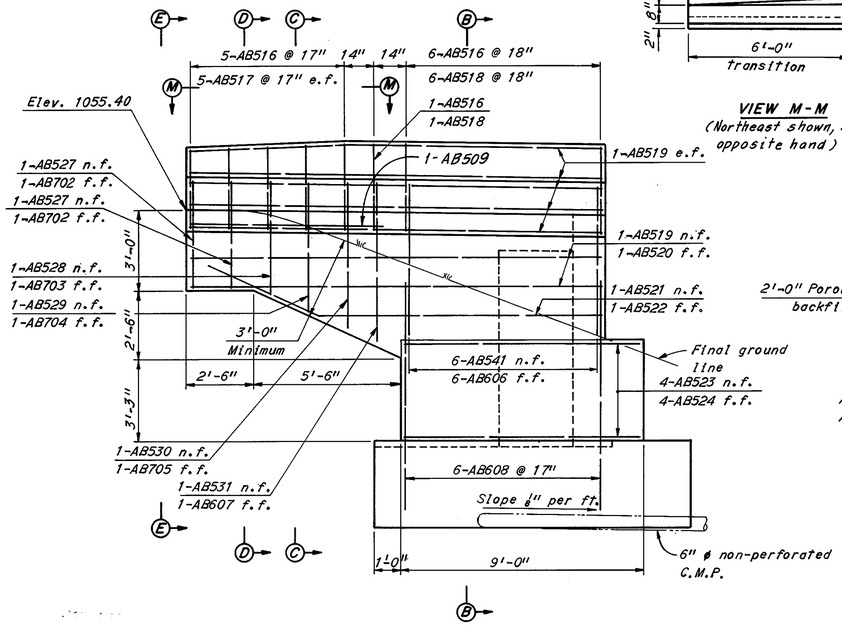

NORTHEAST WINGWALL ELEVATION

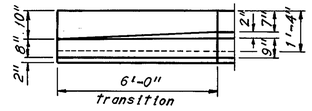

VIEW M-M
(Northeast shown, Southeast opposite hand)

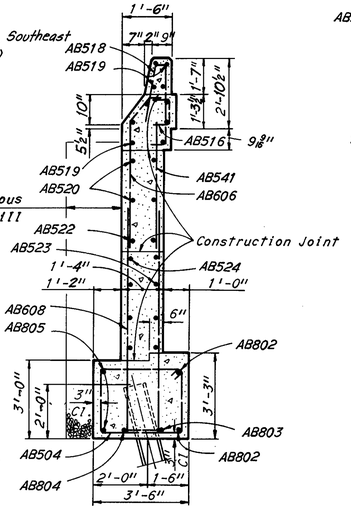

SECTION B-B

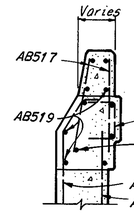

SECTION C-C

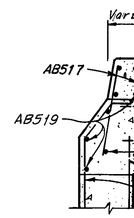

SECTION D-D

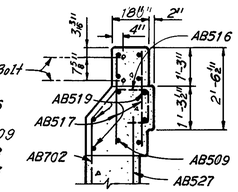

VIEW E-E

Sloped surface of wall to be non-performed if Reinforced Earth wall is selected to be built. Contractor to submit plan to Project Engineer for approval.

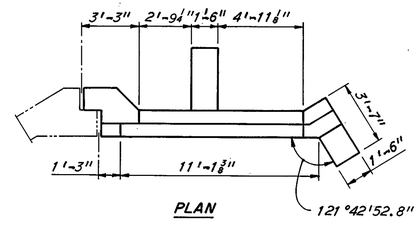

PLAN

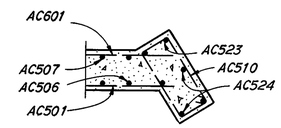

SECTION J-J

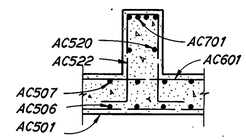

SECTION K-K

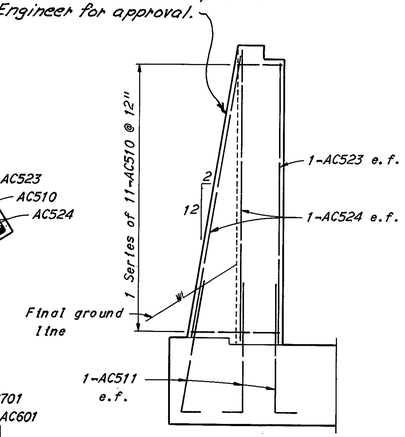

VIEW H-H

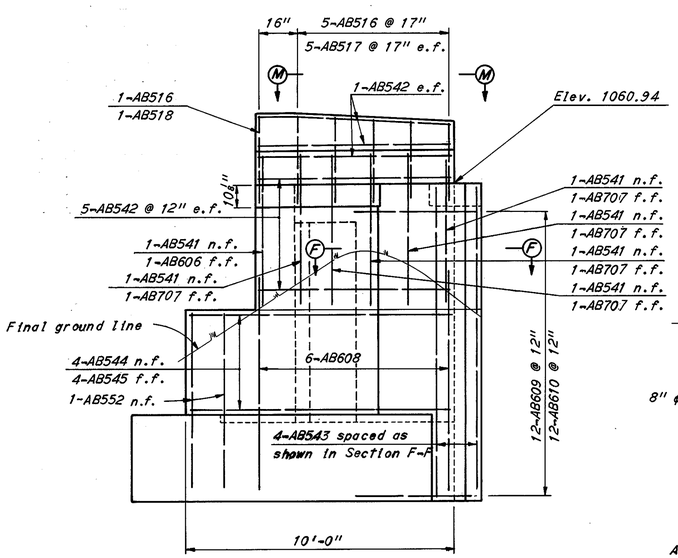

VIEW L-L

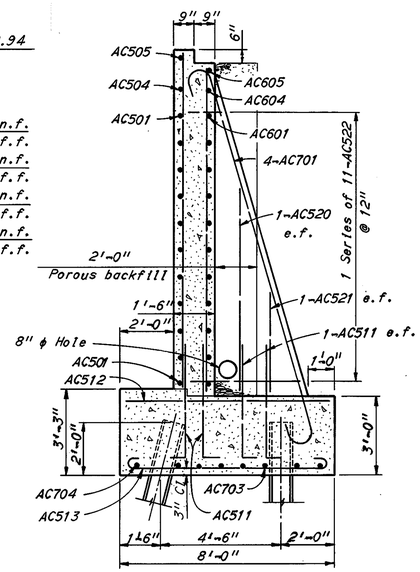

SECTION G-G

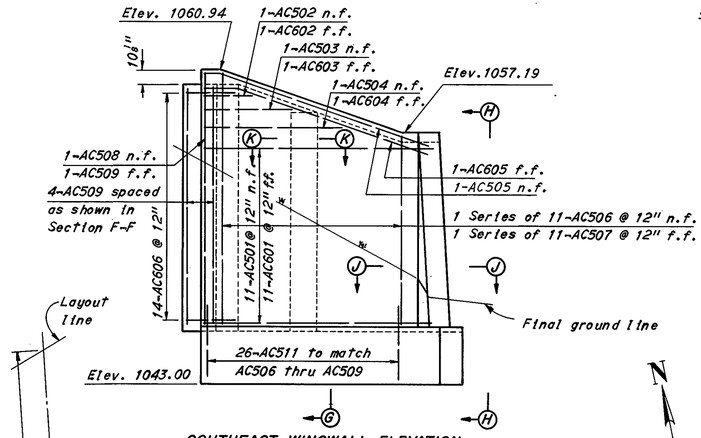

SOUTHEAST WINGWALL ELEVATION

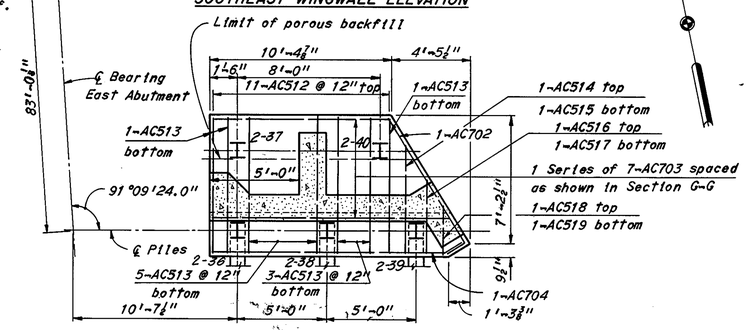

FOOTING PLAN

Notes:

For roadway end dam details see Ohio Standard Drawing SD-1-69, Sheets 1 and 2 of 4 and Sheet CD5

AB401 bars shall be placed 2 1/4" ± below top of bridge seat.

n.f. denotes near face, f.f. denotes far face, and e.f. denotes each face.

For reinforcement schedule see Sheet 18/20.

Shear keys at contraction joints shall be centered between front and back faces.

For modified support angle at end dam see Sheet CD5.

All battered piles are battered 3 in 12.

Pile dimensions are measured along bottom of footing.

Piles not shown in elevation.

All piles are HP10x42 piles

For Parapet transition notes, see Sheet 3/20.

For Section F-F, see Sheet 6/20.

Minimum reinforcing bar laps shall be 30 bar diameters.

MICROFILMED
FEB 14 1985

H.N.T.B. BRIDGE NO. 17 | Revised 2-19-79 | By R.H.W.

HOWARD, NEEDLES, TAMMEN & BERGENDOFF
CONSULTING ENGINEERS
KANSAS CITY CLEVELAND NEW YORK

7 / 20

EAST ABUTMENT DETAILS

U.S. 30, RAMP E-C AND RAMP C-E
OVER N.&W. R.R.

BR. NO. STA-30-15 81 STA. 1009+66.11
SCALE: NONE STA. 1011+50.60

RELOCATED U.S. 30

CANTON STARK COUNTY OHIO

DRAWN CAC	TRACED	CHECKED DPK	REVIEWED RWK	REVISED 2-1-82
DATE 5-1-70	DATE	DATE 8-14-70	DATE 11-22-71	1668

FED. ROAD DIV. NO.	STATE	FEDERAL AID PROJECT NO.	TYPE FUNDS
2	OHIO		

207 / 328

STARK COUNTY
STA-30-15.66

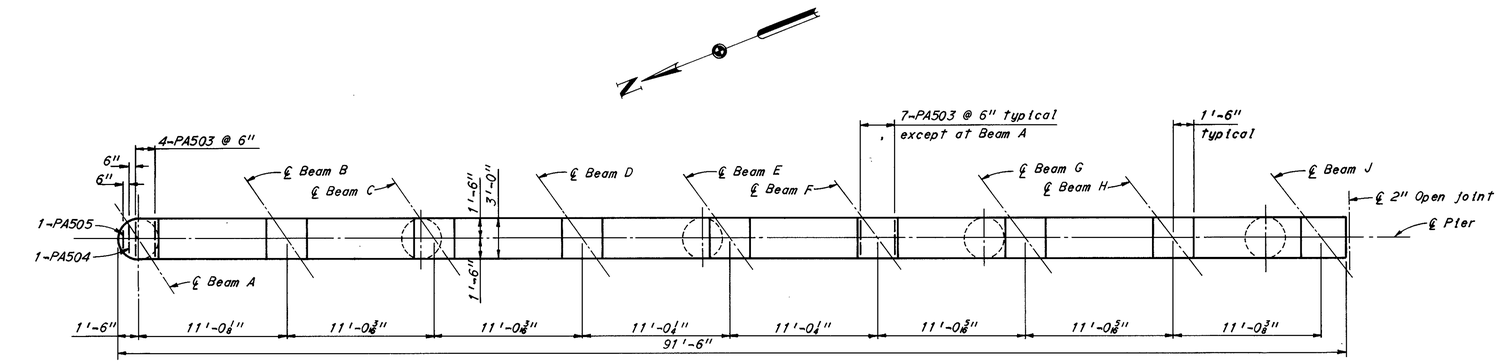

PLAN

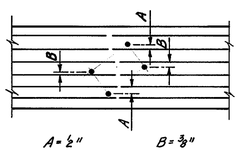

PARTIAL PLAN - PIER I
(Minimum clearance between capbeam reinforcement and anchor bolt)

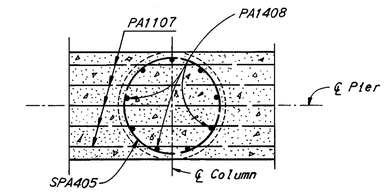

SECTION A-A

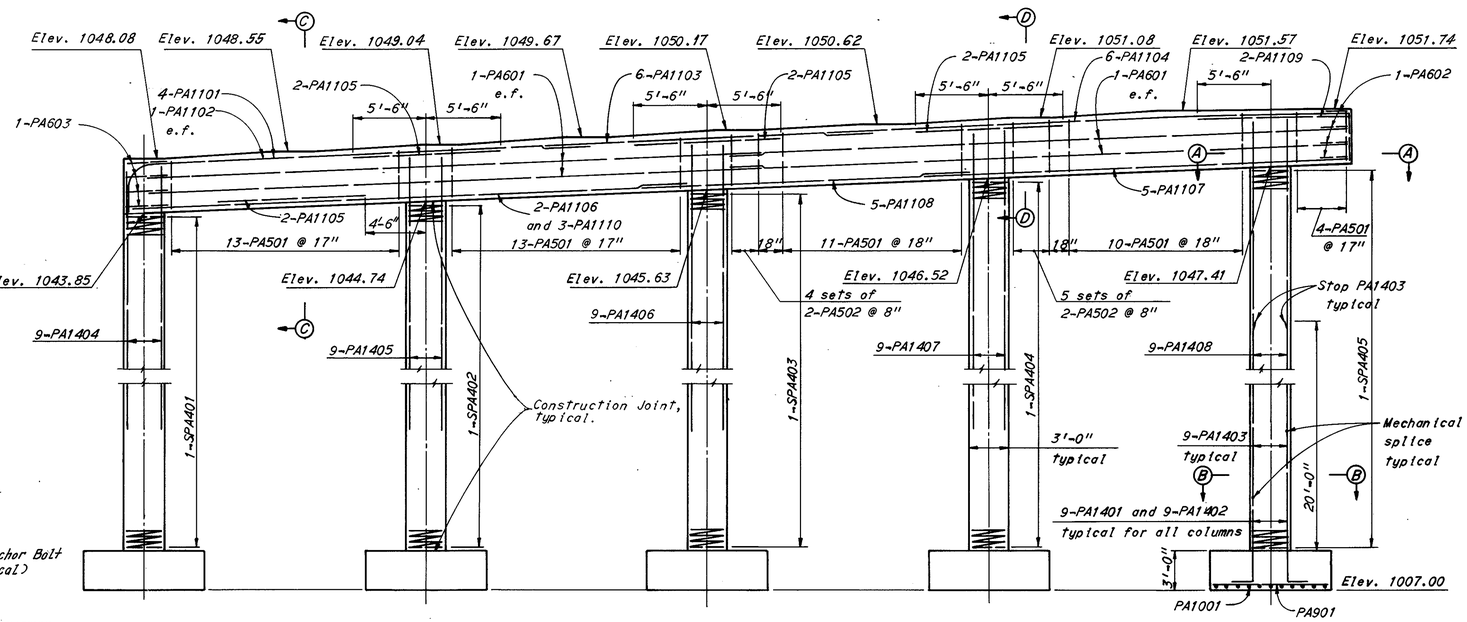

ELEVATION

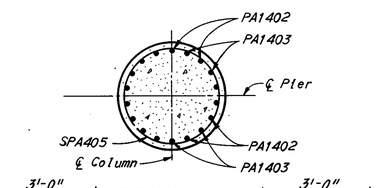

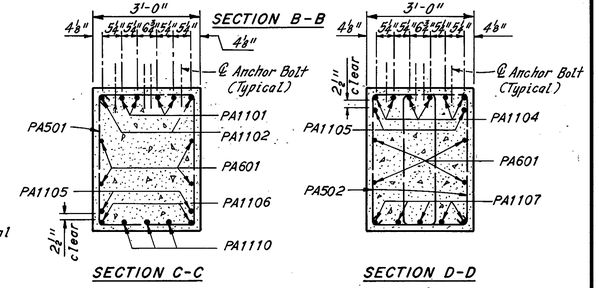

ANCHOR BOLT SETTING PIER I				
BEAM	X_1	X_2	Y_1	Y_2
A	11 5/8"	5 1/4"	1/2"	10 1/2"
B	11 5/8"	5"	5/8"	10 1/2"
C	11 5/8"	4 3/4"	3/4"	10 3/8"
D	11 5/8"	4 3/4"	5/8"	10 3/8"
E	11 5/8"	4 3/4"	1"	10 3/4"
F	11 5/8"	4 1/2"	1"	10 3/4"
G	11 5/8"	4 1/2"	1 1/8"	10 3/4"
H	11 5/8"	4 3/8"	1 1/4"	10 5/8"
J thru M	11 5/8"	4 1/4"	1 3/8"	10 5/8"
N	11 5/8"	4 1/2"	1 3/8"	10 3/8"
P and Q	11 5/8"	4 1/8"	1 1/2"	10 3/8"
R	11 1/2"	4 1/8"	1 1/2"	10 3/8"
S	11 1/2"	4"	1 1/2"	10 3/8"
T and U	11 1/2"	4"	1 3/8"	11"

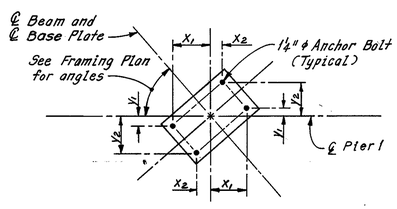

ANCHOR BOLT SETTING PLAN

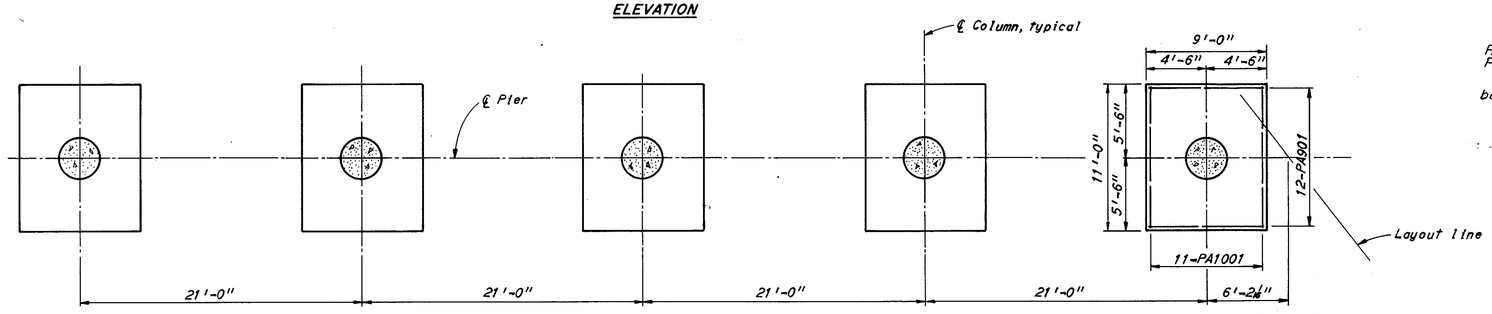

FOOTING PLAN

Note: Dimensions and reinforcing shown are typical for all footings.

Notes:

PA503, PA504 and PA505 bars shall be placed 2 1/4" ± below top of cap beam.

For reinforcement schedule see Sheet 19/20.

For other notes see Sheet 10/20.

PA1401 bars shall be spliced to PA1403 bars and PA1402 bars shall be spliced to PA1404 thru PA1408 bars.

Minimum reinforcing bar laps shall be 30 bar diameters.

MICROFILMED
FEB 14 1985

H.N.T.B. BRIDGE NO. 17 | Revised 2-19-79 By R.H.W. | 8/20

HOWARD, NEEDLES, TAMMEN & BERGENDOFF
CONSULTING ENGINEERS
KANSAS CITY CLEVELAND NEW YORK

PIER IN

U.S. 30, RAMP E-C AND RAMP C-E
OVER N.&W. R.R.

BR. NO. STA-30-15.81 STA. 1009+66.11
SCALE: 3/16" = 1'-0" STA. 1011+50.60

RELOCATED U.S. 30

CANTON STARK COUNTY OHIO

DRAWN CAC	TRACED	CHECKED DEK	REVIEWED MJK	REVISED
DATE 5-20-70	DATE	DATE 7-24-70	DATE 11-22-71	1668

FED. ROAD DIV. NO.	STATE	FEDERAL AID PROJECT NO.	TYPE FUNDS
2	OHIO		

208 / 328

STARK COUNTY
STA-30-15.66

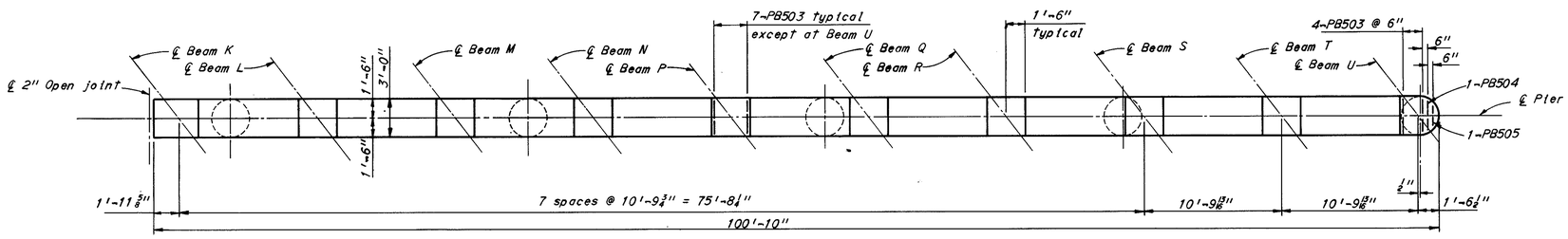

PLAN

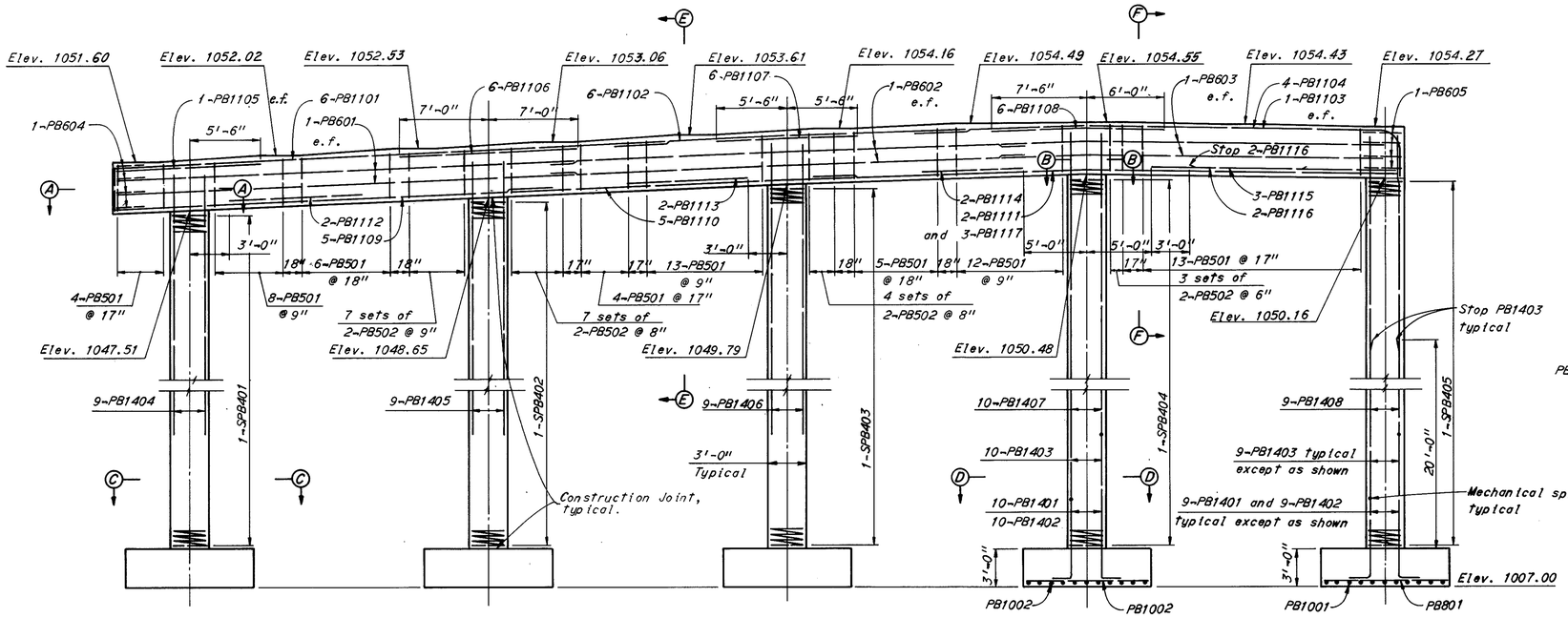

ELEVATION

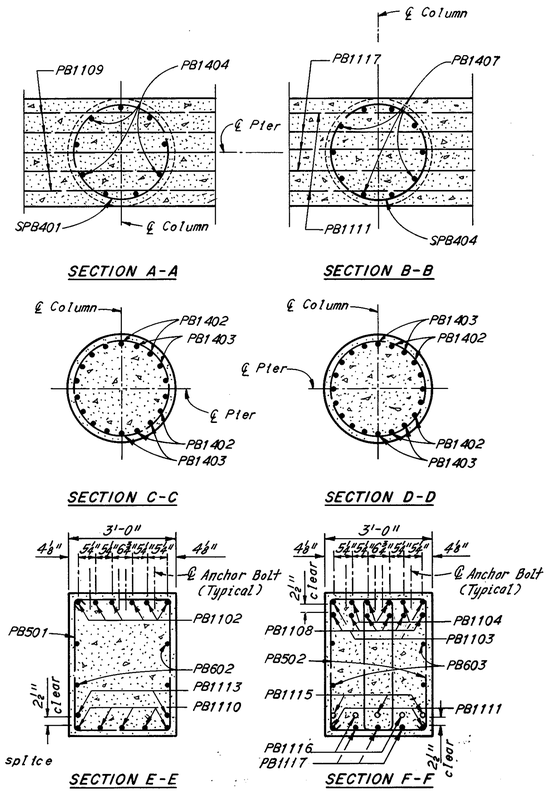

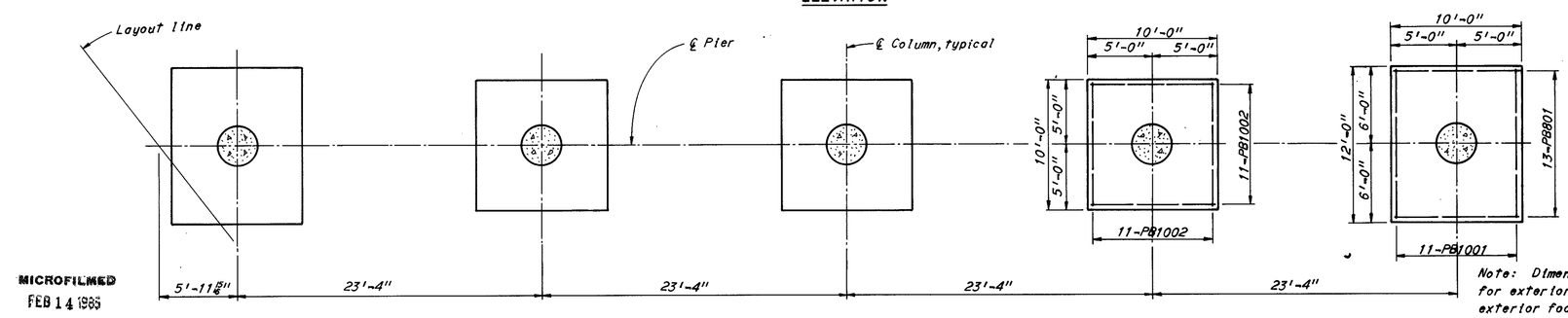

FOOTING PLAN

Notes:
For Anchor Bolt Setting Plan see Sheet 8/20.
PB503, PB504 and PB505 shall be placed 2 1/2" ± below top of cap beam.
For reinforcement schedule see Sheet 19/20.
For other notes see Sheet 10/20.
PB1401 bars shall be spliced to PB1403 bars and PB1402 bars shall be spliced to PB1404 thru PB1408 bars.
Minimum reinforcing bar laps shall be 30 bar diameters.

Note: Dimensions and reinforcing shown for exterior footing are typical for both exterior footings. Dimensions and reinforcing shown for interior footing are typical for three interior footings.

H.N.T.B. BRIDGE NO. 17 — Revised 2-19-79 By R.H.W.

HOWARD, NEEDLES, TAMMEN & BERGENDOFF — 9/20
CONSULTING ENGINEERS
KANSAS CITY CLEVELAND NEW YORK

PIER IS

U.S. 30, RAMP E-C AND RAMP C-E
OVER N.&W. R.R.

BR. NO. STA-30-15.81 — STA. 1009+66.11
SCALE: 3/16" = 1'-0" — STA. 1011+50.60

RELOCATED U.S. 30

CANTON — STARK COUNTY — OHIO

DRAWN CAC	TRACED	CHECKED OPK	REVIEWED MJK	REVISED
DATE 5-26-70	DATE	DATE 11-6-70	DATE 11-21-71	1668

MICROFILMED
FEB 14 1985

FED. ROAD DIV. NO.	STATE	FEDERAL AID PROJECT NO.	TYPE FUNDS
1	0 1111		

209 / 300

FED. ROAD DIV. NO.	STATE	FEDERAL AID PROJECT NO.	TYPE FUNDS
2	OHIO		

209 / 328

STARK COUNTY
STA-30-15.66

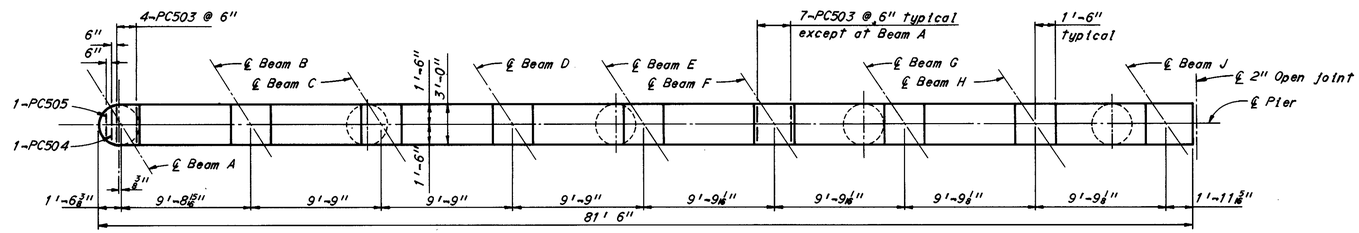

PLAN

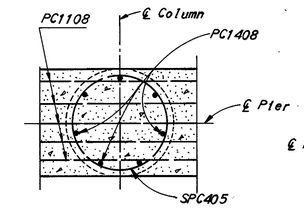

SECTION A-A

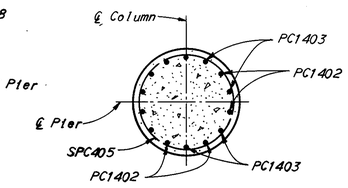

SECTION B-B

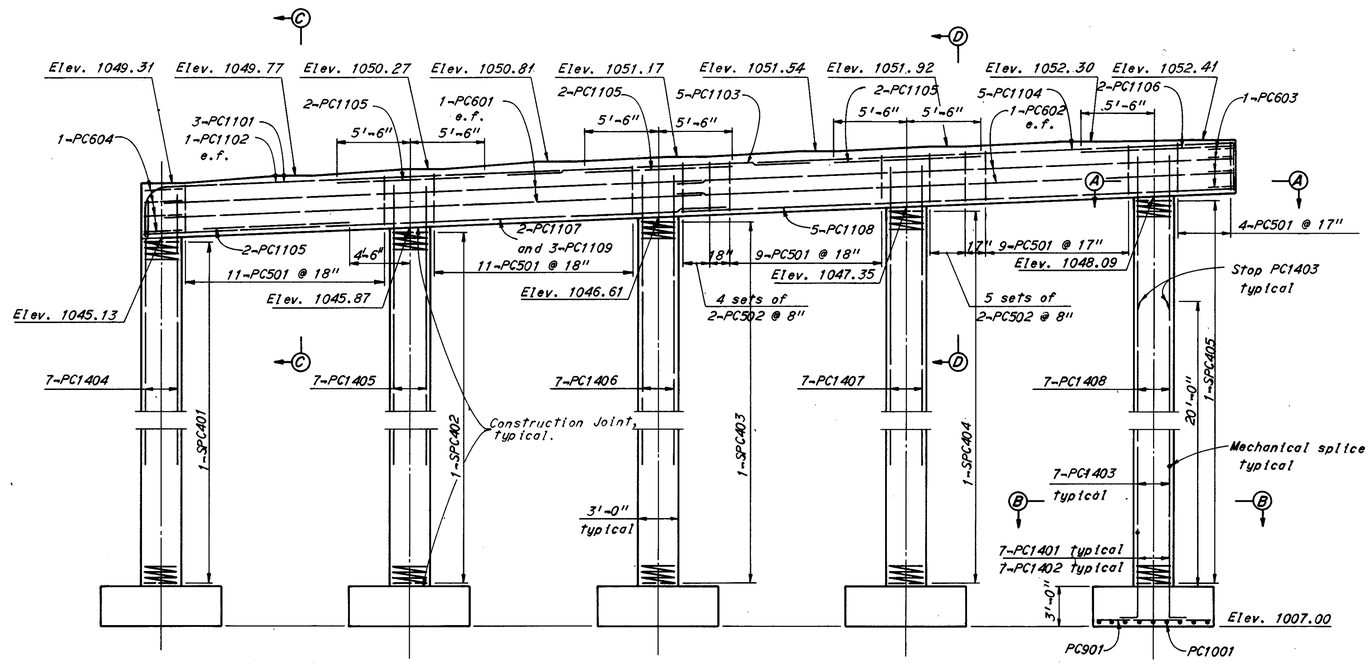

ELEVATION

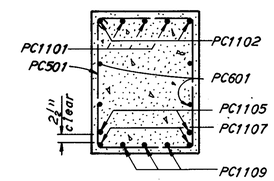

SECTION C-C

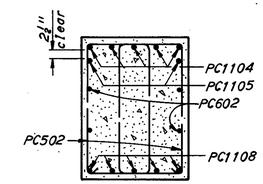

SECTION D-D

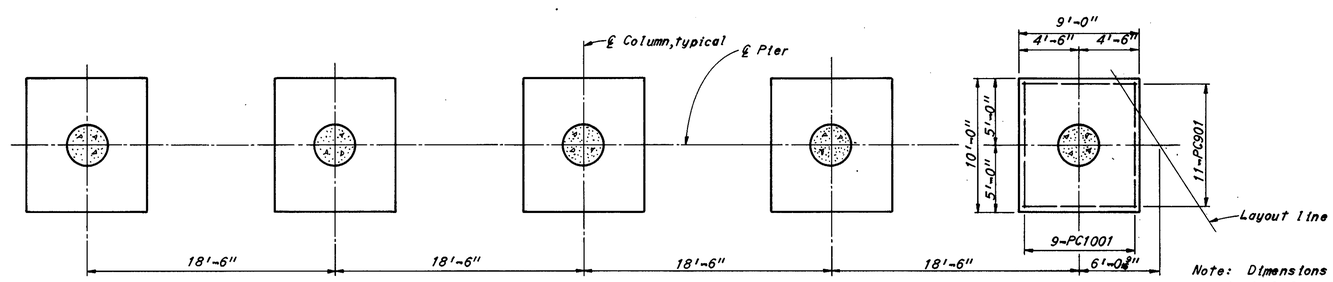

FOOTING PLAN

Note: Dimensions and reinforcing shown are typical for all footings.

Notes:

Special care shall be taken when placing reinforcing steel so as not be interfere with anchor bolt or anchor rod setting. Piers 1N and 1S only.

PC503, PC504 and PC505 bars shall be placed 2½"± below top of cap beam.

For reinforcement schedule see Sheets 19/20 and 20/20.

For beam angles see Sheet 12/20.

For footing layout see Sheet 17/20.

e.f. denotes each face.

Splices in No. 14 size reinforcing bars shall be made by an approved positive mechanical method designed to develop 125% of the specified yield strength of the bar.

The stirrups within 5 feet of the ℄ columns and in cantilever spans shall be placed with the hooks in the bottom of the cap beam. All others shall be placed with hooks in the top.

PC1401 bars shall be spliced to PC1403 bars and PC1402 bars shall be spliced to PC1404 thru PC1408 bars.

Minimum reinforcing bar laps shall be 30 bar diameters.

See Sheet 196 for General Note 28.-Mechanical Splicing of Reinforcing Bars.

H.N.T.B. BRIDGE NO. 17 — Revised 2-19-79 — By R.H.W.

HOWARD, NEEDLES, TAMMEN & BERGENDOFF — 10/20
CONSULTING ENGINEERS
KANSAS CITY CLEVELAND NEW YORK

PIER 2N

U.S. 30, RAMP E-C AND RAMP C-E
OVER N.&W. R.R.

BR. NO. STA-30-15.81 — STA. 1009+66.11
SCALE: 3/16" = 1'-0" — STA. 1011+50.60

RELOCATED U.S. 30

CANTON — STARK COUNTY — OHIO

DRAWN CAC	TRACED	CHECKED DPK	REVIEWED MJK	REVISED
DATE 6-1-70	DATE	DATE 7-30-70	DATE 11-22-71	1668

MICROFILMED
FEB 14 1985

FED. ROAD DIV. NO.	STATE	FEDERAL AID PROJECT NO.	TYPE FUNDS
2	OHIO		

210 / 328

STARK COUNTY
STA-30-15.66

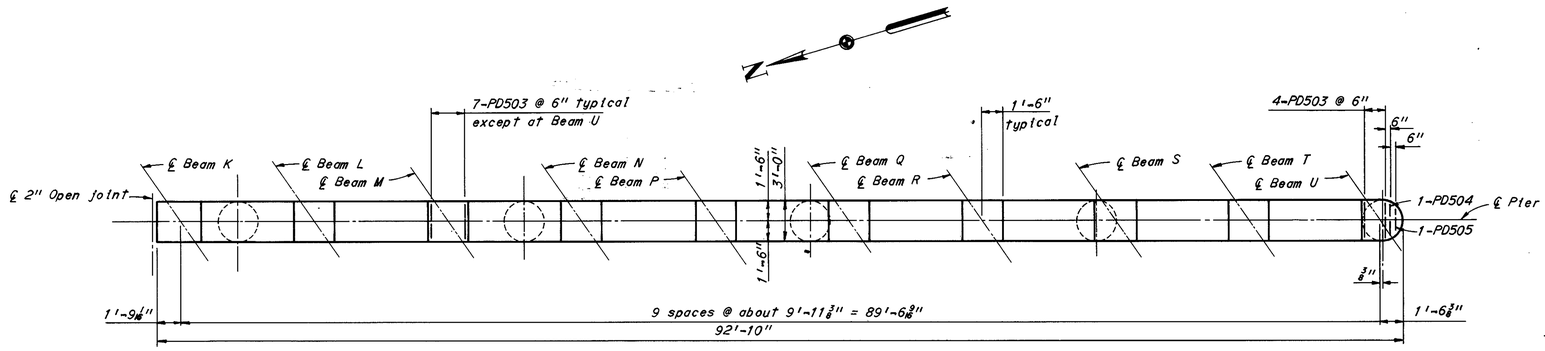

PLAN

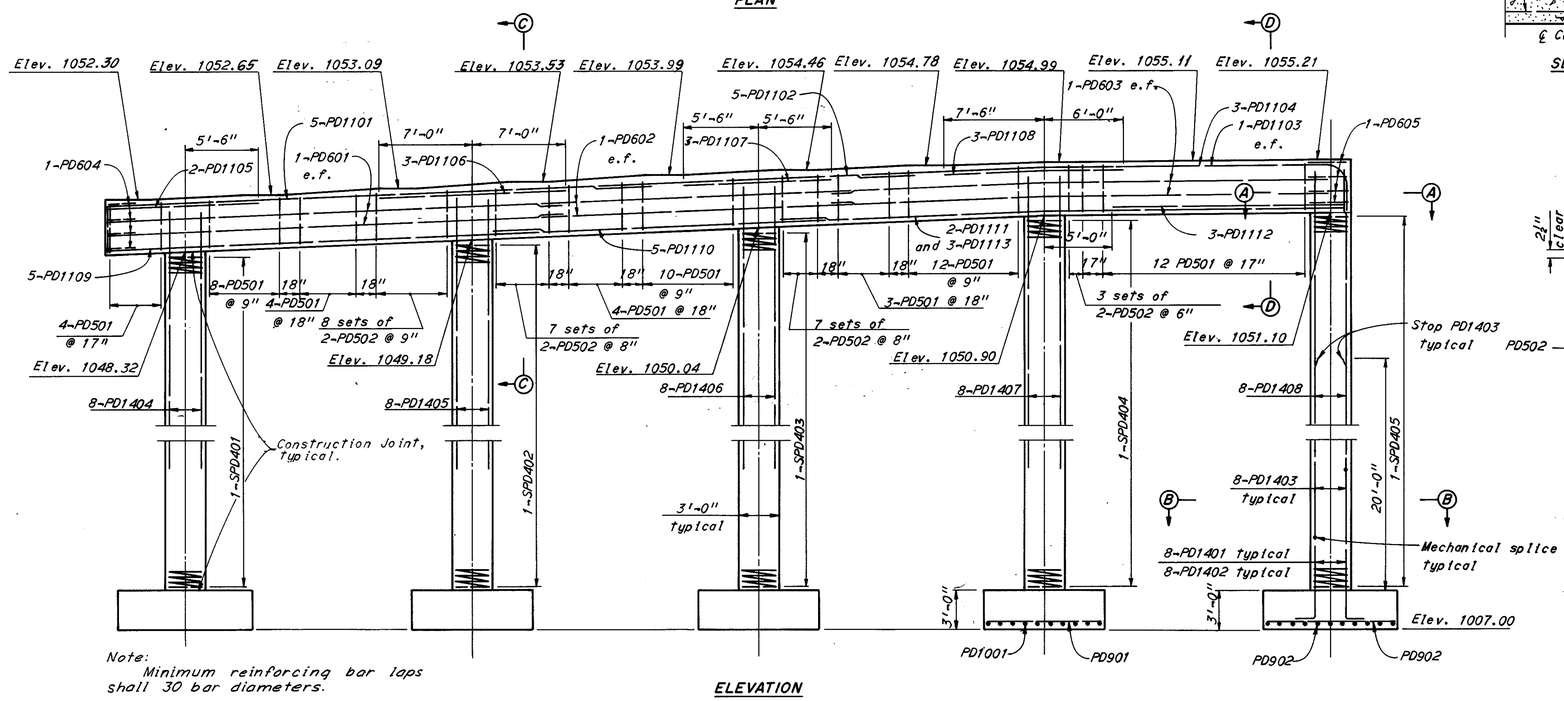

Note:
Minimum reinforcing bar laps shall 30 bar diameters.

ELEVATION

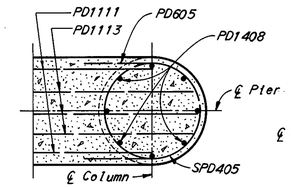

SECTION A-A

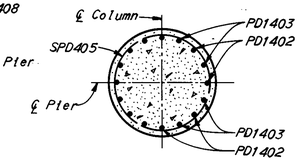

SECTION B-B

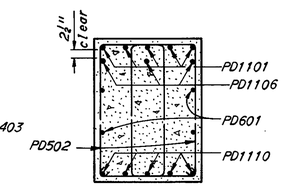

SECTION C-C

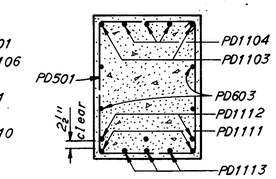

SECTION D-D

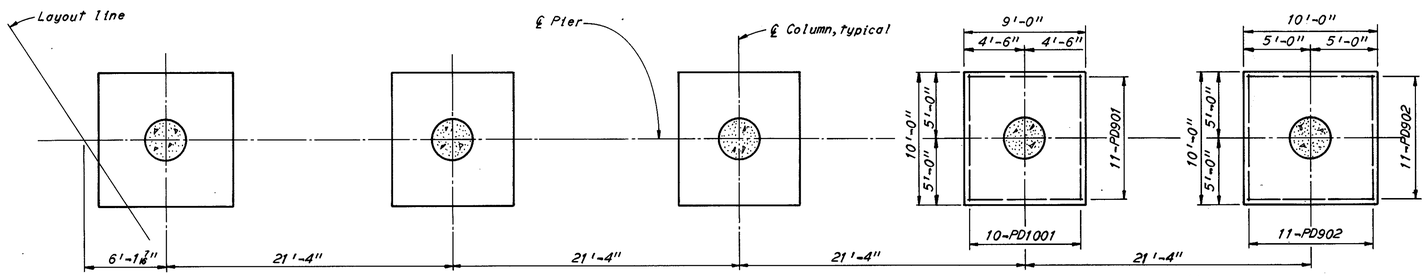

FOOTING PLAN

Notes:

Dimensions and reinforcing shown for exterior footing are typical for both exterior footings. Dimensions and reinforcing shown for interior footing are typical for three interior footings.

PD503, PD504 and PD505 bars shall be placed 2 1/4" ± below top of cap beam.

For reinforcement schedule see Sheet 20/20.

For other notes see Sheet 10/20.

PD1401 bars shall be spliced to PD1403 bars and PD1402 bars shall be spliced to PD1404 thru PD1408 bars.

H.N.T.B. BRIDGE NO. 17 — Revised 2-19-79 — By R.H.W.

HOWARD, NEEDLES, TAMMEN & BERGENDOFF — 11/20
CONSULTING ENGINEERS
KANSAS CITY CLEVELAND NEW YORK

PIER 2S

U.S. 30, RAMP E-C AND RAMP C-E
OVER N.&W. R.R.

BR. NO. STA-30-15 81 — STA. 1009+ 66.11
SCALE: 3/16" = 1'-0" — STA. 1011+ 50.60

RELOCATED U.S. 30

CANTON — STARK COUNTY — OHIO

DRAWN CAC	TRACED	CHECKED OPK	REVIEWED HJK	REVISED
DATE 6-3-70	DATE	DATE 7-30-70	DATE 11-22-71	1668

MICROFILMED
MICROFILMED
FEB 15 1985
FEB 14 1985

FED. ROAD DIV. NO.	STATE	FEDERAL AID PROJECT NO.	TYPE FUNDS
2	OHIO		

211
328

STARK COUNTY
STA-30-15.66

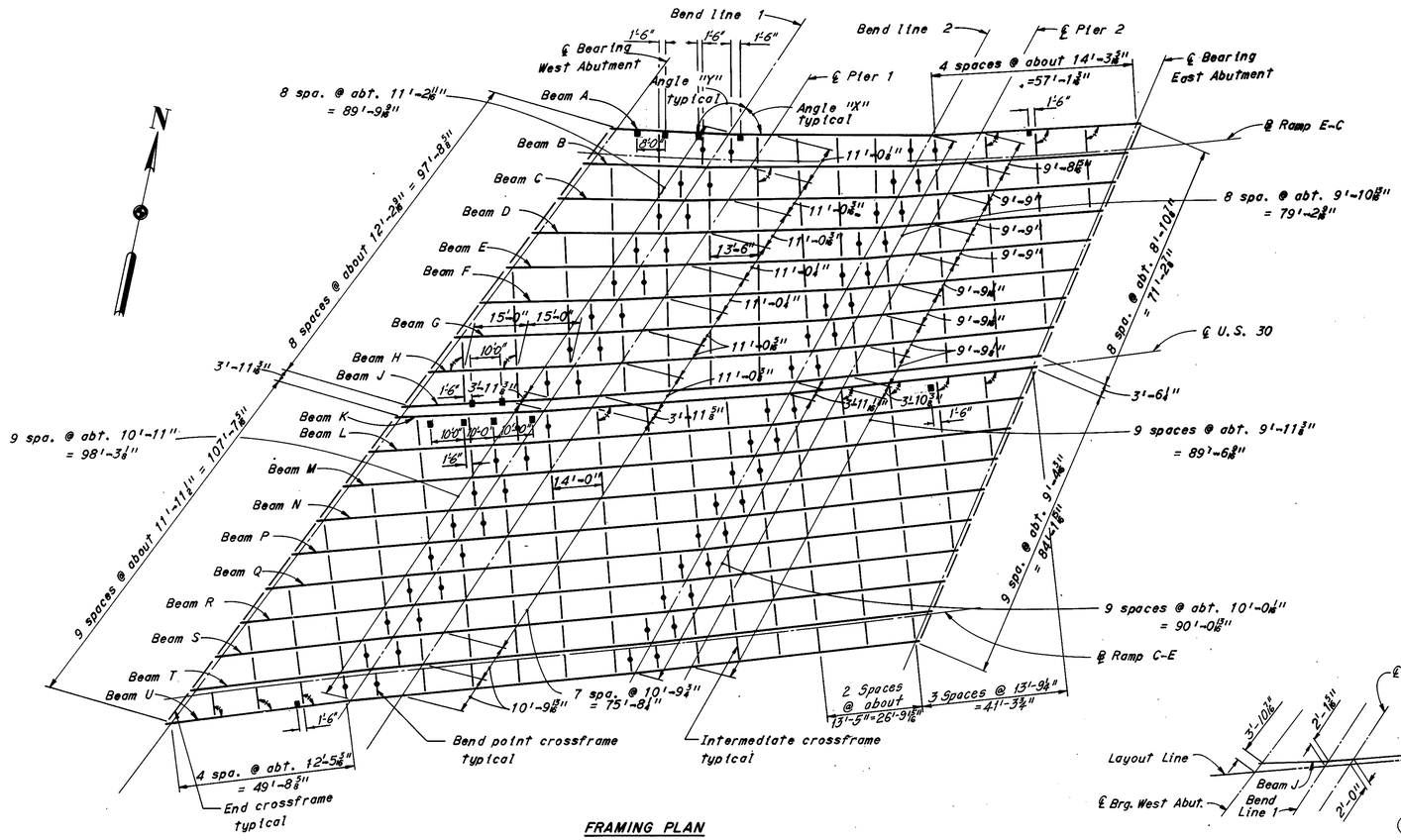

FRAMING PLAN

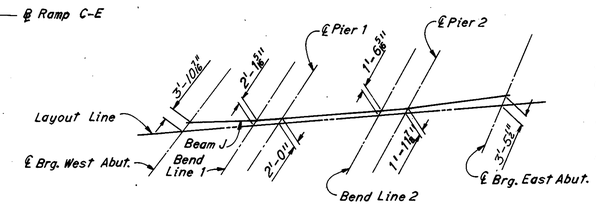

LAYOUT SKETCH

Notes:

For details of roadway end dam, see Ohio Standard Drawing SD-1-69, Sheets 1 and 2 of 4, and Sheet CD5.

For end crossframe details see Ohio Standard Drawing SD-1-69, Sheet 1 of 4.

For field splice details see Sheet CD4.

For intermediate crossframe details see Sheets 14/20 and 15/20.

Dimensions to scuppers are measured along centerline of beam.

For moment plate details see Ohio Standard Drawing SD-1-69, Sheet 3 of 4.

For bend point crossframe details see Sheets 14/20 and 15/20.

—•— Denotes bend point crossframe.

Set bend point crossframes normal to beam near the bend point.

For Camber and Deflection Tables see Sheet 17/20.

F.S. denotes field splice.

▮ Denotes standard scupper.

For details of standard scupper see Ohio Standard Drawing SD-1-69, Sheet 3 of 4.

⟩ Denotes 90°00'00.0".

For details of rockers and bolsters see Ohio Standard Drawing RB-1-55. For shoes with notation M omit the 1/4" side plates on the top bearing plate.

For detail of modified support angle at end dam see Sheet CD5.

For details of curb plates at concrete bridge railing see Ohio Standard Drawing SD-1-69, Sheet 2 of 4.

The allowance to be made in screed settings to compensate for dead load deflections due to concrete and wearing course shall be made above or below the top of pavement elevations as required. Screeds may require further adjustment due to irregularities of the fabricated steel.

BEAM ANGLES "X" AND "Y"

BEAM	WEST ABUTMENT	BEND LINE 1		PIER 1	BEND LINE 2		PIER 2	EAST ABUTMENT
	X	Y	X	X	Y	X	X	Y
A	56°00'51.9"	120°52'57.0"	56°28'56.0"	56°50'19.2"	118°40'57.8"	57°46'22.6"	58°10'08.4"	116°30'56.5"
B	55°08'41.9"	121°45'07.0"	55°49'40.9"	56°11'04.1"	119°20'12.9"	57°22'46.9"	57°46'32.7"	116°54'32.2"
C	54°19'51.5"	122°33'57.4"	55°12'19.5"	55°33'42.7"	119°57'34.3"	57°00'12.2"	57°23'58.0"	117°17'06.9"
D	53°34'03.1"	123°19'45.8"	54°36'44.0"	54°58'07.2"	120°33'09.8"	56°38'34.8"	57°02'20.6"	117°38'44.3"
E	52°51'01.2"	124°02'47.7"	54°02'47.6"	54°24'10.8"	121°07'06.2"	56°17'51.1"	56°41'36.9"	117°59'28.0"
F	52°10'32.0"	124°43'16.9"	53°30'24.0"	53°51'47.2"	121°39'29.8"	55°57'58.0"	56°21'43.8"	118°19'21.1"
G	51°32'22.7"	125°21'26.2"	52°59'27.2"	53°20'50.4"	122°10'26.6"	55°38'52.5"	56°02'38.3"	118°38'26.6"
H	50°56'22.3"	125°57'26.6"	52°29'51.8"	52°51'15.0"	122°40'02.0"	55°20'31.9"	55°44'17.7"	118°56'47.2"
J	50°22'20.6"	126°31'28.3"	52°01'32.9"	52°22.56.1"	123°08'20.9"	55°02'53.6"	55°26'39.4"	119°14'25.5"
K	50°34'47.9"	126°19'01.0"	52°10'07.2"	52°31'30.4"	122°59'46.6"	54°55'53.9"	55°19'39.7"	119°21'25.2"
L	49°58'26.8"	126°55'22.1"	51°58'56.8"	52°20'20.0"	123°10'57.0"	54°53'55.6"	55°17'41.4"	119°23'23.5"
M	49°24'01.3"	127°29'47.6"	51°48'09.7"	52°09'32.9"	123°21'44.1"	54°52'01.1"	55°15'46.9"	119°25'18.0"
N	48°51'22.7"	128°02'26.2"	51°37'44.6"	51°59'07.8"	123°32'09.2"	54°50'10.3"	55°13'56.1"	119°27'08.8"
P	48°20'23.4"	128°33'25.5"	51°27'40.5"	51°49'03.7"	123°42'13.3"	54°48'23.1"	55°12'08.9"	119°28'56.0"
Q	47°50'56.2"	129°02'52.7"	51°17'56.3"	51°39'19.5"	123°51'57.5"	54°46'39.1"	55°10'24.9"	119°30'40.0"
R	47°22'54.7"	129°30'54.2"	51°08'31.1"	51°29'54.3"	124°01'22.7"	54°44'58.3"	55°08'44.1"	119°32'20.8"
S	46°56'13.1"	129°57'35.8"	50°59'24.0"	51°20'47.2"	124°10'29.8"	54°43'20.6"	55°07'06.4"	119°33'58.5"
T	46°30'45.9"	130°23'03.0"	50°50'34.1"	51°11'57.3"	124°19'19.7"	54°41'45.7"	55°05'31.5"	119°35'33.4"
U	46°06'28.2"	130°47'20.7"	50°42'00.7"	51°03'23.9"	124°27'53.1"	54°40'13.7"	55°03'59.5"	119°37'05.4"

SHOES

	Beams B thru H and L thru T	Beams A, J, K and U
WEST ABUTMENT	*R-100	R-100M
PIER 1	B-200	B-200M
PIER 2	R-200	R-200M
EAST ABUTMENT	R-100	R-100M

* Shoes shall be R-100M for Beams L and T.

MICROFILMED
FEB 15 1985

H.N.T.B. BRIDGE NO. 17 | Revised 2-19-79 | By R.H.W.

HOWARD, NEEDLES, TAMMEN & BERGENDOFF 12/20
CONSULTING ENGINEERS
KANSAS CITY CLEVELAND NEW YORK

FRAMING PLAN

U.S. 30, RAMP E-C AND RAMP C-E
OVER N.&W. R.R.

BR. NO. STA-30-15.81 STA. 1009+66.11
SCALE: 1" = 20'-0" STA. 1011+50.60

RELOCATED U.S. 30

CANTON STARK COUNTY OHIO

DRAWN CAC	TRACED	CHECKED OPK	REVIEWED MJR	REVISED
DATE 3-26-70	DATE	DATE 8-18-70	DATE 11-22-71	1668

FED. ROAD DIV. NO.	STATE	FEDERAL AID PROJECT NO.	TYPE FUNDS
2	OHIO		

212 / 328

STARK COUNTY
STA-30-15,66

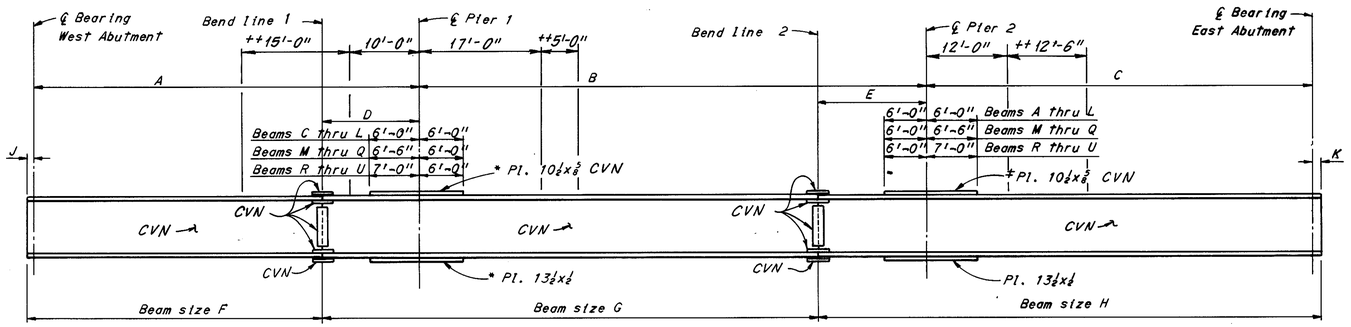

CVN - see Sheet GN1/ .

BEAM ELEVATION

* No cover Plate for Beams A and B.
‡ Use 8x⅝ plate for Beam A.
++ Denotes the range where welded attachments can not be made to the top flange of Beam J. For Beams A, K and U there is no limitation to welded attachments.

GUTTERLINE ELEVATIONS AT TOP OF PORTLAND CEMENT CONCRETE *

	WEST ABUTMENT	0.25	0.50	0.75	PIER 1	0.25	0.50	0.75	PIER 2	0.25	0.50	0.75	EAST ABUTMENT
NORTH GUTTERLINE	1052.08	1052.36	1052.63	1052.90	1053.16	1053.51	1053.85	1054.14	1054.41	1054.61	1054.80	1054.98	1055.14
NORTH GUTTERLINE OF MEDIAN	1056.17	1056.35	1056.51	1056.65	1056.79	1056.99	1057.19	1057.33	1057.47	1057.59	1057.70	1057.80	1057.89
SOUTH GUTTERLINE OF MEDIAN	1056.15	1056.33	1056.49	1056.63	1056.77	1056.98	1057.17	1057.32	1057.46	1057.58	1057.69	1057.79	1057.88
SOUTH GUTTERLINE	1058.31	1058.65	1058.96	1059.22	1059.46	1059.76	1060.00	1060.20	1060.39	1060.56	1060.72	1060.84	1060.91

Note: The gutterline elevations shown have been adjusted for dead load deflections due to the weight of the concrete and wearing course and are the elevations required before the concrete deck is placed.

BEAM DIMENSIONS

BEAM	A	B	C	D	E	F	G	H	J	K
A	43'-9 1/8"	59'-2 9/16"	44'-1 1/4"	12'-2 3/16"	13'-11 15/16"	36 WF 135	36 WF 150	36 WF 135	10 5/8"	10 1/4"
B	45'-0 1/4"	60'-7"	45'-3 1/4"	12'-4 11/16"	14'-1 3/8"	36 WF 135	↑	↑	10 5/8"	10 1/4"
C	46'-3 1/4"	62'-0 1/4"	46'-5 1/4"	12'-6 13/16"	14'-3 3/8"	36 WF 135	↑	↑	11 1/4"	10 1/4"
D	47'-6 1/4"	63'-5 3/8"	47'-7 3/8"	12'-8 15/16"	14'-5"	36 WF 150	36 WF 150		11 3/8"	10 3/8"
E	48'-9 3/8"	64'-10 3/8"	48'-9 7/8"	12'-11"	14'-6 11/16"	↑	36 WF 160		11 3/8"	10 3/8"
F	50'-0 5/8"	66'-3 11/16"	49'-11 3/8"	13'-1 1/8"	14'-8 3/16"	↑	36 WF 160		11 3/8"	10 1/4"
G	51'-3 13/16"	67'-9"	51'-1 11/16"	13'-3 3/8"	14'-10"	36 WF 150	36 WF 160	36 WF 135	11 1/4"	10 1/4"
H	52'-7 1/4"	69'-2 3/8"	52'-3 13/16"	13'-5 3/8"	14'-11 3/8"	36 WF 160	36 WF 170	36 WF 150	11 3/8"	10 3/8"
J	53'-10 3/8"	70'-7 7/8"	53'-6 1/4"	13'-7 3/8"	15'-1 1/4"	↑	36 WF 170	36 WF 150	11 13/16"	↑
K	54'-0 3/8"	70'-11 7/8"	53'-11 13/16"	13'-7 3/8"	15'-1 7/8"	↓	36 WF 182	36 WF 160	11 5/8"	↓
L	55'-3 3/8"	72'-2 3/8"	55'-0 11/16"	13'-8 3/8"	15'-3"	↓	36 WF 182	↓	11 3/4"	↓
M	56'-6 3/8"	73'-5 3/16"	56'-1 3/8"	13'-10 3/8"	15'-4 11/16"	36 WF 160	36 WF 194	↑	11 3/4"	↑
N	57'-9 5/8"	74'-7 11/16"	57'-2 1/4"	13'-11 3/8"	15'-5 1/8"	36 WF 170	↑	36 WF 160	11 13/16"	↑
P	59'-0 3/8"	75'-10 3/8"	58'-3 13/16"	14'-1 3/8"	15'-6 3/8"	36 WF 170	↑	36 WF 170	1'-0 1/4"	↑
Q	60'-3 7/16"	77'-1"	59'-4 3/8"	14'-2 3/8"	15'-7 3/8"	36 WF 182	↑	36 WF 170	1'-0 1/4"	10 3/8"
R	61'-7 1/16"	78'-3 11/16"	60'-5 1/4"	14'-4"	15'-8 3/8"	36 WF 182	↑	36 WF 182	1'-0 1/4"	10 3/8"
S	62'-10 3/8"	79'-6 3/8"	61'-6 1/4"	14'-5 3/8"	15'-9 7/8"	36 WF 194	↑	↑	1'-0 3/8"	↑
T	64'-1 3/8"	80'-9"	62'-7 1/16"	14'-6 3/8"	15'-10 1/4"	36 WF 194	↓	↓	1'-0 3/8"	↓
U	65'-4 13/16"	81'-11 11/16"	63'-8"	14'-8 3/8"	15'-11 3/8"	36 WF 194	36 WF 194	36 WF 182	1'-0 1/2"	10 3/8"

TOP OF PORTLAND CEMENT CONCRETE ELEVATIONS *

BEAM	WEST ABUTMENT	0.25	0.50	BEND LINE 1	0.75	PIER 1	0.25	0.50	0.75	BEND LINE 2	PIER 2	0.25	0.50	0.75	EAST ABUTMENT
A	1052.08	1052.35	1052.62	1052.87	1052.90	1053.16	1053.50	1053.82	1054.14	1054.16	1054.41	1054.61	1054.80	1054.97	1055.14
B	1052.65	1052.90	1053.16	1053.40	1053.43	1053.67	1054.00	1054.33	1054.65	1054.67	1054.91	1055.09	1055.28	1055.46	1055.64
C	1053.24	1053.48	1053.72	1053.94	1053.96	1054.19	1054.52	1054.84	1055.15	1055.18	1055.41	1055.60	1055.78	1055.96	1056.13
D	1053.86	1054.10	1054.36	1054.59	1054.60	1054.83	1055.13	1055.43	1055.72	1055.75	1055.95	1056.12	1056.28	1056.44	1056.59
E	1054.45	1054.68	1054.91	1055.12	1055.13	1055.33	1055.59	1055.85	1056.28	1056.12	1056.31	1056.46	1056.62	1056.76	1056.90
F	1054.97	1055.18	1055.39	1055.59	1055.60	1055.78	1056.02	1056.26	1056.49	1056.51	1056.68	1056.82	1056.96	1057.10	1057.23
G	1055.52	1055.70	1055.90	1056.08	1056.08	1056.25	1056.46	1056.68	1056.89	1056.91	1057.06	1057.19	1057.31	1057.44	1057.56
H	1056.08	1056.25	1056.42	1056.58	1056.58	1056.73	1056.92	1057.11	1057.30	1057.32	1057.46	1057.57	1057.68	1057.79	1057.90
J	1056.28	1056.45	1056.60	1056.75	1056.75	1056.90	1057.09	1057.26	1057.41	1057.43	1057.57	1057.63	1057.73	1057.83	1057.92
K	1056.16	1056.33	1056.48	1056.64	1056.64	1056.78	1056.97	1057.14	1057.31	1057.33	1057.47	1057.58	1057.68	1057.79	1057.88
L	1056.64	1056.79	1056.94	1057.08	1057.08	1057.20	1057.37	1057.53	1057.69	1057.71	1057.82	1057.91	1058.01	1058.10	1058.19
M	1057.21	1057.35	1057.48	1057.61	1057.61	1057.72	1057.86	1058.00	1058.14	1058.16	1058.25	1058.34	1058.42	1058.50	1058.58
N	1057.78	1057.92	1058.04	1058.16	1058.15	1058.25	1058.37	1058.49	1058.61	1058.63	1058.70	1058.77	1058.84	1058.90	1058.97
P	1058.35	1058.48	1058.60	1058.71	1058.70	1058.79	1058.89	1058.99	1059.08	1059.10	1059.16	1059.21	1059.26	1059.32	1059.37
Q	1058.86	1059.01	1059.15	1059.27	1059.26	1059.34	1059.42	1059.50	1059.57	1059.59	1059.63	1059.66	1059.70	1059.74	1059.78
R	1059.24	1059.39	1059.50	1059.61	1059.61	1059.68	1059.78	1059.86	1059.91	1059.92	1059.96	1059.99	1060.02	1060.06	1060.10
S	1059.08	1059.27	1059.45	1059.62	1059.60	1059.73	1059.87	1059.97	1060.07	1060.09	1060.17	1060.23	1060.28	1060.33	1060.37
T	1058.72	1058.98	1059.22	1059.45	1059.43	1059.62	1059.82	1059.98	1060.14	1060.17	1060.29	1060.41	1060.50	1060.58	1060.65
U	1058.31	1058.64	1058.94	1059.24	1059.21	1059.46	1059.73	1059.97	1060.18	1060.22	1060.39	1060.55	1060.69	1060.82	1060.91

* Profile grade is 1" below top of portland cement. See Note on Sheet 1/20 .

Note:
For notes see Sheet 12/20 .

MICROFILMED
FEB 15 1985

H.N.T.B. BRIDGE NO. 17 — Revised 2-19-79 — By R.H.W.

HOWARD, NEEDLES, TAMMEN & BERGENDOFF — 13/20
CONSULTING ENGINEERS
KANSAS CITY CLEVELAND NEW YORK

BEAM ELEVATION

U.S. 30, RAMP E-C AND RAMP C-E
OVER N.&W. R.R.

BR. NO. STA-30-15.81 — STA. 1009+66.11
SCALE: NONE — STA. 1011+50.60

RELOCATED U.S. 30

CANTON — STARK COUNTY — OHIO

DRAWN CAC	TRACED	CHECKED OPK	REVIEWED MJK	REVISED
DATE 2-17-70	DATE	DATE 11-6-70	DATE 11-22-71	1668

FED. ROAD DIV. NO.	STATE	FEDERAL AID PROJECT NO.	TYPE FUNDS
2	OHIO		

STARK COUNTY
STA-30-15.66

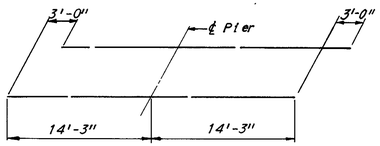

DIAGRAM SHOWING PLACEMENT OF ESA627 BARS OVER PIERS

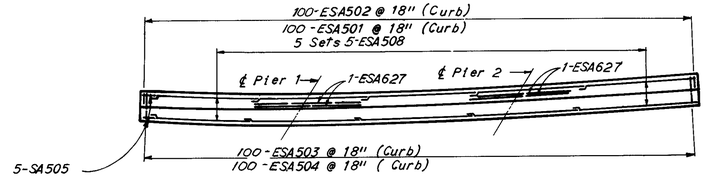

NORTH CURB PLAN

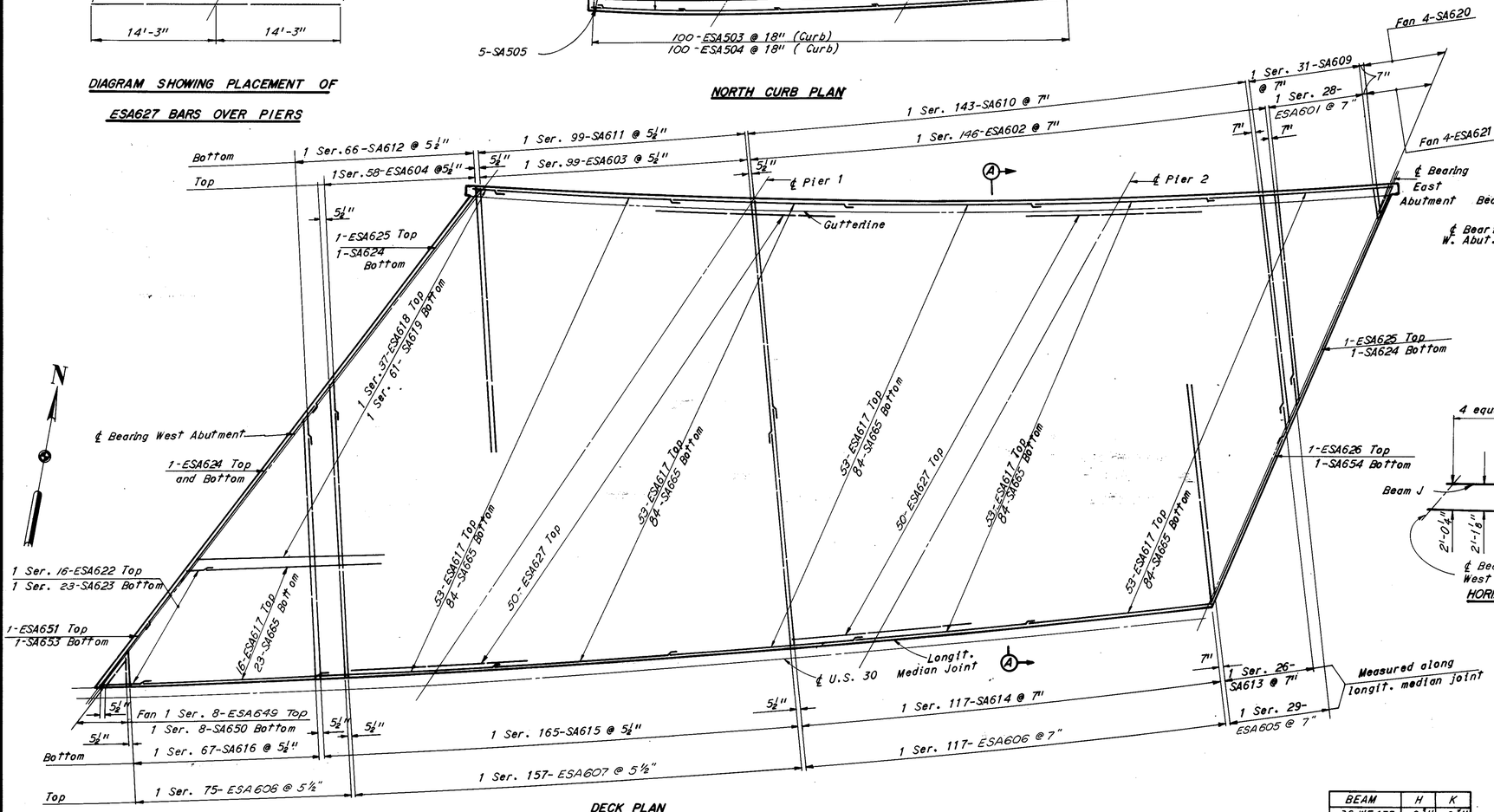

DECK PLAN

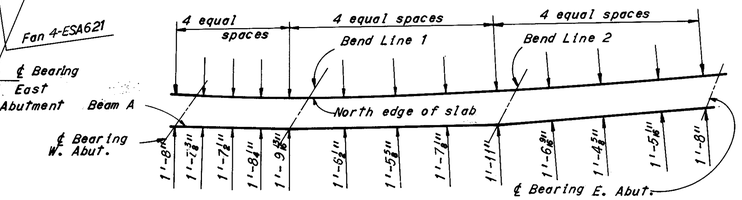

HORIZ. OFFSETS TO NORTH EDGE OF SLAB

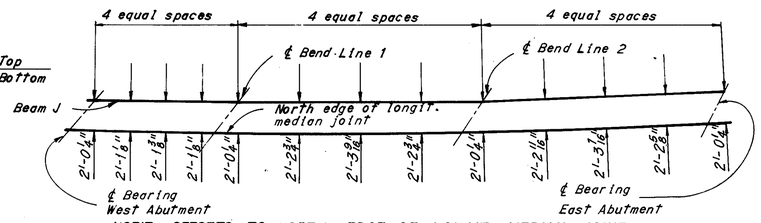

HORIZ. OFFSETS TO NORTH EDGE OF LONGIT. MEDIAN JOINT

Notes:

Transverse reinforcing steel shall be placed radially to ℄ U.S. 30.

Fanned bars at northeast acute corner of slab shall have their outer ends spaced at 7" centers.

Fanned bars at southwest acute corner of slab shall have their outer ends spaced at 5½" centers.

For bars in parapet see Sheet 16/20.

For other notes see Sheet 15/20.

Minimum reinforcing bar laps shall be 30 bar diameters.

BEAM	H	K
36 WF 135	9⅜"	8¾"
36 WF 150	9⅛"	8⅝"
36 WF 160	9"	—

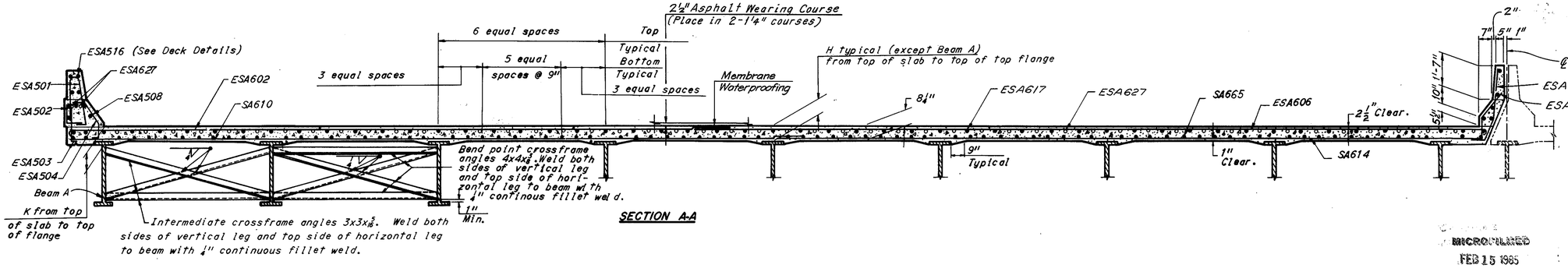

SECTION A-A

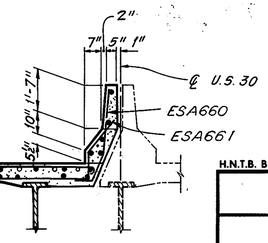

MICROFILMED
FEB 15 1985

H.N.T.B. BRIDGE NO. 17 — Revised 2-19-79 — By R.H.W.

HOWARD, NEEDLES, TAMMEN & BERGENDOFF
CONSULTING ENGINEERS
KANSAS CITY CLEVELAND NEW YORK

14/20

DECK PLAN

U.S. 30, RAMP E-C AND RAMP C-E OVER N.&W. R.R.

BR. NO. STA-30-15 81 — STA. 1009+ 66.11
SCALE: NONE — STA. 1011+ 50.60

RELOCATED U.S. 30

CANTON — STARK COUNTY — OHIO

DRAWN JDA	TRACED	CHECKED OPK	REVIEWED MJK	REVISED
DATE 2/16/70	DATE	DATE 8-25-70	DATE 11-22-71	1668

FED. ROAD DIV. NO.	STATE	FEDERAL AID PROJECT NO.	TYPE FUNDS
2	OHIO		

214 / 328

STARK COUNTY
STA-30-15.66

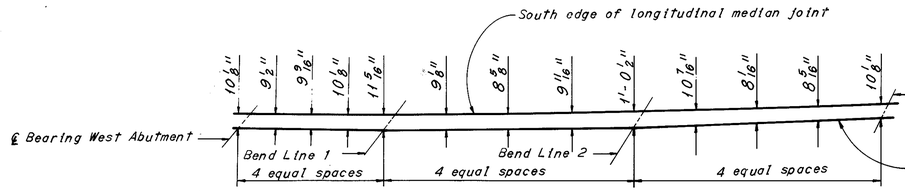

HORIZ. OFFSETS TO SOUTH EDGE OF LONGIT. MEDIAN JOINT

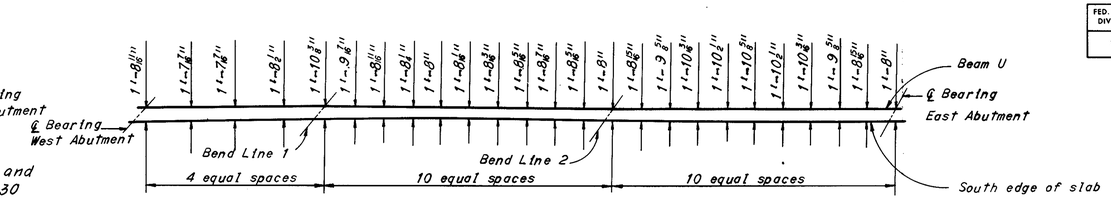

HORIZ. OFFSETS TO SOUTH EDGE OF SLAB

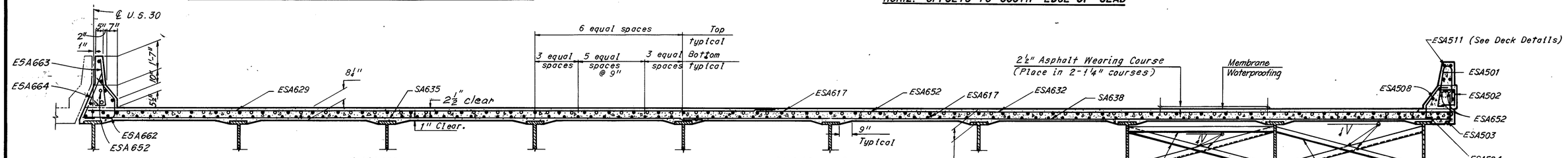

Deck Slab Depth: The distance shown from top of deck slab to top of steel beam is the design dimension. The quantity of deck concrete to be paid for shall be based on this dimension, even though deviation from it may be necessary because the top flange of the beam may not have the exact camber or conformation required to place it parallel to the finished grade.

Note:
For placement of Median Reinforcement see Section A-A Sheet 253, and Section B-B, this sheet.

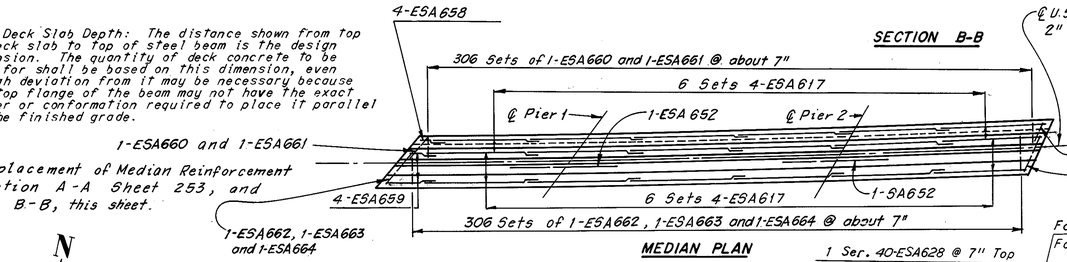

SECTION B-B

BEAM	H
36 WF 160	9"
36 WF 170	8 7/8"
36 WF 182	8 15/16"
36 WF 194	8 3/4"

MEDIAN PLAN

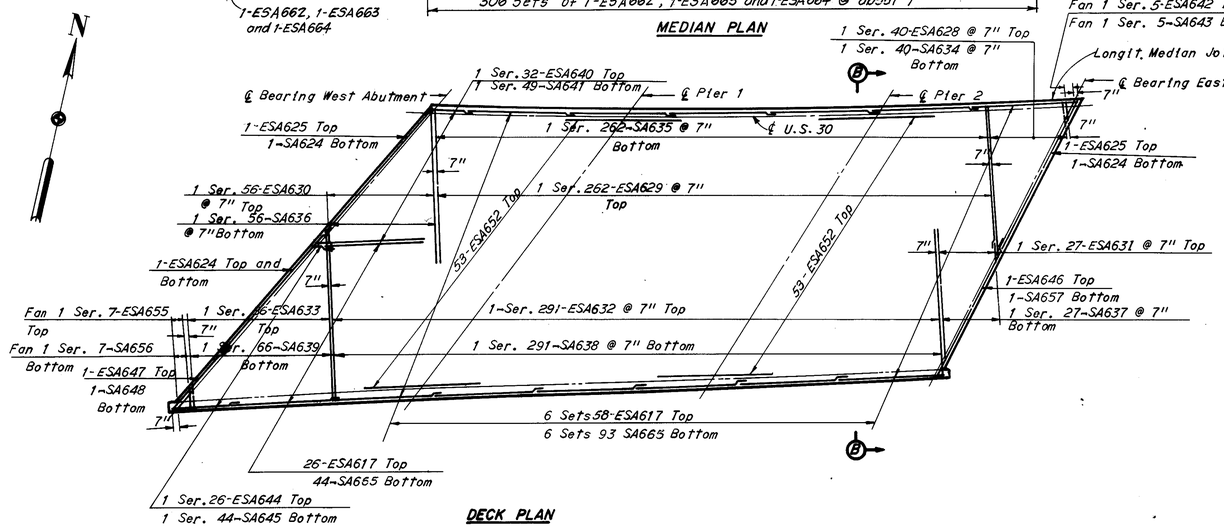

DECK PLAN

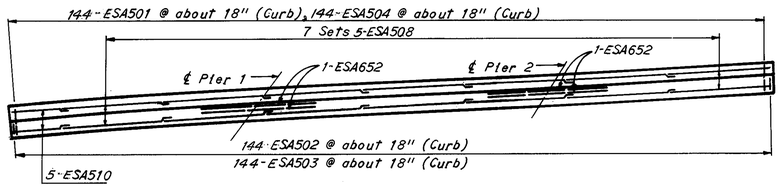

SOUTH CURB PLAN

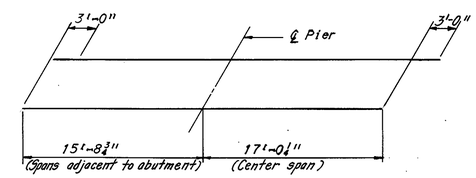

DIAGRAM SHOWING PLACEMENT OF ESA652 BARS OVER PIERS

Notes:
Reinforcing steel shall be adjusted as required to clear scuppers.

A typical haunch width of 9" shall be used for computing quantity of concrete. However, the haunch width may vary between 6" and 12" provided that the slope shall be not more than 1:4 for a haunch less than 9" in width.

For concrete railing details see Sheet CD2.
For deflection joint details see Sheet CD2.
For median and railing details see Sheet CD5.
For curb and parapet dimensions see Sheet CD5.
Transverse reinforcing steel shall be placed radially to South Fascia.
Fanned bars at acute corners of slab shall have their outer ends spaced at 7" centers.
For superelevation transition scheme see Sheet 16/20.
For reinforcement schedule see Sheet 20/20.
For bars in parapet see Sheet 16/20.
Minimum reinforcing bar laps shall be 30 bar diameters.

MICROFILMED
FEB 15 1985

H.N.T.B. BRIDGE NO. 17 — Revised 2-19-79 By R.H.W.

HOWARD, NEEDLES, TAMMEN & BERGENDOFF
CONSULTING ENGINEERS
KANSAS CITY CLEVELAND NEW YORK

15/20

DECK PLAN

U.S. 30, RAMP E-C AND RAMP C-E
OVER N.&W. R.R.

BR. NO. STA-30-15.81 — STA. 1009+66.11
SCALE: NONE — STA. 1011+50.60

RELOCATED U.S. 30

CANTON — STARK COUNTY — OHIO

DRAWN J.D.A.	TRACED	CHECKED DPK	REVIEWED MJK	REVISED
DATE 2/10/70	DATE	DATE 8-27-70	DATE 11-23-71	1668

FED. ROAD DIV. NO.	STATE	FEDERAL AID PROJECT NO.	TYPE FUNDS
2	OHIO		

215 / 328

STARK COUNTY
STA-30-15.66

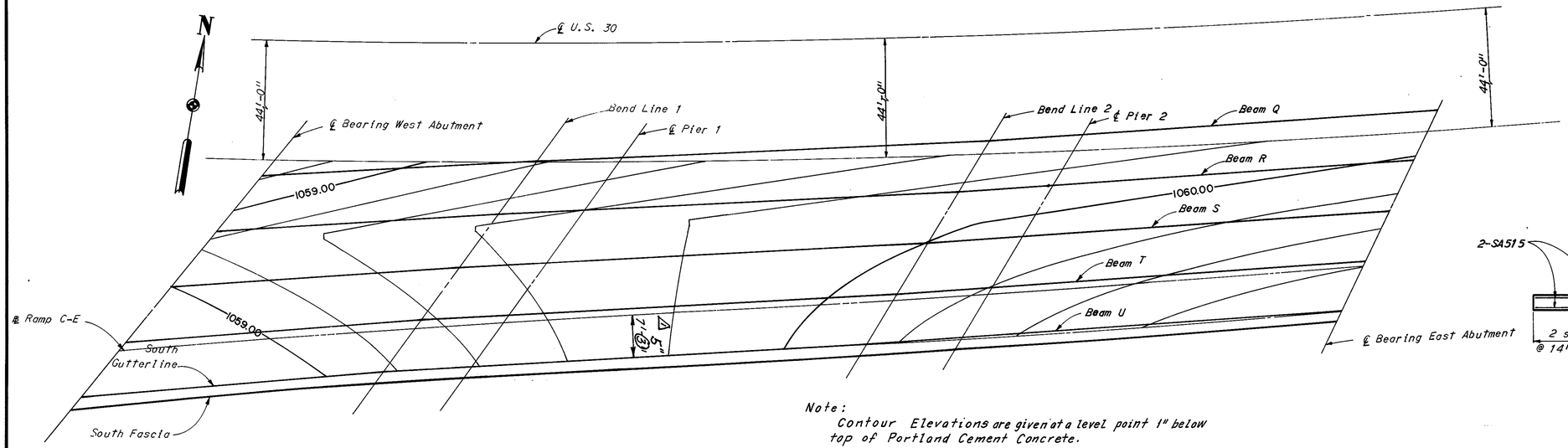

Note:
Contour Elevations are given at a level point 1" below top of Portland Cement Concrete.

CONTOUR PLAN

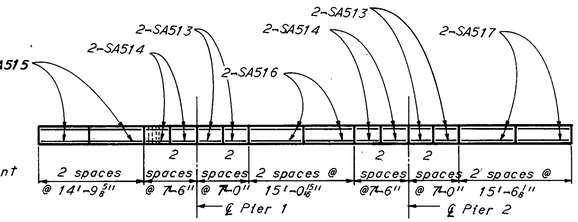

NORTH PARAPET ELEVATION
Measured along North Gutterline

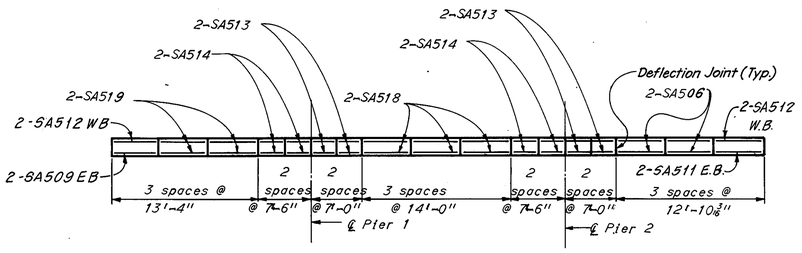

MEDIAN ELEVATION
Measured along ℄ U.S. 30

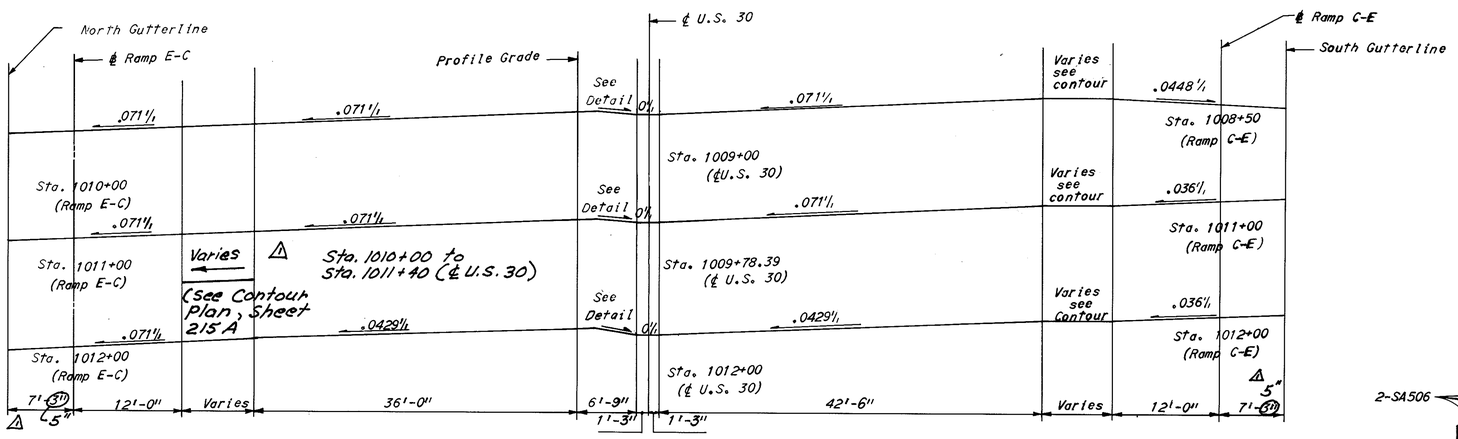

SUPERELEVATION TRANSITION SCHEME

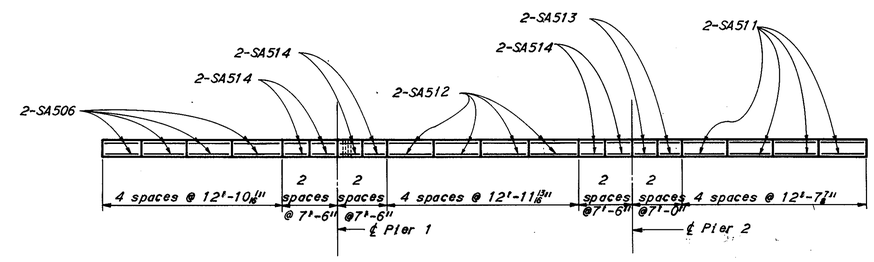

SOUTH PARAPET ELEVATION
Measured along South Gutterline

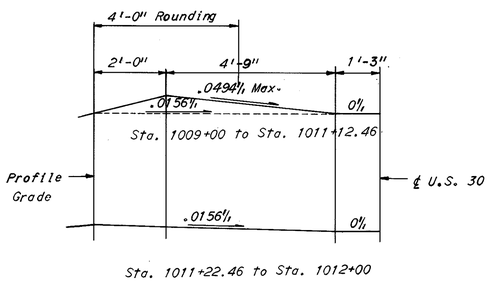

LOW SIDE MEDIAN SHOULDER DETAIL

Note:
For deflection joint details see Sheet CD2.
E.B. Denotes Eastbound
W.B. Denotes Westbound

MICROFILMED
FEB 15 1985

Δ Revised 8-23-82

H.N.T.B. BRIDGE NO. 17 — Revised 2-19-79 By R.H.W. — 16/20

HOWARD, NEEDLES, TAMMEN & BERGENDOFF
CONSULTING ENGINEERS
KANSAS CITY CLEVELAND NEW YORK

DECK DETAILS

U.S. 30, RAMP E-C AND RAMP C-E
OVER N.&W. R.R.

BR. NO. STA-30-15 81 — STA. 1009+ 66.11
SCALE: NONE — STA. 1011+ 50.60

RELOCATED U.S. 30

CANTON — STARK COUNTY — OHIO

DRAWN L.D.A.	TRACED	CHECKED O.D.K.	REVIEWED M.J.K.	REVISED
DATE 8/30/70	DATE	DATE 9-4-70	DATE 11-22-71	1668

FED. ROAD DIV. NO.	STATE	FEDERAL AID PROJECT NO.	TYPE FUNDS
2	OHIO		

215A
328

STARK COUNTY
STA-30-15.66

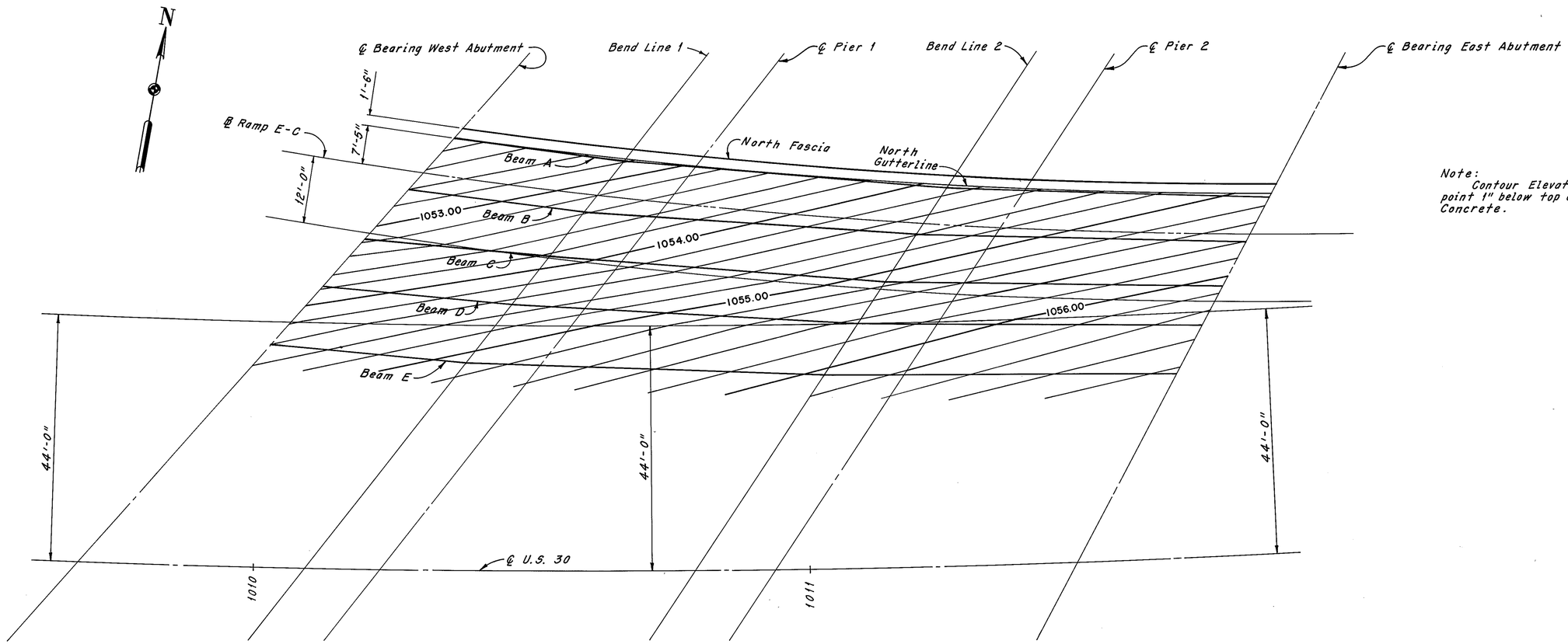

Note:
Contour Elevations are given at a level point 1" below top of Portland Cement Concrete.

CONTOUR PLAN

MICROFILMED
FEB 15 1985

H.N.T.B. BRIDGE NO. 17

HOWARD, NEEDLES, TAMMEN & BERGENDOFF 16A/20
CONSULTING ENGINEERS
KANSAS CITY CLEVELAND NEW YORK

CONTOUR PLAN

U.S. 30, RAMP E-C AND RAMP C-E
OVER N.&W. R.R.
BR. NO. STA-30-1581 STA. 1009+66.11
SCALE: NONE STA. 1011+50.60

RELOCATED U.S. 30

CANTON STARK COUNTY OHIO

DRAWN C.K.B.	TRACED C.P.	CHECKED W.E.B.	REVIEWED C.A.B.	REVISED
DATE 7-25-82	DATE 8-2-82	DATE 7-27-82	DATE 8-2-82	1668

Sheet added 8-23-82

FED. ROAD DIV. NO.	STATE	FEDERAL AID PROJECT NO.	TYPE FUNDS
2	OHIO		

216
328

STARK COUNTY
STA-30-15,66

BRIDGE 1581 DEFLECTION AND CAMBER

		West Abut.	.25	.50	FS	Pier 1	.25	.50	FS	Pier 2	.25	.50	.75	East Abut.
Beam A	1	0	0	0	0	0	0	1/16	0	0	0	0	0	0
	2		1/8	1/8	1/16	0	5/16	1/4	3/16	0	1/16	1/8	1/8	
	3		0	0	1/8	0	1/8	1/2	9/16	0	3/16	1/4	3/16	
	4		1/8	1/8	3/16	0	9/16	13/16	3/4	0	1/4	3/8	5/16	
	5					1 15/16				2 1/4				
Beam B	1		0	0	0	0	0	1/16	0	0	0	0	0	
	2		3/16	3/16	1/16	0	3/16	5/16	3/16	0	1/16	1/8	1/8	
	3		-1/16	0	1/8	0	1/4	1/2	5/8	0	1/16	1/16	1/16	
	4		1/8	3/16	3/16	0	7/16	7/8	13/16	0	1/8	3/16	3/16	
	5					1 9/16				2				
Beam C	1		0	0	0	0	1/16	1/16	1/16	0	0	0	0	
	2		3/16	3/16	1/8	0	3/16	5/16	3/16	0	1/16	3/16	1/8	
	3		1/16	1/16	1/16	0	1/4	1/2	3/16	0	1/16	1/16	1/16	
	4		1/4	1/4	3/16	0	1/2	7/8	13/16	0	1/8	1/4	3/16	
	5					1 1/16				1 3/4				
Beam D	1		0	0	0	0	1/16	1/16	1/16	0	0	0	0	
	2		3/16	3/16	1/8	0	3/16	3/8	3/16	0	1/16	3/16	3/16	
	3		-1/16	1/16	1/16	0	1/4	1/2	5/8	0	1/16	1/8	1/16	
	4		1/8	3/8	5/16	0	1/2	15/16	7/8	0	1/8	5/16	1/4	
	5					1 15/16				2 3/8				
Beam E	1		0	1/16	0	0	1/16	1/16	1/16	0	0	0	0	
	2		3/16	5/16	1/8	0	3/16	3/8	5/16	0	1/16	1/16	3/16	
	3		1/8	1/16	1/4	0	3/16	5/16	7/16	0	1/16	1/8	1/16	
	4		5/16	7/16	3/8	0	7/16	3/4	11/16	0	1/8	9/16	1/4	
	5					1 3/4				1 3/4				
Beam F	1		0	1/16	0	0	1/16	1/16	1/16	0	0	0	0	
	2		3/16	3/16	1/8	0	3/16	7/16	3/16	0	1/16	3/16	5/16	
	3		1/8	1/16	1/4	0	3/16	3/8	1/8	0	1/16	1/8	1/16	
	4		5/16	7/16	3/8	0	7/16	13/16	5/8	0	1/8	5/16	1/4	
	5					1 9/16				1 9/16				
Beam G	1		1/16	1/16	0	0	1/16	1/16	1/16	0	0	1/16	0	
	2		3/16	3/16	1/8	0	1/4	1/2	3/16	0	1/16	3/16	3/16	
	3		1/16	1/8	3/16	0	1/8	1/4	5/16	0	1/16	1/16	1/16	
	4		5/16	3/8	3/16	0	7/16	3/4	9/16	0	1/8	5/16	1/4	
	5					1 3/8				1 3/8				
Beam H	1		1/16	1/16	0	0	1/16	1/16	1/16	0	0	1/16	0	
	2		3/16	3/16	1/8	0	1/4	1/2	1/4	0	1/16	3/16	3/16	
	3		1/16	1/8	1/16	0	1/8	1/4	1/16	0	1/16	1/16	1/16	
	4		5/16	3/8	3/16	0	7/16	13/16	5/8	0	1/8	7/16	1/4	
	5					1 1/4				1 1/4				
Beam J	1		0	0	0	0	1/16	1/16	0	0	0	0	0	
	2		3/16	3/16	1/16	0	3/16	3/8	3/16	0	1/16	3/16	3/16	
	3		1/8	1/8	1/16	0	1/4	1/4	1/8	0	1/8	3/16	1/8	
	4		5/16	5/16	1/8	0	1/2	11/16	5/16	0	3/16	3/8	5/16	
	5					1 1/2				1 3/4				
Beam K	1		1/16	1/16	0	0	1/16	1/16	1/16	0	0	1/16	1/16	
	2		1/8	3/16	1/16	0	3/16	3/8	3/16	0	1/8	3/16	1/8	
	3		1/8	1/8	1/8	0	3/16	1/4	3/16	0	1/8	1/8	1/8	
	4		5/16	3/8	3/16	0	7/16	11/16	7/16	0	1/4	3/8	5/16	
	5	0				1 1/4				1 1/4				0

		West Abut.	.25	.50	FS	Pier 1	.25	.50	FS	Pier 2	.25	.50	.75	East Abut.
Beam L	1	0	1/16	1/16	0	0	1/16	1/8	1/16	0	0	1/16	1/16	0
	2		3/16	1/4	1/8	0	1/4	1/2	1/4	0	1/8	1/4	3/16	
	3		1/8	1/16	3/16	0	1/8	1/16	3/16	0	0	0	0	
	4		3/8	1/2	5/16	0	7/16	3/4	5/8	0	1/8	5/16	1/4	
	5					1 1/16				1 1/8				
Beam M	1		1/16	1/16	0	0	1/16	1/8	1/16	0	0	1/16	1/16	
	2		1/4	1/8	1/8	0	5/16	1/2	1/4	0	1/8	1/4	1/4	
	3		1/8	1/4	1/4	0	1/8	3/16	1/4	0	0	0	0	
	4		7/16	9/16	3/8	0	1/2	13/16	9/16	0	1/8	5/16	5/16	
	5					1 1/16				1 1/16				
Beam N	1		1/16	1/16	0	0	1/16	1/8	1/16	0	0	1/16	1/16	
	2		1/4	5/16	1/8	0	5/16	1/2	1/4	0	1/8	5/16	1/4	
	3		3/16	5/16	1/4	0	1/16	1/8	1/4	0	0	0	0	
	4		1/2	11/16	3/8	0	7/16	3/4	9/16	0	1/8	3/8	5/16	
	5					1 1/4				1 1/16				
Beam P	1		1/16	1/16	0	0	1/16	1/8	1/16	0	0	1/16	1/16	
	2		1/4	1/16	1/8	0	5/16	1/2	1/4	0	3/16	5/16	1/4	
	3		1/4	3/8	1/4	0	1/16	1/8	3/16	0	0	0	0	
	4		9/16	3/4	3/8	0	7/16	3/4	1/2	0	3/16	3/8	5/16	
	5					1 9/16				1 1/8				
Beam Q	1		1/16	1/16	0	0	1/16	1/8	1/16	0	0	1/16	1/16	
	2		5/16	5/16	1/8	0	5/16	9/16	1/4	0	3/16	5/16	1/4	
	3		3/8	9/16	7/16	0	1/8	1/8	3/16	0	0	0	0	
	4		3/4	15/16	1/2	0	2	13/16	1/2	0	3/16	3/8	5/16	
	5					2 7/16				1 1/2				
Beam R	1		1/16	1/16	0	0	1/16	1/8	1/16	0	0	1/16	1/16	
	2		5/16	3/8	3/16	0	5/16	9/16	1/4	0	3/16	5/16	5/16	
	3		1/2	1/2	1/8	0	3/8	1/2	1/4	0	-1/16	-1/8	-1/16	
	4		7/8	15/16	11/16	0	3/4	1 3/16	9/16	0	1/8	5/16	5/16	
	5					2 1/8				1 7/16				
Beam S	1		1/16	1/16	0	0	1/16	1/8	1/16	0	0	1/16	1/16	
	2		3/16	3/8	1/16	0	7/16	9/16	1/4	0	3/16	3/8	5/16	
	3		3/8	9/16	7/16	0	1/4	3/16	1/8	0	1/8	1/8	1/16	
	4		3/4	1	5/8	0	5/8	7/8	7/16	0	5/16	9/16	7/16	
	5					3 1/8				2 1/4				
Beam T	1		1/16	1/16	0	0	1/16	1/8	1/16	0	0	1/16	1/16	
	2		3/8	7/16	3/16	0	3/8	5/8	1/4	0	3/16	3/8	5/16	
	3		7/16	9/16	1/8	0	1/2	3/8	1/8	0	3/16	3/8	1/4	
	4		7/8	1 1/16	5/8	0	13/16	1 1/16	1/2	0	1/2	13/16	5/8	
	5					3 5/8				2 3/4				
Beam U	1		1/16	1/16	0	0	1/16	1/16	1/16	0	0	1/16	1/16	
	2		1/4	5/16	1/8	0	1/4	1/2	3/16	0	3/16	5/16	1/4	
	3		1/2	5/8	1/2	0	1/2	1/2	1/4	0	3/16	1/2	7/16	
	4		13/16	1	5/8	0	13/16	1 1/16	1/2	0	9/16	7/8	3/4	
	5	0				4 1/8				3 1/8				0

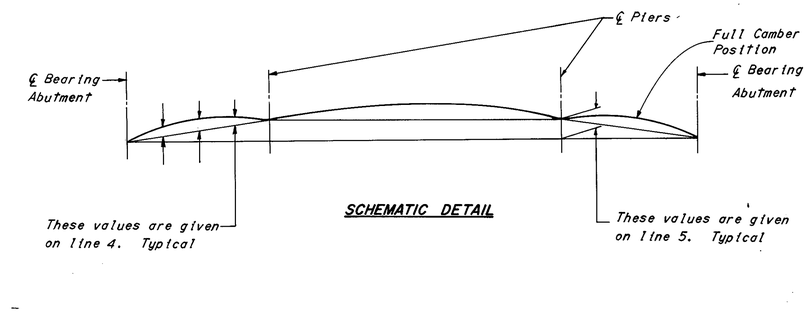

SCHEMATIC DETAIL

Notes:
Line 1 Deflections due to the weight of steel.
Line 2. Deflections due to the remaining dead load.
Line 3. Adjustment required for vertical curve.
Line 4. Required shop camber.
Line 5. Vertical offsets.
Values given in the table are to nearest 1/16 inch.
Negative deflection indicates upward deflection.
FS indicates field splice.

MICROFILMED
FEB 15 1985

H.N.T.B. BRIDGE NO. 17 — Revised 2-19-79 By R.H.W. — 17/20

HOWARD, NEEDLES, TAMMEN & BERGENDOFF
CONSULTING ENGINEERS
KANSAS CITY CLEVELAND NEW YORK

DEFLECTION AND CAMBER

U.S. 30, RAMP E-C AND RAMP C-E
OVER N.&W. R.R.

BR. NO. STA-30-15 81 — STA. 1009+66.11
SCALE: NONE — STA. 1011+50.60

RELOCATED U.S. 30

CANTON — STARK COUNTY — OHIO

DRAWN J.D.A.	TRACED	CHECKED CAC	REVIEWED MJK	REVISED
DATE 6/8/70	DATE	DATE 6-25-70	DATE 11-22-71	1668

FED ROAD DIV NO	STATE	FEDERAL AID PROJECT NO	TYPE FUNDS
2	OHIO		

217
328

STARK COUNTY
STA-30-15.66

MARK	NUMBER	LENGTH	TYPE	DIMENSIONS A	B	C	SERIES INCRE.	WEIGHT POUNDS
WEST ABUTMENT								
AA401	133	3'-11"	105	1'-3"	1'-8"			348
AA501	158	8'-4"	105	1'-7"	5'-5"			1,375
AA502	158	7'-6"	104	6'-7½"	1'-0"			1,237
AA503	158	8'-2"	105	2'-6"	3'-5"			1,348
AA504	34	39'-6"	Str.					1,401
AA505	20	32'-0"	Str.					668
AA506	3	30'-0"	Str.					94
AA507	4	32'-6"	Str.					136
AA508	6	33'-6"	Str.					209
AA509	1	31'-0"	Str.					32
AA510	1	31'-9"	Str.					33
AA511	14	18'-3"	Str.					268
AA512	7	3'-2"	108	1'-7"	1'-7"	1'-1½"		22
AA513	9	5'-9"	Str.					54
AA514	2	15'-9"	108	10'-9"	5'-0"	1'-9"		33
AA515	4	11'-6"	Str.					48
AA516	4	12'-0"	Str.					50
AA517	24	2'-0"	105	7½"	11"			50
AA518	14	6'-5"	114	3'-4"				94
AA519	20	2'-9"	Str.					57
AA520	5	3'-3"	Str.					17
AA521	1	3'-6"	Str.					4
AA522	1	4'-0"	Str.					4
AA523	1 Ser. 4	11'-0" to 14'-6"	109	3'-0" to 4'-9"	2'-3"		14"	53
AA524	13	11'-0"	109	3'-0"	2'-3"			149
AA525	14	12'-9"	Str.					186
AA526	3	4'-4"	118	1'-7"	1'-3"	1'-4"		14
AA527	4	3'-10"	118	1'-7"	9"	1'-4"		16
AA528	2	12'-0"	108	7'-6"	4'-6"	2'-0"		25
AA529	4	7'-9"	Str.					32
AA530	1	33'-9"	Str.					35
AA531	9	1'-6"	Str.					14
AA532	1	3'-9"	Str.					4
AA533	1	4'-3"	Str.					4
AA534	5	4'-9"	Str.					25
AA535	1	5'-3"	Str.					5
AA536	6	6'-11"	108	5'-4"	1'-7"	1'-5"		43
AA538	18	34'-0"	Str.					639
AA539	4	2'-6"	Str.					10
AA540	3	34'-3"	Str.					107
AA541	6	30'-9"	Str.					193
AA542	1	34'-6"	Str.					36
AA543	2	24'-6"	Str.					51
AA544	2	33'-0"	Str.					69
AA545	4	4'-0"	153	2'-7"	1'-0"	1⅝"		17
AA546	4	3'-10"	143	8"	9"	1'-5"		16
AA547	2	7'-0"	Str.					15
AA553	1	10'-0"	Str.					10
AA554	2	6'-6"	Str.					14
AA601	211	5'-7"	105	2'-6"	11"			1,769
AA602	211	4'-1"	105	1'-6"	1'-5"			1,294
AA604	211	11'-1"	105	5'-0"	1'-5"			3,505
AA605	13	6'-1"	115	4'-8"	6"	9"		119
AA606	12	18'-8"	105	9'-0"	1'-0"			336
AA607	158	14'-4"	106	5'-5"	6'-7"	2'-8"		3,405
AA608	1	6'-7"	115	5'-2"	6"	9"		10
AA702	5	4'-5"	115	3'-4"	6"	4½"		45
AA704	1	7'-7"	115	3'-7"	6"	4"		9
AA705	1	5'-0"	115	4'-0"	6"	4"		10
AA706	1	4'-11"	115	3'-8"	6"	4"		10
AA707	1	5'-2"	115	4'-2"	6"	4"		11
AA708	1	5'-8"	115	4'-8"	6"	4"		12
AA801	28	46'-0"	Str.					3,440
AA802	2	11'-6"	Str.					61
AA803	1	10'-6"	Str.					28
AA804	1	9'-6"	Str.					25
AA805	2	16'-9"	108	14'-3"	2'-6"	1'-9"		89
AA806	2	15'-1"	142	2'-3"	1'-4"	10'-6"		80
AA807	1	7'-6"	Str.					20
AA808	1	7'-0"	Str.					19
AA809	2	6'-3"	Str.					33
AA810	2	42'-0"	Str.					224
AA811	1	41'-3"	Str.					110
AA812	2	40'-9"	Str.					218
AA813	2	37'-6"	Str.					200
DA801	110	5'-10"	117	3'-9"				1713
							Total	26,159
EAST ABUTMENT								
AB401	133	3'-11"	105	1'-3"	1'-8"			348
AB501	125	8'-4"	105	1'-7"	5'-5"			1,087
AB502	125	7'-6"	104	6'-7"	1'-0"			978
AB503	125	7'-4"	105	2'-1"	3'-5"			956
AB504	11	11'-0"	109	3'-0"	2'-3"			126
AB505	1 Ser. 5	11'-2" to 14'-2"	109	3'-1" to 4'-7"	2'-3"		9"	67
AB506	20	40'-0"	Str.					834
AB507	7	42'-0"	Str.					307
AB508	3	41'-3"	Str.					129
AB509	1	7'-0"	Str.					7
AB510	1	41'-0"	Str.					43
AB511	1	40'-6"	Str.					42
AB512	4	40'-3"	Str.					168
AB513	4	4'-0"	153	2'-9"	9"	2¾"		17
AB514	4	4'-0"	143	10"	11½"	1'-3"		17
AB515	9	1'-3"	Str.					12
AB516	18	2'-0"	105	7½"	11"			38
AB517	20	2'-9"	Str.					57
AB518	8	6'-5"	114	3'-4"				54
AB519	12	15'-0"	Str.					188
AB520	2	12'-9"	Str.					28
AB521	1	14'-9"	108	10'-6"	4'-3"	1'-9"		15
AB522	1	12'-3"	108	8'-0"	4'-3"	1'-9"		13
AB523	4	8'-9"	Str.					37
AB524	4	6'-3"	Str.					26
AB525	6	6'-6"	Str.					41
AB527	2	3'-3"	Str.					7
AB528	1	3'-6"	Str.					4
AB529	1	4'-3"	Str.					4
AB530	1	4'-9"	Str.					5
AB531	1	5'-6"	Str.					6
AB533	17	38'-0"	Str.					674
AB534	6	38'-6"	Str.					241
AB535	2	39'-3"	Str.					82
AB536	4	41'-9"	Str.					174
AB539	1	42'-3"	Str.					44
AB540	1	12'-7"	109	3'-6"	2'-6"			13
AB541	12	5'-3"	Str.					66
AB542	16	7'-0"	Str.					117
AB543	4	11'-6"	Str.					48
AB544	4	10'-5"	104	9'-6"	1'-0"			44
AB545	4	8'-6"	Str.					35
AB546	2	41'-6"	Str.					87
AB547	3	4'-4"	118	1'-7"	1'-3"	1'-4"		14
AB548	4	3'-10"	118	1'-7"	9"	1'-4"		16
AB549	7	5'-9"	Str.					42
AB550	7	3'-2"	108	1'-7"	1'-7"	1'-5"		23
AB552	2	6'-6"	Str.					14
AB553	4	3'-10"	153	2'-7"	10"	1½"		16
AB554	4	3'-8"	143	7"	9"	1'-4"		15
AB555	9	1'-6"	Str.					14
AB601	159	5'-7"	105	2'-6"	11"			1,333
AB602	159	4'-1"	105	1'-6"	1'-5"			975
AB604	159	11'-1"	105	5'-0"	1'-5"			2,645
AB605	125	14'-4"	106	5'-5"	6'-7"	2'-8"		2,690
AB606	7	6'-4"	115	4'-11"	6"			67
AB607	1	6'-7"	115	5'-2"	6"			10
AB608	12	17'-8"	105	8'-6"	1'-0"			318
AB609	12	8'-0"	106	10½"	4'-6"	3'-0"		144
AB610	12	7'-3"	108	4'-0"	3'-3"	1'-10"		131
AB702	2	4'-4"	115	3'-4"	6"	4"		18
AB703	1	4'-7"	115	3'-7"	6"	4"		9
AB704	1	5'-3"	115	4'-3"	6"	4"		11
AB705	1	5'-10"	115	4'-10"	6"	4"		12
AB707	5	5'-11"	115	4'-11"	6"	4"		61
AB801	21	46'-0"	Str.					2,580
AB802	2	13'-9"	108	11'-3"	2'-6"	2'-2½"		73
AB803	1	8'-0"	Str.					21
AB804	1	8'-6"	Str.					23
AB805	2	9'-0"	Str.					48
AB806	2	7'-9"	Str.					41
AB807	1	8'-9"	Str.					23
AB808	1	9'-3"	Str.					25
AB809	2	16'-1"	142	2'-3"	2'-3"	11'-6"		86
AB810	4	33'-9"	Str.					360
AB811	1	31'-9"	Str.					85
DB801	97	5'-5"	117	3'-4"				1,403
							Total	20,622
SOUTHEAST WINGWALL								
AC501	11	12'-6"	Str.					143
AC502	1	3'-9"	Str.					4
AC503	1	6'-6"	Str.					7
AC504	1	9'-3"	Str.					10
AC505	1	13'-0"	108	12'-0"	1'-0"	4"		14

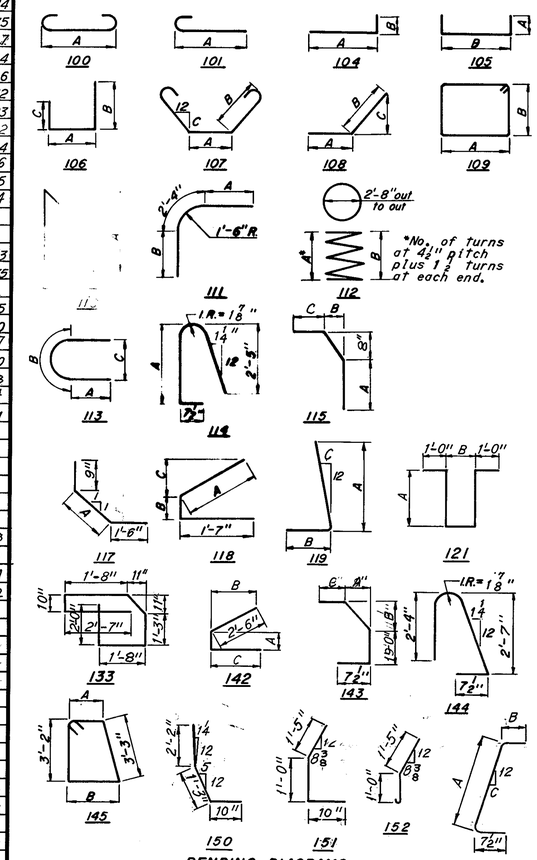

BENDING DIAGRAMS

Notes:

All bar dimensions are given out to out.

All bars of a series shall vary in length by a constant increment.

For replacement reinforcement note see sheet 19/20.

Four steel channels, tee or angle spacers, weighing approximately 0.80 pounds per linear foot shall be provided for each spiral unit. They shall be equally spaced along the periphery of the coil. An allowance of 0.80 pounds per linear foot for spacers is included with the weight of the spiral bars and paid for as reinforcing steel.

Splices in No. 14 or No. 18 size reinforcing bars shall be made by an approved positive mechanical method designed to develop 125% of the specified yield strength of the bar.

H.N.T.B. BRIDGE NO. 17 — Revised 2-19-79 By R.H.W.

HOWARD, NEEDLES, TAMMEN & BERGENDOFF — 18/20
CONSULTING ENGINEERS
KANSAS CITY CLEVELAND NEW YORK

REINFORCEMENT SCHEDULE

U.S. 30, RAMP E-C AND RAMP C-E
OVER N.&W. R.R.

BR. NO. STA-30-15 81 — STA. 1009+66.11
SCALE: NONE — STA. 1011+50.60

RELOCATED U.S. 30

CANTON — STARK COUNTY — OHIO

DRAWN LJF	TRACED	CHECKED JDA	REVIEWED RWK	REVISED
DATE 10-8-70	DATE	DATE 11-6-70	DATE 11-22-71	1668

MICROFILMED
FEB 15 1985

MARK	NUMBER	LENGTH	TYPE	DIMENSIONS A	B	C	SERIES INCRE.	WEIGHT POUNDS
AC506	1 Ser. 11	10'-9"to14'-3"	Str.				4 3/16"	143
AC507	1 Ser. 11	10'-6"to14'-0"	Str.				4 3/16"	141
AC508	1	14'-3"	Str.					15
AC509	5	13'-6"	Str.					70
AC510	1 Ser. 11	5'-10"to9'-2"	109	1'-6" to 3'-2"	1'-2"		4"	86
AC511	36	5'-6"	104	4'-7"	1'-0"			207
AC512	11	7'-6"	Str.					86
AC513	11	8'-8"	100	7'-6"				99
AC514	1	6'-0"	Str.					6
AC515	1	7'-2"	100	6'-0"				7
AC516	1	4'-3"	Str.					4
AC517	1	5'-2"	100	4'-0"				5
AC518	1	2'-6"	Str.					3
AC519	1	3'-8"	100	2'-6"				4
AC520	2	7'-9"	Str.					16
AC521	2	4'-0"	Str.					8
AC522	1 Ser. 11	5'-2"to11'-0"	121	1'-3" to 4'-2"	1'-2"		7"	93
AC523	2	10'-6"	Str.					21
AC524	4	11'-0"	Str.					46
AC601	11	12'-6"	Str.					207
AC602	1	3'-0"	Str.					5
AC603	1	5'-6"	Str.					8
AC604	1	8'-6"	Str.					13
AC605	1	13'-0"	108	11'-0"	2'-0"	8"		20
AC606	14	10'-5"	133					219
AC701	4	16'-2"	100	14'-6"				132
AC702	1	9'-1"	104	8'-0"	1'-3"			19
AC703	1 Ser. 7	10'-0"to13'-6"	Str.				7"	168
AC704	1	14'-6"	108	13'-3"	1'-3"	7 3/4"		30
							Total	2,059

PIER-IN

MARK	NUMBER	LENGTH	TYPE	DIMENSIONS A	B	C	SERIES INCRE.	WEIGHT POUNDS
SPA401	1	765'-0"	112	92.7	33'-9"			619
SPA402	1	785'-2"	112	95.1	34'-8"			635
SPA403	1	805'-4"	112	97.6	35'-7"			652
SPA404	1	823'-8"	112	99.8	36'-5"			667
SPA405	1	843'-10"	112	102.2	37'-4"			683
PA501	51	13'-2"	109	2'-8"	3'-8"			700
PA502	18	11'-4"	109	1'-9"	3'-8"			213
PA503	60	4'-5"	105	1'-0"	2'-8"			277
PA504	1	4'-3"	105	1'-0"	2'-6"			4
PA505	1	3'-7"	105	1'-0"	1'-10"			4
PA601	8	46'-0"	Str.					553
PA602	4	6'-0"	105	1'-11"	2'-6"			36
PA603	4	8'-0"	113	1'-11"	4'-2"	2'-8"		48

MARK	NUMBER	LENGTH	TYPE	DIMENSIONS A	B	C	SERIES INCRE.	WEIGHT POUNDS
PA901	60	8'-6"	Str.					1,733
PA1001	55	10'-6"	Str.					2,485
PA1101	4	38'-1"	111	33'-6"	2'-3"			808
PA1102	2	33'-6"	Str.					356
PA1103	6	25'-6"	Str.					813
PA1104	6	42'-9"	104	39'-6"	3'-7"			1,363
PA1105	8	11'-0"	Str.					468
PA1106	2	40'-6"	Str.					431
PA1107	5	32'-0"	Str.					851
PA1108	5	24'-6"	Str.					652
PA1109	2	11'-3"	Str.					120
PA1110	3	41'-9"	Str.					666
PA1401	45	7'-8"	104	6'-7"	1'-6"			2,640
PA1402	45	12'-8"	104	11'-7"	1'-6"			4,360
PA1403	45	16'-0"	Str.					5,510
PA1404	9	28'-0"	Str.					1,928
PA1405	9	29'-0"	Str.					1,996
PA1406	9	30'-0"	Str.					2,065
PA1407	9	30'-9"	Str.					2,115
PA1408	9	31'-3"	Str.					2,150
							Total	38,602

PIER-1S

MARK	NUMBER	LENGTH	TYPE	DIMENSIONS A	B	C	SERIES INCRE.	WEIGHT POUNDS
SPB401	1	845'-3"	112	102.4	37'-5"			685
SPB402	1	871'-9"	112	105.6	38'-7"			706
SPB403	1	895'-0"	112	108.4	39'-8"			725
SPB404	1	911'-6"	112	110.4	40'-5"			738
SPB405	1	904'-9"	112	109.6	40'-1"			732
PB501	65	13'-2"	109	2'-8"	3'-8"			894
PB502	42	11'-4"	109	1'-9"	3'-8"			497
PB503	67	4'-5"	105	1'-0"	2'-8"			309
PB504	1	4'-3"	105	1'-0"	2'-6"			4
PB505	1	3'-7"	105	1'-0"	1'-10"			4
PB601	4	36'-0"	Str.					216
PB602	4	37'-0"	Str.					222
PB603	4	30'-0"	Str.					180
PB604	4	6'-0"	105	1'-11"	2'-6"			36
PB605	4	8'-0"	113	1'-11"	4'-2"	2'-8"		48

MARK	NUMBER	LENGTH	TYPE	DIMENSIONS A	B	C	SERIES INCRE.	WEIGHT POUNDS
PB801	26	9'-6"	Str.					659
PB1001	22	11'-6"	Str.					1,089
PB1002	66	9'-6"	Str.					2,695
PB1101	6	46'-6"	104	43'-0"	3'-10"			1,482
PB1102	6	27'-6"	Str.					876
PB1103	2	37'-0"	Str.					394
PB1104	4	41'-7"	111	37'-0"	2'-3"			883
PB1105	2	11'-3"	Str.					120
PB1106	6	14'-0"	Str.					446
PB1107	6	11'-0"	Str.					351
PB1108	6	13'-6"	Str.					430
PB1109	5	34'-3"	Str.					910
PB1110	5	27'-6"	Str.					731
PB1111	2	45'-0"	Str.					479
PB1112	2	10'-6"	Str.					112
PB1113	2	9'-6"	Str.					101
PB1114	2	8'-0"	Str.					85
PB1115	3	19'-9"	Str.					315
PB1116	2	9'-3"	Str.					98
PB1117	3	46'-0"	Str.					734
PB1401	46	7'-8"	104	6'-7"	1'-6"			2,700
PB1402	46	12'-8"	104	11'-7"	1'-6"			4,460
PB1403	46	16'-0"	Str.					5,630
PB1404	9	31'-9"	Str.					2,185
PB1405	9	33'-0"	Str.					2,270
PV1406	9	34'-0"	Str.					2,340
PB1407	10	34'-9"	Str.					2,660
PB1408	9	34'-3"	Str.					2,355
							Total	43,586

REINFORCING STEEL SAMPLES

Refer to CMS Sections 106.03, 700, 709.01 through 709.05 and 709.08. Sufficient additional reinforcing steel shall be provided for sampling. Random samples shall be replaced in the structures by the additional steel, spliced in accordance with 509.08.

PIER-2N

MARK	NUMBER	LENGTH	TYPE	DIMENSIONS A	B	C	SERIES INCRE.	WEIGHT POUNDS
SPC401	1	792'-0"	112	96.0	35'-0"			641
SPC402	1	809'-0"	112	98.0	35'-9"			655
SPC403	1	825'-6"	112	100.0	36'-6"			668
SPC404	1	842'-0"	112	102.0	37'-3"			682
SPC405	1	858'-6"	112	104.0	38'-0"			695
PC501	44	13'-2"	109	2'-8"	3'-8"			604
PC502	18	11'-4"	109	1'-9"	3'-8"			213
PC503	60	4'-5"	105	1'-0"	2'-8"			277
PC504	1	4'-3"	105	1'-0"	2'-6"			4
PC505	1	3'-7"	105	1'-0"	1'-10"			4
PC601	4	40'-0"	Str.					240
PC602	4	41'-9"	Str.					252
PC603	4	6'-0"	105	1'-11"	2'-6"			36

FED. ROAD DIV. NO.	STATE	FEDERAL AID PROJECT NO.	TYPE FUNDS
2	OHIO		

218 / 328

STARK COUNTY
STA-30-15.66

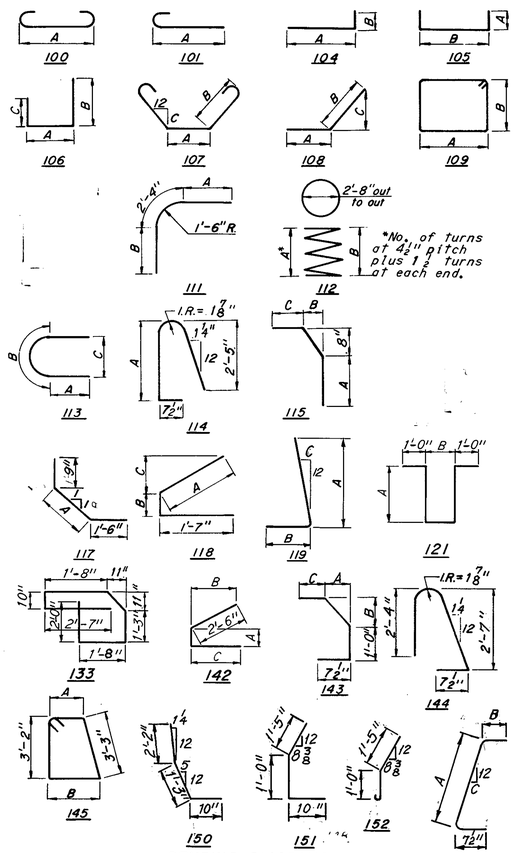

BENDING DIAGRAMS

Notes:
All bar dimensions are given out to out.
All bars of a series shall vary in length by a constant increment.

Four steel channels, tee or angle spacers, weighing approximately 0.80 pounds per linear foot shall be provided for each spiral unit. They shall be equally spaced along the periphery of the coil. An allowance of 0.80 pounds per linear foot for spacers is included with the weight of the spiral bars and paid for as reinforcing steel.
Splices in No. 14 or No. 18 size reinforcing bars shall be made by an approved positive mechanical method designed to develop 125% of the specified yield strength of the bar.

MICROFILMED
FEB 15 1985

H.N.T.B. BRIDGE NO. 17 — Revised 2-19-79 — By R.H.W.

HOWARD, NEEDLES, TAMMEN & BERGENDOFF 19/20
CONSULTING ENGINEERS
KANSAS CITY CLEVELAND NEW YORK

REINFORCEMENT SCHEDULE

U.S. 30, RAMP E-C AND RAMP C-E
OVER N.&W. R.R.

BR. NO. STA-30-15 81 — STA. 1009+66.11
SCALE: NONE — STA. 1011+50.60

RELOCATED U.S. 30

CANTON — STARK COUNTY — OHIO

DRAWN LJF	TRACED	CHECKED JDA	REVIEWED MJK	REVISED
DATE 10-8-70	DATE	DATE 11-6-70	DATE 11-22-71	1668