MICROFILMED
JUL 18 1979
REPRODUCTION

| FED. RD. DIVISION | STATE | PROJECT | |
|---|---|---|---|
| 2 | OHIO | | |

65

STA-43-13.40 PT-1

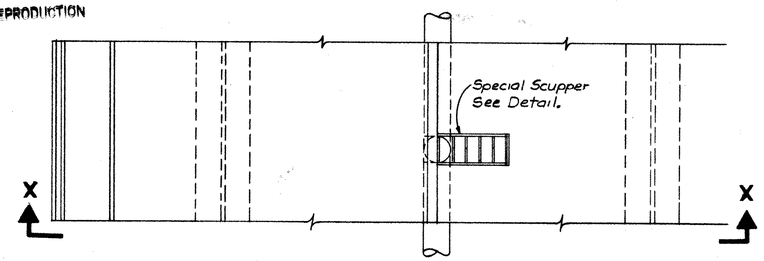


PART PLAN - LEFT

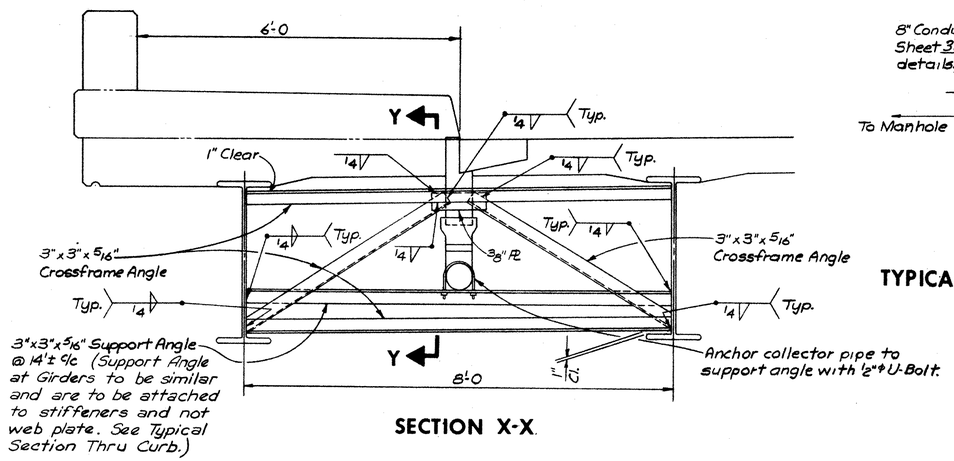


SECTION X-X

SPECIAL INTERMEDIATE CROSSFRAME DETAIL FOR BEAMS

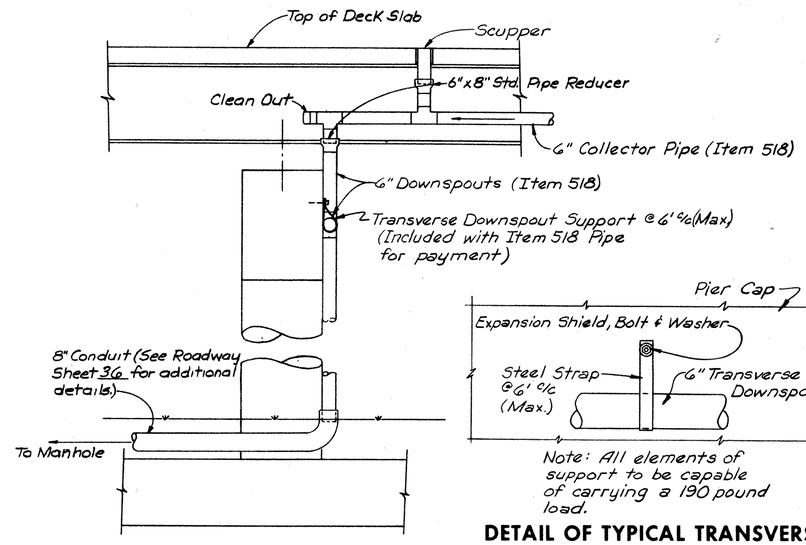


TYPICAL DETAIL OF DOWNSPOUT AT PIER

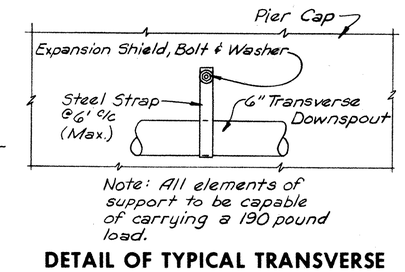


DETAIL OF TYPICAL TRANSVERSE DOWNSPOUT SUPPORT AT PIER

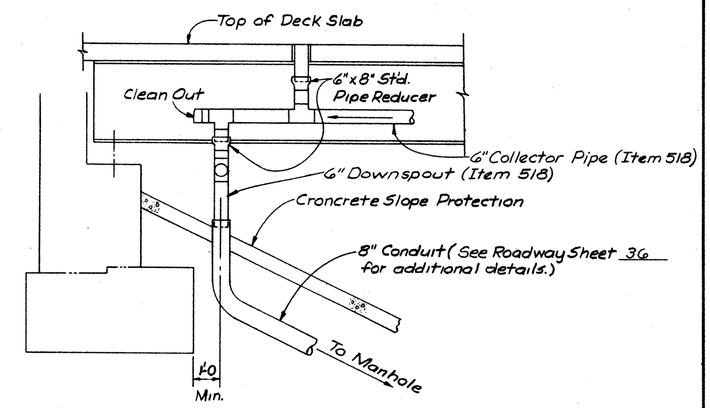


TYPICAL DETAIL OF DOWNSPOUT AT ABUTMENT

Notes:

Maintain a minimum slope of .4% on all longitudinal collector pipes and transverse downspouts.

Provide a clean out at end of all longitudinal collector pipes and transverse downspouts.

All pipe to be 6" Std. Pipe with welded connections, unless otherwise noted.

Piping to be supported on 14'-0± centers with 3"x3"x5/16" Support Angle and 1/2"φ U-Bolt as shown. (Included with Structural Steel for payment.)

Scuppers including support angles, shall be galvanized in accordance with Sec. 711.02.

For Location of Scuppers and Piping Diagrams, see sheets 4, 5 and 6.

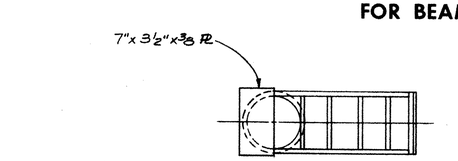


PLAN

For additional details
see Std. Dwg. SD-1-65
Sheet 2 of 3.

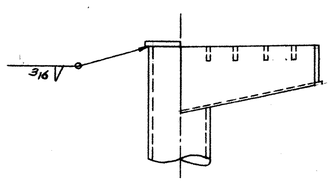


ELEVATION

SPECIAL SCUPPER DETAILS

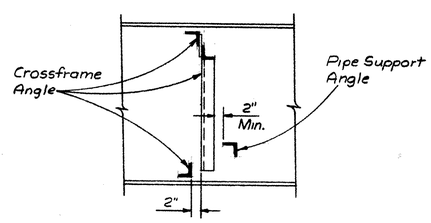


SECTION Y-Y

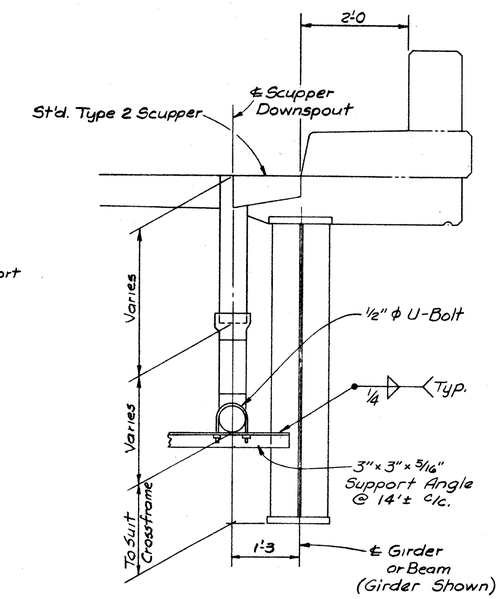


TYPICAL SECTION THRU CURB - RIGHT

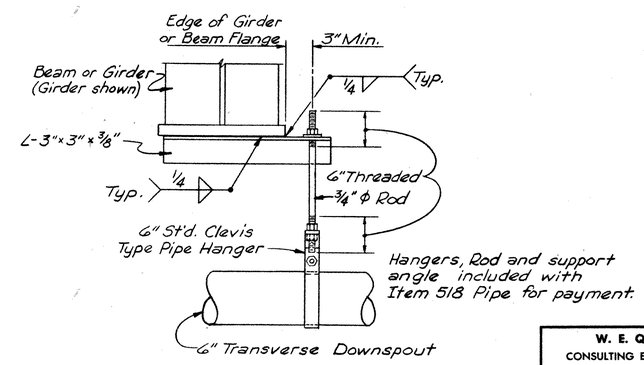


DETAIL OF TYPICAL TRANSVERSE DOWNSPOUT SUPPORT AT ABUTMENT

Sheet 7 / 37

W. E. QUICKSALL AND ASSOCIATES, INC.
CONSULTING ENGINEERS • NEW PHILADELPHIA, OHIO

SCUPPER DRAINAGE DETAILS

BRIDGE NO. STA-43-1352

S.R. 43 over B&O R.R., N&W R.R. & P.R.R.

STARK COUNTY

STA. 15+34.75
STA. 29+49.87

| DESIGNED | DRAWN | TRACED | CHECKED | REVIEWED | DATE | REVISED |
|---|---|---|---|---|---|---|
| | PMZ | | TG | DLM | 2-21-69 | |

MICROFILMED
JUL 18 1979
REPRODUCTION

| FED. RD. DIVISION | STATE | PROJECT | |
|---|---|---|---|
| 2 | OHIO | | |

66

STA-43-13.40 PT-1

## TOP OF DECK SLAB ELEVATIONS

| STATION | PROFILE GRADE | CURB LINE ELEV. Lt. | CURB LINE ELEV. Rt. |
|---|---|---|---|
| 15+37.00 | 1042.38 | 1041.97 | 1041.97 |
| 15+50 | 1042.79 | 1042.40 | 1042.40 |
| 15+75 | 1043.58 | 1043.18 | 1043.18 |
| 15+82.00 | 1043.81 | 1043.40 | 1043.40 |
| 16+00 | 1044.38 | 1044.00 | 1044.00 |
| 16+25 | 1045.17 | 1044.78 | 1044.78 |
| 16+39.00 | 1045.62 | 1045.21 | 1045.21 |
| 16+50 | 1045.97 | 1045.57 | 1045.57 |
| 16+75 | 1046.76 | 1046.37 | 1046.37 |
| 16+96.00 | 1047.43 | 1047.02 | 1047.02 |
| 17+00 | 1047.56 | 1047.15 | 1047.15 |
| 17+25 | 1048.35 | 1047.96 | 1047.96 |
| 17+50 | 1049.14 | 1048.74 | 1048.74 |
| 17+53.00 | 1049.24 | 1048.83 | 1048.83 |
| 17+75 | 1049.94 | 1049.55 | 1049.55 |
| 18+00 | 1050.73 | 1050.33 | 1050.33 |
| 18+10.00 | 1051.05 | 1050.64 | 1050.64 |
| 18+25 | 1051.53 | 1051.13 | 1051.13 |
| 18+50 | 1052.32 | 1051.93 | 1051.93 |
| 18+67.00 | 1052.86 | 1052.45 | 1052.45 |
| 18+75 | 1053.11 | 1052.71 | 1052.71 |
| 19+00 | 1053.91 | 1053.52 | 1053.52 |
| 19+24.00 | 1054.67 | 1054.26 | 1054.26 |
| 19+50 | 1055.50 | 1055.11 | 1055.11 |
| 19+75 | 1056.29 | 1055.89 | 1055.89 |
| 19+81.00 | 1056.48 | 1056.07 | 1056.07 |
| 20+00 | 1057.08 | 1056.69 | 1056.69 |
| 20+25 | 1057.88 | 1057.48 | 1057.48 |
| 20+38.00 | 1058.29 | 1057.89 | 1057.89 |
| 20+50 | 1058.67 | 1058.28 | 1058.28 |
| 20+75 | 1059.45 | 1059.06 | 1059.06 |
| 20+95.00 | 1060.04 | 1059.64 | 1059.64 |
| 21+00 | 1060.19 | 1059.78 | 1059.78 |
| 21+25 | 1060.87 | 1060.48 | 1060.48 |
| 21+52.00 | 1061.56 | 1061.16 | 1061.16 |
| 21+75 | 1062.11 | 1061.75 | 1061.75 |
| 22+00 | 1062.65 | 1062.29 | 1062.29 |
| 22+27.00 | 1063.19 | 1062.79 | 1062.79 |
| 22+50 | 1063.61 | 1063.23 | 1063.22 |
| 22+75 | 1064.01 | 1063.64 | 1063.63 |
| 23+02.00 | 1064.40 | 1063.99 | 1063.99 |
| 23+25 | 1064.69 | 1064.31 | 1064.32 |
| 23+50 | 1064.95 | 1064.57 | 1064.60 |
| 23+68.04 | 1065.12 | 1064.71 | -- |
| 23+75 | 1065.17 | 1064.77 | 1064.78 |
| 23+86.96 | 1065.26 | -- | 1064.86 |
| 24+00 | 1065.35 | 1064.95 | 1064.97 |
| 24+25 | 1065.47 | 1065.06 | 1065.14 |
| 24+31.22 | 1065.50 | 1065.09 | -- |
| 24+50 | 1065.55 | 1065.18 | 1065.20 |
| 24+74.78 | 1065.59 | -- | 1065.18 |
| 24+75 | 1065.59 | 1065.23 | 1065.18 |
| 25+00 | 1065.57 | 1065.20 | 1065.15 |
| 25+25 | 1065.51 | 1065.11 | 1065.07 |
| 25+44.38 | 1065.43 | 1065.03 | -- |
| 25+50 | 1065.40 | 1065.01 | 1064.98 |
| 25+66.02 | 1065.31 | -- | 1064.91 |
| 25+75 | 1065.25 | 1064.91 | 1064.88 |
| 26+00 | 1065.05 | 1064.77 | 1064.77 |
| 26+25 | 1064.80 | 1064.53 | 1064.57 |
| 26+50 | 1064.51 | 1064.19 | 1064.28 |
| 26+75 | 1064.17 | 1063.80 | 1063.89 |
| 26+90.78 | 1063.93 | 1063.52 | -- |
| 27+00 | 1063.78 | 1063.39 | 1063.42 |
| 27+12.42 | 1063.57 | -- | 1063.17 |
| 27+25 | 1063.35 | 1062.97 | 1062.95 |
| 27+50 | 1062.87 | 1062.53 | 1062.49 |
| 27+75 | 1062.34 | 1062.00 | 1061.91 |
| 28+00 | 1061.77 | 1061.40 | 1061.34 |
| 28+25 | 1061.15 | 1060.72 | 1060.74 |
| 28+27.15 | 1061.09 | -- | 1060.69 |
| 28+34.05 | 1060.91 | 1060.44 | -- |
| 28+50 | 1060.48 | 1059.98 | 1060.14 |
| 28+75 | 1059.77 | 1059.17 | 1059.49 |
| 29+00 | 1059.01 | 1058.29 | 1058.73 |
| 29+25 | 1058.20 | 1057.32 | 1057.87 |
| 29+44.15 | 1057.55 | -- | 1057.14 |
| 29+51.05 | 1057.31 | 1056.21 | -- |

## ESTIMATED QUANTITIES

| ITEM | TOTAL | UNIT | DESCRIPTION | ABUT. | PIERS | SUPER | GENERAL |
|---|---|---|---|---|---|---|---|
| | | | | | | | |
| 503 | Lump | Sum | Cofferdams, cribs, and sheeting | | | | Lump |
| 503 | 3824 | Cu. Yds. | Unclassified Excavation | 370 | 3454 | | |
| 505 | Lump | Sum | First test pile | | | | Lump |
| 507 | 1120 | Lin. Ft. | Piles: 12" Cast-in-place Reinforced Concrete | 1120 | | | |
| 509 | 1,147,122 | Lbs. | Reinforcing Steel | 17,161 | 398,274 | 731,687 | |
| 511 | 2687 | Cu. Yds. | Class C concrete, superstructure | | | 2687 | |
| 511 | 981 | Cu. Yds. | Class C concrete, footings | 108 | 873 | | |
| 511 | 158 | Cu. Yds. | Class C concrete, abutments above footings | 158 | | | |
| 511 | 494 | Cu. Yds | Class C concrete, piers above footings (Cap & Column) | | 494 | | |
| 511 | 709 | Cu. Yds. | Class C concrete, piers above footings (T-Type) | | 709 | | |
| 512 | 15 | Lin. Ft. | Premolded sealing strip | 15 | | | |
| 513 | 2,385,000 | Lbs. | Structural Steel | | | 2,385,000 | |
| 514 | 2,385,000 | Lbs. | Field painting of structural steel | | | 2,385,000 | |
| 517 | 2898.39 | Lin. Ft. | Bridge Railing ~ Type 2 | 72.65 | | 2825.74 | |
| 518 | 74 | Each | Scuppers, including supports | | | 74 | |
| 518 | 57 | Cu. Yds. | Porous Backfill | 57 | | | |
| 518 | 110 | Lin. Ft. | 6" Perforated helical C.M.P., including specials (707.01) | 110 | | | |
| 518 | 83 | Lin. Ft. | 6" Non-perforated helical C.M.P. (707.01) | 83 | | | |
| | | | | | | | |
| 518 | 100 | Lin. Ft. | 6" Std. pipe downspout, wrought iron, alloy steel (707.11) or hot-dip galvanized steel, including specials | | 100 | | |
| 518 | 2879 | Lin. Ft. | 6" Std. Collector Pipe including specials – wrought iron, alloy steel (707.11) or hot-dip galvanized steel. | | | 2879 | |
| 601 | 112 | Sq. Yds. | Crushed aggregate slope protection | 112 | | | |
| 601 | 234 | Sq. Yds. | Concrete Slope Protection | 234 | | | |
| 625 | | | See sheet No. 51 for Lighting Summary | | | | |
| 808 | 2687 | Units | Chemical admixture for concrete, Type A, B or D. | | | 2687 | |
| | | | | | | | |
| | | | | | | | |

NOTE:

Elevations shown are at the intersection of the abutment and pier ℄ of bearings and the face of railing curb and face of median curb, and at even 25' stations.

Elevations are those required before deck concrete is placed to allow for dead load deflection caused by the weight of the concrete.

# GENERAL NOTES

DESIGN SPECIFICATIONS: This structure conforms to "Standard Specifications for Highway Bridges" adopted by the American Association of State Highway Officials, 1965, including the Ohio Supplement to these specifications.

DESIGN DATA:

Design Loading: - HS20-44
Concrete Class C: - Unit Stress 1200 p.s.i. for superstructure
Unit Stress 1333 p.s.i. for substructure
Structural Steel: - ASTM A-36, unit stress 20,000 p.s.i.
Reinforcing Steel: - ASTM A615, A616 or A617 Unit stress 20,000 p.s.i.
Spiral reinforcement shall be plain bars ASTM A306 or A499.

REFERENCE shall be made to:

Standard Drawings:
SD-1-65, dated 11-8-65 -
AS-1-67, revised 6-12-69. -
RB-1-55, revised 2-2-59 -
BR-2-67, dated 9-17-69. -

Supplemental Specifications:
808, dated 11-14-69 -
811, dated 1-1-69 -
836, dated 6-17-69. -
927, dated 1-1-69 -

PROCEDURE: The embankments shall be constructed to the level of the subgrade for a minimum distance of 200 feet back of the abutments. Excavation shall then be made for the abutments.

PILES shall be driven to a minimum bearing capacity of 35 tons per pile for the abutments.

FOUNDATION BEARING PRESSURE: Pier footings are designed for a maximum bearing pressure of 3 tons per sq. ft.

UTILITY LINES: All expense involved in relocating the affected utility lines shall be borne by the owners. The Contractor and Owners are requested to cooperate by arranging their work in such a manner that inconvenience to either would be held to a minimum.

MAINTENANCE OF TRAFFIC: Refer to the project "General Notes" for a complete description of the areas where traffic must be maintained. All areas where traffic must be maintained shall have a minimum vertical clearance of 15'-0".

CONSTRUCTION CLEARANCE of * vertically above the top of the railroad rails and 8' horizontally from the center of tracks shall be maintained at all times.

RAILROAD AERIAL LINES will be relocated by the Railroad. The Contractor shall use all precautions necessary to see that the lines are not disturbed during the construction stage and shall cooperate with the Railroad in the relocation of these lines. The cost of the relocation shall be included in the railroad force account work.

END DAM PAINTING: Portions of end dams which will be in contact with steel or with concrete shall not be painted. All other portions shall be cleaned and painted in accordance with 514.

REINFORCING STEEL CLEARANCE shall be 2" from face of concrete to face of bar on all bars except in footings. Footing reinforcing steel shall be 3" clear from all concrete faces.

* 21 ft. for Baltimore and Ohio Railroad and Norfolk and Western Railroad and 20 ft. for Penn Central Railroad.

Sheet 8/37

W. E. QUICKSALL AND ASSOCIATES, INC.
CONSULTING ENGINEERS • NEW PHILADELPHIA, OHIO

**GENERAL NOTES, ESTIMATED QUANTITIES & SLAB ELEVATIONS**
**BRIDGE NO. STA-43-1352**
S.R. 43 over B&O R.R., N&W R.R. & P.R.R.
STARK COUNTY STA. 15+34.75 – STA. 29+49.87

| DESIGNED | DRAWN | TRACED | CHECKED | REVIEWED | DATE | REVISED |
|---|---|---|---|---|---|---|
| | wda | | DLM 2-21-69 | | - | |

MICROFILMED
JUL 18 1979
REPRODUCTION

| FED. RD. DIVISION | STATE | PROJECT | |
|---|---|---|---|
| 2 | OHIO | | |

67

STA-43-13.40 PT-1

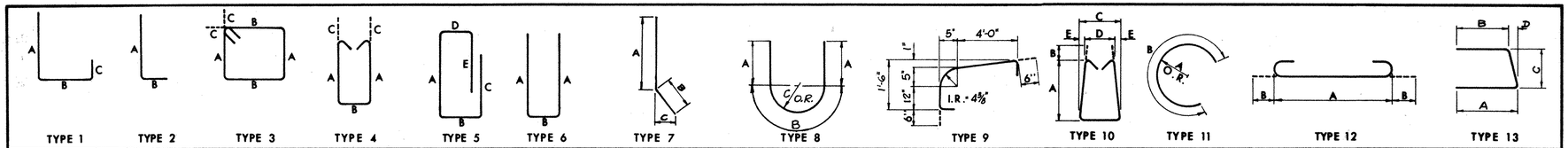


## SUPERSTRUCTURE

| MARK | TYPE | A | B | C | D | E | NO. | LENGTH | WEIGHT |
|---|---|---|---|---|---|---|---|---|---|
| S701 | S | | | | | | 1632 | 35'-11" | 11981 |
| S702 | S | | | | | | 3315 | 31'-11" | 21626 |
| S703 | S | | | | | | 1683 | 27'-11" | 9603 |
| S704 | S | Varies by increments of 1'-0 5/8" | | | | | 4 Sets of 28 | 6'-5" to 34'-10" | 4722 |
| S705 | S | Varies by increments of 1'-0 5/8" | | | | | 2 Sets of 24 | 10'-0" to 34'-2" | 2167 |
| S706 | S | Varies by increments of 1'-0 1/8" | | | | | 2 Sets of 24 | 6'-0" to 30'-2" | 1774 |
| S707 | S | Varies by increments of 6'-3 1/2" | | | | | 1 Set of 3 | 17'-4" to 29'-11" | 145 |
| S708 | S | Varies by increments of 6'-3 1/2" | | | | | 1 Set of 3 | 13'-4" to 25'-11" | 120 |
| S709 | S | Varies by increments of 6'-3 1/2" | | | | | 2 Sets of 5 | 11'-4" to 36'-6" | 489 |
| S710 | S | | | | | | 20 | 6'-3" | 256 |
| S711 | S | | | | | | 4 | 9'-0" | 74 |
| | | | | | | | | | |
| S601 | S | | | | | | 4702 | 30'-0" | 211872 |
| S602 | S | | | | | | 99 | 33'-8" | 5006 |
| S603 | S | | | | | | 91 | 25'-8" | 3508 |
| S604 | S | Varies by increments of 1'-3 1/4" | | | | | 2 Sets of 26 | 3'-6" to 35'-4" | 1517 |
| S605 | S | Varies by increments of 11" | | | | | 2 Sets of 36 | 2'-5" to 34'-6" | 1996 |
| S606 | S | Varies by increments of 1'-4 1/2" | | | | | 2 Sets of 11 | 8'-6" to 22'-3" | 508 |
| S607 | S | Varies by increments of 11" | | | | | 2 Sets of 16 | 8'-3" to 22'-0" | 727 |
| S608 | S | Varies by increments of 2 5/8" | | | | | 1 Set of 38 | 7'-6" to 15'-7" | 659 |
| S609 | S | Varies by increments of 1 1/8" | | | | | 1 Set of 53 | 7'-6" to 15'-7" | 919 |
| S610 | S | | | | | | 5 | 35'-4" | 265 |
| S611 | S | | | | | | 3 | 17'-4" | 78 |
| S612 | S | | | | | | 3 | 9'-11" | 45 |
| S613 | S | | | | | | 117 | 23'-0" | 4042 |
| S614 | S | | | | | | 156 | 38'-0" | 8904 |
| S615 | S | | | | | | 39 | 35'-0" | 2050 |
| S616 | S | | | | | | 39 | 34'-0" | 1992 |
| S617 | S | | | | | | 390 | 23'-0" | 13473 |
| | | | | | | | | | |
| | | | | | | | | | |
| S501 | 4 | 2'-2" | 8" | 5" | | | 2117 | 5'-7" | 12328 |
| S502 | 6 | 7 1/2" | 6'-6" | | | | 945 | 7'-6" | 7392 |
| S503 | 6 | 7 1/2" | 1'-5" | | | | 945 | 2'-5" | 2382 |
| S504 | 6 | 7 1/2" | 1'-3" | | | | 2825 | 2'-3" | 6630 |
| S505 | 6 | 7 1/2" | 2'-6" | | | | 940 | 3'-6" | 3431 |
| S506 | S | | | | | | 18 | 2'-10 | 53 |
| S507 | 14 | 1'-1 | 1'-4 | 1'-4 | 1'-10 1/2 | 7 1/2 | 9 | 5'-7 | 52 |
| | | | | | | | | | |

## REAR ABUTMENT

| MARK | TYPE | A | B | C | D | E | NO. | LENGTH | WEIGHT |
|---|---|---|---|---|---|---|---|---|---|
| A501 | S | | | | | | 17 | 32'-0" | 567 |
| A502 | 6 | 2'-0" | 3'-5" | | | | 42 | 7'-2" | 314 |
| A503 | 2 | 6'-8" | 7 1/2" | | | | 42 | 7'-2" | 314 |
| A504 | 6 | 1'-7" | 5'-4" | | | | 42 | 8'-3" | 361 |
| A505 | 3 | 2'-6" | 3'-0" | 5" | | | 8 | 11'-6" | 96 |
| A506 | 2 | 4'-11" | 7 1/2" | | | | 20 | 5'-5" | 113 |
| A507 | 4 | 3'-10" | 1'-2" | 5" | | | 4 | 9'-5" | 39 |
| A508 | 4 | 2'-11" to 3'-0 1/2" Varies by increments of 1/2" | 1'-2" | 5" | | | 2 Sets of 4 | 7'-7" to 7'-10" Varies by increments of 1" | 64 |
| A509 | S | | | | | | 17 | 28'-6" | 505 |
| A510 | S | | | | | | 2 | 6'-6" | 14 |
| A511 | 13 | 2'-6 | 2'-4 | 1'-3 | 2" | | 11 | 5'-10" | 67 |
| A512 | 4 | 2'-2" | 8" | 5" | | | 14 | 5'-7" | 82 |
| A513 | 12 | 6'-0" | 7" | | | | 12 | 7'-2" | 90 |
| A514 | S | | | | | | 4 | 3'-8" | 15 |
| A515 | S | | | | | | 12 | 8'-3" | 103 |
| A516 | S | | | | | | 4 | 6'-3" | 26 |
| A517 | S | | | | | | 18 | 14'-3 | 268 |
| | | | | | | | | | |
| A601 | 5 | 6'-5" | 1'-5" | 4'-5" | 11" | 3'-0" | 52 | 15'-6" | 1211 |
| A602 | 1 | 6'-8" | 5'-4" | 2'-6" | | | 42 | 14'-2" | 894 |
| A603 | 6 | 8'-8" | 1'-2" | | | | 10 | 18'-2" | 273 |
| A604 | 6 | 7'-4" | 1'-5 | | | | 6 | 15'-9" | 142 |
| | | | | | | | | | |
| | | | | | | | | | |
| A801 | S | | | | | | 14 | 32'-10" | 1227 |
| A802 | S | | | | | | 12 | 11'-1" | 355 |

## RAILING

| MARK | TYPE | A | B | C | D | E | NO. | LENGTH | WEIGHT |
|---|---|---|---|---|---|---|---|---|---|
| R501 | 8 | 1'-3" | 9 3/4" | 3 1/4" | | | 16 | 3'-3" | * |
| R502 | 9 | See Detail | | | | | 8 | 6'-7" | * |
| R503 | 1 | 3'-2" | 4'-8" | 7 1/2" | | | 8 | 8'-3" | * |
| R504 | 4 | 3'-2" | 8" | 5" | | | 16 | 7'-7" | * |
| R505 | S | | | | | | 2 | 4'-8" | * |
| R506 | S | | | | | | 4 | 14'-3" | * |
| R507 | S | | | | | | 4 | 21'-6" | * |
| R508 | S | | | | | | 4 | 21'-4" | * |
| R509 | S | | | | | | 4 | 16'-8" | * |
| R510 | S | | | | | | 4 | 15'-10" | * |
| R511 | S | | | | | | 4 | 13'-10" | * |
| R512 | S | | | | | | 4 | 10'-2" | * |
| R513 | S | | | | | | 8 | 9'-9" | * |
| R514 | S | | | | | | 484 | 14'-8" | * |
| R515 | S | | | | | | 48 | 9'-8" | * |
| R516 | S | | | | | | 648 | 4'-8" | * |
| R517 | 14 | 1'-1 | 1'-4 | 1'-4 | 1'-10 1/2 | 7 1/2 | 9 | 5'-7 | * |
| | | | | | | | | | |

## FORWARD ABUTMENT

| MARK | TYPE | A | B | C | D | E | NO. | LENGTH | WEIGHT |
|---|---|---|---|---|---|---|---|---|---|
| B801 | S | | | | | | 14 | 34'-2 | 1277 |
| B802 | S | | | | | | 5 | 18'-2 | 245 |
| B803 | S | | | | | | 1 | 16'-8 | 45 |
| B804 | S | | | | | | 5 | 18'-0 | 240 |
| B805 | S | | | | | | 1 | 16'-4 | 44 |
| | | | | | | | | | |
| B701 | 5 | 9'-7 | 1'-5 | 7-7 | 11" | 3'-0 | 53 | 21'-10 | 2365 |
| B702 | 6 | 10'-4 | 1'-5 | | | | 6 | 21'-9 | 267 |
| B703 | 6 | 11'-4 | 1'-2 | | | | 7 | 23'-6 | 336 |
| B704 | 6 | 12'-5 | 1'-2 | | | | 7 | 25'-8 | 367 |
| | | | | | | | | | |
| B601 | 1 | 7'-9 | 5'-4 | 2'-6 | | | 21 | 15'-3 | 481 |
| B602 | 1 | 7'-4 | 5'-4 | 2'-6 | | | 5 | 14'-10 | 111 |
| B603 | 1 | 6'-7 | 5'-4 | 2'-6 | | | 10 | 14'-1 | 212 |
| B604 | 2 | 5'-5 | 10" | | | | 14 | 6'-1 | 128 |
| B605 | 6 | 8'-9 | 1'-2 | | | | 3 | 18'-4 | 83 |
| B606 | 2 | 8'-3 | 10" | | | | 6 | 8'-11 | 80 |
| B607 | 2 | 5'-5 | 10" | | | | 14 | 6'-1 | 128 |
| B608 | 6 | 9'-11 | 1'-2 | | | | 2 | 20'-8 | 62 |
| B609 | 2 | 8'-1 | 10" | | | | 6 | 8'-9 | 79 |
| B610 | 6 | 6'-0 | 1'-2 | | | | 1 | 12'-10 | 19 |
| | | | | | | | | | |
| B501 | 6 | 1'-7 | 5'-4 | | | | 36 | 8'-3 | 310 |
| B502 | 6 | 2'-0 | 3'-5 | | | | 36 | 7'-2 | 269 |
| B503 | 2 | 6'-7 | 7 1/2" | | | | 10 | 7'-1 | 74 |
| B504 | 2 | 7'-4 | 7 1/2" | | | | 5 | 7'-10 | 41 |
| B505 | 2 | 7'-9 | 7 1/2" | | | | 21 | 8'-3 | 181 |
| B506 | 9 | | | | | | 19 | 30'-2 | 598 |
| B507 | 9 | | | | | | 2 | 6'-0 | 13 |
| B508 | 9 | | | | | | 19 | 30'-7 | 606 |
| B509 | 9 | | | | | | 8 | 21'-6 | 179 |
| B510 | 9 | | | | | | 12 | 15'-5 | 193 |
| B511 | 9 | | | | | | 2 | 13'-6 | 28 |
| B512 | 9 | | | | | | 2 | 9'-10 | 21 |
| B513 | 3 | 2'-6 | 3'-0 | 5" | | | 18 | 11'-6 | 216 |
| B514 | 9 | | | | | | 1 | 3'-8 | 4 |
| B515 | 4 | 2'-2 | 8" | 5" | | | 24 | 5'-7 | 140 |
| B516 | 6 | 3'-8 | 1'-2 | | | | 2 | 8'-3 | 17 |
| B517 | 4 | 2'-11 to 3'-0 1/2 Varies by increments of 1/2 | 1'-2 | 5" | | | 2 sets of 4 | 7'-7 to 7'-10 Varies by increments of 1" | 64 |
| B518 | 9 | | | | | | 10 | 21'-4 | 223 |
| B519 | 9 | | | | | | 2 | 13'-4 | 28 |
| B520 | 9 | | | | | | 2 | 9'-5 | 20 |
| B521 | 12 | 6'-2 | 7" | | | | 6 | 7'-4 | 46 |
| B522 | 12 | 7'-0 | 7" | | | | 6 | 8'-2 | 51 |
| B523 | 13 | 2'-8 | 2'-6 | 1'-5 | 2" | | 16 | 6'-4 | 106 |
| B524 | 6 | 4'-0 | 1'-2 | | | | 2 | 8'-11 | 19 |
| B525 | S | | | | | | 1 | 4'-9 | 5 |
| | | | | | | | | | |
| | | | | | | | | | |
| | | | | | | | | | |

# NOTES

BAR SIZE is indicated in the bar mark. The first digit where three digits are used, and the first two digits where four are used, indicate the bar size number. For example, A700 is a No. 7 size bar and A1014 is a No. 10 size.

SPIRAL REINFORCING BARS: The "Length" shown in the steel list for the spiral bars is the distance from the top of the footing to the bottom of the pier cap.
The "No. of Turns" shown is the "Length" divided by the pitch, plus 3 turns (total number of closed coils), expressed as the nearest whole number. Spiral reinforcing bars shall not have deformations but shall in other respects conform to Item 509
11/2 closed coils shall be provided at the ends of each spiral unit.
Four steel channel, tee or angle spacers, weighing approximately 0.68 lb. per lin. ft. of spacer, shall be equally spaced along the periphery of the coil. The number of pounds of these spacers, based on 0.68 per lin. ft., will be paid for as reinforcing steel and is included in the tabulated quantity of spiral bars.

All dimensions are out-to-out.

**S** in the "TYPE" column indicates straight bars.

* Include with railing for payment.

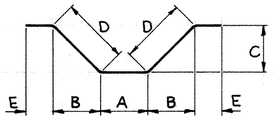


## REPLACEMENT BARS

| MARK | TYPE | A | B | NO. | LENGTH |
|---|---|---|---|---|---|
| RE1101 | S | | | 9 | 8'-6 |
| RE1001 | S | | | 5 | 8'-2 |
| RE901 | S | | | 3 | 7'-10 |
| RE801 | S | | | 2 | 7'-6 |
| RE701 | S | | | 24 | 7'-2 |
| RE601 | S | | | 14 | 6'-11 |
| RE501 | S | | | 3 | 6'-7 |
| RE401 | 11 | 1'-4 | 6'-3 | 1 | 6'-3 |

For additional reinforcing steel, see sheet 10



W. E. QUICKSALL AND ASSOCIATES, INC.
CONSULTING ENGINEERS • NEW PHILADELPHIA, OHIO

**REINFORCING BAR SCHEDULE**
**BRIDGE NO. STA-43-1352**
**S.R. 43 over B&O R.R., N&W R.R. & P.R.R.**

STARK COUNTY — STA. 15+34.75 — STA. 29+49.87

| DESIGNED | DRAWN | TRACED | CHECKED | REVIEWED | DATE | REVISED |
|---|---|---|---|---|---|---|
| | L.A.K. | | PMZ | DLM | 2-21-69 | |

MICROFILMED
JUL 18 1979
REPRODUCTION

| FED. RD. DIVISION | STATE | PROJECT | |
|---|---|---|---|
| 2 | OHIO | | |

68

STA-43-13.40 PT-1

## CAP & COLUMN PIERS

| MARK | TYPE | A | B | C | NUMBER PER PIER 1 | 2 | 3 | 4 | 5 | 6 | 7 | 8 | 9 | 10 | 11 | TOTAL NUMBER | LENGTH | WEIGHT |
|---|---|---|---|---|---|---|---|---|---|---|---|---|---|---|---|---|---|---|
| P1101 | Str. | | | | | | | | | | | | | | 14 | 14 | 26'-8 | 1984 |
| P1102 | Str. | | | | 52 | 52 | 52 | 52 | 52 | 52 | 52 | 52 | 60 | 60 | 60 | 596 | 25'-6 | 80747 |
| | | | | | | | | | | | | | | | | | | |
| P1001 | Str | | | | 40 | | | | | | | | | | | 40 | 14'-11 | 2567 |
| P1002 | Str. | | | | | 40 | | | | | | | | | | 40 | 16'-8 | 2869 |
| P1003 | Str. | | | | | | 40 | | | | | | | | | 40 | 18'-6 | 3184 |
| P1004 | Str. | | | | | | | 40 | | | | | | | | 40 | 20'-3 | 3485 |
| P1005 | Str. | | | | | | | | 40 | | | | | | | 40 | 22'-1 | 3801 |
| P1006 | Str | | | | | | | | | 40 | | | | | | 40 | 22'-11 | 3944 |
| P1007 | Str. | | | | | | | | | | 40 | | | | | 40 | 23'-9 | 4088 |
| P1008 | Str. | | | | | | | | | | | 40 | | | | 40 | 25'-6 | 4389 |
| P1009 | Str | | | | | | | | | | | | 40 | | | 40 | 27'-4 | 4705 |
| P1010 | Str. | | | | | | | | | | | | | 40 | | 40 | 29'-1 | 5006 |
| P1011 | Str. | | | | | | | | | | | | | | 40 | 40 | 30'-5 | 5235 |
| P1012 | 2 | 5'-5 | 1'-4½ | | 40 | 40 | 40 | 40 | 40 | 40 | 40 | 40 | 40 | 40 | 40 | 440 | 6'-6 | 12307 |
| P1013 | Str. | | | | 14 | 14 | 14 | 14 | 14 | 14 | 14 | 14 | 14 | 14 | | 140 | 26'-8 | 16065 |
| | | | | | | | | | | | | | | | | | | |
| P901 | Str. | | | | 52 | 52 | 52 | 52 | 52 | 52 | 52 | 52 | | | | 416 | 6'-6 | 9194 |
| P902 | Str. | | | | | | | | | | | | 70 | 70 | 70 | 210 | 7'-6 | 5355 |
| | | | | | | | | | | | | | | | | | | |

## CAP & COLUMN PIERS

| MARK | TYPE | A | B | C | NUMBER PER PIER 1 | 2 | 3 | 4 | 5 | 6 | 7 | 8 | 9 | 10 | 11 | TOTAL NUMBER | LENGTH | WEIGHT |
|---|---|---|---|---|---|---|---|---|---|---|---|---|---|---|---|---|---|---|
| P801 | Str. | | | | 12 | 12 | 12 | 12 | 12 | 12 | 12 | 12 | 12 | 12 | 14 | 134 | 26'-8 | 9541 |
| | | | | | | | | | | | | | | | | | | |
| P601 | Str. | | | | 26 | 26 | 26 | 26 | 26 | 26 | 26 | 26 | | | | 208 | 6'-6 | 2031 |
| P602 | 6 | 3'-0 | 2'-8 | | 72 | 72 | 72 | 72 | 72 | 72 | 72 | 72 | 72 | 72 | 72 | 792 | 8'-4 | 9913 |
| P603 | Str. | | | | | | | | | | | | 26 | 26 | 26 | 78 | 7'-6 | 879 |
| | | | | | | | | | | | | | | | | | | |
| P501 | Str. | | | | 8 | 8 | 8 | 8 | 8 | 8 | 8 | 8 | 8 | 8 | 8 | 8 | 26'-8 | 2448 |

## SPIRAL REINFORCING BARS

| MARK | CORE DIA. | PITCH | NO. TURNS | 1 | 2 | 3 | 4 | 5 | 6 | 7 | 8 | 9 | 10 | 11 | TOTAL NO. | LENGTH | WEIGHT |
|---|---|---|---|---|---|---|---|---|---|---|---|---|---|---|---|---|---|
| SP401 | 32 | 4½ | 35 | 4 | | | | | | | | | | | 4 | 11'-1 | 846 |
| SP402 | 32 | 4½ | 38 | | 4 | | | | | | | | | | 4 | 12'-10 | 969 |
| SP403 | 32 | 4½ | 42 | | | 4 | | | | | | | | | 4 | 14'-7 | 1092 |
| SP404 | 32 | 4½ | 47 | | | | 4 | | | | | | | | 4 | 16'-5 | 1220 |
| SP405 | 32 | 4½ | 52 | | | | | 4 | | | | | | | 4 | 18'-3 | 1349 |
| SP406 | 32 | 4½ | 54 | | | | | | 4 | | | | | | 4 | 19'-1 | 1408 |
| SP407 | 32 | 4½ | 56 | | | | | | | 4 | | | | | 4 | 19'-10 | 1460 |
| SP408 | 32 | 4½ | 61 | | | | | | | | 4 | | | | 4 | 21'-8 | 1589 |
| SP409 | 32 | 4½ | 66 | | | | | | | | | 4 | | | 4 | 23'-6 | 1718 |
| SP410 | 32 | 4½ | 70 | | | | | | | | | | 4 | | 4 | 25'-3 | 1841 |
| SP411 | 32 | 4½ | 74 | | | | | | | | | | | 4 | 4 | 26'-7 | 1934 |

## T-TYPE PIERS

| MARK | TYPE | A | B | C | NUMBER PER PIER 12 | 13 | 14 | 15 | 16 | 17 | 18 | TOTAL NUMBER | LENGTH | WEIGHT |
|---|---|---|---|---|---|---|---|---|---|---|---|---|---|---|
| T1101 | Str. | | | | 56 | 56 | | | | | | 112 | 17'-10 | 10612 |
| T1102 | 2 | 6'-3 | 1'-5½ | | 56 | 56 | | | | | | 192 | 7'-5 | 7569 |
| T1103 | Str. | | | | 36 | 36 | 36 | | | | | 108 | 12'-6 | 7173 |
| T1104 | Str. | | | | 20 | 20 | | | | | 20 | 60 | 27'-2 | 8660 |
| T1105 | Str. | | | | | | 20 | | | | | 20 | 28'-8 | 3046 |
| T1106 | Str. | | | | | | | 20 | | | | 20 | 34'-8 | 3684 |
| T1107 | Str | | | | | | | | 24 | 24 | | 48 | 29'-8 | 7566 |
| T1108 | Str. | | | | | | | | 72 | 72 | | 144 | 17'-2 | 13134 |
| T1109 | Str. | | | | | | | | 56 | 56 | | 112 | 16'-0 | 9521 |
| T1110 | 2 | 6'-9 | 1'-5½ | | | | 96 | | 120 | 120 | 88 | 424 | 7'-11 | 17841 |
| T1111 | Str. | | | | | | | | | | 52 | 52 | 12'-2 | 3361 |
| T1112 | Str. | | | | | | | 50 | | | 40 | 90 | 14'-6 | 6933 |
| | | | | | | | | | | | | | | |
| T1001 | Str. | | | | | | 56 | | | | | 56 | 17'-10 | 4297 |
| T1002 | Str. | | | | | | | | 72 | | | 72 | 10'-6 | 3253 |
| T1003 | Str. | | | | | | | | | 72 | | 72 | 7'-11 | 2453 |
| | | | | | | | | | | | | | | |
| T901 | Str. | | | | 56 | 56 | | | | | | 112 | 12'-7 | 4792 |
| T902 | Str. | | | | 56 | 56 | | | | | | 112 | 13'-10 | 5268 |
| T903 | Str. | | | | | | 20 | | | | | 20 | 7'-0 | 476 |
| T904 | Str. | | | | | | 36 | | | | | 36 | 14'-6 | 1775 |
| T905 | Str. | | | | | | | 32 | | | | 32 | 18'-6 | 2013 |
| T906 | Str. | | | | | | | 72 | | | | 72 | 16'-6 | 4039 |
| T907 | 2 | 6'-1 | 1'-3 | | | | | 120 | | | | 120 | 7'-1 | 2890 |
| T908 | Str. | | | | | | | | 34 | 34 | | 68 | 20'-6 | 4740 |
| T909 | Str | | | | | | | | | | 36 | 36 | 12'-2 | 1489 |
| T910 | Str. | | | | | | | | | | 30 | 30 | 19'-6 | 1989 |
| | | | | | | | | | | | | | | |
| T801 | Str. | | | | 26 | 26 | 26 | | | | | 78 | 17'-6 | 3645 |
| T802 | 7 | 8'-4 | 3'-2 | 1'-2 | 20 | 20 | 20 | | | | | 60 | 11'-6 | 1842 |
| T803 | Str. | | | | | | 40 | | | | | 40 | 11'-0 | 1175 |
| T804 | Str. | | | | | | | 72 | | | | 72 | 11'-9 | 2259 |
| T805 | 13 | 10'-4 | 2'-0 | 8" | | | | 20 | | | | 20 | 12'-4 | 659 |
| T806 | Str | | | | | | | | 30 | 30 | | 60 | 16'-0 | 2563 |
| T807 | 13 | 9'-6 | 2'-0 | 10" | | | | | 24 | 24 | | 48 | 11'-6 | 1474 |
| T808 | 13 | 8'-9 | 3'-0 | 1'-4 | | | | | | | 20 | 20 | 11'-9 | 627 |
| T809 | Str | | | | | | | | | | 88 | 88 | 8'-8 | 2037 |
| T701 | Str. | | | | 40 | 40 | | | 52 | 52 | 40 | 224 | 7'-10 | 3586 |
| T702 | Str. | | | | | | | | 18 | 18 | | 36 | 20'-6 | 1508 |
| T703 | Str. | | | | | | | | 48 | 48 | | 96 | 8'-0 | 1570 |
| T704 | 6 | 5'-0 | 2'-8 | | | | | | 32 | 32 | 32 | 96 | 12'-4 | 2419 |
| T705 | 6 | 3'-2 | 2'-8 | | | | | | | | | 8 | 8'-8 | 142 |
| T706 | 6 | 4'-1 | 2'-8 | | | | | | 80 | 80 | 56 | 216 | 10'-6 | 4636 |
| T707 | Str. | | | | | | | | | | 28 | 28 | 14'-6 | 830 |

## T-TYPE PIERS

| MARK | TYPE | A | B | C | NUMBER PER PIER 12 | 13 | 14 | 15 | 16 | 17 | 18 | TOTAL NUMBER | LENGTH | WEIGHT |
|---|---|---|---|---|---|---|---|---|---|---|---|---|---|---|
| T708 | Str. | | | | | | | | | | 16 | 16 | 19'-6 | 638 |
| | | | | | | | | | | | | | | |
| | | | | | | | | | | | | | | |
| | | | | | | | | | | | | | | |
| | | | | | | | | | | | | | | |
| | | | | | | | | | | | | | | |
| T601 | Str. | | | | 18 | 18 | 18 | | | | | 54 | 12'-6 | 1014 |
| T602 | Str. | | | | 14 | 14 | 14 | | | | | 42 | 17'-6 | 1104 |
| T603 | Str. | | | | 36 | 36 | 24 | | | | | 96 | 5'-10 | 841 |
| T604 | Str. | | | | | | | 20 | | | | 20 | 14'-6 | 436 |
| T605 | Str. | | | | | | | 48 | | | | 48 | 9'-0 | 649 |
| T606 | Str. | | | | | | | 52 | | | | 52 | 7'-0 | 547 |
| | | | | | | | | | | | | | | |
| T501 | Str. | | | | 68 | 72 | | | | | 48 | 188 | 8'-6 | 1667 |
| T502 | 8 | 1'-7 | 4'-1 | 1'-4 | 68 | 72 | 76 | 68 | 64 | 56 | 48 | 452 | 7'-3 | 3418 |
| T503 | Str. | | | | 4 | 4 | | | | | 8 | 16 | 27'-2 | 453 |
| T504 | Str. | | | | 4 | 4 | | | | | | 8 | 25'-8 | 214 |
| T505 | Str. | | | | 4 | 4 | | | | | | 8 | 16'-10 | 140 |
| T506 | 6 | 3'-7 | 2'-8 | | 24 | 24 | | | | | | 48 | 9'-7 | 480 |
| T507 | 6 | 2'-11 | 2'-8 | | 64 | 64 | | | | | | 128 | 8'-3 | 1101 |
| T508 | 6 | 2'-2 | 2'-8 | | 8 | 8 | | | | | | 16 | 6'-9 | 113 |
| T509 | 6 | 3'-3 | 2'-8 | | | | 72 | | | | | 72 | 8'-11 | 670 |
| T510 | Str. | | | | | | | | | | 4 | 4 | 13'-0 | 54 |
| T511 | 6 | 3'-10 | 2'-8 | | | | 24 | | | | | 24 | 10'-1 | 252 |
| T512 | Str. | | | | | | 4 | | | | | 4 | 18'-0 | 75 |
| T513 | Str. | | | | | | 4 | 4 | | | | 8 | 26'-9 | 223 |
| T514 | Str. | | | | | | 4 | | | | | 4 | 28'-8 | 120 |
| T515 | Str. | | | | | | 76 | | 64 | 56 | | 196 | 9'-6 | 1942 |
| T516 | 6 | 2'-5 | 2'-8 | | | | 28 | | | | | 28 | 7'-3 | 212 |
| T517 | Str. | | | | | | | 8 | | | | 8 | 34'-8 | 289 |
| T518 | Str. | | | | | | | 4 | | | | 4 | 18'-0 | 75 |
| T519 | Str. | | | | | | | 68 | | | | 68 | 12'-0 | 851 |
| T520 | 6 | 3'-2 | 2'-8 | | | | | 28 | | | | 28 | 8'-9 | 256 |
| T521 | 6 | 3'-11 | 2'-8 | | | | | 12 | | | | 12 | 10'-3 | 128 |
| T522 | 6 | 3'-7 | 2'-8 | | | | | 28 | | | | 28 | 9'-7 | 280 |
| T523 | 6 | 4'-1 | 2'-8 | | | | | 12 | | | | 12 | 10'-7 | 132 |
| T524 | Str. | | | | | | | | 8 | 8 | | 16 | 29'-8 | 495 |
| T525 | Str. | | | | | | | | 4 | 4 | | 8 | 27'-0 | 225 |
| T526 | Str. | | | | | | | | 4 | 4 | | 8 | 20'-0 | 167 |
| T527 | Str. | | | | | | | | 4 | 4 | | 8 | 14'-0 | 117 |
| T528 | Str. | | | | | | | | | | 4 | 4 | 25'-0 | 104 |
| T529 | Str. | | | | | | | | | | 4 | 4 | 19'-0 | 79 |
| | | | | | | | | | | | | | | |
| | | | | | | | | | | | | | | |

For notes and reinforcing bar types, see Sheet 9

Sheet 10 / 37

W. E. QUICKSALL AND ASSOCIATES, INC.
CONSULTING ENGINEERS • NEW PHILADELPHIA, OHIO

# REINFORCING BAR SCHEDULE

BRIDGE NO. STA-43-1352

S.R. 43 over B&O R.R., N&W R.R. & P.R.R.

STA. 15+34.75

STARK COUNTY STA. 29+49.87

| DESIGNED | DRAWN | TRACED | CHECKED | REVIEWED | DATE | REVISED |
|---|---|---|---|---|---|---|
| | wda | | LK | DLM | 2-21-69 | |

MICROFILMED
JUL 18 1979
REPRODUCTION

| FED. RD. DIVISION | STATE | PROJECT | |
|---|---|---|---|
| 2 | OHIO | | |

69

STA-43-13.40 PT-1

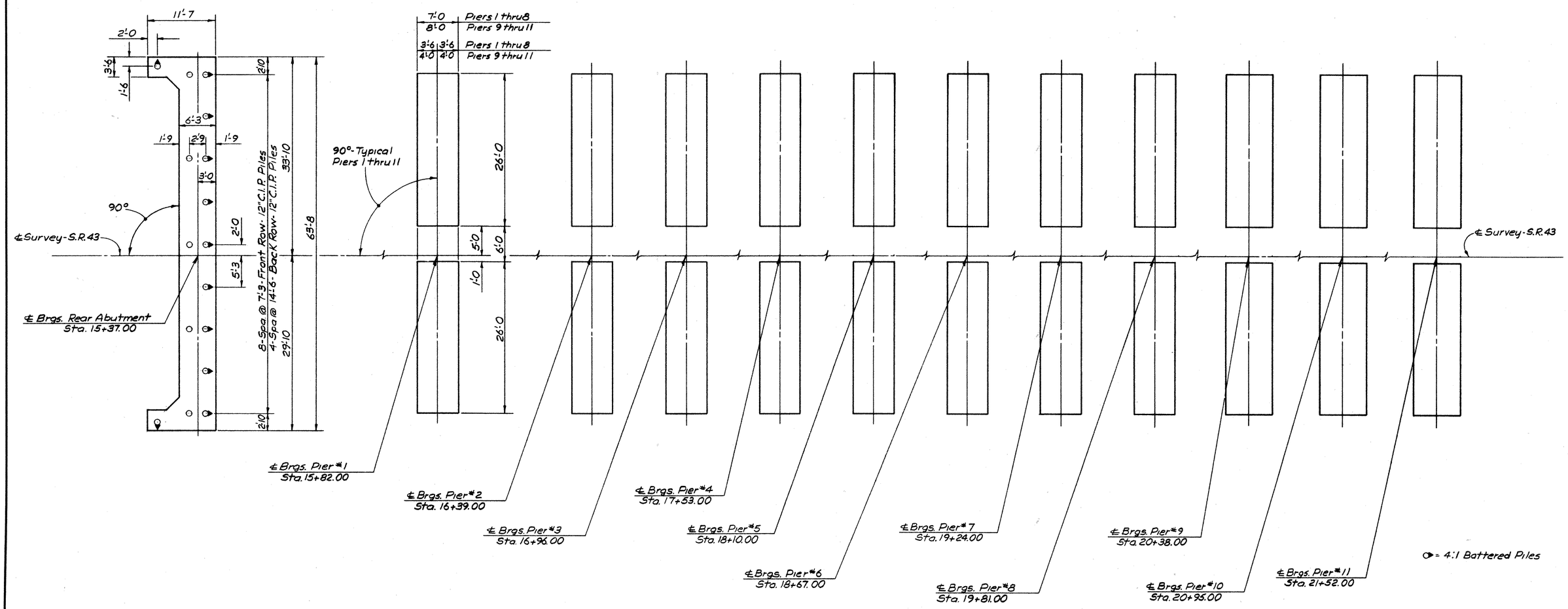


For continuation of Footing Plan, see sheet No. 12

Sheet 11 / 37

W. E. QUICKSALL AND ASSOCIATES, INC.
CONSULTING ENGINEERS • NEW PHILADELPHIA, OHIO

# FOOTING PLAN

## BRIDGE NO. STA-43-1352

S.R. 43 over B&O, N&W & P.R.R.

STARK COUNTY

STA. 15+34.75
STA. 29+49.87

| DESIGNED | DRAWN | TRACED | CHECKED | REVIEWED | DATE | REVISED |
|---|---|---|---|---|---|---|
| | PMZ | | wda | DLM | 2-21-69 | |

MICROFILMED
JUL 18 1979
REPRODUCTION

| FED. RD. DIVISION | STATE | PROJECT | |
|---|---|---|---|
| 2 | OHIO | | |

STA-43-13.40 PT-1



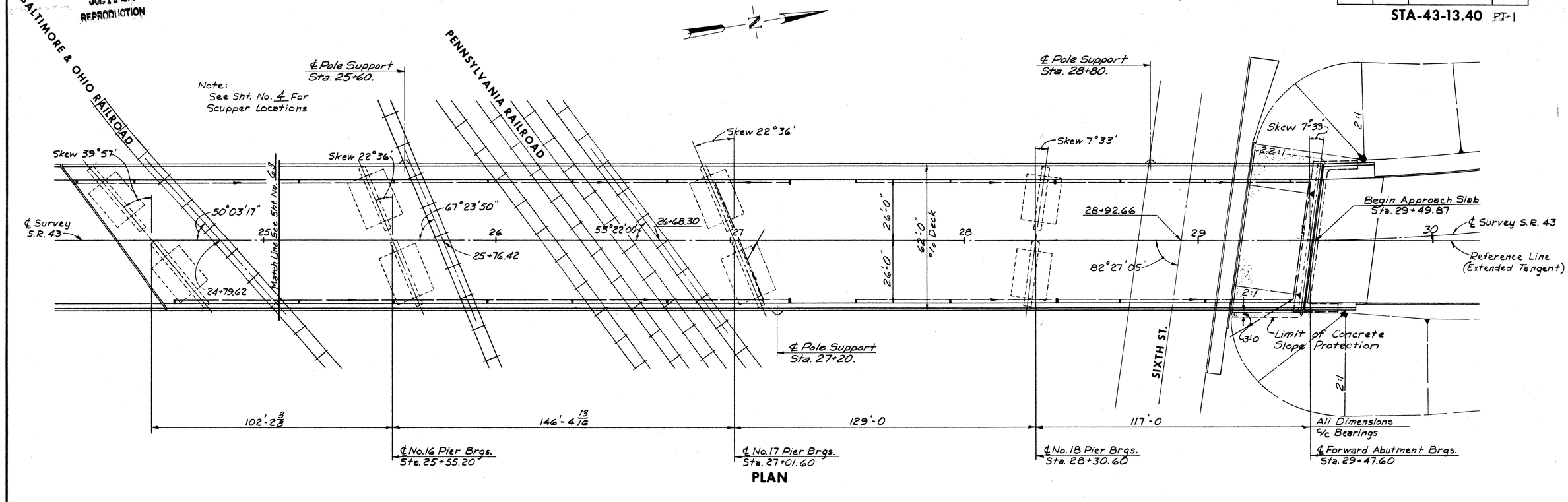


PLAN

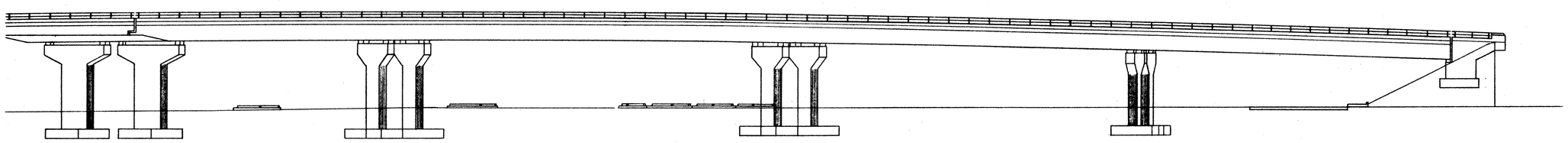

ELEVATION

Note:
12" C.I.P. Piles in Forward
Abutment Not Shown.

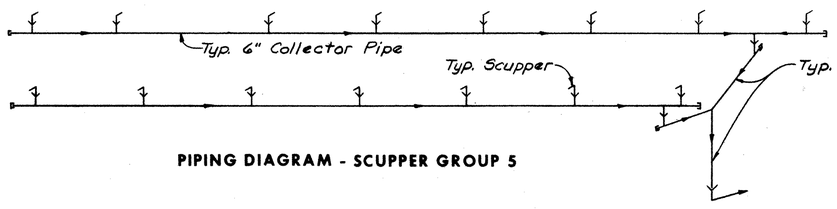


PIPING DIAGRAM - SCUPPER GROUP 5

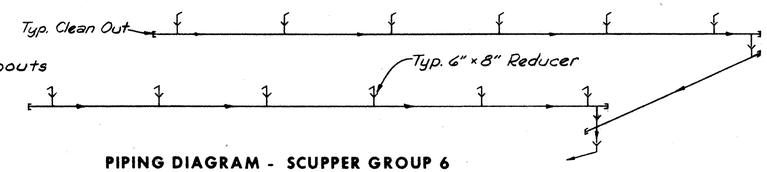


PIPING DIAGRAM - SCUPPER GROUP 6

Sheet 6 / 37

W. E. QUICKSALL AND ASSOCIATES, INC.
CONSULTING ENGINEERS • NEW PHILADELPHIA, OHIO

# GENERAL PLAN & ELEVATION

BRIDGE NO. STA-43-1352

S.R. 43 over B & O, N & W, & P.R.R.

STA. 15+34.75
STA. 29+49.87

STARK COUNTY

| DESIGNED | DRAWN | TRACED | CHECKED | REVIEWED | DATE | REVISED |
|---|---|---|---|---|---|---|
| | LY | | PMZ | DLM | 2-21-69 | |

MICROFILMED
JUL 18 1979
REPRODUCTION

| FED. RD. DIVISION | STATE | PROJECT | |
|---|---|---|---|
| 2 | OHIO | | |

70

STA-43-13.40 PT-1

Note;
Dimensions for Pier #13
identical to Pier #12.

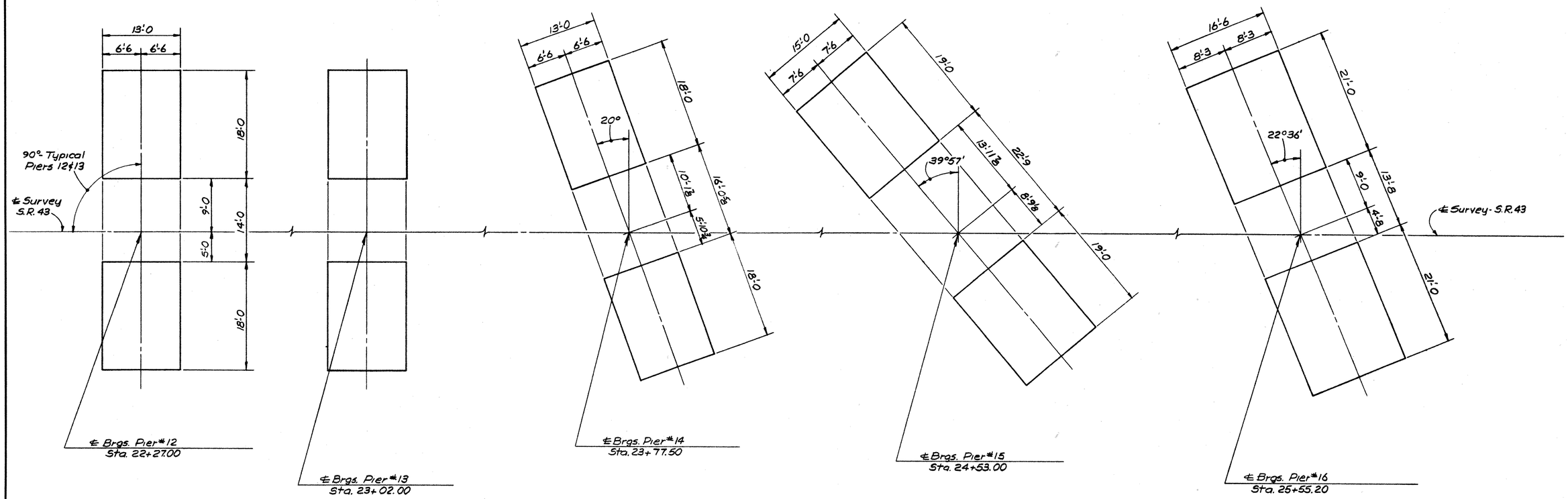


For continuation of Footing Plan,
see sheet No. 13

Sheet 12 / 37

W. E. QUICKSALL AND ASSOCIATES, INC.
CONSULTING ENGINEERS • NEW PHILADELPHIA, OHIO

# FOOTING PLAN

BRIDGE NO. STA-43-1352

S.R. 43 over B&O, N&W & P.R.R.

STARK COUNTY

STA. 15+34.75
STA. 29+49.87

| DESIGNED | DRAWN | TRACED | CHECKED | REVIEWED | DATE | REVISED |
|---|---|---|---|---|---|---|
| | PMZ | | wdz | DLM | 2-21-69 | |

MICROFILMED
JUL 18 1979
REPRODUCTION

| FED. RD. DIVISION | STATE | PROJECT | |
|---|---|---|---|
| 2 | OHIO | | |

71

STA-43-13.40 PT-1

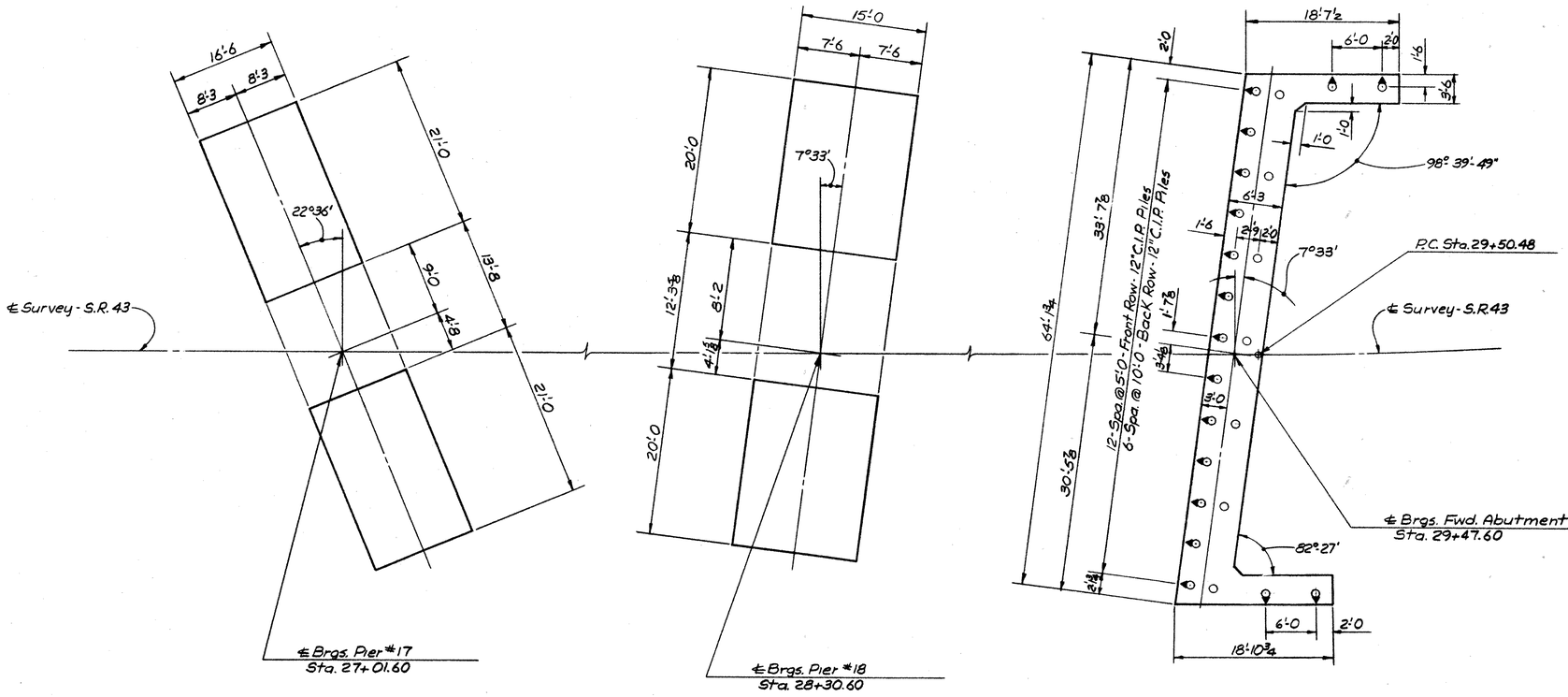


● = 4:1 Battered Piles

Sheet 13 / 37

W. E. QUICKSALL AND ASSOCIATES, INC.
CONSULTING ENGINEERS • NEW PHILADELPHIA, OHIO

# FOOTING PLAN

## BRIDGE NO. STA-43-1352

S.R. 43 over B&O, N&W & P.R.R.

STARK COUNTY

STA. 15+34.75
STA. 29+49.87

| DESIGNED | DRAWN | TRACED | CHECKED | REVIEWED | DATE | REVISED |
|---|---|---|---|---|---|---|
| | PMZ | | wda | DLM | 2-21-69 | |

| FED. RD. DIVISION | STATE | PROJECT | |
|---|---|---|---|
| 2 | OHIO | | |

72

**STA-43-13.40** PT-1

MICROFILMED
JUL 18 1979
REPRODUCTION

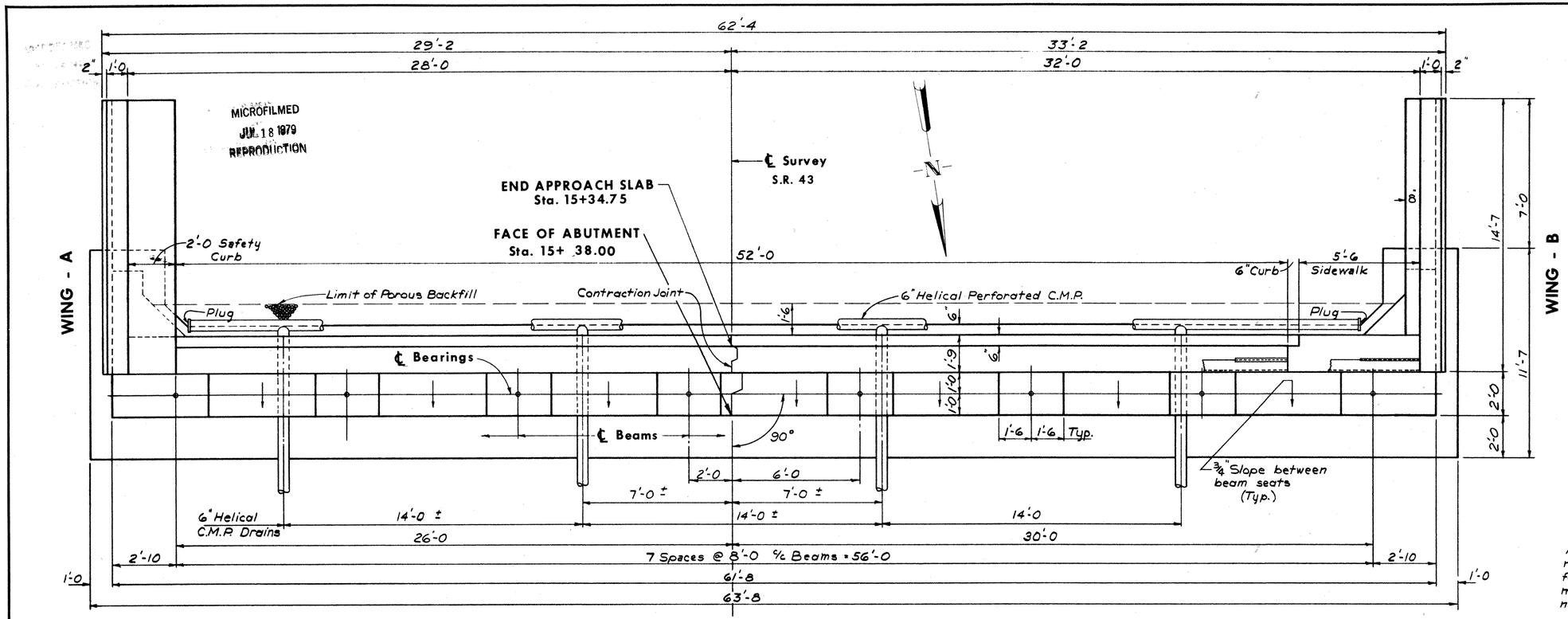


PLAN

Adjustable Type Elbows meeting specification requirements for gage and coating are acceptable for making bends in perforated corrugated metal pipe. Elbows and the stem of tees need not be perforated.

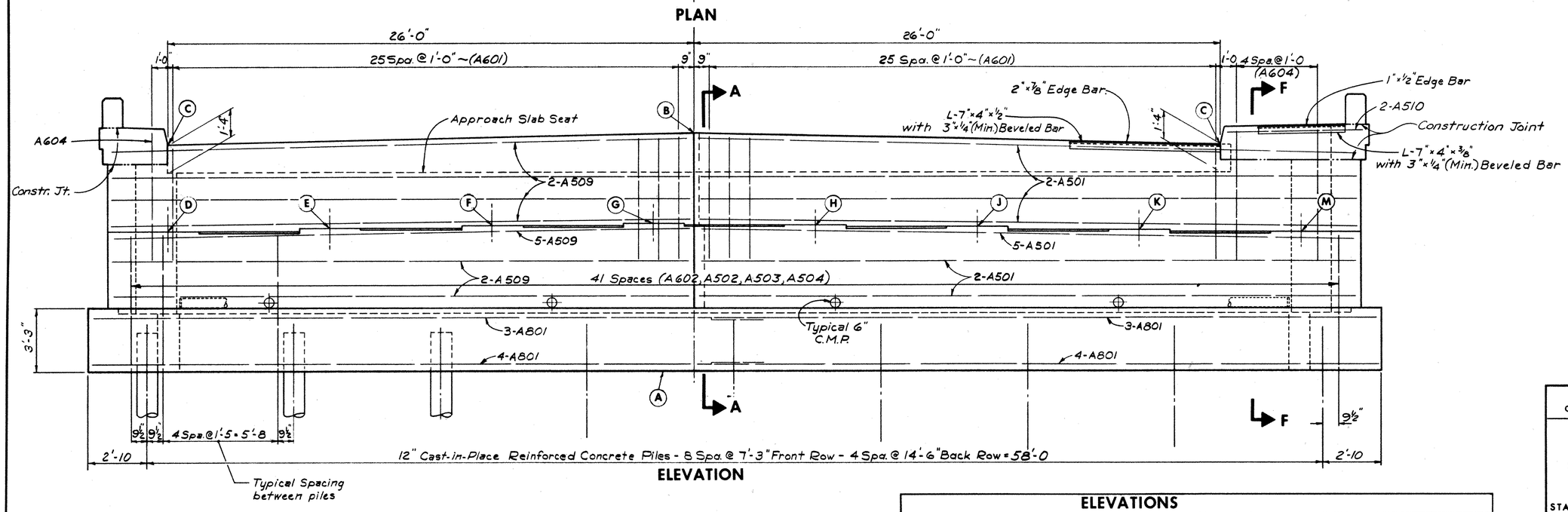


ELEVATION

For additional details refer to sheet 15.

| ELEVATIONS | | | | | | | | | | |
|---|---|---|---|---|---|---|---|---|---|---|
| A | B | C | D | E | F | G | H | J | K | M |
| 1030.40 | 1042.36 | 1041.95 | 1037.51 | 1037.64 | 1037.77 | 1037.90 | 1037.84 | 1037.72 | 1037.59 | 1037.47 |

Sheet 14/37

W. E. QUICKSALL AND ASSOCIATES, INC.
CONSULTING ENGINEERS • NEW PHILADELPHIA, OHIO

# REAR ABUTMENT DETAILS

**BRIDGE NO. STA-43-1352**

S.R. 43 over B. & O., N. & W., & P.R.R.

STA. 15+34.75
STA. 29+49.87

STARK COUNTY

| DESIGNED | DRAWN | TRACED | CHECKED | REVIEWED | DATE | REVISED |
|---|---|---|---|---|---|---|
| | G.E.F. | | | DLM | 2-21-69 | |

MICROFILMED
JUL 18 1979
REPRODUCTION

| FED. RD. DIVISION | STATE | PROJECT | |
|---|---|---|---|
| 2 | OHIO | | |

73

STA-43-13.40 PT-1

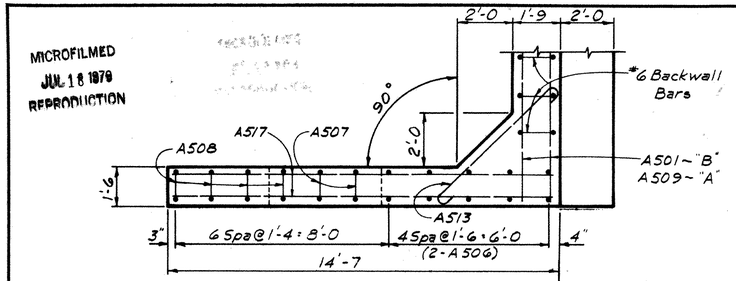


SECTION D-D

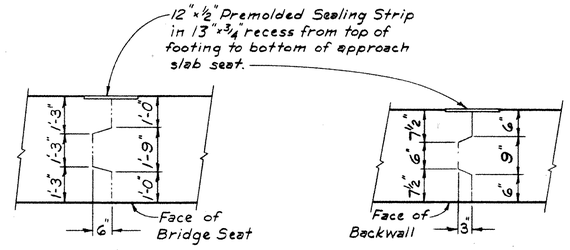


CONTRACTION JOINT DETAILS

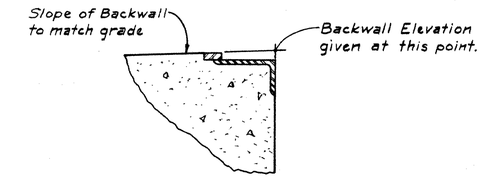


DETAIL 'A'

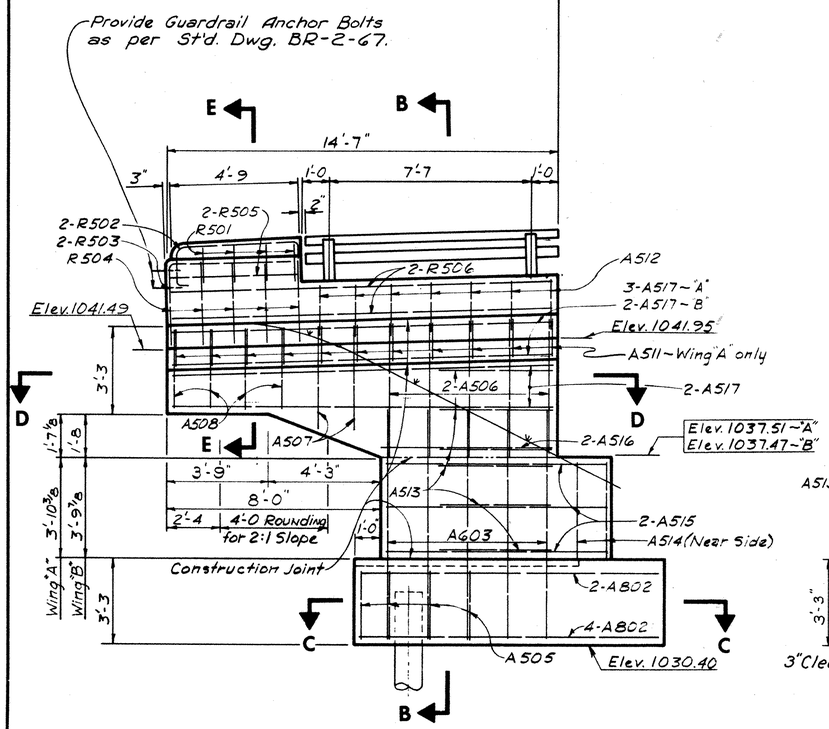


ELEVATION - WING A AS SHOWN & NOTED
WING 'B' - OPPOSITE HAND & NOTED

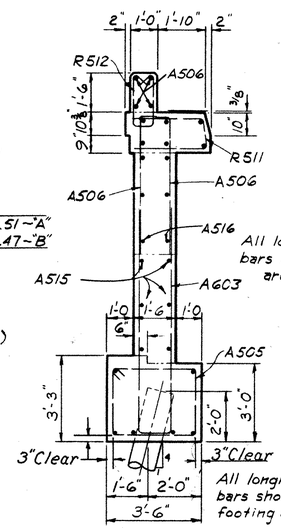


SECTION B-B
WING A

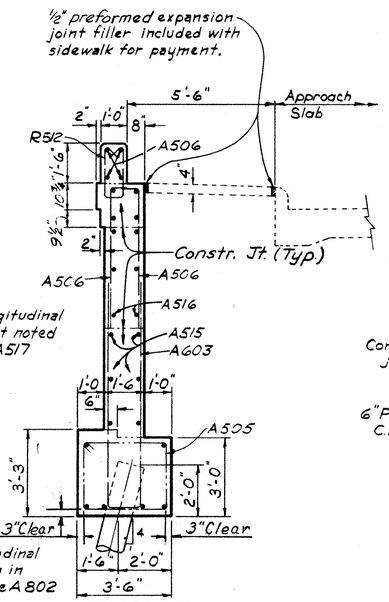


SECTION B-B
WING B

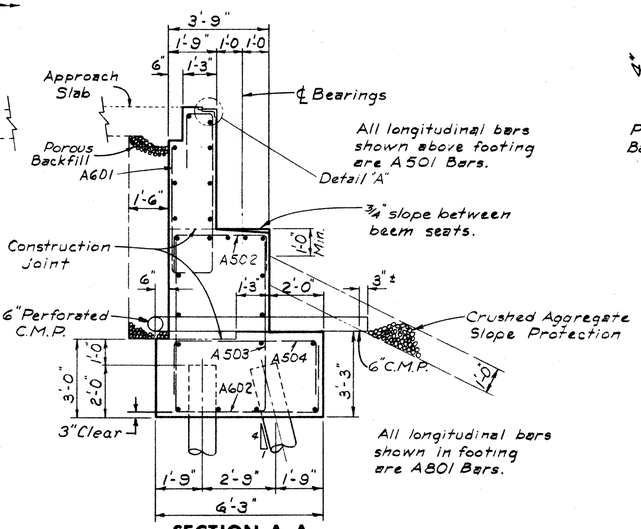


SECTION A-A

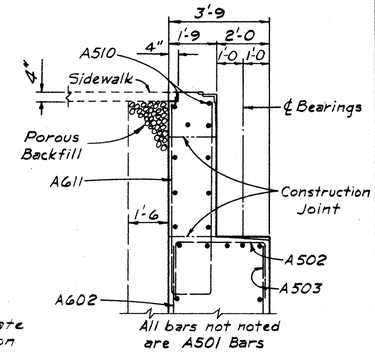


PARTIAL SECTION F-F

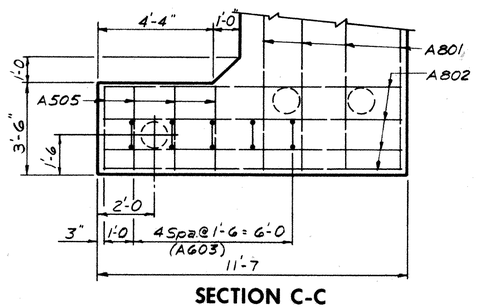


SECTION C-C

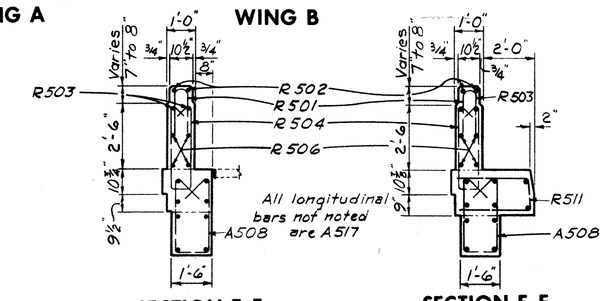


SECTION E-E
WING B

SECTION E-E
WING A

Sheet 15/37

W. E. QUICKSALL AND ASSOCIATES, INC.
CONSULTING ENGINEERS • NEW PHILADELPHIA, OHIO

# REAR ABUTMENT DETAILS

BRIDGE NO. STA-43-1352

S.R. 43 over B. & O., N. & W., & P.R.R.

STA. 15+34.75

STARK COUNTY

STA. 29+49.87

| DESIGNED | DRAWN | TRACED | CHECKED | REVIEWED | DATE | REVISED |
|---|---|---|---|---|---|---|
| | G.E.F. | | TG | DLM | 2-21-69 | |

MICROFILMED
JUL 18 1979
REPRODUCTION

| FED. RD. DIVISION | STATE | PROJECT | |
|---|---|---|---|
| 2 | OHIO | | |

74

STA-43-13.40 PT-1

Adjustable Type Elbows meeting specification requirements for gage and coating are acceptable for making bends in perforated corrugated metal pipe. Elbows and the stem of tees need not be perforated.

**ELEVATIONS**

| A | B | C | D | E | F | G | H | J | K | M | N |
|---|---|---|---|---|---|---|---|---|---|---|---|
| 1041.50 | 1057.39 | 1056.16 | 1057.11 | 1048.53 | 1048.91 | 1049.28 | 1049.66 | 1049.92 | 1049.83 | 1049.74 | 1049.65 |

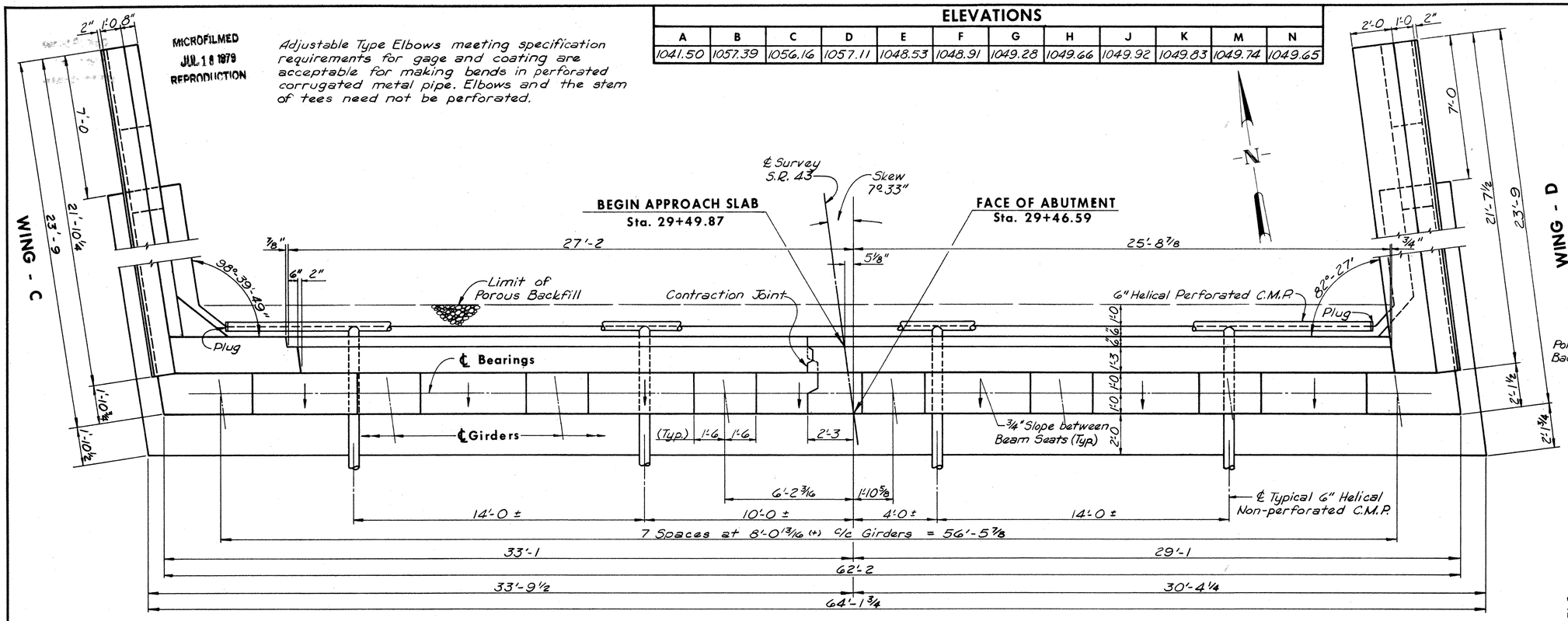


**PLAN**

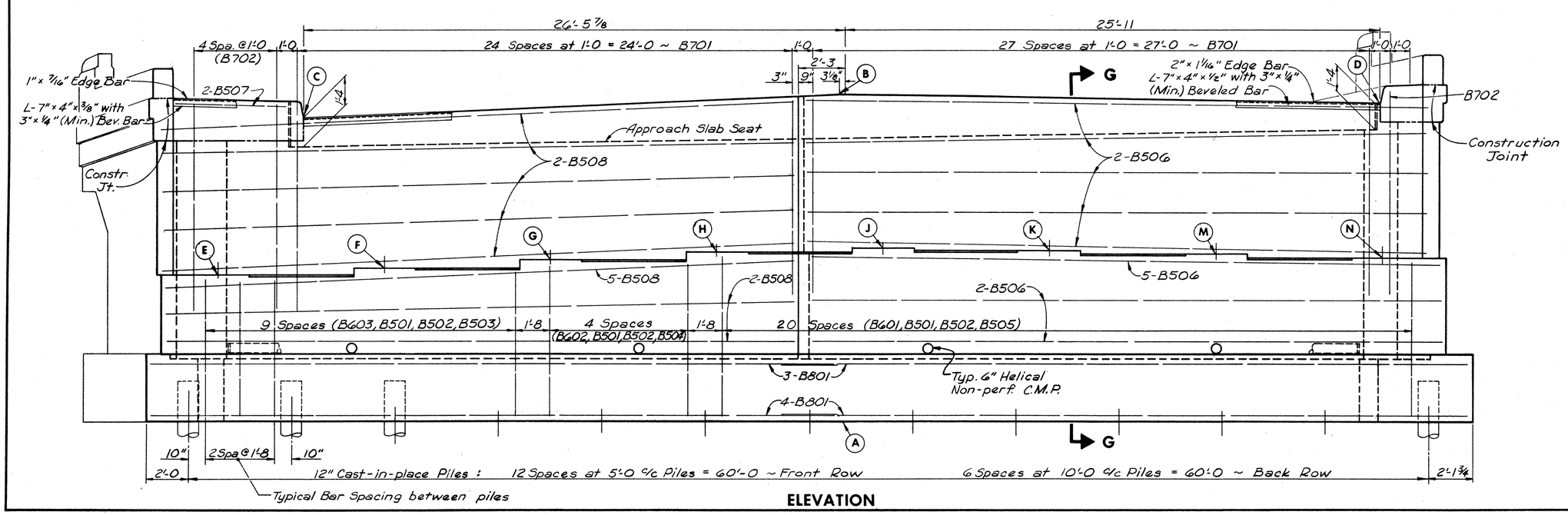


**ELEVATION**

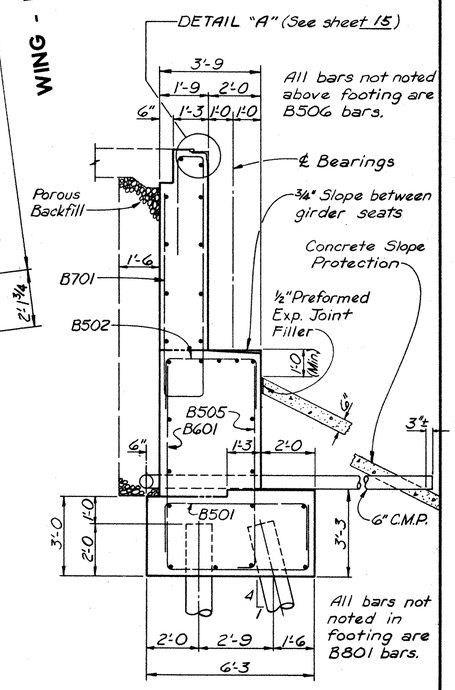


**SECTION G-G**

Note:

Refer to sheet 15 for Contraction Joint Details.

See sheet 17 for additional details.

Sheet 16/37

W. E. QUICKSALL AND ASSOCIATES, INC.
CONSULTING ENGINEERS • NEW PHILADELPHIA, OHIO

# FORWARD ABUTMENT DETAILS

BRIDGE NO. STA-43-1352

S.R. 43 over B&O R.R., N&W R.R. & P.R.

STARK COUNTY — STA. 15+34.75 / STA. 29+49.87

| DESIGNED | DRAWN | TRACED | CHECKED | REVIEWED | DATE | REVISED |
|---|---|---|---|---|---|---|
| | TG | | wda | DLM | 2-21-69 | |

MICROFILMED
JUL 18 1979
REPRODUCTION

| FED. RD. DIVISION | STATE | PROJECT | |
|---|---|---|---|
| 2 | OHIO | | |

75

STA-43-13.40 PT-1

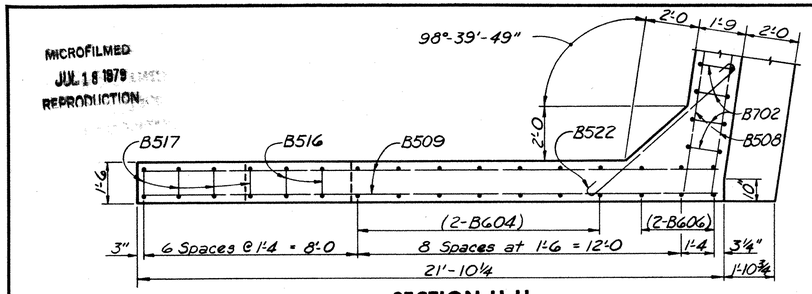


SECTION H-H

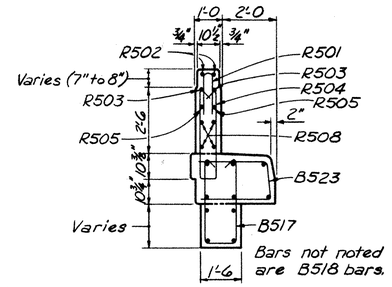


SECTION N-N

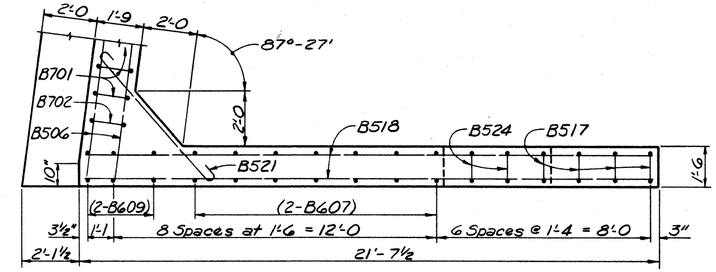


SECTION P-P

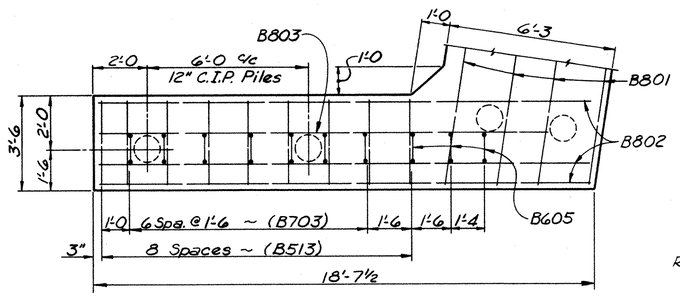


SECTION J-J

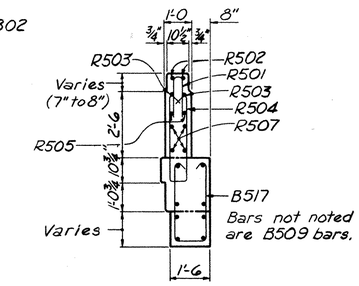


SECTION M-M

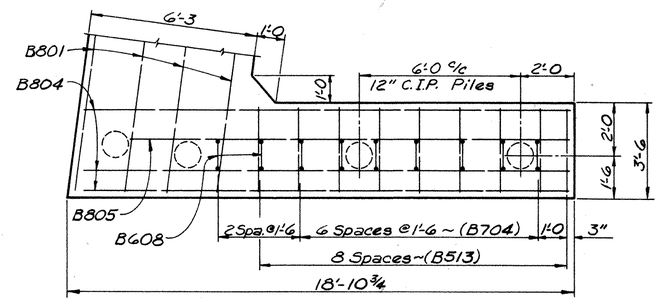


SECTION Q-Q

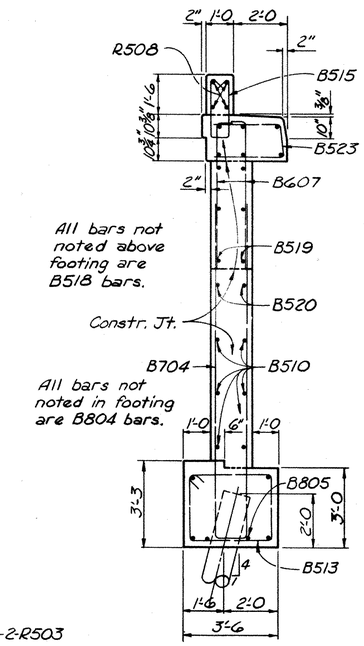


SECTION R-R

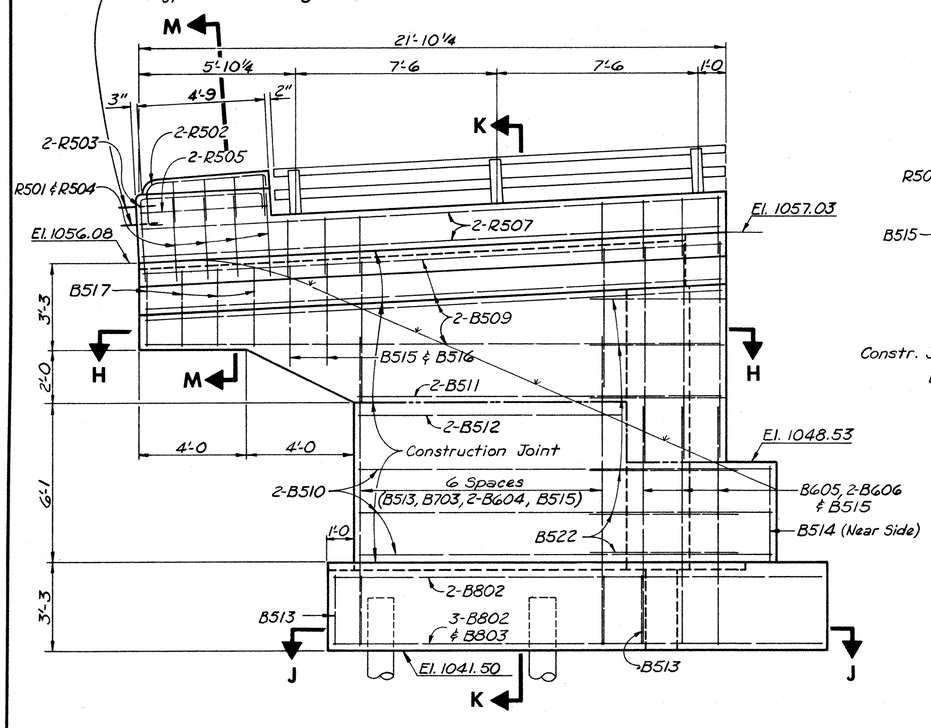


ELEVATION - WING 'C'

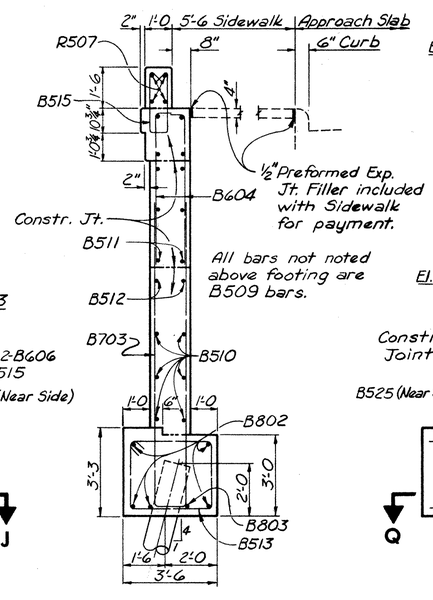


SECTION K-K

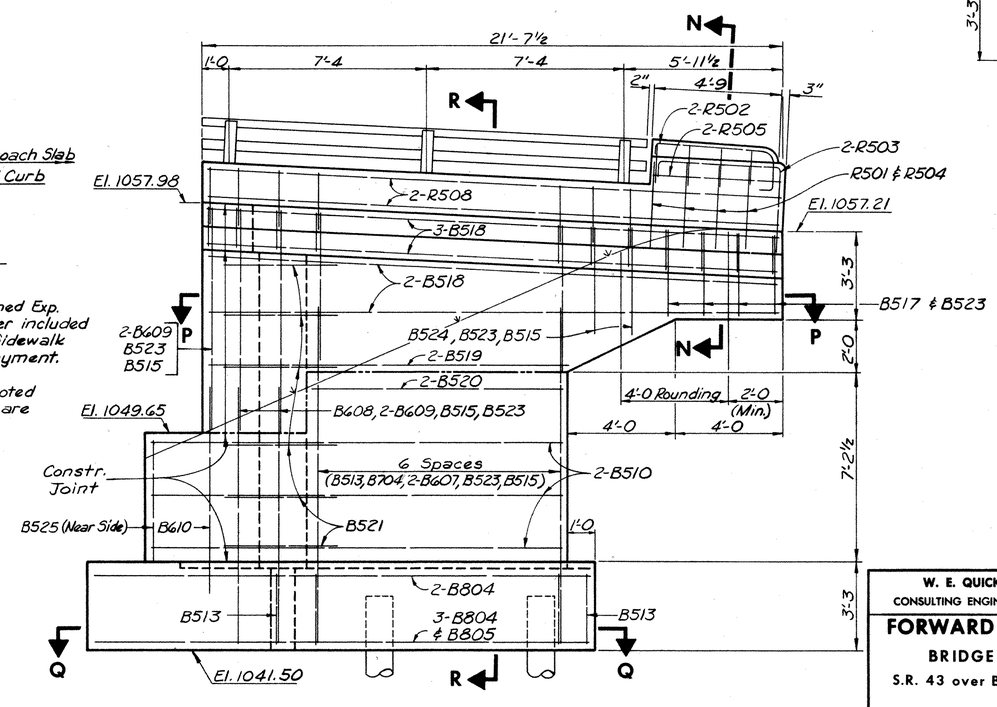


ELEVATION - WING D

Sheet 17/37

W. E. QUICKSALL AND ASSOCIATES, INC.
CONSULTING ENGINEERS • NEW PHILADELPHIA, OHIO

**FORWARD ABUTMENT DETAILS**

BRIDGE NO. STA-43-1352

S.R. 43 over B&O R.R., N&W R.R. & P.R.R.

STARK COUNTY

STA. 15+34.75
STA. 29+49.87

| DESIGNED | DRAWN | TRACED | CHECKED | REVIEWED | DATE | REVISED |
|---|---|---|---|---|---|---|
| | TG | | wda | DLM | 2-21-69 | |

MICROFILMED
JUL 18 1979
REPRODUCTION

| FED. RD. DIVISION | STATE | PROJECT | |
|---|---|---|---|
| 2 | OHIO | | |

76

**STA-43-13.40** PT-1

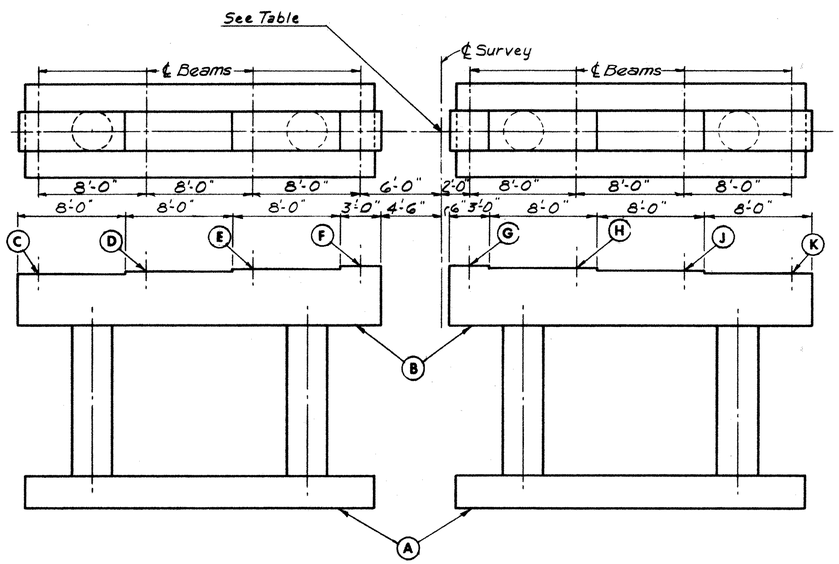


**ELEVATION**

| Reinforcing Bars | | |
|---|---|---|
| | A | B |
| Pier #1 | P1001 | SP401 |
| Pier #2 | P1002 | SP402 |
| Pier #3 | P1003 | SP403 |
| Pier #4 | P1004 | SP404 |
| Pier #5 | P1005 | SP405 |
| Pier #6 | P1006 | SP406 |
| Pier #7 | P1007 | SP407 |
| Pier #8 | P1008 | SP408 |
| Pier #9 | P1009 | SP409 |
| Pier #10 | P1010 | SP410 |
| Pier #11 | P1011 | SP411 |

| Sta. Mk. @ ℄ Bearings | |
|---|---|
| Pier No. | Sta. |
| 1 | 15+82.00 |
| 2 | 16+39.00 |
| 3 | 16+96.00 |
| 4 | 17+53.00 |
| 5 | 18+10.00 |
| 6 | 18+67.00 |
| 7 | 19+24.00 |
| 8 | 19+81.00 |
| 9 | 20+38.00 |
| 10 | 20+95.00 |
| 11 | 21+52.00 |

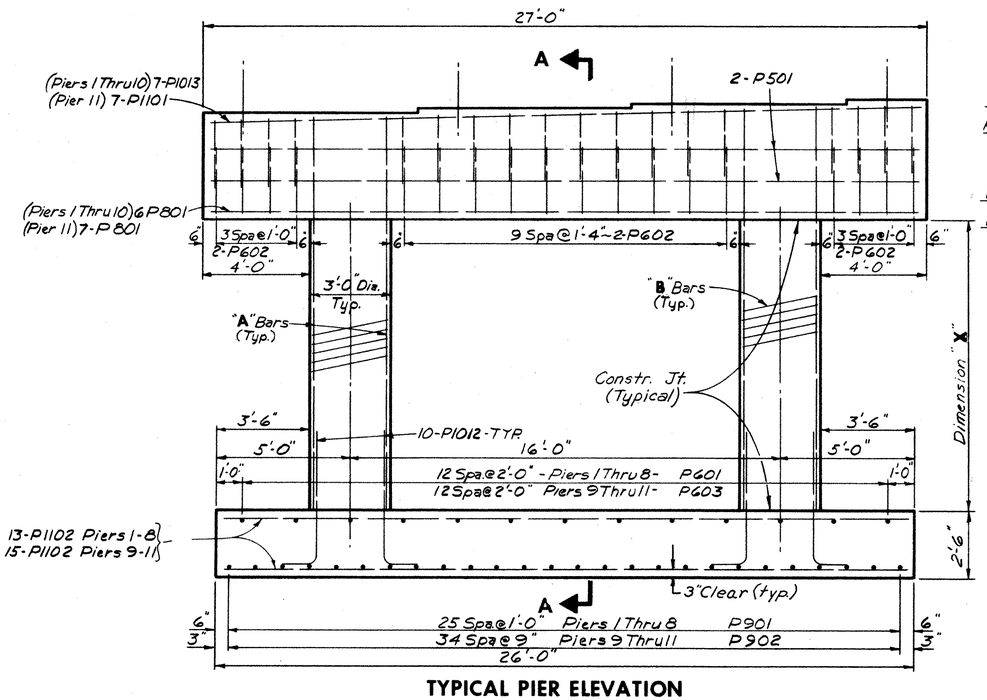


**TYPICAL PIER ELEVATION**

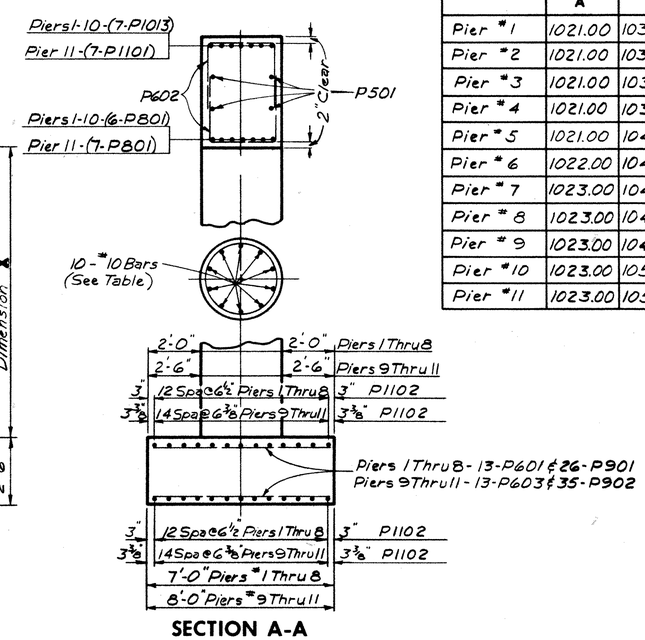


**SECTION A-A**

| | ELEVATIONS | | | | | | | | | | DIM. |
|---|---|---|---|---|---|---|---|---|---|---|---|
| | A | B | C | D | E | F | G | H | J | K | X |
| Pier #1 | 1021.00 | 1034.58 | 1038.58 | 1038.71 | 1038.83 | 1038.96 | 1039.02 | 1038.89 | 1038.76 | 1038.63 | 11'-1 |
| Pier #2 | 1021.00 | 1036.35 | 1040.35 | 1040.48 | 1040.60 | 1040.73 | 1040.79 | 1040.65 | 1040.52 | 1040.40 | 12'-10¼ |
| Pier #3 | 1021.00 | 1038.16 | 1042.16 | 1042.29 | 1042.41 | 1042.54 | 1042.60 | 1042.46 | 1042.33 | 1042.21 | 14'-7⅜ |
| Pier #4 | 1021.00 | 1039.97 | 1043.97 | 1044.10 | 1044.22 | 1044.35 | 1044.41 | 1044.28 | 1044.15 | 1044.02 | 16'-5⅝ |
| Pier #5 | 1021.00 | 1041.78 | 1045.78 | 1045.91 | 1046.03 | 1046.16 | 1046.22 | 1046.09 | 1045.96 | 1045.83 | 18'-3⅜ |
| Pier #6 | 1022.00 | 1043.59 | 1047.59 | 1047.72 | 1047.84 | 1047.97 | 1048.03 | 1047.90 | 1047.77 | 1047.64 | 19'-1⅛ |
| Pier #7 | 1023.00 | 1045.40 | 1049.40 | 1049.53 | 1049.65 | 1049.78 | 1049.84 | 1049.71 | 1049.58 | 1049.45 | 19'-10¾ |
| Pier #8 | 1023.00 | 1047.22 | 1051.22 | 1051.34 | 1051.47 | 1051.59 | 1051.65 | 1051.52 | 1051.39 | 1051.26 | 21'-8⅝ |
| Pier #9 | 1023.00 | 1049.03 | 1053.03 | 1053.15 | 1053.28 | 1053.40 | 1053.46 | 1053.33 | 1053.20 | 1053.07 | 23'-6⅜ |
| Pier #10 | 1023.00 | 1050.78 | 1054.78 | 1054.90 | 1055.03 | 1055.15 | 1055.22 | 1055.08 | 1054.95 | 1054.82 | 25'-3⅜ |
| Pier #11 | 1023.00 | 1052.12 | 1056.12 | 1056.25 | 1056.37 | 1056.50 | 1056.56 | 1056.43 | 1056.30 | 1056.17 | 26'-7½ |

Note:
Special care shall be taken in placing the reinforcing steel in the cap of Pier #4 so they will not interfere with the bearing anchor bolts.

Sheet 18/37

W. E. QUICKSALL AND ASSOCIATES, INC.
CONSULTING ENGINEERS • NEW PHILADELPHIA, OHIO

**PIER #1 THRU 11 DETAILS**

**BRIDGE NO. STA-43-1352**

S.R. 43 over B. & O., N. & W., & P.R.

STA. 15+34.75

STARK COUNTY STA. 29+49.87

| DESIGNED | DRAWN | TRACED | CHECKED | REVIEWED | DATE | REVISED |
|---|---|---|---|---|---|---|
| | LJ | | PMZ | DLM | 2-21-69 | |

MICROFILMED
JUL 18 1979
REPRODUCTION

| FED. RD. DIVISION | STATE | PROJECT | |
|---|---|---|---|
| 2 | OHIO | | |

77

**STA-43-13.40** PT-1

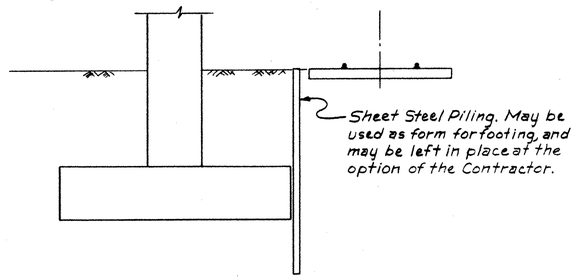


Pier 12

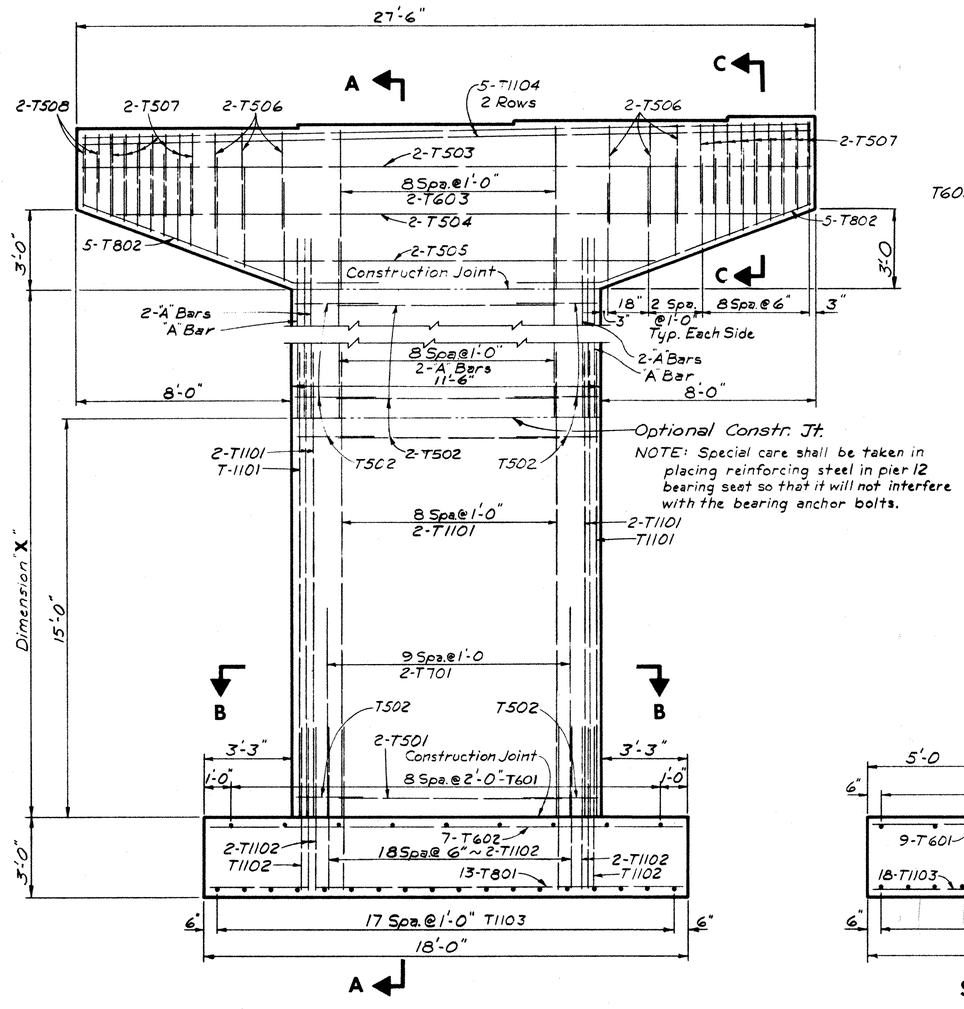


TYPICAL PIER ELEVATION

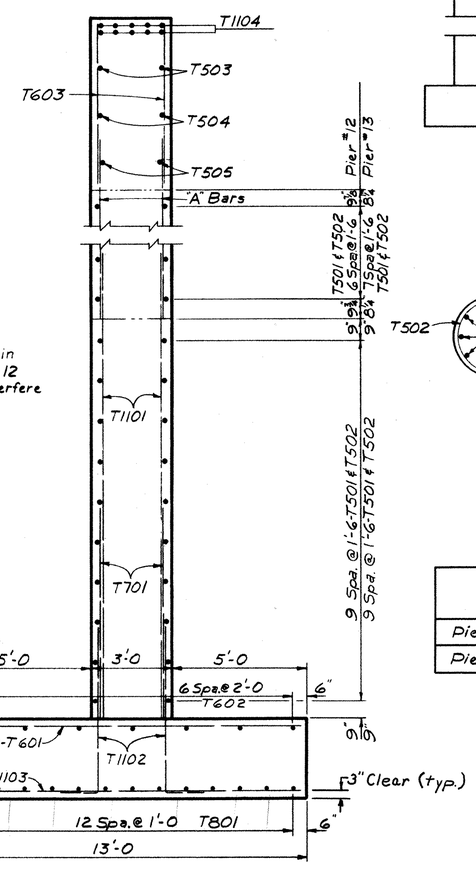


SECTION A-A

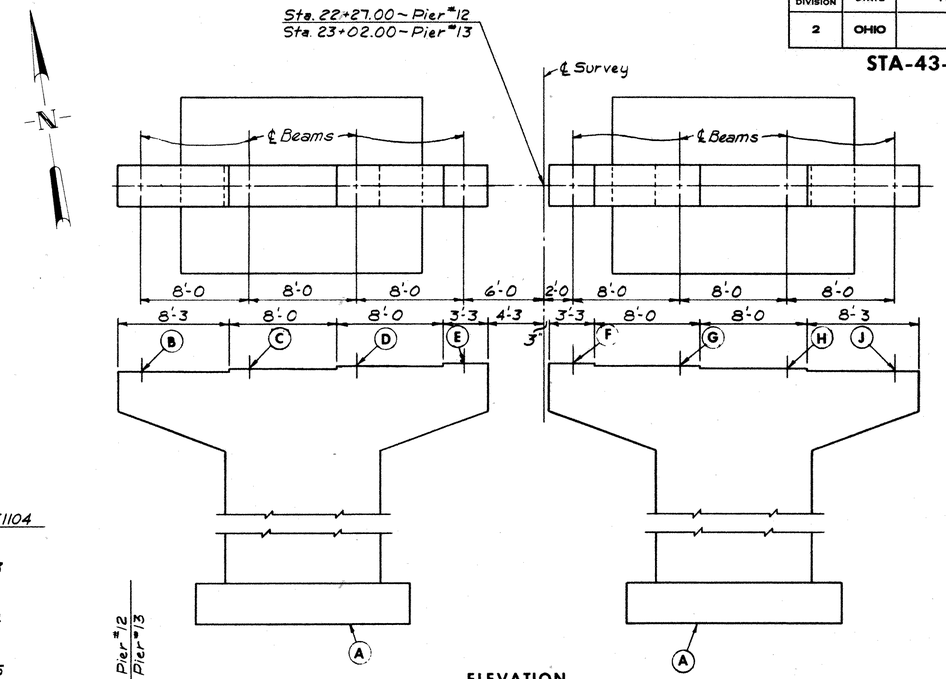


ELEVATION

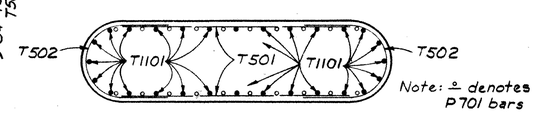


SECTION B-B

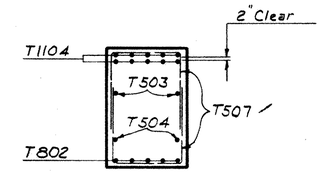


SECTION C-C

| | ELEVATIONS | | | | | | | | | Dim | 'A' |
|---|---|---|---|---|---|---|---|---|---|---|---|
| | A | B | C | D | E | F | G | H | J | 'X' | BARS |
| Pier # 12 | 1023.00 | 1057.64 | 1057.76 | 1057.89 | 1058.01 | 1058.08 | 1057.94 | 1057.81 | 1057.69 | 25'-7 5/8" | T901 |
| Pier # 13 | 1023.00 | 1058.88 | 1058.99 | 1059.12 | 1059.23 | 1059.30 | 1059.15 | 1059.01 | 1058.88 | 26'-10 1/2" | T902 |

Sheet 19/37

W. E. QUICKSALL AND ASSOCIATES, INC.
CONSULTING ENGINEERS • NEW PHILADELPHIA, OHIO

# PIER # 12 & 13 DETAILS

BRIDGE NO. STA-43-1352
S.R. 43 over B. & O., N. & W., & P.R.R.

STARK COUNTY

STA. 15+34.75
STA. 29+49.87

| DESIGNED | DRAWN | TRACED | CHECKED | REVIEWED | DATE | REVISED |
|---|---|---|---|---|---|---|
| | 44 | | PMZ | DLM | 2-21-69 | |

| | ELEVATIONS | | | | | | | | |
|---|---|---|---|---|---|---|---|---|---|
| LOCATION | A | B | C | D | E | F | G | H | J |
| PIER #14 | 1023.00 | 1059.59 | 1059.74 | 1059.89 | 1060.02 | 1060.09 | 1059.96 | 1059.84 | 1059.73 |

MICROFILMED
JUL 18 1979
REPRODUCTION

| FED. RD. DIVISION | STATE | PROJECT | |
|---|---|---|---|
| 2 | OHIO | | |

STA-43-13.40 PT-1

78

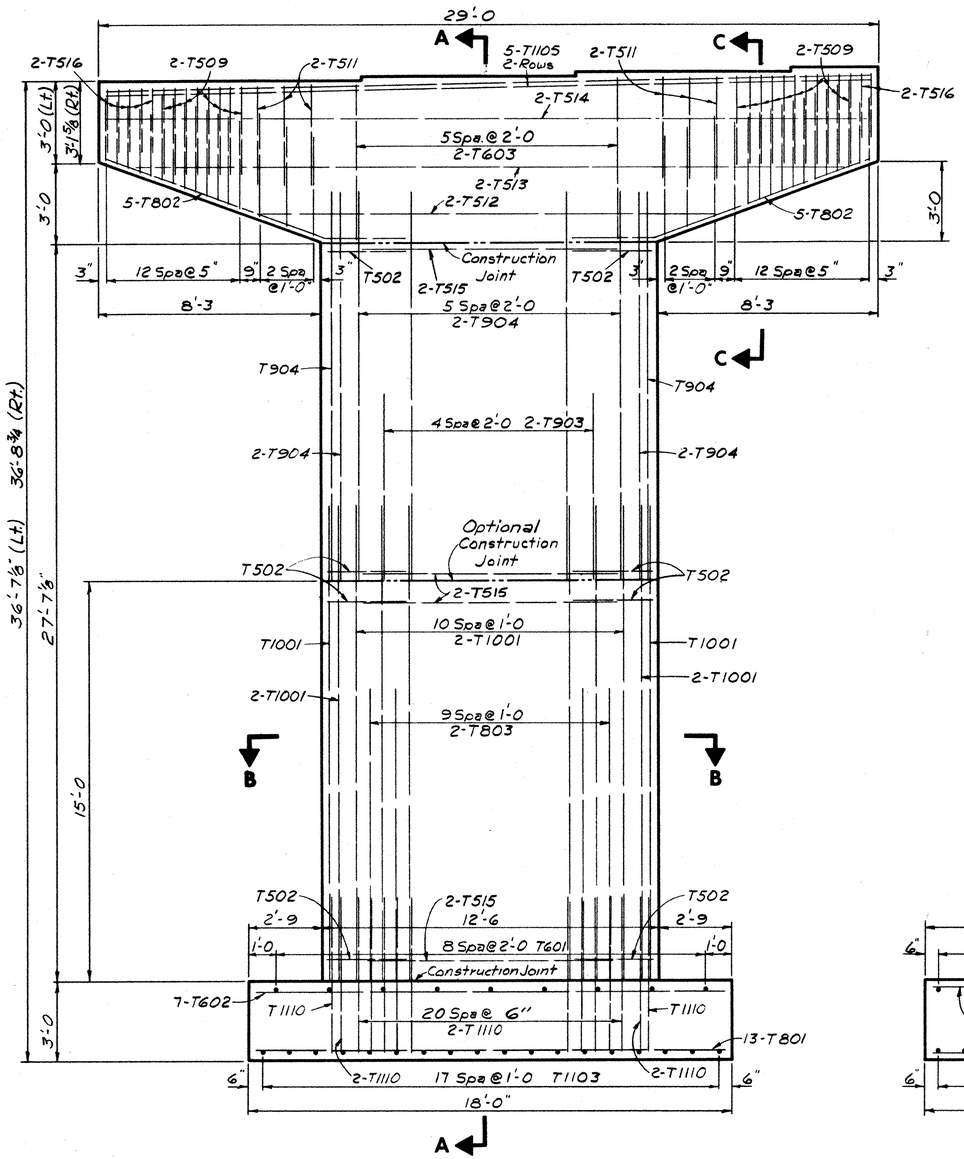


TYPICAL PIER ELEVATION

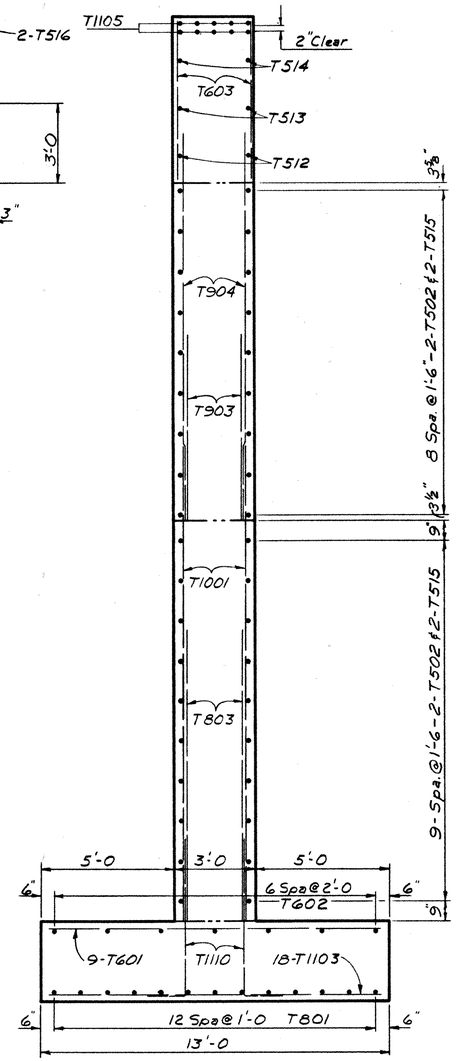


SECTION A-A

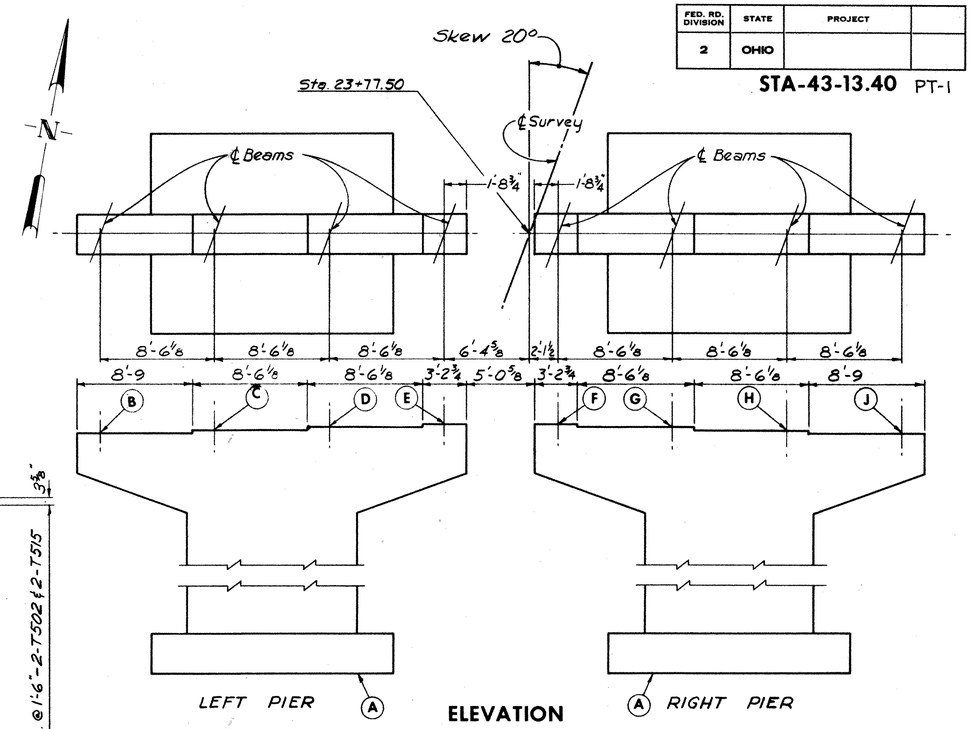


ELEVATION

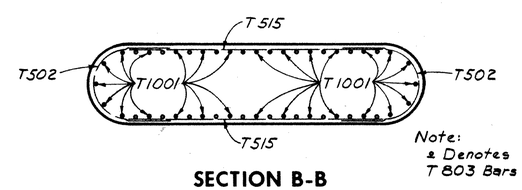


SECTION B-B

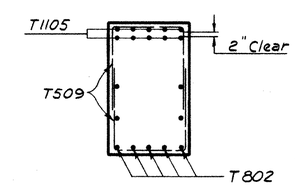


SECTION C-C

Sheet 20/37

W. E. QUICKSALL AND ASSOCIATES, INC.
CONSULTING ENGINEERS • NEW PHILADELPHIA, OHIO

## PIER NO. 14 DETAILS

BRIDGE NO. STA-43-1352

S.R. 43 over B & O, N & W, & P.R.R.

STA. 15+34.75

STARK COUNTY

STA. 29+49.87

| DESIGNED | DRAWN | TRACED | CHECKED | REVIEWED | DATE | REVISED |
|---|---|---|---|---|---|---|
| | | | PMZ | DLM | 2-21-69 | |

| ELEVATIONS | | | | | | | | | |
|---|---|---|---|---|---|---|---|---|---|
| LOCATION | A | B | C | D | E | F | G | H | J |
| Pier #15 | 1023.00 | 1057.17 | 1057.32 | 1057.47 | 1057.61 | 1057.69 | 1057.57 | 1057.46 | 1057.34 |

MICROFILMED
JUL 18 1979
REPRODUCTION

| FED. RD. DIVISION | STATE | PROJECT | |
|---|---|---|---|
| 2 | OHIO | | |

79

STA-43-13.40 PT-1

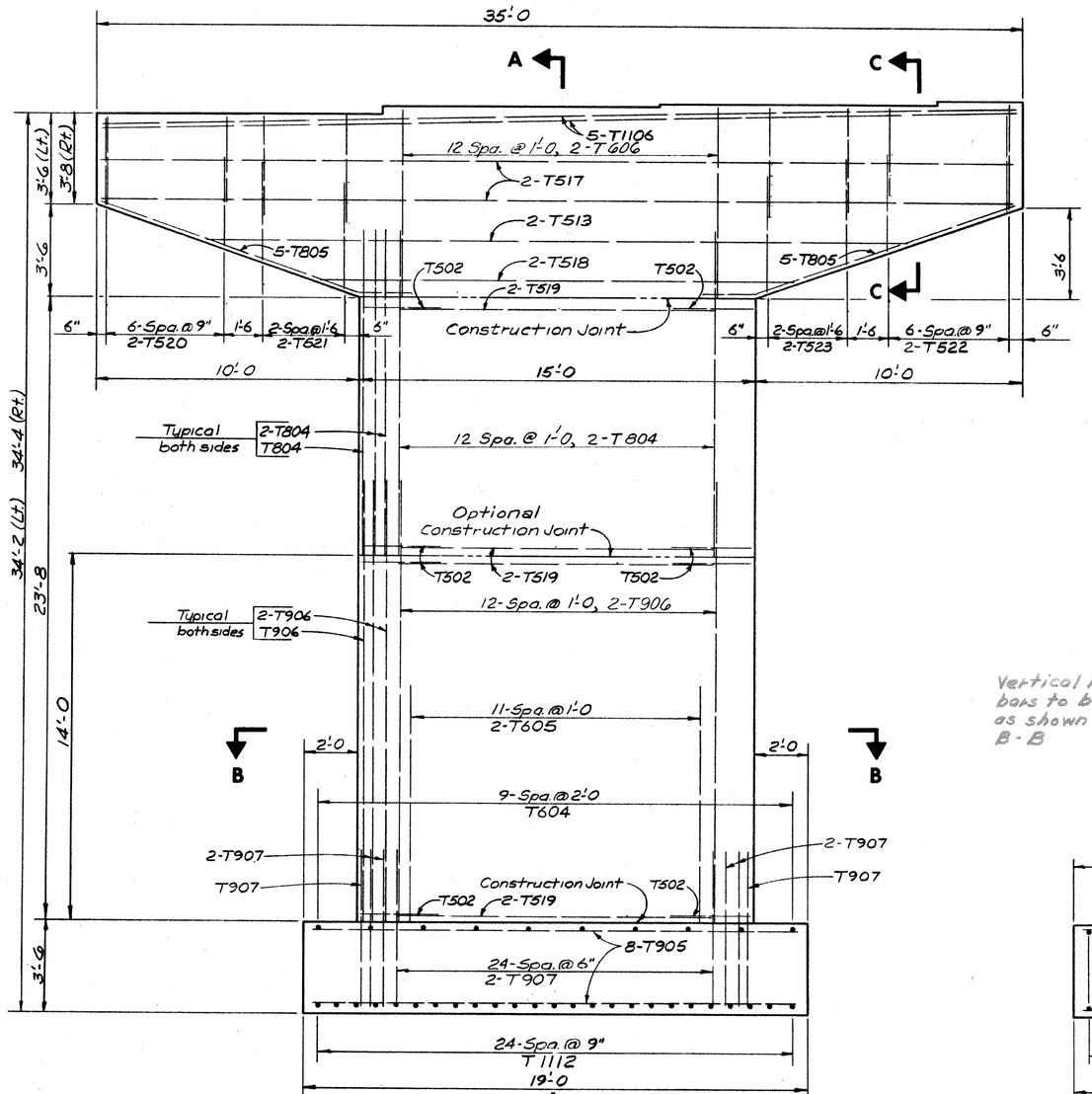


A ELEVATION

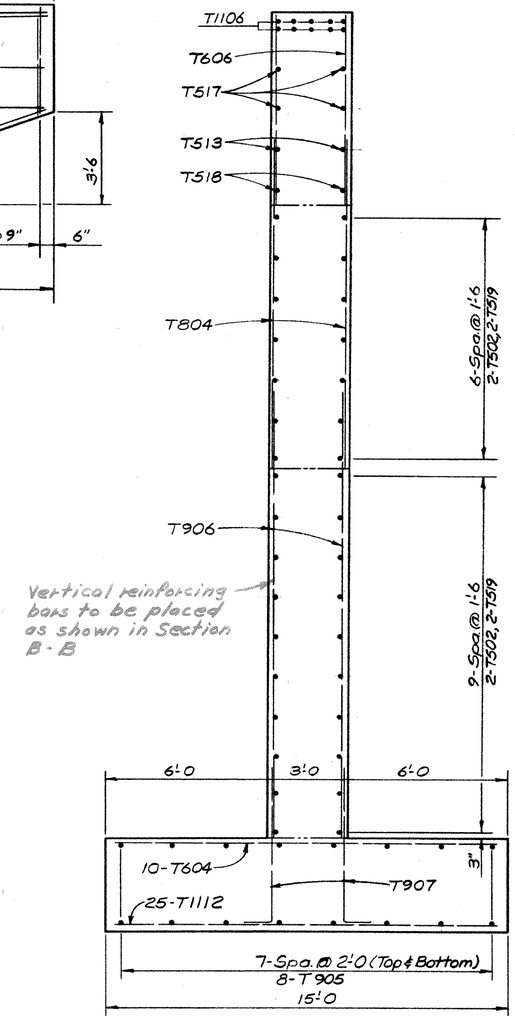


SECTION A-A

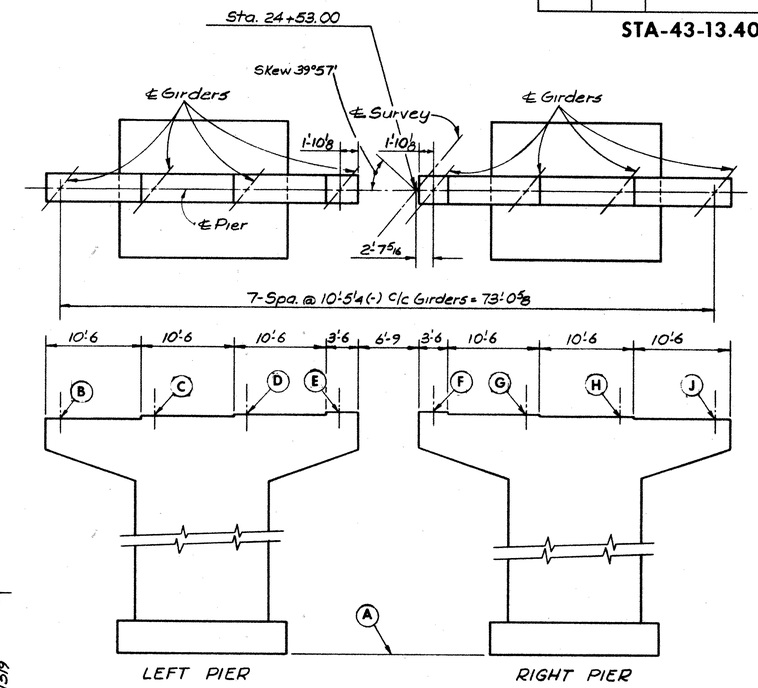


PLAN & ELEVATION

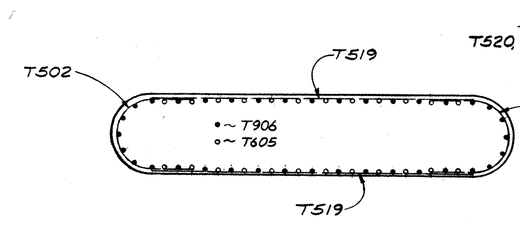


SECTION B-B

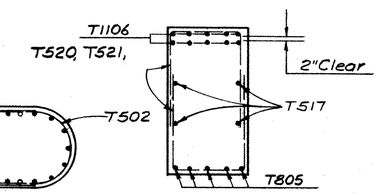


SECTION C-C

Sheet 21 / 37

W. E. QUICKSALL AND ASSOCIATES, INC.
CONSULTING ENGINEERS • NEW PHILADELPHIA, OHIO

# PIER NO. 15 DETAILS

BRIDGE NO. STA-43-1352

S.R. 43 over B&O, N&W & P.R.R.

STARK COUNTY

STA. 15+34.75
STA. 29+49.87

| DESIGNED | DRAWN | TRACED | CHECKED | REVIEWED | DATE | REVISED |
|---|---|---|---|---|---|---|
| | PMZ | | wda | DLM | 2-21-69 | 12-22-70 |

| FED. RD. DIVISION | STATE | PROJECT | |
|---|---|---|---|
| 2 | OHIO | | |

80

**STA-43-13.40** PT-1

| ELEVATIONS | | | | | | | | | |
|---|---|---|---|---|---|---|---|---|---|
| LOCATION | A | B | C | D | E | F | G | H | J |
| Pier #16 | 1023.00 | 1056.72 | 1056.84 | 1056.95 | 1057.06 | 1057.09 | 1056.97 | 1056.83 | 1056.69 |
| Pier #17 | 1024.00 | 1055.22 | 1055.29 | 1055.38 | 1055.45 | 1055.47 | 1055.30 | 1055.11 | 1054.94 |

MICROFILMED
JUL 18 1979
REPRODUCTION

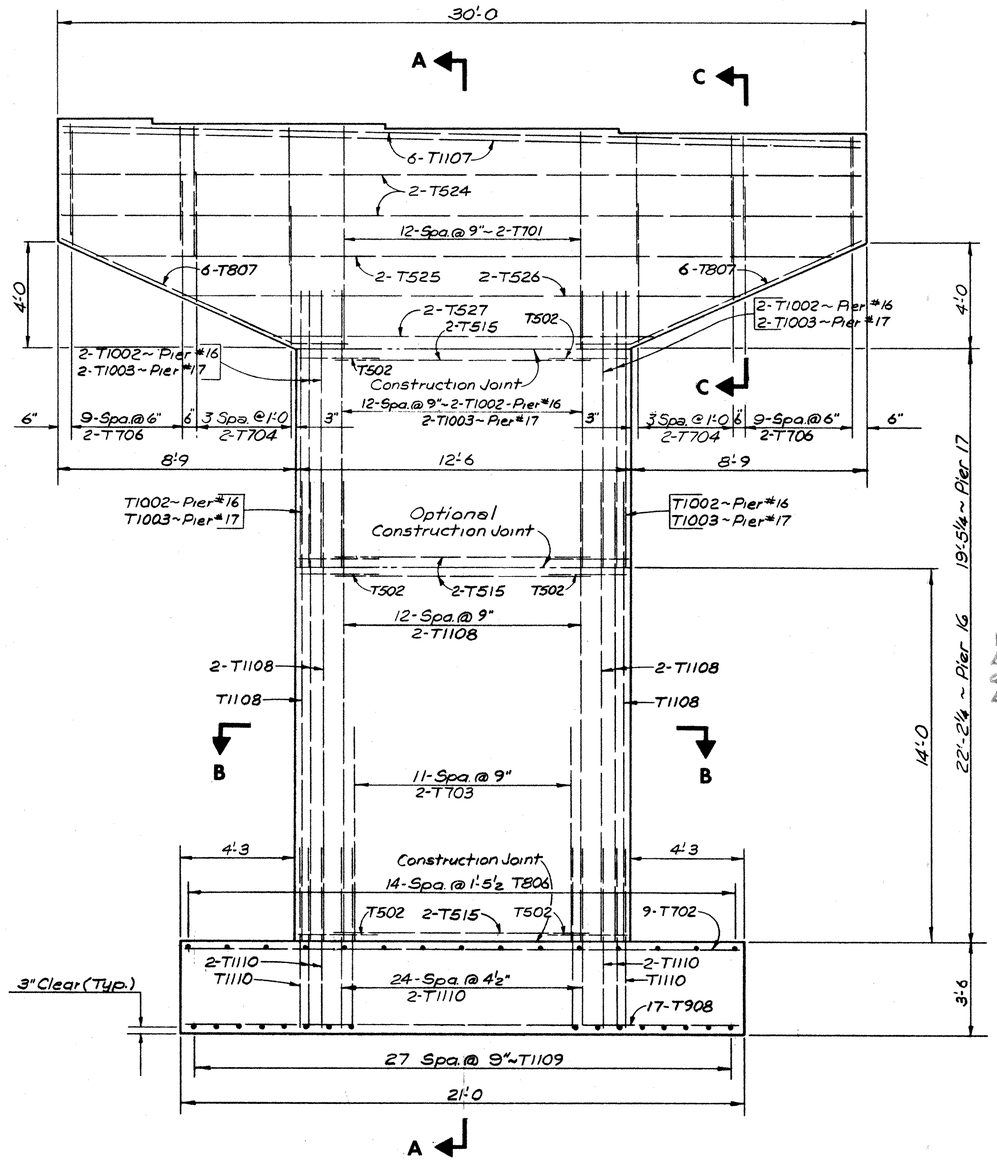


ELEVATION

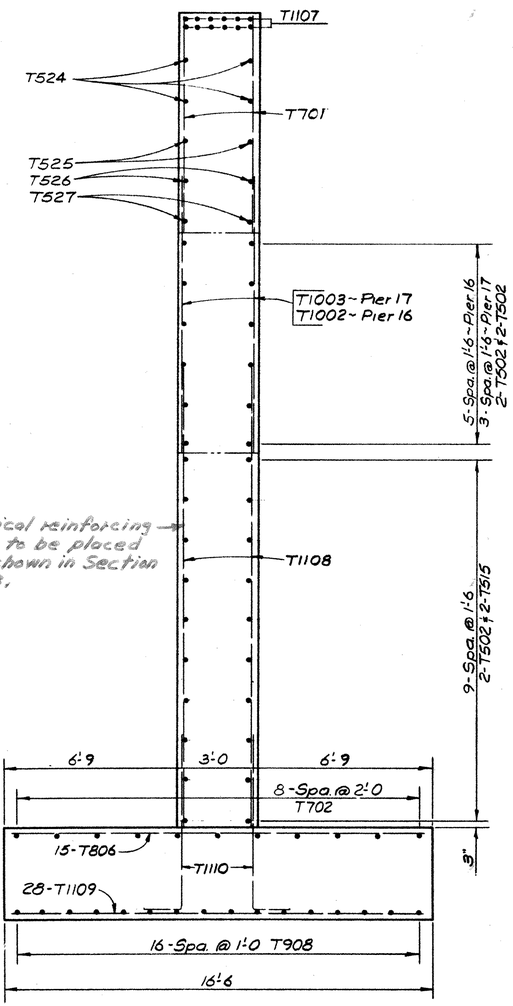


SECTION A-A

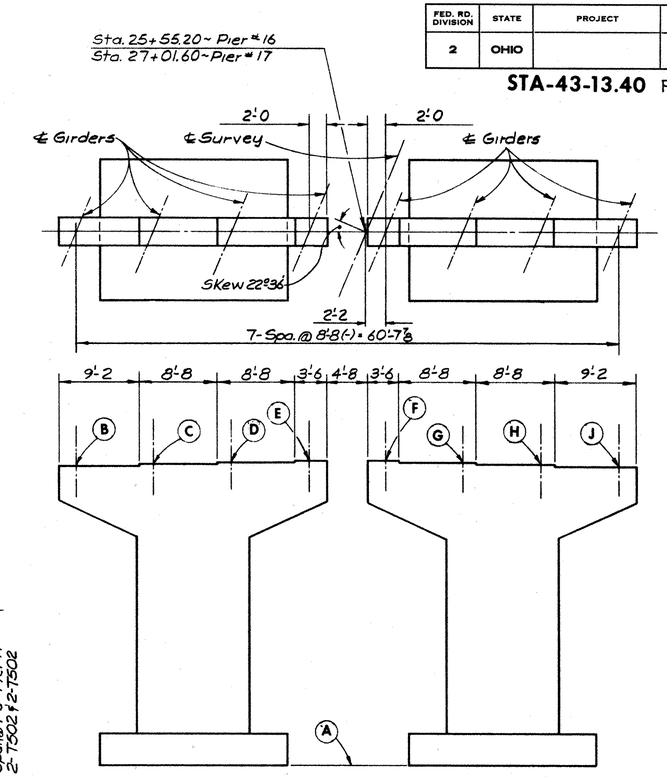


PLAN & ELEVATION

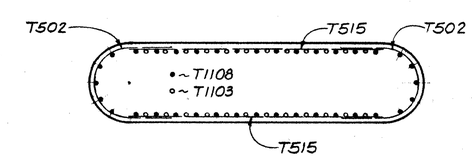


SECTION B-B

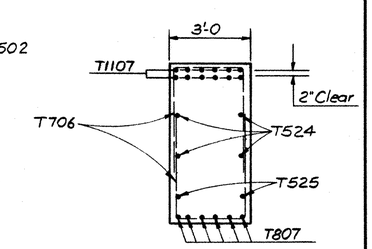


SECTION C-C

Note:
Special care shall be taken in placing reinforcing steel in the Pier 17 cap so that it will not interfere with the bearing anchor bolts.

Sheet 22 / 37

W. E. QUICKSALL AND ASSOCIATES, INC.
CONSULTING ENGINEERS • NEW PHILADELPHIA, OHIO

# PIER NO. 16 & 17 DETAILS

BRIDGE NO. STA-43-1352
S.R. 43 over B&O, N&W & P.R.R.

STARK COUNTY

STA. 15+34.75
STA. 29+49.87

| DESIGNED | DRAWN | TRACED | CHECKED | REVIEWED | DATE | REVISED |
|---|---|---|---|---|---|---|
| | PMZ | | wda | DLM | 2-21-69 | 12-23-70 |

| FED. RD. DIVISION | STATE | PROJECT | |
|---|---|---|---|
| 2 | OHIO | | |

81

**STA-43-13.40** PT-1

| LOCATION | ELEVATIONS | | | | | | | | |
|---|---|---|---|---|---|---|---|---|---|
| | A | B | C | D | E | F | G | H | J |
| PIER #18 | 1024.00 | 1052.09 | 1052.28 | 1052.46 | 1052.64 | 1052.76 | 1052.67 | 1052.58 | 1052.49 |

MICROFILMED
JUL 18 1979
REPRODUCTION

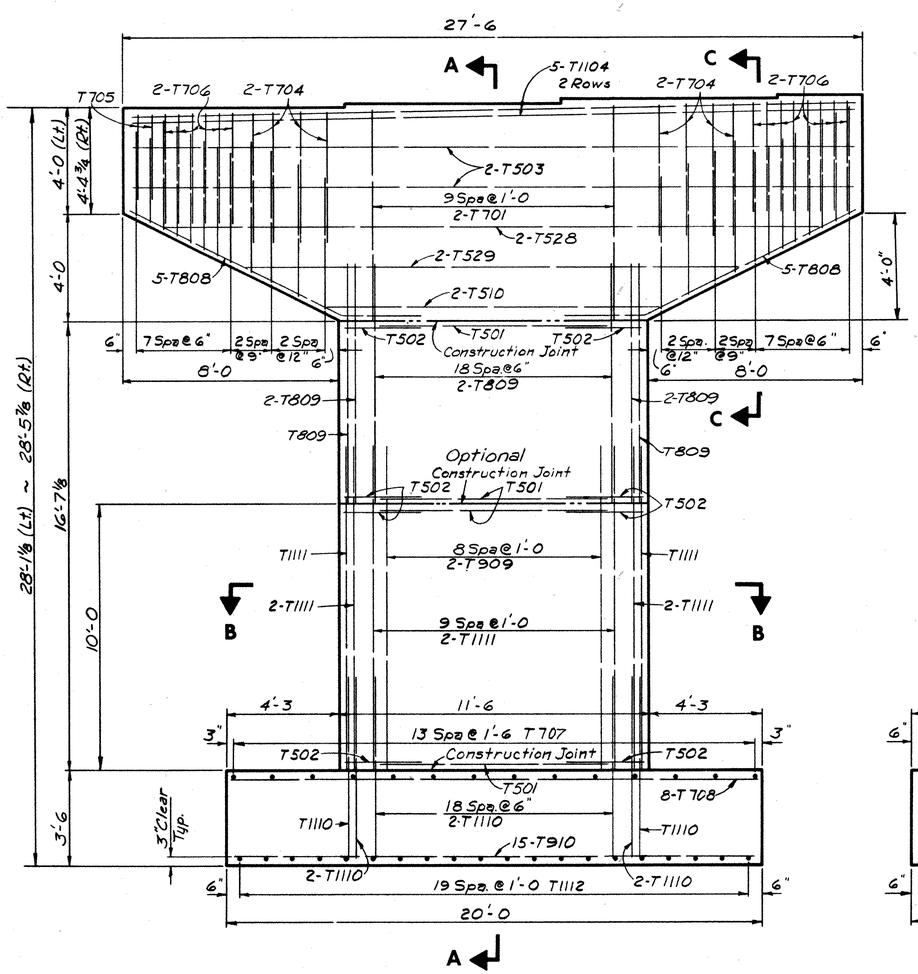


TYPICAL PIER ELEVATION

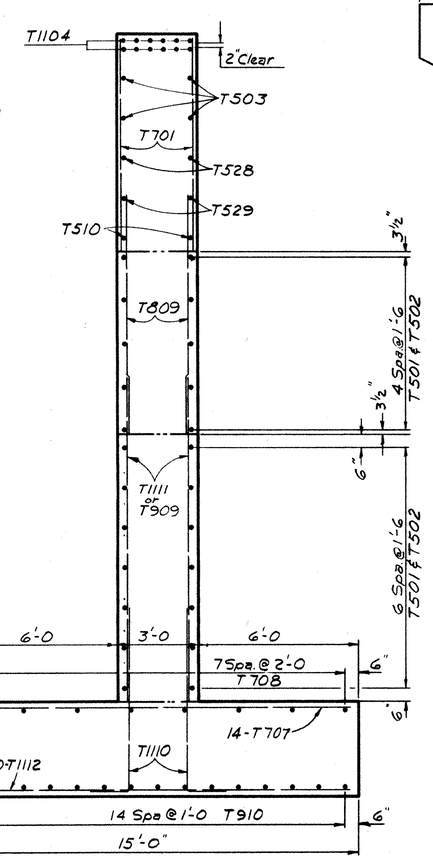


SECTION A-A

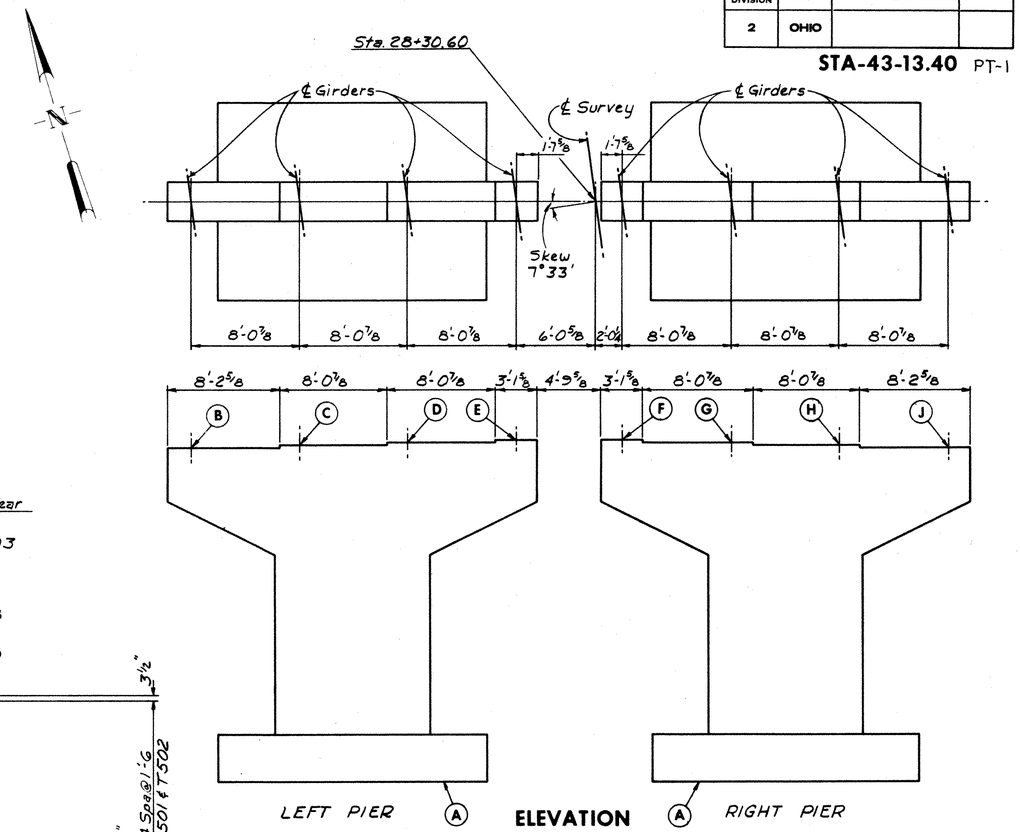


ELEVATION

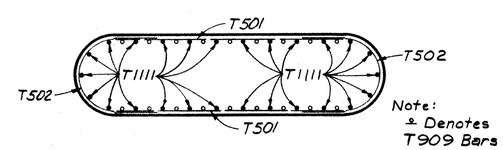


SECTION B-B

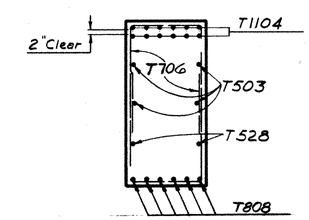


SECTION C-C

Sheet 23/37

W. E. QUICKSALL AND ASSOCIATES, INC.
CONSULTING ENGINEERS • NEW PHILADELPHIA, OHIO

# PIER NO. 18 DETAILS

BRIDGE NO. STA-43-1352
S.R. 43 over B&O, N&W & P.R.R.

STA. 15+34.75
STA. 29+49.87

STARK COUNTY

| DESIGNED | DRAWN | TRACED | CHECKED | REVIEWED | DATE | REVISED |
|---|---|---|---|---|---|---|
| | 4 | | PMZ | DLM | 2-21-69 | |

MICROFILMED
JUL 18 1979
REPRODUCTION

| FED. RD. DIVISION | STATE | PROJECT | |
|---|---|---|---|
| 2 | OHIO | | |

82

STA-43-13.40 PT-1

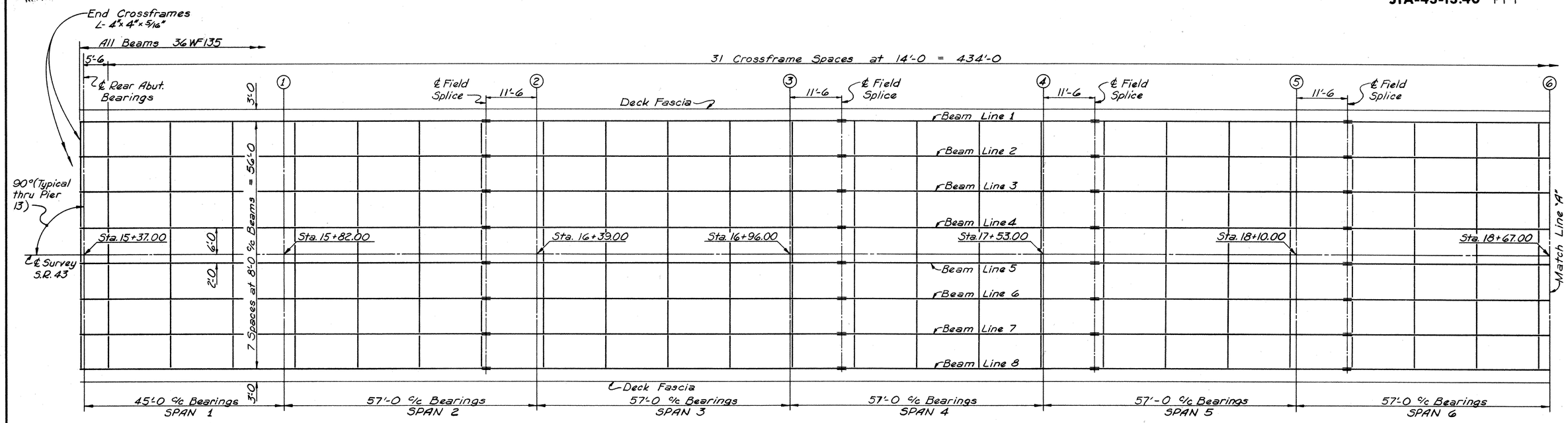


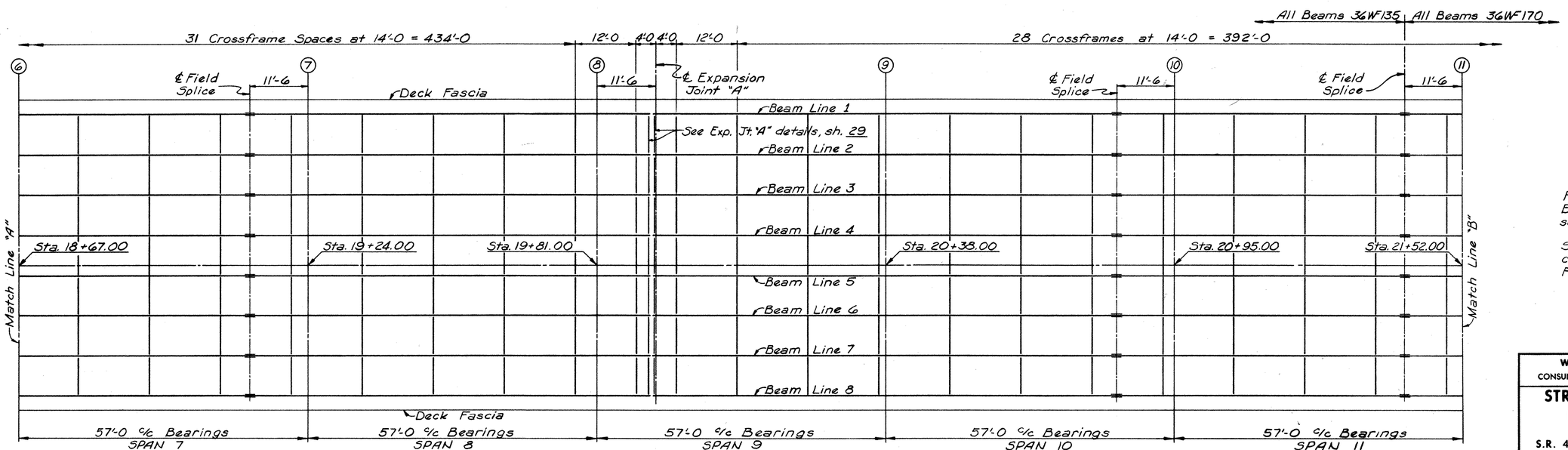


For additional details, Bearings and notes, see sheet 26.

See sheet 25 for continuation of Framing Plan.

Sheet 24/37

W. E. QUICKSALL AND ASSOCIATES, INC.
CONSULTING ENGINEERS • NEW PHILADELPHIA, OHIO

**STRUCTURAL STEEL DETAILS**
**BRIDGE NO. STA-43-1352**

S.R. 43 over B&O R.R., N&W R.R. & P.R.R.

STARK COUNTY

STA. 15+34.75
STA. 29+49.87

| DESIGNED | DRAWN | TRACED | CHECKED | REVIEWED | DATE | REVISED |
|---|---|---|---|---|---|---|
| | PG | | wda | DLM | 2-21-69 | |

**PART STRUCTURAL STEEL FRAMING PLAN**

MICROFILMED
JUL 18 1979
REPRODUCTION

| FED. RD. DIVISION | STATE | PROJECT | |
|---|---|---|---|
| 2 | OHIO | | |

83

STA-43-13.40 PT-1

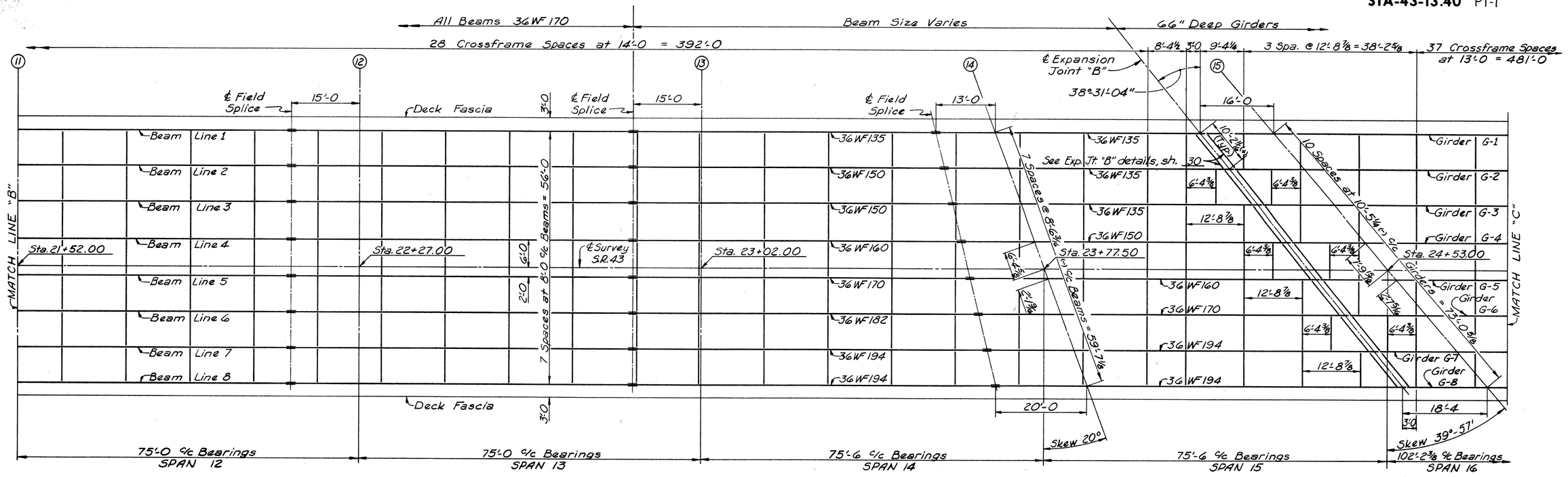


## PART STRUCTURAL STEEL FRAMING PLAN

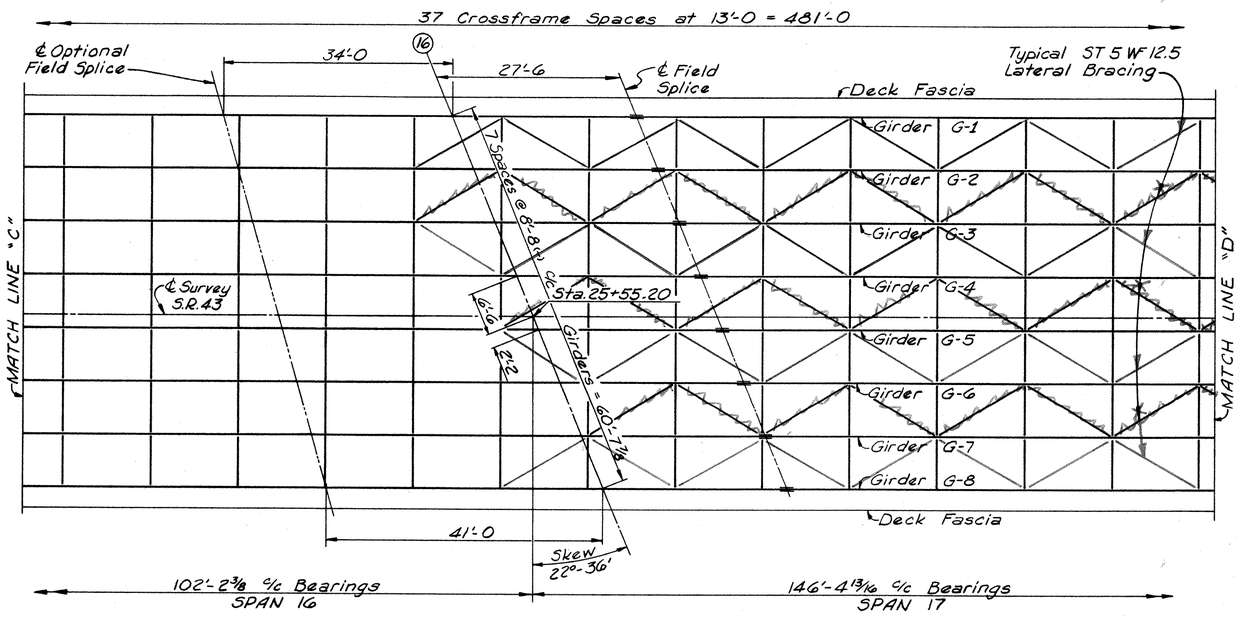


## PART STRUCTURAL STEEL FRAMING PLAN

### LENGTH OF BEAM OR GIRDER AT VARIABLE SPANS

| BEAM OR GIRDER LINE | SPAN 14 | SPAN 15 | SPAN 16 | SPAN 18 |
|---|---|---|---|---|
| 1 | 64'-7 | 61'-3½ | 114'-10⅛ | 145'-5 9/16 |
| 2 | 67'-5 15/16 | 65'-1 | 111'-5⅝ | 141'-0⅞ |
| 3 | 70'-4⅞ | 68'-10 7/16 | 108'-1 3/16 | 136'-8 3/16 |
| 4 | 73'-3 13/16 | 72'-7⅞ | 104'-8¾ | 132'-3½ |
| 5 | 76'-2¾ | 76'-5⅜ | 101'-4 5/16 | 127'-10 13/16 |
| 6 | 79'-1 11/16 | 80'-2 13/16 | 97'-11 13/16 | 123'-6⅛ |
| 7 | 82'-0⅝ | 84'-0 9/16 | 94'-7⅜ | 119'-1 7/16 |
| 8 | 84'-11 9/16 | 87'-9¾ | 91'-2 15/16 | 114'-8¾ |

For continuation of Framing Plan, additional details, notes and Bearings, see sheet 26.

Sheet 25 / 37

W. E. QUICKSALL AND ASSOCIATES, INC.
CONSULTING ENGINEERS • NEW PHILADELPHIA, OHIO

**STRUCTURAL STEEL DETAILS**

**BRIDGE NO. STA-43-1352**

**S.R. 43 over B&O R.R., N&W R.R. & P.R.R.**

STARK COUNTY

STA. 15+34.75
STA. 29+49.87

| DESIGNED | DRAWN | TRACED | CHECKED | REVIEWED | DATE | REVISED |
|---|---|---|---|---|---|---|
| | TG | | wda | DLM | 2-21-69 | 12-28-70 |

MICROFILMED
JUL 18 1979
REPRODUCTION

| FED. RD. DIVISION | STATE | PROJECT | |
|---|---|---|---|
| 2 | OHIO | | |

84

**STA-43-13.40** PT-1

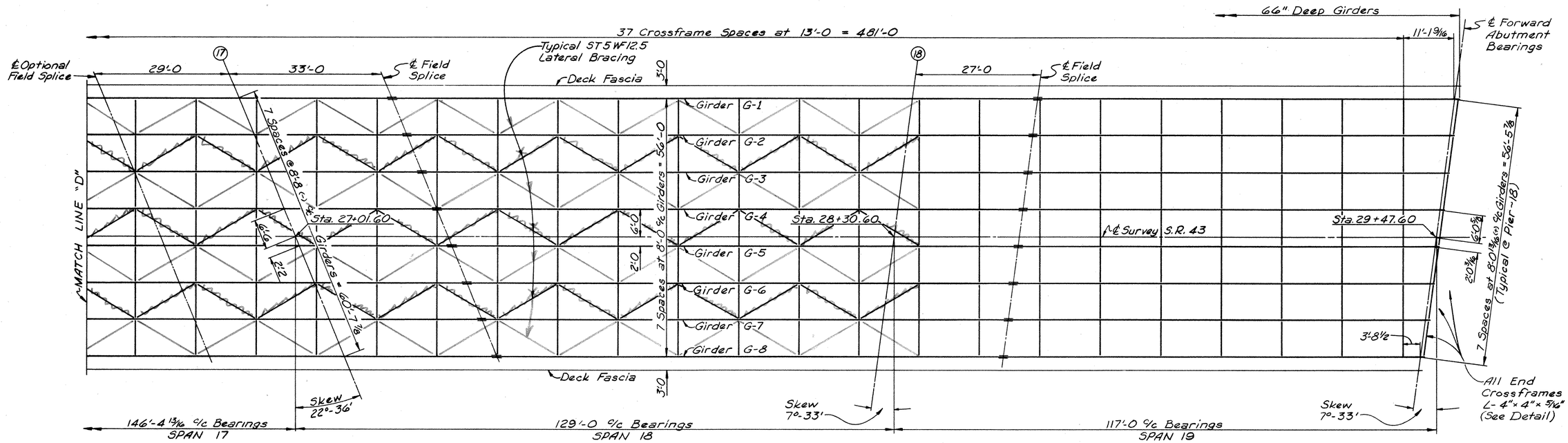


## PART STRUCTURAL STEEL FRAMING PLAN

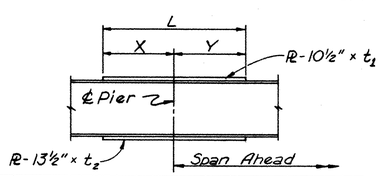


## MOMENT PLATES

| PIER | | | $t_1$ | $t_2$ | L | X | Y |
|---|---|---|---|---|---|---|---|
| 2 thru 7 | | | 7/16" | 1/2" | 9'-0 | 4'-6 | 4'-6 |
| 8 | | | | | 11'-0 | 6'-6 | 4'-6 |
| 9 & 10 | | | | 1/2" | 9'-0 | 4'-6 | 4'-6 |
| 11 | | | 7/16" | 9/16" | 11'-0 | 6'-6 | 4'-6 |
| 12 | | | 11/16" | 5/8" | 12'-6 | 6'-3 | 6'-3 |
| 13 | BEAMS | 1 | 5/8" | 9/16" | 14'-6 | 7'-3 | 7'-3 |
| | | 2 | 5/8" | 1/2" | 12'-0 | 6'-0 | 6'-0 |
| | | 3 | 5/8" | 1/2" | 12'-6 | 6'-3 | 6'-3 |
| | | 4 | 5/8" | 9/16" | 12'-0 | 6'-0 | 6'-0 |
| | | 5 | 5/8" | 9/16" | 12'-0 | 6'-0 | 6'-0 |
| | | 6 | 9/16" | 1/2" | 11'-0 | 5'-6 | 5'-6 |
| | | 7 | 9/16" | 9/16" | 10'-6 | 5'-3 | 5'-3 |
| | | 8 | 5/8" | 9/16" | 11'-6 | 5'-9 | 5'-9 |
| 14 | BEAMS | 1 | 7/16" | 1/2" | 9'-0 | 4'-6 | 4'-6 |
| | | 2 | 7/16" | | 9'-6 | 4'-9 | 4'-9 |
| | | 3 | 1/2" | | 11'-6 | 5'-9 | 5'-9 |
| | | 4 | 5/8" | 1/2" | 12'-0 | 6'-0 | 6'-0 |
| | | 5 | 11/16" | 9/16" | 13'-6 | 6'-9 | 6'-9 |
| | | 6 | 13/16" | 11/16" | 14'-8 | 7'-4 | 7'-4 |
| | | 7 | 13/16" | 11/16" | 13'-6 | 6'-9 | 6'-9 |
| | | 8 | 1" | 3/4" | 15'-6 | 7'-9 | 7'-9 |

Note: No Moment Plates required for Pier 1.

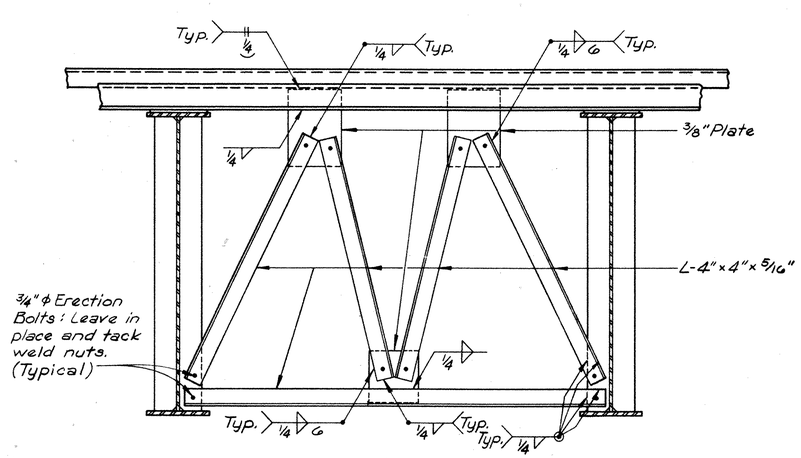


## END CROSS FRAME DETAILS
### FORWARD ABUTMENT

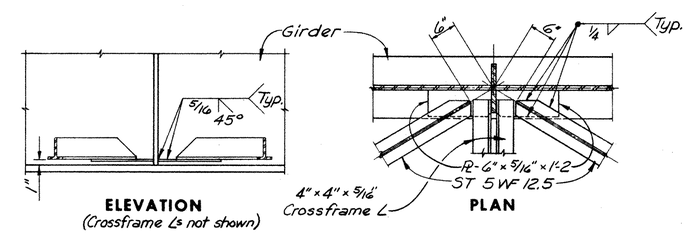


## TYPICAL LATERAL BRACING CONNECTION DETAIL

Notes:

Use CF 2000 at Abutment End Dams as per Standard Drawing SD-1-65, sheet 1. Item 828 Joint Sealer including bond breaker shall be omitted.

For additional details refer to Standard Drawing SD-1-65, sheets 1, 2, & 3.

For scupper spacing, drainage details and scupper details, see sheets 4 thru 7

## DATA FOR R-325 ROCKER & B-325 BOLSTER

| DIMENSIONS (inches) | | | | | | | | | | | | | WEIGHT EA. (lbs) | | MAX. LOAD (lbs) |
|---|---|---|---|---|---|---|---|---|---|---|---|---|---|---|---|
| A | B | C | D | F | G | H | K | L | M | R | T | Y | Bolster | Rocker | |
| 3 1/2 | 16 | 4 | 3 1/4 | 3/4 | 12 | 19 5/8 | 12 1/2 | 23 | 20 | 13 | 3 | 1 11/16 | 720 | 820 | 325,000 |

Refer to Standard Drawing RB-1-55 for Rocker and Bolster details.

## BEARINGS

| Rear Abut. | PIERS 1 | 2 | 3 | 4 | 5 | 6 | 7 | 8 | 9 | 10 | 11 | 12 | 13 | 14 | 15 | 16 | 17 | 18 | Fwd. Abut. |
|---|---|---|---|---|---|---|---|---|---|---|---|---|---|---|---|---|---|---|---|
| R-75 | R-150 | R-150 | R-150 | B-150 | R-150 | R-150 | R-150 | R-150 | R-150 | R-150 | R-175 | B-200 | R-200 | R-200 | R-200 | R-325 | B-325 | R-325 | R-125 |

W. E. QUICKSALL AND ASSOCIATES, INC.
CONSULTING ENGINEERS • NEW PHILADELPHIA, OHIO

**STRUCTURAL STEEL DETAILS**
**BRIDGE NO. STA-43-1352**
S.R. 43 over B&O R.R., N&W R.R. & P.R.R.

STARK COUNTY — STA. 15+34.75 — STA. 29+49.87

| DESIGNED | DRAWN | TRACED | CHECKED | REVIEWED | DATE | REVISED |
|---|---|---|---|---|---|---|
| | TG | | wda | DLM | 2-21-69 | 12-22-70 |

Sheet 26 / 37

MICROFILMED
JUL 18 1979
REPRODUCTION

| FED. RD. DIVISION | STATE | PROJECT | |
|---|---|---|---|
| 2 | OHIO | | |

85

**STA-43-13.40** PT-1

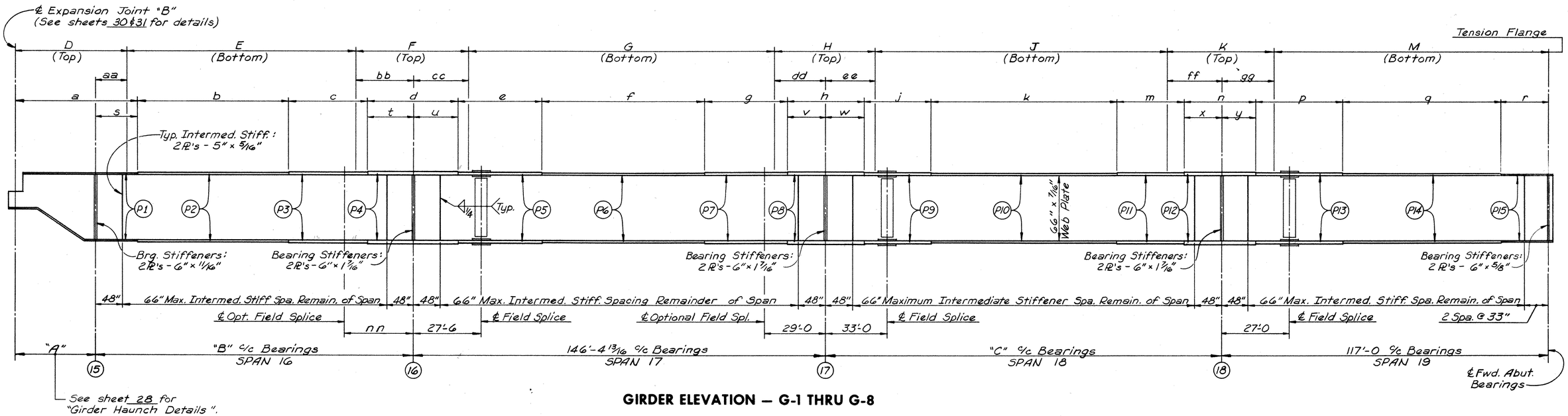


## GIRDER ELEVATION — G-1 THRU G-8

| GIRDER | DIMENSIONS | | | | | | | | FLANGE PLATES (14" WIDE) | | | | | | | | | | | | | | | | | | | | | | | | | | | |
|---|---|---|---|---|---|---|---|---|---|---|---|---|---|---|---|---|---|---|---|---|---|---|---|---|---|---|---|---|---|---|---|---|---|---|---|---|
| | nn | s | t | u | v | w | x | y | P1 | a | P2 | b | P3 | c | P4 | d | P5 | e | P6 | f | P7 | g | P8 | h | P9 | j | P10 | k | P11 | m | P12 | n | P13 | p | P14 | q | P15 | r |
| G-1 | 34'-0 | 25'-4 | 18'-2 | 16'-11 | 19'-2 | 19'-9 | 18'-3 | 18'-6 | 7/8" | 41'-4 | 1 1/8" | 48'-2 | 7/8" | 23'-2 1/8 | 2 1/2" | 35'-1 | 7/8" | 29'-3 | 1 9/16" | 55'-10 | 7/8" | 25'-2 13/16 | 2 3/4" | 38'-11 | 7/8" | 26'-6 | 1 3/16" | 49'-9 | 7/8" | 31'-2 9/16 | 2 5/8" | 36'-9 | 7/8" | 23'-2 | 1 3/8" | 55'-4 | 7/8" | 20'-0 |
| G-2 | 35'-0 | 26'-9 | 18'-3 | 16'-3 | 18'-6 | 20'-3 | 17'-6 | 17'-4 | ↑ | 43'-1 | 1" | 41'-3 | 7/8" | 25'-2 5/8 | 2 7/16" | 34'-6 | ↑ | 29'-9 | 1 3/8" | 56'-0 | ↑ | 25'-10 13/16 | 2 11/16" | 38'-9 | ↑ | 27'-6 | 1 1/8" | 44'-9 | 7/8" | 31'-0 7/8 | 2 1/2" | 34'-10 | ↑ | 22'-8 | 1 7/16" | 57'-3 | ↑ | 19'-9 |
| G-3 | 36'-0 | 90'-1 3/16 | 18'-0 | 15'-6 | 18'-0 | 19'-3 | 17'-8 | 15'-0 | | 106'-9 3/16 | — | — | — | — | 2 3/8" | 33'-6 | | 30'-0 | 1 3/8" | 56'-6 | | 26'-4 13/16 | 2 9/16" | 37'-3 | | 27'-8 | 1" | 39'-6 | 7/8" | 32'-7 3/16 | 2 3/8" | 32'-8 | | 24'-10 | 1 7/16" | 58'-2 | | 19'-0 |
| G-4 | 37'-0 | 86'-8 3/4 | 18'-0 | 14'-8 | 16'-10 | 19'-6 | 16'-6 | 15'-0 | | 103'-8 3/4 | — | — | — | — | 2 5/16" | 32'-8 | | 29'-4 | 1 7/16" | 59'-0 | | 26'-6 13/16 | 2 1/2" | 36'-4 | | 96'-3 1/2 | — | — | — | — | 2 1/4" | 31'-6 | | 24'-9 | 1 1/2" | 58'-7 | | 18'-8 |
| G-5 | 38'-0 | 83'-10 5/16 | 17'-6 | 14'-0 | 15'-9 | 19'-3 | 15'-0 | 14'-0 | | 101'-2 5/16 | — | — | — | — | 2 1/4" | 31'-6 | | 29'-6 | 1 1/2" | 59'-9 | | 27'-4 13/16 | 2 7/16" | 35'-0 | | 93'-7 13/16 | — | — | — | — | 2 1/8" | 29'-0 | | 24'-6 | 1 9/16" | 60'-0 | | 18'-6 |
| G-6 | 39'-0 | 80'-8 13/16 | 17'-3 | 13'-3 | 15'-8 | 18'-4 | 14'-8 | 12'-1 | | 98'-4 13/16 | — | — | — | — | 2 3/16" | 30'-6 | | 27'-10 | 1 9/16" | 62'-11 | | 26'-8 13/16 | 2 5/16" | 34'-0 | | 90'-6 1/8 | — | — | — | — | 2 1/16" | 26'-9 | | 26'-1 | 1 5/8" | 61'-0 | | 17'-10 |
| G-7 | 40'-0 | 77'-4 3/8 | 17'-3 | 13'-0 | 14'-8 | 18'-6 | 13'-3 | 11'-0 | ↓ | 95'-4 3/8 | — | — | — | — | 2 1/8" | 30'-3 | ↓ | 29'-0 | 1 9/16" | 62'-6 | ↓ | 27'-2 13/16 | 2 5/16" | 33'-2 | ↓ | 87'-4 7/16 | — | — | — | — | 1 15/16" | 24'-3 | ↓ | 27'-3 | 1 5/8" | 61'-6 | ↓ | 17'-3 |
| G-8 | 41'-0 | 73'-8 15/16 | 17'-6 | 11'-9 | 14'-0 | 17'-10 | 12'-8 | 9'-10 | 7/8" | 92'-0 15/16 | — | — | — | — | 2 1/8" | 29'-3 | 7/8" | 28'-8 | 1 5/8" | 64'-7 | 7/8" | 27'-4 13/16 | 2 1/4" | 31'-10 | 7/8" | 84'-2 3/4 | — | — | — | — | 1 13/16" | 22'-6 | 7/8" | 27'-4 | 1 5/8" | 62'-4 | 7/8" | 17'-6 |

| GIRDER | SPANS | | | TENSION FLANGE | | | | | | | | | | | | | | | |
|---|---|---|---|---|---|---|---|---|---|---|---|---|---|---|---|---|---|---|---|
| | "A" | "B" | "C" | aa | bb | cc | dd | ee | ff | gg | D | E | F | G | H | J | K | M |
| G-1 | 16'-0 | 114'-10 1/8 | 145'-5 9/16 | 9'-0 | 34'-0 | 32'-0 | 34'-0 | 35'-0 | 34'-0 | 32'-0 | 25'-0 | 71'-10 1/8 | 66'-0 | 80'-4 13/16 | 69'-0 | 76'-5 9/16 | 66'-0 | 85'-0 |
| G-2 | 16'-4 | 111'-5 5/8 | 141'-0 7/8 | 10'-0 | 34'-0 | 30'-0 | 32'-0 | 35'-0 | 34'-0 | 31'-0 | 26'-4 | 67'-5 5/8 | 64'-0 | 84'-4 13/16 | 67'-0 | 72'-0 7/8 | 65'-0 | 86'-0 |
| G-3 | 16'-8 | 108'-1 3/16 | 136'-8 3/16 | 12'-0 | 35'-0 | 29'-0 | 31'-0 | 36'-0 | 34'-0 | 29'-0 | 28'-8 | 61'-1 3/16 | 64'-0 | 86'-4 5/16 | ↑ | 66'-8 3/16 | 63'-0 | 88'-0 |
| G-4 | 17'-0 | 104'-8 3/4 | 132'-3 1/2 | 14'-0 | 36'-0 | 28'-0 | 30'-0 | 37'-0 | 34'-0 | 28'-0 | 31'-0 | 54'-8 3/4 | 64'-0 | 88'-4 13/16 | | 61'-3 1/2 | 62'-0 | 89'-0 |
| G-5 | 17'-4 | 101'-4 5/16 | 127'-10 13/16 | 16'-0 | 38'-0 | 27'-0 | 29'-0 | 38'-0 | 35'-0 | 26'-0 | 33'-4 | 47'-4 5/16 | 65'-0 | 90'-4 13/16 | | 54'-10 13/16 | 61'-0 | 91'-0 |
| G-6 | 17'-8 | 97'-11 13/16 | 123'-6 1/8 | 19'-0 | 41'-0 | 27'-0 | 28'-0 | 39'-0 | 35'-0 | 25'-0 | 36'-8 | 37'-11 13/16 | 68'-0 | 91'-4 13/16 | ↓ | 49'-6 1/8 | 60'-0 | 92'-0 |
| G-7 | 18'-0 | 94'-7 3/8 | 119'-1 7/16 | 24'-0 | 45'-0 | 26'-0 | 27'-0 | 40'-0 | 36'-0 | 23'-0 | 42'-0 | 25'-7 3/8 | 71'-0 | 93'-4 13/16 | 67'-0 | 43'-1 7/16 | 59'-0 | 94'-0 |
| G-8 | 18'-4 | 91'-2 15/16 | 114'-8 3/4 | 31'-0 | 50'-0 | 25'-0 | 27'-0 | 42'-0 | 37'-0 | 22'-0 | 49'-4 | 10'-2 15/16 | 75'-0 | 94'-4 13/16 | 69'-0 | 35'-8 3/4 | 59'-0 | 95'-0 |

All Flange to Web welds to be continuous fillet weld on both sides of Web as follows:
For Flange Plates 3/4" to 1 1/2" use 5/16" weld.
For Flange Plates 1 1/2" to 2 1/4" use 3/8" weld.
For Flange Plates over 2 1/4" use 1/2" weld.

All Intermediate Stiffeners to be 5" x 5/16" plates with maximum spacing as noted. Adjust spacing within the maximum to coincide with the crossframe spacing as shown on the "Structural Steel Framing Plan", sheets 24 & 25.

1 1/4" allowable clearance between Intermediate Stiffeners and Tension Flange; tight fit with Compression Flange.

For additional details and Field Splice Details see sheet 28.

Sheet 27 / 37

W. E. QUICKSALL AND ASSOCIATES, INC.
CONSULTING ENGINEERS • NEW PHILADELPHIA, OHIO

**GIRDER DETAILS**

**BRIDGE NO. STA-43-1352**

**S.R. 43 over B&O R.R., N&W R.R. & P.R.R.**

STARK COUNTY

STA. 15+34.75
STA. 29+49.87

| DESIGNED | DRAWN | TRACED | CHECKED | REVIEWED | DATE | REVISED |
|---|---|---|---|---|---|---|
| | RG | | wd & | DLM | 2-21-69 | |

MICROFILMED
JUL 18 1979
REPRODUCTION

| FED. RD. DIVISION | STATE | PROJECT | |
|---|---|---|---|
| 2 | OHIO | | |

86

STA-43-13.40 PT-1

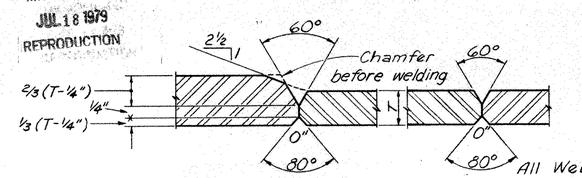


FLANGE SPLICE

(T = 1½" Max.*)

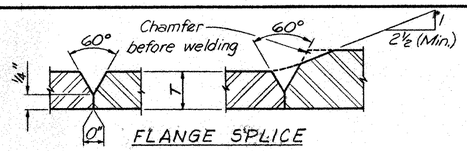


FLANGE SPLICE

(T = ⅞" or 1")

Notes:

All Web Splices to be made at a minimum of 5'-0 from Flange Splices.

Butt welds on girder flange plates shall be ground flush, the finish grinding being parallel to the direction of stress.

All full penetration welds to be back-gouged and welded after welding far side.

*-For plate thickness over 1½", use joint preparation conforming to B-U3a-S or B-U7-S, Figure 216, A.W.S. Specifications.

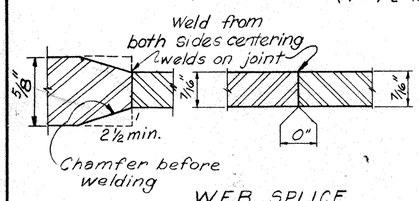


WEB SPLICE

WELDED SHOP SPLICES

(Automatic Submerged Arc)

| GIRDER | "A" | hh | kk | mm |
|---|---|---|---|---|
| G-1 | 16'-0 | 2'-0 | 2'-10 1/16 | 2'-7 15/16 |
| G-2 | 16'-4 | 2'-4 | 2'-10 1/16 | 2'-7 15/16 |
| G-3 | 16'-8 | 2'-8 | 2'-10 1/16 | 2'-7 15/16 |
| G-4 | 17'-0 | 3'-0 | 2'-9 7/8 | 2'-8 1/8 |
| G-5 | 17'-4 | 3'-4 | 2'-9 13/16 | 2'-8 3/16 |
| G-6 | 17'-8 | 3'-8 | 2'-9 5/8 | 2'-8 3/8 |
| G-7 | 18'-0 | 4'-0 | 2'-9 3/8 | 2'-8 5/8 |
| G-8 | 18'-4 | 4'-4 | 2'-9 3/8 | 2'-8 5/8 |

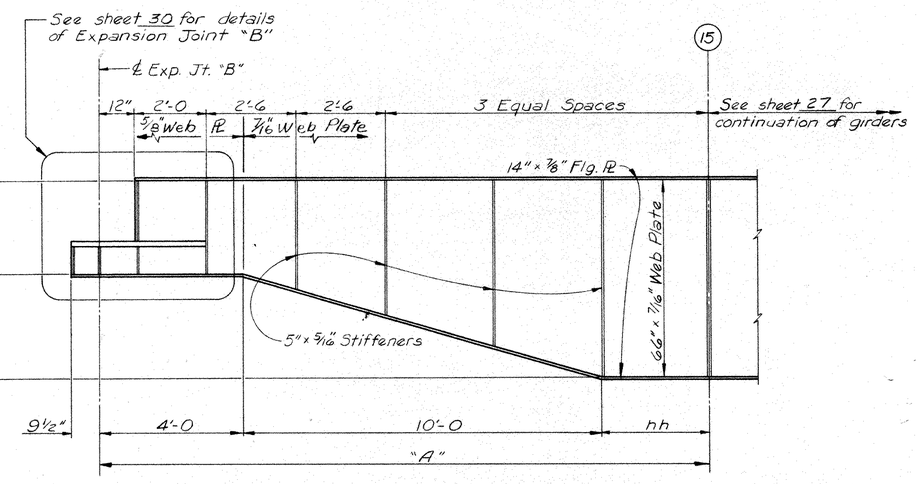


GIRDER HAUNCH DETAIL

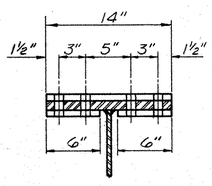


SECTION X-X

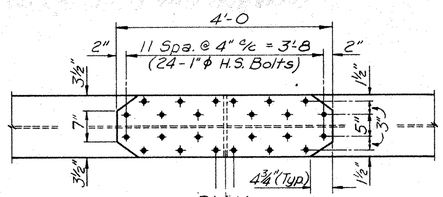


PLAN

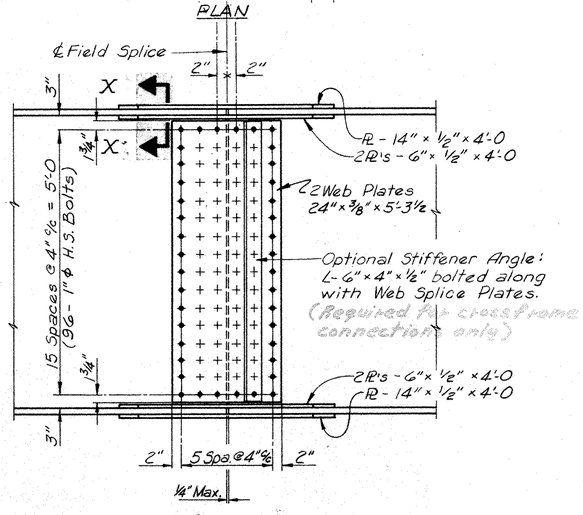


ELEVATION

FIELD SPLICE DETAIL

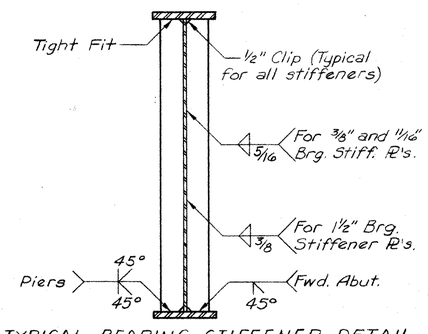


TYPICAL BEARING STIFFENER DETAIL

Sheet 28 | 37

W. E. QUICKSALL AND ASSOCIATES, INC.
CONSULTING ENGINEERS • NEW PHILADELPHIA, OHIO

GIRDER DETAILS

BRIDGE NO. STA-43-1352
S.R. 43 over B&O R.R., N&W R.R., & P.R.R.

STA. 15+34.75
STA. 29+49.87

STARK COUNTY

| DESIGNED | DRAWN | TRACED | CHECKED | REVIEWED | DATE | REVISED |
|---|---|---|---|---|---|---|
| | TG | | wda | DLM | 2-21-69 | |

MICROFILMED
JUL 18 1979
REPRODUCTION

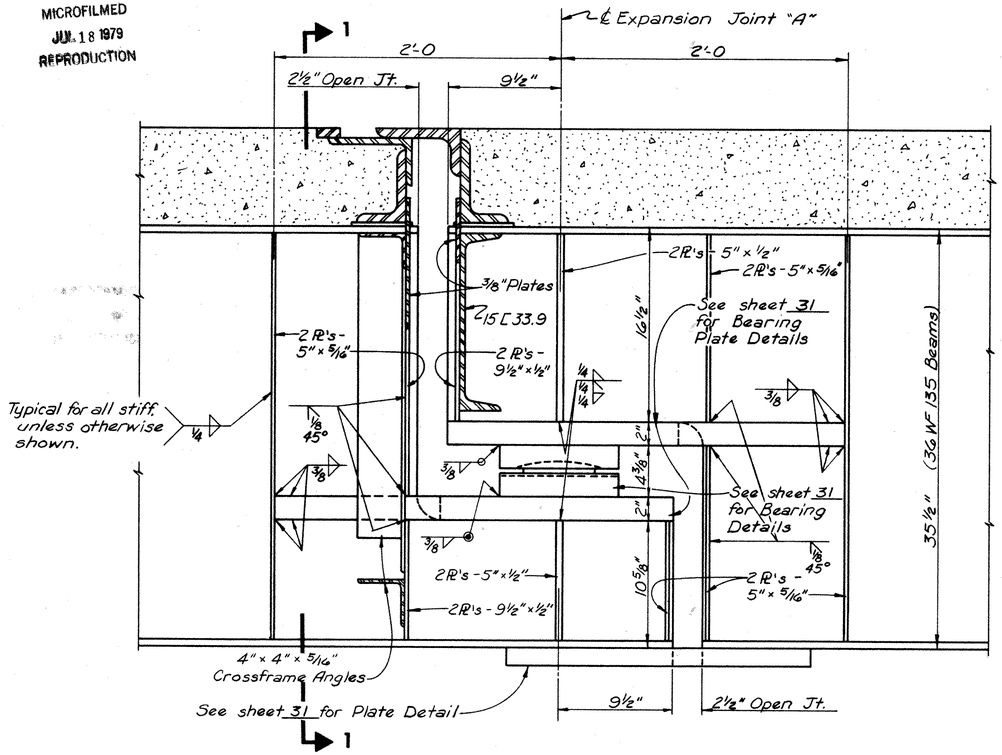


**ELEVATION**

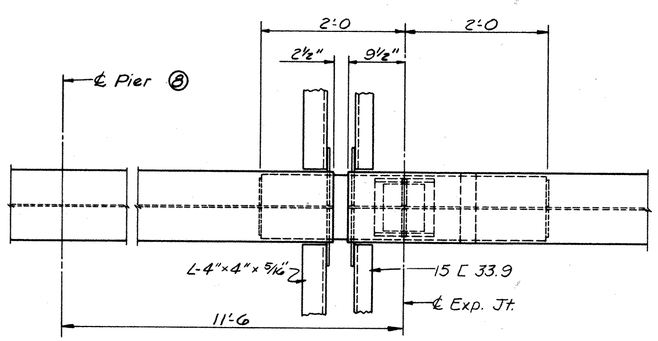


**PLAN**

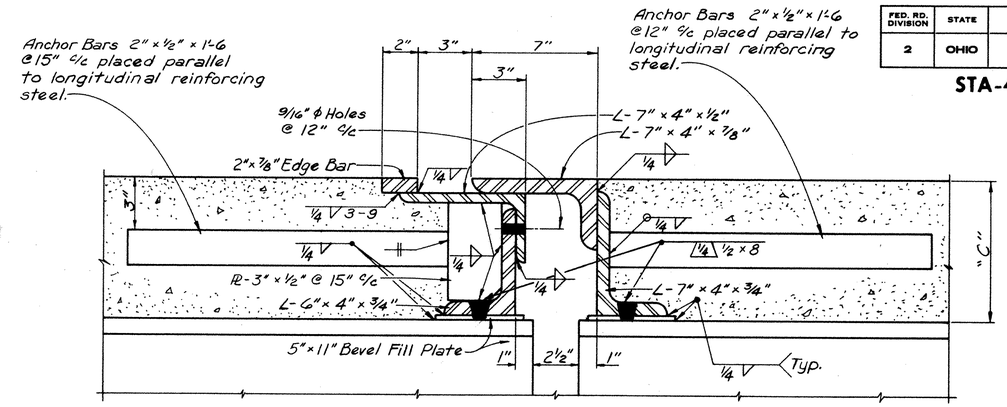


**END DAM ANGLES AT EXPANSION JOINT 'A'**

| BEAM LINE | DIM. "C" |
|---|---|
| 1 thru 5 | 8 1/16" |
| 6 | 8 3/16" |
| 7 & 8 | 8 1/4" |

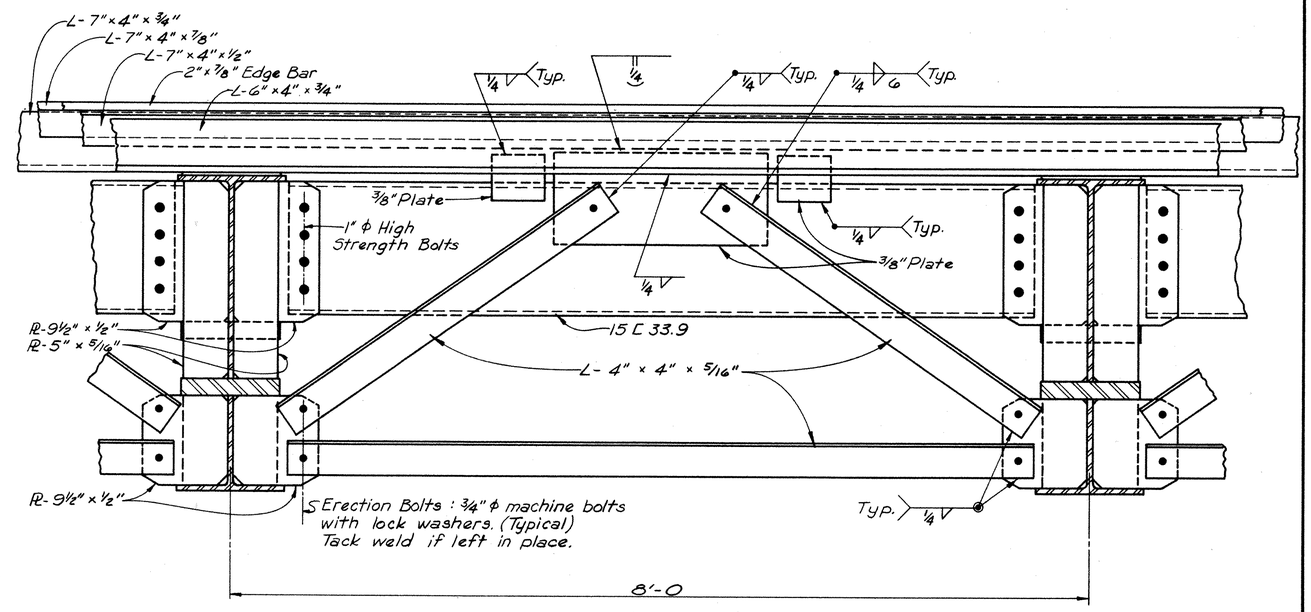


**SECTION 1-1**

| FED. RD. DIVISION | STATE | PROJECT | |
|---|---|---|---|
| 2 | OHIO | | |

87

**STA-43-13.40** PT-1

Sheet 29/37

W. E. QUICKSALL AND ASSOCIATES, INC.
CONSULTING ENGINEERS • NEW PHILADELPHIA, OHIO

# EXPANSION JOINT 'A' DETAILS

**BRIDGE NO. STA-43-1352**
**S.R. 43 over B&O R.R., N&W R.R. & P.R.R.**

STARK COUNTY — STA. 15+34.75 STA. 29+49.87

| DESIGNED | DRAWN | TRACED | CHECKED | REVIEWED | DATE | REVISED |
|---|---|---|---|---|---|---|
| | RG | | wda | DLM | 2-21-69 | |

| FED. RD. DIVISION | STATE | PROJECT | |
|---|---|---|---|
| 2 | OHIO | | |

STA-43-13.40 PT-1

88

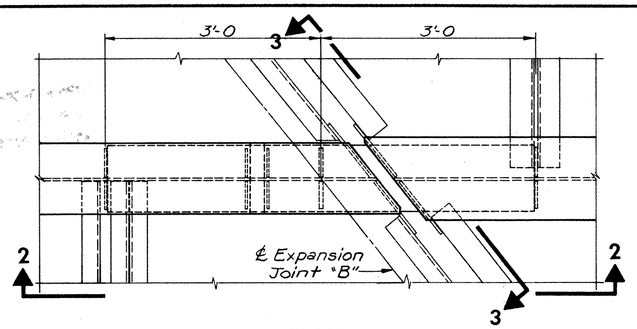


**PLAN**

(Note: End Dam Angles not shown)

MICROFILMED
JUL 18 1979
REPRODUCTION

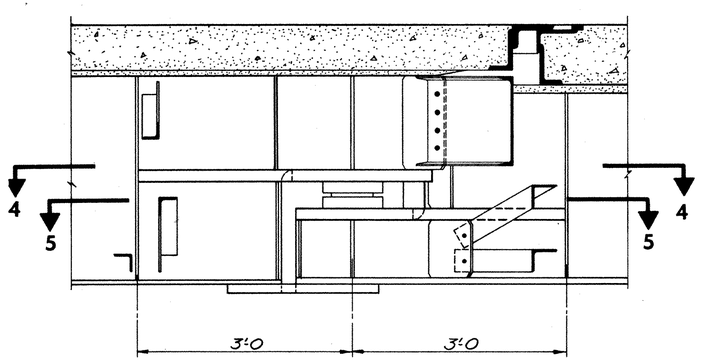


**SECTION 2-2**

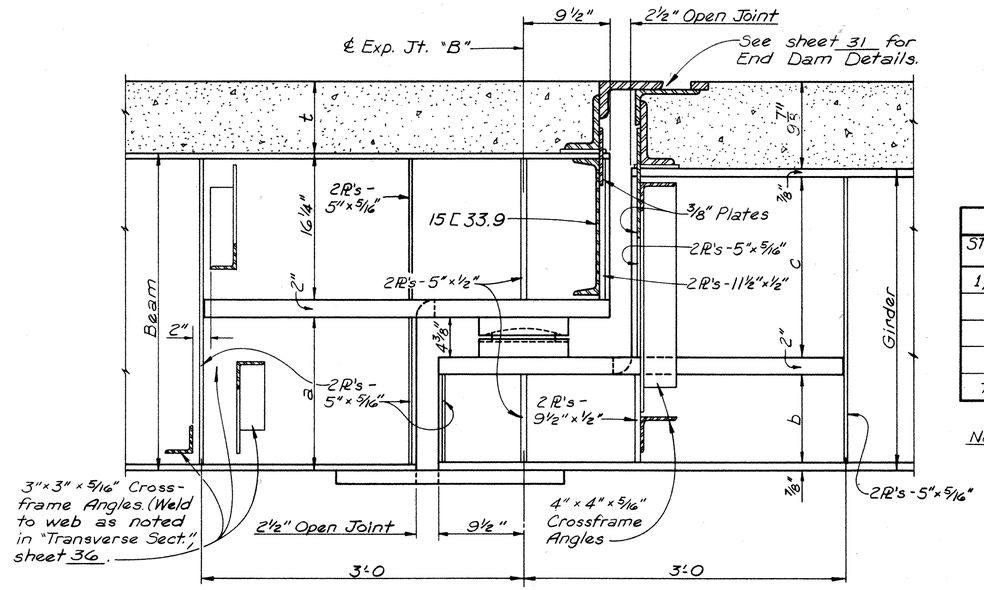


**ELEVATION**

( Non - skewed )

| DIMENSIONS | | | | |
|---|---|---|---|---|
| STRINGER LINE | t | a | b | c |
| 1, 2 & 3 | 8 1/16" | 17¼" | 10" | 19 15/16" |
| 4 | 7⅞" | 17⅝" | 10⅜" | 19¾" |
| 5 | 7 13/16" | 17¾" | 10½" | 19 11/16" |
| 6 | 7⅞" | 17⅞" | 10⅝" | 19¾" |
| 7 & 8 | 7¾" | 18¼" | 11" | 19⅝" |

Note: For additional details refer to "Elevation" of Expansion Joint "A", sheet 29.

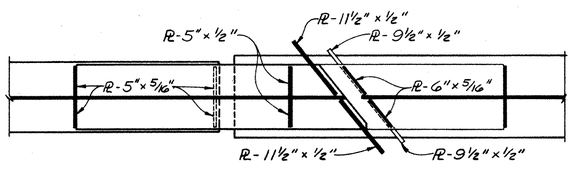


**SECTION 4-4**

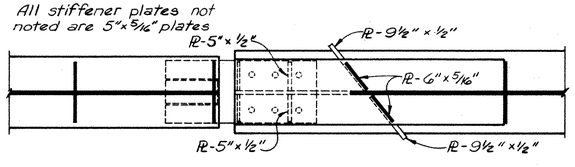


**SECTION 5-5**

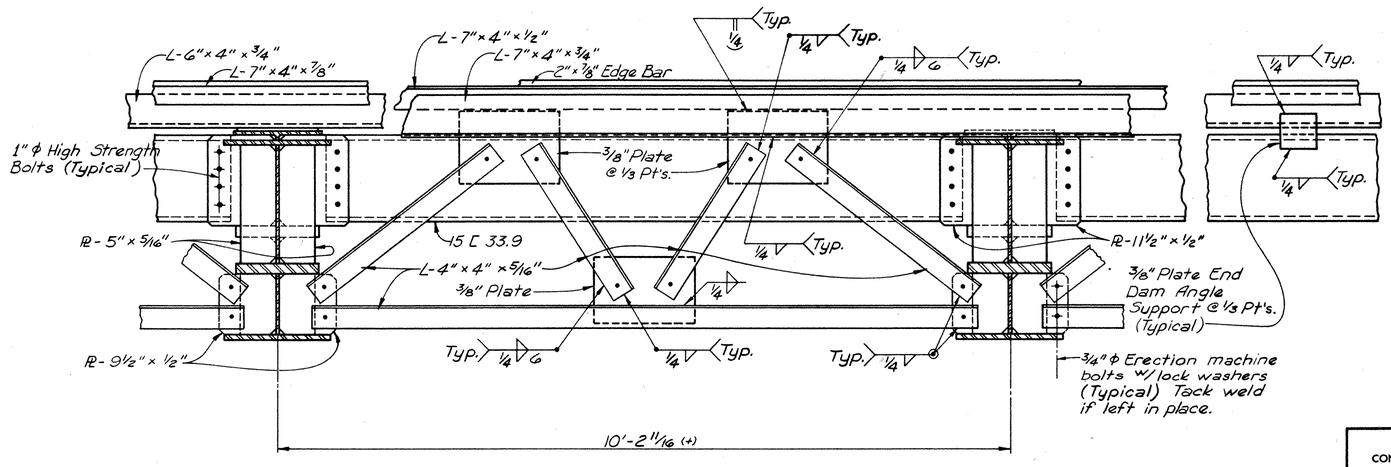


**SECTION 3-3**

Sheet 30 | 37

W. E. QUICKSALL AND ASSOCIATES, INC.
CONSULTING ENGINEERS • NEW PHILADELPHIA, OHIO

# EXPANSION JOINT 'B' DETAILS

**BRIDGE NO. STA-43-1352**

S.R. 43 over B&O R.R., N&W R.R. & P.R.R.

STARK COUNTY

STA. 15+34.75
STA. 29+49.87

| DESIGNED | DRAWN | TRACED | CHECKED | REVIEWED | DATE | REVISED |
|---|---|---|---|---|---|---|
| | TG | | wdz | DLM | 2-21-69 | |

MICROFILMED
JUL 18 1979
REPRODUCTION

| FED. RD. DIVISION | STATE | PROJECT | |
|---|---|---|---|
| 2 | OHIO | | |

89

STA-43-13.40 PT-1

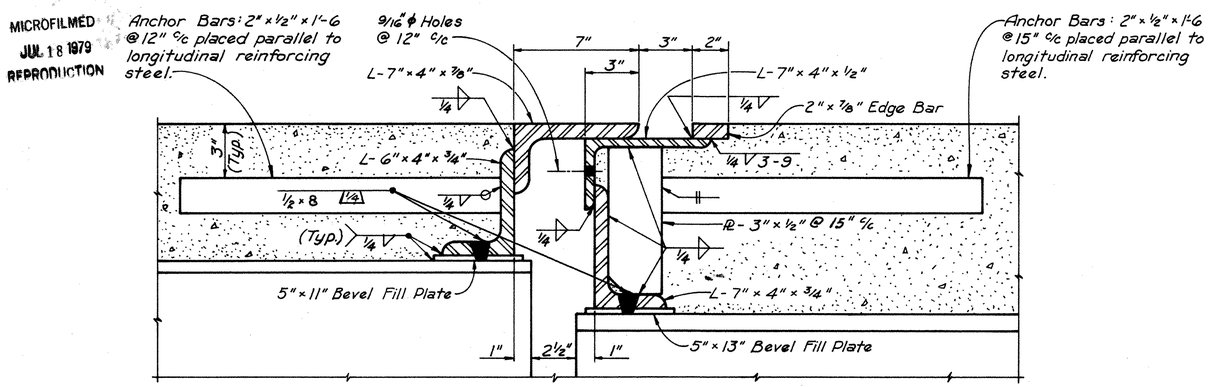


## END DAM DETAILS AT EXPANSION JOINT "B"

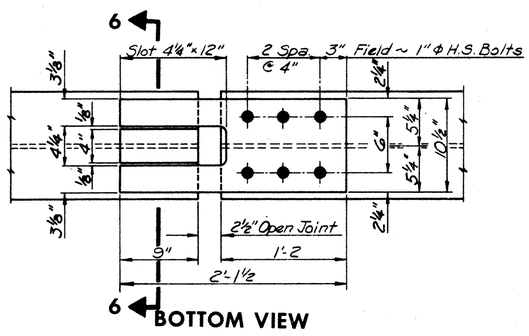


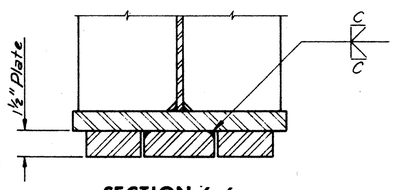


SECTION 6-6

## BOTTOM PLATE DETAIL

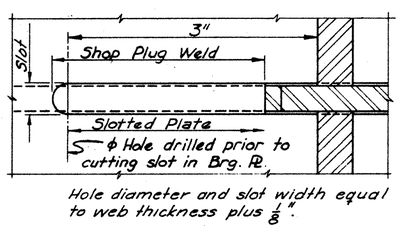


SECTION 7-7

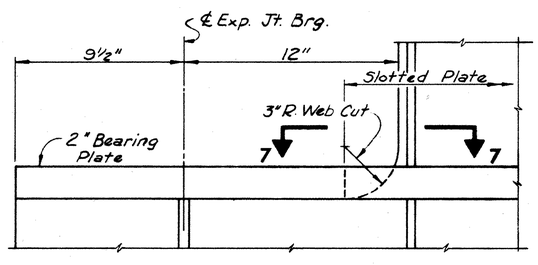


ELEVATION

## BEARING PLATE DETAIL

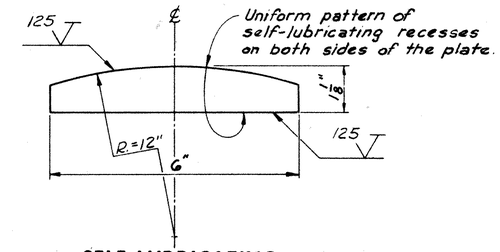


## SELF-LUBRICATING BRONZE PLATE DETAIL

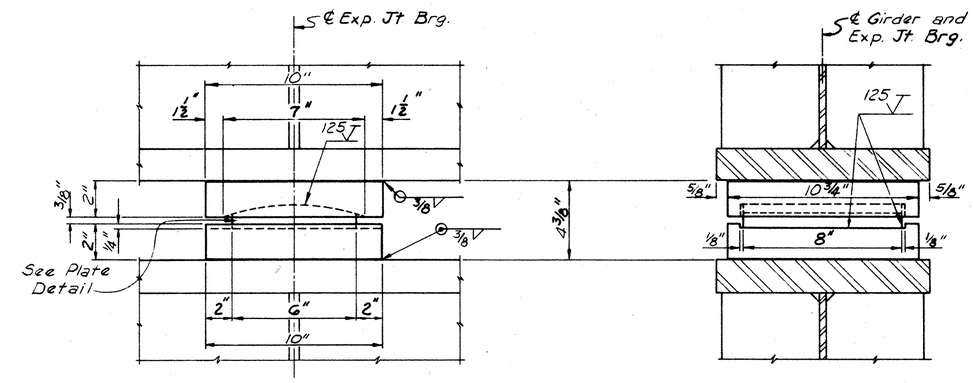


## EXPANSION JOINT BEARING DETAILS

(Refer to Supplemental Spec. 927)

Sheet 31/37

W. E. QUICKSALL AND ASSOCIATES, INC.
CONSULTING ENGINEERS • NEW PHILADELPHIA, OHIO

**EXPANSION JOINT DETAILS**
**BRIDGE NO. STA-43-1352**
**S.R. 43 over B&O R.R., N&W R.R. & P.R.**

STARK COUNTY — STA. 15+34.75 / STA. 29+49.87

| DESIGNED | DRAWN | TRACED | CHECKED | REVIEWED | DATE | REVISED |
|---|---|---|---|---|---|---|
| | TG | | wds | DLM | 2-21-69 | |

MICROFILMED
JUL 18 1979
REPRODUCTION

| FED. RD. DIVISION | STATE | PROJECT | |
|---|---|---|---|
| 2 | OHIO | | |

90

STA-43-13.40 PT-1

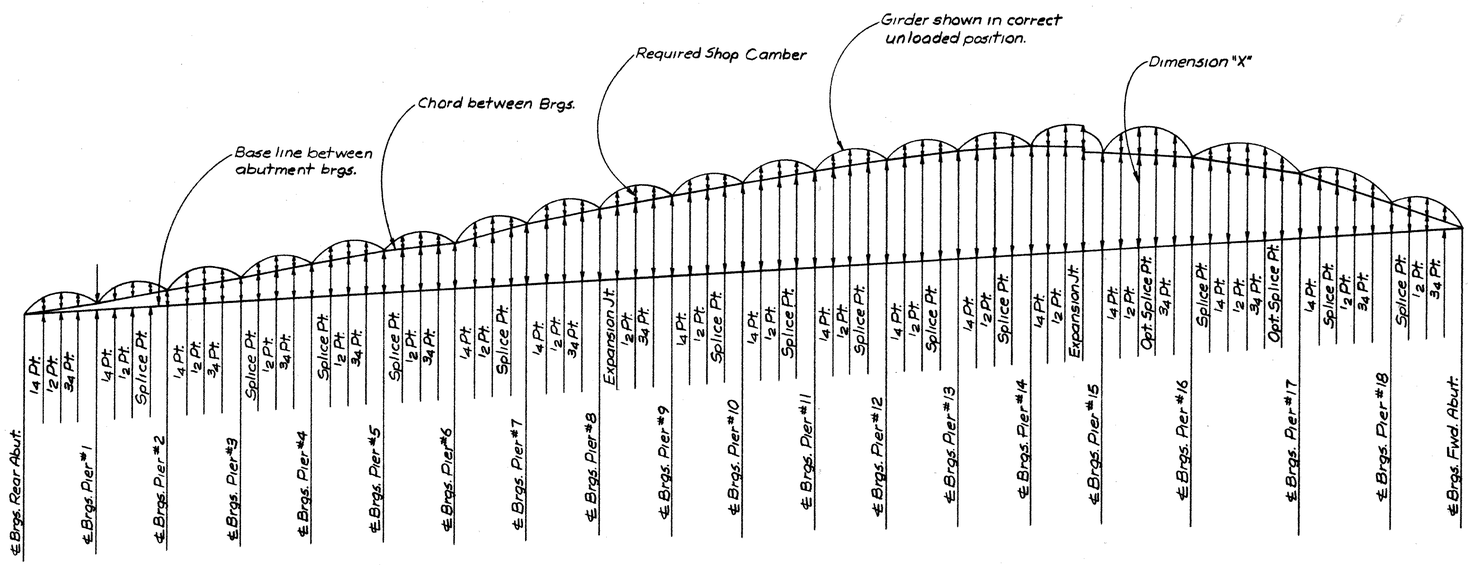


## CAMBER AND DEFLECTION DIAGRAM

See Sheet No. 33 for Camber and Deflection Tables.

Sheet 32/37

W. E. QUICKSALL AND ASSOCIATES, INC.
CONSULTING ENGINEERS • NEW PHILADELPHIA, OHIO

**CAMBER & DEFLECTION DIAGRAM**

**BRIDGE NO. STA-43-1352**

**S.R. 43 over B&O R.R., N&W R.R. & P.R.**

STARK COUNTY

STA. 15+34.75
STA. 29+49.87

| DESIGNED | DRAWN | TRACED | CHECKED | REVIEWED | DATE | REVISED |
|---|---|---|---|---|---|---|
| | PMZ | | wda | DLM | 2-21-69 | |

MICROFILMED
JUL 18 1979
REPRODUCTION

| FED. RD. DIVISION | STATE | PROJECT | |
|---|---|---|---|
| 2 | OHIO | | |

91

STA-43-13.40 PT-1

# CAMBER AND DEFLECTION

| LOCATION | GIRDER | SPAN 1 | | | | SPAN 2 | | | | SPAN 3 | | | | SPAN 4 | | | | SPAN 5 | | | |
|---|---|---|---|---|---|---|---|---|---|---|---|---|---|---|---|---|---|---|---|---|---|
| | | ℄ Brgs. | 1/4 Pt. | 1/2 Pt. | 3/4 Pt. | ℄ Brgs. | 1/4 Pt. | 1/2 Pt. | Splice | ℄ Brgs. | 1/4 Pt. | 1/2 Pt. | 3/4 Pt. | ℄ Brgs. | Splice | 1/2 Pt. | 3/4 Pt. | ℄ Brgs. | Splice | 1/2 Pt. | 3/4 Pt. |
| Dimension "X" (Difference in elevation between chord and base line) | 1 | 0 | 3 1/16" | 6 3/16" | 9 1/4" | 1'-0 3/8" | 1'-4 1/4" | 1'-8 9/16" | 2'-0 13/16" | 2'-4 | 2'-7 7/8" | 2'-11 13/16" | 3'-3 1/16" | 3'-7 5/8" | 3'-10 13/16" | 4'-3 1/16" | 4'-7 5/16" | 4'-11 1/4" | 5'-2 3/8" | 5'-7 1/16" | 5'-10 15/16" |
| | 2 | 0 | 3 1/16" | 6 1/8" | 9 3/16" | 1'-0 1/4" | 1'-4 1/8" | 1'-8 | 2'-0 5/8" | 2'-3 3/4" | 2'-7 5/8" | 2'-11 1/2" | 3'-3 3/8" | 3'-7 1/4" | 3'-10 3/8" | 4'-3 | 4'-6 7/8" | 4'-10 3/4" | 5'-1 7/8" | 5'-6 1/2" | 5'-10 3/8" |
| | 3 | 0 | 3 1/16" | 6 1/16" | 9 1/8" | 1'-0 1/8" | 1'-4 | 1'-7 13/16" | 2'-0 7/16" | 2'-3 1/2" | 2'-7 3/8" | 2'-11 3/16" | 3'-3 1/16" | 3'-6 7/8" | 3'-10 | 4'-2 9/16" | 4'-6 7/16" | 4'-10 1/4" | 5'-1 3/8" | 5'-5 15/16" | 5'-9 3/4" |
| | 4 | 0 | 3" | 6" | 9 1/16" | 1'-0 1/16" | 1'-3 7/8" | 1'-7 11/16" | 2'-0 3/16" | 2'-3 5/16" | 2'-7 1/8" | 2'-10 15/16" | 3'-2 3/4" | 3'-6 9/16" | 3'-9 5/8" | 4'-2 7/16" | 4'-6 | 4'-9 13/16" | 5'-0 7/8" | 5'-5 7/16" | 5'-9 3/16" |
| | 5 | 0 | 3" | 6" | 9" | 11 15/16" | 1'-3 3/4" | 1'-7 9/16" | 2'-0 1/16" | 2'-3 1/8" | 2'-6 7/8" | 2'-10 1/16" | 3'-2 1/2" | 3'-6 1/4" | 3'-9 7/16" | 4'-1 7/8" | 4'-5 5/8" | 4'-9 7/16" | 5'-0 1/2" | 5'-5 | 5'-8 3/4" |
| | 6 | 0 | 3" | 6" | 8 15/16" | 11 15/16" | 1'-3 3/4" | 1'-7 1/2" | 2'-0 | 2'-3 1/16" | 2'-6 7/8" | 2'-10 1/8" | 3'-2 3/8" | 3'-6 3/16" | 3'-9 1/4" | 4'-1 3/4" | 4'-5 1/2" | 4'-9 5/16" | 5'-0 3/8" | 5'-4 3/8" | 5'-8 5/8" |
| | 7 | 0 | 3" | 5 15/16" | 8 15/16" | 11 15/16" | 1'-3 1/16" | 1'-7 1/16" | 1'-11 15/16" | 2'-3 | 2'-6 3/4" | 2'-10 7/8" | 3'-2 9/16" | 3'-6 1/8" | 3'-9 1/8" | 4'-1 1/16" | 4'-5 1/16" | 4'-9 3/16" | 5'-0 1/4" | 5'-4 3/4" | 5'-8 1/2" |
| | 8 | 0 | 3" | 5 15/16" | 8 15/16" | 11 15/16" | 1'-3 1/16" | 1'-7 1/16" | 1'-11 15/16" | 2'-3 | 2'-6 3/4" | 2'-10 1/2" | 3'-2 1/4" | 3'-6 1/16" | 3'-9 1/16" | 4'-1 9/16" | 4'-5 3/8" | 4'-9 1/8" | 5'-0 1/8" | 5'-4 5/8" | 5'-8 7/16" |
| Deflection due to weight of steel | 1 | 0 | 0 | 0 | 0 | 0 | 0 | 0 | 0 | 0 | 0 | 0 | 0 | 0 | 0 | 0 | 0 | 0 | 0 | 0 | 0 |
| | 2 | ↑ | ↑ | ↑ | ↑ | ↑ | ↑ | ↑ | ↑ | ↑ | ↑ | ↑ | ↑ | ↑ | ↑ | ↑ | ↑ | ↑ | ↑ | ↑ | ↑ |
| | 3 | ↑ | ↑ | ↑ | ↑ | ↑ | ↑ | ↑ | ↑ | ↑ | ↑ | ↑ | ↑ | ↑ | ↑ | ↑ | ↑ | ↑ | ↑ | ↑ | ↑ |
| | 4 | ↑ | ↑ | ↑ | ↑ | ↑ | ↑ | ↑ | ↑ | ↑ | ↑ | ↑ | ↑ | ↑ | ↑ | ↑ | ↑ | ↑ | ↑ | ↑ | ↑ |
| | 5 | ↑ | ↑ | ↑ | ↑ | ↑ | ↑ | ↑ | ↑ | ↑ | ↑ | ↑ | ↑ | ↑ | ↑ | ↑ | ↑ | ↑ | ↑ | ↑ | ↑ |
| | 6 | ↑ | ↑ | ↑ | ↑ | ↑ | ↑ | ↑ | ↑ | ↑ | ↑ | ↑ | ↑ | ↑ | ↑ | ↑ | ↑ | ↑ | ↑ | ↑ | ↑ |
| | 7 | ↑ | ↑ | ↑ | ↑ | ↑ | ↑ | ↑ | ↑ | ↑ | ↑ | ↑ | ↑ | ↑ | ↑ | ↑ | ↑ | ↑ | ↑ | ↑ | ↑ |
| | 8 | 0 | 0 | 0 | 0 | 0 | 0 | 0 | 0 | 0 | 0 | 0 | 0 | 0 | 0 | 0 | 0 | 0 | 0 | 0 | 0 |
| Deflection due to remaining dead load | 1 | 0 | 3/16" | 1/4" | 1/8" | 0 | 3/16" | 5/16" | 1/8" | 0 | 1/8" | 1/4" | 1/8" | 0 | 1/8" | 1/4" | 1/8" | 0 | 1/8" | 1/4" | 1/8" |
| | 2 | ↑ | ↑ | ↑ | ↑ | ↑ | ↑ | ↑ | ↑ | ↑ | ↑ | ↑ | ↑ | ↑ | ↑ | ↑ | ↑ | ↑ | ↑ | ↑ | ↑ |
| | 3 | ↑ | ↑ | ↑ | ↑ | ↑ | ↑ | ↑ | ↑ | ↑ | ↑ | ↑ | ↑ | ↑ | ↑ | ↑ | ↑ | ↑ | ↑ | ↑ | ↑ |
| | 4 | ↑ | ↑ | ↑ | ↑ | ↑ | ↑ | ↑ | ↑ | ↑ | ↑ | ↑ | ↑ | ↑ | ↑ | ↑ | ↑ | ↑ | ↑ | ↑ | ↑ |
| | 5 | ↑ | ↑ | ↑ | ↑ | ↑ | ↑ | ↑ | ↑ | ↑ | ↑ | ↑ | ↑ | ↑ | ↑ | ↑ | ↑ | ↑ | ↑ | ↑ | ↑ |
| | 6 | ↑ | ↑ | ↑ | ↑ | ↑ | ↑ | ↑ | ↑ | ↑ | ↑ | ↑ | ↑ | ↑ | ↑ | ↑ | ↑ | ↑ | ↑ | ↑ | ↑ |
| | 7 | ↑ | ↑ | ↑ | ↑ | ↑ | ↑ | ↑ | ↑ | ↑ | ↑ | ↑ | ↑ | ↑ | ↑ | ↑ | ↑ | ↑ | ↑ | ↑ | ↑ |
| | 8 | 0 | 3/16" | 1/4" | 1/8" | 0 | 3/16" | 5/16" | 1/8" | 0 | 1/8" | 1/4" | 1/8" | 0 | 1/8" | 1/4" | 1/8" | 0 | 1/8" | 1/4" | 1/8" |
| Adjustment required for vertical crest curve | 1 | 0 | 0 | 0 | 0 | 0 | 0 | 0 | 0 | 0 | 0 | 0 | 0 | 0 | 0 | 0 | 0 | 0 | 0 | 0 | 0 |
| | 2 | ↑ | ↑ | ↑ | ↑ | ↑ | ↑ | ↑ | ↑ | ↑ | ↑ | ↑ | ↑ | ↑ | ↑ | ↑ | ↑ | ↑ | ↑ | ↑ | ↑ |
| | 3 | ↑ | ↑ | ↑ | ↑ | ↑ | ↑ | ↑ | ↑ | ↑ | ↑ | ↑ | ↑ | ↑ | ↑ | ↑ | ↑ | ↑ | ↑ | ↑ | ↑ |
| | 4 | ↑ | ↑ | ↑ | ↑ | ↑ | ↑ | ↑ | ↑ | ↑ | ↑ | ↑ | ↑ | ↑ | ↑ | ↑ | ↑ | ↑ | ↑ | ↑ | ↑ |
| | 5 | ↑ | ↑ | ↑ | ↑ | ↑ | ↑ | ↑ | ↑ | ↑ | ↑ | ↑ | ↑ | ↑ | ↑ | ↑ | ↑ | ↑ | ↑ | ↑ | ↑ |
| | 6 | ↑ | ↑ | ↑ | ↑ | ↑ | ↑ | ↑ | ↑ | ↑ | ↑ | ↑ | ↑ | ↑ | ↑ | ↑ | ↑ | ↑ | ↑ | ↑ | ↑ |
| | 7 | ↑ | ↑ | ↑ | ↑ | ↑ | ↑ | ↑ | ↑ | ↑ | ↑ | ↑ | ↑ | ↑ | ↑ | ↑ | ↑ | ↑ | ↑ | ↑ | ↑ |
| | 8 | 0 | 0 | 0 | 0 | 0 | 0 | 0 | 0 | 0 | 0 | 0 | 0 | 0 | 0 | 0 | 0 | 0 | 0 | 0 | 0 |
| Required Shop Camber | 1 | 0 | 3/16" | 1/4" | 1/8" | 0 | 3/16" | 5/16" | 1/8" | 0 | 1/8" | 1/4" | 1/8" | 0 | 1/8" | 1/4" | 1/8" | 0 | 1/8" | 1/4" | 1/8" |
| | 2 | ↑ | ↑ | ↑ | ↑ | ↑ | ↑ | ↑ | ↑ | ↑ | ↑ | ↑ | ↑ | ↑ | ↑ | ↑ | ↑ | ↑ | ↑ | ↑ | ↑ |
| | 3 | ↑ | ↑ | ↑ | ↑ | ↑ | ↑ | ↑ | ↑ | ↑ | ↑ | ↑ | ↑ | ↑ | ↑ | ↑ | ↑ | ↑ | ↑ | ↑ | ↑ |
| | 4 | ↑ | ↑ | ↑ | ↑ | ↑ | ↑ | ↑ | ↑ | ↑ | ↑ | ↑ | ↑ | ↑ | ↑ | ↑ | ↑ | ↑ | ↑ | ↑ | ↑ |
| | 5 | ↑ | ↑ | ↑ | ↑ | ↑ | ↑ | ↑ | ↑ | ↑ | ↑ | ↑ | ↑ | ↑ | ↑ | ↑ | ↑ | ↑ | ↑ | ↑ | ↑ |
| | 6 | ↑ | ↑ | ↑ | ↑ | ↑ | ↑ | ↑ | ↑ | ↑ | ↑ | ↑ | ↑ | ↑ | ↑ | ↑ | ↑ | ↑ | ↑ | ↑ | ↑ |
| | 7 | ↑ | ↑ | ↑ | ↑ | ↑ | ↑ | ↑ | ↑ | ↑ | ↑ | ↑ | ↑ | ↑ | ↑ | ↑ | ↑ | ↑ | ↑ | ↑ | ↑ |
| | 8 | 0 | 3/16" | 1/4" | 1/8" | 0 | 3/16" | 5/16" | 1/8" | 0 | 1/8" | 1/4" | 1/8" | 0 | 1/8" | 1/4" | 1/8" | 0 | 1/8" | 1/4" | 1/8" |

| LOCATION | GIRDER | SPAN 6 | | | | SPAN 7 | | | | SPAN 8 | | | | SPAN 9 | | | | SPAN 10 | | | |
|---|---|---|---|---|---|---|---|---|---|---|---|---|---|---|---|---|---|---|---|---|---|
| | | ℄ Brgs. | Splice | 1/2 Pt. | 3/4 Pt. | ℄ Brgs. | 1/4 Pt. | 1/2 Pt. | Splice | ℄ Brgs. | 1/4 Pt. | 1/2 Pt. | 3/4 Pt. | ℄ Brgs. | Exp. Jt. | 1/2 Pt. | 3/4 Pt. | ℄ Brgs. | 1/4 Pt. | 1/2 Pt. | Splice | ℄ Brgs. |
| Dimension "X" (Difference in elevation between chord and base line) | 1 | 6'-2 1/8" | 6'-6 | 6'-10 11/16" | 7'-2 9/16" | 7'-6 1/2" | 7'-10 3/8" | 8'-2 5/16" | 8'-6 1/8" | 8'-10 1/8" | 9'-2 | 9'-5 1/16" | 9'-9 1/8" | 10'-1 3/4" | 10'-4 1/8" | 10'-9 9/16" | 11'-1 7/16" | 11'-5 3/8" | 11'-9 1/8" | 12'-0 13/16" | 12'-5 1/4" | 12'-8 9/16" |
| | 2 | 6'-2 1/4" | 6'-5 3/8" | 6'-10 | 7'-1 7/8" | 7'-5 3/4" | 7'-9 5/8" | 8'-1 1/2" | 8'-5 1/8" | 8'-9 1/4" | 9'-1 1/8" | 9'-5 | 9'-8 7/8" | 10'-0 3/4" | 10'-3 7/8" | 10'-8 1/2" | 11'-0 3/8" | 11'-4 | 11'-7 7/8" | 11'-11 5/8" | 12'-4 1/16" | 12'-7 1/16" |
| | 3 | 6'-1 5/8" | 6'-4 3/4" | 6'-9 9/16" | 7'-1 1/8" | 7'-5 | 7'-8 7/8" | 8'-0 1/16" | 8'-5 1/4" | 8'-8 3/8" | 9'-0 1/4" | 9'-4 1/16" | 9'-7 7/8" | 9'-11 3/4" | 10'-2 7/8" | 10'-7 7/16" | 10'-11 1/4" | 11'-3 1/8" | 11'-6 13/16" | 11'-10 7/16" | 12'-2 13/16" | 12'-5 13/16" |
| | 4 | 6'-1 1/16" | 6'-4 1/8" | 6'-8 1/16" | 7'-0 1/16" | 7'-4 9/16" | 7'-8 1/8" | 7'-11 15/16" | 8'-4 7/16" | 8'-7 1/2" | 8'-11 5/16" | 9'-3 1/8" | 9'-6 15/16" | 9'-10 3/4" | 10'-1 7/8" | 10'-6 3/8" | 10'-10 3/16" | 11'-2 | 11'-5 11/16" | 11'-9 5/16" | 12'-1 5/8" | 12'-4 9/16" |
| | 5 | 6'-0 9/16" | 6'-3 5/8" | 6'-8 1/8" | 6'-11 15/16" | 7'-3 1/16" | 7'-7 1/2" | 7'-11 7/16" | 8'-3 13/16" | 8'-6 5/8" | 8'-10 5/8" | 9'-2 7/16" | 9'-6 5/16" | 9'-10 | 10'-1 1/16" | 10'-5 9/16" | 10'-9 3/8" | 11'-1 3/16" | 11'-4 3/4" | 11'-8 3/8" | 12'-0 1/16" | 12'-3 9/16" |
| | 6 | 6'-0 1/16" | 6'-3 1/16" | 6'-8 | 6'-11 3/4" | 7'-3 9/16" | 7'-7 9/16" | 7'-11 1/8" | 8'-3 3/8" | 8'-6 1/16" | 8'-10 1/16" | 9'-2 1/4" | 9'-6 | 9'-9 13/16" | 10'-0 5/8" | 10'-5 3/8" | 10'-9 1/8" | 11'-0 15/16" | 11'-4 1/2" | 11'-8 1/8" | 12'-0 1/8" | 12'-3 5/16" |
| | 7 | 6'-0 1/16" | 6'-3 3/8" | 6'-7 7/8" | 6'-11 5/8" | 7'-3 3/8" | 7'-7 3/16" | 7'-10 15/16" | 8'-3 7/16" | 8'-6 1/2" | 8'-10 1/4" | 9'-2 1/16" | 9'-5 13/16" | 9'-9 7/16" | 10'-0 9/16" | 10'-5 5/16" | 10'-8 15/16" | 11'-0 1/16" | 11'-4 5/16" | 11'-7 7/8" | 12'-0 1/8" | 12'-3 1/16" |
| | 8 | 6'-0 3/16" | 6'-3 1/4" | 6'-7 3/4" | 6'-11 1/2" | 7'-3 1/4" | 7'-7 1/16" | 7'-10 13/16" | 8'-3 5/16" | 8'-6 5/16" | 8'-10 1/8" | 9'-1 7/8" | 9'-5 9/16" | 9'-9 7/16" | 10'-0 7/16" | 10'-4 15/16" | 10'-8 11/16" | 11'-0 1/2" | 11'-4 1/16" | 11'-7 5/8" | 11'-11 15/16" | 12'-2 13/16" |
| Deflection due to weight of steel | 1 | 0 | 0 | 0 | 0 | 0 | 0 | 0 | 0 | 0 | 0 | 1/16" | 0 | 0 | 0 | 0 | 0 | 0 | 0 | 1/16" | 0 | 0 |
| | 2 | ↑ | ↑ | ↑ | ↑ | ↑ | ↑ | ↑ | ↑ | ↑ | ↑ | ↑ | ↑ | ↑ | ↑ | ↑ | ↑ | ↑ | ↑ | ↑ | ↑ | ↑ |
| | 3 | ↑ | ↑ | ↑ | ↑ | ↑ | ↑ | ↑ | ↑ | ↑ | ↑ | ↑ | ↑ | ↑ | ↑ | ↑ | ↑ | ↑ | ↑ | ↑ | ↑ | ↑ |
| | 4 | ↑ | ↑ | ↑ | ↑ | ↑ | ↑ | ↑ | ↑ | ↑ | ↑ | ↑ | ↑ | ↑ | ↑ | ↑ | ↑ | ↑ | ↑ | ↑ | ↑ | ↑ |
| | 5 | ↑ | ↑ | ↑ | ↑ | ↑ | ↑ | ↑ | ↑ | ↑ | ↑ | ↑ | ↑ | ↑ | ↑ | ↑ | ↑ | ↑ | ↑ | ↑ | ↑ | ↑ |
| | 6 | ↑ | ↑ | ↑ | ↑ | ↑ | ↑ | ↑ | ↑ | ↑ | ↑ | ↑ | ↑ | ↑ | ↑ | ↑ | ↑ | ↑ | ↑ | ↑ | ↑ | ↑ |
| | 7 | ↑ | ↑ | ↑ | ↑ | ↑ | ↑ | ↑ | ↑ | ↑ | ↑ | ↑ | ↑ | ↑ | ↑ | ↑ | ↑ | ↑ | ↑ | ↑ | ↑ | ↑ |
| | 8 | 0 | 0 | 0 | 0 | 0 | 0 | 0 | 0 | 0 | 0 | 1/16" | 0 | 0 | 0 | 0 | 0 | 0 | 0 | 1/16" | 0 | 0 |
| Deflection due to remaining dead load | 1 | 0 | 1/8" | 1/4" | 1/16" | 0 | 1/8" | 1/4" | 3/16" | 0 | 1/16" | 3/16" | 1/8" | 0 | 3/16" | 1/4" | 1/8" | 0 | 1/16" | 3/16" | 1/8" | 0 |
| | 2 | ↑ | ↑ | ↑ | ↑ | ↑ | ↑ | ↑ | ↑ | ↑ | ↑ | ↑ | ↑ | ↑ | ↑ | ↑ | ↑ | ↑ | ↑ | ↑ | ↑ | ↑ |
| | 3 | ↑ | ↑ | ↑ | ↑ | ↑ | ↑ | ↑ | ↑ | ↑ | ↑ | ↑ | ↑ | ↑ | ↑ | ↑ | ↑ | ↑ | ↑ | ↑ | ↑ | ↑ |
| | 4 | ↑ | ↑ | ↑ | ↑ | ↑ | ↑ | ↑ | ↑ | ↑ | ↑ | ↑ | ↑ | ↑ | ↑ | ↑ | ↑ | ↑ | ↑ | ↑ | ↑ | ↑ |
| | 5 | ↑ | ↑ | ↑ | ↑ | ↑ | ↑ | ↑ | ↑ | ↑ | ↑ | ↑ | ↑ | ↑ | ↑ | ↑ | ↑ | ↑ | ↑ | ↑ | ↑ | ↑ |
| | 6 | ↑ | ↑ | ↑ | ↑ | ↑ | ↑ | ↑ | ↑ | ↑ | ↑ | ↑ | ↑ | ↑ | ↑ | ↑ | ↑ | ↑ | ↑ | ↑ | ↑ | ↑ |
| | 7 | ↑ | ↑ | ↑ | ↑ | ↑ | ↑ | ↑ | ↑ | ↑ | ↑ | ↑ | ↑ | ↑ | ↑ | ↑ | ↑ | ↑ | ↑ | ↑ | ↑ | ↑ |
| | 8 | 0 | 1/8" | 1/4" | 1/8" | 0 | 1/8" | 1/4" | 1/16" | 0 | 1/8" | 1/4" | 3/16" | 0 | 1/16" | 3/16" | 1/8" | 0 | 3/16" | 5/16" | 3/16" | 0 |
| Adjustment required for vertical crest curve | 1 | 0 | 0 | 0 | 0 | 0 | 0 | 0 | 0 | 0 | 0 | 0 | 0 | 0 | 0 | 0 | 0 | 3/16" | 5/16" | 3/16" | 0 | |
| | 2 | ↑ | ↑ | ↑ | ↑ | ↑ | ↑ | ↑ | ↑ | ↑ | ↑ | ↑ | ↑ | ↑ | ↑ | ↑ | ↑ | ↑ | ↑ | ↑ | ↑ | ↑ |
| | 3 | ↑ | ↑ | ↑ | ↑ | ↑ | ↑ | ↑ | ↑ | ↑ | ↑ | ↑ | ↑ | ↑ | ↑ | ↑ | ↑ | ↑ | ↑ | ↑ | ↑ | ↑ |
| | 4 | ↑ | ↑ | ↑ | ↑ | ↑ | ↑ | ↑ | ↑ | ↑ | ↑ | ↑ | ↑ | ↑ | ↑ | ↑ | ↑ | ↑ | ↑ | ↑ | ↑ | ↑ |
| | 5 | ↑ | ↑ | ↑ | ↑ | ↑ | ↑ | ↑ | ↑ | ↑ | ↑ | ↑ | ↑ | ↑ | ↑ | ↑ | ↑ | ↑ | ↑ | ↑ | ↑ | ↑ |
| | 6 | ↑ | ↑ | ↑ | ↑ | ↑ | ↑ | ↑ | ↑ | ↑ | ↑ | ↑ | ↑ | ↑ | ↑ | ↑ | ↑ | ↑ | ↑ | ↑ | ↑ | ↑ |
| | 7 | ↑ | ↑ | ↑ | ↑ | ↑ | ↑ | ↑ | ↑ | ↑ | ↑ | ↑ | ↑ | ↑ | ↑ | ↑ | ↑ | ↑ | ↑ | ↑ | ↑ | ↑ |
| | 8 | 0 | 0 | 0 | 0 | 0 | 0 | 0 | 0 | 0 | 0 | 0 | 0 | 0 | 0 | 0 | 0 | 3/16" | 5/16" | 3/16" | 0 | |
| Required Shop Camber | 1 | 0 | 1/8" | 1/4" | 1/8" | 0 | 1/8" | 1/4" | 1/16" | 0 | 1/8" | 5/16" | 3/16" | 0 | 1/16" | 3/16" | 1/8" | 0 | 3/16" | 5/8" | 5/16" | 0 |
| | 2 | ↑ | ↑ | ↑ | ↑ | ↑ | ↑ | ↑ | ↑ | ↑ | ↑ | ↑ | ↑ | ↑ | ↑ | ↑ | ↑ | ↑ | ↑ | ↑ | ↑ | ↑ |
| | 3 | ↑ | ↑ | ↑ | ↑ | ↑ | ↑ | ↑ | ↑ | ↑ | ↑ | ↑ | ↑ | ↑ | ↑ | ↑ | ↑ | ↑ | ↑ | ↑ | ↑ | ↑ |
| | 4 | ↑ | ↑ | ↑ | ↑ | ↑ | ↑ | ↑ | ↑ | ↑ | ↑ | ↑ | ↑ | ↑ | ↑ | ↑ | ↑ | ↑ | ↑ | ↑ | ↑ | ↑ |
| | 5 | ↑ | ↑ | ↑ | ↑ | ↑ | ↑ | ↑ | ↑ | ↑ | ↑ | ↑ | ↑ | ↑ | ↑ | ↑ | ↑ | ↑ | ↑ | ↑ | ↑ | ↑ |
| | 6 | ↑ | ↑ | ↑ | ↑ | ↑ | ↑ | ↑ | ↑ | ↑ | ↑ | ↑ | ↑ | ↑ | ↑ | ↑ | ↑ | ↑ | ↑ | ↑ | ↑ | ↑ |
| | 7 | ↑ | ↑ | ↑ | ↑ | ↑ | ↑ | ↑ | ↑ | ↑ | ↑ | ↑ | ↑ | ↑ | ↑ | ↑ | ↑ | ↑ | ↑ | ↑ | ↑ | ↑ |
| | 8 | 0 | 1/8" | 1/4" | 1/8" | 0 | 1/8" | 1/4" | 1/16" | 0 | 1/8" | 5/16" | 3/16" | 0 | 1/16" | 3/16" | 1/8" | 0 | 3/16" | 5/8" | 5/16" | 0 |

See Sheet No. 34 for continuation of Camber and Deflection Table.

See Sheet No. 32 for Camber and Deflection Diagram.

Sheet 33/37

W. E. QUICKSALL AND ASSOCIATES, INC.
CONSULTING ENGINEERS • NEW PHILADELPHIA, OHIO

## CAMBER & DEFLECTION TABLES

BRIDGE NO. STA-43-1352

S.R. 43 over B & O, N & W, & P.R.R.

STARK COUNTY

STA. 15+34.75
STA. 29+49.87

| DESIGNED | DRAWN | TRACED | CHECKED | REVIEWED | DATE | REVISED |
|---|---|---|---|---|---|---|
| | PMZ | | wda | DLM | 2-21-69 | |

MICROFILMED
JUL 18 1979
REPRODUCTION



# CAMBER AND DEFLECTION

| LOCATION | GIRDER | SPAN 11 | | | | SPAN 12 | | | | SPAN 13 | | | | SPAN 14 | | | | SPAN 15 | | | | | SPAN 16 | | | | | SPAN 17 | | | | | | SPAN 18 | | | | | SPAN 19 | | | | |
|---|---|---|---|---|---|---|---|---|---|---|---|---|---|---|---|---|---|---|---|---|---|---|---|---|---|---|---|---|---|---|---|---|---|---|---|---|---|---|---|---|---|---|---|
| | | ℄ Brgs. | 1/4 Pt. | 1/2 Pt. | Splice | ℄ Brgs. | 1/4 Pt. | 1/2 Pt. | Splice | ℄ Brgs. | 1/4 Pt. | 1/2 Pt. | Splice | ℄ Brgs. | 1/4 Pt. | 1/2 Pt. | Splice | ℄ Brgs. | 1/4 Pt. | 1/2 Pt. | Exp. Jt. | Exp. Jt. | ℄ Brgs. | 1/4 Pt. | 1/2 Pt. | Opt. Spl. | 3/4 Pt. | ℄ Brgs. | Splice | 1/4 Pt. | 1/2 Pt. | 3/4 Pt. | Opt. Spl. | ℄ Brgs. | Splice | 1/4 Pt. | 1/2 Pt. | 3/4 Pt. | ℄ Brgs. | Splice | 1/2 Pt. | 3/4 Pt. | ℄ Brgs. |
| Dimension "X" (Difference in elevation between chord and base line) | 1 | 12'-8 7/16 | 12'-11 5/16 | 13'-2 3/8 | 13'-6 | 13'-8 7/16 | 13'-11 5/16 | 14'-2 7/16 | 14'-5 5/8 | 14'-7 15/16 | 14'-9 9/16 | 14'-11 3/16 | 15'-1 1/8 | 15'-2 7/16 | 15'-2 13/16 | 15'-3 3/16 | 15'-3 5/8 | 15'-3 15/16 | 15'-3 9/16 | 15'-3 3/16 | 15'-2 13/16 | 13'-8 3/4 | 13'-8 | 13'-4 13/16 | 13'-1 5/8 | 12'-11 | 12'-10 7/16 | 12'-7 1/4 | 12'-0 15/16 | 11'-10 7/8 | 11'-2 1/2 | 10'-6 1/8 | 10'-4 3/8 | 9'-9 3/4 | 8'-9 11/16 | 8'-8 7/16 | 7'-7 3/16 | 6'-5 7/8 | 5'-4 9/16 | 4'-1 11/16 | 2'-8 5/16 | 1'-4 1/8 | 0 |
| | 2 | 12'-7 1/16 | 12'-10 1/16 | 13'-1 1/16 | 13'-4 5/8 | 13'-7 1/16 | 13'-9 7/8 | 14'-0 3/4 | 14'-4 1/8 | 14'-6 3/8 | 14'-8 | 14'-9 9/16 | 14'-11 7/16 | 15'-0 11/16 | 15'-1 1/16 | 15'-1 3/8 | 15'-1 1/8 | 15'-2 1/16 | 15'-1 9/16 | 15'-1 1/16 | 15'-0 1/2 | 13'-6 9/16 | 13'-5 9/16 | 13'-2 1/4 | 12'-11 | 12'-8 9/16 | 12'-7 11/16 | 12'-4 3/8 | 11'-9 15/16 | 11'-7 13/16 | 10'-11 1/4 | 10'-2 3/4 | 10'-0 15/16 | 9'-6 3/16 | 8'-6 1/16 | 8'-5 1/4 | 7'-4 5/16 | 6'-3 3/8 | 5'-2 3/8 | 4'-0 | 2'-7 3/16 | 1'-3 5/8 | 0 |
| | 3 | 12'-5 13/16 | 12'-8 3/4 | 12'-11 3/4 | 13'-3 1/4 | 13'-5 11/16 | 13'-8 7/16 | 13'-11 1/4 | 14'-2 5/8 | 14'-4 7/8 | 14'-6 3/8 | 14'-7 15/16 | 14'-9 3/4 | 14'-11 | 14'-11 5/16 | 14'-11 9/16 | 14'-11 15/16 | 15'-0 3/16 | 14'-11 1/2 | 14'-10 7/8 | 14'-10 3/16 | 13'-4 1/4 | 13'-3 1/16 | 12'-11 11/16 | 12'-8 5/16 | 12'-6 1/16 | 12'-4 15/16 | 12'-1 9/16 | 11'-7 | 11'-4 13/16 | 10'-8 1/16 | 9'-11 5/16 | 9'-9 1/2 | 9'-2 9/16 | 8'-2 7/16 | 8'-2 | 7'-1 3/8 | 6'-0 3/4 | 5'-0 3/16 | 3'-10 5/16 | 2'-6 1/16 | 1'-3 1/16 | 0 |
| | 4 | 12'-4 9/16 | 12'-7 1/2 | 12'-10 7/16 | 13'-1 15/16 | 13'-4 5/16 | 13'-7 1/16 | 13'-9 13/16 | 14'-1 1/8 | 14'-3 5/16 | 14'-4 13/16 | 14'-6 5/16 | 14'-8 1/8 | 14'-9 5/16 | 14'-9 9/16 | 14'-9 13/16 | 14'-10 1/16 | 14'-10 1/4 | 14'-9 7/16 | 14'-8 11/16 | 14'-7 13/16 | 13'-1 7/8 | 13'-0 9/16 | 12'-9 1/8 | 12'-5 5/8 | 12'-3 5/8 | 12'-2 3/16 | 11'-10 3/4 | 11'-4 1/16 | 11'-1 13/16 | 10'-4 7/8 | 9'-7 15/16 | 9'-6 1/16 | 8'-11 | 7'-10 3/4 | 7'-10 3/4 | 6'-10 1/2 | 5'-10 1/4 | 4'-10 | 3'-8 5/8 | 2'-5 | 1'-2 1/2 | 0 |
| | 5 | 12'-3 9/16 | 12'-6 1/2 | 12'-9 7/16 | 13'-0 7/8 | 13'-3 1/4 | 13'-5 15/16 | 13'-8 11/16 | 13'-11 15/16 | 14'-2 1/8 | 14'-3 5/8 | 14'-5 1/16 | 14'-6 13/16 | 14'-7 15/16 | 14'-8 3/16 | 14'-8 3/8 | 14'-8 9/16 | 14'-8 3/4 | 14'-7 3/8 | 14'-6 13/16 | 14'-5 3/4 | 12'-11 13/16 | 12'-10 3/8 | 12'-6 7/8 | 12'-3 3/8 | 12'-1 5/8 | 11'-11 7/8 | 11'-8 3/8 | 11'-1 9/16 | 10'-11 1/4 | 10'-2 3/16 | 9'-5 1/16 | 9'-3 1/8 | 8'-7 15/16 | 7'-7 5/8 | 7'-8 1/16 | 6'-8 1/8 | 5'-8 1/4 | 4'-8 3/8 | 3'-7 3/8 | 2'-4 3/16 | 1'-2 1/16 | 0 |
| | 6 | 12'-3 5/16 | 12'-6 1/4 | 12'-9 1/8 | 13'-0 5/8 | 13'-2 15/16 | 13'-5 5/8 | 13'-8 3/8 | 13'-11 5/8 | 14'-1 13/16 | 14'-3 1/4 | 14'-4 11/16 | 14'-6 7/16 | 14'-7 5/8 | 14'-7 3/4 | 14'-7 15/16 | 14'-8 1/8 | 14'-8 1/4 | 14'-7 3/8 | 14'-6 1/16 | 14'-4 13/16 | 12'-11 | 12'-9 3/8 | 12'-5 7/8 | 12'-2 3/8 | 12'-0 15/16 | 11'-10 3/8 | 11'-7 3/8 | 11'-0 7/8 | 10'-10 1/8 | 10'-0 15/16 | 9'-3 11/16 | 9'-1 3/4 | 8'-6 7/16 | 7'-6 1/8 | 7'-6 7/8 | 6'-7 3/8 | 5'-7 13/16 | 4'-8 5/16 | 3'-7 5/16 | 2'-4 1/8 | 1'-2 1/16 | 0 |
| | 7 | 12'-3 1/16 | 12'-5 15/16 | 12'-8 7/8 | 13'-0 5/16 | 13'-2 11/16 | 13'-5 3/8 | 13'-8 1/16 | 13'-11 5/16 | 14'-1 1/2 | 14'-2 15/16 | 14'-4 3/8 | 14'-6 1/8 | 14'-7 1/4 | 14'-7 3/8 | 14'-7 1/2 | 14'-7 11/16 | 14'-7 13/16 | 14'-6 9/16 | 14'-5 5/16 | 14'-3 7/8 | 12'-10 1/8 | 12'-8 3/8 | 12'-4 7/8 | 12'-1 3/8 | 12'-0 1/4 | 11'-9 7/8 | 11'-6 3/8 | 10'-11 5/16 | 10'-9 | 9'-11 5/8 | 9'-2 1/4 | 9'-0 5/16 | 8'-4 15/16 | 7'-4 9/16 | 7'-5 3/4 | 6'-6 9/16 | 5'-7 3/8 | 4'-8 1/4 | 3'-7 1/4 | 2'-4 1/8 | 1'-2 1/16 | 0 |
| | 8 | 12'-2 13/16 | 12'-5 3/4 | 12'-8 5/8 | 13'-0 1/16 | 13'-2 7/16 | 13'-5 1/8 | 13'-7 13/16 | 13'-11 1/16 | 14'-1 3/16 | 14'-2 5/8 | 14'-4 1/16 | 14'-5 13/16 | 14'-6 15/16 | 14'-7 1/16 | 14'-7 3/16 | 14'-7 1/4 | 14'-7 3/8 | 14'-5 15/16 | 14'-4 9/16 | 14'-2 7/8 | 12'-9 1/8 | 12'-7 1/4 | 12'-3 3/4 | 12'-0 5/16 | 11'-11 9/16 | 11'-8 13/16 | 11'-5 5/16 | 10'-10 3/16 | 10'-7 13/16 | 9'-10 5/16 | 9'-0 13/16 | 8'-10 7/8 | 8'-3 3/8 | 7'-2 15/16 | 7'-4 9/16 | 6'-5 3/4 | 5'-7 | 4'-8 7/16 | 3'-7 1/4 | 2'-4 1/16 | 1'-2 1/16 | 0 |
| Deflection due to weight of steel | 1 | 0 | 0 | 0 | 0 | 0 | 1/16" | 1/8" | 1/16" | 0 | 1/16" | 1/16" | 1/16" | 0 | 0 | 1/16" | 1/16" | 0 | 0 | 0 | -1/16" | -1/16" | 0 | 3/16" | 3/16" | 1/16" | 1/16" | 0 | 1/16" | 1/8" | 5/16" | 1/4" | 1/8" | 0 | 1/8" | 1/8" | 3/16" | 1/8" | 0 | 1/8" | 3/16" | 3/16" | 0 |
| | 2 | | | | | | | | | | | | 1/16" | | | | 0 | | | 0 | 0 | 0 | | 1/8" | 1/8" | | 0 | | 1/8" | 3/16" | 1/4" | 3/16" | 1/8" | | 1/16" | 1/16" | 1/8" | 1/16" | | | 3/16" | 3/16" | |
| | 3 | | | | | | | | | | | | 1/16" | | | | 1/16" | | | 1/16" | | | | 1/16" | 1/16" | | | | 1/8" | 3/16" | 3/8" | 3/16" | 1/8" | | 1/16" | - | 1/8" | 1/16" | | | 1/4" | 1/4" | |
| | 4 | | | | | | | | | | | | 0 | | | | | | 0 | | | | | 1/16" | 1/16" | 1/16" | | | 3/16" | 1/4" | 3/8" | 3/16" | 3/16" | | 0 | - | 1/16" | 1/16" | | 1/8" | 1/4" | | |
| | 5 | | | | | | | | | | | | 0 | | 0 | | | | 1/16" | | 0 | | | 0 | 0 | 0 | 0 | | 3/16" | | 3/8" | 1/4" | 3/16" | | 0 | - | 1/16" | 0 | | 3/16" | 5/16" | | |
| | 6 | | | | | | | | | | | | 1/16" | | 1/16" | | | | 1/16" | 1/16" | 1/16" | | | | 0 | 0 | -1/16" | | 1/4" | | 7/16" | 1/4" | 1/4" | | 0 | - | 0 | 0 | | | 5/16" | | |
| | 7 | | | | | | | | | | | | 0 | | 1/16" | 1/16" | | | 1/16" | 1/8" | | 0 | | | -1/16" | 0 | -1/16" | | 1/4" | 1/4 | 7/16" | 1/4" | 1/4" | | -1/16" | - | 0 | 0 | | | 5/16" | | |
| | 8 | 0 | 0 | 0 | 0 | 0 | 1/16" | 1/8" | 1/16" | 0 | 1/16" | 1/16" | 0 | 0 | 1/16" | 1/8" | 1/16" | 0 | 1/8" | 3/16" | 1/16" | 1/16" | 0 | 0 | -1/16" | -1/16" | -1/16" | 0 | 1/4" | 5/16" | 1/2" | 1/4" | 1/4" | 0 | -1/16" | - | -1/16" | -1/16" | 0 | 3/16" | 3/8" | 1/4" | 0 |
| Deflection due to remaining dead load | 1 | 0 | 1/16" | 1/8" | -1/16" | 0 | 1/2" | 11/16" | 1/4" | 0 | 5/16" | 5/8" | 1/4" | 0 | 3/16" | 3/8" | 3/16" | 0 | 0 | -1/16" | -1/4" | -1/4" | 0 | 11/16" | 13/16" | 3/8" | 5/16" | 0 | 5/8" | 7/8" | 1 1/2" | 13/16" | 9/16" | 0 | 1/2" | 5/8" | 1 1/4" | 5/8" | 0 | 7/16" | 1 1/4" | 1 1/16" | 0 |
| | 2 | | | | | | | | | | 1/4" | 9/16" | 3/16" | | 1/4" | 1/2" | 3/16" | | 1/8" | 1/8" | -3/16" | -3/16" | | 9/16" | 5/8" | 3/16" | 3/16" | | 11/16" | 1" | 1 11/16" | 1" | 3/4" | | 5/16" | 7/16" | 1" | 7/16" | | 9/16" | 1 3/8" | 1 1/8" | |
| | 3 | | | | | | | | | | 1/4" | 9/16" | 3/16" | | 5/16" | 9/16" | 1/4" | | 3/16" | 1/4" | 0 | 0 | | 3/8" | 3/8" | 1/8" | 0 | | 13/16" | 1 1/8" | 1 7/8" | 1 1/8" | 7/8" | | 1/8" | - | 5/8" | 1/4" | | 5/8" | 1 7/16" | 1 3/16" | |
| | 4 | | | | | | | | | | 1/4" | 1/2" | 1/4" | | 1/4" | 9/16" | | | 1/4" | 3/8" | 1/8" | 1/8" | | 3/16" | 3/16" | 0 | -1/16" | | 7/8" | 1 3/16" | 2" | 1 3/16" | 7/8" | | 1/8" | - | 1/2" | 1/8" | | 11/16" | 1 1/2" | 1 3/16" | |
| | 5 | | | | | | | | | | 3/16" | 7/16" | 3/16" | | 5/16" | 5/8" | | | 1/4" | 1/2" | 1/4" | 1/4" | | 1/8" | 1/8" | -1/8" | -1/8" | | 15/16" | 1 5/16" | 2 1/8" | 1 1/4" | 15/16" | | 0 | - | 5/16" | 1/16" | | 3/4" | 1 9/16" | 1 1/4" | |
| | 6 | | | | | | | | | | | 7/16" | 1/8 | | 5/16" | 5/8" | 1/4" | | 5/16" | 5/8" | 5/16" | 5/16 | | 0 | -1/16" | -3/16" | -3/16" | | 1" | 1 3/8" | 2 3/16" | 1 5/16" | 1" | | -1/16" | - | 3/16" | -1/16" | | 13/16" | 1 5/8" | 1 5/16" | |
| | 7 | | | | | | | | | | | 3/8" | 1/8" | | 7/16" | 3/4" | 5/16" | | 7/16" | 3/4" | 7/16" | 7/16" | | -1/8" | -3/16" | -1/4 | -5/16" | | 1 1/8" | 1 1/2" | 2 5/16" | 1 7/16" | 1 1/8" | | -3/16" | - | -1/16" | -3/16" | | 7/8" | 1 11/16" | 1 5/16" | |
| | 8 | 0 | 1/16" | 1/8" | -1/16" | 0 | 1/2" | 11/16" | 1/4" | 0 | 3/16" | 3/8" | 1/8" | 0 | 1/2" | 13/16" | 5/16" | 0 | 1/2" | 15/16" | 9/16" | 9/16" | 0 | -1/4" | -3/8" | -3/8" | -3/8" | 0 | 1 3/16" | 1 9/16" | 2 7/16" | 1 9/16" | 1 3/16" | 0 | -5/16" | - | -1/4" | -1/4" | 0 | 1 5/16" | 1 3/4" | 1 3/8" | 0 |
| Adjustment required for vertical crest curve | 1 | 0 | 1/4" | 3/8" | 1/4" | 0 | 1/2" | 5/8" | 3/8" | 0 | 1/2" | 5/8" | 3/8" | 0 | 3/8" | 7/16" | 5/16" | 0 | 5/16" | 7/16" | 5/16" | 5/16" | 0 | 1 1/8" | 1 1/2" | 1 3/16" | 1 1/8" | 0 | 1 1/2" | 1 13/16" | 2 3/8" | 1 13/16" | 1 9/16" | 0 | 1 7/8" | 1 15/16" | 2 3/4" | 2 3/8" | 0 | 1 1/8" | 1 9/16" | 1 1/8" | 0 |
| | 2 | | | | | | | | | | | | | | 3/8" | 1/2" | 5/16" | | 3/8" | 1/2" | 3/8" | 3/8" | | 1 1/16" | 1 3/8" | 1 1/8" | 1 1/16" | | | | | | | | 1 3/4" | 1 13/16" | 2 9/16" | 2 1/8" | | | | 1 3/16" | |
| | 3 | | | | | | | | | | | | | | 7/16" | 9/16" | 3/8" | | 3/8" | 9/16" | 3/8" | 3/8" | | 1" | 1 5/16" | 1 1/8" | 1" | | | | | | | | 1 5/8" | - | 2 1/4" | 1 13/16" | | | | 1 1/8" | |
| | 4 | | | | | | | | | | | | | | 7/16" | 5/8" | 7/16" | | 7/16" | 9/16" | 7/16" | 7/16" | | 15/16" | 1 1/4" | 1 1/16" | 15/16" | | | | | | | | 1 1/2" | - | 2" | 1 9/16" | | 1 1/8" | | | |
| | 5 | | | | | | | | | | | | | | 1/2" | 5/8" | 7/16" | | 1/2" | 5/8" | 7/16" | 7/16" | | 7/8" | 1 1/8" | 1" | 7/8" | | | | | | | | 1 7/16" | - | 1 13/16" | 1 3/8" | | 1 1/16" | | | |
| | 6 | | | | | | | | | | | | | | 1/2" | 11/16" | 1/2" | | 9/16" | 3/4" | 1/2" | 1/2" | | 13/16" | 1 1/16" | 15/16" | 13/16" | | | | | | | | 1 3/8" | - | 1 11/16" | 1 1/4" | | | | | |
| | 7 | | | | | | | | | | | | | | 9/16" | 3/4" | 9/16" | | 9/16" | 13/16" | 1/2" | 1/2" | | 3/4" | 1" | 7/8" | 3/4" | | | | | | | | 1 1/4" | - | 1 9/16" | 1 3/16" | | | | | |
| | 8 | 0 | 1/4" | 3/8" | 1/4" | 0 | 1/2" | 5/8" | 3/8" | 0 | 1/2" | 5/8" | 3/8" | 0 | 5/8" | 13/16" | 9/16" | 0 | 5/8" | 7/8" | 9/16" | 9/16" | 0 | 11/16" | 15/16" | 7/8" | 11/16" | 0 | 1 1/2" | 1 13/16" | 2 3/8" | 1 13/16" | 1 9/16" | 0 | 1 3/16" | - | 15/16" | 11/16" | 0 | 1 1/16" | 1 9/16" | 1 1/8" | 0 |
| Required Shop Camber | 1 | 0 | 5/16" | 1/2" | 3/16" | 0 | 1 1/16" | 1 7/16" | 11/16" | 0 | 7/8" | 1 5/16" | 11/16" | 0 | 9/16" | 7/8" | 9/16" | 0 | 5/16" | 3/8" | 0 | 0 | 0 | 2" | 2 1/2" | 1 5/8" | 1 1/2" | 0 | 2 3/16" | 2 1/8" | 4 3/16" | 2 7/8" | 2 1/4" | 0 | 2 1/2" | 2 1/16" | 4 3/16" | 3 1/8" | 0 | 1 1/16" | 3" | 2 3/8" | 0 |
| | 2 | | | | | | | | | | 13/16" | 1 1/4" | 5/8" | | 5/8" | 1 1/16" | 1/2" | | 1/2" | 5/8" | 3/16" | 3/16" | | 1 3/4" | 2 1/8" | 1 3/8" | 1 1/4" | | 2 5/16" | 3" | 4 5/16" | 3" | 2 7/16" | | 2 1/8" | 2 5/16" | 3 1/16" | 2 5/8" | | 1 13/16" | 3 1/8" | 2 1/2" | |
| | 3 | | | | | | | | | | | 1 1/4" | | | 3/4" | 1 3/16" | 11/16" | | 9/16" | 7/8" | 3/8" | 3/8" | | 1 7/16" | 1 3/4" | 1 5/16" | 1" | | 2 7/16" | 3 1/8" | 4 5/8" | 3 1/8" | 2 9/16" | | 1 13/16" | - | 3" | 2 1/8" | | 1 7/8" | 3 1/4" | 2 9/16" | |
| | 4 | | | | | | | | | | 13/16" | 1 3/16" | 5/8" | | 11/16" | 1 1/4" | 3/4" | | 11/16" | 1" | 9/16" | 9/16" | | 1 3/16" | 1 1/2" | 1 1/8" | 7/8" | | 2 9/16" | 3 1/4" | 4 3/4" | 3 3/16" | 2 5/8" | | 1 5/8" | - | 2 9/16" | 1 3/4" | | 1 15/16" | 3 5/16" | 2 9/16" | |
| | 5 | | | | | | | | | | 3/4" | 1 1/8" | 9/16" | | 13/16" | 1 5/16" | 3/4" | | 13/16" | 1 3/16" | 11/16" | 11/16" | | 1" | 1 1/4" | 7/8" | 3/4" | | 2 5/8" | 3 3/8" | 4 7/8" | 3 5/16" | 2 11/16" | | 1 7/16" | - | 2 3/16" | 1 7/16" | | 2" | 3 7/16" | 2 5/8" | |
| | 6 | | | | | | | | | | | 1 1/8" | 9/16" | | 7/8" | 1 3/8" | 13/16" | | 15/16" | 1 7/16" | 7/8" | 13/16" | | 1 3/16" | 1" | 3/4" | 9/16" | | 2 3/4" | 3 7/16" | 5" | 3 3/8" | 2 13/16" | | 1 5/16" | - | 1 7/8" | 1 3/16" | | 2 1/16" | 3 1/2" | 2 11/16" | |
| | 7 | | | | | | | | | | | 1 1/16" | 1/2" | | 1 1/16" | 1 9/16" | 15/16" | | 1 1/16" | 1 11/16" | 1" | 15/16" | | 5/8" | 3/4" | 5/8" | 3/8" | | 2 7/8" | 3 9/16" | 5 1/8" | 3 1/2" | 2 15/16" | | 1" | - | 1 1/2" | 1" | | 2 1/8" | 3 9/16" | 2 11/16" | |
| | 8 | 0 | 5/16" | 1/2" | 3/16" | 0 | 1 1/16" | 1 7/16" | 11/16" | 0 | 3/4" | 1 1/16" | 1/2" | 0 | 1 3/16" | 1 3/4" | 1 5/16" | 0 | 1 1/4" | 2" | 1 3/16" | 1 3/8" | 0 | 7/16" | 1/2" | 7/16" | 1/4" | 0 | 2 15/16" | 3 11/16" | 5 5/16" | 3 5/8" | 3" | 0 | 1 3/16" | - | 5/8" | 3/8" | 0 | 2 3/16" | 3 1/16" | 2 3/4" | 0 |

Minus deflection value indicates an upward deflection.

See Sheet No. 32 for Camber and Deflection Diagram.



W. E. QUICKSALL AND ASSOCIATES, INC.
CONSULTING ENGINEERS • NEW PHILADELPHIA, OHIO

## CAMBER & DEFLECTION TABLES

BRIDGE NO. STA-43-1352

S.R. 43 over B & O, N & W, & P.R.R.

STARK COUNTY — STA. 15+34.75 — STA. 29+49.87

| DESIGNED | DRAWN | TRACED | CHECKED | REVIEWED | DATE | REVISED |
|---|---|---|---|---|---|---|
| | PMZ | | wda | DLM | 2-21-69 | |

MICROFILMED
JUL 18 1979
REPRODUCTION

| FED. RD. DIVISION | STATE | PROJECT | |
|---|---|---|---|
| 2 | OHIO | | |

93

**STA-43-13.40** PT-1

✳ Expansion Fitting shall have Underwriters Laboratory approved internal bonding or external bonding jumper.

Note:
For spacing of longitudinal bars, see "Typical Transverse Sections", sheet 36

For longitudinal bars in sidewalk and curb, see sheet 37.

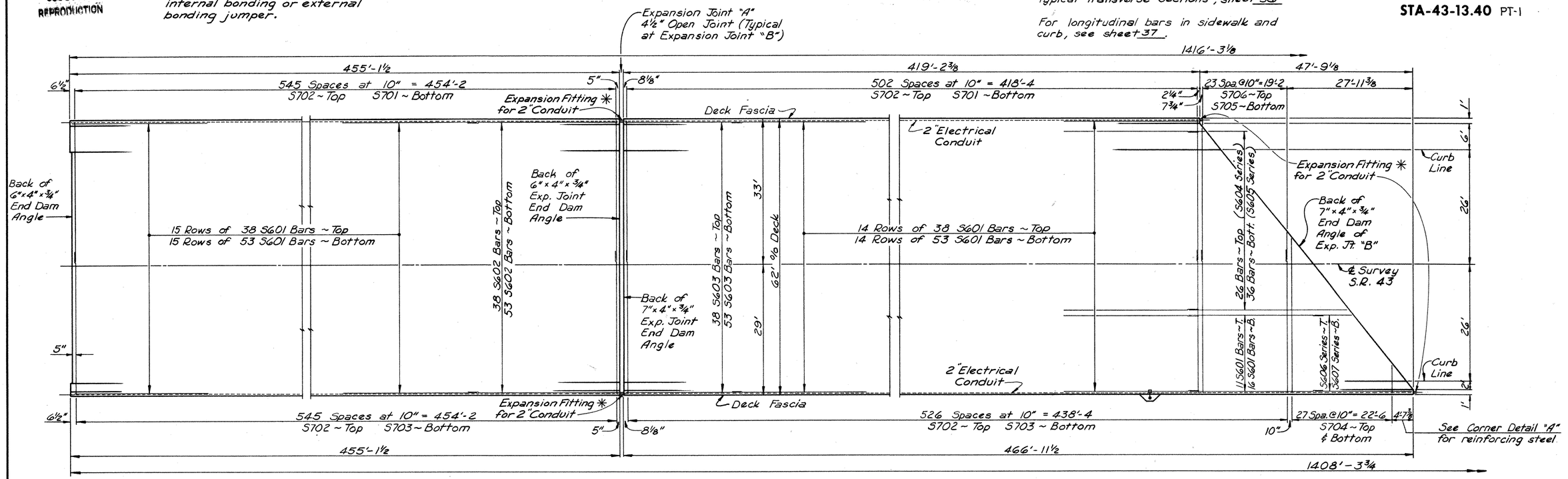


## PLAN OF TOP AND BOTTOM DECK REINFORCING STEEL

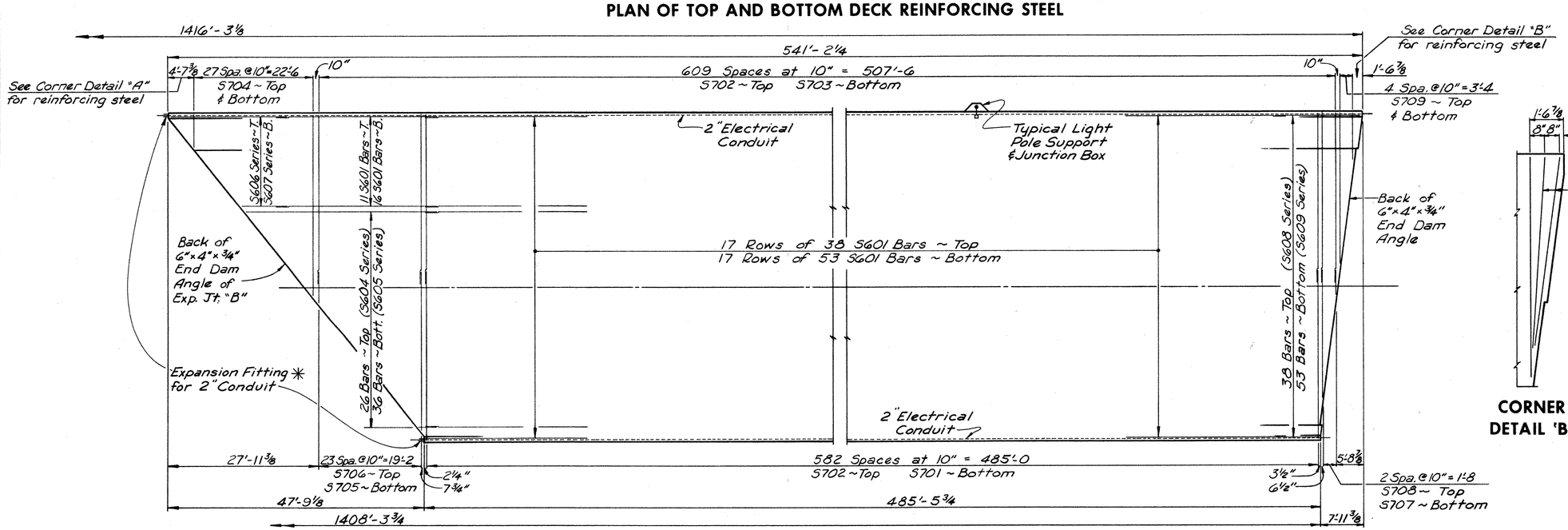


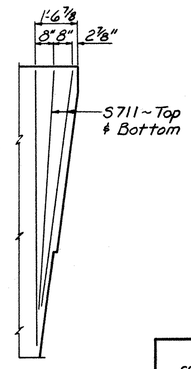


## CORNER DETAIL 'B'

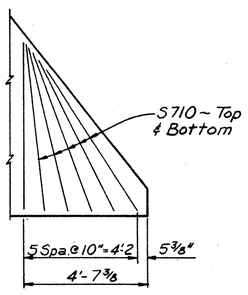


## CORNER DETAIL 'A'

Sheet 35 | 37

W. E. QUICKSALL AND ASSOCIATES, INC.
CONSULTING ENGINEERS • NEW PHILADELPHIA, OHIO

**SUPERSTRUCTURE DETAILS**

**BRIDGE NO. STA-43-1352**

S.R. 43 over B&O R.R., N&W R.R. & P.R.R.
STA. 15+34.75
STARK COUNTY STA. 29+49.87

| DESIGNED | DRAWN | TRACED | CHECKED | REVIEWED | DATE | REVISED |
|---|---|---|---|---|---|---|
| | TG | | wda | DLM | 2-21-69 | |

| FED. RD. DIVISION | STATE | PROJECT | |
|---|---|---|---|
| 2 | OHIO | | |

94

**STA-43-13.40** PT-1

✳ – This dimension is the nominal dimension. The quantity of deck concrete to be paid for shall be based upon this dimension, even though deviation from it may be necessary because the top flange of the girder (or beam) may not have the exact camber or conformation required to place it parallel to the finished grade. Deduction shall be made for volume of encased steel plates as per Sec. 511.19 of the Construction and Material Specifications.

MICROFILMED
JUL 18 1979
REPRODUCTION

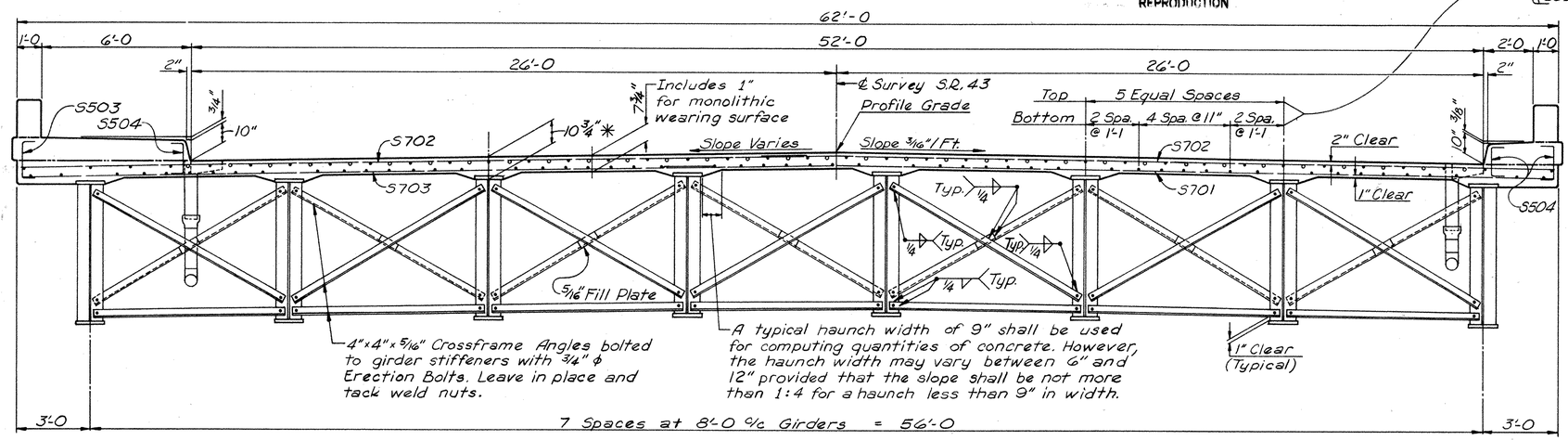


DECK POURING SEQUENCE: The deck slab shall be poured beginning at the rear abutment and progressing forward to the expansion joint adjacent to Pier 15, with transverse construction joints permitted as per the Construction and Material Specifications. The remainder of the deck may be poured according to the Construction and Material Specifications.

All longitudinal reinforcing steel shown in deck are #6 bars lapped 1'-11 minimum. (See sheet 35 for bar marks)

Bars shown thus (o) are #6 "A" Bars over piers. (See details this sheet)

## TRANSVERSE SECTION — EXPANSION JOINT 'B' TO FORWARD ABUTMENT

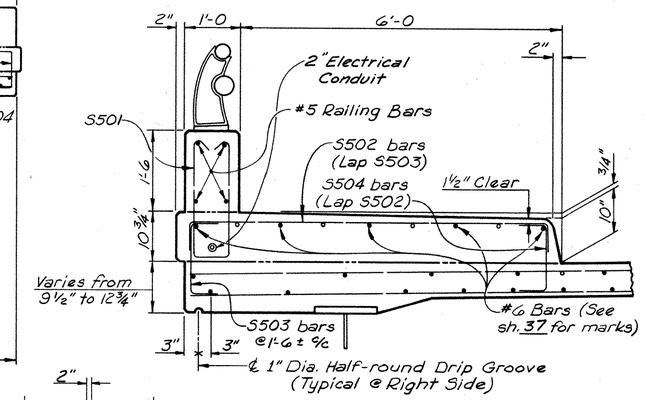


## CURB DETAILS — LEFT SIDE

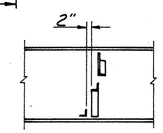


## SECTION A-A

See sheet 37 for #5 Railing Bar marks and spacing of S501 Bars. (Typical for Left Side)

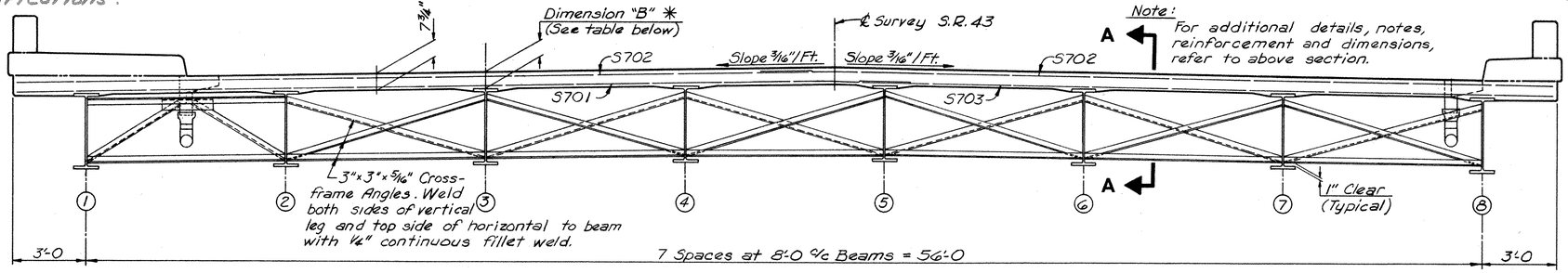


## TRANSVERSE SECTION — REAR ABUTMENT TO EXPANSION JOINT 'B'

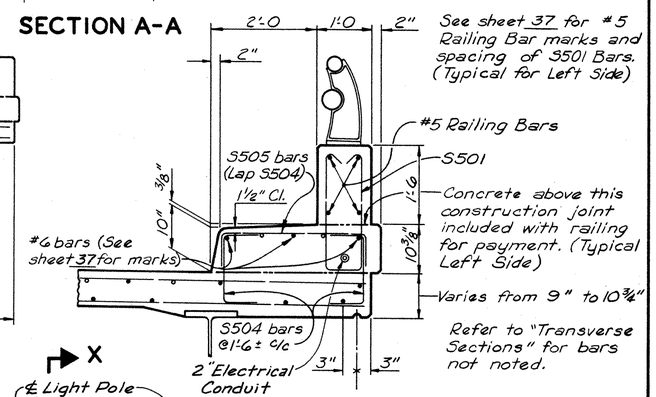


Refer to "Transverse Sections" for bars not noted.

## CURB DETAILS — RIGHT SIDE

| PIER | "L" | "A" BAR |
|---|---|---|
| 1 thru 10 except 8 | 10'-0 | S617 |
| 11 and 12 | 13'-6 | S601 |
| 13 | 15'-6 | S616 |
| 14 | 16'-0 | S615 |

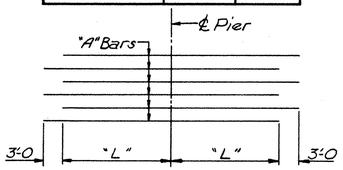


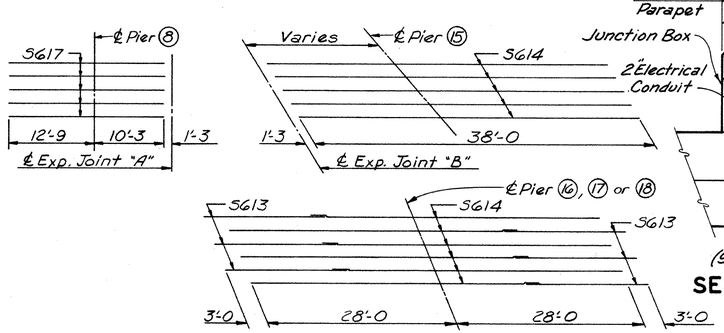


## PLAN OF 'A' BARS OVER PIERS

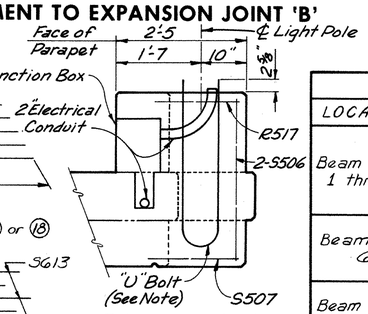


## SECTION X-X

Note: "U" Bolts are 1 1/4" dia., 76 1/2" long. Length may vary by ± 1/2".

| DIMENSION 'B' | | |
|---|---|---|
| LOCATION | BEAM | "B" |
| Beam Lines 1 thru 5 | 36 WF 135 | 8 1/16" |
| | 36 WF 150 | 7 7/8" |
| | 36 WF 160 | 7 13/16" |
| | 36 WF 170 | 7 3/4" |
| Beam Line 6 | 36 WF 135 | 8 3/16" |
| | 36 WF 170 | 7 7/8" |
| | 36 WF 182 | 7 3/4" |
| Beam Lines 7 and 8 | 36 WF 135 | 8 1/4" |
| | 36 WF 170 | 7 15/16" |
| | 36 WF 194 | 7 3/4" |

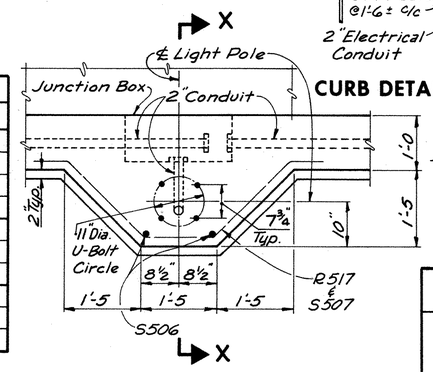


Note: See sheet 7 for Scupper Collector Pipe Support Angle Details.

## TYPICAL LIGHT POLE SUPPORT

Sheet 36 | 37

W. E. QUICKSALL AND ASSOCIATES, INC.
CONSULTING ENGINEERS • NEW PHILADELPHIA, OHIO

**SUPERSTRUCTURE DETAILS**

**BRIDGE NO. STA-43-1352**

S.R. 43 over B&O R.R., N&W R.R. & P.R.R.

STARK COUNTY

STA. 15+34.75
STA. 29+49.87

| DESIGNED | DRAWN | TRACED | CHECKED | REVIEWED | DATE | REVISED |
|---|---|---|---|---|---|---|
| | TG | | wda | DLM | 2-21-69 | 12-28-70 |

| FED. RD. DIVISION | STATE | PROJECT | |
|---|---|---|---|
| 2 | OHIO | | |

95

**STA-43-13.40** PT-1

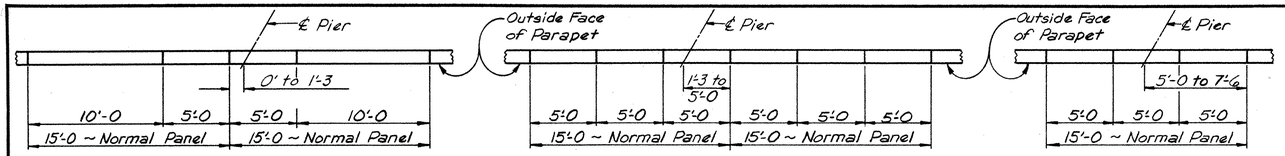


**NORMAL PANEL JOINT OCCURING 0' TO 1'-3 FROM ℄ PIER**
*Condition "A"*

**NORMAL PANEL JOINT OCCURING 1'-3 TO 5'-0 FROM ℄ PIER**
*(Condition "B")*

**NORMAL PANEL JOINT OCCURING 5'-0 TO 7'-6 FROM ℄ PIER**
*(Condition "C")*

## PLAN OF PARAPET PANEL DEFLECTION JOINTS AT PIERS

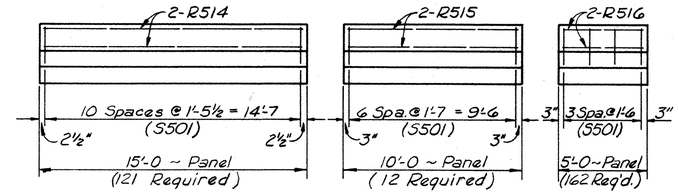


**TYPICAL PARAPET PANELS**

MICROFILMED
JUL 18 1979
REPRODUCTION

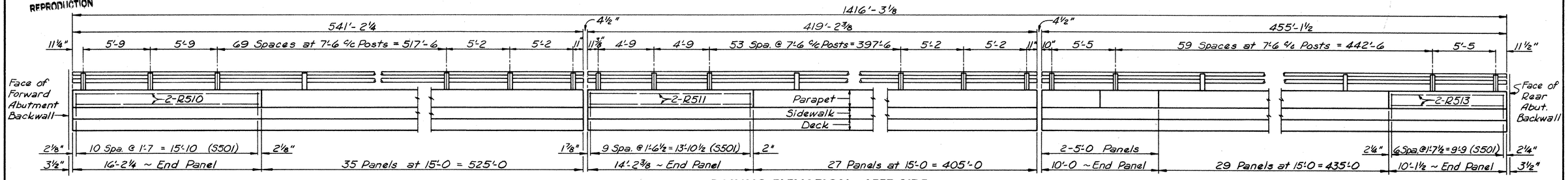


**RAILING ELEVATION - LEFT SIDE**

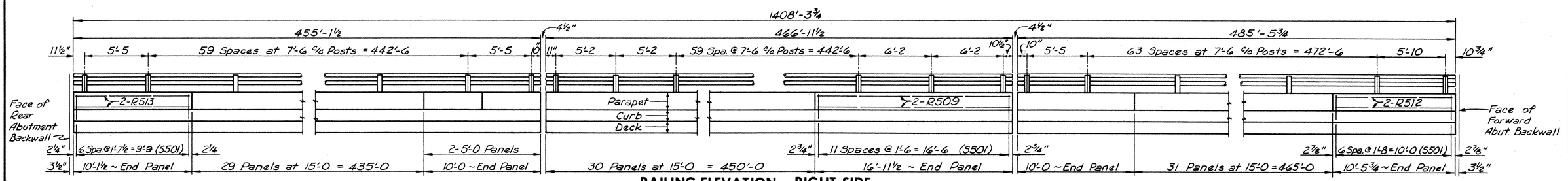


**RAILING ELEVATION - RIGHT SIDE**

**LOCATION OF PANEL DEFLECTION JOINT CONDITIONS AT PIERS**

| SIDE | COND. | PIERS 1 | 2 | 3 | 4 | 5 | 6 | 7 | 8 | 9 | 10 | 11 | 12 | 13 | 14 | 15 | 16 | 17 | 18 |
|---|---|---|---|---|---|---|---|---|---|---|---|---|---|---|---|---|---|---|---|
| Right | A | | | ◆ | | | | | ◆ | ◆ | | | | | | | | | |
| | B | | ◆ | | ◆ | | | ◆ | | | ◆ | ◆ | ◆ | ◆ | | | | ◆ | ◆ |
| | C | ◆ | | | | ◆ | ◆ | | | | | | | | ◆ | ◆ | ◆ | | |
| Left | A | | | ◆ | | | | | ◆ | ◆ | | | | | | ◆ | | | |
| | B | | ◆ | | ◆ | | | ◆ | | | ◆ | ◆ | ◆ | ◆ | ◆ | | ◆ | | ◆ |
| | C | ◆ | | | | ◆ | ◆ | | | | | | | | | | | ◆ | |

*Note:*
*For additional railing details refer to Standard Drawing BR-2-67.*

*All dimensions measured along outside face of parapet.*

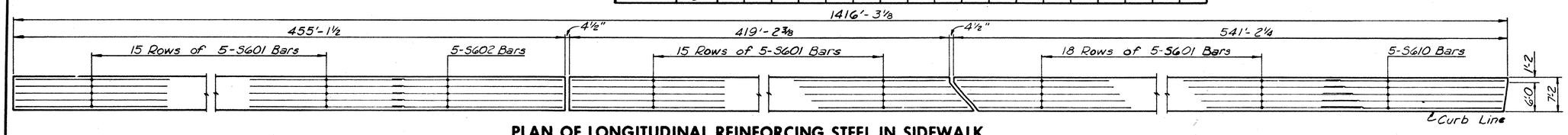


**PLAN OF LONGITUDINAL REINFORCING STEEL IN SIDEWALK**

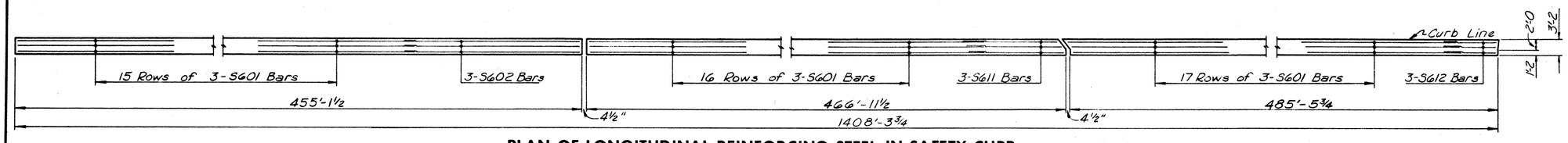


**PLAN OF LONGITUDINAL REINFORCING STEEL IN SAFETY CURB**

Sheet 37/37

W. E. QUICKSALL AND ASSOCIATES, INC.
CONSULTING ENGINEERS • NEW PHILADELPHIA, OHIO

**SUPERSTRUCTURE DETAILS**

**BRIDGE NO. STA-43-1352**

S.R. 43 over B&O R.R., N&W R.R. & P.R.R.

STARK COUNTY

STA. 15+34.75
STA. 29+49.87

| DESIGNED | DRAWN | TRACED | CHECKED | REVIEWED | DATE | REVISED |
|---|---|---|---|---|---|---|
| | TG | | wdz | DLM | 2-21-69 | |

MICROFILMED
JUL 18 1979
REPRODUCTION

| FED. RD. DIVISION | STATE | PROJECT | |
|---|---|---|---|
| 2 | OHIO | | |

58/110

STA-43-13.40 PT-1

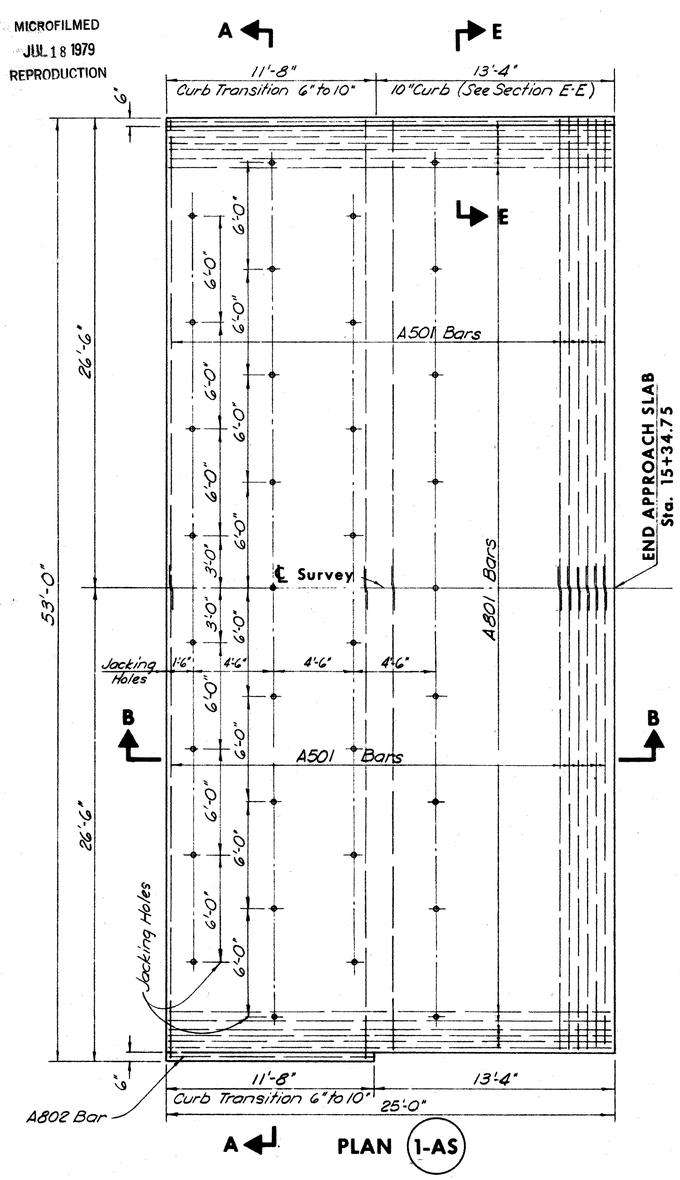


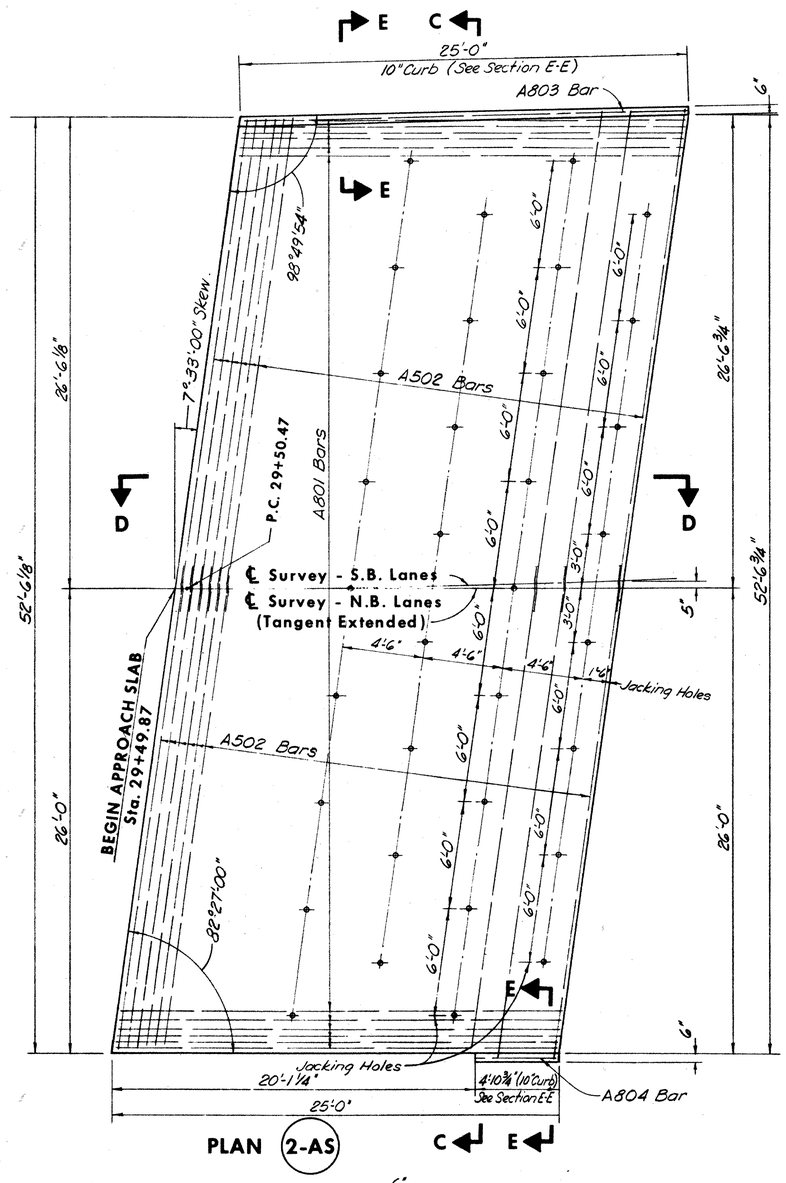


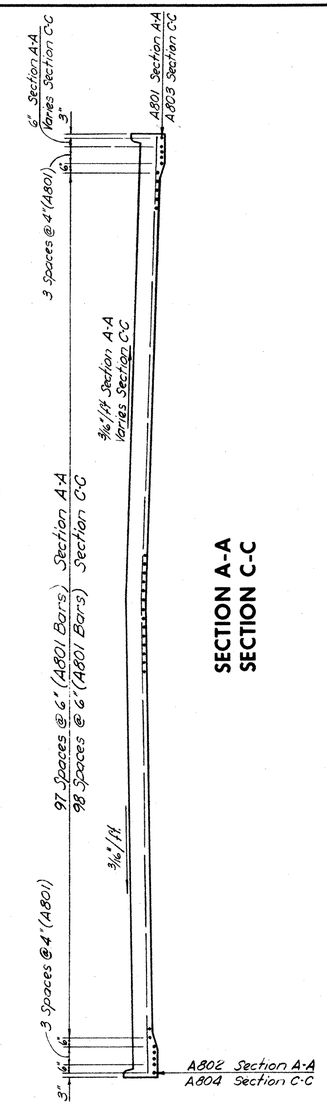


SECTION A-A
SECTION C-C

| STEEL LIST | | | |
|---|---|---|---|
| MARK | NO. REQ'D. | LENGTH | DIMEN. 'A' |
| A801 | 214 | 25'-7" | 24'-6" |
| A802 | 1 | 11'-2" | — |
| A803 | 1 | 21'-0" | — |
| A804 | 1 | 4'-2" | — |
| A501 | 40 | 27'-2" | — |
| A502 | 40 | 27'-8" | — |

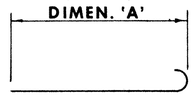


## QUANTITIES

Sta. 15+09.75 to Sta. 15+34.75 = 146 Sq. Yds.
Sta. 29+49.87 to Sta. 29+74.87 = 147 Sq. Yds.
Quantities Carried to Sheet No. 11E 16

NOTE:
For additional details not shown, see Standard Drawing AS-1-67.

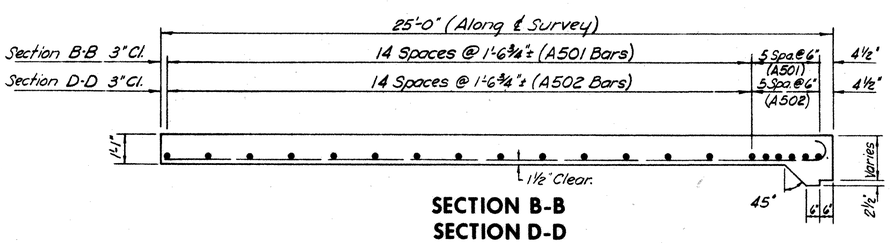


SECTION B-B
SECTION D-D

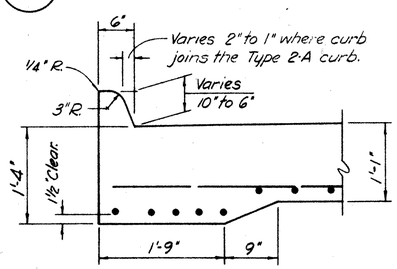


CURB TRANSITION DETAIL

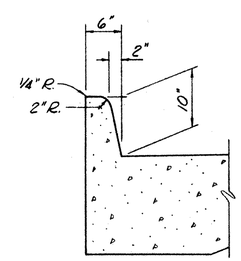


SECTION E-E

BRIDGE NO. STA-43-1352

# APPROACH SLABS 1-AS AND 2-AS

STA. 15+09.75 TO STA. 15+34.75

STA. 29+49.87 TO STA. 29+74.87

| Dwn. L.A. Kelley 2-14-67 | Chk. W.A.B. 2-15-67 | Chk. L.A. Kelley 2-15-67 | Des. Chk. D.L.M. 2-20-67 |
|---|---|---|---|

MICROFILMED
JUL 18 1979
REPRODUCTION

| FED. RD. DIVISION | STATE | PROJECT | |
|---|---|---|---|
| 2 | OHIO | | |

59

# STARK COUNTY
## STA-43-13.40 PT-1
## In Canton

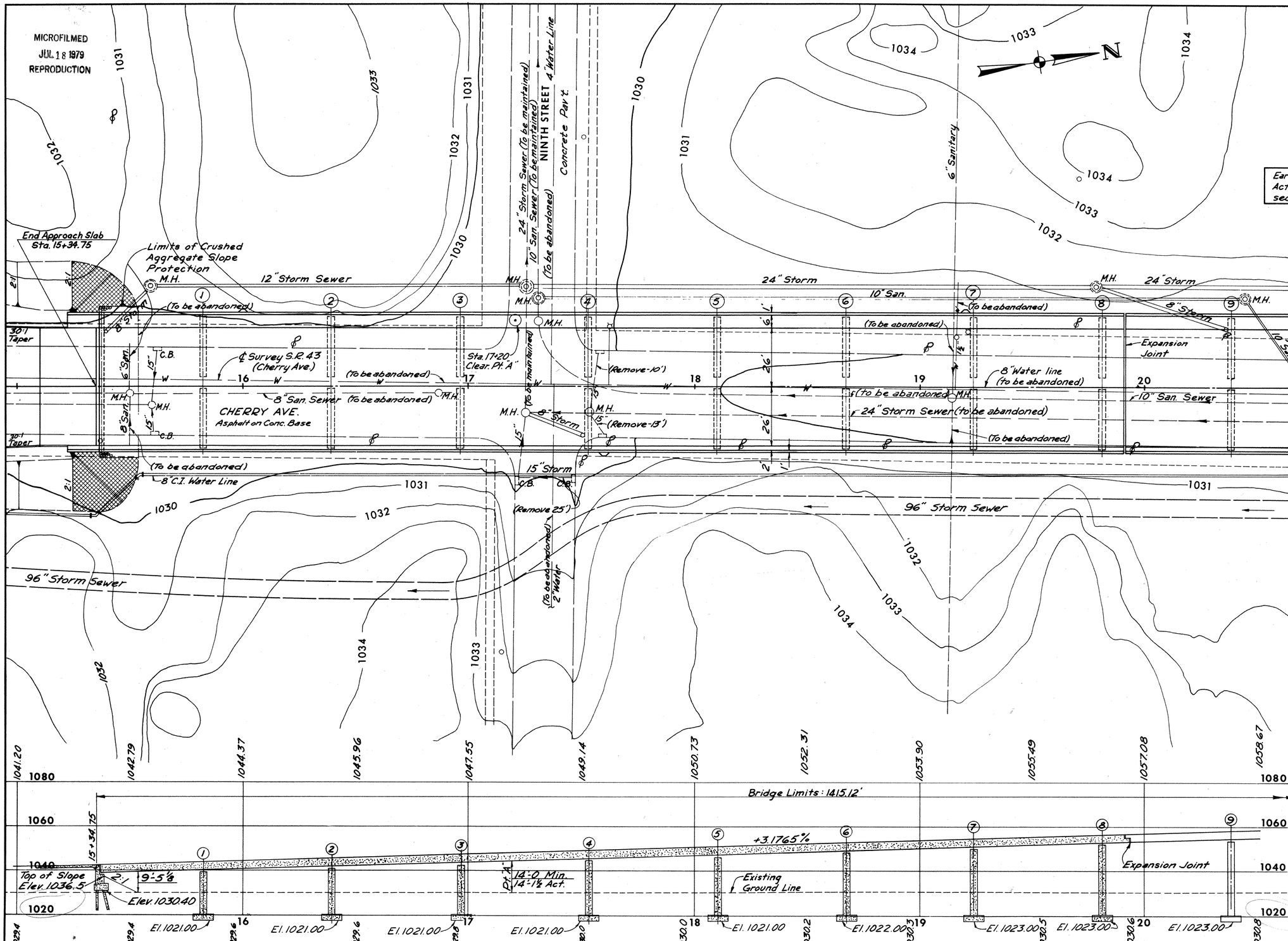


Earthwork limits shown are schematic. Actual slopes shall conform to plan cross-sections.

All notations made to the Pennsylvania Railroad (P.R.R.) refer to the Penn Central Railroad Company.

B.M. H-28 - ELEV. 1032.156 R.R. Spike in North side of power pole N.W. corner 11th Street and Broxham Court.

## PROPOSED STRUCTURE

TYPE: Continuous steel beams and girders with reinforced concrete deck and substructure.

SPANS: 45'-57'-57'-57'-57'-57'-57'-57'-57'-57'-57'-57'-75'-75'-75.5'-75.5'-102.2'-146.4'-129'-117'

ROADWAY: 52'-0" of 2'-0 safety curb (Rt.) and 6'-0 sidewalk (Lt.)

LIVE LOAD: HS-20-44

SKEW: 0° unless otherwise shown.

WEARING SURFACE: 1" monolithic

APPROACH SLABS: AS-1-67, 25' long.

ALIGNMENT: Tangent.

1985 Average Daily Traffic = 22,000

Piles:
All piles 12" cast-in-place reinforced concrete.
Estimated average pay lengths: Rear Abutment 25', Forward Abutment 30'.

W.E.Q. BRIDGE 1
SHEET NO. 1/37

W. E. QUICKSALL AND ASSOCIATES, INC.
CONSULTING ENGINEERS NEW PHILADELPHIA, OHIO

## SITE PLAN
### BRIDGE NO. STA-43-1352
S.R. 43 over B & O, N & W, & P.R.R.
STA. 15+34.75
STARK COUNTY STA. 29+49.87

| PRESENT TOPOGRAPHY | | PROPOSED WORK | | | |
|---|---|---|---|---|---|
| SURVEYED | DRAWN | DESIGNED | DRAWN | CHECKED | REVIEWED |
| Kucera | TG | wdz | TG | DLM | DLM |

MICROFILMED
JUL 18 1979
REPRODUCTION

| FED. RD. DIVISION | STATE | PROJECT | |
|---|---|---|---|
| 2 | OHIO | | |

60

**STARK COUNTY**
**STA-43-13.40** PT-1
**In Canton**

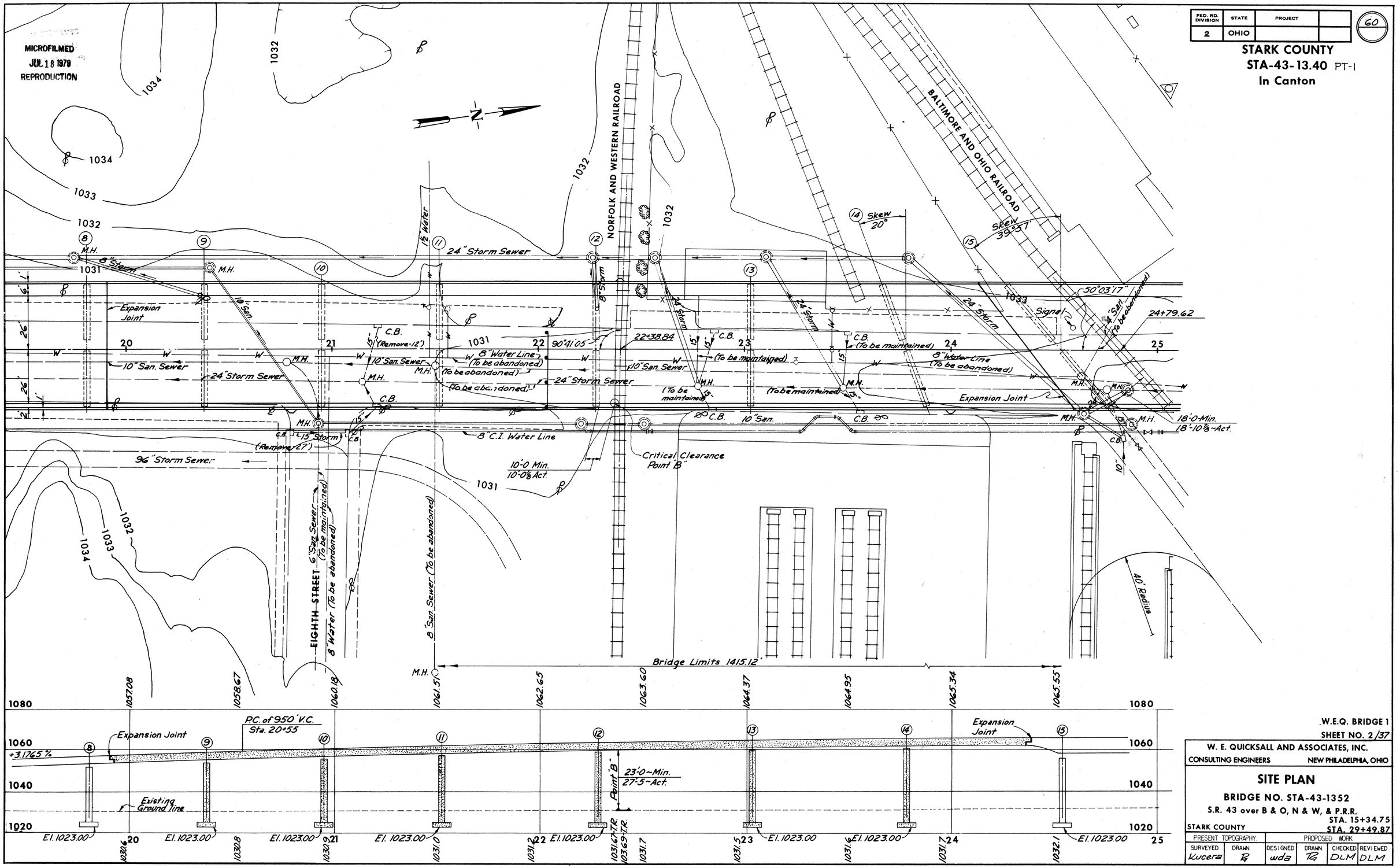


W.E.Q. BRIDGE 1
SHEET NO. 2/37

W. E. QUICKSALL AND ASSOCIATES, INC.
CONSULTING ENGINEERS NEW PHILADELPHIA, OHIO

## SITE PLAN

**BRIDGE NO. STA-43-1352**
S.R. 43 over B & O, N & W, & P.R.R.
STA. 15+34.75
STA. 29+49.87
STARK COUNTY

| PRESENT TOPOGRAPHY | | PROPOSED WORK | | | |
|---|---|---|---|---|---|
| SURVEYED | DRAWN | DESIGNED | DRAWN | CHECKED | REVIEWED |
| Kucera | R | wda | TG | DLM | DLM |

MICROFILMED
JUL 18 1979
REPRODUCTION

| FED. RD. DIVISION | STATE | PROJECT | |
|---|---|---|---|
| 2 | OHIO | | |

61

# STARK COUNTY
## STA-43-13.40 PT-1
## In Canton

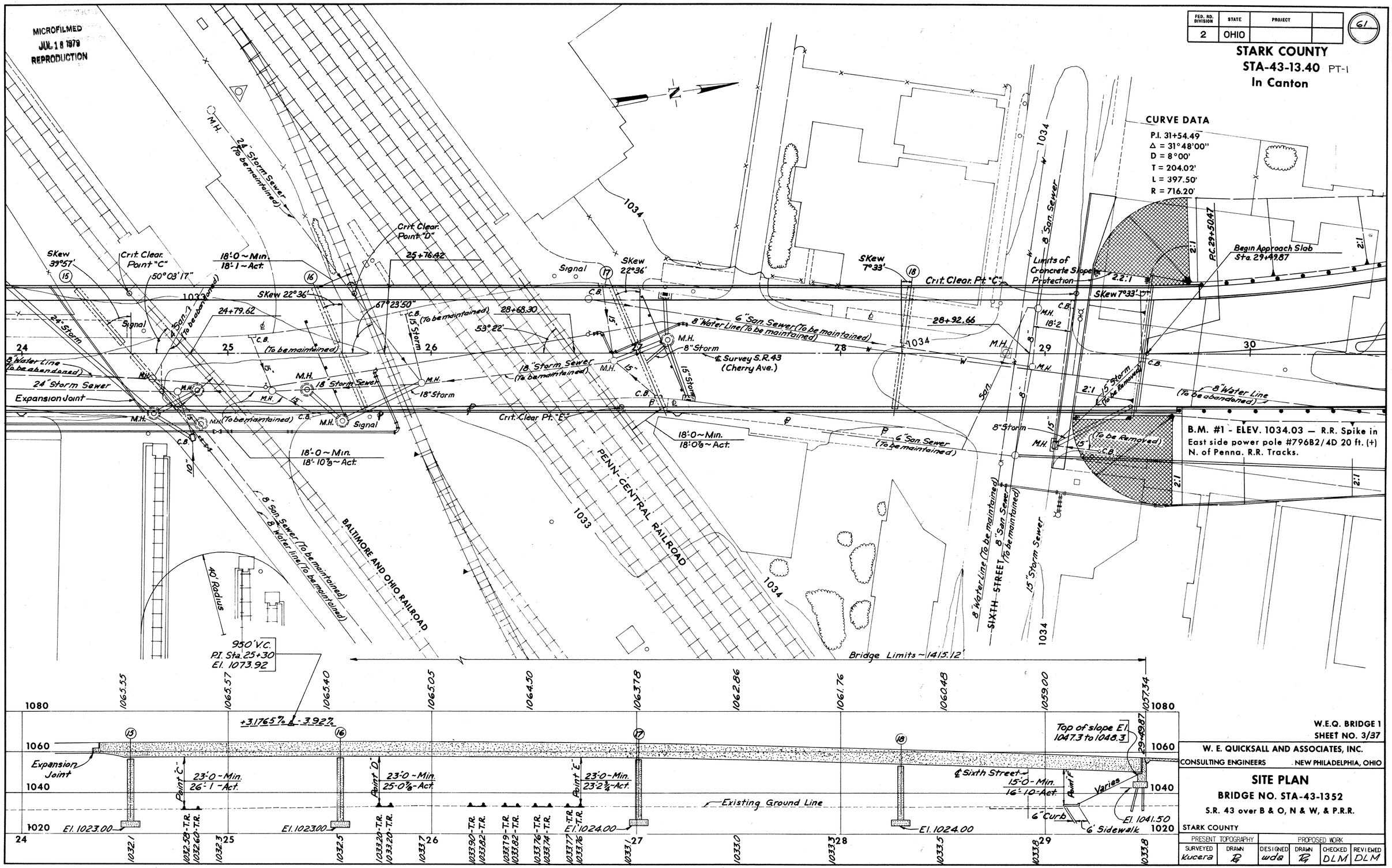


W.E.Q. BRIDGE 1
SHEET NO. 3/37

W. E. QUICKSALL AND ASSOCIATES, INC.
CONSULTING ENGINEERS NEW PHILADELPHIA, OHIO

## SITE PLAN
## BRIDGE NO. STA-43-1352
S.R. 43 over B & O, N & W, & P.R.R.

STARK COUNTY

| PRESENT TOPOGRAPHY | | PROPOSED WORK | | | |
|---|---|---|---|---|---|
| SURVEYED | DRAWN | DESIGNED | DRAWN | CHECKED | REVIEWED |
| Kucera | R | wda | R | DLM | DLM |

MICROFILMED
JUL 18 1979
REPRODUCTION

| FED. RD. DIVISION | STATE | PROJECT | |
|---|---|---|---|
| 2 | OHIO | | |

62

**STA-43-13.40** PT-1

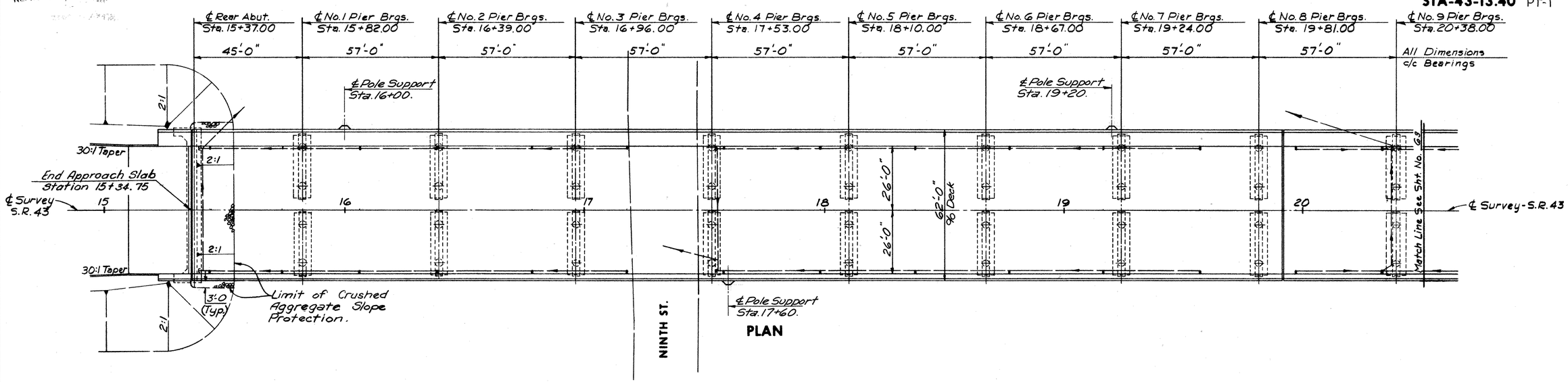


**PLAN**

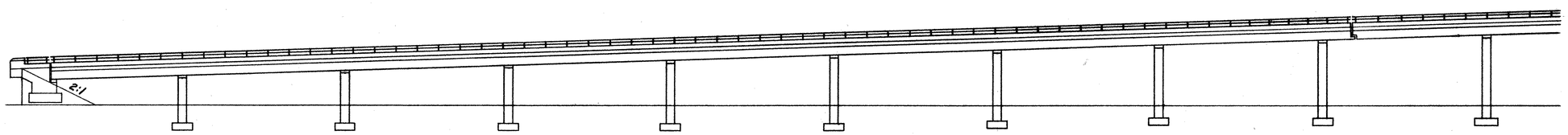


**ELEVATION**

Note:
12" C.I.P. Piles in Rear Abutment not shown.

**LOCATION OF SCUPPERS**

| Right & Left | 15+44 | 15+74 | 16+06 | 16+33 | 16+78 | 17+18 | 17+59 | 17+98 | 18+38 | 18+77 | 19+17 | 19+57 | 19+97 | 20+32 | 20+75 | 21+15 | 21+60 | 21+95 | 22+35 | 22+75 | 23+14 | 23+55 | 23+95 | 24+20 Left Only | 24+30 Right Only | 24+45 Left Only | 24+62 Right Only | 25+15 | 25+55 | 25+95 | 26+35 | 26+75 | 27+25 | 27+55 | 27+95 | 28+39 | 28+67 | 29+03 | 29+39 |
|---|---|---|---|---|---|---|---|---|---|---|---|---|---|---|---|---|---|---|---|---|---|---|---|---|---|---|---|---|---|---|---|---|---|---|---|---|---|---|---|

Note: Scuppers on the right side as per Std. Dw'g. SD-1-65, Type II.
Scuppers on the left side modified as per details on sheet 7

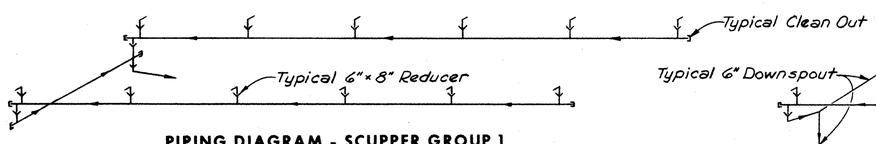


**PIPING DIAGRAM - SCUPPER GROUP 1**

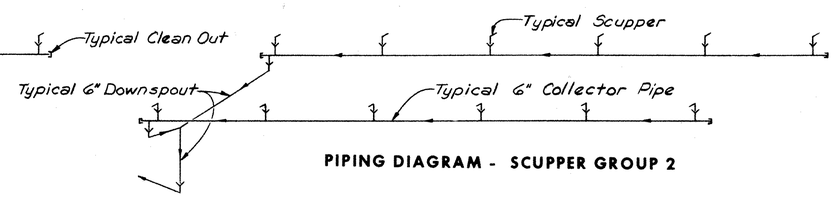


**PIPING DIAGRAM - SCUPPER GROUP 2**

Note:
See sheet 5 for Piping Diagram - Scupper Group 3.

Sheet 4 / 37

W. E. QUICKSALL AND ASSOCIATES, INC.
CONSULTING ENGINEERS • NEW PHILADELPHIA, OHIO

**GENERAL PLAN & ELEVATION**

**BRIDGE NO. STA-43-1352**

S.R. 43 over B & O, N & W, & P.R.R.

STA. 15+34.75
STA. 29+49.87

STARK COUNTY

| DESIGNED | DRAWN | TRACED | CHECKED | REVIEWED | DATE | REVISED |
|---|---|---|---|---|---|---|
| | LY | | PMZ | DLM | 2-21-69 | |

MICROFILMED
JUL 18 1979
REPRODUCTION

| FED. RD. DIVISION | STATE | PROJECT | |
|---|---|---|---|
| 2 | OHIO | | |

63

STA-43-13.40 PT-1

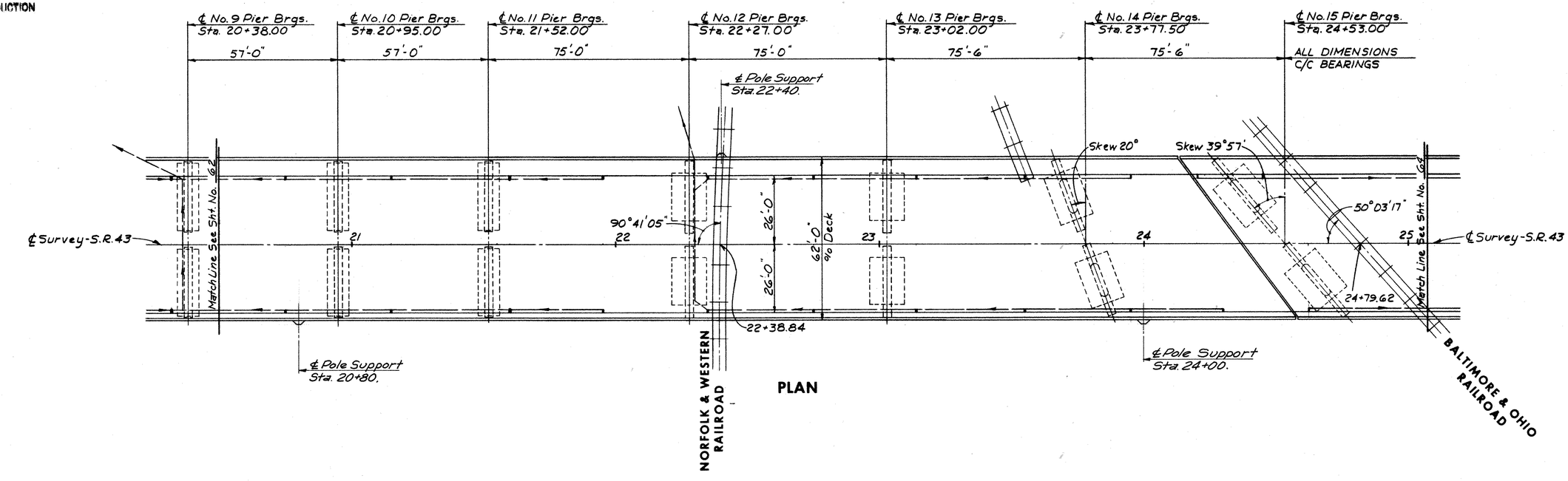


PLAN

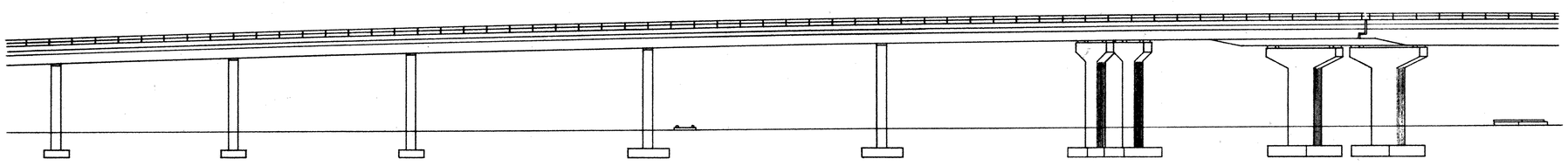

ELEVATION

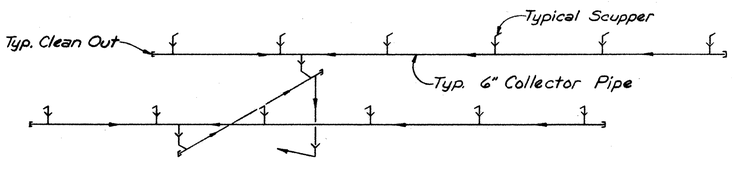


PIPING DIAGRAM - SCUPPER GROUP 3

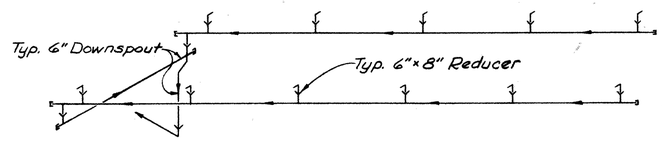


PIPING DIAGRAM - SCUPPER GROUP 4

Note:
See sheet 4 for Scupper Locations.

See sheet 6 for Piping Diagram - Scupper Group 5.

Sheet 5 / 37

W. E. QUICKSALL AND ASSOCIATES, INC.
CONSULTING ENGINEERS • NEW PHILADELPHIA, OHIO

**GENERAL PLAN & ELEVATION**

BRIDGE NO. STA-43-1352

S.R. 43 over B & O, N & W, & P.R.R.

STA. 15+34.75
STA. 29+49.87

STARK COUNTY

| DESIGNED | DRAWN | TRACED | CHECKED | REVIEWED | DATE | REVISED |
|---|---|---|---|---|---|---|
| | | | PMZ | DLM | 2-21-69 | |