MICROFILMED
FEB 23 1996

I.M. - 277 - 6(7) NH- 51 (84)	FHWA REGION 5	OHIO FEDERAL PROJECT

1 / 196

STATE OF OHIO
DEPARTMENT OF TRANSPORTATION

SUM-277/224-0.00/(6.31)-(10.22)

SUMMIT COUNTY
CITY OF AKRON - COVENTRY TOWNSHIP

DESIGN DESIGNATION

CURRENT A.D.T. (1991)	=	41279
DESIGN YEAR A.D.T. (2011)	=	50694
D.H.V.	=	5069
D	=	50%
T	=	5%
V	=	60 M.P.H.
FUNCTIONAL CLASSIFICATION	=	URBAN INTERSTATE
DESIGN EXCEPTIONS	=	NONE

CONVENTIONAL SIGNS

County Line
Township Line
Section Line
Corporation Line or
Fence Line(existing) -x—x- (proposed) —x—x—
Center Line 352 353
Trees, Stumps, (to be removed)
Utility Poles: Telephone, Power, Light

Limited Access (only) —LA—
Right of Way (only) —RW—
Limited Access & Right of Way —LA & RW—
Existing Right of Way
Property Line (in existing fence) -x-
Railroad or
Guardrail (existing) (proposed)

INDEX OF SHEETS

BEGIN PROJECT
STA. 59+05.19
S.L.M. 0.00 (277)
6.31 (224)

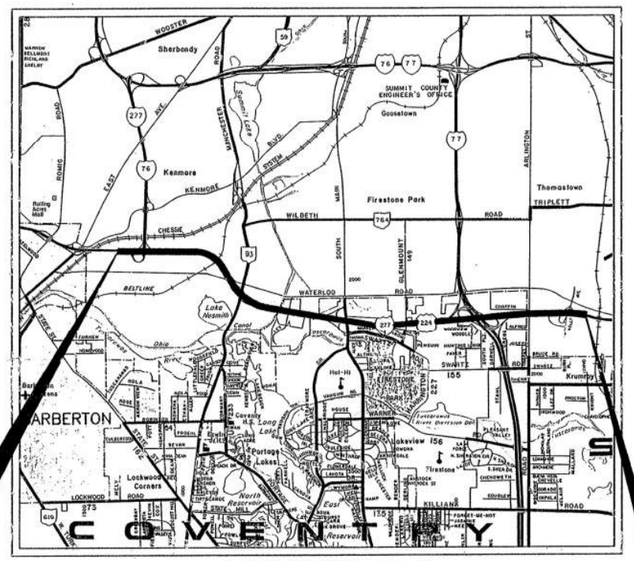

END PROJECT
STA. 314+25.00
S.L.M. 11.24 (224)

LOCATION MAP

SCALE IN MILES
0 1/2 1 2 3

UNDERGROUND UTILITIES
TWO WORKING DAYS
BEFORE YOU DIG
Call...800-362-2764 (Toll free)
OHIO UTILITIES PROTECTION SERVICE
NON-MEMBERS
MUST BE CALLED DIRECTLY

Portion to be Improved
State & Federal Routes
Other Roads

SCALES

Plan 0 50 100 200
Profile : Horizontal N/A Vertical N/A
Cross Section : Horizontal 0 5 10 Vertical 0 5 10

LINE DATA

BEGIN PROJECT: STA. 59+05.19
STA. EQUATION: STA. 228+00 BK. = STA. 222+59.78 AHD.
END PROJECT: STA. 314+25.00
TOTAL LENGTH OF PROJECT = 26060.03 LIN. FT. or 4.936 MILES

BEGIN WORK: STA. 58+95
STA. EQUATION: STA. 228+00 BK. = STA. 222+59.78 AHD.
END WORK: STA. 318+45
TOTAL LENGTH OF WORK = 26490.22 LIN. FT. or 5.017 MILES

PLANS PREPARED BY:
OHIO DEPT. OF TRANSPORTATION
DISTRICT 4 OFFICE

Project : SUM - 277/224 - 0.00/(6.31)-(10.22)
Date of Letting _____, 19__ Contract No. _____

SUPPLEMENTAL SPECIFICATIONS			
802	4-13-90	902	8-31-79
		903	1-1-69
811	9-26-88		
		910	5-20-91
820	3-18-92	940	6-10-87
921	12-4-72	942	3-18-92
924	12-14-88	944	5-2-94
852	7-30-93	923	1-10-69

SUPPLEMENTAL PRINTS OF STANDARD CONSTRUCTION DRAWINGS													
BP-2.1	2-21-92	GR-1.3	2-21-92	MT-9.2	5-6-91	HL-10.11	5-1-87	HL-30.33	5-1-87	TC-7.65	3-1-79	I-3A&B	4-1-80
BP-2.2	2-21-92	BP-1.1	2-21-92	MT-95.30	10-10-88	HL-10.12	5-1-87	HL-40.10	5-1-87	TC-9.10	4-24-80	TC-41.20	3-26-79
BP-2.5	2-21-92	GR-1.1	5-6-91	MT-95.31	10-10-88	HL-10.13	5-1-87	HL-50.11	5-1-87	TC-9.30	4-24-80	TC-41.40	6-18-79
GR-3.5	1-31-94	GR-1.2	10-30-92	MT-95.32	8-25-89	HL-10.31	5-1-87	HL-50.21	5-1-87	TC-12.30	1-20-84	TC-41.50	3-26-79
GR-4.3	2-21-92	GR-2.1	5-6-91	MT-97.10	4-29-88	HL-20.11	5-1-87	HL-60.11	5-1-87	TC-21.10	9-1-92	TC-42.10	8-19-77
GR-4.4	2-21-92	GR-3.1	5-6-91	MT-98.12	8-25-89	HL-20.13	5-1-87	HL-60.12	5-1-87	TC-21.20	9-1-92	TC-42.20	3-26-79
MC-VI	8-1-78	GR-3.2	5-6-91	MT-98.13	8-25-89	HL-20.21	5-1-87	HL-60.21	5-1-87	TC-21.40	9-1-92	TC-51.10	1-20-84
MC-9A	1-11-85	GR-4.1	5-6-91	MT-98.14	8-25-89	HL-20.22	5-1-87	HL-60.31	5-1-87	TC-22.10	9-1-92	TC-51.11	1-20-84
MC-9.3	10-30-92	GR-4.2	5-6-91	MT-98.15	8-25-89	HL-20.23	5-1-87	AS-1-81	11-27-81	TC-22.20	9-1-92	TC-52.10	4-3-79
MC-9.4	10-30-92	GR-6	2-5-82	MT-99.10	11-14-86	HL-20.31	5-1-87	BR-1	5-29-79	TC-31.21	9-1-92	TC-52.20	4-3-79
HW-4A	4-1-80	GR-8.1	1-31-94	MT-99.20	4-29-88	HL-30.11	5-1-87	EXJ-4-87	1-5-89	TC-32.10	9-1-92	TC-61.10	4-5-82
HW-4B	4-1-80	MC-9.1	10-30-92	MT-101.60	7-1-92	HL-30.21	5-1-87	SD-1-69	6-12-69	TC-35.10	8-29-84	TC-71.10	9-10-91
		MT-105.10	7-1-92	MT-102.10	8-25-89	HL-30.22	5-1-87	FSB-1-62	4-19-62	TC-41.10	8-29-84	TC-72.20	2-26-82
		MT-105.11	7-1-92									MC-5	6-12-75

LIMITED ACCESS

This improvement has been declared a limited access highway or freeway by action of the Director of Highways in accordance with the provisions of Section 5511.02, Revised Code of Ohio, and is especially designed for through traffic.

1993 SPECIFICATIONS

The standard specification of the State of Ohio, Department of Transportation, including changes and supplemental specifications listed in the proposal shall govern this improvement.

I hereby approve these plans and declare that the making of this improvement will require the part time closing of the highway to traffic, as noted on sheet 22-24, during which time detours will be provided as shown hereon. provisions for the maintenance and safety of traffic will be as set forth on the plans and estimates.

Under authority of section 4511.21, Division (I) of the Revised Code of Ohio, the revised prima facie speed limits as indicated herein are determined to be reasonable and safe, and are hereby established for the duration of this project. The prima facie speed limit or limits hereby established shall become effective when appropriate signs giving notice thereof are erected.

Approved Leila A. Brown
Date 10/25/93 Service Director, City of Akron

Approved David R Dreger
Date 10-16-93 District Deputy Director of Transportation

Approved L D Hartkemeier/jw
Date 1-26-94 Engineer, Bureau of Bridges and Structural Design

Approved Christopher L. Runyan
Date 3-25-94 Deputy Director of Design

Approved Jerry Wray
Date 3-25-94 Director, Department of Transportation

REVISED 6/30/94 REVISED 5-27-94

DEPARTMENT OF TRANSPORTATION
FEDERAL HIGHWAY ADMINISTRATION

APPROVED:

DIVISION ADMINISTRATOR DATE

TITLE SHEET

ZFA2:20.7:SU277001.DGN

FHWA REGION	STATE	PROJECT NO.	FUNDS
5	OHIO		

2
196

SUM-277/224-0.00/6.31-10.22

SCHEMATIC PLAN

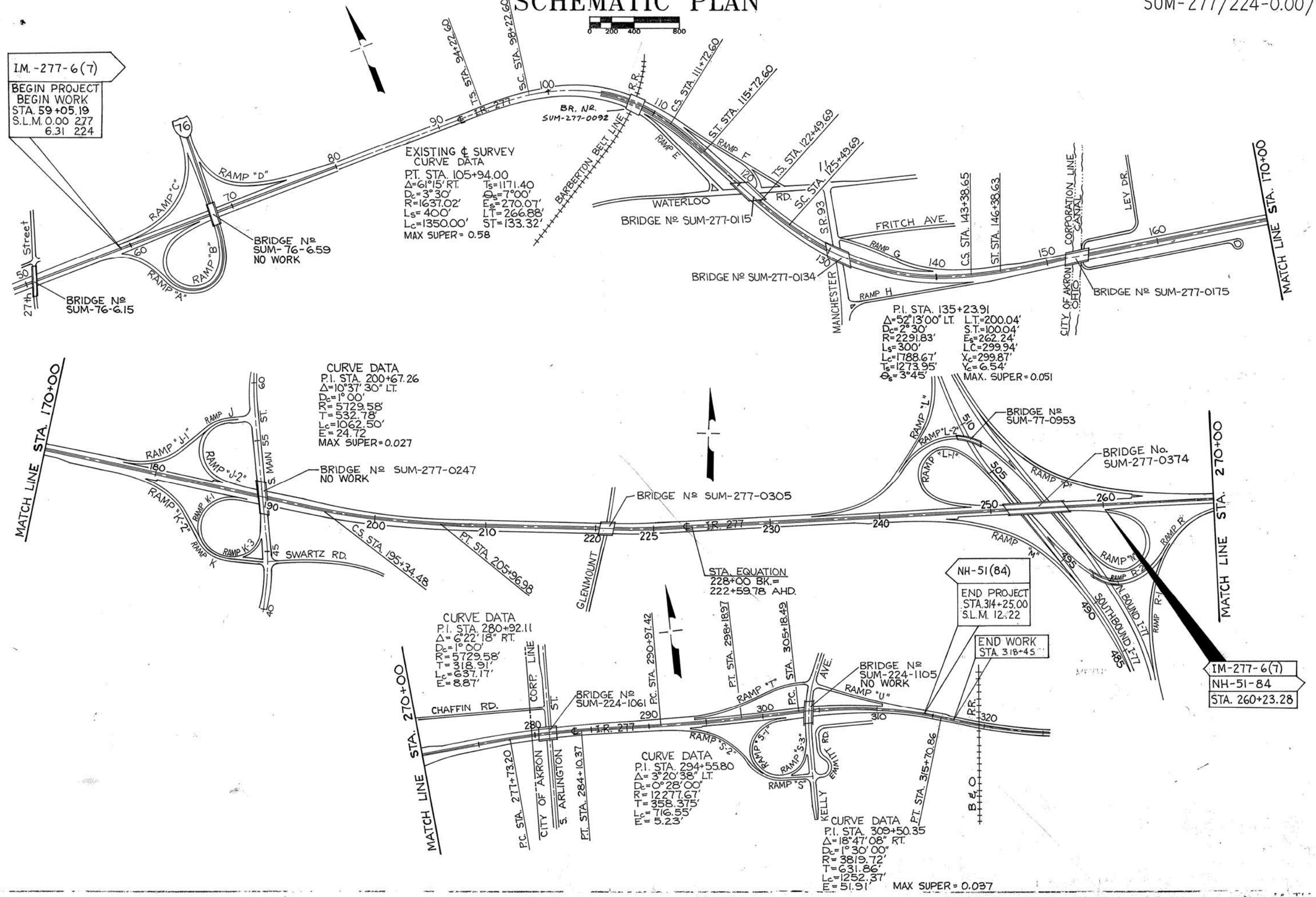

F.H.W.A. REGION	STATE	PROJECT	
5	OHIO		

SUM-277/224 0.00/6.31-10.

TYPICAL SECTIONS
TYPE OPEN GRADED ON 446

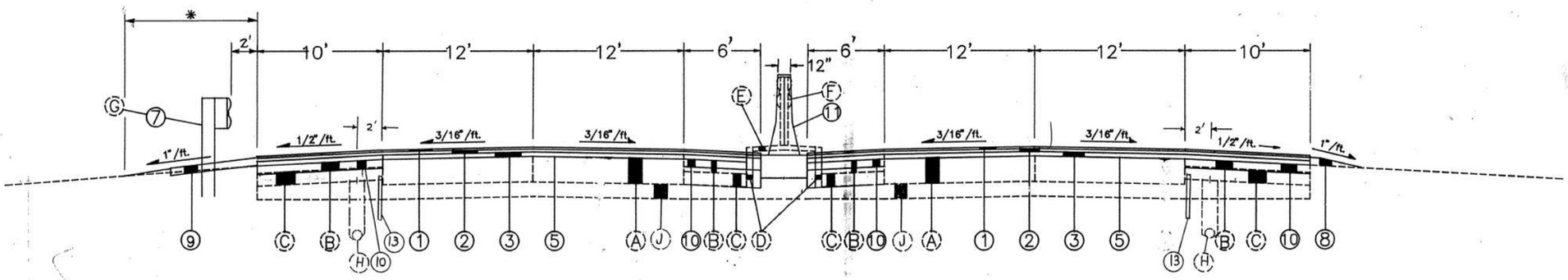

NORMAL SECTION

STATION FROM	STATION TO	LIN. FT.	REMARKS
59+05.19	86+00	2694.81	WESTBOUND
59+05.19	79+00	1994.81	EASTBOUND

NOTE: AT STA. 59+05 LOOKING BACK, THE EXISTING MEDIAN IS CONCRETE BARRIER.

* SEE SHEET NO. 7 FOR LINEAR GRADING DIMENSION

PROPOSED LEGEND

(1)	ITEM SPECIAL	– 3/4" RUBBERIZED OPEN GRADED ASPHALT FRICTION COURSE (SEE PROPOSAL NOTE)
(2)	ITEM 446	– 1 1/4" ASPHALT CONCRETE SURFACE COURSE, TYPE 1, AC–20
(3)	ITEM 446	– 1 3/4" ASPHALT CONCRETE INTERMEDIATE COURSE, TYPE 2, AC–20
(5)	ITEM 407	– TACK COAT
(6)	ITEM 811	– ASPHALT UNDERSEALING OF EXISTING CONCRETE PAVEMENT
(7)	ITEM 606	– GUARDRAIL, TYPE 5
(8)	ITEM 203	– LINEAR GRADING, METHOD 1 SEE SHEET NO. 7
(9)	ITEM 203	– LINEAR GRADING, METHOD 2 SEE SHEET NO. 7
(10)	ITEM 301	– 3" BITUMINOUS AGGREGATE BASE, AC-20 SEE GENERAL NOTE SHT. 13
(11)	ITEM 622	– CONCRETE BARRIER, TYPE B–50
(12)	ITEM 622	– CONCRETE BARRIER, TYPE B–50, AS PER PLAN
(13)	ITEM 605	– SHALLOW UNDERDRAIN, AS PER PLAN
(14)	ITEM 451	– 10" REINFORCED CONCRETE PAVEMENT
(15)	ITEM 310	– SUBBASE, AS PER PLAN
(16)	ITEM 605	– 6" SHALLOW PIPE UNDERDRAIN, AS PER PLAN

EXISTING LEGEND

- (A) 10" REINFORCED CONCRETE PAVEMENT
- (B) 3" WATERPROOFED AGGREGATE BASE COURSE
- (C) 5" STABILIZED CRUSHED AGGREGATE SHOULDERS
- (D) STANDARD TYPE 6 CURB
- (E) PORTLAND CEMENT CONCRETE MEDIAN PAVEMENT
- (F) BARRIER GUARDRAIL, STEEL BEAM(DEEP) USING 6"x8" SQUARE SAWED WOOD POSTS
- (G) GUARDRAIL, TYPE 5
- (H) 6" UNDERDRAIN
- (J) 6" SUBBASE

F.H.W.A. REGION	STATE	PROJECT	
5	OHIO		

SUM-277/224-0.00/6.31-10.

TYPICAL SECTIONS
TYPE OPEN GRADED ON 446

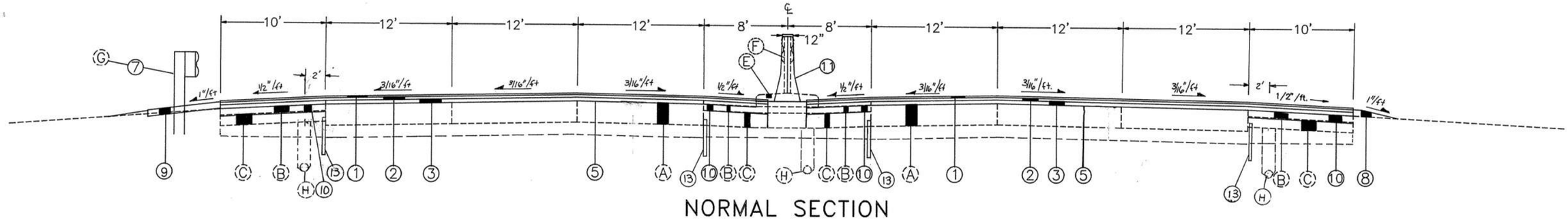

NORMAL SECTION

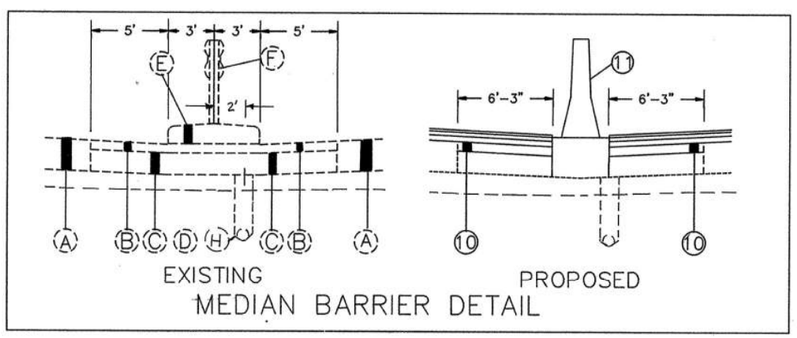

MEDIAN BARRIER DETAIL

STATION FROM	STATION TO	LIN. FT.	REMARKS
86+00	94+27	827	WESTBOUND
79+00	92+88.37	1388.37	EASTBOUND
117+50	119+91.47	241.47	
148+00	151+79.95	379.95	
153+78.05	193+26.48	3948.43	
208+04.98	219+94.05	1189.07	
221+62.59	228+00 BK.	637.41	STATION EQUATION
222+59.78 AHD.	251+17.15	2857.37	228+00 BK = 222+78.35 AHD
256+78.35	273+82.76	1704.41	
273+82.76	275+13.20	130.44	
286+70.37	301+80.49	1510.12	WESTBOUND
286+70.37	301+40.49	1470.12	EASTBOUND

* 1/2"/FT. OR RATE OF SUPER ELEVATION WHICHEVER IS GREATER.

** VARIES 1/2"/FT. TO 1/8/FT.

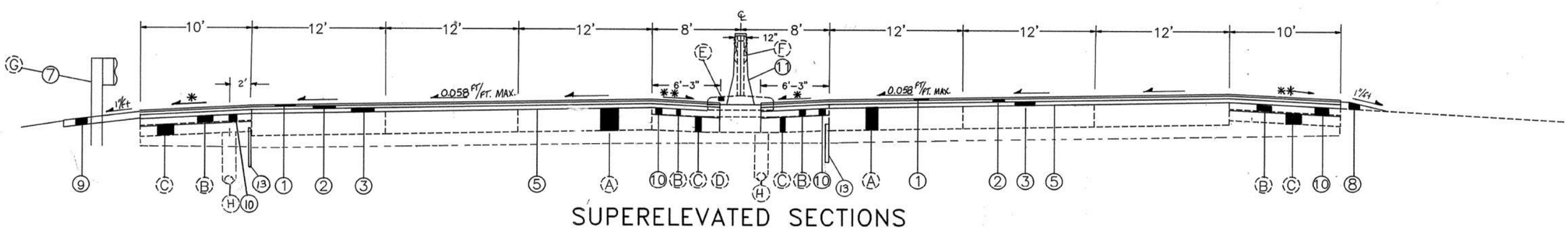

SUPERELEVATED SECTIONS

STATION FROM	STATION TO	LIN. FT.	REMARKS
94+27	115+75	2148	WESTBOUND
92+88.37	115+75	2286.63	EASTBOUND
115+75	117+50	175.	
122+11.81	129+77.38	765.57	
131+94.64	148+00	1605.36	
193+26.48	208+04.98	1478.50	
275+13.20	279+71.95	458.75	
279+71.95	280+57.89	85.94	
282+04.89	286+70.37	465.48	

FOR LEGEND SEE SHEET 3

TYPICAL SECTIONS
TYPE OPEN GRADED ON 446

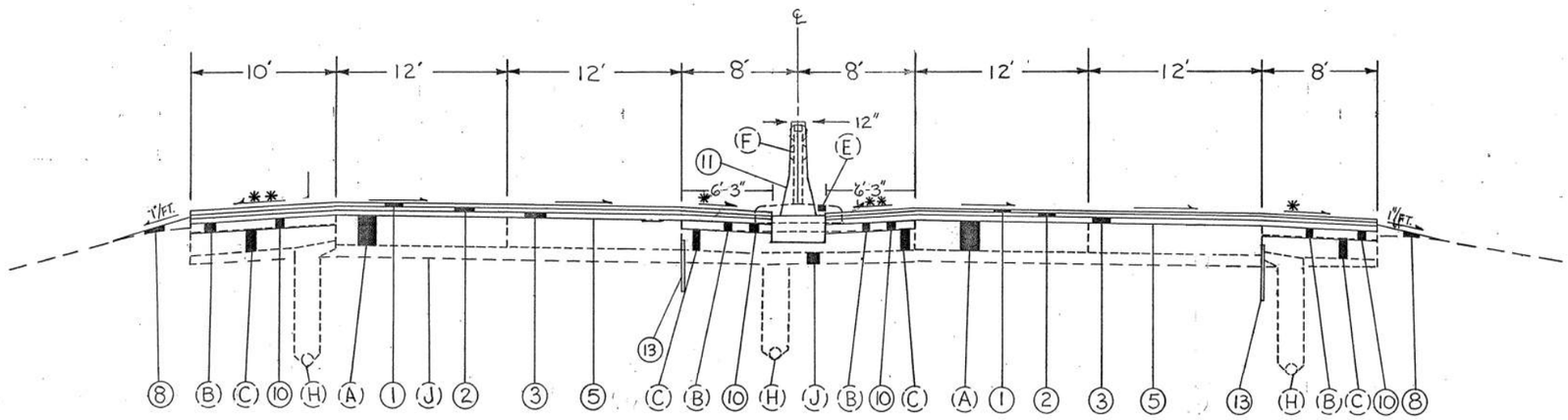

SUPERELEVATED SECTION

STATION FROM	STATION TO	LIN. FT.	REMARKS
301+80.49	315+70.86	1,390.37	WESTBOUND ⊛
301+40.49	314+25.00	1,284.51	EASTBOUND ⊛
			⊛ SEE SHEET 7A FOR STA. 301+75 TO STA. 308+00

* 1/2"/FT. OR RATE OF SUPERELEVATION WHICHEVER IS GREATER.

** VARIES 1/2"/FT. TO 1/8"/FT.

FOR LEGEND SEE SHEET 3

FOR MEDIAN BARRIER DETAIL SEE SHEET 4

TYPICAL SECTIONS
TYPE 446 ON 451

OHIO	6/96
FHWA REGION 5	
FEDERAL PROJECT	

SUM-277/224-0.00/6.31-10.22

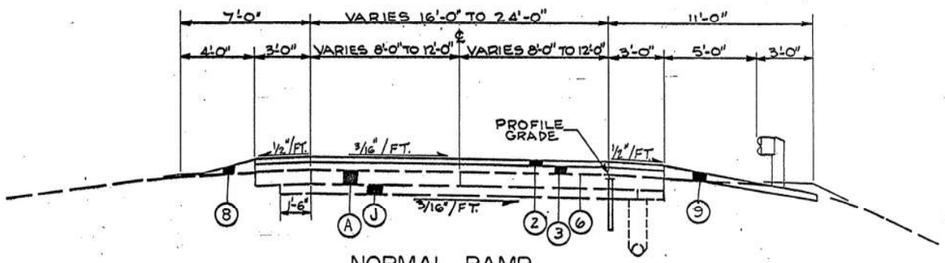

NORMAL RAMP

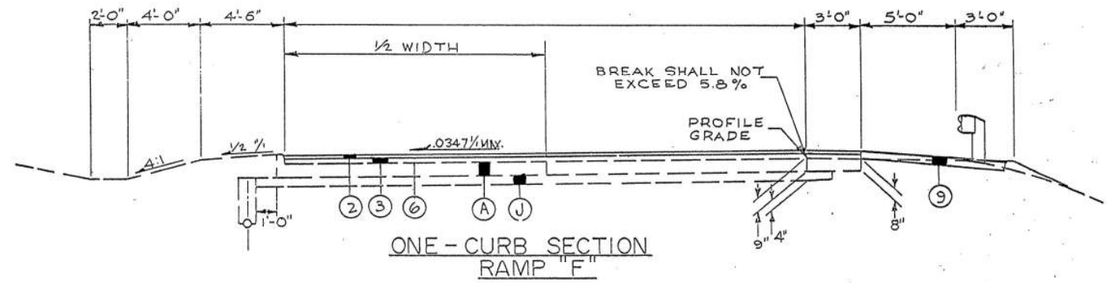

ONE - CURB SECTION
RAMP "F"

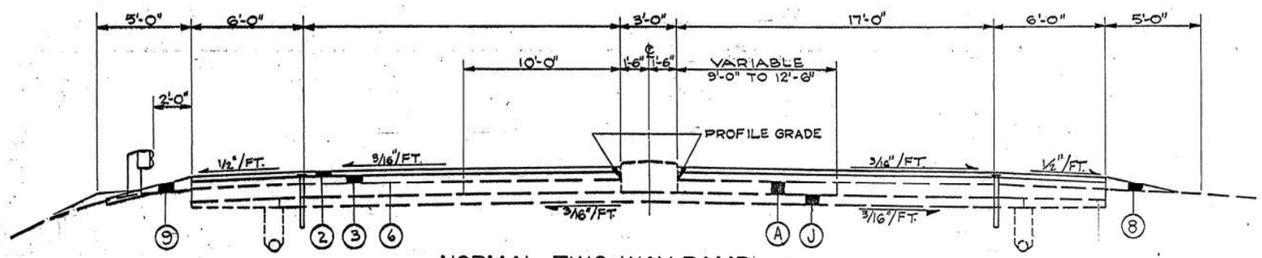

NORMAL TWO WAY RAMP

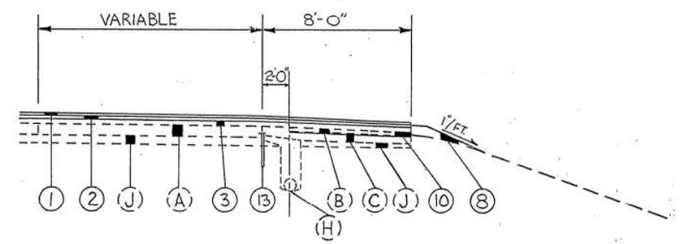

SPEED CHANGE LANE

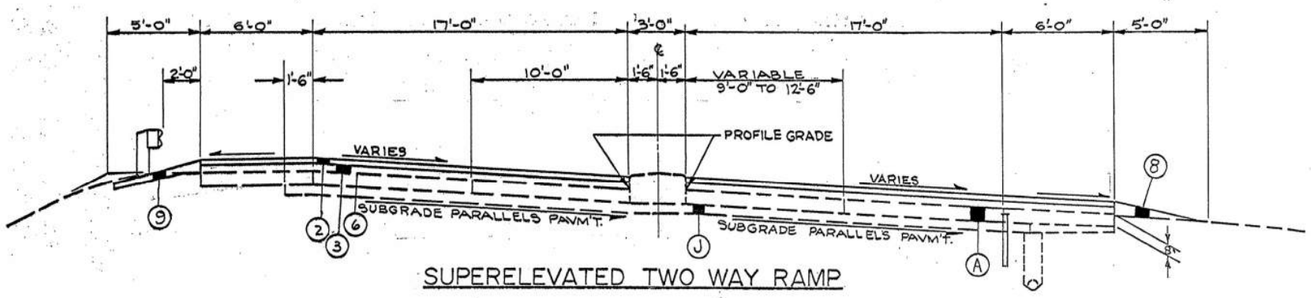

SUPERELEVATED TWO WAY RAMP

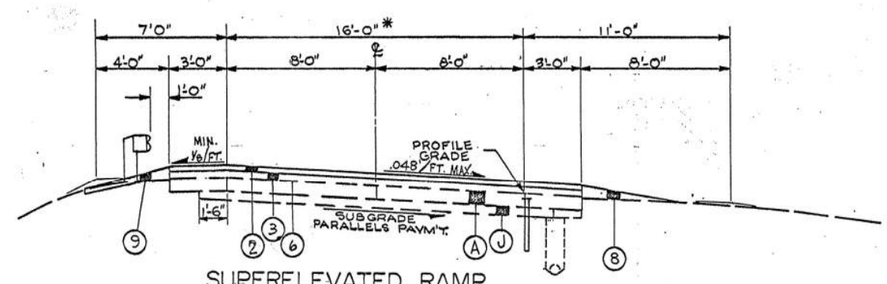

SUPERELEVATED RAMP
* VARIES 16'-0" TO 34'-0" RAMP

FOR LEGEND DETAIL SEE SHEET 3

LINEAR GRADING

METHOD 1

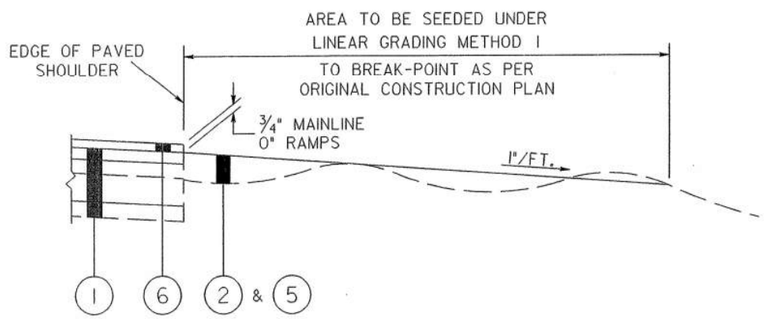

LEGEND

1		PAVED SHOULDER
2	203	LINEAR GRADING, METHOD 1
3	203	LINEAR GRADING, METHOD 2
4	404	ASPHALT CONCRETE, AC-20 UNDER GUARDRAIL
5	203	EMBANKMENT, AS PER PLAN (IF REQUIRED, SEE NOTE THIS SHEET)
6	SPECIAL	3/4" RUBBERIZED OPEN GRADED ASPHALT FRICTION COURSE

METHOD 2

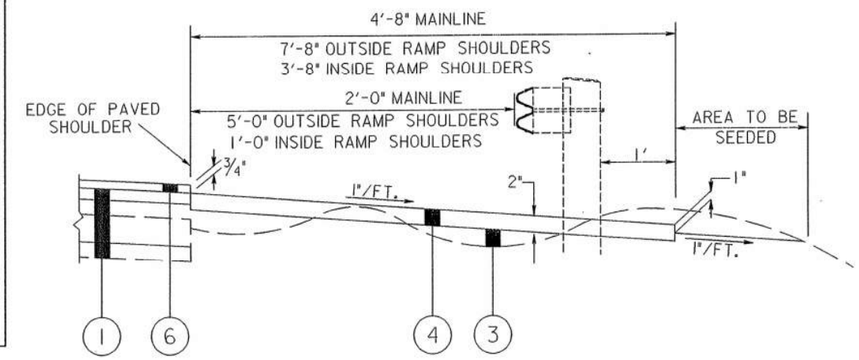

LINEAR GRADING - METHOD 1

THIS WORK SHALL CONSIST OF REGRADING THE EXISTING SHOULDER IN NON-GUARDRAIL AREAS ON THE MAINLINE OUTSIDE AND INSIDE SHOULDERS AND ON BOTH INSIDE AND OUTSIDE SHOULDERS OF THE RAMPS AS INDICATED IN THE SKETCH. REGRADING WILL BE ACCOMPLISHED BY REMOVING EXCESS TURF BETWEEN THE EDGES OF THE PAVED SHOULDER AND THE BREAK-OVER POINT USING A SLOPE OF APPROXIMATELY 1"/FT. EXCESS MATERIAL SHALL BE WINDROWED ON THE SHOULDER AND REMOVED BY THE CONTRACTOR. ANY VOIDS OR IRREGULARITIES BETWEEN THE EDGE OF PAVED SHOULDER AND BREAK-OVER POINT SHALL BE FILLED AND ADEQUATELY COMPACTED USING EXCESS MATERIAL. EXISTING RUTTED AREAS CAUSED BY SURFACE EROSION SHALL BE SCARIFIED PRIOR TO FILLING. ITEM 203 - EMBANKMENT, AS PER PLAN SHALL BE PROVIDED WHERE WINDROWED MATERIAL IS NOT AVALIABLE. ADEQUATE QUANTITY SHALL BE PROVIDED TO COMPLETE THE TYPICAL SECTION AS SHOWN. AFTER GRADING OPERATION IS COMPLETED THE DISTURBED AREA SHALL BE SEEDED AND MULCHED AS PER ITEM 659. ALL COMPACTION SHALL BE AS PER ITEM 203.

THE METHOD OF MEASUREMENT SHALL BE CONSIDERED AS ONE STATION EQUAL TO 100 LIN.FT. MEASURED SEPARATELY FOR EACH SIDE OF EACH DIRECTIONAL LANE AND SHALL INCLUDE ALL WORK REQUIRED AS DESCRIBED ABOVE INCLUDING THE NECESSARY SEEDING.
THERE MAY BE AREAS WHERE LINEAR GRADING MAY NOT BE REQUIRED IN THE FIELD. THE ENGINEER SHALL DETERMINE THESE LOCATIONS AND APPROPRIATE DEDUCTION MADE AS A RESULT OF THIS FIELD INVESTIGATION.

THE COST OF THE ABOVE OPERATION SHALL BE INCLUDED IN THE PRICE BID FOR ITEM 203 - LINEAR GRADING, METHOD 1

NOTE:

ITEM 203 - EMBANKMENT, AS PER PLAN SHALL MEET THE SPECIFICATIONS OF ITEM 203 EXCEPT THAT GRANULAR MATERIAL AS PER 203.02 SHALL BE EXCLUDED. THIS ITEM IS PROVIDED IN CASE WINDROWED MATERIAL IS NOT AVAILABLE NOR SUFFICIENT. EMBANKMENT MAY BE OBTAINED FROM WITHIN THE EXISTING R/W AS APPROVED BY THE ENGINEER.

ESTIMATED QUANTITIES

203 LINEAR GRADING, METHOD 1	=	242	STATIONS (I.R. 277)
		24	STATIONS (U.S. 224 RURAL)
		101	STATIONS (U.S. 224 URBAN)
TOTAL	=	367	STATIONS

ITEM 203 LINEAR GRADING - METHOD 2

THIS ITEM SHALL CONSIST OF EXCAVATING TOPSOIL, PLACING GRANULAR MATERIAL AND APPLYING HERBICIDE TO THE EXISTING OUTSIDE AND INSIDE SHOULDER BETWEEN THE PAVED SHOULDER AND BREAK POINT OF THE SHOULDER IN AREAS WHERE GUARDRAIL EXISTS AND IN ACCORDANCE WITH THE FOLLOWING:

ALL COLLECTED DEBRIS AND TOPSOIL, INCLUDING RHIZOMES, ROOTS AND OTHER VEGETATIVE PLANT MATERIAL SHALL BE REMOVED AND DISPOSED OF AS SPECIFIED IN SECTION 203.05 OF THE CONSTRUCTION AND MATERIAL SPECIFICATIONS.

THE REMOVED MATERIAL SHALL BE REPLACED WITH COMPACTABLE GRANULAR MATERIAL CONFORMING TO 203.02 AND SHALL BE PLACED TO GRADE AS DETAILED ABOVE OR AS APPROVED BY THE ENGINEER.

HERBICIDE SHALL BE TREFLAN E.C., SPIKE OR AN APPROVED EQUAL AND SHALL BE APPLIED TO THE PREPARED AREA AFTER FINAL LEVELING AND GRADING HAS BEEN COMPLETED. THE APPLICATION SHALL BE JUST PRIOR TO PAVING AND SHALL STRICTLY ADHERE TO THE MANUFACTURER'S LABEL INSTRUCTIONS.

ONLY PROPERLY LICENSED PERSONNEL SHALL APPLY HERBICIDES AS REQUIRED BY THE OHIO REVISED CODE.

AREAS DISTURBED BEYOND THE 404 LIMIT SHALL BE SEEDED AND MULCHED AS PER 659. COMPACTION SHALL BE AS PER ITEM 203. THE METHOD OF MEASUREMENT SHALL BE CONSIDERED AS ONE STATION EQUAL TO 100 LIN. FT. OF GUARDRAIL PAVED UNDER, AND SHALL INCLUDE ALL WORK REQUIRED AS DESCRIBED ABOVE EXCEPT FOR ITEM 404 ASPHALT CONCRETE.

THE COST FOR THE ABOVE OPERATION SHALL BE INCLUDED IN THE PRICE BID ITEM 203 LINEAR GRADING METHOD 2.

ITEM 404 ASPHALT CONCRETE, AC-20, UNDER GUARDRAIL

THIS ITEM SHALL CONSIST OF PAVING UNDER GUARDRAIL AS SPECIFIED ABOVE AND IN ACCORDANCE WITH THE FOLLOWING:

PAVING SHALL CONSIST OF PLACING ITEM 404 TO THE DEPTH SPECIFIED USING THE FOLLOWING METHOD:

1) PERFORM LINEAR GRADING, METHOD 2 (SEPARATE PAY ITEM)
2) PLACE ITEM 404

ALL EQUIPMENT, MATERIALS AND LABOR REQUIRED TO PERFORM THE WORK OUTLINED ABOVE, WITH THE EXCEPTION OF LINEAR GRADING, METHOD 2 SHALL BE INCLUDED FOR PAYMENT UNDER ITEM 404 ASPHALT CONCRETE, AC-20, UNDER GUARDRAIL.

ESTIMATED QUANTITIES

		277	224 RURAL	224 URBAN	TOTAL	
203 LINEAR GRADING, METHOD 2	=	312	52	14	378	STATIONS
404 ASPHALT CONCRETE, AC-20, UNDER GUARDRAIL	=	578	96	26	700	CU. YDS.

F.H.W.A. REGION	STATE	PROJECT NO.	FUNDS
5	OHIO		

7A
196

SUM-277/224-0.00/6.31-10.22

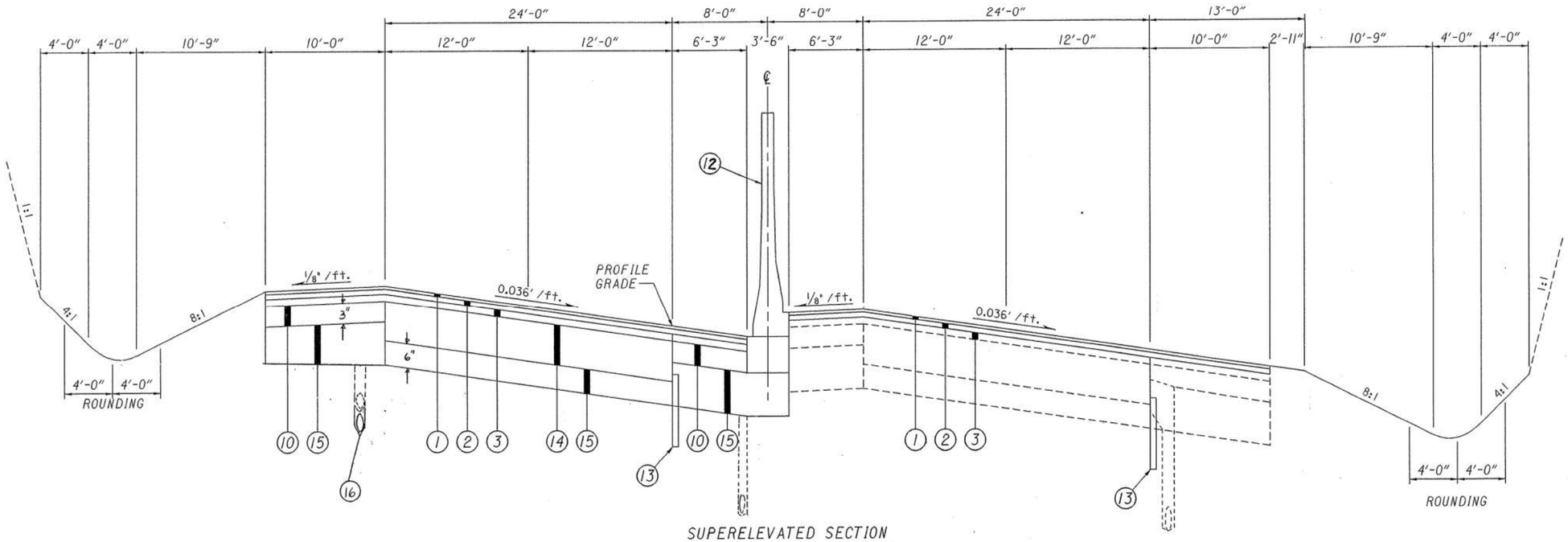

SUPERELEVATED SECTION
STA. 301+75 TO 308+00 = 625 L.F.
SEE SHEET NO. 3 FOR LEGEND

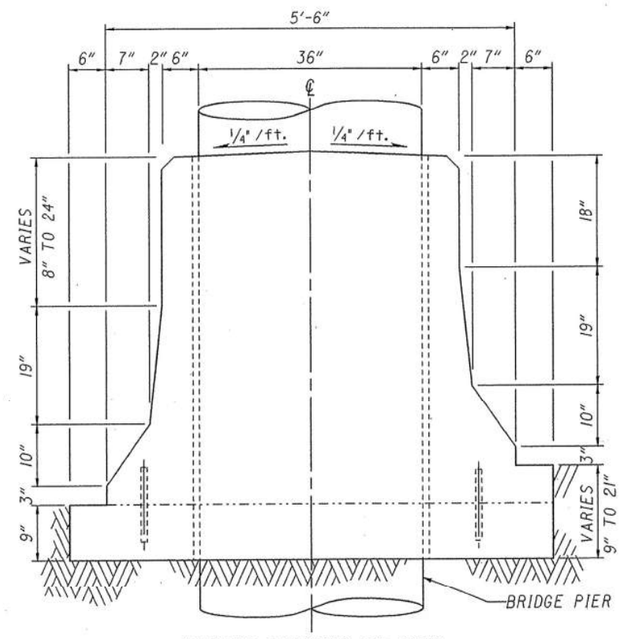

MEDIAN BARRIER AT PIER
FOR ADDITIONAL DETAILS SEE
STD. DRAWINGS MC-9.3 & MC-9.4

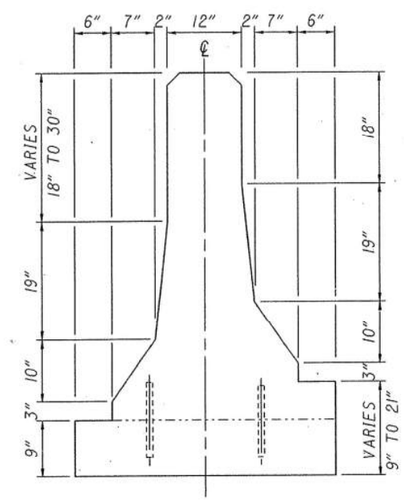

MEDIAN BARRIER DETAILS

ITEM 622 - CONCRETE BARRIER, TYPE B-50, AS PER PLAN

TYPICAL SECTIONS

PAVEMENT DETAILS

F.H.W.A. REGION	STATE	PROJECT NO.	FUNDS
5	OHIO		

SUM-277/224-0.00/6.31-10.22

8/196

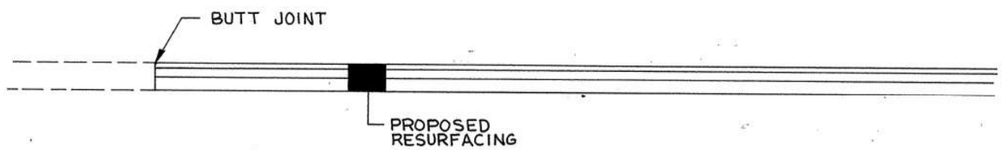

DETAIL NO.1 BEGIN PROJECT

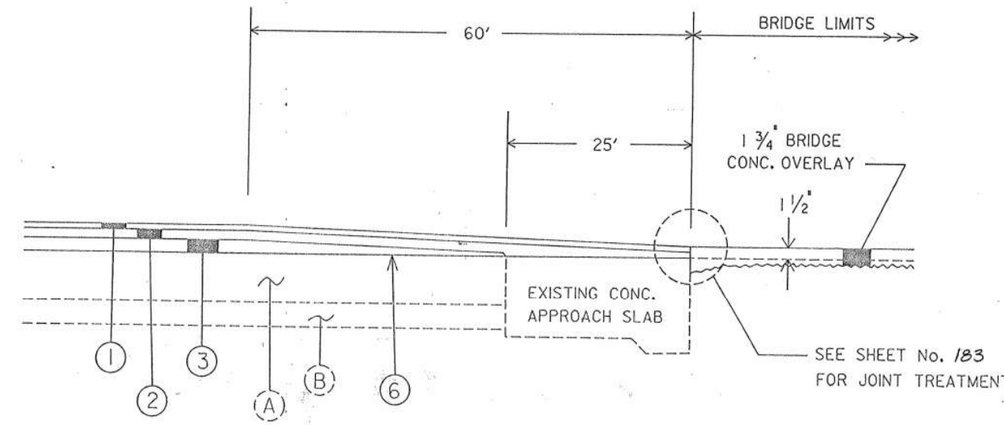

DETAIL No. 4 AT BRIDGE APPROACHES

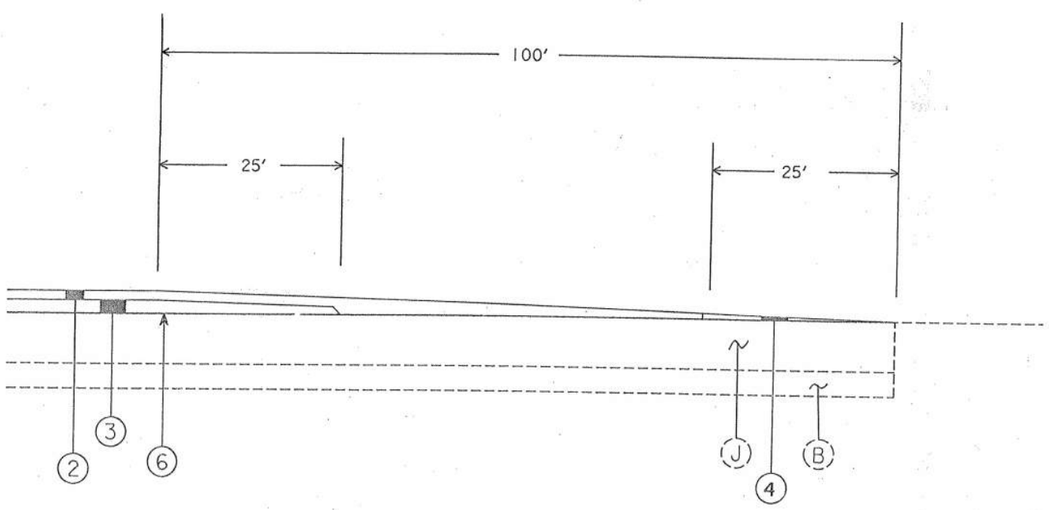

DETAIL No. 3 AT RAMP TERMINAL

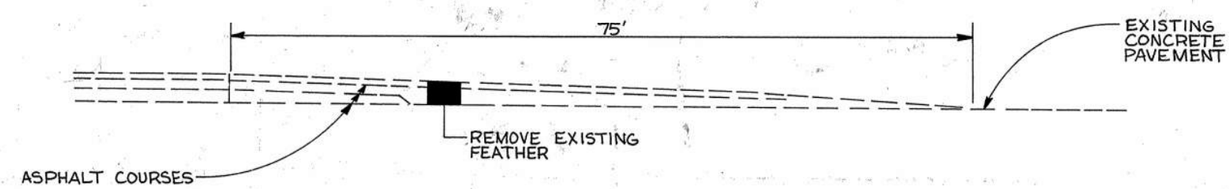

DETAIL NO.2 END PROJECT

(4) ITEM 448 - ASPHALT CONCRETE INTERMED. COURSE, TYPE I, AC - 20 (0" MIN.)

SEE SHEET No. 3 FOR PAVEMENT LEGEND

ZFA1:E20,S34L.ANE.CEL AS PD

ITEM SPECIAL – PRECAST REINFORCED CONCRETE OUTLET

The Concrete outlet shall meet the requirements of Item 604 in the Construction & Materials Specifications. Payment shall be made on an Each basis. Payment shall include the cost of the Sod & Wire Cloth.

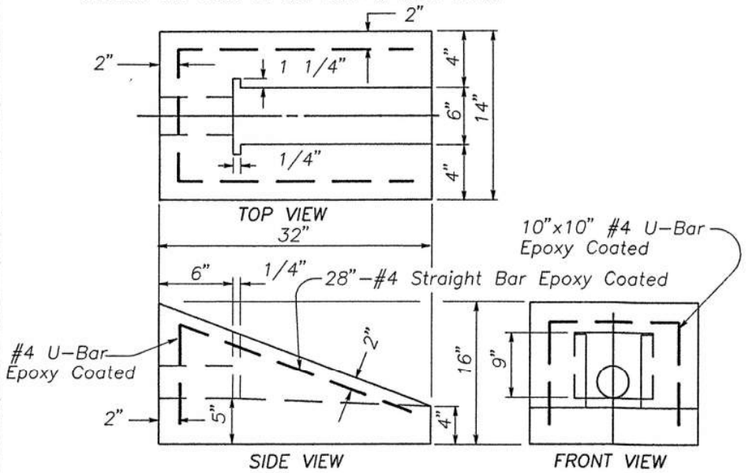

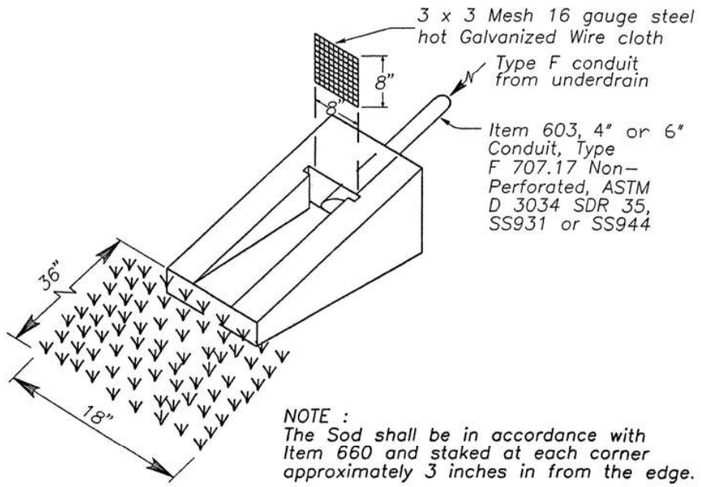

NOTE :
The Sod shall be in accordance with Item 660 and staked at each corner approximately 3 inches in from the edge.

OUTLET DETAILS

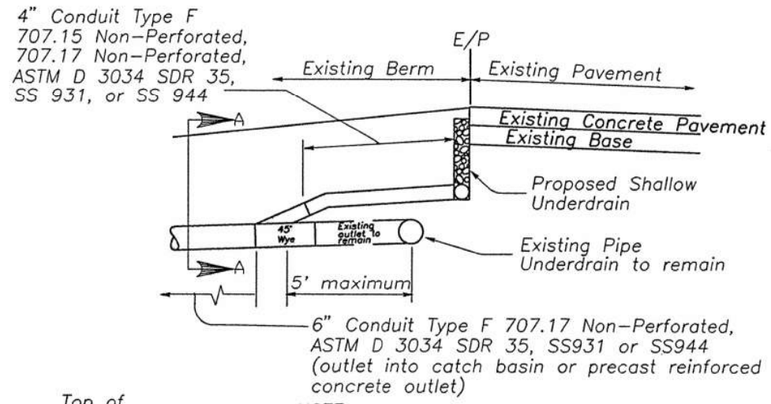

NOTE:
The cost of the 4" conduit Type F and necessary pipe bends and branches needed to connect the existing and proposed underdrains shall be included with the cost of the 6" conduit Type F beyond the existing underdrain.

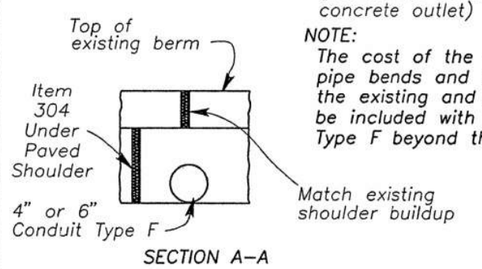

SECTION A–A

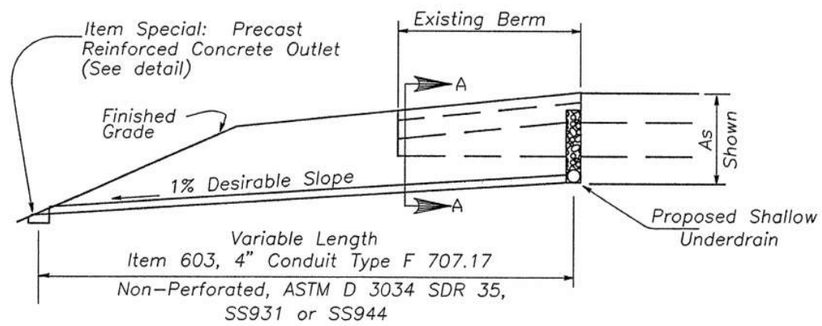

NOTE: For underdrain outlets into catch basins the above Type F Conduit shall be used entirely between the underdrain & catch basin.

PIPE UNDERDRAIN SYSTEM

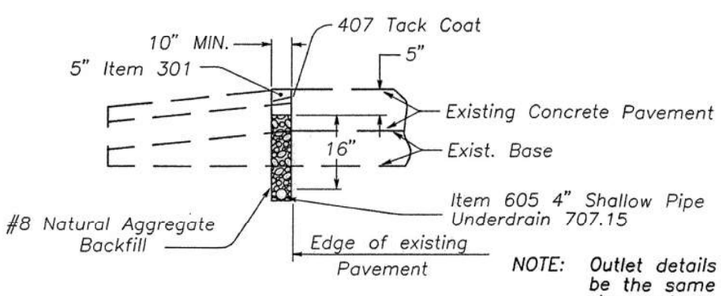

NOTE: Outlet details to be the same as shown above.

PREFABRICATED EDGE DRAIN SYSTEM

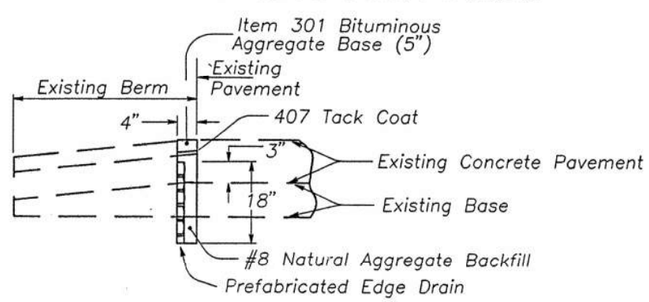

DESCRIPTION: This item shall consist of furnishing and installing a pipe underdrain system or prefabricated edge drain system in accordance with the specifications, details as shown on the plans, and as directed by the Engineer.

MATERIALS: The underdrain shall be a pipe underdrain system per Item 605 or a prefabricated edge drain system meeting the following requirements. The prefabricated edge drain shall consist of a polymeric core with a minimum thickness of one inch wrapped in fabric meeting 712.09 Type A. The drain shall be flexible, rectangular in shape and of hollow construction. The core material shall be resistant to petroleum based chemicals, natural occuring soil chemicals, and road de-icing agents.

The core material shall have sufficient flexiblity to withstand installation bending and handling without damage. Side walls of the core shall provide at least 5% open area to permit unobstructed flow through the filter and wall to the core.

The core shall have a minimum open area (in the plane of flow) of 10.5 square inches.

The composite structure shall be tested using the Kentucky Vertical Compression Test Procedure For Geocomposite Panel Drains on file at the Ohio Department of Transportation Testing Laboratory. The performance, under load, of the composite structure shall be such that no more than a 10% loss in core open area occurs at a maximum vertical load of 22 PSI tested in a loose, dry sand.

The prefabricated edge drain manufacturer's certified test results shall be furnished in accordance with 101.061.

CONSTRUCTION: The prefabricated edge drain shall be installed against the outside wall of the trench as shown and backfilled adjacent to the pavement with No. 8 natural aggregate. The No. 8 aggregate shall be placed in one (1) or more lifts with a vibratory compactor run over the final lift to consolidate the aggregate prior to placing the asphalt plug. The first layer of the backfill material shall be placed simultaneously with the trenching operation to hold the edge drain flush against the trench wall.

The prefabricated edge drain shall be spliced as required prior to placement in the trench, using material furnished by the manufacturer and in accordance with the manufacturer's directions. All material required for the splices will be supplied by the manufacturer, but any equipment required shall be furnished by the Contractor. Splices shall prevent seperation of adjoining sections of the prefabricated edge drain panels.

The underdrain outlets shall be placed in accordance with Item 603 using outlet fittings. The manufacturer shall supply outlet fittings which will make the transition between the prefabricated edge drain and the outlet pipe.

The outlets for the underdrain system shall be constructed as soon as possible after placement of the underdrain. The underdrain and outlets on crack & seat projects shall be in place and functional prior to cracking and seating the existing pavement.

METHOD OF MEASUREMENT: Completed and accepted underdrains will be measured by the linear foot in place.

BASIS OF PAYMENT: Work completed and accepted under this item and measured will be paid for at the contract unit price bid per linear foot for item 605 – Shallow Underdrain, as per plan. Which price shall be full compensation for excavation and backfill; removing and disposing all surplus excavation in accordance with 203; for furnishing materials, including material for splices; outlet fittings and Item 301; for all labor, tools, equipment, and incidentals necessary to complete the work.

REVISED 7-13-94

ITEM 605–SHALLOW UNDERDRAIN, AS PER PLAN

DATE 5-3-94

FHWA REGION	STATE	PROJECT NO.	FUNDS
5	OHIO		

10
196

SUM-277/224-0.00/6.31-10.22

UNDERDRAIN PLAN

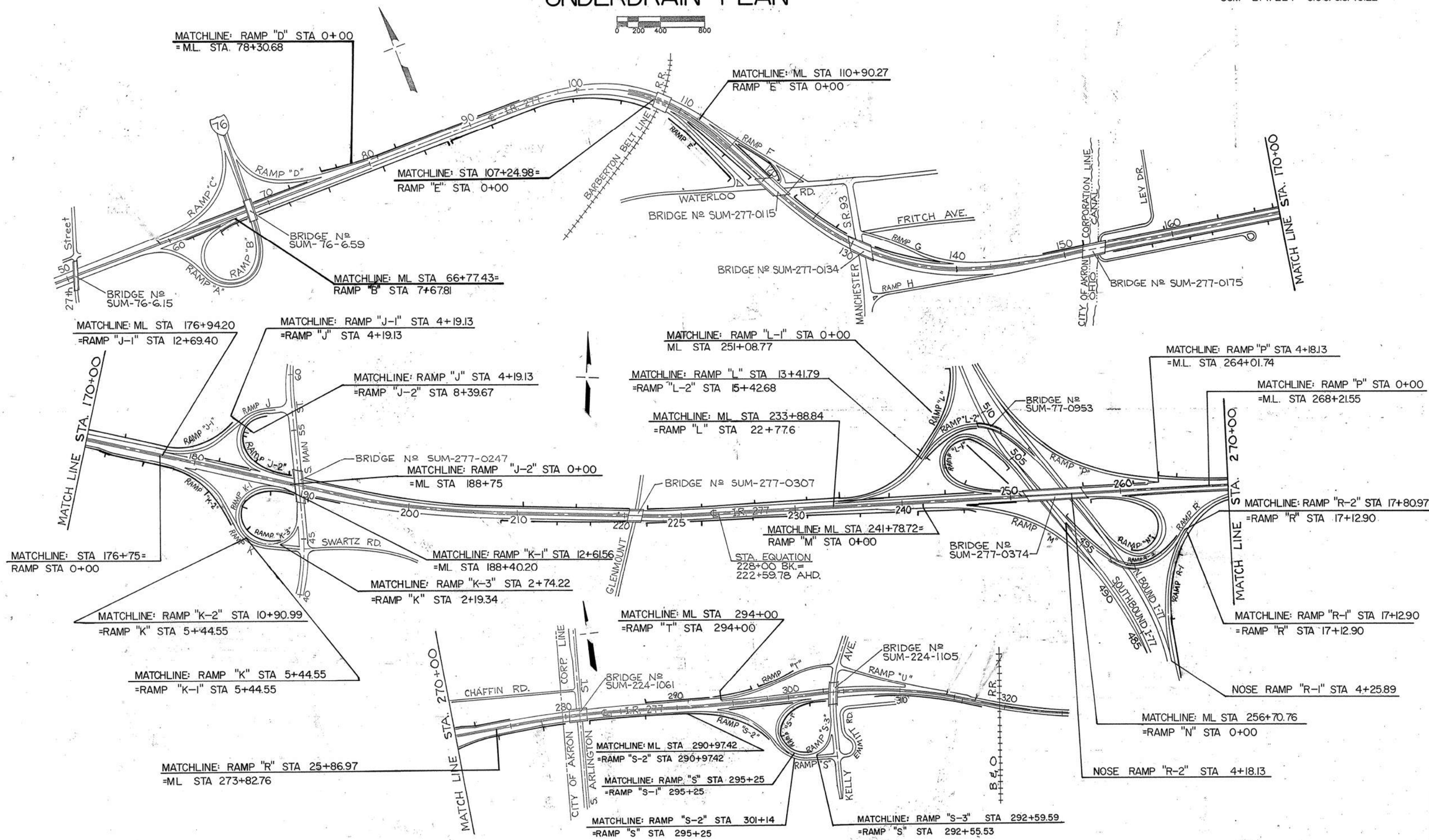

FHWA REGION	STATE	PROJECT NO.	FUNDS
5	OHIO		

11
#96

SUM-277/224-0.00/6.31-10.22

SHALLOW UNDERDRAIN, AS PER PLAN
DRAINAGE QUANTITIES

SUM 277

STATIONS FROM — TO	605 SHALLOW UNDERDRAIN AS PER PLAN LIN. FT.	603 6" CONDUIT TYPE F, 707.17 NON-PERFORATED LIN. FT.	OUTLET INTO EXISTING CATCH BASIN STATION	OUTLET STATION	SPEC PRECAST REINFORCED CONCRETE OUTLET EACH	603 4" CONDUIT TYPE F 707.15 NON PERFORATED LIN. FT.
RT- EASTBOUND						
60+00 65+30	530	20		61+70	1	
RAMP "B"						
6+00 7+68	168	18		6+00	1	
MATCHLINE: RAMP "B" STA. 7+67.81 = ML. EAST BD. STA. 66+77.43						
RT-EASTBOUND						
66+77 87+50	2073	20		66+75	1	
		20		71+75	1	
		20		76+75	1	
		20		81+00	1	10
		20		85+00	1	
87+60 107+32	1972	20		87+60	1	
		20		91+60	1	
		20		95+60	1	
		20		99+30	1	10
		20		104+00	1	
MATCHLINE: RT. EAST BD. STA. 107+24.98 = RAMP "E" STA. 0+00						
RAMP "E"						
1+75 10+00	825	13		5+75	1	
		13		10+00	1	
RT. - EAST BD.						
111+25 119+35	810	20		115+75	1	
		20		119+00	1	10
154+55 176+50	2195	25		157+96	1	10
		20		161+46	1	10
		25		163+50	1	
		25		166+54	1	10
		25		168+64	1	10
		25		171+98	1	
		20		175+48	1	
MATCHLINE: RT. EAST BD. STA. 176+75 = RAMP "K-2" STA. 0+00						
RAMP "K-2"						
0+00 9+00	900	15		4+00	1	
RAMP "K-3"						
0+00 2+73	273	13		2+73	1	
RAMP "K-3"; RAMP "K"						
2+75						
MATCHLINE: RAMP "K" STA. 5+45 = RAMP "K-1" STA. 5+45						
RAMP "K-1"						
5+87	368	13		5+87	1	
5+90 8+48	258	13		8+48	1	
8+52 12+62	500	13		10+75	1	
MATCHLINE: RAMP "K-1" STA. 12+61.56 = RT. EAST BD. STA. 188+40.20						
RT. EAST BD.						
188+40 189+30						
190+50 193+26	276		190+50			
208+45 213+45	500	20		208+45	1	

SUM 277

STATIONS FROM — TO	605 SHALLOW UNDERDRAIN AS PER PLAN LIN. FT.	603 6" CONDUIT TYPE F, 707.17 NON-PERFORATED LIN. FT.	OUTLET INTO EXISTING CATCH BASIN STATION	OUTLET STATION	SPEC PRECAST REINFORCED CONCRETE OUTLET EACH	603 4" CONDUIT TYPE F 707.15 NON PERFORATED LIN. FT.
213+50 216+50	300	20		213+50	1	
216+52 219+92	340	20		216+52	1	
221+40 228+00	500	20		221+40	1	
		20		226+40 BK.	1	10
STATION EQUATION: STA. 228+00 BK. = STA. 222+59.78 AH.						
222+60 241+00	2000					
		20		226+00	1	10
		20		231+00	1	10
		20		236+00	1	10
241+00						
STATION EQUATION: RT. EAST BD. STA. 241+78.72 = RAMP "M" STA. 0+00						
RAMP "M"						
4+16	500	20		241+00	1	10
		20		4+20	1	10
RT. EAST BD.						
246+00 251+00	500	20		246+00		
MATCHLINE: RT. EAST BD. STA. 256+70.76 = RAMP "N" STA. 0+00						
RAMP "N"						
0+75 3+50	275	15		0+75	1	
LT. WEST BD.						
63+25 74+50	1125	20		63+25	1	10
		20		67+25	1	
		20		72+05	1	
RAMP "D"						
0+00 2+75	275	13		2+75	1	
MATCHLINE: RAMP "D" STA. 0+00 = M.L. WEST BD. STA. 78+30.68						
LT. WEST BD.						
78+31 94+00	1569	20		78+31	1	10
		50		82+60	1	
MATCHLINE: LT. WEST BD. STA. 110+90.27 = RAMP "F" STA. 0+00						
RAMP "F" (℄)						
3+95 8+00	500	20		8+00	1	
RAMP "F" (SPUR)						
8+00 10+43	243	20		10+43	1	
LT. WEST BD.						
115+75 119+41	366	20		119+41	1	
123+00 129+65	665	22		123+00	1	10
		22		128+00	1	
132+00 139+00	700	20		137+00	1	
			139+00			
146+00 151+50	550	20		151+50	1	10
154+00 176+95	2295	25		159+00	1	
		25		164+00	1	
		25		167+54	1	
		25		169+00	1	
		25		173+50	1	
MATCHLINE: LT. WEST BD. STA. 176+94.20 = RAMP "J-1" STA. 12+69.40						
RAMP "J-1"						

SUM 277

STATIONS FROM — TO	605 SHALLOW UNDERDRAIN AS PER PLAN LIN. FT.	603 6" CONDUIT TYPE F, 707.17 NON-PERFORATED LIN. FT.	OUTLET INTO EXISTING CATCH BASIN STATION	OUTLET STATION	SPEC PRECAST REINFORCED CONCRETE OUTLET EACH	603 4" CONDUIT TYPE F 707.15 NON PERFORATED LIN. FT.
5+25 12+65	740	18		8+75	1	
		18		12+65	1	10
LT. WEST BD.						
177+00 185+20	820	20	177+00			
		20		182+00	1	
RAMP "J"						
1+00						
MATCHLINE: RAMP "J" STA. 4+19.13 = RAMP "J-2" STA. 8+39.67						
RAMP "J-2"						
8+25	334	18		8+25	1	
8+00 0+50	500	18		7+25	1	
	250	18		3+00	1	
0+50						
MATCHLINE: RAMP "J-2" STA. 0+00 = LT. WEST BD. STA. 188+75						
LT. WEST BD.						
211+50	2275					
211+50 220+10	860	28		211+50	1	
		25		215+70	1	
221+65 226+65	500	25		221+65	1	10
226+65				226+25 BK		
STATION EQUATION: STA. 228+00 BK. = STA. 222+59.78 AH.						
226+25	500	25			1	
226+25 231+25	500	25		226+25	1	
231+25						
MATCHLINE: LT. WEST BD. STA. 233+88.84 = RAMP "L" STA. 22+77.6						
RAMP "L"						
22+54	288	25		231+25	1	
22+54 3+65	1889	25		22+54	1	
		18		15+00	1	
		18		6+00	1	
MATCHLINE: RAMP "L" STA. 13+41.75 = RAMP "L-2" STA. 15+4						
RAMP "L-2"						
15+25 9+75	550	15		15+30	1	
7+25 3+60	365	15		3+60	1	
LT. WEST BD.						
233+90 247+20	1330	20	233+90		1	10
		25		238+90	1	
		25		243+90	1	
RAMP "L-1"						
15+40 10+40	1500	17		15+40	1	
10+40 5+40		15		10+40	1	
5+40 0+40		15		5+40	1	
MATCHLINE: RAMP "L-1" STA. 0+00 = LT. WEST BD. STA. 251+08.77						
LT. WEST BD.						
256+75 260+23	348	25		256+75	1	
TOTAL	37,900	1699			81	200
SUM 277 TO GENERAL SUMMARY	37,900 L.F.	1699 L.F.			81 EA.	200 L.F.

FHWA REGION	STATE	PROJECT NO.	FUNDS
5	OHIO		

SUM-277/224-0.00/6.31-10.22

12
196

SHALLOW UNDERDRAIN, AS PER PLAN
DRAINAGE QUANTITIES

SUM 224 (RURAL)

STATIONS FROM — TO	605 SHALLOW UNDERDRAIN AS PER PLAN LIN. FT.	603 6" CONDUIT TYPE F, 707.17 NON-PERFORATED LIN. FT.	OUTLET INTO EXISTING CATCH BASIN STATION	OUTLET STATION	SPEC PRECAST REINFORCED CONCRETE OUTLET EACH	
RAMP "N"						
3+50 3+95	45	(SEE RAMP "N" SUM 277)				
4+00 13+00	900	15		9+00	1	
		18		13+00	1	
RT. EAST BD.						
260+25 265+95	570	13	260+25			
266+05 273+83	778	20		266+05	1	
		20		270+00	1	
RAMP "R-2"						
4+25 9+25	500	15		4+25	1	10
11+92 16+92	500	15		11+92	1	10
RAMP "R-1"						
4+20 16+00	1180	15		7+04	1	
		15		9+20	1	
		15		12+50	1	
16+00						
MATCHLINE: RAMP "R-1" STA. 17+12.90 = RAMP "R" STA. 17+12.90						
21+00	500	15		16+00	1	
21+00						
MATCHLINE: RAMP "R" STA. 25+86.97 = RT. EAST BD. STA. 273+82.76						
RT. EAST BD.						
273+96	500	15		21+00	1	
273+96 279+72	576	20		273+96	1	
		20		277+96	1	
LT. WEST BD.						
260+23 263+00	152	(SEE WEST BD. STA. 260+23 SUM 277)				
	125	20		261+75	1	
RAMP "P"						
4+00 3+00						
3+00						
MATCHLINE: RAMP "P" STA. 0.00 = LT. WEST BD. STA. 268+22						
272+00	678	20		3+00	1	10
272+00 275+13	313	15		272+00	1	
TOTAL	7,317	286			16	30
SUM 224 (RURAL) TO GENERAL SUMMARY	7,317 L.F.	286 L.F.			16 EA	30 L.F.

SUM 224 (URBAN)

STATIONS FROM — TO	605 SHALLOW UNDERDRAIN AS PER PLAN LIN. FT.	603 6" CONDUIT TYPE F, 707.17 NON-PERFORATED LIN. FT.	OUTLET INTO EXISTING CATCH BASIN STATION	OUTLET STATION	SPEC PRECAST REINFORCED CONCRETE OUTLET EACH	
RT. EAST BD.						
279+72 280+25	53	(SEE RT. EAST BD. STA. 273+82.76 - SUM 277)				
282+25	1000	20		282+25	1	
		30		287+25	1	
MATCHLINE: RT. EAST BD. STA. 290+97.42 = RAMP "S-2" STA. 290+97.42						
292+25						
292+50 299+52	702	25		297+50	1	
		25		297+54	1	
RAMP "S"						
292+55						
MATCHLINE: RAMP "S" STA. 295+25 = RAMP "S-1" STA. 295+25						
RAMP "S-1"						
297+50	495	25	297+50			
297+50 301+97	447	15		301+97	1	10
RT.-EAST BD.						
295+00 302+00	700		302+00			10
302+02 317+64	1562		317+63.5			
LT. WEST BD.						
287+00 293+50	650	20	287+00			
MATCHLINE: LT. WEST BD. STA. 294+00 = RAMP "T" STA. 294+00						
RAMP "T"						
294+00 301+00	700	20		297+00	1	
		20		297+50	1	
TOTAL	6,309	200			7	20
SUM 224 (URBAN) TO GENERAL SUMMARY	6,309 L.F.	200 L.F.			7 EA.	20 L.F.

GENERAL NOTES

ORIGINAL CONSTRUCTION PLANS

THIS PROJECT INCLUDES CONSTRUCTION PROJECTS AS LISTED BELOW, WITH COPIES ON FILE IN THE DISTRICT 4 OFFICE, 705 OAKWOOD STREET, RAVENNA, OHIO 44266.
SUM-224-5.90 SUM-277-0.46 SUM-277-0.00 SUM-224-10.48

STAGING AND STORAGE AREA

FOR SAFETY PURPOSES, NO MATERIAL OR EQUIPMENT SHALL BE STORED OR PARKED IN THE MEDIAN OR WITHIN FIFTY (50) FEET OF THE OUTSIDE EDGE OF PAVEMENT UNLESS BEHIND GUARDRAIL.

NO PRIVATE VEHICLES BELONGING TO THE CONTRACTOR'S EMPLOYEES AND TO ODOT PERSONNEL PERMANENTLY ASSIGNED TO THE PROJECT SHALL BE PARKED WITHIN THE LIMITS OF THE HIGHWAY PROJECT. ALL PARKING WILL BE DONE AT THE APPROVED CONTRACTOR'S STAGING AREA THE CONTRACTOR WILL BE RESPONSIBLE FOR PROVIDING TRANSPORT VEHICLES TO TRANSPORT PERSONNEL FROM THE STAGING AREA TO THE WORK SITE.

CONTINGENCY QUANTITIES

THE CONTRACTOR SHALL NOT ORDER MATERIALS OR PERFORM WORK LISTED IN THE GENERAL SUMMARY FOR ITEMS DESIGNATED BY PLAN NOTE TO BE USED "AS DIRECTED BY THE ENGINEER" UNLESS AUTHORIZED BY THE ENGINEER. (THE ACTUAL WORK LOCATIONS AND QUANTITIES USED AT THE ENGINEER'S DISCRETION SHALL BE MADE A MATTER OF RECORD BY INCORPORATION INTO THE FINAL CHANGE ORDER GOVERNING COMPLETION OF THIS PROJECT.)

GUARDRAIL REPLACEMENT

NO HAZARD SHALL BE LEFT UNPROTECTED EXCEPT FOR THE ACTUAL TIME NECESSARY TO REMOVE, GRADE AND REINSTALL GUARDRAIL IN A CONTINUOUS OPERATION. THE REMOVAL OF ALL GUARDRAIL SHALL AT ALL TIMES BE AS DIRECTED BY THE ENGINEER. NO GUARDRAIL SHALL BE REMOVED UNTIL THE REPLACEMENT MATERIAL IS ON THE SITE, READY FOR INSTALLATION. FAILURE TO COMPLY WITH THIS REQUIREMENT SHALL BE DEEMED SUFFICIENT CAUSE TO ORDER WORK SUSPENDED ON THIS PROJECT UNTIL SUCH TIME THAT THE ENGINEER IS ASSURED OF SAID COMPLIANCE.

PROFILE AND ALIGNMENT

THE PROPOSED PAVEMENT RESURFACING COURSE SHALL FOLLOW THE ALIGNMENT AND PROFILE OF THE EXISTING PAVEMENT. PREVIOUS CONSTRUCTION PLANS SHOWING THE ORIGINAL ALIGNMENT AND PROFILE GRADE ARE ON FILE FOR INSPECTION IF NECESSARY AT THE ODOT DISTRICT 4 OFFICE. THE PROPOSED ASPHALT CONCRETE OVERLAY SHALL HAVE A UNIFORM THICKNESS OF APPROXIMATELY 3¾ INCHES.

BERM REMOVAL AND REPLACEMENT

ON ALL MAINLINE RESURFACING OPERATIONS, ITEM 301 BITUMINOUS AGGREGATE BASE SHALL BE PLACED ON OUTSIDE AND MEDIAN BERMS AS SHOWN IN THE TYPICAL SECTIONS. ON MAINLINE OUTSIDE BERMS, 3" OF EXISTING AGGREGATE SHALL BE REMOVED AND REPLACED WITH 3" ITEM 301 BITUMINOUS AGGREGATE BASE. ON MEDIAN BERMS WHERE EXISTING GUARDRAIL IS TO BE REPLACED WITH TYPE B-50 CONCRETE BARRIER, THE EXISTING BERM MATERIAL SHALL BE REMOVED, SHAPED, AND COMPACTED TO AN ADEQUATE DEPTH TO PERMIT THE PLACEMENT OF 3" OF 301 BITUMINOUS AGGREGATE BASE PRIOR TO PLACING THE WEARING COURSES. ONLY THE RUBBERIZED OPEN GRADED ASPHALT FRICTION COURSE SHALL BE PLACED ABOVE THE GRADE OF THE TOP OF THE CONCRETE MEDIAN BASE. ADDITIONAL BERM MATERIAL NEEDED IN ADDITION TO THE CALCULATED AMOUNT DUE TO OVER EXCAVATION, SHALL BE AT THE CONTRACTORS EXPENSE.

TEMPORARY TRAFFIC MARKINGS

THE ROAD SHALL NOT BE OPENED TO TRAFFIC UNTIL EITHER THE PERMENANT OR TEMPORARY MARKINGS ARE IN PLACE. TEMPORARY PAVEMENT MARKINGS SHALL BE PROVIDED AS DIRECTED BY THE ENGINEER.
IF THE 642 PAVEMENT MARKINGS ARE IN PLACE PRIOR TO OPENING THE ROAD TO TRAFFIC, THIS ITEM SHALL BE NON-PERFORMED.

ITEM 614 _____ MI. TEMPORARY EDGE LINES, CLASS I
ITEM 614 _____ MI. TEMPORARY CENTER LINES, CLASS II

SUBBASE/SUBGRADE FAILURES

IF AFTER THE REMOVAL OF THE RIGID PAVEMENT, THE ENGINEER DETERMINES THE SUBBASE OR SUBGRADE HAS FAILED OR IS PUMPING, HE SHALL DIRECT THE CONTRACTOR TO EXCAVATE THE UNSUITABLE MATERIAL AND REPLACE IT WITH ITEM 304 AGGREGATE BASE, AS PER PLAN.

ITEM 203 EXCAVATION NOT INCLUDING EMBANKMENT CONSTRUCTION

50 CUBIC YARDS

ITEM 304 AGGREGATE BASE, AS PER PLAN

50 CUBIC YARDS

ITEM 304 – AGGREGATE BASE, AS PER PLAN
ITEM 310 – SUBBASE, AS PER PLAN

MATERIALS FURNISHED FOR THIS ITEM SHALL EXCLUDE ALL SLAG EXCEPT GRANULATED SLAG OR CRUSHED AIR-COOLED BLAST FURNACE SLAG

DOWEL BASKET ASSEMBLIES

Where dowel basket assemblies are used by the Contractor, all spacer wires (shipping wires) shall be removed from the basket assemblies prior to paving. It shall be the responsibility of the Contractor to insure the dowel basket assemblies are stable and held firmly in place.

ITEM 202, RAISED PAVEMENT MARKERS REMOVED FOR STORAGE

RAISED PAV'T MARKERS SHALL BE REMOVED IN A MANNER THAT PREVENTS DAMAGE TO THE CASTINGS. ALL DEPRESSIONS CAUSED BY REMOVAL OF THE MARKERS SHALL BE FILLED WITH 404 TO THE EXISTING ROAD SURFACE PRIOR TO RESURFACING. REMOVED MARKERS ARE TO BE STORED ON THE PROJECT SITE AS DIRECTED BY THE ENGINEER. ALL COSTS TO BE INCLUDED IN THE CONTRACT PRICE BID PER EACH FOR ITEM 202-RAISED PVT. MARKERS REMOVED FOR STORAGE. _____ 500 EACH

PAVEMENT REPAIR

JOINT REPAIR SHALL BE DONE ACCORDING TO BP-2.5, AND CONST. & MAT'L. SPECIFICATIONS 252 AND 255 WITH THE FOLLOWING CONSTRICTIONS:
FOR REPAIR LENGTHS LESS THAN 10 FEET, TYPE T JOINTS SHALL BE CONSTRUCTED ON THE LEAVE SIDE OF THE REPAIR WITH REFERENCE TO THE DIRECTION OF TRAFFIC, AND TYPE Y JOINTS SHALL BE CONSTRUCTED ON THE APPROACH SIDE OF THE REPAIR WITH REFERENCE TO THE DIRECTION OF TRAFFIC.
FOR REPAIR LENGTHS GREATER THAN 10 FEET, BOTH ENDS OF THE REPAIR SHALL BE CONSTRUCTED WITH TYPE Y JOINTS.
THE MAXIMUM SPACING BETWEEN PROPOSED TYPE Y JOINTS AND EXISTING CONTRACTION (TYPE N) JOINTS TO REMAIN IN PLACE SHALL BE 40 FEET.
WHERE A PAVEMENT REPAIR LENGTH EXCEEDS 40 FEET, A TYPE N JOINT SHALL BE PROVIDED IN THE CENTER OF THE REPAIR.
ALL TYPE N JOINTS CONSTRUCTED AS PART OF THIS PROJECT SHALL BE SHAPED AND SEALED AS SHOWN ON BP-2.2 FOR ITEM 305 PLAIN CONCRETE BASE.
THE FOLLOWING ESTIMATED QUANTITIES OF THESE ITEMS HAVE BEEN INCLUDED IN THE GENERAL SUMMARY FOR PAVEMENT REPAIRS.:

ITEM 255	FULL DEPTH RIGID PAVEMENT REMOVAL AND RIGID REPLACENT, CLASS FS	4500 SQ.YD.
ITEM 255	FULL DEPTH PAVEMENT SAWING	1250 LIN. FT.
ITEM 251	PARTIAL DEPTH PAVEMENT REPAIR	1700 SQ.YD.

ITEM SPECIAL - SAWING AND SEALING ASPHALT CONCRETE JOINTS, 705.04 (see proposal notes)

THE FOLLOWING ESTIMATED QUANTITIES HAVE BEEN INCLUDED IN THE GENERAL SUMMARY FOR THIS WORK.

I-277	25745 LIN. FT.
224 RURAL	707 LIN. FT.
224 URBAN	3887 LIN. FT.
TOTAL	30339 LIN. FT.

ITEM 202 CONCRETE MEDIAN REMOVED, AS PER PLAN

THIS ITEM SHALL INCLUDE REMOVING AND DISPOSING OF THE EXISTING MEDIAN GUARDRAIL BARRIER, PORTLAND CEMENT MEDIAN PAVEMENT, AND CURBING. THIS WORK SHALL ALSO INCLUDE RESHAPING THE EXISTING BERM AGGREGATE MATERIAL AS SHOWN IN THE TYPICAL SECTION, AND REMOVED AND DISPOSED OF THE EXCESS AS NECESSARY TO OBTAIN THE WIDTH & THICKNESS SHOWN.
PAYMENT FOR THE WORK, INCLUDING MATERIAL, LABOR, TOOLS AND EQUIPMENT INCIDENTAL TO THE ABOVE OPERATION WILL BE AT THE CONTRACT UNIT BID PRICE FOR ITEM 202 - CONCRETE MEDIAN REMOVED, AS PER PLAN _____ LIN.FT.

ITEM 203 EXCAVATION NOT INCLUDING EMBANKMENT CONSTRUCTION

THIS WORK SHALL CONSIST OF REMOVING THE EXISTING MEDIAN AND OUTSIDE BERMS TO THE LINES, GRADES AND THICKNESSES SHOWN IN THE TYPICAL SECTIONS. PAYMENT FOR THIS WORK, INCLUDING MATERIAL, LABOR, TOOLS AND EQUIPMENT INCIDENTAL TO THE ABOVE OPEATION WILL BE AT THE CONTRACT UNIT PRICE FOR ITEM 203 EXCAVATION NOT INCLUDING EMBANKMENT CONSTRUCTION _____ CU.YD.

ITEM 203 SUBGRADE COMPACTION

THIS ITEM SHALL BE USED TO PREPARE THE REMAINING GRANULAR BASE MATERIAL AFTER THE REMOVAL OF THE EXISTING MEDIAN AND OUTSIDE BERMS, AND REMAOVAL OF THE EXISTING PORTLAND CEMENT MEDIAN PAVEMENT, TO THE LINE AND GRADE SHOWN IN THE TYPICAL SECTION.
PAYMENT FOR THIS WORK, INCLUDING MATERIAL, LABOR, TOOLS AND EQUIPMENT INCIDENTAL TO THE ABOVE OPERATION WILL BE AT THE CONTRACT UNIT PRICE FOR ITEM 203 SUBGRADE COMPACTION _____ SQ.YDS.

ITEM 605 – 6" SHALLOW PIPE UNDERDRAIN, AS PER PLAN

THE PROPOSED 6" PIPE UNDERDRAIN FROM STA. 301+75 LT. TO STA. 308+00 LT. SHALL BE CONNECTED AT BOTH ENDS TO THE EXISTING PIPE UNDERDRAIN USING APPROPRIATE FITTINGS AS DIRECTED BY THE ENGINEER.

ITEM 622 – CONCRETE BARRIER, TYPE D, AS PER PLAN

THESE SECTIONS OF CONCRETE BARRIER, TYPE D ARE INTENDED FOR PIER PROTECTION WHICH HAVE ONE END CONNECTED TO A GUARDRAIL RUN. THEY SHALL BE CONSTRUCTED AS PER DETAILS SHOWN ON STD. CONST. DRWG. GR-8.

UTILITY OWNERSHIP

THE FOLLOWING UTILITIES AND OWNERS ARE LOCATED WITHIN THE WORK LIMITS OF THIS PROJECT:

OHIO EDISON CO.
76 S. MAIN ST.
AKRON, OH. 44308
ATTN: MR. PAUL SEVERYN
DIV. ENGR.

OHIO BELL TELEPHONE CO.
2525 STATE RD.
CUYAHOGA FALLS, OH. 44223
ATTN: MS. LYNN A. KAVAN
DIST. MGR.

THE EAST OHIO GAS CO.
2100 EASTWOOD AVE.
AKRON, OH. 44305
ATTN: MR. HAROLD WRIGHT
DIV. ENGR.

BUREAU OF WATER - CITY OF AKRON
65 S. HIGH ST.
AKRON, OH. 44308
ATTN: MR. FRED M. DEBELLIS
UTILITIES ENGR.

ITEM 407 TACK COAT

THE RATE OF APPLICATION OF THE 407 TACK COAT SHALL BE SUBJECT TO ADJUSTMENT AS DIRECTED BY THE ENGINEER. PLAN QUANTITIES INDICATE AN AVERAGE APPLICATION RATE OF 0.10 GALLONS PER SQUARE YARD OF TACK COAT FOR ESTIMATING PURPOSES ONLY.

MAINTENANCE OF TRAFFIC GENERAL SUMMARY

COMPLETED BY [illegible] DATE 8/22/91
CHECKED BY LAJ DATE 8/22/91

F.H.W.A. REGION	STATE	PROJECT NO.	FUNDS
5	OHIO		

SUM-277/224-0.00/6.13/10.22

SHEET NUMBER 15	16	17	18		20	21			25	26	PARTICIPATION IM	RURAL NH	URBAN NH	ITEM	ITEM EXT.	GRAND TOTAL	UNIT	DESCRIPTION
																		MAINTENANCE OF TRAFFIC
250											197.5	18.75	33.75	301	10003	250	CU. YD.	BITUMINOUS AGGREGATE BASE, AC-20, AS PER PLAN
250											197.5	18.75	33.75	404	35000	250	CU. YD.	BITUMINOUS CONCRETE FOR MAINTAINING TRAFFIC
			500								395	37.5	67.5	SPECIAL	61411100	500	HOURS	LAW ENFORCEMENT OFFICER WITH PATROL CAR
	40										34	2	4	614	12470	40	EACH	WORK ZONE SPEED LIMIT SIGN
	500										395	37.5	67.5	SPECIAL	61412500	500	SQ. FT.	REPLACEMENT SIGN
			200								158	15	27	SPECIAL	61412600	200	EACH	REPLACEMENT DRUM
			200								158	15	27	SPECIAL	61412720	200	EACH	PLASTIC SAFETY DRUM
										6399	6399			614	12800	6399	EACH	TEMPORARY RAISED PAVEMENT MARKER
1820											1800	4	16	614	13300	1820	EACH	BARRIER REFLECTOR, TYPE B
			180								176		4	614	13300	180	EACH	BARRIER REFLECTOR, TYPE B (REPLACEMENT)
1820											1800	4	16	614	13350	1820	EACH	OBJECT MARKERS
									31.40		24.92	2.36	4.12	614	20000	31.40	MILE	TEMPORARY LANE LINE, CLASS I
									57.63		46.59	2.95	8.09	614	22000	57.63	MILE	TEMPORARY EDGE LINE, CLASS I
									12317		9327	640	2350	614	23000	12317	LIN. FT.	TEMPORARY CHANNELIZING LINE, CLASS I
									1574		1238		336	614	25000	1574	LIN. FT.	TEMPORARY TRANSVERSE LINE, CLASS I
									90		40		50	614	26000	90	LIN. FT.	TEMPORARY STOP LINE, CLASS I
									4		2		2	614	30000	4	EACH	TEMPORARY LANE ARROW, CLASS I
									3		2		1	614	31000	3	EACH	TEMPORARY WORD ON PAVEMENT, 72", CLASS I
											LUMP			615	10000	LUMP	LUMP	TEMPORARY ROAD
720											720			615	20000	720	SQ. YD.	TEMPORARY PAVEMENT, CLASS A
16860											15860		1000	622	40020	16860	LIN. FT.	PORTABLE CONCRETE BARRIER, 32"
1500											1500			622	40031	1500	LIN. FT.	PORTABLE CONCRETE BARRIER, 50", AS PER PLAN
5780											5180		600	622	40040	5780	LIN. FT.	PORTABLE CONCRETE BARRIER, 32", BRIDGE MOUNTED
					3	3					6			SPECIAL	69010300	6	EACH	TEMPORARY IMPACT ATTENUATOR (G.R.E.A.T. TYPE)(MODEL #200200NF6GCZ)
					3	3					6			SPECIAL	69098000	6	EACH	TEMPORARY IMPACT ATTENUATOR (HEX FOAM TYPE)(MODEL #209509H5S)
		1									1			SPECIAL	69010410	1	EACH	REPLACEMENT IMPACT ATTENUATOR (G.R.E.A.T. SYSTEM, MODEL #200200NF6GCZ)
		1									1			SPECIAL	69010410	1	EACH	REPLACEMENT IMPACT ATTENUATOR (HEX FOAM SYSTEM, MODEL #209509H5S)

REVISED 6-30-94

MAINTENANCE OF TRAFFIC

CONTRACTOR'S EQUIPMENT OPERATION AND STORAGE

THE CONTRACTOR'S EQUIPMENT SHALL BE OPERATED IN THE DIRECTION OF TRAFFIC WHERE PRACTICAL. A QUALIFIED FLAGGER SHALL BE EMPLOYED WHERE THE CONTRACTOR'S EQUIPMENT MUST MERGE WITH THE TRAFFIC STREAM. THE CONTRACTOR'S EQUIPMENT SHALL BE EQUIPPED WITH AT LEAST ONE AMBER FLASHING LIGHT. PAVERS, ROLLERS AND OTHER EQUIPMENT MAY BE PARKED IN AREAS ALONG THE HIGHWAY WHEN PAVING OPERATIONS ARE SCHEDULED TO CONTINUE WITHIN THE NEXT WORKDAY: OTHERWISE THE EQUIPMENT SHALL BE STORED AT A STORAGE AREA, THE LOCATION OF WHICH SHALL HAVE PRIOR APPROVAL OF THE ENGINEER. WHEN PARKING ALONG THE HIGHWAY, THE EQUIPMENT SHALL BE PARKED FITHER FIFTY (50) FEET FROM THE EDGE OF PAVEMENT OR SIX (6) FEET BEHIND GUARDRAIL WITH A MINIMUM OF 125 FEET OF GUARDRAIL PRECEDING THE EQUIPMENT. ADEQUATE BARRICADES AND LIGHTS SHALL BE PLACED ON THE PAVEMENT SIDE OF THE EQUIPMENT TO IDENTIFY THE LIMITS OF THE EQUIPMENT. ALL OTHER EQUIPMENT SHALL BE STORED AT THE APPROVED CONTRACTOR'S STORAGE AREA.

MAINTENANCE OF TRAFFIC

THIS ITEM SHALL CONSIST OF MAINTENANCE OF TRAFFIC ON EXISTING ROADWAYS AND RAMPS IN ACCORDANCE WITH THE OHIO MANUAL OF UNIFORM TRAFFIC CONTROL DEVICES FOR STREETS AND HIGHWAYS, CURRENT EDITON, LATEST REVISION, THE SPECIFICATIONS AND THE FOLLOWING:

1. TWO LANES OF TRAFFIC IN EACH DIRECTION SHALL BE MAINTAINED WHEREVER THERE IS AN EXISTING THREE LANE FACILITY AND ONE LANE OF TRAFFIC IN EACH DIRECTION SHALL BE MAINTAINED WHEREVER THERE IS AN EXISTING TWO LANE FACILITY. THE CONTRACTOR SHALL SET UP AND OPERATE HIS/HER EQUIPMENT IN SUCH A MANNER AS TO ENCROACH UPON THE TRAVELED WIDTH OF THE PAVEMENT TO A MINIMUM EXTENT.

2. ALL EXISTING LANES SHALL BE OPEN TO TRAFFIC BETWEEN NOV. 20TH AND MARCH 11TH. Nov. 20th SHALL BE CONSIDERED TO CONSTITUTE AN INTERIM COMPLETION DATE AND LIQUIDATED DAMAGES IN THE AMOUNT AS PER CMS 108.07 PER DAY SHALL BE ASSESSED FOR EACH CALENDAR DAY THAT THE ROADWAY REMAINS CLOSED TO TRAFFIC BEYOND THE SPECIFIED LIMIT. NO POSTPONEMENT OF THE COMPLETION DATE DUE TO WEATHER OR SEASONAL CONDITIONS WILL BE PERMITTED.

3. THE CONTRACTOR SHALL DESIGNATE IN WRITING AN INDIVIDUAL, OTHER THAN THE SUPERINTENDENT AND SUBJECT TO THE APPROVAL OF THE ENGINEER, TO CONTINUOUSLY INSPECT ALL TRAFFIC CONTROL DEVICES WHENEVER CONSTRUCTION WORK IS BEING PERFORMED WITHIN THE WORK LIMITS OF THE PROJECT. THE DESIGNATED INDIVIDUAL SHALL ALSO INSPECT ALL TRAFFIC CONTROL DEVICES AT THE BEGINNING AND AT THE END OF EACH WORK DAY. THE DESIGNATED INDIVIDUAL SHALL ALSO BE AVAILABLE ON AN AROUND-THE-CLOCK BASIS TO REPAIR AND/OR REPLACE DAMAGED OR MISSING TRAFFIC CONTROL DEVICES. PAYMENT FOR THE SERVICES OF THE TRAFFIC CONTROL INSPECTOR SHALL BE INCLUDED IN THE LUMP SUM PRICE BID FOR ITEM 614 MAINTAINING TRAFFIC.

4. IN AREAS OF LANE CLOSURES THE CONTRACTOR SHALL BE RESPONSIBLE FOR GRADING THE EXISTING SHOULDER NEXT TO THE TRAVELLED LANE, TO AN ELEVATION NOT MORE THAN ONE (1) INCH BELOW EXISTING PAVEMENT ELEVATION AND MAINTAINING THE SHOULDERS IN A SAFE CONDITION FOR THE DURATION OF THE PROJECT.

5. CONES SHALL NOT BE ACCEPTABLE TRAFFIC CONTROL DEVICES FOR LANE RESTRICTIONS OR LANE REDUCTIONS THAT ARE IN OPERATION ONE-HALF HOUR AFTER SUNSET OR ONE-HALF HOUR BEFORE SUNRISE. ALL NIGHTTIME LANE RESTRICTIONS OR LANE REDUCTIONS SHALL REQUIRE DRUMS OR BARRICADES AT A MAXIMUM SPACING OF SIXTY (60) FEET.

6. A FLASHING ARROW BARRICADE (TC 35.10) SHALL BE USED FOR TRAFFIC CONTROL WHENEVER THERE IS A LANE CLOSURE OR LANE SHIFT FOR THROUGH TRAFFIC.

7. ALL TRAFFIC CONTROL DEVICES REQUIRED INSIDE THE WORK LIMITS SHALL BE FURNISHED, ERECTED, MAINTAINED AND SUBSEQUENTLY REMOVED BY THE CONTRACTOR. DETOUR SIGNS FOR THE WATERLOO/SR 93 DETOURS ON CITY STREETS SHALL BE PROVIDED BY THE CONTRACTOR FOR THE CITY OF AKRON, TRAFFIC ENGINEERING DIVISION TO ERECT AS SHOWN ON SHEET 22, 23, MAINTAIN AND SUBSEQUENTLY REMOVE. DETOUR SIGNS FOR RAMP R-2 DETOUR SHALL BE FURNISHED, ERECTED AS SHOWN ON SHEET 24, MAINTAINED, AND SUBSEQUENTLY REMOVED BY THE CONTRACTOR.

8. THE CONTRACTOR SHALL FURNISH AND MAINTAIN ALL FLAGS, FLAGGERS, WATCHMEN, BARRICADES, SIGNS, SIGN SUPPORTS AND INCIDENTALS RELATED TO TRAFFIC CONTROL, THE ABOVE ITEMS SHALL BE UTILIZED IN CONFORMANCE WITH THE OHIO MANUAL OF UNIFORM TRAFFIC CONTROL DEVICES, CURRENT EDITION, LATEST REVISION.

9. A QUANTITY OF 250 CU.YDS. OF 404 BITUMINOUS CONCRETE FOR MAINTAINING TRAFFIC⊕ SHALL BE PROVIDED FOR USE IN MAINTAINING PAVEMENT AND SHOULDERS PRIOR TO RESURFACING AS DIRECTED BY THE ENGINEER. SS 921 MAY BE SUBSTITUTED WHEN ITEM 404 IS UNAVAILABLE (BEFORE ASPHALT PLANTS OPEN FOR THE YEAR OR AFTER ASPHALT PLANTS CLOSE FOR THE YEAR).

⊕ AND BITUMINOUS AGGREGATE BASE, AC-20, AS PER PLAN

10. NO BRIDGE DEMOLITION WORK SHALL BE PERFORMED OVER OPEN TRAFFIC LANES OR SIDEWALKS. SIDEWALKS SHALL BE CLOSED USING BARRICADES AND R-175-30. PAYMENT FOR FURNISHING, ERECTION, MAINTENANCE AND REMOVAL OF THE BARRICADES AND SIGNS SHALL BE INCLUDED IN THE LUMP SUM PRICE FOR ITEM 614 MAINTAINING TRAFFIC.

11. A SAFETY NET OR PLATFORM SHALL BE REQUIRED TO PROTECT THE ROADWAY, RAILROAD OR STREAM DURING THE REMOVAL OF THE EXISTING CONCRETE PARAPET AND ON THE FOLLOWING STRUCTURES:

SUM-277-0093	SUM-277-0307
SUM-277-0115	SUM-277-0374
SUM-277-0134	SUM-77-0953
SUM-277-0175	SUM-77-0928
SUM-277-0247	SUM-224-1061

THE CONTRACTOR SHALL PROVIDE A SAFETY NET OR PLATFORM OF SUITABLE STRENGTH ON THE UNDERSIDE OF THE DECK. THE DESIGN OF THE NET OR PLATFORM SHALL CONFORM WITH OSHA REQUIREMENTS AND THE APPROVAL OF THE ENGINEER AND SHALL REMAIN IN PLACE UNTIL THE WORK HAS BEEN COMPLETED AND ACCEPTED OR AS DIRECTED BY THE ENGINEER.

ONE LANE CONDITIONS SHALL NOT OCCUR FOR MORE THAN SIXTY (60) CALENDAR DAYS TOTAL AT ANY LOCATION OVER THE DURATION OF THE PROJECT. IT SHALL BE THE RESPONSIBILITY OF THE CONTRACTOR TO SCHEDULE AND PERFORM THE CONSTRUCTION WORK WITHIN THE ONE LANE LOCATIONS IN THE TIME REQUIRED. THE FAILURE OF THE CONTRACTOR TO MEET THE ONE LANE DURATION LIMITATION WILL CAUSE SEPARATE LIQUIDATED DAMAGES OF CMS 108.07 PER CALENDAR DAY OF OVERRUN OF THE ONE LANE DURATION REQUIREMENT TO BE ASSESSED. FUTHERMORE, EACH LOCATION WITHIN THE PROJECT THAT EXPERIENCES ONE LANE OF TRAFFIC WILL BE TREATED INDEPENDENTLY AND LIQUIDATED DAMAGES ASSESSED FOR EACH LOCATION THAT THE TIME LIMITATION IS VIOLATED FOR.

12. FOR ADDITIONAL MAINTENANCE OF TRAFFIC NOTES, DETAILS AND SKETCHES, SEE SHEET NOS. 27, 28, 29. IN REFERENCE TO THESE SHEETS, WHEREVER POSSIBLE THE WORK VEHICLE SHOWN PARKED ON THE ROADWAY SHALL BE REPLACED WITH AN ADDITIONAL 300 FEET OF PARALLEL WORK ZONE LENGTH PRIOR TO THE START OF THE WORK AREA.

13. UNDER NO CIRCUMSTANCES SHALL THE CONTRACTOR BE PERMITTED TO HAVE WORK ZONES THAT ALTERNATELY CLOSE BOTH THE PASSING LANE AND THE DRIVING LANE UNLESS THE DISTANCE BETWEEN THE DRUMS, BARRICADES OR CONES EXCEEDS TWO (2) MILES. ANY BREAK BETWEEN ZONES IN THE SAME DIRECTION SHALL NOT BE LESS THAN 2 MILES IN LENGTH.

THE FOLLOWING QUANTITIES SHALL BE USED FOR THE MAINTENANCE OF TRAFFIC ON THIS PROJECT: (QUANTITIES CARRIED TO SHEET 14)

ITEM 614 MAINTAINING TRAFFIC		LUMP SUM
ITEM 404 BITUMINOUS CONCRETE FOR MAINTAINING TRAFFIC	250	CU.YD
ITEM 622 PORTABLE CONCRETE BARRIER, 32"	16860	LIN. FT.
ITEM 614 BARRIER REFLECTORS, TYPE B	1820	EACH
ITEM 622 PORTABLE CONCRETE BARRIER, BRIDGE MOUNTED, 32"	5780	LIN. FT.
ITEM 622 PORTABLE CONCRETE BARRIER, 50" AS PER PLAN	1500	LIN. FT.

614 BARRIER REFLECTORS

THESE REFLECTORS AND THEIR MOUNTING SHALL CONFORM TO SUPPLEMENTAL SPECIFICATION 802 EXCEPT THAT SPACING SHALL BE AT 25' INCREMENTS. AN ESTIMATED QUANTITY OF 1820 EACH OF ITEM 614 BARRIER REFLECTOR, TYPE B HAS BEEN PROVIDED AND CARRIED TO THE GENERAL SUMMARY (SHEET 14).

DETOUR LIMITATION AND LIQUIDATED DAMAGES

THE MAXIMUM LENGTH OF TIME FOR THE DETOUR ROUTE TO BE IN EFFECT SHALL BE NINETY (90) DAYS.* CONSTRUCTION WORK MAY BE PERFORMED BEFORE AND AFTER THE DETOUR LIMITATION DATES, BUT THERE SHALL BE NO RESTRICTIONS (LANE WIDTH REDUCTIONS, TEMPORARY ROADWAYS, OR ONE WAY TRAFFIC) TO THROUGH OR LOCAL TRAFFIC. IT SHALL BE THE RESPONSIBILITY OF THE CONTRACTOR TO SCHEDULE AND PERFORM THE CONSTRUCTION WORK WITHIN THE DETOUR LIMITATION TIME. THE FAILURE OF THE CONTRACTOR TO MEET THE DETOUR LIMITATION DATES WILL CAUSE SEPARATE LIQUIDATED DAMAGES AS PER CMS 108.07 PER CALENDAR DAY OF OVERRUN OF DETOUR LIMITATION TIME TO BE ASSESSED. THE CONTRACTOR WILL COMPLY WITH ALL PROVISIONS OF 108.07 OF THE DEPARTMENT OF TRANSPORTATION CONSTRUCTION AND MATERIAL SPECIFICATIONS. (AS SHOWN ON SHEETS 22, 23 & 24).

* IN A CALENDAR YEAR.

PAVEMENT MARKING REMOVAL

ALL CONFLICTING PAVEMENT MARKINGS SHALL BE REMOVED AS PER 641.10. PAYMENT SHALL BE INCLUDED IN THE LUMP SUM PRICE BID FOR ITEM 614 MAINTAINING TRAFFIC AND SHALL BE FULL COMPENSATION FOR ALL MATERIALS, LABOR, INCIDENTALS AND EQUIPMENT NECESSARY TO COMPLETE THIS ITEM OF WORK.

ITEM 615 TEMPORARY PAVEMENT

ON THIS PROJECT THE TEMPORARY CLASS A PAVEMENT SHALL BE 16 FEET WIDE. THE ALIGNMENT AND PAVEMENT TYPICAL SECTION SHALL BE AS DETAILED ON SHEETS 20 & 21.

THE FOLLOWING ESTIMATED QUANTITIES HAVE BEEN INCLUDED IN THE GENERAL SUMMARY TO BE USED IN CONSTRUCTING THE TEMPORARY CLASS A PAVEMENT.

ITEM 615 TEMPORARY ROADS	LUMP SUM
ITEM 615 TEMPORARY PAVEMENT, CLASS A	720 S.Y.

TEMPORARY PAVEMENTS SHALL NOT BE OPENED TO TRAFFIC UNTIL ALL TEMPORARY TRAFFIC CONTROL DEVICES, SIGNS, PAVEMENT MARKINGS AND PORTABLE CONCRETE BARRIERS HAVE BEEN ERECTED AND APPROVED BY THE ENGINEER.

REVISED 6-30-94

MAINTENANCE OF TRAFFIC

ITEM SPECIAL-REPLACEMENT SIGNS

FLAT SHEET SIGNS FURNISHED BY THE CONTRACTOR IN ACCORDANCE WITH THE REQUIREMENTS OF THE PLAN, SPECIFICATION, AND PROPOSAL WHICH BECOME DAMAGED BY TRAFFIC FOR REASONS BEYOND THE CONTROL OF THE CONTRACTOR SHALL BE REPLACED IN KIND WHEN ORDERED BY THE ENGINEER.
PAYMENT FOR THE NEW SIGNS SHALL BE MADE AT THE BID PRICE PER SQUARE FOOT PER ITEM SPECIAL-REPLACEMENT SIGNS AND SHALL INCLUDE THE COST OF REMOVING AND DISPOSING OF THE DAMAGED SIGNS, HARDWARE AND SUPPORTS AND PROVIDING NECESSARY REPLACEMENT HARDWARE, SUPPORTS, ETC..
REPLACEMENT SIGNS SHALL BE NEW. SUPPORTS AND HARDWARE MAY BE SALVAGED SUBJECT TO THE APPROVAL OF THE ENGINEER.
AN ESTIMATED QUANTITY OF ITEM SPECIAL-REPLACEMENT SIGNS HAS BEEN CARRIED TO THE GENERAL SUMMARY:

ITEM SPECIAL-REPLACEMENT SIGNS 500 SQ. FT.

614 WORK ZONE SPEED LIMIT SIGN

THE CONTRACTOR SHALL FURNISH, INSTALL, MAINTAIN, COVER DURING SUSPENSION OF WORK, AND REMOVE WORK ZONE SPEED LIMIT SIGNS AND SUPPORTS (R-10-48)(45 MPH) WITHIN THE WORK LIMITS IN ACCORDANCE WITH THE FOLLOWING REQUIREMENTS.

THE CONTRACTOR SHALL COVER OR REMOVE ANY EXISTING SPEED LIMIT OR MINIMUM SPEED SIGNS WITHIN THE REDUCED SPEED ZONE. THESE SIGNS SHALL BE RESTORED DURING SUSPENSION OR TERMINATION OF THE REDUCED SPEED LIMIT. THE EXPENSE OF COVERING OR REMOVAL AND RESTORATION OF EXISTING SPEED LIMIT OR MINIMUM SPEED LIMIT SIGNS IS INCIDENTAL TO THE PAY ITEM FOR THE WORK ZONE SPEED LIMIT SIGNS.

THE WORK ZONE SPEED LIMIT SIGNS MAY BE ERECTED AND COVERED PRIOR TO STARTING WORK OR MAY BE ERECTED UNCOVERED NO MORE THAN 4 HOURS BEFORE THE ACTUAL START OF WORK. THE SIGNS SHALL BE REMOVED OR COVERED NO LATER THAN 4 HOURS FOLLOWING RESTORATION OF ALL LANES TO TRAFFIC WITH NO RESTRICTIONS OR SOONER AS DIRECTED BY THE ENGINEER.

THE CONTRACTOR SHALL ERECT A WORK ZONE SPEED LIMIT SIGN IN ADVANCE OF ANY LANE RESTRICTION EXPECTED TO LAST AT LEAST 30 DAYS OR AS DIRECTED BY THE ENGINEER. THE SIGN SHALL BE MOUNTED ON BOTH SIDES OF DIVIDED HIGHWAYS, 500 FEET IN ADVANCE OF THE LANE REDUCTION TAPER. THE SIGN SHALL BE MOUNTED ON THE RIGHT SIDE, 250 FEET IN ADVANCE OF THE LANE REDUCTION TAPER ON UNDIVIDED HIGHWAYS.

THE SIGN SHALL BE REPEATED, ON THE SIDE NEAREST TRAFFIC, EVERY 1 MILE FOR 55 MPH ZONES AND EVERY 1/2 MILE FOR 45 MPH ZONES. THESE SIGNS SHALL ALSO BE ERECTED IMMEDIATELY AFTER EACH ENTRANCE RAMP WITHIN THE ZONE.

THE CONTRACTOR MAY USE SIGNS AND SUPPORTS IN USED (BUT GOOD) CONDITION PROVIDED THE SIGNS MEET CURRENT ODOT SPECIFICATIONS. SIGN FACES SHALL BE REFLECTORIZED WITH TYPE G SHEETING COMPLYING WITH THE REQUIREMENTS OF 730.19 AND U.S. DEPARTMENT OF TRANSPORTATION SUPPLEMENTAL SPECIFICATION FOR TYPE III SHEETING, FP-85. WORK ZONE SPEED LIMIT SIGNS SHALL BE MOUNTED ON TWO (2) ITEM 630 GROUND MOUNTED SUPPORTS, NO. 4 POSTS.

WORK ZONE SPEED LIMIT SIGN AND SUPPORTS WILL BE MEASURED AS THE NUMBER OF SIGN INSTALLATIONS, INCLUDING THE SIGN AND NECESSARY SUPPORTS. IF A SIGN AND SUPPORT COMBINATION IS REMOVED AND RE-ERECTED AT ANOTHER LOCATION WITHIN THE PROJECT DUE TO CHANGES IN THE SPEED ZONE DIRECTED BY THE ENGINEER, IT SHALL BE CONSIDERED ANOTHER UNIT.

PAYMENT FOR ACCEPTED QUANTITIES, COMPLETE, IN PLACE WILL BE MADE AT THE CONTRACT UNIT PRICE. PAYMENT SHALL BE FULL COMPENSATION FOR ALL MATERIALS, LABOR, INCIDENTALS AND EQUIPMENT FOR FURNISHING, ERECTION, MAINTENANCE, COVERING DURING SUSPENSION OF WORK, AND REMOVAL OF THE SIGNS AND SUPPORTS. THIS QUANTITY HAS BEEN CARRIED TO THE GENERAL SUMMARY.

ITEM	UNIT	DESCRIPTION
614	40 EACH	WORK ZONE SPEED LIMIT SIGN

TRAFFIC CONTROL DEVICES

ALL TRAFFIC CONTROL DEVICES SHALL BE FURNISHED BY THE CONTRACTOR IN NEW CONDITION AND SHALL BE ERECTED AND MAINTAINED IN COMPLIANCE WITH THE STATE OF OHIO "MANUAL OF UNIFORM TRAFFIC CONTROL DEVICES" CURRENT EDITION, LATEST REVISION. THE CONTRACTOR SHALL BE RESPONSIBLE AT ALL TIMES FOR PROVIDING AND MAINTAINING LIGHTS, SIGNS, AND BARRICADES FOR THE MAINTENANCE OF TRAFFIC AND SAFETY OF HIS/HER WORK AT THE LOCATIONS SHOWN ON THESE PLANS OR AS DIRECTED BY THE ENGINEER.
ANY REPAIRS TO TRAFFIC CONTROL DEVICES SHALL BE PERFORMED WITHIN 24 HOURS OF NOTIFICATION.

SUSPENSION OF WORK

IF THE CONTRACTOR FAILS TO COMPLY WITH THE PROVISIONS FOR TRAFFIC CONTROL AS SET FORTH IN THESE PLANS OR WITH PROVISIONS OF THE MANUAL, THE ENGINEER SHALL SUSPEND WORK UNTIL THE CONTRACTOR COMPLIES WITH THE NECESSARY REQUIREMENTS.

PRIOR NOTICE

EIGHTEEN (18) DAYS PRIOR TO IMPLEMENTATION OF ANY MAINTENANCE OF TRAFFIC MEASURE, THE CONTRACTOR SHALL PROVIDE WRITTEN NOTIFICATION TO THE PROJECT ENGINEER AND THE DISTRICT TRAFFIC ENGINEER OF THE TYPE TO BE DONE, THE MAINLINE LANE CLOSURES, WIDTH RESTRICTIONS AND ANY OTHER PERTINENT MAINTENANCE OF TRAFFIC INFORMATION. THE CONTRACTOR SHALL ALSO GIVE THE CITY OF AKRON, TRAFFIC ENGINEERING DIVISION, A MINIMUM OF SEVEN (7) DAYS NOTICE PRIOR TO STARTING WORK. CONTACT NIRMAL SINGH , (216) 375-2851.

PRIVATE VEHICLES

NO PRIVATELY OWNED VEHICLES (BELONGING TO THE CONTRACTOR'S EMPLOYEES OR TO ODOT PERSONNEL ASSIGNED TO THE PROJECT) SHALL BE PARKED WITHIN THE ROADWAY TRAVEL PORTION (PAVEMENT AND SHOULDER) OF THE HIGHWAY PROJECT LIMITS. NO PRIVATELY OWNED VEHICLES SHALL BE PARKED WITHIN THE LIMITS OF THE PERMANENT LIMITED ACCESS FENCE.

INSTALLATION AND RESETTING CONSTRUCTION PHASES

ONLY DURING OFF-PEAK TRAFFIC PERIODS(IE.... ANY PERIOD OTHER THAN 7-9 A.M. AND 4-6 P.M.) SHALL THE CONTRACTOR INSTALL AND SUBSEQUENTLY RESET ALL TRAFFIC CONTROL DEVICES NECESSARY FOR MAINTAINING TRAFFIC FOR EACH CONSTRUCTION PHASE.

EXISTING LIGHTING

EXISTING LIGHTING ON ALL EXISTING ROADWAYS REMAINING OPEN TO TRAFFIC THROUGH THE PROJECT AREA SHALL BE MAINTAINED. SEE LIGHTING PLAN SHEET 100 FOR CONTRACTOR'S MAINTENANCE RESPONSIBILITY DURING CONSTRUCTION OPERATIONS AND FOR ANY DISRUPTION OF EXISTING SERVICE. THIS WILL BE PAID FOR UNDER ITEM SPECIAL-MAINTAIN EXISTING LIGHTING.

NIGHT WORK

UNLESS OTHERWISE REQUIRED BY SPECIFIC PLAN NOTE, NO WORK SHALL BE DONE AT NIGHT UNLESS WRITTEN APPROVAL BY THE PROJECT ENGINEER HAS BEEN RECEIVED. THE CONTRACTOR'S REQUEST FOR USE OF NIGHT WORK SHALL INCLUDE THE TYPE OF WORK DONE, THE DURATION OF THE WORK, LOCATION OF THE INTENDED WORK, AND THE CONTRACTOR'S TEMPORARY LIGHTING PLAN. ALL TEMPORARY LIGHTING REQUIRED FOR NIGHT WORK SHALL BE AT THE CONTRACTOR'S EXPENCE.

STOPPAGE OF MAINLINE TRAFFIC

ERECTION OF SPAN TYPE OVERHEAD SUPPORTS SHALL BE ACCOMPLISHED IN SUCH A MANNER THAT COMPLETE TRAFFIC STOPPAGE ON ALL LANES OF ANY DIRECTIONAL ROADWAY IS NOT MORE THAN 10 MINUTES IN ANY CONSECUTIVE 30-MINUTE PERIOD. A MINIMUM OF TWO (2) LAW ENFORCEMENT PATROL VEHICLES SHALL BE USED TO PACE MOTORISTS TO A STOP. AFTER TRAFFIC HAS BEEN SLOWED, ONE (1) PATROL VEHICLE SHALL TRAVEL ALONG THE ROADWAY SHOULDER 500' BEHIND THE BACK UP OF STOPPED VEHICLES. SEE DETAIL BELOW. WHERE STOPPAGE OCCURS IN THE VICINITY OF FREEWAY ENTRANCES, THE CONTRACTOR SHALL PLACE FLAGGERS ON THE RAMPS TO STOP TRAFFIC. PATROL VEHICLES SHALL HAVE HIGH RISE FLASHING BEACONS TO PROVIDE ADEQUATE VISIBILITY TO APPROACHING MOTORISTS. WHEN THE ENGINEER DEEMS APPROPRIATE, THE CONTRACTOR SHALL ERECT AND MAINTAIN "PREPARE TO STOP" AND "STOP AHEAD" SIGNS WITH FLASHING 12" TRAFFIC SIGNAL HEADS IN ACCORDANCE WITH 632.05. PATROL VEHICLES AND SIGNS SHALL BE LOCATED IN ACCORDANCE WITH THE FOLLOWING SKETCH. ERECTION OF SIGN SPACING SHALL BE DONE DURING DAYLIGHT HOURS EXCEPT DURING PEAK HOURS(7-9 A.M. AND 4-6 P.M.) THE CONTRACTOR SHALL NOTIFY THE CITY OF AKRON POLICE DEPARTMENT 24 HOURS PRIOR TO ANY MAINLINE TRAFFIC STOPPAGE.

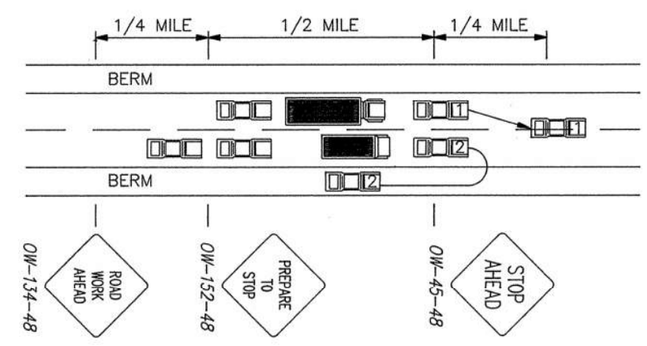

MAINTENANCE OF TRAFFIC

ITEM SPECIAL-@ IMPACT ATTENUATOR, HEX FOAM SYSTEM, MODEL NO. 209509H5S

@ TEMPORARY

THIS WORK SHALL CONSIST OF FURNISHING IMPACT ATTENUATORS, AS REQUIRED IN THE PLANS. THIS ITEM SHALL INCLUDE ALL RELATED HARDWARE, NOT SEPARATELY SPECIFIED, AS REQUIRED BY THE MANUFACTURER TO CONSTRUCT COMPLETE AND FUNCTIONAL FIVE-BAY, MEDIUM WIDTH HEX-FOAM IMPACT ATTENUATORS SYSTEMS. THE IMPACT ATTENUATOR SHALL BE MANUFACTURED BY THE ENERGY ABSORPTION SYSTEMS, INC., ONE EAST WACKER DRIVE, CHICAGO ILLINOIS 60601; TELEPHONE: (312) 467-6750. THE ATTENUATORS SHALL BE PLACED IN ACCORDANCE WITH THE MANUFACTURER'S SPECIFICATIONS AND AT THE LOCATION SHOWN ON SHEET 20,21

THE CONTRACTOR SHALL BE RESPONSIBLE FOR INSPECTION, REPAIRING, AND OTHERWISE RESTORING THE IMPACT ATTENUATOR IN ACCORDANCE WITH THE MANUFACTURER'S INSTRUCTIONS WHILE IT IS IN USE ON THE PROJECT. SUCH REPAIRS SHALL BE PERFORMED WITHIN TWENTY-FOUR (24) HOURS OF NOTIFICATION OF THE INCIDENT WHICH CAUSED DAMAGE TO THE ATTENUATOR. THE CONTRACTOR SHALL BE RESPONSIBLE FOR SUPPLYING ALL NECESSARY MATERIALS AND EQUIPMENT REQUIRED TO PERFORM THE ABOVE DESCRIBED RESTORATION OF THE ATTENUATOR. ONE (1) EXTRA COMPLETE SET OF HEX-FOAM CARTRIDGES, AS MANUFACTURED BY ENERGY ABSORPTION SYSTEMS. INC., FOR THE ATTENUATOR FURNISHED, SHALL BE STOCKED AT ALL TIMES FOR THE ABOVE REPAIRS AND THE COST SHALL BE INCLUDED IN THE COST OF THE ATTENUATOR.

THE NOSE COVER OF THE ATTENUATOR SHALL BE MARKED WITH EVENLY SPACED 4" WIDE HORIZONTAL STRIPES OF YELLOW REFLECTIVE MATERIAAL, MEETING THE REQUIREMENTS OF SECTION 730.19 OF THE SPECIFICATIONS.

PAYMENT FOR THE ABOVE WORK SHALL BE MADE AT THE UNIT PRICE BID FOR EACH, ITEM SPECIAL-@ IMPACT ATTENUATOR, HEX-FOAM SYSTEM, MODEL NO. 209509H5S, WHICH PRICE SHALL BE CONSIDERED FULL PAYMENT FOR FURNISHING, INSTALLING, AT THE SPECIFIED LOCATIONS, FURNISHING EXTRA HEX-FOAM CARTRIDGES AS SPECIFIED ABOVE, RESTORATION AFTER EACH VEHICLE IMPACT, INCLUDING ALL LABOR TOOLS, EQUIPMENT, AND MISCELLANEOUS HARDWARE MATERIALS NECESSARY TO COMPLETE THIS ITEM OF WORK IN PLACE. ALSO INCLUDED IN THE ABOVE COST SHALL BE THE REMOVAL OF THE IMPACT ATTENUATOR AND INSTALLATION AT THE LOCATION SPECIFIED FOR THE NEXT STAGE OF CONSTRUCTION.

ITEM SPECIAL--REPLACEMENT IMPACT ATTENUATOR, HEX-FOAM SYSTEM, MODEL NO. 209509H5S

IMPACT ATTENUATORS FURNISHED BY THE CONTRACTOR IN ACCORDANCE WITH THE REQUIREMENT OF THE PLAN, SPECIFICATION, AND PROPOSAL WHICH BECOME DAMAGED BEYOND REPAIR BY TRAFFIC FOR REASONS BEYOND THE CONTROL OF THE CONTRACTOR SHALL BE REPLACED AS DIRECTED BY THE ENGINEER BY THE CONTRACTOR WITHIN TWENTY-FOUR (24) HOURS OF NOTIFICATION OF THE INCIDENT WHICH CAUSED THE DAMAGE TO THE ATTENUATOR. REPLACEMENT ATTENUATORS SHALL MEET THE SPECIFICATIONS OF THE ORIGINAL ATTENUATOR.

ONE (1) REPLACEMENT ATTENUATOR SHALL BE STOCKED AT ALL TIMES BY THE CONTRACTOR FOR IMMEDIATE REPLACEMENT ON THE PROJECT.

THE FOLLOWING ESTIMATED QUANTITY FOR A REPLACEMENT IMPACT ATTENAUTOR HAS BEEN CARRIED TO THE MAINTENANCE OF TRAFFIC SUMMARY FOR USE AS DIRECTED BY THE ENGINEER.

ITEM SPECIAL-REPLACEMENT IMPACT ATTENUATOR, HEX-FOAM SYSTEM
MODEL NO. 209509H5S 1 EACH

ITEM SPECIAL-@ IMPACT ATTENUATOR, G.R.E.A.T. SYSTEM, MODEL NO. 200200NF6GCZ

THIS WORK SHALL CONSIST OF FURNISHING IMPACT ATTENUATORS, AS REQUIRED IN THE PLANS. THIS ITEM SHALL INCLUDE ALL RELATED HARDWARE, NOT SEPARATELY SPECIFIED, AS REQUIRED BY THE MANUFACTURER TO CONSTRUCT COMPLETE AND FUNCTIONAL G.R.E.A.T. IMPACT ATTENUATOR SYSTEMS. THE IMPACT ATTENUATOR SHALL BE MANUFACTURED BY THE ENERGY ABSORPTION SYSTEMS, INC., ONE EAST WACKER DRIVE, CHICAGO, ILLINOIS 60601. TELEPHONE: (312) 467-6750. THE ATTENUATORS SHALL BE PLACED IN ACCORDANCE WITH THE MANUFACTURER'S SPECIFICATIONS AND AT THE LOCATIONS SHOWN ON SHEET 20,21.

THE CONTRACTOR SHALL BE RESPONSIBLE FOR THE INSPECTION, REPAIRING, AND OTHERWISE RESTORING THE IMPACT ATTENUATOR IN ACCORDANCE WITH THE MANUFACTURER'S MAINTENANCE INSTRUCTIONS WHILE IT IS IN USE ON THE PROJECT.. SUCH REPAIRS SHALL BE PERFORMED WITHIN TWENTY-FOUR (24) HOURS OF NOTIFICATION OF THE INCIDENT WHICH CAUSED DAMAGE TO THE ATTENUATOR. THE CONTRACTOR SHALL BE RESPONSIBLE FOR SUPPLYING ALL NECESSARY MATERIALS AND EQUIPMENT REQUIRED TO PERFORM THE ABOVE DESCRIBED RESTORATION OF THE ATTENUATOR. ONE (1) EXTRA COMPLETE SET OF HEX-FOAM CARTRIDGES, AS MANUFACTURED BY ENERGY ABSORPTION SYSTEMS, INC., FOR THE ATTENUATOR FURNISHED, SHALL BE STOCKED AT ALL TIMES FOR THE ABOVE REPAIRS AND THE COST SHALL BE INCLUDED IN THE COST OF THE ATTENUATOR.

THE NOSE COVER OF THE ATTENUATOR SHALL BE MARKED WITH EVENLY SPACED 4" WIDE HORIZONTAL STRIPES OF YELLOW REFLECTIVE MATERIAL, MEETING THE REQUIREMENTS OF SECTION 730.19 OF THE SPECIFICATIONS.

PAYMENT FOR THE ABOVE WORK SHALL BE MADE AT THE UNIT PRICE BID FOR EACH, ITEM SPECIAL-@ IMPACT ATTENUATOR, G.R.E.A.T. SYSTEM, MODEL NO. 200200NF6GCZ, WHICH PRICE SHALL BE CONSIDERED FULL PAYMENT FOR FURNISHING, INSTALLING AT THE SPECIFIED LOCATIONS, FURNISHING EXTRA HEX-FOAM CARTRIDGES AS SPECIFIED ABOVE, RESTORATION AFTER EACH VEHICLE IMPACT, INCLUDING ALL LABOR, TOOLS, EQUIPMENT, AND MISCELLANEOUS HARDWARE MATERIALS NECESSARY TO COMPLETE THIS ITEM OF WORK IN PLACE. ALSO INCLUDED IN THE ABOVE COST SHALL BE THE REMOVAL OF THE IMPACT ATTENUATOR AND INSTALLATION AT THE LOCATION SPECIFIED FOR THE NEXT STAGE OF CONSTRUCTION.

ITEM SPECIAL-REPLACEMENT IMPACT ATTENUATOR, G.R.E.A.T. SYSTEM MODEL NO. 200200NF6GCZ

IMPACT ATTENUATORS FURNISHED BY THE CONTRACTOR IN ACCORDANCE WITH THE REQUIREMENT OF THE PLAN, SPECIFICATION, AND PROPOSAL WHICH BECOME DAMAGED BEYOND REPAIR BY TRAFFIC FOR REASONS BEYOND THE CONTROL OF THE CONTRACTOR SHALL BE REPLACED AS DIRECTED BY THE ENGINEER BY THE CONTRACTOR WITHIN TWENTY-FOUR (24) HOURS OF NOTIFICATION OF THE INCIDENT WHICH CAUSED THE DAMAGE TO THE ATTENUATOR. REPLACEMENT ATTENUATORS SHALL MEET THE SPECIFICATIONS OF THE ORIGINAL ATTENUATOR.

ONE (1) REPLACEMENT ATTENUATOR SHALL BE STOCKED AT ALL TIMES BY THE CONTRACTOR FOR IMMEDIATE REPLACEMENT ON THE PROJECT.

THE FOLLOWING ESTIMATED QUANTITY FOR A REPLACEMENT IMPACT ATTENUATOR HAS BEEN CARRIED TO THE MAINTENANCE OF TRAFFIC SUMMARY FOR USE AS DIRECTED BY THE ENGINEER.

ITEM SPECIAL-REPLACEMENT IMPACT ATTENUATOR, G.R.E.A.T. SYSTEM
MODEL NO. 200200NF6GCZ 1 EACH

ITEM 622-PORTABLE CONCRETE BARRIER, 50," AS PER PLAN

THIS WORK SHALL CONSIST OF THE FURNISHING, INSTALLATION, MAINTENANCE, AND SUBSEQUENT REMOVAL OF A 50" PORTABLE CONCRETE BARRIER AT THE LOCATIONS SHOWN ON THE PLANS. THE INDIVIDUAL SECTIONS SHALL NOT BE LESS THAN 10' IN LENGTH.

PORTABLE CONCRETE BARRIER, TYPE A 32 WITH AN 18" MINIMUM HEIGHT GLARE SCREEN MAY BE USED AT THE OPTION OF THE CONTRACTOR. THE PORTABLE CONCRETE BARRIER, TYPE A 32, SHALL BE CONSTRUCTED USING ONE (1) OF THE FOLLOWING SYSTEMS OR EQUAL APPROVED BY THE ENGINEER.

SYRO GLAREFOIL
SYRO STEEL COMPANY
1170 NORTH STATE ST.
GIRARD, OHIO 44420
(216) 545-4373

CARSONITE MODULAR GLARE SCREEN
CARSONITE INTERNATIONAL
2900 LOCKHEED WAY
CARSON CITY, NEVADA 89701
(702) 883-5104 (800) 648-7974

FORWARD GLARE SCREEN
PROVEN PRODUCTS INC.
7560 S.W. LAVIEW DRIVE
PORTLAND, OREGON 97219
(503) 244-9185

PADDLE OR INTERMITTENT-TYPE GLARE SCREEN SHALL BE DESIGNED USING A 20 DEGREE CUT-OFF ANGLE BASED ON TANGENT ALIGNMENT. THAT SPACING SHALL BE USED THROUGHOUT THE BARRIER LENGTH WITHOUT REGARD TO THE BARRIER CURVATURE. THE GLARE SCREEN SYSTEM ATTACHED TO THE 32" PORTABLE CONCRETE BARRIER SHALL BE SECURELY FASTENED USING THE HARDWARE AND PROCEDURES SPECIFIED BY THE MANUFACTURER.

PORTABLE CONCRETE BARRIER WHICH HAS BECOME DAMAGED BEYOND REPAIR BY TRAFFIC SHALL BE REPLACED BY THE CONTRACTOR WITHIN TWENTY-FOUR (24) HOURS OF NOTIFICATION OF THE INCIDENT WHICH CAUSED THE DAMAGE. REPLACEMENT BARRIER SHALL BE AS PER SECTION 622.04 OF THE SPECIFICATIONS.

PAYMENT SHALL INCLUDE FURNISHING, INSTALLATION, MAINTENANCE AND SUBSEQUENT REMOVAL OF PORTABLE CONCRETE BARRIER INCLUDING ALL LABOR, MATERIAL, AND EQUIPMENT NECESSARY TO PERFORM THE WORK. THIS ITEM SHALL BE PAID FOR BY THE ACTUAL LINEAL FEET OF ITEM 622 PORTABLE CONCRETE BARRIER, 50," AS PER PLAN, INSTALLED AT A PARTICULAR LOCATION REGARDLESS OF WHETHER THE SAME SECTION OF BARRIER COULD BE RE-USED AGAIN ON THE PROJECT.

MAINTENANCE OF TRAFFIC

TEMPORARY PAVEMENT MARKINGS

TEMPORARY LINE PAVEMENT MARKINGS SHALL BE 4" IN WIDTH AND SHALL BE INSTALLED BY THE CONTRACTOR AS PER MT-99.10. ALL TEMPORARY PAVEMENT MARKINGS SHALL BE INSTALLED PRIOR TO SETTING THE PORTABLE CONCRETE BARRIER. FOR ADDITIONAL INFORMATION SEE SHEET 25.

ALTERNATE MAINTENANCE OF TRAFFIC PLANS

THE CONTRACTOR MAY SUBMIT ALTERNATE METHODS FOR THE MAINTENANCE OF TRAFFIC, PROVIDED THE INTENT OF THE ABOVE PROVISIONS ARE FOLLOWED AND NO ADDITIONAL INCONVIENENCE TO THE TRAVELING PUBLIC RESULTS THEREFROM. NO ALTERNATE PLAN SHALL BE PLACED INTO EFFECT UNTIL APPROVAL HAS BEEN GRANTED IN WRITING BY THE DIRECTOR.

ITEM 614-REPLACEMENT BARRIER REFLECTORS, TYPE B

REPLACEMENT BARRIER REFLECTORS AND THEIR MOUNTING SHALL CONFORM TO SUPPLEMENTAL SPECIFICATION 802 EXCEPT THAT SPACING SHALL BE AT 25' INCREMENTS, ONE REFLECTOR PER EACH UNIT OF TEMPORARY CONCRETE BARRIER. THE FOLLOWING QUANTITY HAS BEEN INCLUDED IN THE GENERAL SUMMARY FOR USE AS DIRECTED BY THE ENGINEER FOR REPLACEMENT OF BARRIER REFLECTORS:

ITEM 614 REPLACEMENT BARRIER REFLECTORS, TYPE B 180 EACH

ITEM SPECIAL-PLASTIC SAFETY DRUM

AN ESTIMATED QUANTITY OF 200 PLASTIC SAFETY DRUMS SHALL BE USED AS DIRECTED BY THE PROJECT ENGINEER.

THE FOLLOWING QUANTITY HAS BEEN INCLUDED IN THE GENERAL SUMMARY:
ITEM SPECIAL-PLASTIC SAFETY DRUM 200 EACH

ITEM SPECIAL-REPLACEMENT DRUMS

DRUMS FURNISHED BY THE CONTRACTOR IN ACCORDANCE WITH THE REQUIREMENT OF THE PLAN, SPECIFICATION, AND PROPOSAL WHICH BECOME DAMAGED BY TRAFFIC FOR REASONS BEYOND THE CONTROL OF THE CONTRACTOR SHALL BE REPLACED WITH NEW DRUMS WHEN ORDERED BY THE ENGINEER AND PAID FOR UNDER ITEM SPECIAL-REPLACEMENT DRUMS.
PAYMENT FOR EACH NEW DRUM SHALL INCLUDE (1) THE COST OF REMOVING AND DISPOSING OF THE DAMAGED DRUM AND (2) PROVIDING, MAINTAINING, REPOSITIONING AND SUBSEQUENTLY REMOVING THE REPLACEMENT DRUM IN ACCORDANCE WITH THE CONTRACT RQUIREMENTS FOR THE ORGINAL DRUMS.
AN ESTIMATED QUANTITYOF ITEM SPECIAL-REPLACEMENT DRUMS HAS BEEN CARRIED TO THE GENERAL SUMMARY FOR USE AS DIRECTED BY THE ENGINEER.

ITEM SPECIAL-REPLACEMENT PLASTIC SAFETY DRUMS 200 EACH

ITEM SPECIAL-LAW ENFORCEMENT OFFICER WITH PATROL CAR

THE CONTRACTOR SHALL PROVIDE THE SERVICES OF UNIFORMED LAW ENFORCEMENT OFFICERS (L.E.O.) WITH PATROL CARS, PER WORK AREA AS DIRECTED BY THE ENGINEER. A L.E.O. WITH PATROL CAR SHALL BE PROVIDED ON THE PROJECT DURING INSTALLATION AND REMOVAL OF PORTABLE CONCRETE BARRIER, OVERHEAD TRAFFIC CONTROL SIGNS, OR FOR OTHER WORK AS DIRECTED BY THE ENGINEER. INFORMATION REGARDING ARRANGEMENTS AND PAYMENT BY THE CONTRACTOR FOR THE L.E.O. MAY BE OBTAINED BY CONTACTING.

OHIO HIGHWAY PATROL
660 MAIN STREET
COLUMBUS, OHIO
(614) 466-2300

IF AFTER CONTACTING THE OHIO HIGHWAY PATROL, IT IS DETERMINED THAT THEY CANNOT SUPPLY THE L.E.O., THEN AN AUTHORIZED MUNICIPAL OR COUNTY POLICE OFFICER EQUIPPED WITH A MARKED AND FLASHER-LIGHT EQUIPPED OFFICAL POLICE OR PATROL CAR SHALL BE PROVIDED.

THIS REQUIREMENT DOES NOT PRECLUDE THE CONTRACTORS USE OF AN L.E.O. FOR OTHER PURPOSES OF CONTROLLING TRAFFIC AS APPROVED BY THE ENGINEER. THE L.E.O. SHALL BE CONSIDERED AN EMPLOYEE OF THE CONTRACTOR AND THE CONTRACTOR SHALL BE RESPONSIBLE FOR HIS/HER ACTIONS. ALTHOUGH EMPLOYED BY THE CONTRACTOR, THE PROJECT ENGINEER SHALL HAVE CONTROL OVER THE L.E.O. PLACEMENT AND HIS/HER ACTIVITIES. PAYMENT SHALL BE AT THE UNIT PRICE BID FOR THE ACTUAL NUMBER OF HOURS FOR ITEM SPECIAL-LAW ENFORCEMENT OFFICER WITH PATROL CAR.
ITEM SPECIAL-LAW ENFORCEMENT OFFICER WITH PATROL CAR 500 HOURS

NOTICE OF CLOSURE SIGNS

THESE SIGNS SHALL BE ERECTED BY THE CONTRACTOR AT LEAST ONE WEEK IN ADVANCE OF THE SCHEDULED ROAD OR RAMP CLOSURE. THE SIGNS SHALL BE ERECTED ON THE RIGHT HAND SIDE OF THE ROAD/RAMP FACING TRAFFIC. THEY SHALL BE LOCATED IN THE FIELD SO AS NOT TO INTERFERE WITH ANY PERMANENT SIGNS. ON ROADWAYS THEY SHOULD BE ERECTED AT THE POINT OF CLOSURE. ON RAMPS THE SIGNS MAY BE ERECTED ANYWHERE ALONG IT; AS LONG AS IT IS VISIBLE TO THE MOTORISTS USING THE RAMP. ON ENTRANCE RAMPS THE SIGN SHALL BE ERECTED WELL IN ADVANCE OF THE MERGE AREA TO AVOID DISTRACTING THE MOTORISTS.

PAYMENT FOR THIS WORK SHALL BE INCLUDED IN THE LUMP SUM BID FOR ITEM 614 MAINTAINING TRAFFIC AND SHALL INCLUDE FURNISHING, ERECTING, MAINTAINING AND REMOVING THE SIGNS INCLUDING SUPPORTS.

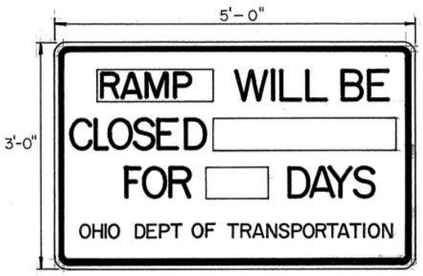

OC-60B

METHOD OF PAYMENT

PAYMENT FOR THE MAINTENANCE OF TRAFFIC ITEMS, UNLESS SPECIFIED SEPERATELY, SHALL BE AT THE LUMP SUM PRICE BID FOR ITEM 614 - MAINTAINING TRAFFIC, WHICH SHALL INCLUDE ALL LABOR, EQUIPMENT, MATERIALS, AND INCIDENTALS TO COMPLETE THE WORK AS DETAILED IN THE PLANS.

SEQUENCE OF CONSTRUCTION

PHASE 1

THE CONTRACTOR SHALL PLACE TRAFFIC ZONES TO REBUILD THE WESTBOUND AND EASTBOUND MAINLINE SHOULDER AND UNDERDRAINS THROUGHOUT THE PROJECT, AND THE MEDIAN CROSSOVERS BETWEEN STA 87+00 – 92+40 AND 158+00 – 161+40 MAINTAINING TWO LANES OF TRAFFIC IN EACH DIRECTION. THE WORK ON BRIDGE SUM-77-0930 SHALL BE TOTALLY COMPLETED DURING PHASES 1,2 AND 3.

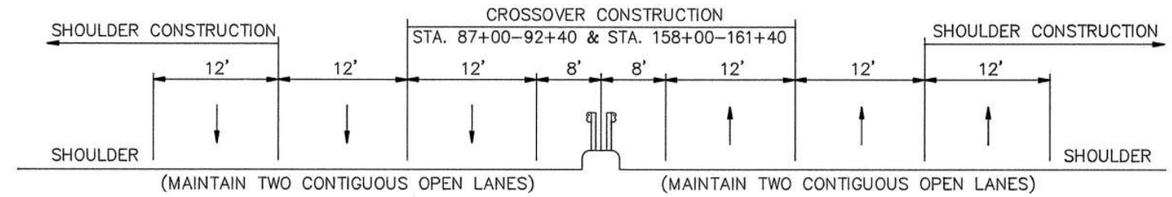

PHASE 2

THE CONTRACTOR SHALL ERECT ALL TRAFFIC MAINTENANCE ITEMS FOR CROSSING TRAFFIC OVER ONTO THE WESTBOUND LANES THEN CROSS EASTBOUND TRAFFIC OVER. ALL BRIDGES, RAMP AND ROADWAY ITEMS ON THE CLOSED SECTION OF ROAD SHALL BE PERFORMED, EXCEPT BUILDING THE MEDIAN BARRIER AND ERECTING THE OVERHEAD TRAFFIC SIGN SPANS. AFTER THE WORK IS COMPLETED THE EASTBOUND TRAFFIC SHALL BE CROSSED BACK OVER TO THE OUTSIDE EASTBOUND LANE AND SHOULDER.

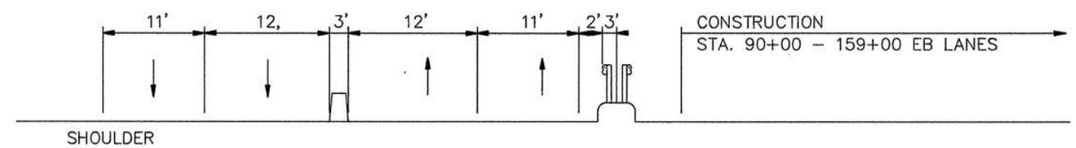

PHASE 3

THE CONTRACTOR SHALL CONSTRUCT THE MEDIAN BARRIER WALL BETWEEN STA 92+40 AND 158+00 AND SHALL ERECT THE OVERHEAD TRAFFIC SIGN SPANS OVER THE EASTBOUND LANES.

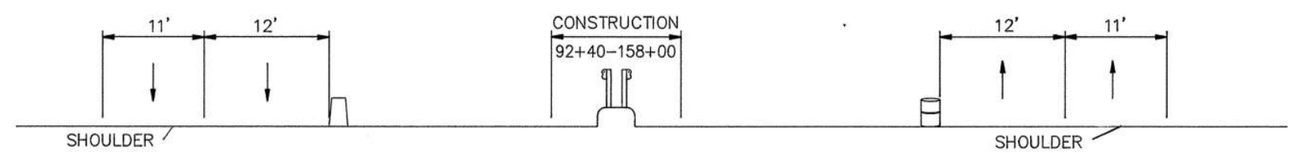

PHASE 4

THE CONTRACTOR SHALL INSTALL ALL TRAFFIC CONTROL DEVICES TO CROSS TRAFFIC OVER TO THE EASTBOUND LANES, THEN CROSS TRAFFIC OVER. ALL BRIDGE, RAMP AND ROADWAY ITEMS ON THE CLOSED SECTION OF THE ROAD SHALL BE PERFORMED. AFTER THIS WORK IS COMPLETE, WESTBOUND TRAFFIC SHALL BE CROSSED BACK TO THE WESTBOUND LANES AND THE MEDIAN BARRIERS SHALL BE COMPLETED.

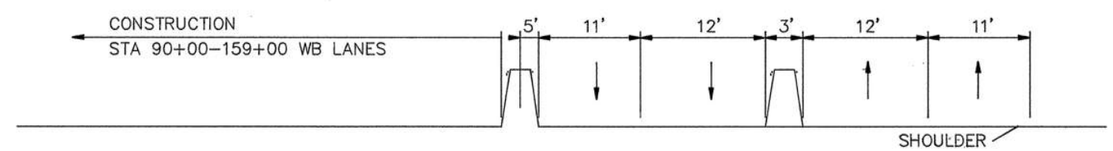

THE PAVING OPERATIONS AND ANY WORK ITEM THAT WILL NOT INTERFERE WITH THE CROSSED OVER TRAFFIC IN ANY PHASE MAY BE CONSTRUCTED AT THE CONTRACTORS DISCRETION. IF THIS CONSTRUCTION OCCURS ON SIDE STREETS, THE CONTRACTOR'S WORK ZONE SHALL CONFORM TO THE OHIO MANUAL OF UNIFORM TRAFFIC CONTROL DEVICES, LATEST EDITION AND NEWEST REVISION COMPLETED.

F.H.W.A. REGION	STATE	PROJECT NO.	FUNDS
5	OHIO		

20
196

SUM-277/224-0.00/6.31/10.22

CROSS-OVER DETAILS FOR PHASE 2

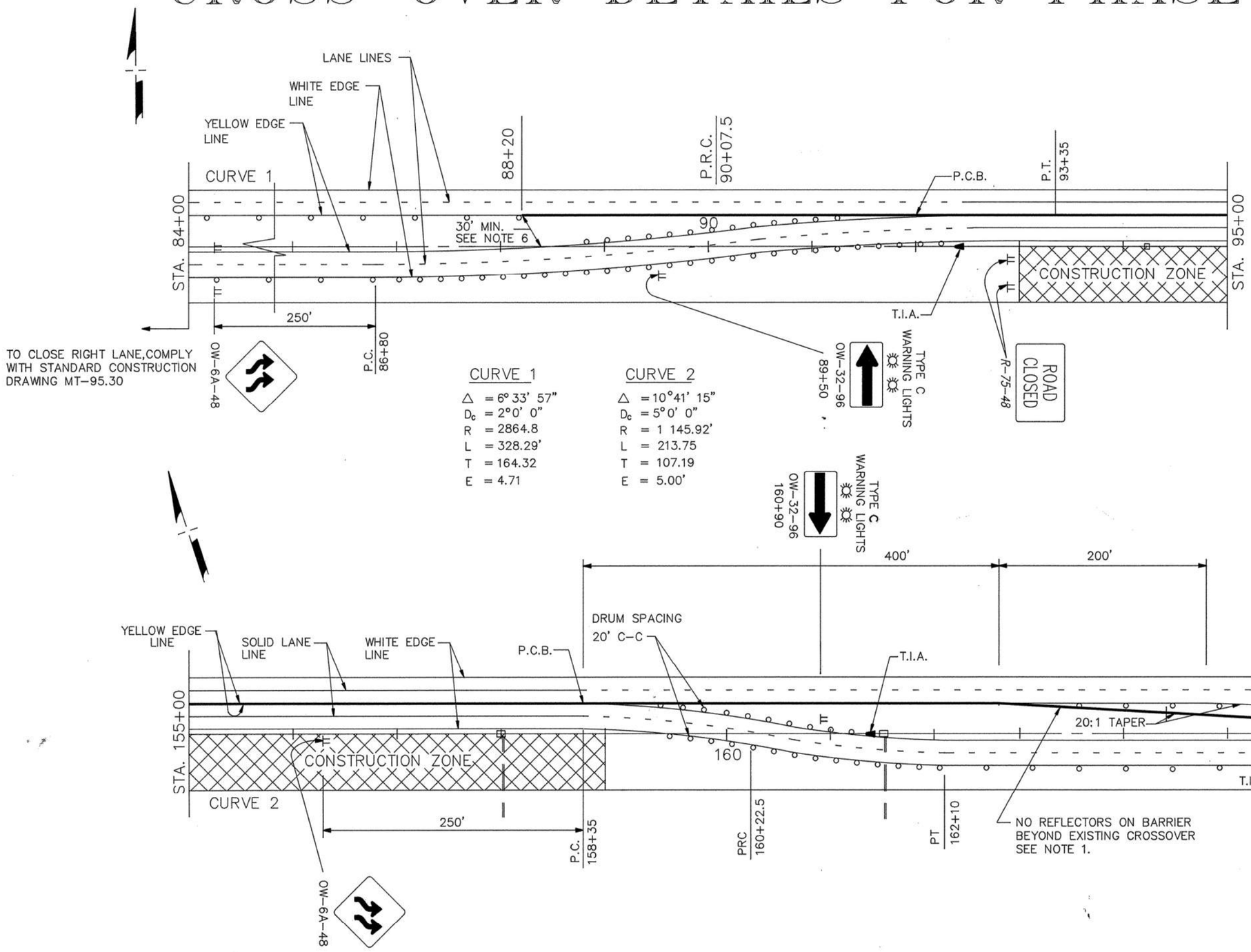

FOR NOTES AND LEGEND SEE SHEET 21.

FOR LANE WIDTHS SEE SHEET 19.

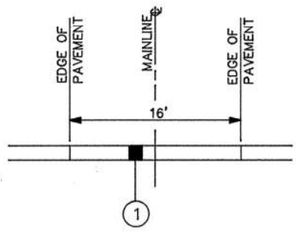

(1) ITEM 615 – TEMPORARY PAVEMENT, CLASS A

CROSS-OVER TYPICAL SECTION @ P.R.C.

F.H.W.A. REGION	STATE	PROJECT NO.	FUNDS
5	OHIO		

21
196

SUM-277/224-0.00/6.31/10.22

CROSS-OVER DETAILS FOR PHASE 4

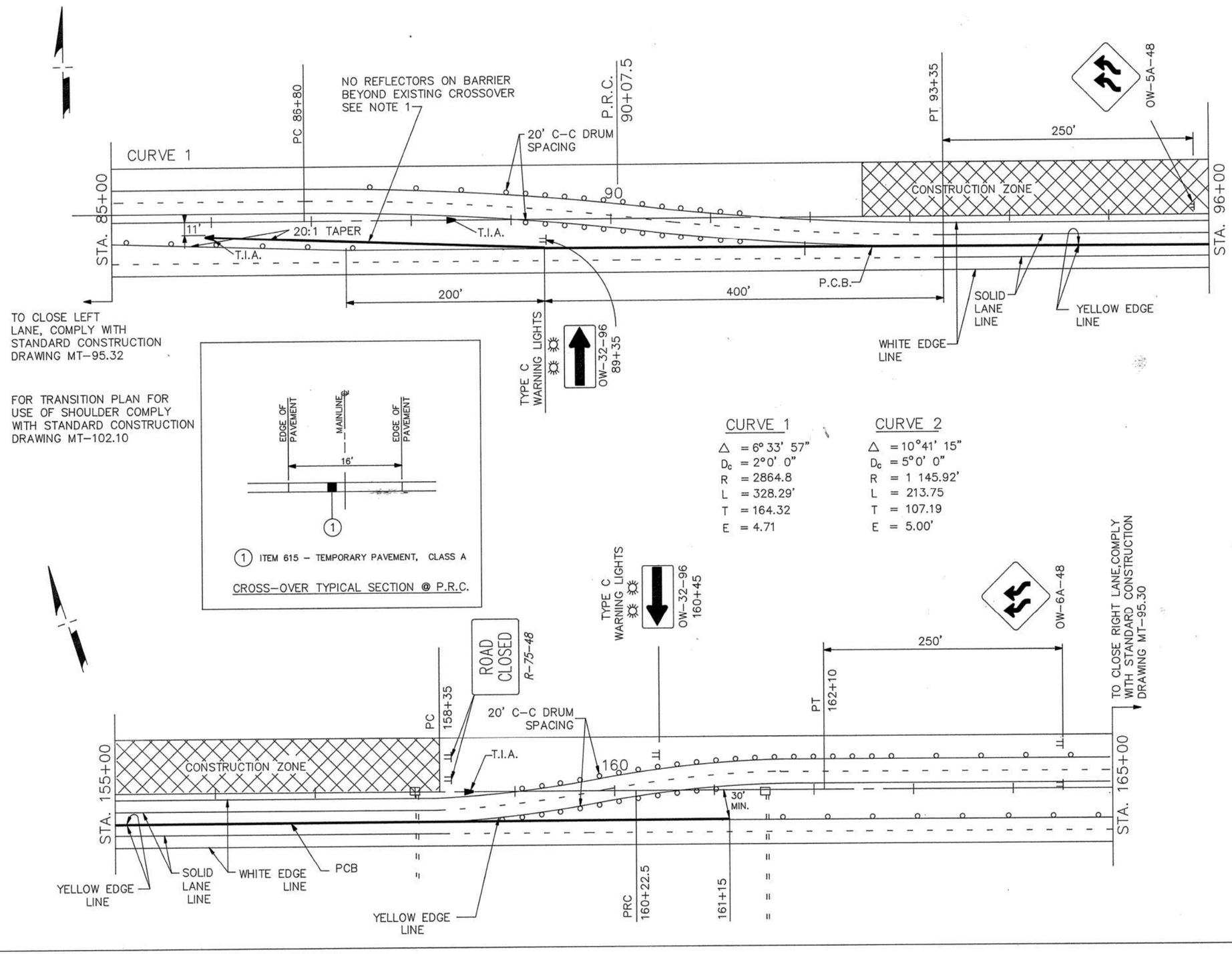

CURVE 1

Δ = 6° 33' 57"
D_c = 2° 0' 0"
R = 2864.8
L = 328.29'
T = 164.32
E = 4.71

CURVE 2

Δ = 10° 41' 15"
D_c = 5° 0' 0"
R = 1 145.92'
L = 213.75
T = 107.19
E = 5.00'

GENERAL NOTES:

1. TEMPORARY BARRIER REFLECTORS (YELLOW) SHALL BE MOUNTED ON THE PORTABLE CONCRETE BARRIER AT A MAXIMUM OF **25** FT. SPACING. NO REFLECTORS OR OTHER CHANNELIZING DEVICES SHALL BE PERMITTED ON THE FACE OF THE PCB FACING THE EXITING CROSSOVER, FROM PT ***TO THE*** END OF BARRIER.

2. THE SPACING BETWEEN PROPOSED SIGNS SHOULD BE ADJUSTED NOT TO CONFLICT WITH AND TO PROVIDE A MINIMUM OF 200 FEET CLEARANCE TO EXISTING SIGNS. IF SHOULDER IS USED AS A LANE, SET BACK ALL SIGNS TO 6 FT BEYOND THE SHOULDER.

3. DRUMS SHALL BE SPACED AT 50 FT C-C UNLESS OTHERWISE SHOWN.

4. THE EDGE LINES ADJACENT TO THE BARRIER MAY USE PAINT ONLY IF THEY WILL BE DESTROYED OR SURFACED OVER IN THE NEXT STAGE OF WORK. THEY SHALL BE INSTALLED WITH REMOVABLE TAPE IF ON THE FINAL SURFACE. IN ORDER TO CHANGE THE COLOR OF THE EDGE LINE NEXT TO THE MEDIAN, IT MAY BE HEAVILY PAINTED OVER (WITH SUBSEQUENT OVER PAINTING IF NECESSARY DURING THE LIFE OF THE WORK STAGE TO MAINTAIN DAY AND NIGHT COLOR) EXCEPT THAT THIS PROCEDURE WILL NOT BE PERMITTED FOR A LINE ON THE FINAL SURFACE.

THE EXISTING CONFLICTING PAVEMENT MARKINGS AND REFLECTORS FROM THE RAISED PAVEMENT MARKERS SHALL BE REMOVED AND THE APPROPRIATE COLOR TEMPORARY EDGE LINES SHALL BE APPLIED. THE RIGHT EDGE LINE IN THE TWO WAY TRAFFIC SECTION SHALL BE WHITE. ALL PAVEMENT MARKINGS WHICH WILL CROSS NORMAL TRAFFIC LANES SHALL BE INSTALLED USING REMOVABLE (645, TYPE C) TAPE, UNLESS THE AREA WILL BE RESURFACED PRIOR TO IMPLEMENTING THE NEXT TRAFFIC STAGE. AFTER COMPLETION OF THE WORK, TEMPORARY MARKINGS SHALL BE REMOVED IN ACCORDANCE WITH 641.10 AND THE ORIGINAL MARKINGS AND RAISED PAVEMENT MARKER REFLECTORS SHALL BE RESTORED.

5. PORTABLE CONCRETE BARRIER (PCB) NEAR THE EXITING CROSSOVER, SHALL EXTEND STRAIGHT ON THE PERMANENT ROADWAY TO 400 FT. BEYOND THE PT OF THE CROSSOVER AND THEN TAPER AT 20:1 ACROSS THE TRAFFIC LANE ENDING WITH A TEMPORARY IMPACT ATTENUATOR AS SHOWN.

6. PCB NEAR THE ENTERING CROSSOVER SHALL EXTEND TO A POINT 30 FT. FROM THE EDGE OF THE CROSSOVER ROADWAY.

7. PCB SHALL BE 50 IN. HIGH OR FITTED WITH GLARE SHIELDS WITHIN THE FOLLOWING LIMITS: (1) NEAR THE ENTERING CROSSOVE FROM THE BEGINNING OF BARRIER TO 300 FT BEYOND THE P.C. AND (2) FROM 200 FT IN ADVANCE OF P.T. TO THE END OF BARRIER NEAR THE EXITING CROSSOVER.

FOR LANE WIDTHS SEE SHEET 19.

T.I.A. = TEMPORARY IMPACT ATTENUATOR

PCB = PORTABLE CONCRETE BARRIER

F.H.W.A. REGION	STATE	PROJECT	FUNDS
5	OHIO		

22
196

SUM-277/224-0.00/6.31/10.22

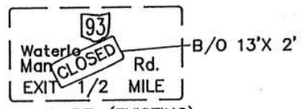

84+27 RT. (EXISTING)

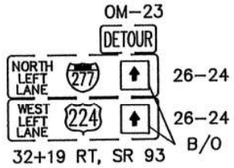

32+19 RT, SR 93

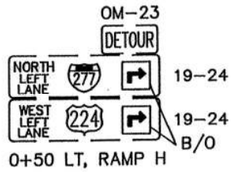

0+50 LT, RAMP H

COMPLETELY COVER SIGN AT:
STA. 91+93 RT
STA. 101+64 RT
STA. 109+05 (a),(b)&(c) RT
STA. 40+04 LT, S.R. 93

DETOUR PHASE 2

■ AREA OF ROAD CLOSURE

* CITY OF AKRON SHALL ERECT, MAINTAIN AND SUBSEQUENTLY REMOVE.

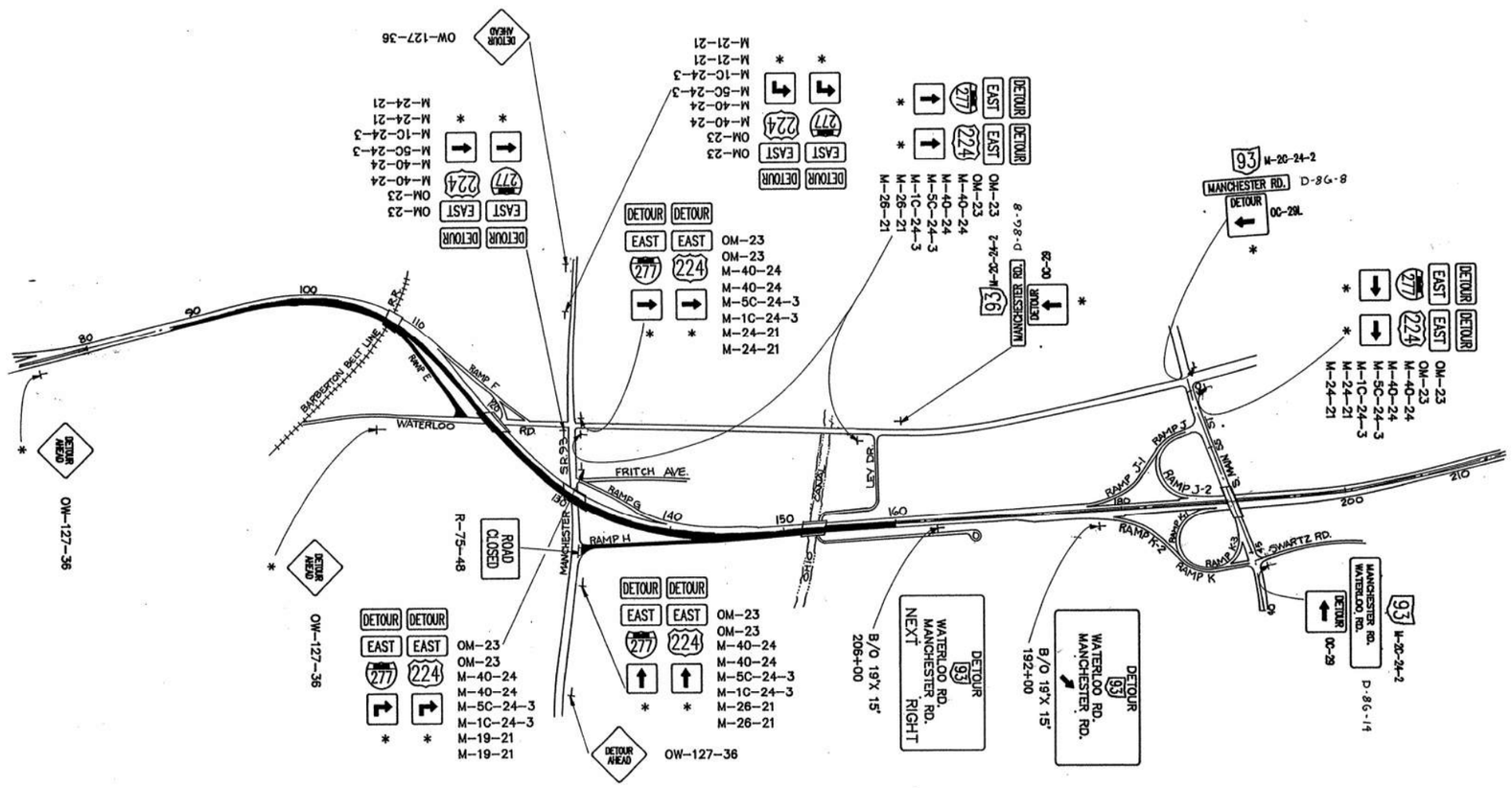

CROSSOVER DETOUR MAPS

F.H.W.A. REGION	STATE	PROJECT	FUNDS
5	OHIO		

23
196

SUM-277/224-0.00/6.31/10.22

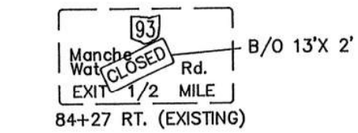

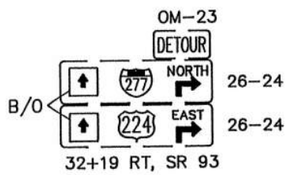

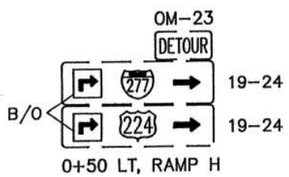

COMPLETELY COVER SIGNS AT:

STA. 162+24 LT
STA. 154+41 LT
STA. 140+30 LT (a)&(b)
STA. 95+00 LT (a)&(b)
STA. 39+92 RT SR 93
STA. 44+88 RT SR 93
STA. 16+76 LT WATERLOO
STA. 14+70 LT WATERLOO
STA. 48+24 RT SR 93

■ AREA OF ROAD CLOSURE

* CITY OF AKRON SHALL ERECT, MAINTAIN AND SUBSEQUENTLY REMOVE.

DETOUR PHASE 4

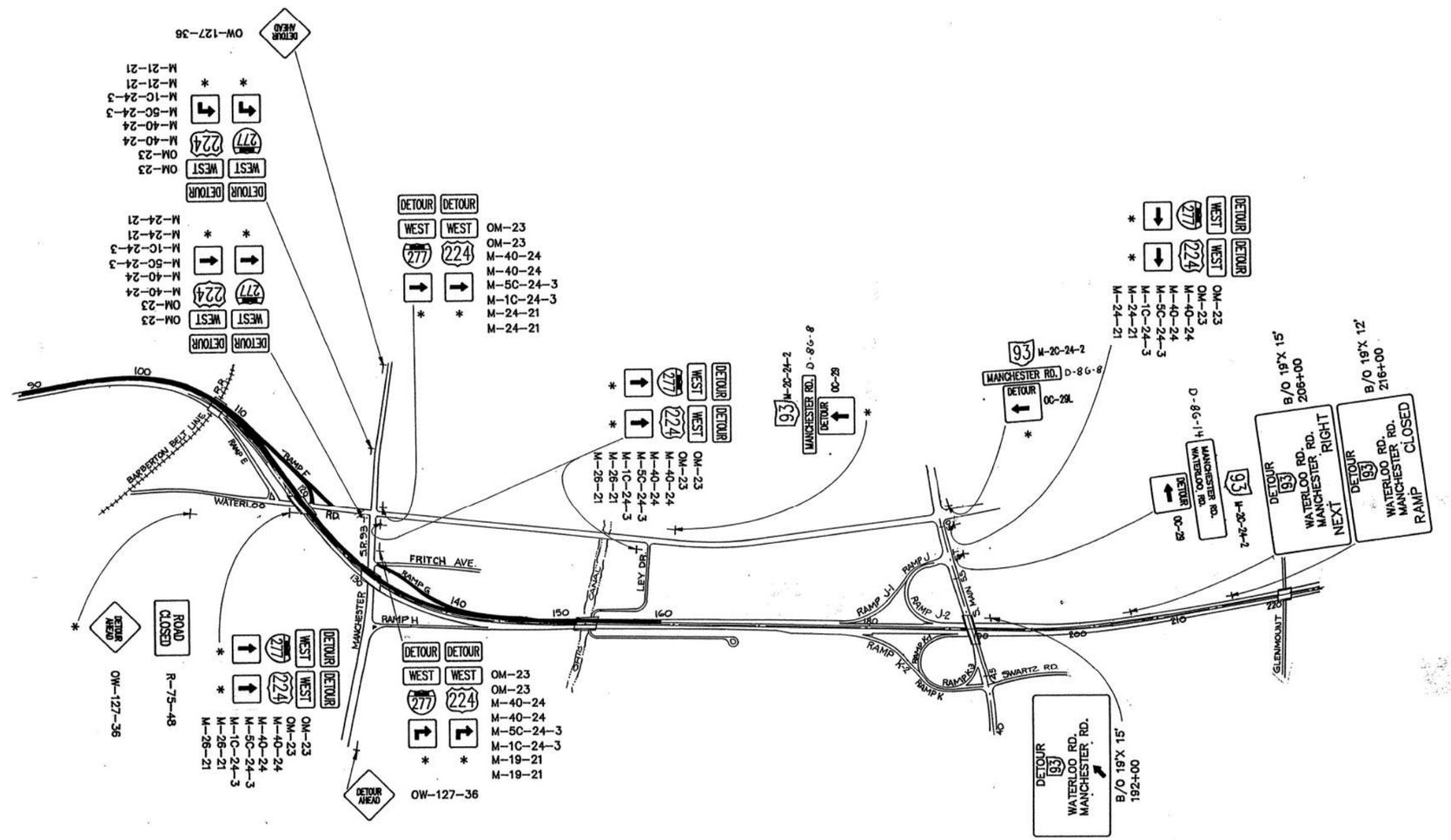

F.H.W.A. REGION	STATE	PROJECT	
5	OHIO		

SUM-277/224-0.00/6.31/10.22

LEGEND:

■ – CLOSED BRIDGE

ADD

DETOUR OM-23-24
EAST M-39-24
224 M-1-36-3

TO SIGNS AT STATIONS
518+10 I 77 SB
326+70(C) I 77 SB
340+17(C) I 77 SB

219+75 I 277 WB
194+17 I 277 WB

DETAIL 1

GATES SHALL BE EXTENDED FROM STA 498+00 IR 77 TO STA 505+00 IR 77 AND SHALL COMPLY WITH STANDARD CONSTRUCTION DRAWING 101.60. PAYMENT FOR THE FURNISHING, ERECTION, MAINTENANCE AND REMOVAL OF THE GATES SHALL BE INCLUDED IN THE LUMP SUM BID PRICE FOR ITEM 614-MAINTAINING TRAFFIC.

DURING THE CLOSURE OF RAMP R-2, RAMPS J-2, K-1, AND K-3 SHALL REMAIN OPEN TO TRAFFIC WITH NO LANE RESTRICTIONS.

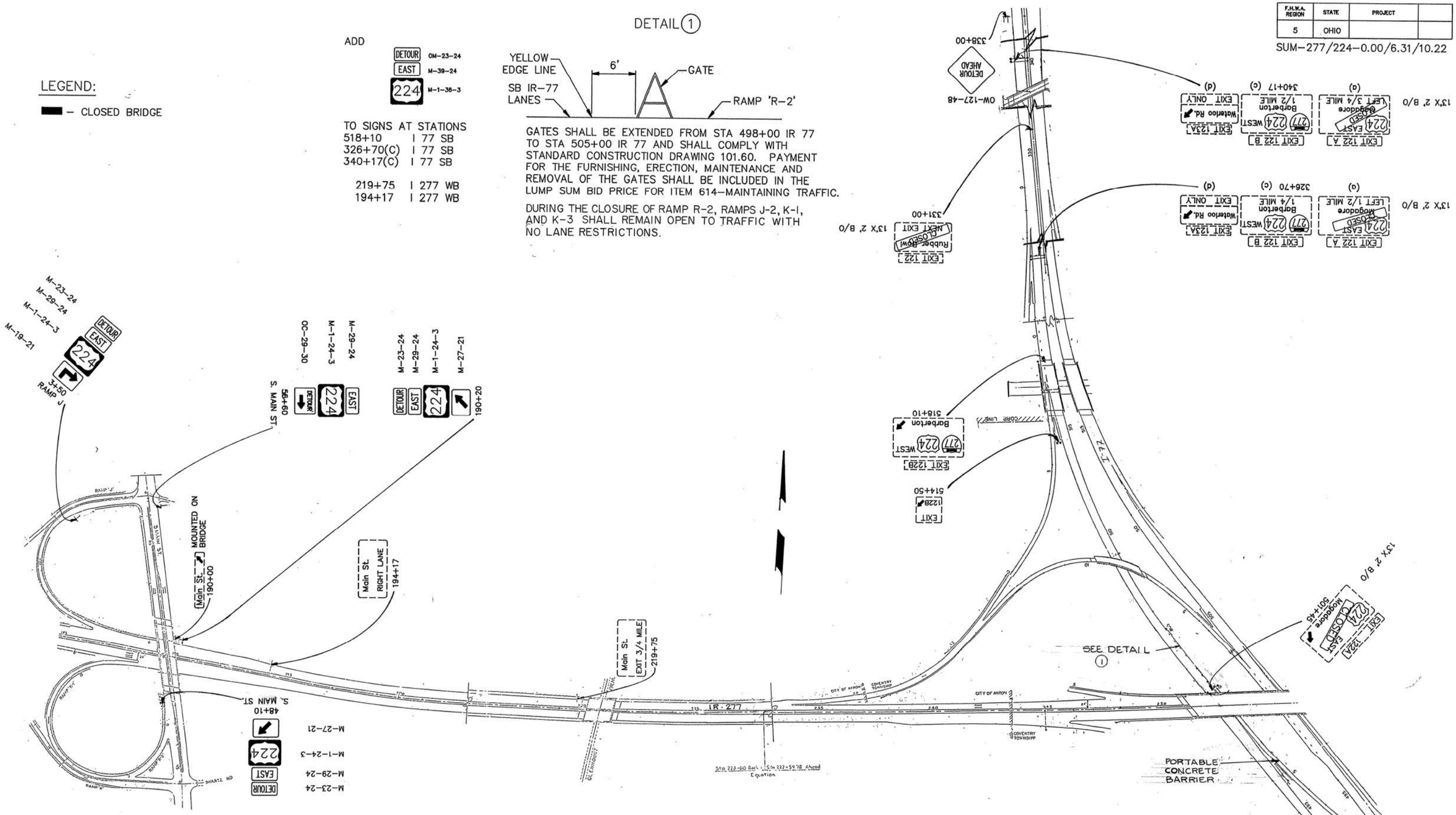

RAMPR2

RAMP R-2 DETOUR

F.H.W.A. REGION	STATE	PROJECT	
5	OHIO		

SUM-277/224-0.00/6.31/10.22

TEMPORARY PAVEMENT MARKING SUB-SUMMARY

LOCATION	SIDE	STATION FROM	STATION TO	TEMPORARY EDGE LINES, YELLOW, CLASS I	TEMPORARY EDGE LINES, WHITE, CLASS I	TEMPORARY LANE LINES, 4 INCH, CLASS I			TEMPORARY CHANNELIZING LINES, CLASS I	TEMPORARY STOP LINES, CLASS I		TEMPORARY TRANSVERSE LINES, WHITE, CLASS I			TEMPORARY LANE ARROWS, CLASS I	TEMPORARY WORD ON PAVEMENT 72 INCH "ONLY", CLASS I	
				LIN.FT	LIN.FT	LIN.FT			LIN.FT	LIN.FT		LIN.FT			EACH	EACH	
X-OVER PHASE I																	
IR 277	LT	85+50	168+50	8500	7850	1350											
	RT	85+50	166+50	8100													
PHASE II																	
IR 277	LT	89+00	164+00	14700	14120	14370											
IR 277	RT	86+70	161+00	7430	7430	7430											
RAMP E	RT/LT	0+00	11+50	965	990												
RAMP H	RT/LT	0+50	13+70	1250	1420												
PHASE III																	
IR 277	RT	89+00	164+00	7200	6690	7020											
PHASE IV																	
IR 277	LT	86+70	163+00	7630	7630	7630											
RAMP F	RT/LT	0+00	12+50	1345	1945												
ALL AREAS EXCEPT X-OVER																	
IR 277	LT	58+00	85+50	5500	5500	6540			420								
RAMP D	RT/LT	0+00	2+90	110	580				450			230					
IR 277	RT	41+80	85+50	8740	8740	10380			460								
IR 277	LT	168+50	260+23.28	19427	19427	36254			2060								
IR 277	RT	166+50	260+23.28	19827	19827	40617			1547								
IR 277	LT	260+23.28	279+71.95	3897	3897	7795			640								
IR 277	RT	260+23.28	279+71.95	3897	3897	4671											
IR 277	LT	279+71.95	326+65	9386	9386	11822			360								
IR 277	RT	279+71.95	315+25	7106	7106	9932			700								
RAMPS																	
K	RT/LT	0+50	5+44.53	705	1259				150						1	1	
K-1	RT/LT	5+44.53	14+65	720	920				200								
K-2	RT/LT	0+00	10+96.93	837	1097				140			126					
J	RT/LT	0+50	4+19.13	738	738				150						1	1	
J-1	RT/LT	4+19.13	14+60	846	1041				195								
J-2	RT/LT	0+00	8+40	580	840				155			140					
L	RT/LT	4+68	26+65	877	2197				280								
L-1	RT/LT	0+00	15+86	1236	1586				410			185					
L-2	RT/LT	4+00	25+00	2100	1140												
M	RT/LT	0+00	14+90	1065	1490				450			203					
N	RT/LT	0+00	15+45	1195	1545				520			189					
			IR 277 (67)	121623	116002	131591			7587	40		1073			2	2	
			F 51 ( ) RURAL	7794	7794	12466			640								
			F 51 ( ) URBAN	16492	16492	21754			1060								
			SUBTOTAL #1	145909	140288	165811			9287	40		1073			2	2	

LOCATION	SIDE	STATION FROM	STATION TO	TEMPORARY EDGE LINES, YELLOW, CLASS I	TEMPORARY EDGE LINES, WHITE, CLASS I	TEMPORARY LANE LINES, 4 INCH, CLASS I			TEMPORARY CHANNELIZING LINES, CLASS I	TEMPORARY STOP LINES, CLASS I		TEMPORARY TRANSVERSE LINES, WHITE, CLASS I			TEMPORARY LANE ARROWS, CLASS I	TEMPORARY WORD ON PAVEMENT 72 INCH "ONLY", CLASS I	
				LIN.FT	LIN.FT	LIN.FT			LIN.FT	LIN.FT		LIN.FT			EACH	EACH	
RAMPS																	
P	RT/LT	0+00	19+40	1515	1940				550			165					
R-1	RT/LT	5+25	27+80	1855	2255												
R-2	RT/LT	15+00	26+75	1175	275												
S	RT/LT	291+00	295+25	425	425												
S-1	RT/LT	295+25	305+25	675	1050				150								
S-2	RT/LT	291+60	301+14	754	954				400			120					
S-3	RT/LT	290+40	295+25	645	160												
T	RT/LT	304+50	290+20	1050	1430				380								
U	RT/LT	304+60	314+25	590	965				360	50		216			2	1	
SUB-TOTAL #2				8684	9454				1840	50		501			2	1	
			NM 277 (67)	125528	120472	131591			9327	40		1238			2	2	
			NH ( ) RURAL	7794	7794	12466			640								
			NH ( ) URBAN	21231	21476	21754			2350	50		336			2	1	
			SUB-TOTAL #1	145909	140288	165811			9287	40		1073			2	2	
			SUB-TOTAL #2	8684	9454				1840	50		501			2	1	
			TOTAL	154553	149742	165811			11127	90		1574			4	3	
			TOTAL		57.63 MI	31.40 MI			11127	90		1574			4	3	

QUANTITIES TAKEN TO GENERAL SUMMARY, SHEET 14

277PMSS

GENERAL

THIS ITEM OF WORK SHALL CONSIST OF FURNISHING, INSTALLING, MAINTAINING, AND SUBSEQUENTLY REMOVING TEMPORARY RAISED PAVEMRNT MARKERS (TRPM'S). THE MARKERS SHALL BE YELLOW OR WHITE, AS DESCRIBED IN THE PLAN.

MATERIAL

ALL MARKERS SHALL BE OF SUFFICIENT STRENGTH AND PROPERLY SHAPED SO AS NOT TO BE DISLODGED OR BROKEN, OR THE REFLECTOR DISLODGED OR BROKEN, OR THE REFLECTOR DISLODGED OR DAMAGED BY IMPACTS FROM VEHICLES TIRES, INCLUDING THOSE OF HIGH PRESSURE TRUCK TIRES LOADED TO 4500 POUNDS.

RETROREFLECTORS SHALL BE PROVIDED IN ONE OR TWO DIRECTIONS ON EACH MARKER AS REQUIRED BY THE USAGE AND SHALL RETURN WHITE OR YELLOW LIGHT AS IS APPROPRIATE FOR THE APPLICATION.

THE REFLECTOR SHALL HAVE AN EFFECTIVE AREA OF 0.35 SQUARE INCHES FOR TYPE A OR 3.0 SQUARE INCHES FOR TYPE B. ITS BRIGHTNESS OR SPECIFIC INTENSITY (WHEN TESTED AT 0.2 DEGREE ANGLE OF OBSERVATION AND THE FOLLOWING ANGLES OF INCIDENCE) SHALL MEET OR EXCEED THE FOLLOWING:

SPECIFIC INTENSITY

INCIDENCE ANGLE (DEGREES)	TYPE A WHITE	TYPE A YELLOW
0	1.0	0.6
20	0.4	0.24
45	—	—

	TYPE B WHITE	TYPE B YELLOW
0	3.0	1.8
20	1.2	0.72
45	0.3	0.2

ANGLE OF INCIDENCE FORMED BY A RAY FROM LIGHT SOURCE TO THE MARKER AND THE NORMAL TO THE LEADING EDGE OF THE MARKER FACE (ALSO HORIZONTAL ENTRANCE ANGLE) .

ANGLE OF OBSERVATION FORMED BY A RAY FROM LIGHT SOURCE TO THE MARKER AND THE RETURNED RAY FROM THE MARKER TO THE MEASURING RECEPTOR.

SPECIFIC INTENSITY IS THE MEAN CANDLEPOWER OF THE REFLECTED LIGHT (AT GIVEN INCIDENCE AND DIVERGENCE ANGLES) FOR EACH FOOT-CANDLE AT THE REFLECTOR (ON A PLANE PERPENDICULAR TO THE INCIDENT LIGHT) .

TYPE A MARKERS ARE INTENDED TO PROVIDE HIGH VISIBILITY BOTH DAY AND NIGHT. THEIR DAY TIME VISIBILITY SHALL BE ASSURED BY SIZE, SHAPE AND COLOR AS FOLLOWS:

1) THE MARKERS SHALL BE A HIGH VISIBILITY YELLOW OR WHITE COLOR WHICH WILL NOT DEGRADE SUBSTANTIALLY DUE TO TRAFFIC WEAR AND WHICH WILL MATCH THE COLOR OF THE REFLECTOR.

2) WHEN VIEWED FROM ABOVE, THE MARKERS SHALL HAVE A VISIBLE AREA OF NOT LESS THAN 14 SQUARE INCHES.

3) WHEN VIEWED FROM THE FRONT, PARALLEL TO THE PAVEMENT, AS FROM APPROACHING TRAFFIC, THE MARKER SHALL HAVE A WIDTH OF APPROXIMATELY 4 INCHES AND A VISIBLE AREA OF NOT LESS THAN 1.5 SQUARE INCHES.

TYPE B MARKERS ARE INTENDED TO PROVIDE HIGH VISIBILITY AT NIGHT BY RETROREFLECTING AUTOMOTIVE HEADLIGHT BACK TO DRIVER.

INSTALLATION

TEMPORARY RAISED PAVEMENT MARKERS SHALL BE ATTACHED TO CLEAN, DRY PAVEMENT BY A BUTYL ADHESIVE PAD, ABITUMINOUS ADHESIVE OR OTHER CONSTRUCTION GRADE ADHESIVES (SUCH AS FRANKLIN PANEL AND METAL ADHESIVE) SUITABLE TO ANCHOR THE MARKER UNDER THE ABOVE CONDITIONS. WHEN IT IS NECESSARY TO ATTACH MARKERS TO NEW CONCRETE PAVEMENT WITH CURING COMPOUND REMAINING, THE CURING COMPOUND MEMBRANE SHALL BE REMOVED BY SANDBLASTING OR OTHER MECHANICAL CLEANING METHOD. MARKERS SHALL BE INSTALLED IN ACCORDANCE WITH THE MANUFACTURER'S RECOMMENDATIONS.

THE CONTRACTOR SHALL IMMEDIATELY REPLACE, AT HIS EXPENSE, ANY MARKERS WHICH FAIL (BROKEN HOUSING, HOUSING WORN TO THE EXTENT THAT DAYTIME VISIBILITY IS SIGNIFICANTLY DIMINISHED OR OF AN UNACCEPTABLE COLOR, DETACHED OR BROKEN REFLECTOR, HOUSING DETACHED FROM ADHESIVE).

MARKERS ARE LIKELY TO BE REMOVED BY SNOW PLOWING OPERATIONS, THUS THEY ARE NOT CONSIDERED SUITABLE FOR USE DURING THE PERIOD FROM OCTOBER 15 UNTIL APRIL 30. THE CONTRACTOR IS ADVISED TO SCHEDULE HIS WORK AND/OR THE USE OF THESE DEVICES TO AVOID THIS PERIOD. SHOULD THE CONTRACTOR CHOOSE TO USE TRPM'S DURING THIS PERIOD AND THEY ARE SUBSEQUENTLY REMOVED OR DESTROYED BY SNOW AND ICE CONTROL ACTIVITIES. THE CONTRACTOR SHALL IMMEDIATELY, AT HIS EXPENSE, PROVIDE A SUBSTITUTE TRAFFIC GUIDANCE SYSTEM EFFECTIVE DURING DAY AND NIGHT AND WHICH IS ACCEPTABLE TO THE ENGINEER.

THE MARKERS SHALL BE PLACED ACCURATELY TO DEPICT STRAIGHT OR UNIFORMLY CURVING INES. WHEN USED TO SUPPLEMENT TEMPORARY PAVEMENT MARKINGS, THEY SHALL BE PLACED ON OR IMMEDIATELY ADJACENT TO THE PAVEMENT MARKING. LOCATIONS SHALL BE ADJUSTED UP TO ONE FOOT LONGITUDINALLY OR SIX INCHES LATERALLY TO AVOID PLACEMENT ON JOINTS, OR ON CRACKED OR DETERIORATED PAVEMENT. MARKERS SHALL NOT BE PLACED DIRECTLY ON PAVEMENT MARKINGS IF THIS DESTRACTS FROM THEIR ABILITY TO REMAIN ATTACHED TO THE PAVEMENT.

APPLICATION

1) WHEN REQUIRED TO SUPPLEMENT PAVEMENT MARKING, TEMPORARY RAISED PAVEMENT MARKERS SHALL BE PLACED AS FOLLOWS:

LINE	TYPE	SPACING
EDGE LINE	A OR B	20'C/C
LANE LINE	A OR B	40'C/C*
CENTER LINE (SINGLE/BROKEN)	A OR B	40'C/C*
CENTER LINE (DOUBLE/SOLID)	A OR B	2 UNITS SIDE BY SIDE 4 INCHES APART 20'C/C
CHANNELIZING LINE (INCLUDES EXIT GORE NOSE)	A OR B	10'C/C

* CENTERED IN GAP

2) WHEN USED TO SIMULATE (REPLACE) PAVEMENT MARKING, TEMPORARY RAISED PAVEMENT MARKERS SHALL BE PLACED AS FOLLOWS:

LINE	TYPE	SPACING
EDGE LINE	A	5' C/C
LANE LINE	A	403.33'C/C 30'GAP (40'CYCLE)
CENTER LINE (DOUBLE/SOLID)	A	2 UNITS SIDE BY SIDE 5' C/C
CENTER LINE (SINGLE/BROKEN)	A	403.33'C/C 30'GAP (40'CYCLE)
CHANNELIZING LINE (INCLUDES EXIT GORE NOSE)	A	5' C/C
EDGE LINE (TWO COLOR) (WHITE/YELLOW)	A	BACK TO BACK 5' C/C

YELLOW MARKERS USED TO SEPARATE OPPOSITE FLOWS OF TRAFFIC (CENTER LINES) SHALL INCLUDE REFLECTIONS FOR BOTH DIRECTIONS. ALL OTHER YELLOW AND WHITE MARKERS SHALL PROVIDE RETROREFLECTIVITY FOR ONE DIRECTION ONLY.

REMOVAL

REMOVAL SHALL BE ACCOMPLISHED IN A MANNER THAT LITTLE OR NONE OF THE ADHESIVE REMAINS ON THE PAVEMENT. PERMANENT PAVEMENT SURFACES SHALL NOT BE SCARRED, BROKEN OR ROUGHENED SIGNIFICANTLY.

PAVEMENT

BASIS OF PAYMENT SHALL BE AT THE CONTRACT UNIT PRICE PER EACH MARKER AND SHALL INCLUDE ALL LABOR, EQUIPMENT, HARDWARE AND INCIDENTALS REQUIRED TO PERFORM THE WORK. IT SHALL ALSO INCLUDE REPLACEMENT AT NO ADDITIONAL COST OF ALL TEMPORARY RAISED PAVEMENT MARKERS WHICH, IN THE JUDGEMENT OF THE ENGINEER, FAIL FOR ANY REASON, EXECPT DUE TO FAILURE OF THE PAVEMENT TO WHICH THEY ARE ATTACHED.

ITEM	UNIT	DESCRIPTION
614	EACH	TEMPORARY RAISED PAVEMENT MARKERS.

STATIONING FROM	TO	SIDE	SPACING (FT)	TYPE B OR A W	Y	Y/Y		REMARKS (LINE TYPE)	STATIONING FROM	TO	SIDE	SPACING (FT)	TYPE B OR A W	Y	Y/Y		REMARKS (LINE TYPE)
CROSSOVER									PHASE III								
PHASE 1									89+00	164+00	RT	20'	335	360			EDGE LINE
85+50	168+50	RT/LT	20'	393	830			EDGE LINE	89+00	164+00	RT	40'	176				LANE LINE
85+50	168+50	LT	40'	34				LANE LINE	PHASE IV								
PHASE II									86+70	163+00	LT	20'	382	382			EDGE LINE
89+00	164+00	LT	20'	706	735			EDGE LINE	86+70	163+00	LT	40'	191				LANE LINE
89+00	164+00	LT	40'	360				LANE LINE	RAMP"F"								
86+70	161+00	RT	20'	372	372			EDGE LINE	0+00	12+50	RT/LT	20'	98	68			EDGE LINE
86+76	161+00	RT	40'	372				LANE LINE									
RAMP"E"																	
0+00	11+50	RT/LT	20'	50	49			EDGE LINE									
RAMP"H"																	
0+50	13+70	RT/LT	20'	71	63			EDGE LINE									
SUB-TOTAL									TOTALS				3540	2859			
													6399				

REVISED BY: DATE:

210120

614 TEMPORARY RAISED PAVEMENT MARKERS

PLAN INSERT SHEET

DATE
03/30/88
03/23/90
03/28/90
07/03/90

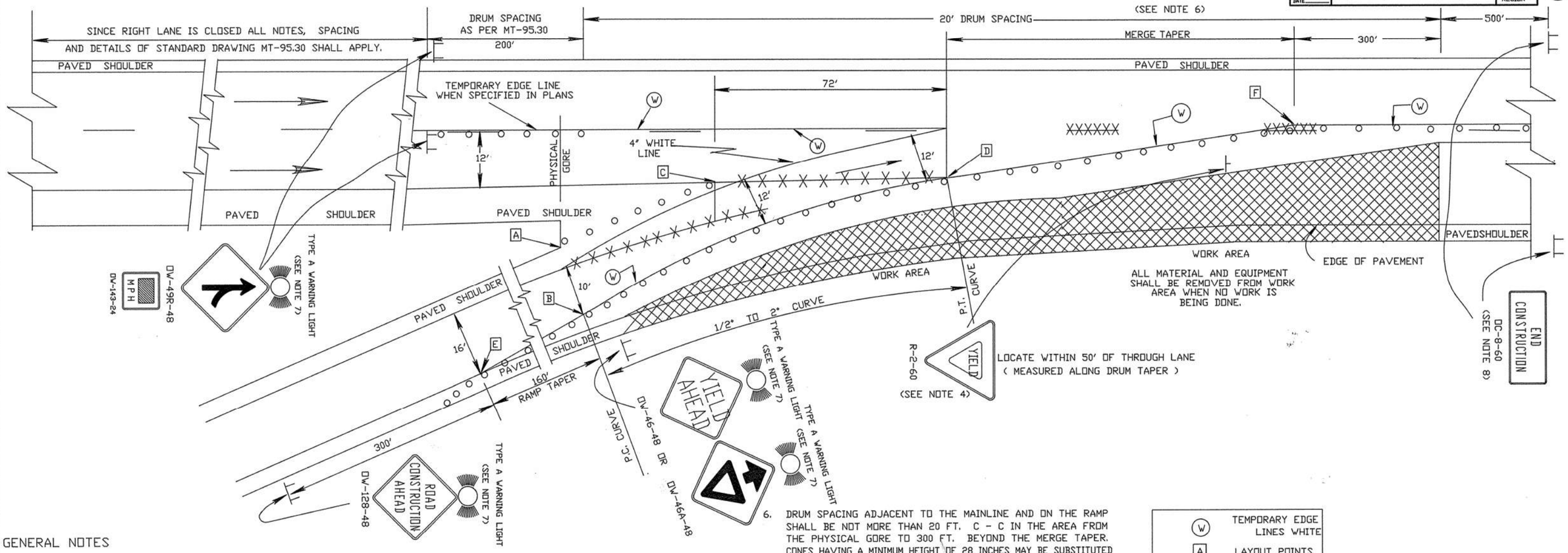

GENERAL NOTES

1. THIS WORK AREA TRAFFIC CONTROL APPLICATION SHALL BE EMPLOYED WHEN: (1) THE LATERAL CLEARANCE BETWEEN CHANNELIZING DEVICES AT THE RIGHT EDGE OF THE WORK AREA AND THE EDGE OF PAVEMENT IS LESS THAN 10 FT. (12 FT. IF THE SHOULDER PAVEMENT IS USED) AS SHOWN ON DRAWING MT-98.15, AND (2) THE REQUIRED RAMP TAPERS AND CURVES CAN BE PROVIDED AS SHOWN. IN THE EVENT THE WORK ZONE CONDITION WOULD PERMIT THE USE OF EITHER MT-98.15 OR MT-98.16, MT-98.15 SHALL BE USED. THIS TRAFFIC CONTROL MEASURE SHALL NOT BE PLACED IN EFFECT UNTIL IMMEDIATELY BEFORE THE CONTRACTOR IS FULLY PREPARED TO PERFORM THE WORK ON THE RAMP OR LANE ADJACENT TO IT. ONCE THIS MEASURE IS PLACED INTO EFFECT, THE CONTRACTOR SHALL EXPEDITIOUSLY PURSUE THE WORK (WORKING CONTINUOUSLY WITH FULL CREW IN THE RAMP AREA ON ALL NORMAL WORKING DAYS) UNTIL IT IS COMPLETED AND SHALL IMMEDIATELY OPEN THE AREA TO NORMAL TRAFFIC OR, AS A MINIMUM, REVERT TO THE METHODS SHOWN ON MT-98.15. IT IS THE INTENT THAT THE LONGEST MERGING TAPER LENGTH POSSIBLE SHALL BE CHOSEN, COMMENSURATE WITH THE REQUIREMENTS OF CONSTRUCTION.

2. THE RAMP TAPER SHALL DESIRABLY BE LOCATED TO PROVIDE A 10' MINIMUM PATH BETWEEN DRUMS AND THE PAVED SHOULDER IN THE GORE. THE RAMP TRAFFIC MAY BE PLACED ON THE PAVED GORE AS SHOWN ABOVE ONLY IF (1) THE TRAFFIC WILL USE THE PAVED SHOULDER PAVEMENT LESS THAN ONE DAY AND THE SHOULDER PAVEMENT IS IN GOOD CONDITION AND IS LEVEL AND SMOOTH OR (2) IF THE SHOULDER PAVEMENT IS ADEQUATELY STRENGTHENED, LEVELED AND SMOOTHED TO CARRY THE ANTICIPATED LOAD. A MINIMUM OF 3 DRUMS SHALL BE USED IN THE RAMP SHOULDER TAPER.

3. WHEN THE RAMP IS NOT LONG ENOUGH TO ALLOW PLACEMENT AS SPECIFIED ABOVE, THE SIGNS MAY BE SPACED PROPORTIONATELY WITHIN THE SPACE AVAILABLE AS DETERMINED BY THE ENGINEER (A 200 FOOT MINIMUM SPACING MUST BE MAINTAINED).

4. IT WILL BE NECESSARY TO MOVE THE LOCATION OF ANY EXISTING YIELD CONDITION. IN THESE CASES, THE PERMANENT R-2 SIGN INSTALLATION SHALL BE COVERED AND THE TEMPORARY INSTALLATION SHALL BE MOUNTED APPROPRIATELY. IF THE REQUIRED DISTANCES (RAMP TAPER, CURVE AND MERGE TAPER) CANNOT BE OBTAINED, THE ENGINEER MAY APPROVE SLIGHTLY LOWER VALUES FOR A SHORT TIME, IN WHICH CASE THE YIELD SIGN SHALL BE REMOVED AND A 36" STOP SIGN PLACED APPROPRIATELY TO BE VISIBLE TO RAMP TRAFFIC BUT NOT BE OBTRUSIVE TO MAINLINE TRAFFIC.

5. IF THE CONSTRUCTION OPERATION REQUIRES THE LANE CLOSURE FOR MORE THAN ONE DAY THEN THE EXISTING CONFLICTING PAVEMENT MARKINGS AND REFLECTORS FROM THE RAISED PAVEMENT MARKERS (RPM'S) SHALL BE REMOVED AND THE APPROPRIATE COLOR TEMPORARY EDGE LINES SHALL BE APPLIED ALONG THE TAPER. TEMPORARY EDGE LINES WHICH WOULD CONFLICT WITH FINAL TRAFFIC LANES SHALL BE REMOVABLE (945.03 TYPE-C) TAPE UNLESS THE AREA WILL BE RESURFACED IN THE NEXT WORK PHASE. AFTER COMPLETION OF THE WORK, TEMPORARY MARKINGS SHALL BE REMOVED IN ACCORDANCE WITH 641.10 AND THE ORIGINAL MARKINGS AND RAISED PAVEMENT MARKER REFLECTORS SHALL BE RESTORED.

6. DRUM SPACING ADJACENT TO THE MAINLINE AND ON THE RAMP SHALL BE NOT MORE THAN 20 FT. C - C IN THE AREA FROM THE PHYSICAL GORE TO 300 FT. BEYOND THE MERGE TAPER. CONES HAVING A MINIMUM HEIGHT OF 28 INCHES MAY BE SUBSTITUTED FOR DRUMS FOR DAYTIME LANE CLOSURES. PROVISIONS SHALL BE MADE TO SAFELY STABILIZE THE CONES TO PREVENT THEM FROM BLOWING OVER. IF THIS CANNOT BE ACHIEVED, DRUMS SHALL BE USED.

7. TYPE A FLASHING WARNING LIGHTS ARE REQUIRED ON THE ROAD CONSTRUCTION AHEAD (DW-128-48), MERGE (DW-49R-48), AND THE YIELD AHEAD (DW-46-48) SIGNS WHENEVER A NIGHT LANE CLOSURE IS NECESSARY.

8. THE DC-8 SIGNS ARE ONLY REQUIRED FOR LANE CLOSURES OF MORE THAN ONE DAY AND MAY BE OMITTED IF THEY FALL WITHIN THE LIMITS OF A CONSTRUCTION PROJECT.

9. FROM THE END OF THE GORE AREA GRADED SHOULDER (POINT A), LOCATE THE PC OF THE CURVE BY MEASURING PERPENDICULAR TO THE RAMP CENTERLINE 10' OF RAMP PAVEMENT, NOT INCLUDING PAVED SHOULDER WIDTH (POINT B). FROM THE END OF THE GORE AREA PAVED SHOULDER (POINT C), LOCATE THE PT OF THE CURVE BY MEASURING 72' FROM POINT C ALONG THE EDGE OF PAVEMENT EXTENDED (POINT D).

10. PLACEMENT OF DRUMS SHALL BEGIN AT (POINT E) 160' UPSTREAM FROM THE PREVIOUSLY LOCATED PC (POINT B) AND AT THE RIGHT EDGE OF RAMP PAVEMENT. FROM THIS POINT A DRUM TAPER SHALL BE PLACED TO THE PC (POINT B) AND THEN ALONG A CURVE AS SHOWN TO THE PT (POINT D) WHERE A 48:1 (MIN.) MERGE TAPER SHALL MEET MAINLINE TRAFFIC CONTROL (POINT F).

(W)	TEMPORARY EDGE LINES WHITE
[A]	LAYOUT POINTS
~~XXXXXXXXX~~	MARKINGS REMOVED

ALL WORK AND TRAFFIC CONTROL DEVICES SHALL BE IN ACCORDANCE WITH 614 AND OTHER APPLICABLE PORTIONS OF THE C & M SPECIFICATIONS AS WELL AS IN ACCORDANCE WITH PART 7 OF THE OMUTCD. PAYMENT FOR ALL LABOR, EQUIPMENT AND MATERIALS TO PROVIDE THIS METHOD OF TRAFFIC CONTROL SHALL BE INCLUDED IN THE LUMP SUM BID FOR 614 MAINTAINING TRAFFIC, UNLESS SEPARATELY ITEMIZED IN THE PLAN.

REVISED BY:	DATE: 8/13/91
209816	DATE 05/07/90 8/13/91
LANE CLOSURE AT ENTRANCE RAMP PLAN B	
PLAN INSERT SHEET	

WCC

CALC BY ____ DATE ____	SUM-277/224-0.00/6.31/10.22	OHIO	28
CHKD BY ____ DATE ____		FHWA REGION 5	196

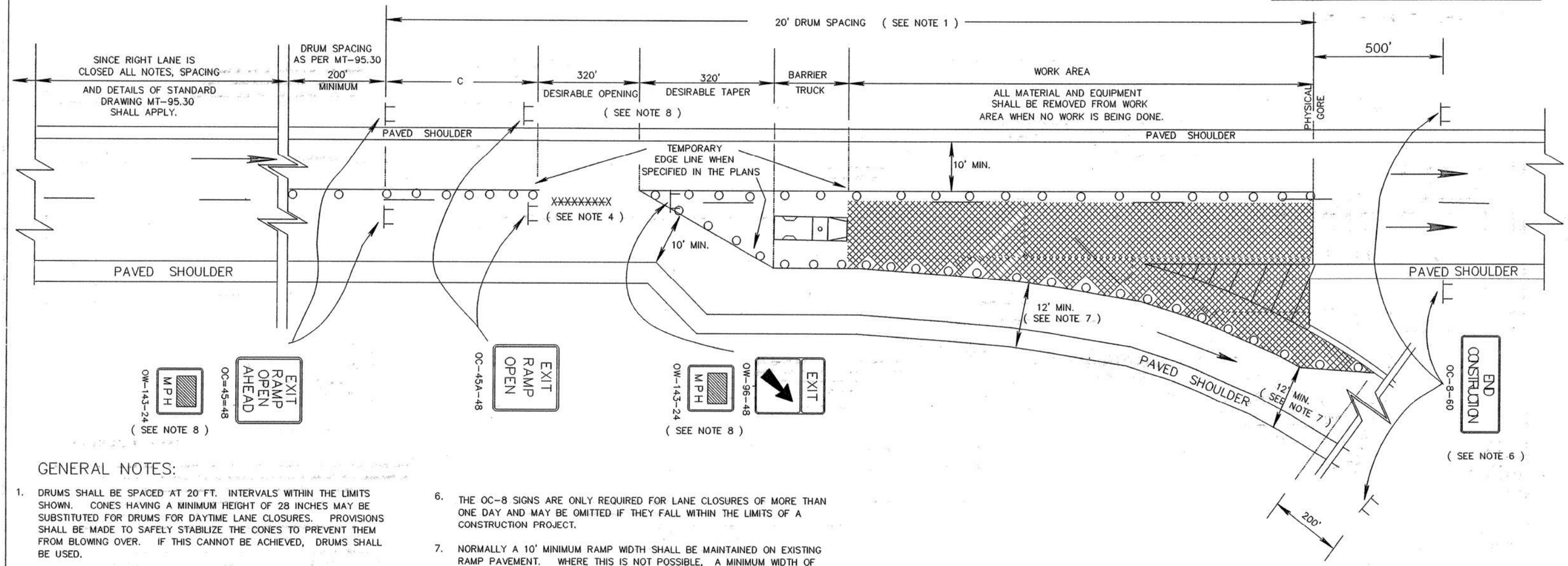

GENERAL NOTES:

1. DRUMS SHALL BE SPACED AT 20 FT. INTERVALS WITHIN THE LIMITS SHOWN. CONES HAVING A MINIMUM HEIGHT OF 28 INCHES MAY BE SUBSTITUTED FOR DRUMS FOR DAYTIME LANE CLOSURES. PROVISIONS SHALL BE MADE TO SAFELY STABILIZE THE CONES TO PREVENT THEM FROM BLOWING OVER. IF THIS CANNOT BE ACHIEVED, DRUMS SHALL BE USED.

2. THE BARRIER TRUCK SHOWN AT THE BEGINNING OF THE WORK AREA SHALL BE IN PLACE AND UNOCCUPIED WHENEVER WORKERS ARE IN THE WORK AREA. THIS VEHICLE SHALL BE REMOVED FROM THE PAVEMENT WHENEVER WORKERS ARE NOT IN THE WORK AREA. OTHER PROTECTIVE DEVICES MAY BE USED IN LIEU OF THE BARRIER TRUCK SHOWN WHEN APPROVED BY THE ENGINEER. THE VEHICLE SHALL BE EQUIPPED WITH A 360 DEGREE ROTATING OR FLASHING AMBER BEACON CLEARLY VISIBLE A MINIMUM OF 1/4 MILE.

4. IF THE CONSTRUCTION OPERATION REQUIRES THE LANE CLOSURE FOR MORE THAN ONE DAY THEN THE EXISTING CONFLICTING PAVEMENT MARKINGS AND REFLECTORS FROM THE RAISED PAVEMENT MARKERS (RPMS) SHALL BE REMOVED. THE APPROPRIATE COLOR TEMPORARY EDGE LINE SHALL BE APPLIED WHEN SPECIFIED IN THE PLANS. TEMPORARY EDGE LINES WHICH WOULD CONFLICT WITH FINAL TRAFFIC LANES SHALL BE REMOVABLE (947.03 TYPE-C) TAPE OR TEMPORARY RPM'S UNLESS THE AREA WILL BE RESURFACED IN THE NEXT WORK PHASE AFTER COMPLETION OF THE WORK. TEMPORARY MARKINGS SHALL BE REMOVED IN ACCORDANCE WITH 641.10 AND THE ORIGINAL MARKINGS AND PAVEMENT MARKER REFLECTORS SHALL BE RESTORED.

5. 36" CONSTRUCTION SIGN SIZES MAY BE USED ON DIVIDED ROADWAYS THAT ARE NOT CLASSIFIED AS FREEWAYS OR EXPRESSWAYS.

6. THE OC-8 SIGNS ARE ONLY REQUIRED FOR LANE CLOSURES OF MORE THAN ONE DAY AND MAY BE OMITTED IF THEY FALL WITHIN THE LIMITS OF A CONSTRUCTION PROJECT.

7. NORMALLY A 10' MINIMUM RAMP WIDTH SHALL BE MAINTAINED ON EXISTING RAMP PAVEMENT. WHERE THIS IS NOT POSSIBLE, A MINIMUM WIDTH OF 12' INCLUDING THE PAVED SHOULDER MAY BE USED ONLY: (1) IF THE TRAFFIC WILL BE ON THE SHOULDER LESS THAN ONE DAY AND THE SHOULDER IS IN GOOD CONDITION, OR (2) IF THE SHOULDER PAVEMENT IS STRENGTHENED TO HOLD THE ANTICIPATED LOAD.

8. THE OPENING TO THE RAMP AND THE TAPER IN ADVANCE OF THE CLOSED LANE SHALL EACH BE 320 FT. OR MORE WHENEVER POSSIBLE. A LESSER OPENING AND/OR TAPER LENGTH MAY BE PROVIDED IF NO OTHER ALTERNATIVE IS AVAILABLE. THE OPENING SHALL NEVER BE LESS THAN THE TAPER, BUT MAY BE MORE. WHEN LESSER OPENING AND/OR TAPER LENGTHS ARE PROVIDED, ADVISORY SPEED PLAQUES (OW-143) SHALL BE ADDED TO THE OW-96 AND OC-45 SIGNS AS FOLLOWS:

OPENING/TAPER	ADVISORY SPEED
290 FT.	50 MPH
260 FT.	45 MPH
230 FT.	40 MPH
200 FT.	35 MPH

IF 200 FT. MINIMUM DIMENSION CANNOT BE PROVIDED, THE RAMP SHOULD BE CLOSED.

THE ADVISORY SPEED DISPLAYED SHALL NOT BE GREATER THAN WOULD OTHERWISE BE REQUIRED TO ACCOMODATE THE PERMANENT RAMP GEOMETRY NEAR THE EXIT.

ADVISORY SPEEDS WITHIN 10 MPH OF THE LEGAL SPEED LIMIT NEED NOT BE DISPLAYED.

TABLE I

MINIMUM DISTANCE	
	C
MAJOR STANDARD	500'
URBAN FREEWAY EXPRESSWAY	500' TO 1000'
RURAL FREEWAY EXPRESSWAY	1000'

ALL WORK AND TRAFFIC CONTROL DEVICES SHALL BE IN ACCORDANCE WITH 614 AND OTHER APPLICABLE PORTIONS OF THE C & M SPECIFICATIONS AS WELL AS IN ACCORDANCE WITH PART 7 OF OMUTCD. PAYMENT FOR ALL LABOR, EQUIPMENT AND MATERIALS TO PROVIDE THIS METHOD OF TRAFFIC CONTROL SHALL BE INCLUDED IN THE LUMP SUM BID FOR 614 MAINTAINING TRAFFIC, UNLESS SEPARATELY ITEMIZED IN THE PLAN.

REVISED BY:	DATE:
209814	DATE 05/15/89
LANE CLOSURE AT EXIT GORE	
PLAN INSERT SHEET	

209T

CALC BY ____ DATE ____	OHIO	29
CHK'D BY ____ DATE ____	FHWA REGION 5	196

SUM-277/224-0.00/6.31/10.22

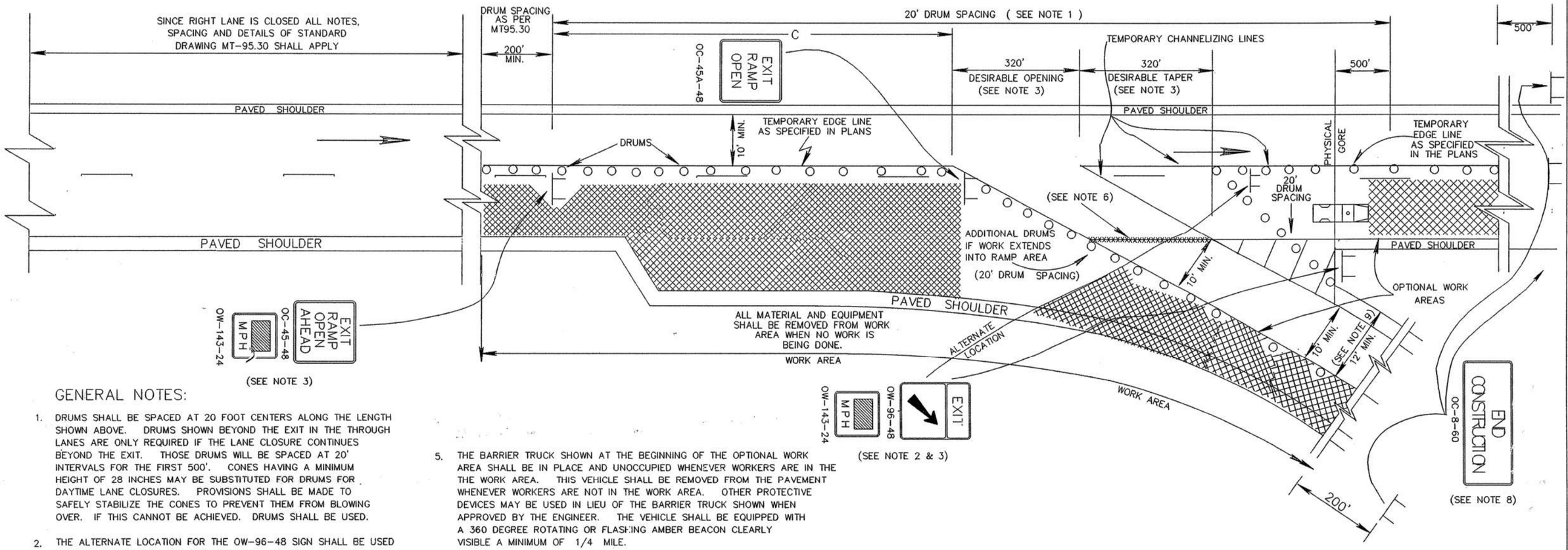

GENERAL NOTES:

1. DRUMS SHALL BE SPACED AT 20 FOOT CENTERS ALONG THE LENGTH SHOWN ABOVE. DRUMS SHOWN BEYOND THE EXIT IN THE THROUGH LANES ARE ONLY REQUIRED IF THE LANE CLOSURE CONTINUES BEYOND THE EXIT. THOSE DRUMS WILL BE SPACED AT 20' INTERVALS FOR THE FIRST 500'. CONES HAVING A MINIMUM HEIGHT OF 28 INCHES MAY BE SUBSTITUTED FOR DRUMS FOR DAYTIME LANE CLOSURES. PROVISIONS SHALL BE MADE TO SAFELY STABILIZE THE CONES TO PREVENT THEM FROM BLOWING OVER. IF THIS CANNOT BE ACHIEVED. DRUMS SHALL BE USED.

2. THE ALTERNATE LOCATION FOR THE OW-96-48 SIGN SHALL BE USED IF THE LANE CLOSURE EXTENDS BEYOND THE EXIT. THIS SIGN MAY BE PLACED ADJACENT TO THE GF SIGN IN THE GORE IF THE LANE CLOSURE DOES NOT EXTEND BEYOND THE EXIT.

3. THE OPENING TO THE RAMP AND THE TAPER ACROSS THE CLOSED LANE SHALL EACH BE 320 FT. OR MORE WHENEVER POSSIBLE. A LESSER OPENING AND/OR TAPER MAY BE PROVIDED IF NO OTHER ALTERNATIVE IS AVAILABLE. THE OPENING SHALL NEVER BE LESS THAN THE TAPER, BUT MAY BE MORE. WHEN LESSER OPENING AND/OR TAPER LENGTHS ARE PROVIDED, ADVISORY SPEED PLAQUES (OW-143) SHALL BE ADDED TO THE OW-96 AND OC-45 SIGNS AS FOLLOWS:

OPENING/TAPER	ADVISORY SPEED
290 FT.	50 MPH
260 FT.	45 MPH
230 FT.	40 MPH
200 FT.	35 MPH

IF 200 FT. MINIMUM DIMENSIONS CANNOT BE PROVIDED, THE RAMP SHOULD BE CLOSED.

THE ADVISORY SPEED DISPLAYED SHALL NOT BE GREATER THAN WOULD OTHERWISE BE REQUIRED TO ACCOMODATE THE PERMANENT RAMP GEOMETRY NEAR THE EXIT.

ADVISORY SPEEDS WITHIN 10 MPH OF THE LEGAL SPEED LIMIT NEED NOT BE DISPLAYED.

5. THE BARRIER TRUCK SHOWN AT THE BEGINNING OF THE OPTIONAL WORK AREA SHALL BE IN PLACE AND UNOCCUPIED WHENEVER WORKERS ARE IN THE THE WORK AREA. THIS VEHICLE SHALL BE REMOVED FROM THE PAVEMENT WHENEVER WORKERS ARE NOT IN THE WORK AREA. OTHER PROTECTIVE DEVICES MAY BE USED IN LIEU OF THE BARRIER TRUCK SHOWN WHEN APPROVED BY THE ENGINEER. THE VEHICLE SHALL BE EQUIPPED WITH A 360 DEGREE ROTATING OR FLASHING AMBER BEACON CLEARLY VISIBLE A MINIMUM OF 1/4 MILE.

6. IF THE CONSTRUCTION OPERATION REQUIRES THE LANE CLOSURE FOR MORE THAN ONE DAY THEN THE EXISTING CONFLICTING PAVEMENT MARKINGS AND REFLECTORS FROM THE RAISED PAVEMENT MARKERS (RPMS) SHALL BE REMOVED. THE APPROPRIATE COLOR TEMPORARY EDGE LINE SHALL BE APPLIED WHEN SPECIFIED IN THE PLAN. TEMPORARY EDGE LINES WHICH WOULD CONFLICT WITH FINAL TRAFFIC LANES SHALL BE REMOVABLE (947.03 TYPE-C) TAPE OR TEMPORARY RPM'S UNLESS THE AREA WILL BE RESURFACED IN THE NEXT WORK PHASE AFTER COMPLETION OF THE WORK. TEMPORARY MARKINGS SHALL BE REMOVED IN ACCORDANCE WITH 641.10 AND THE ORIGINAL MARKINGS AND PAVEMENT MARKER REFLECTORS SHALL BE RESTORED.

7. 36" CONSTRUCTION SIGN SIZES MAY BE USED ON DIVIDED ROADWAYS THAT ARE NOT CLASSIFIED AS FREEWAYS OR EXPRESSWAYS.

8. THE OC-8 SIGNS ARE ONLY REQUIRED FOR LANE CLOSURES OF MORE THAN ONE DAY AND MAY BE OMITTED IF THEY FALL WITHIN THE LIMITS OF A CONSTRUCTION PROJECT.

9. NORMALLY A 10' MINIMUM RAMP WIDTH SHALL BE MAINTAINED ON EXISTING RAMP PAVEMENT. WHERE THIS IS NOT POSSIBLE, A MINIMUM WIDTH OF 12' INCLUDING THE PAVED SHOULDER MAY BE USED ONLY: (1) IF THE TRAFFIC WILL BE ON THE SHOULDER LESS THAN ONE DAY AND THE SHOULDER IS IN GOOD CONDITION, OR (2) IF THE SHOULDER PAVEMENT IS STRENGTHENED TO HOLD THE ANTICIPATED LOAD.

TABLE I

MINIMUM DISTANCE	
	C
MAJOR STANDARD	500'
URBAN FREEWAY EXPRESSWAY	500' TO 1000'
RURAL FREEWAY EXPRESSWAY	1000'

ALL WORK AND TRAFFIC CONTROL DEVICES SHALL BE IN ACCORDANCE WITH 614 AND OTHER APPLICABLE PORTIONS OF THE C & M SPECIFICATIONS AS WELL AS IN ACCORDANCE WITH PART 7 OF OMUTCD. PAYMENT FOR ALL LABOR, EQUIPMENT AND MATERIALS TO PROVIDE THIS METHOD OF TRAFFIC CONTROL SHALL BE INCLUDED IN THE LUMP SUM BID FOR 614 MAINTAINING TRAFFIC, UNLESS SEPARATELY ITEMIZED IN THE PLAN.

REVISED BY:	DATE:

209813	DATE 05/15/89
LANE CLOSURE BEFORE EXIT GORE	
PLAN INSERT SHEET	

209S

REVISED 9/88

F.H.W.A. REGION	STATE	PROJECT NO.	FUNDS
5	OHIO		

30
196

SUM-277/224-0.00/6.31/10.22

PROPOSED BARRIER DETAILS

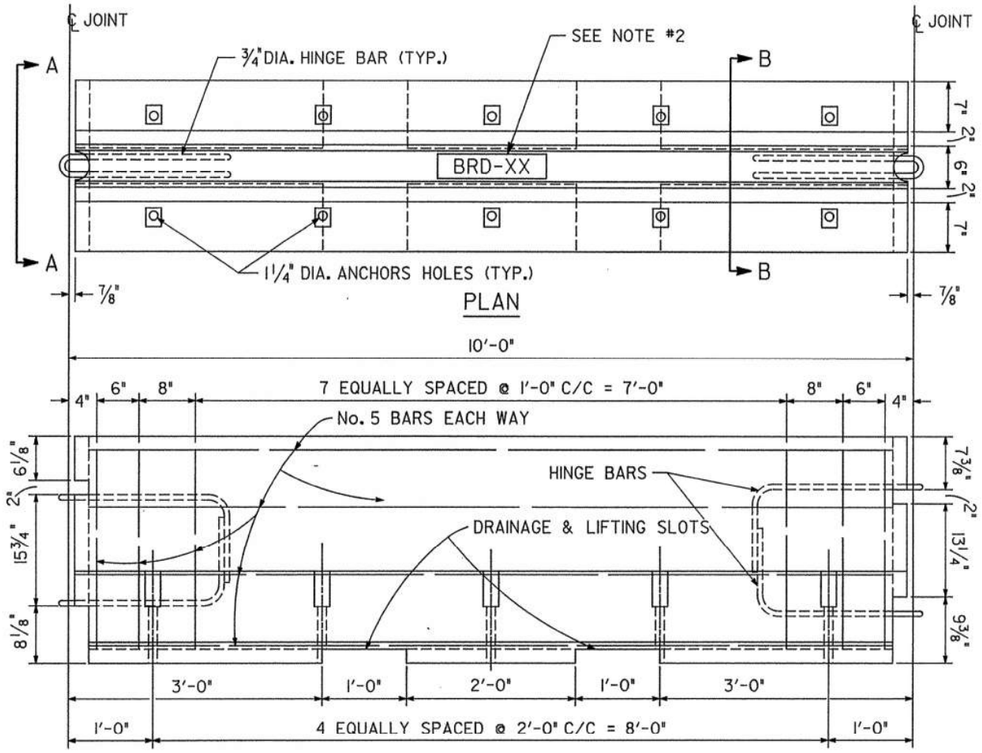

ELEVATION

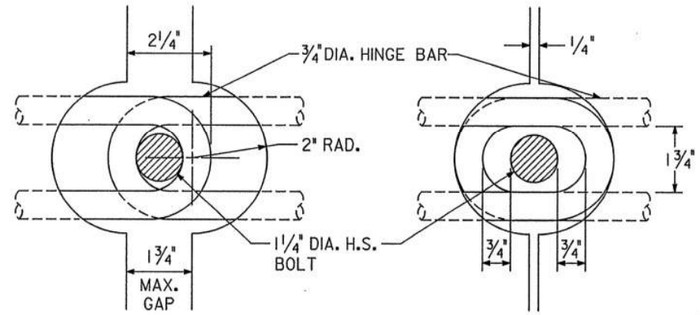

① OPEN JOINT ② CLOSED JOINT

JOINT CONNECTION DETAILS

① BARRIER JOINTS MUST BE FULLY OPEN BEFORE NUT IS TIGHTED ONTO BOLT AND OPENING IS EITHER GROUTED OR SHIMMED.

② BARRIERS SHOULD INITIALLY BE PLACED CLOSER TOGETHER SO THAT BOLTS CAN BE EASILY INSERTED THROUGH HINGE BAR LOOPS.

NOTES:

1. ALL ANCHORS SHALL BE 1" DIA., HIGH STRENGTH, THRU BOLTS OR APPROVED RESIN ANCHORS. WHEN RESIN ANCHORS ARE USED, THEY MUST BE EMBEDDED A MINIMUM OF 6" INTO FIRM CONCRETE. THE NUMBER OF ANCHORS SHALL BE AS SPECIFIED IN THE PLAN.

2. ALL NEW BARRIER SEGMENTS MADE ACCORDINGLY TO THE PROPOSED DESIGN, OR AN APPROVED EQUAL, SHALL BE CLEARLY MARKED, SUCH AS "BRD-XX". (WHERE XX = THE YEAR CAST)

3. PROPOSED BARRIER DESIGN DATA:

   1. THE STEEL ROD CONNECTOR LOOPS AND THE OTHER REINFORCING STEEL, SHALL HAVE A MINIMUM YIELD STRENGTH OF 60,000 psi.

   2. THE CONCRETE SHALL HAVE A MINIMUM COMPRESSIVE STRENGTH OF 4,000 psi.

4. THE DESIGNER MAY USE THIS BARRIER OR ONE OF A SIMILAR DESIGN, AS APPROVED BY THE DIRECTOR. ALL DESIGNS SHALL MEET OR EXCEED THE DESIGN REQUIREMENTS DESCRIBED IN THE REPORT, "DESIGN AND EVALUATION OF TEMPORARY PRECAST CONCRETE BARRIERS FOR USE ON OHIO BRIDGE DECKS"*. DESIGNS, AS SUBMITTED, SHALL BECOME THE PROPERTY OF THE STATE OF OHIO.

* COPIES OF THIS REPORT ARE AVAILABLE FROM THE OHIO DEPARTMENT OF TRANSPORTATION, BUREAU OF BRIDGES AND STRUCTURAL DESIGN.

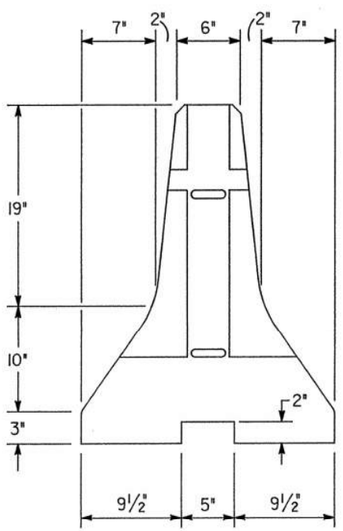

SECTION "A-A"

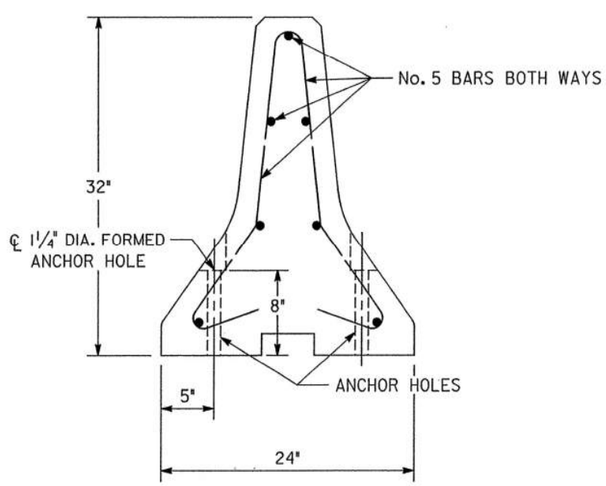

SECTION "B-B"

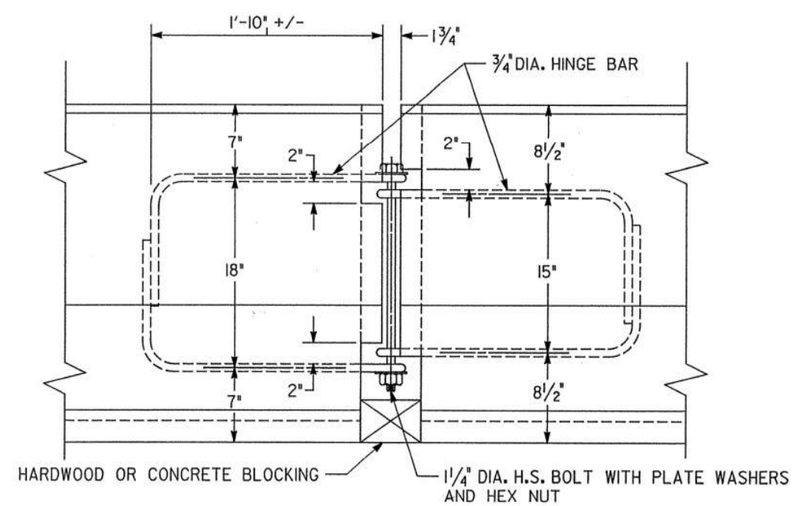

DETAIL AT HINGED CONNECTION

DRAWN 2/88

REVISED 9/88

MODIFIED (EXISTING) BARRIER DETAILS

F.H.W.A. REGION	STATE	PROJECT NO.	FUNDS
	OHIO		

31/196

SUM-277/224-0.00/6.31/10.22

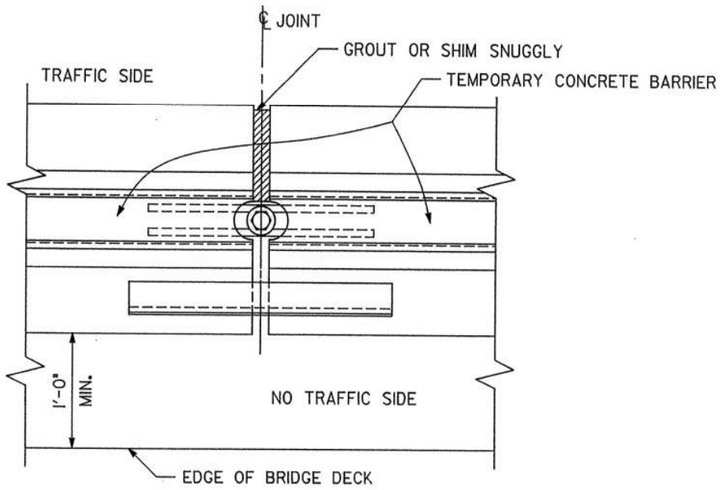

PLAN AT JOINT

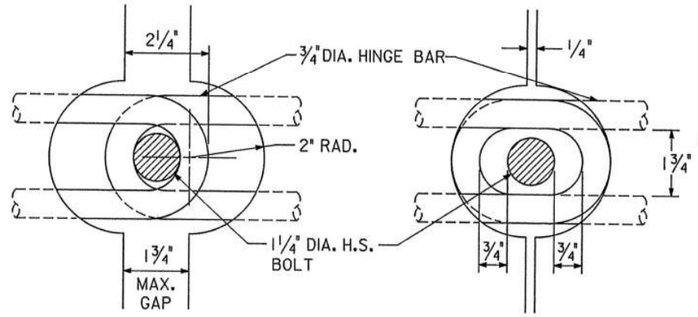

① OPEN JOINT ② CLOSED JOINT

JOINT CONNECTION DETAILS

① BARRIER JOINTS MUST BE FULLY OPEN BEFORE NUT IS TIGHTED ONTO BOLT AND OPENING IS EITHER GROUTED OR SHIMMED.

② BARRIERS SHOULD INITIALLY BE PLACED CLOSER TOGETHER SO THAT BOLTS CAN BE EASILY INSERTED THROUGH HINGE BAR LOOPS.

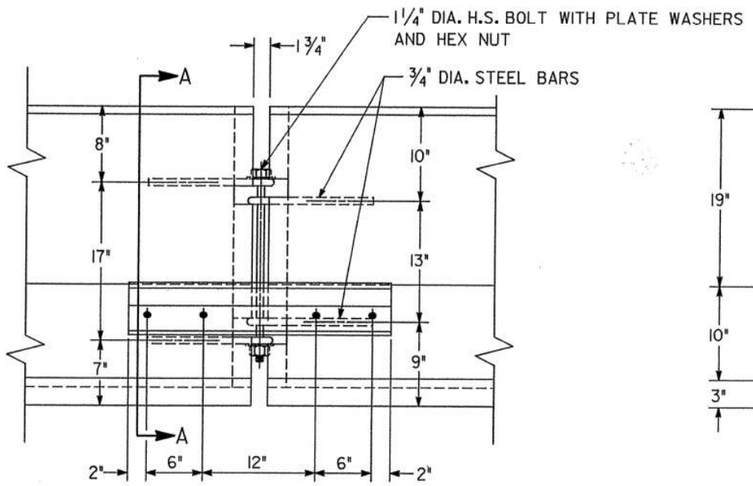

ELEVATION AT JOINT

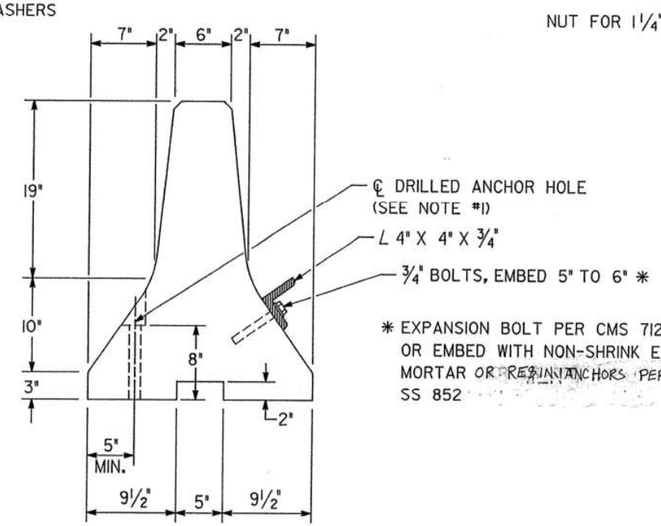

* EXPANSION BOLT PER CMS 712.01 OR EMBED WITH NON-SHRINK EPOXY MORTAR OR RESIN ANCHORS PER SS 852

SECTION "A-A"

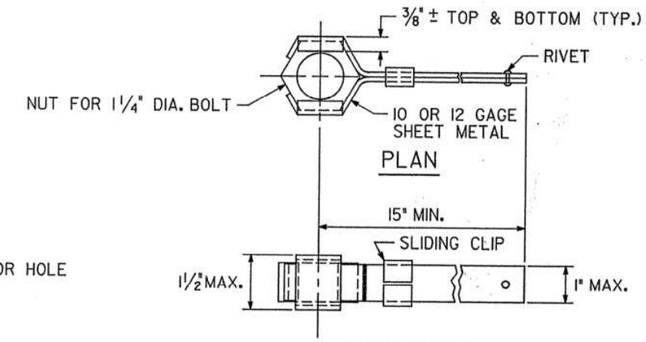

ELEVATION

NUT RETAINER DETAIL

NOTES:

1. IN ORDER TO ANCHOR THE MODIFIED (EXISTING) BARRIER TO THE BRIDGE DECK, WHERE ANCHORING IS REQUIRED, 1-1/4" MIN. DIA. HOLES MUST BE DRILLED THROUGH THE BARRIER TOE AT THE LOCATION SHOWN IN SECTION "A-A". GREAT CARE MUST BE USED IN DRILLING AND INSTALLING THE BARRIER SEGMENTS, AS ANY DAMAGE TO THEM WILL BE CONSIDERED CAUSE FOR THEIR REJECTION.

   ALL ANCHORS SHALL BE 1" DIA., HIGH STRENGTH, THRU BOLTS OR APPROVED RESIN ANCHORS. WHEN RESIN ANCHORS ARE USED, THEY MUST BE EMBEDDED A MINIMUM OF 6" INTO FIRM CONCRETE. THE NUMBER OF ANCHORS SHALL BE AS SPECIFIED IN THE PLAN.

3. USE OF THE EXISTING OHIO BARRIER:

   THE EXISTING OHIO BARRIER (STANDARD CONSTRUCTIO DRAWING MC-9A, REVISED 1-11-85, CONNECTING PIN TYPE), EVEN WHEN MODIFIED, CARE MUST BE TAKEN BY THE DESIGNER WHEN SPECIFYING ITS USE IN AREAS OF PROBABLE HIGH IMPACT SEVERITY (OVER 45,000 FT-LBS). THE MODIFICATIONS TO BE MADE TO THE EXISTING BARRIER, PRIOR TO ITS USE ON OHIO BRIDGE DECKS, ARE LISTED BELOW AND DETAILE AT LEFT.

   A. REPLACE CONNECTION PINS WITH 1-1/4 INCH DIA. HIGH STRENGTH BOLTS.

   B. FURTHER STIFFEN THE CONNECTION, WHERE REQUIRED **, BY FASTENING AN ANGLE (4" X 4" X 3/4") TO THE BACK FACE OF JOINT.

   C. LIMIT THE SLACK IN JOINTS BETWEEN SEGMENTS TO A MAXIMUM OF 3 DEGREES BY SHIMMING AND/OR GROUTING THE JOINT.

** WHEN THE EXISTING BARRIER IS USED IN AREAS OF LOW TO MODERATE IMPACT SEVERITY (30,000 FT-LBS OR LESS) THE STEEL ANGLE MAY GENERALLY BE OMITTED.

DRAWN 2/88

F.H.W.A. REGION	STATE	PROJECT NO.	FUNDS
5	OHIO		

32
196

SUM-277/224-0.00/6.31/10.22

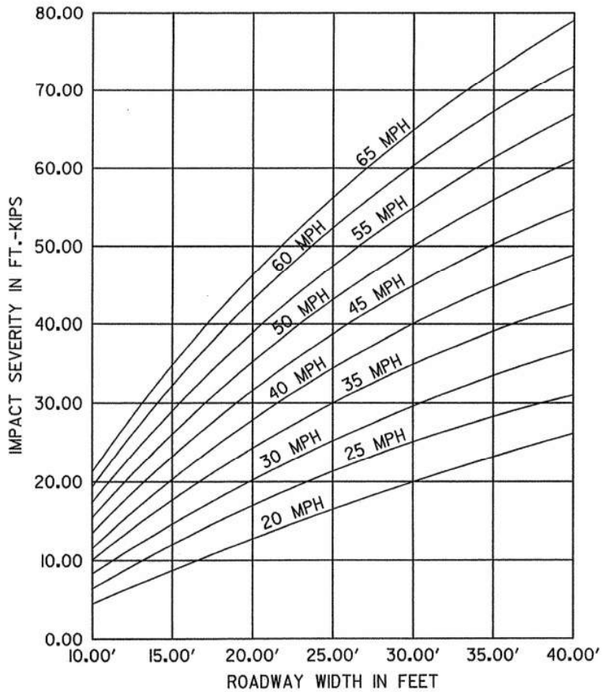

IMPACT SEVERITY VS ROADWAY WIDTH

FIGURE 1

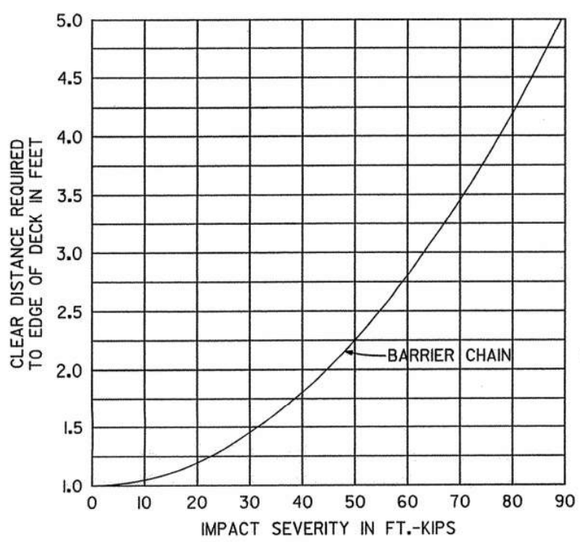

PLACEMENT VS IMPACT SEVERITY OF AN UNANCHORED BARRIER CHAIN COMPOSED OF 10' LONG SEGMENTS

FIGURE 2

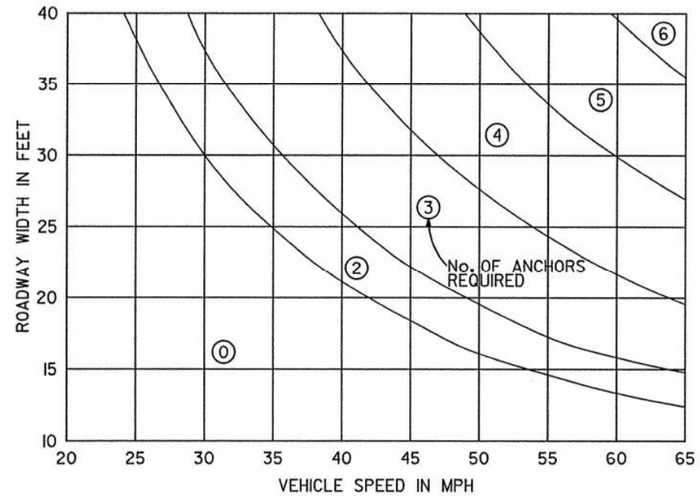

ANCHORS REQUIRED PER 10' BARRIER SEGMENT FOR MODIFIED (EXISTING) BARRIERS

FIGURE 3

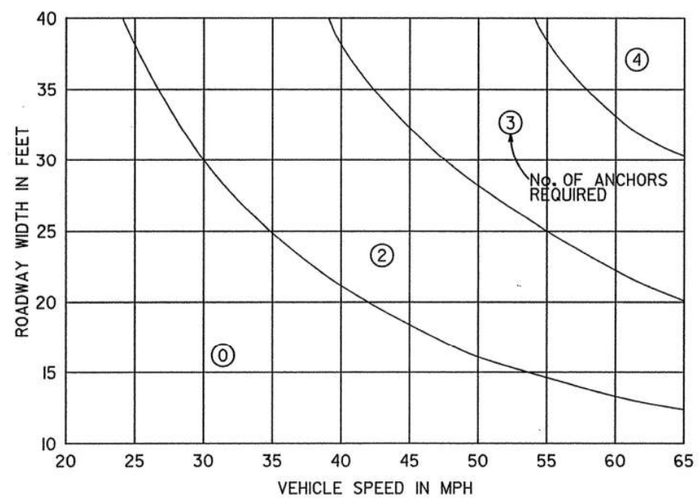

ANCHORS REQUIRED PER 10' BARRIER SEGMENT FOR PROPOSED BARRIERS

FIGURE 4

NOTES:
"ROADWAY WIDTH" SHALL BE DEFINED AS THE CLEAR DISTANCE BETWEEN THE TRAFFIC FACE OF THE PRECAST TEMPORARY CONCRETE BARRIER CHAIN AND THE PERMANENT BRIDGE RAILING OR FACE OF SIDEWALK CURB.

GENERAL NOTES

BRIDGE DECK SURFACE PREPARATION:

THE PROCEDURES WHICH MUST BE FOLLOWED WHEN INSTALLING ALL TEMPORARY PRECAST CONCRETE BARRIERS, ON OHIO BRIDGE DECKS, ARE GIVEN BELOW.

A. THE BRIDGE DECK SURFACE AREA, ON WHICH THE PRECAST CONCRETE BARRIERS WILL REST, SHALL BE CLEARED OF ALL LOOSE SAND, GRAVEL, DIRT AND DEBRIS.

B. ANY IRREGULARITIES IN THE BRIDGE DECK AREA, UNLESS JUDGED BY THE ENGINEER TO BE INCONSEQUENTIAL, SHALL BE LEVELED WITH GROUT AND/OR ASPHALT.

C. ASPHALT ROLL ROOFING SHALL BE PLACED ON THOSE BRIDGE DECK AREAS, AS JUDGED BY THE ENGINEER, TO HAVE A SURFACE ROUGHNESS WHICH WOULD INHIBIT FRICTION CONTACT BETWEEN BARRIER SEGMENTS AND DECK.

BARRIER ANCHORAGE REQUIREMENTS:

THE ANCHORAGE REQUIREMENTS FOR TEMPORARY PRECAST CONCRETE BARRIERS CAN BE DETERMINED BY USING THE FOLLOWING PROCEDURES.

1. ENTER FIGURE 3 WITH THE KNOWN ROADWAY WIDTH AND THE POSTED SPEED LIMIT * AND FIND THE NUMBER OF ANCHORS REQUIRED WHEN THE MODIFIED (EXISTING) BARRIER DESIGN IS USED.

OR

ENTER FIGURE 4 WITH THE KNOWN ROADWAY WIDTH AND THE POSTED SPEED LIMIT * AND FIND THE NUMBER OF ANCHORS REQUIRED WHEN THE PROPOSED BARRIER DESIGN IS USED.

2. IF THE BARRIER INSTALLATION IS TO REMAIN UNANCHORED, EITHER BECAUSE OF LOW IMPACT SEVERITY OR THE AVAILABILITY OF SPACE BETWEEN THE BARRIER AND THE EDGE OF THE BRIDGE DECK, ENTER FIGURE 1 WITH THE KNOWN ROADWAY WIDTH AND THE POSTED SPEED LIMIT * AND FIND THE IMPACT SEVERITY. THEN, WITH THE KNOWN IMPACT SEVERITY, ENTER FIGURE 2 AND FIND THE MINIMUM CLEAR DISTANCE REQUIRED FROM THE EDGE OF THE BRIDGE DECK AT WHICH THE BARRIER (MODIFIED OR PROPOSED) CAN BE LOCATED.

* THE POSTED SPEED LIMIT SHALL BE DEFINED AS THE SPEED THAT IS ACTIVELY ENFORCED EITHER BY LEGAL MEANS OR TRAFFIC CONTROL DEVICES.

ALL BARRIER SEGMENTS SHALL, WHERE REQUIRED, BE FASTENED TO THE BRIDGE DECK USING ONE INCH DIAMETER HIGH STRENGTH THRU BOLTS OR APPROVED RESIN ANCHORS. WHEN RESIN ANCHORS ARE USED THEY MUST BE EMBEDDED A MINIMUM OF 6" INTO FIRM CONCRETE. GENERALLY, ALL ANCHORS SHALL BE PLACED ON THE TRAFFIC SIDE OF THE BARRIER WITH THE ANCHOR PATTERN SYMMETRICAL ABOUT THE CENTER OF EACH TEN FOOT SEGMENT. EVEN THOSE PRECAST CONCRETE BARRIER SEGMENTS, NOT OTHERWISE REQUIRING ANCHORING SHALL, WHEN LOCATED ON BRIDGE DECKS CROSSING OVER ROADWAYS, RAILROADS AND/OR RECREATIONAL AREAS, BE SECURED BY NO LESS THAN TWO (2) ANCHORS **.

** UNLESS BARRIER SEGMENTS ARE TO BE INSTALLED 6' OR MORE (CLEAR DISTANCE) FROM THE EDGE OF DECK, EQUIPMENT AND/OR PROBABLE WORK AREAS.

SUM-277/2.24-0.00/6.31/10.22

PORTABLE CONCRETE BARRIER WITH GLARE SCREEN

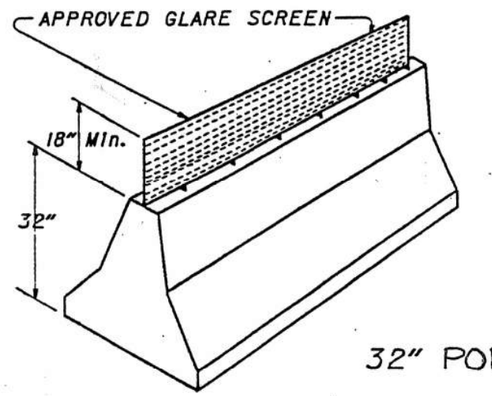

32" PORTABLE CONCRETE BARRIER WITH GLARE SCREEN

SEE MC-9A FOR BARRIER DETAILS

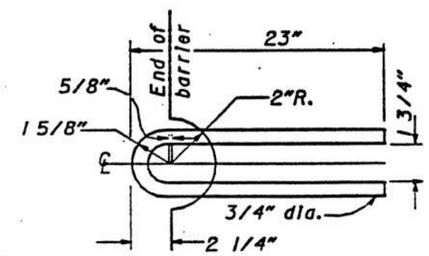

STEEL ROD CONNECTOR

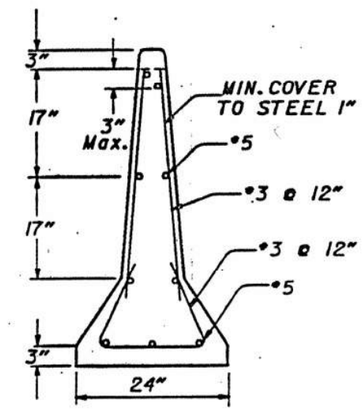

SECTION A-A

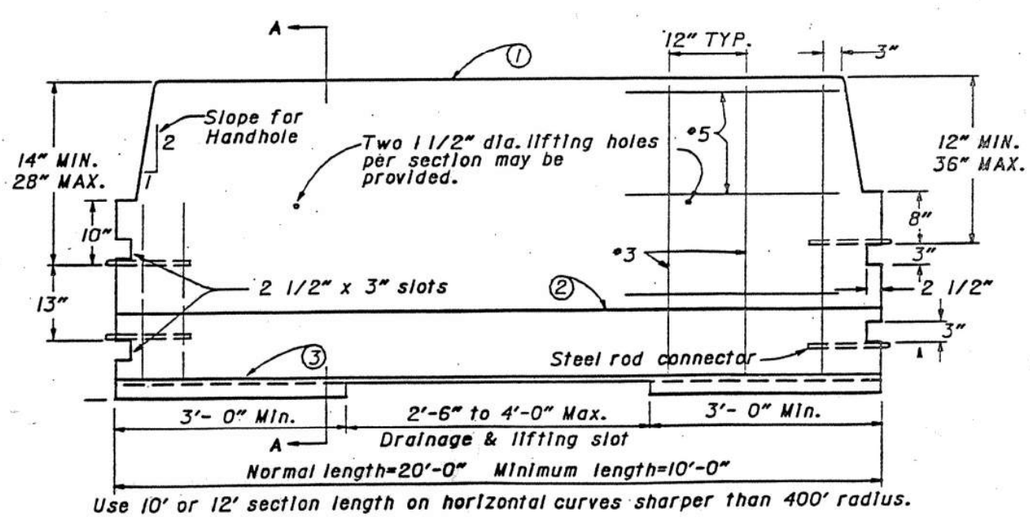

Use 10' or 12' section length on horizontal curves sharper than 400' radius.

ELEVATION

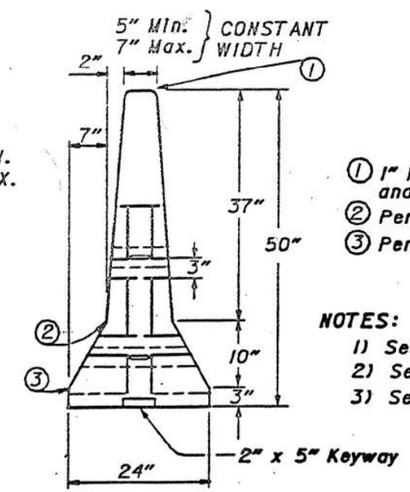

END

LEGEND

1. 1" Radius or 3/4" Chamfer, all top and end corners
2. Permissible 10" radius
3. Permissible 1" radius

NOTES:

1) See MC-9 For PLAN VIEW
2) See MC-9A For CONNECTING PIN DETAIL & BASE RESTRAINT NOTE, & DETAILS NOT SHOWN
3) See Item 622.02 & 622.04 ODOT C & M SPEC.

50" PORTABLE CONCRETE BARRIER

CALCULATIONS

MAINLINE PAVEMENT AREA

	IM-277-6(7) SUM 277	NH-51(84) SUM 224 (RURAL)	SUM 224 (URBAN)
STA.59+05.19 TO STA.66+71 E.B.: 765.81' x 24' x 1/9 =	2,042.16 S.Y.		
STA.66+71 TO STA.86+00 E.B.: 1,929' x 36' x 1/9 =	7,716.00 S.Y.		
TAPER RAMP "B"	289.00 S.Y.		
STA.59+05.19 TO STA.75+50 W.B. : 1,644.81' x 24' x 1/9 =	4,386.16 S.Y.		
STA.75+50 TO STA.86+00 W.B. : 1,050' x 36' x 1/9 =	4,200.00 S.Y.		
TAPER RAMP "D"	33.00 S.Y.		
(FROM PLAN SUM – 277 –0.46 ITEM 451)			
STA.86+00 TO STA.228+68.84	106,351.59 S.Y.		
DECELERATION LANE & TAPER RAMP "E" : 662.7 + 484.65 =	1,147.35 S.Y.		
ACCELERATION LANE & TAPER RAMP "F"	1,095.53 S.Y.		
(FROM PLAN SUM – 277 – 0.00 ITEM 451)			
STA.228+68.84 TO STA.260+23.28	19,894.72 S.Y.		
STA.260+23.28 TO STA.273+82.76		8,996.53 S.Y.	
(FROM PLAN SUM – 224 – 10.48 ITEM 451)			
STA.273+82.76 TO STA.279+71.95		3,927.93 S.Y.	
STA.279+71.95 TO STA.314+25			35,326.26 S.Y.
TOTAL MAINLINE PAVEMENT AREA=	147,155.51 S.Y.	12,924.46 S.Y.	35,326.26 S.Y.

RAMP AREA

RAMP "E" =2,044 S.Y.	RAMP "K-3"= 799 S.Y.	
RAMP "F" =2,311 S.Y.	RAMP "L" =3,764 S.Y.	
RAMP "G" =1,524 S.Y.	RAMP "L-1" =2,197 S.Y.	
RAMP "H" =2,477 S.Y.	RAMP "L-2" =1,657 S.Y.	
RAMP "J" =1,939 S.Y.	RAMP "M" =1,812 S.Y.	
RAMP "J-1" =1,497 S.Y.	RAMP "N" =2,124 S.Y.	
RAMP "J-2" =1,039 S.Y.	RAMP "R" =2,182 S.Y.	
RAMP "K" =2,365 S.Y.	RAMP "R-1" =2,112 S.Y.	
RAMP "K-1" =1,271 S.Y.	RAMP "R-2" =1,830 S.Y.	
RAMP "K-2" =1,511 S.Y.	(SUB-TOTAL)= 36,455 S.Y.	
RAMP "S" =1,758 S.Y.	RAMP "T" =2,055 S.Y.	
RAMP "S-1" =1,227 S.Y.	RAMP "U" =1,556 S.Y.	
RAMP "S-2" =1,365 S.Y.	(SUB-TOTAL)=	7,961 S.Y.
	TOTAL RAMP AREA= 36,455 S.Y.	7,961 S.Y.

MAINLINE BERM AREA

OUTSIDE BERM			
STA.59+05.19 TO STA.79+00 RT.: 1,994.81' x 10' x 1/9 =	2,216.45 S.Y.		
STA.59+05.19 TO STA.86+00 LT.: 2,694.81' x 10' x 1/9 =	2,994.23 S.Y.		
(FROM PLAN SUM – 277 – 0.46 ITEM I-22)	27,658.27 S.Y.		
(FROM PLAN SUM – 277 – 0.00 ITEM 409)			
STA.228+68.84 TO STA.260+23.28	3,027.41 S.Y.		
STA.260+23.28 TO STA.273+82.76		3,021.06 S.Y.	
(FROM PLAN SUM – 224 – 10.48 ITEM 301)			
STA.273+82.76 TO STA.279+71.95		1,309.31 S.Y.	
STA.279+71.95 TO STA.314+25			6,334.41 S.Y.
SUB-TOTAL =	35,896.36 S.Y.	4,330.37 S.Y.	6,334.41 S.Y.
MEDIAN BERM			
STA.59+05.19 TO STA.260+23.28 = 20,658.31 L.F.			
DEDUCT BRIDGES: 20,658.31' – 1,593.48' = 19,064.83. L.F.			
19,064.83' x 2 x 6.25' x 1/9 =	26,478.93 S.Y.		
STA.260+23.28 TO STA.279+71.95		2,706.49 S.Y.	
STA.279+71.95 TO STA.314+25			4,795.90 S.Y.
TOTAL MAINLINE BERM AREA=	62,375.29 S.Y.	7,036.86 S.Y.	11,130.31 S.Y.

RAMP BERM

		IM-277-6(7) SUM 277	NH-51(84) SUM 224 (RURAL)	SUM 224 (URBAN)
RAMP "E" = 663 S.Y.	RAMP "K-3" = 118 S.Y.			
RAMP "F" = 901 S.Y.	RAMP "L" =1,412 S.Y.			
RAMP "G" = 545 S.Y.	RAMP "L-1" = 824 S.Y.			
RAMP "H" = 769 S.Y.	RAMP "L-2" =1,268 S.Y.			
RAMP "J" = 361 S.Y.	RAMP "M" = 680 S.Y.			
RAMP "J-1" = 464 S.Y.	RAMP "N" = 796 S.Y.			
RAMP "J-2" = 416 S.Y.	RAMP "R" = 583 S.Y.			
RAMP "K" = 382 S.Y.	RAMP "R-1" = 792 S.Y.			
RAMP "K-1" = 348 S.Y.	RAMP "R-2" = 686 S.Y.			
RAMP "K-2" = 655 S.Y.	(SUB-TOTAL)=	12,663 S.Y.		
RAMP "S" = 374 S.Y.	RAMP "T" = 677 S.Y.			
RAMP "S-1" = 432 S.Y.	RAMP "U" = 425 S.Y.			
RAMP "S-2" = 542 S.Y.	(SUB-TOTAL)=			2,450 S.Y.
	TOTAL RAMP AREA =	12,663 S.Y.		2,450 S.Y.

ITEM SPECIAL 3/4" RUBBERIZED OPEN GRADED ASPHALT CONCRETE FRICTION COURSE

MAINLINE PAVEMENT AREA	147,155.51 S.Y.	12,924.46 S.Y.	35,326.26 S.Y.
MAINLINE BERM AREA	62,375.29 S.Y.	7,036.86 S.Y.	11,130.31 S.Y.
TOTAL AREA =	209,530.80 S.Y.	19,961.32 S.Y.	46,456.57 S.Y.
209,530.80 S.Y. x 0.75" x 1/36=	4,365 C.Y.		
19,961.32 S.Y. x 0.75" x 1/36 =		416 C.Y.	
46,456.57 S.Y. x 0.75" x 1/36 =			968 C.Y.
TO GENERAL SUMMARY=	4,365 C.Y.	416 C.Y.	968 C.Y.

ITEM 446 ASPHALT CONCRETE SURFACE COURSE,TYPE 1,AC-20 (THICKNESS=1 1/4")

AREA FROM FRICTION COURSE	209,530.80 S.Y.	19,961.32 S.Y.	46,456.57 S.Y.
RAMP AREA	36,455.00 S.Y.		7,961.00 S.Y.
RAMP BERM	12,663.00 S.Y.		2,450.00 S.Y.
TOTAL AREA=	258,648.80 S.Y.	19,961.32 S.Y.	56,867.57 S.Y.
258,648.8 S.Y. x 1.25" x 1/36 =	8,981.00 C.Y.		
19,961.32 S.Y. x 1.25" x 1/36 =		693 C.Y.	
56,867.57 S.Y. x 1.25" x 1/36 =			1,975 C.Y.
SUB-TOTAL =	8,981 C.Y.	693 C.Y.	1,975 C.Y.
ADJUSTMENTS FOR FEATHERING:			
AT RAMP TERMINALS:			
14 x 75' x (16+3+3)' x 1.25"/2 x 1/12 x 1/27 =	–45 C.Y.		
5 x 75' x (16+3+3)' x 1.25"/2 x 1/12 x 1/27 =			–16 C.Y.
AT BRIDGES APPROACH:			
6 x 52.25' x 25' x 4 x 1.25"/2 x 1/12 x 1/27 =	–60 C.Y.		
2 x 22' x 25' x 2 x 1.25"/2 x 1/12 x 1/27 =	–4 C.Y.		
1 x 52.25' x 25' x 4 x 1.25"/2 x 1/12 x 1/27 =			–10 C.Y.
TO GENERAL SUMMARY =	8,872 C.Y.	693 C.Y.	1,949 C.Y.

ITEM 446 ASPHALT CONCRETE INTERMEDIATE COURSE,TYPE 2,AC-20 (THICKNESS=1 3/4

VOLUME OF ITEM 446, TYPE 1:			
8,872 C.Y. x 1.75"/1.25" =	12,421 C.Y.		
693 C.Y. x 1.75"/1.25" =		970 C.Y.	
1,949 C.Y. x 1.75"/1.25" =			2,729 C.Y.
TO GENERAL SUMMARY =	12,421 C.Y.	970 C.Y.	2,729 C.Y.

CALCULATIONS

ITEM 407 TACK COAT

	IM-277-6(7) SUM 277	NH-51(84) SUM 224 (RURAL)	NH-51(84) SUM 224 (URBAN)
AREA FROM ITEM 446, TYPE 1:			
258,648.80 S.Y. x .10 GAL. =	25,865 GAL.		
19,961.32 S.Y. x .10 GAL. =		1,996 GAL.	
56,867.57 S.Y. x .10 GAL. =			5,687 GAL.
TO GENERAL SUMMARY =	25,865 GAL.	1,996 GAL.	5,687 GAL.

HOLES FOR UNDERSEALING

STA.59+05.19 TO STA.66+71 E.B.: 765.81 L.F. STA.59+05.19 TO STA.75+50 W.B.: 1,644.81 L.F. (765.81' + 1,644.81') x (2) LANES x 1/10=	482 HOLES		
STA.66+71 TO STA.86+00 E.B.: 1,929 L.F. STA.75+50 TO STA.86+00 W.B.: 1,050 L.F. (1,929' + 1,050') x (3) LANES x 1/10 =	894 HOLES		
STA.86+00 TO STA.260+23.28: 17,963.50 L.F. DEDUCT BRIDGES: 17,963.5' – 1,593.48' = 16,370.02 L.F. 16,370.02' x (6) LANES x 1/10=	9,822 HOLES		
STA.260+23.28 TO STA.273+82.76: 1,359.38 L.F. 1,359.38' x (5) LANES x 1/10 =		680 HOLES	
STA.273+82.76 TO STA.279+71.95: 589.19 L.F. 589.19' x (6) LANES x 1/10=		354 HOLES	
STA.279+71.95 TO STA.286+70.37: 698.42 L.F. DEDUCT BRIDGE: 698.42' – 146.50' = 551.92 L.F. 551.92' x (6) LANES x 1/10=			331 HOLES
STA.286+70.37 TO STA.314+25: 2,754.63 L.F. 2,754.63' x (4) LANES x 1/10=			1,102 HOLES
TOTAL=	11,198 HOLES	1,034 HOLES	1,433 HOLES

ITEM 811 ASPHALT UNDERSEALING

SEE HOLES FOR UNDERSEALING: 11,198 HOLES x 18 GAL./HOLE x 8.33 LBS./GAL. x 1/2000=	840 TONS		
1,034 HOLES x 18 GAL./HOLE x 8.33 LBS./GAL. x 1/2000=		78 TONS	
1,433 HOLES x 18 GAL./HOLE x 8.33 LBS./GAL. x 1/2000=			107 TONS
TO GENERAL SUMMARY =	840 TONS	78 TONS	107 TONS

ITEM 202 - APPROACH SLAB REMOVED
ITEM 611 - REINFORCED CONCRETE APPROACH SLAB (T=15")

STRUCTURE No.	REMOVAL AREA	PROPOSED AREA
SUM-277-0092	598	704
SUM-277-0175	400	617
SUM-77-0928	45	168
SUM-277-0305	100	100
TOTAL TO GENERAL SUMMARY	1143 S.Y.	1589 S.Y.

ITEM 203 EXCAVATION NOT INCLUDING EMBANKMENT CONSTRUCTION
ITEM 301 BITUMINOUS AGGREGATE BASE

	IM-277-6(7) SUM 277	NH-51(84) SUM 224 (RURAL)	NH-51(84) SUM 224 (URBAN)
SEE MAINLINE CALCULATIONS OUTSIDE BERM: 35,896.36 S.Y. x 3" x 1/36 =	2,991 C.Y.		
4,330.37 S.Y. x 3" x 1/36 =		361 C.Y.	
6,334.41 S.Y. x 3" x 1/36 =			528 C.Y.
MEDIAN BERM: STA.77+45 TO STA.260+23.28: 18,278.28 L.F. DEDUCT BRIDGES: 18,278.28' – 1,593.48' = 16,684.80 L.F. 16,684.80' x 2 x 6.25' x 3" x 1/12 x 1/27 =	1,931 C.Y.		
STA.260+23.28 TO STA.279+71.95 2,706.49 S.Y. x 3" x 1/36 =		226 C.Y.	
STA.279+71.95 TO STA.314+25 4,795.90 S.Y. x 3" x 1/36 =			400 C.Y.
RAMPS: SUM-277 12,663 S.Y. x 3" x 1/36 =	1,055 C.Y.		
SUM-224 (URBAN) 2,450 S.Y. x 3" x 1/36 =			204 C.Y.
TO GENERAL SUMMARY =	5,977 C.Y.	587 C.Y.	1,132 C.Y.

ITEM 203 SUBGRADE COMPACTION

SEE MAINLINE BERM AREA OUTSIDE BERM: STA.59+05.19 TO STA.260+23.28	35,896.36 S.Y.		
STA.260+23.28 TO STA.279+71.95		4,330.37 S.Y.	
STA.279+71.95 TO STA.314+25			6,334.41 S.Y.
MEDIAN BERM: STA.77+45 TO STA.260+23.28: 18,278.28 L.F. DEDUCT BRIDGES: 18,278.28 – 1,593.48' = 16,684.8 L.F. 16,684.8' x 2 x 6.25' x 1/9 =	23,173.33 S.Y.		
STA.260+23.28 TO STA.279+71.95		2,706.49 S.Y.	
STA.279+71.95 TO STA.314+25			4,795.90 S.Y.
RAMPS: SUM-277 =	12,633 S.Y.		
SUM-224 (URBAN) =			2,450 S.Y.
TO GENERAL SUMMARY =	71,703 S.Y.	7,037 S.Y.	13,580 S.Y.

ITEM 659 - COMMERCIAL FERTILIZER

RATE OF APPLICATION 20 LBS./1000 SQ. FT.
SEEDING AREA = 12278 SQ. YD.
20 x 12278 x 9 ÷ 1000 ÷ 2000 = 1.11 TONS
TO GENERAL SUMMARY = 1.11 TONS

ITEM 659 - AGRICULTURAL LIMING

RATE OF APPLICATION 100 LBS./1000 SQ. FT.
100 x 12278 x 9 ÷ 1000 ÷ 2000 = 5.53 TONS
TO GENERAL SUMMARY = 5.53 TONS

ITEM 659 - WATER

RATE OF APPLICATION 120 GALS./1000 SQ. FT.
120 x 12278 x 9 ÷ 1000 ÷ 1000 = 13.26 M GALS.
TO GENERAL SUMMARY = 13.26 M GALS.

ITEM 659 - MOWING

12278 x 9 ÷ 1000 = 111 M SQ. FT.
TO GENERAL SUMMARY = 111 M SQ. FT.

GENERAL SUMMARY

F.H.W.A. REGION	STATE	PROJECT NO.	FUNDS
5	OHIO		

COMPLETED BY S.T. DATE 6-91
CHECKED BY K.S. DATE 11-91

SUM-277/224-0.00/6.31-10.22

SHEET NUMBER 7	11	12	13	35	38	39	40	41	42	42A	43	47	177	PARTICIPATION IM-277-6(7) 277	NH-5(124) 224 RURAL	224 URBAN	ITEM	ITEM EXT.	GRAND TOTAL	UNIT	DESCRIPTION	
																					ROADWAY	
				1143										1143			202	22900	1143	SQ. YD.	APPROACH SLAB REMOVED	
										1667						1667	202	23000	1667	SQ. YD.	PAVEMENT REMOVED	
					3599	5264	5331	2919	4794					16636	1949	3322	202	30501	21907	LIN. FT.	CONCRETE MEDIAN REMOVED, AS PER PLAN	SEE SHEET NO. 13
					30									30			202	30700	30	LIN. FT.	CONCRETE BARRIER REMOVED	
						415								415			202	32000	415	LIN. FT.	CURB REMOVED	
											60			60			202	32600	60	LIN. FT.	GUTTER REMOVED	
					2938	8564	10160	14279	5605					34770	5201	1575	202	38000	41546	LIN. FT.	GUARDRAIL REMOVED	
			500											500			202	54100	500	EACH	RAISED PAVEMENT MARKERS, REMOVED FOR STORAGE	SEE SHEET No. 13
													41	41			202	98300	41	SQ. YD.	REMOVAL MISC. CONCRETE SLOPE PROTECTION	
			50	7696						1600	139			6027	587	2871	203	12000	9485	CU. YD.	EXCAVATION NOT INCLUDING EMBANKMENT CONSTRUCTION	
											3278	4585		7863			203	20000	7863	CU. YD.	EMBANKMENT	
				92320										71703	7037	13580	203	50000	92320	SQ. YD.	SUBGRADE COMPACTION	
367														242	24	101	203	60200	367	STATION	LINEAR GRADING, METHOD 1	SEE SHEET No. 7
378														312	52	14	203	60204	378	STATION	LINEAR GRADING, METHOD 2	SEE SHEET No. 7
									25							25	606	15500	25	LIN. FT.	GUARDRAIL, BARRIER DESIGN, TYPE 5	
700														578	96	26	404	30000	700	CU. YD.	ASPHALT CONCRETE, AC-20, UNDER GUARDRAIL	
									1							1	606	35004	1	EACH	BRIDGE TERMINAL ASSEMBLY, TYPE 1, BARRIER DESIGN	
					3638	8322	8758	13129	5330					32776	5051	1350	606	13000	39177	LIN. FT.	GUARDRAIL, TYPE 5	
					1		4	12	4					13	6	2	606	25000	21	EACH	ANCHOR ASSEMBLY, TYPE A	
					4	3		2						9			606	26000	9	EACH	ANCHOR ASSEMBLY, TYPE B	
						1								1			606	26100	1	EACH	ANCHOR ASSEMBLY, TYPE E	
					4	3	7	12	4					26	2	2	606	26500	30	EACH	ANCHOR ASSEMBLY, TYPE T	
					4	8	4	6	3					22	1	2	606	35000	25	EACH	BRIDGE TERMINAL ASSEMBLY, TYPE 1	
					2	6	2	7	2					17	2		606	35100	19	EACH	BRIDGE TERMINAL ASSEMBLY TYPE 2	
																					EROSION CONTROL	
													126	111		15	601	21001	126	SQ. YD.	CONCRETE SLOPE PROTECTION, AS PER PLAN	SEE SHEET 177
											11			11			601	32100	11	CU. YD.	ROCK CHANNEL PROTECTION, TYPE B, WITH FILTER	
											60			60			601	38000	60	LIN. FT.	PAVED GUTTER, TYPE 1-4	
										1389	6264	6014		12278		1389	659	10000	13667	SQ. YD.	SEEDING AND MULCHING	
				1.11						0.13				1.11		0.13	659	20000	1.24	TON	COMMERCIAL FERTILIZER	
				5.53						0.63				5.53		0.63	659	30000	6.16	TON	AGRICULTURAL LIMING	
				13.26						1.5				13		2	659	35000	15	M. GAL.	WATER	
				111										111			659	40000	111	M. SQ. FT	MOWING	
																					DRAINAGE	
											2	0.4		2.4			602	20000	2.4	CU. YD.	CONCRETE MASONRY	
200	50													200	30	20	603	00406	250	LIN. FT.	4" CONDUIT, TYPE F, 707.15 NON-PERFORATED	
1699	486													1699	286	200	603	01500	2185	LIN. FT.	6" CONDUIT, TYPE F, 707.17 NON-PERFORATED	
												32		32			603	10400	32	LIN. FT.	24" CONDUIT, TYPE B	
											32			32			603	13400	32	LIN. FT.	30" CONDUIT, TYPE B	
											16			16			603	16400	16	LIN. FT.	36" CONDUIT, TYPE B	
					3	13	10	1	7					27	3	4	604	14602	34	EACH	INLET No. 3B50	
80	23													80	16	7	SPECIAL	60436600	103	EACH	PRECAST REINFORCED CONCRETE OUTLET	SEE SHEET No. 9
37900	13626									625						625	605	11101	625	LIN. FT.	6" SHALLOW PIPE UNDERDRAIN, AS PER PLAN	SEE SHEET No. 13
37900	13626													37900	7317	6309	605	30001	51526	LIN. FT.	SHALLOW UNDERDRAIN, AS PER PLAN	SEE SHEET No. 9

GENERAL SUMMARY

COMPLETED BY S.T. DATE 6-91
CHECKED BY K.S. DATE 11-91

F.H.W.A. REGION	STATE	PROJECT NO.	FUNDS
5	OHIO		

SUM-277/224-0.00/6.31-10.22

SHEET NUMBER 13	34	35	38	39	40	41	42	42A	PARTICIPATION 277 (JM-277-6(7))	224 RURAL (NH-5(86))	224 URBAN	ITEM	ITEM EXT.	GRAND TOTAL	UNIT	DESCRIPTION
																PAVEMENT
1700									1700			251	01000	1700	SQ. YD.	PARTIAL DEPTH PAVEMENT REPAIR
4500									4500			255	10100	4500	SQ. YD.	FULL DEPTH PAVEMENT REMOVAL AND RIGID REPLACEMENT, CLASS FS
1250									1250			255	20000	1250	LIN. FT.	FULL DEPTH PAVEMENT SAWING
		7696					2		5977	587	1134	301	10002	7698	CU. YD.	BITUMINOUS AGGREGATE BASE, AC-20
50									50			304	20001	50	CU. YD.	AGGREGATE BASE, AS PER PLAN SEE SHEET No. 1
								773			773	310	10001	773	CU. YD.	SUBBASE, AS PER PLAN SEE SHEET No. 1
	5749								4365	416	968	SPECIAL	40445000	5749	CU. YD.	RUBBERIZED OPEN GRADED ASPHALT FRICTION COURSE (See Proposal Note)
		33548							25865	1996	5687	407	10000	33548	GAL.	TACK COAT
								1215			1215	408	10000	1215	GAL.	BITUMINOUS PRIME COAT
	16120								12421	970	2729	446	01200	16120	CU. YD.	ASPHALT CONCRETE INTERMEDIATE COURSE, TYPE 2, AC-20
	11514								8872	693	1949	446	01400	11514	CU. YD.	ASPHALT CONCRETE SURFACE COURSE, TYPE 1, AC-20
30339									25745	707	3887	SPECIAL	45014000	30339	LIN. FT.	SAWING AND SEALING ASPHALT CONCRETE PAVEMENT JOINTS, 705.04 (See Proposal N
								1667			1667	451	15000	1667	SQ. YD.	10" REINFORCED CONCRETE PAVEMENT
		1589							1589			611	25000	1589	SQ. YD.	REINFORCED CONCRETE APPROACH SLAB (T=15")
							6				6	622	23400	6	LIN. FT.	CONCRETE BARRIER, TYPE B
			3544	5004	5181	2919	3939		16171	1814	2602	622	23404	20587	LIN. FT.	CONCRETE BARRIER, TYPE B-50
							625				625	622	23405	625	LIN. FT.	CONCRETE BARRIER, TYPE B-50, AS PER PLAN SEE SHEET No. 7
							14				14	622	23402	14	LIN. FT.	CONCRETE BARRIER, TYPE B, REINFORCED
			310	200	320		260		880		260	622	24001	1140	LIN. FT.	CONCRETE BARRIER, TYPE D, AS PER PLAN SEE SHEET No. 1
		1025							840	78	107	811	00100	1025	TONS	ASPHALT UNDERSEALING
																FOR LANDSCAPING GENERAL SUMMARY SEE SHEET NO. 137 C
																FOR MAINTENANCE OF TRAFFIC GENERAL SUMMARY SEE SHEET No. 14
																FOR TRAFFIC CONTROL GENERAL SUMMARY SEE SHEET No. 52 - 53
																FOR LIGHTING GENERAL SUMMARY SEE SHEET Nos. 102, 103
																FOR BRIDGE REPAIRS GENERAL SUMMARY SEE SHEET No. 139, 150, 161 AND 175
												614	11000	LUMP	LUMP	MAINTAINING TRAFFIC
												619	15010	LUMP	LUMP	FIELD OFFICE, TYPE B
												623	10000	LUMP	LUMP	CONSTRUCTION LAYOUT STAKES
												624	10000	LUMP	LUMP	MOBILIZATION

FHWA REGION	STATE	PROJECT NO.	FUNDS
5	OHIO		

38/196

SUM-277/224-0.00/6.31-10.22

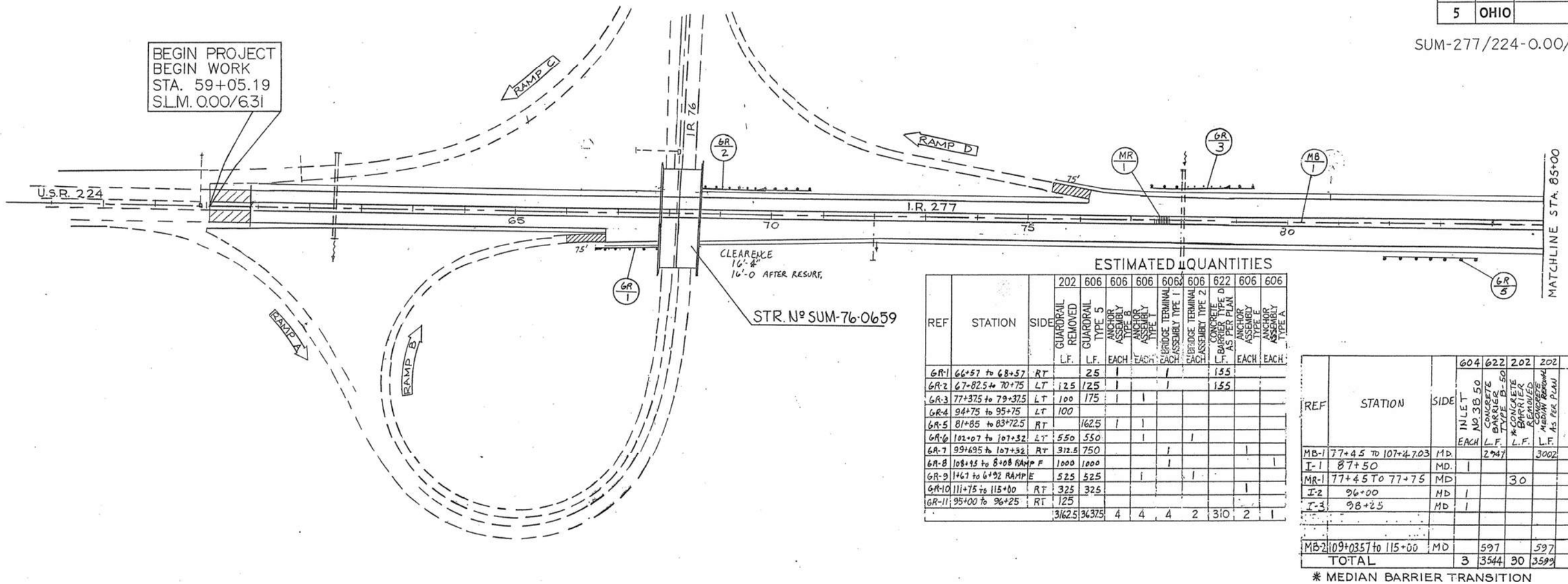

ESTIMATED QUANTITIES

REF	STATION	SIDE	202 GUARDRAIL REMOVED L.F.	606 GUARDRAIL TYPE 5 L.F.	606 ANCHOR ASSEMBLY TYPE B EACH	606 ANCHOR ASSEMBLY TYPE T EACH	606 BRIDGE TERMINAL ASSEMBLY TYPE I EACH	606 BRIDGE TERMINAL ASSEMBLY TYPE 2 EACH	622 CONCRETE BARRIER TYPE D AS PER PLAN L.F.	606 ANCHOR ASSEMBLY TYPE E EACH	606 ANCHOR ASSEMBLY TYPE A EACH
GR-1	66+57 to 68+57	RT		25	1		1		155		
GR-2	67+82.5 to 70+75	LT	125	125	1		1		155		
GR-3	77+37.5 to 79+37.5	LT	100	175	1	1					
GR-4	94+75 to 95+75	LT	100								
GR-5	81+85 to 83+72.5	RT		162.5	1	1					
GR-6	102+07 to 107+32	LT	550	550		1		1			
GR-7	99+695 to 107+32	RT	312.5	750			1			1	
GR-8	108+95 to 8+08 RAMP F		1000	1000			1				1
GR-9	1+67 to 6+92 RAMP E		525	525		1		1			
GR-10	111+75 to 115+00	RT	325	325						1	
GR-11	95+00 to 96+25	RT	125								
			3162.5	3637.5	4	4	4	2	310	2	1

REF	STATION	SIDE	604 INLET Nº 38 50 EACH	622 CONCRETE BARRIER TYPE B-50 L.F.	202 *CONCRETE BARRIER REMOVED MEDIAN BEYOND AS PER PLAN L.F.	202 L.F.			
MB-1	77+45 TO 107+47.03	MD.		2947		3002			
I-1	87+50	MD.	1						
MR-1	77+45 TO 77+75	MD			30				
I-2	96+00	MD	1						
I-3	98+25	MD	1						
MB-2	109+03.57 to 115+00	MD		597		597			
TOTAL			3	3544	30	3599			

* MEDIAN BARRIER TRANSITION

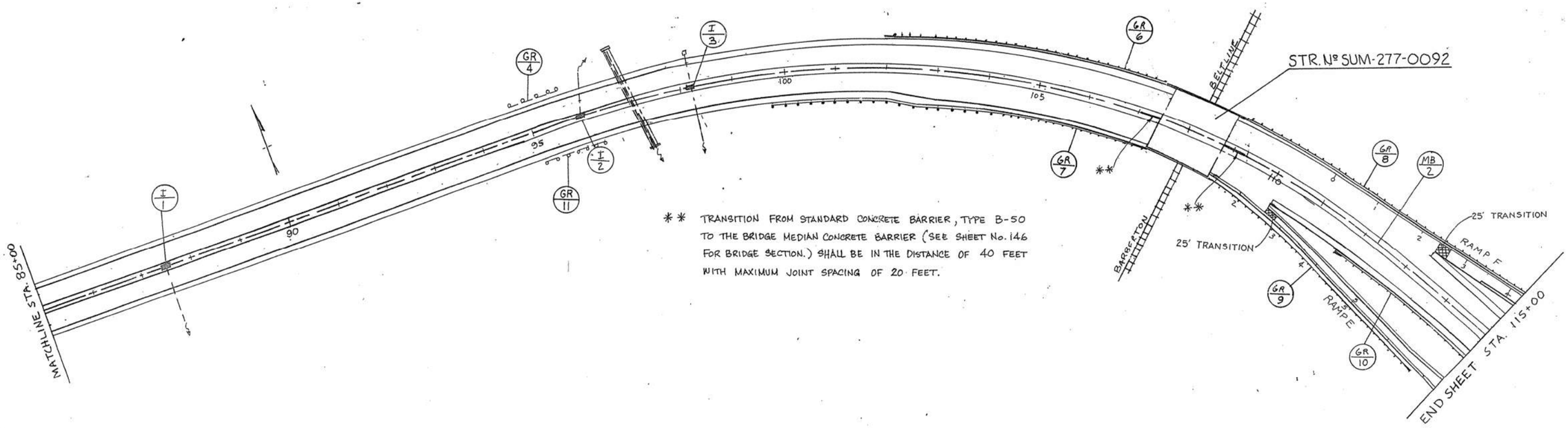

FHWA REGION	STATE	PROJECT NO.	FUNDS
5	OHIO		

39
196

SUM-277/224-0.00/6.31-10.22

ESTIMATED QUANTITIES

REF	STATION	SIDE	202 GUARDRAIL REMOVED L.F.	606 GUARDRAIL TYPE 5 L.F.	606 ANCHOR ASSEMBLY TYPE B EACH	606 ANCHOR ASSEMBLY TYPE E EACH	606 BRIDGE TERMINAL ASSEMBLY TYPE 1 EACH	606 BRIDGE TERMINAL ASSEMBLY TYPE 2 EACH	622 CONCRETE BARRIER TYPE D AS PER PLAN L.F.	202 CURB REMOVED L.F.	606 ANCHOR ASSEMBLY TYPE E EACH
GR-1	140+00 to 141+25	LT	125								
GR-2	115+51 to 120+26	LT	475	450		1		1			
GR-3	115+00 to 119+23	RT	423	423			1				
GR-4	122+79 to 129+15	LT	636	636			1	1			
GR-5	121+74 to 130+07	RT	833	833			1	1			
GR-6	131+75 to 133+50	LT	175	150			1				1
GR-7	132+44 to 139+94	RT	750	750		1		1			
GR-8	148+00 to 151+90	LT	390	390		1		1			
GR-9	147+91 to 151+66	RT	375	350	1		1				
GR-10	153+92 to 175+00	LT	2108	2108			1				
GR-11	153+68 to 175+00	RT	2132	2132				1			
B-1	144+45 to 146+07.50	LT		50	1		1		100	100	
B-2	142+90 to 144+52.5	RT		50	1		1		100	100	
CR-1	141+23.93 to 143+38.63	RT								215	
TOTAL			8422	8322	3	3	8	6	200	415	1

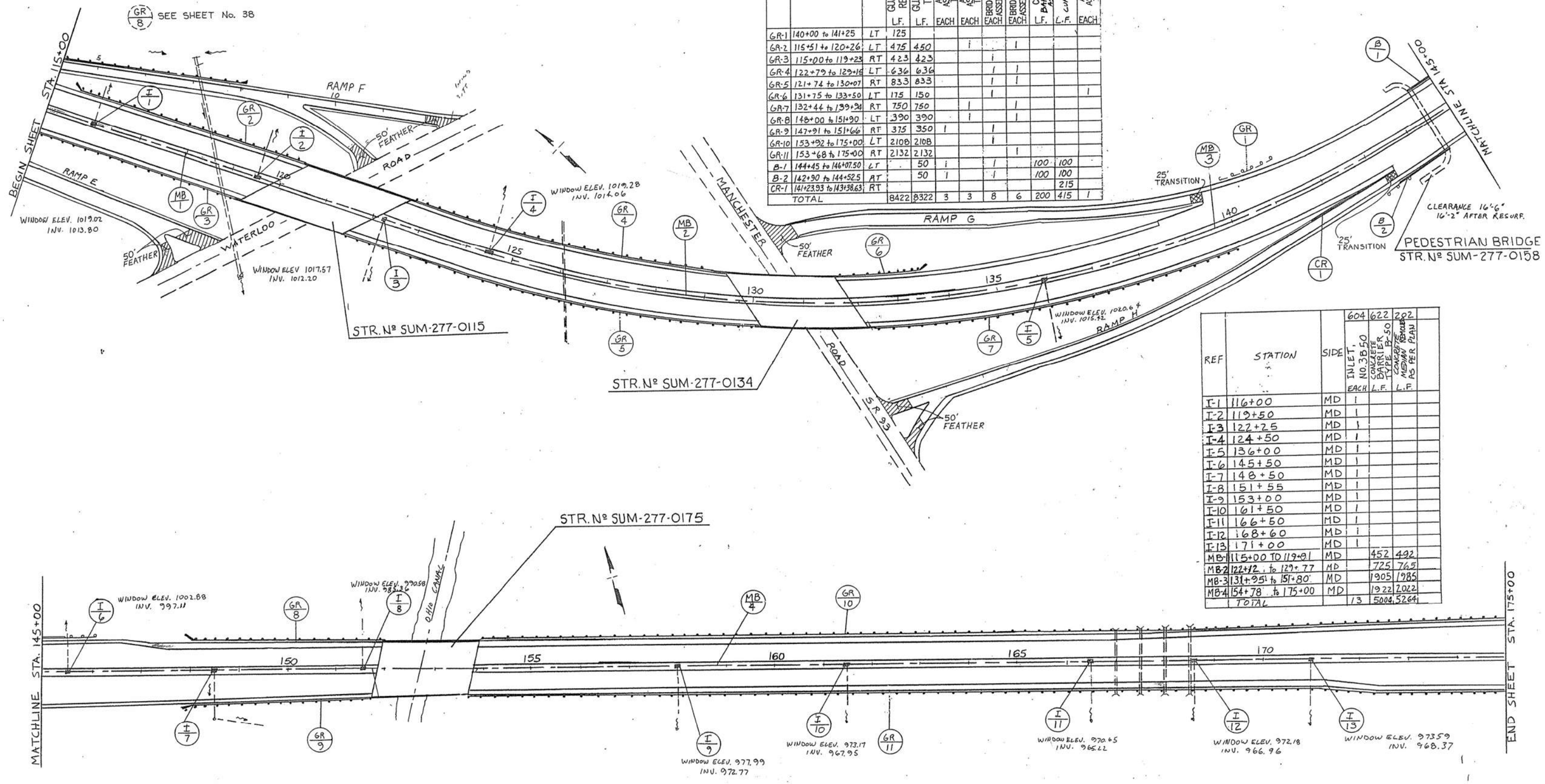

REF	STATION	SIDE	604 INLET, NO. 3B50 EACH	622 CONCRETE BARRIER TYPE D-50 L.F.	202 CONCRETE MEDIAN REMOVED AS PER PLAN L.F.	
I-1	116+00	MD	1			
I-2	119+50	MD	1			
I-3	122+25	MD	1			
I-4	124+50	MD	1			
I-5	136+00	MD	1			
I-6	145+50	MD	1			
I-7	148+50	MD	1			
I-8	151+55	MD	1			
I-9	153+00	MD	1			
I-10	161+50	MD	1			
I-11	166+50	MD	1			
I-12	168+60	MD	1			
I-13	171+00	MD	1			
MB-1	115+00 TO 119+01	MD		452	492	
MB-2	122+12 to 129+77	MD		725	765	
MB-3	131+95 to 151+80	MD		1905	1985	
MB-4	154+78 to 175+00	MD		1922	2022	
TOTAL			13	5004	5264	

FHWA REGION	STATE	PROJECT NO.	FUNDS
5	OHIO		

A0
196

SUM-277/224-0.00/6.31-10.22

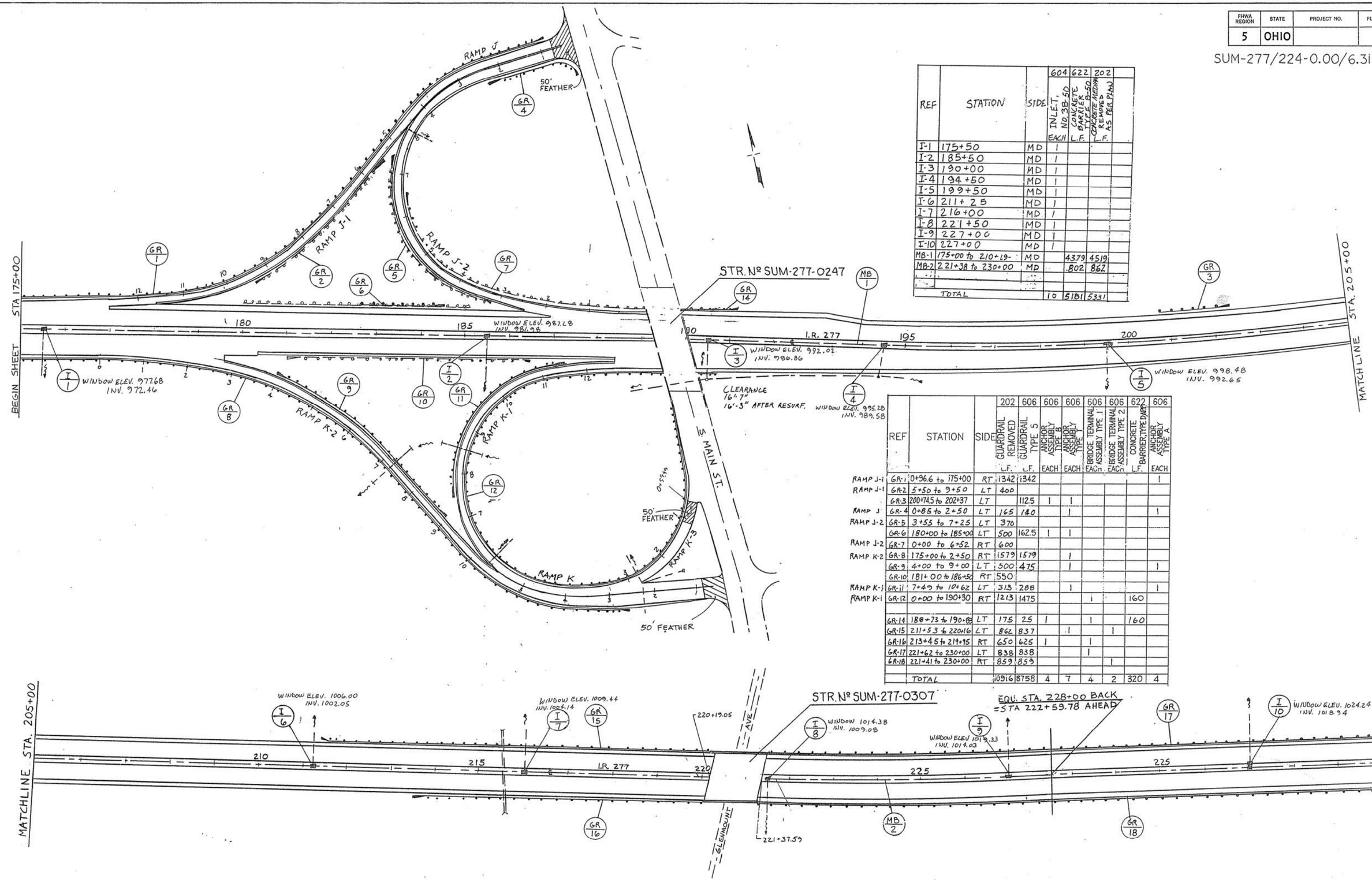

REF	STATION	SIDE	604 INLET, NO. 3B-50 EACH	622 CONCRETE BARRIER TYPE D-50 L.F.	202 CONCRETE MEDIAN REMOVED AS PER PLAN L.F.	
I-1	175+50	MD	1			
I-2	185+50	MD	1			
I-3	190+00	MD	1			
I-4	194+50	MD	1			
I-5	199+50	MD	1			
I-6	211+25	MD	1			
I-7	216+00	MD	1			
I-8	221+50	MD	1			
I-9	227+00	MD	1			
I-10	227+00	MD	1			
MB-1	175+00 to 210+19	MD		437.9	451.9	
MB-2	221+38 to 230+00	MD		80.2	86.2	
TOTAL			10	518.1	533.1	

	REF	STATION	SIDE	202 GUARDRAIL REMOVED L.F.	606 GUARDRAIL TYPE 5 L.F.	606 ANCHOR ASSEMBLY TYPE B EACH	606 ANCHOR ASSEMBLY TYPE T EACH	606 BRIDGE TERMINAL ASSEMBLY TYPE 1 EACH	606 BRIDGE TERMINAL ASSEMBLY TYPE 2 EACH	622 CONCRETE BARRIER, TYPE D-50 L.F.	606 ANCHOR ASSEMBLY TYPE A EACH
RAMP J-1	GR-1	0+96.6 to 175+00	RT	1342	1342						1
RAMP J-1	GR-2	5+50 to 9+50	LT	400							
	GR-3	200+74.5 to 202+37	LT		112.5	1	1				
RAMP J	GR-4	0+85 to 2+50	LT	165	140		1				1
RAMP J-2	GR-5	3+55 to 7+25	LT	370							
	GR-6	180+00 to 185+00	LT	500	162.5	1	1				
RAMP J-2	GR-7	0+00 to 6+52	RT	600							
RAMP K-2	GR-8	175+00 to 2+50	RT	1579	1579		1				
	GR-9	4+00 to 9+00	LT	500	475		1				1
	GR-10	181+00 to 186+50	RT	550							
RAMP K-1	GR-11	7+49 to 10+62	LT	313	288		1				1
RAMP K-1	GR-12	0+00 to 190+30	RT	1213	1475			1		160	
	GR-14	188+73 to 190+88	LT	175	25	1		1		160	
	GR-15	211+53 to 220+16	LT	862	837		1		1		
	GR-16	213+45 to 219+95	RT	650	625	1		1			
	GR-17	221+62 to 230+00	LT	838	838			1			
	GR-18	221+41 to 230+00	RT	859	859				1		
		TOTAL		10916	8758	4	7	4	2	320	4

FHWA REGION	STATE	PROJECT NO.	FUNDS
5	OHIO		

41
196

SUM - 277/224 - 0.00/6.31 - 10.22

SUM - 277

REF	STATION	SIDE	604 INLET, NO. 3 B 50 EACH	622 CONCRETE BARRIER TYPE B-50 L.F.	202 CONCRETE MED. REMOVED, AS PER PLAN L.F.
I-1	244+90	MD	1		
MB-1	230+00 To 251+17.13	MD		2097	2097
MB-2	256+78.35 To 260+23.25	MD		345	345
	TOTAL		1	2442	2442

SUM-224 (RURAL)

REF.	STATION	SIDE	622 CONCRETE BARRIER TYPE B-50 L.F.	202 CONCRETE MED. REMOVED, AS PER PLAN L.F.
MB-3	260+23.28 To 265+00	MD	477	477
	TOTAL		477	477

ESTIMATED QUANTITIES

REF	STATION	SIDE	202 GUARDRAIL REMOVED L.F.	606 GUARDRAIL TYPE 5 L.F.	606 ANCHOR ASSEMBLY, TYPE A EACH	606 ANCHOR ASSEMBLY, TYPE T EACH	606 ANCHOR ASSEMBLY, TYPE B EACH	606 BRIDGE TERMINAL ASSEMBLY, TYPE 1 EACH	606 BRIDGE TERMINAL ASSEMBLY, TYPE 2 EACH
GR-1	4+57 TO 15+57 L RAMP	RT	1100	1100		1			1
GR-2	5+50 TO 10+75 L	LT	525	525	1	1			
GR-3	9+90 TO 13+28 L-2	RT	337	337		1			1
GR-4	230+00 TO 233+88	LT	388	388	1	1			
GR-5	9+70 TO 15+43 L-2	LT	575	575		1			1
GR-6	0+50 TO 17+90 L-1	RT	1740	1740		1			1
GR-7	5+00 TO 12+25 L-1	LT	725						
GR-8	5+52 TO 7+64 L-2	RT	212	212	1			1	
GR-9	1+50 TO 7+13 L-2	LT	563	563	1			1	
GR-10	8+00 TO 16+00 P	LT	800	800		1			
GR-11	256+53 TO 260+23	LT	370	370				1	
GR-12	8+00 TO 18+22 P	RT	1022	1022					
GR-13	0+67.30 TO 8+05 N	RT	737.5	737.5		1			1
GR-14	6+00 TO 12+22.8 N	LT	675	675	1	1			
GR-15	6+04 TO 9+29 R-2	LT	325		1			1	
GR-16	7+95 TO 9+82 R-2	RT	187	162	1			1	
GR-17	11+92 TO 15+00 R-2	LT	589	589		1			1
GR-18	12+07 TO 15+57 R-2	RT	350	350		1			1
GR-19	6+00 TO 13+00 M	LT	500						
GR-20	1+03 TO 14+90 M	RT	1387	1362	1				
GR-22	235+95 TO 237+82.5	RT		162.5		1	1	1	
GR-23	247+43.5 TO 251+43.5	RT	400	387.5			1		
	TOTAL I.R. 277		13508	12058	8	12	2	6	7
GR-10A	7+00 TO 8+00	LT	100	75	1				
GR-11A	260+23.88 TO 262+03	LT	180	155	1				
GR-12A	2+59 TO 8+00 P	RT	541	516	1				
GR-21	261+50 TO 265+00	RT	350	325	1				
	TOTAL U.S. 224 RURAL		1171	1071	4				

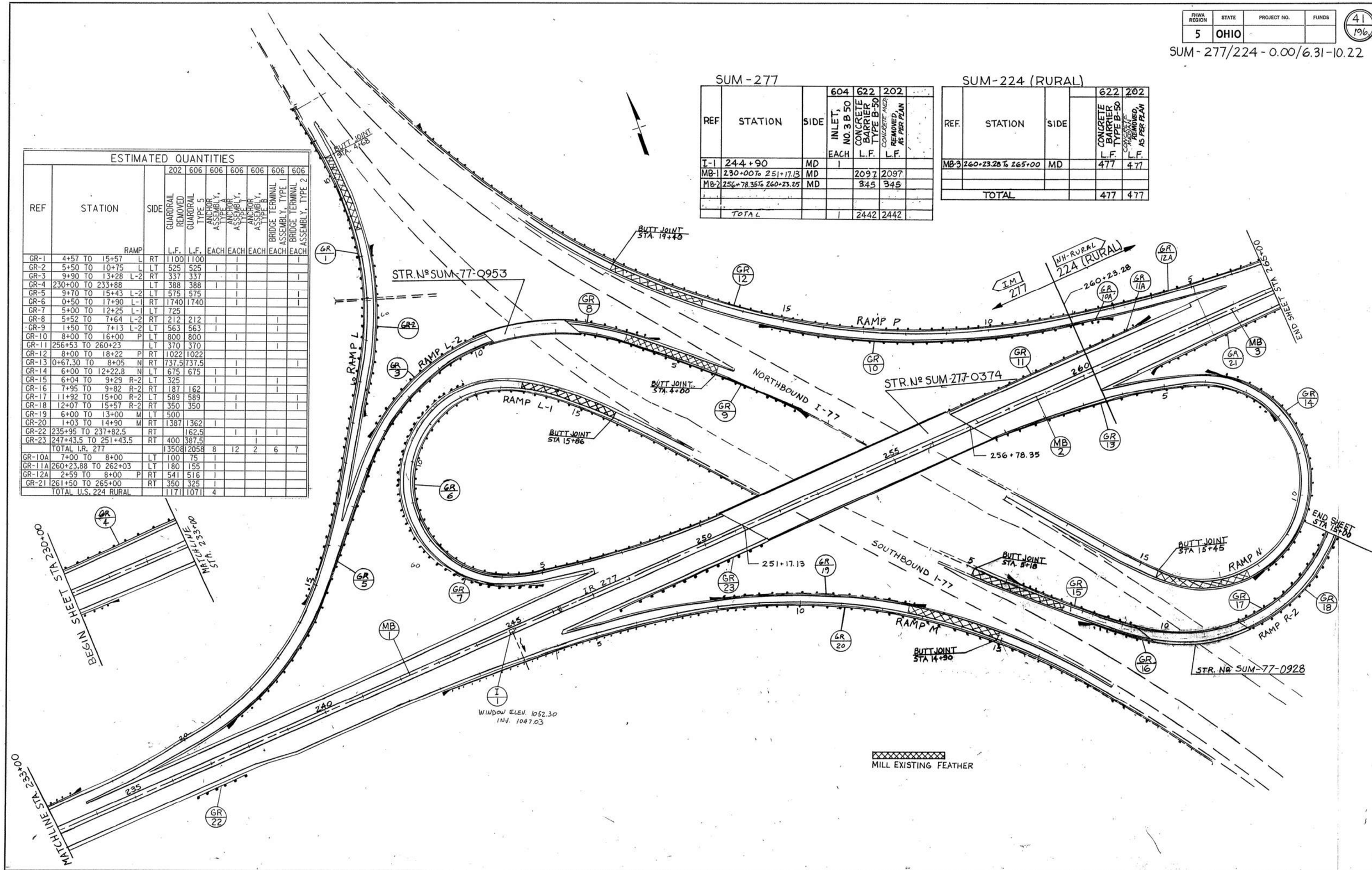

STA 230+00 TO STA 265+00

F.H.W.A. REGION	STATE	PROJECT	
5	OHIO		

42 / 196

SUM-277/224-0.00/6.31-10.22

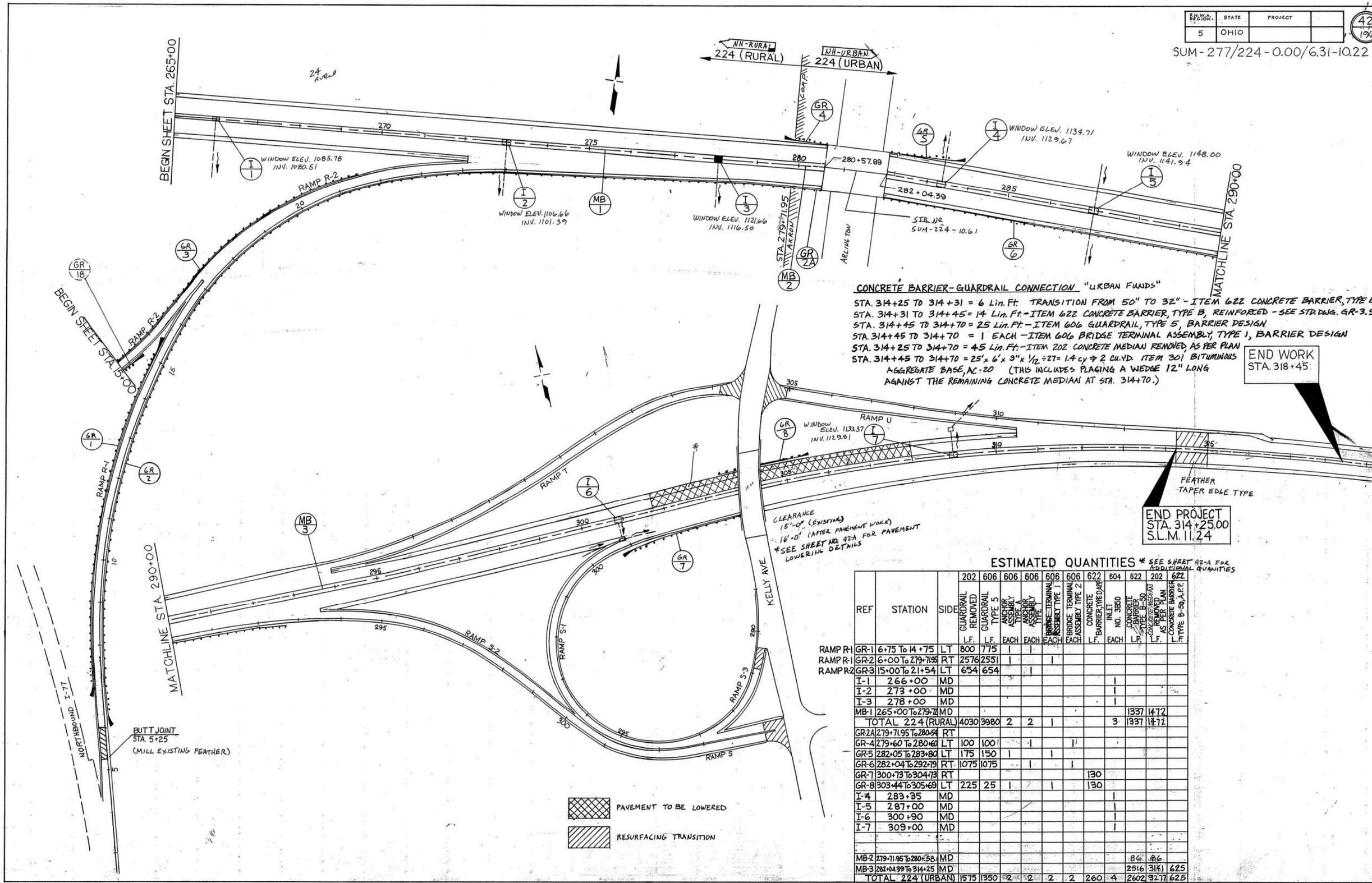

CONCRETE BARRIER-GUARDRAIL CONNECTION "URBAN FUNDS"

STA. 314+25 TO 314+31 = 6 Lin. Ft. TRANSITION FROM 50" TO 32" - ITEM 622 CONCRETE BARRIER, TYPE B.
STA. 314+31 TO 314+45 = 14 Lin. Ft. - ITEM 622 CONCRETE BARRIER, TYPE B, REINFORCED - SEE STD. DWG. GR-3.5.
STA. 314+45 TO 314+70 = 25 Lin. Ft. - ITEM 606 GUARDRAIL, TYPE 5, BARRIER DESIGN
STA. 314+45 TO 314+70 = 1 EACH - ITEM 606 BRIDGE TERMINAL ASSEMBLY, TYPE 1, BARRIER DESIGN
STA. 314+25 TO 314+70 = 45 Lin. Ft. - ITEM 202 CONCRETE MEDIAN REMOVED, AS PER PLAN
STA. 314+45 TO 314+70 = 25' x 6' x 3" x 1/12 ÷ 27 = 1.4 cy ⇒ 2 cu.yd. ITEM 301 BITUMINOUS AGGREGATE BASE, AC-20 (THIS INCLUDES PLACING A WEDGE 12" LONG AGAINST THE REMAINING CONCRETE MEDIAN AT STA. 314+70.)

ESTIMATED QUANTITIES

* SEE SHEET 42-A FOR ADDITIONAL QUANTITIES

	REF	STATION	SIDE	202 GUARDRAIL REMOVED L.F.	606 GUARDRAIL TYPE 5 L.F.	606 ANCHOR ASSEMBLY TYPE A EACH	606 ANCHOR ASSEMBLY TYPE 1 EACH	606 BRIDGE TERMINAL ASSEMBLY TYPE 1 EACH	606 BRIDGE TERMINAL ASSEMBLY TYPE 2 EACH	622 CONCRETE BARRIER, TYPE D, APP. L.F.	604 INLET NO. 3850 EACH	622 CONCRETE BARRIER TYPE B-50 L.F.	202 CONCRETE MEDIAN REMOVED AS PER PLAN L.F.	622 CONCRETE BARRIER TYPE B-50, A.P.P. L.F.
RAMP R-1	GR-1	6+75 To 14+75	LT	800	775	1	1							
RAMP R-1	GR-2	6+00 To 279+71.95	RT	2576	2551	1		1						
RAMP R-2	GR-3	15+00 To 21+54	LT	654	654		1							
	I-1	266+00	MD								1			
	I-2	273+00	MD								1			
	I-3	278+00	MD								1			
	MB-1	265+00 To 279+71.95	MD									1337	1472	
	TOTAL 224 (RURAL)			4030	3980	2	2	1			3	1337	1472	
	GR-2A	279+71.95 To 280+54	RT											
	GR-4	279+60 To 280+60	LT	100	100		1		1					
	GR-5	282+05 To 283+80	LT	175	150	1		1						
	GR-6	282+04 To 292+79	RT	1075	1075		1		1					
	GR-7	300+13 To 304+13	RT							130				
	GR-8	303+44 To 305+69	LT	225	25	1		1		130				
	I-4	283+35	MD								1			
	I-5	287+00	MD								1			
	I-6	300+90	MD								1			
	I-7	309+00	MD								1			
	MB-2	279+71.95 To 280+58	MD									86	86	
	MB-3	282+04.39 To 314+25	MD									2516	3141	625
	TOTAL 224 (URBAN)			1575	1350	2	2	2	2	260	4	2602	3277	625

STA 265+00 TO END PROJECT

F.H.W.A. REGION	STATE	PROJECT NO.	FUNDS
5	OHIO		

42A
196

SUM-277/224-0.00/6.31-10.22

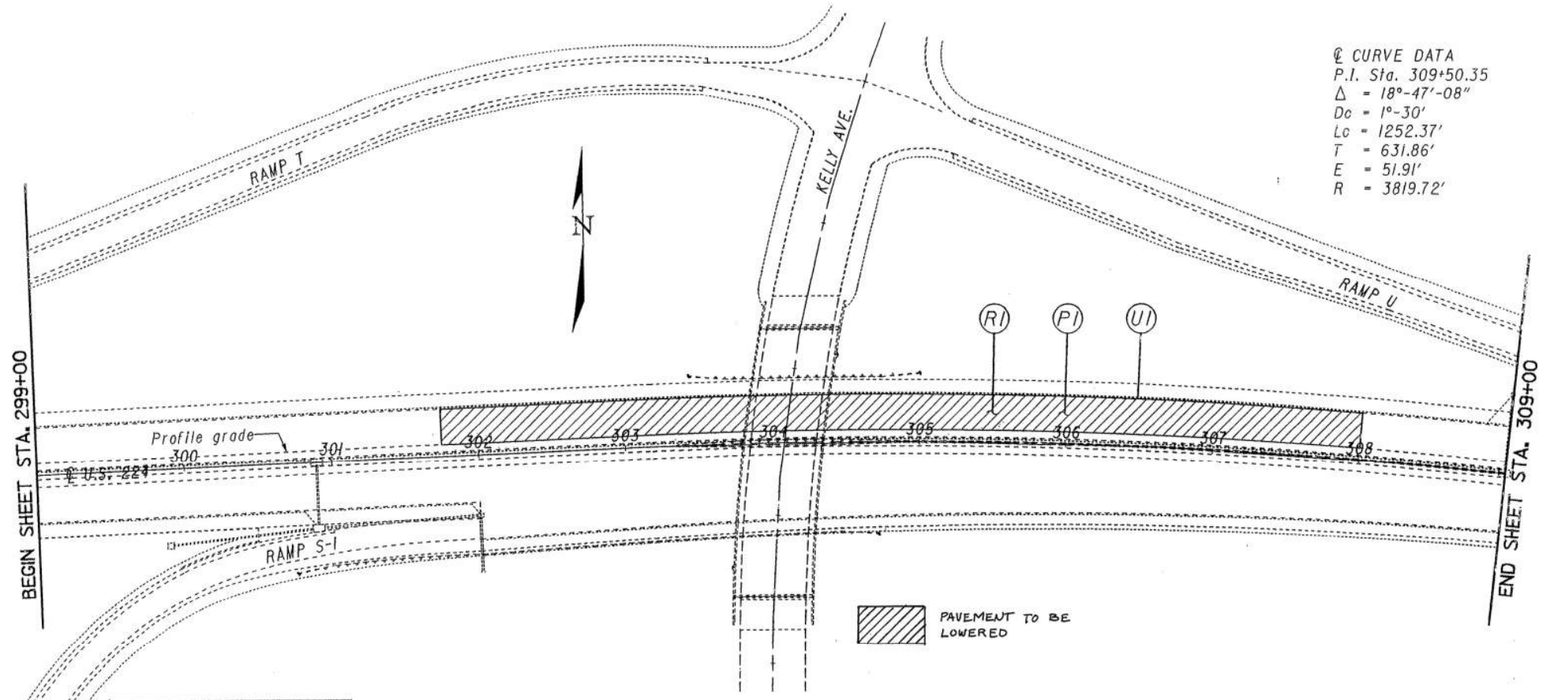

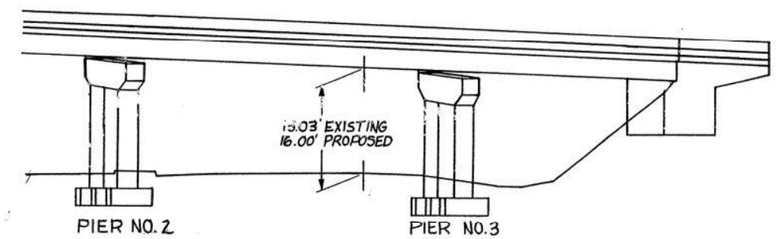

BENCHMARK
Top of pin in monument box
Sta. 298+13.97
Elevation = 1153.44

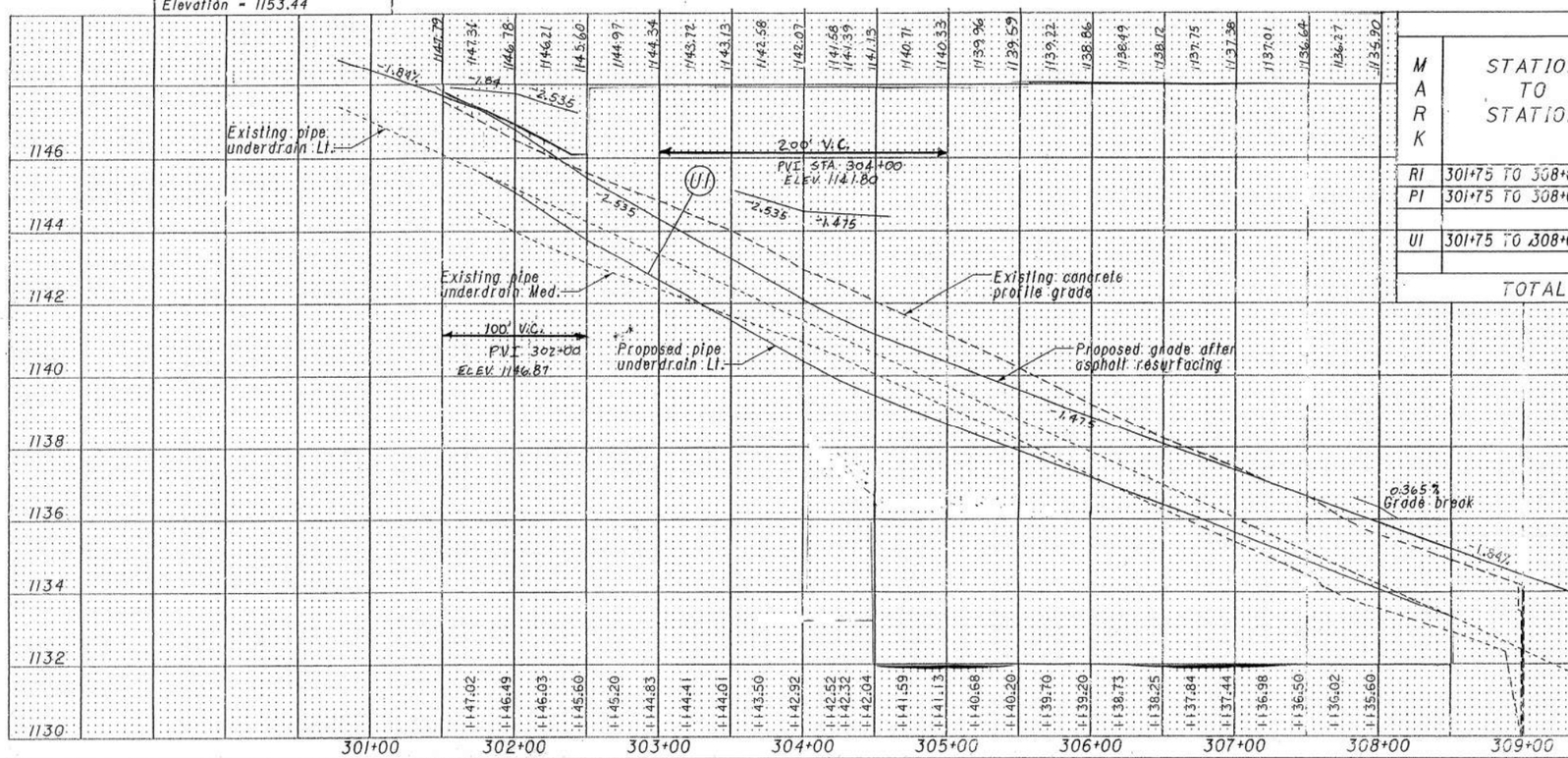

ESTIMATED QUANTITIES

MARK	STATION TO STATION	SIDE	202 PAVEMENT REMOVED	203 EXCAVATION	310 SUB BASE, AS PER PLAN	408 BITUMINOUS PRIME COAT	451 10" REINFORCED CONCRETE PAVEMENT	605 6" SHALLOW PIPE UNDERDRAIN, AS PER PLAN	659 SEEDING AND MULCHING	659 COMMERCIAL FERTILIZER	659 AGRICULTURAL LIMING	659 WATER
			SQ. YD.	CU. YD.	CU. YD.	GAL.	SQ. YD.	LIN. FT.	SQ. YD.	TON	TON	M-GAL.
R1	301+75 TO 308+00	LT.	1667	1600								
P1	301+75 TO 308+00	LT.			773	1215	1667					
		LT.							1389	.125	.625	1.5
U1	301+75 TO 308+00	LT.						625				
TOTAL			1667	1600	773	1215	1667	625	1389	.13	.63	1.5

LINE SHEET STA. 301+00 TO 308+00

D04W4A SU277010.DGN

F.H.W.A. REGION	STATE	PROJECT NO.	FUNDS
5	OHIO		

42-B
PG6

SUM-277/224-0.00/6.31-10.22

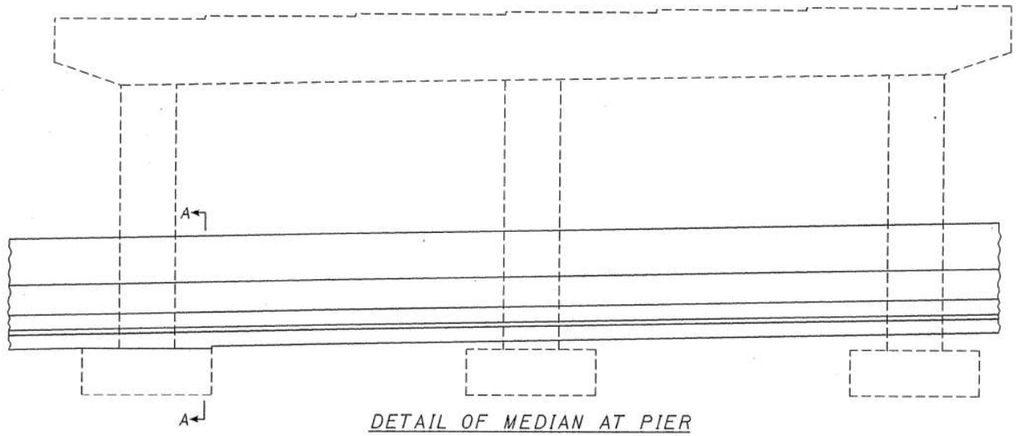

DETAIL OF MEDIAN AT PIER

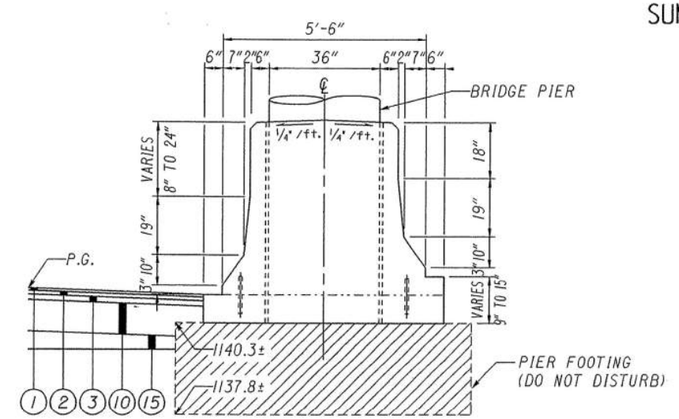

SECTION A-A

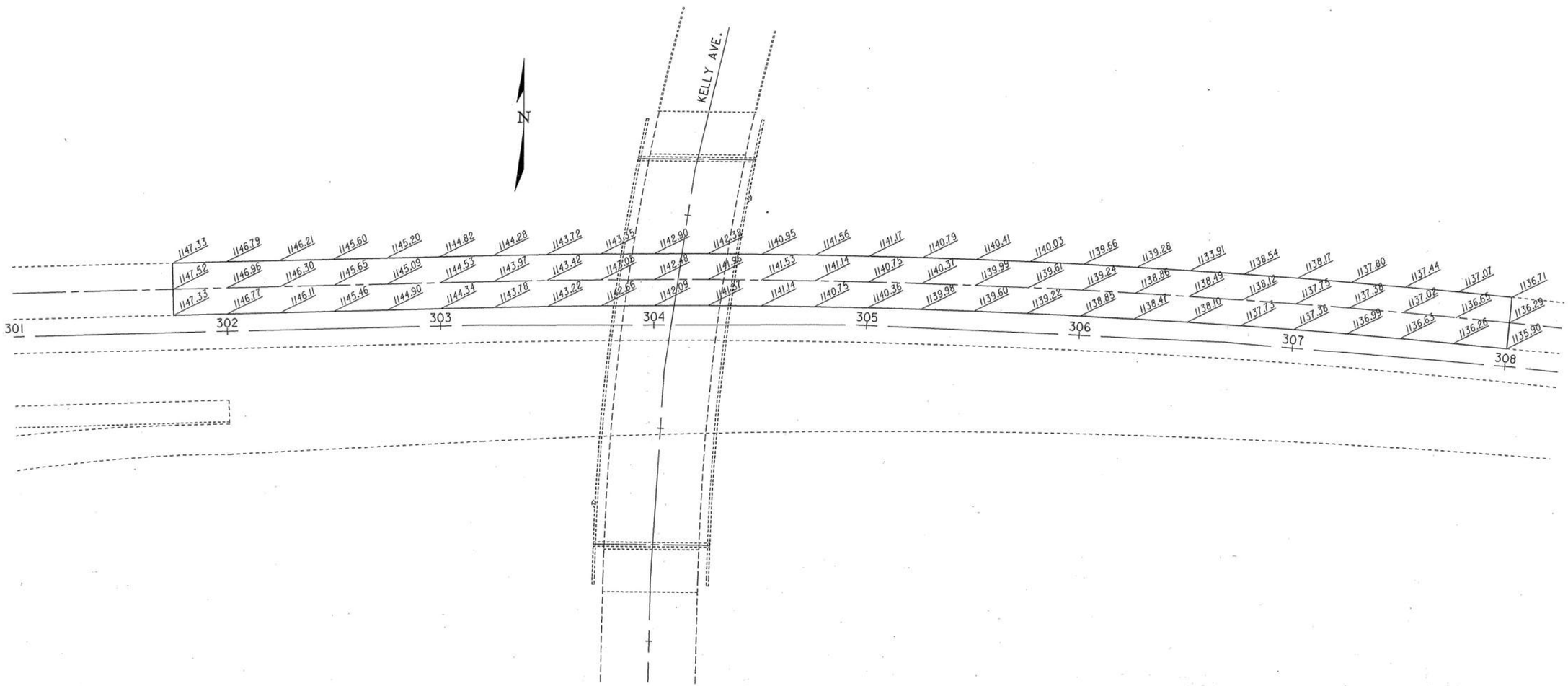

PAVEMENT ELEVATIONS

PAVEMENT ELEVATIONS

FED RD DIVISION	STATE	PROJECT	
5	OHIO		

42-C
196

SUM-277/224-0.00/6.31/10.22

END AREA CUT	END AREA FILL	CU. YDS. CUT	CU. YDS. FILL
		253	0
140	0		
		224	0
162	0		
		133	0
85	0		
		146	0
173	0		
		81	0
14	0		
		13	0
0	0		

FINAL SURVEY BY DATE
SURVEYED
PLOTTED
NOTE BOOK TEMPLATE
NO. AREAS
AREAS CHECKED

ORIGINAL SURVEY BY DATE
SURVEYED
PLOTTED
NOTE BOOK TEMPLATE
NO. AREAS
AREAS CHECKED

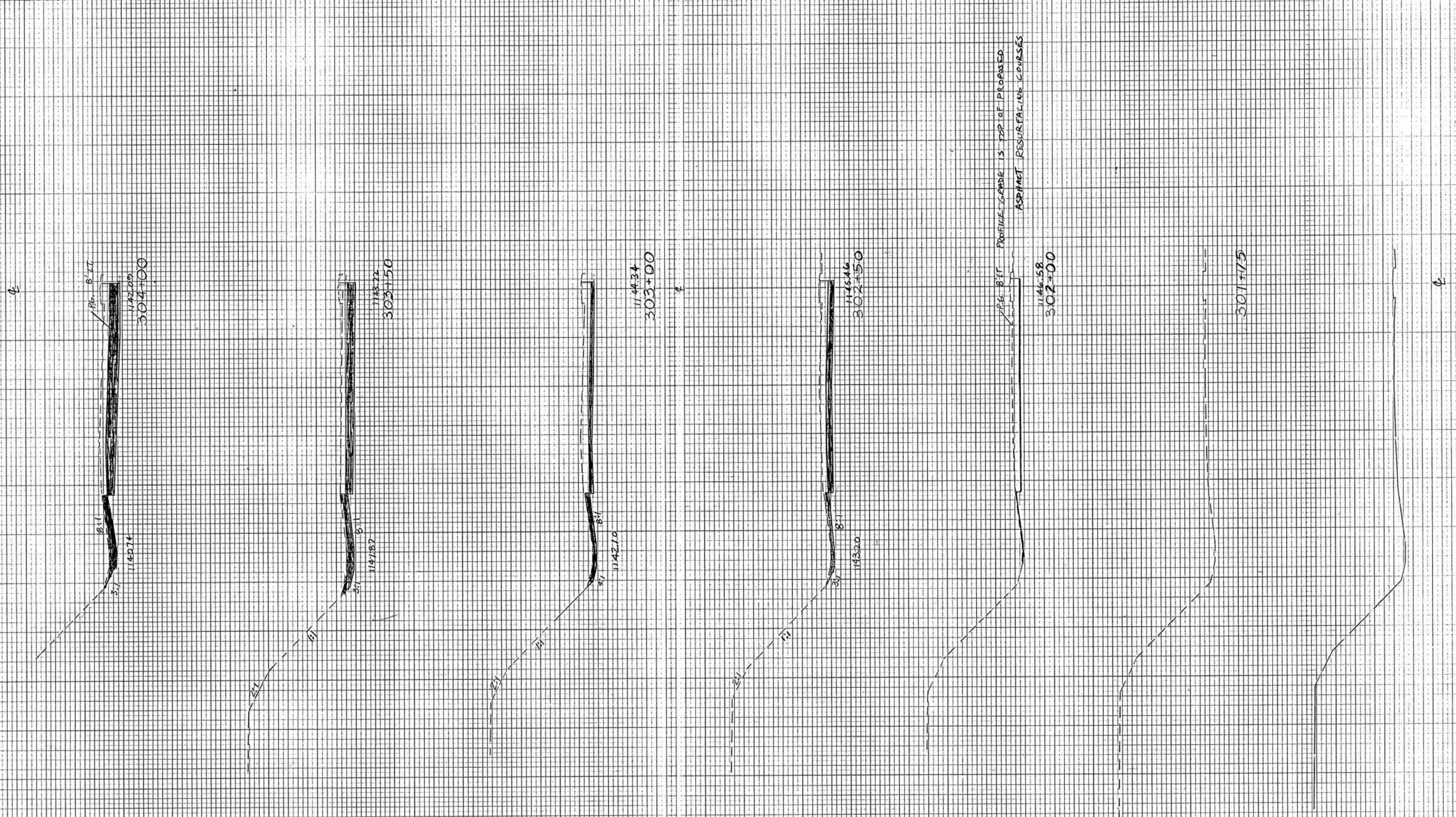

RB4223

PLATE 3-FULL CROSS SECTION-FULL LINE

PLATE 3-FULL CROSS SECTION-FULL LINE

FHWA REGION	STATE	PROJECT NO.	FUNDS
5	OHIO		

SUM-277/224-0.00/6.31-10.22

CONCRETE COLLAR DETAIL

NO SCALE

NOTES:
THE COST OF DRILLING AND SETTING DOWELS, CONSTRUCTING CONCRETE COLLARS (USING CLASS C CONCRETE) AND ALL RELATED WORK IS TO BE INCLUDED IN THE PERTINENT BID FOR ITEM 603 CONDUIT, AS PER 603.01. AS AN ALTERNATE, THE EXISTING HEADWALL AND THE LAST SECTION OF THE EXISTING CONDUIT MAY BE REMOVED AND REPLACED WITH AN ADDITIONAL SECTION OF NEW CONDUIT AT NO ADDITIONAL COSTS. THE COST OF REMOVING THE WALL AND CONDUIT AND REPLACING THE LENGTH OF CONDUIT REMOVED SHALL BE INCLUDED IN THE UNIT PRICE BID FOR THE PROPOSED CONDUIT EXTENSION, MEASURED FROM THE FACE OF THE EXISTING WALL.

IN CASES WHERE A CULVERT TO BE EXTENDED HAS NO EXISTING HEADWALL, THE MEANS OF SEALING THE JOINT SHALL BE AS DETERMINED BY THE ENGINEER WITH A STANDARD CONCRETE COLLAR BEING USED IN MOST CASES.

CULVERT EXTENSION TYPICAL

NO SCALE

NOTE:
THE DIMENSIONS (H)(W)(T) VARY ACCORDING TO CONDUIT DIA. REFER TO STATE OF OHIO, STANDARD CONST. DRAWING, HW-4.

ESTIMATED QUANTITIES

REF	STATION	SIDE	203 EMBANKMENT C.Y.	602 CONCRETE MASONRY C.Y.	603 30" CONDUIT TYPE A L.F.	603 36" CONDUIT TYPE A L.F.	659 SEEDING AND MULCHING S.Y.	202 GUTTER REMOVED L.F.	601 4" PAVED GUTTER TYPE 1-4 L.F.	601 ROCK CHANNEL PROTECTION TYPE B W/FILTER C.Y.	203 EXCAVATION NOT INCLUDING EMBANKMENT C.Y. CONSTRUCTION		
E-1	180+50 to 185+00	LT	883				1624						
E-2	0+50 To 7+50	LT RT	1853				3436				139		
E-4	5+50 TO 9+00	LT	542				1204						
D-2	5+50	RT		0.6	16								
D-3	5+50	LT		0.6	16								
D-4	7+50	LT		0.76		16							
PG-1	0+40 To 1+00	RT						60	60				
DR-1										11			
TOTAL			3278	2	32	16	6264	60	60	11	139		

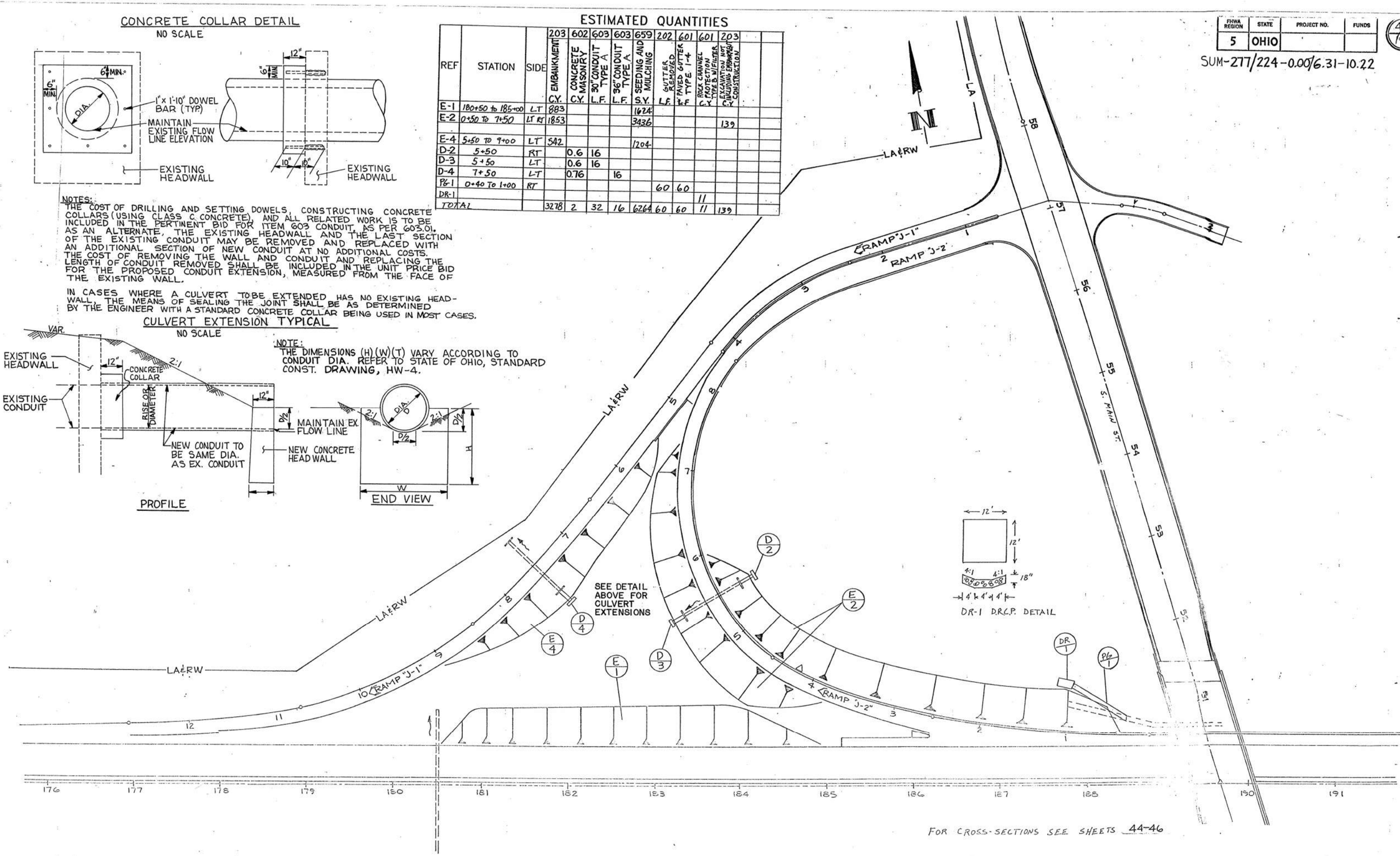

FOR CROSS-SECTIONS SEE SHEETS 44-46

EARTHWORK PLAN RAMP "J-1", "J-2" AND MAINLINE

FED RD DIVISION	STATE	PROJECT	
5	OHIO		

SUM-277/224-0.00/6.31-10.22

	SEEDING	END AREA	VOLUME
	END WIDTH	S.Y.	CUT	FILL	CUT	FILL
185+00						
	40	191	66		105	
184+14						
	40	62	66		34	
184+00						
	40	222	64		120	
183+50						
	40	225	72		126	
183+00						
	40	176	74		105	
182+61						
	38	264	62		154	
182+00						
	33	203	54		107	
181+50						
	33	41	91			
181+00						
	33	92	189			
180+50						
		1624	44			
		883	33			
		SHEET TOTAL				

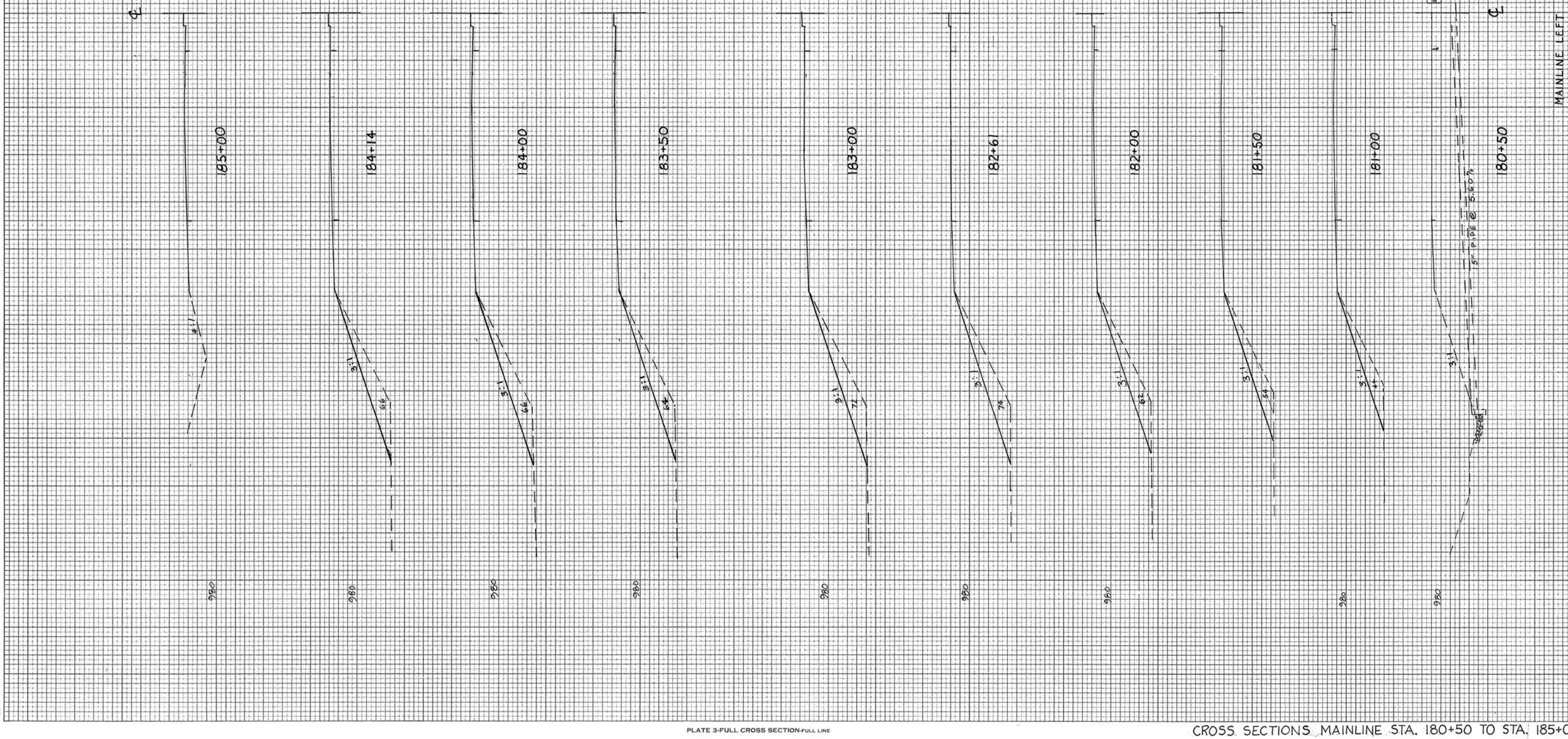

FINAL SURVEY	BY	DATE
SURVEYED		
PLOTTED		
TEMPLATE		
AREAS		
AREAS CHECKED		
NOTE BOOK NO.		

ORIGINAL SURVEY	BY	DATE
SURVEYED		
PLOTTED		
TEMPLATE		
AREAS		
AREAS CHECKED		
NOTE BOOK NO.		

N-1025

PLATE 3-FULL CROSS SECTION-FULL LINE

CROSS SECTIONS MAINLINE STA. 180+50 TO STA. 185+0

FED RD DIVISION	STATE	PROJECT	
5	OHIO		

45
1980

SUM-277/224-0.00/6.31-10.22

SEEDING END WIDTH	SEEDING S.Y.	END AREA CUT	END AREA FILL	CU. YDS. CUT	CU. YDS. FILL
	222		46		85
40					
	225		60		98
41					
	241		46		98
35					
	367		47		172
32					
	178				87
	1203				540

QUANTITIES CARRIED TO SHEET 43

RAMP J-1 TOTAL

SEEDING END WIDTH	SEEDING S.Y.	END AREA CUT	END AREA FILL	CU. YDS. CUT	CU. YDS. FILL
	55		22		20
20					
	339		71		172
41					
	190				
	134				
	344				
	83				
0	922				
139	833				
139	2775				
SHEET TOTAL	738				
RAMP J2 TOTAL	3092				
	3830				

QUANTITIES CARRIED TO SHEET 44

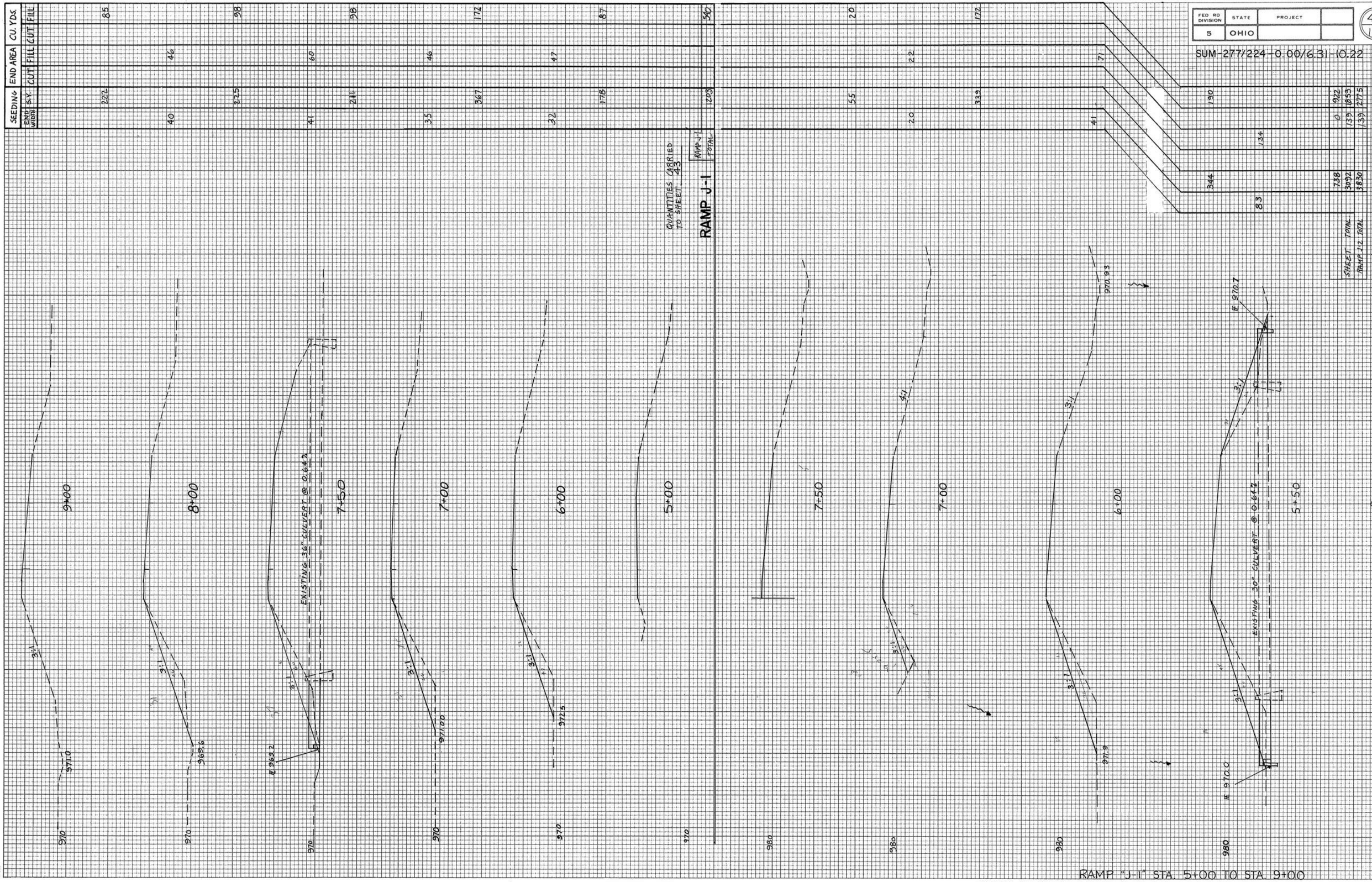

RAMP J-2

RAMP "J-1" STA. 5+00 TO STA. 9+00
CROSS SECTIONS RAMP "J-2" STA. 5+50 TO STA. 7+50

PLATE 3-FULL CROSS SECTION-FULL LINE

FINAL SURVEY
SURVEYED
PLOTTED
TEMPLATE
AREAS
AREAS CHECKED
NOTE BOOK
NO.
BY
DATE

ORIGINAL SURVEY
SURVEYED
PLOTTED
TEMPLATE
AREAS
AREAS CHECKED
NOTE BOOK
NO.
BY
DATE

FED RD DIVISION	STATE	PROJECT		
5	OHIO			

46
196

SUM-277/224-0.00/6.31-0.22

SEEDING		END AREA		CU. YDS.	
E.W.	S.Y.	CUT	FILL	CUT	FILL
	933				544
85			160		
	355			6	218
43		6	76		
	362			12	217
44		3	80		
	346			10	218
45		5	88		
	278			9	183
46		4	92		
	286			15	170
57		12	92		
	314			43	176
56		34	98		
	218			44	127
	3092			139	1853

FINAL SURVEY
NOTE BOOK
NO.
SURVEYED
PLOTTED
TEMPLATE
AREAS
AREAS CHECKED
BY
DATE

ORIGINAL SURVEY
NOTE BOOK
NO.
SURVEYED
PLOTTED
TEMPLATE
AREAS
AREAS CHECKED
BY
DATE

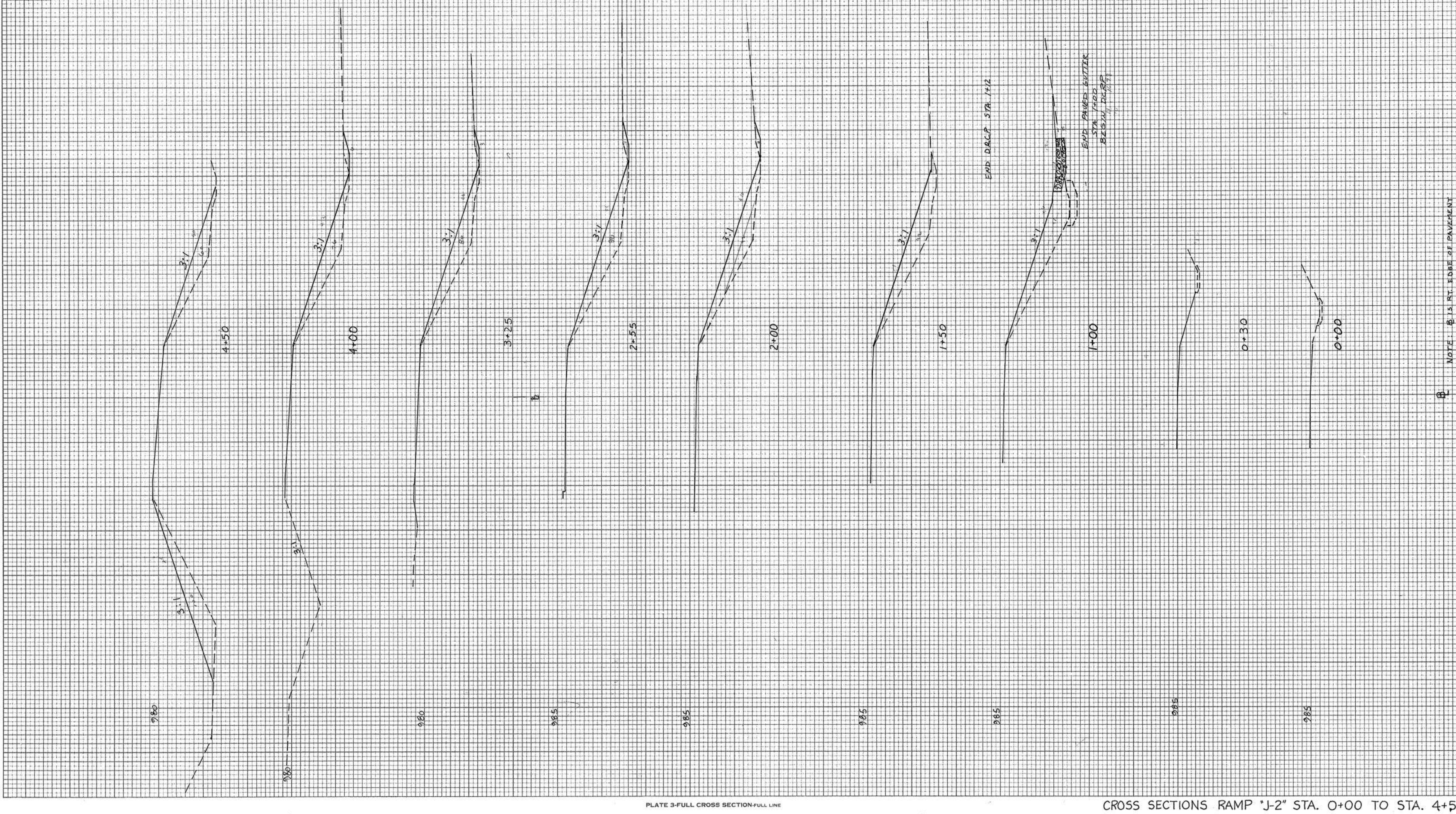

RAMP J-2

PLATE 3-FULL CROSS SECTION-FULL LINE

CROSS SECTIONS RAMP "J-2" STA. 0+00 TO STA. 4+50

FED. RD. DIVISION	STATE	PROJECT	
2	OHIO		

SUM-277/2.24-0.00/6.31-10.22

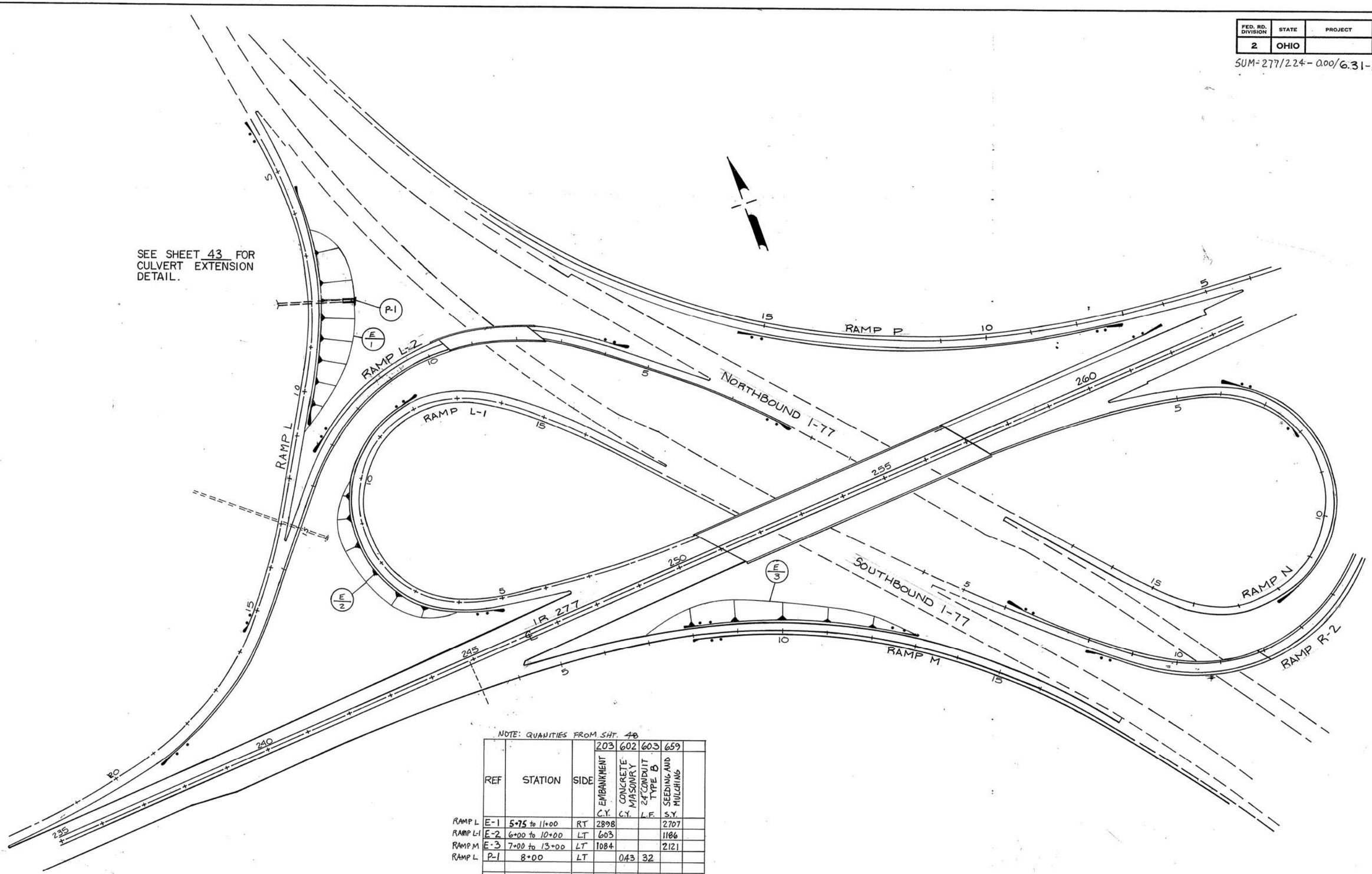

NOTE: QUANITIES FROM SHT. 48

	REF	STATION	SIDE	203 EMBANKMENT C.Y.	602 CONCRETE MASONRY C.Y.	603 24" CONDUIT TYPE B L.F.	659 SEEDING AND MULCHING S.Y.	
RAMP L	E-1	5+75 to 11+00	RT	2898			2707	
RAMP L-1	E-2	6+00 to 10+00	LT	603			1186	
RAMP M	E-3	7+00 to 13+00	LT	1084			2121	
RAMP L	P-1	8+00	LT		0.43	32		
TOTAL				4585	0.43	32	6014	

EARTHWORK PLAN RAMP "L", "L-1" AND RAMP "M"

FED RD DIVISION	STATE	PROJECT	
5	OHIO		

SUM-277/224-0.00/6.31-10.22

48

	SEEDING	END AREA VOLUME			
	E.W.S.Y.	CUT	FILL	CUT	FILL
11+00					
	125		72		
10+25					
	30	32			
9+25					
	70	232			
8+75					
	75	264			
8+00					
	80	318			
7+00					
	64	160			
6+50					
	1178		148		
SHEET TOTAL	2707		2898		

QUANTITIES CARRIED TO SHT. NO. 47

PLATE 3-FULL CROSS SECTION-FULL LINE

CROSS SECTIONS RAMP "L" STA. 6+50 TO STA. 11+00

FINAL SURVEY NOTE BOOK NO. — SURVEYED, PLOTTED, TEMPLATE, AREAS, AREAS CHECKED — BY — DATE

ORIGINAL SURVEY NOTE BOOK NO. — SURVEYED, PLOTTED, TEMPLATE, AREAS, AREAS CHECKED — BY — DATE

N-1203

FED RD DIVISION	STATE	PROJECT	
5	OHIO		

49
19

SUM-277/224-0.00/6.31-10.22

	SEEDING	END AREA		VOLUME	
E.W.	S.Y.	CUT	FILL	CUT	FILL
	205				113
37			61		
	200				105
35			52		
	383				191
34			50		
	215				105
35			51		
	183				89
SHEET TOTAL	1186				603

FINAL SURVEY
NOTE BOOK NO.
SURVEYED
PLOTTED
TEMPLATE
AREAS
AREAS CHECKED
BY
DATE

ORIGINAL SURVEY
NOTE BOOK NO.
SURVEYED
PLOTTED
TEMPLATE
AREAS
AREAS CHECKED
BY
DATE

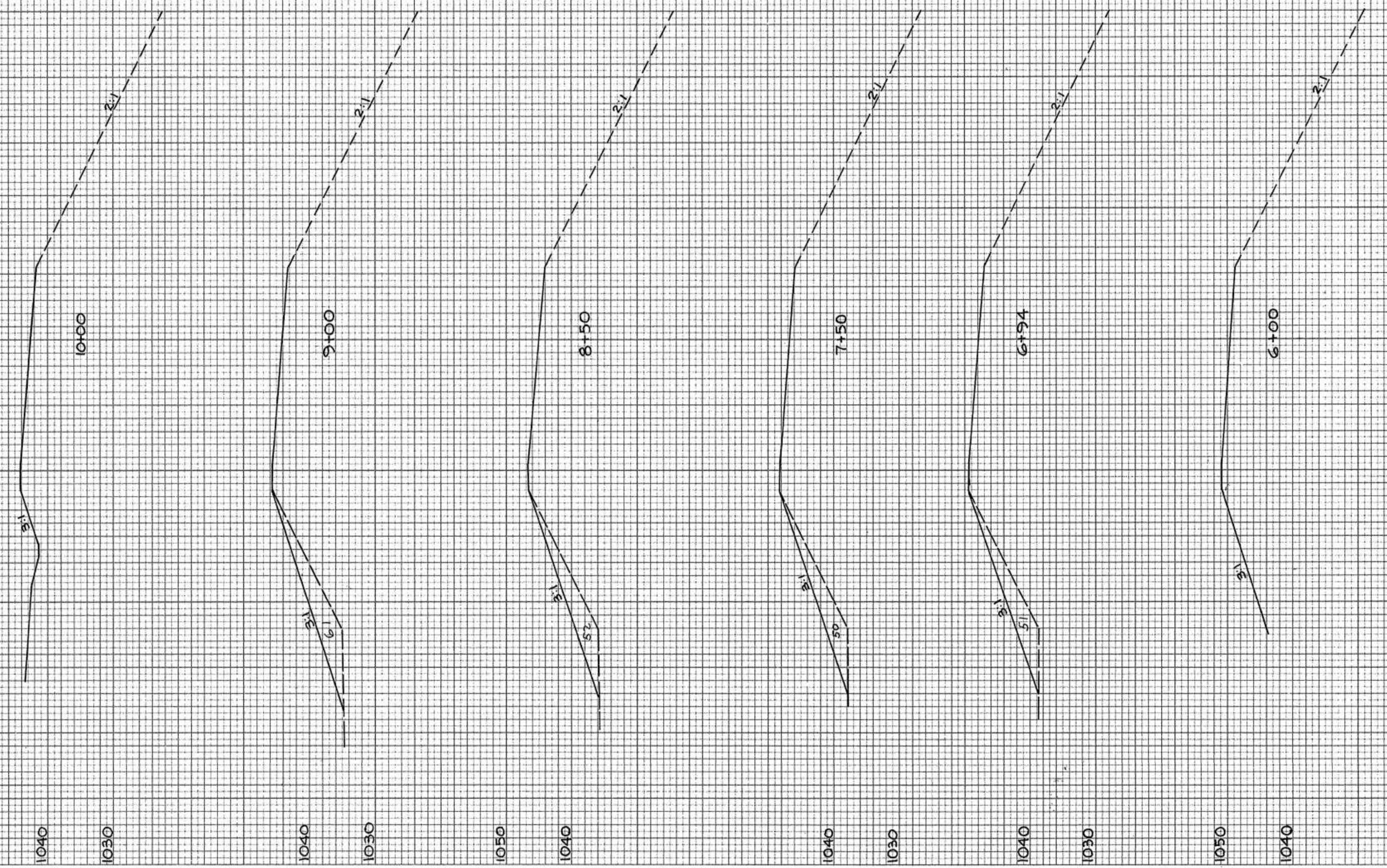

N13835

PLATE 3-FULL CROSS SECTION-FULL LINE

CROSS SECTIONS RAMP "L-1" STA. 6+00 TO STA. 10+00

FED RD DIVISION	STATE	PROJECT	
5	OHIO		

50
196

SUM-277/224-0.00/6.31-10.22

	13+00	12+00	11+00	10+00	9+00	8+00	7+00	SHEET TOTAL
SEEDING AREA	63	152	209	268	270	122		1085
END AREA	34	48	65	80	66			
VOLUME EW, S.Y.	161	344	405	478	494	239		2121
CUT	29	33	40	46	43			
FILL								

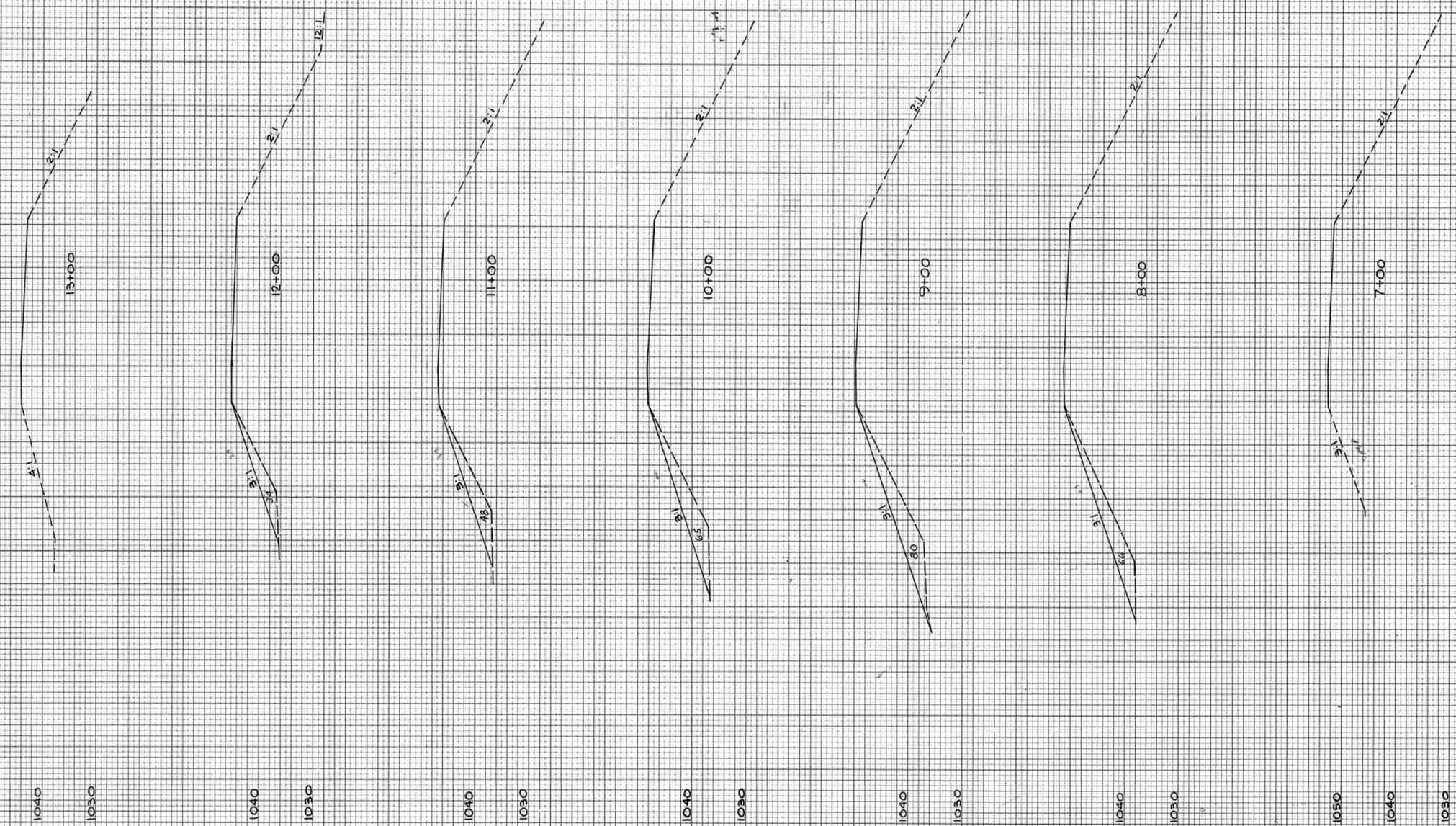

FINAL SURVEY
SURVEYED
PLOTTED
TEMPLATE
AREAS
AREAS CHECKED
NOTE BOOK
NO.
BY
DATE

ORIGINAL SURVEY
SURVEYED
PLOTTED
TEMPLATE
AREAS
AREAS CHECKED
NOTE BOOK
NO.
BY
DATE

PLATE 3-FULL CROSS SECTION-FULL LINE

CROSS SECTIONS RAMP "M" STA. 7+00 TO STA. 13+00

TRAFFIC CONTROL GENERAL NOTES

TRAFFIC CONTROL STANDARD CONSTRUCTION DRAWINGS

REFERENCES TO SUPPLEMENTAL SPECIFICATIONS 857, 858, 861, 957, 958, 806, 847, 947, 961 AND ITEM 621 ON THE TRAFFIC CONTROL STANDARD CONSTRUCTION DRAWINGS IN THE PLANS SHALL BE CONSIDERED TO READ AS RESPECTIVE REFERENCES TO ITEMS 630, 631, 633, 730, 731, 733, 643, 644, 645, 642.

MILE MARKER LOCATION

THE LOCATION OF MILE MARKERS ON THE PLANS ARE APPROXIMATE AND A MORE PRECISE LOCATION WILL BE PROVIDED BY THE DEPARTMENT. THE CONTRACTOR SHALL NOTIFY THE ENGINEER AT LEAST 30 DAYS IN ADVANCE OF THE PLANNED DATE OF MARKER INSTALLATION. THE ENGINEER WILL CONTACT THE BUREAU OF TECHNICAL SERVICES WHICH WILL LOCATE THE LONGITUDINAL POSITION OF MILE MARKERS BY MEANS OF A PAINT MARK ON THE PAVEMENT EDGE. ALTERNATE MARKS WILL NOT BE PROVIDED ON DIVIDED HIGHWAYS AND THE CONTRACTOR SHALL SET MARKERS FOR THE OPPOSITE ROADWAY ACROSS FROM THE PROVIDED MARK. DELINEATORS WHOSE NORMAL POSITION FALLS WITHIN 50 FEET OF A MILE MARKER SHALL BE OMITTED.

REMOVAL OF LUMINAIRE FOR STORAGE, AS PER PLAN

THIS ITEM OF WORK SHALL CONSIST OF REMOVING AN EXISTING LUMINAIRE AND SUPPORT ARM TO BE STORED ON THE SITE FOR THE CITY OF AKRON TO TAKE POSSESSION OF.
PAYMENT SHALL BE MADE AT THE UNIT PRICE BID. EACH ITEM 631-REMOVAL OF LUMINAIRE FOR STORAGE, AS PER PLAN. WHICH WILL BE COMPENSATION FOR ALL LABOR, EQUIPMENT, MATERIALS AND INCIDENTALS NECESSARY TO COMPLETE THIS ITEM OF WORK.

SIGN PLACEMENT

THE EXACT LOCATIONS OF SIGNS ARE TO BE STAKED AND CHECKED BY THE ENGINEER PRIOR TO PLACEMENT TO INSURE CLEARENCE OF THE DRIVES, ROADWAY AND OTHER OBSTACLES. IF THERE ARE ANY CONFLICTS, THEY ARE TO BE ADJUSTED AS DIRECTED BY THE ENGINEER.
PAYMENT FOR THIS IS INCIDENTAL TO ALL 630 ITEMS.

620 DELINEATOR, FLEXIBLE POST MOUNTED.

THE DELINEATORS SHALL BE INSTALLED IN ACCORDANCE WITH ITEM 620 OF THE CONSTRUCTION AND MATERIALS SPECIFICATIONS. ALL OF THE DELINEATORS SHALL BE "SAFE HIT" MODEL SH2486P3 OR APPROVED EQUIVALENT. THE DELINEATOR SHALL BE THE SAME COLOR AS THE NEAREST EDGE LINE, USING DELINEATOR, TYPE G, REFLECTOR (SILVER/YELLOW), 72" (WHITE/YELLOW) POST WITH ANCHOR SLEEVE.

PAYMENT SHALL BE FULL COMPENSATION FOR ALL LABOR, MATERIALS, TOOLS, EQUIPMENT, AND OTHER INCIDENTALS NECESSARY TO COMPLETE THIS ITEM AND PAID FOR UNDER ITEM 620 DELINEATORS, FLEXIBLE, POST MOUNTED.

630 OVERHEAD SIGN SUPPORT TC-9.30 DESIGN 2, AS PER PLAN

THIS SIGN SUPPORT STRUCTURE SHALL HAVE A TUBE POLE AS PER TC-9.30 AND SHALL BE PLACED AS SHOWN ON SHEET 81. THIS STRUCTURE SHALL HAVE 2 SETS OF BACK-TO-BACK SIGNS AND THE ARMS FOR EACH SET OF SIGNS SHALL BE; 2 ARMS @ 7' AND 2 ARMS @ 9' AS SHOWN ON SHEET 89. THE POLES' HAND HOLE SHALL FACE EAST BOUND TRAFFIC ON WATERLOO RD.

PAYMENT WILL BE AT THE CONTRACT UNIT BID PRICE FOR EACH OVERHEAD SIGN SUPPORT WHICH SHALL INCLUDE ALL LABOR, MATERIALS, EQUIPMENT, AND INCIDENTALS NECESSARY TO COMPLETE THIS WORK.

POWER SUPPLY FOR SIGN LIGHTING

ELECTRIC POWER SHALL BE OBTAINED FROM THE FOLLOWING LISTED COMPANY AT THE LOCATION INDICATED ON THE PLANS. POWER SUPPLIED SHALL BE 480 VOLTS.

OHIO EDISION CO.
76 S. MAIN ST.
AKRON, OHIO 44308
(216) 384-5100

TRAFFIC CONTROL GENERAL SUMMARY

COMPLETED BY T.P. DATE 8-9-90
CHECKED BY R.L. DATE 8/9/90

F.H.W.A. REGION	STATE	PROJECT NO.	FUNDS
5	OHIO		

SUM-277/224-0.00/631/10.22

SHEET NUMBER 56	57	66	67	68	69	70	71	82	91	PARTICIPATION IM277(61) FEDERAL STATE	NH (51) RURAL FEDERAL STATE	NH (51) URBAN FEDERAL STATE, CITY	ITEM	ITEM EXT.	GRAND TOTAL	UNIT	DESCRIPTION
								168		144	6	18	620	70000	168	EACH	DELINEATOR, TYPE A, FLEXIBLE POST MOUNTED
								83		66		17	620	70000	83	EACH	DELINEATOR, TYPE B, FLEXIBLE POST MOUNTED
								200		159		41	620	31200	200	EACH	DELINEATOR REMOVED FOR DISPOSAL
									25.37	20.86	1.15	3.36	642	00090	25.37	MILE	EDGE LINE
									17.99	15.30	0.34	2.35	642	00190	17.99	MILE	LANE LINE
									7290	5550		1740	642	00390	7290	LIN. FT.	CHANNELIZING LINE
									140	90		50	642	00490	140	LIN. FT.	STOP LINE
									1817	1406		411	642	00690	1817	LIN. FT	TRANSVERSE LINE
									2			2	642	01290	2	EACH	LANE ARROW
									1			1	642	01408	1	EACH	WORD ON PAVEMENT, 96 IN
						35	3			30	3	5	625	32000	38	EACH	GROUND ROD
						261.6	820			189.74	21.16	58.9	630	00000	269.80	CU. YD.	CONCRETE FOR ANCHOR BASE FOUNDATION
		8.76	3.24	8.22	2.86					14.3	0.5	8.2	630	00100	23.0	CU. YD.	CONCRETE FOR EMBEDDED FOUNDATIONS
		39.0	86.0	20.0						125.0	20.0		630	02100	145	LIN. FT.	GROUND MOUNTED SUPPORT, NO. 2 POST
		205.0	170.5	166.0	12.0					399		155	630	03100	554	LIN. FT.	GROUND MOUNTED SUPPORT, NO. 3 POST
32.0	15.0	609.0	551.0		43.5					1401	26	280	630	04100	1707	LIN. FT.	GROUND MOUNTED SUPPORT, NO. 4 POST
		101.0		457						101.0			630	06100	101	LIN. FT.	GROUND MOUNTED SUPPORT NO. 6 POST
		126	199.0	90.9						292	33	91	630	06400	416	LIN. FT.	GROUND MOUNTED SUPPORT S4X7.7 BEAM
					33.2					33			630	06500	33	LIN. FT.	GROUND MOUNTED SUPPORT W 6X9 BEAM
		118.3		120.7	37.2					156		121	630	07600	277	LIN. FT.	GROUND MOUNTED SUPPORT W10X12 BEAM
		75.5	14.5	30.0						90.0		30	630	08004	120	LIN. FT.	ONE WAY SUPPORT NO. 3 POST
		14	12	12	4					28	2	12	630	09000	42	EACH	BREAKAWAY BEAM CONNECTION
						1				1			630	20400	1	EACH	OVERHEAD SIGN SUPPORT TYPE TC-12.30 DESIGN 4, 20' ARM
						4				4			630	20500	4	EACH	OVERHEAD SIGN SUPPORT TYPE TC-12.30 DESIGN 5, 22' ARM
						6	1			6	1		630	20600	7	EACH	OVERHEAD SIGN SUPPORT TYPE TC-12.30 DESIGN 6, 25' ARM
						1	1				1	1	630	20600	2	EACH	OVERHEAD SIGN SUPPORT TYPE TC-12.30 DESIGN 6, 26' ARM
						2				1	1		630	20800	2	EACH	OVERHEAD SIGN SUPPORT TYPE TC-12.30 DESIGN 8, 26' ARM
						4				4			630	21100	4	EACH	OVERHEAD SIGN SUPPORT TYPE TC-12.30 DESIGN 11, 26' ARM
							1			1			630	30201	1	EACH	OVERHEAD SIGN SUPPORT TYPE TC-9.30 DESIGN 2, AS PER PLAN
						2				2			630	31200	2	EACH	OVERHEAD SIGN SUPPORT TYPE TC 9.10 DESIGN 2, 9' ARM
						1				1			630	31200	1	EACH	OVERHEAD SIGN SUPPORT TYPE TC-9.10 DESIGN 2, 10' ARM
						1				1			630	31200	1	EACH	OVERHEAD SIGN SUPPORT TYPE TC-9.10 DESIGN 2, 9' ARMS & 10' ARMS

ZFA1:(20,33)LANE.CEL AS GS

TRAFFIC CONTROL GENERAL SUMMARY

COMPLETED BY TP DATE 8-9-90
CHECKED BY [illegible] DATE 8-9-90

F.H.W.A. REGION	STATE	PROJECT NO.	FUNDS
5	OHIO		

SUM-277/224-0.00/6.31/10.22

SHEET NUMBER 54	55	56	57	66	67	68	69	70	71	72	73	PARTICIPATION IM277(67) FEDERAL STATE	NH (51) RURAL FEDERAL STATE	NH (51) URBAN FEDERAL STATE, CITY	ITEM	ITEM EXT.	GRAND TOTAL	UNIT	DESCRIPTION
								6				3		3	630	36000	6	EACH	OVERHEAD SIGN SUPPORT TYPE TC-7.65 DESIGN 6, 64' F.T.
								3				2		1	630	36500	3	EACH	OVERHEAD SIGN SUPPORT TYPE TC-7.65 DESIGN 6, 66' F.T.
								5				4	1		630	47500	5	EACH	OVERHEAD SIGN SUPPORT TYPE TC-7.65 DESIGN 8, 77' F.T.
									19					19	630	75000	19	EACH	SIGN ATTACHMENT ASSEMBLY
									8					8	630	75106	8	EACH	LUMINAIRE SUPPORT ASSEMBLY TYPE TC-31.21
1					4							5			630	79500	5	EACH	SIGN SUPPORT ASSEMBLY, POLE MOUNTED
				618.2	465.5	468.5	40.7					1246	20	327	630	80102	1593	SQ. FT	SIGN, FLAT SHEET, TYPE G
				440.0	222.0	315.5	90.0	8199.5	815.0			7180.0	821	2081	630	80204	10082	SQ. FT	SIGN, EXTRU SHEET, TYPE G
				2								2			630	82000	2	EACH	SIGN BACKING ASSEMBLY
						1						1			630	82500	1	EACH	EXISTING SIGN REVISED WITH DEMOUNTABLE COPY
81	58	50	26									175	2	38	630	84900	215	EACH	REMOVAL OF GROUND MOUNTED SIGN AND DISPOSAL
3		1	2									5		1	630	85100	6	EACH	REMOVAL OF GROUND MOUNTED SIGN AND RE-ERECTION
3	5	1	3									10	1	1	630	85400	12	EACH	REMOVAL OF GROUND MOUNTED MAJOR SIGN AND DISPOSAL
56	38	39	19									121	3	28	630	86002	152	EACH	REMOVAL OF GROUND MOUNTED POST SUPPORT AND DISPOSAL
12	10	21	8									30	5	16	630	87400	51	EACH	REMOVAL OF OVERHEAD MOUNTED SIGN AND DISPOSAL
9	7	11	3									20	3	7	630	89702	30	EACH	REMOVAL OF OVERHEAD SIGN SUPPORT AND DISPOSAL
	1											1			630	89808	1	EACH	REMOVAL OF OVERHEAD SIGN SUPPORT AND DISPOSAL, TYPE 18.26
								28	13			30	2	9	631	84000	41	EACH	SIGN SERVICE
								42	24			47	5	14	631	84300	66	EACH	SIGN WIRED
								28	10			30	2	6	631	85100	38	EACH	DISCONNECT SWITCH WITH ENCLOSURE TYPE X
								28	10			30	2	6	631	85500	38	EACH	SWITCH ENCLOSURE MOUNTING BRACKET ASSEMBLY
									4			2		2	631	87102	4	EACH	BALLAST, TYPE CMR1-100-480 INTEGRAL
								51	28			55	6	18	631	87202	79	EACH	BALLAST, TYPE CMR1-175-480 INTEGRAL
								24	8			24	4	4	631	87302	32	EACH	BALLAST, TYPE CMR1-250-480 INTEGRAL
									4			2		2	631	89100	4	EACH	MERCURY VAPOR LUMINAIRE, TYPE TC-31.21 WITH 100 WATT LAMP
								51	28			55	6	18	631	89200	79	EACH	MERCURY VAPOR LUMINAIRE, TYPE TC-31.21 WITH 175 WATT LAMP
								24	8			24	4	4	631	89300	32	EACH	MERCURY VAPOR LUMINAIRE, TYPE TC-31.21 WITH 250 WATT LAMP
24	17	26										57	10		631	94200	67	EACH	REMOVAL OF LUMINAIRE AND DISPOSAL
		13	8											21	631	94001	21	EACH	REMOVAL OF LUMINAIRE AND STORAGE, AS PER PLAN
LUMP																			

ZFA1:(20,324LANE.CEL AS GS

SIGNING SUB-SUMMARY

F.H.W.A. REGION	STATE	PROJECT NO.	FUNDS
5	OHIO		

SUM-277/224-0.00/6.31/10.22

54
196

SIGN CODE NUMBER & SIZE

SIGNING QUANTITIES

NO.	STATION	SIDE	630 GROUND MOUNTED SUPPORTS 6" POST (LIN. FT.)	630 SIGN SUPPORT ASSEMBLY POLE MOUNTED (EACH)	630 REMOVAL OF GROUND MOUNTED SIGN AND RE-ERECTION (EACH)	630 REMOVAL OF GROUND MOUNTED SIGN AND DISPOSAL (EACH)	630 REMOVAL OF GROUND MOUNTED MAJOR SIGN AND DISPOSAL (EACH)	630 REMOVAL OF OVERHEAD MOUNTED SIGN AND DISPOSAL (EACH)	630 REMOVAL OF GROUND MOUNTED POST SUPPORT AND DISPOSAL (EACH)	630 REMOVAL OF OVERHEAD SIGN SUPPORT AND DISPOSAL TYPE, TC-7.4 (EACH)	630 REMOVAL OF OVERHEAD SIGN SUPPORT AND DISPOSAL TYPE TC-7.5 (EACH)	630 REMOVAL OF OVERHEAD SIGN SUPPORT AND DISPOSAL TYPE TC-7.6 (EACH)	630 REMOVAL OF OVERHEAD SIGN SUPPORT AND DISPOSAL TYPE TC-10.48 (EACH)	630 REMOVAL OF STRUCTURE MOUNTED SIGN SUPPORT AND DISPOSAL TYPE TC-18.26 (EACH)	630 REMOVAL OF OVERHEAD SIGN SUPPORT AND DISPOSAL TYPE TC-12.24 (EACH)	631 REMOVAL OF LUMINAIRE AND DISPOSAL (EACH)	631 REMOVAL OF LUMINAIRE FOR STORAGE, AS PER PLAN (EACH)
	SHEET 58																
	IR 277																
1	63+68	LT				1			1								
2	65+00	RT				1			1								
3	68+90	LT						1							1	2	
4	71+70	RT				2			1								
5	75+75	LT				1			2								
6	76+65	LT				1			2								
7	76+78	LT						2		1						4	
8	79+66	RT				1			2								
9	82+66	LT				1			2								
10	84+27	RT						1							1	2	
11	91+93	RT					1		7								
12	95+00	LT						2		1						4	
13	101+64	RT						1							1	2	
14	102+63	LT				2											
15	107+00	LT				1											
16	109+05	RT						3		1						5	
17	111+00	RT				3			2								
19	113+21	RT				1											
	RAMP E																
18	2+40	LT				1			1								
	SHEET 59																
	IR 277																
26	123+10	RT				1											
27	137+67	LT				1			1								
28	139+87	RT				1											
29	139+30	LT				3			2								
30	140+30	LT						2		1						5	
	RAMP E																
1	7+70	RT				2			3								
2	8+20	RT				3			1								
3	9+80	RT/LT				2			2								
4	10+20	LT				1			1								
5	10+80	MED				1			1								
6	11+20	RT/MED				4			2								
7	11+35	MED				1			1								
	RAMP F																
10	9+30	MED				1			1								
11	11+80	LT				1			1								
	WATERLOO RD.																
8	11+24	RT				4			1								
9	12+78	RT				2			2								
12	14+70	LT				6			2								
13	16+76	LT				3											
	SR 93																
14	44+88	RT				3			1								
15	43+14	LT	1	3					2								
19	39+92	RT				3			1								
20	40+04	LT				7			2								
	39+15	RT													1		
	38+90	LT													1		
23	32+19	RT					2		2								
22	25+22	RT				2			1								
	RAMP G																
16	12+30	RT/LT				8			2								
17	9+70	LT				1			1								
18	8+39	RT				4			2								
	FED PROJ IR277 (67)		1	3	81	3	12		56	4					5	24	
TOTAL THIS SHEET			1	3	81	3	12		56	4					5	24	

SIGNING SUB-SUMMARY

F.H.W.A. REGION	STATE	PROJECT NO.	FUNDS
5	OHIO		

SUM-277/224-0.00/6.31/10.22

55
196

SIGN CODE NUMBER & SIZE

SIGNING QUANTITIES

NO.	STATION	SIDE	630 GROUND MOUNTED SUPPORTS 4" POST (LIN. FT.)	630 REMOVAL OF GROUND MOUNTED SIGN AND RE-ERECTION (EACH)	630 REMOVAL OF GROUND MOUNTED SIGN AND DISPOSAL (EACH)	630 REMOVAL OF GROUND MOUNTED MAJOR SIGN AND DISPOSAL (EACH)	630 REMOVAL OF OVERHEAD MOUNTED SIGN AND DISPOSAL (EACH)	630 REMOVAL OF GROUND MOUNTED POST SUPPORT AND DISPOSAL (EACH)	630 REMOVAL OF OVERHEAD SIGN SUPPORT AND DISPOSAL TYPE TC-7.4 (EACH)	630 REMOVAL OF OVERHEAD SIGN SUPPORT AND DISPOSAL TYPE TC-7.5 (EACH)	630 REMOVAL OF OVERHEAD SIGN SUPPORT AND DISPOSAL TYPE TC-7.6 (EACH)	630 REMOVAL OF OVERHEAD SIGN SUPPORT AND DISPOSAL TYPE TC-10.48 (EACH)	630 REMOVAL OF STRUCTURE MOUNTED SIGN SUPPORT AND DISPOSAL TYPE TC-18.26 (EACH)	630 REMOVAL OF OVERHEAD SIGN SUPPORT AND DISPOSAL TYPE TC-12.24 (EACH)	631 REMOVAL OF LUMINAIRE AND DISPOSAL (EACH)	631 REMOVAL OF LUMINAIRE FOR STORAGE, AS PER PLAN (EACH)
	SHEET CONT. 59															
	RAMP H															
21	0+50	MED				2		2								
24	0+70	RT			1			1								
25	1+25	RT			1			1								
31	10+85	RT			1			1								
	SHEET 60															
	IR 277															
1	148+36	RT			2			1								
2	151+60	LT			1											
3	154+41	LT					1						1		2	
4	154+87	RT			1			1								
5	162+24	LT				1		4								
6	167+06	LT			2			1								
7	170+50	RT					1						1		2	
	SHEET 61															
	IR 277															
1	177+86	RT			1			1								
2	178+21	RT					2		1						2	
3	180+20	RT			3			2								
4	182+16	RT			1			1								
5	183+75	LT					1						1		2	
24	184+52	LT			1			1								
25	185+84	LT			3			2								
26	187+00	LT			1			1								
27	190+00						1					1			1	
28	194+17	LT					1						1		2	
	RAMP K2															
6	8+56	LT			1			1								
	RAMP K															
7	3+75	LT			1			1								
8	2+12	RT			2			1								
10	0+64	MED			3			1								
11A	0+74	LT			1			1								
11	0+64	LT			2			1								
12	0+51	RT			1			1								
	RAMP K3															
9	2+65	RT			1			1								
15	0+50	LT			3			1								
16	0+25	RT			1			1								
	RAMP J 2															
23	6+50	RT			2			1								
22	7+15	LT			1											
	RAMP J															
21	2+52	LT			1											
20	0+70	LT			3											
19	0+70	MED			3			1								
	S. MAIN ST															
13	43+37	RT			6			2								
14	44+90	RT				2		2								
17	47+50	RT			3			1								
18	56+80	RT			3			1								
	SHEET 62															
	IR 277															
1	219+75	LT					1						1		2	
2	224+83	LT			1											
3	228+50	RT					2		1						4	
	FED PROJ IR277(67)				58	5	10	38	2			1	5		17	
TOTAL THIS SHEET					58	5	10	38	2			1	5		17	

△ – RURAL FED. PROJ # F(51)
○ – URBAN FED PROJ # F(51)

SIGNING SUB-SUMMARY

F.H.W.A. REGION	STATE	PROJECT NO.	FUNDS
5	OHIO		

SUM-277/224-0.00/6.31/10.22

SIGN CODE NUMBER & SIZE

SIGNING QUANTITIES

LOCATION NO.	STATION	SIDE	630 GROUND MOUNTED SUPPORTS 4 POST (LIN. FT.)	630	630 REMOVAL OF GROUND MOUNTED SIGN AND RE-ERECTION (EACH)	630 REMOVAL OF GROUND MOUNTED SIGN AND DISPOSAL (EACH)	630 REMOVAL OF GROUND MOUNTED MAJOR SIGN AND DISPOSAL (EACH)	630 REMOVAL OF OVERHEAD MOUNTED SIGN AND DISPOSAL (EACH)	630 REMOVAL OF GROUND MOUNTED POST SUPPORT AND DISPOSAL (EACH)	630 REMOVAL OF OVERHEAD SIGN SUPPORT AND DISPOSAL TYPE TC-7.4 (EACH)	630 REMOVAL OF OVERHEAD SIGN SUPPORT AND DISPOSAL TYPE TC-7.5 (EACH)	630 REMOVAL OF OVERHEAD SIGN SUPPORT AND DISPOSAL TYPE TC-7.6 (EACH)	630 REMOVAL OF OVERHEAD SIGN SUPPORT AND DISPOSAL TYPE TC-10.48 (EACH)	630 REMOVAL OF STRUCTURE, MOUNTED SIGN SUPPORT AND DISPOSAL TYPE TC-18.24 (EACH)	630 REMOVAL OF OVERHEAD SIGN SUPPORT AND DISPOSAL TYPE TC-12.24 (EACH)	631 REMOVAL OF LUMINAIRE AND DISPOSAL (EACH)	631 REMOVAL OF LUMINAIRE FOR STORAGE, AS PER PLAN (EACH)	63
	SHEET 63																	
	IR 277																	
1	230+00	LT				2			1									
2	230+07	LT				1												
4	237+40	RT						1							1	2		
9	243+48	LT				2			2									
10	243+48	RT				1			2									
11	244+93	RT						3			1					6		
12	248+47	LT						2		1						4		
13	251+30	RT				1			1									
14	257+00	LT				1			1									
15	259+31.9	RT						2		1						4		
	RAMP L																	
3	18+30	RT				1			2									
5	10+50	RT				1			1									
	RAMP L-2																	
6	11+50	RT				1			1									
7	7+77	RT				1			1									
8	7+40	LT				1			1									
	RAMP R2																	
16	9+30	LT				1			1									
17	9+80	RT				1			1									
	SHEET 64																	
	IR 277																	
1	265+07 △	LT						3				1				6		
2	266+10 △	RT						1							1	2		
4	270+30 △	RT				2			1									
5	272+60 △	LT						1							1	2		
6	277+89 △	LT					1		2									
7	279+80 ○	RT				1			2									
8	282+90 ○	RT						2		1							4	
9	283+05 ○	LT						2		1							3	
32	284+30 ○	LT	160/16.0		1													
10	286+94 ○	LT				2												
11	292+53 ○	RT						2		1							3	
12	293+55 ○	RT				1			2									
13	294+75 ○	RT				1												
14	295+50 ○	LT				1			1									
29	307+00 ○	RT				1			2									
30	312+16 ○	LT						2		1							3	
31	314+20 ○	RT				1			1									
	RAMP R																	
3	17+15	RT				1			1									
	RAMP S2																	
15	300+00 ○	RT				2			2									
	RAMP S																	
16	292+90 ○	LT				1			1									
17	292+35 ○	RT				1			1									
18	291+23 ○	LT				3			1									
19	291+23 ○	MED.				4			1									
	RAMP T																	
25	305+60 ○	LT				1			1									
	RAMP U																	
26	304+80 ○	RT/LT				8			2									
27	307+49 ○	LT				3			2									
28	309+70 ○	RT				1			1									
	FED. PROJ. IR277(67)		—		—	16	—	8	17	2	1	—			1	16		
△	FED. PROJ. F(51) RURAL		—		—	2	1	5	3	—	—	1			2	10		
○	FED. PROJ. F(51) URBAN		32.0		1	32	—	8	19	4	—	—			—		13	
TOTAL THIS SHEET			32.0		1	50	1	21	39	6	1	1			3	26	13	

△ RURAL FED. PROJ.# F(51)
○ URBAN FED. PROJ.# F(51)

SIGNING SUB-SUMMARY

F.H.W.A. REGION	STATE	PROJECT NO.	FUNDS
5	OHIO		

SUM-277/224-0.00/6.31/10.22

57
196

SIGN CODE NUMBER & SIZE

SIGNING QUANTITIES

NO.	STATION	SIDE	630 GROUND MOUNTED SUPPORTS 4 POST (UN. FT.)	630 REMOVAL OF GROUND MOUNTED SIGN AND RE-ERECTION (EACH)	630 REMOVAL OF GROUND MOUNTED SIGN AND DISPOSAL (EACH)	630 REMOVAL OF GROUND MOUNTED MAJOR SIGN AND DISPOSAL (EACH)	630 REMOVAL OF OVERHEAD MOUNTED SIGN AND DISPOSAL (EACH)	630 REMOVAL OF GROUND MOUNTED POST SUPPORT AND DISPOSAL (EACH)	630 REMOVAL OF OVERHEAD SIGN SUPPORT AND DISPOSAL TYPE TC-7.4 (EACH)	630 REMOVAL OF OVERHEAD SIGN SUPPORT AND DISPOSAL TYPE TC-7.5 (EACH)	630 REMOVAL OF OVERHEAD SIGN SUPPORT AND DISPOSAL TYPE TC-7.6 (EACH)	630 REMOVAL OF OVERHEAD SIGN SUPPORT AND DISPOSAL TYPE TC-10.48 (EACH)	630 REMOVAL OF STRUCTURE MOUNTED SIGN SUPPORT AND DISPOSAL TYPE TC-18.26 (EACH)	630 REMOVAL OF OVERHEAD SIGN SUPPORT AND DISPOSAL TYPE TC-12.24 (EACH)	631 REMOVAL OF LUMINAIRE AND DISPOSAL (EACH)	631 REMOVAL OF LUMINAIRE FOR STORAGE, AS PER PLAN (EACH)
	SHEET CONT. 64															
	KELLY AVE															
20	46+00 ○	LT					1							1		1
21	47+55 ○	LT			2			1								
22	48+50 ○	LT					1									1
23	49+00 ○	LT			1			2								
24	53+56 ○	LT			1		2									2
	SHEET 65															
	WATERLOO RD.															
5	28+75	LT			3			1								
9	173+00 ○	RT					1							1		1
11	185+00 ○	LT				1		2								
	SR 93															
1	52+66	LT	15.0	2	1			1								
2	52+18	LT			3			1								
3	49+50	LT			3											
4	48+24	RT			3											
	S. MAIN ST.															
6	33+34	RT			1			2								
7	36+30	RT			2			2								
12	58+00	LT				2		2								
13	61+39	LT			2			2								
14	62+96	LT			2			1								
	KELLY AVE.															
10	55+56 ○	LT					2									2
8	60+00 ○	LT					1							1		1
	WATERLOO RD															
15	177+50 ○	RT			1			1								
15	179+00 ○	RT			1			1								
	FED PROJ IR277(67)		15.0	2	20	2	–	11						–	–	–
○	FED PROJ F(51) URBAN		–	–	6	1	8	8						3		8
	TOTAL THIS SHEET		15.0	2	26	3	8	19						3		8

FHWA REGION	STATE	PROJECT NO.	FUNDS
5	OHIO		

58
196

SUM-277/224-0.00/6.31/10.22

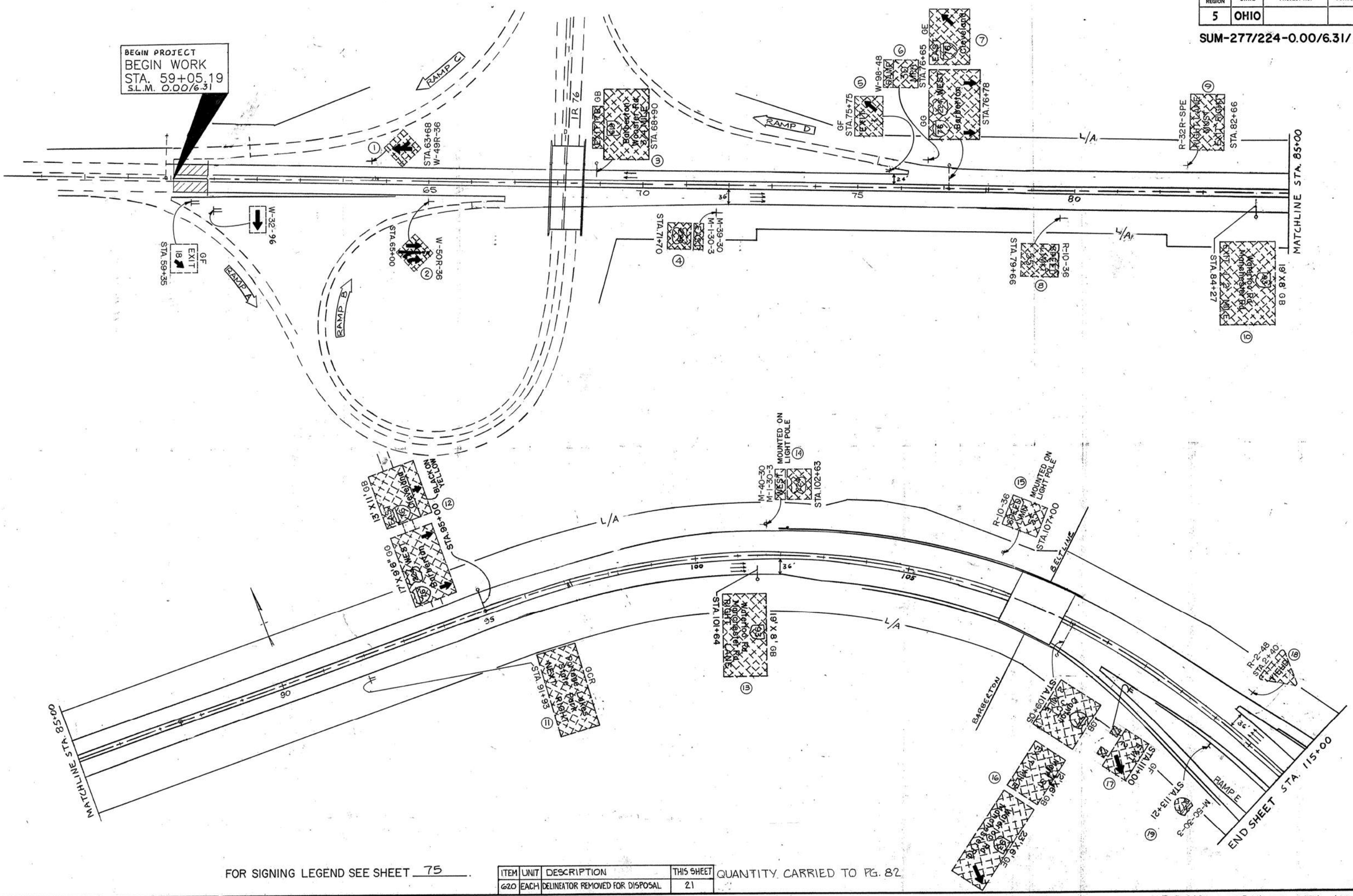

FOR SIGNING LEGEND SEE SHEET 75.

ITEM	UNIT	DESCRIPTION	THIS SHEET
620	EACH	DELINEATOR REMOVED FOR DISPOSAL	21

QUANTITY CARRIED TO PG. 82

BEGIN WORK TO STA. 115+00

FHWA REGION	STATE	PROJECT NO.	FUNDS
5	OHIO		

SUM-277/224-0.00/6.31/10.22

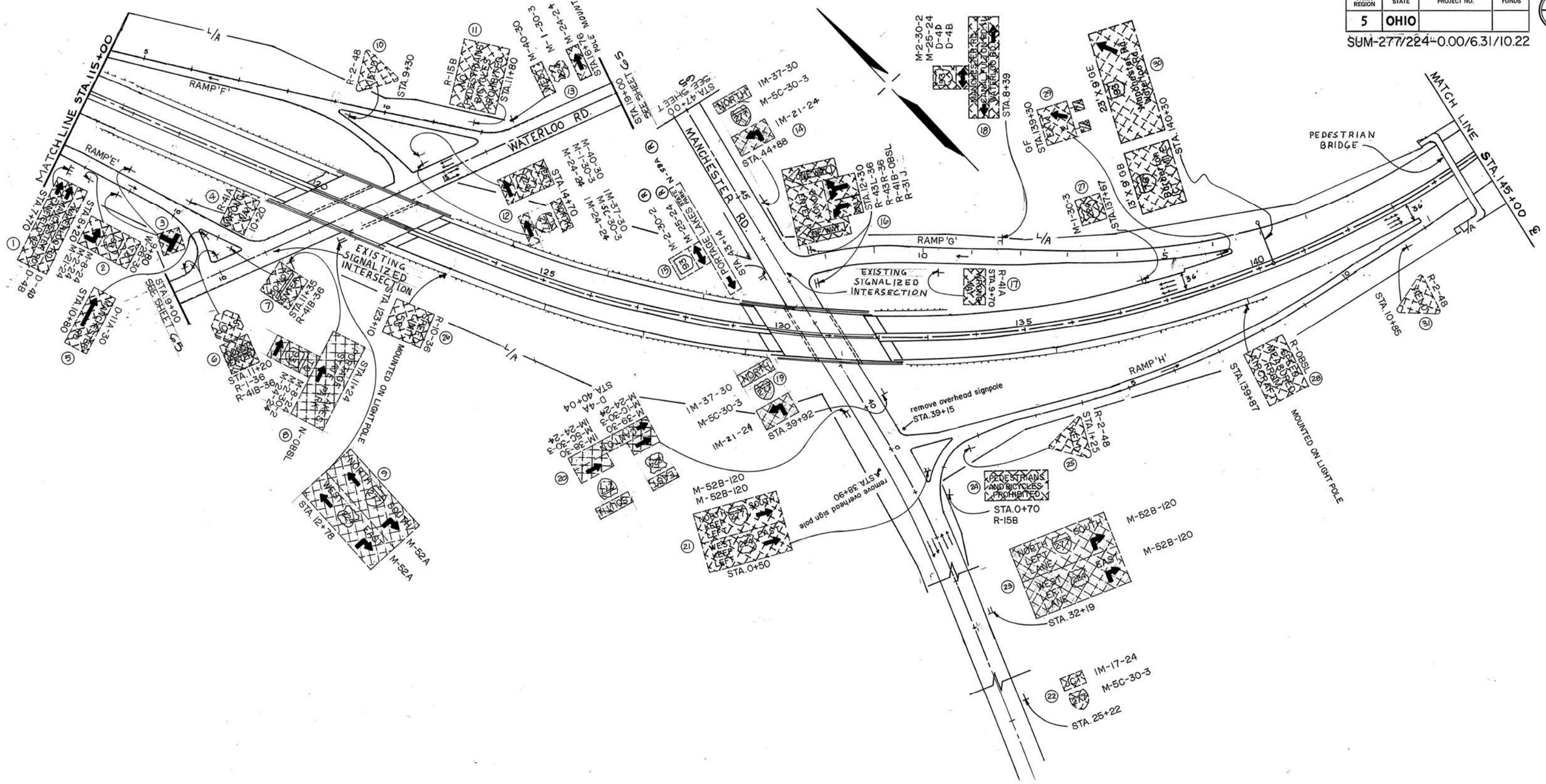

ITEM	UNIT	DESCRIPTION	THIS SHEET
620	EACH	DELINEATOR REMOVED FOR DISPOSAL	31

QUANTITY CARRIED TO PG. 82

FOR SIGNING LEGEND SEE SHEET 75

FHWA REGION	STATE	PROJECT NO.	FUNDS
5	OHIO		

SUM-277224-0.00/6.31/10.22

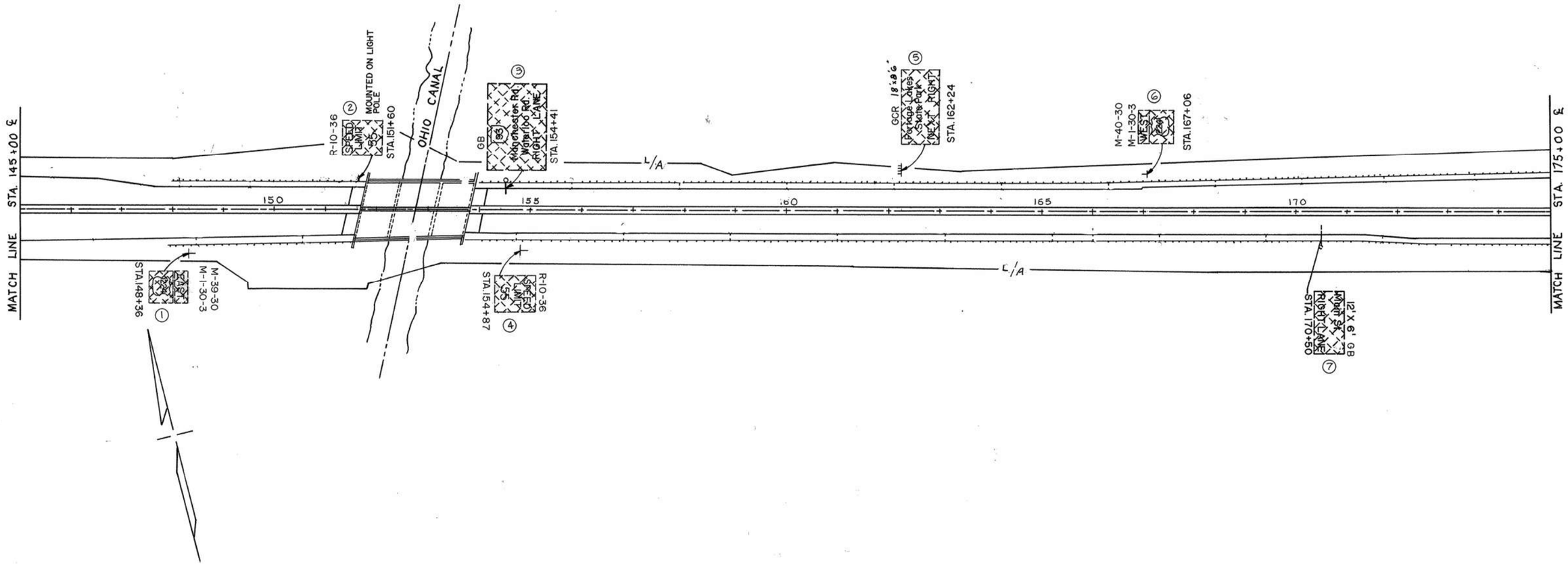

ITEM	UNIT	DESCRIPTION	THIS SHEET
620	EACH	DELINEATOR REMOVED FOR DISPOSAL	15

QUANTITY CARRIED TO PG. 82

FOR SIGNING LEGEND SEE SHEET 75

FHWA REGION	STATE	PROJECT NO.	FUNDS
5	OHIO		

SUM-277/224-0.00/6.31/10.22

61
196

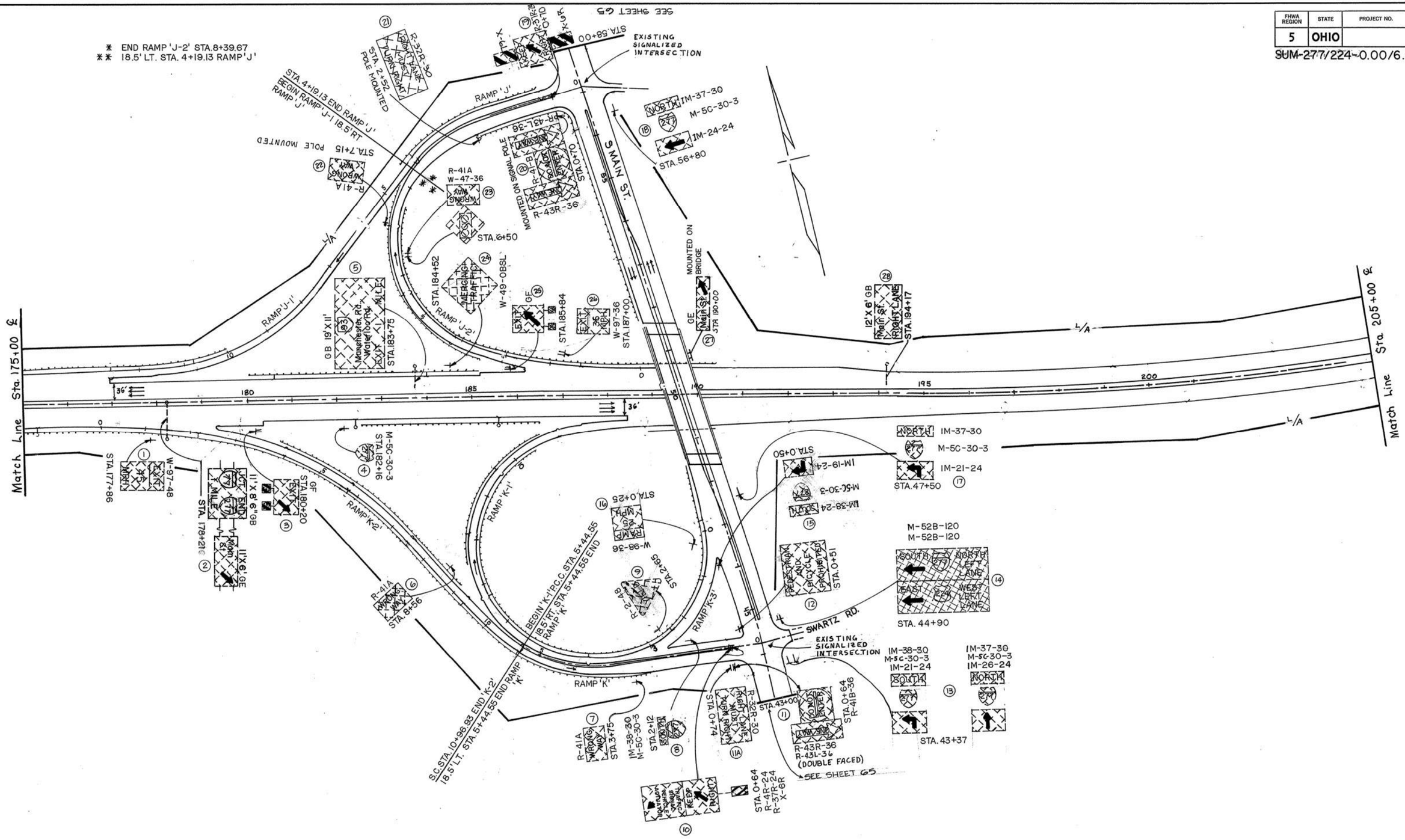

ITEM	UNIT	DESCRIPTION	THIS SHEET
620	EACH	DELINEATOR REMOVED FOR DISPOSAL	62

QUANTITY CARRIED TO PG. 82

FOR SIGNING LEGEND SEE SHEET 75.

FHWA REGION	STATE	PROJECT-NO.	FUNDS
5	OHIO		

SUM-277/224-0.00/6.31/10.22

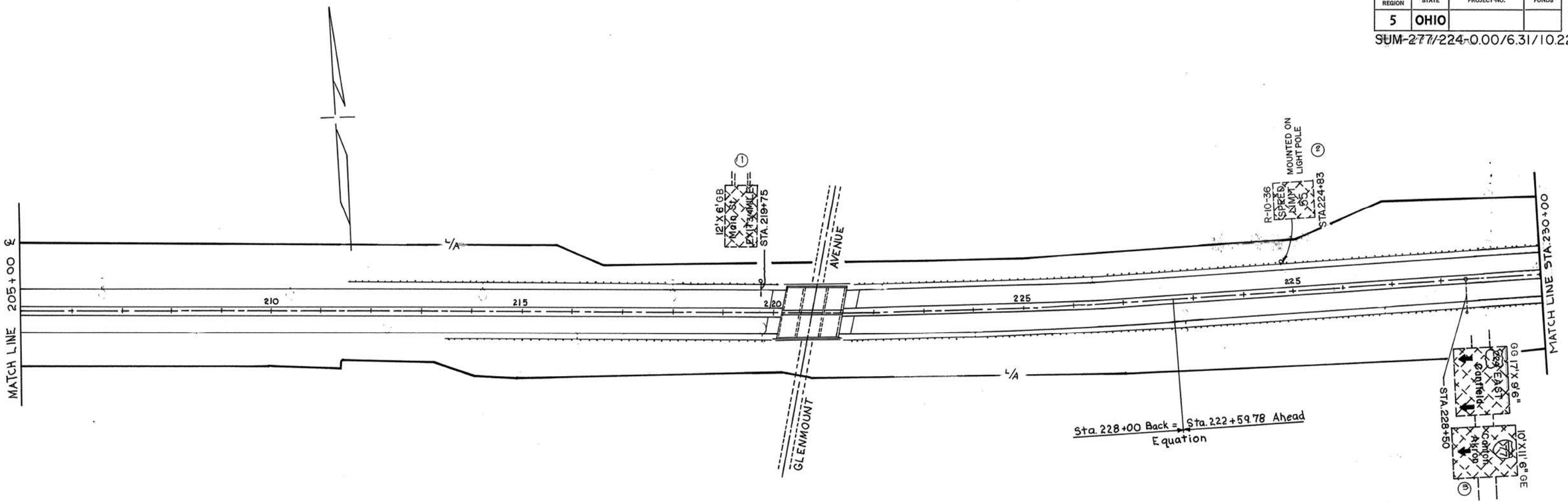

ITEM	UNIT	DESCRIPTION	THIS SHEET
620	EACH	DELINEATOR REMOVED FOR DISPOSAL	6

QUANTITY CARRIED TO PG. 82

FOR SIGNING LEGEND SEE SHEET 75.

STA. 205+00 TO 230+00

FHWA REGION	STATE	PROJECT NO.	FUNDS
5	OHIO		

SUM-277/224-0.00/6.31/10:22

63
198

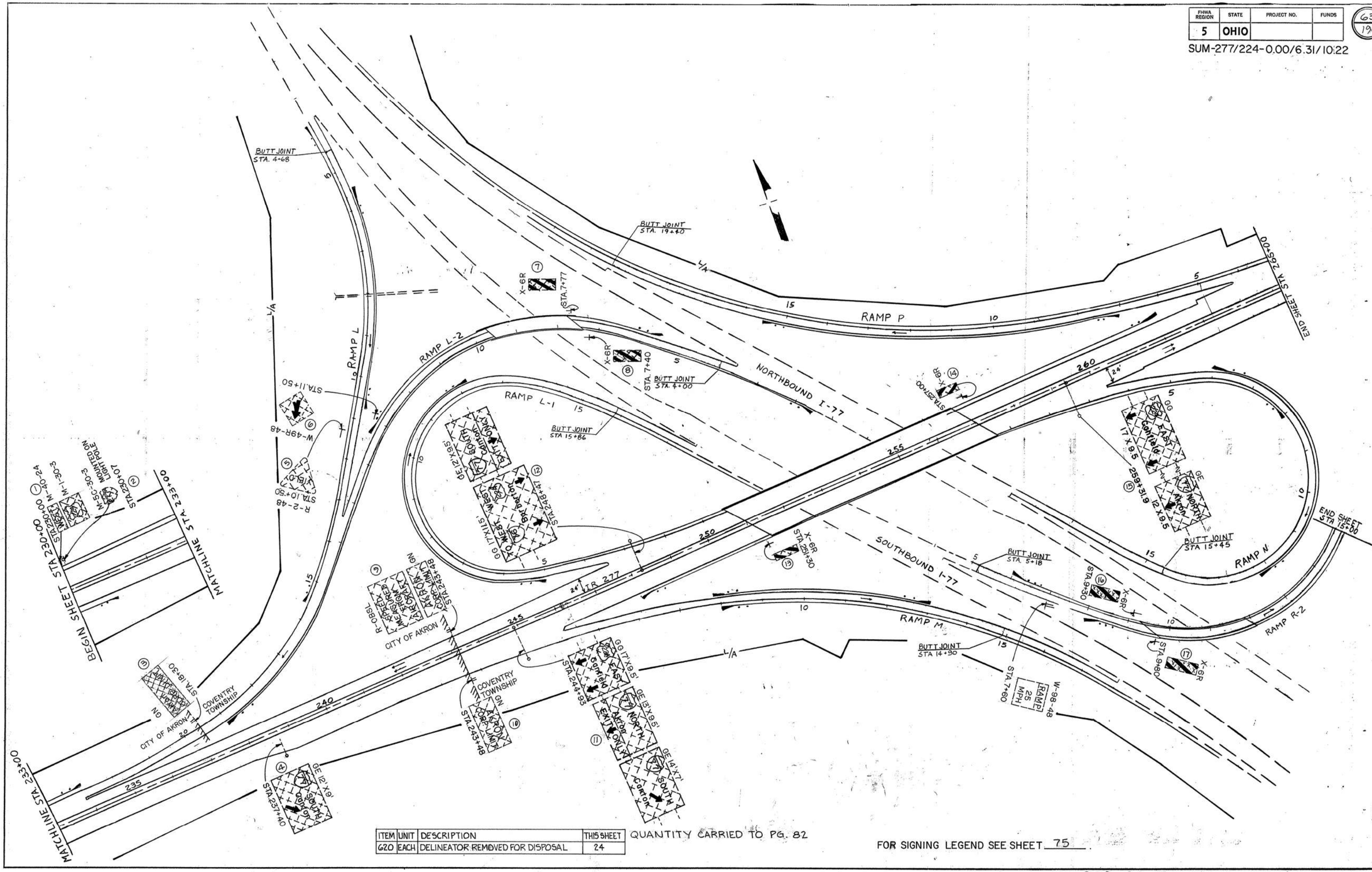

ITEM	UNIT	DESCRIPTION	THIS SHEET
620	EACH	DELINEATOR REMOVED FOR DISPOSAL	24

QUANTITY CARRIED TO PG. 82

FOR SIGNING LEGEND SEE SHEET 75.

STA 230+00 TO STA 265+00

F.H.W.A. REGION	STATE	PROJECT	
5	OHIO		

SUM-277/224-0.00/6.31/10.22

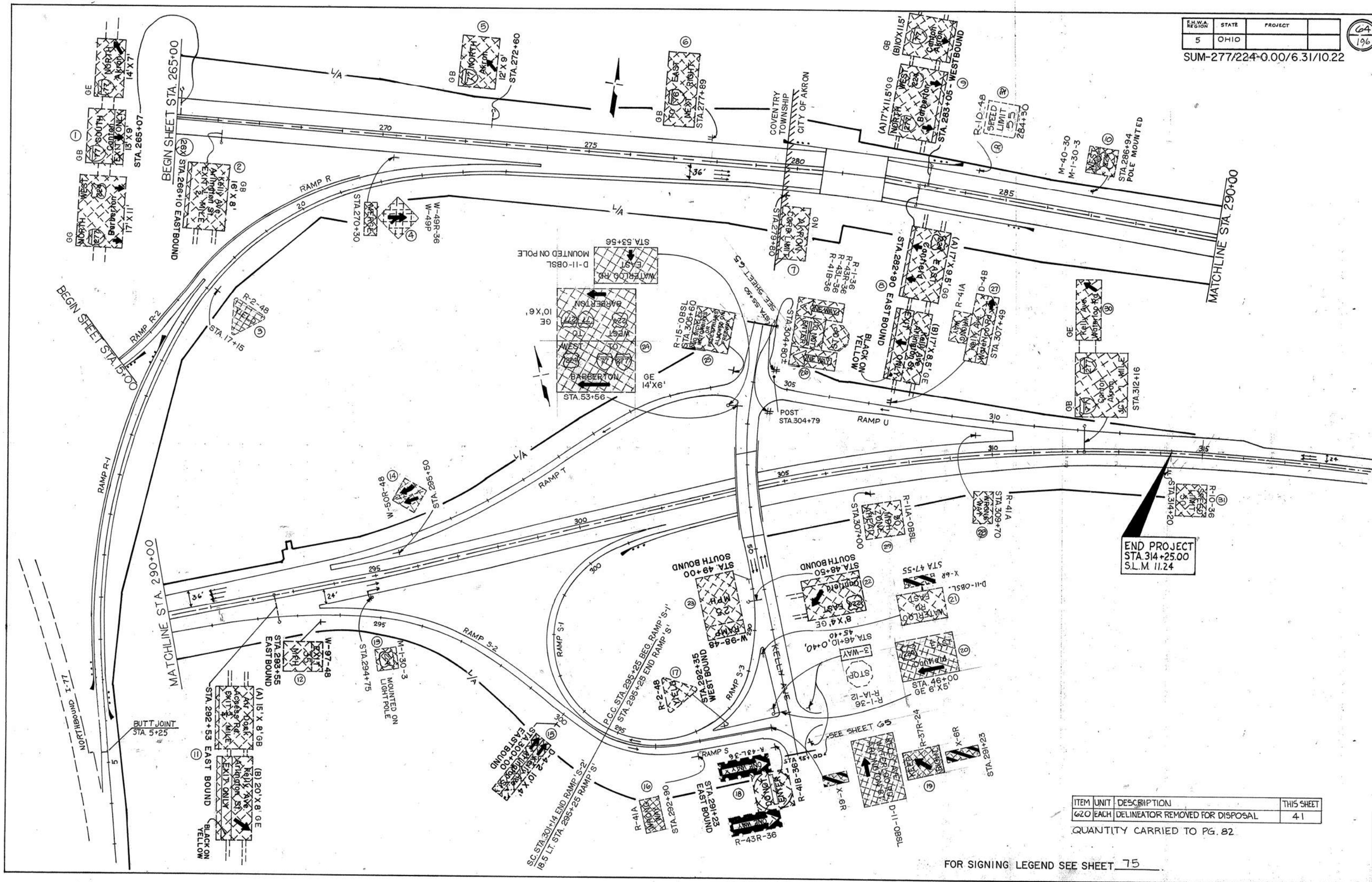

ITEM	UNIT	DESCRIPTION	THIS SHEET
620	EACH	DELINEATOR REMOVED FOR DISPOSAL	41

QUANTITY CARRIED TO PG. 82

STA. 265+00 TO END PROJECT

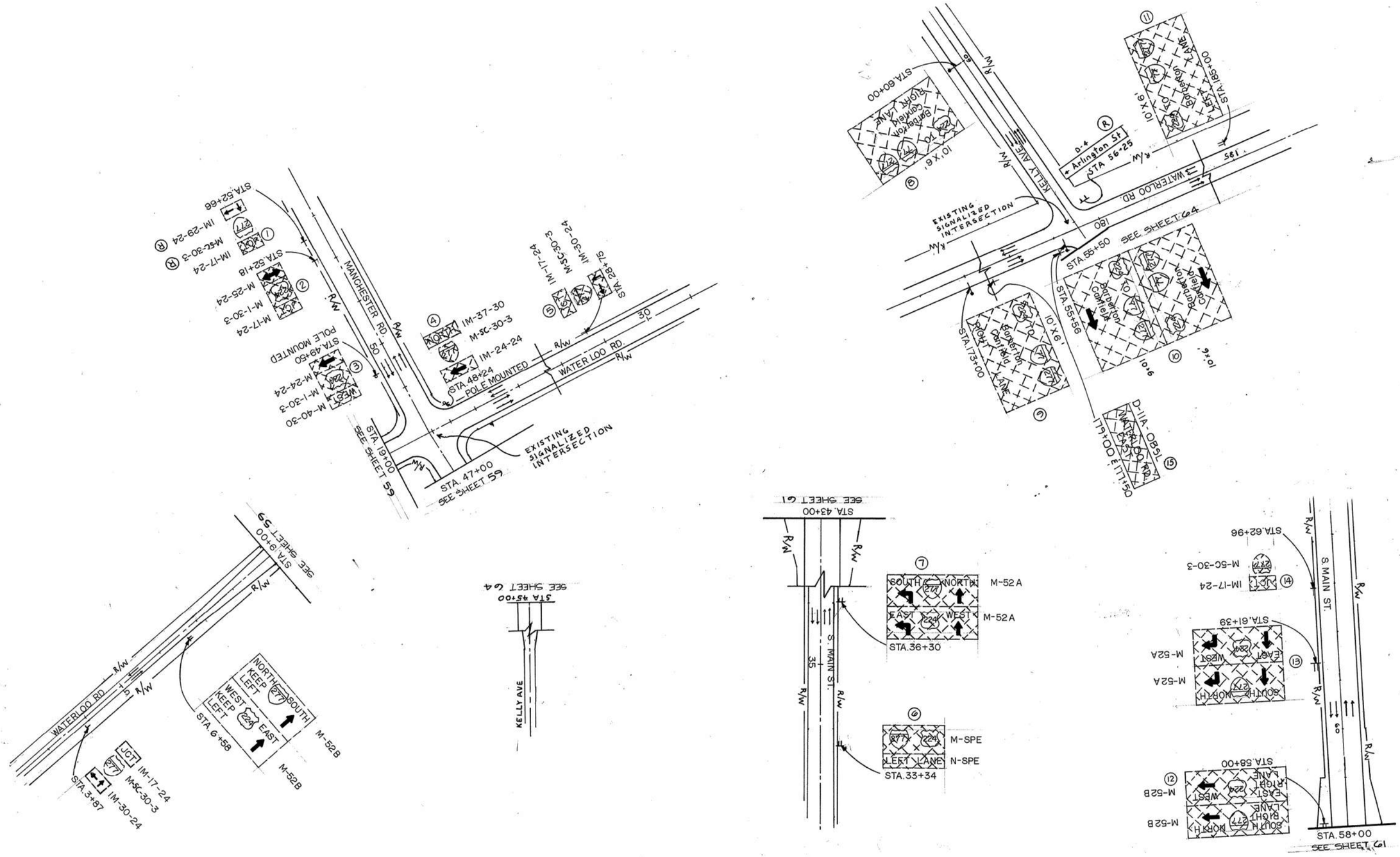

FOR SIGNING LEGEND SEE SHEET 75.

SIGNING SUB-SUMMARY

F.H.W.A. REGION	STATE	PROJECT NO.	FUNDS
5	OHIO		

66/196

SUM-277/224-0.00/6.31/10.22

LOCATION			SIGN CODE NUMBER & SIZE																																																									
NO.	STATION	SIDE	W-49R-48 (48"X48")	W-50R-48 (48"X48")	W-98-48 (48"X60")	W-97-48 (48"X60")	W-47-48 (48"X48")	N-41 (12"X24")	N-58A-72 (72"X12")	X-6R (12"X36")	X-6L (12"X36")	M-1-36-3 (45"X36")	M-1C-36-3 (45"X36")	M-1C-30-3 (37½"X30")	M-2-30-2 (30"X30")	M-5-36-3 (48"X36")	M-5C-30-3 (40"X30")	M-8-30 (30"X15")	M-17-24 (24"X12")	IM-17-24 (24"X12")	M-19-24 (24"X18")	IM-19-24 (24"X18")	M-21-24 (24"X18")	IM-21-24 (24"X18")	M-24-24 (24"X18")	M-25-24 (24"X18")	M-26-24 (24"X18")	IM-26-24 (24"X18")	M-29-24 (24"X18")	IM-29-24 (24"X18")	M-30-24 (24"X18")	M-39-36 (36"X18")	IM-39-36 (36"X18")	M-40-36 (36"X18")	IM-40-36 (36"X18")	R-1-48 (48"X48")	R-2-60 (60"X60"X60")	R-2-48 (48"X48"X48")	R-7A-48 (48"X48")	R-10-48 (48"X60")	R-11A-48 (48"X60")	R-15D (30"X30")	R-3R-36 (36"X54")	R-31J-36 (42"X30")	R-31V-36 (36"X30")	R-32R-30 (30"X30")	R-32L-30 (30"X30")	R-37R-24 (24"X30")	R-41A-36 (36"X24")	R-41B-36 (36"X36")	R-43R-48 (48"X18")	R-43L-48 (48"X18")	D-4A (72"X24")	D-4B (108"X48")	D-4D (72"X24")	D-4D (108"X24")	GQ (72"X48")	GN (108"X42")	GF (72"X60")	GCR (15'X5')	M-52B-120 (120"X48")	GEP-72 (6'X2')
	SHEET 74																																																													
	IR 277																																																													
1	60+90	LT	1																																																										
2	65+05	RT		1																																																									
4	71+65	RT														1																1																														
5	71+65	RT										1																				1																														
6	74+70	LT																																																							1			
7	76+00	RT																																					1																						
9	77+55	LT			1																																																							
11	91+95	RT																																																								1		1
12	100+00	LT																																					1																						
15	106+50	LT														1																		1																												
16	106+50	LT										1																					1																													
18	110+65	RT																																																							1			
19	112+66	RT/LT						2																																																					
21	78+00	RT																																				1																							
20	6+20 RAMP E	RT							1						1			1																																	1		1							
22	102+00 IR 277	LT																																				1																							
	SHEET																																																													
	IR 277																																																													
24	138+90	LT																																																							1			
26	142+75	RT	1																																																									
	RAMP E																																																													
1	9+20	RT													1			1						1																							1													
2	9+20	LT																																													1													
4	11+20	RT/MED																																2														2	2	2										
5	11+35	MED																																														1	1	1										
	RAMP F																																																													
8	9+40	MED																																		1																								
9	10+60	LT/MED																																						2																				
	WATERLOO RD.																																																													
6	11+00	RT													1			1							1																																			
	SR 93																																																													
13	30+19	RT															1			1										1																														
14	30+19	RT											1						1										1																															
15	32+19	RT																																																									2	
	RAMP G																																																													
22	7+60	RT							1						1											1																					1				1		1							
21	7+60	LT																																													1													
20	12+30	RT/LT																																								2						2	2	2										
	RAMP H																																																													
16	0+90	RT																																						1																				
19	1+10	LT																																						1																				
18	1+40	RT																																		1																								
	SHEET 75																																																													
	IR-277																																																													
1	148+36	RT														1																1																														
2	148+36	RT										1																				1																														
3	151+48	RT																																																						1					
4	154+05	LT																																																						1					
5	155+00	RT																																					1																						
8	165+46	RT/LT						2																																																					
10	172+00	LT														1																		1																												
11	172+00	LT										1																					1																													
7	162+20	LT																																																								1		1
12	157+00	RT																																				1																							
	FED PROJ IR277(67)		2	1	1			4	2			4	1		4	4	1	3	1	1				1	1	1			1	1		2	2	2	2	2		2	3	3		4		2					4	5	5	5	2		2		2		3	2	2	2
TOTAL THIS SHEET			2	1	1			4	2			4	1		4	4	1	3	1	1				1	1	1			1	1		2	2	2	2	2		2	3	3		4		2					4	5	5	5	2		2		2		3	2	2	2

SIGNING QUANTITIES

NO.	STATION	SIDE	630 CONCRETE FOR EMBEDDED SUPPORTS	630	630 GROUND MOUNTED SUPPORTS #2 POST	630 GROUND MOUNTED SUPPORTS #3 POST	630 GROUND MOUNTED SUPPORTS #4 POST	630 GROUND MOUNTED SUPPORTS #6 POST	630 ONE WAY SUPPORTS #3 POST	630 SIGN SUPPORT ASSEMBLY, POLE MOUNTED	630 GROUND MOUNTED SUPPORT W6X9 BEAM	630 GROUND MOUNTED SUPPORT W10X12 BEAM	630 GROUND MOUNTED SUPPORT S4X7.7 BEAM	630 SIGNS, FLAT SHEET	630 SIGNS EXTRUSHEET	630 BREAKAWAY BEAM CONNECTION	630 SIGN BACKING ASSEMBLY	630 EXISTING SIGNS REVISED WITH DEMOUNTABLE COPY
			CU.YD.		LIN.FT.	LIN.FT	LIN.FT.	LIN.FT.	LIN.FT.	EACH	LIN.FT.	LIN.FT.	LIN.FT	SQ.FT.	SQ.FT.	EACH	EACH	EACH
	SHEET 74																	
	IR 277																	
1	60+90	LT					14.5/15.0							16.0				
2	65+05	RT					14.5/15.0							16.0				
4	71+65	RT					15.5/16.0							16.5				
5	71+65	RT					16.5/17.0							16.5				
6	74+70	LT	0.54										15.0/15.0		30.0	2		
7	76+00	RT					15.0/15.5							20.0				
9	77+55	LT					16.0/16.0							20.0				
11	91+95	RT	2.20									18.0/17.5			87.0	2		
12	100+00	LT					14.5/15.0							20.0				
15	106+50	LT					17.5/18.0							16.5				
16	106+50	LT					19.5/20.0							16.5				
18	110+65	RT	0.54										17.0/17.6		30.0	2		
19	112+66	RT/LT			10.0/10.0									4.0				
21	78+00	RT					19.0/19.5							16.0				
20	6+20 RAMP E	RT						19.7/21.3						15.4	24.0		1	
22	102+00 IR 277	LT					18.5/19.0							16.0				
	SHEET																	
	IR 277																	
24	138+90	LT	0.54										16.2/16.4		30.0	2		
26	142+75	RT					13.5/13.5							16.0				
	RAMP E																	
1	9+20	RT					16.0/16.5							18.4				
2	9+20	LT				12.5								6.0				
4	11+20	RT/MED				14.0/14.0			15.5/15.5					74.0				
5	11+35	MED				13.0			14.5					21.0				
	RAMP F																	
8	9+40	MED				15.0/15.0								6.9				
9	10+60	LT/MED				13.0/13.0								12.5				
	WATERLOO RD.																	
6	11+00	RT					16.0							12.4				
	SR 93																	
13	30+19	RT					15.5							13.3				
14	30+19	RT					15.5							16.2				
15	32+19	RT	2.2									20.5/20.3			80.0	2		
	RAMP G																	
22	7+60	RT	0.54										15/13.8	21.2	24.0	2	1	
21	7+60	LT				12.5								6.0				
20	12+30	RT/LT				13.5/13.5			15.0/15.0					59.5				
	RAMP H																	
16	0+90	RT				13.0								6.25				
19	1+10	LT				13.0								6.25				
18	1+40	RT				15.0/15.0								6.9				
	SHEET 75																	
	IR-277																	
1	148+36	RT					15.0							16.5				
2	148+36	RT					15.0							16.5				
3	151+48	RT						14.5/15.5							24.0			
4	154+05	LT						14.5/15.5							24.0			
5	155+00	RT					18.0/18.5							20.0				
8	165+46	RT/LT			9.5/9.5									4.0				
10	172+00	LT					15.0							16.5				
11	172+00	LT					17.0							16.5				
7	162+20	LT	2.20									20/22			87.0	2		
12	157+00	RT					18.0/18.5							16.0				
	FED PROJ IR277(67)		8.76		39.0	205.0	609.0	101.0	75.5			118.3	126.	618.2	440.0	14	2	
TOTAL THIS SHEET			8.76		39.0	205.0	609.0	101.0	75.5			118.3	126.0	618.2	440.0	14	2	

SIGNING SUB-SUMMARY

△ RURAL FED. PROJ. # F(51)

SIGNING SUB-SUMMARY

F.H.W.A. REGION	STATE	PROJECT NO.	FUNDS
5	OHIO		

SUM-277/224-0.00/6.31/10.22

SIGN CODE NUMBER & SIZE

NO.	STATION	SIDE	W-49R-48 (48"X48")	W-50R-48 (48"X48")	W-98-48 (48"X60")	W-97-48 (48"X60")	W-47-48 (48"X48")	N-4-1 (12"X24")	N-58A-72 (72"X12")	X-6R (12"X36")	X-6L (12"X36")	M-1-36-3 (45"X36")	M-1C-36-3 (45"X36")	M-1C-30-3 (37½"X30")	M-2-30-2 (30"X30")	M-5-36-3 (48"X36")	M-5C-30-3 (40"X30")	M-8-30 (30"X15")	M-11-24 (24"X12")	IM-11-24 (24"X12")	M-19-24 (24"X18")	IM-19-24 (24"X18")	M-21-24 (24"X18")	IM-21-24 (24"X18")	M-24-24 (24"X18")	M-25-24 (24"X18")	M-26-24 (24"X18")	IM-26-24 (24"X18")	M-29-24 (24"X18")	IM-29-24 (24"X18")	M-30-24 (24"X18")	M-39-36 (36"X18")	IM-39-36 (36"X18")	M-40-36 (36"X18")	IM-40-36 (36"X18")	R-1-48 (48"X48")	R-2-60 (60"X60"X60")	R-2-48 (48"X48"X48")	R-7A-48 (48"X48")	R-10-48 (48"X60")	R-11A-48 (48"X60")	R-15D (30"X30")	R-3R-36 (36"X54")	R-31J-36 (42"X30")	R-31V-36 (36"X30")	R-32R-30 (30"X30")	R-32L-30 (30"X30")	R-37R-24 (24"X30")	R-41A-36 (36"X24")	R-41B-36 (36"X36")	R-43R-48 (48"X18")	R-43L-48 (48"X18")	D-4A (72"X24")	D-4B (108"X48")	D-4D (72"X24")	D-4D (108"X24")	GQ (72"X48")	GN (72"X42")	GF (72"X60")	GCR (15"X5")
	SHEET 76																																																																					
	IR-277																																																																					
2	178+00	LT	1																																																																			
3	180+15	RT																																																																				
23	185+30	LT																																																																				
5	187+90	RT	1																																																																			
24	190+15	LT				1																																																																
26	195+00	RT													1																			1																																			
27	195+00	RT										1																					1																																					
28	198+00	RT																																						1																													
	RAMP K-2																																																																				
4	8+00	RT/LT																																																																			
	RAMP K																																																																				
6	4+00	LT																																																																			
10	1+00	RT																																																																			
11	0+64	MED																																																																			
12	0+64	LT																																																																			
	RAMP K-3																																																																				
7	2+65	RT																																																																			
8	1+50	RT																																																																			
9	0+10	RT			1																																																																	
	RAMP J																																																																				
16	0+70	LT																																																																			
17	0+70	MED																																																																			
18	1+30	RT																																																																			
19	4+00	LT																																																																			
	RAMP J-2																																																																				
20	6+45	LT																																																																			
22	6+45	RT					1																																																														
30	200+00(IR 277)	RT																																						1																														
	SHEET 78																																																																				
	IR 277																																																																				
2	218+26	RT/LT						2																																																													
3	266+80	LT																																						1																														
4	255+40	LT													1																					1																																		
5	255+40	LT										1																							1																																		
7	224+80	LT																																1																																		
	SHEET 78																																																																				
	IR 277																																																																				
1	236+00	LT		1																																																																		
8	243+48	LT																																																																			
10	246+60	RT																																																																			
11	247+00	LT																																																																			
13	249+52	LT			1																																																																	
14	251+30	RT							1																																																												
15	257+00	LT								1																																																											
16	257+50	RT			1																																																																
18	260+90	RT																																																																			
19	263+30 △	LT																																																																			
	RAMP L																																																																				
4	11+15	RT																																																																			
3	18+30	RT																																																																			
	RAMP L 2																																																																				
5	12+00	RT	1																																																																		
6	7+69	RT							1																																																												
7	7+29	LT								1																																																											
	RAMP R-2																																																																				
20	9+22	LT								1																																																										
21	9+79	RT							1																																																												
	FED. PROJ IR277(67)		3	1	3	1	1		3	3	2				2															1	1	1	1		1	1	2	2		3	1		1	1		2	5	2	2	2			1	6										
△	FED. PROJ F(51) RURAL		-	-	-	-	-		-	-	-				-															-	-	-	-		-	-	-	-		-	-		-	-		-	-	-	-	-			1	-										
TOTAL THIS SHEET			3	1	3	1	1	2	3	3	2				2															1	1	1	1		1	1	2	2		3	1		1	1		2	5	2	2	2			2	6										

SIGNING QUANTITIES

NO.	STATION	SIDE	630 CONCRETE FOR EMBEDDED FOUNDATION (CU.YD.)	630	630 GROUND MOUNTED SUPPORTS #2 POST (LIN.FT.)	630 GROUND MOUNTED SUPPORTS #3 POST (LIN.FT.)	630 GROUND MOUNTED SUPPORTS #4 POST (LIN.FT.)	630 GROUND MOUNTED SUPPORTS #6 POST (LIN.FT.)	630 ONE WAY SUPPORTS #3 POST (LIN.FT.)	630 SIGN SUPPORT ASSEMBLY, POLE MOUNTED. (EACH)	630 GROUND MOUNTED SUPPORT W6X9 BEAM (LIN.FT.)	630 GROUND MOUNTED SUPPORT W10X12 BEAM (LIN.FT.)		630 GROUND MOUNTED SUPPORT S4X7.7 BEAM (LIN.FT.)	630 SIGNS, FLAT SHEET (SQ.FT.)	630 SIGNS EXTRUSHEET (SQ.FT.)	630 BREAKAWAY BEAM CONNECTION (EACH)	630 SIGN BACKING ASSEMBLY (EACH)	630 EXISTING SIGNS REVISED WITH DEMOUNTABLE COPY (EACH)
	SHEET 76																		
	IR-277																		
2	178+00	LT					13.5/14.0								16.0				
3	180+15	RT	0.54											16.9/16.5		30.0	2		
23	185+30	LT	0.54											16.8/16.2		30.0	2		
5	187+90	RT					13.5/14.0								16.0				
24	190+15	LT								1					20.0				
26	195+00	RT					14.5/14.0								16.5				
27	195+00	RT					15.5/15.0								16.5				
28	198+00	RT					18.0/18.0								20.0				
	RAMP K-2																		
4	8+00	RT/LT				12.0/12.0									12.0				
	RAMP K																		
6	4+00	LT				12.0									6.0				
10	1+00	RT				12.5									6.2				
11	0+64	MED					14.0								18.5				
12	0+64	LT				13.0			14.5						27.2				
	RAMP K-3																		
7	2+65	RT				11.5/12.0									6.9				
8	1+50	RT				12.5									6.2				
9	0+10	RT					15.0/16.5								20.0				
	RAMP J																		
16	0+70	LT								3					21.0				
17	0+70	MED				12.0									5.0				
18	1+30	RT				12.5									6.2				
19	4+00	LT				12.0									7.5				
	RAMP J-2																		
20	6+45	LT				12.5									6.0				
22	6+45	RT					13.0/13.5								22.0				
30	200+00(IR 277)	RT					18.0/18.0								16.0				
	SHEET 78																		
	IR 277																		
2	218+26	RT/LT			100/100										4.0				
3	266+80	LT					15.0/15.0								20.0				
4	255+40	LT					15.0/16.0								16.5				
5	255+40	LT					15.5/16.0								16.5				
7	224+80	LT					15.0/15.5								16.0				
	SHEET 78																		
	IR 277																		
1	236+00	LT					13.0/13.0								16.0				
8	243+48	LT					13.5/14.0									21.0			
10	246+60	RT	0.54											16.4/16.8		30.0	2		
11	247+00	LT	0.54											16.7/16.6		30.0	2		
13	249+52	LT					15.0/16.0								20.0				
14	251+30	RT			11.0										3.0				
15	257+00	LT			11.0										3.0				
16	257+50	RT					15.0/16.0								20.0				
18	260+90	RT	0.54											16.9/16.8		30.0	2		
19	263+30 △	LT	0.54											16.4/16.5		30.0	2		
	RAMP L																		
4	11+15	RT				12.0/12.0									10.8				
3	18+30	RT					14.0/14.0									21.0			
	RAMP L 2																		
5	12+00	RT					13.5/13.5								16.0				
6	7+69	RT			11.0										3.0				
7	7+29	LT			11.0										3.0				
	RAMP R-2																		
20	9+22	LT			11.0										3.0				
21	9+79	RT			11.0										3.0				
	FED. PROJ IR277(67)		2.70		86.0	170.5	551.0		14.5	4				1616.1	465.5	122.0	10		
△	FED. PROJ F(51) RURAL		0.54		—	—	—		—	—				32.9	—	30.0	2		
TOTAL THIS SHEET			3.24		86.0	170.5	551.0		14.5	4				1649	465.5	152.0	12		

△ RURAL FED. PROJ. # F(51)

○ URBAN FED. PROJ. # F(51)

SIGNING SUB-SUMMARY

F.H.W.A. REGION	STATE	PROJECT NO.	FUNDS
5	OHIO		

SUM-277/22A-0.00/6.31/10.22

68 / 196

SIGN CODE NUMBER & SIZE

NO.	STATION	SIDE	W-49R-48 (48"X48")	W-50R-48 (48"X48")	W-9B-48 (48"X60")	W-97-48 (48"X60")	W-47-48 (48"X48")	N-41 (12"X24")	N-58A-72 (72"X72")	X-6R (12"X36")	X-6L (12"X36")	M-1-36-3 (45"X36")	M-1C-36-3 (45"X36")	M-1C-30-3 (37½"X30")	M-2-30-2 (30"X30")	M-5-36-3 (48"X36")	M-5C-30-3 (40"X30")	M-8-30 (30"X15")	M-17-24 (24"X12")	IM-17-24 (24"X12")	M-19-24 (24"X18")	IM-19-24 (24"X18")	M-21-24 (24"X18")	IM-21-24 (24"X18")	M-24-24 (24"X18")	M-25-24 (24"X18")	M-26-24 (24"X18")	IM-26-24 (24"X18")	M-29-24 (24"X18")	IM-29-24 (24"X18")	M-30-24 (24"X18")	M-39-36 (36"X18")	IM-39-36 (36"X18")	M-40-36 (36"X18")	IM-40-36 (36"X18")	R-1-48 (48"X48")	R-2-60 (60"X60")	R-2-48 (48"X48")	R-7B-48 (48"X96")	R-10-48 (48"X60")	R-11A-48 (48"X60")	R-15D (30"X30")	R-3R-36 (36"X54")	R-31J-36 (42"X30")	R-31V-36 (36"X30")	R-32R-30 (30"X30")	R-32L-30 (30"X30")	R-37R-24 (24"X30")	R-41A-36 (36"X24")	R-41B-36 (36"X36")	R-43R-48 (48"X18")	R-43L-48 (48"X18")	D-4A (72"X24")	D-4B (108"X48")	D-4D (72"X24")	D-4D (108"X24")	GQ (72"X48")	GN (72"X42")	GF (72"X60")	GCR (15"X5")	M-92B-120 (120"X48")	M-92A-108 (108"X30")	IM-30-24 (24"X18")	GB (15"X8")
	SHEET 79																																																																					
	IR 277																																																																				
1	265+66 △	RT/LT						2																																																														
6	272+50 △	RT		1																																																																		
8	279+80 ○	RT																																																																			
12	288+90 ○	LT										1																						1																																				
14	294+20 ○	RT																																																																			
15	296+20 ○	LT		1																																																																	
31	300+00 ○	RT	1																																																																		
32	307+00 ○	RT																						1																																														
33	309+50 ○	RT										1																					1																																				
34	310+05 ○	LT																																																																		
36	314+25 ○	RT																																								1																											
	RAMP R-2																																																																				
4	15+10	RT	1																																																																		
	RAMP R																																																																				
5	17+00	RT																																				1																																		
	RAMP S-2																																																																				
16	298+40 ○	RT/LT																																																																			
17	300+00 ○	RT																																																																			
	RAMP S																																																																				
18	294+50 ○	LT																																																																			
19	292+35 ○	RT																																																																			
23	291+53 ○	RT																																																																			
20	291+23 ○	LT																																																																			
21	291+23 ○	MED																																																																			
	RAMP S-3																																																																				
23	290+80 ○	RT																																																																			
25	289+40 ○	RT			1																																																																
	RAMP T																																																																				
27	303+80 ○	LT																																																																			
	RAMP U																																																																				
28	304+80 ○	RT/LT																																																																			
29	308+00 ○	RT																																																																			
30	308+00 ○	LT																																																																			
	KELLY AVE																																																																				
22	46+00 ○	RT																																																																			
	SHEET 80																																																																				
	WATERLOO RD.																																																																				
1	3+87	RT											1					1													1																																						
2	6+58	RT																																																																			
6	23+80	LT											1					1													1																																						
7	25+80	LT													1			1																																																			
19	51+20	RT													1					1																																																	
20	52+65	RT											1						1																																																	
25	57+60	LT											1							1																																																
24	59+00	LT													1							1																																														
14	171+00 ○	RT											1						1																																																
17	185+00 ○	LT																																																																		
18	187+00 ○	LT											1								1																																															
	SR 93																																																																			
5	52+66	LT																	1																																																
4	50+90	LT											1					1												1																																						
	S. MAIN ST.																																																																			
9	33+30	RT													1				1											1																																						
10	33+30	RT											1					1												1																																						
	FED. PROJ. IR277(67)		1	-	-		-			-	-	6		4		4	3	1	1	1	1			2	1	2	-		-	-	1	-		-	-	-					-	-	-	-	-	-		-		-	-			-	-	-	—
△	FED. PROJ. F(51) RURAL		-	1	-		2			-	-	-		-		-	-	-	-	-	-			-	-	-	-		-	-	-	-		-	-	-					-	-	-	-	-	-		-		-	-			-	-	-	—
○	FED. PROJ. F(51) URBAN		1	1	1		-			2	1	2		-		-	1	-	1	-				-	-	-	1		1	2	4	1		1	1	3					1	1	5	3	3	3		2		2		1	2			1	1	1	8.22
TOTAL THIS SHEET			2	2	1		2			2		8		4		4	3	2	1	2	1			2	1	2	1		1	2	1	1		1	1	3					1	1	5	3	3	3		2		2		1	2			1	1	1	8.22

SIGNING QUANTITIES

NO.	STATION	SIDE	630 CONCRETE FOR EMBEDDED FOUNDATION (CU.YD.)	630	630 GROUND MOUNTED SUPPORTS #2 POST (LIN.FT.)	630 GROUND MOUNTED SUPPORTS #3 POST (LIN.FT.)	630 GROUND MOUNTED SUPPORTS #4 POST (LIN.FT.)	630 GROUND MOUNTED SUPPORTS #6 POST (LIN.FT.)	630 ONE WAY SUPPORTS #3 POST (LIN.FT.)	630 SIGN SUPPORT ASSEMBLY, POLE MOUNTED (EACH)	630 GROUND MOUNTED SUPPORT W6X9 BEAM (LIN.FT.)	630 GROUND MOUNTED SUPPORT W10X12 BEAM (LIN.FT.)		630 GROUND MOUNTED SUPPORT 5X7.7 BEAM (LIN.FT.)	630 SIGNS, FLAT SHEET (SQ.FT.)	630 SIGNS EXTRUSHEET (SQ.FT.)	630 BREAKAWAY BEAM CONNECTIONS (EACH)	630 SIGN BACKING ASSEMBLY (EACH)	630 EXISTING SIGNS REVISED WITH DEMOUNTABLE COPY (EACH)
	SHEET 79																		
	IR 277																		
1	265+66 △	RT/LT																	
6	272+50 △	RT			10.9/10.0										4.0				
8	279+80 ○	RT					13.0/13.0								16.0				
12	288+90 ○	LT					13.5/14.5									21.0			
14	294+20 ○	RT					14.5								15.7				
15	296+20 ○	LT	0.54											16.0/16.0		30.0	2		
31	300+00 ○	RT					13.0/13.0								16.0				
32	307+00 ○	RT					13.5/13.5								16.0				
33	309+50 ○	RT					14.0/14.5								20.0				
34	310+05 ○	LT					14.5								15.7				
36	314+25 ○	RT	0.54											15.9/16.6		30.0	2		
	RAMP R-2						14.0/14.5								20.0				
4	15+10	RT																	
	RAMP R						13.0/13.0								16.0				
5	17+00	RT																	
	RAMP S-2					11.5/12.0									10.8				
16	298+40 ○	RT/LT																	
17	300+00 ○	RT				12.0/12.0									12.0				
	RAMP S		2.20									20.0/21.0				54.0	2		
18	294+50 ○	LT																	
19	292+35 ○	RT				12.0									6.0				
23	291+53 ○	RT				15.0/15.0									6.9				
20	291+23 ○	LT				12.5									6.2				
21	291+23 ○	MED				13.0			14.5						21.0				
	RAMP S-3					12.0									5.0				
23	290+80 ○	RT																	
25	289+40 ○	RT				12.5									6.2				
	RAMP T						15.5/16.0								20.0				
27	303+80 ○	LT																	
	RAMP U					12.5									6.2				
28	304+80 ○	RT/LT																	
29	308+00 ○	RT				14.0			15.5						74.0				
30	308+00 ○	LT	2.20				12.5					20.0/20.5			12.2 / 6.0	54.0	2		
	KELLY AVE																		
22	46+00 ○	RT	0.54											13.2/13.2		22.5	2		
	SHEET 80																		
	WATERLOO RD.																		
1	3+87	RT					14.0								12.8			1	
2	6+58	RT																	
6	23+80	LT					15.5								12.8				
7	25+80	LT					15.5								10.3				
19	51+20	RT					14.5								9.3				
20	52+65	RT					14.5								10.8				
25	57+60	LT					14.5								10.8				
24	59+00	LT					14.5								9.3				
14	171+00 ○	RT					14.5								10.8				
17	185+00 ○	LT	2.2									20.3/18.9				104.0	2		
18	187+00 ○	LT					14.5								10.8				
	SR 93																		
5	52+66	LT					15.5								2.0				
4	50+90	LT					15.5								12.8				
	S. MAIN ST.																		
9	33+30	RT					15.5								11.3				
10	33+30	RT					15.5								12.8				
	FED. PROJ. IR277(67)		—		—	23.5	191.0		—			—		—	141.8	—	—		1
△	FED. PROJ. F(51) RURAL		—		20.0	—	26.0	—	—			—		—	20.0	—	—		—
○	FED. PROJ. F(51) URBAN		8.22		—	142.5	240.0		30.0			120.7		90.9	306.77	315.5	12		—
TOTAL THIS SHEET			8.22		20.0	166.0	457		30.0			120.7		90.9	468.5	315.5	12		1

○ URBAN FED PROJ F(51)

SIGNING SUB-SUMMARY

LOCATION

SIGN CODE NUMBER & SIZE

NO.	STATION	SIDE	W-49R-48 (48"X48")	W-50R-48 (48"X48")	W-98-48 (48"X60")	W-97-48 (48"X60")	W-47-48 (48"X48")	N-41 (12"X24")	N-58A-72 (72"X12")	X-6R (12"X36")	X-6L (12"X36")	M-1-36-3 (45"X36")	M-1C-36-3 (45"X36")	M-1C-30-3 (37½"X30")	M-2-30-2 (30"X30")	M-5-36-3 (48"X36")	M-5C-30-3 (40"X30")	M-8-30 (30"X15")	M-17-24 (24"X12")	IM-17-24 (24"X12")	M-19-24 (24"X18")	IM-19-24 (24"X18")	M-21-24 (24"X18")	IM-21-24 (24"X18")	M-24-24 (24"X18")	M-25-24 (24"X18")	M-26-24 (24"X18")	IM-26-24 (24"X18")	M-29-24 (24"X18")	IM-29-24 (24"X18")	M-30-24 (24"X18")	M-39-36 (36"X18")	IM-39-36 (36"X18")	M-40-36 (36"X18")	IM-40-36 (36"X18")
	SHEET80 CONT.																																		
	S.MAIN ST.CONT.																																		
11	36+33	RT																																	
21	61+35	LT																																	
22	66+00	LT												1													1								
23	67+50	LT															1											1							
	KELLY AVE.																																		
8	41+00 ○	RT												1					1																
12	62+00 ○	LT												1													1								
	FED.PROJ. IR277(67)													1			1										1	1							
○	FED PROJ. F(51)URBAN													2			–		1								1	–							
	TOTAL THIS SHEET													3			1		1								2	1							

NO.	STATION	SIDE	R-1-48 (48"X48")	R-2-60 (60"X60"X60")	R-2-48 (48"X48"X48")	R-7B-48 (48"X96")	R-10-48 (48"X60")	R-11A-48 (48"X60")	R-15D (30"X30")	R-3R-36 (36"X54")	R-31J-36 (42"X30")	R-31V-36 (36"X30")	R-32R-30 (30"X30")	R-32L-30 (30"X30")	R-37R-24 (24"X30")	R-41A-36 (36"X24")	R-41B-36 (36"X36")	R-43R-48 (48"X18")	R-43L-48 (48"X18")	D-4A (72"X24")	D-4B (108"X48")	D-4D (72"X24")	D-4D (108"X24")	GQ (72"X48")	GN (72"X42")	GF (72"X60")	GCR (18"X6')	M-52B-120 (120"X48")	M-52A-108 (108"X30")	IM-30-24 (24"X18")	GB (13'X8')
	SHEET80 CONT.																														
	S.MAIN ST.CONT.																														
11	36+33	RT																											2		
21	61+35	LT																											2		
22	66+00	LT																													
23	67+50	LT																													
	KELLY AVE.																														
8	41+00 ○	RT																													
12	62+00 ○	LT																													
	FED.PROJ. IR277(67)																												4		
○	FED PROJ. F(51)URBAN																												–		
	TOTAL THIS SHEET																												4		

SIGNING QUANTITIES

NO.	STATION	SIDE	630 CONCRETE FOR EMBEDDED FOUNDATION CU.YD.	630	630 GROUND MOUNTED SUPPORTS #2 POST LIN.FT.	630 GROUND MOUNTED SUPPORTS #3 POST LIN.FT	630 GROUND MOUNTED SUPPORTS #4 POST LIN.FT.	630 GROUND MOUNTED SUPPORTS #6 POST LIN.FT.	630 ONE WAY SUPPORTS #3 POST LIN.FT.	630 SIGN SUPPORT ASSEMBLY, POLE MOUNTED EACH	630 GROUND MOUNTED SUPPORT W6X9 BEAM LIN.FT.	630 GROUND MOUNTED SUPPORT W10X12 BEAM LIN.FT.		630 GROUND MOUNTED SUPPORT S4X7.7 BEAM LIN.FT	630 SIGNS, FLAT SHEET SQ.FT.	630 SIGNS EXTRUSHEET SQ.FT.	630 BREAK AWAY BEAM CONNECTION EACH	630 SIGN BACKING ASSEMBLY EACH	630 EXISTING SIGNS REVISED WITH DEMOUNTABLE COPY EACH
	SHEET80 CONT.																		
	S.MAIN ST.CONT.																		
11	36+33	RT	2.2									18.5/18.7				45.0	2		
21	61+35	LT	0.66								16.5/16.7					45.0	2		
22	66+00	LT					14.5								10.8				
23	67+50	LT					14.5								9.3				
	KELLY AVE.																		
8	41+00 ○	RT				12.0									9.8				
12	62+00 ○	LT					14.5								10.8				
	FED.PROJ. IR277(67)		2.86			—	29.0				33.2'	37.2'			20.1	90.0	4		
○	FED PROJ. F(51)URBAN		—			12.0	14.5				—	—			20.6	—	—		
	TOTAL THIS SHEET		2.86			12.0	43.5				33.2'	37.2'			40.7	90.0	4		

△ RURAL FED. PROJ. F(51)
○ URBAN FED. PROJ F(51)

SIGNING SUB-SUMMARY

F.H.W.A. REGION	STATE	PROJECT NO.	FUNDS
5	OHIO		

70/196

SUM-277/224-0.00/6.21/10.22

SIGN CODE-NUMBER & SIZE

NO.	STATION	SIDE	GEP-84 (7'X2')	GEP-72 (6'X2')	GEP-96 (8'X2')	GEP-120 (10'X2')	GB (13'X10')	GB (20'X12')	GB (19'X12')	GB (10'X12')	GB (17'X12')	GB (13'X6')	GB (15'X12')	GB (12'X10')	GB (15'X7')	GB (7'X9')	GB (12'X10')	GB (16'X9')	GB (13'X8')	GG (17'X10')	GG (18'X12')	GG (17'X7')	GG (17'X12')	GE (15'X12')	GE (6'X12')	GE (20'X10')	GE (19'X6')	GE (12'X10')	GE (15'X10')	GE (15'X7')	GE (17'X12')	GE (16'X10')	GE (11'X6')	GE (9'X6')	GE (17'X9')	GH (11'X6')	GH (9'X8')	GH (11'X5')	GH (13'X8')	M-52A-108 (108"X30")	M-52B-120 (120"X48")	M-45-42 (42"X72")
	SHEET 74																																									
	IR 277																																									
3	69+00	LT		1			1																																			
8	76+70	LT	1																	1											1												
10	83+60	RT	1					1																																		
13	101+54	RT	1						1																																	
14	103+00	LT	1																	1					1																	
17	109+45	RT	2		1					1		1														1																	
	SHEET 75																																									
	IR 277																																									
23	137+03	RT	1									1																														
25	141+50	LT	2								1													1		1																	
	WATERLOO RD																																									
7	12+20	RT																																							2	
10	16+60	LT																																			1					
	SR 93																																									
11	43+14	LT																																	1							
12	38+66	LT																																				1				
17	38+25	RT																																							2	
	SHEET 76																																									
	IR 277																																									
6	156+40	LT		1					1																																	
9	170+40	RT		1								1																														
	SHEET 77																																									
	IR 277																																									
1	178+00	RT		1		1							1									1										1										
21	182+80	LT		1				1																																		
25	190+15	LT		1																		1																				
29	201+00	LT		1								1																														
	S.MAIN ST																																									
13	44+90	RT																																							2	
14	48+00	LT																																			1					
15	57+60	LT																																				1			2	
	SHEET 78																																									
	IR 277																																									
1	215+40	LT		1								1																														
6	228+40	RT				1				1										1																						
	SHEET 79																																									
	IR 277																																									
2	237+71	RT	1																									1														
9	243+90	RT	2																	1										1		1											
12	248+70	LT	1																			1							1														
17	258+20	RT	1																	1									1														
	SHEET 80																																									
	IR 277																																									
2	266+10 △	LT	2											1	1								1																			
3	266+20 △	RT															1																									
7	273+00 △	LT	1															1																								
9	282+80 ○	LT				1				1												1																				
10	283+15 ○	RT																		1															1							
13	291+70 ○	RT																1																	1							
35	312+25 ○	LT								1																		1														
	FED PROJ IR277(67)		5	16	1	3		1	2	2	1	5	1	-	-	-	-	-		5		1	-	1	1	1	2	-	1	2	1	1	1	2	1	-	2	2			8	
△	FED PROJ F(51) RURAL		3	-	-	-		-	-	-	-	-	-	1	1	1	1	-		-		-	1	-	-	-	-	-	-	-	-	-	-	-	-	-	-	-			-	
○	FED PROJ F(51) URBAN		-	-	-	1		-	-	2	-	-	-	-	-	-	-	1		1		-	1	-	-	-	-	1	-	-	-	-	-	-	-	2	-	-			-	
TOTAL THIS SHEET			8	16	1	4		1	2	2	4	1	5	1	1	1	1	1	1	6		1	2	1	1	1	2	1	1	2	1	1	1	2	1	2	2	2			8	

SIGNING QUANTITIES

NO.	STATION	SIDE	630 CONCRETE FOR ANCHOR BASE FOUNDATION CU.YD.	630 SIGNS EXTRUSHEET SQ.FT	630 OVERHEAD SIGN SUPPORT TYPE TC-7.65 DES.6 SPAN 64, EACH	630 OVERHEAD SIGN SUPPORT TYPE TC-7.65 DES. 6 SPAN 66 EACH	630 OVERHEAD SIGN SUPPORT TYPE TC-7.65 DES. 8 SPAN 65, EACH	630 OVERHEAD SIGN SUPPORT TYPE TC-7.65 DES. 8 SPAN 77, EACH	630 OVERHEAD SIGN SUPPORT TYPE TC-9.10 DES. 2 10' ARMS EACH	630 OVERHEAD SIGN SUPPORT TYPE TC-9.10 DES. 2 9' ARMS EACH	630 OVERHEAD SIGN SUPPORT TYPE TC-9.30 DES. 2 4 ARMS @ 7', 4 ARMS @ 9', 25' ARM EACH	630 OVERHEAD SIGN SUPPORT TYPE TC-12.30 DES. 4 20' ARM EACH	630 OVERHEAD SIGN SUPPORT TYPE TC-9.10 DES. 2, 2 ARMS @ 10', 2 ARMS @ 9' EACH	630 OVERHEAD SIGN SUPPORT TYPE TC-12.30 DES. 6 26' ARM EACH	630 OVERHEAD SIGN SUPPORT TYPE TC-12.30 DES. 6 25' ARM EACH	630 OVERHEAD SIGN SUPPORT TYPE TC-12.30 DES. 8 26' ARM EACH	630 OVERHEAD SIGN SUPPORT TYPE TC-12.30 DES. 11 26' ARM, EACH	630 OVERHEAD SIGN SUPPORT TYPE TC-12.30 DES. 5 22' ARM EACH	630 SIGN ATTACHMENT ASSEMBLY EACH	630 LUMINAIRE SUPPORT ASSEMBLY TYPE TC-31.21 EACH	625 GROUND ROD EACH
	SHEET 74																				
	IR 277																				
3	69+00	LT	3.96	146.0										1							1
8	76+70	LT	14.00	386.0		1															1
10	83+60	RT	4.75	262.0											1						1
13	101+54	RT	4.49	249.5											1						1
14	103+00	LT	14.00	374.0		1															1
17	109+45	RT	14.30	453.5				1													1
	SHEET 75																				
	IR 277																				
23	137+03	RT	2.90	96.5													1				1
25	141+50	LT	14.30	608.0				1													1
	WATERLOO RD																				
7	12+20	RT	2.90	80.0											1						1
10	16+60	LT	2.90	71.5											1						1
	SR 93																				
11	43+14	LT	1.45	58.5											1						1
12	38+66	LT	1.45	72.0											1						1
17	38+25	RT	2.90	80.0											1						1
	SHEET 76																				
	IR 277																				
6	156+40	LT	4.49	249.5													1				1
9	170+40	RT	2.90	96.5														1			1
	SHEET 77																				
	IR 277																				
1	178+00	RT	14.3	418.5				1													1
21	182+80	LT	4.75	262.0													1				1
25	190+15	LT	2.90	83.5														1			1
29	201+00	LT	2.90	96.5											1						1
	S.MAIN ST																				
13	44+90	RT	1.45	80.0						1											1
14	48+00	LT	2.90	71.5								1									1
15	57+60	LT	1.45	152.0									1								1
	SHEET 78																				
	IR 277																				
1	215+40	LT	2.90	96.5														1			1
6	228+40	RT	14.00	315.0	1																1
	SHEET 79																				
	IR 277																				
2	237+71	RT	2.90	134.0											1						1
9	243+90	RT	14.30	478.5				1													1
12	248+70	LT	14.00	368.0	1																1
17	258+20	RT	14.00	334.0	1																1
	SHEET 80																				
	IR 277																				
2	266+10 △	LT	14.30	504.5				1													1
3	266+20 △	RT	3.96	153.0											1						1
7	273+00 △	LT	2.90	134.0											1						1
9	282+80 ○	LT	14.0	349.0	1																1
10	283+15 ○	RT	14.0	331.5	1																1
13	291+70 ○	RT	14.0	305.5	1																1
35	312+25 ○	LT	14.0	248.5		1															1
	FED PROJ IR277(67)		184.44	6173.5	3	2		4	1	2			1	1		5	1		4	4			28
△	FED PROJ F(51) RURAL		21.16	791.5	-	-	-	1	-	-		-	-	-		1	1	-	-	-			3
○	FED PROJ F(51) URBAN		56.0	1234.5	3	1	-	-	-	-		-	-	-		-	-	-	-	-			4
TOTAL THIS SHEET			261.6	8199.5	6	3		5	1	2			1	1		6	2		4	4			35

○ URBAN FED PROJ # F(51)

SIGNING SUB-SUMMARY

F.H.W.A. REGION	STATE	PROJECT NO.	FUNDS
5	OHIO		

SUM-277/224-0.00/6.21/10.22

SIGN CODE NUMBER & SIZE

NO.	STATION	SIDE	GEP-72 (6'X 2')	GEP-96 (8'X 2')	GEP-120 (10'X 2')	GB (13'X10')	GB (20'X12' G)	GB (19'X12' G)	GB (10'X 12' G)	GB (17'X12')	GB (13'X 6' G)	GB (15'X12' G)	GB (10'X 10')	GB (15'X 7' G)	GB (17'X 9')	GB (12'X10')	GB (16'X 9')	GB (13'X 8' G)	GG (17'X 10')	GG (18'X12')	GG (17'X 7' G)	GG (17'X 12')	GE (15'X 12')	GE (16'X 12')	GE (20'X 10')	GE (19'X 6' G)	GE (12'X 10')	GE (15'X 10')	GE (15'X 7' G)	GE (17'X 12')	GE (16'X 10' G)	GE (14'X 6' G)	GE (9'X 6' G)	GH (11'X 6' G)	GH (9'X 8')	GH (11'X 5')	GH (13'X 8')	M-52A-108 (108"X30")	M-52B-120 (120"X48")	M-45-42 (42"X72")
	SHEET 80 CONT.																																							
	KELLY AVE.																																							
24	48+50 ○	LT																																		1				
26	53+56 ○	LT																																			1		1	
	SHEET 81																																							
	WATERLOO RD.																																							
15	173+10	RT																1																						
	SR 93																																					4		4
3	48+35	LT																																						
	KELLY AVE.																																							
16	55+50 ○	LT																2																						
13	60+10 ○	LT																1																						
	FED PROJ IR277 (67)																	1																		-	-	4		4
○	FED. PROJ F(51) URBAN																	3																		1	1	-	1	-
	TOTAL THIS SHEET																	4																		1	1	4	1	4

SIGNING QUANTITIES

NO.	STATION	SIDE	630 CONCRETE FOR ANCHOR BASE FOUNDATIONS CU.YD.	630 SIGNS EXTRUSHEET SQ.FT	630 OVERHEAD SIGN SUPPORT TYPE TC-7.65 DES. 6 SPAN 64 EACH	630 OVERHEAD SIGN SUPPORT TYPE TC-7.65 DES. 6 SPAN 66 EACH	630 OVERHEAD SIGN SUPPORT TYPE TC-7.65 DES. 8 SPAN 65 EACH	630 OVERHEAD SIGN SUPPORT TYPE TC-7.65 DES. 8 SPAN 77 EACH	630 OVERHEAD SIGN SUPPORT TYPE TC-9.10 DES. 2 10' ARM EACH	630 OVERHEAD SIGN SUPPORT TYPE TC-9.10 DES. 2 9' ARM EACH	630 OVERHEAD SIGN SUPPORT TYPE TC-9.30 DES. 2 4 ARMS @ 9', 1 ARM @ 6', 1 REF. BANK EACH		630 OVERHEAD SIGN SUPPORT TYPE TC-12.30 DES. 4 20' ARM EACH	630 OVERHEAD SIGN SUPPORT TYPE TC-12.30 DES. 6 28' ARM EACH	630 OVERHEAD SIGN SUPPORT TYPE TC-9.10 DES. 2 2 ARMS @ 10', 2 ARMS @ 9' EACH	630 OVERHEAD SIGN SUPPORT TYPE TC-12.30 DES. 6 25' ARM EACH	630 OVERHEAD SIGN SUPPORT TYPE TC-12.30 DES. 8 26' ARM EACH		630 OVERHEAD SIGN SUPPORT TYPE TC-12.30 DES. 11 26' ARM EACH	630 OVERHEAD SIGN SUPPORT TYPE TC-12.30 DES. 5 22' ARM EACH	630 SIGN ATTACHMENT ASSEMBLY EACH	630 LUMINAIRE SUPPORT ASSEMBLY TYPE TC-31.21 EACH	625 GROUND ROD EACH
	SHEET 80 CONT.																								
	KELLY AVE.																								
24	48+50 ○	LT		55.0																		2	1		
26	53+56 ○	LT		144.0																		7	3		
	SHEET 81																								
	WATERLOO RD.																								
15	173+10	RT	2.90	110.5										1											1
	SR 93																								1
3	48+35	LT	2.40	174.0									1												
	KELLY AVE.																								
16	55+50 ○	LT		221.0																		10	4		
13	60+10 ○	LT	2.90	110.5																					1
	FED PROJ IR277 (67)		5.30	284.5									1		1		—					—	—		2
○	FED. PROJ F(51) URBAN		2.90	530.5									—		—		1					19	8		1
	TOTAL THIS SHEET		8.20	815.0									1		1		1					19	8		3

SIGNING SUB-SUMMARY

F.H.W.A. REGION	STATE	PROJECT NO.	FUNDS
5	OHIO		

SUM-277/224-0.00/6.31/10.22

SIGN CODE NUMBER & SIZE

SIGNING QUANTITIES

NO.	LOCATION STATION	SIDE	631 SIGNS SERVICED EACH	631 SIGNS WIRED EACH	631 DISCONNECT SWITCH WITH ENCLOSURE TYPE X EACH	631 SWITCH ENCLOSURE MOUNTING BRACKET ASSEMBLY EACH	631 BALLAST (INTEGRAL) TYPE: CMRI-100(a) EACH	631 BALLAST (INTEGRAL) TYPE: CMRI-175(a) EACH	631 BALLAST (INTEGRAL) TYPE: CMRI-250(a) EACH	631 MERCURY VAPOR LUMINAIRE TYPE TC-31.21 WITH 100 W LAMP EACH	631 MERCURY VAPOR LUMINAIRE TYPE TC-31.21 WITH 175 W LAMP EACH	631 MERCURY VAPOR LUMINAIRE TYPE TC-31.21 WITH 250 W LAMP EACH
	SHEET 74											
	IR 277											
3	69+00	LT	1	1	1	1		2			2	
8	77+50	LT	1	2	1	1		2	2		2	2
10	83+60	RT	1	1	1	1			3			3
13	101+54	RT	1	1	1	1			2			2
14	103+00	LT	1	2	1	1		2	2		2	2
17	108+90	RT	1	3	1	1		5	1		5	1
	SHEET 75											
	IR 277											
23	137+03	RT	1	1	1	1		2			2	
25	141+50	LT	1	3	1	1		3	4		3	4
	WATERLOO RD.											
7	12+20	RT	1	1	1	1		1			1	
10	16+60	LT	1	1	1	1		1			1	
	SR 93											
11	43+14	LT	1	1	1	1		1			1	
12	38+66	LT	1	1	1	1		1			1	
17	38+25	RT	1	1	1	1		1			1	
	SHEET 76											
	IR 277											
6	156+40	LT	1	1	1	1			2			2
9	170+40	RT	1	1	1	1		2			2	
	SHEET 77											
	IR 277											
1	178+00	RT	1	3	1	1		3	2		3	2
21	182+80	LT	1	1	1	1			3			3
25	190+15	LT	1	1	1	1		1			1	
29	201+00	LT	1	1	1	1		2			2	
	S. MAIN ST											
13	44+90	RT	1	1	1	1		1			1	
14	48+00	LT	1	1	1	1		1			1	
15	57+60	LT	1	2	1	1		2			2	
	SHEET 78											
	IR 277											
1	215+40	LT	1	1	1	1		2			2	
6	228+40	RT	1	2	1	1		2	1		2	1
	SHEET 79											
	IR 277											
2	237+71	RT	1	1	1	1		2			2	
9	243+90	RT	1	3	1	1		6			6	
12	249+50	LT	1	2	1	1		2	2		2	2
17	258+20	RT.	1	2	1	1		4			4	
	FED PROJ IR277 (67)		28	42	28	28		51	24		51	24
TOTAL THIS SHEET			28	42	28	28		51	24		51	24

△ RURAL FED. PROJ # F(51)
○ URBAN FED. PROJ # F(51)

SIGNING SUB-SUMMARY

F.H.W.A. REGION	STATE	PROJECT NO.	FUNDS
5	OHIO		

SUM-277/224-0.00/6.31/10.22

SIGN CODE NUMBER & SIZE

SIGNING QUANTITIES

NO.	STATION	SIDE	631 SIGNS SERVICED EACH	631 SIGNS WIRED EACH	631 DISCONNECT SWITCH WITH ENCLOSURE TYPE X EACH	631 SWITCH ENCLOSURE MOUNTING BRACKET ASSEMBLY EACH	631 BALLAST (INTEGRAL) TYPE: CMRI-100(a) EACH	631 BALLAST (INTEGRAL) TYPE: CMRI-175 (a) EACH	631 BALLAST (INTEGRAL) TYPE: CMRI-250(a) EACH	631 MERCURY VAPOR LUMINAIRE TYPE TC-31.21 WITH 100 W LAMP EACH	631 MERCURY VAPOR LUMINAIRE TYPE TC-31.21 WITH 175 W LAMP EACH	631 MERCURY VAPOR LUMINAIRE TYPE TC-31.21 WITH 250 W LAMP EACH
	SHEET 80											
	IR 277											
2	266+10 △	LT	1	3	1	1		2	4		2	4
3	266+20 △	RT	1	1	1	1		2			2	
7	273+00 △	LT	1	1	1	1		2			2	
9	282+80 ○	LT	1	2	1	1			3			3
10	283+15 ○	RT	1	2	1	1		4			4	
13	291+70 ○	RT	1	2	1	1		4			4	
35	312+25 ○	LT	1	2	1	1		2	1		2	1
	KELLY AVE											
24	48+50 ○	LT	1	1			1			1		
26	53+56 ○	LT	1	2			1	2		1	2	
	SHEET 81											
	WATERLOO RD.											
15	173+10	RT	1	1	1	1		2			2	
	SR 93											
3	48+35	LT	1	4	1	1	2	2		2	2	
	KELLY AVE.											
16	55+50 ○	LT	1	2				4			4	
13	60+10 ○	LT	1	1	1	1		2			2	
	FED PROJ IR 277 (67)											
△	FED PROJ F(51) RURAL		2	5	2	2	2	4	—	2	4	—
○	FED PROJ F(51) URBAN		2	5	2	2	—	6	4	—	6	4
TOTAL THIS SHEET			9	14	6	6	2	18	4	2	18	4
			13	24	10	10	4	28	8	4	28	8

FHWA REGION	STATE	PROJECT NO.	FUNDS
5	OHIO		

SUM-277/224-0.00/6.31/10.22

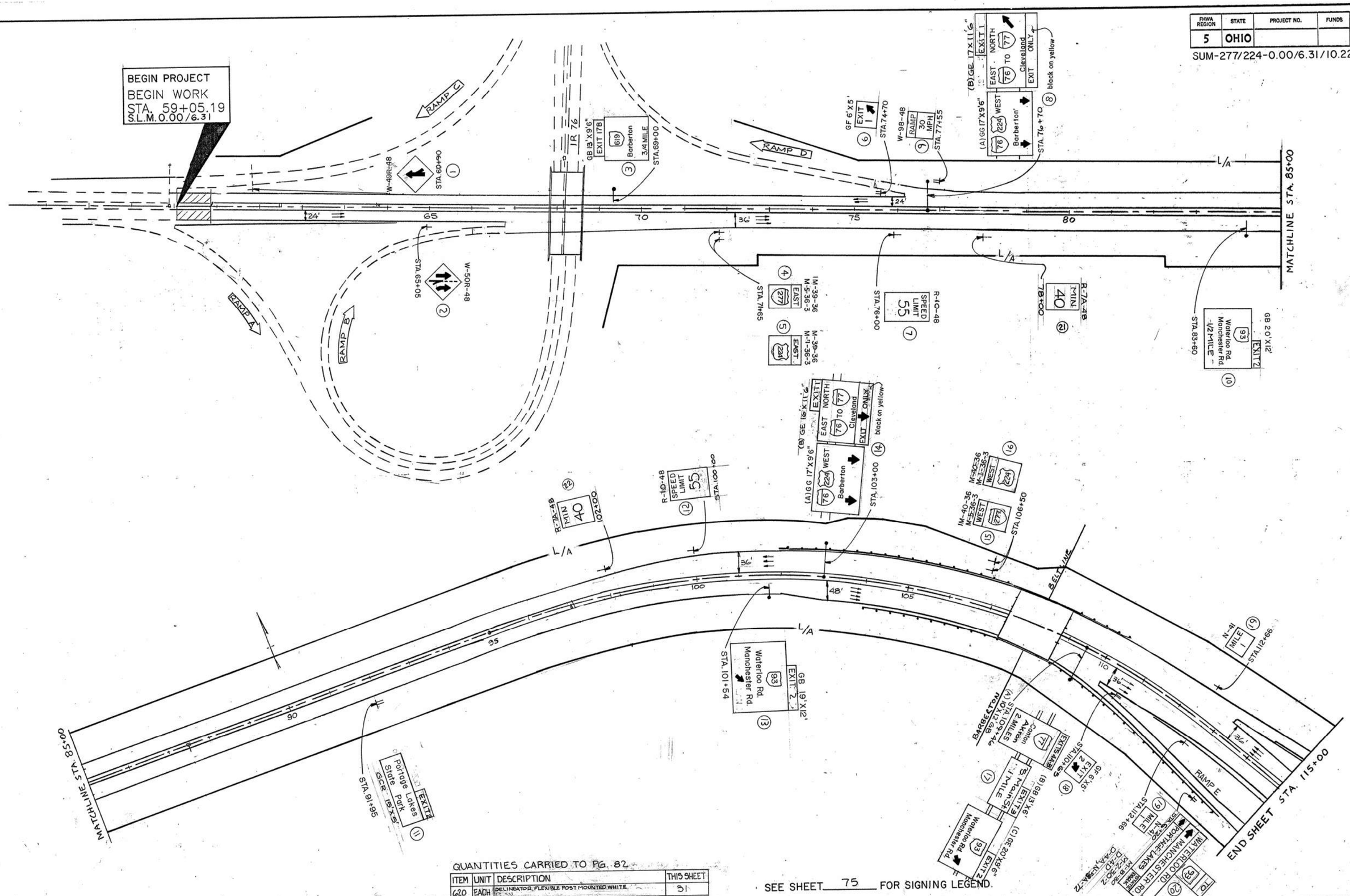

QUANTITIES CARRIED TO PG. 82

ITEM	UNIT	DESCRIPTION	THIS SHEET
620	EACH	DELINEATOR, FLEXIBLE POST MOUNTED WHITE	31
620	EACH	DELINEATOR, FLEXIBLE POST MOUNTED YELLOW	3

SEE SHEET 75 FOR SIGNING LEGEND.

BEGIN WORK TO STA. 115+00

FHWA REGION	STATE	PROJECT NO.	FUNDS
5	OHIO		

SUM-277/224-0.00/6.31/10.22

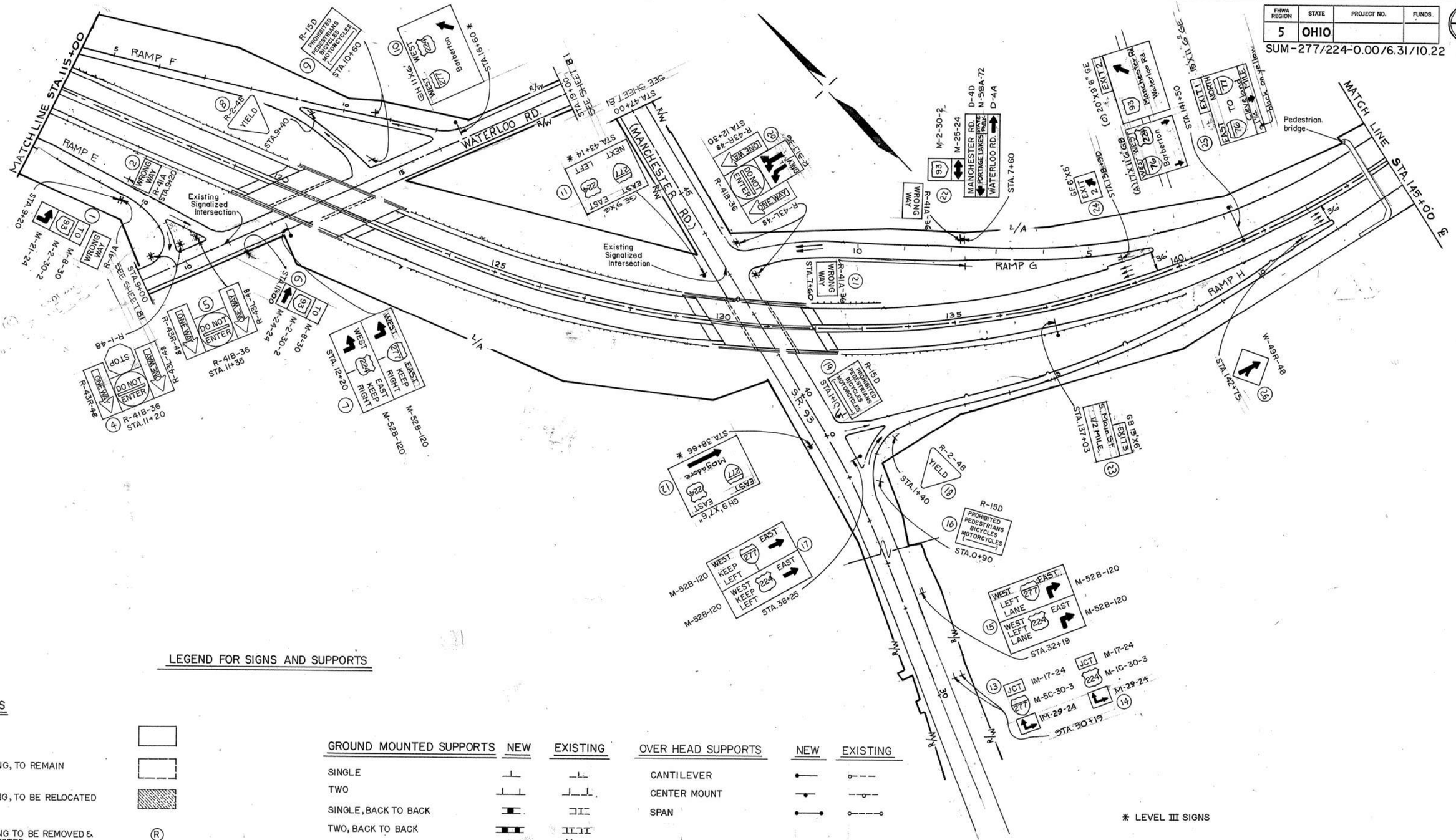

LEGEND FOR SIGNS AND SUPPORTS

SIGNS

- NEW
- EXISTING, TO REMAIN
- EXISTING, TO BE RELOCATED
- EXISTING TO BE REMOVED & RE-ERECTED
- EXISTING, TO BE REMOVED
- DEMOUNTABLE COPY ADDED TO EXISTING SIGN.

GROUND MOUNTED SUPPORTS	NEW	EXISTING
SINGLE		
TWO		
SINGLE, BACK TO BACK		
TWO, BACK TO BACK		
STOP, ONE WAY, DO NOT ENTER		
BANDED TO POLE		

OVER HEAD SUPPORTS	NEW	EXISTING
CANTILEVER		
CENTER MOUNT		
SPAN		

* LEVEL III SIGNS

QUANTITIES CARRIED TO PG. 82

ITEM	UNIT	DESCRIPTION	THIS SHEET
620	EACH	DELINEATOR, FLEXIBLE POST MOUNTED, WHITE,	34
620	EACH	DELINEATOR, FLEXIBLE POST MOUNTED, YELLOW,	20

FHWA REGION	STATE	PROJECT NO.	FUNDS
5	OHIO		

SUM-277/224-0.00/6.31/10.22

76
196

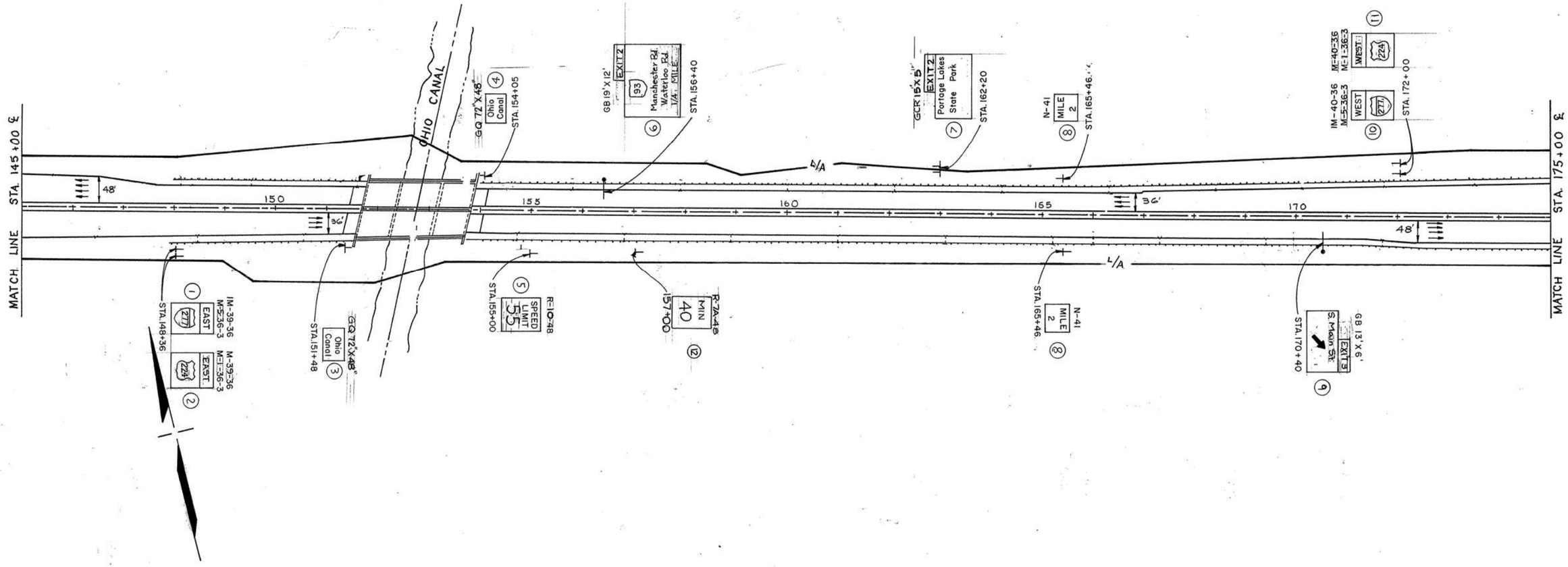

SEE SHEET 75 FOR SIGNING LEGEND

QUANTITY CARRIED TO PAGE 82.

ITEM	UNIT	DESCRIPTION	THIS SHEET
620	EACH	DELINEATOR FLEXIBLE POST MOUNTED WHITE,	14

FHWA REGION	STATE	PROJECT NO.	FUNDS
5	OHIO		

SUM-277/224-0.00/6.31/10.22

77 / 196

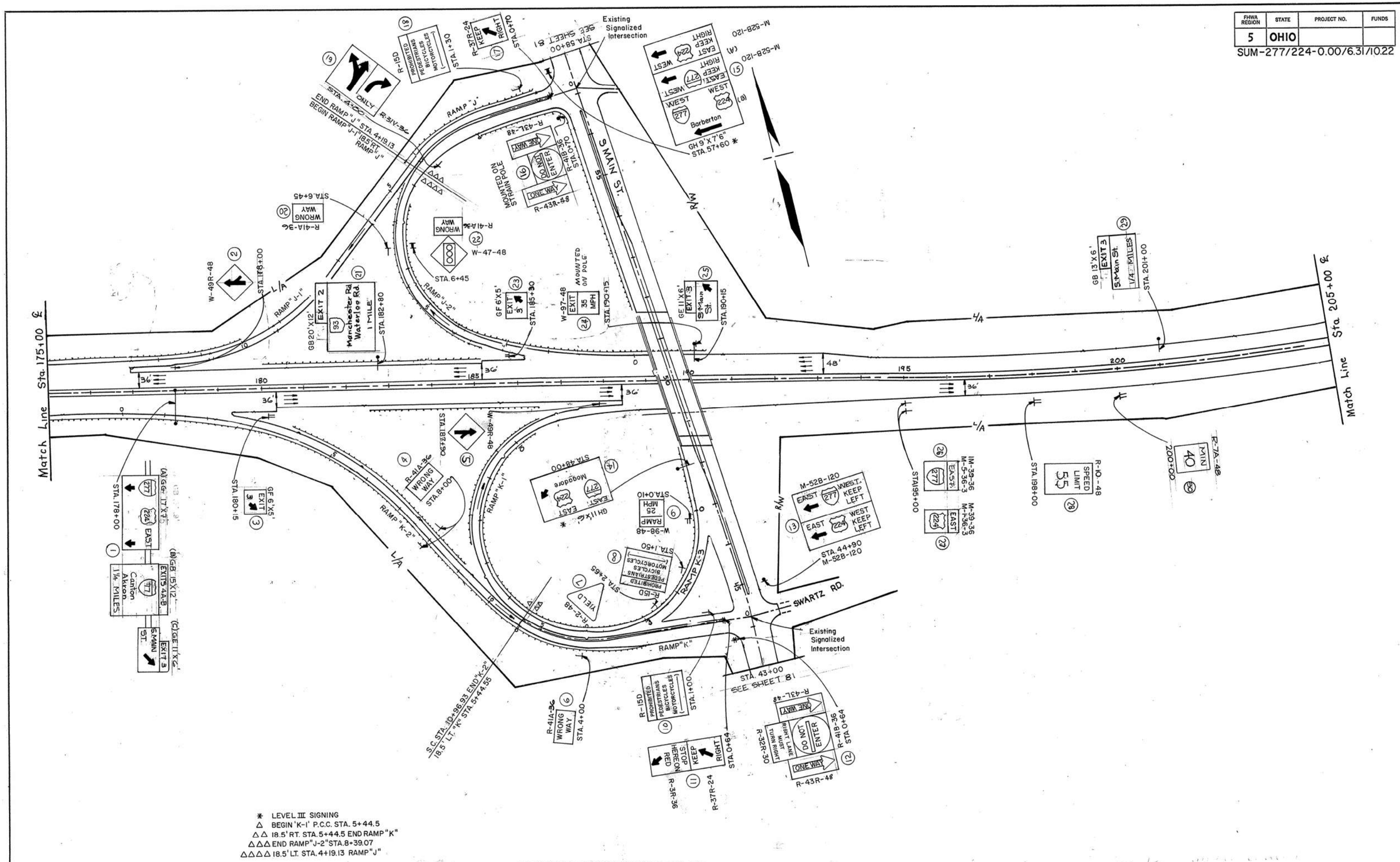

✱ LEVEL III SIGNING
△ BEGIN 'K-1' P.C.C. STA. 5+44.5
△△ 18.5' RT. STA. 5+44.5 END RAMP "K"
△△△ END RAMP "J-2" STA. 8+39.07
△△△△ 18.5' LT. STA. 4+19.13 RAMP "J"

QUANTITIES CARRIED TO PG. 82

ITEM	UNIT	DESCRIPTION	THIS SHEET
620	EACH	DELINEATOR, FLEXIBLE POST MOUNTED WHITE,	49
620	EACH	DELINEATOR, FLEXIBLE POST MOUNTED YELLOW,	21

SEE SHEET 75 FOR SIGNING LEGEND.

FHWA REGION	STATE	PROJECT-NO.	FUNDS
5	OHIO		

SUM-277/224-0.00/6.31/10.22

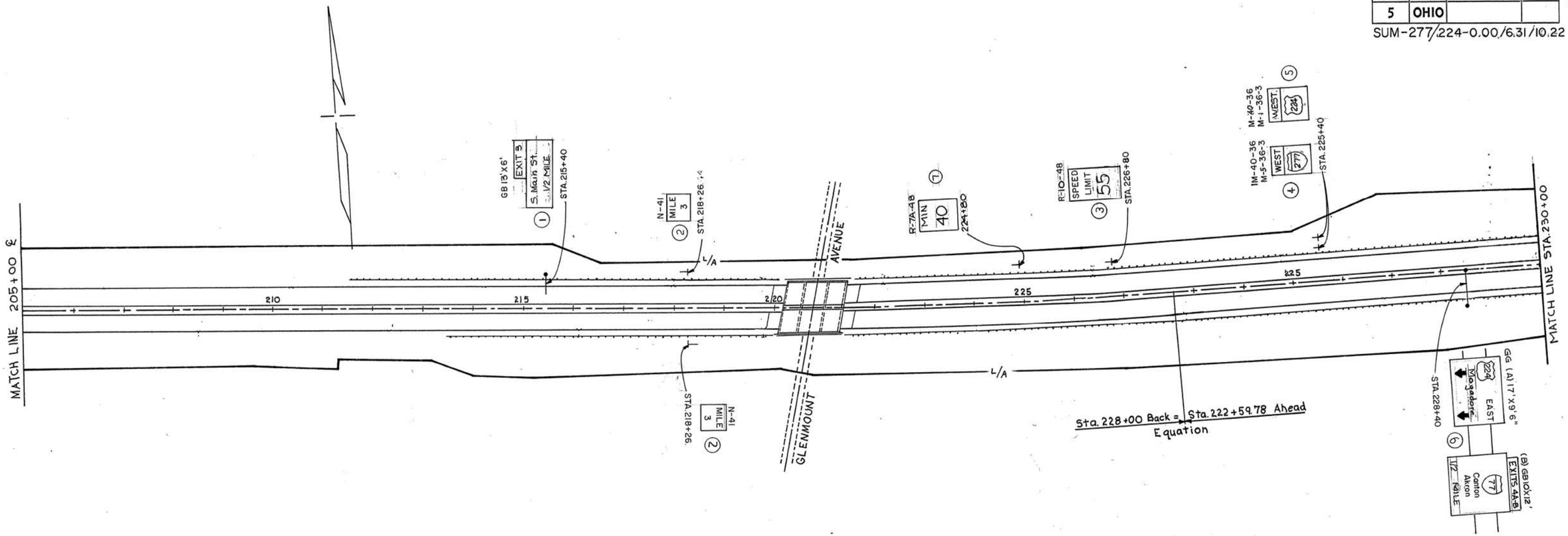

QUANTITY CARRIED TO PG. 82

ITEM	UNIT	DESCRIPTION	THIS SHEET
620	EACH	DELINEATOR, FLEXIBLE POST MOUNTED WHITE,	12

SEE SHEET 75 FOR SIGNING LEGEND.

STA. 205+00 TO 230+00

FHWA REGION	STATE	PROJECT NO.	FUNDS
5	OHIO		

79/196

SUM-277/224-0.00/6.31/10.22

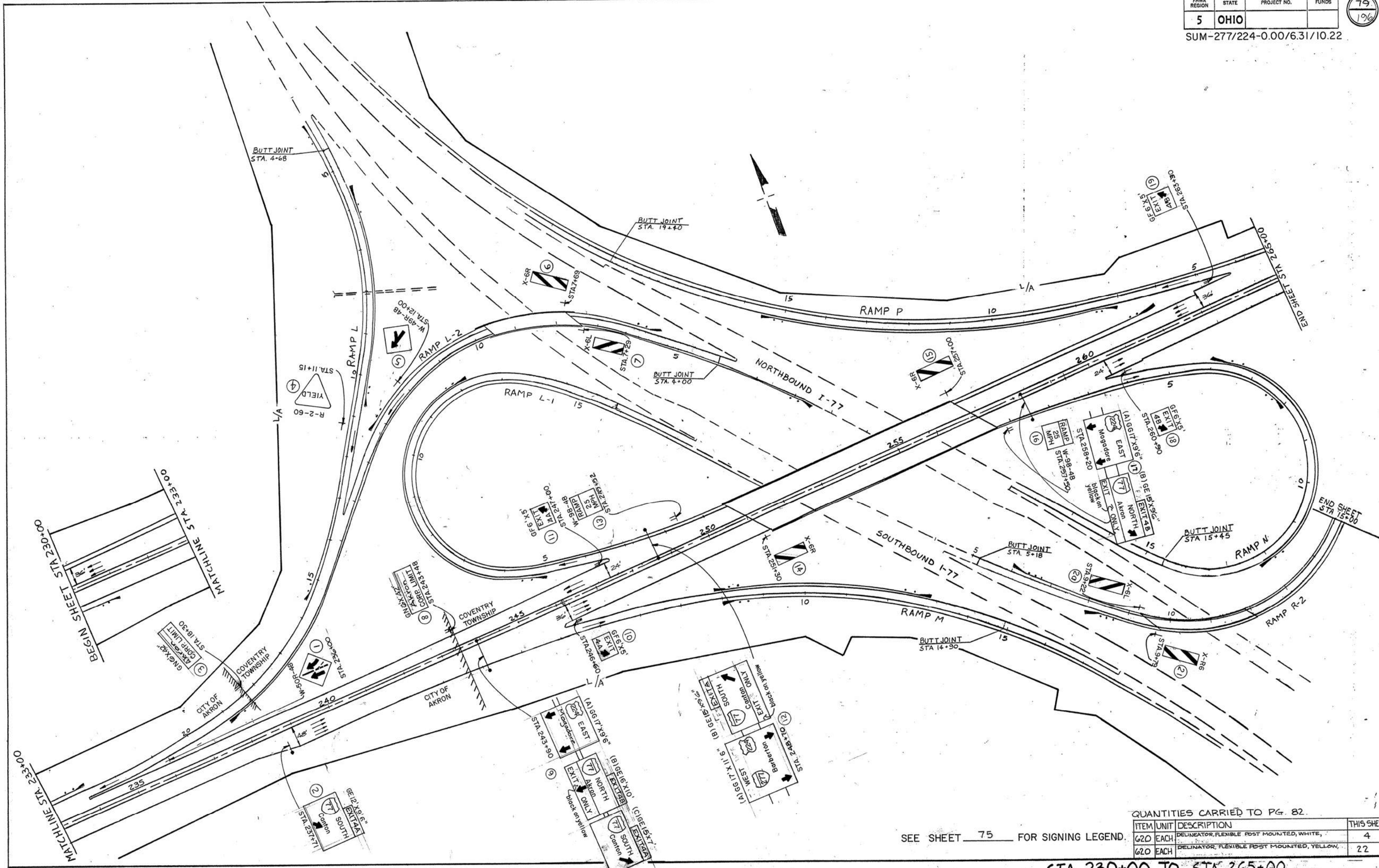

SEE SHEET 75 FOR SIGNING LEGEND.

QUANTITIES CARRIED TO PG. 82.

ITEM	UNIT	DESCRIPTION	THIS SHEET
620	EACH	DELINEATOR, FLEXIBLE POST MOUNTED, WHITE,	4
620	EACH	DELINATOR, FLEXIBLE POST MOUNTED, YELLOW,	22

STA 230+00 TO STA 265+00

F.H.W.A. REGION	STATE	PROJECT	
5	OHIO		

SUM-277/224-0.00/6.31/10.22

80 / 1%

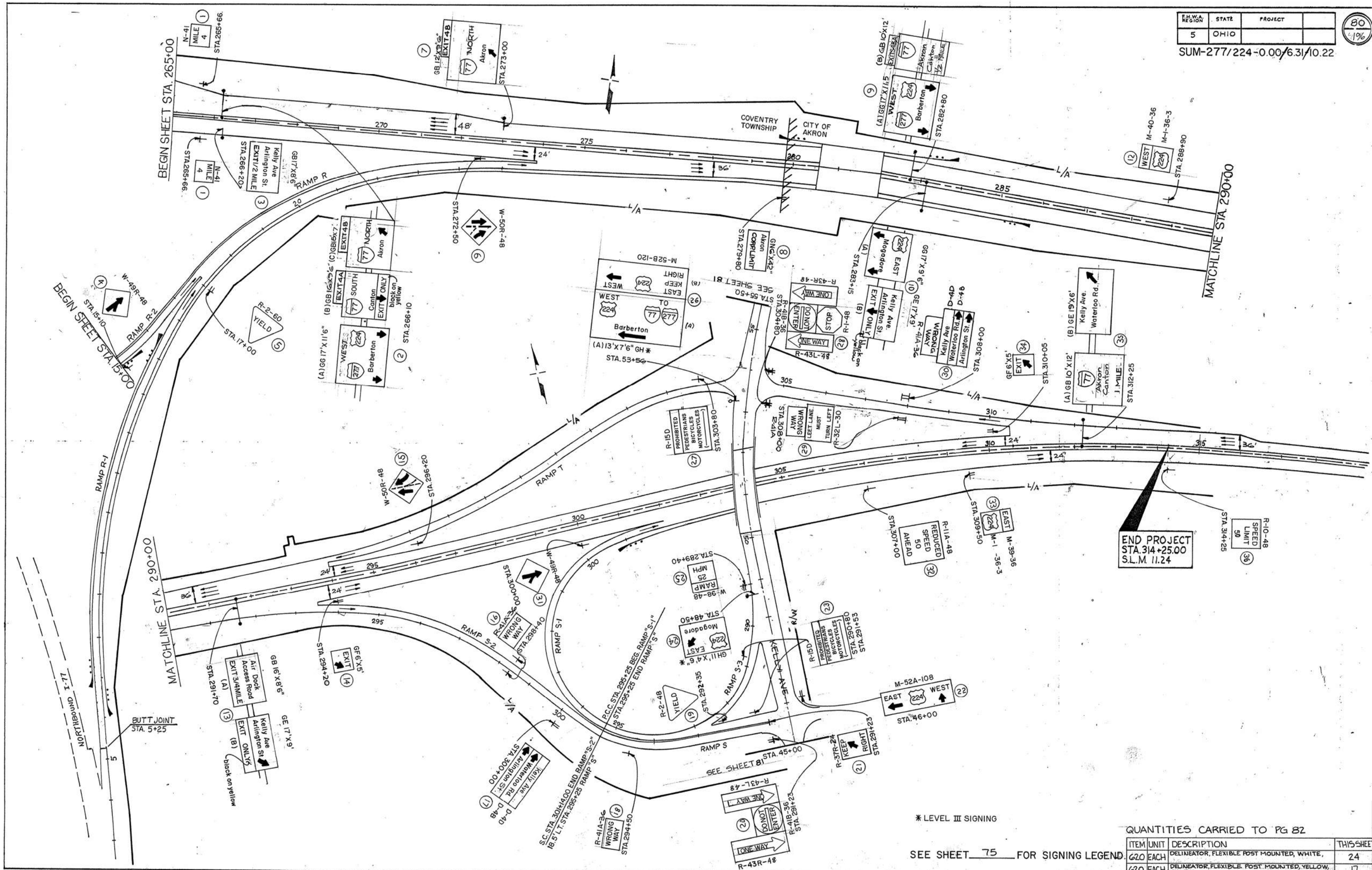

SEE SHEET 75 FOR SIGNING LEGEND.

QUANTITIES CARRIED TO PG 82

ITEM	UNIT	DESCRIPTION	THIS SHEET
620	EACH	DELINEATOR, FLEXIBLE POST MOUNTED, WHITE,	24
620	EACH	DELINEATOR, FLEXIBLE POST MOUNTED, YELLOW,	17

FHWA REGION	STATE	PROJECT NO.	FUNDS
5	OHIO		

SUM-277/224-0.00/6.31/10.22

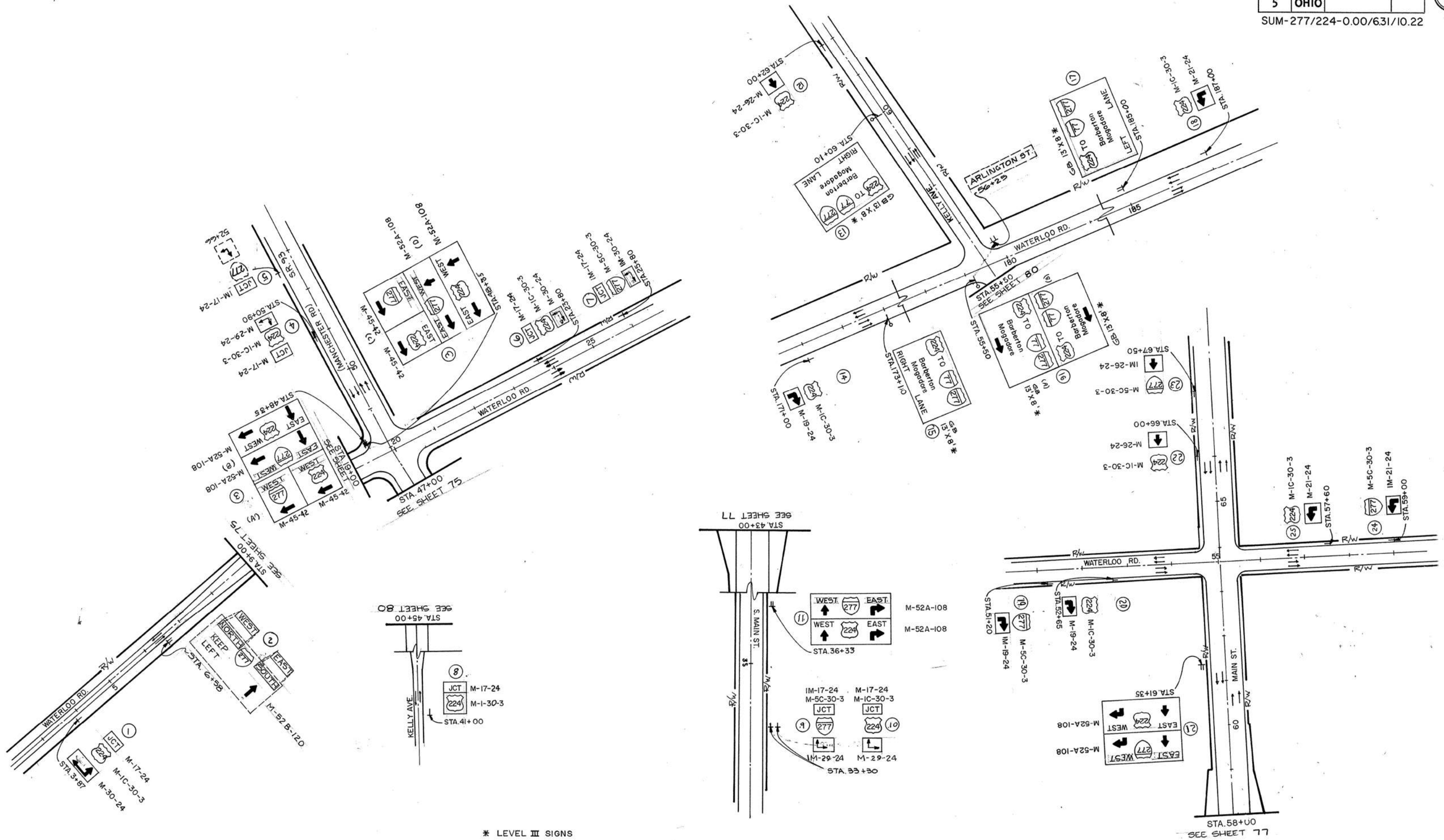

FOR SIGNING LEGEND SEE SHEET 75

	OHIO	82
	FHWA REGION 5	19
	FEDERAL PROJECT	

SUM-277/224-0.00/6.31/10.22

SHEET 74 SIGN #20

6+20 RAMP 'E' RT.
GROUND MOUNTED SIGN

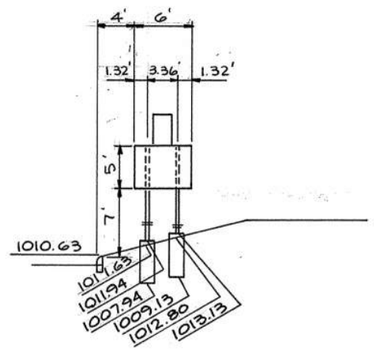

STEEL BEAMS: LEFT = 15'0" S4 X 7.7 BEAM
RIGHT = 13'10" S4 X 7.7 BEAM
6'X5' = 30 FT²
CONCRETE = 0.54 CU.YD.

SHEET 75 SIGN #22

7+60 RAMP 'G' RT
GROUND MOUNTED SIGN

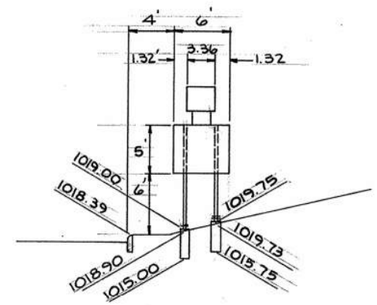

STEEL BEAMS: LEFT = 15' S4 X 7.7
RIGHT = 14.25 S4 X 7.7
5'X6' = 30 FT²
CONCRETE = 0.54 CU.YD.

SHEET 80 SIGN #30

308+00 RAMP 'U' LT.
GROUND MOUNTED SIGN

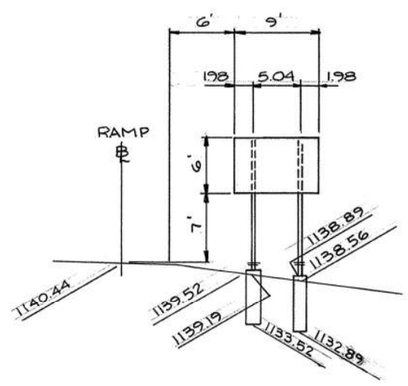

STEEL BEAMS LEFT = 20'0" W10X12
RIGHT = 20'6" W10X12
9'X6' = 54 FT²
CONCRETE = 2.20 CU. YD.

SHEET 80 SIGN #17

300+00 RAMP 'S-2' RT
GROUND MOUNTED SIGN

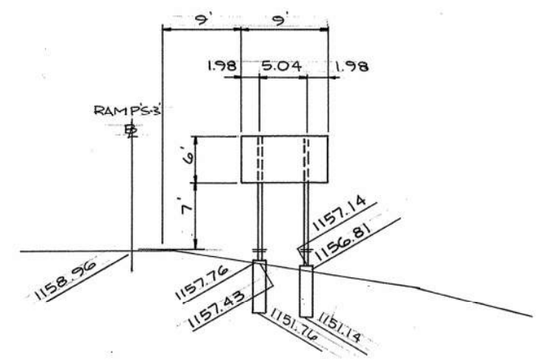

STEEL BEAMS: LEFT = 20'6" W10X12
RIGHT = 21'0" W10X12
9'X6' = 54 FT²
CONCRETE = 2.20 CU. YD.

DELINEATOR SUB-SUMMARY

SHEET NO.	DELINEATOR REMOVED FOR DISPOSAL	SHEET NO.	DELINEATOR, FLEXIBLE POST MOUNTED,	
			WHITE	YELLOW
58	21	74	31	3
59	31	75	34	20
60	15	76	14	
61	62	77	49	21
62	6	78	12	
63	24	79	4	22
64	41	80	24	17
TOTAL	200		168	83

SIGN ELEVATIONS / DELINEATOR SUB-SUMMARY

OHIO	FHWA REGION 5	FEDERAL PROJECT

SUM-277/224-0.00/6.31/10.22

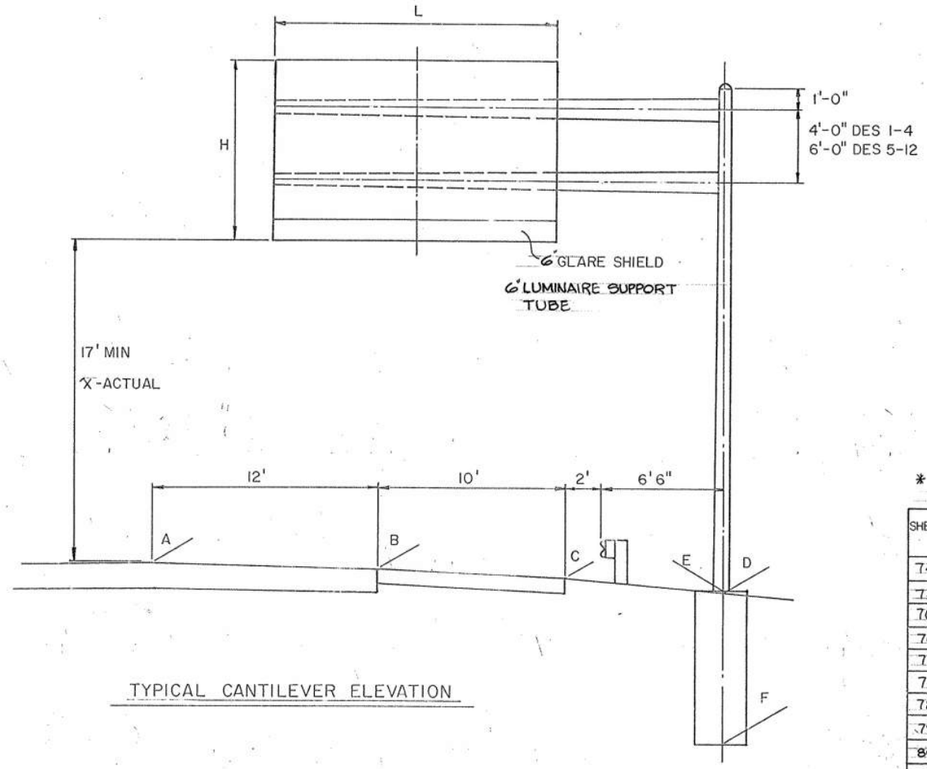

TYPICAL CANTILEVER ELEVATION

* SIGN AREA INCLUDES EXIT NUMBER PANEL

SHEET	SIGN	STATION	SIDE	SIGN SUPPORT	DESIGN #	ARM LENGTH (FT.)	POLE LENGTH (FT.)	SIGN SIZE L (FT)	SIGN SIZE H (FT)	SIGN SIZE * AREA (FT²)	LUMINAIRE #	LUMINAIRE WATT	BRACKET #	X (FT)	GROUND ELEVATIONS A	B	C	D	E	F	FOUNDATION (CU.YD.)
74	3	69+00	LT.	TC-12.30	8	26	28	13	10.5	152.5	2	175	3	17.6	976.33	976.14	975.72	975.01	975.18	960.18	3.96
74	10	83+60	RT.	TC-12.30	11	26	30	20	13	272.0	3	250	4	17.4	982.05	981.86	981.44	979.81	979.98	961.98	4.75
76	6	156+40	LT.	TC-12.30	10	26	30	19	13	259.0	2	250	3	17.0	981.35	981.16	980.74	978.62	978.79	961.79	4.49
76	9	170+40	RT.	TC-12.30	5	22	28	13	7	103.0	2	175	3	17.0	973.75	973.56	973.14	971.51	971.68	960.68	2.90
77	21	182+80	LT.	TC-12.30	11	26	30	20	13	272.0	3	250	4	17.4	985.28	985.09	984.67	983.04	983.21	965.21	4.75
77	25	190+15	LT.	TC-12.30	5	22	28	11	7	89.0	1	175	2	17.0	992.14	991.95	991.53	989.90	990.07	979.07	2.90
78	1	215+40	LT.	TC-12.30	5	22	28	13	7	103.0	2	175	3	17.0	1005.05	1004.86	1004.44	1002.81	1002.98	991.98	2.90
79	2	237+71	RT.	TC-12.30	6	25	28	12	10.5	140.0	2	175	3	17.1	1040.29	1040.10	1039.68	1038.50	1038.67	1027.67	2.90
80	3	266+20	RT.	TC-12.30	8	26	28	17	9.5	161.5	2	175	3	17.9	1087.05	1086.86	1086.44	1085.50	1085.67	1070.67	3.96
80	7	273+00	LT.	TC-12.30	6	25	28	12	10.5	140.0	2	175	3	17.0	1107.25	1107.06	1106.64	1105.01	1105.18	1094.18	2.90

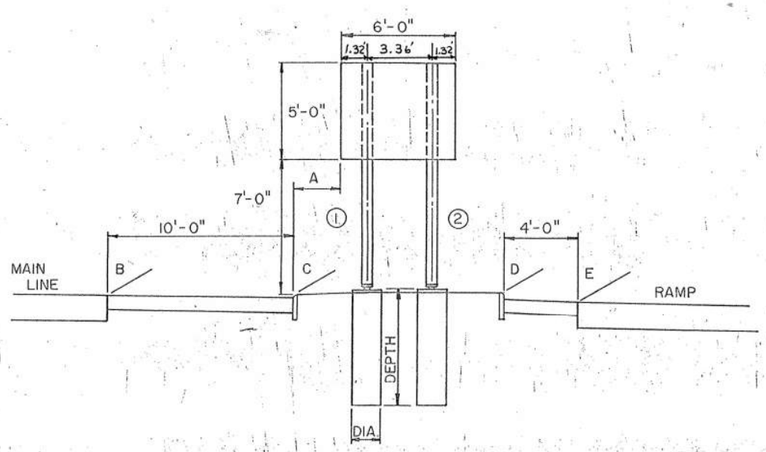

TYPICAL EXIT GORE ELEVATIONS

SHEET #	SIGN #	STATION	SIDE	BEAM SIZE	BEAM LENGTH ① (FT)	BEAM LENGTH ② (FT)	FOUNDATION DIA. (FT)	FOUNDATION DEPTH (FT)	FOUNDATION VOL. (CU.YD)	SIGN AREA (FT²)	A (FT)	GROUND ELEVATIONS B	C	D	E
74	6	74+70	LT.	54X7.7	15.0	15.0	1.5	4	.54	30.0	8.0	978.53	978.43	978.81	978.76
74	18	110+65	RT.	54X7.7	17.0	17.6	1.5	4	.54	30.0	6.2	1023.41	1022.99	1021.25	1020.52
75	24	138+90	LT.	54X7.7	16.2	16.4	1.5	4	.54	30.0	4.5	1016.37	1016.13	1015.39	1014.86
77	3	180+15	RT.	54X7.7	16.9	16.5	1.5	4	.54	30.0	9.0	982.46	982.26	982.23	982.10
77	23	185+30	LT.	54X7.7	16.3	16.2	1.5	4	.54	30.0	9.5	987.49	987.70	987.73	987.31
79	10	246+60	RT.	54X7.7	16.4	16.8	1.5	4	.54	30.0	3.5	1053.61	1053.69	1052.93	1053.00
79	11	247+00	LT.	54X7.7	16.7	16.6	1.5	4	.54	30.0	4.75	1054.41	1054.22	1053.80	1053.77
79	18	260+90	RT.	54X7.7	16.9	16.8	1.5	4	.54	30.0	6.75	1075.35	1075.53	1074.03	1074.01
80	19	263+30	LT.	54X7.7	16.4	16.5	1.5	4	.54	30.0	3.75	1079.83	1079.65	1074.22	1079.16
80	14	294+20	RT.	54X7.7	16.0	16.0	1.5	4	.54	30.0	6.5	1156.75	1157.15	1157.14	1156.36
80	34	310+05	LT.	54X7.7	15.9	16.6	1.5	4	.54	30.0	5.5	1131.07	1131.05	1131.26	1131.24

TYPICAL SIGN ELEVATIONS

SHEET 75 SIGN #7

STA. 12+20 RT

WATERLOO RD.

OVERHEAD SIGN SUPPORT

TC-12.30 DES. 6, 25' ARM

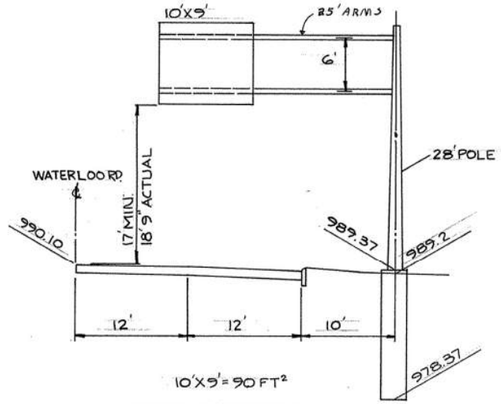

10'X9' = 90 FT²

NO. OF BRACKETS: 2

NO. OF LUMINAIRES: 1@175W

CONCRETE 2.9 CU.YD.

SHEET 75 SIGN #10

STA. 16+60 LT.

WATERLOO RD.

OVERHEAD SIGN SUPPORT

TC-12.30 DES. 6, 25' ARM

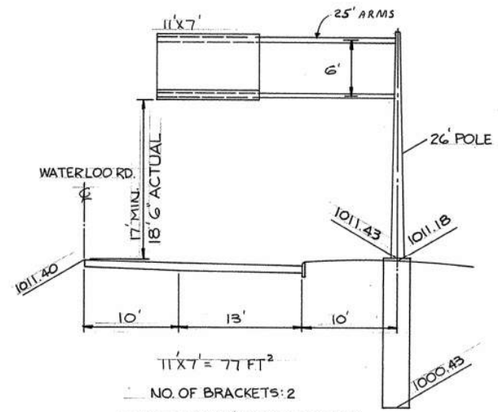

11'X7' = 77 FT²

NO. OF BRACKETS: 2

NO. OF LUMINAIRES: 1@175W

CONCRETE 2.9 CU.YD.

SHEET 75 SIGN #11

STA. 43+14 LT

SR 93

OVERHEAD SIGN SUPPORT

TC-9.10 DES. 2, 2 ARMS @ 9'

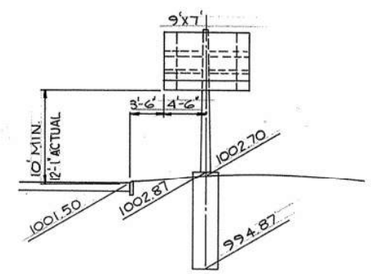

9'X7' = 63 FT²

NO. OF BRACKETS: 2

SPACING: 16 3/8, 75 3/8, 16 1/4

NO. OF LUMINAIRES: 1@175W

CONCRETE 1.45 CU.YD.

SHEET 75 SIGN #17

STA. 38+25 RT

SR 93

OVERHEAD SIGN SUPPORT

TC-12.30 DES. 6, 25' ARMS

NOTE: SIGN SIZES INCLUDE GLARE SHIELD

* SIGN AREA INCLUDES EXIT NUMBER SIGN

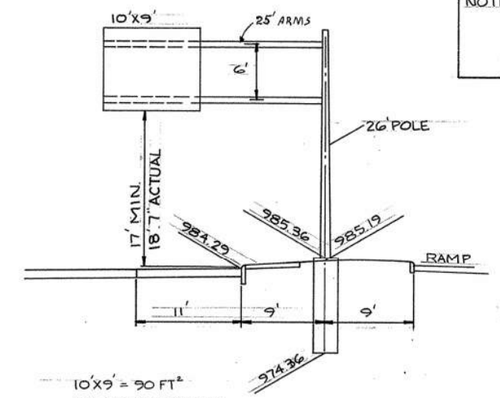

10'X9' = 90 FT²

NO. OF BRACKETS: 2

NO. OF LUMINAIRES: 1@175W

CONCRETE 2.90 CU.YD.

SHEET 75 SIGN #12

STA. 38+66 LT

SR 93

OVERHEAD SIGN SUPPORT

TC-9.10 DES. 2, 2 ARMS @ 9'

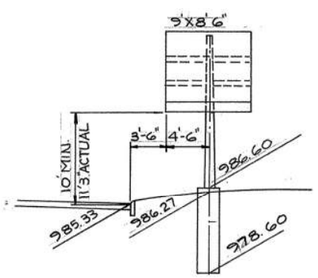

9'X8'6" = 76.5 FT²

NO. OF BRACKETS: 2

SPACING: 16 3/8, 75 3/8, 16 1/4

NO. OF LUMINAIRES: 1@175W

CONCRETE 1.45 CU.YD.

SHEET 75 SIGN #15

STA. 32+19 RT.

SR 93

GROUND MOUNTED SIGN

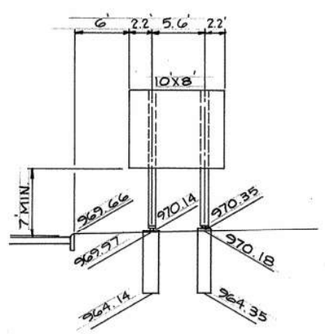

10'X8' = 80 FT²

STEEL BEAMS: LEFT = 14'6" W10X12
RIGHT = 14'4" W10X12

CONCRETE 2.2 CU.YD.

SHEET 75 SIGN #25

STA. 141+50 LT.

OVERHEAD SIGN SUPPORT TC-7.65 DES. 8, 77 SPAN

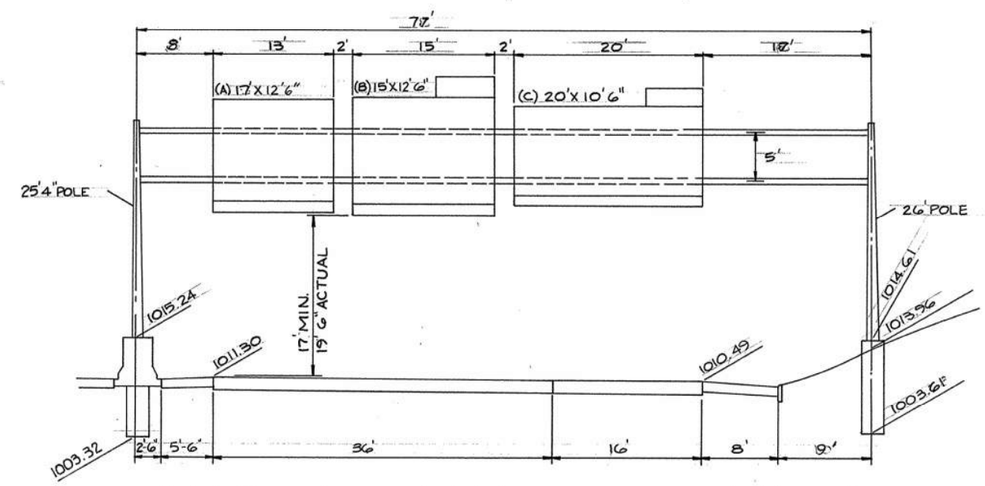

(A) 17'X12'6" = 212.5 FT²
NO. OF BRACKETS: 3
NO. OF LUMINAIRES: 2@250W

(B) 15'X12'6" = 199.5 FT²*
NO. OF BRACKETS: 3
NO. OF LUMINAIRES: 2@250W

(C) 20'X10'6" = 222 FT²*
NO. OF BRACKETS: 4
NO. OF LUMINAIRES: 3@175W

CONCRETE 9.2 CU.YD. + 5.1 CU.YD = 14.3 CU.YD.

SIGN ELEVATIONS

SHEET 74 SIGN #8

STA. 77+50 WESTBOUND
OVERHEAD SIGN SUPPORT TC-7.65 DES. 6, 66' SPAN

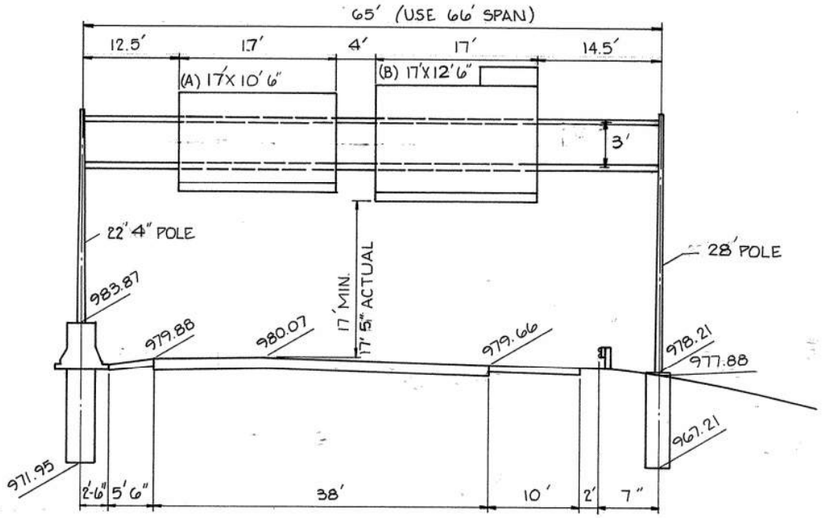

(A) 17'X10' 6" = 178.5 FT²
NO. OF BRACKETS: 3
NO. OF LUMINAIRES: 2 @ 175 W

(B) 17'X 12' 6" = 224.5 FT²*
NO. OF BRACKETS: 3
NO. OF LUMINAIRES: 2 @ 250 W

CONCRETE: 9.2 CU. YD. + 4.8 CU. YD. = 14.0 CU. YD.

SHEET 74 SIGN #11

STA. 91+95 EASTBOUND
GROUND MOUNTED SIGN

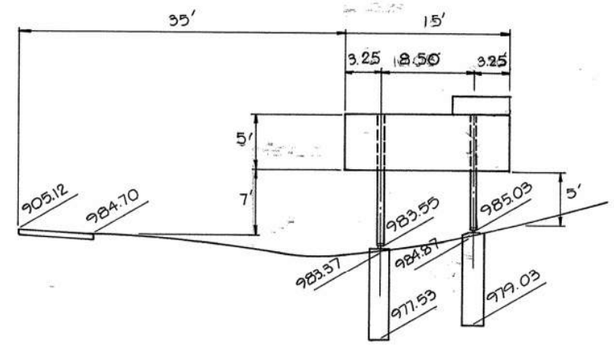

STEEL BEAMS: LEFT = 20' W10X12 BEAM
RIGHT = 18' 6" W10X12 BEAM
15' X 5 = 187 FT²*
CONCRETE: 2.2 CU. YDS.

SHEET 74 SIGN #13

STA. 101+54 EAST BOUND
OVERHEAD SUPPORT TC-12.30 DES. 11, 26' ARM

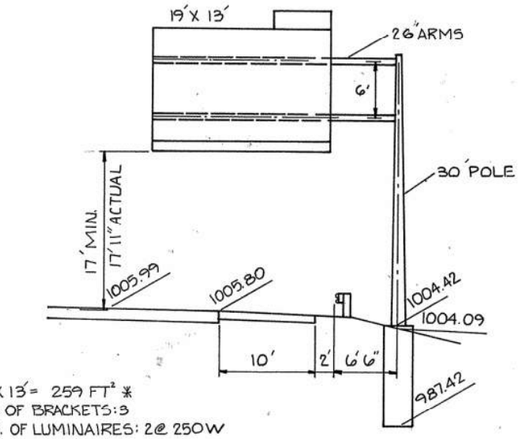

19' X 13' = 259 FT²*
NO. OF BRACKETS: 3
NO. OF LUMINAIRES: 2 @ 250 W
CONCRETE: 4.49 CU. YDS.

SHEET 74 SIGN #14

STA. 103+00 WEST BOUND
OVERHEAD SIGN SUPPORT TC-7.65 DES. 6, 66' SPAN

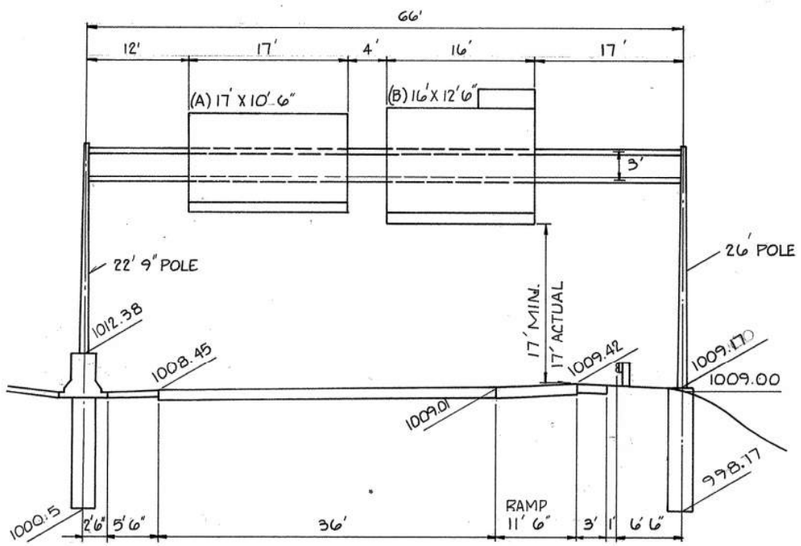

(A) 17' X 10' 6" = 178.5 FT²
NO. OF BRACKETS: 3
NO. OF LUMINAIRES: 2 @ 175 W

(B) 16' X 17' 6" = 212.0 FT²*
NO. OF BRACKETS: 3
NO. OF LUMINAIRES: 2 @ 250 W

CONCRETE: 9.2 CU. YD. + 4.8 CU. YD. = 14.0 CU. YD.

SHEET 74 SIGN #17

STA. 108+90 EAST BOUND
OVERHEAD SUPPORT TC-7.65 DES. 8, 77' SPAN

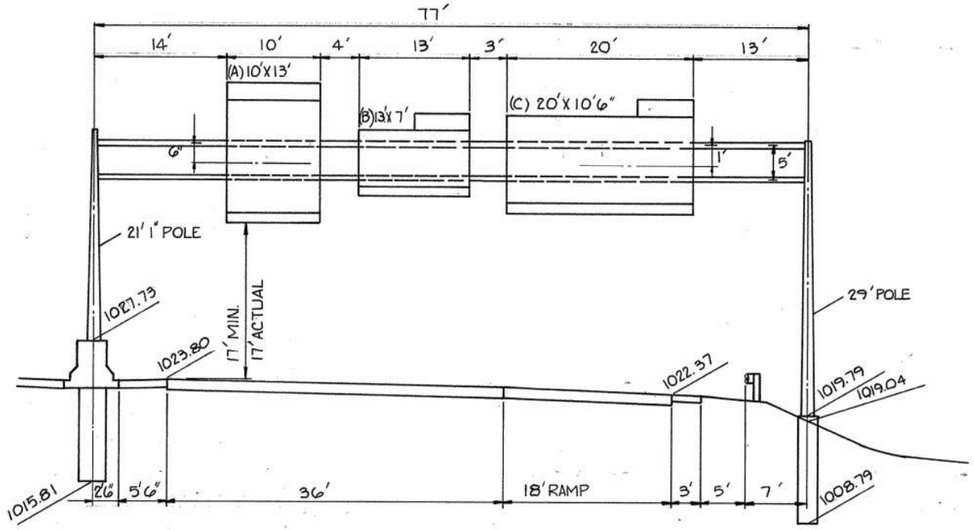

(A) 10' X 13' = 150 FT²*
NO. OF BRACKETS: 3
NO. OF LUMINAIRES: 1 @ 250 W

(B) 13' X 7' = 103 FT²*
NO. OF BRACKETS: 3
NO. OF LUMINAIRES: 2 @ 175 W

(C) 20' X 10' 6" = 222 FT²*
NO. OF BRACKETS: 4
NO. OF LUMINAIRES: 3 @ 175 W

CONCRETE: 9.2 CU. YD. + 5.1 CU. YD. = 14.3 CU. YD.

NOTE: SIGN SIZE INCLUDES GLARE SHIELD
*: SIGN AREA INCLUDES EXIT NUMBER SIGN

SIGN ELEVATIONS

OHIO	8E
FHWA REGION 5	19
FEDERAL PROJECT	

SUM-277/224-0.00/6.31/10.22

SHEET 75 SIGN # 23

STA. 137+03 EAST BOUND

OVERHEAD SIGN SUPPORT

TC-12.30 DES. 5 , 22' ARM

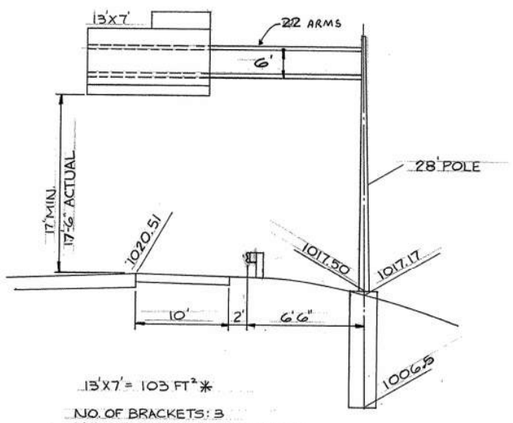

13'X7' = 103 FT² *

NO. OF BRACKETS: 3
NO. OF LUMINAIRES; 2 @ 175 W

CONCRETE 2.9 CU.YD.

SHEET 76 SIGN # 7

STA. 162+20 WESTBOUND

GROUND MOUNTED SIGN SUPPORT

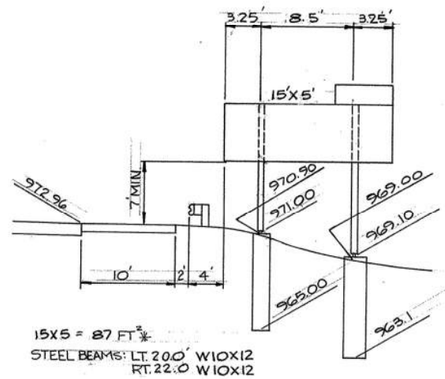

15X5 = 87 FT² *

STEEL BEAMS: LT. 20.0' W10X12
RT. 22.0 W10X12

CONCRETE 2.2 CU.YD.

SHEET 77 SIGN # 1

STA. 178+00 EASTBOUND

OVER HEAD SIGN SUPPORT TC-7.65 DES.8 , 77' SPAN

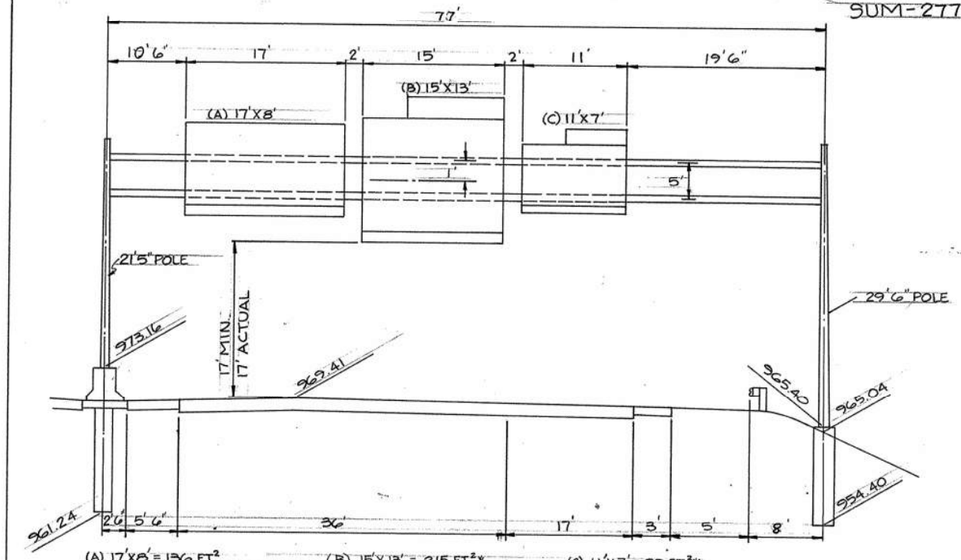

NOTE: SIGN SIZE INCLUDES GLARE SHIELD

*: SIGN AREA INCLUDES EXIT NUMBER SIGN

(A) 17'X8' = 136 FT²
NO. OF BRACKETS: 3
NO. OF LUMINAIRES: 2@175 W

(B) 15'X13' = 215 FT² *
NO. OF BRACKETS: 3
NO. OF LUMINAIRE: 2 @ 250W

(C) 11'X7' = 89 FT² *
NO. OF BRACKETS: 2
NO. OF LUMINAIRES: 1@ 175 W

CONCRETE 9.2 CU.YD. + 5.1 CU.YD. = 14.3 CU.YD.

SHEET 77 SIGN # 13

STA. 44+90 RT.

S. MAIN ST.

OVERHEAD SIGN SUPPORT

TC 9.10 DES. 2 , 2 ARMS @ 10'

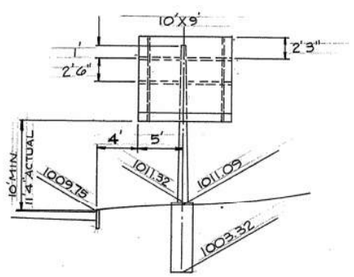

10'X9' = 90 FT²
SPACING 10 3/8, 99 3/8, 10 1/4
NO. OF BRACKETS: 2
NO. OF LUMINAIRES: 1@ 175W

CONCRETE 1.45 CU.YD.

SHEET 77 SIGN # 14

STA. 48+00 LT.

S. MAIN ST.

OVERHEAD SIGN SUPPORT

TC-12.30 DES. 4 , 20" ARM

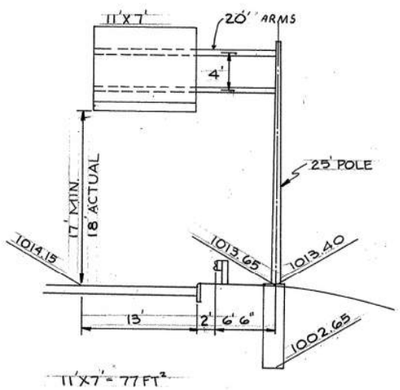

11'X7' = 77 FT²

NO. OF BRACKETS: 2
NO. OF LUMINAIRES: 1@ 175W

CONCRETE 2.9 CU.YD.

SHEET 77 SIGN # 15

STA. 57+60 LT.

S. MAIN ST.

OVERHEAD SIGN SUPPORT

TC-9.10 DES. 2 2 ARMS @ 9'
2 ARMS @ 10'

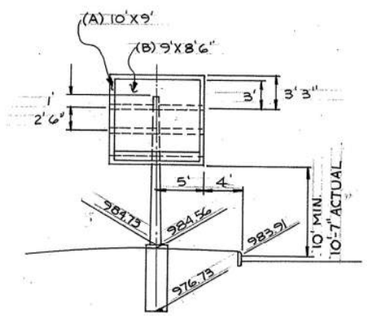

(A) 10'X9' = 90 FT²
SPACING: 10 3/8, 99 3/8, 10 1/4
NO. OF BRACKETS: 2
NO. OF LUMINAIRES: 1@175W

(B) 9'X8'6" = 76.5 FT²
SPACING: 16 3/8, 75 3/8, 10 1/4
NO. OF BRACKETS: 2
NO. OF LUMINAIRES: 1@175W

CONCRETE 1.45 CU.YD.

SHEET 78 SIGN # 6

STA. 228+40 EAST BOUND

OVERHEAD SIGN SUPPORT TC-7.65 DES.6, 64' SPAN

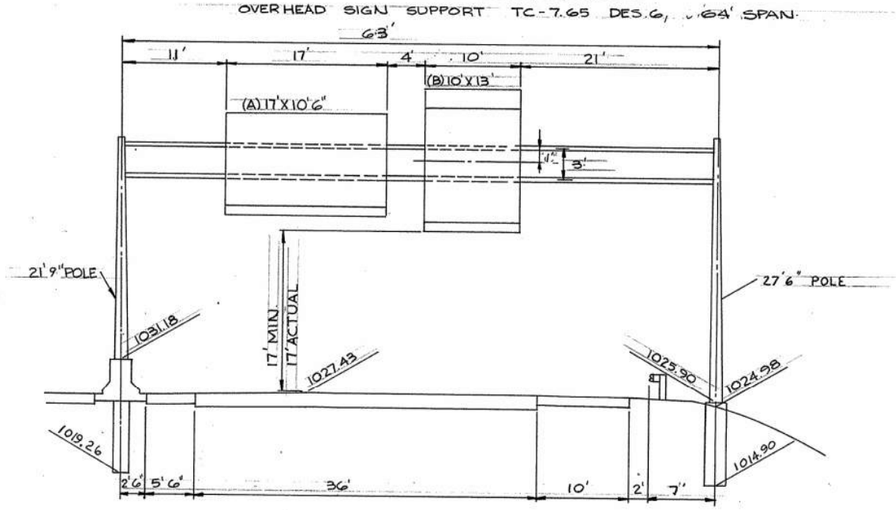

(A) 17'X10'6" = 178.5 FT²
NO. OF BRACKETS: 3
NO. OF LUMINAIRES: 2@ 175 W

(B) 10'X13' = 130 FT² *
NO. OF BRACKETS: 4
NO. OF LUMINAIRES: 1@ 250W

CONCRETE 9.2 CU.YD + 4.8 CU.YD. = 14.0 CU.YD.

SIGN ELEVATIONS

OHIO	87
FHWA REGION 5	19
FEDERAL PROJECT	

SUM-277/224-0.00/6.31/10.22

SHEET 79 SIGN #9

STA. 243+90 EAST BOUND

OVER HEAD SIGN SUPPORT TC-7.65 DES.8, 77' SPAN

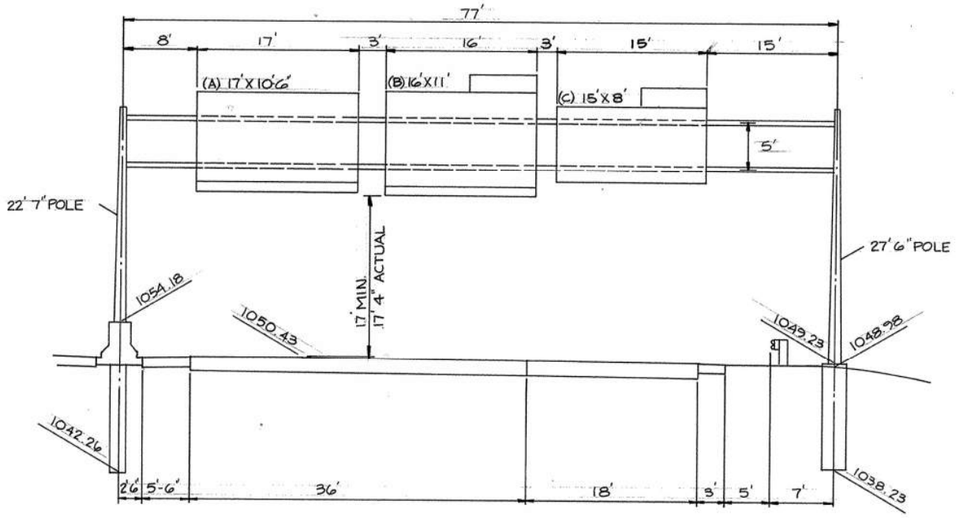

(A) 17'X10'6" = 178.5 FT² (B) 16'X11' = 190 FT²* (C) 15'X8' = 134 FT.²*

NO. OF BRACKETS: 3 NO. OF BRACKETS: 3 NO. OF BRACKETS: 3

NO. OF LUMINAIRES: 2@175W NO. OF LUMINAIRES: 2@175W NO. OF LUMINAIRES: 2@175W

CONCRETE 9.2 CU.YD. + 5.1 CU.YD. = 14.3 CU.YD.

SHEET 79 SIGN #12

STA. 249+50 WEST BOUND

OVER HEAD SIGN SUPPORT TC-7.65 DES. 6, 64' SPAN

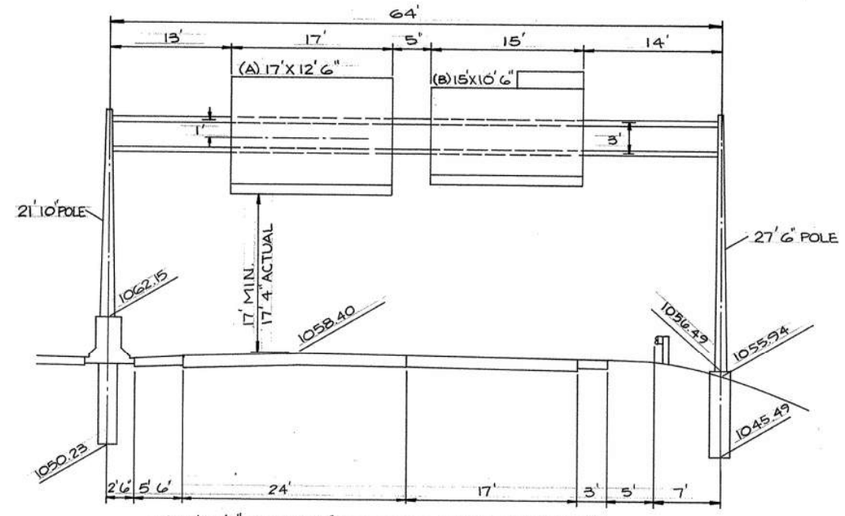

(A) 17'X12'6" = 212.5 FT² (B) 15'X10'6" = 171.5 FT²*

NO. OF BRACKETS: 3 NO. OF BRACKETS: 3

NO. OF LUMINAIRES: 2@250W NO. OF LUMINAIRES: 2@175W

CONCRETE 9.2 CU.YD. + 4.8 CU.YD = 14.0 CU.YD.

NOTE: SIGN SIZES INCLUDE GLARE SHIELD

* SIGN AREA INCLUDES EXIT NUMBER SIGN

SHEET 79 SIGN #17

STA. 258+20 EAST BOUND

OVER HEAD SIGN SUPPORT TC-7.65 DES. 6, 64' SPAN

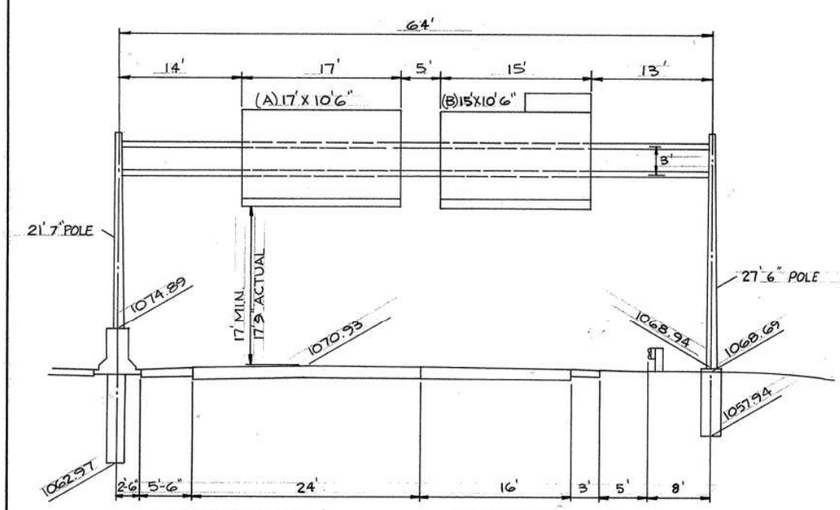

(A) 17'X10'6" = 178.5 FT² (B) 15'X10'6" = 171.5 FT²*

NO. OF BRACKETS: 3 NO. OF BRACKETS: 3

NO. OF LUMINAIRES: 2@175W NO. OF LUMINAIRES: 2@175W

CONCRETE 9.2 CU.YD + 4.8 CU.YD. = 14.0 CU.YD.

SHEET 80 SIGN # 2

STA. 266+10 WEST BOUND

OVER HEAD SIGN SUPPORT TC 7.65 DES.8, 77' SPAN

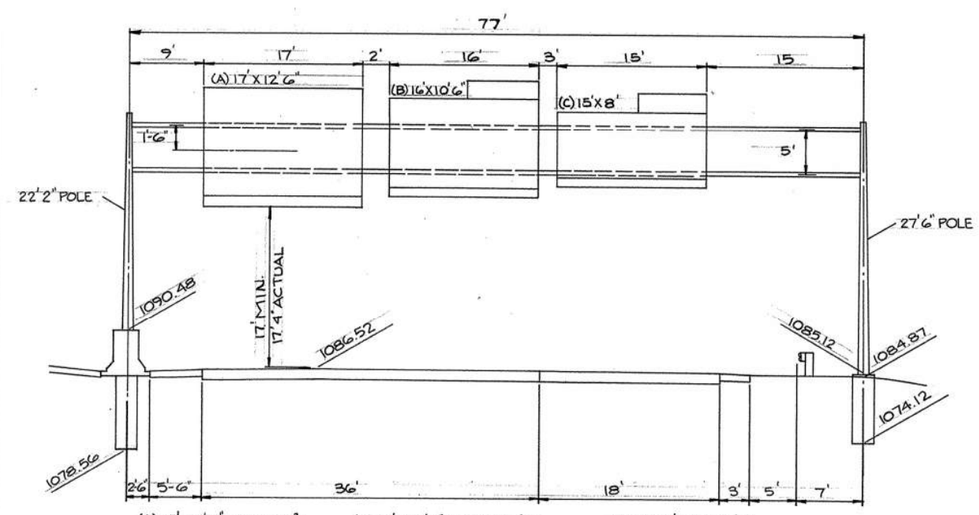

(A) 17'X12'6" = 212.5 FT² (B) 16'X10'6" = 182.0 FT²* (C) 15'X8' = 134 FT²*

NO. OF BRACKETS: 3 NO. OF BRACKETS: 3 NO. OF BRACKETS: 3

NO. OF LUMINAIRES: 2@250W NO. OF LUMINAIRES: 2@250W NO. OF LUMINAIRES: 2@175W

CONCRETE 9.2 CU.YD. + 5.1 CU.YD. = 14.3 CU.YD.

SHEET 80 SIGN # 24

STA. 48+50 LT.

KELLY AVE.

EXISTING OVERHEAD SIGN SUPPORT

TC-12.24 DES. 2

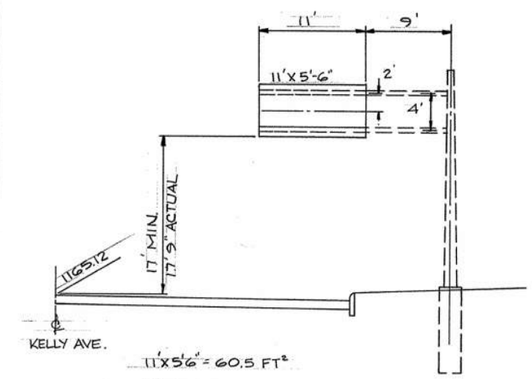

11'X5'6" = 60.5 FT²

NO. OF BRACKETS: 2

NO. OF LUMINAIRES: 1@100W

SIGN ELEVATIONS

320649

OHIO	88
FHWA REGION 5	190
FEDERAL PROJECT	

SUM 277/224-0.00/6.31/10.22

SHEET 80 SIGN #9

STA. 282+80 WESTBOUND

OVERHEAD SIGN SUPPORT TC-7.65 DES. 6, 64' SPAN

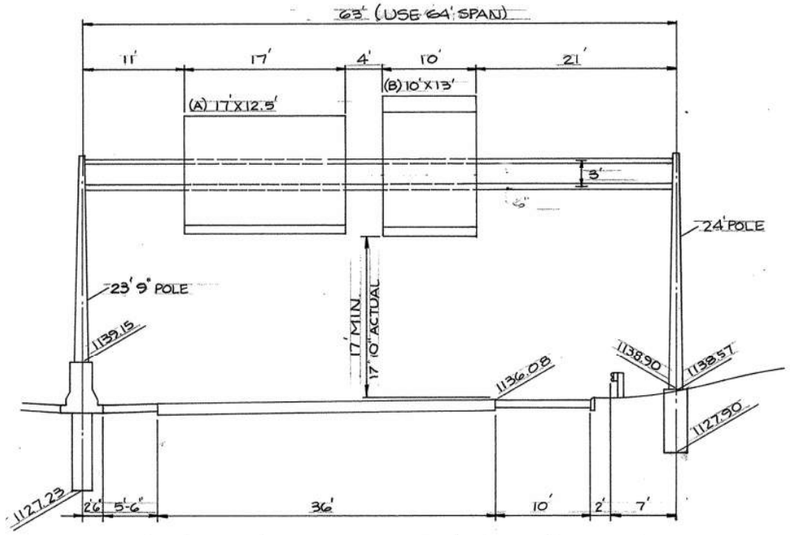

(A) 17'X12.5' = 212.5 FT²
NO. OF BRACKETS: 3
NO. OF LUMINAIRES: 2@250W

(B) 10'X13' = 130 FT²*
NO. OF BRACKETS: 3
NO. OF LUMINAIRES: 1@250W

CONCRETE: 9.2 CU.YD + 4.8 CU.YD. = 14.0 CU.YD.

SHEET 80 SIGN #10

STA. 283+15 EAST BOUND

OVERHEAD SIGN SUPPORT TC-7.65 DES. 6, 64' SPAN

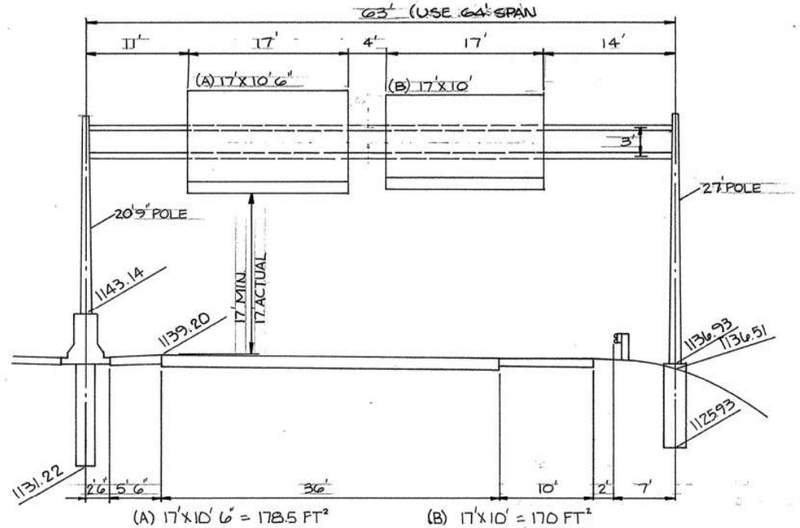

(A) 17'X10' 6" = 178.5 FT²
NO. OF BRACKETS: 3
NO. OF LUMINAIRES: 2@175W

(B) 17'X10' = 170 FT²
NO. OF BRACKETS: 3
NO. OF LUMINAIRES: 2@175W

CONCRETE: 9.2 CU.YD + 4.8 CU.YD. = 14.0 CU.YD.

SHEET 80 SIGN #26

STA. 53+56 LT
KELLY AVE.

EXISTING OVERHEAD COMB. POLE

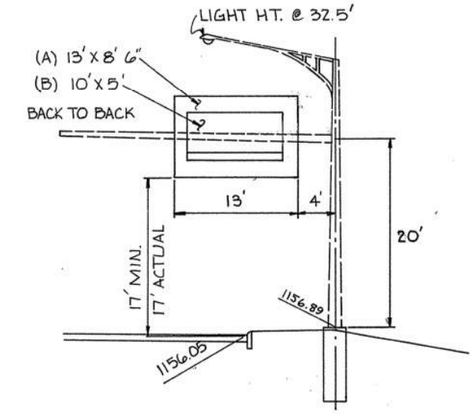

(A) 13'X8' 6" = 110.5 FT²
NO. OF BRACKETS: 5
NO. OF LUMINAIRES: 2@175W

(B) 10'X5' = 50 FT²
NO. OF BRACKETS: 2
NO. OF LUMINAIRES: 1@100W

SHEET 80 SIGN #13

STA. 291+70 EASTBOUND

OVERHEAD SIGN SUPPORT TC-7.65 DES. 6, 64' SPAN

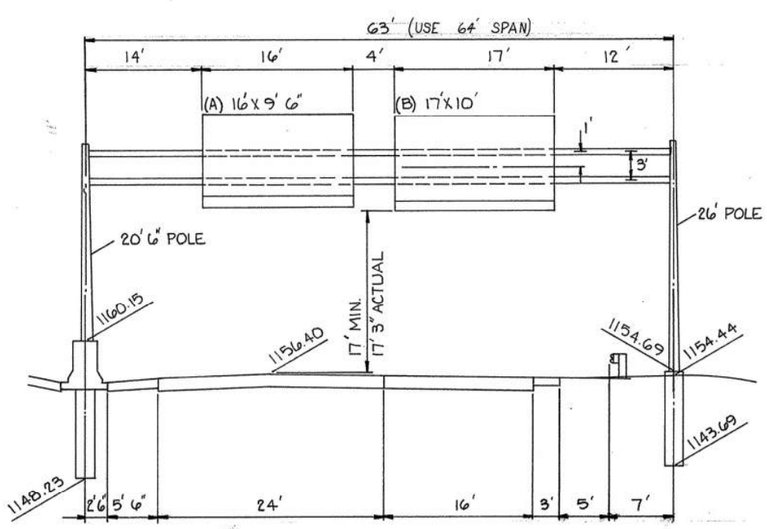

(A) 16' X 9' 6" = 152 FT²
NO. OF BRACKETS: 3
NO. OF LUMINAIRES: 2@175W

(B) 17'X10' = 170 FT²
NO. OF BRACKETS: 3
NO. OF LUMINAIRES: 2@175W

CONCRETE: 9.2 CU.YD. + 4.8 CU.YD. = 14.0 CU.YD.

SHEET 80 SIGN #35

STA. 312+25 WEST BOUND

OVERHEAD SIGN SUPPORT TC-7.65 DES. 6, 66' SPAN

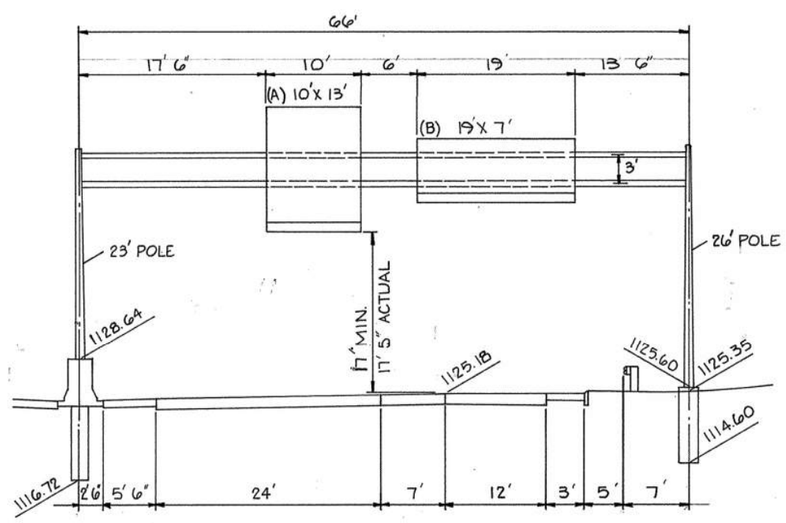

(A) 10'X 13' = 130 FT²
NO. OF BRACKETS: 3
NO. OF LUMINAIRES: 1@250W

(B) 19'X 7' = 133 FT²
NO. OF BRACKETS: 3
NO. OF LUMINAIRES: 2@175W

CONCRETE: 9.2 CU.YD. + 4.8 CU.YD = 14.0 CU.YD.

SHEET 80 SIGN #22

STA. 46+00 RT
KELLY AVE.

GROUND MOUNTED SIGN SUPPORT

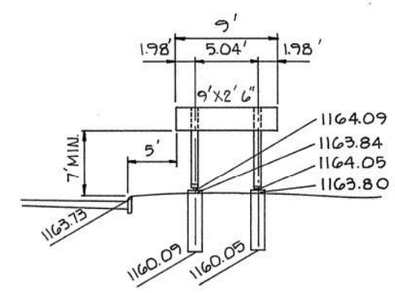

9' X 2' 6" = 22.5 FT²
STEEL BEAMS: LT. 13' 3" S4X7.7
RT. 13' 3" S4X7.7

CONCRETE: 0.54 CU.YD.

NOTE: SIGN SIZE INCLUDES GLARE SHIELD
*: SIGN AREA INCLUDE EXIT NUMBER SIGN

SIGN ELEVATIONS

528649

OHIO	89
FHWA REGION 5	196
FEDERAL PROJECT	

SUM-277/224-0.00/6.31/10.22

SHEET 81 SIGN #11

STA. 36+33 RT. S. MAIN ST.

GROUND MOUNTED SIGN SUPPORT

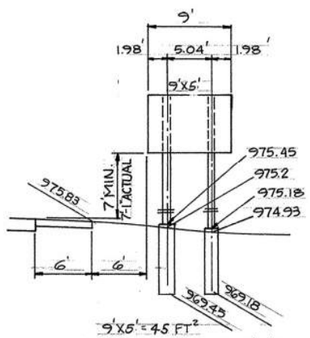

9'X5' = 45 FT²

STEEL BEAMS: LT = 18'6" W10X12

RT = 18'9" W10X12

CONCRETE: 2.2 CU. YD.

SHEET 81 SIGN #21

STA. 61+35 LT. S. MAIN ST.

GROUND MOUNTED SIGN SUPPORT

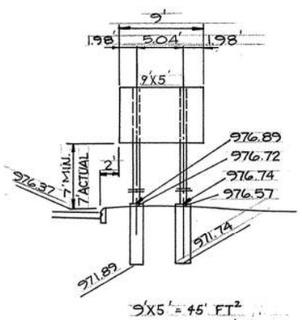

9'X5' = 45 FT²

STEEL BEAMS: LT = 16'6" W6X9

RT = 16'8" W6X9

CONCRETE: .66 CU. YD.

SHEET 81 DESIGN #17

STA. 185+00 LT.

WATERLOO RD.

GROUND MOUNTED SIGN SUPPORT

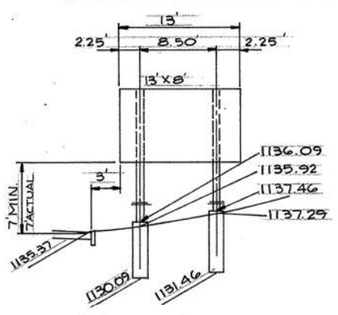

13'X8' = 104 FT²

STEEL BEAMS: LT = 26'4" W10X12

RT = 18'11" W10X12

CONCRETE: 2.2 CU. YD.

SHEET 77 SIGN #29

STA. 201+00 WESTBOUND

OVERHEAD SIGN SUPPORT

TC 12.30 DES. 6, 25' ARM

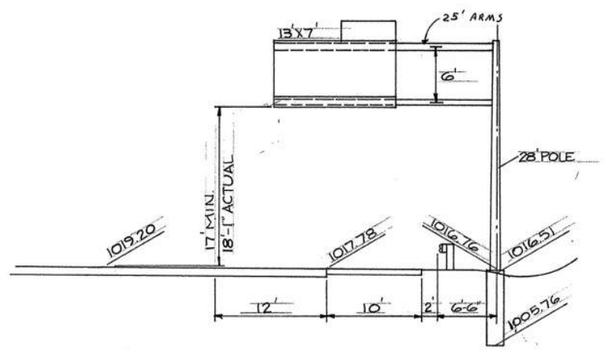

13'X7' = 103 FT² *

NO. OF BRACKETS: 3

NO. OF LUMINAIRES: 2 @ 175 W

CONCRETE: 2.9 CU. YD.

SHEET 81 SIGN #16

STA. 55+50 LT.

KELLY AVE.

EXISTING COMB. SIGN & SIGNAL SUPPORT

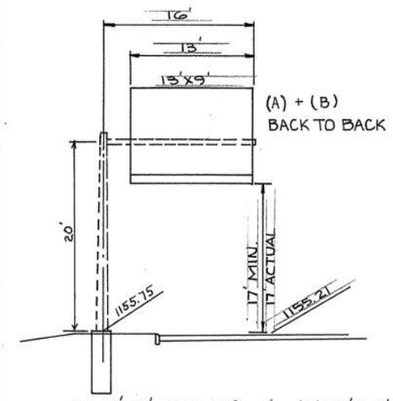

(A) 13' X 9' = 117 FT²
NO. OF BRACKETS: 5
NO. OF LUMINAIRES: 2 @ 175W

(B) 13' X 9' = 117 FT²
NO. OF BRACKETS: 5
NO. OF LUMINAIRES: 2 @ 175W

SHEET 81 SIGN #13

STA. 60+10 KELLY AVE.

OVERHEAD SIGN SUPPORT TC-12.30 DES. 6 25' ARM

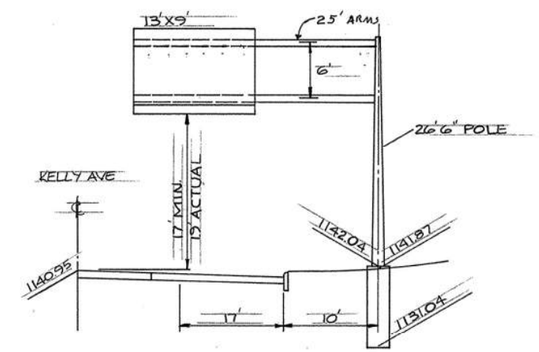

13'X9' = 117 FT²

NO. OF BRACKETS: 3

NO. OF LUMINAIRES: 2 @ 175 W

CONCRETE: 2.9 CU. YD.

SHEET 81 SIGN #3

STA. 48+35 LT. SR 93

OVERHEAD SIGN SUPPORT TC-9.30 DES. 2 TUBE 4 ARMS @ 9'

4 ARMS @ 10', AS PER PLAN

N.B. ON SR. 93

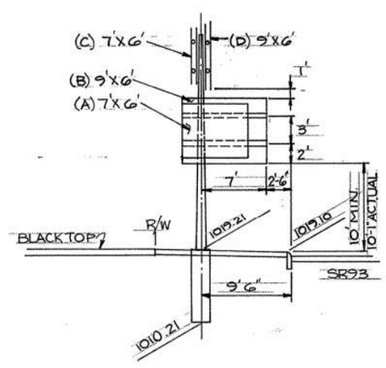

WB ON WATERLOO RD.

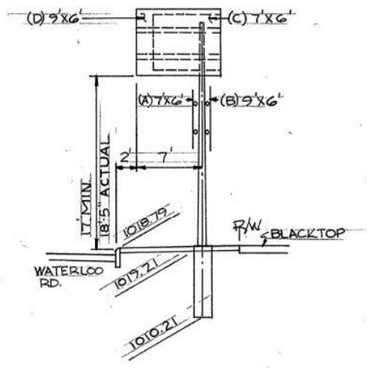

(A) 7'X6' = 42 FT²
SPACING: 6, 72, 6
NO. OF BRACKETS: 2
NO. OF LUMINAIRES: @100W

(B) 9'X6' = 54 FT²
SPACING: 10 3/8, 87 1/4, 10 3/8
NO. OF BRACKETS: 2
NO. OF LUMINAIRES: 1@175W

(C) 7'X6' = 42 FT²
SPACING: 6, 72, 6
NO. OF BRACKETS: 2
NO. OF LUMINAIRES: 1@100W

(D) 9'X6' = 54 FT²
SPACING: 10 3/8, 87 1/4, 10 3/8
NO. OF BRACKETS: 2
NO. OF LUMINAIRES: 1@175W

CONCRETE: 2.4 CU. YD.

SHEET 81 SIGN #15

STA. 173+10 RT

WATERLOO R.D.

OVERHEAD SIGN SUPPORT TC-12.30 DES. 6, 26' ARM

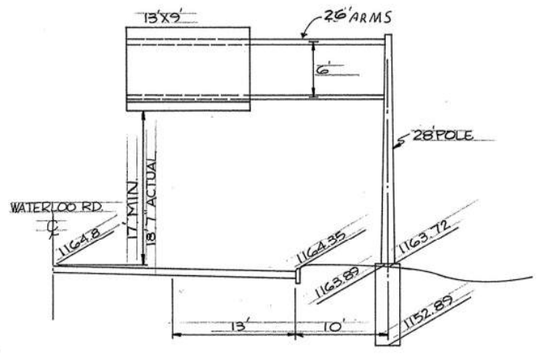

13'X9' = 117 FT²

NO. OF BRACKETS: 3

NO. OF LUMINAIRES: 2 @ 175 W

CONCRETE: 2.9 CU. YD.

NOTE: SIGN SIZE INCLUDES GLARE SHIELDS

*: SIGN AREA INCLUDES EXIT NUMBER SIGN

SIGN ELEVATIONS

526049

PAVEMENT MARKING SUB-SUMMARY

F.H.W.A. REGION	STATE	PROJECT NO.	FUNDS
5	OHIO		

90 196

SUM-277/224-0.00/6.31/10.22

COMPLETED BY ____ DATE ____
CHECKED BY ____ DATE ____

LOCATION	SIDE	STATION FROM	STATION TO	EDGE LINES, YELLOW	EDGE LINES, WHITE	LANE LINES, 4 INCH	CENTER LINES, DOUBLE SOLID		CHANNELIZING LINES	STOP LINES	TRANSVERSE LINES, YELLOW	TRANSVERSE LINES, WHITE	CURB MARKING	ISLAND MARKING	LANE ARROWS	WORD ON PAVEMENT 96 INCH, "ONLY"	
				LIN.FT.	LIN.FT.	LIN.FT.	LIN.FT.		LIN.FT.	LIN.FT.	LIN.FT.	LIN.FT.	LIN.FT.	SQ.FT.	EACH	EACH	
SHEET NO.	92																
IR 277	RT/LT	59+00	214+25	310.50													
IR 277	RT	59+00	69+10		1010												
IR 277	RT	59+00	69+10			1010											
RAMP B	LT	7+70	10+00						230								
RAMP B	RT	7+70	10+00		230												
IR 277	RT	69+10	115+00			9180											
IR 277	RT	69+10	107+20		3810												
IR 277	LT	105+75	108+80			305											
RAMP E	RT	0+00	7+40		740												
RAMP E	LT	1+45	2+75						260								
RAMP E	LT	1+45	2+75									94					
RAMP E	LT	2+75	7+40	465													
IR 277	RT	110+10	115+00		490												
IR 277	LT	59+00	76+10		1710												
IR 277	LT	59+00	80+30			2130											
RAMP D	LT.	76+10	78+30						440								
RAMP D	LT	76+10	78+30									198					
RAMP D	LT	2+25	2+90	65													
RAMP D	RT	0+00	2+90		290												
IR 277	LT	78+30	80+30						200								
IR 277	LT	78+30	110+90		3260												
IR 277	LT	80+30	115+00			6940											
RAMP F	LT	105+50	111+40			590											
RAMP F	LT	111+40	113+30						190								
RAMP F	LT	111+40	115+00		360												
RAMP F	RT	0+00	4+30		430												
RAMP F	LT	2+40	4+30	190													
SHEET NO	93																
IR 277	RT	115+00	144+60		2960												
IR 277	LT	115+00	138+50		2350												
IR 277	RT/LT	115+00	145+00			12000											
RAMP F	RT/LT	4+30	12+50	820	820												
RAMP F	RT/LT	9+15	12+50	335	335												
RAMP E	RT/LT	7+40	11+50	410	410												
RAMP E	RT/LT	10+60	11+50	90	90												
RAMP E	RT	11+50								40							
RAMP G		12+50								50							
RAMP G		11+00	12+50						150								
RAMP G	RT	0+00	12+50		1250												
RAMP G	LT	3+70	12+50	880													
RAMP G	LT	1+75	3+70						195								
IR 277	LT	138+50	141+60						310								
IR 277	LT	139+60	141+60									181					
IR 277	LT	141+60	143+65			205											
IR 277	LT	143+65	145+00		135												
SUB TOTAL #1				34305	20680	32360			1975	90		473					

LOCATION	SIDE	STATION FROM	STATION TO	EDGE LINES, YELLOW	EDGE LINES, WHITE	LANE LINES, 4 INCH	CENTER LINES, DOUBLE SOLID		CHANNELIZING LINES	STOP LINES	TRANSVERSE LINES, YELLOW	TRANSVERSE LINES, WHITE	CURB MARKING	ISLAND MARKING	LANE ARROWS	WORD ON PAVEMENT 96 INCH, "ONLY"	
				LIN.FT.	LIN.FT.	LIN.FT.	LIN.FT.		LIN.FT.	LIN.FT.	LIN.FT.	LIN.FT.	LIN.FT.	SQ.FT.	EACH	EACH	
SHEET 93 CONT.																	
RAMP H	RT	0+50	13+70		1320												
RAMP H	LT	0+50	12+00	1150													
RAMP H	RT/LT	0+50	1+50	100	100												
RAMP H	LT	13+35	12+00						135								
RAMP H	LT	13+35	13+70			35											
SHEET NO.	94																
IR 277	RT/LT	145+00	175+00		6000												
IR 277	RT/LT	145+00	175+00			12000											
RAMP H	LT	13+70	15+75			205											
RAMP J-I	LT	14+60	17+60			300											
SHEET NO.	95																
IR 277	RT/LT	175+00	205+00			12000											
IR 277	RT	175+00	176+70		170												
IR 277	RT	175+10	177+90			280											
RAMP K-2	RT	0+00	10+96.93		109693												
RAMP K-2	LT	2+60	10+96.93	836.93													
RAMP K OFF	RT/LT	0+50	5+44.55	494.55	494.55												
RAMP K ON	RT	0+00	5+44.55		544.55												
RAMP K ON	LT	0+60	2+70	210													
RAMP K ON	RT	0+50	2+70		220												
RAMP K-1	RT	5+44.55	14+65		920.45												
RAMP K-1	LT	5+44.55	12+65	720.45													
RAMP K-1	LT	12+65	14+65						200								
RAMP K-2	LT	1+20	2+60						140								
RAMP K-2	LT	1+20	2+60									126					
IR-277	RT	177+90	180+30						240								
IR-277	RT	180+30	190+40		1010												
IR-277	RT	190+40	192+50			210											
IR-277	RT	190+40	205+00		1460												
IR-277	LT	175+00	185+20		1020												
RAMP J-I	RT	4+19.13	14+60		1040.87												
RAMP J-I	LT	12+65	14+60						195								
RAMP J-I	LT	4+19.13	12+65	845.87													
RAMP J ON	RT/LT	0+50	4+19.13	369.13	369.13												
RAMP J OFF	RT/LT	0+50	4+19.13	369.13	369.13												
RAMP J OFF		0+50	2+00						150								
RAMP J-2	RT	0+00	8+39.67		839.67												
RAMP J-2	LT	2+60	8+39.67	579.67													
RAMP J-2	LT	1+05	2+60						155								
RAMP J-2	LT	1+05	2+60									140					
IR 277	LT	185+20	187+70						250								
IR 277	LT	187+70	190+20			250											
IR 277	LT	188+75	205+00		1625												
RAMP 'K' OFF	LT	0+50	2+00						150								
SUB TOTAL #2				5675.73	18600.28	25280			1615			266					

PAVEMENT MARKING SUB-SUMMARY

F.H.W.A. REGION	STATE	PROJECT NO.	FUNDS
5	OHIO		

SUM-277/224-0.00/6.31/10.22

91
196

COMPLETED BY ____ DATE ____
CHECKED BY ____ DATE ____

LOCATION	SIDE	STATION FROM	STATION TO	EDGE LINES, YELLOW	EDGE LINES, WHITE	LANE LINES, 4 INCH	CENTER LINES, DOUBLE SOLID		CHANNELIZING LINES	STOP LINES	TRANSVERSE LINES, YELLOW	TRANSVERSE LINES, WHITE	CURB MARKING	ISLAND MARKING	LANE ARROWS	WORD ON PAVEMENT 96 INCH, "ONLY"	
				LIN.FT.	LIN.FT.	LIN.FT.	LIN.FT.		LIN.FT.	LIN.FT.	LIN.FT.	LIN.FT.	LIN.FT.	SQ.FT.	EACH	EACH	
SHEET NO	96																
IR 277	RT/LT	205+00	228+00		4600												
IR 277	RT/LT	205+00	228+00			9200											
IR 277	RT/LT	222+59.78	230+00		1480.44												
IR 277	RT/LT	222+59.78	230+00			2960.88											
SHEET NO.	97																
IR 277	RT	230+00	241+75		1175												
IR 277	RT	230+00	258+10			5620											
RAMP M	RT	0+00	14+90		1490												
RAMP M	LT	0+00	2+00			200											
RAMP M	LT	2+00	4+25						450			203					
RAMP M	LT	4+25	14+90	1065													
IR 277	RT	245+00	258+10		1310												
RAMP N	RT	0+00	15+45		1545												
RAMP N	LT	1+40	3+50						210			189					
RAMP N	LT	1+40	4+50						310								
RAMP N	LT	3+50	15+45	1195													
IR 277	RT	258+10	265+00			690											
IR 277	RT	261+20	265+00		380												
RAMP R-2	RT/LT	5+18	15+00	982	982												
RAMP L-2	LT	4+00	25+00	2100													
RAMP L-2	RT	4+00	15+40		1140												
RAMP L	LT	4+68	13+40	872													
RAMP L	RT	4+68	26+65		2197												
RAMP L	LT	22+80	25+60						280								
RAMP L	LT	25+60	26+65			105											
IR 277	LT	230+00	249+60			1960											
IR 277	LT	231+10	247+50		1640												
RAMP L-1	LT	1+45	3+50						410			185					
RAMP L-1	RT	0+00	15+86		1586												
RAMP L-1	LT	3+50	15+86	1236													
IR 277	LT	249+60	265+00			3080											
IR 277	LT	251+10	263+00		1190												
RAMP P	LT	3+25	4+25						100			90					
RAMP P	LT	3+25	5+25						200								
RAMP P	RT	3+25	19+40		1615												
RAMP P	LT	4+25	19+40	1515													
SHEET NO.	98																
IR 277	RT	265+00	275+85		1085	1085											
RAMP R-1	RT	5+25	27+80		2255												
RAMP R-1	LT	5+25	17+10	1185													
RAMP R-2	RT	15+00	17+75		275												
RAMP R2	LT.	15+00	26+75	1175													
IR 277	RT	275+85	291+60		1575	2150											
SUBTOTAL # 3				11325	27520.44	27050.88			1960			667					

LOCATION	SIDE	STATION FROM	STATION TO	EDGE LINES, YELLOW	EDGE LINES, WHITE	LANE LINES, 4 INCH	CENTER LINES, DOUBLE SOLID		CHANNELIZING LINES	STOP LINES	TRANSVERSE LINES, YELLOW	TRANSVERSE LINES, WHITE	CURB MARKING	ISLAND MARKING	LANE ARROWS	WORD ON PAVEMENT 96 INCH, "ONLY"	
				LIN.FT.	LIN.FT.	LIN.FT.	LIN.FT.		LIN.FT.	LIN.FT.	LIN.FT.	LIN.FT.	LIN.FT.	SQ.FT.	EACH	EACH	
SHEET CONT.	98																
RAMP 92	RT	291+60	301+14		954												
RAMP 92	LT	291+60	293+60						400			120					
RAMP 92	LT	293+60	301+14	754													
RAMP 9	RT/LT	291+00	295+25	425	425												
RAMP 9-3	RT	290+40	295+25		485												
RAMP 9-3	LT	290+40	292+60	220													
RAMP 9-3	RT	291+00	292+60		160												
RAMP 9-3	LT	291+00	295+25	425													
RAMP 9-1	RT	295+25	305+75		1050												
RAMP 9-1	LT	295+25	302+00	675													
RAMP 9-1	LT	302+00	303+50						150								
RAMP 9-1	LT	303+50	305+75			225											
IR 277	RT	293+60	302+00		840												
IR 277	RT	291+60	314+25			2265											
IR 277	RT	305+75	314+25		850												
IR 277	LT	265+00	290+20			5040											
RAMP P	LT	2+00	3+25						250			75					
RAMP P	RT	0+00	3+25		325												
RAMP P	LT	0+00	2+00			200											
IR 277	LT	268+20	290+20		2200												
RAMP T	RT	0+50	14+80		1430												
RAMP T	LT	11+00	14+80						380								
RAMP T	LT	0+50	11+00	1050													
RAMP U		304+60								50							
RAMP U		304+60	306+60						200								
RAMP U	LT	304+90													1		
RAMP U	LT	305+75														1	
RAMP U	LT	306+50													1		
RAMP U	LT	304+60	310+50	590													
RAMP U	RT	304+60	314+25		965												
RAMP U	LT	310+50	312+30						360			216					
RAMP U	LT	312+30	314+00			170											
IR 277	LT	290+20	314+25			2405											
IR 277	LT	290+20	310+50		2030												
SUBTOTAL #4				4139	11714	10305			1740	50		411			2	1	
SUBTOTAL #3				11325	27520.44	27050.88			1960			667					
SUBTOTAL #2				5675.73	18600.28	25280			1615			2666					
SUBTOTAL #1				34305	20680	32360			1975	90		473					
TOTAL				55445	78515	94996			7290	140		1817			2	1	
				10.50 MI	14.87 MI	17.99 MI											

FHWA REGION	STATE	PROJECT NO.	FUNDS
5	OHIO		

SUM-277/224-0.00/6.31/10.22

92/196

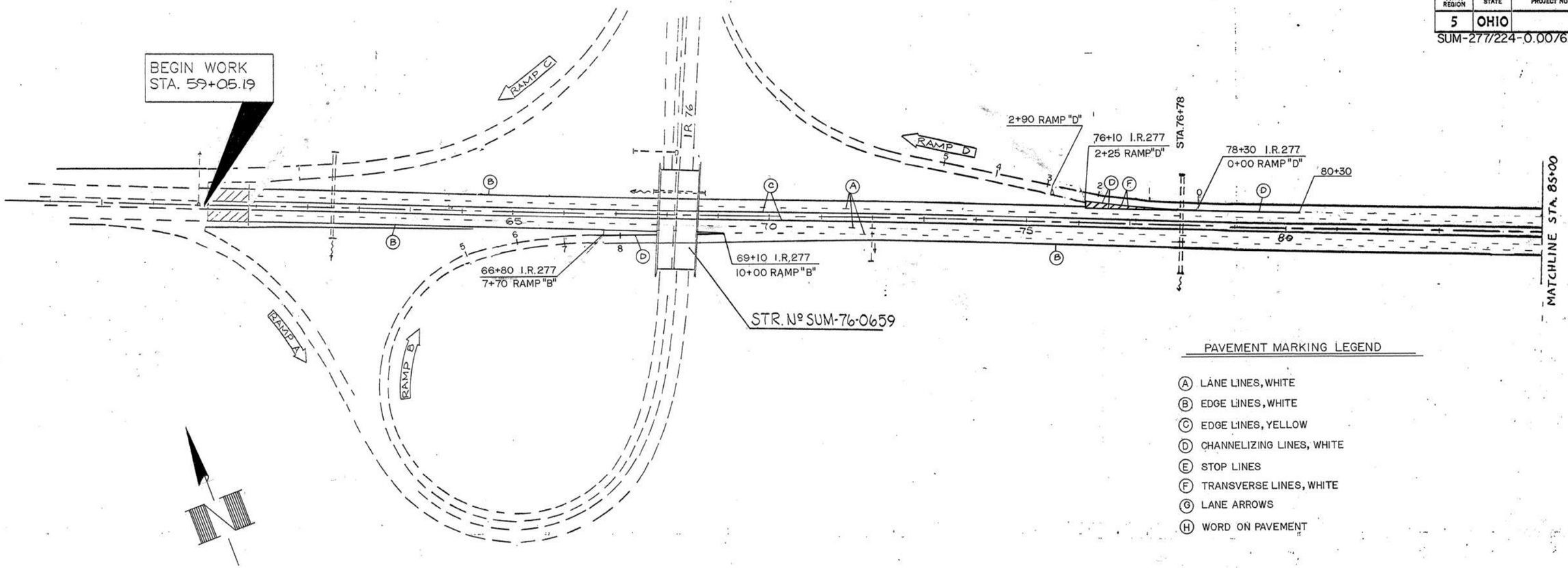

PAVEMENT MARKING LEGEND

- (A) LANE LINES, WHITE
- (B) EDGE LINES, WHITE
- (C) EDGE LINES, YELLOW
- (D) CHANNELIZING LINES, WHITE
- (E) STOP LINES
- (F) TRANSVERSE LINES, WHITE
- (G) LANE ARROWS
- (H) WORD ON PAVEMENT

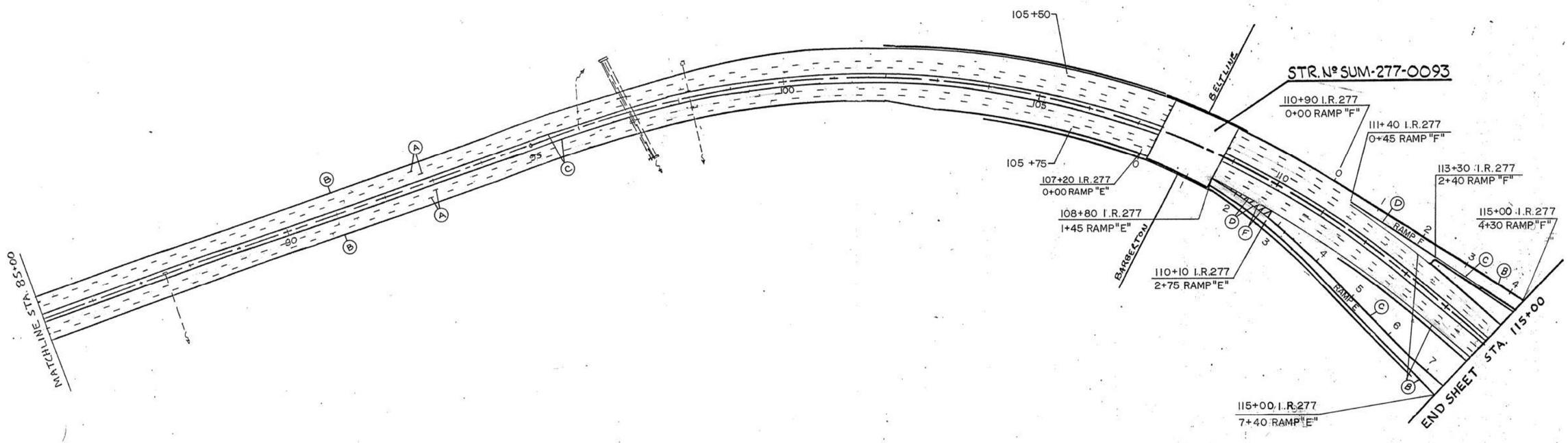

BEGIN WORK STA. 59+00 TO STA. 115+00

FHWA REGION	STATE	PROJECT NO.	FUNDS
5	OHIO		

SUM-277/224-0.00/6.31/10.22

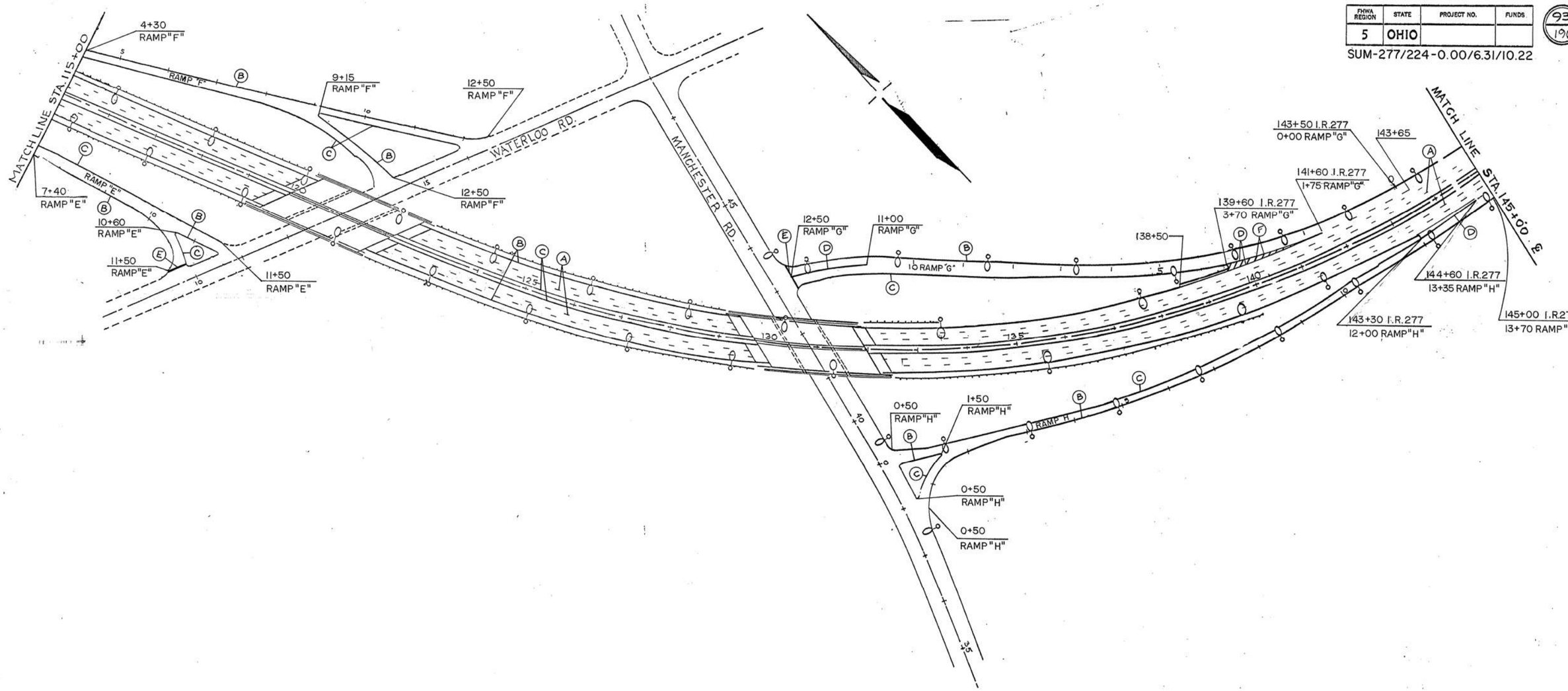

FOR PAVEMENT MARKING LEGEND SEE SHEET 92

STA. 115+00 TO 145+00

FHWA REGION	STATE	PROJECT NO.	FUNDS
5	OHIO		

SUM-277/224-0.00/6.31/10.22

94
196

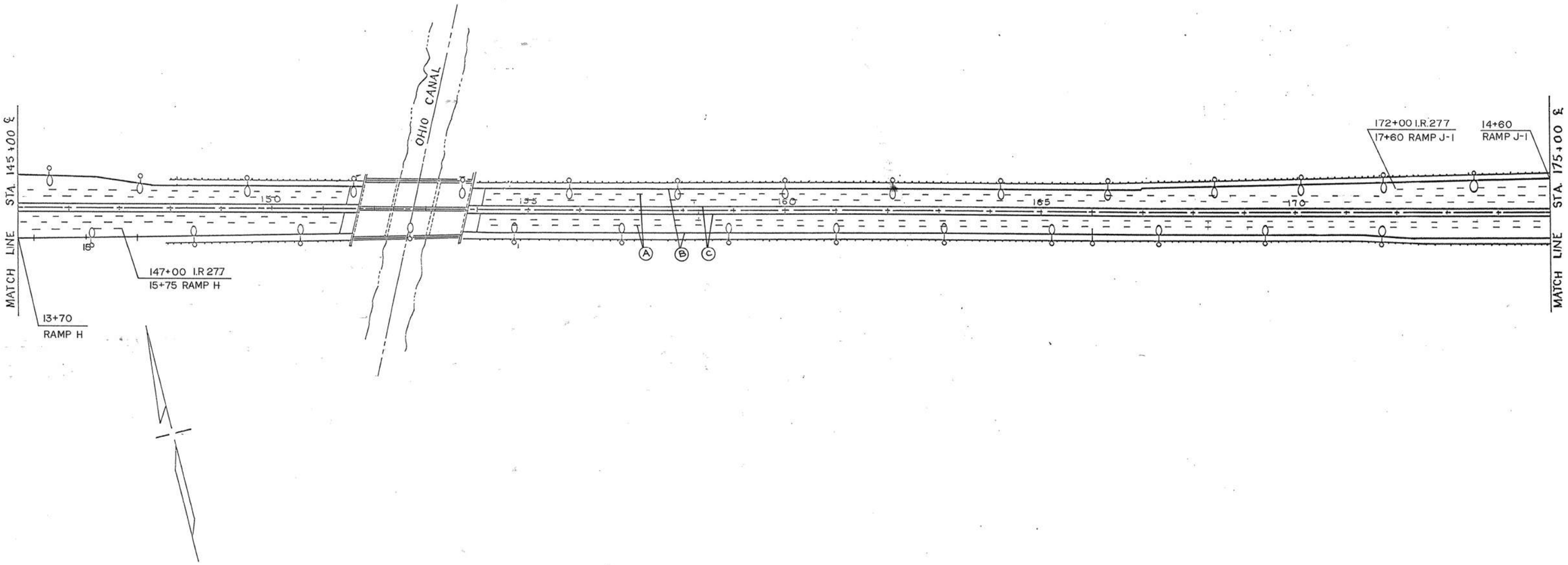

FOR PAVEMENT MARKING LEGEND SEE SHEET 92.

STA. 145+00 TO STA. 175+00

FHWA REGION	STATE	PROJECT NO.	FUNDS
5	OHIO		

SUM-277/224-0.00/6.31/10.22

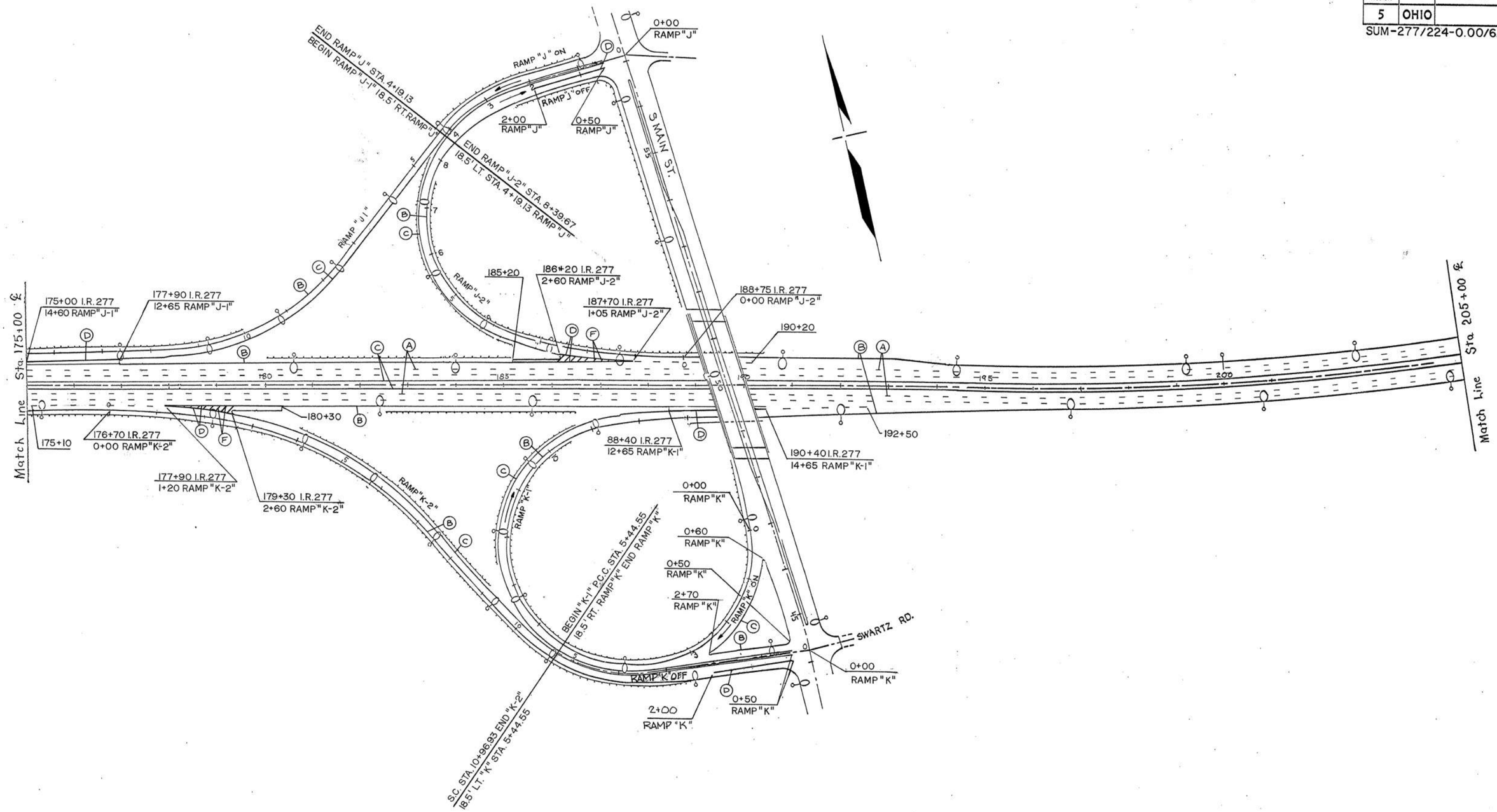

FOR PAVEMENT MARKING LEGEND SEE SHEET 92.

STA. 175+00 TO STA. 205+00

FHWA REGION	STATE	PROJECT-NO.	FUNDS
5	OHIO		

SUM-277/224-0.00/6.31/10.22

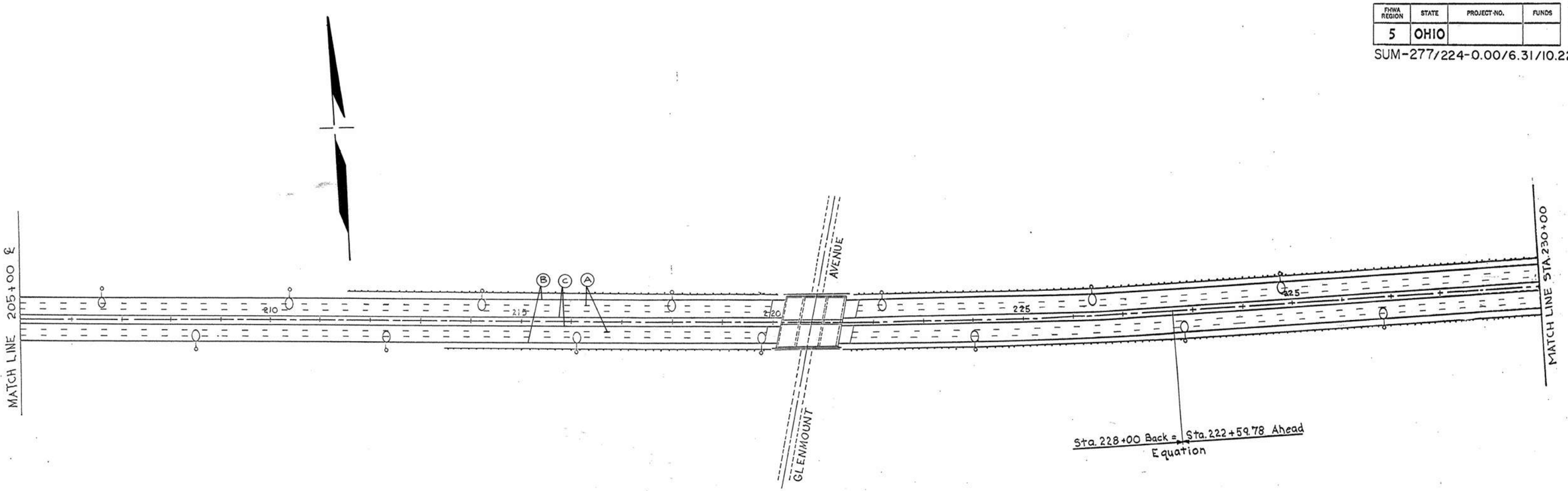

FOR PAVEMENT MARKING LEGEND SEE SHEET 92.

STA. 205+00 TO STA. 230+00

FHWA REGION	STATE	PROJECT NO.	FUNDS
5	OHIO		

SUM-277/224-0.00/6.31/10.22

97/196

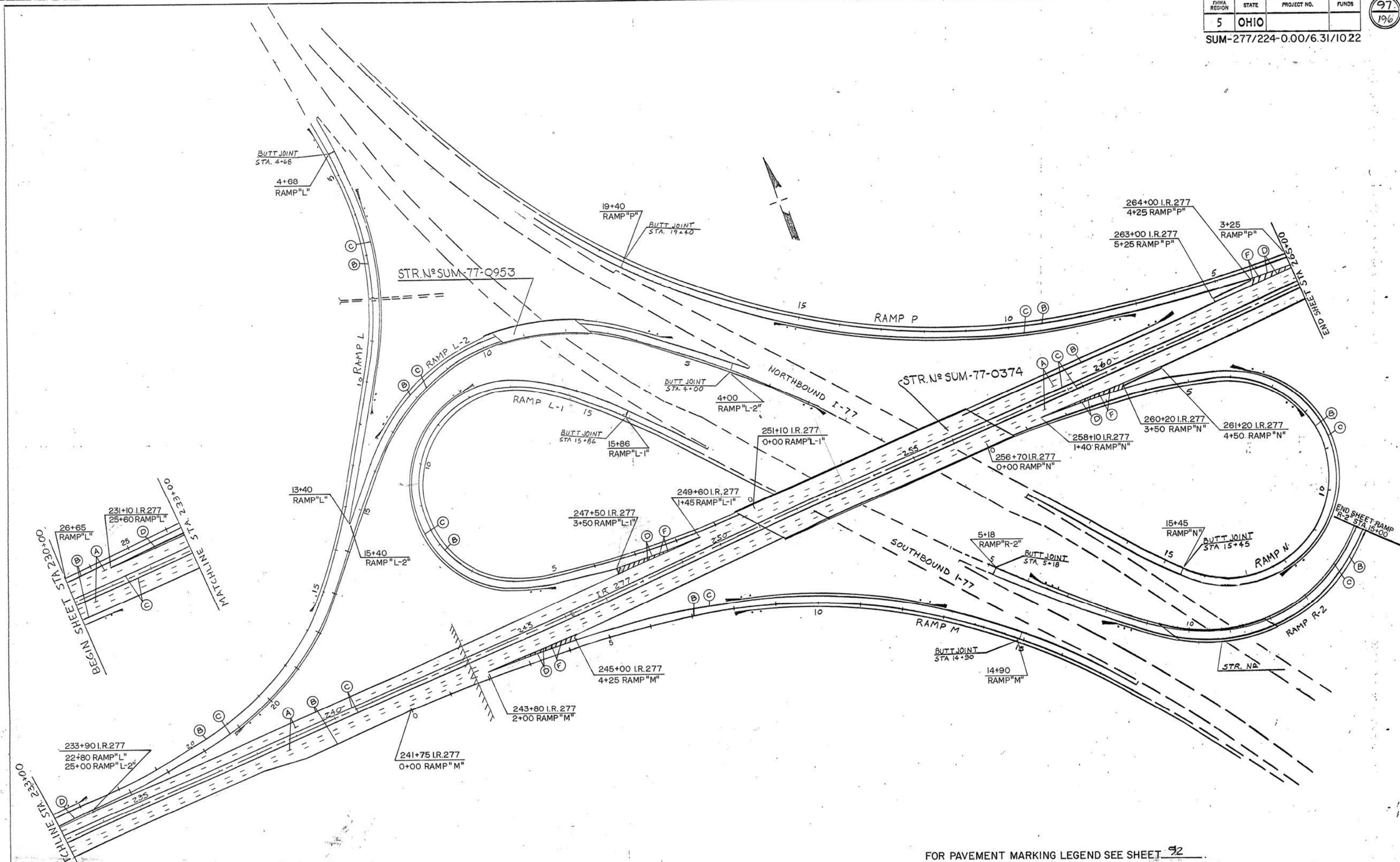

FOR PAVEMENT MARKING LEGEND SEE SHEET 92.

STA 230+00 TO STA 265+00

F.H.W.A. REGION	STATE	PROJECT	
5	OHIO		

SUM-277/224-0.00/6.31/10.22

98
1/96

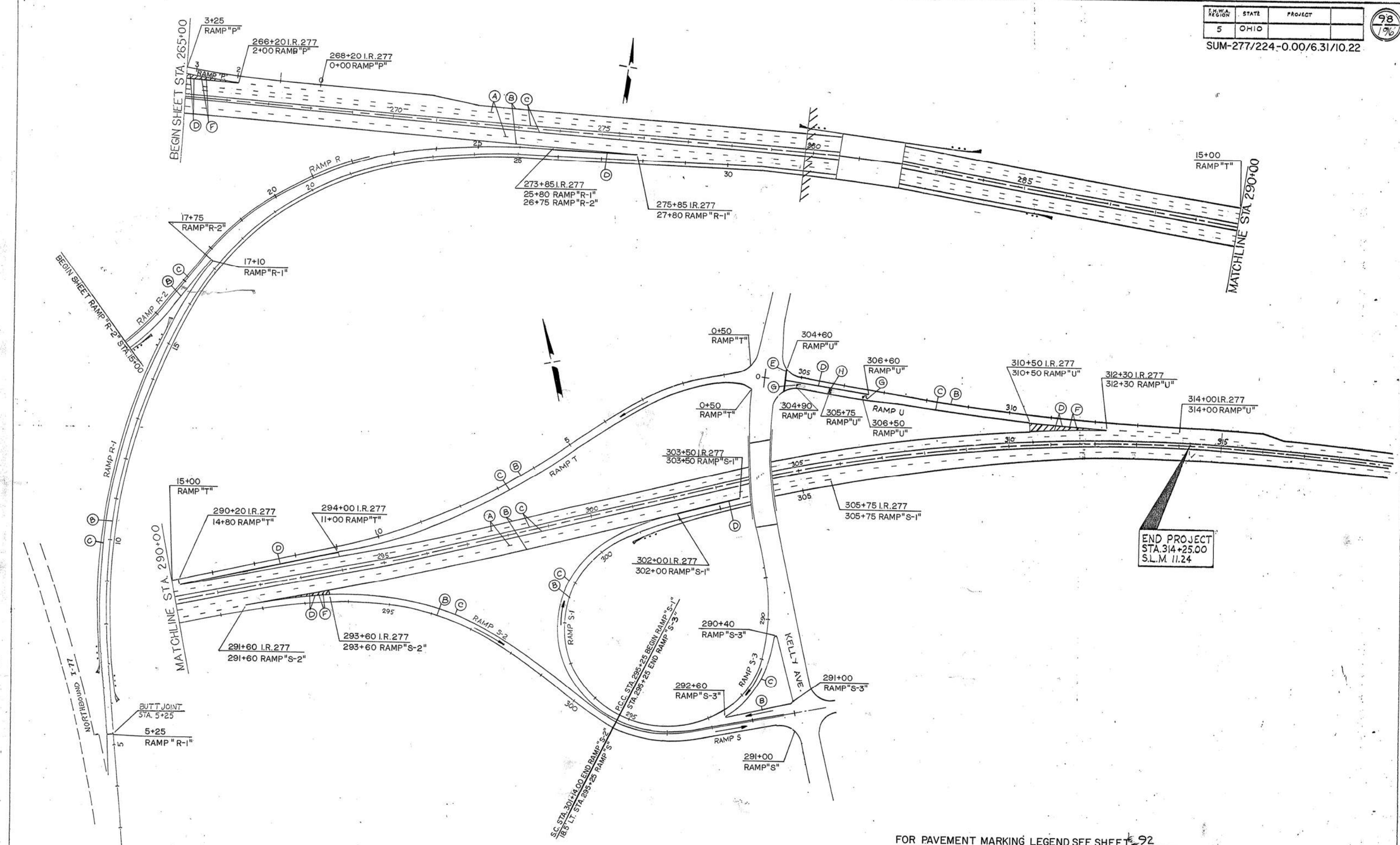

FOR PAVEMENT MARKING LEGEND SEE SHEET 92

STA. 265+00 TO END PROJECT STA. 314+25.00

LIGHTING GENERAL NOTES

POWER SERVICE

THE POWER SUPPLYING AGENCY FOR THIS PROJECT IS OHIO EDISON COMPANY, III CASCADE PLAZA, AKRON, OHIO 44308 (216) 384-5095.

ELECTRICAL ENERGY FROM EXISTING POWER SERVICES SHALL CONTINUE TO BE CHARGED TO THE MAINTAINING AGENCY. THE CONTRACTOR SHALL PAY ELECTRICAL ENERGY FOR NEW POWER SERVICES ESTABLISHED BY THIS PROJECT. UPON COMPLETION OF THIS PROJECT,POWER SERVICE ELECTRICAL ENERGY ACCOUNTS SHALL BE TRANSFERRED TO THE MAINTAINING AGENCIES NOTED IN THE PLANS. THIS SHALL INCLUDE NEW POWER SERVICE ESTABLISHED BY THIS PROJECT AS WELL AS REASSIGNMENT OF THE EXISTING SERVICE DUE TO WORK PERFORMED BY THIS PROJECT.

625.07-713.11 LUMINAIRES

STYLE C LUMINAIRES SHALL HAVE SINGLE RATED 480 VOLT, 400 WATT, INTEGRAL REGULATORS BALLASTS FOR USE WITH HIGH PRESSURE SODIUM LAMPS AND SHALL BE GENERAL ELECTRIC M1000, CROUSE-HIND OVL AMERICAN 327/328 OR EQUAL APPROVED BY THE ENGINEER.

STYLE B LUMINAIRES SHALL HAVE SINGLE RATED 240 VOLT, 200 WATT, INTEGRAL REGULATOR BALLASTS FOR USE WITH HIGH PRESSURE SODIUM LAMPS & SHALL BE GENERAL ELECTRIC M-400, CROUSE-HIND OVM, AMERICAN 25/26, OR EQUAL APPROVED BY THE ENGINEER.

713.14 LAMPS

HIGH PRESSURE SODIUM LAMPS SHALL BE GENERAL ELECTRIC "LUCALOX", PHILIPS "CERAMALUX", SYLVANIA "LUMALUX", OR EQUAL APPROVED BY THE ENGINEER.

625.07-713.13 UNDERPASS LUMINAIRES

UNDERPASS LUMINAIRES SHALL BE HOLOPHANE "UNDERPASS WALLPACK" CROUSE-HINDS WA, OR GENERAL ELECTRIC W 175 L UNDERPASS UNIT OR EQUAL APPROVED BY THE ENGINEER, AND SHALL BE FURNISHED WITH AN INTEGRAL FUSE HOLDER AND 10-AMPERE FUSE. THE INTEGRAL HIGH PRESSURE SODIUM BALLAST SHALL BE OF A REGULATOR TYPE RATED FOR 120 VOLTS,100 WATTS.

ITEM SPECIAL - MAINTAIN EXISTING LIGHTING

EXISTING ROADWAYS WHICH ARE TO REMAIN OPEN TO TRAFFIC DURING CONSTRUCTION OF THIS PROJECT AND WHICH ARE LIGHTED SHALL HAVE THE LIGHTING MAINTAINED AS DESCRIBED HEREIN. BEFORE ANY WORK IS STARTED IN THE IMMEDIATE VICINITY OF ANY EXISTING LIGHTING CIRCUITS, REPRESENTATIVES OF THE STATE, THE MAINTAINING AGENCY, AND THE CONTRACTOR SHALL MAKE A VISUAL INSPECTION OF THE EXISTING ROADWAY LIGHTING CIRCUITS TO BE MAINTAINED. DURING THIS INSPECTION, A WRITTEN RECORD OF THE CONDITION OF THE EXISTING LIGHTING SHALL BE MADE BY THE STATE'S REPRESENTATIVE. THIS WRITTEN REPORT SHALL NOTE INDIVIDUAL LUMINAIRES WHICH ARE NOT IN WORKING ORDER, INDIVIDUAL POLES WHICH ARE NOT STANDING, AND INDIVIDUAL CIRCUITS WHICH ARE NOT IN WORKING ORDER. THE COMPLETED REPORT SHALL BE SIGNED BY THE REPRESENTATIVES OF THE STATE, THE MAINTAINING AGENCY, AND THE CONTRACTOR. IF, AS A RESULT OF THIS INSPECTION, IT IS DETERMINED THAT THE CONDITION OF THE EXISTING SYSTEM IS BELOW THAT REQUIRED FOR THE SAFETY OF THE TRAVELING PUBLIC, THEN THE MAINTAINING AGENCY SHALL

ITEM SPECIAL--MAINTAIN EXISTING LIGHTING CONT'D

MAKE REPAIRS NECESSARY TO RETURN THE SYSTEM TO AN ACCEPTABLE CONDITION. FOLLOWING THESE REPAIRS, THE SYSTEM SHALL AGAIN BE INSPECTED AND A REPORT MADE AND SIGNED AS OUTLINED HEREIN. WHEN THE EXISTING SYSTEM IS IN AN ACCEPTABLE CONDITION, IT SHALL BE TURNED OVER TO THE CONTRACTOR WHO SHALL THEN BE REQUIRED TO MAINTAIN THE EXISTING LIGHTING TO THE CONDITION OUTLINED IN THIS REPORT WITH THE EXCEPTION OF KNOCKDOWNS DUE TO TRAFFIC ACCIDENTS. REPLACEMENT OF KNOCKED DOWN UNITS SHALL BE DONE ONLY WHEN THE ENGINEER HAS DETERMINED THAT THE REPLACEMENT OF THE KNOCKED DOWN UNIT IS NECESSARY AND SHALL BE PAID SEPARATELY ON UNIT BASIS. BETTERMENTS SHALL BE COVERED IN ITEMS OF WORK PERTAINING TO THE CONSTRUCTION OF PERMANENT IMPROVEMENTS. SHOULD THE CONTRACTOR DESIRE THE REMOVAL OF THE EXISTING LIGHTING BEFORE THE NEW LIGHTING IS OPERATIONAL,THE CONTRACTOR SHALL THEN BE RESPONSIBLE FOR ADEQUATE TEMPORARY LIGHTING OF THAT PORTION OF THE EXISTING ROADWAY AFFECTED BY THE REMOVAL OF THE EXISTING LIGHTING. PRIOR TO INSTALLING SUCH LIGHTING, THE CONTRACTOR SHALL PREPARE AND SUBMIT FOUR (4) SETS OF THE TEMPORARY LIGHTING PLAN TO THE DIRECTOR FOR REVIEW AND APPROVAL. THIS PLAN SHALL SHOW LOCATION OF POLES, LENGTH OF BRACKET ARMS,STYLE OF LUMINAIRES, MOUNTING HEIGHT, WIRING METHODS, AND OTHER PERTINENT INFORMATION. THE TEMPORARY LIGHTING SHALL PROVIDE AN AVERAGE INITIAL INTENSITY OF 1.2 FOOTCANDLES WITH AN AVERAGE TO MINIMUM UNIFORMITY NOT TO EXCEED 4:1. MOUNTING HEIGHT FOR TEMPORARY LUMINAIRES SHALL NOT BE LESS THAN 27 FEET AND MINIMUM OVERHEAD CONDUCTOR CLEARANCE SHALL BE 20 FEET. TEMPORARY OVERHEAD CONSTRUCTION SHALL NOT BE LESS THAN GRADE "A" FOR STRENGTH REQUIREMENT AS DEFINED BY THE NATIONAL ELECTRIC SAFETY CODE. WOOD POLES WITH OVERHEAD WIRING MAY BE USED. HOWEVER, TEMPORARY LIGHTING SHALL MEET FEDERAL AND STATE SAFETY CRITERIA. IF BREAKAWAY POLES ARE USED TO MEET THESE CRITERIA, THEN UNDERGROUND WIRING WILL BE USED. RECONDITIONED OR USED MATERIALS MAY BE FURNISHED FOR TEMPORARY LIGHTING. ALL MATERIALS NECESSARY TO COMPLETE THE TEMPORARY LIGHTING SHALL BE FURNISHED AND INSTALLED BY THE CONTRACTOR. WHEN NO LONGER NEEDED, THE TEMPORARY LIGHTING INSTALLATION SHALL BE REMOVED AND PROPERLY DISPOSED OF BY THE CONTRACTOR. THE MAINTAINING AGENCY WILL PAY FOR ELECTRICAL ENERGY, INSTALLATION REMOVAL, AND MAINTENANCE OF ANY TEMPORARY POWER SERVICES. THE LUMP SUM BID PRICE FOR ITEM SPECIAL "MAINTAIN EXISTING LIGHTING" SHALL INCLUDE PAYMENT FOR ALL LABOR, EQUIPMENT, MATERIALS,AND INCIDENTALS NECESSARY TO MAINTAIN THE EXISTING LIGHTING AS SPECIFIED HEREIN. THE UNIT BID PRICE FOR ITEM "625 REPLACEMENT OF EXISTING LIGHTING UNIT SHALL BE FULL PAYMENT FOR THE REPLACEMENT OF AN EXISTING UNIT WHICH HAS BEEN KNOCKED DOWN AFTER THE AFORMENTIONED INSPECTION AND SHALL INCLUDE ALL LABOR, EQUIPMENT, MATERIALS, AND INCIDENTALS NECESSARY TO PROVIDE A REPLACEMENT FOR SUCH UNIT. THE FOLLOWING QUANTITY HAS BEEN INCLUDED IN THE LIGHTING GENERAL SUMMARY FOR USE AS DIRECTED BY THE ENGINEER.

ITEM 625 "REPLACEMENT OF EXISTING LIGHTING UNIT" __8__ EACH

UNDERDRAINS FOR PULLBOXES

REFERENCE IS MADE TO STANDARD DRAWING HL-30.11 FOR DETAILS OF DRAINING PULL BOXES, UNDERDRAINS FOR PULL BOXES SHALL BE USED AS DIRECTED BY THE ENGINEER AND SHALL BE PROVIDED WHERE THE LENGTH REQUIRED FOR A SATISFACTORY OUTLET DOES NOT EXCEED APPROXIMATELY 40 FEET. AN ESTIMATED QUANTITY OF"1200 LINEAR FEET OF ITEM 603, 4 INCH CONDUIT TYPE E"IS INCLUDED IN THE LIGHTING GENERAL SUMMARY FOR THIS PURPOSE.

PADLOCKS AND KEYS

PADLOCKS FURNISHED SHALL BE EITHER BRASS OR BRONZE, EQUAL TO MASTER NO. 4BKA OR WILSON BOHANNON 660A,OR EQUAL AS APPROVED BY THE ENGINEER, AND SHALL BE KEYED IN ACCORDANCE WITH SPECIFICATION 631.08 PARAGRAPH 3. PAYMENT SHALL BE INCLUDED IN THE BID FOR THE ITEM(S) BEING LOCKED

UTILITIES NOTIFICATION

AT LEAST THREE (3) WORKING DAYS PRIOR TO COMMENCING CONSTRUCTION OPERATIONS IN ANY AREA WHICH MAY INVOLVE UNDERGROUND FACILITIES, THE CONTRACTOR SHALL NOTIFY THE PROJECT ENGINEER, THE REGISTERED UNDERGROUND UTILITY PROTECTION SERVICES AND THE OWNERS OF ALL UNDERGROUND UTILITY FACILITIES SHOWN IN THE PLAN. AFTER NOTICE IS RECEIVED, THE OWNER OF ANY UNDERGROUND UTILITY FACILITY THAT IS TO REMAIN IN SERVICE DURING AND/OR AFTER CONSTRUCTION SHALL WITHIN 48 HOURS, EXCLUDING SATURDAYS, SUNDAYS AND LEGAL HOLDAYS, STAKE, MARK OR OTHERWISE DESIGNATE THE LOCATION OF THE UNDERGROUND FACILITIES IN THE CONSTRUCTION AREA IN SUCH A MANNER AS TO INDICATE THEIR COURSE TOGETHER WITH THE APPROXIMATE DEPTH AT WHICH THEY WERE INSTALLED. THE MARKINGS OR LOCATION SHALL BE COORDINATED TO STAY APPROXIMATELY TWO (2) DAYS AHEAD OF THE PLANNED CONSTRUCTION.

UNDERGROUND UTILITIES

THE LOCATIONS OF THE UNDERGROUND UTILITIES SHOWN ON THE PLANS ARE AS OBTAINED FROM THE OWNERS OF THE UTILITIES AS REQUIRED BY SECTION 153.64 ORC.

POLE IDENTIFICATION

ALL EXISTING LIGHT POLES THAT ARE TO BE REUSED AND RE-ERECTED SHALL BE RELABELED TO CORRESPOND TO THE POLE NUMBER SHOWN IN THE PLANS IF THE EXISTING POLE NUMBER DOES NOT MATCH THE PROPOSED NUMBER.
RELABELING SHALL CONFORM TO 625.23.
THE COST OF THIS WORK SHALL BE INCIDENTAL TO THE ITEMS BID.

COOPERATION BETWEEN CONTRACTORS

THE CONTRACTORS SHALL BE ADVISED THAT OTHER PROJECTS MAY BE ONGOING IN AREAS IMMEDIATELY ADJACENT TO AND WITHIN THE PROJECT LIMITS OF THIS PROJECT. THE CONTRACTOR SHALL SCHEDULE HIS WORK SO AS TO CAUSE A MINIMUM OF DELAY OR CONFLICT WITH THE OTHER PROJECT OR PROJECTS. IN ACCORDANCE WITH 105.07 THE CONTRACTOR SHALL ARRANGE WITH THE OTHER CONTRACTORS, A MUTUALLY ACCEPTABLE WORK SCHEDULE, SUBJECT TO THE APPROVAL OF THE ENGINEER. THE CONTRACTOR SHALL RECEIVE DAILY APPROVAL FROM THE ENGINEER PRIOR TO COMMENCING ANY OPERATIONS. ANY CONFLICT BETWEEN CONTRACTORS INVOLVING WORK SCHEDULES, WORK AREA OR COOPERATION SHALL BE RESOLVED BY THE ENGINEER. COMPENSATION FOR THE ABOVE COOPERATION SHALL BE INCIDENTAL TO THE VARIOUS PAY ITEMS INCLUDED WITHIN THIS PROJECT.

ELECTRICAL SERVICE FOR ILLUMINATED SIGNS

THE PAY ITEMS IN THE LIGHTING GENERAL SUMMARY INCLUDE THE PULL BOX OR JUNCTION BOX ADJACENT TO EACH LIGHTED SIGN AND THE ELECTRICAL CONNECTIONS LEADING INTO THE BOX, INCLUDING SPLICES OR CONNECTOR KITS IN THE PULL BOX OR JUNCTION BOX. QUANTITIES FOR ELECTRICAL SERVICE FROM THE CONNECTION IN THE PULL BOX OR JUNCTION BOX TO THE SIGN ARE INCLUDED IN THE TRAFFIC CONTROL GENERAL SUMMARY.

F.H.W.A. REGION	STATE	PROJECT	
5	OHIO		

SUM-277/224-0.00/6.31/10.22

LIGHTING GENERAL NOTES

ITEM SPECIAL – DISCONNECT EXISTING CIRCUIT

THIS ITEM OF WORK SHALL CONSIST OF THE DISCONNECTION OF ANY EXISTING LIGHT CIRCUIT AT PULL BOX. DISCONNECTION AT A PULL BOX SHALL INVOLVE CUTTING THE EXISTING CIRCUIT AND REMOVING ALL SPLICE KITS. ANY CABLE THAT IS TO BE LEFT ABANDONED SHALL BE TERMINATED IN A MANNER SUCH THAT NO CABLE IS LEFT IN THE PULL BOX. ALL EXISTING CABLE THAT IS DISCONNECTED BY CUTTING, SHALL BE CUT IN A MANNER SO THAT THERE IS SUFFICIENT CABLE LEFT FOR RECONNECTION. PAYMENT SHALL BE MADE AT THE UNIT BID PRICE FOR EACH ITEM SPECIAL –"DISCONNECT EXISTING CIRCUIT" AND SHALL BE FULL COMPENSATION FOR ALL LABOR, MATERIAL AND INCIDENTALS REQUIRED TO COMPLETE THE DISCONNECTION IN A SATISFACTORY, WORKMANLIKE MANNER.

ITEM SPECIAL – CONDUIT CLEANED AND CABLE REMOVED

THIS ITEM SHALL CONSIST OF LOCATING AND CLEANING AN EXISTING CONDUIT OF ALL EXISTING CABLES, MUD AND DEBRIS SO THAT NEW CABLE MAY BE INSTALLED. INCIDENTAL TO THE CLEANING IS THE INSTALLATION OF BUSHINGS AND/OR COUPLINGS ON THE ENDS OF THE EXISTING CONDUIT AS REQUIRED. MATERIALS REMOVED SHALL BECOME PROPERTY OF THE CONTRACTOR AND SHALL BE DISPOSED OF OFF THE PROJECT SITE. DISTURBED AREAS SHALL BE PROPERLY RESTORED. PAYMENT SHALL BE MADE AT THE UNIT BID PRICE FOR EACH LINEAR FOOT OF ITEM SPECIAL–"CONDUIT CLEANED AND CABLE REMOVED" AND SHALL BE FULL COMPENSATION FOR ALL LABOR, MATERIALS AND INCIDENTALS REQUIRED TO COMPLETE THE WORK IN A SATISFACTORY WORKMANLIKE MANNER.

REMOVING AND REPLACING PULL BOXES

THE STATIONING SHOWN IN THE PLANS FOR PULL BOXES TO BE REMOVED AND REPLACED IS ONLY APPROXIMATE. IT IS THE INTENT OF THIS WORK THAT THE CONTRACTOR WILL CAREFULLY REMOVE THE EXISTING PULL BOX WITHOUT DISTURBING ANY EXISTING CONDUIT, GUARDRAIL, SIGN STRUCTURE, ETC..., AND INSTALL A NEW CONCRETE PULL BOX IN THE EXTRACTED PULL BOXES LOCATION. PAYMENT FOR ALL LABOR, MATERIALS AND EQUIPMENT NECESSARY TO REMOVE THE EXISTING PULL BOX AND REPLACE IT WITH A NEW CONCRETE PULL BOX SHALL BE PAID FOR AT THE CONTRACT UNIT PRICE EACH ITEM 202 PULL BOX REMOVED, AS PER PLAN AND EACH ITEM 625 PULL BOX CONCRETE, 18" 713.08.

ITEM SPECIAL – PLASTIC CAUTION TAPE

THE LOCATION OF UNDERGROUND DUCT CABLE OR NON–METALLIC CONDUIT, WHEN INSTALLED IN LOCATIONS OTHER THAN THE NORMAL OR ALTERNATE TRENCH ALIGNMENT SHOWN ON STANDARD CONSTRUCTION DRAWING HL– 20.11 SHALL BE MARKED BY THE USE OF A CONTINUOUS IDENTIFYING TAPE BURIED IN THE TRENCH ABOVE THE LINE. THE IDENTIFYING TAPE SHALL BE AN INERT MATERIAL, APPROXIMATELY 6" WIDE, COMPOSED OF POLYETHYLENE PLASTIC, HIGHLY RESISTANT TO ALKALIS, ACIDS OR OTHER CHEMICAL COMPONENTS LIKELY TO BE ENCOUNTERED IN SOILS. THE TAPE SHALL BE BRIGHT YELLOW WITH IDENTIFYING PRINTING "ELECTRIC" IN BLACK LETTERS, ONE SIDE ONLY. TAPES SHALL BE SUPPLIED IN CONTINUOUS ROLLS WITH THE IDENTIFYING LETTERING REPEATED CONTINUOUSLY THE FULL LENGTH OF THE TAPE. IDENTIFYING TAPES SHALL BE BURIED IN THE ELECTRIC LINE TRENCH WITH ONE STRIP PLACED APPROXIMATELY 8" TO 12" BELOW THE FINAL FINISHED GRADE THE TAPE SHALL BE PLACED IN THE TRENCH WITH PRINTED SIDE UP AND SHALL BE ESSENTIALLY PARALLEL WITH THE FINISHED SURFACE. THE CONTRACTOR SHALL TAKE NECESSARY PRECAUTIONS TO INSURE THAT THE TAPE IS NOT PULLED, DISTORTED OR OTHERWISE MISPLACED IN COMPLETING THE TRENCH BACKFILL. TAPE SHALL BE ALLEN SYSTEM'S, TERRA TAPE OR EQUAL AS APPROVED BY THE ENGINEER. THE TAPE SHALL BE PAID FOR PER LINEAR FEET OF ITEM SPECIAL–"PLASTIC CAUTION TAPE" COMPLETE AND IN PLACE.

ITEM SPECIAL–PULL BOX, CONCRETE, 18" CIRCULAR (AKRON STANDARD)

THIS ITEM SHALL CONSIST OF FURNISHING AND INSTALLING CONCRETE PULL BOXES AS SPECIFIED AND AT THE LOCATIONS SHOWN ON THE PLANS. THE CIRCULAR **PULL BOXES** SHALL BE A MINIMUM OF 18" I.D., 18" DEEP, WITH A 2" WALL THICKNESS. FOUR KNOCKOUTS SHALL BE INCLUDED FOR 3" CONDUIT, LOCATED 90° APART AND 2": FROM THE BOTTOM OF THE PULL BOX. A RING AND COVER SHALL BE PROVIDED FOR EACH PULL BOX. THE RING SHALL BE CAST IRON SUITABLE FOR INSTALLATION IN SIDEWALKS OR EARTH. THE COVER SHALL BE SOLID, BOLT DOWN AND RATED FOR TRUCK TRAFFIC. INSTALLATION OF THE PULL BOXES SHALL INCLUDE ALL EXCAVATING, BACK–FILLING, GRADING, SURFACE RESTORATION, COPPERWELD GROUND RODS AND WIRE LEADS. THE METAL COVERS SHALL BE BONDED TO THE GROUND SYSTEM BY #6 BARE COPPER WIRE. THE RING ASSEMBLY SHALL BE BONDED TO THE CONCRETE PULL BOX WITH EPOXY CEMENT. PAYMENT SHALL BE THE UNIT PRICE BID EACH ITEM SPECIAL–PULL BOX, CONCRETE, 18", CIRCULAR (AKRON STANDARD) INSTALLED, INCLUDING MATERIALS, LABOR AND ALL INCIDENTALS NECESSARY TO COMPLETE THIS ITEM AS SPECIFIED.

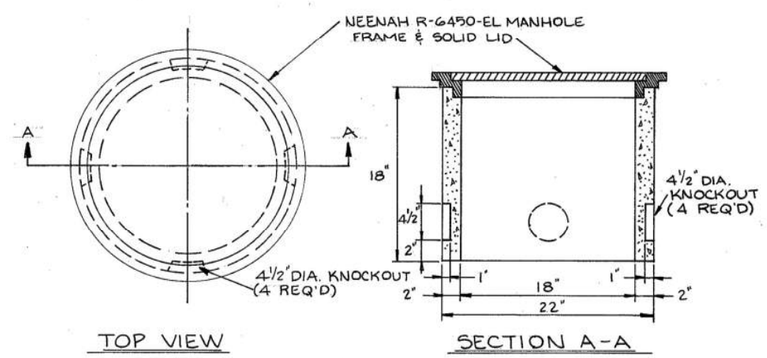

NOTES:

1. PRECAST CONCRETE TO HAVE STRENGTH OF 4,000 P.S.I. AFTER 28 DAYS.
2. PRECAST CONCRETE TO BE REINFORCED WITH ONE LAYER OF 4"X12"-4/9 GAUGE WIRE MESH.

ITEM 202-BARRIER/PILASTER MOUNTED LIGHT POLE REMOVED, AS PER PLAN

IN ADDITION TO THE REQUIREMENTS OF ITEM 202 LIGHT POLE REMOVED FOR STORAGE, AS PER PLAN, THE CONTRACTOR SHALL NEATLY CUT THE EXPOSED ANCHOR BOLTS AND CONDUITS FLUSH WITH THE TOP OF THE BARRIER/PILASTER. THE CUT CONDUITS SHALL ALSO BE FILLED WITH GROUT TO THE TOP SURFACE OF THE BARRIER/PILASTER. PAYMENT FOR THIS WORK WILL BE AT THE UNIT PRICE BID FOR EACH ITEM 202 BARRIER/PILASTER MOUNTED LIGHT POLE REMOVED, AS PER PLAN AND SHALL INCLUDE REMOVAL OF THE LIGHT POLE, CUTTING OF THE ANCHOR BOLTS AND CONDUITS AND PLUGGING THE CONDUIT WITH GROUT. NO SEPERATE PAYMENT WILL BE MADE FOR REMOVAL OF FOUNDATIONS IN CONJUNCTION WITH EXISTING BARRIER OR PILASTER MOUNTED LIGHT POLE.

ITEM 202–POWER SERVICE REMOVED, AS PER PLAN

THIS ITEM CONSISTS OF THE FOLLOWING EQUIPMENT, BUT NOT LIMITED TO: WIRE, SERVICE AND POLE, AND ALL MISCELLANEOUS MATERIALS NORMALLY COMPRISING OF A SERVICE POLE. NO MATERIAL SHALL BE REUSED. THE CONTRACTOR SHALL NOTIFY THE POWER COMPANY THREE (3) DAYS PRIOR TO REMOVAL SO THEIR EQUIPMENT CAN BE DISCONNECTED AND REMOVED. ALL EQUIPMENT NOT PROPERTY OF OHIO EDISON COMPANY AND EXCLUDING ALL CONTROL CENTERS, SHALL BECOME THE PROPERTY OF THE CONTRACTOR AND SHALL BE REMOVED FROM THE PROJECT SITE. THE STATE OF OHIO SHALL TAKE POSSESSION OF ALL OF THE CONTROL CENTERS. PAYMENT SHALL BE AT THE UNIT PRICE BID EACH ITEM 202–POWER SERVICE REMOVED, AS PER PLAN AND SHALL INCLUDE ALL MATERIAL, LABOR AND INCIDENTALS NECESSARY TO COMPLETE THE REMOVAL.

ITEM SPECIAL–REFURBISH POWER SERVICE

THIS ITEM OF WORK SHALL CONSIST OF THE REMOVAL OF THE EXISTING FUSES. THE FUSES SHALL BE REPLACED WITH NEW FUSES BEING THE SIZE AS SHOWN ON SHEET __114___. THE GROUND AREA AROUND THE CONTROL CENTER SHALL HAVE ALL THE DEBRIS REMOVED AND THE GRASS TRIMMED. ALL MATERIALS REMOVED SHALL BECOME THE PROPERTY OF THE CONTRACTOR AND SHALL BE REMOVED FROM THE PROJECT SITE. PAYMENT SHALL BE MADE AT THE UNIT PRICE FOR EACH "ITEM SPECIAL–REFURBISH POWER SERVICE" AND SHALL BE FULL COMPENSATION FOR ALL LABOR, MATERIALS AND INCIDENTALS REQUIRED TO COMPLETE THE INSTALLATION IN A SATISFACTORY WORKMANLIKE MANNER.

ITEM 625–POWER SERVICE

THE CONTRACTOR SHALL PAY ANY UTILITY COMPANY FEES ASSOCIATED WITH THE INSTALLATION AND CONNECTION OF THE POWER SERVICE. ALL 480 VOLT POWER SERVICES SHALL HAVE 2 GROUND RODS AS PER 625.18

ITEM SPECIAL LIGHT POLE WIRING REMOVED

THIS ITEM OF WORK SHALL CONSIST OF THE REMOVAL OF THE EXISTING POLE, BRACKET CABLE AND CONNECTOR KITS FROM AN EXISTING LIGHT POLE. THE REMOVED WIRING SHALL BE DISPOSED OF BY THE CONTRACTOR.

PAYMENT SHALL BE MADE AT THE UNIT PRICE BID FOR EACH ITEM SPECIAL LIGHT POLE WIRING REMOVED AND SHALL BE FULL COMPENSATION FOR ALL LABOR, MATERIALS, EQUIPMENT AND INCIDENTALS NEEDED TO COMPLETE THE WORK AS SPECIFIED.

ITEM 202-LIGHT POLE REMOVED FOR STORAGE, AS PER PLAN

THIS ITEM OF WORK SHALL CONSIST OF REMOVING AN EXISTING LIGHT POLE INCLUDING THE BRACKET ARM(S), TRANSFORMER BASE (IF USED). AND LUMINAIRE(S). THE EXISTING WIRING SHALL BE REMOVED FROM THE POLE AND BRACKET ARM AND DISPOSED OF. THE POLE, BRACKET ARM(S) TRANSFORMER BASE AND LUMINAIRE(S) SHALL BE SEPERATED AND STORED ON THE SITE FOR THE CITY OF AKRON TO TAKE POSSESSION OF ALL ITEMS. PAYMENT FOR THIS ITEM OF WORK WILL BE AT THE CONTRACT UNIT PRICE BID PER EACH ITEM 202 LIGHT POLE REMOVED FOR STORAGE, AS PER PLAN, WHICH WILL BE COMPENSATION FOR ALL LABOR, MATERIALS, EQUIPMENT AND INCIDENTALS NECESSARY TO COMPLETE THIS ITEM OF WORK.

CIRCUIT IDENTIFICATION

ALL EXISTING CIRCUITS THAT ARE TO REMAIN ACTIVE SHALL BE RETAGGED IF THE EXISTING CIRCUIT NUMBER DOES NOT CORRESPOND TO THE CIRCUIT IDENTIFICATION SHOWN IN THE PLAN. TAGGING SHALL CONFORM TO 625.14.

THE COST OF THIS WORK SHALL BE INCIDENTAL TO THE ITEMS BID.

LIGHTING GENERAL NOTES

ITEM 202-LIGHT POLE FOUNDATION REMOVED,AS PER PLAN

THIS ITEM OF WORK SHALL INCLUDE REMOVING THE EXISTING CONCRETE FOUNDATIONS TO DEPTH OF ONE FOOT (1') BELOW GROUND EXCEPT WHERE INTERFERENCE WITH LIGHTING ITEMS EXISTS, THEN THE ENTIRE FOUNDATION SHALL BE REMOVED AND THE HOLE BACKFILLED. PAYMENT SHALL BE PER EACH OF ITEM 202 LIGHT POLE FOUNDATION REMOVED, AS PER PLAN.

LUMINAIRE REMOVED FOR STORAGE, AS PER PLAN

THIS ITEM OF WORK SHALL CONSIST OF REMOVING AN EXISTING LUMINAIRE, TO BE STORED ON THE PROJECT SITE FOR THE CITY OF AKRON TO TAKE POSSESSION OF.
PAYMENT WILL BE MADE FOR EACH ITEM 202 LUMINAIRE REMOVED FOR STORAGE, AS PER PLAN.

LUMINAIRE REMOVED, AS PER PLAN

THIS ITEM OF WORK SHALL CONSIST OF REMOVING AN EXISTING LUMINAIRE. THE LUMINAIRE SHALL BECOME THE PROPERTY OF THE CONTRACTOR AND SHALL BE PROPERLY DISPOSED OF BY THE CONTRACTOR OFF THE PROJECT SITE. PAYMENT WILL BE MADE FOR EACH ITEM 202 LUMINAIRE REMOVED, AS PER PLAN.

UNDERPASS LUMINAIRE REMOVED, AS PER PLAN

THIS ITEM OF WORK SHALL CONSIST OF REMOVING AN EXISTING UNDERPASS LUMINAIRE AND ASSOCIATED HARDWARE AND STORING IT ON THE PROJECT SITE FOR THE CITY OF AKRON TO TAKE POSSESSION OF ALL ITEMS. PAYMENT WILL BE MADE FOR EACH ITEM 202 UNDERPASS LUMINAIRE REMOVED, AS PER PLAN.

ITEM 202-UNDERPASS SERVICE REMOVED, AS PER PLAN

THIS ITEM SHALL CONSIST OF REMOVING SURFACE MOUNTED CONDUIT, WIRE, JUNCTION BOXES AND ANY MISCELLANEOUS ITEMS INCLUDED IN THE UNDERPASS LIGHTING SYSTEM, UNLESS NOTED, FOR THE FOLLOWING BRIDGES:

SUM-277-0115 (OVER WATERLOO RD.)
SUM-277-0134 (OVER SR 93)
SUM-277-0175 (OVER LEY DR.)
SUM-277-0307 (OVER GLENMOUNT AVE.)
SUM-224-2062 (OVER ARLINGTON ST.)

ALL MATERIALS REMOVED SHALL BECOME THE PROPERTY OF THE CONTRACTOR AND DISPOSED OF BY THE CONTRACTOR OFF OF THE PROJECT SITE. PAYMENT SHALL BE THE UNIT BID PRICE FOR EACH ITEM 202-UNDERPASS SERVICE REMOVED, AS PER PLAN, AND SHALL INCLUDE ALL MATERIAL, LABOR AND INCIDENTALS NECESSARY TO COMPLETE THE WORK AS SPECIFIED.

ITEM SPECIAL-MEDIAN LIGHT TOWER FOUNDATION,36" X 25' DEEP

IN ADDITION TO MEETING THE SPECIFICATION OF ITEM 625.06 LIGHT TOWER FOUNDATION THE CONTRACTOR SHALL CONSTRUCT THE FOUNDATION AS SHOWN IN THE MEDIAN TOWER (POLE) FOUNDATION DETAILS ON SHEET 130 .
PAYMENT FOR THIS WORK SHALL BE AT THE UNIT BID PRICE FOR EACH ITEM SPECIAL LIGHT TOWER FOUNDATION, 36"X 25' DEEP MEDIAN MOUNTED, AND SHALL INCLUDE ALL LABOR, MATERIALS, EQUIPMENT AND INCIDENTALS NECESSARY TO COMPLETE THE WORK AS SPECIFIED.

TOWER LIGHTNING PROTECTION SYSTEM

THIS ITEM SHALL CONSIST OF PROVIDING AND INSTALLING AN APPROVED TOWER LIGHTINING PROTECTION SYSTEM AS DETAILED IN THE STANDARD DRAWINGS FOR EACH TOWER ERECTED. THE COST OF ALL LABOR, MATERIALS AND EQUIPMENT NEEDED TO INSTALL THIS PROTECTION SHALL BE INCLUDED IN THE UNIT BID PRICE FOR EACH ITEM 625-LIGHT TOWER.

ITEM 625-SERVICE TO UNDERPASS LIGHTING

THIS ITEM SHALL CONSIST OF PROVIDING COMPLETE ELECTRICAL SERVICE, EXCEPT FOR LUMINAIRES AND STRUCTURE GROUNDING, FOR AN UNDERPASS LIGHTING SYSTEM ON BRIDGE NO.

SUM-277-0115 (OVER WATERLOO RD.)
SUM-277-0134 (OVER SR 93)
SUM-277-0175 (OVER LEY DR.)
SUM-277-0307 (OVER GLENMOUNT AVE.)
SUM-224-1061 (OVER ARLINGTON ST.)

THE INSTALLATION WORK SHALL INCLUDE CONDUITS, CONDUIT GROUNDING, MOUNTINGS, FITTINGS, JUNCTION BOXES, CABLES AND ALL INCIDENTALS NECESSARY TO COMPLETE, READY FOR USE.
THE LUMP SUM BID PRICE FOR ITEM 625-SERVICE TO UNDERPASS LIGHTING SHALL INCLUDE PAYMENT FOR ALL EQUIPMENT, LABOR AND MATERIALS NECESSARY TO COMPLETE THE WORK AS SPECIFIED. COMPONENT PARTS NOT SPECIFICALLY MENTIONED BUT REQUIRED FOR SATISFACTORY OPERATION OF THIS ITEM SHALL BE FURNISHED AND CONSIDERED PAID FOR AS PART OF THIS ITEM.

ITEM SPECIAL-TOWER FOUNDATION GRADING

THIS ITEM OF WORK SHALL CONSIST OF FURNISHING ALL LABOR, MATERIALS AND EQUIPMENT NECESSARY TO GRADE THE GROUND AROUND A LIGHT TOWER FOUNDATION WHERE SHOWN ON THE PLANS AND AS DETAILED ON HL-20.21. PAYMENT WILL BE MADE FOR EACH ITEM SPECIAL-TOWER FOUNDATION GRADING AND SHALL BE FULL COMPENSATION TO COMPLETE THE WORK IN A SATISFACTORY MANNER.

CONDUIT ON STRUCTURES

EXPANSION FITTINGS FOR CONDUIT ON STRUCTURES SHALL BE: OZ TYPE AX, SPRING CITY TYPE AF, APPLETON TYPE XJ-4, OR EQUAL APPROVED BY THE ENGINER FOR THE FOLLOWING BRIDGES:

SUM-277-0093 (OVER BARBERTON BELTLINE RR)
SUM-277-0115 (OVER WATERLOO RD.)
SUM-277-0134 (OVER SR 93)
SUM-277-0175 (OVER CANAL AND LEY DR.)
SUM-277-0307 (OVER GLENMOUNT AVE.)
SUM-277-0374 (OVER IR 77)
SUM-224-1061 (OVER ARLINGTON ST.)

EACH EXPANSION FITTING SHALL HAVE AN EXTERNAL BONDING JUMPER.

STRUCTURE GROUNDS

A COMPLETE GROUNDING SYSTEM SHALL BE PROVIDED IN ACCORDANCE WITH 625.20 FOR EACH OF THE FOLLOWING BRIDGES:

SUM-277-0093 SUM-277-1034 SUM-277-0307 SUM-224-1061
SUM-277-0115 SUM-277-0175 SUM-277-0374

ITEM 625-PORTABLE POWER UNIT 713.21

THE CONTRACTOR SHALL SUPPLY A PORTABLE UNIT AS SPECIFIED IN THE ODOT CONSTRUCTION AND MATERIAL SPECIFICATIONS. A QUANTITY OF "2 EACH" OF ITEM 625-PORTABLE POWER UNIT 713.21 IS IN THE GENERAL SUMMARY.

GROUNDING OF RIGHT-OF-WAY FENCES AT OVERHEAD TRANSMISSION LINES CROSSINGS

THIS ITEM CONSISTS OF GROUNDING THE RIGHT-OF-WAY FENCES AT THE LOCATIONS LISTED IN THE FOLLOWING TABLE, PER STANDARD DRAWING 50.11. PAYMENT SHALL BE AT THE UNIT BID PRICE PER ITEM 625-GROUND RODS INCLUDING MATERIALS, LABOR AND ALL INCIDENTALS NECESSARY TO COMPLETE THE WORK AS SPECIFIED.

SHEET NO.	NO. OF GROUND RODS
117	4
118	16
119	14
120	10
123	4

TRANSITION JUNCTION BOX

THE UNIT BID PRICE FOR EACH ITEM 625 TRANSITION JUNCTION BOX SHALL BE FULL COMPENSATION FOR FURNISHING AND PLACING THE JUNCTION BOX AS SHOWN IN THE DETAIL ON HL-30.33 AND ALL LABOR, MATERIALS, EQUIPMENT AND INCIDENTALS NECESSARY TO COMPLETE THE WORK AS SPECIFIED.

HIGH MAST LIGHTING TOWERS

THE MANUFACTURER SHALL SUBMIT A REPORT FROM AN INDEPENDENT TESTING LABORATORY TO SHOW THAT THE LUMINAIRES DO NOT RECEIVE MORE THAN THE SPECIFIED ACCELERATION LOAD. THE TESTING LABORATORIES REPORT SHALL SPECIFY IN DETAIL THE MOUNTING LOCATIONS OF THE ACCELEROMETERS AND THE TEST PROCEDURES USED. IN ADDITION TO THIS REPORT ODOT RESERVES THE RIGHT TO CONDUCT FIELD MEASUREMENTS OF THOSE ACCELERATION LOADS AND TO ACCEPT ONLY THOSE DESIGNS IN WHICH THE TESTE INSTALLATIONS MEET THE SPECIFICATIONS. THE TERMINAL BLOCK SHOWN ON THE STANDARD CONSTRUCTION DRAWINGS SHALL BE INCLUDED IN THE PRICE OF THE TOWER.

LIGHT TOWER LUMINAIRE MOUNTING ARRANGEMENT

UNLESS OTHERWISE SPECIFIED IN THE PLANS ALL LUMINAIRES WITH ASYMETRIC DISTRIBUTION SHALL BE INSTALLED SO THE 'ARROW' OR 'STREET SIDE' DESIGNATIO ON THE OPTICAL ASSEMBLY IS POSITIONED PERPENDICULAR TO THE CENTERLINE OR BASELINE OF THE PAVEMENT FROM WHICH THE TOWER IS STATIONED. ANY OPTICAL ROTATION CALLED FOR WILL BE EXPRESSES AS A CLOCKWISE (CW) OR COUNTERCLOCKWISE (CCW) ANGULAR MEASUREMENT FOR THE NORMAL 'ARROW' ORIENTATION.

LIGHT TOWER DETAILS

STANDARD DRAWING HL-10.31, AS OF 2/09/88 HAS BEEN REVISED AS FOLLOWS: THE TWO DIMENSIONS SHOWN AS 4 3/4 INCHES BETWEEN THE CENTER LINES OF THE DRIVE SUPPORT TUBE AND THE WINCH INPUT SHOULD READ 3 3/4 INCHES.

ITEM 625-MEDIAN LIGHT POLE FOUNDATION

TO WIRE THIS ITEM, SEE MEDIAN TOWER (POLE) FOUNDATION DETAILS ON SHEET 130 .

LIGHTING GENERAL SUMMARY

COMPLETED BY _____ DATE _____
CHECKED BY _____ DATE _____

F.H.W.A. REGION	STATE	PROJECT NO.	FUNDS
5	OHIO		

SUM-277/224-0.00/6.31/10.22

SHEET NUMBER 99	101	104	105	106	107	108	109	110	111	112	113	PARTICIPATION IM 277(67) FEDERAL STATE	NH 51 ( ) RURAL FEDERAL STATE	URBAN FEDERAL STATE, CITY	ITEM	ITEM EXT.	GRAND TOTAL	UNIT	DESCRIPTION
		16	11	5	25	9	22	20	35			110		33	202	75301	143	EACH	PULL BOX REMOVED, AS PER PLAN
					1		4					5			202	75401	5	EACH	(BARRIER/PILASTER MOUNTED) LIGHT POLE REMOVED, AS PER PLAN
		58	43	28	48	23	103	89	47			397	9	33	202	75401	439	EACH	LIGHT POLE REMOVED AS PER PLAN
		58	43	28	48	23	103	89	47			397	9	33	202	75501	439	EACH	LIGHT POLE FOUNDATION REMOVED, AS PER PLAN
									5					5	202	75507	5	EACH	LUMINAIRE REMOVED, AS PER PLAN
									30					30	202	75505	30	EACH	LUMINAIRE REMOVED FOR STORAGE, AS PER PLAN
			12	2		3			5			17		5	202	75507	22	EACH	LUMINAIRE REMOVED, AS PER PLAN, (UNDERPASS)
		2			1		1	1				5			202	75511	5	EACH	POWER SERVICE REMOVED, AS PER PLAN
			2	1		1			1			4		1	202	98100	5	EACH	REMOVAL MISCELLANEOUS UNDERPASS SERVICE REMOVED, AS PER PLAN
1200												951.6	90	158.4	603	00400	1200	LIN. FT.	4 INCH CONDUIT, TYPE E
		9		8	4	8				26	21	29	1	46	625	00500	76	EACH	CONNECTOR KIT, TYPE II
		9		8	4	8				26	21	29	1	46	625	00600	76	EACH	CONNECTOR KIT, TYPE III
		8	4	2	2	6				2	2	22	2	2	625	01004	26	EACH	CONNECTOR KIT, TYPE VII B
										4				4	625	01100	4	EACH	CONNECTOR KIT, TYPE VII C
		28	20	4	26	14	24	38		20	48	160		62	625	01500	222	EACH	CABLE SPLICING KIT
		9		8	4	8				10	2	29	1	11	625	10500	41	EACH	LIGHT POLE, DESIGN A8BB50D
		1	2	1	1		1			1		7			625	13200	7	EACH	LIGHT TOWER, BBBB 100
					1	1		1		1		4			625	13204	4	EACH	LIGHT TOWER, BBBB 110
					1	1	2					4			625	13208	4	EACH	LIGHT TOWER, BBBB 120
			4		1			2				7			625	13400	7	EACH	LIGHT TOWER, BBBBBB 100
					2		2	4				8			625	13404	8	EACH	LIGHT TOWER, BBBBBB 110
					1		3					4			625	13406	4	EACH	LIGHT TOWER, BBBBBB 120
		9		8	4	8				10	2	29	1	11	625	14306	41	EACH	MEDIAN LIGHT POLE FOUNDATION, 10' DEEP
				1	1		1					3			625	15100	3	EACH	LIGHT TOWER FOUNDATION, 36" X 20' DEEP
					4	2	7	7		2		22			625	15200	22	EACH	LIGHT TOWER FOUNDATION, 36" X 25' DEEP
					2							2			625	15300	2	EACH	LIGHT TOWER FOUNDATION, 36" X 30' DEEP
		1	6									7			SPEC	625 15200	7	EACH	LIGHT TOWER FOUNDATION, 36" X 25' DEEP, MEDIAN MOUNTED
	2											2			625	20000	2	EACH	PORTABLE POWER UNIT, 713.21
								1				1			625	21100	1	EACH	LIGHT TOWER MAINTENANCE PLATFORM, TYPE B
						1	2	1		1		5			625	21200	5	EACH	LIGHT TOWER MAINTENANCE PLATFORM, TYPE C
			1008									1008			625	22900	1008	LIN. FT.	NO. 1/0 AWG 5000 VOLT DISTRIBUTION CABLE
		2184	1478	2938	2596	6706	566	1300		7082	3624	18534	1157	8783	625	23200	28474	LIN. FT.	NO. 4 AWG 5000 VOLT DISTRIBUTION CABLE
		6960	2434	2676								12070			625	23300	12070	LIN. FT.	NO. 2 AWG 5000 VOLT DISTRIBUTION CABLE
		1332		1184	592	1184				2839	2049	4292	148	4740	625	23400	9180	LIN. FT.	NO. 10 AWG POLE AND BRACKET CABLE
		740	534	511	4473	1160	3225	6483		4589	4540	16864	1347	8044	625	24100	26255	LIN. FT.	1 1/2" DUCT CABLE WITH 2 NO. 4 AWG 5000 VOLTS CABLES
							440	370				810			625	24300	810	LIN. FT.	1 1/2" DUCT CABLE WITH 2 NO. 2 AWG 5000 VOLTS CABLES
			582									582			625	24310	582	LIN. FT.	1 1/2" DUCT CABLE WITH 2 NO. 1/0 AWG 5000 VOLTS CABLE

277LGS1

LIGHTING GENERAL SUMMARY

COMPLETED BY _____ DATE _____
CHECKED BY _____ DATE _____

F.H.W.A. REGION	STATE	PROJECT NO.	FUNDS
5	OHIO		

SUM-277/224-0.00/6.31/10.22

SHEET NUMBER 99	101	104	105	106	107	108	109	110	111	112	113	PARTICIPATION IM277(67) FEDERAL STATE	NH 51( ) RURAL FEDERAL STATE	NH 51( ) URBAN FEDERAL STATE, CITY	ITEM	ITEM EXT.	GRAND TOTAL	UNIT	DESCRIPTION
		10	10	10	10	10	10	80		10		140		10	625	25500	150	LIN. FT.	CONDUIT, 3", 713.04
		533	438	132	530	368	103	430		336	222	2598		494	625	25900	3092	LIN. FT.	CONDUIT JACKED OR DRILLED UNDER PAVEMENT, SIZE: 3"
							150	170	1127			370		1077	SPECIAL	62525910	1447	LIN. FT.	CONDUIT CLEANED AND CABLE REMOVED
										16	14			30	625	26300	30	EACH	LUMINAIRE, STYLE B, TYPE III, 200 W H.P.S., 713.11, 480 VOLT
		18		16	8	16				20	9	58	2	27	625	27600	87	EACH	LUMINAIRE, STYLE C, TYPE II, 200 W H.P.S., 713.11, 480 VOLT
		4	8	4	12	8	12	4		8		52			625	27000	52	EACH	LUMINAIRE, ASYMMETRIC, 400 W, H.P.S., 713.21, 480 VOLT
			24		24		30	36				114			625	27200	114	EACH	LUMINAIRE, SYMMETRIC. 400 W, H.P.S., 713.21, 480 VOLT
			12	2		3				5		17		5	625	27600	22	EACH	LUMINAIRE, UNDERPASS 100 W, H.P.S., 713.21, 120/240 VOLT
		445	970	480	3941	1060	3055	6013		4359	4260	16614	395	7574	625	29002	24583	LIN. FT.	TRENCH, 24" DEEP
		135										135			625	29400	135	LIN. FT.	TRENCH IN PAVED AREA
		2	4	2		2		2		2		12		2	625	29910	14	EACH	TRANSITION JUNCTION BOX
		14	5	2	11	5	7	13		10		59		8	625	30700.	67	EACH	PULL BOX, 713.08, 18"
								2				2			625	30706	2	EACH	PULL BOX, 713.08, 24"
		4	2	1		3				2		11		1	625	31500	12	EACH	MEDIAN PULL BOX
		6	6	2	2	2			16			18		16	SPECIAL	62531600	34	EACH	PULL BOX, CONCRETE, 18" CIRCULAR (AKRON STANDARD)
	48	11	12	10	18	12	16	14		14	2	143	3	11	625	32000	157	EACH	GROUND ROD
		1	2	1		1	1	2		1		8		1	625	33000	9	EACH	STRUCTURE GROUNDING SYSTEM
		1	1	1		1	1	1		1		6		1	625	34000	7	EACH	POWER SERVICE
		100	496	450	2626		2075	975		445		6772	395		SPECIAL	62536000	7167	LIN. FT.	PLASTIC CAUTION TAPE
			2	1		1				1		4		1	625	37100	5	EACH	SERVICE TO UNDERPASS LIGHTING
												1			625	38000	LUMP SUM	LUMP SUM	HIGH VOLTAGE TEST
LUMP SUM												1			SPECIAL	625 40000	LUMP SUM	LUMP SUM	MAINTAIN EXISTING LIGHTING
8															SPECIAL	62540010	8	EACH	REPLACEMENT OF EXISTING LIGHTING UNIT
			2		1	1			2			4		2	SPECIAL	625 98000	6	EACH	REFURBISH POWER SERVICE
		2					3					5			SPECIAL	625 40020	5	EACH	DISCONNECT EXISTING CIRCUIT
									35					35	SPECIAL	625 98000	35	EACH	LIGHT POLE WIRING REMOVED

LIGHTING SUB-SUMMARY

F.H.W.A. REGION	STATE	PROJECT	
5	OHIO		

SUM-277/224-0.00/6.31/10.22

SHEET NO.	STATION	STATION	SIDE	202 LIGHT POLE REMOVED FOR STORAGE, AS PER PLAN	202 LIGHT POLE FOUNDATION REMOVED		202 POWER SERVICE REMOVED, AS PER PLAN	202 PULL BOX REMOVED, AS PER PLAN		625 LIGHT POLE DESIGN A88850D	625 MEDIAN LIGHT POLE FOUNDATION, 10' DEEP	625 LIGHT TOWER BBBB 100	SPEC LIGHT TOWER FOUNDATION 36" X 25' DEEP MEDIAN MOUNTED,	625 LUMINAIRE, STYLE C TYPE II 400W H.P.S.,	625 LUMINAIRE, ASYMMETRIC, 400W H.P.S.,	625 GROUND RODS		625 PULL BOX, 713.08, 18"	625 MEDIAN PULL BOX	625 TRANSITION JUNCTION BOX	625 TRENCH, 24" DEEP	625 TRENCH IN PAVED AREA,	625 CONDUIT JACKED OR DRILLED UNDER PAVEMENT SIZE: 3"	625 1 1/2" DUCT CABLE WITH 2 NO.4 AWG, 5000 VOLT CABLE		625 NO. 4 AWG, 5000 VOLT DISTRIBUTION CABLE	625 NO. 2 AWG, 5000 VOLT DISTRIBUTION CABLE	625 CONDUIT, 3", 713.07	625 NO.10 POLE AND BRACKET CABLE		625 CABLE SPLICE KIT	625 CONNECTOR KIT TYPE II	625 CONNECTOR KIT TYPE III	625 CONNECTOR KIT TYPE VII B	625 PLASTIC CAUTION TAPE	625 STRUCTURE GROUNDING SYSTEM FOR BR. NO. SUM-277-0093	625 POWER SERVICE		SPE DISCONNECT EXISTING CIRCUIT	SPE PULL BOX, CONCRETE, 18" CIRCULAR (AKRON STANDARD)			
116				EA	EA		EA	EA		EA	EA	EA	EA	EA	EA	EA		EA	EA	EA	L.F.	L.F.	L.F.	L.F.		L.F.	L.F.	L.F.	L.F.		EA	EA	EA	EA	L.F.	EA	EA		EA	EA			
	IR-277																																										
		69+15	LT					1										1													2								1				
	76+90	77+40	LT					1										1			50			60							2								1				
		77+40	LT															1													2												
	80+60	83+70	MED							1	1			2		1										640			148			1	1										
		83+70	MED/RT															1					66			152					2												
	83+70	83+90	MED																1							60								2									
	83+90	87+20	MED							1	1			2		1										680			148			1	1										
	87+20	90+50	MED							1	1			2		1											680		148			1	1										
	90+50	93+80	MED							1	1			2		1											680		148			1	1										
	93+80	97+10	MED							1	1			2		1											680		148			1	1										
	97+10	100+40	MED							1	1			2		1											680		148			1	1										
	100+40	101+60	MED							1	1			2		1											260		148			1	1										
		101+60	MED/RT															1					66			152					2												
	101+60	102+90	MED																1								280							2									
		102+90	MED/LT															1					70			160					2												
	102+90	103+70	MED																1								180							2									
	103+70	107+00	MED							1	1			2		1											680		148			1	1										
	107+00	109+00	MED							1	1			2		1				2							420		148			1	1										
		109+00	MED/RT															1					80				180				2												
	109+00	111+35	MED																1								490							2									
	111+35	115+00	MED									1	1		4	2											1750																
	59+05.19	115+00	RT/MED/LT		58	58		2	14																												1						
	WATERLOO RD.																																										
	CC "DPW"	13+10	LT																		5			15				10										1					
	13+10	13+52	LT															1			100			110							2					100							
		13+52	LT/RT															1					80			180					2											1	
	13+52	12+30	RT															1			122			132							2											1	
		12+30	RT															1													2											1	
	13+52	15+80	LT																		128		701	238																			
	15+80	16+50	LT															1					70			160					2											1	
	16+50	48+35 LT SR 93	LT															1			40	135		185							2											1	
		48+35 SR 93	LT															1													2											1	
		IR-277 (67)			58	58		2	16		9	9	1	1	18	4	11		14	4	2	445	135	533	740		2184	6960	10	1332		28	9	9	8	100	1	1		2	6			
				58	58		2	16		9	9	1	1	18	4	11		14	4	2	445	135	533	740		2184	6960	10	1332		28	9	9	8	100	1	1		2	6			

SUM277L8

LIGHTING SUB-SUMMARY

F.H.W.A. REGION	STATE	PROJECT	
5	OHIO		

SUM-277/224-0.00/6.31/10.22

SHEET NO. 117	STATION	STATION	SIDE	202 LIGHT POLE REMOVED FOR STORAGE, AS PER PLAN	202 LIGHT POLE FOUNDATION REMOVED	202 PULL BOX REMOVED, AS PER PLAN	202 UNDERPASS SERVICE REMOVED, AS PER PLAN BR. NO. SUM-277-0115	202 UNDERPASS SERVICE REMOVED, AS PER PLAN BR.NO. SUM-277-0134	202 UNDERPASS LUMINAIRES REMOVED, AS PER PLAN		625 LIGHT TOWER BBBBBB 100	625 LIGHT TOWER BBBB 100	SPEC LIGHT TOWER FOUNDATION 36" X 25' DEEP, MEDIAN MOUNTED	625 LUMINAIRE,SYMMETRIC 400 W H.P.S., 713.21, 480 VOLT	625 LUMINAIRE, ASYMMETRIC 400 W H.P.S., 713.21, 480 VOLT	625 GROUND ROD	625 PULL BOX, 713.21, 18"	625 MEDIAN PULL BOX	625 TRANSITION JUNCTION BOX	625 TRENCH, 24" DEEP	625 CONDUIT JACKED OR DRILLED UNDERPAVEMENT SIZE: 3		625 NO. 4 AWG, 5000 VOLT DISTRIBUTION CABLE	625 NO.2 AWG, 5000 VOLT DISTRIBUTION CABLE	625 NO. 1/0 AWG 5000 VOLT DISTRIBUTION CABLE	625 1 1/2" DUCT CABLE WITH 2 NO. 4 AWG, 5000 VOLT CABLE	625 CONDUIT, 3", 713.04	625 1 1/2" DUCT CABLE WITH 2 NO. 1/0 AWG, 5000 VOLT CABLE	625 CABLE SPLICING KIT	625 CONNECTOR KIT TYPE VII B	625 PLASTIC CAUTION TAPE		625 POWER SERVICE	625 SERVICE TO UNDERPASS LIGHTING BR. NO. SUM-277-0115	625 SERVICE TO UNDERPASS LIGHTING BR. NO. SUM-277-0134	625 LUMINAIRE,UNDERPASS, 100 W H.P.S., 713.13	625 STRUCTURE GROUNDING SYSTEM FOR BR. NO. SUM-277-0115	625 STRUCTURE GROUNDING SYSTEM FOR BR. NO. SUM-277-0134		SPE POWER SERVICE REFURBISHED	SPE PULL BOX, CONCRETE, 18", CIRCULAR (AKRON STANDARD)			
				EA	EA	EA	EA	EA	EA		EA	EA	EA	EA	EA	EA	EA	EA	EA	L.F.	L.F.		L.F.	L.F.	L.F.	L.F.	L.F.	L.F.	EA	EA	L.F.		EA	EA	EA	EA	EA	EA		EA	EA			
	IR 277																																													
	115+00	116+80	MED																					380																						
		116+80	MED/LT																		66				152																					
	116+80	120+90	LT															1			411								421	2		411														
	120+90	CC "WA"	LT															1			5								15					1												
	116+80	123+00	MED				1		6		1		1	6		2			2				126											1		6	1								
	123+00	127+95	MED								1		1	6		2																														
	127+95	132+95	MED					1	6			1	1		4	2			2				1020												1	6		1								
	132+95 MED	132+40 RT	MED/RT																	55	66								131			55														
	132+40	CC "MA"	RT															1		5									15	2																
		CC "MA"	RT																																					1						
	132+95	137+13	MED								1		1	6		2									856																					
		137+13	MED/RT																		66		152																							
		137+13	RT															1												2																	
	137+13	137+80	MED																1					154							2															
	137+80	141+40	MED								1		1	6		2								740																						
		141+40	MED/LT																		80		180																							
		141+40	LT															1												2																	
	141+40	143+80	MED																1					500							2															
	141+80	145+00	MED									1	1		4	2								660																						
	115+00	145+00	RT/MED/LT	43	43	11																																								
	SR 93 (MANCHESTER RD.)																																													
	CC "UPM"	42+30	RT																	5						15	10													1					
	42+30	42+10	RT																	30						40				2		30										1			
		42+10	RT/LT																		80									2												1			
	42+10	43+04	LT																	94						104																			
		43+04	LT																											2												1			
	42+10	38+45	LT																	365						375				2												1			
		38+45	LT/RT																		80									2												1			
		38+45	RT																											2												1			
		IR 277 (67)		43	43	11	1	1	12		4	2	6	24	8	12	5	2	4	970	438		1478	2434	1008	534	10	582	20	4	496		1	1	1	12	1	1		2	6			
				43	43	11	1	1	12		4	2	6	24	8	12	5	2	4	970	438		1478	2434	1008	534	10	582	20	4	496		1	1	1	12	1	1		2	6			

SUM277LQ

LIGHTING SUB-SUMMARY

F.H.W.A. REGION	STATE	PROJECT	
5	OHIO		

SUM-277/224-0.00/6.31/10.22

SHEET NO. 118	STATION	STATION	SIDE	202 LIGHT POLE REMOVED FOR STORAGE, AS PER PLAN		202 LIGHT POLE FOUNDATION REMOVED AS PER PLAN	202 PULLBOX REMOVED, AS PER PLAN			202 UNDERPASS SERVICE REMOVED, AS PER PLAN, BR.NO.SUM-277-0715	202 UNDERPASS LUMINAIRES REMOVED, AS PER PLAN		625 LIGHT POLE DESIGN A88B50D	625 MEDIAN LIGHT POLE FOUNDATION, 10' DEEP	625 LIGHT TOWER B888 100	625 LIGHT TOWER FOUNDATION 36" X 20' DEEP	625 LUMINAIRE, STYLE C TYPE II 400 H.P.S., 713.11 480 VOLT	625 LUMINAIRE, ASYMMETRIC, 400W H.P.S., 713.21 480 VOLTS	625 GROUND ROD	625 CONDUIT, 3", 713.04	625 PULL BOX, 713.08, 18"	625 MEDIAN PULL BOX	625 TRANSITION JUNCTION BOX	625 TRENCH, 24" DEEP	625 CONDUIT JACKED OR DRILLED UNDER PAVEMENT SIZE: 3"		625 NO.4 AWG, 5000 VOLT DISTRIBUTION CABLE	625 1 1/4" DUCT CABLE WITH 2 NO.4 AWG, 5000 VOLT CABLE	625 CONNECTOR KIT, TYPE II	625 CONNECTOR KIT, TYPE III	625 CABLE SPLICING KITS	625 PLASTIC CAUTION TAPE	625 POWER SERVICE	625 CONNECTOR KIT, TYPE VII B	625 STRUCTURE GROUNDING SYSTEM FOR BR.NO. SUM-277-0175	625 SERVICE TO UNDERPASS LIGHTING BR.NO.SUM-277-0175	625 LUMINAIRE, UNDERPASS, 100 H.P.S., 713.13	SPE. NO.2 AWG 5000 VOLT DISTRIBUTION CABLE	SPE. NO.10 POLE AND BRACKET CABLE	SPE. PULLBOX, CONCRETE, 18" CIRCULAR (AKRON STANDARD)		
				EA		EA	EA			EA	EA		EA	EA	EA	EA	EA	EA	EA	EA	EA	EA	EA	L.F.	L.F.		L.F.	L.F.	EA	EA	EA	L.F.	EA	EA	EA	EA	EA	L.F.	L.F.		EA		
	IR 277																																											
	145+00	148+30	MED																																			680						
	148+30	151+50	MED										1	1			2		1											1	1							660	148					
	151+50	154+69	MED							1	2		1	1			2		1				2							1	1					1	1	2	658	148					
	153+80	157+95	LT																					450				461				450										1		
	157+95	CC "UPL"	LT																	10				5				15					1									1		
	154+69	156+30	MED										1	1			2		1											1	1							342	148					
		156+30	MED/LT																		1				66		152					2											
	156+30	157+88	MED																			1													2				336					
	157+88	161+07	MED										1	1			2		1								658			1	1								148					
	161+07	164+26	MED										1	1			2		1								658			1	1								148					
	164+26	167+45	MED										1	1			2		1								658			1	1								148					
	167+45	170+65	MED										1	1			2		1								660			1	1								148					
		170+65	MED/RT																		1				66		152					2											
		170+65	MED										1	1			2		1											1	1								148					
	174+75	175+00	LT												1	1		4	2					25				35																
	145+00	175+00	RT/LT		28		28	5																																				
		IR-277(67)			28		28	5			1	2		8	8	1	1	16	4	10	10	2	1	2	480	132		2938	511	8	8	4	450	1	2	1	1	2	2676	1184		2		
				28		28	5			1	2		8	8	1	1	16	4	10	10	2	1	2	480	132		2938	511	8	8	4	450	1	2	1	1	2	2676	1184		2		

LIGHTING SUB-SUMMARY

F.H.W.A. REGION	STATE	PROJECT	
5	OHIO		

SUM-277/224-0.00/6.31/10.22

SHEET NO. 119	STATION	STATION	SIDE	202 LIGHT POLE REMOVED FOR STORAGE, AS PER PLAN (EA)	BARRIER/PILASTER MOUNTED LIGHT POLE REMOVED, AS PER PLAN (EA)	LIGHT POLE FOUNDATION REMOVED, AS PER PLAN (EA)	POWER SERVICE REMOVED, AS PER PLAN (EA)		PULL BOX REMOVED, AS PER PLAN (EA)	625 LIGHT POLE, DESIGN A8B850D (EA)	MEDIAN LIGHT POLE FOUNDATION, 10' DEEP (EA)	LIGHT TOWER BBBB 100 (EA)	LIGHT TOWER BBBB 110 (EA)	LIGHT TOWER BBBB 120 (EA)	LIGHT TOWER BBBBBB 100 (EA)	LIGHT TOWER BBBBBB 110 (EA)	LIGHT TOWER BBBBBB 120 (EA)	LIGHT TOWER FOUNDATION 36" X 20' DEEP (EA)	LIGHT TOWER FOUNDATION 36" X 25' DEEP (EA)	LIGHT TOWER FOUNDATION 36" X 30' DEEP (EA)		LUMINAIRE, SYMMETRIC, 400 W H.P.S., 713.2), 480 VOLT (EA)	LUMINAIRE, ASYMMETRIC, 400 W H.P.S., 713.2), 480 VOLT (EA)	LUMINAIRE, STYLE C TYPE II, 400W H.P.S., 713.21, 480 VOLT (EA)	GROUND ROD (EA)		PULL BOX, 713.08, 18" (EA)	TRENCH 24" DEEP (L.F.)	CONDUIT JACKED OR DRILLED UNDER PAVEMENT, SIZE: 3" (L.F.)	NO. 10 AWG POLE AND BRACKET CABLE (L.F.)	NO.4 AWG 5000 VOLT DISTRIBUTION CABLE (L.F.)	1 1/2" DUCT CABLE WITH 2 NO.4 AWG 5000 VOLT CABLES (L.F.)	CONNECTOR KIT TYPE II (EA)	CONECTOR KIT TYPE III (EA)	CONNECTOR KIT TYPE VII B (EA)	CABLE SPLICING KIT (EA)	PLASTIC CAUTION TAPE (L.F.)	CONDUIT, 3", 713.04 (L.F.)	SPE		POWER SERVICE REFURBISHED (EA)	PULL BOX, CONCRETE, 18", CIRCULAR (AKRON STANDARD) (EA)		
	IR 277																																												
	175+00 LT	7+00 RAMP 'J-1' RT																											755				765												
	7+00 RAMP 'J-1' RT	182+40 LT																									1	40	32			82				2	40							
	182+40 LT	6+10 RAMP 'J-2' RT																										70	35			115					70							
	6+10 RAMP 'J-2' RT	55+70 S. MAIN LT																									1	380				390				2	380							
	55+70 S. MAIN	0+50 RAMP 'J'	LT																									110				120					110							
	0+50 RAMP 'J'	57+80 S. MAIN	LT						1																			50	70			130				2						1		
	57+80 S. MAIN	CC "SM"	LT						1																			5				15						10			1	1		
	55+70 S. MAIN	190+05	LT														1			1		6			2			590				600					590							
	190+05	190+40	LT																								1	46				56				2	46							
		190+40	LT												1				1			6			2																			
	182+40	182+70	LT													1				1		6			2			201				211					201							
		182+70	LT/RT																								1		132		284					2								
	182+70 RT	3+75 RAMP 'K-2' LT																										215				225					215							
	3+75 RAMP 'K-2' LT	179+10 RT																										130	35			175				2								
	179+10	178+30	RT										1					1					4		2			80				90												
		178+30	RT						1																		1									2								
	182+70	184+80	RT																								1	214				224				2	214							
	184+80	9+70 RAMP 'K-1'	RT													1			1			6			2			80	35			125					80							
	9+70 RAMP 'K-1'	5+35 RAMP 'K'	RT																								1	335				345				2	335							
	5+35 RAMP 'K'	1+75 RAMP 'K-3'	RT											1					1				4		2			320				330					320							
	1+75 RAMP 'K-B' RT	45+00 S. MAIN LT																										25	45			80					25							
		45+00 S. MAIN	LT/RT									1							1				4		2			40	80			130												
		45+00 S. MAIN	RT																								1									2								
	1+75 RAMP 'K-3' RT	47+90 S. MAIN LT																									1	255				265				2								
		47+90 S. MAIN	LT																								1									2								
	194+60	197+69	MED							1	1													2	1					148	638		1	1									
	197+69	200+88	MED							1	1													2	1					148	658		1	1									
		200+88	MED/LT																										66		152				2								
		200+88	LT																								1									2								
	200+88	204+07	MED							1	1													2	1					148	658		1	1									
	204+07	205+00	MED							1	1													2	1					148	206		1	1									
	175+00	205+00 (+RAMPS)	RT/MED/LT	42		42	1		18																																			
	43+00 S. MAIN	60+00 S. MAIN	RT/LT	6	1	6			4																																			
		IR 277 (67)		48	1	48	1		25	4	4	1	1	1	1	2	1	1	4	2		24	12	8	18		11	3941	530	592	2596	4473	4	4	2	26	2626	10			1	2		
				48	1	48	1		25	4	4	1	1	1	1	2	1	1	4	2		24	12	8	18		11	3941	530	592	2596	4473	4	4	2	26	2626	10			1	2		

SUM277L7

LIGHTING SUB-SUMMARY

F.H.W.A. REGION	STATE	PROJECT	
5	OHIO		

SUM-277/224-0.00/6.31/10.22

				202																	625																	SPE				
SHEET NO. 120	STATION	STATION	SIDE	LIGHT POLE REMOVED, FOR STORAGE, AS PER PLAN	LIGHT POLE FOUNDATION REMOVED, AS PER PLAN		PULL BOX REMOVED, AS PER PLAN	UNDERPASS SERVICE REMOVED, AS PER PLAN, BR.NO.SUM-277-0307	UNDERPASS LUMINAIRE REMOVED, AS PER PLAN		LIGHTPOLE DESIGN A88B50D	MEDIAN LIGHT POLE FOUNDATION 10' DEEP	LIGHT TOWER BBBB 110	LIGHT TOWER BBBB 120	LIGHT TOWER FOUNDATION 36" X 25' DEEP	LIGHT TOWER MAINTENANCE PLATFORM C	LUMINAIRE, ASYMMETRIC, 400W, H.P.S. 713.21, 480 VOLT	LUMINAIRE, STYLE C, TYPE II, 400W, H.P.S. 713.11, 480 VOLT	GROUND ROD	NO.10 AWG, POLE AND BRACKET ARM CABLE	PULLBOX, 713.08, 18"	MEDIAN PULL BOX	TRANSITION JUNCTION BOX	TRENCH, 24" DEEP		CONDUIT JACKED OR DRILLED UNDER PAVEMENT, SIZE: 3"	NO.4 AWG 5000 VOLT DISTRIBUTION CABLE	1 1/2" DUCT CABLE WITH 2 NO.4 AWG 5000 VOLT CABLE	CONNECTOR KIT, TYPE II	CONNECTOR KIT, TYPE III	CABLE SPLICING KIT	POWER SERVICE	CONNECTOR KIT, TYPE VII B	STRUCTURE GROUNDING SYSTEM FOR BR.NO.SUM-277-0307	SERVICE TO UNDERPASS LIGHTING BR.NO.SUM-277-0307	LUMINAIRE, UNDERPASS 100W H.P.S., 712.13	CONDUIT, 3", 713.04		POWER SERVICE REFURBISHED	PULLBOX, CONCRETE, 18" CIRCULAR (AKRON STANDARD)			
				EA	EA		EA	EA	EA		EA	EA	EA	EA	EA	EA	EA	EA	EA		EA	EA	EA	L.F.		L.F.	L.F.	L.F.	EA	EA	EA	EA	EA	EA	EA	EA	EA		EA	EA			
	IR - 277																																										
	205+00	207+26	MED																								472																
	207+26	210+45	MED								1	1						2	1	148							658		1	1													
	210+45	213+64	MED								1	1						2	1	148							658		1	1													
	213+64	215+35	MED								1	1						2	1	148							362		1	1													
		215+35	LT/MED																		1					66	152				2												
	215+35	216+83	MED																			1					316						2										
	216+83	220+20	MED								1	1						2	1	148							694		1	1													
	220+20	221+80	MED					1	3		1	1						2	1	148			2				340		1	1				1	1	3							
		221+80	MED/RT																							66	152																
	221+80	C.C.'GL'	RT																		1			100				110			2								1				
	221+10(CC'UPG')	49+25(GLENMOUNT)	RT																					5				15			2	1						10			1		
	49+25(GLENMOUNT)	49+40(GLENMOUNT)	RT																					15				25			2										1		
	221+80	223+32	MED																			1					324						2										
	223+32	226+62	MED								1	1						2	1	148							680		1	1													
	226+62	224+55	MED								1	1						2	1	148							686		1	1													
	224+55	228+60	MED								1	1						2	1	148							780		1	1													
		228+60	MED/RT				1														1	1				66	152				2		2										
	229+50	234+50	LT											1	1	1	4		2					500				510															
	234+50	237+40	LT										1		1		4		2					280		40		330															
		237+40	LT/RT																							130	280																
		237+40	RT				1														1										2												
	237+40	239+00	LT				1														1			160				170			2												
	205+00	239+00	RT/LT		23	23	6																																				
		IR 277 (67)			23	23	9	1	3		8	8	1	1	2	1	8	16	12	1184	5	3	2	1060		368	6706	1160	8	8	14	1	6	1	1	3	10		1	2			
				23	23		9	1	3		8	8	1	1	2	1	8	16	12	1184	5	3	2	1060		368	6706	1160	8	8	14	1	6	1	1	3	10		1	2			

LIGHTING SUB-SUMMARY

F.H.W.A. REGION	STATE	PROJECT	
5	OHIO		

SUM-277/224-0.00/6.31/10.22

SHEET NO. 121	STATION	STATION	SIDE	202 POWER SERVICE REMOVED, AS PER PLAN	LIGHT POLE REMOVED FOR STORAGE, AS PER PLAN	BARRIER/PILASTER MOUNTED LIGHT POLE REMOVED	LIGHT POLE FOUNDATION REMOVED		PULL BOX REMOVED, AS PER PLAN	625 LIGHT TOWER BBBB 100	LIGHT TOWER BBBB 120	LIGHT TOWER BBBBBB 110	LIGHT TOWER BBBBBB 120		LIGHT TOWER FOUNDATION 36"X20' DEEP	LIGHT TOWER FOUNDATION 36"X 25'DEEP			LIGHT TOWER MAINTENANCE PLATFORM TYPE C	LUMINAIRES, SYMMETRIC, 400W, H.P.S. 713.21 480 VOLT	LUMINAIRES, ASYMMETRIC, 400W, H.P.S. 713.21 480 VOLT	GROUND ROD		PULL BOX, 713.08, 18"	TRENCH, 24" DEEP	CONDUIT JACKED OR DRILLED UNDER PAVEMENT, SIZE 3"	1 1/2" DUCT CABLE WITH 2 NO.2 AWG, 5000 VOLT CABLES	CONDUIT, 3", 713.04	NO.4 AWG, 5000 VOLT DISTRIBUTION CABLE	1 1/2" DUCT CABLE WITH 2 NO.4, AWG 5000 VOLT CABLE	SPLICING KITS	PLASTIC CAUTION TAPE		POWER SERVICE		STRUCTURE GROUNDING SYSTEM FOR BR. NO. SUM-77-0959		SPE. DISCONNECT EXISTING CIRCUIT		CONDUIT CLEANED AND CABLE REMOVED	
				EA	EA	EA	EA		EA	EA	EA	EA	EA		EA	EA			EA	EA	EA	EA		EA	L.F.	L.F.	L.F.	L.F.	L.F.	L.F.	EA	L.F.		EA		EA			EA		L.F.	
	IR-277																																									
	239+00	240+00	LT																						100					110		100										
	240+00	246+10	LT									1				1				6		2			610					620		610										
	246+10 LT	4+80(RAMP 'L-1')	RT																							53			126													
	4+80(RAMP 'L-1')RT	249+45	LT																					1	325					335	2											
	4+80(RAMP 'L-1')RT	10+00(RAMP 'L-1')	RT								1					1			1		4	2		1	370					380	2	370										
	246+10 LT	4+50(RAMP 'M')	RT						1															1					320		2										150	
	4+50(RAMP 'M')	CC-'WO'	RT	1					1															1	20		30	10		60				1								
	4+50(RAMP 'M')	243+95	RT																					1	215					225	2											
	4+50(RAMP 'M')	5+50(RAMP 'M')	RT																						100		110			110	6											
	5+50(RAMP 'M')	8+40(RAMP 'M')	RT								1				1				1		4	2			290		300			300												
	239+00	250+00	RT/LT		9		9																																			
	0+00(RAMP 'M')	8+40(RAMP 'M')	RT		4		4																																			
	1+05(RAMP 'L-1')	18+50(RAMP 'L-1')	RT/LT		10		10		4																											1						
	2+10(RAMP 'L-2')	16+00(RAMP 'L-2')	RT/LT		7	1	7		6																																	
	0+00(RAMP 'L')	17+50(RAMP 'L')	RT		8	1	8																																			
	14+00(RAMP 'P')	25+00(RAMP 'P')	RT		7		7		2																																	
	IR-77																																									
	503+00 NB	504+50	MED																						150					160		150										
	504+50 MED	6+50(RAMP 'L-2')	LT										1			1				6		2			270					280		270										
		6+50(RAMP 'L-2')	LT/RT																					1		50			120		2											
	6+50(RAMP 'L-2')RT	513+00	MED									1				1				6		2		1	575					585	2	575										
	518+20	518+25	LT										1			1				6		2			5					15	2								1			
	518+46	2+00(RAMP 'S-11')	LT										1			1				6		2			20					30	2								1			
	524+17	524+17	LT							1						1					4	2			5					15	2								1			
	503+00	326+00	RT/LT/MED		27	2	27		4																																	
	14+00(RAMP 'S-12')	2+50(RAMP 'S-12')	RT/LT		12		12		3																																	
	0+00(RAMP 'S-11')	11+50(RAMP 'S-11')	RT/LT		12		12																																			
		ALLENDALE ST.			2		2																																			
	4+50(WATERLOO RD)	10+50(WATERLOO RD)	RT/LT		5		5		1																																	
		IR 277 (67)		1	103	4	103		22	1	2	2	3		1	7			2	30	12	16		7	3055	103	440	10	566	3225	24	2075		1		1			3		150	
				1	103	4	103		22	1	2	2	3		1	7			2	30	12	16		7	3055	103	440	10	566	3225	24	2075		1		1			3		150	

LIGHTING SUB-SUMMARY

F.H.W.A. REGION	STATE	PROJECT	
5	OHIO		

SUM-277/224-0.00/6.31/10.22

SHEET NO. 122	STATION	STATION	SIDE	202 LIGHT POLE REMOVED FOR STORAGE, AS PER PLAN	202 LIGHT POLE FOUNDATION REMOVED, AS PER PLAN	202 [illegible]	202 PULL BOX REMOVED, AS PER PLAN	202 POWER SERVICE REMOVED, AS PER PLAN	202 [illegible]	625 LIGHT TOWER BBBB 110	625 LIGHT TOWER BBBBBB 110	625 LIGHT TOWER BBBBBB 100	625 LIGHT TOWER FOUNDATION 36" X 25' DEEP	625 LIGHT TOWER MAINTENANCE PLATFORM TYPE B	625 LIGHT TOWER MAINTENANCE PLATFORM TYPE C	625 LUMINAIRE, SYMMETRIC 400 W H.P.S., 713.21 480 VOLT	625 LUMINAIRE, ASYMMETRIC, 400W H.P.S., 713.21 480 VOLT	625 GROUND ROD	625 CONDUIT, 3", 713.04	625 PULL BOX, 713.08, 18"	625 TRENCH, 24" DEEP	625 3" CONDUIT JACKED OR DRILLED UNDER PAVEMENT	625 1 1/2" DUCT CABLE WITH 2 NO. 4 AWG, 5000 VOLT CABLES	625 1 1/2" DUCT CABLE WITH 2 NO. 2 AWG, 5000 VOLT CABLES	625 CABLE SPLICING KIT	625 TRANSITION JUNCTION BOX	625 PLASTIC CAUTION TAPE	625 NO. 4 AWG 5000 VOLT DISTRIBUTION CABLE	625 POWER SERVICE	625 PULL BOX, 713.08, 24"	625 STRUCTURE GROUNDING SYSTEM FOR BR. NO. SUM-277-0953	625 STRUCTURE GROUNDING SYSTEM FOR BR. NO. SUM-77-0928	SPE [illegible]	SPE [illegible]	SPE CONDUIT CLEANED AND CABLE REMOVED
				EA	EA	EA	EA	EA		EA	EA	EA	EA	EA	EA	EA	EA	EA	L.F.	EA	L.F.	L.F.	L.F.	L.F.	EA	EA	L.F.	L.F.	EA	EA	EA	EA			L.F.
	IR 277																																			
	250+00	268+50	MED																							2										
	502+75(IR77) RT NB	257+50	LT																	1	400		410		2		400									
	257+50	5+50 (RAMP 'P')	LT							1			1		1		4	2			520		530													
		5+50 (RAMP 'P')	LT/RT				1																		4			240		1					50	
	5+50 (RAMP 'P')	CC "CH"	RT				1	1											80		70				4		70	320	1	1						
	5+50 (RAMP 'P') RT	266+00 LT																			330		340													
	266+00	268+50	LT																	1	250		260		2											
	5+50 (RAMP 'P') LT	262+70	RT																						4			520							120	
	262+70 RT	5+80 (RAMP 'N') LT																		1	50		60		2											
	5+80 (RAMP 'N') LT	258+25 RT					1													1	380	40	430		2											
	262+70	263+50	RT																		80		90				80									
	263+50	266+25	RT								1		1			6		2			275		285				275									
	266+25	268+50	RT																	1	225		235		2											
	250+00 (+ IR 77)	268+50 (+RAMPS)	RT/LT	89	89		17																									1	1			
	IR 77																																			
		502+75 NB	RT/LT																	1		100			2			220								
	502+75	503+00	LT																	1	25		35		2		25									
	502+75 NB LT	502+25 SB RT																		1	125		135		2		125									
	8+40 (RAMP 'M')	12+00 (RAMP 'M')	RT																		360		370	370												
	12+00 (RAMP 'M') RT	498+00 SB LT																			40	35	85													
		498+00 SB	RT/LT								1		1			6		2			35	95	140													
	498+00 SB RT	494+50 NB LT																		1	480		490		2											
		494+50 NB	LT								1		1			6		2																		
	12+00 (RAMP 'M')	19+50 (RAMP 'M')	RT																	1	750		760		2											
	19+50 (RAMP 'M') RT	491+10 NB LT																		1	148	80	238		2											
	491+10 NB	487+00 NB	LT																		410		420													
	487+00 NB	480+10 NB	LT									1	1			6		2			690		700													
	480+10 NB	480+00 NB	LT																	1	10		20		2											
		480+00 NB	LT									1	1			6		2																		
	491+10 NB LT	14+50(RAMP'R-2')RT																		1	360	80	450		2											
		14+50 (RAMP 'R-2')	RT								1		1	1		6		2																		
		IR 277 (67)		83	83		16	1		1	3	2	6	1	1	30	4	12	80	13	5106	430	5541	370	30	2	620	1040	1	1	1	1			50	
		F51 ( ) RURAL		6	6		4				1		1			6		2			907		942		8		355	260		1					120	
				89	89		20	1		1	4	2	7	1	1	36	4	14	80	13	6013	430	6483	370	38	2	975	1300	1	2	1	1			170	

SUM277L2

LIGHTING SUB-SUMMARY

F.H.W.A. REGION	STATE	PROJECT	
5	OHIO		

SUM-277/224-0.00/6.31/10.22

SHEET NO. 123	STATION	STATION	SIDE	202													SPECIAL																						
					LIGHT POLE REMOVED FOR STORAGE, AS PER PLAN	LIGHT POLE FOUNDATION REMOVED, AS PER PLAN			PULL BOX REMOVED, AS PER PLAN	LUMINAIRE REMOVED FOR STORAGE, AS PER PLAN	LUMINAIRE REMOVED, AS PER PLAN		UNDERPASS SERVICE REMOVED, AS PER PLAN BR. NO. SUM-224-1061	UNDERPASS LUMINAIRE REMOVED, AS PER PLAN						CONDUIT CLEANED AND CABLE REMOVED		PULL BOX, CONCRETE, 18" CIRCULAR, (AKRON STANDARD)		POWER SERVICE REFURBISHED		LIGHT POLE WIRING REMOVED													
					EA	EA			EA	EA	EA		EA	EA						L.F.		EA		EA		EA													
	US 224																																						
		269+00	LT																																				
		274+50	RT																																				
		23+50 (RAMP 'R-1')	LT/RT						2											50																			
		314+05	RT								1															1													
		314+80	LT								1															1													
		316+25	RT								1															1													
		317+30	LT								1															1													
		318+45	RT								1															1													
		RAMP 'S-2'	RT							4																4													
		RAMP 'S-1'	RT							3																3													
		RAMP 'S'	RT/LT						2	2										65						2													
		RAMP 'S-3'	RT							2																2													
		RAMP 'T'	LT						1	5																5													
		RAMP 'U'	LT						2	3																3													
	268+50(+KELLY AVE)	314+25 (+RAMPS)	RT/LT		47	47			13				1	5																									
	KELLY AVE.																																						
	43+50	50+15	LT/RT						3	5										80		3				5													
	50+15	52+46	RT/LT						2	2										462		2				2													
	52+46	54+25	RT						1	1										80		1				1													
	52+46	54+75	LT						3	1										80		3				1													
	54+75	55+40	RT/LT						3	1										160		3		2		1													
	56+10	60+05	RT/LT						1	1										70		1				1													
	WATERLOO RD.																																						
	173+05	180+06							2											80		3																	
		IR 277 (67)			5	5			2											50																			
		F51 ( ) RURAL			9	9																																	
		F51 ( ) URBAN			33	33			35	30	5		1	5						1077		16		2		35													
					47	47			35	30	5		1	5						1127		16		2		35													

SUM277L9

LIGHTING SUB-SUMMARY

F.H.W.A. REGION	STATE	PROJECT	
5	OHIO		

SUM-277/224-0.00/6.31/10.22

SHEET NO. 123	STATION	STATION	SIDE	LIGHT POLE DESIGN A8BB50D		MEDIAN LIGHT POLE FOUNDATION, 10' DEEP		LIGHT TOWER BBBB 100	LIGHT POLE BBBB 110	LIGHT TOWER FOUNDATION 36" X 25' DEEP		LIGHT TOWER MAINTENANCE PLATFORM TYPE C	LUMINAIRE ASYMMETRIC, 400 W H.P.S., 713.21 480 VOLTS	LUMINAIRE STYLE C TYPE II, 400W H.P.S. 713.11 480 VOLTS	LUMINAIRE STYLE B TYPE III 200W H.P.S. 713.11, 480 VOLTS	GROUND RODS		PULL BOX. 713.08, 18"	MEDIAN PULL BOX	TRANSITION JUNCTION BOX	TRENCH, 24" DEEP	CONDUIT JACKED OR DRILLED UNDER PAVEMENT, SIZE: 3		NO. 4 AWG, 5000 VOLT DISTRIBUTION CABLE	NO. 10 AWG POLE AND BRACKET CABLE	1 1/2" DUCT CABLE WITH 2 NO. 4 AWG, 5000 VOLT CABLE	PLASTIC CAUTION TAPE	CONDUIT, 3", 713.07	CONNECTOR KIT TYPE II	CONNECTOR KIT TYPE III	CONNECTOR KIT TYPE VII B	CONNECTOR KIT TYPE VII C	CABLE SPLICING KIT		POWER SERVICE		STRUCTURE GROUNDING SYSTEM FOR BR. NO. SUM-224-1061	SERVICE TO UNDERPASS LIGHTING BR. NO. SUM-224-1061	LUMINAIRE UNDERPASS 100 H.P.S. 712.13
				EA		EA		EA	EA	EA		EA	EA	EA	EA	EA		EA	EA	EA	L.F.	L.F.		L.F.	L.F.	L.F.	L.F.	L.F.	EA	EA	EA	EA	EA		EA		EA	EA	EA
	US 224																																							
	268+50	269+00	LT																		50					60	50													
	269+00	272+95	LT					1		1			4			2		1			395					405	395						2							
	268+50	23+50(RAMP 'R-1) LT																			280					290														
		23+50(RAMP 'R-1')	LT/RT															1						120									2							
	23+50 (RAMP 'R-1')	274+50	RT															1			320					330							2							
		274+50	RT/MED						1	1		1	4			2						64		148																
	274+50	277+05	MED																1					530								2								
	277+05	280+45	MED	1		1								2		1								700	148				1	1										
	280+45	282+95	RT/MED/LT	1		1								2		1				2					148			10	1	1					1		1	1	5	
		282+95	MED/RT															1				66		152									2							
		282+95	MED/LT															1				66		152									2							
	282+95	283+80	MED																1					190								2								
	283+80	286+90	MED	1		1								2		1								640	148				1	1										
	286+90	290+00	MED	1		1								2		1								640	148				1	1										
	290+00	293+00	MED	1		1								2		1								620	148				1	1										
		293+00	MED/RT																			70		160																
	293+00	291+75	RT															1			125					135							2							
	293+00	295+14(RAMP 'S-2')	RT															1			214					224							2							
	295+14(RAMP 'S-2')	296+94(RAMP 'S-2')	RT												1						180				85	190			1	1										
	296+94(RAMP 'S-2')	298+74(RAMP '2-2')	RT												1						180				85	190			1	1										
	298+74(RAMP 'S-2')	300+54(RAMP 'S-2')	RT												1						180				85	190			1	1										
	300+54(RAMP'S-2')RT	294+50(RAMP'2') LT													1						135				85	145			1	1										
	294+50 (RAMP 'S')	293+10 (RAMP 'S')	LT												1						140				85	150			1	1										
	291+50 (RAMP 'S')	293+10 (RAMP 'S')	LT												1						160				85	170			1	1										
		293+10 (RAMP 'S')	LT/RT															1						150									2							
	291+50(RAMP 'S-3')	293+10 (RAMP 'S')	RT												1						150				85	160			1	1										
	293+00(RAMP 'S-3')	293+10 (RAMP 'S')	RT												1						10				85	20			1	1										
	293+00(RAMP 'S-3')	297+10(RAMP 'S-1')	RT															1			350					360							2							
	297+10(RAMP 'S-1')	298+60(RAMP 'S-1')	RT												1						150				85	160			1	1										
	298+60(RAMP 'S-1')	300+00(RAMP 'S-1')	RT												2						140				169	150			2	2										
		293+00	MED/RT																			70		160																
	293+00	295+32 (RAMP 'T')	LT															1			232					242							2							
	295+32 (RAMP 'T')	297+44 (RAMP 'T')	LT												1						212				85	222			1	1										
	297+44 (RAMP 'T')	299+56 (RAMP 'T')	LT												1						212				85	222			1	1										
	299+56 (RAMP 'T')	301+68 (RAMP 'T')	LT												1						212				85	222			1	1										
	301+68 (RAMP 'T')	303+80 (RAMP 'T')	LT												1						212				85	222			1	1										
	303+80 (RAMP 'T')	54+15 (KELLY AVE.)	LT												1						120				85	130			1	1										
	293+00	296+25	MED	1		1								2		1								670	148				1	1		2								
	296+25	299+70	MED	1		1								2		1								710	148				1	1										
	299+70	302+90	MED	1		1								2		1									148				1	1										
	302+90	306+05	MED	1		1								2		1								650	148				1	1										
	306+05	309+40	MED	1		1								2		1								690	148				1	1										
		IR 277 (67)						1	1	2		1	8			4		2	1		650	64		268		680	50						6							
		F 51( ) RURAL		1		1								2		1					395			1157	148	405	395		1	1	2									
		F 51( ) URBAN		9		9								18	16	9		8	1	2	3314	272		5657	2691	3504		10	25	25		4	14		1		1	1	5	
				10		10		1	1	2		1	8	20	16	14		10	2	2	4359	336		7082	2839	4589	445	10	26	26	2	4	20		1		1	1	5	

SUM277L1

LIGHTING SUB-SUMMARY

F.H.W.A. REGION	STATE	PROJECT	
5	OHIO		

SUM-277/224-0.00/6.31/10.22

SHEET NO. 123	STATION	STATION	SIDE	LIGHT POLE DESIGN A8B85OD	MEDIAN LIGHT POLE FOUNDATION, 10' DEEP	LUMINAIRE, STYLE C, TYPE II, 400W H.P.S. 713.11, 480 VOLTS	LUMINAIRE, STYLE B, TYPE III, 200W H.P.S. 713.11, 480 VOLTS	GROUND ROD	PULL BOX, 713.08, 18"	TRENCH, 24" DEEP	CONDUIT JACKED OR DRILLED UNDER PAVEMENT, SIZE: 3"	NO. 4 AWG, 5000 VOLT DISTRIBUTION CABLE	NO. 10 AWG POLE AND BRACKET CABLE	1 1/2" DUCT CABLE WITH 2 NO. 4 AWG, 5000 VOLT CABLE	CONNECTOR KIT TYPE II	CONNECTOR KIT TYPE III	CONNECTOR KIT TYPE VII B	CABLE SPLICING KIT
				EA	EA	EA	EA	EA	EA	L.F.	L.F.	L.F.	L.F.	L.F.	EA	EA	EA	EA
	US 224																	
	309+40 MED	309+30(RAMP 'U') LT									100	220						
	309+30 (RAMP 'U')	308+90 (RAMP 'U')	LT						1	40				50				2
	308+90 (RAMP 'U')	306+90 (RAMP 'U')	LT				1			200			84	210	1	1		
	306+90 (RAMP 'U')	304+90 (RAMP 'U')	LT				2		1	205			169	225	2	2		
	309+30 (RAMP 'U')	312+15	LT						1	285				295				2
	312+15	314+80	LT						1	265				275				2
	314+80	317+30	LT			2				250			197	260	2	2		
	309+40	312+30	MED	1	1	2		1				600	148		1	1	2	
		312+30	MED/RT	1	1	2		1			54	128	148		1	1		
	312+30	314+05	RT						1	175				185				2
	314+05	316+25	RT			1				220			98	230	1	1		
	316+25	318+45	RT			2				220			197	230	2	2		
	KELLY AVE.																	
	43+50	45+17	LT				1			167			92	177	1	1		
	45+17 LT	45+20 RT					1				68	156	92		1	1		
	45+20	46+00	RT									180						2
	46+00	46+60	RT							60				70				2
	46+60	49+25	RT				1			265			92	275	1	1		
	49+25	50+15	RT				1			90			92	100	1	1		
	50+15	52+11	RT									412						2
	52+11	52+46	RT				1					90	90		1	1		
	52+46	304+50 (RAMP 'U')	RT							85				95				2
	304+50(RAMP'U') RT	304+90(RAMP'U') LT										144						
	304+90(RAMP'U') LT	54+25 LT								25				35				4
	54+25	CC "KE"/"CKE"	RT				1			90			92	100	1	1		
	304+90(RAMP'U') LT'	CC "KE"/"CKE" RT								110				120				
	48+05	48+40	LT				1			30			92	40	1	1		
	48+40	50+15	LT							175				185				2
	50+15	50+64	LT									118						2
	50+64	52+46	LT				1					382	90		1	1		
	52+46	53+56	LT							110				120				2
	53+56 LT	304±90(RAMP'T') RT					1			5			92	15	1	1		
	304+90(RAMP'T') RT	54+75 LT										240						2
	54+75 LT	CC "KE"/"CKE" RT										400						4
	CC "KE"/"CKE" RT	54+85 LT										200						4
	54+85	55+20	LT							38				48				2
	55+20	55+40	LT				1			20			92	30	1	1		
	55+40 LT	173+15 (WATERLOO RD.) RT								605				615				2
	CC "KE"/"CKE"	55+25	RT							90				100				
	55+25	56+10	RT									194						2
	56+10	56+50	RT				1			40			92	50	1	1		
		56+10	RT/LT									160						2
	56+10	60+05	LT							395				405				4
		F51 ( ) URBAN		2	2	9	14	2	5	4260	222	3624	2049	4540	21	21	2	48
				2	2	9	14	2	5	4260	222	3624	2049	4540	21	21	2	48

SUM277L4

F.H.W.A. REGION	STATE	PROJECT	
5	OHIO		

SUM 277/224-0.00/631/10.22

POWER SERVICE DATA

POWER SERVICE	VOLTS	CONNECTED LOAD KVA	SERVICE ENT RANCE CONDUCTOR SIZE AWG	ENCLOSURE RATING AMPS	CIRCUIT NUMBER	CIRCUIT LOAD AMPS	CIRCUIT FUSE SIZE AMPS	MAINTAINING AGENCY	REMARKS
WA	480	25.2	1/0	60	1	42.0	60	STATE	
MA	480	20.5	1/0	60	1	42.8	60	STATE	
SM	480	22.6	2	60	1	47.0	60	STATE	
GL	480	13.1	2	60	1	27.3	40	STATE	
WO	480	29.3	2	60	1	21.5	30	STATE	
					2	18.6	30	STATE	
					3	21.0	30	STATE	
CH	480	20.5	2	60	1	22.8	30	STATE	
					2	19.9	30	STATE	
KE/ CKE	480	19.8	2	30	KE-1	18.5	30	AKRON	
					KE-2	22.8	30	AKRON	
					CKE 1	23.5	30	AKRON	*
					CKE 2	18	30	AKRON	*
CA	480	28.8	2	60	1	31.0	40	STATE	
					2	29.0	40	STATE	
UPW	120	1.94	4	30	1	16.2	20	AKRON	
UPM	120	1.48	4	60	1	12.3	20	AKRON	
UPL	120	0.24	4	30	1	2.4	10	AKRON	
UPG	120	0.43	4	30	1	3.6	10	AKRON	
UAS	120	0.58	4	30	1	4.8	10	AKRON	

* STEPPED DOWN TO 120 V SEE SHEET 130.

LEGEND

EXISTING LIGHT POLE TO BE REMOVED

EXISTING 34.2' POLE TO BE REFURBISHED AND REFITTED WITH A NEW 200 WATT H.P.S., TYPE III LUMINAIRE

EXISTING 34.2' POLE TO BE REFURBISHED AND REFITTED WITH A NEW 400 WATT H.P.S., TYPE II LUMINAIRE

PROPOSED 50' POLE TWIN ARM CONVENTIONAL, M-S II, 2 400 WATT H.P.S.

PROPOSED HIGH MAST UNIT, 6-400 WATT H.P.S., SYMMETRICAL DISTRIBUTION

PROPOSED HIGH MAST UNIT, 4-400 WATT H.P.S, ASYMMETRICAL DISTRIBUTION

EXISTING UNDERPASS LUMINAIRE TO BE REMOVED

PROPOSED UNDERPASS LUMINAIRE, 100 WATT H.P.S., MOUNTED AT 15' AND CONNECTED TO A CITY OF AKRON CIRCUIT

EXISTING POWER SERVICE

PROPOSED POWER SERVICE

PROPOSED TRANSITION JUNCTION BOX

EXISTING PULLBOX TO BE REMOVED

EXISTING PULLBOX TO BE REPLACED WITH CONCRETE, 18" OR 24" (AS NOTED)

PROPOSED PULLBOX 18" OR 24" (AS NOTED), 713.08

EXISTING ILLUMINATED OVERHEAD SIGNS TO BE REMOVED

CANTILEVER

CENTER MOUNT

SPAN

PROPOSED ILLUMINATED OVERHEAD SIGNS

CANTILEVER

CENTER MOUNT

SPAN

EXISTING CONDUIT

EXISTING CONDUIT AND WIRE TO BE RECONNECTED TO CKT

PROPOSED 1 1/2" DUCT CABLE, #4 AWG

PROPOSED 1 1/2" DUCT CABLE, #2 AWG

PROPOSED 1 1/2" DUCT CABLE #1/0 AWG

PROPOSED 3" CONDUIT, UNDER PAVEMENT

HIGH TENSION WIRE STRUCTURE

F.H.W.A. REGION	STATE	PROJECT	
5	OHIO		

SUM 277/224 – 0.00/6.31/10.22

TOWER	DESIGN NUMBER	FND. TYPE	DEPTH	MAINT. PLATFORM TYPE	ELEVATION
1	BBBBBB 120	I	25'	NR	1038.00
2	BBBB 100	I	25'	NR	1070.00
3	BBBBBB 120	II	25'	NR	1033.50
4	BBBB 120	I	25'	C	1040.00
5	BBBBBB 110	I	25'	NR	1036.50
6	BBBBBB 110	I	25'	NR	1037.00
7	BBBBBB 110	I	25'	B	1054.50
8	BBBBBB 100	I	25'	NR	1046.50
9	BBBBBB 100	I	25'	NR	1052.50
10	BBBB 120	I	25'	C	1031.00
11	BBBBBB 110	I	25'	NR	1037.00
12	BBBB 110	I	25'	NR	1030.50
13	BBBB 120	I	25'	C	1015.00
14	BBBBBB 110	I	25'	NR	1069.00
15	BBBB 110	I	25'	C	1100.00
16	BBBB 100	I	25'	NR	1097.50
17	BBBB 110	I	25'	C	1058.50
18	BBBBBB 120	I	25'	NR	1029.50
19	BBBBBB 110	I	25'	NR	1041.50
20	BBBB 100	I	25'	NR	1025.90
21	BBBBBB 100	I	25'	NR	1022.65
22	BBBBBB 100	I	25'	NR	1022.76
23	BBBB 100	I	25'	NR	1023.58
24	BBBBBB 100	I	25'	NR	1026.49
25	BBBBBB 100	I	25'	NR	1022.54
26	BBBB 100	I	25'	NR	1010.45
27	BBBB 100	I	20'	NR	973.68
28	BBBB 110	I	20'	NR	919.69
29	BBBBBB 110	I	30'	NR	970.49
30	BBBBBB 120	I	30'	NR	975.44
31	BBBBBB 100	I	25'	NR	996.15
32	BBBBBB 110	I	25'	NR	976.49
33	BBBB 120	I	25'	NR	983.18
34	BBBBBB 100	I	25'	NR	1006.00

NR- NOT REQUIRED

LIGHT POLE DATA					
REFERENCE LETTER	DESIGN NUMBER	FOUNDATION ANCHOR BOLTS		FOUNATION DEPTH BELOW GRADE	TRANSFORMER BASE STYLES
		SIZE DIAMETER X LENGTH	BOLT CIRCLE DIAMETER		
A	A8BB50D	1 1/4"X70"	19 3/4"	10	NR
B	A8BB40D	1 1/4"X70"	19 3/4"	8	NR

"D"-DESIGNATES 22"X12" POLE BASE PLATE

SYSTEM VOLTAGES – 480 V – 2 WIRE–ONE SIDE GROUNDED

120 VOLTS/240 VOLTS – 3 WIRE
(CITY CIRCUITS)

OHIO
FHWA REGION 5
FEDERAL PROJECT

SUM-277/224-0.00/6.31/10.22

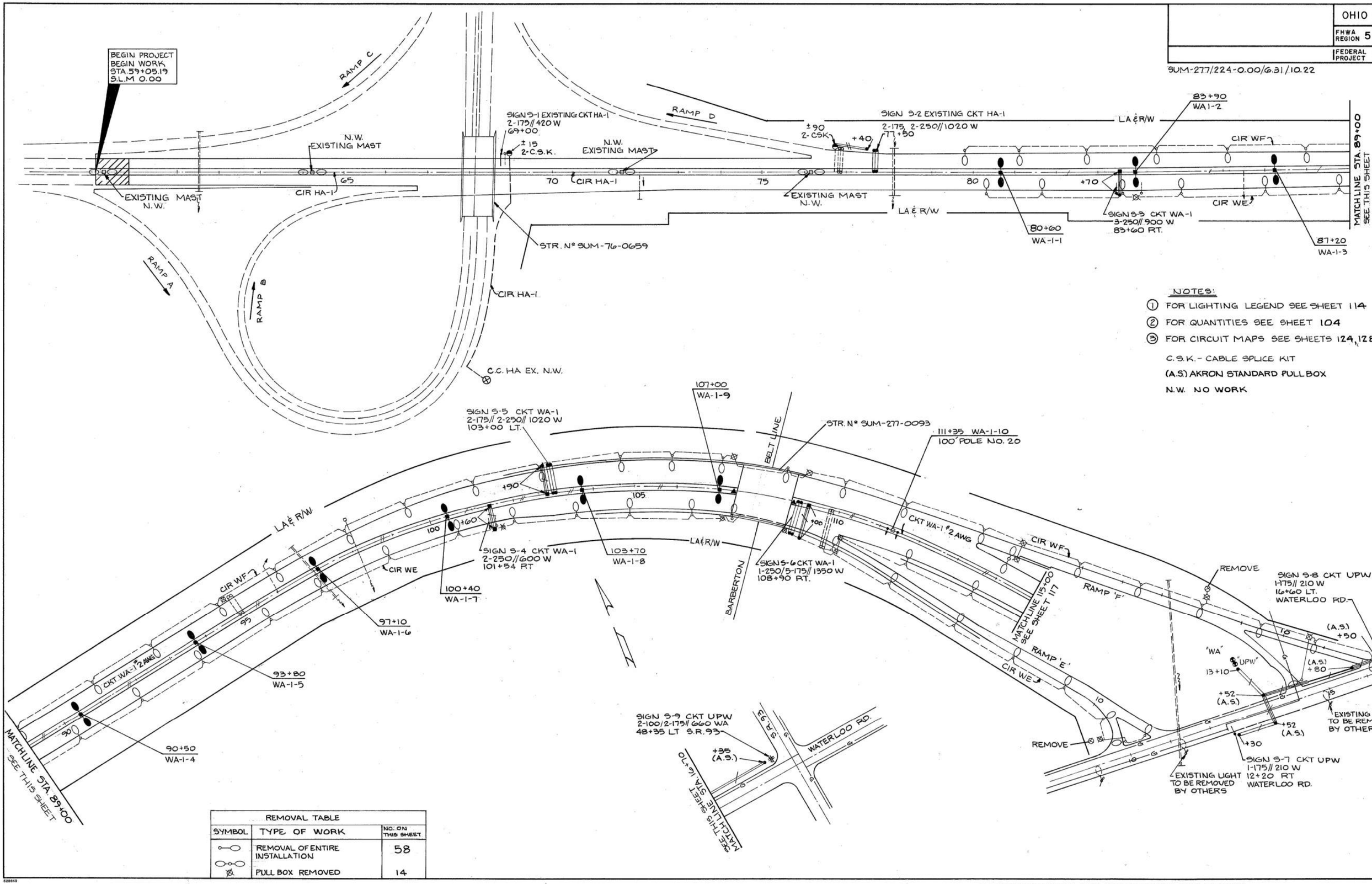

REMOVAL TABLE		
SYMBOL	TYPE OF WORK	NO. ON THIS SHEET
	REMOVAL OF ENTIRE INSTALLATION	58
	PULL BOX REMOVED	14

BEGIN PROJECT STA. 59+05.19 TO STA. 115+00

OHIO	
FHWA REGION 5	FEDERAL PROJECT

SUM-277/224-0.00/6.31/10.22

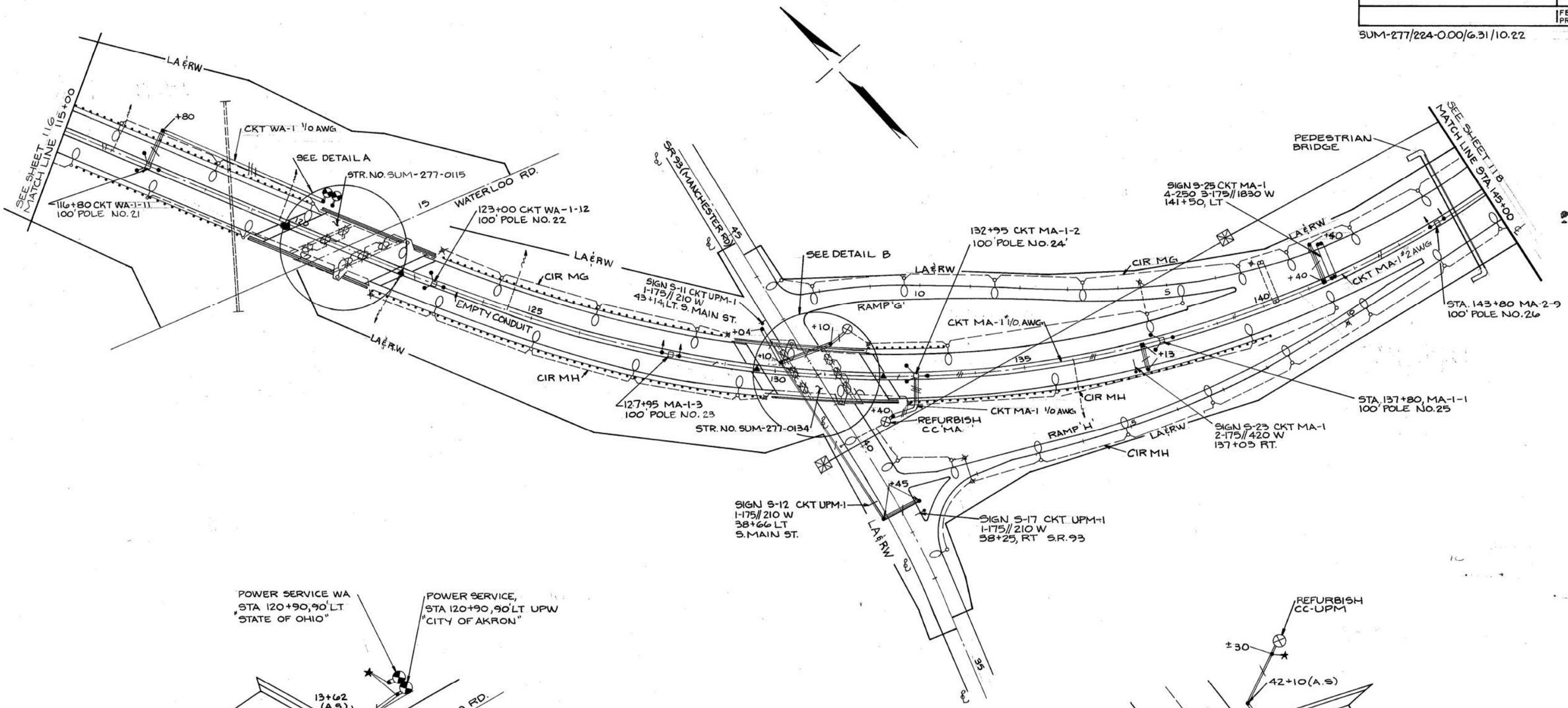

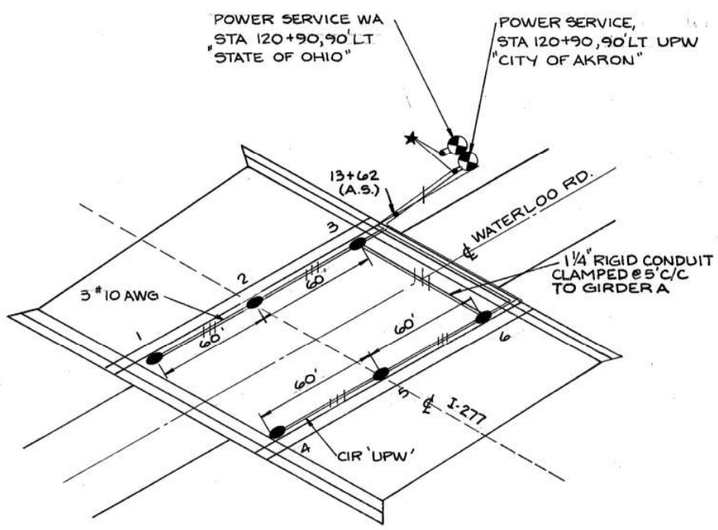

DETAIL A

NOTES:

1. FOR LIGHTING LEGEND SEE SHEET 114
2. FOR QUANTITIES SEE SHEET 105
3. FOR CIRCUIT MAPS SEE SHEET 124, 129 (A.S) AKRON STANDARD PULL BOX

★ STRIP DUCT CABLE AND EXTEND CABLES INTO ENCLOSURE WITHOUT SPLICES

REMOVAL TABLE		
SYMBOL	TYPE OF WORK	NO. ON THIS SHT.
	REMOVAL OF ENTIRE INSTALLATION	43
	UNDERPASS LIGHT REMOVED	12
	PULL BOX REMOVED	11

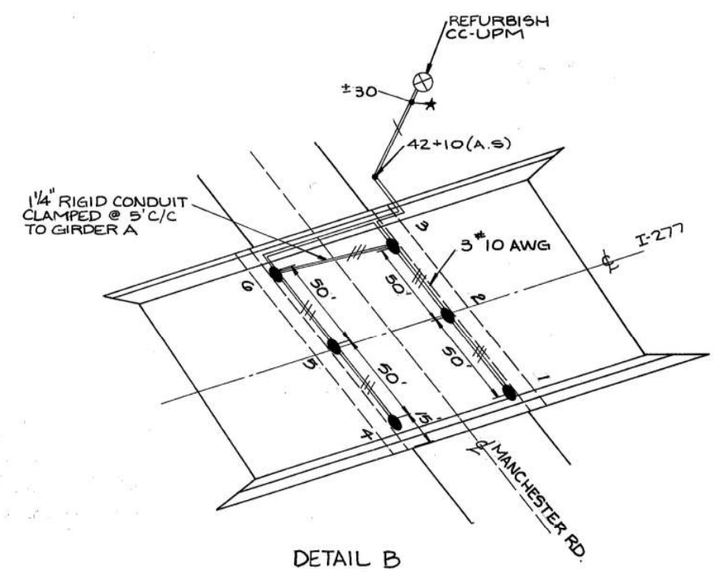

DETAIL B

STA. 115+00 - STA. 145+00

FHWA REGION	STATE	PROJECT NO.	FUNDS
5	OHIO		

SUM-277/224-0.00/6.31/10.

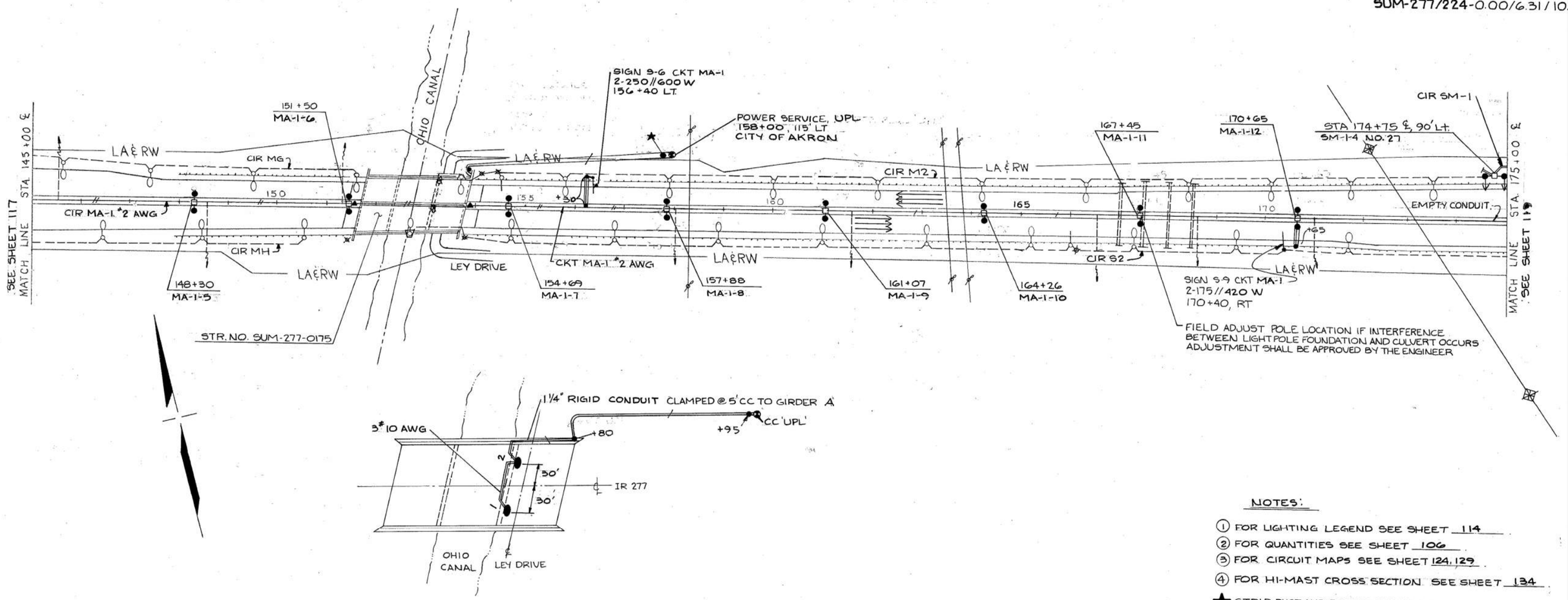

NOTES:

1. FOR LIGHTING LEGEND SEE SHEET 114
2. FOR QUANTITIES SEE SHEET 106
3. FOR CIRCUIT MAPS SEE SHEET 124, 129
4. FOR HI-MAST CROSS SECTION SEE SHEET 134

★ STRIP DUCT AND EXTEND CABLES INTO ENCLOSURE WITHOUT SPLICES

REMOVAL TABLE		
SYMBOL	TYPE OF WORK	NO. ON THIS SHEET
	REMOVAL OF ENTIRE INSTALLATION	28
	UNDERPASS LIGHTING REMOVED	2
	PULL BOX REMOVED	5

OHIO
FHWA REGION 5
FEDERAL PROJECT

SUM-277/224-0.00/6.31/10.22

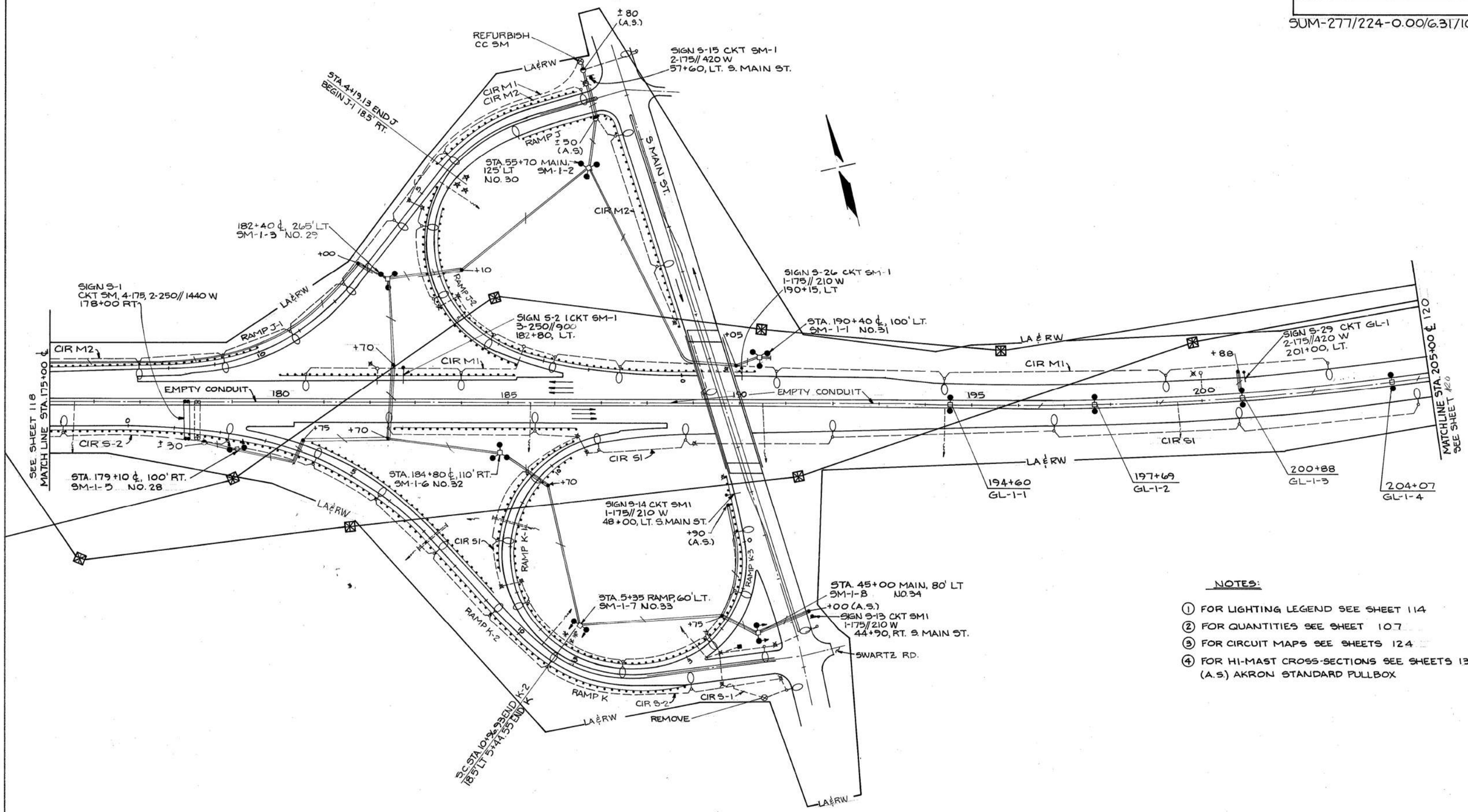

NOTES:

1. FOR LIGHTING LEGEND SEE SHEET 114
2. FOR QUANTITIES SEE SHEET 107
3. FOR CIRCUIT MAPS SEE SHEETS 124
4. FOR HI-MAST CROSS-SECTIONS SEE SHEETS 134,135,136,
(A.S.) AKRON STANDARD PULLBOX

✱ BEGIN K-1 P.C.C. STA. 5+44.55
✱✱ 18.5' RT. STA. 5+44.55 END 'K'
★ END J-2 STA. 8+39.67
★★ 18.5' LT, STA. 4+19.13 'J'

REMOVAL TABLE		
SYMBOL	TYPE OF WORK	NO. ON THIS SHEET
⊶	REMOVAL OF ENTIRE INSTALLATION	48
⊠	PULL BOX REMOVED	22
⊶	REMOVAL OF ENTIRE INSTALLATION	1

STA. 175+00 TO STA. 205+00

FHWA REGION	STATE	PROJECT NO.	FUNDS
5	OHIO		

SUM-277/224-0.00/6.31/10.2

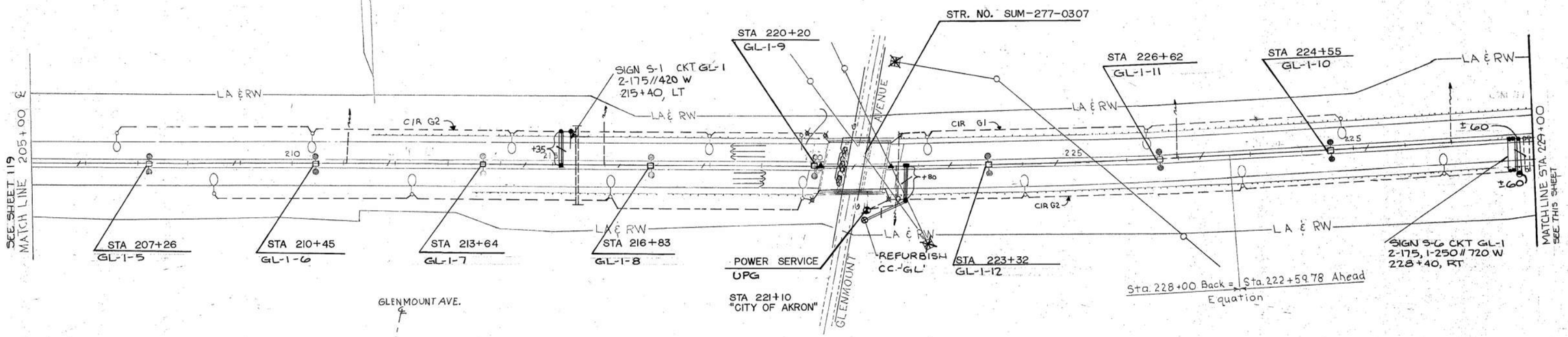

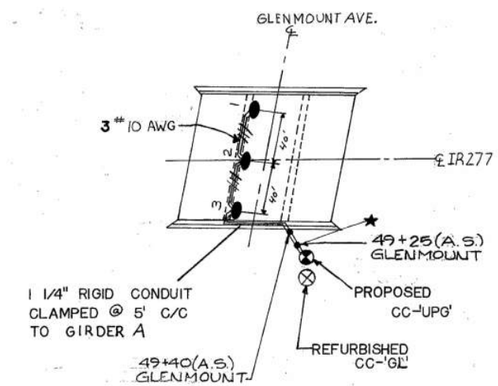

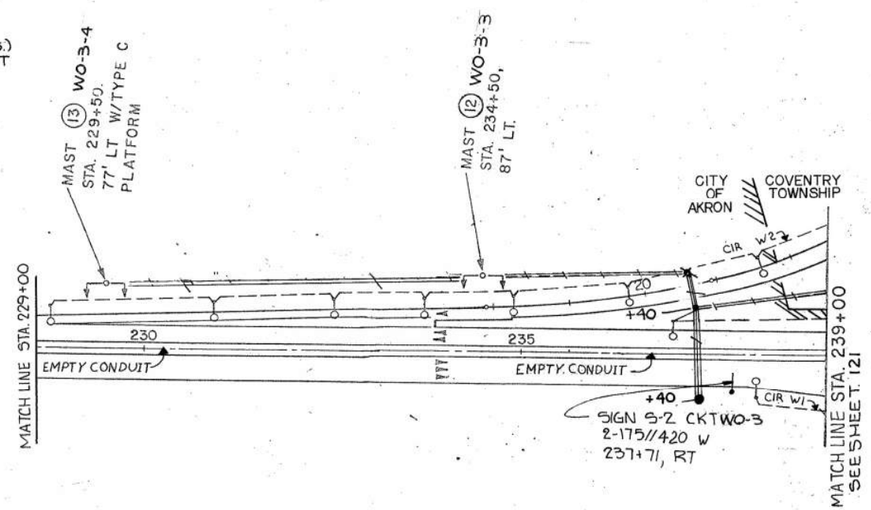

NOTES:

1. FOR LIGHTING LEGEND SEE SHEET 114
2. FOR QUANTITIES SEE SHEET 108
3. FOR CIRCUIT MAP SEE SHEETS 124, 125, 129
4. FOR HI-MAST CROSS-SECTIONS SEE SHEET 132

(A.S.) AKRON STANDARD PULLBOX

★ STRIP DUCT CABLE AND EXTEND CABLES INTO ENCLOSURE WITHOUT SPLICES

REMOVAL TABLE

SYMBOL	TYPE OF WORK	NO. ON THIS SHT.
	REMOVAL OF ENTIRE INSTALLATION	23
	UNDERPASS LIGHT REMOVED	3
	PULL BOX REMOVED	6

STA. 205+00 TO STA. 239+00

DRWG. BY DATE		OHIO
CHK'D BY DATE		FHWA REGION 5

SUM-277/224-0.00/6.31/10.22

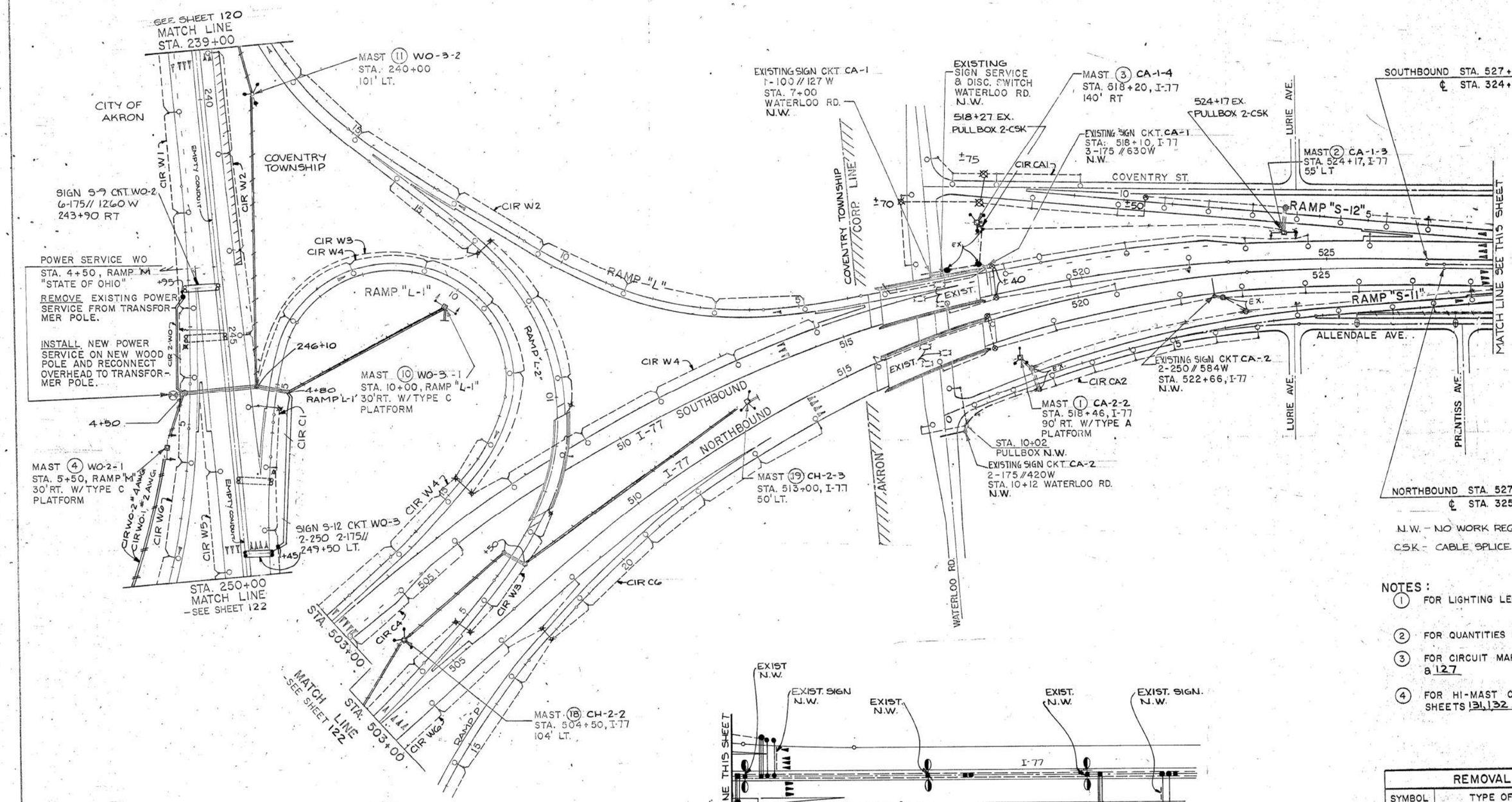

N.W. – NO WORK REQUIRED

CSK – CABLE SPLICE KIT

NOTES:

1. FOR LIGHTING LEGEND SEE SHEET 11
2. FOR QUANTITIES SEE SHEET 109
3. FOR CIRCUIT MAPS SEE SHEETS 12 & 127
4. FOR HI-MAST CROSS SECTIONS SE SHEETS 131, 132 & 133

REMOVAL TABLE		
SYMBOL	TYPE OF WORK	NO. ON THIS SH
—o	REMOVE ENTIRE INSTALLATION	106
⊗	REMOVE PULL BOX	20

STA. 239+00 TO STA. 250+00

CALC. BY ____ DATE ____		OHIO
CHK'D BY ____ DATE ____		FHWA REGION 5

SUM-277/224-0.00/6.31/10.22

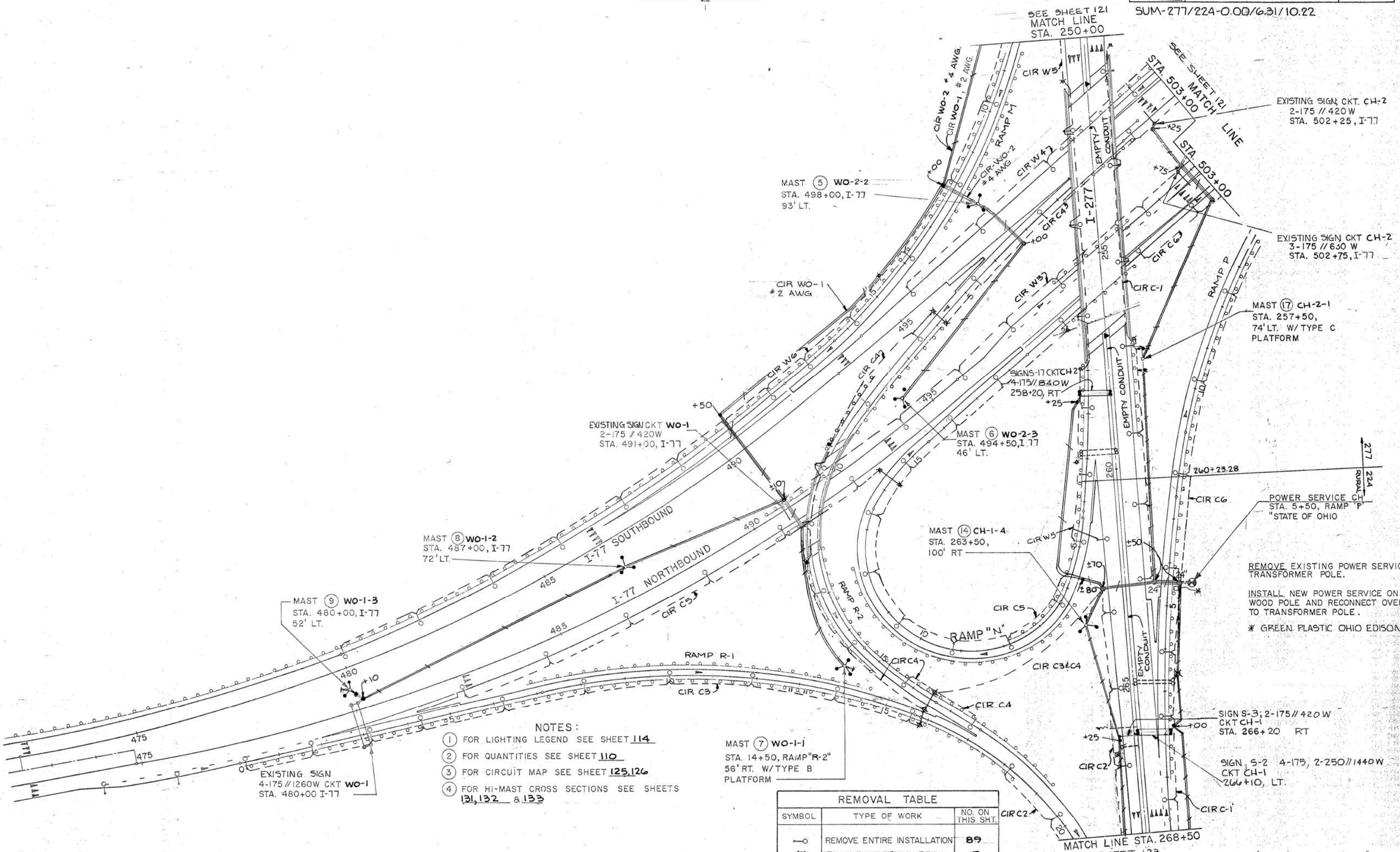

NOTES:

1. FOR LIGHTING LEGEND SEE SHEET 114
2. FOR QUANTITIES SEE SHEET 110
3. FOR CIRCUIT MAP SEE SHEET 125,126
4. FOR HI-MAST CROSS SECTIONS SEE SHEETS 131,132 & 133

REMOVAL TABLE

SYMBOL	TYPE OF WORK	NO. ON THIS SHT.
—o	REMOVE ENTIRE INSTALLATION	89
⊗	PULL BOX REMOVED	17

STA. 250+00 TO STA 268+50

F.H.W.A. REGION	STATE	PROJECT	
5	OHIO		

SUM-277/224-0.00/6.31/10

NOTES

1. FOR LIGHTING LEGEND SEE SHEET 114
2. FOR QUANTITIES SEE SHEETS 111,112,113
3. FOR CIRCUIT MAP SEE SHEETS 125,126,129
4. FOR HI-MAST CROSS SECTION SEE SHEET 132

(A.S.) AKRON STANDARD PULLBOX

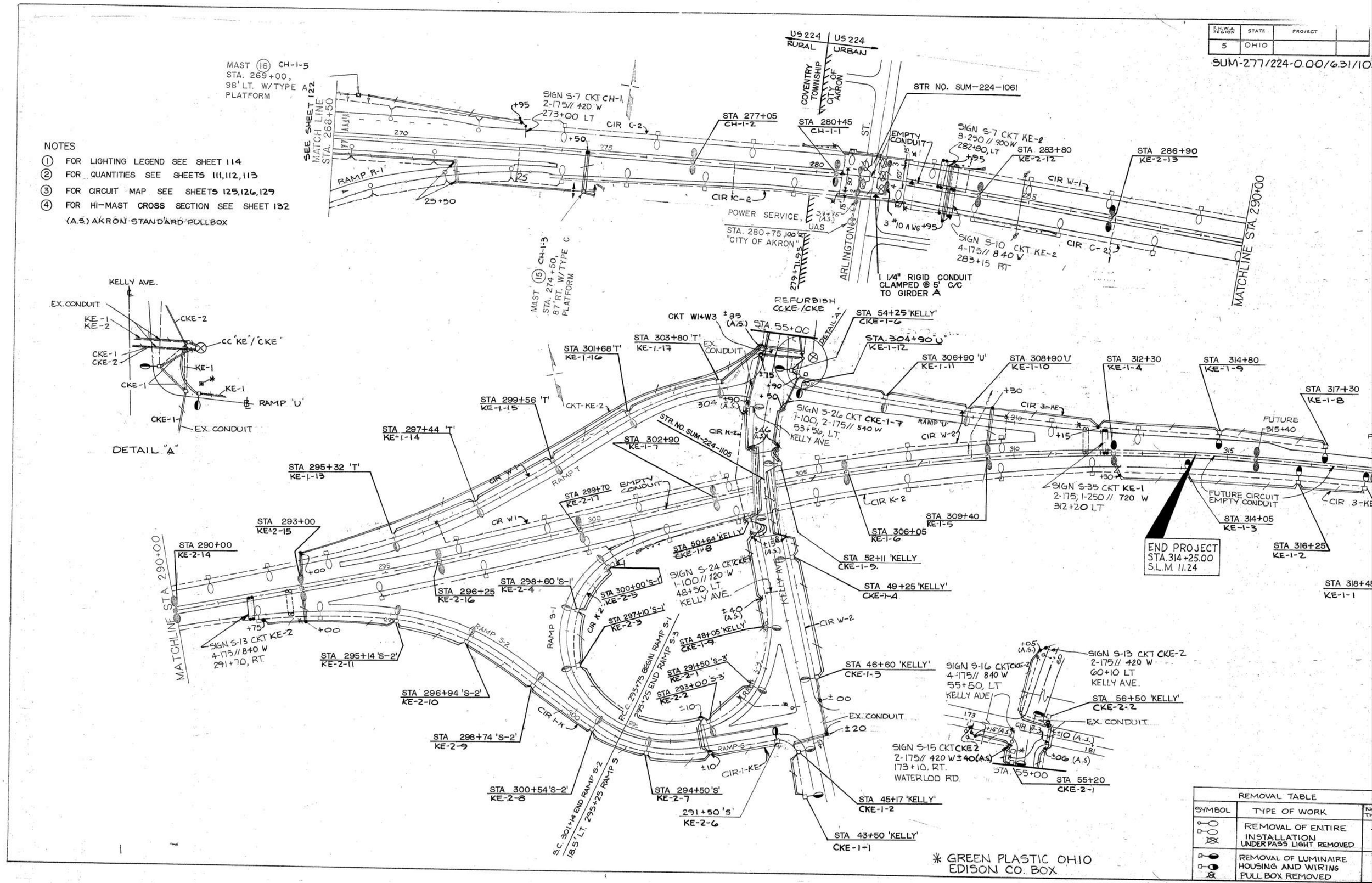

REMOVAL TABLE		
SYMBOL	TYPE OF WORK	N TH
	REMOVAL OF ENTIRE INSTALLATION UNDER PASS LIGHT REMOVED	
	REMOVAL OF LUMINAIRE HOUSING AND WIRING PULL BOX REMOVED	

STA. 268+50 TO END PROJECT

F.H.W.A. REGION	STATE	PROJECT	
5	OHIO		

SUM 277/224 – 0.00/6.31/10.22

CIRCUIT "WA"

34 LIGHTS – 400 HPS, 480 LINE WATTS	16320 W	34 A
SIGN 3 – 3:250 WATT MERCURY, 900 LINE WATTS	900 W	1.9 A
SIGN 4 – 2:250 WATT MERCURY, 600 LINE WATTS	600 W	1.2 A
SIGN 5 – 2:175 WATT, 2:250 WATT } MERCURY, 1020 LINE WATTS	1020 W	2.1 A
SIGN 6 – 1:250 WATT, 5:175 WATT } MERCURY, 1350 LINE WATTS	1350 W	2.8 A
	20190 W	42 A

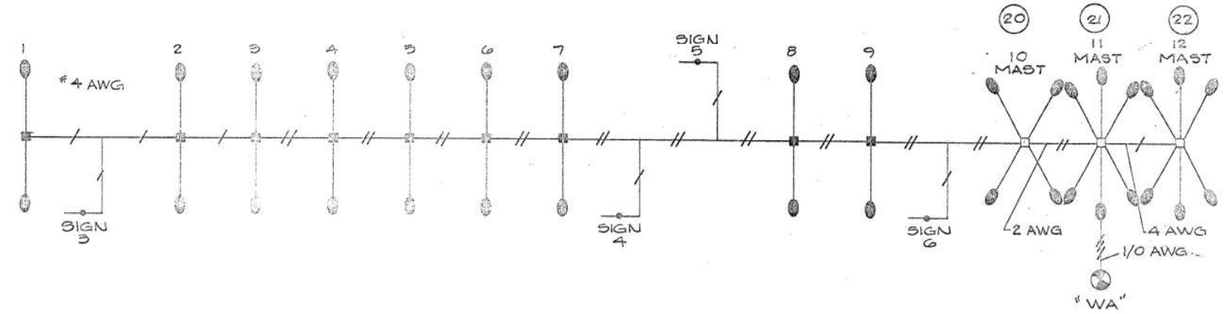

CIRCUIT "MA"

36 LIGHTS – 400 HPS, 480 LINE WATTS	17280 W	36 A
SIGN 9 – 2:175 WATT MERCURY, 420 LINE WATTS	420 W	0.9 A
SIGN 6 – 2:250 WATT MERCURY, 600 LINE WATTS	600 W	1.2 A
SIGN 25 – 3:175 WATT, 4:250 WATT } MERCURY, 1830 LINE WATTS	1830 W	3.8 A
SIGN 23 – 2:175 WATT MERCURY, 420 LINE WATTS	420 W	0.9 A
	20550 W	42.8 A

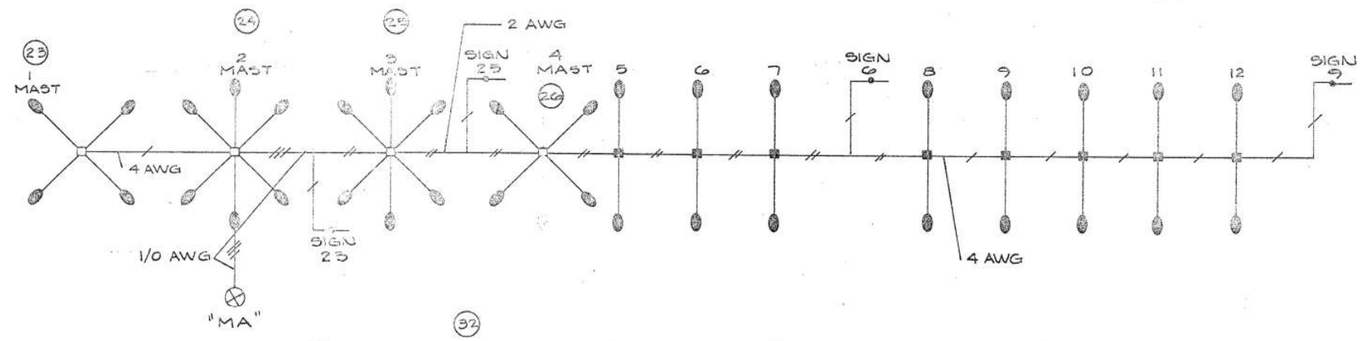

CIRCUIT "SM"

40 LIGHTS – 400 WATT HPS, 480 LINE WATTS	19200 W	40 A
SIGN 1 – 4:175 WATT, 2:250 WATT } MERCURY, 1440 LINE WATTS	1420 W	3 A
SIGN 13 – 1:175 WATT MERCURY, 210 LINE WATTS	210 W	0.8 A
SIGN 14 – 1:175 WATT MERCURY, 210 LINE WATTS	210 W	0.8 A
SIGN 15 – 2:175 WATT MERCURY, 420 LINE WATTS	420 W	1.6 A
SIGN 21 – 3:250 WATT MERCURY, 900 LINE WATTS	900 W	1.9 A
SIGN 26 – 1:175 WATT MERCURY, 210 LINE WATTS	210 W	0.8 A
	22590 W	48.9 A

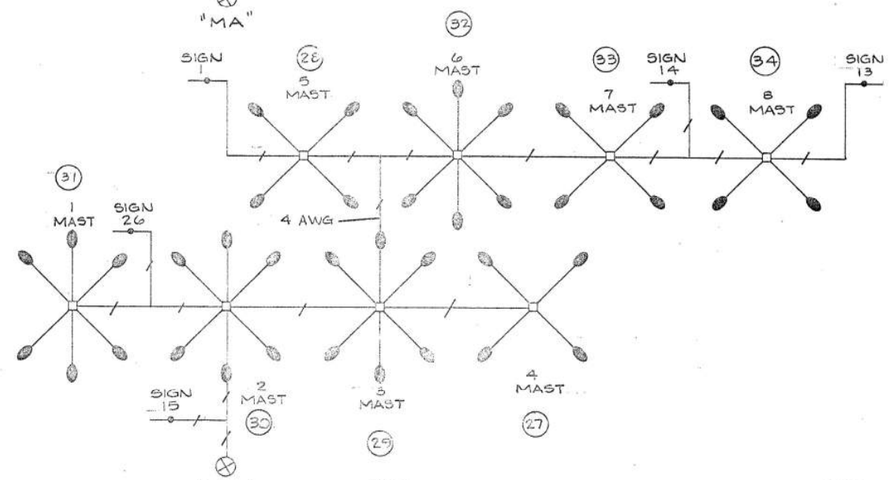

CIRCUIT "GL"

24 LIGHTS – 400 WATT HPS, 480 LINE WATTS	11520 W	24 A
SIGNS 1 & 9 – 2:175 MERCURY, 420 LINE WATTS	840 W	1.8 A
SIGN 6 – 2:175 WATT, 1:259 WATT } MERCURY, 720 LINE WATTS	720 W	1.5 A
	13080 W	27.3 A

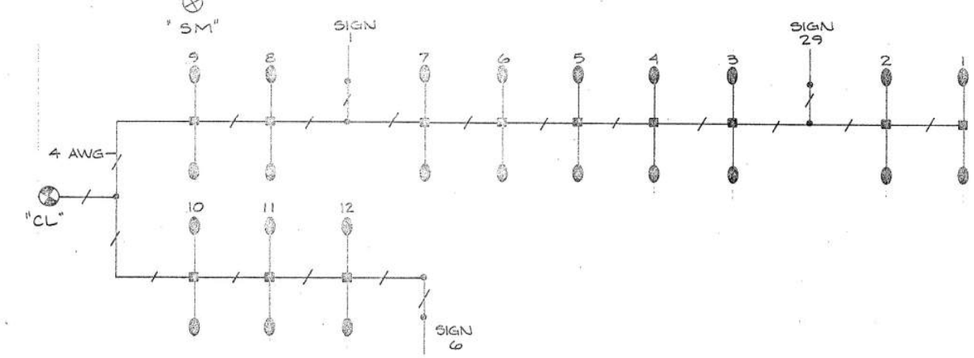

SU277CM1

CIRCUIT MAP

CIRCUIT "WO-1"

18 LIGHTS – 400 WATT H.P.S, 480 LINE WATTS	8640 W	18 AMP
EX. SIGN 1 – 6:175 MERCURY, 1260 LINE WATTS	1260 W	2.6 AMP
EX. SIGN 2 – 2:175 MERCURY, 420 LINE WATTS	420 W	0.9 AMP
	10320 W	21.5 AMP

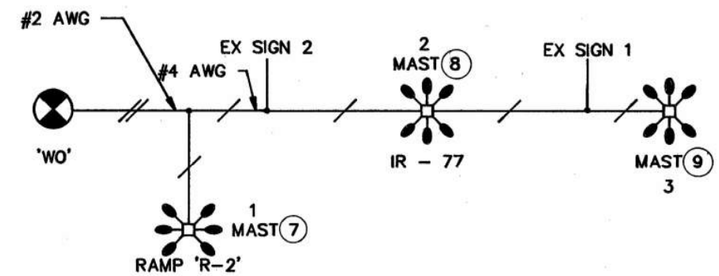

CIRCUIT "WO-2"

16 LIGHTS – 400 WATT H.P.S., 480 LINE WATTS	7680 W	16 AMP
SIGN 9 – 6:175 MERCURY, 1260 LINE WATTS	1260 W	2.6 AMP
	8940 W	18.6 AMP

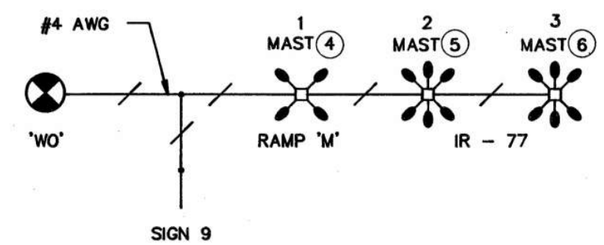

CIRCUIT "WO-3"

18 LIGHTS – 400 WATT H.P.S., 480 LINE WATTS	8640 W	18 AMP
SIGN 12 – 2:175, 2:250 ┐├ MERCURY, 1020 LINE WATTS	1020 W	2.1 AMP
SIGN 2 – 2:175 MERCURY, 420 LINE WATTS	420 W	0.9 AMP
	10080 W	21.0 AMP

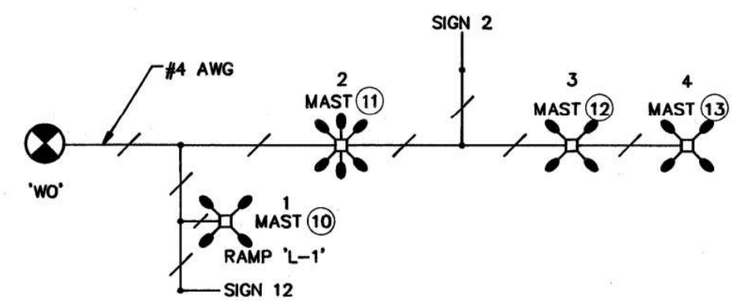

CIRCUIT "CH-1"

18 LIGHTS – 400 WATT H.P.S., 480 LINE WATTS	860 W	18 AMP
SIGN 2 – 4:175, 2:250 ┐├ MERCURY, 1440 LINE WATTS	1440 W	3 AMP
SIGNS 7 & 3 – 2:175 MERCURY, 420 LINE WATTS	840 W	1.8 AMP
	10920 W	22.8 AMP

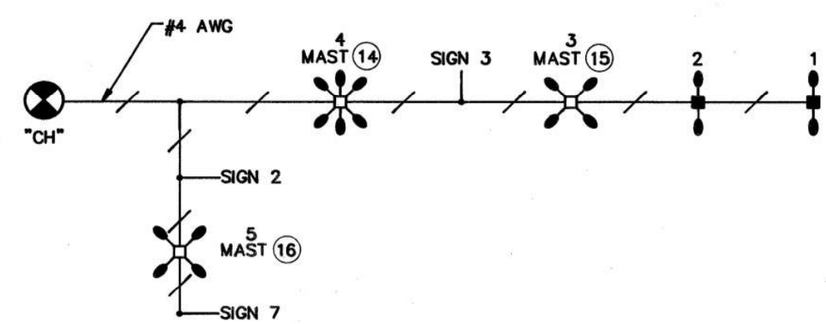

F.H.W.A. REGION	STATE	PROJECT	
5	OHIO		

SUM 277/224 – 0.00/6.31/10.22

CIRCUIT "CH–2"

16 LIGHTS – 400 WATTS HPS, 480 LINE WATTS	7680 W	16 A
EX. SIGN 3– 2:175 WATT MERCURY, 420 LINE WATTS	420 W	0.9 A
EX. SIGN 4– 3:175 WATT MERCURY, 630 LINE WATTS	630 W	1.3 A
SIGN 17 – 4:175 WATT MERCURY, 840 LINE WATTS	830 W	1.7 A
	9560 W	19.9 A

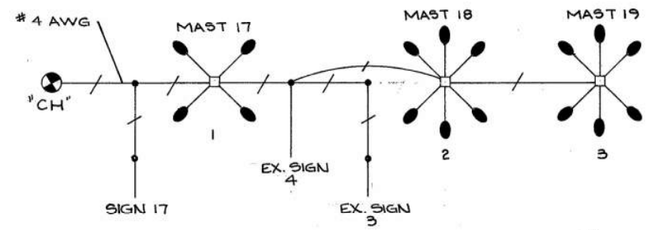

CIRCUIT "KE–1"

13 LIGHTS – 400 WATT HPS, 480 LINE WATTS	6240 W	13 A
8 LIGHTS – 200 WATT HPS, 240 LINE WATTS	1920 W	4 A
SIGN 35 – 2:175 WATT, 1:250 WATT } MERCURY, 720 LINE WATTS	720 W	1.5 A.
	8880 W	18.5 A

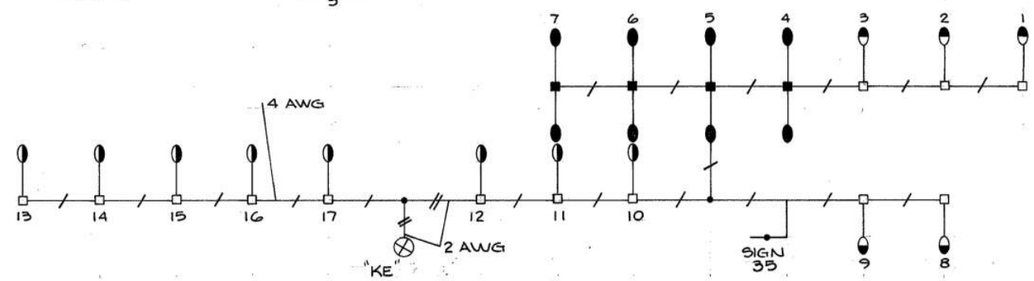

CIRCUIT "KE–2"

12 LIGHTS – 400 WATT HPS, 480 LINE WATTS	5760 W	12 A
11 LIGHTS – 200 WATT HPS, 240 LINE WATTS	2640 W	5.5 A
SIGN 7 – 3:250 WATT MERCURY, 900 LINE WATTS	900 W	1.9 A
SIGN 10 – 4:175 WATT MERCURY, 840 LINE WATTS	840 W	1.7 A
SIGN 13 – 4:175 WATT MERCURY, 840 LINE WATTS	840 W	1.7 A
	10980 W	22.8 A

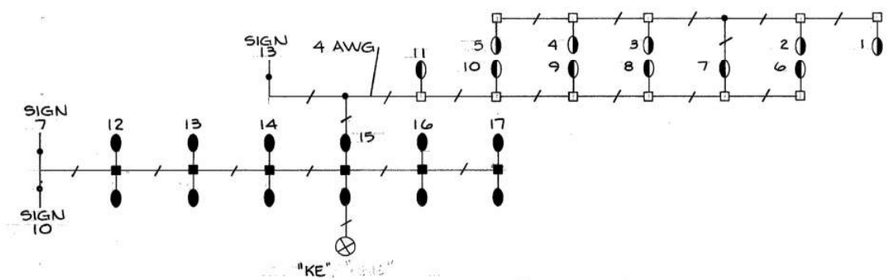

CIRCUIT "CKE–2" (120 VOLT)

2 LIGHTS – 200 W HPS, 240 LINE WATTS	480 W	4 A
SIGN 14 – 2:175 WATT MERCURY, 420 LINE WATTS	420 W	3.5 A
SIGN 15 – 2:175 WATT MERCURY, 420 LINE WATTS	420 W	3.5 A
SIGN 16 – 4:175 WATT MERCURY, 840 LINE WATTS	840 W	2.0 A
	2160 W	13 A

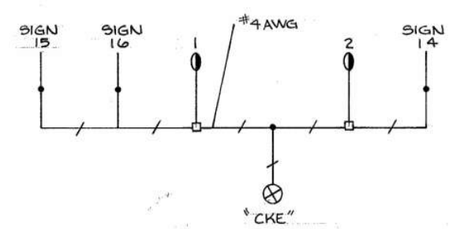

CIRCUIT "CKE–1" (120 VOLT)

9 LIGHTS – 200 W HPS, 240 LINE WATTS	2160 W	18 A
SIGN 26 – 1:100 WATT, 2:17 WATT } MERCURY, 540 LINE WATTS	540 W	4.5 A
SIGN 24 – 1:100 WATT MERCURY, 120 LINE WATTS	120 W	1 A
	2820 W	23.5 A

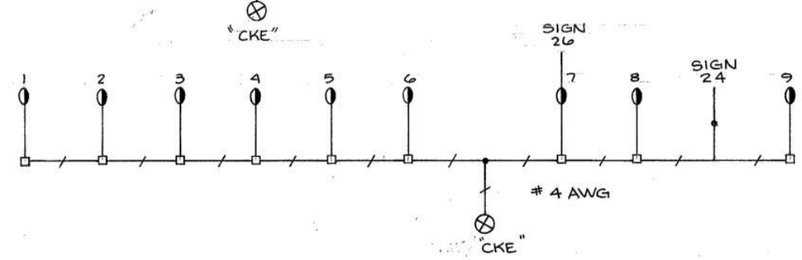

CALC. BY DATE	OHIO
CHK'D BY DATE	FHWA REGION 5

SUM 277/224—0.00/631/10.22

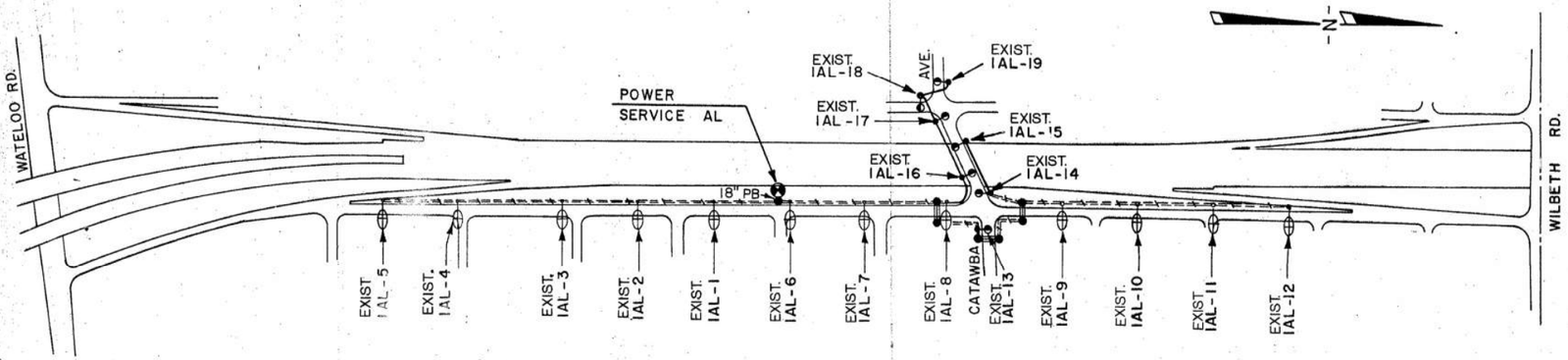

CIRCUIT IAL

7-150W; 195 LINE WATTS; H.P.S. =	1365W	3.5A
12-200W; 254 LINE WATTS; H.P.S. =	3,048 W	7.1 A
	4,413 W	10.6 A

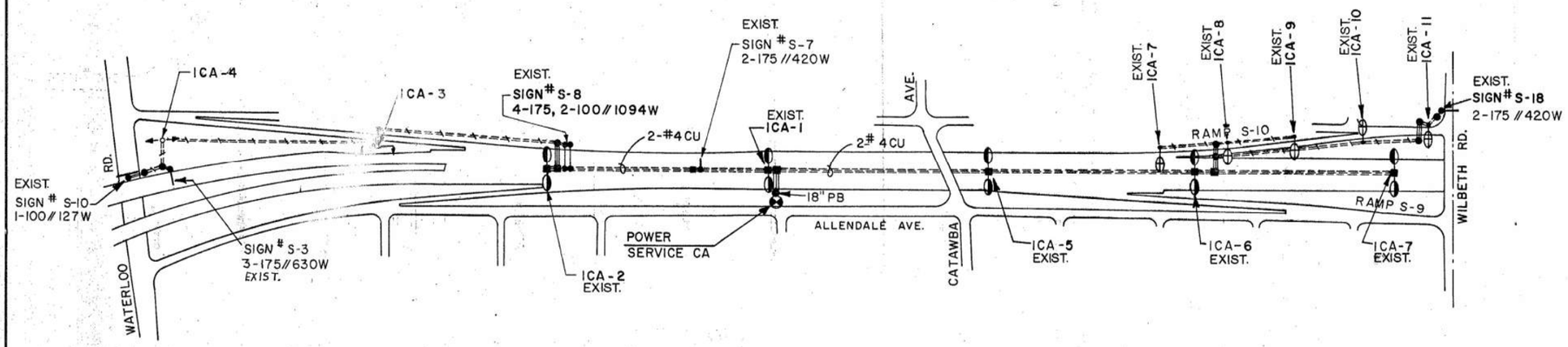

CIRCUIT ICA

5 - 200W; 254 LINE WATTS; H.P.S. =	1270 W	3.0A
20-400W; 485 LINE WATTS; H.P.S. =	9,700W	22.0A
SIGN # S-10; MERCURY	127W	0.3A
S-3 ; MERCURY	630W	1.5A
S-8; MERCURY	1094W	2.5A
S-18; MERCURY	420W	1.0A
S-7; MERCURY	420W	1.0A
	13,661W	31.3A

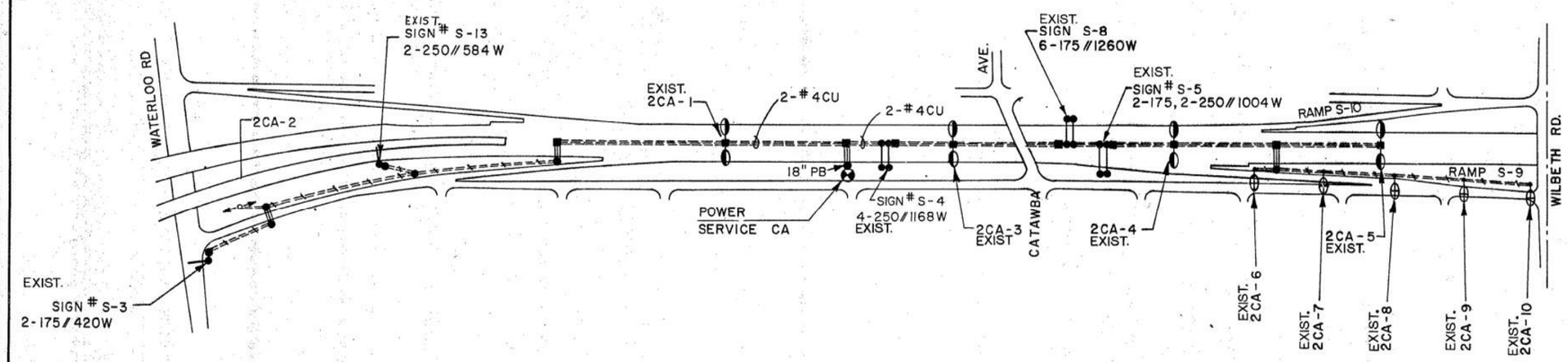

CIRCUIT 2CA

5-200W; 254 LINE WATTS; H.P.S. =	1270W	3.0A
14-400W; 485 LINE WATTS; H.P.S. =	6,790W	15.4A
SIGN # S-8 MERCURY	1260W	2.9A
S-4 MERCURY	1168W	2.8A
S-5 MERCURY	1004W	2.3A
S-3 MERCURY	420W	1.0A
S-13 MERCURY	584W	1.4A
	12,496W	28.8A

CIRCUIT DRAWINGS

OHIO	
FHWA REGION	5
FEDERAL PROJECT	

SUM-277/224-0.00/6.31/10.22

CIRCUIT 'HA'

12-400 W H.P.S. LAMPS	5760 W	12 AMP
EX SIGN S-1 MERCURY VAPOR	935 W	1.9 AMP
SIGN S-1 MERCURY VAPOR	420 W	0.9 AMP
SIGN S-2 MERCURY VAPOR	1020 W	2.1 AMP
	8135 W	16.9 AMP

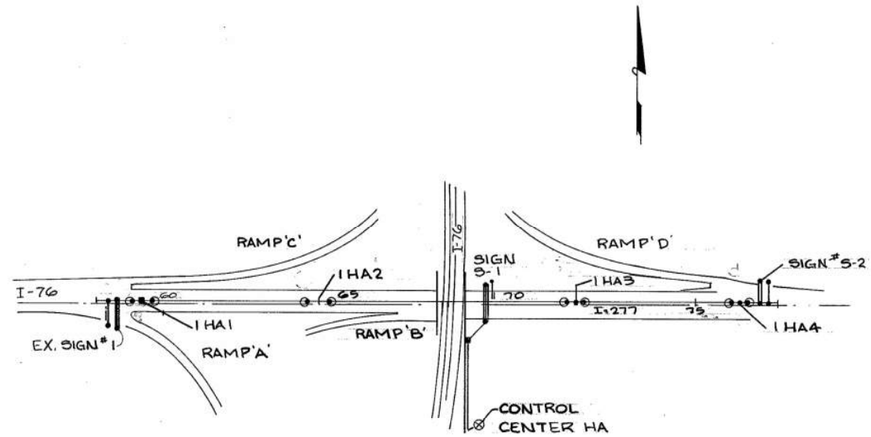

CIRCUIT MAP

F.H.W.A. REGION	STATE	PROJECT	
5	OHIO		

SUM – 277/224 – 0.00/6.31/10.22

WATERLOO RD.

CIRCUIT "UPW"

6 UNDERPASS UNITS – 100 WATTS HPS, 144 LINE WATTS	864 W	7.2 A
SIGN 7 – 1:175 WATT MERCURY, 210 LINE WATTS	210 W	1.75 A
SIGN 8 – 1:175 WATT MERCURY, 210 LINE WATTS	210 W	1.75 A
SIGN 9 – 2:100 WATT, 2:175 WATT } MERCURY, 660 LINE WATTS	660 W	5.5 A
	1944 W	16.2 A

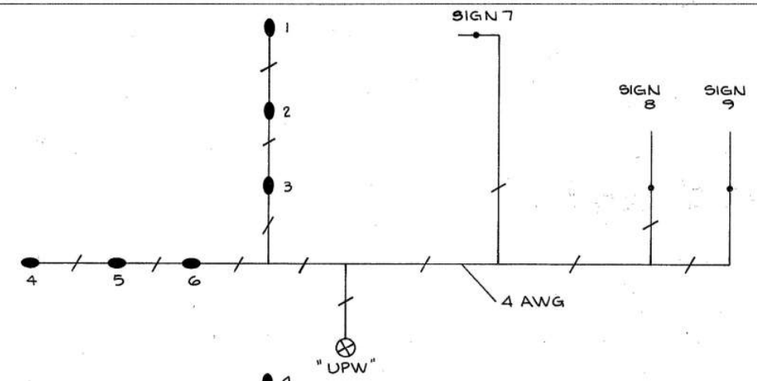

S.R. 93 (MANCHESTER RD.)

CIRCUIT "UPM"

6 UNDERPASS UNITS – 100 WATT HPS, 144 LINE WATTS	864 W	7.2 A
SIGN 11 – 1:175 WATT MERCURY, 210 LINE WATTS	210 W	1.75 A
SIGN 12 – 1:175 WATT MERCURY, 210 LINE WATTS	210 W	1.75 A
SIGN 17 – 1:175 WATT MERCURY, 210 LINE WATTS	210 W	1.75 A
	1494 W	12.4 A

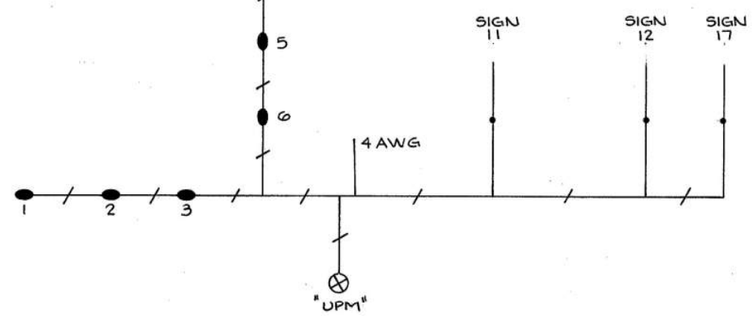

LEY DRIVE

SUM – 277 – 0175

2 UNDERPASS UNITS, 100 WATT H.P.S., 144 LINE WATTS 288 W 2.4 AMP

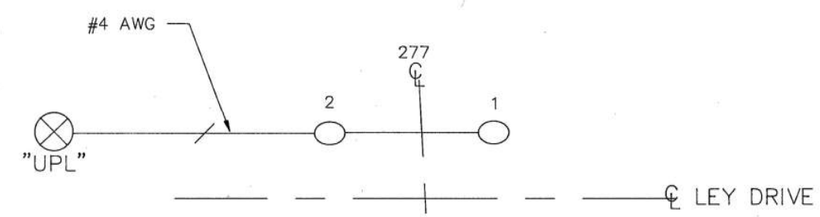

GLENMOUNT

SUM – 277 – 0307

3 UNDERPASS UNITS, 100 WATT H.P.S., 144 LINE WATTS 432 W 3.6 AMP

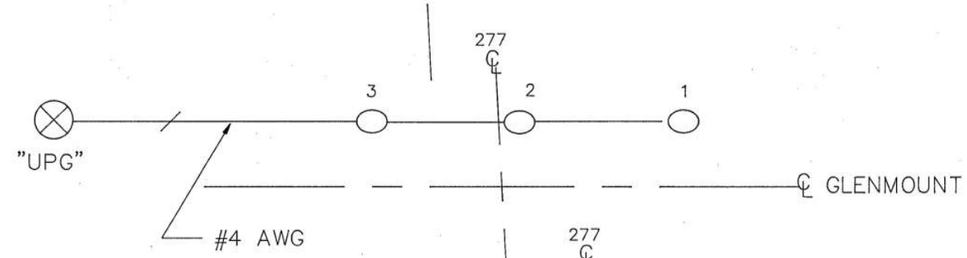

ARLINGTON ST.

SUM – 224 – 1061

4 UNDERPASS UNITS, 100 WATT H.P.S., 144 LINE WATTS 576 W 4.8 AMP

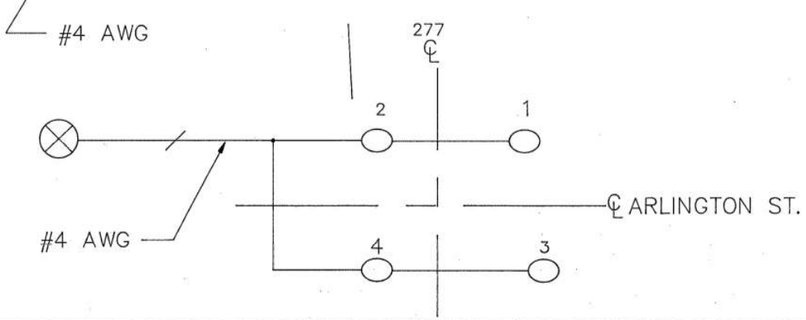

UNDERPASS CIRCUIT MAPS

OHIO	
FHWA REGION 5	
FEDERAL PROJECT	

SUM-277/224-0.00/6.31/10.22

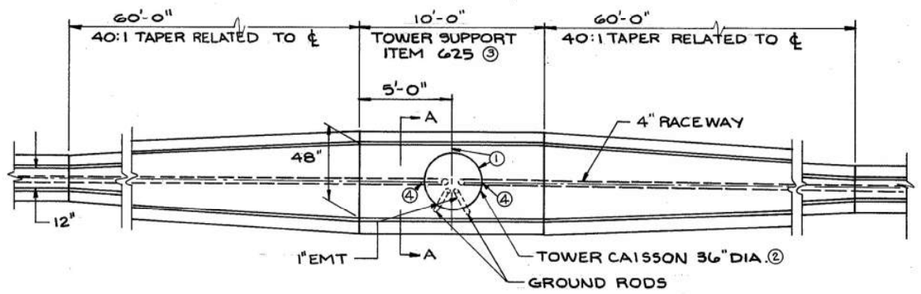

BARRIER TOWER FOUNDATION - PLAN VIEW

SCALE: 1/4" = 1'-0"

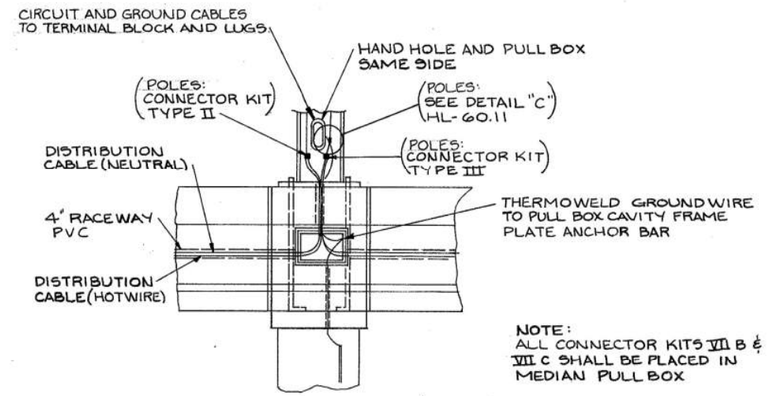

NOTE:
ALL CONNECTOR KITS VII B & VII C SHALL BE PLACED IN MEDIAN PULL BOX

TYPICAL WIRING DIAGRAM FOR
MEDIAN MOUNTED TOWERS (POLES)

NO SCALE

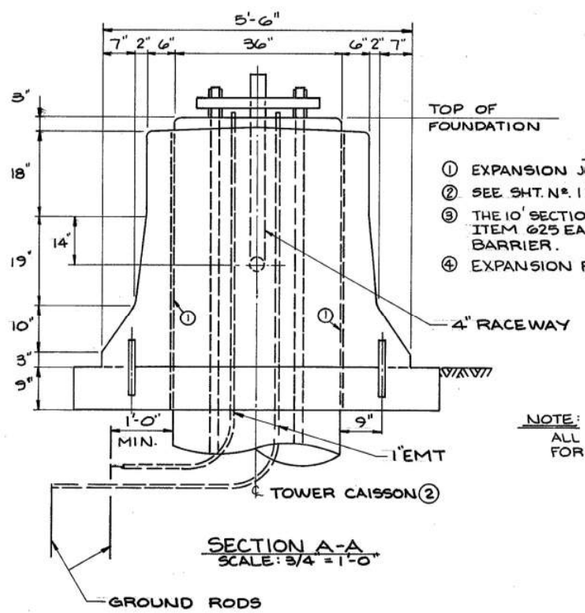

LEGEND

① EXPANSION JOINT, 3/4" MIN. PREFORMED FILLER 705.03

② SEE SHT. Nº. 115 FOR TOWER FND. DESIGN INFO.

③ THE 10' SECTION OF BARRIER SHALL BE PAID FOR UNDER ITEM 625 EA. "LIGHT TOWER FOUNDATION MEDIAN BARRIER.

④ EXPANSION FITTING - INCLUDED IN COST OF END.

NOTE:
ALL DIMENSIONS TYPICAL FOR TOWERS Nº 20 THRU 26

SECTION A-A
SCALE: 3/4 = 1'-0"

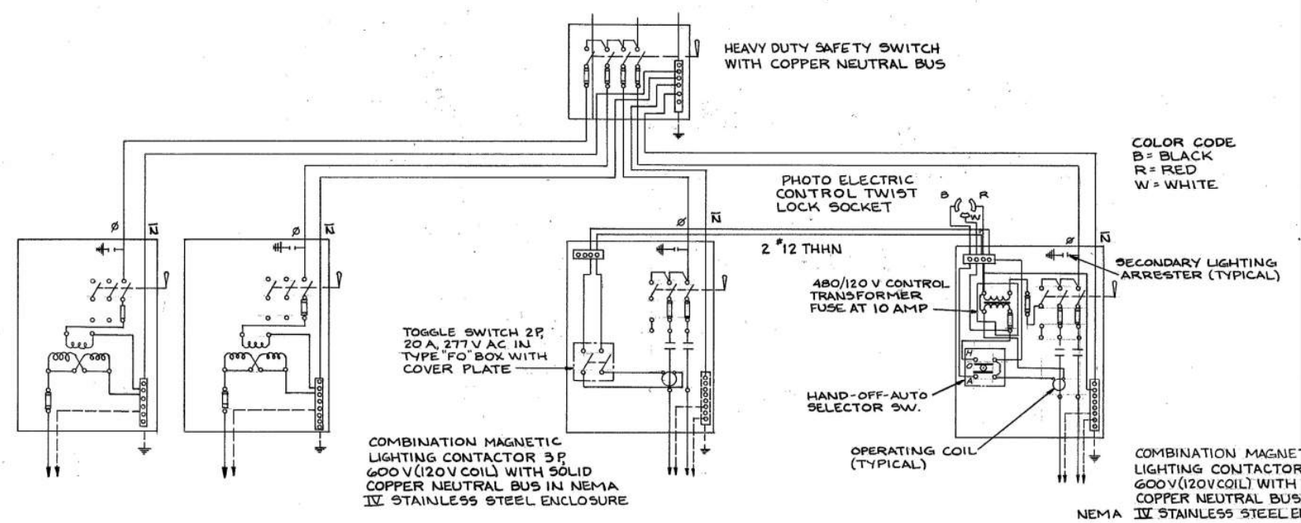

EXISTING TRAFFIC SIGNAL CONTROL CENTERS
NO WORK

LIGHTING CONTROLLER "KE"

LIGHTING CONTROLLER "CKE"

POWER SERVICE "KE"/"CKE" WIRING DIAGRAM

SURVEY			
NOTE BOOK	SURVEYED		
	PLOTTED		
	TEMPLATE		
	AREAS		
No.	AREAS CHECKED		

SURVEY			
NOTE BOOK	SURVEYED		
	PLOTTED		
	TEMPLATE		
	AREAS		
No.	AREAS CHECKED		

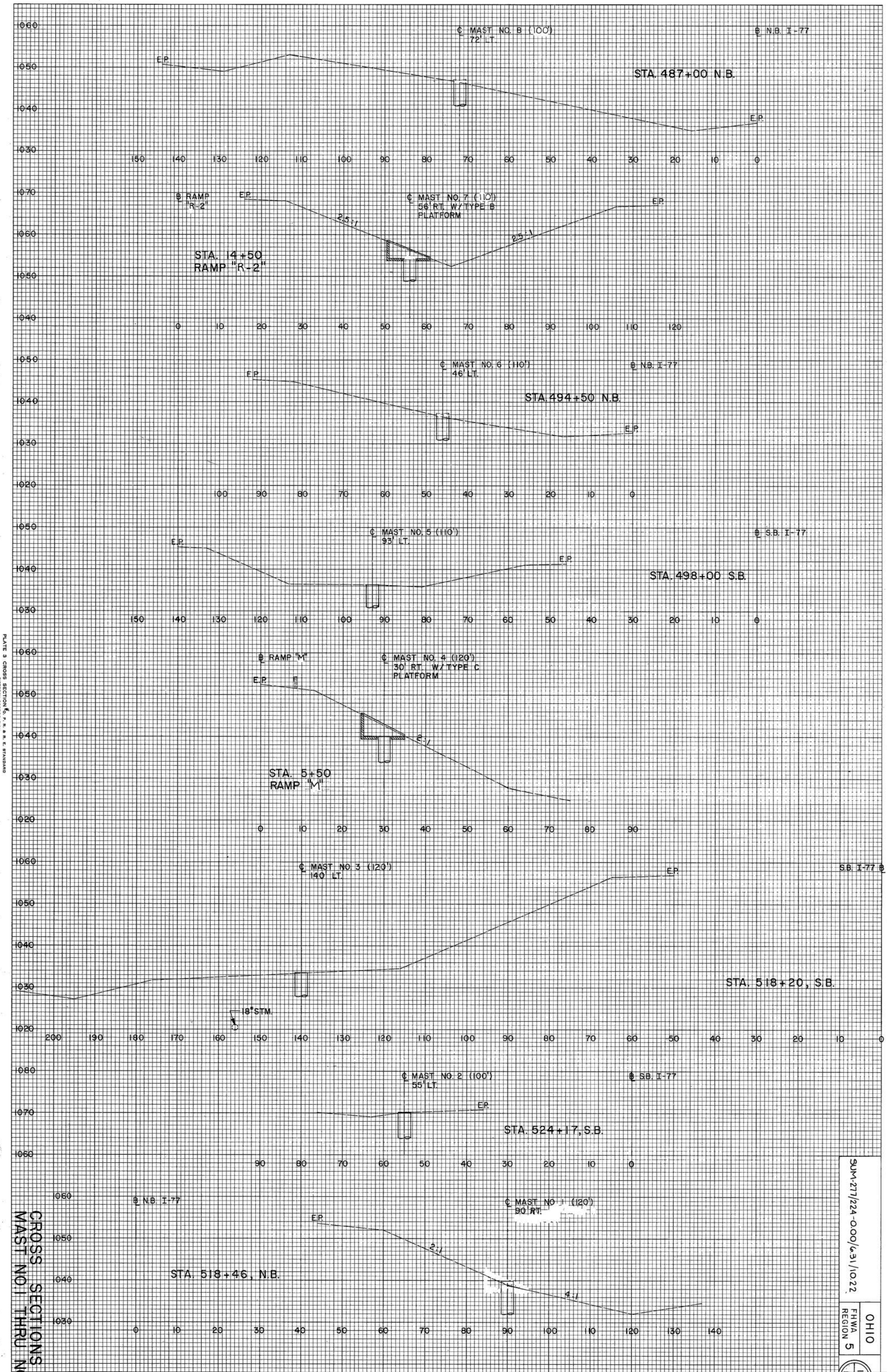

PLATE 3 CROSS SECTION O. P. R. & R. E. STANDARD
DETZEN CORPORATION

CROSS SECTIONS MAST NO. 1 THRU N

SUM-277/224-000/631/1022

OHIO
FHWA REGION 5

SURVEY		
NOTE BOOK No.	PLOTTED	
	TEMPLATE	
	AREAS	
	AREAS CHECKED	

SURVEY		
NOTE BOOK No.	PLOTTED	
	TEMPLATE	
	AREAS	
	AREAS CHECKED	

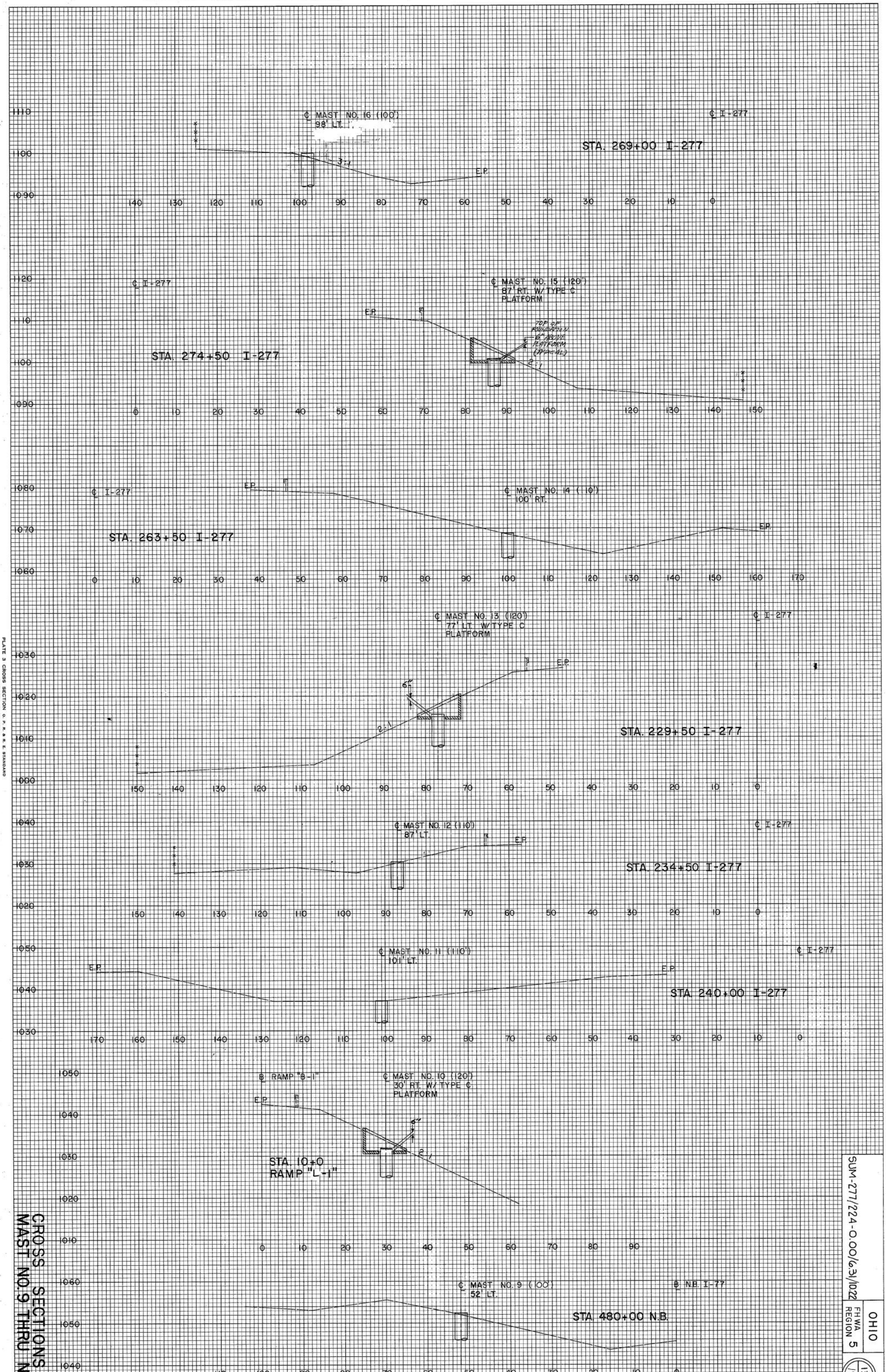

PLATE 3 CROSS SECTION O. P. R. R. E. STANDARD
DETZEN CORPORATION

CROSS SECTIONS
MAST NO. 9 THRU NO. 16

SUM-277/224-0.00/6.31/1022

OHIO
FHWA REGION 5

13
(19)

FINAL SURVEY		BY	DATE
NOTE BOOK No.	SURVEYED		
	PLOTTED		
	TEMPLATE		
	AREAS		
	AREAS CHECKED		

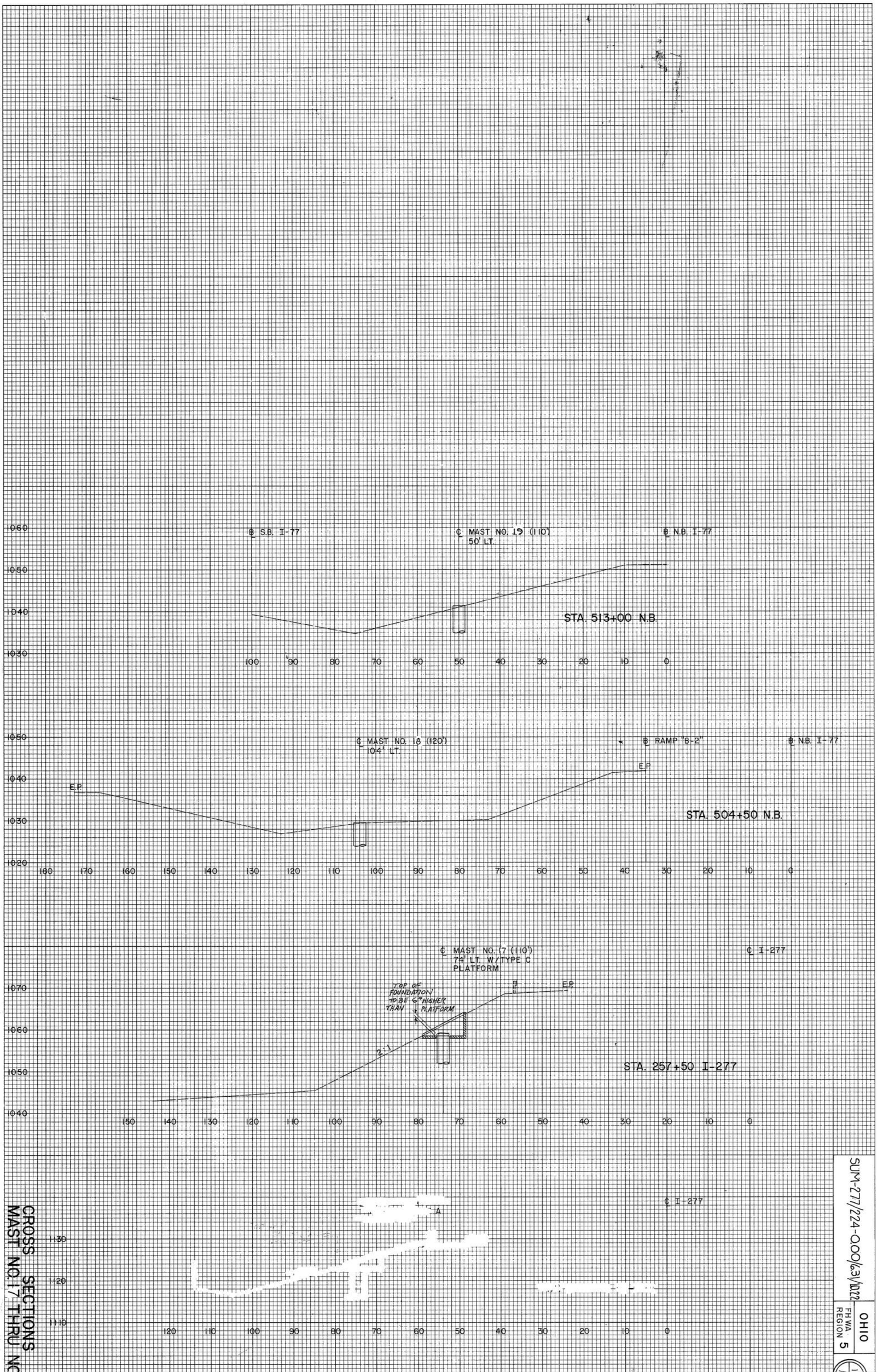

CROSS SECTIONS
MAST NO. 17 THRU NO.

PLATE 3 CROSS SECTION O. P. R. R. E. STANDARD
OREGON CORPORATION

SUM-277/224-000/63/1022	OHIO
	FHWA REGION 5

FED. RD. DIVISION	STATE	PROJECT	
5	OHIO		

SUM-277/224-0.00/6.31/10.27

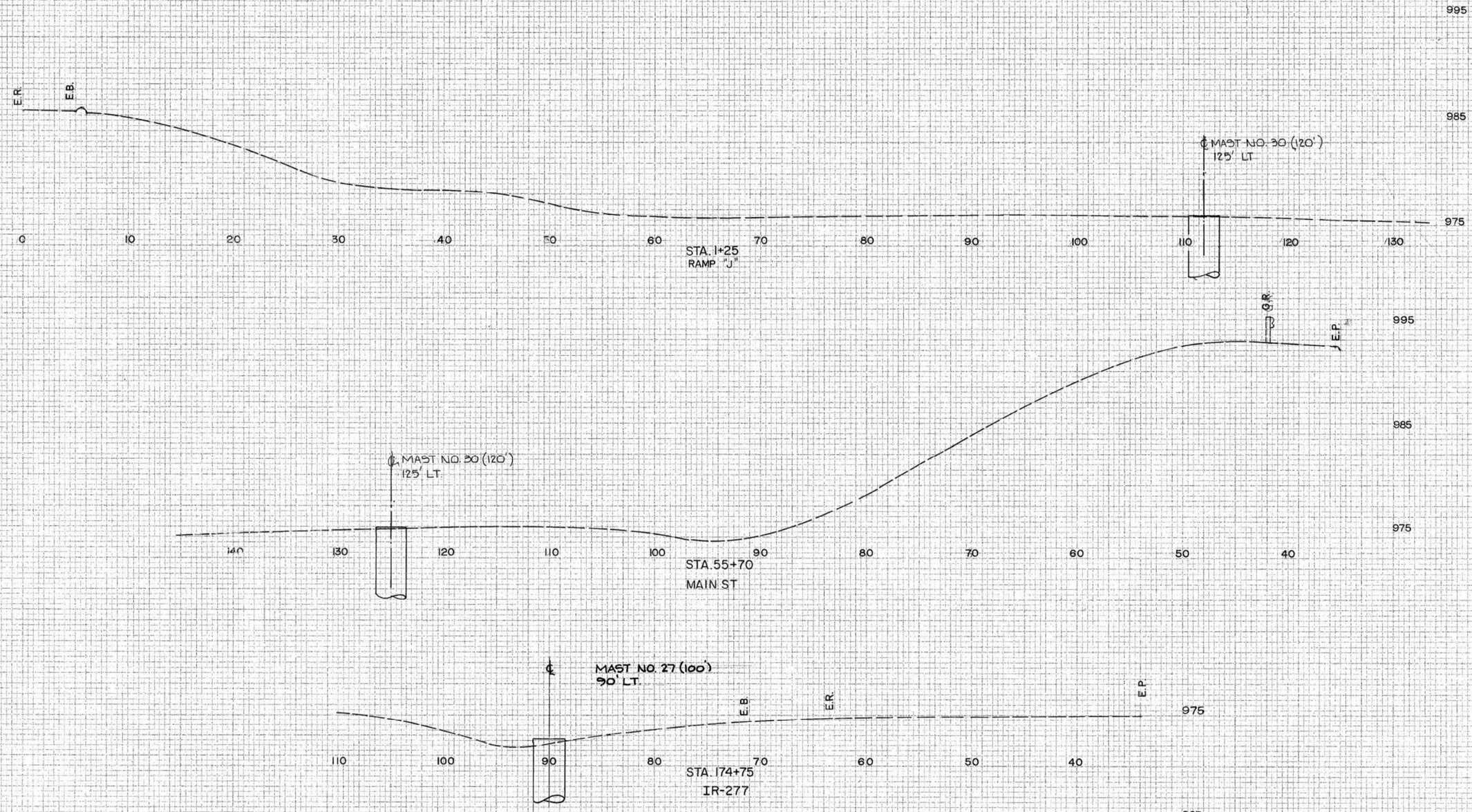

ORIGINAL SURVEY

COMPUTED	
PLOTTED	
NOTE BOOK	SHEETS
NO.	PAGE

PLATE 3-FULL CROSS SECTION-FULL LINE

CROSS—SECTION MAST 27/30

FED. RD. DIVISION	STATE	PROJECT	
5	OHIO		

SUM-277/224-0.00/6.31/10.22

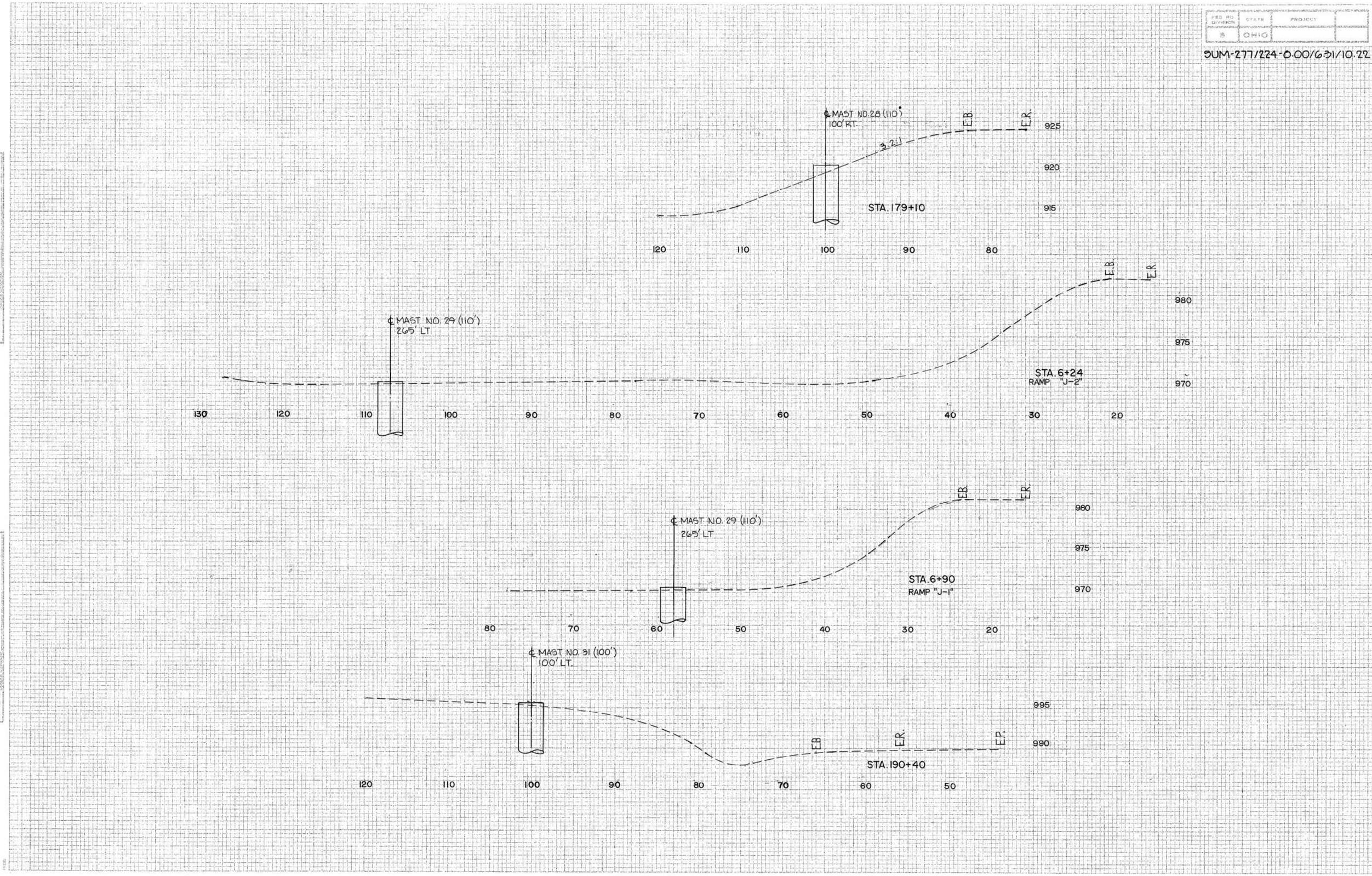

PLATE 3-FULL CROSS SECTION-FULL LINE

CROSS-SECTION MASTS 28/29/31

FED. RD. DIVISION	STATE	PROJECT	
5	OHIO		

SUM-277/224-0.00/6.31/10.2

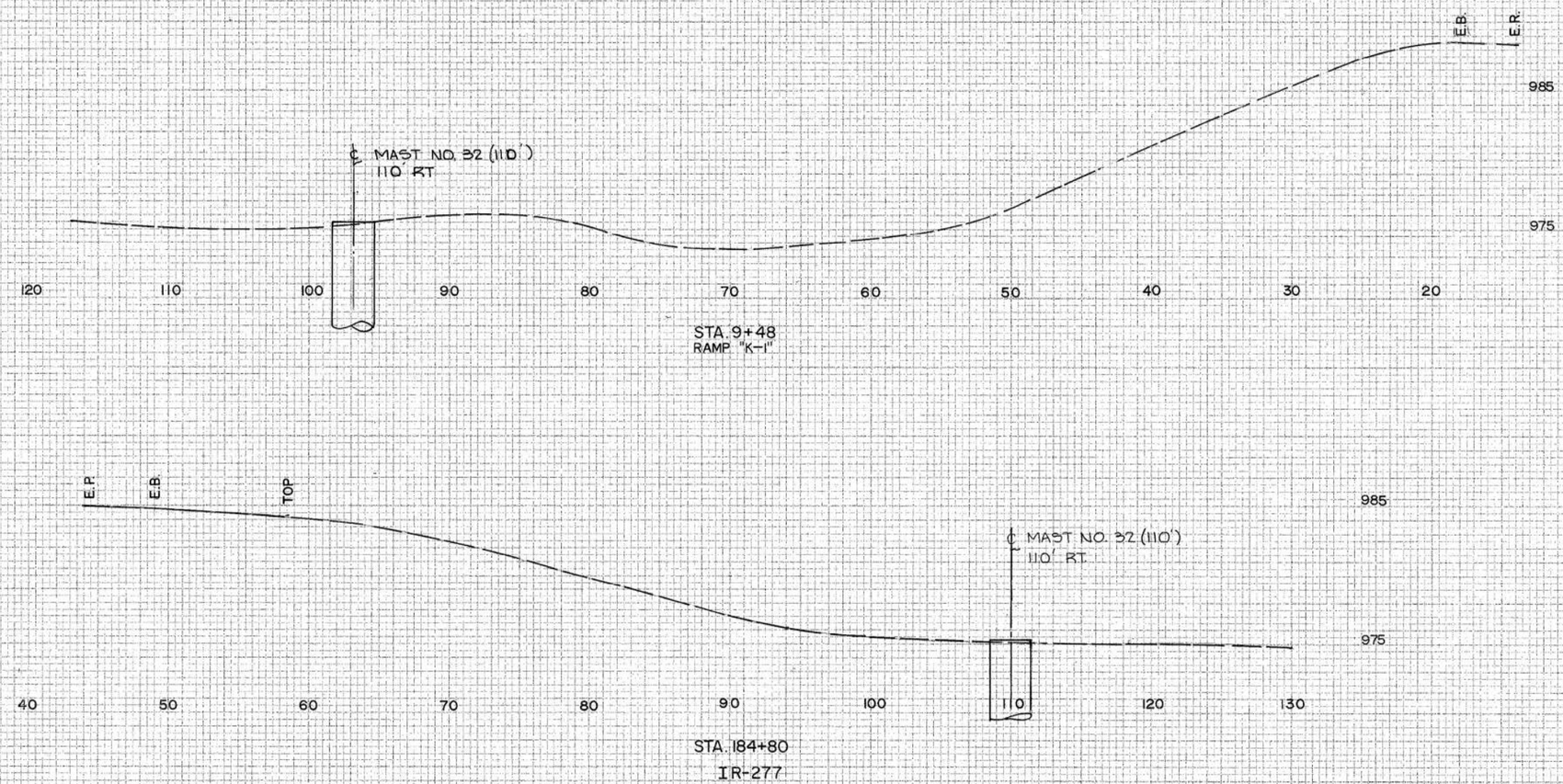

PLATE 3-FULL CROSS SECTION-FULL LINE

CROSS—SECTION MAST 32

FED. RD. DIVISION	STATE	PROJECT
5	OHIO	

SUM 277/224-0.00/6.31/10.7

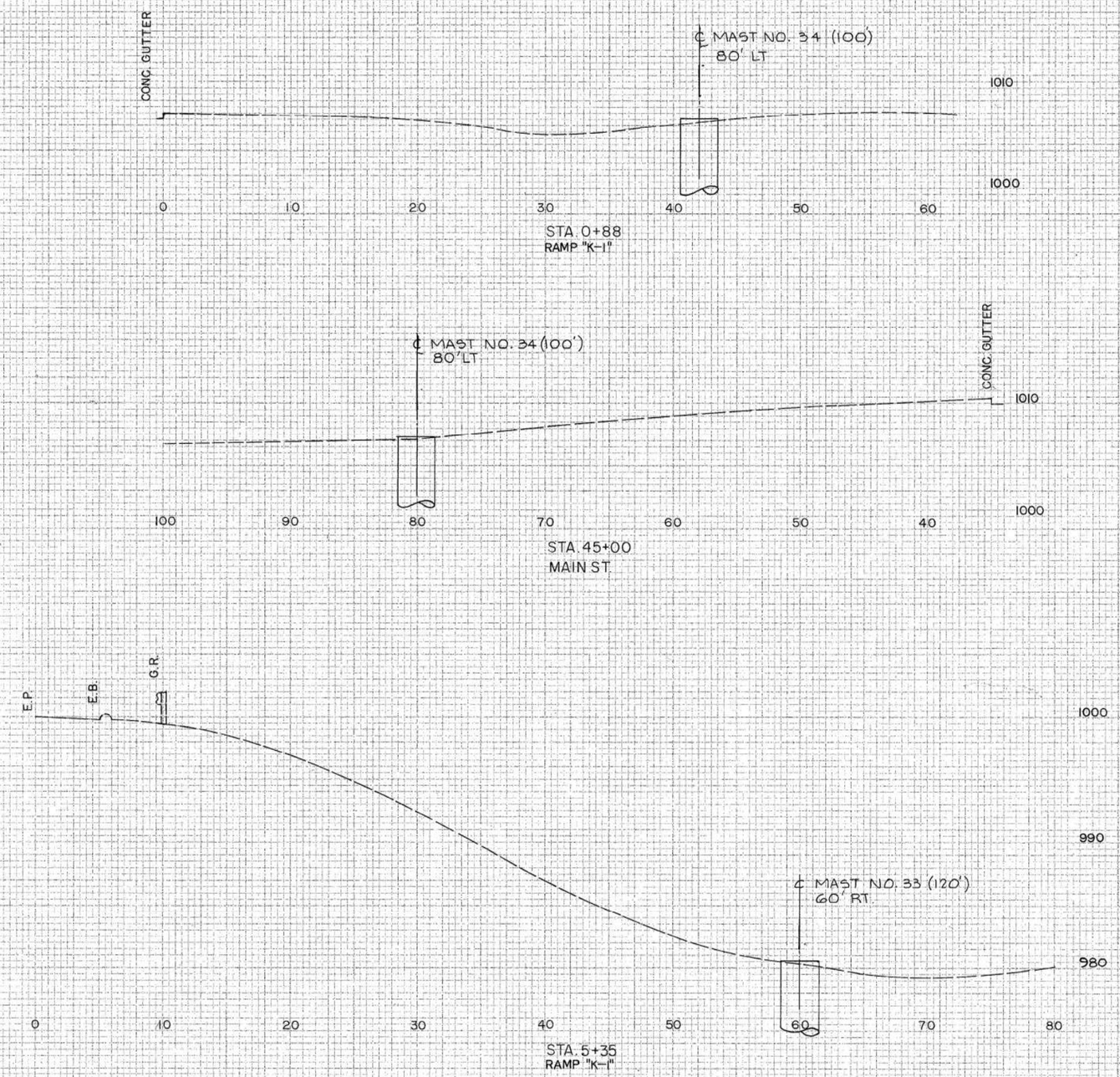

PLATE 3-FULL CROSS SECTION-FULL LINE

CROSS-SECTION MAST 33-34

GENERAL NOTES

REFERENCE: REFERENCE SHALL BE MADE TO SUPPLEMENTAL SPECIFICATION 943 - WOOD FIBER MULCHING MATERIAL DATED JUNE 10, 1987, STANDARD DRAWING LA-2 DATED JUNE 1, 1979, STANDARD DRAWING TC-41.20 DATED 3-26-79.

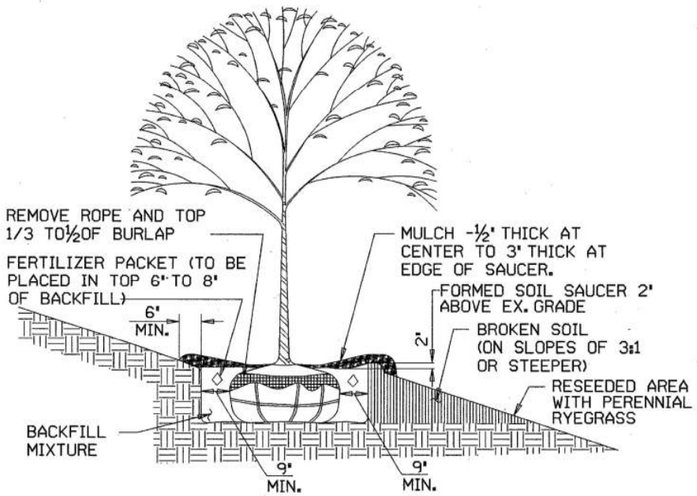

PLANTING DETAIL

THE TOP OF THE ROOT BALL SHALL BE SET BETWEEN NORMAL GROUND LINE AND 1 INCH HIGH OR AS APPROVED BY THE ENGINEER.

ON SLOPES WHERE HEAVY CLAY AND IMPERMEABLE SOILS ARE PRESENT, THE DOWNHILL SIDE OF THE POCKET HOLE SHALL BE BROKEN OR LOOSENED AND RETURNED TO ITS NATURAL GRADE TO PROVIDE DRAINAGE FOR THE HOLE.

INSPECTION
ALL NURSERY STOCK TO BE PURCHASED UNDER THIS PROJECT SHALL BE SUBJECT TO INSPECTION AND SEALING BY THE LANDSCAPE ARCHITECT, IN THE NURSERY, WITH DEPARTMENT SEALS BEFORE DIGGING AND SHIPPING.

PLANTING HOLE PREPARATION
AFTER THE LAYOUT IS APPROVED BY THE ENGINEER, AS PER ITEM 662.12, INDIVIDUAL HOLES SHALL BE DUG ON CENTERS AS SHOWN ON THE PLANS. THESE HOLES SHALL ALLOW FOR A MINIMUM OF NINE (9) INCHES OF BACKFILL MIXTURE AROUND THE SIDES OF THE BALLS. THE BOTTOM OF THE HOLE SHALL BE AT THE SAME DEPTH OF THE BALL OR UP TO 1 INCH LESS. OR AS APPROVED BY THE ENGINEER. THE MATERIAL REMOVED FROM THE HOLES SHALL BE TAKEN FROM THE PROJECT IF IT IS FOUND TO BE UNACCEPTABLE FOR USE AS BACKFILL AS DETERMINED BY THE ENGINEER. THE PLANT SHALL THEN BE SET AND THE HOLE FILLED WITH BACKFILL MIXTURE, AND THE PLANTING OPERATION PERFORMED AS SPECIFIED IN ITEMS 662.17 AND 662.18. ALL EXCESS DIRT SHALL BE REMOVED FROM THE SITE.

EXISTING TREES AND SHRUBS DESIGNATED TO REMAIN SHALL TAKE PRIORITY OVER PROPOSED PLANTINGS. THE LOCATIONS OF THE PROPOSED TREES ARE APPROXIMATE AND MAY BE REARRANGED AT THE DIRECTION OF THE ENGINEER, AFTER CONSULTATION WITH THE LANDSCAPE DESIGNER.

AN AUGER MAY BE USED IN DIGGING HOLES, PROVIDED SIDES OF AUGERED HOLES ARE COMPLETED WITH HAND TOOLS TO PREVENT POLISHED OR SHINY SIDES.

BACKFILL NO. 1: THE BACKFILL MIXTURE USED TO FILL POCKET HOLES IN LIGHT AND MEDIUM SOILS SHALL CONSIST BY VOLUME OF TWO PARTS EXISTING SOIL MATERIAL OR APPROVED TOPSOIL, AND ONE PART *SOIL CONDITIONER.

BACKFILL NO. 2: THE BACKFILL MIXTURE USED TO FILL POCKET HOLES IN HEAVY SOILS SHALL CONSIST BY VOLUME OF ONE PART EXISTING SOIL MATERIAL OR APPROVED TOPSOIL, ONE PART SHARP SAND, AND ONE PART *SOIL CONDITIONER.

INCORPORATE THOROUGHLY INTO THE BACKFILL MIXTURES FIVE POUNDS OF COMMERCIAL FERTILIZER (0-20-20) PER CUBIC YARD. THE ENGINEER, AFTER CONSULTATION WITH THE LANDSCAPE ARCHITECT, SHALL DETERMINE THE LOCATIONS WHERE THE BACKFILL MIXTURES SHALL BE USED.

*SOIL CONDITIONER
SOIL CONDITIONER SHALL CONSIST OF CITY OF AKRON COMPOST, TECHNA GRO TM., OR APPROVED EQUAL.

SOIL TESTING - FERTILIZING
CONTRACTOR, PRIOR TO PLANTINGS, SHALL HAVE SEPARATE SOIL ANALYSIS COMPLETED FOR EACH PLANT GENUS. MIX SOIL SAMPLES TOGETHER TO SUBMIT A REPRESENTATIVE SAMPLE. NARROW LEAF EVERGREEN SAMPLES SHALL BE TAKEN FROM BACKFILL NO. 1 AND/OR NO. 2. ANALYSIS RESULTS SHALL INDICATE AVAILABLE PHOSPHOROUS, EXCHANGEABLE POTASSIUM, CALCIUM, MAGNESIUM, SOIL PH AND LIME REQUIREMENT. CONTRACTOR, ON COLLABORATION WITH THE ENGINEER, SHALL APPLY MIX AND/OR INCORPORATE FERTILIZER TYPES OR CORRECTIVES SUCH AS LIME AT RATES AND METHODS NOTED IN ANALYSIS RESULTS TO THE FULL DEPTH OF ROOT SYSTEMS FOR EACH PLANT TYPE. COST TO PROCURE SOIL SAMPLES, ANALYSIS RESULTS, FERTILIZERS, SOIL CORRECTIVES, AND THE APPLICATION, MIXTURE OR INCORPORATION OF SAME, SHALL BE INCLUDED IN COST OF PLANT.

APPROPRIATE SOIL SAMPLES SHALL BE SENT TO OARDC IN WOOSTER, OHIO, OR TO AN APPROVED PRIVATE LAB OF THE CONTRACTOR'S CHOICE.

USE OF WATER POLYMER
A WATER POLYMER SUCH AS 'TERRASORB' AS MANUFACTURED BY INDUSTRIAL SERVICES INTERNATIONAL, P.O. BOX 10834, BRADENTON, FLA. 34282-0834, PHONE: 813-792-7778; OR 'SOIL MOIST' AS MANUFACTURED BY JRM CHEMICAL DIVISION, 13900 BROADWAY AVENUE, CLEVELAND, OHIO 44125, OR APPROVED EQUAL, SHALL BE UNIFORMLY MIXED THROUGHOUT APPROVED BACKFILL MIX AT THE RATE RECOMMENDED BY THE MANUFACTURER, FOR TREES PRIOR TO PLACEMENT.

PRE-EMERGENT HERBICIDE
ON COMPLETION OF PLANTING(S) OF TREES BY THE CONTRACTOR, AND APPROVED BY THE ENGINEER (PRIOR TO MULCHING) SAUCERS CONSISTING OF APPROVED BACKFILL MIX OR EXISTING SOIL SHALL BE TREATED WITH A PRE-EMERGENT HERBICIDE TYPE AS RECOMMENDED IN THE OHIO COOPERATIVE EXTENSION SERVICE (OCES) BULLETIN MM-297, AGDEX 270/641. THE RATE AND METHOD OF APPLICATION SHALL BE IN STRICT ACCORDANCE WITH THE MANUFACTURER'S PRODUCT LABEL. THIS WORK SHALL BE ACCOMPLISHED UNDER THE DIRECT SUPERVISION OF A PESTICIDE APPLICATOR LICENSED BY THE STATE OF OHIO.

PLANTING PERIOD OF ESTABLISHMENT
BEFORE FINAL INSPECTION, ALL PLANTINGS SHALL BE IN PLACE AND UNDER THE CARE OF THE CONTRACTOR FOR A PERIOD OF ESTABLISHMENT. THIS PERIOD SHALL BEGIN IMMEDIATELY UPON COMPLETION OF THE PLANTING OPERATION FOR ANY PLANT OR SPECIES GROUP AND CONTINUE UNTIL OCTOBER 1. IN NO CASE SHALL IT BE LESS THAN ONE GROWING SEASON, JUNE 1 TO OCTOBER 1.

DURING THIS PERIOD OF ESTABLISHMENT, IT SHALL BE THE CONTRACTOR'S RESPONSIBILITY TO FOLLOW SUCH HORTICULTURAL PRACTICES AS REQUIRED TO ASSURE THE VIGOR AND GROWTH OF THE TRANSPLANTED MATERIAL. THIS CARE SHALL INCLUDE WATERING, REMULCHING, WEEDING, PRUNING OF DEAD AND BROKEN BRANCHES, RAISE OR LOWER PLANT MATERIAL TO SPECIFIED LEVEL(S), STRAIGHTENING, RESTAKING, GUYING, AND CULTIVATING. THERE SHALL BE A MINIMUM OF TWO WEEDING AND MOWING PROGRAMS OF SUCH INTENSITY AS TO COMPLETELY RID THE PLANTED AND MULCHED AREAS OF WEEDS AND GRASSES. THE FIRST PROGRAM SHALL BEGIN ON OR ABOUT JUNE 15 AND THE OTHER APPROXIMATELY EIGHT WEEKS LATER. CONTRACTOR SHALL NOTIFY ENGINEER 24 HOURS IN ADVANCE OF EACH PROGRAM.

EACH PLANT SHALL HAVE SUFFICIENT WATER TO KEEP IT IN A HEALTHY, GROWING CONDITION. IF LOCAL WEATHER CONDITIONS WARRANT, THE ENGINEER MAY REQUIRE WEEKLY WATERING. A SCHEDULE FOR WATERING EACH PLANT AND MAINTENANCE AS DESCRIBED IN THE PRECEDING PARAGRAPH SHALL BE SUPPLIED TO AND APPROVED BY THE ENGINEER AT THE PRECONSTRUCTION MEETING. SOIL MOISTURE SHALL BE MEASURED IN EACH PLANTING ZONE BY A SOIL MOISTURE METER APPROVED, READ AND RECORDED BY THE ENGINEER ON A WEEKLY BASIS. WATERING SHALL BE DONE ACCORDING TO THE WATERING TABLE WHEN INDICATED BY THE WEEKLY METER READINGS AND DETERMINED BY THE ENGINEER IN CONSULTATION WITH THE LANDSCAPE ARCHITECT. THE WATER SHALL BE APPLIED IN SUCH A MANNER AS TO SATURATE THE ROOT AND MULCHED AREA OF EACH PLANT WITHOUT CAUSING RUN-OFF (SEE WATERING TABLE).

ON OR ABOUT SEPTEMBER 15, THE ENGINEER SHALL INSPECT THE PLANTING AND SUPPLY THE CONTRACTOR WITH A LISTING OF THOSE PLANTS HAVING DIED, DIED BACK BEYOND NORMAL PRUNING LINES, OR WHICH ARE MISSING FROM THE PLANTING. THE CONTRACTOR SHALL MAKE THE REPLANTING AS REQUIRED AND IN ACCORDANCE WITH THE SPECIFICATIONS FOR THE ORIGINAL MATERIAL. THESE REPLACEMENTS ARE NOT SUBJECT TO THE PERIOD OF ESTABLISHMENT. HOWEVER, PLANTS PLANTED INITIALLY IN THE FALL WHICH HAVE DIED BEFORE THE SPRING PLANTING SEASON SHALL BE REPLACED IMMEDIATELY AND ARE SUBJECT TO THE ESTABLISHMENT PERIOD.

AFTER REPLACEMENTS HAVE BEEN PLANTED, THE FINAL INSPECTION SHALL BE MADE AND THE ACTUAL COUNT OF LIVE PLANTS OF EACH VARIETY AND SPECIES LISTED FOR PAYMENT.

ITEM 661.21 - WATERING
WATER SHALL BE FURNISHED BY THE CONTRACTOR AND ALL PLANT MATERIAL SHALL BE WATERED THOROUGHLY AT THE TIME OF PLANTING REGARDLESS OF AMPLE MOISTURE CONTENT OF THE SURROUNDING SOIL. SUSPENSION OF WATERING OPERATIONS BECAUSE OF RAINFALL WILL BE DETERMINED BY THE ENGINEER IN CONSULTATION WITH THE LANDSCAPE ARCHITECT. AN AVERAGE OF ONE INCH OF RAINFALL PER WEEK SHALL BE CONSIDERED ADEQUATE. DETERMINATION OF RAINFALL SHALL BE BASED UPON THE USE OF A RAIN GAUGE APPROVED BY THE PROJECT ENGINEER, AND LOCATED WITHIN THE LIMITS OF THE PROJECT.

WATERING TABLE

TREES	2' - 3' SIZE	4 GAL. PER PLANT
TREES	3' - 4' SIZE	6 GAL. PER PLANT
TREES	4' - 5' SIZE	9 GAL. PER PLANT
TREES	5' - 6' SIZE	11 GAL. PER PLANT
TREES	6' - 7' SIZE	13 GAL. PER PLANT
TREES	7' - 8' SIZE	15 GAL. PER PLANT
TREES	8' - 9' SIZE	17 GAL. PER PLANT
SHRUBS	1'-2' SIZE	2 GAL. PER PLANT

THE METHOD OF MEASUREMENT FOR SUMMER WATERING SHALL BE BY APPROVED METERING FROM TANKS OR BY INDIVIDUALLY MEASURED CONTAINERS TO EACH PLANT TO BE WATERED. PAYMENT FOR PLANTING PERIOD OF ESTABLISHMENT SHALL BE INCLUDED IN THE UNIT PRICE BID FOR ITEM 663 IS CONSIDERED TO BE 15% OF THE COST FOR THE ITEM.

ITEM 663 - WATERING, AS PER PLAN
THE INTENT OF THIS ITEM IS TO PROVIDE WATERING AN ADDITIONAL TWO YEARS AFTER THE GUARANTEE PERIOD.

UPON DIRECTION OF THE ENGINEER, THE CONTRACTOR SHALL WATER EACH PLANT BY APPROVED METERING FROM TANKS OR BY INDIVIDUALLY MEASURED CONTAINERS.

THIS ITEM INCLUDES MOBILIZATION, EQUIPMENT, MATERIALS AND LABOR TO SATISFACTORILY COMPLETE THIS ITEM. PAYMENT WILL BE MADE AT THE CONTRACT UNIT PRICE BID FOR ITEM 663 - WATERING, AS PER PLAN.

MULCH
MULCH SHALL BE AS PER ITEM 661.04 WITH FOLLOWING EXCEPTIONS: WOOD SHAVINGS OR PEAT MOSS OR CORN COBS SHALL NOT BE USED AS A TOP MULCH. WOOD CHIPS SHALL BE AGED (STOCKPILED) AT LEAST SIX MONTHS PRIOR TO PLACEMENT AROUND PLANTS. MULCH SHALL BE½TO 3 INCHES LOOSE MEASUREMENT AFTER MULCHING. COMMERCIAL FERTILIZER (12-12-12) SHALL BE APPLIED AS SPECIFIED IN ITEM 662.18.

PRUNING
ALL PLANTS SHALL BE PRUNED WITHIN SEVEN DAYS AFTER PLANTING. CONTRACTOR SHALL NOTIFY ENGINEER 24 HOURS PRIOR TO PRUNING. CONTRACTOR TO CLEAN BLADES OF PRUNING TOOLS ON SITE PRIOR TO USE, WITH WOOD ALCOHOL OR AN APPROVED DISINFECTANT AND CLEAN PAPER TOWELS. THE PRUNING SHALL BE DONE ACCORDING TO SELECTED TYPICAL PLANTS OF EACH SPECIES PRUNED AND USED AS A SAMPLE AS DIRECTED BY THE ENGINEER. ANY CANDLE GROWTH OF NEEDLE EVERGREENS WHICH EXCEED THREE INCHES AT PLANTING TIME SHALL BE CUT BACK TO THAT LENGTH IMMEDIATELY. ALL PLANTS SHALL BE PRUNED A SECOND TIME AT THE END OF THE FIRST YEAR, BUT BEFORE FINALIZATION, CONTRACTOR SHALL NOTIFY ENGINEER A MINIMUM OF 24 HOURS PRIOR TO PRUNING.

STAKING MATERIALS
ALL TREES SHALL BE STAKED AS SHOWN IN THE STANDARD DRAWING LA-2.

FERTILIZER
FOUR OUNCE (8-YEAR) COMMERCIAL FERTILIZER PACKETS USED IN PLANTING OPERATION SHALL BE DELIVERED DRY IN ORIGINAL, UNOPENED CONTAINERS. FERTILIZER ANALYSIS SHALL BE 16% NITROGEN, 8% PHOSPHORIC ACID AND 16% POTASH. FERTILIZER SHALL BE OF A SLOW RELEASE TYPE IN A POLYETHYLENE PERFORATED PACKET WITH MICROPORE HOLES.

THE PACKETS SHALL BE PLACED SIX TO EIGHT INCHES DEEP AND EVENLY SPACED AROUND THE PERIMETER OF THE PLANTING HOLE, ADJACENT TO THE BALL OR ROOT MASS BUT NOT IN DIRECT CONTACT WITH THE ROOTS. THE PACKETS SHALL NOT BE CUT, RIPPED OR DAMAGED.

EACH TREE SHALL BE FERTILIZED ACCORDING TO THE FOLLOWING SCHEDULE:

SHRUBS	1'-2' SIZE	2 PACKETS
TREES	2' - 3'	2 PACKETS
TREES	3' - 4'	2 PACKETS
TREES	4' - 5'	3 PACKETS
TREES	5' - 6'	3 PACKETS
TREES	6' - 7'	4 PACKETS
TREES	7' - 8'	4 PACKETS
TREES	8' - 9'	5 PACKETS

IF IT BECOMES NECESSARY TO REMOVE AND REPLACE MISSING, DEAD OR UNHEALTHY PLANTS, ALL OLD PACKETS SHALL BE REPLACED WITH NEW PACKETS.

CALC BY DATE		OHIO	137AA 196
CHKD BY DATE		FHWA REGION 5	

SUM-277/224-0.00/6.31-10.22

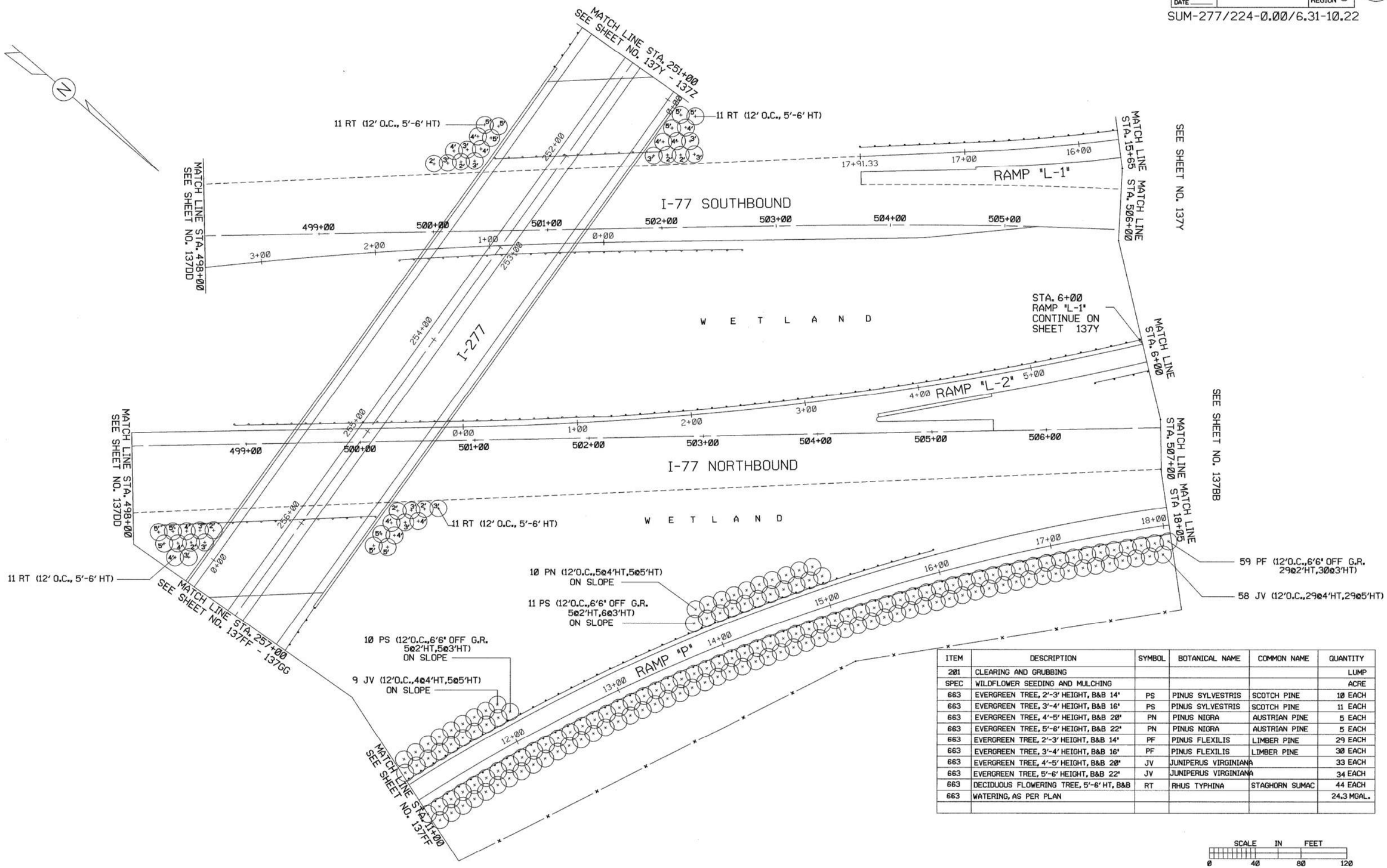

ITEM	DESCRIPTION	SYMBOL	BOTANICAL NAME	COMMON NAME	QUANTITY
201	CLEARING AND GRUBBING				LUMP
SPEC	WILDFLOWER SEEDING AND MULCHING				ACRE
663	EVERGREEN TREE, 2'-3' HEIGHT, B&B 14'	PS	PINUS SYLVESTRIS	SCOTCH PINE	10 EACH
663	EVERGREEN TREE, 3'-4' HEIGHT, B&B 16'	PS	PINUS SYLVESTRIS	SCOTCH PINE	11 EACH
663	EVERGREEN TREE, 4'-5' HEIGHT, B&B 20'	PN	PINUS NIGRA	AUSTRIAN PINE	5 EACH
663	EVERGREEN TREE, 5'-6' HEIGHT, B&B 22'	PN	PINUS NIGRA	AUSTRIAN PINE	5 EACH
663	EVERGREEN TREE, 2'-3' HEIGHT, B&B 14'	PF	PINUS FLEXILIS	LIMBER PINE	29 EACH
663	EVERGREEN TREE, 3'-4' HEIGHT, B&B 16'	PF	PINUS FLEXILIS	LIMBER PINE	30 EACH
663	EVERGREEN TREE, 4'-5' HEIGHT, B&B 20'	JV	JUNIPERUS VIRGINIANA		33 EACH
663	EVERGREEN TREE, 5'-6' HEIGHT, B&B 22'	JV	JUNIPERUS VIRGINIANA		34 EACH
663	DECIDUOUS FLOWERING TREE, 5'-6' HT, B&B	RT	RHUS TYPHINA	STAGHORN SUMAC	44 EACH
663	WATERING, AS PER PLAN				24.3 MGAL.

SCALE IN FEET
0 40 80 120

I-277 OVER I-77
STA. 251+00 TO STA. 257+00

277PG22.DWG

LANDSCAPE PLAN

GENERAL NOTES

THE FOUR OUNCE 16-8-16 FERTILIZER PACKETS SHALL BE DESIGNATED BY THE MANUFACTURER TO BE EFFECTIVE FOR EIGHT YEARS. PACKETS SUCH AS 'EEESY GROW' (S & D PRODUCTS, INC., BOX 66, PRAIRIE DU CHIEN, WISCONSIN 53821, (608)326-2821); 'THE UNIQUE FEEDER' (UNIQUE FERTILIZER, INC., P.O. BOX 99, DEPTFORD, NEW JERSEY 08096, [609] 848-4444); OR AN APPROVED EQUAL SHALL BE USED.

HERBICIDES
AFTER PLANTING AND FERTILIZING HAVE BEEN COMPLETED AND APPROVED, THE TREES SHALL BE TREATED WITH 'SURFLAN' BRAND HERBICIDE OR AN APPROVED EQUAL. THE RATE AND METHOD OF APPLICATION SHALL BE IN STRICT CONFORMANCE WITH THE MANUFACTURER'S PRODUCT LABEL AND CONSISTENT WITH CURRENT PRACTICES FOR ROADSIDE MANAGEMENT. THIS WORK SHALL BE ACCOMPLISHED UNDER THE DIRECT SUPERVISION OF A PESTICIDE APPLICATOR LICENSED BY THE STATE OF OHIO, AND PROVIDED BY THE CONTRACTOR.

STORAGE AREAS
THE CONTRACTOR MAY STORE PLANT MATERIALS AND EQUIPMENT 30 FEET FROM PAVEMENT, BEHIND GUARDRAIL AND WITHIN OR ADJACENT TO THE PROJECT LIMITS BY OBTAINING OFFICIAL PERMISSION OF THE ENGINEER. NO PEDESTRIAN OR VEHICULAR TRAFFIC MAY BE IMPEDED NOR HAZARDOUS CONDITION CREATED AS A RESULT OF SUCH STORAGE. THESE AREAS MUST BE COORDINATED WITH AREAS DESCRIBED IN THE MAINTENANCE OF TRAFFIC NOTES, SEE ITEM 614.03.

THE STORAGE OF ALL DUG PLANTS SHALL CONFORM TO 661.14 WHETHER WITHIN THE PROJECT, ADJACENT THERETO, OR AT SOME OTHER LOCATION. THESE AREAS SHALL BE DESIGNATED PRIOR TO ACTUAL PLANT STORAGE AND SHALL BE OPEN TO INSPECTION UPON REQUEST OF THE ENGINEER.

SCHEDULING
EVERGREENS SHALL BE DUG AND PLANTED AFTER MARCH 15 AND BEFORE JUNE 1.

ITEM 663
ALL TREES SHALL BE SPECIMEN (NO. 1 GRADE) PLANTS WITH GROWTH AND BRANCHING HABIT TYPICAL OF THE SPECIES SPECIFIED. NO PARK OR STREET TREE GRADE (NO. 2 OR 3 GRADE) PLANTS WILL BE ACCEPTED.

BEFORE STARTING CONSTRUCTION, CONTRACTOR SHALL STAKE INDIVIDUAL TREE LOCATIONS, FOR APPROVAL BY THE ENGINEER. COST OF STAKING LOCATIONS SHALL PAID FOR UNDER COST OF TREE ITEM.

NO TREES SHALL BE PLANTED WITHIN DITCH LINES. LOCATION OF DRAINAGE DITCHES ARE ONLY APPROXIMATE. ADJUST PLANT MATERIAL ACCORDINGLY IN FIELD.

ALL TREES PLANTED BEHIND GUARDRAIL SHALL BE A MINIMUM OF 6.5' FROM FACE OF GUARDRAIL, OR CONCRETE BARRIER.

ALL TREES PLANTED ON THE MAINLINE SHALL BE A MINIMUM OF 31' FROM EDGE OF PAVEMENT. THE EXCEPTION IS TREES PLANTED BEHIND GUARDRAIL, CONCRETE BARRIER, AND RETAINING WALL, WHICH SHALL BE A MINIMUM OF 6.5'.

TREES SHALL NOT BE PLANTED WITHIN 5.0 FEET OF THE WATER MAINS, SHALLOW STORM, AND SANITARY SEWERS. TREES SHALL NOT BE PLANTED WITHIN 10.0 FEET OF 24 INCH DIAMETER SEWERS, OR SEWERS GREATER THAN 15.0 FEET IN DEPTH.

ITEM 201-CLEARING AND GRUBBING
THE INTENT OF THIS PLAN IS TO CLEAR AND GRUB ONLY IN AREAS WHERE EXISTING TREES AND STUMPS WOULD BE AN OBSTACLE TO THE PLANTING OF PROPOSED TREES.

REGROWTH MAY RESULT FROM TREES AND/OR STUMPS EITHER POORLY OR INADEQUATELY CLEARED, GRUBBED, OR TREATED IN THE CLEARING AND GRUBBING PHASE. THE CONTRACTOR SHALL BE RESPONSIBLE, WHEN IDENTIFIED BY THE ENGINEER, TO REGRUB OR RETREAT REGROWTH MONTHLY THROUGHOUT THE CONTRACT LIFE AT NO ADDITIONAL COST TO THE CITY.

NO SEPARATE PAYMENT WILL BE MADE FOR THIS WORK, BUT THE COST IS TO BE INCLUDED IN THE COST OF ITEM 201 - CLEARING AND GRUBBING.

SPECIFICATIONS FOR WILDFLOWER SEEDING AND MULCHING

ITEM SPECIAL - WILDFLOWER SEEDING AND MULCHING

PART 1 - DESCRIPTION
PART 2 - MATERIAL
PART 3 - SEED BED PREPARATION
PART 4 - SEEDING AND MULCHING
PART 5 - METHOD OF MEASUREMENT
PART 6 - BASIS FOR PAYMENT

PART 1 - DESCRIPTION THIS ITEM SHALL CONSIST OF FURNISHING ALL LABOR, TOOLS, MACHINERY, MATERIALS AND PROCESSES REQUIRED FOR THE PLANTING OF WILDFLOWER SEE AS SPECIFIED HEREIN AND AS SHOWN ON THE PLANS.

PART 2 - MATERIALS ALL SEED SHALL MEET THE REQUIREMENTS OF A CERTIFIED SEED TEST LABORATORY, INCLUDING THE TESTING AND LABELING OF THE BULK SEED.

SEED SHALL BE OF THE PREVIOUS SEASON CROP AND THE ANALYSIS SHOWN ON THE SEED CONTAINER SHALL BE DATED WITHIN SEVEN MONTHS PRIOR TO THE PLANTING DATE.

EACH SEED SPECIES SHALL BE SHIPPED IN INDIVIDUAL SEED CONTAINERS. SEED CONTAINER SHALL BE CLEARLY LABELED AND SHALL BE FREE OF NOXIOUS WEEDS AND AT LEAST 90% SPECIFIED WILDFLOWER VARIETIES. THE SEED TAGS ON EACH CONTAINER SHALL INDICATE THE BOTANICAL NAME, COMMON NAME, PURITY, GERMINATION PERIOD, AND SHALL VERIFY THAT THE ENCLOSED SEED MEETS ALL REQUIREMENTS OF A CERTIFIED SEED LABORATORY AS WELL AS THE OHIO DEPARTMENT OF TRANSPORTATION.

AFTER ALL SEED HAS BEEN TESTED, THE CERTIFIED RESULTS SHALL BE GIVEN TO THE ENGINEER PRIOR TO PLANTING.

THE SEED MIXTURE, INDIVIDUAL RATES OF PLANTING AND THE MINIMUM ACCEPTABLE RATE OF GERMINATION FOR EACH SEED SPECIES (AS TESTED BY A CERTIFIED SEED TESTING LABORATORY) IS SHOWN BELOW.

THE MULCHING MATERIALS SHALL BE A WOOD CELLULOSE MULCH IN ACCORDANCE WITH SUPPLEMENTAL SPECIFICATION 943.

WILDFLOWER SEEDING MIXTURE

SPECIES	RATE/ ACRE	MINIMUM GERMINATION
PART 3 - SEED BED PREPARATION		
COREOPSIS LANCEOLATA-LANCED LEAF	10 LBS.	85%
DELPHINUM AJACIS-ROCKET LARKSPUR	8 LBS.	80%
ECHINACEA PURPUREA-PURPLE CONEFLOWER	12 LBS.	85%
HESPERIS MATRONALIS-DAMES ROCKET	2 LBS.	75%
PAPAVER RHOEAS-CORN POPPY	4 LBS.	75%
RATIBIDA COLUMNIFERA-PRAIRIE CONEFLOWER	2 LBS.	70%
RUDBECKIA HIRTA-BLACKEYED SUSAN	2 LBS.	70%

PART 3 - SEED BED PREPARATION ALL AREAS TO BE SEEDED ON NEW CONSTRUCTION PROJECTS SHALL BE FREE OF FOREIGN MATERIALS AND ROCK THREE INCHES OR GREATER IN ANY DIMENSION AND SHALL BE SATISFACTORILY SHAPED AND FINISHED AS PROVIDED IN 203.
AREAS OF EXISTING HERBACEOUS VEGETATION TO BE SEEDED WITH WILDFLOWERS SHALL FIRST BE KILLED BY THE APPLICATION OF AN APPROVED POST-EMERGENT HERBICIDE. APPROVED HERBICIDE SHALL BE APPLIED ACCORDING TO THE MANUFACTURER'S INSTRUCTIONS. IF, IN THE JUDGEMENT OF THE ENGINEER, THE VEGETATION HEIGHT IS EXCESSIVE FOR THE HERBICIDE TO BE EFFECTIVE, THE AREASHALL BE MOWED AND ALLOWED TO REGROW FOR TWO TO THREE WEEKS BEFORE HERBICIDE APPLICATION. EXCESSIVE PLANT RESIDUE SHALL BE REMOVED AT THE TIME OF MOWING. TEN DAYS SUBSEQUENT TO HERBICIDE APPLICATION AND UPON VEGETATION KILL, THE AREA SHALL BE TILLED TO A DEPTH OF EIGHT (8") INCHES.
AREAS TO BE SEEDED SHALL HAVE A SMOOTH SURFACE, EQUIVALENT TO THAT PRODUCED BY HAND RAKING. PAYMENT FOR THE WORK NECESSARY FOR PROPER PREPARATION OF THE SEED BED WILL BE INCLUDED IN THE UNIT PRICE FOR ITEM SPECIAL - WILDFLOWER SEEDING AND MULCHING.

PART 4 ITEM SPECIAL - WILDFLOWER SEEDING AND MULCHING THE WILDFLOWER SEED SHALL BE UNIFORMLY AND EVENLY DISTRIBUTED OVER THE AREAS INDICATED ON THE PLANS OR AS DIRECTED BY THE ENGINEER. THE AMOUNT AND TYPE OF SEED PLANTED PER ACRE SHALL CONFORM TO THE RATES INDICATED IN A SEED MIXTURE SHOWN ABOVE.

WILDFLOWER SEEDING SHALL BE DONE IN THE PERIOD AFTER MARCH 1 AND BEFORE APRIL 30, OR IN THE PERIOD AFTER SEPTEMBER 1 AND BEFORE NOVEMBER 30. THE OPERATION OF PLANTING THE SEED SHALL NOT BE ATTEMPTED WHEN THE GROUND IS FROZEN OR MUDDY, OR WHEN THE SOIL OR WEATHER CONDITIONS WOULD PREVENT THE PROPER SOIL PREPARATION AND SUBSEQUENT OPERATIONS AS SPECIFIED.

THE WILDFLOWER SEED SHALL BE PLANTED BY A DRILL TYPE SEEDER SPECIFICALLY CALIBRATED FOR EACH SEED TYPE. SEED TYPES MUST NOT BE MIXED WITH OTHER TYPES. HOWEVER, SEEDS OF LIKE SIZE AND SHAPE MAY BE MIXED FOR THE PLANTING OPERATION WITH THE APPROVAL OF THE ENGINEER.

THE METHOD OF PLANTING USED SHALL INSURE THAT THE SEED WILL MAKE DIRECT POSITIVE CONTACT WITH THE SOIL BUT NOT BE PLANTED DEEPER THAN THE DEPTH RECOMMENDED FOR THE SEED SIZE OF THE PARTICULAR SPECIES BEING PLANTED. THE METHOD OF INSTALLATION SHALL BE CAPABLE OF PLANTING THE SEED IN ALL AREAS SHOWN ON THE PLANS.

WITHIN 48 HOURS AFTER ANY GIVEN AREA IS SEEDED, WOOD CELLULOSE MULCHING MATERIAL SHALL BE PLACED EVENLY OVER THE ENTIRE SEED BED. THE WOOD CELLULOSE MULCH AND ITS RATE OF APPLICATION SHALL CONFORM TO SUPPLEMENTAL SPECIFICATION 943.

THE CONTRACTOR SHALL MAINTAIN ALL SEEDED AND MULCHED AREAS UNTIL THE FINAL INSPECTION. MAINTENANCE SHALL INCLUDE REPAIRING ANY AREAS DAMAGED FOLLOWING THE WILDFLOWER SEEDING AND MULCHING OPERATION DUE TO WIND, WATER, FIRE OR OTHER CAUSES. DAMAGED AREAS SHALL BE REPAIRED TO RE-ESTABLISH THE CONDITION AND GRADING OF THE AREA PRIOR TO SEEDING AND SHALL THEN BE RESEEDED AND REMULCHED, TO THE SATISFACTION OF THE ENGINEER.

PART 5 - METHOD OF MEASUREMENT MEASUREMENT OF WILDFLOWER SEEDING AND MULCHING WILL BE THE ACTUAL NUMBER OF ACRES SEEDED, MULCHED, COMPLETED AND ACCEPTED.

PART 6 - BASIS OF PAYMENT PAYMENT FOR ACCEPTED QUANTITIES WILL BE MADE AT THE CONTRACT PRICE FOR:

ITEM	UNIT	DESCRIPTION
SPECIAL	ACRE	WILDFLOWER SEEDING AND MULCHING

NOTICE TO CONTRACTOR:
THE INTENT OF THIS PLAN IS TO INTERSPERSE IN A SYMMETRICAL FASHION, DIFFERENT HEIGHTS OF TREES WHEN MORE THAN ONE HEIGHT IS LISTED FOR THE SAME ROW. WHEN QUANTITIES OF TWO DIFFERENT HEIGHTS OF TREES ARE EQUAL OR +/- ONE, THE HEIGHTS OF THESE TREES SHALL ALTERNATE.

USE EXTREME CAUTION WHEN EXCAVATING IN THE AREA OF EXISTING WATER MAIN PIPES, VALVES AND FIRE HYDRANTS.

ANY EXISTING WATER APPURTENANCES THAT ARE DAMAGED MUST BE REPAIRED OR REPLACED AT CONTRACTOR'S EXPENSE AT NO COST TO THE CITY OF AKRON, PUBLIC UTILITIES BUREAU.

CONTRACTOR SHALL BE REQUIRED TO CONTACT THOMAS MITAN OR JAMES CARLTON AT 375-2420, A MINIMUM OF 48 HOURS PRIOR TO BEGINNING OF CONSTRUCTION.

ITEM SPECIAL - WEED CONTROL,
THE SCOPE OF THIS WORK INCLUDES PROVIDING ALL LABOR, EQUIPMENT AND MATERIALS FOR EXECUTION, USING METHODS APPROVED BY AND AT INTERVALS DESIGNATED BY THE PROJECT ENGINEER. THE INTENT IS TO PROVIDE VEGETATION CONTROL AS DIRECTED BY THE ENGINEER FOR AREAS INACCESSIBLE TO LARGE MOWING EQUIPMENT AND NOW COVERED UNDER THE NORMAL SCOPE OF THIS CONTRACT. EXAMPLES WOULD BE STEEP SLOPES, SWALES, BETWEEN PLANTS, ALONG FENCES, ETC. PHYSICAL REMOVAL, MECHANICAL, OR CHEMICAL MEANS SHALL BE UTILIZED FOR THE DURATION OF THIS CONTRACT TO ACHIEVE VISUAL ACCEPTABILITY AS DETERMINED BY THE ENGINEER IN CONSULTATION WITH THE CITY OF AKRON HORTICULTURALIST. MOWING OF GRASS AREAS BETWEEN PLANTINGS THAT AREINACCESSIBLE TO LARGE MOWERS NOT COVERED UNDER THE NORMAL SCOPE OF THIS CONTRACT SHALL ALSO BE PERFORMED AS DIRECTED BY THE ENGINEER UNDER THIS ITEM. EXCESSIVE PLANT RESIDUES SHALL BE REMOVED FROM THE JOB SITE.

VEGETATION SHALL BE MAINTAINED TO A HEIGHT OF SIX (6") TO TWELVE (12") INCHES WHEN USING MECHANICAL OR CHEMICAL METHODS. VEGETATION IN EXCESS OF TWELVE (12") INCHES SHALL BE ADDRESSED WHEN DIRECTED BY THE PROJECT ENGINEER.

MEASUREMENT AND PAYMENT SHALL BE EACH TIME PER THOUSAND SQUARE FEET (MSF), ITEM SPECIAL - WEED CONTROL,

AN ESTIMATED QUANTITY OF 950 MSF IS CARRIED TO THE GENERAL SUMMARY TO BE USED AS DIRECTED BY THE ENGINEER.

CALC BY DATE		OHIO	137BB
CHKD BY DATE		FHWA REGION 5	196

SUM-277/224-0.00/6.31-10.22

ITEM	DESCRIPTION	SYMBOL	BOTANICAL NAME	COMMON NAME	QUANTITY
201	CLEARING AND GRUBBING				LUMP
SPEC	WILDFLOWER SEEDING AND MULCHING				— ACRE
663	EVERGREEN TREE, 2'-3' HEIGHT, B&B 14'	PF	PINUS FLEXILIS	LIMBER PINE	37 EACH
663	EVERGREEN TREE, 3'-4' HEIGHT, B&B 16'	PF	PINUS FLEXILIS	LIMBER PINE	38 EACH
663	EVERGREEN TREE, 4'-5' HEIGHT, B&B 20'	PN	PINUS NIGRA	AUSTRIAN PINE	13 EACH
663	EVERGREEN TREE, 5'-6' HEIGHT, B&B 22'	PN	PINUS NIGRA	AUSTRIAN PINE	14 EACH
663	EVERGREEN TREE, 4'-5' HEIGHT, B&B 20'	PS	PINUS SYLVESTRIS	SCOTCH PINE	27 EACH
663	EVERGREEN TREE, 5'-6' HEIGHT, B&B 22'	PS	PINUS SYLVESTRIS	SCOTCH PINE	27 EACH
663	DECIDUOUS FLOWERING TREE, 5'-6' HT, B&B	CCA	CERCIS CANADENSIS	'ALBA'	10 EACH
663	DECIDUOUS FLOWERING TREE, 5'-6' HT, B&B	RT	RHUS TYPHINA	STAGHORN SUMAC	22 EACH
663	EVERGREEN TREE, 2'-3' HEIGHT, B&B 14'	JV	JUNIPERUS VIRGINIANA		26 EACH
663	EVERGREEN TREE, 3'-4' HEIGHT, B&B 16'	JV	JUNIPERUS VIRGINIANA		27 EACH
663	EVERGREEN TREE, 4'-5' HEIGHT, B&B 20'	JV	JUNIPERUS VIRGINIANA		28 EACH
663	EVERGREEN TREE, 5'-6' HEIGHT, B&B 22'	JV	JUNIPERUS VIRGINIANA		29 EACH
663	WATERING, AS PER PLAN				36.0 MGAL.

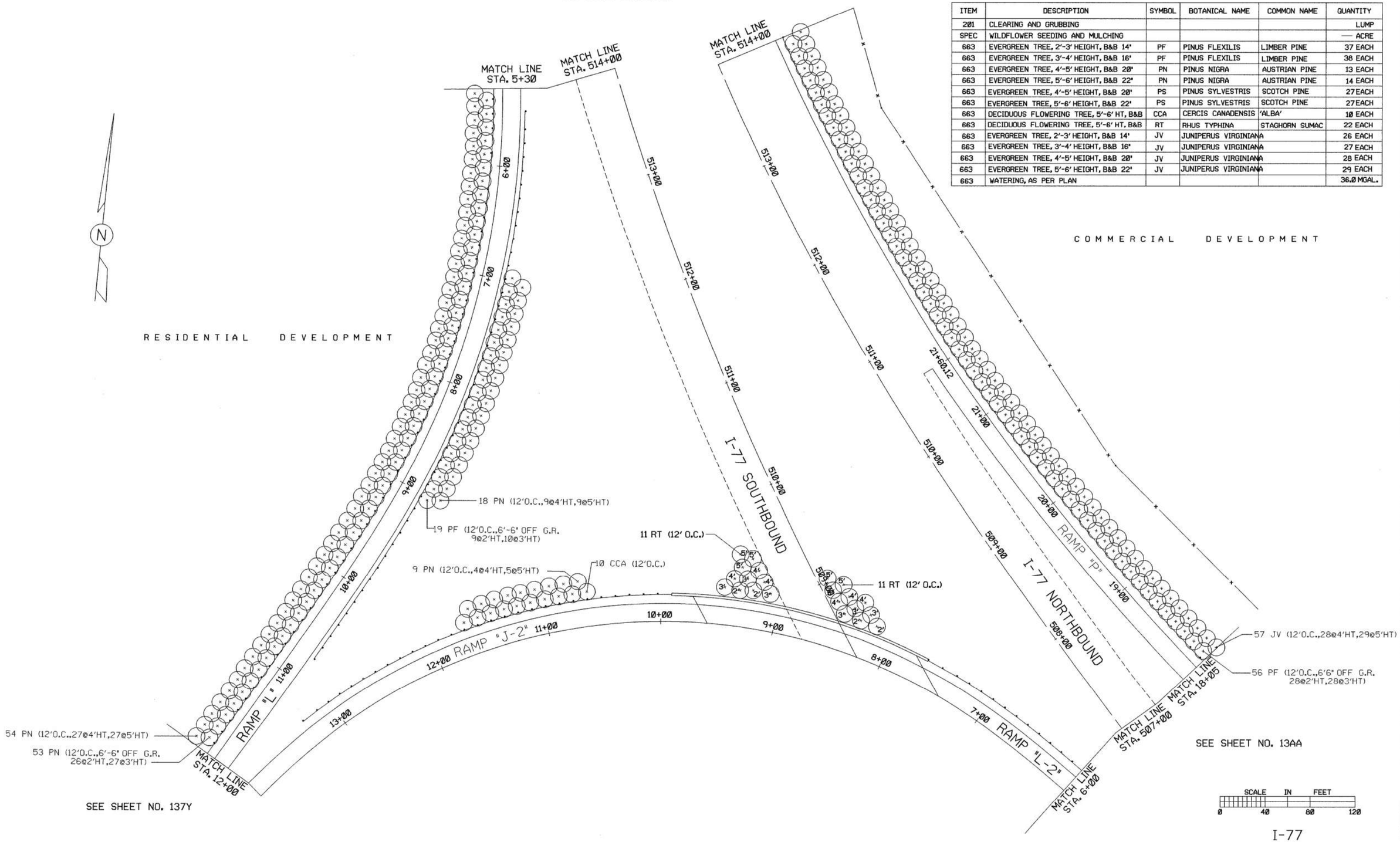

I-77
STA. 507+00 TO STA. 514+00

277PG23.DWG

LANDSCAPE PLAN

GENERAL SUMMARY

CALC BY CEH DATE 3/13/94	OHIO	137C 196
CHKD BY CEH DATE 3/13/94	FHWA REGION 5	

SUM-277/224-0.00/6.31-10.22

ITEM	SHEET NUMBER 137D	137E	137F	137G	137H	137J	137L	137M	137N	137P	137Q	137R	137T	137U	137V	137W	137X	137Y	137Z	137AA	137BB	137CC	137DD	137EE	137FF	137GG	137HH	137JJ *	137KK *	137LL *	137MM *	PARTICIPATION IM FUNDS	NH FUNDS *	ITEM	ITEM EXT.	GRAND TOTAL	UNIT	DESCRIPTION
103																																						
201																																		201	11000	LUMP		CLEARING AND GRUBBING
624																																						
SPEC.																								0.33								0.33		SPEC.	65910202	0.33	ACRE	WILDFLOWER SEEDING
																																						AND MULCHING
																																950		SPEC.	69099600	950	MSF	WEED CONTROL
663																																		663	31000		EACH	EVERGREEN TREE, 2'-3' HEIGHT,
					10	17	18	41	5			8		8	65		41	1		10					9	6	19/9•	19				258	28	663	31000	286	EACH	PINUS SYLVESTRIS, B&B 14'
							23	42	41	17	28			23		25	3	5	4	29	36	7	5								8	288	8	663	31000	296	EACH	PINUS FLEXILIS, B&B 14'
663			12	11	14	1																										38	0	663	31000	38	EACH	PINUS NIGRA, B&B 14'
				26													9	8			26	6										75	0	663	31000	75	EACH	JUNIPERUS VIRGINIANA, B&B 14'
																																		663	31500		EACH	EVERGREEN TREE, 3'-4' HEIGHT,
663					9	18	20	42	5			8		2	66		52	2		11					9	5	20/9•	19				269	28	663	31500	297	EACH	PINUS SYLVESTRIS, B&B 16'
							23	42	42	19	28			24		26	4		4	30	38	8	5								9	293	9	663	31500	302	EACH	PINUS FLEXILIS, B&B 16'
			12	12	15																											39	0	663	31500	39	EACH	PINUS NIGRA, B&B 16'
663				27													9	8			27	7										78	0	663	31500	78	EACH	JUNIPERUS VIRGINIANA, B&B 16'
																																		663	32000		EACH	EVERGREEN TREE, 4'-5' HEIGHT,
			12	11						8	22							27	4		27	6	4					7				121	7	663	32000	128	EACH	PINUS SYLVESTRIS, B&B 20'
663				26	29	1	7				10			5	22		42	1								13	6					162	0	663	32000	162	EACH	PINUS FLEXILIS, B&B 20'
											3			23						5	13										8	44	8	663	32000	52	EACH	PINUS NIGRA, B&B 20'
			21	11	9	17	28	83	46	13	36	35		2	43	25	9	9		33	28	7			9	8	14/9•	18				486	27	663	32000	513	EACH	JUNIPERUS VIRGINIANA, B&B 20'
663																																		663	32500		EACH	EVERGREEN TREE, 5'-6' HEIGHT,
			13	12						10	24							29	4		27	6	5					8				130	8	663	32500	138	EACH	PINUS SYLVESTRIS, B&B 22'
				26	32		8				11				23		45	2								14	5					166		663	32500	166	EACH	PINUS FLEXILIS, B&B 22'
663											4			23						5	14										8	54		663	32500	54	EACH	PINUS NIGRA, B&B 22'
			22	11	10	17	30	84	47	13	39	40		2	44	25	11	9		34	29	7			9	9	14/9•	19				506	28	663	32500	534	EACH	JUNIPERUS VIRGINIANA, B&B 22'
																																		663	33000		EACH	EVERGREEN TREE, 6'-7' HEIGHT,
663	16		23											13																	19	52	19	663	33000	71	EACH	PINUS SYLVESTRIS, B&B 24'
			27				11						11														4•	25			9	49	38	663	33000	87	EACH	PINUS FLEXILIS, B&B 24'
																															20	0	20	663	33000	20	EACH	PINUS NIGRA, B&B 24'
					8		8																					7				16	7	663	33000	23	EACH	JUNIPERUS VIRGINIANA, B&B 24'
																																		663	33500		EACH	EVERGREEN TREE, 7'-8' HEIGHT,
	9	4	22											7												8					12	50	12	663	33500	62	EACH	PINUS SYLVESTRIS, B&B 27'
	8		24		7		10						6														3•	14	8	12	17	55	54	663	33500	109	EACH	PINUS FLEXILIS, B&B 27'
					4								5														2•	12			17	9	31	663	33500	40	EACH	PINUS NIGRA, B&B 27'
			13		16		10							6									5					7			5	50	12	663	33500	62	EACH	JUNIPERUS VIRGINIANA, B&B 27'
																																		663	34000		EACH	EVERGREEN TREE, 8'-9' HEIGHT,
		9	19																							19						47		663	34000	47	EACH	PINUS SYLVESTRIS, B&B 30'
	17		25		15		9																						16	27	31	66	74	663	34000	140	EACH	PINUS FLEXILIS, B&B 30'
					9								12														5•	26			9	31	30	663	34000	61	EACH	PINUS NIGRA, B&B 30'
			28		15		12							13									13								12	81	12	663	34000	93	EACH	JUNIPERUS VIRGINIANA, B&B 30'
																																		663	10000		EACH	DECID. FLOWERING TREE, 5'-6' HT
		13	73	24		35				9	35							37								18			16	26		244	42	663	10000	286	EACH	CRATAEGUS CRUSGALLI B&B
											30	28						12			5					9						84	0	663	10000	84	EACH	CERCIS CANADENSIS 'ALBA' B&B
												36						11								8						55	0	663	10000	55	EACH	PYRUS C. 'CHANTICLEER' B&B
											22	22						22		20	10		12					5	21			163	26	663	10000	189	EACH	RHUS TYPHINA B&B
																																		663	10010		EACH	DECID. FLOWERING TREE, 6'-7' HT
																										10			8	14		10	22	663	10010	32	EACH	CRATAEGUS CRUSGALLI B&B
					21																5					9						35	0	663	10010	35	EACH	CERCIS CANADENSIS 'ALBA' B&B
					49																					9						58	0	663	10010	58	EACH	PYRUS C. 'CHANTICLEER' B&B
																				24	12		7					6	11			43	17	663	10010	60	EACH	RHUS TYPHINA B&B
																																		662	20000		EACH	EVERGREEN SHRUB, 12'-15' HT
					19																											19	0	662	20000	19	EACH	JUNIPERUS HORIZONTALIS CONT.
																																		662	22100		EACH	EVERGREEN SHRUB, 3'-4' HT
					25																											25	0	662	22100	25	EACH	JUNIPERUS COMMUNIS CONT.

LANDSCAPE GENERAL SUMMARY

GENSUM.DWG

CALC BY DATE		OHIO	137CC 196
CHKD BY DATE		FHWA REGION 5	

SUM-277/224-0.00/6.31-10.22

END SHEET STA. 520+00

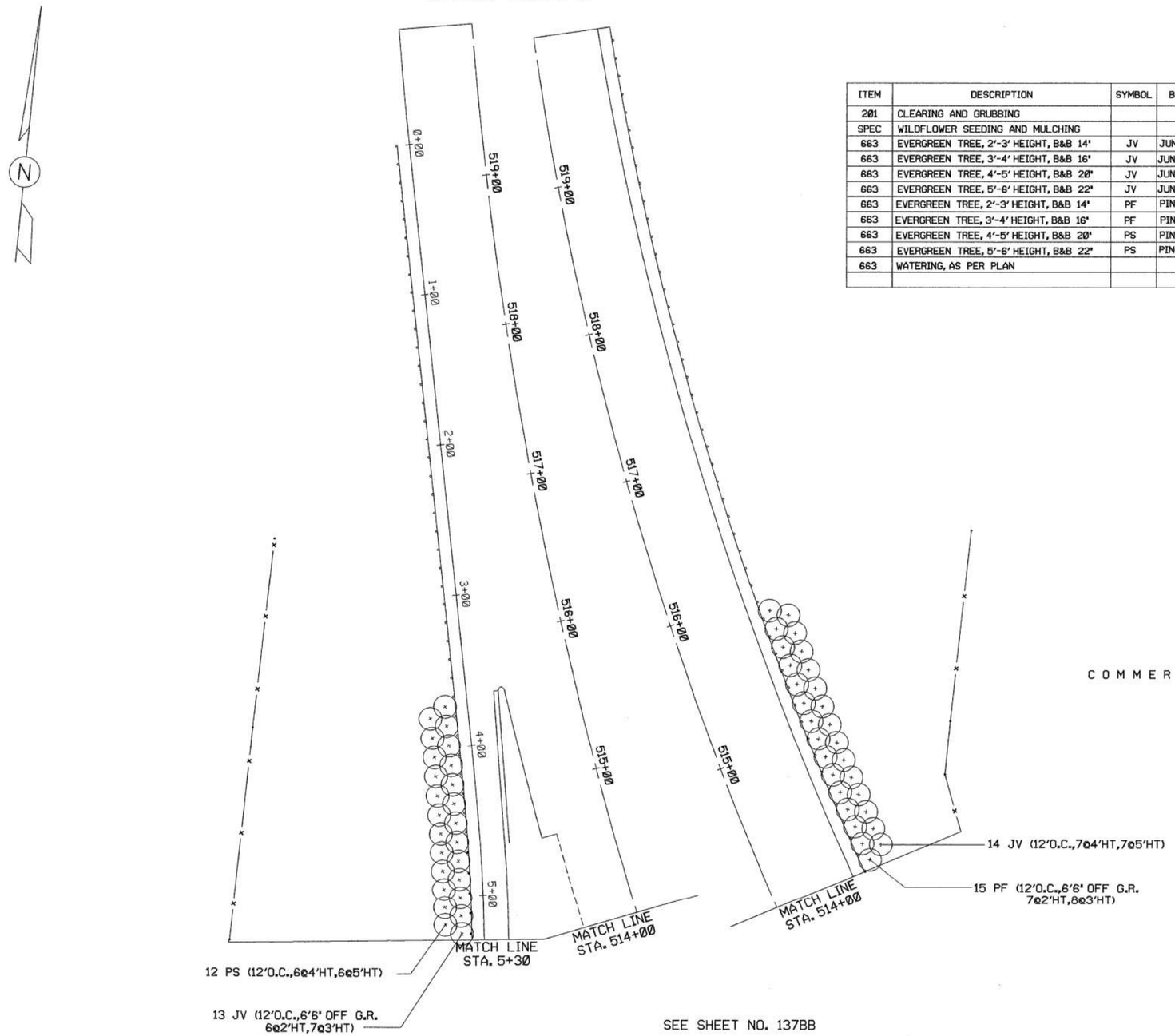

ITEM	DESCRIPTION	SYMBOL	BOTANICAL NAME	COMMON NAME	QUANTITY
201	CLEARING AND GRUBBING				LUMP
SPEC	WILDFLOWER SEEDING AND MULCHING				— ACRE
663	EVERGREEN TREE, 2'-3' HEIGHT, B&B 14"	JV	JUNIPERUS VIRGINIANA		6 EACH
663	EVERGREEN TREE, 3'-4' HEIGHT, B&B 16"	JV	JUNIPERUS VIRGINIANA		7 EACH
663	EVERGREEN TREE, 4'-5' HEIGHT, B&B 20"	JV	JUNIPERUS VIRGINIANA		7 EACH
663	EVERGREEN TREE, 5'-6' HEIGHT, B&B 22"	JV	JUNIPERUS VIRGINIANA		7 EACH
663	EVERGREEN TREE, 2'-3' HEIGHT, B&B 14"	PF	PINUS FLEXILIS	LIMBER PINE	7 EACH
663	EVERGREEN TREE, 3'-4' HEIGHT, B&B 16"	PF	PINUS FLEXILIS	LIMBER PINE	8 EACH
663	EVERGREEN TREE, 4'-5' HEIGHT, B&B 20"	PS	PINUS SYLVESTRIS	SCOTCH PINE	6 EACH
663	EVERGREEN TREE, 5'-6' HEIGHT, B&B 22"	PS	PINUS SYLVESTRIS	SCOTCH PINE	6 EACH
663	WATERING, AS PER PLAN				6.4 MGAL.

SCALE IN FEET
0 40 80 120

I-77
STA. 514+00 TO STA. 520+00
LANDSCAPE PLAN

277PG24.DWG

CALC BY DATE	OHIO	137D
CHKD BY DATE	FHWA REGION 5	196

SUM-277/224-0.00/6.31-10.22

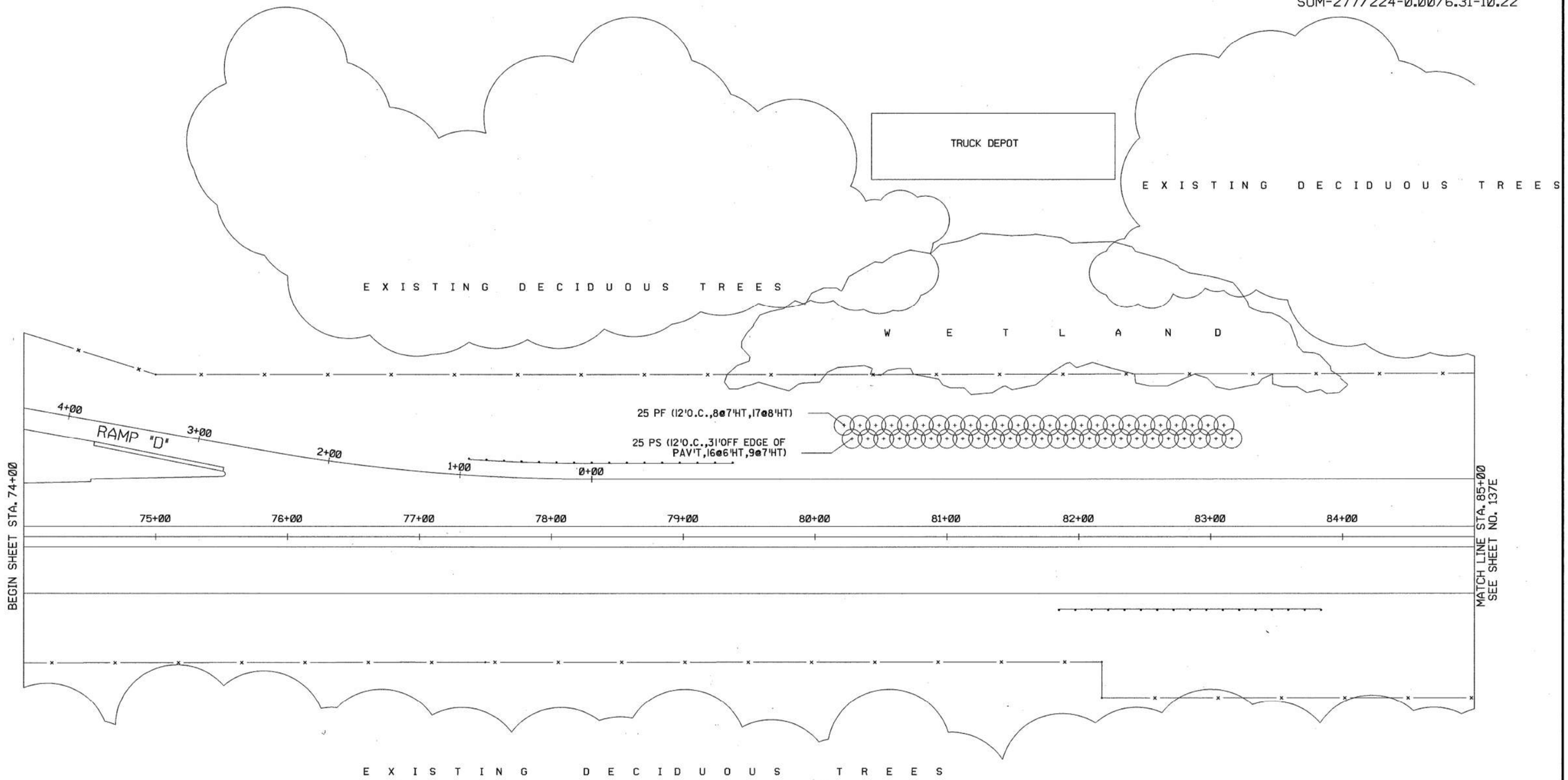

ITEM	DESCRIPTION	SYMBOL	BOTANICAL NAME	COMMON NAME	QUANTITY
201	CLEARING AND GRUBBING				LUMP
SPEC	WILDFLOWER SEEDING AND MULCHING				ACRE
663	EVERGREEN TREE, 2'-3' HEIGHT, B&B 14'	PN	PINUS NIGRA	AUSTRIAN PINE	EACH
663	EVERGREEN TREE, 3'-4' HEIGHT, B&B 16'	PN	PINUS NIGRA	AUSTRIAN PINE	EACH
663	EVERGREEN TREE, 4'-5' HEIGHT, B&B 20'	PN	PINUS NIGRA	AUSTRIAN PINE	EACH
663	EVERGREEN TREE, 7'-8' HEIGHT, B&B 27'	PS	PINUS SYLVESTRIS	SCOTCH PINE	9 EACH
663	EVERGREEN TREE, 6'-7' HEIGHT, B&B 24'	PS	PINUS SYLVESTRIS	SCOTCH PINE	16 EACH
663	EVERGREEN TREE, 7'-8' HEIGHT, B&B 27'	PF	PINUS FLEXILIS	LIMBER PINE	8 EACH
663	EVERGREEN TREE, 8'-9' HEIGHT, B&B 30'	PF	PINUS FLEXILIS	LIMBER PINE	17 EACH
659	WATERING, AS PER PLAN				12.0 MGAL.

SCALE IN FEET
0 40 80 120

STA. 74+00 TO STA. 85+00

LANDSCAPE PLAN

277PG1.DWG

CALC BY ____ DATE ____		OHIO	137DD
CHKD BY ____ DATE ____		FHWA REGION 5	196

SUM-277/224-0.00/6.31-10.22

ITEM	DESCRIPTION	SYMBOL	BOTANICAL NAME	COMMON NAME	QUANTITY
201	CLEARING AND GRUBBING				LUMP
SPEC	WILDFLOWER SEEDING AND MULCHING				— ACRE
663	EVERGREEN TREE, 2'-3' HEIGHT, B&B 14"	PF	PINUS FLEXILIS	LIMBER PINE	5 EACH
663	EVERGREEN TREE, 3'-4' HEIGHT, B&B 16"	PF	PINUS FLEXILIS	LIMBER PINE	5 EACH
663	EVERGREEN TREE, 4'-5' HEIGHT, B&B 20"	PS	PINUS SYLVESTRIS	SCOTCH PINE	4 EACH
663	EVERGREEN TREE, 5'-6' HEIGHT, B&B 22"	PS	PINUS SYLVESTRIS	SCOTCH PINE	5 EACH
663	EVERGREEN TREE, 7'-8' HEIGHT, B&B 27"	JV	JUNIPERUS VIRGINIANA		5 EACH
663	EVERGREEN TREE, 8'-9' HEIGHT, B&B 30"	JV	JUNIPERUS VIRGINIANA		13 EACH
663	DECIDUOUS FLOWERING TREE, 5'-6' HT, B&B	RT	RHUS TYPHINA	STAGHORN SUMAC	19 EACH
663	WATERING, AS PER PLAN				11.2 MGAL.

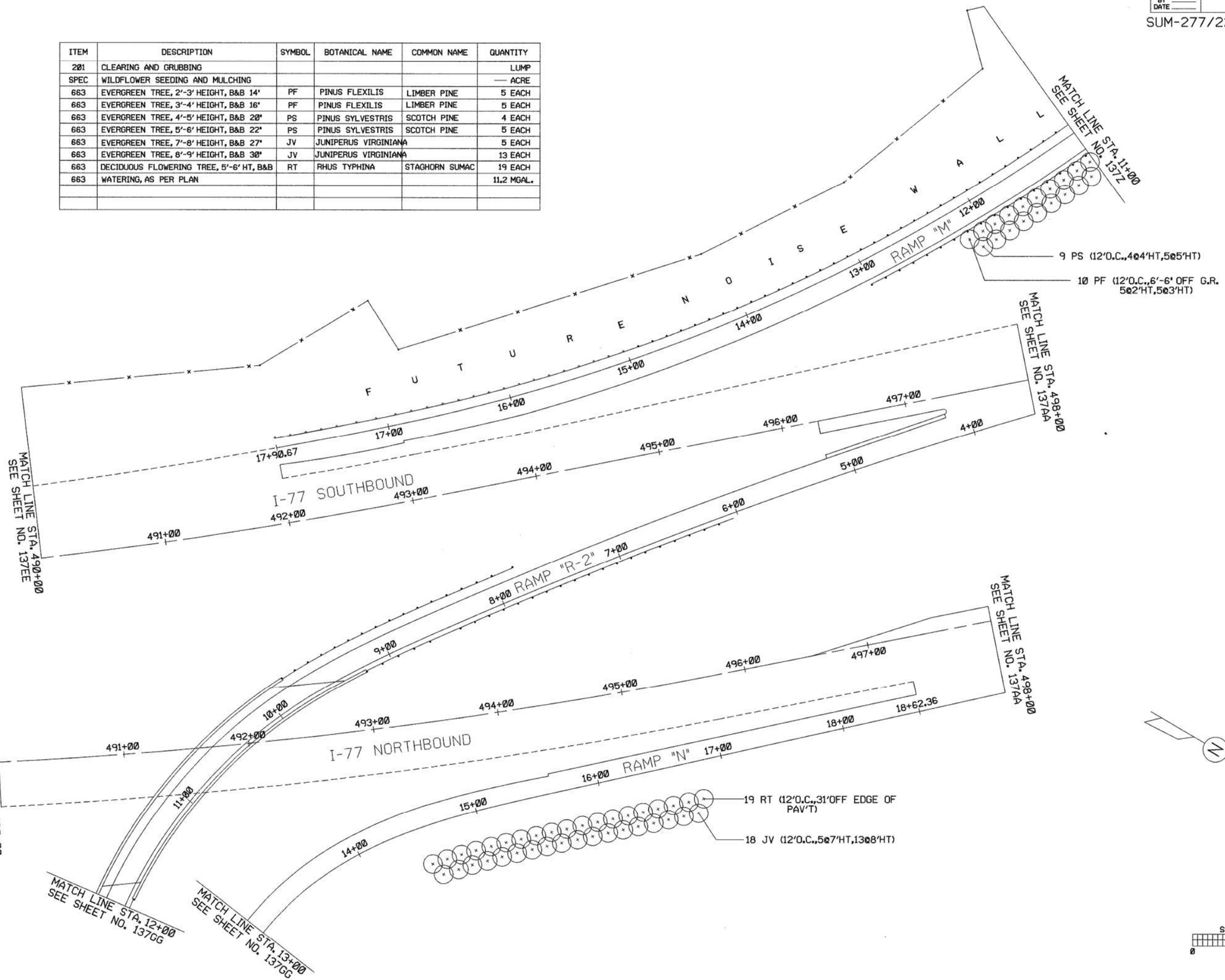

I-77
STA. 490+00 TO STA. 498+00
LANDSCAPE PLAN

277PG25.DWG

CALC BY ____ DATE ____	OHIO	137E
CHKD BY ____ DATE ____	FHWA REGION 5	196

SUM-277/224-0.00/6.31-10.22

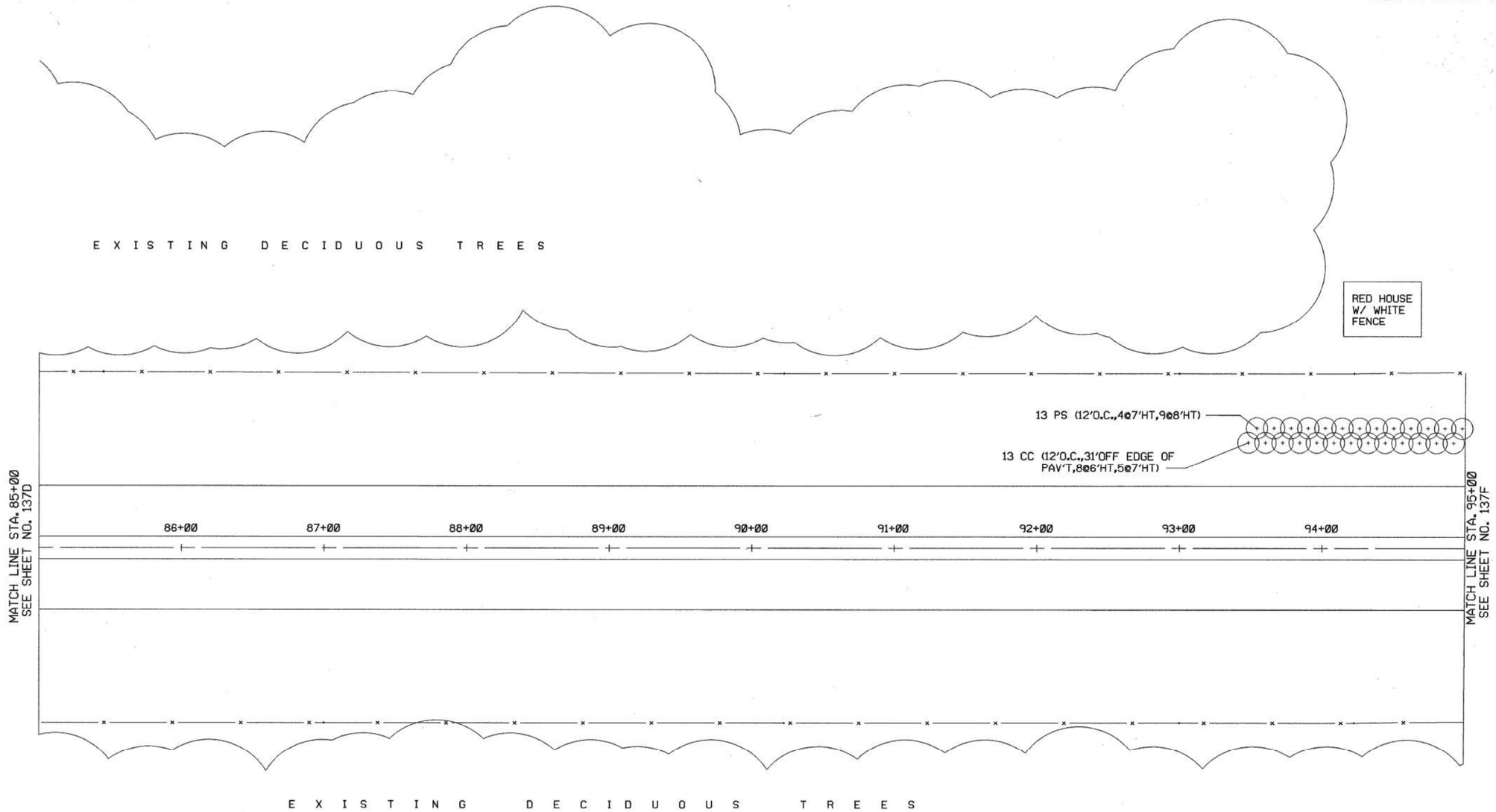

ITEM	DESCRIPTION	SYMBOL	BOTANICAL NAME	COMMON NAME	QUANTITY
201	CLEARING AND GRUBBING				LUMP
SPEC	WILDFLOWER SEEDING AND MULCHING				— ACRE
663	DECIDUOUS FLOWERING TREE, 5'-6' HT, B&B	CC	CRATAEGUS CRUSGALLI		13 EACH
663	EVERGREEN TREE, 3'-4' HEIGHT, B&B 16'	PN	PINUS NIGRA	AUSTRIAN PINE	— EACH
663	EVERGREEN TREE, 4'-5' HEIGHT, B&B 20'	PN	PINUS NIGRA	AUSTRIAN PINE	— EACH
663	EVERGREEN TREE, 5'-6' HEIGHT, B&B 22'	PN	PINUS NIGRA	AUSTRIAN PINE	— EACH
663	EVERGREEN TREE, 6'-7' HEIGHT, B&B 24'	PN	PINUS NIGRA	AUSTRIAN PINE	EACH
663	EVERGREEN TREE, 7'-8' HEIGHT, B&B 27'	PS	PINUS SYLVESTRIS	SCOTCH PINE	4 EACH
663	EVERGREEN TREE, 8'-9' HEIGHT, B&B 30'	PS	PINUS SYLVESTRIS	SCOTCH PINE	9 EACH
659	WATERING, AS PER PLAN				6.3 MGAL.

SCALE IN FEET
0 40 80 120

STA. 85+00 TO STA. 95+00

LANDSCAPE PLAN

277PG2.DWG

CALC BY ____ DATE ____	OHIO	137EE
CHKD BY ____ DATE ____	FHWA REGION 5	196

SUM-277/224-0.00/6.31-10.22

ITEM	DESCRIPTION	SYMBOL	BOTANICAL NAME	COMMON NAME	QUANTITY
201	CLEARING AND GRUBBING				LUMP
SPEC	WILDFLOWER SEEDING AND MULCHING				0.33 ACRE
663	EVERGREEN TREE, 2'-3' HEIGHT, B&B 14'	PN	PINUS NIGRA	AUSTRIAN PINE	— EACH
663	EVERGREEN TREE, 3'-4' HEIGHT, B&B 16'	PN	PINUS NIGRA	AUSTRIAN PINE	— EACH
663	EVERGREEN TREE, 4'-5' HEIGHT, B&B 20'	PN	PINUS NIGRA	AUSTRIAN PINE	— EACH
663	EVERGREEN TREE, 5'-6' HEIGHT, B&B 22'	PN	PINUS NIGRA	AUSTRIAN PINE	— EACH
663	EVERGREEN TREE, 6'-7' HEIGHT, B&B 24'	PN	PINUS NIGRA	AUSTRIAN PINE	— EACH
663	EVERGREEN TREE, 7'-8' HEIGHT, B&B 27'	PN	PINUS NIGRA	AUSTRIAN PINE	— EACH
663	EVERGREEN TREE, 8'-9' HEIGHT, B&B 30'	PN	PINUS NIGRA	AUSTRIAN PINE	— EACH
663	WATERING, AS PER PLAN				— MGAL.

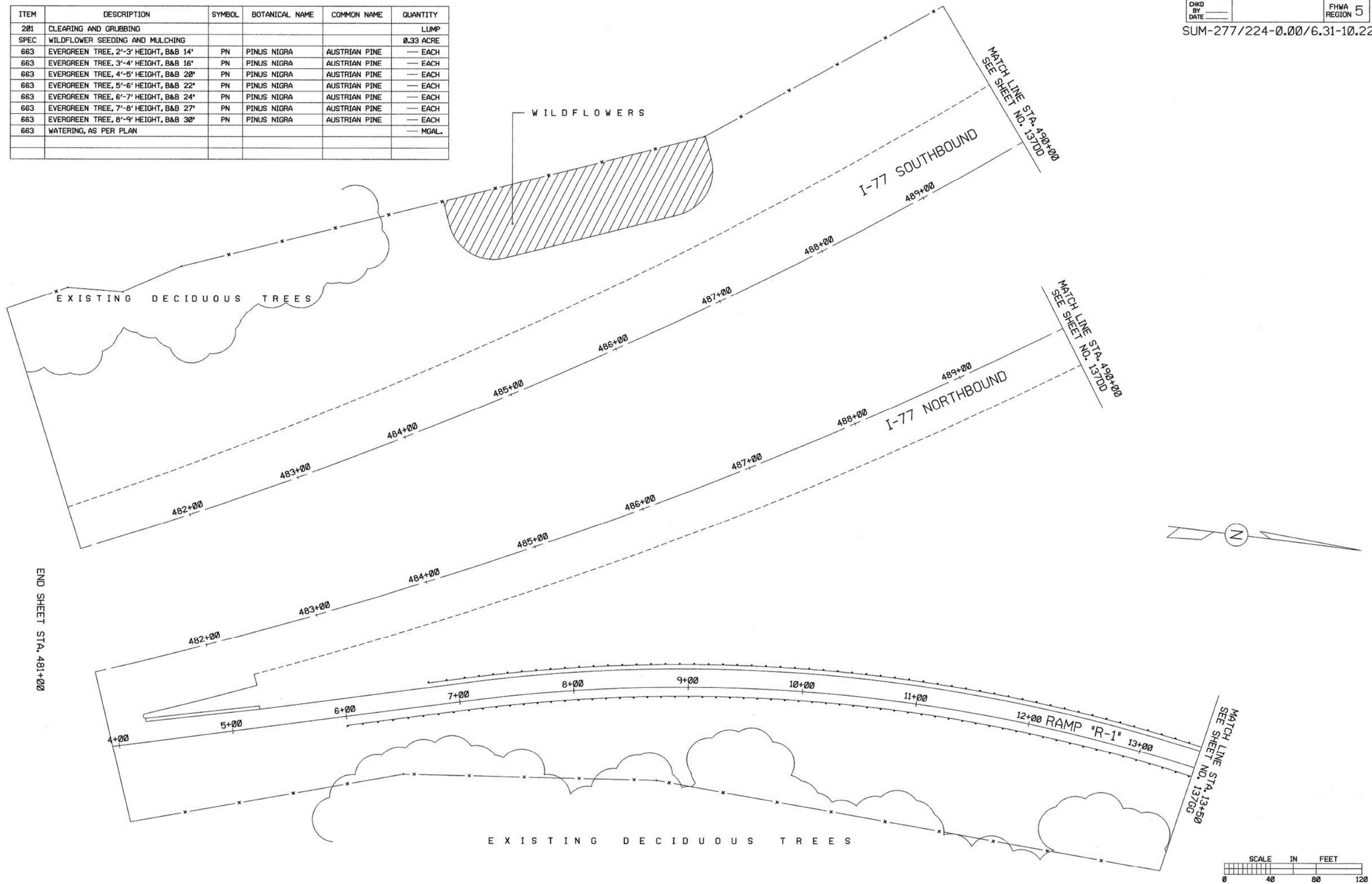

I-77
STA. 481+00 TO STA. 490+00

LANDSCAPE PLAN

277PG26.DWG

CALC BY DATE		OHIO	137F
CHKD BY DATE		FHWA REGION 5	196

SUM-277/224-0.00/6.31-10.22

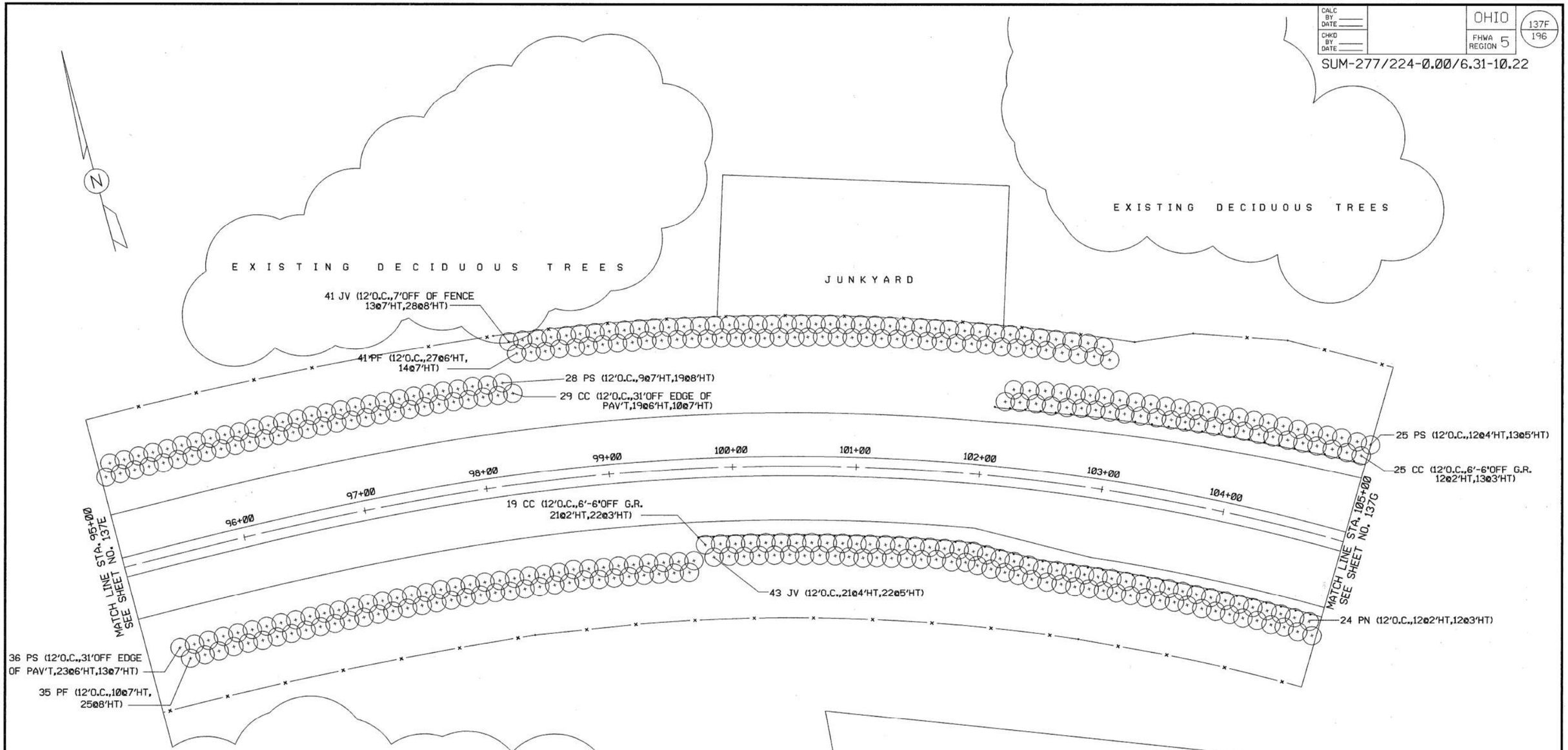

ITEM	DESCRIPTION	SYMBOL	BOTANICAL NAME	COMMON NAME	QUANTITY
201	CLEARING AND GRUBBING				LUMP
SPEC	WILDFLOWER SEEDING AND MULCHING				— ACRE
663	EVERGREEN TREE, 2'-3' HEIGHT, B&B 14'	PN	PINUS NIGRA	AUSTRIAN PINE	12 EACH
663	EVERGREEN TREE, 3'-4' HEIGHT, B&B 16'	PN	PINUS NIGRA	AUSTRIAN PINE	12 EACH
663	EVERGREEN TREE, 4'-5' HEIGHT, B&B 20'	PS	PINUS SYLVESTRIS	SCOTCH PINE	12 EACH
663	EVERGREEN TREE, 4'-5' HEIGHT, B&B 20'	JV	JUNIPERUS VIRGINIANA		21 EACH
663	EVERGREEN TREE, 5'-6' HEIGHT, B&B 22'	PS	PINUS SYLVESTRIS	SCOTCH PINE	13 EACH
663	EVERGREEN TREE, 5'-6' HEIGHT, B&B 22'	JV	JUNIPERUS VIRGINIANA		22 EACH
663	EVERGREEN TREE, 6'-7' HEIGHT, B&B 24'	PS	PINUS SYLVESTRIS	SCOTCH PINE	23 EACH
663	EVERGREEN TREE, 6'-7' HEIGHT, B&B 24'	PF	PINUS FLEXILIS	LIMBER PINE	27 EACH
663	EVERGREEN TREE, 7'-8' HEIGHT, B&B 27'	PS	PINUS SYLVESTRIS	SCOTCH PINE	22 EACH
659	WATERING, AS PER PLAN				66.9 MGAL.

ITEM	DESCRIPTION	SYMBOL	BOTANICAL NAME	COMMON NAME	QUANTITY
663	EVERGREEN TREE, 7'-8' HEIGHT, B&B 27'	PF	PINUS FLEXILIS	LIMBER PINE	24 EACH
663	EVERGREEN TREE, 7'-8' HEIGHT, B&B 27'	JV	JUNIPERUS VIRGINIANA		13 EACH
663	EVERGREEN TREE, 8'-9' HEIGHT, B&B 30'	PS	PINUS SYLVESTRIS	SCOTCH PINE	19 EACH
663	EVERGREEN TREE, 8'-9' HEIGHT, B&B 30'	PF	PINUS FLEXILIS	LIMBER PINE	25 EACH
663	EVERGREEN TREE, 8'-9' HEIGHT, B&B 30'	JV	JUNIPERUS VIRGINIANA		28 EACH
663	DECUDUOUS FLOWERING TREE,5'-6' HT B&B	CC	CRATAEGUS CRUSGALLI		73 EACH

SCALE IN FEET
0 40 80 120

STA. 95+00 TO STA. 105+00

LANDSCAPE PLAN

277PG3.DWG

CALC BY DATE		OHIO	137FF 196
CHKD BY DATE		FHWA REGION 5	

SUM-277/224-0.00/6.31-10.22

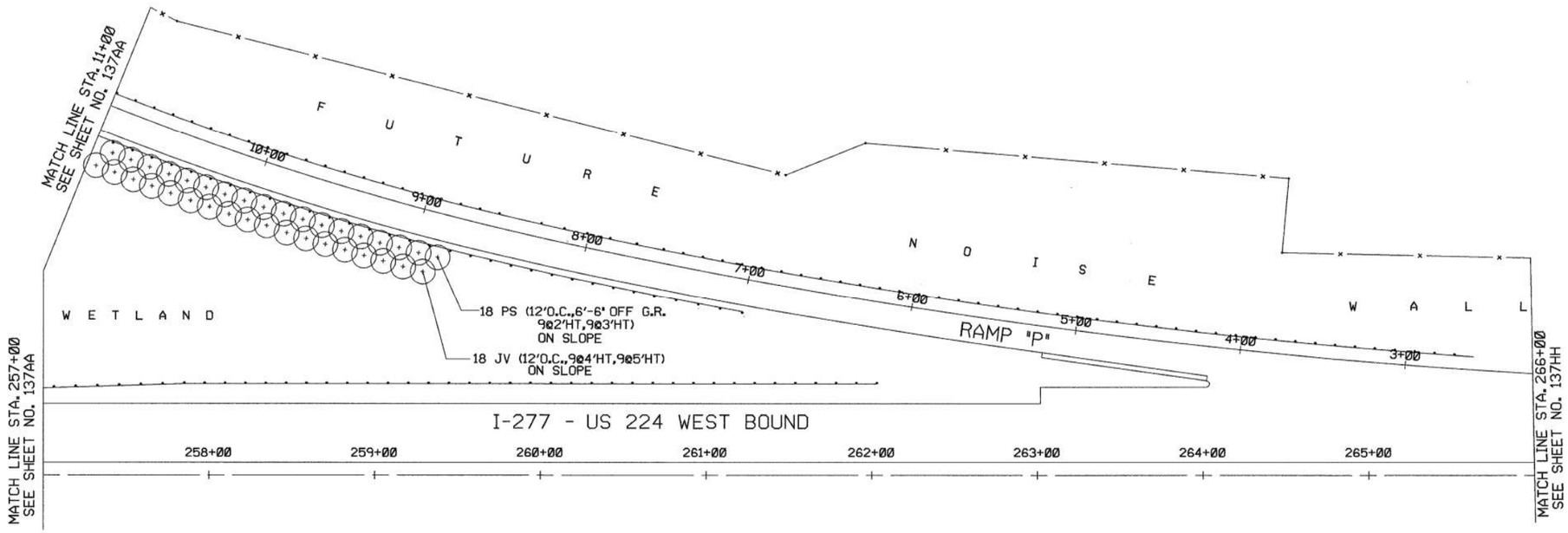

ITEM	DESCRIPTION	SYMBOL	BOTANICAL NAME	COMMON NAME	QUANTITY
201	CLEARING AND GRUBBING				LUMP
SPEC	WILDFLOWER SEEDING AND MULCHING				— ACRE
663	EVERGREEN TREE, 2'-3' HEIGHT, B&B 14'	PS	PINUS SYLVESTRIS	SCOTCH PINE	9 EACH
663	EVERGREEN TREE, 3'-4' HEIGHT, B&B 16'	PS	PINUS SYLVESTRIS	SCOTCH PINE	9 EACH
663	EVERGREEN TREE, 4'-5' HEIGHT, B&B 20'	JV	JUNIPERUS VIRGINIANA		9 EACH
663	EVERGREEN TREE, 5'-6' HEIGHT, B&B 22'	JV	JUNIPERUS VIRGINIANA		9 EACH
663	EVERGREEN TREE, 6'-7' HEIGHT, B&B 24'				EACH
663	EVERGREEN TREE, 7'-8' HEIGHT, B&B 27'				EACH
663	EVERGREEN TREE, 8'-9' HEIGHT, B&B 30'				EACH
663	WATERING, AS PER PLAN				4.3 MGAL.

SCALE IN FEET
0 40 80 120

WEST BOUND
STA. 257+00 TO STA. 266+00

LANDSCAPE PLAN

277PG27.DWG

CALC BY DATE		OHIO	137G 196
CHKD BY DATE		FHWA REGION 5	

SUM-277/224-0.00/6.31-10.22

ITEM	DESCRIPTION	SYMBOL	BOTANICAL NAME	COMMON NAME	QUANTITY
201	CLEARING AND GRUBBING				LUMP
SPEC	WILDFLOWER SEEDING AND MULCHING				— ACRE
663	EVERGREEN TREE, 2'-3' HEIGHT, B&B 14"	PN	PINUS NIGRA	AUSTRIAN PINE	11 EACH
663	EVERGREEN TREE, 3'-4' HEIGHT, B&B 16"	PN	PINUS NIGRA	AUSTRIAN PINE	12 EACH
663	EVERGREEN TREE, 2'-3' HEIGHT, B&B 14"	JV	JUNIPERUS VIRGINIANA		26 EACH
663	EVERGREEN TREE, 3'-4' HEIGHT, B&B 16"	JV	JUNIPERUS VIRGINIANA		27 EACH
663	EVERGREEN TREE, 5'-6' HEIGHT, B&B 22"	JV	JUNIPERUS VIRGINIANA		11 EACH
663	EVERGREEN TREE, 6'-7' HEIGHT, B&B 24"	JV	JUNIPERUS VIRGINIANA		11 EACH
663	EVERGREEN TREE, 4'-5' HEIGHT, B&B 20"	PS	PINUS SYLVESTRIS	SCOTCH PINE	11 EACH
663	EVERGREEN TREE, 5'-6' HEIGHT, B&B 22"	PS	PINUS SYLVESTRIS	SCOTCH PINE	12 EACH
663	EVERGREEN TREE, 4'-5' HEIGHT, B&B 20"	PF	PINUS FLEXILIS	LIMBER PINE	26 EACH
663	WATERING, AS PER PLAN				23.6 MGAL.

ITEM	DESCRIPTION	SYMBOL	BOTANICAL NAME	COMMON NAME	QUANTITY
663	EVERGREEN TREE, 5'-6' HEIGHT, B&B 22"	PF	PINUS FLEXILIS	LIMBER PINE	26 EACH
663	DECIDUOUS FLOWERING TREE, 5'-6' B&B	CC	CRATAEGUS CRUSGALLI		24 EACH
663	EVERGREEN TREE, 2'-3' HEIGHT, B&B 14"	PN	PINUS NIGRA	AUSTRIAN PINE	EACH
663	EVERGREEN TREE, 3'-4' HEIGHT, B&B 16"	PN	PINUS NIGRA	AUSTRIAN PINE	EACH
663	EVERGREEN TREE, 4'-5' HEIGHT, B&B 20"	PN	PINUS NIGRA	AUSTRIAN PINE	EACH
663	EVERGREEN TREE, 5'-6' HEIGHT, B&B 22"	PN	PINUS NIGRA	AUSTRIAN PINE	EACH
663	EVERGREEN TREE, 6'-7' HEIGHT, B&B 24"	PN	PINUS NIGRA	AUSTRIAN PINE	— EACH
663	EVERGREEN TREE, 7'-8' HEIGHT, B&B 27"	PN	PINUS NIGRA	AUSTRIAN PINE	— EACH
663	EVERGREEN TREE, 8'-9' HEIGHT, B&B 30"	PN	PINUS NIGRA	AUSTRIAN PINE	— EACH

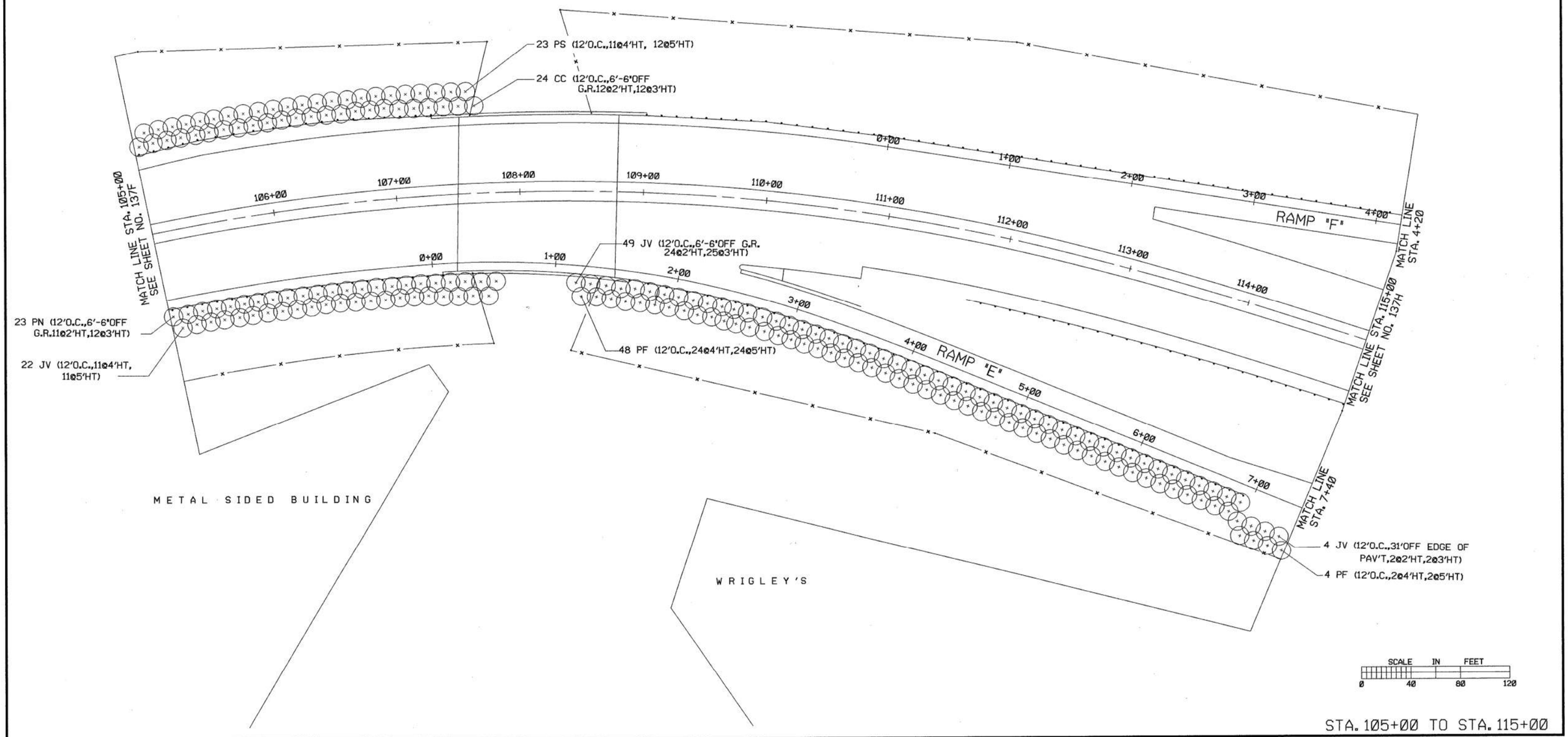

STA. 105+00 TO STA. 115+00

LANDSCAPE PLAN

277PG4.DWG

CALC BY DATE	OHIO	137GG
CHKD BY DATE	FHWA REGION 5	196

SUM-277/224-0.00/6.31-10.22

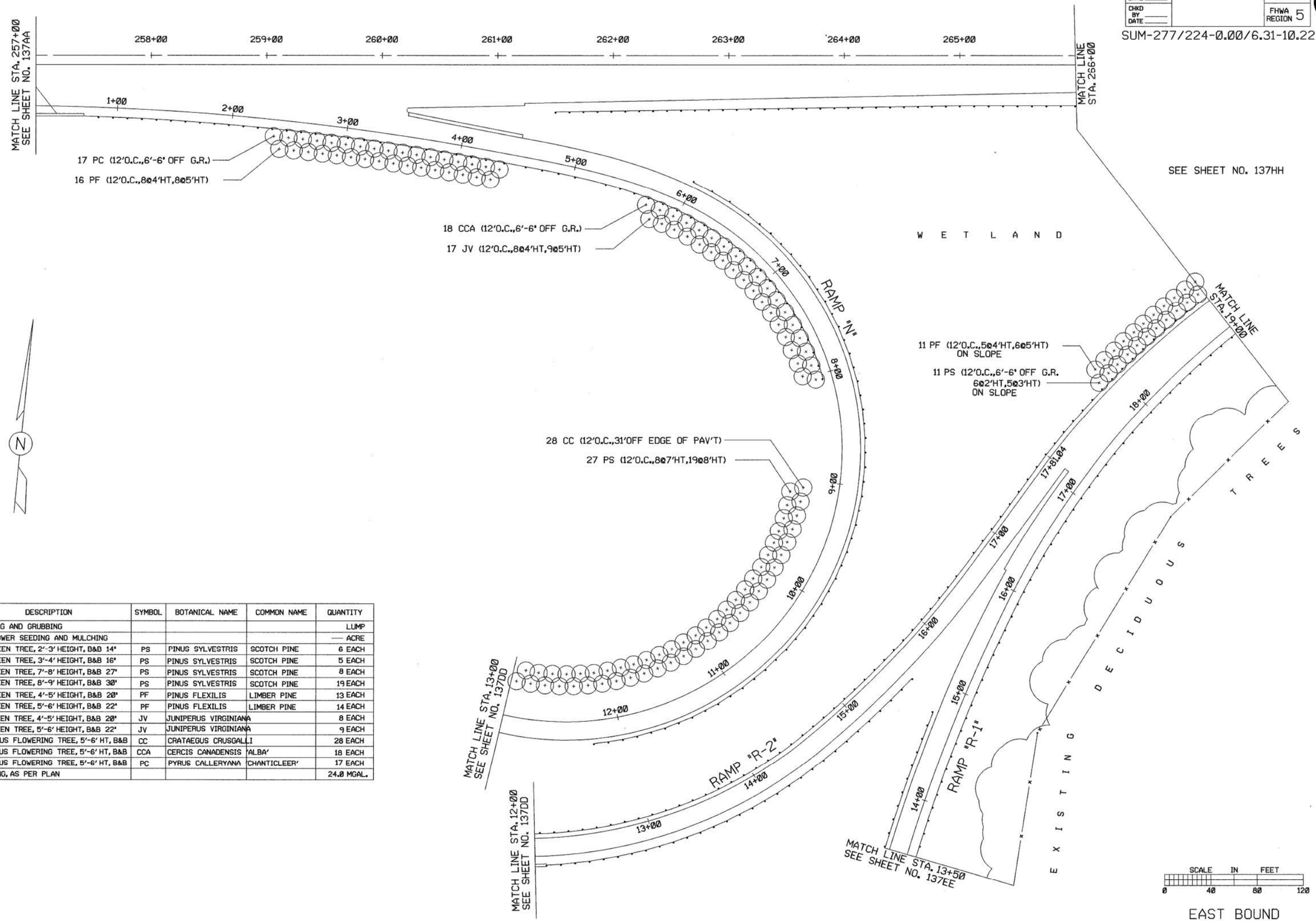

ITEM	DESCRIPTION	SYMBOL	BOTANICAL NAME	COMMON NAME	QUANTITY
201	CLEARING AND GRUBBING				LUMP
SPEC	WILDFLOWER SEEDING AND MULCHING				— ACRE
663	EVERGREEN TREE, 2'-3' HEIGHT, B&B 14"	PS	PINUS SYLVESTRIS	SCOTCH PINE	6 EACH
663	EVERGREEN TREE, 3'-4' HEIGHT, B&B 16"	PS	PINUS SYLVESTRIS	SCOTCH PINE	5 EACH
663	EVERGREEN TREE, 7'-8' HEIGHT, B&B 27"	PS	PINUS SYLVESTRIS	SCOTCH PINE	8 EACH
663	EVERGREEN TREE, 8'-9' HEIGHT, B&B 30"	PS	PINUS SYLVESTRIS	SCOTCH PINE	19 EACH
663	EVERGREEN TREE, 4'-5' HEIGHT, B&B 20"	PF	PINUS FLEXILIS	LIMBER PINE	13 EACH
663	EVERGREEN TREE, 5'-6' HEIGHT, B&B 22"	PF	PINUS FLEXILIS	LIMBER PINE	14 EACH
663	EVERGREEN TREE, 4'-5' HEIGHT, B&B 20"	JV	JUNIPERUS VIRGINIANA		8 EACH
663	EVERGREEN TREE, 5'-6' HEIGHT, B&B 22"	JV	JUNIPERUS VIRGINIANA		9 EACH
663	DECIDUOUS FLOWERING TREE, 5'-6' HT, B&B	CC	CRATAEGUS CRUSGALLI		28 EACH
663	DECIDUOUS FLOWERING TREE, 5'-6' HT, B&B	CCA	CERCIS CANADENSIS	'ALBA'	18 EACH
663	DECIDUOUS FLOWERING TREE, 5'-6' HT, B&B	PC	PYRUS CALLERYANA	'CHANTICLEER'	17 EACH
663	WATERING, AS PER PLAN				24.0 MGAL.

EAST BOUND
STA. 257+00 TO STA. 266+00

277PG28.DWG

LANDSCAPE PLAN

CALC BY DATE		OHIO	137H 196
CHKD BY DATE		FHWA REGION 5	

SUM-277/224-0.00/6.31-10.22

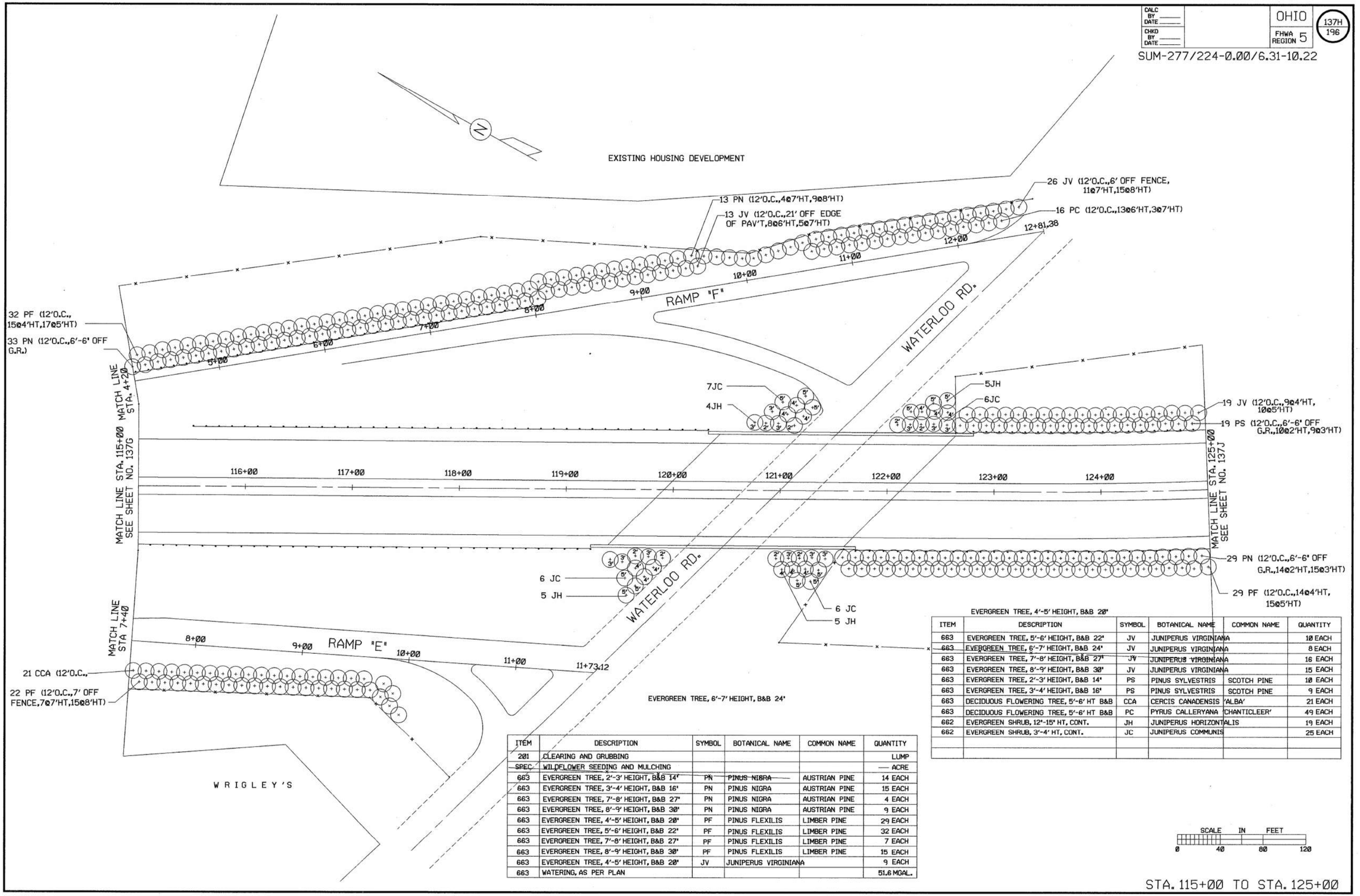

EVERGREEN TREE, 4'-5' HEIGHT, B&B 20'

ITEM	DESCRIPTION	SYMBOL	BOTANICAL NAME	COMMON NAME	QUANTITY
663	EVERGREEN TREE, 5'-6' HEIGHT, B&B 22'	JV	JUNIPERUS VIRGINIANA		10 EACH
663	EVERGREEN TREE, 6'-7' HEIGHT, B&B 24'	JV	JUNIPERUS VIRGINIANA		8 EACH
663	EVERGREEN TREE, 7'-8' HEIGHT, B&B 27'	JV	JUNIPERUS VIRGINIANA		16 EACH
663	EVERGREEN TREE, 8'-9' HEIGHT, B&B 30'	JV	JUNIPERUS VIRGINIANA		15 EACH
663	EVERGREEN TREE, 2'-3' HEIGHT, B&B 14'	PS	PINUS SYLVESTRIS	SCOTCH PINE	10 EACH
663	EVERGREEN TREE, 3'-4' HEIGHT, B&B 16'	PS	PINUS SYLVESTRIS	SCOTCH PINE	9 EACH
663	DECIDUOUS FLOWERING TREE, 5'-6' HT B&B	CCA	CERCIS CANADENSIS	'ALBA'	21 EACH
663	DECIDUOUS FLOWERING TREE, 5'-6' HT B&B	PC	PYRUS CALLERYANA	'CHANTICLEER'	49 EACH
662	EVERGREEN SHRUB, 12"-15" HT, CONT.	JH	JUNIPERUS HORIZONTALIS		19 EACH
662	EVERGREEN SHRUB, 3'-4' HT, CONT.	JC	JUNIPERUS COMMUNIS		25 EACH

ITEM	DESCRIPTION	SYMBOL	BOTANICAL NAME	COMMON NAME	QUANTITY
201	CLEARING AND GRUBBING				LUMP
SPEC	WILDFLOWER SEEDING AND MULCHING				— ACRE
663	EVERGREEN TREE, 2'-3' HEIGHT, B&B 14'	PN	PINUS NIGRA	AUSTRIAN PINE	14 EACH
663	EVERGREEN TREE, 3'-4' HEIGHT, B&B 16'	PN	PINUS NIGRA	AUSTRIAN PINE	15 EACH
663	EVERGREEN TREE, 7'-8' HEIGHT, B&B 27'	PN	PINUS NIGRA	AUSTRIAN PINE	4 EACH
663	EVERGREEN TREE, 8'-9' HEIGHT, B&B 30'	PN	PINUS NIGRA	AUSTRIAN PINE	9 EACH
663	EVERGREEN TREE, 4'-5' HEIGHT, B&B 20'	PF	PINUS FLEXILIS	LIMBER PINE	29 EACH
663	EVERGREEN TREE, 5'-6' HEIGHT, B&B 22'	PF	PINUS FLEXILIS	LIMBER PINE	32 EACH
663	EVERGREEN TREE, 7'-8' HEIGHT, B&B 27'	PF	PINUS FLEXILIS	LIMBER PINE	7 EACH
663	EVERGREEN TREE, 8'-9' HEIGHT, B&B 30'	PF	PINUS FLEXILIS	LIMBER PINE	15 EACH
663	EVERGREEN TREE, 4'-5' HEIGHT, B&B 20'	JV	JUNIPERUS VIRGINIANA		9 EACH
663	WATERING, AS PER PLAN				51.6 MGAL.

STA. 115+00 TO STA. 125+00

LANDSCAPE PLAN

277PG5.DWG

CALC BY ____ DATE ____	OHIO	137HH
CHKD BY ____ DATE ____	FHWA REGION 5	196

SUM-277/224-0.00/6.31-10.22

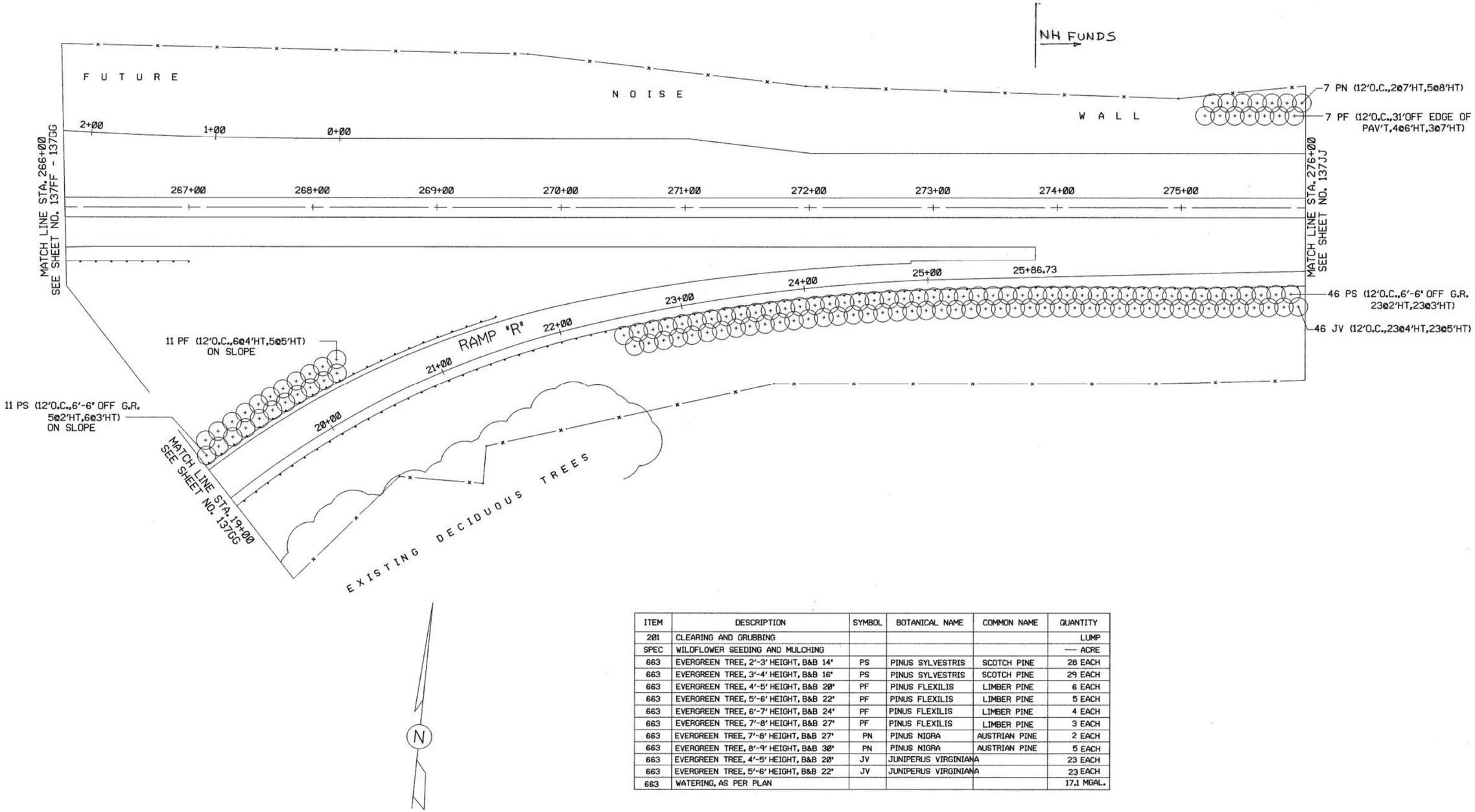

ITEM	DESCRIPTION	SYMBOL	BOTANICAL NAME	COMMON NAME	QUANTITY
201	CLEARING AND GRUBBING				LUMP
SPEC	WILDFLOWER SEEDING AND MULCHING				— ACRE
663	EVERGREEN TREE, 2'-3' HEIGHT, B&B 14"	PS	PINUS SYLVESTRIS	SCOTCH PINE	28 EACH
663	EVERGREEN TREE, 3'-4' HEIGHT, B&B 16"	PS	PINUS SYLVESTRIS	SCOTCH PINE	29 EACH
663	EVERGREEN TREE, 4'-5' HEIGHT, B&B 20"	PF	PINUS FLEXILIS	LIMBER PINE	6 EACH
663	EVERGREEN TREE, 5'-6' HEIGHT, B&B 22"	PF	PINUS FLEXILIS	LIMBER PINE	5 EACH
663	EVERGREEN TREE, 6'-7' HEIGHT, B&B 24"	PF	PINUS FLEXILIS	LIMBER PINE	4 EACH
663	EVERGREEN TREE, 7'-8' HEIGHT, B&B 27"	PF	PINUS FLEXILIS	LIMBER PINE	3 EACH
663	EVERGREEN TREE, 7'-8' HEIGHT, B&B 27"	PN	PINUS NIGRA	AUSTRIAN PINE	2 EACH
663	EVERGREEN TREE, 8'-9' HEIGHT, B&B 30"	PN	PINUS NIGRA	AUSTRIAN PINE	5 EACH
663	EVERGREEN TREE, 4'-5' HEIGHT, B&B 20"	JV	JUNIPERUS VIRGINIANA		23 EACH
663	EVERGREEN TREE, 5'-6' HEIGHT, B&B 22"	JV	JUNIPERUS VIRGINIANA		23 EACH
663	WATERING, AS PER PLAN				17.1 MGAL.

SCALE IN FEET
0 40 80 120

STA. 266+00 TO STA. 276+00

LANDSCAPE PLAN

277PG29.DWG

CALC BY DATE		OHIO	137J 196
CHKD BY DATE		FHWA REGION 5	

SUM-277/224-0.00/6.31-10.22

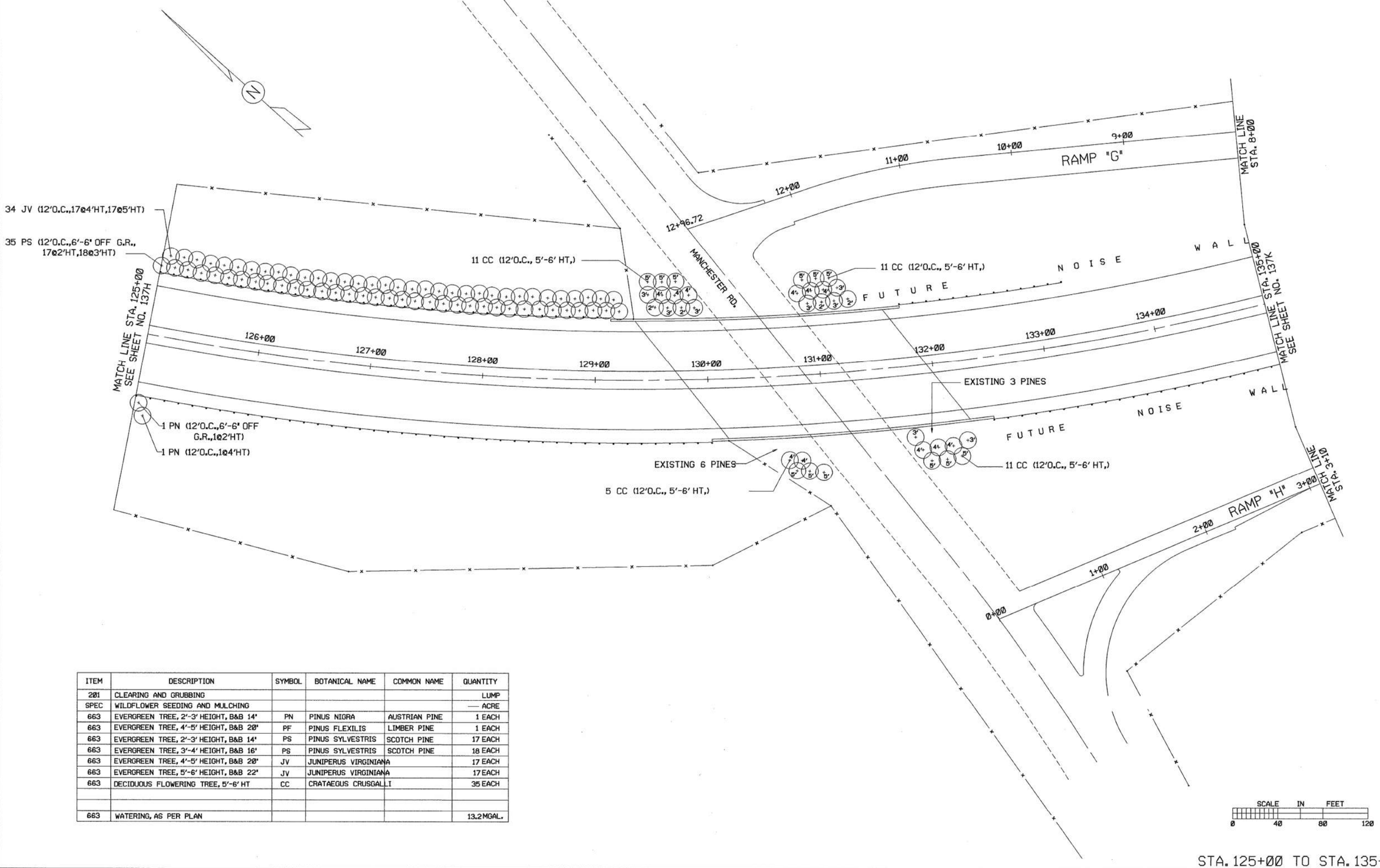

ITEM	DESCRIPTION	SYMBOL	BOTANICAL NAME	COMMON NAME	QUANTITY
201	CLEARING AND GRUBBING				LUMP
SPEC	WILDFLOWER SEEDING AND MULCHING				— ACRE
663	EVERGREEN TREE, 2'-3' HEIGHT, B&B 14"	PN	PINUS NIGRA	AUSTRIAN PINE	1 EACH
663	EVERGREEN TREE, 4'-5' HEIGHT, B&B 20"	PF	PINUS FLEXILIS	LIMBER PINE	1 EACH
663	EVERGREEN TREE, 2'-3' HEIGHT, B&B 14"	PS	PINUS SYLVESTRIS	SCOTCH PINE	17 EACH
663	EVERGREEN TREE, 3'-4' HEIGHT, B&B 16"	PS	PINUS SYLVESTRIS	SCOTCH PINE	18 EACH
663	EVERGREEN TREE, 4'-5' HEIGHT, B&B 20"	JV	JUNIPERUS VIRGINIANA		17 EACH
663	EVERGREEN TREE, 5'-6' HEIGHT, B&B 22"	JV	JUNIPERUS VIRGINIANA		17 EACH
663	DECIDUOUS FLOWERING TREE, 5'-6' HT	CC	CRATAEGUS CRUSGALLI		35 EACH
663	WATERING, AS PER PLAN				13.2 MGAL.

STA. 125+00 TO STA. 135+00

277PG6.DWG

LANDSCAPE PLAN

CALC BY DATE		OHIO	137.
CHKD BY DATE		FHWA REGION 5	196

SUM-277/224-0.00/6.31-10.22

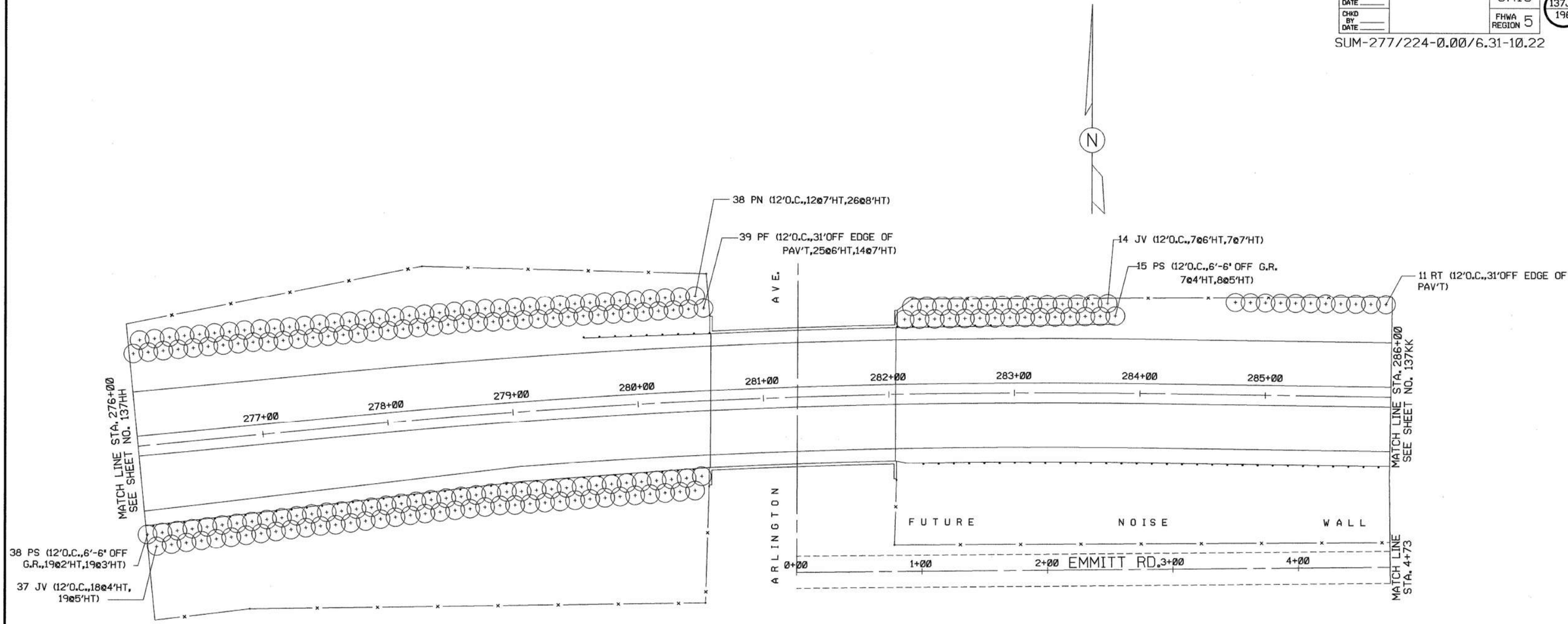

ITEM	DESCRIPTION	SYMBOL	BOTANICAL NAME	COMMON NAME	QUANTITY
201	CLEARING AND GRUBBING				LUMP
SPEC	WILDFLOWER SEEDING AND MULCHING				— ACRE
663	EVERGREEN TREE, 2'-3' HEIGHT, B&B 14'	PS	PINUS SYLVESTRIS	SCOTCH PINE	19 EACH
663	EVERGREEN TREE, 3'-4' HEIGHT, B&B 16'	PS	PINUS SYLVESTRIS	SCOTCH PINE	19 EACH
663	EVERGREEN TREE, 4'-5' HEIGHT, B&B 20'	PS	PINUS SYLVESTRIS	SCOTCH PINE	7 EACH
663	EVERGREEN TREE, 5'-6' HEIGHT, B&B 22'	PS	PINUS SYLVESTRIS	SCOTCH PINE	8 EACH
663	EVERGREEN TREE, 6'-7' HEIGHT, B&B 24'	PF	PINUS FLEXILIS	LIMBER PINE	25 EACH
663	EVERGREEN TREE, 7'-8' HEIGHT, B&B 27'	PF	PINUS FLEXILIS	LIMBER PINE	14 EACH
663	EVERGREEN TREE, 7'-8' HEIGHT, B&B 27'	PN	PINUS NIGRA	AUSTRIAN PINE	12 EACH
663	EVERGREEN TREE, 8'-9' HEIGHT, B&B 30'	PN	PINUS NIGRA	AUSTRIAN PINE	26 EACH
663	EVERGREEN TREE, 4'-5' HEIGHT, B&B 20'	JV	JUNIPERUS VIRGINIANA		18 EACH
663	EVERGREEN TREE, 5'-6' HEIGHT, B&B 22'	JV	JUNIPERUS VIRGINIANA		19 EACH
663	EVERGREEN TREE, 6'-7' HEIGHT, B&B 24'	JV	JUNIPERUS VIRGINIANA		7 EACH
663	EVERGREEN TREE, 7'-8' HEIGHT, B&B 27'	JV	JUNIPERUS VIRGINIANA		7 EACH
663	DECIDUOUS FLOWERING TREE, 5'-6' HT, B&B	RT	RHUS TYPHINA	STAGHORN SUMAC	11 EACH
663	WATERING, AS PER PLAN				35.4 MGAL.

SCALE IN FEET
0 40 80 120

STA. 276+00 TO STA. 286+00

277PG30.DWG

LANDSCAPE PLAN

CALC BY DATE		OHIO	137K 196
CHKD BY DATE		FHWA REGION 5	

SUM-277/224-0.00/6.31-10.22

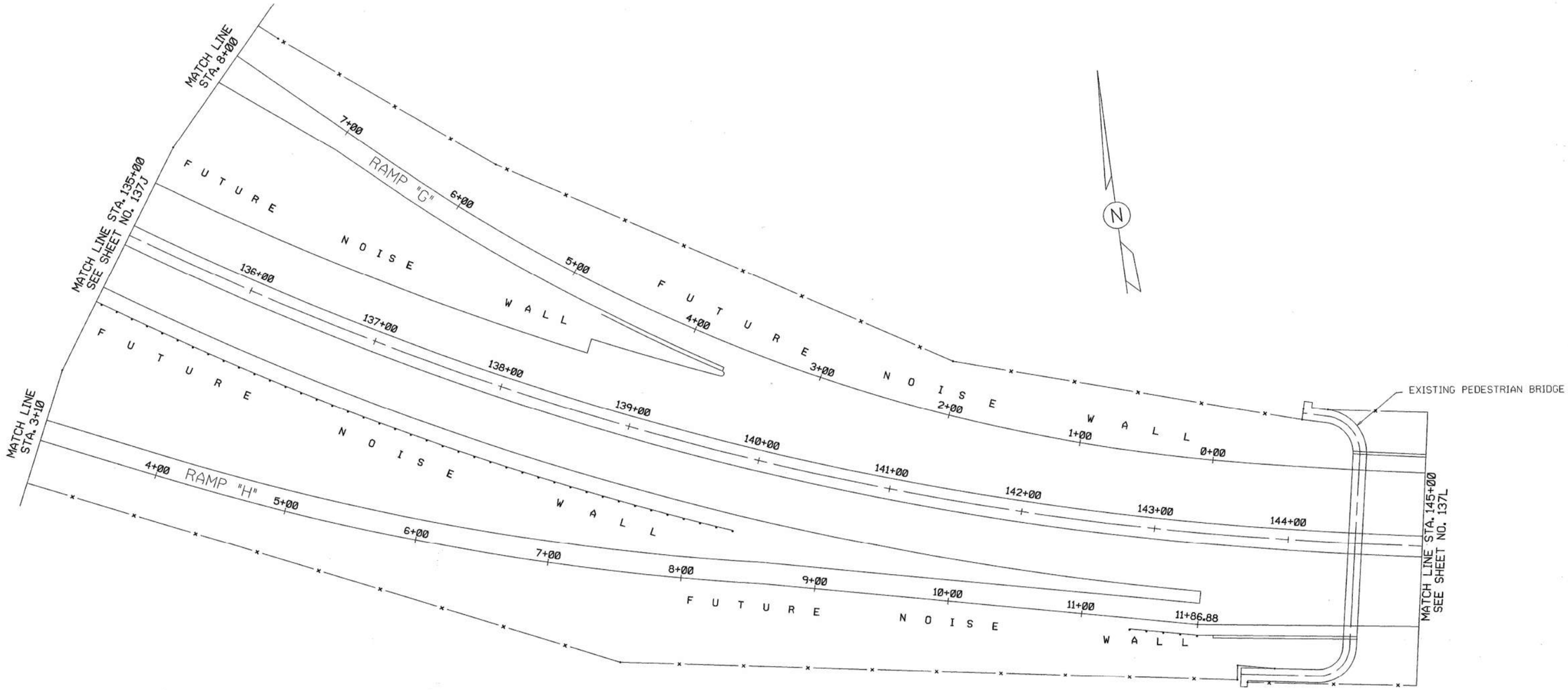

ITEM	DESCRIPTION	SYMBOL	BOTANICAL NAME	COMMON NAME	QUANTITY
201	CLEARING AND GRUBBING				LUMP
SPEC	WILDFLOWER SEEDING AND MULCHING				— ACRE
663	EVERGREEN TREE, 2'-3' HEIGHT, B&B 14'	PN	PINUS NIGRA	AUSTRIAN PINE	— EACH
663	EVERGREEN TREE, 3'-4' HEIGHT, B&B 16'	PN	PINUS NIGRA	AUSTRIAN PINE	— EACH
663	EVERGREEN TREE, 4'-5' HEIGHT, B&B 20'	PN	PINUS NIGRA	AUSTRIAN PINE	— EACH
663	EVERGREEN TREE, 5'-6' HEIGHT, B&B 22'	PN	PINUS NIGRA	AUSTRIAN PINE	— EACH
663	EVERGREEN TREE, 6'-7' HEIGHT, B&B 24'	PN	PINUS NIGRA	AUSTRIAN PINE	— EACH
663	EVERGREEN TREE, 7'-8' HEIGHT, B&B 27'	PN	PINUS NIGRA	AUSTRIAN PINE	— EACH
663	EVERGREEN TREE, 8'-9' HEIGHT, B&B 30'	PN	PINUS NIGRA	AUSTRIAN PINE	— EACH
663	WATERING, AS PER PLAN				— MGAL.

SCALE IN FEET

0 40 80 120

STA. 135+00 TO STA. 145+00

LANDSCAPE PLAN

277PG7.DWG

AKRON SQUARE
SHOPPING CENTER

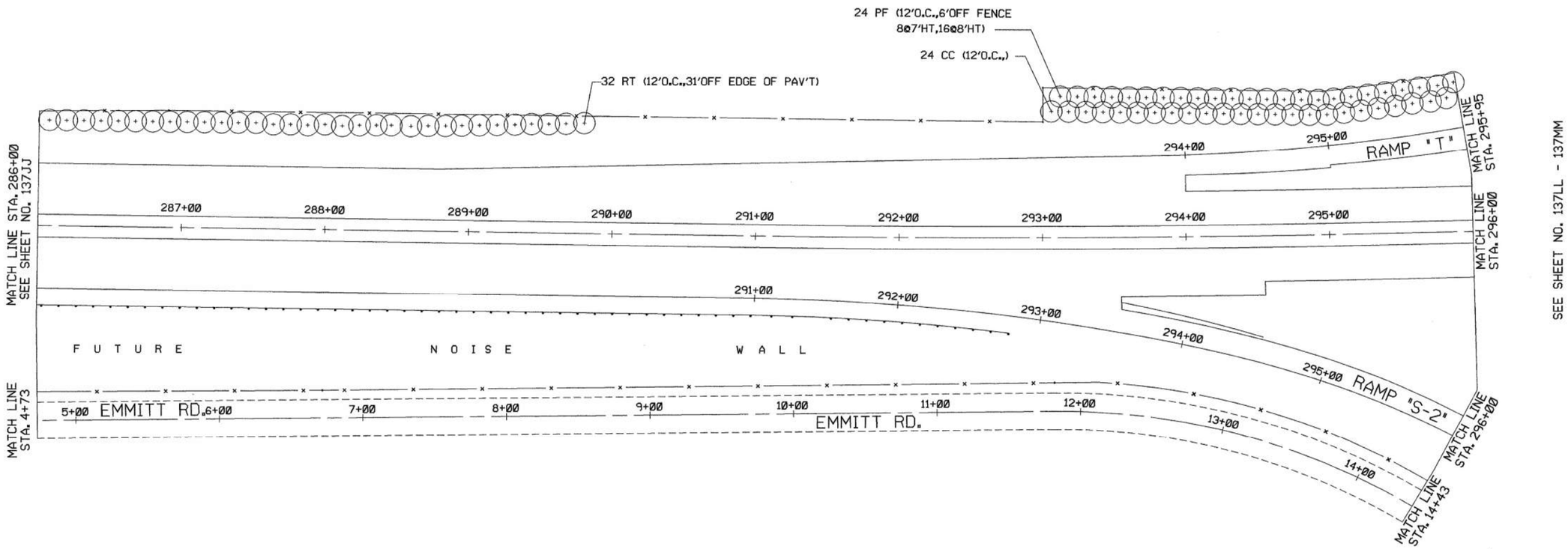

ITEM	DESCRIPTION	SYMBOL	BOTANICAL NAME	COMMON NAME	QUANTITY
201	CLEARING AND GRUBBING				LUMP
SPEC	WILDFLOWER SEEDING AND MULCHING				— ACRE
663	EVERGREEN TREE, 2'-3' HEIGHT, B&B 14'				EACH
663	EVERGREEN TREE, 3'-4' HEIGHT, B&B 16'				EACH
663	DECIDUOUS FLOWERING TREE, 5'-6' HT, B&B	CC	CRATAEGUS CRUSGALLI		24 EACH
663	DECIDUOUS FLOWERING TREE, 5'-6' HT, B&B	RT	RHUS TYPHINA	STAGHORN SUMAC	32 EACH
663	EVERGREEN TREE, 6'-7' HEIGHT, B&B 24'				EACH
663	EVERGREEN TREE, 7'-8' HEIGHT, B&B 27'	PF	PINUS FLEXILIS	LIMBER PINE	8 EACH
663	EVERGREEN TREE, 8'-9' HEIGHT, B&B 30'	PF	PINUS FLEXILIS	LIMBER PINE	16 EACH
663	WATERING, AS PER PLAN				18.2 MGAL.

SCALE IN FEET
0 40 80 120

STA. 286+00 TO STA. 296+00

LANDSCAPE PLAN

CALC BY ____ DATE ____		OHIO	137L
CHKD BY ____ DATE ____		FHWA REGION 5	196

SUM-277/224-0.00/6.31-10.22

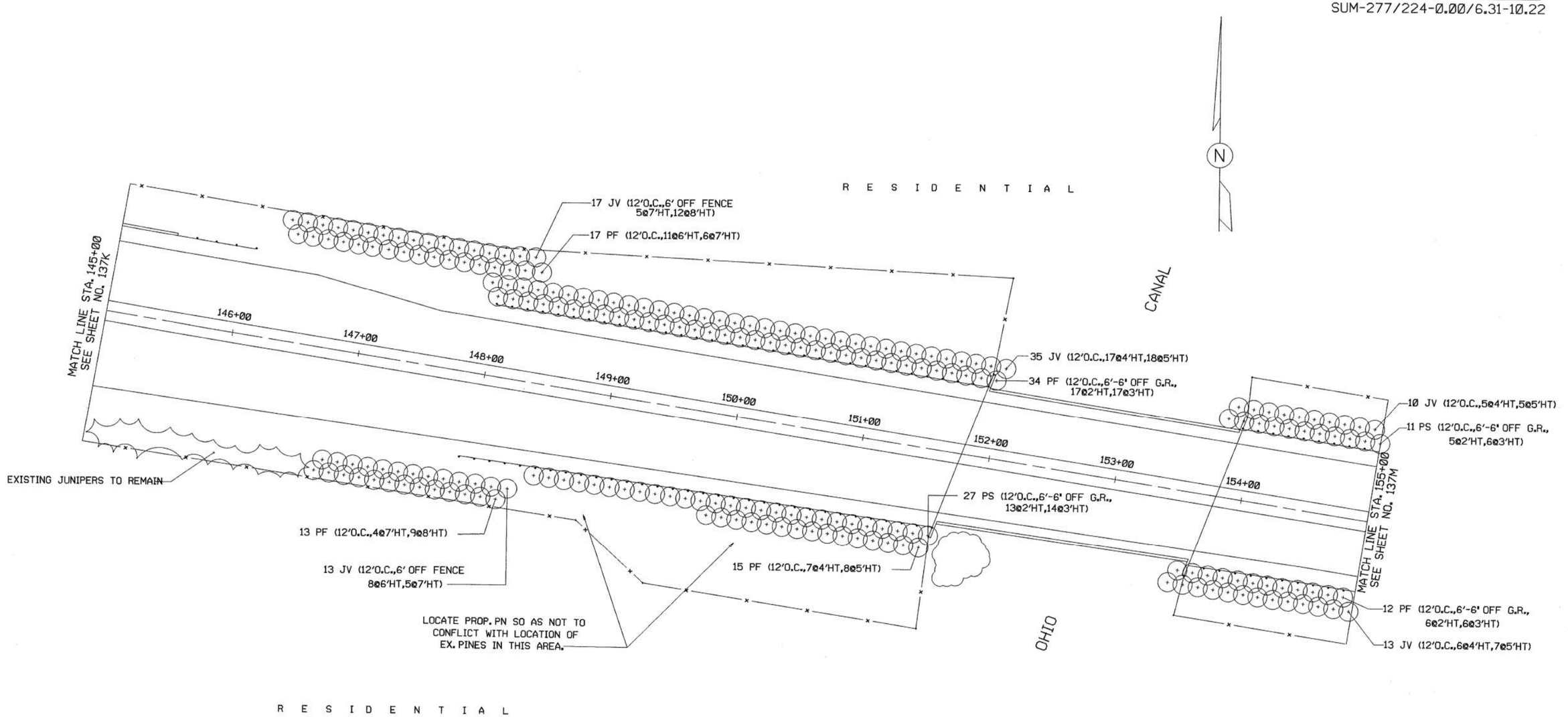

ITEM	DESCRIPTION	SYMBOL	BOTANICAL NAME	COMMON NAME	QUANTITY
201	CLEARING AND GRUBBING				LUMP
SPEC	WILDFLOWER SEEDING AND MULCHING				— ACRE
663	EVERGREEN TREE, 2'-3' HEIGHT, B&B 14'	PF	PINUS FLEXILIS	LIMBER PINE	23 EACH
663	EVERGREEN TREE, 3'-4' HEIGHT, B&B 16'	PF	PINUS FLEXILIS	LIMBER PINE	23 EACH
663	EVERGREEN TREE, 4'-5' HEIGHT, B&B 20'	PF	PINUS FLEXILIS	LIMBER PINE	7 EACH
663	EVERGREEN TREE, 5'-6' HEIGHT, B&B 22'	PF	PINUS FLEXILIS	LIMBER PINE	8 EACH
663	EVERGREEN TREE, 6'-7' HEIGHT, B&B 24'	PF	PINUS FLEXILIS	LIMBER PINE	11 EACH
663	EVERGREEN TREE, 7'-8' HEIGHT, B&B 27'	PF	PINUS FLEXILIS	LIMBER PINE	10 EACH
663	EVERGREEN TREE, 8'-9' HEIGHT, B&B 30'	PF	PINUS FLEXILIS	LIMBER PINE	9 EACH
663	WATERING, AS PER PLAN				32.9 MGAL.

ITEM	DESCRIPTION	SYMBOL	BOTANICAL NAME	COMMON NAME	QUANTITY
663	EVERGREEN TREE, 2'-3' HEIGHT, B&B 14'	PS	PINUS SYLVESTRIS	SCOTCH PINE	18 EACH
663	EVERGREEN TREE, 3'-4' HEIGHT, B&B 16'	PS	PINUS SYLVESTRIS	SCOTCH PINE	20 EACH
663	EVERGREEN TREE, 4'-5' HEIGHT, B&B 20'	JV	JUNIPERUS VIRGINIANA		28 EACH
663	EVERGREEN TREE, 5'-6' HEIGHT, B&B 22'	JV	JUNIPERUS VIRGINIANA		30 EACH
663	EVERGREEN TREE, 6'-7' HEIGHT, B&B 24'	JV	JUNIPERUS VIRGINIANA		8 EACH
663	EVERGREEN TREE, 7'-8' HEIGHT, B&B 27'	JV	JUNIPERUS VIRGINIANA		10 EACH
663	EVERGREEN TREE, 8'-9' HEIGHT, B&B 30'	JV	JUNIPERUS VIRGINIANA		12 EACH

SCALE IN FEET
0 40 80 120

STA. 145+00 TO STA. 155+00

LANDSCAPE PLAN

277PG8.DWG

CALC BY DATE		OHIO	137LL
CHKD BY DATE		FHWA REGION 5	196

SUM-277/224-0.00/6.31-10.22

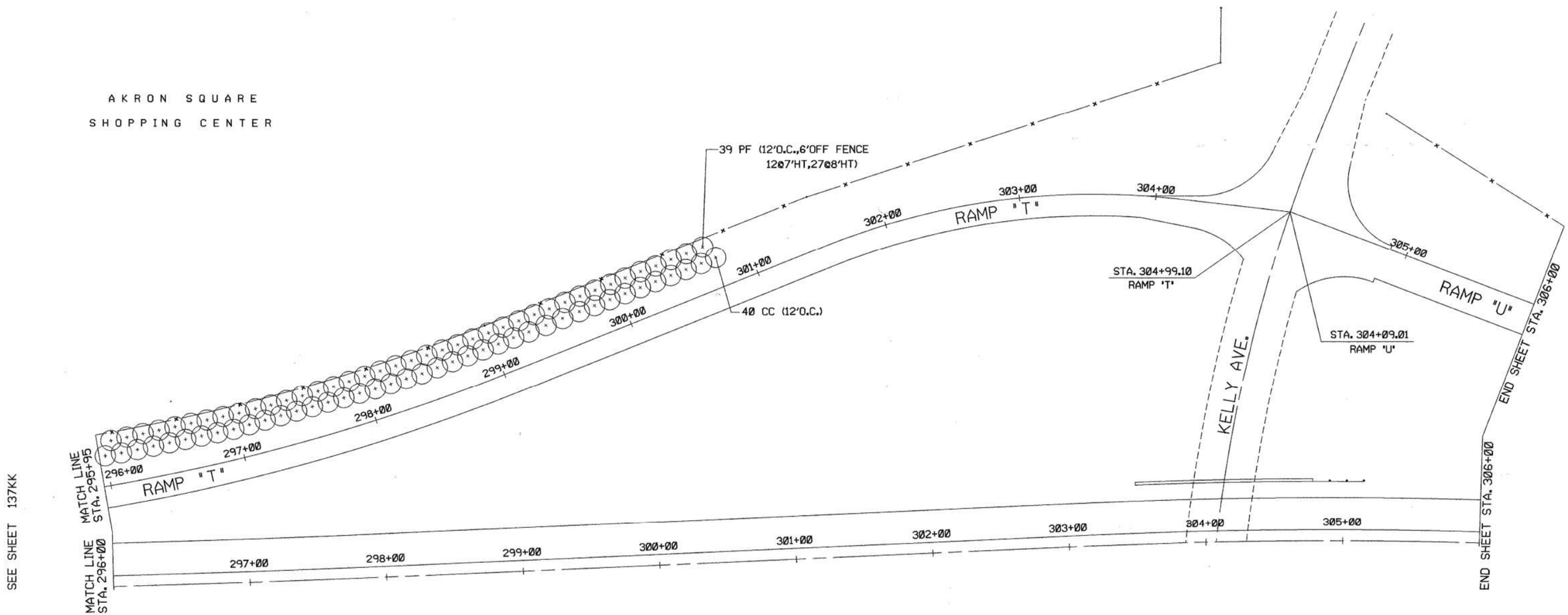

ITEM	DESCRIPTION	SYMBOL	BOTANICAL NAME	COMMON NAME	QUANTITY
201	CLEARING AND GRUBBING				LUMP
SPEC	WILDFLOWER SEEDING AND MULCHING				— ACRE
663	EVERGREEN TREE, 2'-3' HEIGHT, B&B 14"				EACH
663	EVERGREEN TREE, 3'-4' HEIGHT, B&B 16"				EACH
663	EVERGREEN TREE, 4'-5' HEIGHT, B&B 20"				EACH
663	DECIDUOUS FLOWERING TREE, 5'-6' HT, B&B	CC	CRATAEGUS CRUSGALLI		40 EACH
663	EVERGREEN TREE, 6'-7' HEIGHT, B&B 24"				EACH
663	EVERGREEN TREE, 7'-8' HEIGHT, B&B 27"	PF	PINUS FLEXILIS	LIMBER PINE	12 EACH
663	EVERGREEN TREE, 8'-9' HEIGHT, B&B 30"	PF	PINUS FLEXILIS	LIMBER PINE	27 EACH
663	WATERING, AS PER PLAN				19.0 MGAL.

SCALE IN FEET
0 40 80 120

WEST BOUND
STA. 296+00 TO STA. 306+00
LANDSCAPE PLAN

277PG32.DWG

CALC BY DATE		OHIO	137M 196
CHKD BY DATE		FHWA REGION 5	

SUM-277/224-0.00/6.31-10.22

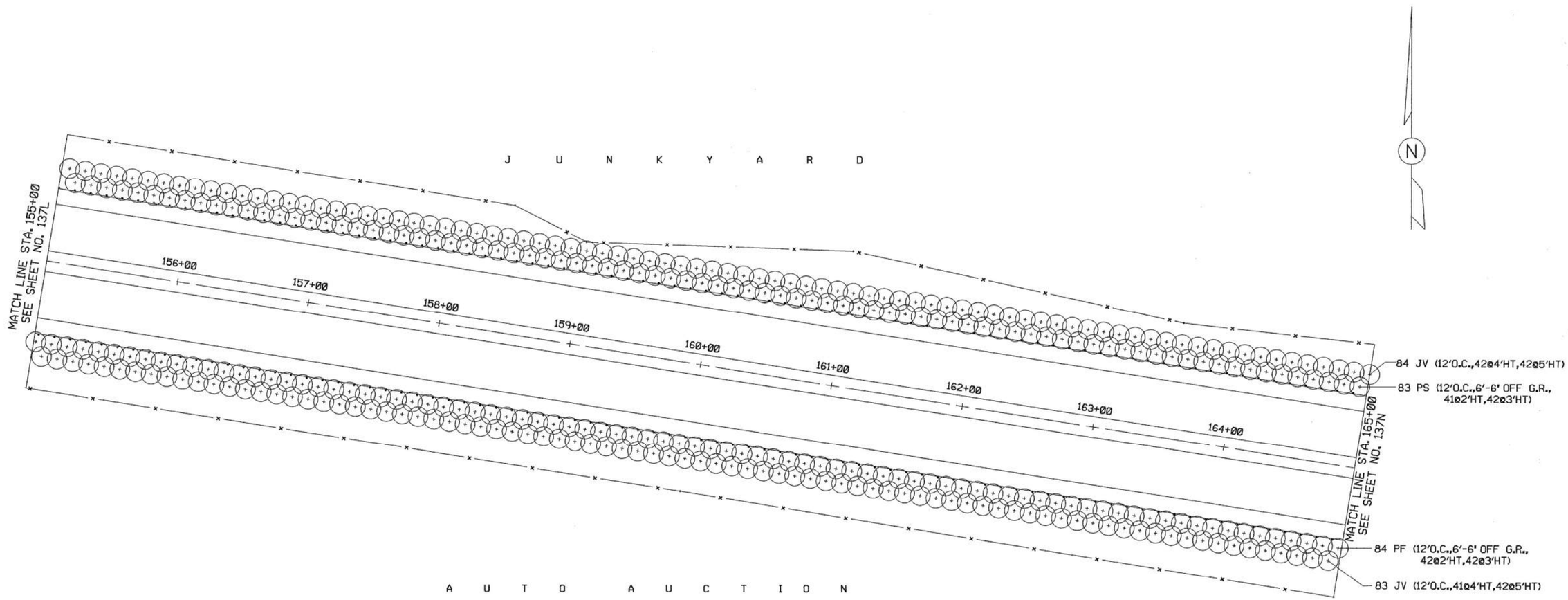

ITEM	DESCRIPTION	SYMBOL	BOTANICAL NAME	COMMON NAME	QUANTITY
201	CLEARING AND GRUBBING				LUMP
SPEC	WILDFLOWER SEEDING AND MULCHING				— ACRE
663	EVERGREEN TREE, 2'-3' HEIGHT, B&B 14'	PF	PINUS FLEXILIS	LIMBER PINE	42 EACH
663	EVERGREEN TREE, 3'-4' HEIGHT, B&B 16'	PF	PINUS FLEXILIS	LIMBER PINE	42 EACH
663	EVERGREEN TREE, 2'-3' HEIGHT, B&B 14'	PS	PINUS SYLVESTRIS		41 EACH
663	EVERGREEN TREE, 3'-4' HEIGHT, B&B 16'	PS	PINUS SYLVESTRIS		42 EACH
663	EVERGREEN TREE, 4'-5' HEIGHT, B&B 20'	JV	JUNIPERUS VIRGINIANA		83 EACH
663	EVERGREEN TREE, 5'-6' HEIGHT, B&B 22'	JV	JUNIPERUS VIRGINIANA		84 EACH
663	WATERING, AS PER PLAN				40.1 MGAL.

SCALE IN FEET
0 40 80 120

STA. 155+00 TO STA. 165+00

LANDSCAPE PLAN

277PG9.DWG

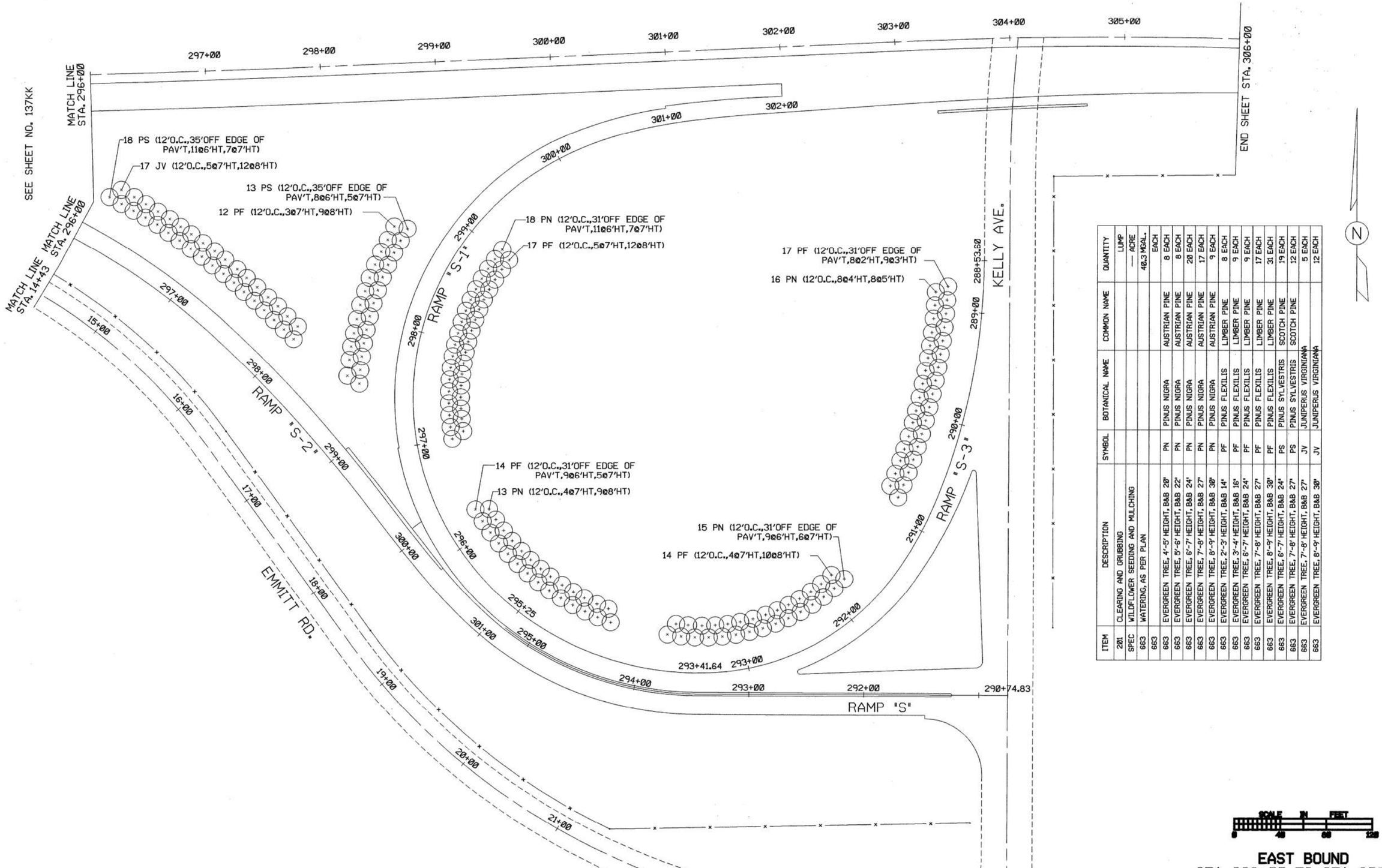

ITEM	DESCRIPTION	SYMBOL	BOTANICAL NAME	COMMON NAME	QUANTITY
201	CLEARING AND GRUBBING				LUMP
SPEC	WILDFLOWER SEEDING AND MULCHING				— ACRE
663	WATERING, AS PER PLAN				48.3 MGAL.
663					EACH
663	EVERGREEN TREE, 4'-5' HEIGHT, B&B 20'	PN	PINUS NIGRA	AUSTRIAN PINE	8 EACH
663	EVERGREEN TREE, 5'-6' HEIGHT, B&B 22'	PN	PINUS NIGRA	AUSTRIAN PINE	8 EACH
663	EVERGREEN TREE, 6'-7' HEIGHT, B&B 24'	PN	PINUS NIGRA	AUSTRIAN PINE	20 EACH
663	EVERGREEN TREE, 7'-8' HEIGHT, B&B 27'	PN	PINUS NIGRA	AUSTRIAN PINE	17 EACH
663	EVERGREEN TREE, 8'-9' HEIGHT, B&B 30'	PN	PINUS NIGRA	AUSTRIAN PINE	9 EACH
663	EVERGREEN TREE, 2'-3' HEIGHT, B&B 14'	PF	PINUS FLEXILIS	LIMBER PINE	8 EACH
663	EVERGREEN TREE, 3'-4' HEIGHT, B&B 16'	PF	PINUS FLEXILIS	LIMBER PINE	9 EACH
663	EVERGREEN TREE, 6'-7' HEIGHT, B&B 24'	PF	PINUS FLEXILIS	LIMBER PINE	9 EACH
663	EVERGREEN TREE, 7'-8' HEIGHT, B&B 27'	PF	PINUS FLEXILIS	LIMBER PINE	17 EACH
663	EVERGREEN TREE, 8'-9' HEIGHT, B&B 30'	PF	PINUS FLEXILIS	LIMBER PINE	31 EACH
663	EVERGREEN TREE, 6'-7' HEIGHT, B&B 24'	PS	PINUS SYLVESTRIS	SCOTCH PINE	19 EACH
663	EVERGREEN TREE, 7'-8' HEIGHT, B&B 27'	PS	PINUS SYLVESTRIS	SCOTCH PINE	12 EACH
663	EVERGREEN TREE, 7'-8' HEIGHT, B&B 27'	JV	JUNIPERUS VIRGINIANA		5 EACH
663	EVERGREEN TREE, 8'-9' HEIGHT, B&B 30'	JV	JUNIPERUS VIRGINIANA		12 EACH

EAST BOUND
STA. 296+00 TO STA. 306+00
LANDSCAPE PLAN

CALC BY ____ DATE ____	OHIO	137N
CHKD BY ____ DATE ____	FHWA REGION 5	196

SUM-277/224-0.00/6.31-10.22

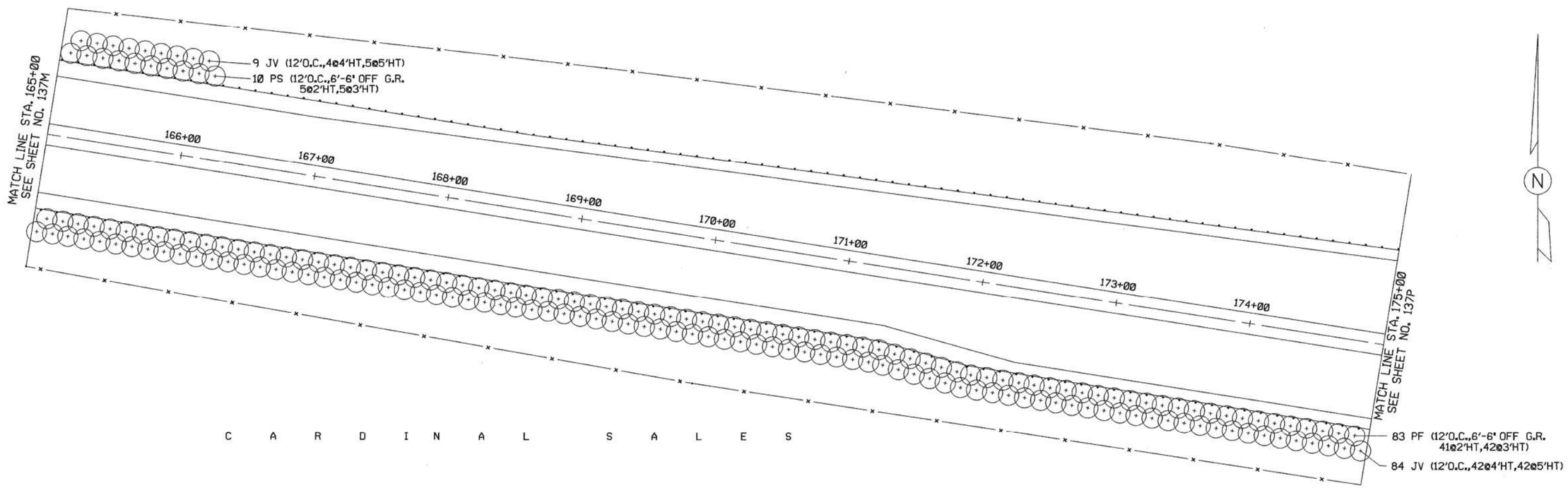

C A R D I N A L S A L E S

ITEM	DESCRIPTION	SYMBOL	BOTANICAL NAME	COMMON NAME	QUANTITY
201	CLEARING AND GRUBBING				LUMP
SPEC	WILDFLOWER SEEDING AND MULCHING				— ACRE
663	EVERGREEN TREE, 2'-3' HEIGHT, B&B 14"	PF	PINUS FLEXILIS	LIMBER PINE	41 EACH
663	EVERGREEN TREE, 3'-4' HEIGHT, B&B 16"	PF	PINUS FLEXILIS	LIMBER PINE	42 EACH
663	EVERGREEN TREE, 2'-3' HEIGHT, B&B 14"	PS	PINUS SYLVESTRIS	SCOTCH PINE	5 EACH
663	EVERGREEN TREE, 3'-4' HEIGHT, B&B 16"	PS	PINUS SYLVESTRIS	SCOTCH PINE	5 EACH
663					— EACH
663	EVERGREEN TREE, 4'-5' HEIGHT, B&B 20"	JV	JUNIPERUS VIRGINIANA	VIRGINIA PINE	46 EACH
663	EVERGREEN TREE, 5'-6' HEIGHT, B&B 22"	JV	JUNIPERUS VIRGINIANA	VIRGINIA PINE	47 EACH
663	WATERING, AS PER PLAN				22.4 MGAL.

SCALE IN FEET
0 40 80 120

STA. 165+00 TO STA. 175+00

LANDSCAPE PLAN

277PG10.DWG

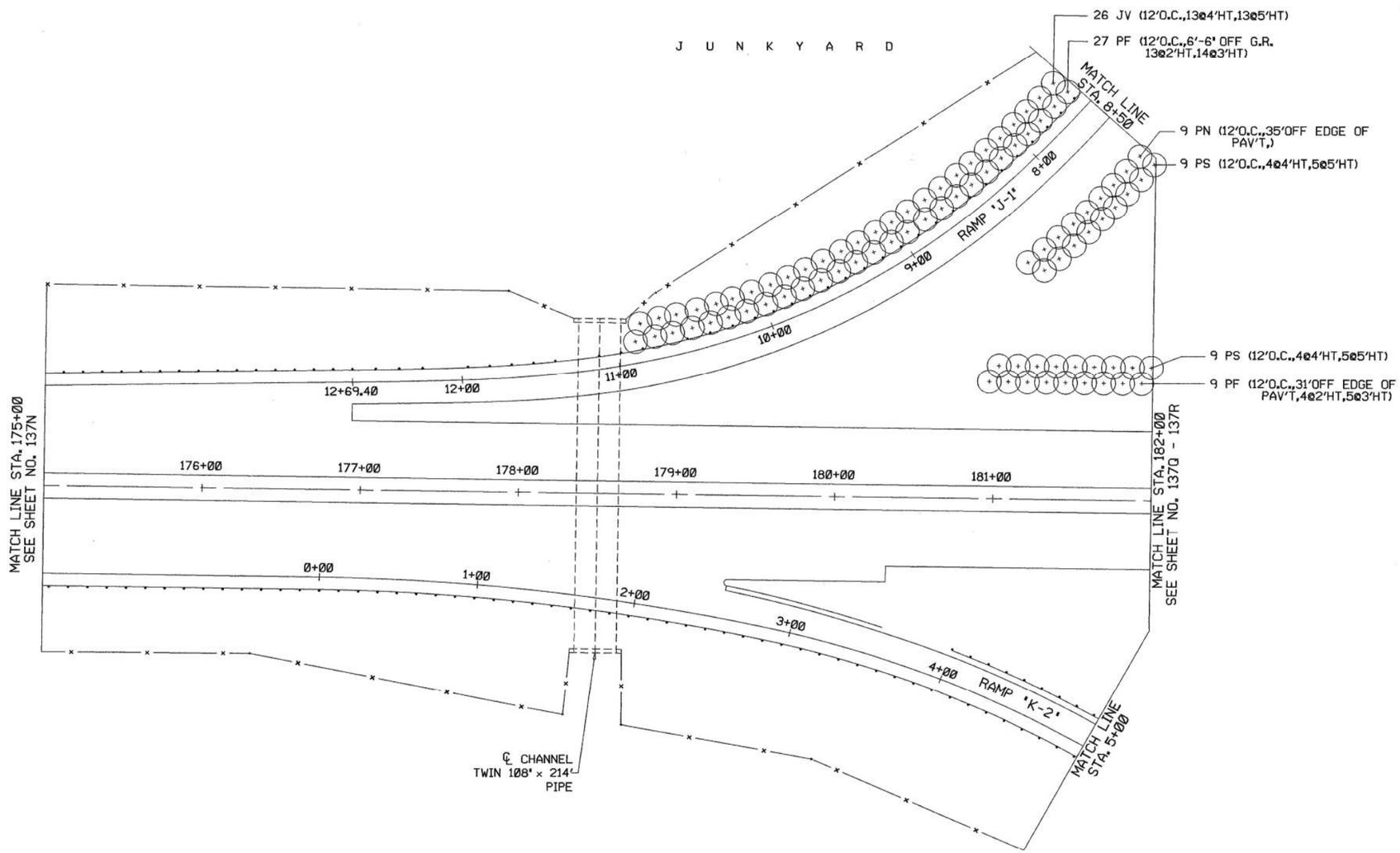

ITEM	DESCRIPTION	SYMBOL	BOTANICAL NAME	COMMON NAME	QUANTITY
201	CLEARING AND GRUBBING				LUMP
SPEC	WILDFLOWER SEEDING AND MULCHING				— ACRE
663	EVERGREEN TREE, 2'-3' HEIGHT, B&B 14"	PF	PINUS FLEXILIS	LIMBER PINE	17 EACH
663	EVERGREEN TREE, 3'-4' HEIGHT, B&B 16"	PF	PINUS FLEXILIS	LIMBER PINE	19 EACH
663	EVERGREEN TREE, 4'-5' HEIGHT, B&B 20"	PS	PINUS SYLVESTRIS		8 EACH
663	EVERGREEN TREE, 5'-6' HEIGHT, B&B 22"	PS	PINUS SYLVESTRIS		10 EACH
663	EVERGREEN TREE, 4'-5' HEIGHT, B&B 20"	JV	JUNIPERUS VIRGINIANA		13 EACH
663	EVERGREEN TREE, 5'-6' HEIGHT, B&B 22"	JV	JUNIPERUS VIRGINIANA		13 EACH
663	DECID. FLOWERING TREE, 5'-6' HT	CC	CRATAEGUS CRUSGALLI		9 EACH
663	WATERING, AS PER PLAN				10.7 MGAL.

SCALE IN FEET
0 40 80 120

STA. 175+00 TO STA. 182+00

LANDSCAPE PLAN

CALC BY ____ DATE ____		OHIO	137Q
CHKD BY ____ DATE ____		FHWA REGION 5	196

SUM-277/224-0.00/6.31-10.22

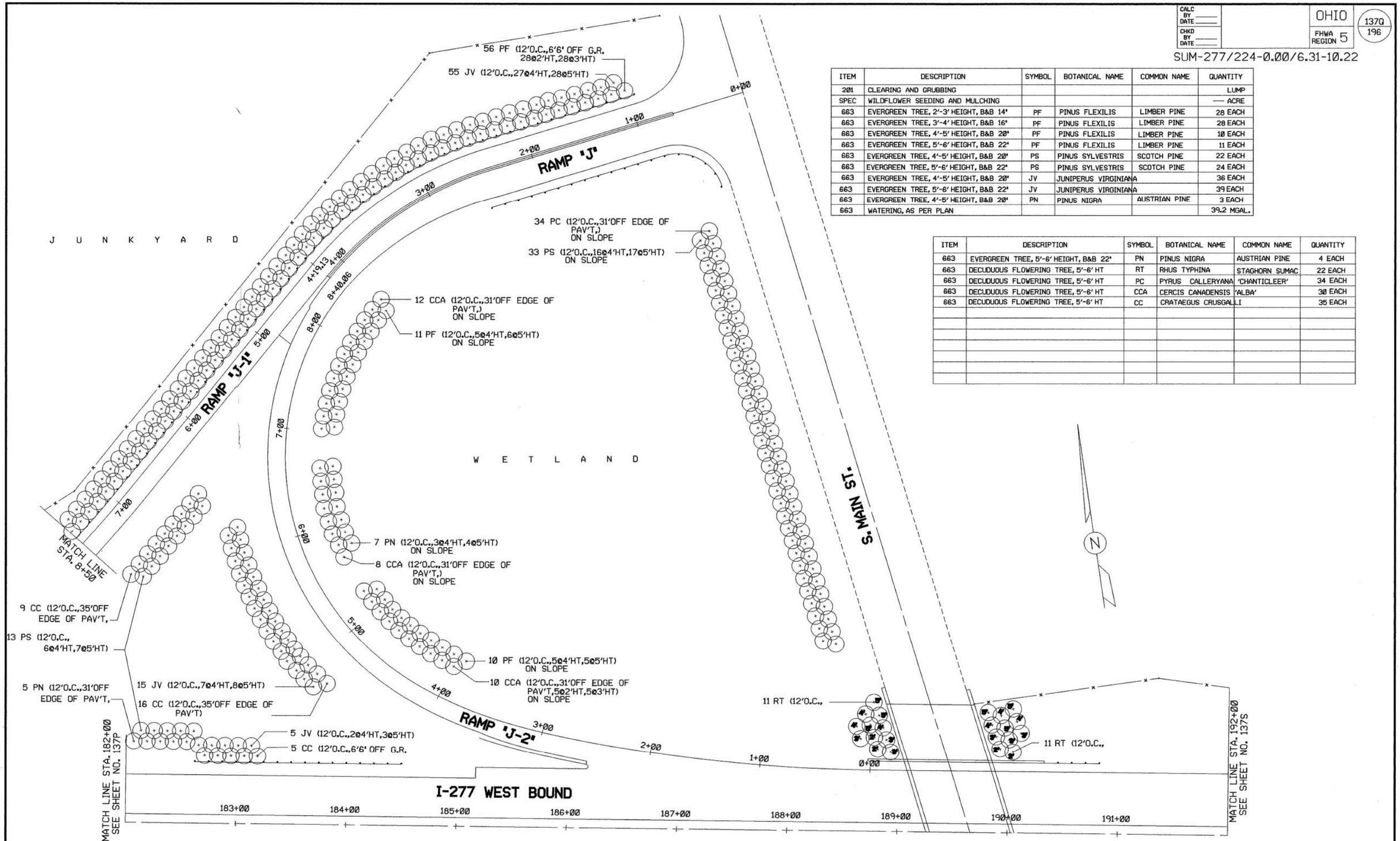

ITEM	DESCRIPTION	SYMBOL	BOTANICAL NAME	COMMON NAME	QUANTITY
201	CLEARING AND GRUBBING				LUMP
SPEC	WILDFLOWER SEEDING AND MULCHING				— ACRE
663	EVERGREEN TREE, 2'-3' HEIGHT, B&B 14"	PF	PINUS FLEXILIS	LIMBER PINE	28 EACH
663	EVERGREEN TREE, 3'-4' HEIGHT, B&B 16"	PF	PINUS FLEXILIS	LIMBER PINE	28 EACH
663	EVERGREEN TREE, 4'-5' HEIGHT, B&B 20"	PF	PINUS FLEXILIS	LIMBER PINE	10 EACH
663	EVERGREEN TREE, 5'-6' HEIGHT, B&B 22"	PF	PINUS FLEXILIS	LIMBER PINE	11 EACH
663	EVERGREEN TREE, 4'-5' HEIGHT, B&B 20"	PS	PINUS SYLVESTRIS	SCOTCH PINE	22 EACH
663	EVERGREEN TREE, 5'-6' HEIGHT, B&B 22"	PS	PINUS SYLVESTRIS	SCOTCH PINE	24 EACH
663	EVERGREEN TREE, 4'-5' HEIGHT, B&B 20"	JV	JUNIPERUS VIRGINIANA		36 EACH
663	EVERGREEN TREE, 5'-6' HEIGHT, B&B 22"	JV	JUNIPERUS VIRGINIANA		39 EACH
663	EVERGREEN TREE, 4'-5' HEIGHT, B&B 20"	PN	PINUS NIGRA	AUSTRIAN PINE	3 EACH
663	WATERING, AS PER PLAN				39.2 MGAL.

ITEM	DESCRIPTION	SYMBOL	BOTANICAL NAME	COMMON NAME	QUANTITY
663	EVERGREEN TREE, 5'-6' HEIGHT, B&B 22"	PN	PINUS NIGRA	AUSTRIAN PINE	4 EACH
663	DECUDUOUS FLOWERING TREE, 5'-6' HT	RT	RHUS TYPHINA	STAGHORN SUMAC	22 EACH
663	DECUDUOUS FLOWERING TREE, 5'-6' HT	PC	PYRUS CALLERYANA	'CHANTICLEER'	34 EACH
663	DECUDUOUS FLOWERING TREE, 5'-6' HT	CCA	CERCIS CANADENSIS	'ALBA'	30 EACH
663	DECUDUOUS FLOWERING TREE, 5'-6' HT	CC	CRATAEGUS CRUSGALLI		35 EACH

WEST BOUND
STA. 182+00 TO STA. 192+00

277PG12.DWG

LANDSCAPE PLAN

CALC BY DATE		OHIO	137R
CHKD BY DATE		FHWA REGION 5	196

SUM-277/224-0.00/6.31-10.22

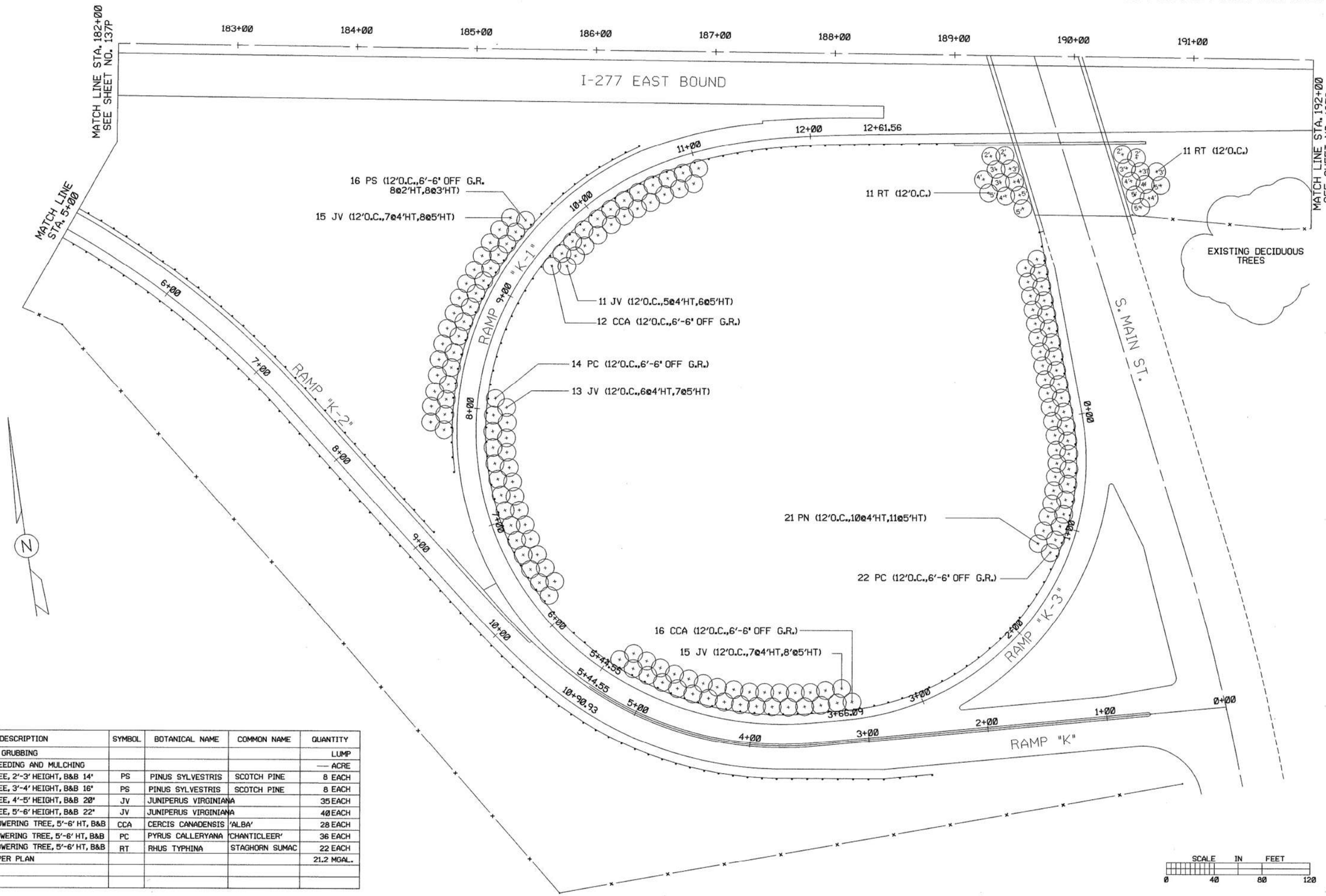

ITEM	DESCRIPTION	SYMBOL	BOTANICAL NAME	COMMON NAME	QUANTITY
201	CLEARING AND GRUBBING				LUMP
SPEC	WILDFLOWER SEEDING AND MULCHING				— ACRE
663	EVERGREEN TREE, 2'-3' HEIGHT, B&B 14'	PS	PINUS SYLVESTRIS	SCOTCH PINE	8 EACH
663	EVERGREEN TREE, 3'-4' HEIGHT, B&B 16'	PS	PINUS SYLVESTRIS	SCOTCH PINE	8 EACH
663	EVERGREEN TREE, 4'-5' HEIGHT, B&B 20'	JV	JUNIPERUS VIRGINIANA		35 EACH
663	EVERGREEN TREE, 5'-6' HEIGHT, B&B 22'	JV	JUNIPERUS VIRGINIANA		40 EACH
663	DECIDUOUS FLOWERING TREE, 5'-6' HT, B&B	CCA	CERCIS CANADENSIS	'ALBA'	28 EACH
663	DECIDUOUS FLOWERING TREE, 5'-6' HT, B&B	PC	PYRUS CALLERYANA	'CHANTICLEER'	36 EACH
663	DECIDUOUS FLOWERING TREE, 5'-6' HT, B&B	RT	RHUS TYPHINA	STAGHORN SUMAC	22 EACH
663	WATERING, AS PER PLAN				21.2 MGAL.

EAST BOUND
STA. 182+00 TO STA. 192+00

LANDSCAPE PLAN

277PG13.DWG

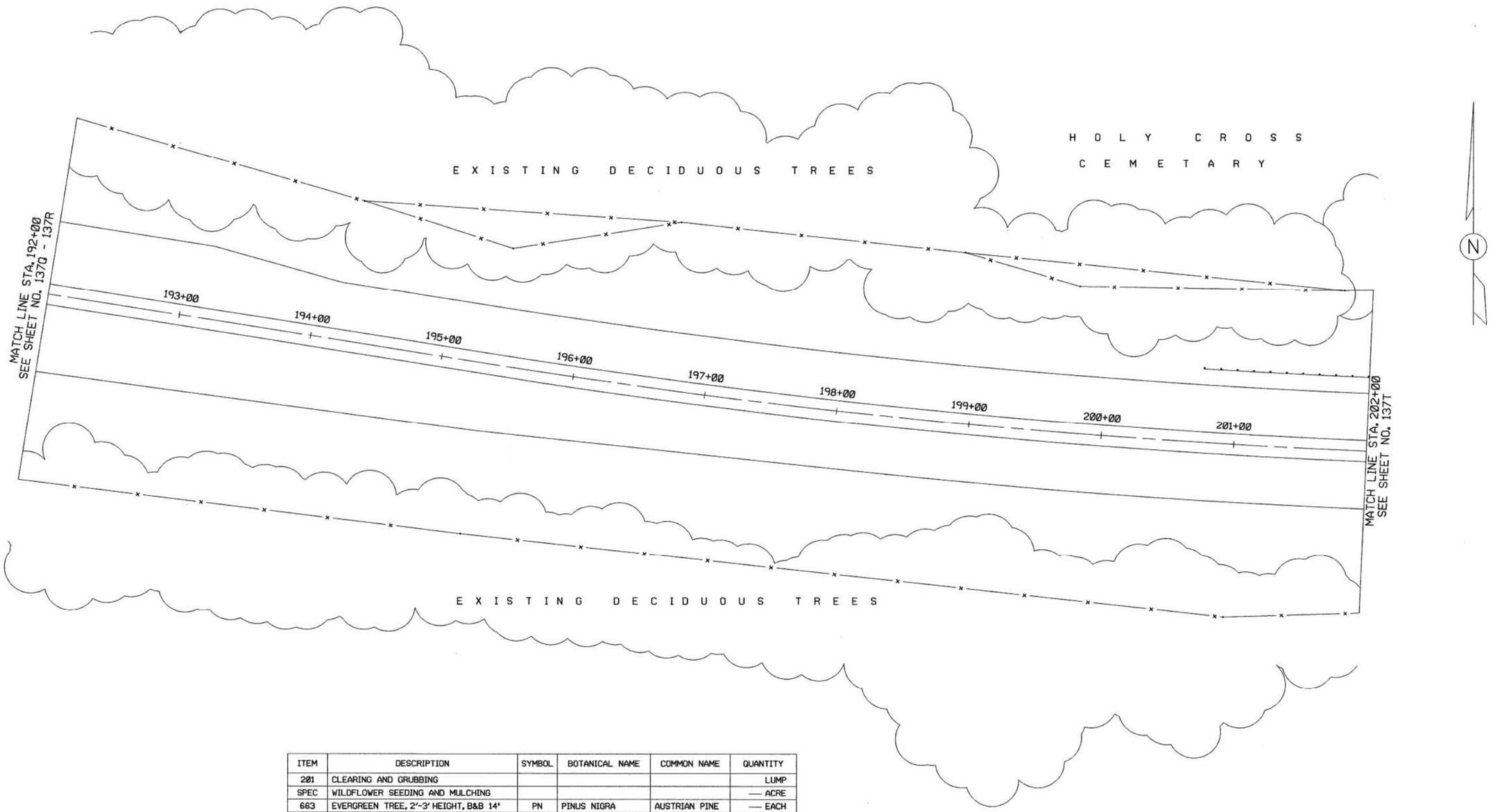

ITEM	DESCRIPTION	SYMBOL	BOTANICAL NAME	COMMON NAME	QUANTITY
201	CLEARING AND GRUBBING				LUMP
SPEC	WILDFLOWER SEEDING AND MULCHING				— ACRE
663	EVERGREEN TREE, 2'-3' HEIGHT, B&B 14'	PN	PINUS NIGRA	AUSTRIAN PINE	— EACH
663	EVERGREEN TREE, 3'-4' HEIGHT, B&B 16'	PN	PINUS NIGRA	AUSTRIAN PINE	— EACH
663	EVERGREEN TREE, 4'-5' HEIGHT, B&B 20'	PN	PINUS NIGRA	AUSTRIAN PINE	— EACH
663	EVERGREEN TREE, 5'-6' HEIGHT, B&B 22'	PN	PINUS NIGRA	AUSTRIAN PINE	— EACH
663	EVERGREEN TREE, 6'-7' HEIGHT, B&B 24'	PN	PINUS NIGRA	AUSTRIAN PINE	— EACH
663	EVERGREEN TREE, 7'-8' HEIGHT, B&B 27'	PN	PINUS NIGRA	AUSTRIAN PINE	— EACH
663	EVERGREEN TREE, 8'-9' HEIGHT, B&B 30'	PN	PINUS NIGRA	AUSTRIAN PINE	— EACH
663	WATERING, AS PER PLAN				— MGAL.

SCALE IN FEET
0 40 80 120

STA. 192+00 TO STA. 202+00

LANDSCAPE PLAN

CALC BY DATE		OHIO	137T 196
CHKD BY DATE		FHWA REGION 5	

SUM-277/224-0.00/6.31-10.22

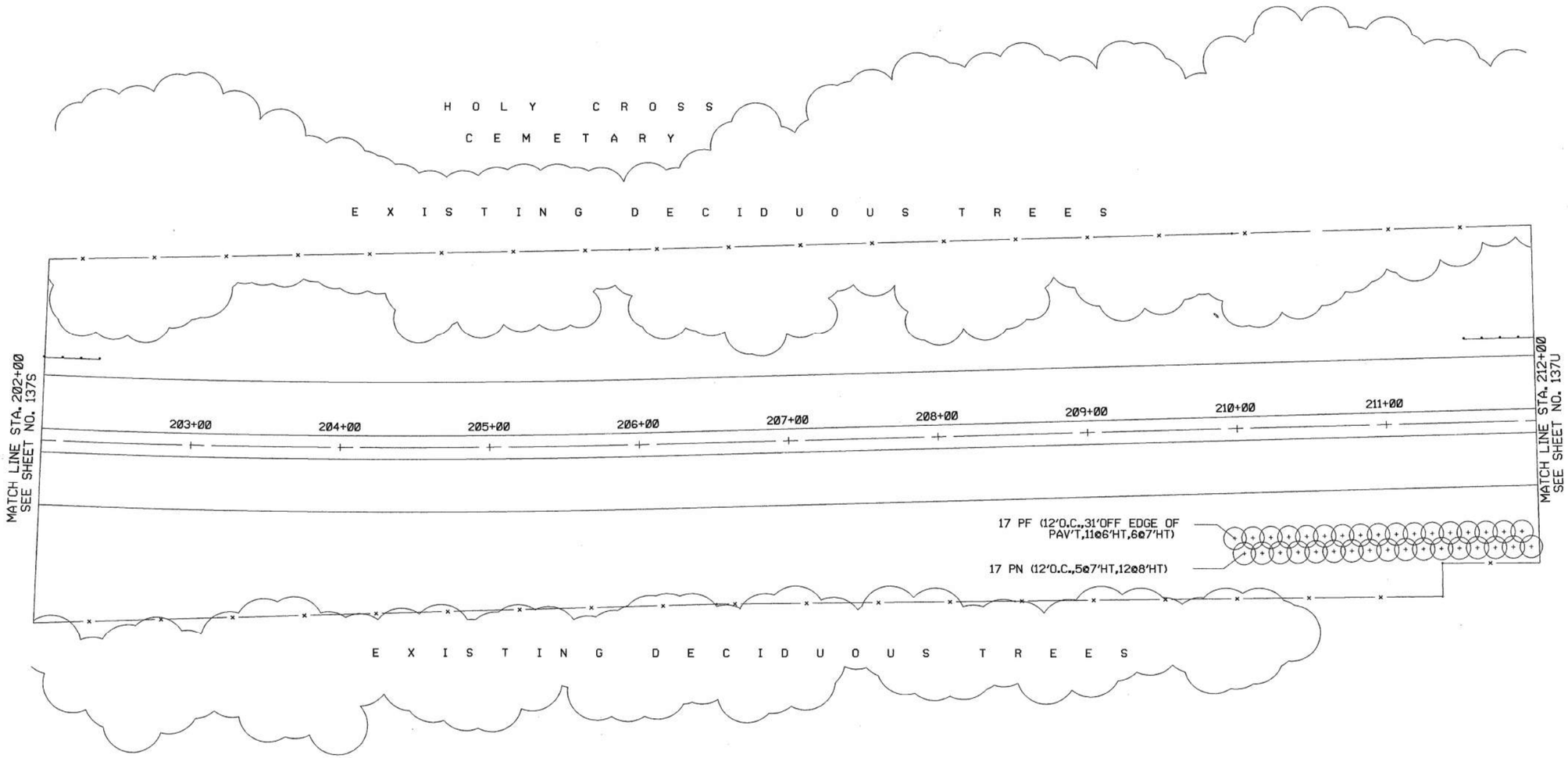

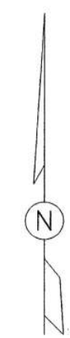

ITEM	DESCRIPTION	SYMBOL	BOTANICAL NAME	COMMON NAME	QUANTITY
201	CLEARING AND GRUBBING				LUMP
SPEC	WILDFLOWER SEEDING AND MULCHING				— ACRE
663	EVERGREEN TREE, 6'-7' HEIGHT, B&B 24'	PF	PINUS FLEXILIS	LIMBER PINE	11 EACH
663	EVERGREEN TREE, 7'-8' HEIGHT, B&B 27'	PF	PINUS FLEXILIS	LIMBER PINE	6 EACH
663	EVERGREEN TREE, 4'-5' HEIGHT, B&B 20'	PN	PINUS NIGRA	AUSTRIAN PINE	— EACH
663	EVERGREEN TREE, 5'-6' HEIGHT, B&B 22'	PN	PINUS NIGRA	AUSTRIAN PINE	— EACH
663	EVERGREEN TREE, 6'-7' HEIGHT, B&B 24'	PN	PINUS NIGRA	AUSTRIAN PINE	EACH
663	EVERGREEN TREE, 7'-8' HEIGHT, B&B 27'	PN	PINUS NIGRA	AUSTRIAN PINE	5 EACH
663	EVERGREEN TREE, 8'-9' HEIGHT, B&B 30'	PN	PINUS NIGRA	AUSTRIAN PINE	12 EACH
663	WATERING, AS PER PLAN				8.2 MGAL.

SCALE IN FEET
0 40 80 120

STA. 202+00 TO STA. 212+00

LANDSCAPE PLAN

277PG15.DWG

CALC BY ____ DATE ____	OHIO	137U
CHKD BY ____ DATE ____	FHWA REGION 5	196

SUM-277/224-0.00/6.31-10.22

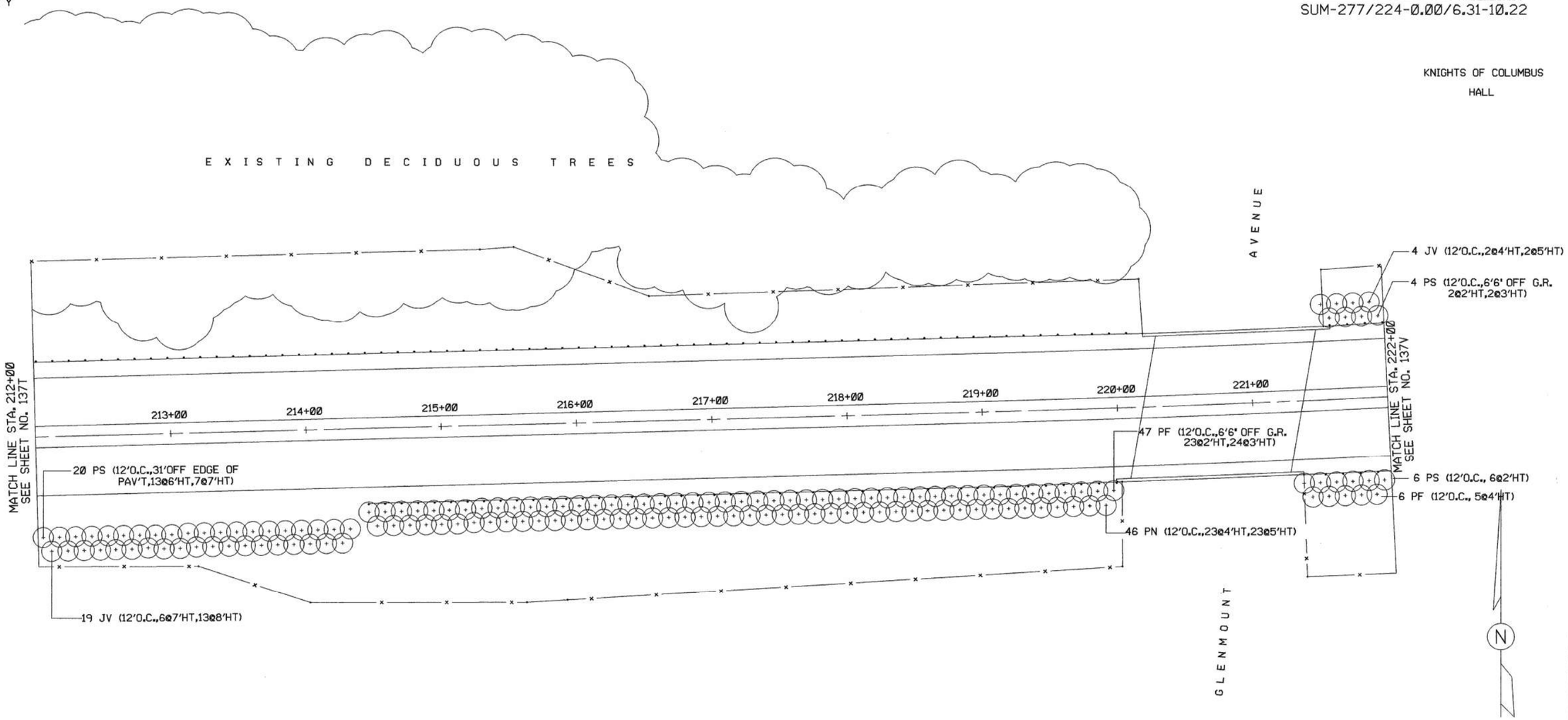

ITEM	DESCRIPTION	SYMBOL	BOTANICAL NAME	COMMON NAME	QUANTITY
201	CLEARING AND GRUBBING				LUMP
SPEC	WILDFLOWER SEEDING AND MULCHING				— ACRE
663	EVERGREEN TREE, 2'-3' HEIGHT, B&B 14"	PF	PINUS FLEXILIS	LIMBER PINE	23 EACH
663	EVERGREEN TREE, 3'-4' HEIGHT, B&B 16"	PF	PINUS FLEXILIS	LIMBER PINE	24 EACH
663	EVERGREEN TREE, 4'-5' HEIGHT, B&B 20"	PF	PINUS FLEXILIS	LIMBER PINE	5 EACH
663	EVERGREEN TREE, 2'-3' HEIGHT, B&B 14"	PS	PINUS SYLVESTRIS	SCOTCH PINE	8 EACH
663	EVERGREEN TREE, 3'-4' HEIGHT, B&B 16"	PS	PINUS SYLVESTRIS	SCOTCH PINE	2 EACH
663	EVERGREEN TREE, 6'-7' HEIGHT, B&B 24"	PS	PINUS SYLVESTRIS	SCOTCH PINE	13 EACH
663	EVERGREEN TREE, 7'-8' HEIGHT, B&B 27"	PS	PINUS SYLVESTRIS	SCOTCH PINE	7 EACH
663	EVERGREEN TREE, 4'-5' HEIGHT, B&B 20"	JV	JUNIPERUS VIRGINIANA		2 EACH
663	EVERGREEN TREE, 5'-6' HEIGHT, B&B 22"	JV	JUNIPERUS VIRGINIANA		2 EACH
663	WATERING, AS PER PLAN				22.8 MGAL.

ITEM	DESCRIPTION	SYMBOL	BOTANICAL NAME	COMMON NAME	QUANTITY
663	EVERGREEN TREE, 7'-8' HEIGHT, B&B 27"	JV	JUNIPERUS VIRGINIANA		6 EACH
663	EVERGREEN TREE, 8'-9' HEIGHT, B&B 30"	JV	JUNIPERUS VIRGINIANA		13 EACH
663	EVERGREEN TREE, 2'-3' HEIGHT, B&B 14"				EACH
663	EVERGREEN TREE, 3'-4' HEIGHT, B&B 16"				EACH
663	EVERGREEN TREE, 4'-5' HEIGHT, B&B 20"	PN	PINUS NIGRA	AUSTRIAN PINE	23 EACH
663	EVERGREEN TREE, 5'-6' HEIGHT, B&B 22"	PN	PINUS NIGRA	AUSTRIAN PINE	23 EACH
663	EVERGREEN TREE, 6'-7' HEIGHT, B&B 24"	PN	PINUS NIGRA	AUSTRIAN PINE	EACH
663	EVERGREEN TREE, 7'-8' HEIGHT, B&B 27"	PN	PINUS NIGRA	AUSTRIAN PINE	EACH
663	EVERGREEN TREE, 8'-9' HEIGHT, B&B 30"	PN	PINUS NIGRA	AUSTRIAN PINE	EACH

SCALE IN FEET
0 40 80 120

STA. 212+00 TO STA. 222+00

LANDSCAPE PLAN

277PG16.DWG

CALC BY DATE		OHIO	137V 196
CHKD BY DATE		FHWA REGION 5	

SUM-277/224-0.00/6.31-10.22

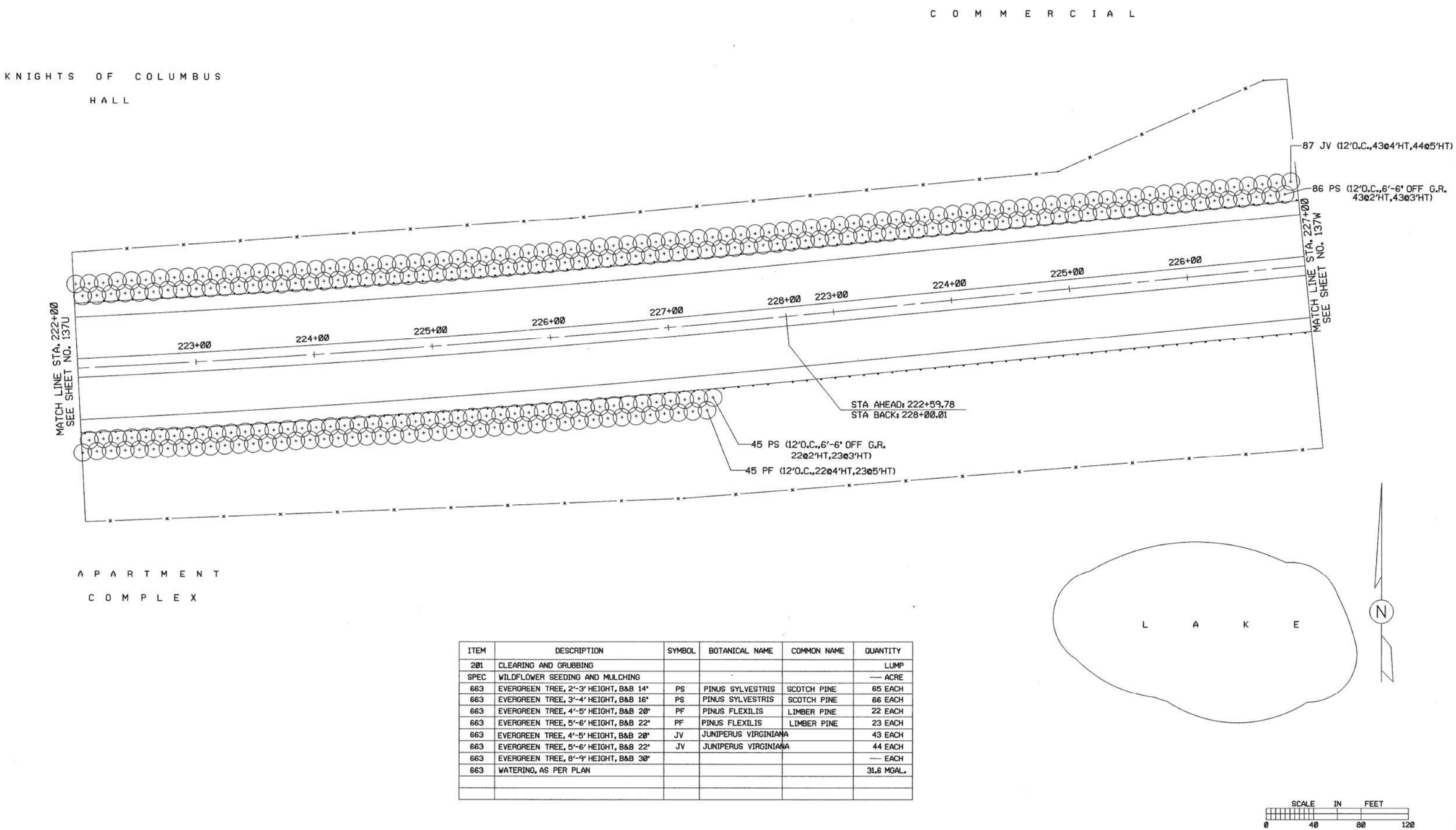

ITEM	DESCRIPTION	SYMBOL	BOTANICAL NAME	COMMON NAME	QUANTITY
201	CLEARING AND GRUBBING				LUMP
SPEC	WILDFLOWER SEEDING AND MULCHING				— ACRE
663	EVERGREEN TREE, 2'-3' HEIGHT, B&B 14'	PS	PINUS SYLVESTRIS	SCOTCH PINE	65 EACH
663	EVERGREEN TREE, 3'-4' HEIGHT, B&B 16'	PS	PINUS SYLVESTRIS	SCOTCH PINE	66 EACH
663	EVERGREEN TREE, 4'-5' HEIGHT, B&B 20'	PF	PINUS FLEXILIS	LIMBER PINE	22 EACH
663	EVERGREEN TREE, 5'-6' HEIGHT, B&B 22'	PF	PINUS FLEXILIS	LIMBER PINE	23 EACH
663	EVERGREEN TREE, 4'-5' HEIGHT, B&B 20'	JV	JUNIPERUS VIRGINIANA		43 EACH
663	EVERGREEN TREE, 5'-6' HEIGHT, B&B 22'	JV	JUNIPERUS VIRGINIANA		44 EACH
663	EVERGREEN TREE, 8'-9' HEIGHT, B&B 30'				— EACH
663	WATERING, AS PER PLAN				31.6 MGAL.

STA. 222+00 TO STA. 227+00

LANDSCAPE PLAN

277PG17.DWG

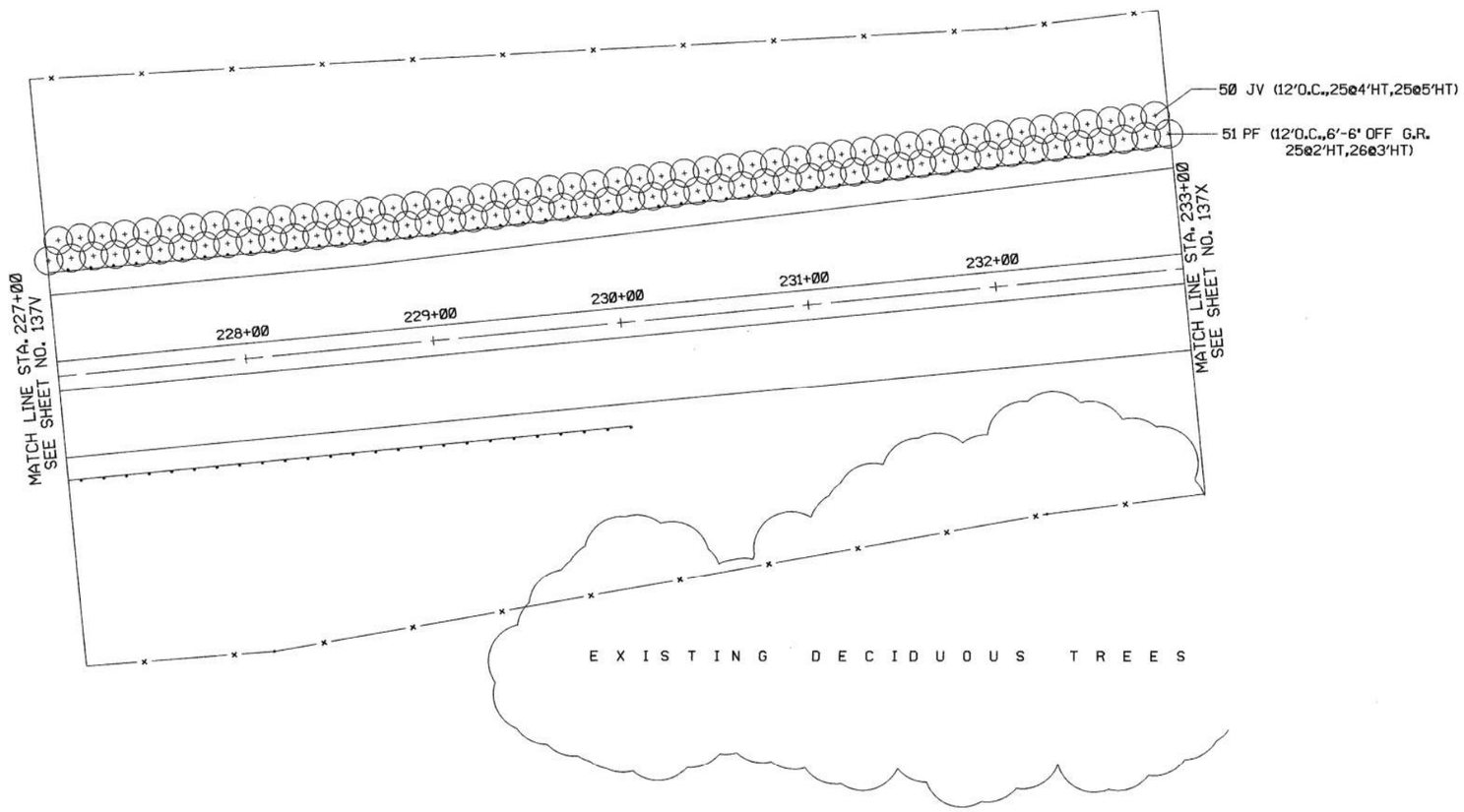

ITEM	DESCRIPTION	SYMBOL	BOTANICAL NAME	COMMON NAME	QUANTITY
201	CLEARING AND GRUBBING				LUMP
SPEC	WILDFLOWER SEEDING AND MULCHING				— ACRE
663	EVERGREEN TREE, 2'-3' HEIGHT, B&B 14'	PF	PINUS FLEXILIS	LIMBER PINE	25 EACH
663	EVERGREEN TREE, 3'-4' HEIGHT, B&B 16'	PF	PINUS FLEXILIS	LIMBER PINE	26 EACH
663	EVERGREEN TREE, 4'-5' HEIGHT, B&B 20'	JV	JUNIPERUS VIRGINIANA		25 EACH
663	EVERGREEN TREE, 5'-6' HEIGHT, B&B 22'	JV	JUNIPERUS VIRGINIANA		25 EACH
663	EVERGREEN TREE, 6'-7' HEIGHT, B&B 24'				— EACH
663	EVERGREEN TREE, 7'-8' HEIGHT, B&B 27'				— EACH
663	EVERGREEN TREE, 8'-9' HEIGHT, B&B 30'				— EACH
663	WATERING, AS PER PLAN				12.1 MGAL.

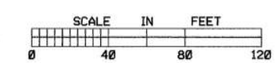

STA. 227+00 TO STA. 233+00

LANDSCAPE PLAN

CALC BY DATE		OHIO	137X
CHKD BY DATE		FHWA REGION 5	196

SUM-277/224-0.00/6.31-10.22

ITEM	DESCRIPTION	SYMBOL	BOTANICAL NAME	COMMON NAME	QUANTITY
201	CLEARING AND GRUBBING				LUMP
SPEC	WILDFLOWER SEEDING AND MULCHING				— ACRE
663	EVERGREEN TREE, 2'-3' HEIGHT, B&B 14'	PF	PINUS FLEXILIS	LIMBER PINE	3 EACH
663	EVERGREEN TREE, 3'-4' HEIGHT, B&B 16'	PF	PINUS FLEXILIS	LIMBER PINE	4 EACH
663	EVERGREEN TREE, 4'-5' HEIGHT, B&B 20'	PF	PINUS FLEXILIS	LIMBER PINE	42 EACH
663	EVERGREEN TREE, 5'-6' HEIGHT, B&B 22'	PF	PINUS FLEXILIS	LIMBER PINE	45 EACH
663	EVERGREEN TREE, 2'-3' HEIGHT, B&B 14'	PS	PINUS SYLVESTRIS	SCOTCH PINE	41 EACH
663	EVERGREEN TREE, 3'-4' HEIGHT, B&B 16'	PS	PINUS SYLVESTRIS	SCOTCH PINE	43 EACH
663	EVERGREEN TREE, 2'-3' HEIGHT, B&B 14'	JV	JUNIPERUS VIRGINIANA		9 EACH
663	EVERGREEN TREE, 3'-4' HEIGHT, B&B 16'	JV	JUNIPERUS VIRGINIANA		9 EACH
663	EVERGREEN TREE, 4'-5' HEIGHT, B&B 20'	JV	JUNIPERUS VIRGINIANA		9 EACH
663	EVERGREEN TREE, 5'-6' HEIGHT, B&B 22'	JV	JUNIPERUS VIRGINIANA		11 EACH
663	WATERING, AS PER PLAN				26.0 MGAL.

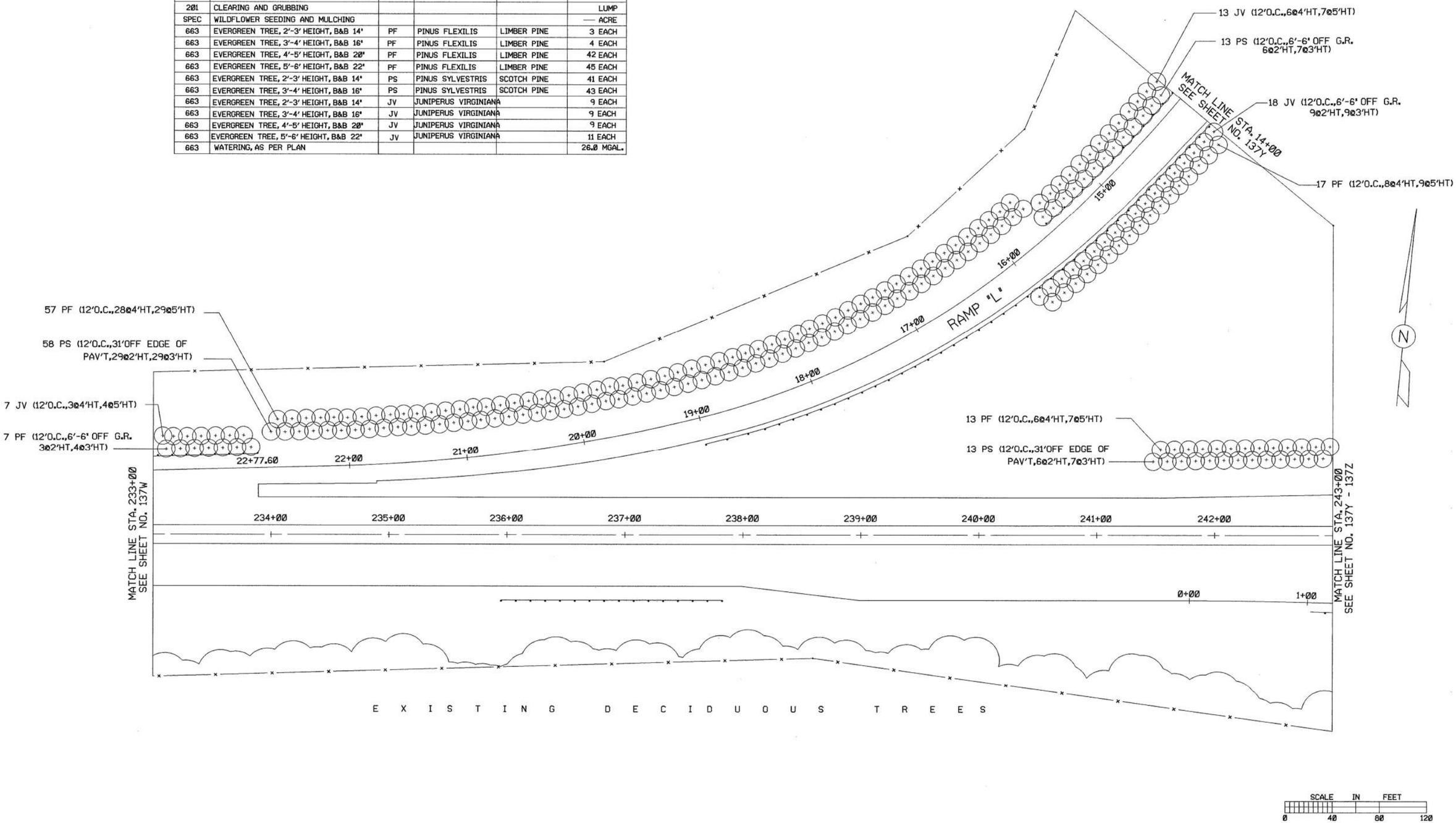

STA. 233+00 TO STA. 243+00

LANDSCAPE PLAN

277PG19.DWG

CALC BY DATE		OHIO	137Y
CHKD BY DATE		FHWA REGION 5	196

SUM-277/224-0.00/6.31-10.22

ITEM	DESCRIPTION	SYMBOL	BOTANICAL NAME	COMMON NAME	QUANTITY
663	EVERGREEN TREE, 4'-5' HEIGHT, B&B 20'	JV	JUNIPERUS VIRGINIANA		9 EACH
663	EVERGREEN TREE, 5'-6' HEIGHT, B&B 22'	JV	JUNIPERUS VIRGINIANA		9 EACH
663	DECIDUOUS FLOWERING TREE, 5'-6' HT, B&B	CC	CRATAEGUS CRUSGALLI		37 EACH
663	DECIDUOUS FLOWERING TREE, 5'-6' HT, B&B	CCA	CERCIS CANADENSIS	'ALBA'	12 EACH
663	DECIDUOUS FLOWERING TREE, 5'-6' HT, B&B	PC	PYRUS CALLERYANA	'CHANTICLEER'	11 EACH
663	DECIDUOUS FLOWERING TREE, 5'-6' HT, B&B	RT	RHUS TYPHINA	STAGHORN SUMAC	22 EACH

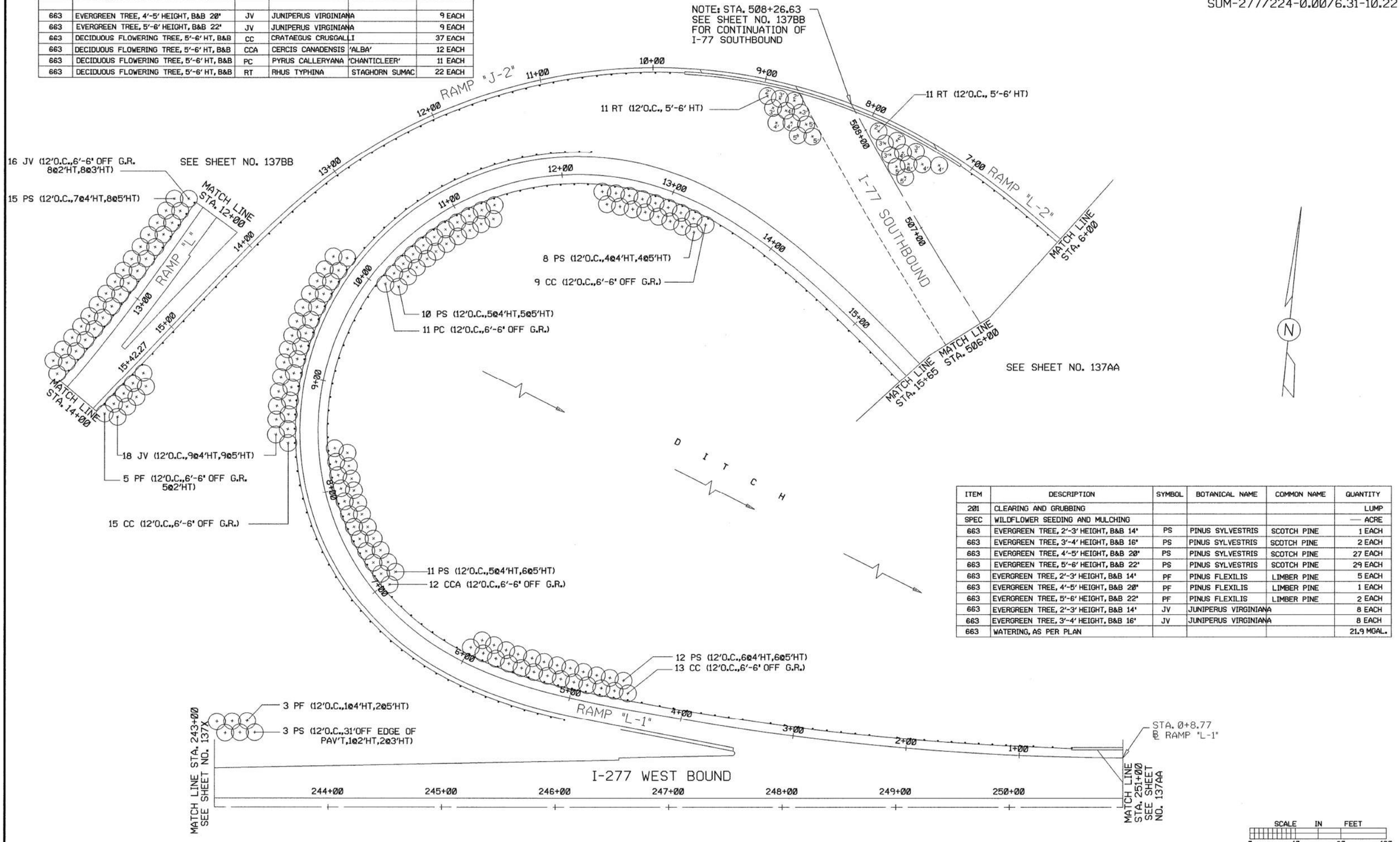

ITEM	DESCRIPTION	SYMBOL	BOTANICAL NAME	COMMON NAME	QUANTITY
201	CLEARING AND GRUBBING				LUMP
SPEC	WILDFLOWER SEEDING AND MULCHING				— ACRE
663	EVERGREEN TREE, 2'-3' HEIGHT, B&B 14'	PS	PINUS SYLVESTRIS	SCOTCH PINE	1 EACH
663	EVERGREEN TREE, 3'-4' HEIGHT, B&B 16'	PS	PINUS SYLVESTRIS	SCOTCH PINE	2 EACH
663	EVERGREEN TREE, 4'-5' HEIGHT, B&B 20'	PS	PINUS SYLVESTRIS	SCOTCH PINE	27 EACH
663	EVERGREEN TREE, 5'-6' HEIGHT, B&B 22'	PS	PINUS SYLVESTRIS	SCOTCH PINE	29 EACH
663	EVERGREEN TREE, 2'-3' HEIGHT, B&B 14'	PF	PINUS FLEXILIS	LIMBER PINE	5 EACH
663	EVERGREEN TREE, 4'-5' HEIGHT, B&B 20'	PF	PINUS FLEXILIS	LIMBER PINE	1 EACH
663	EVERGREEN TREE, 5'-6' HEIGHT, B&B 22'	PF	PINUS FLEXILIS	LIMBER PINE	2 EACH
663	EVERGREEN TREE, 2'-3' HEIGHT, B&B 14'	JV	JUNIPERUS VIRGINIANA		8 EACH
663	EVERGREEN TREE, 3'-4' HEIGHT, B&B 16'	JV	JUNIPERUS VIRGINIANA		8 EACH
663	WATERING, AS PER PLAN				21.9 MGAL.

SCALE IN FEET
0 40 80 120

WEST BOUND
STA. 243+00 TO STA. 251+00

277PG20.DWG

LANDSCAPE PLAN

CALC BY ____ DATE ____		OHIO	137Z
CHKD BY ____ DATE ____		FHWA REGION 5	196

SUM-277/224-0.00/6.31-10.22

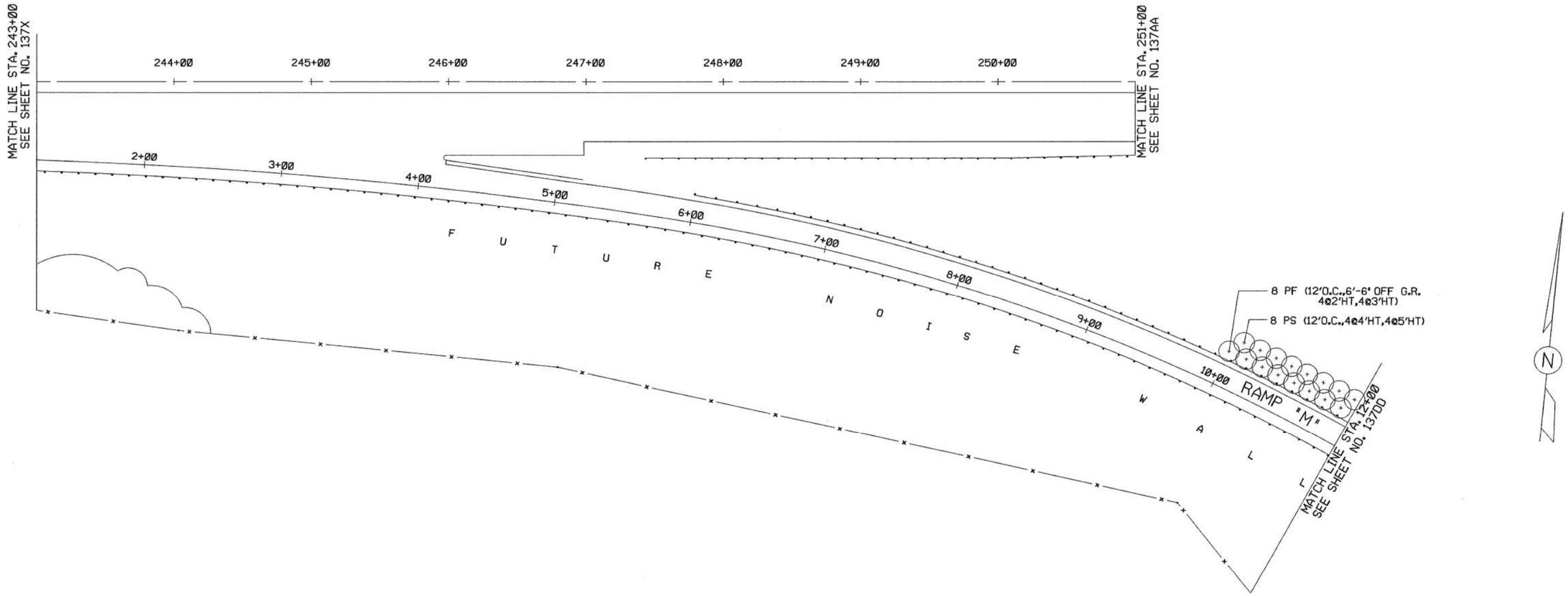

ITEM	DESCRIPTION	SYMBOL	BOTANICAL NAME	COMMON NAME	QUANTITY
201	CLEARING AND GRUBBING				LUMP
SPEC	WILDFLOWER SEEDING AND MULCHING				— ACRE
663	EVERGREEN TREE, 2'-3' HEIGHT, B&B 14"	PF	PINUS FLEXILIS	LIMBER PINE	4 EACH
663	EVERGREEN TREE, 3'-4' HEIGHT, B&B 16"	PF	PINUS FLEXILIS	LIMBER PINE	4 EACH
663	EVERGREEN TREE, 4'-5' HEIGHT, B&B 20"	PS	PINUS SYLVESTRIS	SCOTCH PINE	4 EACH
663	EVERGREEN TREE, 5'-6' HEIGHT, B&B 22"	PS	PINUS SYLVESTRIS	SCOTCH PINE	4 EACH
663	EVERGREEN TREE, 6'-7' HEIGHT, B&B 24"	PN	PINUS NIGRA	AUSTRIAN PINE	— EACH
663	EVERGREEN TREE, 7'-8' HEIGHT, B&B 27"	PN	PINUS NIGRA	AUSTRIAN PINE	— EACH
663	EVERGREEN TREE, 8'-9' HEIGHT, B&B 30"	PN	PINUS NIGRA	AUSTRIAN PINE	— EACH
663	WATERING, AS PER PLAN				1.9 MGAL.

SCALE IN FEET
0 40 80 120

EAST BOUND
STA. 243+00 TO STA. 251+00

LANDSCAPE PLAN

277PG21.DWG

F.H.W.A. REGION	STATE	PROJECT NO.	FUNDS
5	OHIO		

139
196

SUM-277/224/-0.00/6.31/10.22

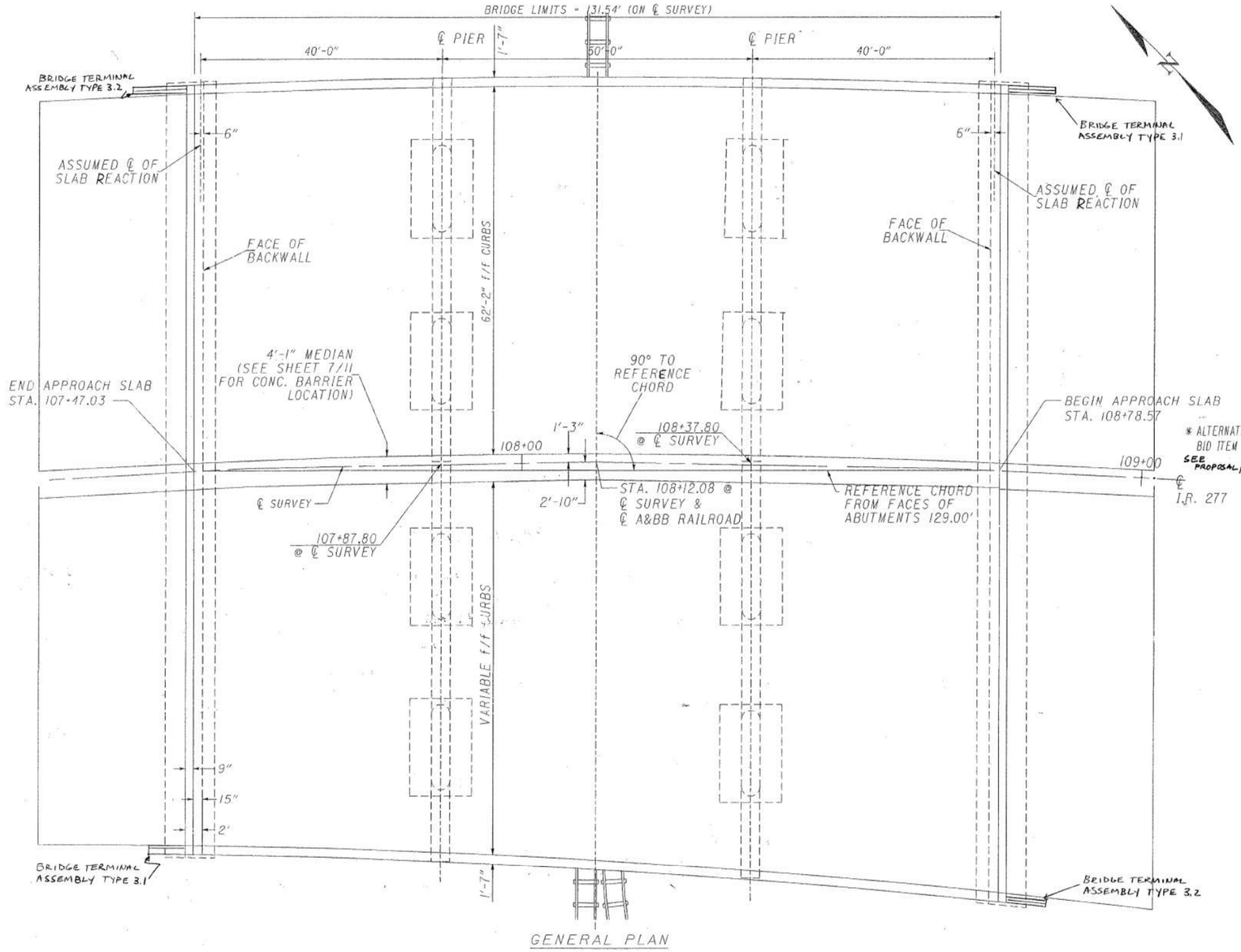

GENERAL PLAN

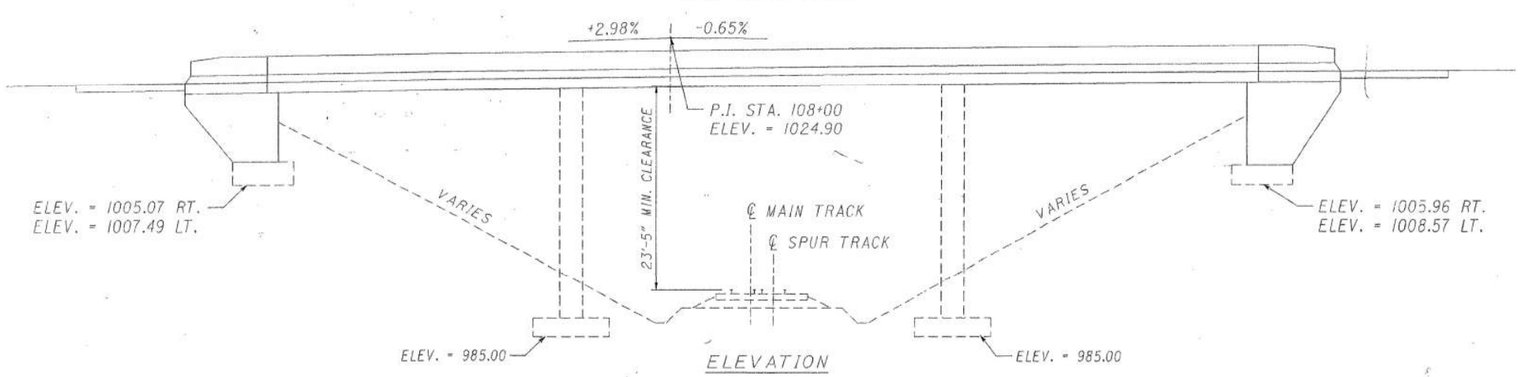

ELEVATION

ESTIMATED QUANTITIES

ITEM	ITEM EXT.	TOTAL	UNIT	DESCRIPTION	SUPER	ABUTMENT	GENE
202	11200	LUMP		PORTIONS OF STRUCTURES REMOVED			
503	21300	LUMP		UNCLASSIFIED EXCAVATION			
509	15840	259216	POUND	EPOXY COATED REINFORCING STEEL, GRADE 60	241169	14926	
510	11100	12	EACH	DOWEL HOLES		12	
* 511	32202	1184	CU. YD.	CLASS S CONCRETE, SUPERSTRUCTURE	1184		
511	45100	82	CU. YD.	CLASS C CONCRETE, ABUTMENT ABOVE FOOTING		82	
511	46000	40	CU. YD.	CLASS C CONCRETE, RETAINING WALL OR WINGWALL		40	
SPECIAL	51267502	627	SQ. YD.	SEALING OF CONCRETE SURFACES (EPOXY) (SEE PROPOSAL NOTE)	522	105	
518	21100	117	CU. YD.	POROUS BACKFILL			11
SPECIAL	10000300	LUMP		PREMIUM ON RAILROAD'S PROTECTIVE PUBLIC LIABILITY AND PROPERTY DAMAGE LIABILITY INSURANCE			
* ALTERNATE BID ITEM	511	33404	1184	CU. YD. CLASS S CONCRETE, SUPERSTRUCTURE, USING SHRINKAGE COMPENSATING CEMENT	1184		
	511	33410	LUMP	CLASS S CONCRETE, USING SHRINKAGE COMPENSATING CEMENT, FOR PRE-PLACEMENT TESTING			

SEE PROPOSAL NOTE

CURVE DATA ℄ SURVEY
P.I. STA. 105+94.00
Δ = 61°15'
D = 3°-30'
R = 1637.02'
Ts= 1171.40'
E = 270.07'
Ls= 400.00'
Lc= 1350.00'
Yc=16.27'
θs=7°
Xc=399.40'

CURVE DATA RAMP 'A'
P.I. STA. 1+26.13
Δ = 18°-45'
Dc= 7°-30'
R = 763.94'
Tc= 126.13'
Ls= 200.00'
Lc= 250.00'
Yc= 8.92'
θs= 7°-30'
Xc= 199.75'
LT= 133.45'
ST= 66.79'
P = 2.19'
K = 99.94'

STRUCTURE No. SUM-277-0092

EXISTING STRUCTURE

-TYPE: CONTINUOUS REINFORCED CONCRETE SLAB WITH REINFORCED CONCRETE SUBSTRUCTURE.
-SPANS: 40'-50'-40' c/c BEARINGS
-ROADWAY: VARIES 128'± TO 135'± f/f OF CONCRETE PARAPETS.
-SKEW: NONE
-WEARING SURFACE: 1" MONOLITHIC CONCRETE.
-ALIGNMENT: 3°-30' CURVE RIGHT
-SUPERELEVATION: 0.083 ft/ft

PROPOSED STRUCTURE

PROPOSED WORK
-REPLACE EXISTING SUPERSTRUCTURE ON EXISTING PIERS AND REPAIR ABUTMENTS ALONG EXISTING ALIGNMENT.
-PROFILE TO BE RAISED 3¾" TO MATCH PROPOSED RESURFACING OF ABUTTING PAVEMENT.
-SPANS: 40'-50'-40' c/c BEARINGS
-WEARING SURFACE: 1" MONOLITHIC CONCRETE.
-ROADWAY: E.B.: VARIES 60'-9" '± TO 68'-5"'±
W.B.: 62'-2" f/f CONC. PARAPETS
-SKEW: NONE
-ALIGNMENT: 3°-30' CURVE RIGHT
-SUPERELEVATION: 0.083 ft/ft
-APPROACHSLABS: AS-1-81 (25' LONG)
-LOADING: HS-20-44 CASE 1 AND ALTERNATE MILITARY LOADING.

SHEET 1/11

STATE OF OHIO
DEPARTMENT OF TRANSPORTATION

GENERAL PLAN & ELEVATION

STRUCTURE No. SUM - 277 - 009
SFN 7709579

DESIGNED	DRAWN	TRACED	CHECKED	REVIEWED	DATE	REVIS
ST	RB		KS	GLB	7-13-93	

7FAB120.73 SU277045.DGN

F.H.W.A. REGION	STATE	PROJECT NO.	FUNDS
5	OHIO		

SUM-277/224-0.00/6.31/10.2

GENERAL NOTES

STR. No. SUM-277-0092

DESIGN SPECIFICATIONS:

THIS STRUCTURE MODIFICATION CONFORMS TO "STANDARD SPECIFICATION FOR HIGHWAY BRIDGES" ADOPTED BY THE AMERICAN ASSOCIATION OF STATE HIGHWAY AND TRANSPORTATION OFFICIALS, 1989, AND THE OHIO "SUPPLEMENT" TO THESE SPECIFICATIONS.

DESIGN DATA:

DESIGN LOADING-HS20-44 AND THE ALTERNATE MILITARY LOADING.

DESIGN STRESSES:

CONCRETE CLASS S- COMPRESSIVE STRENGTH 4500 P.S.I.
CONCRETE CLASS C- COMPRESSIVE STRENGTH 4000 P.S.I.
REINFORCING STEEL- ASTM A615 OR A617- GRADE 60 MINIMUM YIELD STRENGTH 60,000 P.S.I.

DECK PROTECTION METHOD- EPOXY COATED REINFORCING STEEL, BOTH MATS MONOLITHIC WEARING SURFACE IS ASSUMED. FOR DESIGN PURPOSES, TO BE 1" THICK

SOIL BORINGS:

THIS PLAN DOES NOT CONTAIN STRUCTURE FOUNDATION INVESTIGATION DRAWINGS. THIS INFORMATION MAY BE INSPECTED AT THE BUREAU OF BRIDGES AND STRUCTURAL DESIGN IN COLUMBUS, OHIO OR IN THE DISTRICT OFFICE IN RAVENNA, OHIO.

EXISTING STRUCTURE VERIFICATION:

DETAILS AND DIMENSIONS SHOWN ON THESE PLANS PERTAINING TO THE EXISTING STRUCTURE HAVE BEEN OBTAINED FROM PLANS OF THE EXISTING STRUCTURE AND/OR FROM FIELD OBSERVATIONS AND MEASUREMENTS. CONSEQUENTLY, THEY ARE INDICATIVE OF THE EXISTING STRUCTURE AND THE PROPOSED WORK BUT THEY SHALL BE CONSIDERED TENTATIVE AND APPROXIMATE. THE CONTRACTOR IS REFERRED TO CMS SECTIONS 102.05, 105.02, AND 513.02.

PILE CAP FOOTING ELEVATIONS ARE FROM THE ORIGINAL CONSTRUCTION PLANS AND MAY NOT BE AS BUILT. THEREFORE, THEY SHOULD NOT BE USED AS A REFERENCE FOR PROPOSED NEW CONSTRUCTION ELEVATIONS.

CONTRACT BID PRICES SHALL BE BASED UPON A RECOGNITION OF THE UNCERTAINTIES DESCRIBED ABOVE AND UPON A PREBID EXAMINATION OF THE EXISTING STRUCTURE BY THE CONTRACTOR. HOWEVER, ALL PROJECT WORK SHALL BE BASED UPON ACTUAL DETAILS AND DIMENSIONS WHICH HAVE BEEN VERIFIED BY THE CONTRACTOR IN THE FIELD.

EXISTING BRIDGE PLANS:

MAY BE INSPECTED AT THE BUREAU OF BRIDGES AND STRUCTURAL DESIGN IN COLUMBUS, OHIO OR IN THE DISTRICT OFFICE IN RAVENNA, OHIO.

TRAFFIC MAINTENANCE:

SEE ROADWAY PLAN GENERAL NOTES UNDER MAINTENANCE OF TRAFFIC.

ITEM SPECIAL - SEALING OF CONCRETE SURFACES (EPOXY)

AFTER COMPLETION OF CONSTRUCTION, ALL PARAPET, MEDIAN BARRIER AND EXPOSED WINGWALL SURFACES (SEE LIMITS OF SEALING DETAILS AT THE RIGHT) SHALL BE COATED WITH EPOXY SEALER TO PROTECT THE CONCRETE SURFACE AND PROVIDE A UNIFORM COLOR. SEE PROPOSAL NOTE FOR SEALING OF CONCRETE SURFACES, EPOXY. A QUANTITY OF 627 S.Y. OF ITEM SPECIAL - SEALING OF CONCRETE SURFACES, (EPOXY) HAS BEEN CARRIED TO THE BRIDGE SUB-SUMMARY AND SHALL INCLUDE THE COST OF ALL LABOR, MATERIALS AND EQUIPMENT NECESSARY TO COAT THE STRUCTURE.

BENCHMARKS

NEW BENCHMARK DISK SHALL BE PROVIDED BY O.D.O.T. AND SET IN PLACE ON A HORIZONTAL SURFACE OF THE ABUTMENT OR WINGWALL BY THE CONTRACTOR. THE PLACEMENT OF THE DISK SHALL BE SUCH THAT ACCESS TO THE DISK WILL NOT BE IMPEDED BY GUARDRAIL, BRIDGE RAILING OR ANY PORTION OF THE STRUCTURE. THE DISK SHALL NOT BE PLACED IN AN AREA THAT IS SUBJECT TO ROADWAY DRAINAGE OR FUTURE RESURFACING. AFTER COMPLETION OF THE PROJECT, O.D.O.T. SHALL REESTABLISH THE ELEVATION. ALL COSTS FOR THE ABOVE DESCRIBED WORK SHALL BE INCIDENTAL TO AND INCLUDED IN THE UNIT PRICE BID FOR ITEM 511 CONCRETE CLASS "S".

RAILROAD CLEARANCE

IN ADDITION TO THE REQUIREMENTS OF THE RAILROAD PROPOSAL NOTE, THE CONTRACTOR SHALL MAINTAIN A MINIMUM HEIGHT CLEARANCE OF 20 FEET, EXTENDING 6 FEET ON EACH SIDE OF THE RAILS, BETWEEN THE TOP OF THE RAIL AND THE BOTTOM OF THE FALSEWORK.

ITEM 511 - CLASS S CONCRETE, SUPERSTRUCTURE

CONCRETE PARAPETS ABOVE UPPER CONSTRUCTION JOINT SHALL BE PLACED IN ALTERNATE SECTIONS BY THE USE OF BULKHEADS. CLOSING SECTIONS SHALL BE PLACED AFTER REMOVAL OF BULKHEADS AND AFTER PLACEMENT OF EXPANSION JOINT FILLER. EXPOSED EDGES OF THE FILLER SHALL BE FLUSH WITH THE SURFACE OF CONCRETE AND SHALL BE FREE OF MORTAR.

PREFORMED EXPANSION JOINT FILLER IN THE PARAPET DEFLECTION JOINTS MAY BE EITHER 1/4" GRAY SPONGE RUBBER OR 1/4" GRAY CELLULAR POLYVINYL CHLORIDE (PVC) SPONGE RUBBER FILLER SHALL CONFORM TO AASHTO M-153, TYPE I. DENSITY OF PVC SPONGE SHALL NOT BE LESS THAN 20 LBS. PER CU. FT.

ALL MATERIAL, EQUIPMENT AND LABOR TO COMPLETE THE ABOVE WORK SHALL BE INCIDENTAL TO AND INCLUDED IN THE PERTINENT 511 PAY ITEM.

PILE CAP FOOTING ELEVATIONS

PILE CAP FOOTING ELEVATIONS ARE FROM THE ORIGINAL CONSTRUCTION PLANS AND MAY NOT BE AS BUILT. THEREFORE, THEY SHOULD NOT BE USED AS A REFERENCE FOR PROPOSED NEW CONSTRUCTION ELEVATIONS.

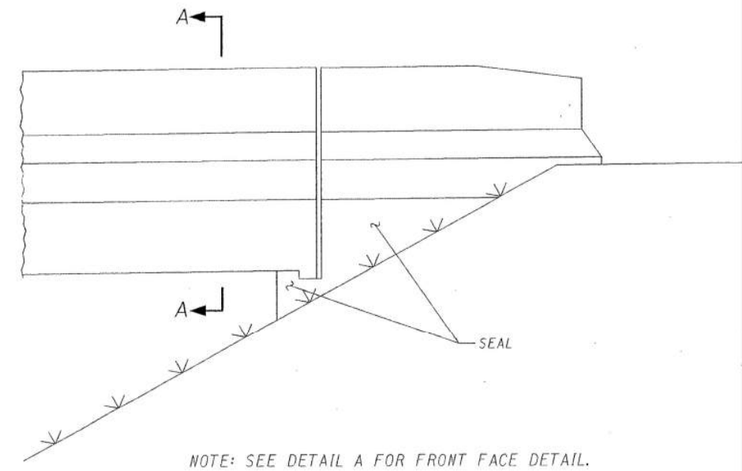

NOTE: SEE DETAIL A FOR FRONT FACE DETAIL.

WINGWALL ELEVATION

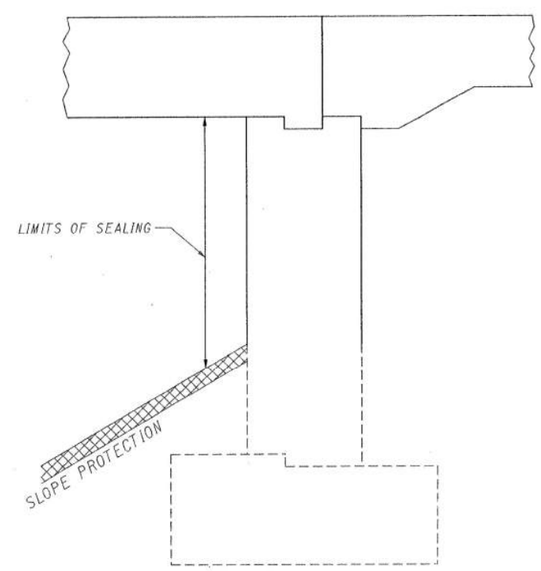

DETAIL A

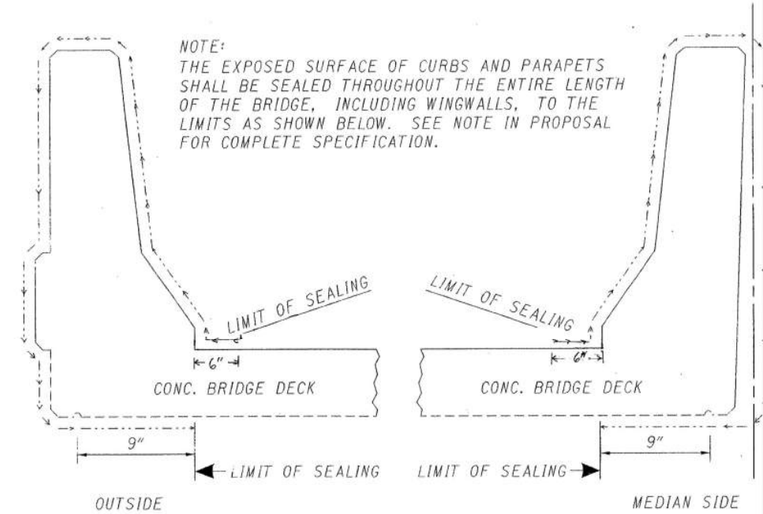

SECTION A-A

STATE OF OHIO
DEPARTMENT OF TRANSPORTATION

GENERAL NOTES

STRUCTURE No. SUM-277-0092
OVER A&BB RAILROAD

DESIGNED	DRAWN	TRACED	CHECKED	REVIEWED	DATE
S.T.	R.B.		KS	GLB	7-13-93

ZFA2:(20,7) SU277004.DGN

F.H.W.A. REGION	STATE	PROJECT NO.	FUNDS
5	OHIO		

SUM-277/224-0.00/6.41/10

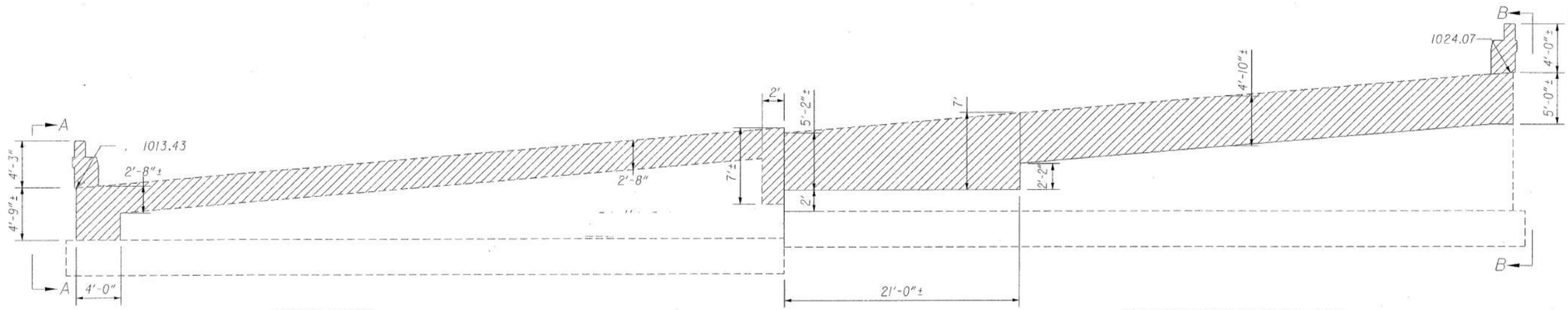

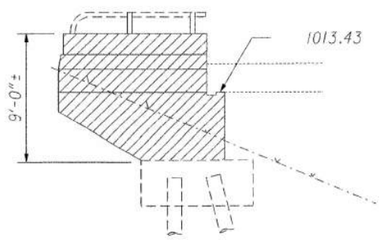

VIEW A-A

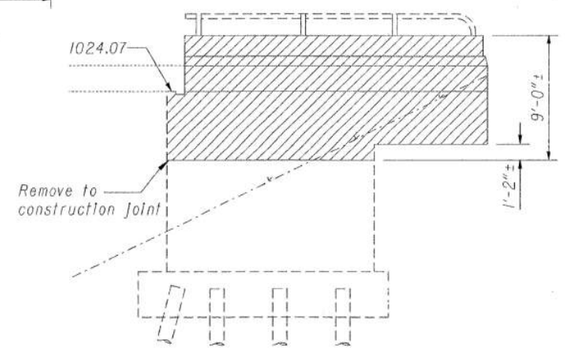

VIEW B-B

REAR ABUTMENT

(View facing abutment)

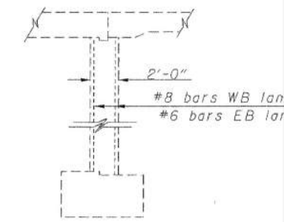

TYPICAL EXISTING ABUTMENT SECTION

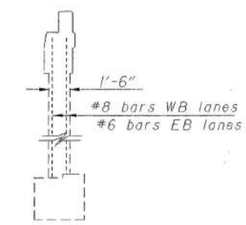

TYPICAL EXISTING WINGWALL SECTION

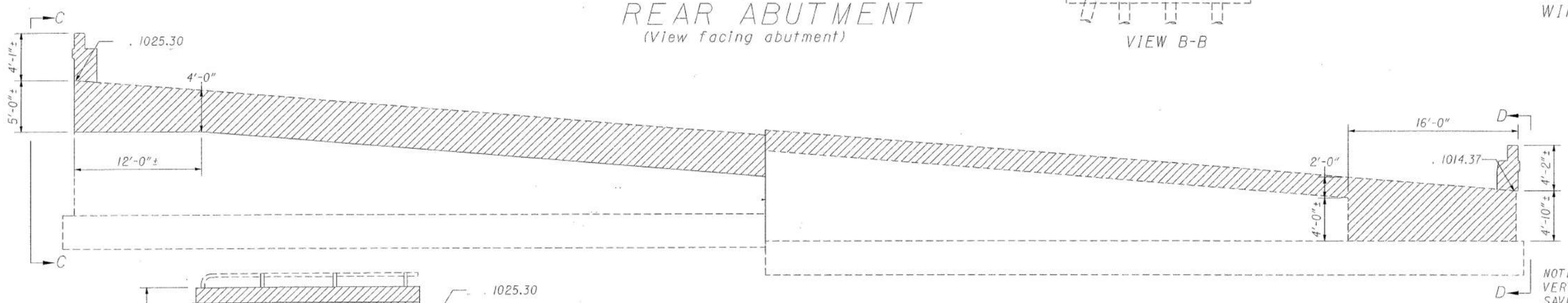

NOTE: IN THE REMOVAL AREAS THE VERTICAL #6 AND #8 BARS SHALL BE SAVED AND TRIMMED TO PROVIDE FO THE REQUIRED LAP LENGTH OF 30 BAR DIAMETERS.

REMOVAL AREA

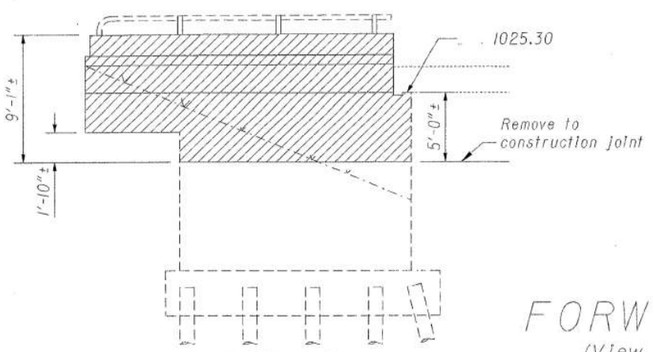

VIEW C-C

FORWARD ABUTMENT

(View facing abutment)

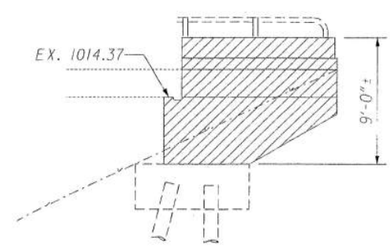

VIEW D-D

SHEET 3/

STATE OF OHIO
DEPARTMENT OF TRANSPORTATION

ABUTMENT REMOVAL DETAI

BRIDGE NO. SUM-277-0092
OVER A & B.B. RAILROAD

DESIGNED	DRAWN	TRACED	CHECKED	REVIEWED	DATE
ST	ST		KS	GLB	7-13-93

d04w4a su277040.dgn

F.H.W.A. REGION	STATE	PROJECT NO.	FUNDS
5	OHIO		

142
196

SUM-277/224-0.00/6.31/10.2

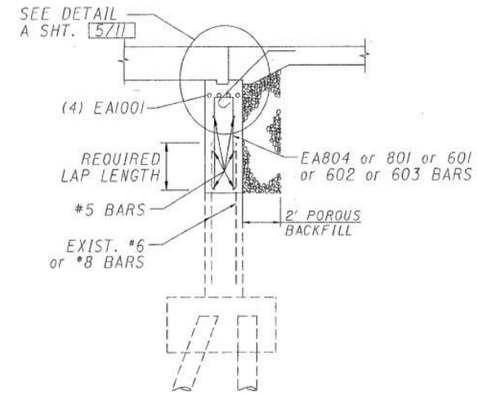

SECTION A-A

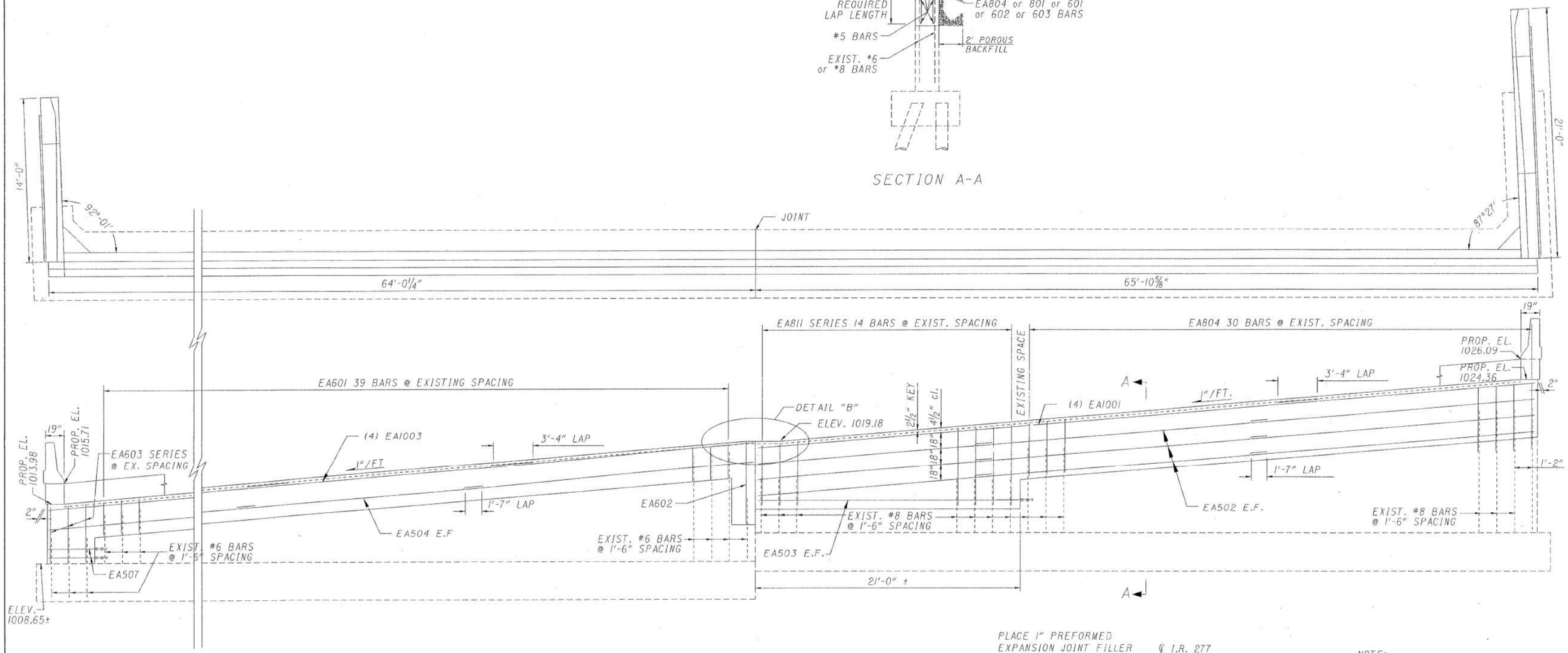

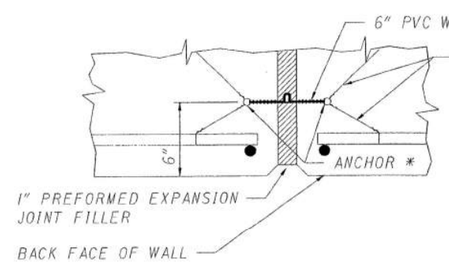

* FOR THE FIRST POUR, THE WATERSTOP SHOULD BE HELD SECURELY IN PLACE BY THE USE OF SPLIT FORMS AND TIE-WIRES. FOR THE SECOND POUR, SECURE THE FREE END OF WATERSTOP IN PROPER POSITION WITH TIE-WIRES. ALTERNATE METHODS, AS APPROVED BY THE ENGINEER, MAY BE USED TO INSURE THE CORRECT POSITIONING OF THE WATERSTOP.

WATERSTOP DETAILS

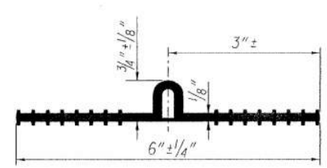

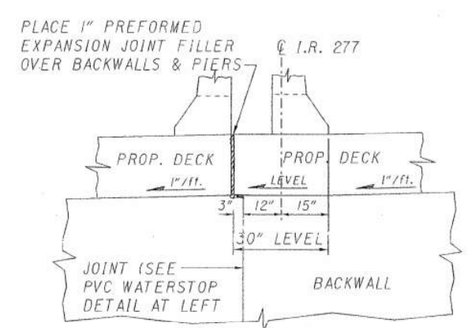

DETAIL B
SHOWING CROSS-SLOPE AT JOINT

NOTE:
ALL DOWEL HOLES ARE 1' IN DEPTH.

FOR WINGWALL PARAPET SAFETY SHAPE DIMENSIONS SEE SHT. No. 7/11.

SHEET 4/

STATE OF OHIO
DEPARTMENT OF TRANSPORTATION
BUREAU OF BRIDGES

REAR ABUTMENT DETAILS

BRIDGE NO. SUM-277-0092
OVER A & B.B. RAILROAD

I-277 SUMMIT COUNTY

DESIGNED	DRAWN	TRACED	CHECKED	REVIEWED	DATE	RE
ST	RB		KS	GLB	7-13-93	

ZFA2:[20,7] SU277050.DGN

F.H.W.A. REGION	STATE	PROJECT NO.	FUNDS
5	OHIO		

143
19

SUM-277/224-0.00/6.31/10.2

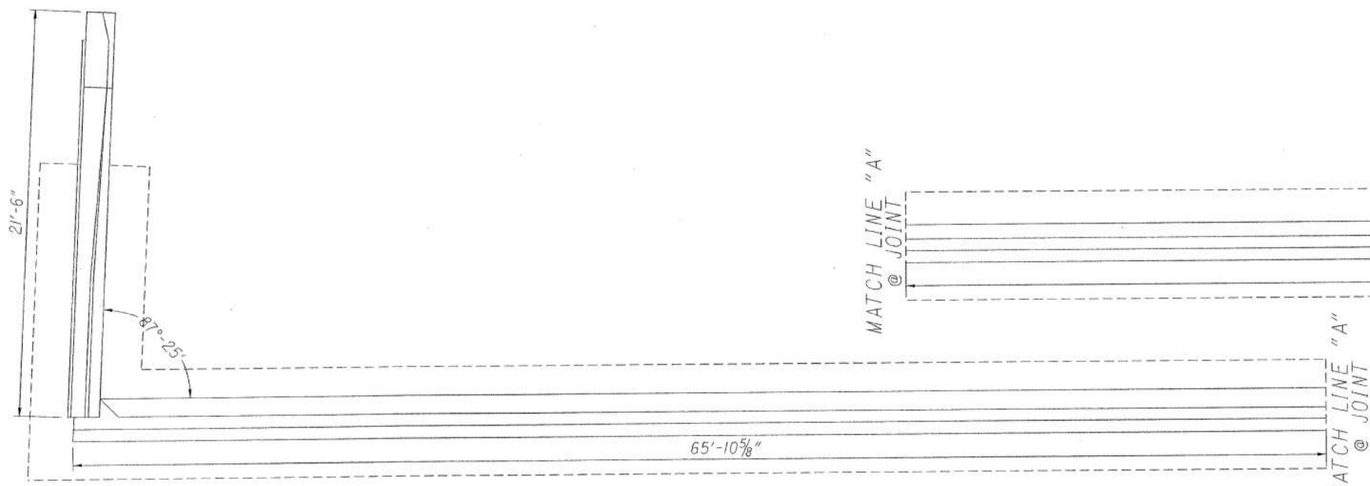

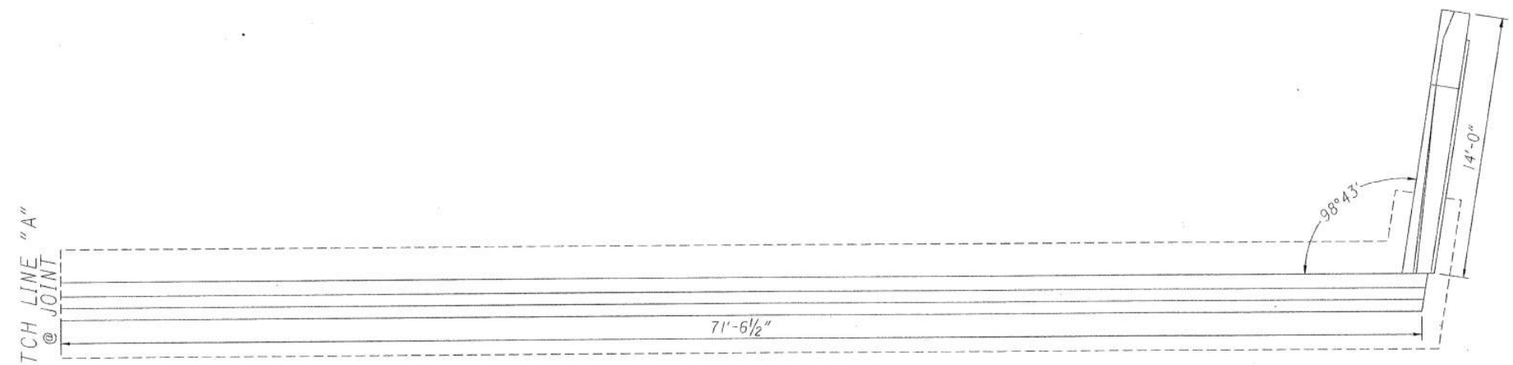

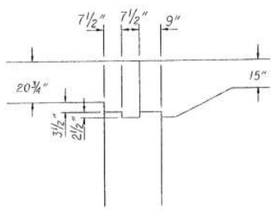

DETAIL A

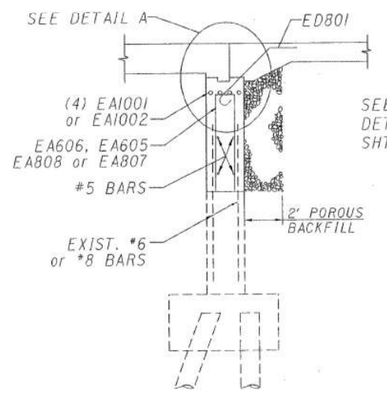

SECTION A-A

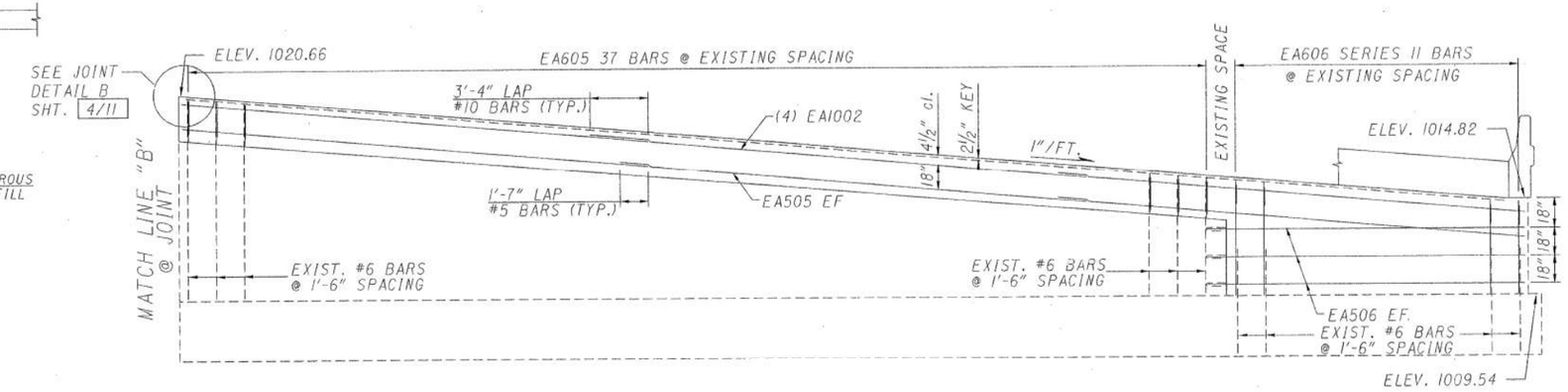

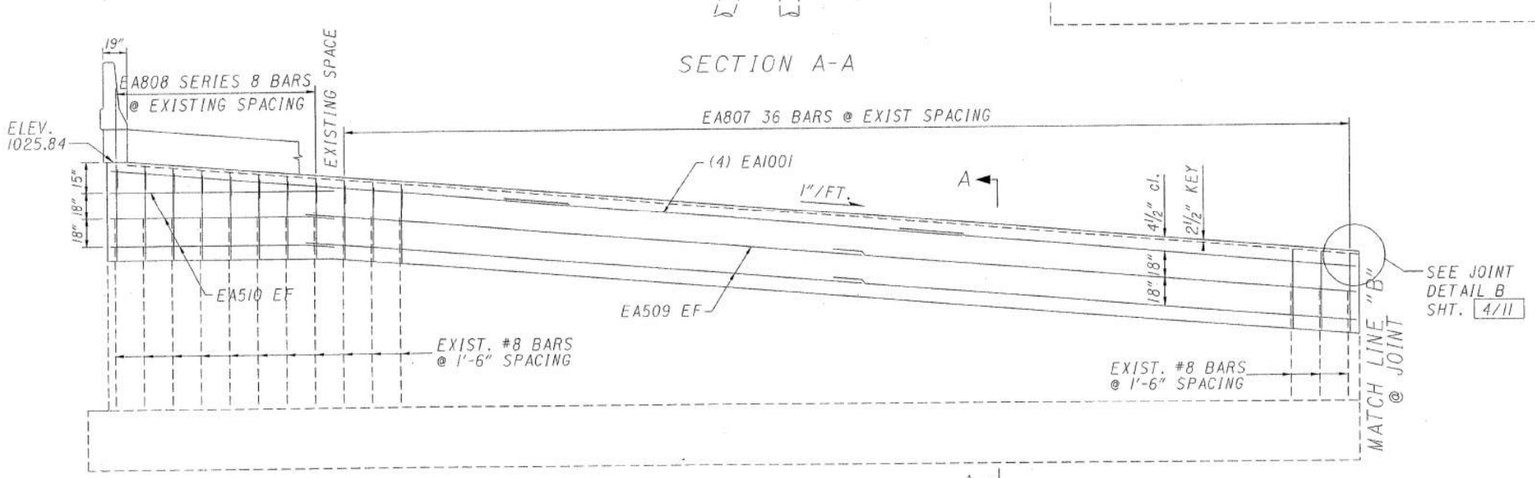

NOTE:
ALL DOWEL HOLES ARE 1' IN DEPTH.

FOR WINGWALL PARAPET SAFETY SHAPE
DIMENSIONS SEE SHT. No. 6/11.

SHEET 5

STATE OF OHIO
DEPARTMENT OF TRANSPORTATION
BUREAU OF BRIDGES

FORWARD ABUTMENT DETAIL

BRIDGE NO. SUM-277-0092
OVER A & B.B. RAILROAD

I-277 SUMMIT COUNTY

DESIGNED	DRAWN	TRACED	CHECKED	REVIEWED	DATE
ST	RB		KS	LLB	7-13-93

F.H.W.A. REGION	STATE	PROJECT NO.	FUNDS
5	OHIO		

144/196

SUM-277/224-0.00/6.31/10.22

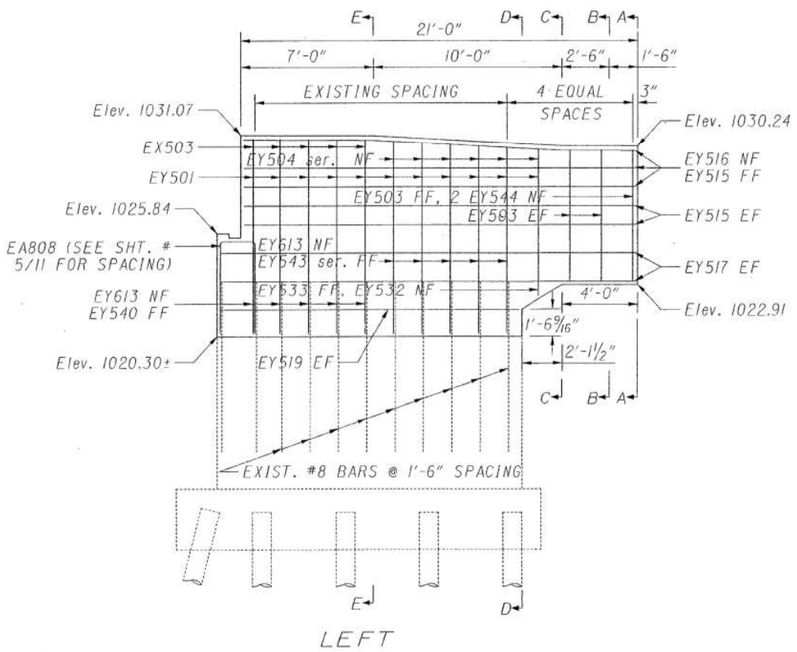

LEFT

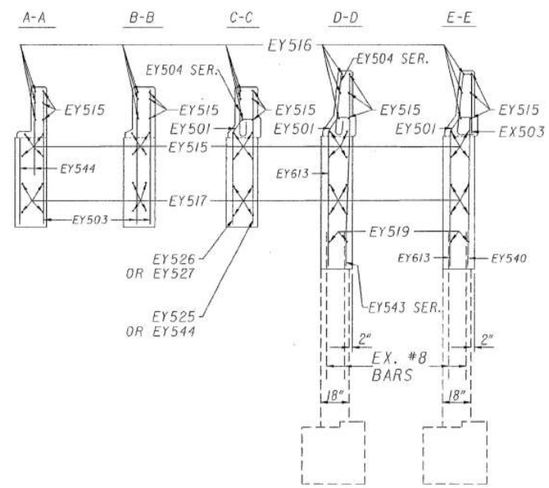

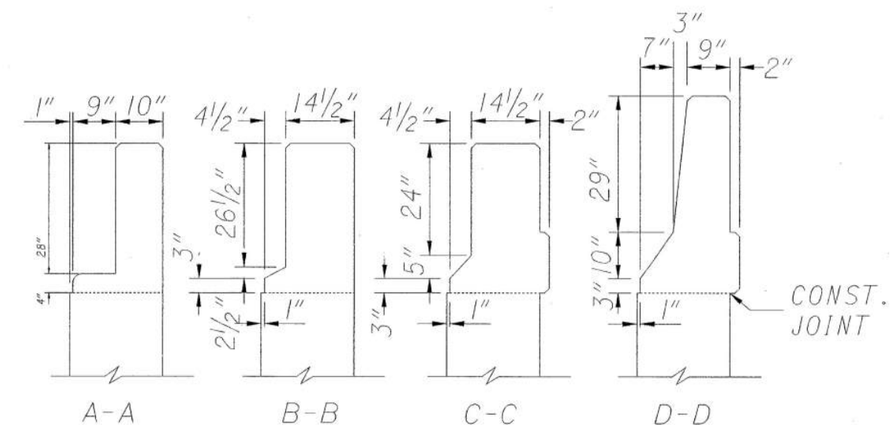

TYPICAL WINGWALL SHAPE TRANSITION

(Bars not shown)

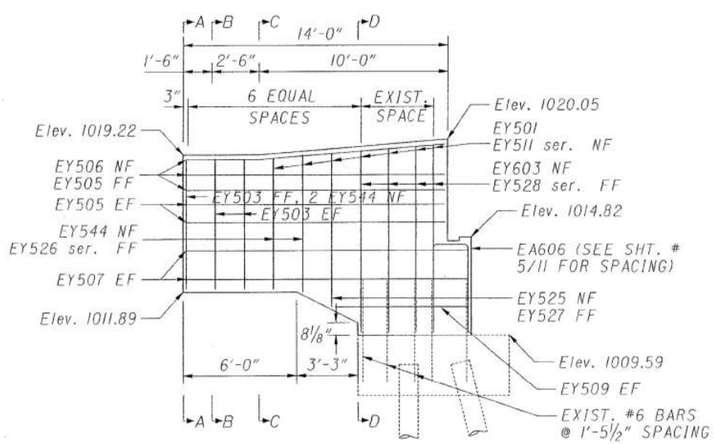

RIGHT

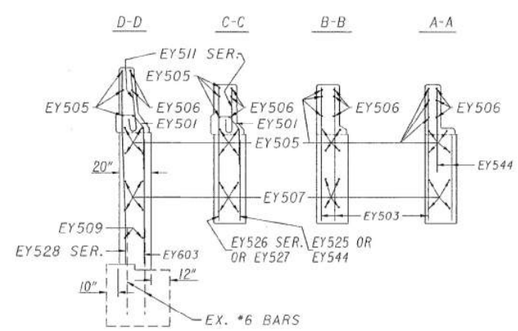

SHEET 6/1

STATE OF OHIO
DEPARTMENT OF TRANSPORTATION

FORWARD ABUTMENT DETAILS

BRIDGE NO. SUM-277-0092
OVER A & B.B. RAILROAD

DESIGNED	DRAWN	TRACED	CHECKED	REVIEWED	DATE	REV
ST	RB		KS	GLB	7-13-93	

F.H.W.A. REGION	STATE	PROJECT NO.	FUNDS
5	OHIO		

SUM-277/224-0.00/6.31/10.2

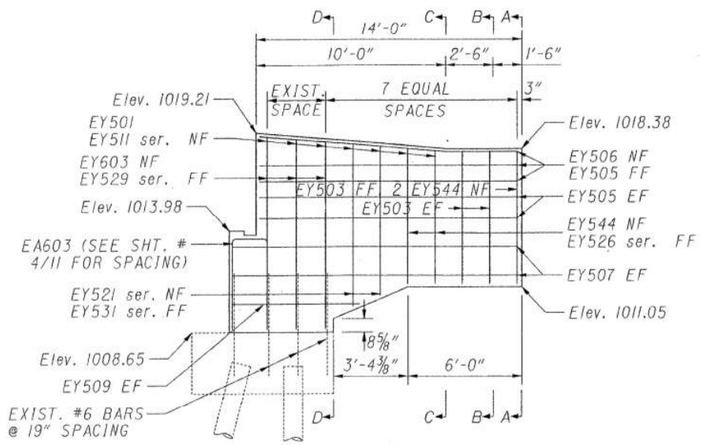

RIGHT

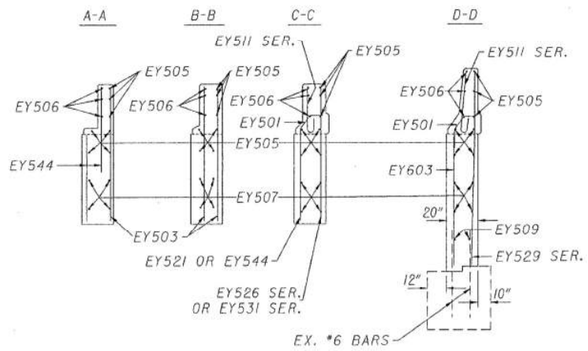

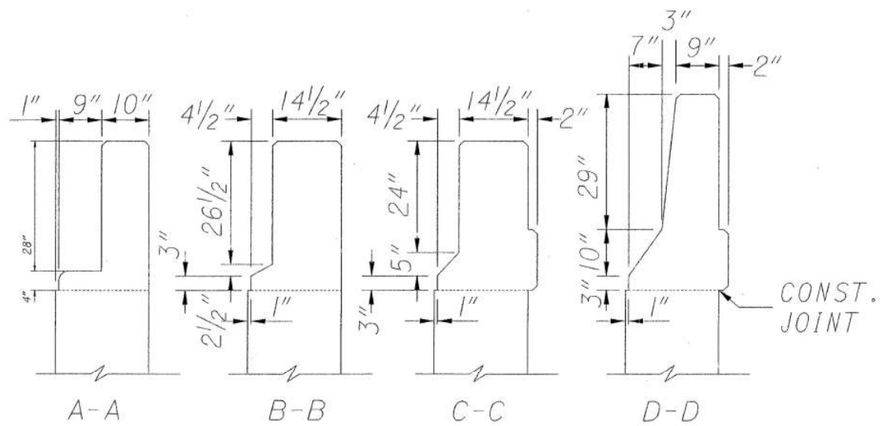

TYPICAL WINGWALL SHAPE TRANSITION

(Bars not shown)

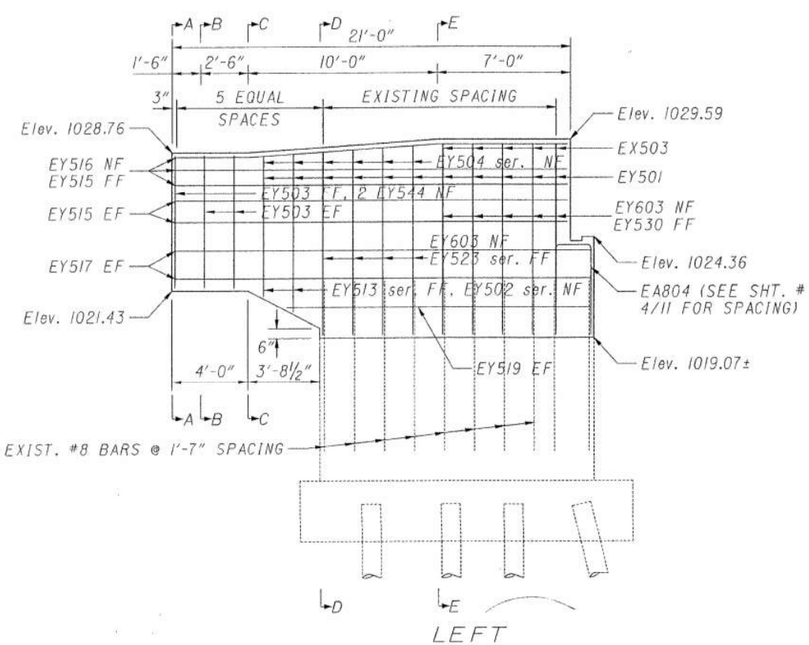

LEFT

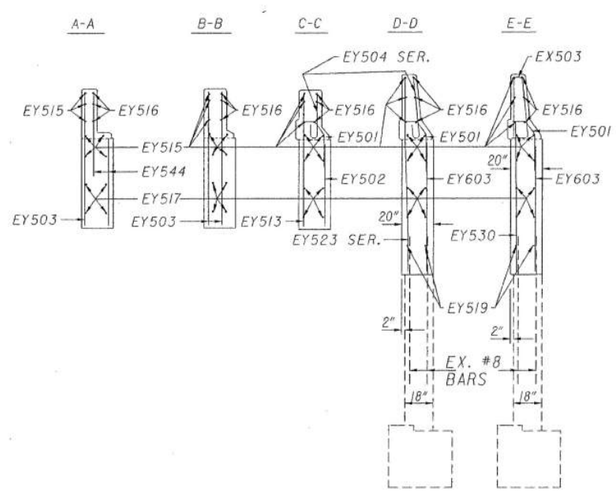

SHEET 7A

STATE OF OHIO
DEPARTMENT OF TRANSPORTATION

REAR ABUTMENT DETAILS

BRIDGE NO. SUM-277-0092
OVER A & B.B. RAILROAD

DESIGNED	DRAWN	TRACED	CHECKED	REVIEWED	DATE
ST	RB		KS	GLB	7-13-93

ZFA2:[20,7] SU277050.DGN

F.H.W.A. REGION	STATE	PROJECT NO.	FUNDS
5	OHIO		

SUM-277/224/-0.00/6.31/

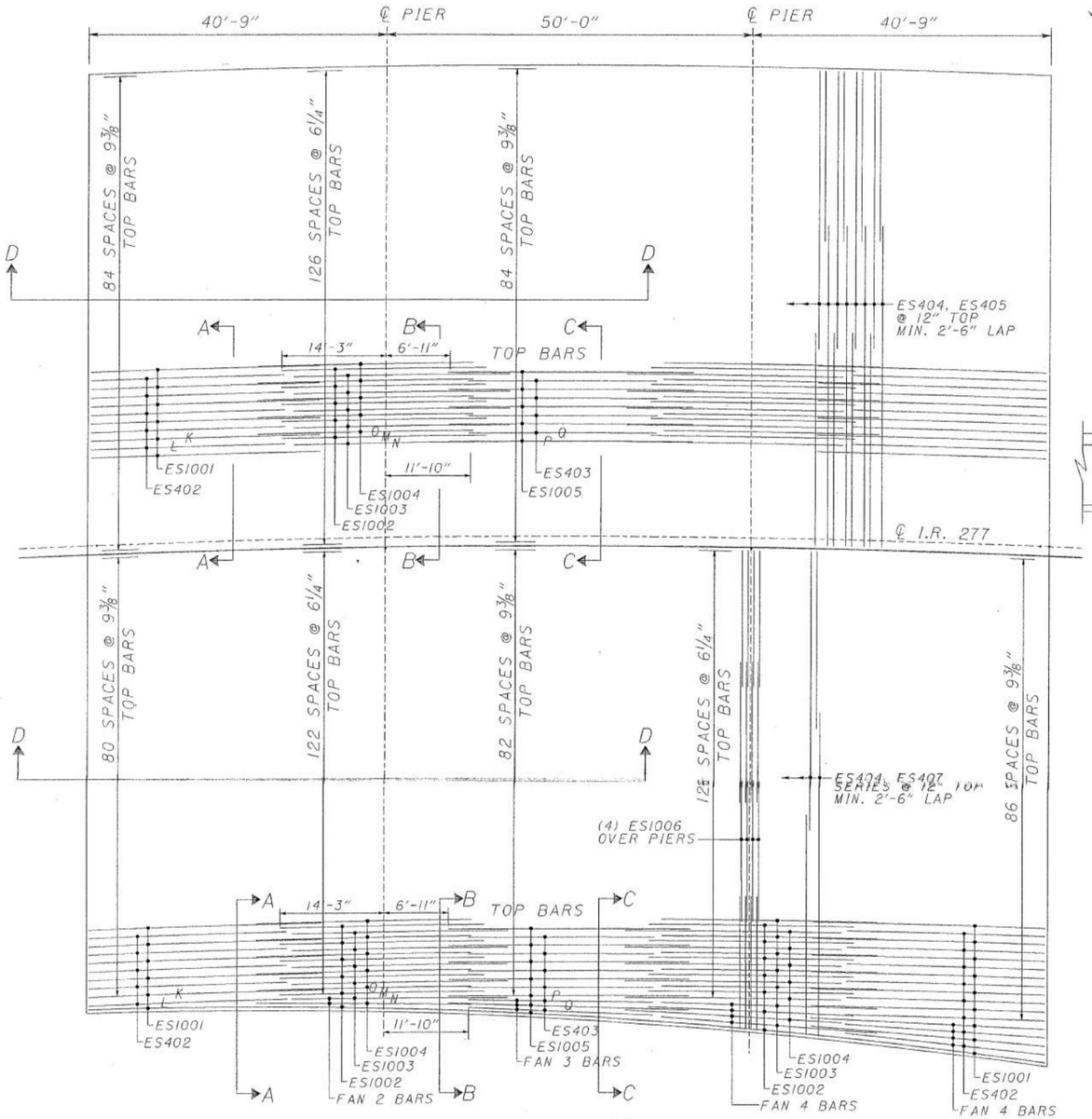

SLAB PLAN TOP BARS

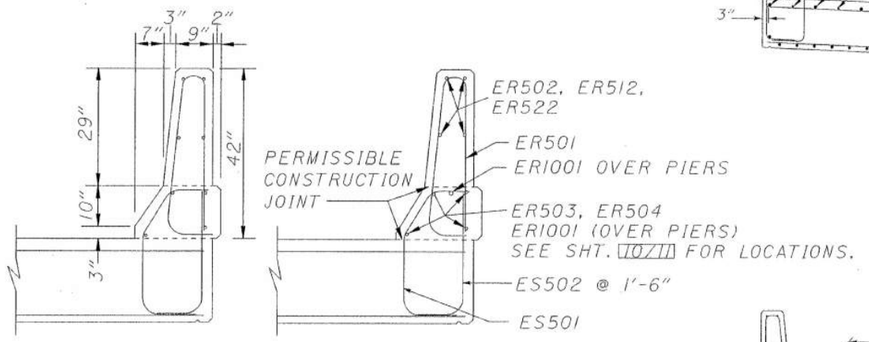

TYPICAL OUTSIDE PARAPET

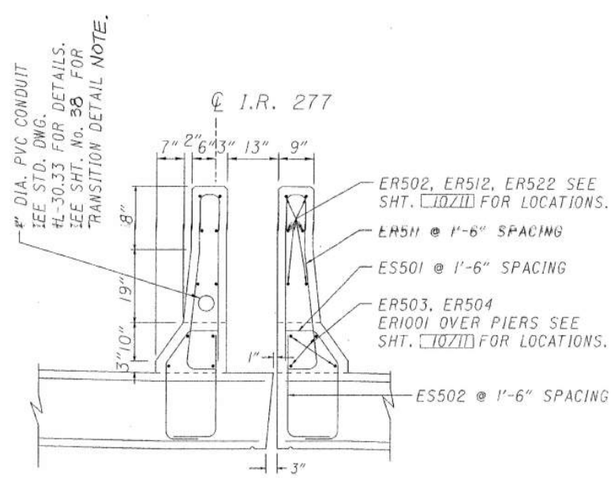

MEDIAN BARRIER DETAILS

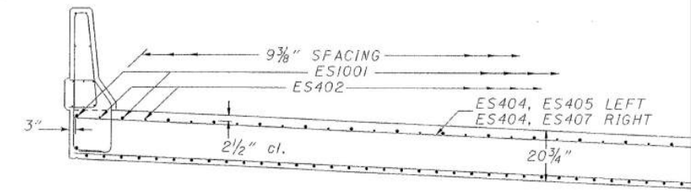

SECTION A-A

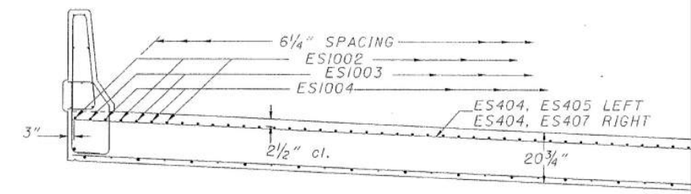

SECTION B-B

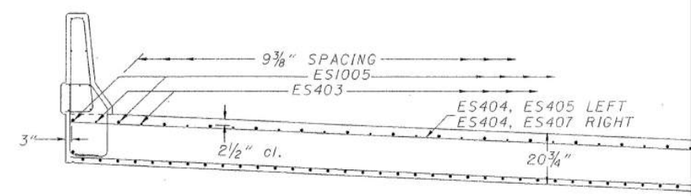

SECTION C-C

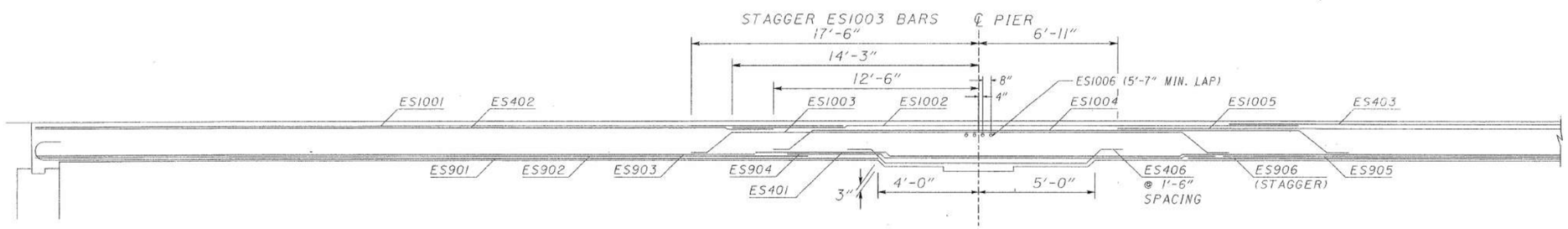

SECTION D-D

SEE SHEET No. 10/11 FOR DECK CROSS-SLOPE DETAILS.

SHEET

STATE OF OHIO
DEPARTMENT OF TRANSPORTATIO

SUPERSTRUCTURE

STRUCTURE No. SUM - 277

DESIGNED	DRAWN	TRACED	CHECKED	REVIEWED
ST	RB		KS	GLB

F.H.W.A. REGION	STATE	PROJECT NO.	FUNDS
5	OHIO		

SUM-277/224/-0.00/6.31/10.

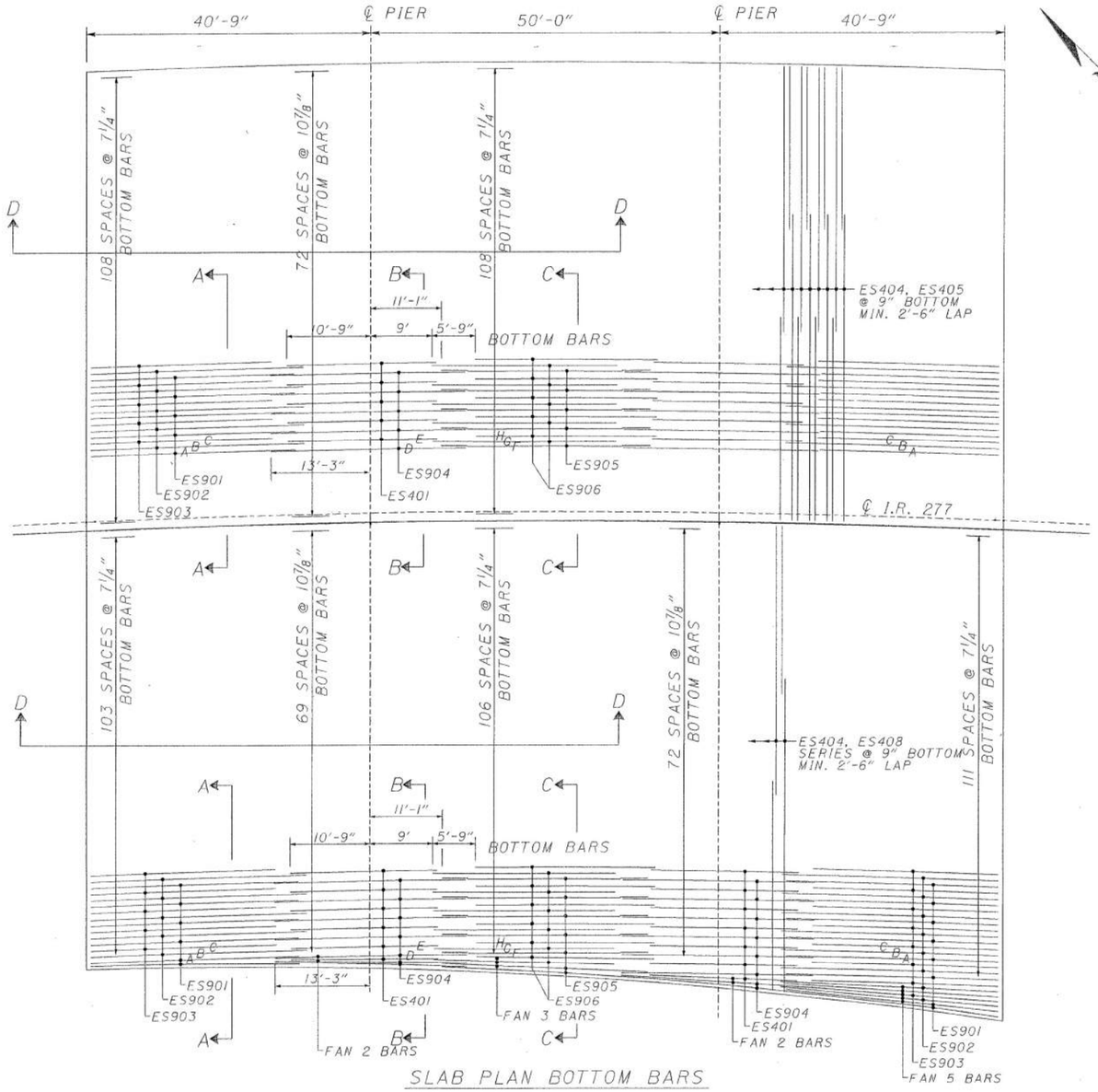

SLAB PLAN BOTTOM BARS

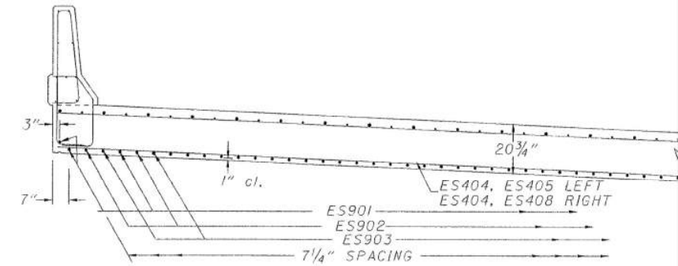

SECTION A-A

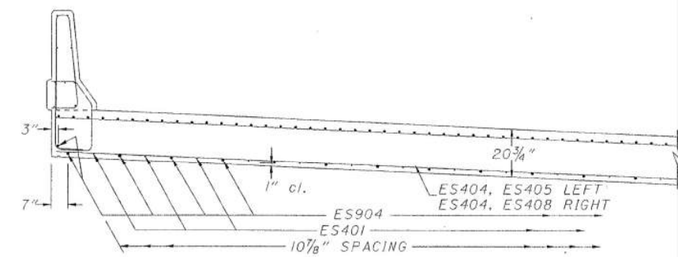

SECTION B-B

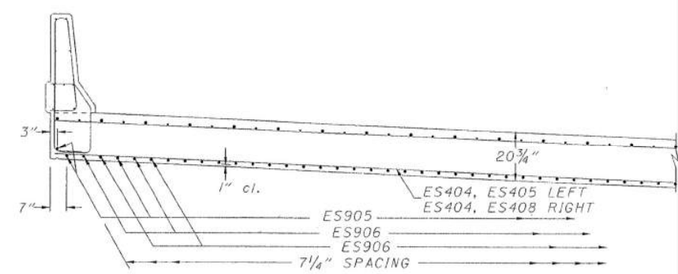

SECTION C-C

SEE SHEET No. 8/11 FOR SECTION D-D.
SEE SHEET No. 10/11 FOR DECK CROSS-SLOPE DETAILS.

SHEET

STATE OF OHIO
DEPARTMENT OF TRANSPORTATION

SUPERSTRUCTURE

STRUCTURE No. SUM - 277 -

DESIGNED	DRAWN	TRACED	CHECKED	REVIEWED	DATE
ST	RB		KS	GLB	7/13-93

ZFA2:E20,7J SU277045.DGN

F.H.W.A. REGION	STATE	PROJECT NO.	FUNDS
5	OHIO		

SUM-277/224/-0.00/6.31/10.22

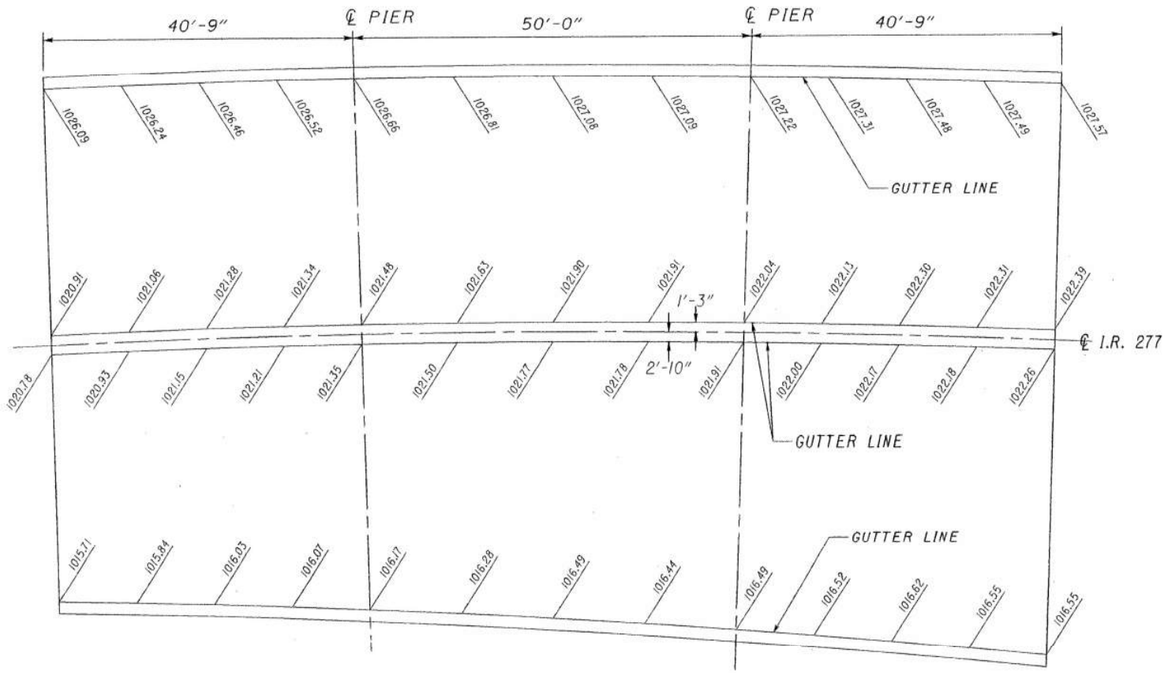

SCREED ELEVATIONS

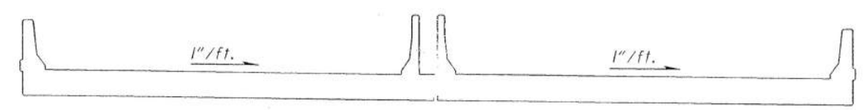

DECK CROSS-SLOPE

** ER501, ES501, ES502 OUTSIDE PARAPETS
ER511, ES501, ES502 MEDIAN BARRIER

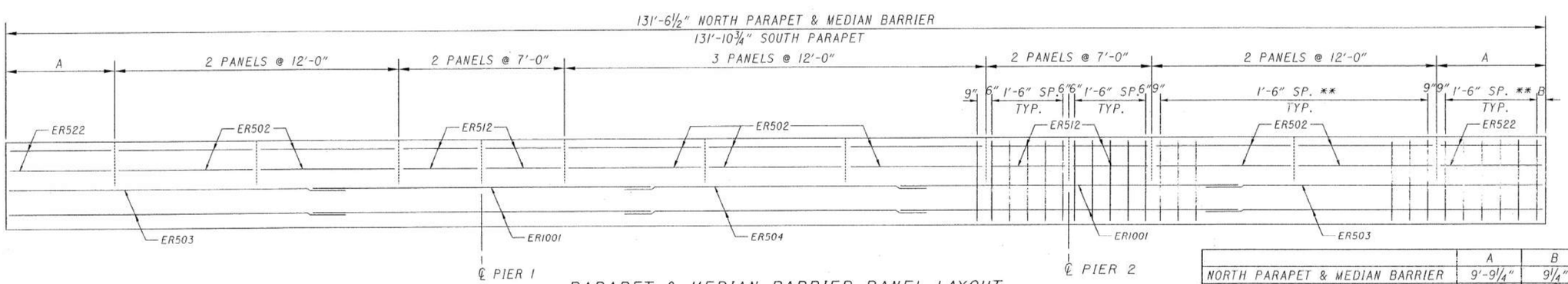

PARAPET & MEDIAN BARRIER PANEL LAYOUT

	A	B
NORTH PARAPET & MEDIAN BARRIER	9'-9¼"	9¼"
SOUTH PARAPET	9'-11⅜"	11⅜"

NOTE:
SCUPPERS NOT REQUIRED ON THIS BRIDGE.

SHEET 10

STATE OF OHIO
DEPARTMENT OF TRANSPORTATION

STRUCTURE DETAILS

STRUCTURE No. SUM - 277 - 0

DESIGNED	DRAWN	TRACED	CHECKED	REVIEWED	DATE
ST	RB		KS	GLB	8-93

ZFA2:[20,7] SU277045.DGN

F.H.W.A. REGION	STATE	PROJECT NO.	FUNDS
5	OHIO		

14
19

SUM-277/224-0.00/6.31/10.2

STRUCTURE No. SUM-277-0092 LT.
REINFORCING STEEL LIST

MARK	NO.	LENGTH	INCREMENT	WEIGHT	TYPE
		ABUTMENT			
EA502	18	23'-0"		432	STRAIGHT
EA503	2	21'-10"		46	STRAIGHT
EA508	7	8'-6"		62	1
EA509	8	28'-6"		238	STRAIGHT
EA510	6	11'-10"		74	STRAIGHT
EA804	30	9'-11"		794	1
EA807	36	8'-3"		793	STRAIGHT
EA808 SERIES	8	10'-5½" / 8'-5"	1¾"	202	STRAIGHT
EA811 SERIES	14	14'-1" / 10'-10"	1½"	466	1
EA1001	24	24'-2"		2496	STRAIGHT
ED801	88	6'-1"		1429	11
		SLAB			
ES401	72	21'-6"		1034	STRAIGHT
ES402	84	28'-1"		1576	STRAIGHT
ES403	42	26'-4"		739	STRAIGHT
ES404	308	33'-6"		6892	STRAIGHT
ES405	308	33'-6"		6892	STRAIGHT
ES406	90	12'-0"		721	12
ES901	78	32'-2"		8531	4
ES902	72	31'-6"		7711	STRAIGHT
ES903	72	27'-3"		6671	STRAIGHT
ES904	78	28'-0"		7426	STRAIGHT
ES905	37	27'-10"		3501	STRAIGHT
ES906	72	26'-3"		6426	STRAIGHT
ES1001	86	33'-0"		12212	STRAIGHT
ES1002	86	28'-3"		10454	STRAIGHT
ES1003	84	30'-2"		10904	8
ES1004	84	30'-2"		10904	8
ES1005	43	36'-2"		6692	STRAIGHT
ES1006	32	21'-5"		2949	STRAIGHT
		PARAPETS			
ES501	194	3'-11"		793	5
ES502	194	3'-7½"		733	6
ER501	97	7'-1"		717	3
ER502	70	11'-6"		840	STRAIGHT
ER512	40	6'-6"		271	STRAIGHT
ER522	20	9'-4"		195	STRAIGHT
ER503	16	30'-6"		509	STRAIGHT
ER504	8	24'-8"		206	STRAIGHT
ER511	97	8'-1"		818	13
ER1001	20	29'-0"		2496	STRAIGHT
		WINGWALLS			
EY501	22	3'-9"		86	7
EY503	10	7'-0"		73	STRAIGHT
EY504 SERIES	2 sets 6 bars	3'-0" / 3'-7½"	1½"	41	10
EY513 SERIES	2	7'-6" / 8'-4½"	10½"	17	STRAIGHT
EY515	14	20'-8"		302	STRAIGHT
EY516	6	20'-8½"		130	2
EY517	8	21'-11"		183	STRAIGHT
EY519	4	16'-6"		69	STRAIGHT
EY523 SERIES	4	9'-8½" / 10'-1"	1½"	41	STRAIGHT
EY530	5	7'-9"		40	STRAIGHT
EY613	7	7'-0"		74	STRAIGHT
EY532	1	5'-1"		5	STRAIGHT
EY502 SERIES	2	4'-10" / 5'-7"	9"	11	STRAIGHT
EY533	1	7'-10"		8	STRAIGHT
EY540	5	8'-0"		42	STRAIGHT
EY603	9	6'-9"		91	STRAIGHT
EY543 SERIES	5	9'-10" / 10'-4"	1½"	53	STRAIGHT
EY544	4	4'-6"		19	STRAIGHT
EX503	10	7'-1"		74	3
TOTAL POUNDS ABUTMENT				8391	
TOTAL POUNDS SUPERSTRUCTURE				119813	

STRUCTURE No. SUM-277-0092 RT.
REINFORCING STEEL LIST

MARK	NO.	LENGTH	INCREMENT	WEIGHT	TYPE
		ABUTMENT			
EA504	12	22'-4"		280	STRAIGHT
EA505	12	24'-11"		312	STRAIGHT
EA506	6	16'-10"		105	STRAIGHT
EA507	4	4'-10"		20	STRAIGHT
	6	8'-6"		53	1
EA601	39	5'-8"		332	1
EA602	1	14'-4"		22	1
EA603 SERIES	3	9'-10" / 10'-6"	2"	46	1
EA605	37	4'-10"		269	STRAIGHT
EA606 SERIES	11	12'-4" / 9'-10"	1½"	183	STRAIGHT
EA1003	12	23'-6"		1213	STRAIGHT
EA1002	12	26'-1"		1347	STRAIGHT
ED801	90	6'-1"		1462	11
		SLAB			
ES401	73	21'-6"		1048	STRAIGHT
ES402	86	28'-1"		1613	STRAIGHT
ES403	43	26'-4"		756	STRAIGHT
ES404	308	33'-6"		6892	STRAIGHT
ES406	92	12'-0"		737	12
ES407 SERIES	132	32'-0" / 40'-3"	¾"	3185	STRAIGHT
ES408 SERIES	176	32'-0" / 39'-4"	½"	4193	STRAIGHT
ES901	78	32'-2"		8531	4
ES902	74	31'-6"		7925	STRAIGHT
ES903	74	27'-3"		6856	STRAIGHT
ES904	78	28'-0"		7426	STRAIGHT
ES905	39	27'-10"		3691	STRAIGHT
ES906	73	26'-3"		6528	STRAIGHT
ES1001	89	33'-0"		12638	STRAIGHT
ES1002	86	28'-3"		10454	STRAIGHT
ES1003	86	30'-2"		11163	8
ES1004	86	30'-2"		11163	8
ES1005	44	36'-2"		6848	STRAIGHT
ES1006	32	21'-5"		2949	STRAIGHT
		PARAPETS			
ES501	194	3'-11"		793	5
ES502	194	3'-7½"		733	6
ER501	97	7'-1"		717	3
ER502	70	11'-6"		840	STRAIGHT
ER512	40	6'-6"		271	STRAIGHT
ER522	20	9'-4"		195	STRAIGHT
ER503	16	30'-6"		509	STRAIGHT
ER504	8	24'-8"		206	STRAIGHT
ER1001	20	29'-0"		2496	STRAIGHT
		WINGWALLS			
EY501	14	3'-9"		55	7
EY503	10	7'-0"		73	STRAIGHT
EY511 SERIES	2 sets 7 bars	2'-11½" / 3'-8½"	1½"	49	10
EY505	14	13'-8"		206	STRAIGHT
EY506	6	13'-8½"		86	2
EY507	8	14'-11"		124	STRAIGHT
EY603	7	6'-9"		71	STRAIGHT
EY509	4	6'-7"		27	STRAIGHT
EY511	2	8'-0"		17	7
EY526 SERIES	2 sets 2 bars	7'-0½" / 7'-2"	1½"	30	STRAIGHT
EY527	1	8'-3"		9	STRAIGHT
EY521 SERIES	2	5'-1½" / 5'-10"	8½"	11	STRAIGHT
EY528 SERIES	4	9'-8½" / 10'-1"	1½"	41	STRAIGHT
EY525	1	5'-3"		5	STRAIGHT
EY529 SERIES	3	9'-11" / 10'-2"	1½"	31	STRAIGHT
EY531 SERIES	2	8'-0" / 8'-10"	10"	18	STRAIGHT
EY544	8	4'-6"		38	STRAIGHT
TOTAL POUNDS ABUTMENT				6535	
TOTAL POUNDS SUPERSTRUCTURE				121356	

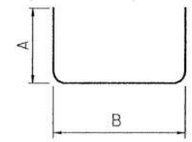

TYPE 1

BAR	DIST. A	DIST. B
EY508	12"	6'-9"
EY601	2'-2"	1'-8"
EY602	6'-6"	1'-8"
EY603	4'-3" min. to 4'-7" max.	1'-8"
EY605	1'-9"	1'-8"
EY606	4'-3" min. to 5'-6" max.	1'-8"
EY804	4'-4"	1'-8"
EY807	3'-6"	1'-8"
EY808	3'-7" min. to 4'-7¼" max.	1'-8"
EY811	4'-9½" min. to 6'-5" max.	1'-8"

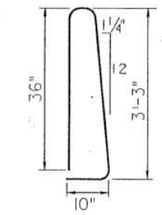

TYPE 3

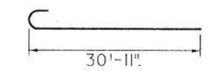

TYPE 4

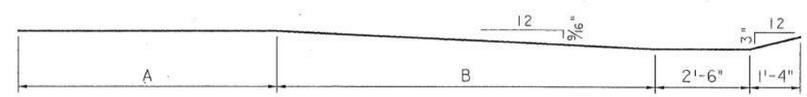

TYPE 2

BAR	DIST. A	DIST. B
EY506	0	9'-10"
EY511	6'-10"	10'-0"

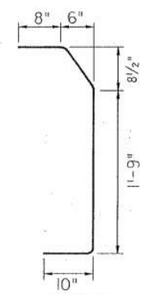

TYPE 5

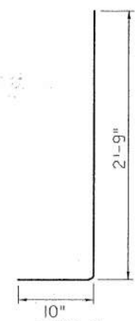

TYPE 6

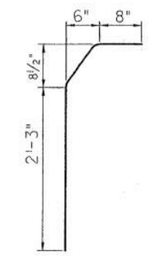

TYPE 7

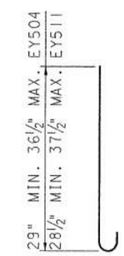

TYPE 10

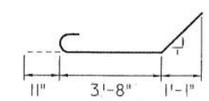

TYPE 11

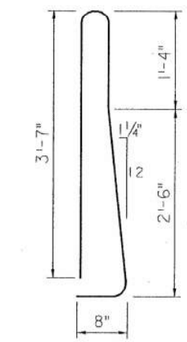

TYPE 13

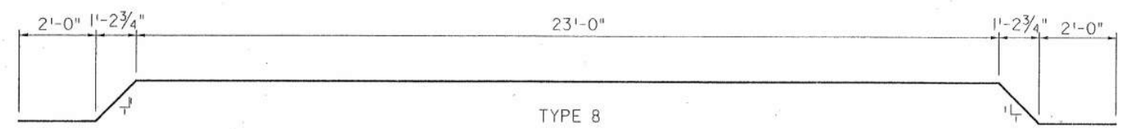

TYPE 8

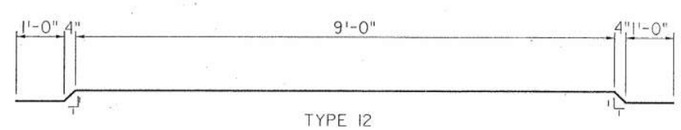

TYPE 12

NOTES:

ALL DIMENSIONS ARE OUT-TO-OUT

REFER TO CONSTRUCTION AND MATERIAL SPECIFICATIONS SECTIONS 106.03 700, 709.01 THRU 709.13, AND 509.08 FOR SPECIFICATIONS AND SAMPLING.

SHEET 11/

STATE OF OHIO
DEPARTMENT OF TRANSPORTATION
BUREAU OF BRIDGES

REINFORCING BAR LIST

BRIDGE NO. SUM-277-0092 LEFT
OVER A & B.B. RAILROAD

I-277 SUMMIT COUNTY

DESIGNED	DRAWN	TRACED	CHECKED	REVIEWED	DATE
ST	RB				

OHIO	
FHWA REGION	5
FEDERAL PROJECT	

SUM-277/224-0.00/6.31/10.22

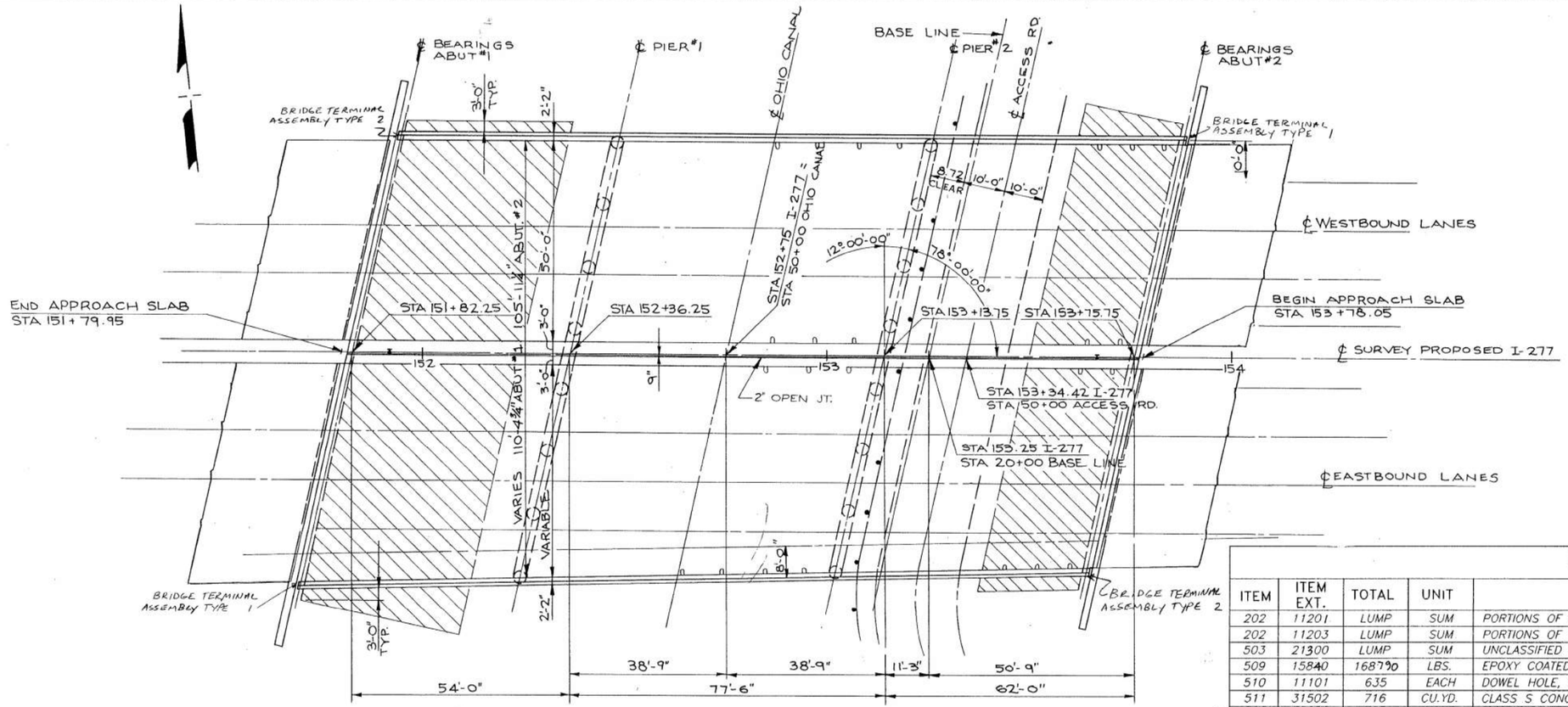

PLAN

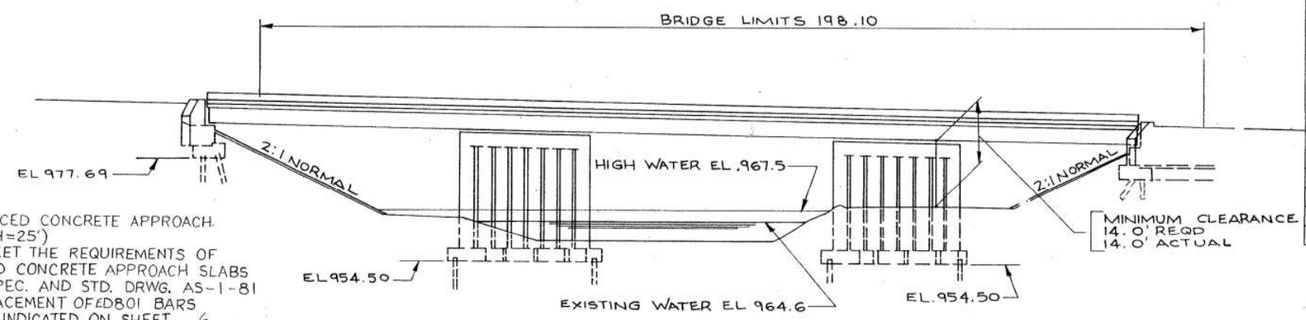

ELEVATION

NOTE:

ITEM 611 – REINFORCED CONCRETE APPROACH SLAB (T=15", LENGTH=25')
THIS WORK SHALL MEET THE REQUIREMENTS OF ITEM 611 REINFORCED CONCRETE APPROACH SLABS OF THE CONST. & SPEC. AND STD. DRWG. AS-1-81 EXCEPT FOR THE PLACEMENT OF ED801 BARS WHICH SHALL BE AS INDICATED ON SHEET 6 AND AS DIRECTED BY THE ENGINEER. 617 SQ.YD. HAVE BEEN CARRIED TO THE ROADWAY GENERAL SUMMARY FOR ITEM 611 REINFORCED CONCRETE APPROACH SLAB.

ESTIMATED QUANTITIES

	ITEM	ITEM EXT.	TOTAL	UNIT	DESCRIPTION	SUPER	ABUT.
	202	11201	LUMP	SUM	PORTIONS OF STRUCTURES REMOVED, AS PER PLAN		
	202	11203	LUMP	SUM	PORTIONS OF STRUCTURES REMOVED, OVER 20' SPAN, AS PER PLAN		
	503	21300	LUMP	SUM	UNCLASSIFIED EXCAVATION		
	509	15840	168790	LBS.	EPOXY COATED REINFORCING STEEL, GRADE 60	157957	10833
	510	11101	635	EACH	DOWEL HOLE, AS PER PLAN		635
	511	31502	716	CU.YD.	CLASS S CONCRETE, SUPERSTRUCTURE	716	
*	511	33404	716	CU.YD.	CLASS S CONCRETE, SUPERSTRUCTURE, USING SHRINKAGE COMPENSATING CEMENT **	716	
*	511	33410	LUMP	SUM	CLASS S CONCRETE, USING SHRINKAGE COMPENSATING CEMENT, FOR PRE-PLACEMENT TESTING**		
	511	44100	77	CU.YD.	CLASS C CONCRETE, ABUTMENT NOT INCLUDING FOOTING		77
	512	33300	43	SQ.YD.	TYPE A WATERPROOFING		43
	513	20000	4857	EACH	WELDED STUD SHEAR CONNECTOR	4857	
	516	11211	222	LIN.FT.	STRUCTURAL STEEL EXPANSION JOINTS INCLUDING ELASTOMERIC STRIP SEAL, AS PER PLAN**	222	
	516	46701	29	EACH	RESET BEARING, AS PER PLAN	29	
	518	21200	82	CU.YD.	POROUS BACKFILL WITH FILTER FABRIC		
	SPECIAL	512 67502	1336	SQ.YD.	SEALING OF CONCRETE SURFACES (EPOXY) **	1211	125
	SPECIAL	51400050	29828	SQ. FT.	SURFACE PREPARATION OF EXISTING STEEL, SYSTEM OZEU **		
	SPECIAL	51400056	29828	SQ. FT.	FIELD PAINTING OF EXISTING STEEL, PRIME COAT, SYSTEM OZEU **		
	SPECIAL	51400060	29828	SQ. FT.	FIELD PAINTING OF EXISTING STEEL, INTERMEDIATE COAT, SYSTEM OZEU **		
	SPECIAL	51400066	29828	SQ. FT.	FIELD PAINTING OF EXISTING STEEL, FINISH COAT, SYSTEM OZEU **		
	SPECIAL	51400500	550	LIN. FT.	CAULKING **		
	SPECIAL	51400504	100	MAN HOURS	GRINDING FINS, TEARS, SLIVERS **		
	SPECIAL	51400508	2700	LIN. FT.	GRINDING FLANGE EDGES **		

* THESE TWO ITEMS SHALL CONSTITUTE ONE ALTERNATE BID TO ITEM 511, CLASS S CONCRETE, SUPERSTRUCTURE

** SEE PROPOSAL NOTE

STATE OF OHIO
DEPARTMENT OF TRANSPORTATION
BUREAU OF BRIDGES

GENERAL PLAN & ELEVAT

BRIDGE No. SUM-277-0175
OVER THE OHIO CANAL
SFN 7709692

I-277 SUMMIT CO

DESIGNED	DRAWN	CHECKED	REVIEWED	DATE
ST	SM	KS	GLB	7-13-9

FED. RD. DIVISION	STATE	PROJECT	
2	OHIO		

SUM-277/224-0.00/6.31/10.22

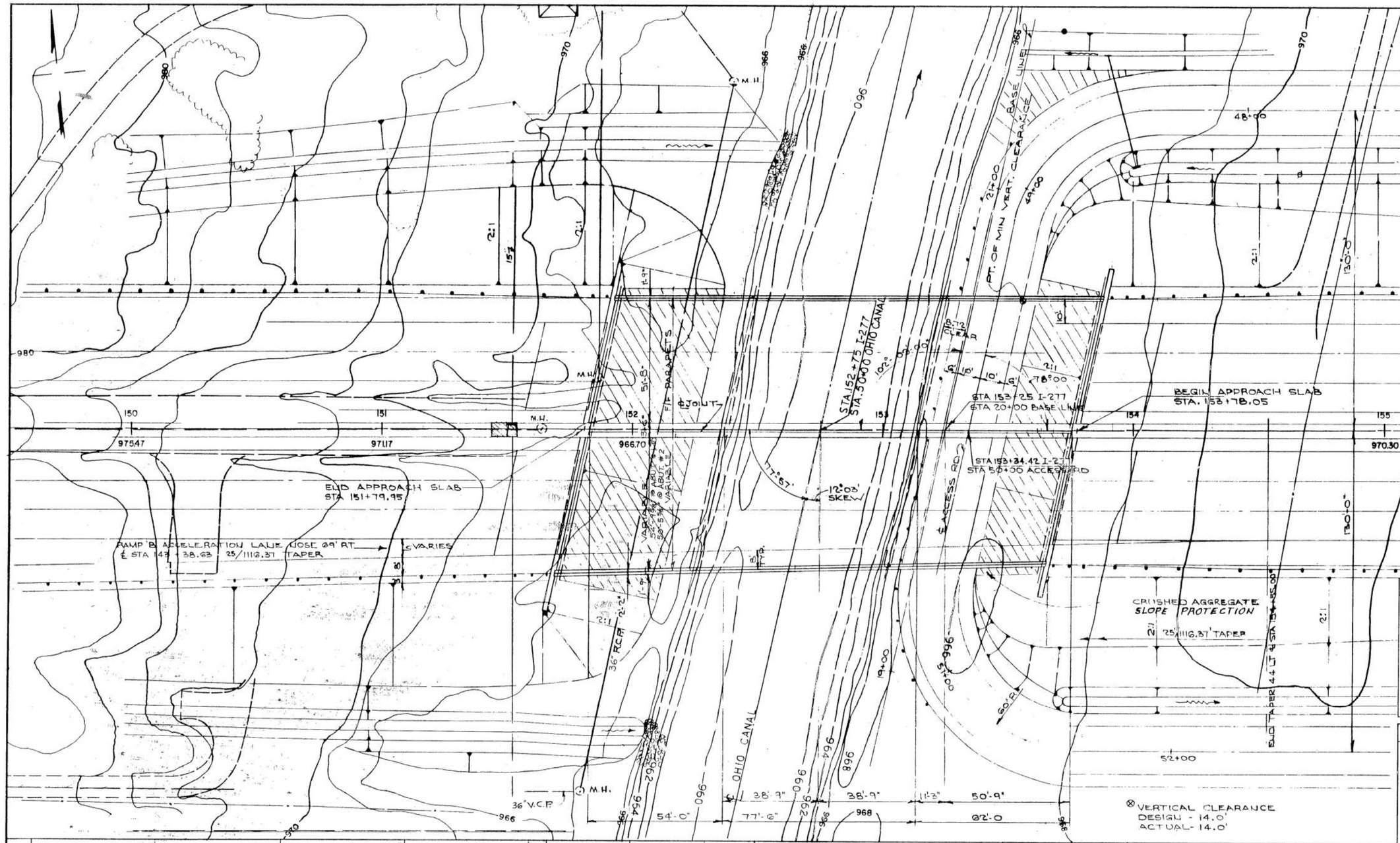

PROPOSED STRUCTURE

TYPE: COMPOSITE CONTINUOUS STEEL WITH REINFORCED CONCRETE DECK AND SUB-STRUCTURE
SKEW: 12°-00'-00" L.F.
SPANS: 54'-0", 77'-6", 62'-0" ℄/℄ BEARINGS
LOAD FREQUENCY: HS-20-44 CASE II
AASHTO ALTERNATE MILITARY LOADING
WEARING SURFACE: 1" MONOLITHIC
ALIGNMENT: TANGENT
SUPERELEVATION: NONE
PROPOSED WORK: REPLACE REINFORCED CONCRETE DECK AND BACKWALLS
APPROACH SLABS: 25' LONG (T=15") (AS-1-81)

EXISTING STRUCTURE

TYPE: CONTINUOUS STEEL WITH REINFORCED CONCRETE DECK AND SUBSTRUCTURE
SKEW: 12°-00'-00" L.F.
SPANS: 54'-0"-77'-6"-62'-0" ℄/℄ BEARINGS
ROADWAY: VARIABLE, F/F PARAPETS W/6'-0" RAISED MEDIAN
LOAD FREQUENCY CF 2,000 (57) ADEQUATE FOR
AASHO ALTERNATE LOADING
WEARING SURFACE: 1" MONOLITHIC
APPROACH SLABS: 25' LONG (AS-1-54)
SUPERELEVATION: NONE
ALIGNMENT: TANGENT
SLOPE PROTECTION: 601 CRUSHED AGGR

STATE OF OHIO
DEPARTMENT OF TRANSPORTATION
BUREAU OF BRIDGES

SITE PLAN

BRIDGE N° SUM-277-0175
OVER THE OHIO CANAL

I-277 SUMMIT COU
STA 151+79.95 TO STA 153+78.0

DESIGNED	DRAWN	TRACED	CHECKED	REVIEWED	DATE
ST			KS	GLP	7/13/92

F.H.W.A. REGION	STATE	PROJECT NO.	FUNDS
5	OHIO		

SUM-277/224-0.00/6.41/10
BR. # SUM-77-0175
ABUTMENT 1

GENERAL NOTES

REFERENCE SHALL BE MADE TO STANDARD DRAWINGS:

AS-1-81	DATED	11-27-81
BR-1	DATED	5-29-79
GR-1	DATED	1-11-85
GR-3.1	DATED	5-6-91
GR-3.2	DATED	5-6-91

AND TO SUPPLEMENTAL SPECIFICATIONS:

852 DATED 7-30-93

DESIGN SPECIFICATIONS:

THIS STRUCTURE MODIFICATION CONFORMS TO "STANDARD SPECIFICATION FOR HIGHWAY BRIDGES" ADOPTED BY THE AMERICAN ASSOCIATION OF STATE HIGHWAY AND TRANSPORTATION OFFICIALS, 1992, AND THE OHIO "SUPPLEMENT" TO THESE SPECIFICATIONS.

DESIGN DATA:

DESIGN LOADING-HS20-44 CASE II AND THE ALTERNATE MILTARY LOADING.

DESIGN STRESSES:

CONCRETE CLASS S - COMPRESSIVE STRENGTH 4500 P.S.I.
CONCRETE CLASS C - COMPRESSIVE STRENGTH 4000 P.S.I.
REINFORCING STEEL - ASTM A615 OR A617 - GRADE 60 MINIMUM YIELD STRENGTH 60000 P.S.I.
STRUCTURAL STEEL - ASTM A36 UNIT STRESS 20,000 P.S.I.
DECK PROTECTION METHOD - EPOXY COATED REINFORCING STEEL, BOTH MATS MONOLITHIC WEARING SURFACE IS ASSUMED. FOR DESIGN PURPOSES, TO BE 1" THICK.

SOIL BORINGS:

THIS PLAN DOES NOT CONTAIN STRUCTURE FOUNDATION INVESTIGATION DRAWINGS. THIS INFORMATION MAY BE INSPECTEL AT THE BUREAU OF BRIDGES AND STRUCTURAL DESIGN IN COLUMBUS, OHIO OR IN THE DISTRICT OFFICE IN RAVENNA, OHIO.

EXISTING STRUCTURE VERIFICATION:

DETAILS AND DIMENSIONS SHOWN ON THESE PLANS PERTAINING TO THE EXISTING STRUCTURE HAVE BEEN OBTAINED FOR PLANS OF THE EXISTING STRUCTURE AND/OR FROM FIELD OBSERVATIONS AND MEASUREMENTS. CONSEQUENTLY, THEY ARE INDICATIVE OF THE EXISTING STRUCTURE AND THE PROPOSED WORK BUT THEY SHALL BE CONSIDERED TENTATIVE AND APPROXIMATE. THE CONTRACTOR IS REFERRED TO CMS SECTIONS 105.02, 105.02, AND 513.02.

CONTRACT BID PRICES SHALL BE BASED UPON A RECOGNITION OF THE UNCERTAINTIES DESCRIBED ABOVE AND UPON A PREBID EXAMINATION OF THE EXISTING STRUCTURE BY THE CONTRACTOR. HOWEVER, ALL PROJECT WORK SHALL BE BASED UPON ACTUAL DETAILS AND DIMENSIONS WHICH HAVE BEEN VERIFIED BY THE CONTRACTOR IN THE FIELD.

EXISTING BRIDGE PLANS:

MAY BE INSPECTED AT THE BUREAU OF DRIDGES AND STRUCTURAL DESIGN IN COLUMBUS, OHIO OR IN THE DISTRICT OFFICE IN RAVENNA, OHIO.

TRAFFIC MAINTENANCE:

SEE ROADWAY PLAN GENERAL NOTES UNDER MAINTENANCE OF TRAFFIC.

END DAM REMOVAL:

THE TOP END CROSS FRAME GUSSET PLATES SHALL BE NEATLY REMOVED FROM THE CROSSFRAME ANGLES AND REPLACED WITH NEW GUSSET PLATES AS PER STANDARD DRAWING EXJ-4-87. ALL EXISTING WELD ON CROSSFRAME ANGLES SHALL BE REMOVED TO THE SATISFACTION OF THE ENGINEER.

ITEM 202 - PORTIONS OF STRUCTURES REMOVED OVER 20' SPAN, AS PER PLAN:

THIS ITEM SHALL BE USED TO REMOVE THE EXISTING BRIDGE DECKS, END DAMS, AND PARAPETS. THIS SHALL ALSO INCLUDE THE PLACEMENT OF PLYWOOD SHEETING AS NECESSARY TO PROTECT TRAFFIC BELOW AND PREVENT DEBRIS FROM FALLING INTO THE CANAL. THE COST FOR PLACEMENT AND SUBSEQUENT REMOVAL OF ALL THE SHEETING SHALL BE INCLUDED IN THE UNIT PRICE BID FOR ITEM 202 - PORTIONS OF STRUCTURE REMOVED OVER 20' SPAN, AS PER PLAN.

ITEM 202 - PORTIONS OF STRUCTURE REMOVED, AS PER PLAN:

THIS ITEM SHALL INCLUDE THE REMOVAL OF THE ABUTMENT BACKWALL, PORTIONS OF THE EXISTING WINGWALLS AND THE APPROACH SLABS. THIS ITEM SHALL INCLUDE ANY EXCAVATION NECESSARY TO SAWCUT THE EXISTING BACKWALLS AND WINGWALLS TO THE CONSTRUCTION JOINT.

THIS ITEM SHALL ALSO INCLUDE THE REMOVAL AND DELIVERY OF THE PARAPET ALUMINUM TUBE RAILS AND ANCHOR POST CASTINGS TO THE O.D.O.T.'S MAINTENANCE OUTPOST IN BOSTON HEIGHTS.

MISCELLANEOUS NOTES:

FOR DETAILS OF THE THRIE BEAM GUARDRAIL BRIDGE TERMINAL TRANSITION AND CONNECTIONS TO THE PARAPET SEE STANDARD CONSTRUCTION DRAWING GR-3.1 AND GR 3.2.

ITEM 516 - RESET BEARING, AS PER PLAN:

THE CONTRACTOR SHALL JACK AND RESET ALL BEARING DEVICES (ROCKERS AND BOLSTERS) AND REPLACE ANY DETERIORATED SHIM PLATES IN ACCORDANCE WITH ITEM 516.05. FOR ADDITIONAL DETAILS SEE STANDARD DRAWING FSB-1-62.

DOWEL HOLES:

ALL DOWEL HOLES PLACED IN EXISTING ABUTMENTS SHALL USE GROUT ANCHORING WITH EPOXY MORTAR AS DESCRIBED IN SUPPLEMENTAL SPECIFICATION 852. THE COST OF PLACEMENT, MATERIALS AND INCIDENTALS OF GROUT ANCHORING SHALL BE INCLUDED IN THE UNIT BID PRICE OF ITEM 510 DOWEL HOLES, AS PER PLAN, 635 - EACH DOWEL HOLES HAVE BEEN CARRIED TO THE ESTIMATED QUANTITIES.

ITEM SPECIAL - SEALING OF CONCRETE SURFACES (EPOXY):

AFTER COMPLETION OF CONSTRUCTION, ALL PARAPET SURFACES AND BACKWALLS, SHALL BE COATED WITH EPOXY SEALER TO PROTECT THE CONCRETE SURFACE AND PROVIDE A UNIFORM COLOR. SEE PROPOSAL NOTE FOR SEALING OF CONCRETE SURFACES, EPOXY. A QUANTITY OF 120 SQ. YD. OF ITEM SPECIAL - SEALING OF CONCRETE SURFACES,(EPOXY) HAS BEEN CARRIED TO THE BRIDGE SUB-SUMMARY AND SHALL INCLUDE THE COST OF ALL LABOR, MATERIALS AND EQUIPMENT NECESSARY TO COAT THE STRUCTURE.
SEE SHEET 7 FOR SEALING LIMITS.

ITEM 516 - STUCTURAL STEEL EXPANSION JOINT, AS PER PLAN:

PAYMENT FOR THIS ITEM SHALL INCLUDE THE NEW TOP CROSS FRAME GUSSET PLATES AS DETAILED IN STANDARD DRAWING EXJ-4-87.

ORIGINAL FRAMING PLAN AND FRAMING DETAILS SHEETS HAVE BEEN INCLUDED IN THIS PLAN FOR REFERENCE. NOTE THAT THE PROPOSED END DAM ELEVATION IS (3-3/4) INCHES HIGHER THAN THE EXISTING TO MATCH THE PROPOSED RESURFACING PROFILE GRADE. THE END DAM ARMOR SHALL HAVE 8x4x3/4 SUPPORT ANGLES AS SHOWN ON SHEET 6, INSTEAD OF THE 6x4x3/4 ANGLES AS SHOWN ON THE STD. DWG. EXJ-4-87.

STRUCTURAL EXPANSION JOINT:

THE "A" DIMENSION TO BE USED TO SET THE END DAM ARMOR IS AS FOLLOWS:

AMBIENT TEMPERATURE	"A"	
	ABUT #1	ABUT #2
30°	2-3/4"	2-9/16"
40°	2-1/2"	2-1/2"
50°	2-5/16"	2-3/8"
60°	2-1/8"	2-5/16"
70°	2"	2-3/16"
80°	1-3/4"	2-1/8"
90°	1-9/16"	2"

ITEM 512 TYPE A WATERPROOFING:

AN ESTIMATED QUANTITY OF 43 SQ.YD. OF TYPE A WATERPROOFING HAS BEEN INCLUDED IN THE GENERAL SUMMARY TO WATERPROOF THE BACKWALL APPROACH SLAB INTERFACE AS DETAILED IN STANDARD DRAWING AS-1-81 SHEET 2 OF 3.

STATE OF OHIO
DEPARTMENT OF TRANSPORTATI
BUREAU OF BRIDGES

GENERAL NOTI

SUM-77-0175
OVER THE OHIO CANAL
I-277 SUMMIT C

DESIGNED	DRAWN	TRACED	CHECKED	REVIEWED
ST	PZ		KS	

JW-P2, 07/02/93

F.H.W.A. REGION	STATE	PROJECT NO.	FUNDS
5	OHIO		

SUM-277/224-0.00/6.41/10.2
BR. # SUM-277-0175
ABUTMENT 1 & 2

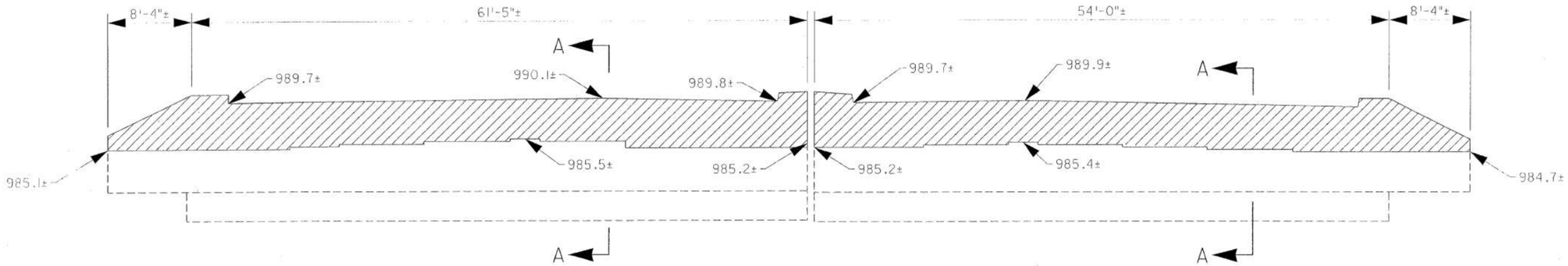

LEFT

RIGHT

ABUTMENT 1

REMOVAL AREA

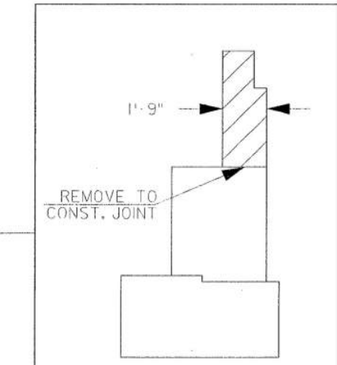

SECTION A-A

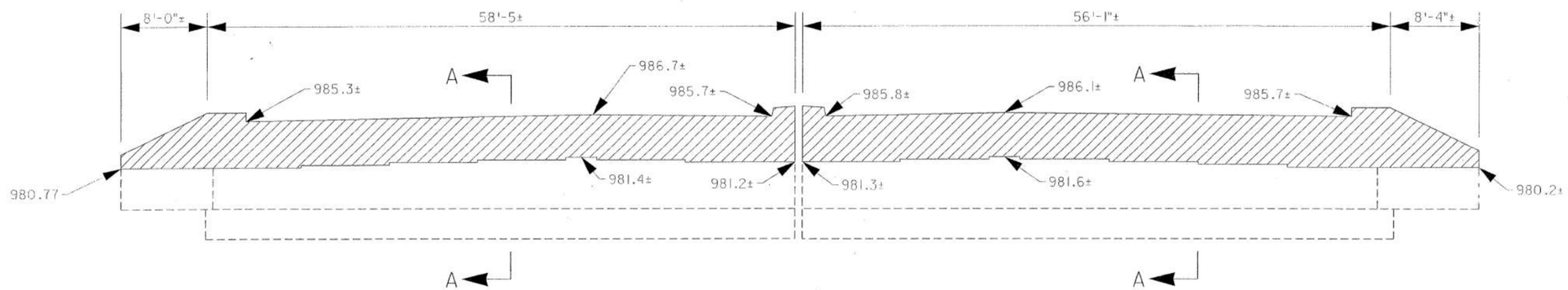

LEFT

RIGHT

ABUTMENT 2

STATE OF OHIO
DEPARTMENT OF TRANSPORTATION
BUREAU OF BRIDGES

ABUTMENT 1 & 2 REMO

BRIDGE NO SUM-277-0175
OVER THE OHIO CANAL
IR-277 SUMMIT COUNTY

DESIGNED	DRAWN	TRACED	CHECKED	REVIEWED	DATE
ST	PZ		KS	GLB	7-13-9

SAM-PZ, 07/06/93

FILENAME: C:\DGN\SU277 22\ 43.DGN

F.H.W.A. REGION	STATE	PROJECT NO.	FUNDS
5	OHIO		

SUM-277/224/-0.00/6.31/10.2

BRIDGE No. SUM-277-0175

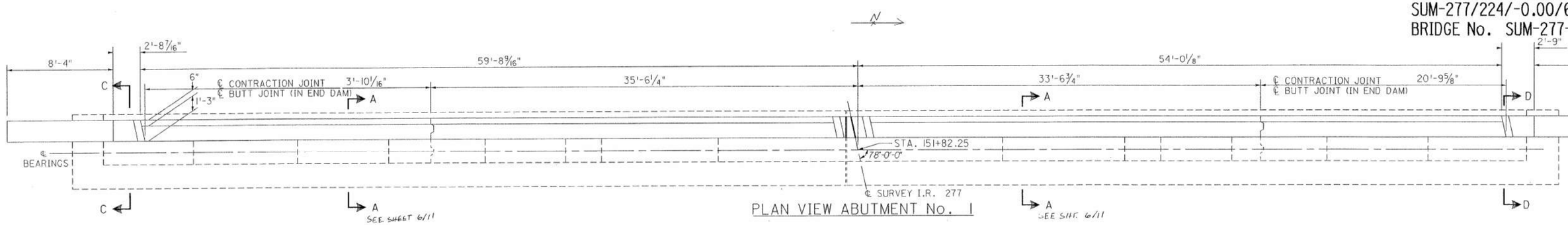

PLAN VIEW ABUTMENT No. 1

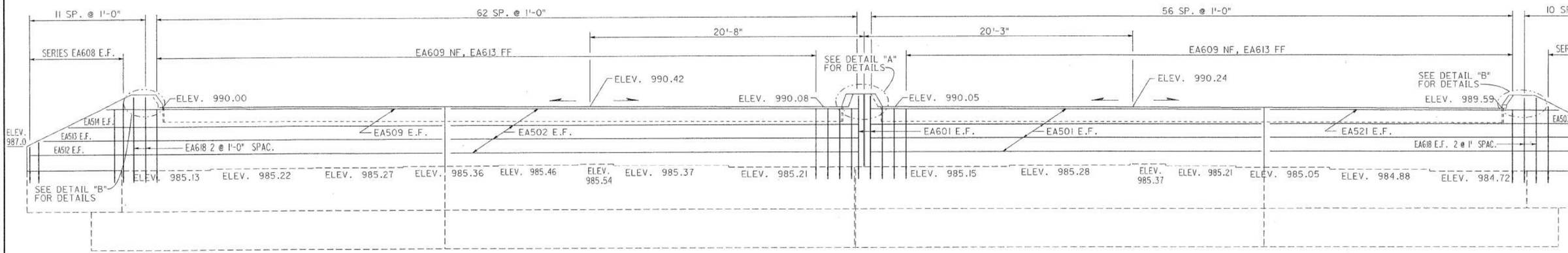

ELEVATION VIEW ABUTMENT No. 1

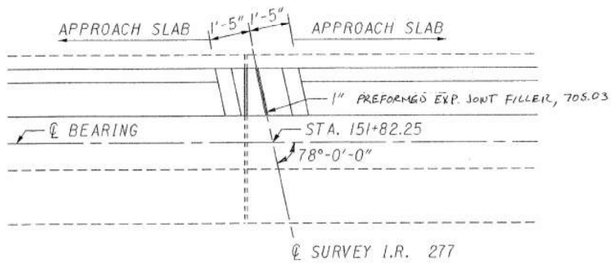

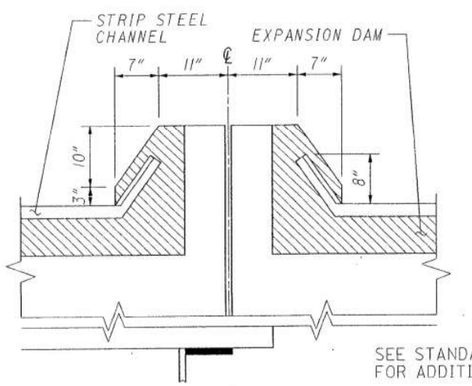

DETAIL A

SEE STANDARD DRAWING EXJ-2-87 FOR ADDITIONAL DETAILS

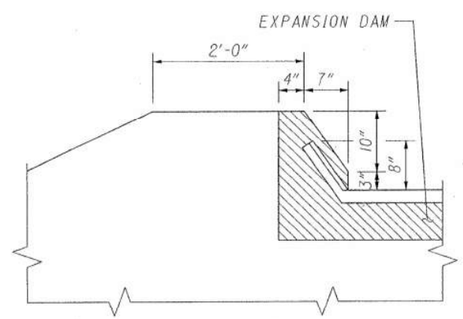

DETAIL B

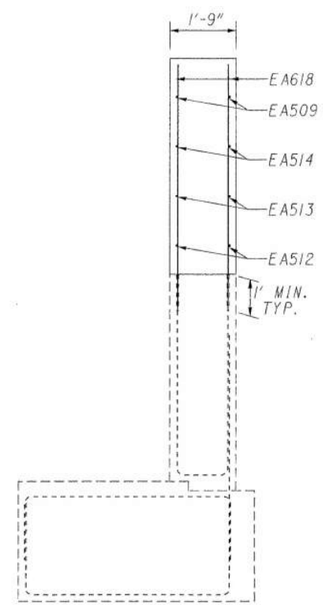

SECTION C-C

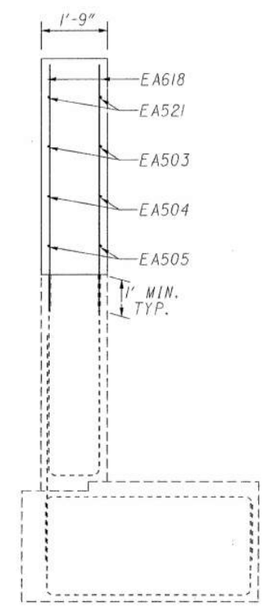

SECTION D-D

NOTE:
SEE SHEET No. 6 FOR DETAILS
SECTION A-A AND END DAM DETAIL

5

STATE OF OHIO
DEPARTMENT OF TRANSPORTATION
BUREAU OF BRIDGES

ABUTMENT No. 1

BRIDGE No. SUM-277-0175
OVER THE OHIO CANAL

I-277 SUMMIT COU

DESIGNED	DRAWN	TRACED	CHECKED	REVIEWED	DATE
ST	RB		KS	GB	7-13-97

F.H.W.A. REGION	STATE	PROJECT NO.	FUNDS
5	OHIO	-	

SUM-277/224/-0.00/6.31/10.2
BRIDGE No. SUM-277-0175

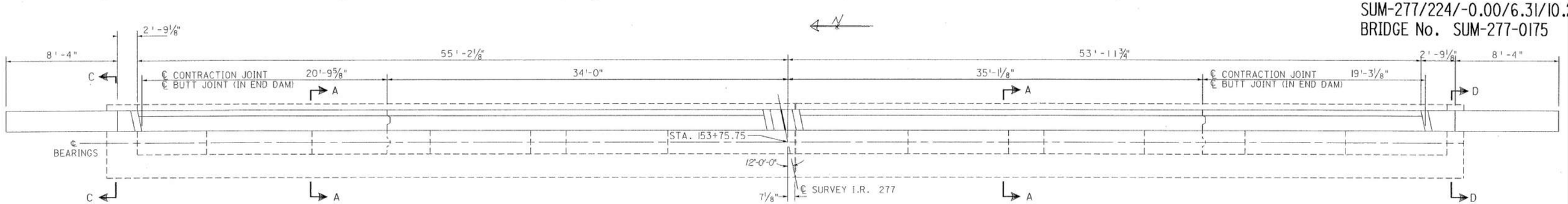

PLAN VIEW ABUTMENT No. 2

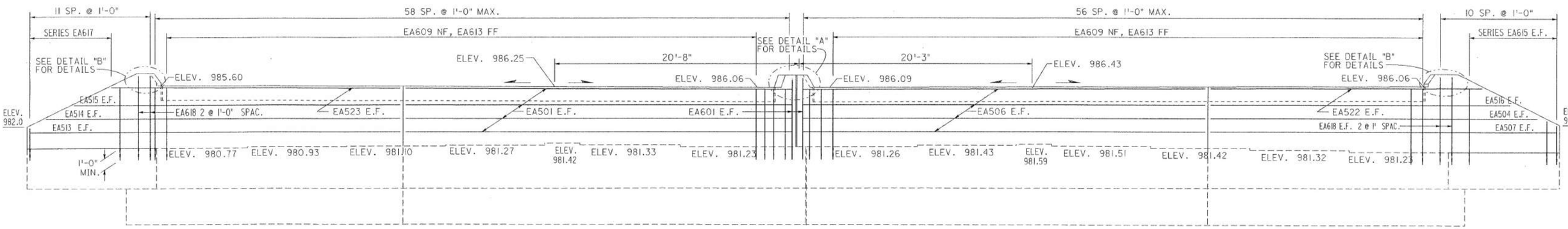

ELEVATION VIEW ABUTMENT No. 2

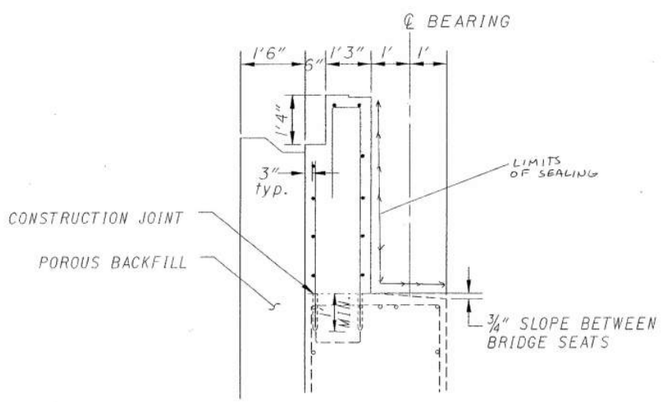

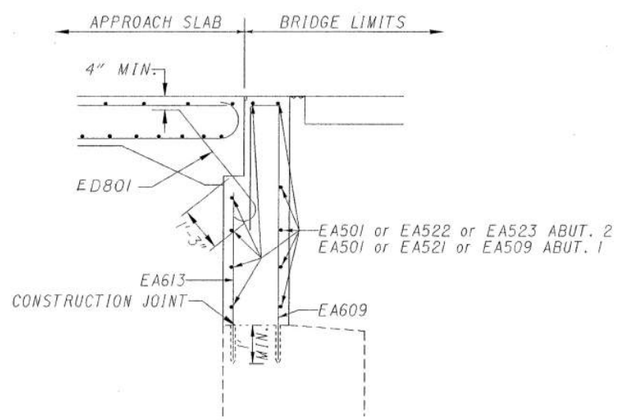

SECTION A-A

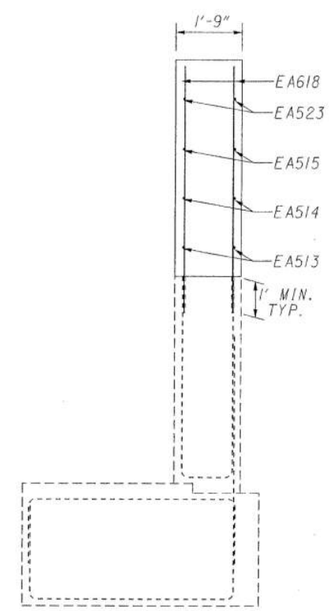

SECTION C-C

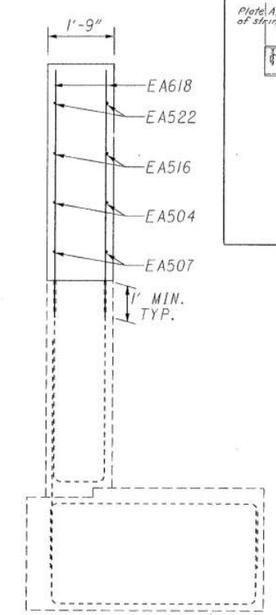

SECTION D-D

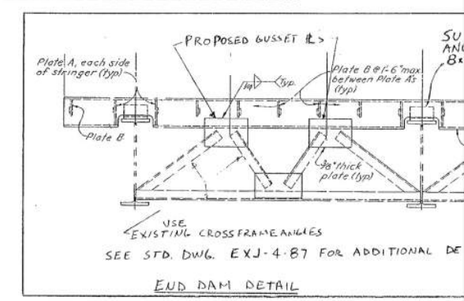

END DAM DETAIL

NOTE:
SEE SHEET No. 5 FOR DETAI
A AND B.

STATE OF OHIO
DEPARTMENT OF TRANSPORTATION
BUREAU OF BRIDGES

ABUTMENT No. 2

BRIDGE No. SUM-277-0175
OVER THE OHIO CANAL

I-277 SUMMIT COU

DESIGNED	DRAWN	TRACED	CHECKED	REVIEWED	DATE
ST	RB		KS	GLB	7-13-93

ZFA2:[20,7] SUM277.DGN

FED. RD.	STATE	PROJECT	
2	OHIO		

SUM-277/224-0.00/6.31/10.22

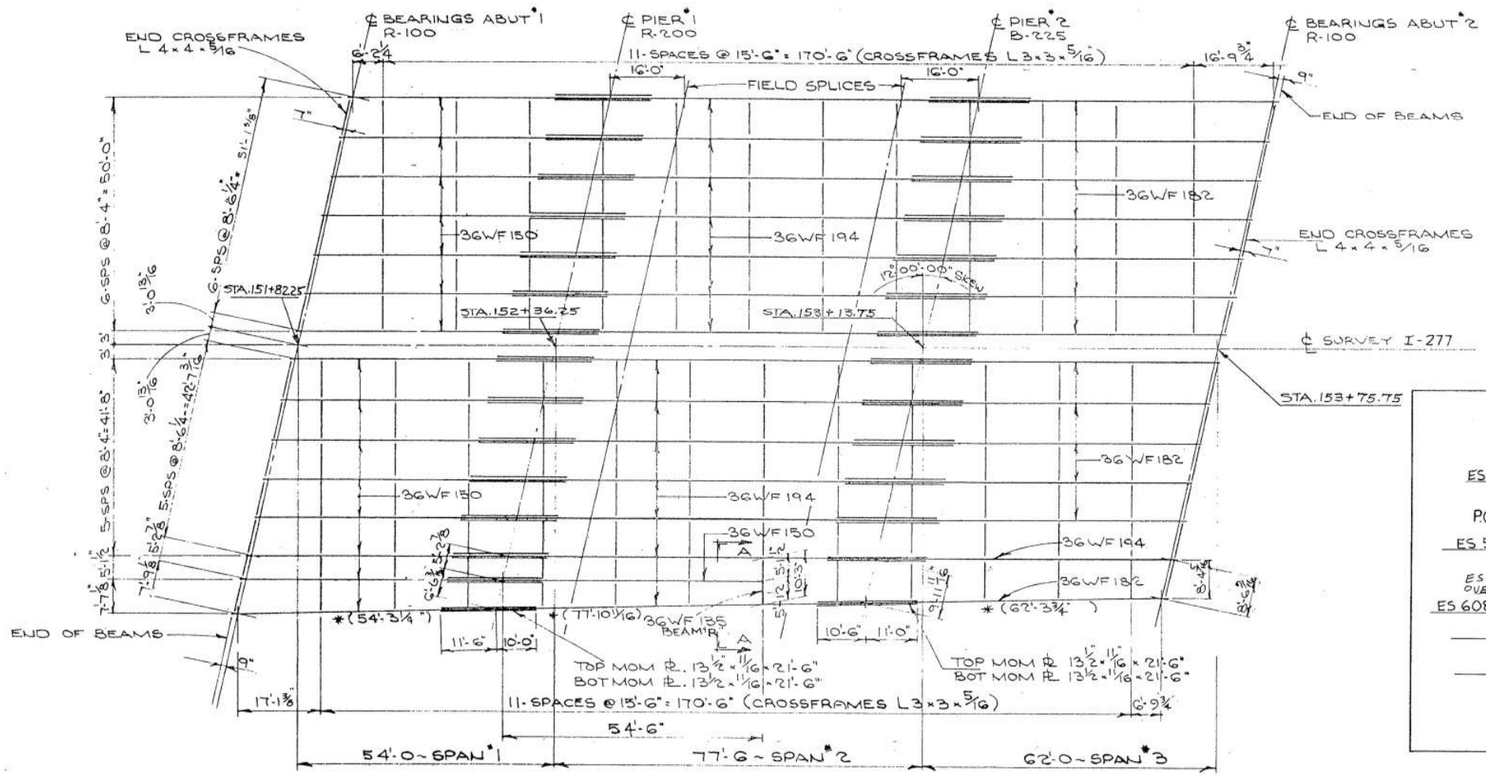

EXISTING FRAMING PLAN

* DECK SLAB DEPTH: The distance shown from top of deck slab to top of steel beam is the design dimension. The quantity of deck concrete to be paid for shall be based on this dimension, even though deviation from it may be necessary because the top flange of the beam may not have the exact camber or conformation required to place it parallel to the finished grade.

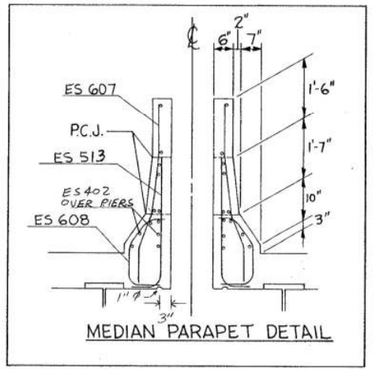

MEDIAN PARAPET DETAIL

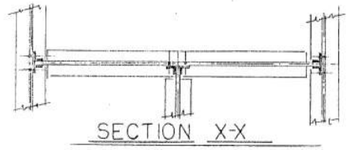

SECTION X-X

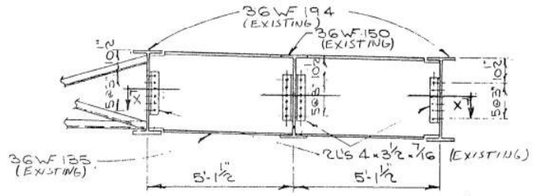

SECTION A-A

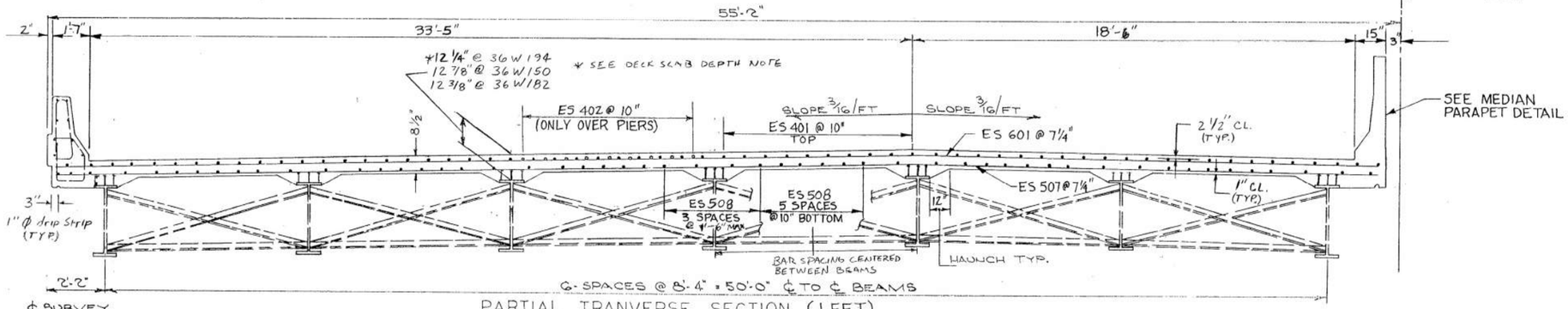

PARTIAL TRANVERSE SECTION (LEFT)

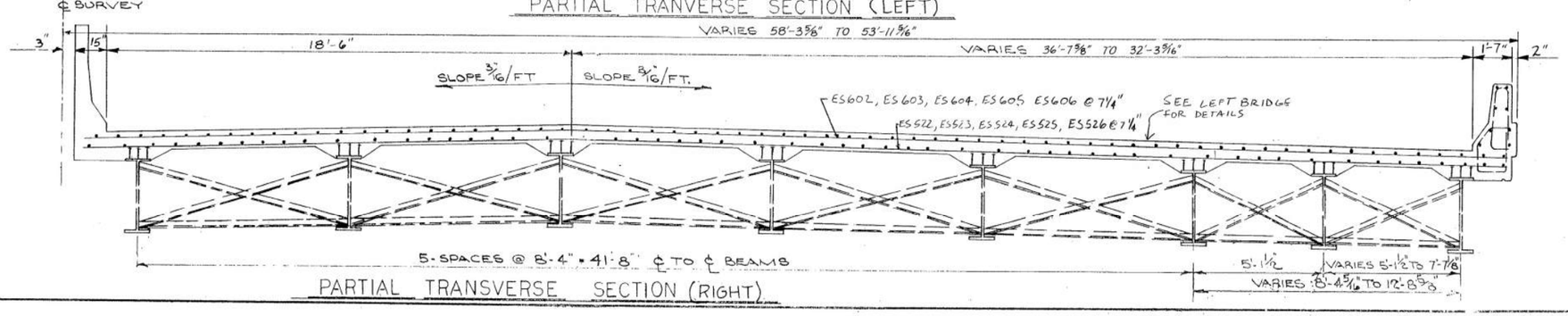

PARTIAL TRANSVERSE SECTION (RIGHT)

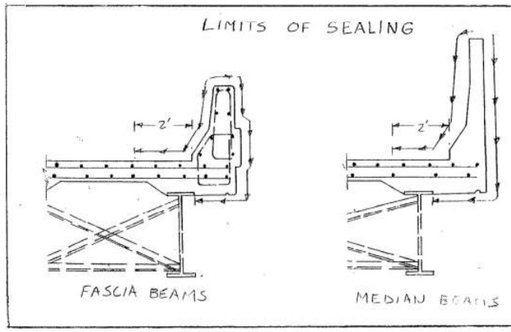

STATE OF OHIO
DEPARTMENT OF TRANSPORTATION
BUREAU OF BRIDGES

FRAMING AND DECK DETAILS
BRIDGE Nº SUM-277-0175
OVER THE OHIO CANAL
I-277 SUMMIT COU
STA 151+79.95 TO STA 153+78.0

DESIGNED	DRAWN	TRACED	CHECKED	REVIEWED	DATE
ST	SM		KS	GLG	

OHIO	
FHWA REGION 5	
FEDERAL PROJECT	

SUM-277/224-0.00/6.31/10.22

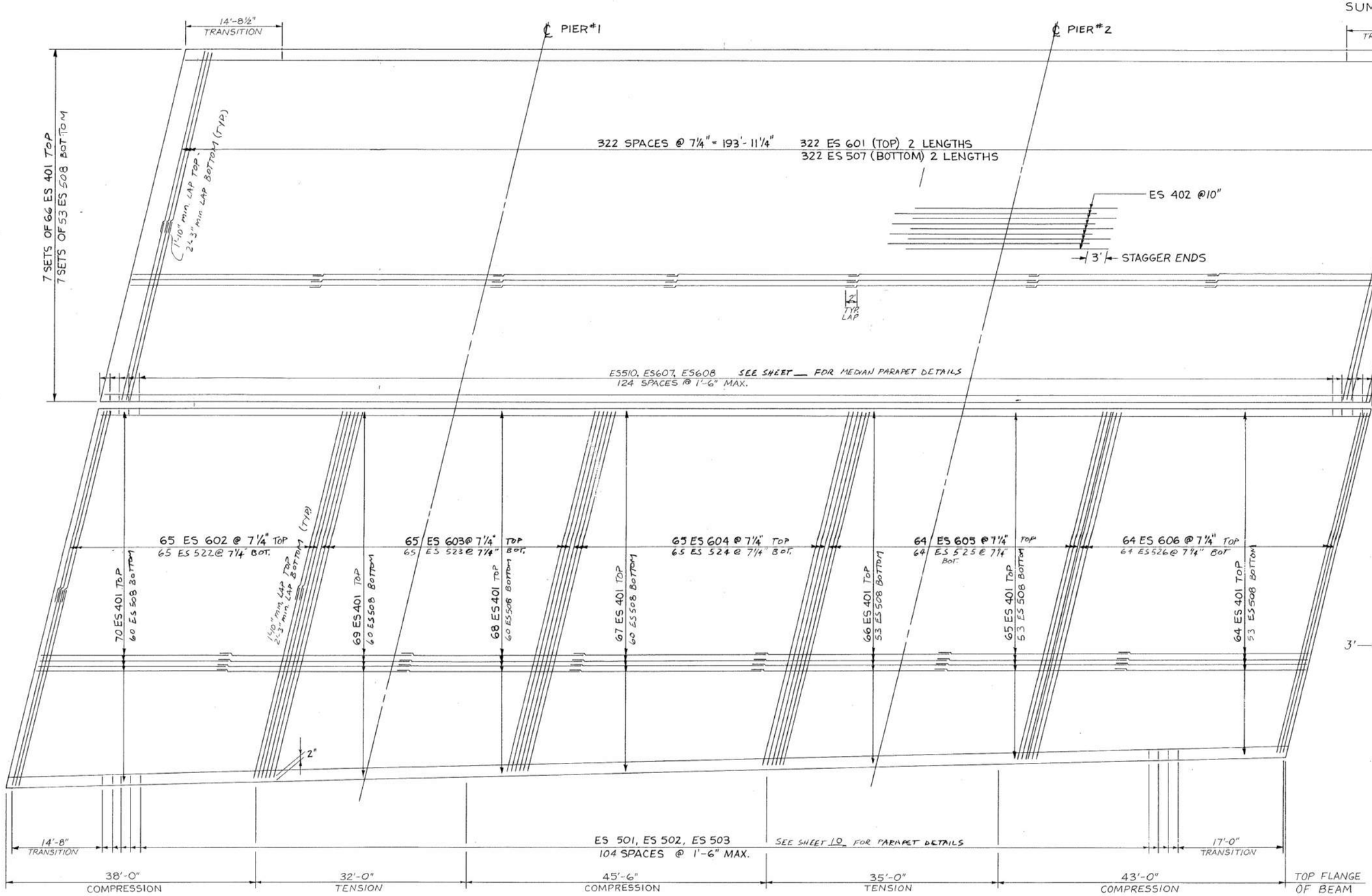

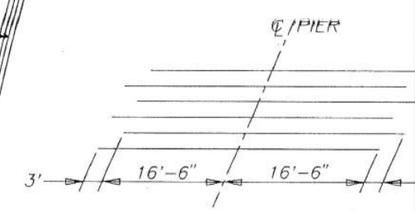

DIAGRAM SHOWING STAGGE
OF ES 402 OVER PIERS

WELDED ATTACHMENT of supports for concrete deck finishing machine may be made to areas of the fascia stringer flanges designated "Compression". Attachments shall not be made to areas designated "Tension". Fillet welds to compression flanges shall be not closer than 1" from edge of flange, be not more than 2" long, and be not smaller than the minimum size required by AASHTO.
for tens d

8

STATE OF OHIO
DEPARTMENT OF TRANSPORTATION
BUREAU OF BRIDGES

SUPERSTRUCTURE

BRIDGE No. SUM-277-0175
OVER THE OHIO CANAL

I-277 SUMMIT CO

DESIGNED	DRAWN	CHECKED	REVIEWED	DATE
ST	SM	KS	GLB	7-13-73

F.H.W.A. REGION	STATE	PROJECT NO.	FUNDS
5	OHIO		

SUM-277/224/-0.00/6.31/10.2
BRIDGE No. SUM-277-0175

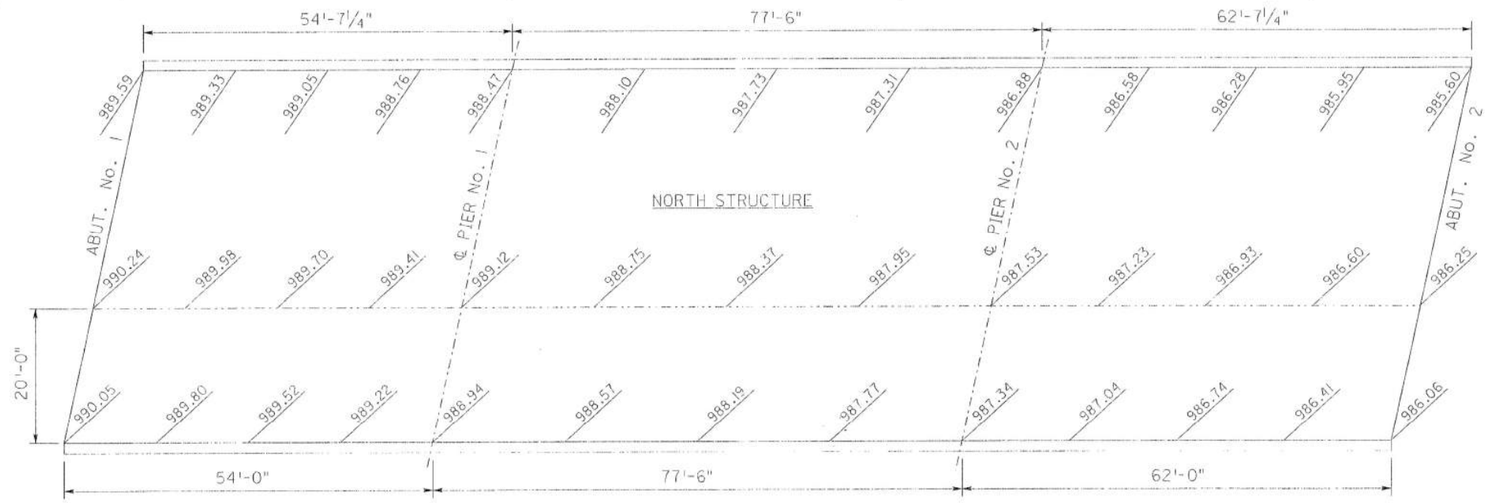

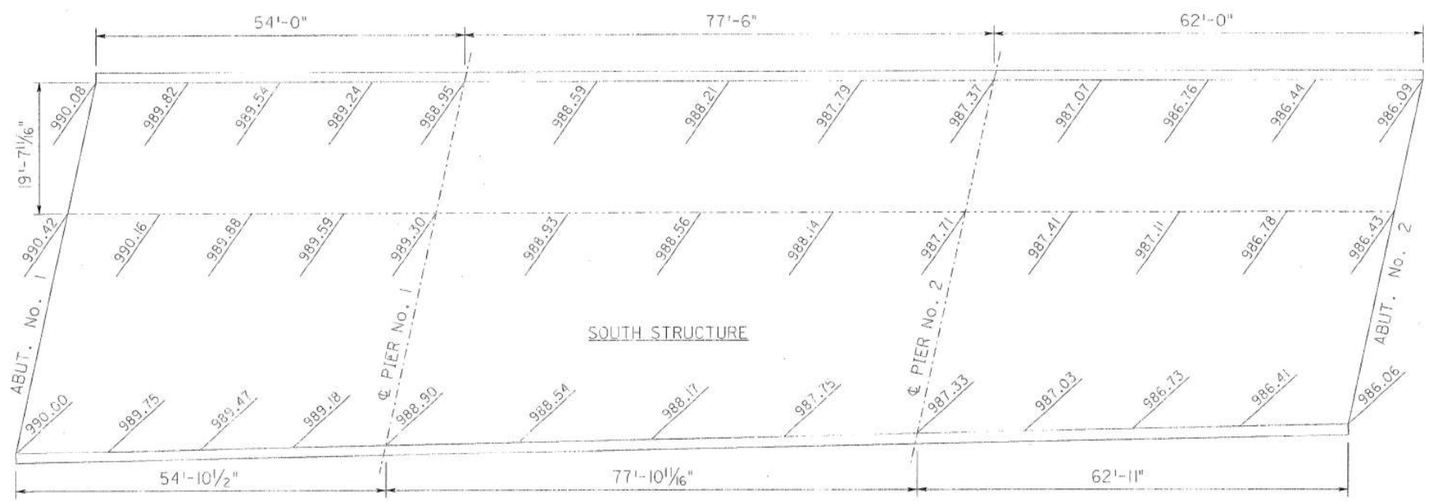

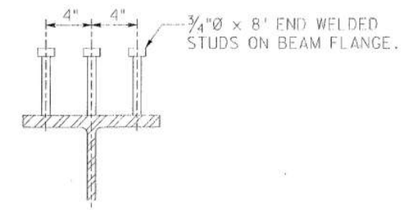

SHEAR STUD DETAIL

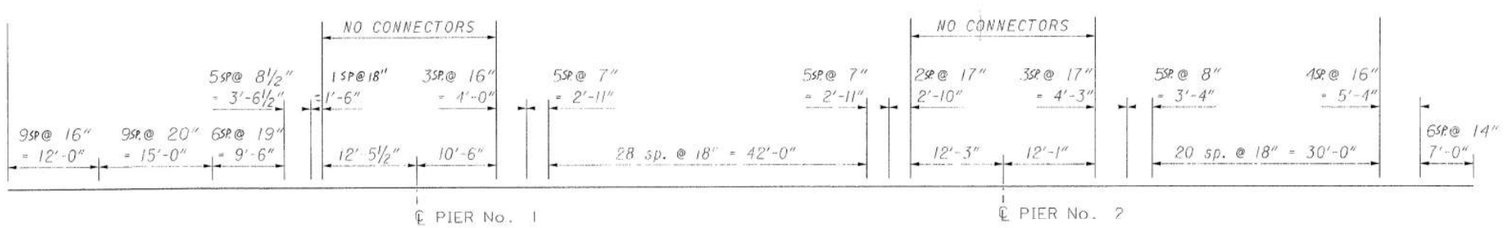

SHEAR STUD LAYOUT

STATE OF OHIO
DEPARTMENT OF TRANSPORTATION
BUREAU OF BRIDGES

SUPERSTRUCTURE DETAI

BRIDGE No. SUM-277-0175
OVER THE OHIO CANAL

I-277 SUMMIT COU

DESIGNED	DRAWN	TRACED	CHECKED	REVIEWED	DATE
ST	RB		KS	GLB	7-13-9

F.H.W.A. REGION	STATE	PROJECT NO.	FUNDS
5	OHIO		

SUM-277/224/-0.00/6.31/10.22
BRIDGE No. SUM-277-0175

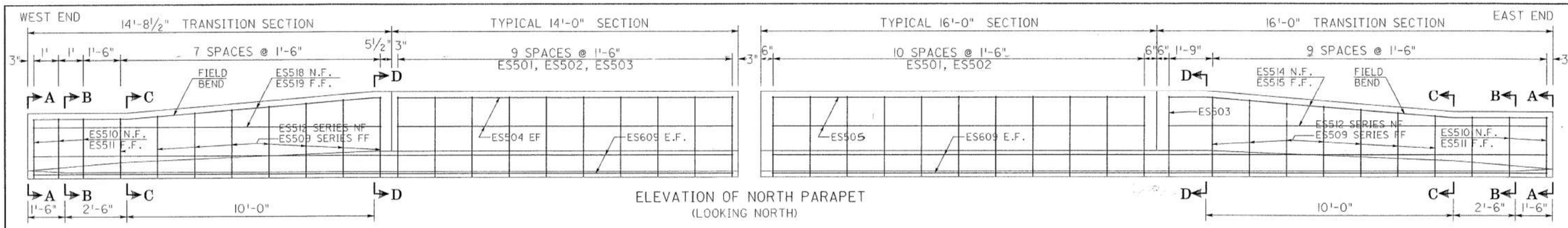

ELEVATION OF NORTH PARAPET
(LOOKING NORTH)

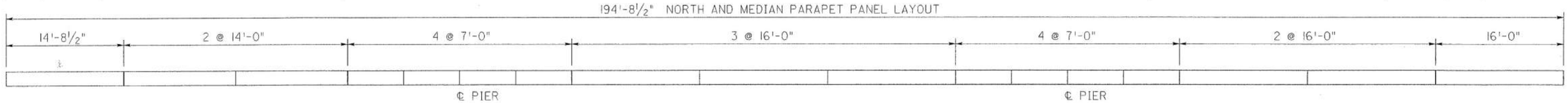

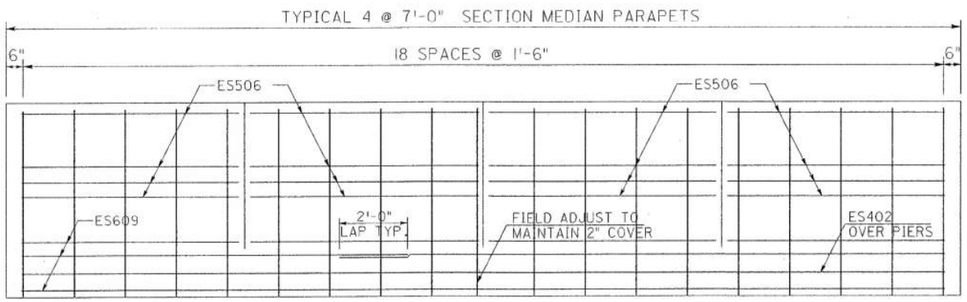

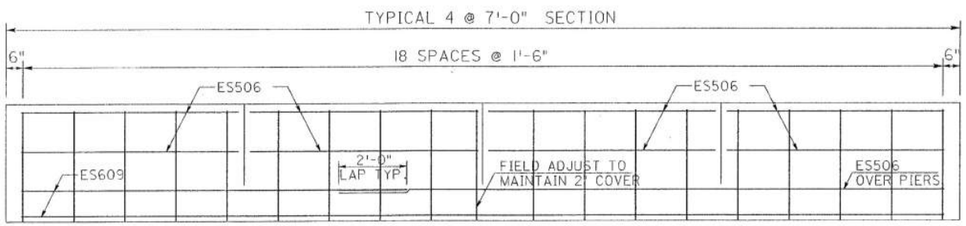

a - ES511, ES516, ES518
b - ES515, ES517, ES519

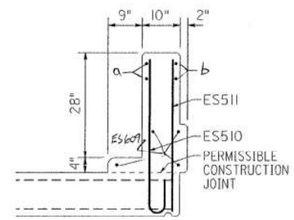

SECTION A-A

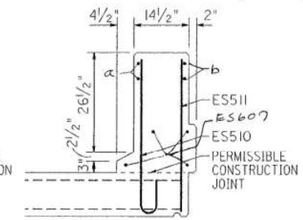

SECTION B-B

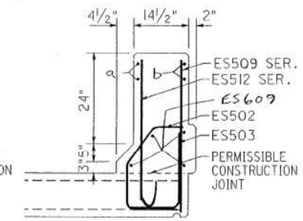

SECTION C-C

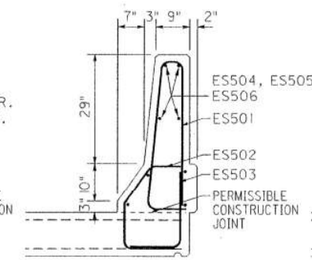

SECTION D-D

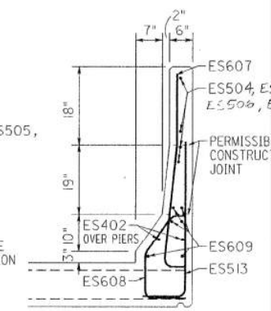

MEDIAN PARAPET
ES519 USED IN 14'-8½" PANEL

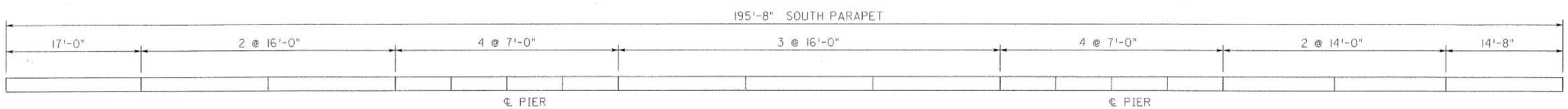

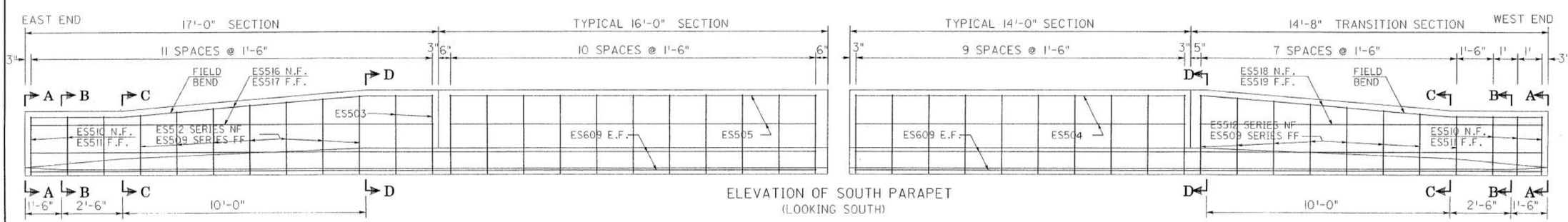

ELEVATION OF SOUTH PARAPET
(LOOKING SOUTH)

STATE OF OHIO
DEPARTMENT OF HIGHWAYS

PARAPETS

BRIDGE No. SUM-277-0175
OVER THE OHIO CANAL

I-277 SUMMIT COUN

DESIGNED	DRAWN	CHECKED	REVIEWED	DATE
ST	RB	KS	GLB	7-13-13

F.H.W.A. REGION	STATE	PROJECT NO.	FUNDS
5	OHIO		

16/19

SUM-277/224-0.00/6.41/10.22
BR. # SUM-277-0175

REINFORCING STEEL LIST SUM-277-0175 LEFT
OVER OHIO CANAL

MARK	NUMBER	LENGTH	TYPE	INCREMENT	WEIGHT
NORTH ABUTMENT:					
EA501	16	33'-4"	S		556
ES503	2	27'-3"	S		142
EA504	2	29'-3"	S		61
EA505	2	31'-3"	S		65
EA513	2	31'-6"	S		66
EA514	2	29'-6"	S		62
EA515	2	27'-6"	S		57
EA521	2	25'-3"	S		132
EA523	2	25'-6"	S		53
EA601	4	6'-9"	S		41
EA607 SERIES	8	3'-2" | 6'-8"	S	6"	55
EA609	113	8'-3"	BENT		1,400
EA613	113	4'-4"	S		735
EA617 SERIES	8	2'-1" | 5'-7"	S	6"	46
EA618	8	5'-9"	S		69
ED801	146	4'-11"	BENT		1,917
TOTAL NORTH ABUTMENT:					5,457
PARAPETS:					
ES501	112	7'-2"	BENT		837
ES502	112	3'-9"	BENT		438
ES503	112	2'-8"	S		312
ES504	8	13'-8"	S		114
ES505	20	15'-8"	S		327
ES506	32	6'-8"	S		223
ES509 SERIES	16	2'-11" | 3'-8"		1-1/2"	55
ES510	4	3'-7"			15
ES511	4	3'-0"			13
ES512 SERIES	16	3'-6" | 4'-3"		1-1/2"	65
ES513	130	4'-2 1/2"	BENT		571
ES514	2	15'-8"	BENT		33
ES515	2	15'-8"	S		33
ES518	2	14'-4"	BENT		30
ES519	2	14'-4"	S		30
ES607	130	4'-3"	BENT		830
ES608	130	3'-1"	BENT		407
ES609	70	29'-6"	S		3,102
ES401	462	29'-6"	S		9,104
ES402	140	31'-0"	S		2,899
ES507	644	29'-0"	S		19,479
ES508	371	29'-6"	S		11,415
ES601	644	28'-9"	S		27,810
TOTAL SUPERSTRUCTURE LEFT:					78,142
TOTAL FOR LEFT SIDE:					83,599

REINFORCING STEEL LIST SUM-277-0175 RIGHT
OVER OHIO CANAL

MARK	NUMBER	LENGTH	TYPE	INCREMENT	WEIGHT
SOUTH ABUTMENT:					
EA502	8	34'-4"	S		291
EA504	2	28'-0"	S		58
EA506	8	34'-11"	S		291
EA507	2	30'-0"	S		63
EA509	2	28'-6"	S		59
EA512	2	34'-6"	S		73
EA513	2	32'-6"	S		68
EA514	2	30'-6"	S		64
EA516	2	26'-0"	S		54
EA522	2	24'-0"	S		50
EA601	4	6'-9"	S		41
EA608 SERIES	8	2'-8" | 6'-2"	S	6"	41
EA609	116	8'-3"	BENT		1,437
EA613	116	4'-4"	S		754
EA615 SERIES	8	2'-1" | 5'-7"	S	6"	46
EA618	8	5'-9"	S		69
ED801	146	4'-11"	BENT		1,917
TOTAL SOUTH ABUTMENT:					5,376
PARAPETS:					
ES501	112	7'-2"	BENT		837
ES502	112	3'-9"	BENT		321
ES503	112	2'-8"	S		312
ES504	8	13'-8"	S		114
ES505	20	15'-8"	S		327
ES506	32	6'-8"	S		289
ES509	16				
ES510	4	3'-7"	BENT		15
ES511	4	3'-0"	S		13
ES512 SERIES	16	3'-6" | 4'-3"	BENT	1-1/2"	65
ES513	130	4'-2 1/2"	BENT		571
ES516	2	16'-8"	BENT		35
ES517	2	16'-8"	S		35
ES518	2	14'-4"	BENT		30
ES519	6	14'-4"	S		90
ES607	130	4'-3"	BENT		830
ES608	130	3'-1"	BENT		602
ES609	70	29'-6"	S		3,102
ES401	469	29'-6"	S		9,242
ES402	143	31'-0"	S		2,961
ES508	399	29'-6"	S		12,277
ES522	130	30'-7"	S		4,147
ES523	130	29'-10"	S		4,045
ES524	130	29'-2"	S		3,955
ES525	128	28'-6"	S		3,805
ES526	128	27'-10"	S		3,716

REINFORCING STEEL LIST SUM-277-0175 RIGHT con't.
OVER OHIO CANAL

MARK	NUMBER	LENGTH	TYPE	INCREMENT	WEIGHT
ES602	130	30'4"	S		5,923
ES603	130	29'-7"	S		5,776
ES604	130	28'-11"	S		5,646
ES605	128	28'-3"	S		5,431
ES606	128	27'-7"	S		5,303
TOTAL SUPERSTRUCTURE RIGHT:					79,815
TOTAL FOR RIGHT SIDE:					85,191

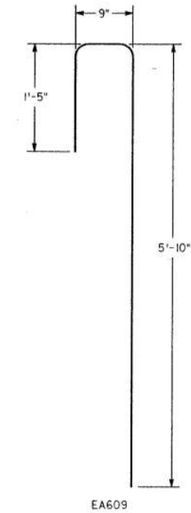

EA609

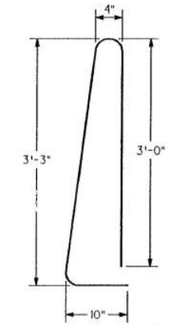

ES501

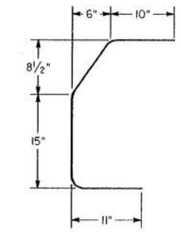

ES502

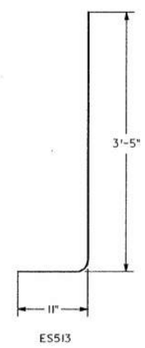

ES513

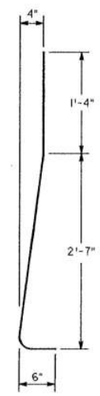

ES607

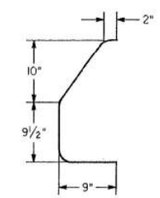

ES608

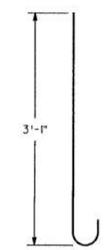

ES510

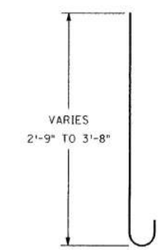

ES512

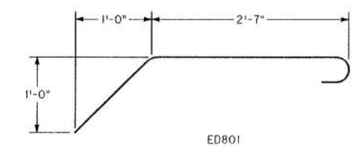

ED801

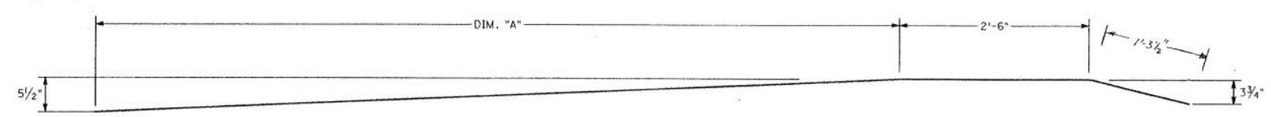

ES514, ES516 & ES518

	DIM. "A"
ES514	11'-10 1/2"
ES516	12'-10 1/2"
ES518	10'-6 1/2"

NOTE:

REFER TO CONSTRUCTION AND MATERIAL SPECIFICATIONS SECTIONS 106.03 700, 709.01 THRU 709.13, AND 509.08 FOR SPECIFICATIONS AND SAMPLING.

STATE OF OHIO
DEPARTMENT OF TRANSPORTATION
BUREAU OF BRIDGES

REINFORCING SCHEDULE

BRIDGE NO. SUM-277-0175
OVER THE OHIO CANAL
IR-277 SUMMIT COUNTY

DESIGNED	DRAWN	TRACED	CHECKED	REVIEWED	DATE
ST	PZ		KS	GLB	7-13-93

SUM-PZ, 07/10/95

FILENAME: C:\DGN\SU277-22\ 54.DGN

FED. RD.	STATE	PROJECT	
2	OHIO		

SUM-277/224-0.00/6.31/10

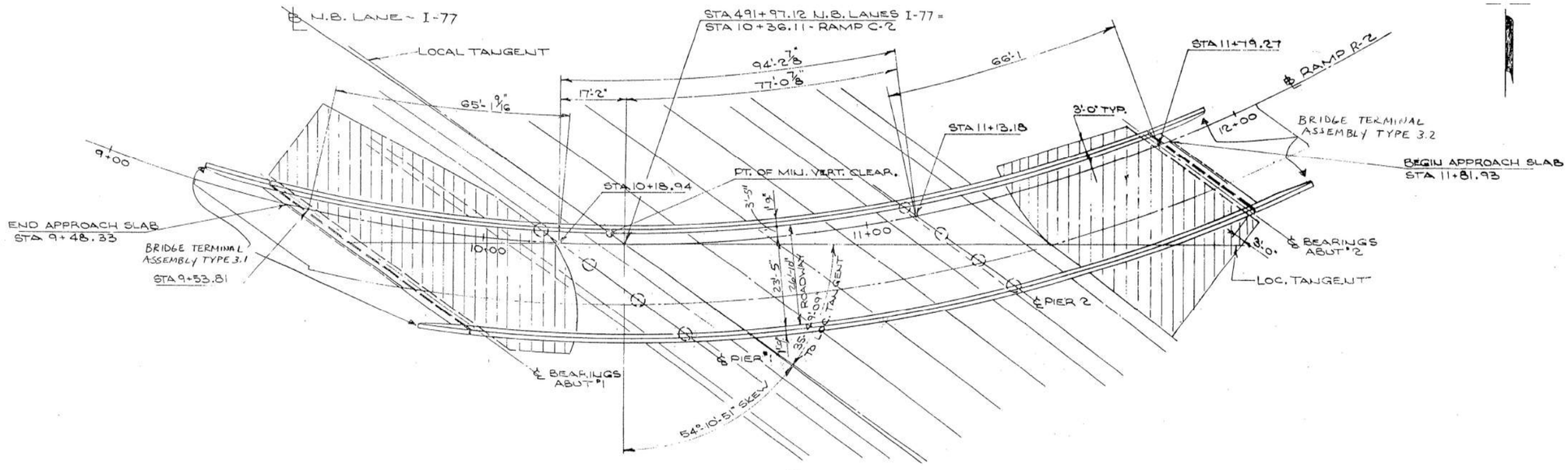

PLAN

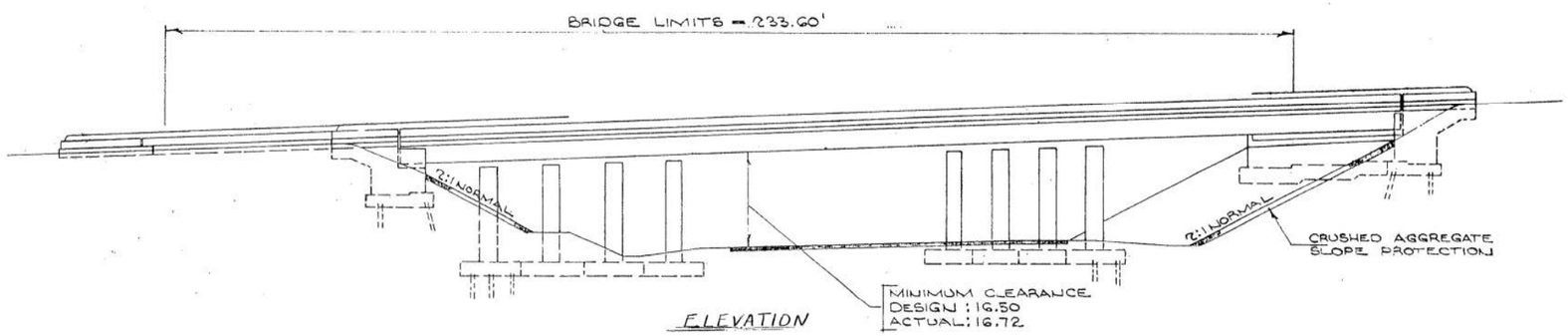

ELEVATION

ESTIMATED QUANTITIES

	ITEM	ITEM EXT.	TOTAL	UNIT	DESCRIPTION	SUPER	ABUT.	GEN.
	202	11201	LUMP	SUM	PORTIONS OF STRUCTURES REMOVED, AS PER PLAN			
	202	11203	LUMP	SUM	PORTIONS OF STRUCTURES REMOVED, OVER 20' SPAN, AS PER PLAN			
	503	21300	LUMP	SUM	UNCLASSIFIED EXCAVATION			
	509	15840	56645	LBS.	EPOXY COATED REINFORCING STEEL, GRADE 60	51474	5171	
	510	11101	182	EACH	DOWEL HOLE, AS PER PLAN		182	
	511	31502	251	CU.YD.	CLASS S CONCRETE, SUPERSTRUCTURE	251		
*	511	33404	251	CU.YD.	CLASS S CONCRETE, SUPERSTRUCTURE, USING SHRINKAGE COMPENSATING CEMENT **			
*	511	33410	LUMP	SUM	CLASS S CONCRETE, USING SHRINKAGE COMPENSATING CEMENT, FOR PRE-PLACEMENT TESTING **			
	511	45700	60	CU.YD.	CLASS C CONCRETE, ABUTMENT		60	
	512	33300	18	SQ.YD.	TYPE A WATERPROOFING		18	
	513	20000	2496	EACH	WELDED STUD SHEAR CONNECTOR	2496		
	516	12201	93.33	LIN.FT.	STRUCTURAL STEEL EXPANSION JOINTS, AS PER PLAN **		93.33	
	516	46701	16	EACH	RESET BEARING, AS PER PLAN	16		
	518	12200	4	EACH	SCUPPER, INCLUDING SUPPORTS	4		
	518	21200	22	CU.YD.	POROUS BACKFILL WITH FILTER FABRIC **		22	
	SPECIAL	512 67502	650	SQ.YD.	SEALING OF CONCRETE SURFACES (EPOXY) **	575	75	

* THESE TWO ITEMS SHALL CONSTITUTE ONE ALTERNATE BID TO ITEM 511, CLASS S CONCRETE, SUPERSTRUCTURE

** SEE PROPOSAL NOTE

STATE OF OHIO
DEPARTMENT OF TRANSPORTATIO
BUREAU OF BRIDGES

GENERAL PLAN AND ELEVA
BRIDGE NO. SUM-77-0928
RAMP R-2 OVER IR-77
I-277 SUMMIT CO
SFN 7702647

DESIGNED	DRAWN	TRACED	CHECKED	REVIEWED	D
ST	SM		VC		7

FED. RD.	STATE	PROJECT	
2	OHIO		

SUM-224/277-0.00/6.31/10.

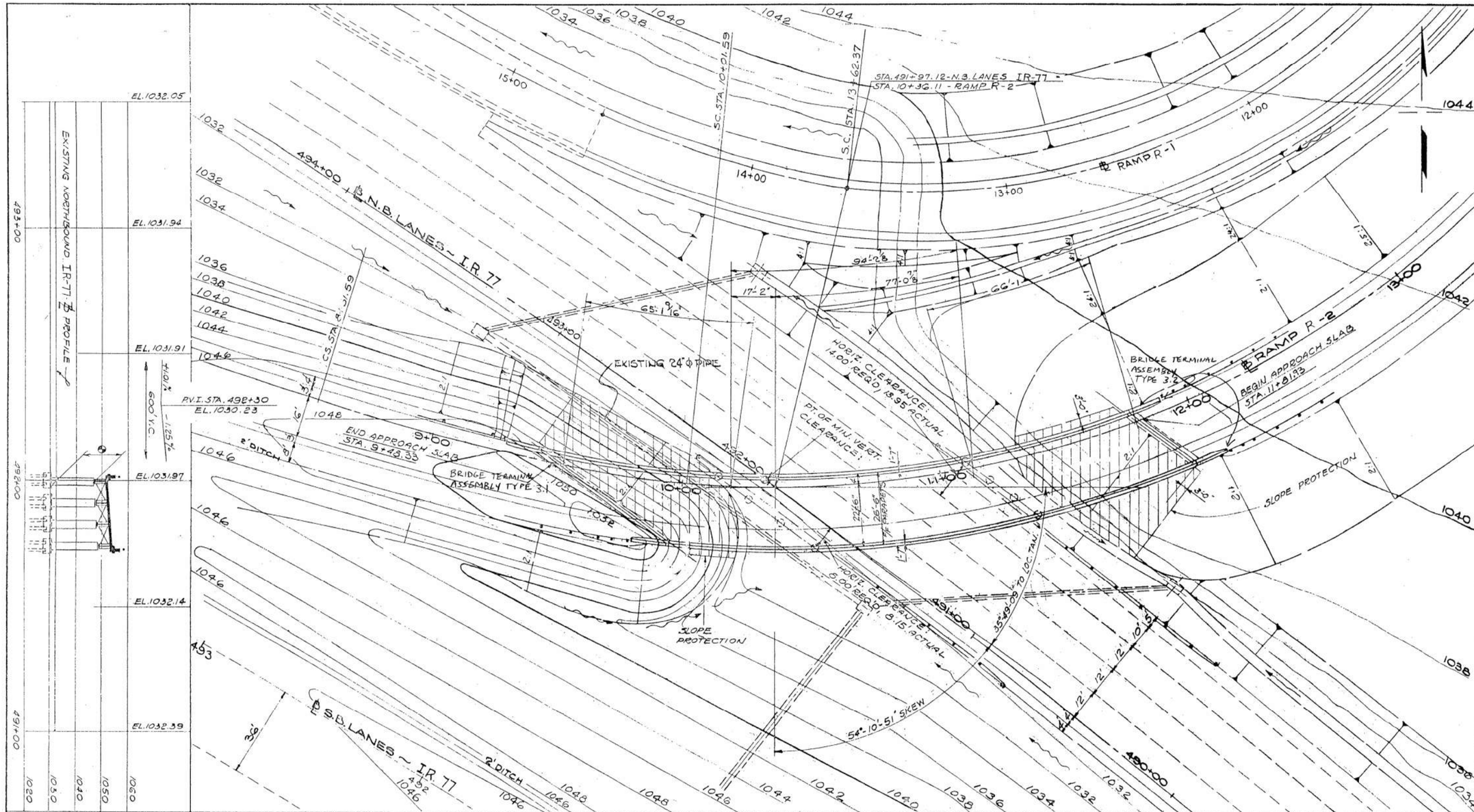

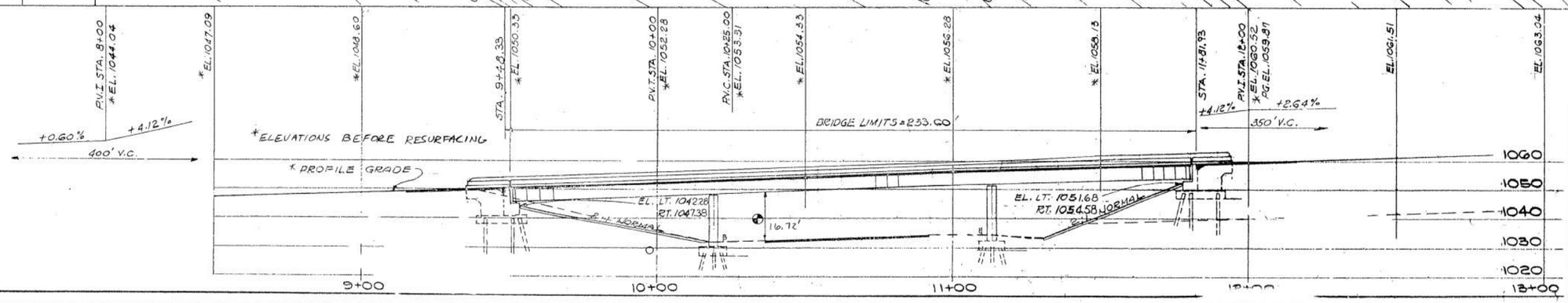

CURVE DATA

IR-77 NORTHBOUND LANES

P.I. STA. 485+55.51
Δ = 30°-33'-00"
D = 1°-28'-00"
R = 3,906.53'
T = 1,066.87'
L = 2,082.95'

RAMP - R-2

C.S. STA. 8+51.59
S.C. STA. 10+01.59
L_s = 150'
LT = 95.79'
ST = 54.80'
Θ_s = 12°-22'-30"

S.C. STA. 10+01.59
P.C.C. STA. 14+55.
Δ = 68°-01'-46" L
D = 15°-00'-00"
R = 381.97'
T = 257.78'
L = 453.53'

VERTICAL CLEARANCE
DESIGN = 16.50'
ACTUAL = 16.72'

EXISTING STRUCTURE

TYPE: CONTINUOUS WELDED PLATE GIRDE
WITH REINFORCED CONCRETE DECK
AND SUBSTRUCTURE.
SKEW: 54°10'51" RF TO LOC. TAN.
SPANS: 65'1"-84'3"-66'1" c/c BEARING
ROADWAY: 28'0" f/f PARAPETS
LOAD FREQUENCY: CF 2,000 ADEQUATE F
A.A.S.H.O. ALTERNATE LOADING
WEARING SURFACE: 1" MONOLITHIC
ALIGNMENT: 15'00'00" LT
SUPERELEVATION: .0833 ft/ft

PROPOSED STRUCTURE

PROPOSED WORK: REPLACE REINFORCED CONCRETE DECK.
TYPE:
WITH REINFORCED CONCRETE DECK
AND SUBSTRUCTURE.
SKEW: 54°10'51" RF TO LOC. TAN.
SPANS: 65'1"-84'3"-66'1" c/c BEARINGS
ROADWAY: 26'6" f/f PARAPETS
LOAD FREQUENCY: HS20-44 AND ALTERNATE MILITARY LOADING
WEARING SURFACE: 1" MONOLITHIC
APPROACH SLABS: 25' LONG
ALIGNMENT: 15'00'00" LT
SUPERELEVATION: .0833 ft/ft

2

STATE OF OHIO
DEPARTMENT OF TRANSPORTATION
BUREAU OF BRIDGES

SITE PLAN
BRIDGE NO. SUM-77-0928
RAMP R-2 OVER IR-77
I-277 SUMMIT COUNTY

DESIGNED	DRAWN	TRACED	CHECKED	REVIEWED	DATE
ST			KS	GLB	7-13-9

F.H.W.A. REGION	STATE	PROJECT NO.	FUNDS
5	OHIO		

SUM-277/224-0.00/6.41/10.22
BR. # SUM-77-09
ABUTMENT 2

GENERAL NOTES

DESIGN SPECIFICATIONS:

THIS STRUCTURE MODIFICATION CONFORMS TO "STANDARD SPECIFICATION FOR HIGHWAY BRIDGES" ADOPTED BY THE AMERICAN ASSOCIATION OF STATE HIGHWAY AND TRANSPORTATION OFFICIALS, 199 , AND THE OHIO "SUPPLEMENT" TO THESE SPECIFICATIONS.

DESIGN DATA:

DESIGN LOADING-HS20-44 CASE II AND THE ALTERNATE MILITARY LOADING.

DESIGN STRESSES:

CONCRETE CLASS S - COMPRESSIVE STRENGTH 4500 P.S.I.
CONCRETE CLASS C - COMPRESSIVE STRENGTH 4000 P.S.I.
REINFORCING STEEL - ASTM A615 OR A617 - GRADE 60 MINIMUM YIELD STRENGTH 60,000 P.S.I.
STRUCTURAL STEEL - ASTM A36 UNIT STRESS 20,000 P.S.I.
DECK PROTECTION METHOD - EPOXY COATED REINFORCING STEEL, BOTH MATS MONOLITHIC WEARING SURFACE IS ASSUMED. FOR DESIGN PURPOSES, TO BE 1" THICK.

SOIL BORINGS:

THIS PLAN DOES NOT CONTAIN STRUCTURE FOUNDATION INVESTIGATION DRAWINGS. THIS INFORMATION MAY BE INSPECTED AT THE BUREAU OF BRIDGES AND STRUCTURAL DESIGN IN COLUMBUS, OHIO OR IN THE DISTRICT OFFICE IN RAVENNA, OHIO.

EXISTING STRUCTURE VERIFICATION:

DETAILS AND DIMENSIONS SHOWN ON THESE PLANS PERTAINING TO THE EXISTING STRUCTURE HAVE BEEN OBTAINED FOR PLANS OF THE EXISTING STRUCTURE AND/OR FROM FIELD OBSERVATIONS AND MEASUREMENTS. CONSEQUENTLY, THEY ARE INDICATIVE OF THE EXISTING STRUCTURE AND THE PROPOSED WORK BUT THEY SHALL BE CONSIDERED TENTATIVE AND APPROXIMATE. THE CONTRACTOR IS REFERRED TO CMS SECTIONS 102.05, 105.02, AND 513.02.

CONTRACT BID PRICES SHALL BE BASED UPON A RECOGNITION OF THE UNCERTAINTIES DESCRIBED ABOVE AND UPON A PREBID EXAMINATION OF THE EXISTING STRUCTURE BY THE CONTRACTOR. HOWEVER, ALL PROJECT WORK SHALL BE BASED UPON ACTUAL DETAILS AND DIMENSIONS WHICH HAVE BEEN VERIFIED BY THE CONTRACTOR IN THE FIELD.

EXISTING BRIDGE PLANS:

MAY BE INSPECTED AT THE BUREAU OF DRIDGES AND STRUCTURAL DESIGN IN COLUMBUS, OHIO OR IN THE DISTRICT OFFICE IN RAVENNA, OHIO.

TRAFIC MAINTENANCE:

SEE ROADWAY PLAN GENERAL NOTES UNDER MAINTENANCE OF TRAFFIC.

ITEM 202 - PORTIONS OF STRUCTURE REMOVED, AS PER PLAN:

THIS ITEM SHALL INCLUDE THE REMOVAL OF THE ABUTMENT BACKWALL, PORTIONS OF THE EXISTING WINGWALLS AND THE APPROACH SLABS. THIS ITEM SHALL INCLUDE ANY EXCAVATION NECESSARY TO SAWCUT THE EXISTING BACKWALLS AND WINGWALLS TO THE CONSTRUCTION JOINT.

THIS ITEM SHALL ALSO INCLUDE THE REMOVAL AND DELIVERY OF THE PARAPET ALUMINUM TUBE RAILS AND ANCHOR POST CASTINGS TO THE O.D.O.T.'S MAINTENANCE OUTPOST IN BOSTON HEIGHTS.

MISCELLANEOUS NOTES:

FOR DETAILS OF THE THRIE BEAM GUARDRAIL BRIDGE TERMINAL TRANSITION AND CONNECTIONS TO THE PARAPET SEE STANDARD CONSTRUCTION DRAWING GR-3.1 AND GR 3.2.

ITEM 202 - PORTIONS OF STRUCTURES REMOVED OVER 20' SPAN, AS PER PLAN:

THIS ITEM SHALL BE USED TO REMOVE THE EXISTING BRIDGE DECKS, END DAMS, AND PARAPETS. ADEQUATE PROTECTION SHALL BE ERECTED TO THE SATISFACTION OF THE ENGINEER TO PROTECT I-77 TRAFIC BELOW DURING THE REMOVAL AND REPLACEMENT OF THE SUPERSTRUCTURE. THE COST FOR PLACEMENT AND SUBSEQUENT REMOVAL OF THE PROTECTION SHALL BE INCLUDED IN THE UNIT PRICE BID FOR ITEM 202 - PORTIONS OF STRUCTURES REMOVED OVER 20' SPAN, AS PER PLAN, - LUMP SUM.

ITEM 516 - RESET BEARING, AS PER PLAN:

THE CONTRACTOR SHALL JACK AND RESET ALL BEARING DEVICES (ROCKERS AND BOLSTERS) AND REPLACE ANY DETERIORATED SHIM PLATES IN ACCORDANCE WITH ITEM 516.05. FOR ADDITIONAL DETAILS SEE STANDARD DRAWING FSB-1-62.

END DAM REMOVAL:

THE TOP END CROSS FRAME GUSSET PLATES SHALL BE NEATLY REMOVED FROM THE CROSSFRAM ANGLES AND REPLACED WITH NEW GUSSET PLATES AS PER STANDARD DRAWING SD-1-69. ALL EXISTING WELD ON CROSSFRAME ANGLES SHALL BE REMOVED TO THE SATISFACTION OF THE ENGINEER.

ITEM 516 - STUCTURAL STEEL EXPANSION JOINT, AS PER PLAN:

PAYMENT FOR THIS ITEM SHALL INCLUDE THE NEW TOP CROSS FRAME GUSSET PLATES AS DETAILED IN STANDARD DRAWING SD-1-69.

PAYMENT SHALL ALSO INCLUDE THE PAINTING OF THE PROPOSED NEW STEEL AREAS, AS WELL AS AREAS OF PAINT REMOVED DURING THE END DAM REMOVAL, WITH (2) COATS OF ZINC-RICH PAINT.

ORIGINAL FRAMING PLAN AND FRAMING DETAILS SHEETS HAVE BEEN INCLUDED IN THIS PLAN FOR REFERENCE. NOTE THAT THE PROPOSED END DAM ELEVATION IS (3) INCHES HIGHER THAN THE EXISTING TO MATCH THE PROPOSED PROFILE GRADE.

DOWEL HOLES:

ALL DOWEL HOLES PLACED IN EXISTING ABUTMENTS SHALL USE GROUT ANCHORING WITH EPOXY MORTAR AS DESCRIBED IN SUPPLEMENTAL SPECIFICATION 852 AND C.M.S. 705.22. THE COST OF PLACEMENT, MATERIALS AND INCIDENTALS OF GROUT ANCHORING SHALL BE INCLUDED IN THE UNIT BID PRICE OF ITEM 510 DOWEL HOLES, AS PER PLAN, 182 - EACH DOWEL HOLES HAVE BEEN CARRIED TO THE ESTIMATED QUANTITIES.

ITEM SPECIAL - SEALING OF CONCRETE SURFACES (EPOXY):

AFTER COMPLETION OF CONSTRUCTION, ALL PARAPET SURFACES AND BACKWALLS, SHALL BE COATED WITH EPOXY SEALER TO PROTECT THE CONCRETE SURFACE AND PROVIDE A UNIFORM COLOR. SEE PROPOSAL NOTE FOR SEALING OF CONCRETE SURFACES, EPOXY. A QUANTITY OF 650 SQ. YD. OF ITEM SPECIAL - SEALING OF CONCRETE SURFACES,(EPOXY) HAS BEEN CARRIED TO THE BRIDGE SUB-SUMMARY AND SHALL INCLUDE THE COST OF ALL LABOR, MATERIALS AND EQUIPMENT NECESSARY TO COAT THE STRUCTURE.

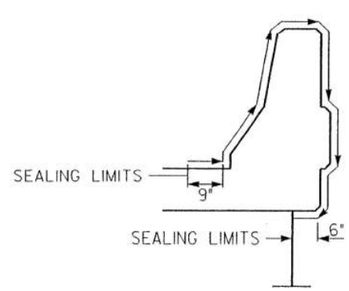

PARAPET SEALING

REFERENCE SHALL BE MADE TO STANDARD DRAWING

AS-1-81	DATED	11-27-81
BR-1	DATED	5-29-79
GR-1	DATED	1-11-85
GR-3.1	DATED	5-6-91
GR-3.2	DATED	5-6-91

AND TO SUPPLEMENTAL SPECIFICATIONS:

852 DATED 7-30-93

ITEM 512 TYPE A WATERPROOFING:

AN ESTIMATED QUANTITY OF 18 SQ.YD. OF TYPE A WATERPROOFING HAS BEEN INCLUDED IN THE GENERAL SUMMARY TO WATERPROOF THE BACKWALL APPROACH SLAB INTERFACE AS DETAILED IN STANDARD DRAWING AS-1-81 SHEET 2 OF 3.

ITEM 611 – REINFORCED CONCRETE APPROACH SLAB (T=15", LENGTH=25')
THIS WORK SHALL MEET THE REQUIREMENTS OF ITEM 611 REINFORCED CONCRETE APPROACH SLABS OF THE C.M.S. AND STD. DRWG. AS-1-81 EXCEPT FOR THE PLACEMENT OF ED801 BARS WHICH SHALL BE AS INDICATED ON SHEETS 6, 7 AND AS DIRECTED BY THE ENGINEER. 168 SQ.YD. HAVE BEEN CARRIED TO THE ROADWAY GENERAL SUMMARY FOR ITEM 611 REINFORCED CONCRETE APPROACH SLAB.

STATE OF OHIO
DEPARTMENT OF TRANSPORTATION
BUREAU OF BRIDGES

GENERAL NOTES

SUM-77-0928
RAMP R-2 OVER IR-77
I-277 SUMMIT COUN

DESIGNED	DRAWN	TRACED	CHECKED	REVIEWED	DATE
ST	PZ		KS	GLB	7-13-

SAM-92, 07/02/93

FILENAME: C:\DGN\SU277-22\ 04.DGN

F.H.W.A. REGION	STATE	PROJECT NO.	FUNDS
5	OHIO		

164
196

SUM-277/224-0.00/6.41/10.2
BR.# SUM-77-0928

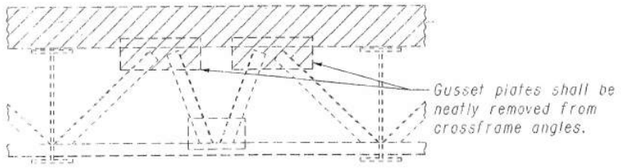

END DAM REMOVAL DETAIL

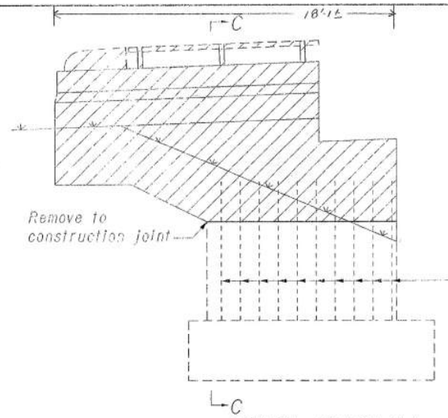

SOUTH WINGWALL

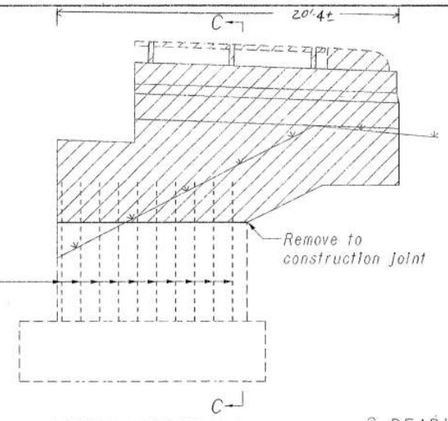

NORTH WINGWALL

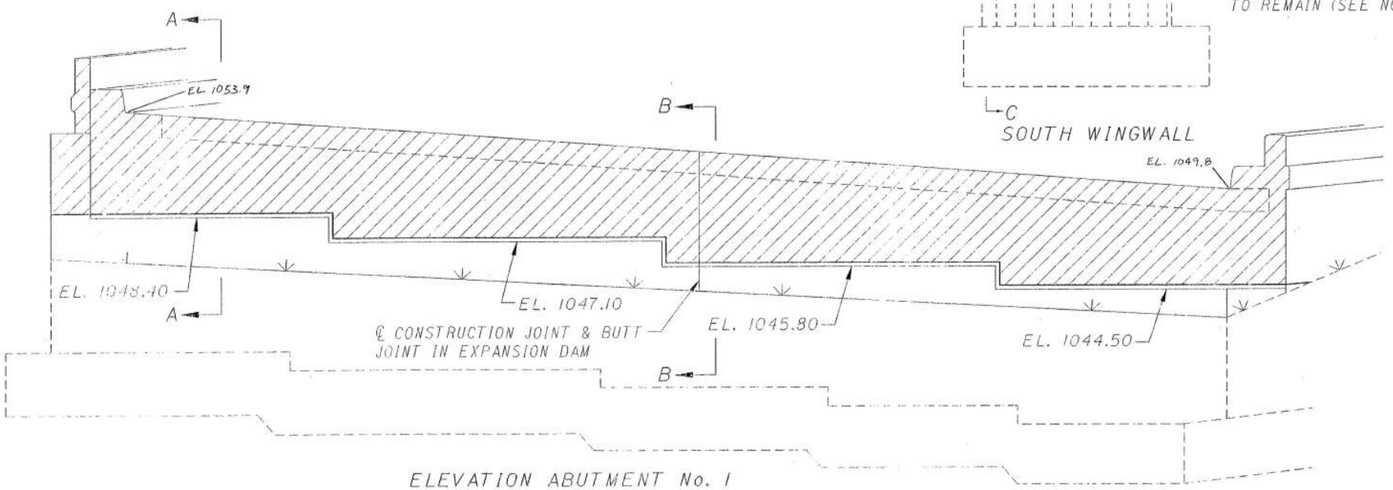

ELEVATION ABUTMENT No. 1

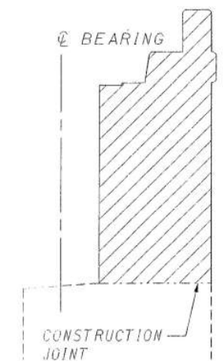

SECTION A-A

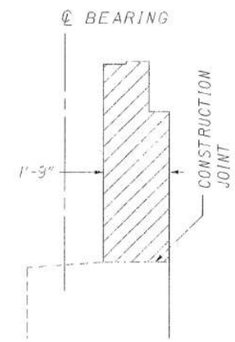

SECTION B-B

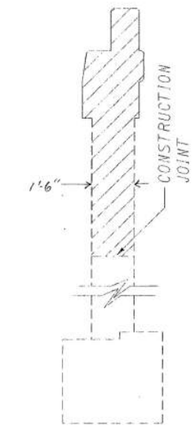

SECTION C-C

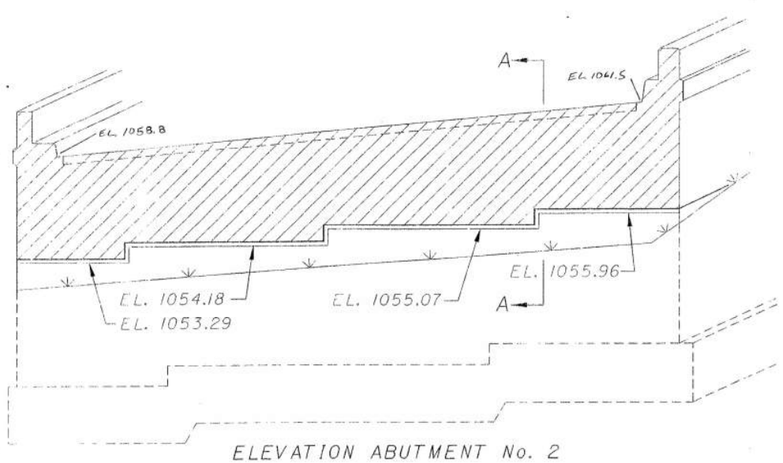

ELEVATION ABUTMENT No. 2

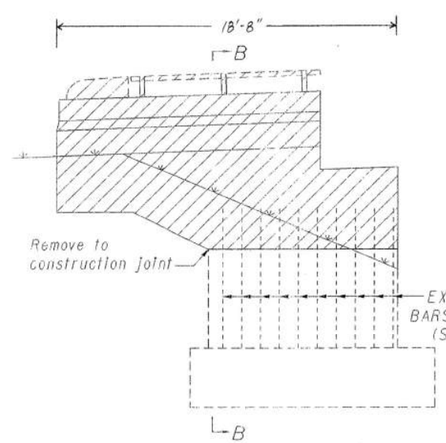

SOUTH WINGWALL

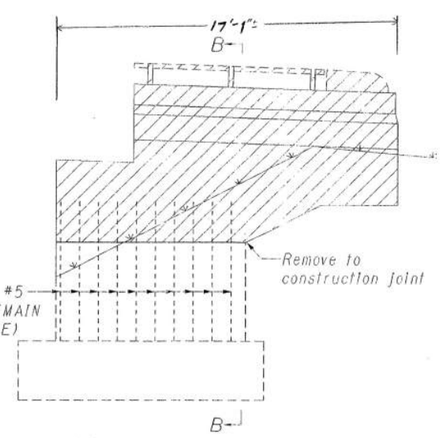

NORTH WINGWALL

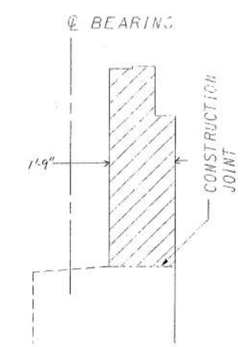

SECTION A-A

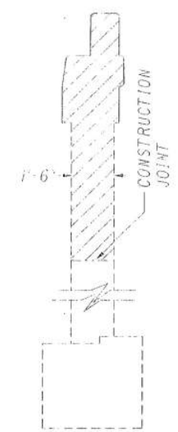

SECTION B-B

NOTE:
IN THE WINGWALL REMOVAL AREAS THE #5 BARSSHALL BE SAVED AND TRIMMED TO PROVIDE A LAP LENGTH OF 1'-8".

REMOVAL AREA

4/

STATE OF OHIO
DEPARTMENT OF TRANSPORTATION
BUREAU OF BRIDGES

ABUTMENT REMOVAL DETAIL

BRIDGE No. SUM-77-0928

RAMP R-2 OVER IR-77
I-277 SUMMIT COUNTY

DESIGNED	DRAWN	TRACED	CHECKED	REVIEWED	DATE	RE
ST	RB		KS	GLB	6-13-98	

d01w4a su3/7040.dgn

F.H.W.A. REGION	STATE	PROJECT NO.	FUNDS
5	OHIO		

SUM-277/224-0.00/6.41/10

BR.# SUM-77-0928

ABUTMENT 1

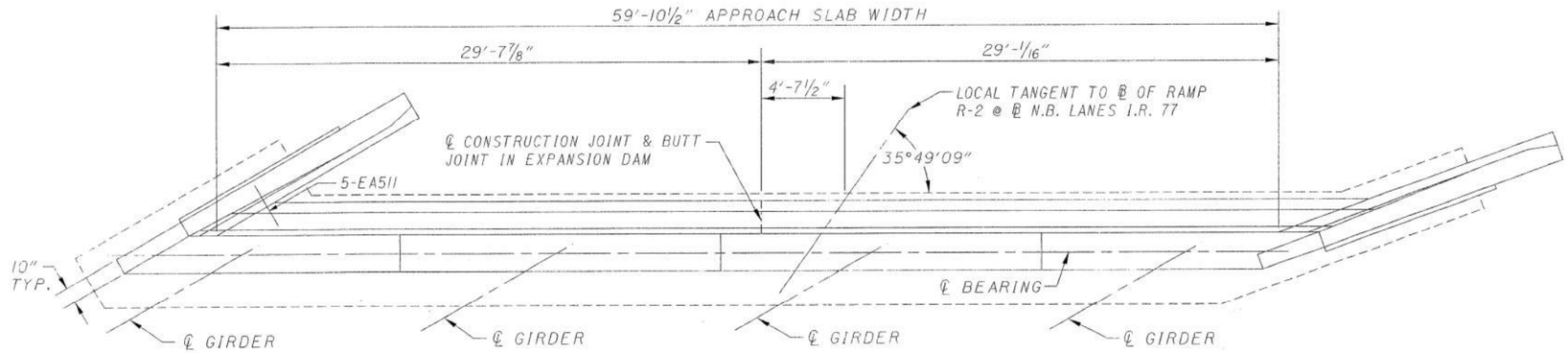

PLAN VIEW

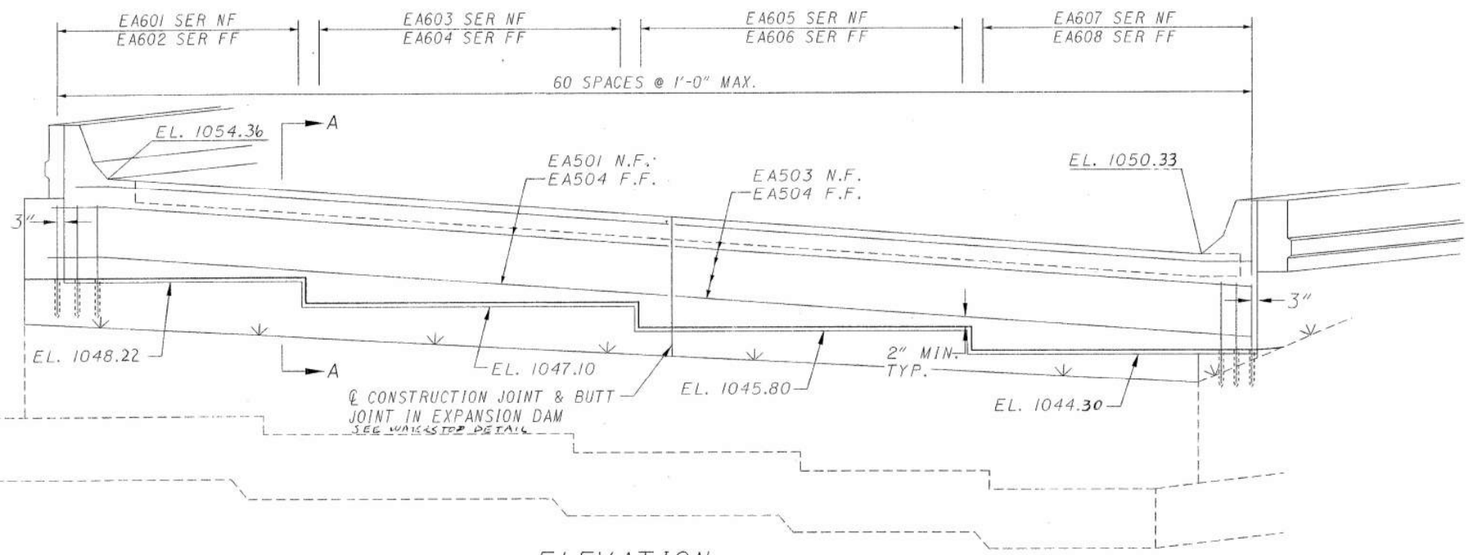

ELEVATION

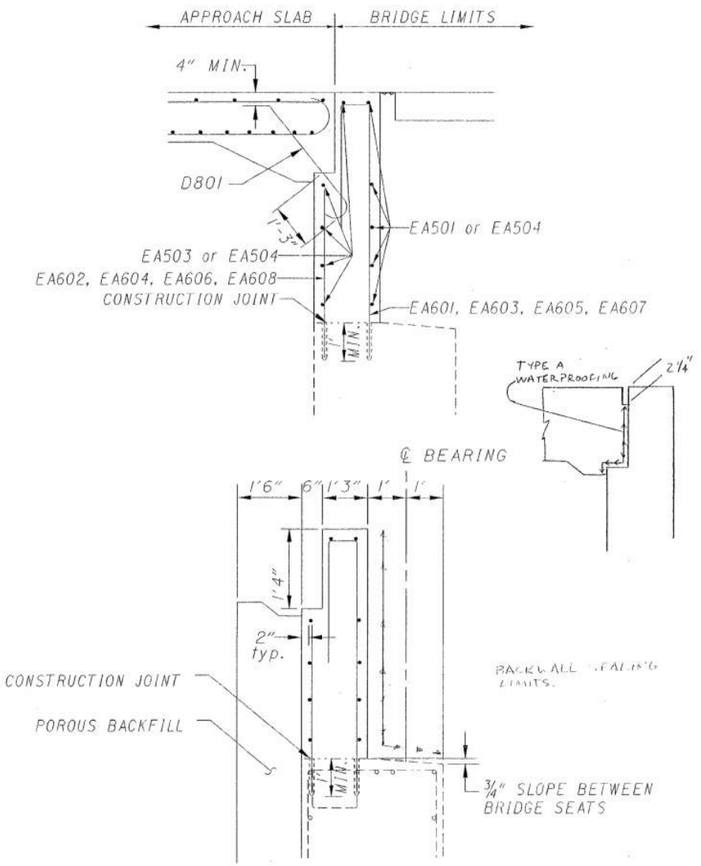

SEE STD. DWG SD-1-69 FOR EXPANSION DAM DETAILS

SECTION A-A

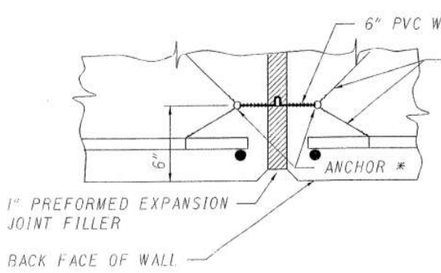

* FOR THE FIRST POUR, THE WATERSTOP SHOULD BE HELD SECURELY IN PLACE BY THE USE OF SPLIT FORMS AND TIE-WIRES. FOR THE SECOND POUR, SECURE THE FREE END OF WATERSTOP IN PROPER POSITION WITH TIE-WIRES. ALTERNATE METHODS, AS APPROVED BY THE ENGINEER, MAY BE USED TO INSURE THE CORRECT POSITIONING OF THE WATERSTOP.

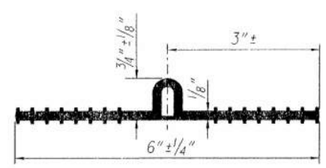

WATERSTOP DETAILS

5

STATE OF OHIO
DEPARTMENT OF TRANSPORTATION
BUREAU OF BRIDGES

SUM- 77-0928 ABUTMENT

1-277 RAMP R-2 OVER IR-77
SUMMIT COUNTY

DESIGNED	DRAWN	TRACED	CHECKED	REVIEWED	DATE
ST	RB		KS	GLB	7-13-93

d04w4o su277040.dgn

F.H.W.A. REGION	STATE	PROJECT NO.	FUNDS
5	OHIO		

SUM-277/224-0.00/6.41/
BR.# SUM-77-0928

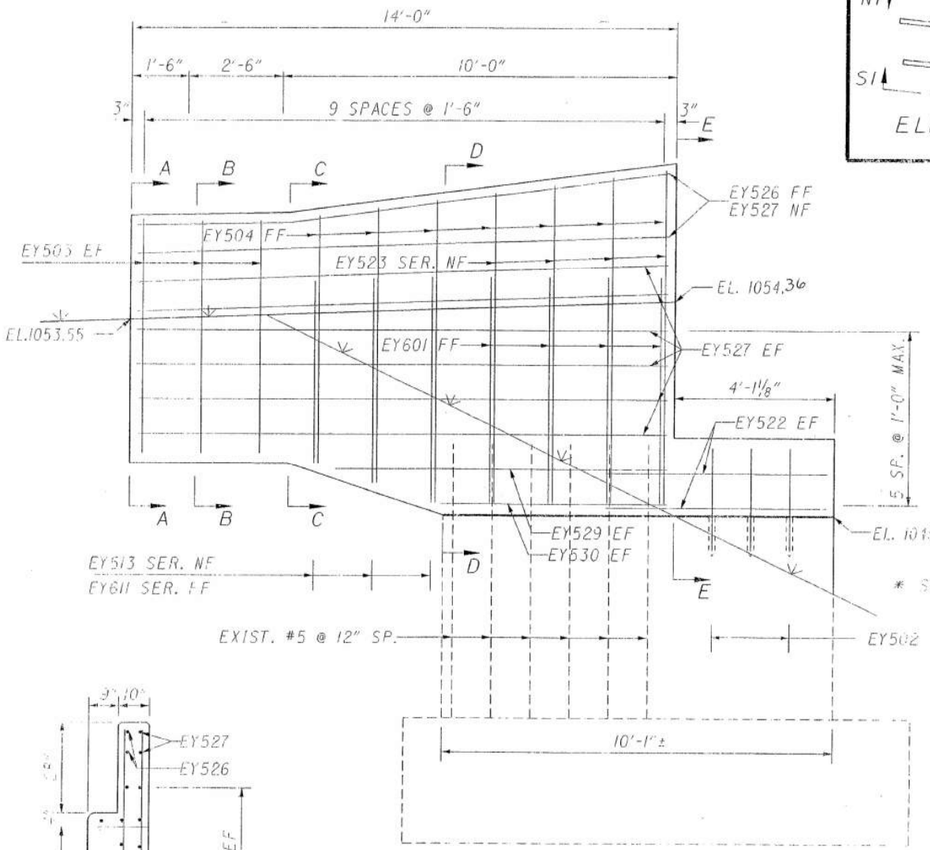

SOUTH WINGWALL
VIEW SI

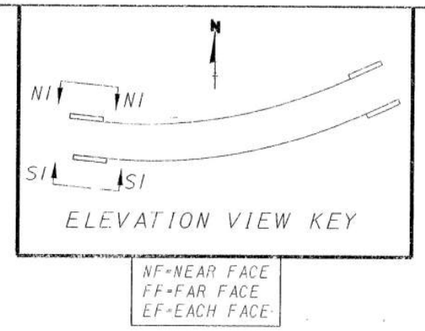

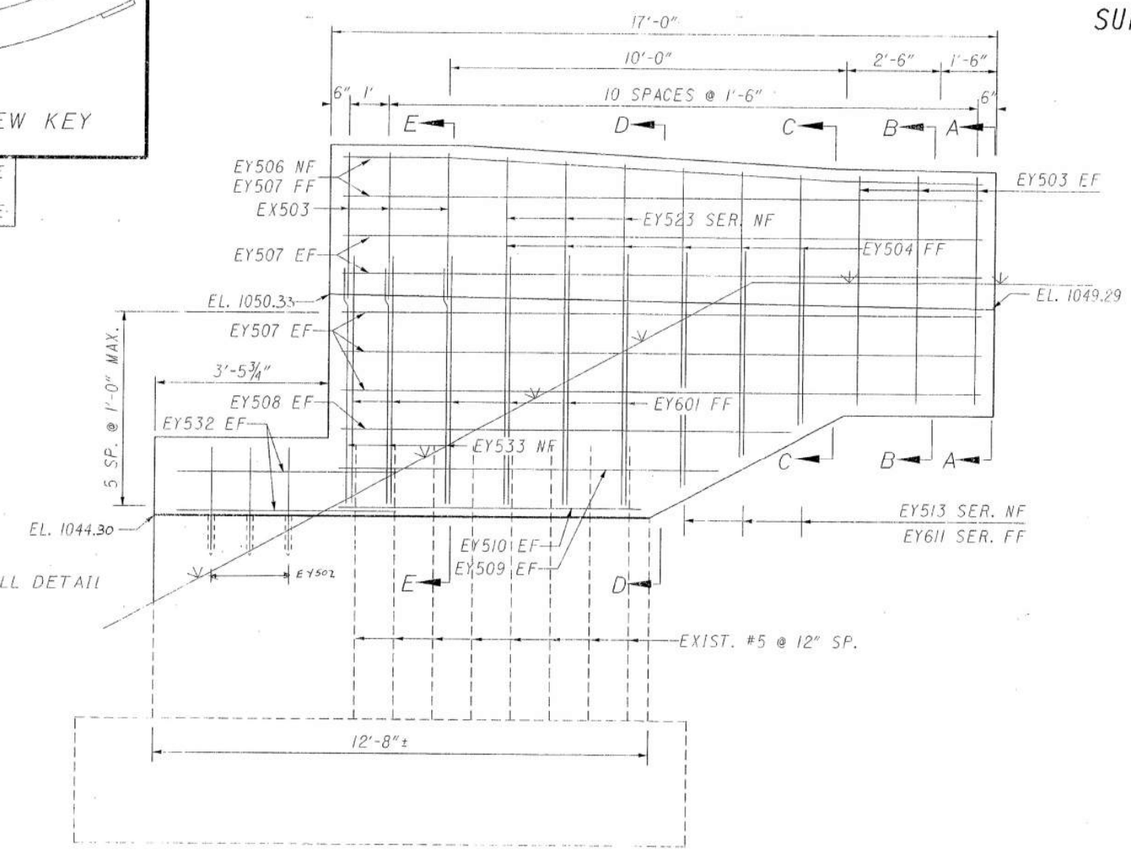

NORTH WINGWALL
VIEW NI

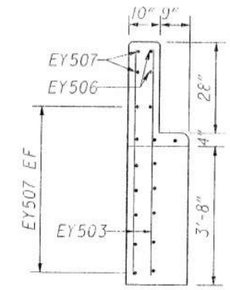

SECTION A-A

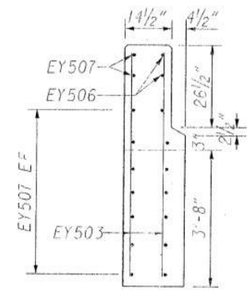

SECTION B-B

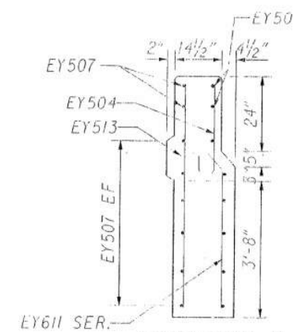

SECTION C-C

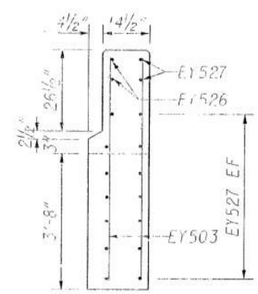

SECTION B-B

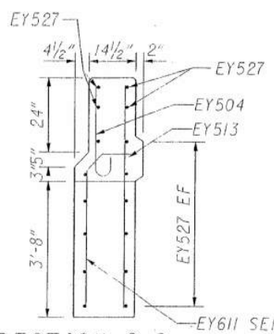

SECTION C-C

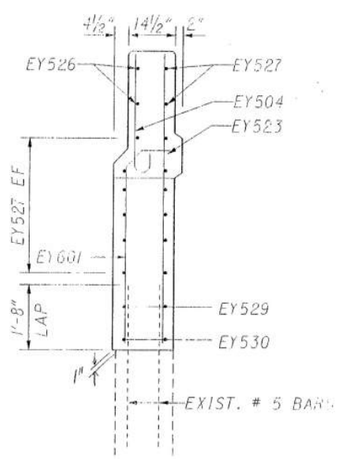

SECTION D-D

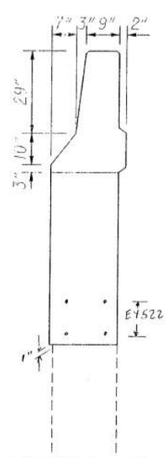

SECTION E-E

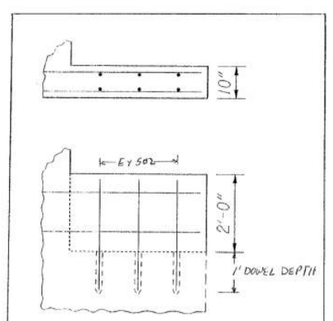

TYPICAL CURTAIN WALL DETAIL

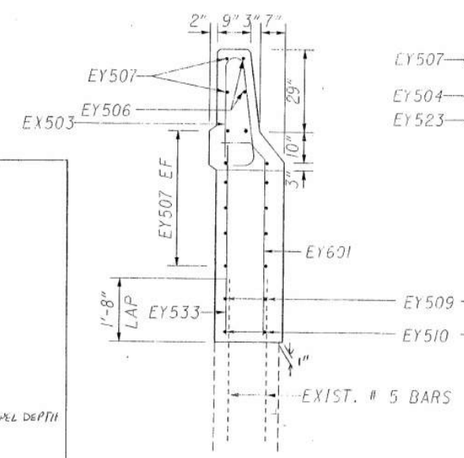

SECTION E-E

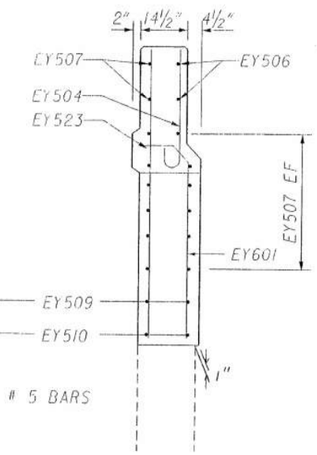

SECTION D-D

STATE OF OHIO
DEPARTMENT OF TRANSPORTATION
BUREAU OF BRIDGES

ABUTMENT #1 WINGWA
BRIDGE NO. SUM-77-0928
RAMP R-2 OVER IR-77
I-277 SUMMIT COU

DESIGNED	DRAWN	TRACED	CHECKED	REVIEWED	DA
ST	RR				

F.H.W.A. REGION	STATE	PROJECT NO.	FUNDS
5	OHIO		

SUM-277/224-0.00/6.4
BR.# SUM-77-0928
ABUTMENT 2

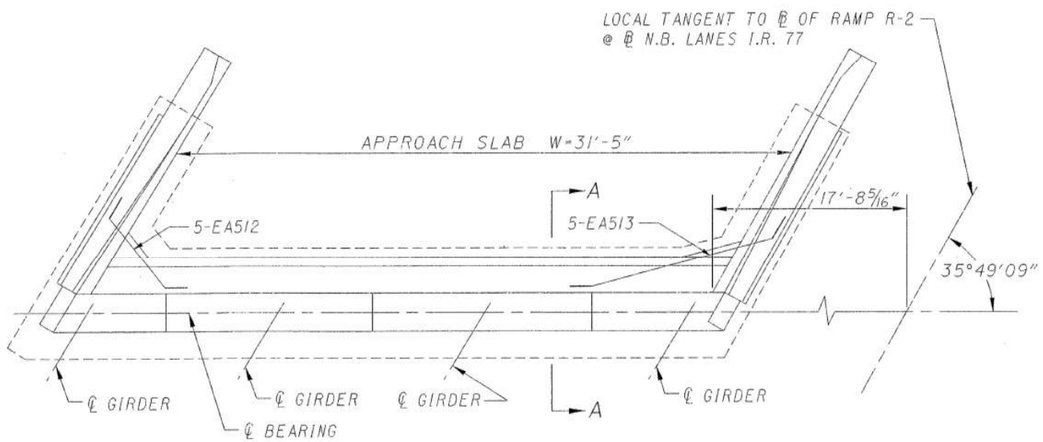

PLAN VIEW

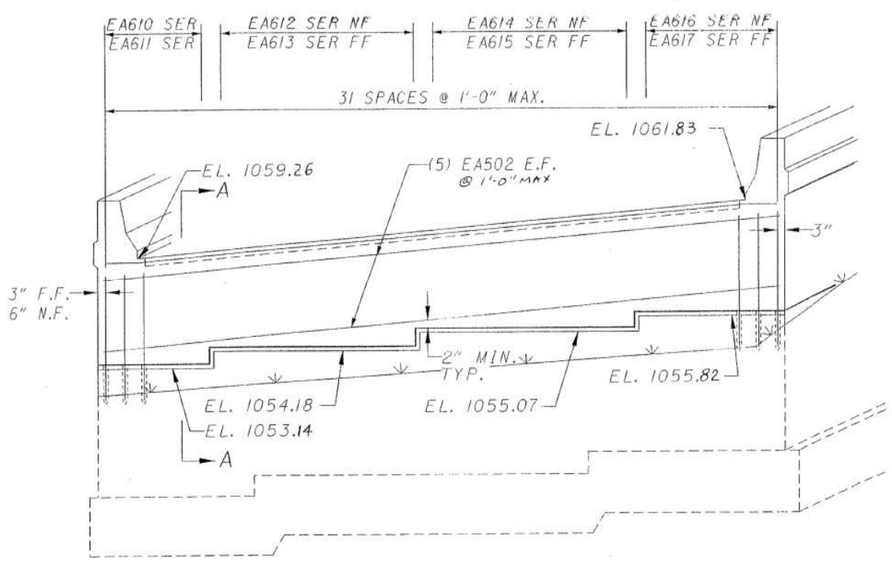

ELEVATION

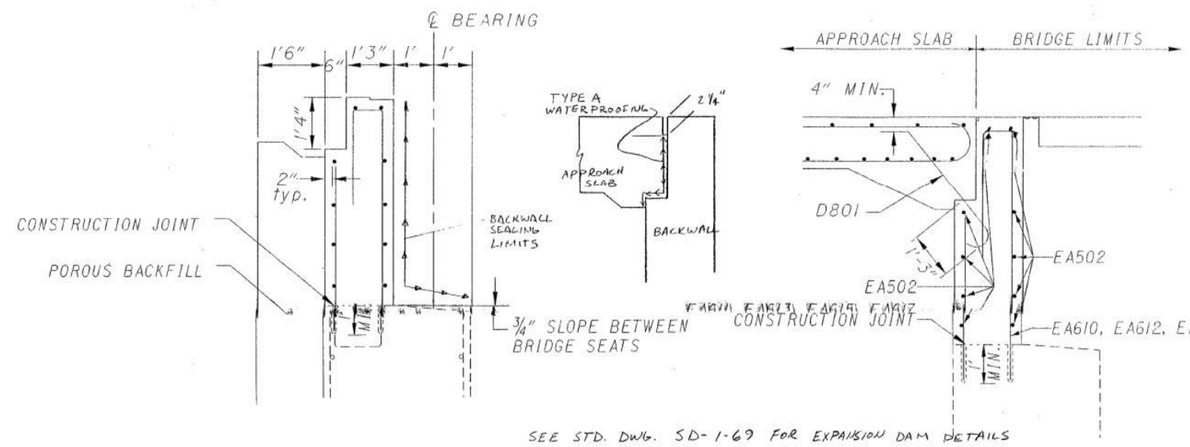

SEE STD. DWG. SD-1-69 FOR EXPANSION DAM DETAILS

SECTION A-A

POROUS BACKFILL = 7.85 CU.YD.

STATE OF OHIO
DEPARTMENT OF TRANSPORTA
BUREAU OF BRIDGES

SUM- 77-0928 ABUTM
RAMP R-2 OVER IR
I-277 SUMMIT

DESIGNED	DRAWN	TRACED	CHECKED	REVIEWED
ST	RB		KS	GLB

F.H.W.A. REGION	STATE	PROJECT NO.	FUNDS
5	OHIO		

SUM-277/224-0.00/6.41/10.
BR.# SUM-77-0928

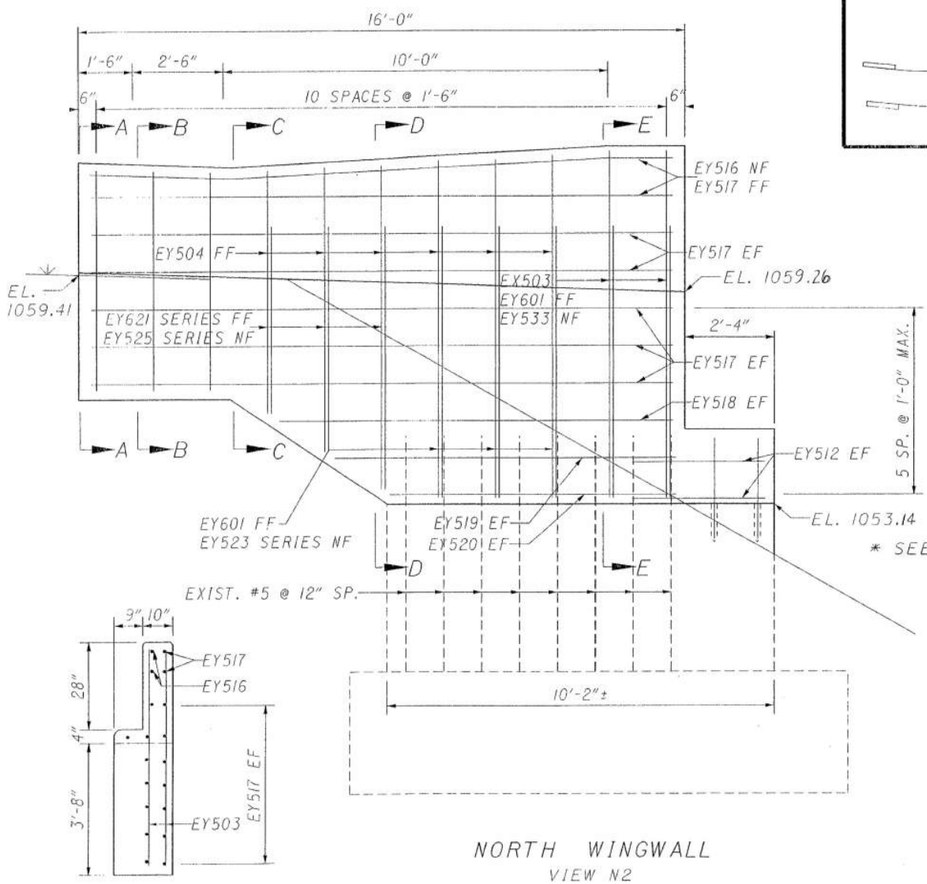

NORTH WINGWALL
VIEW N2

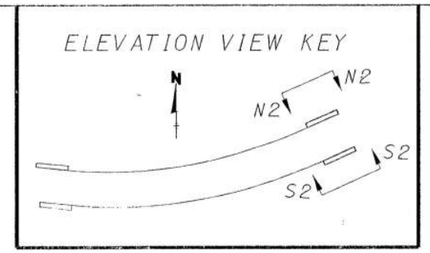

SECTION A-A

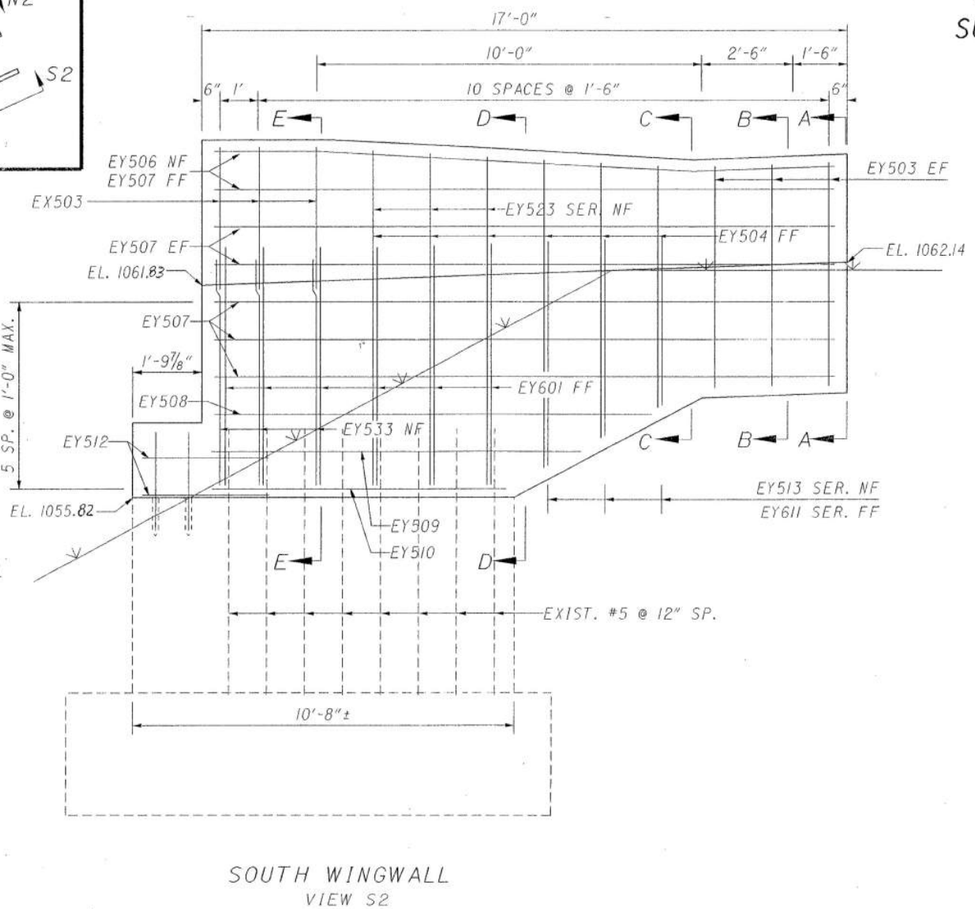

SOUTH WINGWALL
VIEW S2

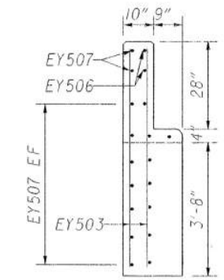

SECTION A-A

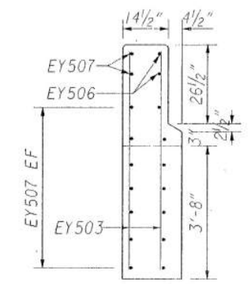

SECTION B-B

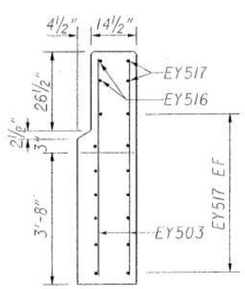

SECTION B-B

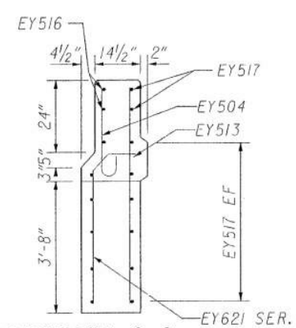

SECTION C-C

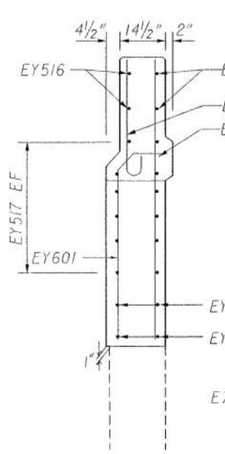

SECTION D-D

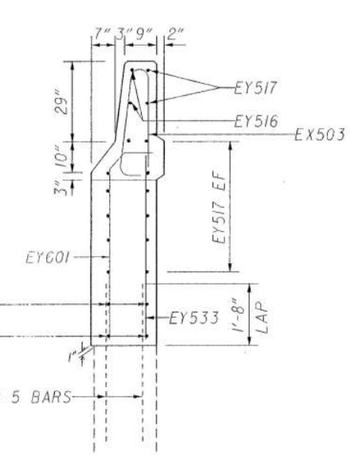

SECTION E-E

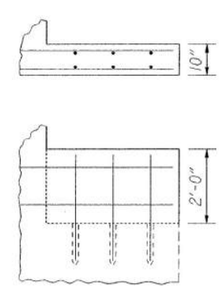

TYPICAL CURTAIN WALL DETAIL

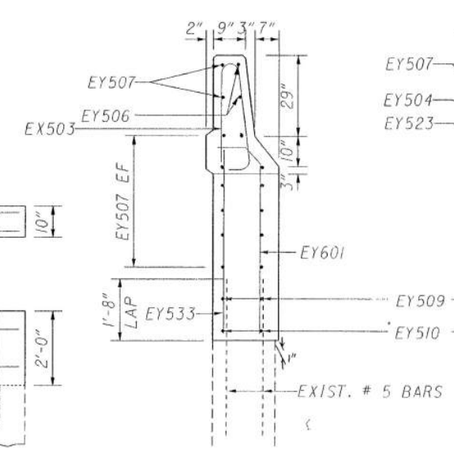

SECTION E-E

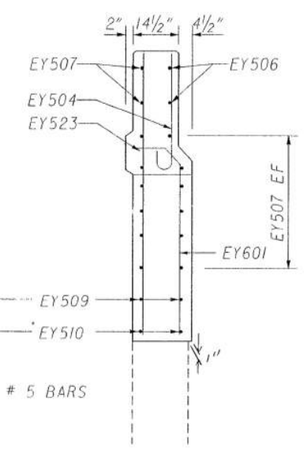

SECTION D-D

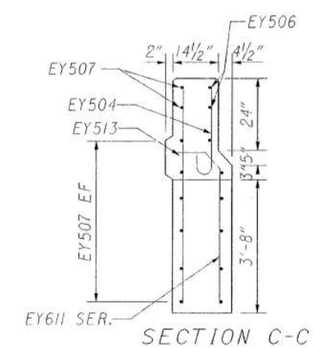

SECTION C-C

8.

STATE OF OHIO
DEPARTMENT OF TRANSPORTATION
BUREAU OF BRIDGES

BRIDGE No. SUM-77-0928
ABUTMENT No. 2 WINGWALL
RAMP R-2 OVER IR 77

I-277 SUMMIT CO.

DESIGNED	DRAWN	TRACED	CHECKED	REVIEWED	DATE
ST	RB		KS	GLB	7-13-2[illegible]

d04w4a su277040.dgn

FED. RD.	STATE	PROJECT	
2	OHIO		

SUM-277-0.00/SUM-277-6.31/10.22

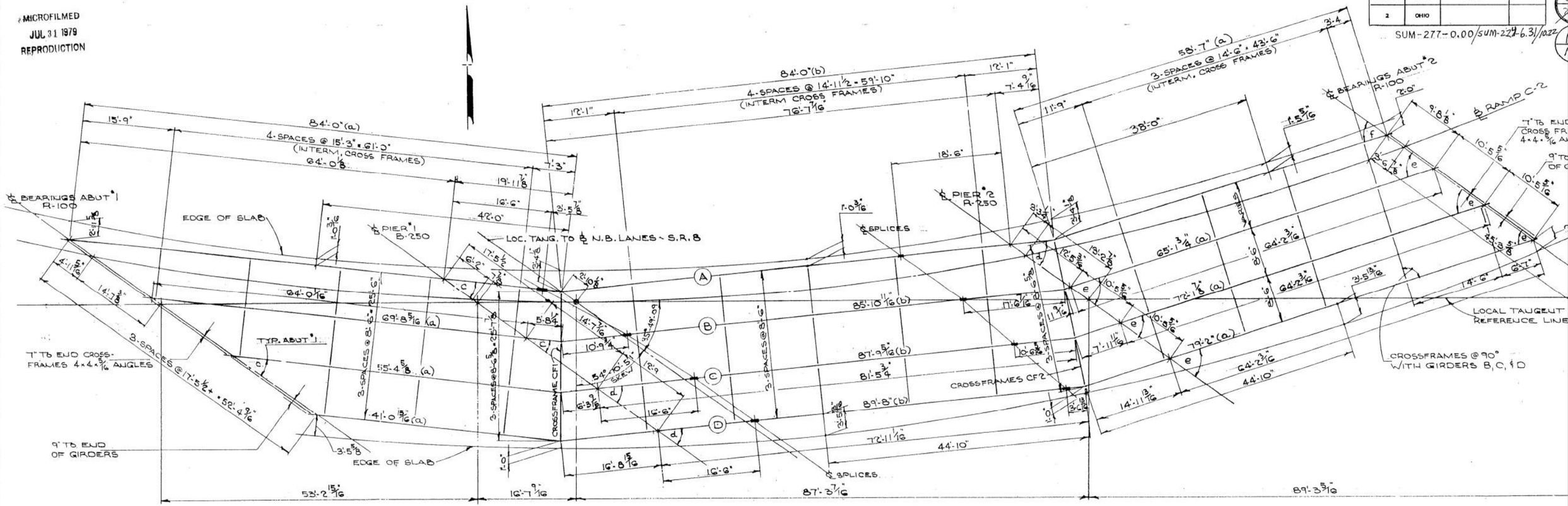

(a) INDICATES GIRDER LENGTH BETWEEN ABUT. BEARINGS AND BEND PO
(b) INDICATES GIRDER LENGTH BETWEEN BEND POINTS

FRAMING PLAN

DEFLECTION & CAMBER

	SPAN Nº 1											
GIRDER LINE	A			B			C			D		
LOCATION	¼ PT.	℄	¾ PT.	¼ PT.	℄	¾ PT.	¼ PT.	℄	¾ PT.	¼ PT.	℄	¾ PT.
DEFLECTION DUE TO WEIGHT OF STEEL	.043	.043	.007	.048	.050	.013	.041	.044	.012	.027	.027	.004
DEFLECTION DUE TO REMAINING DEAD LOAD	.185	.185	.030	.220	.231	.061	.190	.204	.054	.122	.118	.017
CONVEXITY REQUIRED FOR VERTICAL CURVE	—	—	—	—	—	—	.036	.072	.048	.036	.080	.084
SUM OF DEFLECTION AND CONVEXITY	.228	.228	.037	.268	.281	.074	.267	.320	.114	.185	.225	.105
REQUIRED CAMBER	1/4"	1/4"	1/16"	1/4"	1/4"	1/16"	1/4"	5/16"	1/8"	3/16"	1/4"	1/8"

	SPAN Nº 2											
GIRDER LINE	A			B			C			D		
LOCATION	¼ PT.	℄	¾ PT.	¼ PT.	℄	¾ PT.	¼ PT.	℄	¾ PT.	¼ PT.	℄	¾ PT.
DEFLECTION DUE TO WEIGHT OF STEEL	.122	.194	.122	.100	.162	.100	.084	.134	.082	.085	.133	.080
DEFLECTION DUE TO REMAINING DEAD LOAD	.506	.810	.506	.475	.754	.475	.389	.617	.380	.376	.591	.356
CONVEXITY REQUIRED FOR VERTICAL CURVE	.390	.540	.390	.393	.525	.393	.354	.472	.354	.327	.436	.327
SUM OF DEFLECTION AND CONVEXITY	1.018	1.544	1.018	.968	1.441	.968	.827	1.223	.816	.788	1.160	.763
REQUIRED CAMBER	1"	1 3/16"	1"	1"	1 7/16"	1"	13/16"	1 1/4"	13/16"	13/16"	1 3/16"	3/4"

	SPAN Nº 3											
GIRDER LINE	A			B			C			D		
LOCATION	¼ PT.	℄	¾ PT.	¼ PT.	℄	¾ PT.	¼ PT.	℄	¾ PT.	¼ PT.	C	¾ PT.
DEFLECTION DUE TO WEIGHT OF STEEL	.007	.043	.043	.013	.050	.048	.018	.054	.051	.018	.056	.051
DEFLECTION DUE TO REMAINING DEAD LOAD	.030	.185	.185	.061	.231	.220	.081	.252	.234	.081	.250	.230
CONVEXITY REQUIRED FOR VERTICAL CURVE	.207	.276	.207	.191	.255	.191	.183	.244	.183	.175	.233	.175
SUM OF DEFLECTION AND CONVEXITY	.244	.504	.435	.265	.536	.459	.282	.550	.468	.274	.539	.456
REQUIRED CAMBER	1/4	1/2	7/16	1/4	9/16	7/16	5/16	9/16	7/16	1/4	9/16	7/16

GIRDER ANGLES

LOC.	ANGLE
c	29° 07'-53"
d	41°-48'-44"
e	54°-29'-35"
f	53°-53'-11"

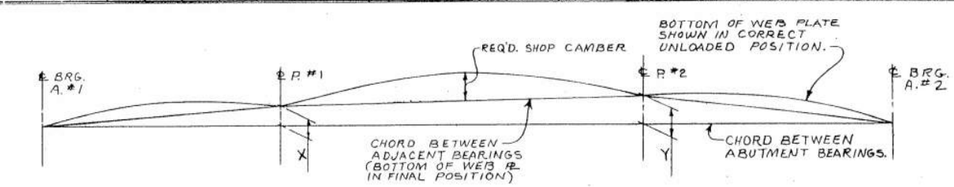

LAYOUT DIAGRAM

BEAM	X	Y
A	5 3/8"	9 3/4"
B	7"	10 7/8"
C	6 5/8"	9 5/16"
D	5 7/8"	8 5/8"

ORIGINAL CONSTRUCTION PLAN FOR
REFERENCE ONLY.

STATE OF OHIO
DEPARTMENT OF HIGHWAYS
BUREAU OF BRIDGES

BEISWENGER, HOCH & ARNOLD
Consulting Engineers Akron

FRAMING PLAN
BRIDGE Nº SUM-8-0930
RAMP C-2 OVER RELOCATED S.R. 8
I-277 SUMMIT CO
STA 491+97.12

DESIGNED	DRAWN	TRACED	CHECKED	REVIEWED	DATE
CLS	DWW		H.G.H.	EBH	6-29-65

FED. RD.	STATE	PROJECT	
2	OHIO		

SUM-277-0.00/SUM-224-6.31

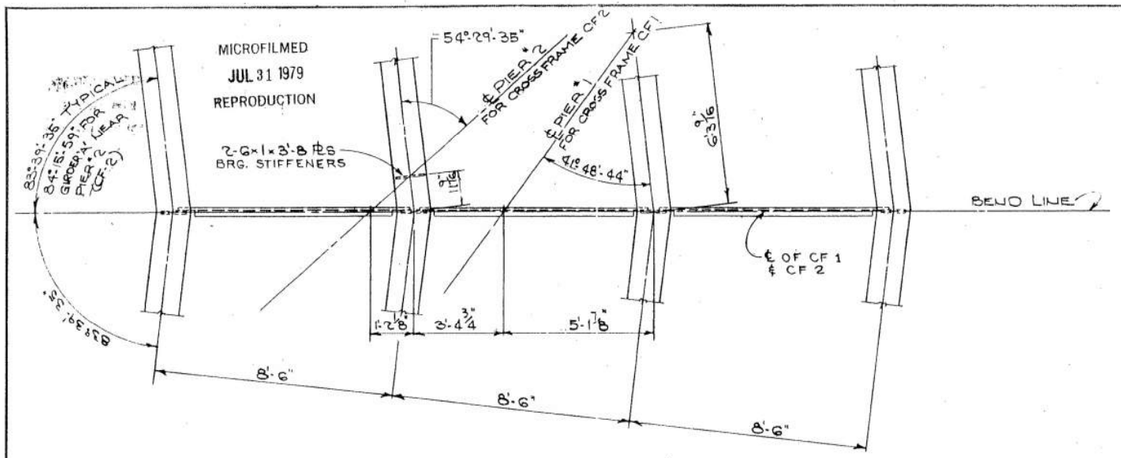

PLAN OF CROSS FRAMES CF1 & CF2

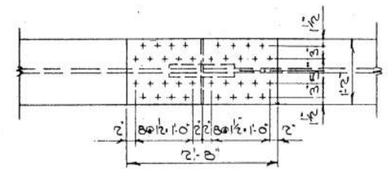

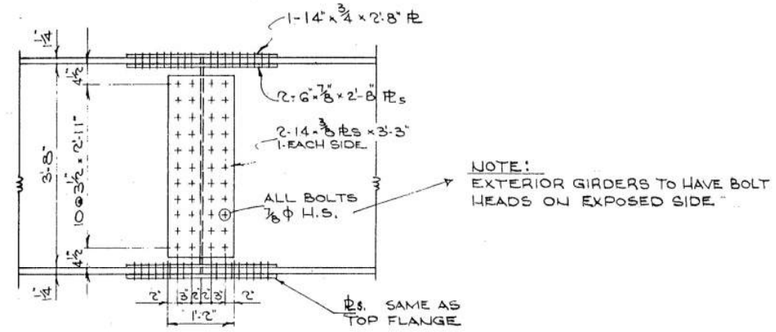

NOTE:
EXTERIOR GIRDERS TO HAVE BOLT HEADS ON EXPOSED SIDE.

FIELD SPLICE DETAIL (TYP.)

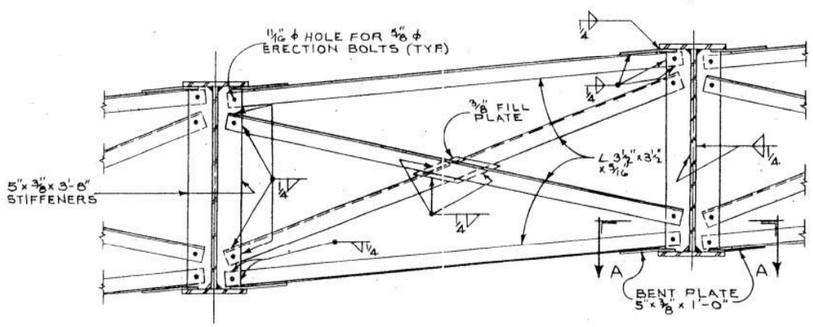

TYPICAL ELEVATION CROSS FRAMES CF1 & CF2

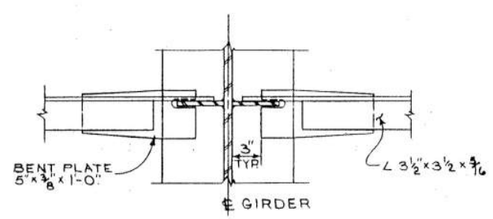

SECTION 'A-A'

DETAIL 'A'

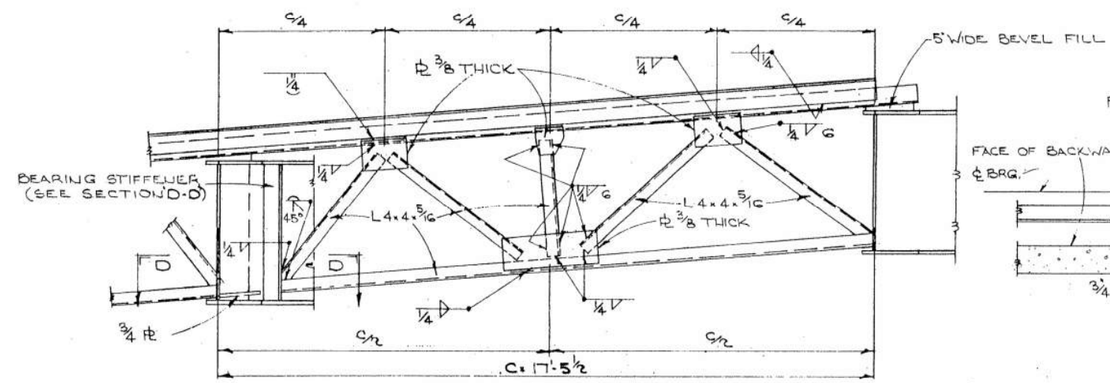

END CROSS FRAME DETAIL @ ABUT #1

FOR END CROSS FRAME DETAIL @ ABUT 2 SEE STANDARD DWGS.

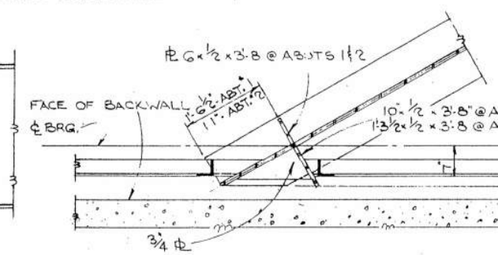

SECTION 'B-B'

ORIGINAL CONSTRUCTION PLAN FOR REFERENCE ONLY.

STATE OF OHIO
DEPARTMENT OF HIGHWAYS
BUREAU OF BRIDGES

BEISWENGER, HOCH & ARNOLD
Consulting Engineers

FRAMING DETAILS
BRIDGE Nº SUM-8-0930
RAMP C-2 OVER RELOCATED S.R. 8
I-277 SUMMIT
STA 491+97.12

DESIGNED	DRAWN	TRACED	CHECKED	REVIEWED	DATE
CLS	JWW		H.G.H.	RDH	6-29-

F.H.W.A. REGION	STATE	PROJECT NO.	FUNDS
5	OHIO		

SUM-277/224-0.00/6.31/10.

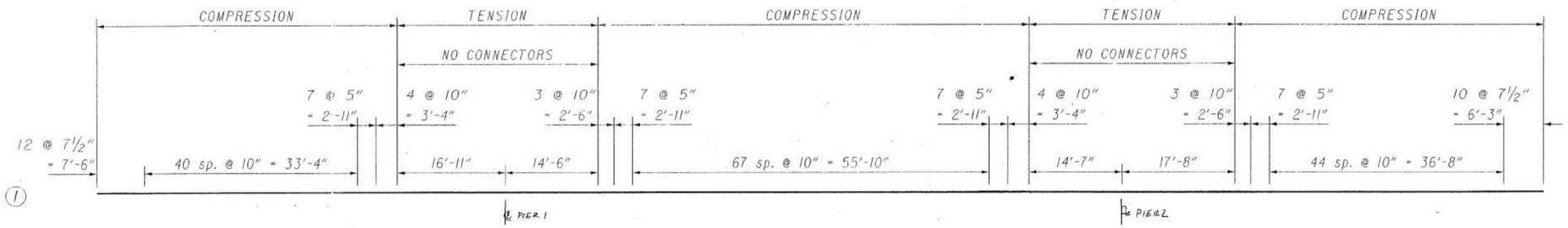

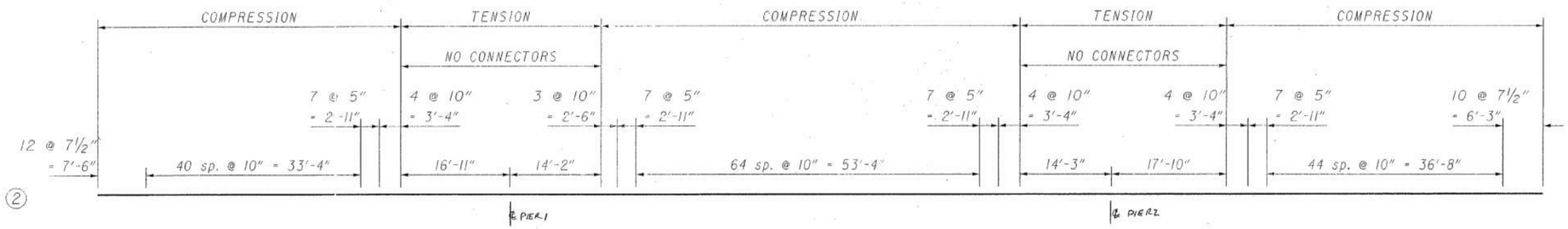

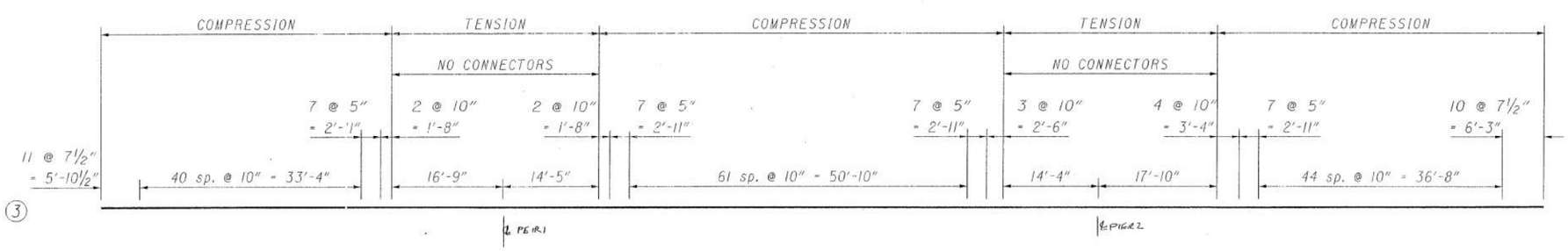

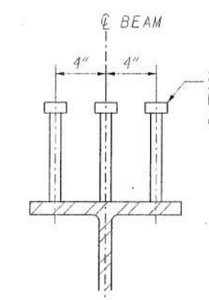

SHEAR STUD DETAIL

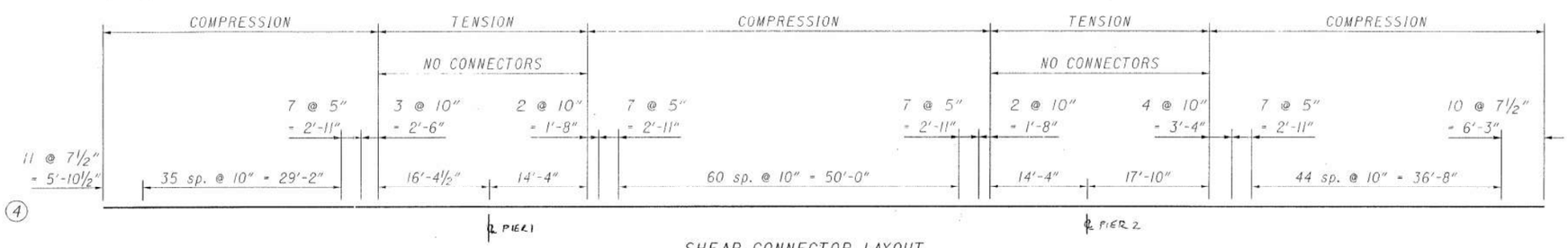

SHEAR CONNECTOR LAYOUT

DIMENSIONS ALONG ℄ OF BEAMS

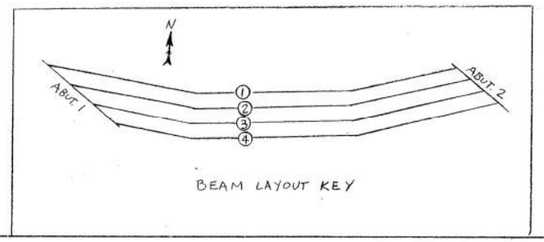

BEAM LAYOUT KEY

STATE OF OHIO
DEPARTMENT OF TRANSPORTATION
BUREAU OF BRIDGES

SLAB DETAILS

RAMP R-2 OVER IR 77

BRIDGE NO. SUM-77-0928

I-277 SUMMIT COU

DESIGNED	DRAWN	TRACED	CHECKED	REVIEWED	DATE
ST	RB		KS	GLB	7-13-93

d04w4o su277040.dgn

F.H.W.A. REGION	STATE	PROJECT	FUNDS
5	OHIO		

17
19

SUM-277/224-0.00/6.31/10.

TABLE "A"

DIMENSIONS FROM TOP OF SLAB TO TOP EDGE OF WEB PLATE ON ℄ GIRDERS.

GIRDER LINE	℄ BRGS ABUT 1	1	2	℄ PIER 1	2	3	4	℄ PIER 2	4	5	℄ BRGS ABUT 2
A	14 15/16"	13 3/16"	-	13 5/8"	15 5/16"	13"	-	14 9/16"	15 5/16"	13 7/16"	14"
B	13 13/16"	13 3/16"	-	14 13/16"	15 3/8"	13"	15 3/8"	15 1/4"	-	13"	13 5/8"
C	13 1/16"	13 3/16"	15 1/2"	14 13/16"	-	13"	15 1/2"	14 5/8"	-	13"	14"
D	13"	-	15 1/2"	14"	-	13"	15 1/2"	14 1/8"	-	13"	14 7/16"

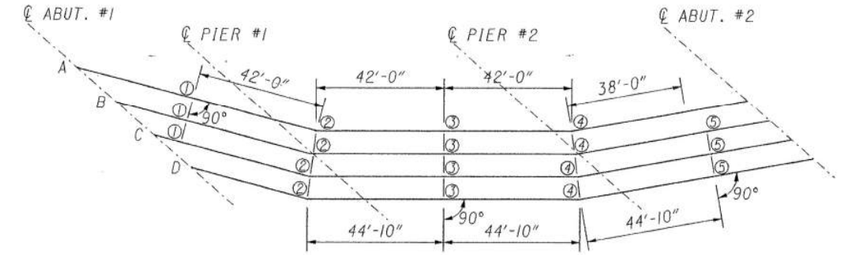

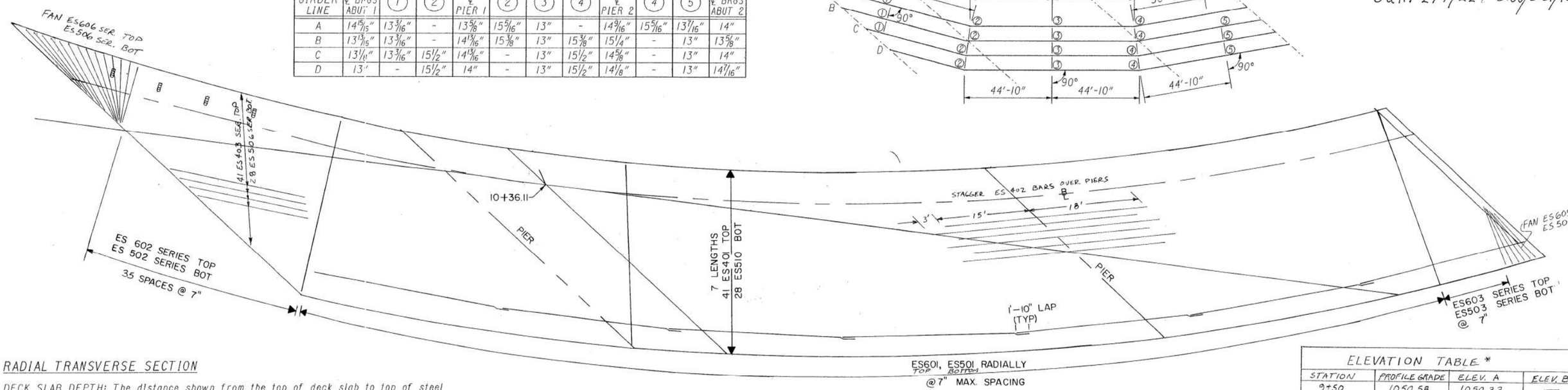

SLAB PLAN

RADIAL TRANSVERSE SECTION

DECK SLAB DEPTH: The distance shown from the top of deck slab to top of steel beam is the design dimension. The quantity of deck concrete to be paid for shall be based on this dimension, even though deviation from it may be necessary because the top flange of the beam may not have the exact camber or conformation required to place it parallel to the finished grade.

WELDED ATTACHMENT of supports for concrete deck finishing machine may be made to areas of the fascia stringer flanges designated "Compression". Attachments shall not be made to areas designated "Tension". Fillet welds to compression flanges shall not be closer than 1" from edge of flange, be not more than 2" long, and be not smaller than the minimum size required by AASHTO. see sheet 8/11 for tension and compression areas.

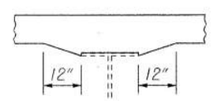

HAUNCH DETAIL

ELEVATION TABLE *

STATION	PROFILE GRADE	ELEV. A	ELEV. B
9+50	1050.58	1050.33	—
9+75	1051.53	1051.30	—
10+00	1052.53	1052.28	1054.45
10+25	1053.56	1053.33	1055.49
10+50	1054.58	1054.39	1056.50
10+75	1055.57	1055.37	1057.53
11+00	1056.53	1056.30	1058.49
11+25	1057.47	1057.22	1059.40
11+50	1058.38	1058.15	1060.31
11+75	1059.26	1059.01	1061.20

* ELEVATIONS A & B ARE ELEVATIONS BEFORE DECK CONCR HAS BEEN PLACED. PROFILE GRADE ELEVATIONS ARE ACTUAL FINISHED PROFILE ELEVATIONS.

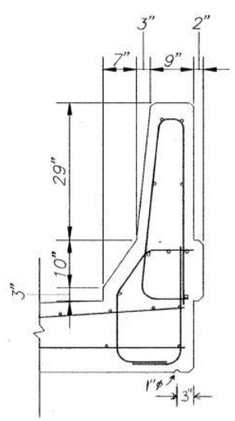

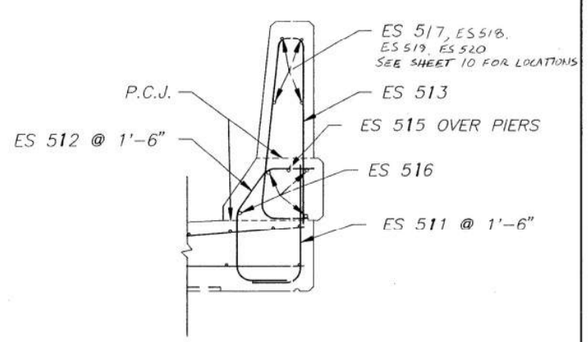

PARAPET DETAILS

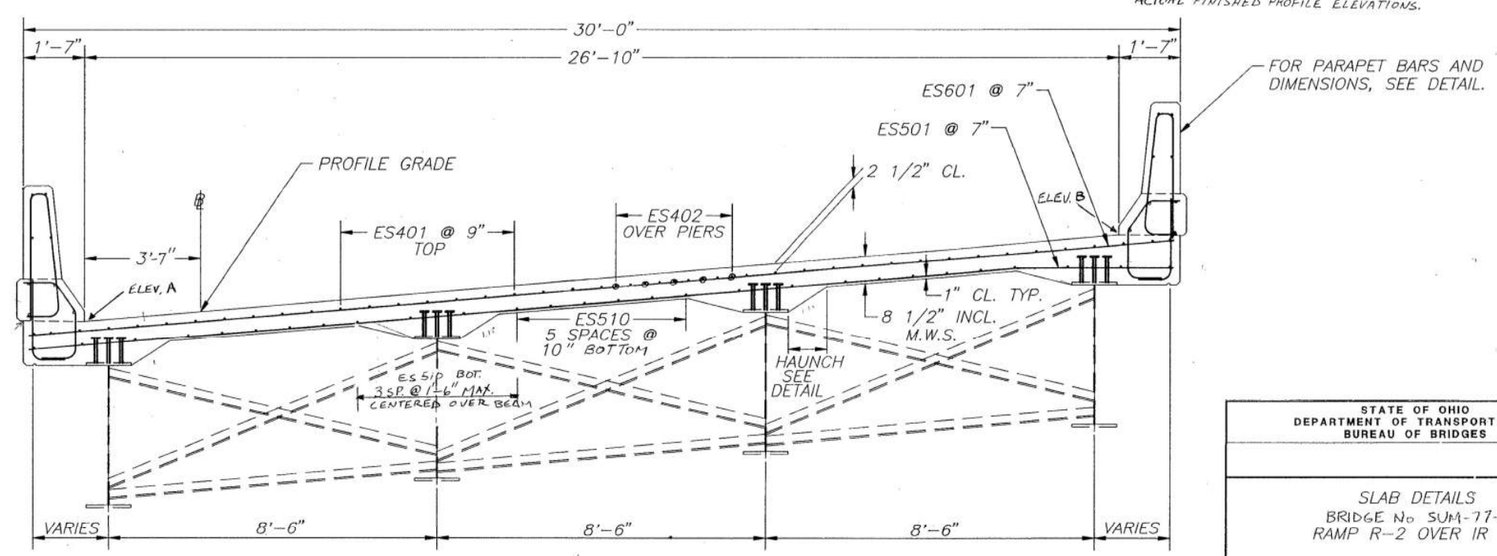

TRANSVERSE SECTION

12

STATE OF OHIO
DEPARTMENT OF TRANSPORTATION
BUREAU OF BRIDGES

SLAB DETAILS
BRIDGE No SUM-77-0328
RAMP R-2 OVER IR 77

I-277 SUMMIT CO.

DESIGNED	DRAWN	TRACED	CHECKED	REVIEWED	DATE
ST	SM		KS	GLB	7-13-93

F.H.W.A. REGION	STATE	PROJECT	FUND
5	OHIO		

SUM-277/224-0.00/6.31

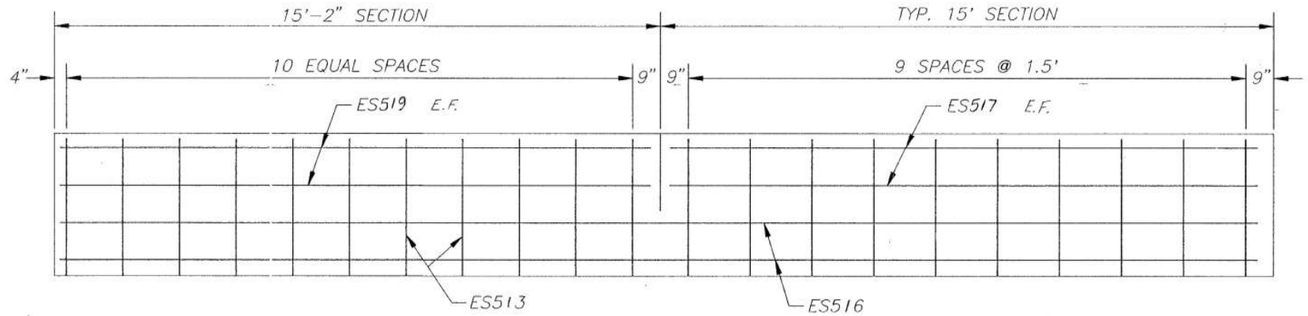

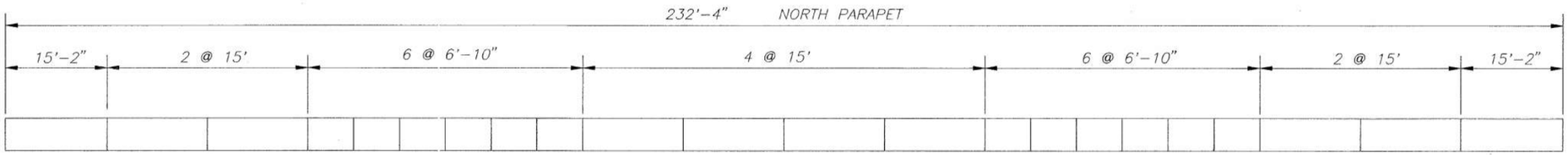

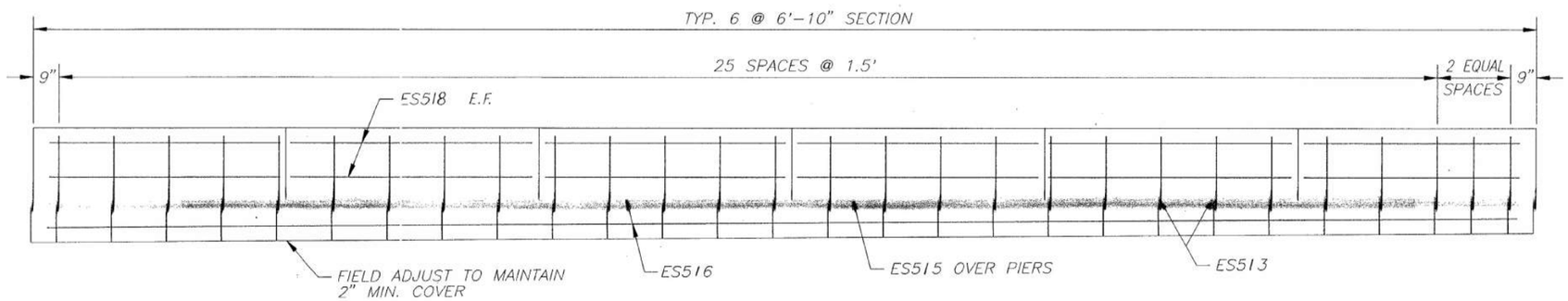

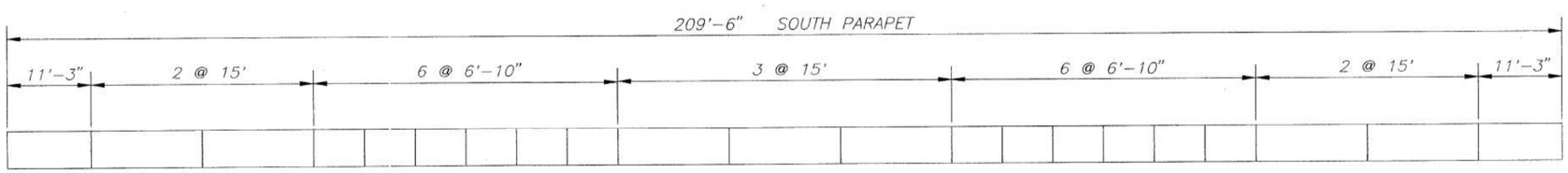

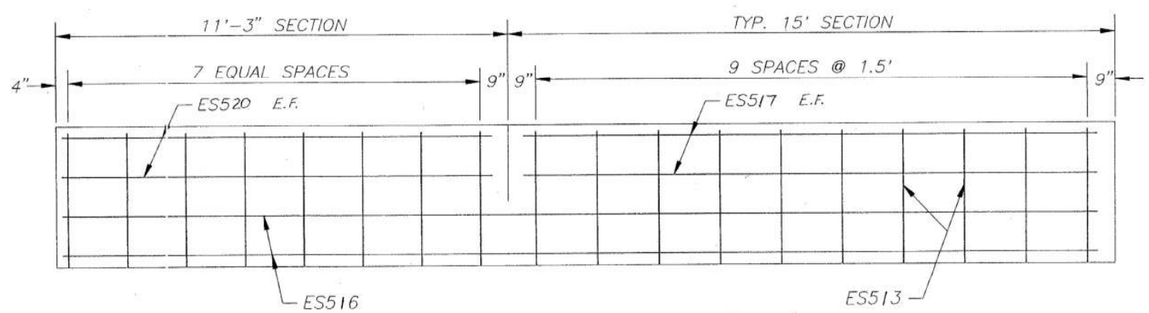

STATE OF OHIO
DEPARTMENT OF HIGHWAYS
BUREAU OF BRIDGES

BRIDGE No. SUM-77-09
RAMP R-2 OVER IR-
I-277 SUMMIT

DESIGNED	DRAWN	TRACED	CHECKED	REVIEWED
ST	SM		KS	

F.H.W.A. REGION	STATE	PROJECT NO.	FUNDS
5	OHIO		

SUM-277/224-0.00/6.31/10.2
BR. # SUM-77-0928

	MARK	NUMBER	LENGTH		TYPE	INCREMENT	WEIGHT
	STRUCTURE NO.: SUM-77-0930 ABUTMENT WINGWALLS						
	EY502	20	3'-0"		S		63
	EY503	24	6'-0"		S		150
*	EY504 SER	18	3'-1"	3'-10"	BENT	1-1/2"	65
	EY506	4	16'-8"		BENT		70
	EY507	24	16'-8"		S		417
	EY508	4	11'-6"		S		48
	EY509	4	10'-0"		S		42
	EY510	4	8'-6"		S		35
	EY512	8	3'-9"		S		31
**	EY513 SER	9	6'-6"	8'-2"	S	10"	69
	EY514 SER	7	3'-1"	3'-10"	BENT	1-1/2"	25
	EY516	2	15'-8"		BENT		33
	EY517	12	15'-8"		S		196
	EY518	2	10'-7"		S		22
	EY519	2	11'-5"		S		24
	EY520	2	10'-0"		S		21
	EY521	1	9'-0"		S		9
	EY522	4	5'-9"		S		24
***	EY523 SER	12	8'-7"	8'-10"	S	1"	109
	EY525 SER	3	6'-5"	8'-8"	S	1'-1 1/2"	24
	EY526	2	13'-8"		S		28
	EY527	14	13'-8"		S		200
	EY529	2	8'-6"		S		18
	EY530	2	6'-0"		S		13
	EY532	4	5'-2"		S		22
	EY533	9	6'-2"		S		58
	EX503	8	7'-6"		BENT		63
	EY601	21	7'-3"		BENT		229
**	EY611 SER	12	5'-5"	7'-1"	BENT	10"	113
	EY621 SER	3	5'-7"	7'-3"	BENT	10"	29
	TOTAL ABUTMENT WINGWALLS:						2,250 ✓
	STRUCTURE NO.: SUM-77-0930 SUPER STRUCTURE						
	ES401	287	30'-0"		S		5751
	ES402	82	33'-0"		S		1808
	ES403 SER	40	35'-4"	2'-10"	S	9-3/4"	510
	ES501	308	29'-8"		S		9530
	ES502 SER	36	29'-1"	10'-4"	S	6-1/4"	740
	ES503 SER	18	29'-1"		S	11-3/4"	381
	ES504	8	11'-6"		S		96
	ES505	10	9'-10"				103
	ES506 SER	27	35'-4"	2'-8 1/2"	S	14-1/2"	535
	ES510	196	30'-0"		S		6133
	ES511	300	2'-11 1/2"		BENT		888
	ES512	300	4'-5"		BENT		1304
	ES513	300	7'-6"		BENT		2347
	ES515	4	33'-0"		S		138
	ES516	68	24-10"		S		2536
	ES517	60	14'-8"		S		918
	ES518	96	6'-6"		S		659
	ES519	8	14'-8"		S		122
	ES520	8	10'-9"		S		90
	ES601	308	29'-8"		S		13724
	ES602 SER	36	29'-1"	10'-4"	S	6-1/4"	1066
	ES603 SER	18	29'-1"	11'-6"	S	11-3/4"	549
	ES604	8	11'-6"		S		138

* 3 SETS OF 6
** 3 SETS OF 3
*** 4 SETS OF 3

MARK	NUMBER	LENGTH		TYPE	INCREMENT	WEIGHT
STRUCTURE NO.: SUM-77-0930 SUPER STRUCTURE con't.						
ES605	10	9'-10"		S		549
ES606 SER	27	35'-4"	2'-8 1/2"	S	14-1/2"	138
ED 801	60	4'-6"		BENT		721
TOTAL SUPER-STRUCTURE:						51,474
STRUCTURE NO.: SUM-77-0930 ABUTMENT WINGWALLS						
EA501	5	31'-0"		S		162
EA502	10	32'-9"		S		342
EA503	5	35'-8"		S		186
EA504	10	29'-2"		S		304
EA511	5	5'-6"		BENT		29
EA512	5	8'-4"		BENT		43
EA513	5	6'-6"		BENT		34
EA601	14	8'-2 1/2"	9'-1"	BENT	13/16"	181
EA602	14	3'-10"	2'-11 1/2"	S	13/16"	71
EA603	16	8'-11 1/2"	9'-11 1/2"	BENT	13/16"	207
EA604	16	3'-10 1/2"	2'-10 1/2"	S	13/16"	81
EA605	16	8'-0 1/2"	9'-0 1/2"	BENT	13/16"	205
EA606	16	3'-9 1/2"	2'-9 1/2"	S	13/16"	79
EA607	14	8'-1 1/4"	8'-11 3/4"	BENT	13/16"	179
EA608	14	3'-8 3/4"	2'-10 1/4"	S	13/16"	69
EA610	4	10'-10 1/2"	10'-7 1/2"	BENT	1"	65
EA611	4	5'-7 1/2"	5'-4 1/2"	S	1"	33
EA612	11	10'-10 3/4"	10'-0 3/4"	BENT	1"	173
EA613	11	5'-7 3/4"	4'-9 3/4"	S	1"	86
EA614	11	10'-10"	10'-0"	BENT	1"	172
EA615	11	5'-7"	4'-9"	S	1"	85
EA616	6	10'-4 1/2"	9'-11 1/2"	BENT	1"	91
EA617	6	5'-1 1/2"	4'-8 1/2"	S	1"	44
TOTAL ABUTMENT:						2,921 ✓
SHEET TOTAL:						56,645

NOTE:
REFER TO CONSTRUCTION AND MATERIAL SPECIFICATIONS SECTIONS 106.03 700, 709.01 THRU 709.13, AND 509.08 FOR SPECIFICATIONS AND SAMPLING.

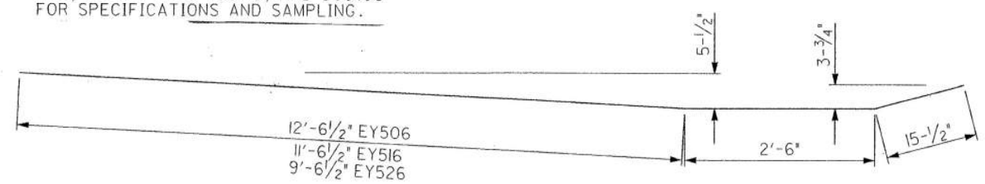

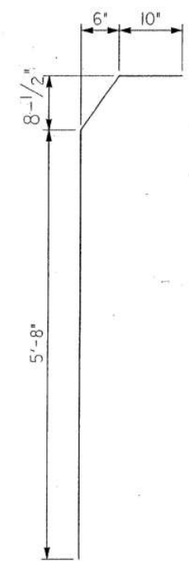

EY601

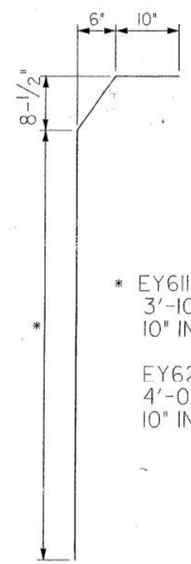

EY611
EY621

* EY611 SER.
3'-10" TO 5'-6"
10" INCR.

EY621 SER.
4'-0" TO 5'-8"
10" INCR.

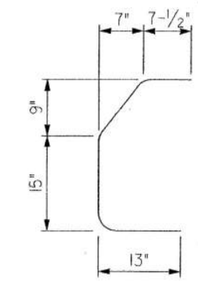

ES512

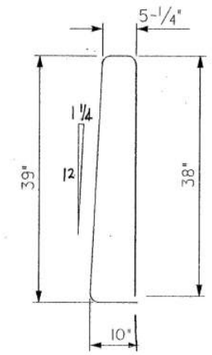

ES513
EX503

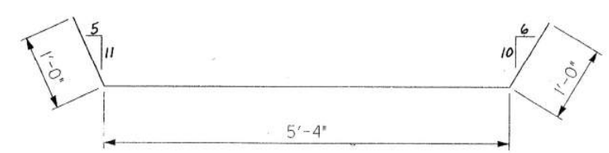

EA512

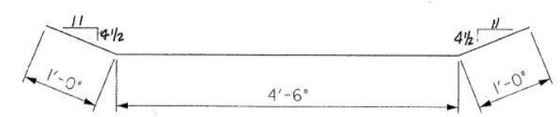

EA513

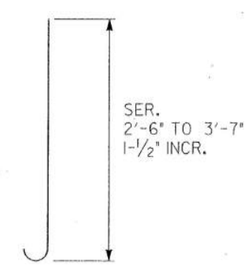

EY504
EY514

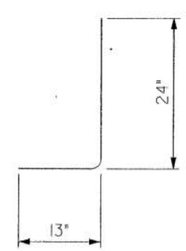

EY511

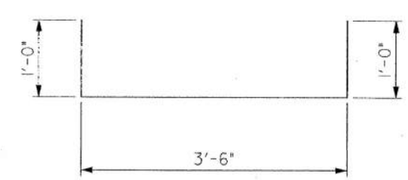

EA511

STATE OF OHIO
DEPARTMENT OF TRANSPORTATION
BUREAU OF BRIDGES

REINFORCING SCHEDUL

BRIDGE NO. SUM-77-0928
RAMP R-2 OVER IR-77
I-277 SUMMIT COUNT

DESIGNED	DRAWN	TRACED	CHECKED	REVIEWED	DATE
ST	PZ		KS	GLR	7-13-93

SM-PZ, 07/09/93

ESTIMATED QUANTITIES

COMPLETED BY RB DATE 8-93
CHECKED BY GLB DATE 8-93

F.H.W.A. REGION	STATE	PROJECT NO.	FUNDS
5	OHIO		

SUM-277/224-0.00/6.31/10.2

STRUCTURE NUMBER												ITEM	ITEM EXT.	TOTAL	UNIT	DESCRIPTION
SUM-277		SUM-277		SUM-277		SUM-277		SUM-277		SUM-224						
0115 L	0115 R	0134 L	0134 R	0305 L	0305 R	0374 L	0374 R	0953 L		1061 L	1061 R					
LUMP	LUMP	LUMP	LUMP	LUMP	LUMP	LUMP	LUMP	LUMP		LUMP	LUMP	202	11200	LUMP		PORTIONS OF STRUCTURES REMOVED
1201	1201	1201	1154	659	659							202	11305	6075	SQ. YDS.	PORTIONS OF STRUCTURES REMOVED, AS PER PLAN
						2971	2971	620		834	834	202	23500	8230	SQ. YDS.	WEARING COURSE REMOVED
140.5	140.5	122	122			121.5	121.5	79				202	98200	847	LIN. FT.	REMOVAL MISC.: EXISTING VERTICAL EXTENSION OF STRUCTURAL EXPANSION JOIN
14103	13108	14700	11778	10353	8646	32900	30514	9884		5818	6501	509	15840	158305	POUND	EPOXY COATED REINFORCING STEEL, GRADE 60
352	352	347	343	206	206	825	824	720		260	260	510	11100	4695	EACH	DOWEL HOLES
86	86	86	85	48	43	207	207	69		52	51	511	34401	1020	CU. YDS.	CLASS S CONCRETE, SUPERSTRUCTURE, AS PER PLAN SEE SHT. NO. 176
100	100	100	100									513	11101	400	POUND	STRUCTURAL STEEL (AISC CATEGORY I), AS PER PLAN SEE SHT. NO. 176
								8				513	18500	8	EACH	BEARING DEVICE (JACKED), RESET AND/OR SHIMMED
146	146	126.5	126.5			126.5	126.5	85				516	11211	883	LIN. FT.	STRUCTURAL EXPANSION JOINTS INCLUDING ELASTOMERIC STRIP SEALS, AS PER PLAN
10	10	10	10	16	16	25	25	5				518	12800	127	EACH	SCUPPER MODIFICATION ⊙
25	25	25	25	25	25	75	75			25	25	519	11100	350	SQ. FT.	PATCHING CONCRETE STRUCTURES
225	225	100	100	75	75					50	50	520	11100	900	SQ. FT.	PNEUMATICALLY PLACED MORTAR
601	601	597	589	323	332	1406	1448	492		418	418	SPECIAL	51267502	7225	SQ YDS.	SEALING OF CONCRETE SURFACES (EPOXY) ⊙
25672	25672	29400	29400			36700	16625					SPECIAL	51400050	110144	SQ. FT.	SURFACE PREPARATION OF EXISTING STEEL, SYSTEM OZEU ⊙
25672	25672	29400	29400			36700	16625					SPECIAL	51400056	110144	SQ. FT.	FIELD PAINTING OF EXISTING STEEL, PRIME COAT, SYSTEM OZEU ⊙
25672	25672	29400	29400			36700	16625					SPECIAL	51400060	110144	SQ. FT.	FIELD PAINTING OF EXISTING STEEL, INTERMEDIATE COAT, SYSTEM OZEU ⊙
25672	25672	29400	29400			36700	16625					SPECIAL	51400066	110144	SQ. FT.	FIELD PAINTING OF EXISTING STEEL, FINISH COAT, SYSTEM OZEU ⊙
600	600	700	700			40	20					SPECIAL	51400500	2660	LIN. FT.	CAULKING ⊙
100	100	120	120			120	60					SPECIAL	51400504	620	MAN HOURS	GRINDING FINS, TEARS, SLIVERS ⊙
2990	2990	2950	2950			6440	4012					SPECIAL	51400508	22332	LIN. FT.	GRINDING FLANGE EDGES ⊙
10	10	10	10									SPECIAL	51862200	40	EACH	STRUCTURE DRAINAGE, MISC.: FOOTER DRAIN REPLACEMENT
1201	1201	1194	1181	659	659	2971	2971	620		834	834	SPECIAL	51922400	14325	SQ. YDS.	SURFACE PREPARATION USING HYDRODEMOLITION ⊙
1299	1299	1281	1268	674	688	3059	3110	644		861	861	SPECIAL	51922006	15044	SQ. YDS.	MICRO-SILICA MODIFIED CONCRETE OVERLAY (2 3/4" THICK), ⊙
43	43	41	41	22	22	156	156	20		44	44	SPECIAL	51922100	632	CU. YDS.	MICRO-SILICA MODIFIED CONCRETE OVERLAY (VARIABLE THICKNESS) ⊙
LUMP	LUMP	LUMP	LUMP	LUMP	LUMP	LUMP	LUMP	LUMP		LUMP	LUMP	SPECIAL	51922300	LUMP		TEST SLAB

⊙ SEE PROPOSAL NOTE

BRIDGE NOTES

F.H.W.A. REGION	STATE	PROJECT NO.	FUNDS
5	OHIO		

SUM - 277/224 - 0.00/6.31/10.

BENCHMARKS

NEW BENCHMARK DISKS SHALL BE PROVIDED BY O.D.O.T. AND SET IN PLACE ON A HORIZONTAL SURFACE OF THE ABUTMENT OR WINGWALL BY THE CONTRACTOR. THE PLACEMENT OF THE DISK SHALL BE SUCH THAT ACCESS TO THE DISK WILL NOT BE IMPEDED BY GUARDRAIL, BRIDGE RAILING, OR ANY PORTION OF THE STRUCTURE. THE DISK SHALL NOT BE PLACED IN AN AREA THAT IS SUBJECT TO ROADWAY TRAFFIC, ROADWAY DRAINAGE, OR FUTURE RESURFACING. AFTER COMPLETION OF THE PROJECT, O.D.O.T. SHALL RE-ESTABLISH THE ELEVATION. ANY EXISTING BENCHMARK DISK THAT IS DISTURBED BY THE CONTRACTOR DURING DEMOLITION SHALL BE CAREFULLY REMOVED AND STORED FOR SALVAGE BY DISTRICT SURVEY CREWS. ALL COSTS FOR THE ABOVE DESCRIBED WORK SHALL BE INCIDENTAL TO, AND INCLUDED IN, THE UNIT PRICE BID FOR ITEM 511 CONCRETE, CLASS "S".

ITEM 202 REMOVAL MISC.: EXISTING VERTICAL EXTENSION OF STRUCTURAL EXPANSION JOINTS

THIS ITEM SHALL CONSIST OF REMOVING THE EXISTING VERTICAL EXTENSION STEEL AND TRIMMING THE EXISTING 8x4x1 ANGLE AND GRINDING IT AND THE 2" BAR FLUSH AS SHOWN ON SHEET # 183 .

MEASUREMENT WILL BE THE ACTUAL NUMBER OF LINEAR FEET OF EXISTING EXPANSION JOINT.

PAYMENT TO DO THE ABOVE WORK SHALL BE MADE AT THE UNIT BID PRICE FOR ITEM 202 REMOVAL MISC.: EXISTING VERTICAL EXTENSION OF STRUCTURAL EXPANSION JOINT.

REPLACEMENT OF EXISTING END CROSSFRAMES

ANY EXISTING END CROSSFRAMES ON STRUCTURES 0115 AND 0134 DEEMED BY THE ENGINEER TO BE UNSUITABLE BECAUSE OF CORROSION SHALL BE REPLACED WITH NEW A36 STRUCTURAL STEEL. REPLACEMENT STRUCTURAL STEEL SHALL BE PAID FOR AT THE BASE BID UNIT PRICE FOR ITEM 513 STRUCTURAL STEEL (AISC CATEGORY 1), AS PER PLAN. THE REQUIREMENT OF 501.05 SHOP DRAWINGS IS WAIVED. REMOVAL OF EXISTING STEEL CROSSFRAMES SHALL BE INCLUDED WITH THIS ITEM, FOR PAYMENT.
ALL WORK SHALL BE DONE IN ACCORDANCE WITH STANDARD BRIDGE DRAWING SD-1-69. ESTIMATED QUANTITIES ARE SHOWN BELOW:

BRIDGE No.	WEIGHT
SUM-277-0115	200 lbs.
SUM-277-0134	200 lbs.

ITEM 520 PNEUMATICALLY PLACED MORTAR

THIS OPERATION SHALL BE PERFORMED IN ACCORDANCE WITH ITEM 520 AND PREPARATION SHALL INCLUDE THE USE OF AN EPOXY BONDING AGENT. THIS ITEM SHALL BE USED ON DETERIORATED SECTIONS OF EXISTING PIERS, ABUTMENTS, DECK UNDERSIDES, AND AS DIRECTED BY THE ENGINEER.

COST OF ALL EQUIPMENT, MATERIAL, AND LABOR REQUIRED TO REPAIR THESE AREAS SHALL BE INCLUDED IN THE UNIT PRICE BID FOR ITEM 520 PNEUMATICALLY PLACED MORTAR.

AN ESTIMATED QUANTITY, AS ITEMIZED BELOW, HAS BEEN CARRIED TO THE GENERAL SUMMARY.

	#0115	#0134	#0305	#1061
REAR ABUTMENT	200 S.F.	100 S.F.	100 S.F.	
FWD. ABUTMENT	200 S.F.	100 S.F.	100 S.F.	
PIERS (TOP)				100 S.F.

MISCELLANEOUS NOTES

REFER TO STANDARD BRIDGE DRAWINGS BR-1, AS-1-81, AND EXJ-4-87 FOR DETAILS NOT SHOWN ON THE FOLLOWING SHEETS FOR THE PROPOSED CONSTRUCTION.

ITEM SPECIAL SEALING OF CONCRETE SURFACES (EPOXY)

EPOXY SEALANT SHALL BE APPLIED TO THE PARAPETS, MEDIAN PARAPETS, ABUTMENTS, BACKWALLS, WINGWALLS, PIERS, AND PIER CAPS OF ALL BRIDGES. THESE QUANTITIES ARE REFLECTED IN THE GENERAL SUMMARY FOR EACH BRIDGE. SEE DETAILS FOR LIMITS OF SEALING ON SHEET # 182 .

ITEM 511 CLASS S CONCRETE SUPERSTRUCTURE, AS PER PLAN

THIS ITEM SHALL BE USED TO RECONSTRUCT EXISTING PARAPETS AND THE FULL DEPTH PORTIONS OF THE DECKS IN THE MEDIAN AS DETAILED ON THE FOLLOWING SHEETS.

ALL COST OF REMOVAL SHALL BE INCLUDED UNDER ITEM 202 PORTIONS OF STRUCTURES REMOVED, (LUMP).

SURFACE PREPARATION

PRIOR TO PLACING THE NEW WALL, ALL SURFACES TO WHICH THE WALL IS TO BOND, INCLUDING EXPOSED REINFORCING AND STRUCTURAL STEEL, SHALL BE CLEANED BY AN APPROVED METHOD OF WATER BLASTING ONLY. THESE SURFACES SHALL BE MADE FREE OF SPALLS, LAITANCE, AND ALL TRAICES OF FOREIGN MATERIAL. IF NECESSARY, DETERGENT CLEANING SHALL PRECEDE BLAST CLEANING TO ENSURE THE REMOVAL OF CONTAMINANTS DETRIMENTAL TO ACHIEVING AN ADEQUATE BOND.

PAYMENT SHALL BE MADE AT THE UNIT BID PRICE FOR THE CALCULATED NUMBER OF CUBIC YARDS.

ITEM 202 PORTIONS OF STRUCTURES REMOVED, LUMP

THIS ITEM SHALL BE USED TO REMOVE THE EXISTING PARAPETS FROM ALL THE BRIDGES AND WINGWALLS AND FULL DEPTH PORTIONS OF THE DECKS AT THE JOINT IN THE MEDIAN ON STRUCTURES # 0115, 0134, 0305 AND 0374 AS SHOWN ON THE FOLLOWING SHEETS. ALL LOOSE, SOFT, HONEYCOMBED, AND DISINTEGRATED CONCRETE PLUS 1/4" DEPTH OF SOUND SHALL BE REMOVED. AFTER COMPLETION OF THE REMOVAL OPERATION, THE ENGINEER SHALL SOUND THE REMAINING CONCRETE TO ENSURE THAT ONLY SOUND CONCRETE REMAINS. ALL WORK SHALL BE BE DONE IN SUCH A MANNER AS NOT TO DAMAGE OR SHATTER THE CONCRETE THAT IS TO REMAIN. CONCRETE MAY BE REMOVED BY CHIPPING OR HAND DRESSING. CHIPPING HAMMERS SHALL NOT BE HEAVIER THAN THE NOMINAL 35 POUND CLASS.

THE EXISTING REINFORCING STEEL SHALL BE CUT AS SHOWN ON THE PARAPET DETAILS.

RAILINGS AND POSTS SHALL BE REMOVED AND WILL BECOME THE PROPERTY OF THE CITY OF AKRON. CONTACT SHALL BE MADE TO MR. JIM BECKETT (216)375-2831 TO ARRANGE FOR DELIVERY TO A SPECIFIED LOCATION.

ALL COSTS OF LABOR, MATERIAL AND EQUIPMENT NECESSARY TO PERFORM THE ABOVE OPERATION SHALL BE INCLUDED UNDER ITEM 202 PORTIONS OF STRUCTURES REMOVED, LUMP.

BRIDGE PAINTING

STRUCTURE No. SUM-277-0374 HAS BEEN PARTIALLY PAINTED UNDER ANOTHER CONTRACT. THE REMAINDER SHALL BE PAINTED AS DETAILED ON SHEET No. 196.

DUST CONTROL

IN CASE OF SAND BLASTING AND/OR THE CLEANING OF BRIDGE DECKS PRIOR TO PLACEMENT OF THE OVERLAY AND PAVEMENT GRINDING, THE CONTRACTOR SHALL BE REQUIRED TO PERFORM ADDITIONAL WORK; SUPPLY ADDITIONAL EQUIPMENT OR ERECT TEMPORARY PROTECTIVE SCREENING TO PROTECT ADJACENT TRAFFIC AND PROPERTY FROM THE DUST ORIGINATING FROM THOSE OPERATIONS. THE CONTRACTOR SHALL SUBMIT HIS METHOD OF CONTROLLING DUST FOR APPROVAL TO THE ENGINEER AT LEAST ONE WEEK PRIOR TO BEGINNING WORK. THESE PROVISIONS SHALL BE PROVIDED AT NO ADDITIONAL COST TO THE PROJECT. THIS REQUIREMENT IS IN ADDITION TO THE PROVISIONS OF SECTION 107.12 OF THE SPECIFICATIONS AND SHALL NOT RELIEVE THE CONTRACTOR FROM HIS OBLIGATION TO PROTECT PROPERTY FROM HIS OTHER OPERATIONS, AND RESTORE IT IF DAMAGED.

STRUCTURE REPAIR METHODS

THE QUANTITIES LISTED ON THE ESTIMATED QUANTITIES SHEET ARE AN ESTIMATED AMOUNT OF REPAIR REQUIRED TO REHABILITATE THE STRUCTURE. THESE QUANTITIES ARE BASED ON VISUAL INSPECTION OF THE EXISTING STRUCTURE AND ARE NOT TO BE CONSIDERED TO REPRESENT THE EXACT AMOUNT OF REPAIR REQUIRED TO REHABILITATE THE BRIDGE. PAYMENT WILL BE BASED ON THE ACTUAL WORK PERFORMED AT THE UNIT PRICE BID FOR THE PERTINENT REPAIR ITEM, AS DIRECTED BY THE ENGINEER.

EXISTING STRUCTURE VERIFICATION

DETAILS AND DIMENSIONS SHOWN ON THESE PLANS PERTAINING TO THE EXIST STRUCTURE HAVE BEEN OBTAINED FROM PLANS OF THE EXISTING STRUCTURE AND FR FIELD OBSERVATIONS AND MEASUREMENTS. CONSEQUENTLY, THEY ARE INDICATIVE OF T EXISTING STRUCTURE AND THE PROPOSED WORK BUT THEY SHALL BE CONSIDERED TENTAT AND APPROXIMATE. THE CONTRACTOR IS REFEREED TO CMS SECTIONS 102.05, 105.02 A 513.02.

CONTRACT BID PRICES SHALL BE BASED UPON A RECOGNITION OF THE UNCERTAINT DESCRIBED ABOVE AND UPON A PREBID EXAMINATION OF THE EXISTING STRUCTURE BY T CONTRACTOR. HOWEVER, ALL PROJECT WORK SHALL BE BASED UPON ACTUAL DETAILS A DIMENSIONS WHICH HAVE BEEN VERIFIED BY THE CONTRACTOR IN THE FIELD.

EXISTING OVERLAYS REMOVED FROM BRIDGE DECKS

REMOVE THE EXISTING ASPHALT CONCRETEOVERLAY FROM STRUCTURE No's. 0374, 1061 A 0953L. THE GRADE FOLLOWING THIS REMOVAL OPERATION WILL NOW BE THE ORIGINAL DE SURFACE GRADE. THE ABOVE DESCRIBED REMOVAL WILL BE REMOVED UNDER ITEM 2 WEARING COURSE REMOVED.

REMOVE THE EXISTING 1 1/4" THICK LATEX MODIFIED CONCRETE OVERLAY FROM STRUCTUR No's. 0115, 0134 AND 0305. THE GRADE FOLLOWING THIS REMOVAL OPERATION WILL N BE 1/4" BELOW THE ORIGINAL DECK SURFACE GRADE. THE ABOVE DESCRIBED REMOVAL SH BE AS PER ITEM 254 PAVEMENT PLANING AND PAID FOR AS PORTIONS OF STRUCTUR REMOVED, AS PER PLAN, SQ. YD.

CONCRETE BRIDGE DECK SURFACE PREPARATION USING HYDRO DEMOLITI

REMOVE A UNIFORM DEPTH OF 1" AND ALL DETERIORATED MATERIAL BELOWTHIS LEV FROM STRUCTURE No's. 0115, 0134 AND 0305. THIS WORK SHALL BE PERFORMED AFT THE "PORTION OF STRUCTURE REMOVED AS PER PLAN WORK ON THE ABOVE NAMED STRUCTUR HAS BEEN PERFORMED."

REMOVE A UNIFORM DEPTH OF 1 1/4" AND ALL DETERIORATED MATERIAL BELOW THIS LEV FROM STRUCTURE No's. 0374, 1061 AND 0953L. THIS WORK SHALL BE PERFORMED AFT THE "ITEM 202 WEARING COURSE REMOVED HAS BEEN PERFORMED."

STATE OF OHIO
DEPARTMENT OF TRANSPORTATION
BUREAU OF BRIDGES

BRIDGE NOTES

BRIDGE Nos. SUM-277-0115, 0134, SUM-277-0305, 0374, SUM-224-1061 & SUM-77-0953L

DESIGNED	DRAWN	TRACED	CHECKED	REVIEWED	DATE
LS	RB				

F.H.W.A. REGION	STATE	PROJECT NO.	FUNDS
5	OHIO		

SUM - 277/224 - 0.00/6.31/10.22

BRIDGE NOTES

SUMMARY OF WORK REQUIRED ON BRIDGES

BRIDGE No. SUM-277-0115
- REMOVE TOP 2" OF EXISTING DECK. REPLACE WITH UNIFORM 2¾" THICKNESS OF MICRO-SILICA MODIFIED CONCRETE AND VARIABLE THICKNESS AT SOME LOCATIONS.
- RETROFIT PARAPETS WITH SAFETY SHAPE.
- MODIFY EXPANSION JOINTS WITH STRIP SEALS.
- REPLACE CORRODED END CROSSFRAMES.
- REPLACE FOOTER DRAINS AT ABUTMENTS.
- SEAL ALL CONCRETE SURFACES WITH EPOXY.
- PATCH SPALLED CONCRETE AREAS (LOCATIONS OUTLINED BY ODOT).
- REPAIR SLOPE PROTECTION (QUANTITY CARRIED TO ROADWAY).
- CONSTRUCT CONCRETE BARRIER IN MEDIAN.
- PAINT STRUCTURAL STEEL.

BRIDGE No. SUM-277-0134
- REMOVE 2" OF EXISTING DECK. REPLACE WITH UNIFORM 2¾" THICKNESS OF MICRO-SILICA MODIFIED CONCRETE AND VARIABLE THICKNESS AT SOME LOCATIONS.
- RETROFIT PARAPETS WITH SAFETY SHAPE.
- MODIFY EXPANSION JOINTS WITH STRIP SEALS.
- REPLACE CORRODED END CROSSFRAMES.
- REPLACE FOOTER DRAINS AT ABUTMENTS.
- SEAL ALL CONCRETE SURFACES WITH EPOXY.
- PATCH SPALLED CONCRETE AREAS (LOCATIONS OUTLINED BY ODOT).
- REPAIR SLOPE PROTECTION (QUANTITY CARRIED TO ROADWAY).
- PAINT STRUCTURAL STEEL.
- CONSTRUCT CONCRETE BARRIER IN MEDIAN.

BRIDGE No. SUM-277-0305
- REMOVE TOP 2" OF EXISTING DECK. REPLACE WITH UNIFORM 2¾" THICKNESS OF MICRO-SILICA MODIFIED CONCRETE AND VARIABLE THICKNESS AT SOME LOCATIONS.
- RETROFIT PARAPETS WITH SAFETY SHAPE.
- REPLACE SOUTHWEST APPROACH SLAB (QUANTITIES CARRIED TO ROADWAY).
- SEAL ALL CONCRETE SURFACES WITH EPOXY.

BRIDGE No. SUM-277-0374
- REMOVE ASPHALT WEARING COURSE AND 1" OF EXISTING DECK. REPLACE WITH UNIFORM 2¾" THICKNESS OF MICRO-SILICA MODIFIED CONCRETE AND VARIABLE THICKNESS AT SOME LOCATIONS.
- RETROFIT PARAPETS WITH SAFETY SHAPE.
- MODIFY EXPANSION JOINTS WITH STRIP SEALS.
- PATCH SPALLED CONCRETE AREAS (LOCATIONS OUTLINED BY ODOT).
- RESET ALL ROCKERS AT BOTH ABUTMENTS.
- CONSTRUCT CONCRETE BARRIER IN MEDIAN.

BRIDGE No. SUM-224-1061
- REMOVE ASPHALT WEARING COURSE AND 1" OF EXISTING DECK. REPLACE WITH UNIFORM 2¾" THICKNESS OF MICRO-SILICA MODIFIED CONCRETE AND VARIABLE THICKNESS AT SOME LOCATIONS.
- RETROFIT PARAPETS WITH SAFETY SHAPE.
- REPAIR SLOPE PROTECTION (QUANTITY CARRIED TO ROADWAY).
- PATCH TOP OF PIERS (LOCATIONS OUTLINED BY ODOT).
- SEAL CONCRETE SURFACES WITH EPOXY.
- CONSTRUCT CONCRETE BARRIER IN MEDIAN.
- REPAIR EROSION AT SOUTHWEST ABUTMENT CORNER.

BRIDGE No. SUM-77-0953L
- REMOVE ASPHALT WEARING COURSE AND 1" OF EXISTING DECK. REPLACE WITH UNIFORM 2¾" THICKNESS OF MICRO-SILICA MODIFIED CONCRETE AND VARIABLE THICKNESS AT SOME LOCATIONS.
- RETROFIT PARAPETS WITH SAFETY SHAPE.
- MODIFY EXPANSION JOINTS WITH STRIP SEALS.
- SEAL CONCRETE SURFACES WITH EPOXY.
- RESET ALL ROCKERS AT BOTH ABUTMENTS.

ITEM 519 PATCHING CONCRETE STRUCTURE

A QUANTITY OF 150 SQ. FT. FOR STRUCTURE No. 0374 AND 50 SQ. FT. FOR REMAINING STRUCTURES IS CARRIED TO THE GENERAL SUMMARY TO BE USED AS DIRECTED BY THE ENGINEER.

ITEM 516 STRUCTURAL EXPANSION JOINT INCLUDING ELASTOMERIC STRIP SEAL, AS PER PLAN

THIS ITEM SHALL INCLUDE ALL EQUIPMENT, MATERIAL, AND LABOR NECESSARY TO CONSTRUCT THE STRIP SEAL SYSTEM AS DETAILED IN THE FOLLOWING SHEETS.

EXPANSION JOINT INFORMATION

BRIDGE NUMBER 0115 L/R

DIMENSION 'A'

LOCATION	GLAND SIZE	30°	40°	50°	60°	70°	80°	90°
ABUT. 1	3"	2 3/16"	2 1/8"	2 1/16"	2"	1 15/16"	1 7/8"	1 13/16"
ABUT. 2	4"	2 7/8"	2 3/4"	2 5/8"	2 1/2"	2 3/8"	2 1/4"	2 1/8"

BRIDGE NUMBER 0134 L/R

DIMENSION 'A'

LOCATION	GLAND SIZE	30°	40°	50°	60°	70°	80°	90°
ABUT. 1	3"	2 3/16"	2 1/8"	2 1/16"	2"	1 15/16"	1 7/8"	1 13/16"
ABUT. 2	3"	2 3/8"	2 1/4"	2 1/8"	2"	1 7/8"	1 3/4"	1 5/8"

BRIDGE NUMBER 0374 L/R

DIMENSION 'A'

LOCATION	GLAND SIZE	30°	40°	50°	60°	70°	80°	90°
ABUT. 1	4"	3 1/16"	2 7/8"	2 11/16"	2 1/2"	2 5/16"	2 1/8"	1 15/16"
ABUT. 2	4"	3 1/16"	2 7/8"	2 11/16"	2 1/2"	2 5/16"	2 1/8"	1 15/16"

BRIDGE NUMBER 0953

DIMENSION 'A'

LOCATION	GLAND SIZE	30°	40°	50°	60°	70°	80°	90°
ABUT. 1	3"	2 3/16"	2 1/8"	2 1/16"	2"	1 15/16"	1 7/8"	1 13/16"
ABUT. 2	3"	2 7/16"	2 3/8"	2 5/16"	2 1/4"	2 3/16"	2 1/8"	2 1/16"

ITEM 601 - CONCRETE SLOPE PROTECTION, AS PER PLAN

THIS ITEM WAS PROVIDED FOR REPLACING THE EXISTING BROKEN CONCRETE SLABS. IT SHALL BE CONSTRUCTED IN ACCORDANCE WITH ITEM 601.06 EXCEPT THAT THE THICKENING OF SLAB ALONG THE BOTTOM EDGE IS NOT REQUIRED.

ITEM 601: #0115 - 20 SQ. YD.
#0134 - 50 SQ. YD.
#1061 - 15 SQ. YD.
65 SQ. YD. (CARRIED TO SHT. No. 36)

ITEM 518 - STRUCTURE DRAINAGE, MISC.: FOOTER DRAIN REPLACEMENT

THIS ITEM SHALL BE PERFORMED AT THE ABUTMENTS OF STRUCTURES SUM-277-0115 AND SUM-277-0134. THIS ITEM SHALL INCLUDE THE REMOVAL OF THE EXISTING PIPE, PLACEMENT OF A NEW NON-PERFORATED 6" CORREGATED METAL PIPE, COUPLING, BACKFILL AND ALL EQUIPMENT, MATERIALS AND LABOR TO COMPLETE THIS ITEM AS DETAILED. PAYMENT SHALL BE MADE UNDER ITEM 518 - STRUCTURE DRAINAGE, MISC.: FOOTER DRAIN REPLACEMENT, EACH. SAWING, REMOVAL AND REPLACEMENT OF CONCRETE SLOPE PROTECTION NECESSARY TO COMPLETE THE PIPE REPLACEMENT OPERATION SHALL BE PAID FOR UNDER ITEM 202 - REMOVAL MISC.: CONCRETE SLOPE PROTECTION AND ITEM 601 - CONCRETE SLOPE PROTECTION, AS PER PLAN.

ITEM 518: #0115 - 20 EACH #0134 - 20 EACH (CARRIED TO SHT. No. 175)
ITEM 202: #0115 - 25 SQ. YD. #0134 - 16 SQ. YD. (CARRIED TO SHT. No. 36)
ITEM 601: #0115 - 25 SQ. YD. # 0134 - 16 SQ. YD. (CARRIED TO SHT. No. 36)

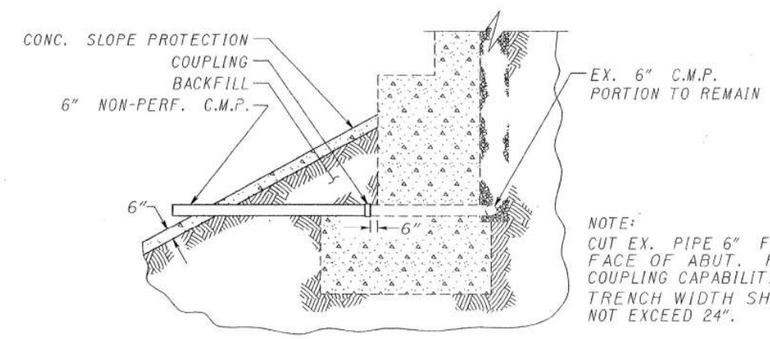

FOOTER DRAIN REPLACEMENT DETAIL

STATE OF OHIO
DEPARTMENT OF TRANSPORTATION
BUREAU OF BRIDGES

BRIDGE NOTES

BRIDGE Nos. SUM-277-0115, 0134, SUM-277-0305, 0374, SUM-224-1061 & SUM-77-0953L

DESIGNED	DRAWN	TRACED	CHECKED	REVIEWED	DATE
LS	RB				

F.H.W.A. REGION	STATE	PROJECT NO.	FUNDS
5	OHIO		

SUM-277/224-0.00/ 6.31/10.

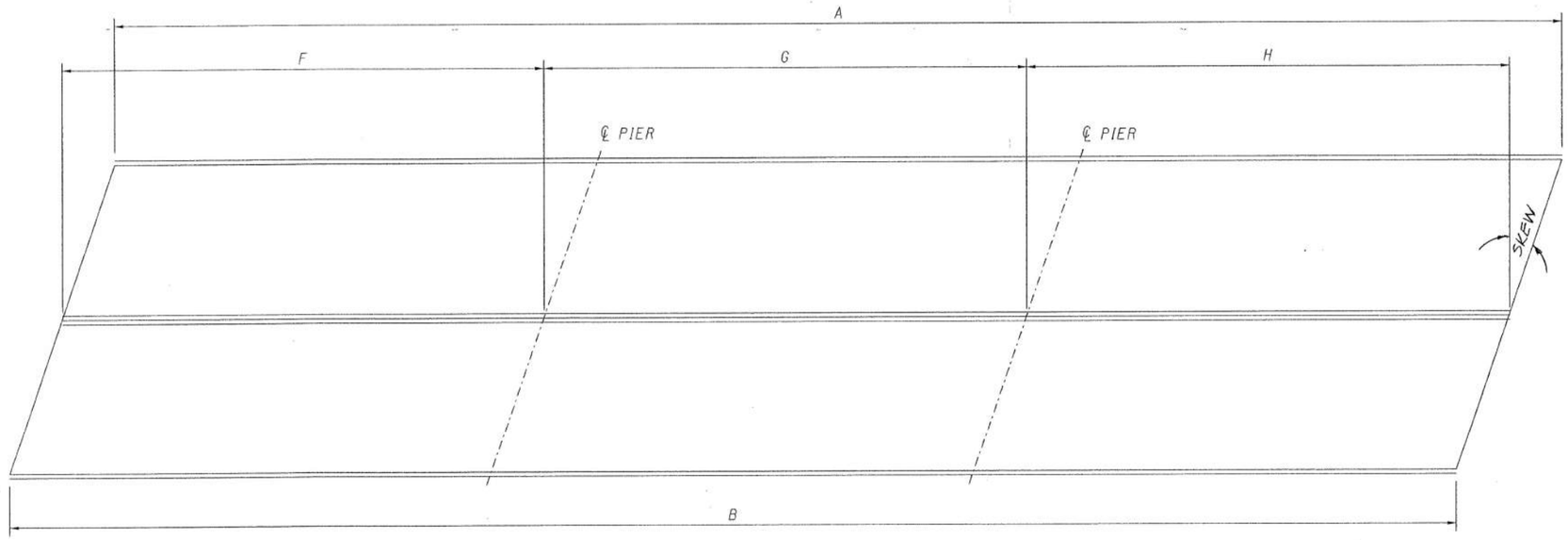

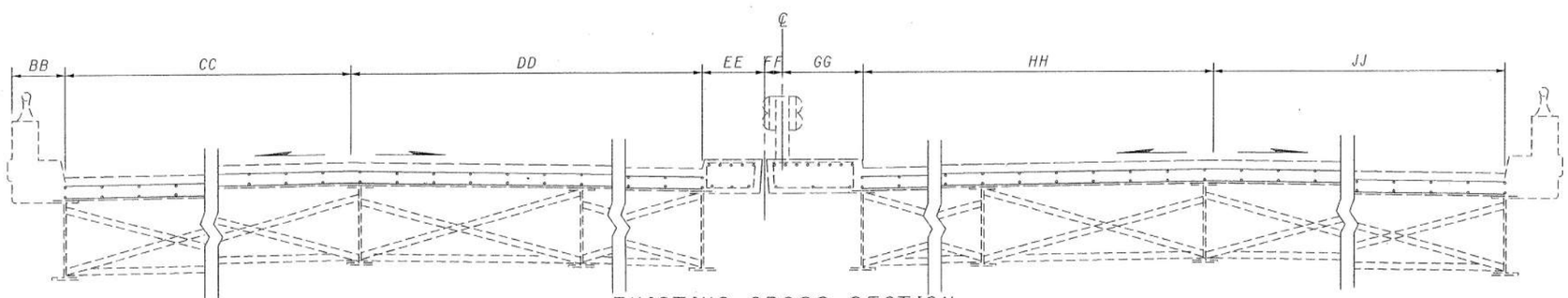

EXISTING CROSS SECTION

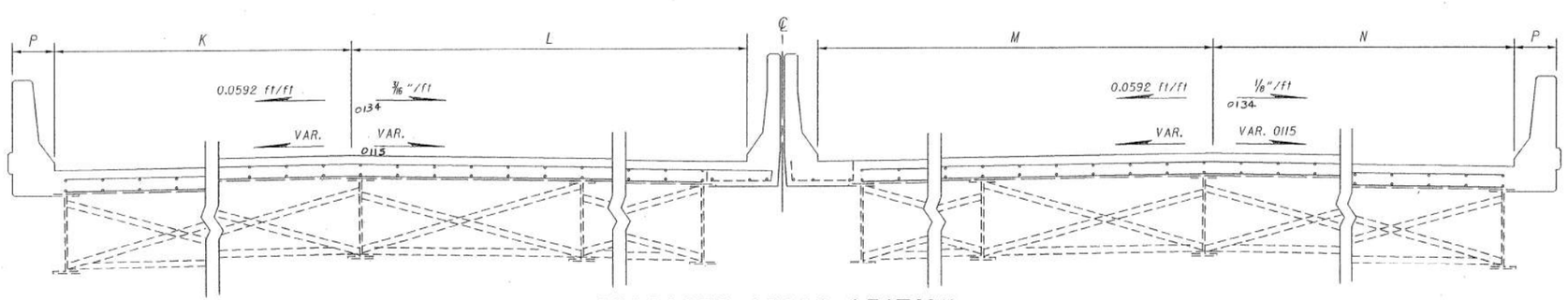

PROPOSED CROSS SECTION

STRUCTURE DATA					
	0115	0134			
A	216'-2¾"	216'-2½"			
B	216'-2¾"	211'-3½"			
C	62'-6"	60'-0"			
D	89'-0"	91'-9"			
E	62'-6"	60'-0"			
BB	2'-0"	2'-0"			
CC	33'-0"	45'-0"			
DD	17'-0"	5'-0"			
EE	2'-3"	3'-9"			
FF	9"	-			
GG	3'-0"	2'-3"			
HH	17'-0"	43'-6"			
JJ	33'-0"	6'-6"			
K	33'-5"	45'-5"			
L	18'-8"	7'-1"			
M	18'-8"	44'-5"			
N	33'-5"	6'-11"			
P	19"	19"			
SKEW	44°41'48"LF	35°02'33"RF			

SEE SHEET 184 FOR MEDIAN DETAILS.

F.H.W.A. REGION	STATE	PROJECT NO.	FUNDS
5	OHIO		

SUM-277/224-0.00/ 6.31/10.2

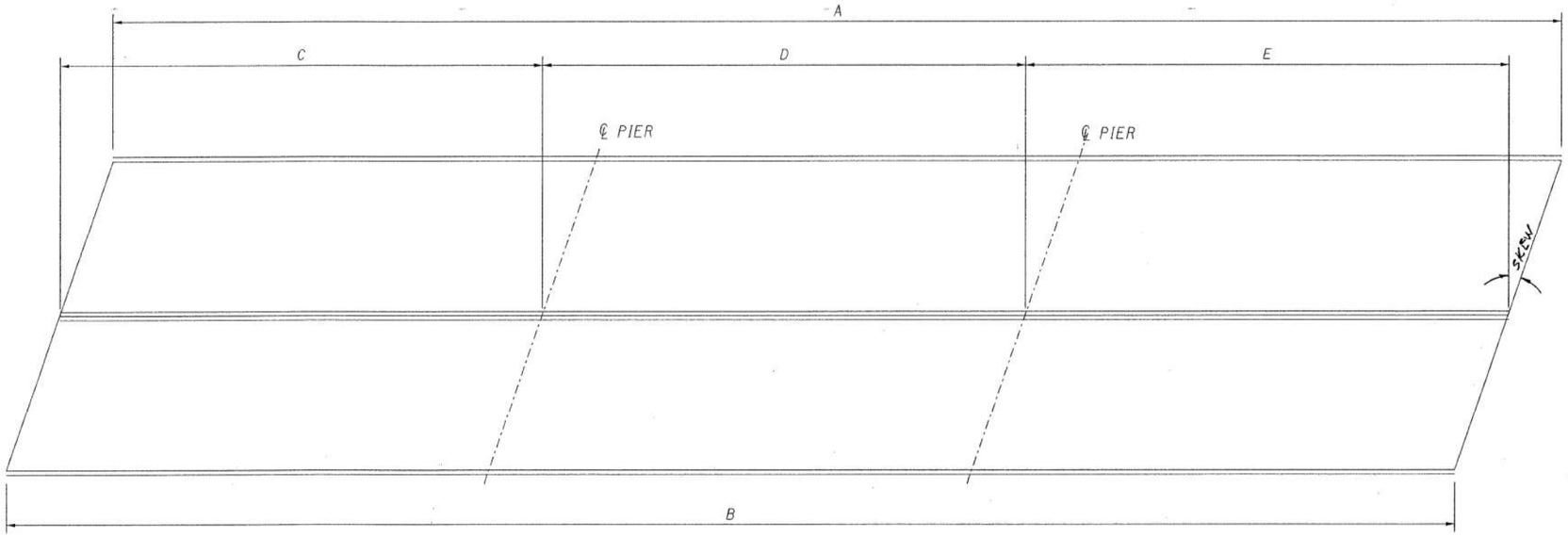

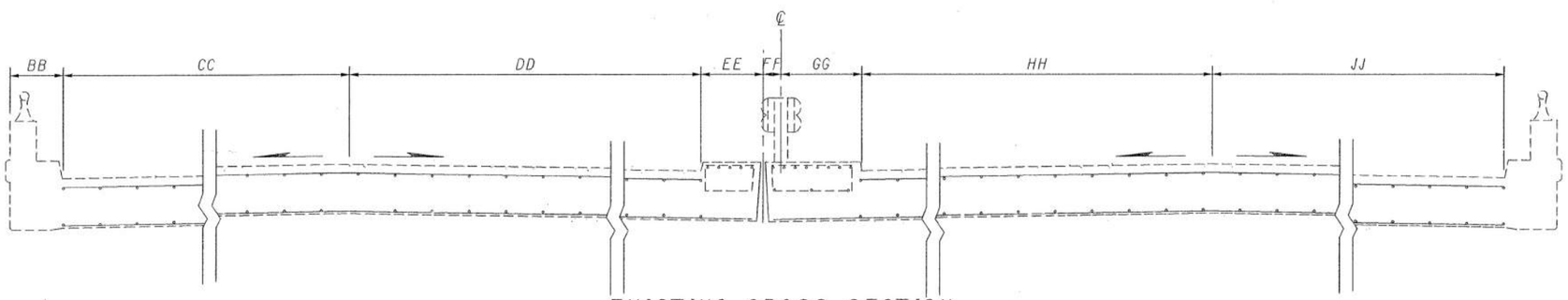

EXISTING CROSS SECTION

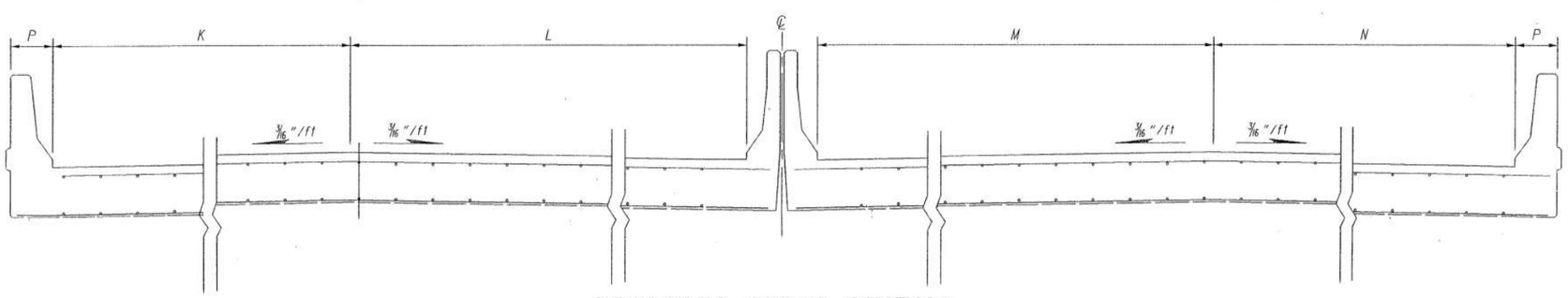

PROPOSED CROSS SECTION

STRUCTURE DATA					
	0305				
A	118.54'				
B	118.54'				
C	36'-0"				
D	45'-0"				
E	36'-0"				
BB	2'-0"				
CC	33'-0"				
DD	17'-0"				
EE	2'-3"				
FF	9"				
GG	3'-0"				
HH	17'-0"				
JJ	33'-0"				
K	33'-5"				
L	17'-11"				
M	18'-4"				
N	33'-5"				
P	19"				
SKEW	11°-56'-21"LF				

F.H.W.A. REGION	STATE	PROJECT NO.	FUNDS
5	OHIO		

SUM-277/224-0.00/ 6.31/10

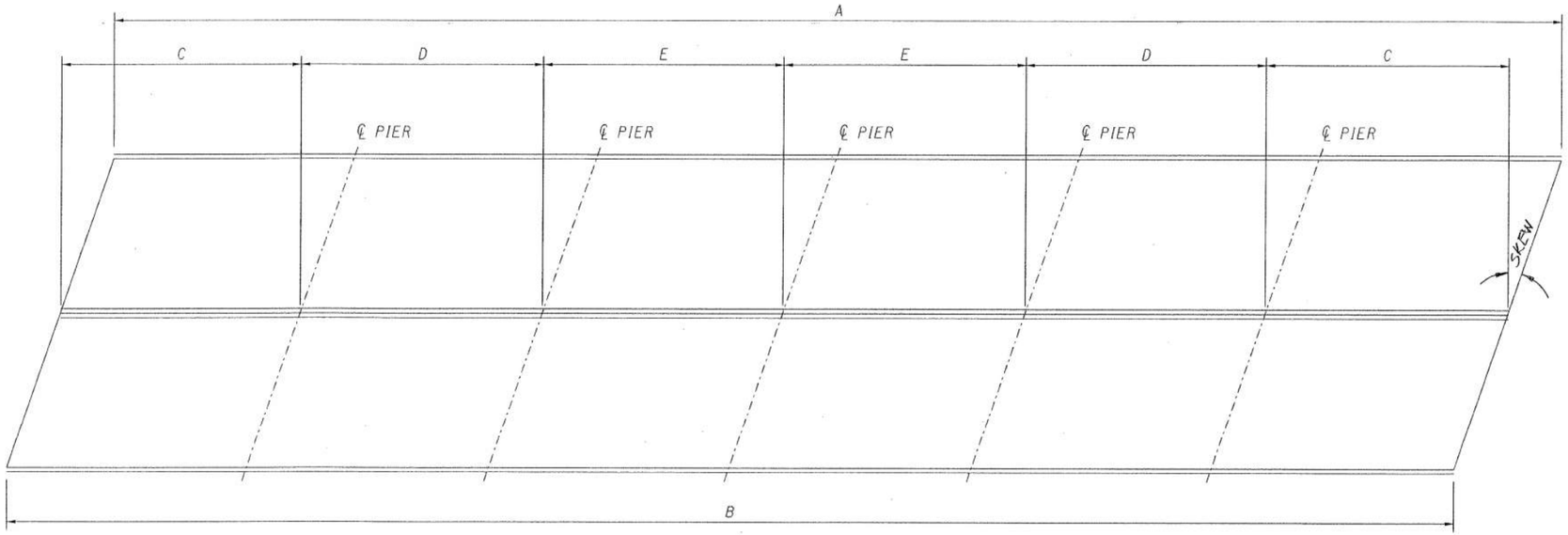

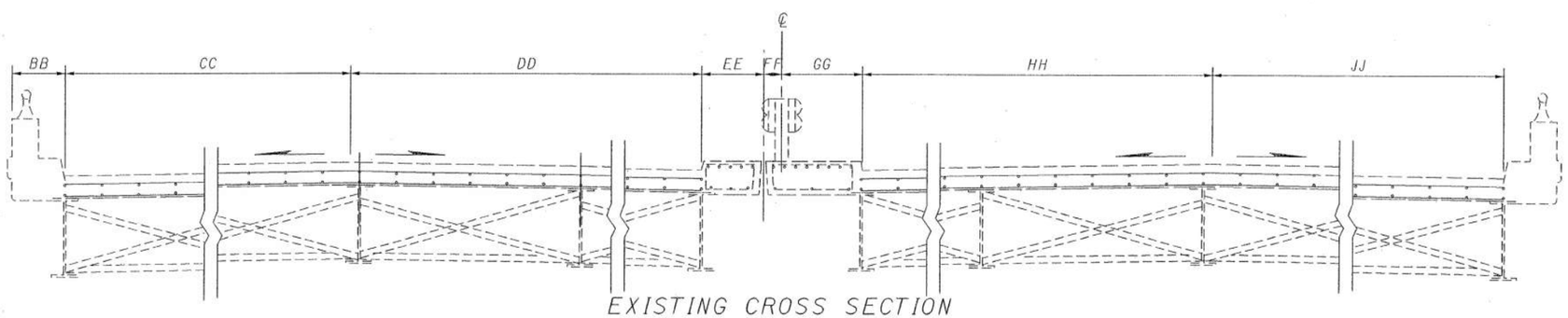

EXISTING CROSS SECTION

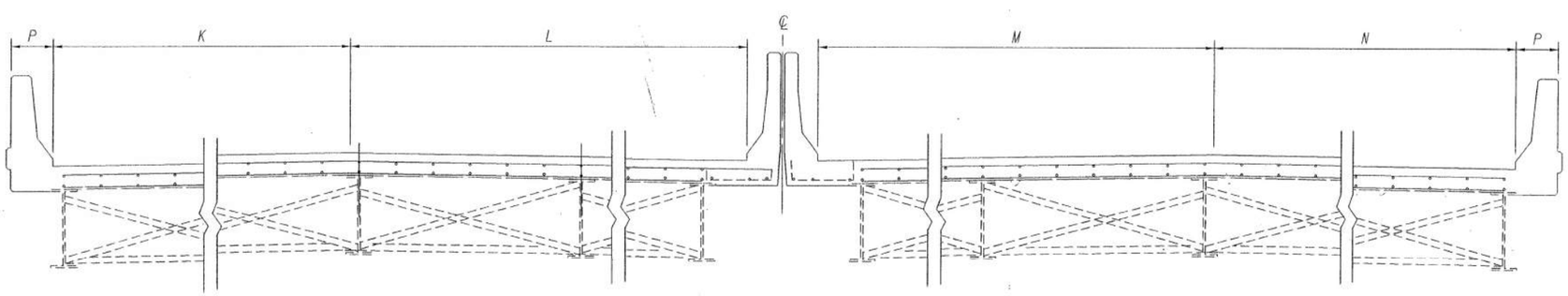

PROPOSED CROSS SECTION

STRUCTURE DATA					
	0374				
A	557'-5 3/8"				
B	557'-5 3/8"				
C	80'-6"				
D	115'-0"				
E	82'-3"				
BB	2'-2"				
CC	31'-0"				
DD	17'-0"				
EE	2'-3"				
FF	9"				
GG	3'-0"				
HH	17'-0"				
JJ	31'-0"				
K	31'-7"				
L	18'-8"				
M	18'-8"				
N	31'-5"				
P	19"				
SKEW	37°-49'-56"RF				

SEE SHEET 184 FOR MEDIAN DETAILS.

F.H.W.A. REGION	STATE	PROJECT NO.	FUNDS
5	OHIO		

SUM-277/224-0.00/16.31/10.2

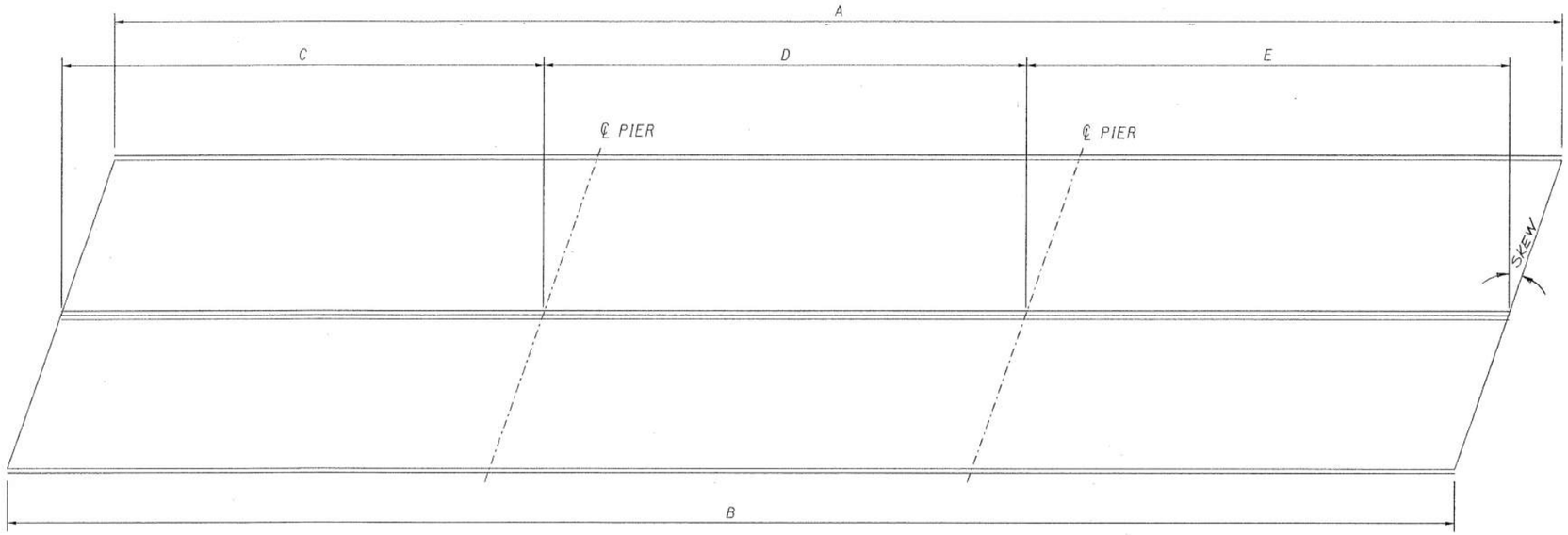

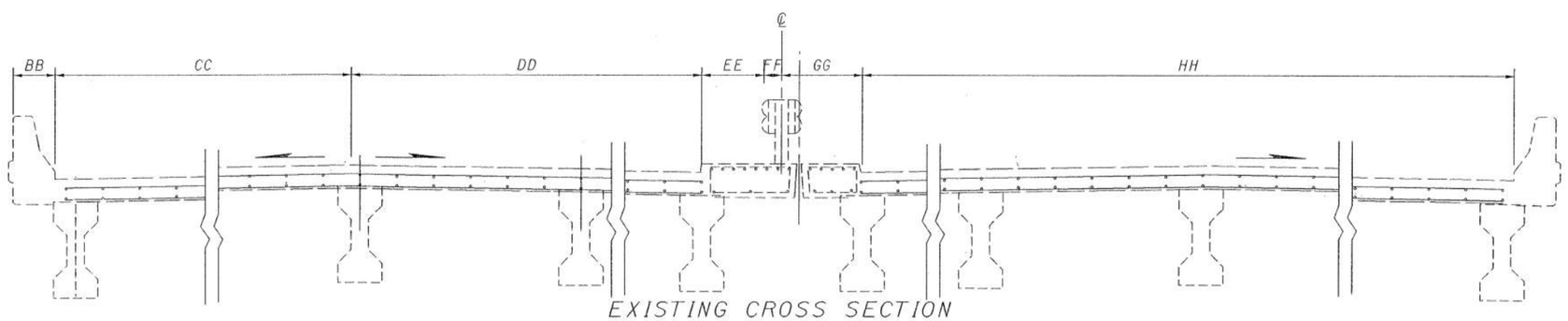

EXISTING CROSS SECTION

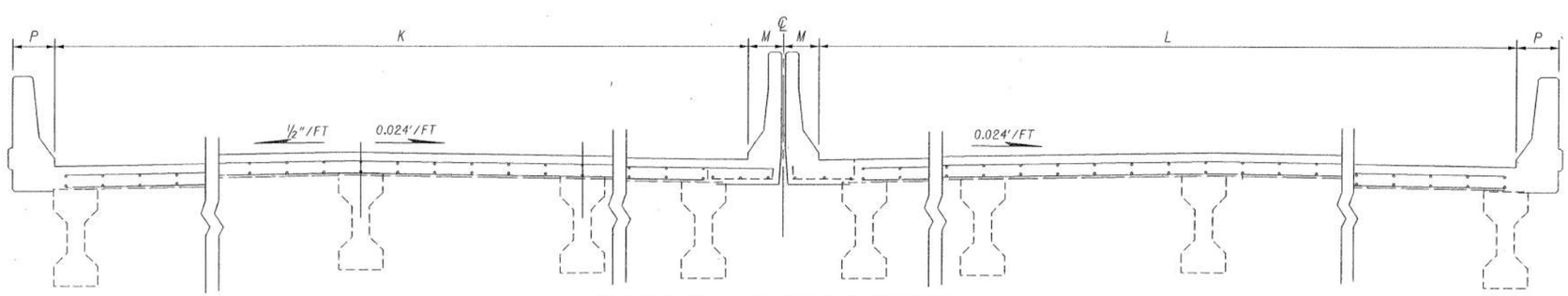

PROPOSED CROSS SECTION

STRUCTURE DATA					
	1061				
A	148-11"				
B	146-1"				
C	36'-6"				
D	63'-6"				
E	44'-6"				
BB	1'-9"				
CC	7'-9"				
DD	43'-6"				
EE	3'-0"				
FF	10"				
GG	2'-2"				
HH	51'-3"				
K	52'-11"				
L	52'-11"				
M	1'-4"				
P	19"				
SKEW	2°08'43"LF				

ZFA2:[20,7] SU277045.DGN

BRIDGE REPAIR DETAILS

F.H.W.A. REGION	STATE	PROJECT NO.	FUNDS
5	OHIO		

SUM - 277/224 - 0.00/6.31/10

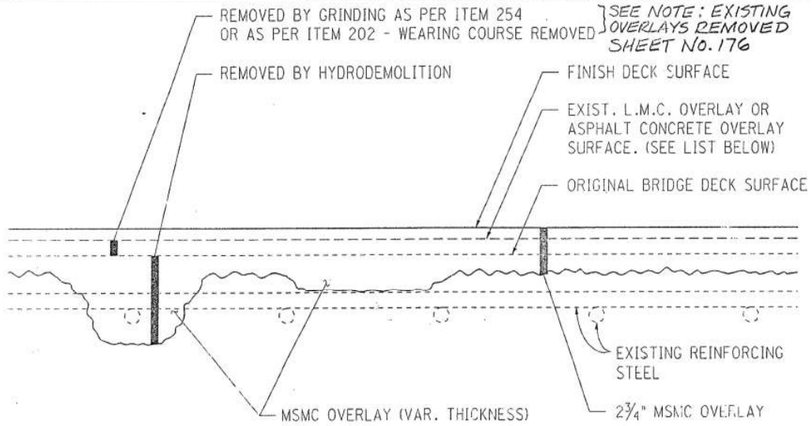

DETAIL OF BRIDGE DECK REPAIRS

STRUCTURE Nos. SUM-277-0115 L&R, SUM-277-0134 L&R, SUM-277-0305 L&R } EXIST LMC OVERLAY

SUM-277-0374 L&R, SUM-224-1061 L&R, SUM-77-0953 L } EXIST. ASP. CONC. OVERLAY

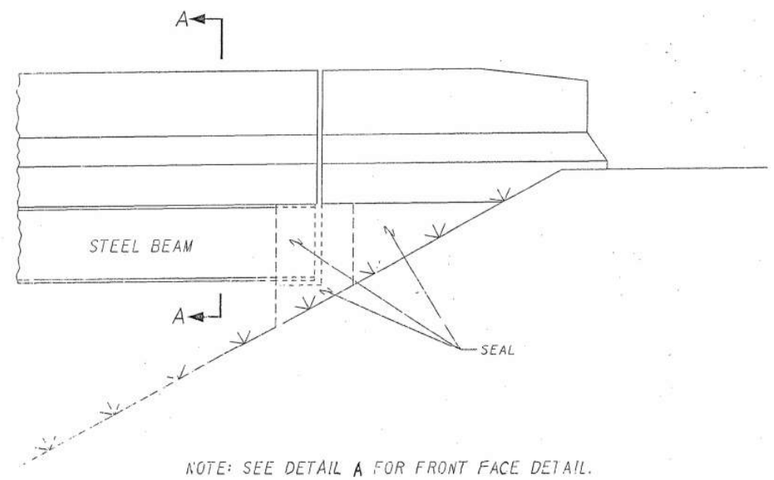

NOTE: SEE DETAIL A FOR FRONT FACE DETAIL.

WINGWALL ELEVATION

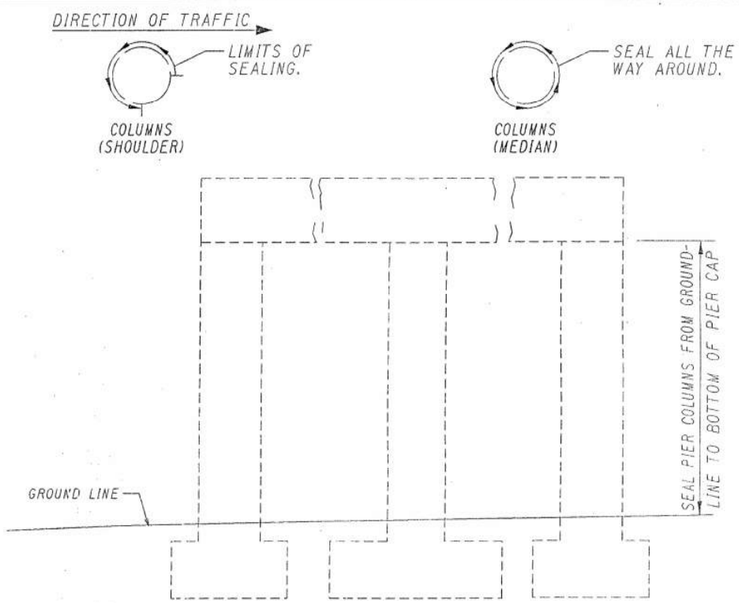

PIER ELEVATION

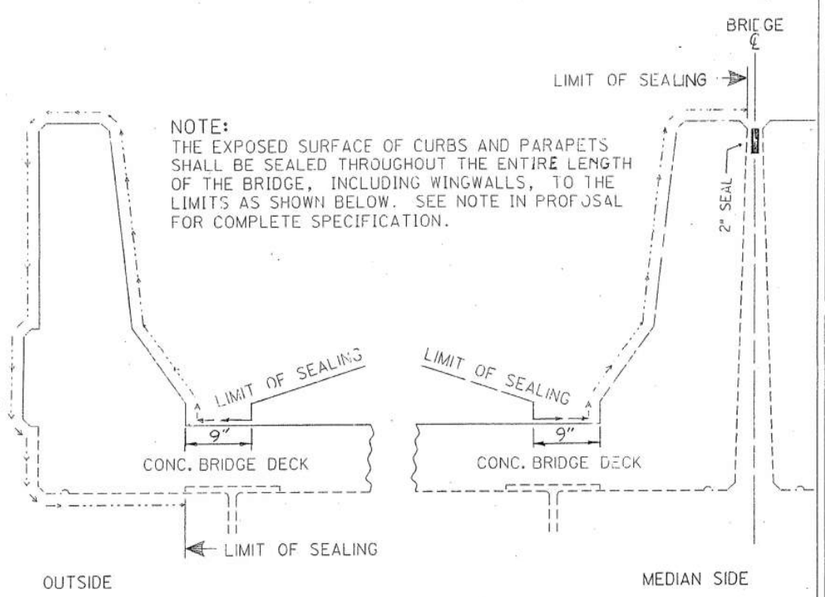

SEALING OF CONCRETE SURFACES

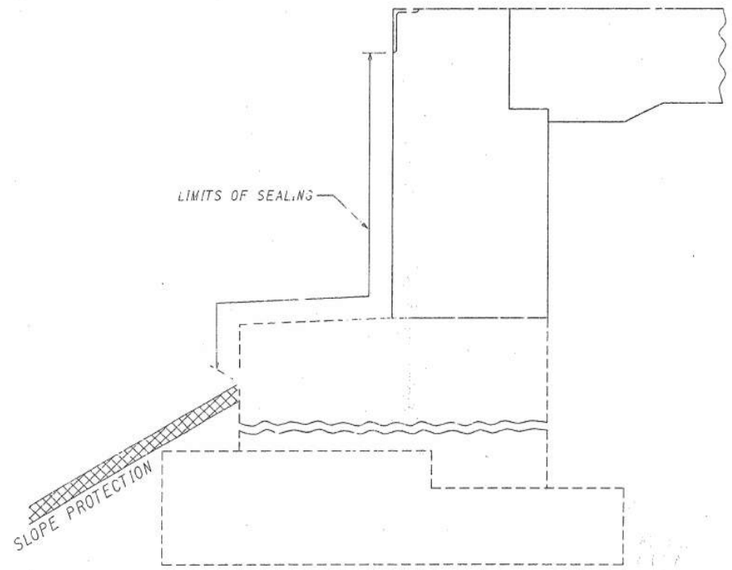

DETAIL A

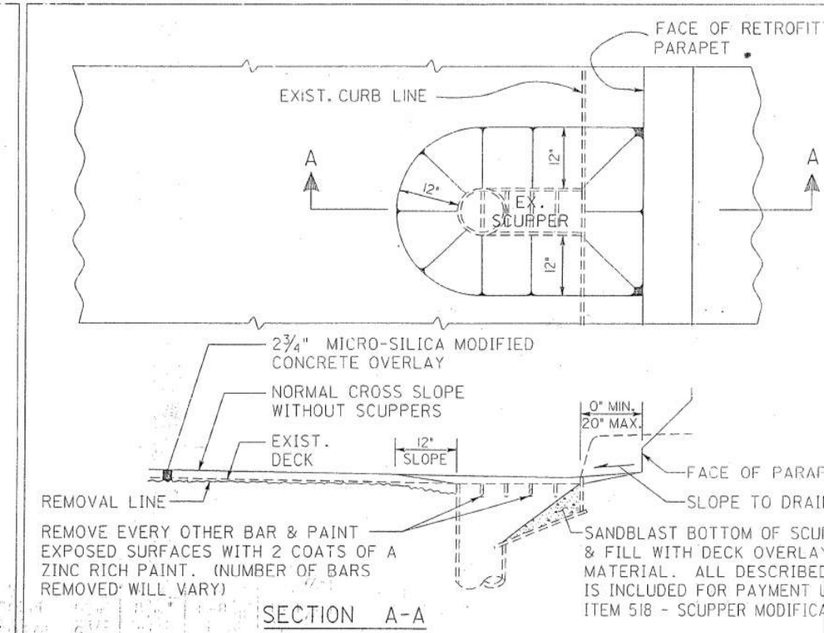

DETAIL AT SCUPPERS

F.H.W.A. REGION	STATE	PROJECT NO.	FUNDS
5	OHIO		

SUM - 277/224 - 0.00/6.31/10.22

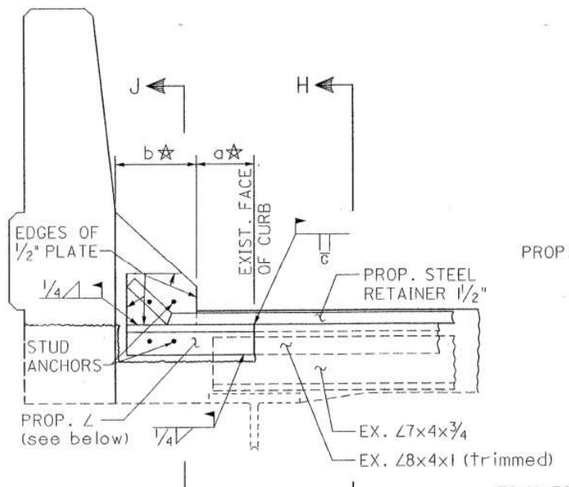

SECTION F-F

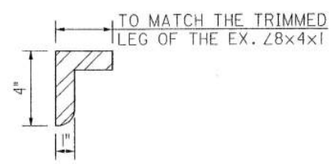

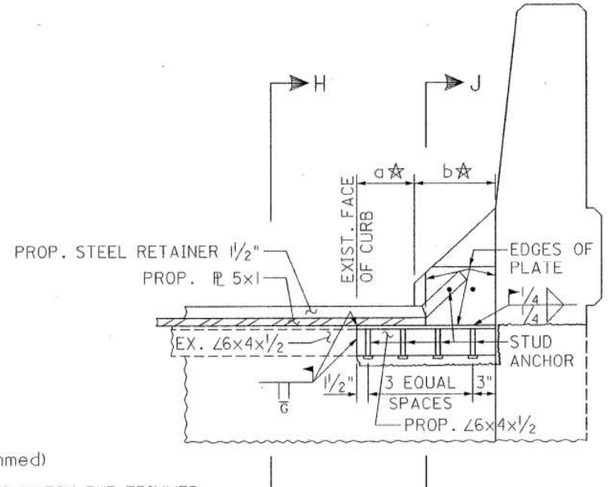

SECTION G-G

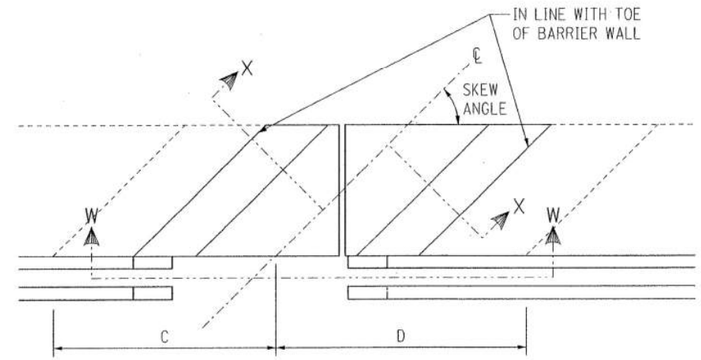

DETAIL OF BACKWALL AT MEDIAN

NOTE:
SKEW ANGLE AND ORIENTATION SHALL CORRESPOND WITH ROADWAY AND STRUCTURE MEDIAN BARRIERS.

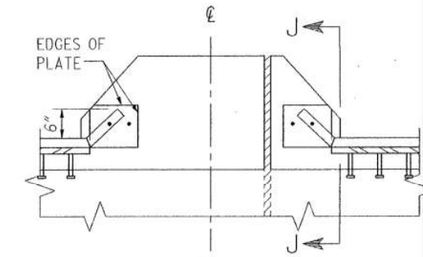

SECTION W-W

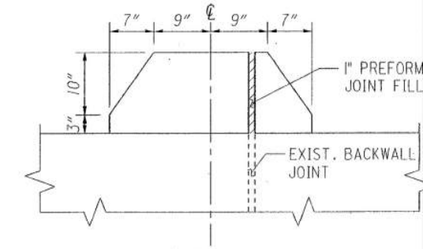

SECTION X-X

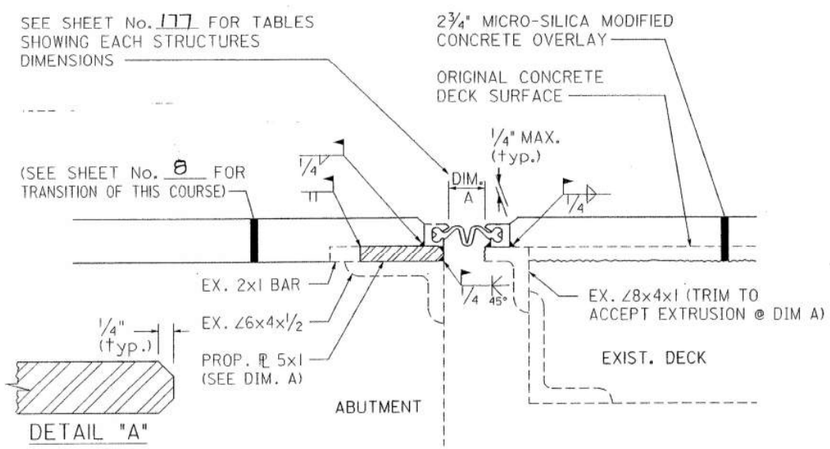

DETAIL "A"

NOTE:
THE EXISTING VERTICAL EXTENSION BARS SHALL BE REMOVED AND THE REMAINING 8" ANGLE TRIMMED AND ALONG WITH THE 2" BAR SHALL BE GROUND FLUSH. THIS WORK INCLUDED IN THE 202 REMOVAL OF VERTICAL EXTENSION OF STRUCTURAL EXPANSION JOINTS.
THE PROPOSED 5x1 PLATE IS INCLUDED IN THE ITEM 516 STRUCTURAL EXPANSION JOINT INCLUDING ELASTOMERIC STRIP SEAL, AS PER PLAN.

VERTICAL EXTENSION OF STRUCTURAL EXPANSION JOINTS WITH ELASTOMERIC STRIP SEAL AT END DAMS

SECTION H-H

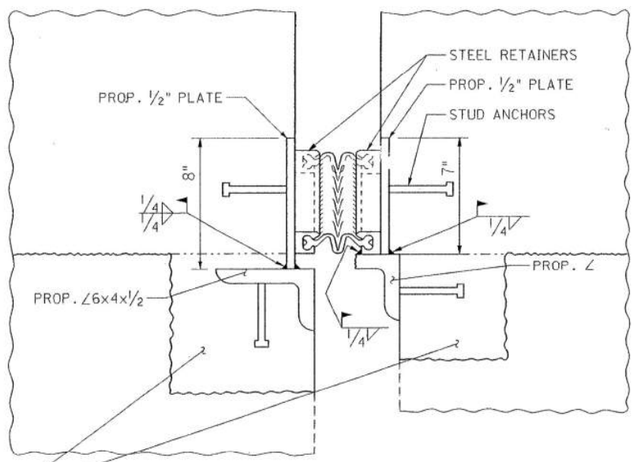

THESE AREAS OF CONCRETE SHOWN IN THE BACKWALL AND BRIDGE DECK SHALL BE REMOVED TO ALLOW FOR THE ANGLES TO BE HORIZONTALLY EXTENDED. THE REINFORCING STEEL SHALL BE SALVAGED AND THE AREAS FILLED WITH CLASS "S" CONCRETE. ALL EQUIPMENT AND LABOR NECESSARY TO REMOVE THE EXISTING CONCRETE AND FILL WITH CLASS "S" CONCRETE ALONG WITH THE PROPOSED STEEL SHOWN IN THIS AND THE ABOVE DETAILS TO INSTALL THE STRIP SEAL SHALL BE INCIDENTAL TO AND INCLUDED IN THE UNIT PRICE BID FOR PAYMENT OF STRUCTURAL EXPANSION JOINT INCLUDING ELASTOMERIC STRIP SEAL, AS PER PLAN.

SECTION J-J

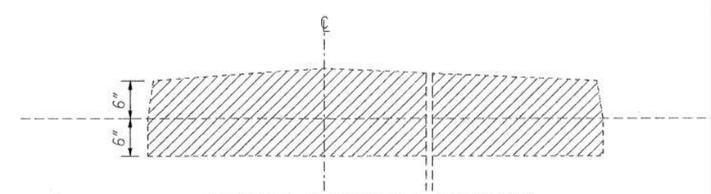

TYPICAL BACKWALL REMOVAL

THE STRIP SEAL EXPANSION JOINT SHALL BE AS PER EXJ-4-87 EXCEPT AS DETAILED.

☆MEASUREMENTS ARE ALONG THE SKEW.

	a	b	c REAR ABUT.	c FWD. ABUT.	d REAR ABUT.	d FWD. ABUT.
#0115	7"	9 7/8"	4'-2 7/8"	4'-2 7/8"	5'-2 3/4"	5'-1 1/2"
#0134	6 1/8"	8 9/16"	4'-8 3/8"	4'-4 3/8"	2'-9 5/8"	2'-7 1/2"
#0374	6 3/8"	8 7/8"	4'-9"	4'-9"	2'-10 1/4"	2'-10 1/4"
#0953	7 5/8"	10 11/16"	-	-	-	-

STATE OF OHIO
DEPARTMENT OF TRANSPORTATION
BUREAU OF BRIDGES

STRIP SEAL DETAILS

BRIDGE Nos. SUM-277-0115, SUM-277-0134, SUM-277-0374 & SUM-77-0953

DESIGNED	DRAWN	TRACED	CHECKED	REVIEWED	DATE
ST	RCB		LLS	KS	8-93

d04w4a SU277046.DGN

F.H.W.A. REGION	STATE	PROJECT NO.	FUNDS
5	OHIO		

SUM - 277/224 - 0.00/6.31/10.2

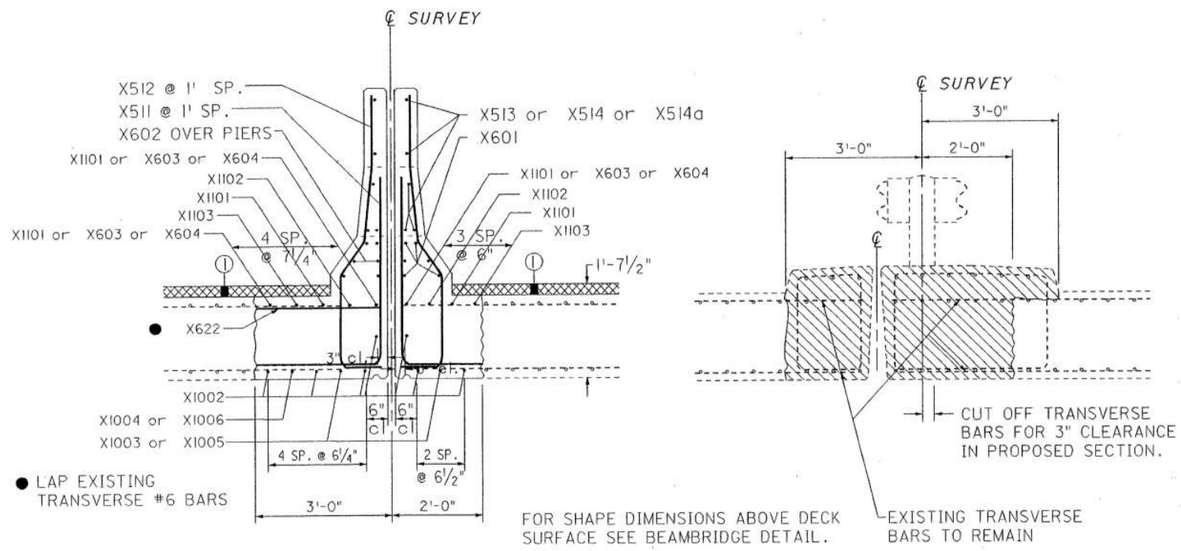

PROPOSED MEDIAN PARAPET EXISTING MEDIAN PARAPET

STRUCTURE No. SUM-277-0305

✳ 7½" SPACING STRS. 0115, 0134
8" SPACING STR. 0374

✳✳ 11½" STR. 0115
12½" STR. 0134
12" STR. 0374

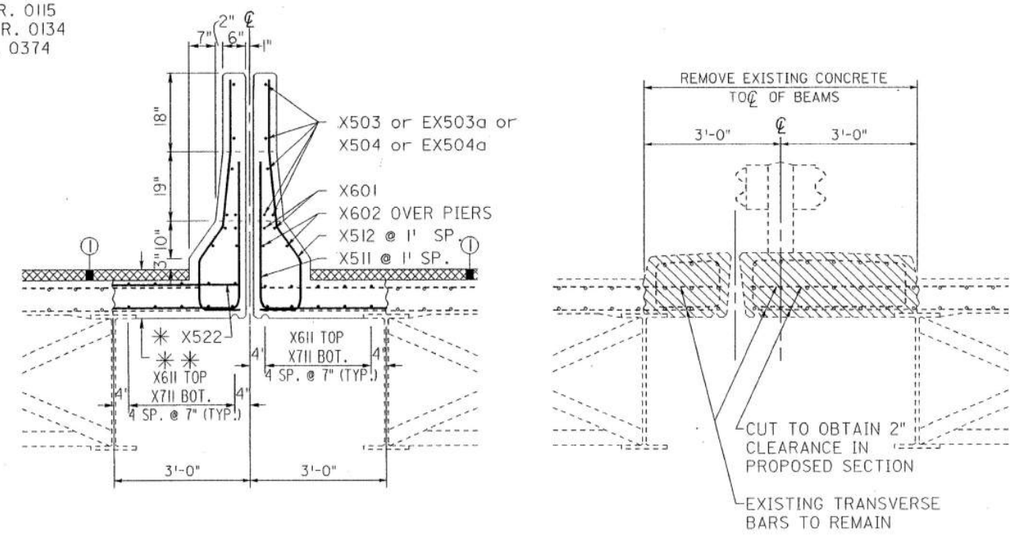

PROPOSED MEDIAN PARAPET EXISTING MEDIAN PARAPET

STRUCTURE Nos. 0115, 0134, 0374 AND 1061

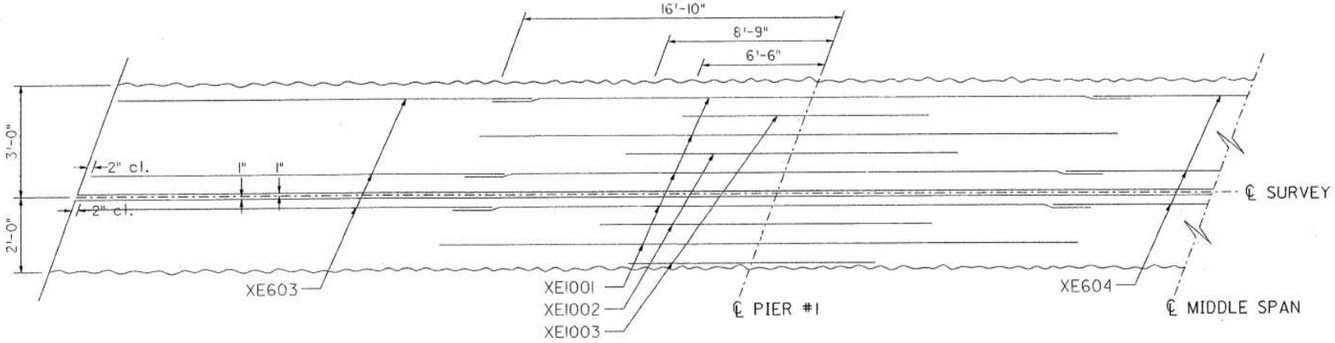

TOP MAT

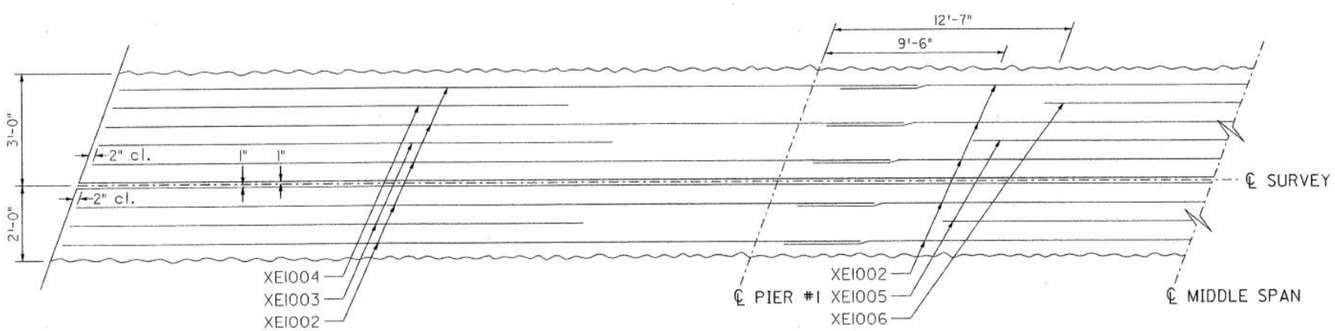

BOTTOM MAT

STRUCTURE No. SUM-277-0305

① MICRO SILICA MODIFIED CONC
OVERLAY 2¾".

SPACING OF THE X511 & X5
BARS IS THE SAME AS SHOWN
SHEET # 186 FOR THE X50
& X502 BARS.

CONCRETE REMOVAL AREA.

STATE OF OHIO
DEPARTMENT OF TRANSPORTATION
BUREAU OF BRIDGES

MEDIAN PARAPET DETAILS

BRIDGE Nos. SUM-277-0115,
SUM-277-0134,
SUM-277-0374,
SUM-277-0305 &
SUM-224-1061

DESIGNED	DRAWN	TRACED	CHECKED	REVIEWED	DATE
LLS	RCB		ST	KS	8-93

F.H.W.A. REGION	STATE	PROJECT NO.	FUNDS
5	OHIO		

SUM-277/224-0.00/6.31/10.2

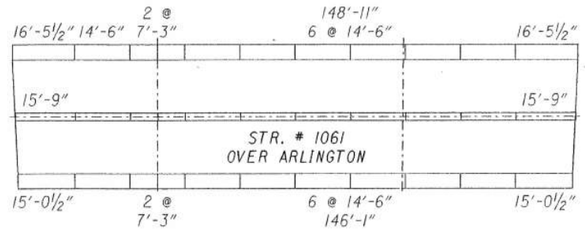

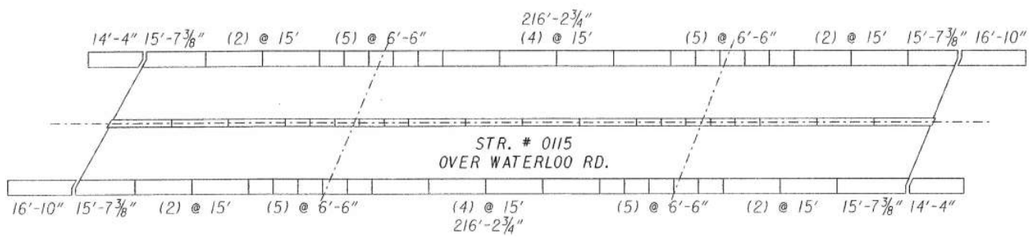

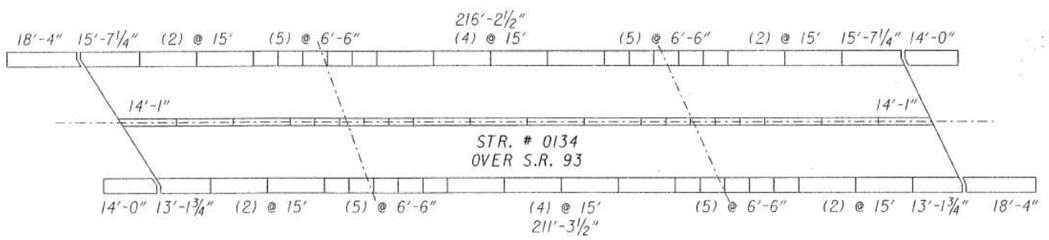

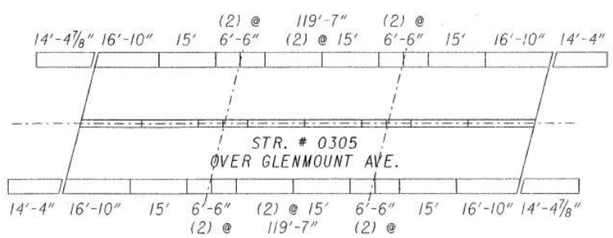

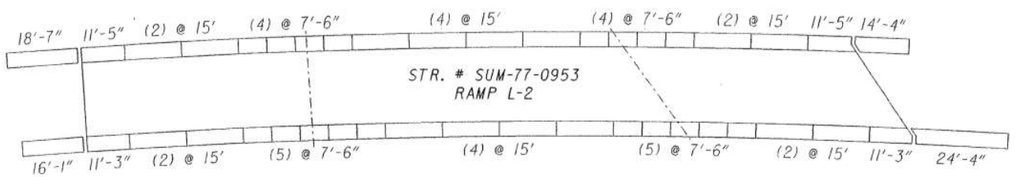

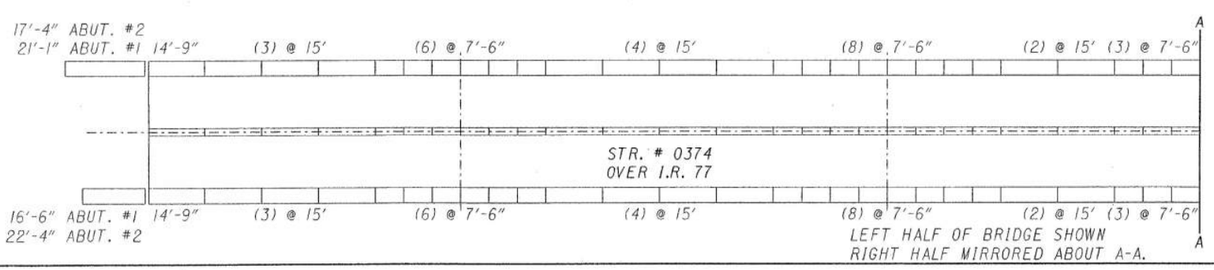

MEDIAN PANEL LENGTHS ARE THE SAME AS THE OUTSIDE PARAPETS IF NO DIMENSION IS SHOWN.

STATE OF OHIO
DEPARTMENT OF TRANSPORTATION
BUREAU OF BRIDGES

PARAPET PANEL LENGTH DIAGRA

BRIDGE Nos. SUM-277-0115, SUM-277-0134, SUM-277-0305, SUM-277-0374, SUM-77-0953 & SUM-224-1061

DESIGNED	DRAWN	TRACED	CHECKED	REVIEWED	DATE
LS	RB		ST	KS	8-93

F.H.W.A. REGION	STATE	PROJECT NO.	FUNDS
5	OHIO		

SUM-277/224-0.00/6.41/10

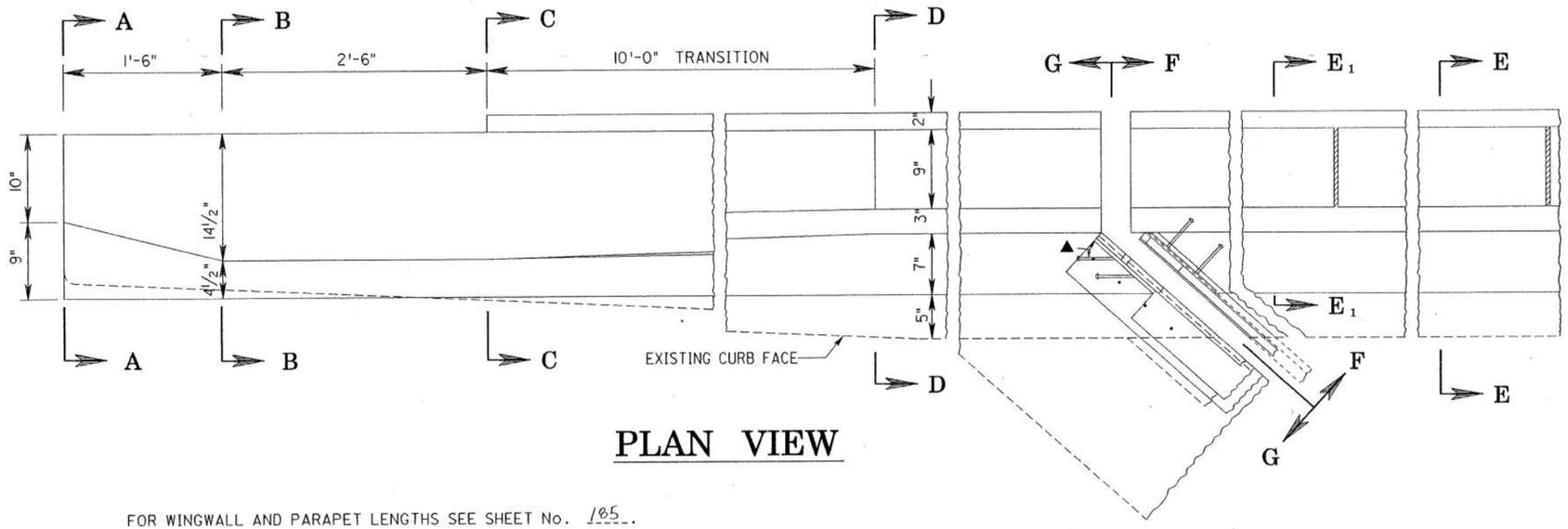

PLAN VIEW

▲ ANGLE	BRIDGE No.
45°	0115
55°	0134
52°	0374
41°	0953

FOR WINGWALL AND PARAPET LENGTHS SEE SHEET No. 105.

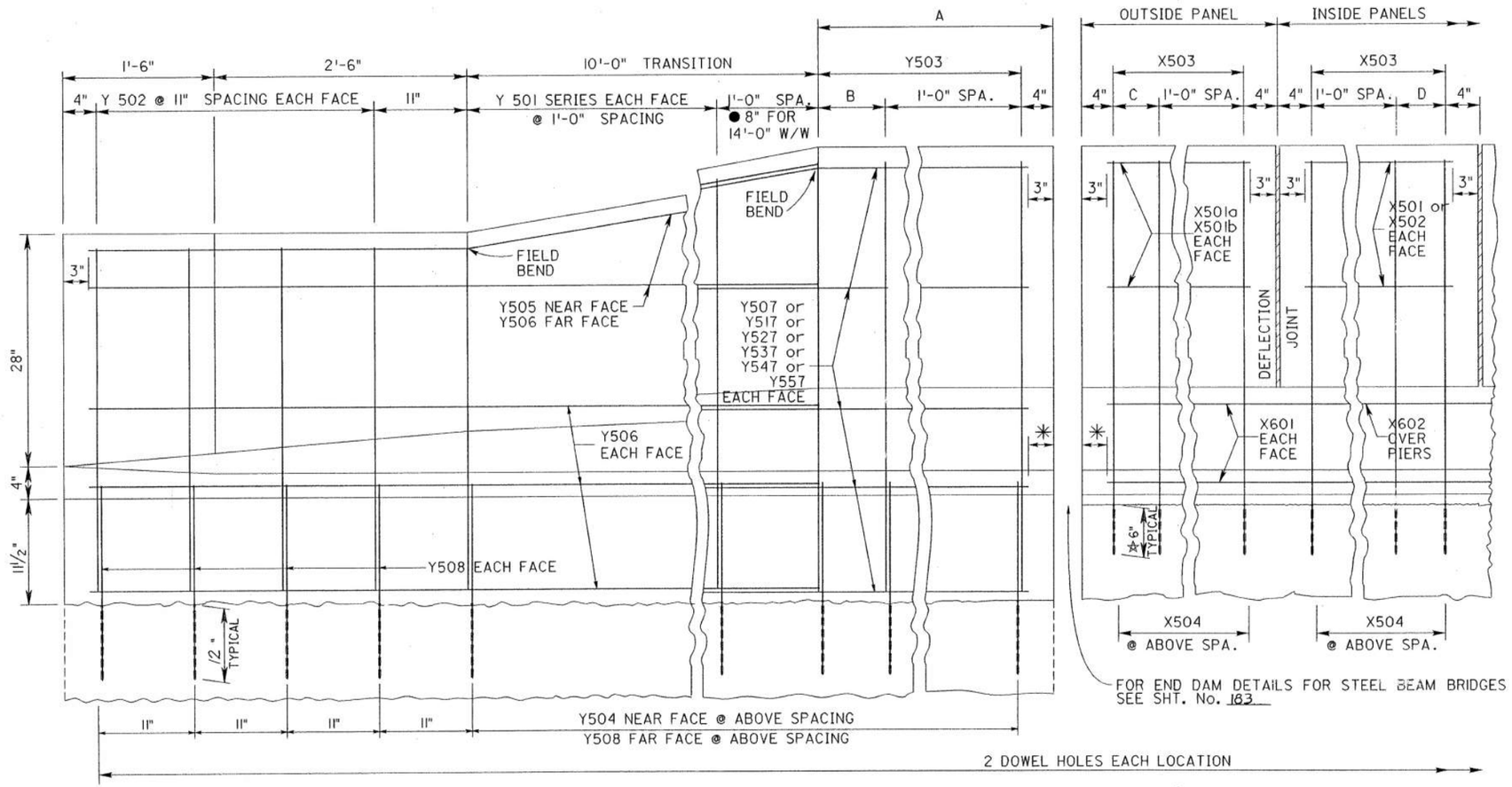

FOR END DAM DETAILS FOR STEEL BEAM BRIDGES SEE SHT. No. 183

PROFILE VIEW

✳ WHEN A SKEW IS ENCOUNTERED THE NEAR FACE Y 507 SERIES AND NEAR FACE X 601 BARS SHALL BE ADJUSTED AT THE LAP JOINT TO MEET THE 3" CLEARANCE.

WINGWALL - EY503 SPACING

FOR 16'-10"	-- A = 2'-10"	B = 1'-6"	
FOR 14'-0"	-- A = 4" (SEE ●)		
FOR 18'-4"	-- A = 4'-4"	B = 1'-0"	
FOR 24'-4"	-- A = 10'-4"	B = 1'-0"	
FOR 18'-7"	-- A = 4'-7"	B = 1'-3"	
FOR 16'-1"	-- A = 2'-1"	B = 9"	
FOR 17'-4"	-- A = 3'-4"	B = 1'-0"	
FOR 21'-1"	-- A = 7'-1"	B = 9"	
FOR 16'-6"	-- A = 2'-6"	B = 1'-2"	
FOR 22'-4"	-- A = 8'-4"	B = 1'-0"	

OUTSIDE PANEL - EX503 or EX512 SPAC

FOR 15'-7⅜"	-- C = 11⅜"
FOR 15'-7¼"	-- C = 11¼"
FOR 13'-1¾"	-- C = 1'-5¾"
FOR 16'-10"	-- C = 1'-2"
FOR 14'-1"	-- C = 1'-5"
FOR 11'-5"	-- C = 9"
FOR 11'-3"	-- C = 1'-7"
FOR 14'-9"	-- C = 1'-1"

INSIDE PANEL - EX503 or EX512 SPACIN

FOR 15'-0"	-- D = 1'-4"
FOR 7'-6"	-- D = 10"
FOR 6'-6"	-- D = 10"

FOR WINGWALL EXTENSIONS SEE SHEET Nos. 191, 192, 193

☆ FOR SLAB BRIDGE No. 0305 USE 9".

NOTE:
THE EXISTING CONDUIT SHALL BE REMOVED WITH THE OLD PARAPET.

SHEET

STATE OF OHIO
DEPARTMENT OF TRANSPORTATION
BUREAU OF BRIDGES

PARAPET RETROFIT DETAIL

BRIDGE Nos. SUM-277-0115, SUM-277-0134, SUM-277-0305, SUM-277-0374 & SUM-77-0953 L

DESIGNED	DRAWN	TRACED	CHECKED	REVIEWED	DATE
LS	RB		ST	KS	8-93

F.H.W.A. REGION	STATE	PROJECT NO.	FUNDS
5	OHIO		

SUM-277/224-0.00/6.41/10.2

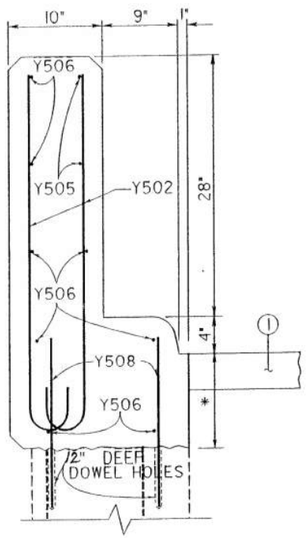

PROPOSED SECTION A-A

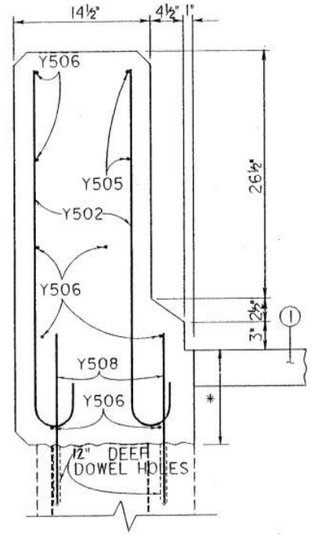

PROPOSED SECTION B-B

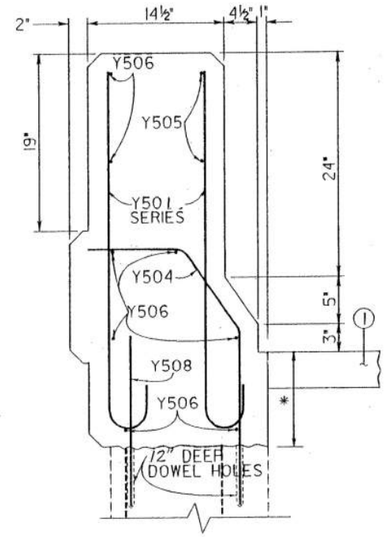

PROPOSED SECTION C-C

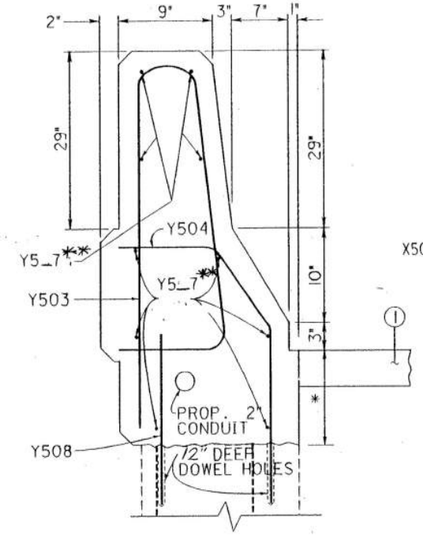

PROPOSED SECTION D-D

** Y507, Y517, Y527, Y537, Y547, Y557

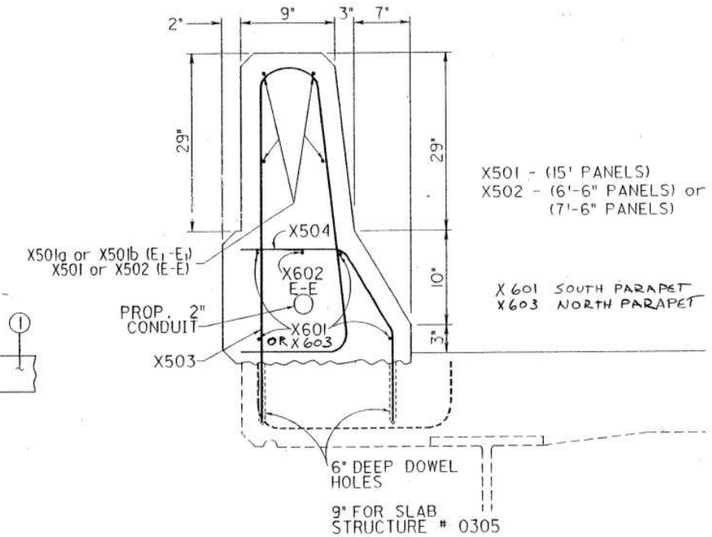

PROPOSED SECTION E-E & E1-E1

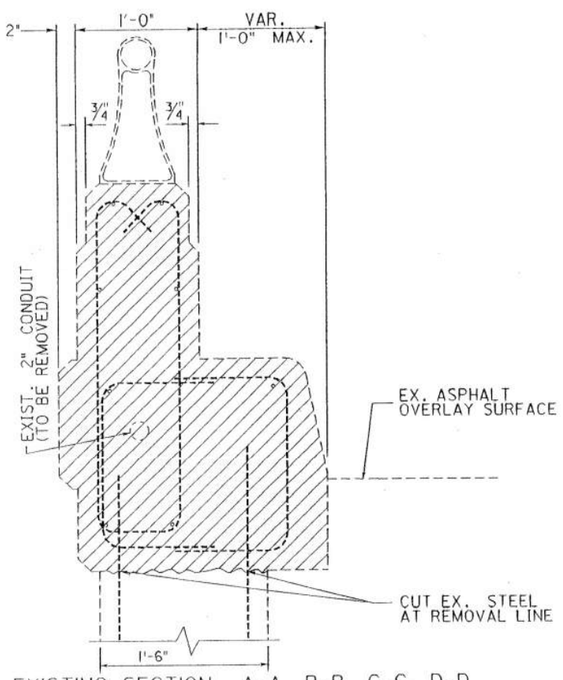

EXISTING SECTION A-A, B-B, C-C, D-D

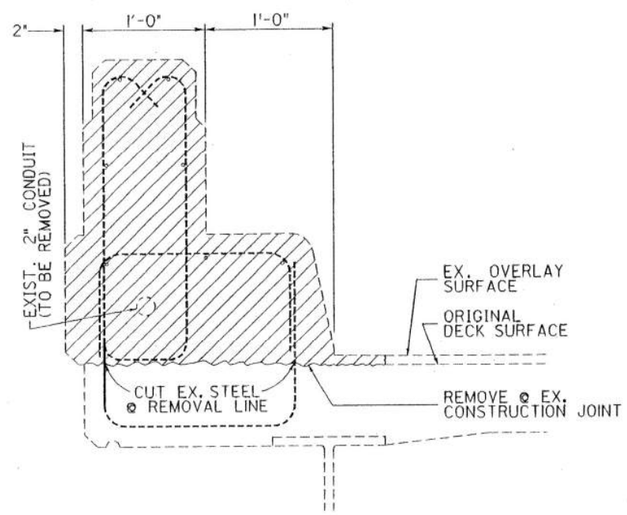

EXISTING SECTION E-E, E1-E1

EXISTING ALUMINUM RAILING NOT SHOWN

(1) PROPOSED SHOULDER

* 12½" STR. # 0134
12" STR. # 0374
11½" STR. # 0953 & 0115
1'-9¼" STR. # 305

REMOVAL AREA

SHEET

STATE OF OHIO
DEPARTMENT OF TRANSPORTATION
BUREAU OF BRIDGES

PARAPET RETROFIT SECTIO

BRIDGE Nos. SUM-277-0115, SUM-277-0134, SUM-277-0305, SUM-277-0374 & SUM-77-0953 L

DESIGNED	DRAWN	TRACED	CHECKED	REVIEWED	DATE
LS	RB		ST	KS	8-93

F.H.W.A. REGION	STATE	PROJECT NO.	FUNDS
5	OHIO		

SUM-277/224-0.00/6.31/10.

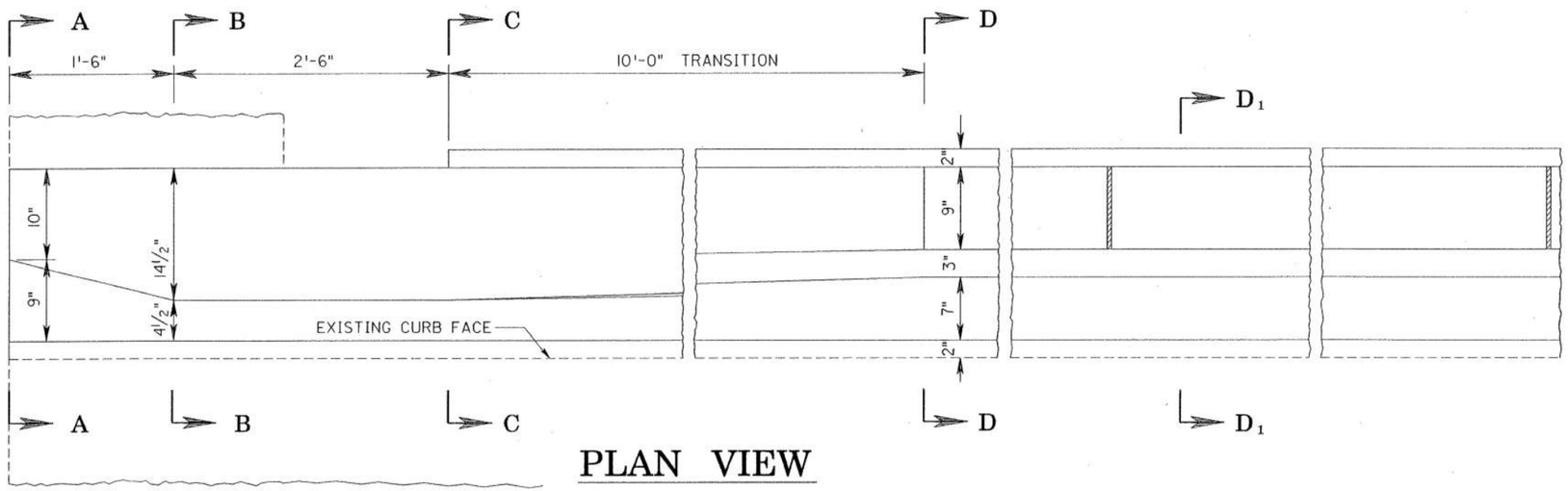

PLAN VIEW

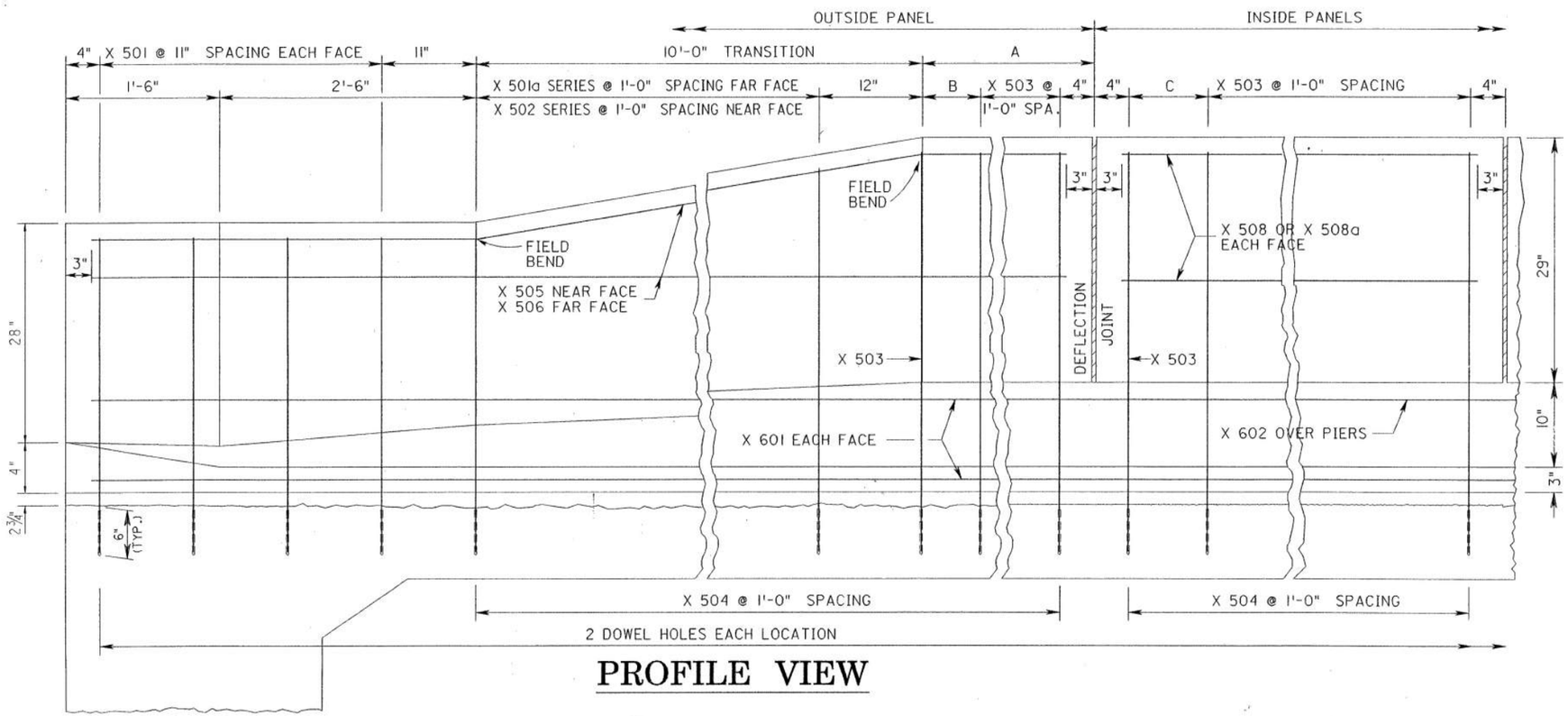

PROFILE VIEW

OUTSIDE PANEL X503 SPACING
FOR 15'-0½" A = 1'-0½" B = 8½"
FOR 16'-5½" A = 2'-5½" B = 1'-1½

MEDIAN OUTSIDE PANEL X512 SPACING
FOR 15'-9" A = 1'-9" B = 1'-5"

INSIDE PANEL X503 OR X512 SPACING
FOR 14'-6" C = 10"
FOR 7'-3" C = 1'-7"

FOR PARAPET LENGTHS SEE SHT. No. 1

STATE OF OHIO
DEPARTMENT OF TRANSPORTATION
BUREAU OF BRIDGES

PARAPET RETROFIT

BRIDGE No. SUM-224-1061

DESIGNED	DRAWN	TRACED	CHECKED	REVIEWED	DATE
LS	RB		ST	RS	8-93

F.H.W.A. REGION	STATE	PROJECT NO.	FUNDS
5	OHIO		

SUM-277/224-0.00/6.31/10.

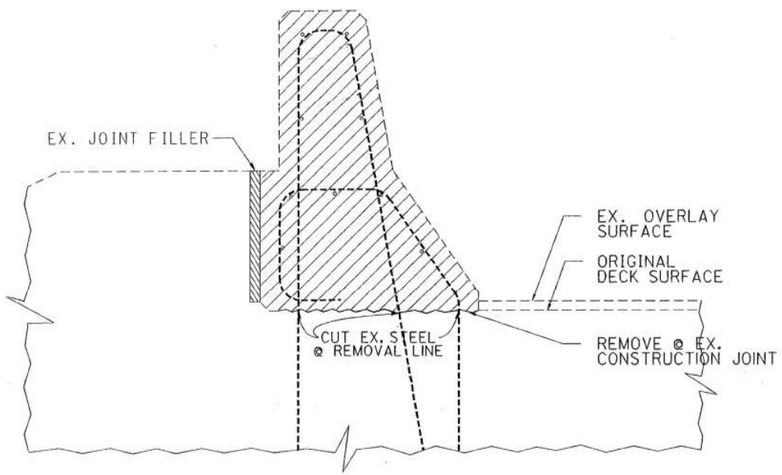

EXISTING SECTION A-A & B-B

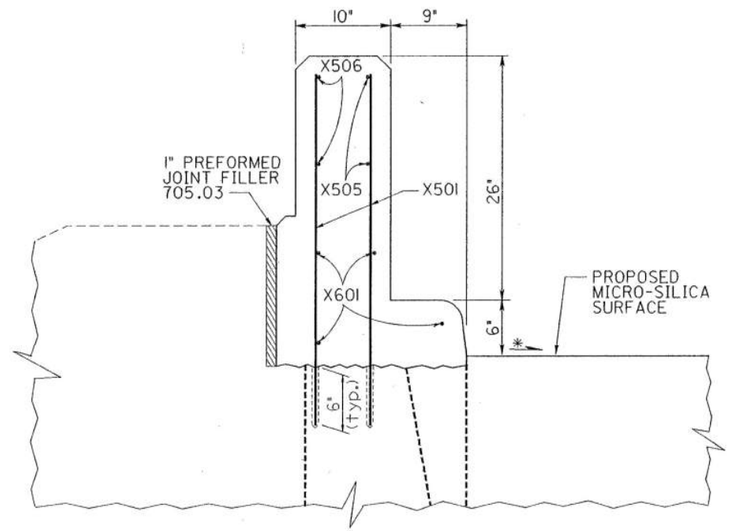

PROPOSED SECTION A-A

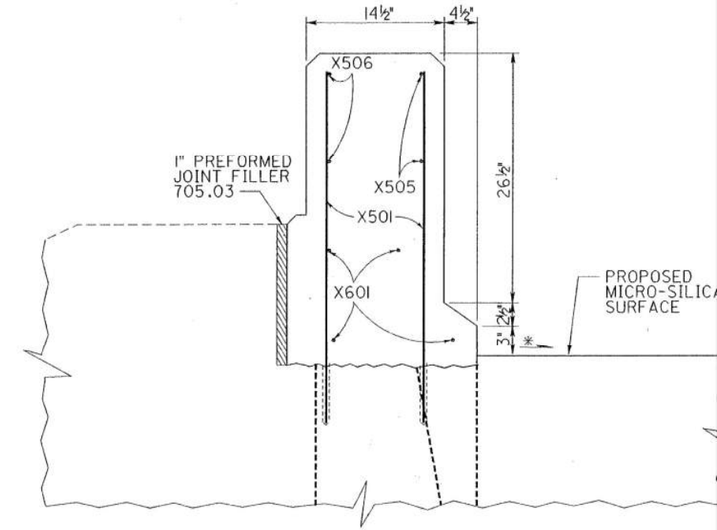

PROPOSED SECTION B-B

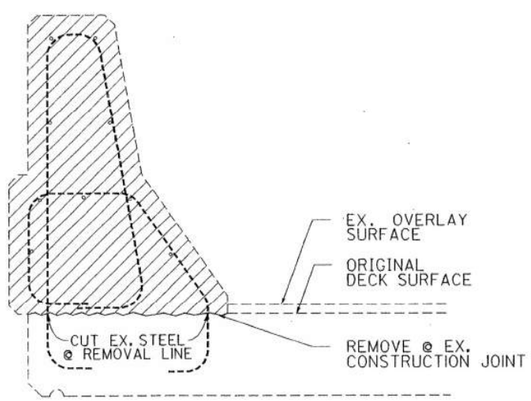

EXISTING SECTION C-C, D-D & D_1-D_1

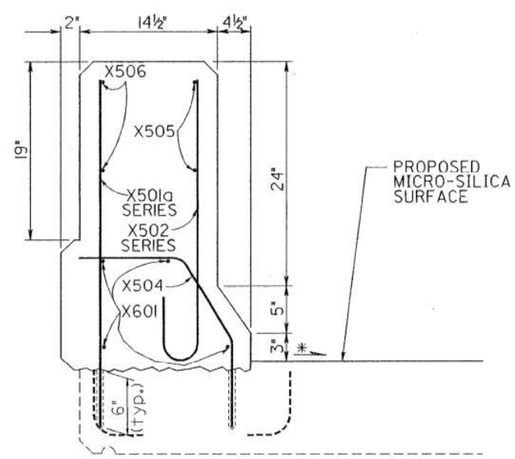

PROPOSED SECTION C-C

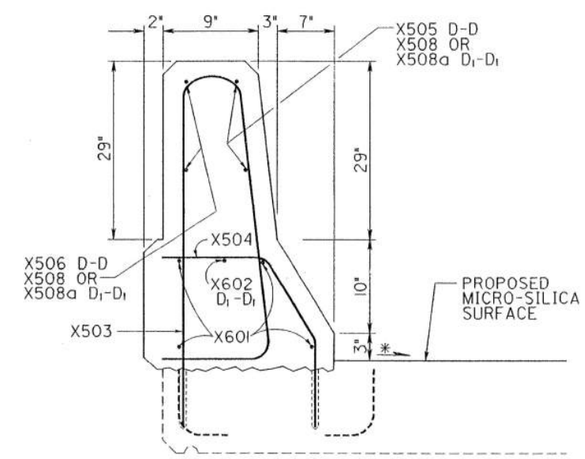

PROPOSED SECTION D-D & D_1-D_1

* SLOPE TO DRAIN

REMOVAL AREA

STATE OF OHIO
DEPARTMENT OF TRANSPORTATION
BUREAU OF BRIDGES

PARAPET RETROFIT DETAI

BRIDGE No. SUM-224-1061

DESIGNED	DRAWN	TRACED	CHECKED	REVIEWED	DATE
LS	RB		ST	KS	8-93

F.H.W.A. REGION	STATE	PROJECT NO.	FUNDS
5	OHIO		

SUM-277/224-0.00/6.31/10

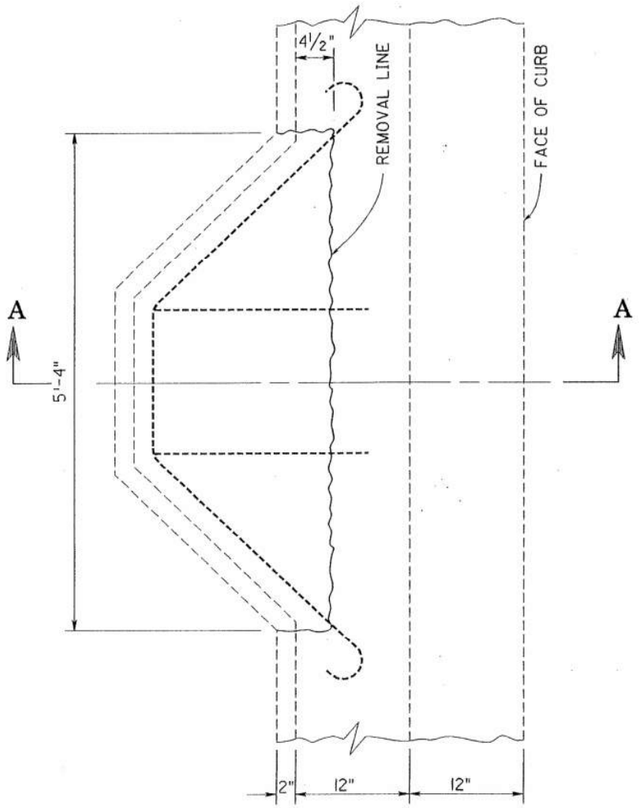

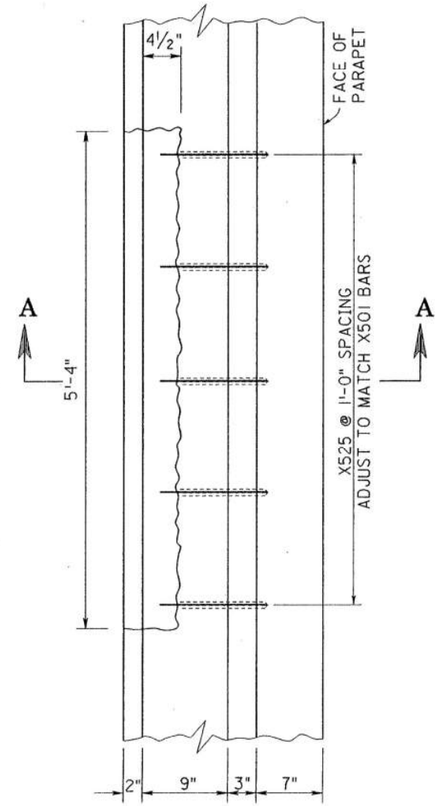

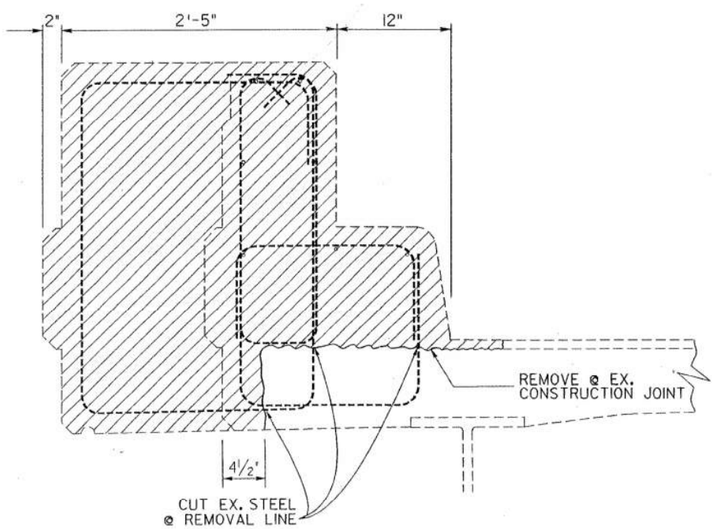

EXISTING SECTION A-A

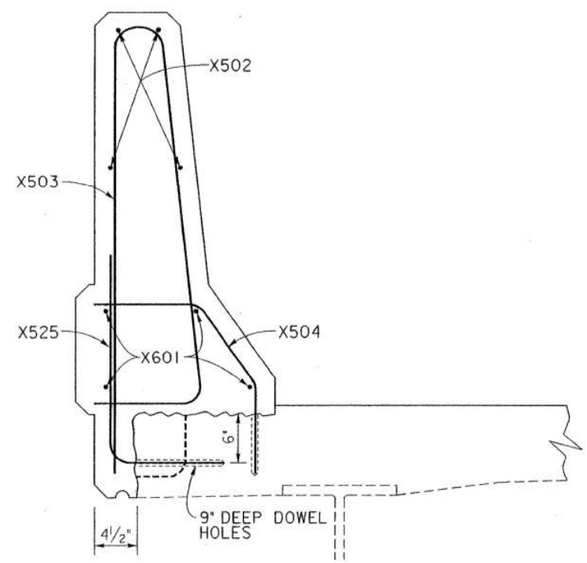

PROPOSED SECTION A-A

STATE OF OHIO
DEPARTMENT OF TRANSPORTATION
BUREAU OF BRIDGES

PILASTER RETROFIT

BRIDGE Nos.
SUM 277 - 0115, 0134, 0305, 03
SUM 77 - 0953L
SUM-224-1061

DESIGNED	DRAWN	TRACED	CHECKED	REVIEWED	DATE
LS	RB		ST	KS	8-93

F.H.W.A. REGION	STATE	PROJECT NO.	FUNDS
5	OHIO		

SUM-277/224-0.00/6.31/10

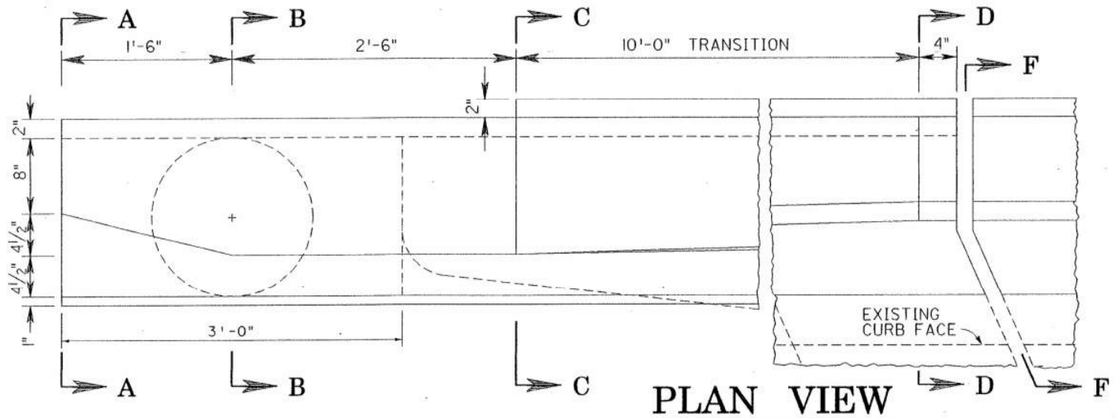

PLAN VIEW

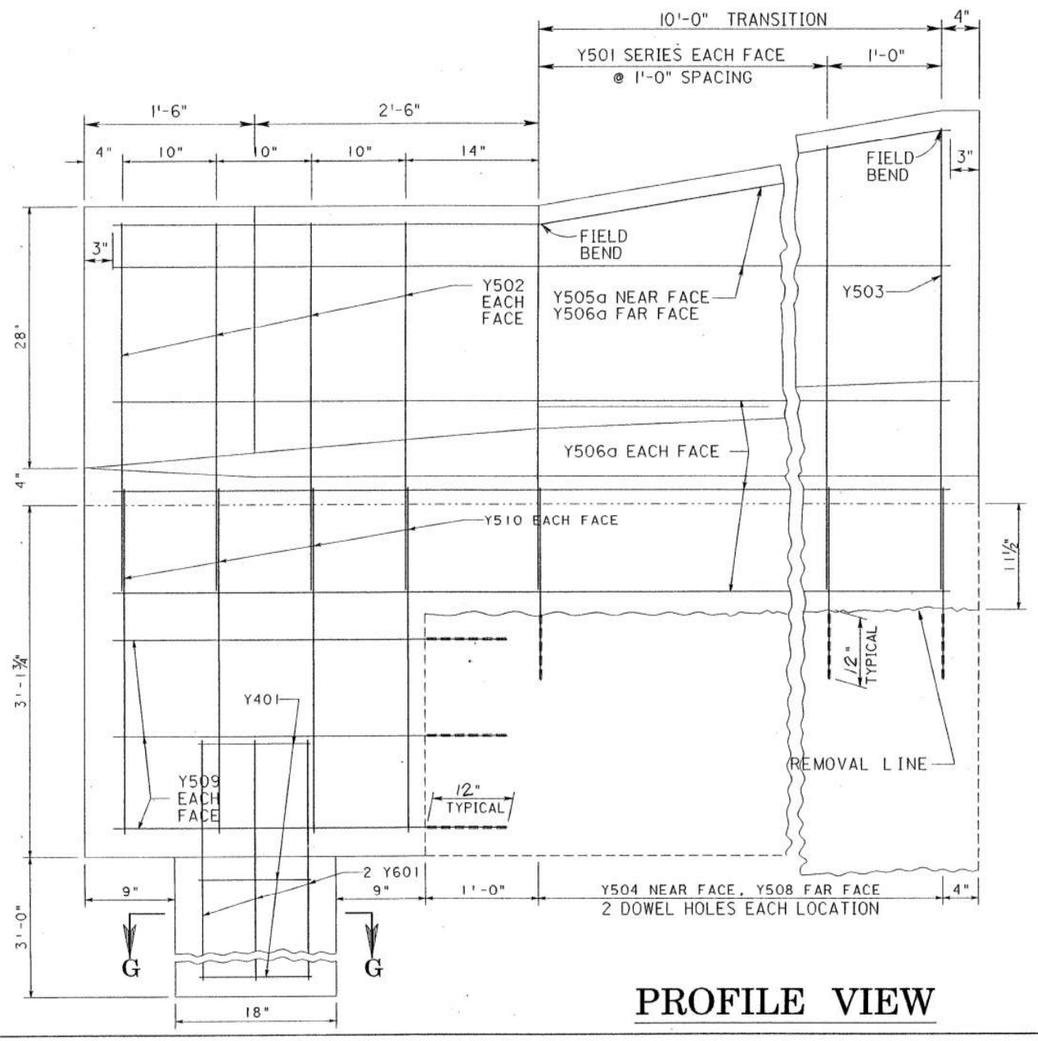

PROFILE VIEW

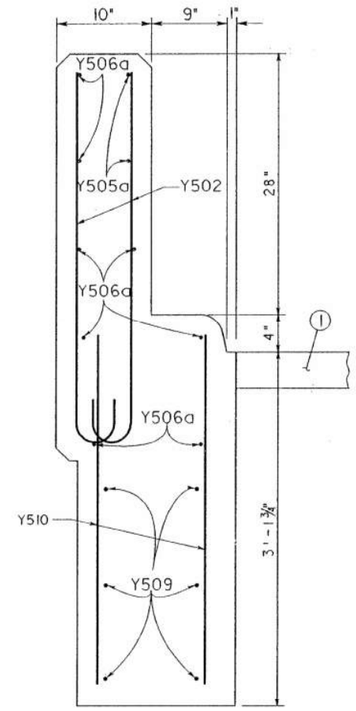

PROPOSED SECTION A-A

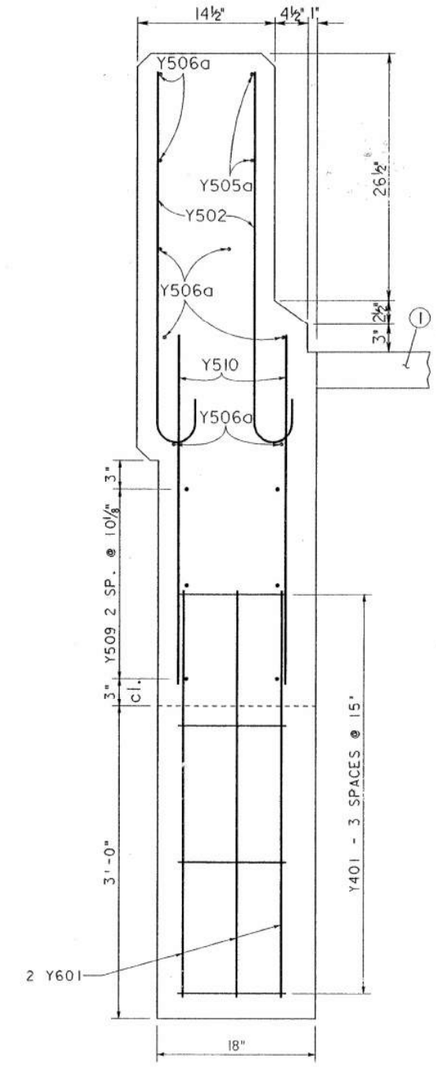

PROPOSED SECTION B-B

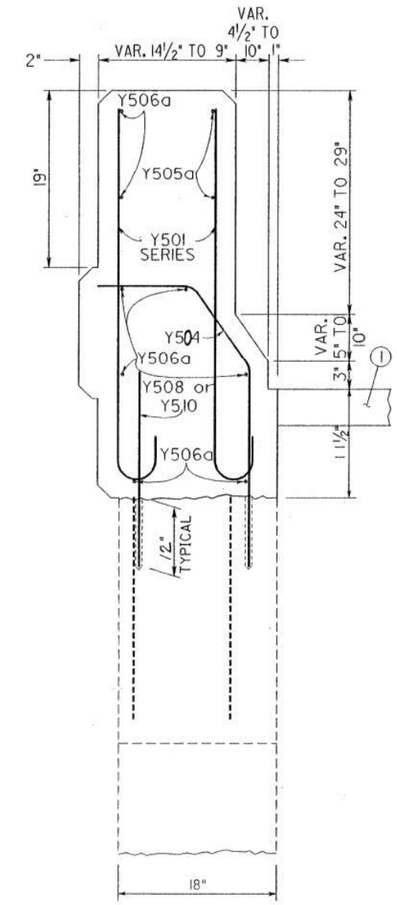

PROPOSED SECTION C-C

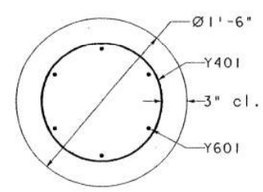

PROPOSED SECTION G-G

FOR SECTION F-F SEE END DAM DETAILS SHT. # 183.

(1) PROPOSED SHOULDER.

FOR SECTION D-D SEE SHT. # 187. (SHOWS Y503 PLACEMENT & PARAPET SHAPE)

STATE OF OHIO
DEPARTMENT OF TRANSPORTATION
BUREAU OF BRIDGES

WINGWALL DETAILS & SECTIO

BRIDGE No. SUM-277-0115

REAR LEFT & FORWARD RIGHT

DESIGNED	DRAWN	TRACED	CHECKED	REVIEWED	DATE
LS	RB		ST	KS	8-93

F.H.W.A. REGION	STATE	PROJECT NO.	FUNDS
5	OHIO		

SUM-277/224-0.00/6.31/10.

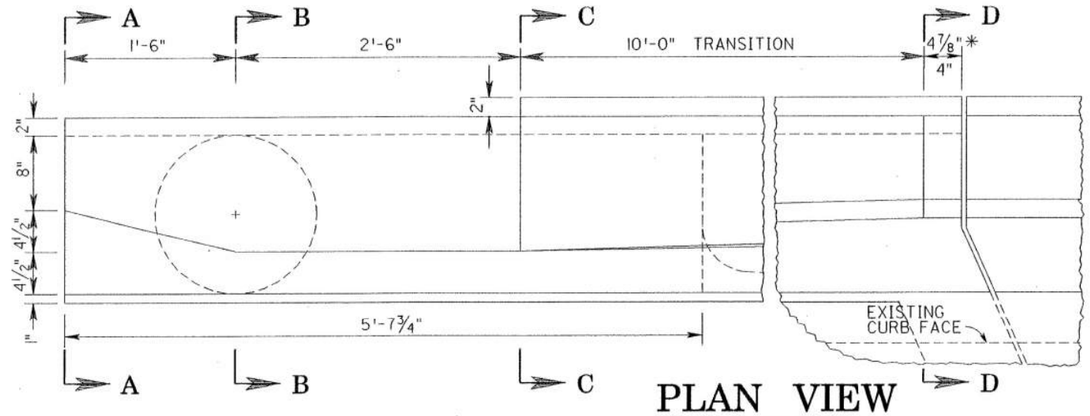

PLAN VIEW

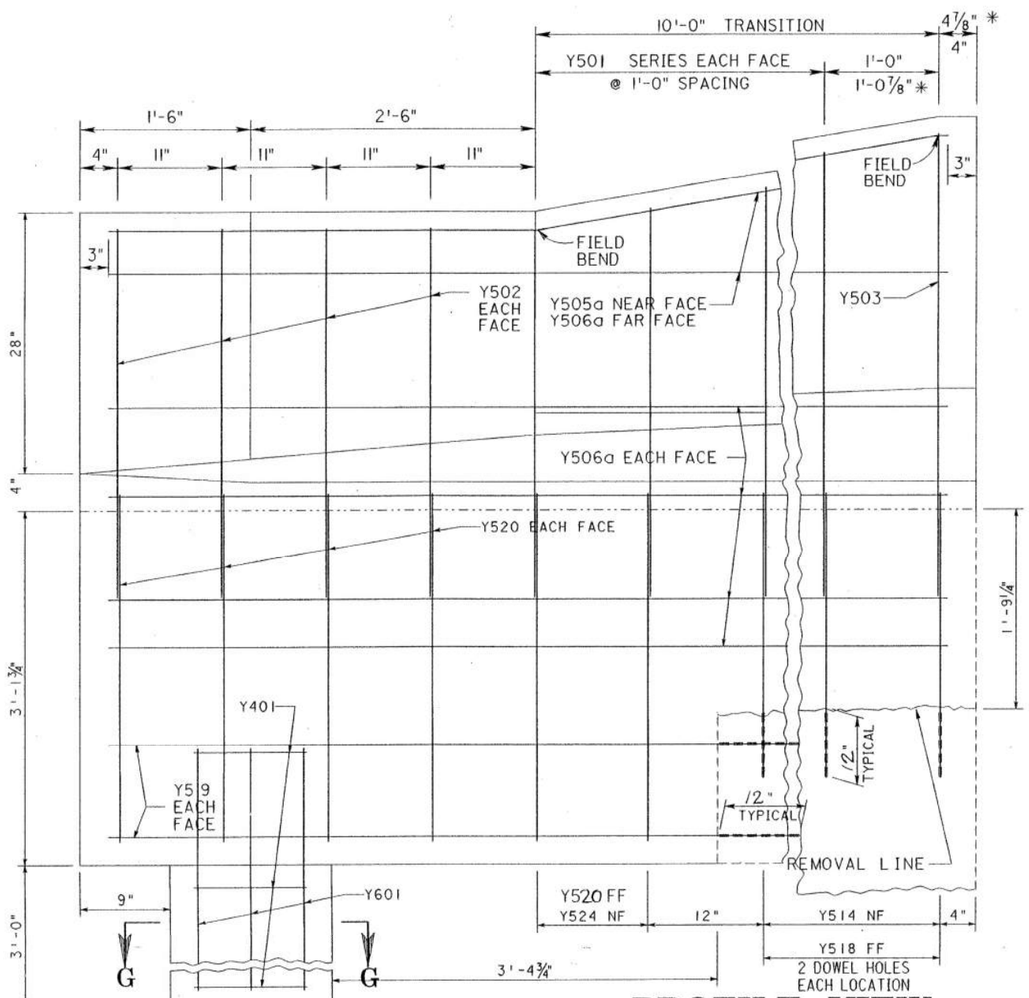

PROFILE VIEW

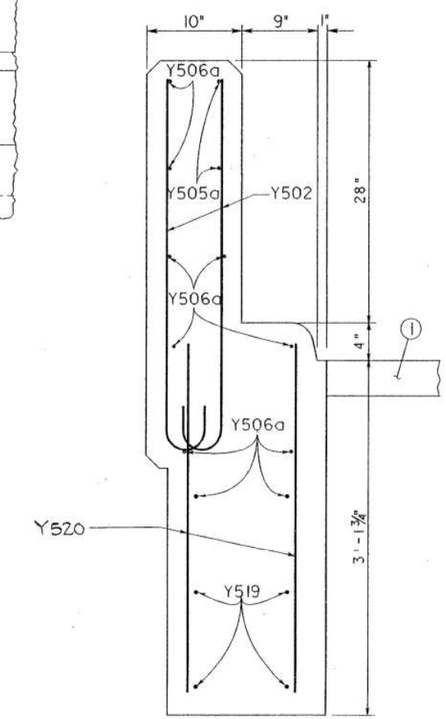

PROPOSED SECTION A-A

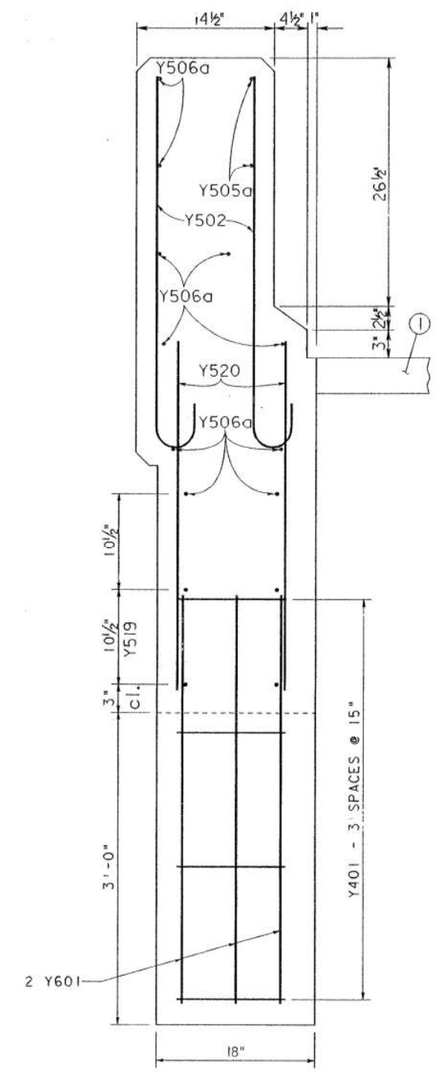

PROPOSED SECTION B-B

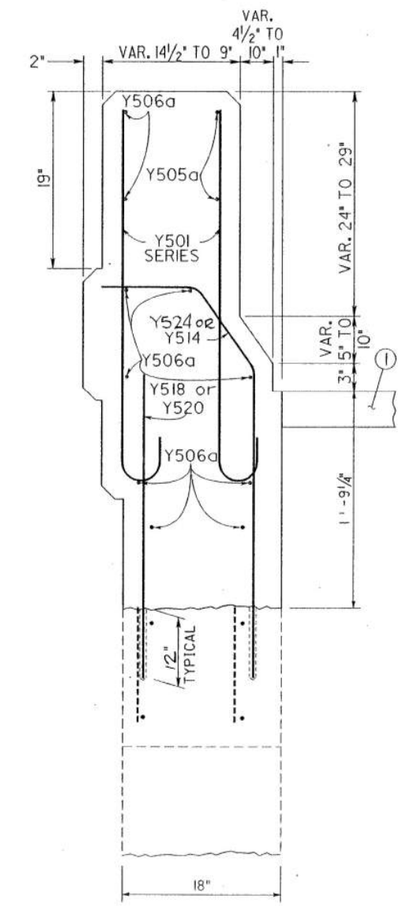

PROPOSED SECTION C-C

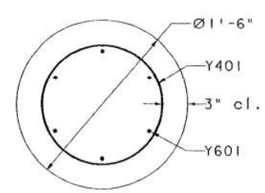

PROPOSED SECTION G-G

* FOR N - W/W ABUT. # 1
& S - W/W ABUT. # 2.

(1) PROPOSED SHOULDER

FOR SECTION D-D SEE SHT. # 187.
(SHOWS Y503 PLACEMENT & PARAPET SHAPE)

STATE OF OHIO
DEPARTMENT OF TRANSPORTATION
BUREAU OF BRIDGES

WINGWALL DETAILS & SECTION

BRIDGE No. SUM-277-0305

REAR LEFT & RIGHT
FORWARD LEFT & RIGHT

DESIGNED	DRAWN	TRACED	CHECKED	REVIEWED	DATE
LS	RB		ST	KS	8-93

d01w4o su277040.dgn

F.H.W.A. REGION	STATE	PROJECT NO.	FUNDS
5	OHIO		

SUM-277/224-0.00/6.31/10

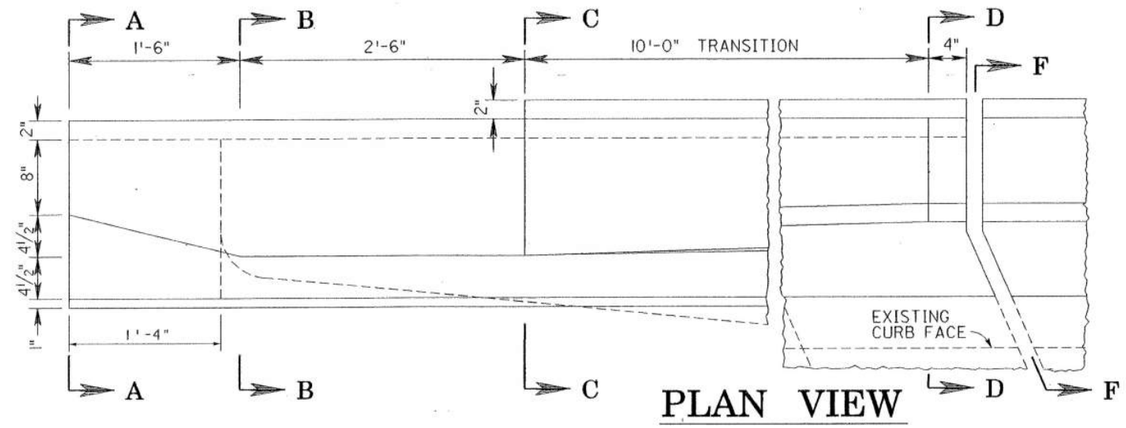

PLAN VIEW

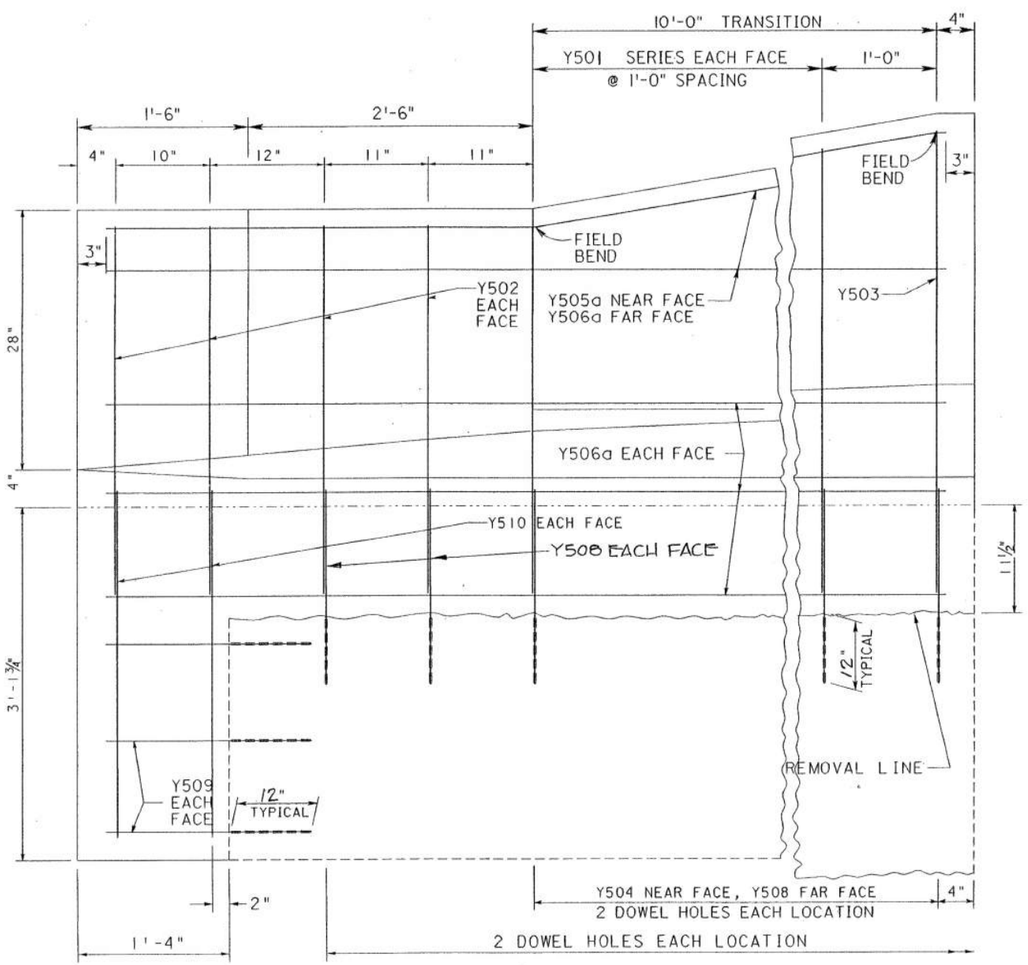

PROFILE VIEW

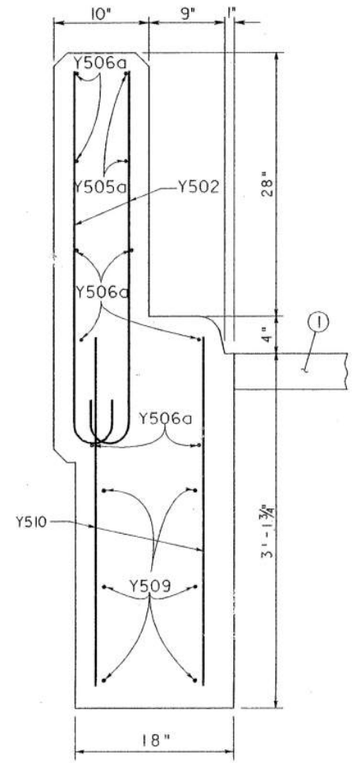

PROPOSED SECTION A-A

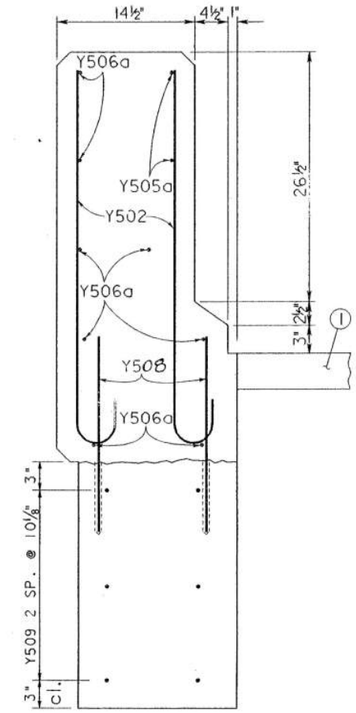

PROPOSED SECTION B-B

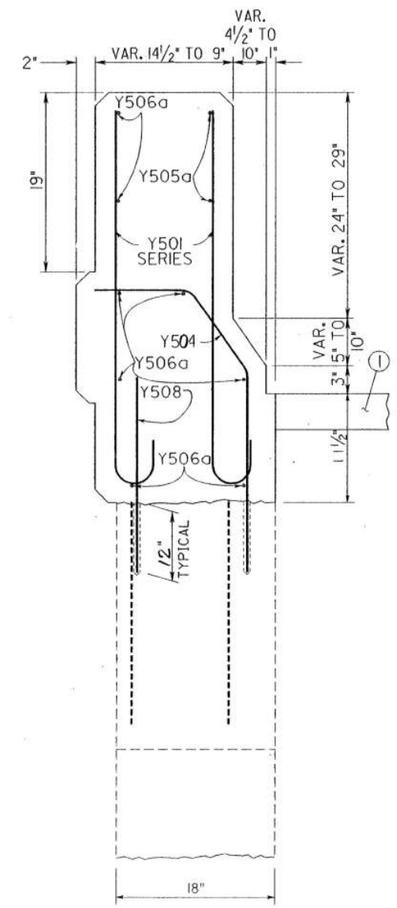

PROPOSED SECTION C-C

FOR SECTION F-F SEE END DAM DETAILS SHT. # 183.

(1) PROPOSED SHOULDER

FOR SECTION D-D SEE SHT. # 187. (SHOWS Y503 PLACEMENT & PARA SHAPE)

STATE OF OHIO
DEPARTMENT OF TRANSPORTATION
BUREAU OF BRIDGES

WINGWALL DETAILS & SECTIO

BRIDGE No. SUM-77-0953L

FORWARD LEFT

DESIGNED	DRAWN	TRACED	CHECKED	REVIEWED	DATE
LS	RB		ST	KS	8-93

d04w4a su277040.dgn

F.H.W.A. REGION	STATE	PROJECT NO.	FUNDS
5	OHIO		

194
196

SUM-277/224-0.00/6.31/10.22

BRIDGE No. 0115

LEFT STRUCTURE

MARK	NO.	LENGTH	WEIGHT	SHAPE
Y401	4	4'-8"	12	BENT
* Y501 ser	40	3'-11" - 4'-8"	179	BENT
Y502	16	3'-11"	65	BENT
Y503	4	8'-4¾"	34	BENT
Y504	24	3'-7½"	91	BENT
Y505	2	13'-10"	29	BENT
Y505a	2	13'-10"	29	BENT
Y506	8	13'-10"	115	STRAIGHT
Y506a	8	13'-10"	115	STRAIGHT
Y507	10	3'-10"	40	STRAIGHT
Y508	32	2'-2"	72	STRAIGHT
Y509	6	3'-11"	25	STRAIGHT
Y510	8	3'-3"	27	STRAIGHT
Y601	6	4'-0"	36	STRAIGHT
X501	32	14'-6"	484	STRAIGHT
X501a	8	15'-1"	126	STRAIGHT
X502	32	6'-0"	200	STRAIGHT
X503	145	8'-4"	1260	BENT
X504	145	2'-7"	391	BENT
X511	217	5'-11"	1339	BENT
X512	217	5'-5¾"	1240	BENT
X513	40	14'-6"	605	STRAIGHT
X513a	10	15'-1"	157	STRAIGHT
X514	6	6'-0"	38	STRAIGHT
X522	347	2'-9"	995	STRAIGHT
X525	5	2'-10"	15	BENT
X601	48	29'-0"	2091	STRAIGHT
X602	4	30'-0"	180	STRAIGHT
X611	40	29'-0"	1742	STRAIGHT
X711	40	29'-0"	2371	STRAIGHT
TOTAL POUNDS			14103	
DOWEL HOLES		352	EACH	

RIGHT STRUCTURE

MARK	NO.	LENGTH	WEIGHT	SHAPE
Y401	4	4'-8"	12	BENT
* Y501 ser	40	3'-11" - 4'-8"	179	BENT
Y502	16	3'-11"	65	BENT
Y503	4	8'-4¾"	34	BENT
Y504	24	3'-7½"	91	BENT
Y505	2	13'-10"	29	BENT
Y505a	2	13'-10"	29	BENT
Y506	8	13'-10"	115	STRAIGHT
Y506a	8	13'-10"	115	STRAIGHT
Y507	10	3'-10"	40	STRAIGHT
Y508	32	2'-2"	72	STRAIGHT
Y509	6	3'-11"	25	STRAIGHT
Y510	8	3'-3"	27	STRAIGHT
Y601	6	4'-0"	36	STRAIGHT
X501	32	14'-6"	484	STRAIGHT
X501a	8	15'-1"	126	STRAIGHT
X502	32	6'-0"	200	STRAIGHT
X503	145	8'-4"	1260	BENT
X504	145	2'-7"	391	BENT
X511	217	5'-11"	1339	BENT
X512	217	5'-5¾"	1240	BENT
X513	40	14'-6"	605	STRAIGHT
X513a	10	15'-1"	157	STRAIGHT
X514	6	6'-0"	38	STRAIGHT
X525	5	2'-10"	15	BENT
X601	48	29'-0"	2091	STRAIGHT
X602	4	30'-0"	180	STRAIGHT
X611	40	29'-0"	1742	STRAIGHT
X711	40	29'-0"	2371	STRIAGHT
TOTAL POUNDS			13108	
DOWEL HOLES		352	EACH	

BRIDGE No. 0134

LEFT STRUCTURE

MARK	NO.	LENGTH	WEIGHT	SHAPE
* Y501 ser	40	3'-11" - 4'-8"	179	BENT
Y502	16	3'-11"	65	BENT
Y503	6	8'-4¾"	53	BENT
Y504	27	3'-7½"	102	BENT
Y505	4	13'-10"	58	BENT
Y506	16	13'-10"	230	STRAIGHT
Y508	30	2'-2"	68	STRAIGHT
Y517	10	5'-4"	56	STRAIGHT
X501	32	14'-6"	484	STRAIGHT
X501a	8	15'-1"	126	STRAIGHT
X502	32	6'-0"	200	STRAIGHT
X503	145	8'-4"	1260	BENT
X504	145	2'-7"	391	BENT
X511	217	5'-11"	1339	BENT
X512	217	5'-5¾"	1240	BENT
X513	40	14'-6"	605	STRAIGHT
X513a	50	15'-1"	787	STRAIGHT
X514	10	6'-0"	63	STRAIGHT
X522	347	2'-9"	995	STRAIGHT
X525	5	2'-10"	15	BENT
X601	48	29'-0"	2091	STRAIGHT
X602	4	30'-0"	180	STRAIGHT
X611	40	29'-0"	1742	STRAIGHT
X711	40	29'-0"	2371	STRAIGHT
TOTAL POUNDS			14700	
DOWEL HOLES		347	EACH	

RIGHT STRUCTURE

MARK	NO.	LENGTH	WEIGHT	SHAPE
* Y501 ser	40	3'-11" - 4'-8"	179	BENT
Y502	16	3'-11"	65	BENT
Y503	6	8'-4¾"	53	BENT
Y504	27	3'-7½"	102	BENT
Y505	4	13'-10"	58	BENT
Y506	16	13'-10"	230	STRAIGHT
Y508	30	2'-2"	68	STRAIGHT
Y517	10	5'-4"	56	STRAIGHT
X501	32	14'-6"	484	STRAIGHT
X501b	8	12'-8"	106	STRAIGHT
X502	32	6'-0"	200	STRAIGHT
X503	143	8'-4"	1243	BENT
X504	143	2'-7"	385	BENT
X511	215	5'-11"	1327	BENT
X512	215	5'-5¾"	107	BENT
X513	40	14'-6"	605	STRAIGHT
X513a	50	15'-1"	787	STRAIGHT
X514	10	6'-0"	63	STRAIGHT
X525	5	2'-10"	15	BENT
X601	32	30'-0"	1442	STRAIGHT
X602	2	30'-0"	90	STRAIGHT
X611	40	29'-0"	1742	STRAIGHT
X711	40	29'-0"	2371	STRAIGHT
TOTAL POUNDS			11778	
DOWEL HOLES		343	EACH	

BRIDGE No. 0305

LEFT STRUCTURE

MARK	NO.	LENGTH	WEIGHT	SHAPE
Y401	8	4'-8"	24	BENT
* Y501 ser	20	3'-11" - 4'-8"	90	BENT
Y502	16	3'-11"	65	BENT
Y503	2	8'-4¾"	18	BENT
Y505a	4	13'-10"	58	BENT
Y506a	40	13'-10"	557	STRAIGHT
Y514	18	4'-5½"	84	BENT
Y518	18	2'-11"	55	STRAIGHT
Y519	8	6'-7"	55	STRAIGHT
Y520	16	3'-3"	55	STRAIGHT
Y524	4	5'-7½"	24	BENT
Y601	12	4'-0"	36	STRAIGHT
X501	16	14'-6"	242	STRAIGHT
X502	16	6'-0"	100	STRAIGHT
X503	81	8'-7"	725	BENT
X504	81	3'-7½"	306	BENT
X511	121	6'-7"	830	BENT
X512	121	6'-4"	799	BENT
X513	8	14'-6"	121	STRAIGHT
X514	8	6'-0"	50	STRAIGHT
X601	32	31'-7"	1518	STRAIGHT
X602	6	30'-0"	270	STRAIGHT
X603	2	21'-11"	66	STRAIGHT
X604	2	15'-8"	47	STRAIGHT
X622	111	2'-9"	458	STRAIGHT
X1002	9	42'-0"	1626	STRAIGHT
X1003	2	29'-9"	256	STRAIGHT
X1004	2	26'-1"	224	STRAIGHT
X1005	1	26'-0"	112	STRAIGHT
X1006	1	19'-10"	85	STRAIGHT
X1101	6	33'-8"	1073	STRAIGHT
X1102	2	17'-6"	186	STRAIGHT
X1103	2	13'-0"	138	STRAIGHT
TOTAL POUNDS			10353	
DOWEL HOLES		206	EACH	

RIGHT STRUCTURE

MARK	NO.	LENGTH	WEIGHT	SHAPE
Y401	8	4'-8"	24	BENT
* Y501 ser	20	3'-11" - 4'-8"	90	BENT
Y502	16	3'-11"	65	BENT
Y503	2	8'-4¾"	18	BENT
Y505a	4	13'-10"	58	BENT
Y506a	40	13'-10"	557	STRAIGHT
Y514	18	4'-5½"	84	BENT
Y518	18	2'-11"	55	STRAIGHT
Y519	8	6'-7"	55	STRAIGHT
Y520	16	3'-3"	55	STRAIGHT
Y524	4	5'-7½"	24	BENT
Y601	12	4'-0"	36	STRAIGHT
X501	16	14'-6"	242	STRAIGHT
X502	16	6'-0"	100	STRAIGHT
X503	81	8'-7"	725	BENT
X504	81	3'-7½"	306	BENT
X511	121	6'-7"	831	BENT
X512	121	6'-4"	799	BENT
X513	8	14'-6"	121	STRAIGHT
X514	8	6'-0"	50	STRAIGHT
X525	5	2'-10"	15	BENT
X601	32	31'-7"	1518	STRAIGHT
X602	6	30'-0"	270	STRAIGHT
X603	1	21'-11"	33	STRAIGHT
X604	1	15'-8"	24	STRAIGHT
X1002	6	42'-0"	1084	STRAIGHT
X1003	2	29'-9"	256	STRAIGHT
X1005	1	26'-0"	112	STRAIGHT
X1101	4	33'-8"	715	STRAIGHT
X1102	2	17'-6"	186	STRAIGHT
X1103	2	13'-0"	138	STRAIGHT
TOTAL POUNDS			8646	
DOWEL HOLES		206	EACH	

BRIDGE No. 0374

LEFT STRUCTURE

MARK	NO.	LENGTH	WEIGHT	SHAPE
* Y501 ser	40	3'-11" - 4'-8"	179	BENT
Y502	16	3'-11"	65	BENT
Y503	12	8'-4¾"	106	BENT
Y504	32	3'-7½"	121	BENT
Y505	4	13'-10"	58	BENT
Y506	16	13'-10"	230	STRAIGHT
Y508	47	2'-2"	106	STRAIGHT
Y527	10	8'-0"	84	STRAIGHT
Y537	10	4'-3"	45	STRAIGHT
X501	72	14'-6"	1089	STRAIGHT
X501a	4	20'-5"	85	STRAIGHT
X501b	4	16'-0"	67	STRAIGHT
X502	68	7'-0"	497	STRAIGHT
X503	373	8'-4"	3242	BENT
X504	373	3'-4½"	1313	BENT
X511	373	5'-11"	2302	BENT
X512	373	5'-5¾"	2132	BENT
X513	80	14'-6"	1210	STRAIGHT
X513a	10	14'-3"	149	STRAIGHT
X514	90	7'-0"	657	STRAIGHT
X522	836	2'-9"	2398	STRAIGHT
X525	15	2'-10"	44	BENT
X601	120	30'-0"	5407	STRAIGHT
X602	15	30'-0"	676	STRAIGHT
X611	100	30'-0"	4506	STRAIGHT
X711	100	30'-0"	6132	STRAIGHT
TOTAL POUNDS			32900	
DOWEL HOLES		825	EACH	

RIGHT STRUCTURE

MARK	NO.	LENGTH	WEIGHT	SHAPE
* Y501 ser	40	3'-11" - 4'-8"	179	BENT
Y502	16	3'-11"	65	BENT
Y503	12	8'-4¾"	106	BENT
Y504	32	3'-7½"	121	BENT
Y505	4	13'-10"	58	BENT
Y506	16	13'-10"	230	STRAIGHT
Y508	46	2'-2"	104	STRAIGHT
Y547	10	3'-5"	36	STRAIGHT
Y557	10	9'-3"	97	STRAIGHT
X501	72	14'-6"	1089	STRAIGHT
X501c	4	16'-10"	70	STRAIGHT
X501d	4	21'-10"	91	STRAIGHT
X502	68	7'-0"	497	STRAIGHT
X503	373	8'-4"	3242	BENT
X504	373	3'-4½"	1313	BENT
X511	373	5'-11"	2303	BENT
X512	373	5'-5¾"	2132	BENT
X513	80	14'-6"	1210	STRAIGHT
X513a	10	14'-3"	149	STRAIGHT
X514	90	7'-0"	657	STRAIGHT
X525	15	2'-10"	44	BENT
X601	120	30'-0"	5407	STRAIGHT
X602	15	30'-0"	676	STRAIGHT
X611	100	30'-0"	4506	STRAIGHT
X711	100	30'-0"	6132	STRAIGHT
TOTAL POUNDS			30514	
DOWEL HOLES		824	EACH	

BRIDGE No. 0953

MARK	NO.	LENGTH	WEIGHT	SHAPE
* Y501 ser	80	3'-11" - 4'-8"	358	BENT
Y502	32	3'-11"	131	BENT
Y503	20	8'-4¾"	175	BENT
Y504	60	3'-7½"	227	BENT
Y505	6	13'-10"	87	BENT
Y505a	2	13'-10"	29	STRAIGHT
Y506	24	13'-10"	346	STRAIGHT
Y506a	8	13'-10"	115	STRAIGHT
Y508	88	2'-2"	199	STRAIGHT
Y509	6	2'-1"	13	STRAIGHT
Y510	4	3'-1"	13	STRAIGHT
Y527	10	11'-8"	122	STRAIGHT
Y537	10	5'-11"	62	STRAIGHT
Y547	10	3'-5"	36	STRAIGHT
X501	64	14'-6"	968	STRAIGHT
X501a	16	10'-10"	181	STRAIGNT
X502	72	7'-0"	526	STRAIGHT
X503	283	8'-4"	2460	BENT
X504	283	3'-4½"	996	BENT
X525	5	2'-10"	15	BENT
X601	32	28'-1"	1349	STRAIGHT
X602	4	30'-0"	180	STRAIGHT
X603	28	30'-10"	1296	STRAIGHT
TOTAL POUNDS			9884	
DOWEL HOLES		720	EACH	

* SERIES, 4 SET OF 10 AT 1" INCREMENT.

NOTE:
LENGTH FOR SIMILAR BAR MARKS MAY VARY WITH EACH STRUCTURE.

SEE SHT. No. 195 FOR BAR SHAPES.

ALL BARS ON THIS SHEET ARE EPOXY COATED

STATE OF OHIO
DEPARTMENT OF TRANSPORTATION
BUREAU OF BRIDGES

STEEL LIST

DESIGNED	DRAWN	TRACED	CHECKED	REVIEWED	DATE	REVIS
LS	RB		ST	KS	8-93	

BRIDGE No. 1061

LEFT STRUCTURE

MARK	NO.	LENGTH	WEIGHT	SHAPE
X501	10	3'-4¾"	36	STRAIGHT
X501a	20	3'-4" - 4'-1"	78	STRAIGHT
X502	20	3'-11" - 5'-0"	93	BENT
X503	120	8'-4"	1043	BENT
X504	140	3'-4½"	493	BENT
X505	4	15'-11½"	67	BENT
X506	4	15'-11½"	67	STRAIGHT
X508	28	14'-0"	409	STRAIGHT
X508a	8	6'-9"	57	STRAIGHT
X511	149	5'-11"	920	BENT
X512	147	6'-4"	985	BENT
X513	28	14'-0"	409	STRAIGHT
X513a	8	6'-9"	57	STRAIGHT
X514	4	15'-11½"	67	STRAIGHT
X525	5	2'-10"	15	BENT
X601	20	31'-0"	932	STRAIGHT
X602	2	30'-0"	90	STRAIGHT
TOTAL POUNDS			5818	
DOWEL HOLES		260	EACH	

RIGHT STRUCTURE

MARK	NO.	LENGTH	WEIGHT	SHAPE
X501	10	3'-4¾"	36	STRAIGHT
X501a	20	3'-4" - 4'-1"	78	STRAIGHT
X502	20	3'-11" - 5'-0"	93	BENT
X503	120	8'-4"	1043	BENT
X504	140	3'-4½"	493	BENT
X505	4	14'-6½"	61	BENT
X506	4	14'-6½"	61	STRAIGHT
X508	28	14'-0"	409	STRAIGHT
X508a	8	6'-9"	57	STRAIGHT
X511	149	5'-11"	920	BENT
X512	147	6'-4"	985	BENT
X513	28	14'-0"	409	STRAIGHT
X513a	8	6'-9"	57	STRAIGHT
X514	4	15'-11½"	67	STRAIGHT
X522	222	3'-0"	695	STRAIGHT
X525	5	2'-10"	15	BENT
X601	20	31'-0"	932	STRAIGHT
X602	2	30'-0"	90	STRAIGHT
TOTAL POUNDS			6501	
DOWEL HOLES		260	EACH	

ALL STEEL ON THIS SHEET IS TO BE EPOXY COATED.

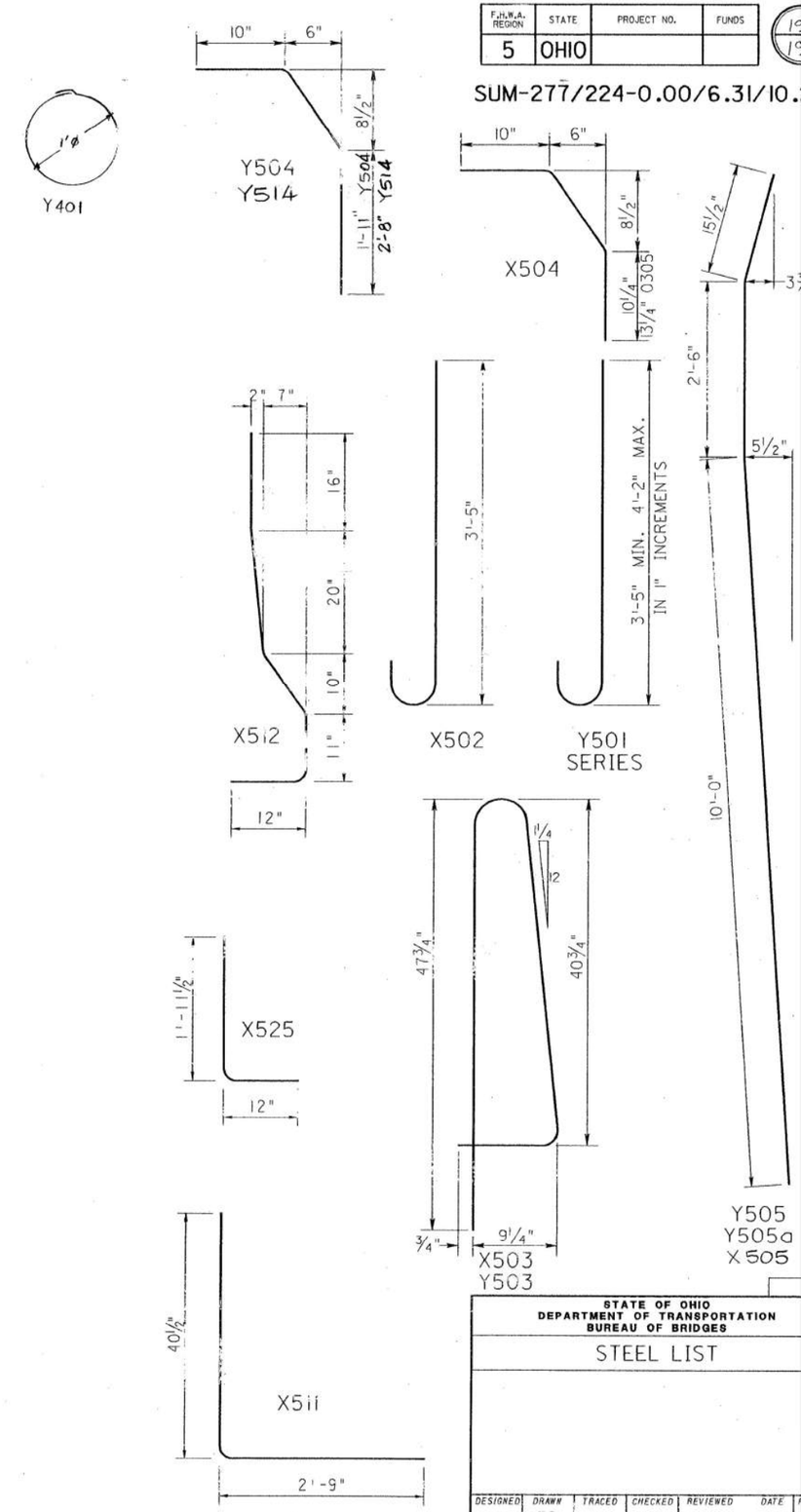

F.H.W.A. REGION	STATE	PROJECT NO.	FUNDS
5	OHIO		

SUM-277/224-0.00/6.31/10.

STATE OF OHIO
DEPARTMENT OF TRANSPORTATION
BUREAU OF BRIDGES

STEEL LIST

DESIGNED	DRAWN	TRACED	CHECKED	REVIEWED	DATE
LS	RB		ST	KS	8-93

d04w4a SU277050.DGN

PAINTING PLAN

F.H.W.A. REGION	STATE	PROJECT	FUNDS
5	OHIO		

SUM 277/224 0.00/6.31/10.2

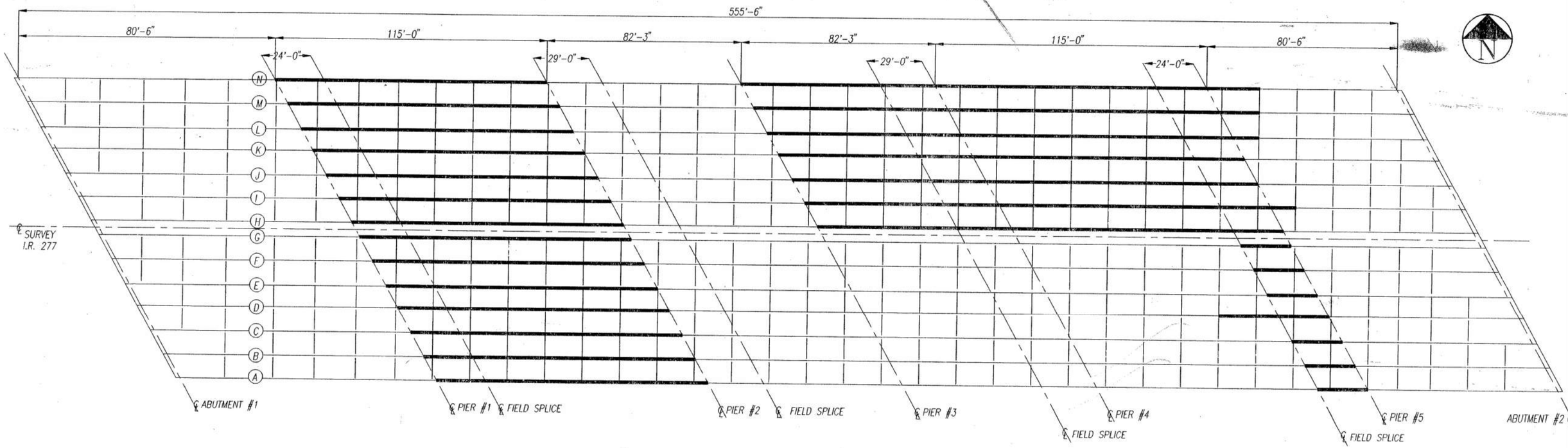

FRAMING PLAN

— BEAMS TO BE PAINTED USING OZEU PAINT SYSTEM INCLUDING CROSSFRAMES, STIFFENERS, SPLICES, ROCKERS AND BOLSTERS. THE AREA OF THE BEAMS HAS BEEN INCREASED BY 25%.

NOTE : ITEM SPECIAL – FIELD PAINTING OF EXISTING STEEL FINISH COAT, SYSTEM OZEU SHALL BE GREEN FS-595A 14260

ITEM	QUANTITY	UNIT	DESCRIPTION
			LEFT STRUCTURE
SPECIAL	36,700	SQ.FT.	SURFACE PREPARATION OF EXISTING STEEL, SYSTEM OZEU
SPECIAL	36,700	SQ.FT.	FIELD PAINTING OF EXISTING STEEL, PRIME COAT, SYSTEM OZEU
SPECIAL	36,700	SQ.FT.	FIELD PAINTING OF EXISTING STEEL, INTERMEDIATE COAT, SYSTEM OZEU
SPECIAL	36,700	SQ.FT.	FIELD PAINTING OF EXISTING STEEL, FINISH COAT, SYSTEM OZEU
SPECIAL	120	MAN HOUR	GRINDING FINS, TEARS, SLIVERS
SPECIAL	6440	LIN.FT.	GRINDING FLANGE EDGES
SPECIAL	40	LIN.FT.	CAULKING
			RIGHT STRUCTURE
SPECIAL	16,625	SQ.FT.	SURFACE PREPARATION OF EXISTING STEEL, SYSTEM OZEU
SPECIAL	16,625	SQ.FT.	FIELD PAINTING OF EXISTING STEEL, PRIME COAT, SYSTEM OZEU
SPECIAL	16,625	SQ.FT.	FIELD PAINTING OF EXISTING STEEL, INTERMEDIATE COAT, SYSTEM OZEU
SPECIAL	16,625	SQ.FT.	FIELD PAINTING OF EXISTING STEEL, FINISH COAT, SYSTEM OZEU
SPECIAL	60	MAN HOUR	GRINDING FINS, TEARS, SLIVERS
SPECIAL	4012	LIN.FT.	GRINDING FLANGE EDGES
SPECIAL	20	LIN.FT.	CAULKING

QUANTITIES CARRIED TO SHEET 175.

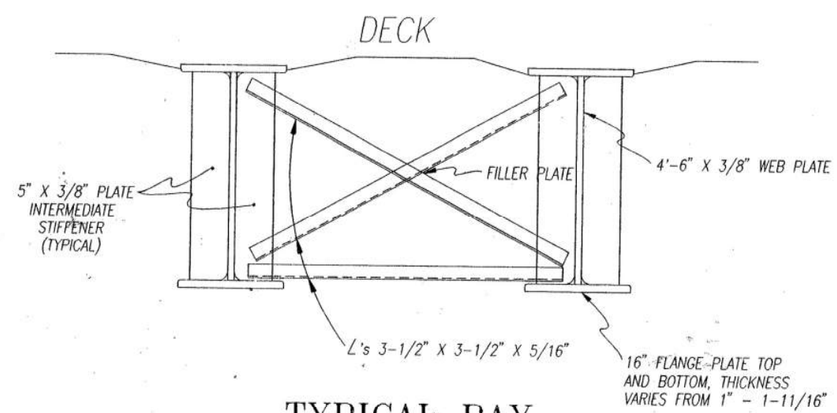

TYPICAL BAY

STATE OF OHIO
DEPARTMENT OF TRANSPORTATION
DISTRICT FOUR OPERATIONS
BRIDGE SECTION

PAINTING PLAN
SUM-277-0374

DESIGNED	DRAWN	CHECKED	REVIEWED	DATE
		ST	KS	8-93

:SUM277FR (10/21/92)