SUMMIT COUNTY	OHIO	i
SUM-271-0.89	FHWA REGION 5	29
STATE		

MICROFILMED
JUN 23 1993

STATE OF OHIO
DEPARTMENT OF TRANSPORTATION

SUM-271-0.89

RICHFIELD TOWNSHIP
SAFETY REST AREA

WASTEWATER TREATMENT SYSTEM UPGRADE

CONVENTIONAL SIGNS :

LIMITED ACCESS & RIGHT OF WAY (EXISTING) ——— LA & RW ——— LA & RW
LIMITED ACCESS & RIGHT OF WAY (PROPOSED) ——— LA & RW ——— LA & RW
LIMITED ACCESS (ONLY) (EXISTING) ——— L/A ——— L/A
LIMITED ACCESS (ONLY) (PROPOSED) ——— L/A ——— L/A
RIGHT OF WAY (EXISTING) ——— RW ——— (PROPOSED) ——— RW
EXISTING RIGHT OF WAY
PROPERTY LINE ——— PL ——— (IN EXISTING FENCE) ——— PL ———
GUARDRAIL (EXISTING) (PROPOSED)
FENCE (EXISTING) (PROPOSED)
CENTERLINE
CORPORATION LIMIT
UTILITY POLES: TELEPHONE POWER LIGHT

INDEX OF SHEETS :

TITLE SHEET ——— 1
GENERAL NOTES ——— 2-6
GENERAL SUMMARY ——— 7
EXISTING SITE AND DEMOLITION ——— 8
SEWER LINE LAYOUT ——— 9
PROFILE SHEET ——— 10,11
GRADING AND W.W.T.P. LAYOUT ——— 12
UTILITY PLAN ——— 13
LANDSCAPING PLAN ——— 14,15
WASTEWATER TREATMENT PLANT PLANS ——— 16-29

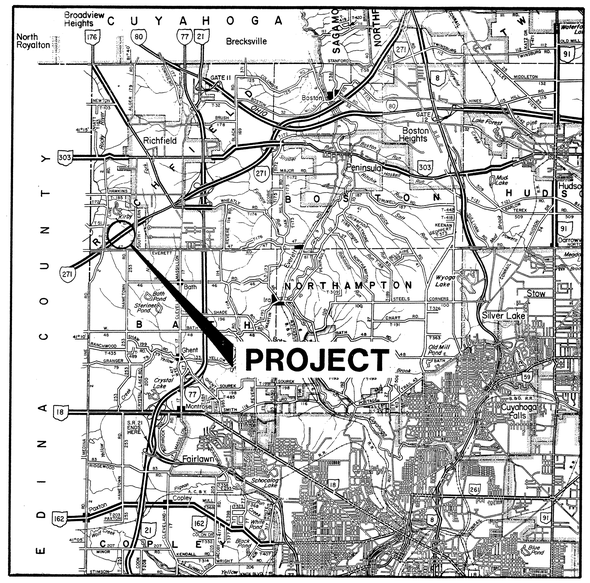

LOCATION MAP :

SCALE IN MILES 0 1 2 3 4 5 6
STATE AND FEDERAL ROUTES
OTHER ROADS

SCALES

PLAN 0 10 / 5 20
PROFILE: HORIZONTAL 0 10 / 5 20
PROFILE: VERTICAL 0 2 / 1 5
CROSS SECTION: HORIZ. 0 2 5 / 1 3 10
CROSS SECTION: VERT. 0 2 5 / 1 3 10

LIMITED ACCESS :

This improvement is especially designed for through traffic and has been declared a limited access highway or freeway by action of the Director in accordance with the provisions of Section 5511.02 of the Revised Code of Ohio.

1989 SPECIFICATIONS :

The standard specifications of the State of Ohio, Department of Transportation, including changes and supplemental specifications listed in the proposal shall govern this improvement.

I hereby approve these plans and declare that the making of this improvement will not require the closing of the highway except for the affected Rest Area, and that provisions for maintenance and safety of traffic will be set forth in these plans and estimate.

APPROVED William Brinkley
DATE 8-16-88 DISTRICT DEPUTY DIRECTOR OF TRANSPORTATION

APPROVED
DATE

APPROVED Theodore J. Stitt
DATE 12/2/88 CHIEF ENGINEER, PLANNING AND DESIGN

APPROVED Bernard D. Hurst
DATE 12/2/88 DIRECTOR, DEPARTMENT OF TRANSPORTATION

Revised 3-10-89

DEPARTMENT OF TRANSPORTATION
FEDERAL HIGHWAY ADMINISTRATION

APPROVED

DIVISION ADMINISTRATOR DATE

UNDERGROUND UTILITIES

2 WORKING DAYS
BEFORE YOU DIG
CALL 800-362-2764 (TOLL FREE)
OHIO UTILITIES PROTECTION SERVICE

NON-MEMBERS
MUST BE CALLED DIRECTLY

LINE DATA :

BEGIN PROJECT = STATION
END PROJECT = STATION
NET LENGTH OF PROJECT = **0.00** LIN. FT.
OR **0.00** MILES

BEGIN WORK = STATION **460+00**
END WORK = STATION **470+00**
TOTAL NET LENGTH OF WORK = **1000** LIN. FT.
OR **0.189** MILES

PLAN PREPARED BY :

OHIO DEPT. OF TRANSPORTATION
BUREAU OF DESIGN SERVICES
ROADSIDE DEVELOPMENT SECTION
COLUMBUS, OHIO

S.W. Jennings 10/17/88
REGISTERED ENGINEER, DATE

SEAL

SUPPLEMENTAL PRINTS OF STANDARD CONSTRUCTION DRAWINGS				
BP-6	10-1-87	HL-30.11	5-1-87	
BP-4	10-1-87			
F-1	11-10-83	MH-5	6-12-75	
HW-D	6-1-65	MH-1	12-18-84	
LA-1	6-1-79			
LA-2	6-1-79			
MH-3	12-18-84			

SUPPLEMENTAL SPECIFICATIONS		
SPECIAL SPECIFICATIONS FOR COMPLETE WASTEWATER TREATMENT SYSTEM, 10/31/88		
814	1-21-88	

Project :
Date of Letting _____, 19__ Contract No. _____

TITLE SHEET

GENERAL NOTES

BENCH MARK AND BASE LINE
A BENCH MARK AND BASE LINE WILL BE ESTABLISHED BY ODOT PERSONNEL.

UNDERGROUND UTILITIES
THE LOCATIONS OF THE UNDERGROUND UTILITIES SHOWN ON THE PLANS ARE AS OBTAINED FROM THE OWNERS OF THE UTILITY AS REQUIRED BY SECTION 153.04 ORC.

UTILITY OWNERS
1. POWER - OHIO EDISON CO., 76 S. MAIN ST., AKRON, OHIO 44308, 216-384-4702

2. TELEPHONE - WESTERN RESERVE TELEPHONE CO., 245 NORTH MAIN ST., HUDSON OHIO 44236, 216-650-8470

3. WATER -

4. SEWER -

APPROVED EQUAL MANUFACTURERS OR COMPANIES
IT IS INTENDED, THAT IN THOSE LOCATIONS THROUGHOUT THE PLANS AND SPECIAL SPECIFICATIONS WHERE MANUFACTURING COMPANIES OR SOURCES OF MATERIALS ARE LISTED, THE CONTRACTORS MAY UTILIZE OTHER MANUFACTURING COMPANIES OR SOURCES OF MATERIALS PROVIDED THE INTENT OF THE PLANS AND SPECIAL SPECIFICATIONS ARE FOLLOWED. THE ACCEPTANCE OF THE CONTRACTORS PROPOSED ALTERNATIVES WILL BE DETERMINED BY THE SUBMISSION AND APPROVAL OF THE CONTRACTORS SHOP DRAWINGS OR MATERIAL SELECTIONS.

ITEM 452 - 7" PLAIN CONCRETE PAVEMENT, AS PER PLAN
SUBGRADE UNDER SERVICE DRIVES AND CURB RAMPS SHALL BE COMPACTED TO A DEPTH OF SIX INCHES (6") AS DESCRIBED IN 203.13. JOINTS SHALL BE PLACED AT MAXIMUM TEN FOOT (10') INTERVALS AND CONSTRUCTED IN ACCORDANCE WITH STANDARD DRAWING BP-6. THE COST OF JOINTS, GRADING, EXCAVATION AND COMPACTION SHALL BE INCLUDED IN ITEM 452 - "7" PLAIN CONCRETE PAVEMENT, AS PER PLAN".

ITEM 619 - FIELD OFFICE
THE GENERAL CONTRACTOR SHALL PROVIDE A SUITABLE FIELD OFFICE HAVING A MINIMUM OF 400 SQUARE FEET OF FLOOR SPACE. PAYMENT SHALL BE AT THE LUMP SUM PRICE BID FOR ITEM 619 "FIELD OFFICE".

ITEM 201 - CLEARING AND GRUBBING
ALL TREES AND STUMPS SPECIFICALLY MARKED FOR REMOVAL WITHIN THE CONSTRUCTION LIMITS OF THIS PROJECT SHALL BE REMOVED UNDER THE LUMP SUM PRICE BID FOR ITEM 201, CLEARING AND GRUBBING, EXCEPT THAT THOSE TREES FOR WHICH PROTECTION AND PRESERVATION IS INDICATED BY THE ENGINEER IN CONSULTATION WITH THE DISTRICT LANDSCAPE ARCHITECT OR HORTICULTURALIST. THE FOLLOWING IS AN APPROXIMATE ESTIMATE OF THE NUMBER OF TREES AND STUMPS TO BE REMOVED:

SIZES:

NUMBER OF TREES:

NUMBER OF STUMPS

THE ABOVE ESTIMATE IS APPROXIMATE AND THE STATE OF OHIO RESERVES THE RIGHT TO ORDER THE REMVAL OF ADDITIONAL TREES OR STUMPS OUTSIDE OF THE LIMITS OF CONSTRUCTION BUT WITHIN THE RIGHT-OF-WAY AND/OR EASEMENT LINES. PAYMENT FOR THE REMOVAL OF THESE ADDIDIONAL TREES OR STUMPS SHALL BE INCLUDED IN THE LUMP SUM PRICE BID FOR ITEM 201, CLEARING AND GRUBBING.

TREE PROTECTION
NO WORK WILL BE PERMITTED WHERE TREES, SHRUBS OR UTILITIES ARE PRESENT WITHIN THE WORK LIMITS OF THE REST AREA PROJECT PRIOR TO STAKING BY THE GENERAL CONTRACTOR OR THE LIMITS OF ALL REST AREA BUILDINGS, SERVICE DRIVES, SIDEWALKS, GRADING WORK AND EXISTING AND PROPOSED UTILITY LINES.

THE METHOD FOR MARKING TREES AND SHRUBS TO BE SALVAGED, PROTECTED OR REMOVED WILL BE ESTABLISHED BY THE ENGINEER, DISTRICT LANDSCAPE ARCHITECT OR HORTICULTURALIST AND THE GENERAL CONTRACTOR PRIOR TO WORK AROUND ANY EXISTING TREES, SHRUBS AND UTILITY LINES.

TREE AND ROOT SYSTEM PROTECTION USING SNOW FENCE SHALL BE PROVIDED BY THE GENERAL CONTRACTOR AS INDICATED ON THE PLAN AND AS DIRECTED BY THE ENGINEER. TREE ROOT AREAS EQUAL TO 24" OUTSIDE THE BRANCH SPREAD SHALL BE PROTECTED AS PER STANDARD DRAWING LA-1.

ONLY PNEUMATIC TIRED EQUIPMENT SHALL BE USED WITHIN THE REST AREAS OUTSIDE THE PARKING LOTS. CARE SHALL BE TAKEN BY THE VARIOUS CONTRACTORS NOT TO OPERATE EQUIPMENT OR OTHER VEHICLES WHEN THE GROUND IS WET OR SOFT IN ORDER TO AVOID DEEP RUTTING, SOIL COMPACTION AND OTHER DESTRUCTION OF TREE ROOT SYSTEMS.

TREES TO BE SALVAGED THAT ARE DAMAGED AT ANY TIME DURING THE CONTRACT SHALL BE REPAIRED OR REPLACED (AT THE CONTRACTOR'S EXPENSE) AS DETERMINED BY THE ENGINEER AFTER CONSULTATION WITH THE DISTRICT LANDSCAPE ARCHITECT OR HORTICULTURALIST. DAMAGED TREES THAT CAN BE REPAIRED SHALL BE PRUNED AND THE DAMAGE REPAIRED WITH PAINT OR WOUND DRESSING AS PER 663.14. REPLACEMENT SHALL BE, IN QUANTITY AND QUALITY, SUFFICIENT TO COMPENSATE FOR SIZES OR TREES LOST. THE WORK SHALL BE COMPLETED AS PER 665 WITH TREES OF THE SIZE AND VARIETY, AS DIRECTED BY THE ENGINEER IN CONSULTATION WITH THE DISTRICT LANDSCAPE ARCHITECT OR HORTICULTURALIST.

ITEM SPECIAL - SNOW FENCE - TREE PROTECTION
SNOW FENCE SHALL CONSIST OF WOOD PICKETS 1/2" X 1 1/2" X 4'-0" NOMINAL SIZE, PAINTED RED AND WOVEN WITH FIVE (5) DOUBLE STRANDS OF 12 GUAGE STEEL WIRE, SPACED APPROXIMATELY TWO INCHES (2") APART OR APPROVED EQUAL.

THE FENCE SHALL BE SUPPORTED BY STEEL OR WOOD POSTS OF ADEQUATE SIZE AND SPACING. USED FENCE AND POSTS IN GOOD CONDITION MAY BE USED AS APPROVED BY THE ENGINEER.

PAYMENT WILL BE AT THE CONTRACT UNIT PRICE PER LINEAR FOOT OF SNOW FENCE FURNISHED, ERECTED AND SUBSEQUENTLY REMOVED. TO BE USED AS DIRECTED BY THE ENGINEER
ITEM SPECIAL-SNOW FENCE 1000 LIN FT.

ITEM 625 - PLASTIC CAUTION TAPE
PLASTIC CAUTION TAPE, SHALL BE INSTALLED ABOVE THE PRIMARY ELECTRIC CABLE UP TO THE TRANSFORMER PAD. VERTICAL TAPE LOCATION IS DETAILED ON THIS SHEET.

TYPICAL TRENCH DETAIL:

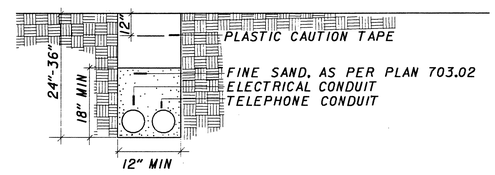

ITEM SPECIAL - 12" STEEL PIPE ENCASEMENT, JACKED UNDER PAVEMENT
THIS WORK SHALL CONSIST OF FURNISHING AND INSTALLING A CASING OF THE DIAMETER INDICATED, TO PERMIT THE LAYING WITHIN OF A SANITARY SEWER LINE AS SHOWN IN THE PLANS. ENCASEMENT PIPE SHALL BE STEEL IN ACCORDANCE WITH ASTM-A53, SCHEDULE 40, GRADE B. THE CONTRACTOR SHALL MAKE ANY NECESSARY EXCAVATION TO COMPLETE THE OPEN CUT OR BORING OR JACKING OPERATION TO INSTALL THE STEEL CASING. THE METHOD OF BORING OR JACKING OPERATION MUST BE SUBMITTED TO THE ENGINEER FOR APPROVAL. THE CONTRACTOR SHALL INSTALL THE CASING AS SHOWN ON THE PLANS. ANY DEVIATION IN GRADE OR ALIGNMENT OF THE CASING WHICH SHALL PREVENT THE SEWER LINE INSTALLATION AS DESIGNED OR ACCESS FOR MAINTENANCE SHALL REQUIRE THE CONTRACTOR TO REINSTALL THE CASING IN THE PROPER MANNER.

THE SEWER LINE WITHIN SHALL BE LAID ON HARDWOOD BLOCKING DESIGNED TO REMAIN FIXED IN POSITION. AFTER THE SEWER LINE IS LAID, THE CONTRACTOR SHALL COMPLETELY FILL ALL VOIDS BETWEEN THE OUTSIDE OF THE SEWER LINE AND THE CASING WITH PEA GRAVEL OR AGGREGATE CONFORMING TO 703.02. BOTH ENDS OF THE CASING SHALL BE CLOSED WITH A 4" BRICK OR CONCRETE BULKHEAD.

STEEL PIPE ENCASEMENT OF SANITARY SEWER LINE WILL BE MEASURED AS THE ACTUAL LINEAR FEET CONSTRUCTED, INCLUDING THE OPEN CUT OR BORING OR JACKING OPERATION. ENCASEMENT PIPE, BLOCKING TO SUPPORT THE INTERNAL SEWER LINE, GRAVEL OR AGGREGATE TO FILL THE INTERIOR VOID AND END BULKHEADS.

PAYMENT FOR ACCEPTABLE QUANTITIES OF STEEL PIPE ENCASEMENT WILL BE MADE AT THE CONTRACT UNIT PRICE.

PAYMENT WILL BE FULL COMPENSATION FOR LABOR, MATERIAL, TOOLS, EQUIPMENT AND INCIDENTALS NECESSARY FOR THE INSTALLATION OF THE STEEL PIPE ENCASEMENT; FURNISHED, INSTALLED IN PLACE, TESTED AND ACCEPTED.

SEWERLINE LEAKAGE TEST
THE CONTRACTOR SHALL PERFORM A LEAKAGE TEST BY THE LOW PRESSURE AIR TEST METHOD, OR WHEN REQUIRED, BY THE INFILTRATION/EXFILTRATION METHOD AS DESCRIBED BELOW:

1. LOW PRESSURE AIR TEST SHALL BE CONDUCTED BETWEEN TWO CONSECUTIVE MANHOLES FOR THE ENTIRE LENGTH OF THE COMPLETED SEWERLINE. ALL PIPE OUTLETS MUST BE PLUGGED IN THE SECTION BEING TESTED WITH SUITABLE TEST PLUGS. ONE OF THE PLUGS USED AT A MANHOLE MUST BE TAPPED AND EQUIPPED FOR AN AIR COMPRESSOR. AIR SHALL BE SUPPLIED SLOWLY TO THE TEST SECTION UNTIL THE INTERNAL PRESSURE REACHES APPROXIMATELY FOUR (4) P.S.I.. AT LEAST TWO MINUTES SHALL BE ALLOWED FOR THE AIR PRESSURE TO STABILIZE. WHEN THE PRESSURE HAS STABILIZED AND IS AT OR ABOVE 3.5 P.S.I. THE AIR SUPPLY SHALL BE DISCONNECTED AND TIMING SHALL BEGIN WITH A STOP WATCH. THE STOP WATCH SHALL BE ALLOWED TO RUN UNTIL THE PRESSURE HAS DROPPED 1.0 P.S.I.. IF THE TIME SHOWN ON THE STOP WATCH IS GREATER THAN THE SPECIFIED MINIMUM TIME AS SHOWN ON THE CHART BELOW, THE SECTION SHALL BE CONSIDERED TO HAVE PASSED THE TEST.

PIPE DIAMETER IN INCHES	MINUTES
04	2.0
06	3.0
08	4.0
10	5.0
12	5.5
15	7.5
18	8.5
21	10.0
24	11.5

IF A SEWERLINE IS BELOW EXISTING GROUNDWATER LEVEL, THE INTERNAL PRESSURE SHALL BE INCREASED BY THE AVERAGE BACK PRESSURE OF ANY GROUNDWATER THAT MAY BE OVER THE PIPE. THE AIR PRESSURE SHALL BE INCREASED .433 P.S.I. FOR EACH FOOT THE GROUNDWATER LEVEL IS ABOVE THE INVERT OF THE PIPE. THE INTERNAL AIR PRESSURES SHOULD NEVER EXCEED 5.0 P.S.I..

IF THE PREVAILING GROUNDWATER IS MORE THAN TWO FEET ABOVE THE INVERT OF THE SEWERLINE, THE INFILTRATION/EXFILTRATION TEST SHOULD BE USED.

2. INFILTRATION AND EXFILTRATION TEST. IF THE SEWERLINE REQUIRES TESTING FOR LEAKAGE BY THE INFILTRATION/EXFILTRATION TEST METHOD, THE MAXIMUM ALLOWABLE LEAKAGE SHALL BE 200 GAL./INCH OF DIAMETER OF PIPE/MILE/DAY AND THE TESTS SHALL BE CONDUCTED IN ACCORDANCE WITH ASTM-C969-82.

PAYMENT FOR TESTING OF THE SEWERLINE SHALL BE INCLUDED IN THE COST OF INSTALLATION OF THE SEWERLINE.

GENERAL NOTES

ITEM SPECIAL - 6" CAST IRON SOIL PIPE (SV) W/FLEXIBLE JOINTS

THE CONTRACTOR SHALL FURNISH AND INSTALL 6" CAST IRON SOIL PIPE W/FLEXIBLE JOINTS IN ITEM 603. CLASS "C" BEDDING AS SHOWN IN THE PLANS.

THE PIPE SHALL CONFORM TO ASTM-A-74-75, C15P-301-78 WITH NEOPRENE GASKETS AS PER ASTM-C-564-70.

THE COMPLETE SEWER LINE SHALL BE TESTED AS DESCRIBED IN THE SEWER LINE LEAKAGE TEST NOTE.

PAYMENT WILL BE MADE AT THE CONTRACT UNIT PRICE PER LINEAR FOOT OF "ITEM SPECIAL - 6" CAST IRON SOIL PIPE W/FLEXIBLE JOINTS" INSTALLED, INCLUDING ALL LABOR, MATERIALS, TOOLS, EQUIPMENT, EXCAVATION & BACKFILLING, INCIDENTALS AND TESTING NECESSARY TO COMPLETE THIS ITEM OF WORK.

ITEM 202 - WASTEWATER TREATMENT SYSTEM REMOVAL, AS PER PLAN

THIS ITEM SHALL CONSIST OF THE REMOVAL AND DISPOSAL OF THE EXISTING WASTEWATER TREATMENT SYSTEM (WWTS) WHICH INCLUDES AN AERATION CHAMBER, TRASH TRAP AND RELATED PIPING.

THE GENERAL CONTRACTOR SHALL, THREE (3) WEEKS IN ADVANCE OF THE DATE HE INTENDS TO REMOVE THE WWTS, MEET WITH ODOT DISTRICT PERSONNEL TO DETERMINE WHICH COMPONENTS OF THE WWTS WILL BE REMOVED BY THE CONTRACTOR AND TURNED OVER TO ODOT FOR FUTURE USE. ALL CONCRETE PADS ENCOUNTERED SHALL BE REMOVED IN ACCORDANCE WITH 202.05. PRIOR TO THE REMOVAL AND DISPOSAL OF THE WWTS, THE CONTRACTOR SHALL HAVE THE WASTE WITHIN THE WWTS REMOVED BY A LICENSED WASTE TANK TRUCK OPERATING AGENCY.

AS SOON AS THE REMOVAL AND DISPOSAL WORK HAS BEEN OTHERWISE COMPLETED AND APPROVED BY THE ENGINEER, BACKFILLING PROCEDURES SHALL BE PERFORMED AS DESCRIBED IN ITEM 202 AND ITEM 203. IN THOSE CASES WHERE THE WWTS AREAS ARE NOT TO BE USED FOR THE PLACEMENT OF A NEW WWTS OR LIFT STATION, THE UPPERMOST TWO (2) INCHES OF BACKFILL SHALL BE TOPSOIL AS PER ITEM 653. THE ENTIRE AREA OF CONSTRUCTION WILL THEN BE SEEDED AND MULCHED USING THE URBAN MIXTURE AS DESCRIBED IN ITEM 659. THE FINAL GRADE OF BACKFILL SHALL BE SUCH AS TO CREATE A NEAT, WELL-DRAINED APPEARANCE AND TO PREVENT WATER FROM DRAINING UNNECESSARILY ONTO ADJACENT PROPERTY.

THE COST FOR ALL OF THE ABOVE SHALL BE INCLUDED IN THE LUMP SUM BID PRICE FOR ITEM 202 - "WASTEWATER TREATMENT SYSTEM REMOVAL, AS PER PLAN".

ELECTRICAL SERVICE TO PROPOSED WASTEWATER TREATMENT PLANT, INCLUDING ALARM SYSTEM

THE CONTRACTOR SHALL INSTALL A COMPLETE ELECTRICAL SERVICE (INCLUDING POWER AND ALARM SYSTEM) TO THE WASTEWATER TREATMENT PLANT (W.W.T.P.) IN THE FOLLOWING MANNER.

POWER CIRCUIT - THE CONTRACTOR SHALL TAP INTO THE EXISTING INCOMING PRIMARY SERVICE INSIDE THE BUILDING PRIOR TO THE EXISTING DISTRIBUTION PANEL AND FURNISH AND INSTALL A JUNCTION BOX (HOFFMAN ENGINEERING COMPANY GASKETED SCREW COVER BOX, NEMA TYPE 12, CAT. NO. A-16126GSC, SIZE 16"X12"X6", WITH 14 GAUGE GALVANIZED STEEL BODY AND 12 GAUGE GALVANIZED STEEL COVER, WELDED CONSTRUCTION, W/CAPTIVATED STAINLESS STEEL COVER SCREWS AND OIL-RESISTANT GASKET AND ADHESIVE, OR APPROVED LIKE KIND AND QUALITY AS MANUFACTURED BY E.M. WIEGMANN AND COMPANY, INC. OR APPROVED EQUAL).

INSIDE THE JUNCTION BOX THE TAP SHALL BE MADE USING BRUNDY TRITAP SERVIT TYPE KSA UNIVERSAL TAP CONNECTORS FOR COPPER TO COPPER APPLICATION, CAT. NO. KSA4/9 OR APPROVED EQUAL, WITH 3-1/C, NO. 4/0 COPPERSTRANDED, TYPE THHN OR THWN SI-58101 CONDUCTORS. ROUTE THE CONDUCTORS FROM THE JUNCTION BOX VIA 2 1/2"CONDUIT (GALVANIZED RIGID STEEL CONDUIT AS PER CMS 713.04) TO A SAFETY SWITCH (SQUARE "D" HEAVY DUTY SAFETY SWITCH WITH VISIBLE BLADES, CAT. NO. H224NAWK NEMA 12, 240 VOLTS, RATED 200 AMPS., SINGLE THROW FUSIBLE, 3-WIRE (2 BLADES AND FUSEHOLDERS, 1 S/N)-240 VOLT AC, ½VOLT DC, WITHOUT KNOCKOUTS, FURNISHED WITH CLASS "R" FUSE KITS-240 VOLT, RATED 200 AMPERES-SQUARE "D" CAT. NO. HRK 1020 AND WITH QUICK-MAKE, QUICK-BREAK OPERATING MECHANISM, A DUAL COVER INTERLOCK AND A COLOR CODED INDICATOR HANDLE, U.L. APPROVED. APPROVED EQUALS SHALL BE AS MANUFACTURED BY I.T.E. IMPERIAL, GENERAL ELECTRIC OR WESTINGHOUSE).

FURNISH AND INSTALL WITHIN THE SAFETY SWITCH FOUR (4) GOULD SHAWMUT A2D-200, U.L. CLASS RKI FUSES W/TIME DELAY 200,000 AMPERES RMS AC INTERRUPTING RATING, 250 VOLTS, CURRENT LIMITING CHARACTERISTICS/CLASS "R" REJECTION FEATURES, ONE-PIECE REJECTION FERRULES AND END CAPS, PLATED CONTACTS, SUPER-TUBE BODIES AND IMPRINTED COLOR CODE MARKINGS, 200 AMPHERE RATING, CAT. NO. A2D, RELIANCE OR APPROVED EQUAL. ONE (1) FUSE SHALL BE PLACED IN THE CLASS "R" FUSE KITS OF THE SAFETY DISCONNECT SWITCH AND THE REMAINING THREE FUSES SHALL BE PLACED INSIDE THE DISCONNECT SWITCH FOR FUTURE REPLACEMENT FROM THE SAFETY SWITCH. ROUTE 3-1/C, NO. 4/0 CONDUCTORS TO A 00 CIRCUIT BREAKER LOAD CENTER (00 CIRCUIT BREAKER LOAD CENTER, MAIN LUGS-INDOOR, FOR 1-PHASE, 3-WIRE, 120 / 240VOLT, AC, U.L. LISTED, MAIN RATING AMPS 200, W/EIGHT (8) SPACES W/00M MAIN FRAME SIZE, W/COVER INCLUDED WITH LOAD CENTER, SQUARE "D" CAT. NO. 00C20US, SURFACE MOUNT, FURNISHED WITH SQUARE "D" EQUIPMENT GROUND BAR KIT CAT. NO. PK9GTA, MAIN WIRE SIZE AL/CU AWG/MCM #4-250, MAX. NUMBER OF SINGLE POLE CIRCUITS, EIGHT (8), MAX. NUMBER OF TANDEM CIRCUIT BREAKERS-ZERO (0), LOAD CENTER BOX AND INTERIOR SQUARE "D" CAT. NO. 008L200, FACTORY ASSEMBLED, ENCLOSURE DIMENSIONS 14.25" W X 26.04" H X 3.75"D.

FURNISH AND INSTALL WITHIN THE LOAD CENTER, ONE (1) 100 AMPHERE, 2-POLE 120 / 240 VOLT A.C., WITH VISI-TRIP INDICATOR, PLUG-ONE W/22,000 AMPHERE RMS, U.L. LISTED INTERRUPTING RATING, FOR THE W.W.T.S. CIRCUIT AND FURNISH AND INSTALL THE FOLLOWING BREAKERS IN THE REMAINING SPACES AS SPARES:

1. 70 A. 2. -POLE, 22,000 AMP. RMS
1. 30 A. 2. -POLE, 22,000 AMP. RMS
2. 20 A. 1. -POLE, 10,000 AMP. RMS

ALL CIRCUIT BREAKERS SHALL BE DESCRIBED ABOVE AND AS MANUFACTURED BY SQUARE "D", ITE IMPERIAL, GENERAL ELECTRIC OR WESTINGHOUSE.

FROM THE 00 CIRCUIT BREAKER LOAD CENTER ROUTE 3-1/C NO. 4/0 VIA 2 1/2" CONDUIT UP THE WALL TO AN ELEVATION JUST BELOW THE CEILING, SUSPENDED BY HANGER AND AVOIDING ALL EXISTING PIPES, CONDUITS AND DEVICES, ROUTE AS CONDITIONS WILL PERMIT, ALONG THE CEILING TO A JUNCTION BOX (HOFFMAN ENGINEERING COMPANY GASKETED SCREW COVER BOX, NEMA TYPE 12, CAT. NO. A-16126GSC, SIZE 16"X12"X6", WITH 14 GAUGE GALVANIZED STEEL BODY AND 12 GAUGE GALVANIZED STEEL COVER, WELDED CONSTRUCTION, W/CAPTIVATED STAINLESS STEEL COVER SCREWS AND OIL-RESISTANT GASKET AND ADHESIVE, OR APPROVED LIKE AND KIND AND QUALITY AS MANUFACTURED BY E.M. WIEGMANN AND COMPANY, INC. OR APPROVED EQUAL) MOUNTED ON BACK WALL NEAR CEILING, OUT THE BACK OF THE JUNCTION BOX, THROUGH THE REAR WALL OF THE BUILDING, TURN 90 DEGREE DOWN AND ROUTE DOWN THE OUTSIDE OF THE WALL TO A DEPTH OF 36" BURY, TURN WITH 36" RADIUS 90 DEGREE ELL AND THEN ROUTE THE 3-1/C, NO. 4/0 VIA 2 1/2" CONDUIT TO THE WWTP AS SHOWN ON THE UTILITY SHEET OF THE PLANS.

ALL JUNCTION BOXES, SAFETY SWITCHES AND LOAD CENTER SHALL BE MOUNTED ON PLYWOOD BACKING BOARDS SECURED TO THE WALL OF THE BUILDING BY PHILLIPS HEAD STEEL SCREWS WITH ZINC CHROMATE FINISH. THE PLYWOOD BACKING BOARD SHALL BE FABRICATED FROM EXTERIOR TYPE B-C EXT-DFPA, GROUP 3, 3/4" THICK PLYWOOD. THE BOARDS DIMENSIONS SHALL BE 2" GREATER THAN THE LENGTH AND WIDTH OF ITS RESPECTIVE BOX.

PRIOR TO MOUNTING THE PLYWOOD BACKING PANELS, THE CONTRACTOR SHALL PAINT THEM AS FOLLOWS:

1. PRATT & LAMBERT SPEC. NO. 143.3 WHICH SHALL CONSIST OF ALKYD-ENAMEL, LOW EGGSHELL AND SHALL BE APPLIED AS FOLLOWS: 1-COAT P&L "INTERIOR TRIM PRIMER" ON FRONT, BACK AND ALL EDGES.

2. 1-COAT P&L "VITRALITE UNDERCOATING" ON FRONT, BACK AND ALL EDGES. TINT VITRALITE UNDERCOATING TO MATCH COLOR OF VITRALITE ENAMEL EGGSHELL.

3. 1-COAT P&L "VITRALITE UNDERCOATING" ON FRONT, BACK AND ALL EDGES. THIS SHALL BE THE FINISH COAT AND SHALL BE P&L CALIBRATED COLOR "WINTER CLOUD" CAT. NO. BG693P.

4. THE BLEMISH-FREE WOOD FINISH ALL PLYWOOD BACKING PANELS SHALL BE MOUNTED FACE-OUT FROM WALLS AFTER BEING PAINTED AND COMPLETELY DRY.

THE ACTUAL MOUNTED LOCATION OF THE JUNCTION BOXES, SAFETY SWITCH, LOAD CENTER AND CONDUIT RUNS WITHIN THE BUILDINGS MECHANICAL ROOM SHALL BE BASED ON A SITE INVESTIGATION AND DETERMINATION OF BEST LOCATION AND ROUTING BY THE CONTRACTOR AND APPROVAL OF THE ROUTING OF THE CIRCUIT BY THE ENGINEER.

THE GROUND ROD SHALL BE INSTALLED OUTSIDE AT THE REAR OF THE BUILDING, WITHIN THE VICINITY WHERE THE NEW CONDUITS FOR THE BRANCH FEEDS AND ALARM CIRCUITS FEED UNDERGROUND. AVOID ALL EXISTING UNDERGROUND SEWER LINES AND UTILITY LINES THAT MAY BE WITHIN THE AREA AND BE SURE THAT PLACEMENT OF THE GROUND ROD DOES NOT OBSTRUCT THE OPERATION OR FUNCTION OF DOORS, EQUIPMENT AND ETC. OR INTERFERE WITH THE SAFETY OF OPERATION, PERSONNEL OR THE PUBLIC.

FURNISH AND INSTALL 1-1/C, NO. 2, COPPER STRANDED, TYPE THHN/THWN SI-58101 CONDUCTOR FROM THE GROUND ROD OUTSIDE THE BUILDING. CONNECTION BETWEEN GROUND ROD AND CABLE SHALL BE MADE BY EXOTHERMIC WELDS WITH TWO (2) COATS OF INSULATING VARNISH APPLIED OVER THE WELDS AND EXPOSED CABLE. FROM ROD CONNECTION THE GROUND CONDUCTOR SHALL ENTER THE BUILDING THROUGH A 1-INCH GALVANIZED STEEL RIGID CONDUIT AS PER CMS 713.04, WHICH SHALL FEED DIRECTLY AS POSSIBLE, AS REQUIRED, OVER TO THE VICINITY OF THE NEWLY INSTALLED, SAFETY DISCONNECT SWITCH AND BOTTOM FEED CONNECT TO SAME. THE GROUND CONDUCTOR SHALL CONNECT TO THE GROUND TERMINAL OF THE SAFETY DISCONNECT SWITCH.

ALL NEW ELECTRICAL EQUIPMENT OR DEVICES INSTALLED FOR THE PURPOSE OF SUPPLYING POWER OR CONTROL WIRING TO THE NEW, PROPOSED WASTEWATER TREATMENT SYSTEM SHALL BE INSTALLED TO PROVIDE CONTINUOUS EQUIPMENT GROUNDING AS PER THE NATIONAL ELECTRIC CODE (N.E.C.). THE COST OF FURNISHING AND INSTALLING THE POWER CIRCUIT FOR THE WWTS INCLUDING ALL LABOR, MATERIALS AND EQUIPMENT SHALL BE INCLUDED IN THE COST OF "ITEM SPECIAL, COMPLETE 8,000 GALLON WASTEWATER TREATMENT SYSTEM" W/F.M. CLARIFIER (INCLUDING ELECTRICAL).

HIGH WATER ALARM CIRCUIT

THE CONTRACTOR SHALL FURNISH AND INSTALL A HIGH WATER ALARM SYSTEM AS DESCRIBED IN "PART D - HIGH WATER ALARM **SYSTEM**" OF THE SPECIAL SPECIFICATIONS FOR COMPLETE WASTEWATER TREATMENT SYSTEM", WITH THE CONDUCTORS AND CONDUIT ROUTING AS DESCRIBED BELOW:

THE CONTRACTOR SHALL MOUNT AN ENCLOSURE FOR THE ALARM SYSTEM AS DESCRIBED IN THE STANDARD SPECIFICATION AND ROUTE 2 1/C, NO. 12, TYPE THHN/THWN SI-58101 CONDUCTORS VIA 1 1/2" CONDUIT FROM THE ALARM ENCLOSURE UP TO AN ELEVATION JUST BELOW THE CEILING TO THE JUNCTION BOX, INSTALLED UNDER THE POWER CIRCUIT, MOUNTED ON THE REAR WALL OF THE BUILDING NEAR THE CEILING, OUT THE REAR OF THE JUNCTION BOX, THROUGH THE REAR WALL, TURN 90 DEGREES DOWN, ROUTE DOWN THE OUTSIDE OF THE WALL TO A DEPTH OF 36" BURY, TURN WITH A 36" RADIUS 90 DEGREES ELL AND ROUTE TO THE WWWTS AS SHOWN ON THE UTILITY PLAN SHEET.

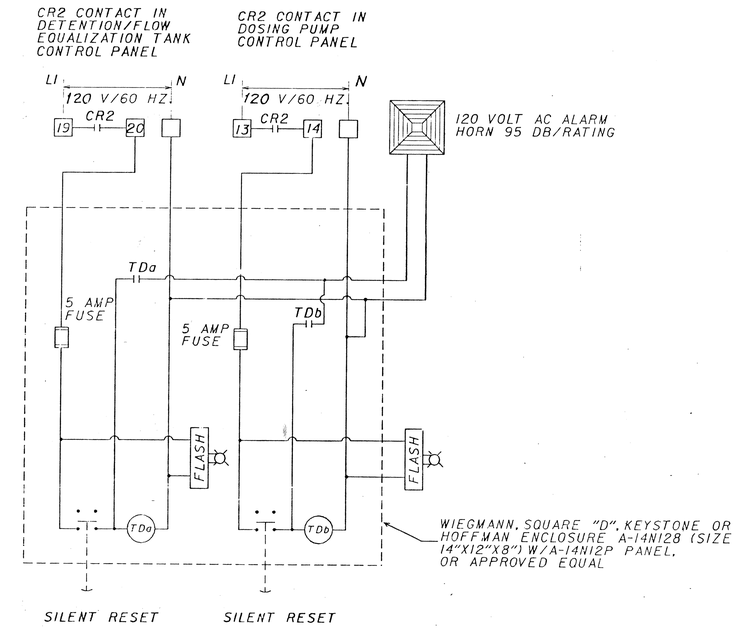

W.W.T.P. HIGH WATER ALARM

THE ACTUAL MOUNTED LOCATION OF THE ALARM ENCLOSURE AND CONDUIT RUNS WITHIN THE MECHANICAL ROOM OF THE BUILDING SHALL BE DETERMINED BASED ON SITE INVESTIGATION BY THE CONTRACTOR AND APPROVAL OF LOCATION AND ROUTING BY THE PROJECT ENGINEER.

THE COST OF FURNISHING AND INSTALLING THE HIGH WATER ALARM SYSTEM FOR THE WWTP INCLUDING ALL LABOR, MATERIALS AND EQUIPMENT SHALL BE INCLUDED IN THE COST OF "ITEM SPECIAL - COMPLETE 8,000 GALLON WASTEWATER TREATMENT SYSTEM W/F.M. CLARIFIER (INCLUDING ELECTRICAL).

ELECTRICAL NOTES

REV 1/14/88, REV. 6/1/88

GENERAL NOTES

ITEM SPECIAL - COLD WATER SERVICE TO WASTEWATER TREATMENT PLANT

THIS ITEM SHALL CONSIST OF PROVIDING ALL LABOR, MATERIALS TOOLS AND EQUIPMENT AND EXECUTING ALL EXCAVATION AND BACKFILLING NECESSARY TO RUN A 2-INCH TYPE K COPPER WATER LINE FROM A POINT INSIDE THE MOTORIST SERVICES BUILDING TO WATER HYDRANT AS SHOWN ON THE PLANS.

THE LAYOUT SHOWN ON THE PLANS IS BASED ON A PARTICULAR MAKE OF EQUIPMENT. IF ANOTHER MAKE OF EQUIPMENT IS USED WHICH REQUIRES MODIFICATION OR CHANGES OF ANY DESCRIPTION FROM THE PLANS OR SPECIFICATIONS, DRAWINGS SHOWING SUCH MODIFICATIONS AND CHANGES SHALL BE SUBMITTED FOR APPROVAL BY THE ENGINEER PRIOR TO STARTING WORK.

THE FOLLOWING WORK IS INCLUDED IN THIS ITEM.

FURNISH AND INSTALL ONE (1) 2-INCH (2") TYPE "K" HARD, 20-FOOT STRAIGHT LENGTHS OF COPPER TUBING AND WROUGHT COPPER OR CAST BRASS SOLDER TYPE FITTINGS FOR THE DOMESTIC COLD WATER LINE SUPPLYING THE HYDRANT WHICH SHALL BE INSTALLED AT THE WASTEWATER TREATMENT PLANT.

TIE INTO THE COLD WATER SUPPLY LINE, ON THE PRESSURE SIDE OF THE EXISTING WATER SYSTEM. AT THIS TIE-IN LOCATION, WITHIN THE BUILDING, FURNISH AND INSTALL THE PROPER FITTINGS TO ADAPT A 2-INCH GATE VALVE WITH UNION, ON THE DOWNSTREAM SIDE, TO ISOLATE THE BRANCH FEED TO THE HYDRANT AND PROVIDE EASE OF REPAIR.

EXTEND THE COLD WATER LINE FROM THE VALVE, UPWARD TO AN ELEVATION BELOW THE CEILING, ALLOWING CLEARANCE TO SUPPORT THE LINE IN HANGERS SUPPORTED FROM THE CEILING. THIS ELEVATION SHALL BE ESTABLISHED IN THE FIELD TO INSURE THAT THE LINE DOESN'T INTERFERE WITH EXISTING CEILING LIGHTS, DOORS, PIPES, ELECTRICAL CONDUITS, HEATING EQUIPMENT, ETC. AND MEETING THE REQUIRED CLEAR DISTANCES FROM ALL ELECTRICAL PANELS AND/OR CONTROL DEVICES AS PER THE NATIONAL ELECTRIC CODE (N.E.C.).

FROM THE TIE-IN LOCATION, AT CEILING ELEVATION, EXTEND THE LINE OVERHEAD, AVOIDING THE ABOVE REFERENCED ITEMS, TO A POINT NEAR THE REAR OF THE BUILDING AND TO THE SIDE OF THE ROOM WHERE THE LINE CAN DROP TO THE FLOOR WITHOUT OBSTRUCTING ACCESS TO OTHER PIPES OR EQUIPMENT FOR OPERATION AND MAINTENANCE.

AT THE DROP LOCATION INSIDE THE BUILDING, FURNISH ALL LABOR, MATERIALS, TOOLS AND EQUIPMENT TO NEATLY CUT THE EXISTING CONCRETE FLOOR. THE SIZE OF THE AREA SHALL BE AS REQUIRED TO PERMIT PROPER EXCAVATION AND BACKFILL AND INSTALLATION OF THE 2-INCH COLD WATER LINE. THE CUT SHALL EXTEND FROM THE DROP OF THE DOMESTIC COLD WATER LINE TO THE INSIDE WALL AT THE REAR OF THE BUILDING. THE DEPTH OF EXCAVATION SHALL PROVIDE FOR A 4'-0" BURY.

THE CONTRACTOR SHALL ALSO PROVIDE PROPER SIZED OPENING IN THE CONCRETE BLOCK WALL, AS REQUIRED, BELOW GRADE, TO ALLOW FOR THE 2-INCH LINE TO PASS THROUGH, ALLOWING FOR PIPE SLEEVE. AFTER THE DOMESTIC COLD WATER LINE HAS BEEN INSTALLED THE CONCRETE BLOCK WALL SHALL BE REPAIRED ON INTERIOR AND EXTERIOR WALL BY PATCHING VOIDS WITH CONCRETE.

AFTER THE LINE HAS BEEN HAS BEEN INSTALLED AND PROPERLY TESTED FOR LEAKS AND SECURED IN THEIR PROPER SPACING AND ALIGNMENT, THE CONTRACTOR SHALL FURNISH ALL LABOR, MATERIALS, TOOLS AND EQUIPMENT TO BACKFILL THE EXCAVATED AREA INSIDE THE BUILDING AND RESTORE THE CUT-OUT AREA OF THE CONCRETE FLOOR TO ITS ORIGINAL CONDITION AND FINISH OR BETTER. BACKFILL AND CONCRETE SHALL BE REPLACED IN LIKE KIND AND QUALITY OF MATERIALS.

THE GENERAL CONTRACTOR SHALL FURNISH ALL LABOR, MATERIALS, TOOLS AND EQUIPMENT TO EXCAVATE A TRENCH OF SUFFICIENT WIDTH AND DEPTH TO INSTALL THE 2-INCH, TYPE "K" HARD, 20-FOOT STRAIGHT LENGTHS OF COPPER TUBING, DOMESTIC COLD WATER LINE FROM THE BUILDING WALL TO THE HYDRANT. AFTER THE DOMESTIC WATER LINE HAS BEEN PROPERLY INSTALLED (PARTIALLY BACKFILLED), HYDRANT INSTALLED AND TESTED AND APPROVED BY THE ENGINEER, BACKFILL THE COMPLETE TRENCH AND RESTORE THE FINISH GRADE TO ITS ORIGINAL CONDITION.

FURNISH ALL LABOR, MATERIALS, TOOLS AND EQUIPMENT TO INSTALL PIPE INSULATION ON THE 2-INCH (2") DOMESTIC COLD WATER LINE NEWLY INSTALLED INSIDE THE REST AREA BUILDING ONLY. INSULATION SHALL START AT THE TIE-IN POINT AND TERMINATE AT THE LOCATION WHERE THE 2-INCH DOMESTIC WATER LINE PASSES THROUGH PIPE SLEEVE AT CONCRETE FLOOR LEVEL, EXTENDING SLEEVE 6-INCHES (6") ABOVE FINISHED CONCRETE FLOOR.

FURNISH ALL LABOR, MATERIALS, TOOLS AND EQUIPMENT REQUIRED TO PERFORM A WATER TEST ON THE 2-INCH (2") DOMESTIC COLD WATER LINE, COMPLETE, FROM TIE-IN INSIDE BUILDING TO HYDRANT.

TEST SHALL BE PLACED ON THE ABOVE AS HEREIN AFTER REFERENCED TO. CHLORINATION OF WATER LINE SHALL COMPLY TO SUPPLEMENTAL SPECIFICATION 814.

THE CONTRACTOR SHALL FURNISH AND INSTALL ON THE ONE (1) MULLER CO. FULL ROUND WAY OPENING QUARTER TURN WITH CHECK SOLID TEE HEAD ORISEAL CURB VALVE CAT. NO. H-10291, 175 P.S.I. WATER WORKING PRESSURE, SIZE 2-INCH (2") WITH 2-INCH (2") INSIDE I.P. THREAD INLET AND OUTLET AND SHALL BE PROVIDED WITH MULLER CO. ROADWAY SCREW TYPE 4 1/4-INCH SHAFT VALVE BOX CAT. NO. H-10366-ARCH BASE SIZE 144-R EXTENSION IN INCHES 42-54 (4'-0" BURY RANGE). THE CURB BOX SHALL BE FURNISHED WITH MULLER COMPANY SHUT-OFF ROD CAT. NO. H-10321, LENGTH OF ROD SHALL BE SIX FEET (6'-0").

THE CURB VALVE AND CURB BOX SHALL BE INSTALLED AT A POINT EQUAL TO 25'-0" DISTANCE ALONG THE RUN OF THE 2-INCH WATER LINE, STARTING THE MEASUREMENT FROM THE EXTERIOR BUILDING WALL AND TERMINATING AT THE CENTER LINE OF THE VALVE.

APPROVED EQUAL MANUFACTURERS FOR THE ABOVE REFERENCED CURB BOX AND ROD SHALL BE CENTRAL FOUNDRY CO. OR BINGHAM & TAYLOR COMPANY; FOR THE CUPB VALVE APPROVED EQUALS SHALL BE FORD METER BOX CO. OR A.Y. McDONALD.

TESTS

A WATER TEST SHALL BE PLACED ON ALL WATER LINES. A 125 LB. PRESSURE SHALL BE LEFT ON ALL WATER LINES FOR 24 HOURS AND NO LEAKS SHALL APPEAR DURING THAT TIME. IF LEAKS APPEAR, THEY SHALL BE REPAIRED BY TIGHTENING THE JOINTS OR REPLACING DEFECTIVE MATERIALS, BUT NO CAULKING WILL BE PERMITTED. TESTS SHALL THEN BE REPEATED. PROTECT ALL GAUGES, DIAPHRAGM VALVES AND CONTROLS THAT OPERATE AT LESSER PRESSURES, AS REQUIRED, DURING TEST. A FINAL AIR TEST SHALL BE PERFORMED IN CONFORMANCE TO AND MEETING THE FINAL APPROVAL OF THE OHIO DEPARTMENT OF HEALTH.

EXCAVATION AND BACKFILL

TRENCH WIDTHS SHALL BE OF SUFFICIENT SIZE TO PERMIT PROPER INSTALLATION OF THE WORK AND THE BOTTOM OF TRENCHES SHALL BE EVENLY GRADED. BELL HOLES SHALL BE PROVIDED TO INSURE UNIFORM BEARING FOR PIPES. EXCAVATIONS BELOW REQUIRED DEPTHS SHALL BE REFILLED WITH SAND OR GRAVEL AND FIRMLY COMPACTED. ROCK ENCOUNTERED SHALL BE EXCAVATED 3 INCHES BELOW THE LOWER MOST PART OF THE PIPE, AND THE SPACE SO FORMED SHALL BE REFILLED WITH SAND OR GRAVEL AND WELL COMPACTED.

TRENCHES SHALL BE SHEATHED OR BRACED AND PUMPING OR BAILING SHALL BE PERFORMED, AS NECESSARY, TO PROTECT WORKMEN AND ADJACENT STRUCTURES AND TO PERMIT PROPER EXECUTION OF THE WORK. AFTER PIPING IS INSTALLED AND HAS BEEN TESTED, INSPECTED, AND APPROVED BY THE ENGINEER, EXCAVATION SHALL BE BACKFILLED WITH EARTH IN 6-INCH LAYERS USING HAND OPERATIONS AND TAMPING COMPACTLY INTO PLACE TO A POINT 12-INCHES ABOVE TOP OF PIPE. THE REMAINDER OF THE BACKFILL SHALL BE EARTH AND MAY BE PLACED BY MACHINE FILLING IN 12-INCH LAYERS, WHICH SHALL BE TAMPED COMPACTLY INTO PLACE AT 12-INCH INTERVALS. BACKFILL ALL TRENCHES WITHIN BUILDING AREA, IN PAVED AREA, OR AREA TO BE PAVED, WITH GRANULAR MATERIAL.

ANY EXCAVATION RUNNING PARALLEL WITHIN FIVE (5) FEET OF AND BELOW THE ELEVATION OF THE BOTTOM OF ANY FOOTING SHALL BE BACKFILLED WITH CLASS "C" CONCRETE TO THE LEVEL OF THE BOTTOM OF THE FOOTING.

INSERTS, PIPE HANGERS AND SUPPORTS

A. ALTERNATE MATERIALS ARE INDICATED IN PARAGRAPH (I) BELOW.

B. FURNISH AND INSTALL NECESSARY PIPE HANGERS AND SUPPORTS TO PROPERLY SUPPORT ALL PIPING AND TO MAINTAIN UNIFORM ELEVATION.

C. HANGERS FOR COPPER LINES, 2-INCHES AND SMALLER, SHALL BE SIMILAR TO GRINNEL FIG. CT-99, ADJUSTABLE WROUGHT PIPE RING, COPPER PLATED, WITH 3/8-INCH HANGER RODS. GALVANIZED HANGERS AND STRAP HANGERS WILL NOT BE PERMITTED FOR SUPPORTING ANY PIPE OR APPARATUS.

D. HANGERS FOR COPPER LINES 2 1/2-INCHES AND LARGER SHALL BE SIMILAR TO GRINNEL FIG. CT-65, ADJUSTABLE WROUGHT CLEVIS, COPPER PLATED, WITH PROPER SIZE RODS. UNPLATED CLEVIS MAY BE USED IF LEAD SLEEVES 2-INCHES WIDER THAN THE CLEVIS ARE SECURED TO THE PIPE AT EACH HANGER.

E. HANGERS FOR STEEL AND WROUGHT IRON LINES 1 1/2-INCHES AND SMALLER SHALL BE SIMILAR TO GRINNEL FIG. 97, ADJUSTABLE WROUGHT PIPE RING, GALVANIZED.

F. HANGERS FOR STEEL AND WROUGHT IRON LINES 3-INCHES AND LARGER SHALL BE SIMILAR TO GRINNEL FIG. 260, ADJUSTABLE WROUGHT CLEVIS, HEAVY DUTY, WITH PROPER SIZE RODS.

G. SUPPORT COPPER, STEEL AND WROUGHT IRON PIPE AT INTERVALS NOT TO EXCEED 8-FEET, AND ELSEWHERE AS REQUIRED IN ACCORDANCE WITH GOOD WORKMANSHIP.

H. HORIZONTAL SOIL PIPE SHALL BE SUPPORTED AT HUB OF EACH 5-FOOT JOINT, BASE OF EACH RISER, AND ELSEWHERE AS REQUIRED, USING GRINNEL FIG. 260, ADJUSTABLE WROUGHT CLEVIS WITH PROPER SIZE RODS.

I. ELCEN, PENN, FEE & MASON, CARPENTER & PATTERSON, INC., OR MODERN HANGERS OF SAME TYPE AND SIZE MAY BE USED.

J. WALL BRACKET PIPE SUPPORTS SHALL BE INSTALLED WHERE REQUIRED.

K. ALL COPPER PIPING IS TO BE SHIELDED FROM STEEL PIPES OR ELECTRICAL CONDUIT WITH SHEET LEAD OR ELECTRICAL TAPE WHEREVER PIPES WOULD TOUCH EACH OTHER.

L. HANGERS SHALL BE OF SIZE TO FIT THE SADDLES.

M. PROVIDE INSULATED AND SHIELDED "MULTI-PURPOSE" PIPE SADDLES AT ALL HANGERS EXCEPT IN PIPE CHASE.

N. ALL PIPING IN PIPE SPACES SHALL BE LOCATED SO AS TO INSURE MAXIMUM ACCESSIBILITY WITH CROSSOVERS MADE AT THE FLOOR OR OVER 6-FEET ABOVE THE FLOOR.

O. THE WATER METER AND METER BY-PASS PIPING ASSEMBLY SHALL BE SUPPORTED, IN PART, FROM THE FLOOR BY MEANS OF USING GRINNEL FIG. NO. 1190, 150 LB. STD., BLACK MALLEABLE IRON FLOOR FLANGES, SIZE 1/2-INCH I.P.S. X 3 1/2-INCH DIA. FLANGE WITH FOUR 1/4-INCH HOLES AND GRINNEL FIG. NO. 138 BLACK MALLEABLE IRON EXTENSION SPLIT PIPE CLAMPS FOR 2 1/2-INCH DIA. PIPE SIZE WITH 1/2-INCH PIPE I.P.S. PIPE THREAD TAPPING. THESE SHALL BE CONNECTED BY USE OF 1/2-INCH DIA. PIPE SIZE WITH 1/2-INCH PIPE I.P.S. PIPE THREAD TAPPING. THESE SHALL BE CONNECTED BY USE OF 1/2-INCH DIA. SCH. 40 GALVANIZED STEEL PIPE. LENGTH AS REQUIRED, TO PROPERLY SUPPORT THE METER AND THE REQUIRED DISTANCE OFF FINISHED FLOOR. USE ITT PHILIPS DRILL COMPANY'S CAT. NO. WW-1422 RED HEAD WEDGE ANCHORS, STAINLESS STEEL, 1/4-INCH DIA. X 2 1/4-INCH LONG, OR APPROVED EQUAL, TO SECURE FLOOR FLANGES TO FLOOR. ISOLATE THE COPPER TUBING FROM THE SPLIT PIPE CLAMPS BY LEAD AT EACH SUPPORT AND EXTENDING 2-INCHES ON EACH SIDE OF CLAMP. A MINIMUM OF FOUR (4) SUPPORTS SHALL BE USED TO SUPPORT THE ASSEMBLY OFF THE FLOOR.

P. CLEAN ALL HANGERS, RODS, SUPPORTS, BRACKETS AND MISCELLANEOUS METALS FOR PAINTING. CLEAN ALL IRON WORK, PIPE INSULATION, ETC., IN EXPOSED AREAS AS NECESSARY FOR PAINTING.

SLEEVES, COLLARS AND ESCUTCHEONS

A. WHERE FERROUS PIPES PASS THROUGH WALLS OR FLOORS, USE SCHEDULE 40 BLACK STEEL PIPE SLEEVES LARGE ENOUGH TO ALLOW 1/4-INCH CLEARANCE ALL AROUND OUTSIDE DIA. OF PIPE OR INSULATION. WHERE NON-FERROUS PIPES PASS THROUGH WALLS OR FLOOR, ESPECIALLY COPPER PIPES, USE TYPE "K" HARD COPPER PIPE SLEEVES, MAINTAINING SPACE REQUIPEMENTS NOTED FOR STEEL SLEEVES.

GENERAL NOTES

B. SLEEVES IN PARTITIONS SHALL HAVE LENGTH EQUAL TO THE THICKNESS OF FINISHED PARTITIONS.

C. IN EXPOSED LOCATIONS, BARE PIPES SHALL BE PROVIDED WITH CHROMIUM PLATED COLLARS OR ESCUTCHEONS AT FLOOR AND CEILING AND AT PARTITIONS.

D. WHERE SERVICE LINES ENTER THE BUILDING BELOW GRADE, SEAL THE SPACE BETWEEN PIPE AND SLEEVE WITH RESILIENT COMPRESSIBLE PACKING AND SEAL FACE OF JOINT WITH PERMANENTLY FLEXIBLE CAULKING MATERIAL.

E. IN LOCATIONS OTHER THAN PIPE CHASES, ALL INSULATED PIPE SHALL BE PROVIDED WITH CHROMIUM PLATED ESCUTCHEON PLATES AT FLOOR, CEILING, WALLS AND PARTITIONS

VALVES, HOSE BIBBS, UNIONS, E.P.A. APPROVED HYDRANTS AND VACUUM BREAKERS

ALTERNATE VALVE MATERIALS ARE INDICATED BELOW.

GATE VALVES 1 THROUGH 1 1/2-INCHES SHALL BE BRONZE, SCREWED TYPE, TAPER DOUBLE WEDGE DISC. RISING STEM, UNION BONNET, 125 LB. SWP, WM. POWELL CO., FIG. 2700 CONFORMING TO ASTM B 62.

EQUAL VALVES, AS MANUFACTURED BY CRANE, LUNKENHEIMER, KENNEDY, WALWORTH, JENKINS OR NIBCO WILL BE ACCEPTED. ALL SHALL BE OF THE SAME MANUFACTURER.

NO SWEAT VALVES SHALL BE USED ON ANY PIPING SYSTEM REQUIRED IN THIS SECTION.

ADAPTERS FOR ALL SCREWED VALVES IN COPPER LINES SHALL BE USED.

UNIONS: PROVIDE DIELECTRIC UNIONS AT ALL CONNECTIONS BETWEEN DISSIMILAR METALS. UNIONS SHALL BE ALL BRONZE, GROUND JOINT, CAST TYPE.

FURNISH AND INSTALL VACUUM BREAKERS ON ALL HOSE BIBBS HAVING 3/4-INCH THREADED HOSE CONNECTION REGARDLESS OF ITS LOCATION, INTERIOR, EXTERIOR OR ON A PARTICULAR SYSTEM SUCH AS THE SEWAGE TREATMENT PLANT. ALL VACUUM BREAKERS SHALL BE A "WATTS" CAT. NO. 8A BACK FLOW PREVENTER WITH 3/4-INCH STANDARD FEMALE HOSE THREAD INLET AND 3/4-INCH STANDARD MALE HOSE THREAD OUTLET, BRASS BODY 2/NON-REMOVABLE FEATURE, OR APPROVED EQUAL. ON ALL FROST-FREE HYDRANTS IN LIEU OF "WATTS" NO. NF8 VACUUM BREAKER OR APPROVED EQUAL.

FURNISH AND INSTALL ONE (1) MURDOCK E.P.A. APPROVED HYDRANT MODEL NO. BFHE-10 FOR 3/4-INCH HOSE CONNECTION, WITH 48-INCH DEPTH OF BURY. HYDRANT SHALL BE VANDAL RESISTANT ALL-METAL CONSTRUCTION, NON-POLLUTABLE, ANTI-SIPHONAGE FROM ANY UNDERGROUND SOURCE WITH PERMANENTLY ATTACHED VACUUM BREAKER ATTACHED TO HOSE OUTLET, ANTI-FREEZING, HAND WHEEL CONTROL WITH GALVANIZED STEEL RISER PIPE AND BLACK STEEL PIPE CASING; THIS SHALL BE INSTALLED AT THE SEWAGE TREATMENT PLANT, LOCATION SHOWN ON THE DRAWINGS. IN LIEU OF THE ABOVE SPECIFIED "MURDOCK" HYDRANT, APPROVED EQUALS MAY BE SUBMITTED, SUBJECT TO THE ENGINEER'S APPROVAL.

SOLDER JOINTS

ALL WATER PIPE SPECIFIED OR SHOWN ON PLANS, SHALL BE TYPE "K" HARD DRAWN COPPER TUBING, FURNISHED IN 20-FOOT STRAIGHT LENGTHS. FITTINGS SHALL BE CAST BRASS OR WROUGHT COPPER, SOLDER TYPE. USE 95-5 TIN-ANTIMONY ANSI/ASTM B 32, ALLOY GRADE 95TA SOLDER JOINTS ONLY.

PITCH ALL WATER LINES TO LOW POINTS IN THE SYSTEMS AND PROVIDE 3/4-INCH DRAIN VALVES AT LOW POINTS OF SYSTEMS TO PERMIT COMPLETE DRAINAGE, OR AS OTHERWISE NOTED ON THE PLANS.

PROVIDE GATE AND CHECK VALVES, STRAINERS, GAUGES, UNIONS AND SHOCK ABSORBERS WHERE INDICATED.

PROVIDE A UNION IN PIPING CONNECTION TO EACH VALVE, DEVICE OR ITEM OF EQUIPMENT, AND ELSEWHERE AS REQUIRED TO MAKE-UP OR DISCONNECT PIPING. EACH UNION SHALL BE SO INSTALLED AS TO PERMIT THE REMOVAL OF PARTS AND EQUIPMENT FOR INSPECTION OR CLEANING, AND SHALL BE INSTALLED IN A POSITION WHICH WILL PERMIT THE VALVE, DEVICE OR PART TO BE REMOVED WITHOUT DISCONNECTING ANY PIPING EXCEPT UNIONS. USE BRONZE UNIONS IN COPPER LINES. UNIONS SHALL BE DOWNSTREAM OF VALVES.

INSTALL DIELECTRIC UNIONS AT ALL CONNECTIONS BETWEEN COPPER AND IRON OR STEEL PIPE.

INSULATION

COVER 1-INCH AND SMALLER EXPOSED COLD WATER PIPING WITH 3/4-INCH THICK AND 1 1/4-INCH AND LARGER EXPOSED COLD WATER PIPING WITH 1-INCH THICK OWENS CORNING "FIBERGLASS" ASJ/SSL-II INSULATION WITH KRAFT REINFORCED FOIL VAPOR BARRIER JACKETING. BUTT JOINTS SHALL BE SEALED WITH BUTT SEALS PROVIDED WITH THE INSULATION. FITTINGS SHALL BE INSULATED WITH JOHNS-MANVILLE ZESTON, ON PIECE PVC INSULATED FITTING WITH FIBERGLASS INSULATION INSERT. INSTALL FITTING INSULATION IN ACCORDANCE WITH MANUFACTURER'S RECOMMENDATIONS. NO INSULATION IS REQUIRED ON COLD WATER PIPES WHICH ARE UNDERGROUND OR BURIED UNDER FLOOR SLABS.

ALL EXPOSED PIPE INSULATION SHALL HAVE A 25/50 OR BETTER FLAME/SMOKE TEST RATING IN ACCORDANCE WITH NFPA AND U.L..

EQUAL INSULATION AS MANUFACTURED BY JOHNS-MANVILLE, PITTSBURGH OR APPROVED EQUAL.

INSULATION SHALL NOT BE APPLIED UNTIL THE GENERAL CONSTRUCTION HAS PROGRESSED SUFFICIENTLY TO ENSURE AGAINST PHYSICAL OR MOISTURE DAMAGE TO THE INSULATION. ALL DAMAGED INSULATION SHALL BE REPLACED.

PAYMENT SHALL BE MADE AT THE CONTRACT UNIT PRICE BID FOR "ITEM SPECIAL COLD WATER SERVICE TO WASTEWATER TREATMENT PLANT", WHICH SHALL INCLUDE ALL LABOR, MATERIALS, EQUIPMENT AND TESTING NECESSARY TO COMPLETE THIS ITEM OF WORK.

GENERAL SUMMARY

SHEET NUMBER 8	9	10	11	12	13	14	15	SUBTOTALS	GRAND TOTAL	UNIT	ITEM	ITEM EXT.	DESCRIPTION		
LUMP									LUMP	LUMP	201	1100-2	CLEARING AND GRUBBING		
2									2	2	202		WASTEWATER TREATMENT SYSTEM REMOVAL, AS PER PLAN		
27									27	S.Y.	202	2300-5	PAVEMENT REMOVED		
				834					834	S.Y.	452	1101-9	7" PLAIN CONCRETE PAVEMENT, AS PER PLAN		
		1							1	C.Y.	602	2000-7	CONCRETE MASONRY		
	8								8	EA.	604	3150-4	MANHOLE, NO. 3		
				1					1	EA.	607	6000-1	GATE, TYPE C.L., 72"x12'-0", DOUBLE SWING, AS PER PLAN		
				439					439	L.F.	607	2050-6	FENCE, TYPE C.L., 72" HIGH		
					245				245	L.F.	625	3600-1	PLASTIC CAUTION TAPE		
					2				2	EA.	625	3076-3	24"x 24" CONCRETE PULL BOX		
					245				245	L.F.	625	2905-6	TRENCH, 24" DEEP		
					275				275	L.F.	625	2530-1	CONDUIT, 713.04, 1½"		
					275				275	L.F.	625	2540-9	CONDUIT, 713.04, 2½"		
					900				900	L.F.	625		1/C NO. 4/0 AWG., 600V., DISTRIBUTION CABLE		
					600				600	L.F.	625		1/C NO. 12 AWG., 600V., DISTRIBUTION CABLE		
						900			900	S.Y.	659	2300-6	SEEDING AND MULCHING		
						.08			.08	TON	659	2000-7	COMMERCIAL FERTILIZER		
		1							1	C.Y.	601	3230-2	ROCK CHANNEL PROTECTION, TYPE D WITH FILTER		
				1					1	EA.	SPECIAL		COMPLETE 8,000 GAL. WASTEWATER TREATMENT SYSTEM W/F.M. CLARIFIERS (INCLUDING ELECTRICAL)		
		105	1247						1352	L.F.	SPECIAL		6" CAST IRON SOIL PIPE W/FLEXIBLE JOINTS		
			252						252	L.F.	SPECIAL		12" STEEL PIPE ENCASEMENT, JACKED UNDER PAVEMENT		
									1000	L.F.	SPECIAL	6801250-0	SNOW FENCE - TREE PROTECTION		
					220				220	L.F.	SPECIAL	6802300-6	COLD WATER SERVICE TO WASTEWATER TREATMENT PLANT		
													BOTANICAL NAME – COMMON NAME	HEIGHT	B&B
						5			5	EA.	662	1200-6	HAMAMELIS VIRGINIANA - COMMON WITCH HAZEL	4 to 5'	14"
						36			36	E.A.	662	2001-7	JUNIPERUS CHINENSIS "SEA GREEN" – SEA GREEN JUNIPER	12" to 15"	10"
						11			11	EA.	662	2150-1	JUNIPERUS CHINESIS "PFITZERIANA" – PFITZER JUNIPER	2' to 2.5'	12"
						13			13	EA.	662	2100-5	TAXUS X MEDIA "BROWNII" – BROWN YEW	1.5 to 2'	10"
						6			6	EA.	663	3250-8	TSUGA CANADENSIS – CANDIAN HEMLOCK	5' to 6'	20"
						26			26	EA.	662	2151-0	VIBURNUM TRILOBUM – AMERICAN CRANBERRYBUSH	4' to 5'	14"
									LUMP	LUMP	614	1100-0	MAINTAINING TRAFFIC		
									LUMP	LUMP	619	1100-7	FIELD OFFICE		
									LUMP	LUMP	623	1100-3	CONSTRUCTION LAYOUT STAKES		
									LUMP	LUMP	624	1000-8	MOBILIZATION		

Summit County
Sum-271-0.89

8/29

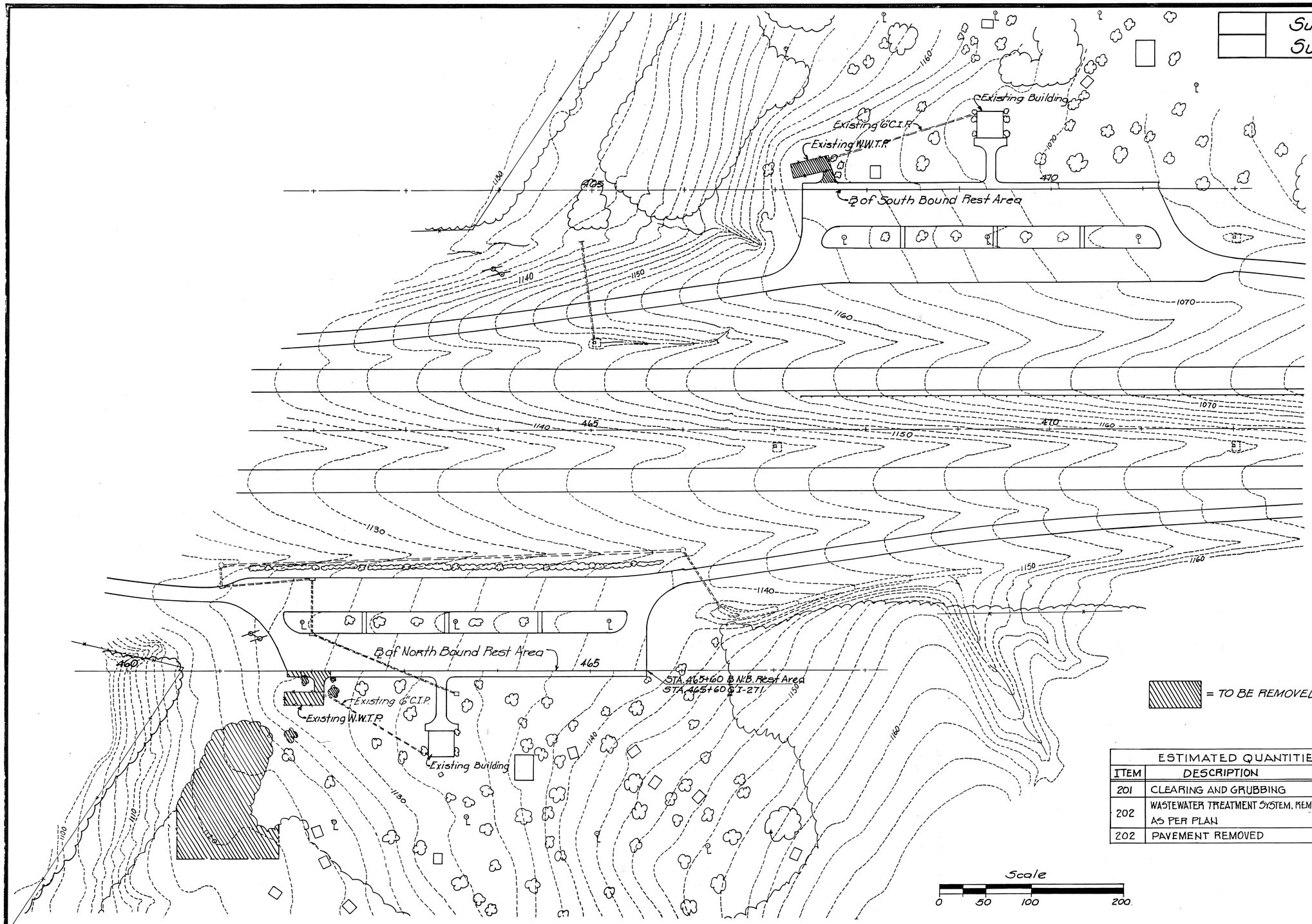

ESTIMATED QUANTITIES		
ITEM	DESCRIPTION	QUANTITY
201	CLEARING AND GRUBBING	LUMP
202	WASTEWATER TREATMENT SYSTEM, REMOVAL, AS PER PLAN	2 EA.
202	PAVEMENT REMOVED	27 S.Y.

Existing Site & Demolition Plan

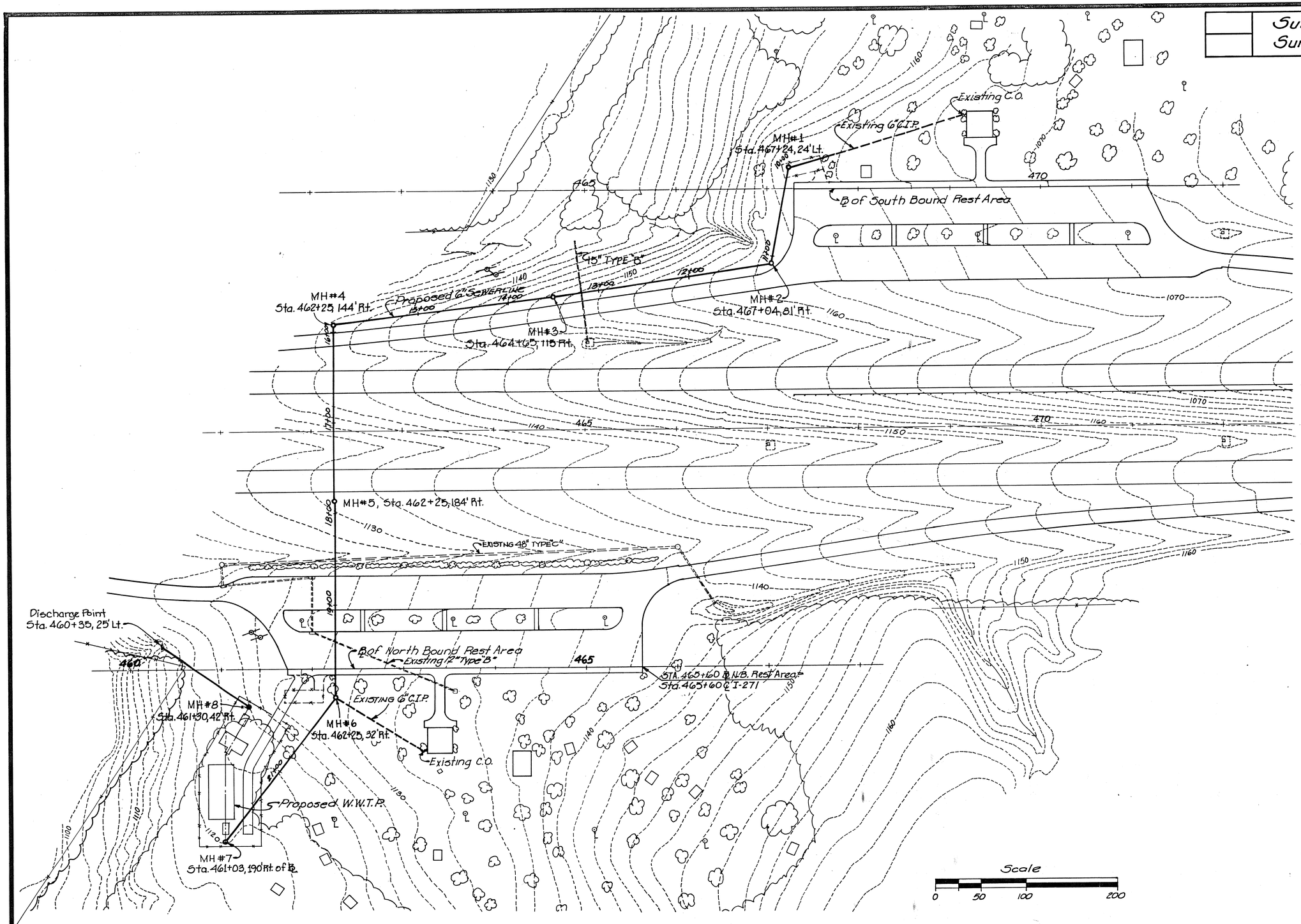

Sewerline Layout

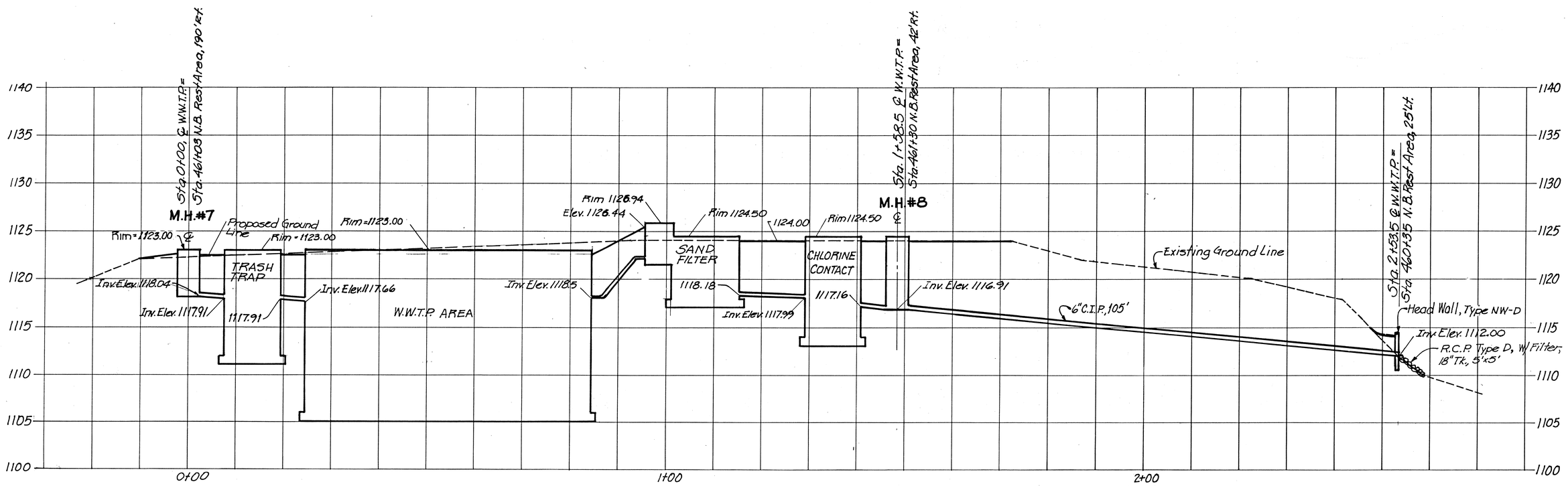

W.W.T.P. PROFILE, Sta. 0+00 To 2+53.5

1" = 10'
1" = 5

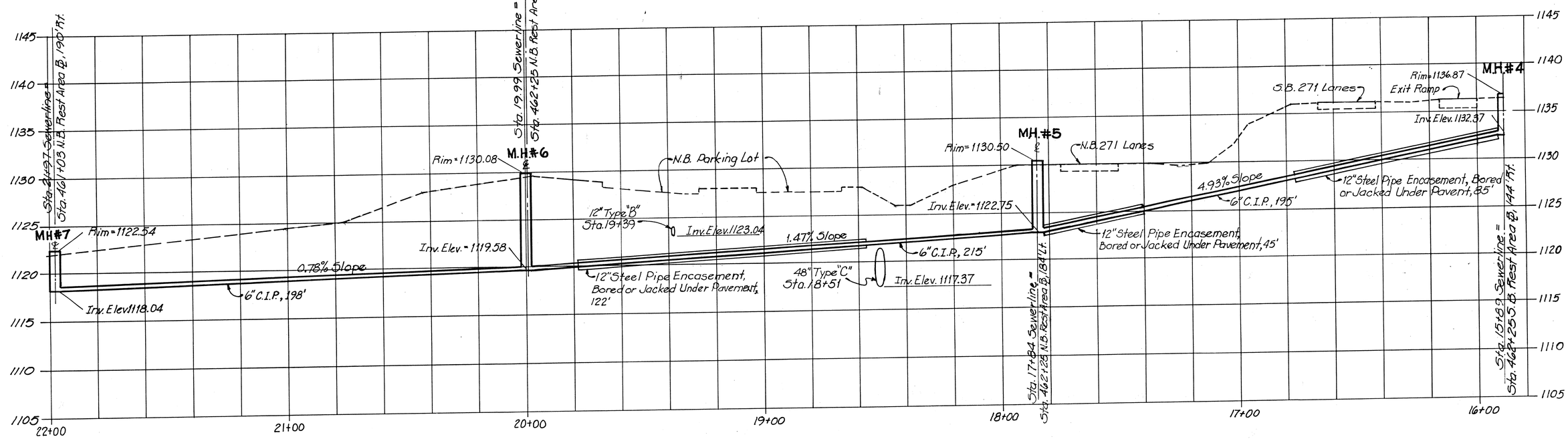

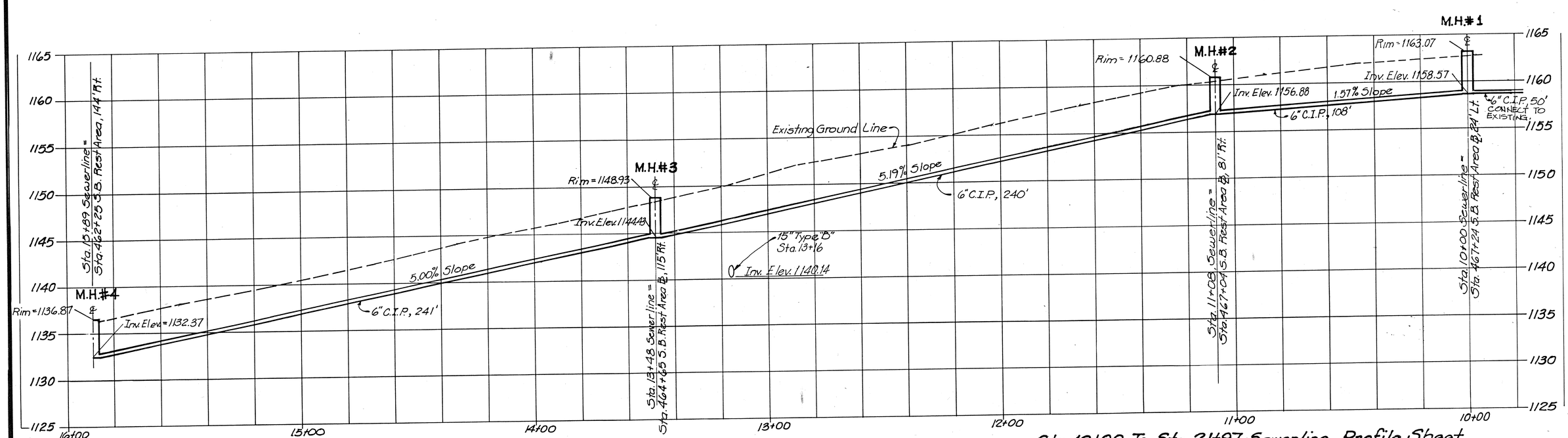

Sta. 10+00 To Sta. 21+97 Sewerline, Profile Sheet

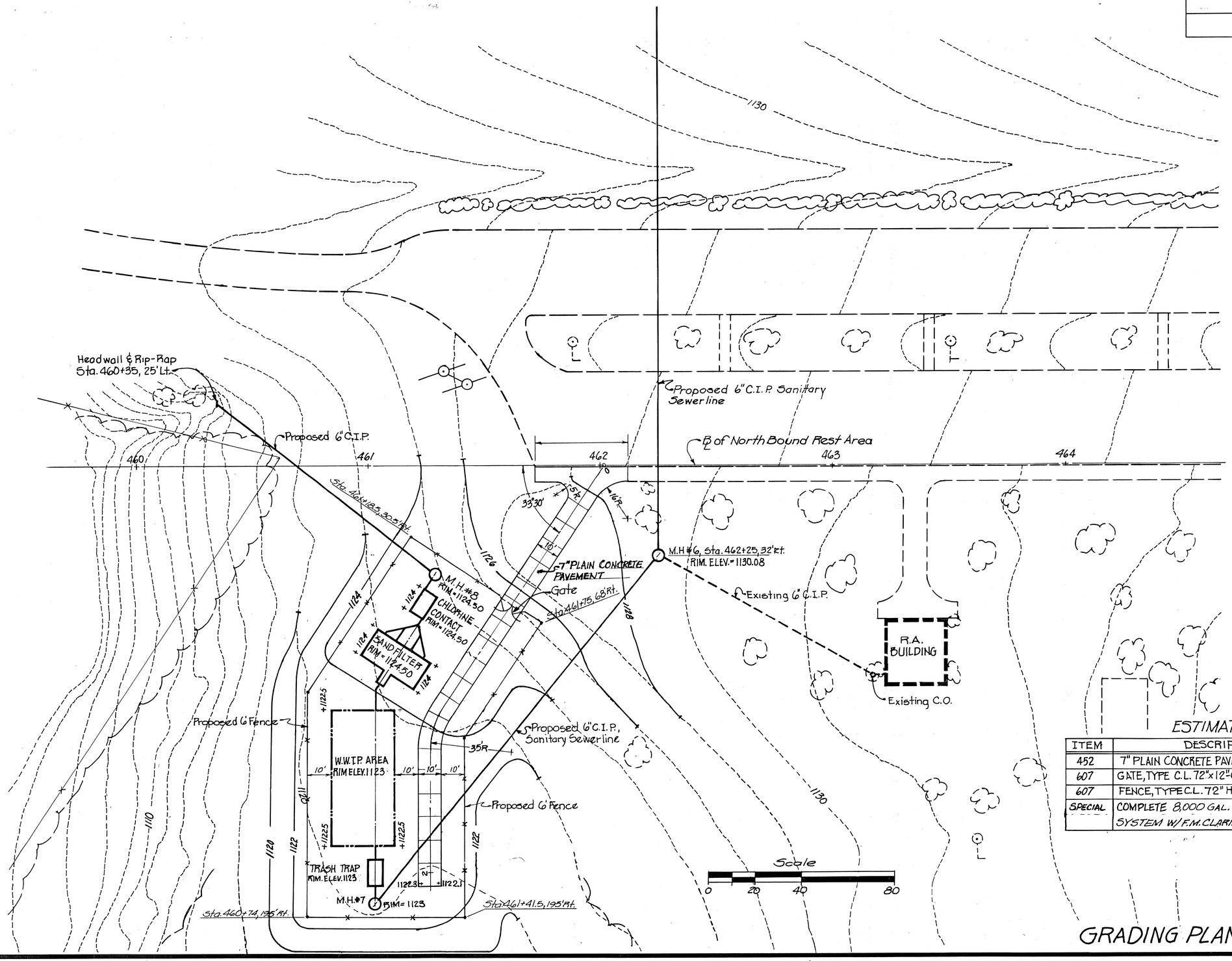

ESTIMATED QUANTITIES

ITEM	DESCRIPTION	QUANTITIES
452	7" PLAIN CONCRETE PAVEMENT, AS PER PLAN	834 S.Y.
607	GATE, TYPE C.L. 72" x 12'-0", DOUBLE SWING, AS PER PLAN	1 EA.
607	FENCE, TYPE C.L. 72" HIGH	439 L.F.
SPECIAL	COMPLETE 8,000 GAL. WASTEWATER TREATMENT SYSTEM W/ F.M. CLARIFIER (INCLUDING ELECTRICAL)	1 EA.

GRADING PLAN & W.W.T.P. LAYOUT

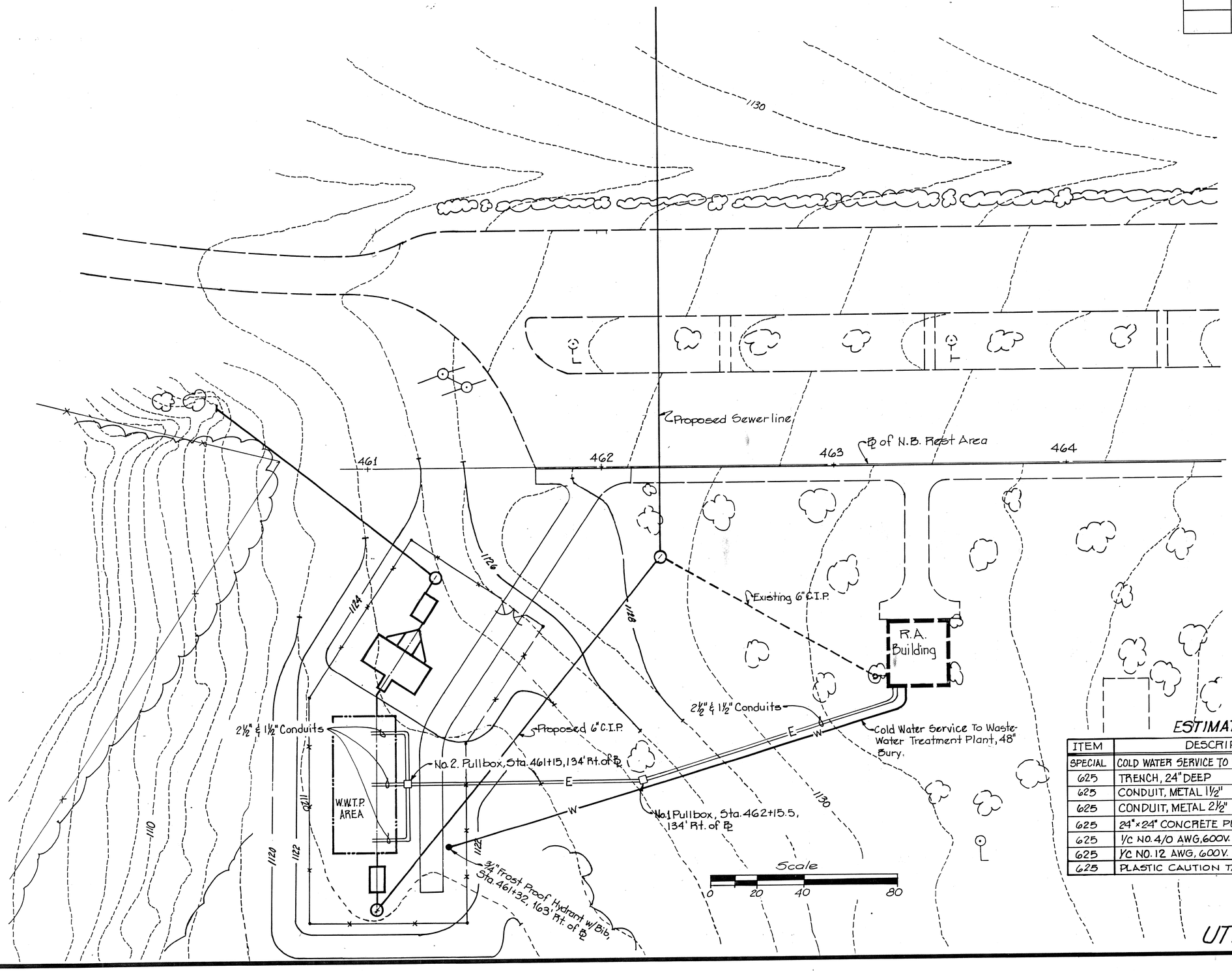

ESTIMATED QUANTITIES

ITEM	DESCRIPTION	QUANTITIES
SPECIAL	COLD WATER SERVICE TO WASTEWATER TREATMENT PLANT	220 L.F.
625	TRENCH, 24" DEEP	245 L.F.
625	CONDUIT, METAL 1½"	275 L.F.
625	CONDUIT, METAL 2½"	275 L.F.
625	24"×24" CONCRETE PULL BOX	2 EA.
625	1/C NO. 4/0 AWG, 600V. DISTRIBUTION CABLE	900 L.F.
625	1/C NO. 12 AWG, 600V. DISTRIBUTION CABLE	600 L.F.
625	PLASTIC CAUTION TAPE	245 L.F.

UTILITY PLAN

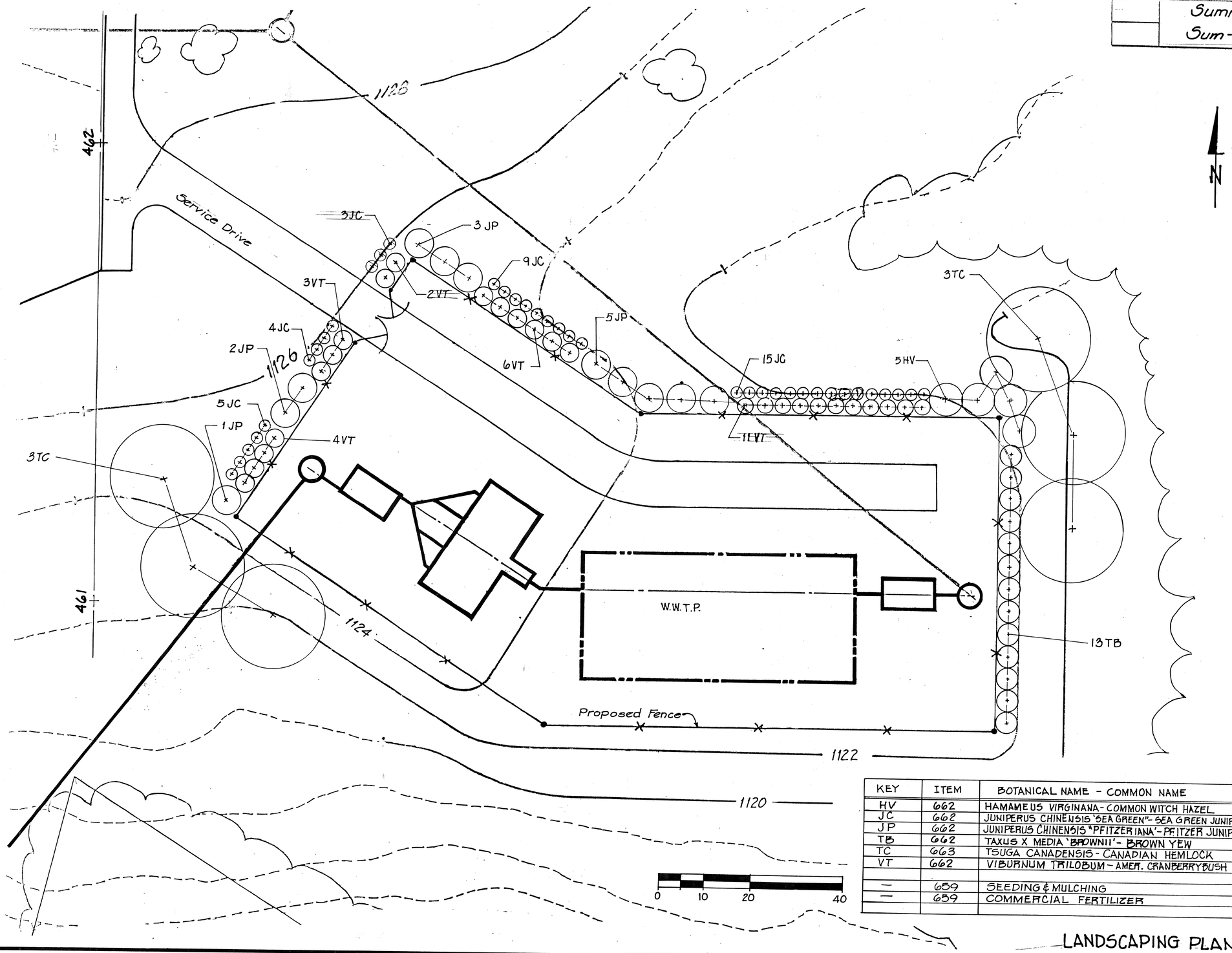

KEY	ITEM	BOTANICAL NAME - COMMON NAME	SIZE	CONDITION	QUANTITY
HV	662	HAMAMELUS VIRGINANA - COMMON WITCH HAZEL	4 to 5'	B&B 14"	5 EA.
JC	662	JUNIPERUS CHINENSIS 'SEA GREEN' - SEA GREEN JUNIPER	12 to 15"	B&B 10"	36 EA.
JP	662	JUNIPERUS CHINENSIS 'PFITZERIANA' - PFITZER JUNIPER	2 to 2.5'	B&B 12"	11 EA.
TB	662	TAXUS X MEDIA 'BROWNII' - BROWN YEW	1.5 to 2'	B&B 10"	13 EA.
TC	663	TSUGA CANADENSIS - CANADIAN HEMLOCK	5 to 6'	B&B 20"	6 EA.
VT	662	VIBURNUM TRILOBUM - AMER. CRANBERRYBUSH	4 to 5'	B&B 14"	26 EA.
—	659	SEEDING & MULCHING	—	—	900 S.Y.
—	659	COMMERCIAL FERTILIZER	—	—	.08 TON

LANDSCAPING PLAN

GENERAL NOTES

PLANTING DETAIL

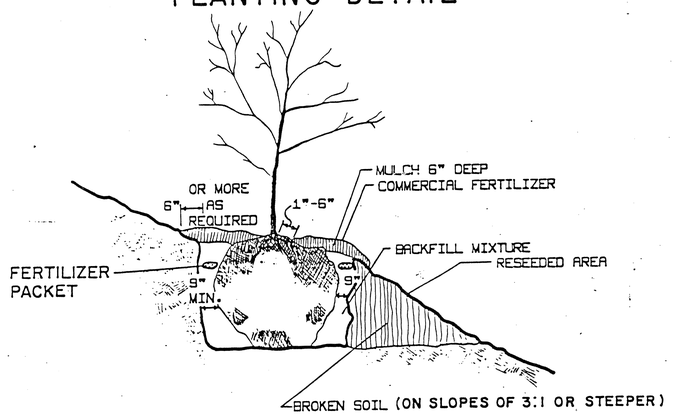

THE TOP OF THE ROOT BALL SHALL BE 2 INCH ABOVE THE NORMAL GROUND LINE IN AVERAGE SOILS, 3 INCHES IN HEAVY CLAY SOILS AND 6 INCHES WHERE IMPERMEABILITY IS ENCOUNTERED.

ON SLOPES WHERE HEAVY CLAY AND IMPERMEABLE SOILS ARE PRESENT THE DOWN HILL SIDE OF THE POCKET HOLE SHALL BE BROKEN OR LOOSENED AND RETURNED TO ITS NATURAL GRADE TO PROVIDE DRAINAGE FOR THE HOLE.

PLANTING HOLE AND BED PREPARATION

AFTER THE LAYOUT IS APPROVED BY THE ENGINEER, SHRUB AND GROUNDCOVER BEDS SHALL BE CULTIVATED TO A MINIMUM DEPTH OF SIX (6) INCHES BY A PLOW, HARROW OR DISC, OR OTHER METHOD APPROVED BY THE ENGINEER. THE CULTIVATION SHALL TAKE PLACE AS FAR IN ADVANCE OF THE PLANTING OPERATION AS POSSIBLE. WHERE SHRUBS ARE SHOWN, INDIVIDUAL HOLES SHALL BE DUG ON CENTERS AS SHOWN ON THE PLANS. THESE HOLES SHALL ALLOW FOR A MINIMUM OF NINE (9) INCHES OF BACKFILL MIXTURE AROUND THE SIDES OF THE BALLS. THE BOTTOM OF THE HOLE SHALL BE NO DEEPER THAN THE BALL TO BE PLANTED. THE MATERIAL REMOVED FROM THE HOLES SHALL BE TAKEN FROM THE PROJECT IF IT IS FOUND TO BE UNACCEPTABLE FOR USE AS BACKFILL AS DETERMINED BY THE ENGINEER. THE PLANT SHALL THEN BE SET AND THE HOLE FILLED WITH BACKFILL MIXTURE, AND THE PLANTING OPERATION PERFORMED AS SPECIFIED IN ITEMS 662.17 AND 662.18. ALL EXCESS DIRT SHALL BE REMOVED FROM THE SITE.

EXISTING TREES AND SHRUBS SHALL TAKE PRIORITY OVER PROPOSED PLANTINGS. THE LOCATIONS OF THE PROPOSED TREES AND SHRUBS ARE APPROXIMATE AND MAY BE REARRANGED AT THE DIRECTION OF THE ENGINEER WHEN OBSTRUCTIONS ARE ENCOUNTERED.

IF AN AUGER IS USED IN DIGGING POCKET HOLES AND POLISHED (SHINY) SIDES OCCUR IN CLAY OR HEAVY SOILS, THE USE OF SUCH AN AUGER SHALL BE DISCONTINUED AND THE HOLES SHALL BE DUG WITH A BACKHOE OR ANOTHER APPROVED METHOD.

BACKFILL NO. 1 - THE BACKFILL MIXTURE USED TO FILL POCKET HOLES IN LIGHT AND MEDIUM SOILS (SAND & AVERAGE) SHALL CONSIST BY VOLUME OF: 2 PARTS *SOIL CONDITIONER, 2 PARTS COMPRESSED SPHAGNUM PEAT OR 3 PARTS SEDGE PEAT, AND 2 PARTS APPROVED TOPSOIL.

BACKFILL NO. 2 - THE BACKFILL MIXTURE USED TO FILL POCKET HOLES IN HEAVY SOILS (CLAY & SHALE) SHALL CONSIST BY VOLUME OF: 1 PART *SOIL CONDITIONER, 1 PART COMPRESSED SPHAGNUM PEAT OR 2 PARTS SEDGE PEAT, AND 2 PARTS APPROVED TOPSOIL.

INCORPORATE THOROUGHLY INTO THE BACKFILL MIXTURES 5 LBS. OF COMMERCIAL FERTILIZER (0-20-20) PER CUBIC YARD. THE ENGINEER, AFTER CONSULTATION WITH THE LANDSCAPE ARCHITECT, SHALL DETERMINE THE LOCATIONS WHERE THE BACKFILL MIXTURES SHALL BE USED.

SCHEDULING

ALL DIGGING AND PLANTING OF DECIDUOUS PLANTS SHALL BE DONE AFTER OCTOBER 1, AND BEFORE JUNE 1. EVERGREENS SHALL BE DUG AND PLANTED AFTER MARCH 15, AND BEFORE JUNE 1.

ITEMS 662 & 663

ALL TREES AND SHRUBS SHALL BE SPECIMEN (NO. 1 GRADE) PLANTS WITH GROWTH AND BRANCHING HABIT TYPICAL OF THE SPECIES SPECIFIED. NO PARK GRADE (NO. 2 OR 3 GRADE) PLANTS WILL BE ACCEPTED.

FERTILIZER

FOUR OUNCE (8 YEAR) COMMERCIAL FERTILIZER PACKETS USED IN PLANTING OPERATION SHALL BE DELIVERED DRY IN ORIGINAL, UNOPENED CONTAINERS. FERTILIZER ANALYSIS SHALL BE 16% NITROGEN, 8% PHOSPHORIC ACID AND 16% POTASH. FERTILIZER SHALL BE OF A SLOW RELEASE TYPE IN A POLYETHYLENE PERFORATED PACKET WITH MICROPORE HOLES.

THE PACKETS SHALL BE PLACED 6 TO 8 INCHES DEEP AND EVENLY SPACED AROUND THE PERIMETER OF THE PLANTING HOLE, ADJACENT TO THE BALL OR ROOT MASS BUT NOT IN DIRECT CONTACT WITH THE ROOTS. THE PACKETS SHALL NOT BE CUT, RIPPED OR DAMAGED.

EACH SHRUB OR TREE SHALL BE FERTILIZED ACCORDING TO THE FOLLOWING SCHEDULE:

SHRUBS	1'-2'	2 PACKETS
SHRUBS	2'-3'	2 PACKETS
SHRUBS	3'-4'	3 PACKETS
TREES	5'-6'	3 PACKETS
TREES	6'-8'	4 PACKETS
TREES	1½"-2" CAL.	2 PACKETS
TREES	2'-2½" CAL.	3 PACKETS
TREES	2½-3" CAL.	4 PACKETS
TREES	3"-3½" CAL.	5 PACKETS

IF IT BECOMES NECESSARY TO REMOVE AND REPLACE MISSING, DEAD OR UNHEALTHY PLANTS, ALL OLD PACKETS SHALL BE REPLACED WITH NEW PACKETS.

THE FOUR OUNCE 16-8-16 FERTILIZER PACKETS SHALL BE DESIGNATED BY THE MANUFACTURER TO BE EFFECTIVE FOR EIGHT YEARS. PACKETS SUCH AS "EEESY GROW"(SPECIALTY FERTILIZER, INC. BOX 355, SUFFERN, N.Y. 10901: (914) 357-7722), "THE UNIQUE FEEDER" (UNIQUE FERTILIZER, INC. P.O. BOX 99, DEPTFORD, N.J. 08096:(609)848-4444) OR APPROVED EQUAL.

ITEM 661.21 WATERING

WATER SHALL BE FURNISHED BY THE CONTRACTOR AND ALL PLANT MATERIAL SHALL BE WATERED THOROUGHLY AT THE TIME OF PLANTING REGARDLESS OF AMPLE MOISTURE CONTENT OF THE SURROUNDING SOIL. SUSPENSION OF WATERING OPERATIONS BECAUSE OF RAINFALL WILL BE DETERMINED BY THE ENGINEER IN CONSULTATION WITH THE LANDSCAPE ARCHITECT. AN AVERAGE OF ONE INCH OF RAINFALL PER WEEK SHALL BE CONSIDERED ADEQUATE. DETERMINATION OF RAINFALL SHALL BE BASED UPON THE USE OF A RAIN GAUGE APPROVED BY THE PROJECT ENGINEER.

MULCH

MULCH SHALL BE AS PER ITEM 661.04 WITH THE FOLLOWING EXCEPTIONS: WOOD SHAVINGS OR PEAT MOSS OR CORN COBS SHALL NOT BE USED AS A TOP MULCH. WOOD CHIPS SHALL BE AGED (STOCKPILED) AT LEAST 6 MONTHS PRIOR TO PLACEMENT AROUND PLANTS. MULCH SHALL BE SIX INCHES LOOSE MEASUREMENT.+ AFTER MULCHING, COMMERCIAL FERTILIZER (12-12-12) SHALL BE APPLIED AS SPECIFIED IN ITEM 662.18.
+GROUNDCOVER BEDS SHALL BE MULCHED AS PER 661.23.

PRUNING

ALL PLANTS SHALL BE PRUNED WITHIN SEVEN DAYS AFTER PLANTING. THE PRUNING SHALL BE DONE ACCORDING TO SELECTED TYPICAL PLANTS OF EACH SPECIES PRUNED AND USED AS A SAMPLE AS DIRECTED BY THE ENGINEER.

ANY CANDLE GROWTH ON NEEDLE EVERGREENS WHICH EXCEED 3 INCHES AT PLANTING TIME SHALL BE CUT BACK TO THAT LENGTH IMMEDIATELY.

STORAGE AREAS

THE CONTRACTOR MAY STORE PLANT MATERIALS AND EQUIPMENT 30 FEET FROM PAVEMENT, BEHIND GUARDRAIL AND WITHIN OR ADJACENT TO THE PROJECT LIMITS BY OBTAINING OFFICAL PERMISSION OF THE ENGINEER. NO PEDESTRIAN OF VEHICULAR TRAFFIC MAY BE IMPEDED NOR HAZARDOUS CONDITION CREATED AS A RESULT OF SUCH STORAGE.

THE STORAGE OF ALL DUG PLANTS SHALL CONFORM TO 661.14 WHETHER WITHIN THE PROJECT LIMITS, ADJACENT THERETO, OR AT SOME OTHER LOCATION. THESE AREAS SHALL BE DESIGNATED PRIOR TO ACTUAL PLANT STORAGE AND SHALL BE OPEN TO INSPECTION UPON REQUEST OF THE ENGINEER.

STAKING MATERIALS

ALL TREES SHALL BE STAKED AS SHOWN IN THE STANDARD DRAWING LA-2. STAKING OF SMALL ORNAMENTAL TREES SHALL BE SIMILAR TO THAT OF EVERGREENS. ALL DECIDUOUS TREE TRUNKS ARE TO BE TREATED WITH LINDANE SPRAY BEFORE WRAPPING.

PLANTING PERIOD OF ESTABLISHMENT

BEFORE FINAL INSPECTION, ALL PLANTINGS SHALL BE IN PLACE AND UNDER THE CARE OF THE CONTRACTOR FOR A PERIOD OF ESTABLISHMENT. THIS PERIOD SHALL BEGIN IMMEDIATELY UPON COMPLETION OF THE PLANTING OPERATION FOR ANY PLANT OR SPECIES GROUP AND CONTINUE UNTIL OCTOBER 1. IN NO CASE SHALL IT BE LESS THAN ONE GROWING SEASON, JUNE 1 TO OCTOBER 1.

DURING THIS PERIOD OF ESTABLISHMENT, IT SHALL BE THE CONTRACTOR'S RESPONSIBILITY TO FOLLOW SUCH HORTICULTURAL PRACTICES AS REQUIRED TO ASSURE THE VIGOR AND GROWTH OF THE TRANSPLANTED MATERIAL. THIS CARE SHALL INCLUDE WATERING, REMULCHING, RESTAKING, GUYING AND CULTIVATING. THERE SHALL BE A MINIMUM OF TWO WEEDING AND MOWING (BED EDGES, AROUND TREES AND GUY STAKES) PROGRAMS OF SUCH INTENSITY AS TO COMPLETELY RID THE PLANTED AND MULCHED AREAS OF WEEDS AND GRASSES. THE FIRST PROGRAM SHALL BEGIN ON OR ABOUT JUNE 15 AND THE OTHER APPROXIMATELY 8 WEEKS LATER.

EACH PLANT SHALL HAVE SUFFICIENT WATER TO KEEP IT IN A HEALTHY, GROWING CONDITION. IF LOCAL WEATHER CONDITIONS WARRANT, THE ENGINEER MAY REQUIRE WEEKLY WATERING. WHEN WATERING IS REQUIRED, A SCHEDULE FOR WATERING EACH PLANT SHALL BE SUPPLIED TO AND APPROVED BY THE ENGINEER. THE WATER SHALL BE APPLIED IN SUCH A MANNER AS TO SATURATE THE ROOT AND MULCHED AREA OF EACH PLANT WITHOUT CAUSING RUNOFF (SEE WATERING TABLE). IN CASE OF FALL PLANTINGS, THESE WATERINGS SHALL CONTINUE UNTIL SOIL FREEZE-UP AND RECOMMENCE AFTER THE SPRING THAW UNLESS OTHERWISE DIRECTED.

ON OR ABOUT SEPTEMBER 15, THE ENGINEER SHALL INSPECT THE PLANTING AND SUPPLY THE CONTRACTOR WITH A LISTING OF THOSE PLANTS HAVING DIED, DIED BACK BEYOND NORMAL PRUNING LINES OR ARE MISSING FROM THE PLANTING. THE CONTRACTOR SHALL MAKE THE REPLANTING AS REQUIRED AND IN ACCORDANCE WITH THE SPECIFICATIONS FOR THE ORIGINAL MATERIAL. THESE REPLACEMENTS ARE NOT SUBJECT TO THE PERIOD OF ESTABLISHMENT, HOWEVER, PLANTS PLANTED INITIALLY IN THE FALL WHICH HAVE DIED BEFORE THE SPRING PLANTING SEASON SHALL BE REPLACED IMMEDIATELY AND ARE SUBJECT TO THE ESTABLISHMENT PERIOD.

AFTER REPLACEMENTS HAVE BEEN PLANTED, THE FINAL INSPECTION SHALL BE MADE AND THE ACTUAL COUNT OF LIVE PLANTS OF EACH VARIETY AND SPECIES LISTED FOR PAYMENT.

WATERING TABLE

SHRUBS 1'-2' SIZE	2 GALLON PER PLANT
SHRUBS 2'-3' SIZE	4 GALLONS PER PLANT
SHRUBS 4'-5' SIZE	7 GALLONS PER PLANT
TREES 5'-6' SIZE	10 GALLONS PER PLANT
TREES 1-1/4" - 1-1/2" CAL.	15 GALLONS PER PLANT
TREES 1-1/2" - 2" CAL.	20 GALLONS PER PLANT
TREES 2"-3" CAL.	25 GALLONS PER PLANT
TREES 3"-4" CAL.	30 GALLONS PER PLANT

THE METHOD OF MEASUREMENT FOR SUMMER WATERING SHALL BE BY APPROVED METERING FROM TANKS OR BY INDIVIDUALLY MEASURED CONTAINERS TO EACH PLANT TO BE WATERED. PAYMENT FOR PLANTING PERIOD OF ESTABLISHMENT SHALL BE INCLUDED IN THE UNIT PRICE BID FOR ITEMS 661, 662 AND 663.

*SOIL CONDITIONER

A SOIL CONDITIONER SUCH AS "HAYDITE", "PERLITE" OR AN APPROVED EQUAL SHALL BE USED. THE PARTICLE SIZE GRADATION OF THE SOIL CONDITIONER SHALL BE AT LEAST 80% PASSING A NO. 6 SIEVE AND NOT MORE THAN 5% PASSING A NO. 50 SIEVE.

HERBICIDES

THE MONTH PRIOR TO CULTIVATION AND PLANTING ALL SHRUB BEDS WILL BE TREATED WITH ROUNDUP BRAND HERBICIDE OR AN APPROVED EQUAL. AFTER PLANTING AND FERTILIZING HAVE BEEN COMPLETED AND APPROVED, THE SHRUB BEDS WILL BE TREATED WITH SURFLAN BRAND HERBICIDE OR AN APPROVED EQUAL. THE RATE AND METHOD OF APPLICATION SHALL BE IN STRICT CONFORMANCE WITH THE MANUFACTURES PRODUCT LABEL AND CONSISTENT WITH CURRENT PRACTICES FOR ROADSIDE MANAGEMENT. THIS WORK SHALL BE ACCOMPLISHED UNDER THE DIRECT SUPERVISION OF A PESTICIDE APPLICATOR LICENSED BY THE STATE OF OHIO.

TOPSOIL TESTING

TOPSOIL FAILING CURRENT TEST STANDARDS MAY BE ALTERED, UPON APPROVAL OF THE ENGINEER, BY ADDING APPROVED CONDITIONERS TO CORRECT THE DEFICIENCIES. TOPSOIL SHALL BE FREE OF JOHNSON GRASS AND CONFORM TO ITEM 653 AS DETERMINED BY THE ENGINEER.

PLANT CAPACITY	TRASH TRAP	DETENTION FLOW EQUALIZATION TANK	SLUDGE STORAGE TANK	AERATION TANK	FINAL SETTLING TANK		FIX MEDIA CLARIFIER		DOSING TANK PUMP		SAND FILTER	CHLORINATION TANK
					SURFACE AREA	EFFECTIVE VOLUME	VOLUME	AREA	VOLUME	RATE		
GPD.	GAL.	GAL.	GAL.	GAL.	S.F.	GAL.	GAL.	S.F.	GAL.	S.F.	S.F.	GAL.
4,000	650	2480	1000	4000	40	1000	647	18	304	83	162	152
5,000	750	3100	1000	5000	50	1250	1294	36	374	83	200	187
6,000	900	3720	1000	6000	60	1500	1294	36	454	83	242	227
7,000	1050	4340	1050	7000	70	1750	1294	36	524	83	280	262
8,000	1200	4960	1200	8000	80	2000	1294	36	600	83	321	300
9,000	1350	5580	1350	9000	90	2250	1294	36	682	83	365	341
10,000	1500	6200	1500	10000	100	2500	1294	36	760	83	406	380
12,000	1750	7440	1800	12000	105	3000	1294	36	900	83	481	450
14,000	1950	8680	2100	14000	112	3500	1294	36	1060	83	567	530
16,000	2100	9920	2400	16000	116	4000	1294	36	1212	83	648	606
18,000	2250	11160	2700	18000	120	4500	1294	36	1350	83	722	675
20,000	2400	12400	3000	20000	126	5000	1486	40	1496	83	800	748

NOTE: THESE MINIMUM ACCEPTABLE CAPACITIES APPLY TO BOTH THE STEEL AND CONCRETE WASTEWATER TREATMENT PLANTS.

NOTE: ALL COMPONENTS OF THE PLANT SHALL BE AS DESCRIBED IN THE SPECIFICATIONS.

BUREAU OF DESIGN SERVICES
DIVISION OF HIGHWAYS
OHIO DEPARTMENT OF TRANSPORTATION

ROADSIDE DEVELOPMENT

DATE 10/30/87

MINIMUM ACCEPTABLE CAPACITIES

WWTP-1

APPROVED S. H. Henderson ENGR OF DESIGN SERVICES

1/14

CALC. BY / DATE	Summit County	OHIO	17
CHKD BY / DATE	Sum-271-0.89	FHWA REGION 5	29

NEENAH CAT. NO. R-1799-0 CAST IRON FRAME W/ ALUMINUM SOLID LID (30" CLEAR OPENING), MCKINLEY TYPE S32L (ALUMINUM) OR LIKE KIND AND QUALITY BY APPROVED EQUAL MANUFACTURERS AS SPECIFIED. (TWO (2) EACH REQUIRED)

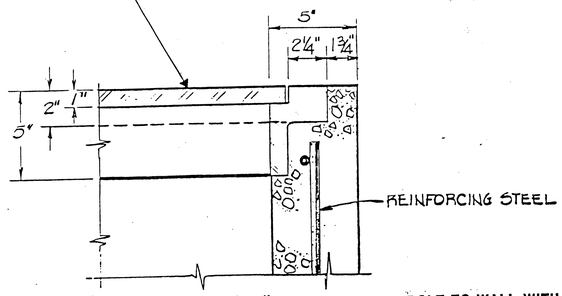

DETAIL "A"

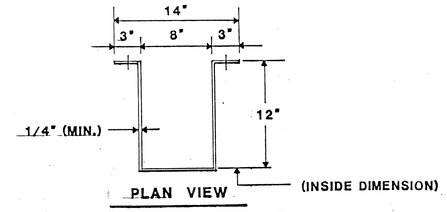

PLAN VIEW

BOLT TO WALL WITH 1/2" DIA. - 13 ANCHOR BOLTS, MIN. SIX (6) REQ.

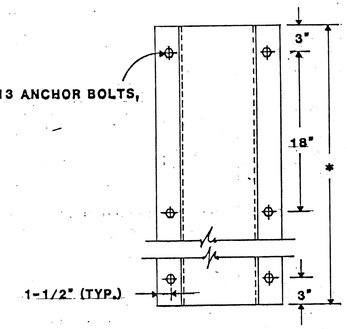

FRONT VIEW

REAR BAFFEL

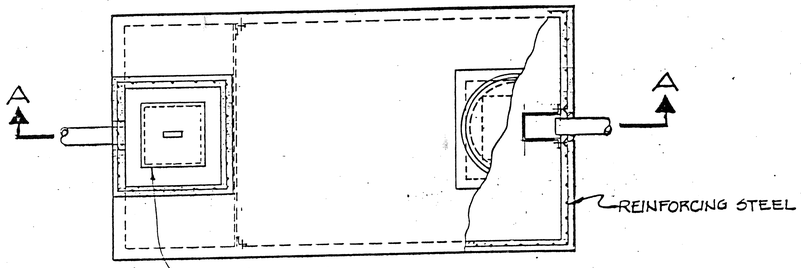

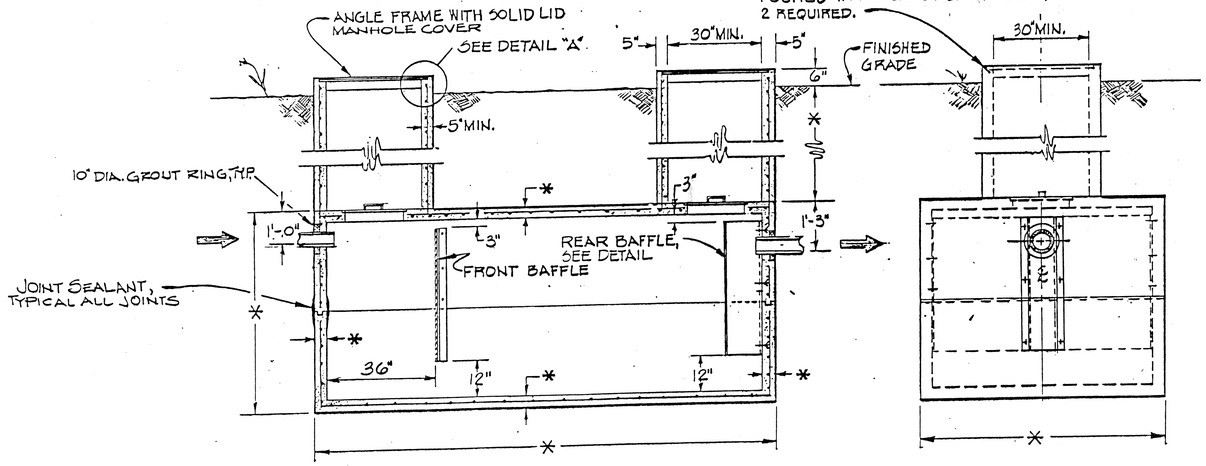

SECTION A-A

NOTE: ALL COMPONENTS OF THE PLANT SHALL BE AS DESCRIBED IN THE SPECIFICATIONS.

*=DIMENSION TO BE SHOWN ON MANUFACTURERS SHOP DRAWINGS. FOR TANK CAPACITIES SEE SHEET WWTP-1

BUREAU OF DESIGN SERVICES
DIVISION OF HIGHWAYS
OHIO DEPARTMENT OF TRANSPORTATION

ROADSIDE DEVELOPMENT

DATE 8/25/86 12/11/86 10/30/87

CONCRETE TRASH TRAP

WWTP-2

APPROVED [signature] Engr. of Design Services

2/14

WASTEWATER TREATMENT PLANT

CHK BY / DATE	Summit County Sum-271-0.89	OHIO	18 / 29
CHKD BY / DATE		FHWA REGN 5	

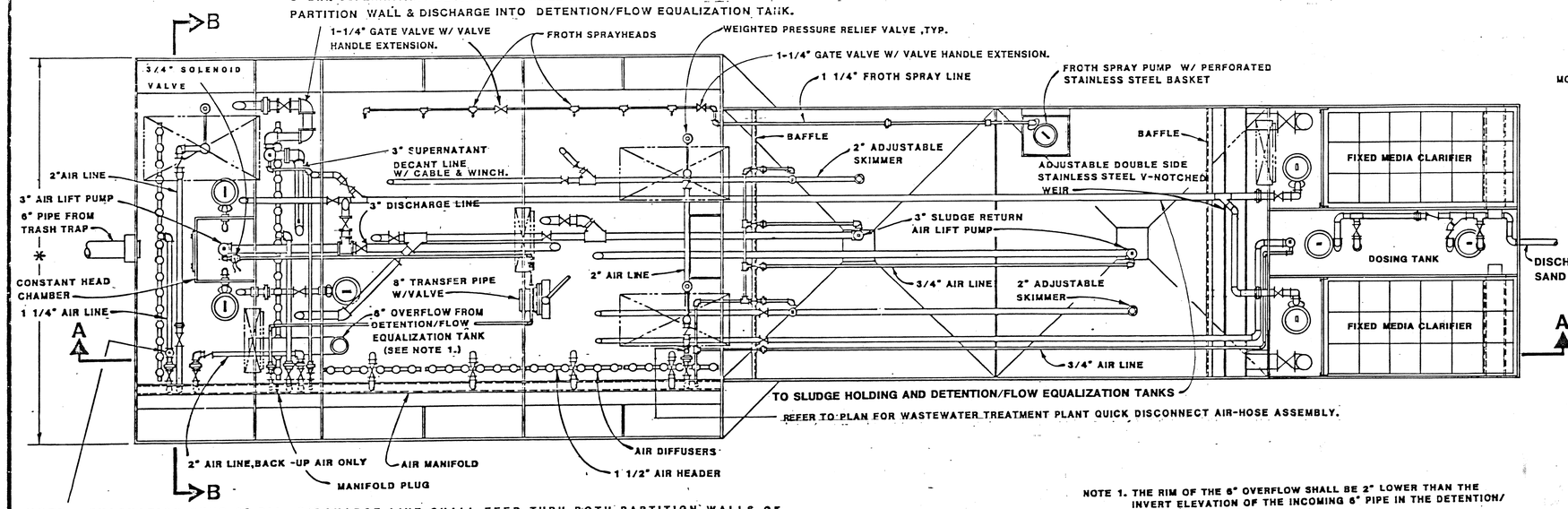

NOTE: EVACUATION PUMP 2" DIA. DISCHARGE LINE SHALL FEED THRU BOTH PARTITION WALLS OF THE SLUDGE HOLDING TANK AND DISCHARGE INTO THE DETENTION/FLOW EQUALIZATION TANK. PROVIDE & INSTALL VALVE, NIPPLES & UNIONS IN 2" RISER NEAR 90° ELBOW AND ON FEED THRU DISCHARGE LINE. CENTER LINE OF 2" FEED THRU DISCHARGE LINE SHALL BE INSTALLED 12" BELOW TOP OF TANK (NOT TOP OF WALL EXTENTION).

1" NPS DIFFERENTIAL LOW PRESSURE REGULATOR VALVE ON AIR LINE TO DIFFUSERS.

NOTE 1. THE RIM OF THE 6" OVERFLOW SHALL BE 2" LOWER THAN THE INVERT ELEVATION OF THE INCOMING 6" PIPE IN THE DETENTION/ FLOW EQUALIZATION TANK

2. FURNISH AND INSTALL MAGNESIUM ANODES AND ANODE TEST BOXES AS SPECIFIED.

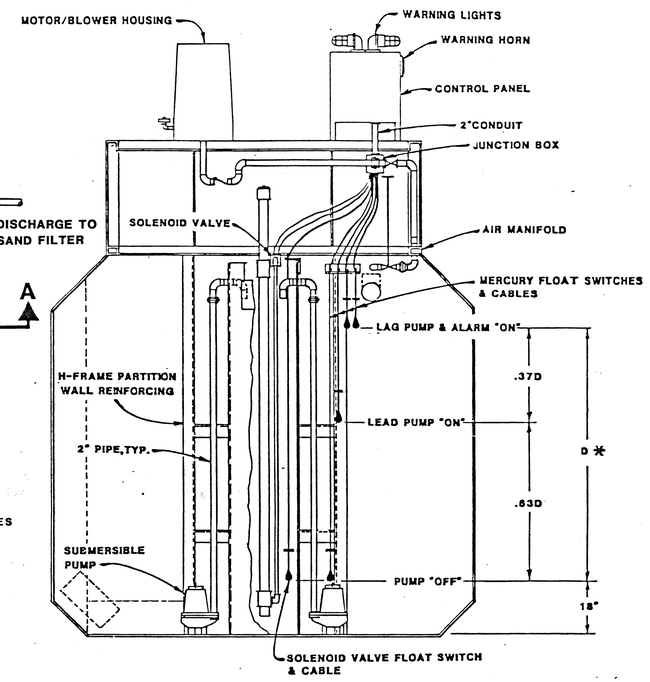

SECTION B-B

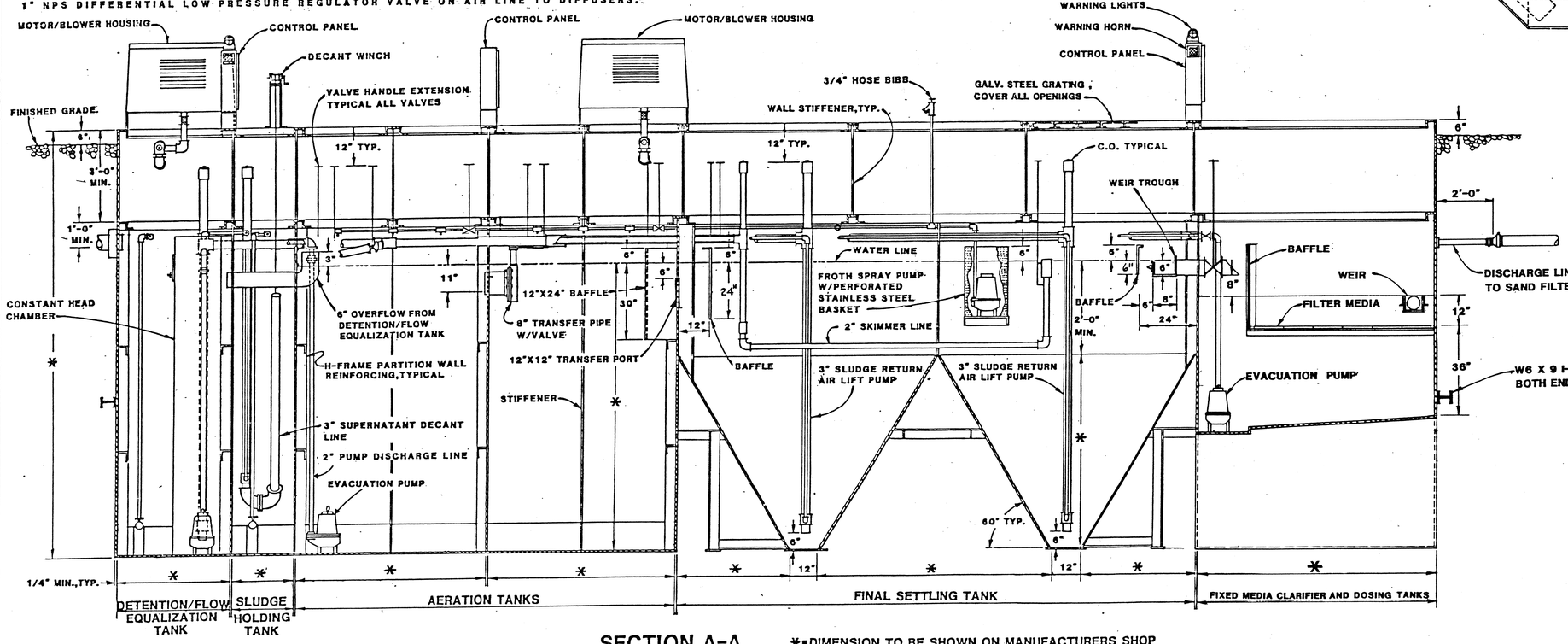

SECTION A-A

*=DIMENSION TO BE SHOWN ON MANUFACTURERS SHOP DRAWINGS. FOR TANK CAPACITIES SEE SHEET WWTP-1

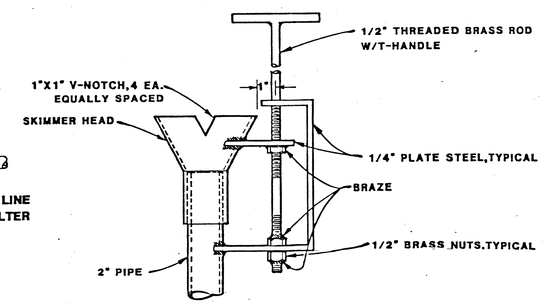

ADJUSTABLE SKIMMER DETAIL

NOTE: ALL COMPONENTS OF THE PLANT SHALL BE AS DESCRIBED IN THE SPECIFICATIONS.

BUREAU OF DESIGN SERVICES
DIVISION OF HIGHWAYS
OHIO DEPARTMENT OF TRANSPORTATION

ROADSIDE DEVELOPMENT

STEEL WASTEWATER TREATMENT PLANT

WWTP- 3

DATE 8/25/86 10/31/86 12/11/86 10/30/87

APPROVED [signature] Engr. of Design Services

3/14

CALC. BY DATE	Summit County	OHIO	19
CHKD. BY DATE	Sum-271-0.89	FHWA REGION 5	29

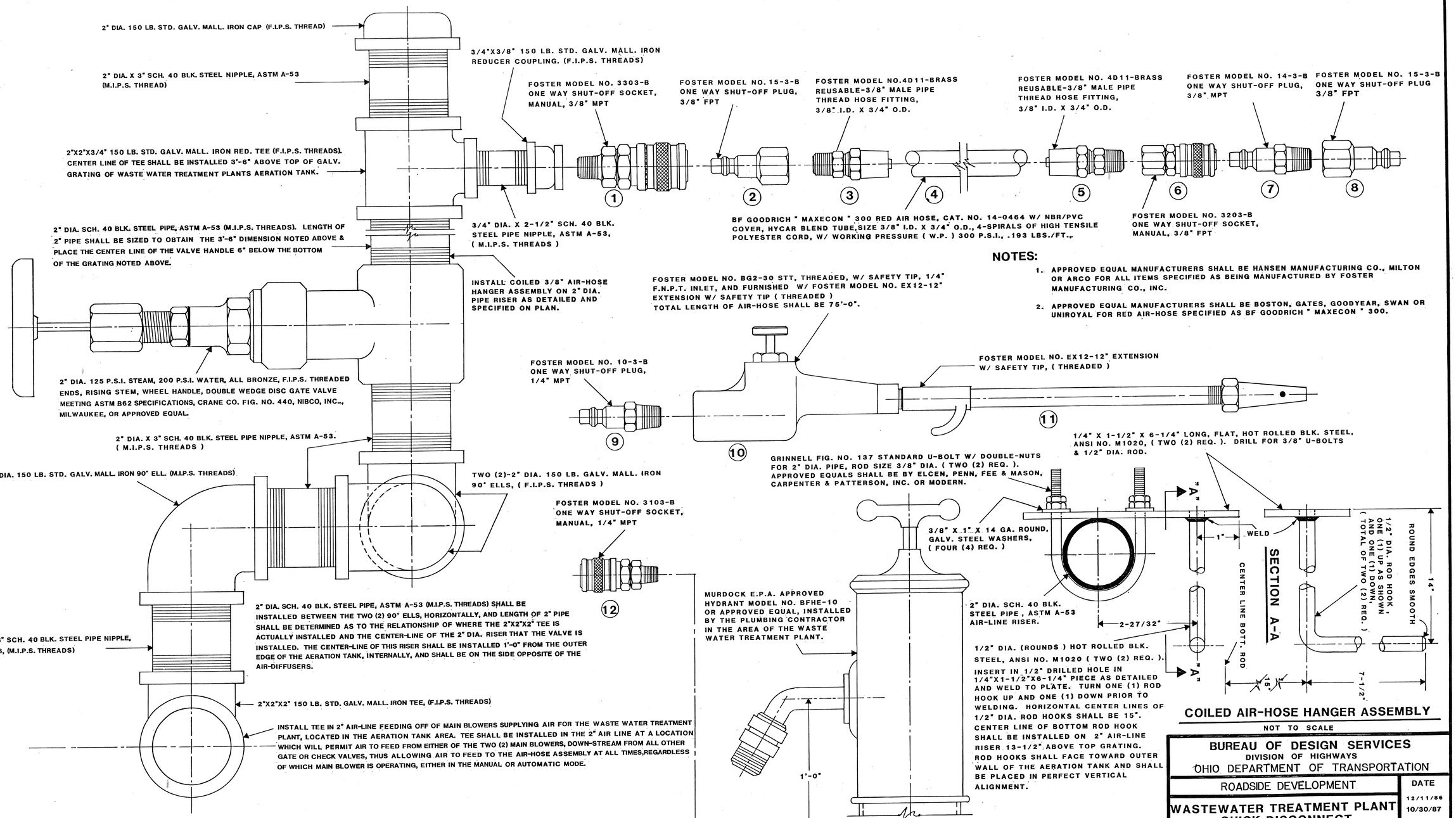

NOTES:

1. APPROVED EQUAL MANUFACTURERS SHALL BE HANSEN MANUFACTURING CO., MILTON OR ARCO FOR ALL ITEMS SPECIFIED AS BEING MANUFACTURED BY FOSTER MANUFACTURING CO., INC.
2. APPROVED EQUAL MANUFACTURERS SHALL BE BOSTON, GATES, GOODYEAR, SWAN OR UNIROYAL FOR RED AIR-HOSE SPECIFIED AS BF GOODRICH " MAXECON " 300.

ELEVATION OF WASTEWATER TREATMENT PLANT AIR-LINE QUICK-DISCONNECT HOSE ASSEMBLY

NOT TO SCALE

COILED AIR-HOSE HANGER ASSEMBLY

NOT TO SCALE

BUREAU OF DESIGN SERVICES
DIVISION OF HIGHWAYS
OHIO DEPARTMENT OF TRANSPORTATION

ROADSIDE DEVELOPMENT

DATE 12/11/86 10/30/87

WASTEWATER TREATMENT PLANT QUICK DISCONNECT AIR-HOSE ASSEMBLY

WWTP- 4

APPROVED [signature] Engr. of Design Services

4/14

CALC. BY / DATE	Summit County	OHIO	20
CHKD BY / DATE	Sum-271-0.89	FHWA REGION 5	29

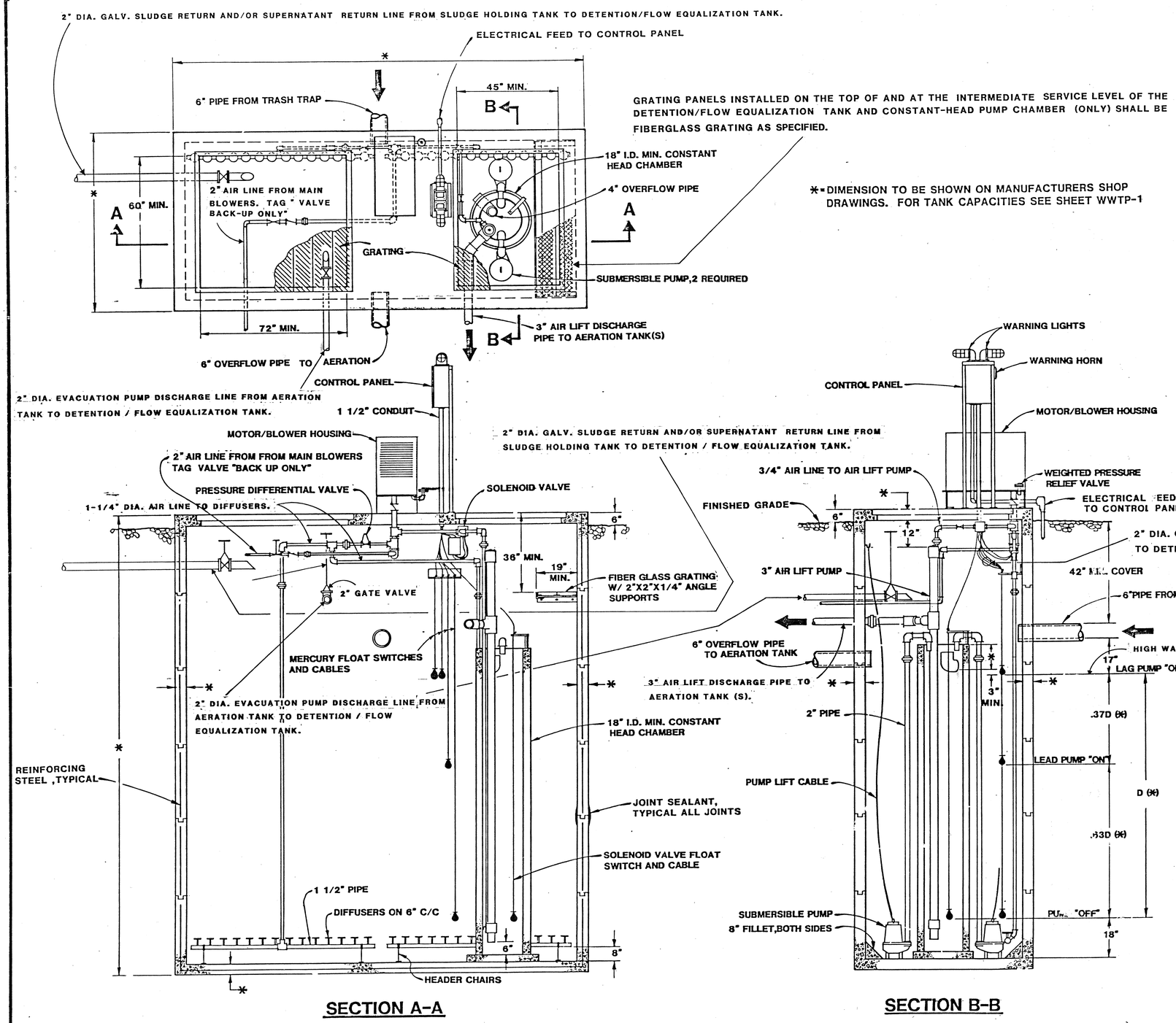

NOTE: ALL COMPONENTS OF THE PLANT SHALL BE AS DESCRIBED IN THE SPECIFICATIONS.

BUREAU OF DESIGN SERVICES DIVISION OF HIGHWAYS OHIO DEPARTMENT OF TRANSPORTATION	
ROADSIDE DEVELOPMENT	DATE 8/25/86 12/11/86 10/30/87
CONCRETE DETENTION/ FLOW EQUALIZATION TANK	
WWTP- 5	5/14
APPROVED [signature] Engr. of Design Services	

NOTE: IN LIEU OF THE TWO (2) FINAL SETTLING TANKS SHOWN ON PLANS, THE GENERAL CONTRACTOR SHALL HAVE THE OPTION TO PROVIDE ONE (1) TANK. THE ONE TANK SHALL MEET OR EXCEED THE SPECIFIED SQUARE FEET OF USABLE SURFACE AREA AND GALLONS OF EFFECTIVE VOLUME. THE ONE TANK SHALL BE FURNISHED WITH TWO (2) SLOPED HOPPERS IN THE BOTTOM OF THE TANK.

CHKD BY / DATE	Summit County Sum-271-0.89	OHIO	21
CHKD BY / DATE		FHWA REGION 5	29

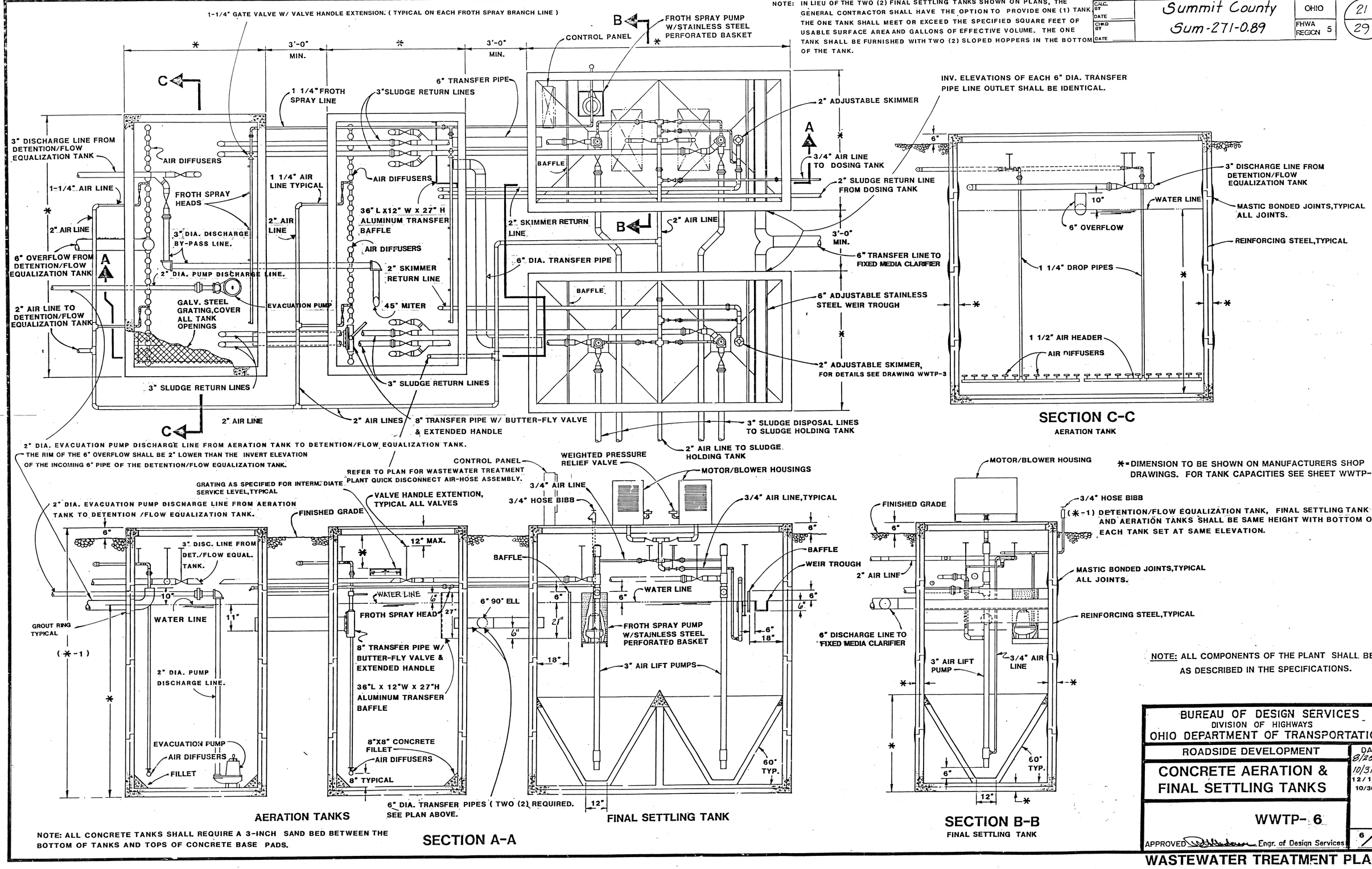

NOTE: ALL CONCRETE TANKS SHALL REQUIRE A 3-INCH SAND BED BETWEEN THE BOTTOM OF TANKS AND TOPS OF CONCRETE BASE PADS.

NOTE: ALL COMPONENTS OF THE PLANT SHALL BE AS DESCRIBED IN THE SPECIFICATIONS.

BUREAU OF DESIGN SERVICES
DIVISION OF HIGHWAYS
OHIO DEPARTMENT OF TRANSPORTATION

ROADSIDE DEVELOPMENT

DATE 8/25/86 10/31/86 12/11/86 10/30/87

CONCRETE AERATION & FINAL SETTLING TANKS

WWTP- 6

APPROVED [signature] Engr. of Design Services

6/14

WASTEWATER TREATMENT PLANT

CALC. BY ____ DATE	Summit County	OHIO	22
CHKD. BY ____ DATE	Sum-271-0.89	FHWA REGION 5	29

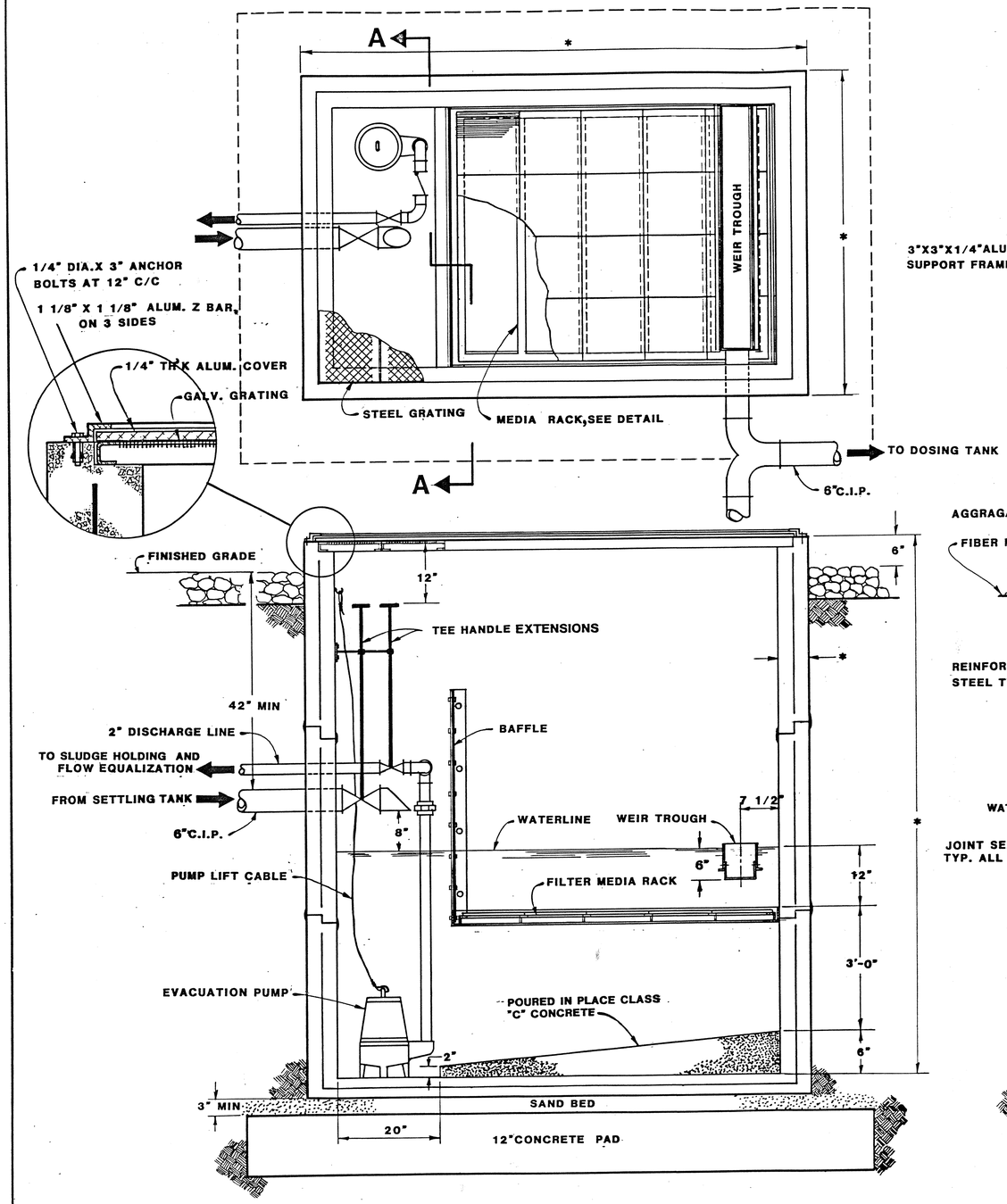

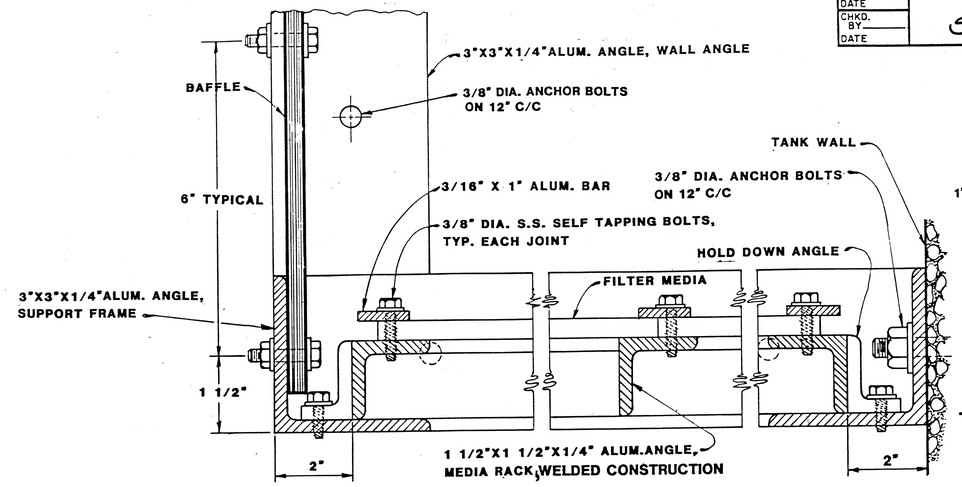

FILTER MEDIA RACK DETAILS

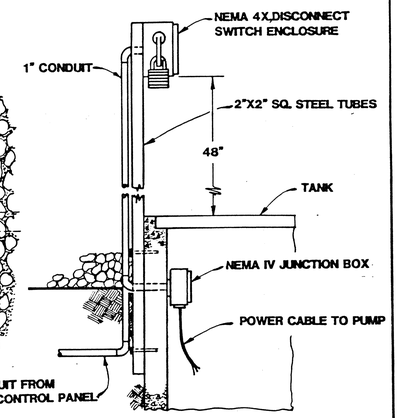

ELECTRICAL DETAILS

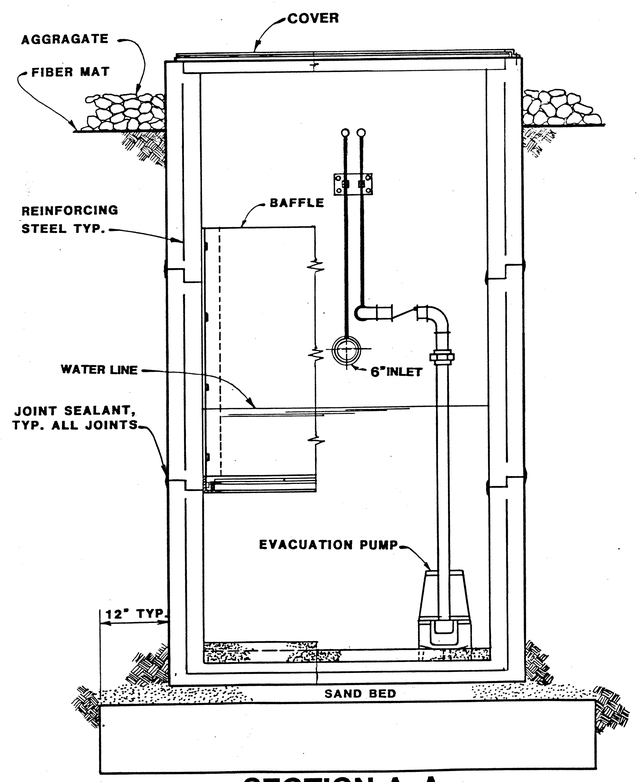

SECTION A-A

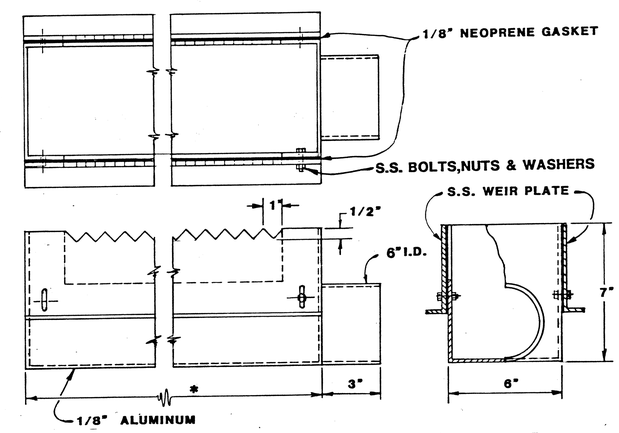

WEIR TROUGH DETAILS

NOTE: ALL COMPONENTS OF THE PLANT SHALL BE AS DESCRIBED IN THE SPECIFICATIONS.

* DIMENSIONS TO BE SHOWN ON MANUFACTURERS SHOP DRAWINGS. FOR TANK CAPACITIES SEE SHEET WWTP-1

BUREAU OF DESIGN SERVICES DIVISION OF HIGHWAYS OHIO DEPARTMENT OF TRANSPORTATION	
ROADWAY DEVELOPMENT	DATE 10/30/87
FIXED MEDIA CLARIFIER	
WWTP-7	
APPROVED Bill Henderson ENGR. OF DESIGN SERVICES	7/14

	Summit County Sum-271-0.89	23 29

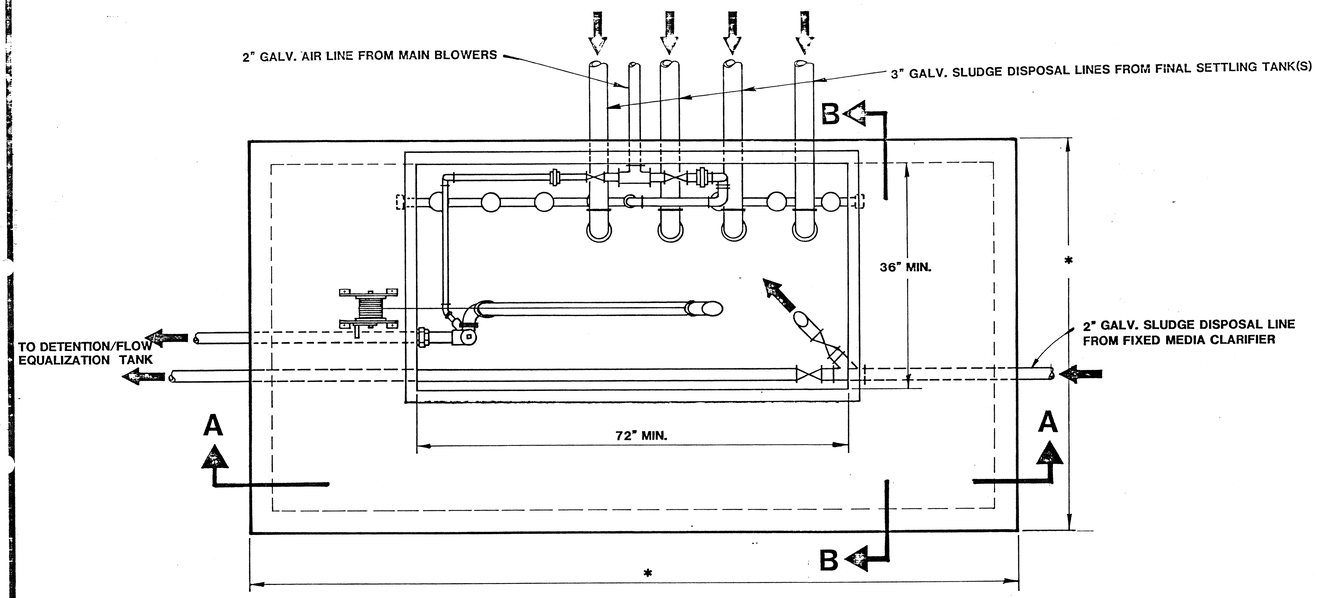

* = DIMENSIONS TO BE SHOWN ON MANUFACTURERS SHOP DRAWINGS
FOR TANK CAPACITIES SEE SHEET WWTP-1

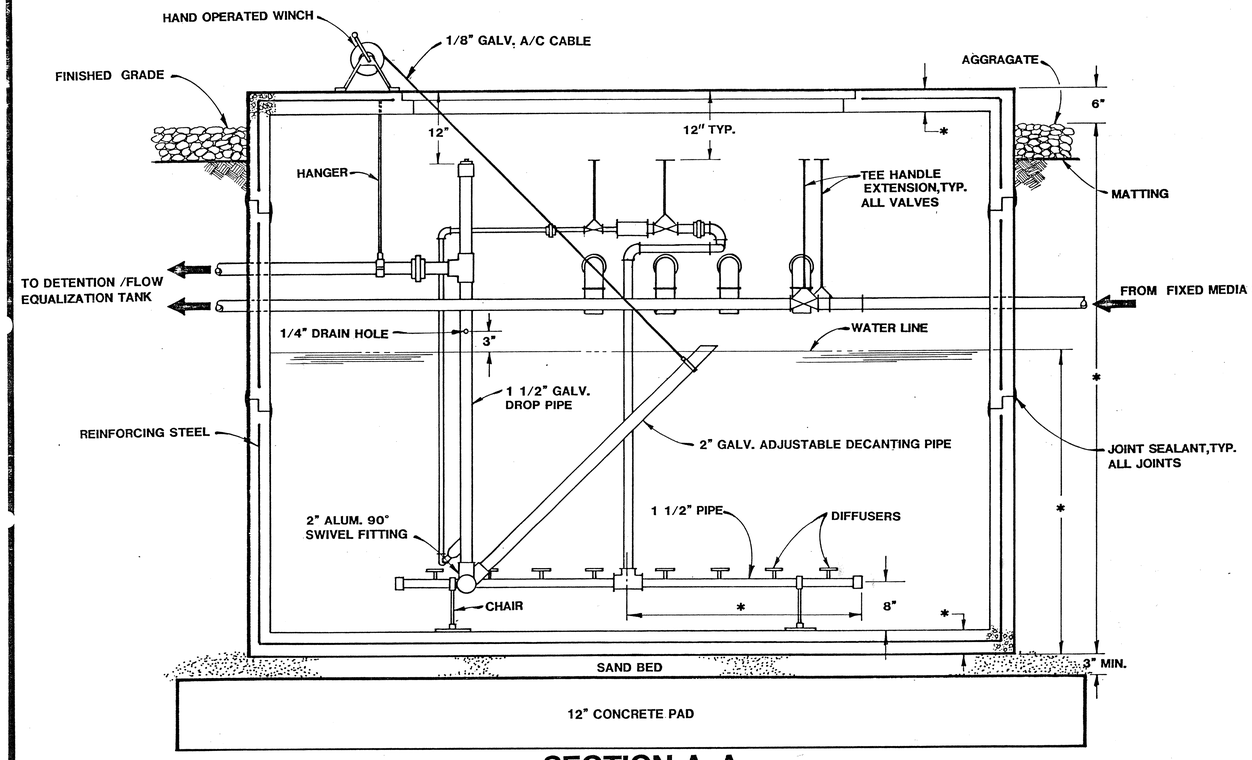

SECTION A-A

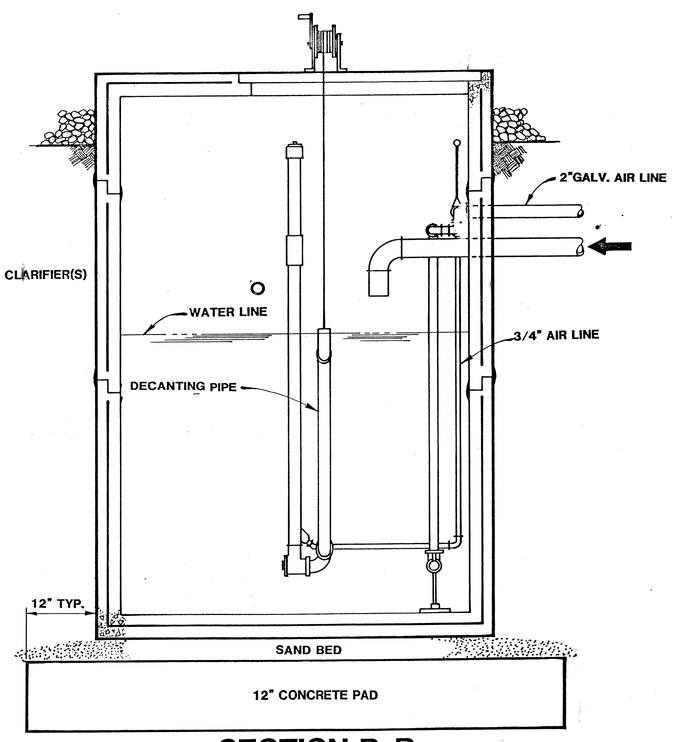

SECTION B-B

NOTE: ALL COMPONENTS OF THE PLANT SHALL BE AS DESCRIBED IN THE SPECIFICATIONS

BUREAU OF DESIGN SERVICES DIVISION OF HIGHWAYS OHIO DEPARTMENT OF TRANSPORTATION	
ROADSIDE DEVELOPMENT	DATE
CONCRETE SLUDGE HOLDING TANK	10/30/87
WWTP-8	
APPROVED _____ ENGR. OF DESIGN SERVICES	8/14

CALC. BY DATE	Summit County Sum-271-0.89	OHIO	24
CHKD BY DATE		FHWA REGION 5	29

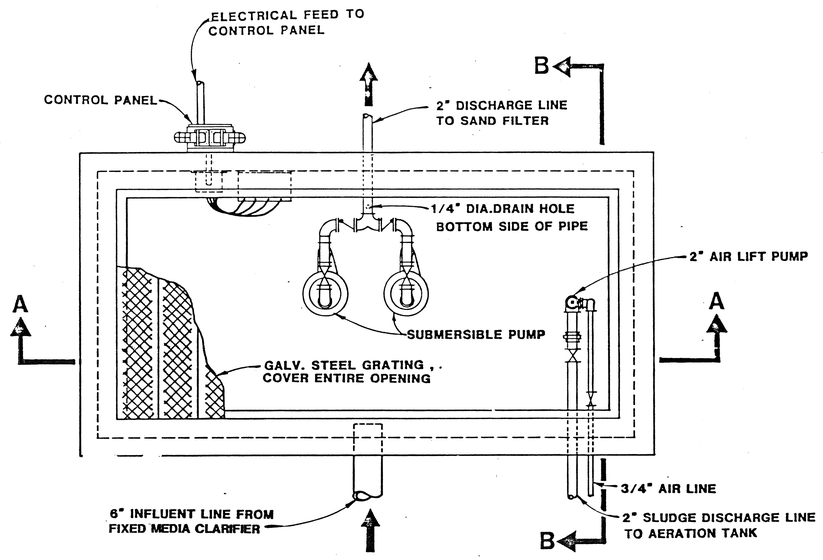

*=DIMENSION TO BE SHOWN ON MANUFACTURERS SHOP DRAWINGS. FOR TANK CAPACITIES SEE SHEET WWTP-1

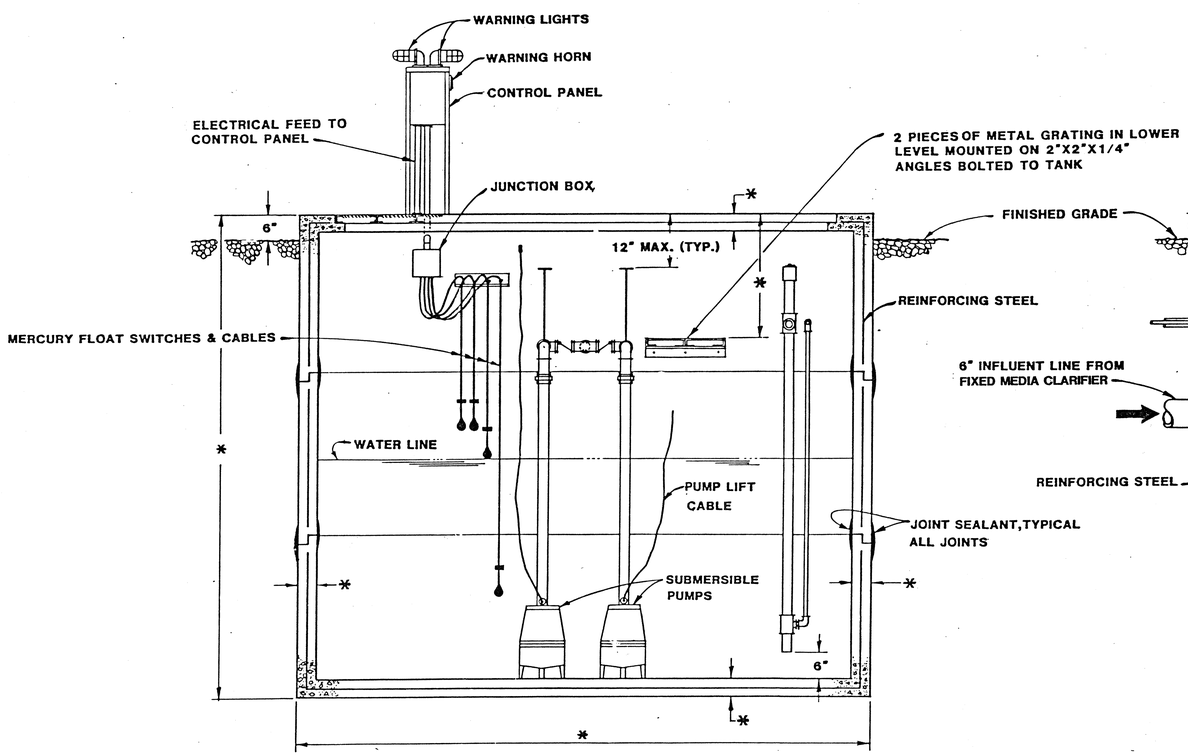

SECTION A-A

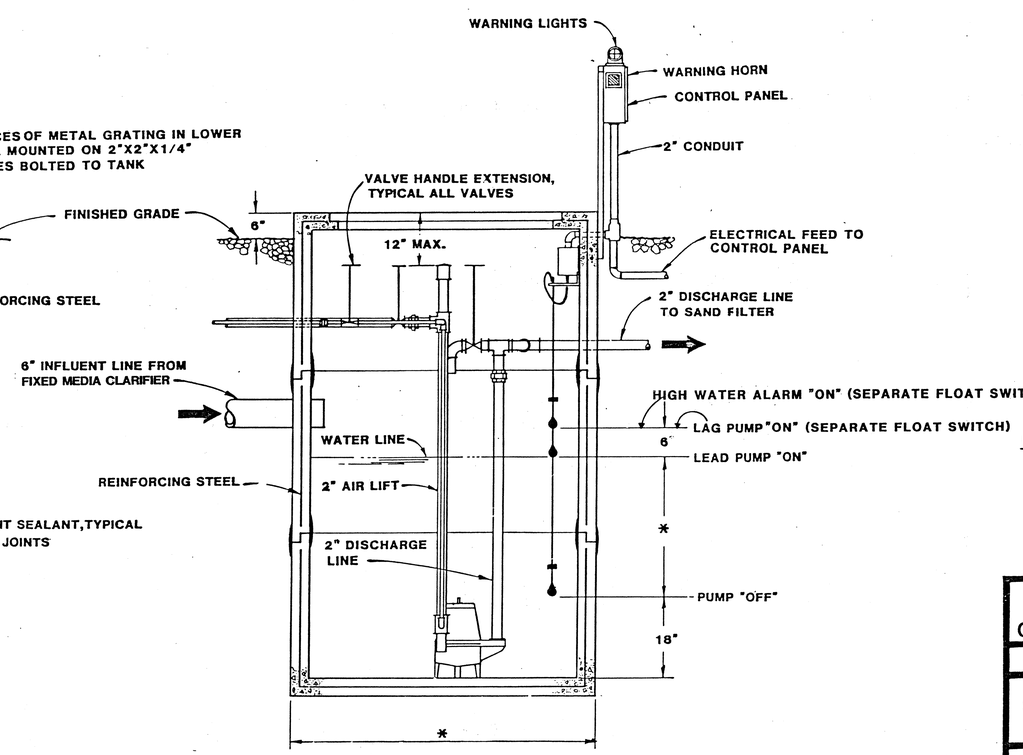

SECTION B-B

NOTE: ALL COMPONENTS OF THE PLANT SHALL BE AS DESCRIBED IN THE SPECIFICATIONS.

BUREAU OF DESIGN SERVICES
DIVISION OF HIGHWAYS
OHIO DEPARTMENT OF TRANSPORTATION

ROADSIDE DEVELOPMENT

DATE 8/25/86 12/11/86 10/30/87

CONCRETE DOSING TANK

WWTP-9

9/14

APPROVED [signature] Engr. of Design Services

WASTEWATER TREATMENT PLANT

SUMMIT COUNTY
SUM-271-0.89

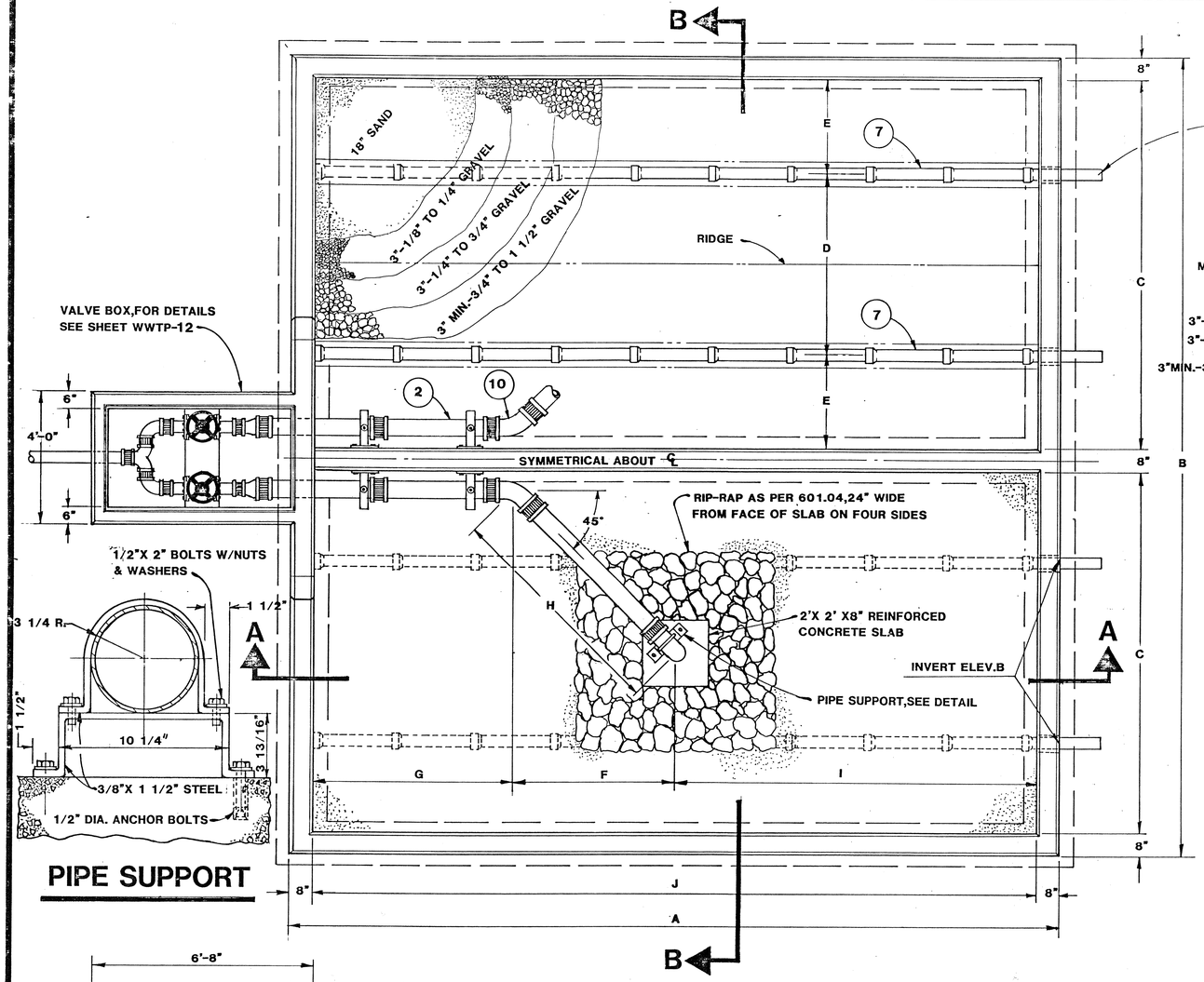

PIPE SUPPORT

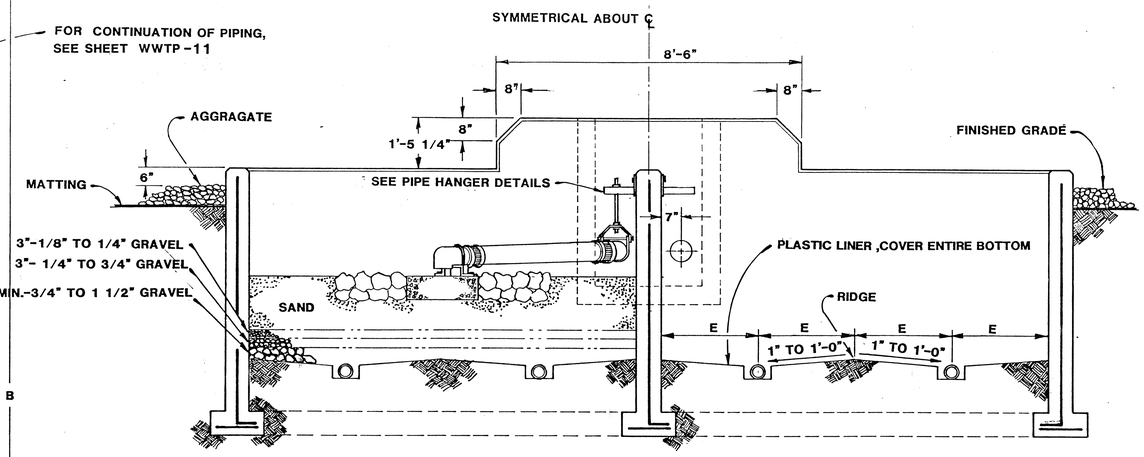

SECTION B-B

SAND FILTER												
PLANT CAPACITY G.P.D.	DIMENSIONS										INVERT A	INVERT B
	A	B	C	D	E	F	G	H	I	J		
4000	10"-4"	20'-0"	9'-0"	4'-6"	2'-3"	3'-11"	7"	5'-6 1/2"	4'-6"	9'-0"	96.26	96.17
5000	11"-4"	22'-0"	10'-0'	5'-0"	2'-6"	4'-5"	7"	6'-3"	5'-0"	10'-0"	96.26	96.16
6000	12'-4"	24'-0"	11'-0"	5'-6"	2'-9"	4'-11"	7"	6'-11 1/2"	5'-6"	11'-0"	96.26	96.15
7000	13'-2"	25'-8"	11'-10"	5'-11"	2'-11 1/2"	5'-4"	7"	7'-6 1/2"	5'-11"	11'-10"	96.26	96.14
8000	14'-0"	27'-4"	12'-8"	6'-4"	3'-2"	5'-9"	7"	8'-1 5/8"	6'-4"	12'-8"	96.26	96.13
9000	14'-10"	29'-0"	13'-6"	6'-9"	3'-4 1/2"	6'-2"	7"	8'-8 5/8"	6'-9"	13'-6"	96.26	96.12
10000	15'-7"	30'-6"	14'-3"	7'-1 1/2"	3'-5 3/4"	6'-6 1/2"	7"	9'-3"	7'-1 1/2"	14'-3"	96.26	96.11
12000	21'-4"	26'-0"	21'-0"	6'-0"	3'-0"	5'-5"	4'-7"	7'-8"	10'-0"	20'-0"	96.26	96.05
14000	21'-7"	30'-0"	14'-0"	7'-0"	3'-6"	6'-5"	3'-8 1/2"	9'-1"	10'-1 1/2"	20'-3"	96.26	96.05
16000	24'-6"	30'-0"	14'-0"	7'-0"	3'-6"	6'-5"	5'-2"	9'-1"	11'-7"	23'-2"	96.26	96.02
18000	27'-2"	30'-0"	14'-0"	7'-0"	3'-6"	6'-5"	6'-6"	9'-1"	12'-11"	25'-10"	96.26	95.99
20000	29'-11"	30'-0"	14'-0"	7'-0"	3'-6"	6'-5"	7'-10 1/2"	9'-1"	14'-3 1/2"	28'-7"	96.26	95.96

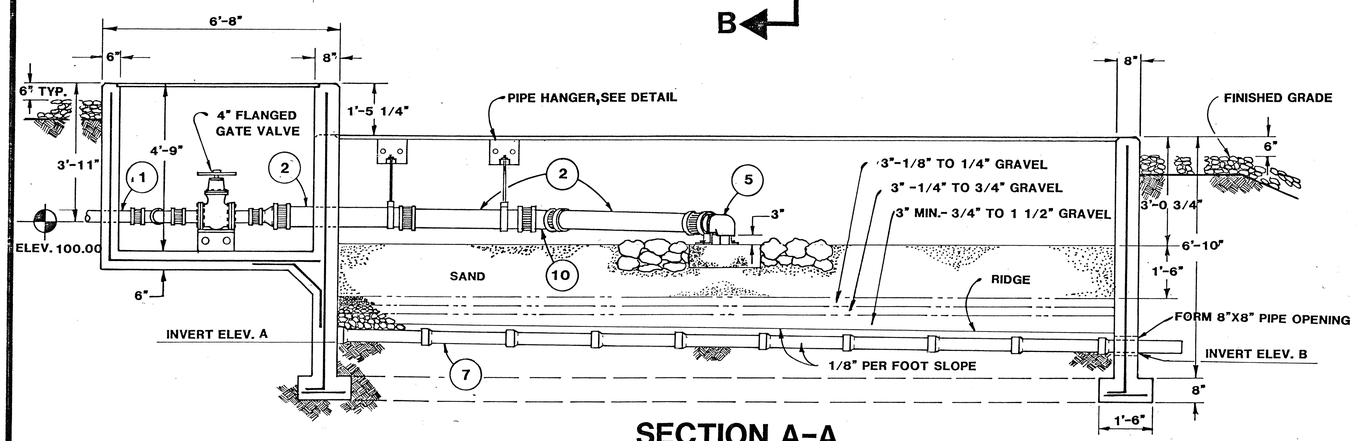

SECTION A-A

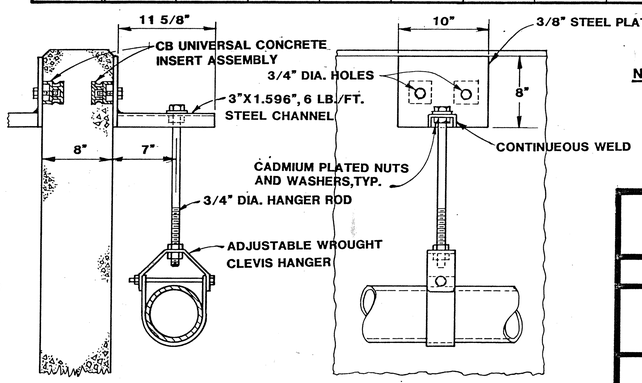

PIPE HANGER DETAIL

NOTE: ALL COMPONENTS OF THE PLANT SHALL BE AS DESCRIBED IN THE SPECIFICATIONS

BUREAU OF DESIGN SERVICES
DIVISION OF HIGHWAYS
OHIO DEPARTMENT OF TRANSPORTATION

ROADSIDE DEVELOPMENT

DATE 10/30/87

SAND FILTER

WWTP-10

APPROVED R.E. Nicholson ENGR. OF DESIGN SERVICES

10/14

CALC. BY ____ DATE ____	Summit County Sum-271-0.89	OHIO	26 / 29
CHKD BY ____ DATE ____		FHWA REGION 5	

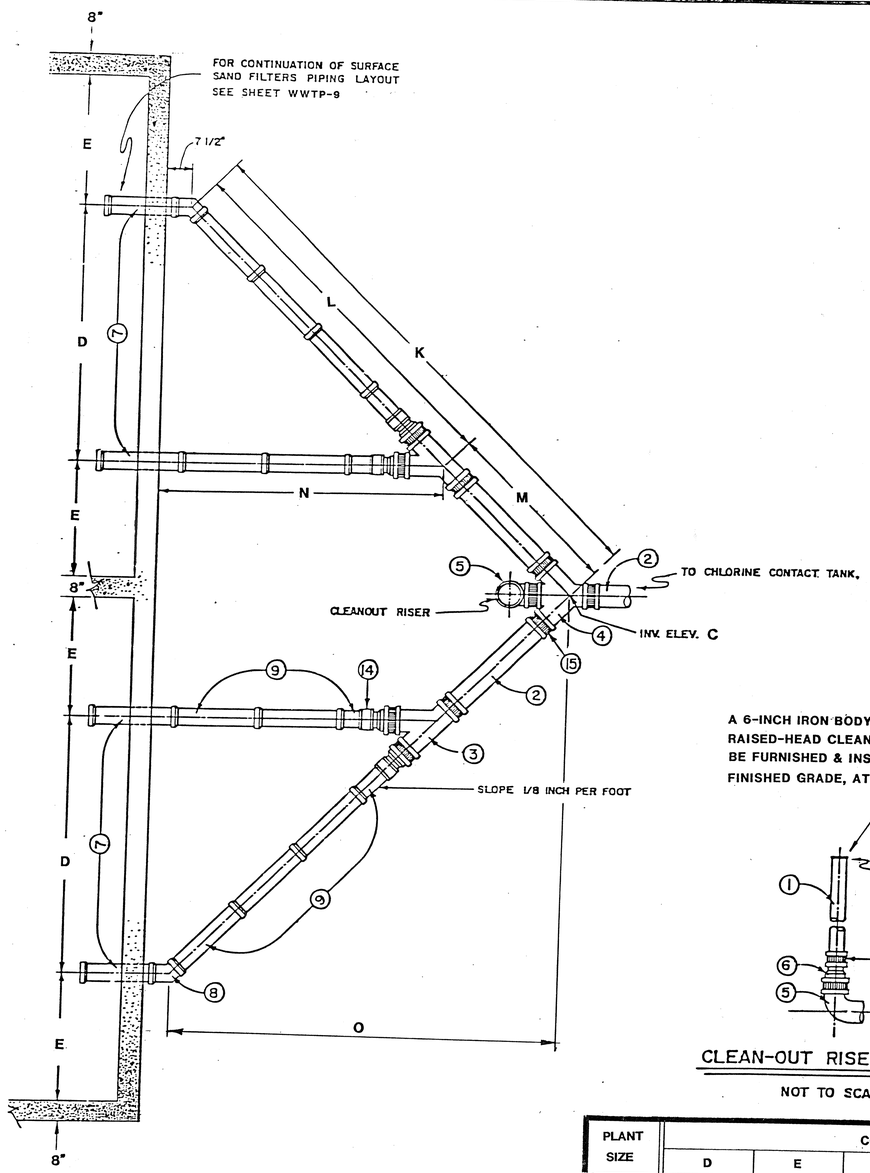

A 6-INCH IRON BODY FERRULE W/ BRASS, RAISED-HEAD CLEAN-OUT PLUG SHALL BE FURNISHED & INSTALLED FLUSH W/ FINISHED GRADE, AT TOP OF RISER.

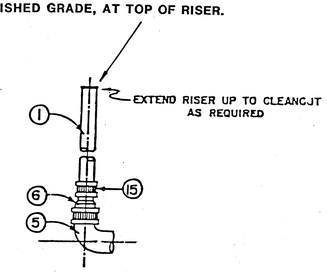

CLEAN-OUT RISER DETAIL

NOT TO SCALE

PIPE AND FITTING LEGEND

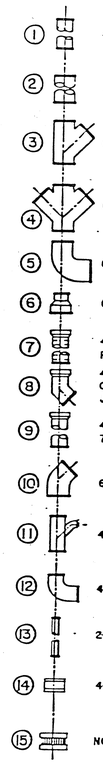

1. 4-INCH NO HUB CAST-IRON SOIL PIPE
2. 6-INCH, SAME AS ABOVE
3. 6-INCH x 6-INCH NO HUB CAST-IRON SOIL 45° WYE
4. 6-INCH x 6-INCH NO HUB CAST-IRON SOIL DOUBLE WYE BRANCH
5. 6-INCH NO HUB CAST-IRON SOIL 1/4 BEND
6. 6-INCH x 4-INCH NO HUB CAST-IRON SOIL REDUCER
7. 4-INCH EXTRA STRENGTH PERFORATED VITRIFIED CLAY PIPE 706.08 WITH 706.12 RESILIENT AND FLEXIBLE JOINTS.
8. 4-INCH EXTRA STRENGTH VITRIFIED CLAY PIPE FITTING 45° CUT CURVE 706.08 WITH 706.12 RESILIENT AND FLEXIBLE JOINTS.
9. 4-INCH EXTRA STRENGTH VITRIFIED CLAY PIPE 706.08 WITH 706.12 RESILIENT AND FLEXIBLE JOINTS
10. 6-INCH NO HUB CAST-IRON SOIL 1/8 BEND
11. 4-INCH x 2-INCH NO HUB CAST-IRON SOIL 45° WYE AND 1/8 BEND
12. 4-INCH NO HUB CAST IRON SOIL 1/4 BEND
13. 2-INCH NO HUB CAST-IRON SOIL PIPE
14. 4-INCH VITRIFIED CLAY TO 4-INCH CAST-IRON PIPE CONNECTOR
15. NO HUB CAST-IRON SOIL PIPE CONNECTOR

PLANT SIZE	COLLECTOR PIPING EXTENSION DIMENSIONS							
	D	E	K	L	M	N	O	INVERT C
4000	4'-6"	2'-3"	10'-0 1/8"	6'-4 21/64"	3'-7 13/16	5'-1 29/64	7'-1"	95.97
5000	5'-0"	2'-6"	11'-31/32"	7-27/32	4'-0"	5'-7 29/64"	7'-10"	95.95
6000	5'-6"	2'-9"	12'-1 11/16"	7'-9 3/3"	4'-0 21/64"	6'-1 29/64"	8'-7"	95.93
7000	5'-11"	2'-11 1/2"	13'-0 1/4"	8'-4 29/64"	4'-7 59/64"	6'-6 31/64"	9'-2 1/2"	95.91
8000	6'-4"	3'-2"	13'-10 13/16"	8'-11 17/32	4'-11 13/32	6'-11 17/32"	9'-10"	95.89
9000	6'-9"	3'-4 1/2	14'-9 31/64"	9'-6 39/64	5'-3"	7'-4 29/64"	10'-5 1/2"	95.87
10000	7'-1 1/2"	3'-5 3/4"	15'-5 41/64"	10'-0 31/32"	5'-4 11/16"	7'-9"	10'-11 1/4"	95.85
12000	6'-0"	3'-0"	13'-2 13/32"	8'-5 57/64	4'-8 17/32"	6'-7 29/64"	9'-4"	95.82
14000	7'-0"	3'-6"	15'-3 27/32"	9'-10 13/16"	5'-5 3/64"	7'-7 29/64"	10'-10"	95.79
16000	7'-0"	3'-6"	15'-3 27/32"	9'-10 13/64"	5'-5 3/64"	7'-5 29/64	10'-10"	95.76
18000	7-0"	3'-6"	15'-3 27/32"	9'-10 13/16"	5'-5 3/64"	7'-7 29/64"	10'-10"	95.73
20000	7'-0"	3'-6"	15'-3 27/32"	9'-10 13/16"	5'-5 3/64"	7'-7 29/64"	10'-10"	95.70

NOTE: ALL COMPONENTS OF THE PLANT SHALL BE AS DESCRIBED IN THE SPECIFICATIONS.

BUREAU OF DESIGN SERVICES
DIVISION OF HIGHWAYS
OHIO DEPARTMENT OF TRANSPORTATION

ROADSIDE DEVELOPMENT

DATE 8/25/86 12/11/86 10/30/87

SAND FILTER

WWTP-11

APPROVED [signature] Engr. of Design Services

11/14

WASTEWATER TREATMENT PLANT

CALC. BY / DATE	Summit County	OHIO	27
CHKD BY / DATE	Sum-271-0.89	FHWA REGON 5	29

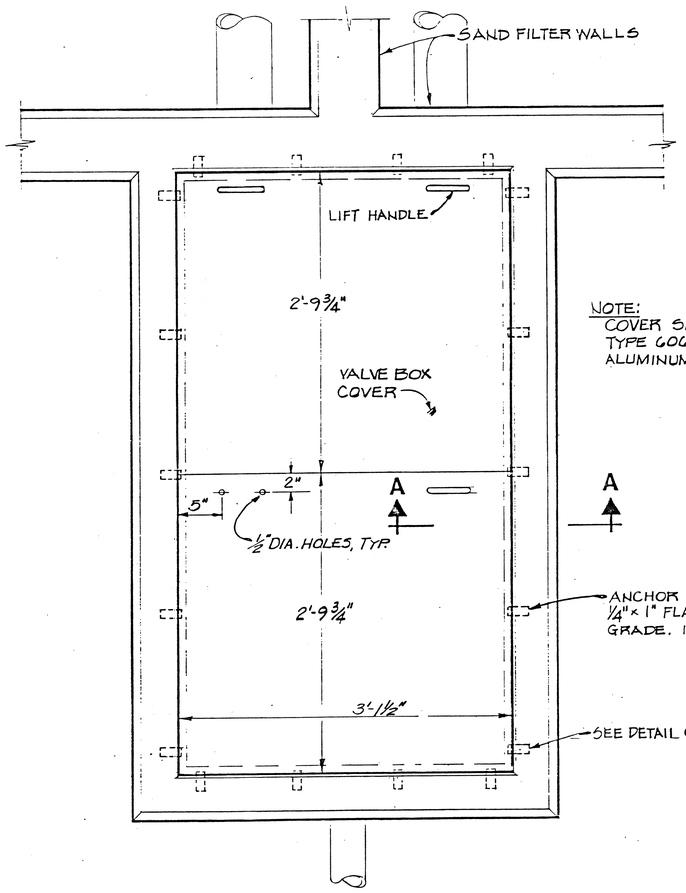

NOTE:
COVER SHALL BE CONSTRUCTED OF TYPE 6061, 3/8" PATTERN C-102, 5.6 PSF ALUMINUM DIAMOND PLATE.

ANCHOR CLIPS, SHALL BE CONSTRUCTED OF 1/4" × 1" FLAT, COLD DRAWN STEEL C1018 COMMERCIAL GRADE. 18 REQUIRED.

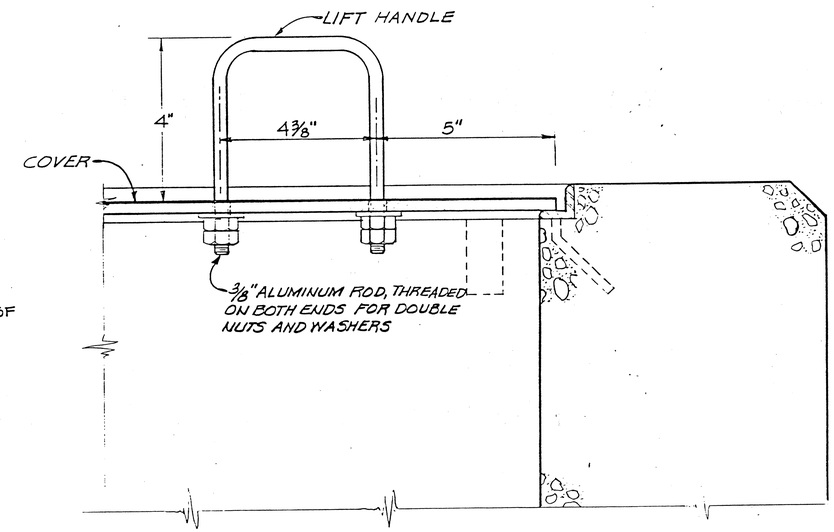

SECTION A-A

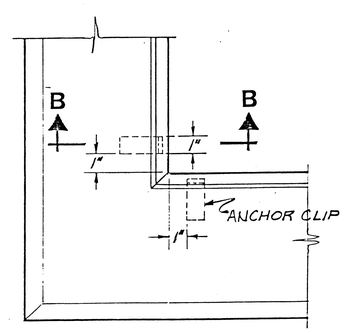

DETAIL C

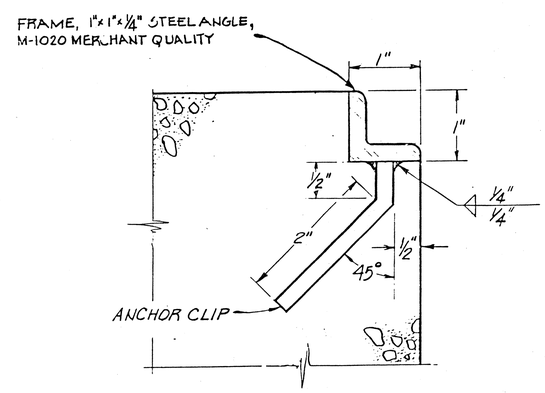

SECTION B-B

NOTE: ALL COMPONENTS OF THE PLANT SHALL BE AS DESCRIBED IN THE SPECIFICATIONS.

BUREAU OF DESIGN SERVICES
DIVISION OF HIGHWAYS
OHIO DEPARTMENT OF TRANSPORTATION

ROADSIDE DEVELOPMENT

DATE 8/25/86 12/11/86 10/30/87

SAND FILTER
VALVE BOX DETAILS

WWTP-12

APPROVED _____ Engr. of Design Services

12/14

WASTEWATER TREATMENT PLANT

CALC. BY / DATE	Summit County Sum-271-0.89	OHIO	28 / 29
CHKD BY / DATE		FHWA REGION 5	

NOTE: ALL COMPONENTS OF THE PLANT SHALL BE AS DESCRIBED IN THE SPECIFICATIONS.

* = DIMENSION TO BE SHOWN ON MANUFACTURERS SHOP DRAWINGS. FOR TANK CAPACITIES SEE SHEET WWTP-1

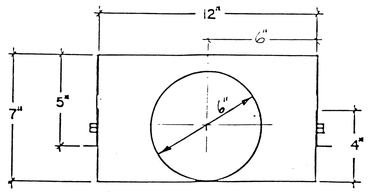

SECTION

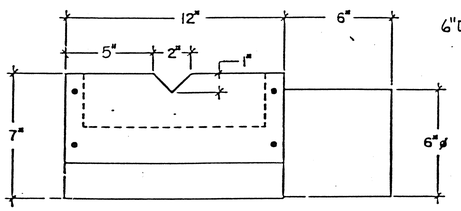

SIDE

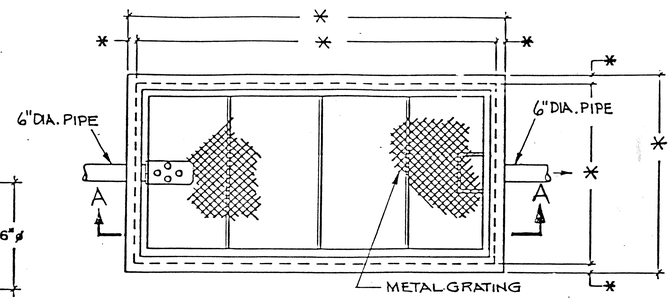

PLAN

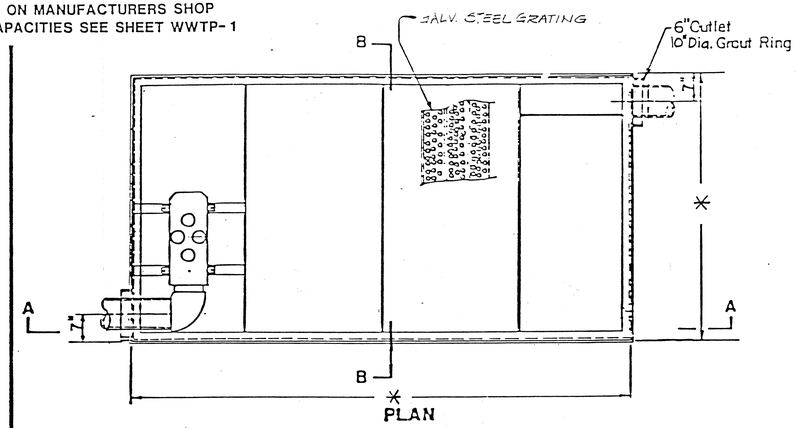

NOTE: FURNISH AND INSTALL MAGNESIUM ANODES AND ANODE TEST BOXES AS SPECIFIED.

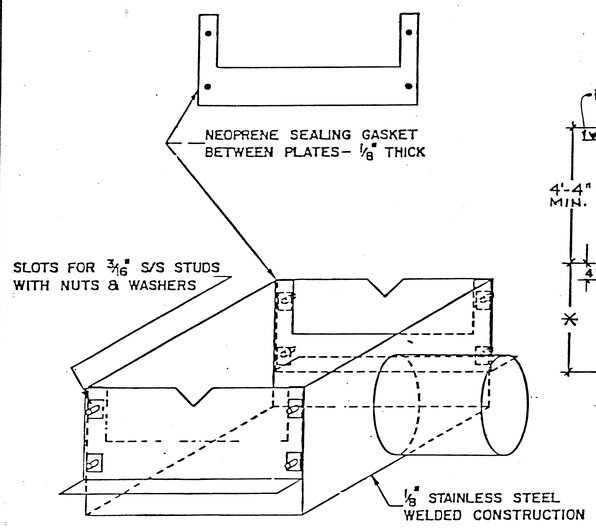

OBLIQUE

WEIR DETAIL

NOT TO SCALE

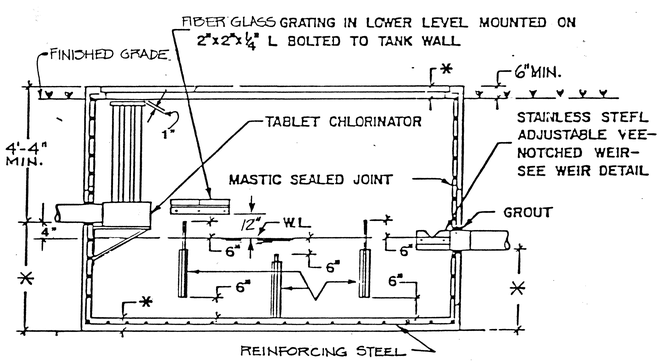

SECTION A-A

CONCRETE CHLORINE CONTACT TANK

NOT TO SCALE

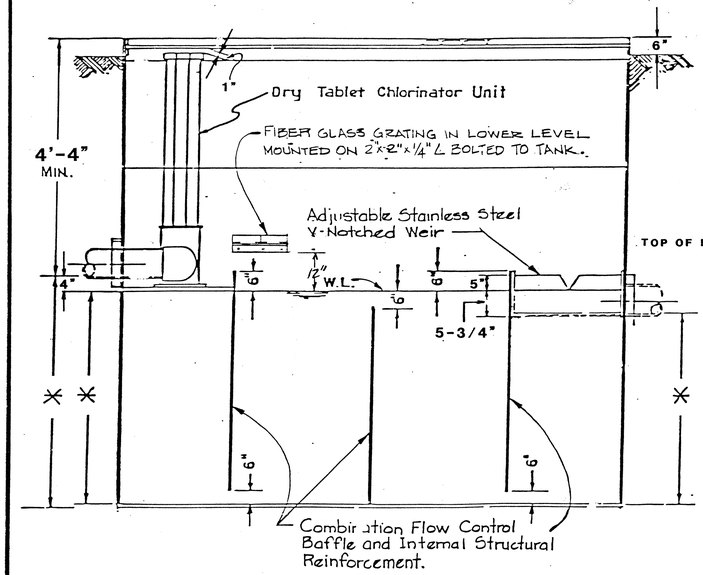

SECTION A-A

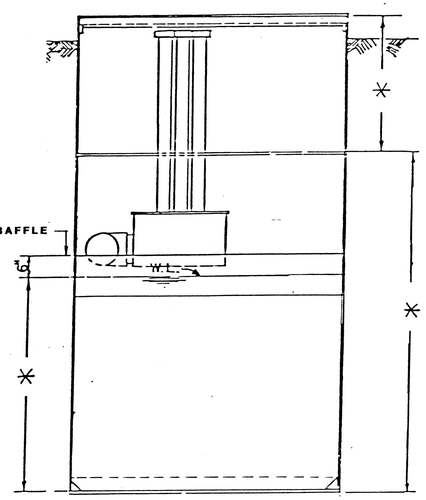

SECTION B-B

STEEL CHLORINE CONTACT TANK

NOT TO SCALE

BUREAU OF DESIGN SERVICES
DIVISION OF HIGHWAYS
OHIO DEPARTMENT OF TRANSPORTATION

ROADSIDE DEVELOPMENT

CHLORINE CONTACT TANKS

WWTP-13

DATE 8/25/86 12/11/86 10/30/87

APPROVED _____ Engr. of Design Services

13/14

WASTEWATER TREATMENT PLANT

Summit County
Sum-271-0.89

29/29

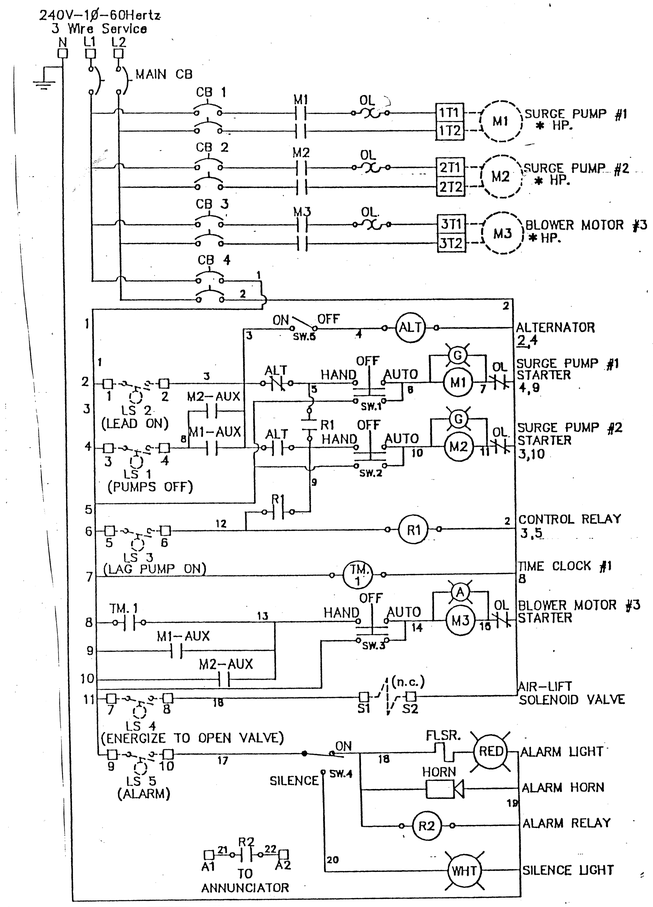

DETENTION/FLOW EQUALIZATION TANK CONTROL PANEL

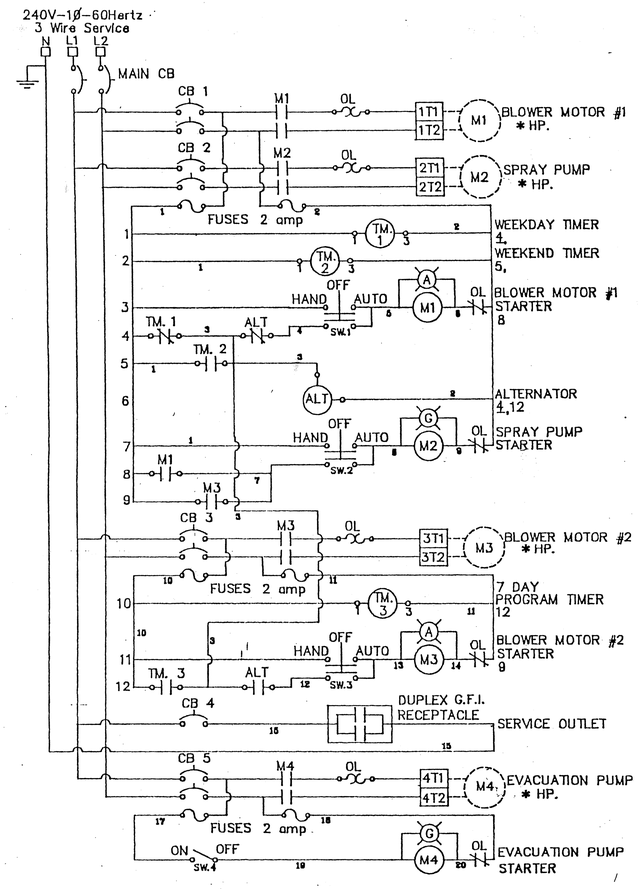

MAIN BLOWER,EVACUATION AND FROTH PUMP CONTROL PANEL

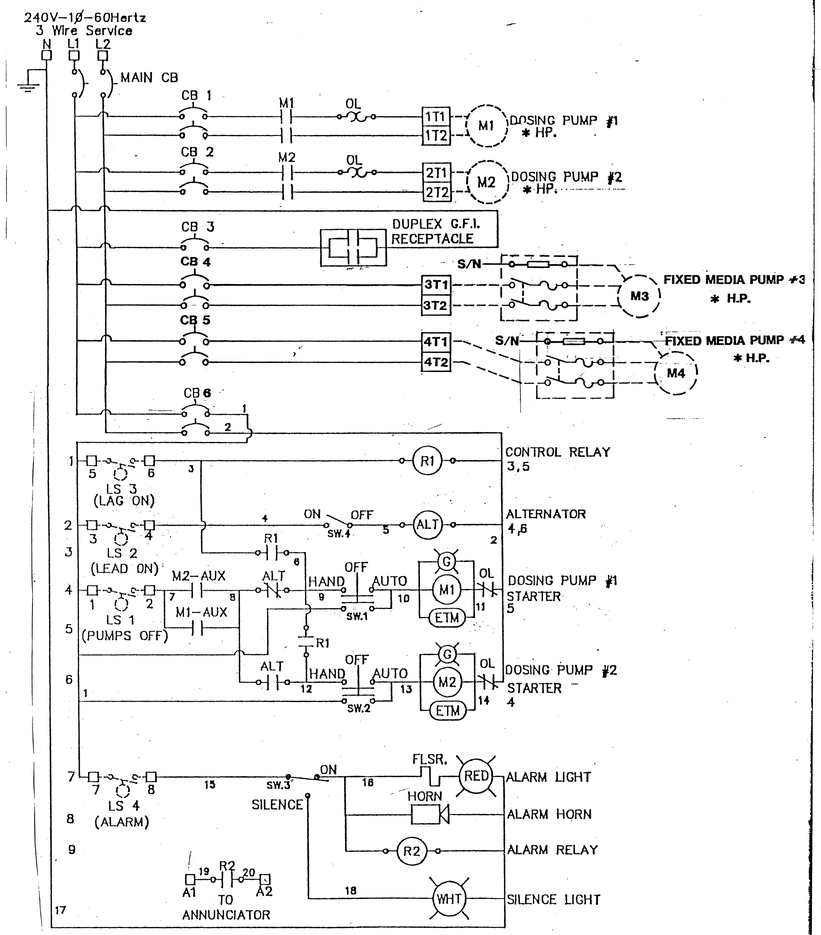

DOSING PUMP CONTROL PANEL

* SEE SPECIFICATIONS FOR REQUIRED MOTOR HORSE POWER RATING

BUREAU OF DESIGN SERVICES
DIVISION OF HIGHWAYS
OHIO DEPARTMENT OF TRANSPORTATION

ROADSIDE DEVELOPMENT

DATE 10/30/87

ELECTRICAL WIRING DIAGRAM

WWTP-14

APPROVED G. W. Wanderer ENGR. OF DESIGN SERVICES

14/14