SALE THURSDAY MAY 28, 1992

COMPLETION 10-31-92

INTERIM COMPLETION 176 9-30-92

UNDERGROUND UTILITIES
TWO WORKING DAYS BEFORE YOU DIG
Call...800-362-2764 (Toll free)
OHIO UTILITIES PROTECTION SERVICE
NON-MEMBERS MUST BE CALLED DIRECTLY

STATE OF OHIO
DEPARTMENT OF TRANSPORTATION
SUM-271/176-3.58/0.28
RICHFIELD TOWNSHIP, VILLAGE OF RICHFIELD
SUMMIT COUNTY
DECK REPLACEMENT AND DECK OVERLAY

BR-62-91	OHIO FHWA REGION 5 FEDERAL PROJECT	1/32

IM-271-6(75)228
IM-77-4(93)138

INDEX OF SHEETS

	SHEET NO.
TITLE SHEET	1
SCHEMATIC PLAN / PROPSED WORK	2
MAINTENANCE OF TRAFFIC	3–9
GENERAL SUMMARY	10–12A
GENERAL NOTES	13–14
TYPICAL SECTIONS	15–17
STRUCTURE REPAIRS SUM-271-3.58	18–25
STRUCTURE REPAIRS SUM-176-0.28	26–31
REINFORCING LIST	32

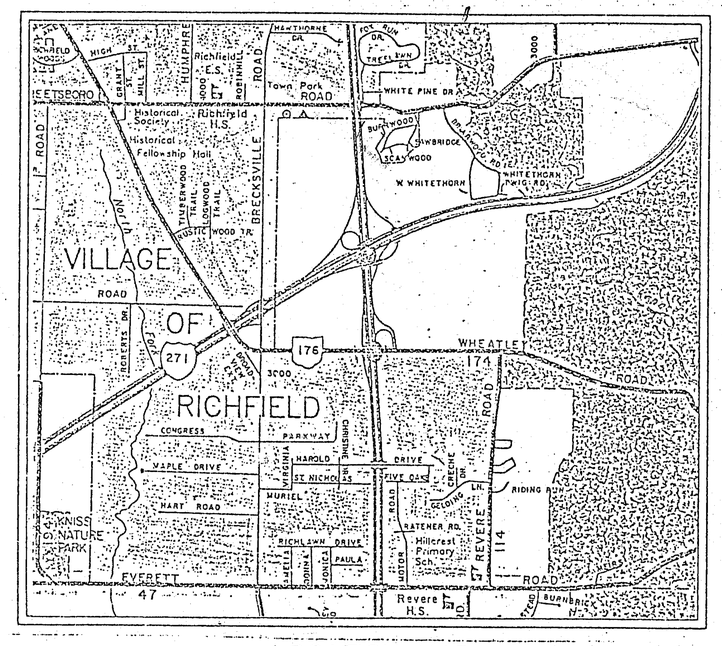

LOCATION MAP
SCALE IN FEET
1" = 4,000'
0 2000 4000 8000 12000

Portion to be improved
State & Federal Routes
Other Roads

LINE DATA

SUM-271-3.58R

BEGIN WORK : STA. 184+50
END WORK : STA. 192+60
Sub Total Length of WORK= 810 L.F. OR 0.153 MILES

BEGIN PROJECT : STA. 186+66.10
END PROJECT : STA. 191+54.71
Sub Total Length of PROJECT = 488.61 L.F. OR 0.093 MILES

SUM-176-00.28

BEGIN WORK : STA. 127+05
END WORK : STA. 138+63
Sub Total Length of WORK = 1158 L.F. OR 0.219 MILES

BEGIN PROJECT : STA. 129+78.69
END PROJECT : STA. 133+33.19
Sub Total Length of PROJECT = 354.50 L.F. OR 0.067 MILES

Total Length of WORK = 1968 L.F. OR 0.373 MILES
Total Length of PROJECT = 843.11 L.F. OR .160 MILES

Plan Prepared By :
OHIO Department of Transportation
District 4
BRIDGE OFFICE

Project :
Date of Letting _____, 19__ Contract No. _____

:TSHT271 (11/19/91) FULL

19 91 SPECIFICATIONS

The standard specification of the State of Ohio, Department of Transportation, including changes and supplemental specifications listed in the proposal shall govern this improvement.

I hereby approve these plans and declare that the making of this improvement will require the closing to traffic of the highway and that provisions for the maintenance and safety of traffic will be as set forth on the plans and estimates for Part No. 1.

I hereby approve these plans and declare that the making of this improvement will require the closing to traffic of the highway and that provisions for the maintenance and safety of traffic will be as set forth on the plans and estimates for Part No. 2.

Approved _____
Date 11-26-91 District Deputy Director of Transportation

Approved _____
Date 3-2-92 Engineer, Bureau of Bridges and Structural Design

Approved _____
Date 3-11-92 Deputy Director of Operations

Approved _____
Date 3-11-92 Director, Department of Transportation

SUPPLEMENTAL SPECIFICATIONS		
802	4-13-90	
852	6-10-87	
952	12-14-88	
910	5-20-91	
862	12-16-88	

SUPPLEMENTAL PRINTS OF STANDARD CONSTRUCTION DRAWINGS							
AS-1-81	11-1-82	SD-1-69	6-12-69	TC-18.24	4-25-79		
BP-5	10-1-87	BR-1	5-29-79				
EXJ-4-87	1-5-89	BP-2	1-11-85				
GR-1.1	5-6-91	BP-3	12-6-76				
GR-1.2	5-6-91	BP-4	10-1-87				
GR-2.1	5-6-91	BP-13	1-23-90				
GR-3.1	5-6-91	MT-95.30	10-10-88				
GR-3.2	5-6-91	MT-97.11	10-4-89				
GR-4.1	5-6-91	MT-98.12	8-25-89				
GR-4.2	5-6-91	MT-98.15	8-25-89				
GR-5	2-5-82	MT-99.10	11-14-86				
GR-6	2-5-82	TC-35.10	8-29-64				
MC-9.2	5-6-91	TC-65.10	2-1-90				

DEPARTMENT OF TRANSPORTATION
FEDERAL HIGHWAY ADMINISTRATION

APPROVED:

DIVISION ADMINISTRATOR DATE

TITLE SHEET

DESIGNED BY	DATE	F.H.W.A. REGION	STATE	PROJECT NO.	FUNDS
REVIEWED BY	DATE	5	OHIO	BR-62-91	

SUM–271/176–3.58/0.28

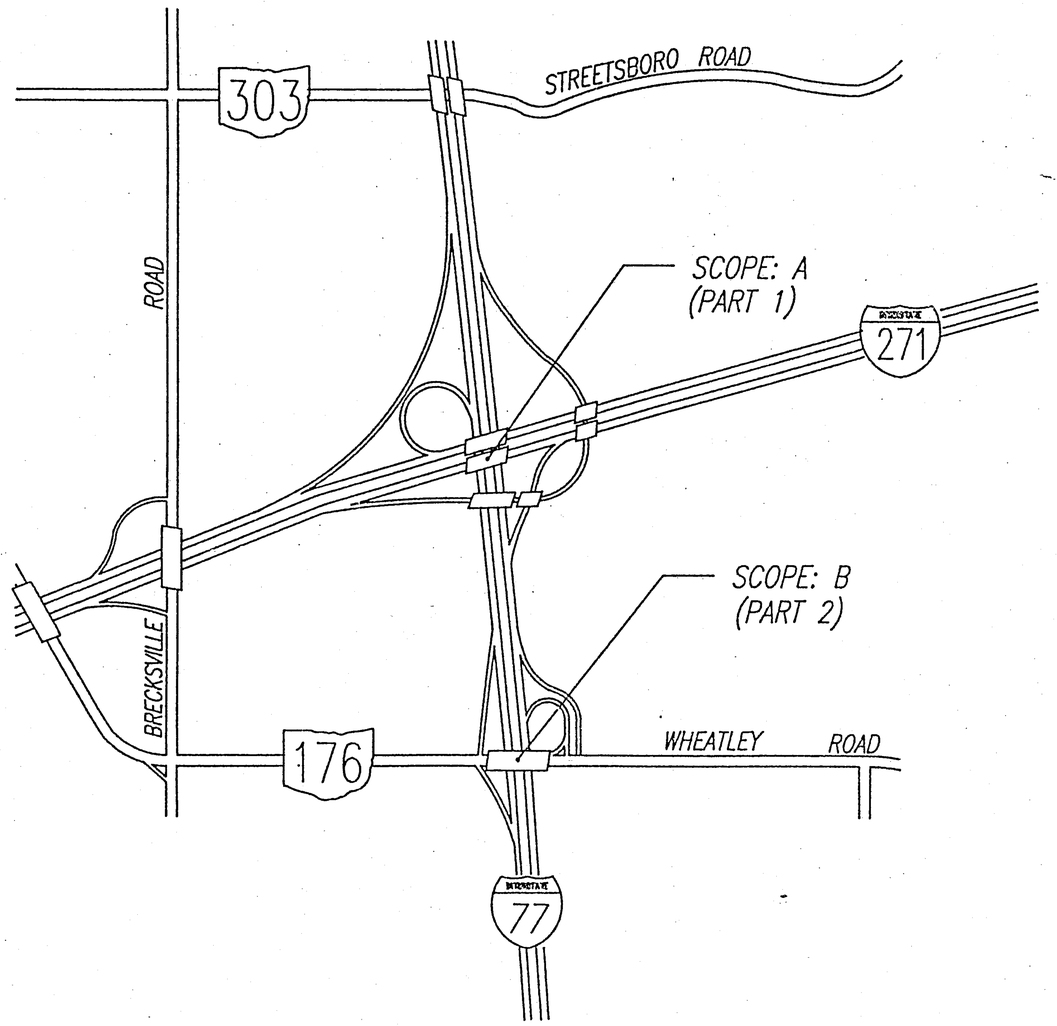

SCOPE: A SUM – 271 – 0358 R.

- REPLACE CONCRETE DECK AND PARAPETS
- INSTALL NEW STRIP SEAL EXPANSION JOINTS
- REPLACE APPROACH SLABS
- ABUTMENT BACKWALL REPAIR
- PAINTING OF STRUCTURAL STEEL, SYSTEM OZEU
- SEALING OF CONCRETE SURFACES WITH EPOXY

SCOPE: B SUM – 176 – 0028

- TOTAL REMOVAL OF ASPHALT WEARING SURFACE
- UNIFORM REMOVAL OF 1–1/2" OF CONCRETE DECK SURFACE AND REPLACE WITH A MSC CONCRETE OVERLAY
- REPLACE EXISTING PARAPETS
- INSTALL NEW STRIP SEAL EXPANSION JOINTS
- REPLACE APPROACH SLABS
- REPLACE ABUTMENT BACKWALLS
- SEALING OF CONCRETE SURFACES WITH EPOXY

NOTE: DRAWING NOT TO SCALE

STATE OF OHIO
DEPARTMENT OF TRANSPORTATION
DIVISION OF DESIGN AND CONSTRUCTION
BUREAU OF BRIDGES

SCOPE OF WORK
SUM – 271– 0358 R.
SUM – 176– 0028

DESIGNED	DRAWN	REVIEWED	CHECKED	REVISED	DATE	REVIEWED
J.M.	P.O.		J.M.			R.A.F.

:SCOPE (11/19/91)

MAINTENANCE OF TRAFFIC

F.H.W.A. REGION	STATE	PROJECT NO.	FUNDS
5	OHIO	BR-62-91	

SUM-271/176-3.58/0.28

MAINTENANCE OF TRAFFIC

THE SAFETY OF THE TRAVELING PUBLIC AND MINIMIZING THE INCONVIENIENCE TO THE HIGHWAY USER SHALL BE OF UPMOST CONCERN TO THE CONTRACTOR WHILE PERFORMING THE WORK. WITH THIS IN MIND, THE FOLLOWING CONDITIONS AND RESRTICTIONS SHALL BE ENFORCED AND WILL BE ADHERED TO DURING THE PROJECT. NO DEVIATION WILL BE PERMITTED WITHOUT THE PRIOR WRITTEN CONSENT OF THE DIRECTOR.

1. ITEM SPECIAL – LAW ENFORCEMENT OFFICER (LEO) WITH PATROL CAR.

A. THE CONTRACTOR SHALL PROVIDE THE SERVICES OF A SPECIAL (LEO) WITH A PATROL CAR FOR THE EXCLUSIVE PURPOSE OF CONTROLLING THROUGH TRAFFIC. THE LEO WITH PATROL CAR SHALL BE UTILIZED DURING THE INSTALLATION, MODIFICATIONS AND REMOVAL OF TRAFFIC CONTROL DEVICES FOR LANE RESTRICTIONS, AND SHORT DURATION LANE CLOSURES, AS AUTHORIZED BY THE ENGINEER. THE LEO SHALL BE POSITIONED ON THE SHOULDER NEAR THE END OF THE LINE OF STOPPED TRAFFIC TO ASSIST IN CONTROLLING TRAFFIC. THE CONTRACTOR, WITH THE PROJECT ENGINEER'S APPROVAL, SHALL DETERMINE WHEN AND HOW MANY OFFICERS SHALL BE REQUIRED.

B. PAYMENT FOR THE OFFICER AND THE VEHICLE WILL BE INCLUDED IN THE ITEM SPECIAL – LAW ENFORCEMENT OFFICER WITH PATROL CAR – 200 HOURS

2. PORTABLE CONCRETE BARRIER, BRIDGE MOUNTED, AS PER PLAN

AN ESTIMATED QUANTITY OF 800 LINEAR FEET OF ITEM 622 – PORTABLE CONCRETE BARRIER, BRIDGE MOUNTED AS PER PLAN, SHALL BE FURNISHED, INSTALLED, MAINTAINED AND SUBSEQUENTLY REMOVED BY THE CONTRACTOR. THE TEMPORARY CONCRETE BARRIER SHALL BE USED TO CLOSE ONE (1) LANE OF THE ROADWAY DURING THE REPLACEMENT OR REHABILITATION OF THE EXISTING PORTION OF THE STRUCTURE. SEE MAINTENANCE OF TRAFFIC SHEETS FOR LOCATIONS. THIS ITEM SHALL BE PAID FOR BY THE ACTUAL LINEAL FEET OF 622 PORTABLE CONCRETE BARRIER (PCB) INSTALLED AT A PARTICULAR LOCATION, AS PER 622.08

THE TEMPORARY CONCRETE BARRIER USED ON ALL STRUCTURES SHALL BE BOLTED CONNECTION TYPE AS SHOWN ON SHEETS 6, 7 . THE TONGUE AND GROOVE ALTERNATIVES SHOWN ON MC-9.2SHALL NOT BE ACCEPTABLE ALTERNATIVES EITHER ON OR OFF STRUCTURES.

3. PORTABLE CONCRETE BARRIER

AN ESTIMATED QUANTITY OF 880 LINEAR FEET OF ITEM 622 – PORTABLE CONCRETE BARRIER SHALL BE FURNISHED, INSTALLED, MAINTAINED AND SUBSEQUENTLY REMOVED BY THE CONTRACTOR. THE PORTABLE CONCRETE BARRIER SHALL BE USED TO CLOSE ONE (1) LANE OF THE ROADWAY, OFF OF THE STRUCTURE, DURING PROFILE GRADE CHANGES IN THE PAVEMENT AND STRUCTURE REPLACEMENT OR REHABILITATION. SEE MAINTENANCE OF TRAFFIC SHEETS FOR LOCATIONS. THIS ITEM SHALL BE PAID FOR BY THE ACTUAL LINEAL FEET OF ITEM 622 PORTABLE CONCRETE BARRIER (PCB) INSTALLED AT A PARTICULAR LOACTION, AS PER 622.08

BARRIER SECTIONS WITHIN THE WORK AREA SHALL BE PROVIDED WITH SIDE MOUNTED REFLECTORS, WHICH SHALL BE INSTALLED AS PER SUPPLEMENTAL SPECIFICATION 802. PAYMENT ON THE REFLECTORS WILL BE AT THE UNIT PRICE BID FOR ITEM 614 – BARRIER REFLECTORS TYPE B.

4. PROTECTION FOR LOCAL STREETS AND HIGHWAYS

A SAFETY NET OR PLATFORM SHALL BE REQUIRED TO PROTECT THE WORKERS AND TRAVELING PUBLIC FROM FALLING DEBRIS DURING THE BRIDGE DEMOLITION AND RECONSTRUCTION OVER EXISTING STREETS OR HIGHWAYS. THE CONTRACTOR SHALL PROVIDE A SAFETY NET OR PLATFORM OF SUITABLE STRENGTH AT THE UNDERSIDE OF THE DECK. THE DESIGN OF THE NET OR PLATFORM SHALL CONFORM WITH OSHA REQUIREMENTS AND HAVE THE APPROVAL OF THE ENGINEER. IT SHALL REMAIN IN PLACE UNTIL THE WORK HAS BEEN COMPLETED AND ACCEPTED, OR AS DIRECTED BY THE ENGINEER. TEMPORARY LANE CLOSURES MAY BE REQUIRED ALONG SOME EXISTING STREETS AND/OR RAMPS UNDER THE BRIDGES DUE TO STRUCTURE RECONSTRUCTION. THE MAINTENANCE OF TRAFFIC AND PROTECTIVE DEVICES NEEDED SHALL BE AS APPROVED BY THE ENGINEER AND INSTALLED, MAINTAINED AND REMOVED BY THE CONTRACTOR. AT NO TIME AND UNDER NO CIRCUMSTANCES SHALL THE CONTRACTOR PERFORM ANY DEMOLITION OR CONSTRUCTION ABOVE A LANE OR SHOULDER THAT IS OPEN TO TRAFFIC.

5. STAGING AND STORAGE AREA

A. NO PRIVATE VEHICLES (BELONGING TO THE CONTRACTOR'S EMPLOYEES OR TO ODOT PERSONNEL PERMANENTLY ASSIGNED TO THE PROJECT) SHALL BE PARKED WITHIN THE L/A LIMITS OF THE HIGHWAY PROJECT. ALL PARKING WILL BE DONE AT THE APPROVED CONTRACTOR'S STAGING AREA. THE CONTRACTOR WILL BE RESPONSIBLE FOR PROVIDING SHUTTLE VEHICLES TO TRANSPORT CONTRACTOR PERSONNEL FROM THE STAGING AREA TO THE WORK SITE.

B. A STAGING AREA SHALL BE APPROVED BY THE PROJECT ENGINEER.

6. PROTECTION OF WORK AREAS

A. TEMPORARY PAVEMENT MARKINGS SHALL BE AS PER STANDARD DRAWING MT-99.10 DATED 11-14-86.

B. DURING THE PLACEMENT OF TEMPORARY PAVEMENT MARKINGS, ALL EXISTING PAVEMENT MARKINGS WHICH CONFLICT SHALL BE REMOVED, AS DIRECTED BY THE ENGINEER.

C. THE TYPE "A" FLASHING BARRICADE WORKING LIGHTS SHALL BE MOUNTED ON NOTED SIGNS AT ALL TIMES AND SHALL BE INCIDENTAL TO ITEM 614-- MAINTAINING TRAFFIC.

7. OPERATION OF EQUIPMENT

THE CONTRACTOR'S EQUIPMENT SHALL BE OPERATED IN THE DIRECTION OF TRAFFIC, WHERE PRACTICAL. A QUALIFIED FLAGMAN SHALL BE EMPLOYED WHERE THE CONTRACTOR'S EQUIPMENT MUST MERGE WITH THE TRAFFIC STREAM. THE CONTRACTOR'S EQUIPMENT SHALL BE EQUIPPED WITH AT LEAST ONE AMBER FLASHING LIGHT. PAVERS, ROLLERS AND OTHER EQUIPMENT MAY BE PARKED IN AREAS ALONG THE HIGHWAY WHEN PAVING OPERATIONS ARE SCHEDULED TO CONTINUE WITHIN THE NEXT WORKDAY: OTHERWISE THE EQUIPMENT SHALL BE STORED AT A STORAGE AREA, THE LOCATION OF WHICH SHALL HAVE PRIOR APPROVAL OF THE ENGINEER. WHEN PARKING ALONG THE HIGHWAY THE EQUIPMENT SHALL BE PARKED EITHER FIFTY (50) FEET FROM THE EDGE OF PAVEMENT OR FOUR (4) FEET BEHIND GUARDRAIL WITH A MINIMUM OF 125 FEET OF GUARDRAIL PRECEDING THE EQUIPMENT. ADEQUATE BARRICADES AND LIGHTS SHALL BE PLACED ON THE PAVEMENT SIDE OF THE EQUIPMENT TO IDENTIFY THE LIMITS OF THE EQUIPMENT. ALL OTHER EQUIPMENT, INCLUDING PRIVATE VEHICLES, SHALL BE STORED AT THE APPROVED CONTRACTOR'S STORAGE AREA.

8. CONTRACTOR'S MAINTENANCE RESPONSIBILITY

ON THIS PROJECT, THE CONTRACTOR'S RESPONSIBILITY FOR MAINTENANCE OF THE EXISTING PAVEMENT, PER C.M.S. ITEM 614, SHALL BE LIMITED TO THOSE PORTIONS OF THE EXISTING HIGHWAY LYING WITHIN THE PROPOSED WORK LIMITS. NECESSARY UPKEEP OF THE ADJOINING PAVEMENTS WHICH ARE USED FOR TRAFFIC MAINTENANCE BUT ARE OUTSIDE THE RIGHT-OF-WAY FOR THE PROPOSED HIGHWAY RELOCATION WILL BE PROVIDED BY OTHERS.

9. ITEM 614 – MAINTAINING TRAFFIC

SEE SHEET 8,9 FOR MAINTENANCE OF TRAFFIC DETAILS. ALSO SEE THE STANDARD DRAWINGS WHICH ARE LISTED ON THE TITLE SHEET. MINOR VARIATIONS OF THESE DETAILS MAY BE NECESSARY TO ACCOMMODATE THE VARIOUS ROADWAY GEOMETRICS AND TRAFFIC DISTRUPTIONS. ALL VARIATIONS OF THESE TRAFFIC DETAILS SHALL BE APPROVED BY THE PROJECT ENGINEER/SUPERVISOR. IMPROPER TRAFFIC CONTROL WILL NOT BE PERMITTED AND THE WORK SHALL BE HALTED UNTIL THE SITUATION IS CORRECTED. THE SAFETY OF THE TRAVELING PUBLIC, WORKERS AND INSPECTORS SHALL NOT BE JEOPARDIZED.

10. MAINTENANCE OF TRAFFIC

THIS ITEM SHALL CONSIST OF MAINTENANCE OF TRAFFIC ON EXISTING ROADWAYS AND RAMPS IN ACCORDANCE WITH THE OHIO MANUAL OF UNIFORM TRAFFIC CONTROL DEVICES FOR STREETS AND HIGHWAYS, CURRENT EDITION, LATEST REVISION, THE SPECIFICATIONS AND THE FOLLOWING:

A. NO MORE THAN ONE LANE OF DIRECTIONAL TRAFFIC, IN EACH DIRECTION SHALL BE CLOSED AT ANY TIME. THE CONTRACTOR SHALL SET UP AND OPERATE HIS EQUIPMENT IN SUCH A MANNER AS TO ENCROACH UPON THE TRAVELLED WIDTH OF THE PAVEMENT TO A MINIMUM EXTENT.

B. NO LANE RESTRICTIONS OR LANE REDUCTIONS SHALL BE PERMITTED FROM 2:00 PM PRECEDING A LEGAL HOLIDAY TO 10:00 AM FOLLOWING A LEGAL HOLIDAY, EXCEPT AS NOTED BELOW.

C. LANE RESTRICTIONS OR LANE REDUCTIONS SHALL NOT BE PERMITTED AFTER NORMAL WORKING HOURS, EXCEPT WHEN THE WORK INVOLVES BRIDGE OR PARAPET WORK. NORMAL WORKING HOURS SHALL BE THOSE HOURS DURING WHICH THE CONTRACTOR HAS A FULL COMPLIMENT OF EMPLOYEES AND EQUIPMENT ACTIVELY REMOVING AND/OR PLACING PAVEMENT MATERIALS.

D. TRAFFIC SHALL NOT BE CROSSED OVER THE MEDIAN AT ANY TIME.

E. IN AREAS OF LANE CLOSURES THE CONTRACTOR SHALL BE RESPONSIBLE FOR GRADING THE EXISTING SHOULDER NEXT TO THE TRAVELLED LANE, TO AN ELEVATION NOT LESS THAN ONE (1) INCH BELOW EXISTING PAVEMENT ELEVATION AND MAINTAINING THE SHOULDERS IN A SAFE CONDITION DURING THE DURATION OF THE PROJECT.

F. NIGHTIME LANE RESTRICTIONS SHALL NOT BE PERMITTED UNLESS THE CONTRACTOR IS EITHER REMOVING PAVEMENT MATERIAL, PLACING NEW PAVEMENT MATERIAL, REPLACING BRIDGE DECKS OR REPLACING PARAPET WALLS AT THE TIME OF THE LANE CLOSURE. WHENEVER THE CONTRACTOR SUSPENDS HIS PAVEMENT REMOVAL OR PLACEMENT ACTIVITIES FOR THE DAY, ALL LANE RESTRICTIONS SHALL BE REMOVED.

:WMAT271 (11/22/91)

STATE OF OHIO
DEPARTMENT OF TRANSPORTATION
DIVISION OF DESIGN AND CONSTRUCTION
BUREAU OF BRIDGES

MAINTENANCE OF TRAFFIC
SUM-271-03.58R
SUM-176-00.28

DESIGNED	DRAWN	TRACED	CHECKED	REVISED	DATE	REVISE
J.M.	P.O.		J.M.			

FHWA REGION	STATE	PROJECT NO.	FUNDS
5	OHIO	BR-62-91	

SUM-271/176-3.58/0.28

MAINTENANCE OF TRAFFIC

CONES SHALL NOT BE ACCEPTABLE TRAFFIC CONTROL DEVICES FOR LANE RESTRICTIONS OR LANE REDUCTIONS THAT ARE IN OPERATION ONE-HALF HOUR AFTER SUNSET OR ONE-HALF HOUR BEFORE SUNRISE. ALL NIGHTTIME LANE RESTRICTIONS OR LANE REDUCTIONS SHALL REQUIRE DRUMS OR BARRICADES AT A MAXIMUM SPACING OF FIFTY (50) FEET. TYPE C STEADY BURNING WARNING LIGHTS SHALL BE MOUNTED ON EACH AND EVERY DRUM OR BARRICADE USED FOR NIGHTTIME LANE REDUCTIONS OR LANE RESTRICTIONS.

G. A FLASHING ARROW BARRICADE (TC 35.10) SHALL BE USED FOR TRAFFIC CONTROL WHENEVER THERE IS A LANE RESTRICTION OR LANE REDUCTION.

H. ALL TRAFFIC CONTROL DEVICES REQUIRED INSIDE THE WORK LIMITS, EXCEPT REGULATORY SIGNS SHALL BE FURNISHED, ERECTED, MAINTAINED AND SUBSEQUENTLY REMOVED BY THE CONTRACTOR.

I. THE CONTRACTOR SHALL FURNISH AND MAINTAIN ALL FLAGS, FLAGGERS, WATCHMEN, BARRICADES, SIGN SUPPORTS AND INCIDENTALS RELATED THERETO. THE ABOVE ITEMS SHALL BE UTILIZED IN CONFORMANCE WITH THE OHIO MANUAL OF UNIFORM TRAFFIC CONTROL DEVICES, CURRENT EDITION, LATEST REVISION.

J. IN ADDITION TO THE REQUIREMENTS OF 614 WORK ZONE PAVEMENT MARKINGS (SHEET ___), AT THE END OF EACH DAY OF WORK, THE CONTRACTOR SHALL REPLACE (WITH TEMPORARY PAVEMENT MARKINGS) ALL LANE LINES, EDGE LINES OR CHANNELIZING LINES THAT WERE REMOVED DURING THE PAVEMENT REMOVAL OPERATIONS. QUANTITIES FOR SUCH REPLACEMENT ARE CARRIED AS PART OF THE ITEMS LISTED UNDER 614 WORK ZONE PAVEMENT MARKINGS.

K. LANE WIDTH RESTRICTION NOTIFICATION: THE CONTRACTOR SHALL NOTIFY THE DISTRICT TRAFFIC ENGINEER OF ANY LANE WIDTH RESTRICTIONS 18 DAYS PRIOR TO THE RESTRICTION.

11. ITEM 614 - BARRIER REFLECTORS

THESE REFLECTORS AND THEIR MOUNTING SHALL CONFORM TO SUPPLIMENTAL SPECIFICATION 802 EXCEPT THAT THE SPACING SHALL BE SHOWN ON THE PLAN. (THE SPACING TO BE USED SHALL BE 50% OF S.S. 802). AN ESTIMATED QUANTITY OF EACH OF ITEM 614 BARRIER REFLECTOR, TYPE B HAS BEEN PROVIDED.

ANY COST ASSOCIATED WITH REMOVING AND RESETTING THE TEMPORARY CONCRETE BARRIER SO THAT THE CLOSED LANE MAY BE OPENED AND THE OPEN LANE CLOSED, SHALL BE INCLUDED IN THE UNIT PRICE BID.

AN COST ASSOCIATED WITH FURNISHING, INSTALLING, MAINTAINING AND WHERE NECESSARY, REPLACING REFLECTORS AS DESCRIBED ON THIS SHEET, SHALL BE INCLUDED IN THE UNIT BID FOR ITEM 614 - MAINTAINING TRAFFIC.

12. WHERE EVER POSSIBLE THE WORK VEHICLE SHOWN PARKED ON THE ROADWAY SHALL BE REPLACED WITHIN AN ADDITIONAL 300 FEET OF WORK ZONE LENGTH PRIOR TO THE START OF THE WORK AREA.

MAINTENANCE OF TRAFFIC SUB-SUMMARY

ITEM	GRAND TOTAL	UNIT	DESCRIPTION
622	880	LIN.FT.	PORTABLE CONCRETE BARRIER
622	800	LIN.FT.	PORTABLE CONCRETE BARRIER, BRIDGE MOUNTED, AS PER PLAN
614	0.65	MILEFT.	TEMPORARY EDGE LINES, CLASS 1
642	200	L.F.	REMOVAL OF PAVEMENT MARKINGS
SPECIAL	200	HRS.	LAW ENFORCEMENT OFFICER (LEO) WITH PATROL CAR

:WMAT271 (11/22/91)

STATE OF OHIO
DEPARTMENT OF TRANSPORTATION
DIVISION OF DESIGN AND CONSTRUCTION
BUREAU OF BRIDGES

MAINTENANCE OF TRAFFIC
SUM-271-0358R
SUM-176-0028

DESIGNED	DRAWN	CHECKED	CHECKED	SUBMITTED	DATE	REVISED
J.M.	P.O.		J.M.			

REVISED 9/88

MODIFIED (EXISTING) BARRIER DETAILS

5	OHIO	BR-62-91	

6/32

SUM-271/176-3.58/0.28

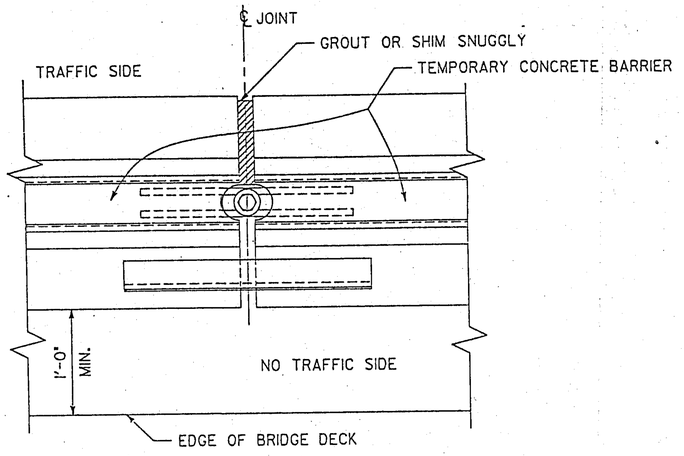

PLAN AT JOINT

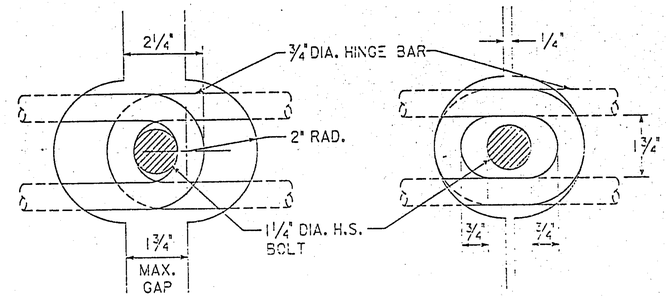

① OPEN JOINT ② CLOSED JOINT

JOINT CONNECTION DETAILS

① BARRIER JOINTS MUST BE FULLY OPEN BEFORE NUT IS TIGHTED ONTO BOLT AND OPENING IS EITHER GROUTED OR SHIMMED.

② BARRIERS SHOULD INITIALLY BE PLACED CLOSER TOGETHER SO THAT BOLTS CAN BE EASILY INSERTED THROUGH HINGE BAR LOOPS.

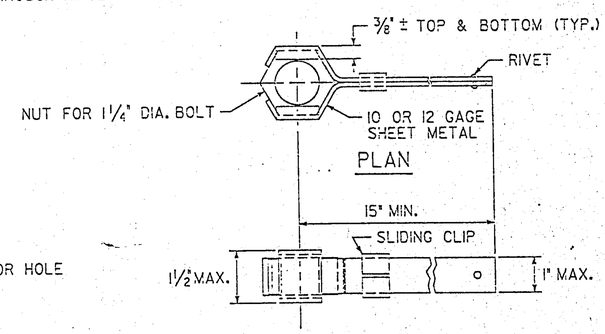

NUT RETAINER DETAIL

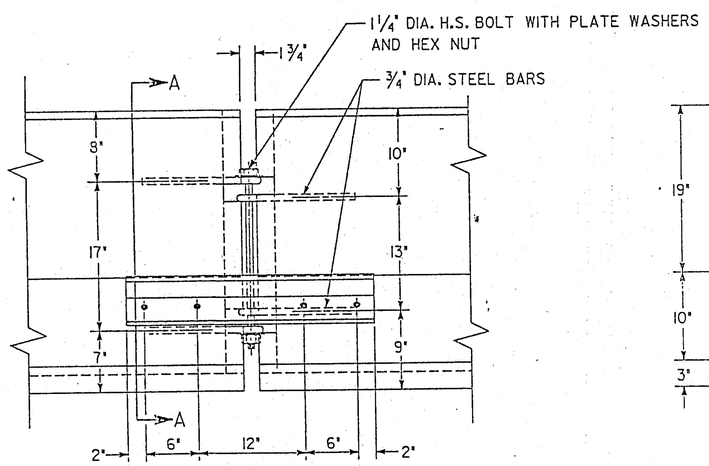

ELEVATION AT JOINT

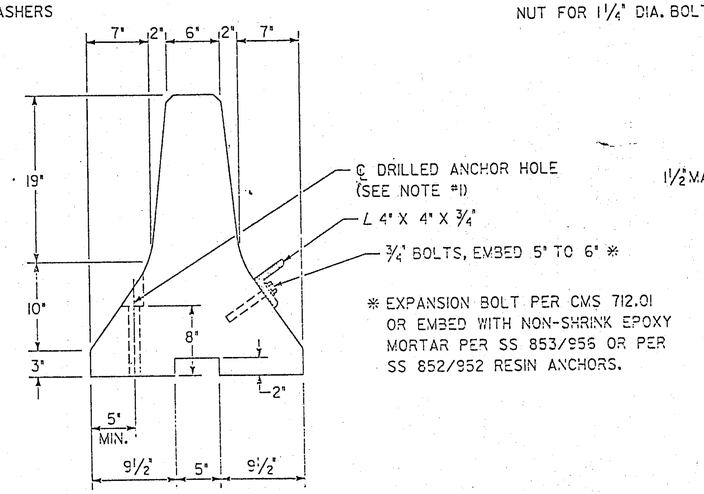

※ EXPANSION BOLT PER CMS 712.01 OR EMBED WITH NON-SHRINK EPOXY MORTAR PER SS 853/956 OR PER SS 852/952 RESIN ANCHORS.

SECTION "A-A"

NOTES:

1. THE REQUIREMENTS OF ANCHORING THE BARRIER WALL TO THE BRIDGE DECK HAVE BEEN WAIVED.

2. USE OF THE EXISTING OHIO BARRIER:

THE EXISTING OHIO BARRIER (STANDARD CONSTRUCTION DRAWING MC-9A, REVISED 1-11-85, CONNECTING PIN TYPE), EVEN WHEN MODIFIED, CARE MUST BE TAKEN BY THE DESIGNER WHEN SPECIFYING ITS USE IN AREAS OF PROBABLE HIGH IMPACT SEVERITY (OVER 45,000 FT-LBS). THE MODIFICATIONS TO BE MADE TO THE EXISTING BARRIER, PRIOR TO ITS USE ON OHIO BRIDGE DECKS, ARE LISTED BELOW AND DETAILED AT LEFT.

A. REPLACE CONNECTION PINS WITH 1-1/4 INCH DIA. HIGH STRENGTH BOLTS.

B. FURTHER STIFFEN THE CONNECTION, WHERE REQUIRED **, BY FASTENING AN ANGLE (4" X 4" X 3/4") TO THE BACK FACE OF JOINT.

C. LIMIT THE SLACK IN JOINTS BETWEEN SEGMENTS TO A MAXIMUM OF 3 DEGREES BY SHIMMING AND/OR GROUTING THE JOINT.

** WHEN THE EXISTING BARRIER IS USED IN AREAS OF LOW TO MODERATE IMPACT SEVERITY (30,000 FT-LBS OR LESS) THE STEEL ANGLE MAY GENERALLY BE OMITTED.

BRIDGE DECK SURFACE PREPARATION:

THE PROCEDURES WHICH MUST BE FOLLOWED WHEN INSTALLING ALL TEMPORARY PRECAST CONCRETE BARRIERS, ON OHIO BRIDGE DECKS, ARE GIVEN BELOW.

A. THE BRIDGE DECK SURFACE AREA, ON WHICH THE PRECAST CONCRETE BARRIERS WILL REST, SHALL BE CLEARED OF ALL LOOSE SAND, GRAVEL, DIRT AND DEBRIS.

B. ANY IRREGULARITIES IN THE BRIDGE DECK AREA, UNLESS JUDGED BY THE ENGINEER TO BE INCONSEQUENTIAL, SHALL BE LEVELED WITH GROUT AND/OR ASPHALT.

C. ASPHALT ROLL ROOFING SHALL BE PLACED ON THOSE BRIDGE DECK AREAS, AS JUDGED BY THE ENGINEER, TO HAVE A SURFACE ROUGHNESS WHICH WOULD INHIBIT FRICTION CONTACT BETWEEN BARRIER SEGMENTS AND DECK.

DRAWN 2/88

REVISED 9/88

PROPOSED BARRIER DETAILS

5	OHIO	BR-62-91	

7/32

SUM-271/176-3.58/0.28

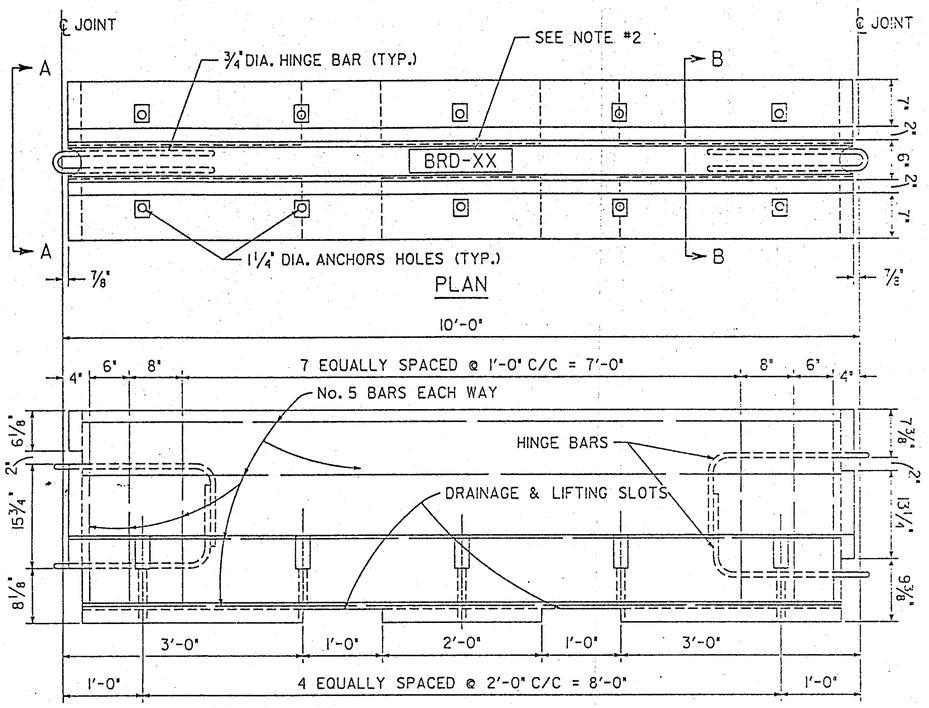

ELEVATION

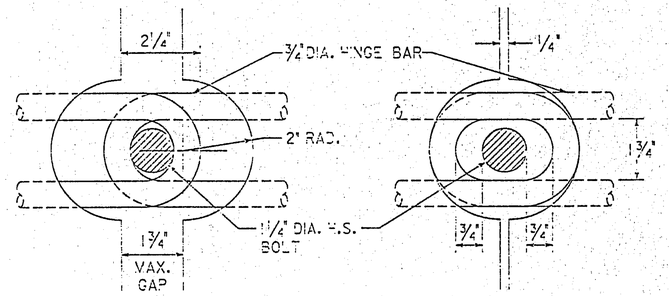

① OPEN JOINT ② CLOSED JOINT

JOINT CONNECTION DETAILS

① BARRIER JOINTS MUST BE FULLY OPEN BEFORE NUT IS TIGHTED ONTO BOLT AND OPENING IS EITHER GROUTED OR SHIMMED.

② BARRIERS SHOULD INITIALLY BE PLACED CLOSER TOGETHER SO THAT BOLTS CAN BE EASILY INSERTED THROUGH HINGE BAR LOOPS.

NOTES:

1. THE REQUIREMENTS OF ANCHORING THE BARRIER WALL TO THE BRIDGE DECK HAVE BEEN WAIVED.

2. ALL NEW BARRIER SEGMENTS MADE ACCORDINGLY TO THE PROPOSED DESIGN, OR AN APPROVED EQUAL, SHALL BE CLEARLY MARKED, SUCH AS "BRD-XX". (WHERE XX = THE YEAR CAST)

3. PROPOSED BARRIER DESIGN DATA:

   1. THE STEEL ROD CONNECTOR LOOPS AND THE OTHER REINFORCING STEEL, SHALL HAVE A MINIMUM YIELD STRENGTH OF 60,000 psi.

   2. THE CONCRETE SHALL HAVE A MINIMUM COMPRESSIVE STRENGTH OF 4,000 psi.

4. THE DESIGNER MAY USE THIS BARRIER OR ONE OF A SIMILAR DESIGN, AS APPROVED BY THE DIRECTOR. ALL DESIGNS SHALL MEET OR EXCEED THE DESIGN REQUIREMENTS DESCRIBED IN THE REPORT, "DESIGN AND EVALUATION OF TEMPORARY PRECAST CONCRETE BARRIERS FOR USE ON OHIO BRIDGE DECKS"*. DESIGNS, AS SUBMITTED, SHALL BECOME THE PROPERTY OF THE STATE OF OHIO.

* COPIES OF THIS REPORT ARE AVAILABLE FROM THE OHIO DEPARTMENT OF TRANSPORTATION, BUREAU OF BRIDGES AND STRUCTURAL DESIGN.

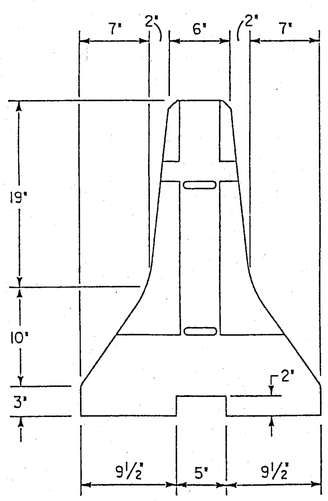

SECTION "A-A"

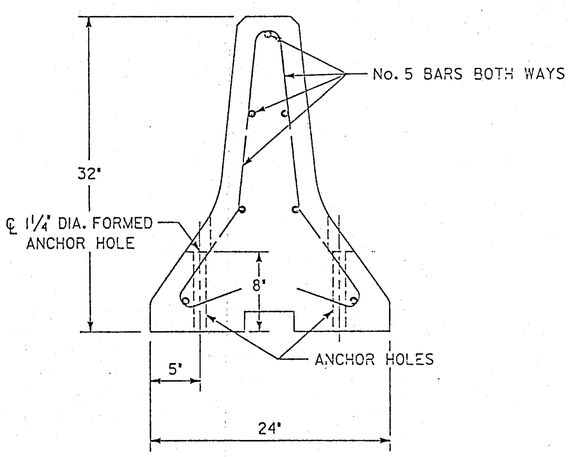

SECTION "B-B"

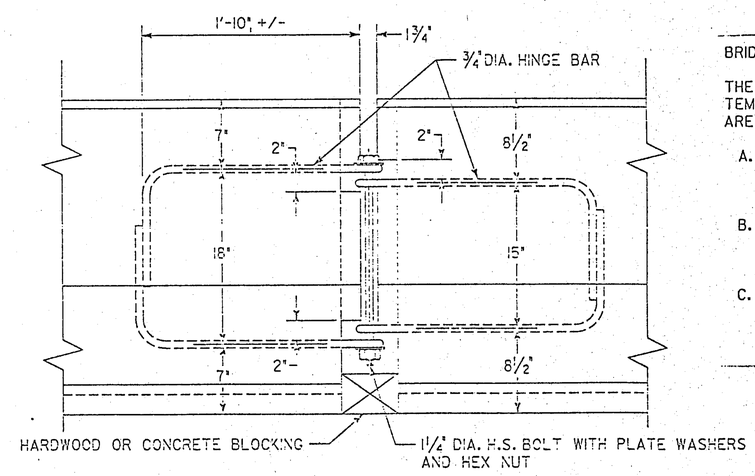

DETAIL AT HINGED CONNECTION

BRIDGE DECK SURFACE PREPARATION:

THE PROCEDURES WHICH MUST BE FOLLOWED WHEN INSTALLING ALL TEMPORARY PRECAST CONCRETE BARRIERS, ON OHIO BRIDGE DECKS, ARE GIVEN BELOW.

A. THE BRIDGE DECK SURFACE AREA, ON WHICH THE PRECAST CONCRETE BARRIERS WILL REST, SHALL BE CLEARED OF ALL LOOSE SAND, GRAVEL, DIRT AND DEBRIS.

B. ANY IRREGULARITIES IN THE BRIDGE DECK AREA, UNLESS JUDGED BY THE ENGINEER TO BE INCONSEQUENTIAL, SHALL BE LEVELED WITH GROUT AND/OR ASPHALT.

C. ASPHALT ROLL ROOFING SHALL BE PLACED ON THOSE BRIDGE DECK AREAS, AS JUDGED BY THE ENGINEER, TO HAVE A SURFACE ROUGHNESS WHICH WOULD INHIBIT FRICTION CONTACT BETWEEN BARRIER SEGMENTS AND DECK.

DRAWN 2/88

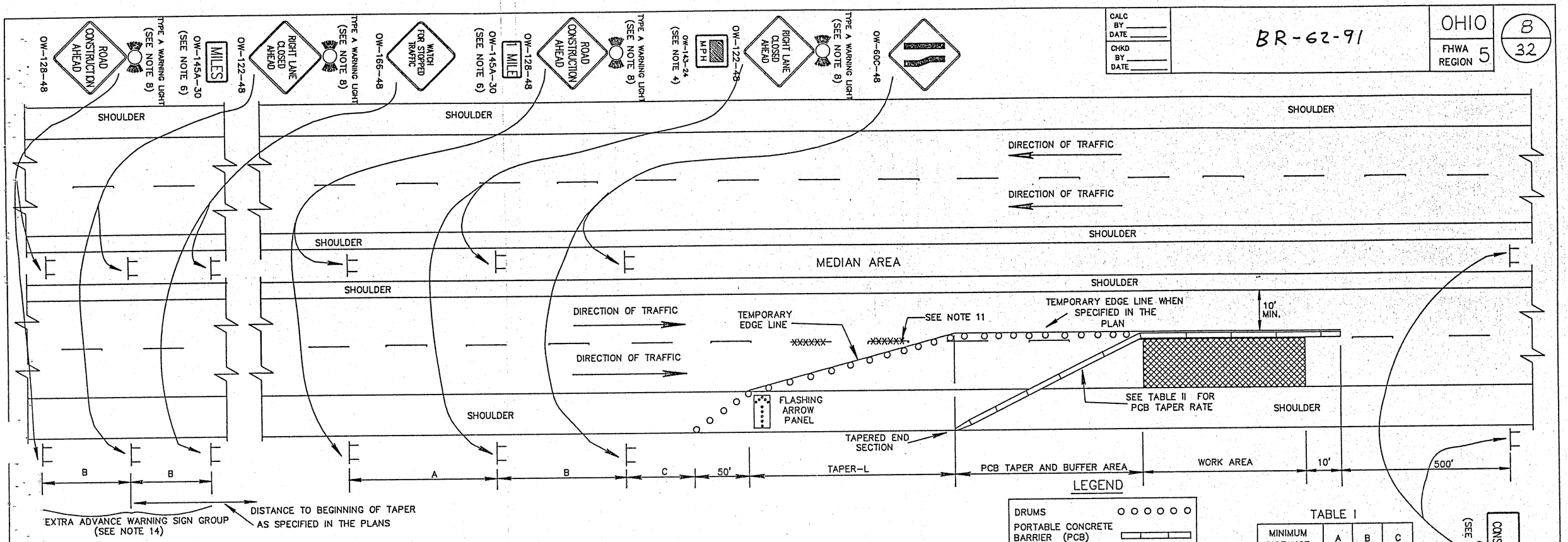

LEGEND

DRUMS	○ ○ ○ ○ ○ ○
PORTABLE CONCRETE BARRIER (PCB)	
REMOVE EXISTING MARKINGS	XXXXXXXXX

GENERAL NOTES:

1. THE LOCATION OF THE TRANSITION TAPER AND THE ADVANCE WARNING SIGNS SHOULD BE ADJUSTED TO PROVIDE FOR ADEQUATE SIGHT DISTANCE FOR THE EXISTING VERTICAL AND HORIZONTAL ROADWAY ALIGNMENT.

2. THE SPACING BETWEEN PROPOSED SIGNS SHOULD BE ADJUSTED TO NOT CONFLICT WITH AND TO PROVIDE A MINIMUM OF 200 FEET CLEARANCE TO EXISTING SIGNS.

3. THE TAPER LENGTH (L), NUMBER (N), AND SPACING (S) OF DRUMS SHALL CONFORM TO TABLE II. DRUM SPACING (S) SHALL BE USED FOR THE PAVEMENT TAPER AND THE BUFFER AREA. A MINIMUM OF 5 DRUMS SHALL BE USED IN THE SHOULDER TAPER.

4. THE ADVISORY SPEED SIGN OW-143-24 SHALL BE USED WHEN SPECIFIED IN THE PLAN OR AS DIRECTED BY THE ENGINEER. THE ADVISORY SPEED SHALL BE AS SPECIFIED IN THE PLAN OR AS DIRECTED BY THE ENGINEER.

5. TYPE C STEADY BURNING WARNING LIGHTS SHALL BE ERECTED ON EACH DRUM, AND ON PCB PARALLEL TO THE EDGE OF PAVEMENT. THE SPACING ON PCB SHALL BE FROM THE " MAXIMUM SPACING (S) COLUMN " SHOWN IN TABLE II.

6. THE DISTANCE PLATE OW-145A-30 SHALL INDICATE THE DISTANCE TO THE BEGINNING OF THE PAVEMENT TAPER (L). DISTANCES LESS THAN ONE MILE MAY BE EXPRESSED IN FEET. THE PLAQUE MAY BE OMITTED IF EXTRA ADVANCE SIGN GROUPS ARE NOT USED.

7. THE FLASHING ARROW PANEL SHALL MEET REQUIREMENTS OF STANDARD CONSTRUCTION DRAWING TC-35.10.

8. TYPE A FLASHING WARNING LIGHTS SHOWN ON THE "ROAD CONSTRUCTION AHEAD" AND "RIGHT (OR LEFT) LANE CLOSED AHEAD" SIGNS ARE REQUIRED.

9. WHEN WORK IS BEING PERFORMED IN THE LANE ADJACENT TO THE MEDIAN ON A DIVIDED HIGHWAY, OW-123-48 SIGNS SHALL BE SUBSTITUTED FOR THE OW-122-48 SIGNS AND OW-60D-48 SIGNS SHALL BE SUBSTITUTED FOR THE OW-60C-48 SIGNS.

10. 36" WARNING SIGN SIZES MAY BE USED ON DIVIDED ROADWAYS THAT ARE NOT CLASSIFIED AS FREEWAYS OR EXPRESSWAYS.

11. THE EXISTING CONFLICTING PAVEMENT MARKINGS AND REFLECTORS FROM THE RAISED PAVEMENT MARKERS (RPMS) SHALL BE REMOVED AND THE APPROPRIATE COLOR TEMPORARY EDGE LINES SHALL BE APPLIED ALONG THE TAPER. TEMPORARY EDGE LINES WHICH WOULD CONFLICT WITH FINAL TRAFFIC LANES SHALL BE REMOVABLE (947.03 TYPE-C) TAPE UNLESS THE AREA WILL BE RESURFACED IN THE NEXT WORK PHASE AFTER COMPLETION OF THE WORK. TEMPORARY MARKINGS SHALL BE REMOVED IN ACCORDANCE WITH 621.134 AND THE ORIGINAL MARKINGS AND PAVEMENT MARKER REFLECTORS SHALL BE RESTORED.

12. THE OC-8 SIGNS MAY BE OMITTED IF THEY FALL WITHIN THE LIMITS OF A CONSTRUCTION PROJECT.

13. BARRIER REFLECTORS (1-WAY WHITE FOR RIGHT LANE CLOSURES: 1-WAY YELLOW FOR LEFT LANE CLOSURE) SHALL BE PROVIDED AT 50' SPACING ON THE PARALLEL PORTIONS ONLY OF THE PCB. NONE SHALL BE VISIBLE ON THE TAPER SECTION OF PCB.

14. EXTRA ADVANCE WARNING SIGN GROUPS CONSISTING OF OW-128, OW-122 AND OW-166 SIGNS PLUS DISTANCE PLATES MAY BE SPECIFIED IN THE PLANS OR REQUIRED TO BE ERECTED AT THE DIRECTION OF THE ENGINEER.

15. THE SPEED LIMIT CHOSEN FOR DESIGN OF TAPERS SHALL BE THE NORMAL LEGAL SPEED EXCEPT WHERE THE LEGAL SPEED LIMIT IS REDUCED DUE TO THE CONSTRUCTION AND THE SUBJECT LANE CLOSURE IS NOT THE FIRST ACTIVE CONSTRUCTION AREA ENCOUNTERED BY TRAFFIC WITHIN THE PROJECT.

16. NO EQUIPMENT OR MATERIAL SHALL BE LOCATED OTHER THAN BEHIND THE PCB.

ALL WORK AND TRAFFIC CONTROL DEVICES SHALL BE IN ACCORDANCE WITH 614 AND OTHER APPLICABLE PORTIONS OF THE C & M SPECIFICATIONS AS WELL AS IN ACCORDANCE WITH PART 7 OF THE OMUTCD. PAYMENT FOR ALL LABOR, EQUIPMENT AND MATERIALS TO PROVIDE THIS METHOD OF TRAFFIC CONTROL SHALL BE INCLUDED IN THE LUMP SUM BID FOR 614 MAINTAINING TRAFFIC, UNLESS SEPARATELY ITEMIZED IN THE PLAN.

TABLE I

MINIMUM DISTANCE	A	B	C
MAJOR STANDARD	500'	500'	500'
URBAN FREEWAY & EXPRESSWAY	500' TO 1000'	500' TO 1000'	500' TO 1000'
RURAL FREEWAY & EXPRESSWAY	2600'	1600'	1000'

*SEE NOTE (15)

TABLE II

SPEED LIMIT MPH*	MINIMUM DRUM TAPER (L) IN FEET	MINIMUM NUMBER (N) OF DRUMS	MAXIMUM SPACING (S) OF DRUMS	PCB TAPER RATE
30-40	320	9	40	11 : 1
45-55	660	12	60	16 : 1
60-65	780	14	60	19 : 1

REVISED BY: DATE:

209540

DATE 11/05/90

CLOSING RIGHT OR LEFT LANE OF A MULTI-LANE DIVIDED HIGHWAY WITH PORTABLE CONCRETE BARRIER

PLAN INSERT SHEET

WCC

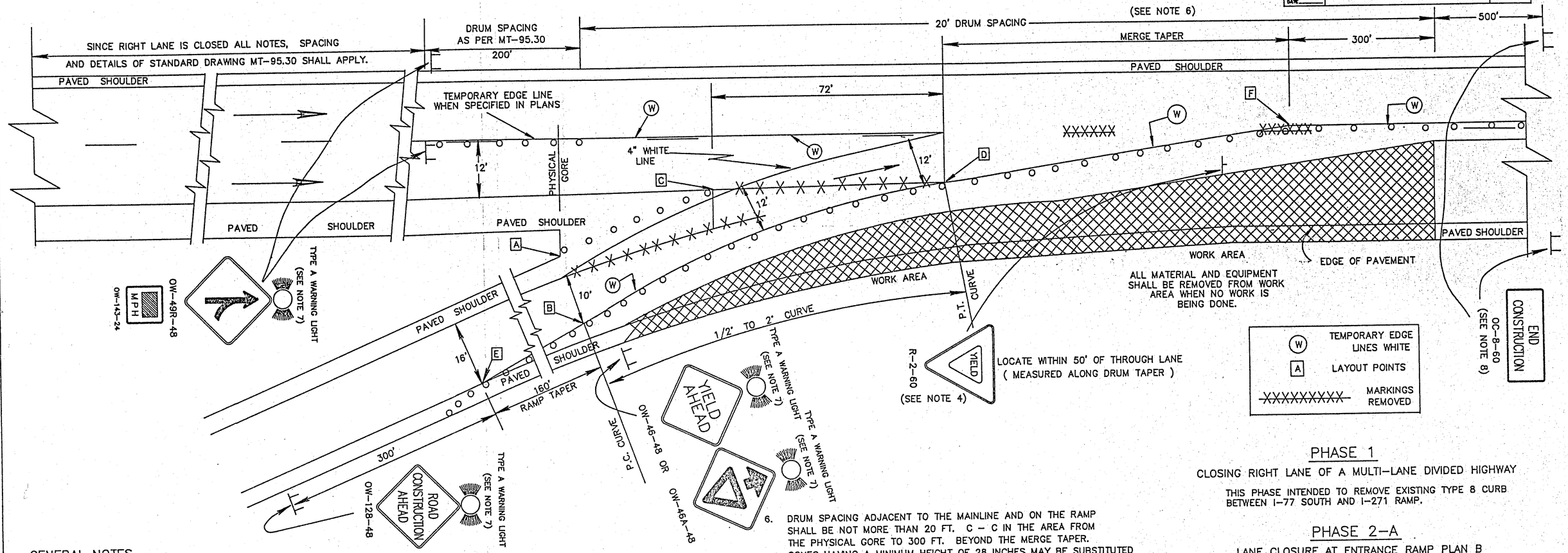

GENERAL NOTES

1. THIS WORK AREA TRAFFIC CONTROL APPLICATION SHALL BE EMPLOYED WHEN: (1) THE LATERAL CLEARANCE BETWEEN CHANNELIZING DEVICES AT THE RIGHT EDGE OF THE WORK AREA AND THE EDGE OF PAVEMENT IS LESS THAN 10 FT. (12 FT. IF THE SHOULDER PAVEMENT IS USED) AS SHOWN ON DRAWING MT-98.15, AND (2) THE REQUIRED RAMP TAPERS AND CURVES CAN BE PROVIDED AS SHOWN. IN THE EVENT THE WORK ZONE CONDITION WOULD PERMIT THE USE OF EITHER MT-98.15 OR MT-98.16, MT-98.15 SHALL BE USED. THIS TRAFFIC CONTROL MEASURE SHALL NOT BE PLACED IN EFFECT UNTIL IMMEDIATELY BEFORE THE CONTRACTOR IS FULLY PREPARED TO PERFORM THE WORK ON THE RAMP OR LANE ADJACENT TO IT. ONCE THIS MEASURE IS PLACED INTO EFFECT, THE CONTRACTOR SHALL EXPEDITIOUSLY PURSUE THE WORK (WORKING CONTINUOUSLY WITH FULL CREW IN THE RAMP AREA ON ALL NORMAL WORKING DAYS) UNTIL IT IS COMPLETED AND SHALL IMMEDIATELY OPEN THE AREA TO NORMAL TRAFFIC OR, AS A MINIMUM, REVERT TO THE METHODS SHOWN ON MT-98.15. IT IS THE INTENT THAT THE LONGEST MERGING TAPER LENGTH POSSIBLE SHALL BE CHOSEN, COMMENSURATE WITH THE REQUIREMENTS OF CONSTRUCTION.

2. THE RAMP TAPER SHALL DESIRABLY BE LOCATED TO PROVIDE A 10' MINIMUM PATH BETWEEN DRUMS AND THE PAVED SHOULDER IN THE GORE. THE RAMP TRAFFIC MAY BE PLACED ON THE PAVED GORE AS SHOWN ABOVE ONLY IF (1) THE TRAFFIC WILL USE THE PAVED SHOULDER PAVEMENT LESS THAN ONE DAY AND THE SHOULDER PAVEMENT IS IN GOOD CONDITION AND IS LEVEL AND SMOOTH OR (2) IF THE SHOULDER PAVEMENT IS ADEQUATELY STRENGTHENED, LEVELED AND SMOOTHED TO CARRY THE ANTICIPATED LOAD. A MINIMUM OF 3 DRUMS SHALL BE USED IN THE RAMP SHOULDER TAPER.

3. WHEN THE RAMP IS NOT LONG ENOUGH TO ALLOW PLACEMENT AS SPECIFIED ABOVE, THE SIGNS MAY BE SPACED PROPORTIONATELY WITHIN THE SPACE AVAILABLE AS DETERMINED BY THE ENGINEER (A 200 FOOT MINIMUM SPACING MUST BE MAINTAINED).

4. IT WILL BE NECESSARY TO MOVE THE LOCATION OF ANY EXISTING YIELD CONDITION. IN THESE CASES, THE PERMANENT R-2 SIGN INSTALLATION SHALL BE COVERED AND THE TEMPORARY INSTALLATION SHALL BE MOUNTED APPROPRIATELY. IF THE REQUIRED DISTANCES (RAMP TAPER, CURVE AND MERGE TAPER) CANNOT BE OBTAINED, THE ENGINEER MAY APPROVE SLIGHTLY LOWER VALUES FOR A SHORT TIME, IN WHICH CASE THE YIELD SIGN SHALL BE REMOVED AND A 36" STOP SIGN PLACED APPROPRIATELY TO BE VISIBLE TO RAMP TRAFFIC BUT NOT BE OBTRUSIVE TO MAINLINE TRAFFIC.

5. IF THE CONSTRUCTION OPERATION REQUIRES THE LANE CLOSURE FOR MORE THAN ONE DAY THEN THE EXISTING CONFLICTING PAVEMENT MARKINGS AND REFLECTORS FROM THE RAISED PAVEMENT MARKERS (RPM'S) SHALL BE REMOVED AND THE APPROPRIATE COLOR TEMPORARY EDGE LINES SHALL BE APPLIED ALONG THE TAPER. TEMPORARY EDGE LINES WHICH WOULD CONFLICT WITH FINAL TRAFFIC LANES SHALL BE REMOVABLE (947.03 TYPE-C) TAPE UNLESS THE AREA WILL BE RESURFACED IN THE NEXT WORK PHASE. AFTER COMPLETION OF THE WORK, TEMPORARY MARKINGS SHALL BE REMOVED IN ACCORDANCE WITH 621.134 AND THE ORIGINAL MARKINGS AND RAISED PAVEMENT MARKER REFLECTORS SHALL BE RESTORED.

6. DRUM SPACING ADJACENT TO THE MAINLINE AND ON THE RAMP SHALL BE NOT MORE THAN 20 FT. C - C IN THE AREA FROM THE PHYSICAL GORE TO 300 FT. BEYOND THE MERGE TAPER. CONES HAVING A MINIMUM HEIGHT OF 28 INCHES MAY BE SUBSTITUTED FOR DRUMS FOR DAYTIME LANE CLOSURES. PROVISIONS SHALL BE MADE TO SAFELY STABILIZE THE CONES TO PREVENT THEM FROM BLOWING OVER. IF THIS CANNOT BE ACHIEVED, DRUMS SHALL BE USED. TYPE C STEADY BURNING WARNING LIGHTS SHALL BE ERECTED ON EACH DRUM FOR NIGHT LANE CLOSURE.

7. TYPE A FLASHING WARNING LIGHTS ARE REQUIRED ON THE ROAD CONSTRUCTION AHEAD (OW-128-48), MERGE (OW-49R-48), AND THE YIELD AHEAD (OW-46-48) SIGNS WHENEVER A NIGHT LANE CLOSURE IS NECESSARY.

8. THE OC-8 SIGNS ARE ONLY REQUIRED FOR LANE CLOSURES OF MORE THAN ONE DAY AND MAY BE OMITTED IF THEY FALL WITHIN THE LIMITS OF A CONSTRUCTION PROJECT.

9. FROM THE END OF THE GORE AREA GRADED SHOULDER (POINT A), LOCATE THE PC OF THE CURVE BY MEASURING PERPENDICULAR TO THE RAMP CENTERLINE 10' OF RAMP PAVEMENT, NOT INCLUDING PAVED SHOULDER WIDTH (POINT B). FROM THE END OF THE GORE AREA PAVED SHOULDER (POINT C), LOCATE THE PT OF THE CURVE BY MEASURING 72' FROM POINT C ALONG THE EDGE OF PAVEMENT EXTENDED (POINT D).

10. PLACEMENT OF DRUMS SHALL BEGIN AT (POINT E) 160' UPSTREAM FROM THE PREVIOUSLY LOCATED PC (POINT B) AND AT THE RIGHT EDGE OF RAMP PAVEMENT. FROM THIS POINT A DRUM TAPER SHALL BE PLACED TO THE PC (POINT B) AND THEN ALONG A CURVE AS SHOWN TO THE PT (POINT D) WHERE A 48:1 (MIN.) MERGE TAPER SHALL MEET MAINLINE TRAFFIC CONTROL (POINT F).

PHASE 1

CLOSING RIGHT LANE OF A MULTI-LANE DIVIDED HIGHWAY

THIS PHASE INTENDED TO REMOVE EXISTING TYPE 8 CURB BETWEEN I-77 SOUTH AND I-271 RAMP.

PHASE 2-A

LANE CLOSURE AT ENTRANCE RAMP PLAN B

THIS PHASE INTENDED TO PROTECT I-77 SOUTH DRIVING LANE AND RAMP TRAFFIC DURING DEMOLITION OF THE OVERHEAD STRUCTURE.

PHASE 2-B

CLOSING LEFT LANE OF A MULTI-LANE DIVIDED HIGHWAY

THIS PHASE INTENDED TO PROTECT I-77 SOUTH PASSING LANE DURING DEMOLITION OF THE OVERHEAD STRUCTURE.

ALL WORK AND TRAFFIC CONTROL DEVICES SHALL BE IN ACCORDANCE WITH 614 AND OTHER APPLICABLE PORTIONS OF THE C & M SPECIFICATIONS AS WELL AS IN ACCORDANCE WITH PART 7 OF THE OMUTCD. PAYMENT FOR ALL LABOR, EQUIPMENT AND MATERIALS TO PROVIDE THIS METHOD OF TRAFFIC CONTROL SHALL BE INCLUDED IN THE LUMP SUM BID FOR 614 MAINTAINING TRAFFIC, UNLESS SEPARATELY ITEMIZED IN THE PLAN.

REVISED BY:	DATE:	
209816		DATE 05/07/90
LANE CLOSURE AT ENTRANCE RAMP PLAN B		
PLAN INSERT SHEET		

WCC

GENERAL SUMMARY

COMPLETED BY JM DATE 2-10-92
CHECKED BY ZZ DATE 2-18-92

F.H.W.A. REGION	STATE	PROJECT NO.	FUNDS
5	OHIO	BR-62-91	

10/32

SUM-271/176-3.58/0.28

SHEET NUMBER	PARTICIPATION	ITEM	ITEM EXT.	GRAND TOTAL	UNIT	DESCRIPTION
						PART 1 - SUM-271-0358R
		202	11200	LUMP	LUMP	PORTIONS OF STRUCTURE REMOVED
		202	22901	148	S.Y.	APPROACH SLAB REMOVED, AS PER PLAN
		202	32000	400	LF	CURB REMOVED
		202	47000	3	EA.	BRIDGE TERMINAL ASSEMBLY REMOVED
		202	54100	15	EA.	RAISED PAVEMENT MARKER REMOVED FOR STORAGE
		202	98500	7	C.Y.	ASPHALT CONCRETE UNDER GUARDRAIL REMOVED, AS PER PLAN
		203	50000	204	S.Y.	SUBGRADE COMPACTION
		254	01000	1160	S.Y.	PAVEMENT PLANING, BITUMINUOUS
		255	10001	240	S.Y.	FULL DEPTH RIGID PAVEMENT REMOVAL AND RIGID REPLACEMENT, CLASS C AS PER PLAN
		255	20000	48	L.F.	FULL DEPTH PAVEMENT SAWING
		301	10002	10	C.Y.	BITUMINOUS AGGREGATE BASE, AC-20
		310	10000	34	C.Y.	SUBBASE
		404	20000	44	C.Y.	ASPHALT CONCRETE, AC-20
		404	30000	5	C.Y.	ASPHALT CONCRETE, AC-20, UNDER GUARDRAIL
		404	35000	10	C.Y.	BITUMINOUS CONCRETE FOR MAINTAINING TRAFFIC
		407	10000	125	GAL.	TACK COAT
		408	10000	78	GAL.	BITUMINOUS PRIME COAT
		509	15800	108,566	LBS.	EPOXY COATED REINFORCING STEEL, GRADE 60
		510	11101	166	EA.	DOWEL HOLE, AS PER PLAN
		511	31502	474	C.Y.	CLASS S CONCRETE, SUPERSTRUCTURE
		511	45501	13	C.Y.	CLASS C CONCRETE, ABUTMENT, AS PER PLAN
		SPEC.	512-67502	1200	S.Y.	SEALING OF CONCRETE SURFACES (EPOXY) (SEE PROPOSAL NOTE)
		SPEC.	512-73000	135	S.Y.	TREATING CONCRETE BRIDGE DECKS WITH HMWM RESIN (SEE PROPOSAL NOTE)
		513	00100	8310	LBS.	STRUCTURAL STEEL (AISC CERTIFICATION NOT REQUIRED)
		SPEC.	514-00050	23,900	S.F.	SURFACE PREPARATION OF EXISTING STEEL, SYSTEM OZEU (SEE PROPOSAL NOTE)
		SPEC.	514-00056	23,900	S.F.	FIELD PAINTING OF EXISTING STEEL, PRIME COAT, SYSTEM OZEU (SEE PROPOSAL NOTE)
GENSUM (02/25/92)						

458

GENERAL SUMMARY

COMPLETED BY JM DATE 2-10-92
CHECKED BY JM DATE 2-18-92

F.H.W.A. REGION	STATE	PROJECT NO.	FUNDS
5	OHIO	BR-62-91	

SUM-271/176-3.58/0.28

SHEET NUMBER	PARTICIPATION State	PARTICIPATION Federal	ITEM	ITEM EXT.	GRAND TOTAL	UNIT	DESCRIPTION (CONT. PART 1 - SUM-271-0358R)
			SPEC.	514-00060	23,900	S.F.	FIELD PAINTING OF EXISTING STEEL, INTERMEDIATE COAT, SYSTEM OZEU (SEE PROPOSAL NOTE)
			SPEC.	514-00066	23,900	S.F.	FIELD PAINTING OF EXISTING STEEL, FINISH COAT, SYSTEM OZEU (SEE PROPOSAL NOTE)
			SPEC.	514-00504	100	HR.	GRINDING FINS, TEARS, SLIVERS (SEE PROPOSAL NOTE)
			SPEC.	514-00508	2080	L.F.	GRINDING FLANGE EDGES (SEE PROPOSAL NOTE)
			SPEC.	514-00500	20	L.F.	CAULKING (SEE PROPOSAL NOTE)
			516	11210	79	L.F.	STRUCTURAL EXPANSION JOINT INCLUDING ELASTOMERIC STRIP SEAL
			516	46701	8	EA.	RESET BEARING,AS PER PLAN
			518	12201	12	EA.	SCUPPER, INCLUDING SUPPORTS, AS PER PLAN
			518	21100	9	C.Y.	POROUS BACKFILL
	50%	50%	519	11101	100	S.F.	PATCHING CONCRETE STRUCTURES, AS PER PLAN
			606	13000	75	L.F.	GUARDRAIL, TYPE 5
			606	17000	200	L.F.	RAISING TYPE 5 GUARDRAIL
			606	35000	2	EA.	BRIDGE TERMINAL ASSEMBLY, TYPE 1
			606	35100	1	EA.	BRIDGE TERMINAL ASSEMBLY, TYPE 2
			611	25001	204	S.Y.	REINFORCED CONCRETE APPROACH SLAB (T=15"), AS PER PLAN
			614	11000	LUMP	LUMP	MAINTAINING TRAFFIC
			SPEC.	614-11100	200	HRS.	LAW ENFORCEMENT OFFICER (LEO) WITH PATROL CAR
			614	22000	0.65	MILE	TEMPORARY EDGE LINES, CLASS 1
			622	40020	880	L.F.	PORTABLE CONCRETE BARRIER, 32"
			622	40041	800	L.F.	PORTABLE CONCRETE BARRIER, 32", BRIDGE MOUNTED, AS PER PLAN
			623	10000	LUMP	LUMP	CONSTRUCTION LAYOUT STAKES
			642	00102	0.30	MI.	EDGE LINE, TYPE 2
			642	00202	0.15	MI.	LANE LINE, TYPE 2
			642	30000	200	L.F.	REMOVAL OF PAVEMENT MARKINGS
			802	00100	3	EA.	BARRIER REFLECTOR, TYPE A
			802	00200	10	EA.	BARRIER REFLECTOR, TYPE B
			862	00100	15	E.A.	RAISED PAVEMENT MARKER

GENSUM (02/25/92)

REV JPW 4-15-92

GENERAL SUMMARY

COMPLETED BY JM DATE 2-10-92
CHECKED BY DM DATE 2-18-92

F.H.W.A. REGION	STATE	PROJECT NO.	FUNDS
5	OHIO	BR-62-91	

SUM-271/176-3.58/0.28

SHEET NUMBER	PARTICIPATION	ITEM	ITEM EXT.	GRAND TOTAL	UNIT	DESCRIPTION
						PART 2 - SUM-176-0028
		202	11200	LUMP	LUMP	PORTIONS OF STRUCTURE REMOVED
		202	11305	1573	S.Y.	PORTIONS OF STRUCTURE REMOVED, AS PER PLAN
		202	23500	1473	S.Y.	WEARING COARSE REMOVED (T=5")
		202	22901	228	S.Y.	APPROACH SLAB REMOVED, AS PER PLAN
		202	47000	4	EA.	BRIDGE TERMINAL ASSEMBLY REMOVED
		202	38000	288	L.F.	GUARDRAIL REMOVED
		202	42206	2	EA.	ANCHOR ASSEMBLY REMOVED, TYPE T
		202	42000	2	EA.	ANCHOR ASSEMBLY REMOVED, TYPE A
		202	30500	471	L.F.	CONCRETE MEDIAN REMOVED, AS PER PLAN
		203	60204	5	STA.	LINEAR GRADING, METHOD 2
		203	50000	280	S.Y.	SUBGRADE COMPACTION
		251	01000	211	S.Y.	PARTIAL DEPTH PAVEMENT REPAIR
		254	01000	4453	S.Y.	PAVEMENT PLANING, BITUMINOUS, (VARIABLE)
		301	10003	66	C.Y.	BITUMINOUS AGGREGATE BASE, AC-20, AS PER PLAN
		310	10000	48	C.Y.	SUBBASE
		403	20001	149	C.Y.	ASPHALT CONCRETE, AC-20, AS PER PLAN
		404	20000	149	C.Y.	ASPHALT CONCRETE, AC-20
		404	35000	8	C.Y.	BITUMINOUS CONCRETE FOR MAINTAINING TRAFFIC
		404	30000	5	C.Y.	ASPHALT CONCRETE, AC-20, UNDER GUARDRAIL
		407	10000	736	GAL	TACK COAT
		408	10000	90	GAL	BITUMINOUS PRIME COAT
		509	15800	17,099	LB.	EPOXY COATED REINFORCING STEEL, GRADE 60
		510	11101	1344	EA.	DOWEL HOLE, AS PER PLAN
		511	34400	101	C.Y.	CLASS S CONCRETE, SUPERSTRUCTURE

GENSUM (02/25/92)

GENERAL SUMMARY

COMPLETED BY JM DATE 2-10-92
CHECKED BY TM DATE 2-18-92

F.H.W.A. REGION	STATE	PROJECT NO.	FUNDS
5	OHIO	BR-62-91	

12A
32

SUM-271/176-3.58/0.28

SHEET NUMBER	PARTICIPATION State	PARTICIPATION Federal	ITEM	ITEM EXT.	GRAND TOTAL	UNIT	DESCRIPTION
			511	45701	35	C.Y.	CLASS C CONCRETE, ABUTMENT, AS PER PLAN
			SPEC.	512-67502	1014	S.Y.	SEALING OF CONCRETE SURFACES (EPOXY) (SEE PROPOSAL NOTE)
			516	11211	106	L.F.	STRUCTURAL EXPANSION JOINT INCLUDING ELASTOMERIC STRIP SEAL, AS PER PLAN
			516	46701	14	E.A.	RESET BEARINGS, AS PER PLAN.
			518	12701	16	EA.	SCUPPER, VERTICAL EXTENSION, AS PER PLAN
			518	21201	39	C.Y.	POROUS BACKFILL WITH FILTER FABRIC, AS PER PLAN
	50%	50%	519	11101	200	S.F.	PATCHING CONCRETE STRUCTURES, AS PER PLAN
			SPEC.	519-22006	1684	S.Y.	MICRO-SILICA MODIFIED CONCRETE OVERLAY (T=3 1/2") (SEE PROPOSAL NOTE)
			SPEC.	519-22100	56	C.Y.	MICRO-SILICA MODIFIED CONCRETE OVERLAY (VARIABLE THICKNESS) (SEE PROPOSAL NOTE)
			SPEC.	519-22300	LUMP	LUMP	TEST SLAB (SEE PROPOSAL NOTE)
			606	13000	288	L.F.	GUARDRAIL, TYPE 5
			606	25000	2	EA.	ANCHOR ASSEMBLY, TYPE A
			606	26500	2	EA.	ANCHOR ASSEMBLY, TYPE T
			606	35000	4	EA.	BRIDGE TERMINAL ASSEMBLY, TYPE 1
			611	25001	280	S.Y.	REINFORCED CONCRETE APPROACH SLAB (T=15"), AS PER PLAN
			614	11000	LUMP	LUMP	MAINTAINING TRAFFIC
			623	10000	LUMP	LUMP	CONSTRUCTION LAYOUT STAKES
			630	87100	2	EA.	REMOVAL OF OVERHEAD MOUNTED SIGN AND REERECTION
			630	89600	2	EA.	REMOVAL OF OVERHEAD SIGN SUPPORT AND REERECTION, TYPE TC-18.24
			631	94201	4	EA.	REMOVAL OF LUMINAIRE AND DISPOSAL, AS PER PLAN
			642	00102	0.60	MI.	EDGE LINE, TYPE 2
			642	00202	0.15	MI.	LANE LINE, TYPE 2
			642	00302	0.23	MI.	CENTER LINE, TYPE 2
			642	00502	70	L.F.	STOP LINE, TYPE 2
			802	00100	8	EA.	BARRIER REFLECTOR, TYPE A
			802	00200	8	EA.	BARRIER REFLECTOR, TYPE B
							PART 3 - SUM-271-0358R AND SUM-176-0028
			619	15010	LUMP	LUMP	FIELD OFFICE, TYPE B
			624	10000	LUMP	LUMP	MOBILIZATION

GENSUM (02/25/92)

REV SJW 4-15-92

GENERAL NOTES

DESIGNED BY	DATE	F.H.W.A. REGION	STATE	PROJECT NO.	FUNDS
REVIEWED BY	DATE	5	OHIO	BR-62-91	

SUM – 271/176 – 3.58/0.28

PART 1: SUM-271-0358R
PART 2: SUM-176-0028

DESIGN STRESSES:

CONCRETE CLASS S – UNIT STRESS – 1500 P.S.I.
COMPRESSIVE STRENGTH – 4500 P.S.I.

CONCRETE CLASS C – UNIT STRESS – 1333 P.S.I.
COMPRESSIVE STRENGTH – 4000 PSI

REINFORCING STEEL – ASTM A615, A616 OR A617
GRADE 60 – UNIT STRESS – 24,000 PSI

STRUCTURAL STEEL – ASTM A709, GRADE 36 – UNIT STRESS – 20,000 PSI

ITEM 202 – PORTIONS OF STRUCTURE REMOVED.

THIS ITEM OF WORK SHALL CONSIST OF REMOVING THE STATED ITEMS TO THE LIMITS SHOWN IN THE PLANS AND DISPOSING OF THE MATE AS PER ITEM 202.02.

(PART 1) REMOVE THE DECK, THE PARAPET WALLS AND ANY ATTACHED BRIDGE RAILING, ALL END CROSSFRAMES AND INTERIOR CROSSFRAMES (FOR DECK CLOSURE SECTION), PORTIONS OF THE BACKWALLS AND WINGWALLS AND ALL EXISTING SCUPPERS.

(PART 2) REMOVE THE PARAPET WALLS AND ANY ATTACHED BRIDGE RAILING, THE PORTLAND CEMENT CONCRETE BRIDGE MEDIAN, THE ABUTMENT BACKWALLS AND PORTIONS OF THE WINGWALLS, AND THE STEEL BULB ANGLES. ALL LABOR, TOOLS, EQUIPMENT AND INCIDENTALS, INCLUDING FALSE-WORK REQUIRED TO PROTECT TRAFFIC, NECESSARY TO COMPLETE THE WORK SHALL BE INCLUDED IN A SINGLE LUMP SUM BID ITEM.

ITEM 202 – PORTIONS OF STRUCTURE REMOVED, AS PER PLAN.

(PART 2) THIS WORK IS TO REMOVE THE EXISTING PORTLAND CEMENT CONCRETE BRIDGE DECK BY MEANS OF A MECHANICAL GRINDER TO A UNIFORM THICKNESS OF ONE AND ONE-HALF INCHES DEEP, ON THE S.R. 176 STRUCTURE.

ITEM 202 – WEARING COARSE REMOVED (T=5")

(PART 2) THIS ITEM SHALL BE USED TO REMOVE THE FIVE (5+) INCHES OF ASPHALT CONCRETE OVERLAY EXISTING ON THE S.R. 176 STRUCTURE.

ITEM 202 – APPROACH SLAB REMOVED, AS PER PLAN

(PART 1)
(PART 2) THE EXISTING REINFORCED CONCRETE APPROACH SLABS SHALL BE REMOVED AT BOTH THE I.R. 271 AND S.R. 176 STRUCTURES. THIS ITEM SHALL INCLUDE ALL EQUIPMENT, TOOLS AND LABOR NECESSARY TO REMOVE THE ASPHALT CONCRETE MAKING UP THE WEARING SURFACE AND BERMS OF THE APPROACH SLABS, REMOVE THE EXISTING REINFORCED CONCRETE APPROACH SLABS AND ANY SUBBASE MATERIAL NECESSARY TO PROVIDE FOR THE PLACEMENT OF THE PROPOSED APPROACH SLABS. ALSO, THIS ITEM SHALL INCLUDE THE REMOVAL OF ALL MATERIAL MAKING UP THE CONCRETE MEDIAN AT THE APPROACH SLAB SECTION OF THE S.R. 176 STRUCTURE. ALL MATERIAL SHALL BE DISPOSED AS PER ITEM 202.02.

ITEM 202 – CONCRETE MEDIAN REMOVED, AS PER PLAN

(PART 2) THIS WORK SHALL CONSIST OF REMOVING THE RAISED CONCRETE MEDIAN ALONG S.R. 176, AS PER PLAN DETAILS, WITHIN THE WORKING LIMITS OF THE PROJECT EXCLUDING THE PORTIONS AT THE BRIDGE AND APPROACH SLABS. ALL EQUIPMENT, TOOLS AND LABOR NECESSARY TO COMPLETE THE WORK SHALL BE INCLUDED WITH THIS ITEM ALONG WITH THE DISPOSAL OF ALL WASTED MATERIAL AS PER ITEM 202.02.

ITEM 202 – ASPHALT CONCRETE UNDER GUARDRAIL REMOVED, AS PER PLAN

(PART 1) THIS ITEM SHALL BE USED TO REMOVE ANY EXISTING ASPHALT CONCRETE UNDER GUARDRAIL AT THE I.R. 271 STRUCTURE. INCLUDED WITH THIS ITEM SHALL BE THE GRADING OF THE REMOVED AREAS SUCH THAT THE SECTION SHALL CONFORM WITH THE ITEM 203 – LINEAR GRADING, METHOD 2 DETAIL. THE REMOVAL AREAS SHALL BE DIRECTED BY THE ENGINEER AND SHALL BE DEPENDENT UPON THE PROPOSED GRADE.

:176NOTES (2/12/92)

ITEM 203 – LINEAR GRADING, METHOD 2

(PART 2) THIS WORK SHALL CONSIST OF GRADING THE EXISTING SHOULDER BETWEEN THE PAVED SHOULDER AND BREAK POINT OF THE SHOULDER IN AREAS WHERE GUARDRAIL EXISTS. IT SHALL CONSIST OF REMOVING THE EXCESS TURF IN THE VICINITY OF THE GUARDRAIL TO PROVIDE A POSITIVE SLOPE AWAY FROM THE PAVED SHOULDER. A SLOPE OF APPROXIMATELY 1"/FT. SHALL BE PROVIDED IN THESE AREAS.
THE AREA BETWEEN THE PAVED SHOULDER AND 1 FT. BEYOND THE REAR OF THE PROPOSED GUARDRAIL POSTS SHALL BE EXCAVATED SUFFICIENTLY IN DEPTH TO PROVIDE A 2" COMPACTED COURSE OF ITEM 404.
EXCESS MATERIAL BEYOND THE EXISTING GUARDRAIL MAY BE WASTED OVER THE SLOPE AT THE DIRECTION OF THE ENGINEER. PRIOR TO PLACING THIS MATERIAL A SOIL STERILIZER USING EITHER OF THE FOLLOWING BRANDS SHALL BE APPLIED BETWEEN THE PAVED SHOULDER AND 1' BEYOND THE POST AT THE RATE AND METHOD RECOMMENDED BY THE MANUFACTURER:

1) PRIMITOL 25E BY CIBA-GEIGY

2) KOVAR BY DIAMOND SHAMROCK OR APPROVED EQUAL

A PRIME COAT SHALL BE APPLIED AT THE RATE OF 0.5 GAL/S.Y. BEFORE APPLYING THE ASPHALT CONCRETE. AREAS DISTURBED BEYOND THE 448 LIMIT SHALL BE SEEDED AND MULCHED AS PER 659. COMPACTION SHALL BE AS PER ITEM 203. THE METHOD OF MEASUREMENT SHALL BE CONSIDERED AS LIN.FT. OF GUARDRAIL PAVED UNDER, AND SHALL INCLUDE ALL WORK REQUIRED AS DESCRIBED ABOVE EXCEPT FOR ITEM 404 ASPHALT CONCRETE AND 408 PRIME COAT. THE COST FOR THE ABOVE OPERATION SHALL BE INCLUDED IN THE PRICE BID ITEM 203 LINEAR GRADING METHOD 2.

ESTIMATED QUANTITIES

203	LINEAR GRADING, METHOD 2	= 5	STATIONS
404	ASPHALT CONCRETE, UNDER GUARDRAIL	= 5	CU.YDS.
408	BITUMINOUS PRIME COAT	= 90	GALLONS

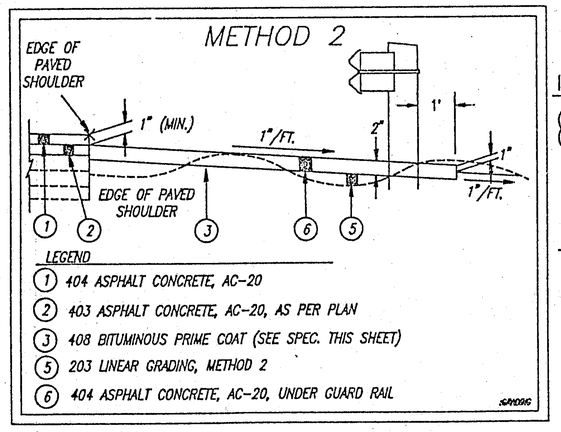

ITEM 254 – PAVEMENT PLANING, BITUMINOUS (VARIABLE)

(PART 2) A QUANTITY OF 200 S.Y. SHALL BE CARRIED TO THE GENERAL SUMMARY TO BE USED AS DIRECTED BY THE ENGINEER TO PROVIDE A SMOOTH TRANSITION BETWEEN THE RAMPS AND THE PROPOSED GRADE OF SR 176.

ITEM 403 – ASPHALT CONCRETE, AC-20, AS PER PLAN

(PART 2) AN ADDITIONAL QUANTITY OF 25 C.Y. HAS BEEN CARRIED TO THE GENERAL SUMMARY TO BE USED AS DIRECTED BY THE ENGINEER. THE INTENT OF THIS QUANTITY IS THAT IT BE USED OUTSIDE THE LIMITS OF ITEM 403, AS SHOWN ON THE ROADWAY SHEET FOR S.R. 176, TO PROVIDE A SMOOTH TRANSITION BETWEEN THE RAMPS AND THE PROPOSED GRADE OF S.R. 176.

ITEM 404 – BITUMINOUS CONCRETE FOR MAINTAINING TRAFFIC

(PART 1)
(PART 2) A QUANTITY OF 10 C.Y. HAS BEEN FORWARDED TO THE PART 1 GENERAL SUMMARY TO BE USED AT THE I.R. 271 STRUCTURE, AS DIRECTED BY THE ENGINEER, TO EITHER BUILD UP AND OR MAINTAIN THE SHOULDERS IN A MANNER THAT WILL PROVIDE SAFE PASSAGE OF THE VEHICLES THROUGH THE HALF WIDTH CONSTRUCTION ZONE. ALSO, A QUANTITY OF 8 C.Y. HAS BEEN FORWARDED TO THE PART 2 GENERAL SUMMARY TO BE USED ON THE S.R. 176 DETOUR ROUTES TO MAINTAIN THE ROADS IN AN AS IS CONDITION AS DIRECTED BY THE PROJECT ENGINEER.

ITEM 404 – ASPHALT CONCRETE, AC-20, UNDER GUARDRAIL

(PART 1)
(PART 2) THIS ITEM IS INTENDED TO BE USED AT THE I.R. 271 STRUCTURE, AS DIRECTED BY THE ENGINEER, TO EITHER ADD TO EXISTING ASPHALT CONCRETE UNDER GUARDRAIL OR TO REPLACE THE ASPHALT CONCRETE UNDER GUARDRAIL IN AREAS WHERE IT HAD TO BE REMOVED AS PER ITEM 202 – ASPHALT CONCRETE UNDER GUARDRAIL REMOVED. THE PROPOSED GRADE SHALL DICTATE THE AREAS WHERE ADDITION OR REMOVAL OF ASPHALT CONCRETE UNDER GUARDRAIL SHALL TAKE PLACE. THIS ITEM IS ALSO INTENDED TO BE USED IN CONJUNCTION WITH ITEM 203 – LINEAR GRADING, METHOD 2 AT THE S.R. 176 STRUCTURE.

ITEM 407 – TACK COAT

(PART 1)
(PART 2) THE RATE OF APPLICATION OF 407 TACK COAT SHALL BE SUBJECT TO ADJUSTMENT, AS DIRECTED BY THE ENGINEER. PLAN QUANTITIES INDICATE AN AVERAGE APPLICATION RATE OF 0.075 GALLONS PER SQUARE YARD OF TACK COAT FOR ESTIMATING PURPOSES ONLY.

ITEM 408 – BITUMINOUS PRIME COAT

(PART 1)
(PART 2) THIS ITEM SHALL BE USED IN AREAS WHERE ASPHALT CONCRETE UNDER GUARDRAIL IS TO BE PLACED. THE RATE OF APPLICATION OF ITEM 408 – BITUMINOUS PRIME COAT SHALL BE SUBJECT TO ADJUSTMENT, AS DIRECTED BY THE ENGINEER. PLAN QUANTITIES INDICATE AN AVERAGE APPLICATION RATE OF 0.5 GALLONS PER SQUARE YARD OF BITUMINOUS PRIME COAT FOR ESTIMATING PURPOSES ONLY.

ITEM 510 – DOWEL HOLE, AS PER PLAN

(PART 1)
(PART 2) IN ACCORDANCE WITH SUPPLEMENTAL SPECIFICATIONS 852 AND 952, THE DOWEL HOLES SHALL BE DRILLED INTO THE EXISTING AND PROPOSED CONCRETE AT THE LOCATIONS SHOWN ON PLAN PAGE NOS.22,23 AND 28 WITH A TOLERABLE VARIANCE OF TWO (2) INCHES. REFER TO THE ABOVE PLAN PAGES FOR THE SPECIFIC DEPTHS OF THE DOWEL HOLES. NON-SHRINKING EPOXY GROUT SHALL BE USED TO ANCHOR THE # 5 AND # 6 REBARS.

ITEM 511 – CLASS S CONCRETE, SUPERSTRUCTURE

(PART 1)
(PART 2) THIS ITEM SHALL INCLUDE THE PARAPET CONSTRUCTION, BOTH DECK AND WINGWALL, OF BOTH STRUCTURES AND THE DECK CONSTRUCTION OF THE I.R. 271 STRUCTURE. REFER TO THE SEQUENCE OF CONSTRUCTION DETAIL, PAGE 19, FOR DETAILS OF DECK CONSTRUCTION ON THE I.R. 271 STRUCTURE.
IN ADDITION TO THE CONCRETE REMOVAL AREAS, ALL LOOSE, SOFT, HONEYCOMBED AND DISINTEGRATED CONCRETE PLUS 1/4" DEPTH OF SOUND CONCRETE SHALL BE REMOVED. AFTER COMPLETION OF THE REMOVAL OPERATION, THE ENGINEER SHALL SOUND THE REMAINING CONCRETE TO ENSURE THAT ONLY SOUND CONCRETE REMAINS. ALL WORK SHALL BE DONE IN SUCH A MANNER AS NOT TO DAMAGE OR SHATTER THE CONCRETE THAT IS TO REMAIN AND PREVENT THE REINFORCING STEEL THAT IS TO REMAIN FROM BEING CUT, ELONGATED OR DAMAGED IN ANY WAY. CONCRETE MAY BE REMOVED BY CHIPPING OR HAND DRESSING. CHIPPING HAMMERS SHALL NOT BE HEAVIER THAN THE NOMINAL 35 POUND CLASS.
PRIOR TO PLACING THE NEW WALL, ALL SURFACES TO WHICH THE WALL IS TO BOND, INCLUDING EXPOSED REINFORCING AND STRUCTURAL STEEL, SHALL BE CLEANED BY AN APPROVED METHOD OF WATER BLASTING. THESE SURFACES SHALL BE MADE FREE OF SPALLS, LAITANCE AND ALL TRACES OF FOREIGN MATERIAL, IF NECESSARY, DETERGENT CLEANING SHALL PRECEDE BLAST CLEANING TO ENSURE THE REMOVAL OF CONTAMINANTS DETRIMENTAL TO ACHIEVING AN ADEQUATE BOND.
ALL COSTS OF LABOR AND MATERIAL NECESSARY TO CUT THE EXISTING NUMBER 5 REBARS AS SHOWN ON THE PROPOSED PARAPET DETAILS SHALL BE INCLUDED UNDER THIS ITEM OF WORK. ALL OTHER STEEL SHALL BE EPOXY COATED AND WILL BE PAID FOR SEPARATELY UNDER ITEM 509 EPOXY COATED REINFORCING STEEL.

ITEM 511 – CLASS C CONCRETE, ABUTMENT, AS PER PLAN

(PART 1)
(PART 2) THIS ITEM SHALL BE USED TO RECONSTRUCT THE EXISTING ABUTMENT BACKWALLS AND WINGWALLS AS PER THE DETAILS SHOWN ON SHEETS 24 AND 30. ALL COSTS OF REMOVAL SHALL BE INCLUDED UNDER ITEM 202 – PORTIONS OF STRUCTURES REMOVED.
IN ADDITION TO THE REMOVAL AREAS AS SHOWN ON THE STRUCTURE MODIFICATION DETAILS ALL LOOSE, SOFT, HONEYCOMBED AND DISINTEGRATED CONCRETE PLUS 1/4" DEPTH OF SOUND CONCRETE SHALL BE REMOVED. AFTER COMPLETION OF THE REMOVAL OPERATION, THE ENGINEER SHALL SOUND THE REMAINING CONCRETE TO ENSURE THAT ONLY SOUND CONCRETE REMAINS. ALL WORK SHALL BE DONE IN SUCH A MANNER AS NOT TO DAMAGE OR SHATTER THE CONCRETE THAT IS TO REMAIN AND PREVENT THE REINFORCING STEEL THAT IS TO REMAIN FROM BEING CUT, ELONGATED OR DAMAGED IN ANY WAY. CONCRETE MAY BE REMOVED BY CHIPPING OR HAND DRESSING. CHIPPING HAMMERS SHALL NOT BE HEAVIER THAN THE NOMINAL 35 POUND CLASS.
PRIOR TO PLACING THE NEW WALL, ALL SURFACES TO WHICH THE WALL IS TO BOND INCLUDING EXPOSED REINFORCING AND STRUCTURAL STEEL, SHALL BE CLEANED BY AN APPROVED METHOD OF WATER BLASTING, THESE SURFACES SHALL BE MADE FREE OF SPALLS, LAITANCE AND ALL TRACES OF FOREIGN MATERIAL, IF NECESSARY, DETERGENT CLEANING SHALL PRECEDE BLAST CLEANING TO ENSURE THE REMOVAL OF CONTAMINANTS DETRIMENTAL TO ACHIEVING AN ADEQUATE BOND.
ALL COSTS OF LABOR AND MATERIALS NECESSARY TO CUT THE EXISTING REBARS AS SHOWN ON THE PROPOSED PARAPET DETAILS SHALL BE INCLUDED UNDER THIS ITEM OF WORK. ALL OTHER STEEL SHALL BE EPOXY COATED AND WILL BE PAID FOR SEPARATELY UNDER ITEM 509 – EPOXY COATED REINFORCING STEEL.

ITEM 516 RESET BEARINGS, AS PER PLAN

(PART 1)
(PART 2) THIS ITEM SHALL BE USED TO IMPROVE THE ROCKER BEARINGS AT THE ABUTMENTS OF THE IR 271 AND SR 176 STRUCTURES. INCLUDED IN THIS ITEM SHALL BE ALL WORK NECESSARY TO PROPERLY ALIGN BEARINGS AS WELL AS THEIR CLEANING AND PAINTING. THIS WORK SHALL CONTAIN THE REQUIRED JACKING AND TEMPORARY SUPPORT, DISASSEMBLY OF THE BEARINGS, HAND CLEANING (GRINDING IF NECESSARY), SANDBLASTING AND PAINTING AS REQUIRED BY PROPOSAL NOTE – FIELD PAINTING OF EXISTING STEEL, SYSTEM OZEU, REPLACEMENT OF ANY DAMAGED SHEET LEAD (711.19), INSTALLATION OF ANY STEEL SHIMS OF THE SAME SIZE AS THE BEARINGS TO PROVIDE A SNUG FIT, REASSEMBLY OF THE BEARINGS AND REMOVAL OF THE JACKS. ALL WORK SHALL BE TO THE SATISFACTION OF THE PROJECT ENGINEER. THE CONTRACTOR SHALL SUBMIT HIS METHOD OF JACKING THE BEAMS TO THE DIRECTOR FOR PRIOR APPROVAL BEFORE COMMENCING THE JACKING OPERATION.

ITEM 519 – PATCHING CONCRETE STRUCTURES, AS PER PLAN

(PART 1)
(PART 2) THIS ITEM SHALL BE USED TO MAKE STRUCTURAL REPAIRS TO THE UNSOUND DETERIORATED EXPOSED FACES OF ABUTMENTS AND WINGWALLS AS DIRECTED BY THE ENGINEER. THE ESTIMATED QUANTITY FOR EACH STRUCTURE SHALL BE INDICATED ON THE GENERAL SUMMARY. ALL LABOR, EQUIPMENT, MATERIAL AND INCIDENTALS NECESSARY TO COMPLETE THE WORK SHALL BE INCLUDED IN THE UNIT BID PRICE PER SQUARE FOOT.

SEE SHEET 27 FOR DETAILS AND NOTES FOR SEALING CONCRETE SURFACES.

REV JJW 4-15-92

STATE OF OHIO
DEPARTMENT OF TRANSPORTATION
DIVISION OF DESIGN AND CONSTRUCTION
BUREAU OF BRIDGES

GENERAL NOTES

SUM-176-0028 & SUM-271-0358R

DESIGNED	DRAWN	TRACED	CHECKED	REVIEWED	DATE	REVISED
J.M.	P.O		J.M.			

DESIGNED BY _____ DATE _____

REVIEWED BY _____ DATE _____

F.H.W.A. REGION	STATE	PROJECT NO.	FUNDS
5	OHIO	BR-62-91	

SUM – 271/176 – 3.58/0.28

GENERAL NOTES

ITEM 202 – RAISED PAVEMENT MARKER REMOVED FOR STORAGE

(PART 1) AN ESTIMATED QUANTITY OF 15 EACH, RAISED PAVEMENT MARKERS REMOVED FOR STORAGE, HAS BEEN CARRIED TO THE GENERAL SUMMARY. THE EXISTING RAISED PAVEMENT MARKERS SHALL BE REMOVED IN A MANNER THAT PREVENTS DAMAGE TO THE CASTINGS AND SHALL BE STORED ON THE PROJECT SITE AS DIRECTED BY THE ENGINEER. THE ENGINEER SHALL BE RESPONSIBLE FOR NOTIFYING THE ODOT DISTRICT FOUR OPERATIONS ENGINEER IN WRITING AS SOON AS THESE REMOVED ITEMS ARE TO BE TRANSPORTED OFF THE PROJECT LIMITS BY STATE FORCES.

ITEM 251 – PARTIAL DEPTH PAVEMENT REPAIR

(PART 2) THIS WORK SHALL BE USED TO REPAIR ANY DETERIORATED AREAS OF THE EXPOSED REINFORCED CONCRETE PAVEMENT AFTER GRINDING AS PER ITEM 254 – PAVEMENT PLANING, BITUMINOUS (VARIABLE). THE DESIGNATED REPAIR AREAS SHALL BE RECTANGULAR AND TAKEN TO A DEPTH OF THREE (3+) INCHES BELOW THE SURFACE. PAYMENT SHALL BE MADE AT THE UNIT BID PRICE PER SQUARE YARD OF THIS ITEM.

ITEM 255 – FULL DEPTH RIGID PAVEMENT REMOVAL AND RIGID REPLACEMENT, CLASS C, AS PER PLAN

(PART 1) THIS WORK IS INTENDED TO BE USED TO REMOVE AND REPLACE THE FIRST PAVEMENT SLABS BEYOND EACH APPROACH SLAB. A QUANTITY IS PROVIDED TO ALLOW FOR THE MAXIMUM ALLOWABLE PAVEMENT SLAB LENGTH PLUS FIVE (5) FEET TO ALLOW FOR THE REMOVAL OF THE TRANSVERSE PAVEMENT JOINT. THIS QUANTITY SHALL BE AS DIRECTED BY THE ENGINEER TO ALLOW FOR EXISTING FIELD CONDITIONS. THERE IS NO INTENTION TO PERFORM ANY WORK TO THE BERMS UNDER THIS ITEM, THUS ANY DISTURBANCE TO THE BERMS OR TO THE PAVEMENT DRAINAGE SYSTEM SHALL BE REPAIRED AT THE EXPENSE OF THE CONTRACTOR. THE SLAB IS INTENDED TO BE PLACED AT A SLOPE (VARIABLE THICKNESS) TO ALLOW FOR A ONE (1) INCH BUTT JOINT AT THE APPROACH SLAB AND PROVIDE A SMOOTH TRANSITION AS PER THE DETAILS OF THE APPROACH PROFILE GRADE SHEET ON PAGE .

ITEM 516 – STRUCTURAL EXPANSION JOINT INCLUDING ELASTOMERIC STRIP SEAL

ITEM 516 – STRUCTURAL EXPANSION JOINT INCLUDING ELASTOMERIC STRIP SEAL, AS PER PLAN

(PART 1) A36 STEEL WITH PAINT SHALL BE USED FOR THE EXPANSION JOINTS AT
(PART 2) BOTH STRUCTURES. THE I.R. 271 STRUCTURE SHALL BE AS PER STANDARD DRAWING EXJ-4-87. THE S.R. 176 STRUCTURE SHALL BE AS PER THE DETAILS ON PAGE 30 AND STANDARD DRAWING EXJ-4-87.

ITEM 611 – REINFORCED CONCRETE APPROACH SLAB (T=15"), AS PER PLAN

(PART 1) THIS ITEM SHALL CONSIST OF THE PLACEMENT OF THE APPROACH SLABS
(PART 2) AS INDICATED IN THE CONTRACT PLANS AND AS DIRECTED BY THE ENGINEER. PAYMENT FOR THIS ITEM SHALL BE AT THE CONTRACT UNIT PRICE BID PER SQUARE YARD AND SHALL INCLUDE ALL LABOR, EQUIPMENT, MATERIALS (INCLUDING DOWEL HOLES AND DOWEL BARS), AND INCIDENTALS NECESSARY TO COMPLETE THE ABOVE WORK. THE APPROACH SLAB SHALL CONFORM TO AS-1-81 EXCEPT THAT THE WIDTH OF THE APPROACH SLAB SHALL EXTEND BETWEEN THE FACES OF THE WINGWALLS.

ITEM 630 – REMOVAL OF OVERHEAD MOUNTED SIGN AND RE-ERECTION

ITEM 630 – REMOVAL OF OVERHEAD SIGN SUPPORT AND RE-ERECTION, TYPE TC-18.24

ITEM 631 – REMOVAL OF LUMINAIRE AND DISPOSAL, AS PER PLAN

(PART 2) THE S.R. 176 STRUCTURE HAS TWO GUIDE SIGNS ATTACHED TO THE PARAPET. ONE SIGN IS 11' X 10.5' WITH AN 8' X 2' EXIT PANEL. THE OTHER SIGN IS 20' X 10' ALSO WITH AN 8' X 2' EXIT PANEL. LIGHTING FIXTURES ARE PRESENT ON BOTH SIGNS. BOTH SIGNS SHALL BE REMOVED BY THE CONTRACTOR AND STORED FOR THE DURATION OF THE PARAPET RECONSTRUCTION. AFTER THE PARAPET IS RECONSTRUCTED, ONLY THE SIGN AND GLARE SHIELD SHALL BE RE-ERECTED ON THE EXISTING OVERHEAD SIGN SUPPORT. THE LUMINAIRE, BRACKET ARMS, WIRES, BALLAST, BALLAST WIRING ENCLOSURE AND BALLAST WIRING ENCLOSURE MOUNTING BRACKET SHALL BE REMOVED FOR DISPOSAL. ALL PORTIONS OF THE OVERPASS MOUNTED SIGN SUPPORT THAT IS IN CONFLICT WITH THE STRUCTURE REPAIR PORTION OF THIS PROJECT SHALL BE REMOVED AND STORED DURING THE PARAPET RECONSTRUCTION. THE OVERPASS STRUCTURE MOUNTED SIGN SUPPORT SHALL BE RE-ERECTED AFTER THE PARAPET IS RECONSTRUCTED.

FIELD PAINTING OF NEW STRUCTURAL STEEL

NEW STEEL SHALL BE PROVIDED BARE FOR PREPARATION AND PAINTING IN THE FIELD. FOR PURPOSES OF FIELD PAINTING, NEWLY ERECTED STEEL SHALL BE CONSIDERED EXISTING STEEL AND SHALL BE PREPARED AND PAINTED WITH A PRIME, INTERMEDIATE AND FINISH COAT OF PAINT IN ACCORDANCE WITH THE PROPOSAL NOTE "FIELD PAINTING OF EXISTING STEEL, SYSTEM OZEU." THE SQUARE FOOT QUANTITY OF SURFACE PREP AND PAINT INDICATED IN THE GENERAL SUMMARY IS INCLUSIVE OF ALL PROPOSED NEW STEEL AND ALL EXISTING STEEL.

STATE SAFETY REQUIREMENTS

STATE SAFETY REQUIREMENTS OUTLINED IN THE CONSTRUCTION CODE FOR THIS TYPE OF WORK WILL BE ENFORCED AND THE CONTRACTOR SHALL COMPLY WITH THE PROVISIONS OUTLINED IN OHIO ADMINISTRATIVE CODE CHAPTER 4121: 1-3: SPECIFIC SAFETY REQUIREMENTS OF THE INDUSTRIAL COMMISSION OF OHIO RELATING TO CONSTRUCTION.

EXISTING STRUCTURE VERIFICATION

DETAILS AND DIMENSIONS SHOWN ON THESE PLANS PERTAINING TO THE EXISTING STRUCTURES HAVE BEEN OBTAINED FROM PLANS OF THE EXISTING STRUCTURES, AND/OR FROM FIELD OBSERVATIONS AND MEASUREMENTS. CONSEQUENTLY, THEY ARE INDICATIVE OF THE EXISTING STRUCTURE AND THE PROPOSED WORK, BUT THEY SHALL BE BE CONSIDERED TENTATIVE AND APPROXIMATE. THE CONTRACTOR IS REFERRED TO THE C.M.S. SECTIONS 102.05, 105.02, AND513.02. CONTRACTOR BID PRICES SHALL BE BASED UPON A RECOGNITION OF THE UNCERTAINTIES DESCRIBED ABOVE AND UPON A PRE-BID EXAMINATION OF THE EXISTING STRUCTURE BY THE CONTRACTOR. HOWEVER, ALL PROJECT WORK SHALL BE BASED UPON ACTUAL DETAILS AND DIMENSIONS WHICH HAVE BEEN VERIFIED BY THE CONTRACTOR IN THE FIELD AND SUBSTANTIATED BY ODOT PROJECT PERSONNEL.

REFERENCES

REFERENCE SHALL BE MADE TO THE SUPPLEMENTAL SPECIFICATIONS AND STANDARD DRAWINGS OF THE STATE OF OHIO THAT ARE LISTED ON THE TITLE PAGE.

ORIGINAL CONSTRUCTION PLANS

FOR MORE INFORMATION, THE ORIGINAL CONSTRUCTION DRAWINGS MAY BE EXAMINED IN THE DISTRICT FOUR (4) OFFICE OF THE DEPARTMENT OF TRANSPORTATION, 705 OAKWOOD STREET, RAVENNA, OHIO AND THE CENTRAL OFFICE, COLUMBUS, OHIO.

GUARDRAIL REPLACEMENT

NO HAZARD SHALL BE LEFT UNPROTECTED EXCEPT FOR THE ACTUAL TIME NECESSARY TO REMOVE, GRADE AND REINSTALL GUARDRAIL IN A CONTINUOUS OPERATION. THE REMOVAL OF ALL GUARDRAIL SHALL AT ALL TIMES BE AS DIRECTED BY THE ENGINEER. NO GUARDRAIL SHALL BE REMOVED UNTIL THE REPLACEMENT MATERIAL IS ON SITE, READY FOR INSTALLATION. FAILURE TO COMPLY WITH THIS REQUIREMENT, SHALL BE DEEMED SUFFICIENT CAUSE TO ORDER WORK SUSPENDED ON THIS PROJECT UNTIL SUCH TIME THAT THE ENGINEER IS ASSURED OF SAID COMPLIANCE.

LOCATION OF GUARDRAIL

THE LOCATIONS OF GUARDRAIL RUNS, AS SHOWN IN THESE PLANS, ARE SUBJECT TO ADJUSTMENT PRIOR TO FINAL ACCEPTANCE. THE PROJECT ENGINEER SHALL BE SATISFIED THAT ALL INSTALLATIONS WILL AFFORD MAXIMUM PROTECTION FOR TRAFFIC.

CONTINGENCY QUANTITIES

THE CONTRACTOR SHALL NOT ORDER MATERIALS OR PERFORM WORK LISTED IN THE GENERAL SUMMARY FOR ITEMS DESIGNATED BY PLAN NOTE TO BE USED "AS DIRECTED BY THE ENGINEER" UNLESS AUTHORIZED BY THE ENGINEER. (THE ACTUAL WORK LOCATIONS AND QUANTITIES USED AT THE ENGINEER'S DISCRETION SHALL BE MADE A MATTER OF RECORD BY INCORPORATION INTO THE FINAL CHANGE ORDER GOVERNING COMPLETION OF THIS PROJECT.)

THE FOLLOWING NOTES REFER TO DECK REPLACEMENT DETAILS ON SHEET 21

THE PROPOSED SCREED ELEVATION TABLE IS SUBJECT TO ADJUSTMENT IN ORDER TO COMPENSATE FOR THE ACTUAL FIELD CAMBER OF THE BEAMS.

THE NOMINAL DECK SLAB DEPTH OVER BEAMS ARE GIVEN. THE ACTUAL SLAB DEPTH MAY BE MORE; IT SHOULD NOT BE LESS. AFTER COMPLETE REMOVAL OF THE EXISTING DECK SLAB, THE CONTRACTOR SHALL DETERMINE ACTUAL TOP OF BEAM ELEVATIONS IN THE FIELD AND DEDUCT THEM FROM PROPOSED SCREED ELEVATIONS TO OBTAIN ACTUAL SLAB DEPTHS.

THE QUANTITY OF DECK CONCRETE TO BE PAID FOR SHALL BE BASED ON THE NOMINAL DECK SLAB DEPTHS GIVEN IN THE PLANS.

STATE OF OHIO
DEPARTMENT OF TRANSPORTATION
DIVISION OF DESIGN AND CONSTRUCTION
BUREAU OF BRIDGES

GENERAL NOTES

SUM-176-0028 & SUM-271-0358R

DESIGNED	DRAWN	TRACED	CHECKED	REVIEWED	DATE	REVISED
J.M.	P.O		J.M.			

:176NOTES (2/12/92)

DESIGNED BY	DATE	F.H.W.A. REGION	STATE	PROJECT NO.	FUNDS
REVIEWED BY	DATE	5	OHIO	BR-62-91	

EXISTING TYPICAL SECTIONS

SUM-I.R.271 NORTHBOUND

SUM-271/176-3.58/0.28

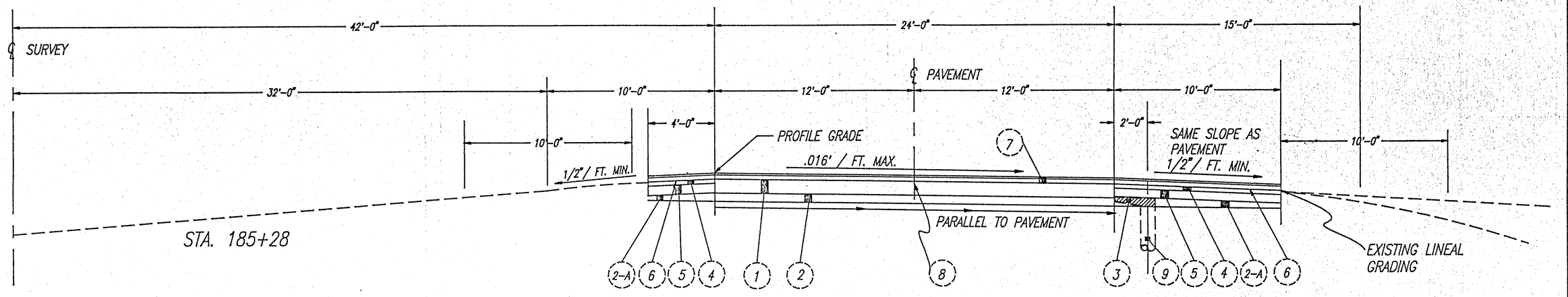

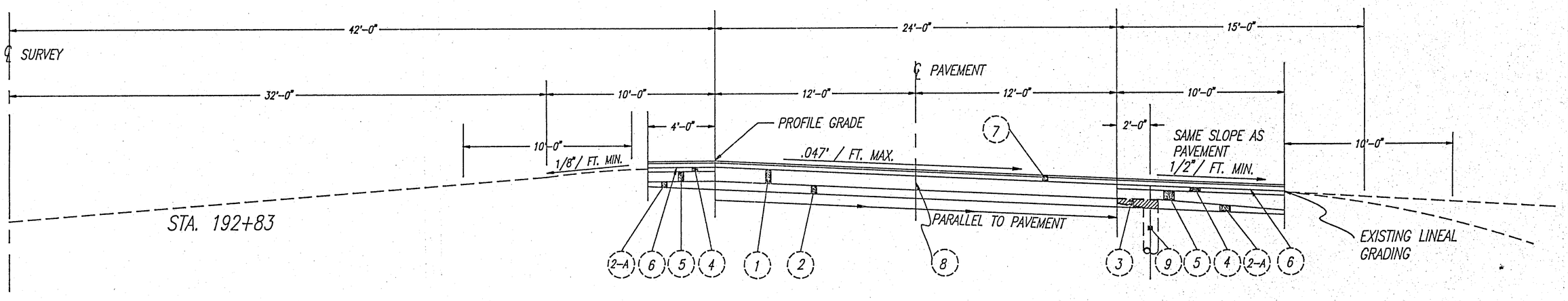

1. EXISTING REINFORCED PORTLAND CEMENT CONCRETE PAVEMENT (10" THICK)
2. EXISTING (VARIABLE DEPTH) SUBBASE, GRADING A OR B MODIFIED AS PER GENERAL NOTE

2-A. EXISTING (VARIABLE DEPTH) SUBBASE

3. EXISTING DRAINAGE CONNECTION, USING NO. 8 AGGREGATE
4. EXISTING 3" BITUMINOUS AGGREGATE BASE 702.01 85-100 OR 702.09 RT12
5. EXISTING (VARIABLE DEPTH) AGGREGATE BASE
6. EXISTING SEAL COAT BITUMINOUS MATERIAL, APPLIED AT 0.03 GAL. / SQ. YD.
   EXISTING SEAL COAT COVER AGREGGATE, NO. 8 APPLIED AT 0.008 CU. YD. / SQ. YD.
7. EXISTING 3/4" OPEN GRADED RUBBERIZED ASPHALT
   EXISTING 2 3/4" ASPHALT CONCRETE AC-20
8. EXISTING STANDARD LONGITUDINAL JOINT
9. EXIISTING 6" PIPE UNDERDRAIN

NOTE: DRAWING NOT TO SCALE

:271SECT (11/13/91)

STATE OF OHIO
DEPARTMENT OF TRANSPORTATION
DIVISION OF DESIGN AND CONSTRUCTION
BUREAU OF BRIDGES

TYPICAL SECTIONS
SUM-271-3.58

DESIGNED	DRAWN	TRACED	CHECKED	REVIEWED	DATE	REVISED
J.M.	P.O.		J.M.			

APPROACH PROFILE GRADE

DESIGNED BY _____ DATE _____
REVIEWED BY _____ DATE _____

F.H.W.A. REGION	STATE	PROJECT NO.	FUNDS
5	OHIO	BR-62-91	

17/32

SUM-271/176-3.58/0.28

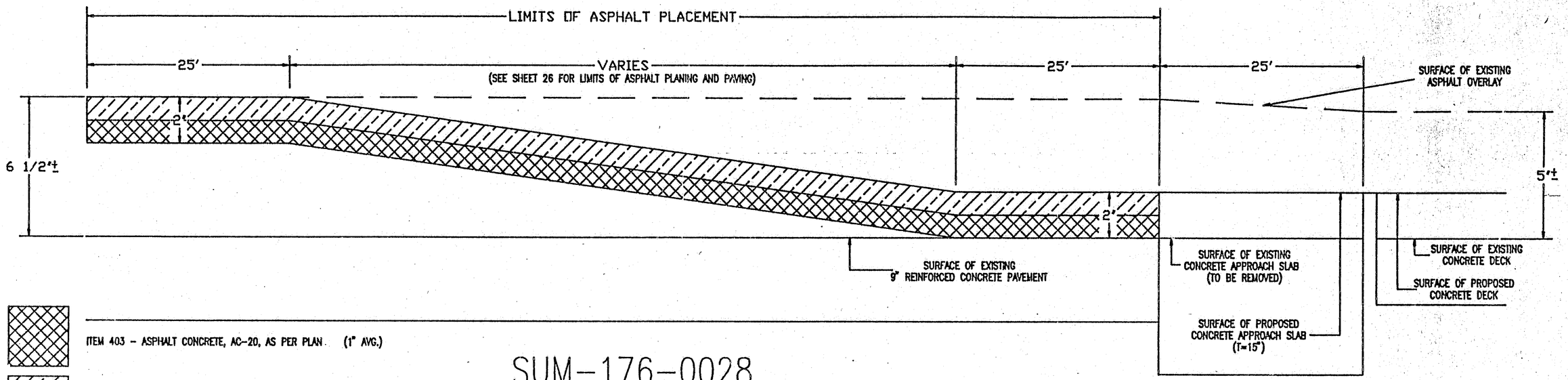

ITEM 403 - ASPHALT CONCRETE, AC-20, AS PER PLAN (1" AVG.)

ITEM 404 - ASPHALT CONCRETE, AC-20 (1")

SUM-176-0028
(PART 2)

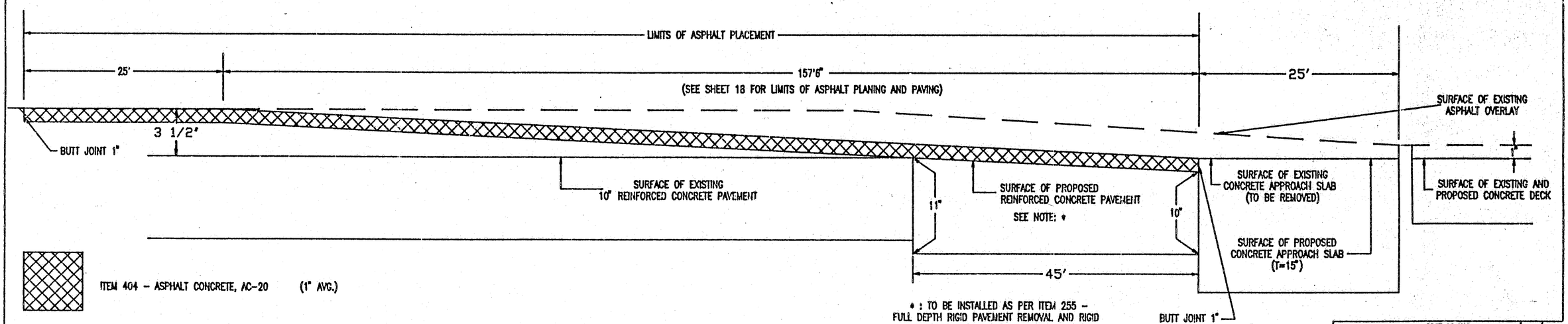

ITEM 404 - ASPHALT CONCRETE, AC-20 (1" AVG.)

* : TO BE INSTALLED AS PER ITEM 255 - FULL DEPTH RIGID PAVEMENT REMOVAL AND RIGID REPLACEMENT, CLASS C, AS PER PLAN

SUM-271-0358R
(PART 1)

NOT TO SCALE

STATE OF OHIO
DEPARTMENT OF TRANSPORTATION
DIVISION OF DESIGN AND CONSTRUCTION
BUREAU OF BRIDGES

APPROACH ROADWAY PROFILE
SUM-176-0028 & SUM-271-0358R

DESIGNED	DRAWN	TRACED	CHECKED	REVISED	DATE	REVISED
J.M.	J.M.					

F.H.W.A. REGION	STATE	PROJECT NO.	FUNDS
5	OHIO	BR-62-91	

18/32

SUM-271-0358 OVER INTERSTATE ROUTE 77

SUM-271/176-3.58/0.28

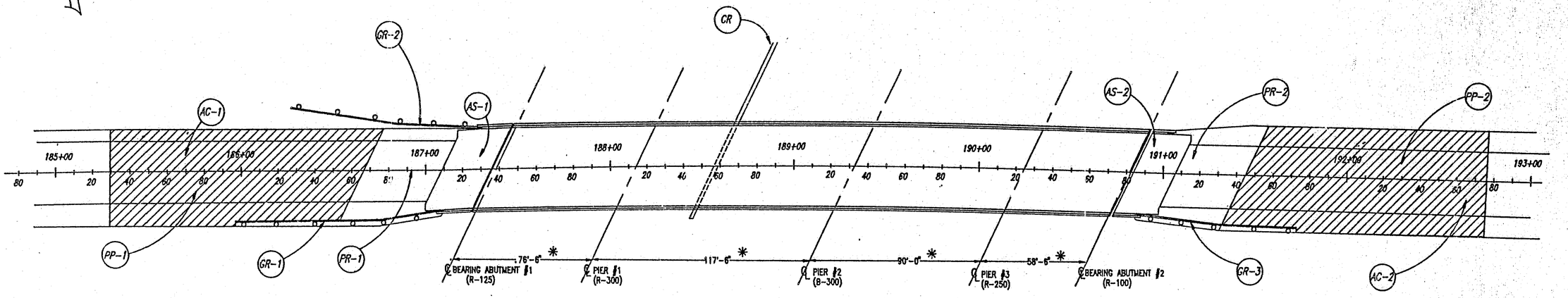

EXTENTS OF ITEM 254 PAVEMENT PLANING (VARIABLE)

✱ MEASURED ALONG LOCAL TANGENT

SUM-271-03.58R OVER IR 77

REFERENCE NUMBER	STATION TO STATION	SIDE	202 REMOVE CURB	202 ASPHALT UNDER GUARDRAIL REMOVED, AS PER PLAN	202 BRIDGE TERMINAL ASSEMBLY REMOVED	202 GUARDRAIL REMOVED	202 APPROACH SLAB REMOVED AS PER PLAN	203 SUBGRADE COMPACTION	254 PAVEMENT PLANING, BITUMINOUS (VARIES)	255 FULL DEPTH RIGID PAVEMENT REMOVAL AND REPLACEMENT, CLASS C, AS PER PLAN	301 BITUMINOUS AGGREGATE BASE, AC-20	310 SUBBASE	404 ASPHALT CONCRETE, AC-20	404 ASPHALT CONCRETE UNDER GUARD RAIL	407 TACK COAT	408 BITUMINOUS PRIME COAT	606 BRIDGE TERMINAL ASSEMBLY, TYPE 1	606 BRIDGE TERMINAL ASSEMBLY, TYPE 2	606 GUARDRAIL, TYPE 5	606 RAISING TYPE 5 GUARDRAIL	611 REINFORCED CONCRETE APPROACH SLABS T=15	642 EDGE LINES, TYPE 2	642 LANE LINES, TYPE 2	862 RAISED PAVEMENT MARKERS, TYPE A
			L.F.	CU.YD.	EACH	L.F.	SQ.YD.	SQ.YD.	SQ.YD.	SQ.YD.	CU.YD.	CU.YD.	CU.YD.	CU.YD.	GAL.	GAL.	EACH	EACH	L.F.	L.F.	SQ.YD.	MILE	MILE	EACH
CR	I-77 S.B. MAINLINE/RAMP		400								10		2		9									
GR-1	186+00 TO 187+00	RT		3	1	25								2		34	1		25	75				
GR-2	186+20 TO 187+20	LT		1	1	25								1		10	1		25	50				
GR-3	191+00 TO 191+80	RT		3	1	25								2		34		1	25	75				
PP-1	184+60 TO 186+70								580															
PP-2	191+40 TO 193+50								580															
AS-1	187+10 TO 187+35						76	104				17									104			
AS-2	190+75 TO 191+00						72	100				17									100			
PR-1	186+70 TO 187+10									120														
PR-2	191+00 TO 191+40									120														
AC-1	184+60 TO 186+70												21		58									
AC-2	191+40 TO 193+50												21		58									
TR	184+60 TO 193+50																					0.3	0.15	15
	TOTAL QUANTITIES		400	7	3	75	148	204	1160	240	10	34	44	5	125	78	2	1	75	200	204	0.3	0.15	15

NOTE: ALL TRAFFIC PAVEMENT MARKINGS ARE TO BE REPLACED AS PER EXISTING MARKINGS.

(CR) — ITEM 202 REMOVE CURB
ITEM 301 BITUMINOUS AGGREGATE BASE, AC-20
ITEM 404 ASPHALT CONCRETE, AC-20
(SEE DETAILS AS PER THIS SHEET)

(GR) — ITEM 202 ASPHALT UNDER GUARDRAIL REMOVED, AS PER PLAN
ITEM 202 BRIDGE TERMINAL ASSEMBLY REMOVED
ITEM 202 GUARDRAIL REMOVED
ITEM 404 ASPHALT CONCRETE UNDER GUARD RAIL
ITEM 408 BITUMINOUS PRIME COAT
ITEM 606 BRIDGE TERMINAL ASSEMBLY, TYPE 1
ITEM 606 BRIDGE TERMINAL ASSEMBLY, TYPE 2
ITEM 606 GUARDRAIL, TYPE 5
ITEM 606 RAISING TYPE 5 GUARDRAIL

(PP) — ITEM 254 PAVEMENT PLANING, BITUMINOUS (VARIES)

(AS) — ITEM 202 APPROACH SLAB REMOVED, AS PER PLAN
ITEM 203 SUBGRADE COMPACTION
ITEM 310 SUBBASE
ITEM 611 REINFORCED CONCRETE APPROACH SLAB (T=15")

(PR) — ITEM 255 FULL DEPTH RIGID PAVEMENT REMOVAL AND REPLACEMENT, CLASS C, AS PER PLAN

(AC) — ITEM 404 ASPHALT CONCRETE, AC-20
ITEM 407 TACK COAT

(TR) — ITEM 642 EDGE LINES, TYPE 2
ITEM 642 LANE LINES, TYPE 2
ITEM 862 RAISED PAVEMENT MARKERS, TYPE A

EXISTING TYPE 8 CURB TO BE REMOVED

NOTE: THIS WORK TO BE COMPLETED PRIOR TO ANY DEMOLITION OF THE STRUCTURE.

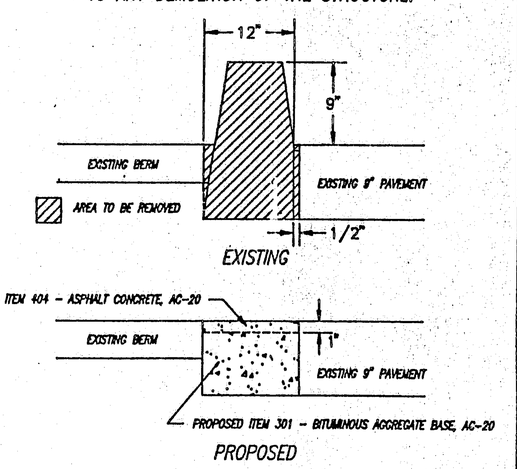

NOTE: DRAWING NOT TO SCALE

STATE OF OHIO
DEPARTMENT OF TRANSPORTATION
DIVISION OF DESIGN AND CONSTRUCTION
BUREAU OF BRIDGES

ROADWAY PLAN
SUM-271-0358 R

DESIGNED	DRAWN	TRACED	CHECKED	REVISED	DATE	REVIEWED
R.A.F.	P.O.		J.M.			

:ROAD271 (11/13/91)

DESIGNED BY	DATE	F.H.W.A. REGION	STATE	PROJECT NO.	FUNDS
REVIEWED BY	DATE	5	OHIO	BR-62-91	

19
32

SUM-271/176-3.58/0.28

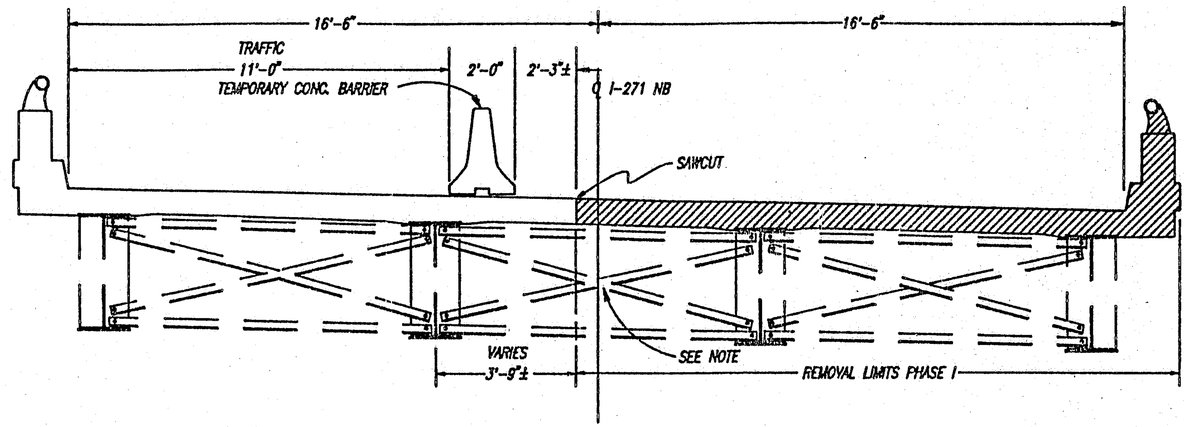

PHASE I

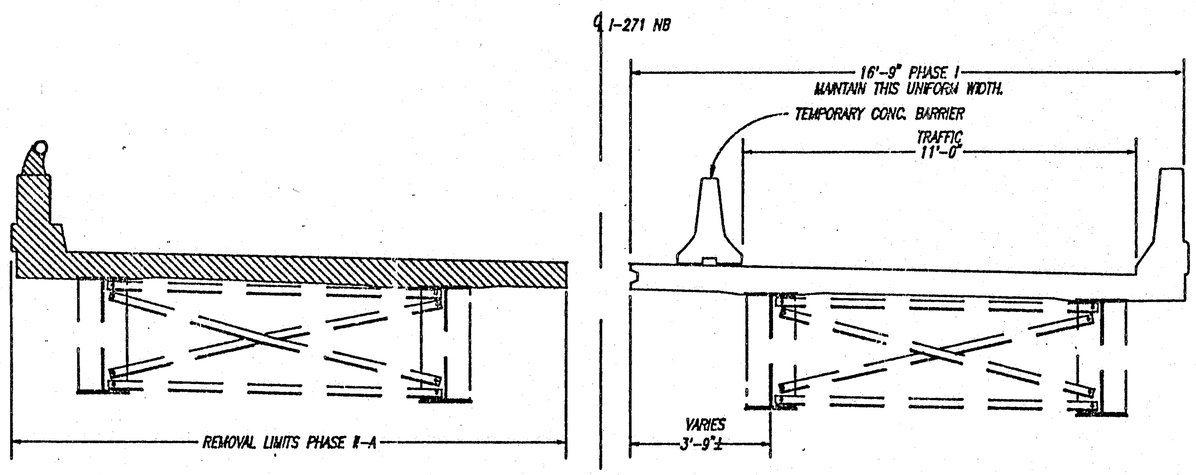

PHASE II-A

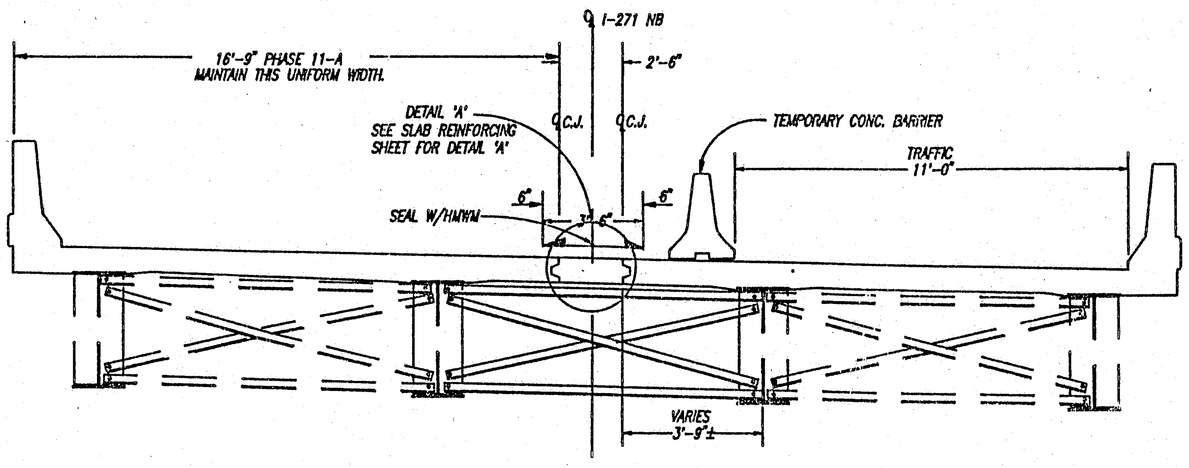

PHASE II-B

NOTE:

ONCE THE CONCRETE DECK HAS BEEN REMOVED FOR PHASE I PROCEDURE, THE EXISTING CROSSFRAMES SHALL BE REMOVED FROM THE BAY CONTAINING THE SAWCUT. FALSEWORK SHALL BE INSTALLED, INDEPENDANT FROM PHASE II, AND PHASE I DECK SHALL BE CAST. AFTER PHASE I HAS CURED AND THE PRECAST BARRIER HAS BEEN INSTALLED, AS DETAILED ON SHEET 6-7 , TRAFFIC SHALL BE RE-DIRECTED, AND THE REMAINING DECK SHALL BE REMOVED. FALSEWORK FOR PHASE II-A SHALL BE ERECTED, INDEPENDANT OF PHASE I, AND PHASE II-A DECK SHALL BE CAST. AFTER PHASE II-A HAS CURED, NEW CROSSFRAMES SHALL BE INSTALLED IN THE BAY CONTAINING PHASE II-B CONSTRUCTION, AND FALSEWORK FOR PHASE II-B CONSTRUCTION MAY, SUB-SEQUENTLY, BE INSTALLED, AND THE REMAINING DECK CAST. PHASE II-B FALSEWORK MAY BE CONNECTED TO PHASE I AND PHASE II-A FALSEWORK.

AREA TO BE REMOVED

ABBREVIATIONS : C.J. - CONSTRUCTION JOINT
HMWM - HIGH MOLECULAR WEIGHT METHACRYLATE

:271PHASE (2/18/92)

NOTE: DRAWING NOT TO SCALE

STATE OF OHIO
DEPARTMENT OF TRANSPORTATION
DIVISION OF DESIGN AND CONSTRUCTION
BUREAU OF BRIDGES

SEQUENCE OF CONSTRUCTION
BRIDGE NO. SUM-271-0358R

NB I 271 OVER I-77

DESIGNED	DRAWN	TRACED	CHECKED	REVIEWED	DATE	REVISED
N.M.	P.O.		N.M.			

DESIGNED BY	DATE	F.H.W.A. REGION	STATE	PROJECT NO.	FUNDS
REVIEWED BY	DATE	5	OHIO	BR-62-91	

20/32

SUM-271/176-3.58/0.28

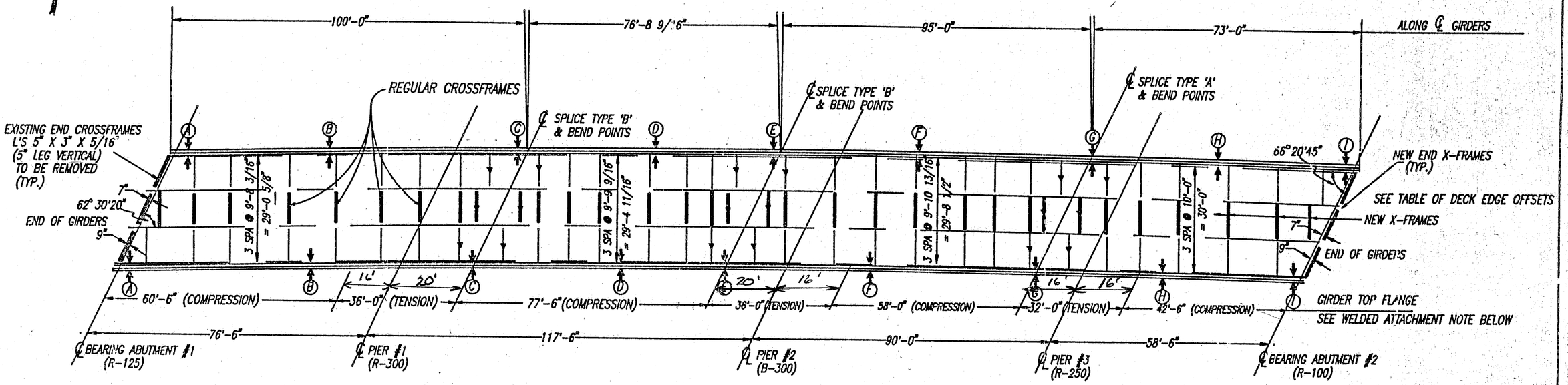

FRAMING PLAN

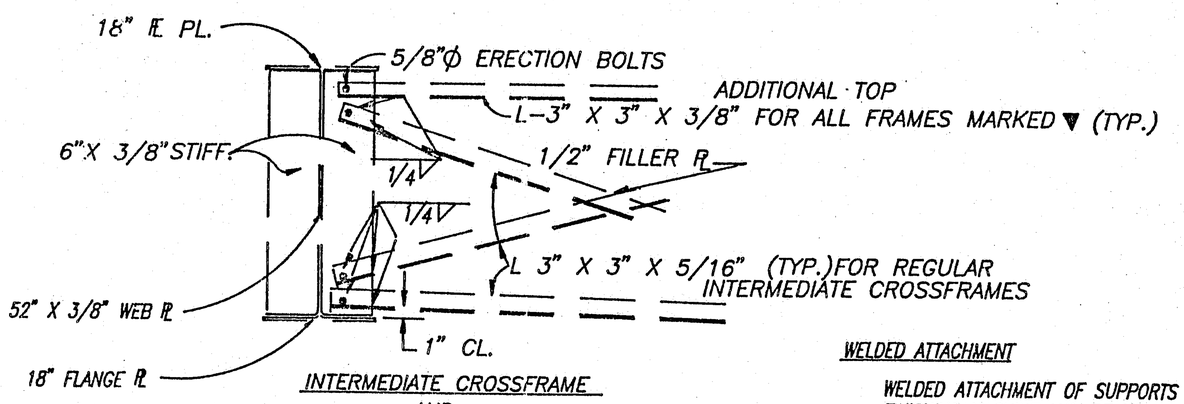

INTERMEDIATE CROSSFRAME AND STIFFENER DETAIL

NOTE:

ERECTION BOLTS LEFT IN PLACE SHALL BE TACK WELDED.

WELDED ATTACHMENT

WELDED ATTACHMENT OF SUPPORTS FOR CONCRETE DECK FINISHING MACHINE MAY BE MADE TO AREAS OF THE FASCIA GIRDER FLANGES DESIGNATED 'COMPRESSION'. ATTACHMENTS SHALL NOT BE MADE TO AREAS DESIGNATED 'TENSION'. FILLET WELDS TO COMPRESSION FLANGES SHALL NOT BE CLOSER THAN 1" FROM THE EDGE OF FLANGE, BUT NOT MORE THAN 2" LONG, AND NOT TO BE SMALLEER THAN THE MINIMUM SIZE REQUIRED BY AASHTO.

DECK EDGE OFFSETS (FROM ℄ BEAM)

LOCATION	NORTH EDGE	SOUTH EDGE
A	3'-6 3/4"	3'-7"
B	3'-9 5/8"	3'-1 3/4"
C	3'-4 1/2"	3'-4 5/8"
D	3'-6"	3'-1 3/8"
E	3'-9 7/8"	3'-2 7/8"
F	3'-5 3/8"	2'-10 1/4"
G	3'-0 3/4"	3'-0 3/4"
H	3'-2 1/8"	2'-9 7/8"
I	2'-11 1/4"	2'-11 3/8"

NOTE: DRAWING NOT TO SCALE

STATE OF OHIO
DEPARTMENT OF TRANSPORTATION
DIVISION OF DESIGN AND CONSTRUCTION
BUREAU OF BRIDGES

FRAMING PLAN
SUM-271-0358R

DESIGNED	DRAWN	TRACED	CHECKED	REVISED	DATE	REVISED
N.M.	P.O.		N.M.			

:271EL 2/18/92

F.H.W.A. REGION	STATE	PROJECT NO.	FUNDS
5	OHIO	BR-62-91	

DESIGNED BY _____ DATE _____

REVIEWED BY _____ DATE _____

21/32

SUM-271/176-3.58/0.28

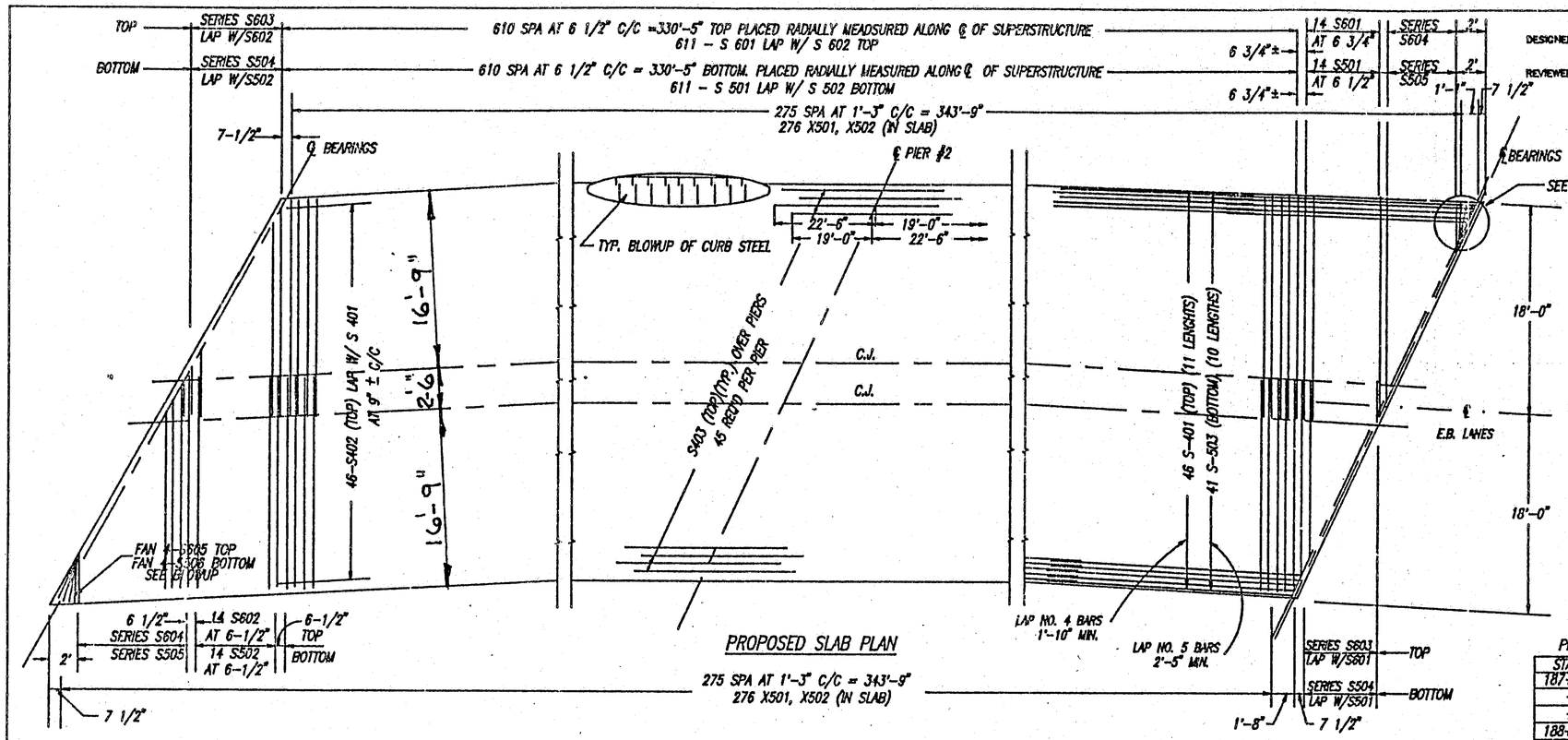

PROPOSED SLAB PLAN

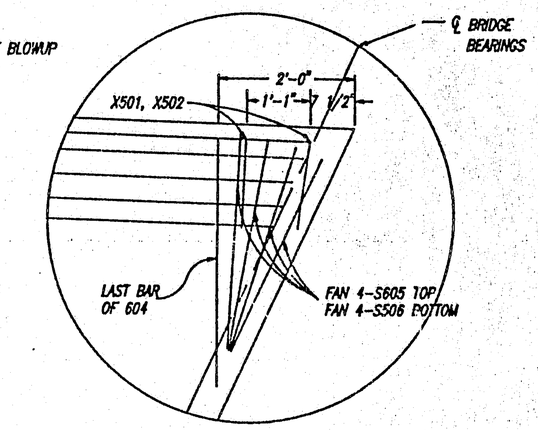

BLOWUP OF FANNED REBAR

PROPOSED SCREED ELEVATION TABLE

STATION	ELEV. 'A'	ELEV. 'B'	ELEV. 'C'
187+25	1117.76	1117.59	1116.62
+50	1117.08	1116.87	1115.87
+75	1116.36	1116.16	1114.91
188+00	1115.66	1115.44	1114.14
+25	1114.99	1114.73	1113.46
+50	1114.31	1114.01	1112.76
+75	1113.58	1113.30	1112.01
189+00	1112.87	1112.58	1111.24
+25	1112.07	1111.87	1110.53
+50	1111.37	1111.15	1109.83
+75	1110.67	1110.44	1109.11
190+00	1109.94	1109.72	1108.38
+25	1109.23	1109.01	1107.68
+50	1108.52	1108.29	1106.95

NOTE:

ELEVATION B IS THE FINISHED GRADE ELEVATION OR PROFILE GRADE.

ELEVATIONS A & C ARE ELEVATIONS BEFORE CONCRETE IS PLACED.

FOR ADDITIONAL NOTES SEE SHEET 14

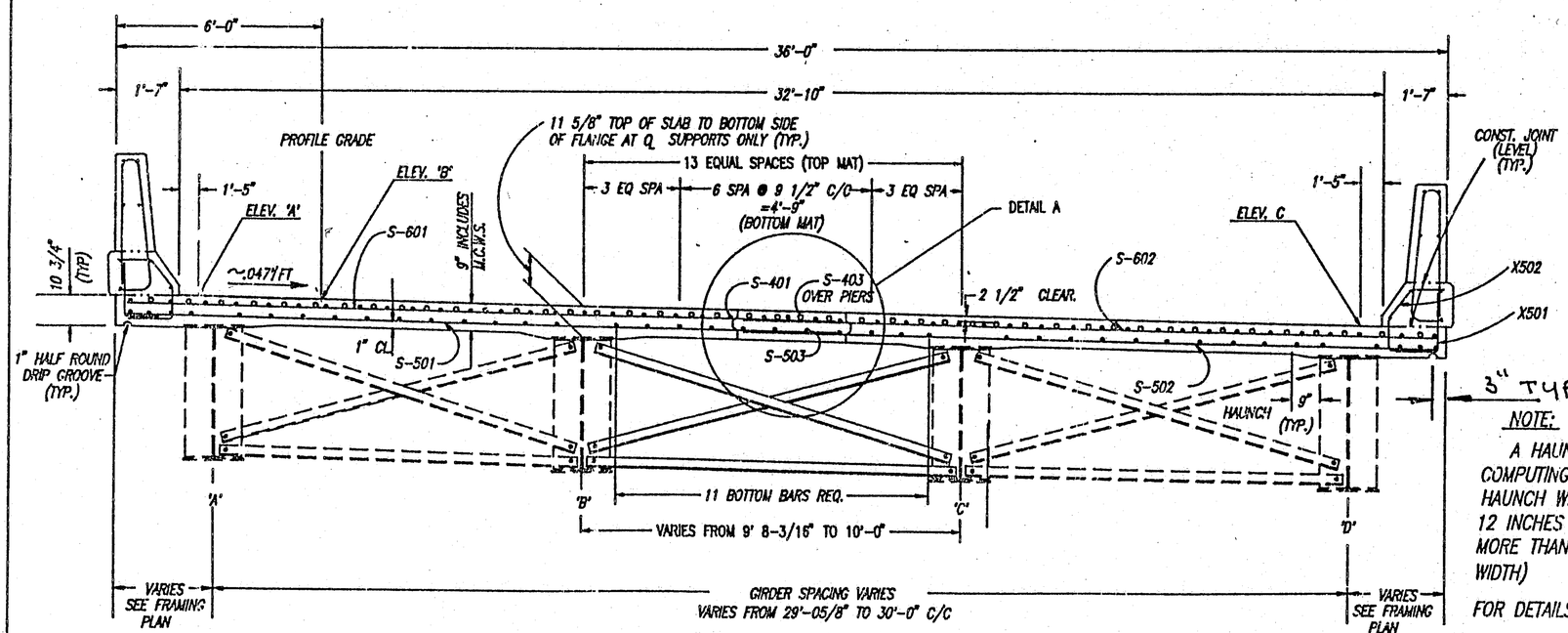

PROPSED TRANSVERSE SECTION

NOTE:

A HAUNCH WIDTH OF 9 INCHES SHALL BE USED FOR COMPUTING QUANTITY OF CONCRETE. HOWEVER, THE HAUNCH WIDTH MAY VARY BETWEEN 6 INCHES AND 12 INCHES (PROVIDED THAT THE SLOPE SHALL BE NOT MORE THAN 1:4 FOR A HAUNCH LESS THAN A 9 INCH WIDTH)

FOR DETAILS ON PARAPET SEE SHEET 22,23

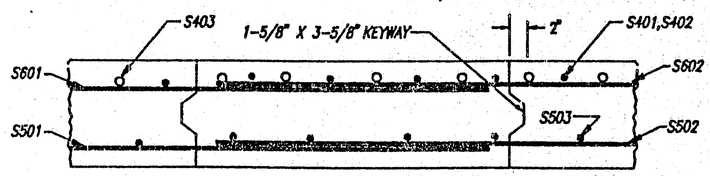

DETAIL 'A'

NOTE: DRAWING NOT TO SCALE

STATE OF OHIO
DEPARTMENT OF TRANSPORTATION
DIVISION OF DESIGN AND CONSTRUCTION
BUREAU OF BRIDGES

SLAB REINFORCING DETAILS

SUM-271-0358 R

DESIGNED	DRAWN	CHECKED	REVIEWED	REVISED	DATE	REVISED
N.M	P.O.		N.M.			

:271TRANS 02/24/92

F.H.W.A. REGION	STATE	PROJECT NO.	FUNDS
5	OHIO	BR-62-91	

22/32

SUM-271/176-3.58/0.28

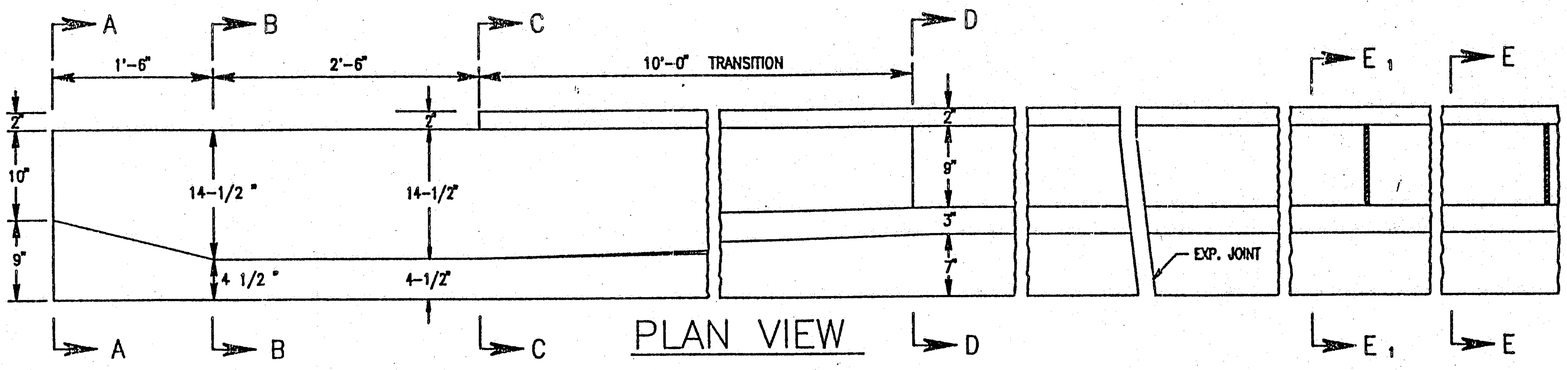

PLAN VIEW

SEE SHEET 23 FOR SECTIONS

STRUCTURE NO.	WINGWALLS								OUTSIDE PANELS								INSIDE PANELS							
	REAR				FORWARD				REAR				FORWARD				BETWEEN PIER PANELS				OVER PIERS NEG. MOMENT AREAS			
	LEFT		RIGHT		LEFT		RIGHT		LEFT		RIGHT		LEFT		RIGHT		NO. LEFT	NO. RIGHT	E	F	NO. LEFT	NO. RIGHT	E	F
	A	B	A	B	A	B	A	B	C	D	C	D	C	D	C	D								
SUM-271-0358	6'8"	1'4"	6'8"	1'4"	3'10"	1'6"	2'5"	1'1"	15'0"	0	15'0"	0	16'1"	1'1"	16'8"	1'8"	13	13	15'0"	7½"	16	16	7'6"	7½"

ALL DIMENSIONS ADDED BY ADDENDUM.

MISCELLANEOUS NOTES

INSTALL DEFLECTION JOINTS AS PER STANDARD BRIDGE DRAWING BR-1. EXCEPT THAT SPACING SHALL BE AS SHOWN ON THIS SHEET.

FOR DETAILS OF THE THRIE BEAM GUARDRAIL BRIDGE TERMINAL TRANSITION AND CONNECTIONS TO THE PARAPET SEE STANDARD CONSTRUCTION DRAWINGS GR-3.1 AND GR-3.2.

REFER TO STANDARD BRIDGE DRAWING BR-1 FOR DETAILS NOT SHOWN ON SHEETS 22 + 23 FOR THE PARAPET CONSTRUCTION.

GROUT SHALL MEET THE REQUIREMENTS OF ASTM C-881, TYPE 1, GRADE 3, CLASS A, B OR C.

NOTE: THE BAR NUMBERS ON THIS SHEET DO NOT NECESSARILY CORRESPOND WITH THE BARS ON OUR STANDARD PLAN SHEETS.

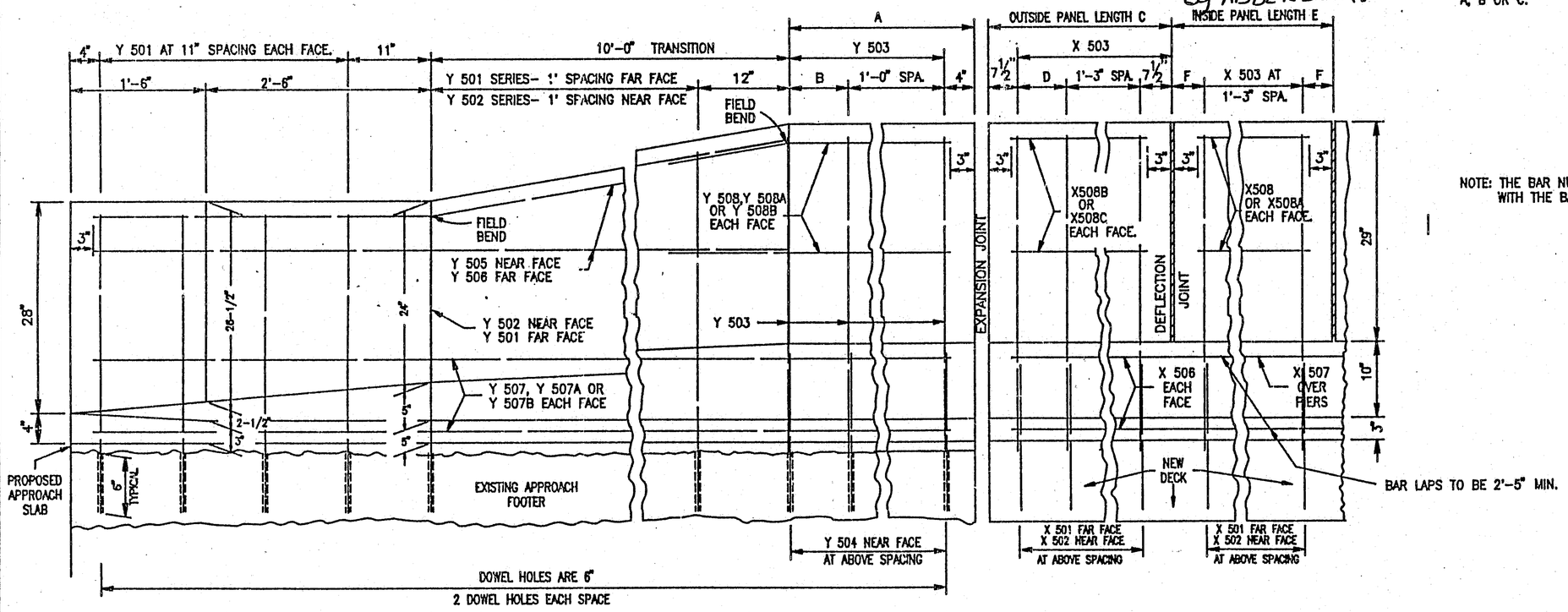

PROFILE VIEW

NOTE: DRAWING NOT TO SCALE

:PRB271 (11/19/91)

STATE OF OHIO
DEPARTMENT OF TRANSPORTATION
DIVISION OF DESIGN AND CONSTRUCTION
BUREAU OF BRIDGES

PARAPET RETROFITTING DETAILS

SUM-271-0358R

DESIGNED	DRAWN	REVIEWED	CHECKED	REVISED	DATE	REVISED
R.F.	R.F.		N.M.			

42" PARAPET RETROFITTING DETAILS (NEW DECK)

DESIGNED BY	DATE
REVIEWED BY	DATE

F.H.W.A. REGION	STATE	PROJECT NO.	FUNDS
5	OHIO	BR-62-91	

SUM-271\176-3.58R\0.28

TYPICAL SECTIONS FOR NEW DECK

NOTE: DRAWING NOT TO SCALE

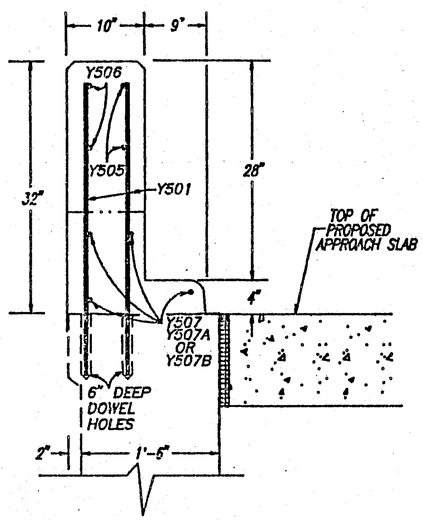

PROPOSED SECTION A–A

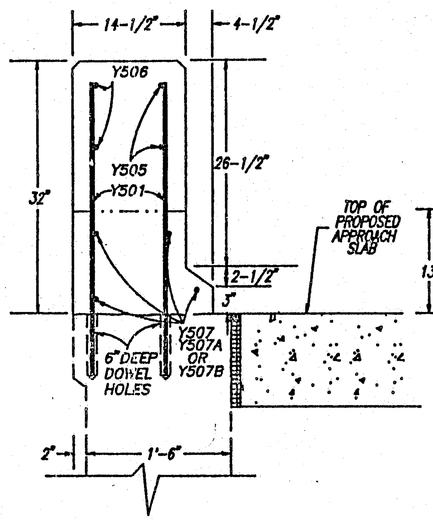

PROPOSED SECTION B–B

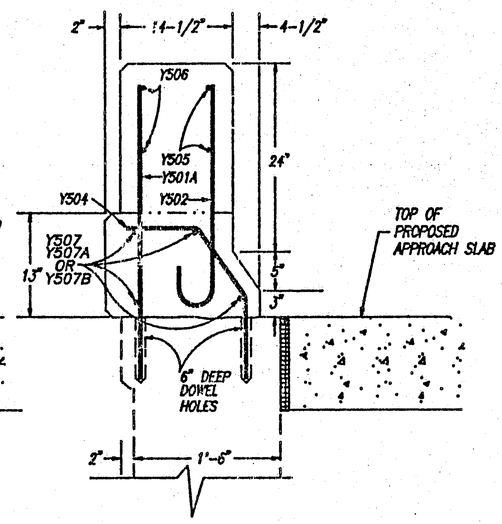

PROPOSED SECTION C–C

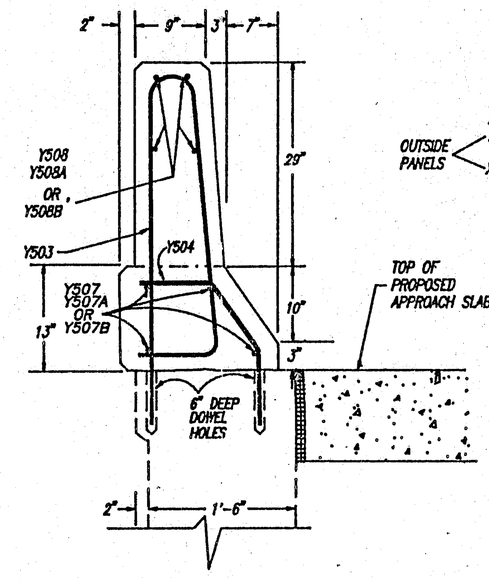

PROPOSED SECTION D–D

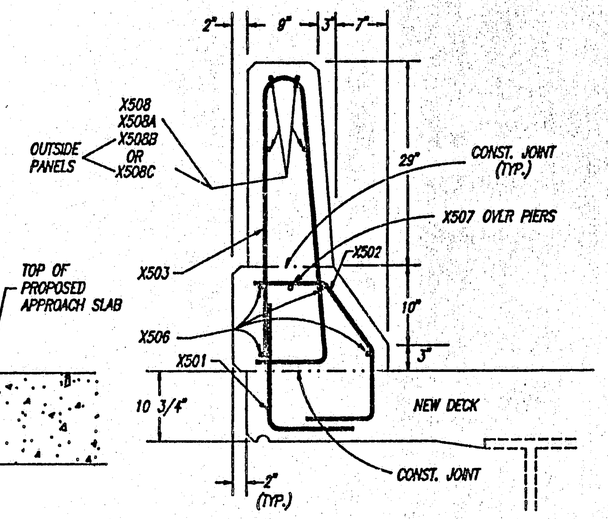

PROPOSED SECTION E–E & E_1–E_1

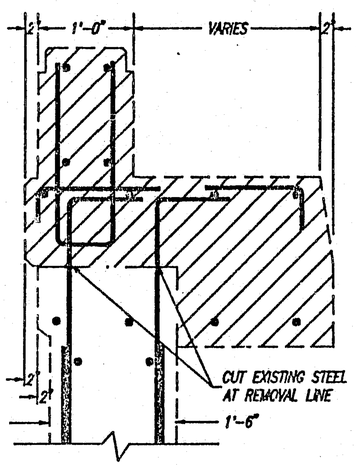

EXISTING SECTIONS A–A,B–B,C–C,D–D

EXISTING ALUMINUM RAILING NOT SHOWN

REMOVAL AREA

STR. NO. SUM-271-0358R

MARK	NO.	LENGTH	WEIGHT	SHAPE
Y 501	32	3'-0"	100	STRAIGHT
Y 501A	*40	3'-0" TO 3'-9" 1" INC.	141	STRAIGHT
Y 502	*40	2'-4" TO 3'-1" 1" INC.	113	BENT
Y 503	21	8'-1"	177	BENT
Y 504	61	2'-3 3/4"	147	BENT
Y 505	8	13'-8"	114	BENT
Y 506	8	13'-9"	115	STRAIGHT
Y 507	8	20'-2"	168	STRAIGHT
Y 507A	4	17'-4"	72	STRAIGHT
Y 507B	4	15'-11 1/2"	67	STRAIGHT
Y 508	8	7'-8"	64	STRAIGHT
Y 508A	4	4'-10"	20	STRAIGHT
Y 508B	4	3'-5 1/2"	14	STRAIGHT
X 501	554	2'-6"	1,445	BENT
X 502	554	3'-3"	1,878	BENT
X 503	554	7'-4"	4,235	BENT
X 506	96	31'-1"	3,112	STRAIGHT
X 507	6	37'-0"	232	STRAIGHT
X 508	112	14'-6"	1,694	STRAIGHT
X 508A	128	7'-0"	935	STRAIGHT
X 508B	4	15'-7"	65	STRAIGHT
X 508C	4	16'-2"	67	STRAIGHT
TOTAL POUNDS			14,975	
DOWEL HOLES			EACH	154

* SERIES : 4 SETS OF 10

STEEL LIST & BENDING DIAGRAM

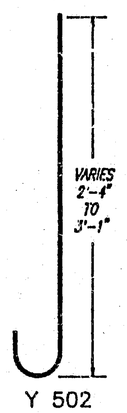

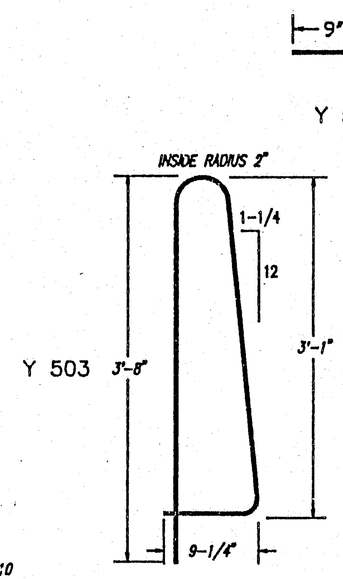

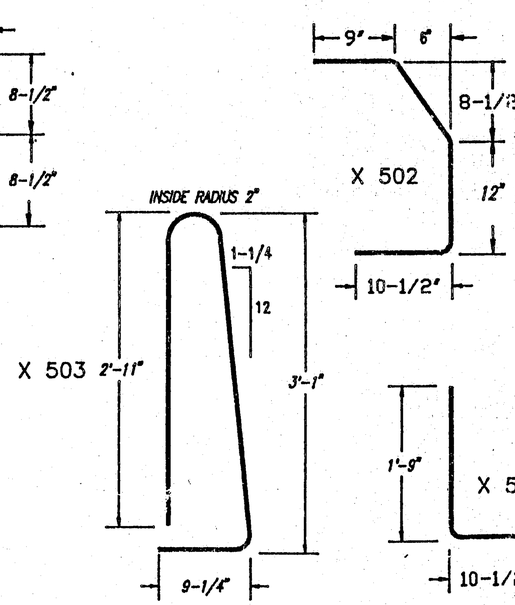

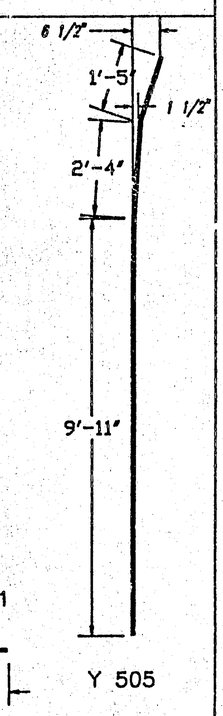

XPAR (02/19/92)

SUM-271-0358R APPROACH SLAB REPLACEMENT AND BACKWALL REPAIR.

F.H.W.A. REGION	STATE	PROJECT NO.	FUNDS
5	OHIO	BR-62-91	

24
32

WINGWALL REBAR SALVAGE AND LAP LENGTH DETAIL

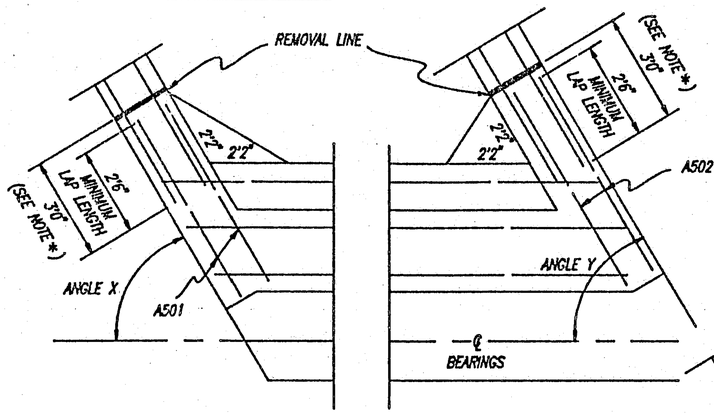

NOTE *:
CUT EXISTING HORIZONTAL WINGWALL REBAR AT 3'0".

	ANGLE X	ANGLE Y
ABUT. NO. 1	61° -28'-12"	61° -41'-10"
ABUT. NO. 2	67° -09'-18"	66° -52'-48"

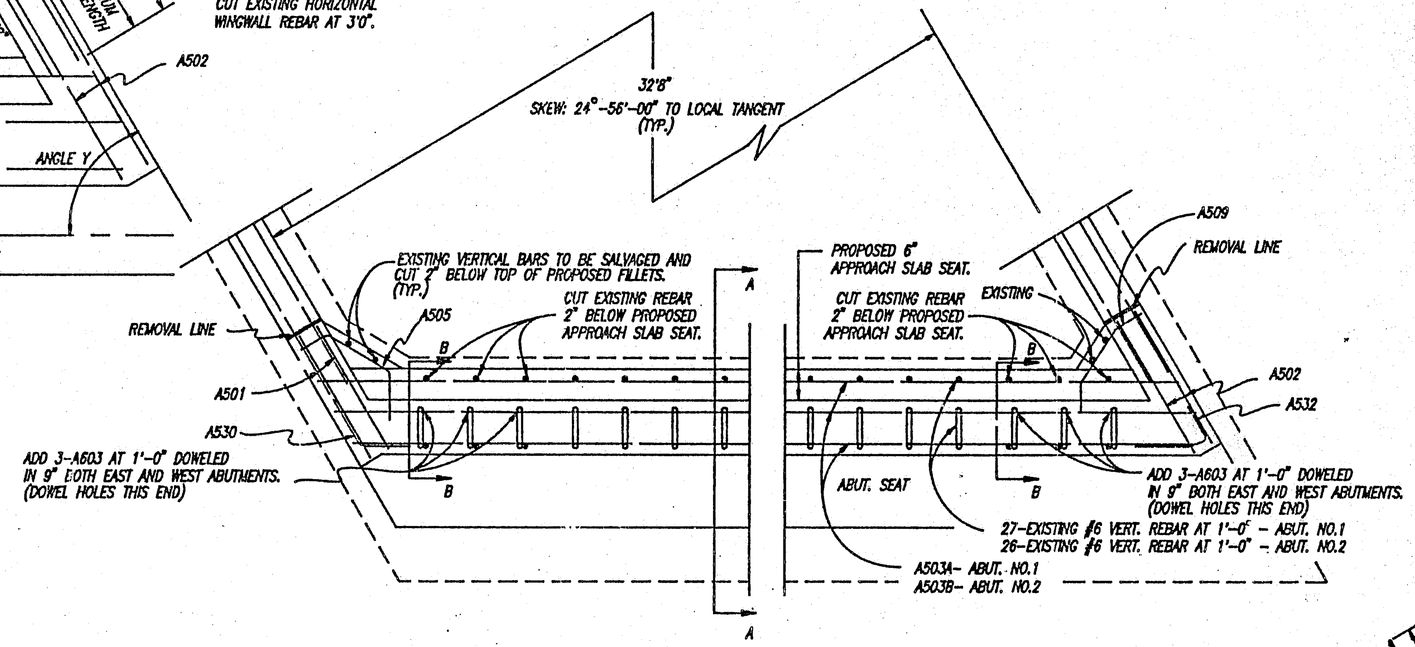

SUM-271-0358R

MARK	NO.	LENGTH	WEIGHT	SHAPE
A501	12	3'8"	46	STR.
A502	12	4'2"	52	STR.
A503A	12	21'0"	263	STR.
A503B	12	20'2"	252	STR.
A505	6	5'11"	37	BENT
A509	6	5'0"	31	BENT
A530	6	4'0"	25	BENT
A532	6	4'5"	28	BENT
A603	12	4'6"	81	BENT
D801	46	3'9"	462	BENT
TOTAL LBS.			1,277	
DOWEL-HOLES	-	-	-	-
	12	9"		

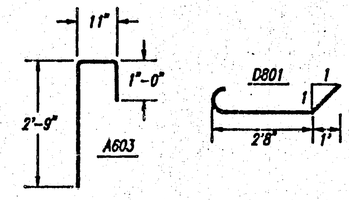

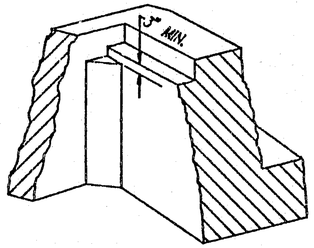

TYPICAL FILLET RECONSTRUCTION DETAIL

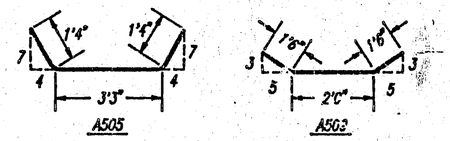

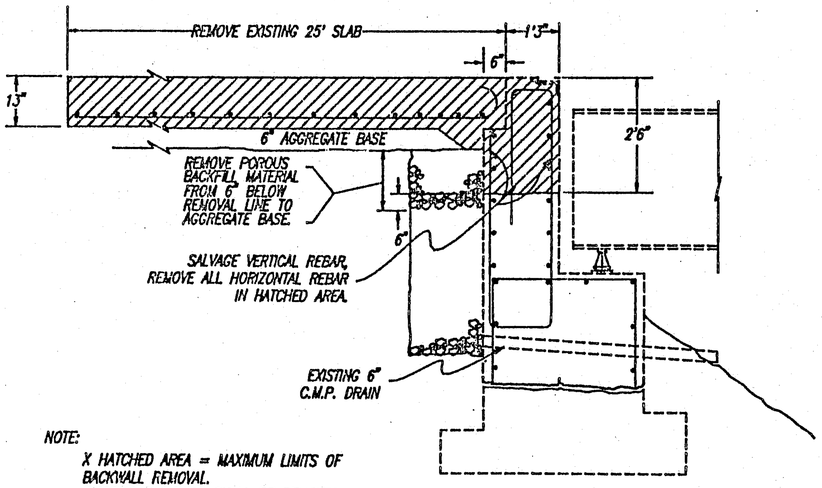

NOTE:
X HATCHED AREA = MAXIMUM LIMITS OF BACKWALL REMOVAL.
EXISTING BACKWALL SHALL BE REMOVED

EXISTING SECTION A-A

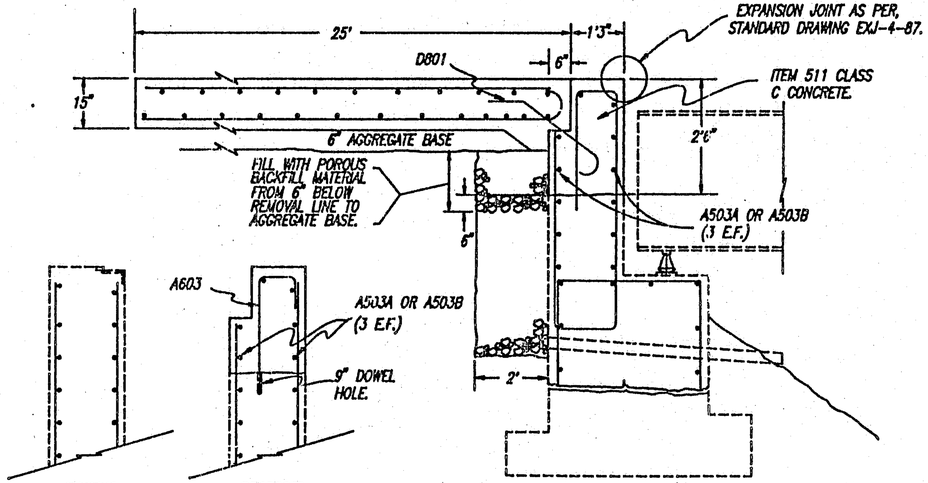

EXISTING SECTION B-B

PROPOSED SECTION B-B

PROPOSED SECTION A-A

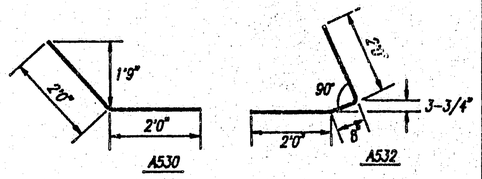

STATE OF OHIO
DEPARTMENT OF TRANSPORTATION
DIRECTOR OF DESIGN AND CONSTRUCTION
BUREAU OF BRIDGES

SUM-271-0358R
APPROACH SLAB REPLACEMENT AND BACKWALL REPAIR

DESIGNED	DRAWN	CHECKED	REVIEWED	DATE
R.A.F.	R.A.F.			

:271BAK

DRAINAGE DETAIL SUM-271-0358R

DESIGNED BY _____ DATE _____
REVIEWED BY _____ DATE _____

F.H.W.A. REGION	STATE	PROJECT NO.	FUNDS
5	OHIO	BR-62-91	

25/32

SUM-271/176-3.58/0.28

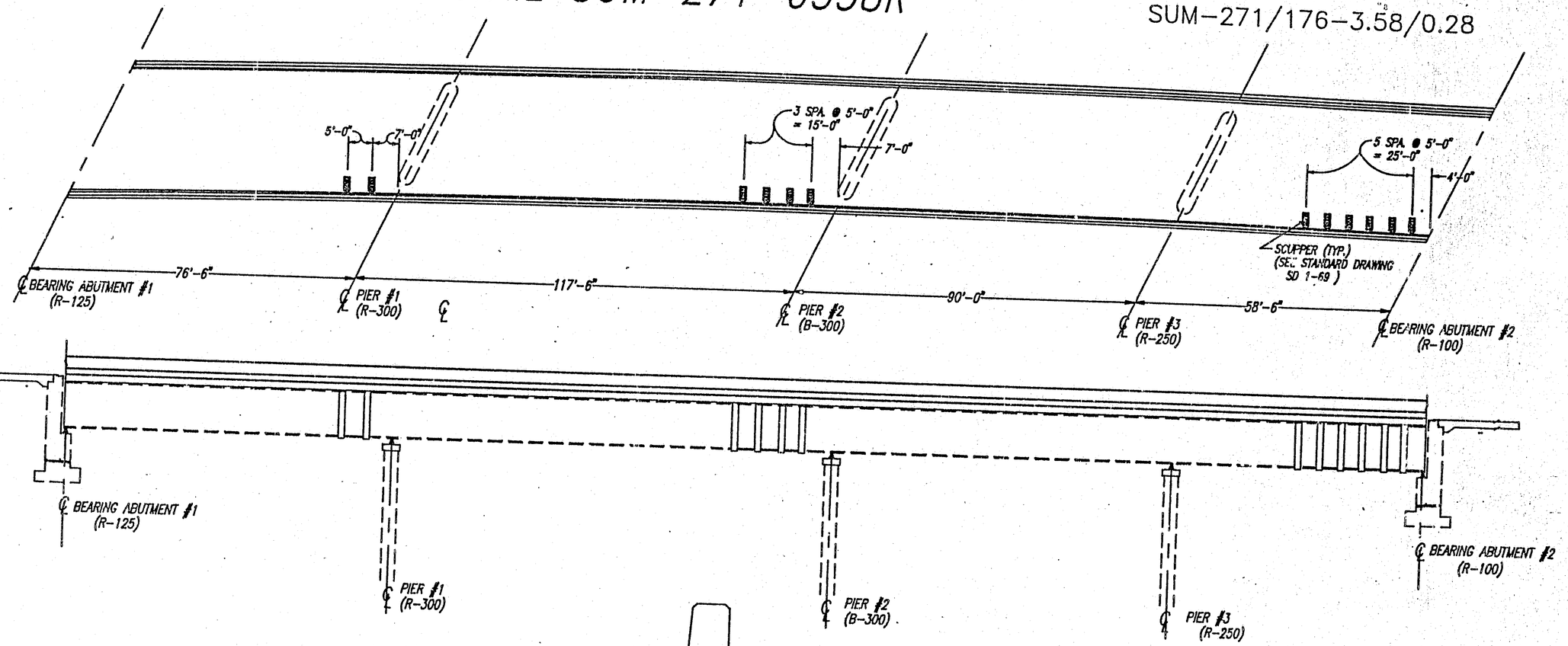

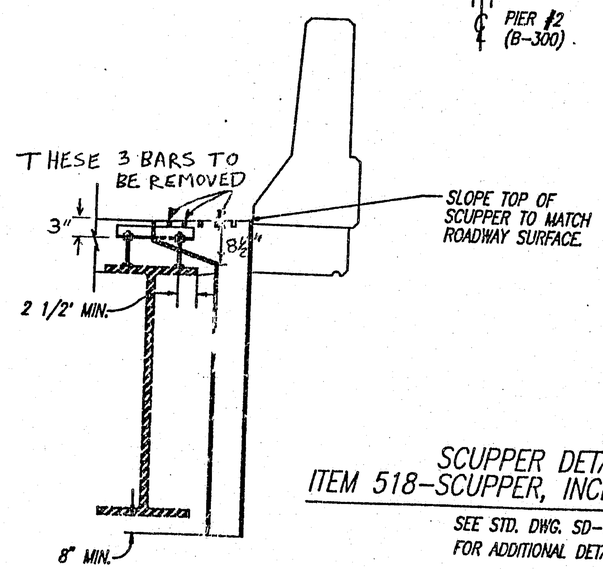

SCUPPER DETAIL AS PER ITEM 518-SCUPPER, INCLUDING SUPPORTS, AS PER PLAN

SEE STD. DWG. SD-1-69 FOR ADDITIONAL DETAILS

NOTE: DRAWING NOT TO SCALE

REV DJW 4-15-92

:271SCUPR (02/20/92)

STATE OF OHIO
DEPARTMENT OF TRANSPORTATION
DIVISION OF DESIGN AND CONSTRUCTION
BUREAU OF BRIDGES

DRAINAGE DETAILS
SUM-271-0358R

DESIGNED	DRAWN	SCALE	CHECKED	REVISED	DATE	REVISION
N.M.	P.O.		N.M.			

DESIGNED BY	DATE	F.H.W.A. REGION	STATE	PROJECT NO.	FUNDS
REVIEWED BY	DATE	5	OHIO		

26/32

SUM-271/176-3.58/0.28

SUM-176-00.28 OVER INTERSTATE ROUTE 77

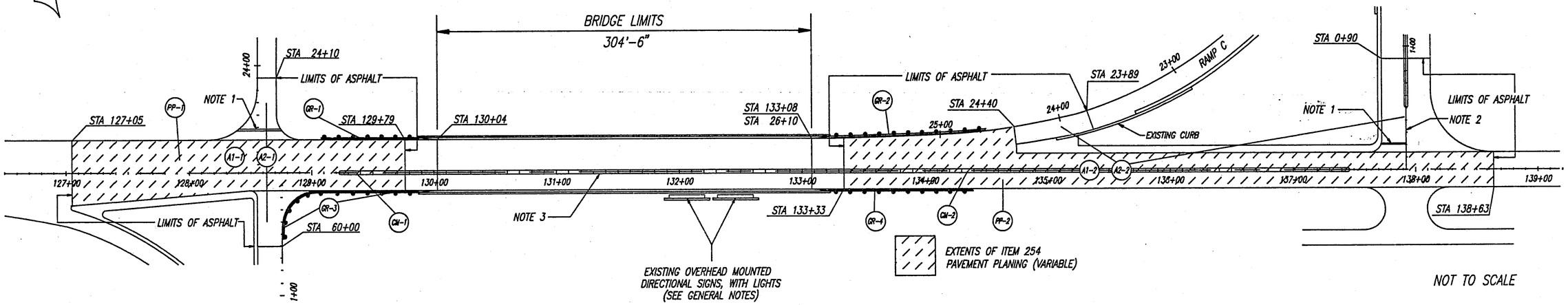

NOT TO SCALE

ALL TRAFFIC PAVEMENT MARKINGS ARE TO BE REPLACED AS PER EXISTING MARKINGS EXCEPT AS NOTED.

NOTE 1: THE PROPOSED STOP LINES ARE TO BE PLACED 8 FT. FROM INTERSECTING EDGE LINE.

NOTE 2: A DOUBLE YELLOW CENTER LINE IS TO PLACED FROM NOSE OF CONCRETE MEDIAN TO 8 FT. FROM INTERSECTING EDGE LINE.

NOTE 3: A DOUBLE YELLOW CENTER LINE IS TO REPLACE THE TWIN EDGE LINES ALONG THE EXISTING CONCRETE MEDIAN TO BE REMOVED.

SUM-176-0028 (WHEATLEY ROAD)

REFERENCE NUMBER	STATION TO STATION	SIDE	202 BRIDGE TERMINAL ASSEMBLY REMOVED	202 GAURDRAIL REMOVED	202 ANCHOR ASSEMBLY REMOVED, TYPE A	202 ANCHOR ASSEMBLY REMOVED, TYPE T	202 CONCRETE MEDIAN REMOVED, AS PER PLAN	254 PAVEMENT PLANING BITUMINOUS, (VARIABLE)	203 LINEAR GRADING, METHOD 2	301 BITUMINOUS AGGREGATE BASE	403 ASPHALT CONCRETE, AC-20, 1" AVG.	404 ASPHALT CONCRETE, AC-20, 1"	404 ASPHALT CONCRETE, AC-20, UNDER GUARDRAIL	407 TACK COAT	408 BITUMINOUS PRIME COAT	606 GAURDRAIL, TYPE 5	606 BRIDGE TERMINAL ASSEMBLY, TYPE 1	606 ANCHOR ASSEMBLY, TYPE T	606 ANCHOR ASSEMBLY, TYPE A	642 EDGE LINE, TYPE 2	642 LANE LINE, TYPE 2	642 CENTER LINE, TYPE 2	642 STOP LINE, TYPE 2	SPEC BARRIER REFLECTOR, TYPE A	SPEC BARRIER REFLECTOR, TYPE B
			EACH	L.F.	EA.	EA.	L.F.	SQ.YD.	L.F.	CU.YD.	CU.YD.	CU.YD.	CU.YD.	GAL.	GAL.	L.F.	EACH	EACH	EACH	MILE	MILE	MILE	L.F.	EACH	EACH
GR-1	128+80 TO 129+90	N	1	50	1				100				1		19	50	1		1					2	
GR-2	24+50 TO 25+90	N	1	63	1				113				1		22	63	1		1					2	
GR-3	50+00(RAMP) TO 129+90	S	1	100		1			135				2		27	100	1	1						2	
GR-4	133+20 TO 134+40	S	1	75		1			110				1		22	75	1	1						2	
CM-1	129+20 TO 129+80	W					57			8															
CM-2	133+30 TO 137+50	E					414			58															
PP-1	127+05 TO 129+79	W						1785																	
PP-2	133+33 TO 138+63	E						2668																	
A1-1	127+05 TO 129+79	W									50			134											
A2-1	127+05 TO 129+79+RAMPS	W										60		162											
A1-2	133+33 TO 138+63	E									74			200											
A2-2	133+33 TO 138+63+RAMPS	E										89		240											
	TOTAL QUANTITIES		4	288	2	2	471	4453	458	66	124	149	5	736	90	288	4	2	2	0.60	0.15	0.23	70	8	8

(CM) – ITEM 202 CONCRETE MEDIAN REMOVED, AS PER PLAN
ITEM 301 BITUMINOUS AGGREGATE BASE

(PP) – ITEM 254 PAVEMENT PLANING, BITUMINOUS (VARIABLE)

(A1) – ITEM 403, ASPHALT CONCRETE, AC-20, 1"AVG.

(A2) – ITEM 404, ASPHALT CONCRETE, AC-20, 1"

(GR) – ITEM 202 GAURDRAIL REMOVED
ITEM 202 ANCHOR ASSEMBLY REMOVED, TYPE A
ITEM 202 ANCHOR ASSEMBLY REMOVED, TYPE T
ITEM 202 BRIDGE TERMINAL ASSEMBLY REMOVED
ITEM 203 LINEAR GRADING, METHOD 2
ITEM 606 GAURDRAIL, TYPE 5
ITEM 606 BRIDGE TERMINAL ASSEMBLY, TYPE 1
ITEM 606 ANCHOR ASSEMBLY, TYPE A
ITEM 606 ANCHOR ASSEMBLY, TYPE T
ITEM SPEC BARRIER REFLECTOR, TYPE A

STATE OF OHIO
DEPARTMENT OF TRANSPORTATION
DIVISION OF DESIGN AND CONSTRUCTION
BUREAU OF BRIDGES

ROADWAY PLAN

SUM-176-00.28

DESIGNED	DRAWN	TRACED	CHECKED	REVIEWED	DATE	REVISED
J.M.	J.M.		J.M.	N.M.	11-25-91	

:176APP(10/9/91) J.M.

STRUCTURE SEALING AND DETAILS

F.H.W.A. REGION	STATE	PROJECT NO.	FUNDS
5	OHIO		

27/32

SUM-271/176-3.58/0.28

SCUPPER MODIFICATION

SUM-176-00.28

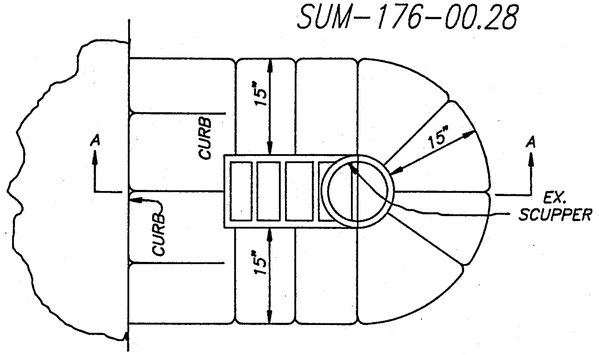

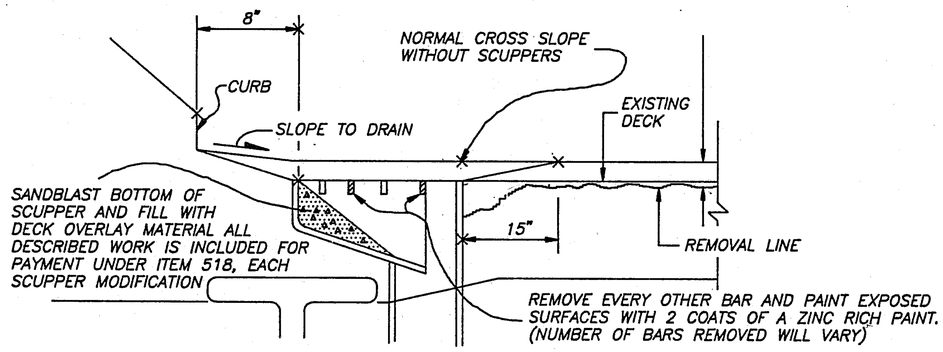

SECTION A-A

TYPICAL OVERLAY DETAIL AT SCUPPERS

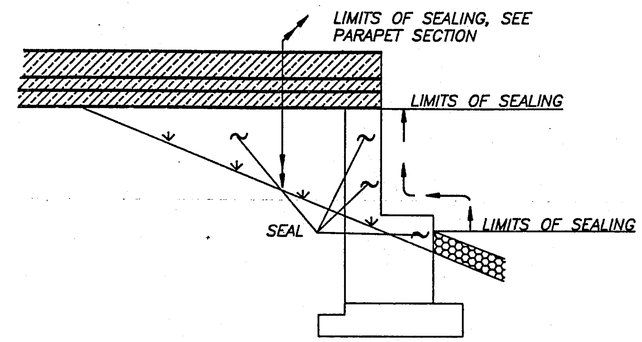

WINGWALL ELEVATION

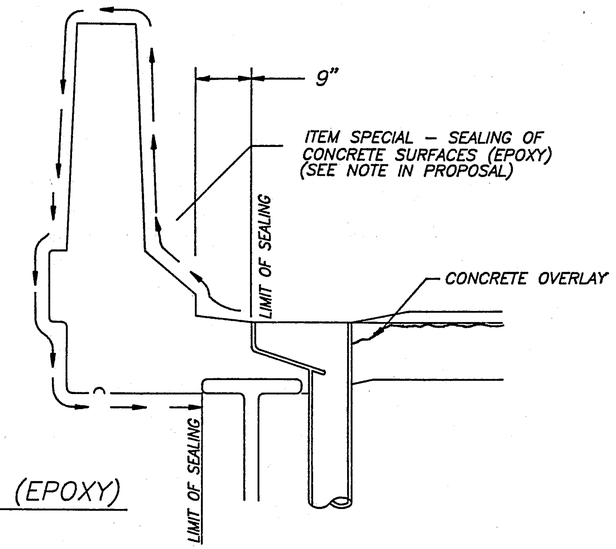

PARAPET SECTION

ITEM SPECIAL - SEALING OF CONCRETE SURFACES (EPOXY)

SUM-271-03.58R

SUM-176-00.28

THE EXPOSED SURFACE OF THE CONCRETE BARRIER WALL PARAPETS SHALL BE SEALED THROUGHOUT THE ENTIRE LENGTH OF THE BRIDGES, INCLUDING WINGWALLS, TO THE SPECIFIC LIMITS AS SHOWN ABOVE IN THE "PARAPET SECTION" VIEW AND IN THE "WINGWALL ELEVATION" VIEW

ALONG WITH SEALING THE PARAPETS AND WINGWALLS, THE ENTIRE LENGTH OF VERTICALLY EXPOSED ABUTMENT WALLS AND BACKWALLS, AS WELL AS THE HORIZONTAL BEAMSEATS, SHALL BE SEALED FROM THE CRUSHED AGGREGATE SLOPE PROTECTION UP TO THE UNDERSIDE OF THE CONCRETE BRIDGE DECK. REFER TO THE "BACKWALL SECTION" AS SHOWN BELOW.

FOR THE COMPLETE SPECIFICATION AND DETAILED MATERIAL REQUIREMENTS, SEE THE SPECIAL NOTES LISTED IN THE PROPOSAL.

SUM-271-00.3.58R ONLY. ALSO, ALL PIER COLUMNS ARE TO BE SEALED AROUND THE FULL CIRCUMFERENCE OF THE COLUMN FROM THE GROUND UP TO THE BOTTOM OF THE PIER CAP.

CONCRETE OVERLAY

SUM-176-00.28

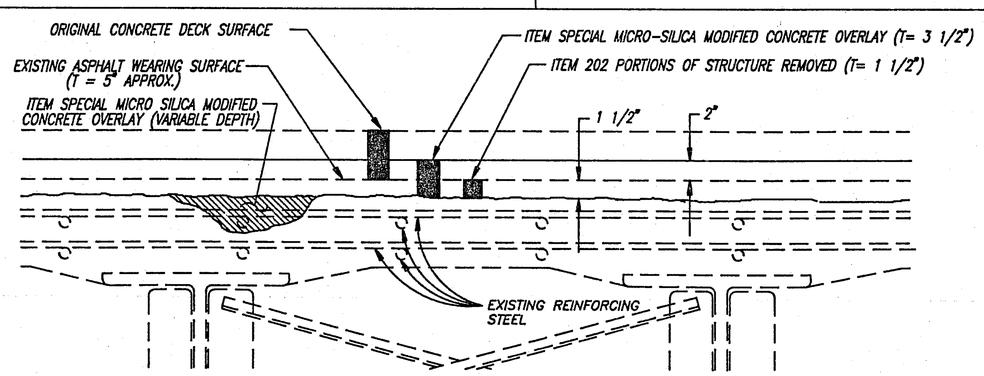

TYPICAL OVERLAY WITH REPAIRS

NOTE: DRAWINGS NOT TO SCALE

STATE OF OHIO
DEPARTMENT OF TRANSPORTATION
DIVISION OF DESIGN AND CONSTRUCTION
BUREAU OF BRIDGES

STRUCTURE SEALING AND DETAILS

SUM-176-00.28

DESIGNED	DRAWN	TRACED	CHECKED	REVIEWED	DATE	REVISED
J.M.	P.O.		J.M.			

:176STR (11/25/91)

F.H.W.A. REGION	STATE	PROJECT NO.	FUNDS
5	OHIO		

28 / 32

SUM-271\176-3.58R\0.28

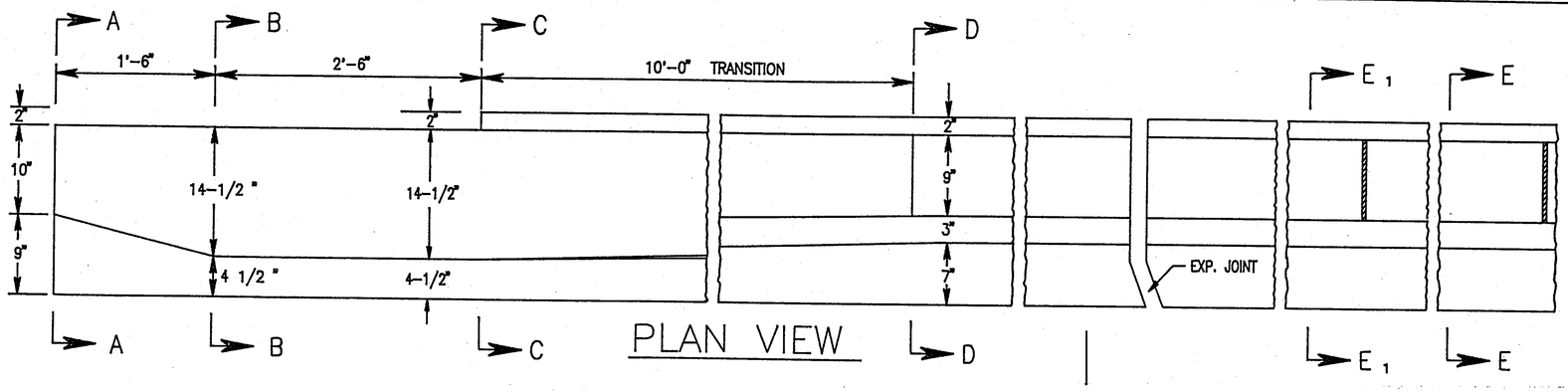

PLAN VIEW

STRUCTURE NO.	WINGWALLS								OUTSIDE PANELS								INSIDE PANELS			
	EAST				WEST				EAST				WEST				BETWEEN PIER PANELS			
	SOUTH		NORTH		SOUTH		NORTH		SOUTH		NORTH		SOUTH		NORTH		NO. SOUTH	NO. NORTH	E	F
	A	B	A	B	A	B	A	B	C	D	C	D	C	D	C	D				
SUM-176-00.28	3'-6"	14"	3'-6"	14"	1'-6"	14"	1'-6"	14"	11'	16"	11'	16"	11'	16"	11'	16"	28	28	10'	6"

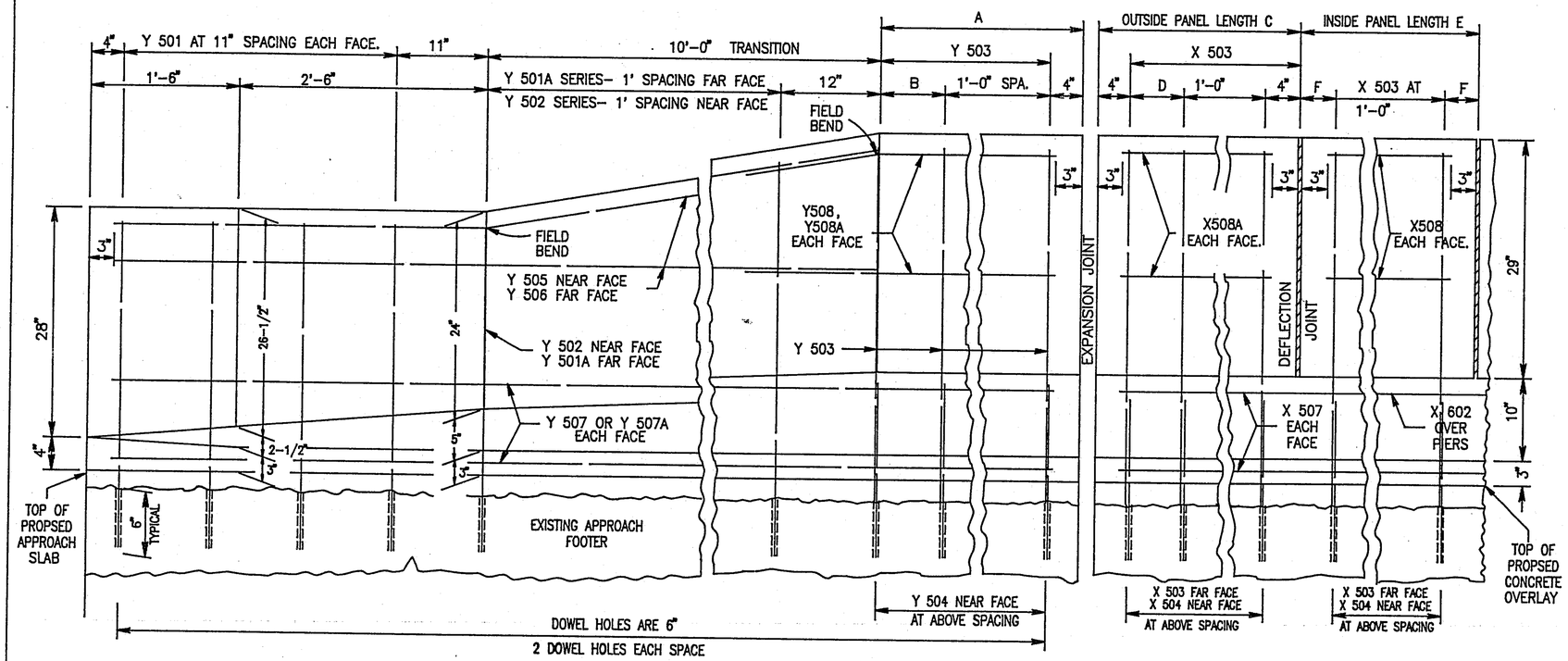

PROFILE VIEW

:PRB176 (11/19/91)

MISCELLANEOUS NOTES

INSTALL DEFLECTION JOINTS AS PER STANDARD BRIDGE DRAWING BR-1. EXCEPT THAT SPACING SHALL BE SHOWN ON THIS SHEET.

FOR DETAILS OF THE THRIE BEAM GUARDRAIL BRIDGE TERMINAL TRANSITION AND CONNECTIONS TO THE PARAPET SEE STANDARD BRIDGE DRAWING BR-1 AND STANDARD CONSTRUCTION DRAWING GR-3

REFER TO STANDARD BRIDGE DRAWING BR-1 FOR DETAILS NOT SHOWN ON SHEETS 28 + 29 FOR THE PARAPET CONSTRUCTION.

GROUT SHALL MEET THE REQUIREMENTS OF ASTM C-881, TYPE 1, GRADE 3, CLASS A, B OR C.

NOTE: THE BAR NUMBERS ON THIS SHEET DO NOT NECESSARILY CORRESPOND WITH THE BARS ON OUR STANDARD PLAN SHEETS.

NOTE: DRAWING NOT TO SCALE

STATE OF OHIO
DEPARTMENT OF TRANSPORTATION
DIVISION OF DESIGN AND CONSTRUCTION
BUREAU OF BRIDGES

PARAPET RETROFITTING DETAILS

SUM-176-0028

DESIGNED	DRAWN	TRACED	CHECKED	REVIEWED	DATE	REVISED
J.M.	R.F.		J.M.			

42" PARAPET RETROFITTING DETAILS

DESIGNED BY	N.M	DATE	10-2-91
REVIEWED BY	J.M.	DATE	11/26-91

F.H.W.A. REGION	STATE	PROJECT NO.	FUNDS
5	OHIO		

TYPICAL SECTIONS FOR OVERLAY SUM-176-00.28

NOTE: DRAWING NOT TO SCALE

SUM-271\176-3.58R\0.28

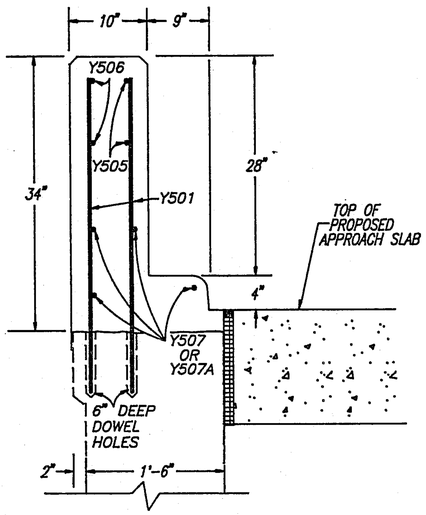

PROPOSED SECTION A-A

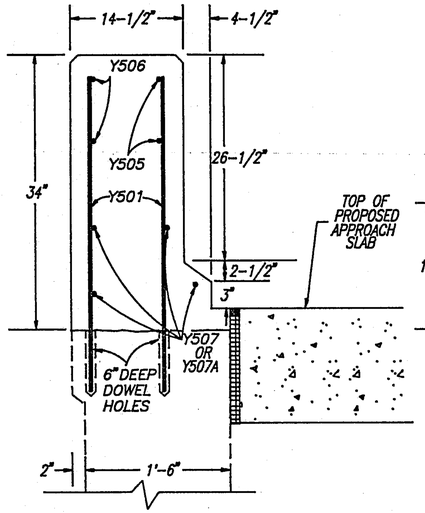

PROPOSED SECTION B-B

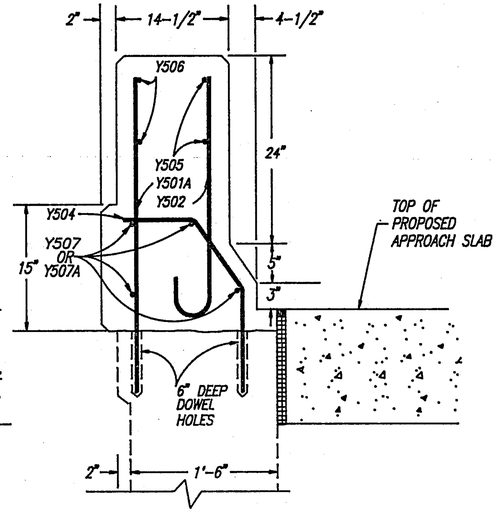

PROPOSED SECTION C-C

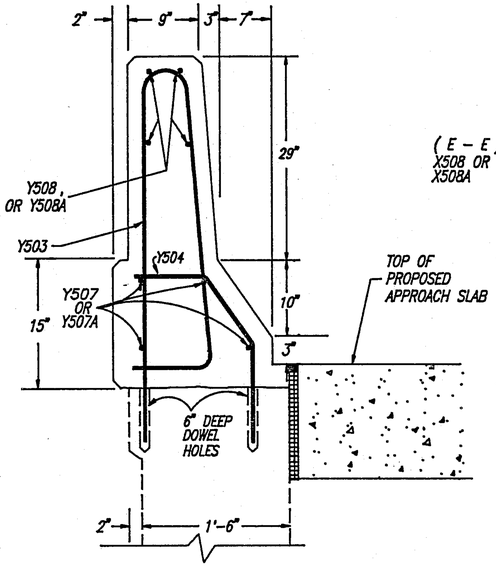

PROPOSED SECTION D-D

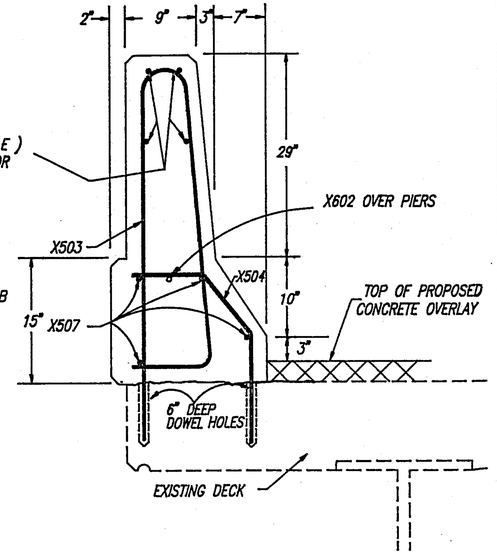

PROPOSED SECTION E-E

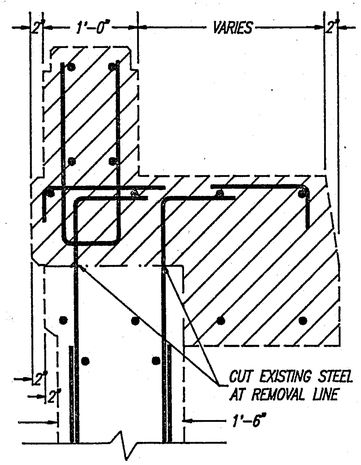

EXISTING SECTIONS A-A,B-B,C-C,D-D

EXISTING ALUMINUM RAILING NOT SHOWN

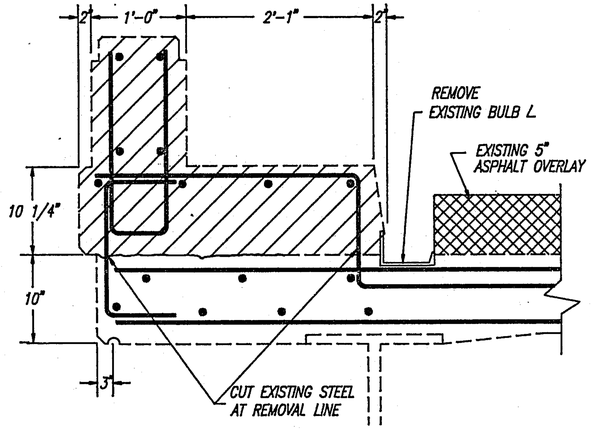

EXISTING SECTIONS E-E,

EXISTING ALUMINUM RAILING NOT SHOWN

REMOVAL AREA

STEEL LIST & BENDING DIAGRAM

STR. NO. SUM-176-00.28

MARK	NO.	LENGTH	WEIGHT	SHAPE
Y 501	32	3'-2"	106	STRAIGHT
Y 501A	*40	3'-2" TO 3'-11" 1" INC.	148	STRAIGHT
Y 502	*40	2'-6" TO 3'-3" 1" INC.	120	BENT
Y 503	12	8'-5"	105	BENT
Y 504	52	2'-5 3/4"	135	BENT
Y 505	8	13'-8"	114	BENT
Y 506	8	13'-9"	115	STRAIGHT
Y 507	8	15'-0"	125	STRAIGHT
Y 507A	8	17'-0"	142	STRAIGHT
Y 508	8	2'-6"	21	STRAIGHT
Y 508A	8	4'-6"	38	STRAIGHT
X 504	604	2'-5 3/4"	1,562	BENT
X 503	604	8'-5"	5,304	BENT
X 507	80	31'-8"	2,642	STRAIGHT
X 508	224	9'-6"	2,220	STRAIGHT
X 508A	16	10'-6"	175	STRAIGHT
X 602	6	36'-0"	324	STRAIGHT
TOTAL POUNDS			13,396	
DOWEL HOLES			EACH	1344

* SERIES : 4 SETS OF 10

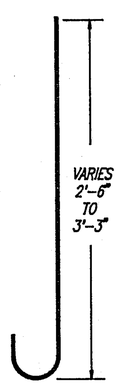

Y 502

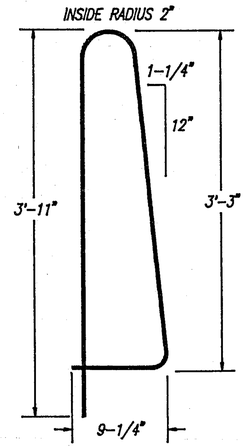

Y 503
X 503

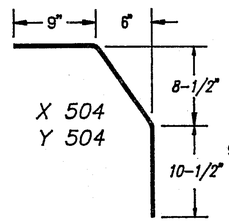

X 504
Y 504

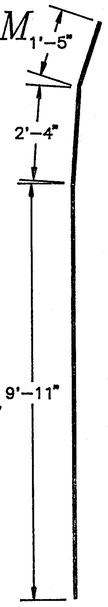

Y 505

XPAR 176 (11/22/89)

ABUTMENT & BACKWALL DETAILS SUM-176-00.28

F.H.W.A. REGION	STATE	PROJECT NO.	FUNDS
5	OHIO		

30/32

SUM-271/176-3.58/0.28

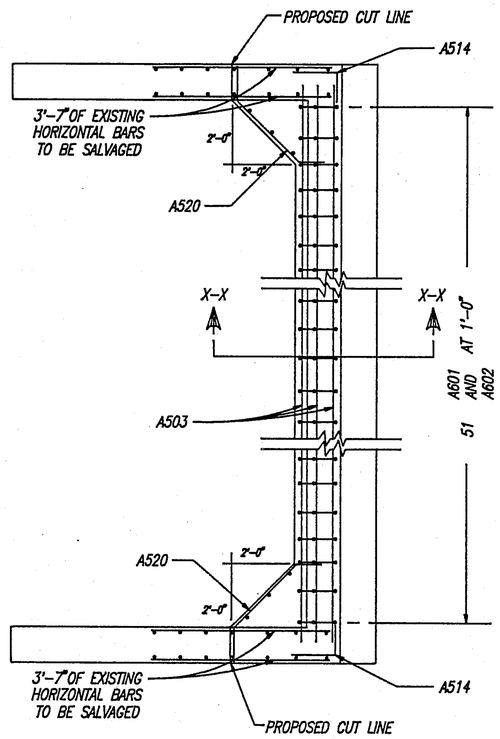

TYPICAL BACKWALL SECTION Y-Y
PROPOSED

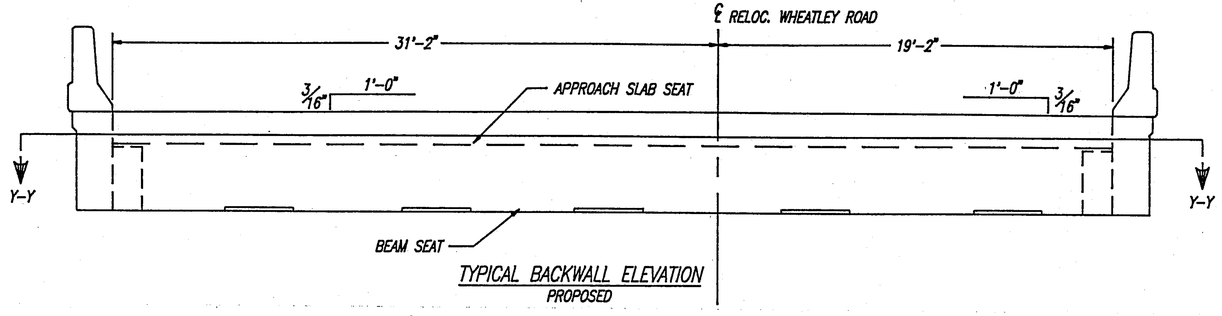

TYPICAL BACKWALL ELEVATION
PROPOSED

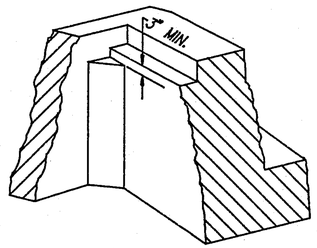

TYPICAL FILLET RECONSTRUCTION

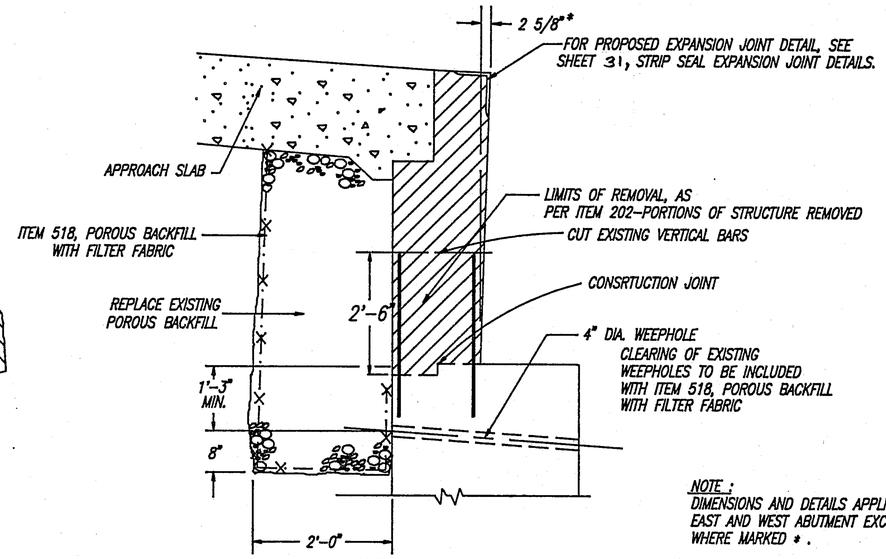

ABUTMENT WEST
PROPOSED SECTION X-X

NOTE:
DIMENSIONS AND DETAILS APPLICABLE TO EAST AND WEST ABUTMENT EXCEPT WHERE MARKED *.

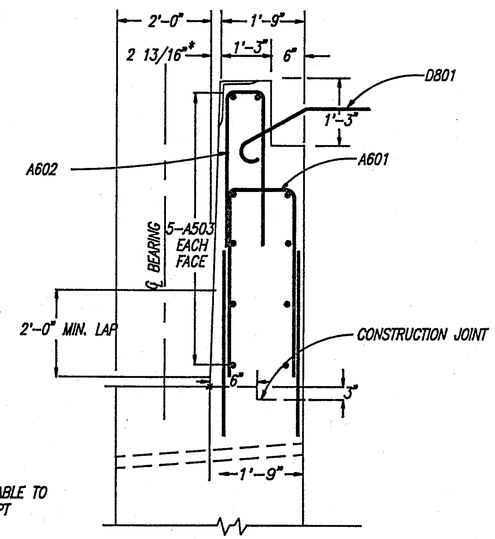

ABUTMENT EAST
PROPOSED SECTION X-X

STEEL LIST & BENDING DIAGRAM

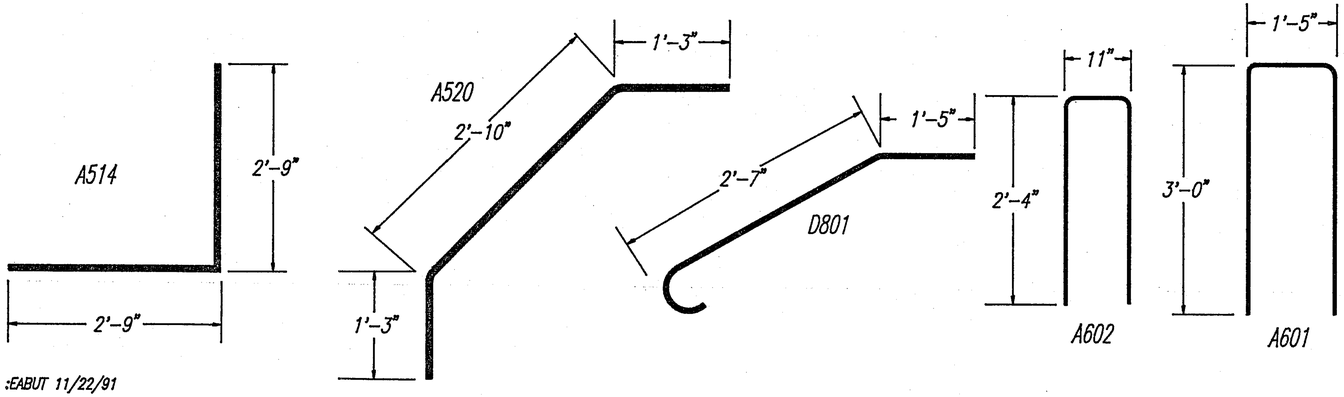

STR. NO. SUM-176-00.28

MARK	NO.	LENGTH	WEIGHT	SHAPE
A601	102	7'-5"	1137	BENT
A602	102	5'-5"	830	BENT
A503	40	27'-6"	1147	STRAIGHT
A507	6	3'-6"	22	STRAIGHT
A508	6	3'-8"	23	STRAIGHT
A514	20	5'-6"	115	BENT
A520	16	5'-4"	89	BENT
D801	68	4'-0"	284	BENT
TOTAL			3,647	

:EABUT 11/22/91

NOTE: DRAWING NOT TO SCALE

STATE OF OHIO
DEPARTMENT OF TRANSPORTATION
DIVISION OF DESIGN AND CONSTRUCTION
BUREAU OF BRIDGES

ABUTMENT DETAILS

SUM-176-0028

DESIGNED	DRAWN	TRACED	CHECKED	REVIEWED	DATE	REVISED
J.M.	P.O.		J.M.			

DESIGNED BY _____ DATE _____
REVIEWED BY _____ DATE _____

F.H.W.A. REGION	STATE	PROJECT NO.	FUNDS
5	OHIO	BR-62-91	

REINFORCING LIST

SUM-271/176-3.58/0.28

SUM-271-0358R

SUPERSRTUCTURE (DECK ONLY)

MARK	NO.	LENGTH	WEIGHT	SHAPE
S401	506	30'-0"	10,140	STRAIGHT
S402	46	36'-6"	1,122	STRAIGHT
S403	135	41'-6"	3,742	STRAIGHT
S501	625	18'-9"	12,223	STRAIGHT
S502	625	18'-9"	12,223	STRAIGHT
S503	410	36'-10"	15,750	STRAIGHT
S504	TWO SERIES OF 14	3'3" TO 18'5" INC. =1'2"	316	STRAIGHT
S505	TWO SERIES OF 14	3'11-1/2" TO 19'1-1/2" INC. =1'2"	337	STRAIGHT
S506	8	3'-0"	25	STRAIGHT
S601	625	18'-11"	17,758	STRAIGHT
S602	625	18'-11"	17,758	STRAIGHT
S603	TWO SERIES OF 14	2'9" TO 18'5-1/2" INC. = 1'2-1/2"	446	STRAIGHT
S604	TWO SERIES OF 13	3'11-1/2" TO 18'5-1/2" INC. = 1'2-1/2"	438	STRAIGHT
S605	8	3'-0"	36	STRAIGHT
SUBTOTAL			92,314 LBS.	

SUPERSTRUCTURE (PARAPETS)
SUBTOTALS FROM SHEET NO. 23
ITEM 509: 14,975 LBS.
ITEM 510: 154 DOWEL HOLES
SUBSTRUCTURE (BACKWALLS)
SUBTOTALS FROM SHEET NO. 24
ITEM 509: 1,277 LBS.
ITEM 510: 12 DOWEL HOLES

GRAND TOTALS:
ITEM 509 - 108,566 LBS.
ITEM 510 - 166 EACH
NOTE: ALL REINFORCING STEEL SHALL BE EPOXY COATED.

SUM-176-0028

SUPERSTRUCTURE (PARAPETS)
SUBTOTALS FROM SHEET NO. 29
ITEM 509: 13,452 LBS.
ITEM 510: 1,344 DOWEL HOLES
SUBSTRUCTURE (BACKWALLS)
SUBTOTALS FROM SHEET NO. 30
ITEM 509: 3,647 LBS.

GRAND TOTALS:
ITEM 509 - 17,099 LBS.
ITEM 510 - 1,344 EACH
NOTE: ALL REINFORCING STEEL SHALL BE EPOXY COATED.

:271REINF (02/24/92)

STATE OF OHIO
DEPARTMENT OF TRANSPORTATION
DIVISION OF HIGHWAY AND CONSTRUCTION
BUREAU OF BRIDGES

REINFORCING LIST
SUM-271-0358R
SUM-176-0028

DESIGNED	DRAWN	TRACED	CHECKED	REVISED	DATE
P.O.	P.O.		H.M.		