STATE OF OHIO
DEPARTMENT OF TRANSPORTATION

SUM-271-10.51

BOSTON TOWNSHIP
SUMMIT COUNTY

metric units

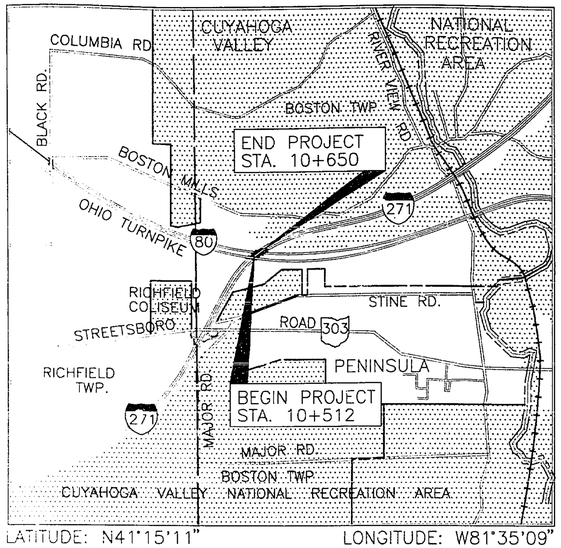

LATITUDE: N41°15'11" LONGITUDE: W81°35'09"

LOCATION MAP

0 1 2 3
SCALE IN KILOMETERS

N

PORTION TO BE IMPROVED
STATE AND FEDERAL ROUTES
OTHER ROADS

MIC[illegible]D
MAR 17 1998

INDEX OF SHEETS

TITLE SHEET 1
TYPICAL SECTIONS 2–4
GENERAL NOTES 5
GENERAL SUMMARY 6
CALCULATIONS 7–8
PLAN AND PROFILE 9–12
ESTIMATED QUANTITIES 13
CROSS SECTIONS 14–25*
MAINTENANCE OF TRAFFIC 27–29,29A,29B,29C,29D,30–51
STRUCTURE PLANS:
SUM–271–10605 LEFT & RIGHT 52–80

*SHEET 26 HAS BEEN OMITTED

PROJECT DESCRIPTION

REHABILITATION OF IR–271 L & R BRIDGES OVER THE WESTBOUND LANES OF THE OHIO TURNPIKE WITH ASSOCIATED ROADWAY WORK FOR A PROJECT LENGTH OF 0.14 KILOMETERS. THE WORK WILL INCLUDE CONSTRUCTION OF NEW COMPOSITE REINFORCED CONCRETE DECKS, ABUTMENT BACKWALL REPLACEMENTS, ABUTMENT AND PIER REPAIRS, NEW APPROACH SLABS, NEW ABUTMENT DRAINAGE, NEW STRIP SEAL EXPANSION DEVICES, NEW PARAPETS WITH VANDAL PROTECTION FENCE AND APPROACH WORK NECESSARY TO TRANSITION THE ROADWAY TO THE NEW DECK.

LIMITED ACCESS

THIS IMPROVEMENT IS ESPECIALLY DESIGNED FOR THROUGH TRAFFIC AND HAS BEEN DECLARED A LIMITED ACCESS HIGHWAY OR FREEWAY BY ACTION OF THE DIRECTOR IN ACCORDANCE WITH THE PROVISION OF SECTION 5511.02 OF THE REVISED CODE OF OHIO.

1997 SPECIFICATIONS

THE STANDARD SPECIFICATIONS OF THE STATE OF OHIO, DEPARTMENT OF TRANSPORTATION, INCLUDING CHANGES AND SUPPLEMENTAL SPECIFICATIONS LISTED IN THE PROPOSAL SHALL GOVERN THIS IMPROVEMENT:

I HEREBY APPROVE THESE PLANS AND DECLARE THAT THE MAKING OF THIS IMPROVEMENT WILL NOT REQUIRE THE CLOSING TRAFFIC OF THE HIGHWAY AND THAT PROVISIONS FOR THE MAINTENANCE AND SAFETY OF TRAFFIC WILL BE AS SET FORTH ON THE PLANS AND ESTIMATES.

UNDER AUTHORITY OF SECTION 4511.21. DIVISION (I) OF THE REVISED CODE OF OHIO, THE REVISED PRIMA FACIE SPEED LIMITS AS INDICATED HEREIN ARE DETERMINE TO BE REASONABLE AND SAFE, AND ARE HEREBY ESTABLISHED FOR THE DURATION OF THIS PROJECT. THE PRIMA FACIE SPEED LIMIT OR LIMITS HEREBY ESTABLISHED SHALL BECOME EFFECTIVE WHEN APPROPRIATE SIGNS GIVING NOTICE THEREOF ARE ERECTED.

DESIGN DESIGNATION

DESIGN YEAR ADT (1997)	23740
DESIGN YEAR ADT (2017)	31480
DESIGN HOURLY VOLUMN (2017)	3148
DIRECTIONAL DISTRIBUTION	60%
TRUCK (24 HOUR B&C)	19%
DESIGN SPEED	110 km/h
LEGAL SPEED	65 MPH
DESIGN FUNTIONAL CLASSIFICATION	RURAL INTERSTATE

DESIGN EXCEPTIONS	APPROVAL DATE	SEE SHEET NO.
HORIZONTAL STOPPING SIGHT DISTANCE	2-18-1997	9
[illegible]	2-18-1997	3

UNDERGROUND UTILITIES
2 WORKING DAYS
BEFORE YOU DIG
CALL 800–362–2764 (TOLL FREE)
OHIO UTILITIES
PROTECTION SERVICE
NON–MEMBER
MUST BE CALLED DIRECTLY

STANDARD CONSTRUCTION DRAWINGS								SUPPLEMENTAL SPECIFICATIONS	
				MT–35.10M	1–30–95				
CB–3.1M	7–12–95	AS–1–81M	10–25–94	MT–35.11M	1–30–95				
GR–1.1M	11–30–94	BR–1M	12–15–94	MT–95.30M	4–25–94			815	05–30–96
GR–1.2M	1–03–96			MT–95.70M	1–30–95			910	07–17–95
GR–1.3M	11–30–94	EXJ–4–87M	03–20–95	MT–95.82M	3–01–96				
GR–2.1M	11–30–94	VPF–1–90M	03–20–95			TC–41.20M	7–01–94		
GR–3.1M	11–30–94			MT–99.10M	1–30–95	TC–42.20M	3–31–94		
GR–3.6M	11–30–94			MT–99.20M	1–30–95	TC–52.10M	7–29–94		
BP–5.1M	10–28–94			MT–100.00M	4–25–94	TC–52.20M	7–29–94		
BP–2.3M	10–28–94			MT–105.10M	4–25–94				
RM–4.1M	6–30–95			MT–105.11M	4–25–94				
RM–4.2M	6–30–95								

APPROVED David R Dreger
DATE 8-28-97 DISTRICT DEPUTY DIRECTOR

APPROVED [signature]
DATE 9.24.97 DIRECTOR, DEPARTMENT OF TRANSPORTATION

PLANS PREPARED BY
THE OSBORN ENGINEERING COMPANY
CLEVELAND, OHIO 44114

FEDERAL PROJECT NO. IM-271-6(94)
PID NO. 6883
CONSTRUCTION PROJECT NO.
RAILROAD INVOVEMENT NONE
SUM–271–10.51
1/80

SUM-271-10.51
970836 12-17-97
80PGS DIST. 04

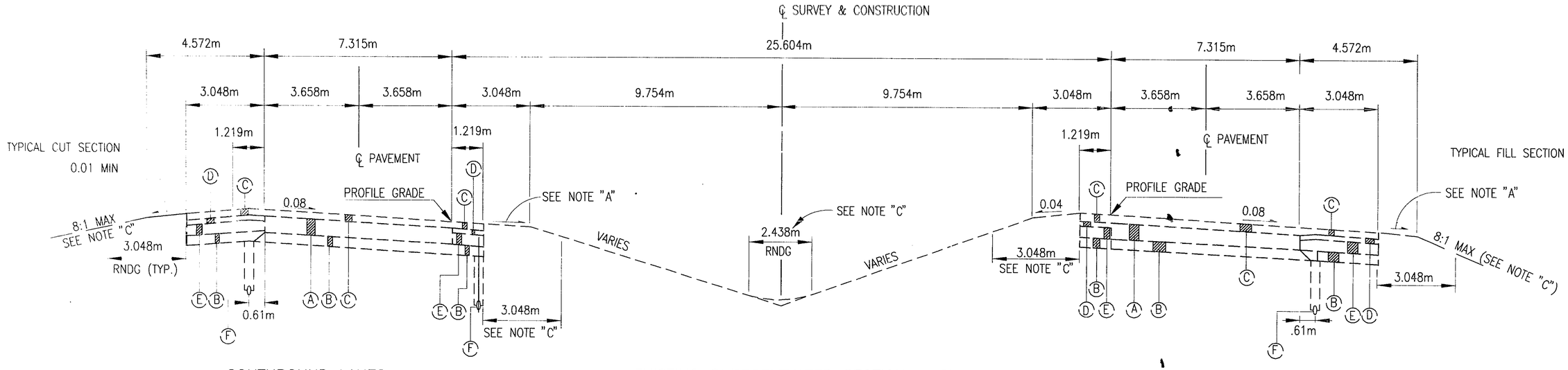

SOUTHBOUND LANES

SECTION APPLIES:
STA. 10+510.00 TO STA. 10+650.00 = 140.00 m
DEDUCT FOR STR. SUM-271-10.512 LEFT AND APPROACH SLAB
STA. 10+542.449 TO STA. 10+629.008 = 86.559 m
TOTAL LENGTH = 53.441 m

EXISTING SUPERELEVATED SECTION – SUM-271

NORTHBOUND LANES

SECTION APPLIES:
STA. 10+510.00 TO STA. 10+650.00 = 140.00 m
DEDUCT FOR STR. SUM-271-10.512 RIGHT AND APPROACH SLAB
STA. 10+543.339 TO STA. 10+624.031 = 80.692 m
TOTAL LENGTH = 59.308 m

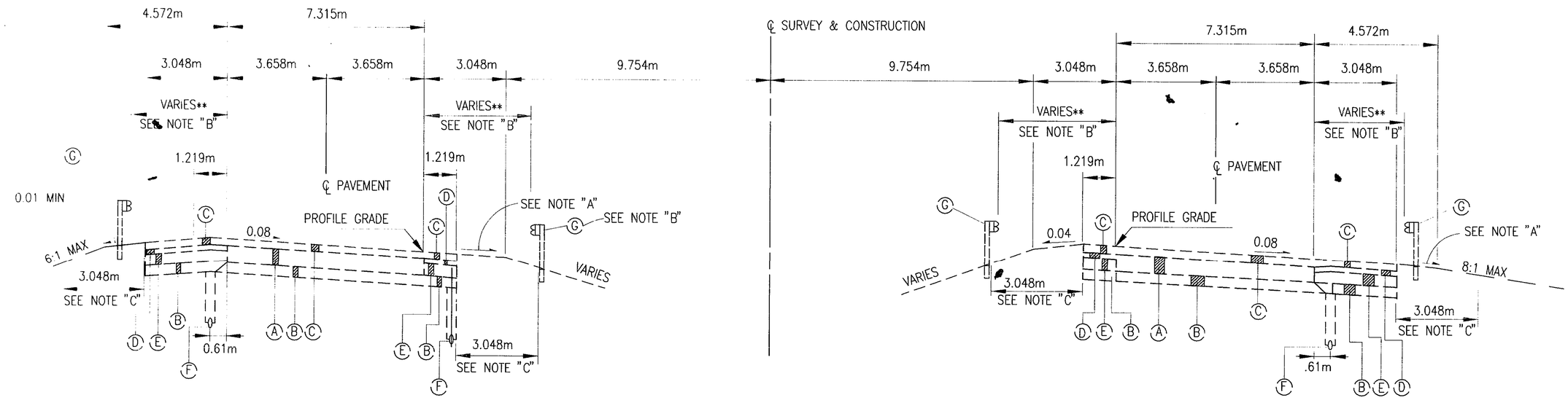

SOUTHBOUND LANES

SECTION APPLIES:
STA. 10+542.449 TO STA. 10+629.008 = 86.559 m
DEDUCT FOR STR. SUM-271-10.512 LEFT
STA. 10+550.049 TO STA. 10+621.408 = 71.359 m
TOTAL LENGTH = 15.200 m

EXISTING SUPERELEVATED APPROACH SLAB SECTION – SUM-271

NORTHBOUND LANES

SECTION APPLIES:
STA. 10+543.339 TO STA. 10+624.031 = 80.692 m
DEDUCT FOR STR. SUM-271-10.512 RIGHT
STA. 10+550.939 TO STA. 10+616.431 = 65.492 m
TOTAL LENGTH = 15.200 m

EXISTING LEGEND

- Ⓐ 254mm REINFORCED CONCRETE
- Ⓑ 152mm SUBBASE
- Ⓒ 102mm ASPHALT CONCRETE (RUBBERIZED)
- Ⓓ 76mm BITUMINOUS AGGREGATE BASE
- Ⓔ AGGREATE BASE
- Ⓕ 152mm PIPE UNDERDRAIN
- Ⓖ GUARDRAIL, TYPE 5

NOTES:
NOTE "A" SAME SLOPE AS PAVEMENT
NOTE "B" FOR GUARDRAIL LIMITS SEE PLANS
NOTE "C" NO ROUNDING IS REQUIRED FOR SLOPE 6:1 OR FLATTER

CROSS REFERENCES	
SHEET NO.	DESCRIPTION
3	PROPOSED TYPICAL SECTIONS

CALCULATED I.M.
CHECKED K.P.

TYPICAL SECTIONS - SUM-271

SUM-271-10.51

N:\ODOT\93580\TYPSEC2.DWG

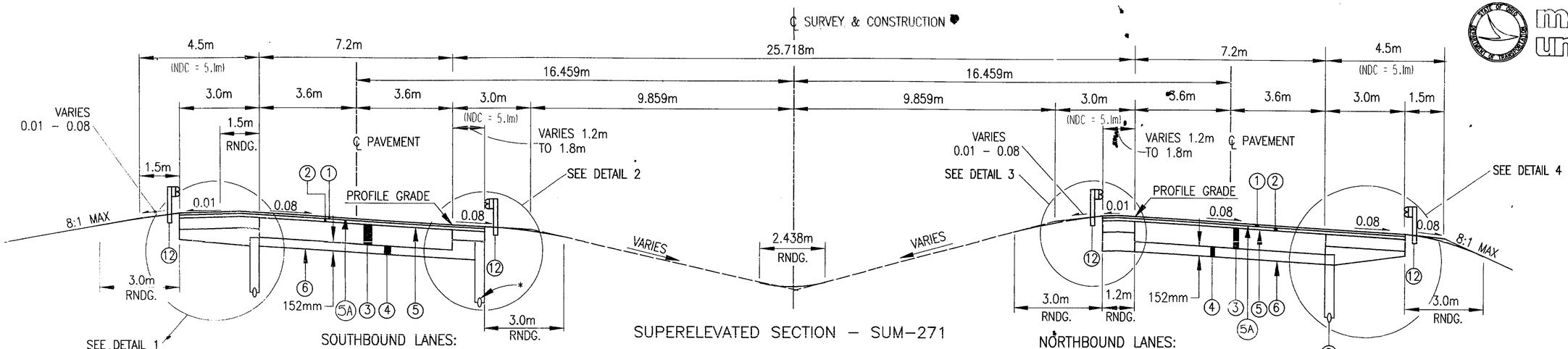

SUPERELEVATED SECTION – SUM–271

DESIGN EXCEPTIONS
GSW *** = 3.0m LEFT & RIGHT
NDC **** = 5.1m LEFT & RIGHT

SOUTHBOUND LANES:
SECTION APPLIES:
STA. 10+510.00 TO STA. 10+650.00 = 140.000 m
DEDUCT FOR STR. SUM–271–10.512 LEFT AND APPROACH SLAB
STA. 10+542.449 TO STA. 10+629.008 = 86.559 m
TOTAL LENGTH = 53.441 m

NORTHBOUND LANES:
SECTION APPLIES:
STA. 10+510.00 TO STA. 10+650.00 = 140.000 m
DEDUCT FOR STR. SUM–271–10.512 RIGHT AND APPROACH SLAB
STA. 10+543.339 TO STA. 10+624.031 = 80.692 m
TOTAL LENGTH = 59.308 m

DESIGN EXCEPTIONS
GSW *** = 3.0m LEFT & RIGHT
NDC **** = 5.1m LEFT & RIGHT

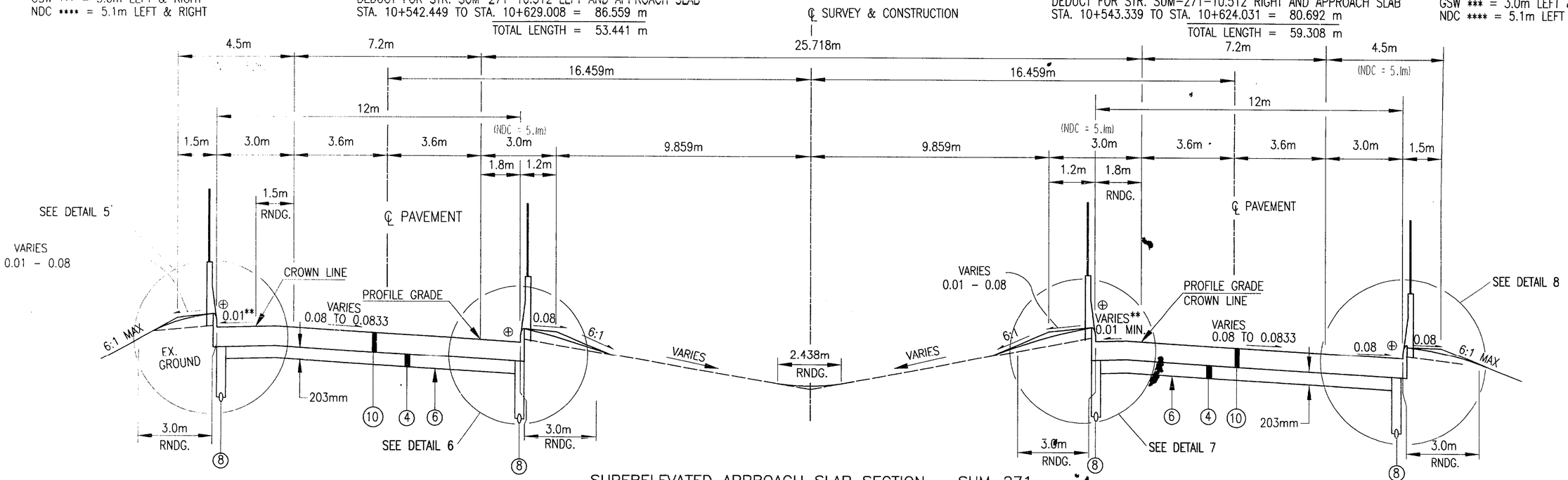

SUPERELEVATED APPROACH SLAB SECTION – SUM–271

SOUTHBOUND LANES:
SECTION APPLIES:
STA. 10+542.449 TO STA. 10+629.008 = 86.559m
DEDUCT FOR STR. SUM–271–10.512 LEFT
STA. 10+550.049 TO STA. 10+621.408 = 71.359m
TOTAL LENGTH = 15.200m

NORTHBOUND LANES:
SECTION APPLIES:
STA. 10+543.339 TO STA. 10+624.031 = 80.692m
DEDUCT FOR STR. SUM–271–10.512 RIGHT
STA. 10+550.939 TO STA. 10+616.431 = 65.492m
TOTAL LENGTH = 15.200m

* FOR LIMITS AND LOCATIONS OF PROPOSED UNDERDRAINS, SEE PLAN & PROFILE DRAWING (SHEET NO. 5)

** SEE DETAIL 5 & DETAIL 7, SHEET NO. 4

*** GRADED SHOULDER WIDTH

**** NORMAL DESIGN CRITERIA

⊕ NO CURBS AT REAR APPROACH SLAB

PROPOSED LEGEND

1. ITEM 448 32mm ASPHALT CONCRETE SURFACE COURSE, TYPE I, PG64-28
2. ITEM 448 45mm ASHALT CONCRETE INTERMEDIATE COURSE, TYPE 2, PG64-28
3. ITEM 305 310mm CONCRETE BASE
4. ITEM 304 AGGREGATE BASE
5. ITEM 407 TACK COAT
6. ITEM 203 SUBGRADE COMPACTION
7. ITEM 301 BITUMINOUS AGGREGATE BASE, PG64-28
8. ITEM 605 150mm PIPE UNDERDRAINS (SHALLOW, DEEP & UNCLASSIFIED)
9. ITEM 659 SEEDING AND MULCHING
10. ITEM 611 REINFORCED CONCRETE APPROACH SLABS T= 380 mm
11. BRIDGE RAILING, DEFLECTOR TYPE WITH CHAIN LINK FENCE
12. ITEM 606 GUARDRAIL, TYPE 5

5A. ITEM 407 TACK COAT FOR INTERMEDIATE COURSE

CROSS REFERENCES	
SHEET NO.	DESCRIPTION
2	EXISTING TYPICAL SECTIONS
4	DETAILS 1 THRU 8
11	SUPERELEVATION TABLES

metric units

CALCULATED I.M.
CHECKED K.P.

TYPICAL SECTIONS – SUM-271

SUM-271-10.51

N:\0001\33580\TYPSECT.DWG

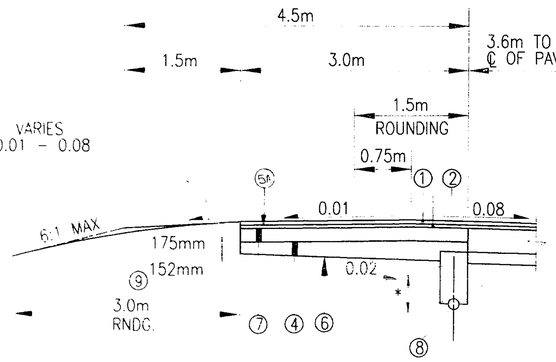

DETAIL 1

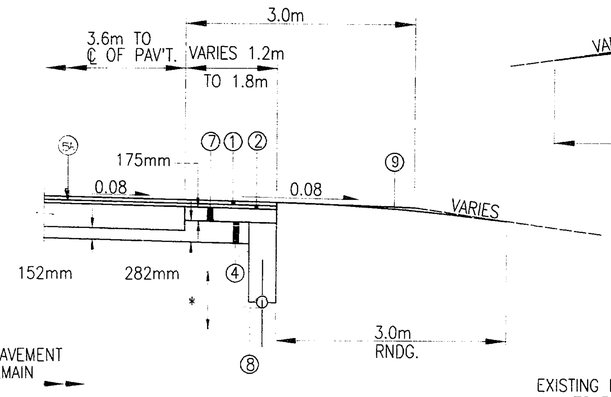

DETAIL 2

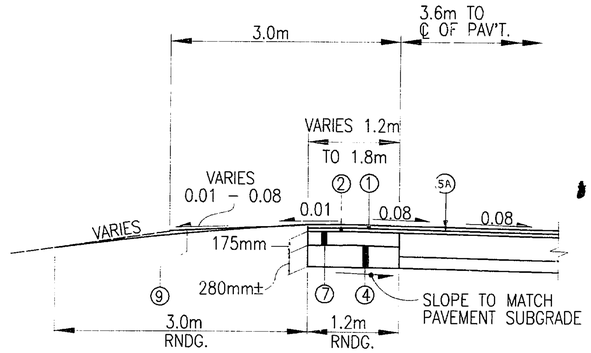

DETAIL 3

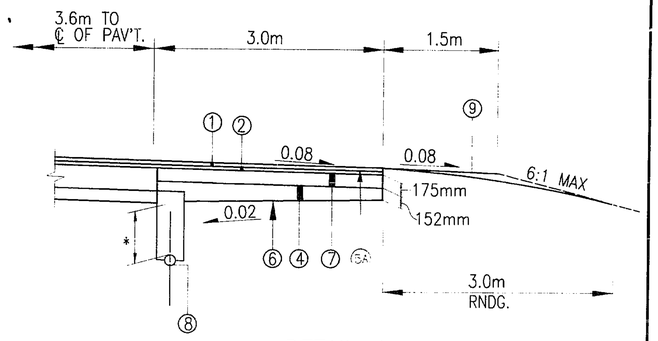

DETAIL 4

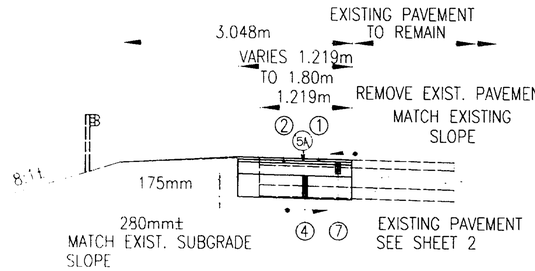

NORTH BOUND HIGH–SIDE
PAVED SHOULDER EXTENSION DETAIL
STA. 10+510.00 TO STA. 10+550.00
STA. 10+635.60 TO STA. 10+675.60

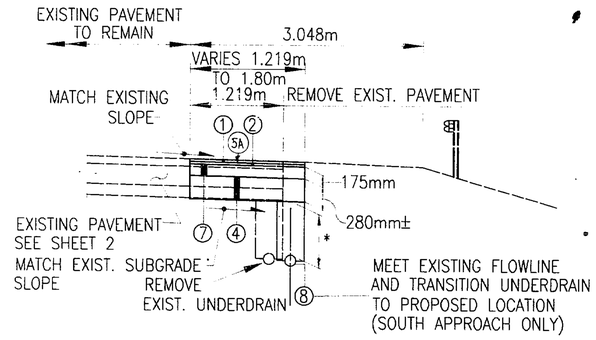

SOUTH BOUND LOW–SIDE
PAVED SHOULDER EXTENSION DETAIL
STA. 10+496.70 TO STA. 10+536.70
STA. 10+620.00 TO STA. 10+660.00

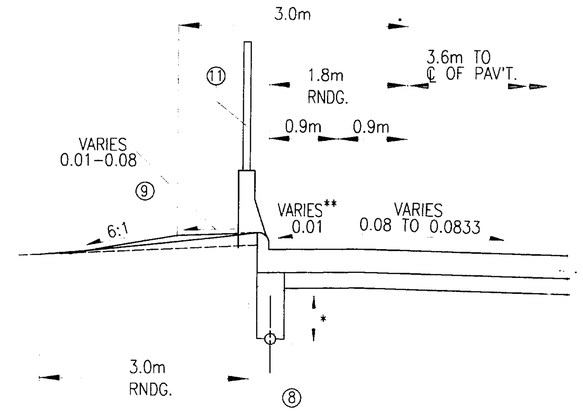

DETAIL 7

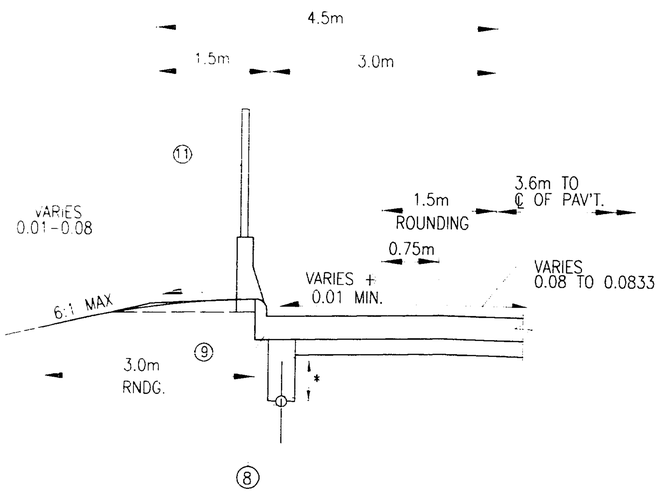

DETAIL 5

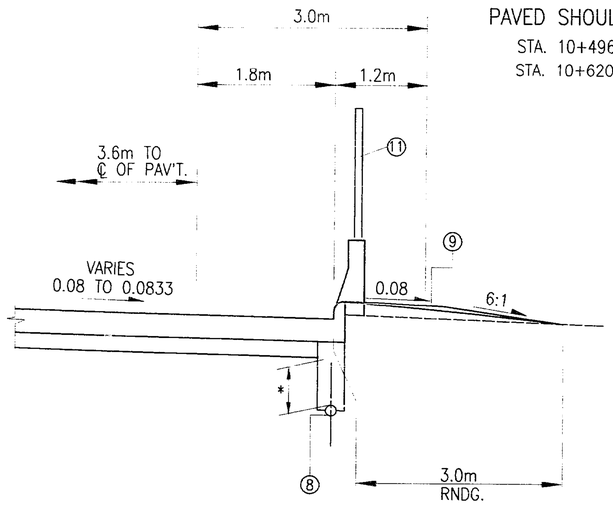

DETAIL 6

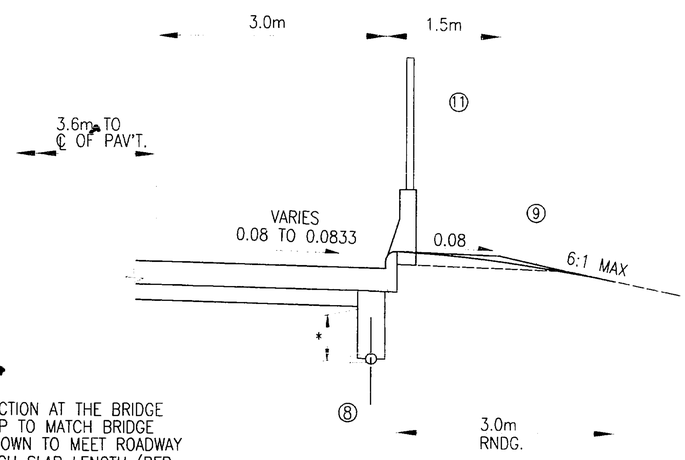

DETAIL 8

NOTES:

* = AS SHOWN ON PLANS

** = AT HIGH SIDE OF SUPERELEVATED SECTION AT THE BRIDGE LIMITS, THE SLOPE SHALL BE 0.08 UP TO MATCH BRIDGE DECK AND SHALL BE TRANSITIONED DOWN TO MEET ROADWAY TYPICAL SECTION WITHIN THE APPROACH SLAB LENGTH (PER BDM SECTION 2.9.1)

⊕ = AT HIGH SIDE OF SUPERELEVATED SECTION AT THE BRIDGE LIMITS, THE SLOPE SHALL BE 0.04 DOWN TO MATCH BRIDGE DECK AND SHALL BE TRANSITIONED DOWN TO 0.01 TO MEET ROADWAY TYPICAL SECTION WITHIN THE APPROACH SLAB LENGTH OF 7.6m (PER BDM SECTION 2.9.1)

CROSS REFERENCES

SHEET NO.	DESCRIPTION
3	PAVEMENT LEGEND
11	SUPERELEVATION TABLES

metric units

CALCULATED I.M.
CHECKED K.P.

PAVED SHOULDER DETAILS - SUM-271

SUM-271-10.51

N:\ODOT\93580\DETAILS.DWG

GENERAL NOTES

ROUNDING

THE ROUNDING AT SLOPE BREAKPOINTS SHOWN ON THE TYPICAL SECTIONS APPLY TO ALL CROSS SECTIONS EVEN THOUGH OTHERWISE SHOWN.

UTILITIES

THE FOLLOWING UTILITIES AND OWNERS ARE LOCATED WITHIN THE WORK LIMITS OF THIS PROJECT:

MCI TELECOMMUNICATIONS CO.
12300 RIDGE ROAD
NORTH ROYALTON, OH 44133
(216) 237-8117
ATTN: ROBERT C. SIMS, JR.

OHIO TURNPIKE COMMISSION
ADMINISTRATION BUILDING
682 PROSPECT ROAD
BEREA, OH 44017
(216) 234-2081

THE LOCATIONS OF THE UNDERGROUND UNTILITIES SHOWN ON THE PLANS ARE AS OBTAINED FROM THE OWNERS OF THE UTILITY AS REQUIRED BY SECTION 153.64 OF THE OHIO REVISED CODE.

CONTINGENCY QUANTITIES

THE CONTRACTOR SHALL NOT ORDER MATERIALS OR PERFORM WORK FOR PLAN ITEMS SET UP TO BE USED "AS DIRECTED BY THE ENGINEER" UNLESS AUTHORIZED BY THE ENGINEER. THE ACTUAL WORK LOCATIONS AND QUANTITIES USED AT THE ENGINEER'S DISCRETION SHALL BE MADE A MATTER OF RECORD BY INCORPORATION INTO THE FINAL CHANGE ORDER GOVERNING COMPLETION OF THIS PROJECT.

ELEVATION DATUM

ALL ELEVATIONS ARE BASED ON LOCAL BENCHMARK AS SHOWN IN THESE PLANS.

WORK LIMITS

ALL WORK SHALL BE PERFORMED WITHIN THE EXISTING RIGHT-OF-WAY OR EASEMENTS. THE INSTALLATION AND OPERATION OF ALL TEMPORARY TRAFFIC CONTROL AND TEMPORARY TRAFFIC CONTROL DEVICES REQUIRED BY THESE PLANS SHALL BE PROVIDED BY THE CONTRACTOR WHETHER INSIDE OR OUTSIDE THESE WORK LIMITS.

ROADWAY:
EXISTING TYPICAL SECTIONS

EXISTING TYPICAL SECTIONS HAVE BEEN TAKEN FROM THE RECORDS AND ARE BELIEVED TO REPRESENT THE EXISTING PAVEMENT, BUT THE STATE OF OHIO DOES NOT GUARANTEE THE ACCURACY OF THE SAME.

FOR FURTHER INFORMATION IN REGARD TO THE EXISTING TYPICAL SECTIONS THE CONTRACTOR SHALL REFER TO THE PREVIOUS CONSTRUCTION PLANS. THESE PLANS MAY BE REVIEWED AT THE OHIO DEPARTMENT OF TRANSPORTATION. DISTRICT FOUR OFFICES, 705 OAKWOOD STREET, RAVENNA, OHIO 44266.

EQUIPMENT AND MATERIAL STORAGE

IN ORDER TO PROVIDE FOR THE SAFETY OF THE TRAVELING PUBLIC THE CONTRACTORS ATTENTION IS DIRECTED TO 614.03. IN ADDITION THE FOLLOWING PROVISIONS SHALL APPLY:

1) ANY REMOVED ITEMS SHALL NOT BE STORED ON THE RIGHT OF WAY FOR MORE THAN THIRTY DAYS.
2) THE STORAGE OF EQUIPMENT, MATERIALS AND VEHICLES WITHIN THE HIGHWAY RIGHT OF WAY WILL BE PERMITTED. THE NUMBER OF AREAS AND EXACT LOCATIONS SHALL BE APPROVED BY THE ENGINEER.
3) ALL DISTURBED AREAS SHALL BE RETURNED TO THEIR ORIGINAL CONDITION AT NO EXPENSE TO THE STATE.

CONNECTION BETWEEN EXISTING AND PROPOSED GUARDRAIL

WHEN IT IS NECESSARY TO SPLICE PROPOSED GUARDRAIL TO EXISTING GUARDRAIL, ONLY THE EXISTING GUARDRAIL SHALL BE CUT, DRILLED, OR PUNCHED. THE CONNECTION SHALL BE MADE USING A "W-BEAM RAIL SPLICE" AS SHOWN ON THE STANDARD CONSTRUCTION DRAWING GR-1.1. PAYMENT SHALL BE INCLUDED IN THE CONTRACT PRICE FOR THE RESPECTIVE GUARDRAIL ITEMS.

ITEM 203 - PROOF ROLLING

AN ESTIMATED QUANTITY FOR THIS ITEM HAS BEEN PROVIDED IN THE GENERAL SUMMARY FOR USE AS DIRECTED BY THE ENGINEER.

ITEM 203 - PROOF ROLLING 10 HOURS

EROSION CONTROL:
ITEM 659 - SEEDING AND MULCHING

SEEDING AND MULCHING SHALL BE APPLIED TO ALL AREAS OF EXPOSED SOIL BETWEEN THE RIGHT-OF-WAY LINES, AND WITHIN THE CONSTRUCTION LIMITS FOR AREAS OUTSIDE THE RIGHT-OF-WAY LINES COVERED BY WORK AGREEMENT OR SLOPE EASEMENT. QUANTITY CALCULATIONS FOR ITEM 659, SEEDING AND MULCHING, ARE BASED ON THESE LIMITS.

WATERING AND MOWING PERMANENT SEEDED AREAS

THE FOLLOWING ESTIMATED QUANTITIES ARE TO BE USED AS DIRECTED BY THE ENGINEER TO PROMOTE GROWTH AND TO CARE FOR PERMANENT SEEDED AREAS PER 659.09:

ITEM 659, WATER	6	CU. METER
ITEM 659, MOWING	140	SQUARE METER

TEMPORARY SOIL EROSION AND SEDIMENT CONTROL

THE FOLLOWING ESTIMATED QUANTITIES ARE TO BE USED AS DIRECTED BY THE ENGINEER FOR TEMPORARY EROSION AND SEDIMENT CONTROL MEASURES:

ITEM 207 - TEMPORARY SEEDING AND MULCHING	118	SQ. METER
ITEM 207 - STRAW OR HAY BALES	50	EACH
ITEM 207 - FILTER FABRIC FENCE	60	METER
ITEM 601 - ROCK CHANNEL PROTECTION, TYPE C WITH FILTER	4	CU. METER
ITEM 659 - MOWING	140	SQ. METER
ITEM 659 - REPAIR SEEDING AND MULCHING	30	SQ. METER
ITEM 659 - WATER	2	CU. METER

PAVEMENT:
CONTRACTION AND EXPANSION JOINTS

ALTHOUGH SPECIFIC LOCATIONS OF CERTAIN CONTRACTION AND EXPANSION JOINTS HAVE BEEN DETAILED ON THIS PLAN, NO WAIVER OF THE SPECIFICATIONS IS INTENDED. PROVISION OF EXPANSION JOINTS AT ALL MAJOR STRUCTURES AND THE MAXIMUM SPACING BETWEEN CONTRACTION JOINTS SHALL, IN ALL CASES, BE IN ACCORDANCE WITH STANDARD CONSTRUCTION DRAWING BP-2.2M AND THE SPECIFICATIONS.

CURBING ON APPROACH SLABS

THE SHAPE OF CURBING ON APPROACH SLABS SHALL BE TRANSTIONED, FROM THE STANDARD SECTION ON THE APPROACHES TO THE SECTION USED ON THE BRIDGE, WITHIN THE LIMITS ON THE APPROACH SLAB.

ITEM 407 - TACK COAT & TACK COAT FOR INTERMEDIATE COURSE

THE RATE OF APPLICATION OF THE 407 TACK COAT SHALL BE SUBJECT TO ADJUSTMENT AS DIRECTED BY THE ENGINEER. PLAN QUANTITIES INDICATE AN AVERAGE APPLICATION RATE OF 0.453 LITERS PER SQUARE METER OF TACK COAT FOR ESTIMATING PURPOSES ONLY.

metric units

CALCULATED R.L. CHECKED K.P.

GENERAL NOTES

SUM-271-10.51

N:\ODOT\93580\GENNOTE.DWG

ITEM	SHEET NUMBER 5	7	8	13	19	25	37	38			ITEM	ITEM EXT.	GRAND TOTAL	UNIT	DESCRIPTION	SEE SHEET NO.
															ROADWAY	
201											201	11000	LUMP	LUMP	CLEARING AND GRUBBING	
202		186	186								202	22900	372	SQ METER	APPROACH SLAB REMOVED	
202		400	430								202	23000	830	SQ METER	PAVEMENT REMOVED	
202				41.91							202	38000	41.91	METER	GUARDRAIL REMOVED	
202							1				202	58501	1	EACH	CATCH BASIN ABANDONED, AS PER PLAN	37
203					374	349					203	12000	723	CU METER	EXCAVATION NOT INCLUDING EMBANKMENT CONSTRUCTION	
203					4	4					203	20000	8	CU METER	EMBANKMENT	
203		835	835								203	50000	1720	SQ METER	SUBGRADE COMPACTION	
203	10										203	45000	10	HOUR	PROOF ROLLING	
606				41.91							606	13000	41.91	METER	GUARDRAIL, TYPE 5	
606				4							606	35000	4	EACH	BRIDGE TERMINAL ASSEMBLY, TYPE 1	
609				33							609	26000	33	METER	CURB, TYPE 6	
															DRAINAGE	
603				13							603	00900	13	METER	150 MM CONDUIT, TYPE B	
603				40							603	01500	40	METER	150 MM CONDUIT, TYPE F	
603				15							603	04600	15	METER	300 MM CONDUIT, TYPE C	
603							2	118			603	05900	120	METER	375 MM CONDUIT, TYPE B	
604								1			604	01200	1	EACH	CATCH BASIN, NO. 4	
604								1			604	01201	1	EACH	CATCH BASIN, NO. 4, AS PER PLAN	37
604							1				604	09501	1	EACH	CATCH BASIN RECONSTRUCTED TO GRADE, AS PER PLAN	38
605				88							605	11100	88	METER	150 MM SHALLOW PIPE UNDERDRAIN	
605				68							605	12200	68	METER	150 MM DEEP PIPE UNDERDRAIN	
605				97							605	13300	97	METER	150 MM UNCLASSIFIED PIPE UNDERDRAIN	
605				36							605	13400	36	METER	150 MM UNCLASSIFIED PIPE UNDERDRAIN, 707.01 TYPE III OR 707.21 TYPE III	
															EROSION CONTROL	
207	118										207	10000	118	SQ METER	TEMPORARY SEEDING AND MULCHING	
207	60										207	30000	60	METER	FILTER FABRIC FENCE	
207	50										207	70000	50	EACH	STRAW OR HAY BALES	
601	4										601	32200	4	CU METER	ROCK CHANNEL PROTECTION, TYPE C WITH FILTER	
659					274	300					659	10000	574	SQ METER	SEEDING AND MULCHING	
659	30										659	14000	30	SQ METER	REPAIR SEEDING AND MULCHING	
659		11	12								659	20000	23	KILOGRAM	COMMERCIAL FERTILIZER	
659	6	3	3								659	35000	15	CU METER	WATER	
659	140	69	75								659	40000	284	SQ METER	MOWING	
670							30	30			670	40000	60	SQ METER	DITCH EROSION PROTECTION	
															PAVEMENT	
301		50	53								301	46000	103	CU METER	BITUMINOUS AGGREGATE BASE, PG64-22	
304		167	175								304	20000	342	CU METER	AGGREGATE BASE	
305		120	130								305	16000	250	SQ METER	310 MM CONCRETE BASE	
407		179	192								407	10000	371	LITER	TACK COAT	
407		179	192								407	14000	371	LITER	TACK COAT FOR INTERMEDIATE COURSE	
448		31	33								448	46040	64	CU METER	ASPHALT CONCRETE INTERMEDIATE COURSE, TYPE 2, PG64-28	
448		22	24								448	47010	46	CU METER	ASPHALT CONCRETE SURFACE COURSE, TYPE 1, PG64-28	
SPECIAL				30							SPECIAL	45130000	30	METER	PRESSURE RELIEF JOINT, TYPE A	
611		183	183								611	25000	366	SQ METER	REINFORCED CONCRETE APPROACH SLAB (T-380 MM)	
															TRAFFIC CONTROL	
621		20	20								621	00100	40	EACH	RAISED PAVEMENT MARKER	
642				10.90							642	00100	10.90	KILOMETER	EDGE LINE, TYPE 1	
642				5.45							642	00200	5.45	KILOMETER	LANE LINE, TYPE 1	
626				20							626	00200	20	EACH	BARRIER REFLECTOR, TYPE B	
															MAINTENANCE OF TRAFFIC	
															FOR QUANTITIES, SEE SHEET NO. 30	
															STRUCTURES	
															FOR STRUCTURE 6m OR OVER, SEE SHEET NO. 57 & 68	
614											614	11000	LUMP	LUMP	MAINTAINING TRAFFIC	
614											614	11001	LUMP	LUMP	MAINTAINING TRAFFIC, AS PER PLAN	29A-D
619											619	15000	LUMP	LUMP	FIELD OFFICE, TYPE A	
SPECIAL											SPECIAL	61925000	LUMP	LUMP	COMPUTER EQUIPMENT FOR TYPE A OFFICE	
623											623	10000	LUMP	LUMP	CONSTRUCTION LAYOUT STAKES	
624											624	10000	LUMP	LUMP	MOBILIZATION	

CALCULATED RL CHECKED KP

GENERAL SUMMARY

SUM-271-10.51

QUANTITY CALCULATIONS
NORTHBOUND

ITEM 202 – APPROACH SLAB REMOVED

STA. 10+553.443 TO STA. 10+561.265* = 7.60 m
STA. 10+629.627 TO STA. 10+637.448* = 7.60 m
TOTAL LENGTH = 15.20 m
15.20 m LENGTH X 12.19 m WIDTH = 185.29 sq. m ; SAY 186 sq. m

ITEM 202 – PAVEMENT REMOVED

STA. 10+510.000 TO STA. 10+553.443* = 42.55 m
STA. 10+637.448 TO STA. 10+650.000* = 12.10 m
TOTAL LENGTH = 54.65 m
54.65 m LENGTH X 7.315 m WIDTH = 399.76 sq. m ; SAY 400 sq. m

ITEM 203 – SUBGRADE COMPACTION

54.65 m LENGTH X 12.00 m WIDTH = 655.80 sq. m
APPROACH SLAB = 14.90 m LENGTH X 12.00 m WIDTH = 178.80 sq. m
TOTAL = 834.60 sq. m ; SAY 835 sq. m

ITEM 301 – BITUMINOUS AGGREGATE BASE, PG64-28

PAVED SHOULDER (RIGHT SIDE):

STA. 10+510.000 TO STA. 10+557.660*
4.00 m LENGTH X 3.024 m AVERAGE WIDTH X 0.175 m DEPTH = 2.12 cu. m
41.31 m LENGTH X 3.00 m AVERAGE WIDTH X 0.175 m DEPTH = 21.69 cu. m

STA. 10+643.185 TO STA. 10+650.000*
3.96 m LENGTH X 3.00 m AVERAGE WIDTH X 0.175 m DEPTH = 2.08 cu. m
4.00 m LENGTH X 3.024 m AVERAGE WIDTH X 0.175 m DEPTH = 2.12 cu. m
TOTAL = 28.01 cu. m

PAVED SHOULDER (LEFT SIDE):

STA. 10+510.000 TO STA. 10+551.192*
4.00 m LENGTH X 1.285 m AVERAGE WIDTH X 0.175 m DEPTH = 0.90 cu. m
36.29 m LENGTH X 1.575 m AVERAGE WIDTH X 0.175 m DEPTH = 10.00 cu. m

STA. 10+634.393 TO STA. 10+675.600*
40.99 m LENGTH X 1.51 m AVERAGE WIDTH X 0.175 m DEPTH = 10.83 cu. m
TOTAL = 21.73 cu. m

TOTAL VOLUME = 28.01 + 21.73 = 49.74 cu. m ; SAY 50 cu. m

ITEM 304 – AGGREGATE BASE

PAVED SHOULDER (RIGHT SIDE):
4.00 m LENGTH X 3.024 m AVERAGE WIDTH X 0.217 m DEPTH = 2.62 cu. m
41.31 m LENGTH X 3.00 m AVERAGE WIDTH X 0.217 m DEPTH = 26.89 cu. m
3.96 m LENGTH X 3.00 m AVERAGE WIDTH X 0.217 m DEPTH = 2.58 cu. m
4.00 m LENGTH X 3.024 m AVERAGE WIDTH X 0.217 m DEPTH = 2.62 cu. m
TOTAL = 34.71 cu. m

PAVED SHOULDER (LEFT SIDE):
4.00 m LENGTH X 1.285 m AVERAGE WIDTH X 0.280 m DEPTH = 1.44 cu. m
36.29 m LENGTH X 1.575 m AVERAGE WIDTH X 0.280 m DEPTH = 16.00 cu. m
40.99 m LENGTH X 1.51 m AVERAGE WIDTH X 0.280 m DEPTH = 17.33 cu. m
TOTAL = 34.77 cu. m

REAR ABUTMENT:
PAVEMENT:
4.00 m LENGTH X 7.258 m AVERAGE WIDTH X 0.152 m DEPTH = 4.41 cu. m
38.55 m LENGTH X 7.20 m AVERAGE WIDTH X 0.152 m DEPTH = 42.19 cu. m
APPROACH SLAB:
7.45 m LENGTH X 12.00 m AVERAGE WIDTH X 0.203 m DEPTH = 18.15 cu. m
TOTAL = 64.75 cu. m

FORWARD ABUTMENT:
APPROACH SLAB:
7.45 m LENGTH X 12.30 m AVERAGE WIDTH X 0.203 m DEPTH = 18.60 cu. m
PAVEMENT:
8.09 m LENGTH X 7.20 m AVERAGE WIDTH X 0.152 m DEPTH = 8.85 cu. m
4.00 m LENGTH X 7.258 m AVERAGE WIDTH X 0.152 m DEPTH = 4.41 cu. m
TOTAL = 31.86 cu. m

TOTAL VOLUME = 34.71 + 34.77 + 64.75 + 31.86 = 166.09 cu. m ; SAY 167 cu. m

ITEM 305 – 310 mm CONCRETE BASE

REAR ABUTMENT:
4.00 m LENGTH X 7.258 m AVERAGE WIDTH X 0.305 m DEPTH = 8.85 cu. m
38.55 m LENGTH X 7.20 m AVERAGE WIDTH X 0.305 m DEPTH = 84.66 cu. m
FORWARD ABUTMENT:
8.09 m LENGTH X 7.20 m AVERAGE WIDTH X 0.305 m DEPTH = 17.77 cu. m
4.00 m LENGTH X 7.258 m AVERAGE WIDTH X 0.305 m DEPTH = 8.85 cu. m
TOTAL = 120.13 cu. m ; SAY 120 cu. m.

ITEM 407 TACK COAT FOR INTERMEDIATE COURSE

ITEM 407 – TACK COAT APPLIED @ 0.453 LITER/SQ. M.

(4.00 +4.00) m LENGTH X 7.258 m AVERAGE WIDTH X 0.453 LITER/sq. m. = 26.30 LITER
(38.55 + 8.09) m LENGTH X 7.20 m AVERAGE WIDTH X 0.453 LITER/sq. m. = 152.12 LITER
TOTAL = 178.42 LITER ; SAY 179 LITER (PER COAT)

ITEM 448 – 32 mm ASPHALT CONCRETE SURFACE COURSE TYPE 1, PG64-28

PAVED SHOULDER (RIGHT SIDE):
4.00 m LENGTH X 3.024 m AVERAGE WIDTH X 0.032 m DEPTH = 0.39 cu. m
41.31 m LENGTH X 3.00 m AVERAGE WIDTH X 0.032 m DEPTH = 3.97 cu. m
3.96 m LENGTH X 3.00 m AVERAGE WIDTH X 0.032 m DEPTH = 0.38 cu. m
4.00 m LENGTH X 3.024 m AVERAGE WIDTH X 0.032 m DEPTH = 0.39 cu. m
TOTAL = 5.13 cu. m.

PAVED SHOULDER (LEFT SIDE):
4.00 m LENGTH X 1.285 m AVERAGE WIDTH X 0.032 m DEPTH = 0.16 cu. m
36.29 m LENGTH X 1.575 m AVERAGE WIDTH X 0.032 m DEPTH = 1.83 cu. m
40.99 m LENGTH X 1.51 m AVERAGE WIDTH X 0.032 m DEPTH = 1.98 cu. m
TOTAL = 3.97 cu. m.

PAVEMENT:
(4.00 + 4.00) m LENGTH X 7.258 m AVERAGE WIDTH X 0.032 m DEPTH = 1.86 cu. m.
(38.55 + 8.09) m LENGTH X 7.20 m AVERAGE WIDTH X 0.032 m DEPTH = 10.75 cu. m.

TOTAL VOLUME = 5.13 + 3.97 + 1.86 + 10.75 = 21.71 cu. m ; SAY 22 cu. m

ITEM 448 – 45 mm ASPHALT CONCRETE INTERMEDIATE COURSE TYPE 2, PG64-28

PAVED SHOULDER (RIGHT SIDE):
4.00 m LENGTH X 3.024 m AVERAGE WIDTH X 0.045 m DEPTH = 0.54 cu. m
41.31 m LENGTH X 3.00 m AVERAGE WIDTH X 0.045 m DEPTH = 5.58 cu. m
3.96 m LENGTH X 3.00 m AVERAGE WIDTH X 0.045 m DEPTH = 0.53 cu. m
4.00 m LENGTH X 3.024 m AVERAGE WIDTH X 0.045 m DEPTH = 0.54 cu. m
TOTAL = 7.19 cu. m.

PAVED SHOULDER (LEFT SIDE):
4.00 m LENGTH X 1.285 m AVERAGE WIDTH X 0.045 m DEPTH = 0.23 cu. m
36.29 m LENGTH X 1.575 m AVERAGE WIDTH X 0.045 m DEPTH = 2.57 cu. m
40.99 m LENGTH X 1.51 m AVERAGE WIDTH X 0.045 m DEPTH = 2.79 cu. m
TOTAL = 5.59 cu. m.

PAVEMENT:
(4.00 + 4.00) m LENG6TH X 7.258 m AVERAGE WIDTH X 0.045 m DEPTH = 2.61 cu. m.
(38.55 + 8.09) m LENGTH X 7.20 m AVERAGE WIDTH X 0.045 m DEPTH = 15.11 cu. m.

TOTAL VOLUME = 7.19 + 5.59 + 2.61 + 15.11 = 30.50 cu. m ; SAY 31 cu. m

ITEM 611 – REINFORCED CONCRETE APPROACH SLABS T = 380 mm

APPROACH SLAB:
(7.60 + 7.60) m LENGTH X 12.00 m AVERAGE WIDTH = 182.40 sq. m ; SAY 183 sq. m.

ITEM 621 – RAISED PAVEMENT MARKER

STA. 10+480.00 TO STA. 10+700 = 220 m LENGTH : 24 m INTERVAL SPACING = 9 SPACING
TOTAL QUANTITIES NEEDED FOR LEFT & RIGHT SIDE = 10 x 2 = 20 EACH ; SAY 20 EACH

ITEM 659 – COMMERCIAL FERTILIZER

AREA FROM SHEET 19 = 274.00 sq. m.
274 sq.m X (3.69kg PER 100 sq.m) = 10.11 kg ; SAY 11 kg

ITEM 659 – WATER

274 sq.m X (1 cu.m. PER 100 sq.m) = 2.74 cu. m. ; SAY 3 cu. m.

ITEM 659 – MOWING

274 sq.m X 0.25 = 68.50 sq. m. ; SAY 69 sq. m.

CROSS REFERENCES	
SHEET NO.	DESCRIPTION
3–4	TYPICAL SECTION
9–10	PLAN
11–12	PROFILE
14–19	CROSS SECTION

* STATIONS GIVEN ARE AT PROFILE GRADE, ACTUAL LENGTH ARE AT CENTERLINE OF PAVEMENT OR SHOULDER.

CALCULATED RL
CHECKED KP

PAVEMENT CALCULATIONS
STA. 10+510.000 TO STA. 10+675.60 (NORTHBOUND)

SUM-271-10.51

N:\ODOT\93580\PAVECALN.DWG

QUANTITY CALCULATIONS
SOUTHBOUND

ITEM 202 – APPROACH SLAB REMOVED

STA. 10+533.034 TO STA. 10+540.425* = 7.60 m
STA. 10+608.933 TO STA. 10+616.324* = 7.60 m
TOTAL LENGTH = 15.20 m

15.20 m LENGTH X 12.19 m WIDTH = 185.29 sq. m ; SAY 186 sq. m

ITEM 202 – PAVEMENT REMOVED

STA. 10+510.000 TO STA. 10+533.034* = 24.00 m
STA. 10+616.324 TO STA. 10+650.000* = 34.80 m
TOTAL LENGTH = 58.80 m

58.80 m LENGTH X 7.315 m WIDTH = 430.12 sq. m ; SAY 430 sq. m

ITEM 203 – SUBGRADE COMPACTION

PAVEMENT:

58.80 m LENGTH X 12.00 m WIDTH = 705.60 sq. m
APPROACH SLAB = 14.90 m LENGTH X 12 m WIDTH = 178.80 sq. m
TOTAL = 884.40 sq. m ; SAY 885 sq. m

ITEM 301 – BITUMINOUS AGGREGATE BASE, PG64-28

PAVED SHOULDER (RIGHT SIDE):

STA. 10+496.700 TO STA. 10+535.026*
39.85 m LENGTH X 1.51 m AVERAGE WIDTH X 0.175 m DEPTH = 10.53 cu. m

STA. 10+619.047 TO STA. 10+660.000*
41.19 m LENGTH X 1.51 m AVERAGE WIDTH X 0.175 m DEPTH = 10.88 cu. m
TOTAL = 21.41 cu. m

PAVED SHOULDER (LEFT SIDE):

STA. 10+510.000 TO STA. 10+529.454*
4.00 m LENGTH X 3.024 m AVERAGE WIDTH X 0.175 m DEPTH = 2.12 cu. m
17.42 m LENGTH X 3.00 m AVERAGE WIDTH X 0.175 m DEPTH = 9.15 cu. m

STA. 10+611.439 TO STA. 10+650.000*
35.00 m LENGTH X 3.00 m AVERAGE WIDTH X 0.175 m DEPTH = 18.38 cu. m
4.00 m LENGTH X 3.024 m AVERAGE WIDTH X 0.175 m DEPTH = 2.12 cu. m
TOTAL = 31.77 cu. m

TOTAL VOLUME = 21.41 + 31.77 = 53.18 cu. m ; SAY 53 cu. m

ITEM 304 – AGGREGATE BASE

PAVED SHOULDER (RIGHT SIDE):

39.85 m LENGTH X 1.51 m AVERAGE WIDTH X 0.282 m DEPTH = 16.97 cu. m
41.19 m LENGTH X 1.51 m AVERAGE WIDTH X 0.282 m DEPTH = 17.54 cu. m
TOTAL = 34.51 cu. m

PAVED SHOULDER (LEFT SIDE):

4.00 m LENGTH X 3.024 m AVERAGE WIDTH X 0.217 m DEPTH = 2.62 cu. m
17.42 m LENGTH X 3.00 m AVERAGE WIDTH X 0.217 m DEPTH = 11.34 cu. m
35.00 m LENGTH X 3.00 m AVERAGE WIDTH X 0.217 m DEPTH = 22.79 cu. m
4.00 m LENGTH X 3.024 m AVERAGE WIDTH X 0.217 m DEPTH = 2.62 cu. m
TOTAL = 39.37 cu. m

REAR ABUTMENT:
PAVEMENT:

4.00 m LENGTH X 7.258 m AVERAGE WIDTH X 0.152 m DEPTH = 4.41 cu. m
20.00 m LENGTH X 7.20 m AVERAGE WIDTH X 0.152 m DEPTH = 21.89 cu. m
APPROACH SLAB:
7.45 m LENGTH X 12.00 m AVERAGE WIDTH X 0.203 m DEPTH = 18.15 cu. m
TOTAL = 44.45 cu. m

FORWARD ABUTMENT:
APPROACH SLAB:
7.45 m LENGTH X 12.30 m AVERAGE WIDTH X 0.203 m DEPTH = 18.60 cu. m
PAVEMENT:
30.80 m LENGTH X 7.20 m AVERAGE WIDTH X 0.152 m DEPTH = 33.71 cu. m
4.00 m LENGTH X 7.258 m AVERAGE WIDTH X 0.152 m DEPTH = 4.41 cu. m
TOTAL = 56.72 cu. m

TOTAL VOLUME = 34.51 + 39.37 + 44.45 + 56.72 = 175.05 cu. m ; SAY 175 cu. m

ITEM 305 – 310 mm CONCRETE BASE

REAR ABUTMENT:
4.00 m LENGTH X 7.258 m AVERAGE WIDTH X 0.305 m DEPTH = 8.85 cu. m
20.00 m LENGTH X 7.20 m AVERAGE WIDTH X 0.305 m DEPTH = 43.92 cu. m
FORWARD ABUTMENT:
30.80 m LENGTH X 7.20 m AVERAGE WIDTH X 0.305 m DEPTH = 67.64 cu. m
4.00 m LENGTH X 7.258 m AVERAGE WIDTH X 0.305 m DEPTH = 8.85 cu. m
TOTAL = 129.26 cu. m ; SAY 130 cu. m.

ITEM 407 TACK COAT FOR INTERMEDIATE COURSE

ITEM 407 – TACK COAT APPLIED @ 0.453 LITER/SQ. M.

(4.00 +4.00) m LENGTH X 7.258 m AVERAGE WIDTH X 0.453 LITER/sq. m. = 26.30 LITER
(20.00 + 30.80) m LENGTH X 7.20 m AVERAGE WIDTH X 0.453 LITER/sq. m. = 165.69 LITER
TOTAL = 191.99 LITER ; SAY 192 LITER (PER COAT)

ITEM 448 – 32 mm ASPHALT CONCRETE SURFACE COURSE TYPE 1, PG64-28

PAVED SHOULDER (RIGHT SIDE):
39.85 m LENGTH X 1.51 m AVERAGE WIDTH X 0.032 m DEPTH = 1.93 cu. m
41.19 m LENGTH X 1.51 m AVERAGE WIDTH X 0.032 m DEPTH = 1.99 cu. m
TOTAL = 3.92 cu. m.

PAVED SHOULDER (LEFT SIDE):
4.00 m LENGTH X 3.024 m AVERAGE WIDTH X 0.032 m DEPTH = 0.39 cu. m
17.42 m LENGTH X 3.00 m AVERAGE WIDTH X 0.032 m DEPTH = 1.67 cu. m
35.00 m LENGTH X 3.00 m AVERAGE WIDTH X 0.032 m DEPTH = 3.36 cu. m
4.00 m LENGTH X 3.024 m AVERAGE WIDTH X 0.032 m DEPTH = 0.39 cu. m
TOTAL = 5.81 cu. m.

PAVEMENT:
(4.00 + 4.00) m LENGTH X 7.258 m AVERAGE WIDTH X 0.032 m DEPTH = 1.86 cu. m.
(20.00 + 30.80) m LENGTH X 7.20 m AVERAGE WIDTH X 0.032 m DEPTH = 11.70 cu. m.
APPROACH SLAB:
(7.60 + 7.60) m LENGTH X 12.00 m AVERAGE WIDTH X 0.032 m DEPTH = 5.84 cu. m.
TOTAL = 13.56 cu. m.

TOTAL VOLUME = 3.92 + 5.81 + 13.56 = 23.29 cu. m ; SAY 24 cu. m

ITEM 448 – 45 mm ASPHALT CONCRETE INTERMEDIATE COURSE TYPE 2, PG64-28

PAVED SHOULDER (RIGHT SIDE):
39.85 m LENGTH X 1.51 m AVERAGE WIDTH X 0.045 m DEPTH = 2.71 cu. m
41.19 m LENGTH X 1.51 m AVERAGE WIDTH X 0.045 m DEPTH = 2.80 cu. m
TOTAL = 5.51 cu. m.

PAVED SHOULDER (LEFT SIDE):
4.00 m LENGTH X 3.024 m AVERAGE WIDTH X 0.045 m DEPTH = 0.54 cu. m
17.42 m LENGTH X 3.00 m AVERAGE WIDTH X 0.032 m DEPTH = 2.35 cu. m
35.00 m LENGTH X 3.00 m AVERAGE WIDTH X 0.032 m DEPTH = 4.73 cu. m
4.00 m LENGTH X 3.024 m AVERAGE WIDTH X 0.045 m DEPTH = 0.54 cu. m
TOTAL = 8.16 cu. m.

PAVEMENT:
(4.00 + 4.00) m LENGTH X 7.258 m AVERAGE WIDTH X 0.045 m DEPTH = 2.61 cu. m.
(20.00 + 30.80) m LENGTH X 7.20 m AVERAGE WIDTH X 0.045 m DEPTH = 16.46 cu. m.
APPROACH SLAB:
(7.60 + 7.60) m LENGTH X 12.00 m AVERAGE WIDTH X 0.045 m DEPTH = 8.21 cu. m.
TOTAL = 19.07 cu. m.

TOTAL VOLUME = 5.51 + 8.16 + 19.07 = 32.74 cu. m ; SAY 33 cu. m

ITEM 611 – REINFORCED CONCRETE APPROACH SLABS T = 380 mm

APPROACH SLAB:
(7.60 + 7.60) m LENGTH X 12.00 m AVERAGE WIDTH = 182.40 sq. m ; SAY 183 sq. m.

ITEM 621 – RAISED PAVEMENT MARKER

STA. 10+480.00 TO STA. 10+700.00 = 220 m LENGTH : 24 m INTERVAL SPACING = 9 SPACES
TOTAL QUANTITIES NEEDED FOR LEFT & RIGHT SIDE = 10 x 2 = 20 EACH ; SAY 20 EACH

ITEM 659 – COMMERCIAL FERTILIZER

AREA FROM SHEET 25 = 300.00 sq. m.
300 sq.m X (3.69kg PER 100 sq.m) = 11.07 kg ; SAY 12 kg

ITEM 659 – WATER

300 sq.m X (1 cu.m. PER 100 sq.m) = 3.00 cu. m. ; SAY 3 cu. m.

ITEM 659 – MOWING

300 sq.m X 0.25 = 75.00 sq. m. ; SAY 75 sq. m.

CROSS REFERENCES	
SHEET NO.	DESCRIPTION
3–4	TYPICAL SECTION
9–10	PLAN
11–12	PROFILE
20–24	CROSS SECTION

* STATIONS GIVEN ARE AT PROFILE GRADE, ACTUAL LENGTH ARE AT CENTERLINE OF PAVEMENT OR SHOULDER.

CALCULATED RL
CHECKED KP

PAVEMENT CALCULATION
STA. 10+496.700 TO STA. 10+660.000 (SOUTHBOUND)

SUM-271-10.51

N:\ODOT\93580\PAVECALS.DWG

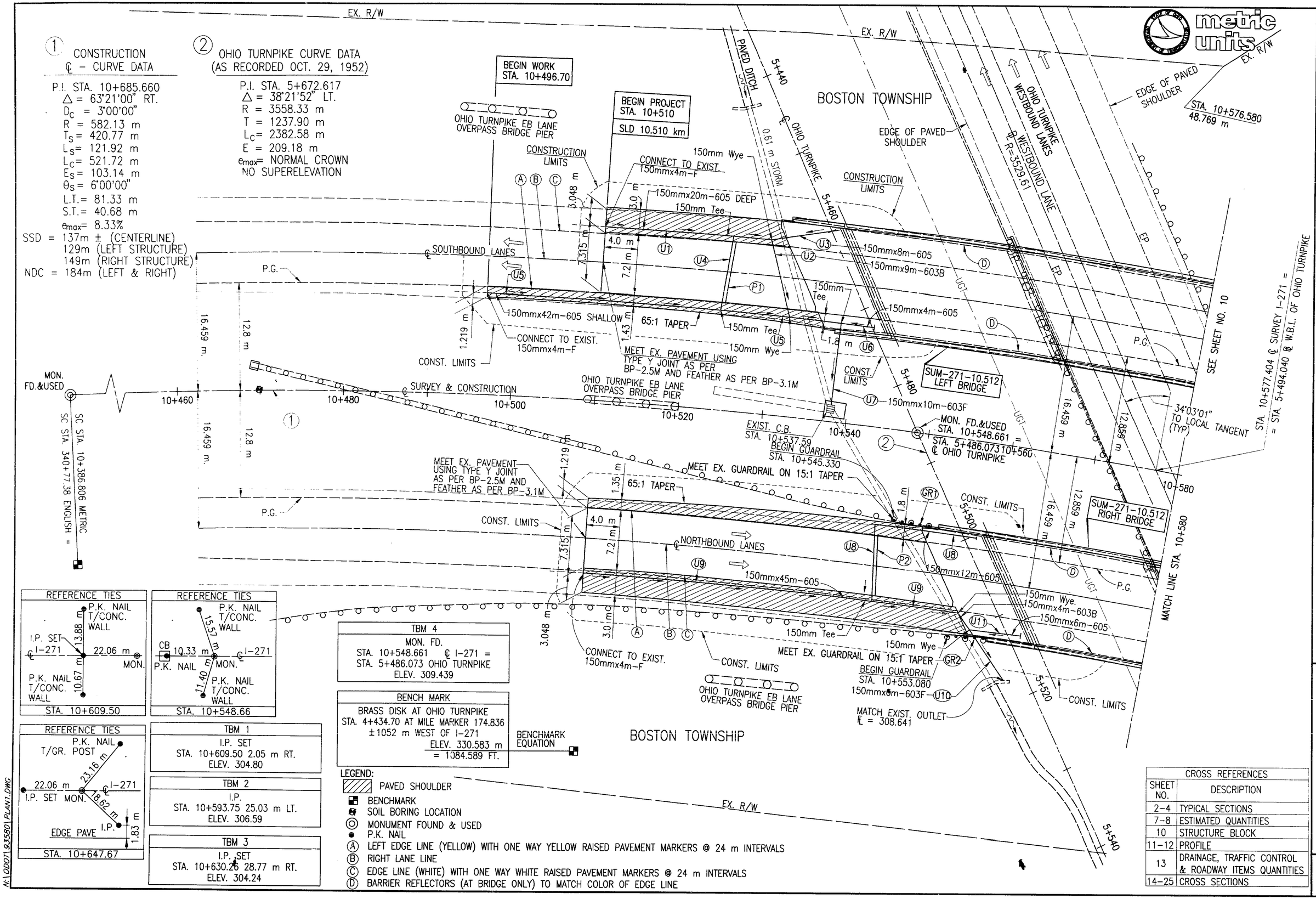

① CONSTRUCTION ℄ - CURVE DATA

P.I. STA. 10+685.660
Δ = 63°21'00" RT.
D_C = 3°00'00"
R = 582.13 m
T_S = 420.77 m
L_S = 121.92 m
L_C = 521.72 m
E_S = 103.14 m
θ_S = 6°00'00"
L.T. = 81.33 m
S.T. = 40.68 m
e_{max} = 8.33%
SSD = 137m ± (CENTERLINE)
129m (LEFT STRUCTURE)
149m (RIGHT STRUCTURE)
NDC = 184m (LEFT & RIGHT)

② OHIO TURNPIKE CURVE DATA (AS RECORDED OCT. 29, 1952)

P.I. STA. 5+672.617
Δ = 38°21'52" LT.
R = 3558.33 m
T = 1237.90 m
L_C = 2382.58 m
E = 209.18 m
e_{max} = NORMAL CROWN
NO SUPERELEVATION

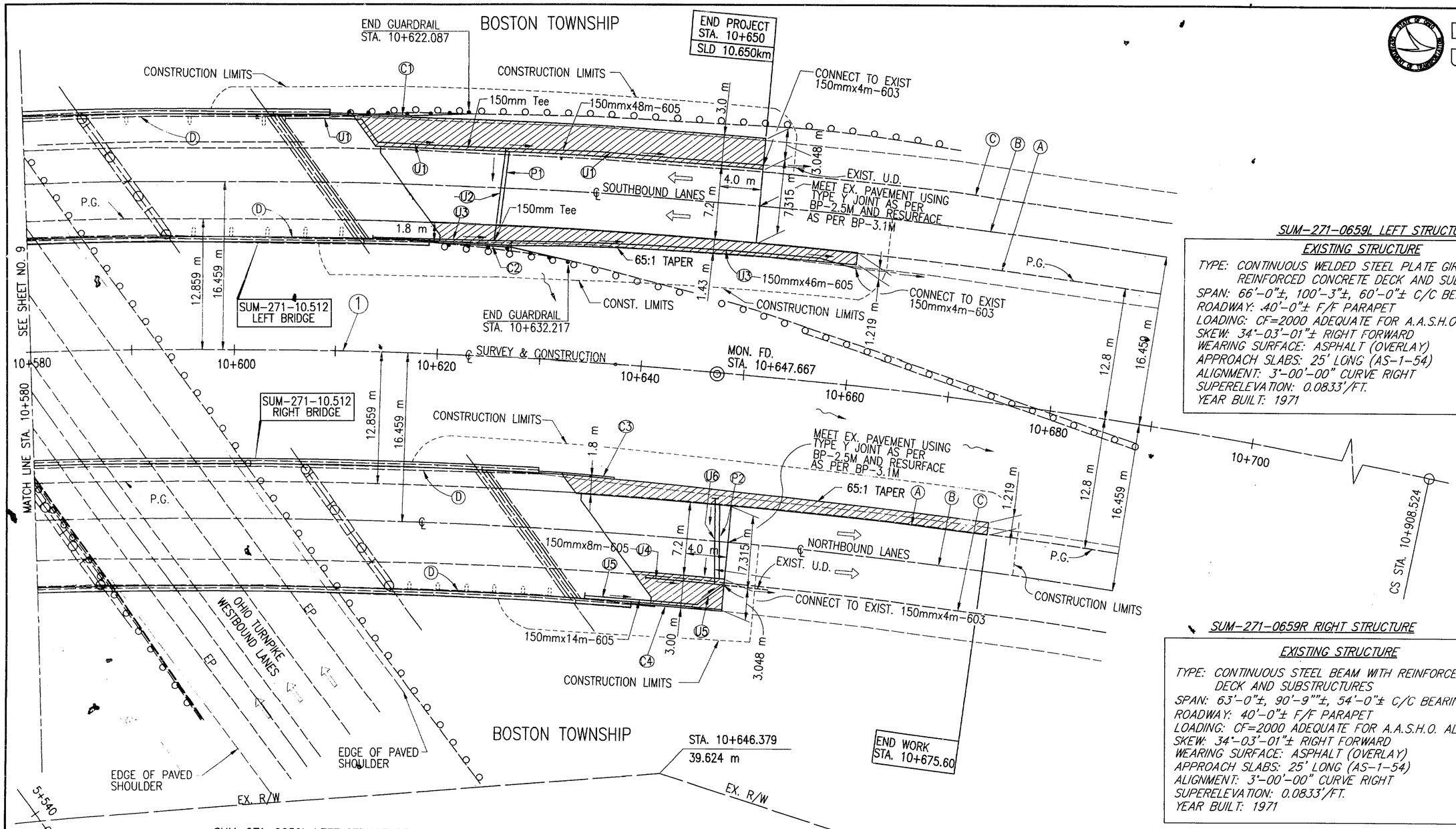

SUM-271-0659L LEFT STRUCTURE

EXISTING STRUCTURE

TYPE: CONTINUOUS WELDED STEEL PLATE GIRDERS WITH REINFORCED CONCRETE DECK AND SUBSTRUCTURES
SPAN: 66'-0"±, 100'-3"±, 60'-0"± C/C BEARINGS
ROADWAY: 40'-0"± F/F PARAPET
LOADING: CF=2000 ADEQUATE FOR A.A.S.H.O. ALTERNATE LOADING
SKEW: 34'-03'-01"± RIGHT FORWARD
WEARING SURFACE: ASPHALT (OVERLAY)
APPROACH SLABS: 25' LONG (AS-1-54)
ALIGNMENT: 3'-00'-00" CURVE RIGHT
SUPERELEVATION: 0.0833'/FT.
YEAR BUILT: 1971

SUM-271-0659R RIGHT STRUCTURE

EXISTING STRUCTURE

TYPE: CONTINUOUS STEEL BEAM WITH REINFORCED CONCRETE DECK AND SUBSTRUCTURES
SPAN: 63'-0"±, 90'-9""±, 54'-0"± C/C BEARINGS
ROADWAY: 40'-0"± F/F PARAPET
LOADING: CF=2000 ADEQUATE FOR A.A.S.H.O. ALTERNATE LOADING
SKEW: 34'-03'-01"± RIGHT FORWARD
WEARING SURFACE: ASPHALT (OVERLAY)
APPROACH SLABS: 25' LONG (AS-1-54)
ALIGNMENT: 3'-00'-00" CURVE RIGHT
SUPERELEVATION: 0.0833'/FT.
YEAR BUILT: 1971

SUM-271-0659L LEFT STRUCTURE

PROPOSED STRUCTURE

PROPOSED WORK: NEW COMPOSITE REINFORCED CONCRETE DECK, REPLACE ABUTMENT BACKWALLS, NEW PARAPETS, NEW STRIP SEAL EXPANSION JOINTS, REPLACE END CROSSFRAMES, RESET ABUTMENT BEARINGS, PATCH CONCRETE AT SUBSTRUCTURE, PAINT STRUCTURE STEELS, NEW APPROACH SLABS AND NEW VANDAL PROTECTION FENCES.

SPAN: 20.116 m±, 30.554 m±, 18.287 m± C/C BEARING
ROADWAY: 12.000 m TOE TO TOE OF PARAPET
LOADING: MS18-44 CASE I AND ALTERNATE MILITARY
SKEW: 34'-03'-01"± RIGHT FORWARD
WEARING SURFACE: 25 mm MONOLITHIC CONCRETE
APPROACH SLABS: 7600 mm LONG (AS-1-81M)
ALIGNMENT: R = 582.13 m CURVE RIGHT
SUPERELEVATION: 0.0833

SUM-271-0659R RIGHT STRUCTURE

PROPOSED STRUCTURE

PROPOSED WORK: NEW COMPOSITE REINFORCED CONCRETE DECK, REPLACE ABUTMENT BACKWALLS, NEW PARAPETS, NEW STRIP SEAL EXPANSION JOINTS, REPLACE END CROSSFRAMES, RESET ABUTMENT BEARINGS, PATCH CONCRETE AT SUBSTRUCTURE, PAINT STRUCTURE STEELS, NEW APPROACH SLABS AND NEW VANDAL PROTECTION FENCES.

SPAN: 19.207 m±, 27.668 m±, 16.463 m± C/C BEARINGS
ROADWAY: 12.000 m TOE TO TOE OF PARAPET
LOADING: MS18-44 CASE I AND ALTERNATE MILITARY
SKEW: 34'-03'-01"± RIGHT FORWARD
WEARING SURFACE: 25 mm MONOLITHIC CONCRETE
APPROACH SLABS: 7600 mm LONG (AS-1-81M)
ALIGNMENT: R = 582.13 m CURVE RIGHT
SUPERELEVATION: 0.0833

LEGEND: FOR LEGEND, SEE SHEET NO. 9

CROSS REFERENCES	
SHEET NO.	DESCRIPTION
2-4	TYPICAL SECTIONS
7-8	ESTIMATED QUANTITIES
9	SURVEYING REFERENCES
9	℄ CONST. CURVE DATA
11-12	PROFILE
13	DRAINAGE & TRAFFIC CONTROL QUANTITIES ROADWAY ITEMS
14	SEWER PROFILES
14-25	CROSS SECTIONS

metric units

HORIZONTAL SCALE IN METER 0 2 5 10

CALCULATED R.L.
CHECKED K.P.

PLAN - SUM-271
STA. 10+580.000 TO STA. 10+908.524

SUM-271-10.51

10/80

N:\ODOT\93580\PLAN2.DWG

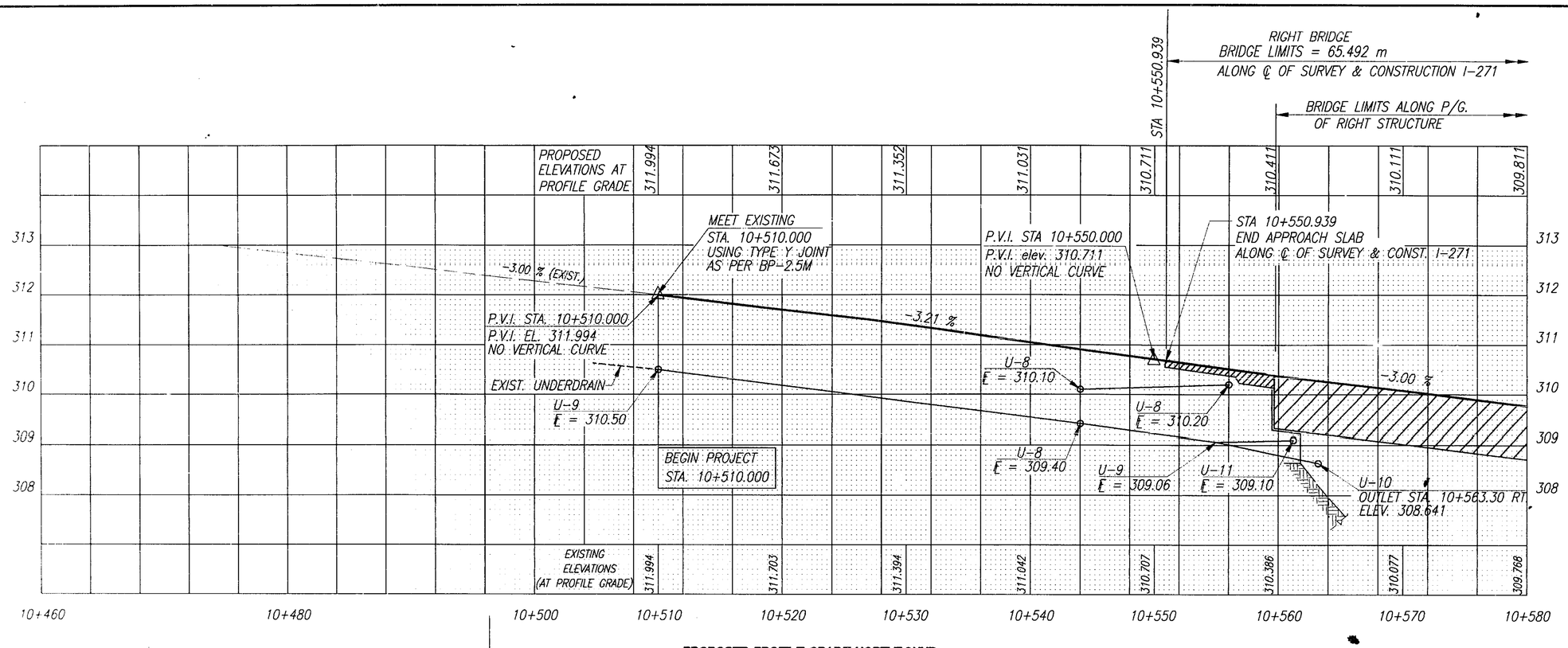

PROPOSED PROFILE GRADE NORTHBOUND

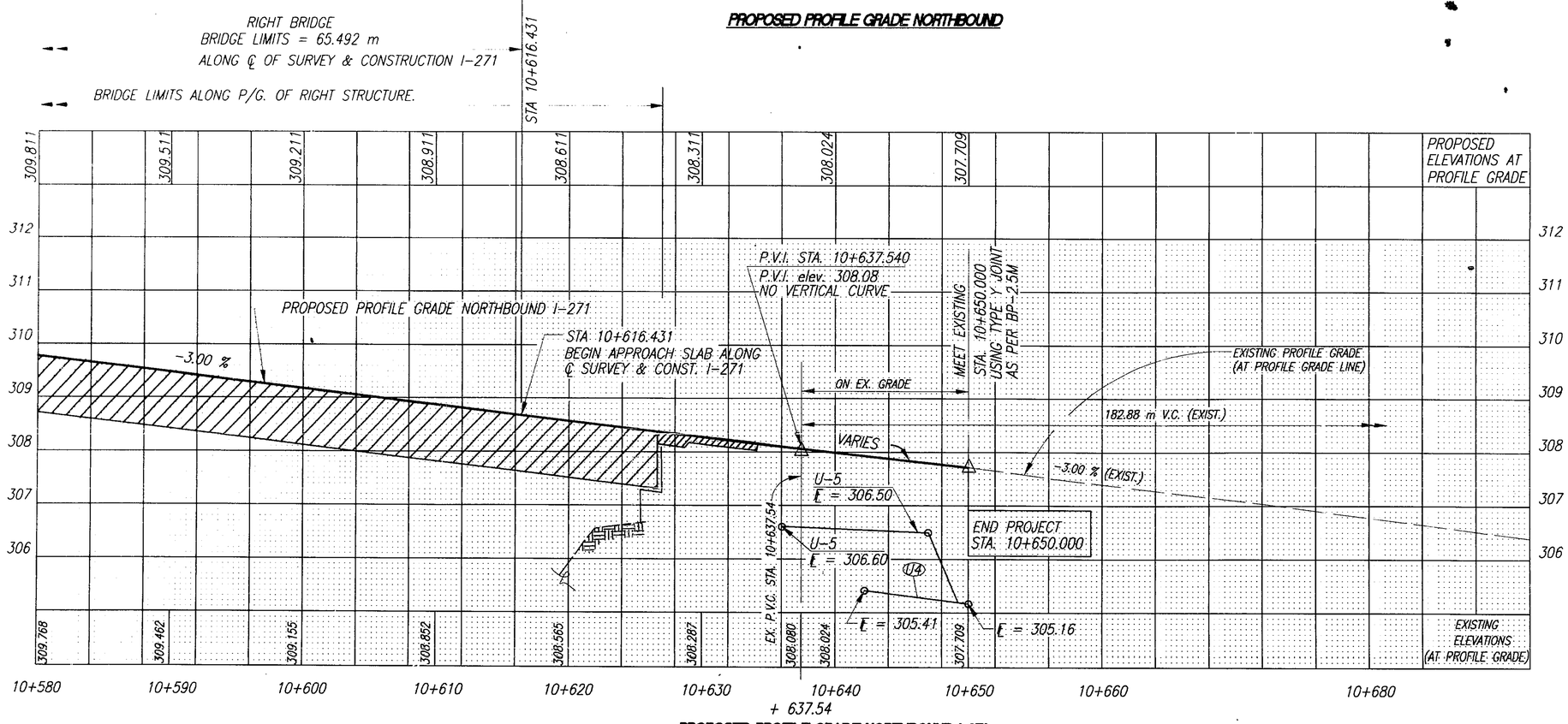

PROPOSED PROFILE GRADE NORTHBOUND I-271

LEFT SIDE (SOUTHBOUND)				CENTERLINE CONTROL		RIGHT SIDE (NORTHBOUND)			
EDGE ELEVATION	ELEVATION CORRECTION	CROSS SLOPE	WIDTH	STATION	PROFILE GRADE	WIDTH	CROSS SLOPE	ELEVATION CORRECTION	EDGE ELEVATION
312.426	+0.432	+0.08	5.4	10+510	311.994	6.6	-0.08	-0.528	311.466
312.135	+0.432	+0.08	5.4	10+520	311.673	6.6	-0.08	-0.528	311.145
311.811	+0.432	+0.08	5.4	10+530	311.352	6.6	-0.08	-0.528	310.824
311.487	+0.432	+0.08	5.4	10+540	311.031	6.6	-0.08	-0.528	310.503
311.143	+0.432	+0.08	5.4	10+550	310.711	6.6	-0.08	-0.528	310.183
310.843	+0.432	+0.08	5.4	10+560	310.411	6.6	-0.08	-0.528	309.883
310.543	+0.432	+0.08	5.4	10+570	310.111	6.6	-0.08	-0.528	309.583
310.243	+0.432	+0.08	5.4	10+580	309.811	6.6	-0.08	-0.528	309.283
309.943	+0.432	+0.08	5.4	10+590	309.511	6.6	-0.08	-0.528	308.983
309.643	+0.432	+0.08	5.4	10+600	309.211	6.6	-0.08	-0.528	308.683
309.343	+0.432	+0.08	5.4	10+610	308.911	6.6	-0.08	-0.528	308.383
309.043	+0.432	+0.08	5.4	10+620	308.611	6.6	-0.08	-0.528	308.083
308.743	+0.432	+0.08	5.4	10+630	308.311	6.6	-0.08	-0.528	307.783
308.456	+0.432	+0.08	5.4	10+640	308.024	6.6	-0.08	-0.528	307.496
308.141	+0.432	+0.08	5.4	10+650	307.709	6.6	-0.08	-0.528	307.181

metric units

HORIZONTAL SCALE IN METER 0 2 5 10

CALCULATED R.L.
CHECKED K.P.

PROFILE - SUM-271
STA. 10+460.000 TO STA. 10+680.000 (NORTHBOUND)

SUM-271-10.51

11
80

N:\ODOT\93580\PROFNORT.DWG

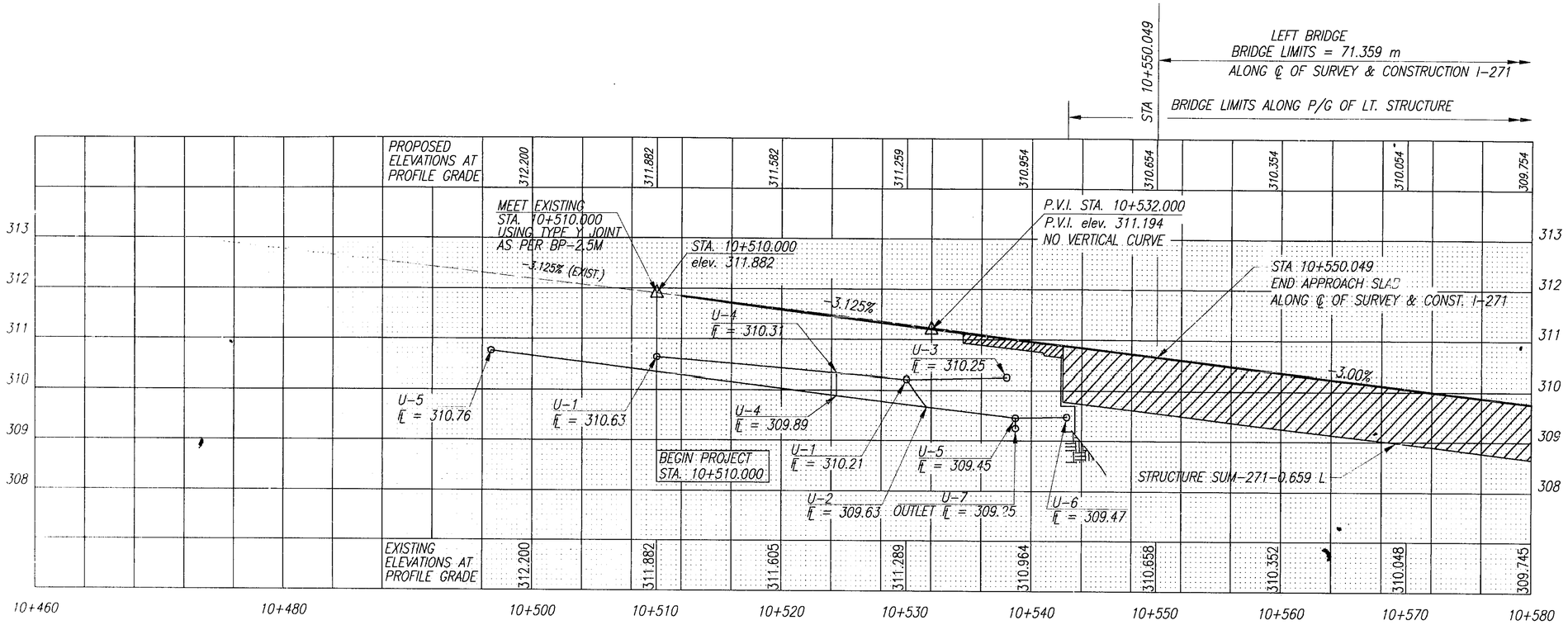

PROPOSED PROFILE GRADE SOUTHBOUND

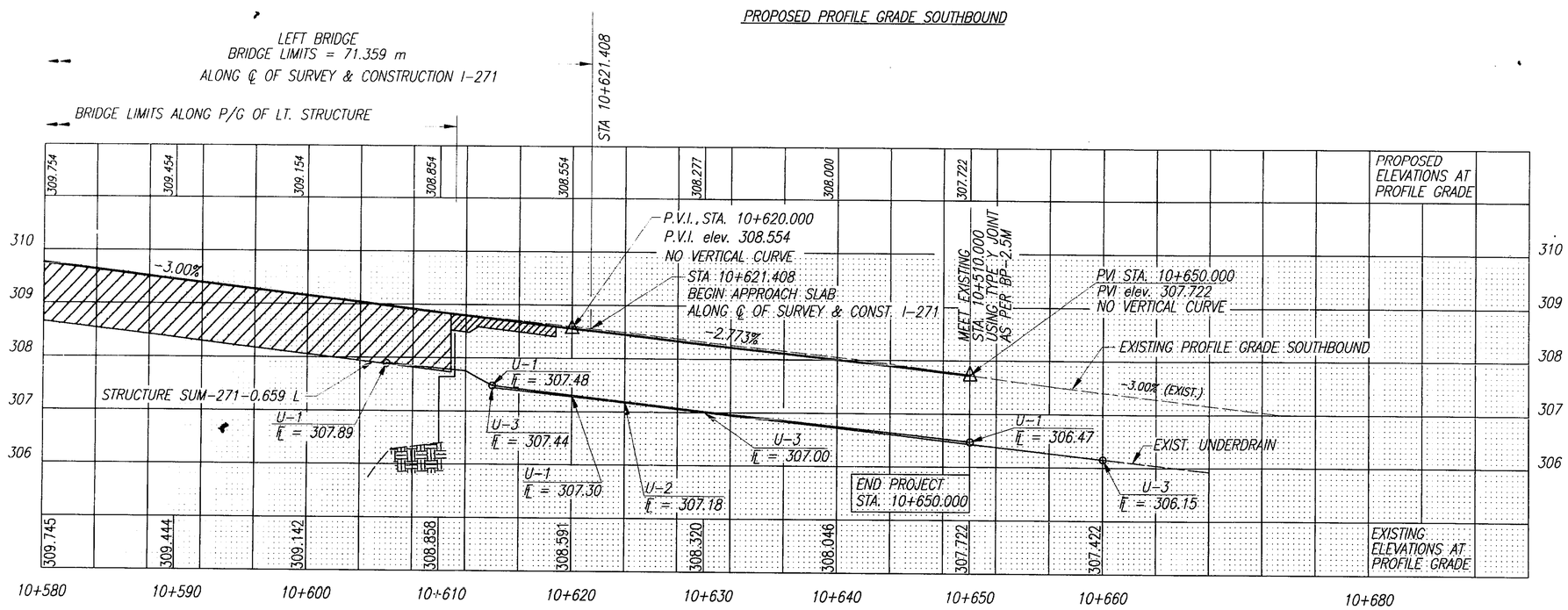

PROPOSED PROFILE GRADE SOUTHBOUND

metric units

HORIZONTAL SCALE IN METER 0 2 5 10

CALCULATED R.L.
CHECKED K.P.

PROFILE - SUM-271
STA. 10+460.000 TO STA. 10+680.000 (SOUTHBOUND)

SUM-271-10.51

12
80

N:\ODOT\93580\PROFSOUT.DWG

ESTIMATED QUANTITIES STA. 10+386.806 TO STA. 10+580.000

REF. NO.	SHEET NO.	STATION FROM	STATION TO	SIDE	202 Guardrail Removed	451 Special-Pressure Relief Joint, Type A	603 150 mm Conduit Type B	603 150 mm Conduit Type F	603 300 mm Conduit Type C	605 150mm UNCLASSIFIED PIPE UNDERDRAIN, 707.01 TYPE III OR 707.21 TYPE III	605 150 mm Unclassified Pipe Underdrains	605 150 mm Shallow Pipe Underdrains	605 150 mm Deep Pipe Underdrains	606 Guardrail, Type 5	606 Bridge Terminal Assembly, type 1	SPECIALS Tee	SPECIALS Wye	SPECIALS Cross	SPECIALS Plug
					m	m	m	m	m	m	m	m	m	m	each				
U1	9	10+510.00	10+529.00	LT.				4.0					20.0				1		
U2	9	10+529.00	10+532.00	LT.			9.0										1		
U3	9	10+529.00	10+537.00	LT.							8.0								
U4	9	10+524.00	10+524.00	LT.						9.0						2			
U5	9	10+496.70	10+537.57	LT.				4.0				42.0				1	1		
U6	9	10+537.57	10+542.00	LT.							4.0								
U7	9	10+537.57	10+537.57	LT.				10.0								1			
U8	9	10+545.00	10+545.00	RT.						9.0	12.0								
U9	9	10+510.00	10+556.00	RT.				4.0			45.0					1	1		
U10	9	10+556.00	10+563.00	RT.			4.0	6.0									1		
U11	9	10+558.00	10+564.00	RT.							6.0								
GR1	9	10+545.330	10+553.097	RT.	7.62									7.62	1				
GR2	9	10+553.080	10+561.014	RT.	7.62									7.62	1				
P1	9	10+524.000		LT.		7.22													
P2	9	10+545.000		RT.		7.22													
TOTAL					15.24	15.00	13.0	28.0		18.0	75.0	42.0	20.0	15.24	2	5	5		

ESTIMATED QUANTITIES STA. 10+580.000 TO STA. 10+908.524

REF. NO.	SHEET NO.	STATION FROM	STATION TO	SIDE	202 Guardrail Removed	451 Special-Pressure Relief Joint, Type A	603 150 mm Conduit Type B	603 150 mm Conduit Type F	603 300 mm Conduit Type C	605 150mm UNCLASSIFIED PIPE UNDERDRAIN, 707.01 TYPE III OR 707.21 TYPE III	605 150 mm Unclassified Pipe Underdrains	605 150 mm Shallow Pipe Underdrains	605 150 mm Deep Pipe Underdrains	606 Guardrail, type 5	606 Bridge Terminal Assembly, Type 1	609 Curb, Type 6	SPECIALS Tee	SPECIALS Wye	SPECIALS Cross	SPECIALS Plug
					m	m	m	m	m	m	m	m	m	m	each	m				
U1	10	10+615.00	10+650.00	LT.				4.0					48.0				1	2		
U2	10	10+625.00	10+625.00	LT.							10.1						1			
U3	10	10+620.00	10+628.00	LT.				4.0				46.0								
U4	10	10+630.00	10+660.00	RT.				4.0				8.0					1	1	1	
U5	10	10+637.00	10+647.00	RT.								14.0						2		
U6	10	10+648.00	10+648.00	RT.							8.0									
C1	10	10+609.029	10+616.731	LT.												8				
C2	10	10+618.814	10+630.000	LT.												8				
C3	10	10+632.966	10+638.700	RT.					8.0							8				
C4	10	10+640.772	10+650.000	RT.					7.0							9				
GR1	10	10+608.738	10+622.087	LT.	13.335									13.335	1					
GR2	10	10+618.868	10+632.217	LT.	13.335									13.335	1					
P1	10	10+625.600		LT.		7.22														
P2	10	10+648.500		RT.		7.22														
TOTAL					26.67	15.0		12.0	15.0		18.0	22.0	46.0	48.0		26.67	2	33	3	5	1

TRAFFIC CONTROL QUANTITIES & PAVEMENT MARKINGS

REF. NO.	STATION FROM	STATION TO	SIDE	621 Raised Pavement Markers (White & Yellow) each	642 Edge Lines (White) km.	642 Edge Lines (Yellow) km.	642 Lane Lines km.	626 Barrier Reflector, Type B each
	10+480.00	10+700.00			0.44	0.44	0.44	20
	9+900.00	11+000.00	N.B.	SEE SHEETS 7 & 8 FOR QUANTITIES	AFTER STAGE I COMPLETION 1.10	1.10	1.10	
	9+940.00	11+240.00	S.B.		1.30	1.30	1.30	
	9+720.00	11+120.00	N.B.		AFTER STAGE II COMPLETION 1.40	1.40	1.40	
	9+940.00	11+150.00	S.B.		1.21	1.21	1.21	
TOTAL					5.45	5.45	5.45	20
					10.90			

CROSS REFERENCES	
SHEET NO.	DESCRIPTION
6	GENERAL SUMMARY

CALCULATED RL
CHECKED KP

ESTIMATED QUANTITIES
STA. 10+386.806 TO STA. 10+908.524

SUM-271-10.51

N:\ODOT\93580\ESTDQTY.DWG

METRIC PROJECT

CALCULATED RL
CHECKED KP

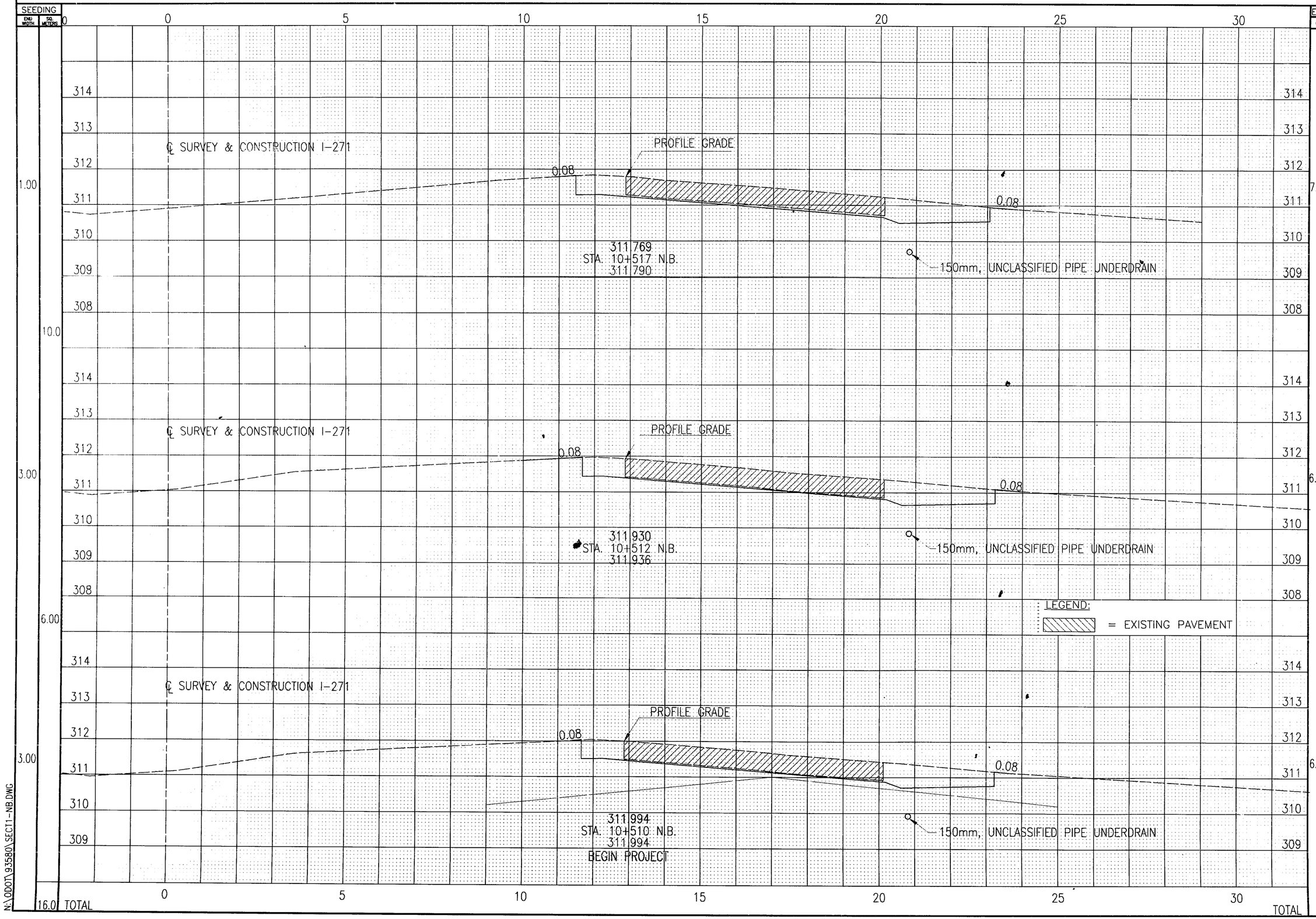

CROSS SECTION SHEET
STA. 10+510 TO STA. 10+517 I-271 NORTHBOUND

SUM-271-10.51

N:\ODOT\93580\SECT1-NB.DWG

METRIC PROJECT

CALCULATED RL
CHECKED KP

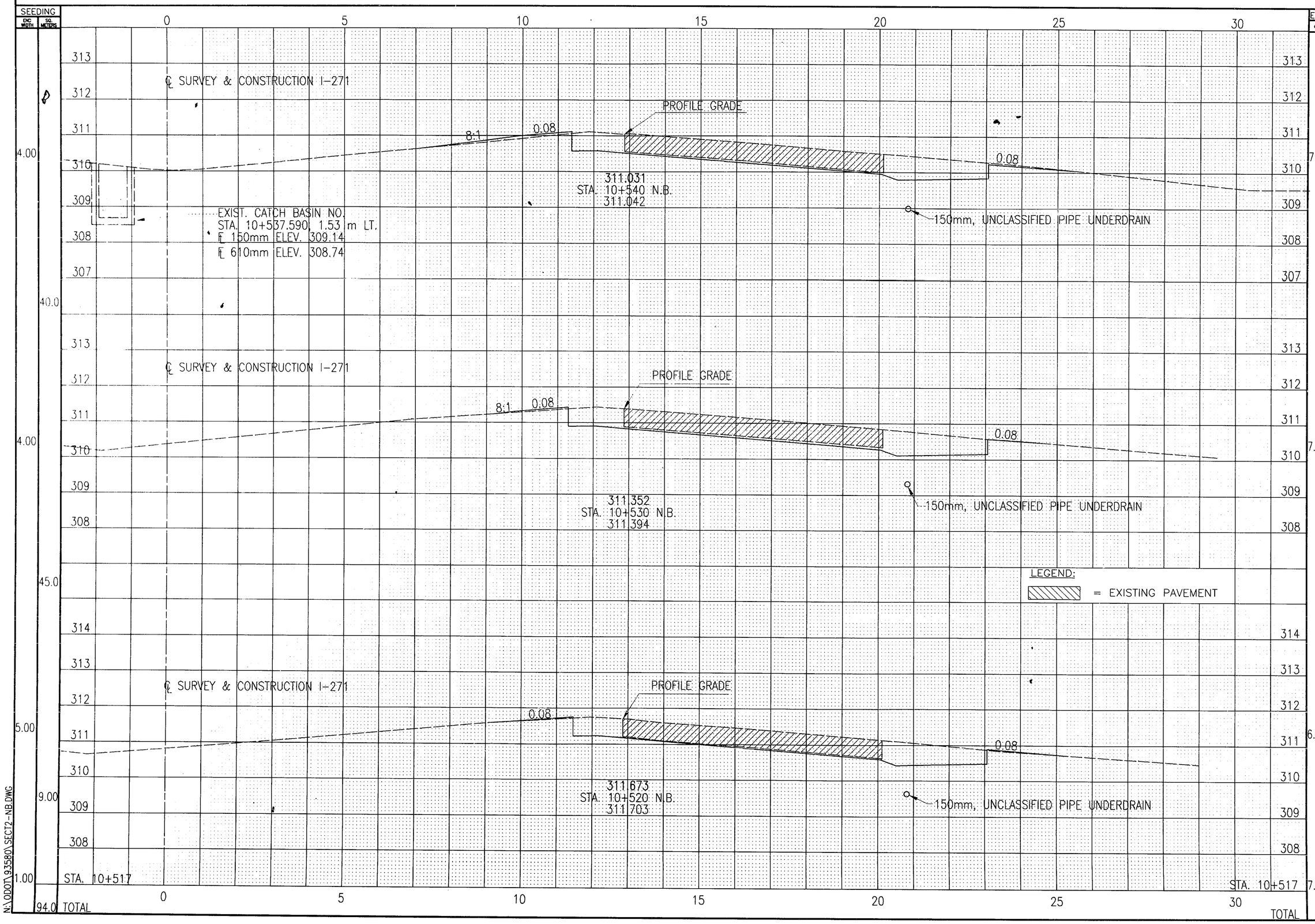

CROSS SECTION SHEET
STA. 10+520 TO STA. 10+540 I-271 NORTHBOUND

SUM-271-10.51

15
80

N:\ODOT\93580\SECT2-NB.DWG

METRIC PROJECT

CALCULATED RL
CHECKED KP

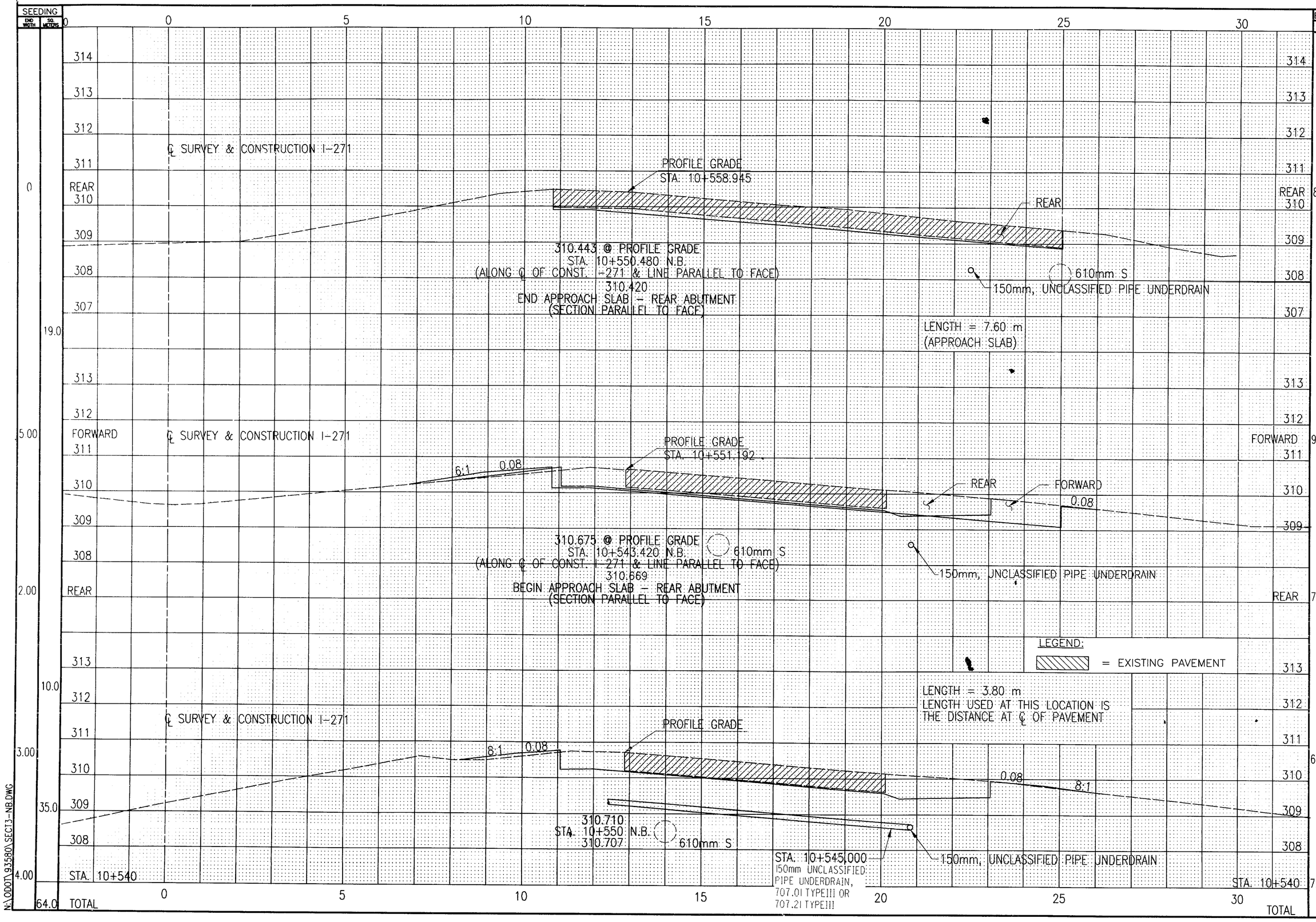

	END AREA CUT	END AREA FILL	VOLUME CUT	VOLUME FILL
REAR	8.00	0		
			65.0	0
FORWARD	9.00	0		
			25.0	0
REAR	7.00	0		
			65.0	0
STA. 10+540	6.00	0		
			155	0
TOTAL	7.00	0		

CROSS SECTION SHEET
STA. 10+550 TO STA. 10+558.945 I-271 NORTHBOUND

SUM-271-10.51

16
80

N:\ODOT\93580\SECT3-NB.DWG

METRIC PROJECT

CALCULATED RL
CHECKED KP

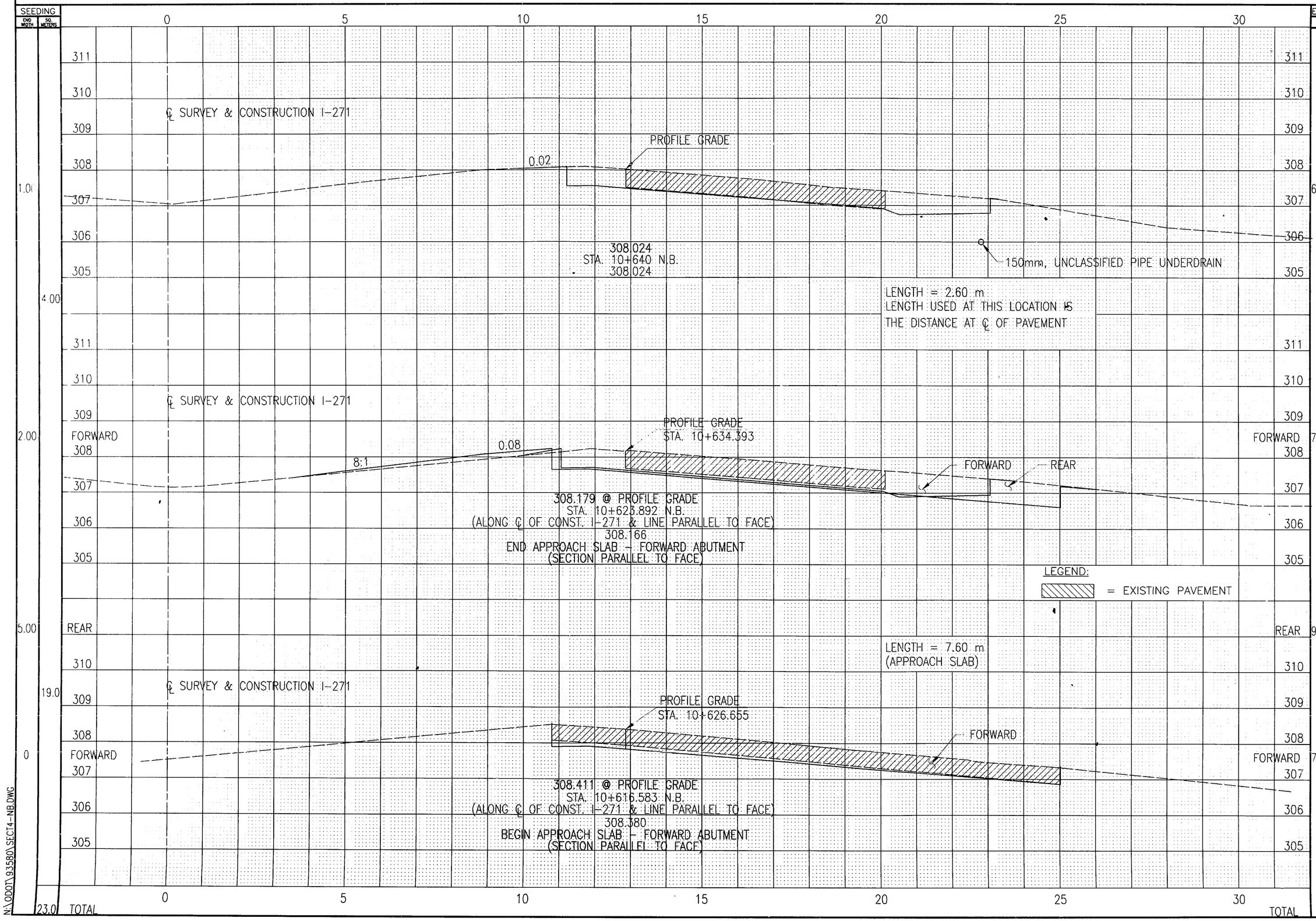

CROSS SECTION SHEET
STA. 10+626.655 TO STA. 10+640 I-271 NORTHBOUND

SUM-271-10.51

N:\ODOT\93580\SECT4-NB.DWG

METRIC PROJECT

CALCULATED RL
CHECKED KP

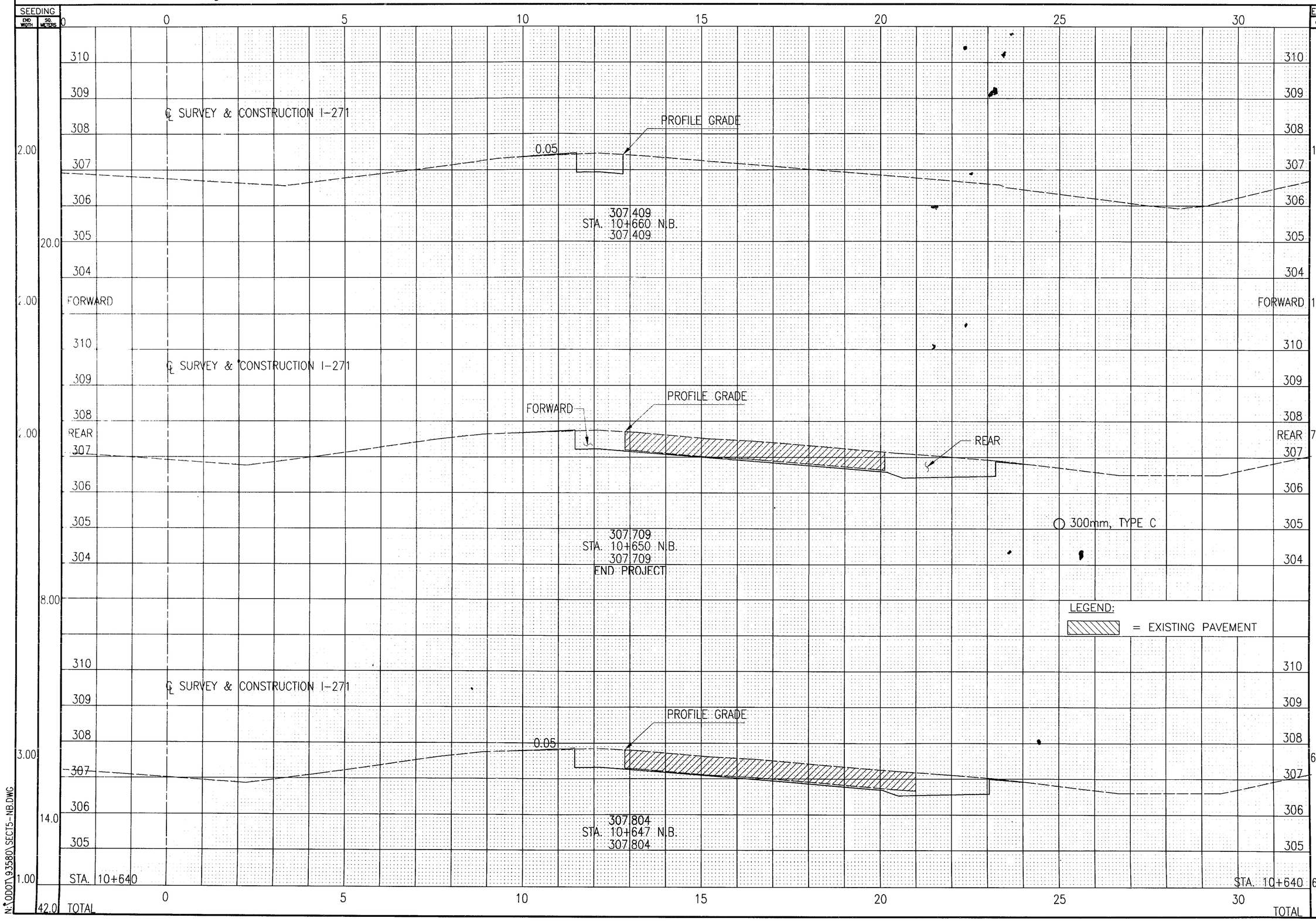

CROSS SECTION SHEET
STA. 10+647 TO STA. 10+660 I-271 NORTHBOUND

SUM-271-10.51

18
80

N:\ODOT\93580\SECT5-NB.DWG

METRIC PROJECT

CALCULATED RL
CHECKED KP

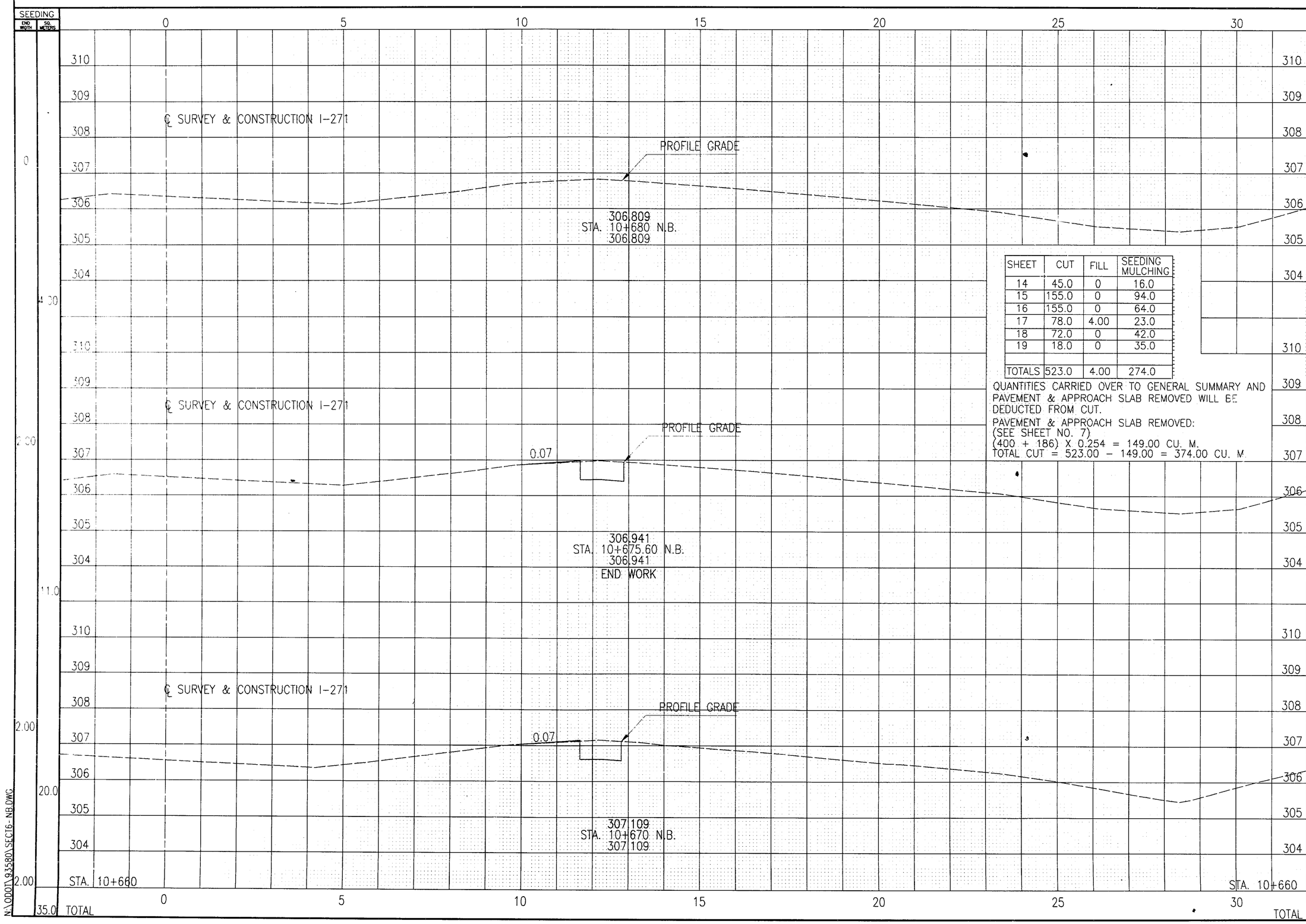

SHEET	CUT	FILL	SEEDING MULCHING
14	45.0	0	16.0
15	155.0	0	94.0
16	155.0	0	64.0
17	78.0	4.00	23.0
18	72.0	0	42.0
19	18.0	0	35.0
TOTALS	523.0	4.00	274.0

QUANTITIES CARRIED OVER TO GENERAL SUMMARY AND PAVEMENT & APPROACH SLAB REMOVED WILL BE DEDUCTED FROM CUT.

PAVEMENT & APPROACH SLAB REMOVED:
(SEE SHEET NO. 7)
(400 + 186) X 0.254 = 149.00 CU. M.
TOTAL CUT = 523.00 − 149.00 = 374.00 CU. M.

CROSS SECTION SHEET
STA. 10+670 TO STA. 10+680 I-271 NORTHBOUND

SUM-271-10.51

19
80

N:\ODOT\93580\SEC16-NB.DWG

METRIC PROJECT

CALCULATED RL
CHECKED KP

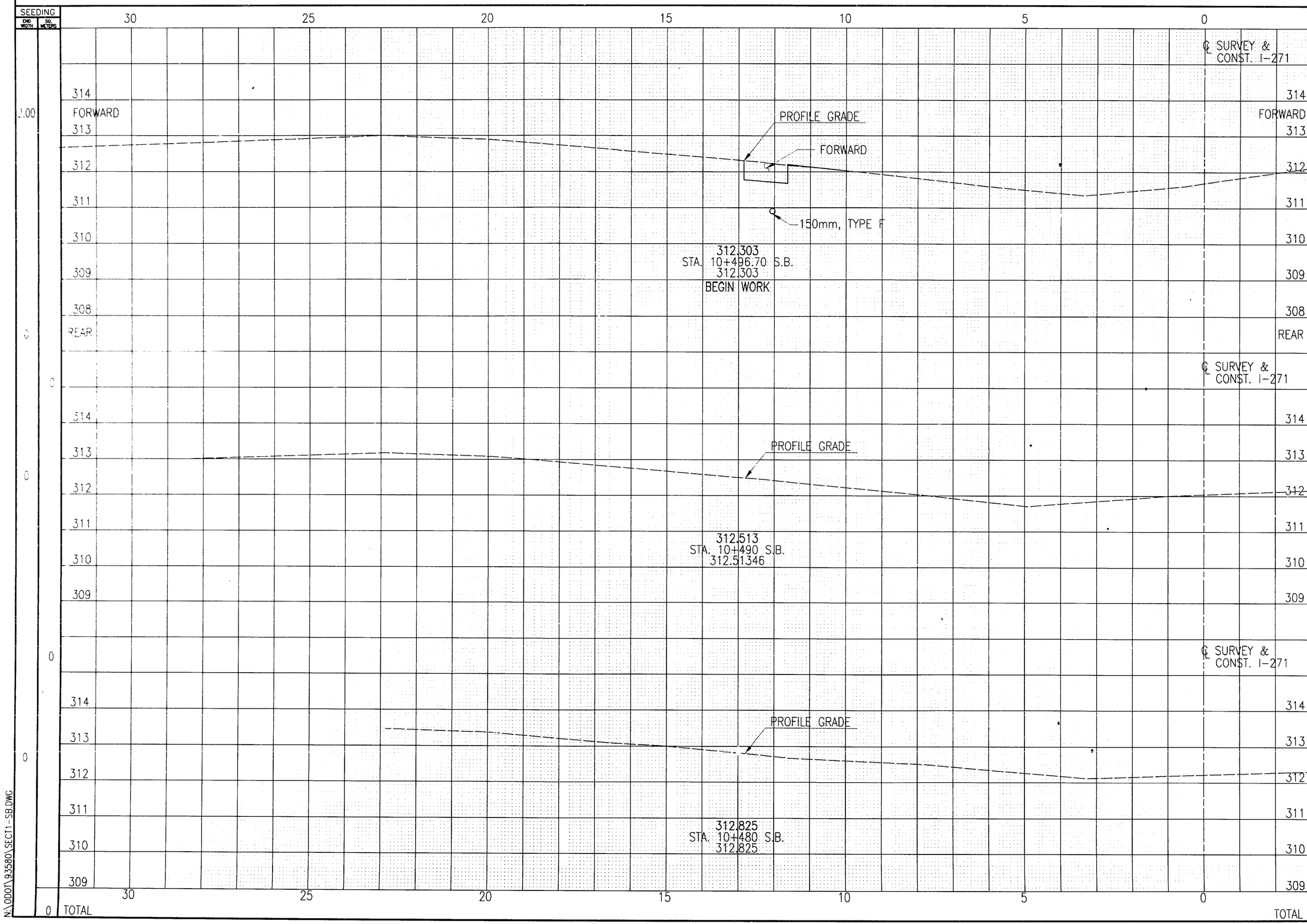

CROSS SECTION SHEET
STA. 10+496.70 I-271 SOUTHBOUND
STA. 10+480 TO

SUM-271-10.51

20
80

N:\ODOT\93580\SECT1-SB.DWG

METRIC PROJECT

CALCULATED RL
CHECKED KP

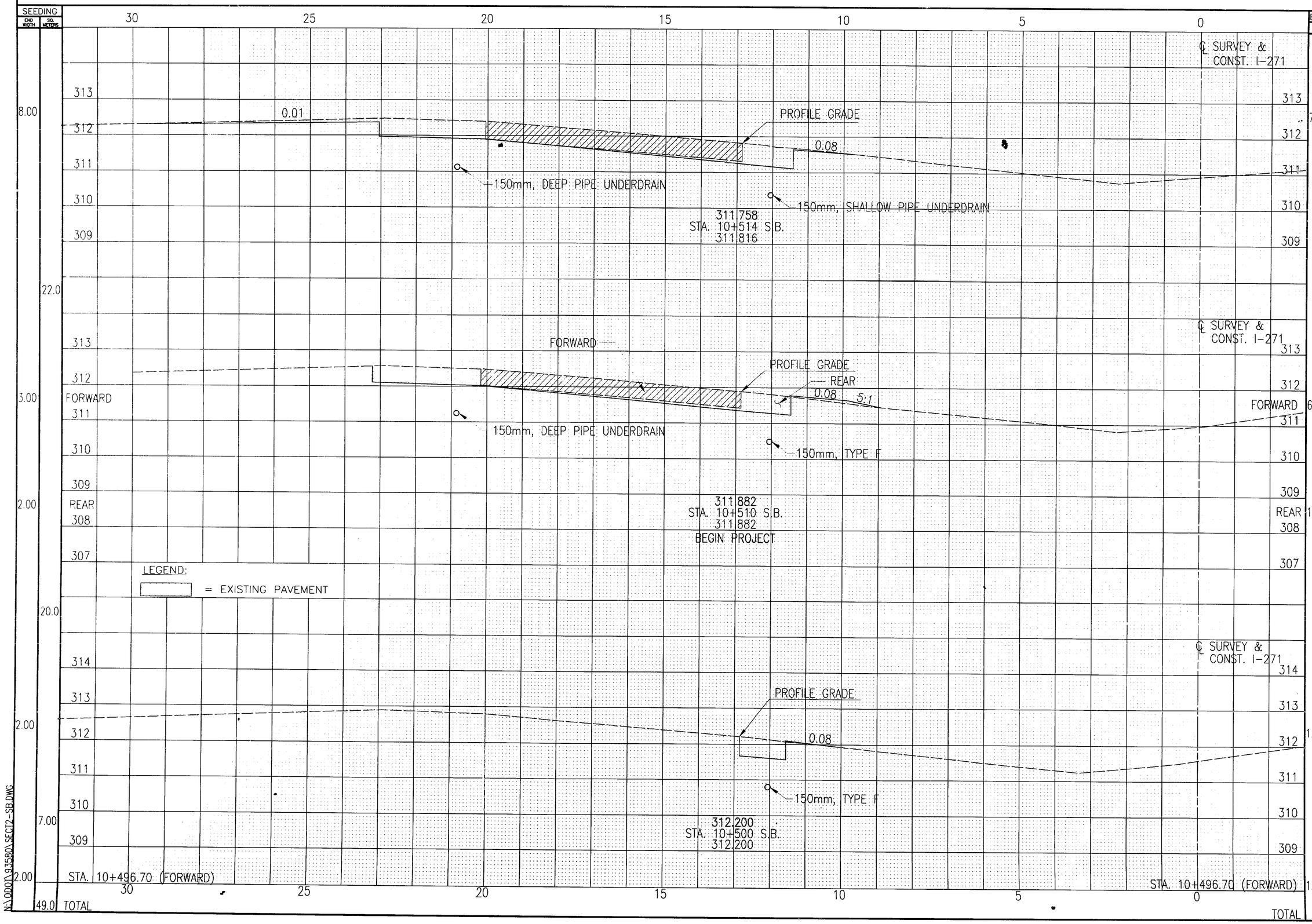

END AREA CUT	END AREA FILL	VOLUME CUT	VOLUME FILL
7.00	0		
		26.0	0
6.00	0		
1.00	0		
		10.0	0
1.00	0		
		3.00	0
1.00	0		
		39.0	0

CROSS SECTION SHEET
STA. 10+500 TO STA. 10+514 I-271 SOUTHBOUND

SUM-271-10.51

N:\ODOT\93580\SEC12-SB.DWG

METRIC PROJECT

CALCULATED RL
CHECKED KP

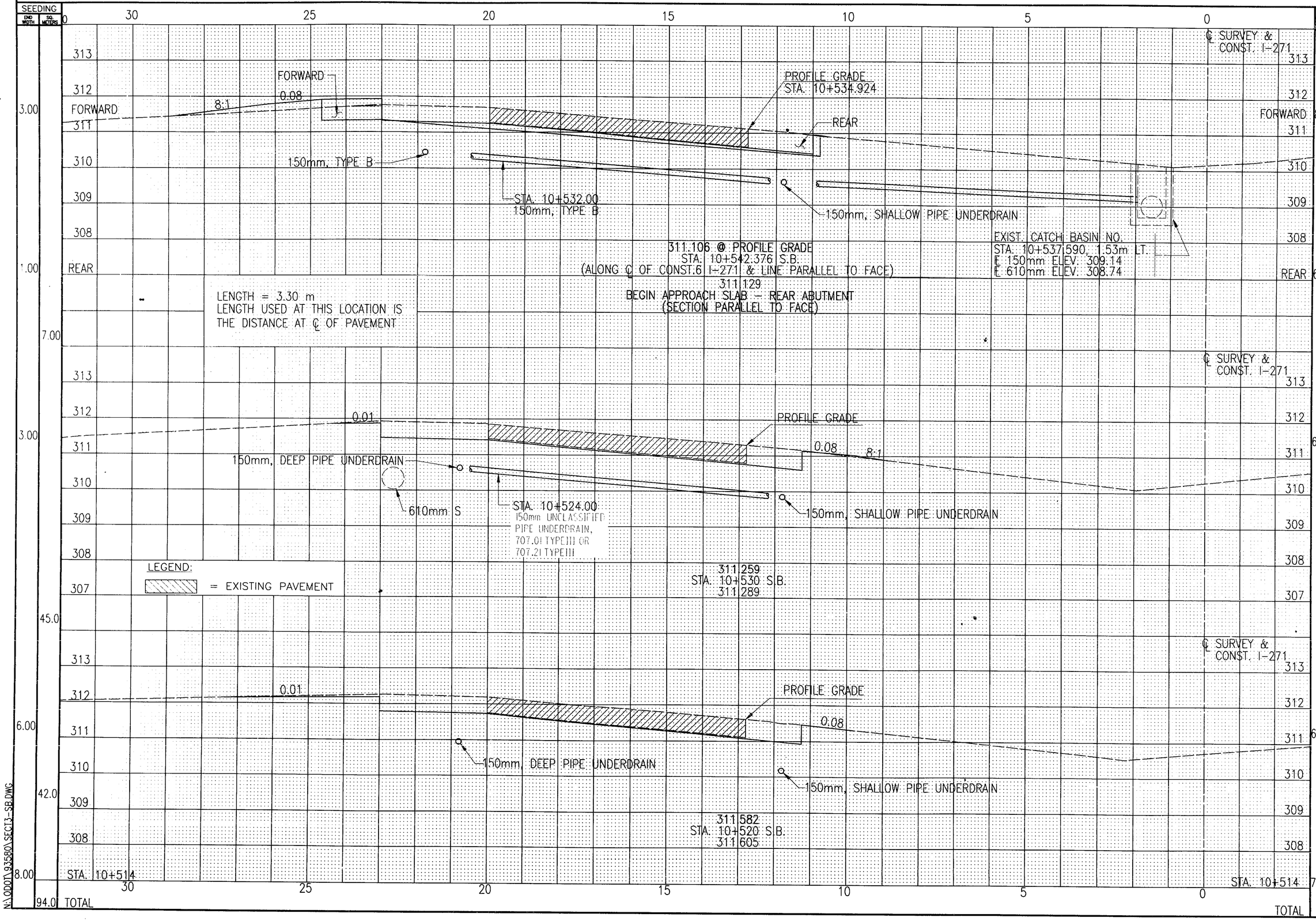

END AREA CUT	END AREA FILL	VOLUME CUT	VOLUME FILL
8.00	1.00		
6.00	0		
		20.0	0
6.00	0		
		60.0	0
6.00	0		
		39.0	0
7.00	0		
TOTAL		119.0	0

CROSS SECTION SHEET
STA. 10+520 TO STA. 10+534.924 I-271 SOUTHBOUND

SUM-271-10.51

22
80

N:\ODOT\932580\SECT3-SB.DWG

METRIC PROJECT

CALCULATED RL
CHECKED KP

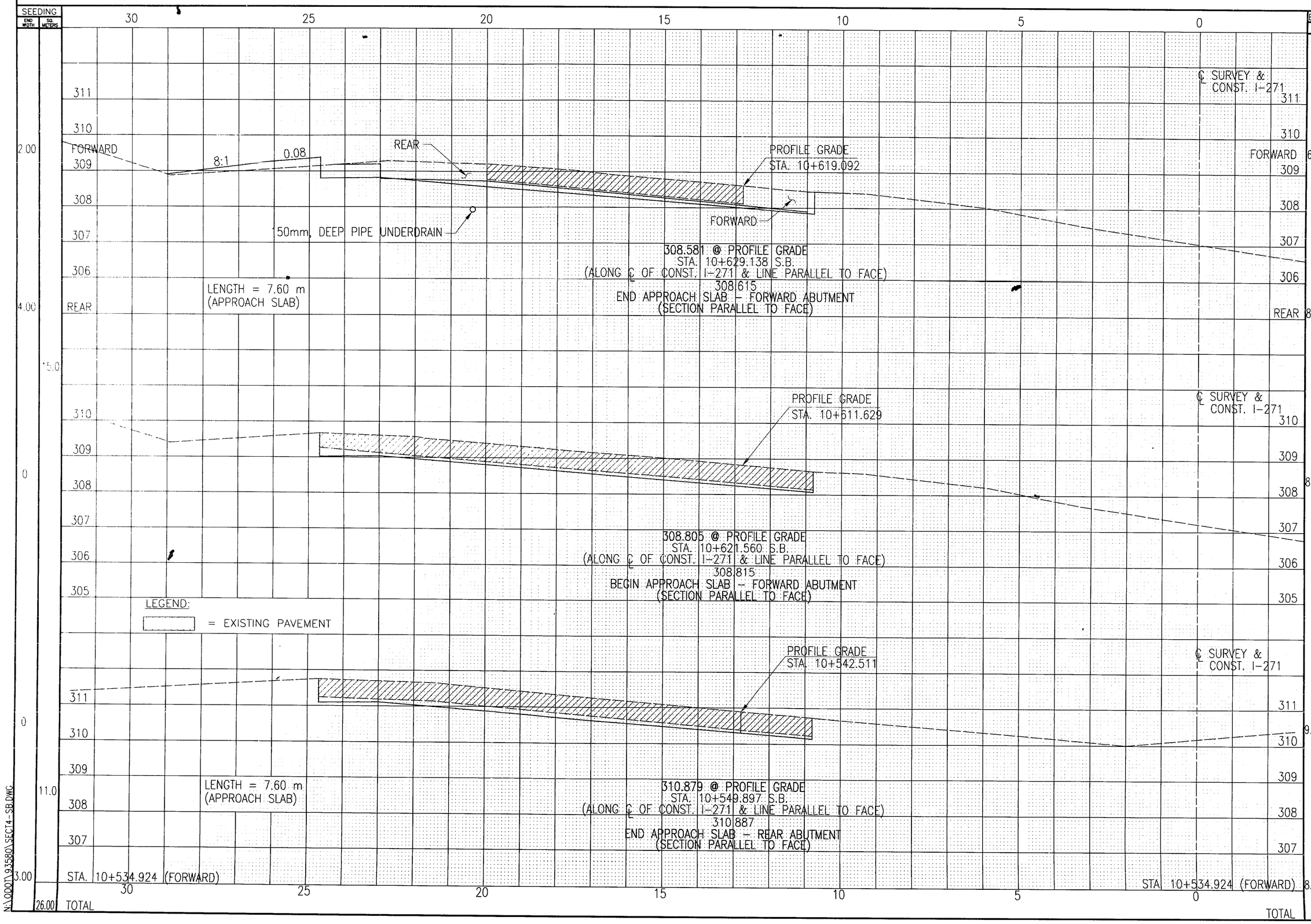

CROSS SECTION SHEET
STA. 10+542.511 TO STA. 10+619.092 I-271 SOUTHBOUND

SUM-271-10.51

23
80

N:\ODOT\93580\SECT4-SB.DWG

METRIC PROJECT

CALCULATED RL
CHECKED KP

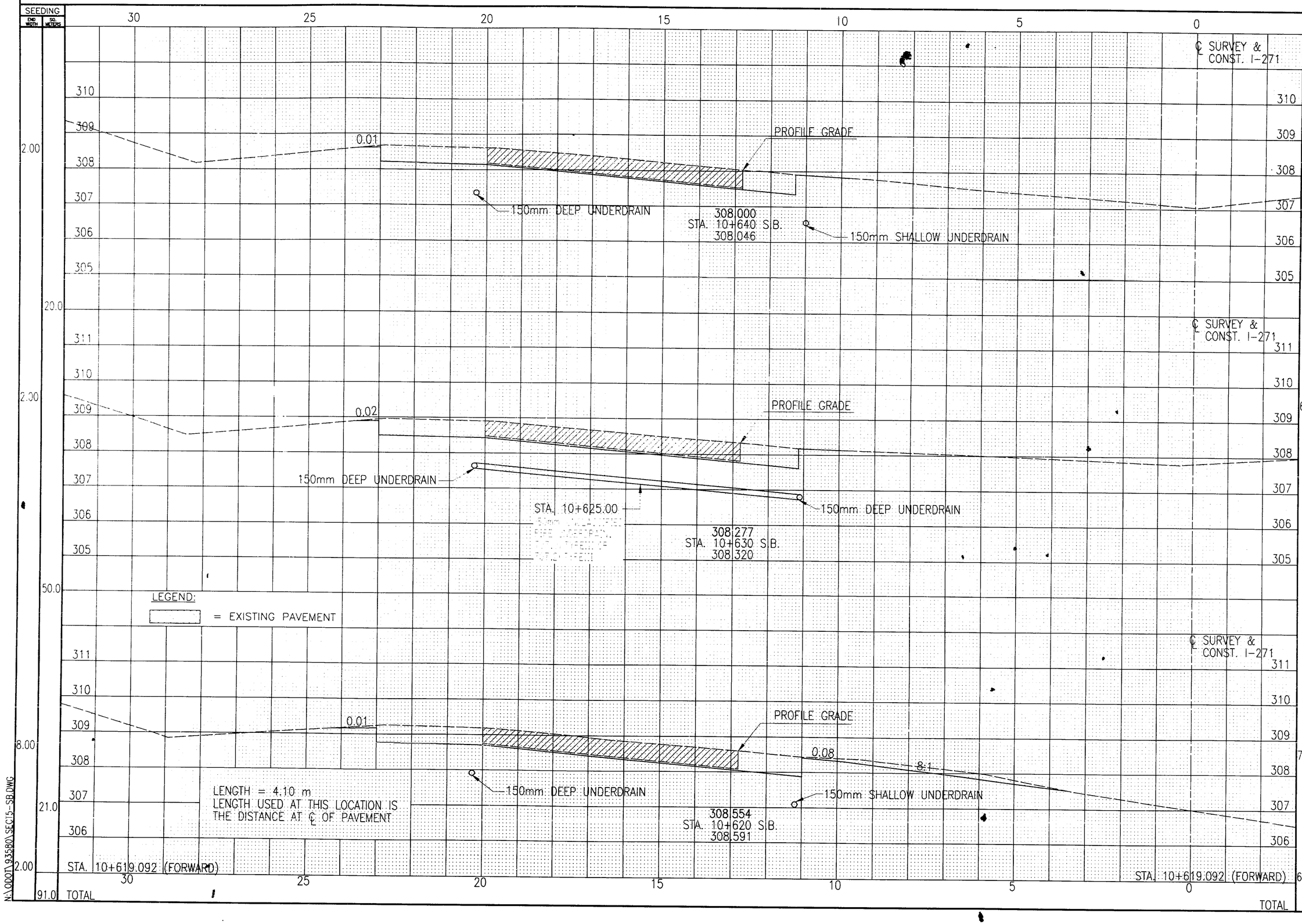

CROSS SECTION SHEET
STA. 10+620 TO STA. 10+640 I-271 SOUTHBOUND

SUM-271-10.51

N:\ODOT\93580\SEC15-SB.DWG

METRIC PROJECT

CALCULATED RL
CHECKED KP

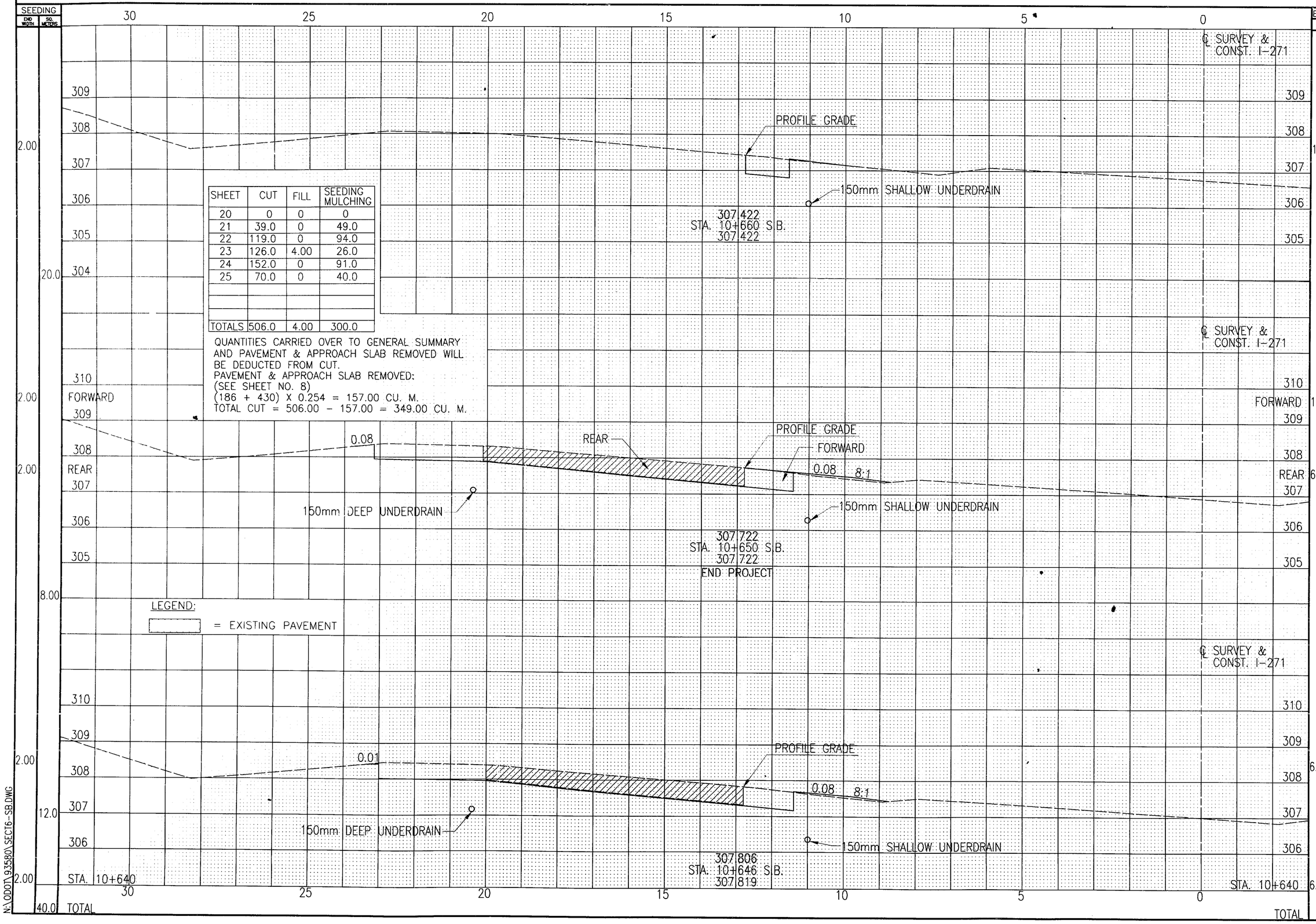

SHEET	CUT	FILL	SEEDING MULCHING
20	0	0	0
21	39.0	0	49.0
22	119.0	0	94.0
23	126.0	4.00	26.0
24	152.0	0	91.0
25	70.0	0	40.0
TOTALS	506.0	4.00	300.0

QUANTITIES CARRIED OVER TO GENERAL SUMMARY AND PAVEMENT & APPROACH SLAB REMOVED WILL BE DEDUCTED FROM CUT.
PAVEMENT & APPROACH SLAB REMOVED:
(SEE SHEET NO. 8)
(186 + 430) X 0.254 = 157.00 CU. M.
TOTAL CUT = 506.00 - 157.00 = 349.00 CU. M.

LEGEND:

= EXISTING PAVEMENT

CROSS SECTION SHEET
STA. 10+646 TO STA. 10+660 I-271 SOUTHBOUND

SUM-271-10.51

25
80

N:\ODOT\93580\SECT6-SB.DWG

MAINTENANCE OF TRAFFIC NOTES

metric units

CALCULATED APC CHECKED GTA

ITEM 614, MAINTAINING TRAFFIC

THIS ITEM SHALL CONSIST OF MAINTENANCE OF TRAFFIC ON EXISTING ROADWAYS AND RAMPS IN ACCORDANCE WITH THE OHIO MANUAL OF UNIFORM TRAFFIC CONTROL DEVICES FOR STREETS AND HIGHWAYS, CURRENT EDITION, LATEST REVISION, THE SPECIFICATIONS, STANDARD PROCEDURE FOR THE MAINTENANCE AND CONTRACTORS OPERATIONS UNDER TRAFFIC ON THE OHIO TURNPIKE LATEST REVISIONS (AVAILABLE AT THE OHIO TURNPIKE COMMISSION OFFICE) AND THE FOLLOWING:

A MINIMUM OF ONE 3.3m LANE OF TRAFFIC IN EACH DIRECTION SHALL BE MAINTAINED AT ALL TIMES BY USE OF THE EXISTING PAVEMENT, THE COMPLETED PAVEMENT, 615 TEMPORARY PAVEMENT AND 615 TEMPORARY ROADS.

ALL ITEMS OF WORK SHALL BE COMPLETED IN TWO CONSECUTIVE CONSTRUCTION SEASONS FOR THIS PROJECT. STAGE I WORK, AS DEFINED ELSEWHERE, SHALL BE COMPLETED PRIOR TO NOVEMBER 30.

ALL EXISTING LANES SHALL BE OPEN TO TRAFFIC BETWEEN NOVEMBER 30 AND APRIL 15. NOVEMBER 30 SHALL BE CONSIDERED TO CONSTITUTE AN INTERIM COMPLETION DATE AND LIQUIDATED DAMAGES SHALL BE ASSESSED IN ACCORDANCE WITH 108.07 FOR EACH CALENDAR DAY THAT ALL LANES ARE NOT OPEN AND AVAILABLE TO TRAFFIC.

CONES SHALL NOT BE ACCEPTABLE TRAFFIC CONTROL DEVICES FOR LANE RESTRICTIONS OR LANE REDUCTIONS THAT ARE IN OPERATION MORE THAN ONE-HALF HOUR BEFORE SUNRISE OR ONE-HALF HOUR AFTER SUNSET. ALL NIGHTTIME LANE RESTRICTIONS OR LANE REDUCTIONS SHALL REQUIRE DRUMS AT A MAXIMUM SPACING OF FIFTEEN (15) METERS.

THE CONTRACTOR SHALL DESIGNATE AN INDIVIDUAL, SUBJECT TO THE APPROVAL OF THE ENGINEER, OTHER THAN THE SUPERINTENDENT TO CONTINUOUSLY INSPECT ALL TRAFFIC CONTROL DEVICES WHENEVER CONSTRUCTION WORK IS BEING PERFORMED WITHIN THE WORK LIMITS OF THE PROJECT. THE DESIGNATED INDIVIDUAL OR A QUALIFIED REPRESENTATIVE SHALL ALSO BE AVAILABLE ON AN AROUND THE CLOCK BASIS TO REPAIR AND/OR REPLACE DAMAGED OR MISSING TRAFFIC CONTROL DEVICES. THESE INDIVIDUALS' NAMES AND PHONE NUMBERS SHALL BE GIVEN TO THE PROJECT ENGINEER AT THE PRECONSTRUCTION MEETING. THE TRAFFIC CONTROL INSPECTOR SHALL BE INCLUDED IN THE LUMP SUM PRICE BID FOR ITEM 614 MAINTAINING TRAFFIC.

ONLY DURING OFF-PEAK TRAFFIC PERIODS (ANY PERIOD OTHER THAN 7-9 AM AND 4-6 PM) SHALL THE CONTRACTOR INSTALL AND SUBSEQUENTLY RESET AND REMOVE ALL TRAFFIC CONTROL DEVICES NECESSARY FOR MAINTAINING TRAFFIC FOR EACH CONSTRUCTION PHASE.

WORK AND LANE WIDTH RESTRICTIONS ON AND OVER THE OHIO TURNPIKE ARE MORE RESTRICTIVE THAN THE OHIO DEPARTMENT OF TRANSPORTATION RESTRICTIONS ON I-271. (SEE NOTE ON SHEET 29 FOR ADDITIONAL NOTES.)

LENGTH AND DURATION OF LANE CLOSURES AND RESTRICTIONS SHALL BE AT THE APPROVAL OF THE ENGINEER. IT IS THE INTENT TO MINIMIZE THE IMPACT TO THE TRAVELING PUBLIC. LANE CLOSURES OR RESTRICTIONS OVER SEGMENTS OF THE PROJECT IN WHICH NO WORK IS ANTICIPATED WITHIN A REASONABLE TIME FRAME, AS DETERMINED BY THE ENGINEER, SHALL NOT BE PERMITTED. THE LEVEL OF UTILIZATION OF MAINTENANCE OF TRAFFIC DEVICES SHALL BE COMMENSURATE WITH THE WORK IN PROGRESS.

THE FOLLOWING ESTIMATED QUANTITIES HAVE BEEN INCLUDED IN THE MAINTENANCE OF TRAFFIC SUMMARY FOR USE AS DIRECTED BY THE ENGINEER.

404, BITUMINOUS CONCRETE FOR MAINTAINING TRAFFIC	30	CUBIC METER
410, TRAFFIC COMPACTED SURFACE, TYPE A OR B	60	CUBIC METER
410, TRAFFIC COMPACTED SURFACE, TYPE C	60	CUBIC METER

STAGE CONSTRUCTION

THE PROJECT REQUIRES CONSTRUCTION OF WORK ITEMS IN STAGES IN ORDER TO MAINTAIN TRAFFIC.

STAGE I WILL BE UTILIZED FOR THE REHABILITATION OF THE LEFT STRUCTURE AND ITS APPROACHES WHILE MAINTAINING I-271 TRAFFIC ON THE RIGHT STRUCTURE.

STAGE II WILL BE UTILIZED FOR THE REHABILITATION OF THE RIGHT STRUCTURE AND ITS APPROACHES WHILE MAINTAINING THE I-271 TRAFFIC ON THE LEFT STRUCTURE.

THE STAGE CONSTRUCTION WILL REQUIRE THE USE OF TEMPORARY CROSSOVERS. THE DETAILS OF STAGE CONSTRUCTION AND THE TEMPORARY CROSSOVERS ARE INCLUDED IN THE M.O.T. PLANS. SEE SHEETS 31 THRU 51.

SAFETY PLATFORM

SAFETY PLATFORMS SHALL BE REQUIRED TO PROTECT THE ROADWAY DURING THE REMOVAL AND SUBSEQUENT RECONSTRUCTION OF THE CONCRETE PARAPET AND DECK. THE CONTRACTOR SHALL PROVIDE SAFETY PLATFORMS OF SUITABLE STRENGTH ON THE UNDERSIDE OF THE DECK. THE DESIGN OF THE PLATFORM SHALL CONFORM WITH OSHA REQUIREMENTS AND THE REQUIREMENT SET BY THE OHIO TURNPIKE COMMISSION (OTC). FOR OTC SAFETY PLATFORM REQUIREMENTS, SEE SHEET 29 UNDER "ITEM – SPECIAL FALSEWORK, TEMPORARY BRACING AND PROTECTIVE STRUCTURE FOR DECK REPLACEMENT PROJECT."

THE SAFETY PROTECTION SHALL REMAIN IN PLACE UNTIL THE WORK HAS BEEN COMPLETED AND ACCEPTED OR AS DIRECTED BY THE ENGINEER.

THE CONTRACTOR SHALL SUBMIT A DEMOLITION PLAN AND SAFETY PLATFORM DESIGN 10 DAYS PRIOR TO COMMENCING ANY DEMOLITION FOR APPROVAL BY THE ENGINEER. THE SUBMITTAL SHALL BE IN WRITING TO THE DISTRICT CONSTRUCTION ENGINEER WITH A COPY TO THE PROJECT ENGINEER.

DUST CONTROL

THE CONTRACTOR SHALL FURNISH AND APPLY WATER AND CALCIUM CHLORIDE FOR DUST CONTROL AS DIRECTED BY THE ENGINEER. THE FOLLOWING CONTINGENCY QUANTITIES HAVE BEEN INCLUDED IN THE MAINTENACE OF TRAFFIC SUMMARY FOR DUST CONTROL PURPOSES:

616, WATER	378.0	CUBIC METER
616, CALCIUM CHLORIDE	9.0	METRIC TON

ITEM 622, PORTABLE CONCRETE BARRIER, 1270mm, AS PER PLAN

THIS WORK SHALL CONSIST OF FURNISHING, INSTALLING, MAINTAINING, AND SUBSEQUENTLY REMOVING A 1270mm PORTABLE CONCRETE BARRIER AT THE LOCATIONS SHOWN ON THE PLANS. FOR DETAILS, SEE STANDARD CONSTRUCTION DRAWING RM-4.1M.

PORTABLE CONCRETE BARRIER, 813mm HIGH WITH A 457mm MINIMUM HEIGHT GLARE SCREEN MAY BE USED AT THE OPTION OF THE CONTRACTOR. THE GLARE SCREEN SHALL BE CONSTRUCTED USING ONE OF THE FOLLOWING SYSTEMS OR AN APPROVED EQUAL:

CARSONITE MODULAR GLARE SCREEN
CARSONITE INTERNATIONAL
2900 LOCKHEED WAY, CARSON CITY, NEVADA 89701
702-883-5104 OR 800-648-7974

FORWARD GLARE SCREEN
PROVEN PRODUCTS, INC.
7560 SW LAVIEW DRIVE, PORTLAND, OREGON 97219
503-244-9185

SYRO GLAREFOIL
SYRO STEEL COMPANY
1170 N. STATE STREET, GIRARD, OHIO 44420
216-545-4373

PADDLE OR INTERMITTENT TYPE GLARE SCREENS SHALL BE DESIGNED USING A 20 DEGREE CUT-OFF ANGLE BASED ON TANGENT ALIGNMENT. THAT SPACING SHALL BE USED THROUGHOUT THE BARRIER LENGTH WITHOUT REGARD TO BARRIER CURVATURE.

THE GLARE SCREEN SYSTEM SHALL BE SECURELY FASTENED TO THE 813mm PORTABLE CONCRETE BARRIER USING THE HARDWARE AND PROCEDURES SPECIFIED BY THE MANUFACTURER.

PAYMENT SHALL INCLUDE ALL LABOR, MATERIAL, AND EQUIPMENT NECESSARY TO PERFORM THE WORK AND SHALL BE PAID FOR AT THE CONTRACT PRICE PER LINEAL FOOT FOR ITEM 622, PORTABLE CONCRETE BARRIER, 1270mm, AS PER PLAN.

THE FOLLOWING QUANTITIES HAVE BEEN INCLUDED IN THE MAINTENACE OF TRAFFIC SUMMARY:

622, PORTABLE CONCRETE BARRIER, 1270mm, AS PER PLAN 1974 METER

GUARDRAIL REPLACEMENT

NO HAZARD SHALL BE LEFT UNPROTECTED EXCEPT FOR THE ACTUAL TIME NECESSARY TO REMOVE THE EXISTING GUARDRAIL, PREPARE THE SITE, AND INSTALL NEW GUARDRAIL IN A CONTINUOUS OPERATION. THE REMOVAL OF ALL GUARDRAIL SHALL AT ALL TIMES BE AS DIRECTED BY THE ENGINEER. NO GUARDRAIL SHALL BE REMOVED UNTIL THE REPLACEMENT MATERIAL IS ON THE SITE, READY FOR INSTALLATION. FAILURE TO COMPLY WITH THIS REQUIREMENT SHALL BE DEEMED SUFFICIENT CAUSE TO ORDER WORK SUSPENDED UNTIL SUCH TIME AS THE ENGINEER IS ASSURED OF COMPLIANCE.

ITEM 614, LAW ENFORCEMENT OFFICER WITH PATROL CAR (FOR I-271 TRAFFIC)

IN ADDITIONAL TO THE REQUIREMENTS OF 614 AND THE LATEST EDITION OF THE OHIO MANUAL OF UNIFORM TRAFFIC CONTROL DEVICES (OMUTCD), A UNIFORMED LAW ENFORCEMENT OFFICE AND OFFICIAL PATROL CAR WITH WORKING TOP MOUNTED EMERGENCY FLASHING LIGHTS SHALL BE PROVIDED FOR CONTROLLING TRAFFIC FOR THE FOLLOWING TASKS ON I-271 ONLY:

FOR LANE CLOSURES: DURING INITIAL SET-UP PERIODS, TEAR DOWN PERIODS, SUBSTANTIAL SHIFTS OF A CLOSURE POINT OR WHEN NEW LANE CLOSURE ARRANGEMENTS ARE INITIATED.

DURING THE ENTIRE ADVANCE PREPARATION AND CLOSURE SEQUENCE WHERE COMPLETE BLOCKAGE OF TRAFFIC IS REQUIRED.

LAW ENFORCEMENT OFFICER (L.E.O.'S) SHOULD NOT BE USED WHERE THE OMUTCD INTENDS THAT FLAGGERS BE USED. THE LEO'S ARE CONSIDERED TO BE EMPLOYED BY THE CONTRACTOR AND THE CONTRACTOR SHALL BE RESPONSIBLE FOR THEIR ACTIONS. ALTHOUGH THEY ARE EMPLOYED BY THE CONTRACTOR, THE PROJECT ENGINEER SHALL HAVE CONTROL OVER THEIR PLACEMENT. THE OFFICE PATROL CAR SHALL BE A PUBLIC SAFETY VEHICLE AS REQUIRED BY THE OHIO REVISED CODE.

THE CONTRACTOR SHALL MAKE ARRANGEMENTS FOR THESE SERVICES WITH:

THE OHIO HIGHWAY PATROL
660 EAST MAIN STREET
COLUMBUS, OHIO 43266-0562
TELE: (614) 466-2300

LAW ENFORCEMENT OFFICERS WITH PATROL CAR REQUIRED BY THE TRAFFIC MAINTENANCE TASKS ABOVE SHALL BE PAID FOR ON A UNIT PRICE (HOURLY) BASIS UNDER ITEM 614 – LAW ENFORCEMENT OFFICER WITH PATROL CAR. THE FOLLOWING ESTIMATED QUANTITIES HAVE BEEN CARRIED TO THE MAINTENANCE OF TRAFFIC SUMMARY:

ITEM 614, LAW ENFORCEMENT OFFICER WITH PATROL CAR – 80 HOURS

THE HOURS PAID SHALL INCLUDE MINIMUM SHOW-UP TIME REQUIRED BY THE LAW ENFORCEMENT AGENCY INVOLVED.

IF THE CONTRACTOR WISHES TO UTILIZE LEO'S FOR FLAGGING AND TRAFFIC CONTROL OTHER THAN FOR THAT REQUIRED IN THESE PLANS, HE MAY DO SO AT HIS OWN EXPENSE. PAYMENT FOR THE EXCESS ABOVE THE CONTRACT REQUIREMENTS WILL BE INCLUDED UNDER ITEM 614, MAINTAINING TRAFFIC.

LANE WIDTH RESTRICTION NOTIFICATION

THE CONTRACTOR SHALL NOTIFY THE DISTRICT TRAFFIC ENGINEER 18 DAYS PRIOR TO THE RESTRICTION. (330)297-0801

NIGHT CONSTRUCTION

UNLESS OTHERWISE REQUIRED BY SPECIFIC NOTE, NO WORK SHALL BE DONE AT NIGHT UNLESS WRITTEN APPROVAL BY THE ENGINEER HAS BEEN RECEIVED. THE CONTRACTOR SHALL REQUEST PERMISSION 15 DAYS PRIOR TO BEGINNING WORK. THE REQUEST SHALL INCLUDE: THE TYPE OF WORK TO BE DONE, THE DURATION OF THE WORK, THE LOCATION OF THE INTENDED WORK, AND THE CONTRACTOR'S TEMPORARY LIGHTING PLAN. ALL TEMPORARY LIGHTING REQUIRED FOR THE NIGHT WORK SHALL BE AT THE CONTRACTOR'S EXPENSE.

SHOULDER REPAIR

THE CONTRACTOR SHALL MAKE REPAIRS TO SHOULDER AS DEEMED NECESSARY BY THE ENGINEER. THE FOLLOWING CONTINGENCY QUANTITIES HAVE BEEN INCLUDED IN THE MAINTENANCE OF TRAFFIC SUMMARY FOR USE AS DIRECTED BY THE ENGINEER:

301, BITUMINOUS AGGREGATE BASE, AC-20	100 CU METER
304, AGGREGATE BASE	100 CU METER
407, TACK COAT	200 LITER
448, ASHALT CONCRETE INTERMEDIATE COURSE, TYPE 2, PG64-22	70 CU METER
448, ASPHALT CONCRETE SURFACE COURSE, TYPE 1, PG64-22	50 CU METER
407 TACK COAT FOR INTERMEDIATE COURSE	200 LITER

MAINTENANCE OF TRAFFIC NOTES

SUM-271-10.51

MAINTENANCE OF TRAFFIC NOTES

metric units

CALCULATED APC CHECKED GTA

ITEM SPECIAL, REPLACEMENT SIGN

FLAT SHEET SIGNS FURNISHED BY THE CONTRACTOR IN ACCORDANCE WITH THE REQUIREMENTS OF THE PLANS, SPECIFICATIONS AND PROPOSAL WHICH BECOME DAMAGED BY TRAFFIC FOR REASONS BEYOND THE CONTROL OF THE CONTRACTOR SHALL BE REPLACED IN KIND WHEN ORDERED BY THE ENGINEER. REPLACEMENT SIGNS SHALL BE NEW. OTHER MATERIALS MAY BE IN USED BUT GOOD CONDITION SUBJECT TO APPROVAL BY THE ENGINEER.

PAYMENT FOR THE NEW SIGNS SHALL BE MADE AT THE CONTRACT PRICE PER SQUARE FOOT FOR ITEM SPECIAL, REPLACEMENT SIGN, AND SHALL INCLUDE THE COST OF REMOVING AND DISPOSING OF DAMAGED SIGNS, HARDWARE AND SUPPORTS, AND PROVIDING THE NECESSARY REPLACEMENT HARDWARE, SUPPORTS, ETC.

AN ESTIMATED QUANTITY OF __10__ SQUARE METERS HAS BEEN PROVIDED IN THE MAINTENANCE OF TRAFFIC SUMMARY.

ITEM SPECIAL, REPLACEMENT DRUM

DRUMS FURNISHED BY THE CONTRACTOR IN ACCORDANCE WITH THE REQUIREMENTS OF THE PLANS, SPECIFICATIONS AND PROPOSAL WHICH BECOME DAMAGED BY TRAFFIC FOR REASONS BEYOND THE CONTROL OF THE CONTRACTOR SHALL BE REPLACED IN KIND WHEN ORDERED BY THE ENGINEER. REPLACEMENT DRUMS SHALL BE NEW.

PAYMENT FOR THE NEW DRUMS SHALL BE MADE AT THE CONTRACT PRICE PER EACH FOR ITEM SPECIAL, REPLACEMENT DRUM, AND SHALL INCLUDE THE COST OF REMOVING AND DISPOSING OF THE DAMAGED DRUM, AND PROVIDING AND MAINTAINING THE REPLACEMENT DRUM IN ACCORDANCE WITH THE CONTRACT REQUIREMENTS FOR THE ORIGINAL DRUM.

AN ESTIMATED QUANTITY OF __50__ EACH HAS BEEN PROVIDED IN THE MAINTENANCE OF TRAFFIC SUMMARY.

COVERING OF SIGNS

WHERE THE PLANS CALL FOR A PERMANENT SIGN TO BE COVERED, THE CONTRACTOR SHALL DO SO IN SUCH A MANNER AS TO AVOID DAMAGING THE PERMANENT SIGN WHEN THE COVER IS REMOVED. THE COVER SHALL BE TOTALLY OPAQUE. THE USE OF ADHESIVE TAPE APPLIED DIRECTLY TO A SIGN FACE IS STRICTLY PROHIBITED.

BARRIER REFLECTORS & OBJECT MARKERS

BARRIER REFLECTORS AND OBJECT MARKERS SHALL BE INSTALLED ON ALL PORTABLE CONCRETE BARRIER USED FOR TRAFFIC CONTROL. BARRIER REFLECTORS SHALL BE AS PER ITEM 626. OBJECT MARKERS SHALL BE AS PER ITEM 614 AND 720.04. THE MAXIMUM SPACING OF BARRIER REFLECTORS AND OBJECT MARKERS SHALL BE 8 METERS. AN ESTIMATED QUANTITY OF __310__ EACH OF ITEM 626 BARRIER REFLECTORS, TYPE B, AND __310__ EACH OF ITEM 614 OBJECT MARKERS HAVE BEEN PROVIDED AND CARRIED TO THE GENERAL SUMMARY.

ITEM 614, WORK ZONE SPEED LIMIT SIGN

THE CONTRACTOR SHALL FURNISH, INSTALL, MAINTAIN, COVER DURING SUSPENSION OF WORK, AND SUBSEQUENTLY REMOVE WORK ZONE SPEED LIMIT SIGNS AND SUPPORTS (R-10-48) (55 MPH) WITHIN THE WORK LIMITS IN ACCORDANCE WITH THE FOLLOWING REQUIREMENTS:

THE CONTRACTOR SHALL COVER OR REMOVE ANY EXISTING SPEED LIMIT OR MINIMUM SPEED SIGNS WITHIN THE REDUCED SPEED ZONE. THESE SIGNS SHALL BE RESTORED DURING SUSPENSION OR TERMINATION OF THE REDUCED SPEED LIMIT. THE EXPENSE OF COVERING OR REMOVAL AND RESTORATION OF EXISTING SPEED LIMIT OR MINIMUM SPEED SIGNS SHALL BE INCLUDED IN THE PAY ITEM FOR THE WORK ZONE SPEED LIMIT SIGNS.

THE WORK ZONE SPEED LIMIT SIGNS MAY BE ERECTED OR UNCOVERED NO MORE THAN 4 HOURS BEFORE THE ACTUAL START OF WORK. THE SIGNS SHALL BE REMOVED OR COVERED NO LATER THAN 4 HOURS FOLLOWING RESTORATION OF ALL LANES TO TRAFFIC WITH NO RESTRICTIONS, OR SOONER AS DIRECTED BY THE ENGINEER. THE CONTRACTOR SHALL ERECT A WORK ZONE SPEED LIMIT SIGN IN ADVANCE OF ANY LANE RESTRICTION EXPECTED TO LAST AT LEAST 30 DAYS, OR AS DIRECTED BY THE ENGINEER. THE SIGN SHALL BE MOUNTED ON BOTH SIDES OF DIVIDED HIGHWAYS, 150 METERS IN ADVANCE OF THE LANE REDUCTION TAPER. THE SIGN SHALL BE MOUNTED ON RIGHT SIDE, 75 METERS IN ADVANCE OF THE LANE REDUCTION TAPER ON UNDIVIDED HIGHWAYS. THE SIGN SHALL BE REPEATED, ON THE SIDE NEAREST TRAFFIC EVERY 1600 METERS FOR 55 MPH ZONES AND EVERY 800 METERS FOR 45 MPH ZONES. THESE SIGNS SHALL ALSO BE ERECTED IMMEDIATELY AFTER EACH OPEN ENTRANCE RAMP WITHIN THE ZONE. A SIGN TO INDICATE THE RESUMPTION OF THE STATUTORY SPEED LIMIT SHALL BE ERECTED AT THE END OF ANY REDUCED SPEED ZONE. THIS SIGN SHALL BE AN R-8A.

THE CONTRACTOR MAY USE SIGNS AND SUPPORTS IN USED BUT GOOD CONDITION PROVIDED THE SIGNS MEET CURRENT ODOT SPECIFICATIONS. SIGN FACES SHALL BE REFLECTORIZED WITH TYPE G SHEETING COMPLYING WITH THE REQUIREMENTS OF 730.19 AND U.S. DEPARTMENT OF TRANSPORTATION SUPPLEMENTAL SPECIFICATION FOR TYPE III-C SHEETING, FP-85. WORK ZONE SPEED LIMIT SIGNS SHALL BE MOUNTED ON TWO (2) ITEM 630 GROUND MOUNTED SUPPORTS, NO. 4 POSTS.

WORK ZONE SPEED LIMIT SIGNS AND SUPPORTS WILL BE MEASURED AS THE NUMBER OF SIGN INSTALLATIONS, INCLUDING THE SIGNS AND NECESSARY SUPPORTS. IF A SIGN AND SUPPORT COMBINATION IS REMOVED AND REERECTED AT ANOTHER LOCATION WITHIN THE PROJECT DUE TO CHANGES IN THE SPEED ZONE DIRECTED BY THE ENGINEER, IT SHALL BE CONSIDERED ANOTHER UNIT.

PAYMENT FOR ACCEPTED QUANTITIES, COMPLETE IN PLACE, WILL BE MADE AT THE CONTRACT UNIT PRICE. PAYMENT SHALL BE FULL COMPENSATION FOR ALL MATERIALS, LABOR, INCIDENTALS AND EQUIPMENT FOR FURNISHING, ERECTING, MAINTAINING, COVERING DURING SUSPENSION OF WORK, AND REMOVING THE SIGNS AND SUPPORTS. THE FOLLOWING QUANTITY HAS BEEN INCLUDED IN THE MAINTENANCE OF TRAFFIC SUMMARY:

614, WORK ZONE SPEED LIMIT SIGN __6__ EA.

ITEM 614, TEMPORARY CROSSOVER LIGHTING SYSTEM

THIS WORK SHALL CONSIST OF FURNISHING, ERECTING, OPERATING, MAINTAINING AND SUBSEQUENTLY REMOVING A TEMPORARY LIGHTING SYSTEM FOR A SINGLE CROSSOVER OR OVERLAPPING A PAIR OF CROSSOVERS ON A TWO LANE TWO WAY OPERATION. THE SYSTEM SHALL BE AS SHOWN ON STANDARD CONSTRUCTION DRAWING MT-100.00M. THE CONTRACTOR SHALL ARRANGE FOR AND PAY FOR POWER. ALL MATERIALS AND CONSTRUCTION SHALL COMPLY WITH APPLICABLE PORTIONS OF 625 AND 713 EXCEPT: THE PERFORMANCE TEST OF 625.22e, AND WORKING DRAWING REQUIREMENTS OF 625.04, ARE WAIVED AND USED MATERIALS IN GOOD CONDITION ARE ACCEPTABLE.

POLES MAY BE LESS THAN NINE (9) METERS FROM THE EDGE OF PAVEMENT WHEN BEHIND GUARDRAIL. ADDITIONAL POLE, LINES, CABLES AND APPURTENANCES NECESSARY TO FURNISH POWER TO THE LIGHTING SYSTEM SHALL BE INCLUDED IN THIS ITEM. SERVICE POLES SHALL BE POSITIONED WITH THE SAME CONSTRAINTS AS THE LIGHTING POLES AS A MINIMUM.

PAYMENT WILL BE MADE AT THE UNIT PRICE PER EACH TEMPORARY CROSSOVER LIGHTING SYSTEM THROUGHOUT ALL PHASES OF WORK WHEN THE CROSSOVER ROADWAYS ARE USED.

ITEM 614 TEMPORARY CROSSOVER LIGHTING SYSTEM __2__ EACH HAVE BEEN CARRIED OVER TO THE MAINTENANCE OF TRAFFIC SUMMARY.

POWER SERVICE

THE POWER SERVICE SUPPLYING AGENCY FOR THIS PROJECT IS:

OHIO EDISON CO.
76 SOUTH MAIN STREET
AKRON, OHIO 44308
(216) 384-4631

POWER SERVICE: 480 VOLT, 2 WIRE PHASE, GROUNDED NEUTRAL
THE CONTRACTOR SHALL COORDINATE WITH OHIO EDISON PRIOR TO BEGINNING WORK FOR POWER SERVICE AND THE LOCATION OF THE POWER SUPPLY.

COOPERATION BETWEEN CONTRACTORS

THE CONTRACTOR SHALL BE ADVISED THAT OTHER PROJECTS MAY BE ONGOING IN AREAS IMMEDIATELY ADJACENT TO AND WITHIN THE PROJECT LIMITS OF THIS PROJECT. THE CONTRACTOR SHALL SCHEDULE HIS WORK SO AS TO CAUSE A MINIMUM OF DELAY OR CONFLICT WITH THE OTHER PROJECT OR WITH THE OTHER CONTRACTORS, A MUTUALLY ACCEPTABLE WORK SCHEDULE, SUBJECT TO THE APPROVAL OF THE ENGINEER. THE CONTRACTOR SHALL RECEIVE DAILY APPROVAL FROM THE ENGINEER PRIOR TO COMMENCING ANY OPERATIONS. ANY CONFLICT BETWEEN CONTRACTORS INVOLVING WORK SCHEDULES, WORK AREA OR COOPERATION SHALL BE RESOLVED BY THE ENGINEER. COMPENSATION FOR THE ABOVE COOPERATION SHALL BE INCIDENTAL TO THE VARIOUS PAY ITEMS INCLUDED WITHIN THIS PROJECT.

CONTRACTOR'S EQUIPMENT OPERATION AND STORAGE

THE CONTRACTOR'S EQUIPMENT SHALL BE OPERATED IN THE DIRECTION OF TRAFFIC. A QUALIFIED FLAGGER SHALL BE EMPLOYED WHERE THE CONTRACTOR'S EQUIPMENT MUST MERGE WITH THE TRAFFIC STREAM. THE CONTRACTOR'S EQUIPMENT SHALL BE EQUIPPED WITH AT LEAST ONE AMBER FLASHING LIGHT. THE EQUIPMENT SHALL BE STORED AT A STORAGE AREA, THE LOCATION OF WHICH SHALL HAVE PRIOR APPROVAL OF THE ENGINEER. PAVERS, ROLLERS AND OTHER EQUIPMENT MAY BE PARKED IN AREAS ALONG THE HIGHWAY WHEN PAVING OPERATIONS ARE SCHEDULED TO CONTINUE WITHIN THE NEXT WORKDAY. WHEN PARKING ALONG THE HIGHWAY, THE EQUIPMENT SHALL BE PARKED EITHER FIFTEEN (15) METERS FROM THE EDGE OF PAVEMENT OR TWO (2) METERS BEHIND GUARDRAIL WITH A MINIMUM OF 38 METERS OF GUARDRAIL PRECEDING THE EQUIPMENT. NO EQUIPMENT SHALL BE PARKED IN THE MEDIAN OF THE HIGHWAY. ADEQUATE BARRICADES AND LIGHTS SHALL BE PLACED ON THE PAVEMENT SIDE OF THE EQUIPMENT TO IDENTIFY THE LIMITS OF THE EQUIPMENT. ALL OTHER EQUIPMENT, INCLUDING PRIVATE VEHICLES, SHALL BE STORED AT THE APPROVED CONTRACTOR'S STORAGE AREA.

ITEM 615, TEMPORARY PAVEMENTS

ON THIS PROJECT THE TEMPORARY CLASS A PAVEMENT SHALL BE 5.4 METERS WIDE AND THE ROADWAY WIDTH SHALL NOT BE LESS THEN 6.6 METERS OUT TO OUT OF SHOULDERS. THE ALIGNMENT AND PAVEMENT TYPICAL SECTION SHALL BE AS DETAILED ON SHEETS 37, 38, & 39.

THE FOLLOWING ESTIMATED QUANTITIES HAVE BEEN INCLUDED IN THE MAINTENANCE OF TRAFFIC SUMMARY TO BE USED IN CONSTRUCTING THE TEMPORARY CLASS A PAVEMENT.

ITEM 615 TEMPORARY ROADS	LUMP SUM
ITEM 615 TEMPORARY PAVEMENT, CLASS A	4960 SQ METER

UPON COMPLETION OF THE PROJECT, THE CONTRACTOR SHALL REMOVE THE TEMPORARY PAVEMENT INCLUDING ANY TEMPORARY DRAINAGE FACILITIES. THE AFFECTED EXISTING EARTH MEDIAN AND PAVED SHOULDERS SHALL BE RESTORED TO THEIR ORIGINAL CONDITION AS DIRECTED BY THE ENGINEER AND AS PER 615.08.

TEMPORARY PAVEMENT SHALL NOT BE OPENED TO TRAFFIC UNTIL ALL TEMPORARY TRAFFIC CONTROL DEVICES, SIGNS, PAVEMENT MARKINGS AND PORTABLE CONRETE BARRIERS HAVE BEEN ERECTED AND APPROVED BY THE ENGINEER.

ALTHOUGH ESTIMATES FOR TEMPORARY EXCAVATION, EMBANKMENT AND TEMPORARY DRAINAGE FACILITIES HAVE BEEN SHOWN ON THE PLAN DETAILS, THESE ITEMS SHALL BE CONSIDERED INCIDENTAL TO, AND INCLUDED WITH PAYMENT FOR ITEM 615 TEMPORARY ROADS.

MAINTENANCE OF TRAFFIC NOTES

SUM-271-10.51

MAINTENANCE OF TRAFFIC NOTES

metric units

CALCULATED APG CHECKED GTA

FALSEWORK, TEMPORARY BRACING AND PROTECTIVE STRUCTURES

A. DESCRIPTION

THIS WORK SHALL CONSIST OF CONSTRUCTING AND REMOVING RIGID TEMPORARY CONSTRUCTIONS REQUIRED TO COMPLETE THE WORK EXCLUSIVE OF FORMWORK AND ITEMS WHICH ARE SPECIFICALLY INCLUDED ELSEWHERE. THE ITEM INCLUDES PLATFORMS OR STAGING AS NEEDED TO PERMIT ACCESS FOR INSPECTION, TEMPORARY PLYWOOD OR OTHER SHEETING MATERIAL FOR CATCHING BROKEN CONCRETE OR OTHER MATERIALS, AND FOR ALL TEMPORARY SUPPORTS AND BRACES REQUIRED TO MAINTAIN A COMPLETELY STABLE STRUCTURE AT ALL TIMES. PROTECTIVE MEASURES FOR THE NEWLY PAINTED STEEL IS ALSO INCLUDED IN THIS ITEM.

B. REQUIREMENTS

THE CONTRACTOR SHALL PROVIDE ALL NECESSARY TEMPORARY SUPPORTS UNDER PORTIONS OF THE STRUCTURE DURING REMOVAL, RECONSTRUCTION, AND CONSTRUCTION OPERATIONS, AS REQUIRED TO MAINTAIN A COMPLETELY STABLE STRUCTURE AT ALL TIMES. IF, IN THE OPINION OF THE ENGINEER, ADDITIONAL SUPPORTS ARE REQUIRED, THEY SHALL BE PROVIDED BY THE CONTRACTOR ENTIRELY AT HIS EXPENSE.

IN ORDER TO PROTECT VEHICULAR AND PEDESTRIAN TRAFFIC AND PAVEMENTS AGAINST DAMAGE FROM FALLING MATERIAL, DEBRIS AND OTHER DEMOLITION OPERATIONS, WHILE SUPERSTRUCTURE CONCRETE IS BEING REMOVED OR WHILE THE CONTRACTOR IS WORKING OVERHEAD, THE CONTRACTOR SHALL FURNISH AND ERECT A TEMPORARY PROTECTIVE STRUCTURE UNDER THE SPANS THAT ARE DIRECTLY OVER THE ROADWAY AND SHOULDER AREAS, PLUS ENOUGH ADDITIONAL COVERAGE IN THE AREA TO PREVENT ANY FALLING MATERIAL FROM ANY SPAN FROM REACHING THESE AREAS. THE AFOREMENTIONED PROTECTIVE STRUCTURE SHALL EXTEND UNDER THE EXISTING STRUCTURE WITHIN THE WORK AREA OR TO THE LIMITS AS DESCRIBED IN THE PLANS.

THE CONTRACTOR SHALL TAKE WHATEVER MEANS NECESSARY TO PROTECT THE FINISHED PAINTED SURFACE FROM DAMAGE DURING THE ERECTION OF THE STEEL, THE INSTALLATION OF THE FALSEWORK AND FORMWORK AND THE POURING OF THE CONCRETE DECK AND PARAPETS. THIS PROTECTION SHALL INCLUDE THE USE OF PADDING ON BRACKETS AND FORMWORK SUPPORTS, CONSTRUCTION OF TIGHT FITTING FORMS AND OTHER PROTECTIVE METHODS THE CONTRACTOR MAY DEEM NECESSARY FOR PROTECTING THE NEWLY PAINTED SURFACE.

THE ENGINEER MAY DELAY THE START OF THE CONTRACTOR'S OPERATIONS OR SUSPEND HIS OPERATIONS IN WHOLE OR IN PART IF THE CONTRACTOR DOES NOT UTILIZE PROPER CARE OR MEANS TO PROTECT THE NEWLY PAINTED STEEL DURING ERECTION OR HIS FORMING OPERATIONS AT NO ADDITIONAL COST TO THE STATE.

IN ADDITION TO THE TEMPORARY PROTECTIVE STRUCTURE, THE CONTRACTOR SHALL PROVIDE PLASTIC SHEETING OR OTHER APPROVED METHODS TO CONTROL WATER USED IN THE SAW CUTTING OPERATION FROM FALLING ON VEHICULAR AND PEDESTRIAN TRAFFIC.

THE PROTECTIVE STRUCTURES SHALL BE MEET WITH THE APPROVED BY OF THE ENGINEER AND SHALL MEET THE FOLLOWING REQUIREMENTS:

1. PROTECTIVE STRUCTURES SHALL BE PLACED ABOVE THE PAVEMENT AND SHOULDERS OF ROADWAYS ON WHICH VEHICULAR AND PEDESTRIAN TRAFFIC IS BEING MAINTAINED ON THE EXISTING LANES OR BY PARTIAL LANE CLOSURES, OR BY TEMPORARY PAVEMENTS CONTIGUOUS WITH THE EXISTING PAVEMENT. THE PROTECTIVE STRUCTURES IN ALL CASES SHALL EXTEND BEYOND THE EXISTING AND/OR NEW EXTERIOR STRUCTURAL BEAMS A SUFFICIENT DISTANCE TO PROTECT UNDER THE EXISTING AND PROPOSED PARAPETS, AND SHALL HAVE SIDEWALLS EXTENDING A MINIMUM OF FOUR (4) FEET UPWARD. THE FLOORING AND SIDEWALLS OF THE PROTECTIVE STRUCTURES SHALL HAVE NO CRACKS OR OPENINGS THROUGH WHICH MATERIAL PARTICLES MAY FALL.

2. THE PROTECTIVE STRUCTURE SHALL BE DESIGNED FOR A LOADING OF 100 POUNDS PER SQUARE FOOT.

3. THE PROTECTIVE STRUCTURE DESIGN SHALL INCORPORATE AT LEAST ONE LAYER OF 3/4 INCH PLYWOOD PLACED BETWEEN THE LOWER FLANGES OF THE STRUCTURAL STEEL BEAMS OR GIRDERS AT THE ABOVE MENTIONED LOCATIONS.

ITEM 527 – FALSEWORK, TEMPORARY BRACING AND PROTECTIVE STRUCTURES (CONT)

THE CALCULATIONS AND DETAILS FOR THE PROTECTIVE STRUCTURES SHALL BE PREPARED BY THE CONTRACTOR AND SHALL BE STAMPED BY A PROFESSIONAL ENGINEER REGISTERED IN THE STATE OF OHIO.

SIDEWALLS SHALL BE BRACED SUBSTANTIALLY TO RESIST WIND LOADS. DURING SAWCUTTING AND DECK REMOVAL OPERATIONS, TEMPORARY SHIELDS ATTACHED TO THE SIDE WALLS AND EXTENDING 1' ABOVE THE TOP OF PARAPET, SHALL BE INSTALLED TO LIMITS AS DIRECTED BY THE ENGINEER. TEMPORARY SHIELDS SHALL BE REMOVED IMMEDIATELY AFTER THEY HAVE SERVED THEIR PURPOSE. DEBRIS SHALL NOT BE PERMITTED TO COLLECT ON THE PROTECTIVE STRUCTURES.

WHEN SUPPORTING THE PROTECTIVE STRUCTURES FROM THE STEEL WORK OF THE BRIDGE(S), ALL CONNECTIONS THERETO SHALL BE MADE BY MEANS OF APPROVED CLAMPS ON BOTH SIDES OF THE BEAM FLANGE. THE DRILLING OF HOLES IN THE STEEL WORK, OR WELDING THERETO, FOR THIS PURPOSE WILL NOT BE PERMITTED. NO PORTION OF THE TEMPORARY SUPPORT SYSTEM AND/OR PROTECTIVE STRUCTURES (INCLUDING CONNECTION DEVICES) SHALL EXTEND MORE THAN 10 INCHES BELOW THE BOTTOM FLANGE OF THE STEEL STRINGERS OR COVER PLATES THAT IS OVER THE TRAVELED WAY (PAVEMENT AND SHOULDERS) OF A HIGHWAY OR RAILROAD ON WHICH TRAFFIC IS BEING MAINTAINED. HOWEVER, IN NO INSTANCE SHALL THE UNDERCLEARANCE BE LESS THAN 4267mm (14'–0").

AFTER THE FALSEWORK, TEMPORARY BRACING AND PROTECTIVE STRUCTURES HAVE SERVED THEIR PURPOSE, AND WHEN SO DIRECTED BY THE ENGINEER, THEY SHALL BE REMOVED. PROTECTIVE STRUCTURES, INCLUDING SIDEWALLS, SHALL NOT BE REMOVED UNTIL THE PARAPETS AND PARAPET FENCE ARE COMPLETED, INCLUDING WEATHERPROOFING. ALL MATERIAL SHALL BECOME THE PROPERTY OF THE CONTRACTOR AND SHALL BE REMOVED FROM THE SITE AND DISPOSED OF BY THE CONTRACTOR AT HIS OWN EXPENSE.

DETAILS OF THE FALSEWORK, TEMPORARY BRACING AND PROTECTIVE STRUCTURES FOR CATCHING BROKEN CONCRETE AND OTHER MATERIALS SHALL BE SUBMITTED, IN QUADRUPLET, TO THE ENGINEER FOR APPROVAL. DETAILS SHALL INCLUDE THE EXISTING AND THE PROPOSED TEMPORARY UNDERCLEARANCES TO THE TRAVELED WAY OF A HIGHWAY OR RAILROAD ON WHICH TRAFFIC IS BEING MAINTAINED. APPROVAL OF THESE PLANS BY THE ENGINEER SHALL NOT RELIEVE THE CONTRACTOR OF HIS RESPONSIBILITY OF PROVIDING A SAFE PROTECTION SYSTEM.

C. PAYMENT

THIS WORK SHALL BE INCLUDED IN THE CONTRACT LUMP SUM BID PRICE, INCLUDING ALL LABOR, EQUIPMENT, MATERIALS AND INCIDENTALS, FOR ITEM 202 PORTIONS OF STRUCTURE REMOVED, AS PER PLAN.

ALTERNATE MAINTENANCE OF TRAFFIC PLANS

IF THE CONTRACTOR SO ELECTS, HE MAY SUBMIT ALTERNATE METHODS FOR THE MAINTENANCE OF TRAFFIC, PROVIDED THE INTENT OF THE ABOVE PROVISIONS IS FOLLOWED AND NO ADDITIONAL INCONVENIENCE TO THE TRAVELING PUBLIC RESULTS THEREFROM. NO ALTERNATE PLAN SHALL BE PLACED IN EFFECT UNTIL APPROVAL HAS BEEN GRANTED IN WRITING BY THE ODOT DISTRICT CONSTRUCTION ENGINEER.

METHOD OF PAYMENT

PAYMENT FOR THE MAINTENANCE OF TRAFFIC ITEMS, UNLESS SPECIFIED SEPARATELY, SHALL BE AT THE LUMP SUM PRICE BID FOR ITEM 614 MAINTAINING TRAFFIC, WHICH SHALL INCLUDE ALL LABOR, EQUIPMENT AND INCIDENTALS TO COMPLETE THE WORK AS DETAILED IN THE PLANS. ALL COSTS OF MAINTAINING TRAFFIC ON THE OHIO TURNPIKE ROADWAY SHALL BE INCLUDED IN THE LUMP SUM PRICE BID FOR ITEM 614 – MAINTAINING TRAFFIC, AS PER PLAN. FOR MAINTAINING TRAFFIC ON THE OHIO TURNPIKE, SEE SHEETS 29A THROUGH 29D.

PAY ITEM FOR MAINTENANCE OF TRAFFIC ON THIS PROJECT

THE FOLLOWING ITEMS HAVE BEEN CARRIED TO THE MAINTENANCE OF TRAFFIC SUMMARY ON SHEET 30.

614, TEMPORARY EDGE LINE, WHITE, CLASS I	3.98 KILOMETER
614, TEMPORARY EDGE LINE, YELLOW, CLASS I	11.75 KILOMETER
614, WORK ZONE MARKING SIGNS (OW–167–48)	4 EACH
614, TEMPORARY LANE LINE, CLASS I	4.00 KILOMETER

MAINTENANCE OF TRAFFIC NOTES

SUM–271–10.51

MAINTENANCE OF TRAFFIC NOTES – OHIO TURNPIKE

metric units

CALCULATED APG CHECKED GTA

ITEM 614 – MAINTAINING TRAFFIC, AS PER PLAN

A. DESCRIPTION
THIS ITEM SHALL CONSIST OF MAINTAINING AND PROTECTING VEHICULAR TRAFFIC AND THE WORK WHILE THE CONTRACT IS IN FORCE.

THE OHIO TURNPIKE COMMISSION WILL PERMIT THE GENERAL CONTRACTOR OR ITS SUBCONTRACTOR TO STAGE LANE CLOSURES ON THE TURNPIKE ROADWAYS. THE STAGED LANE CLOSURES SHALL BE PERFORMED BY THE CONTRACTOR IN ACCORDANCE WITH OHIO TURNPIKE STANDARD DRAWINGS TCR–1, TCR–2, TCR–10, (SHEETS 29B, 29C, AND 29D, RESPECTIVELY) PROJECT PLANS AND NOTES. CONTRACTOR SHALL INCLUDE ALL COSTS OF MAINTAINING TRAFFIC ON THE TURNPIKE ROADWAY IN THE LUMP SUM BID FOR ITEM 614 – MAINTAINING TRAFFIC, AS PER PLAN.

B. REQUIREMENTS

1. THE CONTRACTOR'S RESPONSIBILITY TO THE SAFETY OF BOTH THE MOTORING PUBLIC AND THE CONSTRUCTION WORKERS AND EQUIPMENT WHILE PERFORMING THE REQUIREMENTS OF HIS CONSTRUCTION CONTRACT WITHIN THE PROJECT LIMITS, SHALL BE IN ACCORDANCE WITH THE MAINTENANCE OF TRAFFIC PLANS, THESE SPECIAL PROVISIONS AND THE LATEST REVISION OF THE OHIO "MANUAL OF UNIFORM TRAFFIC CONTROL DEVICES" AND THE "STANDARD PROCEDURE FOR MAINTENANCE AND CONTRACTORS' OPERATIONS UNDER TRAFFIC ON THE OHIO TURNPIKE" AS REVISED JULY, 1994.

THE CONTRACTOR SHALL SCHEDULE HIS OPERATIONS SO THAT AT LEAST THE MINIMUM NUMBER OF TRAFFIC LANES, AS INDICATED ON THE PLANS MAINTENANCE OF TRAFFIC DRAWINGS, IS MAINTAINED AT ALL TIMES. NO WORK WILL BE PERMITTED WHICH WILL REDUCE THE NUMBER OF LANES, EXCEPT AS NOTED ON THE PLANS, OR AS DIRECTED BY THE CHIEF ENGINEER, OF THE TURNPIKE.

THE OHIO TURNPIKE COMMISSION SHALL MONITOR THE TRAFFIC CONTROL SET-UP, INCLUDING THE PLACEMENT AND USE OF FLAGGERS, AND MAY ORDER SUCH MAINTENANCE, REPLACEMENT OR ADJUSTMENTS AS MAY BE DEEMED NECESSARY TO INSURE THE SAFETY OF THE TRAVELING PUBLIC. COMPLIANCE WITH ANY SUCH REQUEST BY THE COMMISSION SHALL BE CARRIED OUT BY THE CONTRACTOR IMMEDIATELY. THE CONTRACTOR SHALL BE RESPONSIBLE AT ALL TIMES FOR PROPER TRAFFIC CONTROL SET–UP AND FOR MAINTAINING ALL OPERATIONS AND TRAFFIC CONTROL DEVICES IN A SAFE AND EFFECTIVE MANNER. IF TRAFFIC CONTROL ZONES ARE SET IMPROPERLY, THE CONTRACTOR SHALL BE GIVEN NOTICE BY THE COMMISSION AS TO THE DEFICIENCIES. THE CONTRACTOR SHALL IMMEDIATELY CORRECT THE DEFICIENCIES. IF DEFICIENCIES ARE NOT IMMEDIATELY CORRECTED BY THE CONTRACTOR, THE COMMISSION RESERVES THE RIGHT TO CORRECT THE DEFICIENCIES, REMOVE THE TRAFFIC CONTROL ZONE AND/OR SUSPEND THE WORK OF THE CONTRACTOR.

2. PARTIAL CLOSURE – MAINLINE: THE CONTRACTOR SHALL NOT PERFORM WORK OVER, OR ADJACENT TO, THE TRAVELED LANES OF THE TURNPIKE ROADWAYS. LANE CLOSURES WILL BE REQUIRED FOR SUCH CONTRACT ITEMS AS CONSTRUCTION OF TEMPORARY PROTECTIVE FALSEWORK, SAWCUTTING AND REMOVAL OF BRIDGE DECKS AND/OR PARAPETS, DECK AND PARAPET POURS, AND REMOVAL OF TEMPORARY FALSEWORK AND FORMS. TO PROVIDE FOR TRAFFIC MAINTENANCE, THE CONTRACTOR SHALL FURNISH, INSTALL, MAINTAIN AND REMOVE THE TRAFFIC CONTROL DEVICES SHOWN ON THE OHIO TURNPIKE COMMISSION STANDARD DRAWINGS FOR LANE CLOSURES OR LANE SHIFT TRAFFIC CONTROL EXCEPT THAT TRAFFIC SIGNS ON BREAK–AWAY POSTS WILL BE FURNISHED, INSTALLED AND REMOVED BY THE COMMISSION BUT SHALL BE MAINTAINED BY THE CONTRACTOR. IF THE TRAFFIC SIGNS ON BREAK–AWAY POSTS HAVE NOT BEEN INSTALLED OR ARE NOT INSTALLED AT THE RIGHT LOCATIONS, TRAFFIC SIGNS ON WOOD BLOCKS WILL BE FURNISHED BY THE COMMISSION BUT SHALL BE INSTALLED, MAINTAINED AND REMOVED BY THE CONTRACTOR.

3. THE CONTRACTOR SHALL PROVIDE, DURING WORKING HOURS, A PICK–UP TRUCK (OR SIMILAR TRUCK TYPE VEHICLE) MOUNTED WITH AMBER FLASHING DOME LIGHT(S), WHICH SHALL BE USED IN THE MAINTENANCE OF ALL TRAFFIC CONTROL ZONES. THE TRAFFIC CONTROL ZONE VEHICLE SHALL BE MANNED BY PERSONS OTHER THAN THE SUPERINTENDENT.

4. THE CONTRACTOR SHALL DESIGNATE A ZONE PERSON, OTHER THAN THE SUPERINTENDENT AND SUBJECT TO THE APPROVAL OF THE ENGINEER, OTHER THAN THE SUPERINTENDENT TO PERFORM THE FOLLOWING FUNCTIONS: TO SUPERVISE THE CORRECT SET–UP OF TRAFFIC CONTROL ZONES, CONTINUOUSLY INSPECT ALL TRAFFIC CONTROL DEVICES 24 HOURS PER DAY, 7 DAYS PER WEEK WITHIN THE WORK LIMITS OF THE PROJECT AND SUPERVISE THE REMOVAL OF TRAFFIC CONTROL ZONES.

THE DESIGNATED ZONE PERSON SHALL HAVE A FULL WORKING KNOWLEDGE OF THE MAINTENANCE OF TRAFFIC PLANS AND SPECIAL PROVISIONS. THE DESIGNATED ZONE PERSON OR A QUALIFIED REPRESENTATIVE SHALL REPLACE (OR REPAIR IF APPLICABLE) DAMAGED OR MISSING TRAFFIC CONTROL DEVICES. IN ADDITION, THE ZONE PERSON SHALL CONTINUALLY CHECK THE REFLECTIVE SURFACES OF ALL THE TRAFFIC CONTROL DEVICES (DRUMS, BARRIER DELINEATORS, SIGNS, ETC.) TO INSURE THAT THE TRAFFIC CONTROL DEVICES ARE CLEAN AND ARE PERFORMING THEIR INTENDED FUNCTION. THESE INDIVIDUALS' NAMES AND PHONE NUMBERS SHALL BE GIVEN TO THE ENGINEER AT THE PRECONSTRUCTION MEETING. THE ZONE PERSON SHALL HAVE NO OTHER CONSTRUCTION RELATED DUTIES.

ITEM 614 – MAINTAINING TRAFFIC, AS PER PLAN (CONT)

5. THE CONTRACTOR'S EQUIPMENT SHALL BE OPERATED IN THE DIRECTION OF OPERATED IN THE DIRECTION OF TRAFFIC. WHERE PRACTICAL, A A QUALIFIED FLAGGER SHALL BE EMPLOYED WHERE THE CONTRACTOR'S EQUIPMENT OR VEHICLES MUST MERGE WITH THE TRAFFIC STREAM. THE CONTRACTOR'S EQUIPMENT AND VEHICLES, INCLUDING MATERIAL DELIVERY AND HAUL VEHICLES SHALL BE EQUIPPED WITH AT LEAST ONE OPERATIONAL AMBER FLASHING LIGHT WHICH SHALL BE VISIBLE TO APPROACHING AND TRAILING TRAFFIC. THE AMBER WARNING LIGHT(S) SHALL BE TURNED ON ONLY DURING INGRESS/EGRESS BUT NOT WHILE WORKING IN THE WORK ZONE. THE EQUIPMENT SHALL BE STORED AT A STORAGE AREA, THE LOCATION OF WHICH SHALL HAVE PRIOR APPROVAL OF THE ENGINEER. PAVERS, ROLLERS AND OTHER EQUIPMENT MAY BE PARKED IN AREAS ALONG THE HIGHWAY WHEN PAVING OPERATIONS ARE SCHEDULED TO CONTINUE WITHIN THE NEXT WORKDAY. WHEN PARKING ALONG THE HIGHWAY, THE EQUIPMENT SHALL BE LOCATED EITHER FIFTY (50) FEET FROM THE EDGE OF PAVEMENT OR SIX (6) FEET BEHIND GUARDRAIL WITH A MINIMUM OF 125 FEET OF GUARDRAIL PRECEDING THE EQUIPMENT. NO EQUIPMENT SHALL BE PARKED IN THE MEDIAN OF THE TURNPIKE DURING PHASE 1. ADEQUATE BARRICADES AND LIGHTS SHALL BE PLACED ON THE PAVEMENT SIDE OF THE EQUIPMENT TO IDENTIFY THE LIMITS OF THE EQUIPMENT. ALL OTHER EQUIPMENT, INCLUDING PRIVATE VEHICLES, SHALL BE STORED AT THE APPROVED CONTRACTOR'S STORAGE AREA.

6. TEMPORARY SIGNS NOT PROTECTED BY GUARDRAIL SHALL BE MOUNTED ON ITEM 630 – YIELDING POST SUPPORTS, ITEM 630 – BREAKAWAY BEAM SUPPORTS OR THEY SHALL BE MOUNTED ON LIGHTWEIGHT PORTABLE SIGN SUPPORT STANDARDS OR TRAILER TYPE SIGN SUPPORT STANDARDS WEIGHING LESS THAN 100 LBS., INCLUDING THE SIGN. WHERE BALLASTING IS NECESSARY, FOR STABILITY, IT SHALL CONSIST OF SANDBAGS MOUNTED NOT MORE THAN 12 INCHES ABOVE THE PAVEMENT SURFACE. TEMPORARY SIGNS SHALL NOT BE MOUNTED ON AUTOMOTIVE AXLE/DIFFERENTIAL ASSEMBLIES OR OTHER SIMILAR HEAVY SUPPORT DEVICES.

7. TEMPORARY TRAFFIC DRUMS SHALL BE NEW AS SHOWN ON OTC STANDARD DRAWING TCR–2. REFLECTORIZATION ON DRUMS SHALL BE KEPT CLEANED ON A MONTHLY BASIS OR AS DIRECTED BY THE ENGINEER. DAMAGED DRUMS SHALL BE REPLACED AS DIRECTED BY THE ENGINEER. PAYMENT FOR REPLACEMENT DRUMS SHALL BE INCLUDED IN THE LUMP SUM PRICE BID FOR ITEM 614–MAINTAINING TRAFFIC, AS PER PLAN.

C. THE WORK AND TRAFFIC ZONE RESTRICTIONS ARE AS FOLLOWS:

NO WORK REQUIRING TRAFFIC ZONES WILL BE PERMITTED ON OR OVER THE TURNPIKE ROADWAYS BEGINNING JUNE 26, 1998 AND EXTENDING THROUGH SEPTEMBER 8, 1998(STAGE I) AND BEGINNING JUNE 25, 1999 AND EXTENDING THROUGH SEPTEMBER 7, 1999(STAGE II) UNLESS OTHERWISE APPROVED BY THE CHIEF ENGINEER OF THE OHIO TURNPIKE. THE CHIEF ENGINEER MAY OR MAY NOT PERMIT THE PERIODIC CLOSURE OF THE PAVED SHOULDERS AND/OR ONE OR TWO DIRECTIONAL LANES

ON THE WESTBOUND ROADWAYS FOR THE CONTRACTOR'S USE DURING THIS PERIOD PENDING TRAFFIC CONDITIONS AND THE CONTRACTOR'S PROPOSED OPERATIONS. IF PERMISSION SHOULD BE GRANTED, SUCH CLOSURES WOULD BE LIMITED TO DAYLIGHT HOURS.

THE CONTRACTOR WILL BE PROVIDED ACCESS AND USE OF THE TURNPIKE ROADWAYS DURING THE PROGRESS OF THE WORK UNDER THIS CONTRACT AS FOLLOWS:

(A) ALL THREE LANES OF TRAFFIC SHALL BE MAINTAINED ON THE TURNPIKE ROADWAYS, EXCEPT AS FOLLOWS: THE COMMISSION WILL PERMIT THE PERIODIC CLOSURE OF ONE OR TWO CONTINUOUS DIRECTIONAL LANES ON THE WESTBOUND ROADWAYS FOR THE CONTRACTOR'S USE,

SUBJECT TO WEATHER AND TRAFFIC CONDITIONS. THE CHIEF ENGINEER MAY RESTRICT THE CONTRACTOR'S ACTIVITIES AND REQUIRE TWO OR THREE LANES TO BE OPEN TO TRAFFIC IF THE WEATHER OR TRAFFIC CONDITIONS SO DICTATE. TRAFFIC ZONES WILL NOT BE PERMITTED FROM 12:00 P.M. (NOON) TO 10:00 P.M. ON FRIDAYS AND SUNDAYS. ANYTIME WORKERS OR EQUIPMENT ARE OCCUPYING A CLOSED LANE. A FLAG PERSON SHALL BE PROVIDED BY THE CONTRACTOR.

PERIODIC CLOSURES WILL BE REQUIRED FOR SUCH CONTRACT ITEMS AS CONSTRUCTION OF TEMPORARY PROTECTIVE FALSEWORK, SAWCUTTING AND REMOVAL OF BRIDGE DECKS AND PARAPETS, BRIDGE DECK AND PARAPET POURS, SEALING OF PARAPETS, PARAPET FENCE INSTALLATION, REHABILITATION AND/OR PATCHING WORK ON SUBSTRUCTURES, PAINT REMOVAL, REPAIRS TO SUPERSTRUCTURE STEEL, FIELD PAINTING AND THE REMOVAL OF TEMPORARY FALSEWORK AND FORMS. THE TURNPIKE COMMISSION SHALL BE NOTIFIED BY THE CONTRACTOR AT LEAST 48 HOURS IN ADVANCE OF ANY REQUESTED USE OF THE ROADWAYS. SUCH CLOSURES WOULD BE LIMITED TO DAYLIGHT HOURS. THE CONTRACTOR SHALL TAKE EXTREME CARE AS NOT TO DAMAGE THE ROADWAYS DURING THESE PERIODS OF PERIODIC USAGE. THE

DURATION AND THE FREQUENCY OF THE PERIODS WILL BE STRICTLY CONTROLLED BY THE TURNPIKE COMMISSION AND WILL BE SUBJECT TO SUCH RESTRICTIONS AS THE TURNPIKE COMMISSION MAY DETERMINE TO BE NECESSARY TO AVOID UNDUE INCONVENIENCE OR HAZARD TO THE TRAVELING PUBLIC.

ITEM 614 – MAINTAINING TRAFFIC, AS PER PLAN (CONT)

NO LANE CLOSURES WILL BE PERMITTED ON THE OHIO TURNPIKE DURING THE FOLLOWING HOLIDAY PERIODS:

STAGE I

EASTER HOLIDAY: NO TRAFFIC ZONES WILL BE PERMITTED ON THE TURNPIKE FROM NOON THURSDAY, APRIL 9, 1998 THRU SUNRISE TUESDAY APRIL 14, 1998.

MOTHER'S DAY: NO TRAFFIC ZONES WILL BE PERMITTED ON THE TURNPIKE FROM

SUNDOWN THURSDAY, MAY 7,1998 THRU SUNRISE MONDAY, MAY 11, 1998. MEMORIAL DAY HOLIDAY: NO TRAFFIC ZONES WILL BE PERMITTED ON THE TURNPIKE FROM SUNDOWN THURSDAY, MAY 21, 1988 THRU SUNRISE WEDNESDAY, MAY 27, 1998.

THANKSGIVING HOLIDAY: NO TRAFFIC ZONES WILL BE PERMITTED ON THE TURNPIKE FROM SUNDOWN TUESDAY, NOVEMBER 24, 1998 THRU SUNRISE MONDAY, NOVEMBER 30, 1988.

WINTER MONTHS: NO TRAFFIC ZONES WILL BE PERMITTED ON THE TURNPIKE BEGINNING DECEMBER 1ST AND ENDING MARCH 15TH.

STAGE II

EASTER HOLIDAY: NO TRAFFIC ZONES WILL BE PERMITTED ON THE TURNPIKE FROM NOON THURSDAY, APRIL 1, 1999 THRU SUNRISE TUESDAY APRIL 6, 1999.

MOTHER'S DAY: NO TRAFFIC ZONES WILL BE PERMITTED ON THE TURNPIKE FROM SUNDOWN THURSDAY, MAY 6, 1999 THRU SUNRISE MONDAY, MAY 10, 1999.

MEMORIAL DAY HOLIDAY: NO TRAFFIC ZONES WILL BE PERMITTED ON THE TURNPIKE FROM SUNDOWN THURSDAY, MAY 27, 1999 THRU SUNRISE WEDNESDAY JUNE 2,1999.

THANKSGIVING HOLIDAY: NO TRAFFIC ZONES WILL BE PERMITTED ON THE TURNPIKE FROM SUNDOWN TUESDAY, NOVEMBER 23, 1999 THRU SUNRISE MONDAY, NOVEMBER 29, 1999.

WINTER MONTHS: NO TRAFFIC ZONES WILL BE PERMITTED ON THE TURNPIKE BEGINNING DECEMBER 1ST AND ENDING MARCH 15TH.

(B) PRIVATE AUTOMOBILES OF WORKMEN WILL NOT BE PERMITTED TO STOP OR PARK ON THE TURNPIKE RIGHT–OF–WAY.

(C) ALL APPLICABLE PROVISIONS OF "STANDARD PROCEDURE FOR MAINTENANCE AND CONTRACTOR'S OPERATIONS UNDER TRAFFIC ON THE OHIO TURNPIKE", LATEST REVISION SHALL APPLY. INTERRUPTING THE FLOW OF TURNPIKE WILL NOT BE PERMITTED.

(D) THE CONTRACTOR WILL BE CHARGED TOLL FOR ALL TRAVEL ON THE OHIO TURNPIKE.

(E) THE CONTRACTOR WILL BE PERMITTED TO USE THE EXISTING MEDIAN CROSSOVER LOCATED AT MILEPOST 176.85 ON A LIMITED BASIS. U–TURNS WEST OF THE PROJECT SITE SHALL BE MADE IN FRONT OF THE TOLL BOOTHS AT INTERCHANGE NO. 11.

(F) U–TURNS IN THE GRASSED MEDIAN STRIP WILL NOT BE PERMITTED. FLAGGERS, SUPPLIED BY THE CONTRACTOR, SHALL BE USED TO DIRECT ANY DELIVERY OR CONTRACTOR'S VEHICLE LARGER THAN A PICK–UP TRUCK ACROSS THE EXISTING MEDIAN CROSSOVER AND SHALL BE USED TO DIRECT ALL U–TURN MOVEMENTS WITHIN THE INTERCHANGE NO. 11. EGRESS FROM THE CROSSOVER INTO THE ACTIVE TURNPIKE LANE SHALL OCCUR ONLY WHEN A SAFE GAP IN TURNPIKE TRAFFIC EXISTS. INTERRUPTING THE FLOW OF TURNPIKE TRAFFIC WILL NOT BE PERMITTED. ALL MEDIAN CROSSOVER MOVEMENTS SHALL BE IN ACCORDANCE WITH "STANDARD PROCEDURE FOR MAINTENANCE AND CONTRACTORS' OPERATIONS UNDER TRAFFIC ON THE OHIO TURNPIKE", LATEST REVISION.

UNFORESEEN CIRCUMSTANCES MAY OCCUR MAKING IT NECESSARY TO RESTRICT CROSSOVER TRAFFIC, AS DEEMED NECESSARY BY THE ENGINEER.

D. METHOD OF PAYMENT
ALL COST OF MAINTAINING TRAFFIC ON THE OHIO TURNPIKE ROADWAY SHALL BE INCLUDED IN THE LUMP SUM PRICE BID FOR ITEM 614 – MAINTAINING TRAFFIC, AS PER PLAN.

REPORT OF ACCIDENTS ON OHIO TURNPIKE

WITHIN TWENTY–FOUR (24) HOURS AFTER THE OCCURRENCE OF ANY ACCIDENT OR OTHER EVENT WHICH RESULTS IN, OR MIGHT RESULT IN, INJURY TO THE PERSON OR PROPERTY OF ANY PERSON, WHICH RESULTS FROM OR INVOLVES ANY ACTION OR FAILURE TO ACT OF THE CONTRACTOR OR ANY SUBCONTRACTOR OR ANY EMPLOYEE OR AGENT OF EITHER, AND WHICH ARISES IN ANY MANNER FROM THE PERFORMANCE OF THE CONTRACT, THE CONTRACTOR SHALL SEND WRITTEN REPORT OF SUCH ACCIDENT OR OTHER EVENT TO THE OHIO TURNPIKE CHIEF ENGINEER AND TURNPIKE COMMISSION'S GENERAL COUNSEL, SETTING FORTH A FULL AND PRECISE STATEMENT OF FACT PERTAINING THERETO. THE CONTRACTOR SHALL ALSO IMMEDIATELY SEND TO THE TURNPIKE COMMISSION'S GENERAL COUNSEL A COPY OF ANY SUMMONS, SUBPOENA, NOTICE, OR OTHER DOCUMENT SERVED UPON OR RECEIVED BY THE CONTRACTOR OR ANY SUBCONTRACTOR, OR ANY AGENT, EMPLOYEE, OR REPRESENTATIVE OF EITHER, IN CONNECTION WITH ANY MATTER BEFORE ANY COURT, ARISING IN ANY MANNER FROM THE CONTRACT OR THE PERFORMANCE OF THE CONTRACT.

MAINTENANCE OF TRAFFIC NOTES

SUM–271–10.51

ITEM 614 – MAINTAINING TRAFFIC, AS PER PLAN

(1) ALL TRAFFIC CONTROL DEVICES, DRUMS, TRAFFIC CONTROL SIGNS, FLASHING ARROW BARS, FLAGGERS, ETC., AS SHOWN AND LOCATED ON THE TRAFFIC CONTROL DRAWINGS SHALL BE INCORPORATED FOR THE VARIOUS TYPES OF WORK AREAS UNDER NORMAL TRAFFIC CONDITIONS. IF SPECIAL TRAFFIC CONDITIONS EXIST, THESE TRAFFIC CONTROL PLANS MAY HAVE TO BE MODIFIED. HOWEVER, NO MODIFICATIONS TO THE LAYOUT OF THE TRAFFIC CONTROL DEVICES SHOWN ON THE TRAFFIC CONTROL DRAWINGS IS TO BE MADE UNLESS APPROVED BY THE CHIEF ENGINEER OF THE TURNPIKE

(2) THE CONTRACTOR'S VEHICLES AND EQUIPMENT MAY BE MOVED ACROSS THE MEDIAN STRIP AT DESIGNATED CROSSINGS ONLY UPON PRIOR AUTHORIZATION OF THE CHIEF ENGINEER OR HIS DULY AUTHORIZED REPRESENTATIVE AND IN STRICT COMPLIANCE WITH THE PROCEDURES SO DESIGNATED BY THE CHIEF ENGINEER. WITH THE EXCEPTION OF SUPERVISORS' VEHICLES AND ZONE TRUCKS, A FLAGGER IS REQUIRED TO ASSIST MEDIAN CROSSINGS OF ALL CONSTRUCTION VEHICLES AND EQUIPMENT. A FLAGGER SHALL BE STATIONED AT EACH LOCATION WHERE VEHICLES AND EQUIPMENT ARE REQUIRED TO ENTER, EXIT OR CROSS ACTIVE TRAFFIC LANES WHEN ENTERING OR EXITING THE WORK ZONES.

(3) SINCE FLAGGERS ARE RESPONSIBLE FOR HUMAN SAFTEY AND MAKE THE GREATEST NUMBER OF CONTACTS WITH THE TRAVELLING PUBLIC OF ALL CONSTRUCTION PERSONEL, IT IS IMPORTANT THEY ARE: MENTALLY ALERT, COURTEOUS BUT WITH A FIRM MANNER; PROPERLY ATTIRED WITH A NEAT APPEARANCE; AWARE OF THEIR RESPONSIBILITY FOR THE SAFETY OF THE MOTORISTS AND THE CONSTRUCTION PERSONEL; INFORMED OF THE EXACT TRAFFIC MOVEMENTS THAT THEY ARE TO CONTROL. FLAGGERS SHALL WEAR BRIGHT ORANGE VESTS OR JACKETS WHICH ARE TO BE REFLECTORIZED FOR NIGHTTIME OPERATIONS. FLAGGERS ARE TO USE RED FLAGS. (RED FLAGS SHALL BE A MINIMUM OF 18"x18" IN SIZE.)

(4) AT ALL ACTIVE HIGH SPEED CROSSOVERS, THE EXISTING CONFLICTING PAVEMENT MARKINGS SHALL BE REMOVED AND CONSTRUCTION ZONE MARKERS SHALL BE INSTALLED TO THE LIMITS AS INDICATED ON THE TRAFFIC CONTROL DRAWINGS PRIOR TO OPENING THE ZONE TO TRAFFIC. REMOVAL OF THE EXISTING PAVEMENT MARKINGS SHALL BE IN ACCORDANCE WITH NOTE (9).

(5) SUPPLEMENTAL GUIDE SIGNS WITHIN THE BIDIRECTIONAL ZONE:

A) ADVANCE GUIDE SIGNS FOR SERVICE OR TOLL PLAZAS WHERE BIDIRECTIONAL TRAFFIC IS SITUATED SO THAT NORMAL MAINLINE ADVANCED GUIDE SIGNS FOR SERVICE AND TOLL PLAZAS ARE NOT READILY VISIBLE TO THE RELOCATED TRAFFIC LANE. SUPPLEMENTAL GUIDE SIGNS (SEE BELOW) SHALL BE INSTALLED ADJACENT TO THE APPROPIATE BIDIRECTIONAL TRAFFIC LANE TO ALERT MOTORIST OF THE APPROACHING PLAZA OR EXIT.

SERVICE PLAZA SUPPLEMENTAL GUIDE SIGNS

SG–S2

SG–S1

SG–S1/2

TOLL PLAZA SUPPLEMENTAL GUIDE SIGNS

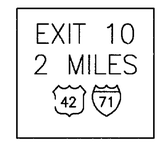

SG–E2

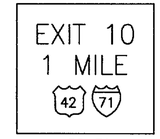

SG–E1

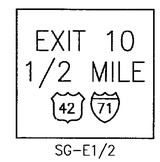

SG–E1/2

B) ADVANCED GUIDE SIGNS FOR BIDIRECTIONAL ZONES EXCEEDING TWO (2) MILES IN LENGTH WHERE BIDIRECTIONAL TRAFFIC ZONES EXCEED TWO (2) MILES IN LENGTH, SUPPLEMENTAL GUIDE (TC–11, TC–22) (SEE BELOW) WILL BE INSTALLED TO INFORM MOTORIST OF THE NUMBER OF MILES OF SINGLE LANE TRAFFIC REMAINING:

TC–11

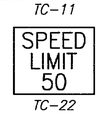

TC–22

(6) CONSTRUCTION ZONE MARKERS SHALL BE INSTALLED IN ACCORDANCE WITH THE TRAFFIC CONTROL PLANS AND SHALL CONFORM TO ITEM SP 626A – "CONSTRUCTION ZONE MARKERS" OF THE SPECIAL PROVISIONS.

(7) TEMPORARY CONCRETE BARRIER SHALL BE IN ACCORDANCE WITH THE TRAFFIC CONTROL PLANS AND SHALL CONFORM TO ITEM SP 622A – "TEMPORARY CONCRETE BARRIER."

(8) REMOVAL OF EXISTING LANE AND EDGE LINES SHALL INCLUDE THE PLACEMENT, MAINTENANCE, REMOVAL AND DISPOSAL OF BLACKOUT TAPE APPROVED BY CHIEF ENGINEER. BLACKOUT TAPE INSTALLATION AND REMOVAL SHALL BE IN ACCORDANCE WITH THE MANUFACTURER'S RECOMMENDATIONS. TAPE WHICH FAILS TO ADHERE SHALL BE REMOVED AND REPLACED AS DIRECTED BY THE ENGINEER. REPLACEMENT TAPE SHALL NOT BE MEASURED FOR PAYMENT. MEASUREMENT OF THIS ITEM SHALL BE THE ACTUAL LINEAL FOOTAGE OF BLACK TAPE INSTALLED AND REMOVED. PAYMENT FOR ITEM 641 – REMOVE EXISTING EDGE LINE, AS PER PLAN SHALL INCLUDE ALL LABOR, MATERIALS, EQUIPMENT AND INCIDENTALS NECESSARY TO FURNISH, INSTALL, MAINTAIN, REMOVE AND DISPOSE OF BLACK TAPE.

LANE DESIGNATIONS

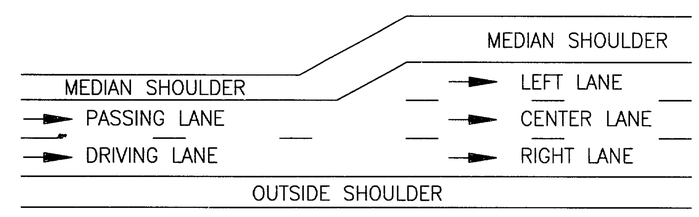

298
80

OHIO TURNPIKE COMMISSION

TRAFFIC CONTROL

GENERAL NOTES

DATE: JANUARY 29, 1997 | SCALE : NONE

OTC STANDARD DRAWING TCR–1

F:\DWGS\STANDARD\TCR-1.DWG MTK 1/29/97

TRAFFIC CONTROL DRAWINGS - LEGEND AND DETAILS

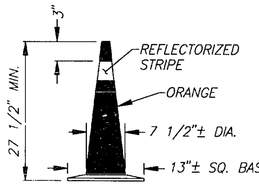

TRAFFIC CONE:

TRAFFIC CONES SHALL BE THE SLIMLINE OR TRIMLINE STYLE WITH THE BODY OF THE TRAFFIC CONE CONSTRUCTED OF POLYVINYL CHLORIDE MATERIAL. THE BASE OF THE TRAFFIC CONE SHALL BE CONSTRUCTED OF POLYVINYL CHLORIDE OR MOLDED RUBBER MATERIAL. THE CONE SHALL BE HOLLOW. THE NET WEIGHT OF THE CONE SHALL NOT BE LESS THAN 5 1/2 POUNDS.

THE EXTERIOR OF THE CONE SHALL BE HIGH VISIBILITY, FADE RESISTANT, IMPREGNATED FLUORESCENT ORANGE. THE GUIDE SHALL HAVE ONE HIGHLY REFLECTIVE WHITE OR SILVER STRIPE ENCIRCLING THE CONE AND BE NOT LESS THAN 4" IN WIDTH. THE STRIPE SHALL BE PERMANENTLY APPLIED SO THAT THE TOP EDGE IS APPROXIMATELY 3" FROM THE CONE APEX.

EACH CONE IS TO HAVE A SLIP-OVER COLLAR BASE. THE SLIP-OVER COLLAR BASE SHALL BE BLACK IN COLOR AND SHALL BE CONSTRUCTED OF A RUBBER MATERIAL AND SHALL WEIGH NOT LESS THAN 5 POUNDS. THE SLIP-OVER COLLAR BASE SHALL BE FULLY COMPATIBLE WITH THE PHYSICAL PROPERTIES OF THE CONE.

A ONE-PIECE TRAFFIC CONE MEETING THE ABOVE MATERIAL REQUIREMENTS AND HAVING A NET WEIGHT OF APPROXIMATELY 10 1/2 POUNDS, WITH THE WEIGHT DISTRIBUTED IN ACCORDANCE WITH GOOD ENGINEERING DESIGN STANDARDS TO ENSURE MAXIMUM STABILITY SO THAT, DURING NORMAL USE IN CONTROL OF HIGH SPEED TRAFFIC, THE GUIDE WILL STAND ERECT WITHOUT USE OF ADDITIONAL WEIGHT OR BALLAST, MAY BE PROVIDED IN LIEU OF THE TWO-PIECE TRAFFIC CONE.

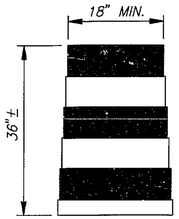

TRAFFIC DRUM:

THE TRAFFIC DRUM SHALL BE A TWO PIECE, BREAKAWAY STYLE, DESIGNED THAT DAMAGE AFTER IMPACT WILL BE MINIMAL THROUGH A TEMPERATURE OF -15F TO +125F. THE DRUM SHALL BE CONSTRUCTED OF NOT LESS THAN 1/8 INCH THICK, IMPACT RESISTANT, POLYETHELENE, FORMULATED TO ALLOW THE DRUM TO RETURN TO THE ORIGINAL DESIGN AFTER IMPACT.

THE DRUM SHALL BE APPROXIMATELY 36" IN HEIGHT AND A MINIMUM OF 18" IN DIAMETER. THE DRUM SHALL CONTAIN 5 RECESSED BANDS WHICH SHALL ACCEPT REFLECTIVE SHEETING BANDS OF 6" WIDTH. THE DRUM SHALL BE DESIGNED WITH ONE OR MORE FLAT SIDES OR WITH AN ANTI-ROLL DEVICE, TO MINIMIZE ROLLING, SHOULD THE UNIT BE KNOCKED OVER. TOTAL WEIGHT OF THE DRUM SHALL BE NOT LESS THAN 12 LBS. TOP OF THE DRUM SHALL BE DESIGNED TO ACCOMMODATE 2 EACH BARRICADE WARNING LIGHTS. COLOR OF THE DRUM SHALL BE COLOR STABILIZED, SAFETY ORANGE. TO PROVIDE STABILITY OF THE DRUM THE WEIGHTED BASE PORTION SHALL BE EITHER THE DETACHABLE SAND WEIGHTED TRAY TYPE OR RUBBER COLLAR WEIGHTING TYPE WITH COMPATIBLE DRUM AS MANUFACTURED BY PLASTIC SAFETY SYSTEMS OR APPROVED EQUAL. DOUBLE WEIGHTING OF DRUMS MAY BE NECESSARY TO PREVENT MOVEMENT.

THE TRAFFIC DRUM SHALL HAVE A MINIMUM OF 4 EACH, NOMINAL 6" WIDE, REFLECTIVE STRIPES APPLIED TO THE DRUM RECESSED BANDS, STARTING FROM THE TOP, IN ORANGE, WHITE, ORANGE, WHITE SEQUENCE. THE STRIPES SHALL BE FABRICATED OF ENCAPSULATED LENS, HIGH INTENSITY REFLECTIVE SHEETING. THE REFLECTIVE SHEETING SHALL BE No. 3810 WHITE (SILVER) AND No. 3814 ORANGE AS MANUFACTURED BY THE 3M COMPANY OR EQUAL, AS APPROVED BY THE CHIEF ENGINEER, CONSIDERING REFLECTIVITY, DURABILITY, PLIABILITY AND ADHESION QUALITIES.

LEGEND

- TYPE III PORTABLE BARRICADE WITH SIGN AS PER PLATE C-5 (PAGE 7-42B) IN THE O.M.U.T.C.D. SIGN TO BE SIMILAR TO R-75
- TRAFFIC SIGN ON BREAK-AWAY POSTS **
- TRAFFIC SIGN ON WOOD BLOCKS **
- REFLECTORIZED TRAFFIC DRUMS *
- REFLECTORIZED TRAFFIC CONES *
- LOCALIZED WORK AREAS.
- ROADWAY CLOSED TO TRAFFIC.
- FLAGGER LOCATION * (ALL WORKING HOURS)
- FLASHING ARROW PANEL TYPE C PER STANDARD CONSTRUCTION DRAWING TC-35.10 *

* TRAFFIC CONTROL DEVICES THAT THE CONTRACTOR IS TO FURNISH, INSTALL, MAINTAIN, AND REMOVE AS SHOWN ON THE TRAFFIC CONTROL DRAWINGS

** SEE SPECIFICATIONS FOR RESPONSIBILITY

GENERAL NOTES

1. TRAFFIC DRUMS ARE TO BE UTILIZED IN ALL OVERNIGHT ZONES (TRAFFIC CONES MAY BE USED FOR DAYTIME ZONES ONLY)
2. TYPICAL DRUM/CONE SPACING IS 50' O/C IN TAPERS AND 100' O/C IN TANGENT AREAS AND CROSSOVERS UNLESS OTHERWISE NOTED
3. FINAL LOCATION OF ARROW BOARDS MAY BE ADJUSTED TO PROVIDE MAXIMUM VISIBILITY
4. LONG TERM (OVERNIGHT) CONSTRUCTION WARNING SIGNS THAT ARE LOCATED ON THE LEFT SIDE OF AN OPEN 3-LANE SECTION OF ROADWAY ARE TO BE MOUNTED ON STANDARDS AND SHOULD STRADDLE THE PERMANENT MEDIAN BARRIER WALL
5. SIGNS SHOULD BE MOUNTED ON BREAKAWAY POSTS OR SIGN STANDARDS WHEN LANE CLOSURE PRECEDES A BIDIRECTIONAL ZONE OR A LONG TERM STATIONARY ZONE
6. REMOVE REFLECTORS FROM ALL EXISTING RAISED PAVEMENT MARKERS (RPM'S) THAT ARE IN CONFLICT WITH TEMPORARY TRAVEL LANES AND PAVEMENT MARKINGS. WHEN EXISTING PAVEMENT MARKINGS CONFLICT WITH TEMPORARY TRAVEL LANES, THEY ARE TO BE COVERED WITH NON-REFLECTIVE BLACK PAVEMENT TAPE.
7. ALL MAINTENANCE OF TRAFFIC DEVICES AND ZONES MAY VARY FROM THESE STANDARDS. IF SPECIAL TRAFFIC CONDITIONS EXIST, THE MAINTENANCE OF TRAFFIC PLANS MAY BE MODIFIED TO SUIT THESE CONDITIONS. NO MODIFICATIONS TO THE MAINTENANCE OF TRAFFIC PLANS SHALL BE MADE UNLESS APPROVED BY THE COMMISSION.

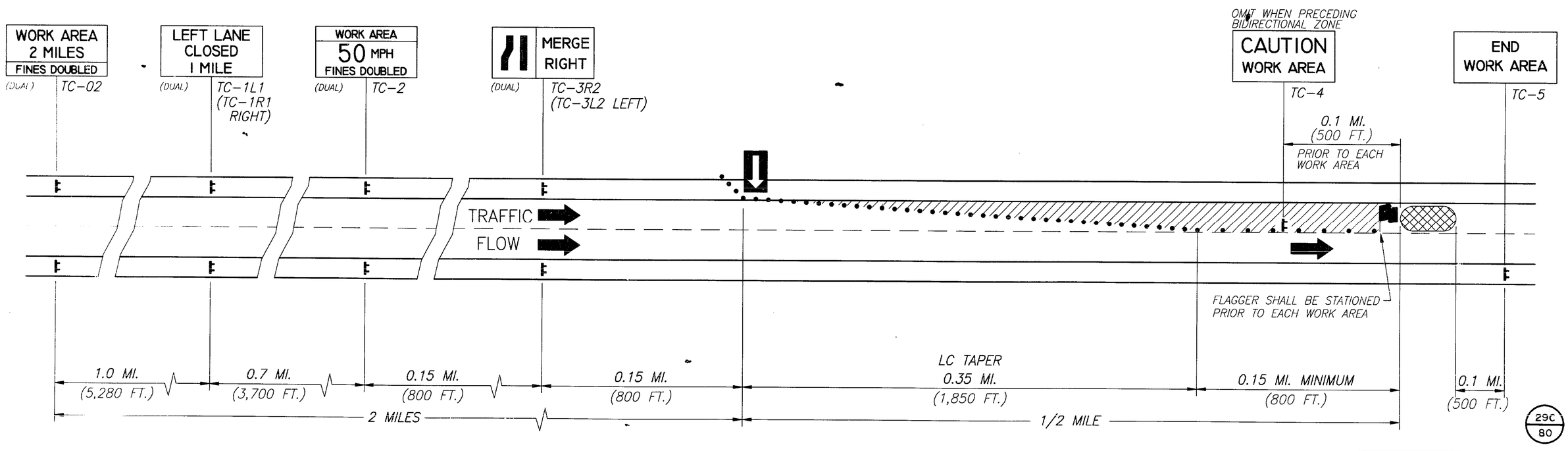

29C
80

STANDARD SINGLE LANE ZONE

TWO & THREE-LANE ROADWAY

OHIO TURNPIKE COMMISSION

TRAFFIC CONTROL
LEGEND & STANDARD
SINGLE LANE ZONE

DATE: JUNE 11, 1997 | SCALE: NONE

OTC STANDARD DRAWING TCR-2

F:\DWGS\STANDARD\TCR-2.DWG WTK 6/10/97

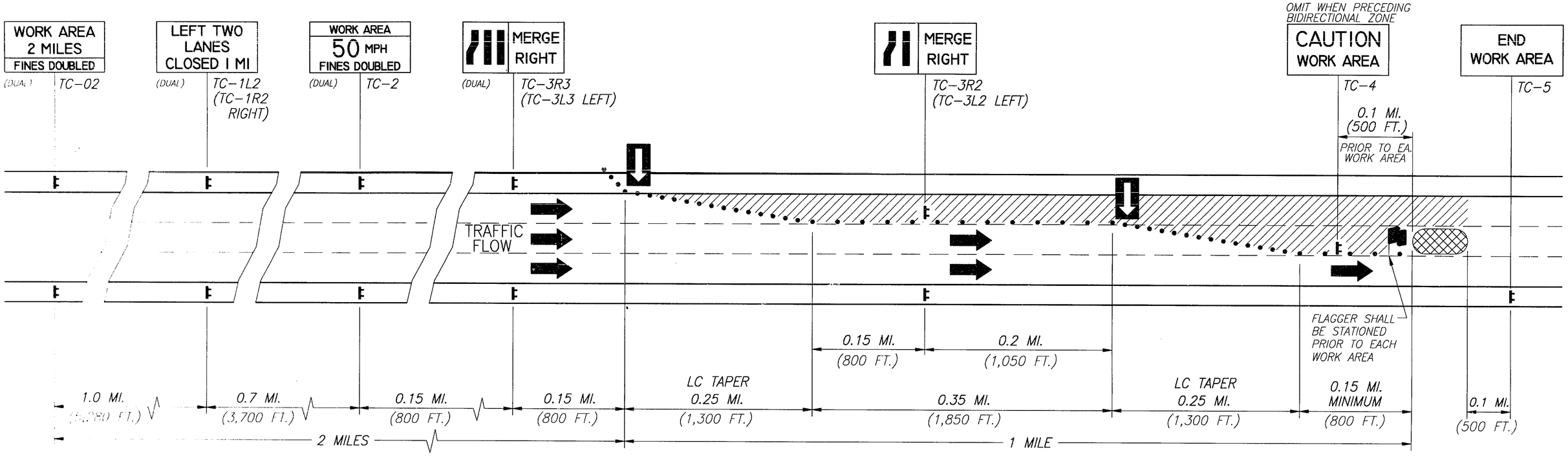

SPECIAL SINGLE LANE ZONE

THREE-LANE ROADWAY

FOR LEGEND AND DETAILS SEE
OTC STANDARD DRAWING TCR-2

200
80

OHIO TURNPIKE COMMISSION

TRAFFIC CONTROL
SPECIAL SINGLE
LANE ZONE

DATE: JUNE 11, 1997	SCALE: NONE
OTC STANDARD DRAWING TCR-10	

F:\DWGS\STANDARD\TCR-10.DWG WTK 6/11/97

MAINTENANCE OF TRAFFIC SUMMARY

metric units

CALCULATED APG
CHECKED GTA

ITEM	SHEET NUMBER 27	28	29	33	36			ITEM	ITEM EXTENSION	QUANTITY	UNIT	DESCRIPTION	FOR AS PLAN REFERENCE SEE SHEET
		50											
301	100							301	46000	100	CU METER	BITUMINOUS AGGREGATE BASE, PG64-22	
304	100							304	20000	100	CU METER	AGGREGATE BASE	
404	30							614	13000	30	CU METER	BITUMINOUS CONCRETE FOR MAINTAINING TRAFFIC	
407	200							407	10000	200	LITER	TACK COAT	
407	200							407	14000	200	LITER	TACK COAT FOR INTERMEDIATE COURSE	
410	60							410	12000	60	CU METER	TRAFFIC COMPACTED SURFACE, TYPE A OR B	
410	60							410	13000	60	CU METER	TRAFFIC COMPACTED SURFACE, TYPE C	
448	70							448	46050	70	CU METER	ASPHALT CONCRETE INTERMEDIATE COURSE, TYPE 2, PG64-22	
448	50							448	47020	50	CU METER	ASPHALT CONCRETE SURFACE COURSE, TYPE 1,PG64-22	
614	80							614	11100	80	HOUR	LAW ENFORCEMENT OFFICER WITH PATROL CAR	
SPECIAL				79.50	106.68			SPECIAL	61412200	186.18	METER	TEMPORARY GUARDRAIL, TYPE 5	
614			4					614	12460	4	EACH	WORK ZONE MARKING SIGN	
614		6						614	12470	6	EACH	WORK ZONE SPEED LIMIT SIGN	
SPECIAL		10						SPECIAL	61412500	10	SQ METER	REPLACEMENT SIGN	
SPECIAL		50						SPECIAL	61412600	50	EACH	REPLACEMENT DRUM	
614			4.00					614	20000	4.00	KILOMETER	TEMPORARY LANE LINE, CLASS I	
614		2						614	12756	2	EACH	TEMPORARY CROSSOVER LIGHTING SYSTEM	
614		310						614	13350	310	EACH	OBJECT MARKER	
614			15.73					614	22000	15.73	KILOMETER	TEMPORARY EDGE LINE, CLASS I	
615		LUMP						615	10000	LUMP		TEMPORARY ROAD	
615		4960						615	20000	4960	SQ METER	TEMPORARY PAVEMENT, CLASS A	
616	378.0							616	10000	378.0	CU METER	WATER	
616	9.0							616	20000	9.0	METRIC TON	CALCIUM CHLORIDE	
622	1974							622	40031	1974	METER	PORTABLE CONCRETE BARRIER, 1270mm, AS PER PLAN	27
626		310						626	00200	310	EACH	BARRIER REFLECTOR, TYPE B	

MAINTENANCE OF TRAFFIC NOTES

SUM-271-10.51

STAGE CONSTRUCTION

PRIOR TO INITIATING STAGE I OF THE CONSTRUCTION, THE CONTRACTOR SHALL COVER CONFLICTING SIGNS AS SHOWN ON THE MAINTENANCE OF TRAFFIC PLANS FOR STAGE I. THE CONTRACTOR SHALL SUBMIT HIS SCHEDULE OF LANE CLOSURE TO THE ENGINEER AND RECEIVE HIS APPROVAL PRIOR TO ITS IMPLEMENTATION IN ANY OF THE STAGE CONSTRUCTION.

STAGE I

STAGE I WILL BE UTILIZED FOR THE DECK REPLACEMENT AND RELATED REHABILITATION OF THE LEFT STRUCTURE (SOUTHBOUND LANE BRIDGE) WHILE MAINTAINING THE I-271 TRAFFIC ON THE RIGHT STRUCTURE.

1. CONSTRUCT BOTH REAR CROSSOVERS AND FORWARD CROSSOVER NO.1 AND PLACE PORTABLE CONCRETE BARRIERS ON THE NORTHBOUND LANES OF I-271 BETWEEN CROSSOVERS. CLOSE LANES PER STANDARD CONSTRUCTION DRAWING MT-95.30M DURING THE CONSTRUCTION OF CROSSOVERS AND THE PORTABLE CONCRETE BARRIER INSTALLATION. THE CROSSOVER CONSTRUCTION INCLUDES, BUT NOT LIMITED TO, TEMPORARY ROADWAY, PAVEMENT, DRAINAGE, SEWERS, SIGNING, PAVEMENT MARKINGS, AND LIGHTING.
2. DIVERT TRAFFIC ON RIGHT STRUCTURE USING NEWLY CONSTRUCTED CROSSOVERS. USE STANDARD DWG. MT-95.70M FOR TWO LANE, TWO WAY OPERATION FOR USE ON FOUR LANE DIVIDED ROADWAYS USING PORTABLE CONCRETE BARRIER PCB, STD. DWG. MT-95.30M AND THE MOT PLANS.
3. INSTALL TEMPORARY FALSEWORK, TEMPORARY BRACING AND PROTECTIVE STRUCTURES ON THE LEFT STRUCTURE OF I-271 OVER THE WEST BOUND LANES OF THE OHIO TURNPIKE (I-80). DURING THE WORK, IT WILL BE NECESSARY TO STAGE LANE CLOSURE ON I-80. FOR THE REQUIREMENTS, SEE MOT NOTES ON SHEETS 27, 28 & 29..
4. PERFORM AND COMPLETE ALL REQUIRED WORK ITEMS ON THE LEFT STRUCTURE AND ITS APPROACHES.
5. REMOVE ALL CONFLICTING PAVEMENT MARKINGS AND SIGNAGE ON I-271 AND OPEN ALL EXISTING LANES OF TRAFFIC IN BOTH DIRECTIONS. THE CROSSOVERS WILL BE CLOSED TO TRAFFIC USING PORTABLE CONCRETE BARRIERS AND BARRELS. REMOVE PORTIONS OF FORWARD CROSSOVER NO. 1 AS REQUIRED TO COMPLETE CONSTRUCTION OF FORWARD CROSSOVER NO. 2.

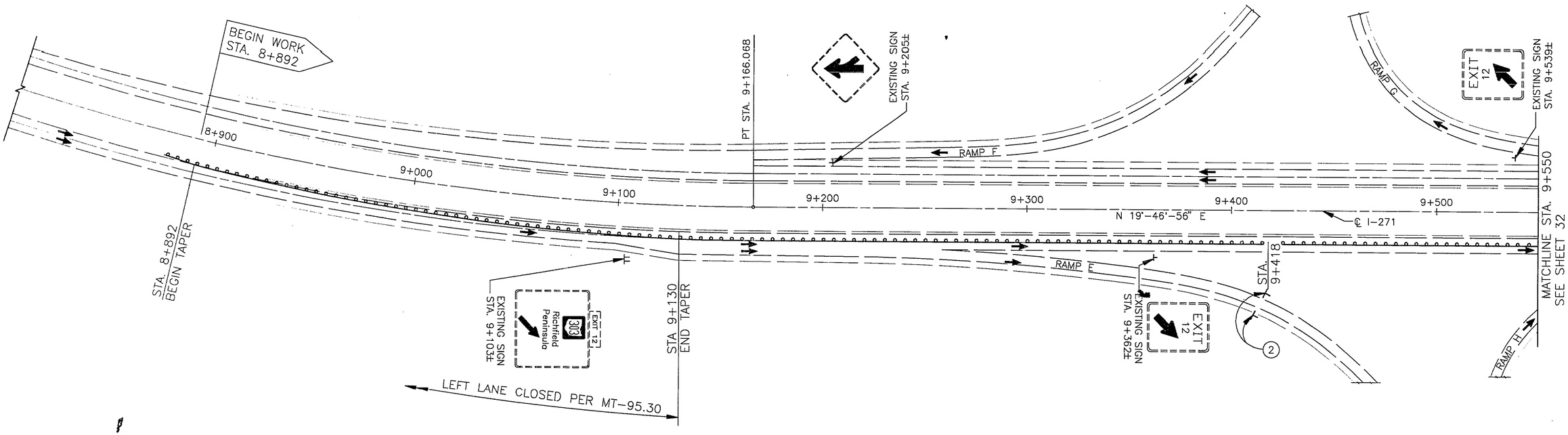

FOR ADDITIONAL NOTES AND LEGEND, SEE SHEET 32

metric units

HORIZONTAL SCALE IN METERS 0 10 20 40

CALCULATED APG
CHECKED GTA

MAINTENANCE OF TRAFFIC
STAGE I – STA. 8+800 TO STA. 9+550

SUM-271-10.51

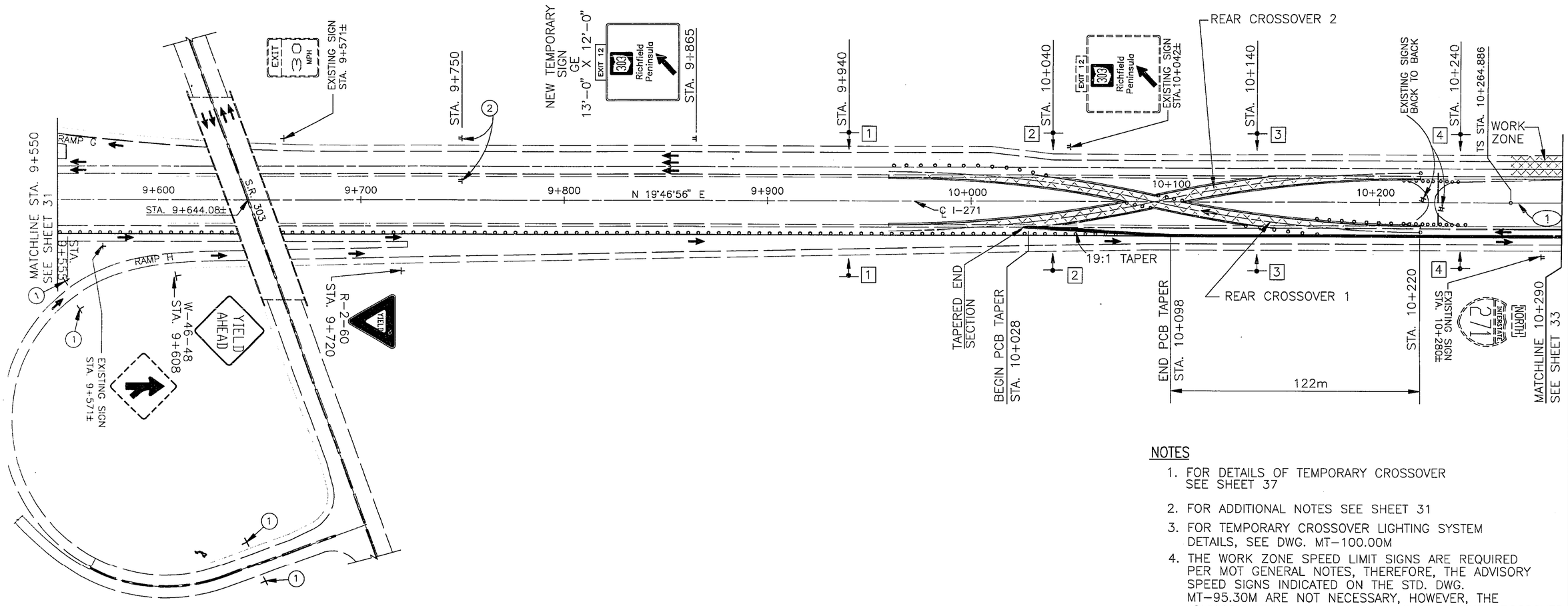

NOTES

1. FOR DETAILS OF TEMPORARY CROSSOVER SEE SHEET 37
2. FOR ADDITIONAL NOTES SEE SHEET 31
3. FOR TEMPORARY CROSSOVER LIGHTING SYSTEM DETAILS, SEE DWG. MT-100.00M
4. THE WORK ZONE SPEED LIMIT SIGNS ARE REQUIRED PER MOT GENERAL NOTES, THEREFORE, THE ADVISORY SPEED SIGNS INDICATED ON THE STD. DWG. MT-95.30M ARE NOT NECESSARY, HOWEVER, THE ADVISORY SPEED SIGNS ARE REQUIRED AT THE CROSSOVER LOCATIONS PER STD. DWG. MT-95.70M. THE ADVISORY SPEED LIMITS AT THESE LOCATIONS IS SHOWN ON SHEETS 37 & 39.

(1) CONSTRUCTION ℄ - CURVE DATA	(2) OHIO TURNPIKE CURVE DATA (AS RECORDED OCT. 29, 1952)
P.I. STA. 10+686.61 Δ = 63°21'00" RT. R = 582.13 m L_S= 121.92 m θ_S= 6°00'00" T_S= 420.77 m E_S= 103.14 m L_C= 521.72 m L.T. = 81.33 m S.T. = 40.68 m e_{max}= 8.33%	P.I. STA. 5+672.61 Δ = 38°21'52" LT. R = 3558.33 m T = 1237.90 m L_C= 2382.58 m E = 209.18 m e_{max}= NORMAL CROWN

TYPE A WARNING LIGHT

ROAD CONSTRUCTION AHEAD

OW-128-48

(1)

END CONSTRUCTION

OC-8

(2)

LEGEND

- LIMIT OF TEMPORARY PAVEMENT FOR CROSSOVER
- WORK ZONE
- (1) TEMPORARY CROSSOVER LIGHTING
- EXISTING SIGN

metric units

HORIZONTAL SCALE IN METERS 0 10 20 40

CALCULATED APG
CHECKED GTA

MAINTENANCE OF TRAFFIC
STAGE I - STA. 9+550 TO STA. 10+290

SUM-271-10.51

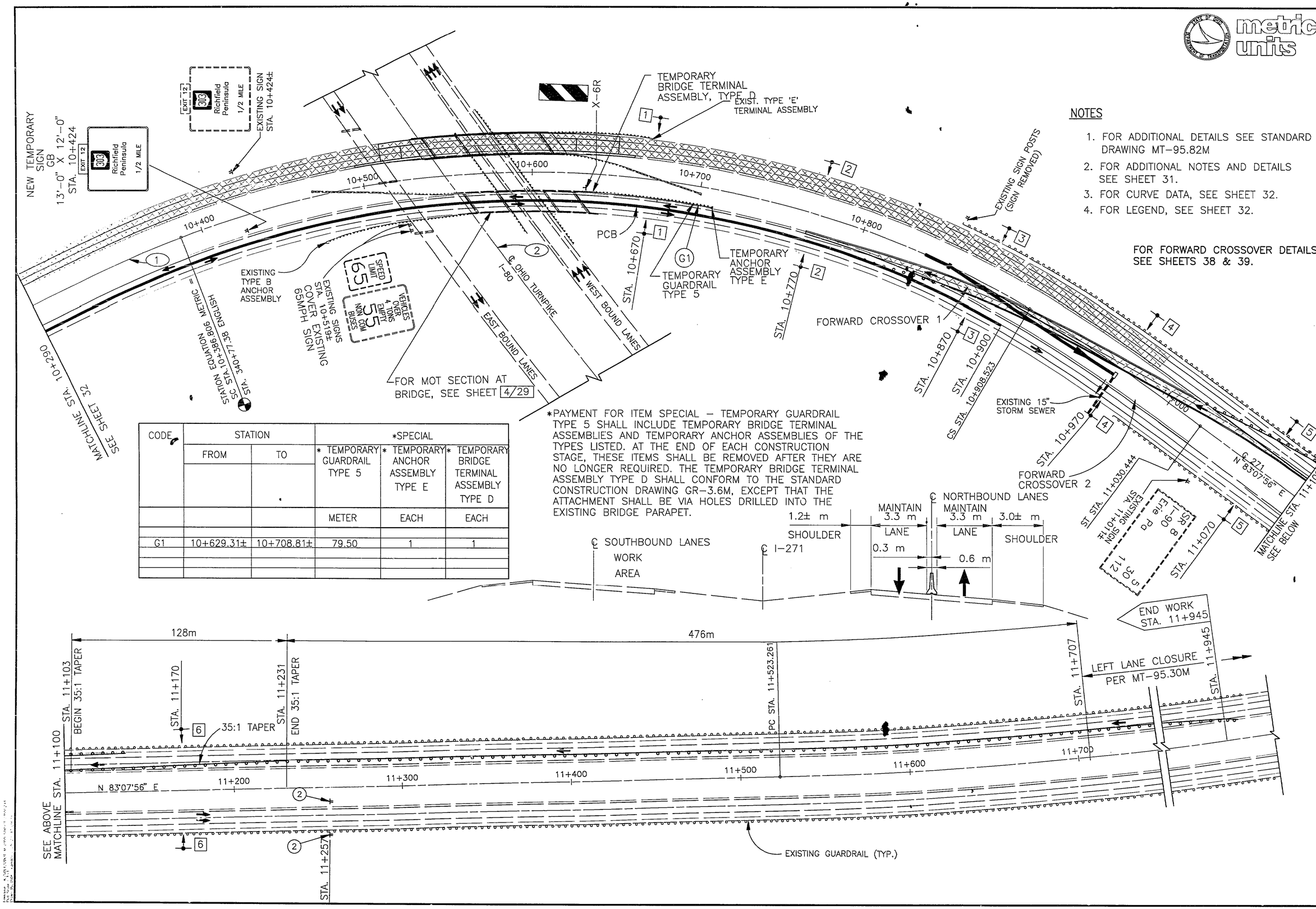

CODE	STATION FROM	STATION TO	*SPECIAL * TEMPORARY GUARDRAIL TYPE 5	*SPECIAL * TEMPORARY ANCHOR ASSEMBLY TYPE E	*SPECIAL * TEMPORARY BRIDGE TERMINAL ASSEMBLY TYPE D
			METER	EACH	EACH
G1	10+629.31±	10+708.81±	79.50	1	1

*PAYMENT FOR ITEM SPECIAL – TEMPORARY GUARDRAIL TYPE 5 SHALL INCLUDE TEMPORARY BRIDGE TERMINAL ASSEMBLIES AND TEMPORARY ANCHOR ASSEMBLIES OF THE TYPES LISTED. AT THE END OF EACH CONSTRUCTION STAGE, THESE ITEMS SHALL BE REMOVED AFTER THEY ARE NO LONGER REQUIRED. THE TEMPORARY BRIDGE TERMINAL ASSEMBLY TYPE D SHALL CONFORM TO THE STANDARD CONSTRUCTION DRAWING GR-3.6M, EXCEPT THAT THE ATTACHMENT SHALL BE VIA HOLES DRILLED INTO THE EXISTING BRIDGE PARAPET.

NOTES

1. FOR ADDITIONAL DETAILS SEE STANDARD DRAWING MT-95.82M
2. FOR ADDITIONAL NOTES AND DETAILS SEE SHEET 31.
3. FOR CURVE DATA, SEE SHEET 32.
4. FOR LEGEND, SEE SHEET 32.

FOR FORWARD CROSSOVER DETAILS SEE SHEETS 38 & 39.

metric units

HORIZONTAL SCALE IN METERS 0 10 20 40

CALCULATED APG
CHECKED GTA

MAINTENANCE OF TRAFFIC
STAGE I – STA. 10+290 TO STA. 12+000

SUM-271-10.51

STAGE II

STAGE II WILL BE UTILIZED FOR THE DECK REPLACEMENT AND RELATED REHABILITATION OF THE RIGHT STRUCTURE (NORTHBOUND LANE BRIDGE) WHILE MAINTAINING THE I-271 TRAFFIC ON THE NEWLY REHABILITATED LEFT STRUCTURE.

1. CONSTRUCT FORWARD CROSSOVER NO. 2, MAINTAIN ONE LANE OF TRAFFIC IN EACH DIRECTION USING MT-95.30M. INSTALL PORTABLE CONCRETE BARRIERS ON THE SOUTHBOUND LANES.

2. DIVERT TRAFFIC ON THE LEFT STRUCTURE USING CROSSOVERS ON BOTH SIDES. USE STD. DWGS. MT-95.70M, MT-95.30M AND THE MOT PLANS.

3. INSTALL TEMPORARY FALSEWORK, TEMPORARY BRACING AND PROTECTIVE STRUCTURE ON THE RIGHT STRUCTURE OF I-271 OVER THE WEST BOUND LANES OF THE OHIO TURNPIKE (I-80). FOR I-80 LANE CLOSURE REQUIREMENTS, SEE MOT NOTES ON SHEETS 27, 28 & 29.

4. PERFORM AND COMPLETE ALL REQUIRED WORK ITEMS ON THE RIGHT STRUCTURE AND ITS APPROACHES.

5. REMOVE TEMPORARY CROSSOVERS, TEMPORARY M.O.T. DEVICES PLACE PERMANENT STRIPPING AND RESTORE I-271 NORMAL TRAFFIC, AT THE CONCLUSION OF STAGE II.

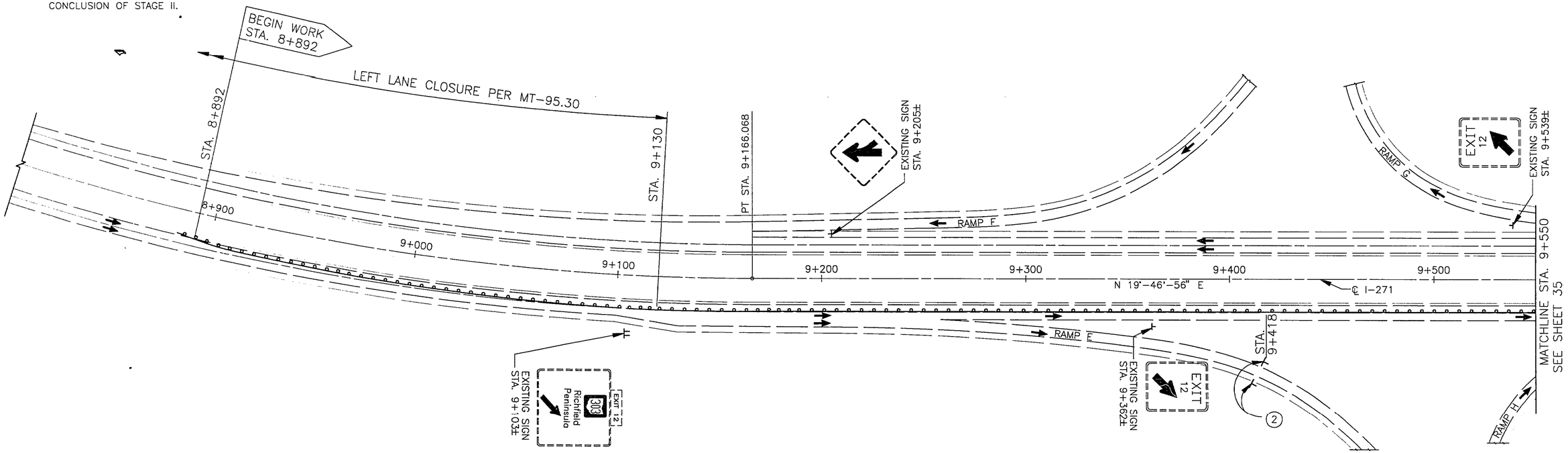

NOTES

1. FOR ADDITIONAL NOTES,DETAILS, AND LEGEND SEE SHEET 32.

metric units

HORIZONTAL SCALE IN METERS 0 10 20 40

CALCULATED APG
CHECKED GTA

MAINTENANCE OF TRAFFIC
STAGE II - STA. 8+800 TO STA. 9+550

SUM-271-10.51

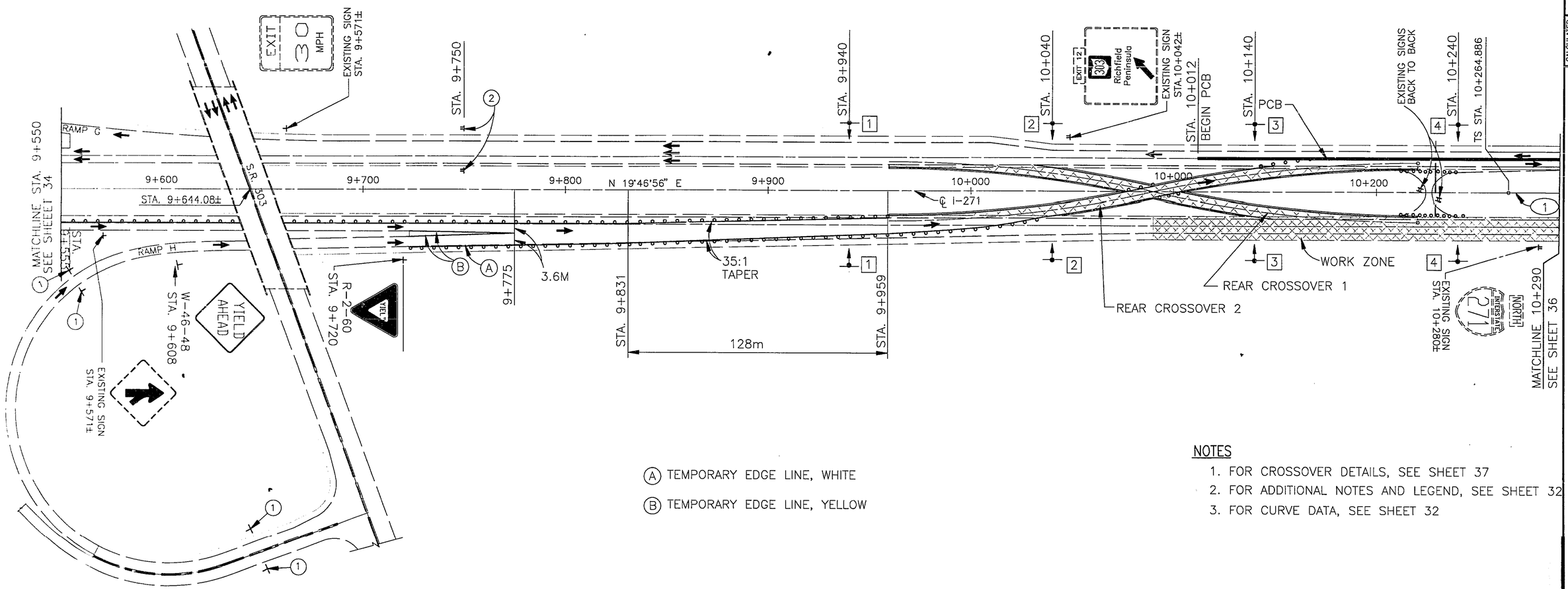

(A) TEMPORARY EDGE LINE, WHITE

(B) TEMPORARY EDGE LINE, YELLOW

NOTES

1. FOR CROSSOVER DETAILS, SEE SHEET 37
2. FOR ADDITIONAL NOTES AND LEGEND, SEE SHEET 32
3. FOR CURVE DATA, SEE SHEET 32

metric units

HORIZONTAL SCALE IN METERS 0 10 20 40

CALCULATED APG
CHECKED GTA

MAINTENANCE OF TRAFFIC
STAGE II – STA. 9+550 TO STA. 10+290

SUM-271-10.51

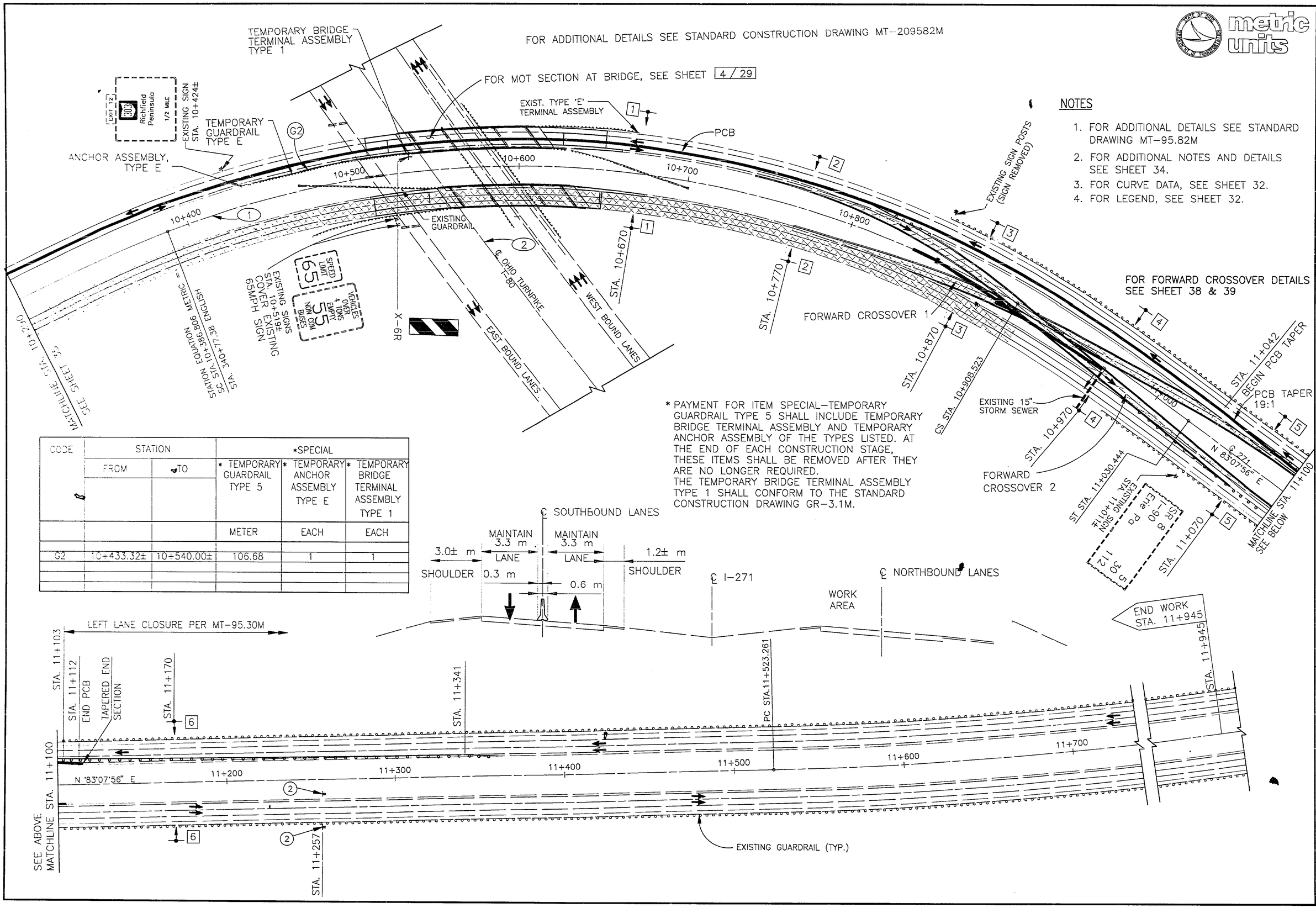

CODE	STATION FROM	STATION TO	*SPECIAL * TEMPORARY GUARDRAIL TYPE 5	*SPECIAL * TEMPORARY ANCHOR ASSEMBLY TYPE E	*SPECIAL * TEMPORARY BRIDGE TERMINAL ASSEMBLY TYPE 1
			METER	EACH	EACH
G2	10+433.32±	10+540.00±	106.68	1	1

* PAYMENT FOR ITEM SPECIAL–TEMPORARY GUARDRAIL TYPE 5 SHALL INCLUDE TEMPORARY BRIDGE TERMINAL ASSEMBLY AND TEMPORARY ANCHOR ASSEMBLY OF THE TYPES LISTED. AT THE END OF EACH CONSTRUCTION STAGE, THESE ITEMS SHALL BE REMOVED AFTER THEY ARE NO LONGER REQUIRED.
THE TEMPORARY BRIDGE TERMINAL ASSEMBLY TYPE 1 SHALL CONFORM TO THE STANDARD CONSTRUCTION DRAWING GR-3.1M.

NOTES

1. FOR ADDITIONAL DETAILS SEE STANDARD DRAWING MT-95.82M
2. FOR ADDITIONAL NOTES AND DETAILS SEE SHEET 34.
3. FOR CURVE DATA, SEE SHEET 32.
4. FOR LEGEND, SEE SHEET 32.

metric units

HORIZONTAL SCALE IN METERS 0 10 20 40

CALCULATED APG
CHECKED GTA

MAINTENANCE OF TRAFFIC
STAGE II – STA. 10+290 TO STA. 12+000

SUM-271-10.51

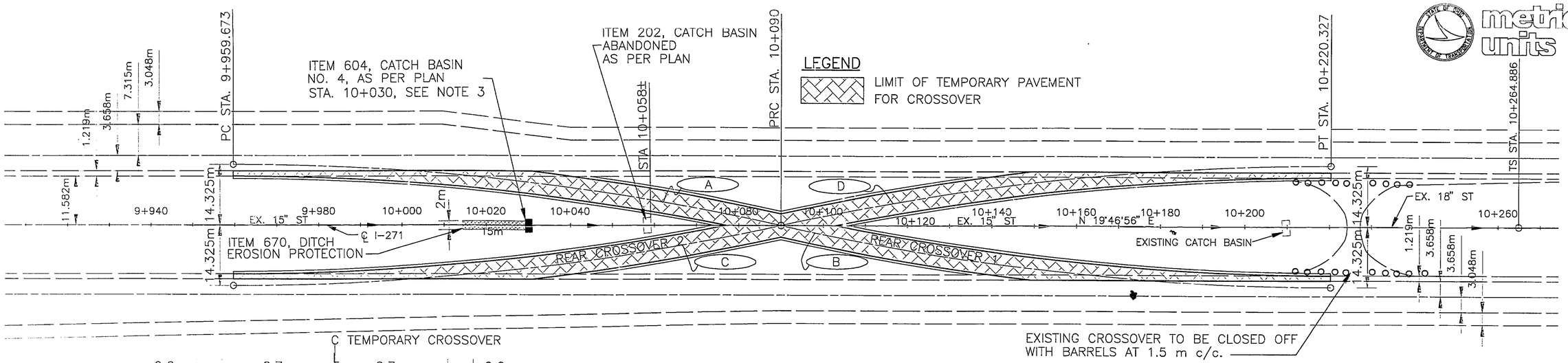

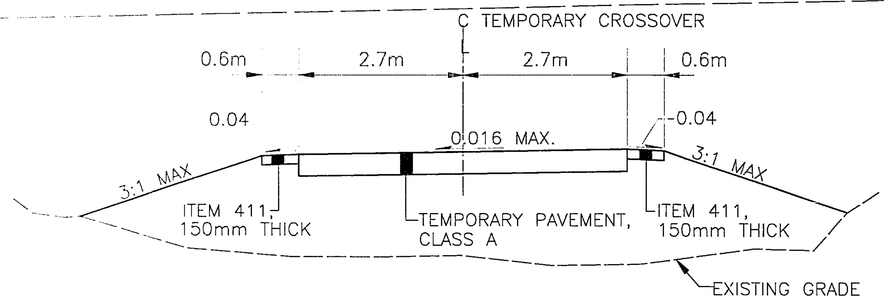

CROSSOVER TYPICAL SECTION AT PRC

CURVE DATA FOR TEMPORARY PAVEMENT

CURVE	RADIUS	LENGTH	TANGENT	CHORD	CHORD BEARING	DELTA
A	600.000m	131.374m	65.951m	131.112m	N 26°03'18" E	12°32'43"
B	600.000m	131.374m	65.951m	131.112m	N 26°03'18" E	12°32'43"
C	600.000m	131.374m	65.951m	131.112m	N 13°30'34" E	12°32'43"
D	600.000m	131.374m	65.951m	131.112m	N 13°30'34" E	12°32'43"

NOTES

1. SIGNING, STRIPING AND PLACEMENT OF PORTABLE CONCRETE BARRIERS SHALL COMPLY WITH MT-95.70M. SPEED THROUGH CROSSOVER SHALL BE 55 MPH.
2. LANE WIDTHS SHALL BE A MINIMUM OF 3.3m.
3. CONSTRUCT NEW CATCH BASIN AT STA. 10+030 AND REMOVE EXISTING CATCH BASIN AT STA. 10+058±.

DRAINAGE QUANTITIES

THE FOLLOWING ITEMS HAVE BEEN CARRIED OVER TO THE GENERAL SUMMARY LOCATED ON PAGE 6.	
ITEM 603, 375mm CONDUIT, TYPE B	2 m
ITEM 202, CATCH BASIN ABANDONED, AS PER PLAN	1 EACH
ITEM 604, CATCH BASIN NO. 4, AS PER PLAN	1 EACH
ITEM 670, DITCH EROSION PROTECTION	30 SQ-m

ITEM 202, CATCH BASIN, ABANDONED, AS PER PLAN
THIS ITEM SHALL CONSIST OF ABANDONING AN EXISTING CATCH BASIN WITH A NEW PIPE THROUGH THE CATCH BASIN. THE PIPE MATERIAL SHALL MATCH THE EXISTING PIPE AND THE PIPE JOINTS SHALL BE SEALED.

ITEM 604, CATCH BASIN NO. 4, AS PER PLAN
THIS ITEM SHALL CONSIST OF CONSTRUCTING CATCH BASIN NO. 4 OVER AN EXISTING STORM SEWER AND SHALL INCLUDE ALL INCIDENTAL WORK RELATED TO THE CONSTRUCTION OF THE CATCH BASIN.

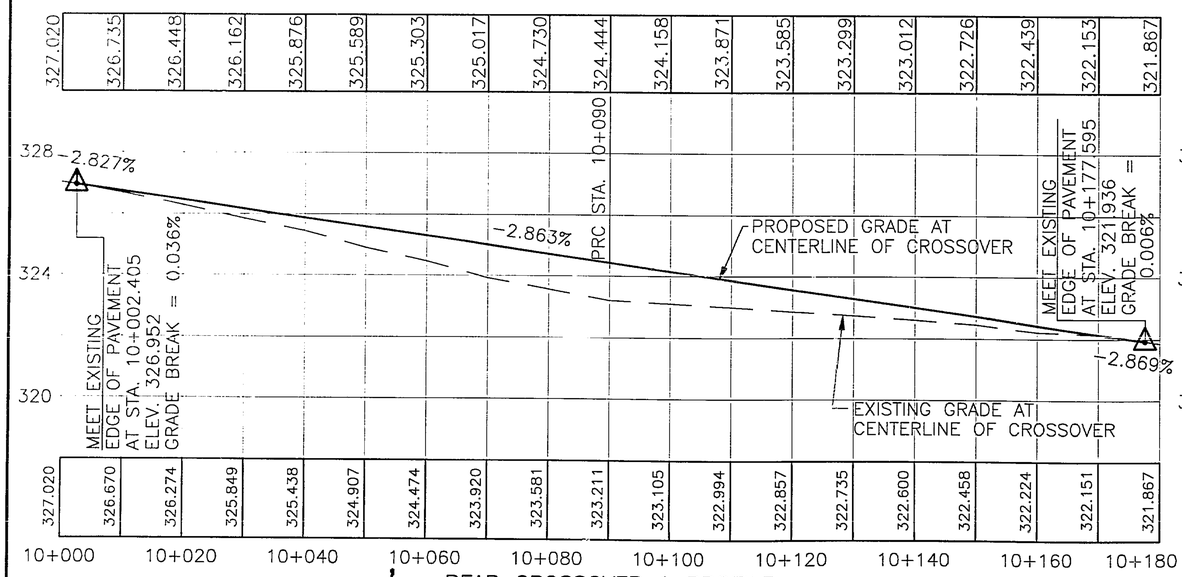

REAR CROSSOVER 1 PROFILE

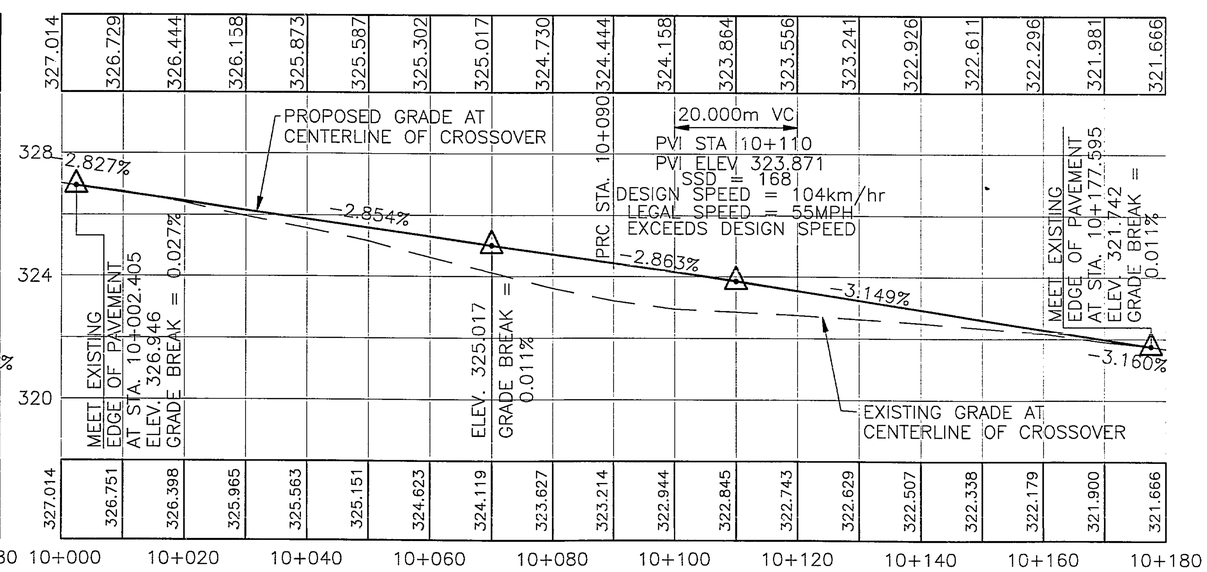

REAR CROSSOVER 2 PROFILE

metric units

HORIZONTAL SCALE IN METERS 0 5 10 20

CALCULATED APG
CHECKED GTA

MAINTENANCE OF TRAFFIC
REAR CROSSOVER PLAN AND DETAILS

SUM-271-10.51

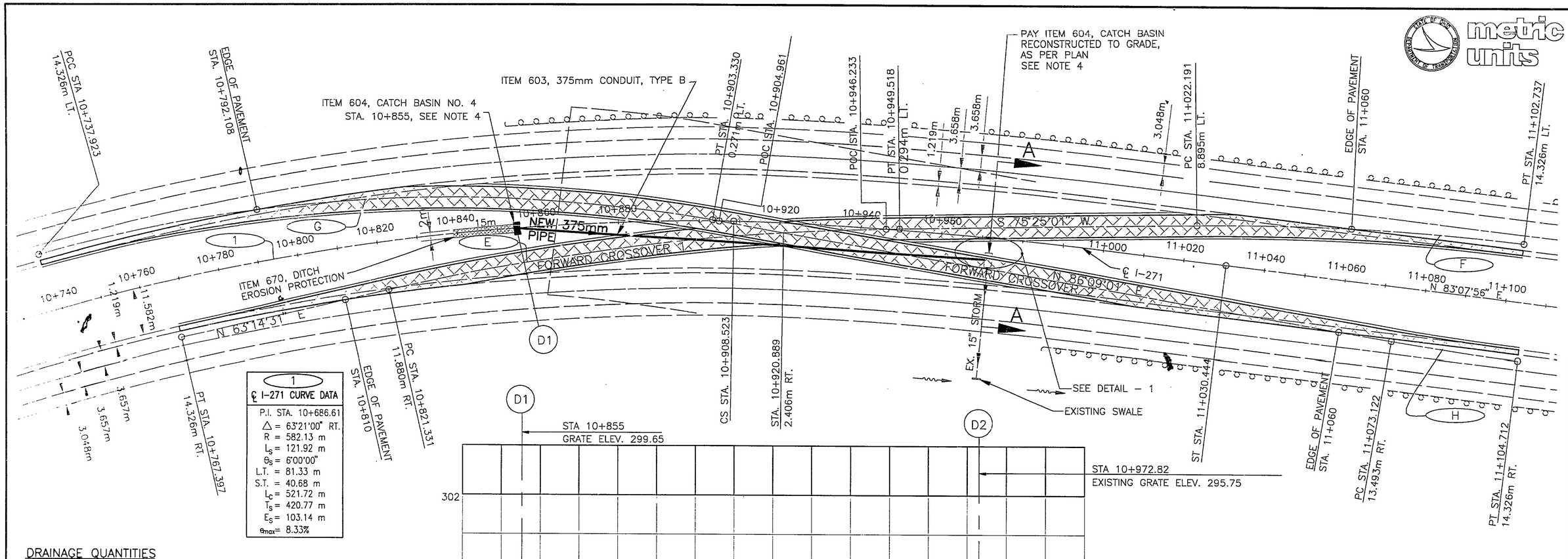

1 ℄ I-271 CURVE DATA
P.I. STA. 10+686.61
Δ = 63°21'00" RT.
R = 582.13 m
L_S = 121.92 m
θ_S = 6°00'00"
L.T. = 81.33 m
S.T. = 40.68 m
L_C = 521.72 m
T_S = 420.77 m
E_S = 103.14 m
e_{max} = 8.33%

DRAINAGE QUANTITIES

THE FOLLOWING ITEMS HAVE BEEN CARRIED OVER TO THE GENERAL SUMMARY LOCATED ON PAGE 6.	
ITEM 603, 375mm CONDUIT, TYPE B	118 m
ITEM 604, CATCH BASIN RECONSTRUCTED TO GRADE, AS PER PLAN	1 EACH
ITEM 604, CATCH BASIN NO. 4, AS PER PLAN	1 EACH
ITEM 670, DITCH EROSION PROTECTION	30 SQ-m

ITEM 604, CATCH BASIN RECONSTRUCTED TO GRADE, AS PER PLAN

THIS ITEM SHALL CONSIST OF MODIFICATION OF THE EXISTING CATCH BASIN TO ACCOMMODATE NEW PIPE, REMOVAL OF EXISTING GRATE AND REPLACING IT WITH A REINFORCED CONCRETE SLAB AND REINSTALLATION OF THE CATCH BASIN GRATE AFTER THE COMPLETE REMOVAL OF THE TEMPORARY CROSSOVERS. PAYMENT FOR ALL LABOR, MATERIALS, TOOLS, EQUIPMENT AND INCIDENTALS NECESSARY TO COMPLETE THE WORK RELATED TO THE MODIFICATION OF THE EXISTING CATCH BASIN, AS SHOWN IN DETAIL – 1 AND RELATED NOTES SHALL BE MADE UNDER ITEM 604, CATCH BASIN RECONSTRUCTED TO GRADE, AS PER PLAN.

NOTES

1. FOR SIGNING, STRIPING, PLACEMENT OF PORTABLE CONCRETE BARRIERS AND ALL OTHER REQUIREMENTS SEE STANDARD CONSTRUCTION DRAWING MT-95.70M. SPEED THROUGH CROSSOVER SHALL BE 55 MPH.
2. LANE WIDTHS SHALL BE A MINIMUM OF 3.3m.
3. SEE SHEET 39 FOR CROSSOVER PROFILES.
4. PROVIDE NEW C.B. AND 375mm STORM SEWER. CONNECT NEW SEWER TO EXISTING CATCH BASIN AT STA. 10+972± AND COVER EXISTING CATCH BASIN IN ORDER TO PREVENT SOIL FROM ENTERING THE CATCH BASIN. UPON REMOVAL OF THE CROSSOVER, RESTORE AND CLEANOUT THE EXISTING C.B. AND THE EXISTING 15" CONDUIT. THE NEW C.B. AND PIPE IS TO REMAIN IN PLACE AFTER CROSSOVER REMOVALS. SEE DETAIL 1 FOR ADDITIONAL DETAILS.
5. FORWARD CROSSOVERS 1 AND 2 ARE AT SEPARATE GRADES; THEREFORE, FORWARD CROSSOVER 2 SHALL BE CONSTRUCTED AFTER THE COMPLETION OF STAGE I BRIDGE CONSTRUCTION.

LEGEND

LIMIT OF TEMPORARY PAVEMENT FOR CROSSOVER

CURVE DATA FOR TEMPORARY PAVEMENT

CURVE	RADIUS	LENGTH	TANGENT	CHORD	CHORD BEARING	DELTA
E	600.000m	127.497m	63.990m	127.258m	N 69°19'46" E	12°10'30"
F	600.000m	80.794m	40.458m	80.733m	N 79°16'29" E	07°42'55"
G	375.000m	168.922m	85.919m	167.497m	N 73°14'44" E	25°48'34"
H	600.000m	31.604m	15.806m	31.601m	N 84°38'28" E	03°01'05"

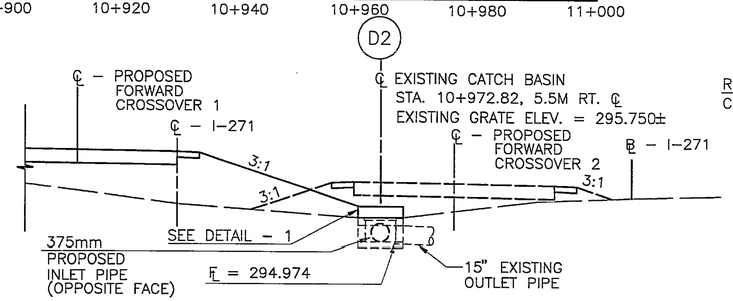

SECTION A–A

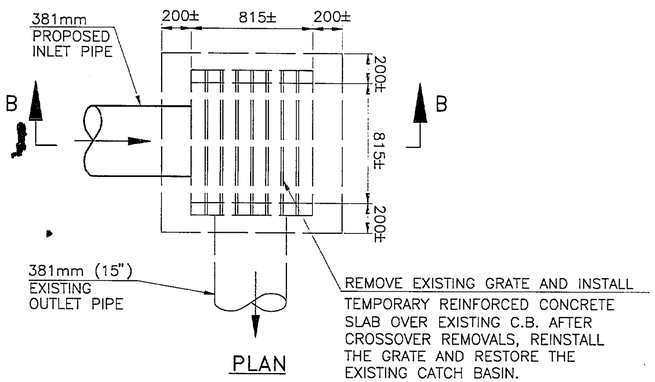

PLAN

DETAIL – 1

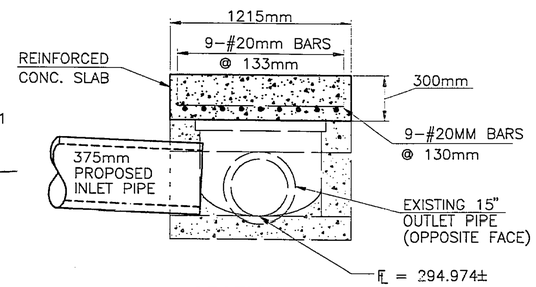

SECTION B–B

CALCULATED APG
CHECKED GTA

HORIZONTAL SCALE IN METERS 0 5 10 20

MAINTENANCE OF TRAFFIC FORWARD CROSSOVER PLAN AND DETAILS

SUM-271-10.51

metric units

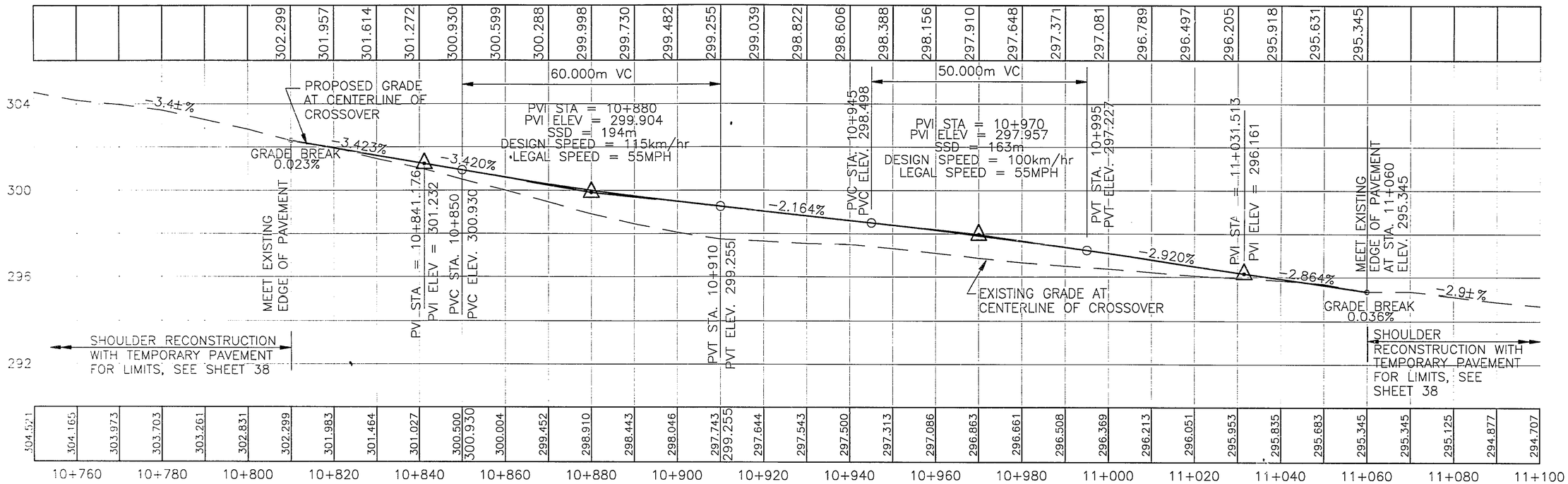

FORWARD CROSSOVER 1 PROFILE

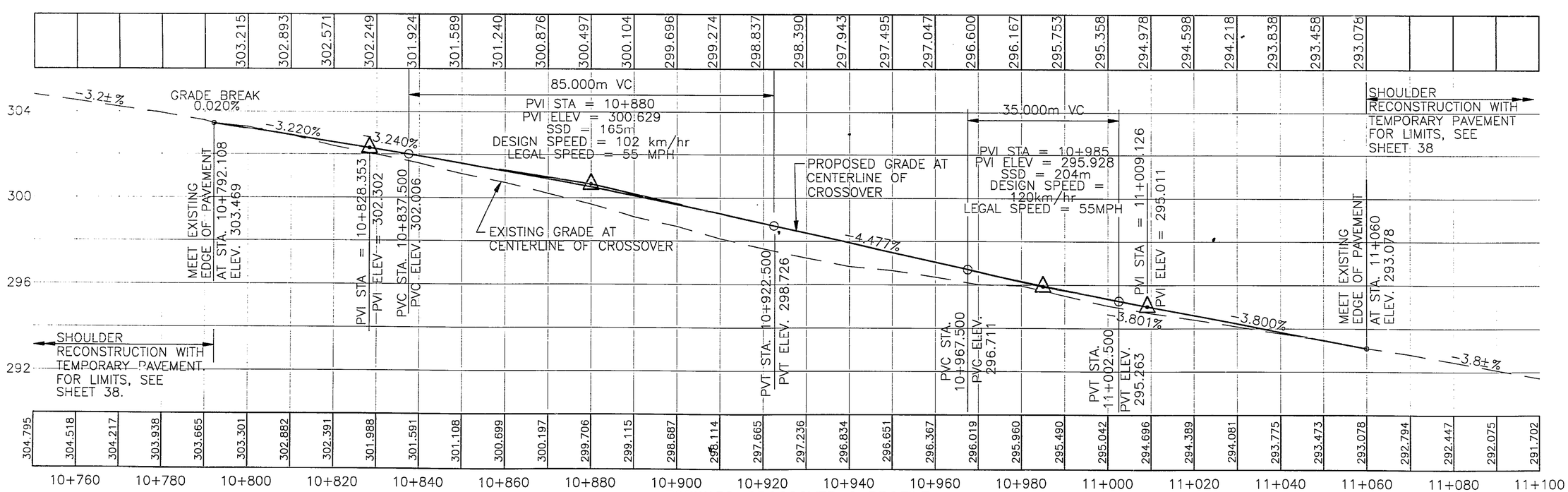

FORWARD CROSSOVER 2 PROFILE

N

HORIZONTAL SCALE IN METERS 0 5 10 20

CALCULATED APG
CHECKED GTA

MAINTENANCE OF TRAFFIC
FORWARD CROSSOVER PROFILES

SUM-271-10.51

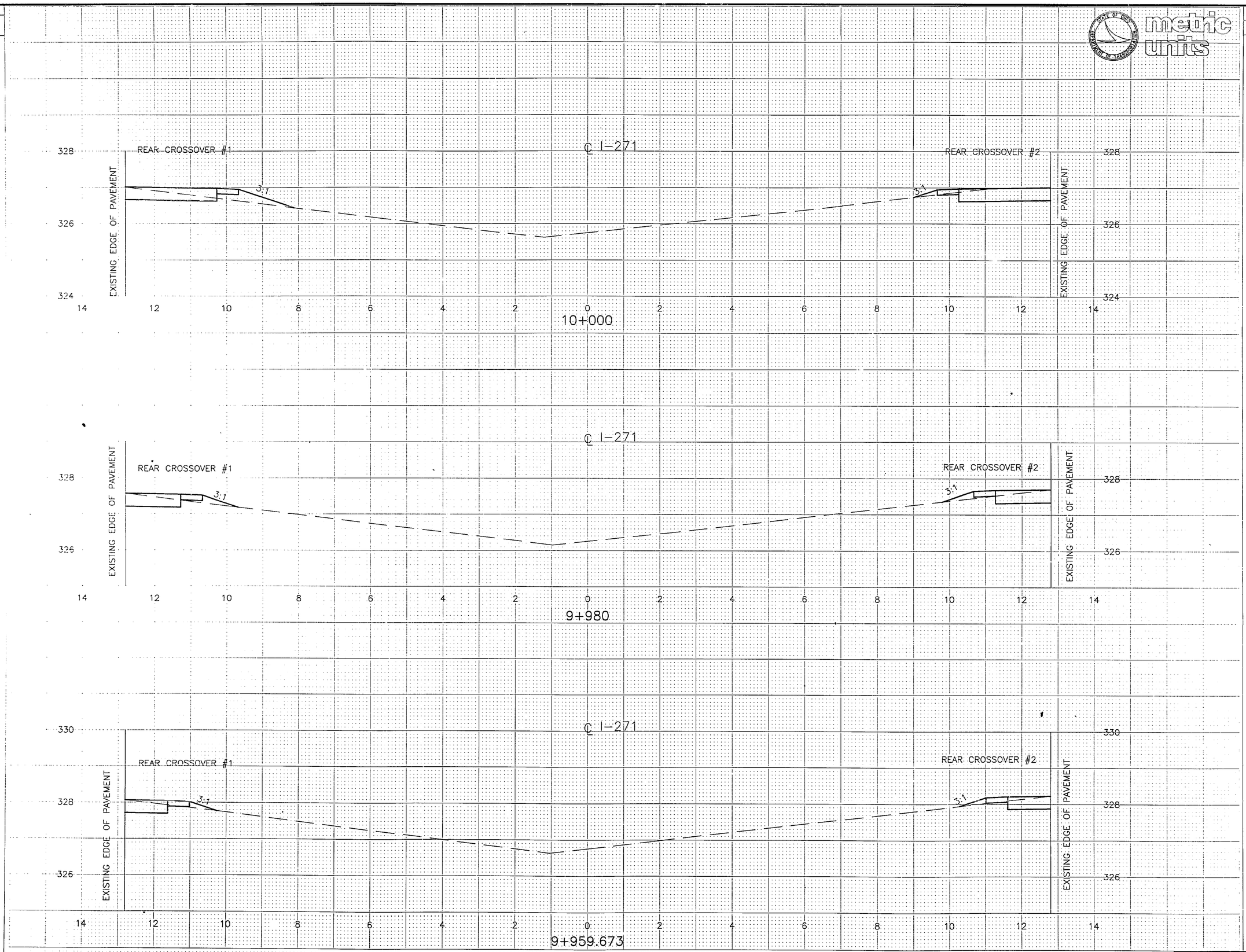

END AREA		VOLUME	
CUT	FILL	CUT	FILL
1.4	0.4		
		22	6
0.8	0.2		
		15	3
0.7	0.1		
SHEET TOTAL		37	9

CALCULATED SMG
CHECKED GA

MAINTENANCE OF TRAFFIC
REAR CROSSOVER CROSS SECTIONS

SUM-271-10.51

FIELDING	
AL	SS

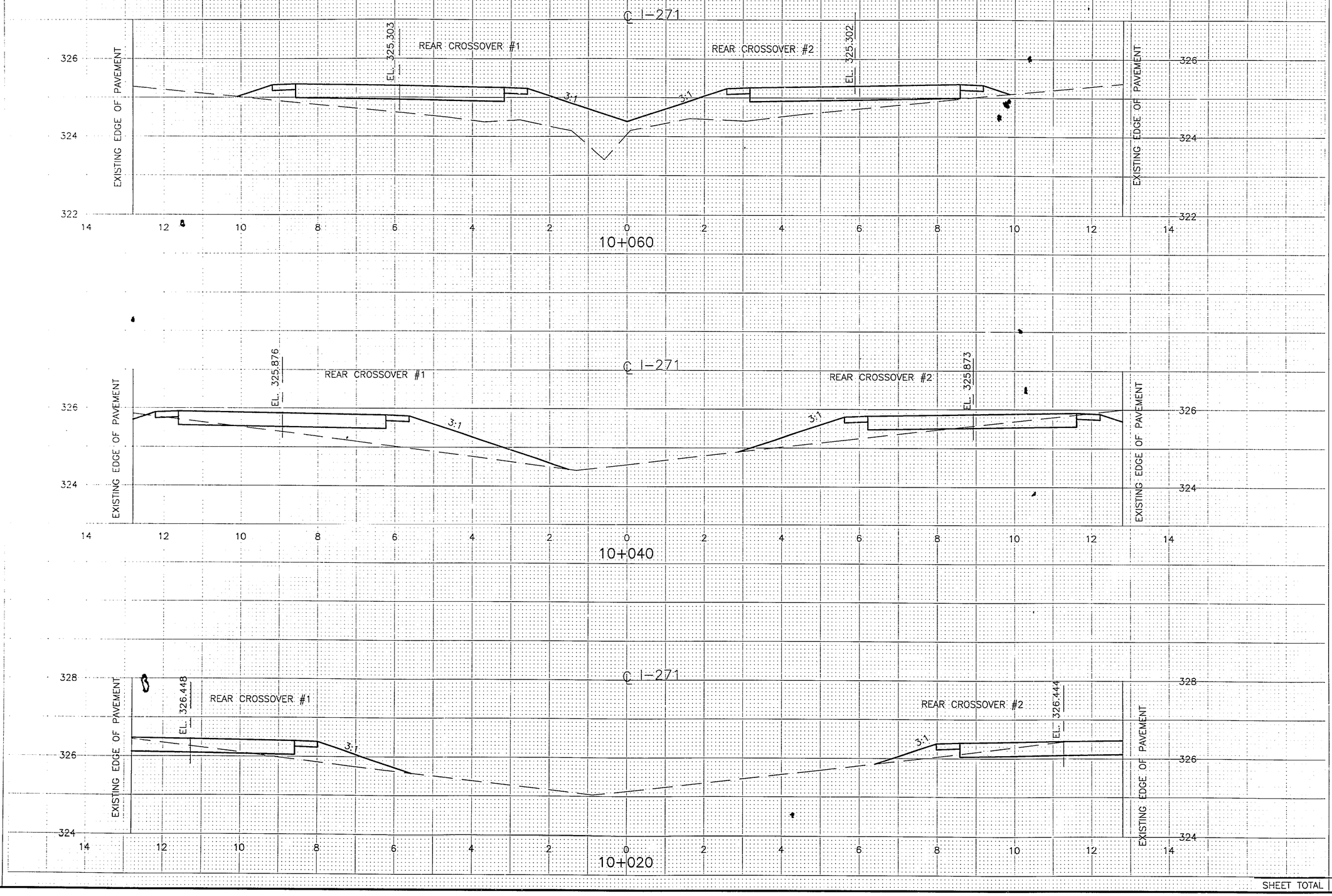

END AREA		VOLUME	
CUT	FILL	CUT	FILL
0.0	7.6		
		7	119
0.7	4.3		
		21	56
1.4	1.3		
		21	17
SHEET TOTAL		49	192

metric units

CALCULATED SMG
CHECKED GA

MAINTENANCE OF TRAFFIC REAR CROSSOVER CROSS SECTIONS

SUM-271-10.51

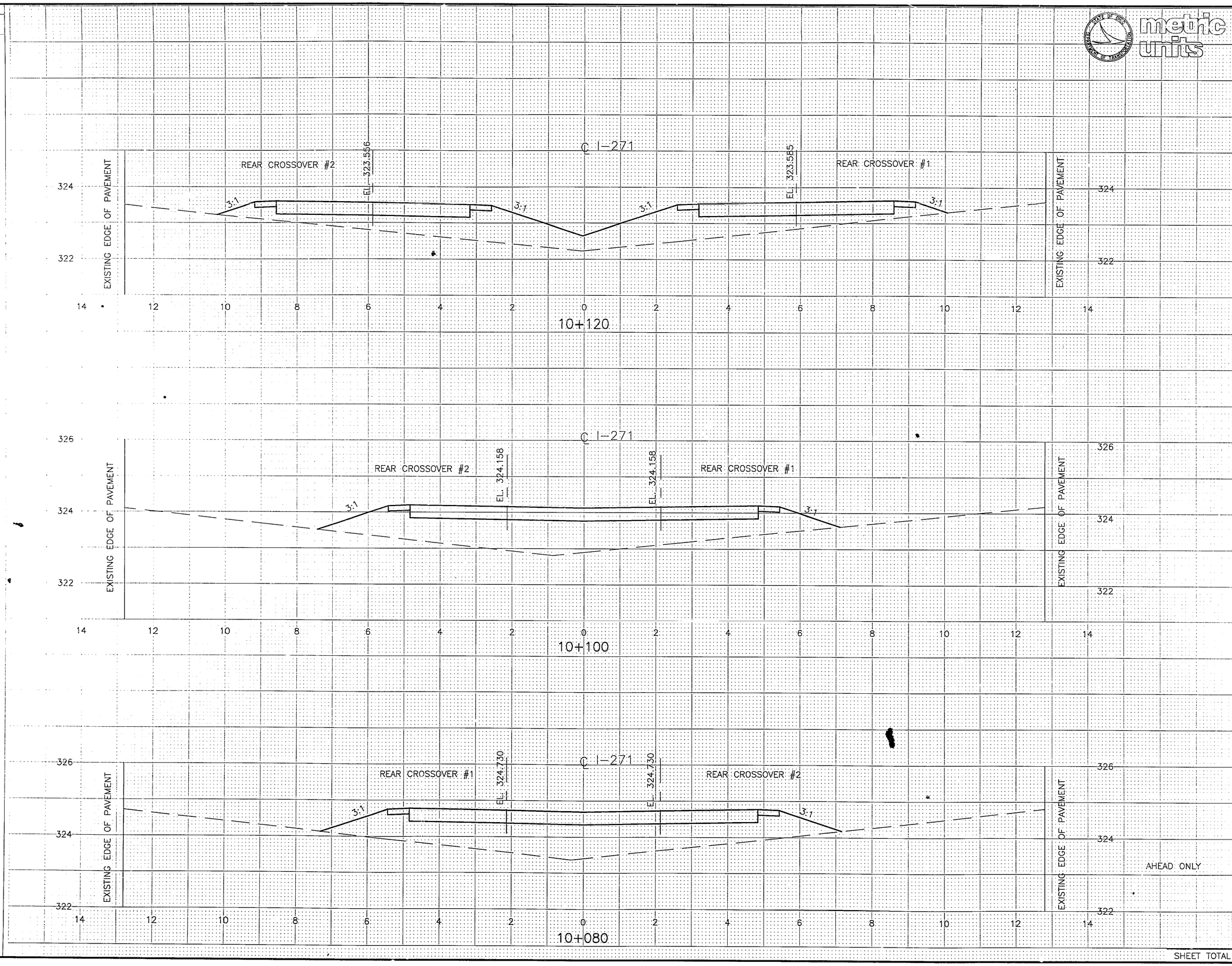

	END AREA CUT	END AREA FILL	VOLUME CUT	VOLUME FILL
10+120	0.0	9.8		
			0	193
10+100	0.0	9.5		
			0	190
10+080	0.0	9.5		
			0	171
SHEET TOTAL			0	554

CALCULATED SMG
CHECKED GA

MAINTENANCE OF TRAFFIC REAR CROSSOVER CROSS SECTIONS

SUM-271-10.51

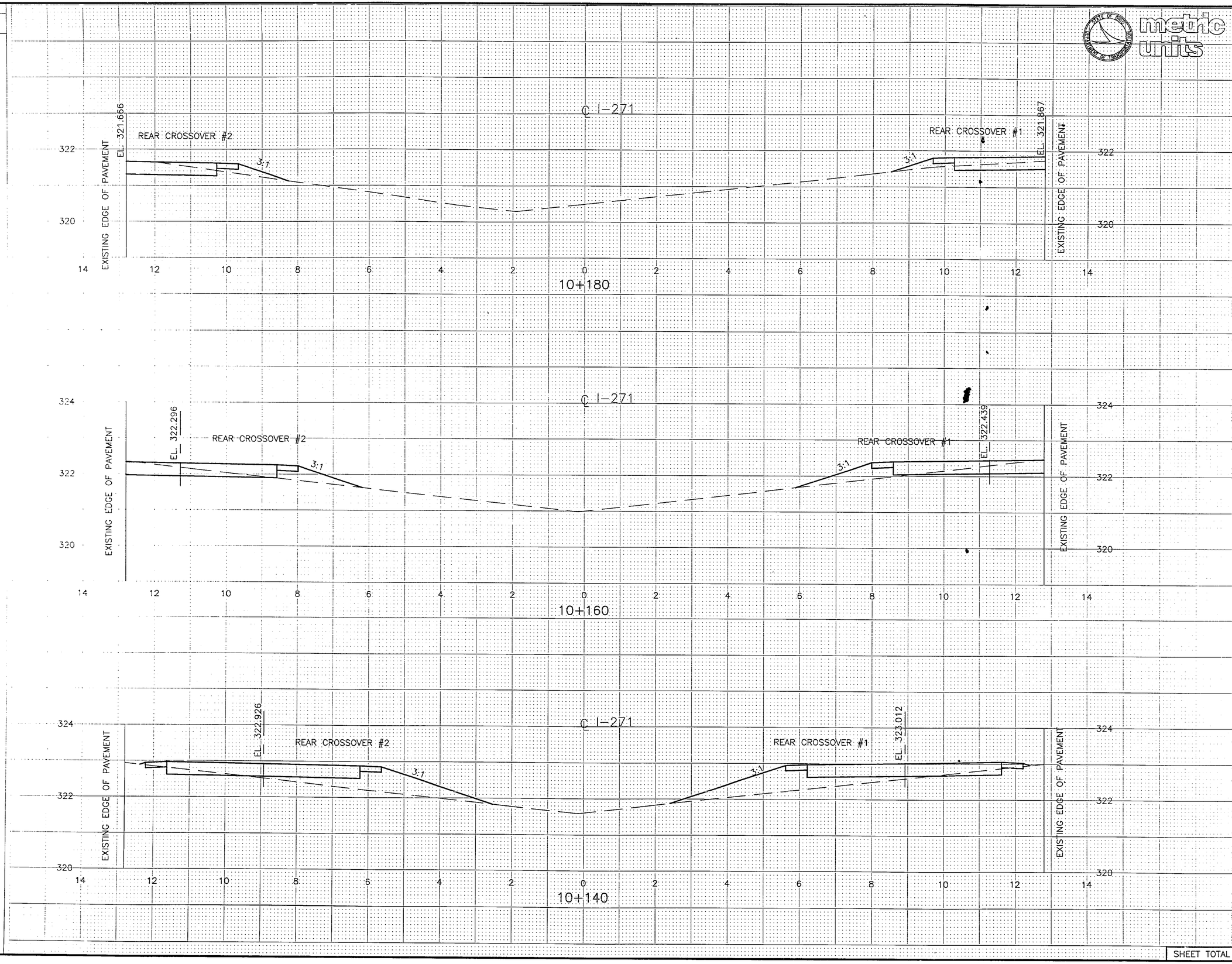

	END AREA		VOLUME	
	CUT	FILL	CUT	FILL
	1.2	0.5		
			27	17
	1.5	1.2		
			19	56
	0.4	4.4		
			4	142
SHEET TOTAL			50	215

CALCULATED SMG
CHECKED GA

MAINTENANCE OF TRAFFIC REAR CROSSOVER CROSS SECTIONS

SUM-271-10.51

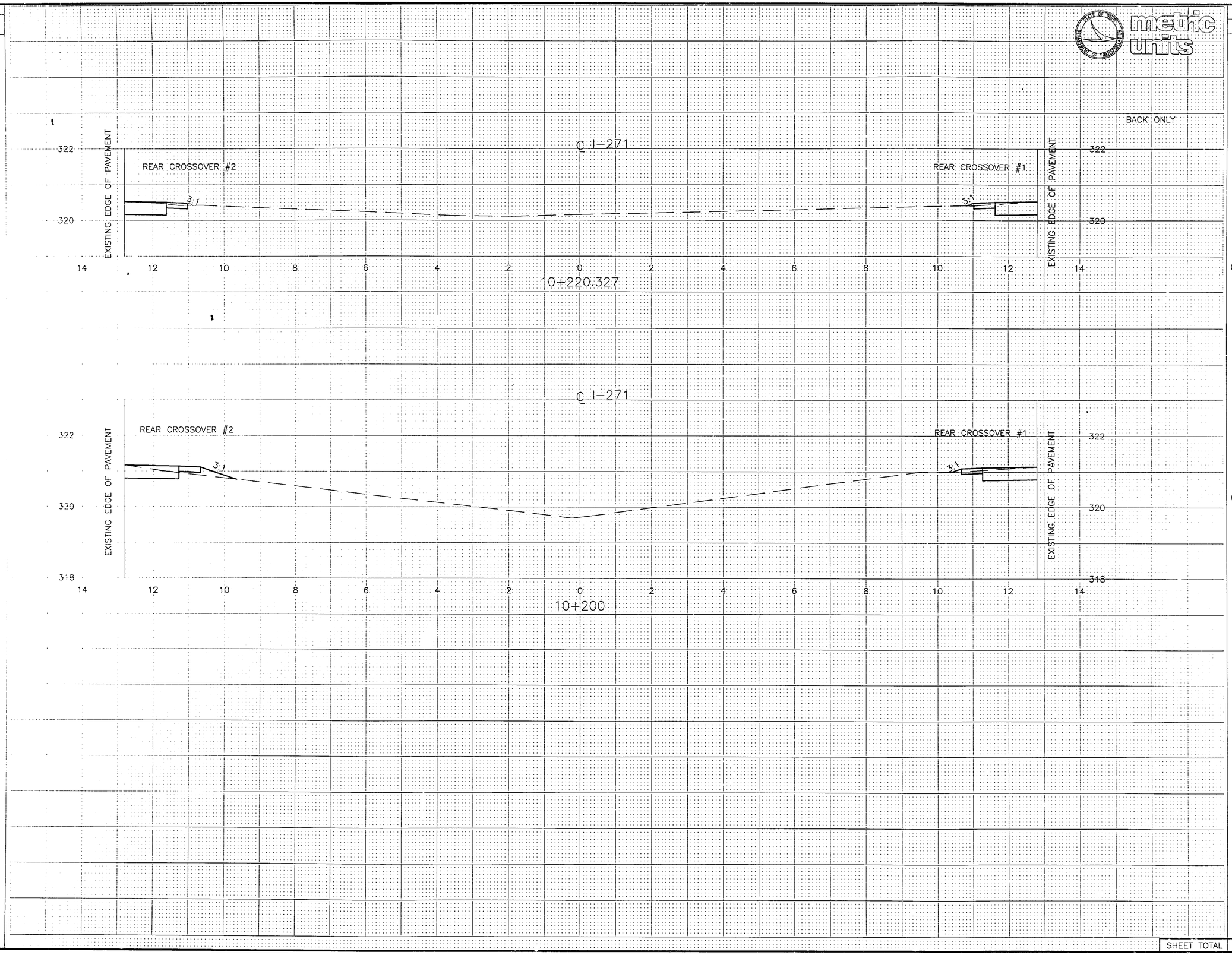

END AREA		VOLUME	
CUT	FILL	CUT	FILL
0.8	0.0		
		17	0
0.9	0.0		
		21	5
SHEET TOTAL		38	5

CALCULATED SMG
CHECKED GA

MAINTENANCE OF TRAFFIC
REAR CROSSOVER CROSS SECTIONS

SUM-271-10.51

LEGEND

FORWARD CROSSOVER #2 TO BE CONSTRUCTED AFTER STAGE I BRIDGE CONSTRUCTION

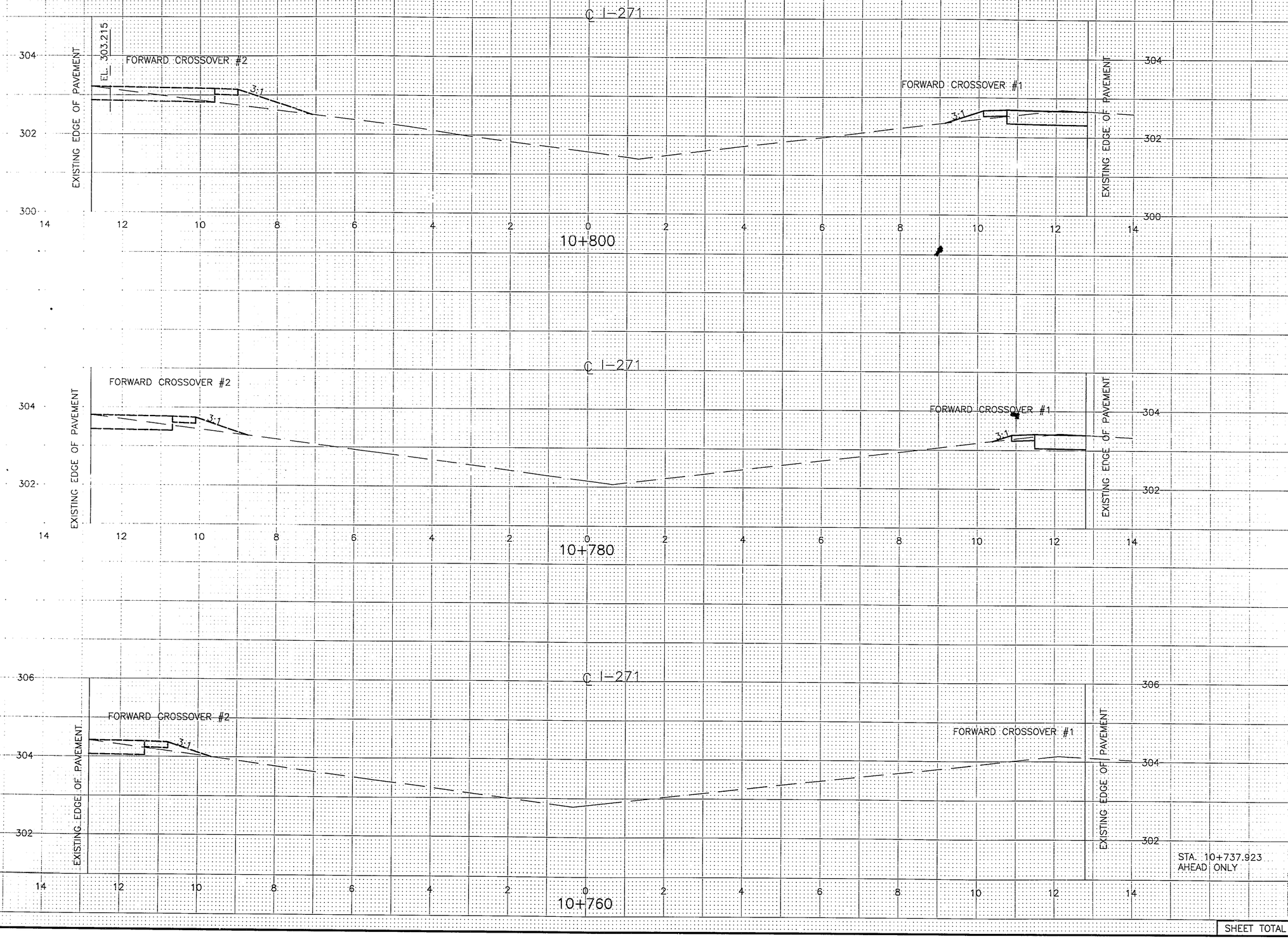

	END AREA CUT	END AREA FILL	VOLUME CUT	VOLUME FILL
10+800	1.2	0.7		
			22	10
10+780	1.0	0.3		
			14	5
10+760	0.4	0.2		
			4	2
STA. 10+737.923 AHEAD ONLY	0.0	0.0		
SHEET TOTAL			40	17

CALCULATED SMG
CHECKED GA

MAINTENANCE OF TRAFFIC
FORWARD CROSSOVER CROSS SECTIONS

SUM-271-10.51

LEGEND

FORWARD CROSSOVER #2 TO BE CONSTRUCTED AFTER STAGE 1 BRIDGE CONSTRUCTION

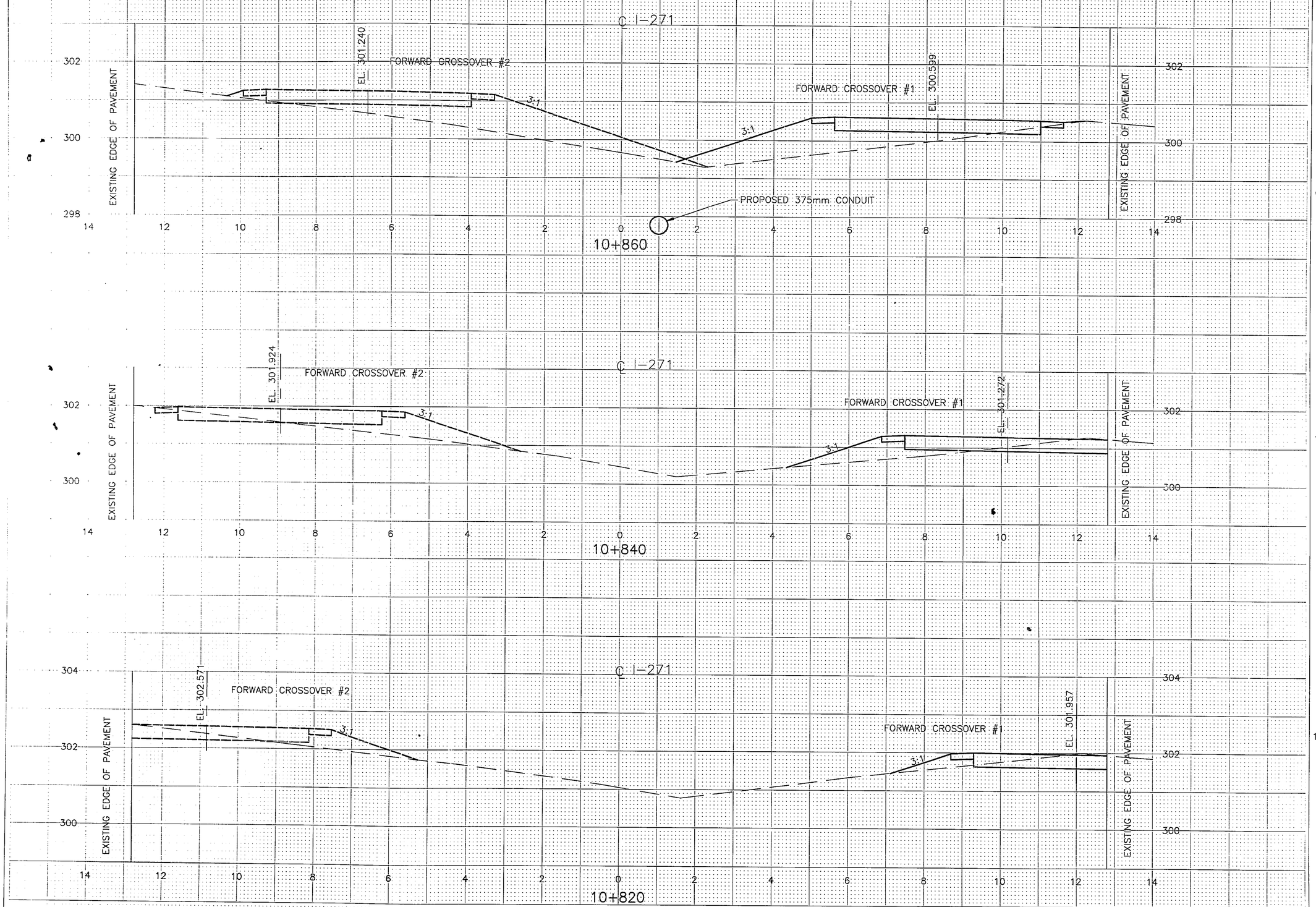

	END AREA		VOLUME	
	CUT	FILL	CUT	FILL
	0.2	8.4	14	112
	1.2	2.8	27	40
	1.5	1.2	27	19
SHEET TOTAL			68	171

metric units

CALCULATED SMG
CHECKED GA

MAINTENANCE OF TRAFFIC FORWARD CROSSOVER CROSS SECTIONS

SUM-271-10.51

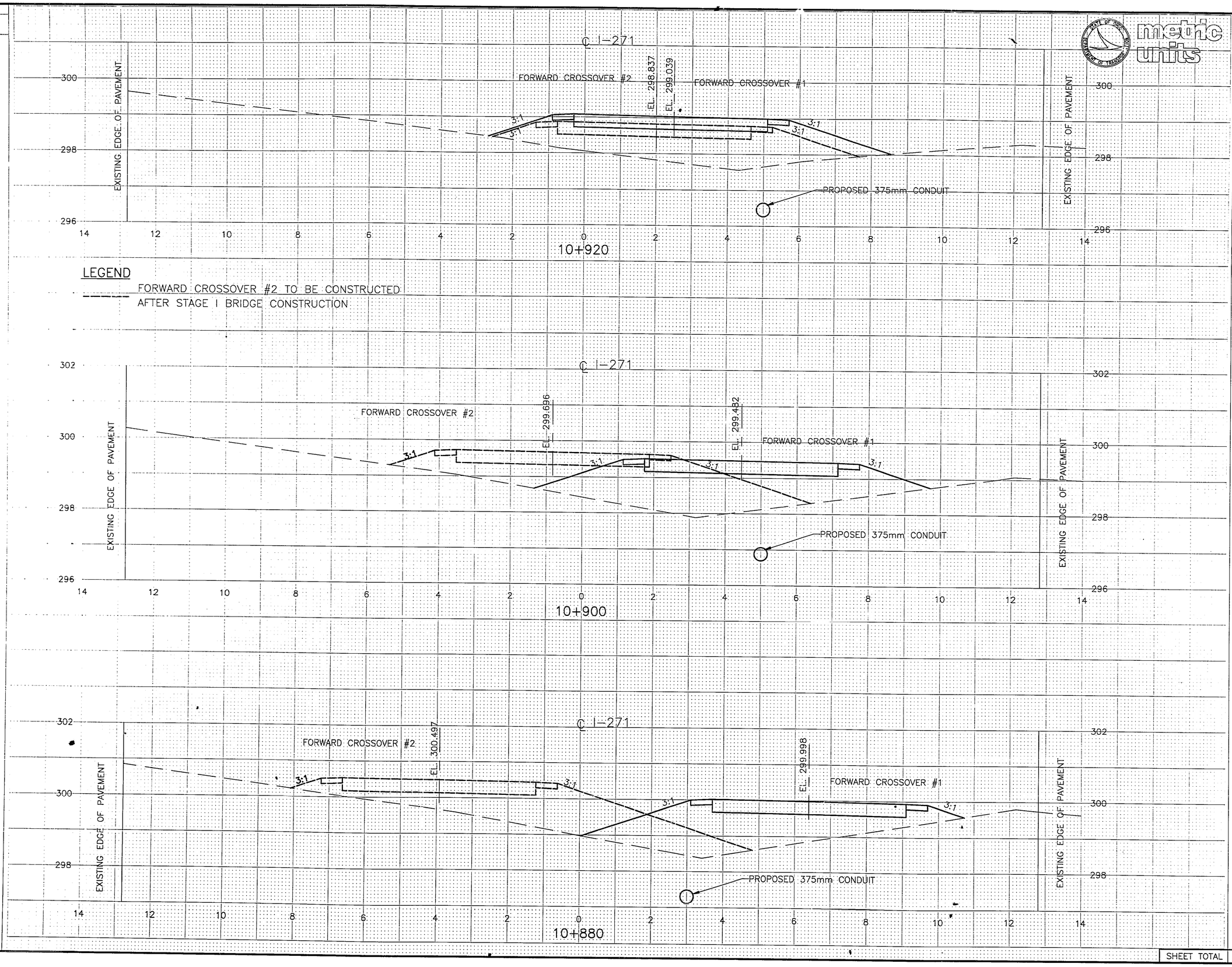

	END AREA CUT	END AREA FILL	VOLUME CUT	VOLUME FILL
10+920	0.0	8.4		
			0	200
10+900	0.0	11.6		
			0	252
10+880	0.0	13.6		
			2	220
SHEET TOTAL			2	672

CALCULATED SMG
CHECKED GA

MAINTENANCE OF TRAFFIC FORWARD CROSSOVER CROSS SECTIONS

SUM-271-10.51

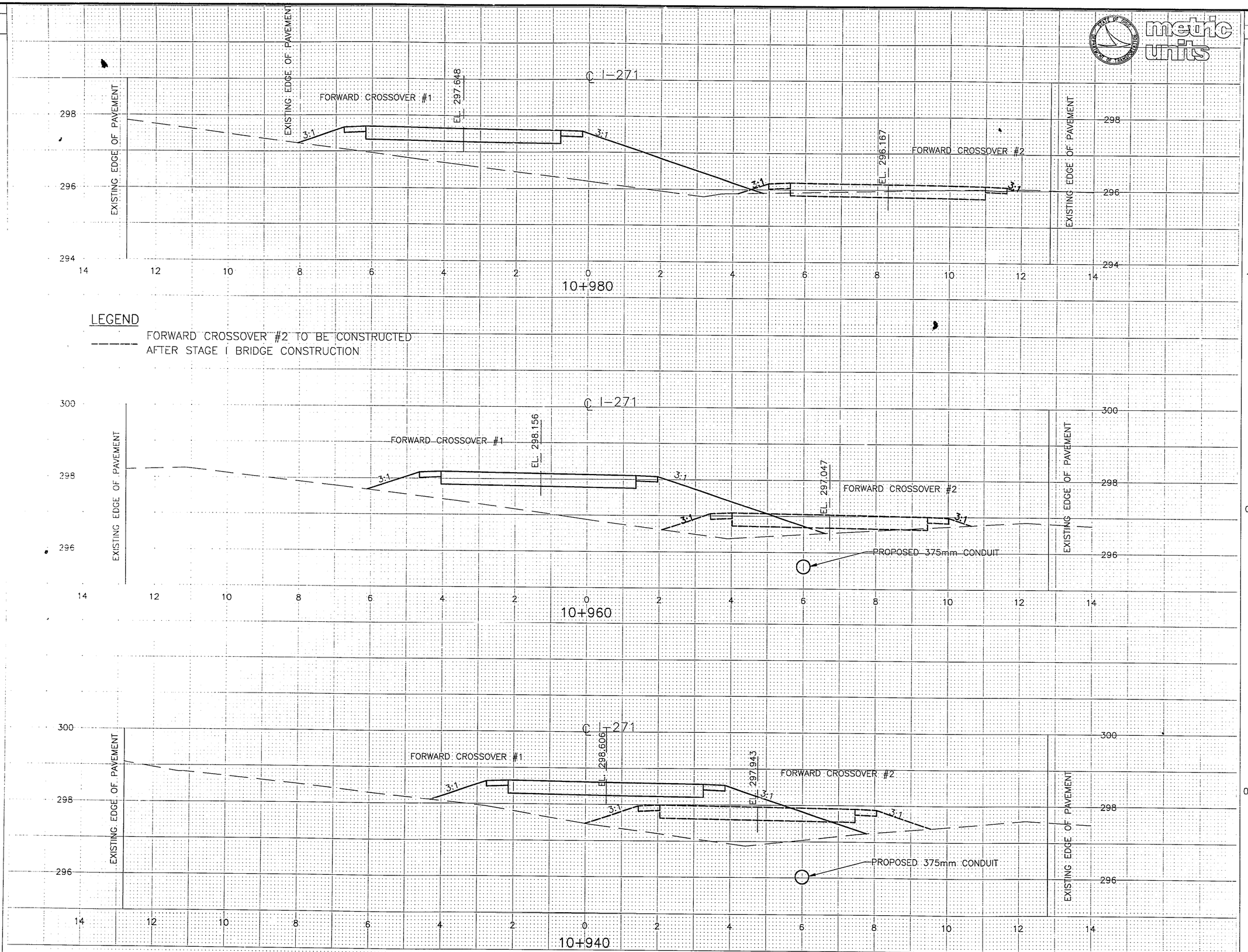

LEGEND

FORWARD CROSSOVER #2 TO BE CONSTRUCTED AFTER STAGE I BRIDGE CONSTRUCTION

	END AREA CUT	END AREA FILL	VOLUME CUT	VOLUME FILL
10+980	1.0	8.9		
			10	186
10+960	0.0	9.7		
			0	201
10+940	0.0	10.4		
			0	188
SHEET TOTAL			10	575

CALCULATED SMG
CHECKED GA

MAINTENANCE OF TRAFFIC FORWARD CROSSOVER CROSS SECTIONS

SUM-271-10.51

LEGEND

FORWARD CROSSOVER #2 TO BE CONSTRUCTED AFTER STAGE 1 BRIDGE CONSTRUCTION

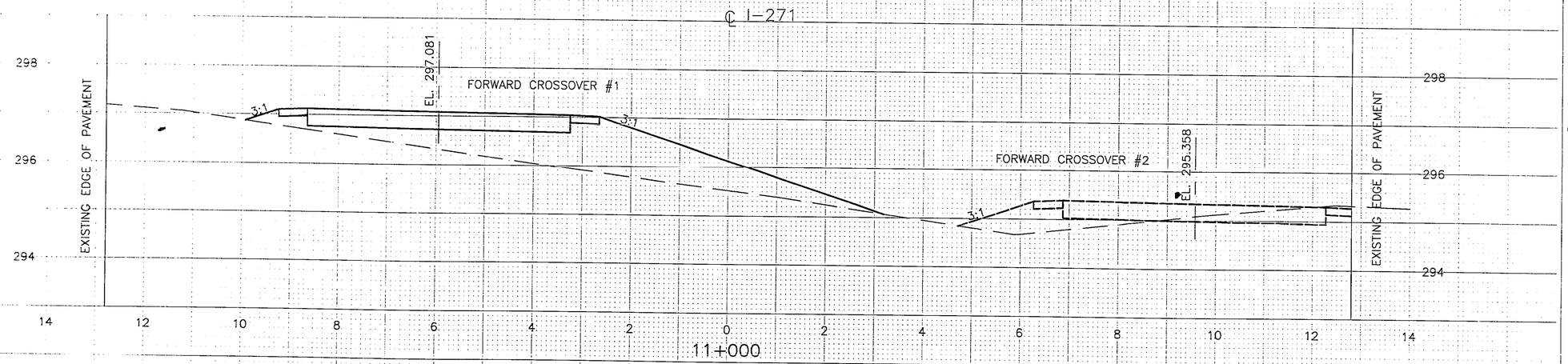

	END AREA CUT	END AREA FILL	VOLUME CUT	VOLUME FILL
	1.0	4.5	18	120
	0.8	7.5	18	164
SHEET TOTAL			36	284

metric units

CALCULATED SMG
CHECKED GA

MAINTENANCE OF TRAFFIC
FORWARD CROSSOVER CROSS SECTIONS

SUM-271-10.51

LEGEND

FORWARD CROSSOVER #2 TO BE CONSTRUCTED AFTER STAGE I BRIDGE CONSTRUCTION

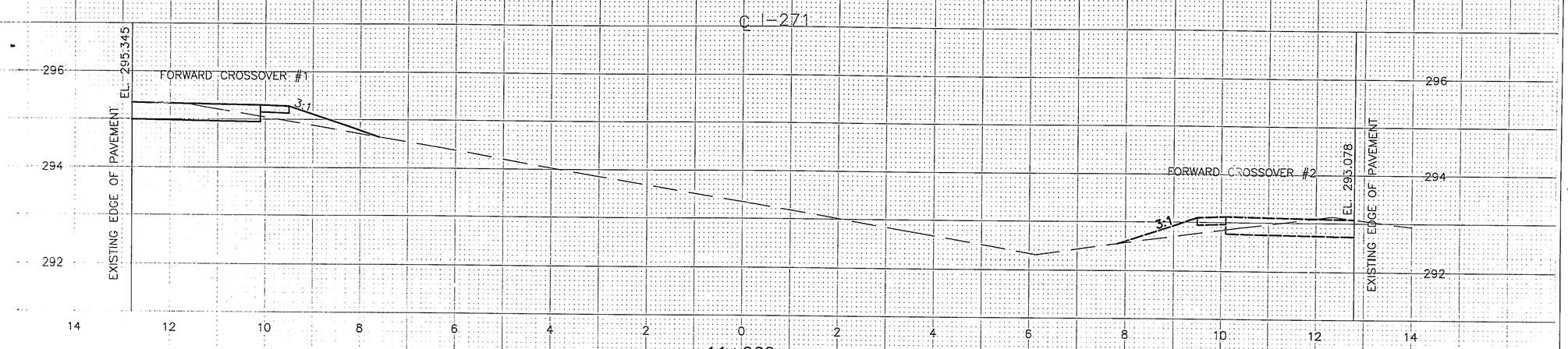

	END AREA CUT	END AREA FILL	VOLUME CUT	VOLUME FILL
	1.5	0.7	30	26
	1.5	1.9	25	64
SHEET TOTAL			55	90

CALCULATED SMG
CHECKED GA

MAINTENANCE OF TRAFFIC FORWARD CROSSOVER CROSS SECTIONS

SUM-271-10.51

50/80

LEGEND

FORWARD CROSSOVER #2 TO BE CONSTRUCTED AFTER STAGE I BRIDGE CONSTRUCTION

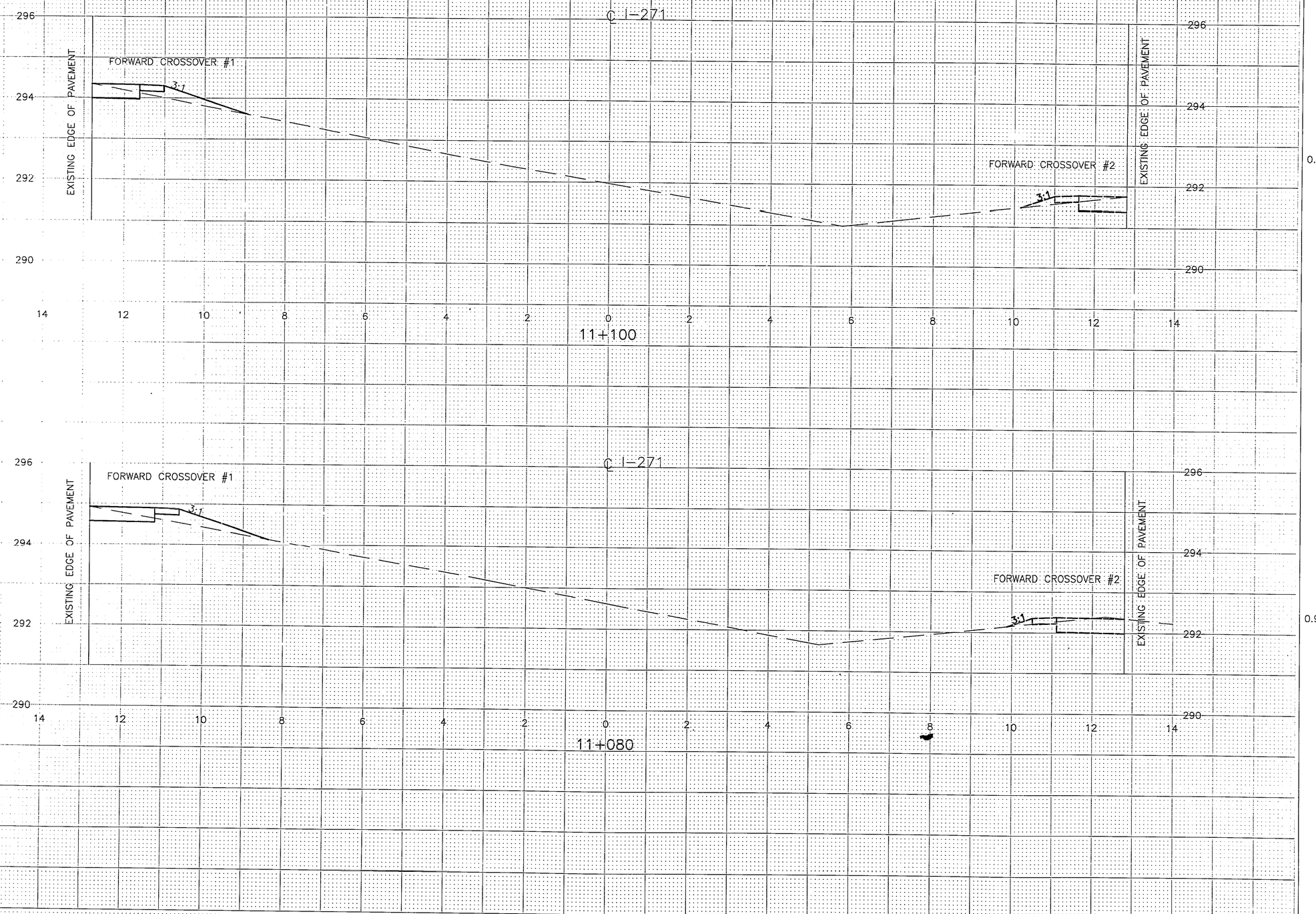

	END AREA CUT	END AREA FILL	VOLUME CUT	VOLUME FILL
STA. 11+104.712 BACK ONLY	0.0	0.0		
			1	1
	0.6	0.5		
			15	10
	0.9	0.5		
			24	12
SHEET TOTAL			40	23

metric units

CALCULATED SMG
CHECKED GA

MAINTENANCE OF TRAFFIC FORWARD CROSSOVER CROSS SECTIONS

SUM-271-10.51

GENERAL NOTES

REFERENCE SHALL BE MADE TO STANDARD DRAWINGS:

AS-1-81M	DATED	10-25-94
BR-1M	DATED	12-15-94
EXJ-4-87M	DATED	03-20-95
VPF-1-90M	DATED	03-20-95

AND TO SUPPLEMENTAL SPECIFICATIONS:

815	DATED	05-30-96
910	DATED	07-17-95

DESIGN SPECIFICATIONS:

THESE STRUCTURES CONFORM TO "STANDARD SPECIFICATIONS FOR HIGHWAY BRIDGES" ADOPTED BY THE AMERICAN ASSOCIATION OF STATE HIGHWAY AND TRANSPORTATION OFFICIALS 1996, AND THE ODOT BRIDGE DESIGN MANUAL.

DESIGN LOADING:

MS18, CASE I AND THE ALTERNATE MILITARY LOADING.

DESIGN DATA:

CONCRETE CLASS S - COMPRESSIVE STRENGTH 31.0 MPa (SUPERSTRUCTURE)

CONCRETE CLASS C - COMPRESSIVE STRENGTH 27.5 MPa (SUBSTRUCTURE)

REINFORCING STEEL - ASTM A615M, A616M OR A617M GRADE 400 MINIMUM YIELD STRENGTH 400 MPa.

STRUCTURAL STEEL - ASTM A36M - YIELD STRENGTH 250 MPa.

DECK PROTECTION METHOD:

EPOXY COATED REINFORCING STEEL.
65 mm CONCRETE COVER.
SEALING OF CONCRETE SURFACES

MONOLITHIC WEARING SURFACE

IS ASSUMED, FOR DESIGN PURPOSES, TO BE 25 mm THICK.

EXISTING STRUCTURE VERIFICATION

DETAILS AND DIMENSIONS SHOWN ON THESE PLANS PERTAINING TO THE EXISTING STRUCTURE HAVE BEEN OBTAINED FROM PLANS OF THE EXISTING STRUCTURE AND FROM FIELD OBSERVATIONS AND MEASUREMENTS. CONSEQUENTLY, THEY ARE INDICATIVE OF THE EXISTING STRUCTURE AND THE PROPOSED WORK BUT THEY SHALL BE CONSIDERED TENTATIVE AND APPROXIMATE. THE CONTRACTOR IS REFERRED TO CONSTRUCTION AND MATERIALS SPECIFICATION (CMS) SECTIONS 102.05, 105.02 AND 513.02.

CONTRACT BID PRICES SHALL BE BASED UPON A RECOGNITION OF THE UNCERTAINTIES DESCRIBED ABOVE AND UPON A PREBID EXAMINATION OF THE EXISTING STRUCTURE BY THE CONTRACTOR. HOWEVER, ALL PROJECT WORK SHALL BE BASED UPON ACTUAL DETAILS AND DIMENSIONS WHICH HAVE BEEN VERIFIED BY THE CONTRACTOR IN THE FIELD.

EXISTING PLANS:

PLANS OF EXISTING BRIDGE ARE AVAILABLE FOR PERUSAL AT ODOT DISTRICT 4 OFFICE.

ADDRESS: OHIO DEPARTMENT OF TRANSPORTATION
DISTRICT 4
705 OAKWOOD STREET
RAVENNA, OHIO 44266

PHONE No: (330) 297-0801

ITEM 202, PORTIONS OF STRUCTURE REMOVED, AS PER PLAN

DESCRIPTION:

THIS WORK SHALL CONSIST OF:
1) THE REMOVAL OF CONCRETE DECK INCLUDING CURBS, PARAPETS, RAILINGS, DECK JOINTS, END CROSSFRAMES, WHERE CALLED UPON PLANS SCUPPERS AND OTHER APPURTENANCES FROM STEEL SUPPORTING SYSTEMS (BEAMS, GIRDERS, CROSS FRAMES, ETC.).

2) ABUTMENT BACKWALLS AND PORTION OF TURNBACK WINGWALLS.

CARE SHALL BE TAKEN DURING DECK REMOVALS TO PROTECT PORTIONS OF SUCH SYSTEMS THAT ARE TO BE SALVAGED AND INCORPORATED INTO THE PROPOSED STRUCTURE. IN THIS RESPECT, THE USE OF EXPLOSIVES, HEADACHE BALLS AND/OR HOE RAM TYPE OF EQUIPMENT IS PROHIBITED. THE CONTRACTOR SHALL REMOVE THE PORTIONS OF THE EXISTING STRUCTURE IN STAGES AS SHOWN ON THE PLANS OR TO THE LIMITS AS DIRECTED BY THE ENGINEER. NO PARTS OR DEBRIS SHALL BE PERMITTED TO BE DROPPED ONTO THE OHIO TURNPIKE.

PROTECTION OF TRAFFIC:

PRIOR TO DEMOLITION OF ANY PORTIONS OF THE EXISTING SUPERSTRUCTURE, THE CONTRACTOR SHALL SUBMIT HIS PLANS FOR THE PROTECTION OF TRAFFIC (VEHICULAR, PEDESTRIAN, ETC.) ADJACENT TO AND/OR UNDER THE STRUCTURES TO THE DIRECTOR FOR APPROVAL. THESE PLANS SHALL INCLUDE PROVISIONS FOR ANY DEVICES AND STRUCTURES THAT MAY BE NECESSARY TO ENSURE SUCH PROTECTION. TEMPORARY VERTICAL CLEARANCES SPECIFIED IN THESE NOTES OR IN THE PROPOSAL SHALL BE MAINTAINED AT ALL TIMES EXCEPT AS OTHERWISE APPROVED BY THE DIRECTOR.

PROTECTION OF STEEL SUPPORT SYSTEMS:

BEFORE DECK SLAB CUTTING IS PERMITTED, THE OUTLINE OF PRIMARY STEEL MEMBERS IN CONTACT WITH THE BOTTOM OF THE DECK SHALL BE DRAWN ON THE SURFACE OF DECK. SMALL DIAMETER PILOT HOLES SHALL BE DRILLED 50 mm OUTSIDE THESE LINES TO CONFIRM THE LOCATION OF FLANGE EDGES. DECK CUTS OVER OR WITHIN 50 mm OF FLANGE EDGES SHALL NOT EXTEND LOWER THAN THE BOTTOM LAYER OF DECK SLAB REINFORCING STEEL. CUTS MADE OUTSIDE 50 mm OF FLANGE EDGES MAY EXTEND THE FULL DEPTH OF THE DECK. DURING CUTTING OF THE DECK SLAB, CARE SHALL BE TAKEN NOT TO DAMAGE STEEL MEMBERS THAT ARE TO BE INCORPORATED INTO THE PROPOSED STRUCTURE.

REMOVAL METHODS:

CONCRETE MAY BE REMOVED BY CUTTING AND BY MEANS OF HAND OPERATED PNEUMATIC HAMMERS EMPLOYING POINTED OR BLUNTED CHISEL TYPE TOOLS. FOR REMOVALS ABOVE STEEL MEMBERS, A HAMMER HEAVIER THAN 16 KILOGRAMS BUT NOT TO EXCEED 41 KILOGRAMS MAY BE USED AT THE APPROVAL OF THE ENGINEER, TO ENSURE ADEQUATE DEPTH CONTROL AND TO PREVENT NICKING OR GOUGING THE PRIMARY STEEL MEMBERS.

DECK REMOVALS:

DUE TO THE POSSIBLE PRESENCE OF WELDED ATTACHMENTS TO EXISTING STRUCTURAL STEEL (FINISHING MACHINE, SCUPPER AND FORM SUPPORTS, ETC.). CARE SHALL BE TAKEN DURING DECK REMOVAL TO AVOID DAMAGING STRINGERS WHICH ARE TO REMAIN. STRINGERS DAMAGED BY THE CONTRACTOR'S REMOVAL OPERATIONS SHALL, AT NO COST TO THE PROJECT, BE REPLACED OR REPAIRED. PROPOSED REPAIRS, DEVELOPED BY A REGISTERED PROFESSIONAL ENGINEER, SHALL BE SUBMITTED IN WRITING FOR REVIEW AND APPROVAL BY THE DIRECTOR.

EXTRANEOUS MEMBERS:

EXISTING EXTRANEOUS MEMBERS (I.E., FINISHING MACHINE AND FORM SUPPORTS, ETC., AND THE SUPPORT FOR SCUPPERS AND BULB ANGLES WHICH ARE TO BE REMOVED) ATTACHED BY WELDED CONNECTIONS TO PORTIONS OF THE TOP FLANGES DESIGNATED "TENSION" SHALL BE REMOVED AND THE FLANGE SURFACES GROUND SMOOTH. GRINDING SHALL BE CAREFULLY DONE AND PARALLEL TO THE FLANGES.

LOADING LIMITATIONS:

NO PART OF THE STRUCTURE SHALL BE SUBJECTED TO UNIT STRESSES THAT EXCEED 136.5% OF THE ALLOWABLE UNIT STRESSES GIVEN IN THE AASHTO STANDARD SPECIFICATION FOR HIGHWAY BRIDGES DUE EITHER TO DEMOLITION, ERECTION OR CONSTRUCTION METHODS, OR TO THE USE OR MOVEMENT OF DEMOLITION OR ERECTION EQUIPMENT ON OR ACROSS THE STRUCTURE. STRUCTURAL ANALYSIS COMPUTATIONS, BY A REGISTERED PROFESSIONAL ENGINEER, SHOWING THE ALLOWABLE STRESSES AND THE MAXIMUM STRESSES PRODUCED BY THE CONTRACTOR'S METHODS OR EQUIPMENT SHALL BE SUBMITTED TO THE DIRECTOR FOR REVIEW AND APPROVAL AT LEAST TWO WEEKS PRIOR TO THE START OF THE WORK.

CUT LINE CONSTRUCTION JOINT PREPARATION:

SAW CUT BOUNDARIES OF PROPOSED CONCRETE REMOVALS 25 mm DEEP. REMOVE CONCRETE TO A ROUGH SURFACE. WHERE PRACTICABLE, THE EXISTING REINFORCING STEEL WHERE REQUIRED IN THE PLANS SHALL BE LEFT IN PLACE. INSTALL DOWEL BARS IF SPECIFIED. PRIOR TO CONCRETE PLACEMENT ABRASIVELY CLEAN JOINT SURFACE AND EXPOSED REINFORCEMENT TO REMOVE LOOSE AND DISINTEGRATED CONCRETE AND LOOSE RUST. THE JOINT SURFACE AND EXPOSED REINFORCEMENT SHALL BE THOROUGHLY CLEANED OF ALL DIRT, DUST, OR OTHER FOREIGN MATERIAL BY THE USE OF WATER, AIR UNDER PRESSURE, OR OTHER METHODS THAT PRODUCE SATISFACTORY RESULTS. CONCRETE BONDING SURFACES SHALL BE WET WITHOUT FREE WATER AS CONCRETE IS PLACED.

SUBSTRUCTURE CONCRETE REMOVAL

SHALL BE BY MEANS OF APPROVED PNEUMATIC HAMMERS EMPLOYING POINTED AND BLUNT CHISEL TOOLS. HYDRAULIC HOE-RAM TYPE HAMMERS WILL NOT BE PERMITTED. THE WEIGHT OF THE HAMMER SHALL NOT BE MORE THAN 16 KILOGRAMS FOR REMOVAL WITHIN 450 mm OF PORTIONS TO BE PRESERVED. OUTSIDE THE 450 mm LIMIT, A HAMMER HEAVIER THAN 16 KILOGRAMS, BUT NOT TO EXCEED 41 KILOGRAMS, MAY BE USED AT THE APPROVAL OF THE ENGINEER. PNEUMATIC HAMMERS SHALL NOT BE PLACED IN DIRECT CONTACT WITH REINFORCING STEEL THAT IS TO BE RETAINED IN THE REBUILT STRUCTURE.

PAYMENT

THE PORTIONS OF STRUCTURE REMOVED WORK DESCRIBED ABOVE SHALL BE PAID FOR AT THE CONTRACT LUMP SUM PRICE BID, WHICH PRICE AND PAYMENT SHALL BE FULL COMPENSATION FOR ALL LABOR, EQUIPMENT, MATERIALS AND INCIDENTALS NECESSARY TO COMPLETE WORK IN CONFORMANCE WITH THESE REQUIREMENTS, WITH PERTINENT PROVISIONS OF 202, AND TO THE SATISFACTION OF THE ENGINEER.

ITEM 503, UNCLASSIFIED EXCAVATION, AS PER PLAN

STRUCTURAL EXCAVATION, IN ADDITION TO THAT NECESSARY TO REMOVE PORTIONS OF THE EXISTING STRUCTURE, AND ALL NECESSARY BACKFILL, IS INCLUDED IN THE LUMP SUM BID ITEM, "UNCLASSIFIED EXCAVATION," FOR PAYMENT. BACKFILL MATERIAL BEHIND ABUTMENTS SHALL BE 203 MATERIAL PLACED IN LIFTS NOT TO EXCEED A THICKNESS OF MORE THAN 150 mm AND SHALL BE COMPACTED IN ACCORDANCE WITH 304.04 USING MECHANICAL COMPACTORS.

metric units

DESIGN AGENCY
THE OSBORN ENGINEERING CO.
668 EUCLID AVENUE
CLEVELAND, OHIO 44114

DESIGNED	DRAWN	REVIEWED	DATE
BK	SMG	JRS	02/29/96

STRUCTURE NO. 7729561, 7729596

GENERAL NOTES
BRIDGE NO. SUM-271-10605 LEFT & RIGHT
OVER WESTBOUND I/ANFS OF I-80

SUM-271-10.51

GENERAL NOTES

TEMPORARY FALSEWORK AND PROTECTIVE STRUCTURES:

FOR TEMPORARY FALSEWORK AND PROTECTIVE STRUCTURES REQUIREMENTS SEE MAINTENANCE OF TRAFFIC NOTES, SHEET 29, 31, AND 34.

INSPECTION OF STRUCTURAL STEEL

THE ENGINEER SHALL VISUALLY INSPECT ALL EXISTING BUTT-WELDED SPLICES AND/OR TOP FLANGE COVER PLATE FILLET WELDS TO ENSURE THAT THEY ARE FREE OF DEFECTS. THE DECK SLAB HAUNCH FORMS IMMEDIATELY ADJACENT TO SUCH WELDS SHALL NOT BE ERECTED UNTIL AFTER THE ENGINEER HAS COMPLETED THIS INSPECTION. THIS INSPECTION SHALL NOT TAKE PLACE UNTIL AFTER THE TOP FLANGES ARE CLEANED AS SPECIFIED IN 511.08, BUT IT SHALL BE DONE BEFORE THE DECK SLAB REINFORCEMENT IS INSTALLED. THE COST ASSOCIATED WITH THIS INSPECTION SHALL BE INCLUDED WITH ITEM 511, SUPERSTRUCTURE CONCRETE FOR PAYMENT.

ITEM 513, STRUCTURAL STEEL, REPLACEMENT OF DETERIORATED END CROSSFRAME, AS PER PLAN

STEEL MEMBERS TO BE FABRICATED UNDER THIS ITEM WILL NOT REQUIRE SHOP DRAWINGS PRIOR TO FABRICATION. THE CONTRACTOR SHALL MAKE NECESSARY MEASUREMENTS AND PREPARE SKETCHES, DRAWINGS, TABLE, ETC. THE ENGINEER SHALL HAVE AUTHORITY AND RESPONSIBILITY FOR ENSURING THAT THE FABRICATED STEEL IS ACCEPTABLE. TECHNICAL ASSISTANCE WILL BE PROVIDED ON REQUEST BY THE OFFICE OF STRUCTURAL ENGINEERING. MILL TEST REPORTS AND SHIPPING DOCUMENTS SHALL BE SUBMITTED TO THE ENGINEER FOR REVIEW AND APPROVAL PRIOR TO INCORPORATING STEEL ITEMS INTO THE WORK, AS REQUIRED BY 501.07. AFTER FABRICATION, THE CONTRACTOR SHALL SUBMIT SHOP DRAWINGS TO THE ENGINEER FOR REVIEW AND APPROVAL TO ENSURE THAT THE THE DRAWINGS DEPICT THE STEEL AS ACTUALLY INCORPORATED INTO THE WORK. THE ENGINEER WILL THEN SEND ONE APPROVED SET TO THE OFFICE OF STRUCTURAL ENGINEERING FOR INFORMATION. PAY WEIGHTS SHALL BE COMPUTED IN COMPLIANCE WITH 513 OF THE CONSTRUCTION AND MATERIAL SPECIFICATIONS AND SUBMITTED TO THE ENGINEER FOR HIS REVIEW AND APPROVAL. THE FABRICATOR SHALL FURNISH A 35 mm MICROFILM COPY OF EACH SHOP DRAWING, WHICH SHALL BE MOUNTED ON AN APERTURE CARD AS SPECIFIED IN 501.05.

STEEL MEMBERS INCLUDED IN THIS ITEM INCLUDE END-CROSSFRAMES.

SEALING OF CONCRETE SURFACES

ITEM SPECIAL SEALING OF CONCRETE SURFACES (EPOXY-URETHANE) SHALL BE APPLIED TO PARAPETS, PIERS, ABUTMENTS, AND WINGWALLS AS SHOWN ON THE PLANS. THE COLOR FOR CONCRETE SEALER SHALL BE THE OFF-WHITE COLOR AND SHALL CONFORM TO FEDERAL SPECIFICATIONS NO. 595B-27875. SEE PROPOSAL FOR SURFACE PREPARATION REQUIREMENTS, APPLICATION RATES, MATERIAL REQUIREMENTS, AND APPLICATION PROCEDURE

ITEM SPECIAL, VANDAL PROTECTION FENCE, 1.8 METER STRAIGHT, COATED FABRIC

VANDAL PROTECTION FENCE SHALL CONFORM TO STANDARD DRAWING VPF-1-90M WITH THE FOLLOWING REQUIRED DETAILS:

1) THE POST SECTION TYPE SHALL BE PS-4. THE REQUIRED

BASE PLATE TYPE SHALL BE BP-5.

2) AN 406 mm x 406 mm ACCESS OPENING AT LIGHT POLE IS REQUIRED AT THE LEFT STRUCTURE. (FOR DETAILS SEE SHEET 5 OF 7 OF STANDARD DWG. VPF-1-90M, FOR LOCATION SEE SHEET 24 OF 29).

3) PAYMENT FOR VANDAL PROTECTION FENCE SHALL BE MADE UNDER ITEM SPECIAL VANDAL PROTECTION FENCE, 1.8 METER STRAIGHT, COATED FABRIC.

PAINTING OF STRUCTURAL STEEL

A. NEW STRUCTURAL STEEL

ALL NEW STRUCTURAL STEEL SHALL BE CLEANED AND PRIME PAINTED IN THE SHOP WITH SYSTEM IZEU IN CONFORMANCE WITH ITEM 513. IT SHALL BE PAINTED WITH A FULL INTERMEDIATE EPOXY COAT AND A BLUE (FEDERAL SPECIFICATION NO.595A-15450) URETHANE FINISH COAT IN CONFORMANCE WITH THE PROPOSAL NOTE PAINTING OF NEW STEEL, SYSTEM IZEU.

ALL COSTS FOR PAINTING NEW STRUCTURAL STEEL SHALL BE PAID FOR AS SPECIFIED IN THE PROPOSAL NOTE "FIELD PAINTING OF NEW STEEL, SYSTEM IZEU."

B. FIELD PAINTING OF EXISTING STEEL AND PORTIONS OF NEW STEEL

ALL FIELD PAINTING OF EXISTING STEEL AND PORTIONS OF NEW STEEL SHALL BE PERFORMED AS DESCRIBED HEREIN AND IN THE SUPPLEMENTAL SPECIFICATION 815. SEE ITEM C FOR RESTRICTIONS ON EMISSIONS TO GROUND (SOIL), WATER, AND SEDIMENT.

THE FIELD PAINTING SHALL BE APPLIED TO ALL SURFACES OF EXISTING STRUCTURAL STEEL INCLUDING ALL GIRDERS, BEAMS, CROSS FRAMES, BEARINGS (EXISTING OR NEW). ALL SURFACES OF EXISTING STRUCTURAL STEEL SHALL BE CLEANED, PRIMED AND FIELD PAINTED IN CONFORMANCE TO SUPPLEMENTAL SPECIFICATION 815 THE COLOR OF THE URETHANE FINISH COAT SHALL BE BLUE, (FEDERAL SPECIFICATION NO. 595A-15450).

SEE THE SUPPLEMENTAL SPECIFICATION 815 FOR SURFACE PREPARATION REQUIREMENTS, APPLICATION RATES, MATERIAL REQUIREMENTS AND APPLICATION PROCEDURES. THE COST OF THIS WORK SHALL BE INCLUDED IN THE SEVERAL SPECIAL OZEU PAINTING ITEMS FOR PAYMENT.

C. RESTRICTIONS ON EMISSIONS TO GROUND (SOIL), WATER, AND SEDIMENT

1. CONDUCT ALL ACTIVITIES SO THAT RELEASES TO THE SOIL, WATER, SEDIMENT, OR STORM SEWERS DO NOT EXIST.

2. THE RELEASE OF PARTICULATE OR DEBRIS BEYOND THE CONTAINED OR PROTECTED AREAS IS CAUSE FOR IMMEDIATE PROJECT SHUT DOWN UNTIL THE CAUSE OF THE EMISSIONS IS CORRECTED.

3. CLEAN UP VISIBLE DEPOSITS OF DEBRIS ON THE UNPROTECTED GROUND, ON THE SOIL, OR IN THE WATER OR SEDIMENT, AROUND THE STORM SEWERS OR DRAINS, OR IN AREAS WHERE RAIN WATER COULD CARRY THE DEBRIS INTO STORM SEWERS OR DRAINS. TAKE THE APPROPRIATE CORRECTIVE ACTION TO CHANGE WORK PRACTICES OR TO MODIFY THE CONTAINMENT TO PREVENT EMISSIONS FROM OCCURRING IN THE FUTURE.

4. THE OHIO TURNPIKE COMMISSION MAY CONDUCT LABORATORY TESTING AND ANALYSIS OF SOIL, WATER, AND/OR SEDIMENT. THE CONTRACTOR WILL BE ADVISED IF SUCH TESTING AND ANALYSIS WILL BE PERFORMED. THE GROUND (SOIL), WATER, AND SEDIMENT WILL BE CONSIDERED TO HAVE BEEN IMPACTED BY PROJECT ACTIVITIES BASED ON THE LABORATORY ANALYSIS AS DESCRIBED BELOW:

a. VISIBLE PAINT CHIPS OR DEBRIS ON THE GROUND, WATER, OR SEDIMENT ARE NOT ALLOWED AND MUST BE REMOVED REGARDLESS OF THE LABORATORY TEST RESULTS.

b. SOIL – THE GROUND (SOIL) IS CONSIDERED TO HAVE BEEN IMPACTED BY PROJECT ACTIVITIES BASED ON INCREASES OVER THE GEOMETRIC MEAN PRE-JOB LEAD CONCENTRATION. IF THE GEOMETRIC MEAN PRE-JOB TOTAL LEAD CONCENTRATION IS LESS THAN 200 PPM, AN IMPACT IS CONSIDERED TO HAVE OCCURRED IF THE POST-JOB GEOMETRIC MEAN LEAD CONCENTRATION IS AN INCREASE OF 100 PPM OR MORE. IF THE PRE-JOB CONCENTRATION IS GREATER THAT 200 PPM, AN IMPACT IS CONSIDERED TO HAVE OCCURRED IF THE POST-JOB GEOMETRIC MEAN LEAD CONCENTRATION EXCEEDS THE PRE-JOB GEOMETRIC MEAN PLUS TWO (2) STANDARD DEVIATIONS OR AN INCREASE OF 100 PPM, WHICHEVER IS GREATER.

c. SEDIMENT – THE SEDIMENT WILL BE CONSIDERED TO HAVE BEEN IMPACTED FROM PROJECT ACTIVITIES FOLLOWING THE SAME CRITERIA UTILIZED FOR SOILS.

d. WATER – THE WATER IS CONSIDERED TO HAVE BEEN IMPACTED FROM PROJECT ACTIVITIES BASED ON INCREASES OVER THE GEOMETRIC MEAN PRE-JOB LEAD CONCENTRATION. IF THE GEOMETRIC MEAN PRE-JOB TOTAL LEAD CONCENTRATION IS LESS THAN 3.5 MICROGRAMS/L, AN IMPACT IS CONSIDERED TO HAVE OCCURRED IF THE POST-JOB GEOMETRIC MEAN LEAD CONCENTRATION IS AN INCREASE OF 1.5 MICROGRAMS/L OR MORE. IF THE PRE-JOB CONCENTRATION IS GREATER THAN 3.5 MICROGRAMS/L, AN IMPACT IS CONSIDERED TO HAVE OCCURRED IF THE POST-JOB GEOMETRIC MEAN LEAD CONCENTRATION EXCEEDS THE PRE-JOB GEOMETRIC MEAN PLUS TWO (2) STANDARD DEVIATIONS, OR AN INCREASE OF 1.5 MICROGRAMS/L OCCURS, WHICHEVER IS GREATER.

e. IF THE LABORATORY ANALYSIS SHOWS THE SOIL, WATER, OR SEDIMENT TO HAVE BEEN IMPACTED BY PROJECT ACTIVITIES, AS DIRECTED BY THE OHIO TURNPIKE COMMISSION, AND AT NO COST TO THE OHIO TURNPIKE COMMISSION, CONDUCT THE CLEANUP OR REMEDIATION NECESSARY TO RETURN THE MEDIA TO PRE-PROJECT LEVELS.

CONCRETE PARAPETS

AS SOON AS A CONCRETE SAW CAN BE OPERATED WITHOUT DAMAGING THE FRESHLY PLACED CONCRETE, 25 mm DEEP CRACK CONTROL JOINTS SHALL BE SAWED INTO THE PERIMETER OF THE CONCRETE PARAPET. THE SAWCUT SHALL BE MADE IN THE COMPLETE CIRCUMFERENCE OF THE PARAPET, STARTING AND ENDING AT THE ELEVATION OF THE CONCRETE DECK, AT LOCATIONS AS DETAILED IN THE PLAN. THE USE OF AN EDGE GUIDE, FENCE, OR JIG IS REQUIRED TO ENSURE THAT THE CUT JOINT IS STRAIGHT, TRUE AND ALIGNED ON ALL FACES OF THE PARAPET. THE JOINT WIDTH SHALL BE THE WIDTH OF THE SAW BLADE, A NOMINAL WIDTH OF 6 mm. THE PERIMETER OF THE CRACK CONTROL JOINT SHALL BE SEALED TO A MINIMUM DEPTH OF 25mm WITH A CAULKING MATERIAL CONFORMING TO FEDERAL SPECIFICATION, TT-S-00227E. THE BOTTOM 15 mm OF THE 25mm DEEP SAWED JOINT IN BOTH THE INSIDE AND OUTSIDE FACE OF THE PARAPET SHOULD BE LEFT UNSEALED TO ALLOW ANY WATER WHICH MAY ENTER THE JOINT TO ESCAPE. CRACK CONTROL JPINT SAWCUT AND CAULKING MATERIAL FOR PARAPET SHALL BE INCLUDED WITH ITEM 511 CLASS S CONCRETE, SUPERSTRUCTURE.

ITEM 516-REFURBISHING BEARING DEVICES, AS PER PLAN

THIS ITEM SHALL INCLUDE ALL WORK NECESSARY TO PROPERLY ALIGN ALL ABUTMENT BEARINGS AS WELL AS THEIR CLEANING AND PAINTING. INCLUDED SHALL BE THE DISASSEMBLY OF THE BEARINGS, HAND TOOL CLEANING (GRINDING IF NECESSARY), PAINTING AS REQUIRED BY SYSTEM OZEU, REPLACEMENT OF ANY DAMAGED SHEET LEAD (711.19), INSTALLATION OF ANY NECESSARY STEEL SHIMS OF THE SAME SIZE AS THE BEARINGS TO PROVIDE A SNUG FIT, REALIGNMENT OF THE UPPER BEARING PLATE BY REMOVING EXISTING WELDS AND REWELDING SO THAT THE BEARINGS ARE VERTICALLY ALIGNED AT 16° C, AND REASSEMBLY OF THE BEARINGS. THE CONTRACTOR SHALL BE SURE THAT ALL BEARINGS ARE SHIMMED ADEQUATELY AND THAT NO BEAMS AND/OR BEARING DEVICES ARE "FLOATING". AT THE OPTION OF THE CONTRACTOR AND AT NO ADDITIONAL COST TO THE STATE, NEW BEARINGS OF THE SAME TYPE AS THE EXISTING MAY BE INSTALLATION IN PLACE OF REFURBISHING THE BEARINGS. ALL WORK SHALL BE TO THE SATISFACTION OF THE ENGINEER. PAYMENT FOR ALL THE ABOVE DESCRIBED LABOR AND MATERIALS WILL BE MADE AT THE CONTRACT PRICE BID FOR ITEM 516 – REFURBISH BEARING DEVICES, AS PER PLAN.

ASBESTOS NOTIFICATION

AN ASBESTOS SURVEY OF THE BRIDGES SCHEDULES FOR RENOVATION WAS CONDUCTED BY A CERTIFIED ASBESTOS HAZARD EVALUATION SPECIALIST. THE SURVEY DETERMINED THAT NO ASBESTOS IS PRESENT ON THE BRIDGES.

A COPY OF THE OHIO ENVIRONMENTAL PROTECTION AGENCY (OEPA) NOTIFICATION OF DEMOLITION AND RENOVATION FORM. PARTIALLY COMPLETED AND SIGNED BY THE BRIDGE OWNER. WILL BE PROVIDED TO THE SUCCESSFUL BIDDER. THE CONTRACTOR SHALL COMPLETE THE FORM AND SUBMIT IT TO AKRON REGIONAL AIR QUALITY MANAGEMENT DISTRICT. 146 S. HIGH ST., SUITE 904. AKRON. OHIO 44308: PHONE (330) 375-2480. FAX (330) 375-2402 AT LEAST TEN (10) WORKING DAYS PRIOR TO THE START OF THE RENOVATION OF THE BRIDGE. THE CONTRACTOR SHALL PROVIDE A COPY OF THE COMPLETED FORM TO THE ENGINEER.

INFORMATION REQUIRED ON THE FORM WILL INCLUDE:
- THE CONTRACTORS NAME AND ADDRESS
- THE SCHEDULED DATES FOR THE START AND COMPLETION OF THE BRIDGE REMOVAL OR RENOVATION
- A DESCRIPTION OF THE PLANNED DEMOLITION OR RENOVATION WORK AND THE METHOD(S) TO BE USED

A COPY OF THE OEPA FROM IS AVAILABLE FOR INSPECTION AT THE ODOT DISTRICT 4 OFFICE. 705 OAKWOOD STREET. RAVENNA. OHIO. 44266.

BASIS FOR PAYMENT

THE CONTRACTOR SHALL FURNISH ALL FEES. LABOR. AND MATERIAL NECESSARY TO COMPLETE AND SUBMIT THE OEPA NOTIFICATION FORM. PAYMENT FOR THIS WORK SHALL BE INCLUDED IN ITEM 202-STRUCTURE REMOVED, AS PER PLAN.

metric units

THE OSBORN ENGINEERING CO.
668 EUCLID AVENUE
CLEVELAND, OHIO 44114

JRS 02/29/96 7729561, 7729596
SMG XXX
BK GTA

GENERAL NOTES
BRIDGE NO. SUM-271-10605 LEFT & RIGHT
OVER WESTBOUND LANES OF I-80

SUM-271-10.51

GENERAL NOTES

ITEM 516, JACKING AND TEMPORARY SUPPORT OF STRUCTURE, AS PER PLAN

THIS ITEM SHALL CONSIST OF FURNISHING ALL NECESSARY LABOR, MATERIALS, AND EQUIPMENT TO RAISE OR REPOSITION ANY EXISTING STRUCTURES TO THE DIMENSIONS AND REQUIREMENTS DEFINED IN THE PROJECT PLANS.

THE CONTRACTOR SHALL BE RESPONSIBLE FOR THE DESIGN, INSTALLATION AND OPERATION OF AN ADEQUATE JACKING SYSTEM, INCLUDING ANY TEMPORARY OR PERMANENT SUPPORTS, TO PERFORM THE WORK DESCRIBED IN THE PROJECT PLANS. THREE (3) SETS OF JACKING PLANS, WHICH INCLUDE INFORMATION DESCRIBED IN THIS NOTE, SHALL BE SUBMITTED TO THE DIRECTOR FOR APPROVAL AT LEAST THIRTY (30) DAYS BEFORE ACTUAL WORK IS TO BEGIN. THE PLANS SHALL BE PREPARED AND STAMPED BY A REGISTERED PROFESSIONAL ENGINEER.

JACKING SUBMITTALS SHALL INCLUDE AT LEAST THE FOLLOWING:

1. THE SIGNATURE AND NUMBER, OR PROFESSIONAL SEAL, OF THE REGISTERED PROFESSIONAL ENGINEER WHO PREPARED THE SUBMITTAL.

2. CALCULATIONS AND ANALYSIS OF THE STRUCTURE TO DETERMINE AND DEFINE THE ACTUAL LOADING APPLIED AT THE CONTRACTOR'S SELECTION JACKING POINTS.

3. A DRAWING SHOWING THE PHYSICAL AND DIMENSIONAL POSITION OF THE JACKS WITH RESPECT TO THE STRUCTURE INCLUDING CLEARANCES AND CENTER OF LIFT.

4. A SCHEMATIC LAYOUT OF JACKS, CHECK VALVES, PUMPS WITH 3 WAY RETRACTOR VALVE, PRESSURE GAGES, FLOW CONTROL VALVES, ETC. IN ACCORDANCE WITH MANUFACTURER'S RECOMMENDATIONS. ALL JACKS FOR EACH ABUTMENT OR PIER SHALL BE CONNECTED TOGETHER. ALL JACKS AT EACH ABUTMENT OR PIER SHALL BE THE SAME SIZE.

5. ANALYSIS AND CALCULATIONS OF THE STRESSES INDUCED OR CREATED IN THE STRUCTURE AND ANY TEMPORARY OR PERMANENT SUPPORTS. DESIGN CALCULATIONS FOR ANY TEMPORARY OR PERMANENT SUPPORTS.

6. PHYSICAL DIMENSIONS, MATERIALS, AND FABRICATION DETAIL OF ANY TEMPORARY OR PERMANENT SUPPORTS. HORIZONTAL OR VERTICAL MOVEMENT RESTRAIN SHALL BE PROVIDED.

7. A STEP BY STEP PROCEDURE DETAILING ALL STEPS IN THE JACKING OPERATION.

8. WELDING TO TENSION AREAS WILL NOT BE PERMITTED.

THE ENTIRE SYSTEM INCLUDING JACKS SHALL HAVE 20% MORE CAPACITY THAN REQUIRED BASED ON CALCULATED LOADS.

FOR LIFTS GREATER THAN 25 mm, JACKS SHALL HAVE LOCKING NUTS TO POSITIVELY LOCK AND SUPPORT THE STRUCTURE DURING THE LIFT.

JACKS SHALL HAVE A SWIVEL LOAD CAP, A DOMED PISTON HEAD OR SOME OTHER DEVICE TO PROTECT AGAINST THE EFFECTS OF SIDE LOADS ON THE JACK.

JACKS ALONE SHALL NOT BE USED TO SUPPORT LOADS EXCEPT DURING THE ACTUAL JACKING OPERATION. TEMPORARY SUPPORTS, BLOCKING OR OTHER METHODS APPROVED BY THE DIRECTOR SHALL BE USED.

SINGLE ACTING RAMS WITH NO OVER-TRAVEL PROTECTION SYSTEM SHALL NOT BE USED.

SPARE EQUIPMENT SHALL BE AVAILABLE ON SITE FOR THE REQUIRED STRUCTURE RAISING TO PROCEED IN THE EVENT OF BREAKDOWN. A LIST OF SPARE EQUIPMENT SHALL BE PROVIDED TO THE ENGINEER.

AT A MINIMUM, A JACKING OPERATION SHALL LIFT ALL BEAMS AT ANY ONE ABUTMENT OR PIER SIMULTANEOUSLY. THE ONLY EXCEPTION IS THE SITUATION WHERE THE WORK INVOLVES REPLACING OR REHABILITATING INDIVIDUAL BEARINGS; NO PERMANENT SHIMMING IS REQUIREDAND THE HEIGHT OF THE LIFT SHALL NOT EXCEED 6 mm.

MAXIMUM DIFFERENTIAL JACKING HEIGHT BETWEEN ANY ADJACENT ABUTMENTS OR PIERS SHALL BE 25 mm OR LESS.

IF, DURING THE JACKING OPERATIONS, CRACKING OF THE CONCRETE SUPERSTRUCTURE, SEPARATION OF THE CONCRETE DECK FROM THE STEEL STRINGERS, OR OTHER DAMAGE TO THE STRUCTURE IS VISUALLY OBSERVED, THE JACKING OPERATION SHALL IMMEDIATELY CEASE AND APPROVED SUPPORTS SHALL BE INSTALLED. THE CONTRACTOR SHALL THEN ANALYZE THE DAMAGE AND SUBMIT A METHOD OF CORRECTION TO THE ENGINEER FOR APPROVAL. ANY BEAMS THAT SEPARATE FROM THE DECK SHALL BE EPOXY INJECTED FOR THE DISTANCE OF THE SEPARATION IN ACCORDANCE WITH THE PROPOSAL NOTE "CONCRETE REPAIR BY EPOXY INJECTION." COST OF THIS EPOXY INJECTION OR OTHER REQUIRED REPAIRS SHALL BE BORNE BY THE CONTRACTOR.

THE CONTRACTOR SHALL DEMONSTRATE TO THE ENGINEER THAT THE BRIDGE BEARINGS ARE FULLY SEATED BETWEEN ALL CONTACT AREAS. IF FULL SEATING IS NOT ATTAINED, SUITABLE MEANS OF REPAIR, SUBJECT TO THE APPROVAL OF THE ENGINEER, WILL BE REQUIRED AT THE CONTRACTOR'S EXPENSE.

THE JACKING OPERATION SHALL BE DIRECTED BY A PROFESSIONAL ENGINEER EMPLOYED BY THE CONTRACTOR. FAILURE TO HAVE A PROFESSIONAL ENGINEER PRESENT SHALL BE CAUSE FOR CEASING JACKING OPERATIONS.

PAYMENT SHALL BE MADE AT THE LUMP SUM PRICE BID FOR ITEM 516, JACKING AND TEMPORARY SUPPORT OF SUPERSTRUCTURE, AS PER PLAN AND SHALL INCLUDE ALL NECESSARY TOOLS, LABOR, EQUIPMENT AND MATERIALS NECESSARY TO COMPLETE THIS ITEM OF WORK.

BAR LAP LENGTHS

UNLESS OTHERWISE SHOWN, BAR LAPS SHALL BE NOT LESS THAN:

BAR NO.	15M	20M	25M	30M
LAP LENGTH FOR EPOXY COATED (mm)	720	880	1400	1960

UTILITY LINES

UTILITY LINES: ALL EXPENSE INVOLVED IN RELOCATION (INSTALLING) THE AFFECTED UTILITY LINES SHALL BE BORNE BY THE UTILITY(IES). THE CONTRACTOR AND UTILITY(IES) ARE TO COOPERATE BY ARRANGING THEIR WORK IN SUCH A MANNER THAT INCONVENIENCE TO EITHER WILL BE HELD TO A MINIMUM.

ITEM 518, 150 mm PERFORATED CORRUGATED PLASTIC PIPE, AS PER PLAN

CORRUGATED PIPE USED IN ABUTMENT DRAINAGE SHALL BE 150 mm DIAMETER, PLASTIC CORRUGATED TYPE SP.

ITEM 518, 150 mm NON-PERFORATED CORRUGATED PLASTIC PIPE, INCLUDING SPECIALS, AS PER PLAN

CORRUGATED PIPE USED IN ABUTMENT DRAINAGE SHALL BE 150 mm DIAMETER, PLASTIC CORRUGATED TYPE S. THIS ITEM SHALL INCLUDE ALL ELBOWS, TEES AND END CAPS REQUIRED TO COMPLETE THE ABUTMENT DRAINAGE SYSTEM. THIS ITEM SHALL ALSO INCLUDE THE COST OF THE CRUSHED AGGREGATE SLOPE AT THE END OF PIPE.

ABBREVIATIONS

℄ = CENTER LINE
TYP. = TYPICAL
R.A. = REAR ABUTMENT
F.A. = FORWARD ABUTMENT
EL. = ELEVATION
PEFJ = PREFORMED EXPANSION JOINT FILLER
N.S. = NEAR SIDE
F.S. = FAR SIDE
SPA. = SPACING
PG = PROFILE GRADE
DIA. = DIAMETER
ø = DIAMETER
℮ = BASE LINE
W.B.L. = WESTBOUND LANE
STA. = STATION

PROPOSED WORK

REHABILITATION OF IR-271 L & R BRIDGES OVER THE WESTBOUND LANES OF THE OHIO TURNPIKE WITH ASSOCIATED ROADWAY WORK FOR A PROJECT LENGTH OF 0.14 KILOMETERS. THE WORK WILL INCLUDE CONSTRUCTION OF NEW COMPOSITE REINFORCED CONCRETE DECKS, ABUTMENT BACKWALL REPLACEMENTS, ABUTMENT AND PIER REPAIRS, NEW APPROACH SLABS, NEW ABUTMENT DRAINAGE, NEW STRIP SEAL EXPANSION DEVICES, NEW PARAPETS WITH VANDAL PROTECTION FENCE AND APPROACH WORK NECESSARY TO TRANSITION THE ROADWAY TO THE NEW DECK.

DESIGN AGENCY
THE OSBORN ENGINEERING CO.
668 EUCLID AVENUE
CLEVELAND, OHIO 44114

DATE 02/29/96
SUBMITTED FOR APPROVAL 7729561, 7729596
CHECKED SMG
DESIGNED BK
REVIEWED GTA

GENERAL NOTES
BRIDGE NO. SUM-271-10.60S LEFT & RIGHT
OVER WESTBOUND LANES OF I-80

SUM-271-10.51

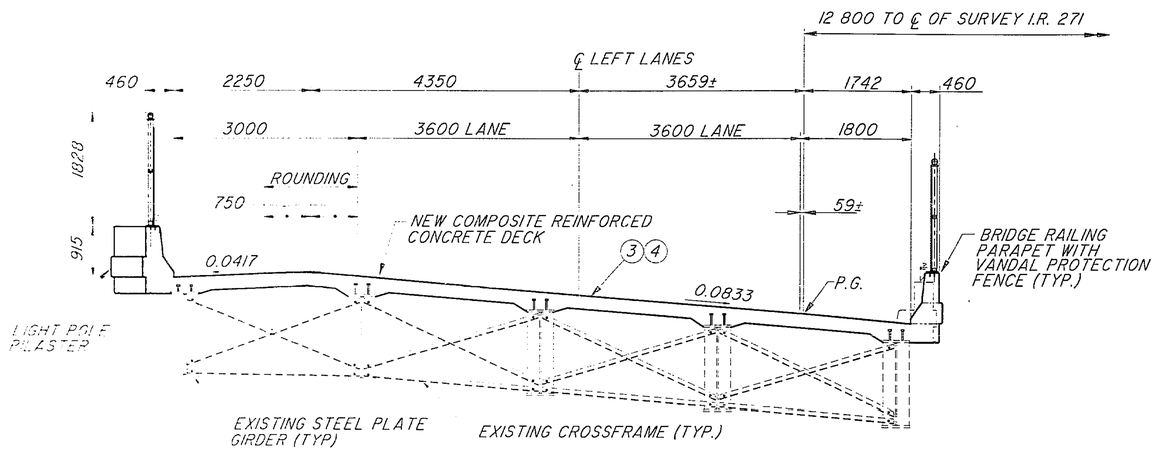

LEFT STRUCTURE SOUTHBOUND

3. REMOVE EXISTING ASPHALT OVERLAY, CONCRETE DECK AND PARAPETS
4. CONSTRUCT PROPOSED COMPOSITE REINFORCED CONCRETE DECK, DEFLECTOR PARAPETS AND VERTICAL VANDAL PROTECTION FENCES

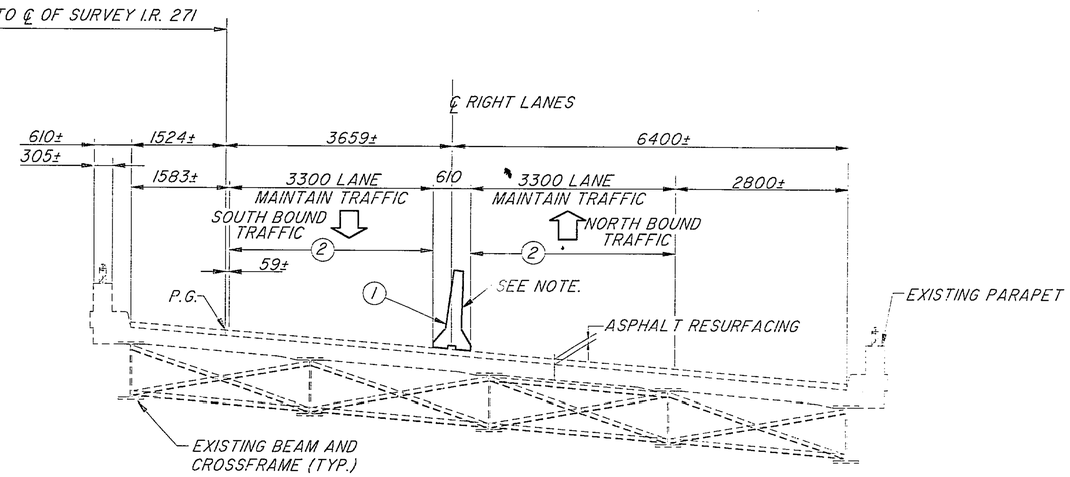

RIGHT STRUCTURE NORTHBOUND

1. INSTALL PORTABLE CONCRETE BARRIERS
2. MAINTAIN TWO WAY TRAFFIC ACROSS THE STRUCTURE

STAGE 1 CONSTRUCTION

NOTE:
ITEM 622, PORTABLE CONCRETE BARRIER, 1270 mm, AS PER PLAN; SEE ROADWAY MAINTENANCE OF TRAFFIC NOTES FOR DESCRIPTION AND M.O.T. SUMMARY FOR QUANTITY.

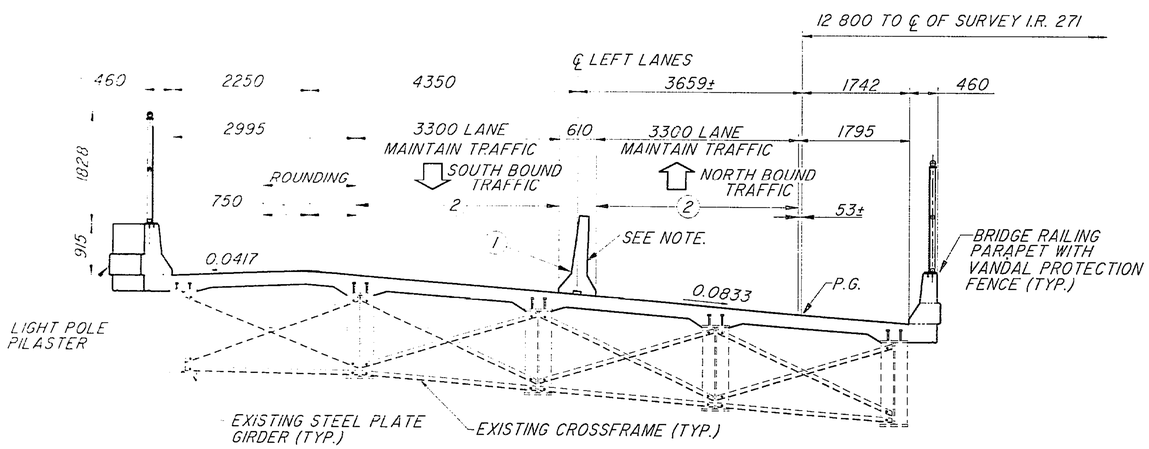

LEFT STRUCTURE SOUTHBOUND

1. INSTALL PORTABLE CONCRETE BARRIERS
2. MAINTAIN TWO WAY TRAFFIC ACROSS THE STRUCTURE

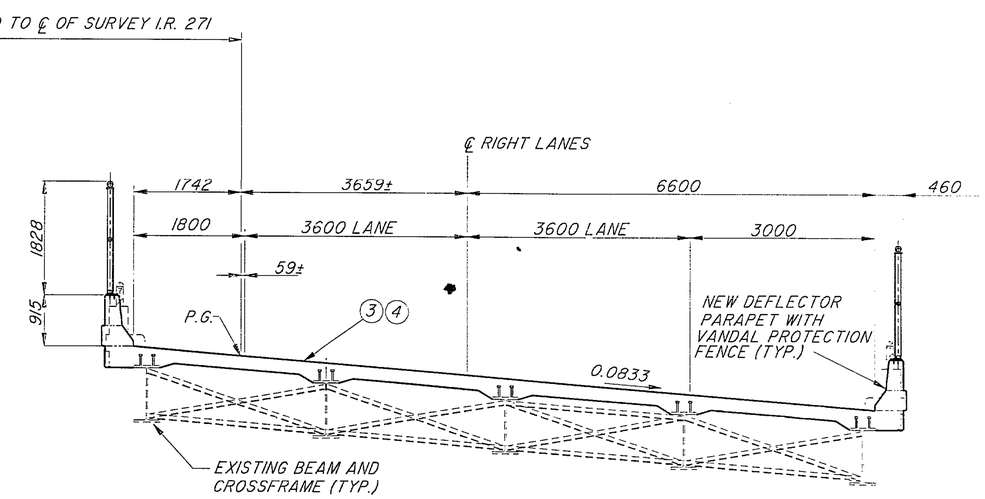

RIGHT STRUCTURE NORTHBOUND

3. REMOVE EXISTING ASPHALT OVERLAY, CONCRETE DECK AND PARAPETS
4. CONSTRUCT PROPOSED COMPOSITE REINFORCED CONCRETE DECK, DEFLECTOR PARAPETS AND VERTICAL VANDAL PROTECTION FENCES

STAGE 2 CONSTRUCTION

metric units

THE OSBORN ENGINEERING CO.
668 EUCLID AVENUE
CLEVELAND, OHIO 44114

JRS 02/29/96
7729561, 7729596
BK
BK GTA

STAGE CONSTRUCTION
BRIDGE NO. SUM-271-10605 LEFT & RIGHT
OVER WESTBOUND LANES OF I-80

SUM-271-10.51

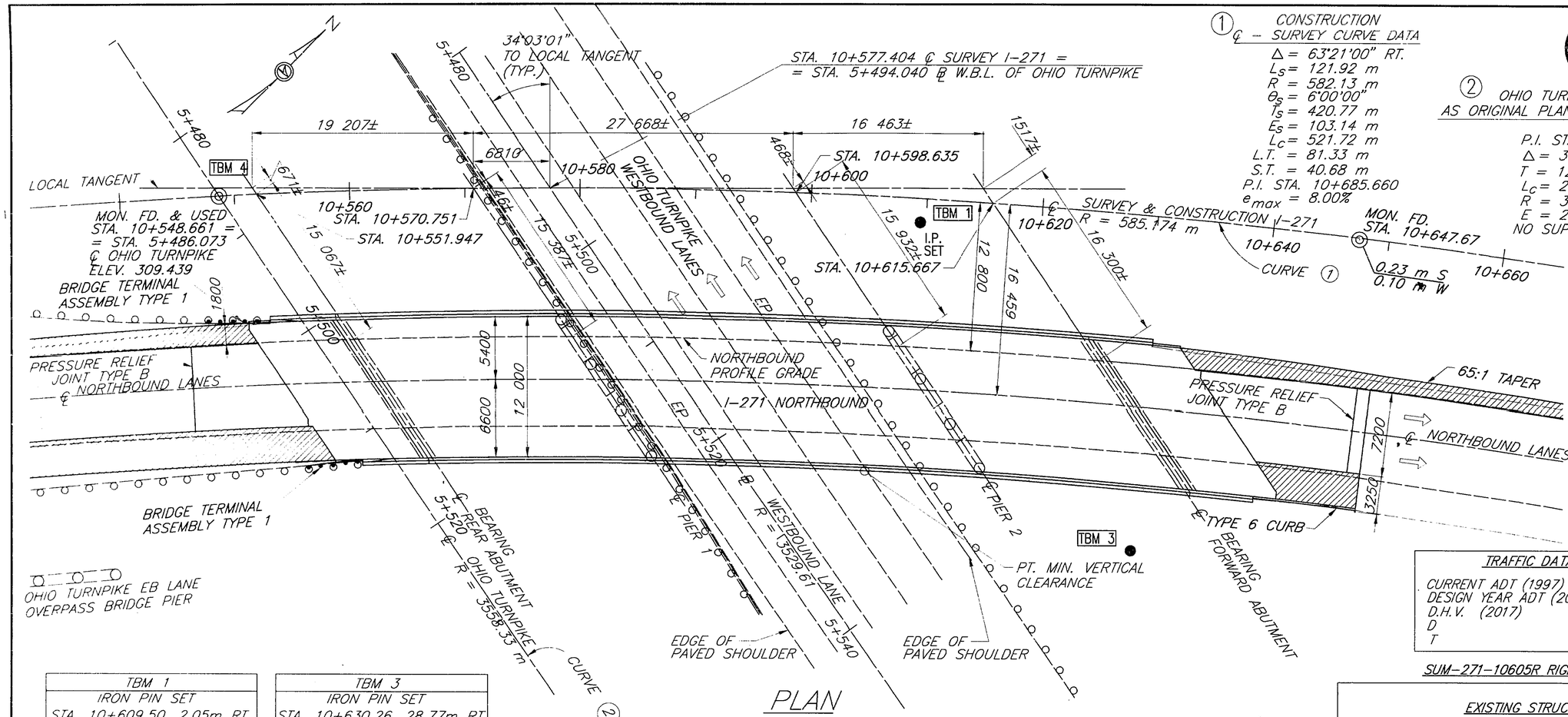

① CONSTRUCTION ℄ - SURVEY CURVE DATA

Δ = 63°21'00" RT.
L_s = 121.92 m
R = 582.13 m
θ_s = 6°00'00"
T_s = 420.77 m
E_s = 103.14 m
L_c = 521.72 m
L.T. = 81.33 m
S.T. = 40.68 m
P.I. STA. 10+685.660
e_{max} = 8.00%

② OHIO TURNPIKE CURV DATA AS ORIGINAL PLAN DATED OCT. 29, 1952

P.I. STA. 5+672.617
Δ = 38°21'52" LT.
T = 1237.90 m
L_c = 2382.58 m
R = 3558.33 m
E = 209.18 m
NO SUPERELEVATION

metric units

LEGEND:
I.P. = IRON PIN
TBM 1 = TEMPORARY BENCH MARK
E.B.L. = EASTBOUND LANE
W.B.L. = WESTBOUND LANE
● = IRON PIN SET
MON. = MONUMENT
FD. = FOUND
STA. = STATION
◎ = MONUMENT FOUND
EP = EDGE OF PAVEMENT
▨ = PAVED SHOULDER

TRAFFIC DATA

CURRENT ADT (1997)	= 23740
DESIGN YEAR ADT (2017)	= 31480
D.H.V. (2017)	= 315
D	= 60%
T	= 19%

SUM-271-10605R RIGHT STRUCTURE

TBM 1
IRON PIN SET
STA. 10+609.50, 2.05m RT.
ELEV. 304.80

TBM 3
IRON PIN SET
STA. 10+630.26, 28.77m RT.
ELEV. 304.24

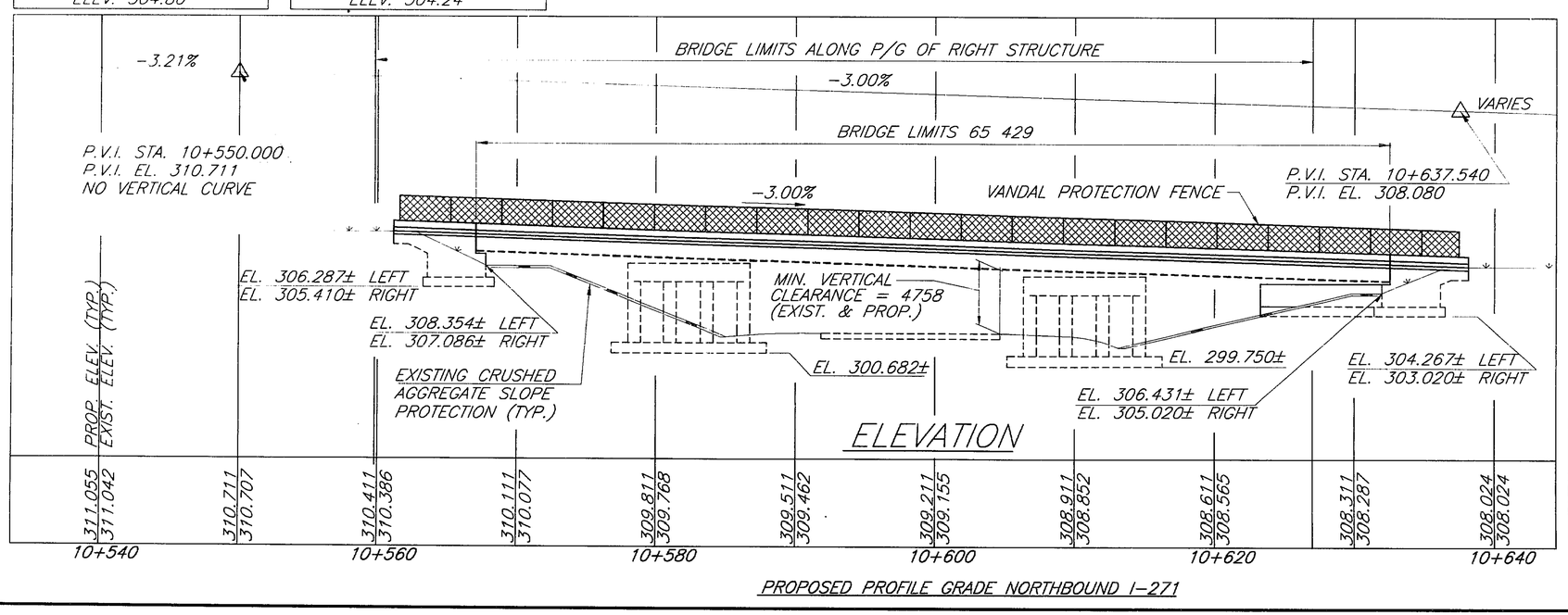

PROPOSED PROFILE GRADE NORTHBOUND I-271

EXISTING STRUCTURE

TYPE: CONTINUOUS STEEL BEAM WITH REINFORCED CONCRETE DECK AND SUBSTRUCTURES

SPAN: 63'-0"±, 90'-9""±, 54'-0"± C/C BEARINGS
ROADWAY: 40'-0"± F/F PARAPET
LOADING: CF=2000 ADEQUATE FOR A.A.S.H.T.O. ALTERNATE LOADING
SKEW: 34°-03'-01"± RIGHT FORWARD
WEARING SURFACE: ASPHALT (OVERLAY)
APPROACH SLABS: 25' LONG (AS-1-54)
ALIGNMENT: 3°-00'-00" CURVE RIGHT
SUPERELEVATION: 0.833'/FT.
YEAR BUILT: 1971
STRUCTURE FILE NO: 7729596

PROPOSED STRUCTURE

PROPOSED WORK: NEW COMPOSITE REINFORCED CONCRETE DECK, REPLACE ABUTMENT BACKWALLS, NEW PARAPETS, NEW STRIP SEAL EXPANSION JOINTS, REPLACE END CROSSFRAMES, RESET ABUTMENT BEARINGS, PATCH CONCRETE AT SUBSTRUCTURE, PAINT STRUCTURE STEELS, NEW APPROACH SLABS AND NEW VANDAL PROTECTION FENCES.

SPAN: 19 207 ±, 27 668 ±, 16 463 ± C/C BEARINGS
ROADWAY: 12.000 m TOE TO TOE OF PARAPET
LOADING: MS18-44 CASE I AND ALTERNATE MILITARY
SKEW: 34°-03'-01"± RIGHT FORWARD
WEARING SURFACE: MONOLITHIC CONCRETE
APPROACH SLABS: 7600 mm LONG (AS-1-81 METRIC)
ALIGNMENT: R = 582.13 m CURVE RIGHT
SUPERELEVATION: 0.0833

THIS PLAN PREPARED BY: RALPH C. TYLER, P.E., P.S., INC. CLEVELAND, OHIO 44106

DESIGN AGENCY: THE OSBORN ENGINEERING CO. CONSULTING ENGINEERS CLEVELAND, OHIO 44114

DESIGNED	DRAWN	REVIEWED	DATE
R.L.	R.L.	RCT	5/97
CHECKED	REVISED	STRUCTURE FILE NUMBER	
K.P.	XXX	7729596	

GENERAL PLAN AND ELEVATION RIGHT STRUCTURE
BRIDGE NO. SUM-271-10605 RIGHT
OVER WESTBOUND LANES OF I-80

SUM-271-10.51

N:\ODOT 933580\GEPLRIGT.DWG

CALC. BY SMG, DATE 2/15/97
CHK. BY BK, DATE 2/15/97

ESTIMATED QUANTITIES

ITEM	ITEM EXTENSION	TOTAL	UNIT	DESCRIPTION	ABUTMENT	PIERS	SUPER-STRUCTURE	GENERAL
202	11203	LUMP		PORTIONS OF STRUCTURE REMOVED, OVER 6 METER SPAN, AS PER PLAN (SEE SHEET 1/29)				LUMP
503	11100	LUMP		COFFERDAMS, CRIBS AND SHEETING				LUMP
503	21301	LUMP		UNCLASSIFIED EXCAVATION, AS PER PLAN (SEE SHEET 1/29)				LUMP
511	31500	298	CU METER	CLASS S CONCRETE, SUPERSTRUCTURE			298	
511	44100	49	CU METER	CLASS C CONCRETE, ABUTMENT NOT INCLUDING FOOTING	49			
SPECIAL	51267510	794	SQ METER	SEALING OF CONCRETE SURFACES (EPOXY-URETHANE)*	143	209	442	
513	15901	968	KILOGRAM	STRUCTURAL STEEL, REPLACEMENT OF DETERIORATED END CROSSFRAMES, AS PER PLAN (SEE SHEET 2/29)			968	
513	16600	LUMP	LUMP	STRUCTURAL STEEL, MISC.: FATIGUE RETROFIT END BOLTED COVER PLATES				LUMP
513	20000	2570	EACH	WELDED STUD SHEAR CONNECTOR			2570	
815	00100	LUMP		SURFACE PREPARATION OF EXISTING STEEL, SYSTEM OZEU				LUMP
815	00200	LUMP		FIELD PAINTING OF EXISTING STEEL, PRIME COAT, SYSTEM OZEU				LUMP
815	00300	LUMP		FIELD PAINTING OF EXISTING STEEL, INTERMEDIATE COAT, SYSTEM OZEU				LUMP
815	00400	LUMP		FIELD PAINTING OF EXISTING STEEL, FINISH COAT, SYSTEM OZEU				LUMP
516	00610	968	KILOGRAM	[illegible] INTERMEDIATE AND FINISH COAT, SYSTEM OZEU			968	
516	13600	7.5	SQ METER	25 mm PREFORMED EXPANSION JOINT FILLER				7.5
516	11210	31.2	METER	STRUCTURAL EXPANSION JOINT INCLUDING ELASTOMERIC STRIP SEAL *			31.2	
516	31010	22	METER	50 mm DEEP JOINT SEALER				22
516	45305	10	EACH	REFURBISH BEARING DEVICE, AS PER PLAN (SEE SHEET 2/29)	10			
516	47001	LUMP		JACKING AND TEMPORARY SUPPORT OF SUPERSTRUCTURE, AS PER PLAN (SEE SHEET 3/29)				LUMP
518	21200	70	CU METER	POROUS BACKFILL WITH FILTER FABRIC	70			
518	40001	39	METER	150 mm PERFORATED CORRUGATED PLASTIC PIPE, AS PER PLAN (SEE SHEET 3/29)	39			
518	40011	55	METER	150 mm NON-PERFORATED CORRUGATED PLASTIC PIPE, INCLUDING SPECIALS, AS PER PLAN (SEE SHEET 3/29)				
519	11101	4	SQ METER	PATCHING CONCRETE STRUCTURES, AS PER PLAN (SEE SHEET 19/29)		4		
SPECIAL	51911502	2	SQ METER	PATCHING CONCRETE STRUCTURE WITH TROWELABLE MORTAR *		2		
SPECIAL	51912610	3.5	METER	CONCRETE REPAIR BY EPOXY INJECTION (INCLUDING SURFACE PREPARATION)*		3.5		
SPECIAL	60739900	154	METER	VANDAL PROTECTION FENCE, 1.8 METER STRAIGHT, COATED FABRIC (SEE SHEET 2/29)	23		131	

*SEE PROPOSAL NOTES

metric units

THE OSBORN ENGINEERING CO.
668 EUCLID AVENUE
CLEVELAND, OHIO 44114

DESIGNED JRS DATE 02/29/96
CHECKED SMG
DRAWN BK
REVIEWED GTA
7729596

ESTIMATED QUANTITIES
BRIDGE NO. SUM-271-10605 RIGHT
OVER WESTBOUND LANES OF I-80

SUM-271-10.51

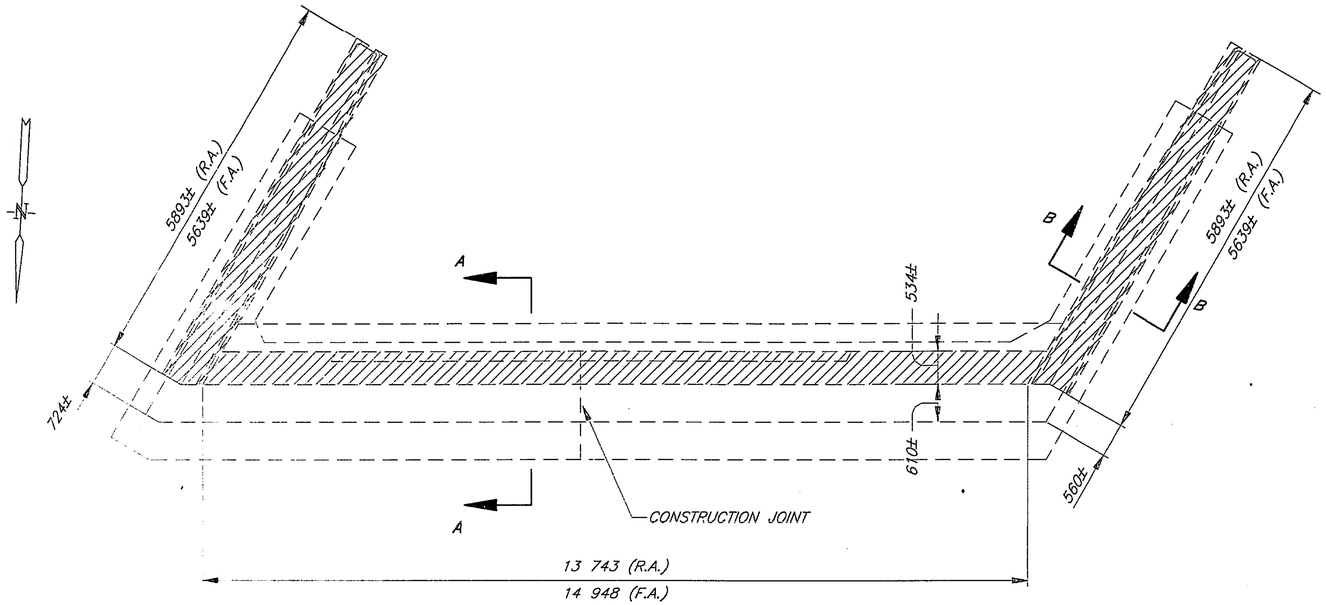

PLAN

REAR ABUTMENT SHOWN
OTHER ABUTMENT SIMILAR

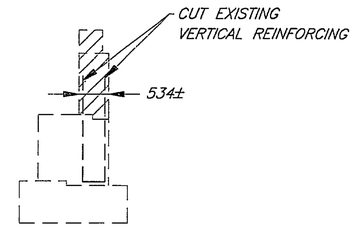

SECTION A–A

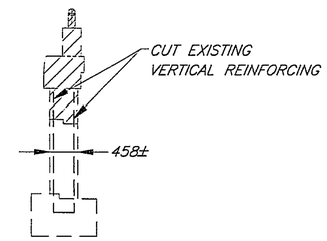

SECTION B–B

LEGEND

ITEM 202 PORTION OF STRUCTURE REMOVED, OVER 6 METER, AS PER PLAN.

ABBREVIATION

R.A. = REAR ABUTMENT
F.A. = FORWARD ABUTMENT

NOTES:

1. FOR SUBSTRUCTURE REPAIR DETAILS SEE SHEET 8 / 29

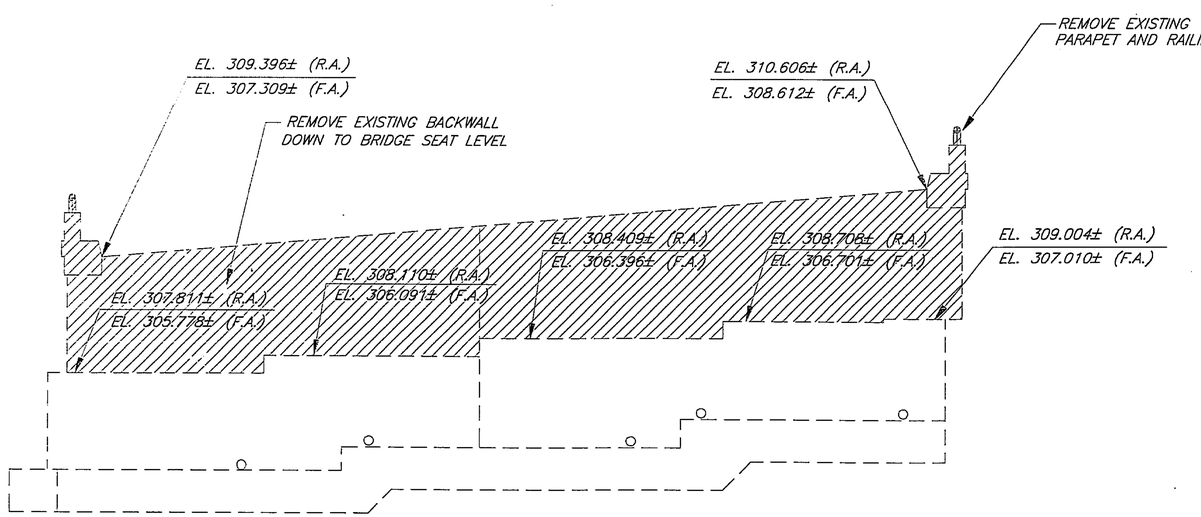

ELEVATION

REAR ABUTMENT SHOWN
OTHER ABUTMENT SIMILAR

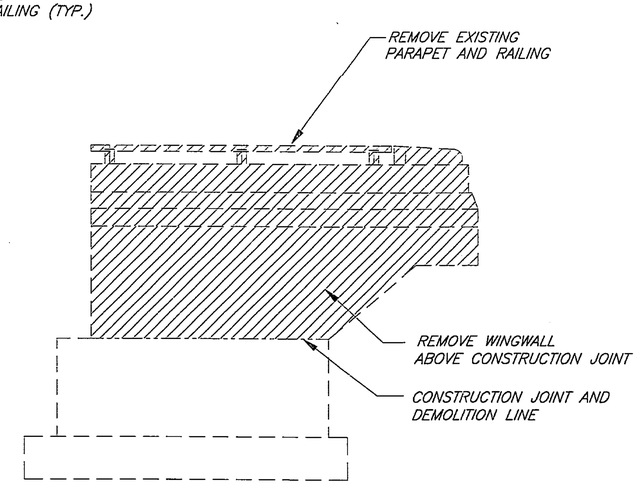

ELEVATION WEST WINGWALL

OTHER WINGWALL SIMILAR

metric units

THE OSBORN ENGINEERING CO.
668 EUCLID AVENUE
CLEVELAND, OHIO 44114

JRS 02/29/96
7729596
SMG
BK
GTA

ABUTMENT DEMOLITION
BRIDGE NO. SUM-271-10605 RIGHT
OVER WESTBOUND LANES OF I-80

SUM-271-10.51

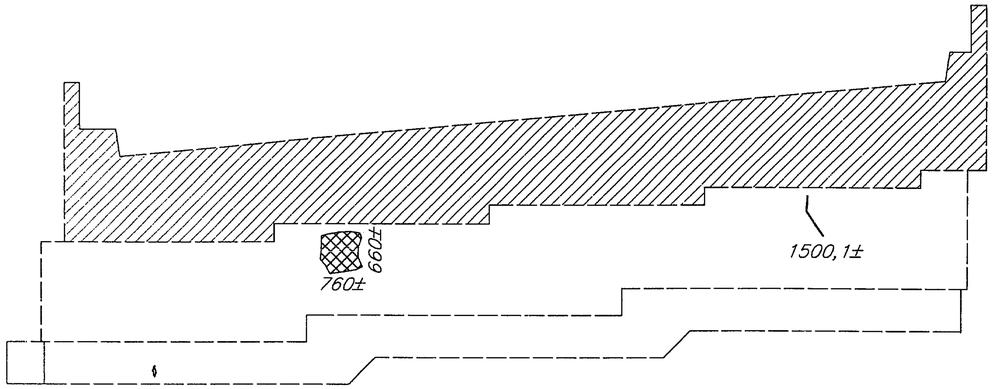

REAR ABUTMENT

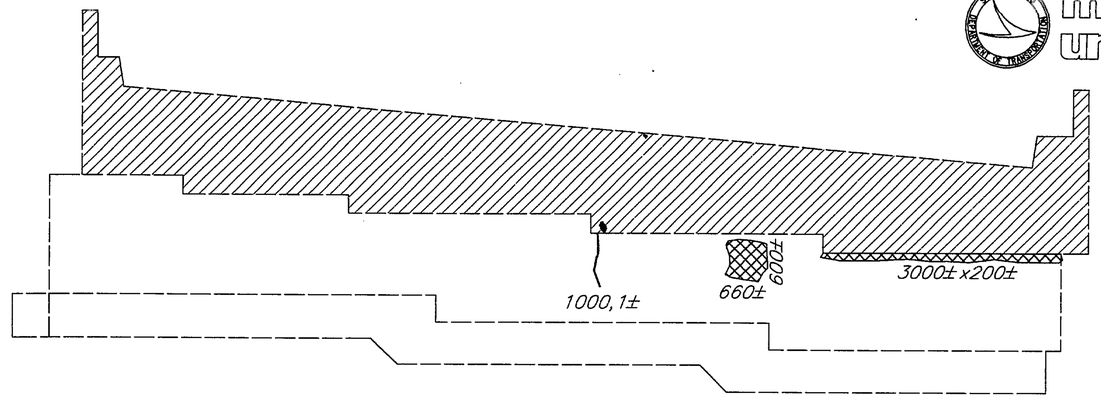

FORWARD ABUTMENT

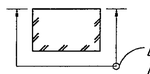

LIMIT OF SEALING PIER CAP WITH EPOXY–URETHANE

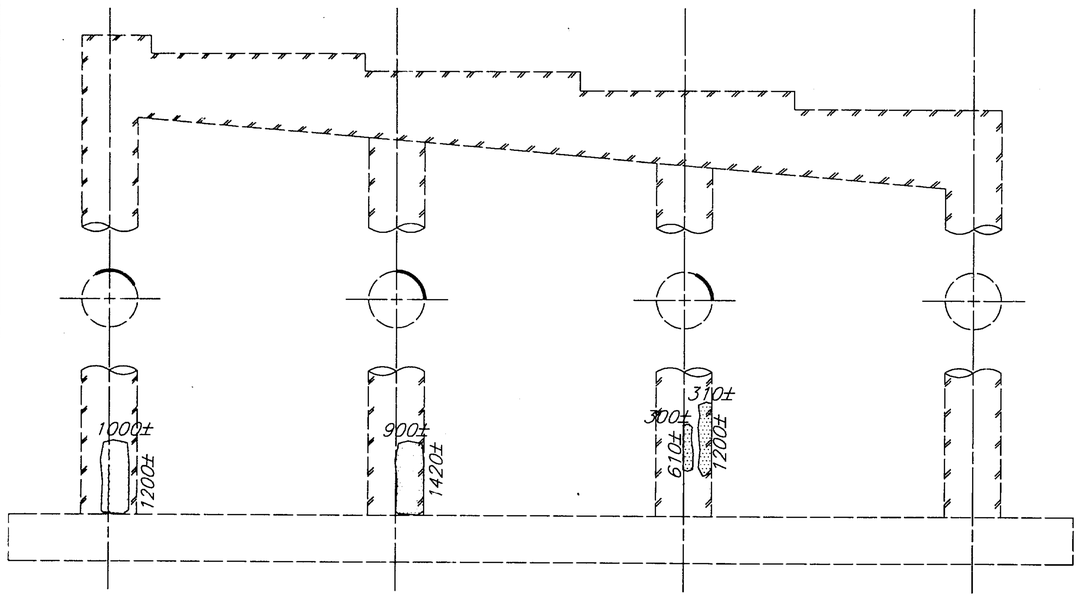

PIER 1

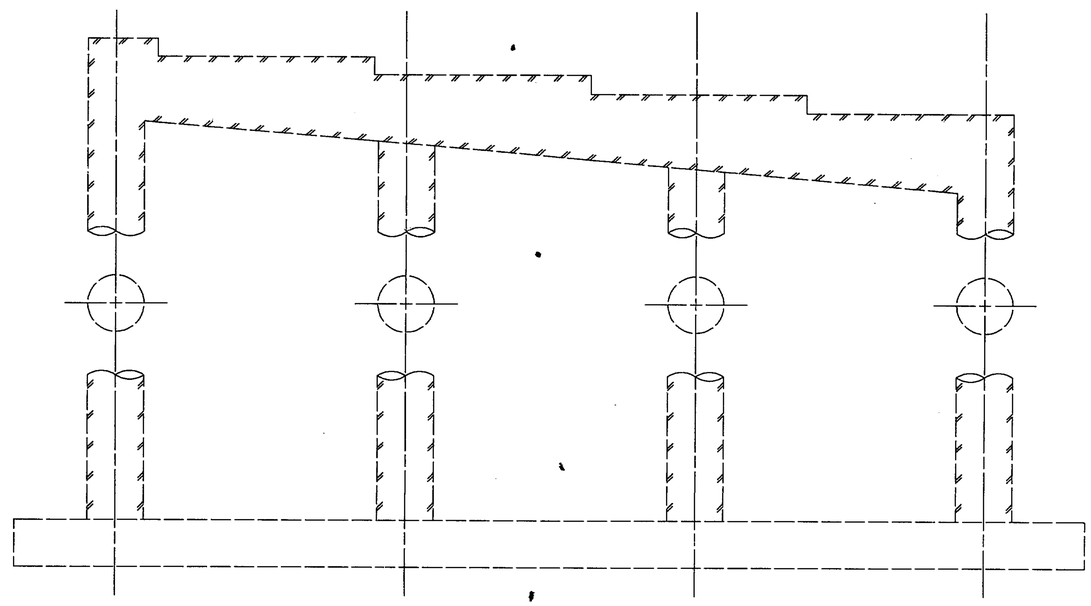

PIER 2

LEGEND:

- ITEM 202 PORTION OF STRUCTURE REMOVAL (SEE ABUTMENT DEMOLITION DRAWINGS)
- ITEM SPECIAL PATCHING CONCRETE STRUCTURES WITH TROWELABLE MORTAR ✳
- CRACK (LENGTH AND WIDTH FOR CRACK AS SHOWN "XXX", "XX" IN mm)
- ITEM 519 PATCHING CONCRETE STRUCTURE, AS PER PLAN ✳
- ITEM SPECIAL SEALING OF CONCRETE SURFACES (EPOXY–URETHANE)

✳NOTES:

1. FOR NOTES SEE SUBSTRUCTURE REPAIR DETAILS LEFT STRUCTURE SEE SHEET 19/29

SUMMARY OF REPAIR QUANTITIES

LOCATION	✳ ITEM SPECIAL CONCRETE REPAIR BY EPOXY INJECTION	✳ ITEM SPECIAL – PATCHING CONC. STRUCTURES WITH TROWELABLE MORTAR	✳ ITEM 519 – PATCHING CONCRETE STRUCTURES, AS PER PLAN
	METER	SQUARE METER	SQUARE METER
FORWARD ABUTMENT	1	1	
PIER 2			
PIER 1			3
REAR ABUTMENT	1.5	0.5	
35% EXPANSION FACTOR	1	0.5	1
TOTAL	3.5	2	4

metric units

THIS PLAN PREPARED BY: RALPH C. TYLER, P.E., P.S., INC. CLEVELAND, OHIO 44106

DESIGN AGENCY: THE OSBORN ENGINEERING CO. CONSULTING ENGINEERS CLEVELAND, OHIO 44114

DESIGNED	DRAWN	REVIEWED	DATE
R.L.	R.L.	RCT	5/97
CHECKED	REVISED	STRUCTURE FILE NUMBER	
K.P.	XXX	7729596	

SUBSTRUCTURE REPAIR DETAILS
BRIDGE NO. SUM–271–10605 RIGHT
OVER WESTBOUND LANES OF I–80

SUM–271–10.51

8 / 29

59 / 80

N:\ODOT\93580\SUBSRIGT.DWG

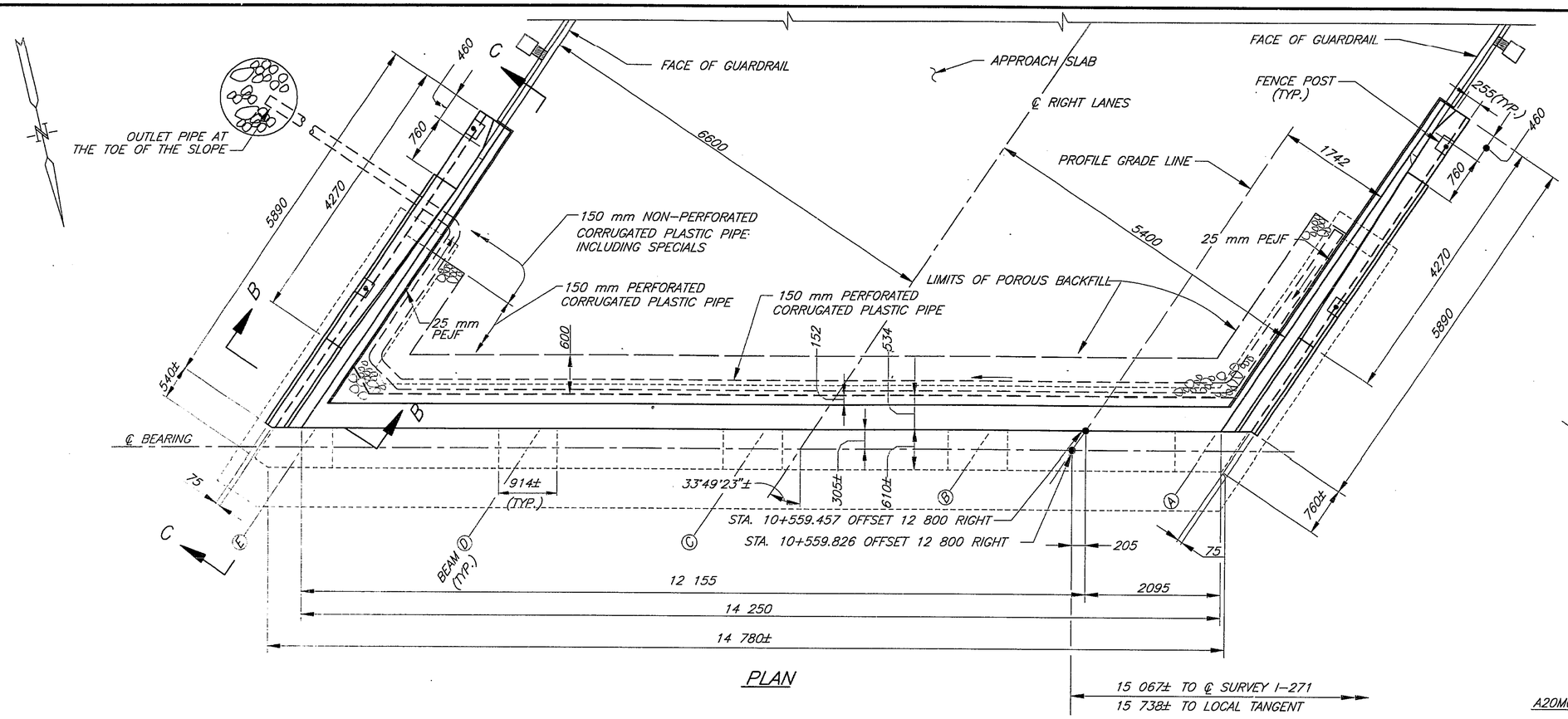

PLAN

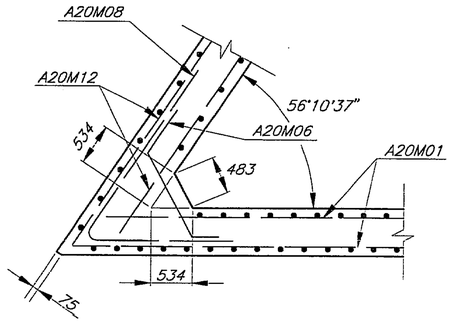

SECTION D-D

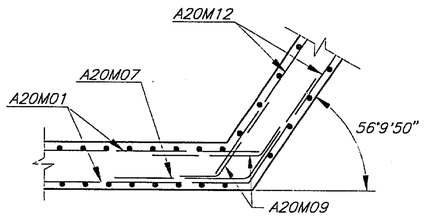

SECTION E-E

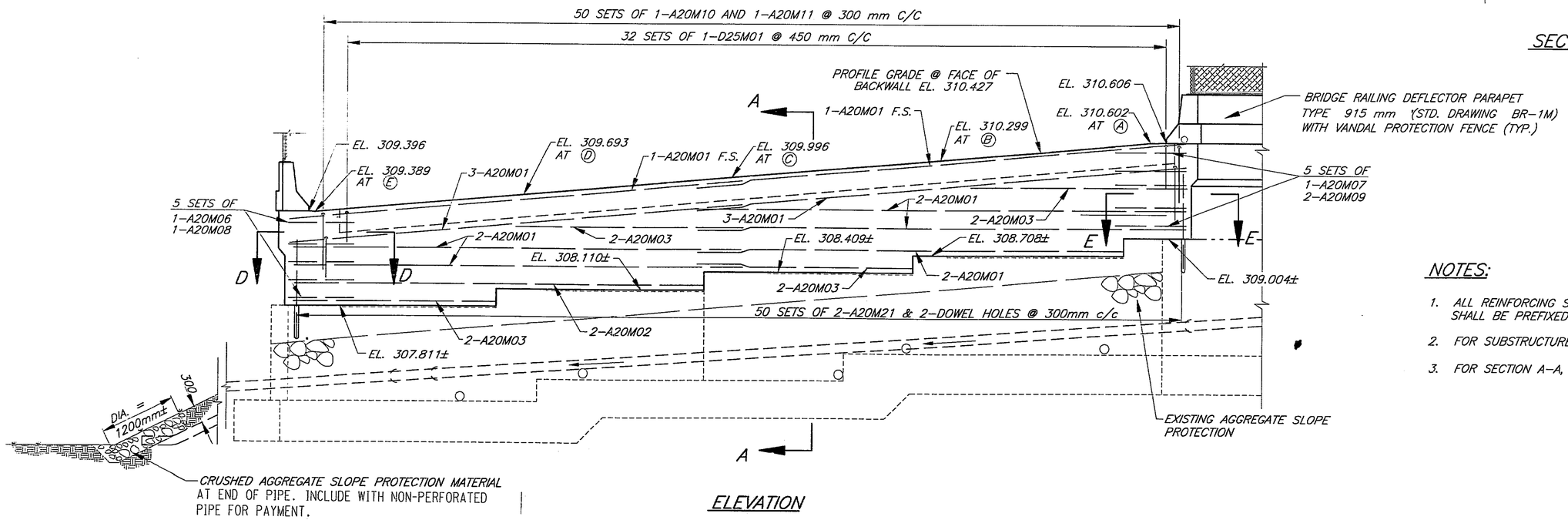

ELEVATION

NOTES:

1. ALL REINFORCING STEEL FOR REAR ABUTMENT SHALL BE PREFIXED "RA".
2. FOR SUBSTRUCTURE REPAIR DETAILS SEE SHEET 8/29.
3. FOR SECTION A-A, B-B AND C-C SEE SHEET 11/29.

metric units

DESIGN AGENCY: THE OSBORN ENGINEERING CO. 668 EUCLID AVENUE CLEVELAND, OHIO 44114

DATE: 02/29/96 | DRAWING FILE NUMBER: 7729596

DESIGNED: JRS | CHECKED: SMG

DRAWN: BK | CHECKED: GTA

REAR ABUTMENT
BRIDGE NO. SUM-271-10605 RIGHT
OVER WESTBOUND LANES OF I-80

SUM-271-10.51

9/29

60/80

Filename: K:\ODOT-M\0355\SIRUCT\0355R*06
Plotted By/Date: kurtsmm / 05-12-97 (19:13)
Drawn By/Date:

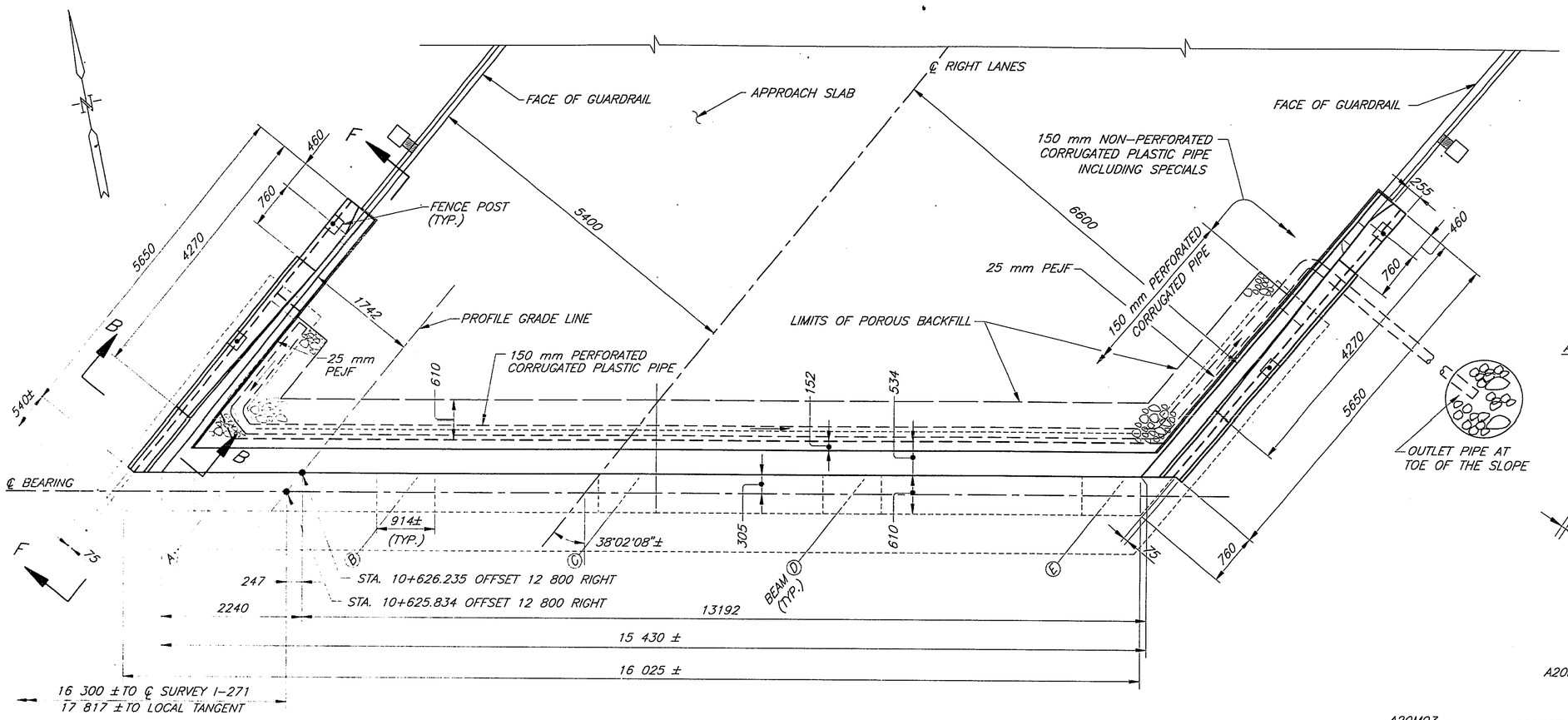

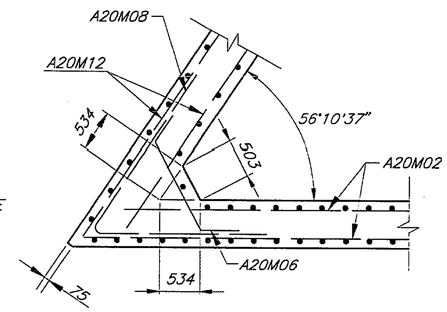

SECTION D-D

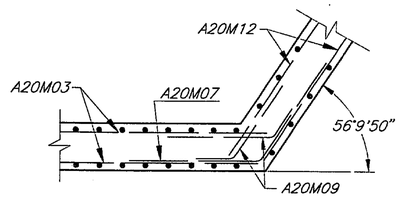

SECTION E-E

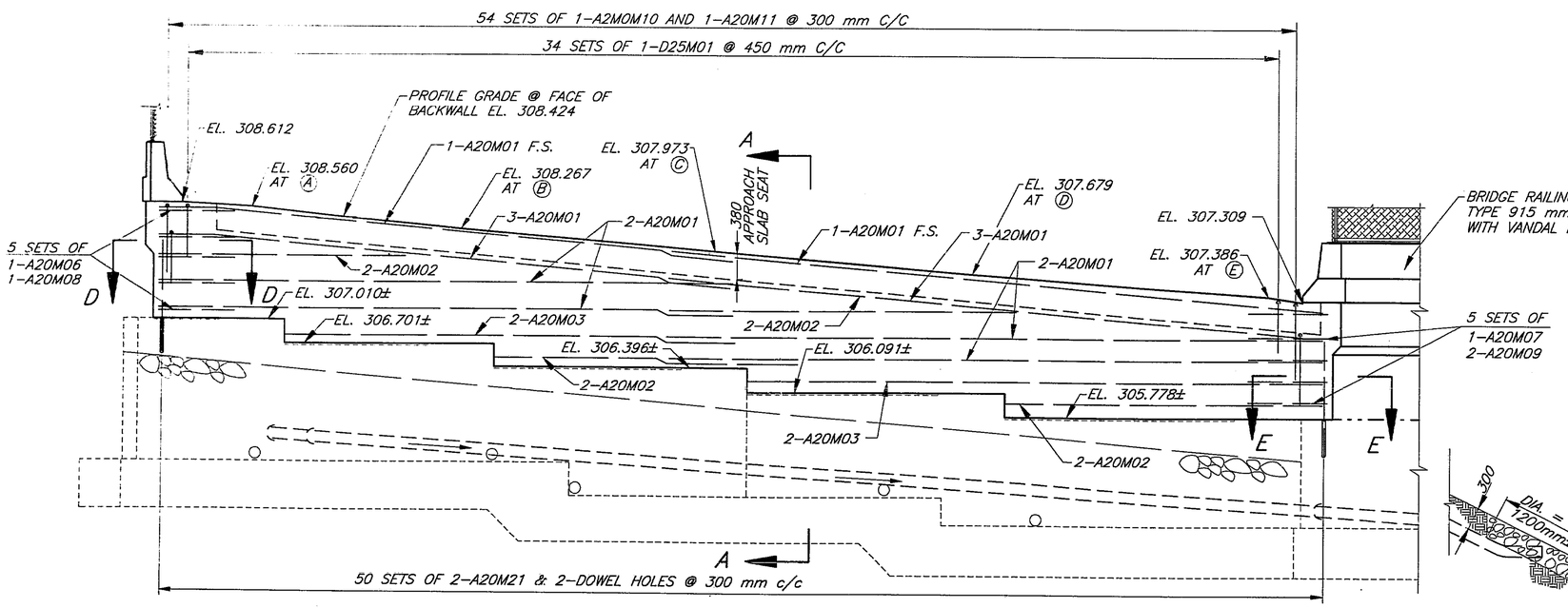

ELEVATION

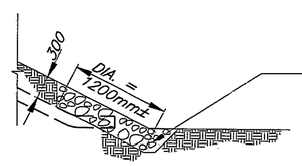

CRUSHED AGGREGATE SLOPE PROTECTION MATERIAL AT END OF PIPE. INCLUDE WITH NON-PERFORATED PIPE FOR PAYMENT.

NOTES:

1. ALL REINFORCING STEEL FOR FORWARD ABUTMENT SHALL BE PREFIXED "FA".
2. FOR SUBSTRUCTURE REPAIR DETAILS SEE SHEET 8/29.
3. FOR SECTION A-A, B-B AND F-F SEE SHEET 11/29.

metric units

DESIGN AGENCY: THE OSBORN ENGINEERING CO. 668 EUCLID AVENUE CLEVELAND, OHIO 44114

DESIGNED	DRAWN	REVIEWED	DATE
BK	SMG	JRS	02/29/96
CHECKED	REVISED	STRUCT. FILE NUMBER	
GTA		7729596	

FORWARD ABUTMENT
BRIDGE NO. SUM-271-10605 RIGHT OVER WESTBOUND LANES OF I-80

SUM-271-10.51

10/29

61/80

Filename K:\ODOT\2001-H\0155\STRUCT\0155R715
Plot Scale 1=10
Plotted By/Date "kentucem / 05-12-97 ()

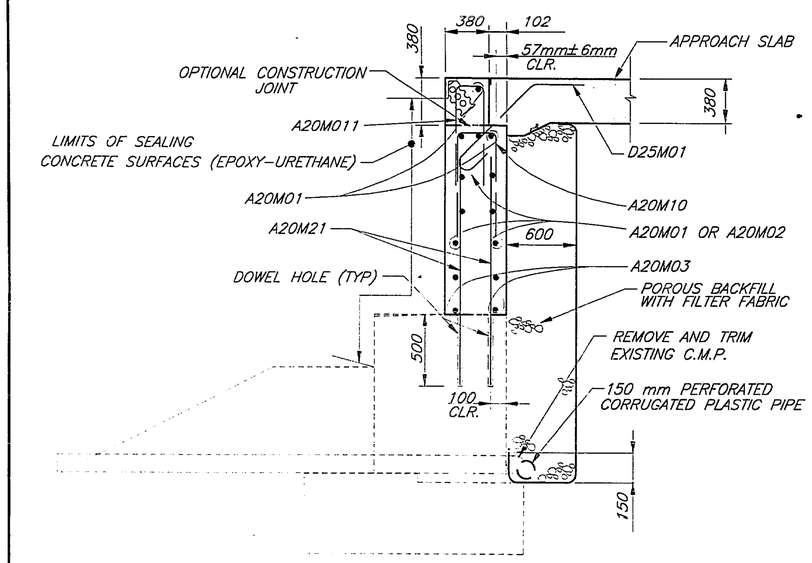

SECTION A-A

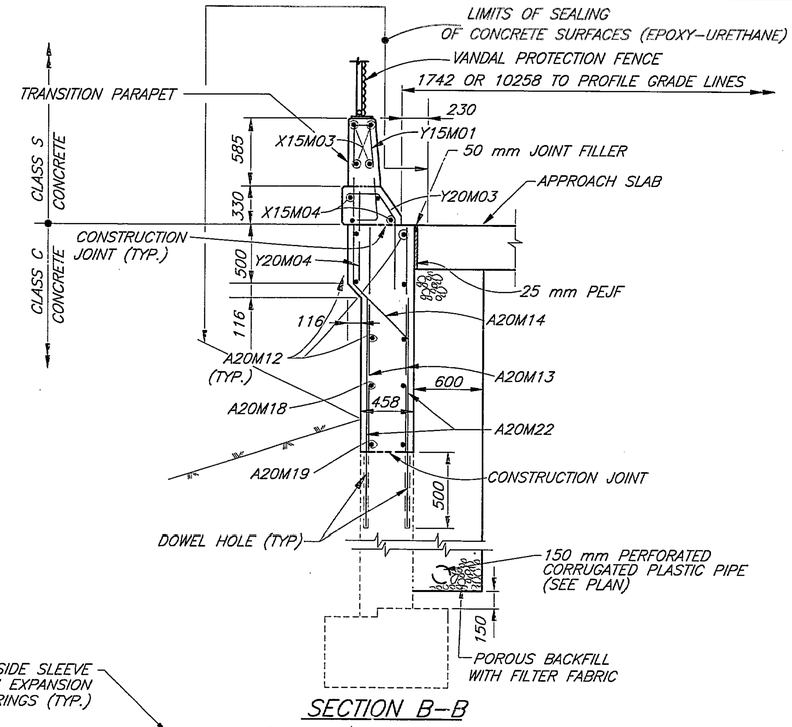

SECTION B-B

TABLE 1				
	REAR ABUTMENT		FORWARD ABUTMENT	
	WEST WINGWALL	EAST WINGWALL	WEST WINGWALL	EAST WINGWALL
EL. A	310.606	309.396	308.612	307.309
EL. B	309.004	307.811	307.010	305.778
EL. C	310.783	309.573	308.443	307.140
DIM. D	4039±	4191±	4064±	4191±

NOTES:

1. ALL REINFORCING STEEL FOR REAR ABUTMENT SHALL BE PREFIXED "RA"
   ALL REINFORCING STEEL FOR FORWARD ABUTMENT SHALL BE PREFIXED "FA"
2. FOR ABUTMENT PLAN AND ELEVATION SEE SHEET 9/29 AND 10/29.
3. FOR ADDITIONAL DETAILS AND NOTES OF BRIDGE RAILING DEFLECTOR PARAPET TYPE, SEE STANDARD DRAWING BR-1M SHEET 1 OF 2.
4. THE THRIE BEAM TERMINAL CONNECTOR SHALL FIT UNDER THE STANDARD GUARDRAIL SECTION AT THE APPROACH END. ALL LAPS SHALL BE IN THE DIRECTION OF TRAFFIC.
5. BACKWALL CONCRETE: IN ADDITION TO THE PROVISION OF 511.08 BACKWALL CONCRETE ABOVE THE OPTIONAL CONSTRUCTION JOINT AT THE APPROACH SLAB SEAT SHALL NOT BE PLACED UNTIL AFTER THE DECK CONCRETE IN THE SPAN ADJACENT TO THE ABUTMENT HAS BEEN PLACED
6. FOR ADDITIONAL DETAILS AND NOTES OF VANDAL PROTECTION FENCE, SEE STANDARD DRAWING VPF-1-90M.

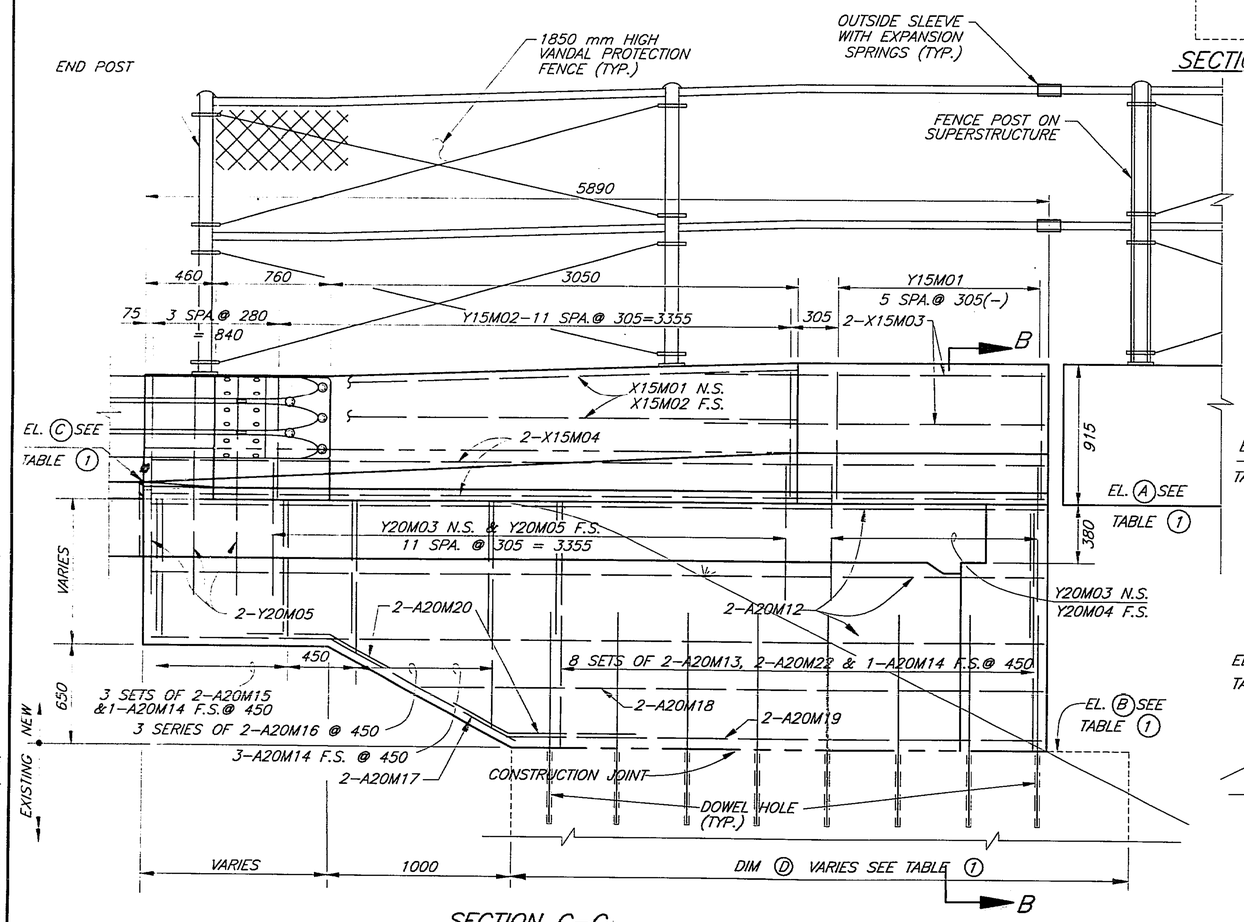

SECTION C-C
REAR ABUTMENT WEST WINGWALL SHOWN
EAST WINGWALL OPPOSITE HAND

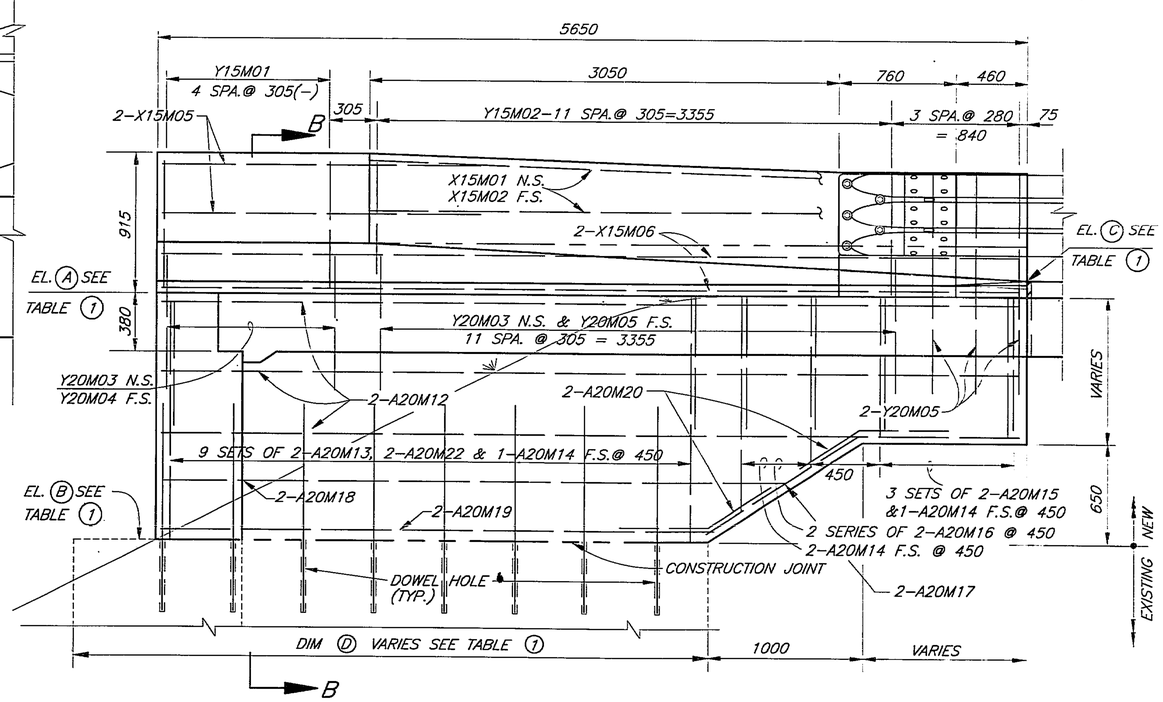

SECTION F-F
FORWARD ABUTMENT WEST WINGWALL SHOWN
EAST WINGWALL OPPOSITE HAND
VANDAL PROTECTION FENCE NOT SHOWN

metric units

DESIGN AGENCY: THE OSBORN ENGINEERING CO. 668 EUCLID AVENUE CLEVELAND, OHIO 44114

REVIEWED: JRS | DATE: 02/29/96 | STRUCTURE FILE NUMBER: 7729596

DRAWN: SMG | REVISED:

DESIGNED: BK | CHECKED: GTA

ABUTMENT DETAILS
BRIDGE NO. SUM-271-10.512 RIGHT
OVER WESTBOUND LANES OF I-80

SUM-271-10.51

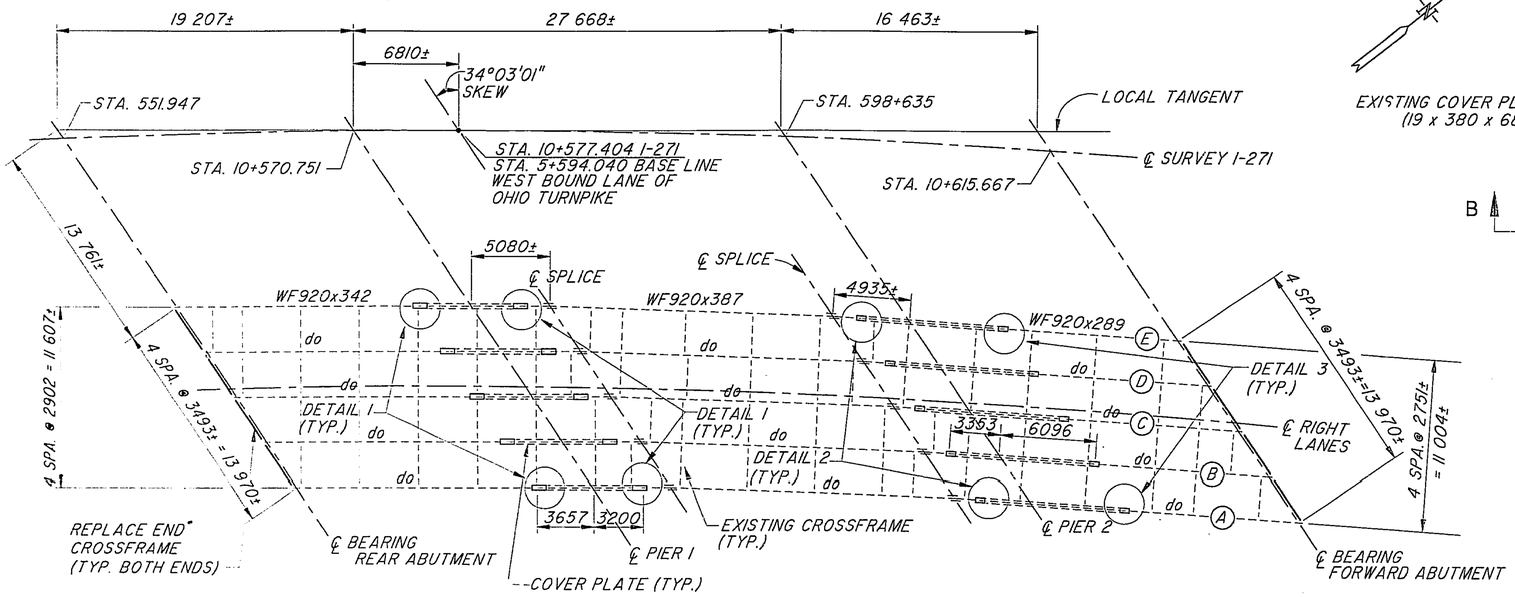

FRAMING PLAN

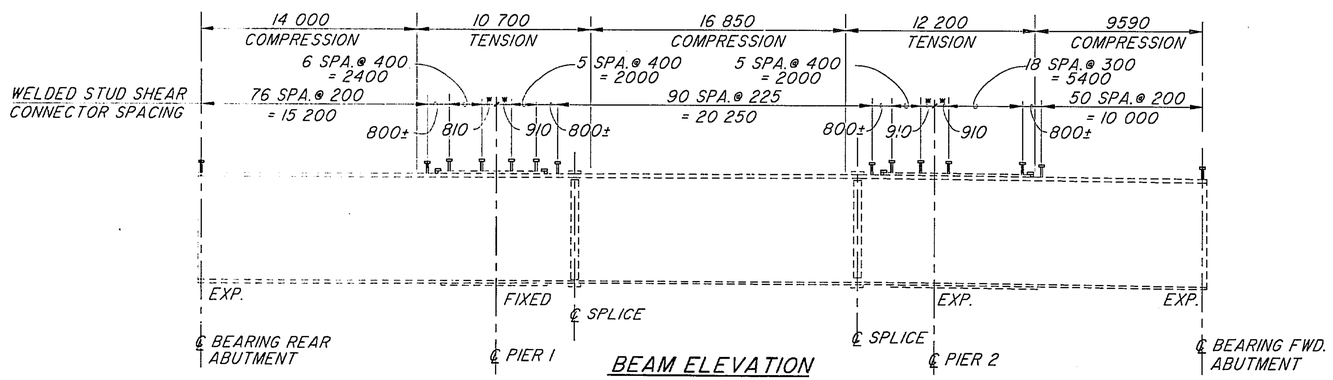

▪ INDICATE NO STUD IN THIS AREA

BEAM ELEVATION

BEAM A SHOWN
BEAM B,C,D, & E SIMILAR

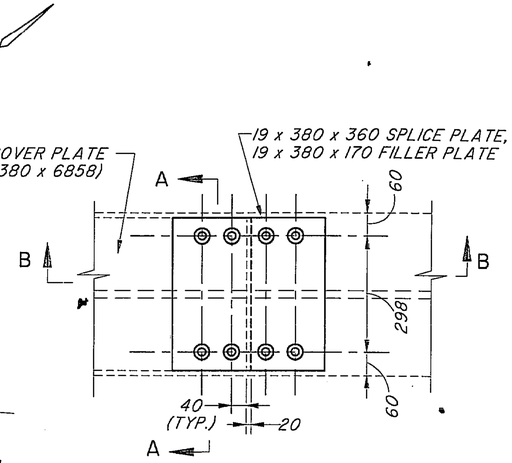

DETAIL 1

END MOMENT PLATE RETROFIT
TOP FLANGE ONLY
TYPICAL AT 10 PLACES

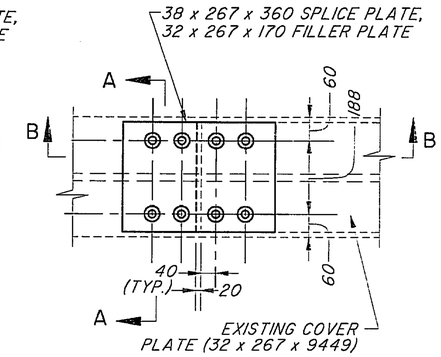

DETAIL 2

END MOMENT PLATE RETROFIT
TOP FLANGE ONLY
TYPICAL AT 5 PLACES

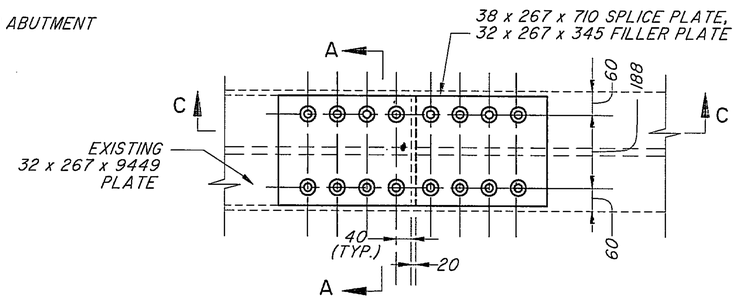

DETAIL 3

END MOMENT PLATE RETROFIT
TOP FLANGE ONLY
TYPICAL AT 5 PLACES

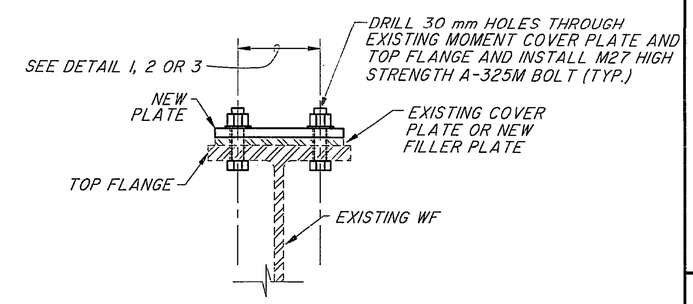

SECTION A-A

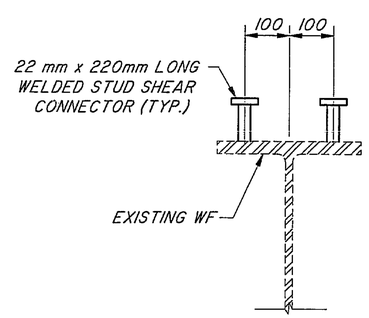

SHEAR STUD CONNECTOR DETAIL

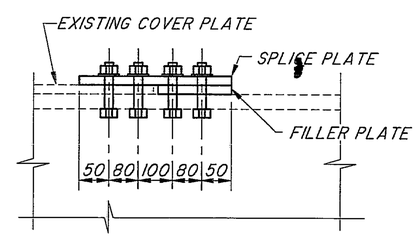

SECTION B-B

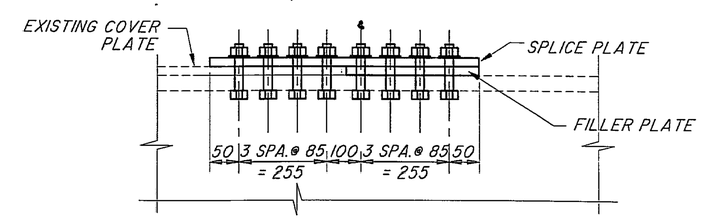

SECTION C-C

NOTES

1. ALL PLATE SHALL BE A36 M.
2. FOR DETAILS OF NEW END CROSSFRAMES SEE STANDARD DRAWINGS EXJ-4-87M SHEET 1 OF 5.
3. HIGH STRENGTH BOLTS SHALL BE M27 DIAMETER A-325 M, GALVANIZED UNLESS OTHERWISE NOTED, ALONG WITH GAVALNIZED NUTS AND WASHERS.
4. WELDED ATTACHMENT OF SUPPORTS FOR CONCRETE DECK FINISHING MACHINE MAY BE MADE TO AREAS OF FACIA STRINGER FLANGES DESIGNATED "COMPRESSION". ATTACHMENTS SHALL NOT BE MADE TO AREAS DESIGNATED "TENSION". FILLET WELDS TO COMPRESSION FLANGES SHALL BE NOT CLOSER THAN 25 mm FROM EDGE OF FLANGE, BE NOT MORE THAN 50 mm LONG, AND BE NOT SMALLER THAN THE MINIMUM SIZE REQUIRED BY AASHTO.

metric units

THE OSBORN ENGINEERING CO.
668 EUCLID AVENUE
CLEVELAND, OHIO 44114

DESIGNED BCK	DRAWN VM	REVIEWED JRS
CHECKED GTA	REVISED	DATE 2/29/96
		STRUCTURE FILE NUMBER 7729596

FRAMING PLAN
BRIDGE NO. SUM-271-10605 RIGHT
OVER WESTBOUND LANES OF I-80

SUM-271-10.51

12 / 29

63 / 80

Filename K:\ODOT\2001-14\0355\STRUCT\0355K710
Plot Scale 1=200 Plotted By Date Nuntakorn / 05-12-97 (19:22)

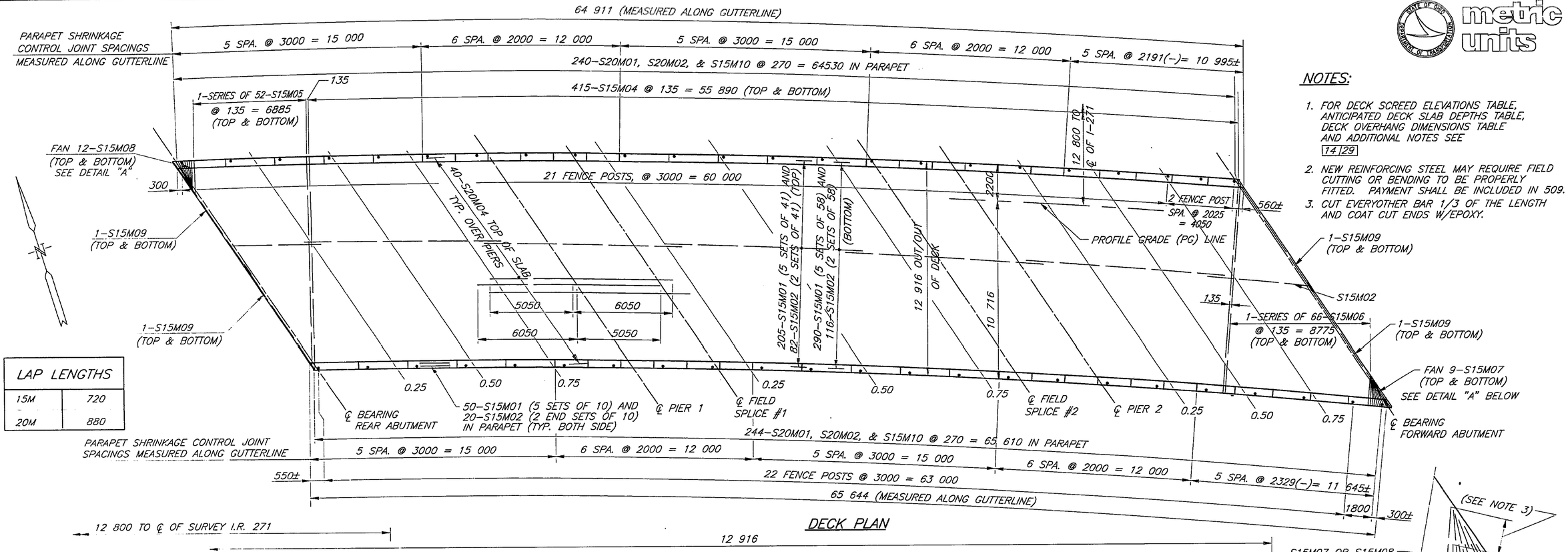

LAP LENGTHS	
15M	720
20M	880

DECK PLAN

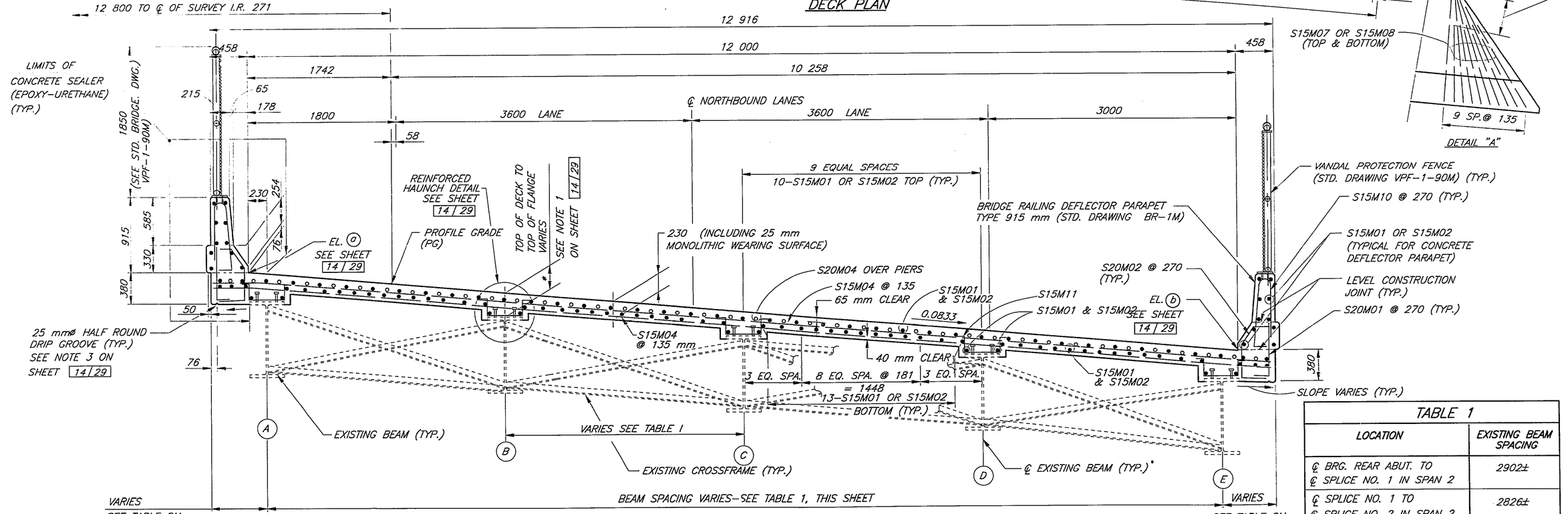

TRANSVERSE DECK SECTION

(RIGHT STRUCTURE NORTHBOUND)

TABLE 1	
LOCATION	EXISTING BEAM SPACING
℄ BRG. REAR ABUT. TO ℄ SPLICE NO. 1 IN SPAN 2	2902±
℄ SPLICE NO. 1 TO ℄ SPLICE NO. 2 IN SPAN 2	2826±
℄ SPLICE NO. 2 IN SPAN 2 TO ℄ BRG. FWD. ABUT.	2751±

NOTES:

1. FOR DECK SCREED ELEVATIONS TABLE, ANTICIPATED DECK SLAB DEPTHS TABLE, DECK OVERHANG DIMENSIONS TABLE AND ADDITIONAL NOTES SEE 14/29
2. NEW REINFORCING STEEL MAY REQUIRE FIELD CUTTING OR BENDING TO BE PROPERLY FITTED. PAYMENT SHALL BE INCLUDED IN 509.
3. CUT EVERYOTHER BAR 1/3 OF THE LENGTH AND COAT CUT ENDS W/EPOXY.

STATE OF OHIO DEPARTMENT OF TRANSPORTATION — metric units

DESIGN AGENCY: THE OSBORN ENGINEERING CO. 668 EUCLID AVENUE CLEVELAND, OHIO 44114

DESIGNED	DRAWN	REVIEWED	DATE
GTA	VM	JRS	02/29/96
CHECKED	REVISED	STRUCTURE FILE NUMBER	
BK		7729596	

DECK PLAN AND TRANSVERSE SECTION

BRIDGE NO. SUM-271-10605 RIGHT
OVER WESTBOUND LANES OF I-80

SUM-271-10.51

Filename: K:\HDL\0001-M\0355\SHEET\0355R11.DGN
Plot Scale: 1=25
Drawn By/Date: kurtzkem / 05-12-13 (19:40)

DECK SCREED ELEVATIONS (TOP OF PORTLAND CEMENT CONCRETE)

ELEVATION LOCATION	SPAN 1				SPAN 2					SPAN 3			
	℄ BEARING REAR ABUT.	0.25	0.50	0.75	℄ PIER 1	F.S. #1	0.5	F.S. #2	℄ PIER 2	0.25	0.50	0.75	℄ BEARING FORWARD ABUT.
LEFT GUTTER EL. ⓐ	310.595	310.458	310.312	310.161	310.014	309.869	309.617	309.313	309.152	309.019	308.890	308.759	308.624
BEAM A	310.590	310.441	310.289	310.134	309.987	309.848	309.582	309.279	309.105	308.966	308.834	308.703	308.572
PROFILE GRADE PG	310.416	310.278	310.132	309.980	309.832	309.687	309.434	309.129	308.966	308.833	308.704	308.572	308.436
BEAM B	310.287	310.139	309.986	309.832	309.686	309.548	309.283	308.981	308.809	308.670	308.539	308.409	308.278
BEAM C	309.984	309.836	309.684	309.531	309.386	309.248	308.984	308.684	308.512	308.374	308.243	308.114	307.984
BEAM D	309.681	309.533	309.382	309.229	309.085	308.948	308.685	308.387	308.215	308.078	307.948	307.820	307.691
BEAM E	309.377	309.230	309.080	308.928	308.784	308.648	308.387	308.089	307.919	307.783	307.653	307.525	307.397
RIGHT GUTTER EL. ⓑ	309.358	309.216	309.066	308.910	308.759	308.609	308.348	308.035	307.868	307.731	307.598	307.462	307.322

ANTICIPATED DECK SLAB DEPTHS *

LOCATION	SPAN 1				SPAN 2					SPAN 3				
	℄ BEARING REAR ABUT.	0.25	0.50	0.75	℄ PIER 1	F.S. #1	0.5	F.S. #2	℄ PIER 2	0.25	0.50	0.75	℄ BEARING FORWARD ABUT.	AVERAGE DEPTH
BEAM A	427	414	404	395	372	402	412	390	397	388	406	379	355	398
BEAM B	405	395	388	379	355	394	404	382	399	372	373	362	354	385
BEAM C	391	386	385	369	341	402	408	383	395	365	364	353	346	381
BEAM D	387	390	397	373	336	401	415	397	397	364	358	354	352	384
BEAM E	395	406	421	379	324	412	425	404	408	365	346	362	382	392

* NOTE: DEPTHS SHOWN ARE FROM TOP OF DECK TO TOP OF STEEL BEAM

DECK OVERHANG DIMENSION

LOCATION	SPAN 1				SPAN 2					SPAN 3			
	℄ BEARING REAR ABUT.	0.25	0.50	0.75	℄ PIER 1	F.S. #1	0.5	F.S. #2	℄ PIER 2	0.25	0.50	0.75	℄ BEARING FORWARD ABUT.
LEFT OVERHANG (NEAR BEAM A)	504	616	688	720	712	659	793	783	893	955	983	979	942
RIGHT OVERHANG (NEAR BEAM E)	643	595	588	623	698	822	817	965	929	933	970	1041	1146

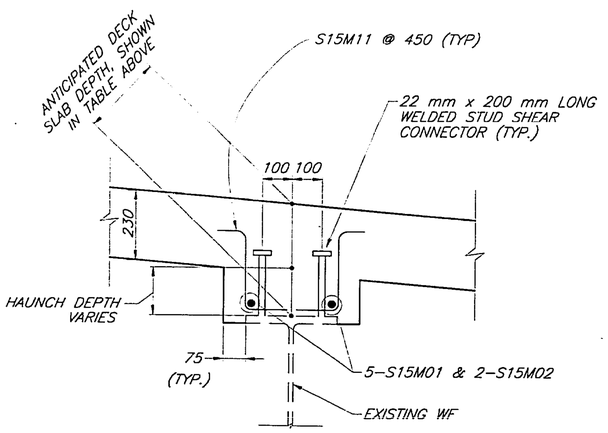

REINFORCED HAUNCH DETAIL

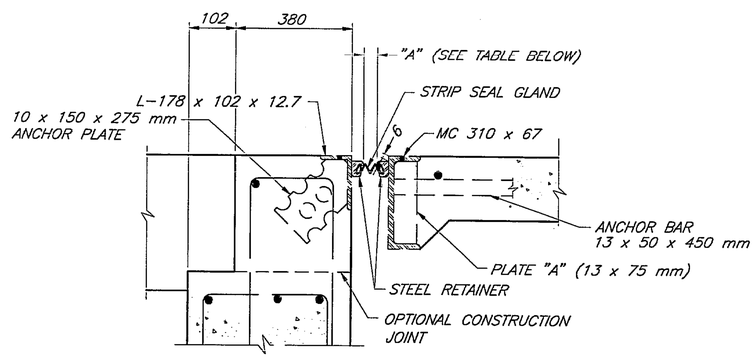

SECTION A-A

DIMENSION "A" FOR DECK JOINT OPENING							
0°C	5°C	10°C	15°C	20°C	25°C	30°C	35°C
46 mm	45 mm	43 mm	42 mm	40 mm	39 mm	37 mm	35 mm

metric units

NOTES:

1. DECK SLAB DEPTH: THE DISTANCE SHOWN FROM THE TOP OF DECK SLAB TO TOP OF STEEL BEAM IS THE ANTICIPATED DECK SLAB DEPTH OVER BEAMS. THE QUANTITY OF DECK CONCRETE TO BE PAID FOR SHALL BE BASED ON AVERAGE OF THESE DIMENSIONS, EVEN THOUGH DEVIATION FROM IT MAY BE NECESSARY BECAUSE THE TOP FLANGE OF THE BEAM MAY NOT HAVE THE EXACT CAMBER OR CONFORMATION REQUIRED TO PLACE IT PARALLEL TO THE FINISHED GRADE.
2. DRIP GROOVES SHALL TERMINATE 600 mm FROM THE FACES OF ABUTMENTS.
3. SCREED ELEVATIONS SHOWN ARE FOR THE DECK SLAB SURFACE PRIOR TO CONCRETE PLACEMENT. ALLOWANCE HAS BEEN MADE FOR ANTICIPATED CALCULATED DEAD LOAD DEFLECTIONS.
4. FOR VANDAL PROTECTION FENCE DETAILS AND NOTES SEE STANDARD DRAWING VPF-1-90M, POST SECTION PS-4 WITH BASE PLATE BP-5 SHALL BE UTILIZED.
5. THE REMOVAL OF THE EXISTING END CROSSFRAMES AND EXISTING EXPANSION JOINT END DAMS SHALL BE INCLUDED WITH ITEM 202 - PORTIONS OF STRUCTURE REMOVED, OVER 6 METER SPAN, AS PER PLAN FOR PAYMENT.
6. FOR ADDITIONAL EXPANSION JOINT AND END CROSS-FRAME DETAILS SEE STANDARD DRAWINGS EXJ-4-87M.
7. STRIP SEAL GLANDS SHALL BE FURNISHED AND INSTALLED IN ONE CONTINUOUS PIECE.
8. INSTALLATION OF SEAL: DURING INSTALLATION OF THE SUPPORT/ARMOR FOR THE SUPERSTRUCTURE SIDE OF THE EXPANSION JOINT SEAL, THE SEATING OF BEAMS ON BEARINGS SHALL BE CAREFULLY OBSERVED TO ASSURE THAT POSITIVE BEARING IS MAINTAINED.

THE OSBORN ENGINEERING CO.
668 EUCLID AVENUE
CLEVELAND, OHIO 44114

DESIGN AGENCY: THE OSBORN ENGINEERING CO.
DRAWN: BK
CHECKED: GTA
REVIEWED: VM
REVISED:
REVIEWED: JRS
DATE: 03/96
SUBMITTED FILE NUMBER: 7729596

DECK SCREED ELEVATIONS AND DECK EXPANSION JOINT

BRIDGE NO. SUM-271-10605 RIGHT
OVER WESTBOUND LANES OF I-80

SUM-271-10.51

Filename: K:\DGN\7\0301-M\0355\STRUCT\0355M112
Plot Scale: 1:1
Plot Date: 05-14-97 (10:11)

MARK	NUMBER	LENGTH (mm)	WEIGHT (kg)	TYPE	SERIES INCR.	A	B	C	D
RIGHT STRUCTURE									
REAR ABUTMENT									
D25M01	32	1625	204	12		926	305	100	100
RA20M01	18	8000	340	STR					
RA20M02	2	7025	33	STR					
RA20M03	8	3525	67	STR					
RA20M04	NOT USED								
RA20M05	NOT USED								
RA20M06	5	2525	30	13		1550	300	400	300
RA20M07	5	2000	24	4		1000	1000	400	300
RA20M08	5	2250	27	17		1000	1000	400	300
RA20M09	10	1750	41	4		1450	300	400	300
RA20M10	50	2082	245	1		900	382		
RA20M11	50	2440	287	1		1130	280		
RA20M12	12	5790	164	STR					
RA20M13	32	1600	113	STR					
RA20M14	28	1175	78	4		500	670	100	100
RA20M15	12	1050	30	STR					
RA20M16	4 SERIES OF 3	VARIES 970 TO 1465	34	STR	248				
RA20M17	4	1175	11	STR					
RA20M18	4	4025	38	STR					
RA20M19	4	3425	32	STR					
RA20M20	8	1750	33	4		880	880	650	1000
RA20M21	100	1500	353	STR					
RA20M22	32	1380	104	STR					
		TOTAL =	2288						
FORWARD ABUTMENT									
D25M01	34	1675	224	12		973	305	100	100
FA20M01	16	8550	322	STR					
FA20M02	8	4525	85	STR					
FA20M03	4	8000	75	STR					
FA20M04	NOT USED								
FA20M05	NOT USED								
FA20M06	5	2525	30	13		1550	300	400	300
FA20M07	5	2000	24	4		1000	1000	400	300
FA20M08	5	2250	26	17		1000	1000	400	300
FA20M09	10	1750	41	4		1450	300	400	300
FA20M10	54	2082	265	1		900	382		
FA20M11	54	2440	310	1		1130	280		
FA20M12	12	5550	157	STR					
FA20M13	36	1600	136	STR					
FA20M14	28	1175	78	4		500	670	100	100
FA20M15	12	775	22	STR					
FA20M16	4 SERIES OF 3	VARIES 1028 TO 1740	39	STR	355				
FA20M17	4	1175	11	STR					
FA20M18	4	3950	37	STR					
FA20M19	4	3575	34	STR					
FA20M20	8	1750	33	4		880	880	650	1000
FA20M21	100	1500	353	STR					
FA20M22	36	1380	117	STR					
		TOTAL =	2419						

MARK	NUMBER	LENGTH (mm)	WEIGHT (kg)	TYPE	SERIES INCR.	A	B	C	D
TRANSITION PARAPET									
X15M01	8	4220	53	99					
X15M02	8	4220	53	STR					
X15M03	8	2100	26	STR					
X15M04	8	5790	73	STR					
X15M05	8	2640	33	STR					
X15M06	8	5550	70	STR					
Y15M01	22	1825	63	11		765	840	205	
Y15M02	48	920	69	5		740			
Y20M01	NOT USED								
Y20M02	NOT USED								
Y20M03	70	1135	187	7		230	152	685	216
Y20M04	22	865	45	STR					
Y20M05	72	1375	233	STR					
		TOTAL =	905						
SUPERSTRUCTURE									
S15M01	645	12 000	12150	STR					
S15M02	258	4950	2005	STR					
S15M03	NOT USED								
S15M04	830	12 865	16 764	STR					
S15M05	2 SERIES OF 52	VARIES 1970 TO 12 565	1183	STR	207				
S15M06	2 SERIES OF 66	VARIES 1720 TO 12 600	1511	STR	167				
S15M07	18	1650	47	STR					
S15M08	24	1750	66	STR					
S15M09	8	2000	25	STR					
S15M10	484	1825	1387	11		765	840	205	
S15M11	146	1110	254	98		280	350	180	
S20M01	484	850	969	2		280	610		
S20M02	484	1075	1225	8		360			
S20M03	NOT USED								
S20M04	80	11 110	2093	STR					
		TOTAL =	39 679						

NOTES:

1. ALL BARS SHALL BE EPOXY COATED.
2. ALL BAR DIMENSIONS ARE GIVEN OUT-TO-OUT, UNLESS OTHERWISE INDICATED.
3. ALL BARS OF A GIVEN SERIES VARY BY A CONSTANT AMOUNT.
4. BAR SIZE NUMBER IS SPECIFIED ON THE PLANS IN THE BAR MARK COLUMN. THE FIRST TWO DIGITS INDICATES THE BAR SIZE NUMBER. FOR EXAMPLE, A 15M01 IS A #15M BAR.
5. FA = FORWARD ABUTMENT
   RA = REAR ABUTMENT
   S = SUPERSTRUCTURE
   X,Y = WINGWALL AND PARAPET

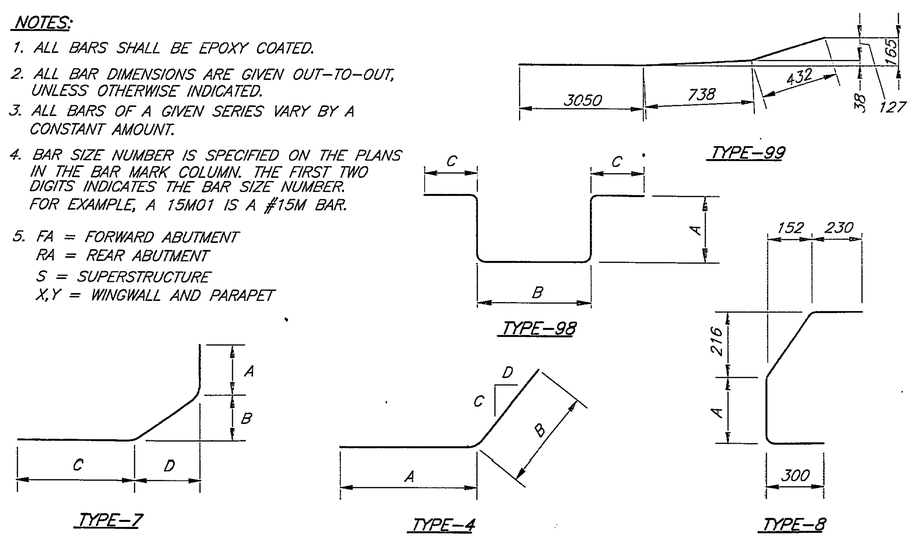

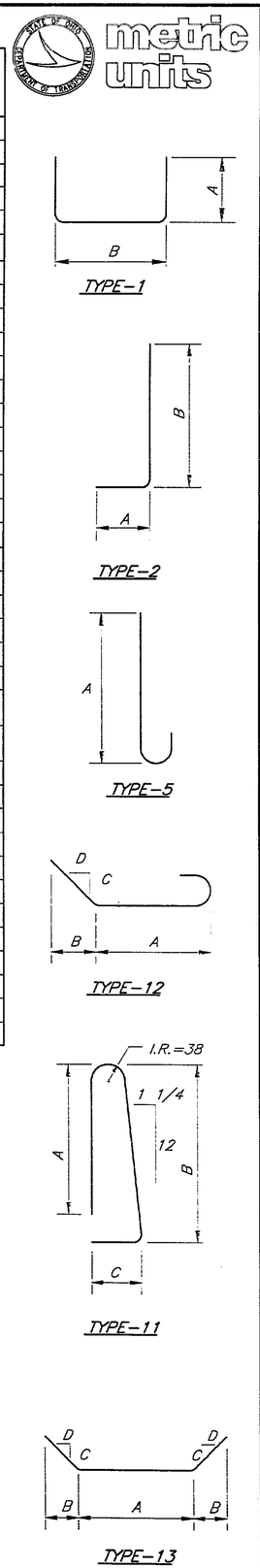

metric units

THE OSBORN ENGINEERING CO.
668 EUCLID AVENUE
CLEVELAND, OHIO 44114

BK	VM	JRS	02/29/96
GTA	XXX		7729596

REINFORCING SCHEDULE SUPERSTRUCTURE
BRIDGE NO. SUM-271-1054 RIGHT
OVFR WESTBOUND LANES OF I-80

SUM-271-10.51

15 / 29

66 / 80

Filename = K:\ROUT\NOT-MAJOR\SUM\271\1054\71
Plot Scale: Not Scale
Plotted By/Date: [illegible] 26-Jan-1996 (10:43)

TRAFFIC DATA	
CURRENT ADT (1997)	= 23740
DESIGN YEAR ADT (2017)	= 31480
D.H.V. (2017)	= 315
D	= 60%
T	= 19%

① CONSTRUCTION ℄ – SURVEY CURVE DATA

Δ = 63°21'00" RT.
L_s = 121.92 m
R = 582.13 m
θ_s = 6°00'00"
T_s = 420.77 m
E_s = 103.14 m
L_c = 521.72 m
L.T. = 81.33 m
S.T. = 40.68 m
P.I. STA. 10+685.660
e_{max} = 8.33%

② OHIO TURNPIKE CURV DATA AS ORIGINAL PLAN DATED OCT. 29, 1952

P.I. STA. 5+672.617
Δ = 38°21'52" LT.
T = 1237.90 m
L_c = 2382.58 m
R = 3558.33 m
E = 209.18 m
NO SUPERELEVATION

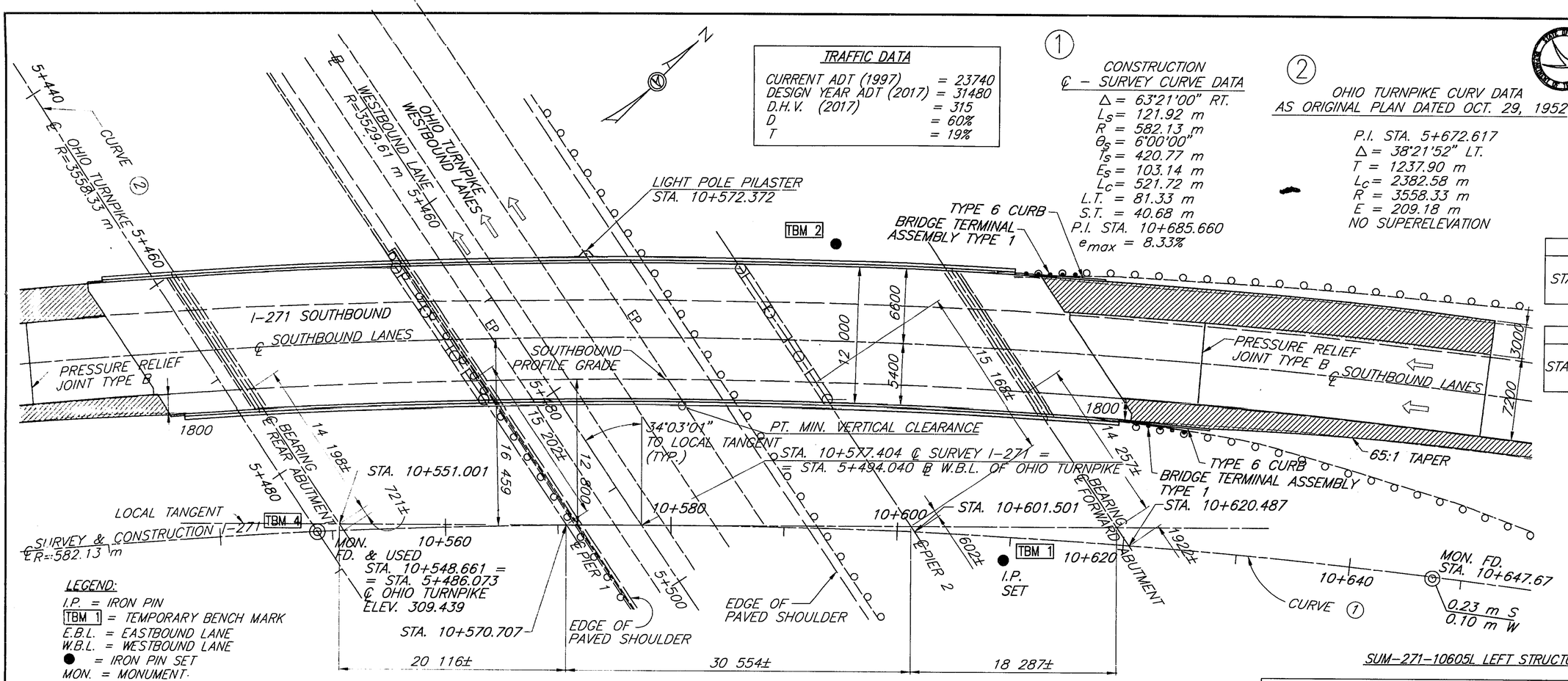

LEGEND:
I.P. = IRON PIN
TBM 1 = TEMPORARY BENCH MARK
E.B.L. = EASTBOUND LANE
W.B.L. = WESTBOUND LANE
● = IRON PIN SET
MON. = MONUMENT
FD. = FOUND
STA. = STATION
◎ = MONUMENT FOUND
EP = EDGE OF PAVEMENT
▨ = PAVED SHOULDER

PLAN

TBM 1
IRON PIN SET
STA. 10+609.50, 2.05m RT.
ELEV. 304.80

TBM 2
IRON PIN SET
STA. 10+593.75, 25.03m LT.
ELEV. 306.59

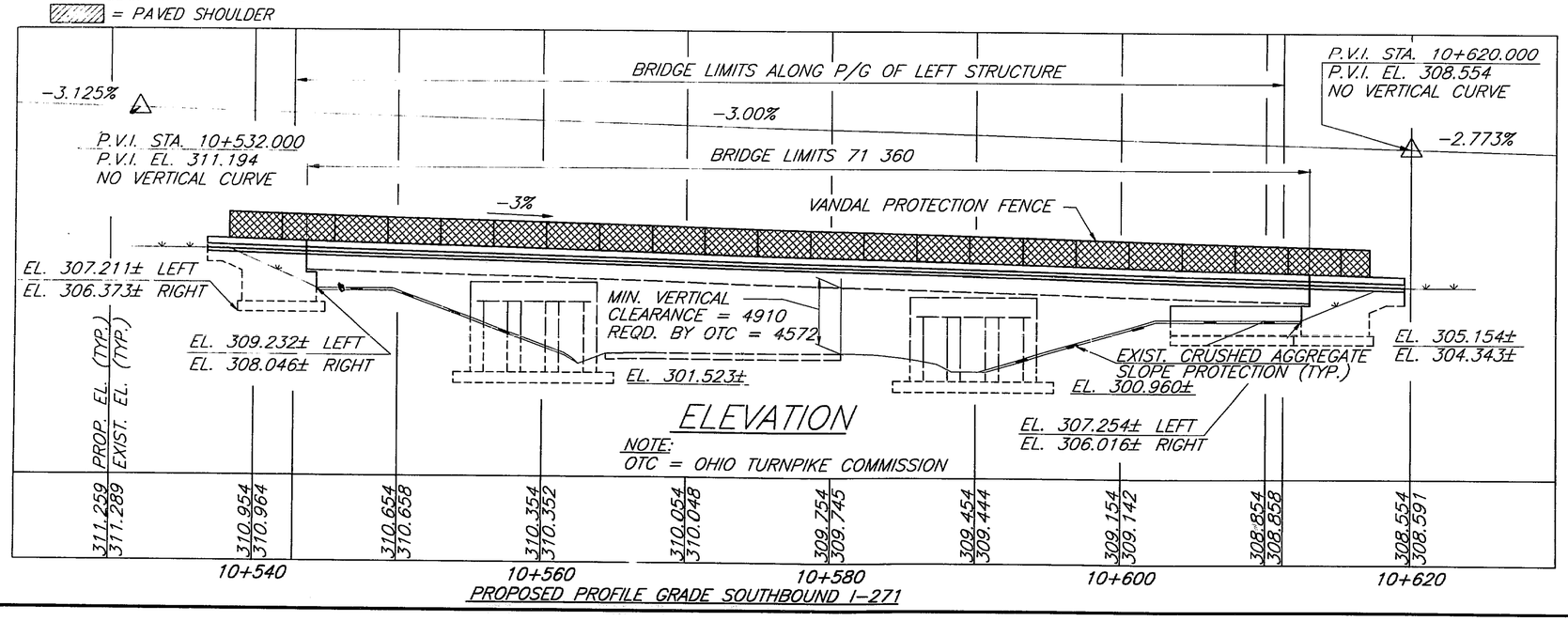

ELEVATION

NOTE:
OTC = OHIO TURNPIKE COMMISSION

PROPOSED PROFILE GRADE SOUTHBOUND I-271

SUM-271-10605L LEFT STRUCTURE

EXISTING STRUCTURE

TYPE: CONTINUOUS WELDED STEEL PLATE GIRDERS WITH REINFORCED CONCRETE DECK AND SUBSTRUCTURES

SPAN: 66'-0"±, 100'-3"±, 60'-0"± C/C BEARINGS
ROADWAY: 40'-0"± F/F PARAPET
LOADING: CF=2000 ADEQUATE FOR A.A.S.H.T.O. ALTERNATE LOADING
SKEW: 34°-03'-01"± RIGHT FORWARD
WEARING SURFACE: ASPHALT (OVERLAY)
APPROACH SLABS: 25' LONG (AS-1-54)
ALIGNMENT: 3°-00'-00" CURVE RIGHT
SUPERELEVATION: 0.0833'/FT.
YEAR BUILT: 1971
STRUCTURE FILE NO: 7729561

PROPOSED STRUCTURE

PROPOSED WORK: NEW COMPOSITE REINFORCED CONCRETE DECK, REPLACE ABUTMENT BACKWALLS, NEW PARAPETS, NEW STRIP SEAL EXPANSION JOINTS, REPLACE END CROSSFRAMES, RESET ABUTMENT BEARINGS, PATCH CONCRETE AT SUBSTRUCTURE, PAINT STRUCTURE STEELS, NEW APPROACH SLABS AND NEW VANDAL PROTECTION FENCES.

SPAN: 20 116 ±, 30 554 ±, 18 287 ± C/C BEARING
ROADWAY: 12.000 m TOE TO TOE OF PARAPET
LOADING: MS18-44 CASE I AND ALTERNATE MILITARY
SKEW: 34°-03'-01"± RIGHT FORWARD
WEARING SURFACE: MONOLITHIC CONCRETE
APPROACH SLABS: 7600 mm LONG (AS-1-81 METRIC)
ALIGNMENT: R = 582.13 m CURVE RIGHT
SUPERELEVATION: 0.0833

metric units

THIS PLAN PREPARED BY: RALPH C. TYLER, P.E., P.S., INC. CLEVELAND, OHIO 44106

DESIGN AGENCY: THE OSBORN ENGINEERING CO. CONSULTING ENGINEERS CLEVELAND, OHIO 44114

DESIGNED	DRAWN	REVIEWED	DATE
R.L.	R.L.	RCT	5/97
CHECKED	REVISED	STRUCTURE FILE NUMBER	
K.P.	XXX	7729596	

GENERAL PLAN AND ELEVATION LEFT STRUCTURE

BRIDGE NO. SUM-271-10605 LEFT
OVER WESTBOUND LANES OF I-80

SUM-271-10.51

16/29

67/80

N:\ODOT\93580\GEPLLEFT.DWG

CALC. BY: SMG, DATE: 2/15/97
CHK. BY: BK, DATE: 2/15/97

ESTIMATED QUANTITIES

ITEM	ITEM EXTENSION	TOTAL	UNIT	DESCRIPTION	ABUTMENT	PIERS	SUPER-STRUCTURE	GENERAL
202	11203	LUMP		PORTIONS OF STRUCTURE REMOVED, OVER 6 METER SPAN, AS PER PLAN (SEE SHEET 1/29)				LUMP
503	11100	LUMP		COFFERDAMS, CRIBS AND SHEETING				LUMP
503	21301	LUMP		UNCLASSIFIED EXCAVATION, AS PER PLAN (SEE SHEET 1/29)				LUMP
511	31500	279	CU METER	CLASS S CONCRETE, SUPERSTRUCTURE			279	
511	44100	57	CU METER	CLASS C CONCRETE, ABUTMENT NOT INCLUDING FOOTING	57			
SPECIAL	51267510	835	SQ METER	SEALING OF CONCRETE SURFACES (EPOXY-URETHANE)*	163	203	469	
513	15901	957	KILOGRAM	STRUCTURAL STEEL, REPLACEMENT OF DETERIORATED END CROSS FRAMES, AS PER PLAN (SEE SHEET 2/29)			957	
513	20000	2390	EACH	WELDED STUD SHEAR CONNECTOR			2390	
	00100	LUMP		SURFACE PREPARATION OF EXISTING STEEL, SYSTEM OZEU				LUMP
	00200	LUMP		FIELD PAINTING OF EXISTING STEEL, PRIME COAT, SYSTEM OZEU				LUMP
	00300	LUMP		FIELD PAINTING OF EXISTING STEEL, INTERMEDIATE COAT, SYSTEM OZEU				LUMP
	00400	LUMP		FIELD PAINTING OF EXISTING STEEL, FINISH COAT, SYSTEM OZEU				LUMP
516	00610	957	KILOGRAM	FIELD PAINTING OF NEW STEEL, INTERMEDIATE AND FINISH COAT, SYSTEM IZEU			957	
516	11210	30.4	METER	STRUCTURAL EXPANSION JOINT INCLUDING ELASTOMERIC STRIP SEAL *			30.4	
516	13600	8.2	SQ METER	25 mm PREFORMED EXPANSION JOINT FILLER				8.2
516	31010	25	METER	50 mm DEEP JOINT SEALER				25
516	45305	10	EACH	REFURBISH BEARING DEVICE, AS PER PLAN (SEE SHEET 2/29)	10			
516	47001	LUMP		JACKING AND TEMPORARY SUPPORT OF SUPERSTRUCTURE, AS PER PLAN (SEE SHEET 3/29)				
518	21200	82	CU METER	POROUS BACKFILL WITH FILTER FABRIC	82			
518	40001	41	METER	150 mm PERFORATED CORRUGATED PLASTIC PIPE, AS PER PLAN (SEE SHEET 3/29)	41			
518	40011	57	METER	150 mm NON-PERFORATED CORRUGATED PLASTIC PIPE, INCLUDING SPECIALS, AS PER PLAN (SEE SHEET 3/29)				
519	11101	4	SQ METER	PATCHING CONCRETE STRUCTURES, AS PER PLAN (SEE SHEET 19/29)	4			
SPECIAL	51911502	3	SQ METER	PATCHING CONCRETE STRUCTURE WITH TROWELABLE MORTAR*	3			
SPECIAL	51912610	4	METER	CONCRETE REPAIR BY EPOXY INJECTION (INCLUDING SURFACE PREPARATION)*	4			
SPECIAL	60739900	164	METER	VANDAL PROTECTION FENCE, 1.8 METER STRAIGHT, COATED FABRIC (SEE SHEET 2/29)	25.3		138.4	

*SEE PROPOSAL NOTES

metric units

DESIGN AGENCY: THE OSBORN ENGINEERING CO. 668 EUCLID AVENUE CLEVELAND, OHIO 44114

DATE: 03/96
CONTRACT NO. 7729561
DESIGNED: JRS
DRAWN: SMG
REVIEWED: BK
CHIEF ENG.: BK

ESTIMATED QUANTITIES
BRIDGE NO. SUM-271-10605 LEFT
OVER WESTBOUND LANES OF I-80

SUM-271-10.51

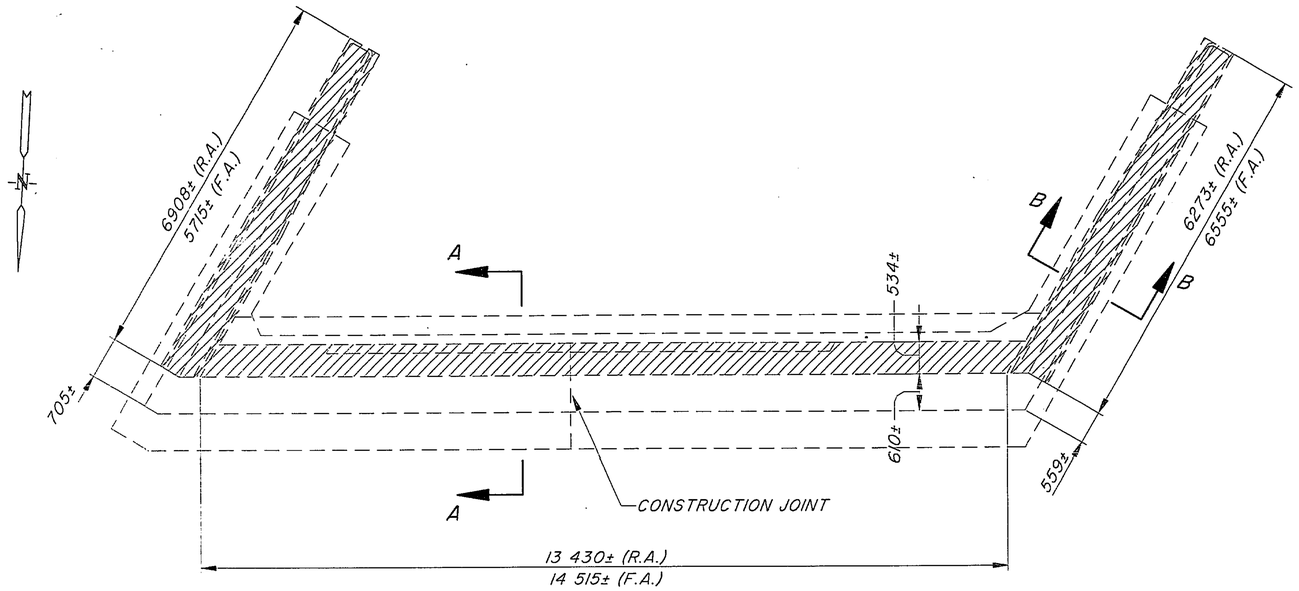

PLAN

REAR ABUTMENT SHOWN
OTHER ABUTMENT SIMILAR

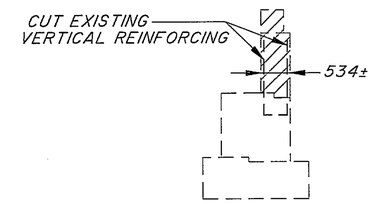

SECTION A-A

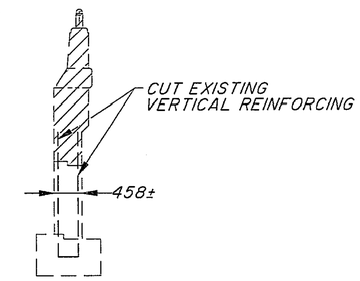

SECTION B-B

LEGEND

ITEM 202 PORTION OF STRUCTURE REMOVED, OVER 6 METER, AS PER PLAN.

ABBREVIATION

R.A. = REAR ABUTMENT
F.A. = FORWARD ABUTMENT

NOTES:

1. FOR SUBSTRUCTURE REPAIR DETAILS SEE SHEET 19/21

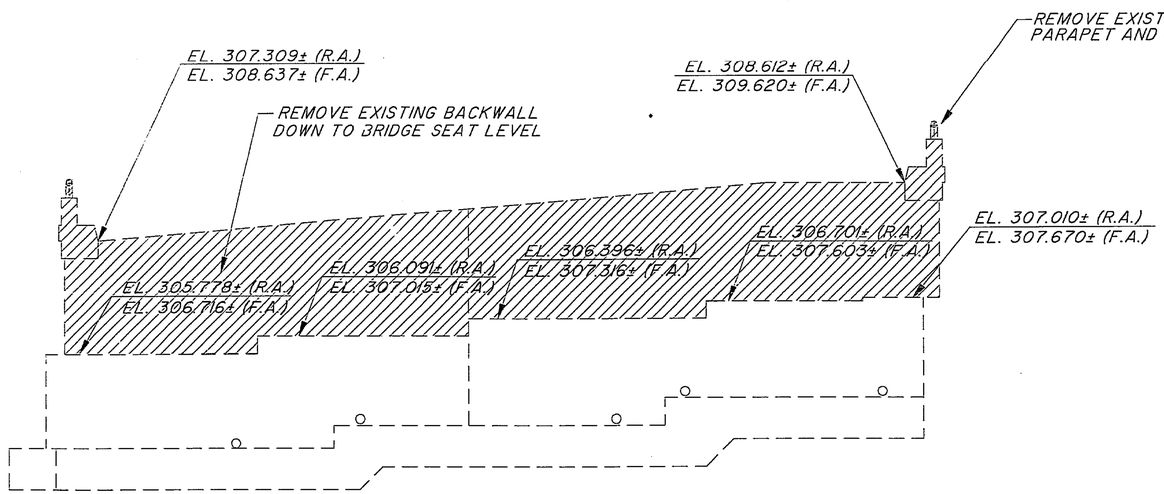

ELEVATION

REAR ABUTMENT SHOWN
OTHER ABUTMENT SIMILAR

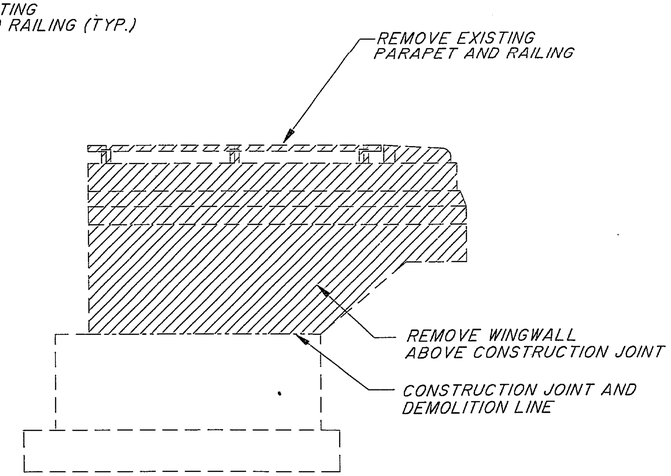

ELEVATION WEST WINGWALL

OTHER WINGWALL SIMILAR

metric units

THE OSBORN ENGINEERING CO.
668 EUCLID AVENUE
CLEVELAND, OHIO 44114

DESIGNED	BK	
CHECKED	BK	
DRAWN	JRS	02/29/96
REVIEWED	GTA	
REVISED		
STRUCTURE NO.	7729561	

ABUTMENT DEMOLITION
BRIDGE NO. SUM-271-10605 LEFT
OVER WESTBOUND LANES OF I-80

SUM-271-10.51

18/29

69/80

Filename: K:\ODOT\0001-W\0355\STRUCT\0355L105
Plot Scale: 1" = 5'
Drawn By/Date: SE / 04-05-96 ()

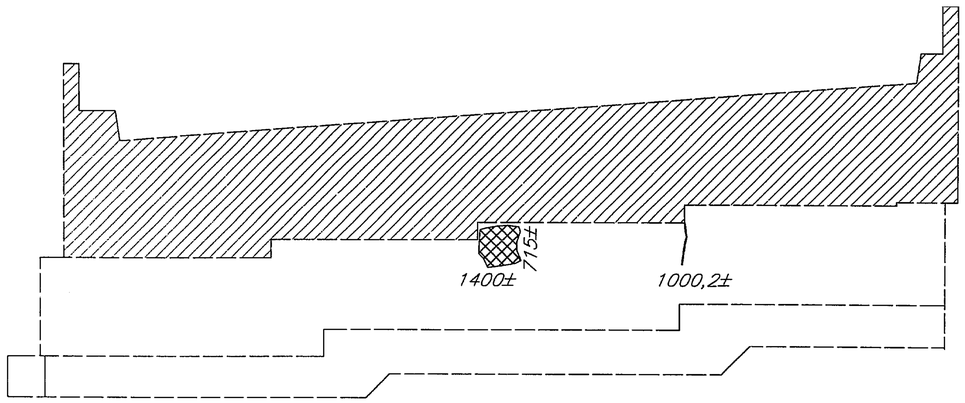

REAR ABUTMENT

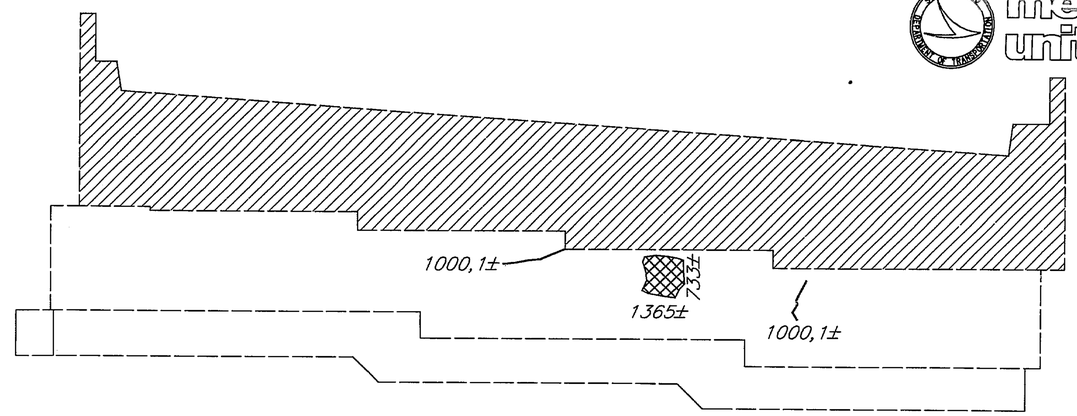

FORWARD ABUTMENT

LEGEND:

- ITEM 202 PORTION OF STRUCTURE REMOVAL (SEE ABUTMENT DEMOLITION DRAWINGS)
- ITEM 519 PATCHING CONCRETE STRUCTURE WITH TROWELABLE MORTAR
- CRACK (LENGTH AND WIDTH FOR CRACK AS SHOWN "XXX", "XX" IN mm)
- ITEM 519 PATCHING CONCRETE STRUCTURE, AS PER PLAN

NOTES:

LOCATIONS AND AREAS SHOWN ARE APPROXIMATE. ACTUAL SHALL BE DETERMINED IN THE FIELD AT THE TIME OF WORK.

ITEM 519 – PATCHING CONCRETE STRUCTURES, AS PER PLAN

THIS ITEM SHALL BE USED AS DIRECTED BY THE ENGINEER TO REPAIR DAMAGED CONCRETE AREAS OUTLINED IN THE FIELD BY THE ENGINEER.

THIS ITEM SHALL BE USED WHERE THE SURFACE TO BE REPAIRED CAN BE MOSTLY AND READILY FORMED AND POURED AND THE REPAIR DEPTH IS OVER 50 mm.

ITEM 519 – PATCHING CONCRETE STRUCTURES WITH TROWELABLE MORTAR

THIS ITEM SHALL BE USED AS DIRECTED BY THE ENGINEER TO REPAIR DAMAGED CONCRETE AREAS OUTLINED IN THE FIELD BY THE ENGINEER.

GENERALLY, ITEM SPECIAL – PATCHING CONCRETE STRUCTURES WITH TROWELABLE MORTAR MAY BE USED WHERE THE SURFACE TO BE REPAIRED CANNOT READILY BE FORMED AND POURED OR THE REPAIR DEPTH IS 50 mm OR LESS.

ALL SURFACES TO BE PATCHED AND THE EXPOSED REINFORCING STEEL WITHIN SHALL BE THOROUGHLY CLEANED BY SANDBLASTING PRIOR TO THE CLEANING SPECIFIED BY 519.04 AND 520.05.

CLEANING SHALL PRECEDE APPLICATION OF THE PATCHING MATERIAL BY NOT MORE THAN 24 HOURS.

ITEM SPECIAL – CONCRETE REPAIR BY EPOXY INJECTION

THIS WORK SHALL CONSIST OF THE REPAIR OF CRACKS OR FRACTURES IN CONCRETE BY MEANS OF AN EPOXY INJECTION SYSTEM IN ACCORDANCE WITH THESE SPECIFICATIONS, IN REASONABLY CLOSE CONFORMITY WITH THE PLANS AND MANUFACTURER'S RECOMMENDATIONS OR AS DIRECTED BY THE ENGINEER.

SEE THE PROPOSAL NOTE "CONCRETE REPAIR BY EPOXY INJECTION" FOR MATERIALS, APPROVALS, PROCEDURES, METHOD OF MEASUREMENT, AND PAYMENT. AREAS TO BE REPAIRED UNDER THIS ITEM SHALL BE VERIFIED IN THE FIELD BY THE ENGINEER.

THE FINAL PHYSICAL INVENTORY OF MEASURED QUANTITIES OF DETERIORATION WAS PERFORMED ON MAY 13, 1997.

SUMMARY OF REPAIR QUANTITIES

LOCATION	ITEM SPECIAL CONCRETE REPAIR BY EPOXY INJECTION	ITEM SPECIAL – PATCHING CONC. STRUCTURES WITH TROWELABLE MORTAR	ITEM 519 – PATCHING CONCRETE STRUCTURES, AS PER PLAN
	METER	SQUARE METER	SQUARE METER
FORWARD ABUTMENT	2	1	
PIER 2			1.5
PIER 1			1.5
REAR ABUTMENT	1	1	
35% EXPANSION FACTOR	1	1	1
TOTAL	4	3	4

metric units

THIS PLAN PREPARED BY: RALPH C. TYLER, P.E., P.S., INC. CLEVELAND, OHIO 44106

DESIGN AGENCY: THE OSBORN ENGINEERING CO. CONSULTING ENGINEERS CLEVELAND, OHIO 44114

DESIGNED	DRAWN	REVIEWED	DATE
R.L.	R.L.	RCT	5/97
CHECKED	REVISED	STRUCTURE FILE NUMBER	
K.P.	XXX	7729596	

SUBSTRUCTURE REPAIR DETAILS
BRIDGE NO. SUM-271-10605 LEFT
OVER WESTBOUND LANES OF I-80

SUM-271-10.51

70/80

N:\ODOT\93580\SUBSLFT1.DWG

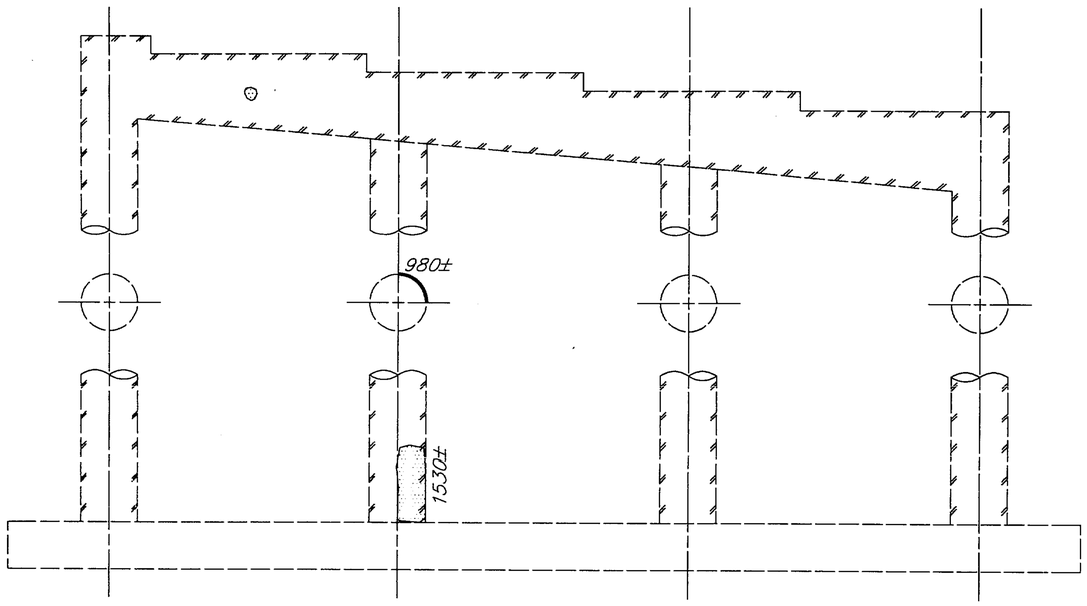

PIER 1

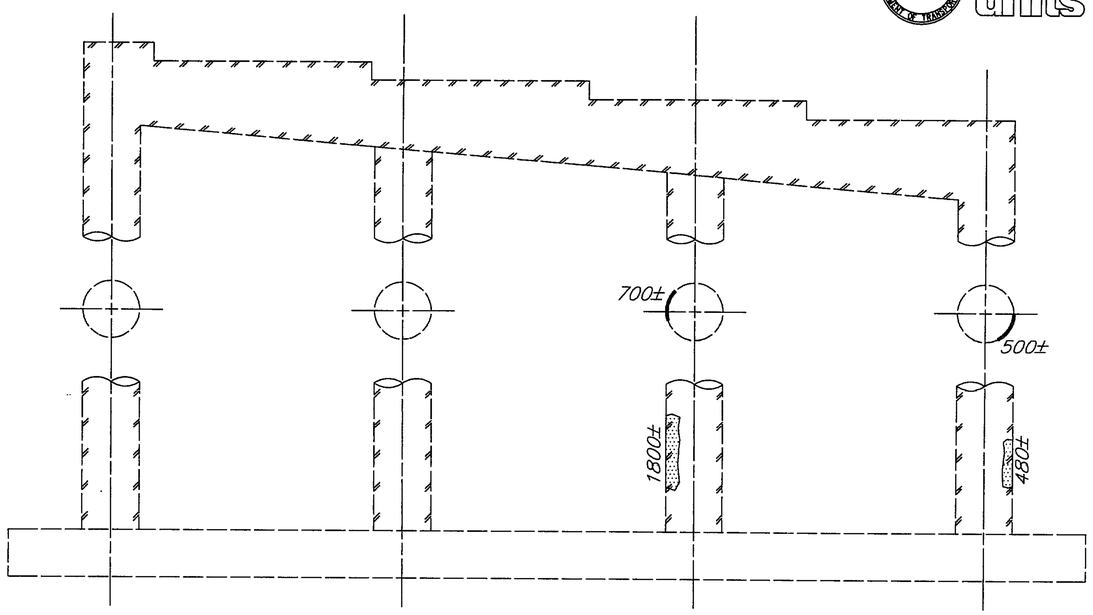

PIER 2

LEGEND:

- ITEM 202 PORTION OF STRUCTURE REMOVAL (SEE ABUTMENT DEMOLITION DRAWINGS)
- ITEM SPECIAL PATCHING CONCRETE STRUCTURE WITH TROWELABLE MORTAR *
- CRACK (LENGTH AND WIDTH FOR CRACK AS SHOWN "XXX", "XX" IN mm)
- ITEM 519 PATCHING CONCRETE STRUCTURE, AS PER PLAN *
- ITEM SPECIAL SEALING OF CONCRETE SURFACES (EPOXY–URETHANE)

* NOTES:

FOR NOTES SEE SUBSTRUCTURE REPAIR DETAILS LEFT STRUCTURE (SEE SHEET 19/29)

metric units

THIS PLAN PREPARED BY:
RALPH C. TYLER, P.E., P.S., INC.
CLEVELAND, OHIO 44106

DESIGN AGENCY
THE OSBORN ENGINEERING CO.
CONSULTING ENGINEERS
CLEVELAND, OHIO 44114

DESIGNED	DRAWN	REVIEWED	DATE
R.L.	R.L.	RCT	5/97
CHECKED	REVISED	STRUCTURE FILE NUMBER	
K.P.	XXX	7729596	

SUBSTRUCTURE REPAIR DETAILS
BRIDGE NO. SUM–271–10605 LEFT
OVER WESTBOUND LANES OF I–80

SUM–271–10.51

N:\ODOT\93580\SUBSLFT2.DWG

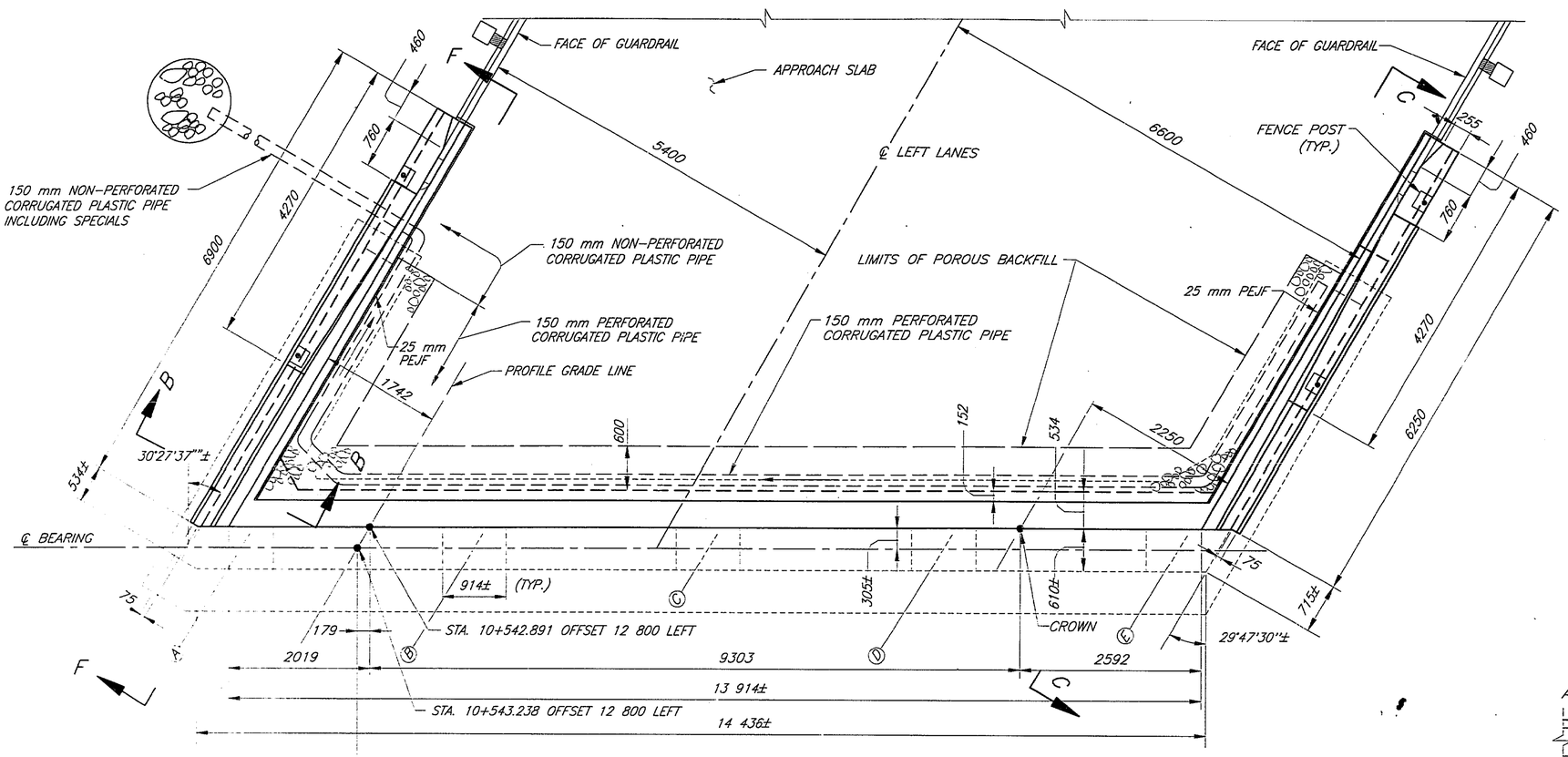

PLAN

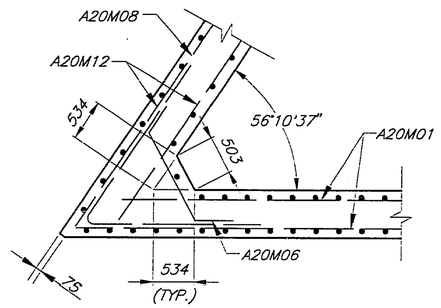

SECTION D-D

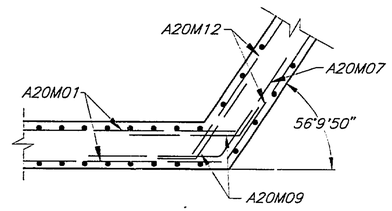

SECTION E-E

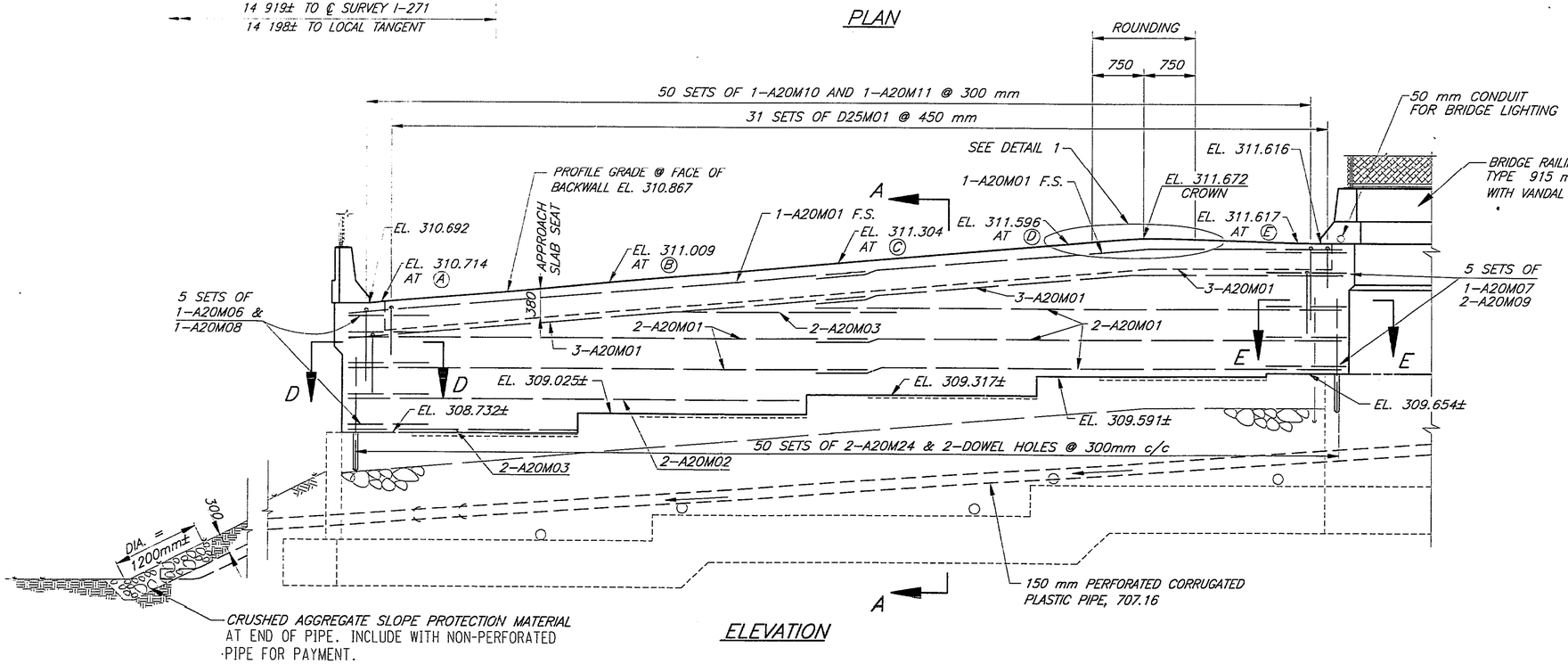

ELEVATION

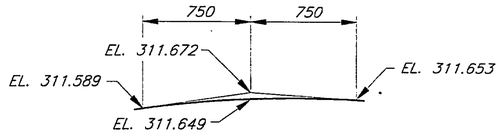

DETAIL 1

NOTES:

1. ALL REINFORCING STEEL FOR REAR ABUTMENT SHALL BE PREFIXED "RA".
2. FOR SUBSTRUCTURE REPAIR DETAILS SEE SHEET 19/29
3. FOR SECTION A-A, B-B, C-C AND F-F SEE SHEET 23/29
4. REINFORCING STEEL: NEW REINFORCING STEEL MAY REQUIRE FIELD BENDING OR CUTTING TO BE PROPERLY FITTED. PAYMENT SHALL BE INCLUDED IN 509.

metric units

DESIGN AGENCY: THE OSBORN ENGINEERING CO. 668 EUCLID AVENUE CLEVELAND, OHIO 44114

DESIGNED	CHECKED	REVIEWED	SUPERVISED	DATE
BK	BK		JRS	02/29/96

DRAWN	CHECKED	REVISED	STRUCTURE FILE NUMBER
GTA			7729561

REAR ABUTMENT
BRIDGE NO. SUM-271-10605 LEFT
OVER WESTBOUND LANES OF I-80

SUM-271-10.51

Filename K:\ODOT\OKH-80\SUM\271\0355\STRUCT\0355A06
Plotted By/Date Terkuns / 05-20-97 ()

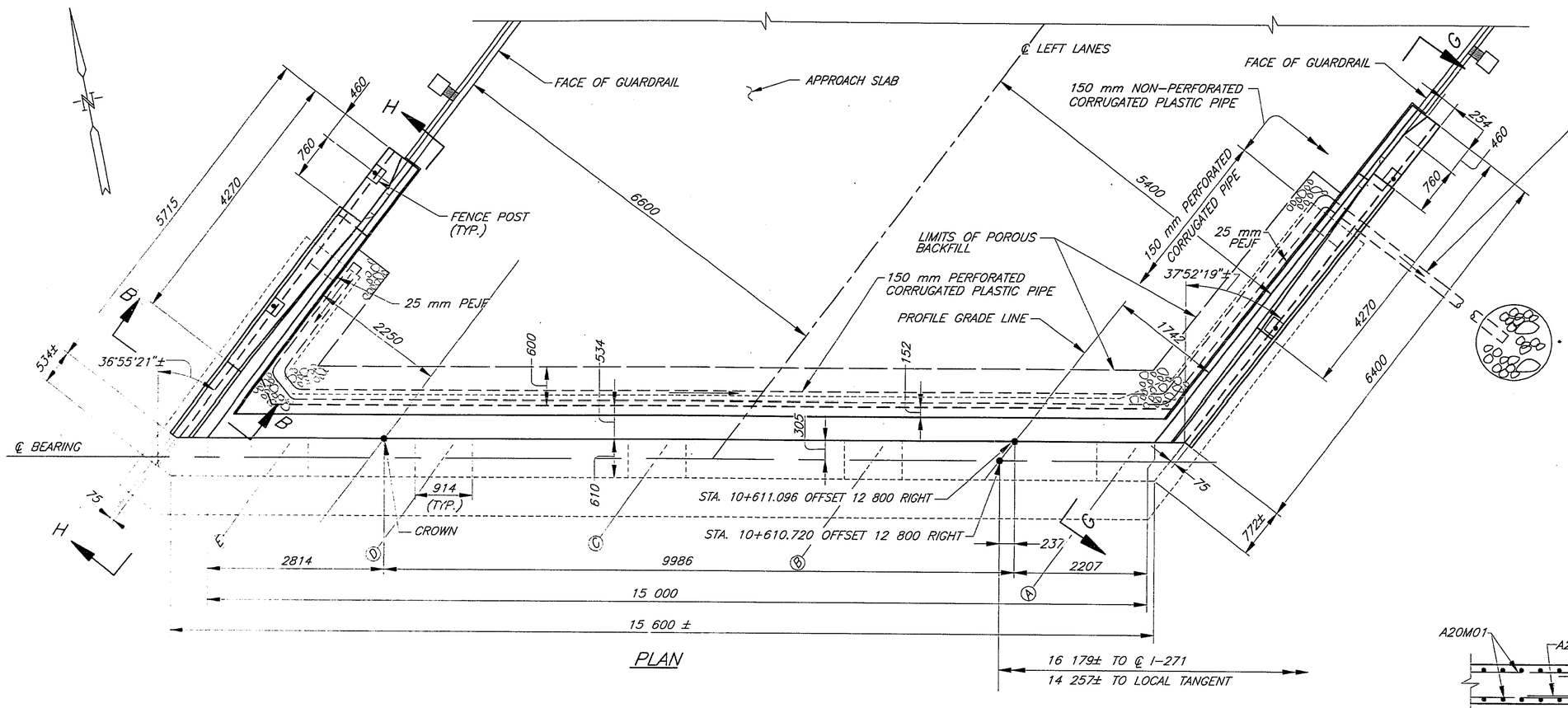

PLAN

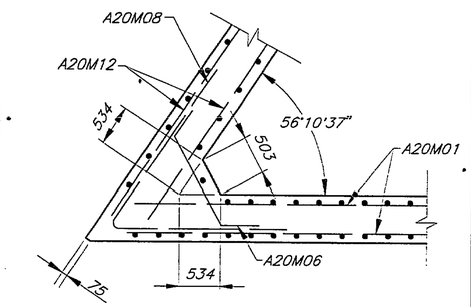

SECTION D–D

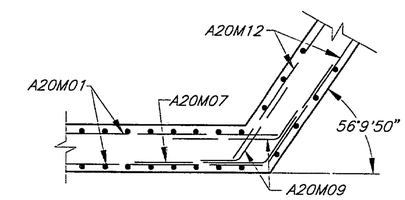

SECTION E–E

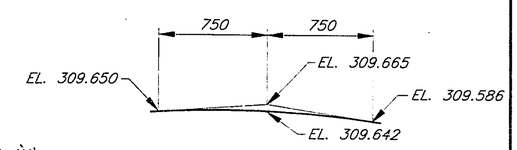

DETAIL 1

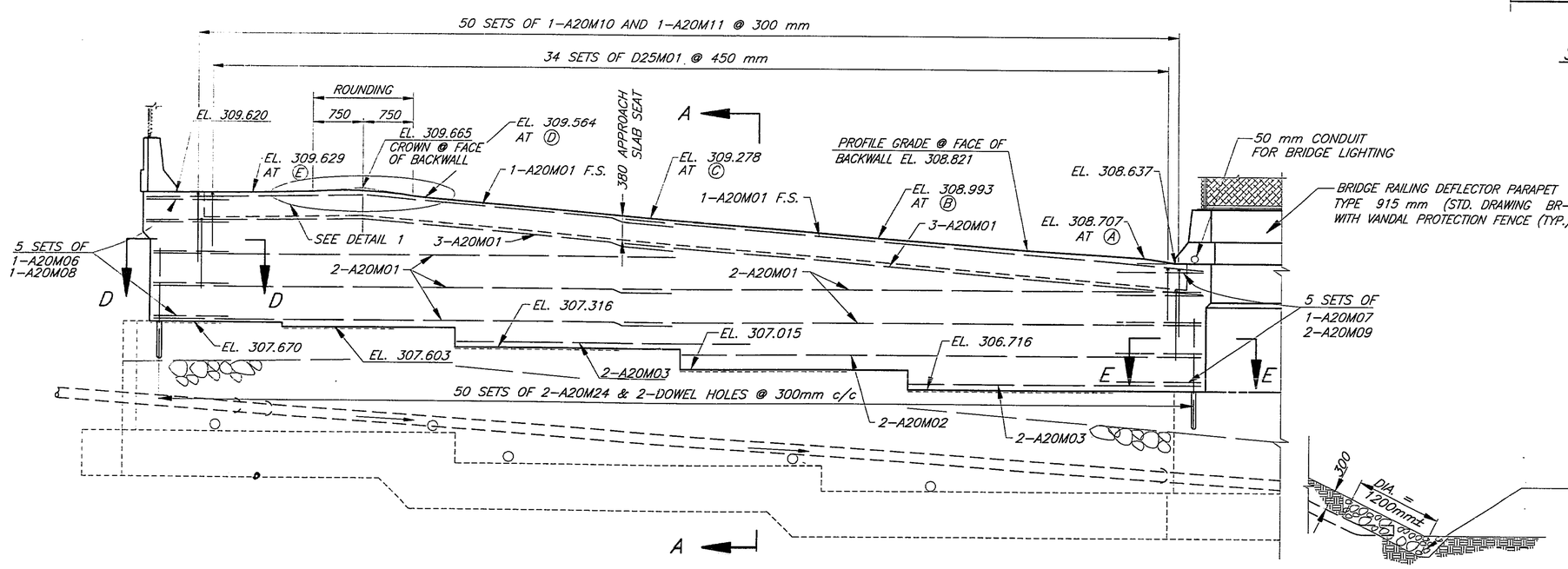

ELEVATION

CRUSHED AGGREGATE SLOPE PROTECTION MATERIAL AT END OF PIPE. INCLUDE WITH NON-PERFORATED PIPE FOR PAYMENT.

NOTES:

1. ALL REINFORCING STEEL FOR FORWARD ABUTMENT SHALL BE PREFIXED "FA".
2. FOR SUBSTRUCTURE REPAIR DETAILS SEE SHEET 19/29.
3. FOR SECTION A–A, B–B, G–G AND H–H SEE SHEET 24/29.
4. REINFORCING STEEL: NEW REINFORCING STEEL MAY REQUIRE FIELD BENDING OR CUTTING TO BE PROPERLY FITTED. PAYMENT SHALL BE INCLUDED IN 509.

metric units

DESIGN AGENCY: THE OSBORN ENGINEERING CO. 668 EUCLID AVENUE CLEVELAND, OHIO 44114

DESIGNED	DRAWN	REVIEWED	DATE
BK	SMG	JRS	02/29/96
CHECKED	REVISED	STRUCTURE FILE NUMBER	
GTA		7729561	

FORWARD ABUTMENT
BRIDGE NO. SUM-271-10605 LEFT
OVER WESTBOUND LANES OF I-80

SUM-271-10.51

22/29

73/80

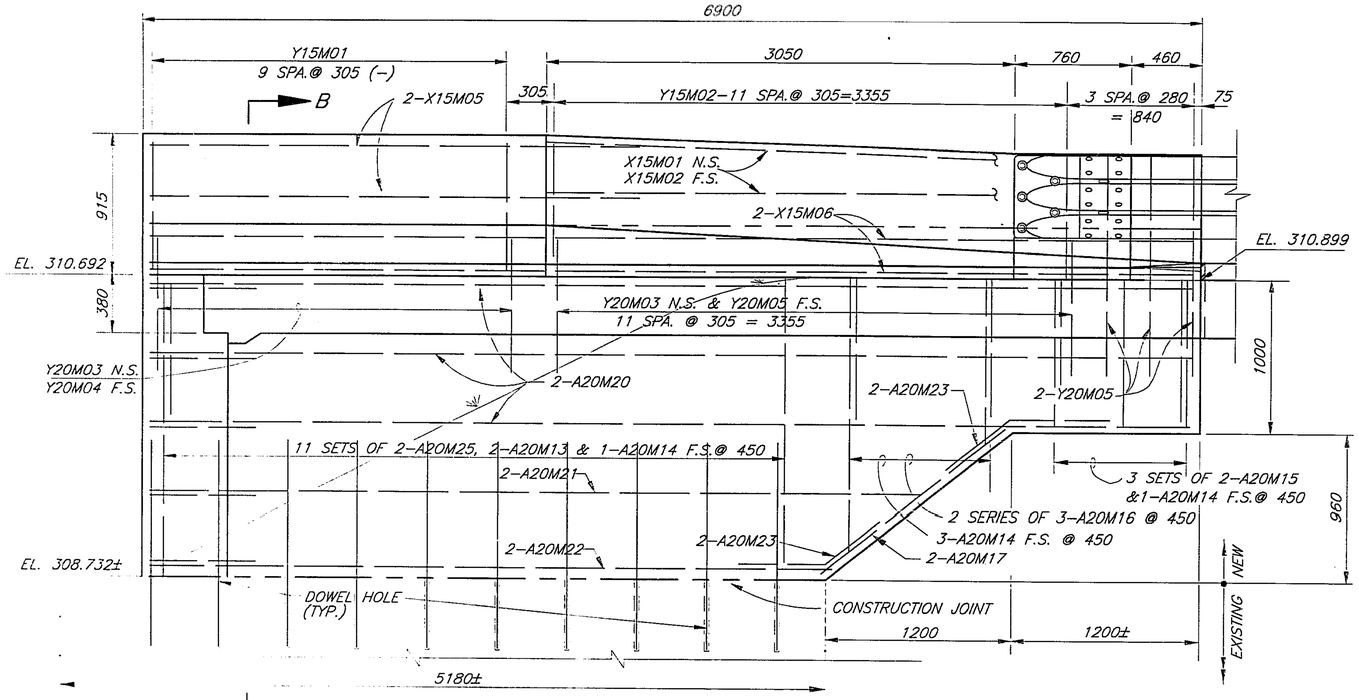

SECTION F-F

REAR ABUTMENT EAST WINGWALL
VANDAL PROTECTION FENCE NOT SHOWN

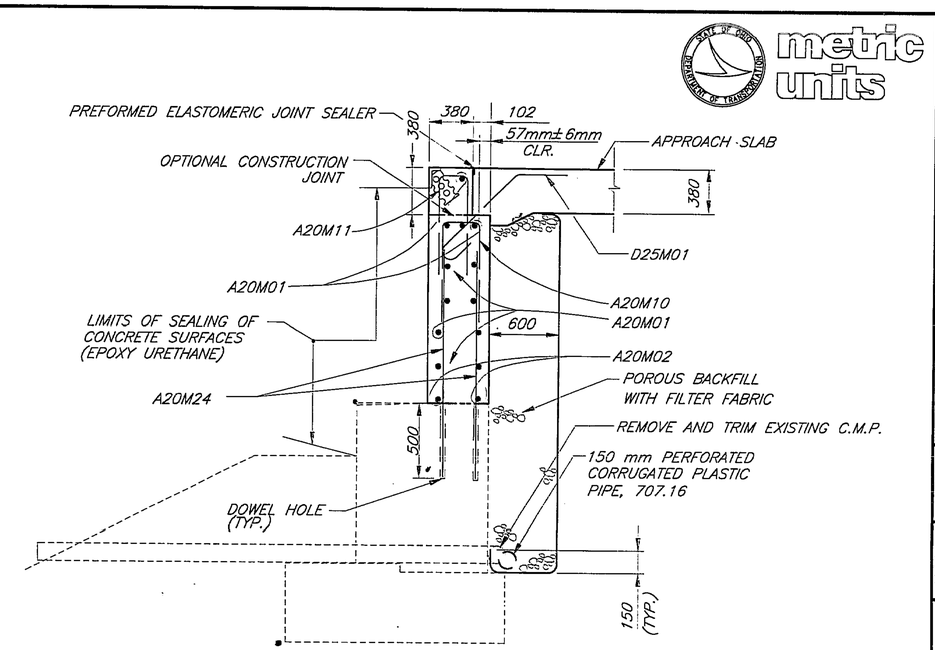

SECTION A-A

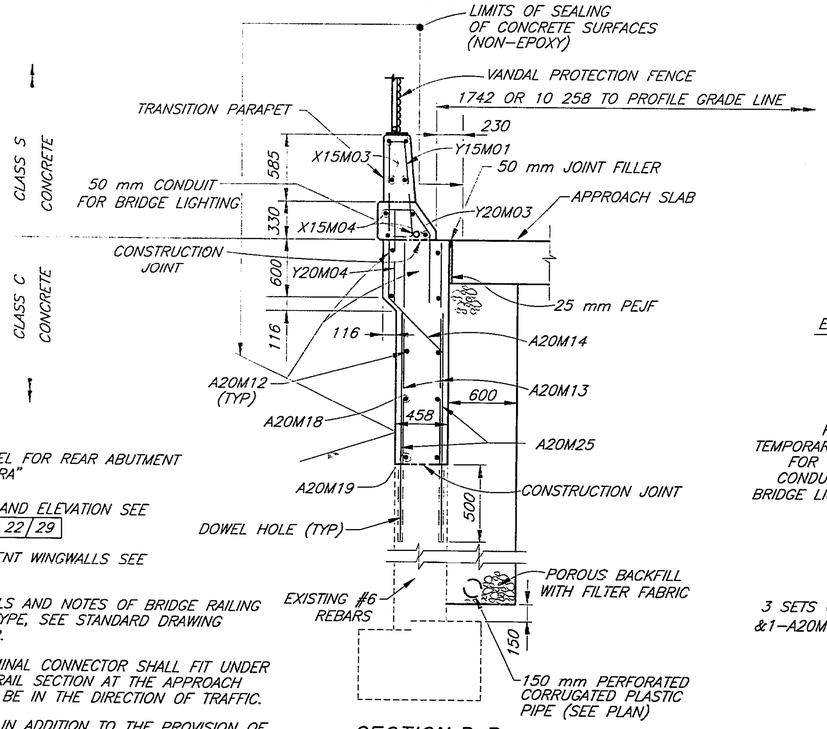

SECTION B-B

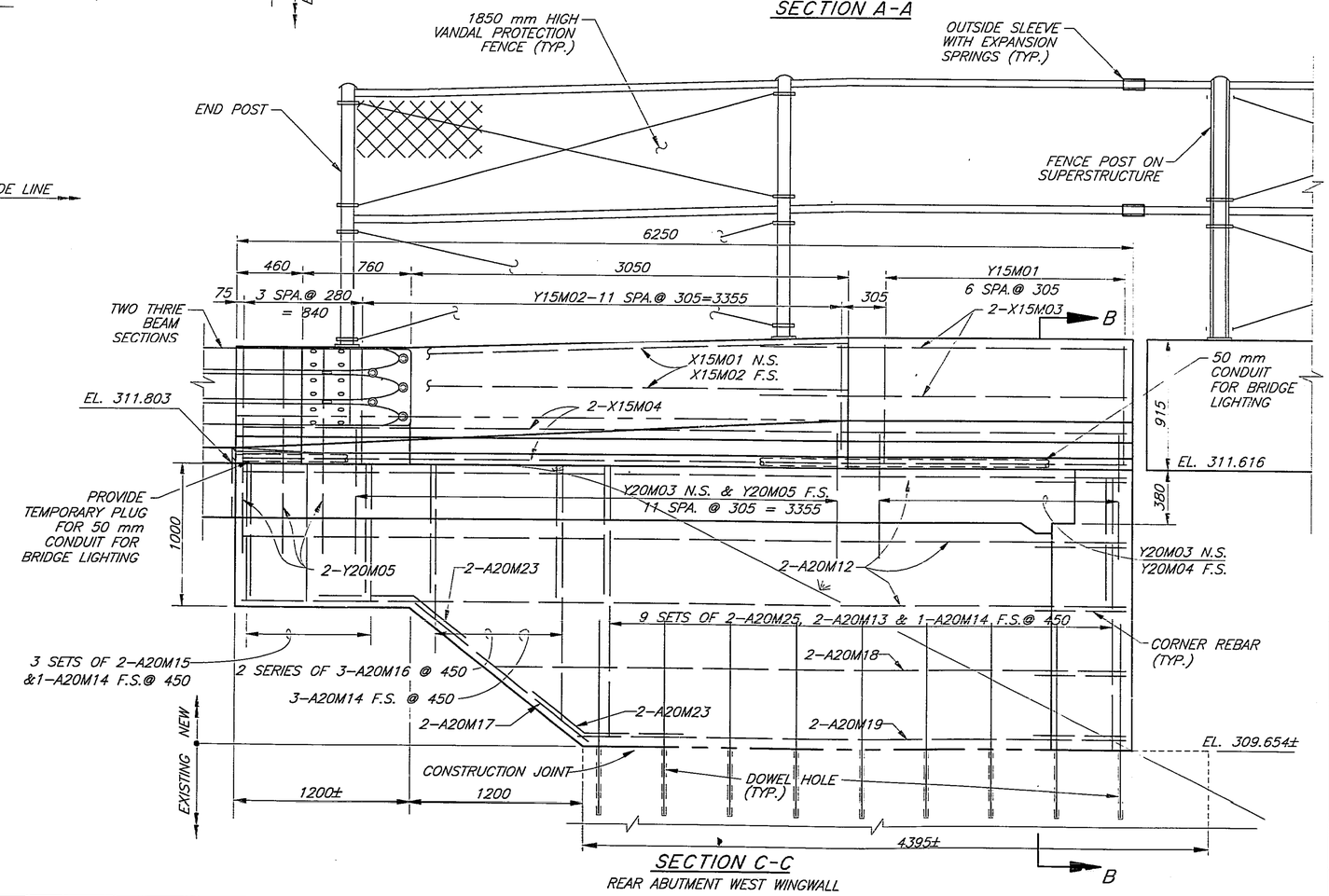

SECTION C-C

REAR ABUTMENT WEST WINGWALL

NOTES:

1. ALL REINFORCING STEEL FOR REAR ABUTMENT SHALL BE PREFIXED "RA"
2. FOR ABUTMENT PLAN AND ELEVATION SEE SHEET 21/29 AND 22/29
3. FOR FORWARD ABUTMENT WINGWALLS SEE SHEET 24/29
4. FOR ADDITIONAL DETAILS AND NOTES OF BRIDGE RAILING DEFLECTOR PARAPET TYPE, SEE STANDARD DRAWING BR–1M SHEET 1 OF 2.
5. THE THRIE BEAM TERMINAL CONNECTOR SHALL FIT UNDER THE STANDARD GUARDRAIL SECTION AT THE APPROACH END. ALL LAPS SHALL BE IN THE DIRECTION OF TRAFFIC.
6. BACKWALL CONCRETE: IN addition TO THE PROVISION OF 511.08 BACKWALL CONCRETE ABOVE THE OPTIONAL CONSTRUCTION JOINT AT THE APPROACH SLAB SEAT SHALL NOT BE PLACED UNTIL AFTER THE DECK CONCRETE IN THE SPAN ADJACENT TO THE ABUTMENT HAS BEEN PLACED.
7. FOR ADDITIONAL DETAILS AND NOTES OF VANDAL PROTECTION FENCE, SEE STANDARD DRAWING VPF–1–90M.

metric units

THE OSBORN ENGINEERING CO.
668 EUCLID AVENUE
CLEVELAND, OHIO 44114

DESIGNED	BK	
CHECKED	GTA	
DRAWN	BK	
REVIEWED	JRS	02/29/96
SUBMITTED		7729561

ABUTMENT DETAILS
BRIDGE NO. SUM–271–10605 LEFT
OVER WESTBOUND LANES OF I–80

SUM–271–10.51

23/29

74/80

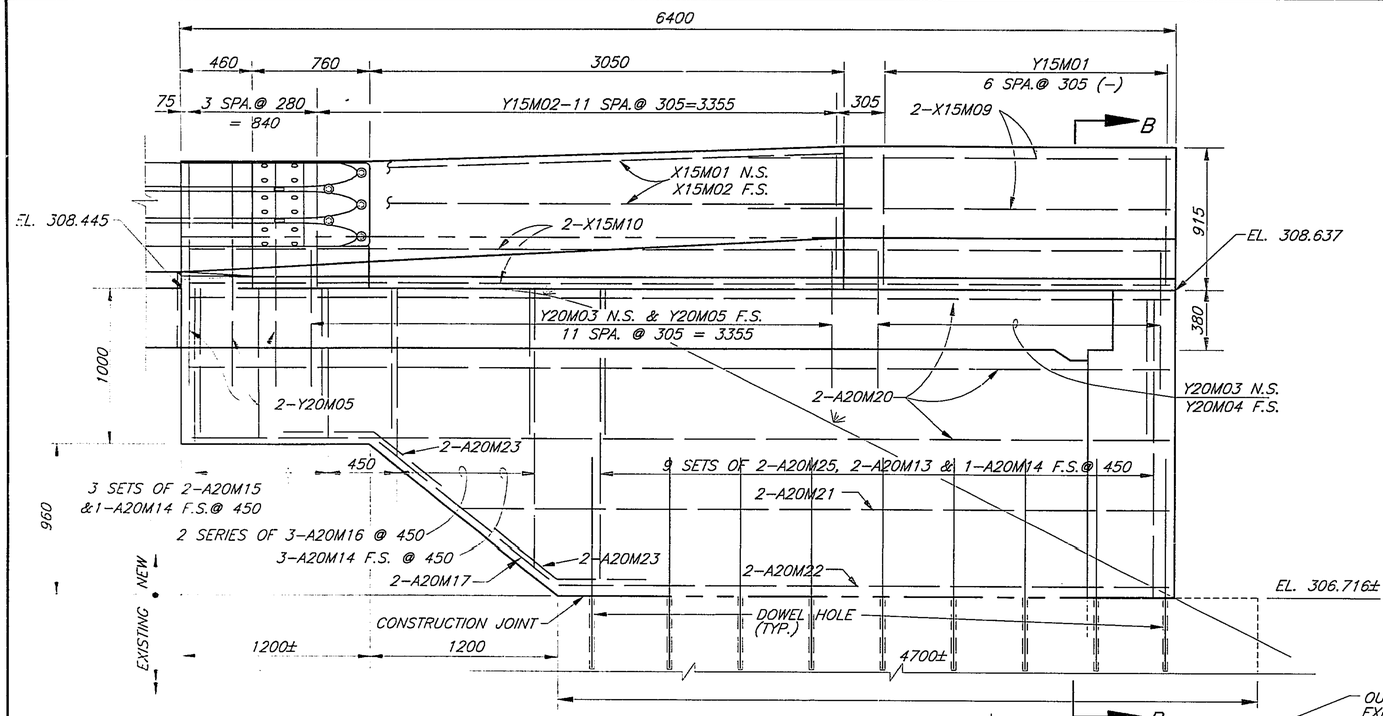

SECTION G-G

FORWARD ABUTMENT EAST WINGWALL
VANDAL PROTECTION FENCE NOT SHOWN

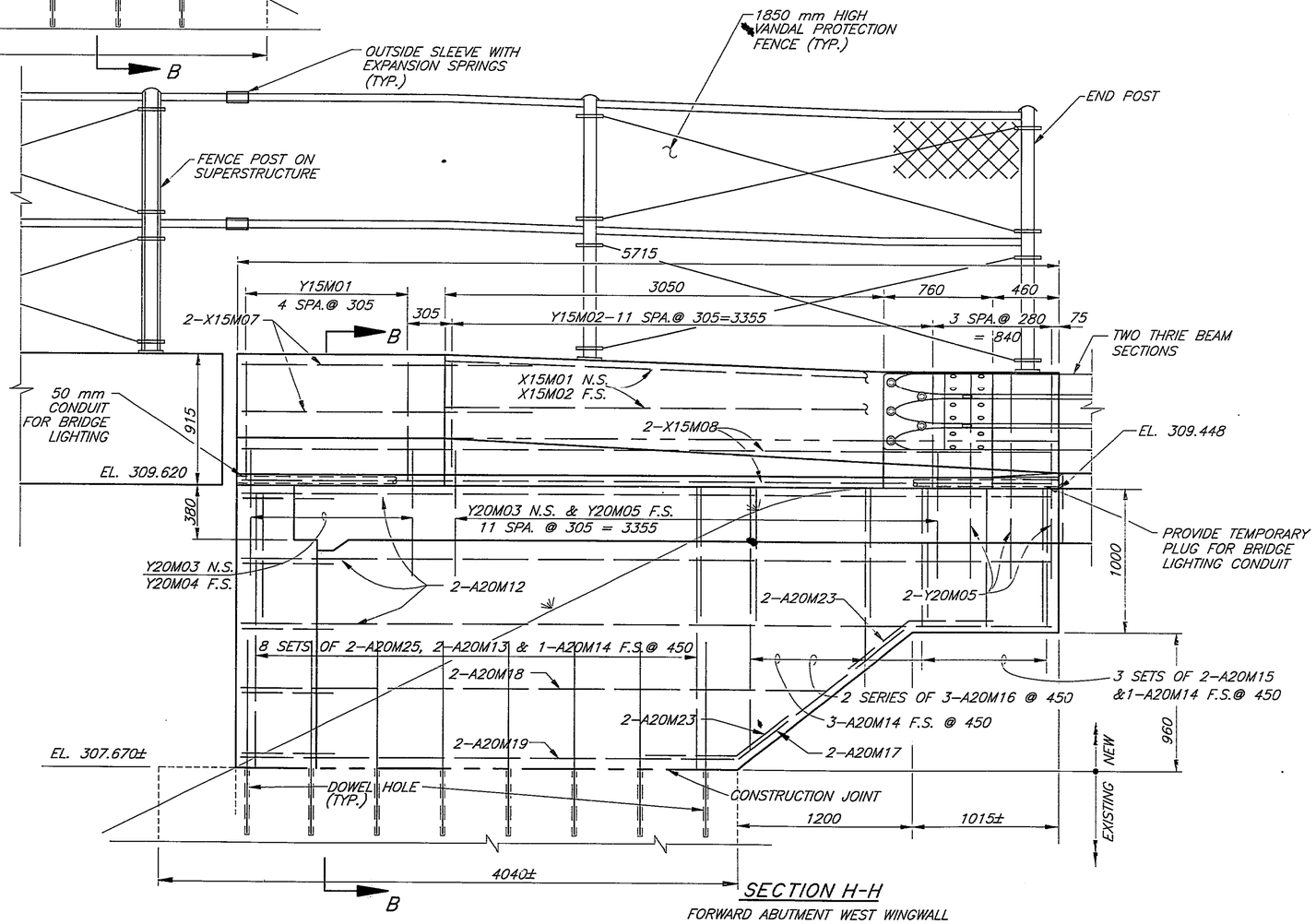

SECTION H-H

FORWARD ABUTMENT WEST WINGWALL

NOTES:

1. ALL REINFORCING STEEL FOR FORWARD ABUTMENT SHALL BE PREFIXED "FA"
2. FOR ABUTMENT PLAN AND ELEVATION SEE SHEET 21 AND 22 OF 29.
3. FOR ADDITIONAL DETAILS, SECTIONS AND NOTES OF BRIDGE RAILING DEFLECTOR PARAPET TYPE, SEE STANDARD DRAWING BR–1M SHEET 1 OF 2.
4. THE THRIE BEAM TERMINAL CONNECTOR SHALL FIT UNDER THE STANDARD GUARDRAIL SECTION AT THE APPROACH END. ALL LAPS SHALL BE IN THE DIRECTION OF TRAFFIC.
5. FOR ABUTMENT SECTIONS AND REAR ABUTMENT WINGWALLS SEE SHEET 23/29
6. FOR ADDITIONAL DETAILS AND NOTES OF VANDAL PROTECTION FENCE, SEE STANDARD DRAWING VPF–1–90M.

metric units

THE OSBORN ENGINEERING CO.
668 EUCLID AVENUE
CLEVELAND, OHIO 44114

DESIGNED	BK	
CHECKED	BK	
DRAWN	JRS	02/29/96
CHECKED	GA	
SUBMITTED FOR PROJECT NUMBER		77295561

ABUTMENT SECTIONS
BRIDGE NO. SUM–271–10605 LEFT
OVER WESTBOUND LANES OF I–80

SUM–271–10.51

24/29

75/80

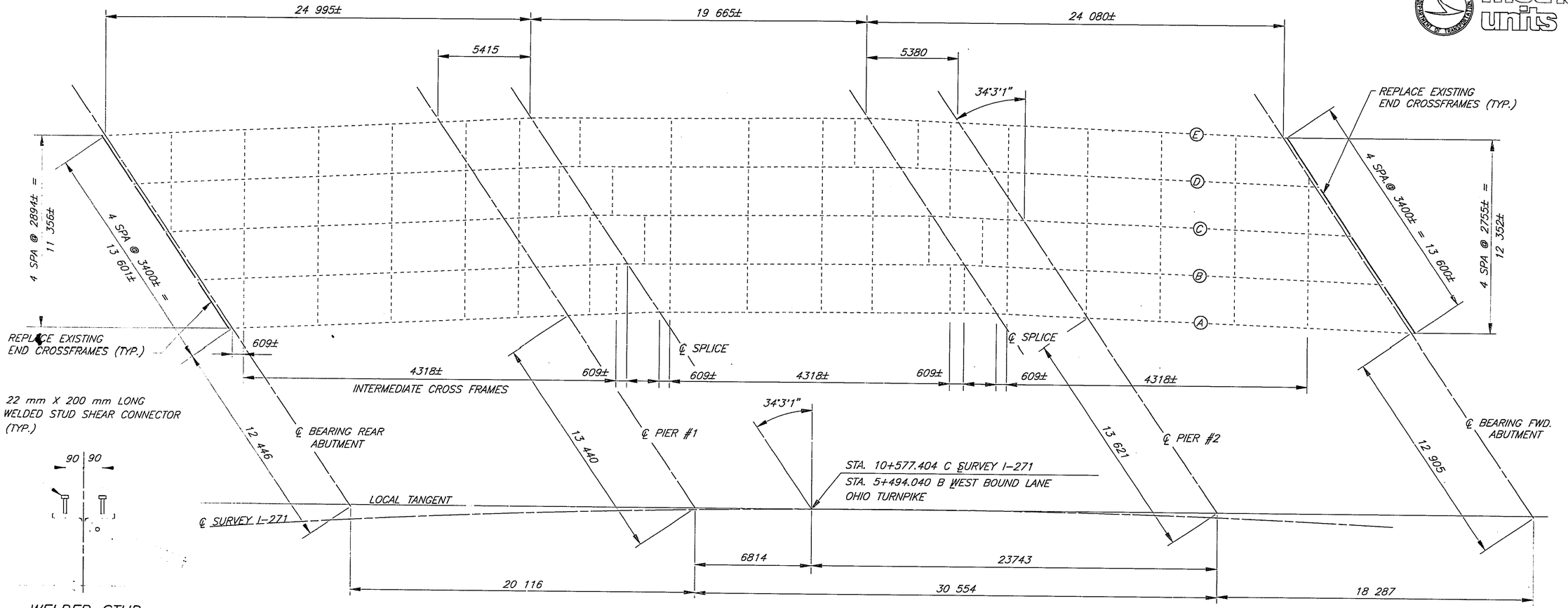

WELDED STUD SHEAR CONNECTOR DETAIL

PLAN

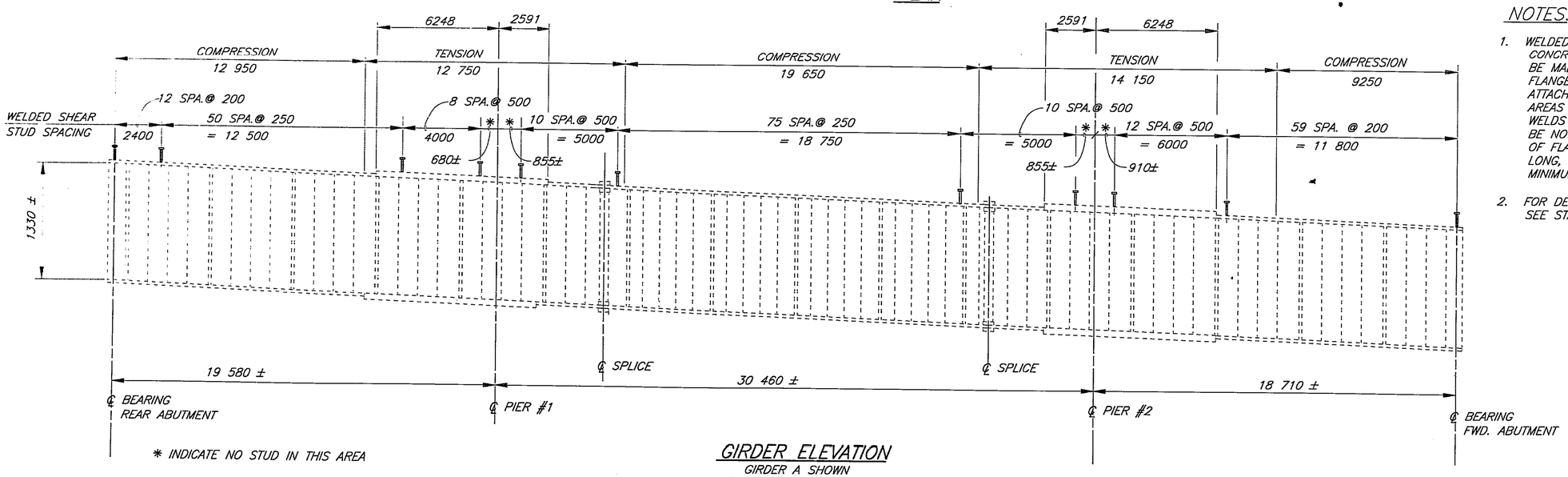

* INDICATE NO STUD IN THIS AREA

GIRDER ELEVATION

GIRDER A SHOWN
GIRDER B,C,D & E SIMILAR

NOTES:

1. WELDED ATTACHMENT OF SUPPORTS FOR CONCRETE DECK FINISHING MACHINE MAY BE MADE TO AREAS OF FACIA STRINGER FLANGES DESIGNATED "COMPRESSION". ATTACHMENTS SHALL NOT BE MADE TO AREAS DESIGNATED "TENSION". FILLET WELDS TO COMPRESSION FLANGES SHALL BE NOT CLOSER THAN 25 mm FROM EDGE OF FLANGE, BE NOT MORE THAN 50 mm LONG, AND BE NOT SMALLER THAN THE MINIMUM SIZE REQUIRED BY AASHTO.
2. FOR DETAILS OF NEW END CROSSFRAMES, SEE STANDARD DRAWING EXJ-4-87M.

metric units

THE OSBORN ENGINEERING CO.
668 EUCLID AVENUE
CLEVELAND, OHIO 44114

JRS	02/29/96	7729561
SMG		
BK		
CHECKED		GTA

FRAMING PLAN
BRIDGE NO. SUM-271-1054 LEFT
OVER WESTBOUND LANES OF I-80

SUM-271-10.510

Filename K:\ALL\2001-10\055\STRUCT\10.506.dgn
Design SG
Drawn By/Date SG / 04-04-06 (11:19)

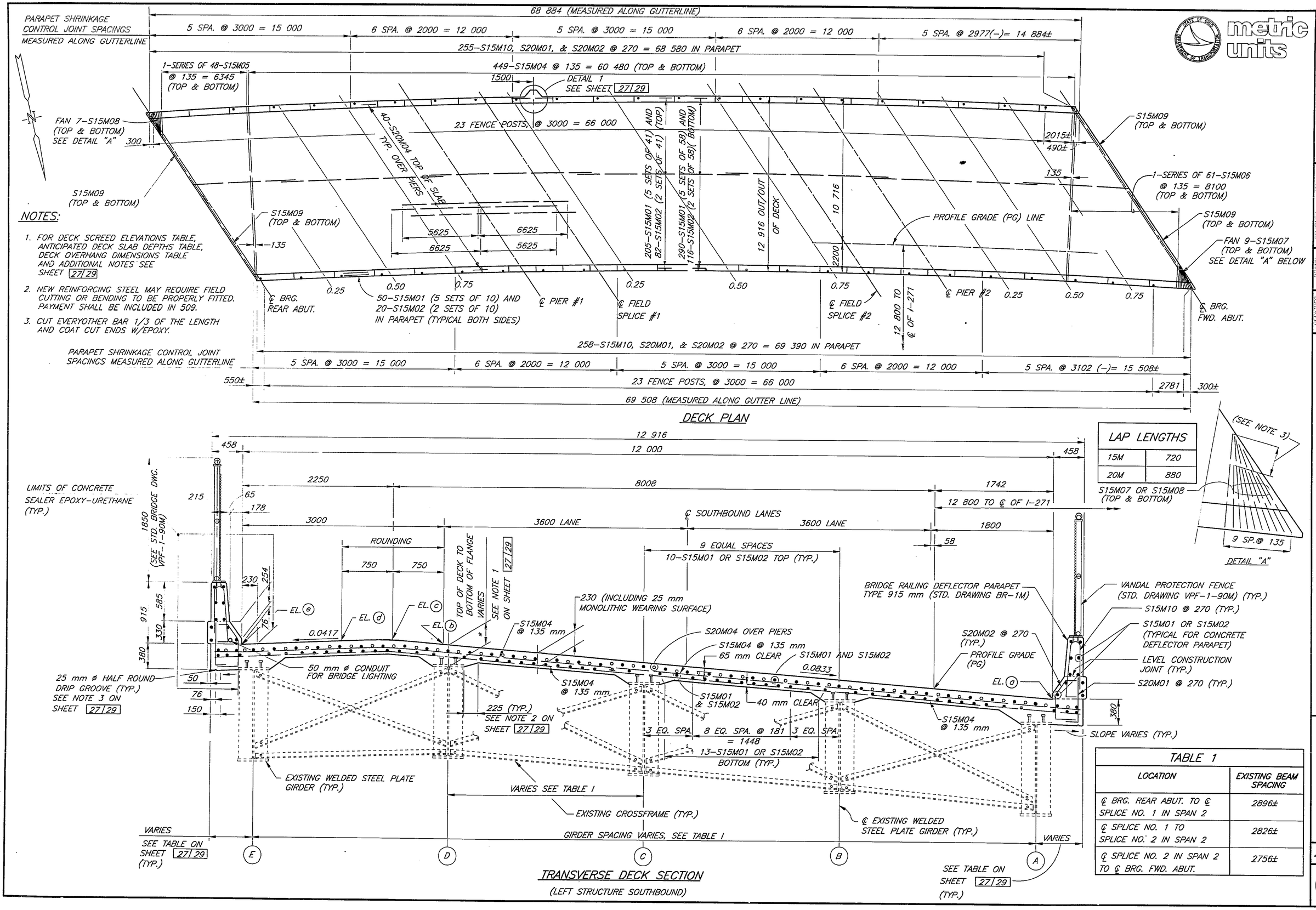

NOTES:

1. FOR DECK SCREED ELEVATIONS TABLE, ANTICIPATED DECK SLAB DEPTHS TABLE, DECK OVERHANG DIMENSIONS TABLE AND ADDITIONAL NOTES SEE SHEET 27/29
2. NEW REINFORCING STEEL MAY REQUIRE FIELD CUTTING OR BENDING TO BE PROPERLY FITTED. PAYMENT SHALL BE INCLUDED IN 509.
3. CUT EVERYOTHER BAR 1/3 OF THE LENGTH AND COAT CUT ENDS W/EPOXY.

LAP LENGTHS	
15M	720
20M	880

TABLE 1	
LOCATION	EXISTING BEAM SPACING
℄ BRG. REAR ABUT. TO ℄ SPLICE NO. 1 IN SPAN 2	2896±
℄ SPLICE NO. 1 TO SPLICE NO. 2 IN SPAN 2	2826±
℄ SPLICE NO. 2 IN SPAN 2 TO ℄ BRG. FWD. ABUT.	2756±

metric units

THE OSBORN ENGINEERING CO.
668 EUCLID AVENUE
CLEVELAND, OHIO 44114

DESIGN JRS 02/29/96
CHECK VM
DRAWN GTA
CHECKED BK

DECK PLAN AND TRANSVERSE SECTION
BRIDGE NO. SUM–271–1054 LEFT
OVER WESTBOUND LANES OF I–80

SUM–271–10.510

DECK SCREED ELEVATIONS (TOP OF PORTLAND CEMENT CONCRETE)

ELEVATION LOCATION	SPAN 1				SPAN 2				SPAN 3				
	℄ BEARING REAR ABUT.	0.25	0.50	0.75	℄ PIER 1	F.S. #1	0.5	F.S. #2	℄ PIER 2	0.25	0.50	0.75	℄ BEARING FORWARD ABUT.
RIGHT GUTTER EL. (a)	310.681	310.542	310.397	310.249	310.104	309.950	309.677	309.369	309.203	309.064	308.926	308.787	308.648
GIRDER A	310.703	310.559	310.413	310.268	310.130	309.988	309.713	309.421	309.250	309.110	308.975	308.845	308.717
PROFILE GRADE (PG)	310.857	310.718	310.574	310.427	310.282	310.129	309.857	309.550	309.385	309.247	309.109	308.971	308.832
GIRDER B	310.998	310.853	310.707	310.561	310.422	310.280	310.004	309.710	309.538	309.398	309.263	309.131	309.003
GIRDER C	311.293	311.147	311.000	310.854	310.714	310.572	310.295	309.999	309.827	309.686	309.550	309.418	309.289
GIRDER D	311.586	311.441	311.293	311.147	311.007	310.863	310.585	310.288	310.115	309.974	309.837	309.704	309.575
EDGE OF LANE EL. (b)	311.587	311.450	311.308	311.163	311.021	310.870	310.604	310.302	310.140	310.004	309.868	309.733	309.597
MID POINT OF ROUNDING EL. (c)	311.661	311.525	311.384	311.239	311.097	310.947	310.681	310.380	310.217	310.081	309.946	309.811	309.676
END OF ROUNDING EL. (d)	311.643	311.507	311.366	311.221	311.080	310.929	310.664	310.363	310.201	310.066	309.931	309.796	309.661
GIRDER E	311.607	311.474	311.335	311.192	311.050	310.899	310.638	310.338	310.179	310.045	309.911	309.776	309.640
LEFT GUTTER EL. (e)	311.605	311.470	311.329	311.185	311.044	310.894	310.630	310.330	310.169	310.034	309.899	309.765	309.631

ANTICIPATED DECK SLAB DEPTHS**

LOCATION	SPAN 1				SPAN 2				SPAN 3					
	℄ BEARING REAR ABUT.	0.25	0.50	0.75	℄ PIER 1	F.S. #1	0.5	F.S. #2	℄ PIER 2	0.25	0.50	0.75	℄ BEARING FORWARD ABUT.	AVERAGE DEPTH
GIRDER A	369	378	390	355	377	393	403	383	365	347	319	336	355	367
GIRDER B	369	375	385	342	374	384	420	386	363	347	320	336	355	366
GIRDER C	377	381	389	344	374	380	394	377	353	330	318	325	336	360
GIRDER D	392	397	414	363	369	391	402	383	357	361	356	335	319	371
GIRDER E	351	376	401	348	354	370	395	371	356	333	304	323	341	356

** NOTE: DEPTHS SHOWN ARE FROM TOP OF DECK TO BOTTOM OF TOP FLANGE

DECK OVERHANG DIMENSION

LOCATION	SPAN 1				SPAN 2				SPAN 3				
	℄ BEARING REAR ABUT.	0.25	0.50	0.75	℄ PIER 1	F.S. #1	0.5	F.S. #2	℄ PIER 2	0.25	0.50	0.75	℄ BEARING FORWARD ABUT.
RIGHT OVERHANG (NEAR GIRDER A)	678	624	611	638	705	827	806	950	901	898	932	1002	1110
LEFT OVERHANG (NEAR GIRDER E)	512	623	694	725	717	661	802	786	905	969	998	990	946

NOTES:

1. DECK SLAB DEPTH: THE DISTANCE SHOWN FROM THE TOP OF THE DECK SLAB TO THE BOTTOM OF THE TOP FLANGE IS THE THEORETICAL DESIGN DIMENSION INCLUDING THE DESIGN HAUNCH THICKNESS OF 134 mm. THE QUANTITY OF DECK CONCRETE TO BE PAID FOR SHALL BE BASED UPON THIS DIMENSION, MINUS THE DESIGN HAUNCH THICKNESS, EVEN THOUGH DEVIATION FROM IT MAY BE NECESSARY BECAUSE THE TOP FLANGE OF THE GIRDER MAY NOT HAVE THE EXACT CAMBER OR CONFORMATION REQUIRED TO PLACE IT PARALLEL TO THE FINISHED GRADE. DEDUCTION SHALL BE MADE FOR VOLUME OF ENCASED STEEL PLATES AS PER 511.18.
2. A HAUNCH WIDTH OF 225 mm SHALL BE USED FOR COMPUTING QUANTITY OF CONCRETE. HOWEVER, THE HAUNCH WIDTH MAY VARY BETWEEN 150 mm AND 300 mm.
3. DRIP GROOVES SHALL TERMINATE 610 mm FROM THE FACES OF ABUTMENTS.
4. SCREED ELEVATIONS SHOWN ARE FOR THE DECK SLAB SURFACE PRIOR TO CONCRETE PLACEMENT. ALLOWANCE HAS BEEN MADE FOR ANTICIPATED CALCULATED DEAD LOAD DEFLECTIONS.
5. FOR VANDAL PROTECTION FENCE DETAILS AND NOTES SEE STANDARD DRAWING VPF-1-90M, POST SECTION PS-4 WITH BASE PLATE BP-5 SHALL BE UTILIZED.
6. THE REMOVAL OF THE EXISTING END CROSSFRAMES AND EXISTING EXPANSION JOINT END DAMS SHALL BE INCLUDED WITH ITEM 202 - PORTIONS OF STRUCTURE REMOVED, OVER 6 METER SPAN, AS PER PLAN FOR PAYMENT.
7. FOR ADDITIONAL EXPANSION JOINT AND END CROSS-FRAME DETAILS SEE STANDARD DRAWINGS EXJ-4-87M.
8. STRIP SEAL GLANDS SHALL BE FURNISHED AND INSTALLED IN ONE CONTINUOUS PIECE.
9. INSTALLATION OF SEAL: DURING INSTALLATION OF THE SUPPORT/ARMOR FOR THE SUPERSTRUCTURE SIDE OF THE EXPANSION JOINT SEAL, THE SEATING OF BEAMS ON BEARINGS SHALL BE CAREFULLY OBSERVED TO ASSURE THAT POSITIVE BEARING IS MAINTAINED.

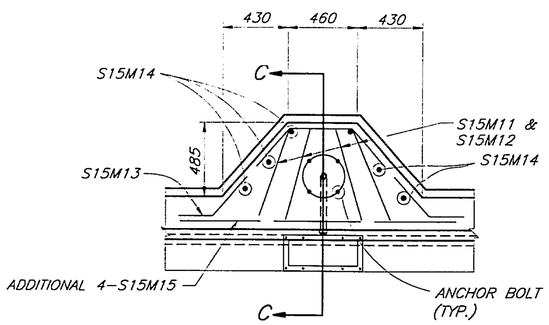

PLAN

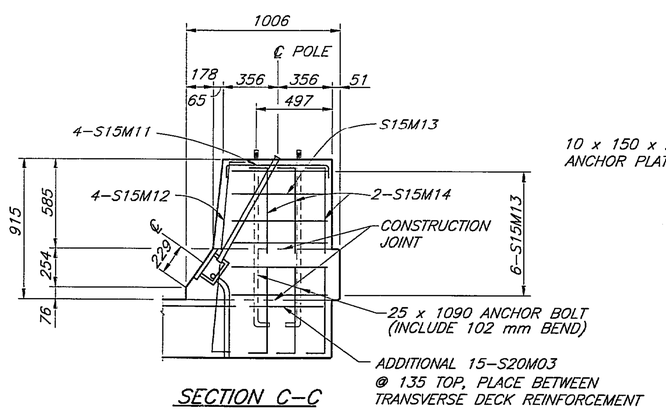

SECTION C-C

DETAIL-1

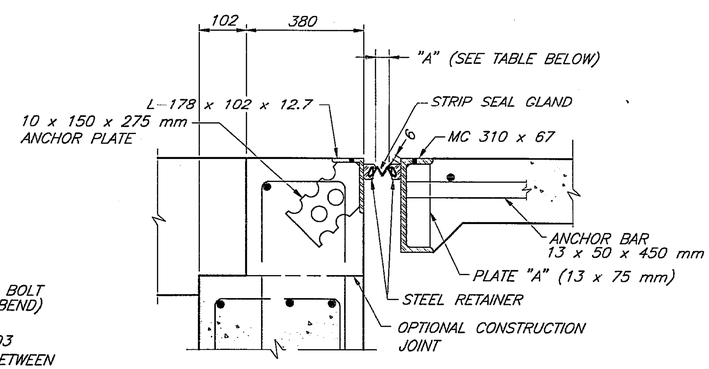

SECTION A-A

NOTE:

FOR ADDITIONAL DETAILS, SEE STD. DWG. HL-20.14M & HL-10.13M. USE DESIGN DIMENSIONS FOR 203 mm POLE SHAFT. THE POLE BASE IS INCLUDED IN THIS CONTRACT, HOWEVER THE LIGHT POLE IS NOT.

DIMENSION "A" FOR DECK JOINT OPENING							
0°C	5°C	10°C	15°C	20°C	25°C	30°C	35°C
46 mm	45 mm	43 mm	41 mm	20 mm	39 mm	37 mm	35 mm

metric units

THE OSBORN ENGINEERING CO.
668 EUCLID AVENUE
CLEVELAND, OHIO 44114

DESIGNED JRS 02/29/96
CHECKED VM
DRAWN BK
CHECKED GTA
CONTRACT NO. 7729561

DECK SCREED ELEVATIONS AND MISCELLANEOUS DETAILS
BRIDGE NO. SUM-271-1054 LEFT
OVER WESTBOUND LANES OF I-80

SUM-271-10.510

Filename: K:\ODOT\70003-M\0305\STRUCT\U0501.*12
Plot Scale: 1:1
Drawn By/Date: SGG / 04-04-96 (11:22)

MARK	NUMBER	LENGTH (mm)	WEIGHT (kg)	TYPE	SERIES INCR.	A	B	C	D
LEFT STRUCTURE									
REAR ABUTMENT									
D25M01	31	1625	198	12		926	305	100	100
RA20M01	18	8350	354	STR					
RA20M02	2	7750	37	STR					
RA20M03	4	4375	41	STR					
RA20M04	NOT USED								
RA20M05	NOT USED								
RA20M06	5	2525	30	13		1550	300	400	300
RA20M07	5	2000	24	4		1000	1000	400	300
RA20M08	5	2250	26	17		1000	1000	400	300
RA20M09	10	1750	41	4		1450	300	400	300
RA20M10	50	2082	245	1		900	382		
RA20M11	50	2440	287	1		1130	280		
RA20M12	6	6150	87	STR					
RA20M13	40	1950	184	STR					
RA20M14	32	1400	106	4		725	674	100	100
RA20M15	12	950	27	STR					
RA20M16	4 SERIES OF 3	VARIES 1080 TO 1775	40	STR	348				
RA20M17	4	1550	15	STR					
RA20M18	2	4400	21	STR					
RA20M19	2	3800	18	STR					
RA20M20	6	6800	96	STR					
RA20M21	2	5050	24	STR					
RA20M22	2	4450	21	STR					
RA20M23	8	1740	33	4		880	880	950	1200
RA20M24	100	1700	400	STR					
RA20M25	38	1380	124	STR					
		TOTAL =	2479						
FORWARD ABUTMENT									
D25M01	34	1675	224	12		973	305	100	100
FA20M01	18	8300	352	STR					
FA20M02	2	7750	37	STR					
FA20M03	4	4450	42	STR					
FA20M04	NOT USED								
FA20M05	NOT USED								
FA20M06	5	2525	30	13		1550	300	400	300
FA20M07	5	2000	24	4		1000	1000	400	300
FA20M08	5	2250	26	17		1000	1000	400	300
FA20M09	10	1750	41	4		1450	300	400	300
FA20M10	50	2082	260	1		900	382		
FA20M11	50	2440	305	1		1130	280		
FA20M12	6	5615	79	STR					
FA20M13	34	1900	152	STR					
FA20M14	29	1175	80	4		500	674	100	100
FA20M15	12	950	27	STR					
FA20M16	4 SERIES OF 3	VARIES 1080 TO 1775	40	STR	348				
FA20M17	4	1550	15	STR					
FA20M18	2	4050	19	STR					
FA20M19	2	3450	16	STR					
FA20M20	6	6300	89	STR					
FA20M21	2	4500	21	STR					
FA20M22	2	3900	18	STR					
FA20M23	8	1740	33	4		880	880	950	1200
FA20M24	100	1700	400	STR					
FA20M25	34	1380	111	STR					
		TOTAL =	2441						

MARK	NUMBER	LENGTH (mm)	WEIGHT (kg)	TYPE	SERIES INCR.	A	B	C	D
LEFT STRUCTURE									
SUPERSTRUCTURE									
S15M01	595	12 000	11 210	STR					
S15M02	238	6864	2565	STR					
S15M03	NOT USED								
S15M04	898	12 854	18 122	STR					
S15M05	2 SERIES OF 48	VARIES 1875 TO 12 575	1083	STR	227				
S15M06	2 SERIES OF 61	VARIES 1750 TO 12 600	1254	STR	180				
S15M07	18	1640	46	STR					
S15M08	14	1650	36	STR					
S15M09	8	8400	106	STR					
S15M10	513	1825	1470	11		765	840	205	
S15M11	4	1590	10	1		560	550		
S15M12	4	1700	11	3		280	1220	280	31
S15M13	6	2280	21	18		550	410	490	280
S15M14	6	2340	22	1		610	1195		
S15M15	4	2900	18	STR					
S20M01	513	840	1015	2		280	610		
S20M02	513	1085	1311	8		360			
S20M03	15	2440	86	STR					
S20M04	80	12 250	2308	STR					
		TOTAL =	40 694						

metric units

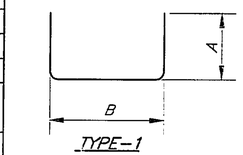

TYPE–1

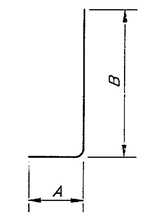

TYPE–2

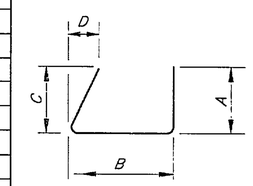

TYPE–3

NOTES:

1. ALL BARS SHALL BE EPOXY COATED.
2. ALL BAR DIMENSIONS ARE GIVEN OUT–TO–OUT, UNLESS OTHERWISE INDICATED.
3. ALL BARS OF A GIVEN SERIES VARY BY A CONSTANT AMOUNT.
4. BAR SIZE NUMBER IS SPECIFIED ON THE PLANS IN THE BAR MARK COLUMN. THE FIRST TWO DIGITS INDICATES THE BAR SIZE NUMBER. FOR EXAMPLE, A 15M01 IS A #15M BAR.
5. FA = FORWARD ABUTMENT
   RA = REAR ABUTMENT
   S = SUPERSTRUCTURE
   X,Y = WINGWALL AND PARAPET

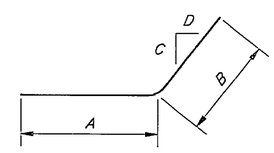

TYPE–4

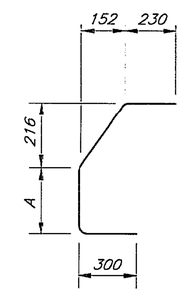

TYPE–8

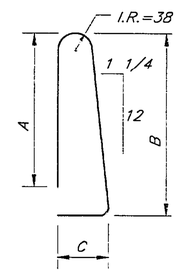

TYPE–11

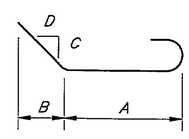

TYPE–12

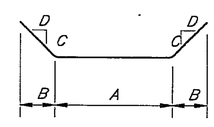

TYPE–13

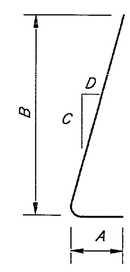

TYPE–17

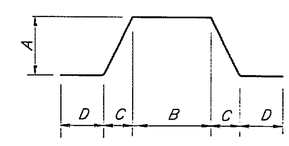

TYPE–18

THE OSBORN ENGINEERING CO.
668 EUCLID AVENUE
CLEVELAND, OHIO 44114

DATE 02/29/96
SCALE NONE
DESIGNED BK
CHECKED GTA
DRAWN JRS
DESIGN SMG
STRUCTURE FILE NUMBER 7729561

REINFORCING SCHEDULE SUPERSTRUCTURE
BRIDGE NO. SUM–271–10605 LEFT
OVER WESTBOUND LANES OF I–80

SUM–271–10.51

MARK	NUMBER	LENGTH (mm)	WEIGHT (kg)	TYPE	SERIES INCR.	A	B	C	D
LEFT STRUCTURE									
TRANSITION PARAPET									
X15M01	8	4220	53	99					
X15M02	8	4220	53	STR					
X15M03	4	2650	17	STR					
X15M04	4	6150	39	STR					
X15M05	4	3300	21	STR					
X15M06	4	6800	43	STR					
X15M07	4	2115	13	STR					
X15M08	4	5615	35	STR					
X15M09	4	2800	18	STR					
X15M10	4	6300	40	STR					
Y15M01	29	1825	83	11		765	840	205	
Y15M02	48	920	69	5		740			
Y20M01	NOT USED								
Y20M02	NOT USED								
Y20M03	77	1135	206	7		230	152	685	216
Y20M04	29	865	59	STR					
Y20M05	72	1375	233	STR					
		TOTAL =	982						

NOTES:

1. ALL BARS SHALL BE EPOXY COATED.
2. ALL BAR DIMENSIONS ARE GIVEN OUT-TO-OUT, UNLESS OTHERWISE INDICATED.
3. ALL BARS OF A GIVEN SERIES VARY BY A CONSTANT AMOUNT.
4. BAR SIZE NUMBER IS SPECIFIED ON THE PLANS IN THE BAR MARK COLUMN. THE FIRST TWO DIGITS INDICATES THE BAR SIZE NUMBER. FOR EXAMPLE, A 15M01 IS A #15M BAR.
5. FA = FORWARD ABUTMENT
   RA = REAR ABUTMENT
   S = SUPERSTRUCTURE
   X,Y = WINGWALL AND PARAPET

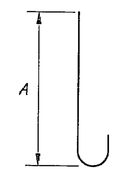

TYPE-5

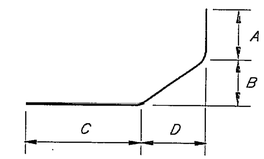

TYPE-7

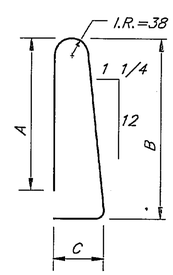

TYPE-11

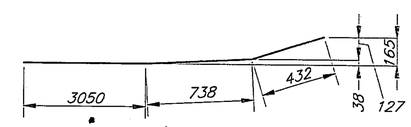

TYPE-99

metric units

THE OSBORN ENGINEERING CO.
668 EUCLID AVENUE
CLEVELAND, OHIO 44114

DESIGNED JRS DATE 02/29/96
DRAWN SMG REVISED
CHECKED BK CHECKED GTA
STRUCTURE NUMBER 7729561

REINFORCING SCHEDULE SUPERSTRUCTURE
BRIDGE NO. SUM-271-1054 LEFT
OVER WESTBOUND LANES OF I-80

SUM-271-10.51
970830 12-17-97
80PC03 DIST. 04

SUM-271-10.510

29/29

80/80

Filename K:\ODOT\1001-M\0355\STRUCT\01554.tif
Plot Scale
Drawn By/Date SG / 04-26-96 (10:39)