Batchplot Spec: \\youngstown-fs1\n\60\06729\standards\plotdrv\batchplt.spc
Pen Table: S:\std\plotting\us1t\v8i\pen1V8i_ms_std.tbl
Plot Driver: S:\std\plotting\us1t\v8i\PDF.pltcfg
Model: Sheet View: SHEET
Printed: 12/12/2013 @ 9:42:59 AM By: srodgers
File: \\youngstown-fs1\n\60\08285\roadway\sheets\764116T002.dgn
34" x 22"
UCF: ohdot8i Ohio DOT Workspace
PCF: 60-06729_Youngstown MAIN\TRU 80-4.50\0.00 Bridge Surveys
0 0.5" 1"

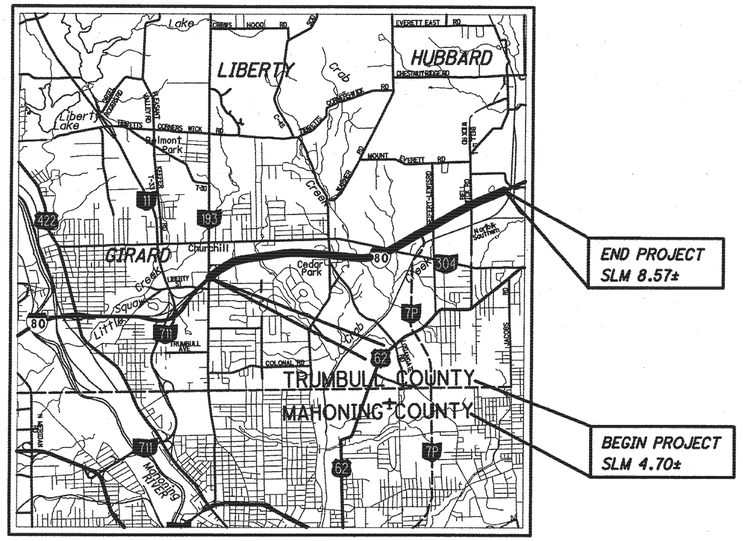

LOCATION MAP

LATITUDE: N41°09'33" LONGITUDE: W80°37'14"

SCALE IN MILES
0 1/2 1 1 1/2 2

N

PORTION TO BE IMPROVED
INTERSTATE HIGHWAY
STATE & FEDERAL ROUTES
COUNTY & TOWNSHIP ROADS
OTHER ROADS

DESIGN DESIGNATION I.R. 80

CURRENT ADT (2013)	38,910
DESIGN YEAR ADT (2033)	45,690
DESIGN HOURLY VOLUME (2033)	4,112
DIRECTIONAL DISTRIBUTION	52%
TRUCKS (24 HOUR B&C)	36%
DESIGN SPEED	70
LEGAL SPEED	65
DESIGN FUNCTIONAL CLASSIFICATION - RURAL FREEWAY/EXPRESSWAY	
NHS PROJECT	YES

10 REVISED 6-6-13

DESIGN EXCEPTIONS

NONE REQUIRED

UNDERGROUND UTILITIES
CONTACT BOTH SERVICES
CALL TWO WORKING DAYS
BEFORE YOU DIG
CALL
1-800-362-2764
(TOLL FREE)
OHIO UTILITIES PROTECTION SERVICE
NON-MEMBERS
MUST BE CALLED DIRECTLY
OIL & GAS PRODUCERS PROTECTIVE SERVICE CALL: **1-800-925-0988**

PLAN PREPARED BY:
ms consultants, inc.
CONSULTING ENGINEERS, ARCHITECTS & PLANNERS
333 E. FEDERAL STREET
YOUNGSTOWN, OHIO 44503

ENGINEERS SEAL: (TRAFFIC PORTION)
STATE OF OHIO
DOUGLAS R BLEGEN
E-48903
REGISTERED
PROFESSIONAL ENGINEER
SIGNED:
DATE: 12-12-13

ENGINEERS SEAL: (ROADWAY PORTION)
STATE OF OHIO
STEVEN W. GEALY
E-57360
REGISTERED
PROFESSIONAL ENGINEER
SIGNED: Steven W. Gealy
DATE: 12-12-13

ENGINEERS SEAL: (BRIDGE PORTION)
STATE OF OHIO
WILLIAM EARL RUGGLES
E-69834
REGISTERED
PROFESSIONAL ENGINEER
SIGNED: William E. Ruggles
DATE: 12-12-13

STATE OF OHIO
DEPARTMENT OF TRANSPORTATION
TRU-80-4.70

LIBERTY TOWNSHIP
HUBBARD TOWNSHIP
TRUMBULL COUNTY

INDEX OF SHEETS:

TITLE SHEET	1
SCHEMATIC/RESURFACING PLAN	2, 3
TYPICAL SECTIONS	4-8
GENERAL NOTES	9-11
MAINTENANCE OF TRAFFIC	12-40
PROJECT SITE PLAN	41, 42
PLAN & PROFILE	43-46
CROSS SECTIONS	47-52
GUARDRAIL DETAILS	53-65
DRAINAGE DETAILS	66
MISCELLANEOUS DETAILS	67
TRAFFIC CONTROL	68-72
STRUCTURES (OVER 20 FT.)	
GENERAL NOTES	73-76
TRU-80-0496L/R	77-108
TRU-80-0591L/R	109-140
TRU-80-0745, TRU-80-0801	141, 142
STRUCTURE FOUNDATION EXPLORATION	

STANDARD CONSTRUCTION DRAWINGS

										SUPPLEMENTAL SPECIFICATIONS	
DM-1.1	7/20/12	CB-3.3	7/15/05	GR-5.1	4-16-10	MT-95.30	7/20/12	TC-61.30	4/20/12	800-2010	7/20/2012
DM-1.2	10/21/05			GR-5.2	4-16-10	MT-96.11	7/20/12	TC-65.10	4/20/12	832	5/5/2009
DM-1.4	7/15/11	HW-2.2	7/30/07	GR-5.3	4-16-10	MT-96.20	7/20/12	TC-65.11	4/20/12	961	10/17/2008
DM-4.1	7/20/12			GR-6.1	4-16-10	MT-96.26	1/16/09	TC-72.20	7/20/12		
DM-4.3	1/18/13	F-3.1	4/16/10			MT-97.10	7/20/12	TC-73.10	4/20/12		
DM-4.4	7/20/12			MGS-1.1	1-18-13	MT-99.20	7/20/12				
		GR-1.1	7-20-12	MGS-2.1	1-18-13	MT-101.70	4/15/11	AS-1-81	7/19/02		
BP-1.1	7/28/00	GR-2.1	7-20-12	MGS-4.1	1-18-13	MT-101.60	7/20/12	GSD-1-96	7/19/02		
BP-2.1	7/18/08	GR-2.2	7-20-12	MGS-4.2	1-18-13	MT-102.10	1/18/13				
BP-2.2	7/18/08	GR-3.1	7-20-12			MT-102.30	7/20/12	SBR-1-99	7/19/02	SPECIAL PROVISIONS	
BP-2.3	7/16/04	GR-3.2	7-20-12			MT-105.10	7/20/12				
BP-3.1	4/20/12	GR-3.4	7-20-12					SICD-1-96	7/19/02		
BP-4.1	7/16/04	GR-4.1	7-20-12								
BP-5.1	7/28/00	GR-4.2	7-20-12								
BP-9.1	4/15/05										

PROJECT DESCRIPTION

THIS PROJECT WILL REPLACE AND WIDEN THE SUPERSTRUCTURE AND ASSOCIATED ROADWAY WORK ON THE IR-80 BRIDGES OVER SAMPSON ROAD (TRU-80-0496L&R) AND LOGAN WAY (TRU-80-0591L&R). THE PROJECT WILL ALSO RESURFACE IR-80 WITHIN THE PROJECT LIMITS, PERFORM BRIDGE MAINTENANCE WORK, REPAIR PAVEMENT AT THE TRUCK WEIGH STATION AND OTHER MISC. WORK.

EARTH DISTURBED AREAS

TRU-80-0496L&R OVER SAMPSON ROAD:

PROJECT EARTH DISTURBED AREA:	1.82 ACRES
ESTIMATED CONTRACTOR EARTH DISTURBED AREA:	0.25 ACRES
NOTICE OF INTENT EARTH DISTURBED AREA:	2.07 ACRES

TRU-80-0591L&R OVER LOGAN WAY:

PROJECT EARTH DISTURBED AREA:	1.73 ACRES
ESTIMATED CONTRACTOR EARTH DISTURBED AREA:	0.25 ACRES
NOTICE OF INTENT EARTH DISTURBED AREA:	1.98 ACRES

2010 SPECIFICATIONS

THE STANDARD SPECIFICATIONS OF THE STATE OF OHIO, DEPARTMENT OF TRANSPORTATION, INCLUDING CHANGES AND SUPPLEMENTAL SPECIFICATIONS LISTED IN THE PROPOSAL SHALL GOVERN THIS IMPROVEMENT.

LIMITED ACCESS

THIS IMPROVEMENT IS ESPECIALLY DESIGNED FOR THROUGH TRAFFIC AND HAS BEEN DECLARED A LIMITED ACCESS HIGHWAY OR FREEWAY BY ACTION OF DIRECTOR IN ACCORDANCE WITH PROVISIONS OF SECTION 5511.02 OF THE OHIO REVISED CODE.

PRIMA FACIE SPEED LIMIT

UNDER AUTHORITY OF SECTION 4511.21, DIVISION (H) OF THE OHIO REVISED CODE, THE REVISED PRIMA FACIE SPEED LIMITS AS INDICATED HEREIN ARE DETERMINED TO BE REASONABLE AND SAFE, AND ARE HEREBY ESTABLISHED FOR THE DURATION OF THIS PROJECT. THE PRIMA FACIE SPEED LIMIT OF LIMITS HEREBY ESTABLISHED SHALL BECOME EFFECTIVE WHEN APPROPRIATE SIGNS GIVING NOTICE THEREOF ARE ERECTED.

AS-BUILT

THIS RECORD DRAWING HAS BEEN PREPARED IN PART BY THE ENGINEER OF RECORD TO DEPICT CHANGES MADE DURING CONSTRUCTION, BASED ON INFORMATION REPORTED BY THE CONSTRUCTION CONTRACTOR.

FEDERAL PROJECT NO. E120(180)
PID NO. 76411
CONSTRUCTION PROJECT NO 12-3009
RAILROAD INVOLVEMENT NONE
TRU-80-4.70
1
142

ms consultants, inc.

PLOT.CEL

ms consultants, inc.
msconsultants.com

Ohio DOT Workspace
Marucci & Gaffney TRU-80 Design Build
www.rmsconsultants.com

1" 0 0.5"

UCF: ohdot1V8i
PCF: 60-08285_Youngstown

Batchplot Spec: \\youngstown-fs1\n\60\08285\standards\plotdrv\batchplt.spc
Pen Table: S:\std\plotting\ustn\V8\pen\V8i_rms_std.tbl
Plot Driver: S:\std\plotting\ustn\V8\PDF.pltcfg

Model: Sheet
Printed: 12/12/2013 @ 2:18:43 PM
File: \\youngstown-fs1\n\60\08285\roadway\sheets\764116B001.dgn
View: FENCE_VIEW1
By: sgeaby

34" x 22"

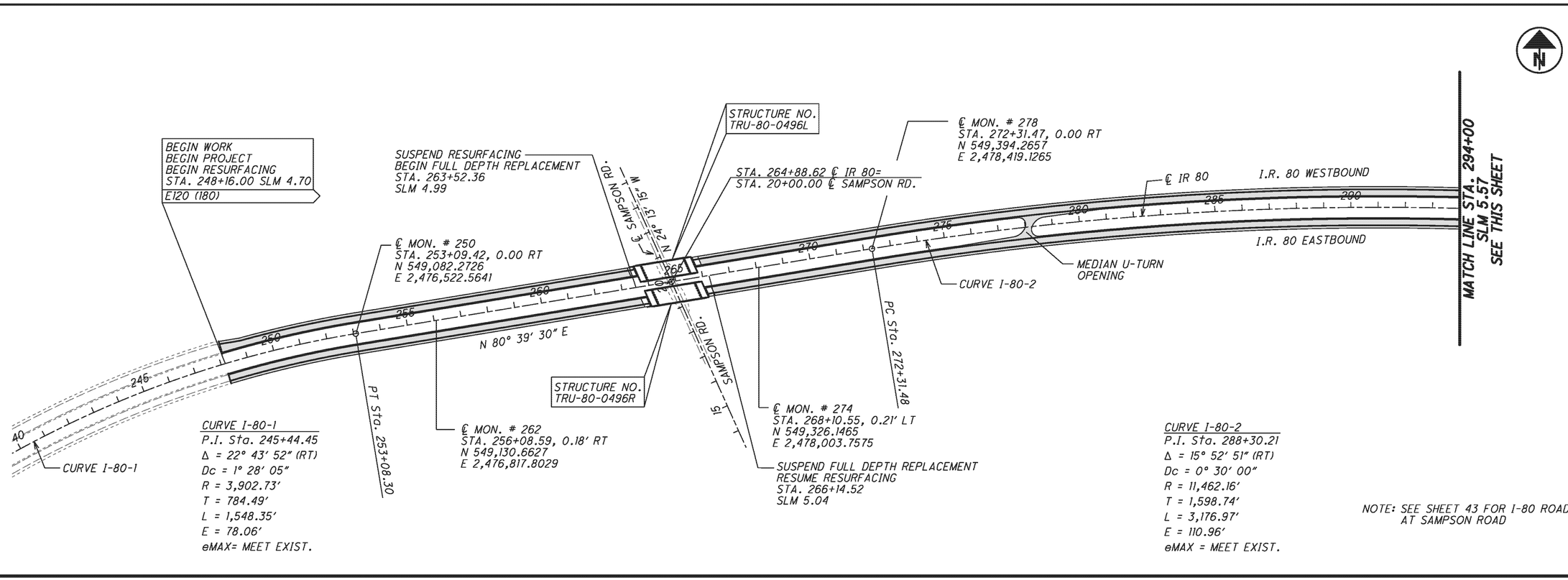

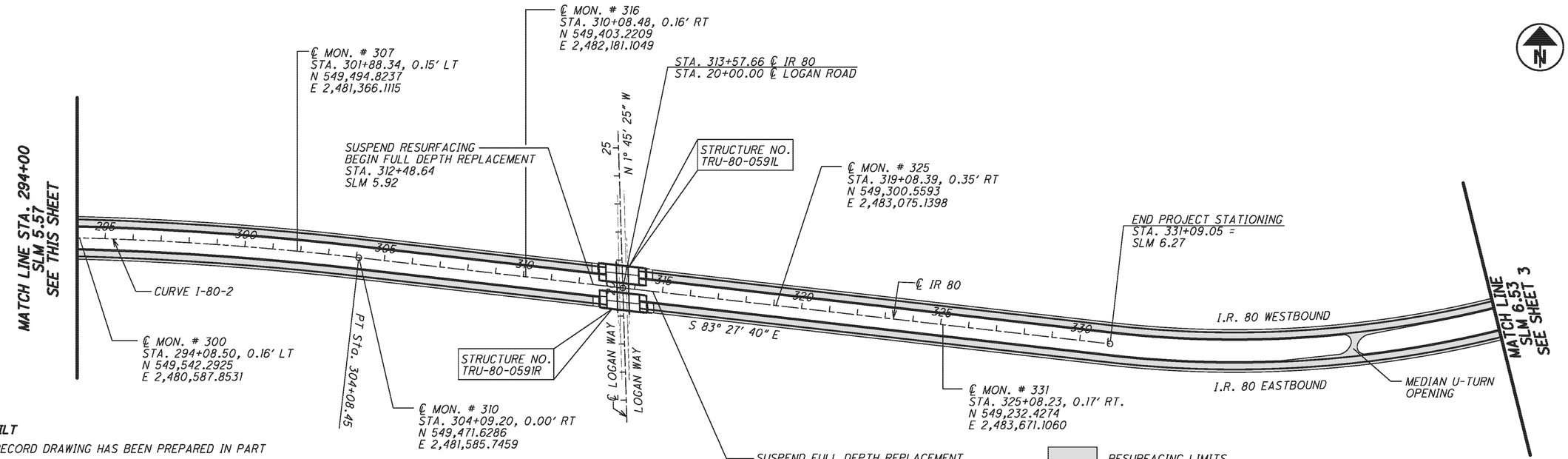

AS-BUILT

THIS RECORD DRAWING HAS BEEN PREPARED IN PART BY THE ENGINEER OF RECORD TO DEPICT CHANGES MADE DURING CONSTRUCTION, BASED ON INFORMATION REPORTED BY THE CONSTRUCTION CONTRACTOR.

HORIZONTAL SCALE IN FEET
0 100 200 400

SCHEMATIC/RESURFACING PLAN
SLM 4.70 TO SLM 6.53

TRU-80-4.70

ms consultants, inc.

PLOT.CEL

ms consultants, inc.
msconsultants.com

Ohio DOT Workspace
Marucci & Coffney TRU-80 Design Build
www.rmsconsultants.com

0 0.5" 1"

UCF: ohdotVBi
PCF: 60-08285_Youngstown

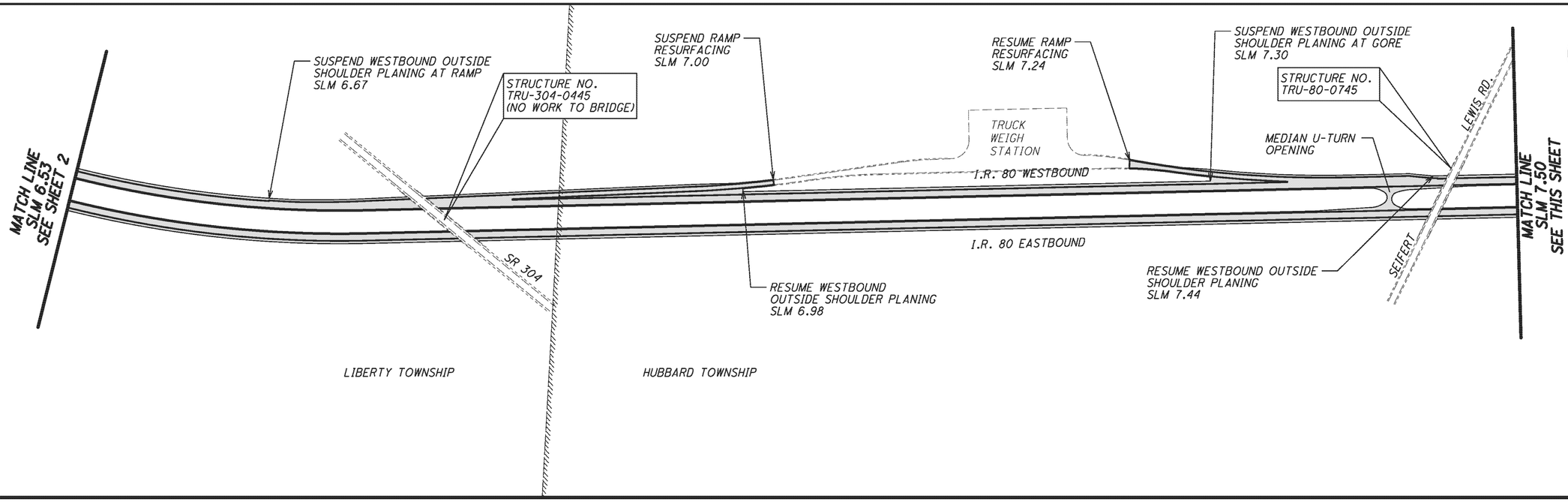

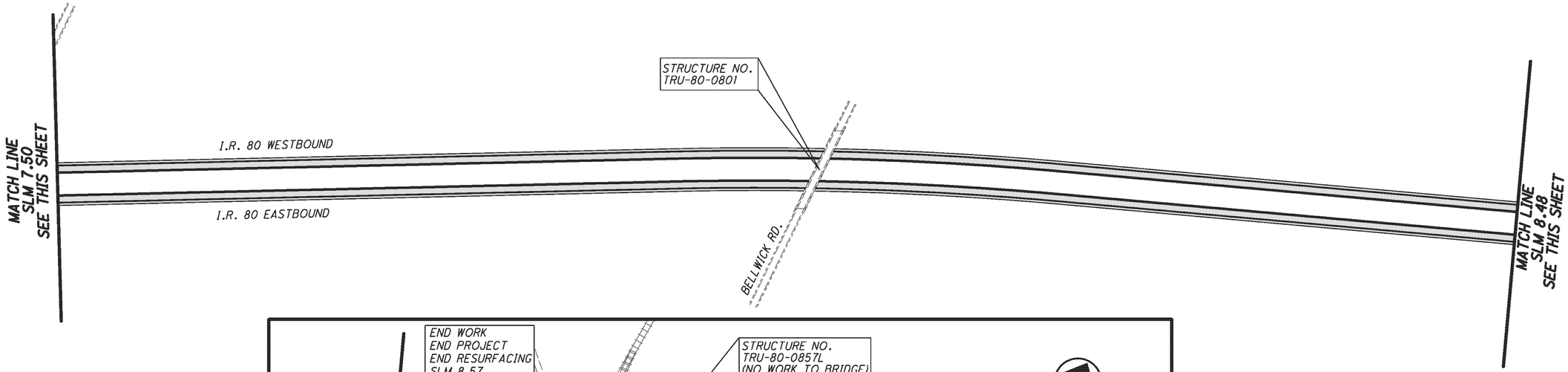

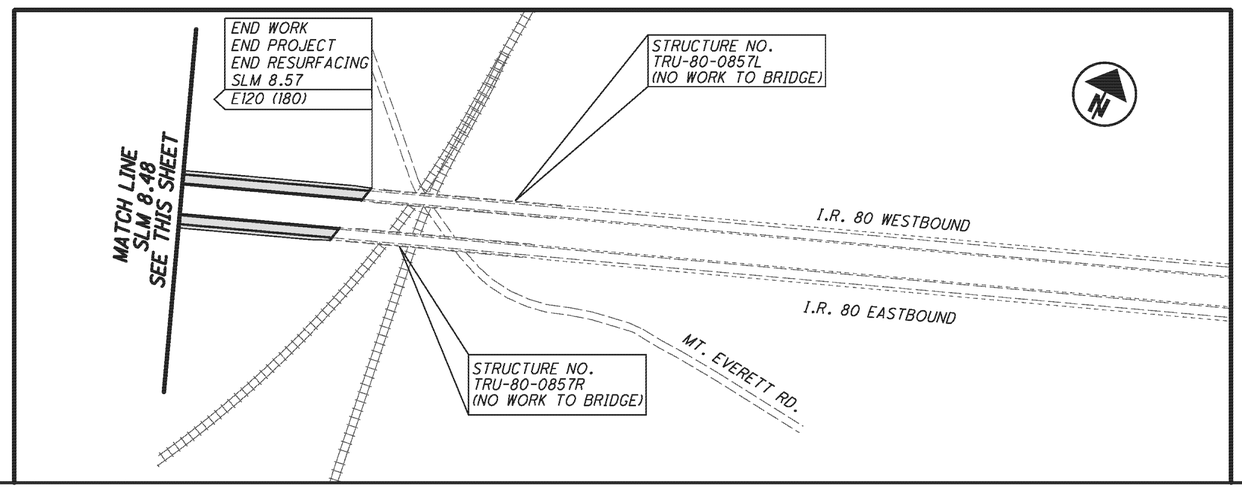

AS-BUILT

THIS RECORD DRAWING HAS BEEN PREPARED IN PART BY THE ENGINEER OF RECORD TO DEPICT CHANGES MADE DURING CONSTRUCTION, BASED ON INFORMATION REPORTED BY THE CONSTRUCTION CONTRACTOR.

RESURFACING LIMITS

0 100 200 400 HORIZONTAL SCALE IN FEET

SCHEMATIC/RESURFACING PLAN SLM 6.53 TO SLM 8.57

TRU-80-4.70

34" x 22"

Batchplot Spec: \\youngstown-fs1\n\60\08285\standards\plotdrv\batchplt.spc
Pen Table: S:\std\plotting\usth\V8i\pen\V8i_ms_std.tbl
Plot Driver: S:\std\plotting\usth\V8i\PDF.pltcfg

Model: Sheet
Printed: 12/12/2013 @ 2:18:44 PM
File: \\youngstown-fs1\n\60\08285\roadway\sheets\76411GB002.dgn
View: FENCE_VIEW1
By: sgady

PLOT.CEL

ms consultants, inc.
msconsultants.com

Ohio DOT Workspace
Marucci & Caffrey TRU-80 Design Build
www.rmsconsultants.com

1"
0.5"
0

UCF: ohdot1V8i
PCF: 60-08285_Youngstown

Batchplot Spec: \\youngstown-fs1\n\60\08285\standards\plotdrv\batchplt.spc
Pen Table: S:\std\plotting\ustn\V8\pen\V8i_rms_std.tbl
Plot Driver: S:\std\plotting\ustn\V8\PDF.pltcfg

Model: Sheet
Printed: 12/12/2013 @ 2:18:44 PM
File: \\youngstown-fs1\n\60\08285\roadway\sheets\V8411GY001.dgn
View: FENCE_VIEW1
By: sgeaty

34" x 22"

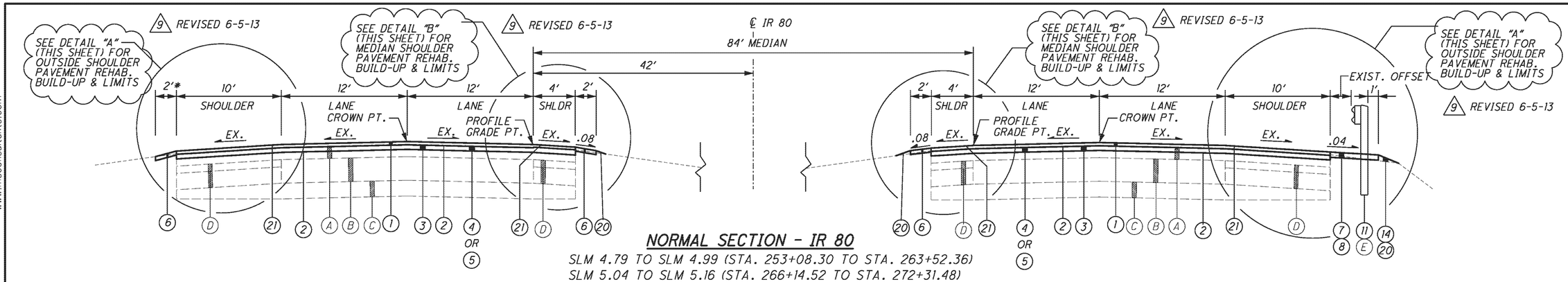

NORMAL SECTION - IR 80

SLM 4.79 TO SLM 4.99 (STA. 253+08.30 TO STA. 263+52.36)
SLM 5.04 TO SLM 5.16 (STA. 266+14.52 TO STA. 272+31.48)
SLM 5.76 TO SLM 5.92 (STA. 304+08.45 TO STA. 312+48.64)
SLM 5.96 TO SLM 6.27 (STA. 314+66.68 TO STA. 331+09.05)
SLM 6.73 TO SLM 7.92
SLM 8.18 TO SLM 8.57

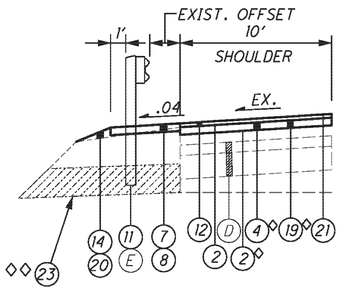

SHOULDER DETAIL "A"+++

STA. 253+80.00 TO STA. 263+52.36 (RT.)
STA. 256+70.00 TO STA. 263+52.36 (LT.)
STA. 265+89.52 TO STA. 272+31.48 (LT. & RT.)
STA. 304+10.00 TO STA. 312+48.64 (RT.)
STA. 305+70.00 TO STA. 312+48.64 (LT.)
STA. 314+41.68 TO STA. 321+50.00 (RT.)
STA. 314+41.68 TO STA. 324+45.00 (LT.)

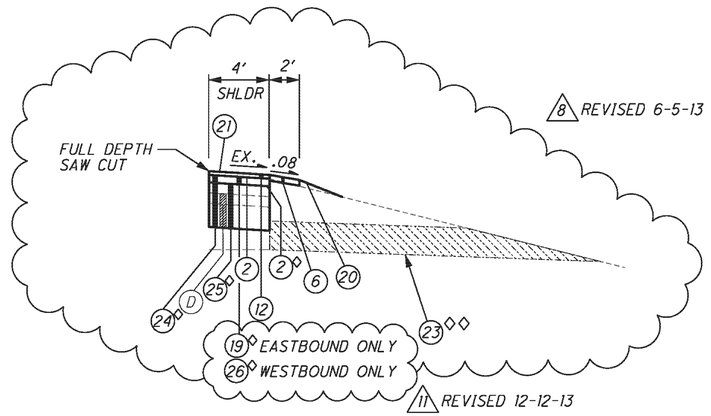

SHOULDER DETAIL "B"+++

STA. 253+08.30 TO STA. 263+52.36 (RT.)
STA. 253+40.00 TO STA. 263+52.36 (LT.)
STA. 265+89.52 TO STA. 272+31.48 (LT. & RT.)
STA. 304+08.45 TO STA. 312+48.64 (LT. & RT.) 9 REVISED 6-5-13
STA. 314+41.68 TO STA. 324+75.00 (RT.)
STA. 314+41.68 TO STA. 329+85.00 (LT.)

AS-BUILT

THIS RECORD DRAWING HAS BEEN PREPARED IN PART BY THE ENGINEER OF RECORD TO DEPICT CHANGES MADE DURING CONSTRUCTION, BASED ON INFORMATION REPORTED BY THE CONSTRUCTION CONTRACTOR.

PROPOSED LEGEND

1. ITEM 442- ASPHALT CONCRETE SURFACE COURSE, 12.5mm, TYPE B (446), AS PER PLAN (T=1 ½")
2. ITEM 690- SPECIAL-MISC.: TRACKLESS TACK COAT
3. ITEM 442- ASPHALT CONCRETE INTERMEDIATE COURSE, 19mm, TYPE B (446) (T=1¾")
4. ITEM 254- PAVEMENT PLANING, ASPHALT CONCRETE (T=2")
5. ITEM 254- PAVEMENT PLANING, ASPHALT CONCRETE (T=3 1/4") +
6. ITEM 617- COMPACTED AGGREGATE, AS PER PLAN (T=2")
7. ITEM 448- ASPHALT CONCRETE INTERMEDIATE COURSE, TYPE 1, UNDER GUARDRAIL, AS PER PLAN (T=2")
8. ITEM 209- LINEAR GRADING
9. ITEM 301- ASPHALT CONCRETE BASE PG64-22 (T=SEE GENERAL NOTES)
10. ITEM 304- AGGREGATE BASE, AS PER PLAN (T=6")
11. ITEM 606- GUARDRAIL, TYPE 5
12. ITEM 442- ASPHALT CONCRETE SURFACE COURSE, 12.5mm, TYPE B (446), AS PER PLAN (T=1 ¼")
13. ITEM 204- SUBGRADE COMPACTION
14. ITEM 203- EMBANKMENT
15. ITEM 526- REINFORCED CONCRETE APPROACH SLABS AS PER PLAN (T=15")
16. ITEM 609- CURB, TYPE 4-A
17. ITEM 605- 6" BASE PIPE UNDERDRAINS WITH FABRIC WRAP
18. ITEM 305 - 10" CONCRETE BASE
19. ITEM 442- ASPHALT CONCRETE INTERMEDIATE COURSE, 19mm, TYPE B (446) (T=2")
20. ITEM 659- SEEDING AND MULCHING
21. ITEM 618- RUMBLE STRIPS, (ASPHALT CONCRETE) LOCATION AND LIMITS AS PER STD DWG BP-9.1
22. ITEM 670 - SLOPE EROSION PROTECTION MAT, TYPE E ++
23. ITEM 605 - AGGREGATE DRAIN
24. ITEM 202 - PAVEMENT REMOVED, ASPHALT
25. ITEM 305 - 8" CONCRETE BASE 8 REVISED 6-5-13
26. ITEM 301 - ASPHALT CONCRETE BASE PG64-22 (T=5" TO 7") 11 REVISED 12-12-13

EXISTING LEGEND

- (A) ASPHALT CONCRETE OVERLAY
- (B) 10" REINFORCED PORTLAND CEMENT CONCRETE PAVEMENT
- (C) AGGREGATE BASE
- (D) EXISTING ASPHALT SHOULDER
- (E) GUARDRAIL
- (F) APPROACH SLAB

NOTES:

EXISTING U-TURN MEDIAN CROSSOVERS NEAR SLM 5.27, SLM 6.44 AND SLM 7.41 SHALL BE MILLED AND RESURFACED WITH PAY ITEMS RELATIVE TO THE TYPICAL SECTION IN THE SLM RANGE.

+ PAVEMENT PLANING TO BE 3 1/4" UNDER OVERHEAD BRIDGES. SEE DETAIL ON SHEET 4

++ ITEM 670 TO BE USED WHERE PROPOSED EMBANKMENT SLOPE IS STEEPER THAN 2:1

◇ ITEMS TO BE UTILIZED FOR MAINTAINING TRAFFIC AND WILL REMAIN IN PLACE FOLLOWING MAINTENANCE OF TRAFFIC OPERATIONS. SEE MAINTENANCE OF TRAFFIC PLAN.

◇◇ AGGREGATE DRAINS 8 REVISED 6-5-13
12" WIDE, 8" DEPTH - SLOPE: 0.04 MIN., 0.08 DESIRABLE

+++ DETAILS ORIENTED FOR LEFT SIDE. REVERSE ORIENTATION FOR RIGHT SIDE CONSTRUCTION

TYPICAL SECTIONS

TRU-80-4.70

rms consultants, inc.

PLOT.CEL

ms consultants, inc.
msconsultants.com

Ohio DOT Workspace
Marucci & Caffrey TRU-80 Design Build
www.rmsconsultants.com

1"
0
0.5"

UCF: ohdot\V8i
PCF: 60-08285_Youngstown

Batchplot Spec: \\youngstown-fs1\n\60\08285\standards\plotdrv\batchplt.spc
Pen Table: S:\std\plotting\ustn\V8\pen\V8i_rms_std.tbl
Plot Driver: S:\std\plotting\ustn\V8\PDF.pltcfg

Model: Sheet
Printed: 12/12/2013 @ 2:18:45 PM
File: \\youngstown-fs1\n\60\08285\roadway\sheets\76411GY001A.dgn
View: FENCE_VIEW1
By: sgady

34" x 22"

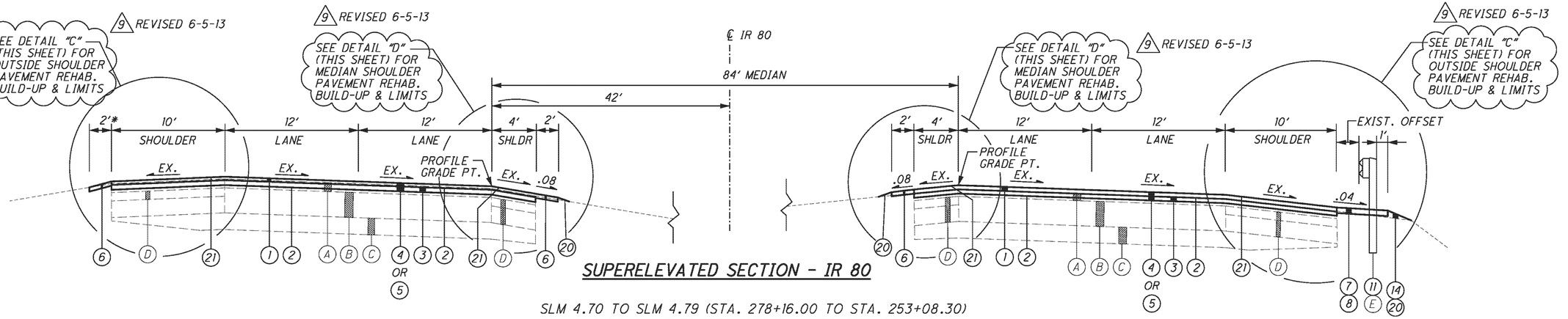

SUPERELEVATED SECTION - IR 80

SLM 4.70 TO SLM 4.79 (STA. 278+16.00 TO STA. 253+08.30)
SLM 5.16 TO SLM 5.76 (STA. 272+31.48 TO STA. 304+08.45)
SLM 6.27 TO SLM 6.73
SLM 7.92 TO SLM 8.18

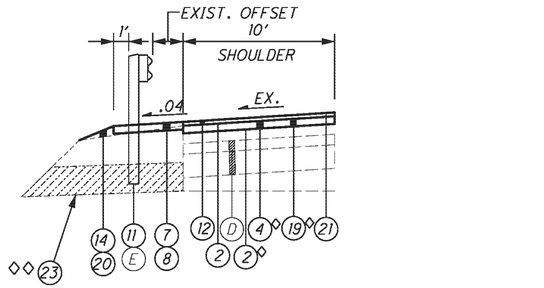

SHOULDER DETAIL "C"+++

STA. 272+31.48 TO STA. 274+45.00 (LT.)
STA. 272+31.48 TO STA. 273+00.00 (RT.)
9 REVISED 6-5-13

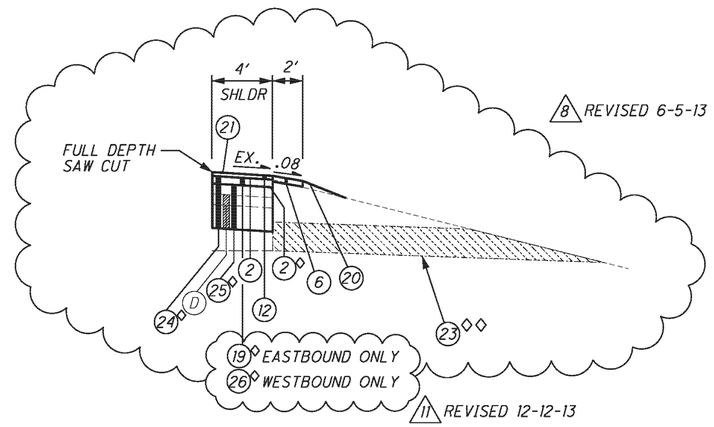

SHOULDER DETAIL "D"+++

STA. 248+35.00 TO STA. 253+08.30 (RT.)
STA. 272+31.48 TO STA. 276+25.00 (RT.)
STA. 272+31.48 TO STA. 279+05.00 (LT.)
STA. 299+60.00 TO STA. 304+08.45 (RT.)
STA. 302+40.00 TO STA. 304+08.45 (LT.)
9 REVISED 6-5-13

AS-BUILT

THIS RECORD DRAWING HAS BEEN PREPARED IN PART BY THE ENGINEER OF RECORD TO DEPICT CHANGES MADE DURING CONSTRUCTION, BASED ON INFORMATION REPORTED BY THE CONSTRUCTION CONTRACTOR.

NOTES:

◇ ITEMS TO BE UTILIZED FOR MAINTAINING TRAFFIC AND WILL REMAIN IN PLACE FOLLOWING MAINTENANCE OF TRAFFIC OPERATIONS. SEE MAINTENANCE OF TRAFFIC PLAN.

◇◇ AGGREGATE DRAINS
12" WIDE, 8" DEPTH - SLOPE: 0.04 MIN., 0.08 DESIRABLE
8 REVISED 6-5-13

+++ DETAILS ORIENTED FOR LEFT SIDE. REVERSE ORIENTATION FOR RIGHT SIDE CONSTRUCTION

FOR EXISTING AND PROPOSED LEGEND SEE SHEET 4

TYPICAL SECTIONS

TRU-80-4.70

ms consultants, inc.

PLOT.CEL

ms consultants, inc.
msconsultants.com

Ohio DOT Workspace
Marucci & Gaffney TRU-80 Design Build
www.rmsconsultants.com

1"
0.5"
0

UCF: ohdot\V8i
PCF: 60-08285_Youngstown

Batchplot Spec: \\youngstown-fs1\n\60\08285\standards\plotdrv\batchplt.spc
Pen Table: S:\std\plotting\usth\V8\pen\V8i_rms_std.tbl
Plot Driver: S:\std\plotting\usth\V8\VPDF.pltcfg

Model: Sheet
Printed: 12/12/2013 @ 2:18:46 PM
File: \\youngstown-fs1\n\60\08285\roadway\sheets\764116GY002.dgn
View: FENCE_VIEW1
By: sgady

34" x 22"

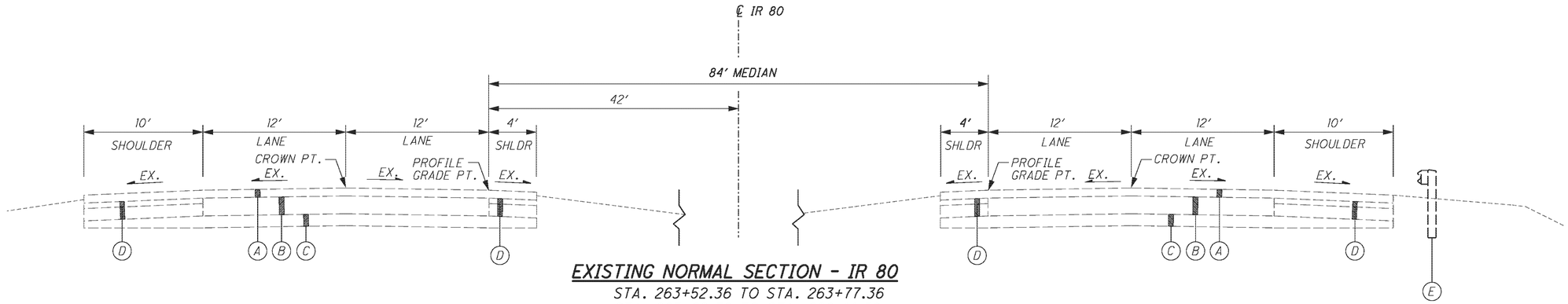

EXISTING NORMAL SECTION - IR 80

STA. 263+52.36 TO STA. 263+77.36
STA. 265+89.52 TO STA. 266+14.52
STA. 312+48.64 TO STA. 312+73.64
STA. 314+41.68 TO STA. 314+66.68

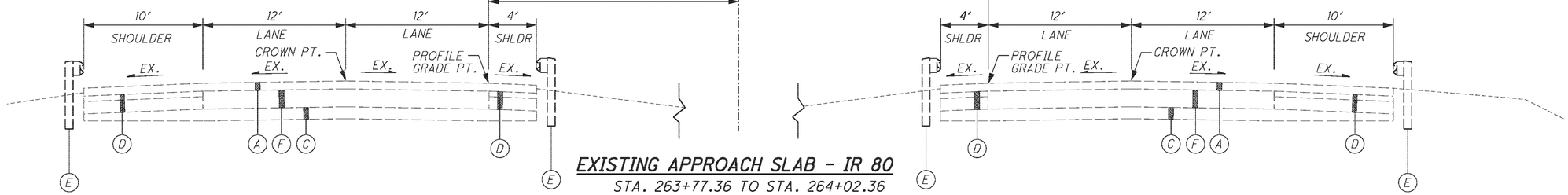

EXISTING APPROACH SLAB - IR 80

STA. 263+77.36 TO STA. 264+02.36
STA. 265+64.52 TO STA. 265+89.52
STA. 312+73.64 TO STA. 312+98.64
STA. 314+16.68 TO STA. 314+41.68

AS-BUILT

THIS RECORD DRAWING HAS BEEN PREPARED IN PART BY THE ENGINEER OF RECORD TO DEPICT CHANGES MADE DURING CONSTRUCTION, BASED ON INFORMATION REPORTED BY THE CONSTRUCTION CONTRACTOR.

FOR EXISTING AND PROPOSED LEGEND SEE SHEET 4

TYPICAL SECTIONS - IR 80

TRU-80-4.70

ms consultants, inc.

PLOT.CEL

ms consultants, inc.
msconsultants.com

Ohio DOT Workspace
Marucci & Coffney TRU-80 Design Build
www.msconsultants.com

UCF: ohdot1V8i
PCF: 60-08285_Youngstown

Batchplot Spec: \\youngstown-fs1\n\60\08285\standards\plotdrv\batchplt.spc
Pen Table: S:\sta\plotting\usta\V8\pen\V8i_ms_std.tbl
Plot Driver: S:\sta\plotting\usta\V8\PDF.pltcfg

Model: Sheet
Printed: 12/12/2013 @ 2:18:46 PM
File: \\youngstown-fs1\n\60\08285\roadway\sheets\764110Y003.dgn
View: FENCE_VIEW1
By: sgeidy

34" x 22"

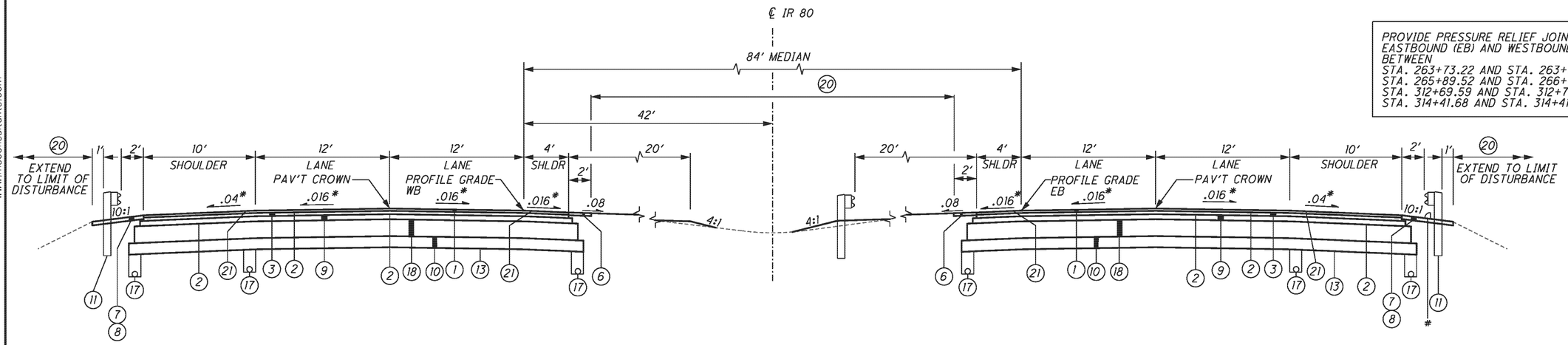

PROVIDE PRESSURE RELIEF JOINT, TYPE A IN THE EASTBOUND (EB) AND WESTBOUND (WB) DIRECTIONS BETWEEN
STA. 263+73.22 AND STA. 263+77.36
STA. 265+89.52 AND STA. 266+14.52
STA. 312+69.59 AND STA. 312+73.64
STA. 314+41.68 AND STA. 314+41.73

PROPOSED NORMAL SECTION - IR 80

STA. 263+52.36 TO STA. 263+77.36
STA. 265+89.52 TO STA. 266+14.52
STA. 312+48.64 TO STA. 312+73.64
STA. 314+41.68 TO STA. 314+66.68

* CROSS SLOPE VARIES BETWEEN EXISTING AND PROPOSED. SEE CROSS SLOPE TRANSITION TABLE, THIS SHEET

\# WHERE TIED CONCRETE BLOCK MAT IS SHOWN IN THE PLAN FORM ASPHALT CONCRETE IN PLACE TO CONFORM WITH ADJACENT CURB. EXTEND ASPHALT CURB TO LIMIT OF TYPE 4C CURB SHOWN IN STANDARD CONSTRUCTION DRAWING DM-4.1.

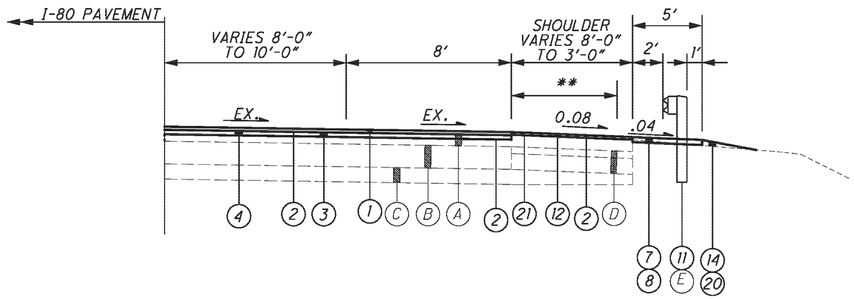

NORMAL RAMP SECTION - WEIGH STATION

SLM 6.67 TO SLM 6.83
SLM 7.35 TO SLM 7.44

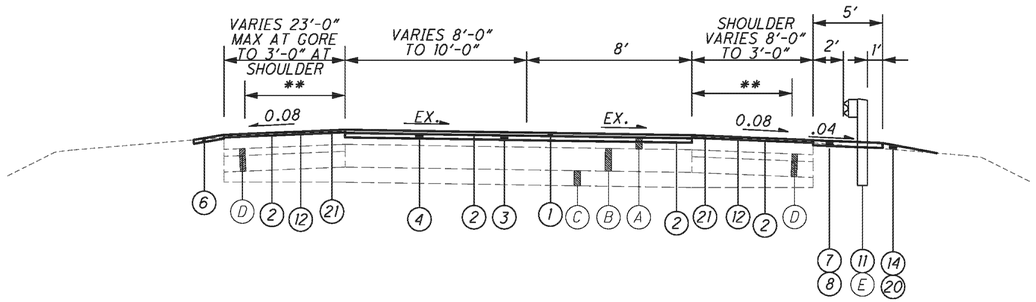

NORMAL RAMP SECTION - WEIGH STATION

SLM 6.83 TO SLM 7.00
SLM 7.24 TO SLM 7.35

** OVERLAY WIDTH VARIES DEPENDING ON EXISTING SHOULDER CROSS SLOPE

AS-BUILT

THIS RECORD DRAWING HAS BEEN PREPARED IN PART BY THE ENGINEER OF RECORD TO DEPICT CHANGES MADE DURING CONSTRUCTION, BASED ON INFORMATION REPORTED BY THE CONSTRUCTION CONTRACTOR.

CROSS SLOPE TRANSITION TABLE

SKEW	CROSS SLOPE (FT/FT) OUTSIDE SHOULDER	WESTBOUND LANES LT	WESTBOUND LANES RT	MEDIAN SHOULDER	STATION REFERENCE	CROSS SLOPE (FT/FT) MEDIAN SHOULDER	EASTBOUND LANES LT	EASTBOUND LANES RT	OUTSIDE SHOULDER	TRANSITION
14°52'45"	0.012	0.016	0.009	0.046	263+52.36	0.002	0.016	0.009	0.018	BEGIN
	0.040	0.016	0.016	0.016	263+77.36	0.016	0.016	0.016	0.040	END
	0.040	0.016	0.016	0.016	265+89.52	0.016	0.016	0.016	0.040	BEGIN
	0.029	0.016	0.009	0.034	266+14.52	0.001	0.090	0.016	0.027	END
8°17'45"	0.042	0.020	0.008	0.008	312+48.64	0.022	0.009	0.024	0.031	BEGIN
	0.040	0.016	0.016	0.016	312+73.64	0.016	0.016	0.016	0.040	END
	0.040	0.016	0.016	0.016	314+41.68	0.016	0.016	0.016	0.040	BEGIN
	0.032	0.020	0.006	0.019	314+66.68	0.019	0.007	0.007	0.047	END

FOR EXISTING AND PROPOSED LEGEND SEE SHEET 4

TYPICAL SECTIONS - IR 80

TRU-80-4.70

ms consultants, inc.

PLOT.CEL

ms consultants, inc.
msconsultants.com

www.rmsconsultants.com
Ohio DOT Workspace
Marucci & Coffney, TRU-80 Design Build
UCF: ohdot\V8i
PCF: 60-08285_Youngstown

1"
0.5"
0

34" x 22"

Batchplot Spec: \\youngstown-fs1\n\60\08285\standards\plotdrv\batchplt.spc
Pen Table: S:\std\plotting\usth\V8\pen\V8i_rms_std.tbl
Plot Driver: S:\std\plotting\usth\V8\VPDF.pltcfg

View: FENCE_VIEW1
By: sgady

Model: Sheet
Printed: 12/12/2013 @ 2:18:47 PM
File: \\youngstown-fs1\n\60\08285\roadway\sheets\7641IGY004.dgn

AS-BUILT

THIS RECORD DRAWING HAS BEEN PREPARED IN PART BY THE ENGINEER OF RECORD TO DEPICT CHANGES MADE DURING CONSTRUCTION, BASED ON INFORMATION REPORTED BY THE CONSTRUCTION CONTRACTOR.

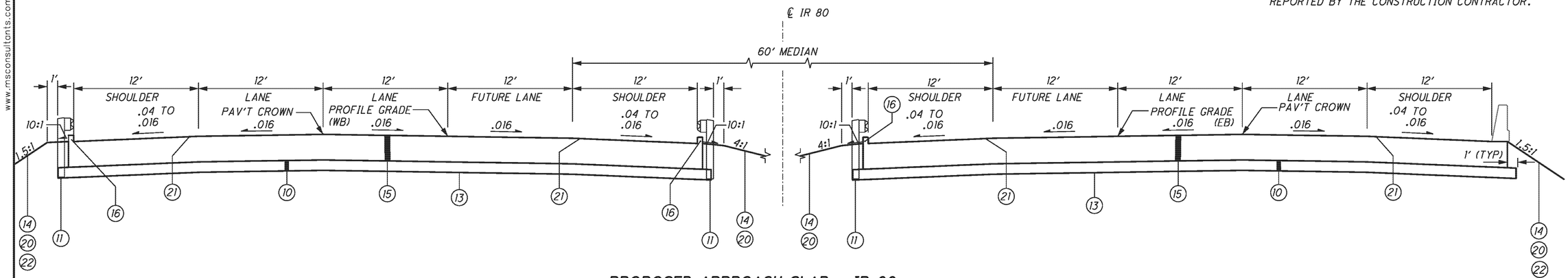

PROPOSED APPROACH SLAB - IR 80

STA. 263+77.36 TO STA. 264+02.36
STA. 265+64.52 TO STA. 265+89.52
STA. 312+73.64 TO STA. 312+98.64
STA. 314+16.68 TO STA. 314+41.68

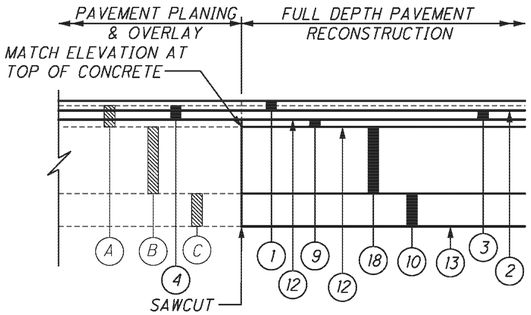

BUTT JOINT DETAIL - BEGIN/END PAVEMENT RECONSTRUCTION

N.T.S

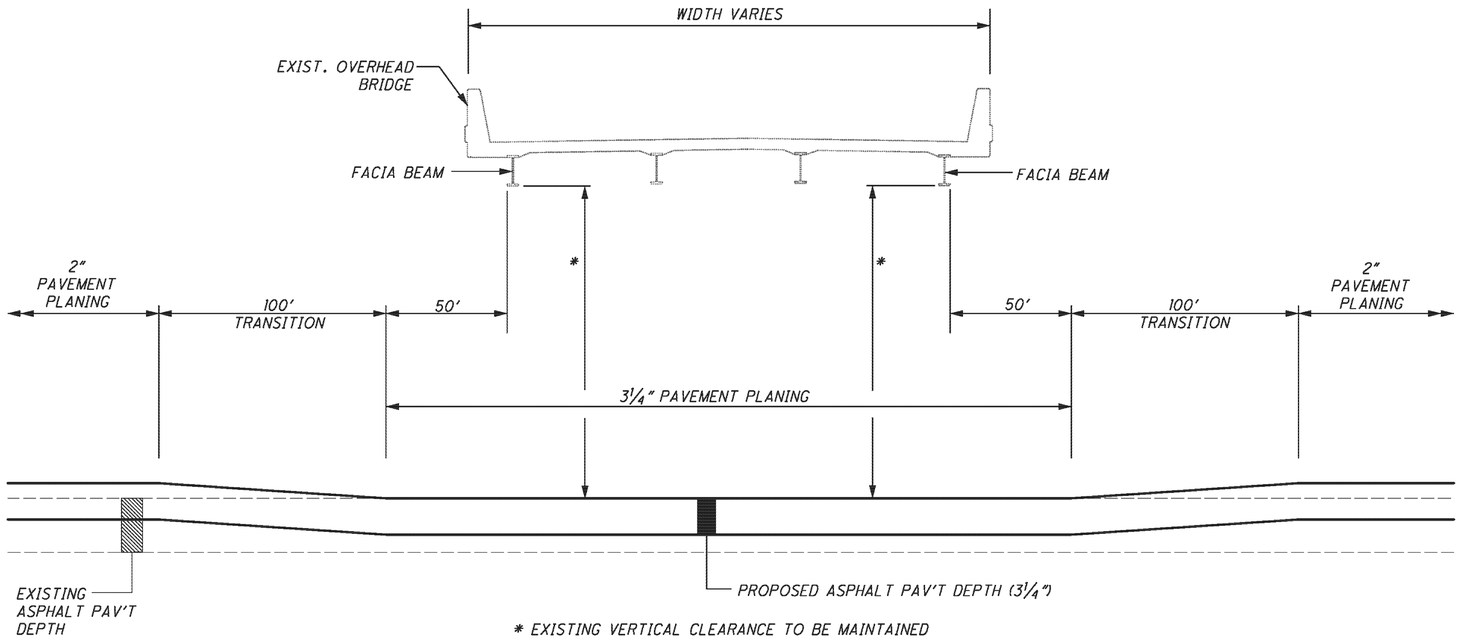

* EXISTING VERTICAL CLEARANCE TO BE MAINTAINED

PAVEMENT PLANING AT OVERHEAD BRIDGE DETAIL

N.T.S

FOR EXISTING AND PROPOSED LEGEND SEE SHEET 4

TYPICAL SECTIONS - IR 80

TRU-80-4.70

PLOT.CEL
rms consultants, inc.
rmsconsultants.com
Ohio DOT Workspace
Marucci & Caffrey TRU-80 Design Build
www.rmsconsultants.com
1"
0.5"
0
UCF: ohdot1V8i
PCF: 60-08285_Youngstown
34" x 22"
Batchplot Spec: \\youngstown-fs1\vn1\60\08285\standards\plotdrv\batchplt.spc
Pen Table: S:\std\plotting\ustn\V8\pen\V8i_rms_std.tbl
Plot Driver: S:\std\plotting\ustn\V8\PDF.pltcfg
Model: Sheet @ 2:18:48 PM View FENCE_VIEW1
Printed: 12/12/2013 By: sgeidy
File: \\youngstown-fs1\vn1\60\08285\roadway\sheets\764INGN001.dgn

ROUNDING

THE ROUNDING AT SLOPE BREAKPOINTS SHOWN ON THE TYPICAL SECTIONS APPLY TO ALL CROSS SECTIONS EVEN THOUGH OTHERWISE SHOWN.

UTILITIES

THE CONTRACTOR SHALL USE THE FOLLOWING PROCEDURE AT EACH LOCATION WHERE WORK IS PERFORMED, IN ACCORDANCE WITH SECTIONS 105.07 AND 107.16 IN THE CONSTRUCTION AND MATERIALS SPECIFICATIONS:

THE CONTRACTOR SHALL NOTIFY THE PROJECT ENGINEER, THE OHIO UTILITIES PROTECTION SERVICE (OUPS), THE OHIO & GAS PROCEDURES UNDERGROUND PROTECTION SERVICE (OGPUPS), THE OHIO DEPARTMENT OF TRANSPORTATION DISTRICT 4 HEADQUARTERS AND ALL NON REGISTERED UTILITY OWNERS AT LEAST TWO (2) WORKING DAYS PRIOR TO COMMENCING CONSTRUCTION OPERATIONS IN ALL AREAS.

OUPS 1-800-362-2764 (CONTACT LIMITED BASIS PARTICIPANTS DIRECTLY)
OGPUPS 1-800-925-0988
ODOT 330-786-3145 KEN GREENE

THE LOCATION OF THE UNDERGROUND UTILITIES SHOWN ON THE PLANS ARE AS OBTAINED FROM THE OWNERS AS REQUIRED BY SECTION 153.64 O.R.C.

LISTED BELOW ARE ALL UTILITIES LOCATED WITHIN THE PROJECT CONSTRUCTION LIMITS TOGETHER WITH THEIR RESPECTIVE OWNERS:

AT&T
ATTN: JERRY SMITH
50 W. BOWERY ST., 6TH FLOOR
AKRON, OH 44308
330-384-8557
330-384-8879 FAX

TIME WARNER CABLE
ATTN: DOUG LAWRENTZ
4352 YOUNGSTOWN ROAD SE
WARREN, OH 44484
330-369-7107

DOMINION EAST OHIO GAS (DEO)
ATTN: MARY LONG
320 SPRINGSIDE DRIVE
SUITE 320
AKRON, OH 44333
330-664-2409
888-504-0126 FAX

CITY OF YOUNGSTOWN
ATTN: GENE LESON
26 S. PHELPS STREET
YOUNGSTOWN, OH 44503

TRUMBULL COUNTY SANITARY ENGINEER
ATTN: SCOTT VERNER
842 YOUNGSTOWN-KINGSVILE ROAD
VIENNA, OH 44473
330-675-7753

OHIO EDISON
ATTN: BILL SPEECE
730 SOUTH AVENUE
YOUNGSTOWN, OH 44502
330-740-7635
330-740-7655 FAX

ONE-FOOT MINIMUM VERTICAL AND HORIZONTAL CLEARANCE MUST BE MAINTAINED BETWEEN DEO'S EXISTING PIPELINE(S) AND ALL OTHER IMPROVEMENTS. IT IS THE CONTRACTOR'S RESPONSIBILITY TO MAINTAIN THE LATERAL AND SUBJACENT SUPPORT OF DEO'S PIPELINE(S), IN COMPLIANCE TO 29 CFR, PART 1926, SUBPART P, (SAFE EXCAVATION & SHORING). EXTREME CARE SHOULD BE TAKEN NOT TO HARM ANY DEO FACILITY OR APPURTENANCE. NOTIFY DEO IMMEDIATELY IF ANY HARM HAS BEEN INFLICTED UPON DEO'S FACILITIES (PIPELINE, ETC.) OR APPURTENANCES THERETO (PIPE COATING, TRACER WIRE, CATHODIC PROTECTION WIRES & DEVICES, TEST SITES, VALVE BOXES, ETC.)

ELEVATION DATUM

ALL ELEVATIONS ARE BASED ON U.S.G.S. DATUM NAD 88.

WORK LIMITS

THE WORK LIMITS SHOWN ON THESE PLANS ARE FOR PHYSICAL CONSTRUCTION ONLY. PROVIDE THE INSTALLATION AND OPERATION OF ALL WORK ZONE TRAFFIC CONTROL AND WORK ZONE TRAFFIC CONTROL DEVICES REQUIRED BY THESE PLANS WHETHER INSIDE OR OUTSIDE THESE WORK LIMITS.

CLEARING AND GRUBBING

ALTHOUGH THERE ARE NO TREES OR STUMPS SPECIFICALLY MARKED FOR REMOVAL WITHIN THE LIMITS OF THE PROJECT, A LUMP SUM QUANTITY IS INCLUDED IN THE GENERAL SUMMARY FOR ITEM 201, CLEARING AND GRUBBING. ALL PROVISIONS AS SET FORTH IN THE SPECIFICATIONS UNDER THIS ITEM ARE INCLUDED IN THE LUMP SUM PRICE BID FOR ITEM 201, CLEARING AND GRUBBING.

SURVEYING PARAMETERS

USE THE FOLLOWING VERTICAL AND HORIZONTAL POSITIONING PARAMETERS FOR ALL SURVEYING:

VERTICAL POSITIONING:

ORTHOMETRIC HEIGHT DATUM: NAVD 88
GEOID: GEOID 09

HORIZONTAL POSITIONING:

REFERENCE FRAME: NAD 83 (CORS96) (EPOCH: 2002.0000)
ELLIPSOID: GRS80
MAP PROJECTION: LAMBERT CONFORMAL CONIC
COORDINATE SYSTEM: OHIO NORTH ZONE (3401)
COMBINED SCALE FACTOR: 0.99989643003
ORIGIN OF SCALE (X,Y)-EASTING (X): 0 , NORTHING (Y): 0

UNITS ARE IN U.S. SURVEY FEET. USE THE FOLLOWING CONVERSION FACTOR: 1 METER = 3.280833333 U.S. SURVEY FEET.

PROFILE AND ALIGNMENT

IN RESURFACING AREAS PLACE THE PROPOSED PAVEMENT TO FOLLOW THE ALIGNMENT AND INCREASE THE PROFILE 1 ¼" ABOVE THE EXISTING PAVEMENT AS SHOWN IN THE PLAN.

PART-WIDTH CONSTRUCTION

BECAUSE OF THE NECESSITY TO BUILD THIS PROJECT UNDER TRAFFIC AND TO CONSTRUCT THE FULL PAVEMENT WIDTH IN STAGES, EXERCISE CARE TO PREVENT THE CONSTRUCTION OF A BUTT JOINT IN THE BASE COURSES. LAP LONGITUDINAL JOINTS AS SHOWN ON STANDARD CONSTRUCTION DRAWING BP-3.1.

ITEM 304-AGGREGATE BASE, AS PER PLAN

GRANULATED SLAG (GS) SHALL NOT BE PERMITTED FOR THIS ITEM. ALL OTHER REQUIREMENTS OF SECTIONS 304 AND 703.17 OF THE CONSTRUCTION AND MATERIAL SPECIFICATIONS SHALL STILL BE APPLICABLE.

ITEM 617-COMPACTED AGGREGATE, AS PER PLAN

IN LOW SHOULDER AREAS EXCEEDING 1", OR AS DIRECTED BY THE ENGINEER, RECYCLED ASPHALT PAVEMENT (RAP) SHALL BE USED IN AREAS ADJACENT TO THE PAVED BERM. THE RAP SHALL HAVE A MINIMUM PG CONTENT OF 4.5% AND MEET THE FOLLOWING GRADATION. ONCE THE STOCKPILE MEETS THE GRADATION, THE PG CONTENT OF THE RAP SHALL BE DETERMINED PER 441.03. THE RAP ANALYSIS MUST BE SUBMITTED TO THE ENGINEER FOR APPROVAL 2 WEEKS PRIOR TO USE. METHODS OF MEASUREMENT SHALL BE AS PER 617.06. PLACEMENT AND COMPACTION SHALL MEET THE REQUIREMENTS OF ITEM 617. ALL MATERIALS, LABOR, EQUIPMENT, TOOLS AND INCIDENTALS NECESSARY TO COMPLETE THE WORK SHALL BE INCLUDED IN THE UNIT PRICE BID FOR ITEM 617 COMPACTED AGGREGATE, AS PER PLAN.

MODIFIED GRADATION SHALL APPLY:

SIEVE	TOTAL PERCENT PASSING
1-1/2"	100
¾"	50-100
NO. 4	35-70
NO. 30	9-33
NO. 200	0-13

ITEM 203 - EXCAVATION (FOR PAVEMENT REPAIR)

THIS ITEM OF WORK SHALL CONSIST OF REMOVING AND DISPOSING OF ALL UNSUITABLE MATERIAL BY EXCAVATING THE EXISTING SUBGRADE AND SUBBASE TO AN AVERAGE DEPTH OF 6 INCHES OR AS DIRECTED BY THE ENGINEER. EXACT LIMITS OF REMOVAL SHALL BE DETERMINED BY THE ENGINEER. ALL EQUIPMENT, LABOR, TOOLS, AND INCIDENTALS NECESSARY TO COMPLETE THIS ITEM SHALL BE INCLUDED.

PAVING UNDER GUARDRAIL

THIS OPERATION SHALL INCLUDE PREPARATION OF THE GRADED SHOULDER USING 209, LINEAR GRADING, AND PAVING UNDER THE GUARDRAIL USING 448 ASPHALT CONCRETE INTERMEDIATE COURSE, TYPE 1, PG-64-22, UNDER GUARDRAIL, AS PER PLAN.

ITEM 209, LINEAR GRADING, SHALL CONSIST OF EXCAVATING EXISTING MATERIAL, PLACING GRANULAR MATERIAL AND APPLYING HERBICIDE AS SPECIFIED IN THE PLANS AND IN ACCORDANCE WITH THE FOLLOWING:

ALL COLLECTED DEBRIS, ASPHALT AND TOPSOIL, INCLUDING RHIZOMES, ROOTS AND OTHER VEGETATIVE PLANT MATERIAL SHALL BE REMOVED AND DISPOSED OF AS SPECIFIED IN 105.17.

THE REMOVED MATERIAL SHALL BE REPLACED WITH COMPACTABLE GRANULAR MATERIAL CONFORMING TO 703.16 PLACED TO GRADE AS DETAILED ON THE TYPICAL SECTION OR AS APPROVED BY THE ENGINEER.

HERBICIDE SHALL BE EPA APPROVED FOR PAVING UNDER GUARDRAIL. IT SHALL BE APPLIED TO THE PREPARED AREA AFTER FINAL LEVELING AND GRADING HAS BEEN COMPLETED. THE APPLICATION SHALL BE JUST PRIOR TO THE PAVING AND SHALL STRICTLY ADHERE TO THE MANUFACTURER'S INSTRUCTIONS.

EACH SUCCESSFUL BIDDER MUST BE LICENSED BY THE OHIO DEPARTMENT OF AGRICULTURE AS A COMMERCIAL APPLICATOR AND ALL PERSONS INVOLVED IN THE ACTUAL SPRAYING SHALL BE LICENSED AS COMMERCIAL OPERATORS IN THE APPROPRIATE SPRAY CATEGORY.

HERBICIDE LABEL, MATERIAL SAFETY DATA SHEET AND COPY OF APPLICATORS LICENSES SHALL BE SUBMITTED TO THE ENGINEER FOR VERIFICATION PRIOR TO COMMENCING WORK.

ALL EQUIPMENT, MATERIALS AND LABOR REQUIRED TO PERFORM THE WORK OUTLINED ABOVE SHALL BE INCLUDED.

PAVING UNDER GUARDRAIL SHALL CONSIST OF PLACING ITEM 448 TO THE DEPTH SPECIFIED. PAVING MAY BE PLACED UNDER EXISTING OR PROPOSED GUARDRAIL USING ONE OF THE FOLLOWING METHODS:

METHOD A:
1) SET GUARDRAIL POSTS (OMIT IF EXISTING GUARDRAIL IS TO REMAIN)
2) PLACE ITEM 448

METHOD B:
1) PLACE ITEM 448
2) BORE ASPHALT AT POST LOCATIONS (MAY BE OMITTED IF STEEL POSTS ARE USED)
3) SET GUARDRAIL POSTS
4) PATCH AROUND POSTS. THE MATERIALS USED FOR PATCHING SHALL BE AN ASPHALT CONCRETE APPROVED BY THE ENGINEER. PATCHED AREAS SHALL BE COMPACTED USING EITHER HAND OR MECHANICAL METHODS. FINISHED SURFACES SHALL BE SMOOTH AND SLOPED TO DRAIN AWAY FROM THE POSTS

ALL EQUIPMENT, MATERIALS AND LABOR REQUIRED TO PERFORM THE WORK OUTLINED ABOVE, WITH THE EXCEPTION OF SETTING GUARDRAIL POSTS, SHALL BE INCLUDED FOR PAYMENT UNDER ITEM 448, ASPHALT CONCRETE, INTERMEDIATE COURSE, TYPE 1, PG-64-22, UNDER GUARDRAIL, AS PER PLAN.

AS-BUILT

THIS RECORD DRAWING HAS BEEN PREPARED IN PART BY THE ENGINEER OF RECORD TO DEPICT CHANGES MADE DURING CONSTRUCTION, BASED ON INFORMATION REPORTED BY THE CONSTRUCTION CONTRACTOR.

CALCULATED SJR
CHECKED SWG

GENERAL NOTES

TRU-80-4.70

rms consultants, inc.

PLOT.CEL

rms consultants, inc.
rmsconsultants.com

Ohio DOT Workspace
Marucci & Caffrey TRU-80 Design Build
www.rmsconsultants.com

1"
0.5"
0

UCF: ohdot\V8i
PCF: 60-08285_Youngstown

Batchplot Spec: \\youngstown-fs1\rn\60\08285\standards\plotdrv\batchplt.spc
Pen Table: S:\std\plotting\ustn\V8\pen\V8i_rms_std.tbl
Plot Driver: S:\std\plotting\ustn\V8\PDF.pltcfg

34" x 22"

View: FENCE_VIEW1
By: sgeaby

Model: Sheet
Printed: 12/12/2013 @ 2:18:49 PM
File: \\youngstown-fs1\rn\60\08285\roadway\sheets\764116N002.dgn

ITEM 690 -- SPECIAL - MISC.: TRACKLESS TACK COAT

DESCRIPTION: THIS WORK CONSISTS OF PREPARING AND TREATING A PAVED SURFACE WITH A TRACKLESS TACK ASPHALT EMULSION.

ALTERNATE PRODUCTS TO BE USED MUST BE ON FILE WITH THE NEW PRODUCT ENGINEER AT THE TIME OF THE ADVERTISEMENT DATE OF THE PROJECT PLANS. PLEASE CONTACT BRAD YOUNG, ODOT NEW PRODUCT ENGINEER, 614-351-2882.

THIS WORK IS CONSIDERED AN EXPERIMENTAL CONSTRUCTION FEATURE FOR EVALUATION OF PRODUCTS THAT ARE ON FILE WITH THE NEW PRODUCT ENGINEER.

MEET ALL REQUIREMENTS OF ODOT 407 TACK COAT IN THE CONSTRUCTION AND MATERIALS SPECIFICATIONS REQUIRED BY THE CONTRACT, EXCEPT AS NOTED BELOW.

A MANUFACTURER'S REPRESENTATIVE MUST BE AT THE PROJECT SITE DURING THE FIRST TWO DAYS OF APPLICATION OF TRACKLESS TACK.

MATERIAL: IF USING BLACKLIDGE TRACKLESS TACK THE MATERIAL WILL CONFORM TO THE FOLLOWING TYPICAL PHYSICAL PROPERTIES:

PARAMETER	TEST METHOD	MIN.	MAX.
SAYBOLT FUROL VISCOSITY, SFS @ 25°C	AASHTO T59	15	100
STORAGE STABILITY, 24 HRS, %	AASHTO T59	--	1
STORAGE STABILITY, 5 DAYS, %	AASHTO T59	--	5
RESIDUE BY DISTILLATION, %	AASHTO T59	50	--
OIL DISTILLATE, %	AASHTO T59	--	1
SIEVE TEST, %	AASHTO T59	--	0.30
TEST ON RESIDUE			
PENETRATION, @ 25°C,	AASHTO T49	--	20
SOFTENING POINT RANGE DEG C	AASHTO T53	65	--
SOLUBILITY, %	AASHTO T44	97.5	--
ORIGINAL BINDER DSR@82°C G*/SIN δ,10 RAD/SEC	AASHTO T315	1.00	--

ITEM 690 -- SPECIAL - MISC.: TRACKLESS TACK COAT (CONTINUED)

FOR TRACKLESS TACK OTHER THAN BLACKLIDGE TRACKLESS TACK, THE MATERIAL WILL CONFORM TO THE PHYSICAL PROPERTIES SUPPLIED BY THE NEW PRODUCT ENGINEER FOR THE TESTS LISTED BELOW:

PARAMETER	TEST METHOD
SAYBOLT FUROL VISCOSITY, SFS @ 25°C	AASHTO T59
STORAGE STABILITY, 24 HRS, %	AASHTO T59
STORAGE STABILITY, 5 DAYS, %	AASHTO T59
RESIDUE BY DISTILLATION, %	AASHTO T59
OIL DISTILLATE, %	AASHTO T59
SIEVE TEST, %	AASHTO T59
TEST ON RESIDUE	
PENETRATION, @ 25°C,	AASHTO T49
SOFTENING POINT RANGE DEG C	AASHTO T53
SOLUBILITY, %	AASHTO T44
ORIGINAL BINDER DSR@82°C G*/SIN δ,10 RAD/SEC	AASHTO T315

NOTE: TRACKLESS TACK SHOULD NOT CONTAIN FILLER SUCH AS CLAY, ETC.

ACCEPTANCE AND SAMPLING OF MATERIALS: FOR ALL TRACKLESS TACK SUPPLY CERTIFIED TEST DATA FROM AN INDEPENDENT LABORATORY TO THE ENGINEER AND TO THE DISTRICT LABORATORY SHOWING THE TRACKLESS TACK SUPPLIED WAS TESTED FOR AND MEETS THE PROPERTIES SUPPLIED BY THE NEW PRODUCT ENGINEER.

DURING CONSTRUCTION, ODOT PERSONNEL WILL SAMPLE AND SUPPLY TO THE DISTRICT TEST LAB A MINIMUM OF 2 QUARTS OF TRACKLESS TACK SAMPLED FROM THE DISTRIBUTOR ON THE FIRST DAY OF APPLICATION. CLEARLY MARK ON THE SAMPLES THE MANUFACTURER'S NAME, PROJECT NUMBER, AND THE WORDS "TRACKLESS TACK".

ADDITIONAL SAMPLING OF BLACKLIDGE TRACKLESS TACK WILL FOLLOW THE REQUIREMENTS OF ITEM 407. FOR ALTERNATE TRACKLESS TACK MATERIAL, 2 QUARTS OF MATERIAL WILL BE SAMPLED EACH DAY THE MATERIAL IS USED.

EQUIPMENT: SEE MANUFACTURER'S REPRESENTATIVE FOR CORRECT DISTRIBUTOR SETTINGS. THOROUGHLY CLEAN ALL EQUIPMENT IF PREVIOUSLY USED MATERIAL CHARGE IS DIFFERENT THAN THE PROPOSED MATERIAL.

APPLICATION OF ASPHALT MATERIAL: UNIFORMLY APPLY THE TRACKLESS TACK WITH A DISTRIBUTOR. IF TRACKLESS TACK IS STORED FOR AN EXTENDED PERIOD OF TIME, PRIOR TO APPLICATION, AGITATE OR GENTLY CIRCULATE THE MATERIAL.

ENSURE ALL NOZZLES AND SPRAY PATTERNS ARE IDENTICAL TO ONE ANOTHER ALONG THE DISTRIBUTOR SPRAY BAR. PLACE THE ANGLE OF THE NOZZLE AT A 15 TO 30 DEGREE ANGLE TO THE SPRAY BAR AXIS TO MAXIMIZE OVERLAP OR AS RECOMMENDED BY THE NOZZLE MANUFACTURER. CONTACT THE MANUFACTURER'S REPRESENTATIVE FOR REQUIRED SPRAY NOZZLE SIZE AND DISTRIBUTOR AND NOZZLE SETTINGS.

ITEM 690 -- SPECIAL - MISC.: TRACKLESS TACK COAT (CONTINUED)

APPLY AT A RATE OF 0.04 TO 0.1 GALLONS PER SQUARE YARD. DO NOT DILUTE TRACKLESS TACK. RECOMMENDED APPLICATION TEMPERATURE IS 160°F TO 180°F. DO NOT EXCEED 180°F. THE ENGINEER AND MANUFACTURER'S REPRESENTATIVE WILL APPROVE THE QUANTITY, RATE OF APPLICATION, TEMPERATURE, DISTRIBUTOR SETTINGS, AND AREAS TO BE TREATED BEFORE APPLICATION OF THE TRACKLESS TACK COAT. THE ENGINEER WILL DETERMINE THE ACTUAL APPLICATION IN GALLONS PER SQUARE YARD BY A CHECK ON THE PROJECT.

PERFORMANCE OF TRACKLESS TACK: FOR ANY TRACKLESS TACK USED SUPPLY DATA FOR SHEAR AND TENSILE BOND STRENGTH ACCORDING TO METHODS DESCRIBED IN VIRGINIA TRANSPORTATION RESEARCH COUNCIL REPORT VTRC 09-R21. RANDOMLY TAKE 6-4 INCH DIAMETER CORES FROM THE PROJECT AND PERFORM 3 SHEAR AND 3 TENSILE BOND STRENGTH TESTS. BE SURE CORES TAKEN INCLUDE BOTH AN ASPHALT LAYER ABOVE AND ASPHALT LAYER BELOW THE TRACKLESS TACK LAYER.

DETERMINE THE TIME TO SET FOR THE MATERIAL TO BECOME TRACKLESS. THE ENGINEER WILL REPORT ANY ISSUES WITH EXCESSIVE TIME TO SET, OR AFTER SET ISSUES WITH STICKINESS, OR PICKUP OF THE TACK TO THE DET AND NEW PRODUCT ENGINEER, BRAD YOUNG 614-351-2882. IF THE CERTIFIED TEST DATA FAILS TO MEET THE LAB TESTING CRITERIA, OR FIELD SAMPLES FAIL TO MEET THE LAB TEST CRITERIA, OR THE TRACKLESS TACK FAILS TO PERFORM SATISFACTORILY IN THE FIELD, AS NOTED ABOVE, THE CONTRACTOR WILL BE REQUIRED TO REPLACE AND SUPPLY BLACKLIDGE TRACKLESS TACK FOR THE REMAINDER OF THE PROJECT AT NO COST TO THE DEPARTMENT.

ANY FAILING EXPERIMENTAL TRACKLESS TACK PRODUCT WILL BE REMOVED FROM THE NEW PRODUCT ENGINEER'S LIST.

IN THE EVENT THE PRODUCT FAILS TO PERFORM TO THE SATISFACTION OF THE DEPARTMENT, THE MANUFACTURER MAY PERFORM THE FOLLOWING ITEMS IN ORDER TO BE CONSIDERED FOR FUTURE EXPERIMENTAL CONSTRUCTION FEATURE PROJECTS:

1. SUBMIT IN WRITING TO THE DEPARTMENT THE REASON(S) WHY PRODUCT FAILED TO PERFORM AND DETAIL CHANGES THAT WILL BE MADE TO ELIMINATE THE CAUSE(S) OF FAILURE, AND
2. PROPOSE CHANGES TO THE PRODUCT'S SPECIFICATIONS, AND
3. SUBMIT SAMPLES OF THE REDEVELOPED PRODUCT TO THE LABORATORY FOR TESTING TO THE NEW SPECIFICATIONS, AND
4. DEMONSTRATE TO THE DEPARTMENT SUCCESSFUL USE OF THE MATERIAL ON AT LEAST ONE NON-ODOT PROJECT.

WHEN THE ABOVE ITEMS ARE COMPLETED TO THE DEPARTMENT'S SATISFACTION, THE REDEVELOPED AND FIELD TESTED PRODUCT MAY BE PUT BACK ON FILE WITH THE NEW PRODUCT ENGINEER AND EVALUATED ON FUTURE ODOT PROJECTS USING THE EXPERIMENTAL CONSTRUCTION FEATURE PROCESS.

ITEM 304 - AGGREGATE BASE (FOR PAVEMENT REPAIR)

THIS ITEM HAS BEEN PROVIDED AND SHALL BE USED AS DIRECTED BY THE ENGINEER TO BACKFILL AREAS WHICH WERE EXCAVATED UNDER ITEM 203 EXCAVATION (FOR PAVEMENT REPAIR).

ITEM 442 - ASPHALT CONCRETE SURFACE COURSE, 12.5 MM, TYPE B (446), AS PER PLAN

703.05 DO NOT USE ANY FINE OR COARSE AGGREGATE WITH A 'SR' OR 'SRH' DESIGNATION ACCORDING TO THE OFFICE OF MATERIALS MANAGEMENT (OMM) IN ANY JOB MIX FORMULA (JMF) FOR THIS ITEM.

AS-BUILT

THIS RECORD DRAWING HAS BEEN PREPARED IN PART BY THE ENGINEER OF RECORD TO DEPICT CHANGES MADE DURING CONSTRUCTION, BASED ON INFORMATION REPORTED BY THE CONSTRUCTION CONTRACTOR.

CALCULATED SJR
CHECKED SWG

GENERAL NOTES

TRU-80-4.70

rms consultants, inc.

PLOT.CEL

rms consultants, inc.
rmsconsultants.com

Ohio DOT Workspace
Marucci & Caffrey TRU-80 Design Build
www.rmsconsultants.com

1"
0
0.5"

UCF: ohdot1V8\
PCF: 60-08285_Youngstown

Batchplot Spec: \\youngstown-fs1\n\60\08285\standards\plotdrv\batchplt.spc
Pen Table: S:\std\plotting\ustn\V8\pen\V8_rms_std.tbl
Plot Driver: S:\std\plotting\ustn\V8\PDF.pltcfg

Model: Sheet
Printed: 12/12/2013 @ 2:18:49 PM
File: \\youngstown-fs1\n\60\08285\roadway\sheets\764110N003.dgn
View: FENCE_VIEW1
By: sgealy

34" x 22"

ITEM 251 - PARTIAL DEPTH PAVEMENT REPAIR

A QUANTITY OF THIS ITEM SHALL BE PROVIDED ON A UNIT COST BASIS FOR USE AS DIRECTED BY THE ENGINEER. THE ITEM SHALL CONSIST OF REPAIRING EXISTING LOCATIONS EXHIBITING SURFACE DETERIORATION AND PLACING ITEM 448 ASPHALT CONCRETE, TYPE 2. THE ASPHALT CONCRETE SHALL BE COMPACTED WITH A TYPE I PNEUMATIC TIRE ROLLER AND A STEEL WHEEL ROLLER AS PER 401.13. IT IS NOT THE INTENT TO REPAIR EVERY DETERIORATED AREA WITHIN THE PROJECT. THE ENGINEER SHALL DETERMINE WHICH AREAS ARE TO BE REPAIRED. UNLESS OTHERWISE DIRECTED BY THE ENGINEER, THIS ITEM SHALL BE PERFORMED AFTER THE COMPLETION OF MAINLINE PAVEMENT PLANING. ALSO, THIS ITEM SHALL COMMENCE WITHIN 7 DAYS OF THE COMPLETION OF MAINLINE PAVEMENT PLANING. PAYMENT SHALL BE BASED ON THE ACTUAL NUMBER OF SQUARE YARDS OF PAVEMENT REPAIR.

FULL DEPTH PAVEMENT REPAIR

THE FOLLOWING ITEMS SHALL BE PROVIDED ON A UNIT COST BASIS AS DIRECTED BY THE ENGINEER FOR FULL DEPTH PAVEMENT REPAIRS IN AREAS OF MAINLINE RESURFACING. THIS WORK SHALL CONSIST OF CUTTING AND REMOVING DETERIORATED PAVEMENT FULL DEPTH AND PLACING FLEXIBLE PAVEMENT AS DIRECTED BY ITEM 252- FULL DEPTH RIGID PAVEMENT REMOVAL AND FLEXIBLE REPLACEMENT. UNLESS OTHERWISE DIRECTED BY THE ENGINEER, THIS ITEM SHALL BE PERFORMED AFTER THE COMPLETION OF MAINLINE PAVEMENT PLANING. ALSO, THIS ITEM SHALL COMMENCE WITHIN 7 DAYS OF THE COMPLETION OF MAINLINE PAVEMENT PLANING. IT IS NOT THE INTENT TO REPAIR EVERY DETERIORATED AREA WITHIN THE PROJECT. THE ENGINEER SHALL DETERMINE WHICH AREAS ARE TO BE REPAIRED. PAYMENT SHALL BE BASED ON THE ACTUAL NUMBER OF SQUARE YARDS OF PAVEMENT REMOVED AND REPLACED TO THE LIMITS DESIGNATED BY THE ENGINEER.

ITEM 252- FULL DEPTH RIGID PAVEMENT REMOVAL AND FLEXIBLE REPLACEMENT
ITEM 252- FULL DEPTH PAVEMENT SAWING
ITEM 203- EXCAVATION (FOR PAVEMENT REPAIR)
ITEM 304 AGGREGATE BASE (FOR PAVEMENT REPAIR)

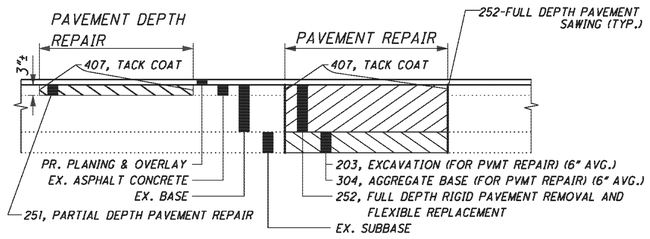

IN ADDITION FULL DEPTH PAVEMENT REPAIRS WILL BE PERFORMED AT THE TRUCK WEIGH STATION. THE PROJECT ENGINEER WILL MARK AREAS OF THE REPAIR. PAYMENT FOR THIS WORK WILL BE MADE AT A UNIT COST BASIS. THE FOLLOWING ITEMS OF WORK WILL BE PERFORMED:

ITEM 255- FULL DEPTH PAVEMENT REMOVAL AND RIGID REPLACEMENT, CLASS FS
ITEM 255- FULL DEPTH PAVEMENT SAWING
ITEM 203 - EXCAVATION (FOR PAVEMENT REPAIR)
ITEM 304- AGGREGATE BASE (FOR PAVEMENT REPAIR)

ITEM 301- ASPHALT CONCRETE BASE, PG64-22

THICKNESS OF ITEM 301 LAYER WILL BE DETERMINED IN THE FIELD SUCH THAT THE NEW CONCRETE BASE IS PLACED AT THE SAME ELEVATION AS THE EXISTING CONCRETE BASE IN THE ADJACENT PAVEMENT (TOP OF NEW CONCRETE BASE WILL MATCH THE TOP OF THE ADJACENT EXISTING CONCRETE BASE). SEE DETAIL SHEET 8

ITEM SPECIAL - MISC. VERTICAL CLEARANCE

AFTER ALL CONSTRUCTION HAS BEEN COMPLETED, A REGISTERED SURVEYOR WILL TAKE VERTICAL CLEARANCE MEASUREMENTS AT LOCATIONS INDICATED ON THE APPROVED ODOT FORM (AVAILABLE IN THE DISTRICT 4 STRUCTURES AND PAVEMENT OFFICE). THE FINAL MEASUREMENTS SHALL BE RECORDED ON THE FORM AND SUBMITTED TO THE PROJECT ENGINEER. THE RECORD SHALL BEAR THE SEAL OF THE LICENSED SURVEYOR WHO HAS TAKEN THE MEASUREMENTS. THIS WORK SHALL BE PERFORMED AT THE FOLLOWING STRUCTURES:

TRU-80-0745, TRU-80-0801, AND TRU-304-0445

TEMPORARY SOIL EROSION AND SEDIMENT CONTROL MEASURES

ALL SOIL EROSION AND SEDIMENT CONTROL MEASURES AS SPECIFIED IN THE STORM WATER POLLUTION PREVENTION PLAN SHALL BE IN PLACE PRIOR TO ANY EXCAVATION, GRADING OR FILLING OPERATIONS AND INSTALLATION OF PROPOSED STRUCTURES OR UTILITIES. THEY SHALL REMAIN IN PLACE UNTIL CONSTRUCTION IS COMPLETE AND THE AREA IS STABILIZED AS ACCEPTED BY THE ENGINEER.

BEST MANAGEMENT PRACTICES

WATER COLUMN AND SEDIMENTATION IMPACTS SHALL BE KEPT TO A MINIMUM THROUGH THE USE OF BEST MANAGEMENT PRACTICES FOR SOIL EROSION AND SEDIMENTATION CONTROL. ALL SOIL EROSION AND SEDIMENT CONTROL MEASURES SHALL BE IN PLACE PRIOR TO ANY EXCAVATION, GRADING OR FILLING OPERATIONS AND INSTALLATION OF PROPOSED STRUCTURES OR UTILITIES. THEY SHALL REMAIN IN PLACE UNTIL CONSTRUCTION IS COMPLETED AND THE AREA IS STABILIZED AS ACCEPTED BY THE ENGINEER. THESE SHALL COMPLY WITH ODOT'S HANDBOOK FOR SEDIMENT AND EROSION CONTROL WHICH MAY BE FOUND AT: http://www.dot.state.oh.us/drrc/

STREAM/WETLANDS AVOIDANCE

UNDER NO CIRCUMSTANCES SHALL THE CONTRACTOR IMPACT ANY STREAMS AND/OR WETLANDS. NO EXCAVATION, GRADING, OR FILLING OPERATIONS SHALL BE PERFORMED IN ANY STREAMS AND/OR WETLANDS. UNDER NO CIRCUMSTANCES SHALL THE CONTRACTOR STORE CONSTRUCTION EQUIPMENT AND/OR MATERIALS IN ANY STREAMS AND/OR WETLANDS.

TREE CUTTING RESTRICTIONS

UNDER NO CIRCUMSTANCES SHALL THE CONTRACTOR CUT/REMOVE ANY TRESS PRIOR TO OR DURING CONSTRUCTION OF THE PROJECT.

ENDANGERED SPECIES/INDIANA BAT

THIS PROJECT IS WITHIN THE RANGE OF THE FEDERALLY ENDANGERED INDIANA BAT (MYOTIS SODALIS). PRIOR TO ANY BRIDGE REHABILITATION/REMOVAL ACTIVITIES, THE UNDERSIDE OF THE EXISTING INTERSTATE ROUTE (IR) 80 BRIDGES OVER SAMPSON ROAD (STRUCTURE NO. TRU-80-4.96 L & R, SFN 7803931 & 7803966) AND LOGAN WAY (STRUCTURE NO. TRU-80-5.91 L & R, SFN 7803990 & 7804024) SHALL BE CAREFULLY EXAMINED FOR THE PRESENCE OF BATS, ESPECIALLY FROM APRIL 1 TO SEPTEMBER 30. IF ANY BATS ARE FOUND ROOSTING ON THE UNDERSIDE OF THE BRIDGE, THE UNITED STATES FISH AND WILDLIFE SERVICE, ECOLOGICAL SERVICE DIVISION, THE ODOT OFFICE OF ENVIRONMENTAL SERVICES AND ODOT DISTRICT 4 ENVIRONMENTAL SECTION SHALL BE CONTACTED TO PROVIDE THIS INFORMATION.

SEEDING AND MULCHING

THE FOLLOWING ITEMS ARE TO BE PROVIDED AS NEEDED TO PROMOTE GROWTH AND CARE OF PERMANENT SEEDED AREAS:

659, TOPSOIL

659, SEEDING AND MULCHING

659, REPAIR SEEDING AND MULCHING

659, COMMERCIAL FERTILIZER

659, LIME

659, WATER

SEEDING AND MULCHING SHALL BE APPLIED TO ALL AREAS OF EXPOSED SOIL BETWEEN THE RIGHT-OF-WAY LINES, AND WITHIN THE CONSTRUCTION LIMITS.

ITEM 622 - CONCRETE BARRIER END SECTION, TYPE D, AS PER PLAN

WORK FOR THIS ITEM SHALL BE IN ACCORDANCE WITH CMS 622 AND STD. CONSTRUCTION DRAWING RM-4.6, EXCEPT THE SHAPE OF THE NEW END SECTION AT THE CONNECTING POINT WITH THE EXISTING BARRIER SHALL MATCH THAT OF THE END OF THE EXISTING BARRIER AT THE CONNECTING POINT. THE LENGTH OF REMOVAL OF THE EXISTING BARRIER IS INDICATED IN THE GUARDRAIL DETAILS. THE NEW END SECTION SHALL CONFORM TO SECTIONS N-N, O-O, AND P-P AS SHOWN ON RM-4.6, SHEET 3.

ITEM 606 - ANCHOR ASSEMBLY, TYPE E

THIS ITEM SHALL CONSIST OF FURNISHING AND INSTALLING ANY OF THE GUARDRAIL END TERMINALS AS LISTED ON ROADWAY ENGINEERING'S WEB PAGE UNDER ROADSIDE SAFETY DEVICES FOR APPROVED GUARDRAIL END TREATMENTS. INSTALLATION SHALL BE AT THE LOCATIONS SPECIFIED IN THE PLANS, IN ACCORDANCE WITH THE MANUFACTURER'S SPECIFICATIONS.

THE FACE OF THE TYPE E IMPACT HEAD SHALL BE COVERED WITH TYPE G REFLECTIVE SHEETING, PER CMS 730.19.

REFER TO THE MANUFACTURER'S INSTRUCTIONS REGARDING THE INSTALLATION OF, AND THE GRADING AROUND, THE FOUNDATION TUBES AND GROUND STRUT. THE TOP OF ANY FOUNDATION TUBE SHOULD BE LESS THAN 4 INCHES ABOVE THE GROUND. THE PLACEMENT OF THE FOUNDATION TUBES SHOULD BE AN APPROPRIATE DEPTH BELOW THE LEVEL LINE IN ORDER TO MAINTAIN THE FINISHED GUARDRAIL HEIGHT OF 29 INCHES FROM THE EDGE OF THE SHOULDER.

ON-SITE GRADING IS REQUIRED IF THE TOP OF THE FOUNDATION TUBES OR TOP OF THE GROUND STRUT DOES PROJECT MORE THAN 4 INCHES ABOVE THE GROUND LINE.

CONNECTION BETWEEN EXISTING AND PROPOSED GUARDRAIL

WHEN IT IS NECESSARY TO SPLICE PROPOSED GUARDRAIL TO EXISTING GUARDRAIL, ONLY THE EXISTING GUARDRAIL SHALL BE CUT, DRILLED, OR PUNCHED. THE CONNECTION SHALL BE MADE USING A "W-BEAM RAIL SPLICE" AS SHOWN IN AASHTO M 180. PAYMENT SHALL BE INCLUDED IN THE CONTRACT PRICE FOR THE RESPECTIVE GUARDRAIL ITEMS.

AS-BUILT

THIS RECORD DRAWING HAS BEEN PREPARED IN PART BY THE ENGINEER OF RECORD TO DEPICT CHANGES MADE DURING CONSTRUCTION, BASED ON INFORMATION REPORTED BY THE CONSTRUCTION CONTRACTOR.

CALCULATED SJR | CHECKED SWG

GENERAL NOTES

TRU-80-4.70

rms consultants, inc.

PLOT.CEL
ms consultants, inc.
msconsultants.com
Ohio DOT Workspace
Marucci & Caffrey TRU-80 Design Build
www.msconsultants.com
1"
0.5"
0
UCF: ohdotV8i
PCF: 60-08285_Youngstown
Batchplot Spec: \\youngstown-fs1\n\60\08285\standards\plotdrv\batchplt.spc
Pen Table: S:\std\plotting\ustn\V8\pen\V8_ms_std.tbl
Plot Driver: S:\std\plotting\ustn\V8\PDF.pltcfg
34" x 22"
Model: Sheet
Printed: 12/12/2013 @ 2:18:50 PM
File: \\youngstown-fs1\n\60\08285\mot\sheets\764TMN001.dgn
View: FENCE_VIEW1
By: sgealy

ITEM 614 - MAINTAINING TRAFFIC

THIS ITEM SHALL CONSIST OF MAINTENANCE OF TRAFFIC ON EXISTING ROADWAYS AND RAMPS IN ACCORDANCE WITH THE OHIO MANUAL OF UNIFORM TRAFFIC CONTROL DEVICES FOR STREETS AND HIGHWAYS, CURRENT EDITION, LATEST REVISION, THE SPECIFICATIONS AND THE FOLLOWING:

1. THE CONTRACTOR SHALL INFORM THE ODOT DISTRICT 4 OFFICE (330) 786-2208, EIGHTEEN (18) DAYS PRIOR TO THE BEGINNING OF WORK.

2. A MINIMUM CLEARANCE OF ONE (1) FOOT WILL BE MAINTAINED BETWEEN TRAFFIC AND CHANNELIZING DEVICES.

3. A MINIMUM OF TWO (2) FEET WILL BE MAINTAINED BETWEEN AN EDGE LINE AND THE EDGE OF PAVEMENT.

4. CONES SHALL NOT BE ACCEPTABLE TRAFFIC CONTROL DEVICES FOR LANE RESTRICTIONS OR LANE REDUCTIONS THAT ARE IN OPERATION ONE-HALF HOUR AFTER SUNSET OR ONE-HALF HOUR BEFORE SUNRISE. ALL NIGHTTIME LANE RESTRICTIONS SHALL REQUIRE DRUMS OR BARRICADES AT A MAXIMUM SPACING OF SIXTY (60) FEET. WEIGHTED CHANNELIZERS MAY BE USED IN ACCORDANCE WITH THE STANDARD CONSTRUCTION DRAWINGS.

5. THE CONTRACTOR SHALL FURNISH, ERECT, MAINTAIN AND SUBSEQUENTLY REMOVE ALL FLAGS, BARRICADES, SIGNS, AND SIGN SUPPORTS, AND FURNISH AND MAINTAIN ALL FLAGGERS, WATCHERS AND INCIDENTALS RELATED THERETO.

6. WHEN NOT IN USE, THE CONTRACTOR MUST COVER OR REMOVE ALL EQUIPMENT AND SIGNAGE PLACED FOR MAINTENANCE OF TRAFFIC.

TRAFFIC CONTROL INSPECTOR

THE CONTRACTOR SHALL DESIGNATE AN INDIVIDUAL OTHER THAN THE SUPERINTENDENT AND SUBJECT TO THE APPROVAL OF THE ENGINEER, TO CONTINUOUSLY INSPECT ALL TRAFFIC CONTROL DEVICES WHENEVER CONSTRUCTION WORK IS BEING PERFORMED WITHIN THE WORK LIMITS OF THE PROJECT. THE DESIGNATED INDIVIDUAL SHALL ALSO INSPECT ALL TRAFFIC DEVICES AT THE BEGINNING AND AT THE END OF EACH WORK DAY. THE DESIGNATED INDIVIDUAL OR A QUALIFIED REPRESENTATIVE SHALL ALSO BE AVAILABLE ON AN AROUND THE CLOCK BASIS TO REPAIR AND/OR REPLACE DAMAGED OR MISSING TRAFFIC CONTROL DEVICES. THESE INDIVIDUALS SHALL BE EQUIPPED WITH CELLULAR PHONES AND THEIR NAMES AND PHONE NUMBERS SHALL BE GIVEN TO THE PROJECT ENGINEER AT THE PRE-CONSTRUCTION MEETING. THE DESIGNATED INDIVIDUAL MAY HAVE OTHER CONSTRUCTION RELATED DUTIES AS LONG AS IMMEDIATE ATTENTION IS GIVEN TO TRAFFIC CONTROL.

SHOULDER CLOSURES ON IR-80

DURING THE CONSTRUCTION OF BRIDGE PIERS AND ABUTMENTS, THE SHOULDERS OF IR-80 IN THE VICINITY OF SAMPSON RD AND LOGANWAY AVE SHALL BE CLOSED AS PER OMUTCD TYPICAL APPLICATION (TA) 5. THE LEFT AND RIGHT SHOULDERS SHALL NOT BE CLOSED SIMULTANEOUSLY, AND SHALL ONLY BE CLOSED DURING DAYLIGHT HOURS.

PORTABLE SIGNALS

THE PORTABLE TRAFFIC SIGNALS PLACED ON SAMPSON RD AND LOGANWAY AVE SHALL BE AS PER ODOT SUPPLEMENTAL SPECIFICATION 961 AND SUPPLEMENT 1050.

THE PORTABLE SIGNALS SHALL ONLY BE IN PLACE AND OPERATING DURING DAYLIGHT HOURS WHILE THE CONTRACTOR IS PRESENT. THE SIGNALS SHALL BE TURNED OFF AND RELOCATED OUTSIDE THE CLEAR ZONE OR PLACED BEHIND GUARDRAIL OR BARRIER, ALL SIGNS COVERED OR REMOVED, AND BOTH TRAVEL LANES OPENED TO TRAFFIC AT NIGHT AND DAYS WHEN THE CONTRACTOR IS NOT ACTIVE IN THE WORK ZONE.

LANE CLOSURES

DURATION OF LANE CLOSURES AND RESTRICTIONS SHALL BE AS PER THE PERMITTED LANE CLOSURE CHART. THE PERMITTED LANE CLOSURE CHART USED FOR THIS PROJECT SHALL BE THE MOST CURRENT CHART AVAILABLE ON THE DATE THIS PROJECT SELLS.

THE CHART CAN BE FOUND AT: http://plcm.dot.state.oh.us

SHOULD THE CONTRACTOR FAIL TO MEET ANY OF THE REQUIREMENTS IN THE CHART, THE CONTRACTOR SHALL BE ASSESSED DISINCENTIVES IN THE AMOUNT OF $2,500 PER HOUR OR PORTION THEREOF THAT THE LANE REDUCTION REMAINS BEYOND THE SPECIFIED LIMIT.

SEQUENCE OF CONSTRUCTION

BRIDGE PIERS AND ABUTMENTS (STRUCTURES TRU-80-0496 L & R AND TRU-80-0591 L & R)

- MERGE BOTH SAMPSON RD. AND LOGANWAY AVE. TRAFFIC INTO A ONE LANE TWO-WAY MOVEMENT CONTROLLED BY PORTABLE SIGNALS, AS SHOWN ON SHEETS 16 AND 17. CONSTRUCT THE PIERS AND ABUTMENTS FOR IR-80, ADJACENT TO SAMPSON RD AND LOGANWAY AVE. CONSTRUCTION ON THE EAST AND WEST SHALL NOT OCCUR SIMULTANEOUSLY.

BRIDGE WIDENING (STRUCTURES TRU-80-0496 L & R AND TRU-80-0591 L & R)

PRE-PHASE 1

-PRIOR TO BEGINNING PHASE 1, THE OUTSIDE SHOULDERS OF IR-80 ON EITHER SIDE OF THE SAMPSON AND LOGANWAY BRIDGES SHALL BE REHABILITATED AS DETAILED ON SHEET 15 AND SHOWN ON PLAN SHEETS 19-21 AND 23-25. RIGHT LANE CLOSURES SHALL BE AS PER SCD MT-95.30.

- IN ADDITION, EXISTING CURB AND PARAPETS SHALL BE REPAIRED AS NEEDED. THE RIGHT SHOULDER OF IR-80 IN BOTH THE EASTBOUND AND WESTBOUND DIRECTIONS IN THE VICINITY OF THE WORK AREA SHALL BE CLOSED AS PER OMUTCD TYPICAL APPLICATION (TA) 5.

PHASE 1

- SHIFT I-80 TRAFFIC TO THE OUTSIDE OF THE ROADWAY AND BRIDGES IN ORDER TO REMOVE AND WIDEN THE INSIDE (MEDIAN SIDE) OF THE STRUCTURES. SHIFT TRAFFIC BACK TO EXISTING TRAVEL LINES BETWEEN THE STRUCTURES OVER SAMPSON ROAD AND LOGANWAY AVENUE.

PRE-PHASE 2

- PRIOR TO BEGINNING PHASE 2, WITH TRAFFIC MAINTAINED ON THE OUTSIDE REHABILITATED SHOULDERS AND TEMPORARY PAVEMENT, REHABILITATE THE MEDIAN SHOULDER AND PLACE TEMPORARY PAVEMENT AND EMBANKMENT AS REQUIRED AND DETAILED ON SHEET 15 AND AS SHOWN ON PLAN SHEETS 29-31 FOR STRUCTURES OVER SAMPSON ROAD AND SHEETS 33-35 FOR STRUCTURES OVER LOGANWAY AVENUE.

- IN PREPARATION FOR PLACING THE TEMPORARY PAVEMENT AND EMBANKMENT FOR THE STRUCTURES OVER LOGANWAY AVENUE, THE CONTRACTOR SHALL REMOVE, STORE, AND SUBSEQUENTLY REERECT THE SIGN TRUSS AT STA. 310+67±, LEFT, USING THE SHORT-DURATION CLOSURE OF MULTI-LANE DIVIDED HIGHWAY DETAIL AND NOTES ON SHEET 40. SHORT-DURATION CLOSURE OF WESTBOUND I-80 LANES SHALL BE LIMITED TO THE HOURS OF 11 P.M. TO 5 A.M. DAILY.

PHASE 2

- SHIFT I-80 TRAFFIC TO THE MEDIAN SIDE (i.e. TEMPORARY PAVEMENT AND NEWLY CONSTRUCTED BRIDGE DECKS) IN ORDER TO REMOVE AND CONSTRUCT THE OUTSIDE OF THE BRIDGES. SHIFT TRAFFIC BACK TO EXISTING TRAVEL LANES BETWEEN THE STRUCTURES OVER SAMPSON ROAD AND LOGANWAY AVENUE.

- UPON COMPLETION OF THE BRIDGE WIDENING, RESTORE I-80 MAINLINE TRAFFIC TO THE EXISTING TRAVEL LANES, REMOVE TEMPORARY PAVEMENT PLACED WIDER THAN THE EXISTING SHOULDERS, AND REERECT THE EXISTING SIGN TRUSS AT STA. 310+67±, LEFT, USING THE SHORT-DURATION CLOSURE OF MULTI-LANE DIVIDED HIGHWAY DETAIL AND NOTES ON SHEET 40. THE OVERHEAD SIGNS SHALL BE RESTORED TO THEIR ORIGINAL POSITION OVER THE ROADWAY.

MAINLINE PAVEMENT REPAIRS, RESURFACING, AND GUARDRAIL REPLACEMENT

- FULL DEPTH AND PARTIAL DEPTH PAVEMENT REPAIRS SHALL BE PERFORMED IN THE AREAS OF RESURFACING. MAINLINE LANE CLOSURES SHALL BE AS PER THE PERMITTED LANE CLOSURE CHART (SEE NOTE TITLED "LANE CLOSURES"). LANE CLOSURES SHALL BE AS PER SCD MT-95.30.

TRUCK WEIGH STATION WORK

- THE TRUCK WEIGH STATION SHALL BE CLOSED WHILE THE PAVEMENT REPAIRS AND RESURFACING WORK ON THE RAMPS ARE PERFORMED. THIS WORK MAY BE COMPLETED DURING THE PAVEMENT REPAIRS, RESURFACING AND GUARDRAIL REPLACEMENT OF THE MAINLINE LANE ADJACENT TO THE RAMP CLOSURE. THE CONTRACTOR IS PERMITTED TO CLOSE THE TRUCK WEIGH STATION AT THE FOLLOWING TIMES:

ONE WEEKEND FROM 6:00 A.M. FRIDAY THROUGH 5:00 A.M. MONDAY.

PRIOR TO CLOSING THE TRUCK WEIGH STATION, THE CONTRACTOR SHALL GIVE 14 DAYS ADVANCE NOTICE TO EITHER SERGEANT ALAN OGDEN OR LIEUTENANT MARVIN E. HILL, U-896 AT ODPS, PHONE NUMBER 330-898-7598.

BRIDGE DECK SEALING (STRUCTURES TRU-80-0745 AND TRU-80-0801)

- THE CONTRACTOR SHALL UTILIZE SCD MT-97.10 IN ORDER TO MAINTAIN A MINIMUM OF ONE BIDIRECTIONAL LANE OF TRAFFIC AT ALL TIMES ON EACH BRIDGE. THE MINIMUM LANE WIDTH SHALL BE 10 FEET.

FINAL MAINLINE PAVEMENT MARKINGS

- THE CONTRACTOR SHALL UTILIZE SCD MT-99.20 WHEN PLACING THE FINAL PAVEMENT MARKINGS ON I-80.

AS-BUILT

THIS RECORD DRAWING HAS BEEN PREPARED IN PART BY THE ENGINEER OF RECORD TO DEPICT CHANGES MADE DURING CONSTRUCTION, BASED ON INFORMATION REPORTED BY THE CONSTRUCTION CONTRACTOR.

CALCULATED PES 12/12
CHECKED DRB 12/12

MAINTENANCE OF TRAFFIC GENERAL NOTES

TRU-80-4.70

ms consultants, inc.

PLOT.CEL
ms consultants, inc.
msconsultants.com
Ohio DOT Workspace
Marucci & Caffrey TRU-80 Design Build
www.msconsultants.com
1"
0.5"
0
UCF: ohdot1V8i
PCF: 60-08285_Youngstown
Batchplot Spec: \\youngstown-fs1\v8\60\08285\standards\plotdrv\batchplt.spc
Pen Table: S:\std\plotting\ustn\V8\pen\V8i_ms_std.tbl
Plot Driver: S:\std\plotting\ustn\V8\PDF.pltcfg
34" x 22"
View: FENCE_VIEW1
By: sgedy
Model: Sheet
Printed: 12/12/2013 @ 2:18:51 PM
File: \\youngstown-fs1\v8\60\08285\mot\sheets\764TMN002.dgn

CONTRACTOR'S EQUIPMENT - OPERATION AND STORAGE

A QUALIFIED FLAGGER SHALL BE EMPLOYED WHERE THE CONTRACTOR'S EQUIPMENT MUST MERGE WITH THE TRAFFIC STREAM. THE CONTRACTOR'S EQUIPMENT SHALL BE EQUIPPED WITH AT LEAST ONE AMBER FLASHING LIGHT. PAVERS, ROLLERS, AND OTHER EQUIPMENT MAY BE PARKED IN AREAS ALONG THE HIGHWAY WHEN PAVING OPERATIONS ARE SCHEDULED TO CONTINUE WITHIN THE NEXT WORKDAY. OTHERWISE THE EQUIPMENT SHALL BE STORED AT A STORAGE AREA OUTSIDE THE R/W, THE LOCATION OF WHICH SHALL HAVE PRIOR APPROVAL OF THE ENGINEER. WHEN PARKING ALONG THE HIGHWAY THE EQUIPMENT SHALL BE PLACED AND DELINEATED AS PER 614.03. NO EQUIPMENT SHALL BE PARKED IN THE MEDIAN OF THE HIGHWAY. ADEQUATE BARRICADES AND LIGHTS SHALL BE PLACED ON THE PAVEMENT SIDE OF THE EQUIPMENT TO IDENTIFY THE LIMITS OF THE EQUIPMENT. ALL OTHER EQUIPMENT, INCLUDING PRIVATE VEHICLES, SHALL BE STORED AT THE APPROVED CONTRACTOR'S STORAGE AREA. NO EQUIPMENT SHALL BE PARKED ON PRIVATE PROPERTY UNLESS PRIOR APPROVAL OF THE OWNER AND THE PROJECT ENGINEER/SUPERVISOR HAS BEEN GRANTED.

ADVANCE NOTICE TO PAVE

THE CONTRACTOR SHALL SUBMIT FOR APPROVAL TO THE DISTRICT CONSTRUCTION ENGINEER A DETAILED SCHEDULE FIFTEEN (15) DAYS PRIOR TO THE PLACEMENT OF THE OVERLAY COURSES, ON HOW THEY PROPOSE TO PROSECUTE THE PAVING OPERATIONS. THE DETAILS SHALL SHOW THE ORDER OF PERFORMANCE OF EACH STAGE (START TO FINISH) OF THE WORK INCLUDING THE MAINTENANCE OF TRAFFIC THAT WILL BE USED.

SPEEDINFO DEVICES WITHIN PROJECT LIMITS

THE CONTRACTOR SHALL TAKE MEASURES TO MAINTAIN THE PROPER OPERATION OF ANY SPEEDINFO DEVICES WITHIN THE PROJECT LIMITS. THE DEVICES ARE DOPPLER RADAR UNITS WHICH LOOK LIKE CYLINDRICAL TUBES WITH SOLAR PANELS ATTACHED TO THEM. THE SENSORS ARE IMPLEMENTED ON ALL INTERSTATES STATEWIDE AND OTHER MAJOR US AND STATE ROUTES IN URBAN AREAS, GENERALLY SPACED BETWEEN 1 TO 2 MILES APART, AND INSTALLED ON ANY EXISTING ODOT INFRASTRUCTURE (TYPICALLY OVERHEAD TRUSSES, CANTILEVERS, GROUND-MOUNTED SIGN SUPPORTS, OR LIGHT POLES). ODOT WILL COORDINATE THE RELOCATION OF ANY DEVICES THAT MAY BE AFFECTED BY THE CONTRACTOR'S OPERATION. THE CONTRACTOR SHALL NOT REMOVE THE DEVICES THEMSELVES. THE CONTRACTOR SHALL NOTIFY THE PROJECT ENGINEER A MINIMUM OF TEN CALENDAR DAYS PRIOR TO PERFORMING ANY WORK WHICH REQUIRES DEVICE RELOCATION. THE PROJECT ENGINEER SHALL THEN NOTIFY SPEEDINFO, INC. AND THE ODOT OFFICE OF TRAFFIC ENGINEERING OF ANY DEVICES THAT REQUIRE RELOCATION. THE CONTRACTOR SHOULD BE AWARE THAT SINCE SPEED DATA IS STILL DESIRABLE TO ODOT, THE PROJECT ENGINEER WILL ATTEMPT TO INFORM SPEEDINFO, INC. OF NEWLY AVAILABLE INSTALL LOCATIONS FOR THE SENSORS TO BE RELOCATED TO, WITH MINIMAL DOWNTIME.

IF IMMEDIATE ATTENTION TO A SPEEDINFO SENSOR IS REQUIRED, THE CONTRACTOR MAY DIRECTLY CONTACT THE REGIONAL INSTALLER FOR SPEEDINFO, INC. FROM THE PROVIDED CONTACT INFORMATION. THE REGIONAL INSTALLER WOULD BE ABLE TO PROVIDE THE QUICKEST POSSIBLE ATTENTION TO THE SITUATION. IF THE REGIONAL INSTALLER CANNOT BE REACHED, THE LIST OF STATEWIDE CONTACTS SHOULD BE USED IN THE ORDER IT IS PRESENTED. AN EMAIL INFORMING ALL PARTIES OF THE SITUATION SHOULD ALSO BE SENT AT THE EARLIEST CONVENIENCE.

1. REGIONAL CONTACT

JEFF CHASE, A+A SAFETY
WORK: (216) 283-8040
CELL: (216) 854-6531
jeffc@aasafetyinc.com

2. STATEWIDE CONTACTS

CHARLIE ARMINGER, SPEEDINFO
OFFICE: (408) 333-9960
CELL: (408) 425-4684
carminger@speedinfo.com

BRYAN COMER, ODOT
(614) 387-1253
bryan.comer@dot.state.oh.us

JASON YERAY, ODOT
(614) 466-2168
jason.yeray@dot.state.oh.us

THE SPEEDINFO DEVICES WITHIN THE PROJECT LIMITS ARE LOCATED AT THE BELOW LOCATIONS. THE CONTRACTOR SHALL BE ADVISED THAT THESE LOCATIONS MAY HAVE CHANGED BY THE TIME OF CONSTRUCTION AND SHALL USE THE ABOVE PROCEDURE FOR ANY OTHER SPEED DETECTION DEVICES.

SERIAL NUMBER	-	A1F1311002683
LATITUDE	-	41.159650
LONGITUDE	-	-80.634995
ROAD NAME	-	I-80
LOCATION NAME	-	I-80 W @ EXIT 228A OH-711S YOUNGSTOWN LEFT 2 MI, EXIT 228B OH-11N ASHTABULA WARREN 1 3/4 MI TRUSS
LOCATION ID	-	13966

ITEM 614 - WORK ZONE IMPACT ATTENUATOR FOR 24" WIDE HAZARDS (UNIDIRECTIONAL OR BIDIRECTIONAL)

THIS ITEM SHALL CONSIST OF FURNISHING AND INSTALLING A NON-GATING IMPACT ATTENUATOR. FURNISH AN IMPACT ATTENUATOR FROM THE OFFICE OF ROADWAY ENGINEERING APPROVED LIST FOR WORK ZONE IMPACT ATTENUATORS. THE APPROVED LIST IS AVAILABLE AT THE "ROADWAY STANDARDS: PROPRIETARY ROADSIDE SAFETY DEVICES" WEB PAGE ON THE OFFICE OF ROADWAY ENGINEERING WEBSITE.

INSTALLATION SHALL BE AT THE LOCATIONS SPECIFIED IN THE PLANS IN ACCORDANCE WITH THE MANUFACTURER'S SPECIFICATIONS.

THE CONTRACTOR SHALL REPAIR OR REPLACE A DAMAGED UNIT WITHIN 24 HOURS OF DAMAGING IMPACT.

WHEN BIDIRECTIONAL DESIGNS ARE SPECIFIED, THE CONTRACTOR SHALL SUPPLY APPROPRIATE TRANSITIONS.

WHEN GATING IMPACT ATTENUATORS ARE DESIRED, THE CONTRACTOR SHALL SUBMIT DOCUMENTATION TO THE ENGINEER FOR ACCEPTANCE.

THE COST FOR THE ADDITIONAL BARRIER REQUIRED FOR A GATING IMPACT ATTENUATOR SHALL BE INCLUDED IN THE COST OF THE GATING IMPACT ATTENUATOR.

BARRIER DELINEATION

BARRIER REFLECTORS AND OBJECT MARKERS SHALL BE INSTALLED ON ALL PERMANENT CONCRETE BARRIER LOCATED WITHIN 5 FEET OF THE EDGE OF THE ADJACENT TRAVEL LANE. BARRIER REFLECTOR AND OBJECT MARKER SPACING SHALL BE AS PER MT-101.70.

PAYMENT SHALL BE FULL COMPENSATION FOR ALL MATERIAL, LABOR, INCIDENTALS AND EQUIPMENT NECESSARY FOR FURNISHING, INSTALLING, MAINTAINING AND REMOVING BARRIER REFLECTORS AND OBJECT MARKERS.

GUARDRAIL DELINEATION

OBJECT MARKERS SHALL BE INSTALLED ON ALL GUARDRAIL LOCATED WITHIN 5 FEET OF THE EDGE OF THE ADJACENT TRAVEL LANE. GUARDRAIL-MOUNTING OF OBJECT MARKERS SHALL BE MADE BY INSTALLING THE OBJECT MARKERS ON THE EXTENSION BLOCKS RATHER THAN DIRECTLY ONTO THE GUARDRAIL ITSELF. OBJECT MARKER SPACING SHALL BE APPROXIMATELY 50 FEET.

PAYMENT SHALL BE FULL COMPENSATION FOR ALL MATERIAL, LABOR, INCIDENTALS AND EQUIPMENT NECESSARY FOR FURNISHING, INSTALLING, MAINTAINING AND REMOVING OBJECT MARKERS.

FLOODLIGHTING

FLOODLIGHTING OF THE WORK SITE FOR OPERATIONS CONDUCTED DURING NIGHTTIME PERIODS SHALL BE ACCOMPLISHED SO THAT THE LIGHTS DO NOT CAUSE GLARE TO THE DRIVERS ON THE ROADWAY. TO ENSURE THE ADEQUACY OF THE FLOODLIGHT PLACEMENT, THE CONTRACTOR AND THE ENGINEER SHALL DRIVE THROUGH THE WORK SITE EACH NIGHT WHEN THE LIGHTING IS IN PLACE AND OPERATIVE PRIOR TO COMMENCING ANY WORK. IF GLARE IS DETECTED, THE LIGHT PLACEMENT AND SHIELDING SHALL BE ADJUSTED TO THE SATISFACTION OF THE ENGINEER BEFORE WORK PROCEEDS.

WINTER TRAFFIC LIMITATIONS

ALL EXISTING LANES SHALL BE OPEN TO TRAFFIC BETWEEN NOVEMBER 15 AND APRIL 1. NOVEMBER 14 SHALL BE CONSIDERED TO CONSTITUTE AN INTERIM COMPLETION DATE AND DISINCENTIVES OF $1,300 SHALL BE ASSESSED FOR EACH CALENDAR DAY THAT THE ROADWAY REMAINS CLOSED TO TRAFFIC BEYOND THE SPECIFIED LIMIT. THE CONTRACTOR MAY CLOSE LANES PRIOR TO APRIL 1 WITH WRITTEN APPROVAL FROM THE DISTRICT CONSTRUCTION ENGINEER.

ITEM 614 - BARRIER REFLECTORS AND/OR OBJECT MARKERS

BARRIER REFLECTORS AND/OR OBJECT MARKERS SHALL BE INSTALLED ON ALL PORTABLE BARRIER (PB) USED FOR TRAFFIC CONTROL. BARRIER REFLECTORS, OBJECT MARKERS AND THEIR INSTALLATION SHALL CONFORM TO CMS 626, EXCEPT THAT THE SPACING SHALL BE 50 FEET.

WORK ZONE INCREASED PENALTIES SIGN (R11-H5a)

R11-H5A-48 SIGNS SHALL BE FURNISHED, ERECTED, AND MAINTAINED IN GOOD CONDITION AND/OR REPLACED AS NECESSARY AND SUBSEQUENTLY REMOVED BY THE CONTRACTOR. SIGNS SHALL BE MOUNTED AT THE APPROPRIATE OFFSETS AND ELEVATIONS AS PRESCRIBED BY THE OHIO MANUAL OF UNIFORM TRAFFIC CONTROL DEVICES. THEY SHALL BE MAINTAINED ON SUPPORTS MEETING CURRENT SAFETY CRITERIA.

THE SIGNS MAY BE ERECTED OR UNCOVERED NO MORE THAN FOUR HOURS BEFORE THE ACTUAL START OF WORK. THE SIGNS SHALL BE REMOVED OR COVERED NO LATER THAN FOUR HOURS FOLLOWING RESTORATION OF ALL LANES TO TRAFFIC WITH NO RESTRICTIONS, OR SOONER AS DIRECTED BY THE ENGINEER. TEMPORARY SIGN COVERING AND UNCOVERING DUE TO TEMPORARY LANE RESTORATIONS SHALL BE GUIDED BY THE FOUR-HOUR LIMITATIONS STATED ABOVE. SUCH LANE RESTORATIONS SHOULD BE EXPECTED TO REMAIN IN EFFECT FOR 30 OR MORE CONSECUTIVE CALENDAR DAYS, SUCH AS DURING WINTER SHUT-DOWNS.

THE SIGNS ON THE MAINLINE SHALL BE DUAL MOUNTED UNLESS NOT PHYSICALLY POSSIBLE. THE FIRST SIGN SHALL BE PLACED BETWEEN THE ROAD WORK AHEAD (W20-1) SIGN AND THE NEXT SIGN IN THE SEQUENCE. SIGNS SHALL BE ERECTED ON EACH ENTRANCE RAMP AND EVERY 2 MILES THROUGH THE CONSTRUCTION WORK LIMITS. SIGNS ON THE MAINLINE SHALL BE R11-H5A-48. SIGNS USED ON THE RAMPS SHALL BE R11-H5A-24. R11-H5A-24 SIGNS MAY BE USED IN THE MEDIAN IN LIEU OF R11-H5A-48 SIGNS IF IT IS NOT PHYSICALLY POSSIBLE TO PROVIDE R11-H5A-48 SIGNS IN THE MEDIAN.

THE CONTRACTOR MAY USE SIGNS AND SUPPORTS IN USED, BUT GOOD, CONDITION PROVIDED THE SIGNS MEET CURRENT ODOT SPECIFICATIONS. SIGN FACES SHALL BE RETROREFLECTORIZED WITH TYPE G SHEETING COMPLYING WITH THE REQUIREMENTS OF CMS 730.19.

WORK ZONE INCREASED PENALTIES SIGNS AND SUPPORTS WILL BE MEASURED AS THE NUMBER OF SIGN INSTALLATIONS, INCLUDING THE SIGN AND NECESSARY SUPPORTS. IF A SIGN AND SUPPORT COMBINATION IS REMOVED AND REERECTED AT ANOTHER LOCATION AS DIRECTED BY THE ENGINEER, IT SHALL BE CONSIDERED ANOTHER UNIT.

AS-BUILT

THIS RECORD DRAWING HAS BEEN PREPARED IN PART BY THE ENGINEER OF RECORD TO DEPICT CHANGES MADE DURING CONSTRUCTION, BASED ON INFORMATION REPORTED BY THE CONSTRUCTION CONTRACTOR.

CALCULATED | CHECKED

MAINTENANCE OF TRAFFIC
GENERAL NOTES

ms consultants, inc.

PLOT.CEL

ms consultants, inc.
msconsultants.com

Ohio DOT Workspace
Marucci & Caffrey, TRU-80 Design Build
www.msconsultants.com

1"
0
0.5"

UCF: ohdot1V8i
PCF: 60-08285_Youngstown

Batchplot Spec: \\youngstown-fs1\n\60\08285\standards\plotdrv\batchplt.spc
Pen Table: S:\std\plotting\ustn\V8\
Plot Driver: S:\std\plotting\ustn\V8\PDF.pltcfg

Model: Sheet
Printed: 12/12/2013 @ 2:18:58 PM
File: \\youngstown-fs1\n\60\08285\mot\sheets\764TMN003.dgn
View: FENCE_VIEW1
By: sgeidy

34" x 22"

ITEM 614 - WORK ZONE SPEED LIMIT SIGN

THE CONTRACTOR SHALL FURNISH, INSTALL, MAINTAIN, COVER DURING SUSPENSION OF WORK, AND SUBSEQUENTLY REMOVE WORK ZONE SPEED LIMIT (R2-1) (55 SPEED LIMIT) SIGNS AND SUPPORTS WITHIN THE WORK LIMITS IN ACCORDANCE WITH THE FOLLOWING REQUIREMENTS:

THE CONTRACTOR SHALL COVER OR REMOVE ANY EXISTING SPEED LIMIT SIGNS WITHIN THE REDUCED SPEED ZONE(S). THESE SIGNS SHALL BE RESTORED DURING SUSPENSION OR TERMINATION OF THE REDUCED SPEED LIMIT. THE EXPENSE OF COVERING OR REMOVAL AND RESTORATION OF EXISTING SPEED LIMIT OR MINIMUM SPEED LIMIT SIGNS SHALL BE INCLUDED IN THE PAY ITEM FOR THE WORK ZONE SPEED LIMIT SIGNS.

THE WORK ZONE SPEED LIMIT SIGNS MAY BE ERECTED OR UNCOVERED NO MORE THAN FOUR HOURS BEFORE THE ACTUAL START OF WORK THAT CAUSES THE WARRANTING CONDITION(S) TO OCCUR. THE SIGNS SHALL BE REMOVED OR COVERED NO LATER THAN FOUR HOURS FOLLOWING REMOVAL OF THE WARRANTING CONDITION(S), OR SOONER AS DIRECTED BY THE ENGINEER. TEMPORARY SIGN COVERING AND UNCOVERING DUE TO TEMPORARY REMOVAL OF WARRANTING CONDITION(S) SHALL BE GUIDED BY THE FOUR-HOUR LIMITATIONS STATED ABOVE.

CONSTRUCTION AND MATERIAL SPECIFICATIONS ITEM 614, PARAGRAPH 614.02(B), INDICATES THAT THE TWO DIRECTIONS OF A DIVIDED HIGHWAY ARE CONSIDERED SEPARATE HIGHWAY SECTIONS. THEREFORE, IF THE WORK ON A MULTI-LANE DIVIDED HIGHWAY IS LIMITED TO ONLY ONE DIRECTION, A SPEED REDUCTION IN THE DIRECTION OF THE WORK DOES NOT AUTOMATICALLY CONSTITUTE A SPEED REDUCTION IN THE OPPOSITE DIRECTION. A SPEED LIMIT REDUCTION IN THE OPPOSITE DIRECTION, IN SUCH CASE, IS APPROPRIATE ONLY IF CONDITIONS ARE EXPECTED TO HAVE AN IMPACT ON THE DIRECTIONAL TRAFFIC FLOW, AS DIRECTED BY THE ENGINEER.

THE CONTRACTOR SHALL ERECT A WORK ZONE SPEED LIMIT SIGN IN ADVANCE OF THE WARRANTING CONDITION, AS DETAILED IN THE PLANS OR AS DIRECTED BY THE ENGINEER. THE SIGN SHALL BE MOUNTED ON BOTH SIDES OF A DIRECTIONAL ROADWAY OF DIVIDED HIGHWAYS. THE FIRST WORK ZONE SPEED LIMIT SIGN SHALL BE PLACED APPROXIMATELY 500 FEET IN ADVANCE OF THE LANE REDUCTION, SHIFT TAPER, OR OTHER ROADWAY OR SHOULDER RESTRICTION THAT WARRANTED THE WORK ZONE SPEED ZONE. ON UNDIVIDED HIGHWAYS THE SIGN SHALL BE MOUNTED ON THE RIGHT SIDE, APPROXIMATELY 250 FEET IN ADVANCE OF SUCH RESTRICTIONS. THE SIGN SHALL BE REPEATED EVERY 1 MILE FOR 55 MPH ZONES AND EVERY ONE HALF MILE FOR 50 MPH AND 45 MPH ZONES. THESE SIGNS SHALL ALSO BE ERECTED IMMEDIATELY AFTER EACH OPEN ENTRANCE RAMP WITHIN THE ZONE.

THE SPEED LIMIT REDUCTION SHALL BE LIMITED TO ONLY THE PORTION OF THE PROJECT AND THE WORK THAT WARRANTED THE WORK ZONE SPEED LIMIT REDUCTION.

SPEED REDUCTION (SPEED ZONE AHEAD SYMBOL) SIGNS (W3-5) SHALL BE ERECTED IN ADVANCE OF THE SPEED REDUCTION, APPROXIMATELY 1250 FEET ON MULTI-LANE HIGHWAYS AND 500 FEET ON TWO LANE HIGHWAYS.

A SIGN(S) TO INDICATE THE RESUMPTION OF THE STATUTORY SPEED LIMIT SHALL BE ERECTED AT THE END OF ANY REDUCED SPEED ZONE. THE CONTRACTOR MAY USE SIGNS AND SUPPORTS IN USED, BUT GOOD CONDITION, PROVIDED THE SIGNS MEET CURRENT ODOT SPECIFICATIONS. SIGN FACES SHALL BE RETROREFLECTORIZED WITH TYPE G SHEETING COMPLYING WITH THE REQUIREMENTS OF CMS 730.19.

WORK ZONE SPEED LIMIT SIGNS SHALL BE MOUNTED ON TWO ITEM 630, GROUND MOUNTED SUPPORTS, NO. 3 POSTS, UNLESS MOUNTED ON A TEMPORARY SIGN SUPPORT PER SCD MT 105.10.

WORK ZONE SPEED LIMIT AND RELATED SIGN SIZES, PLACEMENT, SUPPORTS, ETC SHALL BE PER THE OMUTCD, WITH TWO EXCEPTIONS: 1) EXPRESSWAY SIZE SPEED LIMIT SIGNS MAY BE USED ON FREEWAYS AND EXPRESSWAYS, IF NECESSARY; 2) THE HEIGHT OF SIGNS MOUNTED ON PORTABLE SUPPORTS SHOULD BE THE HEIGHT REQUIRED FOR GROUND MOUNTED SIGNS BUT SHALL NOT BE MORE THAN 1 FOOT LOWER THAN THE HEIGHT REQUIRED BY THE OMUTCD, OR AS DIRECTED BY THE ENGINEER. PORTABLE SUPPORTS SHOULD NOT BE USED FOR A DURATION OF MORE THAN 3 DAYS.

WORK ZONE SPEED LIMIT SIGNS AND SUPPORTS WILL BE MEASURED AS THE NUMBER OF SIGN INSTALLATIONS, INCLUDING THE SIGNS AND NECESSARY SUPPORTS. IF A SIGN AND SUPPORT COMBINATION IS REMOVED AND REERECTED AT ANOTHER LOCATION WITHIN THE PROJECT DUE TO CHANGES IN THE SPEED ZONE AS DETAILED IN THE PLANS OR AS DIRECTED BY THE ENGINEER, IT SHALL BE CONSIDERED ANOTHER UNIT.

PAYMENT FOR ACCEPTED QUANTITIES, COMPLETE IN PLACE, WILL BE MADE AT THE CONTRACT UNIT PRICE. PAYMENT SHALL BE FULL COMPENSATION FOR ALL MATERIALS, LABOR, INCIDENTALS AND EQUIPMENT FOR FURNISHING, ERECTING, MAINTAINING, COVERING DURING SUSPENSION OF WORK, AND REMOVING THE SIGNS AND SUPPORTS. SPEED LIMIT SIGNING FOR THE POINT OF RESUMPTION OF THE STATUTORY SPEED LIMIT SHALL BE PAID FOR AS WORK ZONE SPEED LIMIT SIGNS. THE FOLLOWING ESTIMATED QUANTITY HAS BEEN CARRIED TO THE GENERAL SUMMARY.

THE FOLLOWING TABLE PROVIDES DETAILS ON WORK ZONE SPEED ZONES APPROVED FOR USE ON THIS PROJECT:

WZSZ REVISION NUMBER	COUNTY & ROUTE	SLM		PHASE/ DIRECTION	APPROVED SPEED LIMIT (MPH)	WARRENTING CONDITION
		FROM	TO			
WZ-25875	TRU-80	4.71	6.09	PHASE 1/EB	55	#3
		4.86	6.24	PHASE 1/WB	55	#3
		4.61	6.15	PHASE 2/EB	55	#3
		4.80	6.34	PHASE 2/WB	55	#3
		4.31	8.61	PHASE 3/EB	55	#5
		4.66	8.96	PHASE 3/WB	55	#5

ITEM 614 - PORTABLE CHANGEABLE MESSAGE SIGNS, AS PER PLAN

THE CONTRACTOR SHALL FURNISH, INSTALL, MAINTAIN AND REMOVE, WHEN NO LONGER NEEDED, A CHANGEABLE MESSAGE SIGN. THE SIGN SHALL BE OF A TYPE SHOWN ON A LIST OF APPROVED PCMS UNITS AVAILABLE ON THE OFFICE OF MATERIALS MANAGEMENT WEB PAGE. THE LIST CONTAINS CLASS A AND B UNITS WITH MINIMUM LEGIBILITY DISTANCES OF 650 FEET AND 475 FEET, RESPECTIVELY.

EACH SIGN SHALL BE TRAILER-MOUNTED AND EQUIPPED WITH A FUNCTIONAL DIMMING MECHANISM, TO DIM THE SIGN DURING DARKNESS, AND A TAMPER AND VANDAL PROOF ENCLOSURE. EACH SIGN SHALL BE PROVIDED WITH APPROPRIATE TRAINING AND OPERATION INSTRUCTIONS TO ENABLE ON-SITE PERSONNEL TO OPERATE AND TROUBLESHOOT THE UNIT. THE SIGN SHALL ALSO BE CAPABLE OF BEING POWERED BY AN ELECTRICAL SERVICE DROP FROM A LOCAL UTILITY COMPANY. PCMS TRAILERS SHALL BE DELINEATED ON A PERMANENT BASIS BY AFFIXING CONSPICUITY TAPE CONFORMING TO CMS 614.03, IN A CONTINUOUS LINE ON THE FACE OF THE TRAILER AS SEEN BY ONCOMING ROAD USERS.

THE PROBABLE PCMS LOCATIONS AND WORK LIMITS FOR THOSE LOCATIONS ARE SHOWN ON SHEET(S) OF THE PLAN. PLACEMENT, OPERATION, MAINTENANCE AND ALL ACTIVATION OF THE SIGNS BY THE CONTRACTOR SHALL BE AS DIRECTED BY THE ENGINEER. THE PCMS SHALL BE LOCATED IN A HIGHLY VISIBLE POSITION YET PROTECTED FROM TRAFFIC. THE CONTRACTOR SHALL, AT THE DIRECTION OF THE ENGINEER, RELOCATE THE PCMS TO IMPROVE VISIBILITY OR ACCOMMODATE CHANGED CONDITIONS. WHEN NOT IN USE, THE PCMS SHALL BE TURNED OFF. ADDITIONALLY, WHEN NOT IN USE FOR EXTENDED PERIODS OF TIME, THE PCMS SHALL BE TURNED, FACING AWAY FROM ALL TRAFFIC, AND SHALL DISPLAY ONE OR MORE TYPE G YELLOW RETROREFLECTIVE SHEETING SURFACES OF 9-INCH BY 15-INCH MINIMUM SIZE FACING TRAFFIC.

THE ENGINEER SHALL BE PROVIDED ACCESS TO EACH SIGN UNIT AND SHALL BE PROVIDED WITH APPROPRIATE TRAINING AND OPERATION INSTRUCTIONS TO ENABLE ODOT PERSONNEL TO OPERATE AND TROUBLESHOOT THE UNIT, AND TO REVISE SIGN MESSAGES, IF NECESSARY.

ALL MESSAGES TO BE DISPLAYED ON THE SIGN WILL BE PROVIDED BY THE CONTRACTOR. A LIST OF ALL REQUIRED PRE-PROGRAMMED MESSAGES WILL BE GIVEN TO THE ENGINEER AT THE PROJECT PRECONSTRUCTION CONFERENCE. THE SIGN SHALL HAVE THE CAPABILITY TO STORE UP TO 99 MESSAGES. MESSAGE MEMORY OR PRE-PROGRAMMED DISPLAYS SHALL NOT BE LOST AS A RESULT OF POWER FAILURES TO THE ON-BOARD COMPUTER. THE SIGN LEGEND SHALL BE CAPABLE OF BEING CHANGED IN THE FIELD. THREE-LINE PRESENTATION FORMATS WITH UP TO SIX MESSAGE PHASES SHALL BE SUPPORTED. PCMS FORMAT SHALL PERMIT THE COMPLETE MESSAGE FOR EACH PHASE TO BE READ AT LEAST TWICE.

THE PCMS SHALL CONTAIN AN ACCURATE CLOCK AND PROGRAMMING LOGIC WHICH WILL ALLOW THE SIGN TO BE ACTIVATED, DEACTIVATED OR MESSAGES CHANGED AUTOMATICALLY AT DIFFERENT TIMES OF THE DAY FOR DIFFERENT DAYS OF THE WEEK.

THE PCMS UNIT SHALL BE MAINTAINED IN GOOD WORKING ORDER BY THE CONTRACTOR IN ACCORDANCE WITH THE PROVISIONS OF CMS 614.07. THE CONTRACTOR SHALL, PRIOR TO ACTIVATING THE UNIT, MAKE ARRANGEMENTS, WITH AN AUTHORIZED SERVICE AGENT FOR THE PCMS, TO ASSURE PROMPT SERVICE IN THE EVENT OF FAILURE. ANY FAILURE SHALL NOT RESULT IN THE SIGN BEING OUT OF SERVICE FOR MORE THAN 12 HOURS, INCLUDING WEEKENDS. FAILURE TO COMPLY MAY RESULT IN AN ORDER TO STOP WORK AND OPEN ALL TRAFFIC LANES AND/OR IN THE DEPARTMENT TAKING APPROPRIATE ACTION TO SAFELY CONTROL TRAFFIC. THE ENTIRE COST TO CONTROL TRAFFIC, ACCRUED BY THE DEPARTMENT DUE TO THE CONTRACTOR'S NONCOMPLIANCE, WILL BE DEDUCTED FROM MONEYS DUE, OR TO BECOME DUE THE CONTRACTOR ON HIS CONTRACT.

THE CONTRACTOR SHALL BE RESPONSIBLE FOR 24-HOUR-PER-DAY OPERATION AND MAINTENANCE OF THESE SIGNS ON THE PROJECT FOR THE DURATION OF THE PHASES WHEN THE PLAN REQUIRES THEIR USE.

AS-BUILT

THIS RECORD DRAWING HAS BEEN PREPARED IN PART BY THE ENGINEER OF RECORD TO DEPICT CHANGES MADE DURING CONSTRUCTION, BASED ON INFORMATION REPORTED BY THE CONSTRUCTION CONTRACTOR.

CALCULATED ---
CHECKED ---

MAINTENANCE OF TRAFFIC
GENERAL NOTES

TRU-80-4.70

ms consultants, inc.

PLOT.CEL

ms consultants, inc.
msconsultants.com

www.msconsultants.com
Ohio DOT Workspace
Marucci & Caffrey TRU-80 Design Build
UCF: ohdot\V8i
PCF: 60-08285_Youngstown

Batchplot Spec: \\youngstown-fs1\n\60\08285\standards\plotdrv\batchplt.spc
Pen Table: S:\std\plotting\ustn\V8i\open\V8i_ms_std.tbl
Plot Driver: S:\std\plotting\ustn\V8i\PDF.pltcfg

Model: Sheet
Printed: 12/12/2013 @ 2:18:59 PM
File: \\youngstown-fs1\n\60\08285\mot\sheets\V8411MMN004.dgn
View: FENCE_VIEW1
By: sgeidy

34" x 22"

ITEM 614 - LAW ENFORCEMENT OFFICER (WITH PATROL CAR) FOR ASSISTANCE DURING CONSTRUCTION OPERATIONS

USE OF LAW ENFORCEMENT OFFICERS (LEOS) BY CONTRACTORS OTHER THAN THE USES SPECIFIED BELOW WILL NOT BE PERMITTED AT PROJECT COST. LEOS SHOULD NOT BE USED WHERE THE OMUTCD INTENDS THAT FLAGGERS BE USED.

IN ADDITION TO THE REQUIREMENTS OF CMS 614 AND THE OMUTCD, A UNIFORMED LEO WITH AN OFFICIAL PATROL CAR (CAR WITH TOP-MOUNTED EMERGENCY FLASHING LIGHTS AND COMPLETE MARKINGS OF APPROPRIATE LAW ENFORCEMENT AGENCY) SHALL BE PROVIDED FOR THE FOLLOWING TRAFFIC CONTROL TASKS:

- DURING THE ENTIRE ADVANCE PREPARATION AND CLOSURE SEQUENCE WHERE COMPLETE BLOCKAGE OF TRAFFIC IS REQUIRED

- DURING A TRAFFIC SIGNAL INSTALLATION WHEN IMPACTING THE NORMAL FUNCTION OF THE SIGNAL OR THE FLOW OF TRAFFIC OR WHEN TRAFFIC NEEDS TO BE DIRECTED THROUGH AN ENERGIZED TRAFFIC SIGNAL CONTRARY TO THE SIGNAL DISPLAY (E.G., DIRECTING MOTORISTS THROUGH A RED LIGHT).

- FOR LANE CLOSURES: DURING INITIAL SET-UP PERIODS, TEAR DOWN PERIODS, SUBSTANTIAL SHIFTS OF A CLOSURE POINT OR WHEN NEW LANE CLOSURE ARRANGEMENTS ARE INITIATED FOR LONG-TERM LANE CLOSURES/SHIFTS (FOR THE FIRST AND LAST DAY OF MAJOR CHANGES IN TRAFFIC CONTROL SETUP). IN GENERAL, LEOS SHOULD BE POSITIONED AT THE POINT OF LANE RESTRICTION OR ROAD CLOSURE AND TO MANUALLY CONTROL TRAFFIC MOVEMENTS THROUGH INTERSECTIONS IN WORK ZONES.

- WHEN CONSTRUCTION VEHICLES ARE ENTERING/EXITING THE ZONE DIRECTLY FROM/INTO AN OPEN LANE OF TRAFFIC. IF A LANE HAS BEEN CLOSED TO PROVIDE AN ACCELERATION/ DECELERATION LANE FOR THE VEHICLE, THE LEO WILL NOT BE REQUIRED.

LEOS SHOULD NOT FORGO THEIR TRAFFIC CONTROL RESPONSIBILITIES TO APPREHEND MOTORISTS FOR ROUTINE TRAFFIC VIOLATIONS. HOWEVER, IF A MOTORIST'S ACTIONS ARE CONSIDERED TO BE RECKLESS, THE PURSUIT OF THE MOTORIST IS APPROPRIATE.

THE LEOS WORK AT THE DIRECTION OF THE ENGINEER. THE CONTRACTOR IS RESPONSIBLE FOR SECURING THE SERVICES OF THE LEOS WITH THE APPROPRIATE AGENCIES AND COMMUNICATING THE INTENTIONS OF THE PLANS WITH RESPECT TO DUTIES OF THE LEOS. THE ENGINEER SHALL HAVE FINAL CONTROL OVER THE LEOS' DUTIES AND PLACEMENT, AND SHALL RESOLVE ANY ISSUES THAT MAY ARISE BETWEEN THE TWO PARTIES.

THE LEO SHALL REPORT IN TO THE CONTRACTOR PRIOR TO THE START OF THE SHIFT, IN ORDER TO RECEIVE INSTRUCTIONS REGARDING SPECIFIC WORK ASSIGNMENTS DURING HIS/HER SHIFT. THE LEO IS EXPECTED TO STAY AT THE PROJECT SITE FOR THE ENTIRE DURATION OF HIS/HER SHIFT. THE LEO SHALL REPORT TO THE CONTRACTOR AT THE END OF HIS/HER SHIFT. ONCE THE LEO HAS COMPLETED THE DUTIES DESCRIBED ABOVE AND STILL HAS TIME REMAINING ON HIS/HER SHIFT, THE LEO MAY BE ASKED TO PATROL THROUGH THE WORK ZONE (WITH FLASHING LIGHTS OFF) OR BE PLACED AT A LOCATION TO DETER MOTORISTS FROM SPEEDING. SHOULD IT BE NECESSARY TO LEAVE THE PROJECT SITE, THE LEO SHALL NOTIFY THE ENGINEER. THE CONTRACTOR SHALL PROVIDE THE LEO WITH A TWO-WAY COMMUNICATION DEVICE WHICH SHALL BE RETURNED TO THE CONTRACTOR AT THE END OF HIS/HER SHIFT.

AS-BUILT

THIS RECORD DRAWING HAS BEEN PREPARED IN PART BY THE ENGINEER OF RECORD TO DEPICT CHANGES MADE DURING CONSTRUCTION, BASED ON INFORMATION REPORTED BY THE CONSTRUCTION CONTRACTOR.

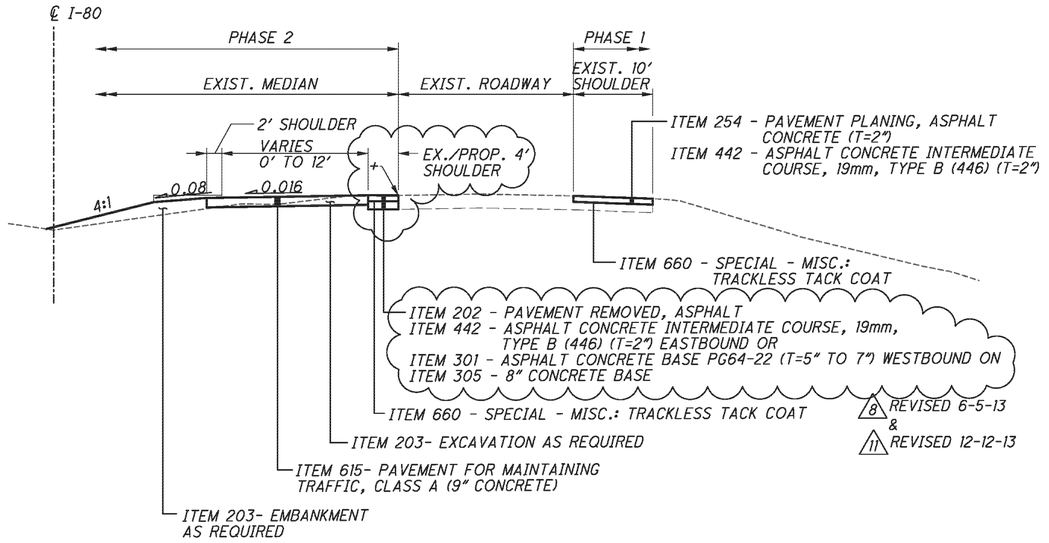

TEMPORARY PAVEMENT TYPICAL SECTION WITHOUT MEDIAN GUARDRAIL

NOT TO SCALE

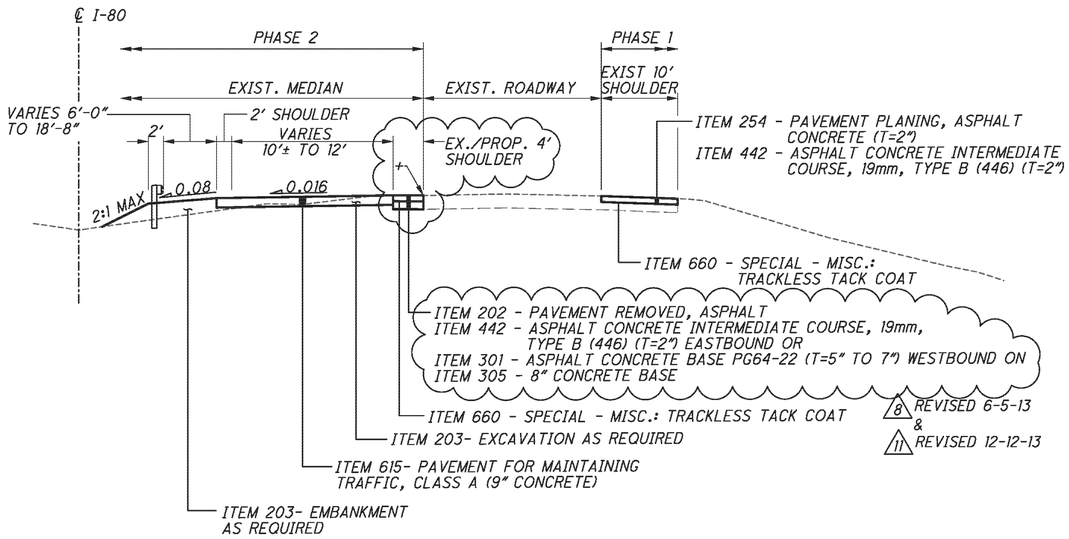

TEMPORARY PAVEMENT TYPICAL SECTION WITH MEDIAN GUARDRAIL

NOT TO SCALE

+ FULL DEPTH SAW CUT

~~* THE 4 FT. WIDE MEDIAN SHOULDER PAVEMENT SHOWN HAS NOT BEEN APPROVED BY ODOT. ONCE THE ALTERNATE PAVEMENT DESIGN FOR THE MEDIAN SHOULDER HAS BEEN APPROVED, THIS SHEET WILL BE UPDATED TO REFLECT ANY CHANGES AND RESUBMITTED TO ODOT FOR APPROVAL.~~

8 REVISED 6-5-13

CALCULATED ---
CHECKED ---

MAINTENANCE OF TRAFFIC
GENERAL NOTES

TRU-80-4.70

ms consultants, inc.

PLOT.CEL

ms consultants, inc.
msconsultants.com

www.msconsultants.com

Ohio DOT Workspace
Marucci & Gaffney TRU-80 Design Build

UCF: ohdot1V8i
PCF: 60-08285_Youngstown

Batchplot Spec: \\youngstown-fs1\n\60\08285\standards\plotdrv\batchplt.spc
Pen Table: S:\std\plotting\ustin\V8i\pen\V8i_ms_std.tbl
Plot Driver: S:\std\plotting\ustin\V8i\PDF.pltcfg

Model: Sheet
Printed: 12/12/2013 @ 2:19:00 PM View: FENCE_VIEW1
File: \\youngstown-fs1\n\60\08285\mot\sheets\764TMP001.dgn By: speidy

34" x 22"

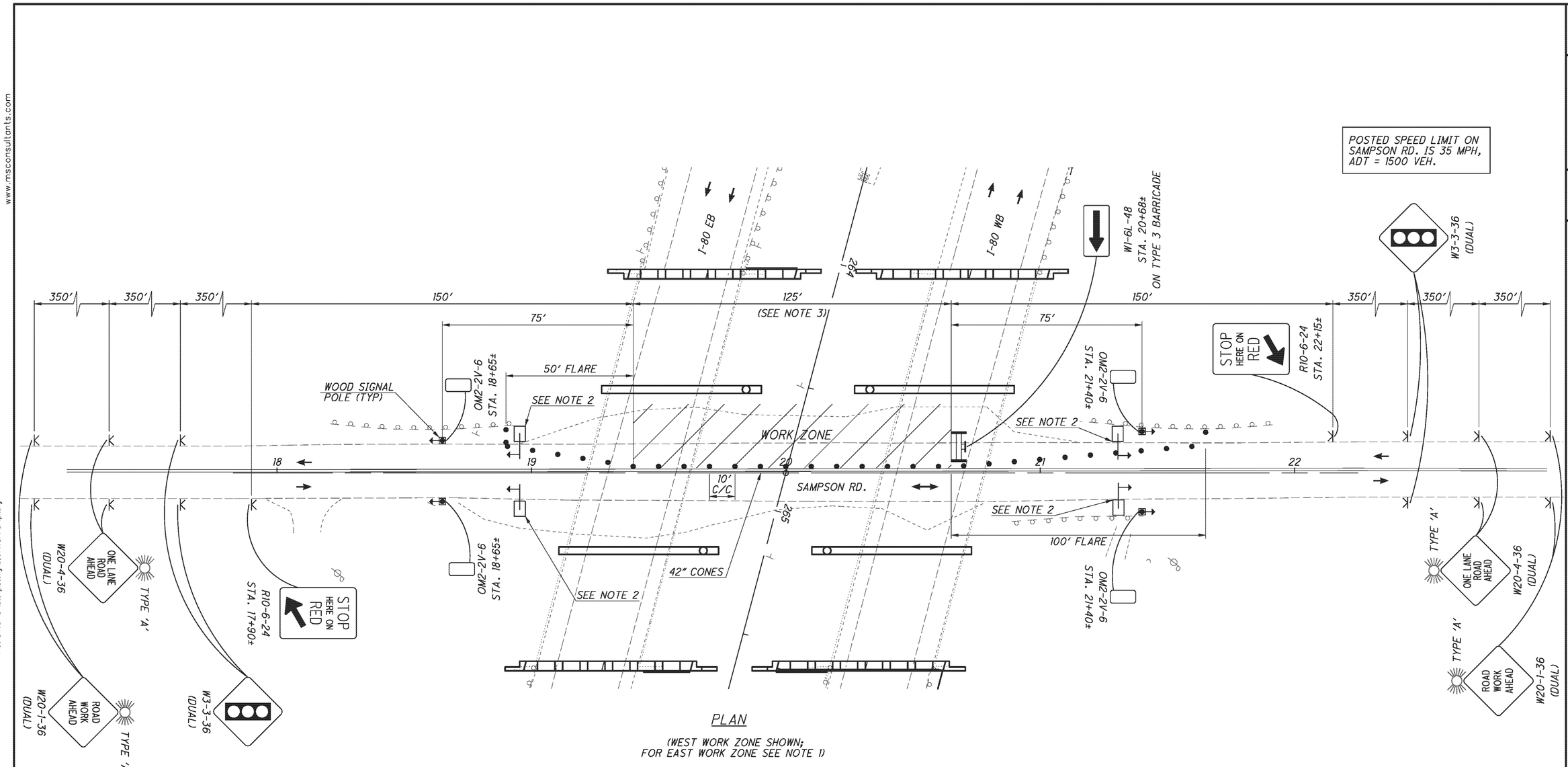

PLAN

(WEST WORK ZONE SHOWN;
FOR EAST WORK ZONE SEE NOTE 1)

(*) INTERNAL CLEARANCE TIMING CALCULATED USING AN AVERAGE DRIVING SPEED OF 30 MPH.

NOTES:

1. WHEN WORKING ON THE EAST SIDE OF SAMPSON RD, THE MAINTENANCE OF TRAFFIC SETUP SHOWN ON THE WEST HALF SHALL BE DUPLICATED ON THE EAST HALF.

2. IF PORTABLE TRAFFIC SIGNALS ARE UTILIZED, THEY MUST BE LOCATED OFF THE PAVEMENT OR BEHIND DRUMS OR 42" CONES AS SHOWN.

3. IF WORK ZONE LENGTH CHANGES FROM THAT SHOWN, SIGNAL TIMING MUST BE ADJUSTED ACCORDINGLY AND APPROVED BY THE ENGINEER.

AS-BUILT

THIS RECORD DRAWING HAS BEEN PREPARED IN PART BY THE ENGINEER OF RECORD TO DEPICT CHANGES MADE DURING CONSTRUCTION, BASED ON INFORMATION REPORTED BY THE CONSTRUCTION CONTRACTOR.

HORIZONTAL SCALE IN FEET
0 10 20 40

CALCULATED PES 12/12
CHECKED DRB 12/12

MAINTENANCE OF TRAFFIC
SAMPSON ROAD

TRU-80-4.70

16
142

PLOT.CEL

ms consultants, inc.
msconsultants.com

Ohio DOT Workspace
Marucci & Gaffney TRU-80 Design Build

www.msconsultants.com

1"
0.5"
0

UCF: ohdot1V8i
PCF: 60-08285_Youngstown

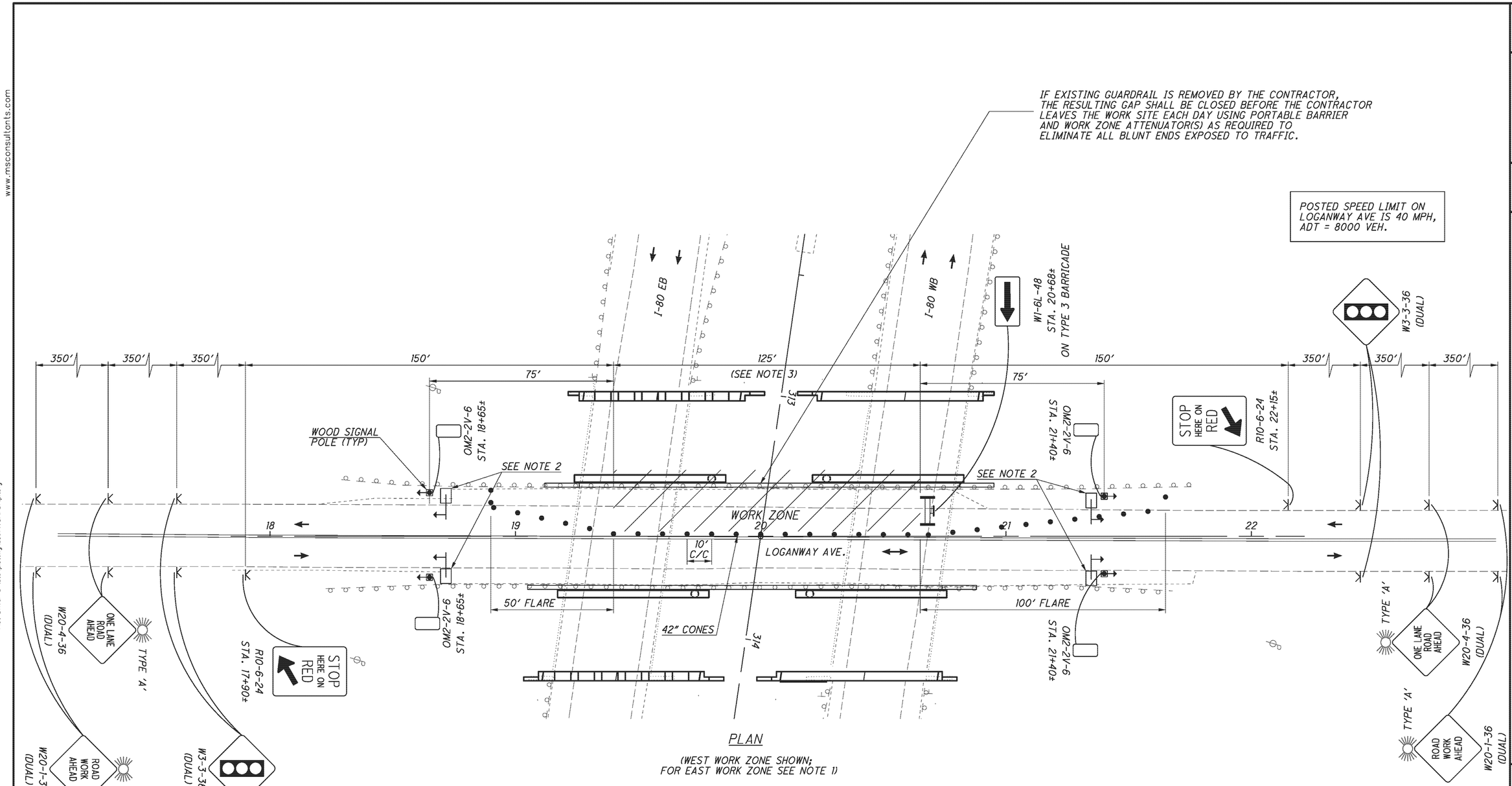

PLAN

(WEST WORK ZONE SHOWN; FOR EAST WORK ZONE SEE NOTE 1)

(*) INTERNAL CLEARANCE TIMING CALCULATED USING AN AVERAGE DRIVING SPEED OF 35 MPH.

NOTES:

1. WHEN WORKING ON THE EAST SIDE OF LOGANWAY AVE, THE MAINTENANCE OF TRAFFIC SETUP SHOWN ON THE WEST HALF SHALL BE DUPLICATED ON THE EAST HALF.

2. IF PORTABLE TRAFFIC SIGNALS ARE UTILIZED, THEY MUST BE LOCATED OFF THE PAVEMENT OR BEHIND DRUMS OR 42" CONES AS SHOWN.

3. IF WORK ZONE LENGTH CHANGES FROM THAT SHOWN, SIGNAL TIMING MUST BE ADJUSTED ACCORDINGLY AND APPROVED BY THE ENGINEER.

AS-BUILT

THIS RECORD DRAWING HAS BEPREPARED IN PART BY THE ENGINEER OF RECORD TO DEPICT CHANGES MADE DURING CONSTRUCTION, BASED ON INFORMATION REPORTED BY THE CONSTRUCTION CONTRACTOR.

HORIZONTAL SCALE IN FEET
0 10 20 40

CALCULATED PES 12/12
CHECKED DRB 12/12

MAINTENANCE OF TRAFFIC LOGANWAY AVE.

TRU-80-4.70

17
142

Batchplot Spec: \\youngstown-fs1\n\60\08285\standards\plotdrv\batchplt.spc
Pen Table: S:\std\plotting\ustn\V8\pen V8i_ms_std.tbl
Plot Driver: S:\std\plotting\ustn\V8\PDF.pltcfg

Model: Sheet
Printed: 12/12/2013 @ 2:19:00 PM
File: \\youngstown-fs1\n\60\08285\mot\sheets\76411MP002.dgn
View: FENCE_VIEW1
By: sgeely

34" x 22"

PLOT.CEL

ms consultants, inc.
msconsultants.com

Ohio DOT Workspace
Marucci & Gaffney TRU-80 Design Build

www.msconsultants.com

0 0.5" 1"

UCF: ohdot1V8i
PCF: 60-08285_Youngstown

Batchplot Spec: \\youngstown-fs1\n\60\08285\standards\plotdrv\batchplt.spc
Pen Table: S:\std\plotting\ustn\V8i\pen\V8i_ms_std.tbl
Plot Driver: S:\std\plotting\ustn\V8i\PDF.pltcfg

Model: Sheet
Printed: 12/12/2013 @ 2:19:01 PM
File: \\youngstown-fs1\n\60\08285\mot\sheets\764TMP101.dgn
View: FENCE_VIEW1
By: sgealy

34" x 22"

LEGEND

- WORK AREA
- ITEM 615, PAVEMENT FOR MAINTAINING TRAFFIC, CLASS A
- WORK ZONE IMPACT ATTENUATOR
- PORTABLE BARRIER, 32"
- DRUMS
- TYPE 'A' WARNING LIGHT
- WORK ZONE SIGN
- TRAFFIC FLOW ARROW (FOR REFERENCE ONLY)
- TYPE 3 BARRICADES WITH SIGN
- CH — WORK ZONE CHANNELIZING LINE, PAINT
- YE — WORK ZONE EDGE LINE, YELLOW, PAINT
- WE — WORK ZONE EDGE LINE, WHITE, PAINT

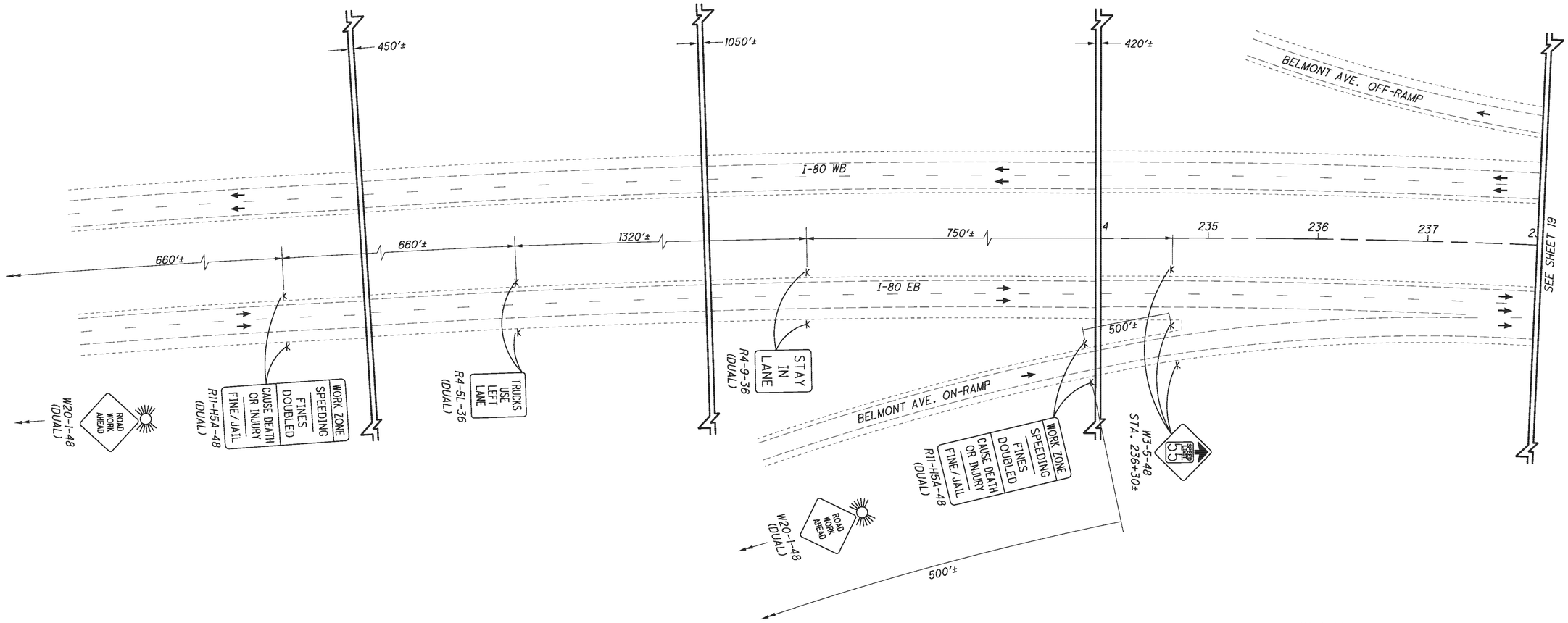

AS-BUILT

THIS RECORD DRAWING HAS BEEN PREPARED IN PART BY THE ENGINEER OF RECORD TO DEPICT CHANGES MADE DURING CONSTRUCTION, BASED ON INFORMATION REPORTED BY THE CONSTRUCTION CONTRACTOR.

HORIZONTAL SCALE IN FEET
0 25 50 100

CALCULATED PES 01/13
CHECKED DRB 01/13

MAINTENANCE OF TRAFFIC
I-80 BRIDGE WIDENING (TRU-80-0496) - PHASE 1

TRU-80-4.70

ms consultants, inc.

34" x 22"
Model: Sheet
View: FENCE_VIEW1
Printed: 12/12/2013 @ 2:19:02 PM
By: sgealy
File: \\youngstown-fs1\n\60\08285\mot\sheets\76411MP102.dgn
Batchplot Spec: \\youngstown-fs1\n\60\08285\standards\plotdrv\batchplt.spc
Pen Table: S:\std\plotting\ustn\V8i\pen\V8i_ms_std.tbl
Plot Driver: S:\std\plotting\ustn\V8i\PDF.pltcfg
UCF: ohdotV8i
PCF: 60-08285_Youngstown
Ohio DOT Workspace
Marucci & Gaffney TRU-80 Design Build
ms consultants, inc.
msconsultants.com
www.msconsultants.com
PLOT.CEL

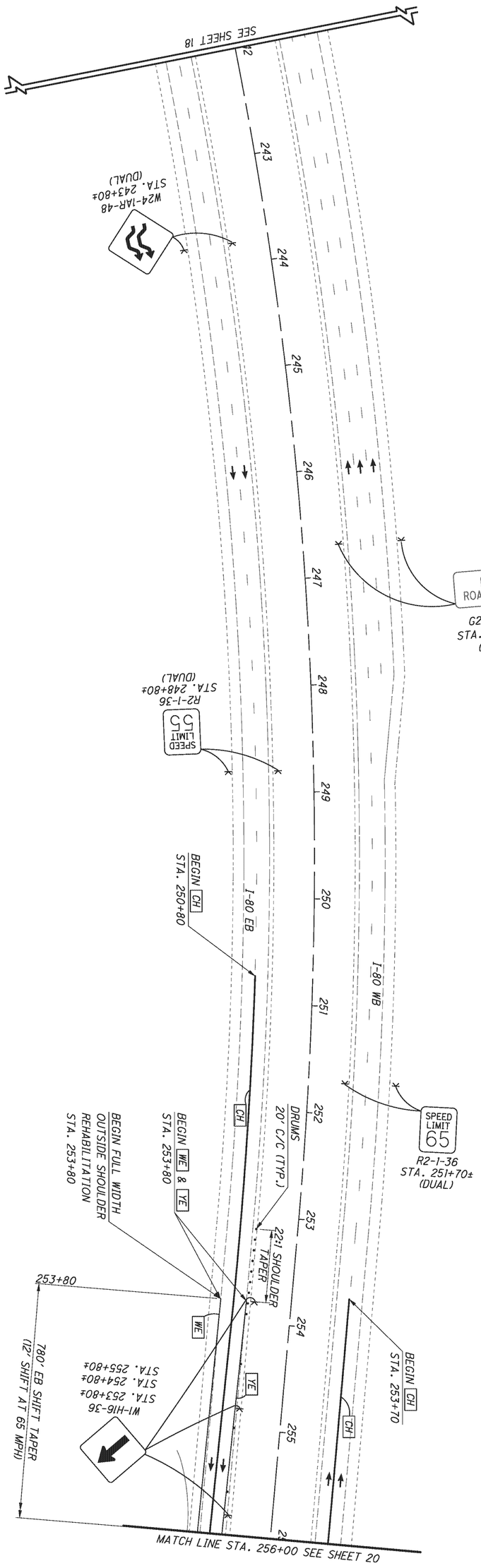

AS-BUILT

THIS RECORD DRAWING HAS BEEN PREPARED IN PART BY THE ENGINEER OF RECORD TO DEPICT CHANGES MADE DURING CONSTRUCTION, BASED ON INFORMATION REPORTED BY THE CONSTRUCTION CONTRACTOR.

FOR LEGEND, SEE SHEET 18

PLOT.CEL

ms consultants, inc.
msconsultants.com

Ohio DOT Workspace
Marucci & Gaffney TRU-80 Design Build
www.msconsultants.com

1"
0.5"
0

UCF: ohdot\V8i
PCF: 60-08285_Youngstown

Batchplot Spec: \\youngstown-fs1\n\60\08285\standards\plotdrv\batchplt.spc
Pen Table: S:\std\plotting\usitn\V8\pen\V8i_ms_std.tbl
Plot Driver: S:\std\plotting\usitn\V8\PDF.pltcfg

Model: Sheet
Printed: 12/12/2013 @ 2:19:03 PM
File: \\youngstown-fs1\n\60\08285\mot\sheets\764TMP103.dgn
View: FENCE_VIEW1
By: speidy

34" x 22"

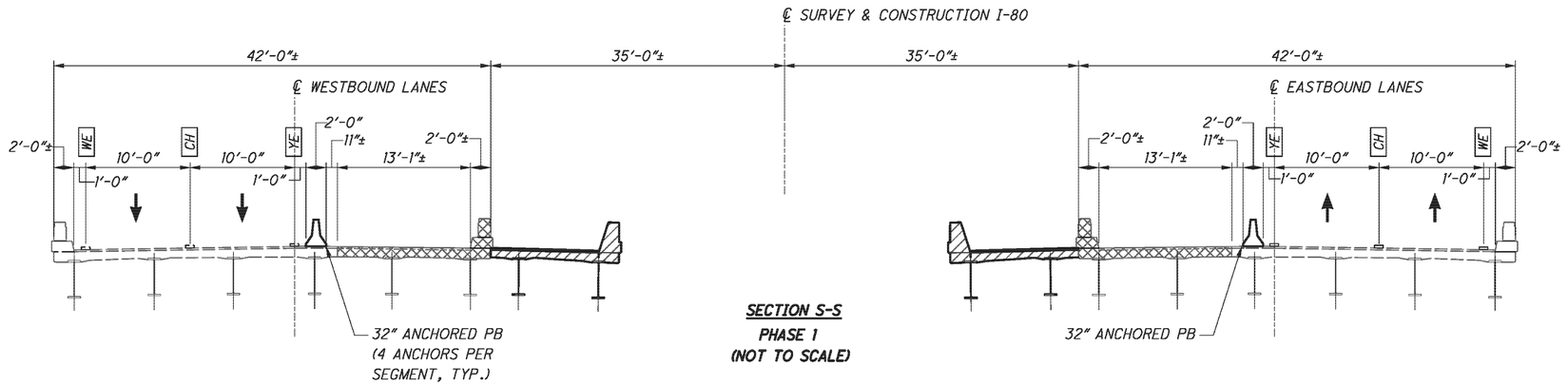

SECTION S-S
PHASE 1
(NOT TO SCALE)

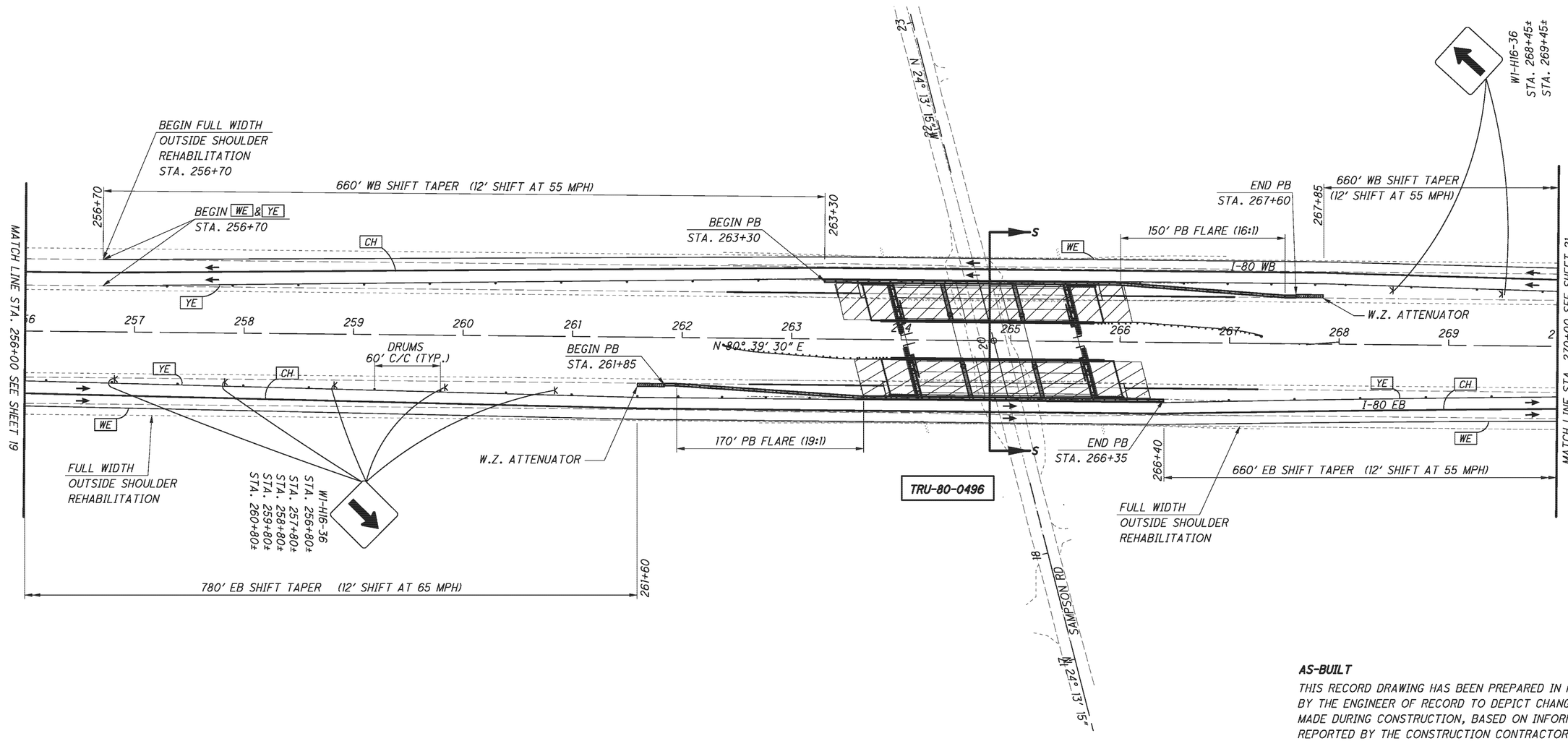

TRU-80-0496

AS-BUILT

THIS RECORD DRAWING HAS BEEN PREPARED IN PART BY THE ENGINEER OF RECORD TO DEPICT CHANGES MADE DURING CONSTRUCTION, BASED ON INFORMATION REPORTED BY THE CONSTRUCTION CONTRACTOR.

FOR LEGEND, SEE SHEET 18

N

0 25 50 100
HORIZONTAL
SCALE IN FEET

CALCULATED PES 01/13
CHECKED DRB 01/13

MAINTENANCE OF TRAFFIC
I-80 BRIDGE WIDENING (TRU-80-0496) - PHASE 1

TRU-80-4.70

ms consultants, inc.

PLOT.CEL

ms consultants, inc.
msconsultants.com

Ohio DOT Workspace
Marucci & Gaffney TRU-80 Design Build
www.msconsultants.com

UCF: ohdot1V8i
PCF: 60-08285_Youngstown

Batchplot Spec: \\youngstown-fs1\n\60\08285\standards\plotdrv\batchplt.spc
Pen Table: S:\std\plotting\ustn\V8\pen V8i_ms_std.tbl
Plot Driver: S:\std\plotting\ustn\V8\PDF.pltcfg

Model: Sheet
Printed: 12/12/2013 @ 2:19:04 PM
File: \\youngstown-fs1\n\60\08285\mot\sheets\1641MP104.dgn
View: FENCE_VIEW1
By: sgeidy

34" x 22"

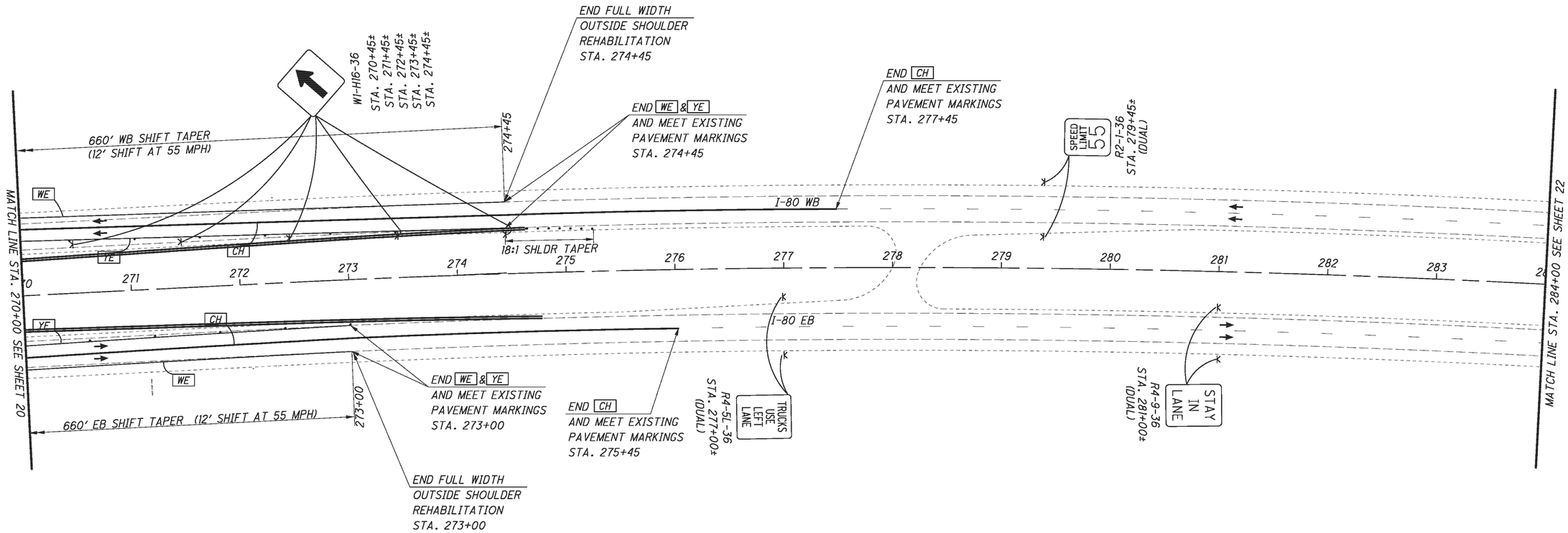

AS-BUILT

THIS RECORD DRAWING HAS BEEN PREPARED IN PART BY THE ENGINEER OF RECORD TO DEPICT CHANGES MADE DURING CONSTRUCTION, BASED ON INFORMATION REPORTED BY THE CONSTRUCTION CONTRACTOR.

FOR LEGEND, SEE SHEET 18

HORIZONTAL SCALE IN FEET
0 25 50 100

CALCULATED PES 01/13
CHECKED DRB 01/13

MAINTENANCE OF TRAFFIC
I-80 BRIDGE WIDENING (TRU-80-0496) - PHASE 1

TRU-80-4.70

ms consultants, inc.

34" x 22"
Model: Sheet
View: FENCE_VIEW1
Printed: 12/12/2013 @ 2:19:05 PM
By: sgealy
File: \\youngstown-fs1\n\60\08285\mot\sheets\76411MP105.dgn
Batchplot Spec: \\youngstown-fs1\n\60\08285\standards\plotdrv\batchplt.spc
Pen Table: S:\std\plotting\ustn\V8i\pen\V8i_ms_std.tbl
Plot Driver: S:\std\plotting\ustn\V8i\PDF.pltcfg
UCF: ohdotV8i
PCF: 60-08285_Youngstown
Ohio DOT Workspace
Marucci & Gaffney TRU-80 Design Build
ms consultants, inc.
msconsultants.com
www.msconsultants.com
PLOT.CEL

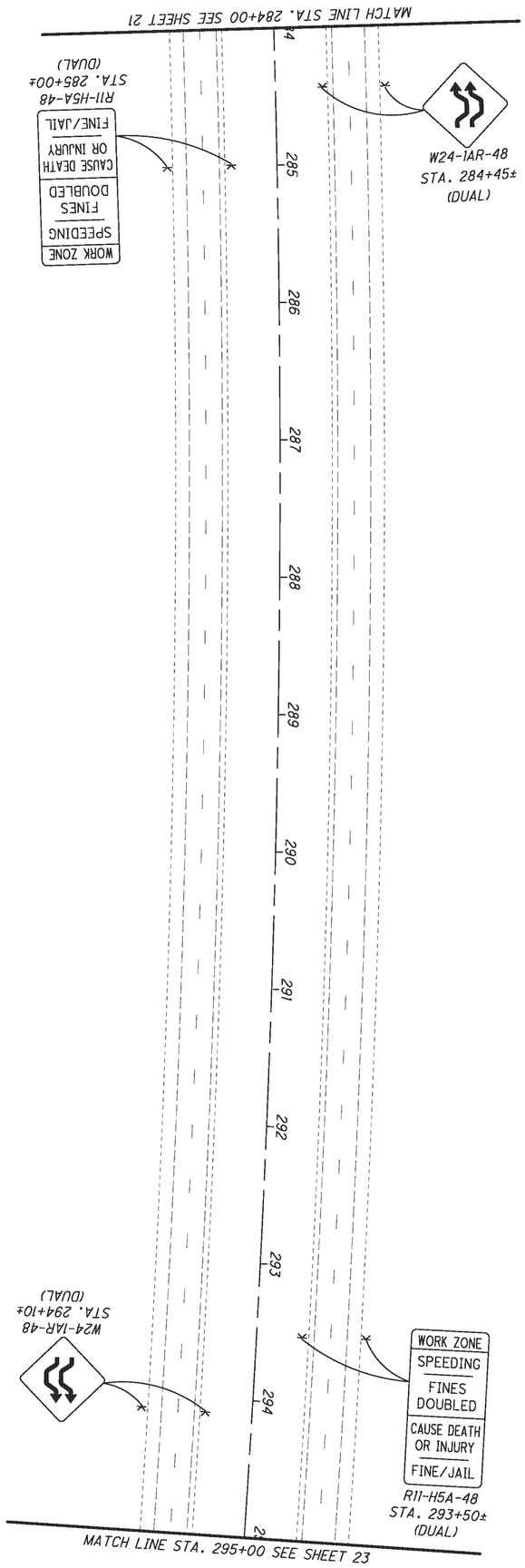

AS-BUILT

THIS RECORD DRAWING HAS BEEN PREPARED IN PART BY THE ENGINEER OF RECORD TO DEPICT CHANGES MADE DURING CONSTRUCTION, BASED ON INFORMATION REPORTED BY THE CONSTRUCTION CONTRACTOR.

FOR LEGEND, SEE SHEET 18

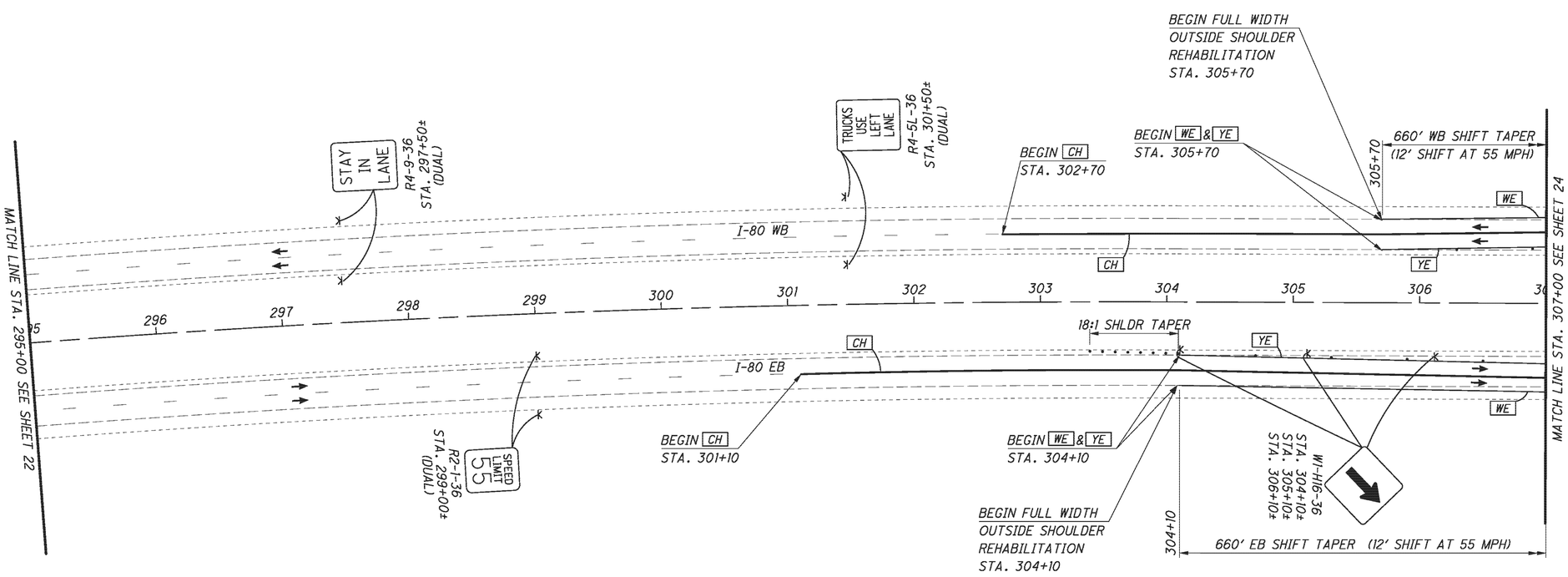

AS-BUILT

THIS RECORD DRAWING HAS BEEN PREPARED IN PART BY THE ENGINEER OF RECORD TO DEPICT CHANGES MADE DURING CONSTRUCTION, BASED ON INFORMATION REPORTED BY THE CONSTRUCTION CONTRACTOR.

FOR LEGEND, SEE SHEET 18

0 25 50 100
HORIZONTAL SCALE IN FEET

CALCULATED PES 01/13
CHECKED DRB 01/13

MAINTENANCE OF TRAFFIC
I-80 BRIDGE WIDENING (TRU-80-0591) - PHASE 1

TRU-80-4.70

ms consultants, inc.
msconsultants.com
Ohio DOT Workspace
Marucci & Gaffney TRU-80 Design Build
www.msconsultants.com
UCF: ohdotV8i
PCF: 60-08285_Youngstown
Batchplot Spec: \\youngstown-fs1\n\60\08285\standards\plotdrv\batchplt.spc
Pen Table: S:\std\plotting\ustn\V8i\pen\V8i_ms_std.tbl
Plot Driver: S:\std\plotting\ustn\V8i\PDF.pltcfg
34" x 22"
Model: Sheet View: FENCE_VIEW1
Printed: 12/12/2013 @ 2:19:05 PM By: sgedy
File: \\youngstown-fs1\n\60\08285\mot\sheets\76411MP106.dgn

PLOT.CEL

ms consultants, inc.
msconsultants.com

Ohio DOT Workspace
Marucci & Gaffney TRU-80 Design Build

www.msconsultants.com

1"
0.5"
0

UCF: ohdot\V8i
PCF: 60-08285_Youngstown

Batchplot Spec: \\youngstown-fs1\n\60\08285\standards\plotdrv\batchplt.spc
Pen Table: S:\std\plotting\ustn\V8\pen\V8i_ms_std.tbl
Plot Driver: S:\std\plotting\ustn\V8\HPDP.pltcfg

Model: Sheet
Printed: 12/12/2013 @ 2:19:06 PM
File: \\youngstown-fs1\n\60\08285\mot\sheets\764TMP807.dgn
View: FENCE_VIEW1
By: sgeely

34" x 22"

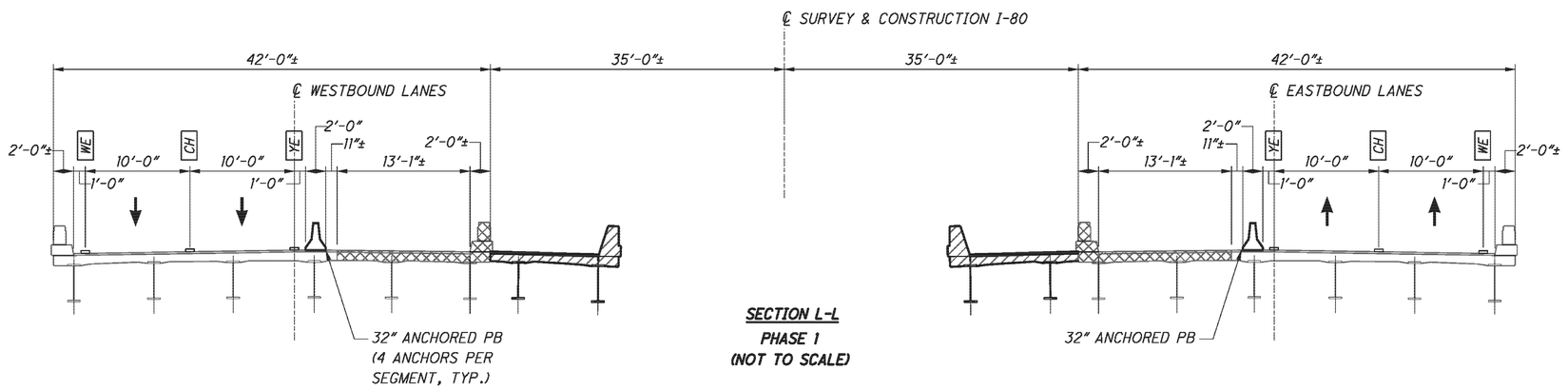

SECTION L-L
PHASE 1
(NOT TO SCALE)

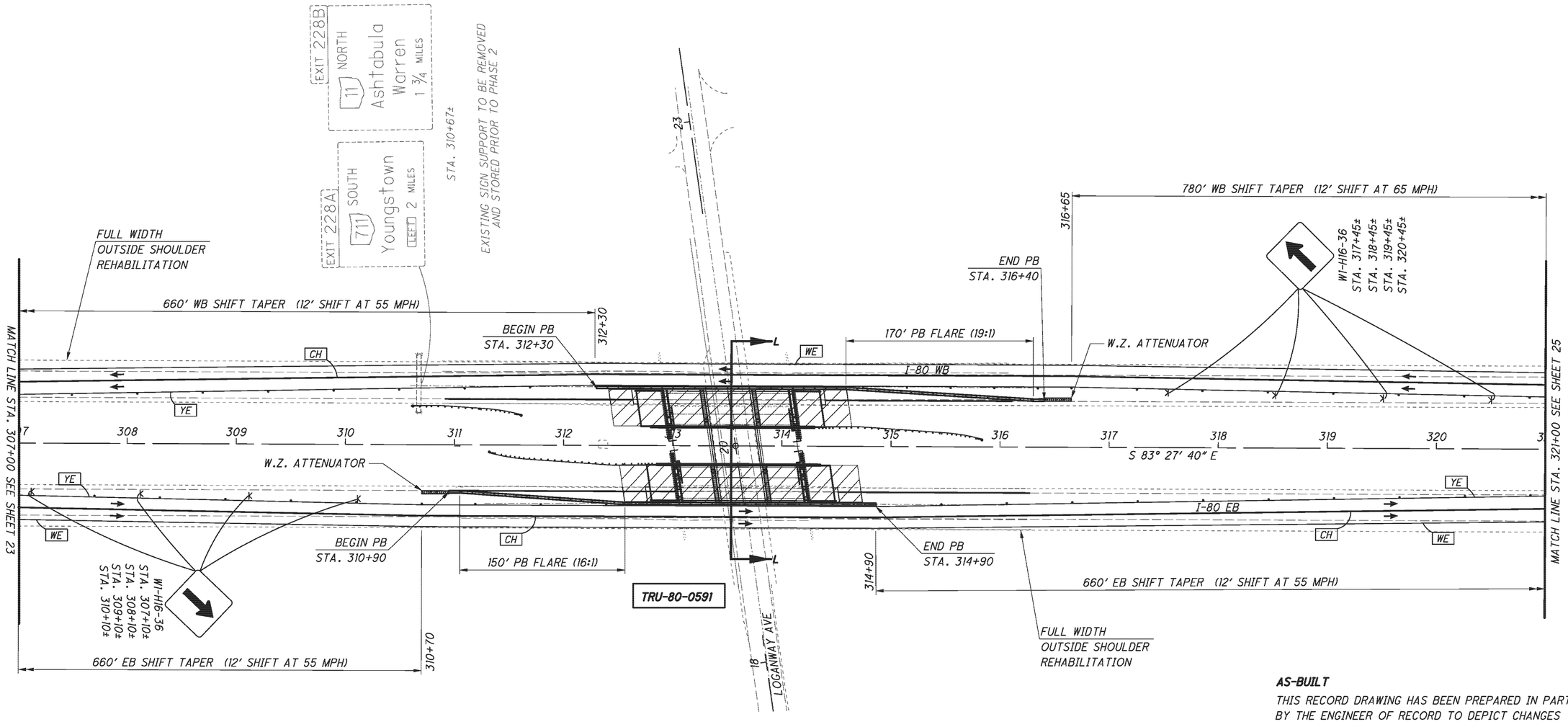

AS-BUILT

THIS RECORD DRAWING HAS BEEN PREPARED IN PART BY THE ENGINEER OF RECORD TO DEPICT CHANGES MADE DURING CONSTRUCTION, BASED ON INFORMATION REPORTED BY THE CONSTRUCTION CONTRACTOR.

FOR LEGEND, SEE SHEET 18

HORIZONTAL SCALE IN FEET
0 25 50 100

CALCULATED PES 01/13
CHECKED DRB 01/13

MAINTENANCE OF TRAFFIC
I-80 BRIDGE WIDENING (TRU-80-0591) - PHASE 1
TRU-80-4.70

ms consultants, inc.

PLOT.CEL

ms consultants, inc.
msconsultants.com

Ohio DOT Workspace
Marucci & Gaffney TRU-80 Design Build
www.msconsultants.com

UCF: ohdot1V8i
PCF: 60-08285_Youngstown

Batchplot Spec: \\youngstown-fs1\n\60\08285\standards\plotdrv\batchplt.spc
Pen Table: S:\std\plotting\ustn\V8\pen V8i_ms_std.tbl
Plot Driver: S:\std\plotting\ustn\V8\PDF.pltcfg

Model: Sheet
Printed: 12/12/2013 @ 2:19:07 PM
File: \\youngstown-fs1\n\60\08285\mot\sheets\764TMP108.dgn
View: FENCE_VIEW1
By: sgeidy

34" x 22"

780' WB SHIFT TAPER (12' SHIFT AT 65 MPH)

324+45

W1-H16-36
STA. 321+45±
STA. 322+45±
STA. 323+45±
STA. 324+45±

END FULL WIDTH
OUTSIDE SHOULDER
REHABILITATION
STA. 324+45

END WE & YE
AND MEET EXISTING
PAVEMENT MARKINGS
STA. 324+45

END CH
AND MEET EXISTING
PAVEMENT MARKINGS
STA. 327+45

SPEED LIMIT 55
R2-1-36
STA. 329+45±
(DUAL)

W24-1AR-48
STA. 334+45±
(DUAL)

WE
YE
CH
22:1 SHLDR TAPER
I-80 WB

MATCH LINE STA. 321+00 SEE SHEET 24

321 322 323 324 325 326 327 328 329 330 331 332 333 334 335

SEE SHEET 26

I-80 EB

321+50

660' EB
SHIFT TAPER
(12' SHIFT
AT 55 MPH)

END WE & YE
AND MEET EXISTING
PAVEMENT MARKINGS
STA. 321+50

END FULL WIDTH
OUTSIDE SHOULDER
REHABILITATION
STA. 321+50

END CH
AND MEET EXISTING
PAVEMENT MARKINGS
STA. 324+50

SPEED LIMIT 65
R2-1-36
STA. 326+50±
(DUAL)

END ROAD WORK
G20-2-48
STA. 331+50±
(DUAL)

0 25 50 100
HORIZONTAL SCALE IN FEET

CALCULATED PES 01/13
CHECKED DRB 01/13

AS-BUILT

THIS RECORD DRAWING HAS BEEN PREPARED IN PART BY THE ENGINEER OF RECORD TO DEPICT CHANGES MADE DURING CONSTRUCTION, BASED ON INFORMATION REPORTED BY THE CONSTRUCTION CONTRACTOR.

FOR LEGEND, SEE SHEET 18

MAINTENANCE OF TRAFFIC
I-80 BRIDGE WIDENING (TRU-80-0591) - PHASE 1

TRU-80-4.70

ms consultants, inc.

34" x 22"
Model: Sheet
View: FENCE_VIEW1
Printed: 12/12/2013 @ 2:19:07 PM
By: sgealy
File: \\youngstown-fs1\n\60\08285\mot\sheets\76411MP109.dgn
Batchplot Spec: \\youngstown-fs1\n\60\08285\standards\plotdrv\batchplt.spc
Pen Table: S:\std\plotting\ustn\V8i\pen\V8i_ms_std.tbl
Plot Driver: S:\std\plotting\ustn\V8i\PDF.pltcfg
0 1"
0.5"
UCF: ohdotV8i
PCF: 60-08285_Youngstown
Ohio DOT Workspace
Marucci & Gaffney TRU-80 Design Build
ms consultants, inc.
msconsultants.com
www.msconsultants.com
PLOT.CEL

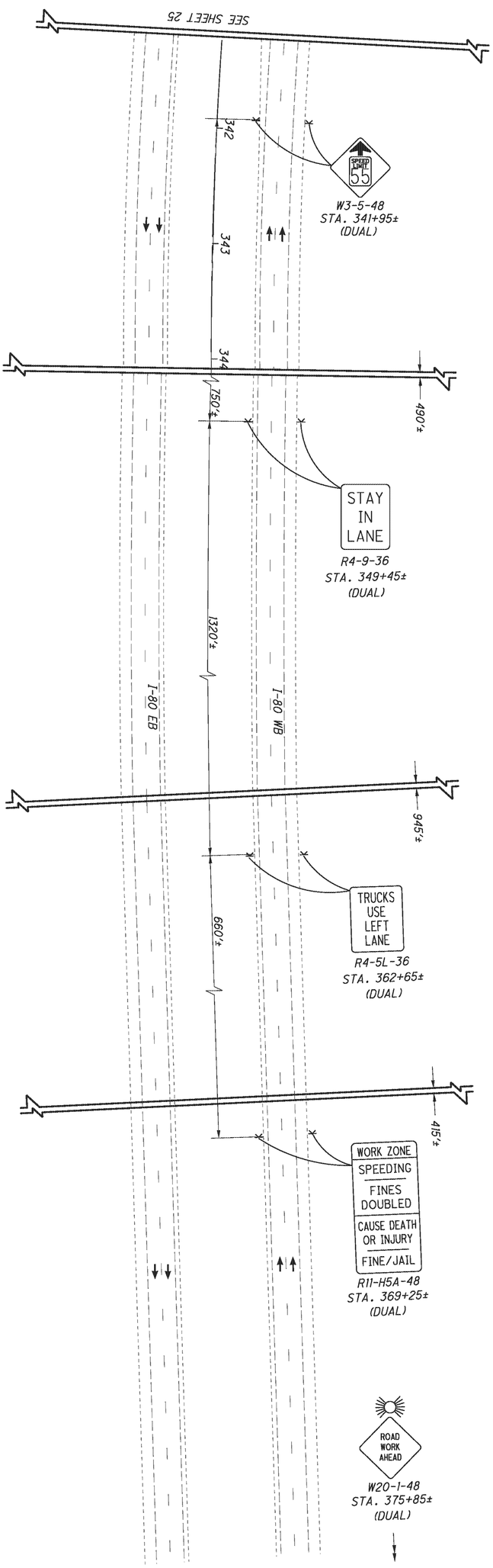

AS-BUILT

THIS RECORD DRAWING HAS BEEN PREPARED IN PART BY THE ENGINEER OF RECORD TO DEPICT CHANGES MADE DURING CONSTRUCTION, BASED ON INFORMATION REPORTED BY THE CONSTRUCTION CONTRACTOR.

FOR LEGEND, SEE SHEET 18

34" x 22"
Model: Sheet
View: FENCE_VIEW1
Printed: 12/12/2013 @ 2:19:08 PM
By: sgealy
File: \\youngstown-fs1\n\60\08285\mot\sheets\76411MP201.dgn
Batchplot Spec: \\youngstown-fs1\n\60\08285\standards\plotdrv\batchplt.spc
Pen Table: S:\std\plotting\ustn\V8i\pen\V8i_ms_std.tbl
Plot Driver: S:\std\plotting\ustn\V8i\PDF.pltcfg
0 1"
0.5"
UCF: ohdotV8i
PCF: 60-08285_Youngstown
Ohio DOT Workspace
Marucci & Gaffney TRU-80 Design Build
ms consultants, inc.
msconsultants.com
www.msconsultants.com
PLOT.CEL

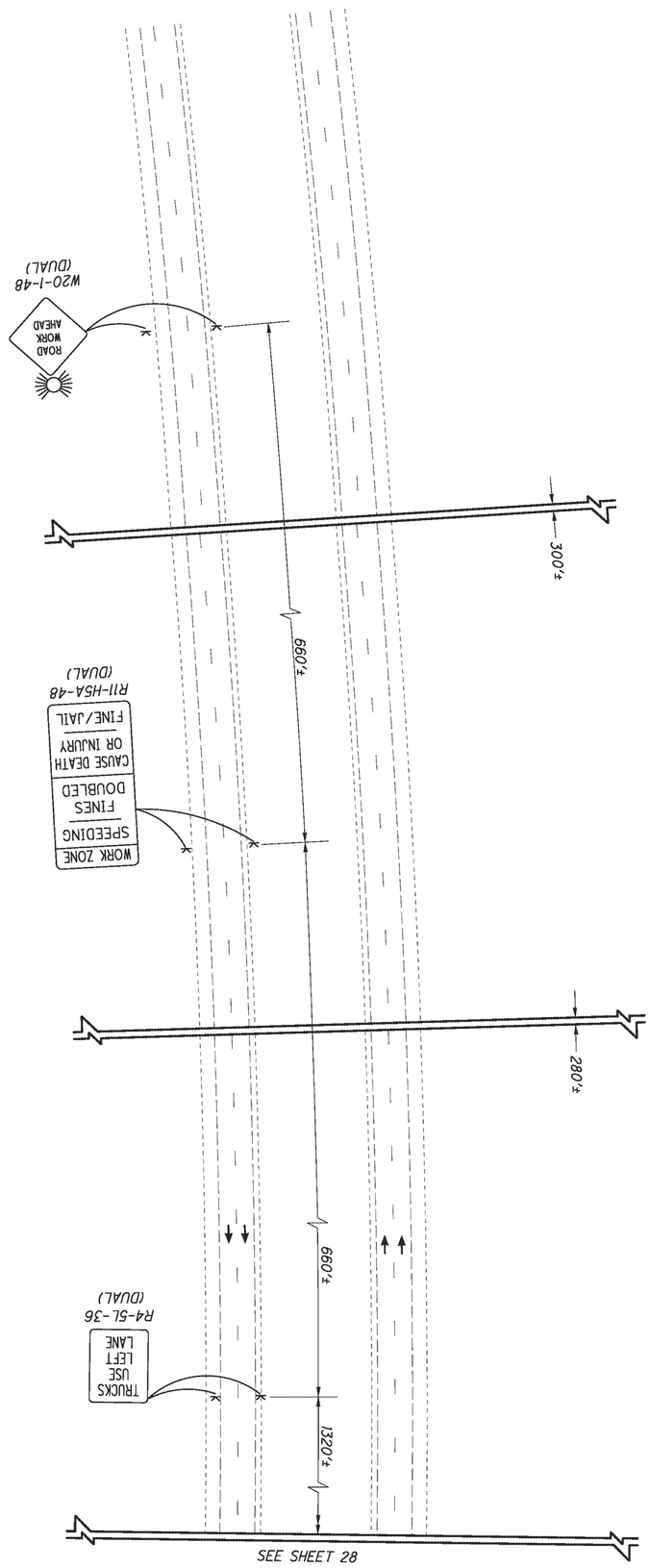

AS-BUILT

THIS RECORD DRAWING HAS BEEN PREPARED IN PART BY THE ENGINEER OF RECORD TO DEPICT CHANGES MADE DURING CONSTRUCTION, BASED ON INFORMATION REPORTED BY THE CONSTRUCTION CONTRACTOR.

FOR LEGEND, SEE SHEET 18

ms consultants, inc.

34" x 22"
Model: Sheet
Printed: 12/12/2013 @ 2:19:09 PM
File: \\youngstown-fs1\n\60\08285\mot\sheets\76411MP202.dgn
View: FENCE_VIEW1
By: sgealy
Batchplot Spec: \\youngstown-fs1\n\60\08285\standards\plotdrv\batchplt.spc
Pen Table: S:\std\plotting\ustn\V8i\pen\V8i_ms_std.tbl
Plot Driver: S:\std\plotting\ustn\V8i\PDF.pltcfg
UCF: ohdotV8i
PCF: 60-08285_Youngstown
Ohio DOT Workspace
Marucci & Gaffney TRU-80 Design Build
ms consultants, inc.
msconsultants.com
www.msconsultants.com
PLOT.CEL

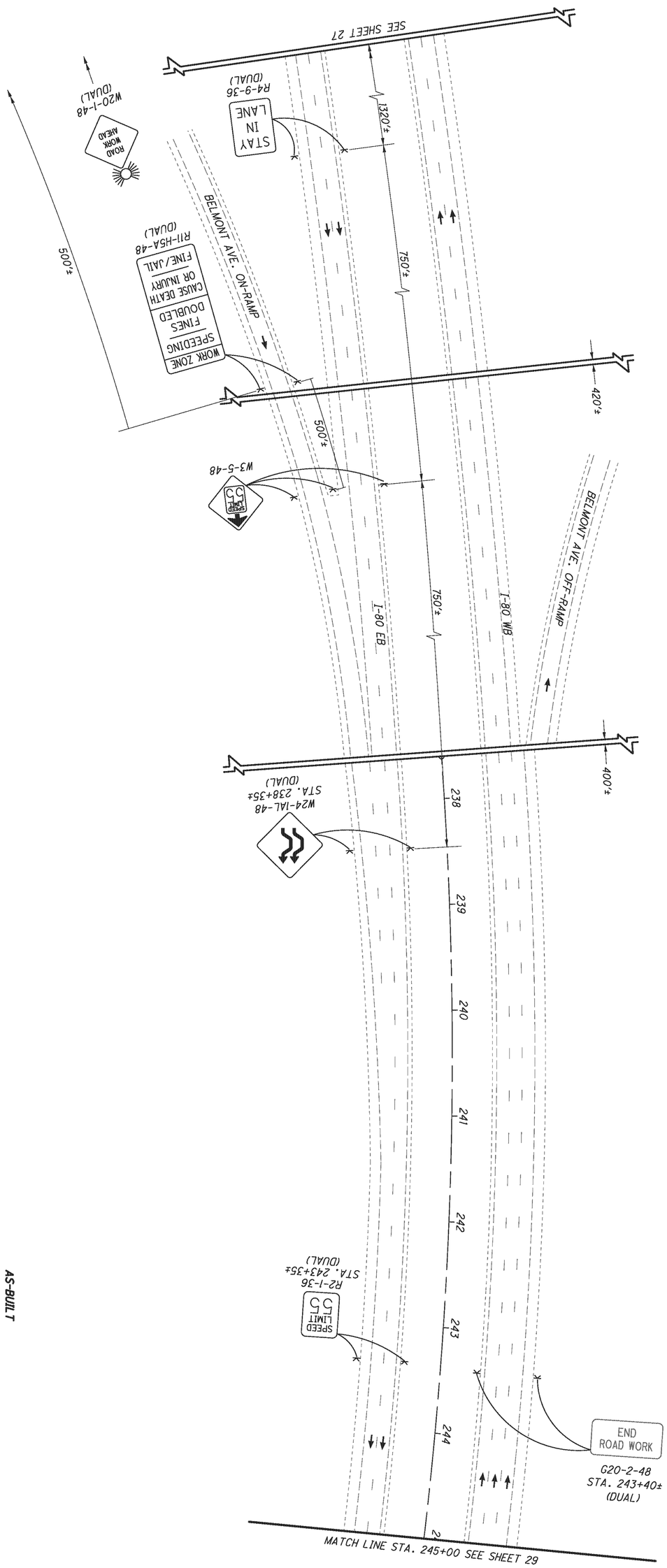

FOR LEGEND, SEE SHEET 18

AS-BUILT

THIS RECORD DRAWING HAS BEEN PREPARED IN PART BY THE ENGINEER OF RECORD TO DEPICT CHANGES MADE DURING CONSTRUCTION, BASED ON INFORMATION REPORTED BY THE CONSTRUCTION CONTRACTOR.

PLOT.CEL

ms consultants, inc.
msconsultants.com

Ohio DOT Workspace
Marucci & Gaffney TRU-80 Design Build
www.msconsultants.com

1"
0.5"
0

UCF: ohdot1V8i
PCF: 60-08285_Youngstown

Batchplot Spec: \\youngstown-fs1\n\60\08285\standards\plotdrv\batchplt.spc
Pen Table: S:\std\plotting\ustn\V8\pen\V8i_ms_std.tbl
Plot Driver: S:\std\plotting\ustn\V8\PDF.pltcfg

Model: Sheet
Printed: 12/12/2013 @ 2:19:10 PM
File: \\youngstown-fs1\n\60\08285\mnt\sheets\7641MP203.dgn
View: FENCE_VIEW1
By: sgeidy

34" x 22"

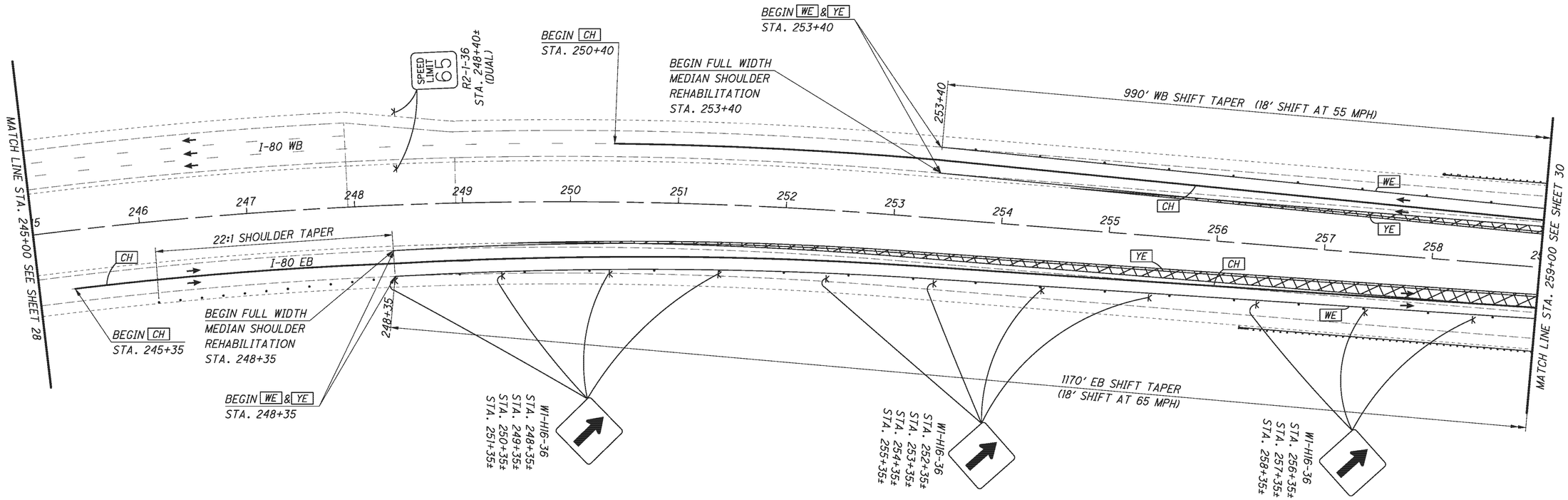

AS-BUILT

THIS RECORD DRAWING HAS BEEN PREPARED IN PART BY THE ENGINEER OF RECORD TO DEPICT CHANGES MADE DURING CONSTRUCTION, BASED ON INFORMATION REPORTED BY THE CONSTRUCTION CONTRACTOR.

FOR LEGEND, SEE SHEET 18

0 25 50 100
HORIZONTAL SCALE IN FEET

CALCULATED PES 01/13
CHECKED DRB 01/13

MAINTENANCE OF TRAFFIC
I-80 BRIDGE WIDENING (TRU-80-0496) - PHASE 2

TRU-80-4.70

PLOT.CEL

ms consultants, inc.
msconsultants.com

Ohio DOT Workspace
Marucci & Gaffney TRU-80 Design Build
www.msconsultants.com

1"
0.5"
0

UCF: ohdot1V8i
PCF: 60-08285_Youngstown

Batchplot Spec: \\youngstown-fs1\n\60\08285\standards\plotdrv\batchplt.spc
Pen Table: S:\std\plotting\usatn\V8\pen\V8i_ms_std.tbl
Plot Driver: S:\std\plotting\usatn\V8\PDF.pltcfg

Model: Sheet
Printed: 12/12/2013 @ 2:19:10 PM
File: \\youngstown-fs1\n\60\08285\mot\sheets\764TMP204.dgn
View: FENCE_VIEW1
By: sgeidy

34" x 22"

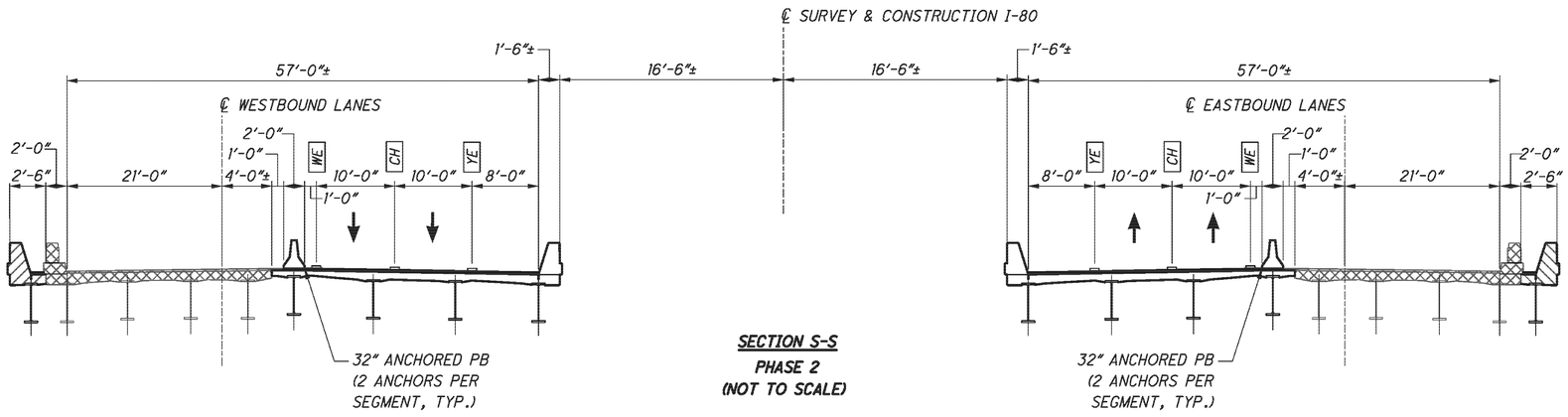

SECTION S-S
PHASE 2
(NOT TO SCALE)

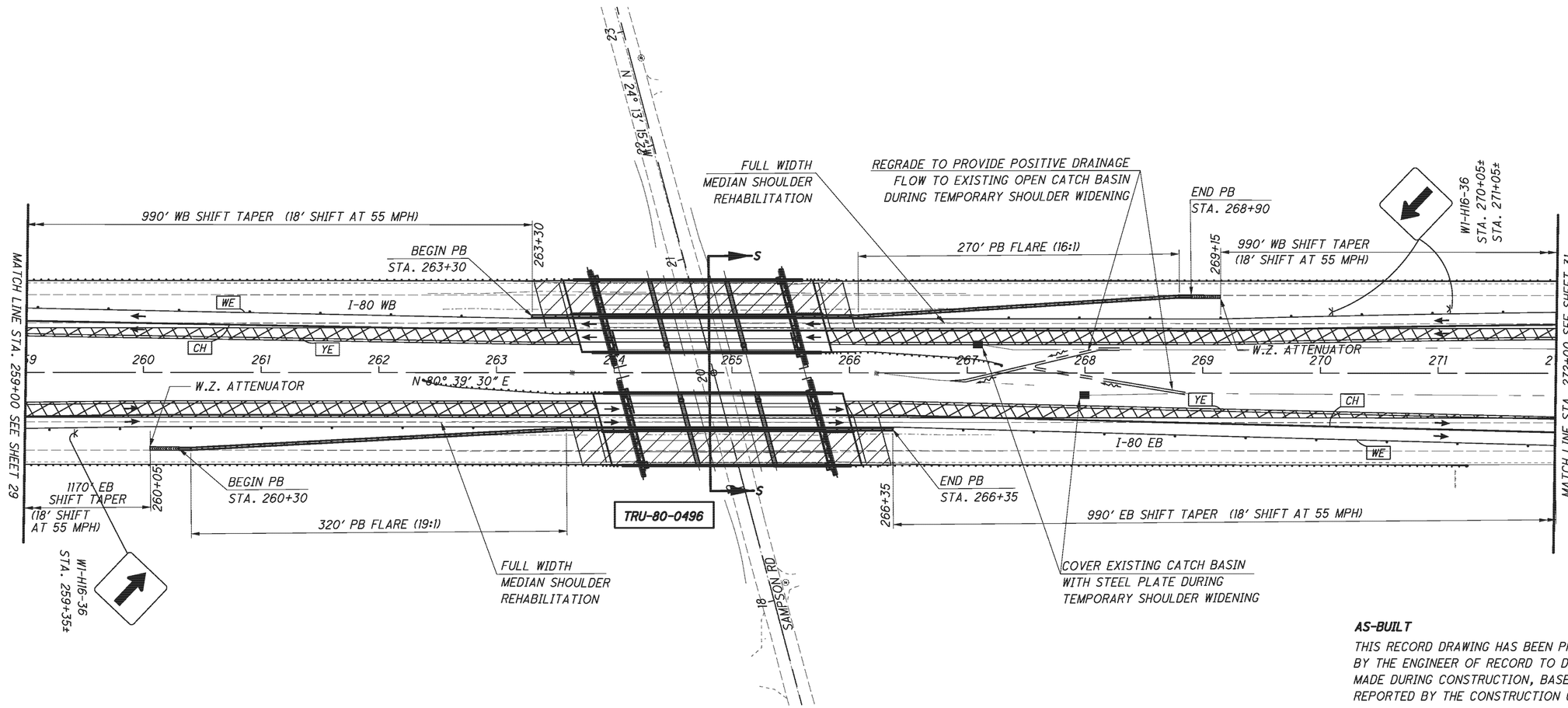

AS-BUILT

THIS RECORD DRAWING HAS BEEN PREPARED IN PART BY THE ENGINEER OF RECORD TO DEPICT CHANGES MADE DURING CONSTRUCTION, BASED ON INFORMATION REPORTED BY THE CONSTRUCTION CONTRACTOR.

FOR LEGEND, SEE SHEET 18

HORIZONTAL SCALE IN FEET
0 25 50 100

CALCULATED PES 01/13
CHECKED DRB 01/13

MAINTENANCE OF TRAFFIC
I-80 BRIDGE WIDENING (TRU-80-0496) - PHASE 2
TRU-80-4.70

ms consultants, inc.

PLOT.CEL

ms consultants, inc.
msconsultants.com

Ohio DOT Workspace
Marucci & Gaffney TRU-80 Design Build

www.msconsultants.com

UCF: ohdot1V8i
PCF: 60-08285_Youngstown

Batchplot Spec: \\youngstown-fs1\n\60\08285\standards\plotdrv\batchplt.spc
Pen Table: S:\std\plotting\ustn\V8\pen\V8i_ms_std.tbl
Plot Driver: S:\std\plotting\ustn\V8i\PDF.pltcfg

Model: Sheet
Printed: 12/12/2013 @ 2:19:12 PM
File: \\youngstown-fs1\n\60\08285\mnat\sheets\7641MP205.dgn
View: FENCE_VIEW1
By: sgeidy

34" x 22"

838+00

990' WB MERGE TAPER (18' SHIFT AT 55 MPH)

W1-H16-36
STA. 272+05±
STA. 273+05±
STA. 274+05±
STA. 275+05±

W1-H16-36
STA. 276+05±
STA. 277+05±
STA. 278+05±
STA. 279+05±

279+05

END WE & YE
AND MEET EXISTING
PAVEMENT MARKINGS
STA. 279+05

END FULL WIDTH
MEDIAN SHOULDER
REHABILITATION
STA. 279+05

END CH
AND MEET EXISTING
PAVEMENT MARKINGS
STA. 282+05

SPEED LIMIT 55
R2-1-36
STA. 284+05±
(DUAL)

MATCH LINE STA. 272+00 SEE SHEET 30

MATCH LINE STA. 285+00 SEE SHEET 32

I-80 WB

18:1 SHOULDER TAPER

YE CH WE

272 273 274 275 276 277 278 279 280 281 282 283 284

I-80 EB

990' EB MERGE TAPER (18' SHIFT AT 55 MPH)

276+25

END FULL WIDTH
MEDIAN SHOULDER
REHABILITATION
STA. 276+25

END WE & YE
AND MEET EXISTING
PAVEMENT MARKINGS
STA. 276+25

END CH
AND MEET EXISTING
PAVEMENT MARKINGS
STA. 279+25

TRUCKS USE LEFT LANE
R4-5L-36
(PLACED IN PHASE 1)
(DUAL)

R4-9-36
(PLACED IN PHASE 1)
(DUAL)

STAY IN LANE

WORK ZONE SPEEDING FINES DOUBLED
CAUSE DEATH OR INJURY
FINE/JAIL
R11-H5A-48
(PLACED IN PHASE 1)
(DUAL)

AS-BUILT

THIS RECORD DRAWING HAS BEEN PREPARED IN PART BY THE ENGINEER OF RECORD TO DEPICT CHANGES MADE DURING CONSTRUCTION, BASED ON INFORMATION REPORTED BY THE CONSTRUCTION CONTRACTOR.

FOR LEGEND, SEE SHEET 18

HORIZONTAL SCALE IN FEET
0 25 50 100

CALCULATED PES 01/13
CHECKED DRB 01/13

MAINTENANCE OF TRAFFIC
I-80 BRIDGE WIDENING (TRU-80-0496) - PHASE 2

TRU-80-4.70

34" x 22"
Model: Sheet
Printed: 12/12/2013 @ 2:19:12 PM
File: \\youngstown-fs1\n\60\08285\mot\sheets\76411MP206.dgn
View: FENCE_VIEW1
By: sgealy
Batchplot Spec: \\youngstown-fs1\n\60\08285\standards\plotdrv\batchplt.spc
Pen Table: S:\std\plotting\ustn\V8i\pen\V8i_ms_std.tbl
Plot Driver: S:\std\plotting\ustn\V8i\PDF.pltcfg
UCF: ohdotV8i
PCF: 60-08285_Youngstown
Ohio DOT Workspace
Marucci & Gaffney TRU-80 Design Build
ms consultants, inc.
msconsultants.com
www.msconsultants.com
PLOT.CEL

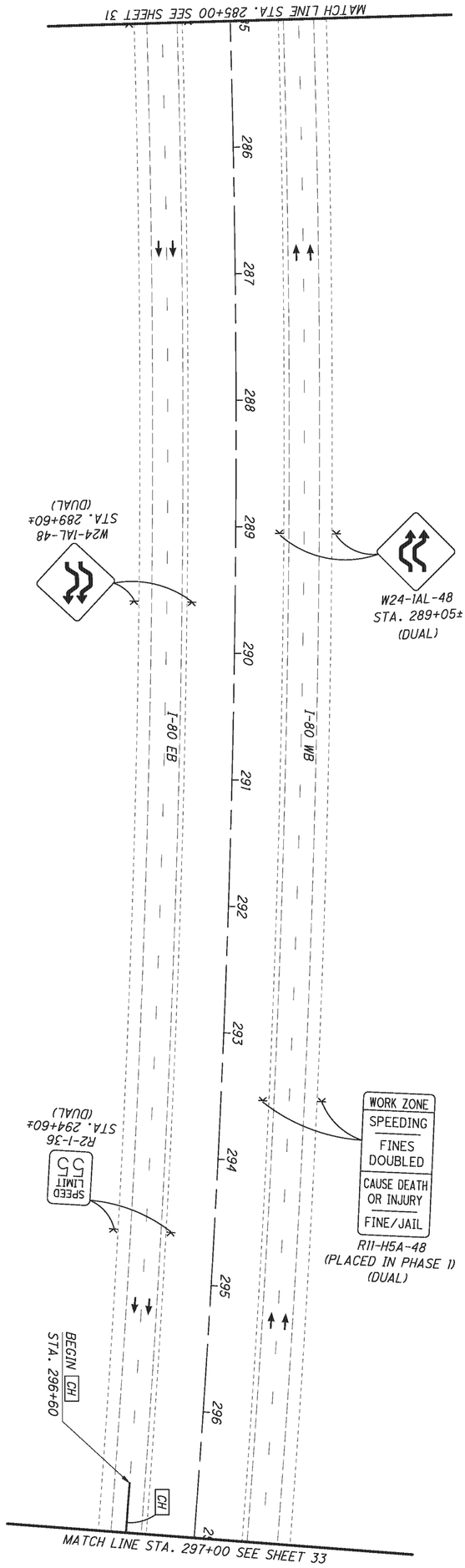

AS-BUILT

THIS RECORD DRAWING HAS BEEN PREPARED IN PART BY THE ENGINEER OF RECORD TO DEPICT CHANGES MADE DURING CONSTRUCTION, BASED ON INFORMATION REPORTED BY THE CONSTRUCTION CONTRACTOR.

FOR LEGEND, SEE SHEET 18

PLOT.CEL

ms consultants, inc.
msconsultants.com

www.msconsultants.com
Ohio DOT Workspace
Marucci & Gaffney TRU-80 Design Build
UCF: ohdot1V8i
PCF: 60-08285_Youngstown

Batchplot Spec: \\youngstown-fs1\vn\60\08285\standards\plotdrv\batchplt.spc
Pen Table: S:\std\plotting\ustn\V8\pen\V8i_ms_std.tbl
Plot Driver: S:\std\plotting\ustn\V8\PDF.pltcfg

Model: Sheet
Printed: 12/12/2013 @ 2:19:13 PM
File: \\youngstown-fs1\vn\60\08285\mot\sheets\764TMP207.dgn
View: FENCE_VIEW1
By: sgedy
34" x 22"

NOTES:

1. IN CONJUNCTION WITH THE REMOVAL OF TEMPORARY PAVEMENT, THE SIGN SUPPORT FOUNDATION ON THE MEDIAN SIDE SHALL BE REMOVED IN ITS ENTIRETY. A NEW FOUNDATION SHALL BE PLACED IN KIND, AND AT THE SAME LOCATION, AS PER TC-21.10 & TC-21.20. THE CONTRACTOR SHALL ASSURE THAT THE TOP OF THE NEW FOUNDATION MATCHES THE ELEVATION OF THE EXISTING FOUNDATION.

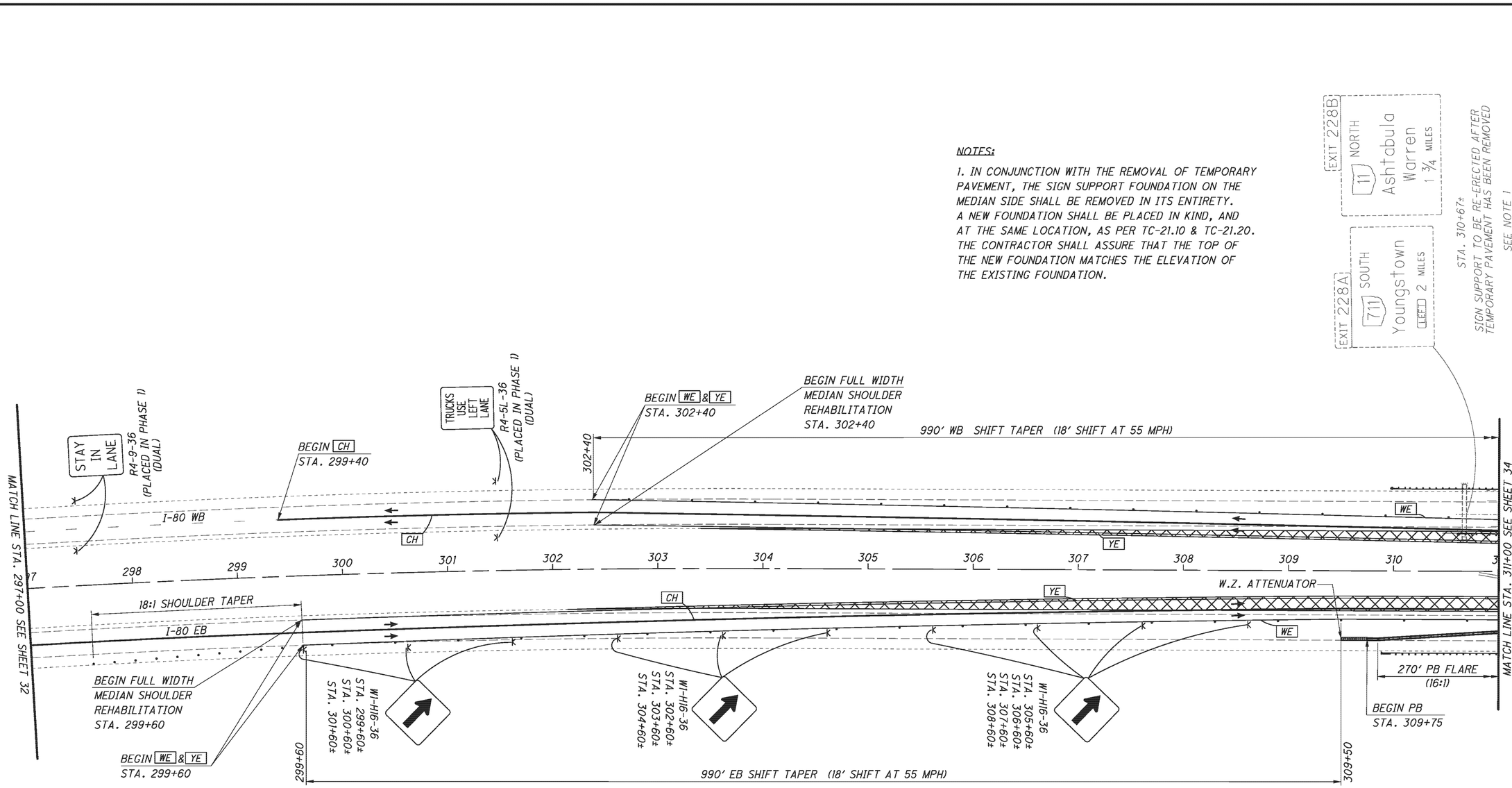

AS-BUILT

THIS RECORD DRAWING HAS BEEN PREPARED IN PART BY THE ENGINEER OF RECORD TO DEPICT CHANGES MADE DURING CONSTRUCTION, BASED ON INFORMATION REPORTED BY THE CONSTRUCTION CONTRACTOR.

FOR LEGEND, SEE SHEET 18

HORIZONTAL SCALE IN FEET
0 25 50 100

CALCULATED PES 01/13
CHECKED DRB 01/13

MAINTENANCE OF TRAFFIC
I-80 BRIDGE WIDENING (TRU-80-0591) - PHASE 2

TRU-80-4.70

ms consultants, inc.

PLOT.CEL

ms consultants, inc.
msconsultants.com

Ohio DOT Workspace
Marucci & Gaffney TRU-80 Design Build
www.msconsultants.com

1"
0.5"
0

UCF: ohdot1V8i
PCF: 60-08285_Youngstown

Batchplot Spec: \\youngstown-fs1\n\60\08285\standards\plotdrv\batchplt.spc
Pen Table: S:\std\plotting\usstn\V8i\pen\V8i_ms_std.tbl
Plot Driver: S:\std\plotting\usstn\V8i\PDF_plt.cfg

Model: Sheet
Printed: 12/12/2013 @ 2:19:14 PM
File: \\youngstown-fs1\n\60\08285\mot\sheets\764TMP208.dgn
View: FENCE_VIEW1
By: sgeidy

34" x 22"

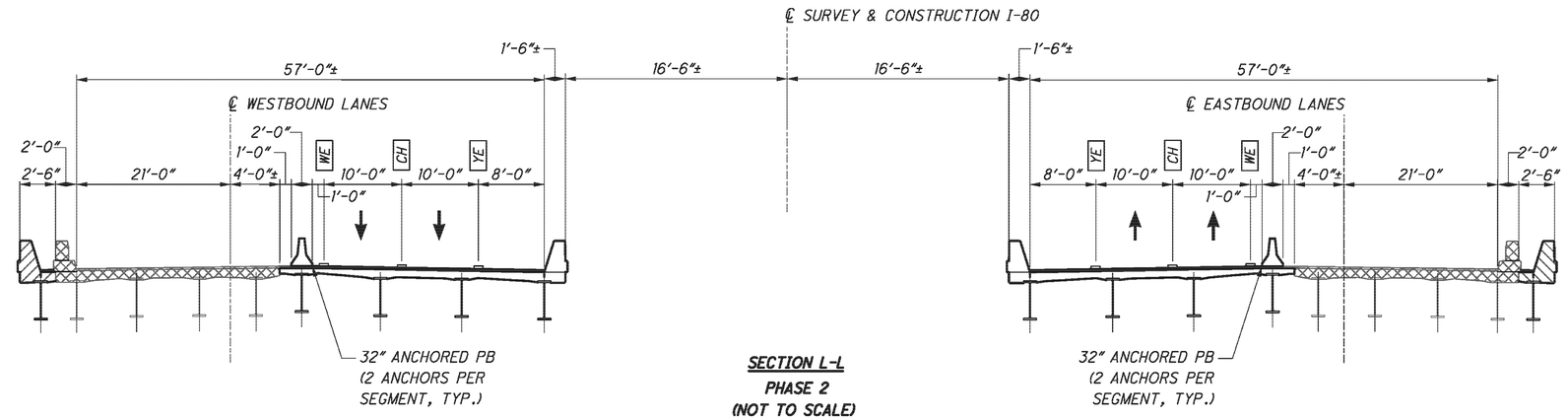

SECTION L-L
PHASE 2
(NOT TO SCALE)

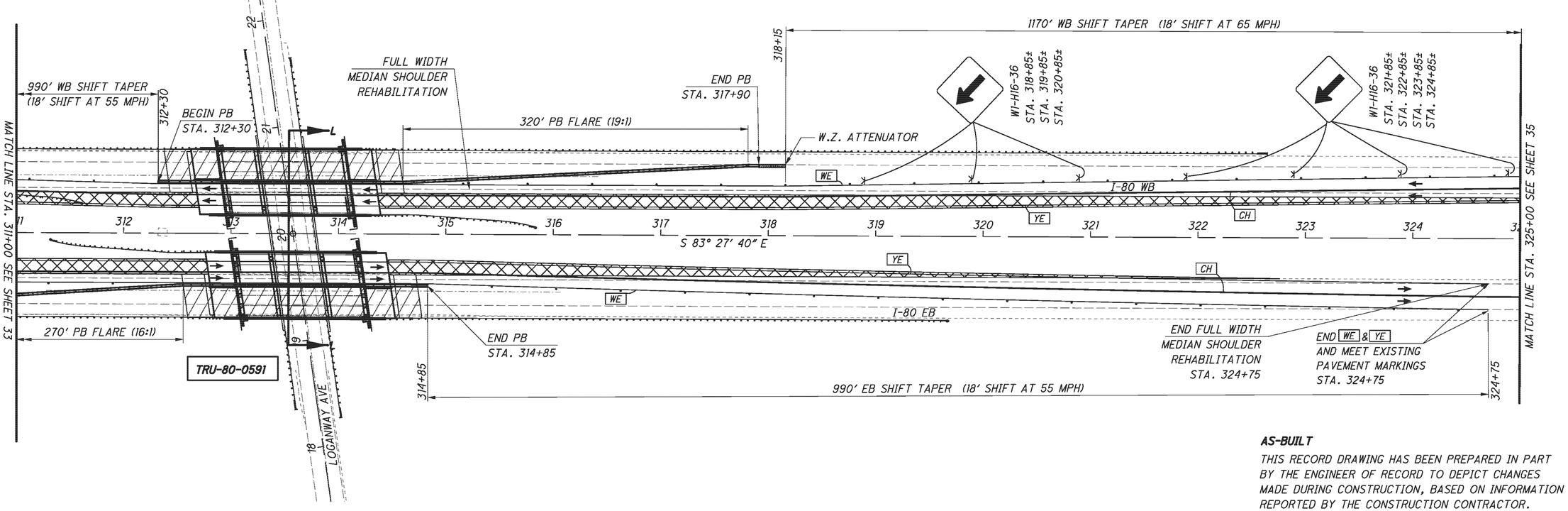

AS-BUILT

THIS RECORD DRAWING HAS BEEN PREPARED IN PART BY THE ENGINEER OF RECORD TO DEPICT CHANGES MADE DURING CONSTRUCTION, BASED ON INFORMATION REPORTED BY THE CONSTRUCTION CONTRACTOR.

FOR LEGEND, SEE SHEET 18

HORIZONTAL SCALE IN FEET
0 25 50 100

CALCULATED PES 01/13
CHECKED DRB 01/13

MAINTENANCE OF TRAFFIC
I-80 BRIDGE WIDENING (TRU-80-0591) - PHASE 2
TRU-80-4.70

ms consultants, inc.

PLOT.CEL

ms consultants, inc.
msconsultants.com

Ohio DOT Workspace
Marucci & Gaffney TRU-80 Design Build

www.msconsultants.com

1"
0.5"
0

UCF: ohdot1V8i
PCF: 60-08285_Youngstown

Batchplot Spec: \\youngstown-fs1\n\60\08285\standards\plotdrv\batchplt.spc
Pen Table: S:\std\plotting\ustn\V8i\penV8i_ms_std.tbl
Plot Driver: S:\std\plotting\ustn\V8i\PDF.pltcfg

Model: Sheet
Printed: 12/12/2013 @ 2:19:15 PM
File: \\youngstown-fs1\n\60\08285\mot\sheets\764TMP209.dgn
View: FENCE_VIEW1
By: sgeedy

34" x 22"

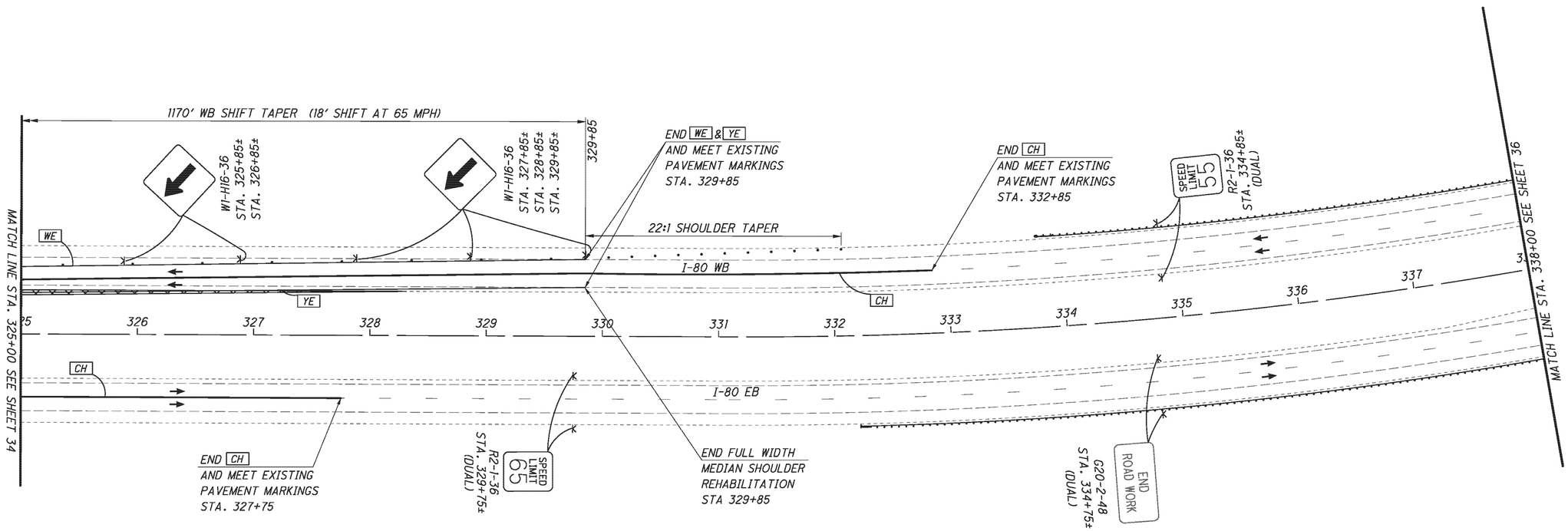

AS-BUILT

THIS RECORD DRAWING HAS BEEN PREPARED IN PART BY THE ENGINEER OF RECORD TO DEPICT CHANGES MADE DURING CONSTRUCTION, BASED ON INFORMATION REPORTED BY THE CONSTRUCTION CONTRACTOR.

FOR LEGEND, SEE SHEET 18

N

0 25 50 100
HORIZONTAL SCALE IN FEET

CALCULATED PES 01/13
CHECKED DRB 01/13

MAINTENANCE OF TRAFFIC
I-80 BRIDGE WIDENING (TRU-80-0591) - PHASE 2
TRU-80-4.70

ms consultants, inc.

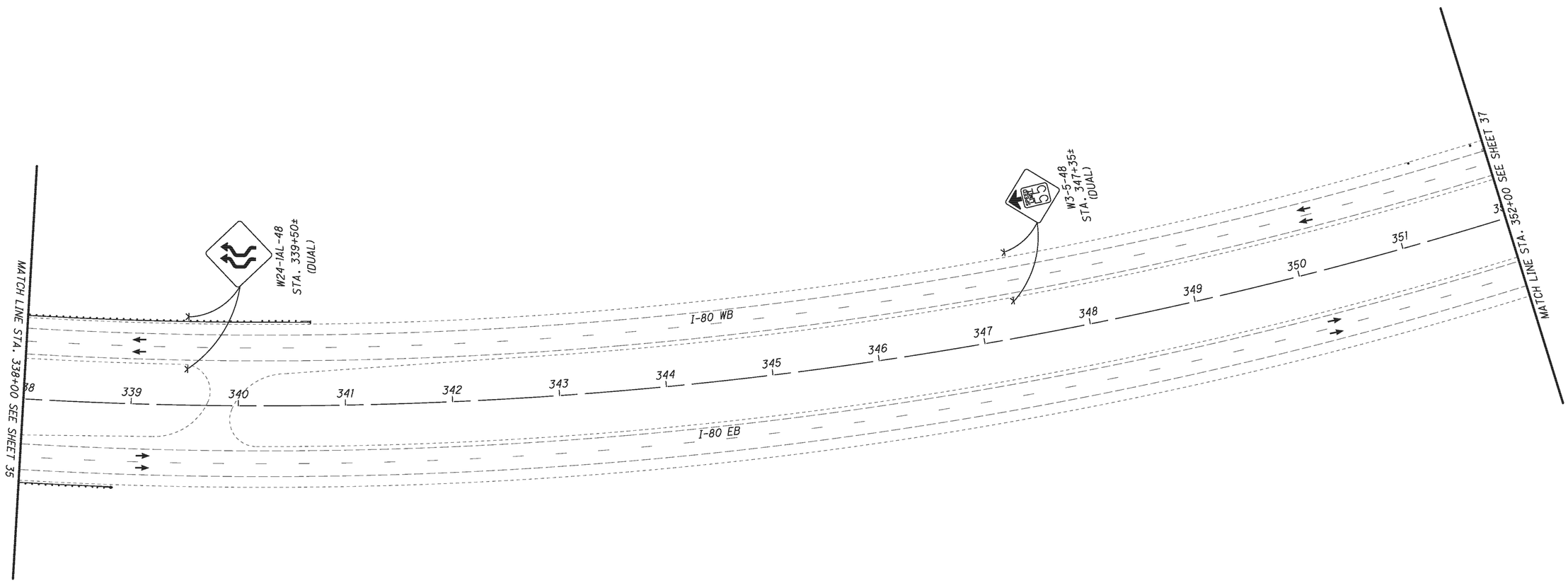

AS-BUILT

THIS RECORD DRAWING HAS BEEN PREPARED IN PART BY THE ENGINEER OF RECORD TO DEPICT CHANGES MADE DURING CONSTRUCTION, BASED ON INFORMATION REPORTED BY THE CONSTRUCTION CONTRACTOR.

FOR LEGEND, SEE SHEET 18

0 25 50 100
HORIZONTAL SCALE IN FEET

CALCULATED PES 01/13
CHECKED DRB 01/13

MAINTENANCE OF TRAFFIC
I-80 BRIDGE WIDENING (TRU-80-0591) - PHASE 2

TRU-80-4.70

ms consultants, inc.
msconsultants.com
Ohio DOT Workspace
Marucci & Gaffney TRU-80 Design Build
www.msconsultants.com

UCF: ohdotV8i
PCF: 60-08285_Youngstown
Batchplot Spec: \\youngstown-fs1\n\60\08285\standards\plotdrv\batchplt.spc
Pen Table: S:\std\plotting\ustn\V8i\pen\V8i_ms_std.tbl
Plot Driver: S:\std\plotting\ustn\V8i\PDF.pltcfg
34" x 22"
Model: Sheet
Printed: 12/12/2013 @ 2:19:16 PM
File: \\youngstown-fs1\n\60\08285\mot\sheets\7641IMP210.dgn
View: FENCE_VIEW1
By: sgealy

PLOT.CEL

ms consultants, inc.
msconsultants.com

Ohio DOT Workspace
Marucci & Gaffney TRU-80 Design Build
www.msconsultants.com

1"
0.5"
0

UCF: ohdot1V8i
PCF: 60-08285_Youngstown

Batchplot Spec: \\youngstown-fs1\n\60\08285\standards\plotdrv\batchplt.spc
Pen Table: S:\std\plotting\ustn\V8i\pen V8i_ms_std.tbl
Plot Driver: S:\std\plotting\ustn\V8i\PDF.pltcfg

Model: Sheet
Printed: 12/12/2013 @ 2:19:16 PM
File: \\youngstown-fs1\n\60\08285\mot\sheets\V8\41MP211.dgn

View: FENCE_VIEW1
By: sgeidy

34" x 22"

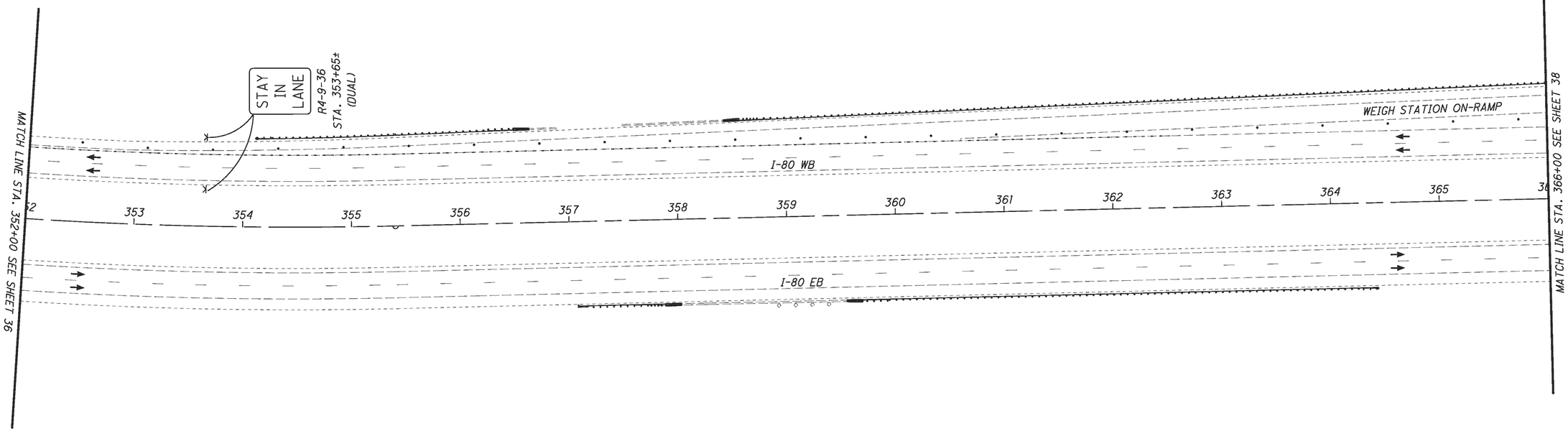

NOTES

1. THE TRUCK WEIGH STATION SHALL BE CLOSED WHILE THE PAVEMENT REPAIRS AND RESURFACING WORK ON THE RAMPS ARE PERFORMED.

2. THE CONTRACTOR IS PERMITTED TO CLOSE THE WEIGH STATION FOR ONE WEEKEND FROM 6AM FRIDAY TO 5AM MONDAY. THE WEIGH STATION SHALL BE OPEN AT ALL OTHER TIMES.

AS-BUILT

THIS RECORD DRAWING HAS BEEN PREPARED IN PART BY THE ENGINEER OF RECORD TO DEPICT CHANGES MADE DURING CONSTRUCTION, BASED ON INFORMATION REPORTED BY THE CONSTRUCTION CONTRACTOR.

FOR LEGEND, SEE SHEET 18

0 25 50 100
HORIZONTAL SCALE IN FEET

CALCULATED PES 01/13
CHECKED DRB 01/13

MAINTENANCE OF TRAFFIC

I-80 BRIDGE WIDENING (TRU-80-0591) - PHASE 2

TRU-80-4.70

PLOT.CEL

ms consultants, inc.
msconsultants.com

Ohio DOT Workspace
Marucci & Gaffney TRU-80 Design Build
www.msconsultants.com

UCF: ohdot1V8i
PCF: 60-08285_Youngstown

0 0.5" 1"

Batchplot Spec: \\youngstown-fs1\n\60\08285\standards\plotdrv\batchplt.spc
Pen Table: S:\std\plotting\ustn\V8\
Plot Driver: S:\std\plotting\ustn\V8\

Model: Sheet
Printed: 12/12/2013 @ 2:19:17 PM
File: \\youngstown-fs1\n\60\08285\mot\sheets\764TMP212.dgn

View: FENCE_VIEW1
By: sgealy

34" x 22"

NOTES

1. THE TRUCK WEIGH STATION SHALL BE CLOSED WHILE THE PAVEMENT REPAIRS AND RESURFACING WORK ON THE RAMPS ARE PERFORMED.

2. THE CONTRACTOR IS PERMITTED TO CLOSE THE WEIGH STATION FOR ONE WEEKEND FROM 6AM FRIDAY TO 5AM MONDAY. THE WEIGH STATION SHALL BE OPEN AT ALL OTHER TIMES.

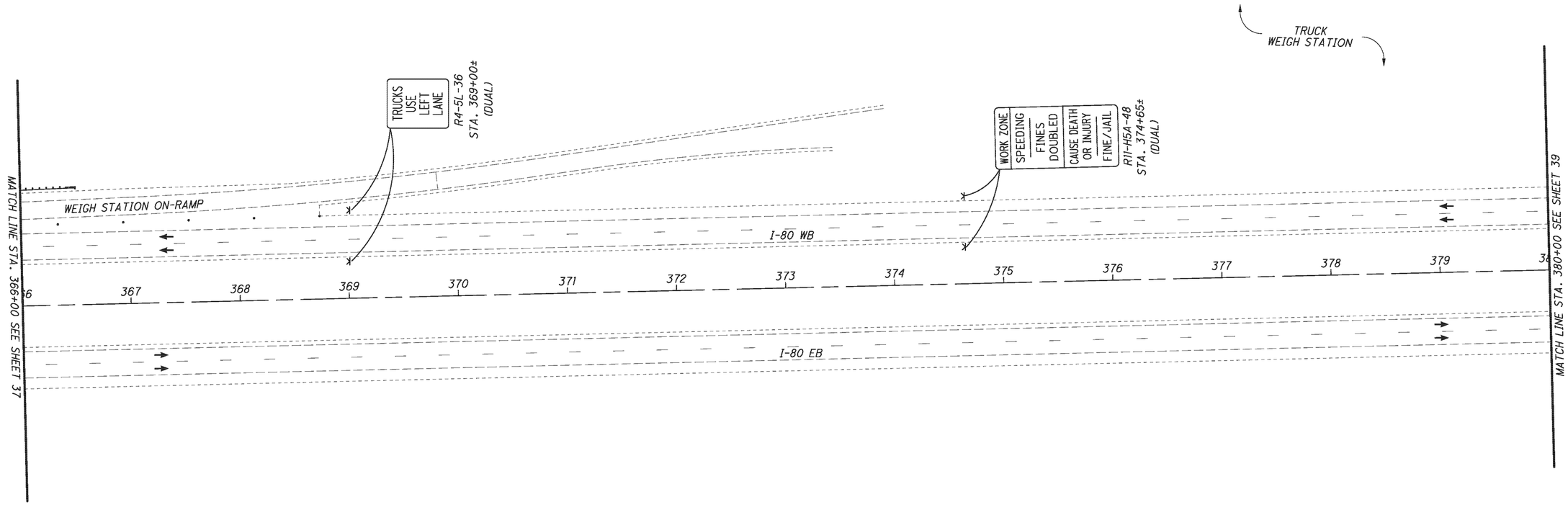

AS-BUILT

THIS RECORD DRAWING HAS BEEN PREPARED IN PART BY THE ENGINEER OF RECORD TO DEPICT CHANGES MADE DURING CONSTRUCTION, BASED ON INFORMATION REPORTED BY THE CONSTRUCTION CONTRACTOR.

FOR LEGEND, SEE SHEET 18

HORIZONTAL SCALE IN FEET
0 25 50 100

CALCULATED PES 01/13
CHECKED DRB 01/13

MAINTENANCE OF TRAFFIC
I-80 BRIDGE WIDENING (TRU-80-0591) - PHASE 2

TRU-80-4.70

PLOT.CEL

ms consultants, inc.
msconsultants.com

www.msconsultants.com

Ohio DOT Workspace
Marucci & Gaffney TRU-80 Design Build

1"
0.5"
0

UCF: ohdot1V8i
PCF: 60-08285_Youngstown

Batchplot Spec: \\youngstown-fs1\n\60\08285\standards\plotdrv\batchplt.spc
Pen Table: S:\sta\plotting\usatn\V8\pen\V8i_ms_std.tbl
Plot Driver: S:\sta\plotting\usatn\V8\PDF.pltcfg

Model: Sheet
Printed: 12/12/2013 @ 2:19:18 PM
File: \\youngstown-fs1\n\60\08285\mot\sheets\764TMP213.dgn
View: FENCE_VIEW1
By: speidy

34" x 22"

NOTES

1. THE TRUCK WEIGH STATION SHALL BE CLOSED WHILE THE PAVEMENT REPAIRS AND RESURFACING WORK ON THE RAMPS ARE PERFORMED. THIS WORK MAY OCCUR DURING THE PAVEMENT REPAIRS, RESURFACING AND GUARDRAIL REPLACEMENT OF THE MAINLINE LANE ADJACENT TO THE RAMP CLOSURE.

2. THE CONTRACTOR IS PERMITTED TO CLOSE THE WEIGH STATION FOR ONE WEEKEND FROM 6AM FRIDAY TO 5AM MONDAY. THE WEIGH STATION SHALL BE OPEN AT ALL OTHER TIMES.

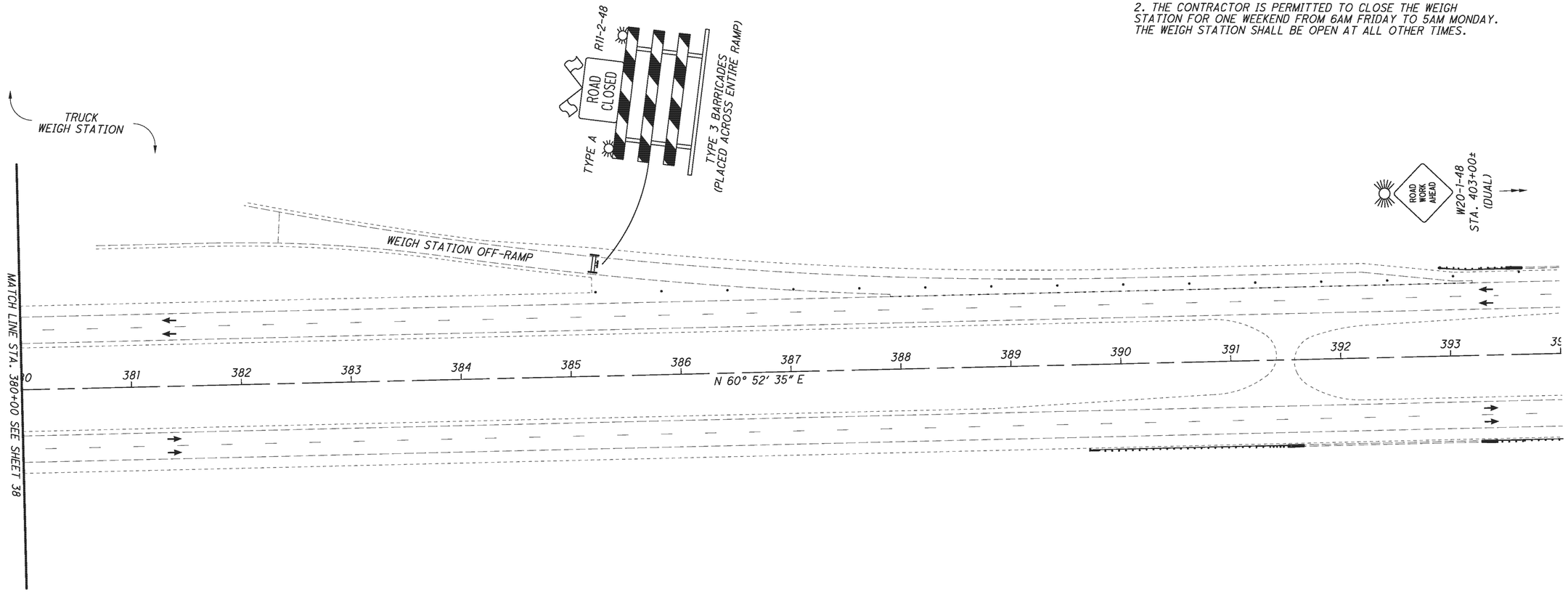

AS-BUILT

THIS RECORD DRAWING HAS BEEN PREPARED IN PART BY THE ENGINEER OF RECORD TO DEPICT CHANGES MADE DURING CONSTRUCTION, BASED ON INFORMATION REPORTED BY THE CONSTRUCTION CONTRACTOR.

FOR LEGEND, SEE SHEET 18

HORIZONTAL SCALE IN FEET
0 25 50 100

CALCULATED PES 01/13
CHECKED DRB 01/13

MAINTENANCE OF TRAFFIC

I-80 BRIDGE WIDENING (TRU-80-0591) - PHASE 2

TRU-80-4.70

PLOT.CEL

ms consultants, inc.
msconsultants.com

Ohio DOT Workspace
Marucci & Gaffney TRU-80 Design Build
www.msconsultants.com

1"
0
0.5"

UCF: ohdot1V8i
PCF: 60-08285_Youngstown

Batchplot Spec: \\youngstown-fs1\n\60\08285\standards\plotdrv\batchplt.spc
Pen Table: S:\std\plotting\usetn\V8\pen V8i_ms_std.tbl
Plot Driver: S:\std\plotting\usetn\V8\PDF.pltcfg

Model: Sheet
Printed: 12/12/2013 @ 2:19:18 PM
File: \\youngstown-fs1\n\60\08285\mot\sheets\PIS_0209960_072012Revision_070912.dgn

34" x 22"

View: FENCE_VIEW1
By: sgealy

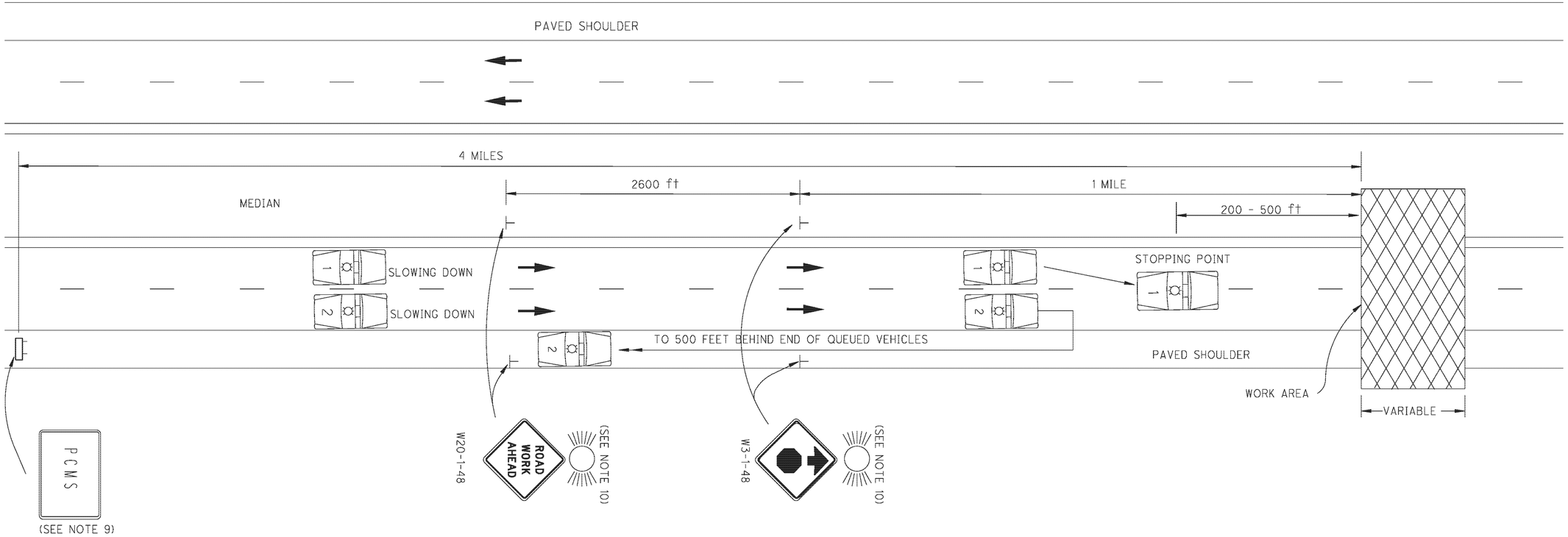

NOTES

1. This type of highway closure shall be used for all construction, maintenance and utility operations when the duration of closure will not exceed 15 minutes.

2. A minimum of two law enforcement officers (LEO) with patrol cars per direction shall be provided to block traffic and pace motorists to a stop. The number of patrol cars shall equal the number of lanes closed on the highway.

3. Patrol cars, with lights flashing, should enter the stream of traffic at approximately 3 miles before the point of closure. At approximately 2 miles before the point of closure, they should begin the gradual slow down. Traffic shall be brought to a complete stop a safe distance, between 200 and 500 feet, from the work area. This slowing operation shall take no more than 10 minutes. After traffic has been stopped, one patrol car shall travel along the roadway shoulder 500 feet behind the end of the queued vehicles.

4. The Contractor shall not begin work until traffic has been brought to a complete stop.

5. All entrance ramps located between the stopped traffic and the work area shall be closed.

6. After the highway has been closed and reopened via this procedure, both of the following requirements shall have been met before implementation of another short duration closure, except with the approval of the Engineer:
   a) A minimum period of 15 minutes shall have elapsed; and
   b) The queued traffic shall have dissipated.

7. The time frame for stopping traffic shall be specified.

8. The public shall be given advance notice of the upcoming closure by providing portable changeable message signs at the site in advance of the scheduled closing. Closure information should also be provided to the Engineer.

9. An ODOT-approved portable changeable message sign, Class 1, shall be provided during operation. The message sign shall be placed approximately 4 miles in advance of the closure or as directed by the Engineer. The message shall be ROAD CLOSED AHEAD (2 sec.), PREPARE TO STOP (2 sec.)

10. The Contractor shall erect and maintain 48-inch ROAD WORK AHEAD and Stop Ahead signs on each side of the highway. Each sign shall be equipped with one Type A flashing warning light and one flare. There shall be one flare at each sign on both sides of the roadway. The flare shall be replaced if it burns out.

OFFICE OF TRAFFIC ENGINEERING

DESIGNED SHB
REVIEWED LAM
REVISION DATE 07/20/12
CHECKED

PIS NUMBER 209960

PLAN INSERT SHEET

SHORT-DURATION CLOSURE OF MULTI-LANE DIVIDED HIGHWAY

ms consultants, inc.

PROJECT SITE DATA FOR TRU-80-0496L&R OVER SAMPSON ROAD:			
Total Area	13.84 Acres	Impervious (Paved) Area for Pre-Construction Site	0.15 Acres
Project Earth Disturbed Area	1.82 Acres	Impervious (Paved) Area for Post-Construction Site	0.19 Acres
Estimated Contractor Disturbed Area	0.25 Acres	Immediate Receiving Waters	Tributary to Crab Creek
Notice of Intent Earth Disturbed Area	4.9 Acres	Subsequent Receiving Waters	Crab Creek
Runoff Coefficient for Pre-Construction Site	0.53	Soil Types	Sandy Silt with rock fragments (A-4a) and silt and Clay with rock fragments (A-6a)
Runoff Coefficient for Post-Construction Site	0.54		

SITE DESCRIPTION:
CONSTRUCTION CONSISTS OF REPLACING AND WIDENING THE SUPERSTRUCTURE ON IR-80 BRIDGE OVER SAMPSON ROAD ALONG WITH ASSOCIATED ROADWAY WORK.

USGS MAP: GIRARD, OHIO N4107.5--W8037.5 / 7.5

LATITUDE: N 41° 09' 34" LONGITUDE: N 80° 39' 06"

AS-BUILT

THIS RECORD DRAWING HAS BEEN PREPARED IN PART BY THE ENGINEER OF RECORD TO DEPICT CHANGES MADE DURING CONSTRUCTION, BASED ON INFORMATION REPORTED BY THE CONSTRUCTION CONTRACTOR.

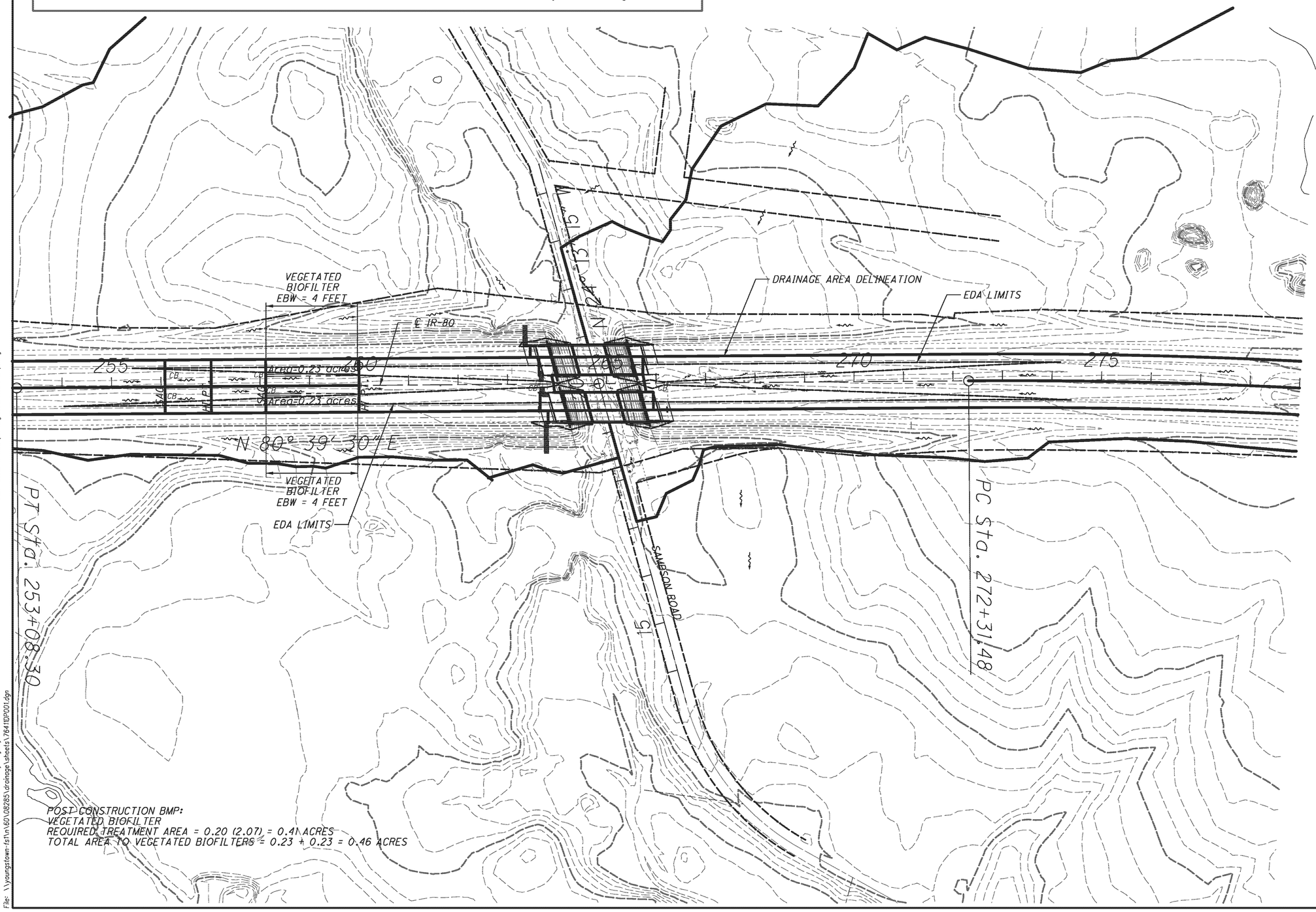

0 HORIZONTAL SCALE IN FEET 100 200

CALCULATED LMH CHECKED CB

PROJECT SITE PLAN
TRU-80-0496L&R OVER SAMPSON ROAD

TRU-80-4.70

41
142

ms consultants, inc.

Ohio DOT Workspace
Marucci & Gaffney TRU-80 Design Build

0 0.5" 1"

UCF: ohdot\V8i
PCF: 60-08285_Youngstown

34" x 22"

Batchplot Spec: \\youngstown-fs1\n\60\08285\standards\plotdrv\batchplt.spc
Pen Table: S:\std\plotting\ustn\V8i\pen\V8i_ms_std.tbl
Plot Driver: S:\std\plotting\ustn\V8i\PDF.pltcfg

Model: Sheet
Printed: 12/12/2013 @ 2:19:21 PM
View: FENCE_VIEW1
By: sgeady
File: \\youngstown-fs1\n\60\08285\drainage\sheets\764TDP001.dgn

SITE DESCRIPTION:
CONSTRUCTION CONSISTS OF REPLACING AND WIDENING THE SUPERSTRUCTURE ON IR-80 BRIDGE OVER LOGAN WAY ALONG WITH ASSOCIATED ROADWAY WORK.

USGS MAP: GIRARD, OHIO N4107.5--W8037.5 / 7.5

LATITUDE: N 41° 09' 33" LONGITUDE: N 80° 38' 02"

PROJECT SITE DATA FOR TRU-80-0591L&R OVER LOGAN WAY:			
Total Area	14.78 Acres	Impervious (Paved) Area for Pre-Construction Site	0.16 Acres
Project Earth Disturbed Area	1.73 Acres	Impervious (Paved) Area for Post-Construction Site	0.20 Acres
Estimated Contractor Disturbed Area	0.25 Acres	Immediate Receiving Waters	Tributary to Crab Creek
Notice of Intent Earth Disturbed Area	4.9 Acres	Subsequent Receiving Waters	Crab Creek
Runoff Coefficient for Pre-Construction Site	0.54	Soil Types	Sandy Silt with rock fragments (A-4a) and
Runoff Coefficient for Post-Construction Site	0.55		silt and Clay with rock fragments (A-6a)

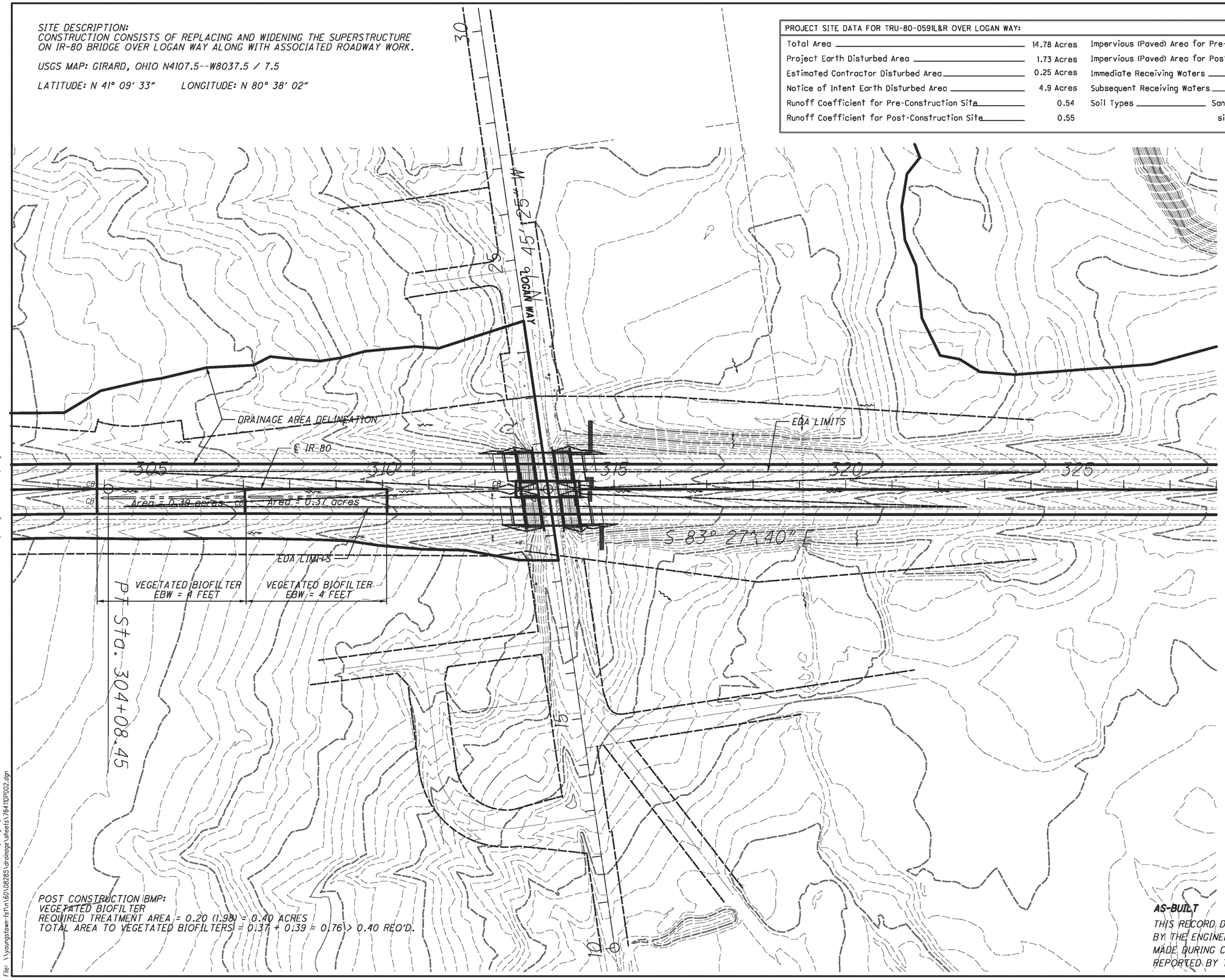

POST CONSTRUCTION BMP:
VEGETATED BIOFILTER
REQUIRED TREATMENT AREA = 0.20 (1.98) = 0.40 ACRES
TOTAL AREA TO VEGETATED BIOFILTERS = 0.37 + 0.39 = 0.76 > 0.40 REQ'D.

AS-BUILT

THIS RECORD DRAWING HAS BEEN PREPARED IN PART BY THE ENGINEER OF RECORD TO DEPICT CHANGES MADE DURING CONSTRUCTION, BASED ON INFORMATION REPORTED BY THE CONSTRUCTION CONTRACTOR.

HORIZONTAL SCALE IN FEET
0 50 100 200

CALCULATED LMH
CHECKED CB

PROJECT SITE PLAN
TRU-80-0591L&R OVER LOGAN WAY

TRU-80-4.70

ms consultants, inc.

Ohio DOT Workspace
Marucci & Caffrey TRU-80 Design Build

0 0.5" 1"

UCF: ohdot\V8i
PCF: 60-08285_Youngstown

Batchplot Spec: \\youngstown-fs1\n\60\08285\standards\plotdrv\batchplt.spc
Pen Table: S:\std\plotting\usth\V8\pen\V8i_ms_std.tbl
Plot Driver: S:\std\plotting\usth\V8\PDF.pltcfg

Model: Sheet
Printed: 12/12/2013 @ 2:19:22 PM
File: \\youngstown-fs1\n\60\08285\drainage\sheets\76410P002.dgn
View: FENCE_VIEW1
By: sgeaty

34" x 22"

PLOT.CEL

ms consultants, inc.
msconsultants.com

Ohio DOT Workspace
Marucci & Caffney TRU-80 Design Build
www.rmsconsultants.com

1" / 0.5" / 0

UCF: ohdot1V8i
PCF: 60-08285_Youngstown

Batchplot Spec: \\youngstown-fs1\n\60\08285\standards\plotdrv\batchplt.spc
Pen Table: S:\sta\plotting\usta\V8\pen\V8i_rms_std.tbl
Plot Driver: S:\sta\plotting\usta\V8\PDF.pltcfg

Model: Sheet
Printed: 12/12/2013 @ 2:19:28 PM
File: \\youngstown-fs1\n\60\08285\roadway\sheets\764110P001.dgn

34" x 22"

View: FENCE_VIEW1
By: sgeidy

AS-BUILT

THIS RECORD DRAWING HAS BEEN PREPARED IN PART BY THE ENGINEER OF RECORD TO DEPICT CHANGES MADE DURING CONSTRUCTION, BASED ON INFORMATION REPORTED BY THE CONSTRUCTION CONTRACTOR.

BENCHMARK DATA

BM #1: ELEV. 1056.36, SQUARE CUT IN CORNER OF AT&T CONC. PAD, EAST OF SAMPSON RD. AND SOUTH OF I-80 STA. 265+61.10, 114.31' RT.

BM #2: ELEV. 1074.57, X-CUT IN N-E GUARDRAIL ANCHOR BOLT @ EAST END OF THE EAST MAINLINE BRIDGE IN THE MEDIAN STA. 267+78.05, 3.04' LT.

N

0 0.5 1 2 HORIZONTAL SCALE IN FEET

CALCULATED LMH
CHECKED SWG

I-80 OVER SAMPSON ROAD PLAN
STA. 262+50 TO STA. 267+50

TRU-80-4.70

43
142

Ex LA-R/W
Ex R/W
SAN
15" VSP SAN
8" STEEL GAS
℄ CONST. SAMPSON ROAD
N 24° 13' 15" W
BURIED TELEPHONE
3 AERIAL ELECTRIC
℄ I-80 STA. 264+84.62=
℄ SAMPSON ROAD STA. 20+00.00
STRUCTURE NO. TRU-80-0496L
CRUSHED AGGREGATE SLOPE PROTECTION (TYP.)
14°-52'-45" SKEW
13 AGGR. DRAINS @ 50' SPACING
+92
CONST. LIMIT
2'
B-006
10'
24'
4
20 AGGR. DRAINS @ 50' SPACING
+17
42'
℄ CONST. IR 80
263
264
265
266
267
TH #5
TH #6
N 80° 39' 30" E
20
17 AGGR. DRAINS @ 50' SPACING
+19
B-007
WESTBOUND
26 AGGR. DRAINS @ 50' SPACING
+44
29 AGGR. DRAINS @ 50' SPACING
+25
15" RCP
B-002
EASTBOUND
B-003
20 AGGR. DRAINS @ 50' SPACING
+50
12" RCP
13 AGGR. DRAINS @ 50' SPACING
+75
STRUCTURE NO. TRU-80-0496R
BM #1
19
18
SAMPSON ROAD
27" RCP
STA. 264+02.36 * BEGIN STRUCTURE
STA. 263+77.36 * END PRESSURE RELIEF JOINT BEGIN APPROACH SLAB
STA. 263+73.22 * SUSPEND FULL DEPTH PAVEMENT BEGIN PRESSURE RELIEF JOINT
STA. 263+52.36 * SUSPEND PLANING AND RESURFACING BEGIN FULL DEPTH PAVEMENT
STA. 266+14.52 * END FULL DEPTH PAVEMENT RESUME PLANING AND RESURFACING
STA. 265+93.66 * END PRESSURE RELIEF JOINT RESUME FULL DEPTH PAVEMENT
STA. 265+89.52 * END APPROACH SLAB BEGIN PRESSURE RELIEF JOINT
STA. 265+64.52 * BEGIN APPROACH SLAB

NOTES: TH# 5 8" STEEL GAS LINE
ELEV 1048.21 (3.92' DEPTH)
TH# 6 25"X15" CONCRETE CAP ON TELEPHONE LINE
ELEV 1046.13 (6.36' DEPTH)

SEE GUARDRAIL PLAN SHTS. 53 - 54 FOR PROPOSED GUARDRAIL DETAILS.

* ℄ STATION PROVIDED ALONG SKEW

Ⓐ CONTRACTOR TO REMOVE FENCE AS REQUIRED AND REINSTALL AT CONCLUSION OF CONSTRUCTION

ITEM 601- TIED CONCRETE BLOCK MAT, TYPE 2

PLOT.CEL

ms consultants, inc.
msconsultants.com

Ohio DOT Workspace
Marucci & Coffney, TRU-80 Design Build
www.msconsultants.com

0 0.5" 1"

UCF: ohdot1V8i
PCF: 60-08285_Youngstown

Batchplot Spec: \\youngstown-fs1\n\60\08285\standards\plotdrv\batchplt.spc
Pen Table: S:\std\plotting\ustn\V8\pen_ms_std.tbl
Plot Driver: S:\std\plotting\ustn\V8\PDF.pltcfg

Model: Sheet
Printed: 12/12/2013 @ 2:19:24 PM
File: \\youngstown-fs1\n\60\08285\roadway\sheets\764110P002.dgn

34" x 22"

View: FENCE... VIEW1
By: sgaby

CALCULATED LMH
CHECKED SWG

SAMPSON ROAD PROFILE
STA. 262+50 TO STA. 267+00

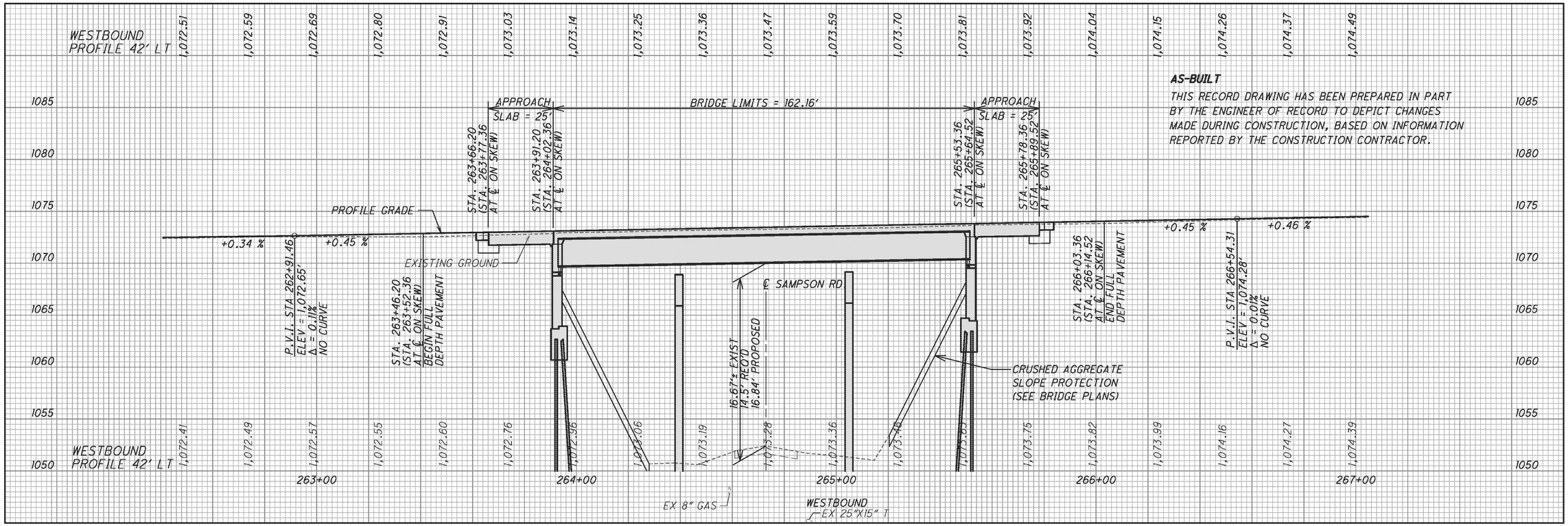

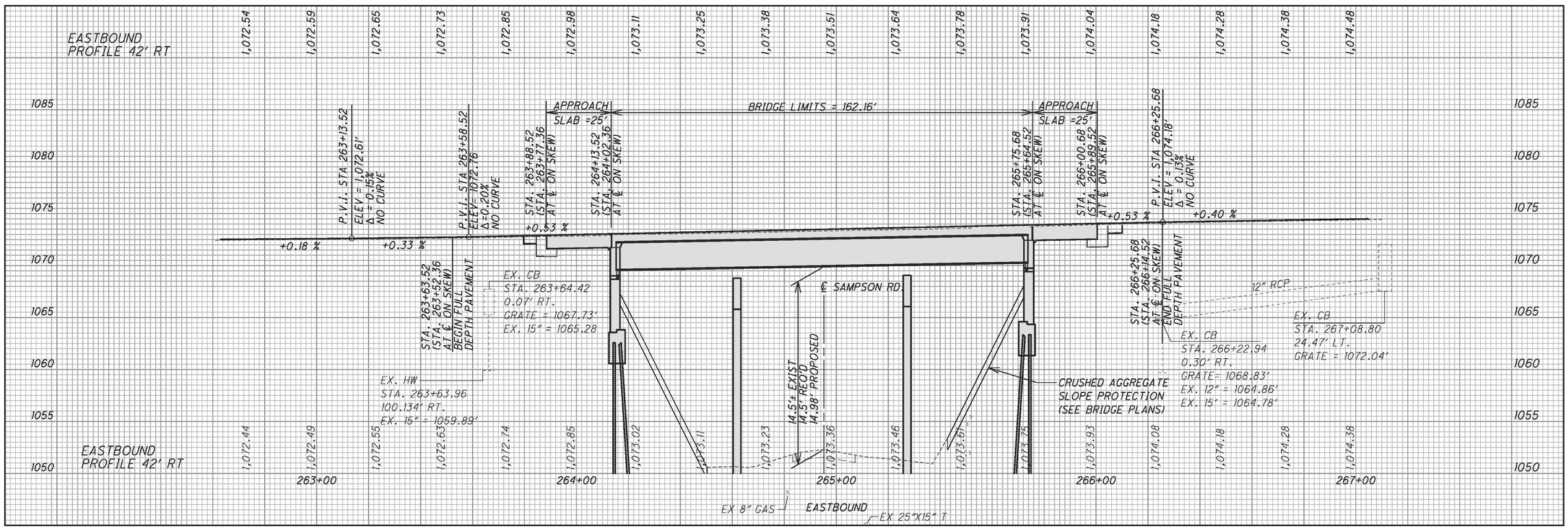

TRU-80-4.70

ms consultants, inc.

PLOT.CEL

ms consultants, inc.
msconsultants.com

Ohio DOT Workspace
Marucci & Gaffney TRU-80 Design Build
www.msconsultants.com

1" / 0.5" / 0

UCF: ohdot\V8i
PCF: 60-08285_Youngstown

Batchplot Spec: \\youngstown-fs1\n\60\08285\standards\plotdrv\batchplt.spc
Pen Table: S:\std\plotting\usstn\V8\pen\V8_ms_std.tbl
Plot Driver: S:\std\plotting\usstn\V8\PDF.pltcfg

Model: Sheet
Printed: 12/12/2013 @ 2:19:26 PM
File: \\youngstown-fs1\n\60\08285\roadway\sheets\764110P003.dgn
View: FENCE_VIEW1
By: sgeidy

34" x 22"

AS-BUILT

THIS RECORD DRAWING HAS BEEN PREPARED IN PART BY THE ENGINEER OF RECORD TO DEPICT CHANGES MADE DURING CONSTRUCTION, BASED ON INFORMATION REPORTED BY THE CONSTRUCTION CONTRACTOR.

BENCHMARK DATA

BM #1: ELEV. 1047.54, X-CUT IN SOUTHEAST BOLT OF THE NORTH-EAST SUPPORT FOR OVERHEAD TRUSS NORTH OF THE I-80 WESTBOUND LANES, STA. 310+69.15, 82.92' LT.

BM #2: ELEV. 1022.70, X-CUT IN NORTH CAP BOLT ON FIRE HYDRANT, STA. 313+62.17, 90.09' LT.

Ex LA-R/W

LOGAN WAY

BURIED TELEPHONE

8" AC WATER

4" STL GAS

12" VSP SAN

AERIAL ELECTRIC

8°-17'-45" SKEW

℄ I-80 STA. 313+57.66=
℄ LOGAN WAT STA. 20+00.00

STRUCTURE NO.
TRU-80-0591L

24" CMP

BM #2

TH #1

TH #2

TH #3

TH #4

STA. 314+66.68 *
END FULL DEPTH PAVEMENT
RESUME PLANING AND RESURFACING

CONST. LIMIT

B-014

B-015

B-010

B-011

WESTBOUND

EASTBOUND

15 AGGR. DRAINS @ 50' SPACING

20 AGGR. DRAINS @ 50' SPACING

30 AGGR. DRAINS @ 50' SPACING

25 AGGR. DRAINS @ 50' SPACING

17 AGGR. DRAINS @ 50' SPACING

13 AGGR. DRAINS @ 50' SPACING

15" RCP

STA. 312+48.64 *
SUSPEND PLANING AND RESURFACING
BEGIN FULL DEPTH PAVEMENT

STA. 312+69.59 *
SUSPEND FULL DEPTH PAVEMENT
BEGIN PRESSURE RELIEF JOINT

STA. 312+73.64 *
END PRESSURE RELIEF JOINT
BEGIN APPROACH SLAB

STA. 312+98.64 *
BEGIN STRUCTURE

STRUCTURE NO.
TRU-80-0591R

℄ CONST. LOGAN WAY

N 1° 45' 25" W

STA. 314+45.73 *
END APPROACH SLAB
RESUME FULL DEPTH PAVEMENT

STA. 314+41.68 *
END APPROACH SLAB
BEGIN PRESSURE RELIEF JOINT

STA. 314+16.68 *
END STRUCTURE

SEE GUARDRAIL PLAN SHT. 55 & 65 FOR PROPOSED GUARDRAIL DETAILS.

* ℄ STATION PROVIDED ALONG SKEW

Ⓐ CONTRACTOR TO REMOVE FENCE AS REQUIRED AND REINSTALL AT CONCLUSION OF CONSTRUCTION

ITEM 601- TIED CONCRETE BLOCK MAT, TYPE 2

NOTES: TH# 1 8" AC WATERLINE
ELEV 1016.78 (4.37' DEPTH)
TH# 2 4" STEEL GAS LINE
ELEV 1016.76 (3.95' DEPTH)
TH# 3 32"X16" CONCRETE CAP
ON TELEPHONE LINES
ELEV 1018.65 (2.86' DEPTH)
TH# 4 4" STEEL GAS LINE
ELEV 1016.80 (4.53' DEPTH)

0 0.5 1 2 HORIZONTAL SCALE IN FEET

CALCULATED LMH
CHECKED SWG

I-80 OVER LOGAN WAY
STA. 311+00 TO STA. 316+00

TRU-80-4.70

45
142

ms consultants, inc.

PLOT.CEL

ms consultants, inc.
msconsultants.com

Ohio DOT Workspace
Marucci & Caffney, TRU-80 Design Build
www.rmsconsultants.com

0 0.5" 1"

UCF: ohdot1V8i
PCF: 60-08285_Youngstown

Batchplot Spec: \\youngstown-fs1\n\60\08285\standards\plotdrv\batchplt.spc
Pen Table: S:\stot\plotting\ustn\V8\pen\V8i_rms_std.tbl
Plot Driver: S:\stot\plotting\ustn\V8\PDF.pltcfg

Model: Sheet
Plotted: 12/12/2013 @ 2:19:26 PM By: sgady
File: \\youngstown-fs1\n\60\08285\roadway\sheets\764110P004.dgn
View: FENCE_VIEW1

34" x 22"

CALCULATED LHM
CHECKED SWG

LOGAN WAY PROFILE
PROFILE STA. 311+50 TO STA. 316+00

WESTBOUND PROFILE 42' LT

EASTBOUND PROFILE 42' RT

AS-BUILT

THIS RECORD DRAWING HAS BEEN PREPARED IN PART BY THE ENGINEER OF RECORD TO DEPICT CHANGES MADE DURING CONSTRUCTION, BASED ON INFORMATION REPORTED BY THE CONSTRUCTION CONTRACTOR.

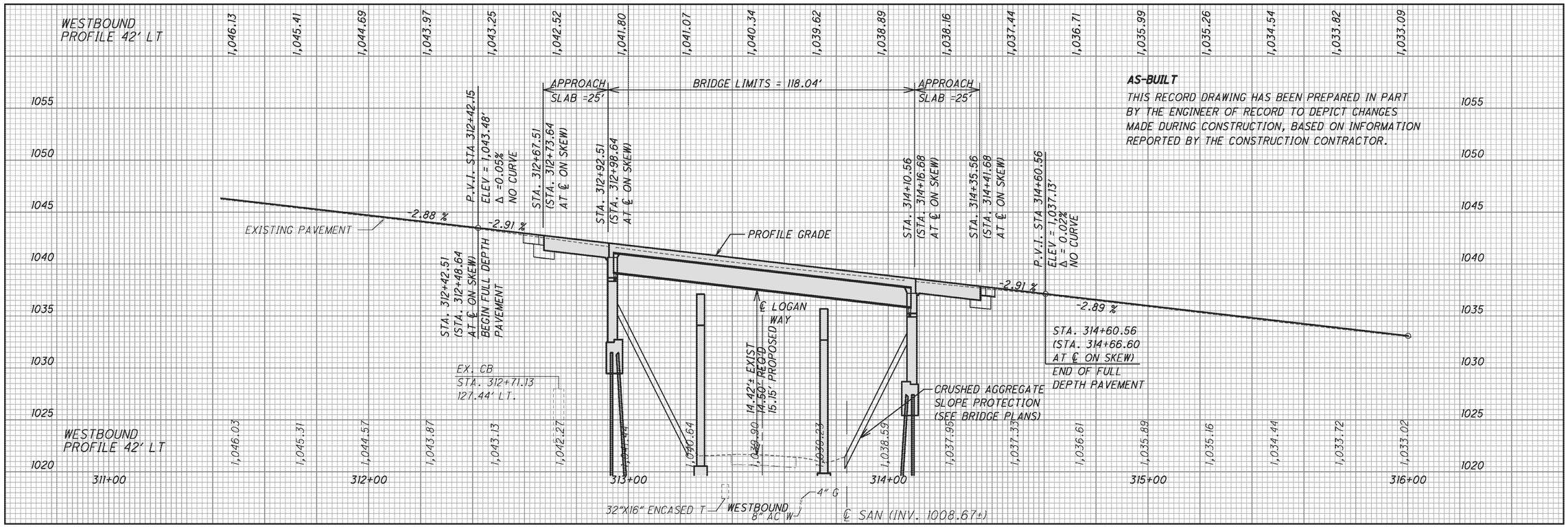

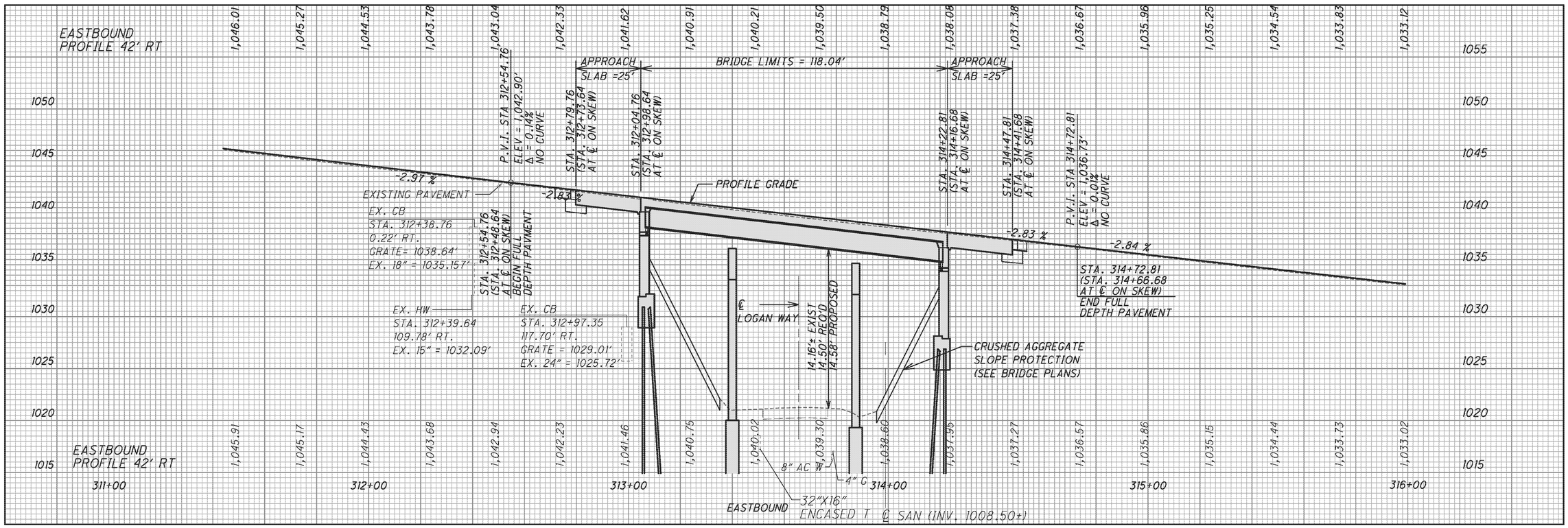

TRU-80-4.70

rms consultants, inc.

SEEDING	
END WIDTH	SQ. YDS.

END AREA		VOLUME	
CUT	FILL	CUT	FILL

CALCULATED

CHECKED

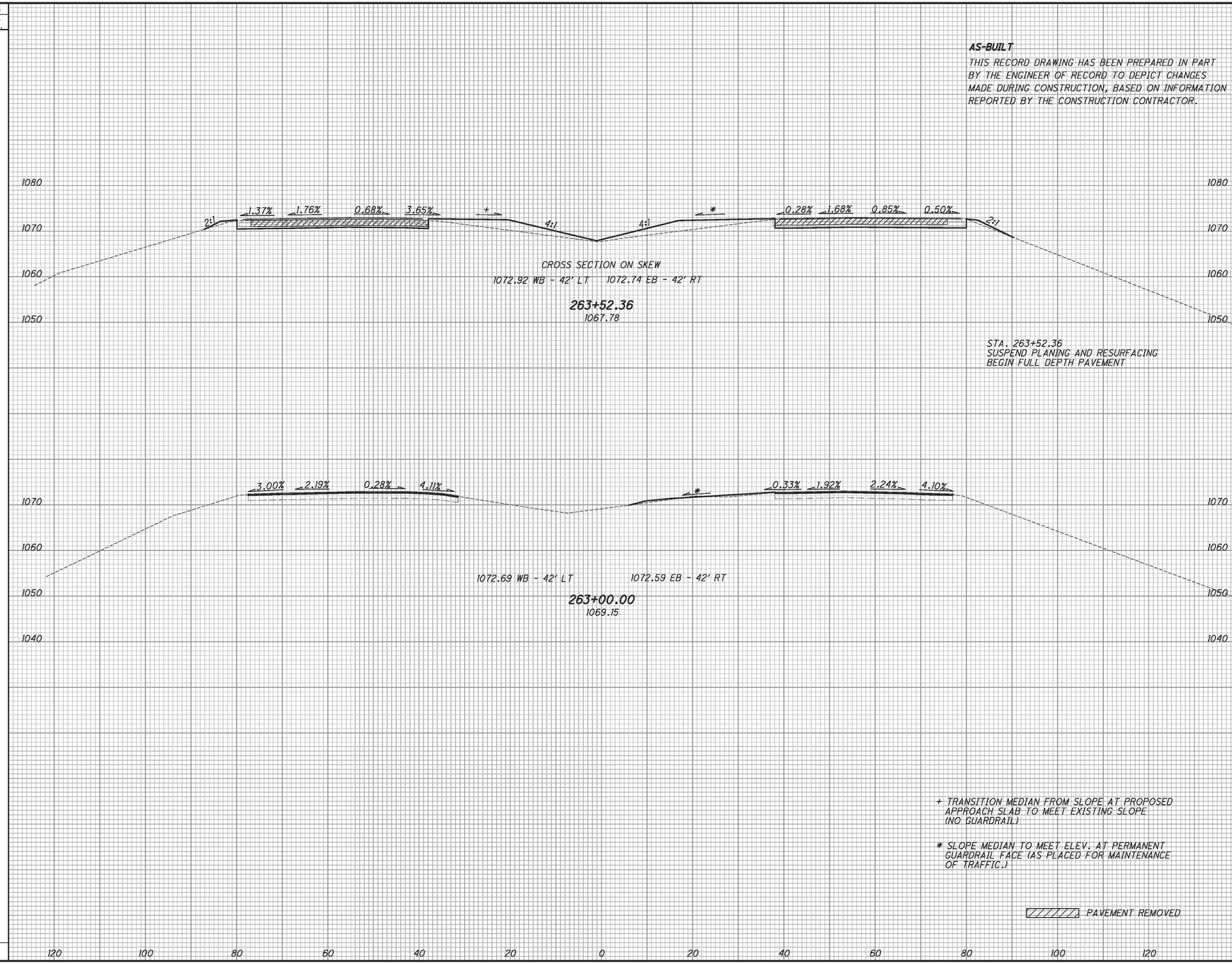

AS-BUILT

THIS RECORD DRAWING HAS BEEN PREPARED IN PART BY THE ENGINEER OF RECORD TO DEPICT CHANGES MADE DURING CONSTRUCTION, BASED ON INFORMATION REPORTED BY THE CONSTRUCTION CONTRACTOR.

+ TRANSITION MEDIAN FROM SLOPE AT PROPOSED APPROACH SLAB TO MEET EXISTING SLOPE (NO GUARDRAIL)

* SLOPE MEDIAN TO MEET ELEV. AT PERMANENT GUARDRAIL FACE (AS PLACED FOR MAINTENANCE OF TRAFFIC.)

PAVEMENT REMOVED

CROSS SECTIONS - IR 80 OVER SAMPSON RD.
STA. 263+00.00 TO STA. 263+52.36

TRU-80-4.70

ms consultants, inc.

Ohio DOT Workspace
Marucci & Goffney TRU-80 Design Build
UCF: ohdot\V8i
PCF: 60-08285_Youngstown
Batchplot Spec: \\youngstown-fs1\n\60\08285\standards\plotdrv\batchplt.spc
Pen Table: S:\std\plotting\ustn\V8i\pen\V8i_ms_std.tbl
Plot Driver: S:\std\plotting\ustn\V8i\PDF.pltcfg
Sheet 12/12/2013 @ 2:19:27 PM
Date
Plotted
File: \\youngstown-fs1\n\60\08285\roadway\sheets\76411XS001.dgn
View FENCE_VIEW1
By: sgeely

SEEDING	
END WIDTH	SQ. YDS.

END AREA		VOLUME	
CUT	FILL	CUT	FILL

CALCULATED

CHECKED

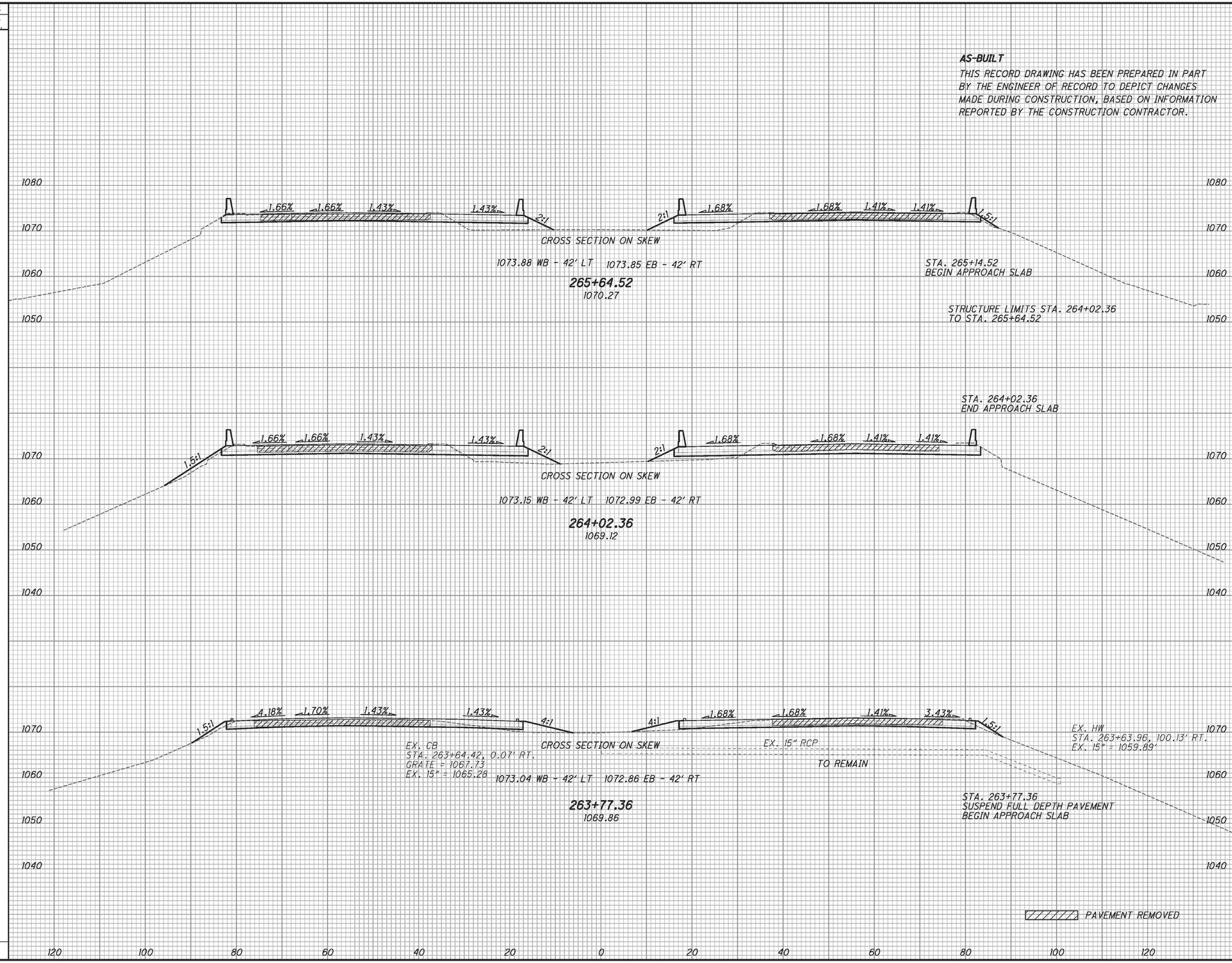

CROSS SECTIONS - IR 80 OVER SAMPSON RD.
STA. 263+77.36 TO STA. 265+64.52

TRU-80-4.70

ms consultants, inc.

Batchplot Spec: \\youngstown-fs1\n\60\08285\standards\plotdrv\batchplt.spc
Pen Table: S:\std\plotting\ustn\V8i\pen\V8i_ms_std.tbl
Plot Driver: S:\std\plotting\ustn\V8i\PDF.pltcfg
Ohio DOT Workspace
Marucci & Gaffney TRU-80 Design Build
UCF: ohdotV8i
PCF: 60-08285_Youngstown
Sheet 12/12/2013 @ 2:19:28 PM
View FENCE_VIEW1
By: sgeely
File: \\youngstown-fs1\n\60\08285\roadway\sheets\76411XS001.dgn

PLOT.CEL

ms consultants, inc.
msconsultants.com

Ohio DOT Workspace
Marucci & Gaffney TRU-80 Design Build
www.msconsultants.com

UCF: ohdotV8i
PCF: 60-08285_Youngstown

Batchplot Spec: \\youngstown-fs1\n\60\08285\standards\plotdrv\batchplt.spc
Pen Table: S:\std\plotting\ustn\V8i\pen\V8i_ms_std.tbl
Plot Driver: S:\std\plotting\ustn\V8i\PDF.pltcfg

Model: Sheet
Printed: 12/12/2013 @ 2:19:28 PM
File: \\youngstown-fs1\n\60\08285\roadway\sheets\76411XS001.dgn
View: FENCE_VIEW1
By: sgeely

SEEDING	
END WIDTH	SQ. YDS.

END AREA		VOLUME	
CUT	FILL	CUT	FILL

CALCULATED

CHECKED

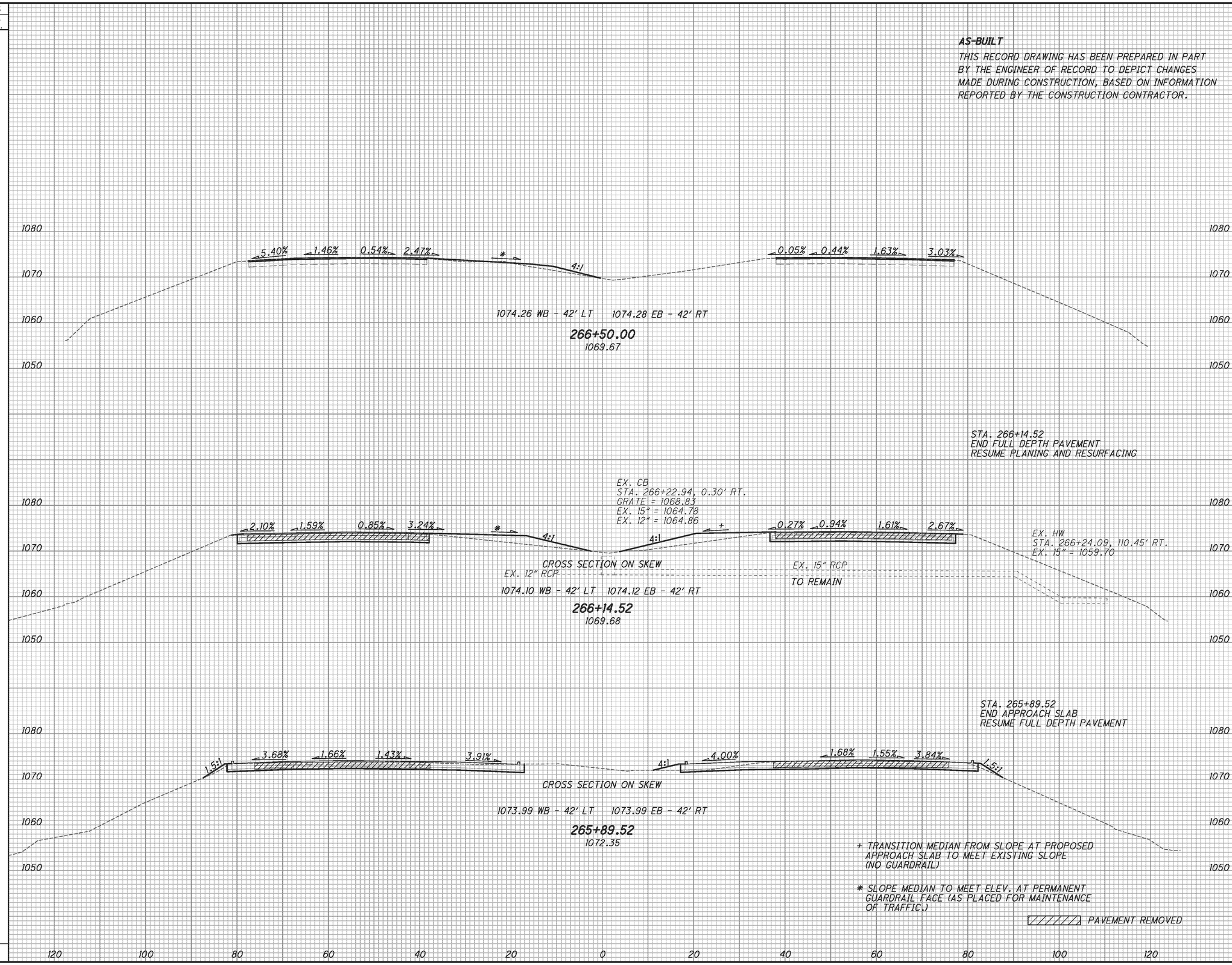

CROSS SECTIONS - IR 80 OVER SAMPSON RD.
STA. 265+89.52 TO STA. 266+50.00

TRU-80-4.70

ms consultants, inc.

SEEDING	
END WIDTH	SQ. YDS.

END AREA		VOLUME	
CUT	FILL	CUT	FILL

CALCULATED

CHECKED

AS-BUILT

THIS RECORD DRAWING HAS BEEN PREPARED IN PART BY THE ENGINEER OF RECORD TO DEPICT CHANGES MADE DURING CONSTRUCTION, BASED ON INFORMATION REPORTED BY THE CONSTRUCTION CONTRACTOR.

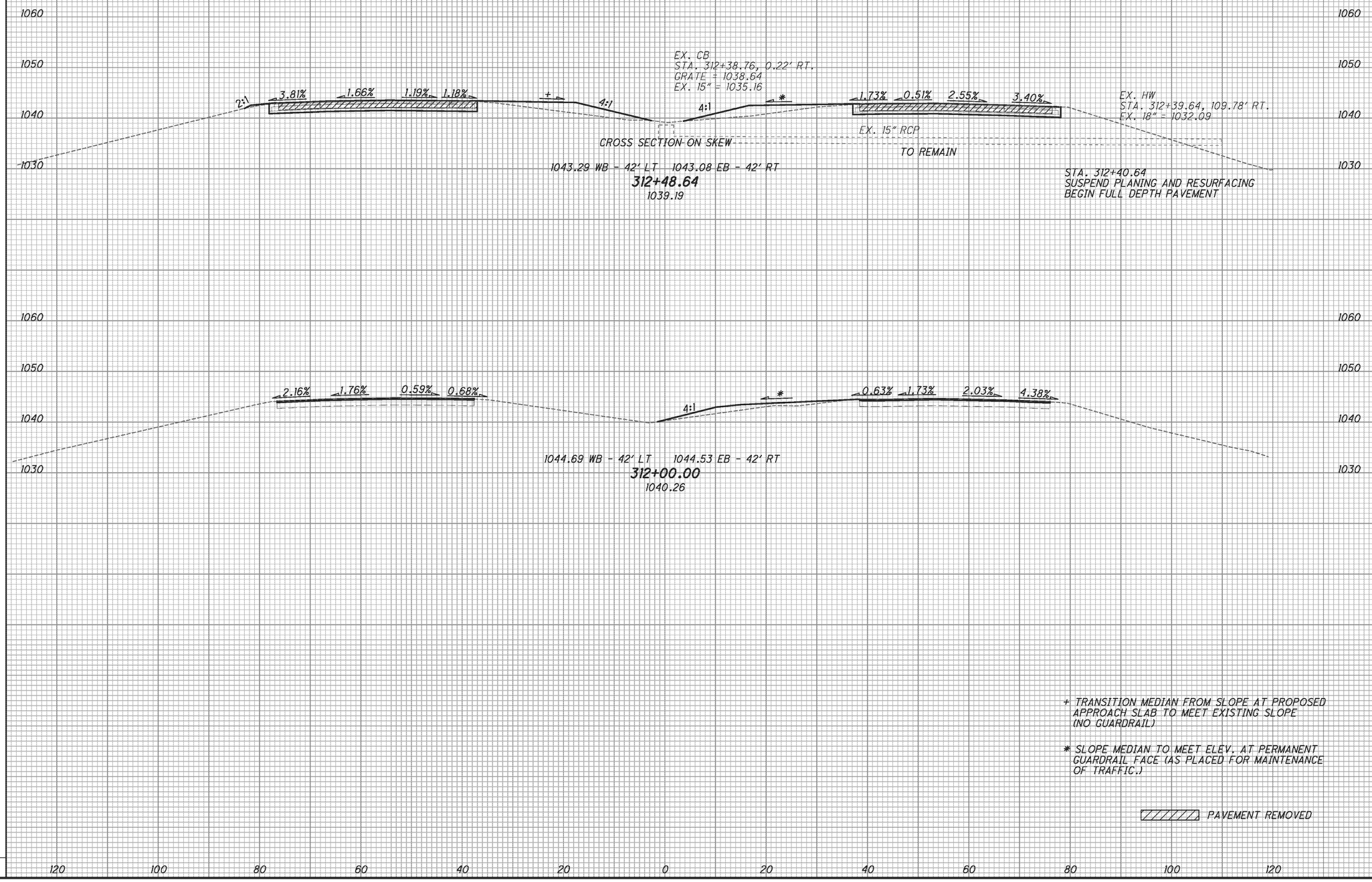

\+ TRANSITION MEDIAN FROM SLOPE AT PROPOSED APPROACH SLAB TO MEET EXISTING SLOPE (NO GUARDRAIL)

* SLOPE MEDIAN TO MEET ELEV. AT PERMANENT GUARDRAIL FACE (AS PLACED FOR MAINTENANCE OF TRAFFIC.)

PAVEMENT REMOVED

CROSS SECTION - IR 80 OVER LOGAN ROAD
STA. 312+00.00 TO STA. 312+48.64

TRU-80-4.70

ms consultants, inc.

Ohio DOT Workspace
Marucci & Gaffney, TRU-80 Design Build

UCF: ohdot1V8i
PCF: 60-08285_Youngstown

Batchplot Spec: \\youngstown-fs1\n\60\08285\standards\plotdrv\batchplt.spc
Pen Table: S:\std\plotting\ustn\V8\pen\V8i_ms_std.tbl
Plot Driver: S:\std\plotting\ustn\V8\PDF.pltcfg

Sheet 12/12/2013 @ 2:19:30 PM User FENCE_VIEW1
Model By: sgady
File: \\youngstown-fs1\n\60\08285\roadway\sheets\76411MXS002.dgn

34" x 22"

SEEDING	
END WIDTH	SQ. YDS.

END AREA		VOLUME	
CUT	FILL	CUT	FILL

CALCULATED

CHECKED

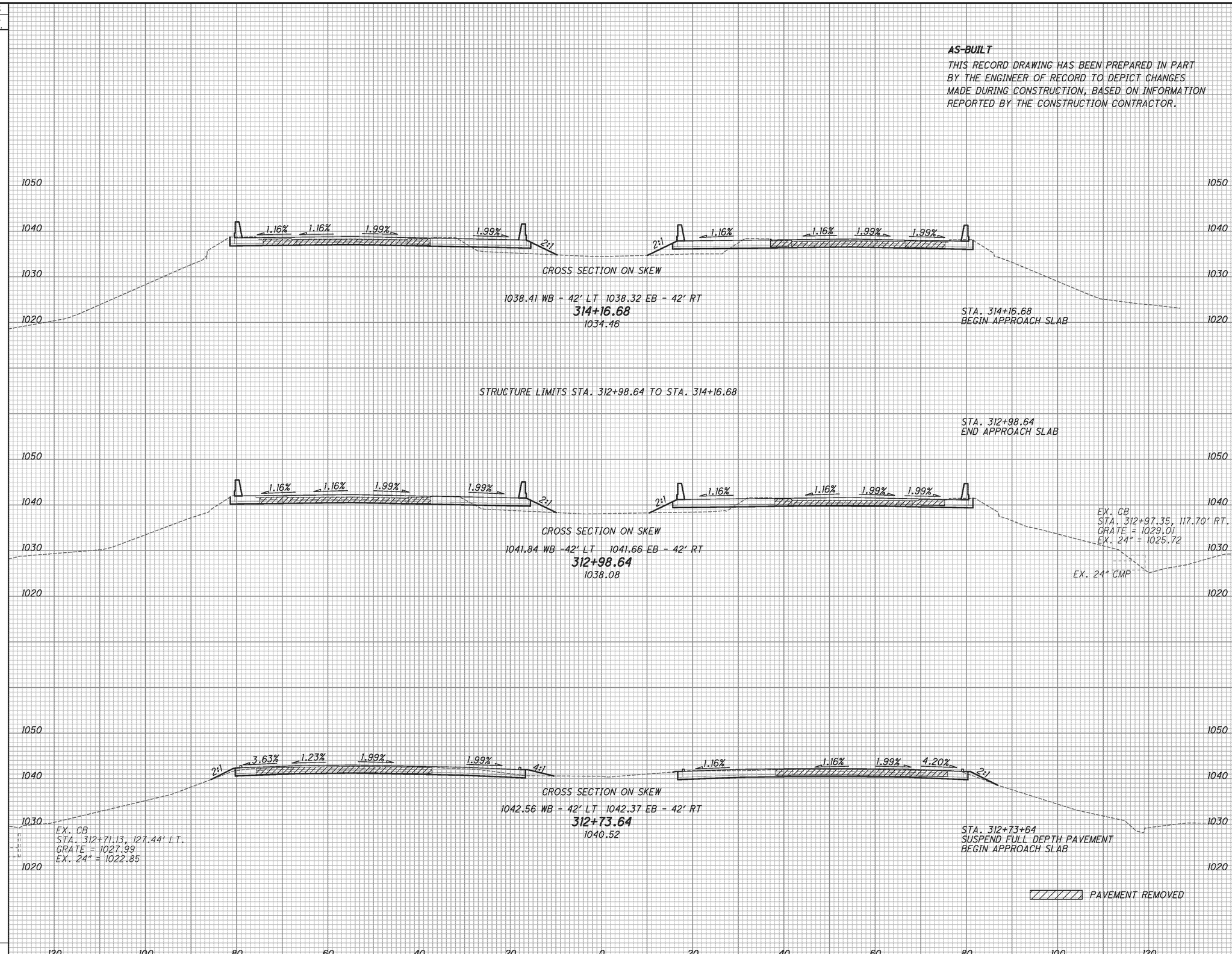

CROSS SECTION - IR 80 OVER LOGAN ROAD
STA. 312+73.64 TO STA. 314+16.68

TRU-80-4.70

ms consultants, inc.

Batchplot Spec: \\youngstown-fs1\n\60\08285\standards\plotdrv\batchplt.spc
Pen Table: S:\std\plotting\ustn\V8i\pen\V8i_ms_std.tbl
Plot Driver: S:\std\plotting\ustn\V8i\PDF.pltcfg
Ohio DOT Workspace
Marucci & Goffney TRU-80 Design Build
UCF: ohdotV8i
PCF: 60-08285_Youngstown
Sheet 12/12/2013 @ 2:19:30 PM
Model FENCE_VIEW1
Project By: sgeely
File: \\youngstown-fs1\n\60\08285\roadway\sheets\76411XS002.dgn

SEEDING	
END WIDTH	SQ. YDS.

END AREA		VOLUME	
CUT	FILL	CUT	FILL

CALCULATED | CHECKED

AS-BUILT

THIS RECORD DRAWING HAS BEEN PREPARED IN PART BY THE ENGINEER OF RECORD TO DEPICT CHANGES MADE DURING CONSTRUCTION, BASED ON INFORMATION REPORTED BY THE CONSTRUCTION CONTRACTOR.

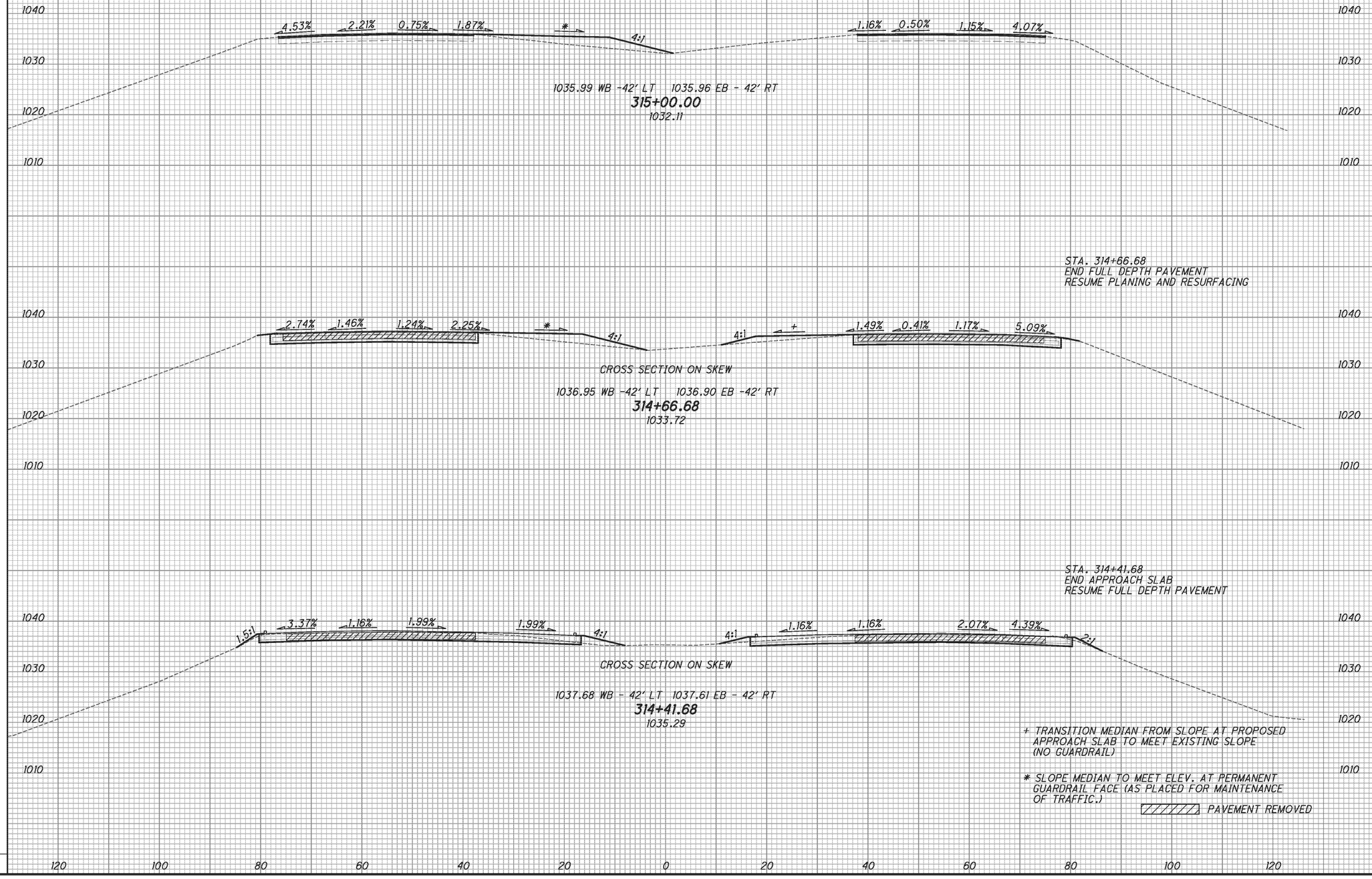

\+ TRANSITION MEDIAN FROM SLOPE AT PROPOSED APPROACH SLAB TO MEET EXISTING SLOPE (NO GUARDRAIL)

* SLOPE MEDIAN TO MEET ELEV. AT PERMANENT GUARDRAIL FACE (AS PLACED FOR MAINTENANCE OF TRAFFIC.)

▨ PAVEMENT REMOVED

CROSS SECTION - IR 80 OVER LOGAN ROAD
STA. 314+41.68 TO STA. 315+00.00

TRU-80-4.70

ms consultants, inc.

Batchplot Spec: \\youngstown-fs1\n\60\08285\standards\plotdrv\batchplt.spc
Pen Table: S:\std\plotting\ustn\V8\pen\V8I_ms_std.tbl
Plot Driver: S:\std\plotting\ustn\V8\HDP.pltcfg
UCF: ohdot1V8i Ohio DOT Workspace
PCF: 60-08285_Youngstown Marucci & Gaffney TRU-80 Design Build
1" 0.5" 0
34" x 22"
Sheet FENCE_VIEW1
12/12/2013 @ 2:19:30 PM By: sgady
File: \\youngstown-fs1\n\60\08285\roadway\sheets\7641fXS002.dgn

PLOT.CEL

ms consultants, inc.
msconsultants.com

www.rmsconsultants.com

Ohio DOT Workspace
Marucci & Caffney TRU-80 Design Build

UCF: ohdot\V8i
PCF: 60-08285_Youngstown

0 0.5" 1"

34" x 22"

Batchplot Spec: \\youngstown-fs1\n\60\08285\standards\plotdrv\batchplt.spc
Pen Table: S:\sta\plotting\austin\V8\pen\V8i_rms_std.tbl
Plot Driver: S:\sta\plotting\austin\V8\PDF.pltcfg

Model: Sheet
Printed: 12/12/2013 @ 2:19:32 PM
File: \\youngstown-fs1\n\60\08285\roadway\sheets\764110GR001.dgn
View: FENCE_VIEW1
By: sgeidy

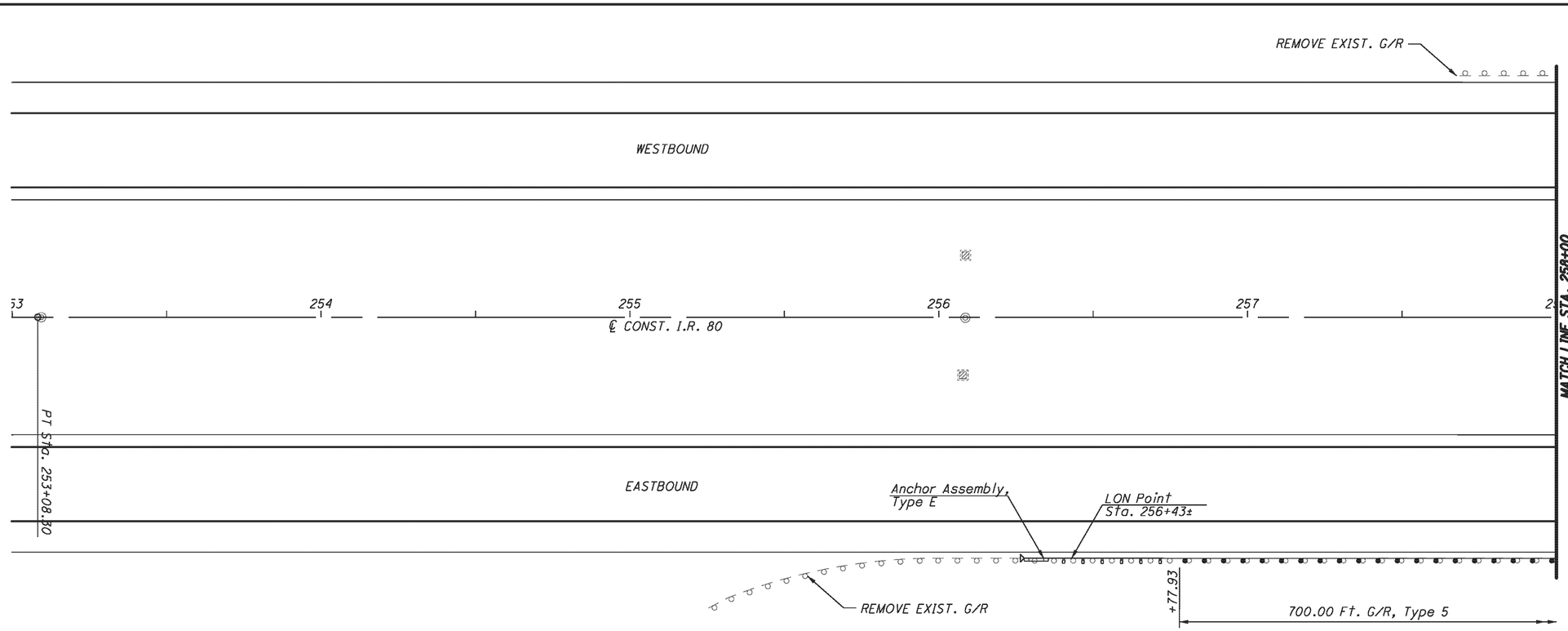

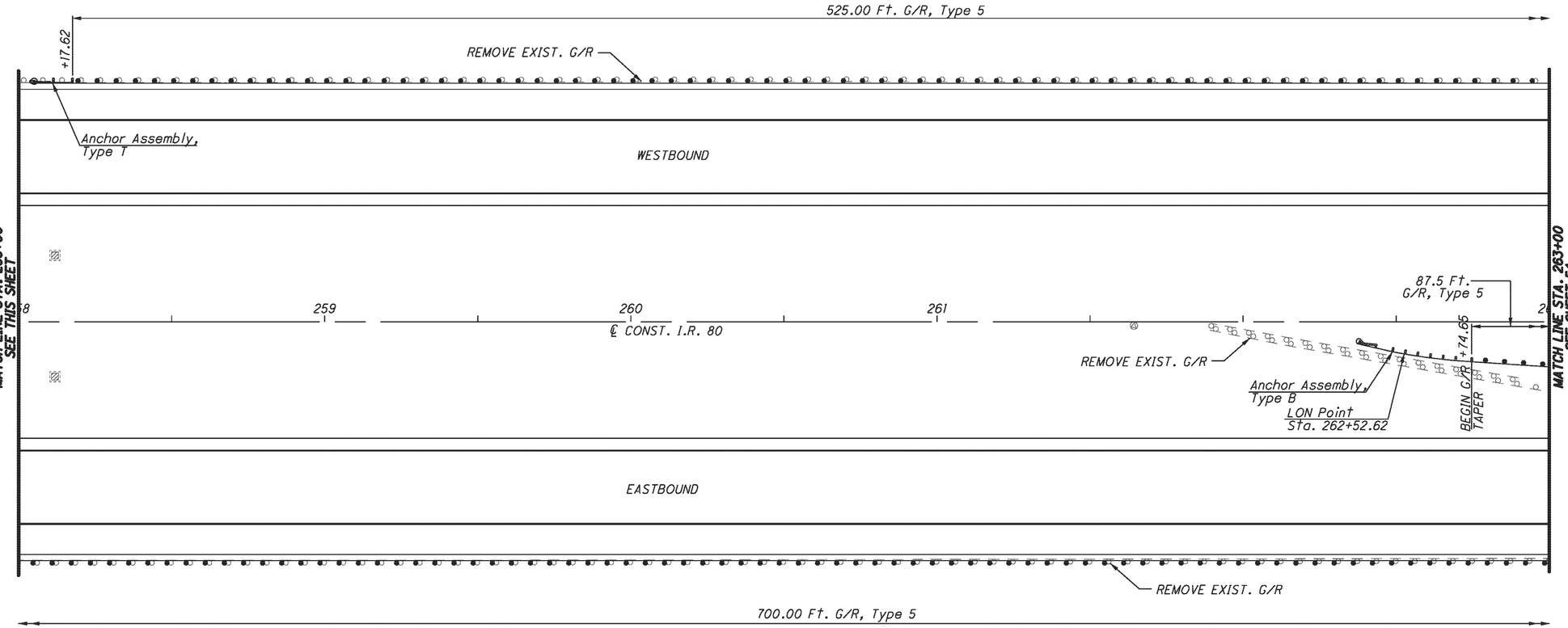

AS-BUILT
THIS RECORD DRAWING HAS BEEN PREPARED IN PART BY THE ENGINEER OF RECORD TO DEPICT CHANGES MADE DURING CONSTRUCTION, BASED ON INFORMATION REPORTED BY THE CONSTRUCTION CONTRACTOR.

LEGEND

BTA = BRIDGE TERMINAL ASSEMBLY
LON = LENGTH OF NEED
G/R = GUARDRAIL

HORIZONTAL SCALE IN FEET
0 10 20 40

CALCULATED LHM
CHECKED SWG

GUARDRAIL PLAN
STA. 253+00 TO STA. 263+00 - I.R.-80

TRU-80-4.70

PLOT.CEL

ms consultants, inc.
msconsultants.com

www.rmsconsultants.com

Ohio DOT Workspace
Marucci & Gaffney TRU-80 Design Build

UCF: ohdot1V8i
PCF: 60-08285_Youngstown

Batchplot Spec: \\youngstown-fs1\n\60\08285\standards\plotdrv\batchplt.spc
Pen Table: S:\std\plotting\usstn\V8\pen\V8i_rms_std.tbl
Plot Driver: S:\std\plotting\usstn\V8\PDF.pltcfg

Model: Sheet
Printed: 12/12/2013 @ 2:19:32 PM
File: \\youngstown-fs1\n\60\08285\roadway\sheets\764110GR002.dgn
View: FENCE_VIEW1
By: sgeidy

34" x 22"

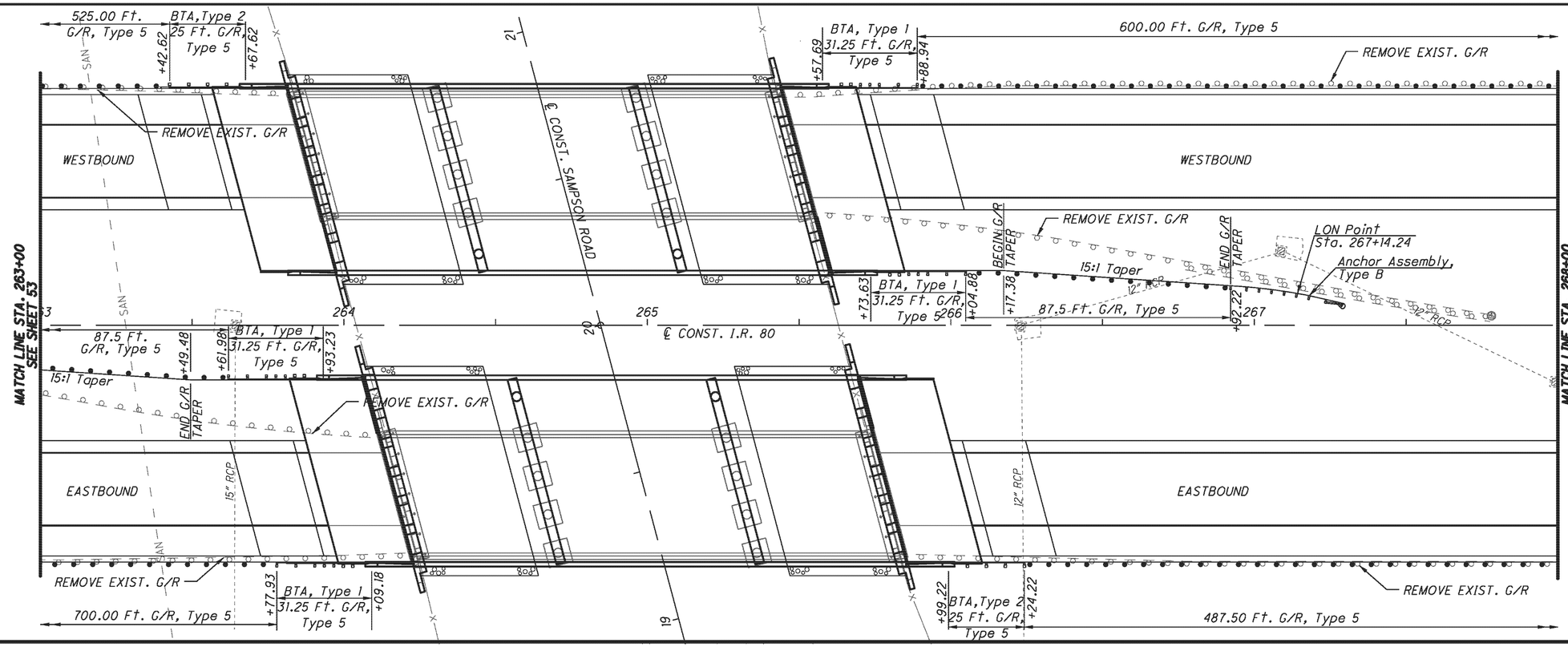

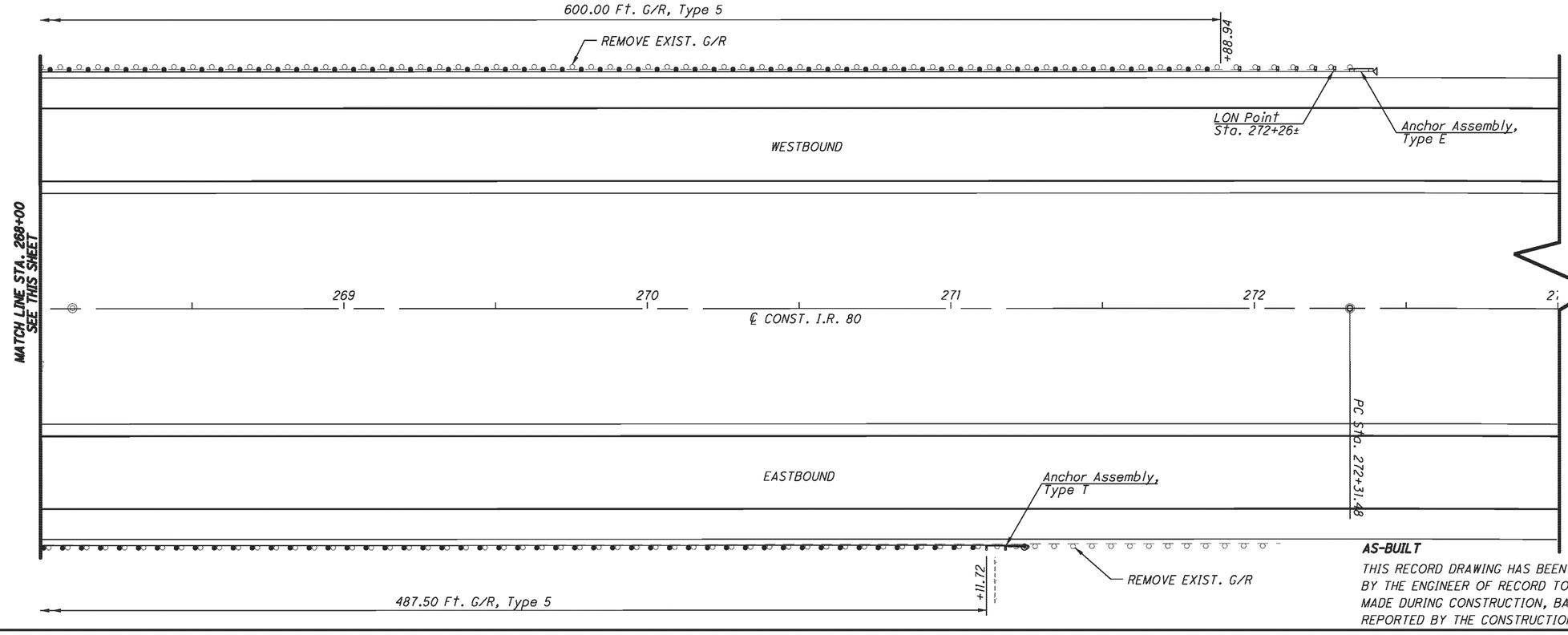

AS-BUILT

THIS RECORD DRAWING HAS BEEN PREPARED IN PART BY THE ENGINEER OF RECORD TO DEPICT CHANGES MADE DURING CONSTRUCTION, BASED ON INFORMATION REPORTED BY THE CONSTRUCTION CONTRACTOR.

HORIZONTAL SCALE IN FEET
0 10 20 40

CALCULATED LHM
CHECKED SWG

GUARDRAIL PLAN
STA. 263+00 TO STA. 273+00 - I.R.-80

TRU-80-4.70

ms consultants, inc.

PLOT.CEL

ms consultants, inc.
msconsultants.com

Ohio DOT Workspace
Marucci & Gaffney TRU-80 Design Build
www.msconsultants.com

1"
0.5"
0

UCF: ohdot1V8i
PCF: 60-08285_Youngstown

Batchplot Spec: \\youngstown-fs1\n\60\08285\standards\plotdrv\batchplt.spc
Pen Table: S:\sta\plotting\ustn\V8\pen\V8i_ms_std.tbl
Plot Driver: S:\sta\plotting\ustn\V8\PDF.pltcfg

Model: Sheet
Printed: 12/12/2013 @ 2:19:33 PM
File: \\youngstown-fs1\n\60\08285\roadway\sheets\764110R003.dgn
View: FENCE_VIEW1
By: sgeidy

34" x 22"

50.00 Ft. G/R, Type 5
12.50 Ft. G/R, Type 5A
175.00 Ft. G/R, Type 5
BTA,Type 2 25 Ft. G/R, Type 5
+10.75
+60.75
+73.25
+48.25
+73.25
REMOVE EXIST. G/R
Conc. Barrier
℄ CONST. LOGAN WAY
Anchor Assembly, Type T
Anchor Assembly, Type T
BEGIN G/R TAPER
END G/R TAPER
Anchor Assembly, Type B
WESTBOUND
+74.28
+86.78
15:1 Taper
+50.0 Ft. G/R, Type 5
+24.20
REMOVE EXIST. G/R
LON Point Sta. 311+49.15
309
310
311
312
313
℄ CONST. I.R. 80
MATCH LINE STA. 313+50 SEE THIS SHEET
+68.78
87.5 Ft. G/R, Type 5
BTA, Type 1 31.25 Ft. G/R, Type 5
+56.11
+87.36
+43.61
HCP
15:1 Taper
Anchor Assembly, Type B
LON Point Sta. 311+46.75
BEGIN G/R TAPER
END G/R TAPER
EASTBOUND
Anchor Assembly, Type E
LON Point Sta. 310+07.5±
REMOVE EXIST. G/R
+39.86
225.00 Ft. G/R, Type 5
+64.86
BTA, Type 1 31.25 Ft. G/R, Type 5
+96.11

+42
BTA, Type 1 31.25 Ft. G/R, Type 5
+19.21
+50.46
762.5 Ft. G/R, Type 5
REMOVE EXIST. G/R
WESTBOUND
MATCH LINE STA. 313+50 SEE THIS SHEET
BEGIN G/R TAPER
LON Point Sta. 315+68.57
Anchor Assembly, Type B
15:1 Taper
REMOVE EXIST. G/R
+27.96
BTA, Type 1 31.25 Ft. G/R, Type 5
+59.21
+71.71
87.5 Ft. G/R, Type 5
+16.54
END G/R TAPER
314
315
316
317
318
℄ CONST. I.R. 80
S 83° 27' 40" E
MATCH LINE STA. 318+50 SEE SHEET 56
℄ CONST. LOGAN WAY
EASTBOUND
REMOVE EXIST. G/R
+42.06
BTA,Type 2 25 Ft. G/R, Type 5
+67.06
487.50 Ft. G/R, Type 5

AS-BUILT
THIS RECORD DRAWING HAS BEEN PREPARED IN PART BY THE ENGINEER OF RECORD TO DEPICT CHANGES MADE DURING CONSTRUCTION, BASED ON INFORMATION REPORTED BY THE CONSTRUCTION CONTRACTOR.

SEE SHEET 53 FOR LEGEND

HORIZONTAL SCALE IN FEET
0 10 20 40

CALCULATED LHM
CHECKED SWG

GUARDRAIL PLAN
STA. 308+50 TO STA. 318+50 - I.R.-80

TRU-80-4.70

PLOT.CEL

ms consultants, inc.
msconsultants.com

www.rmsconsultants.com

Ohio DOT Workspace
Marucci & Gaffney TRU-80 Design Build

1" 0.5" 0

UCF: ohdot1V8i
PCF: 60-08285_Youngstown

Batchplot Spec: \\youngstown-fs1\n\60\08285\standards\plotdrv\batchplt.spc
Pen Table: S:\std\plotting\ustn\V8\pen\V8i_ms_std.tbl
Plot Driver: S:\std\plotting\ustn\V8\PDF.pltcfg

Model: Sheet
Printed: 12/12/2013 @ 2:19:34 PM
File: \\youngstown-fs1\n\60\08285\roadway\sheets\76411GR004.dgn

View: FENCE_VIEW1
By: sgady

34" x 22"

AS-BUILT

THIS RECORD DRAWING HAS BEEN PREPARED IN PART BY THE ENGINEER OF RECORD TO DEPICT CHANGES MADE DURING CONSTRUCTION, BASED ON INFORMATION REPORTED BY THE CONSTRUCTION CONTRACTOR.

762.5 Ft. G/R, Type 5

+12.96

LON Point
Sta. 322+48.5±

Anchor Assembly, Type E

**MATCHLINE STA. 318+50
SEE SHEET 55**

319 320 321 322 323

Anchor Assembly, Type T

+54.56

487.50 Ft. G/R, Type 5

612.50 Ft. G/R, Type 5

SLM 6.32

Anchor Assembly, Type T

12" RCP

15" RCP

**MATCHLINE SLM 6.37
SEE SHEET 57**

Anchor Assembly, Type E

LON Point

SLM 6.36

612.50 Ft. G/R, Type 5

SEE SHEET 53 FOR LEGEND

HORIZONTAL SCALE IN FEET
0 10 20 40

CALCULATED LHM
CHECKED SWG

GUARDRAIL PLAN
STA. 318+50 TO STA. 323+50
S.L.M. 6.28 TO S.L.M. 6.37

TRU-80-4.70

rms consultants, inc.

PLOT.CEL

ms consultants, inc.
msconsultants.com

Ohio DOT Workspace
Marucci & Coffney TRU-80 Design Build
www.rmsconsultants.com

0 1" 0.5"

UCF: ohdot1V8i
PCF: 60-08285_Youngstown

Batchplot Spec: \\youngstown-fs1\n\60\08285\standards\plotdrv\batchplt.spc
Pen Table: S:\std\plotting\ustn\V8\pen\V8_rms_std.tbl
Plot Driver: S:\std\plotting\ustn\V8\PDF.pltcfg

Model: Sheet
Printed: 12/12/2013 @ 2:19:35 PM
File: \\youngstown-fs1\n\60\08285\roadway\sheets\764116R005.dgn
View: FENCE_VIEW1
By: sgeddy

34" x 22"

612.50 Ft. G/R, Type 5

SLM 6.44

AS-BUILT

THIS RECORD DRAWING HAS BEEN PREPARED IN PART BY THE ENGINEER OF RECORD TO DEPICT CHANGES MADE DURING CONSTRUCTION, BASED ON INFORMATION REPORTED BY THE CONSTRUCTION CONTRACTOR.

LON Point

Anchor Assembly, Type E

MATCH LINE SLM 6.37 SEE SHEET 56

Anchor Assembly, Type T

612.50 Ft. G/R, Type 5

SLM 6.42

200.00 Ft. G/R, Type 5

BTA, Type 2 25 Ft. G/R, Type 5

Anchor Assembly, Type T

Conc. Barrier End Section, Type D, APP

SLM 6.75

Remove 6' Ex. Conc. Barrier

SR 304

7 REVISED 5-13-13

12" RCP

15" RCP

MATCH LINE SLM 6.79 SEE SHEET 58

7 REVISED 5-13-13

Anchor Assembly, Type E

LON Point

Conc. Barrier End Section, Type D, APP

SLM 6.78

BTA, Type 1 31.25 Ft. G/R, Type 5

Remove 20' Ex. Conc. Barrier

SEE SHEET 53 FOR LEGEND

N

0 10 20 40 HORIZONTAL SCALE IN FEET

CALCULATED LHM
CHECKED SWG

GUARDRAIL PLAN
S.L.M. 6.37 TO S.L.M. 6.47
S.L.M. 6.71 TO S.L.M. 6.79

TRU-80-4.70

ms consultants, inc.

PLOT.CEL

ms consultants, inc.
msconsultants.com

www.msconsultants.com
Marucci & Gaffney TRU-80 Design Build
Ohio DOT Workspace

UCF: ohdot1V8i
PCF: 60-08285_Youngstown

0 0.5" 1"

Batchplot Spec: \\youngstown-fs1\n\60\08285\standards\plotdrv\batchplt.spc
Pen Table: S:\std\plotting\usth\V8\pen\V8i_ms_std.tbl
Plot Driver: S:\std\plotting\usth\V8\PDF.pltcfg

Model: Sheet
Printed: 12/12/2013 @ 2:19:35 PM
File: \\youngstown-fs1\n\60\08285\roadway\sheets\764115R006.dgn
View: FENCE_VIEW1
By: sgealy

34" x 22"

7 REVISED 5-13-13

6 REVISED 4-29-13

Remove 12.5' Ex. Conc. Barrier

SLM 6.79

BTA, Type 1
31.25 Ft. G/R, Type 5

712.5 Ft. G/R, Type 5

REMOVE EXIST. G/R

EXIST. CONCRETE BARRIER

WEIGH STATION RAMP

Conc. Barrier End Section, Type D, APP

WESTBOUND I-80

MATCHLINE SLM 6.79
SEE SHEET 57

MATCHLINE SLM 6.88
SEE SHEET 59

SR 304

Remove 6' Ex. Conc. Barrier

Conc. Barrier End Section, Type D, APP

EASTBOUND I-80

SLM 6.81

BTA,Type 2
25 Ft. G/R, Type 5

437.50 Ft. G/R, Type 5

REMOVE EXIST. G/R

EXIST. CONCRETE BARRIER

AS-BUILT

THIS RECORD DRAWING HAS BEEN PREPARED IN PART BY THE ENGINEER OF RECORD TO DEPICT CHANGES MADE DURING CONSTRUCTION, BASED ON INFORMATION REPORTED BY THE CONSTRUCTION CONTRACTOR.

SEE SHEET 53 FOR LEGEND

HORIZONTAL SCALE IN FEET
0 10 20 40

CALCULATED LHM
CHECKED SWG

GUARDRAIL PLAN
S.L.M. 6.79 TO S.L.M. 6.88 - I.R.-80

TRU-80-4.70

ms consultants, inc.

PLOT.CEL

ms consultants, inc.
msconsultants.com

Ohio DOT Workspace
Marucci & Gaffney TRU-80 Design Build
www.rmsconsultants.com

1"
0
0.5"

UCF: ohdotV8i
PCF: 60-08285_Youngstown

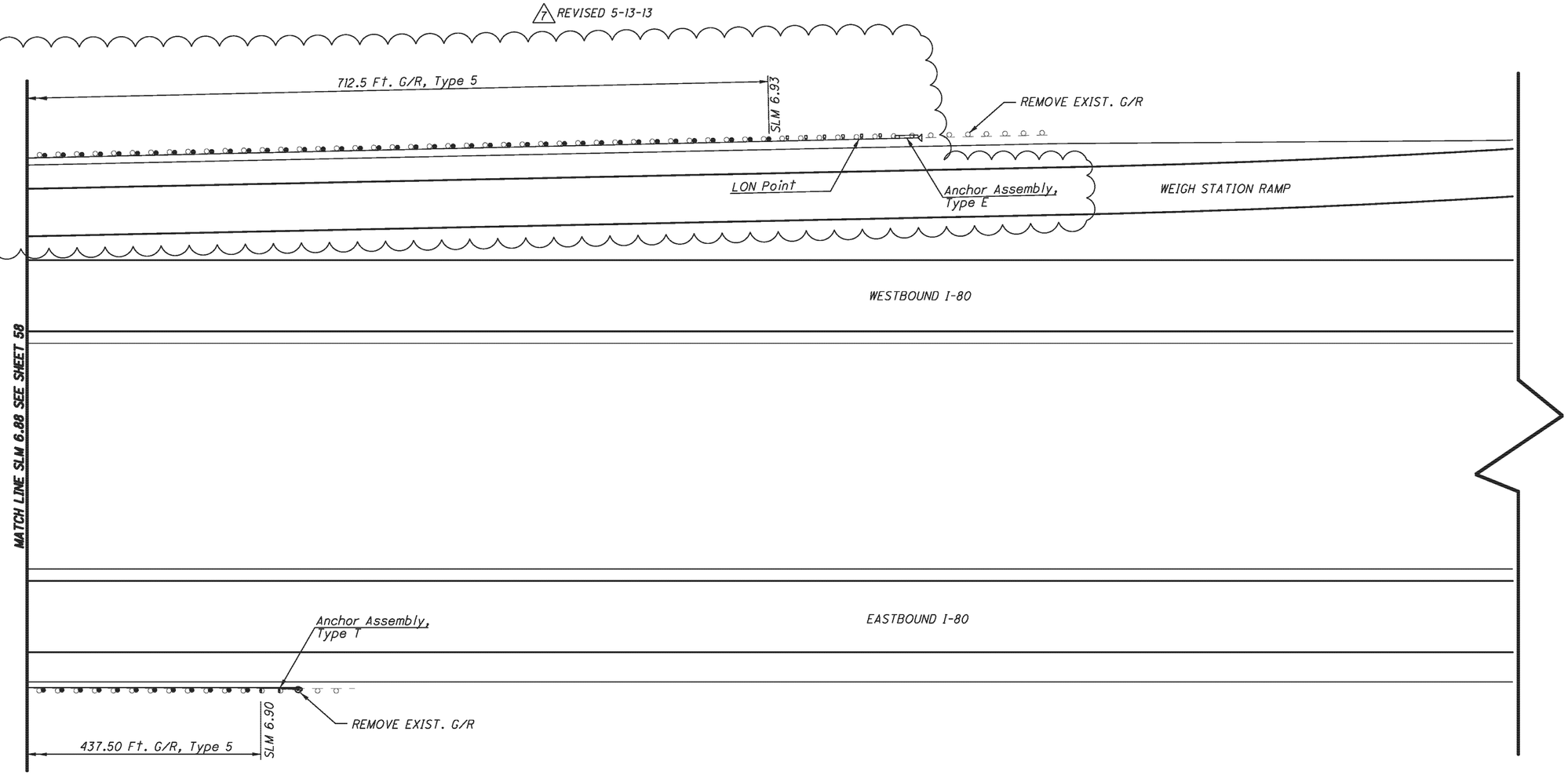

AS-BUILT

THIS RECORD DRAWING HAS BEEN PREPARED IN PART BY THE ENGINEER OF RECORD TO DEPICT CHANGES MADE DURING CONSTRUCTION, BASED ON INFORMATION REPORTED BY THE CONSTRUCTION CONTRACTOR.

SEE SHEET 53 FOR LEGEND

HORIZONTAL SCALE IN FEET
0 10 20 40

CALCULATED LHM
CHECKED SWG

GUARDRAIL PLAN
S.L.M. 6.88 TO S.L.M. 6.98 - I.R.-80

TRU-80-4.70

34" x 22"

Batchplot Spec: \\youngstown-fs1\n\60\08285\standards\plotdrv\batchplt.spc
Pen Table: S:\std\plotting\usth\V8\pen\V8i_rms_std.tbl
Plot Driver: S:\std\plotting\usth\V8\PDF.pltcfg

Model: Sheet
Printed: 12/12/2013 @ 2:19:36 PM
File: \\youngstown-fs1\n\60\08285\roadway\sheets\76411GR007.dgn
View: FENCE_VIEW1
By: sgaby

PLOT.CEL

ms consultants, inc.
msconsultants.com

www.rmsconsultants.com

Ohio DOT Workspace
Marucci & Coffney TRU-80 Design Build

0 1" 0.5"

UCF: ohdot1V8i
PCF: 60-08285_Youngstown

Batchplot Spec: \\youngstown-fs1\n\60\08285\standards\plotdrv\batchplt.spc
Pen Table: S:\std\plotting\ustn\V8\pen\V8i_ms_std.tbl
Plot Driver: S:\std\plotting\ustn\V8\PDF.pltcfg

Model: Sheet
Printed: 12/12/2013 @ 2:19:37 PM
File: \\youngstown-fs1\n\60\08285\roadway\sheets\764115R008.dgn

View: FENCE_VIEW1
By: sgealy

34" x 22"

WEIGH STATION RAMP

WESTBOUND I-80

MATCH LINE SLM 7.43
SEE THIS SHEET

CULVERT

EXIST. CONCRETE BARRIER

Anchor Assembly, Type E

LON Point

EASTBOUND I-80

Conc. Barrier End Section, Type D, APP

Remove 6' Ex. Conc. Barrier

EXIST. HEADWALL

BTA, Type 1
31.25 Ft. G/R, Type 5

SLM 7.42

100.00 Ft. G/R, Type 5

25 Ft. Flare Arc
Per SCD GR-5.1
25 Ft. G/R, Type 5

SLM 7.44

BTA, Type 2
25 Ft. G/R, Type 5

SLM 7.45

REMOVE EXIST. G/R

Remove 30' Ex. Conc. Barrier

Anchor Assembly, Type T

Conc. Barrier End Section, Type D, APP

SEIFERT LEWIS RD.

7 REVISED 5-13-13

EXIST. CONCRETE BARRIER

Anchor Assembly, Type T

Conc. Barrier End Section, Type D, APP

Remove 8.5' Ex. Conc. Barrier

SLM 7.45

BTA, Type 2
25 Ft. G/R, Type 5

62.50 Ft. G/R, Type 5

SLM 7.47

SLM 7.48

BTA, Type 1
31.25 Ft. G/R, Type 5

200.00 Ft. G/R, Type 5

SLM 7.53

MATCH LINE SLM 7.53
SEE SHEET 58

AS-BUILT

THIS RECORD DRAWING HAS BEEN PREPARED IN PART BY THE ENGINEER OF RECORD TO DEPICT CHANGES MADE DURING CONSTRUCTION, BASED ON INFORMATION REPORTED BY THE CONSTRUCTION CONTRACTOR.

SEE SHEET 53 FOR LEGEND

HORIZONTAL SCALE IN FEET
0 10 20 40

CALCULATED LHM
CHECKED SWG

GUARDRAIL PLAN
S.L.M. 7.33 TO S.L.M. 7.53 - I.R.-80

TRU-80-4.70

ms consultants, inc.

PLOT.CEL

ms consultants, inc.
msconsultants.com

Ohio DOT Workspace
Marucci & Coffney TRU-80 Design Build
www.rmsconsultants.com

1"
0.5"
0

UCF: ohdot\V8i
PCF: 60-08285_Youngstown

Batchplot Spec: \\youngstown-fs1\n\60\08285\standards\plotdrv\batchplt.spc
Pen Table: S:\std\plotting\usstn\V8\pen\V8i_ms_std.tbl
Plot Driver: S:\std\plotting\usstn\V8\PDF.pltcfg

Model: Sheet
Printed: 12/12/2013 @ 2:19:37 PM
File: \\youngstown-fs1\n\60\08285\roadway\sheets\764115R009.dgn
View: FENCE_VIEW1
By: sgealy

34" x 22"

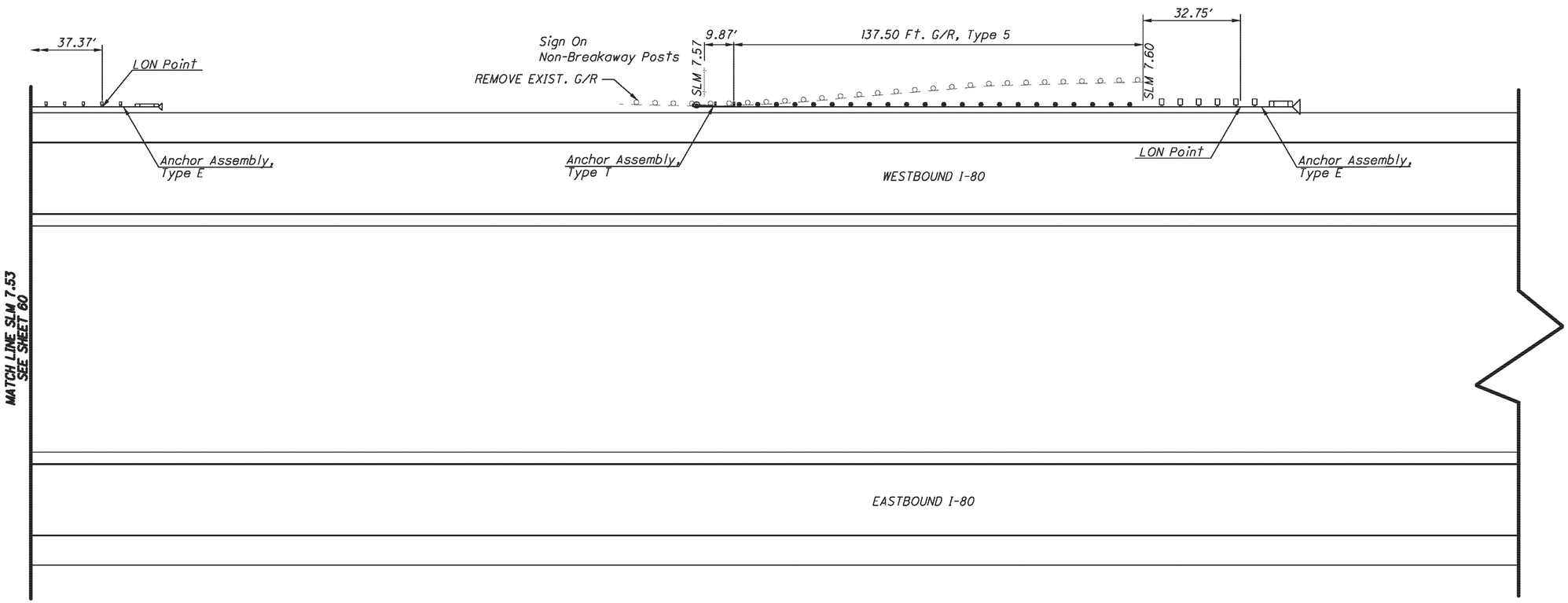

AS-BUILT

THIS RECORD DRAWING HAS BEEN PREPARED IN PART BY THE ENGINEER OF RECORD TO DEPICT CHANGES MADE DURING CONSTRUCTION, BASED ON INFORMATION REPORTED BY THE CONSTRUCTION CONTRACTOR.

SEE SHEET 53 FOR LEGEND

HORIZONTAL SCALE IN FEET
0 10 20 40

CALCULATED LHM
CHECKED SWG

GUARDRAIL PLAN
S.L.M. 7.53 TO S.L.M. 7.62 - I.R.-80

TRU-80-4.70

PLOT.CEL

ms consultants, inc.
msconsultants.com

www.rmsconsultants.com

Ohio DOT Workspace
Marucci & Gaffney TRU-80 Design Build

0 0.5" 1"

UCF: ohdot\V8i
PCF: 60-08285_Youngstown

EXIST. CONCRETE BARRIER

WESTBOUND I-80

MATCH LINE SLM 8.03
SEE THIS SHEET

BELLWICK RD.

EASTBOUND I-80

Anchor Assembly, Type E

LON Point

Conc. Barrier End Section, Type D, APP

REMOVE EXIST. G/R

SLM 7.97

62.50 Ft. G/R, Type 5

BTA, Type 1 31.25 Ft. G/R, Type 5

SLM 7.98

Sign On Non-Breakaway Posts

Remove 20' Ex. Conc. Barrier

EXIST. CONCRETE BARRIER

7 REVISED 5-13-13

SLM 8.04

BTA, Type 1 31.25 Ft. G/R, Type 5

SLM 8.05

Sign On Breakaway Posts

REMOVE EXIST. G/R

LON Point

Anchor Assembly, Type E

Conc. Barrier End Section, Type D, APP

WESTBOUND I-80

MATCH LINE SLM 8.03
SEE THIS SHEET

EASTBOUND I-80

AS-BUILT
THIS RECORD DRAWING HAS BEEN PREPARED IN PART BY THE ENGINEER OF RECORD TO DEPICT CHANGES MADE DURING CONSTRUCTION, BASED ON INFORMATION REPORTED BY THE CONSTRUCTION CONTRACTOR.

SEE SHEET 53 FOR LEGEND

0 10 20 40 HORIZONTAL SCALE IN FEET

CALCULATED LHM
CHECKED SWG

GUARDRAIL PLAN

S.L.M. 7.94 TO S.L.M. 8.13 - I.R.-80

TRU-80-4.70

ms consultants, inc.

Batchplot Spec: \\youngstown-fs1\n\60\08285\standards\plotdrv\batchplt.spc
Pen Table: S:\std\plotting\usth\V8\pen\V8i_rms_std.tbl
Plot Driver: S:\std\plotting\usth\V8\PDF.pltcfg

Model: Sheet
Printed: 12/12/2013 @ 2:19:38 PM
File: \\youngstown-fs1\n\60\08285\roadway\sheets\7841TGR10.dgn

View: FENCE_VIEW1
By: sgeidy

34" x 22"

PLOT.CEL

ms consultants, inc.
msconsultants.com

www.rmsconsultants.com
Ohio DOT Workspace
Marucci & Coffney TRU-80 Design Build

UCF: ohdot1V8i
PCF: 60-08285_Youngstown

Batchplot Spec: \\youngstown-fs1\n\60\08285\standards\plotdrv\batchplt.spc
Pen Table: S:\std\plotting\ustn\V8\pen\V8i_ms_std.tbl
Plot Driver: S:\std\plotting\ustn\V8\PDF.pltcfg

Model: Sheet
Printed: 12/12/2013 @ 2:19:38 PM
File: \\youngstown-fs1\n\60\08285\roadway\sheets\764115GR01.dgn
View: FENCE_VIEW1
By: sgealy

34" x 22"

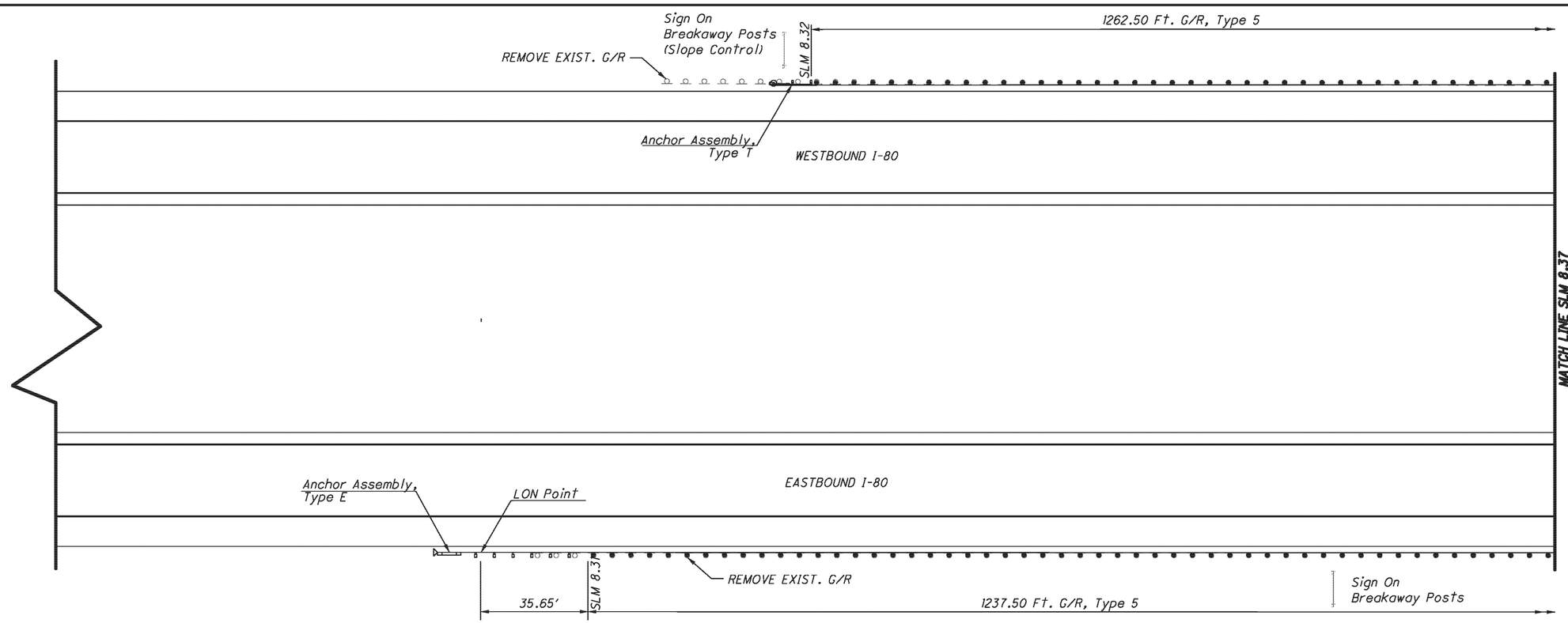

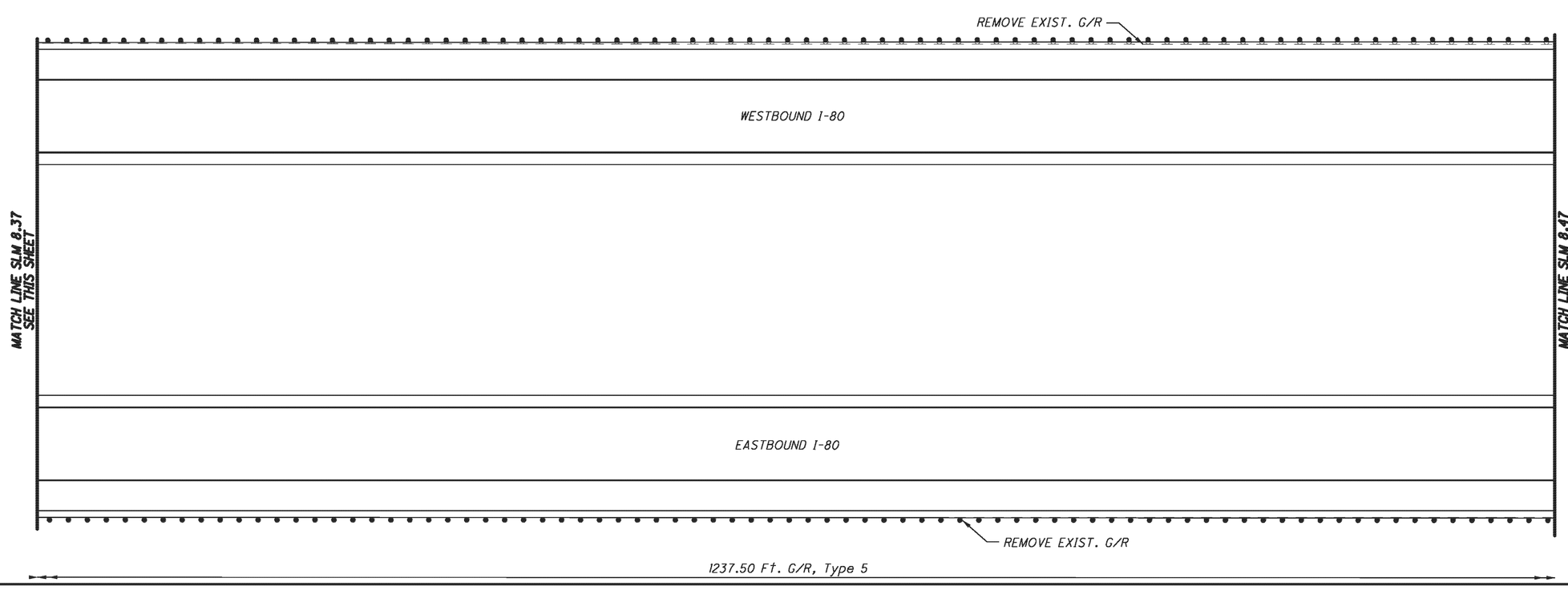

AS-BUILT
THIS RECORD DRAWING HAS BEEN PREPARED IN PART BY THE ENGINEER OF RECORD TO DEPICT CHANGES MADE DURING CONSTRUCTION, BASED ON INFORMATION REPORTED BY THE CONSTRUCTION CONTRACTOR.

SEE SHEET 53 FOR LEGEND

HORIZONTAL SCALE IN FEET
0 10 20 40

CALCULATED LHM
CHECKED SWG

GUARDRAIL PLAN
S.L.M. 8.28 TO S.L.M. 8.47 - I.R.-80

TRU-80-4.70

ms consultants, inc.

PLOT.CEL

ms consultants, inc.
rmsconsultants.com

www.rmsconsultants.com

Ohio DOT Workspace
Marucci & Coffney TRU-80 Design Build

UCF: ohdot1V8i
PCF: 60-08285_Youngstown

Batchplot Spec: \\youngstown-fs1\n\60\08285\standards\plotdrv\batchplt.spc
Pen Table: S:\std\plotting\ustn\V8\pen\V8i_rms_std.tbl
Plot Driver: S:\std\plotting\ustn\V8\PDF.pltcfg

Model: Sheet
Printed: 12/12/2013 @ 2:19:39 PM
File: \\youngstown-fs1\n\60\08285\roadway\sheets\V764115GR012.dgn

View: FENCE_VIEW1
By: sgealy

34" x 22"

1262.50 Ft. G/R, Type 5

WESTBOUND I-80

EASTBOUND I-80

MATCH LINE SLM 8.47
SEE SHEET 63

MATCH LINE SLM 8.56
SEE THIS SHEET

SLM 8.52

Meet Existing Guardrail
@ Beginning of Ex. G/R Taper
(Field Splice)

1237.50 Ft. G/R, Type 5

1262.50 Ft. G/R, Type 5

SLM 8.56

Meet Existing Guardrail
@ Beginning of Ex. G/R Taper
(Field Splice)

WESTBOUND I-80

STRUCTURE NO. TRU-80-0857L

MATCH LINE SLM 8.56
SEE THIS SHEET

MT. EVERETT ROAD

EASTBOUND I-80

STRUCTURE NO. TRU-80-0857R

AS-BUILT

THIS RECORD DRAWING HAS BEEN PREPARED IN PART BY THE ENGINEER OF RECORD TO DEPICT CHANGES MADE DURING CONSTRUCTION, BASED ON INFORMATION REPORTED BY THE CONSTRUCTION CONTRACTOR.

SEE SHEET 53 FOR LEGEND

HORIZONTAL SCALE IN FEET
0 10 20 40

CALCULATED LHM
CHECKED SWG

GUARDRAIL PLAN
S.L.M. 8.47 TO S.L.M. 8.66 - I.R.-80
TRU-80-4.70

PLOT.CEL

ms consultants, inc.
msconsultants.com

Ohio DOT Workspace
Marucci & Gaffney TRU-80 Design Build
www.msconsultants.com

0 0.5" 1"

UCF: ohdot1V8i
PCF: 60-08285_Youngstown

Batchplot Spec: \\youngstown-fs1\n\60\08285\standards\plotdrv\batchplt.spc
Pen Table: S:\sta\plotting\usta\V8\pen\V8i_ms_std.tbl
Plot Driver: S:\sta\plotting\usta\V8\PDF.pltcfg

Model: Sheet
Printed: 12/12/2013 @ 2:19:40 PM
File: \\youngstown-fs1\n\60\08285\roadway\sheets\764110GR013.dgn
View: FENCE_VIEW1
By: sgeidy

34" x 22"

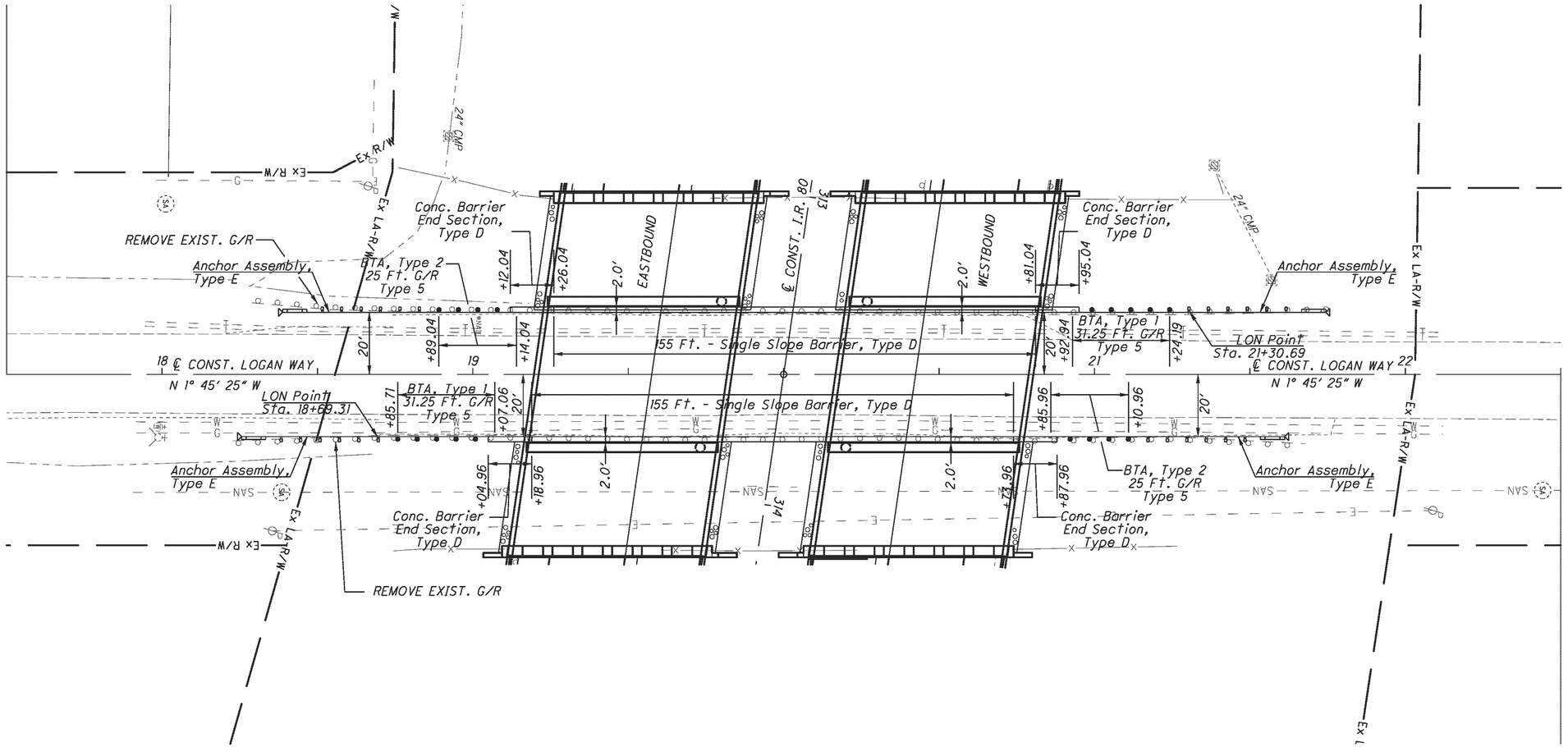

AS-BUILT

THIS RECORD DRAWING HAS BEEN PREPARED IN PART BY THE ENGINEER OF RECORD TO DEPICT CHANGES MADE DURING CONSTRUCTION, BASED ON INFORMATION REPORTED BY THE CONSTRUCTION CONTRACTOR.

SEE SHEET 53 FOR LEGEND

N

0 10 20 40
HORIZONTAL SCALE IN FEET

CALCULATED LHM
CHECKED SWG

GUARDRAIL PLAN
STA. 17+50 TO STA. 22+50 - LOGAN WAY

TRU-80-4.70

ms consultants, inc.

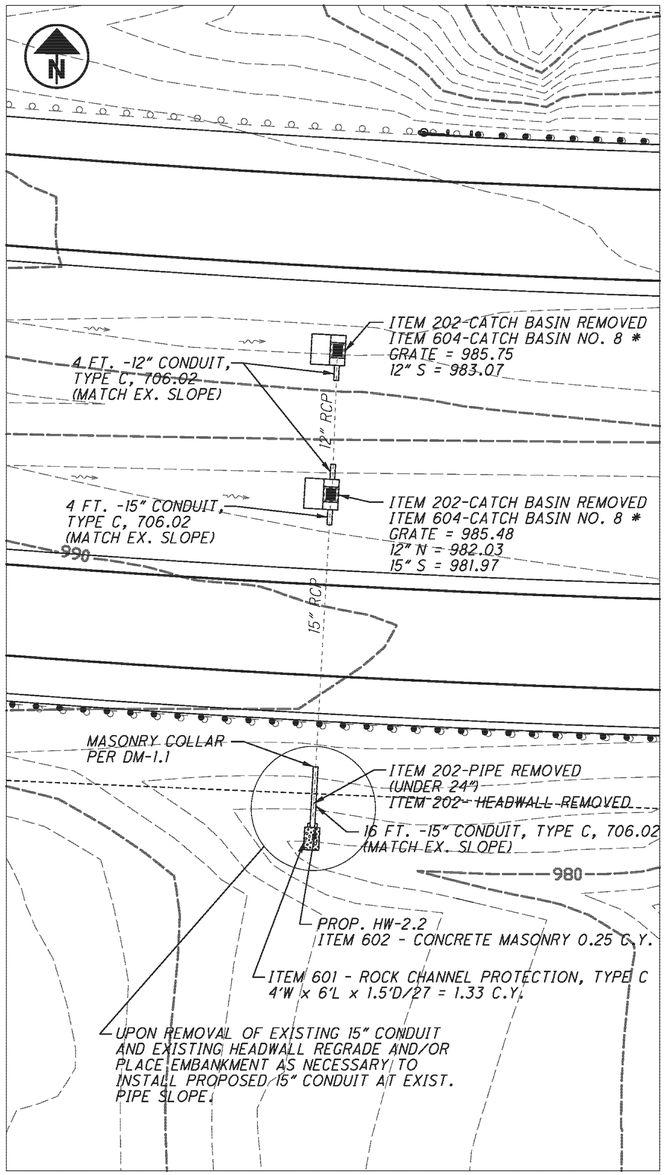

S.L.M. 6.31

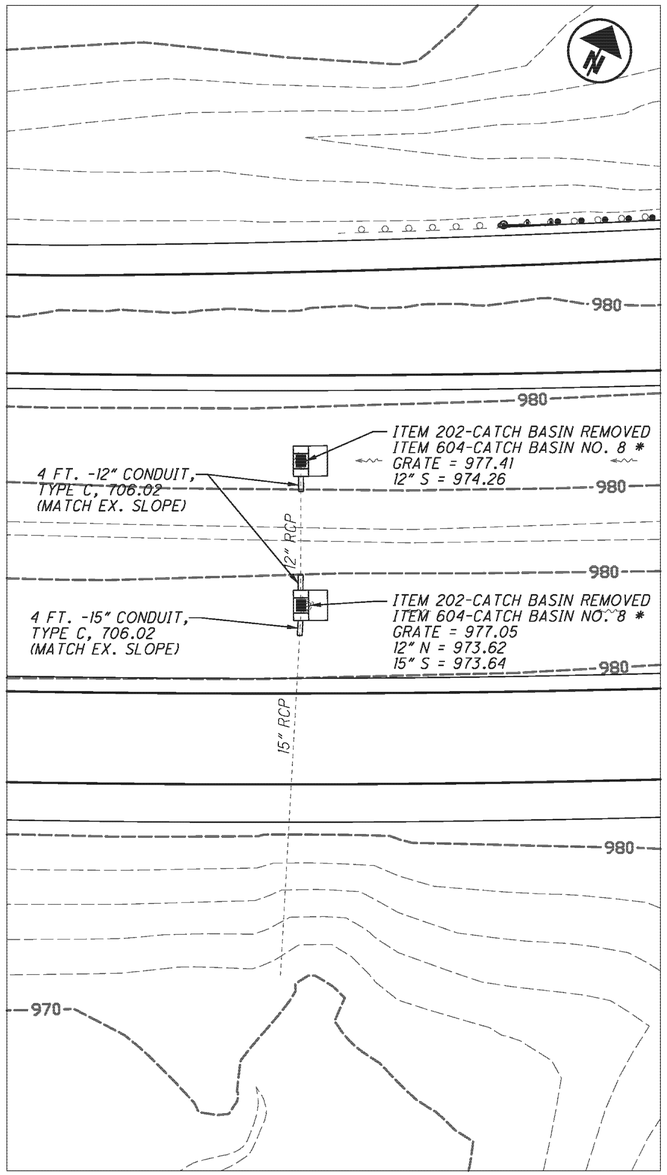

S.L.M. 6.70

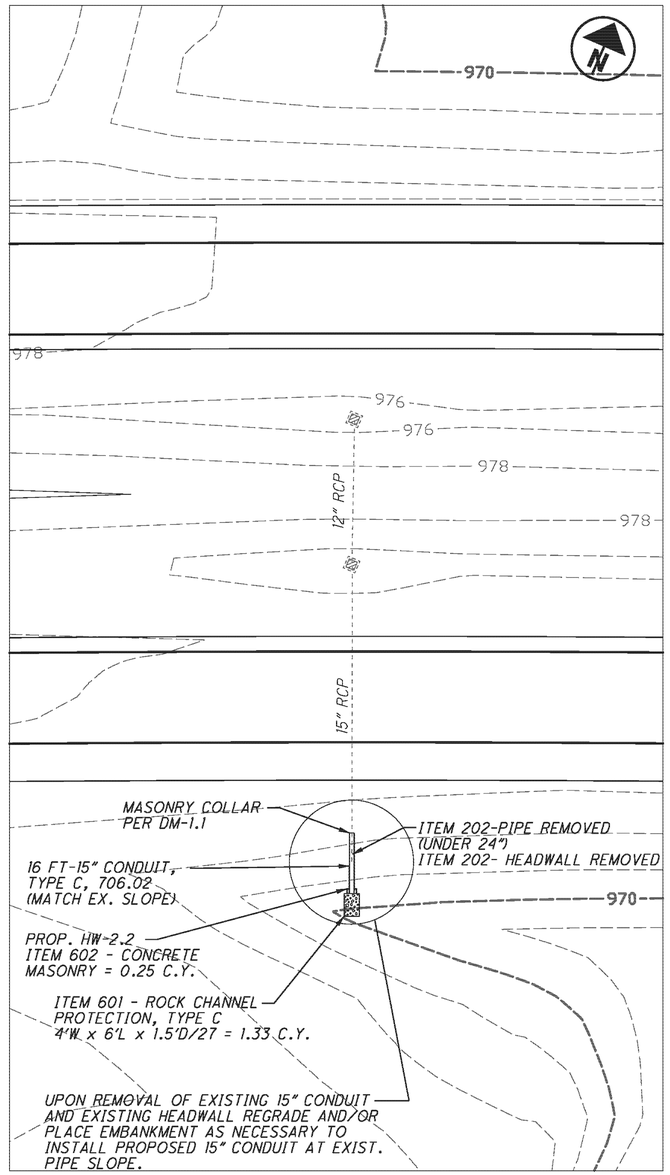

S.L.M. 8.15

AS-BUILT

THIS RECORD DRAWING HAS BEEN PREPARED IN PART BY THE ENGINEER OF RECORD TO DEPICT CHANGES MADE DURING CONSTRUCTION, BASED ON INFORMATION REPORTED BY THE CONSTRUCTION CONTRACTOR.

NOTE: GRADE AREAS DISTURBED BY DRAINAGE CONSTRUCTION. PROVIDE ITEM 659 - SEEDING AND MULCHING ON ALL DISTURBED AREAS.

** AS PER SCD CB-3.3, THE CONCRETE APRON WITH CUTOFF WALL AND DIKE IS INCIDENTAL TO ITEM 604 - CATCH BASIN, NO. 8*

STORM SEWER REPAIR DETAILS
S.L.M. 6.31, 6.70 & 8.15

CALCULATED LMH
CHECKED SWG

0 10 20 40
HORIZONTAL SCALE IN FEET

TRU-80-4.70

ms consultants, inc.

Batchplot Spec: \\youngstown-fs1\n\60\08285\standards\plotdrv\batchplt.spc
Pen Table: S:\std\plotting\usth1\V8\pen\V8i_ms_std.tbl
Plot Driver: S:\std\plotting\usth1\V8\PDF.pltcfg
UCF: ohdot1V8i
PCF: 60-08285_Youngstown
Ohio DOT Workspace
Marucci & Coffney, TRU-80 Design Build
1" = 0.5"
3/4" x 22"
Model: Sheet
Printed: 12/12/2013 @ 2:19:43 PM
File: \\youngstown-fs1\n\60\08285\drainage\sheets\V8411D0001.dgn
View: FENCE_VIEW1
By: sgealy

PLOT.CEL

ms consultants, inc.
msconsultants.com

Ohio DOT Workspace
Marucci & Gaffney TRU-80 Design Build
www.rmsconsultants.com

UCF: ohdot\V8i
PCF: 60-08285_Youngstown

Batchplot Spec: \\youngstown-fs1\n\60\08285\standards\plotdrv\batchplt.spc
Pen Table: S:\std\plotting\ustn\V8\pen\V8i_rms_std.tbl
Plot Driver: S:\std\plotting\ustn\V8\PDF.pltcfg

Model: Sheet
Printed: 12/12/2013 @ 2:19:43 PM
File: \\youngstown-fs1\n\60\08285\roadway\sheets\764110M001.dgn
View: FENCE_VIEW1
By: sgealy

34" x 22"

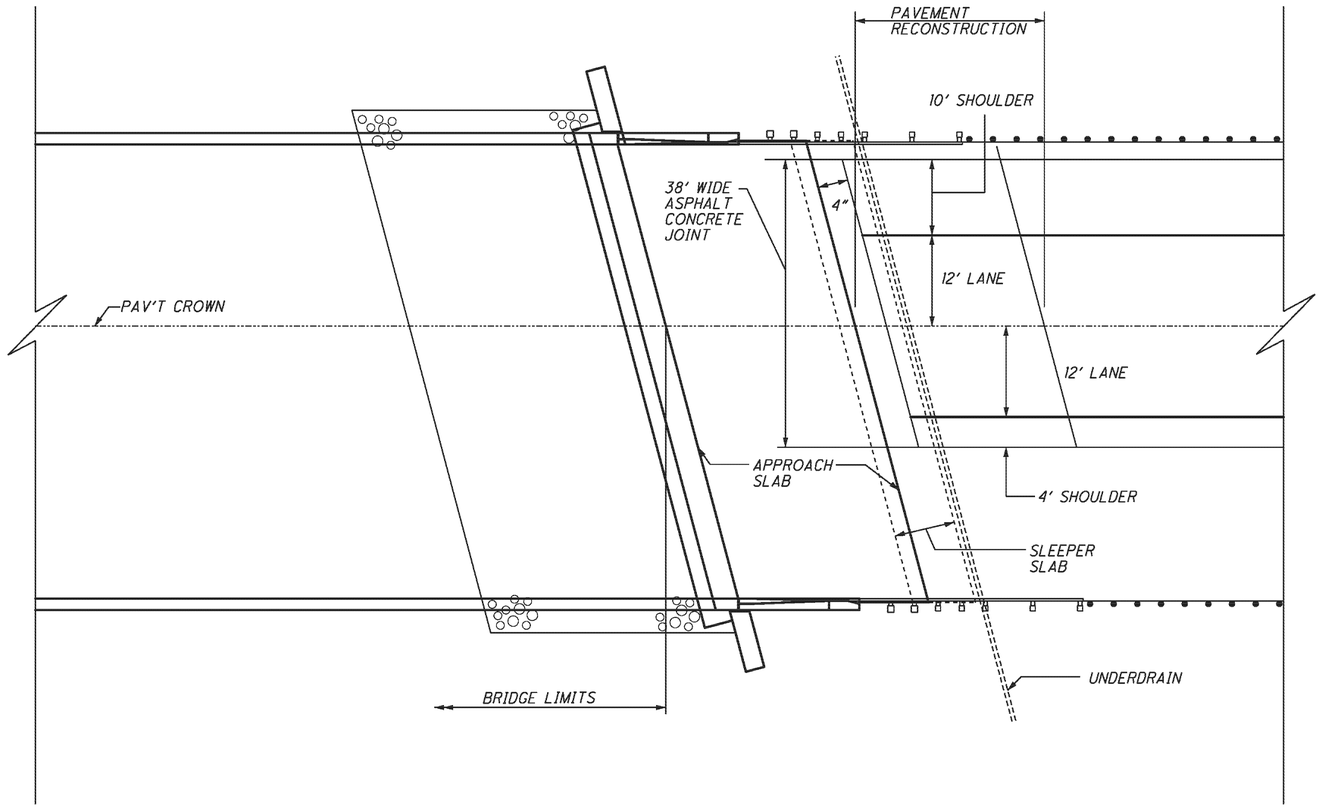

NOTES:

1. FOR ADDITIONAL DETAILS SEE STANDARD CONSTRUCTION DRAWING BP-2.3
2. SLEEPER SLAB TO EXTEND THE ENTIRE WIDTH OF THE NEW APPROACH SLAB.
3. THE 4' ASPHALT CONCRETE PORTION OF THE JOINT TO EXTEND FROM OUTSIDE TO OUTSIDE OF ROADWAY/SHOULDER CONSTRUCTION (38' WIDTH)

PRESSURE RELIEF JOINT, TYPE A, AS PER PLAN DETAIL

AS-BUILT

THIS RECORD DRAWING HAS BEEN PREPARED IN PART BY THE ENGINEER OF RECORD TO DEPICT CHANGES MADE DURING CONSTRUCTION, BASED ON INFORMATION REPORTED BY THE CONSTRUCTION CONTRACTOR.

CALCULATED LHM
CHECKED SWG

ROADWAY DETAILS

TRU-80-4.70

ms consultants, inc.

PLOT.CEL

ms consultants, inc.
msconsultants.com

Ohio DOT Workspace
Marucci & Gaffney TRU-80 Design Build
www.msconsultants.com

1"
0.5"
0

UCF: ohdot1V8i
PCF: 60-08285_Youngstown

Batchplot Spec: \\youngstown-fs1\n\60\08285\standards\plotdrv\batchplt.spc
Pen Table: S:\std\plotting\usstn\V8\pen V8i_ms_std.tbl
Plot Driver: S:\std\plotting\usstn\V8\PDF.pltcfg

Model: Sheet
Printed: 12/12/2013 @ 2:19:45 PM
File: \\youngstown-fs1\n\60\08285\traffic\sheets\764111P001.dgn
View: FENCE_VIEW1
By: sgeely

34" x 22"

NOTE:
INSTALL RPM'S ON I-80 MAINLINE AND RAMPS AS PER TC-65.10 AND TC-65.11

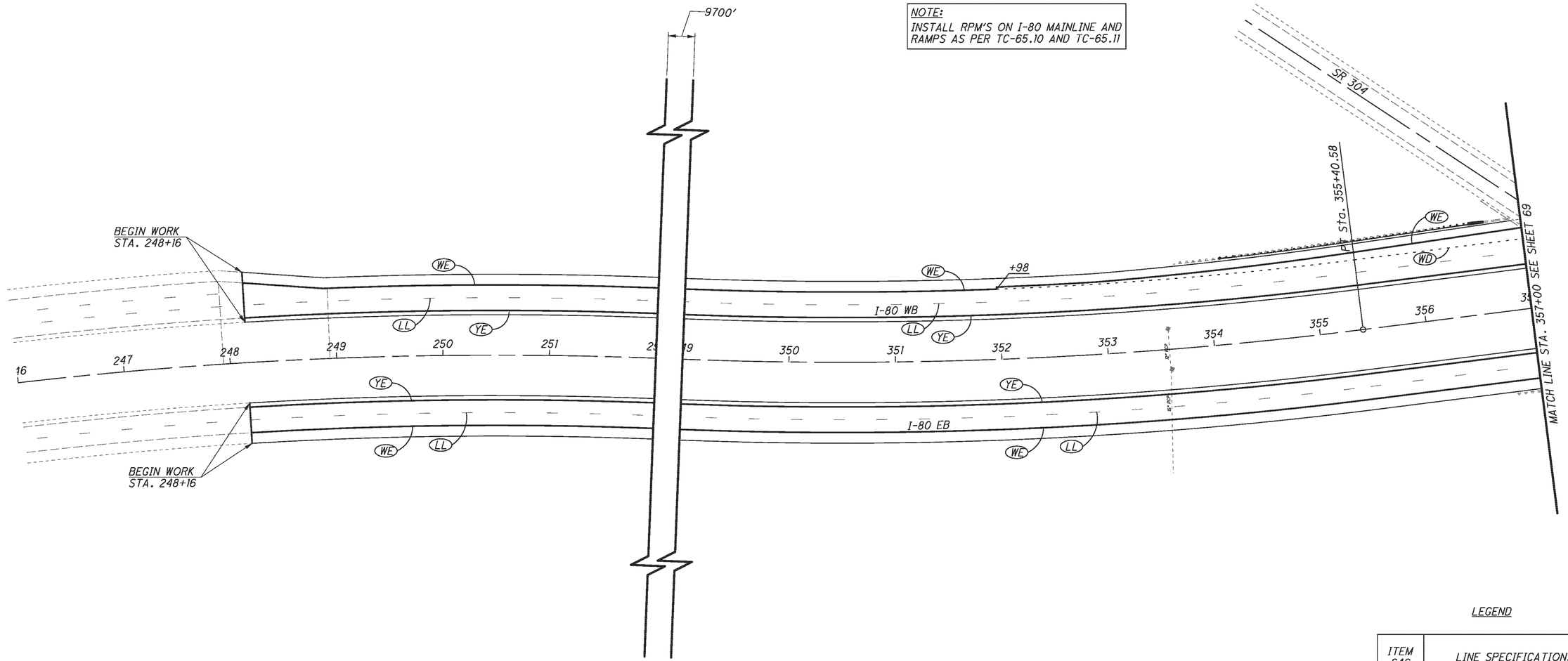

LEGEND

ITEM 646	LINE SPECIFICATIONS
LL	LANE LINE, 6"
CH	CHANNELIZING LINE, 12"
WE	EDGE LINE, WHITE, 4"
WE	EDGE LINE, WHITE, 6"
YE	EDGE LINE, YELLOW, 6"
DY	CENTER LINE, SOLID DOUBLE
WD	DOTTED LINE, 6", WHITE 13' 9' 13'

AS-BUILT
THIS RECORD DRAWING HAS BEEN PREPARED IN PART BY THE ENGINEER OF RECORD TO DEPICT CHANGES MADE DURING CONSTRUCTION, BASED ON INFORMATION REPORTED BY THE CONSTRUCTION CONTRACTOR.

N

0 25 50 100
HORIZONTAL SCALE IN FEET

CALCULATED | CHECKED

PAVEMENT MARKING PLAN
I-80. - STA. 246+00 TO STA. 357+00

TRU-80-4.70

68
142

ms consultants, inc.

PLOT.CEL

ms consultants, inc.
msconsultants.com

www.msconsultants.com

Ohio DOT Workspace
Marucci & Gaffney TRU-80 Design Build

UCF: ohdot1V8i
PCF: 60-08285_Youngstown

1"
0.5"
0

Batchplot Spec: \\youngstown-fs1\n\60\08285\standards\plotdrv\batchplt.spc
Pen Table: S:\sta\plotting\astn\V8i\pen\V8i_ms_std.tbl
Plot Driver: S:\sta\plotting\astn\V8i\PDF.pltcfg

Model: Sheet
Printed: 12/12/2013 @ 2:19:46 PM
File: \\youngstown-fs1\n\60\08285\traffic\sheets\764ITP002.dgn

View: FENCE_VIEW1
By: sgeidy

34" x 22"

NOTE:
INSTALL RPM'S ON I-80 MAINLINE AND RAMPS AS PER TC-65.10 AND TC-65.11

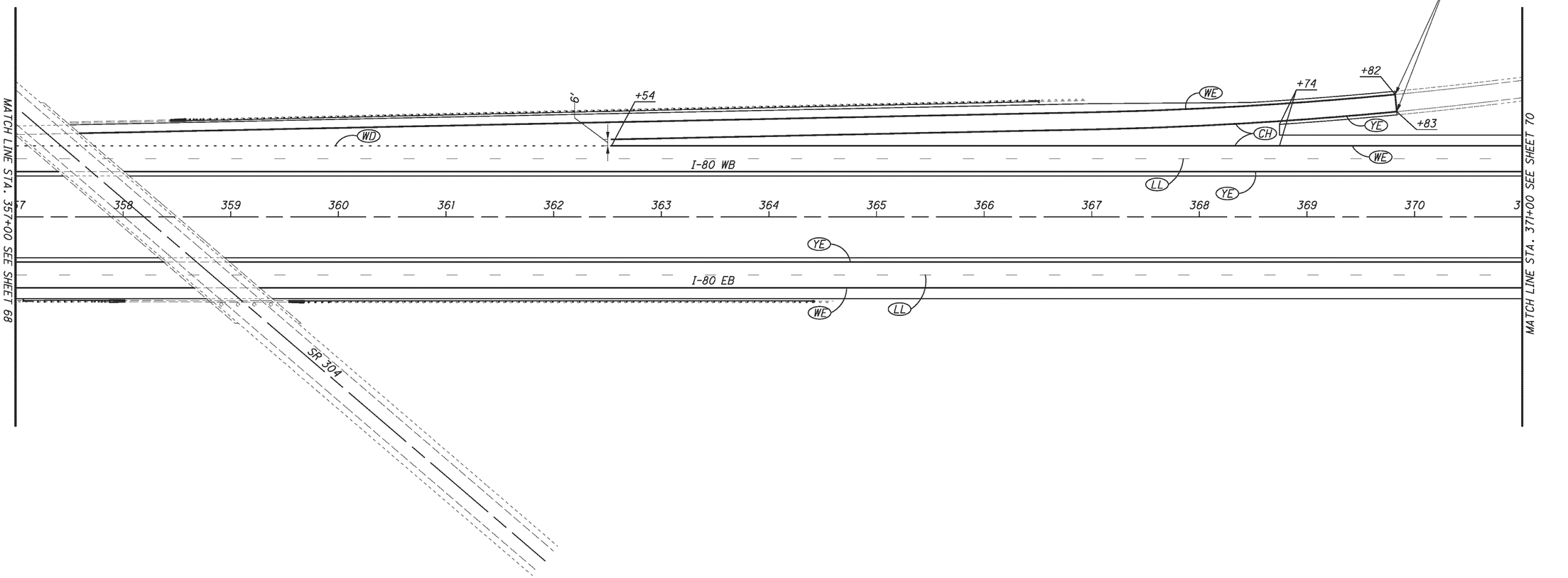

AS-BUILT

THIS RECORD DRAWING HAS BEEN PREPARED IN PART BY THE ENGINEER OF RECORD TO DEPICT CHANGES MADE DURING CONSTRUCTION, BASED ON INFORMATION REPORTED BY THE CONSTRUCTION CONTRACTOR.

FOR LEGEND, SEE SHEET 68

HORIZONTAL SCALE IN FEET
0 25 50 100

CALCULATED | CHECKED

PAVEMENT MARKING PLAN
I-80. - STA. 357+00 TO STA. 371+00

TRU-80-4.70

PLOT.CEL

ms consultants, inc.
msconsultants.com

Ohio DOT Workspace
Marucci & Gaffney TRU-80 Design Build
www.msconsultants.com

1"
0.5"
0

UCF: ohdot1V8i
PCF: 60-08285_Youngstown

Batchplot Spec: \\youngstown-fs1\n\60\08285\standards\plotdrv\batchplt.spc
Pen Table: S:\std\plotting\usstn\V8i\pen_std.tbl
Plot Driver: S:\std\plotting\usstn\V8i\PDF.pltcfg

Model: Sheet
Printed: 12/12/2013 @ 2:19:46 PM
File: \\youngstown-fs1\n\60\08285\traffic\sheets\76411TP003.dgn
View: FENCE_VIEW1
By: sgeidy

34" x 22"

NOTE:
REPLACE ANY PAVEMENT MARKINGS WHICH ARE REMOVED DUE TO PAVEMENT REPAIRS IN THE TRUCK WEIGH STATION.

TRUCK WEIGH STATION

NOTE:
INSTALL RPM'S ON I-80 MAINLINE AND RAMPS AS PER TC-65.10 AND TC-65.11

MEET EXISTING PAVEMENT MARKINGS

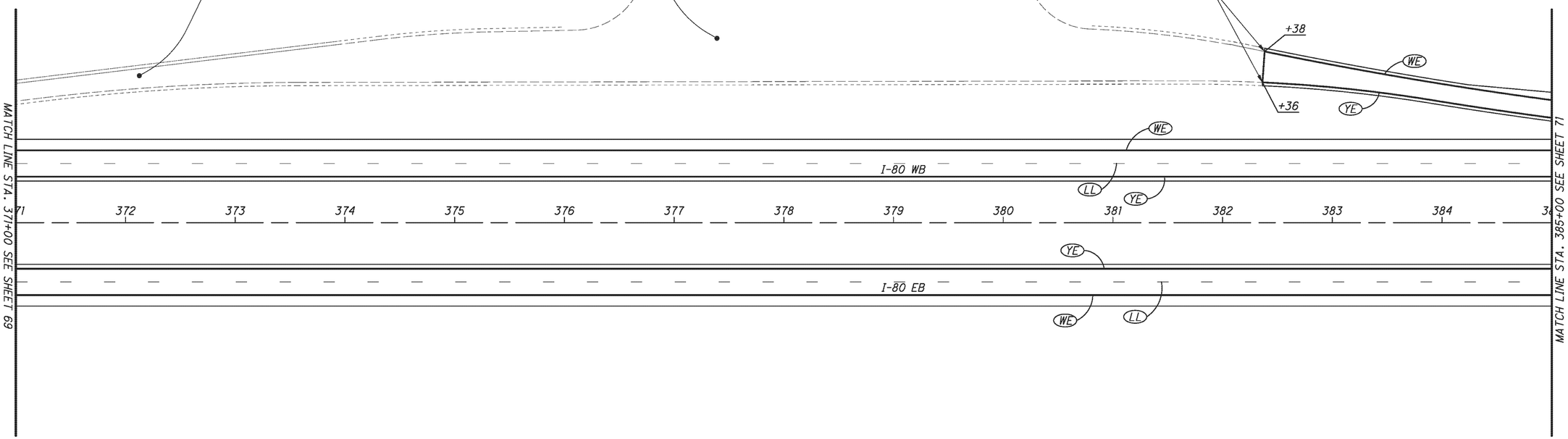

AS-BUILT

THIS RECORD DRAWING HAS BEEN PREPARED IN PART BY THE ENGINEER OF RECORD TO DEPICT CHANGES MADE DURING CONSTRUCTION, BASED ON INFORMATION REPORTED BY THE CONSTRUCTION CONTRACTOR.

FOR LEGEND, SEE SHEET 68

HORIZONTAL SCALE IN FEET
0 25 50 100

CALCULATED | CHECKED

PAVEMENT MARKING PLAN
I-80. - STA. 371+00 TO STA. 385+00

TRU-80-4.70

ms consultants, inc.

PLOT.CEL

ms consultants, inc.
msconsultants.com

Ohio DOT Workspace
Marucci & Gaffney TRU-80 Design Build
www.msconsultants.com

UCF: ohdot1V8i
PCF: 60-08285_Youngstown

Batchplot Spec: \\youngstown-fs1\n\60\08285\standards\plotdrv\batchplt.spc
Pen Table: S:\std\plotting\ustn\V8\pen V8i_ms_std.tbl
Plot Driver: S:\std\plotting\ustn\V8\PDF.pltcfg

Model: Sheet
Printed: 12/12/2013 @ 2:19:47 PM
File: \\youngstown-fs1\n\60\08285\traffic\sheets\TB411TP004.dgn
View: FENCE_VIEW1
By: sgeidy

34" x 22"

NOTE:
INSTALL RPM'S ON I-80 MAINLINE AND RAMPS AS PER TC-65.10 AND TC-65.11

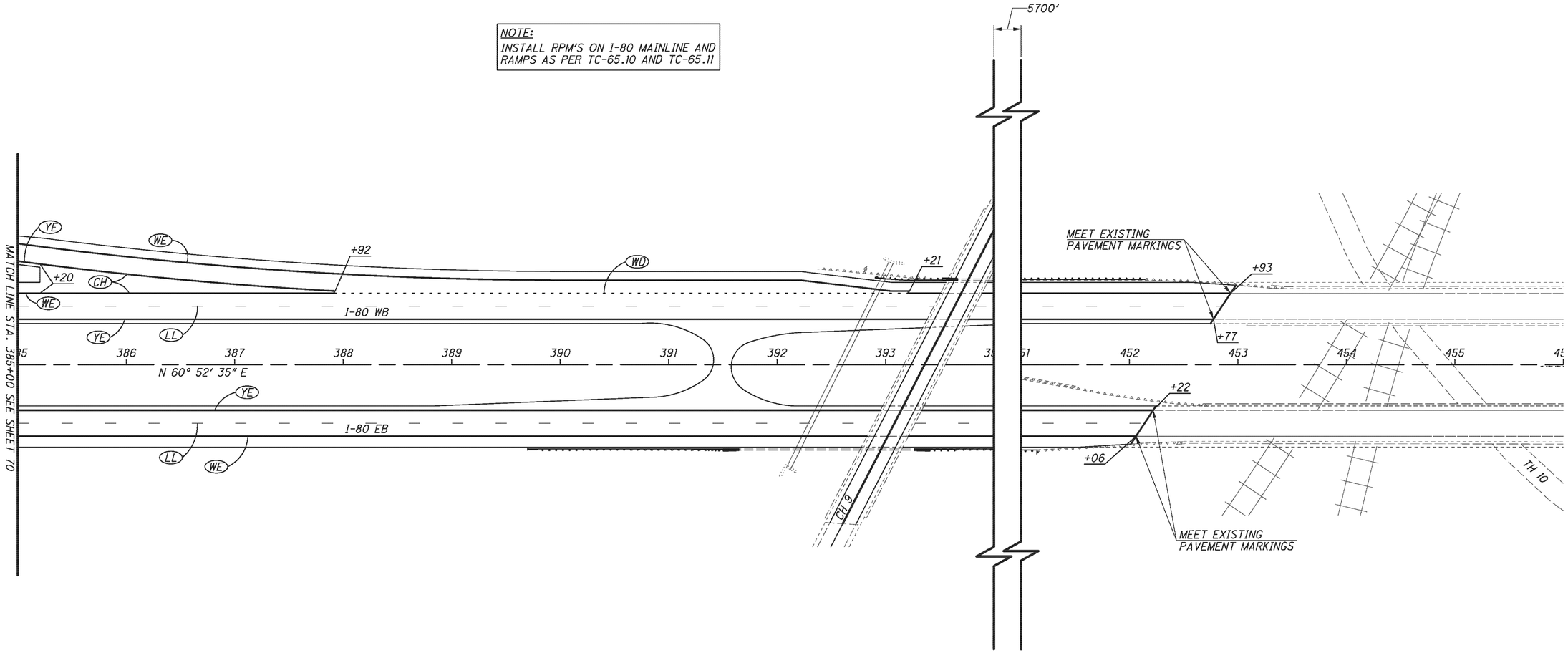

AS-BUILT

THIS RECORD DRAWING HAS BEEN PREPARED IN PART BY THE ENGINEER OF RECORD TO DEPICT CHANGES MADE DURING CONSTRUCTION, BASED ON INFORMATION REPORTED BY THE CONSTRUCTION CONTRACTOR.

FOR LEGEND, SEE SHEET 68

HORIZONTAL SCALE IN FEET
0 25 50 100

CALCULATED | CHECKED

PAVEMENT MARKING PLAN
I-80. - STA. 385+00 TO STA. 455+00

TRU-80-4.70

ms consultants, inc.

PLOT.CEL

ms consultants, inc.
msconsultants.com

Ohio DOT Workspace
Marucci & Gaffney TRU-80 Design Build
www.msconsultants.com

1"
0.5"
0

UCF: ohdot1V8i
PCF: 60-08285_Youngstown

Batchplot Spec: \\youngstown-fs1\n\60\08285\standards\plotdrv\batchplt.spc
Pen Table: S:\std\plotting\ustn\V8\pen V8i_ms_std.tbl
Plot Driver: S:\std\plotting\ustn\V8\PDF.pltcfg

Model: Sheet
Plotted: 12/12/2013 @ 2:19:48 PM
File: \\youngstown-fs1\n\60\08285\traffic\sheets\764111P005.dgn

View: FENCE_VIEW1
By: sgeely

34" x 22"

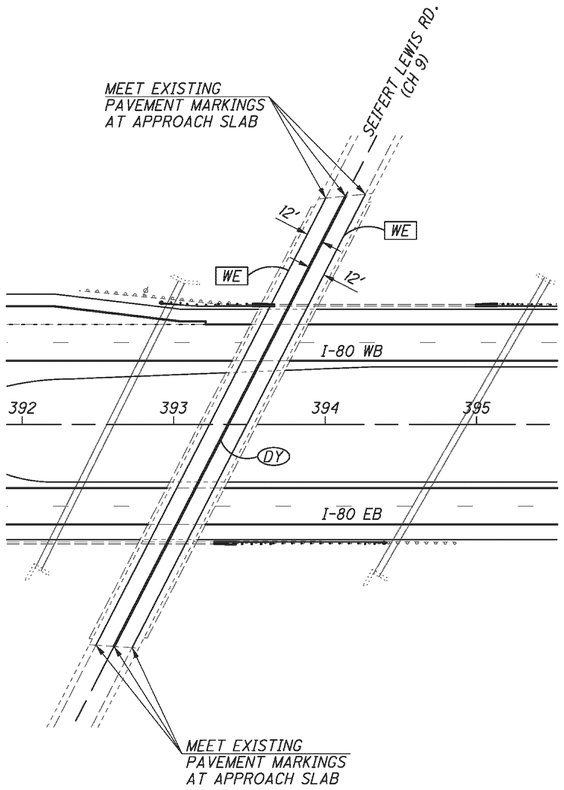

TRU-80-0745

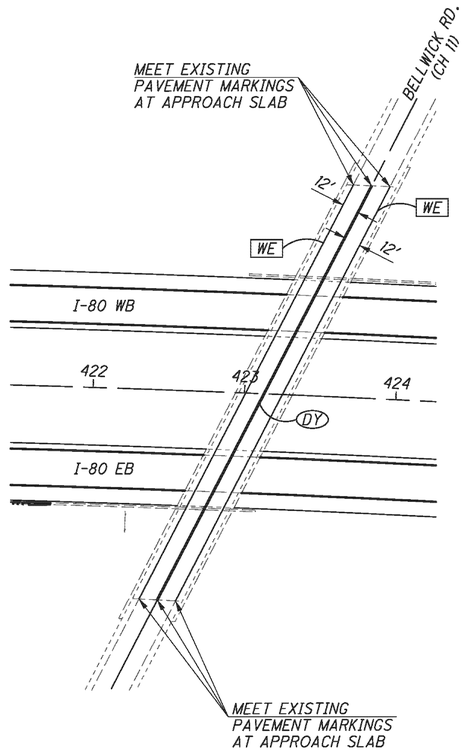

TRU-80-0801

AS-BUILT

THIS RECORD DRAWING HAS BEEN PREPARED IN PART BY THE ENGINEER OF RECORD TO DEPICT CHANGES MADE DURING CONSTRUCTION, BASED ON INFORMATION REPORTED BY THE CONSTRUCTION CONTRACTOR.

FOR LEGEND, SEE SHEET 68

0 25 50 100
HORIZONTAL SCALE IN FEET

CALCULATED | CHECKED

PAVEMENT MARKING PLAN
TRU-80-0745, TRU-80-0801

TRU-80-4.70

ms consultants, inc.

PLOT.CEL

ms consultants, inc.
msconsultants.com

Ohio DOT Workspace
Marucci & Gaffney TRU-80 Design Build
www.msconsultants.com

1"
0.5"
0

UCF: ohdotV8i
PCF: 60-08285_Youngstown

Batchplot Spec: \\youngstown-fs1\n\60\08285\standards\plotdrv\batchplt.spc
Pen Table: S:\std\plotting\astm\V8i\pen\V8i_ms_std.tbl
Plot Driver: S:\std\plotting\astm\V8i\PDF_plt.cfg

34" x 22"

View: SHEET
By: wruggles

Model: Sheet @ 3:53:01 PM
Printed: 1/6/2014
File: \\youngstown-fs1\n\60\08285\structures\TRU-80-0496_Sampson\sheets\080_0496LGN001.dgn

STANDARD DRAWINGS AND SUPPLEMENTAL SPECIFICATIONS

REFER TO THE FOLLOWING STANDARD BRIDGE DRAWINGS:

AS-1-81	REVISED	7-19-02	SBR-1-99	REVISED	7-19-02
DM-1.1	REVISED	7-20-12	SICD-1-96	REVISED	7-19-02
GSD-1-96	REVISED	7-19-02			

DESIGN SPECIFICATIONS

THIS STRUCTURE CONFORMS TO "STANDARD SPECIFICATIONS FOR HIGHWAY BRIDGES" ADOPTED BY THE AMERICAN ASSOCIATION OF STATE HIGHWAY AND TRANSPORTATION OFFICIALS, 17™ EDITION, 2002, INCLUDING THE 2007 INTERIM SPECIFICATIONS AND THE ODOT BRIDGE DESIGN MANUAL.

DESIGN LOADING

HS20-44, CASE I AND ALTERNATE MILITARY LOADING.
FUTURE WEARING SURFACE (FWS) OF 60 LBS./SQ. FT.

DESIGN DATA

CONCRETE CLASS HP - COMPRESSIVE STRENGTH 4500 PSI (SUPERSTRUCTURE)
CONCRETE CLASS C - COMPRESSIVE STRENGTH 4000 PSI (SUBSTRUCTURE)
REINFORCING STEEL - ASTM A615 OR A996, GRADE 60, MINIMUM YIELD STRENGTH 60,000 PSI
STRUCTURAL STEEL - ASTM A709, GRADE 50, MIN. YIELD STRENGTH 50,000 PSI

DECK PROTECTION METHOD

EPOXY COATED REINFORCING STEEL
2 ½" CONCRETE COVER

MONOLITHIC WEARING SURFACE

MONOLITHIC WEARING SURFACE IS ASSUMED, FOR DESIGN PURPOSES, TO BE 1" THICK.

ITEM 202, PORTIONS OF STRUCTURE REMOVED, AS PER PLAN

THIS WORK CONSISTS OF THE REMOVAL OF CONCRETE DECKS INCLUDING PARAPETS, RAILINGS, DECK JOINTS, STEEL SUPPORTING SYSTEMS (BEAMS, CROSS FRAMES, ETC.) AND OTHER APPURTENANCES (SCUPPERS, ETC.) AS NOTED IN THE PLANS. THE PROVISIONS OF ITEM 202 APPLY EXCEPT AS SPECIFIED BY THE FOLLOWING NOTES. PERFORM WORK CAREFULLY DURING DECK REMOVALS TO PROTECT PORTIONS OF SUCH SYSTEMS THAT ARE CARRYING PHASE 1 TRAFFIC. THE USE OF EXPLOSIVES, HEADACHE BALLS AND/OR HOE RAM TYPE OF EQUIPMENT IS PROHIBITED. SUBMIT CONSTRUCTION PLANS ACCORDING TO CMS 501.05.

REVISED 12-14-12 (1)

PROTECTION OF STEEL SUPPORT SYSTEMS: BEFORE DECK SLAB CUTTING IS PERMITTED, DRAW ON THE SURFACE OF THE DECK AN OUTLINE OF THE ADJACENT PRIMARY STEEL MEMBERS THAT ARE REQUIRED TO CARRY PHASE 1 TRAFFIC. DRILL SMALL DIAMETER PILOT HOLES 2 INCHES OUTSIDE THESE LINES TO CONFIRM THE LOCATION OF FLANGE EDGES. DECK CUTS OVER OR WITHIN 2 INCHES OF FLANGE EDGES SHALL NOT EXTEND LOWER THAN THE BOTTOM LAYER OF DECK SLAB REINFORCING STEEL. CUTS MADE OUTSIDE 2 INCHES OF FLANGE EDGES MAY EXTEND THE FULL DEPTH OF THE DECK. PERFORM WORK CAREFULLY DURING CUTTING OF THE DECK SLAB TO AVOID DAMAGING STEEL MEMBERS THAT ARE CARRYING PHASE 1 TRAFFIC. REPAIR ANY OF THESE STEEL MEMBERS THAT ARE DAMAGED BY THE DECK SLAB CUTTING OPERATIONS AT NO COST TO THE PROJECT. AT LEAST 7 DAYS BEFORE PERFORMING REPAIR WORK, SUBMIT A PROPOSED REPAIR PLAN, DEVELOPED BY AN OHIO REGISTERED PROFESSIONAL ENGINEER TO THE DIRECTOR. OBTAIN THE DIRECTOR'S APPROVAL BEFORE PERFORMING REPAIR.

ITEM 202, PORTIONS OF STRUCTURE REMOVED, AS PER PLAN (CONTINUED)

REMOVAL METHODS: THE CONTRACTOR MAY REMOVE CONCRETE BY CUTTING AND BY MEANS OF HAND OPERATED PNEUMATIC HAMMERS EMPLOYING POINTED OR BLUNTED CHISEL TYPE TOOLS. FOR REMOVALS OVER STRUCTURAL MEMBERS (STEEL BEAM), THE CONTRACTOR MAY USE A HAMMER HEAVIER THAN 35 POUNDS BUT NOT TO EXCEED 90 POUNDS UNLESS APPROVED BY THE ENGINEER. REMOVAL METHODS OVER STRUCTURAL MEMBERS SHALL ENSURE ADEQUATE DEPTH CONTROL AND PREVENT NICKING OR GOUGING THE PRIMARY STRUCTURAL MEMBERS THAT ARE REQUIRED TO MAINTAIN PHASE 1 TRAFFIC.

DUE TO THE POSSIBLE PRESENCE OF ATTACHMENTS (E.G., FINISHING MACHINE, SCUPPER AND FORM SUPPORTS, ETC.) TO EXISTING STRUCTURAL MEMBERS, PERFORM WORK CAREFULLY DURING DECK REMOVAL TO AVOID DAMAGING STRUCTURAL MEMBERS THAT ARE REQUIRED TO MAINTAIN TRAFFIC DURING PHASE I CONSTRUCTION. REPAIR ANY OF THESE STRUCTURAL MEMBERS THAT ARE DAMAGED BY THE REMOVAL OPERATIONS AT NO COST TO THE PROJECT. AT LEAST 7 DAYS BEFORE PERFORMING REPAIR WORK, SUBMIT A PROPOSED REPAIR PLAN, DEVELOPED BY AN OHIO REGISTERED PROFESSIONAL ENGINEER TO THE DIRECTOR. OBTAIN THE DIRECTOR'S APPROVAL BEFORE PERFORMING REPAIR.

CUT LINE CONSTRUCTION JOINT PREPARATION

SAW CUT BOUNDARIES OF PROPOSED CONCRETE REMOVALS 1 INCH DEEP. REMOVE CONCRETE TO A ROUGH SURFACE. LEAVE THE EXISTING REINFORCING STEEL, IF REQUIRED IN THE PLANS, IN PLACE. INSTALL DOWEL BARS IF SPECIFIED. PRIOR TO CONCRETE PLACEMENT ABRASIVELY CLEAN JOINT SURFACES AND EXISTING EXPOSED REINFORCEMENT TO REMOVE LOOSE AND DISINTEGRATED CONCRETE AND LOOSE RUST. THOROUGHLY CLEAN THE JOINT SURFACE AND EXPOSED REINFORCEMENT OF ALL DIRT, DUST, RUST OR OTHER FOREIGN MATERIAL BY THE USE OF WATER, AIR UNDER PRESSURE, OR OTHER METHODS THAT PRODUCE SATISFACTORY RESULTS. EXISTING REINFORCING STEEL DOES NOT HAVE TO HAVE A BRIGHT STEEL FINISH, BUT REMOVE ALL PACK AND LOOSE RUST. THOROUGHLY DRENCH EXISTING CONCRETE SURFACES WITH CLEAN WATER AND ALLOW TO DRY TO A DAMP CONDITION BEFORE PLACING CONCRETE.

SUBSTRUCTURE CONCRETE REMOVAL

REMOVE CONCRETE BY MEANS OF APPROVED PNEUMATIC HAMMERS EMPLOYING POINTED AND BLUNT CHISEL TOOLS. HYDRAULIC HOE-RAM TYPE HAMMERS WILL NOT BE PERMITTED. THE WEIGHT OF THE HAMMER SHALL NOT BE MORE THAN 35 POUNDS FOR REMOVAL WITHIN 18 INCHES OF PORTIONS TO BE PRESERVED. OUTSIDE THE 18 INCH LIMIT, THE CONTRACTOR MAY USE HAMMERS NOT EXCEEDING 90 POUNDS UPON THE APPROVAL OF THE ENGINEER. DO NOT PLACE PNEUMATIC HAMMERS IN DIRECT CONTACT WITH REINFORCING STEEL THAT IS TO BE RETAINED IN THE REBUILT STRUCTURE.

ITEM 203 EMBANKMENT, AS PER PLAN:

PLACE AND COMPACT EMBANKMENT MATERIAL IN 6 INCH LIFTS FOR THE CONSTRUCTION OF THE APPROACH EMBANKMENT.

PILE DRIVING CONSTRAINTS:

PRIOR TO DRIVING PILES, CONSTRUCT THE SPILL THROUGH SLOPES AND THE BRIDGE APPROACH EMBANKMENT BEHIND THE ABUTMENTS UP TO THE LEVEL OF THE SUBGRADE ELEVATION FOR A MINIMUM DISTANCE OF 200 FT. BEHIND EACH ABUTMENT. DO NOT BEGIN THE EXCAVATION FOR THE ABUTMENT FOOTINGS AND THE INSTALLATION OF THE ABUTMENT PILES UNTIL AFTER THE ABOVE REQUIRED EMBANKMENT HAS BEEN CONSTRUCTED.

AS-BUILT

THIS RECORD DRAWING HAS BEEN PREPARED IN PART BY THE ENGINEER OF RECORD TO DEPICT CHANGES MADE DURING CONSTRUCTION, BASED ON INFORMATION REPORTED BY THE CONSTRUCTION CONTRACTOR.

DRILLED SHAFTS:

TRU-80-0496L/R OVER SAMPSON ROAD:

THE DESIGN LOAD TO BE SUPPORTED BY EACH DRILLED SHAFT IS 252 TONS AT THE PIERS. THIS LOAD IS RESISTED BY SHAFT ADHESION WITHIN A PORTION OF THE BEDROCK SOCKET AND ALSO BY SHAFT END BEARING. THE ALLOWABLE BEDROCK ADHESION IS 126.5 TONS, ASSUMED TO ACT ALONG THE BOTTOM 11.5 FEET OF THE BEDROCK SOCKET FOR THE PIERS. THE ALLOWABLE END BEARING PRESSURE IS 16 TONS PER SQUARE FOOT. THE REINFORCING STEEL SHALL BE EPOXY COATED ACCORDING TO 709.00.

TRU-80-0591L/R OVER LOGAN WAY:

THE DESIGN LOAD TO BE SUPPORTED BY EACH DRILLED SHAFT IS 204 TONS AT THE PIERS. THIS LOAD IS RESISTED BY SHAFT ADHESION WITHIN A PORTION OF THE BEDROCK SOCKET AND ALSO BY SHAFT END BEARING. THE ALLOWABLE BEDROCK ADHESION IS 127.5 TONS, ASSUMED TO ACT ALONG THE BOTTOM 3.5 FEET OF THE BEDROCK SOCKET FOR THE PIERS. THE ALLOWABLE END BEARING PRESSURE IS 22.5 TONS PER SQUARE FOOT. THE REINFORCING STEEL SHALL BE EPOXY COATED ACCORDING TO 709.00.

ITEM 511 - CLASS HP CONCRETE, AS PER PLAN

THE PROVISIONS OF ITEM 511 SHALL APPLY EXCEPT AS NOTED BELOW.

MIX OPTIONS:
ALL SUPERSTRUCTURE, BRIDGE DECK, APPROACH SLABS AND PARAPET CONCRETE SHALL BE THIS MIX (HP4, AS PER PLAN). THE FOLLOWING PROPORTIONS WILL BE USED AS A STARTING MIX DESIGN.

CONCRETE TABLE
QUANTITIES PER CUBIC YARD
AGGREGATES (SSD)
MIX 4, AS PER PLAN (GGBF SLAG + MICROSILICA)

AGG TYPE	FINE AGG (LB)	#8 COARSE AGG (LB) *	#57 COARSE AGG (LB) *	TOTAL (LB) *	CEMENT CONTENT (LB)	GGBF SLAG (LB)	MICRO SILICA (LB)	MAX WATER TO CEMENTITIOUS RATIO	AIR CONTENT +/-2%
GRAVEL	1370	650	790	2810	440	190	30	0.42	6
LIME-STONE	1370	655	800	2820	440	190	30	0.42	6
SLAG	1370	570	695	2635	440	190	30	0.42	6

* ALL COARSE AGGREGATE SHALL HAVE AN ABSORPTION OF 1.00% OR GREATER AS DEFINED PER ASTM C127

UTILITY LINES

THE UTILITIES SHALL BORE ALL EXPENSE INVOLVED IN RELOCATING (INSTALLING) THE AFFECTED UTILITY LINES. THE CONTRACTOR AND UTILITIES ARE TO COOPERATE BY ARRANGING THEIR WORK IN SUCH A MANNER THAT INCONVENIENCE TO EITHER WILL BE HELD TO A MINIMUM.

EXISTING STRUCTURE VERIFICATION

DETAILS AND DIMENSIONS SHOWN ON THESE PLANS PERTAINING TO THE EXISTING STRUCTURE HAVE BEEN OBTAINED FROM PLANS OF THE EXISTING STRUCTURE AND FROM FIELD OBSERVATIONS AND MEASUREMENTS. CONSEQUENTLY, THEY ARE INDICATIVE OF THE EXISTING STRUCTURE AND THE PROPOSED WORK BUT THEY SHALL BE CONSIDERED TENTATIVE AND APPROXIMATE. THE CONTRACTOR IS REFERRED TO CMS SECTIONS 102.05 AND 105.02.

DESIGN AGENCY
ms consultants, inc.
engineers, architects & planners
225 Second Street
Youngstown, Ohio 44503
Tel 330.743.1050 Fax 330.743.7070
www.msconsultants.com

DESIGNED	DRAWN	REVIEWED	DATE
WER	KRM	JDH	1/25/2013
CHECKED	REVISED	STRUCTURE FILE NUMBER 7803990, 7804024	
LAW			

GENERAL NOTES
BRIDGE NO. TRU-80-0496L/R OVER SAMPSON ROAD
BRIDGE NO. TRU-80-0591L/R OVER LOGAN WAY

TRU-80-4.70
PID No. 76411

G1 / G4

73
142

ITEM 519 - PATCHING CONCRETE STRUCTURE, AS PER PLAN

PRIOR TO THE SURFACE CLEANING SPECIFIED IN 519.04 AND WITHIN 24 HOURS OF PLACING PATCHING MATERIAL, BLAST CLEAN ALL SURFACES TO BE PATCHED INCLUDING THE EXPOSED REINFORCING STEEL. ACCEPTABLE METHODS INCLUDE HIGH PRESSURE WATER BLASTING WITH OR WITHOUT ABRASIVES IN THE WATER, ABRASIVE BLASTING WITH CONTAINMENT, OR VACUUM ABRASIVE BLASTING.

AN ALLOWANCE OF 200 S.F. IS INCLUDED IN THE CONTRACT DOCUMENTS TO PATCH DEFICIENT AREAS OF THE CONCRETE SUBSTRUCTURES. AREAS REQUIRING PATCHING WILL BE DETERMINED IN THE FIELD BY THE PROJECT ENGINEER AND REPAIRED AS PER THE REQUIREMENTS OF ITEM 519 - PATCHING CONCRETE STRUCTURE.

ITEM 526 - REINFORCED CONCRETE APPROACH SLABS, AS PER PLAN

THE PROVISIONS OF CMS 526 SHALL APPLY EXCEPT AS NOTED BELOW.

CLASS HP CONCRETE, MIX 4, AS PER PLAN, SHALL BE THE ONLY MIX DESIGN OPTION. THE PROPORTIONS FOR THE STARTING MIX DESIGN SHALL BE AS SHOWN FOR ITEM 511 - CLASS HP CONCRETE, AS PER PLAN.

DECK PLACEMENT DESIGN ASSUMPTIONS

THE FOLLOWING ASSUMPTIONS OF CONSTRUCTION MEANS AND METHODS WERE MADE FOR THE ANALYSIS AND DESIGN OF THE SUPERSTRUCTURE. THE CONTRACTOR IS RESPONSIBLE FOR THE DESIGN OF THE FALSEWORK SUPPORT SYSTEM WITHIN THESE PARAMETERS AND WILL ASSUME RESPONSIBILITY FOR SUPERSTRUCTURE ANALYSIS FOR DEVIATION FROM THESE DESIGN ASSUMPTIONS.

AN EIGHT WHEEL FINISHING MACHINE WITH A MAXIMUM WHEEL LOAD OF 1.25 KIPS FOR A TOTAL MACHINE LOAD OF 10.0 KIPS.

A MINIMUM OUT-TO-OUT WHEEL SPACING AT EACH END OF THE MACHINE OF 103".

A MAXIMUM SPACING OF OVERHANG FALSEWORK BRACKETS OF 48 IN.

A MAXIMUM DISTANCE FROM THE CENTERLINE OF THE FASCIA BEAM TO THE FACE OF THE SAFETY HANDRAIL OF 65".

STRUCTURE IDENTIFICATION SIGNS

STRUCTURE IDENTIFICATION SIGNS (I-H25a) WILL BE PLACED ON EACH APPROACH OFF THE RIGHT SHOULDER, FACING TRAFFIC, AND BEHIND THE GUARDRAIL IF APPLICABLE. A QUANTITY OF ONE SIGN PER APPROACH WILL BE INSTALLED. THE SIGNS WILL HAVE A NON-REFLECTIVE WHITE SHEETING BACKGROUND.

THE SIGNS WILL BE MOUNTED ON NEW NO. 2 POSTS AND WILL BE INSTALLED AS PER STANDARD CONSTRUCTION DRAWING TC-41.20, MOST CURRENT REVISION. EACH POST WILL BE 7.5' IN LENGTH.

INSTALL SIGNS FOR THE FOLLOWING STRUCTURES: TRU-80-0496 L (1 APPROACH), TRU-80-0496 R (1 APPROACH), TRU-80-0591 L (1 APPROACH), TRU-80-0591 R (1 APPROACH)

THE FOLLOWING QUANTITIES HAVE BEEN INCLUDED FOR EACH APPROACH:
ITEM 630 - SIGN, FLAT SHEET, 730.20, 1 SQ. FT.
ITEM 630 - GROUND MOUNTED SUPPORT, NO. 2 POST, 7.5 FT
ITEM 630 - REMOVAL OF GROUND MOUNTED SIGN AND DISPOSAL, 1 EACH
ITEM 630 - REMOVAL OF GROUND MOUNTED POST SUPPORT AND DISPOSAL, 1 EACH

AS-BUILT

THIS RECORD DRAWING HAS BEEN PREPARED IN PART BY THE ENGINEER OF RECORD TO DEPICT CHANGES MADE DURING CONSTRUCTION, BASED ON INFORMATION REPORTED BY THE CONSTRUCTION CONTRACTOR.

PAINTING AND SEALING OPERATIONS

THE CONTRACTOR SHALL TAKE ALL PRECAUTIONS NECESSARY TO PREVENT EPOXY-URETHANE SEALER, PAINT, OR OTHER MATERIALS USED TO REPAIR, CLEAN, SEAL, OR TREAT ANY BRIDGE STRUCTURE FROM ENTERING ANY STREAMS, WETLANDS OR OTHER WATERS OF THE UNITED STATES AND TAKE THE APPROPRIATE ACTIONS IN THE EVENT OF A RELEASE.

HAZARDOUS MATERIALS

ASBESTOS NOTIFICATION

AN ASBESTOS SURVEY OF THE INTERSTATE ROUTE (IR) 80 BRIDGES OVER SAMPSON ROAD (STRUCTURE NO. TRU-80-4.96L/R, SFN 7803931 &7803966), AND LOGAN WAY (STRUCTURE NO. TRU-80-5.91L/R, SFN 7803990 & 7804024), SCHEDULED FOR DEMOLITION WAS CONDUCTED BY A CERTIFIED ASBESTOS HAZARD EVALUATION SPECIALIST. THE SURVEY DETERMINED THAT APPROXIMATELY 54 SQUARE FEET (TOTAL IS FOR ALL FOUR STRUCTURES) OF CATEGORY I NONFRIABLE ASBESTOS WAS IDENTIFIED IN CAULKING MATERIAL ASSOCIATED WITH THE BRIDGE PARAPET RAILING ON ALL FOUR STRUCTURES. THE REMOVAL AND DISPOSAL OF THE ASBESTOS CONTAINING MATERIAL MUST COMPLY WITH THE OHIO ADMINISTRATIVE CODE, THE OCCUPATION SAFETY & HEALTH ADMINISTRATIVE (OSHA) REGULATIONS AND THE NATIONAL EMISSION STANDARD FOR HAZARDOUS AIR POLLUTANTS (NESHAP) STANDARD FOR ASBESTOS. THIS ASBESTOS CONTAINING MATERIAL WILL BE REMOVED BY THE CONTRACTOR DURING THE BRIDGE DECK REPLACEMENTS. THE CONTRACTOR WILL PROVIDE AN INDIVIDUAL TRAINED IN THE PROVISIONS OF THE NESHAP ON SITE, TO DIRECT THE REMOVAL OF THE ASBESTOS CONTAINING MATERIAL.

A COPY OF THE OHIO ENVIRONMENTAL PROTECTION AGENCY(OEPA) NOTIFICATION OF DEMOLITION AND RENOVATION FORMS, PARTIALLY COMPLETED AND SIGNED BY THE BRIDGE OWNER, WILL BE PROVIDED TO THE SUCCESSFUL BIDDER. THE CONTRACTOR SHALL COMPLETE THE FORM AND SUBMIT IT TO:

MAHONING-TRUMBULL AIR POLLUTION CONTROL
345 OAK HILL AVENUE, SUITE 200
YOUNGSTOWN, OHIO 44502
NEIL H. ALTMAN
(330) 743-3333
FAX: (330) 743-3960

AT LEAST TEN (10) WORKING DAYS PRIOR TO THE START OF THE DEMOLITION OF THE BRIDGES. THE CONTRACTOR SHALL PROVIDE A COPY OF THE COMPLETED FORM TO THE ENGINEER. INFORMATION REQUIRED ON THE FORM WILL INCLUDE:

1) THE CONTRACTORS NAME AND ADDRESS, 2) THE SCHEDULED DATES FOR THE START AND COMPLETION OF THE BRIDGE REMOVAL AND A DESCRIPTION OF THE PLANNED DEMOLITION WORK AND THE METHOD(S) TO BE USED, 3) THE DATES AND HOURS OF OPERATION FOR THE ASBESTOS REMOVAL, 4) A DESCRIPTION OF THE PLANNED RENOVATION WORK AND THE METHOD(S) TO BE USED, 5) THE NAME AND ADDRESS OF WASTE DISPOSAL FACILITY TO BE USED

A COPY OF THE OEPA FORM IS AVAILABLE FOR INSPECTION AT THE ODOT DISTRICT 4 OFFICE, 2088 SOUTH ARLINGTON RD., AKRON, OHIO 44306.

THE CONTRACTOR WILL FURNISH ALL FEES, LABOR, AND MATERIAL NECESSARY TO COMPLETE AND SUBMIT THE OEPA NOTIFICATION FORM, AND REMOVE OF ANY/ALL ASBESTOS CONTAINING MATERIAL (ACM).

SPECIAL - PATCHING CONCRETE STRUCTURE, MISC.: CURB REPAIR

THIS ITEM WILL BE USED TO REPAIR THE DETERIORATED FACE OF THE CURB ON THE BRIDGE DECK AND/OR APPROACH SLABS. THIS WORK WILL BE PERFORMED PRIOR TO SHIFTING TRAFFIC CLOSER TO THE EXISTING PARAPETS AND IN ACCORDANCE WITH ITEM 519 - PATCHING CONCRETE STRUCTURES AND AS MODIFIED HEREIN.

PRIOR TO THE SURFACE CLEANING SPECIFIED IN 519.04 AND WITHIN 24 HOURS OF PLACING PATCHING MATERIAL, BLAST CLEAN ALL SURFACES TO BE PATCHED INCLUDING THE EXPOSED REINFORCING STEEL. ACCEPTABLE METHODS INCLUDE HIGH-PRESSURE WATER BLASTING WITH OR WITHOUT ABRASIVES IN THE WATER, ABRASIVE BLASTING WITH CONTAINMENT, OR VACUUM ABRASIVE BLASTING.

ABBREVIATIONS

ABUT. - ABUTMENT
APPR. - APPROACH
BOTT. - BOTTOM
BRG. - BEARING
C/C - CENTER TO CENTER
C.I.P. - CAST-IN-PLACE
C.J. - CONSTRUCTION JOINT
C.M.P. - CORRUGATED METAL PIPE
CONN. - CONNECTOR
CONST. - CONSTRUCTION
C.P.P. - CORRUGATED PLASTIC PIPE
DIA. - DIAMETER
EL. - ELEV. - ELEVATION
EX. - EXIST. - EXISTING
EXP. - EXPANSION
EQ. SPA. - EQUAL SPACE
E.F. - EACH FACE
F.F. - FAR FACE
FWD. - FORWARD
H.M.W.M. - HIGH MOLECULAR WEIGHT METHACRYLATE
MAX. - MAXIMUM
M.C. - MECHANICAL CONNECTOR
M.O.T. - MAINTENACE OF TRAFFIC
MID. - MIDDLE
MIN. - MINIMUM
N.F. - NEAR FACE
o/o - OUT TO OUT
P.E.J.F. - PREFORMED EXPANSION JOINT FILLER
P.G. - PROFILE GRADE
S.B. - SOUTHBOUND
SER. - SERIES
S.R. - STATE ROUTE
STA. - STATION
T & B - TOP AND BOTTOM
TYP. - TYPICAL
T/T - TOE TO TOE
VAR. - VARIES
VERT. - VERTICAL

ITEM SPECIAL - MISC.: VERTICAL CLEARANCE

PRIOR TO COMMENCING CONSTRUCTION AND AFTER ALL CONSTRUCTION HAS BEEN COMPLETED, A REGISTERED SURVEYOR WILL TAKE VERTICAL CLEARANCE MEASUREMENTS AT LOCATIONS INDICATED ON THE APPROVED ODOT FORM (AVAILABLE IN THE DISTRICT 4 STRUCTURES AND PAVEMENT OFFICE). THE FINAL MEASUREMENTS SHALL BE RECORDED ON THE FORM AND SUBMITTED TO THE PROJECT ENGINEER AND THE DISTRICT 4 STRUCTURES AND PAVEMENT ENGINEER. THE RECORD SHALL BEAR THE SEAL OF THE LICENSED SURVEYOR WHO HAS TAKEN THE MEASUREMENTS.

PROPOSED WORK (TRU-80-0496L/R & TRU-80-0591L/R)

IN GENERAL, THE PROPOSED WORK CONSISTS OF: REMOVAL OF THE EXISTING APPROACH SLABS, PARAPETS, BRIDGE DECKS, CROSSFRAMES, BEAMS, BEARINGS AND REMOVAL OF PORTIONS OF THE ABUTMENTS AND WINGWALLS; REPLACING EXISTING ABUTMENT DRAINAGE SYSTEMS; NEW ELASTOMERIC BEARINGS; SEMI-INTEGRAL BREASTWALL AND DIAPHRAGMS, STEEL BEAMS, CROSS FRAMES, BRIDGE DECK, PARAPETS AND INCIDENTAL ITEMS OF WORK; RESTORATION OF EXISTING SLOPES AND PROTECTION OF NEW SLOPES WITH CRUSHED AGGREGATE SLOPE PROTECTION. TRAFFIC ON THE BRIDGE, AS WELL AS ON PERTINENT ROADS UNDER THE BRIDGE, MUST BE MAINTAINED THROUGHOUT CONSTRUCTION, NECESSITATING THE WORK BE COMPLETED IN STAGES. SOME OF THE PROJECT ITEMS OF WORK MAY BE PERFORMED AT THE CONTRACTOR'S OWN SCHEDULE WITHIN THE TIME FRAME. HOWEVER, IT MUST BE COORDINATED WITH MAINTENANCE OF TRAFFIC PLANS AND SAFETY REQUIREMENTS.

PILES DRIVEN TO BEDROCK

DRIVE PILES TO REFUSAL ON BEDROCK. THE DEPARTMENT WILL CONSIDER REFUSAL TO BE OBTAINED BY PENETRATING SOFT BEDROCK FOR SEVERAL INCHES TO A MINIMUM RESISTANCE OF 20 BLOWS PER INCH OR BY CONTACTING HARD BEDROCK AND THE PILE RECEIVING AT LEAST 20 BLOWS. SELECT THE HAMMER SIZE TO ACHIEVE THE REQUIRED DEPTH TO BEDROCK AND REFUSAL. INSTEAD OF DRIVING TO REFUSAL, THE CONTRACTOR MAY PERFORM DYNAMIC LOAD TESTING ACCORDING TO C&MS 523 TO ESTABLISH A DRIVING CRITERIA FOR EACH PILE TYPE AND CAPACITY. ESTABLISH THE DRIVING CRITERIA TO ACHIEVE AN ULTIMATE BEARING VALUE GIVEN BELOW FOR THE PILES. PAYMENT FOR DYNAMIC LOAD TESTING PERFORMED AT THE CONTRACTOR'S OPTION IS INCLUDED IN THE UNIT PRICE PAY ITEM FOR PILES DRIVEN.

THE ULTIMATE BEARING VALUE IS 120 TONS PER PILE FOR THE REAR AND FORWARD ABUTMENT PILES FOR THE TRU-80-0496L/R BRIDGE. THE ULTIMATE BEARING VALUE IS 106 TONS PER PILE FOR THE REAR AND FORWARD ABUTMENT FOR THE TRU-80-0591L/R BRIDGE.

ABUTMENT PILES:
HP10X42 PILES 30 FEET LONG, ORDER LENGTH (TRU-80-0496L/R)
HP10X42 PILES 35 FEET LONG, ORDER LENGTH (TRU-80-0591L/R)

2 REVISED 1-8-13

DESIGN AGENCY: ms consultants, inc. engineers, architects & planners, 2221 Schrock Road, Columbus, Ohio 43229-1547, Tel 614.898.7100 Fax 614.898.7570, www.msconsultants.com

DESIGNED	DRAWN	REVIEWED	DATE
WER	KRM	JDH	1/25/2013
CHECKED	REVISED	STRUCTURE FILE NUMBER	
LAW		7803931/7803966 7803990/7804024	

GENERAL NOTES
BRIDGE NO. TRU-80-0496L/R OVER SAMPSON ROAD
BRIDGE NO. TRU-80-0591L/R OVER LOGAN WAY

TRU-80-4.70
PID No. 76411

G2/G4

PLOT.CEL
ms consultants, inc.
msconsultants.com
Ohio DOT Workspace
Marucci & Gaffney TRU-80 Design Build
www.msconsultants.com
UCF: ohdotV8i
PCF: 60-08285_Youngstown
Batchplot Spec: \\youngstown-fs1\n\60\08285\standards\plotdrv\batchplt.spc
Pen Table: S:\std\plotting\ustn\V8i\pen\V8i_ms_std.tbl
Plot Driver: S:\std\plotting\ustn\V8i\PDF.pltcfg
34" x 22"
Model: Sheet View: SHEET
Printed: 1/6/2014 @ 3:53:02 PM By: wruggles
File: \\youngstown-fs1\n\60\08285\structures\TRU-80-0496_Sampson\sheets\080_0496LGN002.dgn
ms consultants, inc.

GALVANIZED COATING SYSTEM FOR STRUCTURAL STEEL BRIDGES

GALVANIZED COATING SYSTEM FOR STRUCTURAL STEEL BRIDGES

1.1.1 DESCRIPTION

IN ADDITION TO THE REQUIREMENTS OF CMS ITEM 513, THIS ITEM SHALL CONSIST OF FURNISHING ALL NECESSARY LABOR, MATERIALS AND EQUIPMENT TO CLEAN AND GALVANIZE ALL STRUCTURAL STEEL SURFACES, AS SPECIFIED HEREIN. THE GALVANIZED COATING SYSTEM MAY BE APPLIED BY A GALVANIZER NOT QUALIFIED AS A FABRICATION SHOP UNDER CMS ITEM 513, BUT THE APPROVED FABRICATOR OF THE STRUCTURAL STEEL SHALL BE RESPONSIBLE FOR THE QUALITY OF THE APPLIED GALVANIZED COATING SYSTEM AND ANY REPAIRS, RE-FABRICATING, ADDITIONAL LAYDOWNS REQUIRED TO ASSURE THE FABRICATED STEEL MEETS ALL REQUIREMENTS OF THIS SPECIFICATION. CMS SECTIONS 513.27 AND 513.28 SHALL NOT APPLY.

THIS ITEM SHALL ALSO INCLUDE GALVANIZING, PER 711.02, OF ALL NUTS, WASHERS, BOLTS, ANCHOR BOLTS.

GRIND THE GALVANIZED COATING OFF THE TOP FLANGE AT EACH SHEAR STUD PRIOR TO FIELD WELDING IT.

1.1.2 PRE-FABRICATION MEETING

IN ADDITION TO THE PRE-FABRICATION MEETING REQUIREMENTS UNDER CMS SECTION 513.07, BOTH THE FABRICATOR'S QUALITY CONTROL SPECIALIST, (QCPS) AND GALVANIZED COATING APPLICATOR SHALL BE PRESENT AND DISCUSS METHODS OF OPERATION, QUALITY CONTROL, INCLUDING REPAIRS, TRANSPORTATION, ERECTION METHODS TO ACCOMPLISH ALL PHASES OF THE PREPARATION AND COATING WORK REQUIRED BY THIS SPECIFICATION.

1.1.3 QUALITY CONTROL

1.1.3.1 QUALITY CONTROL SPECIALIST

THE QCPS (QUALITY CONTROL PAINT SPECIALIST) REQUIRED UNDER CMS SECTION 514.04A, IS RESPONSIBLE FOR ALL QUALITY CONTROL REQUIREMENTS OF THIS SPECIFICATION. THE QCPS SHALL HAVE THE TESTING EQUIPMENT SPECIFIED IN CMS SECTION 514.05.

1.1.3.2 QUALITY CONTROL POINTS (QCP)

QUALITY CONTROL POINTS (QCP) ARE POINTS IN TIME WHEN ONE PHASE OF THE WORK IS COMPLETE AND READY FOR INSPECTION BY THE FABRICATOR'S QCPS AND THE DEPARTMENT'S QA REPRESENTATIVE. THE NEXT OPERATIONAL STEP MUST NOT PROCEED UNLESS THE QCP HAS BEEN ACCEPTED OR QA INSPECTION WAIVED BY THE DEPARTMENT'S QA REPRESENTATIVE. AT THESE POINTS THE FABRICATOR MUST AFFORD ACCESS TO INSPECT ALL AFFECTED SURFACES. IF INSPECTION INDICATES A DEFICIENCY, THAT PHASE OF THE WORK MUST BE CORRECTED IN ACCORDANCE WITH THESE SPECIFICATIONS PRIOR TO BEGINNING THE NEXT PHASE OF WORK. DISCOVERY OF DEFECTIVE WORK OR MATERIAL AFTER A QUALITY CONTROL POINT IS PAST OR FAILURE OF THE FINAL PRODUCT BEFORE FINAL ACCEPTANCE, MUST NOT IN ANY WAY PREVENT REJECTION OR OBLIGATE THE DEPARTMENT TO FINAL ACCEPTANCE.

QUALITY CONTROL POINTS	
QUALITY CONTROL POINTS (QCP)	PURPOSE
SOLVENT CLEANING	REMOVE ASPHALTIC CEMENT, OIL, GREASE, SALT, DIRT, ETC.
GRINDING EDGES	REMOVE SHARP CORNERS PER AWS.
ABRASIVE BLASTING	BLAST SURFACES, INCLUDING REPAIR FINS, TEARS, SLIVERS OR SHARP EDGES.
GALVANIZING	CHECK COATING THICKNESS
FAYING SURFACE CLEANING	CHECK FAYING SURFACE ROUGHNESS. CHECK BOLT HOLE CLEARANCE. CHECK FOR OTHER FIELD CONNECTIONS UNIFORM COATING THICKNESS.
SECOND LAY DOWN	CHECK SWEEP AND CAMBER TOLERANCES OF EACH STRUCTURAL MEMBER.
FIELD REPAIR OF DAMAGE AREAS	CHECK FOR DAMAGE AREAS AFTER ERECTION OF STRUCTURE. PERFORM DAMAGE REPAIRS.
FINAL REVIEW	CLEAN STRUCTURE AS PER QCP#1. VISUALLY INSPECT SYSTEM FOR ACCEPTANCE.

1.1.3.2.1 SOLVENT CLEANING (QCP #1)

THE STEEL MUST BE SOLVENT CLEANED WHERE NECESSARY TO REMOVE ALL TRACES OF ASPHALTIC CEMENT, OIL, GREASE, DIESEL FUEL DEPOSITS, AND OTHER SOLUBLE CONTAMINANTS PER SSPC-SP 1 SOLVENT CLEANING. UNDER NO CIRCUMSTANCES MUST ANY ABRASIVE BLASTING BE DONE TO AREAS WITH ASPHALTIC CEMENT, OIL, GREASE, OR DIESEL FUEL DEPOSITS. STEEL MUST BE ALLOWED TO DRY BEFORE BLAST CLEANING BEGINS. THE QCPS SHALL INSPECT AND DOCUMENT THAT THE CLEANING CONFORMS TO SSPC-SP1 AND PROVIDE A COVER LETTER LISTING EACH MAIN MEMBER INSPECTED.

1.1.3.2.2 GRINDING EDGES (QCP #2)

ALL CORNERS OF THERMALLY CUT OR SHEARED EDGES MUST HAVE A 1/16 INCH [1.6 MM] RADIUS OR EQUIVALENT FLAT SURFACE AT A SUITABLE ANGLE. THERMALLY CUT MATERIAL THICKER THAN 1½ INCH [40 MM] MUST HAVE THE SIDES GROUND TO REMOVE THE HEAT EFFECTED ZONE, AS NECESSARY TO ACHIEVE THE SPECIFIED SURFACE CLEANING. THE QCPS MUST VISUALLY INSPECT AND DOCUMENT THAT THE GRINDING CONFORMS TO THIS SPECIFICATION AND PROVIDE A COVER LETTER LISTING EACH MAIN MEMBER INSPECTED.

1.1.3.2.3 ABRASIVE BLASTING (QCP #3)

BEAMS AND GIRDERS MUST BE PREPARED BY THE FABRICATOR TO STEEL STRUCTURES PAINTING COUNCIL (SSPC) GRADE SIX (6) COMMERCIAL BLAST CLEANING PRIOR TO GALVANIZING. ALL MATERIAL MUST BE FREE OF PAINT MARKS. SECONDARY ANGLE, PLATES, BARS AND SHAPES NEED NOT BE BLAST CLEANED.

ABRASIVES MUST ALSO BE CHECKED FOR OIL CONTAMINATION BEFORE USE. A SMALL SAMPLE OF ABRASIVES MUST BE ADDED TO ORDINARY TAP WATER. ANY DETECTION OF AN OIL FILM ON THE SURFACE OF THE WATER MUST BE CAUSE FOR REJECTION. THE QCPS MUST PERFORM AND RECORD THIS TEST AT THE START OF EACH SHIFT.

ALL FINS, TEARS, SLIVERS AND BURRED OR SHARP EDGES THAT ARE PRESENT ON ANY STEEL MEMBER OR THAT APPEAR AFTER THE BLASTING OPERATION MUST BE CONDITIONED PER ASTM A6. WELDING REPAIRS MUST ONLY BE PERFORMED BY THE ITEM 513 FABRICATOR.

THE QCPS MUST VISUALLY INSPECT AND DOCUMENT THAT THE BLAST CONFORMS TO SSPC-SP6, THAT ALL CONDITIONING IS PERFORMED PER ASTM A6, AND PROVIDE A COVER LETTER LISTING EACH MAIN MEMBER INSPECTED.

1.1.3.2.4 GALVANIZING (QCP #4)

GALVANIZED PER 711.02 AND THIS SPECIFICATION. COATING THICKNESS MUST BE A MINIMUM OF 4 MILS [100 μM] MEASURED AS SPECIFIED.

MATERIAL MUST BE FREE OF IMPERFECTIONS OR DEPRESSIONS CAUSED BY MATERIAL HANDLING. THE FABRICATOR, GALVANIZER AND ERECTOR MUST USE LIFTING CLAMPS OR SOFTENERS FOR HANDLING. PRIOR TO GALVANIZING, SURFACE IMPERFECTIONS MAY BE REPAIRED BY THE FABRICATOR IN CONFORMANCE WITH ASTM A6. IMPERFECTIONS GREATER THAN THE LIMITS ALLOWED BY ASTM A6 MUST BE DOCUMENTED. REPAIR OR REPLACEMENT OF THIS MEMBER WILL BE AT THE DISCRETION OF THE DEPARTMENT.

ALL DAMAGED GALVANIZING MUST BE REPAIRED IN ACCORDANCE WITH ASTM A780, METHOD A1 OR A3.

DOCUMENTATION OF COATING THICKNESS MUST BE PERFORMED BY THE QCPS. THE QCPS MUST RECORD THE GAGE READINGS AND PROVIDE A COVER LETTER LISTING EACH MAIN MEMBER INSPECTED.

1.1.3.2.5 FAYING SURFACE CLEANING (QCP #5)

AREAS OF FIELD CONNECTIONS MUST HAVE A UNIFORM GALVANIZED COATING THICKNESS FREE OF LOCAL EXCESSIVE ROUGHNESS WHICH WOULD PREVENT SPLICE PLATES, BEARINGS OR OTHER FIELD CONNECTIONS FROM MAKING INTIMATE CONTACT.

FAYING SURFACES OF THE BOLTED SPLICES MUST BE ROUGHENED IN THE SHOP AFTER GALVANIZING BY HAND WIRE BRUSHING. POWER WIRE BRUSHING IS NOT PERMITTED. ALL FIELD SPLICE BOLT HOLES MUST BE FREE OF ZINC BUILD UP. AFTER GALVANIZING, EACH HOLE MUST BE CHECKED IN THE SHOP BY USING A DRIFT PIN WITH A DIAMETER 1/16 INCH [1.6 MM] GREATER THAN THE DIAMETER OF THE BOLT TO BE USED IN THAT HOLE. CONSIDERATION WILL BE GIVEN TO OTHER METHODS OF TREATING THE FAYING SURFACES IF A WRITTEN REQUEST IS SUBMITTED TO THE OFFICE OF STRUCTURAL ENGINEERING (OSE) IN ACCORDANCE WITH CMS 108.05.

INSPECTION OF THE ROUGHENING OF THE FAYING SURFACES AND CHECKING OF HOLES WITH DRIFT PINS MUST BE PERFORMED BY THE QCPS. ACCEPTANCE OF THE FAYING SURFACES AND HOLES SHALL BE DOCUMENTED BY THE QCPS.

1.1.3.2.6 SECOND LAY DOWN (QCP # 6)

AFTER GALVANIZING, MATERIALS MUST BE PLACED IN A SECOND SHOP ASSEMBLY PER CMS SECTION 513.24 TO CHECK ALIGNMENT OF HOLES, SWEEP AND CAMBER AGAINST THE FABRICATORS ORIGINAL RECORDED LAY DOWN DIMENSIONS. THIS SHOP ASSEMBLY MAY BE PERFORMED AT THE GALVANIZERS FACILITY, BY THE FABRICATORS PERSONNEL, IF APPROVED BY THE OSE. THE SECOND LAY DOWN MAY BE WAIVED BY THE OSE IF THE FABRICATOR RECORDS INDIVIDUAL BEAM CAMBERS AND SWEEPS DURING THE FIRST LAY DOWN, AND THE NEW INDIVIDUAL BEAM CAMBERS AND SWEEPS, AFTER GALVANIZING, COMPARED TO THE FIRST LAY DOWN ARE WITHIN THE FOLLOWING TOLERANCES:

BEARING POINTS AFTER GALVANIZING MUST BE WITHIN +/- 1/8 INCH [3.2 MM] OF THE APPROVED SHOP DRAWING LAY DOWN.

CAMBER POINTS AFTER GALVANIZING MUST BE + 1/4 INCH [6 MM] OR - 0 INCHES FROM THE FIRST LAY DOWN.

SWEEP POINTS AFTER GALVANIZING MUST BE +/- 3/8 INCH [9 MM] FROM THE FIRST LAY DOWN.

INDIVIDUAL BEAMS THAT EXCEED THE LISTED TOLERANCES MUST BE PLACED WITH AT LEAST TWO ADJACENT BEAMS IN LAY DOWN FOR CHECKING AGAINST THE RECORDED SHOP ASSEMBLY RECORDS PER CMS SECTION 513.04. DOCUMENTATION OF THE SECOND LAY DOWN OR INDIVIDUAL MEMBER CAMBERS MUST BE RECORDED BY THE QCPS PER CMS SECTION 513.24.

1.1.3.2.7 FIELD REPAIR OF DAMAGED AREAS (QCP #7)

MATERIAL MUST BE FREE OF IMPERFECTIONS OR DEPRESSIONS CAUSED BY MATERIAL HANDLING. THE CONTRACTOR MUST USE LIFTING CLAMPS OR SOFTENERS FOR HANDLING. IMPERFECTIONS MAY BE REPAIRED BY GRINDING AS ALLOWED BY ASTM A6 BY THE CONTRACTOR. IMPERFECTIONS THAT ARE GREATER THAN THE GRINDING LIMITS ALLOWED BY ASTM A6, MUST BE DOCUMENTED. REPAIR OR REPLACEMENT OF THIS MEMBER WILL BE AT THE DISCRETION OF THE OSE.

ALL DAMAGED GALVANIZING MUST BE REPAIRED IN ACCORDANCE WITH ASTM A780, METHOD A1 OR A3.

DAMAGED GALVANIZING WHICH WILL BE INACCESSIBLE FOR REPAIR AFTER ERECTION MUST BE REPAIRED PRIOR TO ERECTION.

IN ORDER TO MINIMIZE DAMAGE TO THE GALVANIZED STEEL, CONCRETE SPLATTER AND FORM LEAKAGE MUST BE WASHED FROM THE SURFACE OF THE STEEL SHORTLY AFTER THE CONCRETE IS PLACED AND BEFORE IT IS DRY. IF THE CONCRETE DRIES, IT MUST BE REMOVED.

TEMPORARY ATTACHMENTS, SUPPORTS FOR SCAFFOLDING AND FINISHING MACHINE OR FORMS MUST NOT DAMAGE THE COATING SYSTEM. IN PARTICULAR, SUFFICIENT SIZE SUPPORT PADS MUST BE USED ON THE FASCIAS WHERE BRACING IS USED.

DOCUMENTATION OF GALVANIZING REPAIRS MUST BE PERFORMED BY THE QCPS BY A COVER LETTER LISTING EACH MAIN MEMBER INSPECTED.

1.1.3.2.8 FINAL REVIEW (QCP # 8)

AFTER THE ERECTION WORK HAS BEEN COMPLETED, INCLUDING ALL CONNECTIONS AND THE APPROVED REPAIR OF ANY DAMAGED BEAMS, GIRDERS OR OTHER STEEL MEMBERS, AND THE DECK HAS BEEN PLACED, THE CONTRACTOR AND ENGINEER MUST INSPECT THE STRUCTURE FOR DAMAGED COATING. (QCP #8). DAMAGED AREAS MUST BE REPAIRED BY QCPS #7. AT THE COMPLETION OF CONSTRUCTION, THE GALVANIZING MUST BE UNDAMAGED AND THE SURFACES FREE FROM GREASE, OIL, CHALK MARKS, PAINT, CONCRETE SPLATTER OR OTHER SILAGE. SUCH SILAGE WILL BE REMOVED BY SOLVENT CLEANING PER SSPC-SP1 (QCP #1)

DOCUMENTATION OF FINAL REVIEW MUST BE PERFORMED BY THE QCPS BY A COVER LETTER LISTING EACH MAIN MEMBER INSPECTED.

1.1.4 TESTING EQUIPMENT

THE FABRICATOR MUST PROVIDE THE QCPS INSPECTOR THE FOLLOWING TESTING EQUIPMENT IN GOOD WORKING ORDER FOR THE DURATION OF THE PROJECT.

ONE (POSITECTOR 2000 OR 6000, QUANIX 2200, OR ELCOMETER A345FBI1) AND THE CALIBRATION PLATES, 38-200 MM AND 250-625 MM [1.5 -8 MILS AND 10-25 MILS] AS PER THE NBS CALIBRATION STANDARDS IN ACCORDANCE WITH ASTM D-1186.

AS-BUILT
THIS RECORD DRAWING HAS BEEN PREPARED IN PART BY THE ENGINEER OF RECORD TO DEPICT CHANGES MADE DURING CONSTRUCTION, BASED ON INFORMATION REPORTED BY THE CONSTRUCTION CONTRACTOR.

PLOT.CEL
ms consultants, inc.
msconsultants.com
Ohio DOT Workspace
Marucci & Gaffney TRU-80 Design Build
www.msconsultants.com
UCF: ohdotV8i
PCF: 60-08285_Youngstown
Batchplot Spec: \\youngstown-fs1\n\60\08285\standards\plotdrv\batchplt.spc
Pen Table: S:\std\plotting\ustn\V8i\pen\V8i_ms_std.tbl
Plot Driver: S:\std\plotting\ustn\V8i\PDF.pltcfg
34" x 22"
Model: Sheet View: SHEET
Printed: 1/6/2014 @ 3:53:04 PM By: wruggles
File: \\youngstown-fs1\n\60\08285\structures\TRU-80-0496_Sampson\sheets\080_0496LGN003.dgn

DESIGN AGENCY
ms consultants, inc.
engineers, architects & planners
2221 Schrock Road
Columbus, Ohio 43229-1547
Tel 614.898.7100 Fax 614.898.7570
www.msconsultants.com

DESIGNED	DRAWN	REVIEWED	DATE
WER	KRM	JDH	1/25/2013
CHECKED	REVISED	STRUCTURE FILE NUMBER	
LAW		7803931/7803966 7803990/7804024	

GENERAL NOTES
BRIDGE NO. TRU-80-0496L/R OVER SAMPSON ROAD
BRIDGE NO. TRU-80-0591L/R OVER LOGAN WAY

TRU-80-4.70
PID No. 76411

GALVANIZED COATING SYSTEM FOR STRUCTURAL STEEL BRIDGES (CONT.)

1.1.5 COATING THICKNESS

GALVANIZED THICKNESS MUST BE DETERMINED BY USE OF TYPE 2 MAGNETIC GAGE IN ACCORDANCE WITH THE FOLLOWING:

FIVE SEPARATE SPOT MEASUREMENTS MUST BE MADE, SPACED EVENLY OVER ONE (1) RANDOMLY SELECTED, 100 SQUARE FEET [9 SQUARE METERS] OF SURFACE AREA ON EACH STRUCTURAL MEMBER. THREE GAGE READINGS MUST BE MADE FOR EACH SPOT MEASUREMENT. THE PROBE MUST BE MOVED A DISTANCE OF 1 TO 3 INCHES [25 TO 75 MM] FOR EACH NEW GAGE READING. ANY UNUSUALLY HIGH OR LOW GAGE READING THAT CANNOT BE REPEATED CONSISTENTLY MUST BE DISCARDED. THE AVERAGE (MEAN) OF THE 3 GAGE READINGS MUST BE USED AS THE SPOT MEASUREMENT. THE AVERAGE OF FIVE SPOT MEASUREMENTS FOR EACH SUCH 100 SQUARE FOOT [9 SQUARE METERS] AREA MUST NOT BE LESS THAT THE SPECIFIED THICKNESS. NO SINGLE SPOT MEASUREMENT IN ANY 100 SQUARE FOOT [9 SQUARE METERS] AREA MUST BE LESS THAN 80% OF THE SPECIFIED MINIMUM THICKNESS. ANY ONE OF 3 READINGS WHICH ARE AVERAGED TO PRODUCE EACH SPOT MEASUREMENT, MAY UNDER-RUN OR OVER-RUN BY A GREATER AMOUNT. THE 5 SPOT MEASUREMENTS MUST BE MADE FOR ONE (1) RANDOMLY SELECTED, 100 SQUARE FEET [9 SQUARE METER] OF AREA ON EACH STRUCTURAL MEMBER. ALL SPLICE MATERIAL AND SECONDARY MEMBERS MUST HAVE AT LEAST ONE SPOT MEASURED ON EACH PIECE. THE PROBE MUST BE MOVED SO THAT ONE READING IS TAKEN AT EACH END AND MIDDLE OF THE PIECE FOR A TOTAL OF THREE READINGS.

THE QCPS MUST INSPECT AND PROVIDE DOCUMENTATION OF ACTUAL DATA, THE GALVANIZED THICKNESS CHECKS WERE PERFORMED PER SPECIFICATION, AND THE COATING THICKNESS MEETS SPECIFICATION REQUIREMENTS.

1.1.6 HANDLING AND SHIPPING

REASONABLE CARE MUST BE EXERCISED IN HANDLING THE GALVANIZED STEEL DURING SHIPPING, ERECTION, AND SUBSEQUENT CONSTRUCTION OF THE BRIDGE. THE STEEL MUST BE INSULATED FROM THE BINDING CHAINS BY SOFTENERS. HOOKS AND SLINGS USED TO HOIST STEEL MUST BE PADDED. DIAPHRAGMS AND SIMILAR PIECES MUST BE SPACED IN SUCH A WAY THAT NO RUBBING WILL OCCUR DURING SHIPMENT THAT MAY DAMAGE THE GALVANIZING. THE STEEL MUST BE STORED ON PALLETS AT THE JOB SITE, OR BY OTHER MEANS, SO THAT IT DOES NOT REST ON THE GROUND OR SO THAT COMPONENTS DO NOT FALL OR REST ON EACH OTHER.

1.1.7 SAFETY REQUIREMENTS AND PRECAUTIONS

THE CONTRACTOR MUST MEET THE SAFETY REQUIREMENTS OF THE OHIO INDUSTRIAL COMMISSION AND THE OCCUPATIONAL SAFETY AND HEALTH ADMINISTRATION (OSHA), IN ADDITION TO THE SCAFFOLDING REQUIREMENTS BELOW.

THE CONTRACTOR IS REQUIRED TO MEET THE APPLICABLE SAFETY REQUIREMENTS OF THE OHIO INDUSTRIAL COMMISSION IN ADDITION TO THE SCAFFOLDING REQUIREMENTS SPECIFIED BELOW.

1.1.8 SCAFFOLDING

RUBBER ROLLERS, OR OTHER PROTECTIVE DEVICES MEETING THE APPROVAL OF THE ENGINEER, MUST BE USED ON SCAFFOLD FASTENINGS. METAL ROLLERS OR CLAMPS AND OTHER TYPES OF FASTENINGS WHICH WILL MAR OR DAMAGE COATED SURFACES MUST NOT BE USED.

1.1.9 INSPECTION ACCESS FOR FIELD REPAIR

IN ADDITION TO THE REQUIREMENT OF 105.11, THE CONTRACTOR MUST FURNISH, ERECT, AND MOVE SCAFFOLDING AND OTHER APPROPRIATE EQUIPMENT, TO PERMIT THE INSPECTOR THE OPPORTUNITY TO INSPECT CLOSELY OBSERVE, ALL AFFECTED SURFACES. THIS OPPORTUNITY MUST BE PROVIDED TO THE INSPECTOR DURING ALL PHASES OF THE WORK AND CONTINUE FOR A PERIOD OF AT LEAST TEN (10) WORKING DAYS AFTER THE TOUCH-UP WORK HAS BEEN COMPLETED. WHEN SCAFFOLDING IS USED, IT MUST BE PROVIDED IN ACCORDANCE WITH THE FOLLOWING REQUIREMENTS. WHEN SCAFFOLDING, OR THE HANGERS ATTACHED TO THE SCAFFOLDING ARE SUPPORTED BY HORIZONTAL WIRE ROPES, OR WHEN SCAFFOLDING IS PLACED DIRECTLY UNDER THE SURFACE TO BE PAINTED, THE FOLLOWING REQUIREMENTS MUST BE COMPLIED WITH:

WHEN SCAFFOLDING IS SUSPENDED 43" [1100 MM] OR MORE BELOW THE COATED SURFACE TO BE REPAIRED, TWO ROWS OF GUARDRAIL MUST BE PLACED ON ALL SIDES OF THE SCAFFOLDING. ONE ROW OF GUARDRAIL MUST BE PLACED AT 42" [1050 MM] ABOVE THE SCAFFOLDING AND THE OTHER ROW AT 20" [500 MM] ABOVE THE SCAFFOLDING.

WHEN THE SCAFFOLDING IS SUSPENDED AT LEAST 21" [530 MM], BUT LESS THAN 43" [1100 MM] BELOW THE COATED SURFACE TO BE REPAIRED, A ROW OF GUARDRAIL MUST BE PLACED ON ALL SIDES OF THE SCAFFOLDING AT 20" [500 MM] ABOVE THE SCAFFOLDING.

TWO ROWS OF GUARDRAIL MUST BE PLACED ON ALL SIDES OF SCAFFOLDING NOT PREVIOUSLY MENTIONED. THE ROWS OF GUARDRAIL MUST BE PLACED AT 42" [1050 MM] AND 20" [500 MM] ABOVE SCAFFOLDING, AS PREVIOUSLY MENTIONED.

ALL SCAFFOLDING MUST BE AT LEAST 24" [610 MM] WIDE WHEN GUARDRAIL IS USED AND 28" [710 MM] WIDE WHEN THE SCAFFOLDING IS SUSPENDED LESS THAN 21" [530 MM] BELOW THE COATED SURFACE TO BE REPAIRED AND GUARDRAIL IS NOT USED. IF TWO OR MORE SCAFFOLDING ARE LAID PARALLEL TO ACHIEVE THE PROPER WIDTH, THEY MUST BE RIGIDLY ATTACHED TO EACH OTHER TO PRECLUDE ANY DIFFERENTIAL MOVEMENT.

ALL GUARDRAIL MUST BE CONSTRUCTED AS A SUBSTANTIAL BARRIER WHICH IS SECURELY FASTENED IN PLACE AND IS FREE FROM PROTRUDING OBJECTS SUCH AS NAILS, SCREWS AND BOLTS. THERE MUST BE AN OPENING IN THE GUARDRAIL, PROPERLY LOCATED, TO ALLOW THE INSPECTOR ACCESS ONTO THE SCAFFOLDING.

THE RAILS AND UPRIGHTS MUST BE EITHER METAL OR WOOD. IF PIPE RAILING IS USED, THE RAILING MUST HAVE A NOMINAL DIAMETER OF NO LESS THAN ONE AND ONE HALF INCHES. IF STRUCTURAL STEEL RAILING IS USED, THE RAILS MUST BE 2 X 2 X3/8INCH [50 X 50 X 10 MM] STEEL ANGLES OR OTHER METAL SHAPES OF EQUAL OR GREATER STRENGTH. IF WOOD RAILING IS USED, THE RAILING MUST BE 2 X 4 INCH [50 X 100 MM] (NOMINAL) STOCK. ALL UPRIGHTS MUST BE SPACED AT NO MORE THAN 8 FEET [2.4 M] ON CENTER. IF WOOD UPRIGHTS ARE USED, THE UPRIGHTS MUST BE 2 X 4 INCHES [50 X 100 MM] (NOMINAL) STOCK.

WHEN THE SURFACE TO BE INSPECTED IS MORE THAN 15 FEET [4.6 M] ABOVE THE GROUND OR WATER, AND THE SCAFFOLDING IS SUPPORTED FROM THE STRUCTURE BEING PAINTED, THE CONTRACTOR MUST PROVIDE THE INSPECTOR WITH A SAFETY BELT AND LIFELINE. THE LIFELINE MUST NOT ALLOW A FALL GREATER THAN 6 FEET [2 M]. THE CONTRACTOR MUST PROVIDE A METHOD OF ATTACHING THE LIFELINE TO THE STRUCTURE INDEPENDENT OF THE SCAFFOLDING, CABLES, OR BRACKETS SUPPORTING THE SCAFFOLDING.

WHEN SCAFFOLDING IS MORE THAN TWO AND ONE HALF FEET [0.75 M] ABOVE THE GROUND, THE CONTRACTOR MUST PROVIDE A LADDER FOR ACCESS ONTO THE SCAFFOLDING. THE LADDER AND ANY EQUIPMENT USED TO ATTACH THE LADDER TO THE STRUCTURE MUST BE CAPABLE OF SUPPORTING 250 POUNDS [115 KG] WITH A SAFETY FACTOR OF AT LEAST FOUR (4). ALL RUNGS, STEPS, CLEATS, OR TREADS MUST HAVE UNIFORM SPACING AND MUST NOT EXCEED 12" [305 MM] ON CENTER. AT LEAST ONE SIDE RAIL MUST EXTEND AT LEAST 36" [915 MM] ABOVE THE LANDING NEAR THE TOP OF THE LADDER.

1.1.9 INSPECTION ACCESS FOR FIELD REPAIR (CONTINUED)

AN ADDITIONAL LANDING MUST BE REQUIRED WHEN THE DISTANCE FROM THE LADDER TO THE POINT WHERE THE SCAFFOLDING MAY BE ACCESSED, EXCEEDS 12" [305 MM]. THE LANDING MUST BE A MINIMUM OF AT LEAST 24" [610 MM] WIDE AND 24" [610 MM] LONG. IT MUST ALSO BE OF ADEQUATE SIZE AND SHAPE SO THAT THE DISTANCE FROM THE LANDING TO THE POINT WHERE THE SCAFFOLDING IS ACCESSED DOES NOT EXCEED 12" [305 MM]. THE LANDING MUST BE RIGID AND FIRMLY ATTACHED TO THE LADDER; HOWEVER, IT MUST NOT BE SUPPORTED BY THE LADDER. THE SCAFFOLDING MUST BE CAPABLE OF SUPPORTING A MINIMUM OF 1000 LBS [455 KG].

IN ADDITION TO THE AFOREMENTIONED REQUIREMENTS, THE CONTRACTOR IS STILL RESPONSIBLE TO OBSERVE AND COMPLY WITH ALL FEDERAL, STATE AND LOCAL LAWS, ORDINANCES, REGULATIONS, ORDERS AND DECREES.

THE CONTRACTOR MUST FURNISH ALL NECESSARY TRAFFIC CONTROL TO PERMIT INSPECTION DURING AND AFTER ALL PHASES OF THE PROJECT.

1.1.10 PROTECTION OF PERSONS AND PROPERTY

THE CONTRACTOR MUST INSTALL AND MAINTAIN SUITABLE SHIELDS OR ENCLOSURES TO PREVENT DAMAGE TO ADJACENT BUILDINGS, PARKED CARS, TRUCKS, BOATS, OR VEHICLES TRAVELING ON, OVER, OR UNDER STRUCTURES HAVING GALVANIZED REPAIRS. THEY MUST BE SUITABLY ANCHORED AND REINFORCED TO PREVENT INTERFERING WITH NORMAL TRAFFIC OPERATIONS IN THE OPEN LANES. PAYMENT FOR THE SHIELDS MUST BE INCLUDED AS INCIDENTAL TO THE APPLICABLE FIELD COATING OPERATION. WORK MUST BE SUSPENDED WHEN DAMAGE TO ADJACENT BUILDINGS, MOTOR VEHICLES, BOATS, OR OTHER PROPERTY IS OCCURRING.

WHEN OR WHERE ANY DIRECT OR INDIRECT DAMAGE OR INJURY IS DONE TO PUBLIC OR PRIVATE PROPERTY, THE CONTRACTOR MUST RESTORE, AT HIS OWN EXPENSE, SUCH PROPERTY, TO A CONDITION SIMILAR OR EQUAL TO THAT EXISTING BEFORE SUCH DAMAGE OR INJURY WAS DONE.

1.1.11 POLLUTION CONTROL

THE CONTRACTOR MUST TAKE ALL NECESSARY PRECAUTIONS TO COMPLY WITH POLLUTION CONTROL LAWS, RULES OR REGULATIONS OF FEDERAL, STATE OR LOCAL AGENCIES.

ITEM 509 REINFORCING STEEL, REPLACEMENT OF EXISTING REINFORCING STEEL, AS PER PLAN:

REPLACE ALL EXISTING REINFORCING BARS DEEMED BY THE ENGINEER TO BE UNUSABLE BECAUSE OF CORROSION. THE DEPARTMENT WILL MEASURE THE REPLACEMENT REINFORCING STEEL BY THE NUMBER OF POUNDS ACCEPTED IN PLACE.

REPLACE ALL EXISTING REINFORCING STEEL BARS WHICH ARE TO BE INCORPORATED INTO THE NEW WORK AND ARE DEEMED BY THE ENGINEER TO BE MADE UNUSABLE BY CONCRETE REMOVAL OPERATIONS WTIH NEW EPOXY COATED REINFORCING STEEL OF THE SAME SIZE.

AS-BUILT

THIS RECORD DRAWING HAS BEEN PREPARED IN PART BY THE ENGINEER OF RECORD TO DEPICT CHANGES MADE DURING CONSTRUCTION, BASED ON INFORMATION REPORTED BY THE CONSTRUCTION CONTRACTOR.

PLOT.CEL
ms consultants, inc.
msconsultants.com
UCF: ohdotV8i
PCF: 60-08285_Youngstown
Ohio DOT Workspace
Marucci & Gaffney TRU-80 Design Build
www.msconsultants.com
0 0.5" 1"
Batchplot Spec: \\youngstown-fs1\n\60\08285\standards\plotdrv\batchplt.spc
Pen Table: S:\std\plotting\ustn\V8i\pen\V8i_ms_std.tbl
Plot Driver: S:\std\plotting\ustn\V8i\PDF.pltcfg
34" x 22"
Model: Sheet View: SHEET
Printed: 1/6/2014 @ 3:53:05 PM By: wruggles
File: \\youngstown-fs1\n\60\08285\structures\TRU-80-0496_Sampson\sheets\080_0496LGN004.dgn

DESIGN AGENCY
ms consultants, inc.
engineers, architects & planners
2221 Schrock Road
Columbus, Ohio 43229-1547
Tel 614.898.7100 Fax 614.898.7570
www.msconsultants.com
DESIGNED WER | DRAWN KRM | REVIEWED JDH | DATE 1/25/2013
CHECKED LAW | REVISED | STRUCTURE FILE NUMBER 7803931/7803966 7803990/7804024
GENERAL NOTES
BRIDGE NO. TRU-80-0496L/R OVER SAMPSON ROAD
BRIDGE NO. TRU-80-0591L/R OVER LOGAN WAY
TRU-80-4.70
PID No. 76411
G4/G4

ms consultants, inc.

PLOT.CEL
ms consultants, inc.
msconsultants.com
Ohio DOT Workspace
Marucci & Gaffney TRU-80 Design Build
www.msconsultants.com
0 0.5" 1"
UCF: ohdotV8i
PCF: 60-08285_Youngstown
Batchplot Spec: \youngstown-fs1\n\60\08285\standards\plotdrv\batchplt.spc
Pen Table: S:\std\plotting\ustn\V8\
Plot Driver: S:\std\plotting\ustn\V8\
Model: Sheet @ 1:35:04 PM
Printed: 12/13/2013
File: \\youngstown-fs1\n\60\08285\structures\TRU-80-0496_Sampson\sheets\080_0496.SP001.dgn
View: SHEET
By: wruggles
34" x 22"

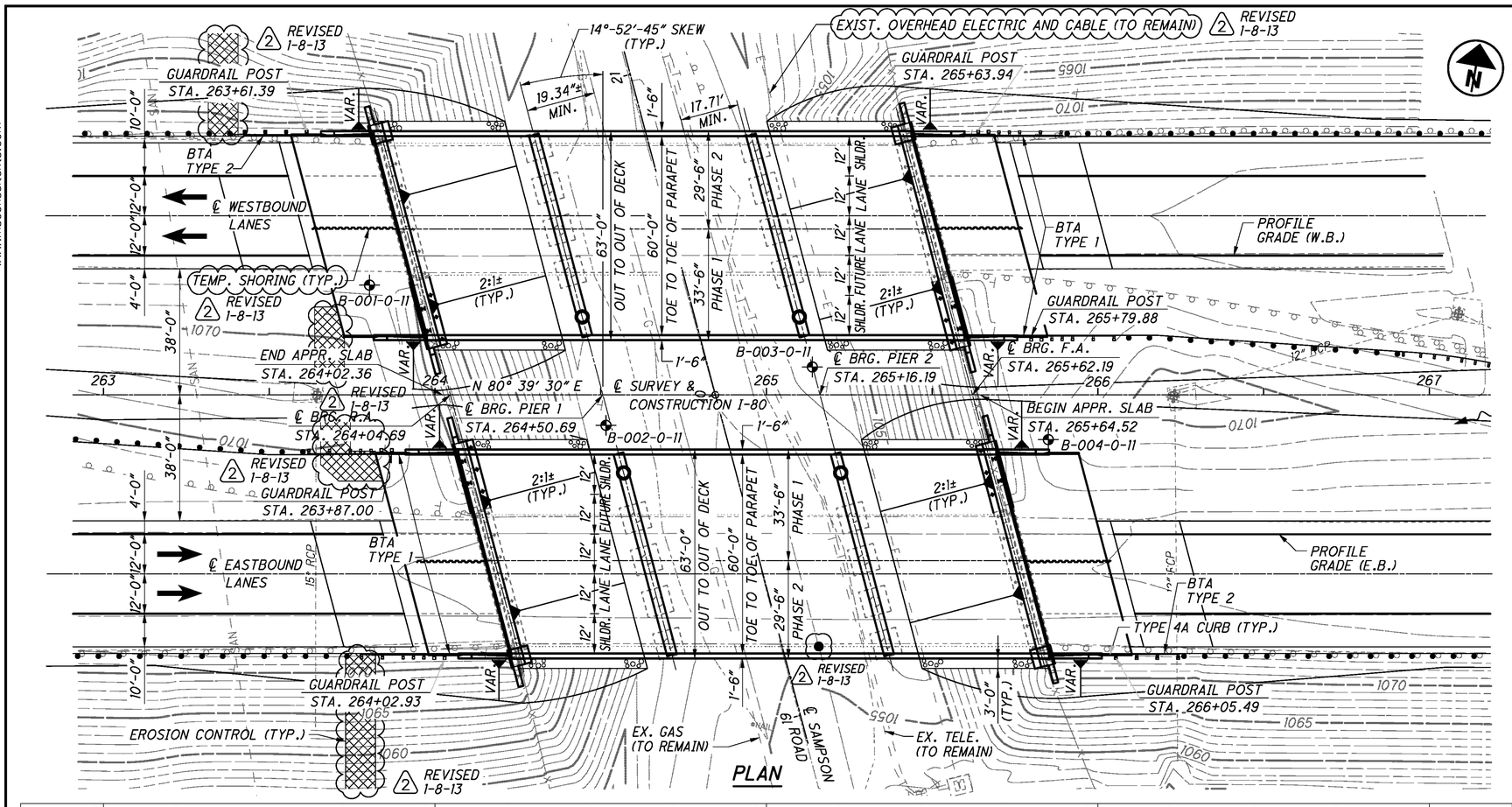

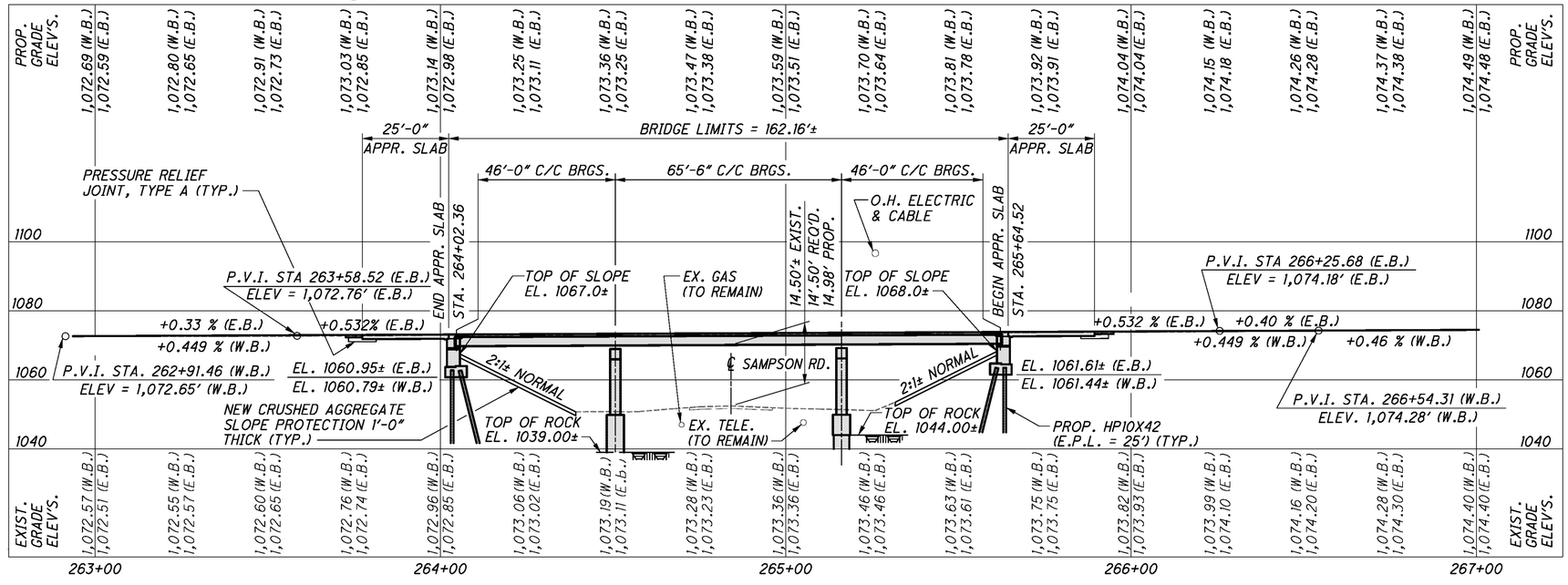

PROFILE AT ℄ SURVEY & CONSTRUCTION I-80

BENCHMARK DATA

BM #1: ELEV. 1056.36, SQUARE CUT IN CORNER OF AT&T CONC. PAD, EAST OF SAMPSON RD. AND SOUTH OF I-80 STA. 265+61.10, 114.31' RT.

BM #2: ELEV. 1074.57, X-CUT IN N-E GUARDRAIL ANCHOR BOLT @ EAST END OF THE EAST MAINLINE BRIDGE IN THE MEDIAN STA. 267+78.05, 3.04' LT.

NOTES

EARTHWORK LIMITS SHOWN ARE APPROXIMATE. ACTUAL SLOPES SHALL CONFORM TO PLAN CROSS SECTIONS.

DESIGN TRAFFIC:
2013 ADT = 38,910 2013 ADTT = 14,010
2033 ADT = 45,690 2033 ADTT = 16,450
DIRECTIONAL DISTRIBUTION = 0.52

LEGEND

BORING LOCATION
PT. OF MINIMUM VERTICAL CLEARANCE (2) REVISED 1-8-13

AS-BUILT

THIS RECORD DRAWING HAS BEEN PREPARED IN PART BY THE ENGINEER OF RECORD TO DEPICT CHANGES MADE DURING CONSTRUCTION, BASED ON INFORMATION REPORTED BY THE CONSTRUCTION CONTRACTOR.

EXISTING STRUCTURE

TYPE: CONTINUOUS STEEL BEAM WITH REINFORCED CONCRETE DECK AND SUBSTRUCTURE
SPANS: 46'-0"±, 65'-6"±, 46'-0"± C/C BEARINGS
ROADWAY: 40'-0"± F/F OF PARAPETS WITH 1'-0"± CURBS
LOADING: CF 2000 (57)
SKEW: 14°-52'-45" R.F.
APPROACH SLABS: 25'-0" LONG (AS-1-54)
ALIGNMENT: TANGENT
CROWN: 3/16" PER FT.
WEARING SURFACE: 2" ASPHALT
STRUCTURAL FILE NUMBER: 7803931/7803966
DATE BUILT: 1970
DISPOSITION: TO BE REHABILITATED

PROPOSED STRUCTURE

PROPOSED WORK: REPLACE DECK AND BEAMS, REMOVE BACKWALLS, WIDEN PIERS, CONVERT ABUTMENTS TO SEMI-INTEGRAL, PATCH AND SEAL SUBSTRUCTURES, AND PROVIDE NEW APPROACH SLABS
TYPE: CONTINUOUS COMPOSITE STEEL BEAMS (W33X118) & (W33X130) (A709 GRADE 50) (GALVANIZED) ON CAP AND COLUMN PIERS AND SEMI-INTEGRAL ABUTS. WITH REINFORCED CONC. DECK
SPANS: 46'-0", 65'-6", 46'-0" C/C BEARINGS
ROADWAY: 60'-0" TOE/TOE PARAPETS
LOADING: HS20-44 CASE I AND ALTERNATE MILITARY LOADING FUTURE WEARING SURFACE = 60 PSF
SKEW: 14°-52'-45" R.F.
APPROACH SLABS: 25'-0" LONG (AS-1-81)
ALIGNMENT: TANGENT
CROWN: 0.016
WEARING SURFACE: 1" MONOLITHIC CONCRETE
COORDINATES: LATITUDE N 41°-09'-34"
LONGITUDE W 80°-39'-06"

DESIGN AGENCY
ms consultants, inc.
engineers, architects & planners
2221 Schrock Road
Columbus, Ohio 43229
Tel 614.898.7100 Fax 614.898.7070
www.msconsultants.com

DESIGNED	DRAWN	REVIEWED	DATE
WER	KRM	JDH	1/25/2013
CHECKED	REVISED	STRUCTURE FILE NUMBER	
LAW		7803931/7803966	

TRUMBULL COUNTY
STA. 264+02.36
STA. 265+64.52

SITE PLAN
BRIDGE NO. TRU-80-0496L/R
OVER SAMPSON ROAD

TRU-80-4.70
PID No. 76411

ms consultants, inc.

PLOT.CEL

ms consultants, inc.
msconsultants.com

Ohio DOT Workspace
Marucci & Gaffney TRU-80 Design Build
www.msconsultants.com

0 1" 0.5"

UCF: ohdotV8i
PCF: 60-08285_Youngstown

Batchplot Spec: \\youngstown-fs1\n\60\08285\standards\plotdrv\batchplt.spc
Pen Table: S:\std\plotting\usstn\V8\pen\V8i_ms_std.tbl
Plot Driver: S:\std\plotting\usstn\V8\PDF.pltcfg

34" x 22"

34" x 22"

Model: Sheet
Printed: 1/6/2014 @ 3:53:16 PM
View: SHEET
By: wruggles
File: \\youngstown-fs1\n\60\08285\structures\TRU-80-0496_Sampson\sheets\080_0496LGP001.dgn

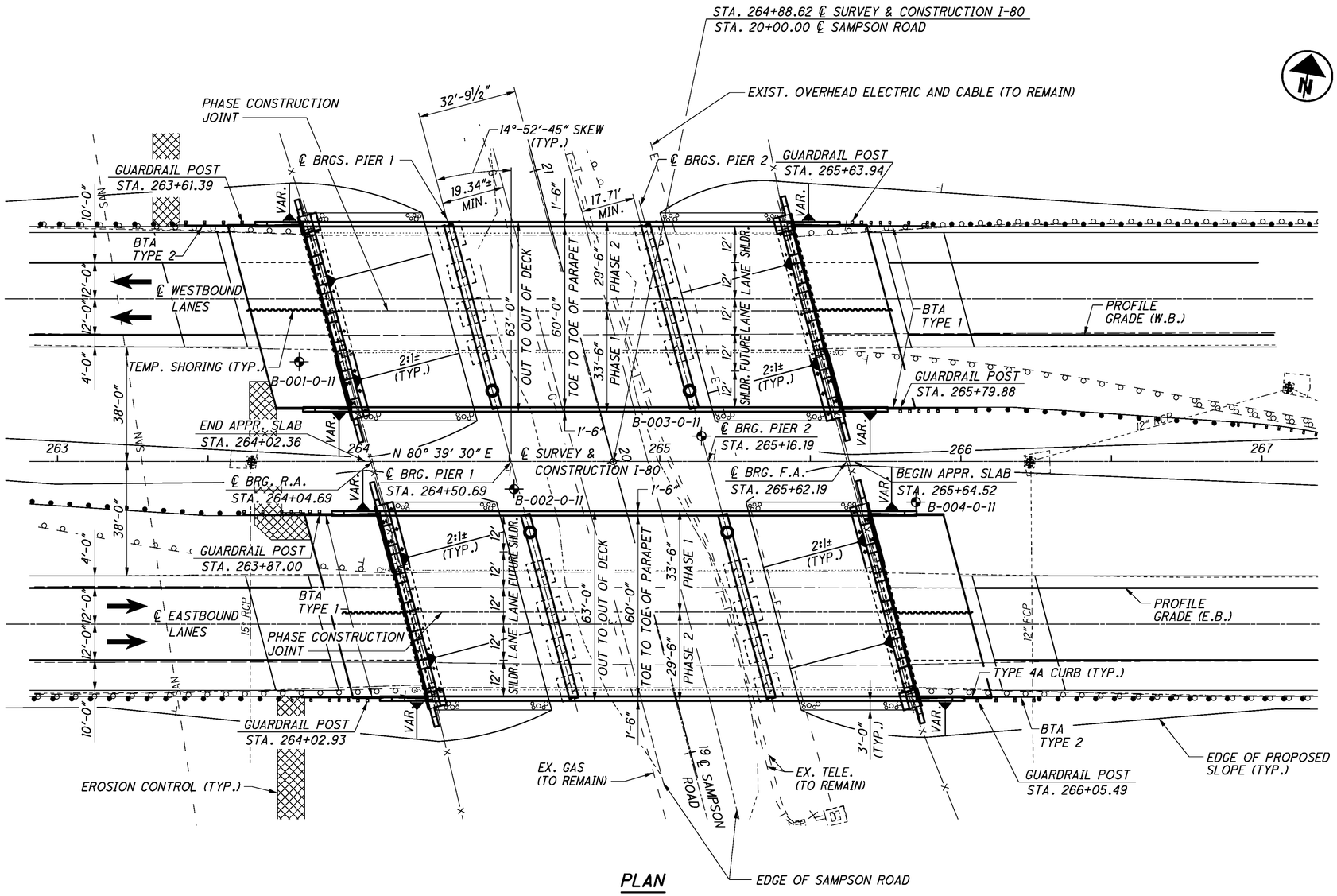

PLAN

AS-BUILT

THIS RECORD DRAWING HAS BEEN PREPARED IN PART BY THE ENGINEER OF RECORD TO DEPICT CHANGES MADE DURING CONSTRUCTION, BASED ON INFORMATION REPORTED BY THE CONSTRUCTION CONTRACTOR.

DESIGN AGENCY
ms consultants, inc.
CONSULTING ENGINEERS & PLANNERS
333 EAST FEDERAL STREET, YOUNGSTOWN, OHIO

DESIGNED	DRAWN	REVIEWED	DATE
WER	KRM	JDH	1-25-13
CHECKED	REVISED	STRUCTURE FILE NUMBER	
RSW		7803931/7803966	

GENERAL PLAN
BRIDGE NO. TRU-80-0496L/R
OVER SAMPSON ROAD

TRU-80-4.70
PID No. 76411

2 / 32

78
142

PLOT.CEL

ms consultants, inc.
msconsultants.com

www.msconsultants.com

Ohio DOT Workspace
Marucci & Gaffney TRU-80 Design Build

1"
0
0.5"

UCF: ohdot1V8i
PCF: 60-08285_Youngstown

34" x 22"

Batchplot Spec: \\youngstown-fs1\n\60\08285\standards\plotdrv\batchplt.spc
Pen Table: S:\std\plotting\ustn\V8i\pen\V8i_ms_std.tbl
Plot Driver: S:\std\plotting\ustn\V8i\PDF.pltcfg

Model: Sheet
Printed: 1/6/2014 @ 3:53:19 PM
File: \\youngstown-fs1\n\60\08285\structures\TRU-80-0496_Sampson\sheets\080_0496LPC001.dgn
View: SHEET
By: wruggles

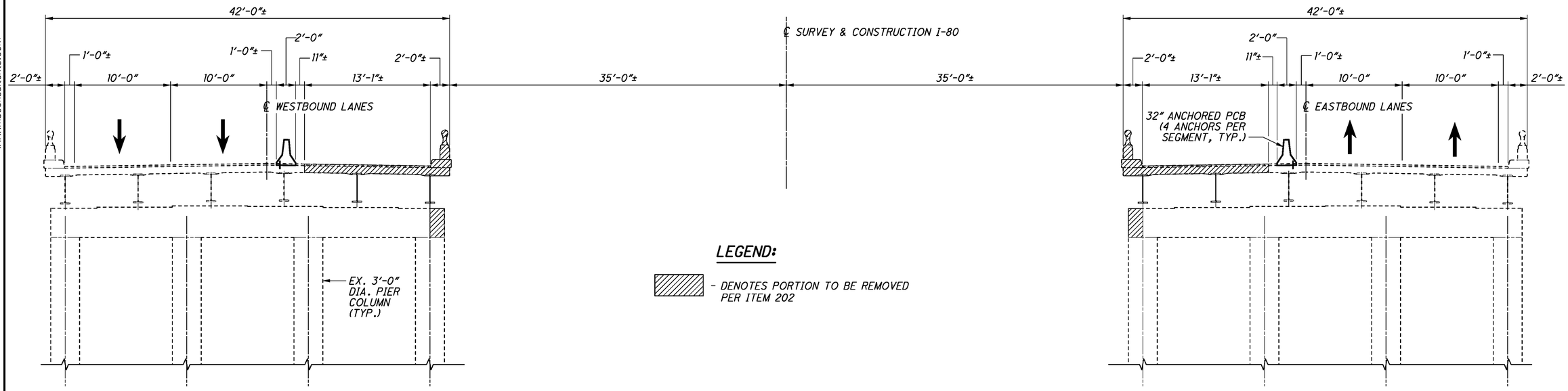

PHASE 1 REMOVAL

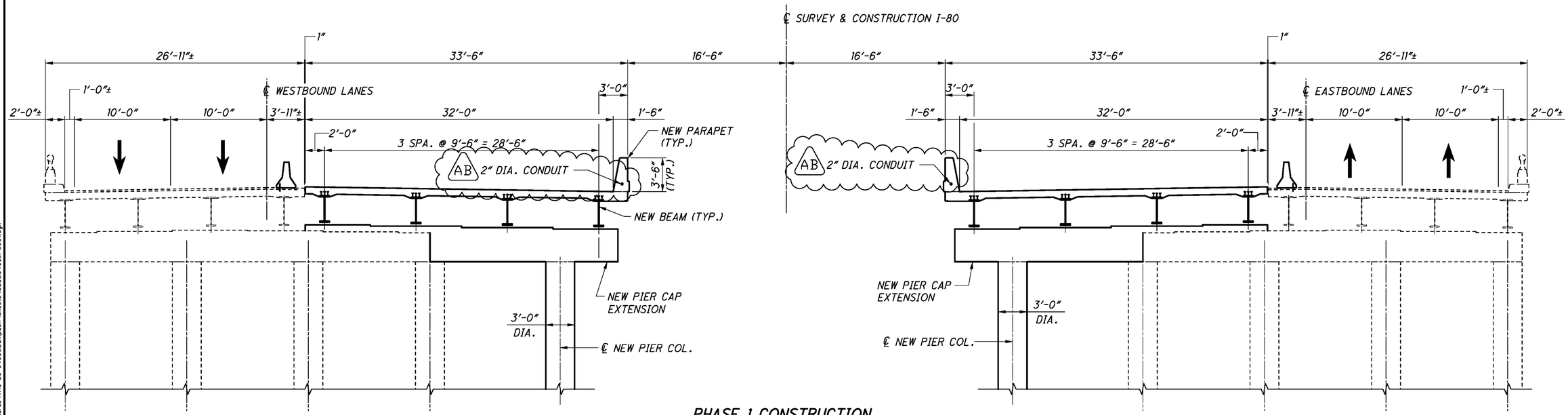

PHASE 1 CONSTRUCTION

AB REVISED 12-9-13

AS-BUILT
THIS RECORD DRAWING HAS BEEN PREPARED IN PART BY THE ENGINEER OF RECORD TO DEPICT CHANGES MADE DURING CONSTRUCTION, BASED ON INFORMATION REPORTED BY THE CONSTRUCTION CONTRACTOR.

DESIGN AGENCY
ms consultants, inc.
engineers, architects & planners
2221 Schrock Road
Columbus, OH 43229
Tel 614.898.7100 Fax 614.898.7070
www.msconsultants.com

DESIGNED	DRAWN	REVIEWED	DATE
WER	KRM	JDH	1/25/2013
CHECKED	REVISED	STRUCTURE FILE NUMBER	
LAW		7803931/7803966	

PHASE 1 REMOVAL & CONSTRUCTION

BRIDGE NO. TRU-80-0496L/R
OVER SAMPSON ROAD

TRU-80-4.70
PID No. 76411

ms consultants, inc.

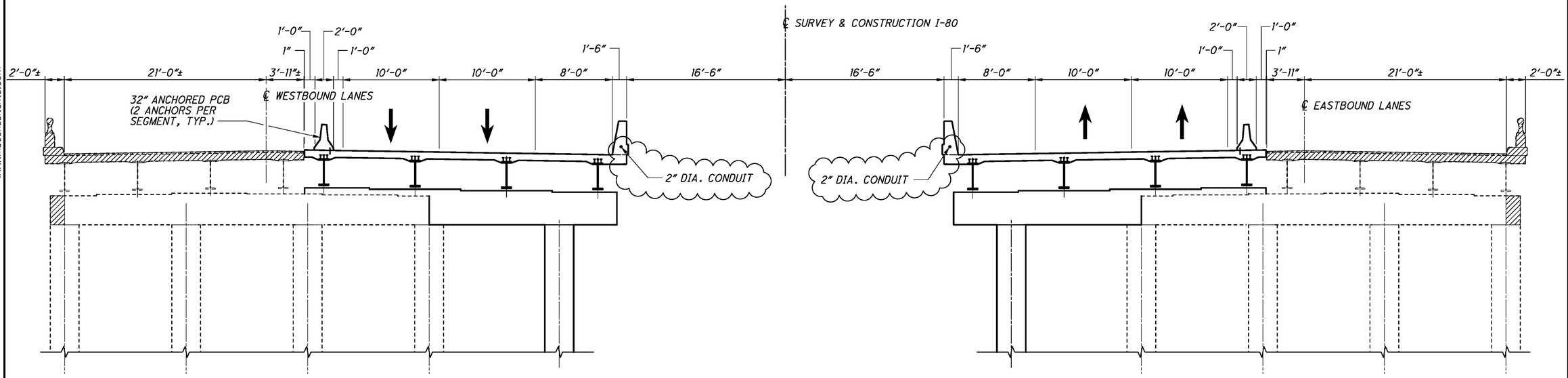

PHASE 2 REMOVAL

LEGEND:

- DENOTES PORTION TO BE REMOVED PER ITEM 202

AB REVISED 12-9-13

AS-BUILT
THIS RECORD DRAWING HAS BEEN PREPARED IN PART BY THE ENGINEER OF RECORD TO DEPICT CHANGES MADE DURING CONSTRUCTION, BASED ON INFORMATION REPORTED BY THE CONSTRUCTION CONTRACTOR.

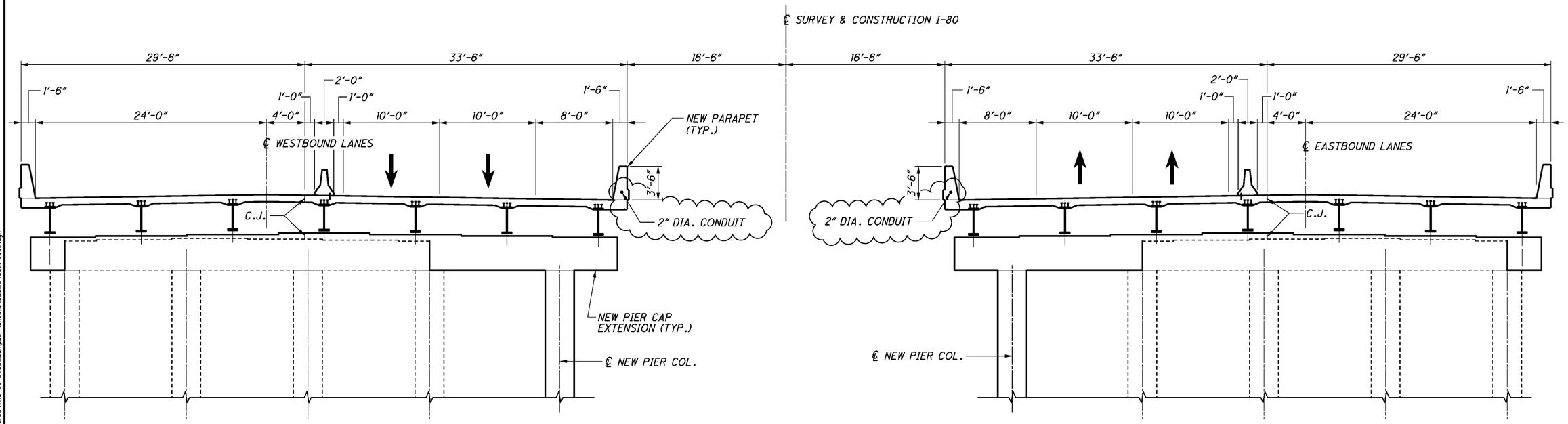

PHASE 2 CONSTRUCTION

PLOT.CEL

ms consultants, inc.
msconsultants.com

Ohio DOT Workspace
Marucci & Gaffney TRU-80 Design Build
www.msconsultants.com

UCF: ohdotV8i
PCF: 60-08285_Youngstown

Batchplot Spec: \\youngstown-fs1\n\60\08285\standards\plotdrv\batchplt.spc
Pen Table: S:\std\plotting\ustn\V8i\pen\V8i_ms_std.tbl
Plot Driver: S:\std\plotting\ustn\V8i\PDF.pltcfg

34" x 22"

Model: Sheet
Printed: 1/6/2014 @ 3:53:20 PM
File: \\youngstown-fs1\n\60\08285\structures\TRU-80-0496_Sampson\sheets\080_0496LPC002.dgn
View: SHEET
By: wruggles

DESIGN AGENCY
ms consultants, inc.
engineers, architects & planners
2221 Schrock Road
Columbus, Ohio 43229-1547
Tel 614.895.7700 Fax 614.895.7570
www.msconsultants.com

DESIGNED	DRAWN	REVIEWED	DATE
WER	KRM	JDH	1/25/2013
CHECKED	REVISED	STRUCTURE FILE NUMBER	
LAW		7803931/7803966	

PHASE 2 REMOVAL & CONSTRUCTION
BRIDGE NO. TRU-80-0496L/R
OVER SAMPSON ROAD

TRU-80-4.70
PID No. 76411

ms consultants, inc.

PLOT.CEL

ms consultants, inc.
msconsultants.com

Ohio DOT Workspace
Marucci & Gaffney TRU-80 Design Build
www.msconsultants.com

1"
0.5"
0

UCF: ohdotV8i
PCF: 60-08285_Youngstown

Batchplot Spec: \\youngstown-fs1\n\60\08285\standards\plotdrv\batchplt.spc
Pen Table: S:\std\plotting\ustn\V8\pen\V8i_ms_std.tbl
Plot Driver: S:\std\plotting\ustn\V8i\PDF.pltcfg

Model: Sheet
Printed: 1/6/2014 @ 3:53:29 PM
File: \\youngstown-fs1\n\60\08285\structures\TRU-80-0496_Sampson\sheets\080_0496LRE001.dgn
View: SHEET
By: wruggles

34" x 22"

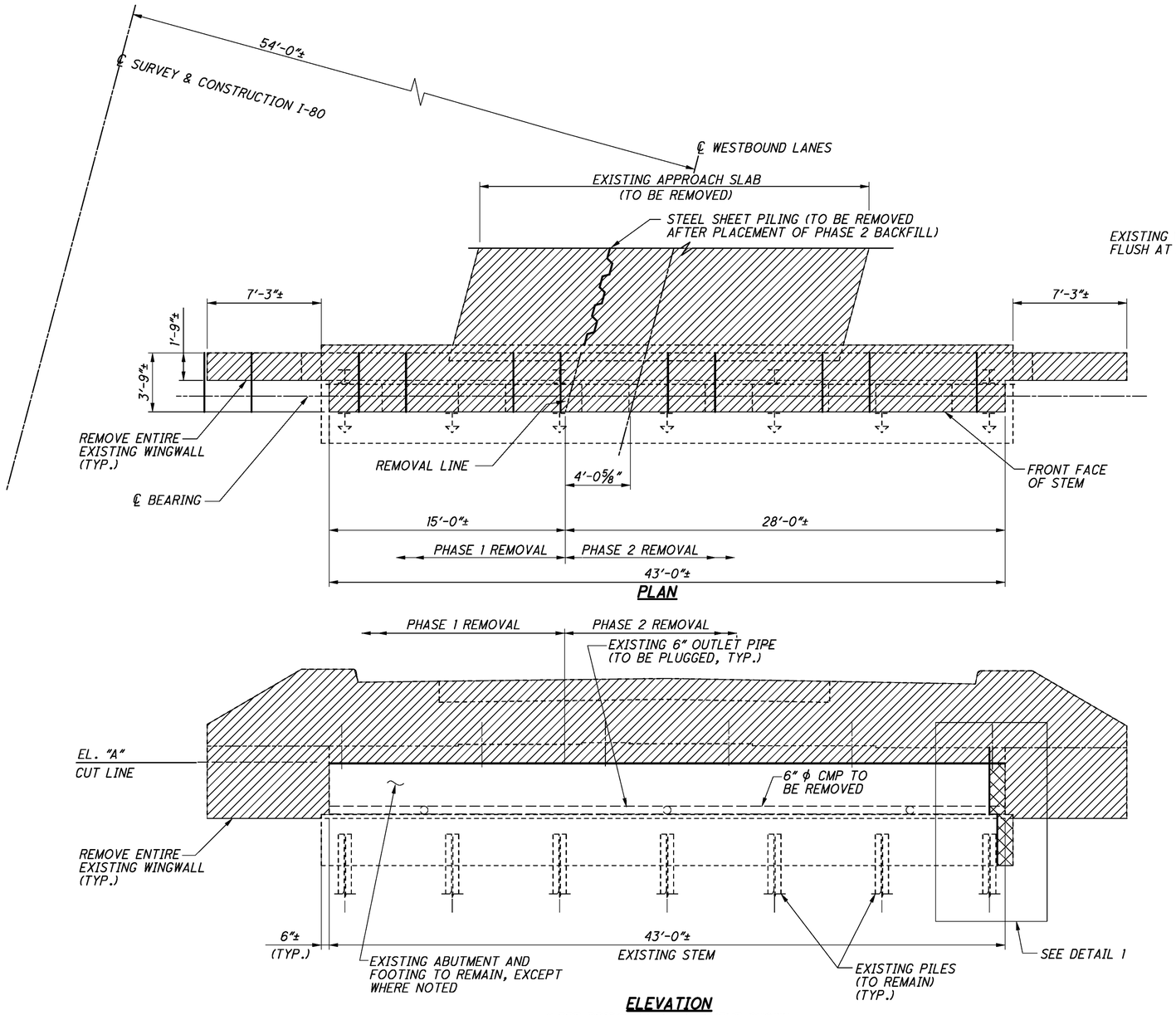

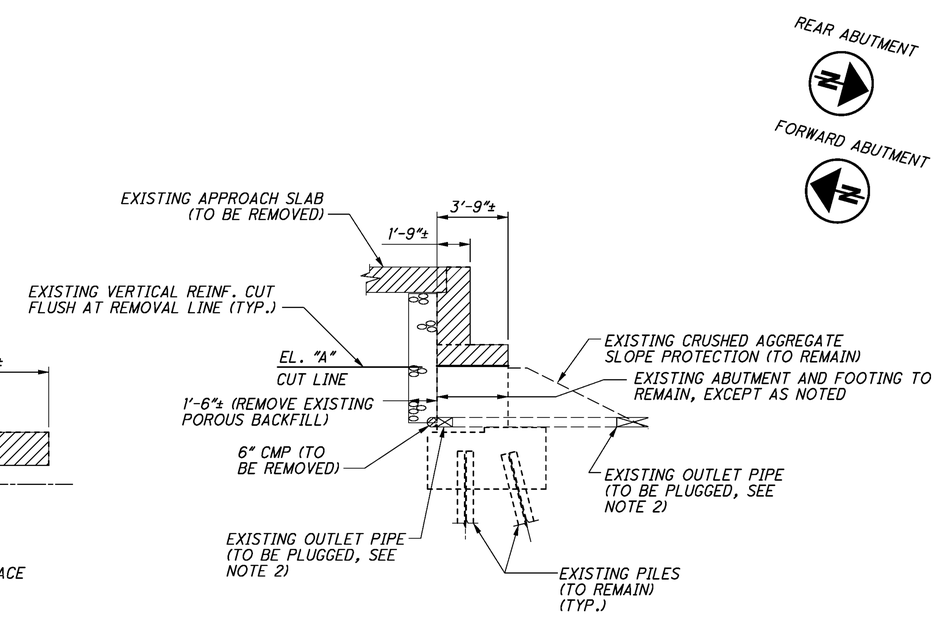

TYPICAL SECTION

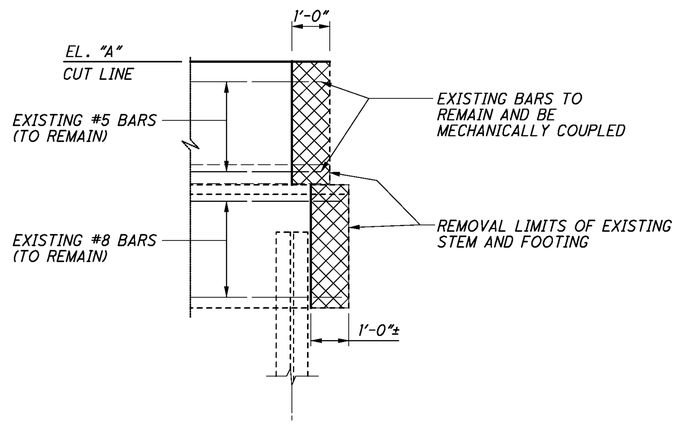

DETAIL 1
(ADDITIONAL STEM AND FOOTING REMOVAL)

ABUTMENT LOCATION	EL. "A"
LEFT REAR	1067.25
LEFT FORWARD	1068.00
RIGHT REAR	1067.25
RIGHT FORWARD	1068.00

NOTES:

1. REMOVE EXISTING ABUTMENT TO EL. "A" IN ABUTMENT LOCATION TABLE.
2. PLUG ALL OUTLET PIPES AT BOTH ENDS USING CEMENT GROUT COMPOSED OF ONE PART OF HYDRAULIC CEMENT (CMS 701) AND THREE PARTS OF SAND (CMS 703.03), BY VOLUME, AND WATER.

LEGEND:

DENOTES ADDITIONAL PORTION OF STEM & FOOTING TO BE REMOVED PER ITEM 202-PORTIONS OF STRUCTURE REMOVED, OVER 20 FOOT SPAN, AS PER PLAN.

DENOTES PORTION TO BE REMOVED PER ITEM 202-PORTIONS OF STRUCTURE REMOVED, OVER 20 FOOT SPAN, AS PER PLAN.

DENOTES STEEL SHEET PILING (TYP.)

AS-BUILT

THIS RECORD DRAWING HAS BEEN PREPARED IN PART BY THE ENGINEER OF RECORD TO DEPICT CHANGES MADE DURING CONSTRUCTION, BASED ON INFORMATION REPORTED BY THE CONSTRUCTION CONTRACTOR.

DESIGN AGENCY
ms consultants, inc.
engineers, architects & planners
2221 Schrock Road
Columbus, Ohio 43229
Tel 614.898.7100 Fax 614.898.7270
www.msconsultants.com

DESIGNED	DRAWN	REVIEWED	DATE
WER	KRM	JDH	1/25/2013
CHECKED	REVISED	STRUCTURE FILE NUMBER	
WER		7803931/7803966	

ABUTMENT REMOVAL DETAILS
BRIDGE NO. TRU-80-0496L/R
OVER SAMPSON ROAD

TRU-80-4.70
PID No. 76411

ms consultants, inc.

PLOT.CEL

ms consultants, inc.
msconsultants.com

Ohio DOT Workspace
Marucci & Gaffney TRU-80 Design Build

www.msconsultants.com

1"
0.5"
0

UCF: ohdot1V8i
PCF: 60-08285_Youngstown

Batchplot Spec: \\youngstown-fs1\n\60\08285\standards\plotdrv\batchplt.spc
Pen Table: S:\std\plotting\usltn\V8i\pen\V8i_ms_std.tbl
Plot Driver: S:\std\plotting\usltn\V8i\PDF.pltcfg

Model: Sheet
Printed: 1/6/2014 @ 3:53:31 PM
File: \\youngstown-fs1\n\60\08285\structures\TRU-80-0496_Sampson\sheets\080_0496LRE002.dgn

View: SHEET
By: wruggles

34" x 22"

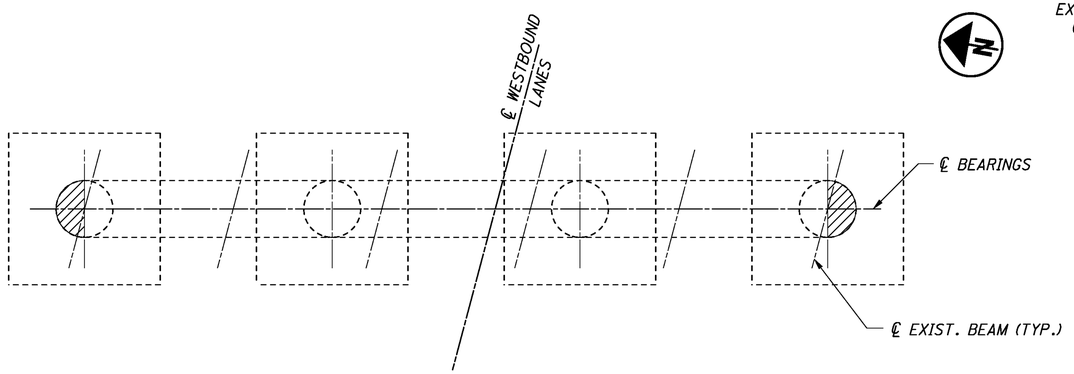

PLAN
(LEFT BRIDGE SHOWN, RIGHT BRIDGE SIMILAR)

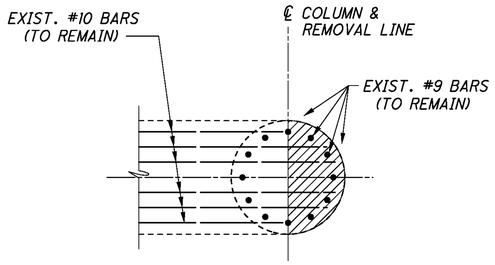

VIEW A-A

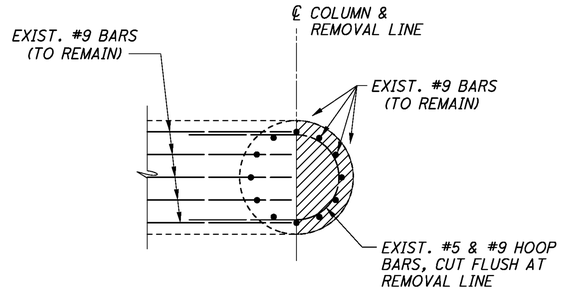

SECTION B-B

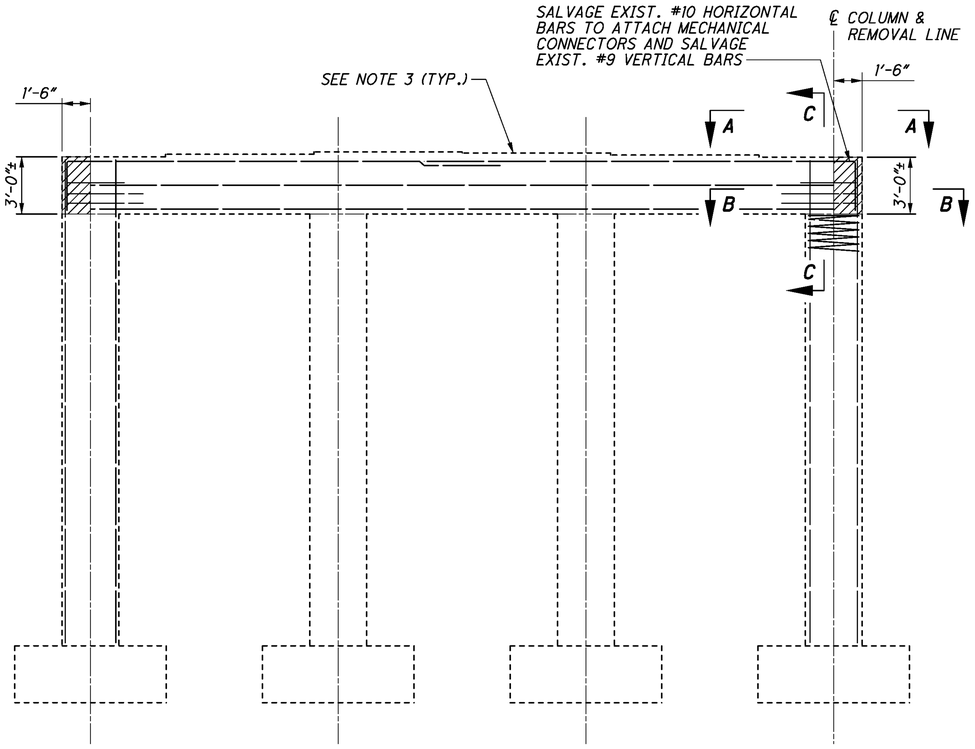

ELEVATION
(LEFT BRIDGE SHOWN, RIGHT BRIDGE SIMILAR)

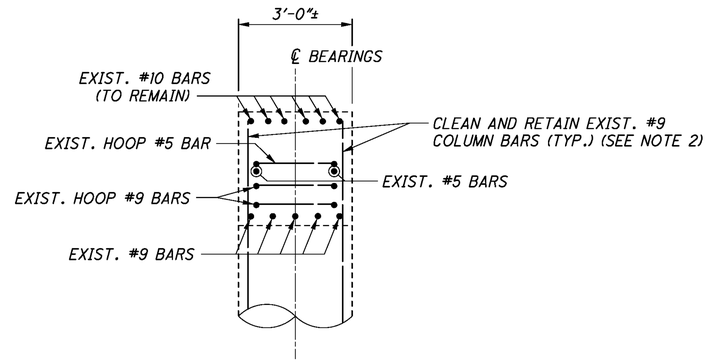

SECTION C-C

LEGEND:

PORTION OF STRUCTURE TO BE REMOVED PER ITEM 202

AS-BUILT

THIS RECORD DRAWING HAS BEEN PREPARED IN PART BY THE ENGINEER OF RECORD TO DEPICT CHANGES MADE DURING CONSTRUCTION, BASED ON INFORMATION REPORTED BY THE CONSTRUCTION CONTRACTOR.

NOTES:

1. PIER CAP REMOVAL SHALL BE COORDINATED WITH PHASE CONSTRUCTION SHEETS.
2. IF THE BOND BETWEEN THE EXISTING PIER CAP CONCRETE AND AN EXISTING VERTICAL COLUMN REINFORCING BAR HAS BEEN DESTROYED, OR IF MORE THAN ONE-HALF OF THE PERIPHERY OF A BAR HAS BEEN EXPOSED, THE CONTRACTOR SHALL REMOVE THE ADJACENT CONCRETE TO A DEPTH THAT WILL PROVIDE A MINIMUM ONE INCH CLEARANCE AROUND THE BAR.
3. SCARIFY THE TOP OF THE EXISTING PIER CAP TO A DEPTH OF 1/4 INCH.
4. PROVIDE TEMPORARY SUPPORT OF EXTERIOR BEAMS IF PIER REMOVALS OCCUR WHILE THE EXISTING DECK AND FASCIA BEAM ARE STILL IN PLACE. SUPPORT THE TEMPORARY COLUMN ON A BASE PLATE ON THE PIER FOOTING AND STRAP THE TEMPORARY COLUMN TO THE EXISTING PIER COLUMN AT 10'-0" MAXIMUM SPACING. PROVIDE A CAP PLATE AND BEARING. REFER TO CMS 501.05.
5. ITEM 509 REINFORCING STEEL, REPLACEMENT OF EXISTING REINFORCING STEEL, AS PER PLAN: REPLACE ALL EXISTING REINFORCING BARS DEEMED BY THE ENGINEER TO BE UNUSABLE BECAUSE OF CORROSION. REPLACE ALL EXISTING REINFORCING STEEL BARS WHICH ARE TO BE INCORPORATED INTO THE NEW WORK AND ARE DEEMED BY THE ENGINEER TO BE MADE UNUSABLE BY CONCRETE REMOVAL OPERATIONS WITH NEW EPOXY COATED REINFORCING STEEL OF THE SAME SIZE.

DESIGN AGENCY
ms consultants, inc.
engineers, architects & planners
2221 Schrock Road
Columbus, OH 43229
Tel 614.898.7100 Fax 614.898.7070
www.msconsultants.com

DESIGNED	DRAWN	REVIEWED	DATE
WER	KRM	JDH	1/25/2013
CHECKED	REVISED	STRUCTURE FILE NUMBER	
RSW		7803931/7803966	

PIER REMOVAL DETAILS
BRIDGE NO. TRU-80-0496L/R
OVER SAMPSON ROAD

TRU-80-4.70
PID No. 76411

ms consultants, inc.

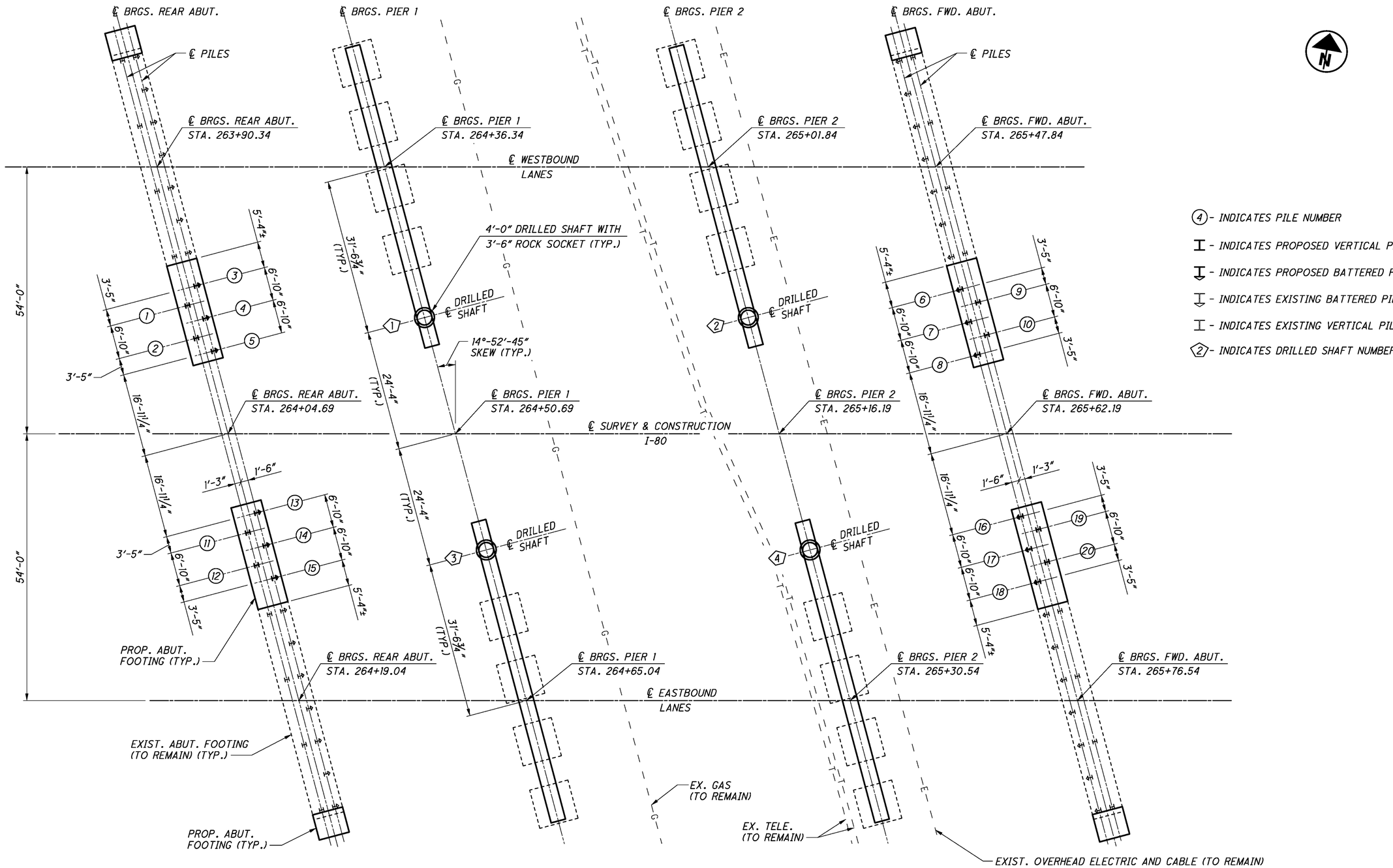

(4) - INDICATES PILE NUMBER

I - INDICATES PROPOSED VERTICAL PILE

I - INDICATES PROPOSED BATTERED PILE

I - INDICATES EXISTING BATTERED PILE

I - INDICATES EXISTING VERTICAL PILE

(2) - INDICATES DRILLED SHAFT NUMBER

AS-BUILT

THIS RECORD DRAWING HAS BEEN PREPARED IN PART BY THE ENGINEER OF RECORD TO DEPICT CHANGES MADE DURING CONSTRUCTION, BASED ON INFORMATION REPORTED BY THE CONSTRUCTION CONTRACTOR.

ESTIMATED AVERAGE PILE LENGTHS				
	REAR ABUT. RIGHT	REAR ABUT. LEFT	FORWARD ABUT. RIGHT	FORWARD ABUT. LEFT
ESTIMATED LENGTH	25'	25'	25'	25'

1. ALL ABUTMENT PILES SHALL BE HP10 X 42.
2. ALL BATTERED PILES SHALL HAVE 1:4 BATTER.
3. SEE SHEETS 8, 9, 10, 11 & 12 FOR ADDITIONAL ABUTMENT DETAILS. SEE SHEETS 13 & 14 FOR PIER DETAILS.

DESIGN AGENCY
ms consultants, inc.
engineers, architects & planners
2221 Schrock Road
Columbus, Ohio 43229-1547
Tel 614.898.7700 Fax 614.898.7570
www.msconsultants.com

DESIGNED	DRAWN	REVIEWED	DATE
WER	KRM	JDH	1/25/2013
CHECKED	REVISED	STRUCTURE FILE NUMBER	
RSW		7803931/7803966	

FOUNDATION LAYOUT PLAN

BRIDGE NO. TRU-80-0496L/R
OVER SAMPSON ROAD

TRU-80-4.70
PID No. 76411

ms consultants, inc.

PLOT.CEL
ms consultants, inc.
msconsultants.com
Ohio DOT Workspace
Marucci & Gaffney TRU-80 Design Build
www.msconsultants.com
UCF: ohdotV8i
PCF: 60-08285_Youngstown
Batchplot Spec: \\youngstown-fs1\n\60\08285\standards\plotdrv\batchplt.spc
Pen Table: S:\std\plotting\ustn\V8i\pen\V8i_ms_std.tbl
Plot Driver: S:\std\plotting\ustn\V8i\PDF.pltcfg
34" x 22"
Model: Sheet View: SHEET
Printed: 1/6/2014 @ 3:53:33 PM By: wruggles
File: \\youngstown-fs1\n\60\08285\structures\TRU-80-0496_Sampson\sheets\080_0496LFP001.dgn

PLOT.CEL

ms consultants, inc.
msconsultants.com

Ohio DOT Workspace
Marucci & Gaffney TRU-80 Design Build
www.msconsultants.com

0 0.5" 1"

UCF: ohdotV8i
PCF: 60-08285_Youngstown

Batchplot Spec: \\youngstown-fs1\n\60\08285\standards\plotdrv\batchplt.spc
Pen Table: S:\std\plotting\ustn\V8\pen V8i_ms_std.tbl
Plot Driver: S:\std\plotting\ustn\V8\PDF.pltcfg

Model: Sheet
Printed: 1/6/2014 @ 3:53:35 PM By: wruggles
File: \\youngstown-fs1\n\60\08285\structures\TRU-80-0496_Sampson\sheets\080_0496LAR001.dgn

34" x 22"

View SHEET

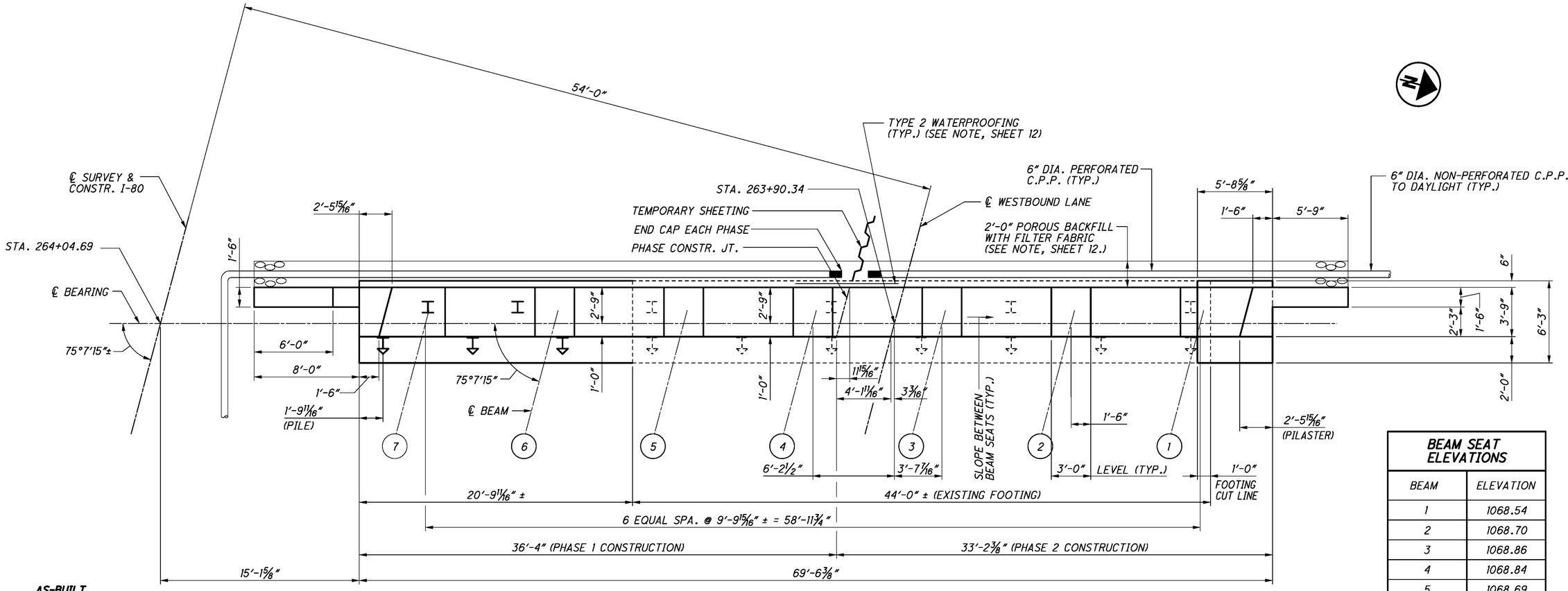

LEFT BRIDGE REAR ABUTMENT PLAN

BEAM SEAT ELEVATIONS	
BEAM	ELEVATION
1	1068.54
2	1068.70
3	1068.86
4	1068.84
5	1068.69
6	1068.55
7	1068.41

AS-BUILT

THIS RECORD DRAWING HAS BEEN PREPARED IN PART BY THE ENGINEER OF RECORD TO DEPICT CHANGES MADE DURING CONSTRUCTION, BASED ON INFORMATION REPORTED BY THE CONSTRUCTION CONTRACTOR.

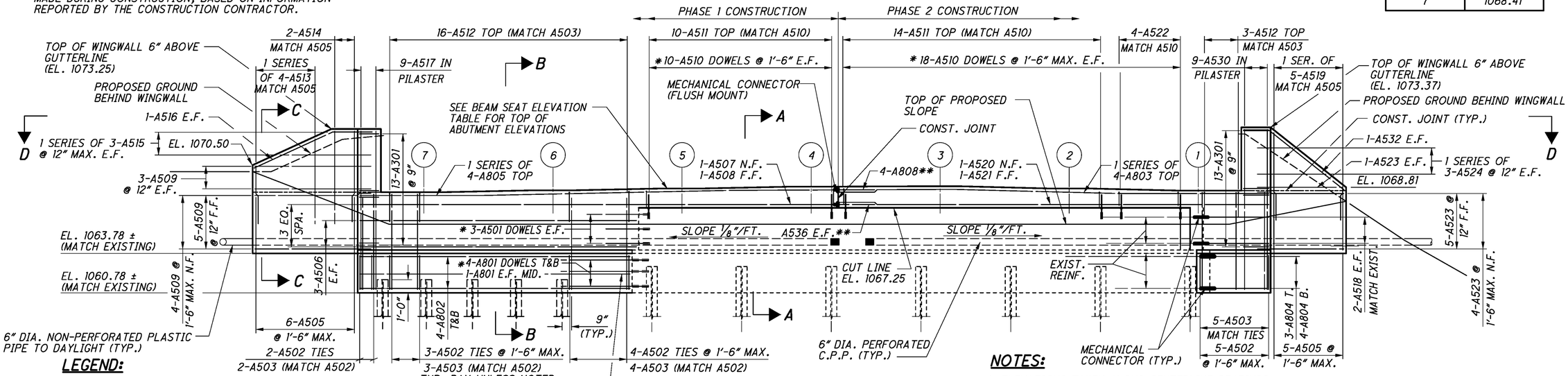

LEFT BRIDGE REAR ABUTMENT ELEVATION

LEGEND:

* DOWEL INTO THE EXISTING STRUCTURE USING HILTI HIT-HY 150 MAX. ADHESIVE ANCHORING SYSTEM, OR APPROVED EQUAL.

** INDICATES BAR WITH ONE END THREADED

MINIMUM DOWEL EMBEDMENT LENGTH:
9" FOR #5 DOWELS
15" FOR #8 DOWELS

NOTES:

1. ELEVATIONS TAKEN ALONG CENTERLINE BEARINGS.
2. MINIMUM REBAR LAPS:
   #4 BARS = 1'-9"
   #5 BARS = 2'-0"
   #8 BARS = 5'-0"
3. FOR ABUTMENT REMOVAL, SEE SHEET 5/32.
4. FOR SECTIONS AND DETAILS, SEE SHEET 12/32.
5. FOR GENERAL NOTES, SEE SHEETS G1 & G2.
6. FOR REINFORCING STEEL LIST, SEE SHEET 31/32.
7. FOR FOUNDATION LAYOUT PLAN, SEE SHEET 7/32.

DESIGN AGENCY
ms consultants, inc.
engineers, architects & planners
225 Federal Street
Youngstown, OH 44503
Tel 330.744.5321
Fax 330.744.3574
www.msconsultants.com

DESIGNED	DRAWN	REVIEWED	DATE
SRM	KRM	JDH	1/25/2013
CHECKED	REVISED	STRUCTURE FILE NUMBER	
WER		7803931/7803966	

LEFT BRIDGE REAR ABUTMENT PLAN AND ELEVATION

BRIDGE NO. TRU-80-0496L/R
OVER SAMPSON ROAD

TRU-80-4.70
PID No. 76411

8 / 32

84 / 142

PLOT.CEL
ms consultants, inc.
msconsultants.com
www.msconsultants.com
Ohio DOT Workspace
Marucci & Gaffney TRU-80 Design Build
UCF: ohdotV8i
PCF: 60-08285_Youngstown
Batchplot Spec: \\youngstown-fs1\n\60\08285\standards\plotdrv\batchplt.spc
Pen Table: S:\std\plotting\ustn\V8\pen\V8i_ms_std.tbl
Plot Driver: S:\std\plotting\ustn\V8\PDF.pltcfg
Model: Sheet @ 3:53:37 PM
Printed: 1/6/2014 By: wruggles
File: \\youngstown-fs1\n\60\08285\structures\TRU-80-0496_Sampson\sheets\080_0496LAF001.dgn
34" x 22"

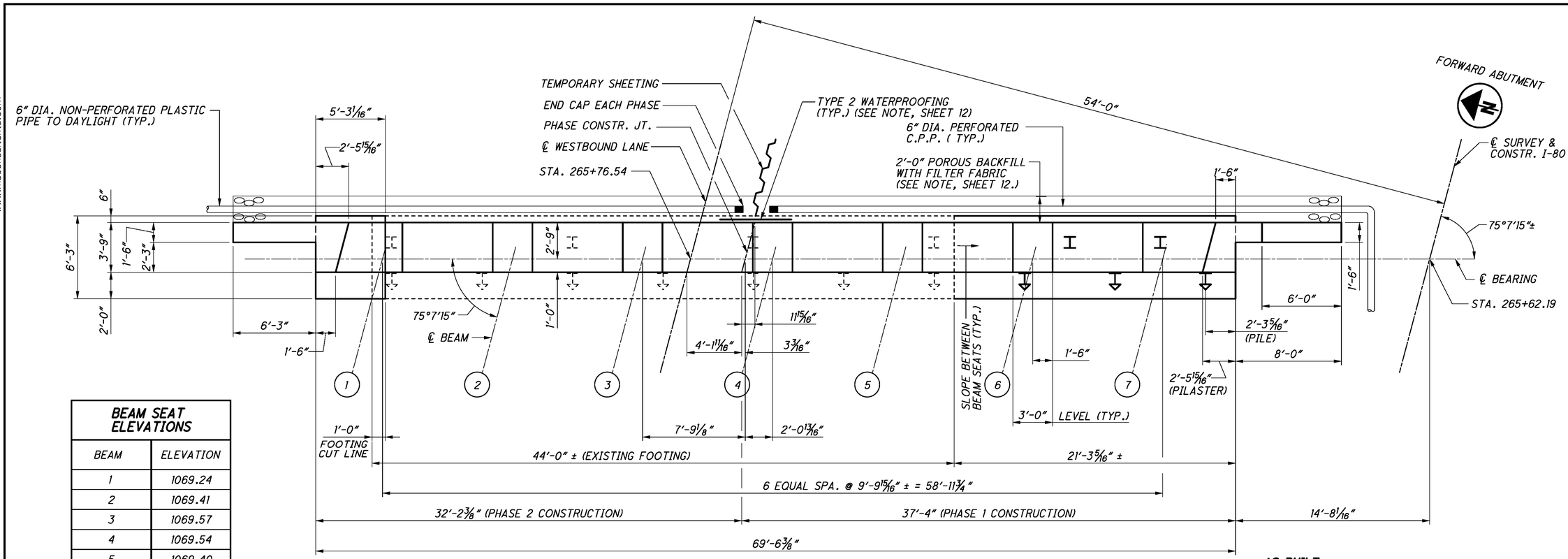

BEAM SEAT ELEVATIONS	
BEAM	ELEVATION
1	1069.24
2	1069.41
3	1069.57
4	1069.54
5	1069.40
6	1069.26
7	1069.12

LEFT BRIDGE FORWARD ABUTMENT PLAN

AS-BUILT
THIS RECORD DRAWING HAS BEEN PREPARED IN PART BY THE ENGINEER OF RECORD TO DEPICT CHANGES MADE DURING CONSTRUCTION, BASED ON INFORMATION REPORTED BY THE CONSTRUCTION CONTRACTOR.

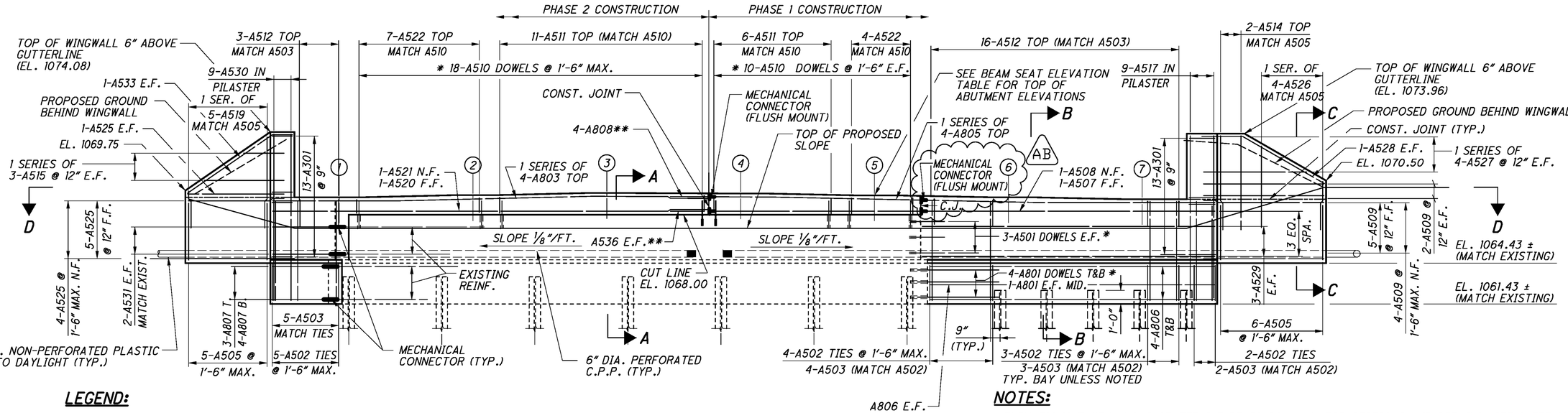

LEFT BRIDGE FORWARD ABUTMENT ELEVATION

LEGEND:

* DOWEL INTO THE EXISTING STRUCTURE USING HILTI HIT-HY 150 MAX. ADHESIVE ANCHORING SYSTEM, OR APPROVED EQUAL.

** INDICATES BAR WITH ONE END THREADED

MINIMUM DOWEL EMBEDMENT LENGTH:
9" FOR #5 DOWELS
15" FOR #8 DOWELS

AB AS-BUILT

NOTES:

1. ELEVATIONS TAKEN ALONG CENTERLINE BEARINGS.
2. MINIMUM REBAR LAPS:
   #4 BARS = 1'-9"
   #5 BARS = 2'-0"
   #8 BARS = 5'-0"
3. FOR ABUTMENT REMOVAL, SEE SHEET 5/32.
4. FOR SECTIONS AND DETAILS, SEE SHEET 12/32.
5. FOR GENERAL NOTES, SEE SHEETS G1 & G2.
6. FOR REINFORCING STEEL LIST, SEE SHEET 31/32.
7. FOR FOUNDATION LAYOUT PLAN, SEE SHEET 7/32.

DESIGN AGENCY
ms consultants, inc.
engineers, architects & planners
225 Federal Street
Youngstown, OH 44503
Tel 330.744.5321
Fax 330.744.3070
www.msconsultants.com

DESIGNED	DRAWN	REVIEWED	DATE
WER	KRM	JDH	1/25/2013
CHECKED	REVISED	STRUCTURE FILE NUMBER	
WER		7803931/7803966	

LEFT BRIDGE FORWARD ABUTMENT PLAN AND ELEVATION
BRIDGE NO. TRU-80-0496L/R
OVER SAMPSON ROAD

TRU-80-4.70
PID No. 76411

ms consultants, inc.

PLOT.CEL

ms consultants, inc.
msconsultants.com

Ohio DOT Workspace
Marucci & Gaffney TRU-80 Design Build
www.msconsultants.com

1" 0.5" 0

UCF: ohdotV8i
PCF: 60-08285_Youngstown

34" x 22"

Batchplot Spec: \\youngstown-fs\fn\60\08285\standards\plotdrv\batchplt.spc
Pen Table: S:\std\plotting\usth\V8i\pen V8i_ms_std.tbl
Plot Driver: S:\std\plotting\usth\V8i\PDF.pltcfg

Model: Sheet
Printed: 1/6/2014 @ 3:53:38 PM
File: \\youngstown-fs\fn\60\08285\structures\TRU-80-0496_Sampson\sheets\080_0496LAR002.dgn
View: SHEET
By: wruggles

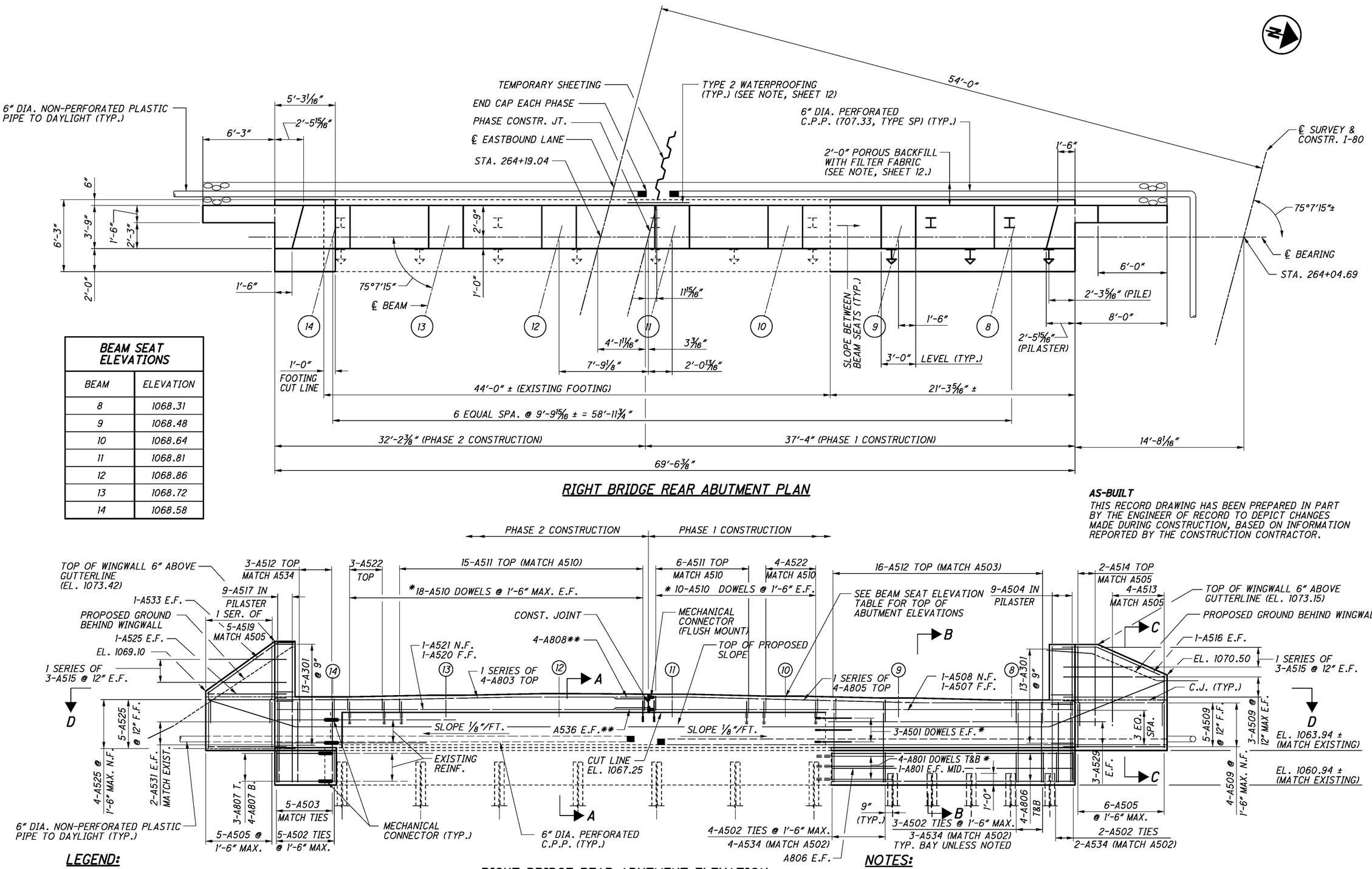

RIGHT BRIDGE REAR ABUTMENT PLAN

BEAM SEAT ELEVATIONS	
BEAM	ELEVATION
8	1068.31
9	1068.48
10	1068.64
11	1068.81
12	1068.86
13	1068.72
14	1068.58

AS-BUILT
THIS RECORD DRAWING HAS BEEN PREPARED IN PART BY THE ENGINEER OF RECORD TO DEPICT CHANGES MADE DURING CONSTRUCTION, BASED ON INFORMATION REPORTED BY THE CONSTRUCTION CONTRACTOR.

RIGHT BRIDGE REAR ABUTMENT ELEVATION

LEGEND:

* DOWEL INTO THE EXISTING STRUCTURE USING HILTI HIT-HY 150 MAX. ADHESIVE ANCHORING SYSTEM, OR APPROVED EQUAL.

** INDICATES BAR WITH ONE END THREADED

MINIMUM DOWEL EMBEDMENT LENGTH:
9" FOR #5 DOWELS
15" FOR #8 DOWELS

NOTES:

1. ELEVATIONS TAKEN ALONG CENTERLINE BEARINGS.
2. MINIMUM REBAR LAPS:
   #4 BARS = 1'-9"
   #5 BARS = 2'-0"
   #8 BARS = 5'-0"
3. FOR ABUTMENT REMOVAL, SEE SHEET 5/32.
4. FOR SECTIONS AND DETAILS, SEE SHEET 12/32.
5. FOR GENERAL NOTES, SEE SHEETS G1 & G2.
6. FOR REINFORCING STEEL LIST, SEE SHEET 31A/32.
7. FOR FOUNDATION LAYOUT PLAN, SEE SHEET 7/32.

DESIGN AGENCY
ms consultants, inc.
engineers, architects & planners
225 Federal Street
Youngstown, Ohio 44503
Tel 330.743.7550 Fax 330.743.7070
www.msconsultants.com

DESIGNED	DRAWN	REVIEWED	DATE
SRM	KRM	JDH	1/25/2013
CHECKED	REVISED	STRUCTURE FILE NUMBER	
WER		7803931/7803966	

RIGHT BRIDGE REAR ABUTMENT PLAN AND ELEVATION
BRIDGE NO. TRU-80-0496L/R
OVER SAMPSON ROAD

TRU-80-4.70
PID No. 76411

10 / 32

86 / 142

PLOT.CEL

ms consultants, inc.
msconsultants.com

Ohio DOT Workspace
Marucci & Gaffney TRU-80 Design Build

www.msconsultants.com

1"
0.5"
0

UCF: ohdotV8i
PCF: 60-08285_Youngstown

Batchplot Spec: \\youngstown-fs1\n\60\08285\standards\plotdrv\batchplt.spc
Pen Table: S:\std\plotting\ustn\V8\pen\V8_ms_std.tbl
Plot Driver: S:\std\plotting\ustn\V8\PDP.pltcfg

Model: Sheet
Printed: 1/6/2014 @ 3:53:40 PM By: wruggles
File: \\youngstown-fs1\n\60\08285\structures\TRU-80-0496_Sampson\sheets\080_0496L#F002.dgn

34" x 22"

View SHEET

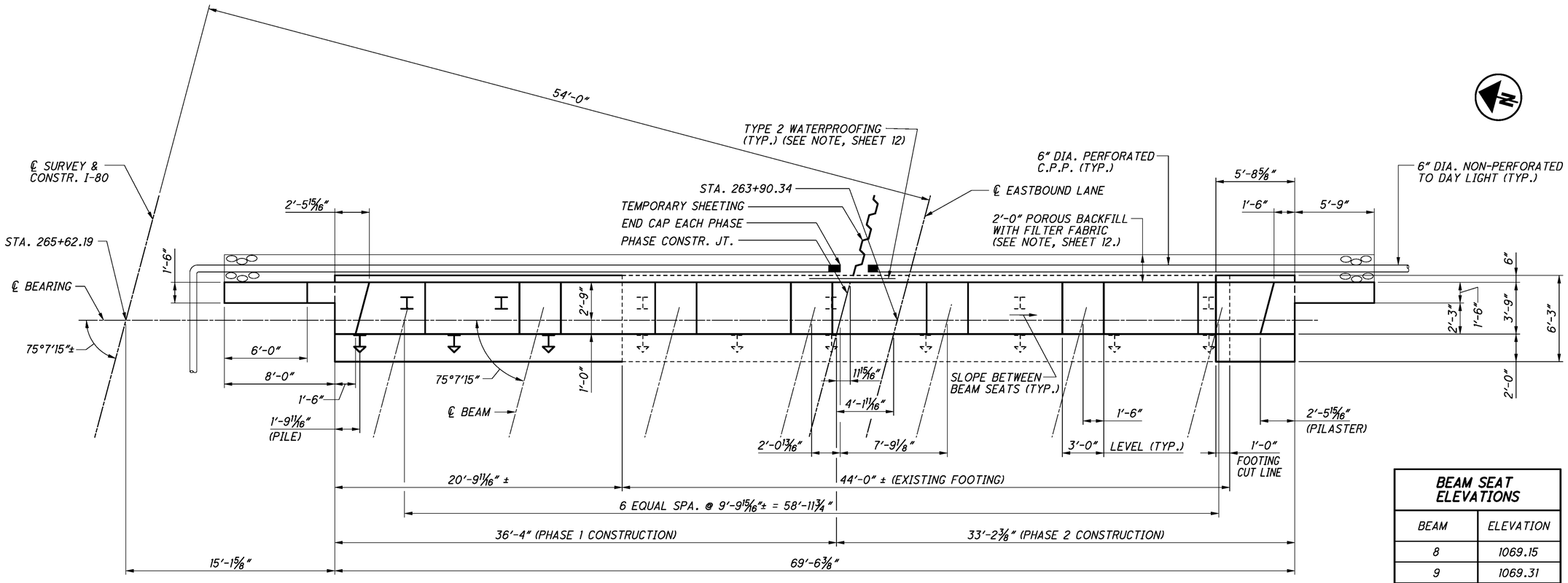

RIGHT BRIDGE FORWARD ABUTMENT PLAN

BEAM SEAT ELEVATIONS	
BEAM	ELEVATION
8	1069.15
9	1069.31
10	1069.48
11	1069.65
12	1069.70
13	1069.56
14	1069.42

AS-BUILT

THIS RECORD DRAWING HAS BEEN PREPARED IN PART BY THE ENGINEER OF RECORD TO DEPICT CHANGES MADE DURING CONSTRUCTION, BASED ON INFORMATION REPORTED BY THE CONSTRUCTION CONTRACTOR.

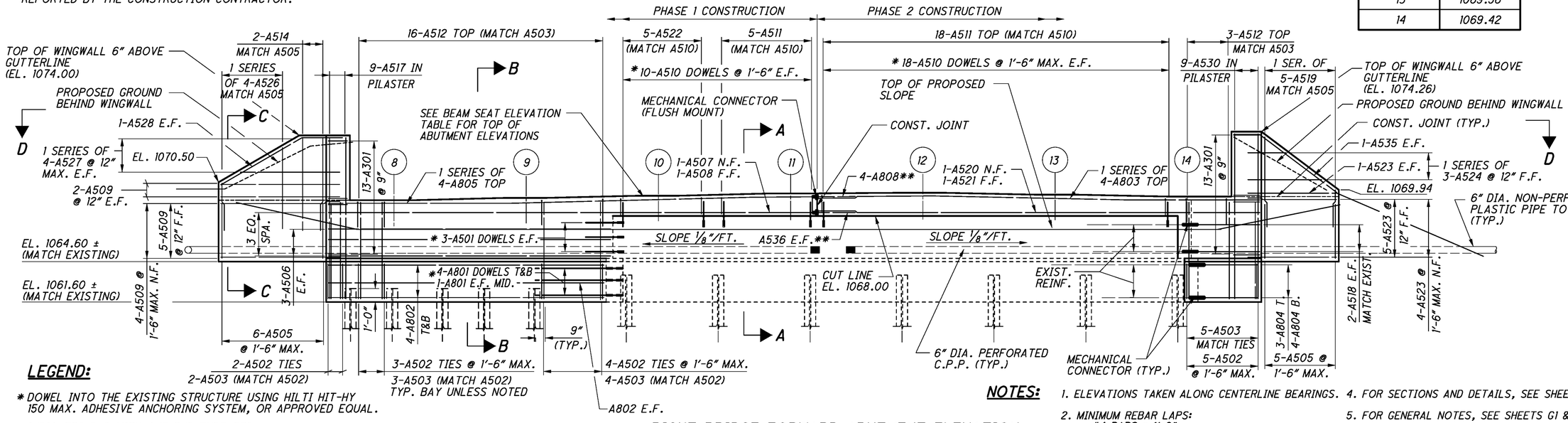

RIGHT BRIDGE FORWARD ABUTMENT ELEVATION

LEGEND:

* DOWEL INTO THE EXISTING STRUCTURE USING HILTI HIT-HY 150 MAX. ADHESIVE ANCHORING SYSTEM, OR APPROVED EQUAL.

** INDICATES BAR WITH ONE END THREADED

MINIMUM DOWEL EMBEDMENT LENGTH:
9" FOR #5 DOWELS
15" FOR #8 DOWELS

NOTES:

1. ELEVATIONS TAKEN ALONG CENTERLINE BEARINGS.
2. MINIMUM REBAR LAPS:
   #4 BARS = 1'-9"
   #5 BARS = 2'-0"
   #8 BARS = 5'-0"
3. FOR ABUTMENT REMOVAL, SEE SHEET 5/32.
4. FOR SECTIONS AND DETAILS, SEE SHEET 12/32.
5. FOR GENERAL NOTES, SEE SHEETS G1 & G2.
6. FOR REINFORCING STEEL LIST, SEE SHEET 31A/32.
7. FOR FOUNDATION LAYOUT, SEE SHEET 7/32.

DESIGN AGENCY
ms consultants, inc.
engineers, architects & planners
225 Federal Street
Youngstown, Ohio 44503
Tel 330.744.5321 Fax 330.744.3574
www.msconsultants.com

DESIGNED	DRAWN	REVIEWED	DATE
SRM	KRM	JDH	1/25/2013
CHECKED	REVISED	STRUCTURE FILE NUMBER	
WER		7803931/7803966	

RIGHT BRIDGE FORWARD ABUTMENT PLAN AND ELEVATION
BRIDGE NO. TRU-80-0496L/R
OVER SAMPSON ROAD

TRU-80-4.70
PID No. 76411

ms consultants, inc.

PLOT.CEL
ms consultants, inc.
msconsultants.com
www.msconsultants.com
Ohio DOT Workspace
Marucci & Gaffney TRU-80 Design Build
UCF: ohdotV8i
PCF: 60-08285_Youngstown
1"
0.5"
0
34" x 22"
Batchplot Spec: \\youngstown-fs1\vn\60\08285\standards\plotdrv\batchplt.spc
Pen Table: S:\std\plotting\ustn\V8\pen\V8_ms_std.tbl
Plot Driver: S:\std\plotting\ustn\V8\PDF.pltcfg
Model: Sheet
Printed: 1/6/2014 @ 3:53:41 PM
File: \\youngstown-fs1\vn\60\08285\structures\TRU-80-0496_Sampson\sheets\080_0496_AR003.dgn
View: SHEET
By: wruggles

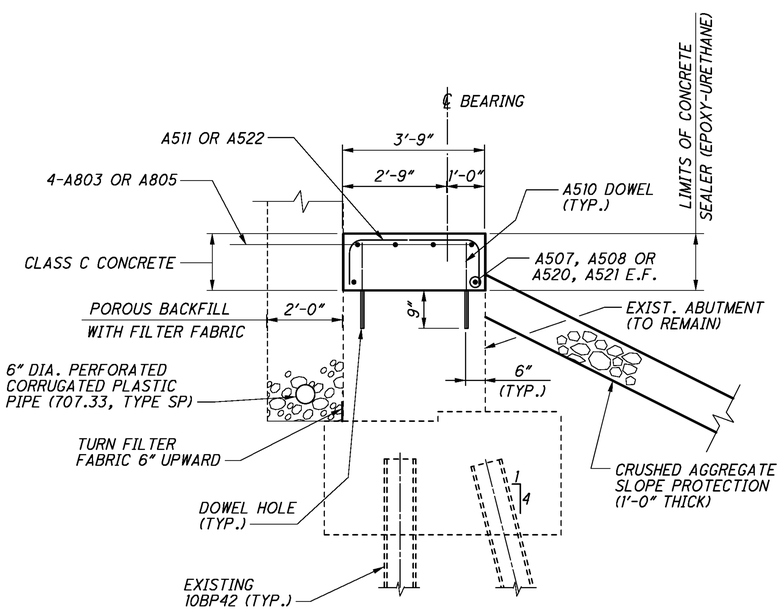

SECTION A-A

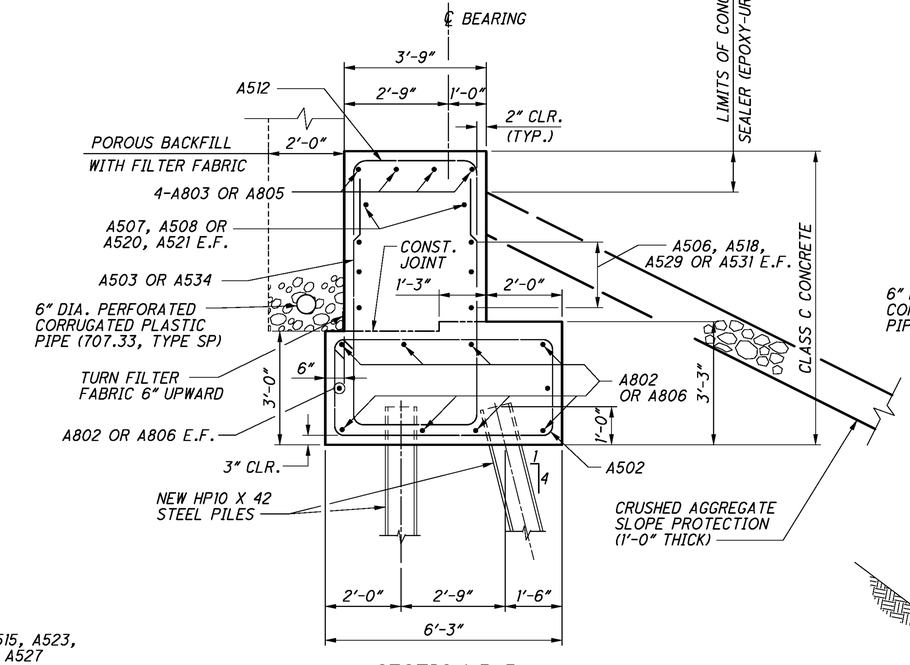

SECTION B-B

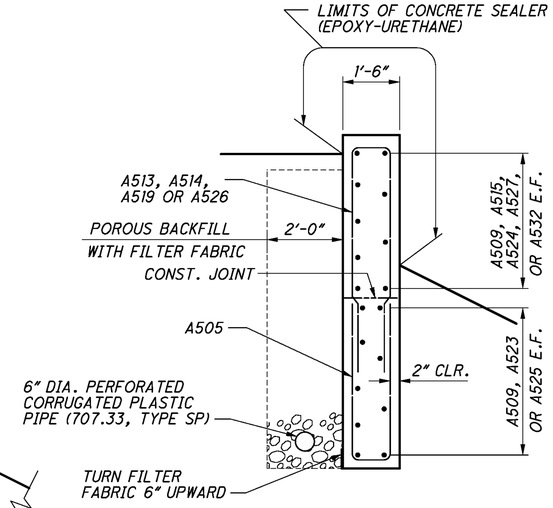

SECTION C-C

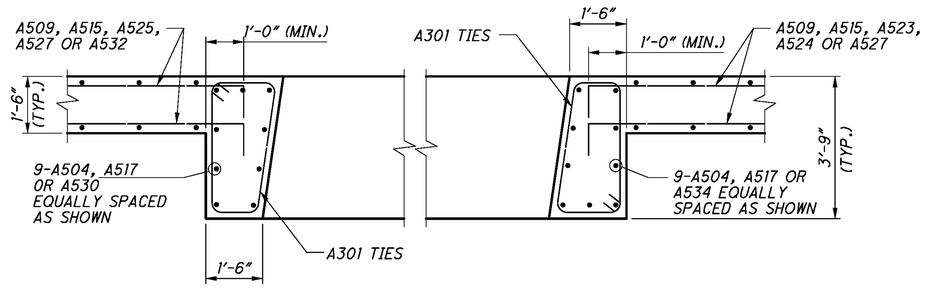

SECTION D-D

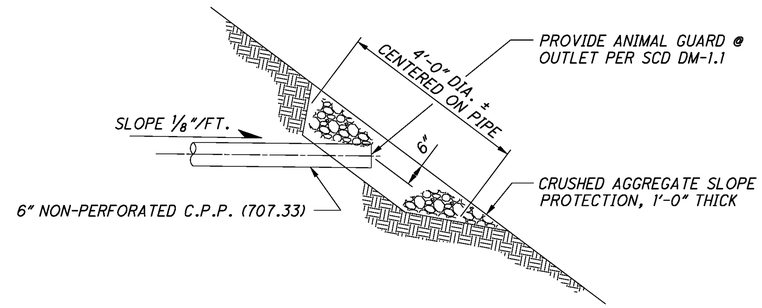

DRAIN PIPE OUTLET DETAIL

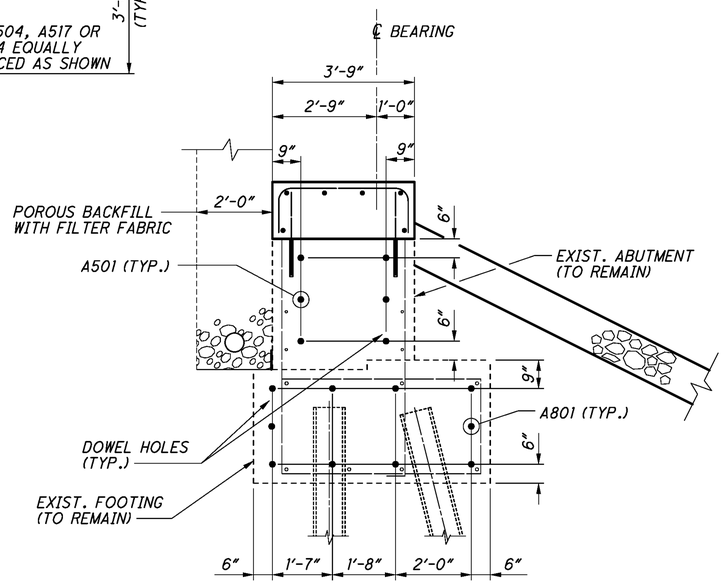

DOWEL HOLE LAYOUT DETAIL

AS-BUILT

THIS RECORD DRAWING HAS BEEN PREPARED IN PART BY THE ENGINEER OF RECORD TO DEPICT CHANGES MADE DURING CONSTRUCTION, BASED ON INFORMATION REPORTED BY THE CONSTRUCTION CONTRACTOR.

NOTES

1. *MECHANICAL CONNECTORS SHALL BE USED AT THE PHASE CONSTRUCTION JOINT. THE MECHANICAL CONNECTOR SHALL MEET THE REQUIREMENTS OF 509.07. REINFORCING BAR LENGTHS ARE DETAILED TO THE FACE OF JOINT.*
2. *POROUS BACKFILL WITH FILTER FABRIC, 2 FEET THICK SHALL EXTEND UP TO THE PLANE OF THE SUBGRADE, AND LATERALLY TO THE LIMITS SHOWN IN THE PLAN.*
3. *TYPE 2 WATERPROOFING, 3'-0" WIDE SHALL BE CENTERED ON THE JOINT AND EXTEND THE FULL LENGTH OF THE PHASE CONSTRUCTION JOINT FROM 1'-6" BELOW THE JOINT WITH EXISTING CONCRETE TO THE TOP OF THE DIAPHRAGM SEAT. INSTALL PRIOR TO NEOPRENE SHEETING.*

DESIGN AGENCY
ms consultants, inc.
engineers, architects & planners
225 Federal Street
Youngstown, OH 44503
Telephone: 330.744.5321
Fax: 330.744.3321
www.msconsultants.com

DESIGNED	DRAWN	REVIEWED	DATE
SRM	KRM	JDH	1/25/2013
CHECKED	REVISED	STRUCTURE FILE NUMBER	
WER		7803931/7803966	

ABUTMENT AND WINGWALL SECTIONS AND DETAILS

BRIDGE NO. TRU-80-0496L/R
OVER SAMPSON ROAD

TRU-80-4.70
PID No. 76411

ms consultants, inc.

PLOT.CEL
ms consultants, inc.
msconsultants.com
www.msconsultants.com
Ohio DOT Workspace
Marucci & Gaffney TRU-80 Design Build
UCF: ohdotV8i
PCF: 60-08285_Youngstown
3/4" x 22"
Batchplot Spec: \\youngstown-fs1\n\60\08285\standards\plotdrv\batchplt.spc
Pen Table: S:\std\plotting\usitn\V8\pen\V8_ms_std.tbl
Plot Driver: S:\std\plotting\usitn\V8\PDF.plt
Model: Sheet @ 3:53:43 PM View: SHEET
Printed: 1/6/2014 By: wruggles
File: \\youngstown-fs1\n\60\08285\structures\TRU-80-0496_Sampson\sheets\080_0496LP001.dgn

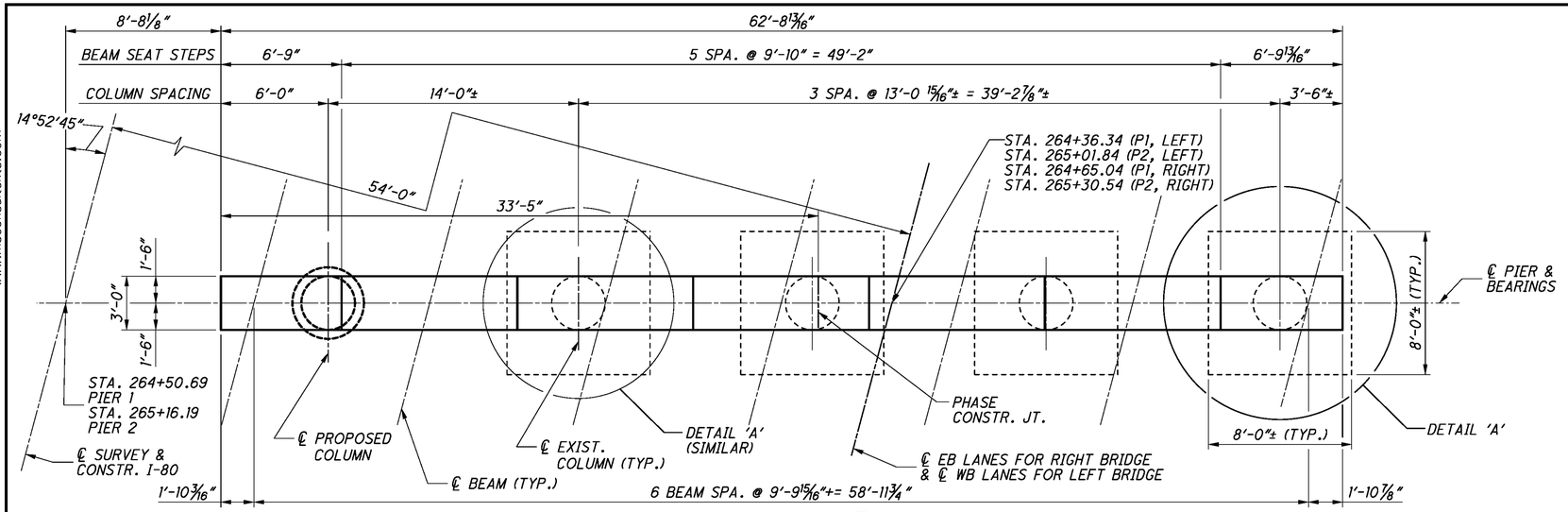

RIGHT BRIDGE

LEFT BRIDGE

MIN. REBAR LAP
#6 4'-1" U.N.O.

PLAN

(RIGHT BRIDGE PIER 1 & 2 SHOWN, LEFT BRIDGE PIER 1 & 2 OPPOSITE HAND)

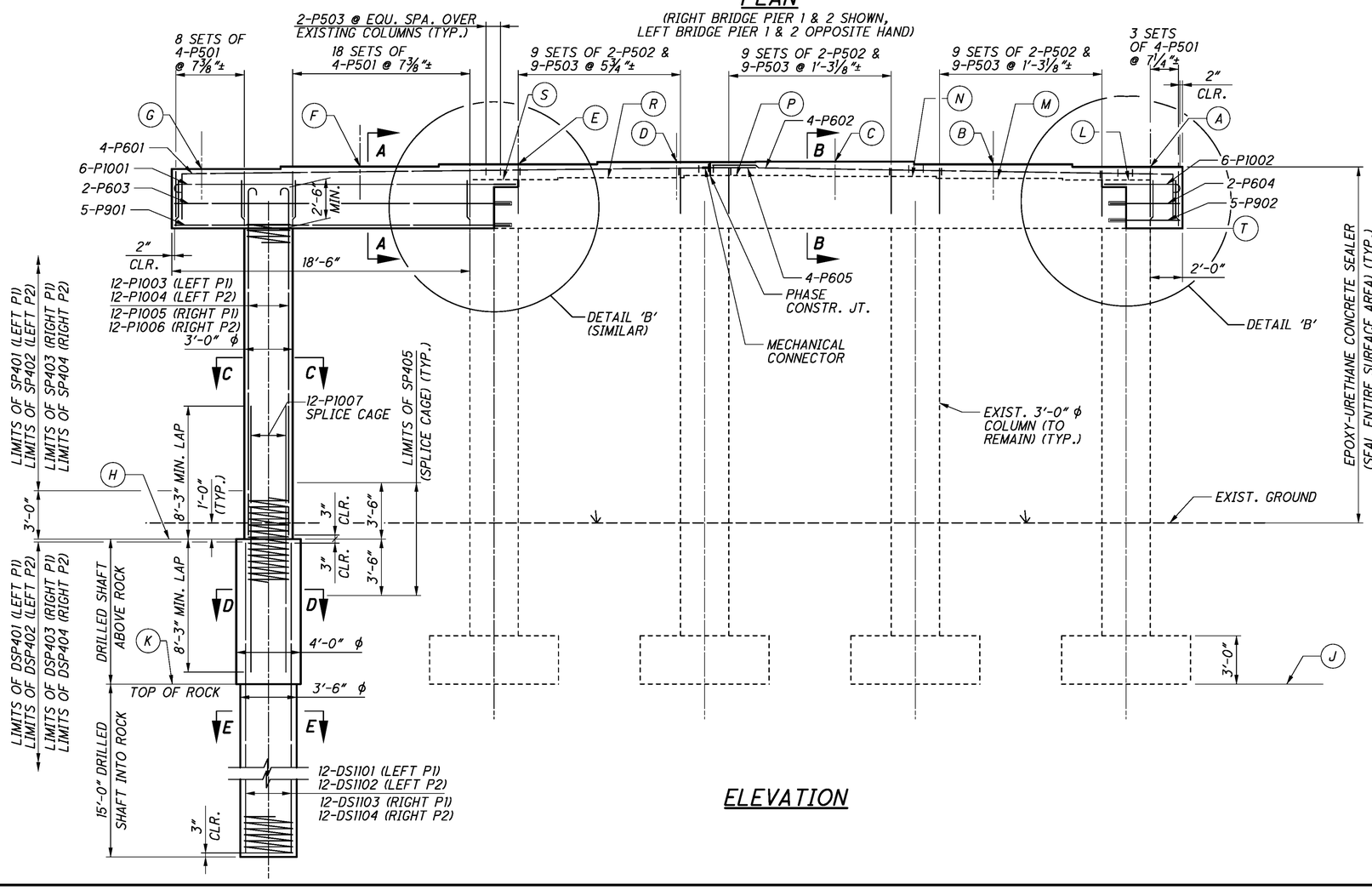

ELEVATION

NOTES:

1. SPIRAL REINFORCEMENT AT TOP OF COLUMNS SHALL BE EMBEDDED 2" INTO PIER CAP CONCRETE.
2. FOR DETAILS 'A' & 'B' & SECTIONS A-A, B-B, C-C, D-D & E-E, SEE SHEET 13/32.
3. P1 INDICATES PIER 1. P2 INDICATES PIER 2.
4. EXISTING STEEL BEAMS MUST BE REMOVED OR TEMPORARILY SHORED DURING CONSTRUCTION OF PIERS.
5. FOR REMOVAL DETAILS, SEE SHEET 6/32.
6. THE GROUT USED FOR DOWELS SHALL BE PER HILTI HIT-HY150 MAX ADHESIVE ANCHORING SYSTEM, OR APPROVED EQUAL.

TABLE OF ELEVATIONS

POINTS	LEFT BRIDGE		RIGHT BRIDGE	
	PIER NO. 1	PIER NO. 2	PIER NO. 1	PIER NO. 2
A	1069.06	1069.35	1069.14	1069.49
B	1069.22	1069.51	1069.28	1069.63
C	1069.38	1069.68	1069.42	1069.77
D	1069.35	1069.65	1069.37	1069.71
E	1069.21	1069.51	1069.20	1069.55
F	1069.07	1069.37	1069.03	1069.38
G	1068.93	1069.23	1068.87	1069.22
H	1049.90	1050.50	1050.60	1051.50
J	1039.6±	1038.6±	1039.6±	1041.6±
K	1039.0±	1044.0±	1039.0±	1044.0±
L	1068.27±	1068.77±	1068.42±	1068.92±
M	1068.36±	1068.90±	1068.50±	1069.01±
N	1068.49±	1068.99±	1068.61±	1069.11±
P	1068.55±	1069.06±	1068.68±	1069.19±
R	1068.47±	1068.93±	1068.54±	1069.04±
S	1068.37±	1068.83±	1068.43±	1068.95±
T	1065.25±	1065.74±	1065.40±	1065.91±

AS-BUILT

THIS RECORD DRAWING HAS BEEN PREPARED IN PART BY THE ENGINEER OF RECORD TO DEPICT CHANGES MADE DURING CONSTRUCTION, BASED ON INFORMATION REPORTED BY THE CONSTRUCTION CONTRACTOR.

DESIGN AGENCY
ms consultants, inc.
engineers, architects & planners
2221 Schrock Road
Columbus, OH 43229
Tel 614.898.7100 Fax 614.898.7270
www.msconsultants.com

DESIGNED	DRAWN	REVIEWED	DATE
WER	KRM	JDH	1/25/2013
CHECKED	REVISED	STRUCTURE FILE NUMBER	
RSW		7803931/7803966	

PIER PLAN AND ELEVATION
BRIDGE NO. TRU-80-0496L/R
OVER SAMPSON ROAD

TRU-80-4.70
PID No. 76411

ms consultants, inc.

PLOT.CEL
ms consultants, inc.
msconsultants.com
Ohio DOT Workspace
Marucci & Gaffney TRU-80 Design Build
www.msconsultants.com
1"
0.5"
0
UCF: ohdot1V8i
PCF: 60-08285_Youngstown
34" x 22"
Batchplot Spec: \\youngstown-fs1\n\60\08285\standards\plotdrv\batchplt.spc
Pen Table: S:\std\plotting\ustin\V8i\pen\V8i_ms_std.tbl
Plot Driver: S:\std\plotting\ustin\V8i\PDF.pltcfg
Model: Sheet
Printed: 1/6/2014 @ 3:53:45 PM
File: \\youngstown-fs1\n\60\08285\structures\TRU-80-0496_Sampson\sheets\080_0496LP002.dgn
View: SHEET
By: wruggles

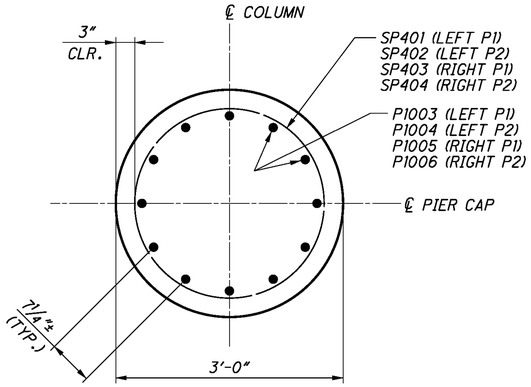

SECTION C-C

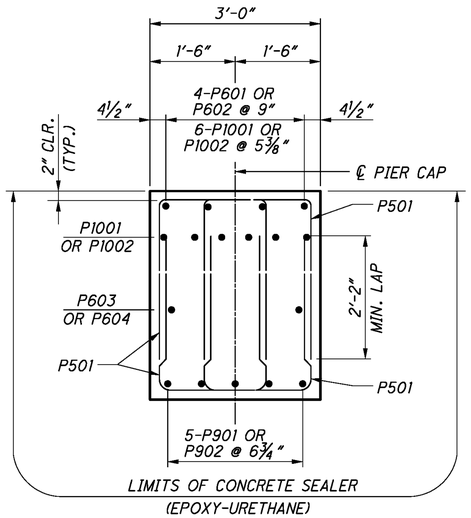

SECTION A-A

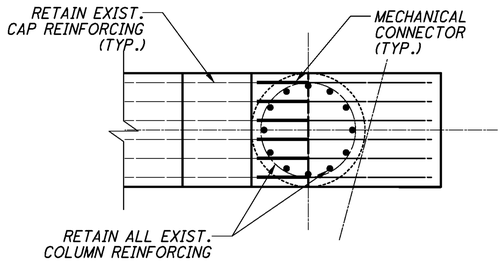

DETAIL 'A'

(#10 REINFORCING SHOWN)

AS-BUILT

THIS RECORD DRAWING HAS BEEN PREPARED IN PART BY THE ENGINEER OF RECORD TO DEPICT CHANGES MADE DURING CONSTRUCTION, BASED ON INFORMATION REPORTED BY THE CONSTRUCTION CONTRACTOR.

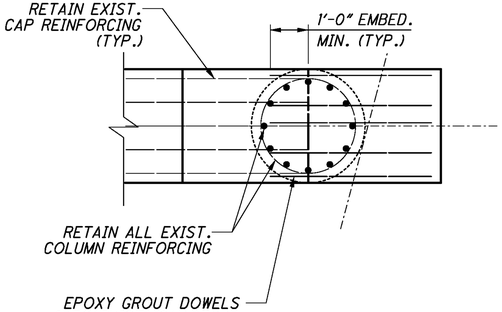

DETAIL 'A'

(BOTTOM & MIDDLE REINFORCING SHOWN)

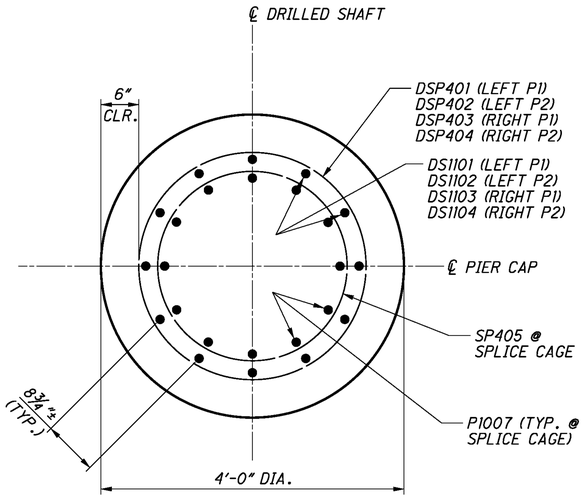

SECTION D-D

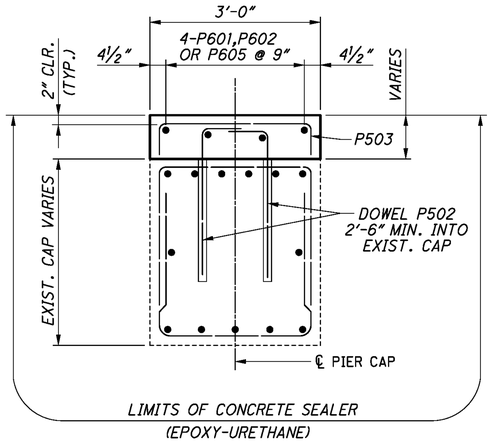

SECTION B-B

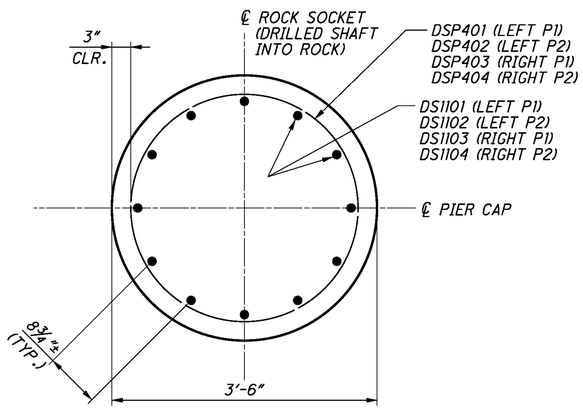

SECTION E-E

NOTES:

1. P1 INDICATES PIER 1.
   P2 INDICATES PIER 2.

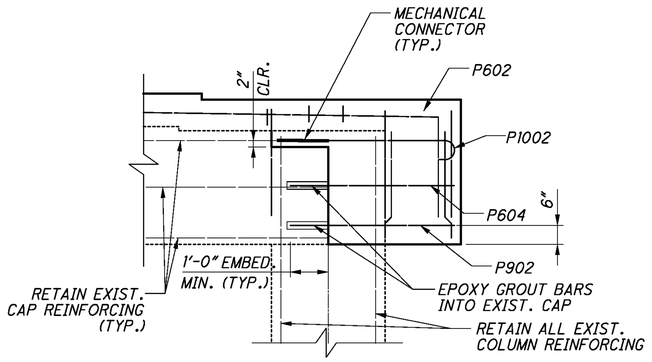

DETAIL 'B'

DESIGN AGENCY
ms consultants, inc.
engineers, architects & planners
2221 Schrock Road
Columbus, OH 43229
Tel 614.898.7100 Fax 614.898.7070
www.msconsultants.com

DESIGNED	DRAWN	REVIEWED	DATE
WER	KRM	JDH	1/25/2013
CHECKED	REVISED	STRUCTURE FILE NUMBER	
RSW		7803931/7803966	

PIER DETAILS

BRIDGE NO. TRU-80-0496L/R
OVER SAMPSON ROAD

TRU-80-4.70

PID No. 76411

14 / 32

90 / 142

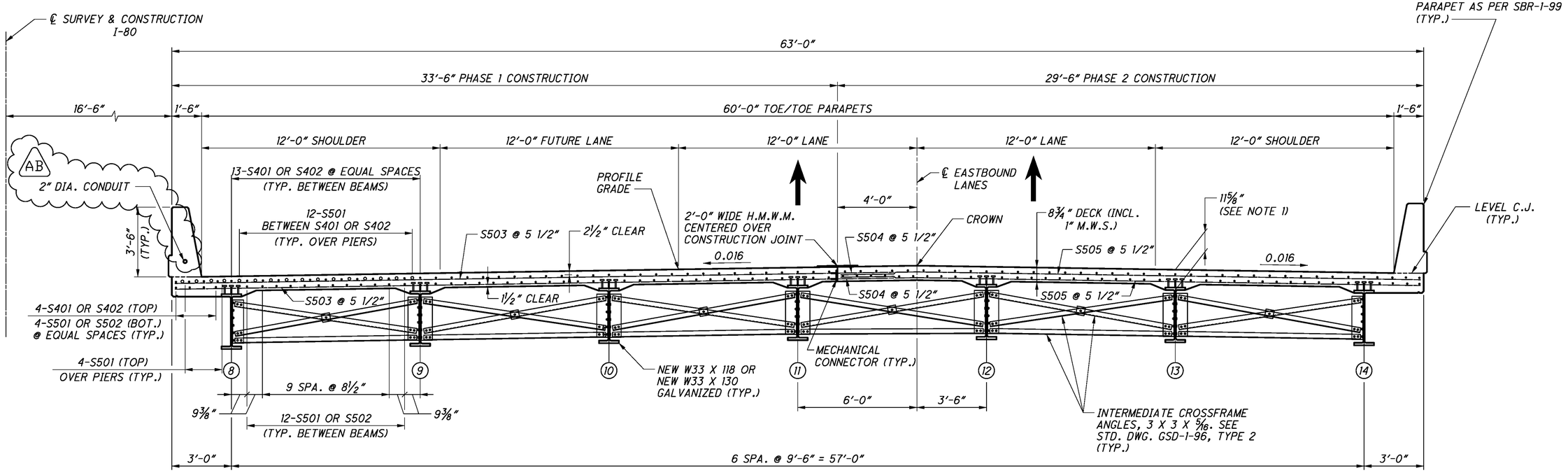

TRANSVERSE SECTION

(RIGHT BRIDGE SHOWN, LEFT OPPOSITE HAND)

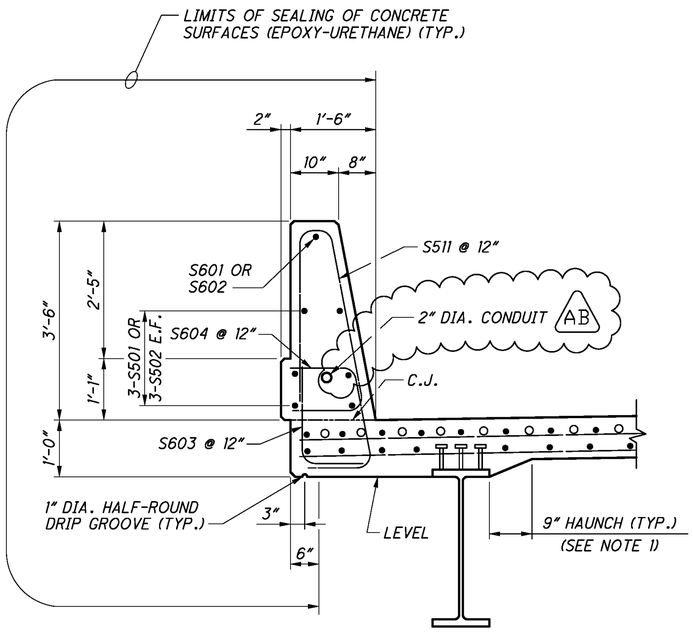

DECK PARAPET DETAIL

AB REVISED 12-9-13

AS-BUILT

THIS RECORD DRAWING HAS BEEN PREPARED IN PART BY THE ENGINEER OF RECORD TO DEPICT CHANGES MADE DURING CONSTRUCTION, BASED ON INFORMATION REPORTED BY THE CONSTRUCTION CONTRACTOR.

NOTES:

1) DECK SLAB CONCRETE: THE HAUNCH THICKNESS WILL VARY AS NECESSARY TO PLACE THE DECK SURFACE AT THE FINISHED GRADE. THE HAUNCH WIDTH IS NOMINALLY 9 INCHES WITH AN ALLOWABLE TOLERANCE OF ± 3 INCHES.

   THE HAUNCH THICKNESS IS MEASURED AT THE CENTERLINE OF THE BEAM, FROM THE SURFACE OF THE DECK TO THE BOTTOM OF THE TOP FLANGE MINUS THE DECK SLAB THICKNESS.

2) FOR ADDITIONAL PARAPET DETAILS, REFER TO O.D.O.T. STANDARD SBR-1-99, REV. 07-19-02.

DESIGN AGENCY
ms consultants, inc.
engineers, architects & planners
2221 Schrock Road
Columbus, Ohio 43229-1547
Tel 614.898.7700 Fax 614.898.7570
www.msconsultants.com

DESIGNED	DRAWN	REVIEWED	DATE
WER	KRM	JDH	1/25/2013
CHECKED	REVISED	STRUCTURE FILE NUMBER	
RSW		7803931/7803966	

TRANSVERSE SECTION
BRIDGE NO. TRU-80-0496L/R
OVER SAMPSON ROAD

TRU-80-4.70
PID No. 76411

PLOT.CEL
ms consultants, inc.
msconsultants.com
Ohio DOT Workspace
Marucci & Gaffney TRU-80 Design Build
www.msconsultants.com
UCF: ohdotV8i
PCF: 60-08285_Youngstown
Batchplot Spec: \\youngstown-fs1\n\60\08285\standards\plotdrv\batchplt.spc
Pen Table: S:\std\plotting\ustn\V8i\pen\V8i_ms_std.tbl
Plot Driver: S:\std\plotting\ustn\V8i\PDF.pltcfg
34" x 22"
Model: Sheet
Printed: 1/6/2014 @ 3:53:47 PM
File: \\youngstown-fs1\n\60\08285\structures\TRU-80-0496_Sampson\sheets\080_0496LTS001.dgn
View: SHEET
By: wruggles
ms consultants, inc.

PLOT.CEL

ms consultants, inc.
msconsultants.com

Ohio DOT Workspace
Marucci & Gaffney TRU-80 Design Build
www.msconsultants.com

1" 0.5" 0

UCF: ohdotV8i
PCF: 60-08285_Youngstown

Batchplot Spec: \\youngstown-fs1\n\60\08285\standards\plotdrv\batchplt.spc
Pen Table: S:\std\plotting\ustn\V8\pen\V8i_ms_std.tbl
Plot Driver: S:\std\plotting\ustn\V8\PDP.pltcfg

34" x 22"

View: SHEET
By: wruggles

Model: Sheet @ 3:53:48 PM
Printed: 1/6/2014
File: \\youngstown-fs1\n\60\08285\structures\TRU-80-0496_Sampson\sheets\080_0496LS0001.dgn

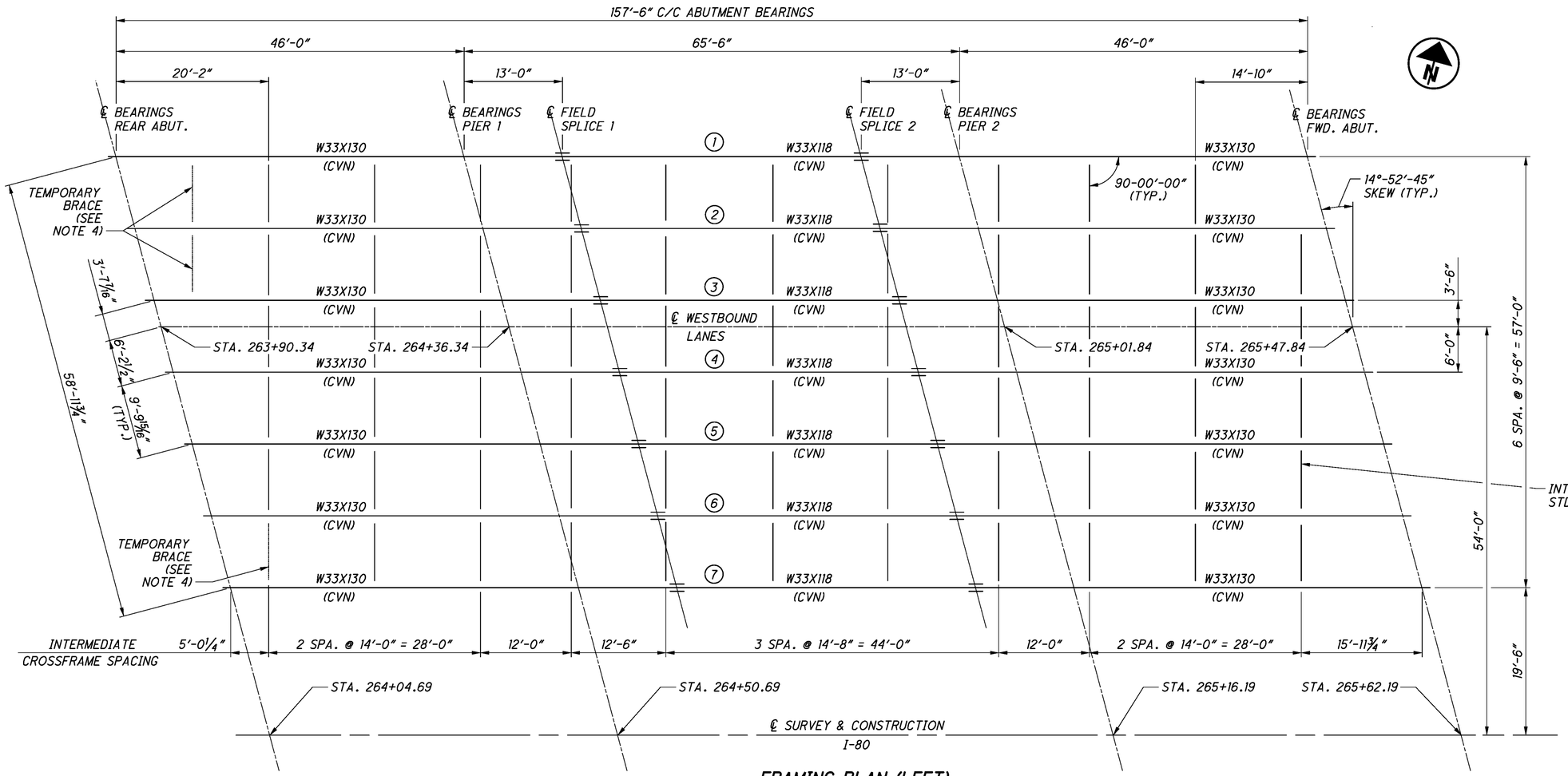

FRAMING PLAN (LEFT)

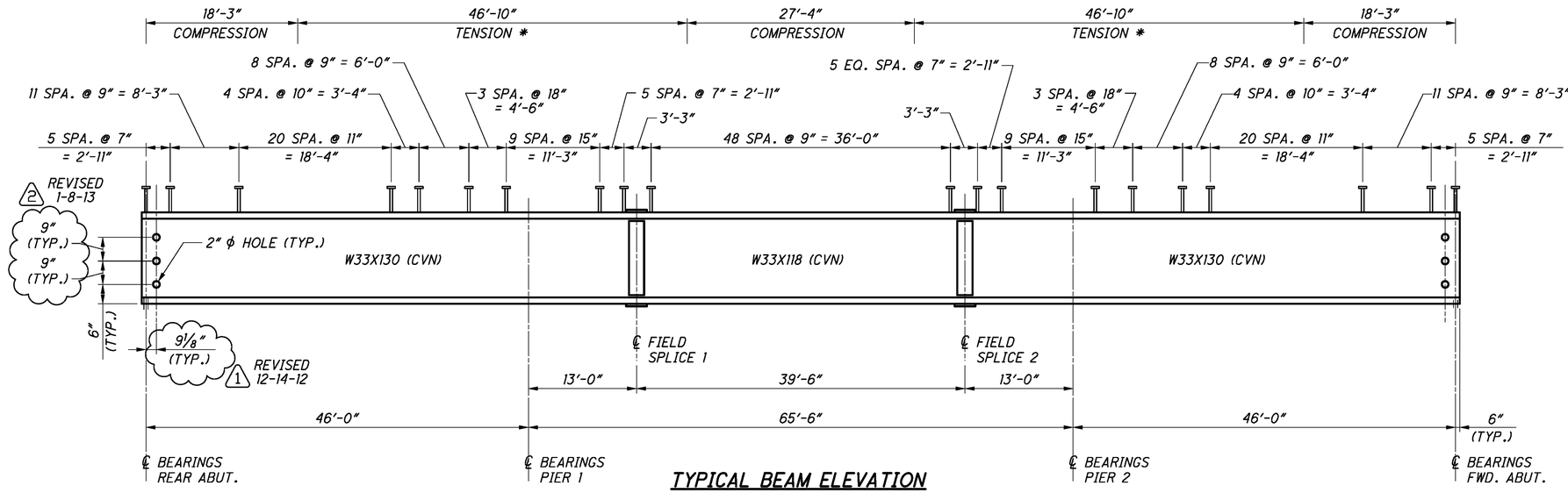

TYPICAL BEAM ELEVATION

* INCLUDES STRESS REVERSAL AREAS

NOTES:

1. FOR FRAMING PLAN (RIGHT) AND CAMBER DIAGRAM, SEE SHEET 17/32.
2. FOR TRANSVERSE SECTION, SEE SHEET 15/32.
3. FOR SPLICE DETAILS AND ADDITIONAL NOTES, SEE SHEET 18/32.
4. TEMPORARY INTERMEDIATE BRACINGS ARE ONLY REQUIRED MIDWAY BETWEEN THE REAR ABUTMENT DIAPHRAGM AND THE FIRST LINE OF INTERMEDIATE CROSSFRAME IN THE FOLLOWING BAYS: BAY 1-2, BAY 2-3, AND BAY 6-7. INTERMEDIATE BRACINGS SHALL CONSIST OF 6X6 TIMBER BLOCKING LOCATED JUST ABOVE THE BOTTOM FLANGE WEDGED TIGHT BETWEEN THE WEBS OF ADJACENT BEAMS. THE INTERMEDIATE BRACING SHALL BE PERPENDICULAR TO BEAM WEBS AND SHALL BE IN PLACE DURING DECK POURING AND REMAIN IN PLACE UNTIL THE WET CONCRETE FULLY HARDENS.

AS-BUILT

THIS RECORD DRAWING HAS BEEN PREPARED IN PART BY THE ENGINEER OF RECORD TO DEPICT CHANGES MADE DURING CONSTRUCTION, BASED ON INFORMATION REPORTED BY THE CONSTRUCTION CONTRACTOR.

DESIGN AGENCY
ms consultants, inc.
engineers, architects & planners
2221 Schrock Road
Columbus, Ohio 43229
Tel 614.895.7700 Fax 614.895.7070
www.msconsultants.com

DESIGNED	DRAWN	REVIEWED	DATE
WER	KRM	JDH	1/25/2013
CHECKED	REVISED	STRUCTURE FILE NUMBER	
RSW		7803931/7803966	

FRAMING PLAN (LEFT) AND BEAM ELEVATION

BRIDGE NO. TRU-80-0496L/R
OVER SAMPSON ROAD

TRU-80-4.70
PID No. 76411

ms consultants, inc.

PLOT.CEL

ms consultants, inc.
msconsultants.com

Ohio DOT Workspace
Marucci & Gaffney TRU-80 Design Build
www.msconsultants.com

0 0.5" 1"

UCF: ohdotV8i
PCF: 60-08285_Youngstown

Batchplot Spec: \\youngstown-fs1\n\60\08285\standards\plotdrv\batchplt.spc
Pen Table: S:\std\plotting\usin\V8\pen\V8i_ms_std.tbl
Plot Driver: S:\std\plotting\usin\V8\PDF.pltcfg

Model: Sheet
Plotted: 1/6/2014 @ 3:53:50 PM
File: \\youngstown-fs1\n\60\08285\structures\TRU-80-0496..Sampson\sheets\080_0496LS0002.dgn

34" x 22"

View: SHEET
By: wruggles

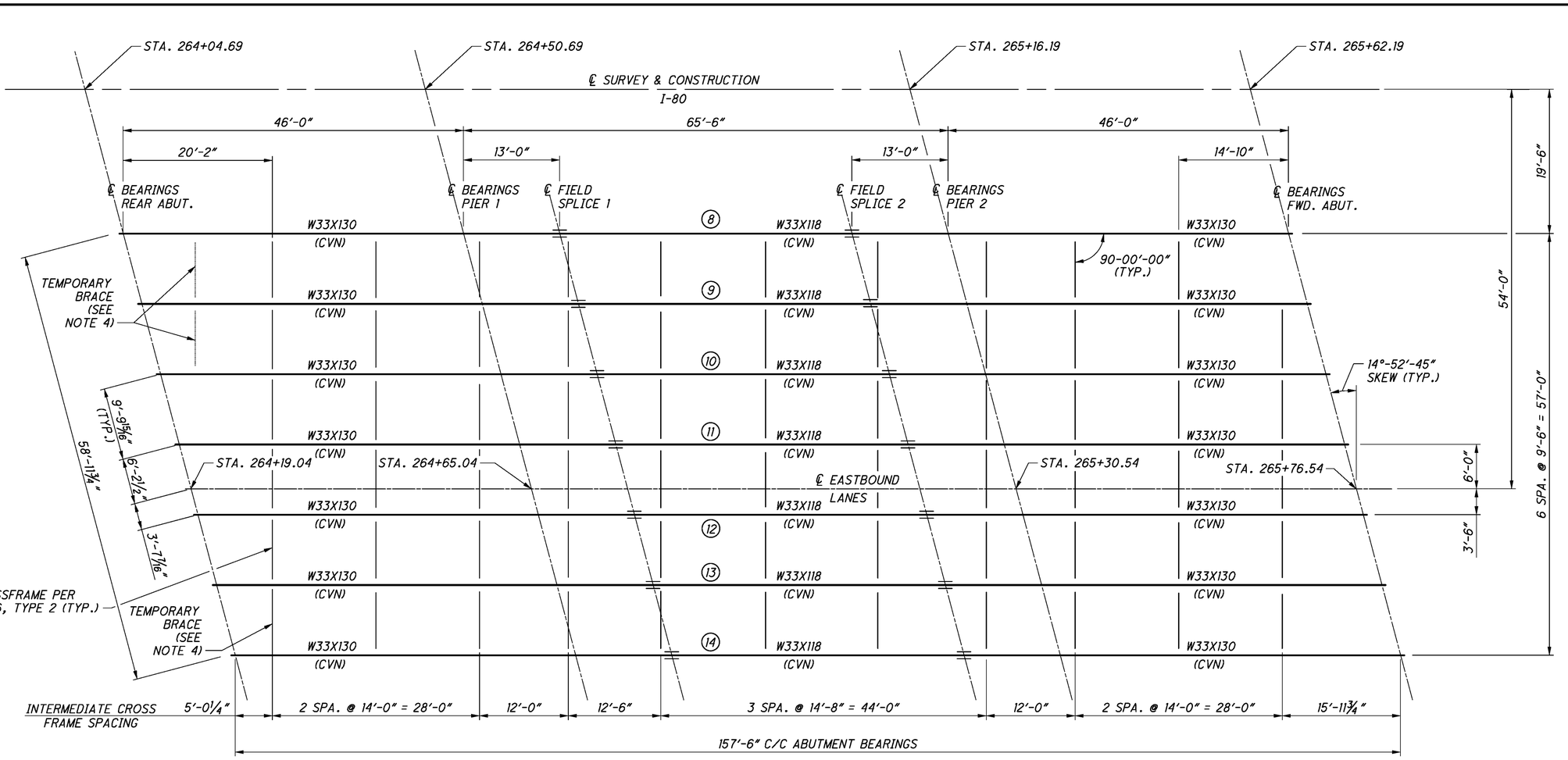

FRAMING PLAN (RIGHT)

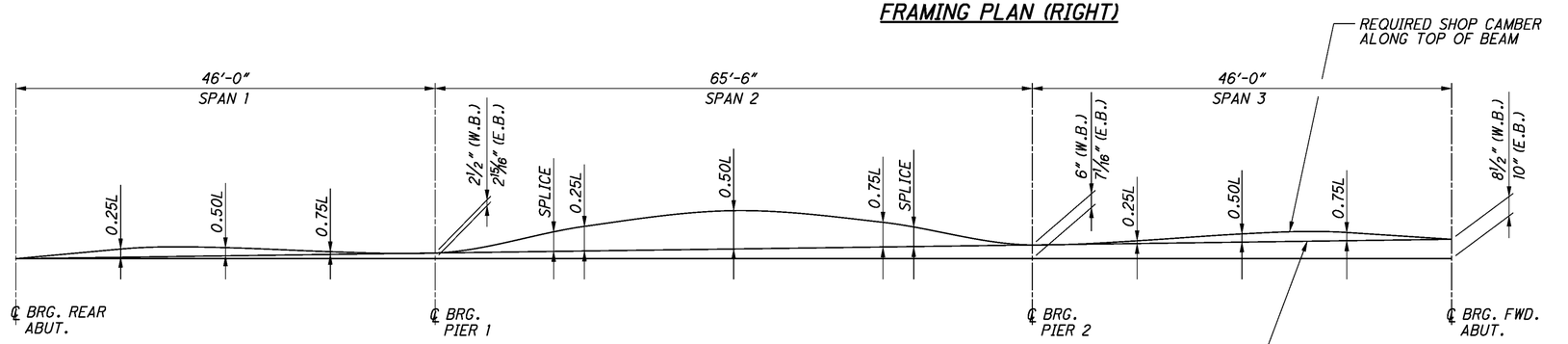

CAMBER DIAGRAM

DEFLECTION AND CAMBER (TYPICAL BEAMS 1-14)												
	SPAN 1			SPAN 2					SPAN 3			
	0.25L	0.50L	0.75L	SPLICE	0.25L	0.50L	0.75L	SPLICE	0.25L	0.50L	0.75L	
DEFLECTION DUE TO WEIGHT OF STEEL	0"	0"	0"	1/16"	1/16"	1/16"	1/16"	1/16"	0"	0"	0	
DEFLECTION DUE TO REMAINING DEAD LOAD	3/16"	3/16"	1/16"	3/8"	1/2"	13/16"	1/2"	3/8"	1/16"	3/16"	3/16"	
ADJUSTMENT DUE TO VERTICAL CURVE	0"	0"	0"	0"	0"	0"	0"	0"	0"	0"	0"	
TOTAL CAMBER	3/16"	3/16"	1/16"	7/16"	9/16"	7/8"	9/16"	7/16"	1/16"	3/16"	3/16"	

NOTES:

1. FOR FRAMING PLAN (LEFT) AND BEAM ELEVATION, SEE SHEET 16/32.
2. FOR TRANSVERSE SECTION, SEE SHEET 15/32.
3. FOR SPLICE DETAILS AND ADDITIONAL NOTES, SEE SHEET 18/32.
4. TEMPORARY INTERMEDIATE BRACINGS ARE ONLY REQUIRED MIDWAY BETWEEN THE REAR ABUTMENT DIAPHRAGM AND THE FIRST LINE OF INTERMEDIATE CROSSFRAME IN THE FOLLOWING BAYS: BAY (BETWEEN BEAMS) 8-9, BAY 9-10, AND BAY 13-14. INTERMEDIATE BRACINGS SHALL CONSIST OF 6X6 TIMBER BLOCKING LOCATED JUST ABOVE THE BOTTOM FLANGE WEDGED TIGHT BETWEEN THE WEBS OF ADJACENT BEAMS. THE INTERMEDIATE BRACING SHALL BE PERPENDICULAR TO BEAM WEBS AND SHALL BE IN PLACE DURING DECK POURING AND REMAIN IN PLACE UNTIL THE WET CONCRETE FULLY HARDENS.

AS-BUILT

THIS RECORD DRAWING HAS BEEN PREPARED IN PART BY THE ENGINEER OF RECORD TO DEPICT CHANGES MADE DURING CONSTRUCTION, BASED ON INFORMATION REPORTED BY THE CONSTRUCTION CONTRACTOR.

DESIGN AGENCY
ms consultants, inc.
engineers, architects & planners
2221 Schrock Road
Columbus, OH 43229
Tel 614.898.7100 Fax 614.898.7070
www.msconsultants.com

DESIGNED	DRAWN	REVIEWED	DATE
WER	KRM	JDH	1/25/2013
CHECKED	REVISED	STRUCTURE FILE NUMBER	
LAW		7803931/7803966	

FRAMING PLAN (RIGHT) AND CAMBER DIAGRAM

BRIDGE NO. TRU-80-0496L/R
OVER SAMPSON ROAD

TRU-80-4.70
PID No. 76411

PLOT.CEL
ms consultants, inc.
msconsultants.com
www.msconsultants.com
Ohio DOT Workspace
Marucci & Gaffney TRU-80 Design Build
UCF: ohdot1V8i
PCF: 60-08285_Youngstown
0 1" 0.5"
Batchplot Spec: \\youngstown-fs1\n\60\08285\standards\plotdrv\batchplt.spc
Pen Table: S:\std\plotting\ustn\V8i\pen\V8i_ms_std.tbl
Plot Driver: S:\std\plotting\ustn\V8i\PDF.pltcfg
Model: Sheet
Printed: 1/6/2014 @ 3:53:51 PM
File: \\youngstown-fs1\n\60\08285\structures\TRU-80-0496_Sampson\sheets\080_0496SD003.dgn
34" x 22"
View: SHEET
By: wruggles

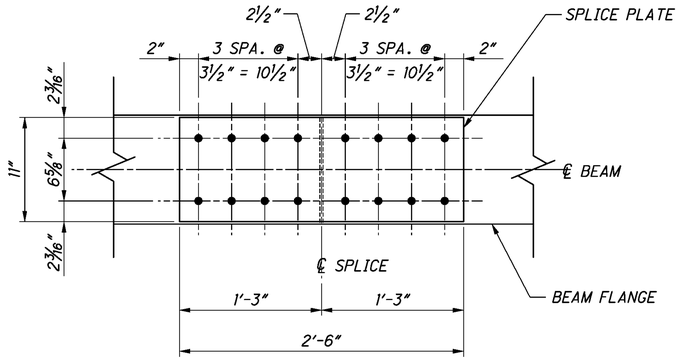

VIEW B-B

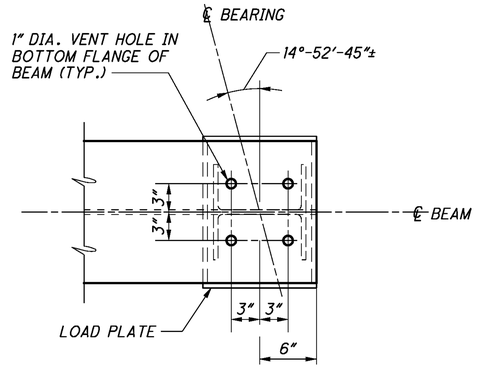

VENT HOLE DETAIL

AS-BUILT

THIS RECORD DRAWING HAS BEEN PREPARED IN PART BY THE ENGINEER OF RECORD TO DEPICT CHANGES MADE DURING CONSTRUCTION, BASED ON INFORMATION REPORTED BY THE CONSTRUCTION CONTRACTOR.

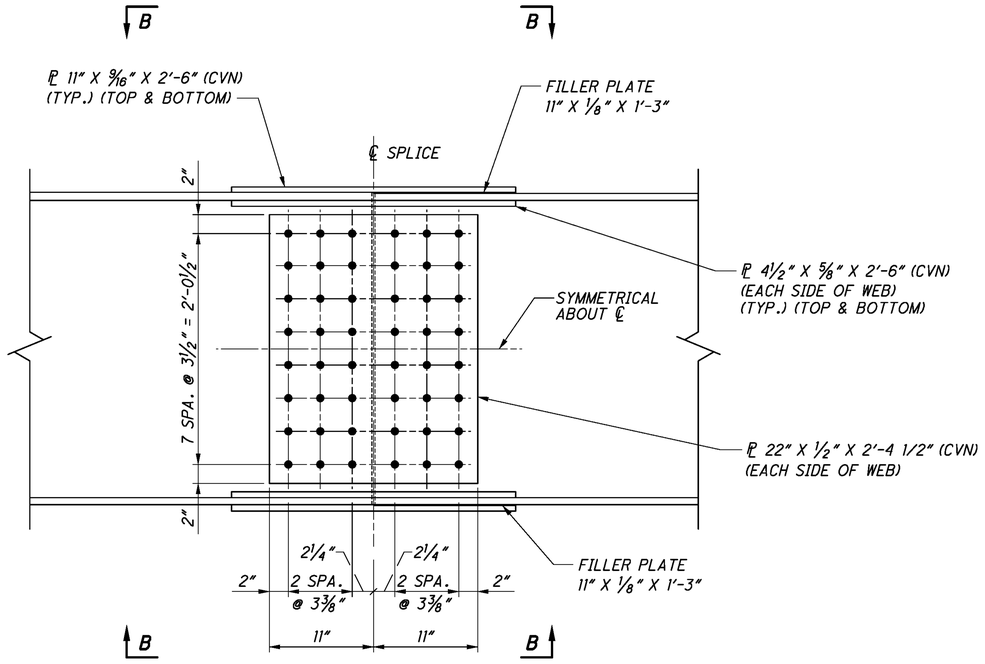

BEAM SPLICE DETAIL

SPLICE 1 (AS SHOWN)
SPLICE 2 (OPP. HAND)

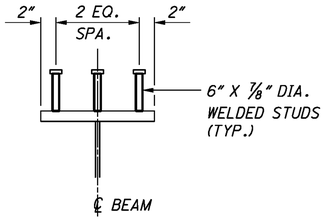

TYPICAL SHEAR CONNECTOR DETAIL

NOTE: SHEAR STUDS SHALL BE LOCATED NO CLOSER THAN 3" FROM EDGE OF BEAM SPLICE PLATE

NOTES:

1. ALL STRUCTURAL STEEL SHALL BE ASTM A709 GRADE 50, GALVANIZED AND SUBJECT TO LEVELTHREE (3) FABRICATION REQUIREMENTS OF ODOT CONSTRUCTION AND MATERIAL SPECIFICATION 513 UNLESS NOTED OTHERWISE.
2. CVN: WHERE A SHAPE OR PLATE IS DESIGNATED (CVN), FURNISH MATERIAL THAT MEETS THE MINIMUM NOTCH TOUGHNESS REQUIREMENTS AS SPECIFIED IN 711.01.
3. WELD ATTACHMENT OF SUPPORTS FOR CONCRETE DECK FINISHING MACHINE TO AREAS OF THE FASCIA STRINGER FLANGES DESIGNATED "COMPRESSION". DO NOT WELD ATTACHMENTS TO AREAS DESIGNATED "TENSION". FILLET WELDS TO COMPRESSION FLANGES SHALL BE AT LEAST 1" FROM EDGE OF FLANGE, BE AT LEAST 2" LONG, AND BE AT LEAST ¼" FOR THICKNESSES UP TO ¾" OR 5/16" FOR GREATER THAN ¾" THICK.
4. FOR INTERMEDIATE CROSSFRAME DETAILS, SEE STANDARD DRAWING GSD-1-96 REFER TO STANDARD DRAWING GSD-1-96, TYPE 2. HOLE DIAMETERS SHALL BE INCREASED BY 1/16". BOLTS SHALL BE ASTM A325 TYPE 1, GALVANIZED.
5. HIGH STRENGTH BOLTS FOR FIELD SPLICE SHALL BE 1" DIAMETER ASTM A-325, TYPE I GALVANIZED. PLACE BOLT HEADS ON BOTTOM SURFACE OF BOTTOM FLANGE SPLICE AND AND ON OUTER FACE OF WEB SPLICES. FLANGE AND WEB HOLE DIAMETERS SHALL BE 1⅛".

DESIGN AGENCY
ms consultants, inc.
engineers, architects & planners
2221 Schrock Road
Columbus, Ohio 43229
Tel 614.898.7100 Fax 614.898.7070
www.msconsultants.com

DESIGNED	DRAWN	REVIEWED	DATE
WER	KRM	JDH	1/25/2013
CHECKED	REVISED	STRUCTURE FILE NUMBER	
LAW		7803931/7803966	

SPLICE DETAILS
BRIDGE NO. TRU-80-0496L/R
OVER SAMPSON ROAD

TRU-80-4.70
PID No. 76411

18 / 32

94 / 142

PLOT.CEL

ms consultants, inc.
msconsultants.com

www.msconsultants.com
Ohio DOT Workspace
Marucci & Gaffney TRU-80 Design Build

UCF: ohdot\V8i
PCF: 60-08285_Youngstown

Batchplot Spec: \\youngstown-fs1\n\60\08285\standards\plotdrv\batchplt.spc
Pen Table: S:\std\plotting\ustn\V8\pen\V8_ms_std.tbl
Plot Driver: S:\std\plotting\ustn\V8\PDP.pltcfg

Model: Sheet
Printed: 1/6/2014 @ 3:53:52 PM
File: \\youngstown-fs1\n\60\08285\structures\TRU-80-0496_Sampson\sheets\080_0496LDP001.dgn
View: SHEET
By: wruggles

34" x 22"

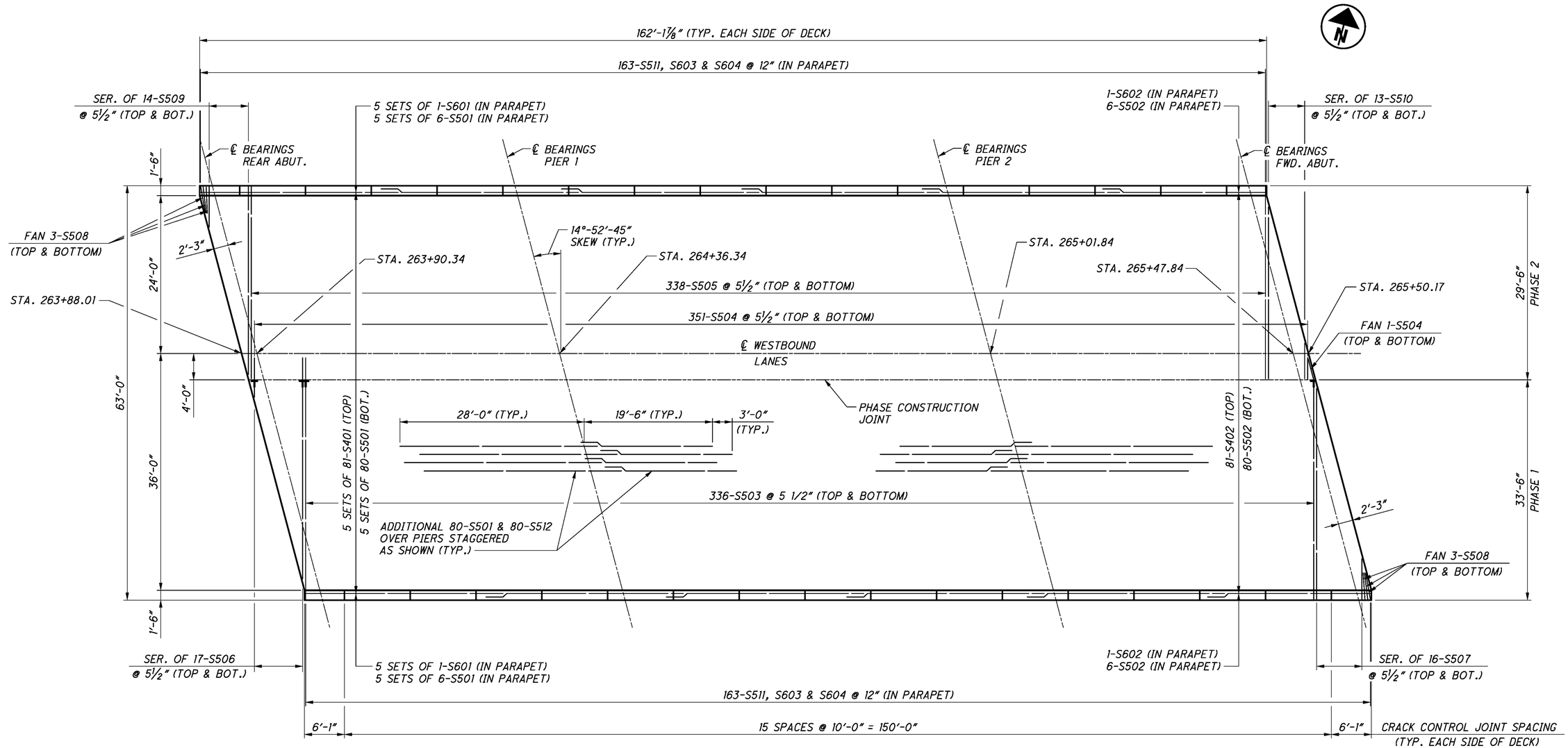

PLAN

(LEFT BRIDGE SHOWN, RIGHT BRIDGE OPPOSITE HAND)

AS-BUILT

THIS RECORD DRAWING HAS BEEN PREPARED IN PART BY THE ENGINEER OF RECORD TO DEPICT CHANGES MADE DURING CONSTRUCTION, BASED ON INFORMATION REPORTED BY THE CONSTRUCTION CONTRACTOR.

NOTES:

1. FOR REINFORCEMENT SCHEDULE, SEE SHEET 32.
2. MINIMUM REBAR LAPS:
   LONGITUDINAL
   #4 BARS = 2'-0"
   #5 BARS = 2'-6"
   #6 BARS = 3'-4"
   TRANSVERSE
   #5 BARS = 3'-2"
3. FOR SEMI-INTEGRAL ABUTMENT DIAPHRAGM DETAIL, SEE SHEETS 20 & 21.
4. FOR TRANSVERSE SECTION AND PARAPET DETAIL, SEE SHEET 15.

DESIGN AGENCY
ms consultants, inc.
engineers, architects & planners
2221 Schrock Road
Columbus, OH 43229
Tel 614.898.7100 Fax 614.898.7070
www.msconsultants.com

DESIGNED	DRAWN	REVIEWED	DATE
WER	KRM	JDH	1/25/2013
CHECKED	REVISED	STRUCTURE FILE NUMBER	
RSW		7803931/7803966	

DECK PLAN
BRIDGE NO. TRU-80-0496L/R
OVER SAMPSON ROAD

TRU-80-4.70
PID No. 76411

ms consultants, inc.

PLOT.CEL

ms consultants, inc.
msconsultants.com

Ohio DOT Workspace
Marucci & Gaffney TRU-80 Design Build
www.msconsultants.com

1"
0
0.5"

UCF: ohdotV8i
PCF: 60-08285_Youngstown

Batchplot Spec: \\youngstown-fs1\n\60\08285\standards\plotdrv\batchplt.spc
Pen Table: S:\std\plotting\astm\V8\pen\V8i_ms_std.tbl
Plot Driver: S:\std\plotting\astm\V8\PDP.pltcfg

Model: Sheet @ 3:53:54 PM
Printed: 1/6/2014 By: wruggles
File: \\youngstown-fs1\n\60\08285\structures\TRU-80-0496_Sampson\sheets\080_0496LAR004.dgn
View: SHEET

34" x 22"

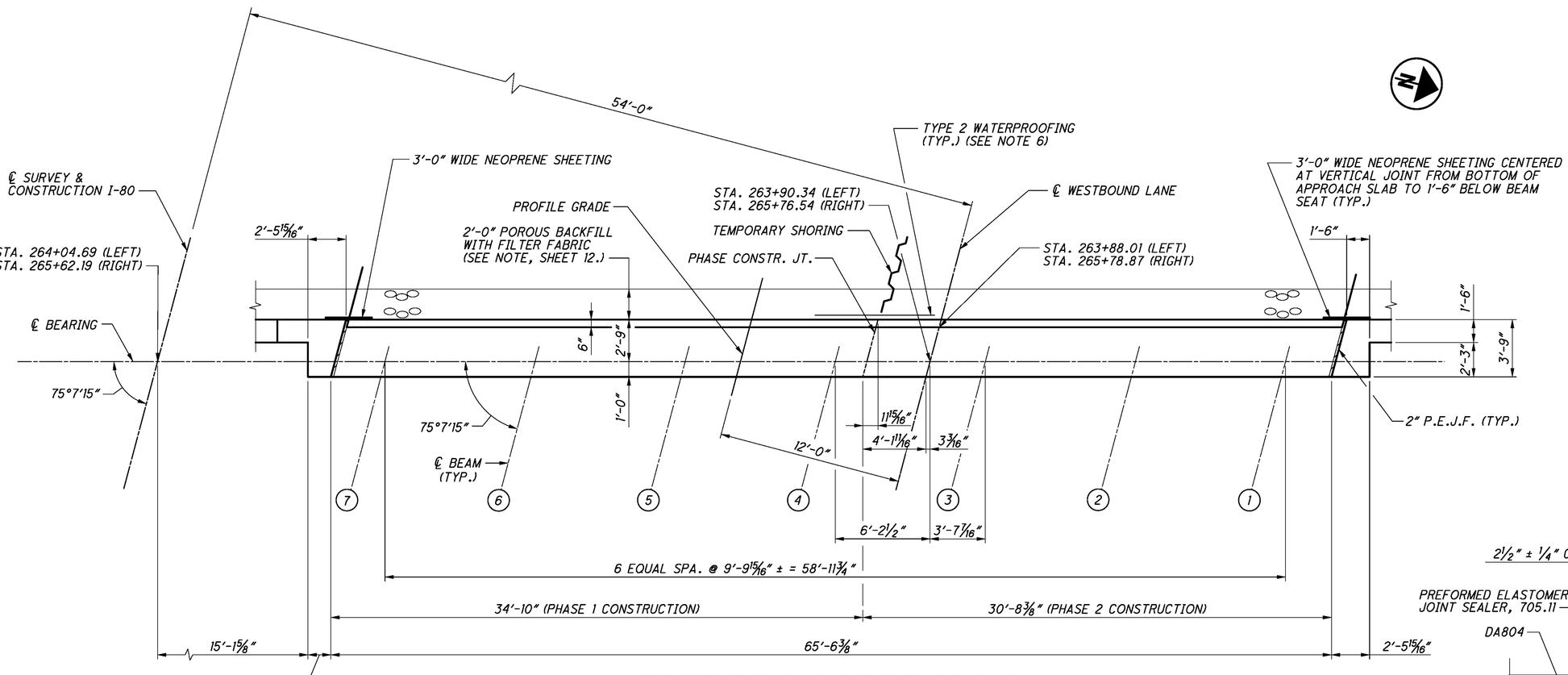

LEFT BRIDGE REAR ABUTMENT DIAPHRAGM PLAN

(APPROACH SLAB NOT SHOWN)
(RIGHT BRIDGE, FORWARD ABUTMENT DIAPHRAGM SIMILAR)

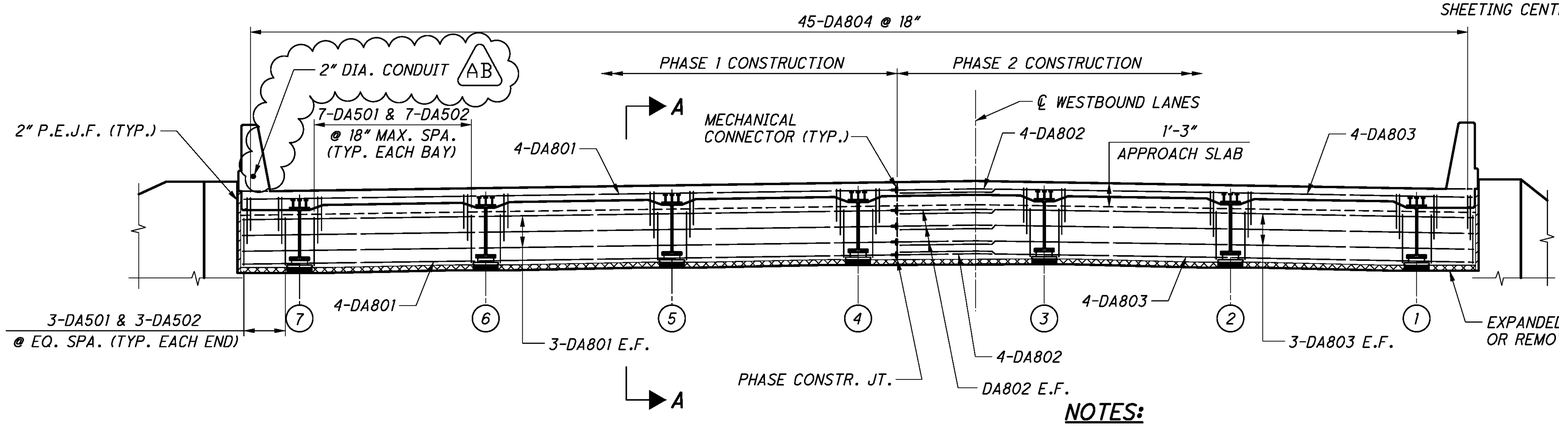

LEFT BRIDGE REAR ABUTMENT DIAPHRAGM ELEVATION

(RIGHT BRIDGE, FORWARD ABUTMENT DIAPHRAGM SIMILAR)

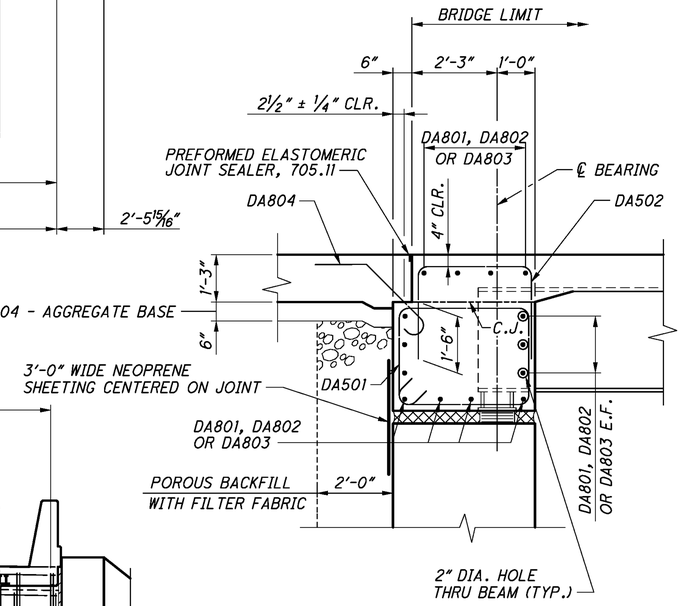

SECTION A-A

AS-BUILT

THIS RECORD DRAWING HAS BEEN PREPARED IN PART BY THE ENGINEER OF RECORD TO DEPICT CHANGES MADE DURING CONSTRUCTION, BASED ON INFORMATION REPORTED BY THE CONSTRUCTION CONTRACTOR.

AB REVISED 12-9-13

NOTES:

1. ABUTMENT DIAPHRAGM CONCRETE: PLACE THE DIAPHRAGM CONCRETE ENCASING THE STRUCTURAL MEMBER ENDS AT LEAST 48 HOURS BEFORE PLACEMENT OF THE DECK CONCRETE. LOCATE THE HORIZONTAL CONSTRUCTION JOINT BETWEEN THE DIAPHRAGM AND DECK CONCRETE AT THE APPROACH SLAB SEAT.
2. MINIMUM REBAR LAPS: #8 BARS = 5'-11"
3. FOR ABUTMENT REMOVAL, SEE SHEET 5/32.
4. FOR GENERAL NOTES, SEE SHEETS G1 & G2.
5. FOR REINFORCING STEEL LIST, SEE SHEET 32/32.
6. 3'-0" WIDE TYPE 2 WATERPROOFING CENTERED AT VERTICAL JOINT FROM TOP OF DIAPHRAGM TO BOTTOM OF POROUS BACKFILL.
7. FOR DECK PLAN, SEE SHEET 19/32.

DESIGN AGENCY
ms consultants, inc.
engineers, architects & planners
2221 Schrock Road
Columbus, OH 43229
Tel 614.898.7100 Fax 614.898.7070
www.msconsultants.com

DESIGNED	DRAWN	REVIEWED	DATE
WER	KRM	JDH	1/25/2013
CHECKED	REVISED	STRUCTURE FILE NUMBER	
RSW		7803931/7803966	

LEFT BRIDGE REAR ABUTMENT DIAPHRAGM DETAILS

BRIDGE NO. TRU-80-0496L/R
OVER SAMPSON ROAD

TRU-80-4.70
PID No. 76411

20/32

96/142

ms consultants, inc.

PLOT.CEL

ms consultants, inc.
msconsultants.com

www.msconsultants.com
Maruca & Gaffney TRU-80 Design Build
Ohio DOT Workspace

UCF: ohdot\V8i
PCF: 60-08285_Youngstown

Batchplot Spec: \\youngstown-fs\rn\60\08285\standards\plotdrv\batchplt.spc
Pen Table: S:\std\plotting\astm\V8i\pen\V8i_ms_std.tbl
Plot Driver: S:\std\plotting\astm\V8i\PDP.pltcfg

Model: Sheet
Printed: 1/6/2014 @ 3:53:56 PM
File: \\youngstown-fs\rn\60\08285\structures\TRU-80-0496_Sampson\sheets\080_0496LAF003.dgn
View: SHEET
By: wruggles

34" x 22"

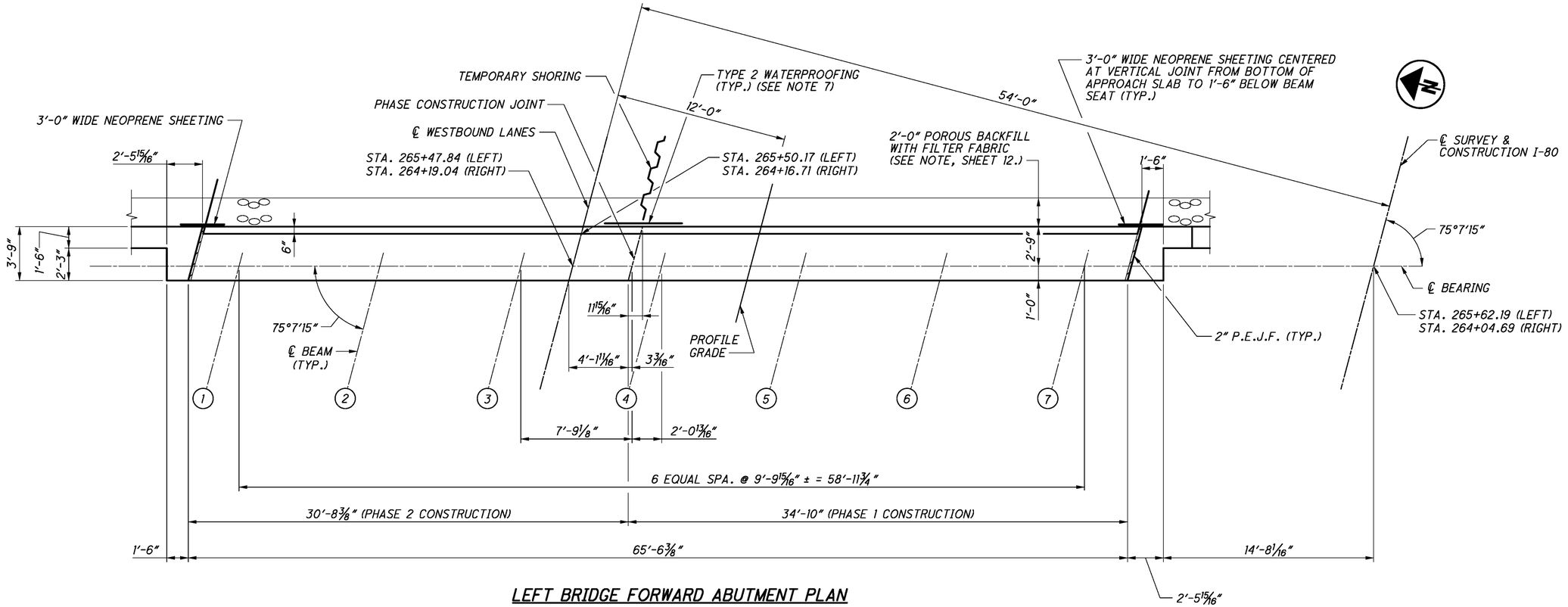

LEFT BRIDGE FORWARD ABUTMENT PLAN

(APPROACH SLAB NOT SHOWN)
(RIGHT BRIDGE, REAR ABUTMENT DIAPHRAGM SIMILAR)

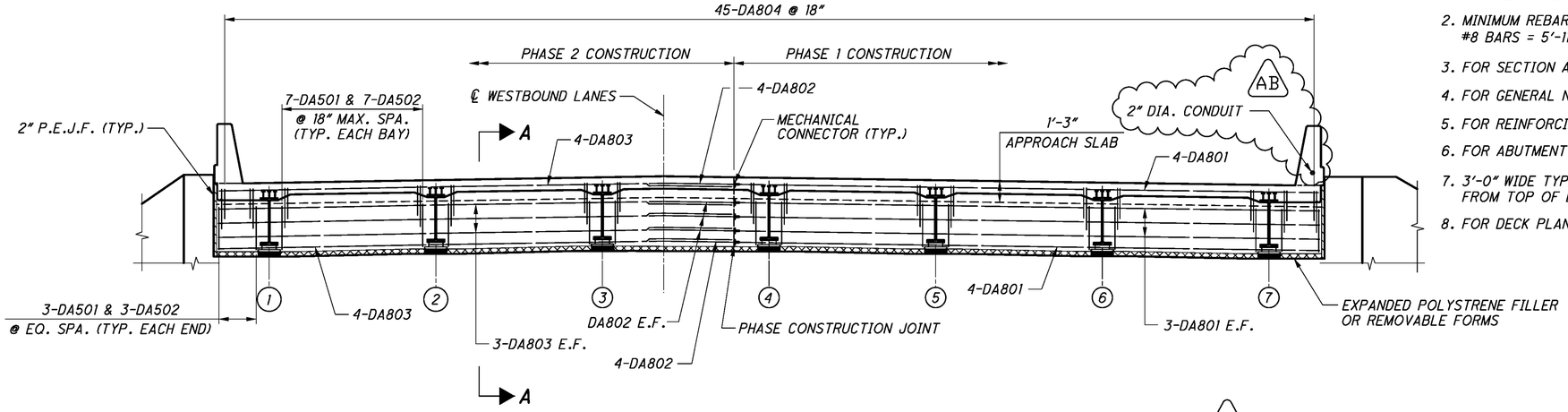

LEFT BRIDGE FORWARD ABUTMENT ELEVATION

(RIGHT BRIDGE, REAR ABUTMENT DIAPHRAGM SIMILAR)

NOTES:

1. ABUTMENT DIAPHRAGM CONCRETE: PLACE THE DIAPHRAGM CONCRETE ENCASING THE STRUCTURAL MEMBER ENDS AT LEAST 48 HOURS BEFORE PLACEMENT OF THE DECK CONCRETE. LOCATE THE HORIZONTAL CONSTRUCTION JOINT BETWEEN THE DIAPHRAGM AND DECK CONCRETE AT THE APPROACH SLAB SEAT.
2. MINIMUM REBAR LAPS:
   #8 BARS = 5'-11"
3. FOR SECTION A-A, SEE SHEET 20/32.
4. FOR GENERAL NOTES, SEE SHEETS G1 & G2.
5. FOR REINFORCING STEEL LIST, SEE SHEET 32/32.
6. FOR ABUTMENT REMOVAL, SEE SHEET 5/32.
7. 3'-0" WIDE TYPE 2 WATERPROOFING CENTERED AT VERTICAL JOINT FROM TOP OF DIAPHRAGM TO BOTTOM OF POROUS BACKFILL.
8. FOR DECK PLAN, SEE SHEET 19/32.

AB REVISED 12-9-13

AS-BUILT

THIS RECORD DRAWING HAS BEPREPARED IN PART BY THE ENGINEER OF RECORD TO DEPICT CHANGES MADE DURING CONSTRUCTION, BASED ON INFORMATION REPORTED BY THE CONSTRUCTION CONTRACTOR.

DESIGN AGENCY
ms consultants, inc.
engineers, architects & planners
2221 Schrock Road
Columbus, OH 43229
Tel 614.898.7100 Fax 614.898.7070
www.msconsultants.com

DESIGNED	DRAWN	REVIEWED	DATE
WER	KRM	JDH	1/25/2013
CHECKED	REVISED	STRUCTURE FILE NUMBER	
RSW		7803931/7803966	

LEFT BRIDGE FORWARD ABUTMENT DIAPHRAGM DETAILS

BRIDGE NO. TRU-80-0496L/R
OVER SAMPSON ROAD

TRU-80-4.70
PID No. 76411

21/32
97/142

PLOT.CEL

ms consultants, inc.
msconsultants.com

Ohio DOT Workspace
Marucci & Gaffney TRU-80 Design Build
www.msconsultants.com

0 0.5" 1"

UCF: ohdotV8i
PCF: 60-08285_Youngstown

34" x 22"

Batchplot Spec: \\youngstown-fs1\n\60\08285\standards\plotdrv\batchplt.spc
Pen Table: S:\std\plotting\ustn\V8\pen\V8_ms_std.tbl
Plot Driver: S:\std\plotting\ustn\V8\PDP.pltcfg

Model: Sheet
Printed: 1/6/2014 @ 3:53:57 PM
File: \\youngstown-fs1\n\60\08285\structures\TRU-80-0496_Sampson\sheets\V80_0496L30004.dgn
View: SHEET
By: wruggles

TOP OF HAUNCH ELEVATIONS

		BEAM 1		BEAM 2		BEAM 3		BEAM 4		BEAM 5		BEAM 6		BEAM 7	
SPAN NO.	LOCATION	STATION	ELEVATION	STATION	ELEVATION	STATION	ELEVATION	STATION	ELEVATION	STATION	ELEVATION	STATION	ELEVATION	STATION	ELEVATION
1	0.00 L	263+84.36	1072.17	263+86.89	1072.33	263+89.41	1072.50	263+91.93	1072.47	263+94.46	1072.33	263+96.98	1072.19	263+99.51	1072.05
	0.25 L	263+95.86	1072.23	263+98.39	1072.40	264+00.91	1072.56	264+03.43	1072.53	264+05.96	1072.39	264+08.48	1072.25	264+11.01	1072.11
	0.50 L	264+07.36	1072.29	264+09.89	1072.45	264+12.41	1072.61	264+14.93	1072.58	264+17.46	1072.44	264+19.98	1072.30	264+22.51	1072.16
	0.75 L	264+18.86	1072.33	264+21.39	1072.49	264+23.91	1072.65	264+26.43	1072.63	264+28.96	1072.48	264+31.48	1072.34	264+34.01	1072.20
2	0.00 L	264+30.36	1072.38	264+32.89	1072.54	264+35.41	1072.70	264+37.93	1072.67	264+40.46	1072.53	264+42.98	1072.39	264+45.51	1072.25
	SPLICE	264+43.36	1072.46	264+45.89	1072.63	264+48.41	1072.79	264+50.93	1072.76	264+53.46	1072.62	264+55.98	1072.48	264+58.51	1072.34
	0.25 L	264+46.74	1072.49	264+49.26	1072.65	264+51.79	1072.81	264+54.31	1072.78	264+56.83	1072.64	264+59.36	1072.50	264+61.88	1072.36
	0.50 L	264+63.11	1072.58	264+65.64	1072.75	264+68.16	1072.91	264+70.68	1072.88	264+73.21	1072.74	264+75.73	1072.60	264+78.26	1072.46
	0.75 L	264+79.49	1072.63	264+82.01	1072.80	264+84.54	1072.96	264+87.06	1072.93	264+89.58	1072.79	264+92.11	1072.65	264+94.63	1072.51
	SPLICE	264+82.86	1072.64	264+85.39	1072.80	264+87.91	1072.97	264+90.43	1072.94	264+92.96	1072.80	264+95.48	1072.66	264+98.01	1072.52
3	0.00 L	264+95.86	1072.67	264+98.39	1072.83	265+00.91	1073.00	265+03.43	1072.97	265+05.96	1072.83	265+08.48	1072.69	265+11.01	1072.55
	0.25 L	265+07.36	1072.72	265+09.89	1072.89	265+12.41	1073.05	265+14.93	1073.02	265+17.46	1072.88	265+19.98	1072.74	265+22.51	1072.60
	0.50 L	265+18.86	1072.79	265+21.39	1072.95	265+23.91	1073.11	265+26.43	1073.08	265+28.96	1072.94	265+31.48	1072.80	265+34.01	1072.66
	0.75 L	265+30.36	1072.84	265+32.89	1073.00	265+35.41	1073.16	265+37.93	1073.14	265+40.46	1072.99	265+42.98	1072.85	265+45.51	1072.71
	1.00 L	265+41.86	1072.88	265+44.39	1073.04	265+46.91	1073.20	265+49.43	1073.18	265+51.96	1073.03	265+54.48	1072.89	265+57.01	1072.75

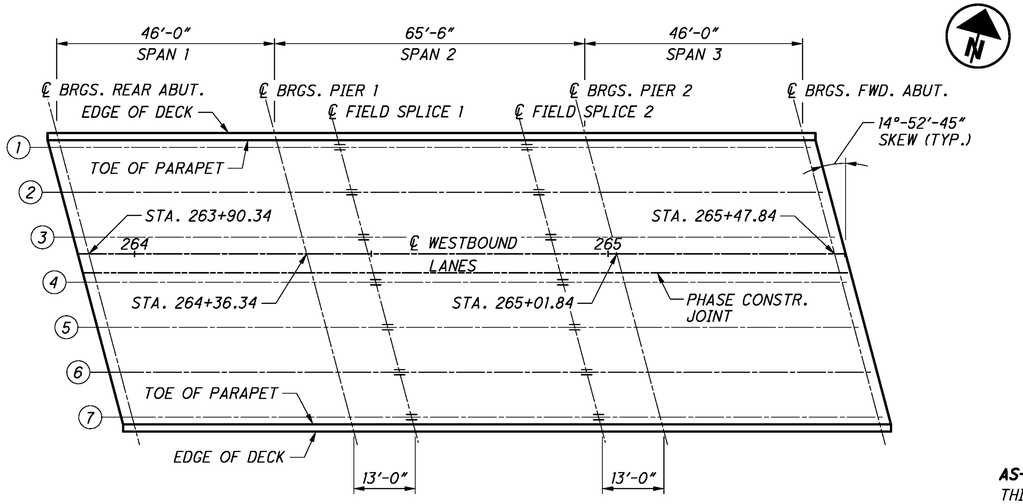

LOCATION PLAN

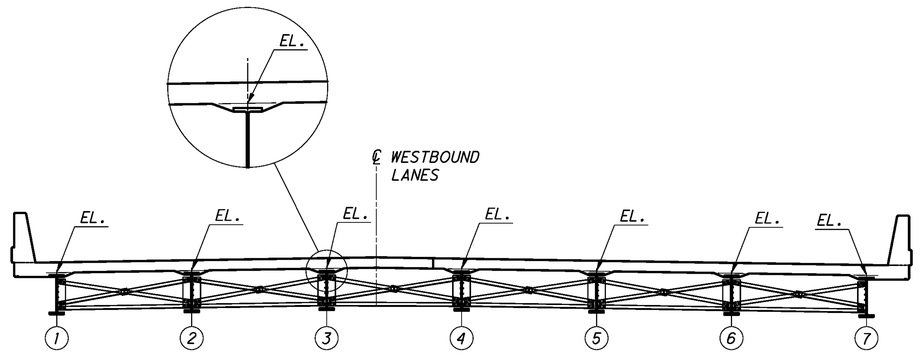

TOP OF HAUNCH LOCATIONS

AS-BUILT

THIS RECORD DRAWING HAS BEEN PREPARED IN PART BY THE ENGINEER OF RECORD TO DEPICT CHANGES MADE DURING CONSTRUCTION, BASED ON INFORMATION REPORTED BY THE CONSTRUCTION CONTRACTOR.

NOTE:

1. TOP OF HAUNCH ELEVATIONS SHOWN REPRESENT THE THEORETICAL LOCATION OF THE BOTTOM OF THE DECK ABOVE THE BEAM HAUNCH PRIOR TO DEFLECTIONS CAUSED BY DECK PLACEMENT AND OTHER ANTICIPATED DEAD LOADS.

L = SPAN LENGTH

DESIGN AGENCY
ms consultants, inc.
engineers, architects & planners
225 Second Street SW
Canton, Ohio 44702
Tel 330.438.3760 Fax 330.456.7070
www.msconsultants.com

DESIGNED	DRAWN	REVIEWED	DATE
RSW	KRM	JDH	1/25/2013
CHECKED	REVISED	STRUCTURE FILE NUMBER	
WER		7803931/7803966	

TOP OF HAUNCH ELEVATIONS (LEFT)
BRIDGE NO. TRU-80-0496L/R
OVER SAMPSON ROAD

TRU-80-4.70
PID No. 76411

ms consultants, inc.

PLOT.CEL

ms consultants, inc.
msconsultants.com

Ohio DOT Workspace
Marucci & Gaffney TRU-80 Design Build
www.msconsultants.com

1" 0.5" 0

UCF: ohdotV8i
PCF: 60-08285_Youngstown

34" x 22"

Batchplot Spec: \\youngstown-fs1\n\60\08285\standards\plotdrv\batchplt.spc
Pen Table: S:\std\plotting\astn\V8i\pen\V8i_ms_std.tbl
Plot Driver: S:\std\plotting\astn\V8i\PDF.pltcfg

Model: Sheet
Printed: 1/6/2014 @ 3:53:58 PM
View: SHEET
By: wruggles
File: \\youngstown-fs1\n\60\08285\structures\TRU-80-0496_Sampson\sheets\080_0496LSD005.dgn

TOP OF HAUNCH ELEVATIONS

		BEAM 8		BEAM 9		BEAM 10		BEAM 11		BEAM 12		BEAM 13		BEAM 14	
SPAN NO.	LOCATION	STATION	ELEVATION	STATION	ELEVATION	STATION	ELEVATION	STATION	ELEVATION	STATION	ELEVATION	STATION	ELEVATION	STATION	ELEVATION
1	0.00 L	264+09.87	1071.95	264+12.40	1072.11	264+14.92	1072.28	264+17.45	1072.44	264+19.97	1072.49	264+22.49	1072.36	264+25.02	1072.22
	0.25 L	264+21.37	1072.02	264+23.90	1072.18	264+26.42	1072.35	264+28.95	1072.51	264+31.47	1072.57	264+33.99	1072.43	264+36.52	1072.29
	0.50 L	264+32.87	1072.08	264+35.40	1072.24	264+37.92	1072.41	264+40.45	1072.57	264+42.97	1072.63	264+45.49	1072.49	264+48.02	1072.35
	0.75 L	264+44.37	1072.13	264+46.90	1072.30	264+49.42	1072.46	264+51.95	1072.63	264+54.47	1072.68	264+56.99	1072.54	264+59.52	1072.40
2	0.00 L	264+55.87	1072.19	264+58.40	1072.35	264+60.92	1072.52	264+63.45	1072.69	264+65.97	1072.74	264+68.49	1072.60	264+71.02	1072.46
	SPLICE	264+68.87	1072.29	264+71.40	1072.45	264+73.92	1072.62	264+76.45	1072.78	264+78.97	1072.83	264+81.49	1072.70	264+84.02	1072.56
	0.25 L	264+72.25	1072.31	264+74.77	1072.48	264+77.30	1072.64	264+79.82	1072.81	264+82.34	1072.86	264+84.87	1072.72	264+87.39	1072.58
	0.50 L	264+88.62	1072.42	264+91.15	1072.59	264+93.67	1072.75	264+96.20	1072.92	264+98.72	1072.97	265+01.24	1072.83	265+03.77	1072.69
	0.75 L	265+05.00	1072.49	265+07.52	1072.65	265+10.05	1072.82	265+12.57	1072.98	265+15.09	1073.04	265+17.62	1072.90	265+20.14	1072.76
	SPLICE	265+08.37	1072.50	265+10.90	1072.66	265+13.42	1072.83	265+15.95	1072.99	265+18.47	1073.04	265+20.99	1072.91	265+23.52	1072.77
3	0.00 L	265+21.37	1072.54	265+23.90	1072.70	265+26.42	1072.87	265+28.95	1073.03	265+31.47	1073.09	265+33.99	1072.95	265+36.52	1072.81
	0.25 L	265+32.87	1072.60	265+35.40	1072.77	265+37.92	1072.93	265+40.45	1073.10	265+42.97	1073.15	265+45.49	1073.01	265+48.02	1072.87
	0.50 L	265+44.37	1072.67	265+46.90	1072.84	265+49.42	1073.00	265+51.95	1073.17	265+54.47	1073.22	265+56.99	1073.08	265+59.52	1072.94
	0.75 L	265+55.87	1072.73	265+58.40	1072.90	265+60.92	1073.06	265+63.45	1073.23	265+65.97	1073.28	265+68.49	1073.14	265+71.02	1073.00
	1.00 L	265+67.37	1072.78	265+69.90	1072.95	265+72.42	1073.11	265+74.95	1073.28	265+77.47	1073.33	265+79.99	1073.19	265+82.52	1073.05

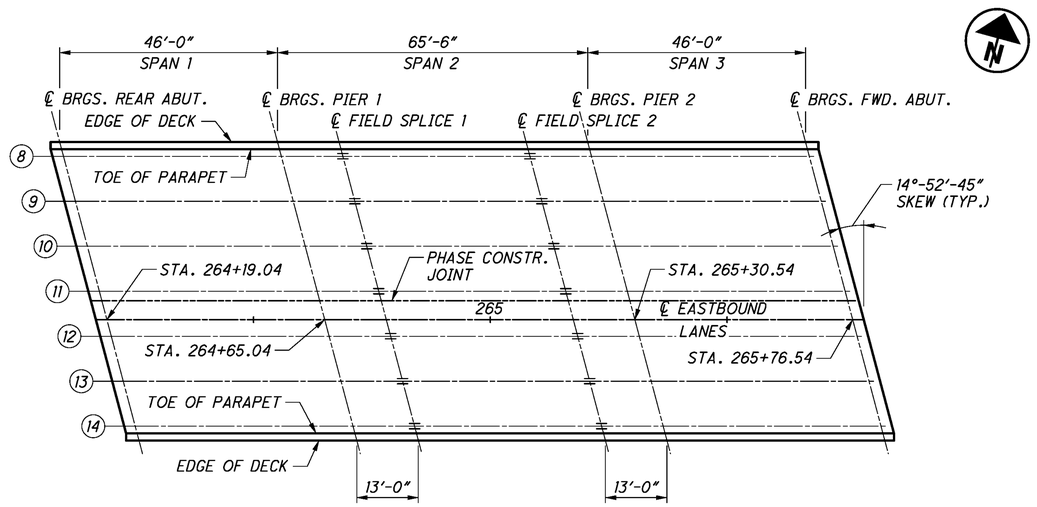

LOCATION PLAN

AS-BUILT
THIS RECORD DRAWING HAS BEEN PREPARED IN PART BY THE ENGINEER OF RECORD TO DEPICT CHANGES MADE DURING CONSTRUCTION, BASED ON INFORMATION REPORTED BY THE CONSTRUCTION CONTRACTOR.

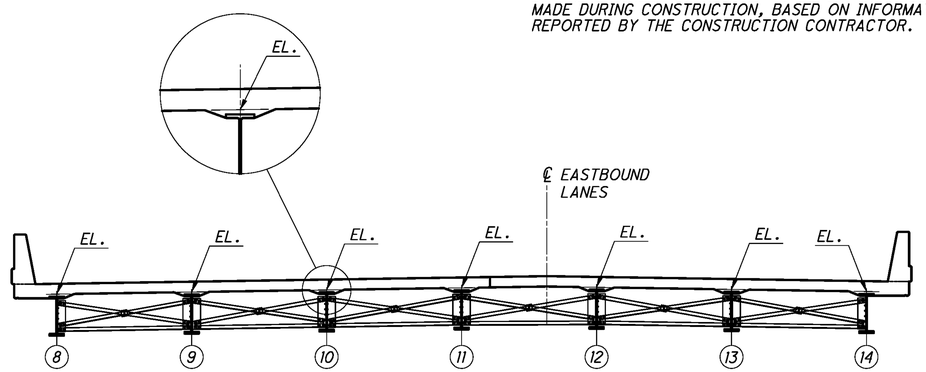

TOP OF HAUNCH LOCATIONS

NOTE:

1. TOP OF HAUNCH ELEVATIONS SHOWN REPRESENT THE THEORETICAL LOCATION OF THE BOTTOM OF THE DECK ABOVE THE BEAM HAUNCH PRIOR TO DEFLECTIONS CAUSED BY DECK PLACEMENT AND OTHER ANTICIPATED DEAD LOADS.

L = SPAN LENGTH

DESIGN AGENCY
ms consultants, inc.
engineers, architects & planners
225 Second Street
Youngstown, OH 44503
Tel 330.743.2703
Fax 330.743.1070
www.msconsultants.com

DESIGNED	DRAWN	REVIEWED	DATE
RSW	KRM	JDH	1/25/2013
CHECKED	REVISED	STRUCTURE FILE NUMBER	
WER		7803931/7803966	

TOP OF HAUNCH ELEVATIONS (RIGHT)
BRIDGE NO. TRU-80-0496L/R
OVER SAMPSON ROAD

TRU-80-4.70
PID No. 76411

PLOT.CEL

ms consultants, inc.
msconsultants.com

Ohio DOT Workspace
Marucci & Gaffney TRU-80 Design Build
www.msconsultants.com

1"
0.5"
0

UCF: ohdotV8i
PCF: 60-08285_Youngstown

Batchplot Spec: \\youngstown-fs1\n\60\08285\standards\plotdrv\batchplt.spc
Pen Table: S:\std\plotting\ustn\V8\pen\V8i_ms_std.tbl
Plot Driver: S:\std\plotting\ustn\V8\PDF.pltcfg

34" x 22"

View: SHEET
By: wruggles

Model: Sheet
Printed: 1/6/2014 @ 3:54:00 PM
File: \\youngstown-fs1\n\60\08285\structures\TRU-80-0496_Sampson\sheets\080_0496SD006.dgn

SCREED ELEVATIONS

		A (TOE OF PARAPET)		B (CROWN)		C (CONSTRUCTION JOINT)		D (PROFILE GRADE)		E (TOE OF PARAPET)	
SPAN NO.	LOCATION	STATION	ELEVATION	STATION	ELEVATION	STATION	ELEVATION	STATION	ELEVATION	STATION	ELEVATION
1	0.00 L	263+83.96	1072.87	263+90.34	1073.29	263+91.40	1073.23	263+93.53	1073.11	263+99.90	1072.75
	0.25 L	263+95.46	1072.94	264+01.84	1073.35	264+02.90	1073.29	264+05.03	1073.17	264+11.40	1072.82
	0.50 L	264+06.96	1072.99	264+13.34	1073.40	264+14.40	1073.34	264+16.53	1073.22	264+22.90	1072.87
	0.75 L	264+18.46	1073.03	264+24.84	1073.44	264+25.90	1073.38	264+28.03	1073.27	264+34.40	1072.91
2	0.00 L	264+29.96	1073.08	264+36.34	1073.49	264+37.40	1073.43	264+39.53	1073.31	264+45.90	1072.96
	SPLICE	264+42.96	1073.17	264+49.34	1073.58	264+50.40	1073.52	264+52.53	1073.40	264+58.90	1073.04
	0.25 L	264+46.34	1073.19	264+52.72	1073.60	264+53.78	1073.54	264+55.90	1073.42	264+62.28	1073.07
	0.50 L	264+62.71	1073.29	264+69.09	1073.70	264+70.15	1073.64	264+72.28	1073.52	264+78.65	1073.17
	0.75 L	264+79.09	1073.34	264+85.47	1073.75	264+86.53	1073.69	264+88.65	1073.57	264+95.03	1073.22
	SPLICE	264+82.46	1073.34	264+88.84	1073.76	264+89.90	1073.70	264+92.03	1073.58	264+98.40	1073.22
3	0.00 L	264+95.46	1073.37	265+01.84	1073.79	265+02.90	1073.73	265+05.03	1073.61	265+11.40	1073.25
	0.25 L	265+06.96	1073.43	265+13.34	1073.84	265+14.40	1073.78	265+16.53	1073.66	265+22.90	1073.31
	0.50 L	265+18.46	1073.49	265+24.84	1073.90	265+25.90	1073.84	265+28.03	1073.72	265+34.40	1073.37
	0.75 L	265+29.96	1073.54	265+36.34	1073.95	265+37.40	1073.89	265+39.53	1073.78	265+45.90	1073.42
	1.00 L	265+41.46	1073.58	265+47.84	1073.99	265+48.90	1073.93	265+51.03	1073.82	265+57.40	1073.46

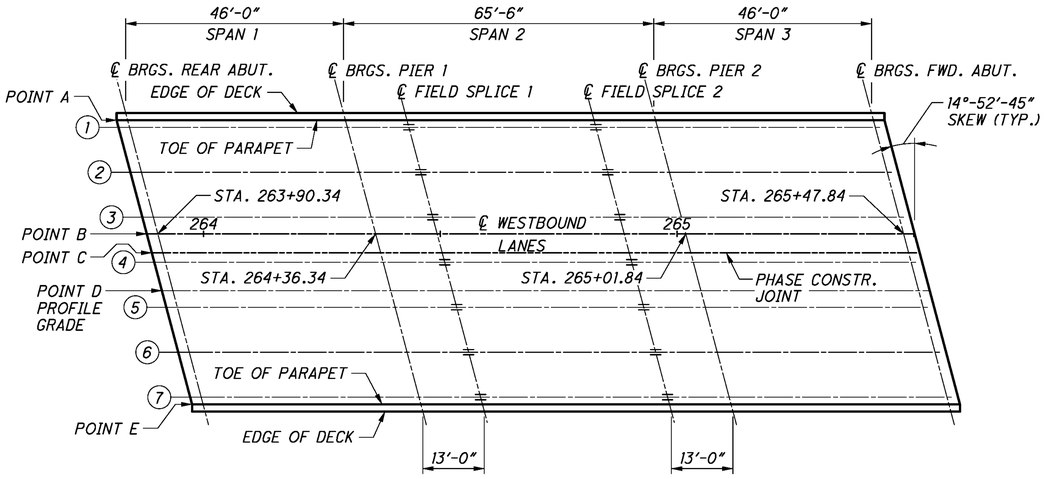

LOCATION PLAN

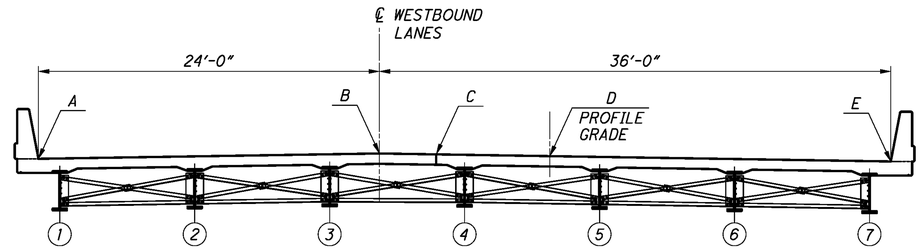

SCREED LINE LOCATIONS

AS-BUILT

THIS RECORD DRAWING HAS BEEN PREPARED IN PART BY THE ENGINEER OF RECORD TO DEPICT CHANGES MADE DURING CONSTRUCTION, BASED ON INFORMATION REPORTED BY THE CONSTRUCTION CONTRACTOR.

NOTE:

1. *SCREED ELEVATIONS SHOWN REPRESENT THE THEORETICAL DECK SURFACE LOCATION PRIOR TO DEFLECTIONS CAUSED BY DECK PLACEMENT AND OTHER ANTICIPATED DEAD LOADS.*

L = SPAN LENGTH

DESIGN AGENCY
ms consultants, inc.
engineers, architects & planners
225 Federal Street
Youngstown, OH 44503
Tel 330.744.5321
Fax 330.744.3574
www.msconsultants.com

DESIGNED	DRAWN	REVIEWED	DATE
RSW	KRM	JDH	1/25/2013
CHECKED	REVISED	STRUCTURE FILE NUMBER	
WER		7803931/7803966	

SCREED ELEVATIONS (LEFT)

BRIDGE NO. TRU-80-0496L/R
OVER SAMPSON ROAD

TRU-80-4.70
PID No. 76411

ms consultants, inc.

PLOT.CEL

ms consultants, inc.
msconsultants.com

Ohio DOT Workspace
Marucci & Gaffney TRU-80 Design Build
www.msconsultants.com

0 0.5" 1"

UCF: ohdotV8i
PCF: 60-08285_Youngstown

Batchplot Spec: \\youngstown-fs1\n\60\08285\standards\plotdrv\batchplt.spc
Pen Table: S:\std\plotting\ustn\V8\pen V8i_ms_std.tbl
Plot Driver: S:\std\plotting\ustn\V8\PDF.pltcfg

34" x 22"

View: SHEET
By: wruggles

Model: Sheet @ 3:54:01 PM
Printed: 1/6/2014
File: \\youngstown-fs1\n\60\08285\structures\TRU-80-0496_Sampson\sheets\080_0496L3D007.dgn

SCREED ELEVATIONS

		F (TOE OF PARAPET)		G (PROFILE GRADE)		H (CONSTRUCTION JOINT)		J (CROWN)		K (TOE OF PARAPET)	
SPAN NO.	LOCATION	STATION	ELEVATION	STATION	ELEVATION	STATION	ELEVATION	STATION	ELEVATION	STATION	ELEVATION
1	0.00 L	264+09.48	1072.65	264+15.85	1073.07	264+17.98	1073.20	264+19.04	1073.27	264+25.42	1072.92
	0.25 L	264+20.98	1072.72	264+27.35	1073.14	264+28.95	1073.28	264+30.54	1073.35	264+36.92	1073.00
	0.50 L	264+32.48	1072.78	264+38.85	1073.20	264+40.45	1073.34	264+42.04	1073.41	264+48.42	1073.06
	0.75 L	264+43.98	1072.83	264+50.35	1073.25	264+51.95	1073.39	264+53.54	1073.46	264+59.92	1073.11
2	0.00 L	264+55.48	1072.89	264+61.85	1073.31	264+63.45	1073.45	264+65.04	1073.52	264+71.42	1073.17
	SPLICE	264+68.48	1072.99	264+74.85	1073.41	264+76.45	1073.55	264+78.04	1073.62	264+84.42	1073.26
	0.25 L	264+71.85	1073.01	264+78.23	1073.43	264+79.82	1073.57	264+81.42	1073.64	264+87.79	1073.29
	0.50 L	264+88.23	1073.13	264+94.60	1073.54	264+96.20	1073.68	264+97.79	1073.75	265+04.17	1073.40
	0.75 L	265+04.60	1073.19	265+10.98	1073.61	265+12.57	1073.75	265+14.17	1073.82	265+20.54	1073.47
	SPLICE	265+07.98	1073.20	265+14.35	1073.62	265+15.95	1073.76	265+17.54	1073.83	265+23.92	1073.48
3	0.00 L	265+20.98	1073.24	265+27.35	1073.66	265+28.95	1073.80	265+30.54	1073.87	265+36.92	1073.52
	0.25 L	265+32.48	1073.30	265+38.85	1073.72	265+40.45	1073.86	265+42.04	1073.93	265+48.42	1073.58
	0.50 L	265+43.98	1073.37	265+50.35	1073.79	265+51.95	1073.93	265+53.54	1074.00	265+59.92	1073.65
	0.75 L	265+55.48	1073.44	265+61.85	1073.85	265+63.45	1073.99	265+65.04	1074.06	265+71.42	1073.71
	1.00 L	265+66.98	1073.48	265+73.35	1073.90	265+74.95	1074.04	265+76.54	1074.11	265+82.92	1073.76

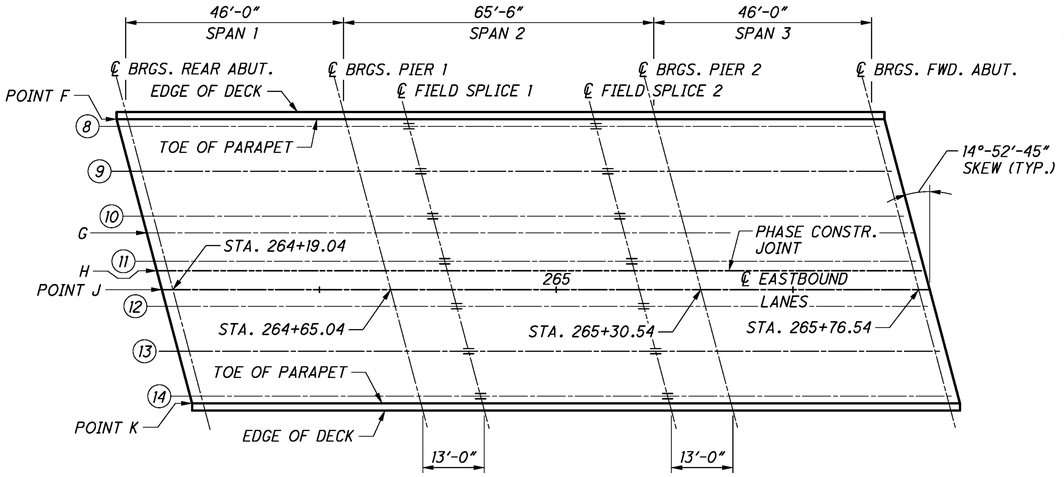

LOCATION PLAN

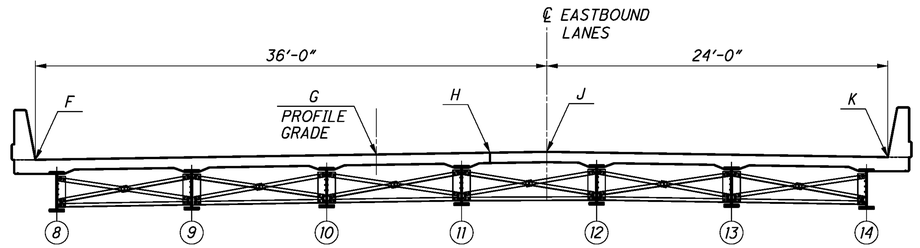

SCREED LINE LOCATIONS

AS-BUILT

THIS RECORD DRAWING HAS BEEN PREPARED IN PART BY THE ENGINEER OF RECORD TO DEPICT CHANGES MADE DURING CONSTRUCTION, BASED ON INFORMATION REPORTED BY THE CONSTRUCTION CONTRACTOR.

NOTE:

1. *SCREED ELEVATIONS SHOWN REPRESENT THE THEORETICAL DECK SURFACE LOCATION PRIOR TO DEFLECTIONS CAUSED BY DECK PLACEMENT AND OTHER ANTICIPATED DEAD LOADS.*

L = SPAN LENGTH

DESIGN AGENCY
ms consultants, inc.
engineers, architects & planners
225 Federal Street
Youngstown, OH 44503
Tel 330.744.5321
Fax 330.744.3070
www.msconsultants.com

DESIGNED RSW | DRAWN KRM | REVIEWED JDH | DATE 1/25/2013
CHECKED WER | REVISED | STRUCTURE FILE NUMBER 7803931/7803966

SCREED ELEVATIONS (RIGHT)

BRIDGE NO. TRU-80-0496L/R
OVER SAMPSON ROAD

TRU-80-4.70
PID No. 76411

ms consultants, inc.

PLOT.CEL

ms consultants, inc.
msconsultants.com

Ohio DOT Workspace
Marucci & Gaffney TRU-80 Design Build

www.msconsultants.com

1"
0.5"
0

UCF: ohdotV8i
PCF: 60-08285_Youngstown

34" x 22"

Batchplot Spec: \\youngstown-fs1\n\60\08285\standards\plotdrv\batchplt.spc
Pen Table: S:\std\plotting\usatn\V8\pen V8i_ms_std.tbl
Plot Driver: S:\std\plotting\usatn\V8\V8P.pltcfg

Model: Sheet
Printed: 1/6/2014 @ 3:54:03 PM By: wruggles
File: \\youngstown-fs1\n\60\08285\structures\TRU-80-0496_Sampson\sheets\080_0496LSD08.dgn
View: SHEET

FINAL DECK SURFACE ELEVATIONS

		A (TOE OF PARAPET)		BEAM 1		BEAM 2		BEAM 3		B (CROWN)		C (CONSTRUCTION JOINT)	
SPAN NO.	LOCATION	STATION	ELEVATION	STATION	ELEVATION	STATION	ELEVATION	STATION	ELEVATION	STATION	ELEVATION	STATION	ELEVATION
1	0.00 L	263+83.96	1072.87	263+84.36	1072.90	263+86.89	1073.06	263+89.41	1073.23	263+90.34	1073.29	263+91.40	1073.23
	0.25 L	263+95.46	1072.92	263+95.86	1072.95	263+98.39	1073.11	264+00.91	1073.28	264+01.84	1073.34	264+02.90	1073.28
	0.50 L	264+06.96	1072.98	264+07.36	1073.00	264+09.89	1073.17	264+12.41	1073.33	264+13.34	1073.39	264+14.40	1073.33
	0.75 L	264+18.46	1073.03	264+18.86	1073.05	264+21.39	1073.22	264+23.91	1073.38	264+24.84	1073.44	264+25.90	1073.38
2	0.00 L	264+29.96	1073.08	264+30.36	1073.11	264+32.89	1073.27	264+35.41	1073.43	264+36.34	1073.49	264+37.40	1073.43
	SPLICE	264+42.96	1073.14	264+43.36	1073.16	264+45.89	1073.33	264+48.41	1073.49	264+49.34	1073.55	264+50.40	1073.49
	0.25 L	264+46.34	1073.15	264+46.74	1073.18	264+49.26	1073.34	264+51.79	1073.51	264+52.72	1073.57	264+53.78	1073.51
	0.50 L	264+62.71	1073.23	264+63.11	1073.25	264+65.64	1073.42	264+68.16	1073.58	264+69.09	1073.64	264+70.15	1073.58
	0.75 L	264+79.09	1073.30	264+79.49	1073.33	264+82.01	1073.49	264+84.54	1073.65	264+85.47	1073.71	264+86.53	1073.65
	SPLICE	264+82.46	1073.32	264+82.86	1073.34	264+85.39	1073.50	264+87.91	1073.67	264+88.84	1073.73	264+89.90	1073.67
3	0.00 L	264+95.46	1073.37	264+95.86	1073.40	264+98.39	1073.56	265+00.91	1073.73	265+01.84	1073.79	265+02.90	1073.73
	0.25 L	265+06.96	1073.43	265+07.36	1073.45	265+09.89	1073.61	265+12.41	1073.78	265+13.34	1073.84	265+14.40	1073.78
	0.50 L	265+18.46	1073.48	265+18.86	1073.50	265+21.39	1073.67	265+23.91	1073.83	265+24.84	1073.89	265+25.90	1073.83
	0.75 L	265+29.96	1073.53	265+30.36	1073.55	265+32.89	1073.72	265+35.41	1073.88	265+36.34	1073.94	265+37.40	1073.88
	1.00 L	265+41.46	1073.58	265+41.86	1073.61	265+44.39	1073.77	265+46.91	1073.93	265+47.84	1073.99	265+48.90	1073.93

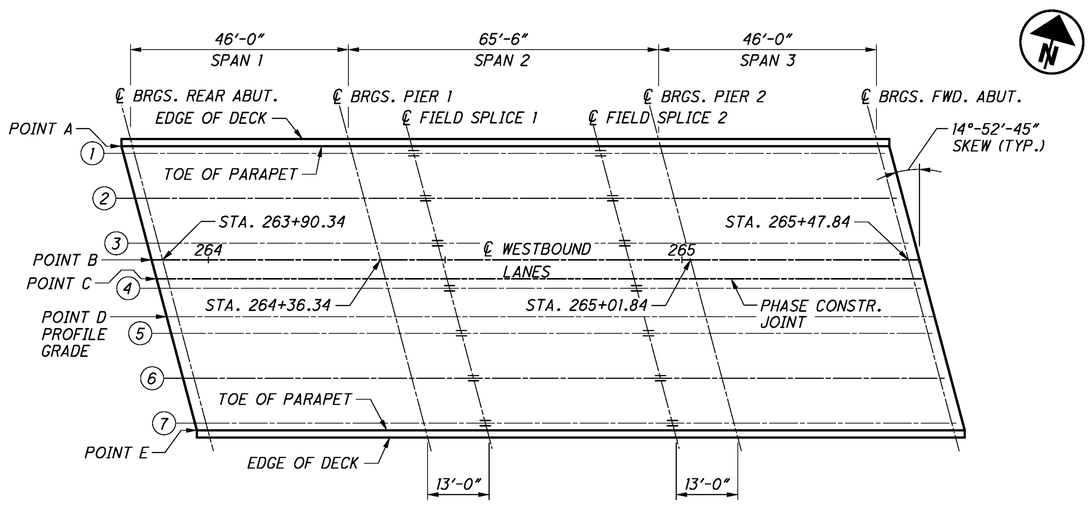

LOCATION PLAN

AS-BUILT

THIS RECORD DRAWING HAS BEEN PREPARED IN PART BY THE ENGINEER OF RECORD TO DEPICT CHANGES MADE DURING CONSTRUCTION, BASED ON INFORMATION REPORTED BY THE CONSTRUCTION CONTRACTOR.

NOTE:

1. *FINAL DECK SURFACE ELEVATIONS SHOWN REPRESENT THE DECK SURFACE LOCATION AFTER ALL ANTICIPATED DEAD PRIOR TO DEFLECTIONS CAUSED BY DECK PLACEMENT AND OTHER LOAD DEFLECTIONS HAVE OCCURRED.*

L = SPAN LENGTH

DESIGN AGENCY
ms consultants, inc.
engineers, architects & planners
225 Federal Street
Youngstown, OH 44503
Tel 330.743.2703 Fax 330.743.1070
www.msconsultants.com

DESIGNED	DRAWN	REVIEWED	DATE
RSW	KRM	JDH	1/25/2013
CHECKED	REVISED	STRUCTURE FILE NUMBER	
WER		7803931/7803966	

FINAL DECK SURFACE ELEVATIONS (LEFT)
BRIDGE NO. TRU-80-0496L/R
OVER SAMPSON ROAD

TRU-80-4.70
PID No. 76411

26/32

102
142

PLOT.CEL

ms consultants, inc.
msconsultants.com

Ohio DOT Workspace
Marucci & Gaffney TRU-80 Design Build
www.msconsultants.com

UCF: ohdotV8i
PCF: 60-08285_Youngstown

0 0.5" 1"

34" x 22"

Batchplot Spec: \\youngstown-fs1\n\60\08285\standards\plotdrv\batchplt.spc
Pen Table: S:\std\plotting\usstn\V8i\pen\V8i_ms_std.tbl
Plot Driver: S:\std\plotting\usstn\V8i\PDP.pltcfg

Model: Sheet
Printed: 1/6/2014 @ 3:54:04 PM View: SHEET
File: \\youngstown-fs1\n\60\08285\structures\TRU-80-0496_Sampson\sheets\080_0496LSD008A.dgn By: wruggles

FINAL DECK SURFACE ELEVATIONS

		BEAM 4		D (PROFILE GRADE)		BEAM 5		BEAM 6		BEAM 7		E (TOE OF PARAPET)	
SPAN NO.	LOCATION	STATION	ELEVATION	STATION	ELEVATION	STATION	ELEVATION	STATION	ELEVATION	STATION	ELEVATION	STATION	ELEVATION
1	0.00 L	263+91.93	1073.20	263+93.53	1073.11	263+94.46	1073.06	263+96.98	1072.92	263+99.51	1072.78	263+99.90	1072.75
	0.25 L	264+03.43	1073.25	264+05.03	1073.16	264+05.96	1073.11	264+08.48	1072.97	264+11.01	1072.83	264+11.40	1072.80
	0.50 L	264+14.93	1073.30	264+16.53	1073.21	264+17.46	1073.16	264+19.98	1073.02	264+22.51	1072.88	264+22.90	1072.86
	0.75 L	264+26.43	1073.35	264+28.03	1073.26	264+28.96	1073.21	264+31.48	1073.07	264+34.01	1072.93	264+34.40	1072.91
2	0.00 L	264+37.93	1073.40	264+39.53	1073.31	264+40.46	1073.26	264+42.98	1073.12	264+45.51	1072.98	264+45.90	1072.96
	SPLICE	264+50.93	1073.46	264+52.53	1073.37	264+53.46	1073.32	264+55.98	1073.18	264+58.51	1073.04	264+58.90	1073.02
	0.25 L	264+54.31	1073.48	264+55.90	1073.39	264+56.83	1073.34	264+59.36	1073.20	264+61.88	1073.06	264+62.28	1073.03
	0.50 L	264+70.68	1073.55	264+72.28	1073.46	264+73.21	1073.41	264+75.73	1073.27	264+78.26	1073.13	264+78.65	1073.11
	0.75 L	264+87.06	1073.62	264+88.65	1073.54	264+89.58	1073.48	264+92.11	1073.34	264+94.63	1073.20	264+95.03	1073.18
	SPLICE	264+90.43	1073.64	264+92.03	1073.55	264+92.96	1073.50	264+95.48	1073.36	264+98.01	1073.22	264+98.40	1073.20
3	0.00 L	265+03.43	1073.70	265+05.03	1073.61	265+05.96	1073.56	265+08.48	1073.42	265+11.01	1073.28	265+11.40	1073.25
	0.25 L	265+14.93	1073.75	265+16.53	1073.66	265+17.46	1073.61	265+19.98	1073.47	265+22.51	1073.33	265+22.90	1073.31
	0.50 L	265+26.43	1073.80	265+28.03	1073.71	265+28.96	1073.66	265+31.48	1073.52	265+34.01	1073.38	265+34.40	1073.36
	0.75 L	265+37.93	1073.85	265+39.53	1073.76	265+40.46	1073.71	265+42.98	1073.57	265+45.51	1073.43	265+45.90	1073.41
	1.00 L	265+49.43	1073.90	265+51.03	1073.82	265+51.96	1073.76	265+54.48	1073.62	265+57.01	1073.48	265+57.40	1073.46

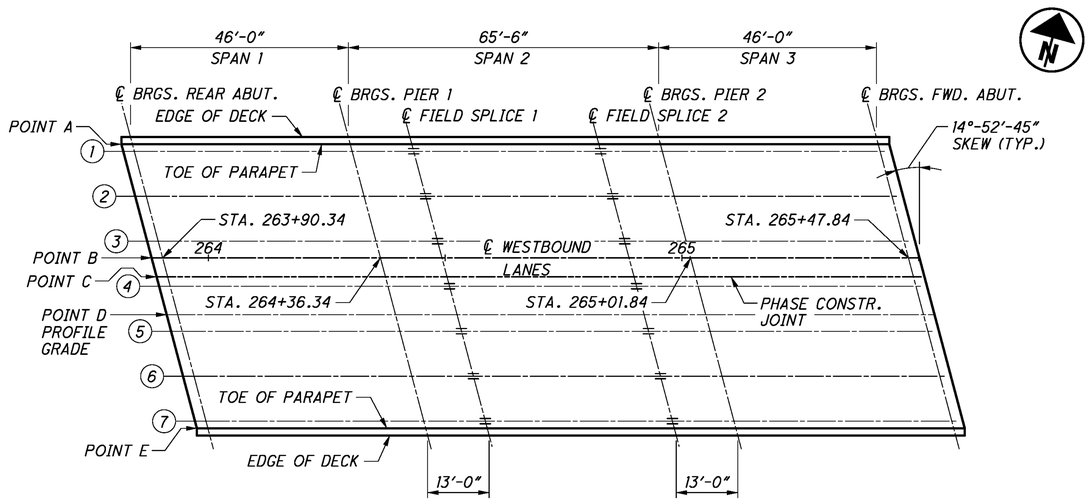

LOCATION PLAN

AS-BUILT
THIS RECORD DRAWING HAS BEEN PREPARED IN PART BY THE ENGINEER OF RECORD TO DEPICT CHANGES MADE DURING CONSTRUCTION, BASED ON INFORMATION REPORTED BY THE CONSTRUCTION CONTRACTOR.

NOTE:

1. *FINAL DECK SURFACE ELEVATIONS SHOWN REPRESENT THE DECK SURFACE LOCATION AFTER ALL ANTICIPATED DEAD PRIOR TO DEFLECTIONS CAUSED BY DECK PLACEMENT AND OTHER LOAD DEFLECTIONS HAVE OCCURRED.*

L = SPAN LENGTH

DESIGN AGENCY
ms consultants, inc.
engineers, architects & planners
225 Second Street
Youngstown, OH 44503
Tel 330.743.2703
Fax 330.743.2070
www.msconsultants.com

DESIGNED	DRAWN	REVIEWED	DATE
RSW	KRM	JDH	1/25/2013
CHECKED	REVISED	STRUCTURE FILE NUMBER	
WER		7803931/7803966	

FINAL DECK SURFACE ELEVATIONS (LEFT)
BRIDGE NO. TRU-80-0496L/R
OVER SAMPSON ROAD

TRU-80-4.70
PID No. 76411

26A / 32

102A
142

PLOT.CEL

ms consultants, inc.
msconsultants.com

www.msconsultants.com
Marucci & Gaffney TRU-80 Design Build
Ohio DOT Workspace

1" 0.5" 0

UCF: ohdotV8i
PCF: 60-08285_Youngstown

Batchplot Spec: \\youngstown-fs1\n\60\08285\standards\plotdrv\batchplt.spc
Pen Table: S:\std\plotting\astn\V8\pen V8i_ms_std.tbl
Plot Driver: S:\std\plotting\astn\V8\PDP.pltcfg

Model: Sheet
Printed: 1/6/2014 @ 3:54:05 PM
File: \\youngstown-fs1\n\60\08285\structures\TRU-80-0496_Sampson\sheets\V80_0496L3D009.dgn
View SHEET
By: wruggles

34" x 22"

FINAL DECK SURFACE ELEVATIONS

		F (TOE OF PARAPET)		BEAM 8		BEAM 9		BEAM 10		G (PROFILE GRADE)		BEAM 11	
SPAN NO.	LOCATION	STATION	ELEVATION	STATION	ELEVATION	STATION	ELEVATION	STATION	ELEVATION	STATION	ELEVATION	STATION	ELEVATION
1	0.00 L	264+09.48	1072.65	264+09.87	1072.68	264+12.40	1072.84	264+14.92	1073.00	264+15.85	1073.07	264+17.45	1073.17
	0.25 L	264+20.98	1072.71	264+21.37	1072.73	264+23.90	1072.90	264+26.42	1073.07	264+27.35	1073.13	264+28.95	1073.23
	0.50 L	264+32.48	1072.77	264+32.87	1072.80	264+35.40	1072.96	264+37.92	1073.13	264+38.85	1073.19	264+40.45	1073.29
	0.75 L	264+43.98	1072.83	264+44.37	1072.86	264+46.90	1073.02	264+49.42	1073.19	264+50.35	1073.25	264+51.95	1073.35
2	0.00 L	264+55.48	1072.89	264+55.87	1072.92	264+58.40	1073.08	264+60.92	1073.25	264+61.85	1073.31	264+63.45	1073.41
	SPLICE	264+68.48	1072.96	264+68.87	1072.99	264+71.40	1073.15	264+73.92	1073.32	264+74.85	1073.38	264+76.45	1073.48
	0.25 L	264+71.85	1072.98	264+72.25	1073.01	264+74.77	1073.17	264+77.30	1073.34	264+78.23	1073.40	264+79.82	1073.50
	0.50 L	264+88.23	1073.07	264+88.62	1073.09	264+91.15	1073.26	264+93.67	1073.42	264+94.60	1073.48	264+96.20	1073.59
	0.75 L	265+04.60	1073.15	265+05.00	1073.18	265+07.52	1073.34	265+10.05	1073.51	265+10.98	1073.57	265+12.57	1073.68
	SPLICE	265+07.98	1073.17	265+08.37	1073.20	265+10.90	1073.36	265+13.42	1073.53	265+14.35	1073.59	265+15.95	1073.69
3	0.00 L	265+20.98	1073.24	265+21.37	1073.27	265+23.90	1073.43	265+26.42	1073.60	265+27.35	1073.66	265+28.95	1073.76
	0.25 L	265+32.48	1073.30	265+32.87	1073.33	265+35.40	1073.49	265+37.92	1073.66	265+38.85	1073.72	265+40.45	1073.82
	0.50 L	265+43.98	1073.36	265+44.37	1073.39	265+46.90	1073.55	265+49.42	1073.72	265+50.35	1073.78	265+51.95	1073.89
	0.75 L	265+55.48	1073.42	265+55.87	1073.45	265+58.40	1073.62	265+60.92	1073.78	265+61.85	1073.84	265+63.45	1073.95
	1.00 L	265+66.98	1073.48	265+67.37	1073.51	265+69.90	1073.68	265+72.42	1073.84	265+73.35	1073.90	265+74.95	1074.01

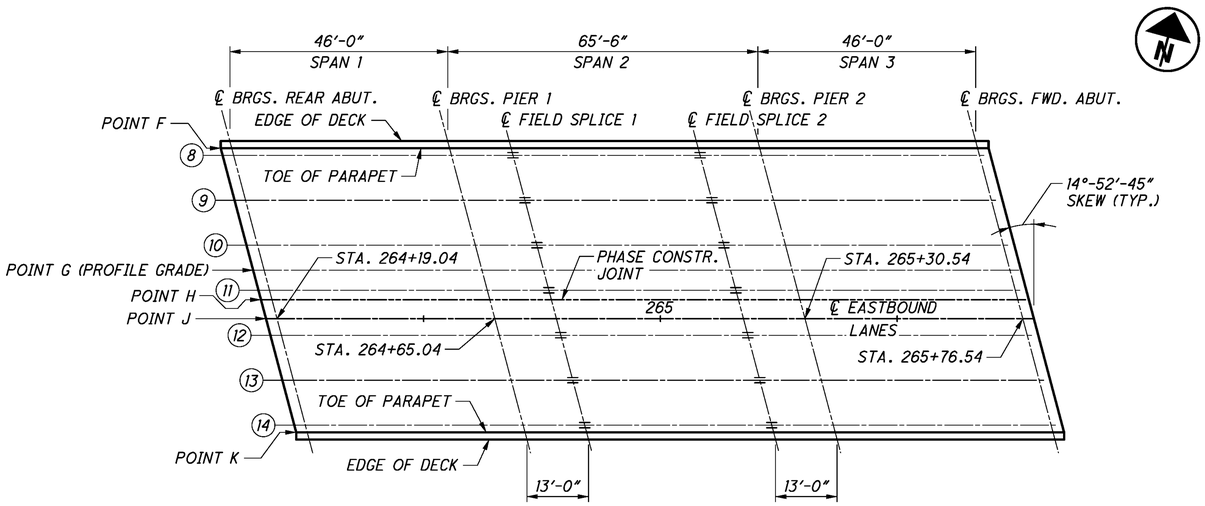

LOCATION PLAN

AS-BUILT

THIS RECORD DRAWING HAS BEEN PREPARED IN PART BY THE ENGINEER OF RECORD TO DEPICT CHANGES MADE DURING CONSTRUCTION, BASED ON INFORMATION REPORTED BY THE CONSTRUCTION CONTRACTOR.

NOTE:

1. *FINAL DECK SURFACE ELEVATIONS SHOWN REPRESENT THE DECK SURFACE LOCATION AFTER ALL ANTICIPATED DEAD PRIOR TO DEFLECTIONS CAUSED BY DECK PLACEMENT AND OTHER LOAD DEFLECTIONS HAVE OCCURRED.*

L = SPAN LENGTH

DESIGN AGENCY
ms consultants, inc.
engineers, architects & planners
225 Second Street SW
Canton, Ohio 44702
Tel 330.438.7760 Fax 330.438.7070
www.msconsultants.com

DESIGNED	DRAWN	REVIEWED	DATE
RSW	KRM	JDH	1/25/2013
CHECKED	REVISED	STRUCTURE FILE NUMBER	
WER		7803931/7803966	

FINAL DECK SURFACE ELEVATIONS (RIGHT)
BRIDGE NO. TRU-80-0496L/R
OVER SAMPSON ROAD

TRU-80-4.70
PID No. 76411

ms consultants, inc.

PLOT.CEL

ms consultants, inc.
msconsultants.com

Ohio DOT Workspace
Marucci & Gaffney TRU-80 Design Build

www.msconsultants.com

0 0.5" 1"

UCF: ohdotV8i
PCF: 60-08285_Youngstown

Batchplot Spec: \\youngstown-fs1\n\60\08285\standards\plotdrv\batchplt.spc
Pen Table: S:\std\plotting\ustn\V8\pen\V8_ms_std.tbl
Plot Driver: S:\std\plotting\ustn\V8\PDF.pltcfg

Model: Sheet
Printed: 1/6/2014 @ 3:54:06 PM
File: \\youngstown-fs1\n\60\08285\structures\TRU-80-0496_Sampson\sheets\080_0496L50009A.dgn

34" x 22"

View SHEET
By: wruggles

FINAL DECK SURFACE ELEVATIONS

		H (CONSTRUCTION JOINT)		J (CROWN)		BEAM 12		BEAM 13		BEAM 14		K (TOE OF PARAPET)	
SPAN NO.	LOCATION	STATION	ELEVATION	STATION	ELEVATION	STATION	ELEVATION	STATION	ELEVATION	STATION	ELEVATION	STATION	ELEVATION
1	0.00 L	264+17.98	1073.20	264+19.04	1073.27	264+19.97	1073.22	264+22.49	1073.08	264+25.02	1072.95	264+25.42	1072.92
	0.25 L	264+29.48	1073.27	264+30.54	1073.34	264+31.47	1073.28	264+33.99	1073.15	264+36.52	1073.01	264+36.92	1072.99
	0.50 L	264+40.98	1073.33	264+42.04	1073.40	264+42.97	1073.35	264+45.49	1073.21	264+48.02	1073.07	264+48.42	1073.05
	0.75 L	264+52.48	1073.39	264+53.54	1073.46	264+54.47	1073.41	264+56.99	1073.27	264+59.52	1073.13	264+59.92	1073.11
2	0.00 L	264+63.98	1073.45	264+65.04	1073.52	264+65.97	1073.47	264+68.49	1073.33	264+71.02	1073.19	264+71.42	1073.17
	SPLICE	264+76.98	1073.52	264+78.04	1073.59	264+78.97	1073.54	264+81.49	1073.40	264+84.02	1073.26	264+84.42	1073.24
	0.25 L	264+80.35	1073.54	264+81.42	1073.61	264+82.34	1073.55	264+84.87	1073.42	264+87.39	1073.28	264+87.79	1073.26
	0.50 L	264+96.73	1073.62	264+97.79	1073.69	264+98.72	1073.64	265+01.24	1073.50	265+03.77	1073.36	265+04.17	1073.34
	0.75 L	265+13.10	1073.71	265+14.17	1073.78	265+15.09	1073.73	265+17.62	1073.59	265+20.14	1073.45	265+20.54	1073.43
	SPLICE	265+16.48	1073.73	265+17.54	1073.80	265+18.47	1073.75	265+20.99	1073.61	265+23.52	1073.47	265+23.92	1073.45
3	0.00 L	265+29.48	1073.80	265+30.54	1073.87	265+31.47	1073.82	265+33.99	1073.68	265+36.52	1073.54	265+36.92	1073.52
	0.25 L	265+40.98	1073.86	265+42.04	1073.93	265+42.97	1073.88	265+45.49	1073.74	265+48.02	1073.60	265+48.42	1073.58
	0.50 L	265+52.48	1073.92	265+53.54	1073.99	265+54.47	1073.94	265+56.99	1073.80	265+59.52	1073.66	265+59.92	1073.64
	0.75 L	265+63.98	1073.98	265+65.04	1074.05	265+65.97	1074.00	265+68.49	1073.86	265+71.02	1073.72	265+71.42	1073.70
	1.00 L	265+75.48	1074.04	265+76.54	1074.11	265+77.47	1074.06	265+79.99	1073.92	265+82.52	1073.78	265+82.92	1073.76

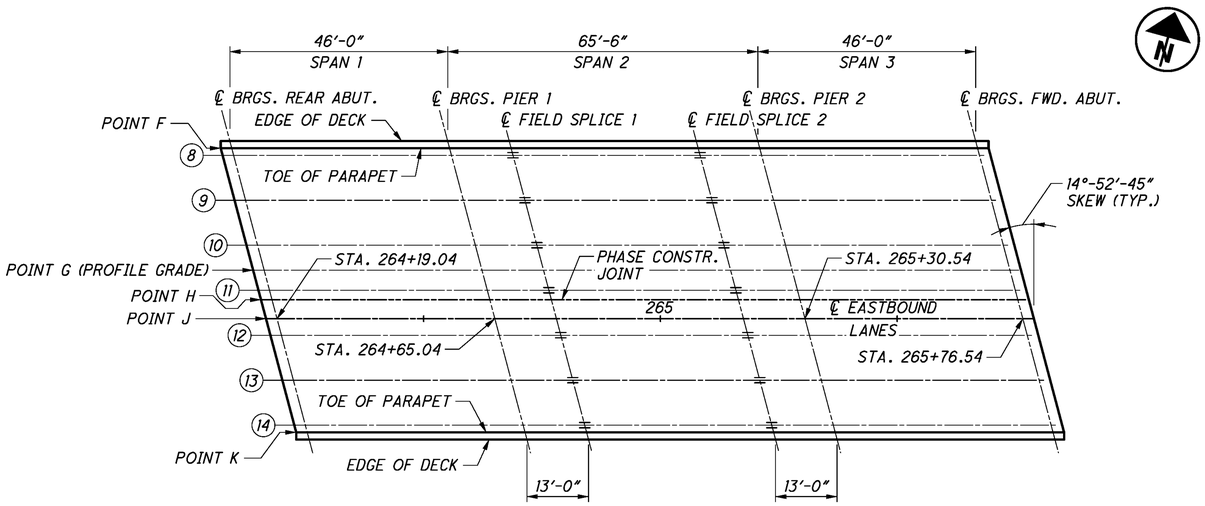

LOCATION PLAN

AS-BUILT

THIS RECORD DRAWING HAS BEEN PREPARED IN PART BY THE ENGINEER OF RECORD TO DEPICT CHANGES MADE DURING CONSTRUCTION, BASED ON INFORMATION REPORTED BY THE CONSTRUCTION CONTRACTOR.

NOTE:

1. FINAL DECK SURFACE ELEVATIONS SHOWN REPRESENT THE DECK SURFACE LOCATION AFTER ALL ANTICIPATED DEAD PRIOR TO DEFLECTIONS CAUSED BY DECK PLACEMENT AND OTHER LOAD DEFLECTIONS HAVE OCCURRED.

L = SPAN LENGTH

DESIGN AGENCY
ms consultants, inc.
engineers, architects & planners
225 Second Street
Youngstown, OH 44503
Tel 330.743.7550 Fax 330.743.7070
www.msconsultants.com

DESIGNED	DRAWN	REVIEWED	DATE
RSW	KRM	JDH	1/25/2013
CHECKED	REVISED	STRUCTURE FILE NUMBER	
WER		7803931/7803966	

FINAL DECK SURFACE ELEVATIONS (RIGHT)
BRIDGE NO. TRU-80-0496L/R
OVER SAMPSON ROAD

TRU-80-4.70
PID No. 76411

27A / 32

103A / 142

PLOT.CEL
ms consultants, inc.
msconsultants.com
www.msconsultants.com
Ohio DOT Workspace
Marucci & Gaffney TRU-80 Design Build
UCF: ohdotV8i
PCF: 60-08285_Youngstown
0 0.5" 1"
34" x 22"
Batchplot Spec: \\youngstown-fs\n\60\08285\standards\plotdrv\batchplt.spc
Pen Table: S:\std\plotting\ustn\V8\pen\V8_ms_std.tbl
Plot Driver: S:\std\plotting\ustn\V8\PDF.pltcfg
Model: Sheet @ 3:54:08 PM View: SHEET
Printed: 1/6/2014 By: wruggles
File: \\youngstown-fs\n\60\08285\structures\TRU-80-0496..Sampson\sheets\080_0496LBR001.dgn

REAR ABUT.

FWD. ABUT.

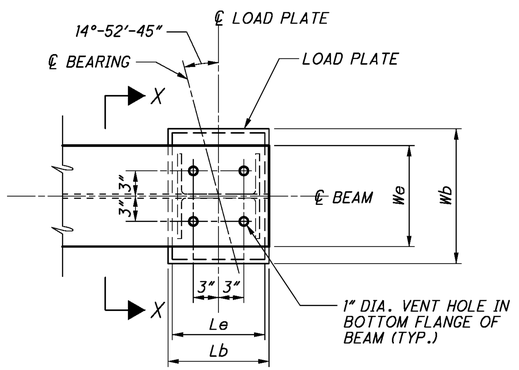

PLAN AT ABUTMENTS

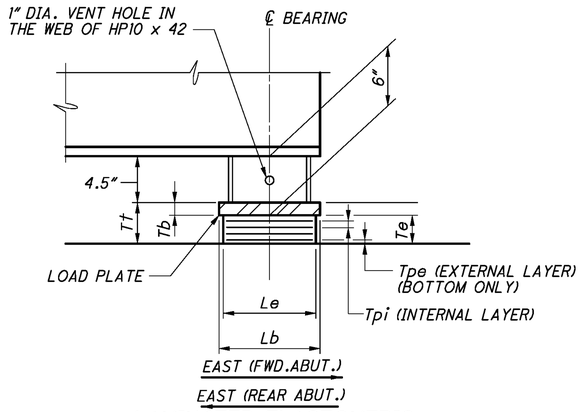

LAMINATED ELASTOMERIC EXPANSION BEARING

(FWD. ABUT. SHOWN)
(REAR ABUT. OPPOSITE HAND)

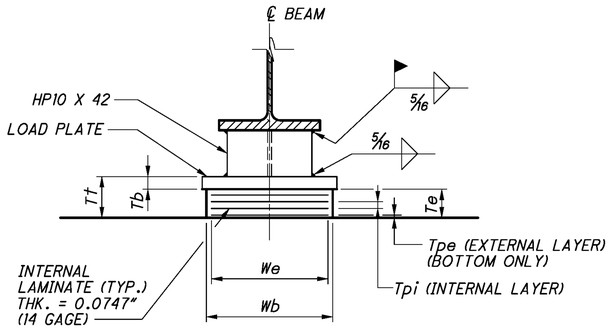

VIEW X-X

(AT ABUTMENTS)

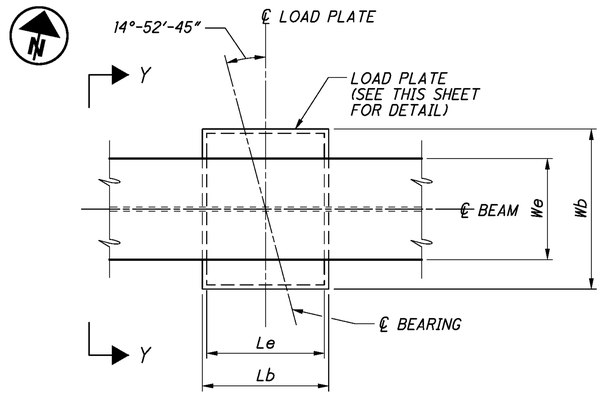

PLAN AT PIERS

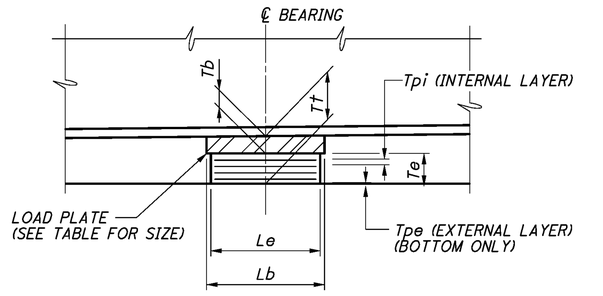

LAMINATED ELASTOMERIC EXPANSION BEARING

(PIERS)

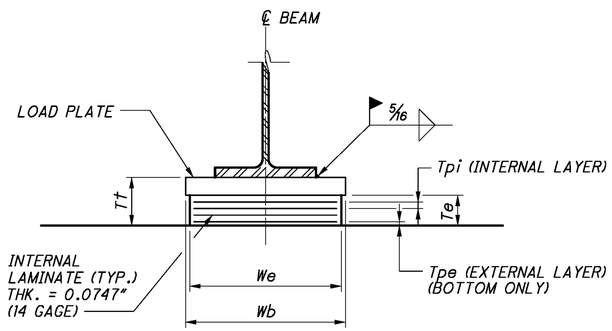

VIEW Y-Y

(AT PIERS)

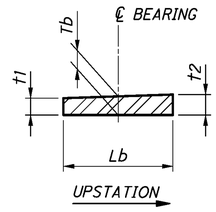

LOAD PLATE DETAIL

NOTES:

1. THE STEEL LOAD PLATE AND HP SHAPE SHALL BE THE SAME MATERIAL AS THE ATTACHED STRUCTURAL STEEL AND SHALL BE GALVANIZED. THE HP SHAPE IS CONSIDERED A COMPONENT OF THE BEARING.
2. THE STEEL LOAD PLATE SHALL BE BONDED BY VULCANIZATION TO THE ELASTOMER DURING THE MOLDING PROCESS.
3. WELDING OF THE LOAD PLATE OR HP SHAPE TO THE SUPERSTRUCTURE SHALL BE CONTROLLED SO THAT THE PLATE TEMPERATURE AT THE ELASTOMER BONDED SURFACE SHALL NOT EXCEED 300° F. AS DETERMINED BY THE USE OF PYROMETRIC STICKS OR OTHER TEMPERATURE MONITORING DEVICES.
4. THE ELASTOMER SHALL HAVE A HARDNESS OF 50 DUROMETER. THE BEARINGS WERE DESIGNED UNDER DIVISION I, SECTION 14.6.6 (METHOD A) OF THE AASHTO STANDARD SPECIFICATIONS FOR HIGHWAY BRIDGES.
5. IF THE EXISTING STEEL IS RESET AT AN AMBIENT TEMPERATURE HIGHER THAN 80° F. OR LOWER THAN 40° F., AND THE BEARING SHEAR DEFLECTION EXCEEDS 1/6 OF THE BEARING HEIGHT AT 60° F. (± 10° F.), THE BEAMS SHALL BE RAISED TO ALLOW THE BEARINGS TO RETURN TO THEIR UNDEFORMED SHAPE AT 60° F. (± 10° F.).

BEARING LOCATION	BEARING TYPE	NO. REQ'D. PER LOCATION	DEAD LOAD (KIPS)	LIVE LOAD (KIPS)	TOTAL LOAD (DL+LL) (KIPS)	Le (inches)	We (inches)	Tpi (inches)	NO. OF Tpi'S	Tpe (1 EA.) (inches)	NUMBER OF INTERNAL LAMINATES (14 GAGE)	Te (inches)	STEEL LOAD PLATE					Tt (inches)
													Lb (inches)	Wb (inches)	Tb (inches)	t1 (inches)	t2 (inches)	
REAR ABUTMENT	EXP.	14	65.3	50.8	116.1	10	16	0.375	5	0.250	5	2.499	11	17	1.50	1.50	1.50	3.999
PIER 1	EXP.	14	123.0	63.0	186.0	11	19.5	0.375	5	0.250	5	2.499	12	20.5	2.25	2.25	2.25	4.749
PIER 2	EXP.	14	123.0	63.0	186.0	11	19.5	0.375	5	0.250	5	2.499	12	20.5	2.25	2.25	2.25	4.749
FWD. ABUTMENT	EXP.	14	65.3	50.8	116.1	10	16	0.375	5	0.250	5	2.499	11	17	1.50	1.50	1.50	3.999

AS-BUILT
THIS RECORD DRAWING HAS BEEN PREPARED IN PART BY THE ENGINEER OF RECORD TO DEPICT CHANGES MADE DURING CONSTRUCTION, BASED ON INFORMATION REPORTED BY THE CONSTRUCTION CONTRACTOR.

DESIGN AGENCY
ms consultants, inc.
engineers, architects & planners
225 Federal Street
Youngstown, OH 44503
Tel 330.782.8567
Fax 330.782.7070
www.msconsultants.com

DESIGNED	DRAWN	REVIEWED	DATE
WER	KRM	JDH	1/25/2013
CHECKED	REVISED	STRUCTURE FILE NUMBER	
RSW		7803931/7803966	

ELASTOMERIC BEARING DETAILS

BRIDGE NO. TRU-80-0496L/R
OVER SAMPSON ROAD

TRU-80-4.70
PID No. 76411

ms consultants, inc.

PLOT.CEL

ms consultants, inc.
msconsultants.com

Ohio DOT Workspace
Marucci & Gaffney TRU-80 Design Build
www.msconsultants.com

UCF: ohdotV8i
PCF: 60-08285_Youngstown

0 1" 0.5"

34" x 22"

Batchplot Spec: \\youngstown-fs1\n\60\08285\standards\plotdrv\batchplt.spc
Pen Table: S:\std\plotting\usitn\V8\pen\V8i_ms_std.tbl
Plot Driver: S:\std\plotting\usitn\V8\PDF.pltcfg

Model: Sheet
Printed: 1/6/2014 @ 3:54:09 PM
File: \\youngstown-fs1\n\60\08285\structures\TRU-80-0496_Sampson\sheets\080_0496_M0001.dgn
View: SHEET
By: wruggles

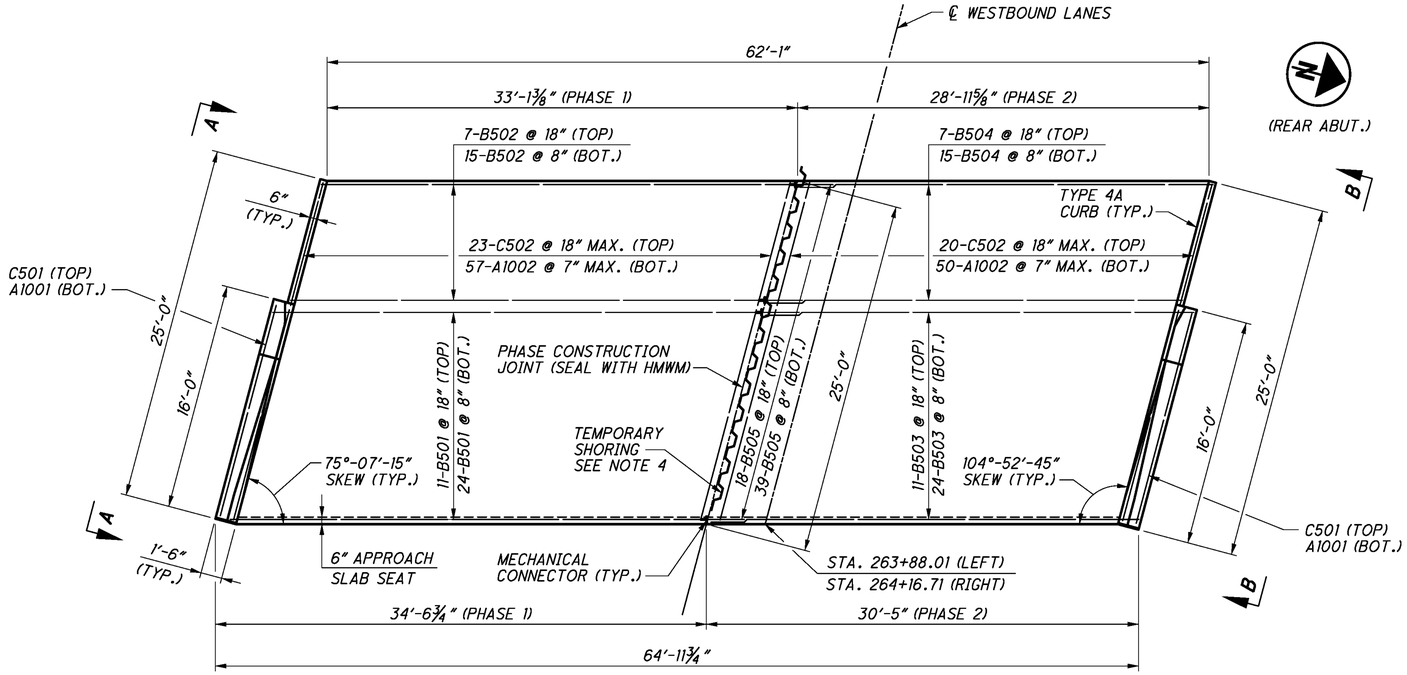

LEFT REAR APPROACH SLAB PLAN

(LEFT BRIDGE SHOWN, RIGHT BRIDGE OPPOSITE HAND)

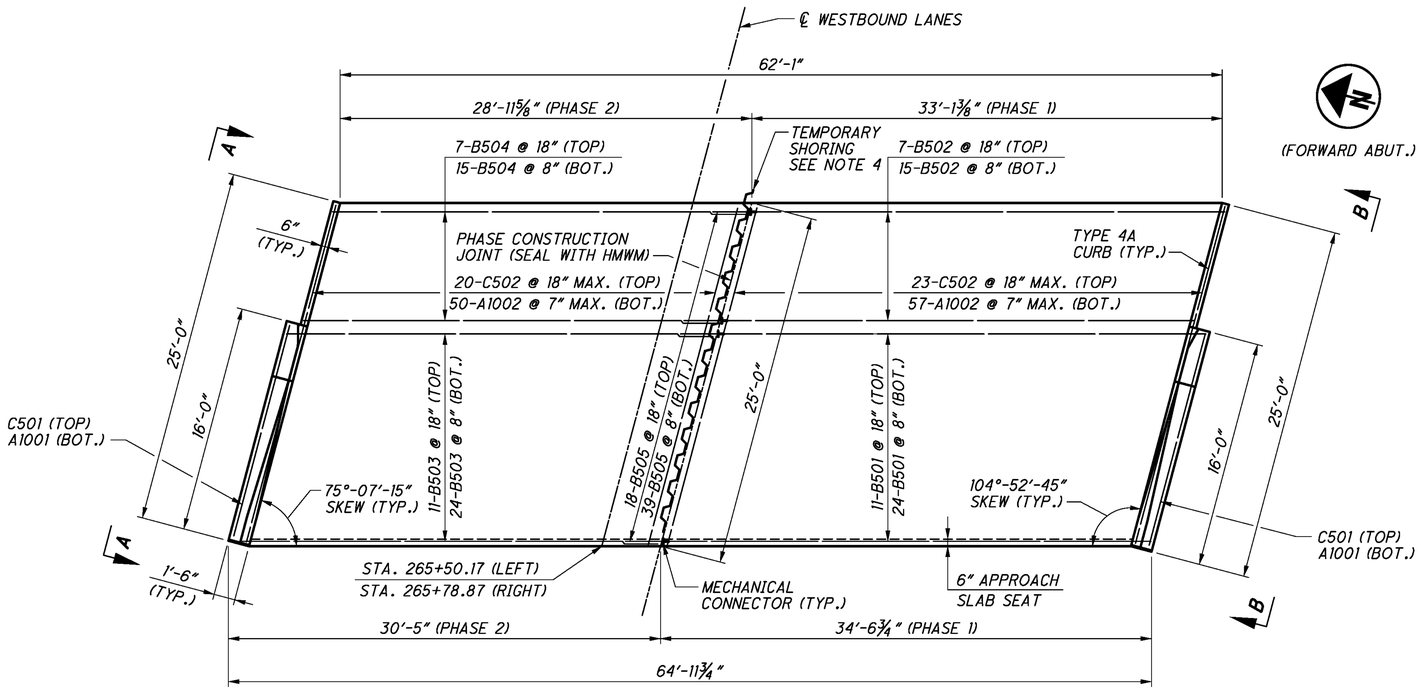

LEFT FORWARD APPROACH SLAB PLAN

(LEFT BRIDGE SHOWN, RIGHT BRIDGE OPPOSITE HAND)

AS-BUILT

THIS RECORD DRAWING HAS BEEN PREPARED IN PART BY THE ENGINEER OF RECORD TO DEPICT CHANGES MADE DURING CONSTRUCTION, BASED ON INFORMATION REPORTED BY THE CONSTRUCTION CONTRACTOR.

NOTES:

1. FOR ADDITIONAL APPROACH SLAB REINFORCEMENT & DETAILS, SEE STANDARD BRIDGE DRAWING AS-1-81.
2. FOR VIEW A-A AND VIEW B-B, SEE SHEET 30.
3. FOR REINFORCING STEEL LIST, SEE SHEET 32A.
4. THE CONTRACTOR SHALL BACKFILL AND REMOVE ALL TEMPORARY SHORING PRIOR TO PLACEMENT OF THE PHASE 2 PORTION OF THE APPROACH SLABS.

DESIGN AGENCY
ms consultants, inc.
engineers, architects & planners
2221 Schrock Road
Columbus, OH 43229
Tel 614.898.7100 Fax 614.898.7070
www.msconsultants.com

DESIGNED	DRAWN	REVIEWED	DATE
WER	KRM	JDH	1/25/2013
CHECKED	REVISED	STRUCTURE FILE NUMBER	
RSW		7803931/7803966	

APPROACH SLAB PLAN
BRIDGE NO. TRU-80-0496L/R
OVER SAMPSON ROAD

TRU-80-4.70
PID No. 76411

ms consultants, inc.

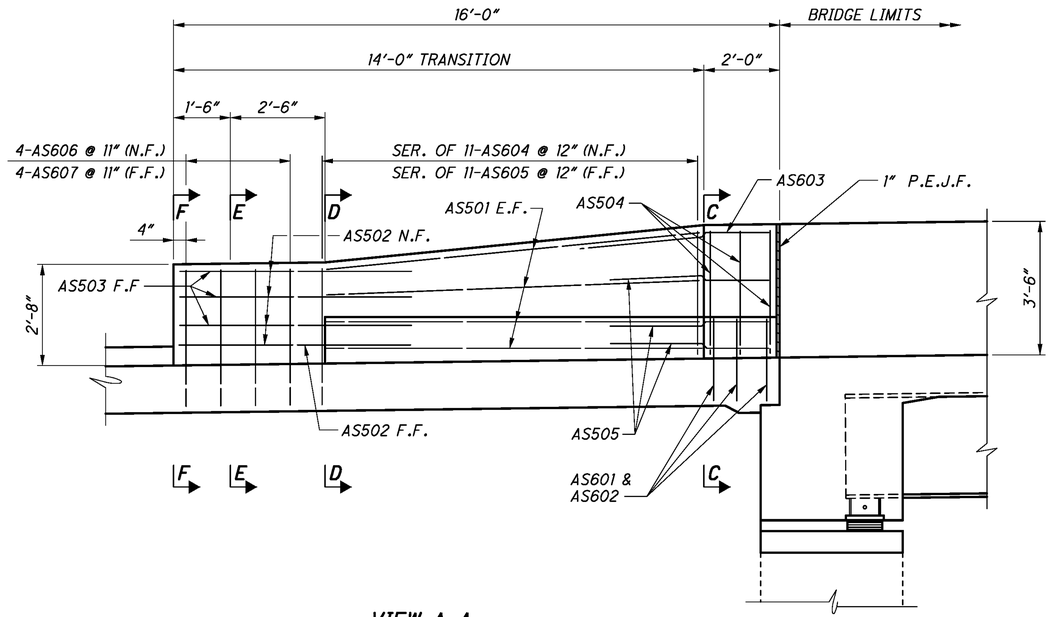

VIEW A-A

VIEW B-B (OPPOSITE HAND)

AS-BUILT

THIS RECORD DRAWING HAS BEEN PREPARED IN PART BY THE ENGINEER OF RECORD TO DEPICT CHANGES MADE DURING CONSTRUCTION, BASED ON INFORMATION REPORTED BY THE CONSTRUCTION CONTRACTOR.

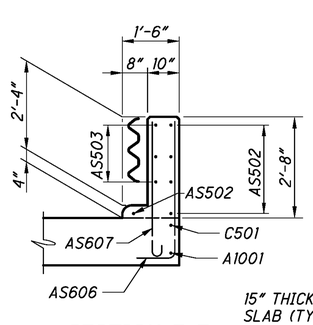

SECTION F-F

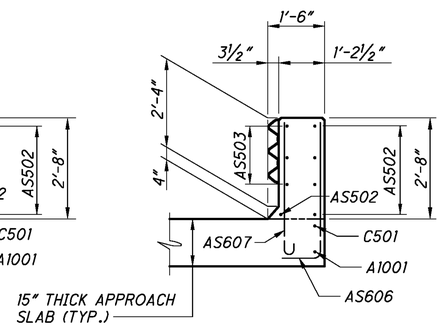

SECTION E-E

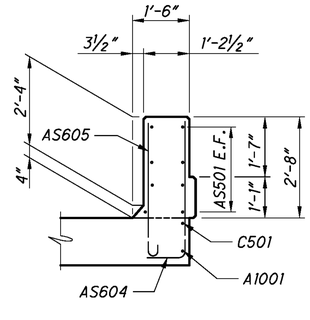

SECTION D-D

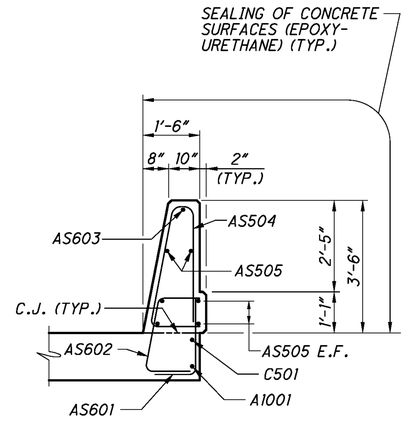

SECTION C-C

NOTES:

1. FOR ADDITIONAL NOTES AND PARAPET DETAILS, SEE STANDARD BRIDGE DRAWING BR-1.
2. FOR VIEWS A-A AND B-B, SEE SHEET 29.
3. FOR PARAPET REINFORCEMENT SCHEDULE, SEE SHEET 32A.
4. CONCRETE FOR PARAPET ON APPROACH SLABS SHALL BE CLASS HP.

DESIGN AGENCY
ms consultants, inc.
engineers, architects & planners
2221 Schrock Road
Columbus, Ohio 43229-1547
Tel 614.898.7700 Fax 614.898.7570
www.msconsultants.com

DESIGNED	DRAWN	REVIEWED	DATE
WER	KRM	JDH	1/25/2013
CHECKED	REVISED	STRUCTURE FILE NUMBER	
RSW		7803931/7803966	

APPROACH SLAB DETAILS
BRIDGE NO. TRU-80-0496L/R
OVER SAMPSON ROAD

TRU-80-4.70
PID No. 76411

ms consultants, inc.

PLOT.CEL
ms consultants, inc.
msconsultants.com
Ohio DOT Workspace
Marucci & Gaffney TRU-80 Design Build
www.msconsultants.com
UCF: ohdotV8i
PCF: 60-08285_Youngstown
Batchplot Spec: \\youngstown-fs1\n\60\08285\standards\plotdrv\batchplt.spc
Pen Table: S:\std\plotting\ustn\V8i\pen\V8i_ms_std.tbl
Plot Driver: S:\std\plotting\ustn\V8i\PDF.pltcfg
34" x 22"
Model: Sheet
Printed: 1/6/2014 @ 3:54:11 PM
File: \\youngstown-fs1\n\60\08285\structures\TRU-80-0496_Sampson\sheets\080_0496LMD002.dgn
View: SHEET
By: wruggles

PLOT.CEL

ms consultants, inc.
msconsultants.com

www.msconsultants.com

Ohio DOT Workspace
Marucci & Gaffney TRU-80 Design Build

UCF: ohdot1V8i
PCF: 60-08285_Youngstown

0 0.5" 1"

34" x 22"

Batchplot Spec: \\youngstown-fs1\vn\60\08285\standards\plotdrv\batchplt.spc
Pen Table: S:\std\plotting\ustn\V8\pen\V8_ms_std.tbl
Plot Driver: S:\std\plotting\ustn\V8\PDF.pltcfg

Model: Sheet
Printed: 1/6/2014 @ 3:54:12 PM
File: \\youngstown-fs1\vn\60\08285\structures\TRU-80-0496_Sampson\sheets\080_0496LR.001.dgn
View: SHEET
By: wruggles

LEFT BRIDGE

MARK	NUMBER			LENGTH	TYPE	DIMENSIONS				
	REAR	FWD.	TOTAL			A	B	C	D	INC
A301	26	26	52	10′-6″	35	1′-2″	2′-2″	3′-5″	0′-4 ½″	
A501	6	6	12	3′-0″	STR.					DOWEL
A502	23	23	46	17′-7″	3	5′-11″	2′-7″			
A503	23	23	46	17′-2″	2	7′-0″	3′-5″	7′-0″		
A505	11	11	22	8′-11″	2	4′-0″	1′-2″	4′-0″		
A506	6		6	21′-1″	STR.					
*A507	1	1	2	36′-2″	STR.					
*A508	1	1	2	37′-2″	STR.					
A509	15	13	28	9′-9″	1	0′-10″	9′-0″			
A510	56	56	112	1′-9″	STR.					DOWEL
A511	24	17	41	5′-8″	2	1′-3″	3′-5″	1′-3″		
A512	19	19	38	8′-0″	2	2′-5″	3′-5″	2′-5″		
A513	1 SER. OF 4		1 SER. OF 4	9′-11″ TO 13′-11″	2	4′-6″ TO 6′-6″	1′-2″	4′-6″ TO 6′-6″		1′-4″
A514	2	2	4	14′-11″	2	7′-0″	1′-2″	7′-0″		
A515	2 SER. OF 3	2 SER. OF 3	4 SER. OF 3	3′-9″ TO 8′-9″	1	0′-10″	3′-0″ TO 8′-0″			2′-6″
A516	2		2	9′-8″	19	3′-3″	5′-10″	2′-8″		
A517	9	9	18	12′- 3″	STR.					
* A518	4		4	5′-2″	STR.					
A519	1 SER. OF 5	1 SER. OF 5	2 SER. OF 5	6′-5″ TO 15′-11″	2	2′-9″ TO 7′-6″	1′-2″	2′-9″ TO 7′-6″		2′-4½″
A520	1	1	2	33′-0″	STR.					
A521	1	1	2	32′-0″	STR.					
A522	4	11	15	5′-4″	2	1′-1″	3′-5″	1′-1″		
A523	11		11	7′-6″	1	0′-10″	6′-9″			
A524	2 SER. OF 3		2 SER. OF 3	3′-6″ TO 6′-0″	1	0′-10″	2′-9″ TO 5′-3″			1′-3″
A525		11	11	8′-0″	1	0′-10″	7′-3″			
A526		1 SER. OF 4	1 SER. OF 4	7′-11″ TO 13′-5″	2	3′-6″ TO 6′-3″	1′-2″	3′-6″ TO 6′-3″		1′-10″
A527		2 SER. OF 4	2 SER. OF 4	3′-9″ TO 8′-9″	1	0′-10″	3′-0″ TO 8′-0″			1′-8″
A528		2	2	10′-0″	19	3′-3″	5′-10″	3′-4″		
A529		6	6	21′-6″	STR.					
A530	9	9	18	12′-3″	STR.					
*A531		4	4	5′-1″	STR.					

LEFT BRIDGE (CONTINUED)

MARK	NUMBER			LENGTH	TYPE	DIMENSIONS				
	REAR	FWD.	TOTAL			A	B	C	D	INC
A532	2		2	8′-4″	19	1′-3″	5′-7″	4′-5″		
A533		2	2	8′-5″	19	1′-3″	5′-10″	4′-3″		
**A536	2	2	4	2′-6″	STR.					
A801	10	10	20	7′-6″	STR.					DOWEL
A802	10		10	20′-7″	STR.					
A803	1 SER. OF 4	1 SER. OF 4	2 SER. OF 4	32′-0″ TO 33′-0″	STR.					0′-4″
*A804	7		7	5′-2″	STR.					
*A805	1 SER. OF 4	1 SER. OF 4	2 SER. OF 4	36′-2″ TO 37′-2″	STR.					0′-4″
A806		10	10	20′-11″	STR.					
*A807		7	7	4′-3″	STR.					
**A808	4	4	8	5′-3″	STR.					

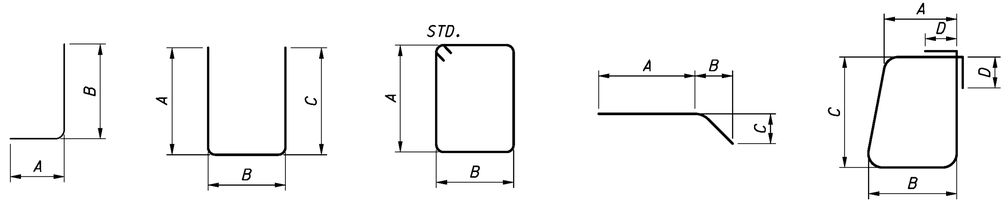

TYPE 1 TYPE 2 TYPE 3 TYPE 19 TYPE 35

* MECHANICAL CONNECTOR REQUIRED - BARS ARE SHOWN FULL LENGTH, NO ALLOWANCE WAS MADE FOR MECHANICAL CONNECTOR. FABRICATOR TO ADJUST BAR LENGTH BASED ON MECHANICAL CONNECTOR MANUFACTURER'S SPECIFICATION.

** INDICATES BAR WITH ONE END THREADED.

NOTES:

BAR SIZE: THE BAR SIZE NUMBER IS SPECIFIED ON THE PLANS IN THE BAR MARK COLUMN. THE FIRST DIGIT WHERE THREE DIGITS ARE USED AND THE FIRST TWO DIGITS WHERE FOUR DIGITS ARE USED INDICATES THE BAR SIZE NUMBER. FOR EXAMPLE, AN A601 IS A #6 BAR. BAR DIMENSIONS SHOWN ARE OUT TO OUT UNLESS OTHERWISE INDICATED. R INDICATES INSIDE RADIUS, UNLESS OTHERWISE NOTED. "STD." WRITTEN IN PLACE OF A DIMENSION INDICATES A STANDARD BEND AT THE END OF THE BAR.

REINFORCING BAR SAMPLES: REFER TO C.M.S. SECTION 700, 709.01 THROUGH 709.05 AND 709.08. SUFFICIENT ADDITIONAL REINFORCING STEEL SHALL BE PROVIDED FOR SAMPLING FOR EACH BRIDGE. RANDOM SAMPLES SHALL BE REPLACED IN THE STR.UCTURES BY THE ADDITIONAL STEEL, SPLICED IN ACCORDANCE WITH THE PROJECT PLANS.

ALL REINFORCING STEEL SHALL BE EPOXY COATED.

AS-BUILT

THIS RECORD DRAWING HAS BEEN PREPARED IN PART BY THE ENGINEER OF RECORD TO DEPICT CHANGES MADE DURING CONSTRUCTION, BASED ON INFORMATION REPORTED BY THE CONSTRUCTION CONTRACTOR.

DESIGN AGENCY
ms consultants, inc.
engineers, architects & planners
2221 Schrock Road
Columbus, OH 43229
Tel 614.898.7100 Fax 614.898.7070
www.msconsultants.com

DESIGNED WER | DRAWN KRM | REVIEWED JDH | DATE 1/25/2013 | CHECKED RSW | REVISED | STRUCTURE FILE NUMBER 7803931/7803966

REINFORCING STEEL LIST
BRIDGE NO. TRU-80-0496L/R
OVER SAMPSON ROAD

TRU-80-4.70
PID No. 76411

ms consultants, inc.

PLOT.CEL

ms consultants, inc.
msconsultants.com

www.msconsultants.com
Maruccl & Gaffney TRU-80 Design Bldg
Ohio DOT Workspace

UCF: ohdot1V8i
PCF: 60-08285_Youngstown

0 0.5" 1"

Batchplot Spec: \\youngstown-fs1\vn\60\08285\standards\plotdrv\batchplt.spc
Pen Table: S:\std\plotting\ustn\V8\pen\V8_ms_std.tbl
Plot Driver: S:\std\plotting\ustn\V8\PDF.pltcfg

34" x 22"

View: SHEET
By: wruggles

Model: Sheet
Printed: 1/6/2014 @ 3:54:13 PM
File: \\youngstown-fs1\vn\60\08285\structures\TRU-80-0496_Sampson\sheets\080_0496LR.001A.dgn

RIGHT BRIDGE

MARK	NUMBER			LENGTH	TYPE	DIMENSIONS				
	REAR	FWD.	TOTAL			A	B	C	D	INC
A301	26	26	52	10′-6″	35	1′-2″	2′-2″	3′-5″	0′-4 ½″	
A501	6	6	12	3′-0″	STR.					DOWEL
A502	23	23	46	17′-7″	3	5′-11″	2′-7″			
A503	5	23	28	17′-2″	2	7′-0″	3′-5″	7′-0″		
A504	9		9	11′-9″	STR.					
A505	11	11	22	8′-11″	2	4′-0″	1′-2″	4′-0″		
A506		6	6	21′-1″	STR.					
*A507	1	1	2	36′-2″	STR.					
*A508	1	1	2	37′-2″	STR.					
A509	15	13	28	9′-9″	1	0′-10″	9′-0″			
A510	56	56	112	1′-9″	STR.					DOWEL
A511	21	23	44	5′-8″	2	1′-3″	3′-5″	1′-3″		
A512	19	19	38	8′-0″	2	2′-5″	3′-5″	2′-5″		
A513	1 SER. OF 4		1 SER. OF 4	9′-11″ TO 13′-11″	2	4′-6″ TO 6′-6″	1′-2″	4′-6″ TO 6′-6″		1′-4″
A514	2	2	4	14′-11″	2	7′-0″	1′-2″	7′-0″		
A515	2 SER. OF 3	2 SER. OF 3	4 SER. OF 3	3′-9″ TO 8′-9″	1	0′-10″	3′-0″ TO 8′-0″			2′-6″
A516	2		2	9′-8″	19	3′-3″	5′-10″	2′-8″		
A517	9	9	18	12′- 3″	STR.					
* A518		4	4	5′-2″	STR.					
A519	1 SER. OF 5	1 SER. OF 5	2 SER. OF 5	6′-5″ TO 15′-11″	2	2′-9″ TO 7′-6″	1′-2″	2′-9″ TO 7′-6″		2′-4½″
A520	1	1	2	33′-0″	STR.					
A521	1	1	2	32′-0″	STR.					
A522	7	5	12	5′-4″	2	1′-1″	3′-5″	1′-1″		
A523		11	11	7′-6″	1	0′-10″	6′-9″			
A524		2 SER. OF 3	2 SER. OF 3	3′-6″ TO 6′-0″	1	0′-10″	2′-9″ TO 5′-3″			1′-3″
A525	11		11	8′-0″	1	0′-10″	7′-3″			
A526		1 SER. OF 4	1 SER. OF 4	7′-11″ TO 13′-5″	2	3′-6″ TO 6′-3″	1′-2″	3′-6″ TO 6′-3″		1′-10″
A527		2 SER. OF 4	2 SER. OF 4	3′-9″ TO 8′-9″	1	0′-10″	3′-0″ TO 8′-0″			1′-8″
A528		2	2	10′-0″	19	3′-3″	5′-10″	3′-4″		
A529	6		6	21′-6″	STR.					
A530		9	9	12′-3″	STR.					
*A531	4		4	5′-1″	STR.					

RIGHT BRIDGE (CONTINUED)

MARK	NUMBER			LENGTH	TYPE	DIMENSIONS				
	REAR	FWD.	TOTAL			A	B	C	D	INC
A533	2		2	8′-5″	19	1′-3″	5′-10″	4′-3″		
A534	18		18	16′-10″	2	6′-10″	3′-5″	6′-10″		
A535		2	2	8′-3″	19	1′-3″	5′-7″	4′-3″		
**A536	2	2	4	2′-6″	STR.					
A801	10	10	20	7′-6″	STR.					DOWEL
A802		10	10	20′-7″	STR.					
*A803	1 SER. OF 4	1 SER. OF 4	2 SER. OF 4	32′-0″ TO 33′-0″	STR.					0′-2″
*A804		7	7	5′-4″	STR.					
*A805	1 SER. OF 4	1 SER. OF 4	2 SER. OF 4	36′-2″ TO 37′-2″	STR.					0′-2″
A806	10		10	20′-11″	STR.					
*A807	7		7	4′-3″	STR.					
**A808	4	4	8	5′-3″	STR.					

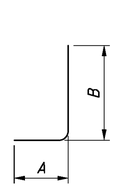

TYPE 1

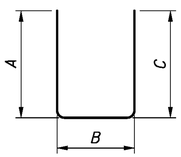

TYPE 2

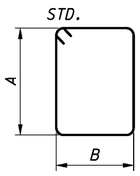

TYPE 3

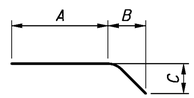

TYPE-19

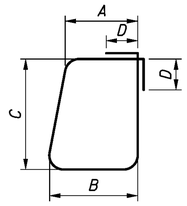

TYPE 35

* MECHANICAL CONNECTOR REQUIRED - BARS ARE SHOWN FULL LENGTH, NO ALLOWANCE WAS MADE FOR MECHANICAL CONNECTOR. FABRICATOR TO ADJUST BAR LENGTH BASED ON MECHANICAL CONNECTOR MANUFACTURER'S SPECIFICATION.

** INDICATES BAR WITH ONE END THREADED.

NOTES:

BAR SIZE: THE BAR SIZE NUMBER IS SPECIFIED ON THE PLANS IN THE BAR MARK COLUMN. THE FIRST DIGIT WHERE THREE DIGITS ARE USED AND THE FIRST TWO DIGITS WHERE FOUR DIGITS ARE USED INDICATES THE BAR SIZE NUMBER. FOR EXAMPLE, AN A601 IS A #6 BAR. BAR DIMENSIONS SHOWN ARE OUT TO OUT UNLESS OTHERWISE INDICATED. R INDICATES INSIDE RADIUS, UNLESS OTHERWISE NOTED. "STD." WRITTEN IN PLACE OF A DIMENSION INDICATES A STANDARD BEND AT THE END OF THE BAR.

REINFORCING BAR SAMPLES: REFER TO C.M.S. SECTION 700, 709.01 THROUGH 709.05 AND 709.08. SUFFICIENT ADDITIONAL REINFORCING STEEL SHALL BE PROVIDED FOR SAMPLING FOR EACH BRIDGE. RANDOM SAMPLES SHALL BE REPLACED IN THE STR.UCTURES BY THE ADDITIONAL STEEL, SPLICED IN ACCORDANCE WITH THE PROJECT PLANS.

ALL REINFORCING STEEL SHALL BE EPOXY COATED.

AS-BUILT

THIS RECORD DRAWING HAS BEEN PREPARED IN PART BY THE ENGINEER OF RECORD TO DEPICT CHANGES MADE DURING CONSTRUCTION, BASED ON INFORMATION REPORTED BY THE CONSTRUCTION CONTRACTOR.

DESIGN AGENCY
ms consultants, inc.
engineers, architects & planners
2221 Schrock Road
Columbus, OH 43229
Tel 614.898.7100 Fax 614.898.7070
www.msconsultants.com

DESIGNED	DRAWN	REVIEWED	DATE
WER	KRM	JDH	1/25/2013
CHECKED	REVISED	STRUCTURE FILE NUMBER	
RSW		7803931/7803966	

REINFORCING STEEL LIST
BRIDGE NO. TRU-80-0496L/R
OVER SAMPSON ROAD

TRU-80-4.70
PID No. 76411

31A / 32

107A / 142

PLOT.CEL
ms consultants, inc.
msconsultants.com
www.msconsultants.com
Ohio DOT Workspace
Marucci & Gaffney TRU-80 Design Build
1"
0.5"
0
UCF: ohdotV8i
PCF: 60-08285_Youngstown
Batchplot Spec: \\youngstown-fs1\n\60\08285\standards\plotdrv\batchplt.spc
Pen Table: S:\std\plotting\ustn\V8\pen\V8i_ms_std.tbl
Plot Driver: S:\std\plotting\ustn\V8\PDF.pltcfg
34" x 22"
View: SHEET
By: wiggles
Model: Sheet @ 3:54:15 PM
Printed: 1/6/2014
File: \\youngstown-fs1\n\60\08285\structures\TRU-80-0496_Sampson\sheets\080_0496LR002.dgn

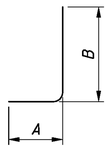

TYPE 1

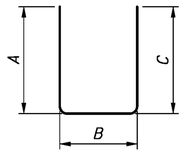

TYPE 2

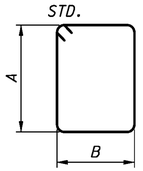

TYPE 3

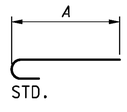

TYPE 16

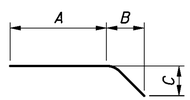

TYPE 19

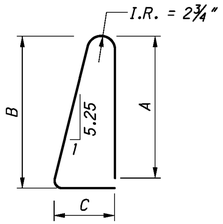

TYPE-23

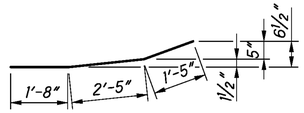

TYPE-25

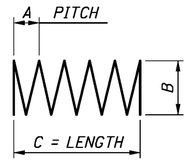

TYPE 27

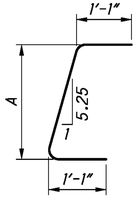

TYPE-28

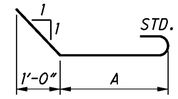

TYPE 29

PIERS

MARK	NUMBER					LENGTH	TYPE	DIMENSIONS		
	PIER 1 LEFT	PIER 2 LEFT	PIER 1 RIGHT	PIER 2 RIGHT	TOTAL			A	B	C
DSP401	1				1	25'-5"	27	4½"	3'-0"	25'-5"
DSP402		1			1	21'-0"	27	4½"	3'-0"	21'-0"
DSP403			1		1	26'-1"	27	4½"	3'-0"	26'-1"
DSP404				1	1	22'-0"	27	4½"	3'-0"	22'-0"
SP401	1				1	12'-6"	27	4½"	2'-6"	12'-6"
SP402		1			1	12'-5"	27	4½"	2'-6"	12'-5"
SP403			1		1	12'-0"	27	4½"	2'-6"	12'-0"
SP404				1	1	11'-7"	27	4½"	2'-6"	11'-7"
SP405	1	1	1	1	4	7'-0"	27	4½"	2'-6"	7'-0"
P501	116	116	116	116	464	7'-4"	2	2'-10"	1'-11"	2'-10"
P502	54	54	54	54	216	3'-8"	1	10"	3'-0"	
P503	35	35	35	35	140	3'-3"	2	5"	2'-8"	5"
*P601	4	4	4	4	16	35'-10"	1	2'-11"	33'-1"	
P602	4	4	4	4	16	31'-11"	1	2'-11"	29'-2"	
P603	2	2	2	2	8	20'-10"	STR.			
P604	2	2	2	2	8	4'-4"	STR.			
**P605	4	4	4	4	16	4'-3"	STR.			
P901	5	5	5	5	20	20'-10"	STR.			
P902	5	5	5	5	20	4'-4"	STR.			
*P1001	6	6	6	6	24	22'-9"	16	21'-4"		
*P1002	6	6	6	6	24	6'-1"	16	4'-8"		
P1003	12				12	19'-1"	16	17'-8"		
P1004		12			12	19'-0"	16	17'-7"		
P1005			12		12	18'-7"	16	17'-2"		
P1006				12	12	18'-2"	16	16'-9"		
P1007	12	12	12	12	48	17'-0"	STR.			
DS1101	12				12	25'-5"	STR.			
DS1102		12			12	21'-0"	STR.			
DS1103			12		12	26'-1"	STR.			
DS1104				12	12	22'-0"	STR.			

SUPERSTRUCTURE AND ABUTMENT DIAPHRAGMS

	MARK	NUMBER					LENGTH	TYPE	DIMENSIONS				
		LEFT (PH. 1)	LEFT (PH. 2)	RIGHT (PH. 1)	RIGHT (PH. 2)	TOTAL			A	B	C	D	INC
5 REVISED 4-18-13	DA501	52	44	52	44	192	12'-5"	3	2'-6"	3'-5"			
	DA502	52	44	52	44	192	7'-2"	2	2'-3"	2'-11"	2'-3"		
	* DA801	28		28		56	34'-8"	STR					
	** DA802		28		28	56	6'-11"	STR					
	DA803		28		28	56	30'-5"	STR					
	DA804	48	42	48	42	180	4'-11"	29	2'-8"				
	S401	215	190	215	190	810	30'-0"	STR					
	S402	43	38	43	38	162	21'-10"	STR					
	S501	324	296	324	296	1240	30'-0"	STR					
5 REVISED 4-18-13	S502	48	44	48	44	184	24'-4"	STR					
	* S503	672		672		1344	33'-4"	STR					
	** S504		704		704	1408	3'-4"	STR					
	S505		676		676	1352	29'-2"	STR					
	S506	2 SER. OF 17		2 SER. OF 17		4 SER. OF 17	2'-8" TO 30'-3"	STR					1'-8 11/16"
	S507	2 SER. OF 16		2 SER. OF 16		4 SER. OF 16	6'-1" TO 32'-0"	STR					1'-8¾"
	S508	6	6	6	6	24	4'-0"	STR					
	S509		2 SER. OF 14		2 SER. OF 14	4 SER. OF 14	6'-1" TO 28'-6"	STR					1'-8 11/16"
	S510		2 SER. OF 13		2 SER. OF 13	4 SER. OF 13	5'-4" TO 26'-1"	STR					1'-8¾"
	S511	163	163	163	163	652	7'-5"	23	3'-0"	3'-2"	1'-1"		
	S512	84	76	84	76	320	20'-0"	STR					
	S601	5	5	5	5	25	30'-0"	STR					
	S602	1	1	1	1	4	28'-6"	STR					
	S603	163	163	163	163	652	2'-10"	1	1'-1"	1'-11"			
	S604	163	163	163	163	652	3'-11"	28	1'-11"				

* INDICATES BAR WITH MECHANICAL CONNECTOR REQUIRED. BARS ARE SHOWN FULL LENGTH, NO ALLOWANCE WAS MADE FOR MECHANICAL CONNECTOR. FABRICATOR TO ADJUST BAR LENGTH BASED ON MECHANICAL CONNECTOR MANUFACTURER'S SPECIFICATION.

** INDICATES BAR WITH ONE END THREADED

5 REVISED 4-18-13, PER RFI-03

AS-BUILT

THIS RECORD DRAWING HAS BEEN PREPARED IN PART BY THE ENGINEER OF RECORD TO DEPICT CHANGES MADE DURING CONSTRUCTION, BASED ON INFORMATION REPORTED BY THE CONSTRUCTION CONTRACTOR.

NOTES:

BAR SIZE: THE BAR SIZE NUMBER IS SPECIFIED ON THE PLANS IN THE BAR MARK COLUMN. THE FIRST DIGIT WHERE THREE DIGITS ARE USED AND THE FIRST TWO DIGITS WHERE FOUR DIGITS ARE USED INDICATES THE BAR SIZE NUMBER. FOR EXAMPLE, AN A601 IS A #6 BAR. BAR DIMENSIONS SHOWN ARE OUT TO OUT UNLESS OTHERWISE INDICATED. R INDICATES INSIDE RADIUS, UNLESS OTHERWISE NOTED. "STD." WRITTEN IN PLACE OF A DIMENSION INDICATES A STANDARD BEND AT THE END OF THE BAR.

REINFORCING BAR SAMPLES: REFER TO C.M.S. SECTION 700, 709.01 THROUGH 709.05 AND 709.08. SUFFICIENT ADDITIONAL REINFORCING STEEL SHALL BE PROVIDED FOR SAMPLING FOR EACH BRIDGE. RANDOM SAMPLES SHALL BE REPLACED IN THE STRUCTURES BY THE ADDITIONAL STEEL, SPLICED IN ACCORDANCE WITH THE PROJECT PLANS.

ALL REINFORCING STEEL SHALL BE EPOXY COATED.

DESIGN AGENCY
ms consultants, inc.
engineers, architects & planners
225 Federal Street
Youngstown, Ohio 44503
Tel 330.744.5321 Fax 330.744.3321
www.msconsultants.com

DESIGNED WER | DRAWN KRM | CHECKED RSW | REVIEWED JDH | DATE 1/25/2013 | REVISED KRM | STRUCTURE FILE NUMBER 7803931/7803966

REINFORCING STEEL LIST
BRIDGE NO. TRU-80-0496L/R
OVER SAMPSON ROAD

TRU-80-4.70
PID No. 76411

32/32

108/142

PLOT.CEL

ms consultants, inc.
msconsultants.com

www.msconsultants.com

Ohio DOT Workspace
Marucci & Gaffney TRU-80 Design Build

1"
0
0.5"

UCF: ohdot1V8i
PCF: 60-08285_Youngstown

Batchplot Spec: \\youngstown-fs1\n\60\08285\standards\plotdrv\batchplt.spc
Pen Table: S:\std\plotting\ustn\V8\pen\V8i_ms_std.tbl
Plot Driver: S:\std\plotting\ustn\V8\VPDF.pltcfg

Model: Sheet
Printed: 1/6/2014 @ 3:54:16 PM
File: \\youngstown-fs1\n\60\08285\structures\TRU-80-0496_Sampson\sheets\080_0496LRL002A.dgn

34" x 22"

View: SHEET
By: wruggles

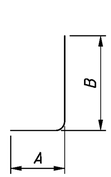

TYPE 1

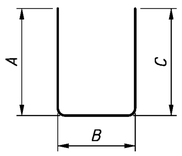

TYPE 2

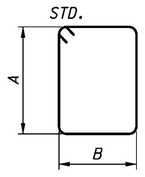

TYPE 3

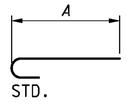

TYPE 16

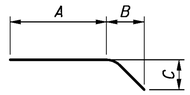

TYPE 19

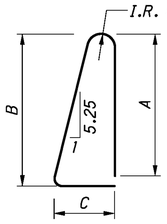

TYPE-23

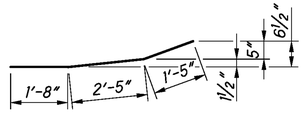

TYPE-25

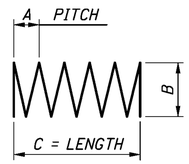

TYPE 27

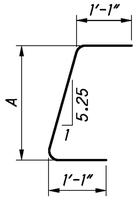

TYPE-28

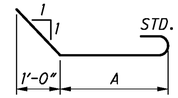

TYPE 29

APPROACH SLABS

MARK	NUMBER				TOTAL	LENGTH	TYPE	DIMENSIONS				
	LEFT (PH. 1)	LEFT (PH. 2)	RIGHT (PH. 1)	RIGHT (PH. 2)				A	B	C	D	INC
A1001	2	2	2	2	8	16'-11"	16	15'-6"				
A1002	114	100	114	100	428	25'-11"	16	24'-6"				
**B501	70		70		140	34'-4"	STR					
**B502	44		44		88	32'-11"	STR					
B503		70		70	140	30'-1"	STR					
B504		44		44	88	28'-8"	STR					
*B505		114		114	228	3'-8"	STR					
C501	2	2	2	2	8	15'-6"	STR					
C502	46	40	46	40	172	24'-6"	STR					
AS501	16	16	16	16	64	10'-0"	STR					
AS502	10	10	10	10	40	5'-6"	STR					
AS503	6	6	6	6	24	5'-6"	25					
AS504	6	6	6	6	24	7'-5"	23	3'-0"	3'-2"	1'-1"		
AS505	12	12	12	12	48	4'-6"	STR					
AS601	6	6	6	6	24	2'-10"	1	1'-1"	1'-11"			
AS602	6	6	6	6	24	3'-11"	28	1'-11"				
AS603	2	2	2	2	8	5'-4"	STR					
AS604	2 SER. OF 11	2 SER. OF 11	2 SER. OF 11	2 SER. OF 11	8 SER. OF 11	4'-5" TO 5'-3"	1	1'-1"	3'-6" TO 4'-4"			1"
AS605	2 SER. OF 11	2 SER. OF 11	2 SER. OF 11	2 SER. OF 11	8 SER. OF 11	4'-2" TO 5'-0"	16	3'-6" TO 4'-4"				1"
AS606	8	8	8	8	32	4'-5"	1	1'-1"	3'-6"			
AS607	8	8	8	8	32	3'-6"						

* INDICATES BAR WITH MECHANICAL CONNECTOR REQUIRED. BARS ARE SHOWN FULL LENGTH, NO ALLOWANCE WAS MADE FOR MECHANICAL CONNECTOR. FABRICATOR TO ADJUST BAR LENGTH BASED ON MECHANICAL CONNECTOR MANUFACTURER'S SPECIFICATION.

** INDICATES BAR WITH ONE END THREADED

AS-BUILT

THIS RECORD DRAWING HAS BEEN PREPARED IN PART BY THE ENGINEER OF RECORD TO DEPICT CHANGES MADE DURING CONSTRUCTION, BASED ON INFORMATION REPORTED BY THE CONSTRUCTION CONTRACTOR.

NOTES:

BAR SIZE: THE BAR SIZE NUMBER IS SPECIFIED ON THE PLANS IN THE BAR MARK COLUMN. THE FIRST DIGIT WHERE THREE DIGITS ARE USED AND THE FIRST TWO DIGITS WHERE FOUR DIGITS ARE USED INDICATES THE BAR SIZE NUMBER. FOR EXAMPLE, AN A601 IS A #6 BAR. BAR DIMENSIONS SHOWN ARE OUT TO OUT UNLESS OTHERWISE INDICATED. R INDICATES INSIDE RADIUS, UNLESS OTHERWISE NOTED. "STD." WRITTEN IN PLACE OF A DIMENSION INDICATES A STANDARD BEND AT THE END OF THE BAR.

REINFORCING BAR SAMPLES: REFER TO C.M.S. SECTION 700, 709.01 THROUGH 709.05 AND 709.08. SUFFICIENT ADDITIONAL REINFORCING STEEL SHALL BE PROVIDED FOR SAMPLING FOR EACH BRIDGE. RANDOM SAMPLES SHALL BE REPLACED IN THE STRUCTURES BY THE ADDITIONAL STEEL, SPLICED IN ACCORDANCE WITH THE PROJECT PLANS.

ALL REINFORCING STEEL SHALL BE EPOXY COATED.

DESIGN AGENCY
ms consultants, inc.
engineers, architects & planners
225 Second Street
Youngstown, Ohio 44507
Tel 330.743.1050 Fax 330.743.7070
www.msconsultants.com

DESIGNED WER | DRAWN KRM | REVIEWED JDH | DATE 1/25/2013 | CHECKED RSW | REVISED | STRUCTURE FILE NUMBER 7803931/7803966

REINFORCING STEEL LIST
BRIDGE NO. TRU-80-0496L/R
OVER SAMPSON ROAD

TRU-80-4.70
PID No. 76411

32A / 32

108A / 142

PLOT.CEL
ms consultants, inc.
msconsultants.com
www.msconsultants.com
Ohio DOT Workspace
Marucci & Gaffney TRU-80 Design Build
UCF: ohdotV8i
PCF: 60-08285_Youngstown
Batchplot Spec: \\youngstown-fs1\n\60\08285\standards\plotdrv\batchplt.spc
Pen Table: S:\std\plotting\ustn\V8\pen\V8i_ms_std.tbl
Plot Driver: S:\std\plotting\ustn\V8\plotdrv\V8P.pltcfg
Model: Sheet
Printed: 12/13/2013 @ 10:42:49 AM
File: \\youngstown-fs1\n\60\08285\structures\TRU-80-059L_Logan\sheets\080_059LSP001.dgn
View: SHEET
By: wruggles
34" x 22"

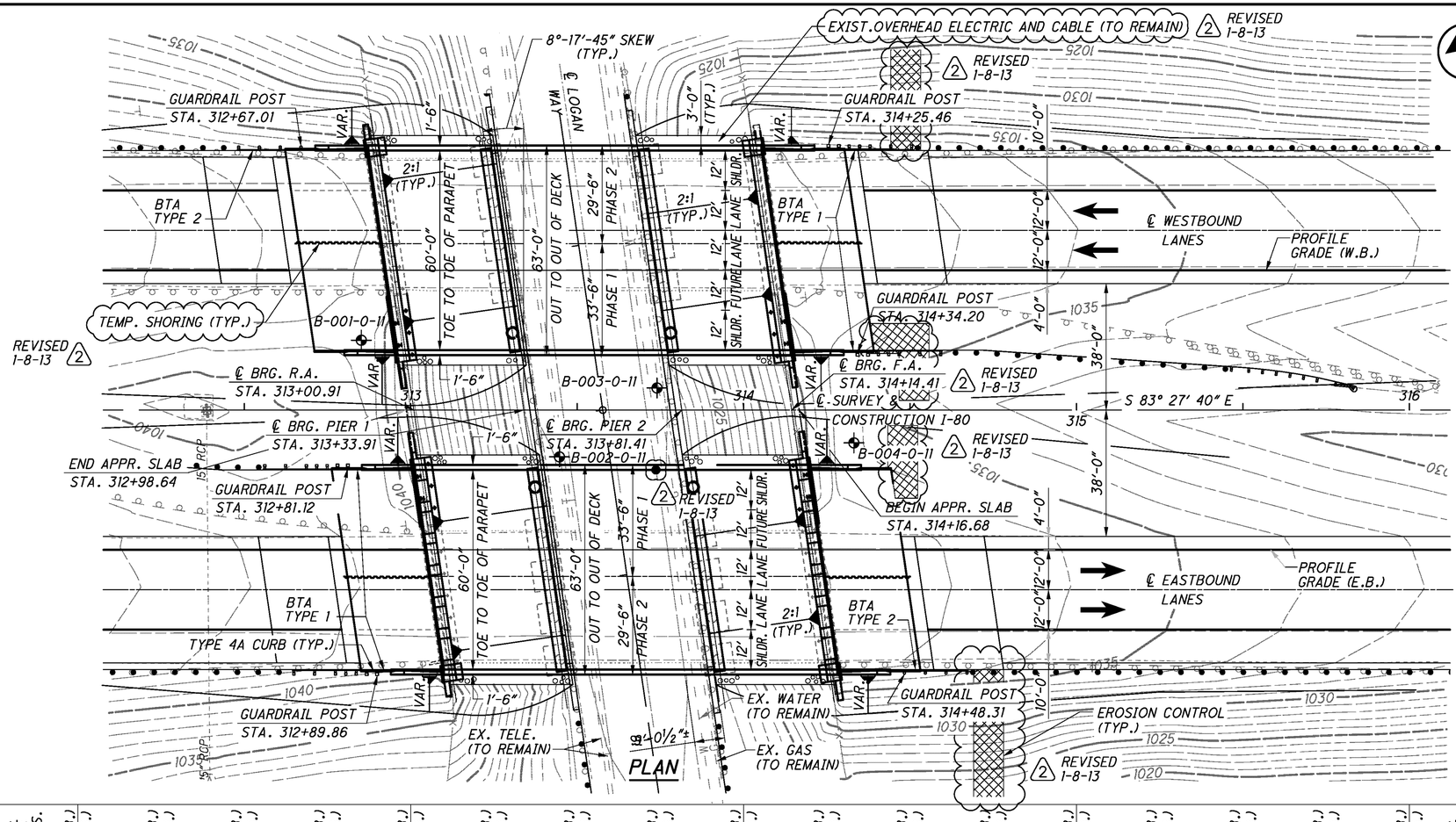

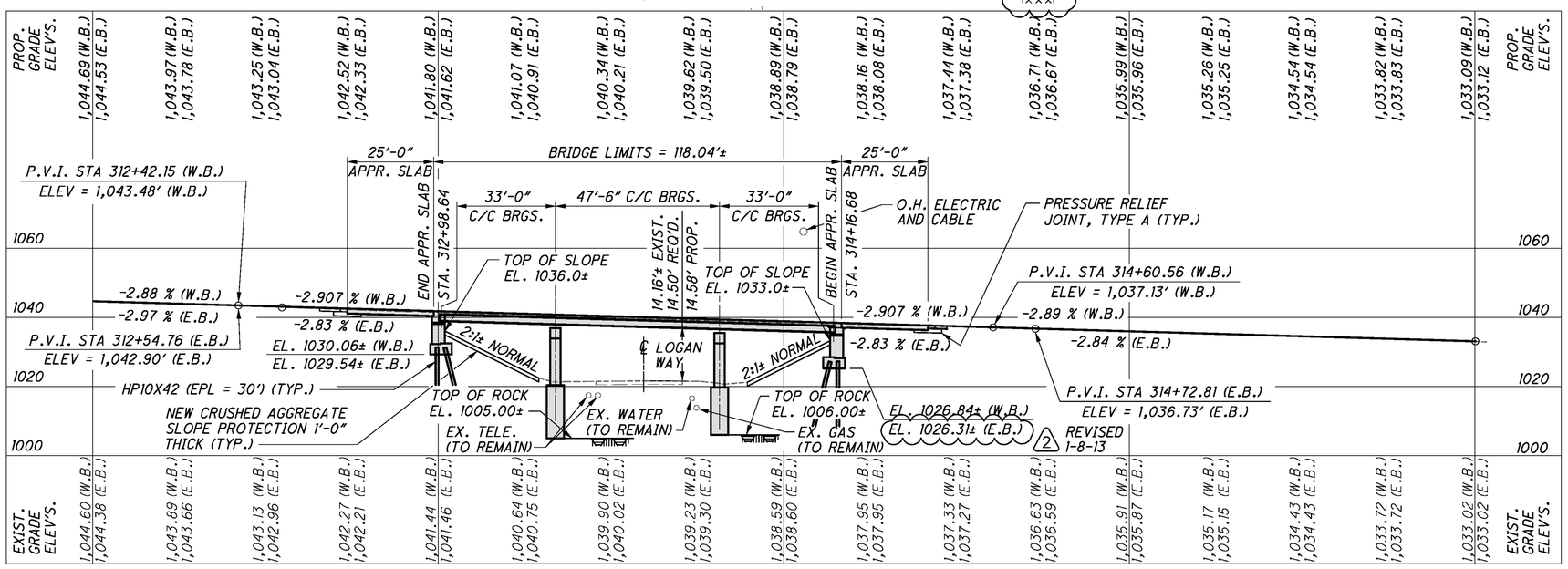

PROFILE AT ℄ SURVEY & CONSTRUCTION I-80

BENCHMARK DATA

BM #1: ELEV. 1047.54, X-CUT IN SOUTHEAST BOLT OF THE NORTH-EAST SUPPORT FOR OVERHEAD TRUSS NORTH OF THE I-80 WESTBOUND LANES, STA. 310+69.15, 82.92' LT.

BM #2: ELEV. 1022.70, X-CUT IN NORTH CAP BOLT ON FIRE HYDRANT, STA. 313+62.17, 90.09' LT.

NOTES

EARTHWORK LIMITS SHOWN ARE APPROXIMATE. ACTUAL SLOPES SHALL CONFORM TO PLAN CROSS SECTIONS.

DESIGN TRAFFIC:
2013 ADT = 38,910 2013 ADTT = 14,010
2033 ADT = 45,690 2033 ADTT = 16,450
DIRECTIONAL DISTRIBUTION = 0.52

LEGEND

BORING LOCATION

PT. OF MINIMUM VERTICAL CLEARANCE — 2 REVISED 1-8-13

AS-BUILT

THIS RECORD DRAWING HAS BEEN PREPARED IN PART BY THE ENGINEER OF RECORD TO DEPICT CHANGES MADE DURING CONSTRUCTION, BASED ON INFORMATION REPORTED BY THE CONSTRUCTION CONTRACTOR.

EXISTING STRUCTURE

TYPE: CONTINUOUS STEEL BEAM WITH REINFORCED CONCRETE DECK AND SUBSTRUCTURE

SPANS: 33'-0"±, 47'-6"±, 33'-0"± C/C BEARINGS

ROADWAY: 40'-0"± F/F PARAPETS WITH 1'-0"± CURBS

LOADING: C.F. 2000 (57)

SKEW: 8°-17'-45"± R.F.

APPROACH SLABS: 25' LONG (AS-1-54)

ALIGNMENT: TANGENT

CROWN: 3/16" PER FT.

WEARING SURFACE: 4" ASPHALT

STRUCTURAL FILE NUMBER: 7803990/7804024

DATE BUILT: 1970

DISPOSITION: TO BE REHABILITATED

PROPOSED STRUCTURE

PROPOSED WORK: REPLACE DECK AND BEAMS, REMOVE BACKWALLS, WIDEN PIERS, CONVERT ABUTMENTS TO SEMI-INTEGRAL, PATCH AND SEAL SUBSTRUCTURES, AND PROVIDE NEW APPROACH SLABS

TYPE: CONTINUOUS COMPOSITE STEEL BEAMS (W30X90), (A709 GRADE 50) (GALVANIZED) ON CAP AND COLUMN PIERS AND SEMI-INTEGRAL ABUTMENTS WITH REINFORCED CONC. DECK

SPANS: 33'-0", 47'-6", 33'-0" C/C BEARINGS

ROADWAY: 60'-0" TOE/TOE PARAPETS

LOADING: HS20-44 CASE I AND ALTERNATE MILITARY LOADING
FUTURE WEARING SURFACE = 60 PSF

SKEW: 8°-17'-45"± R.F.

APPROACH SLABS: 25'-0" LONG (AS-1-81)

ALIGNMENT: TANGENT

CROWN: 0.016

WEARING SURFACE: 1" MONOLITHIC CONCRETE

COORDINATES: LATITUDE N 41°-09-34"
LONGITUDE W 80°-38'-03"

DESIGN AGENCY
ms consultants, inc.
engineers, architects & planners
2221 Schrock Road
Columbus, OH 43229
Tel 614.898.7100
Fax 614.898.7270
www.msconsultants.com

DESIGNED	DRAWN	REVIEWED	DATE
WER	KRM	JDH	1/25/2013
CHECKED	REVISED	STRUCTURE FILE NUMBER	
LAW	KRM	7803990/7804024	

TRUMBULL COUNTY
STA. 312+98.64
STA. 314+16.68

SITE PLAN
BRIDGE NO. TRU-80-059L/R
OVER LOGAN WAY

TRU-80-4.70
PID No. 76411

1 / 32

109 / 142

ms consultants, inc.

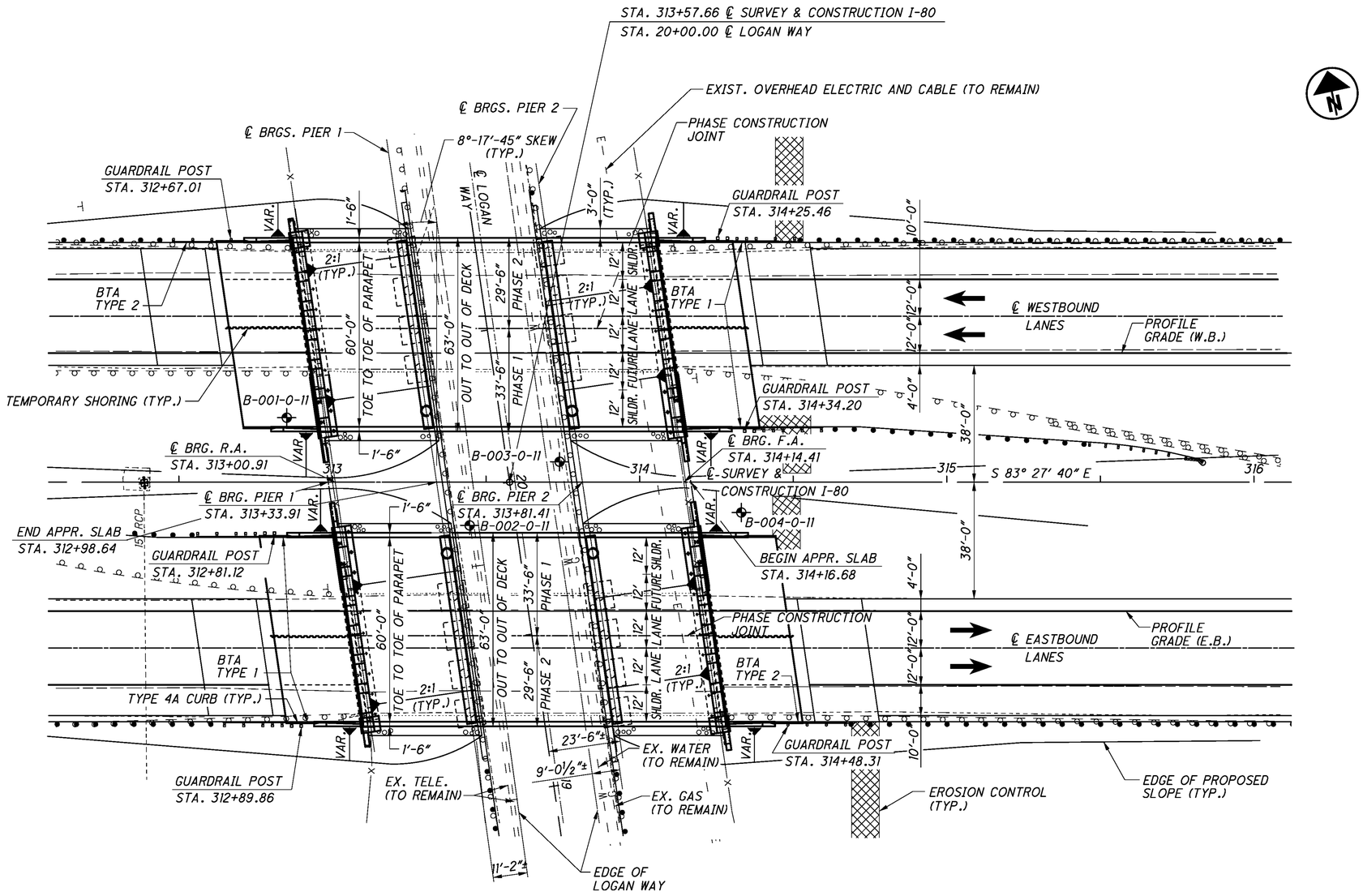

PLAN

AS-BUILT

THIS RECORD DRAWING HAS BEEN PREPARED IN PART BY THE ENGINEER OF RECORD TO DEPICT CHANGES MADE DURING CONSTRUCTION, BASED ON INFORMATION REPORTED BY THE CONSTRUCTION CONTRACTOR.

DESIGN AGENCY
ms consultants, inc.
CONSULTING ENGINEERS & PLANNERS
333 EAST FEDERAL STREET, YOUNGSTOWN, OHIO

DESIGNED	DRAWN	REVIEWED	DATE
WER	KRM	JDH	1-25-13
CHECKED	REVISED	STRUCTURE FILE NUMBER	
RSW		7803990/7804024	

GENERAL PLAN
BRIDGE NO. TRU-80-0591L/R
OVER LOGAN WAY

TRU-80-4.70
PID No. 76411

2 / 32

110
142

Batchplot Spec: \\youngstown-fs\fn\60\08285\standards\plotdrv\batchplt.spc
Pen Table: S:\std\plotting\usth\V8i\pen\V8i_ms_std.tbl
Plot Driver: S:\std\plotting\usth\V8i\PDF.pltcfg
UCF: ohdotV8i Ohio DOT Workspace
PCF: 60-08285_Youngstown Marucci & Gaffney TRU-80 Design Build
Model: Sheet
Printed: 1/6/2014 @ 3:54:25 PM
File: \\youngstown-fs\fn\60\08285\structures\TRU-80-0591_Logan\sheets\080_0591LGP001.dgn
View: SHEET
By: wruggles
34" x 22"

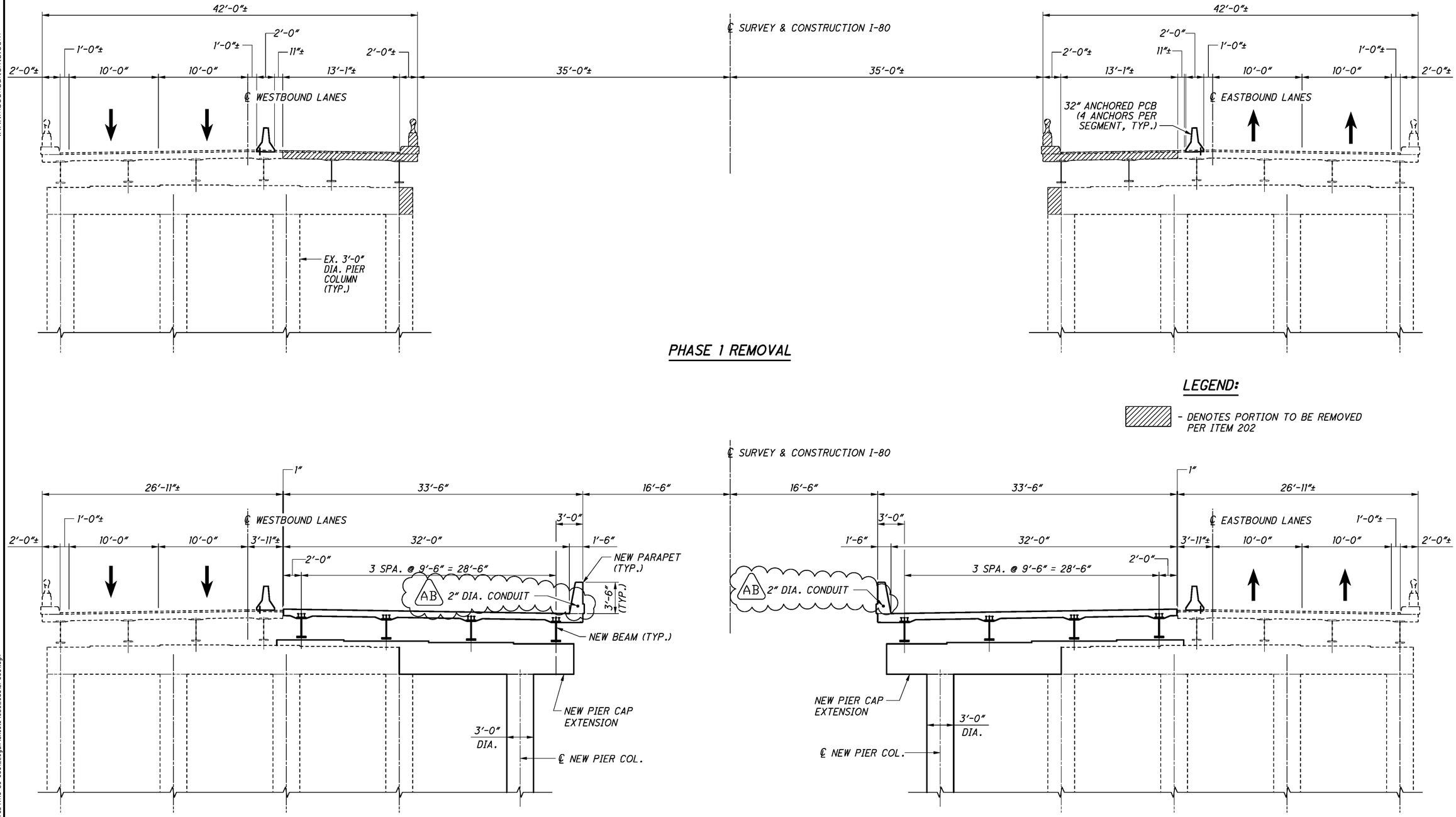

PHASE 1 REMOVAL

PHASE 1 CONSTRUCTION

AB REVISED 12-9-13

AS-BUILT

THIS RECORD DRAWING HAS BEEN PREPARED IN PART BY THE ENGINEER OF RECORD TO DEPICT CHANGES MADE DURING CONSTRUCTION, BASED ON INFORMATION REPORTED BY THE CONSTRUCTION CONTRACTOR.

PLOT.CEL

ms consultants, inc.
msconsultants.com

Ohio DOT Workspace
Marucci & Gaffney TRU-80 Design Build
www.msconsultants.com

UCF: ohdotV8i
PCF: 60-08285_Youngstown

Batchplot Spec: \\youngstown-fs1\n\60\08285\standards\plotdrv\batchplt.spc
Pen Table: S:\std\plotting\ustn\V8i\pen\V8i_ms_std.tbl
Plot Driver: S:\std\plotting\ustn\V8i\PDF.pltcfg

34" x 22"

Model: Sheet
Printed: 1/6/2014 @ 3:54:28 PM
File: \\youngstown-fs1\n\60\08285\structures\TRU-80-0591_Logan\sheets\080_0591LPC001.dgn
View: SHEET
By: wruggles

DESIGN AGENCY
ms consultants, inc.
engineers, architects & planners
2221 Schrock Road
Columbus, Ohio 43229-1547
Tel 614.898.7700 Fax 614.898.7570
www.msconsultants.com

DESIGNED	DRAWN	REVIEWED	DATE
WER	KRM	JDH	1/2/2013
CHECKED	REVISED	STRUCTURE FILE NUMBER	
LAW		7803990/7804024	

PHASE 1 REMOVAL & CONSTRUCTION
BRIDGE NO. TRU-80-0591L/R
OVER LOGAN WAY

TRU-80-4.70
PID No. 76411

ms consultants, inc.

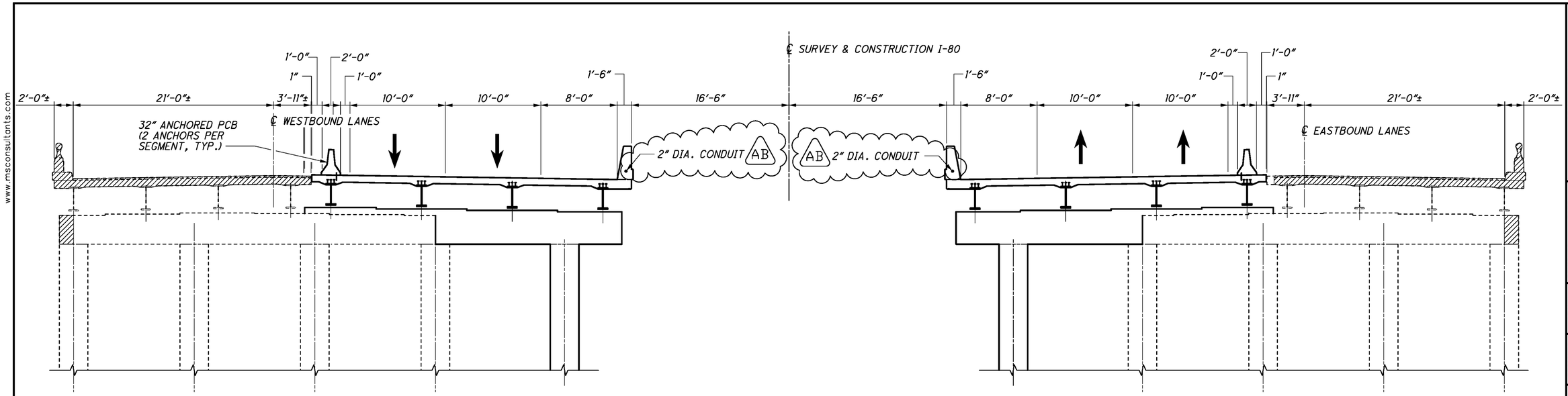

PHASE 2 REMOVAL

LEGEND:

- DENOTES PORTION TO BE REMOVED PER ITEM 202

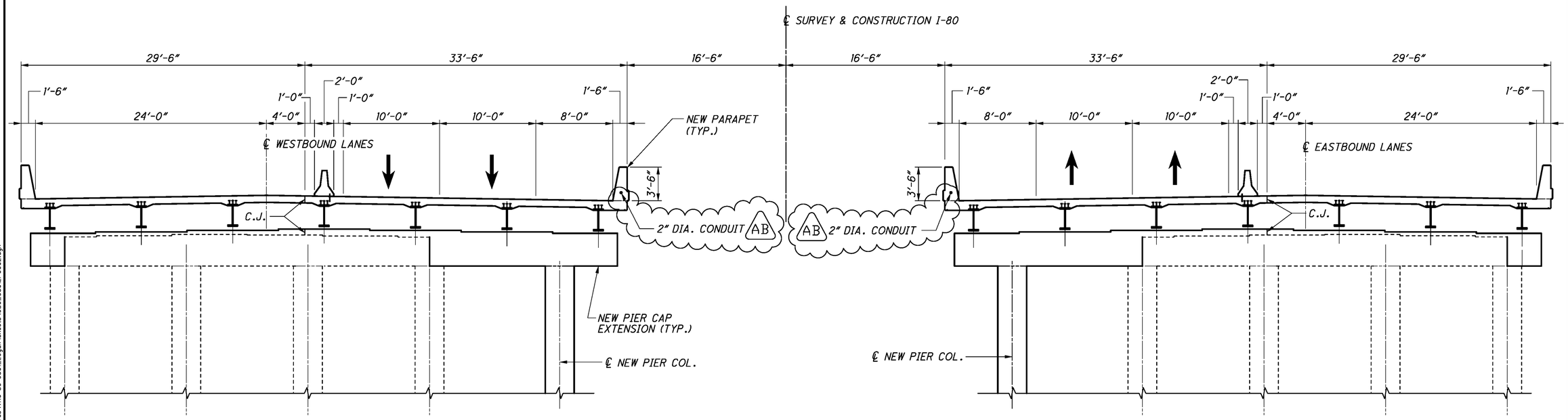

PHASE 2 CONSTRUCTION

AB REVISED 12-9-13

AS-BUILT
THIS RECORD DRAWING HAS BEEN PREPARED IN PART BY THE ENGINEER OF RECORD TO DEPICT CHANGES MADE DURING CONSTRUCTION, BASED ON INFORMATION REPORTED BY THE CONSTRUCTION CONTRACTOR.

PLOT.CEL

ms consultants, inc.
msconsultants.com

Ohio DOT Workspace
Marucci & Gaffney TRU-80 Design Build
www.msconsultants.com

UCF: ohdotV8i
PCF: 60-08285_Youngstown

Batchplot Spec: \\youngstown-fs1\n\60\08285\standards\plotdrv\batchplt.spc
Pen Table: S:\std\plotting\ustn\V8i\pen\V8i_ms_std.tbl
Plot Driver: S:\std\plotting\ustn\V8i\PDF.pltcfg

34" x 22"

Model: Sheet
Printed: 1/6/2014 @ 3:54:29 PM
File: \\youngstown-fs1\n\60\08285\structures\TRU-80-0591_Logan\sheets\080_0591LPC002.dgn
View: SHEET
By: wruggles

DESIGN AGENCY
ms consultants, inc.
engineers, architects & planners
2221 Schrock Road
Columbus, Ohio 43229-1547
Tel 614.898.7700 Fax 614.898.7570
www.msconsultants.com

DESIGNED	DRAWN	REVIEWED	DATE
WER	KRM	JDH	1/2/2013
CHECKED	REVISED	STRUCTURE FILE NUMBER	
LAW		7803990/7804024	

PHASE 2 REMOVAL & CONSTRUCTION
BRIDGE NO. TRU-80-0591L/R
OVER LOGAN WAY

TRU-80-4.70
PID No. 76411

ms consultants, inc.

PLOT.CEL
ms consultants, inc.
msconsultants.com
Ohio DOT Workspace
Marucci & Gaffney TRU-80 Design Build
www.msconsultants.com
1"
0.5"
0
UCF: ohdotV8i
PCF: 60-08285_Youngstown
34" x 22"
Batchplot Spec: \\youngstown-fs1\vn\60\08285\standards\plotdrv\batchplt.spc
Pen Table: S:\std\plotting\ustn\V8\pen\V8_ms_std.tbl
Plot Driver: S:\std\plotting\ustn\V8\PDF.pltcfg
Model: Sheet
Printed: 1/6/2014 @ 3:54:31 PM
File: \\youngstown-fs1\vn\60\08285\structures\TRU-80-0591_Logan\sheets\080_0591LRE001.dgn
View: SHEET
By: wruggles

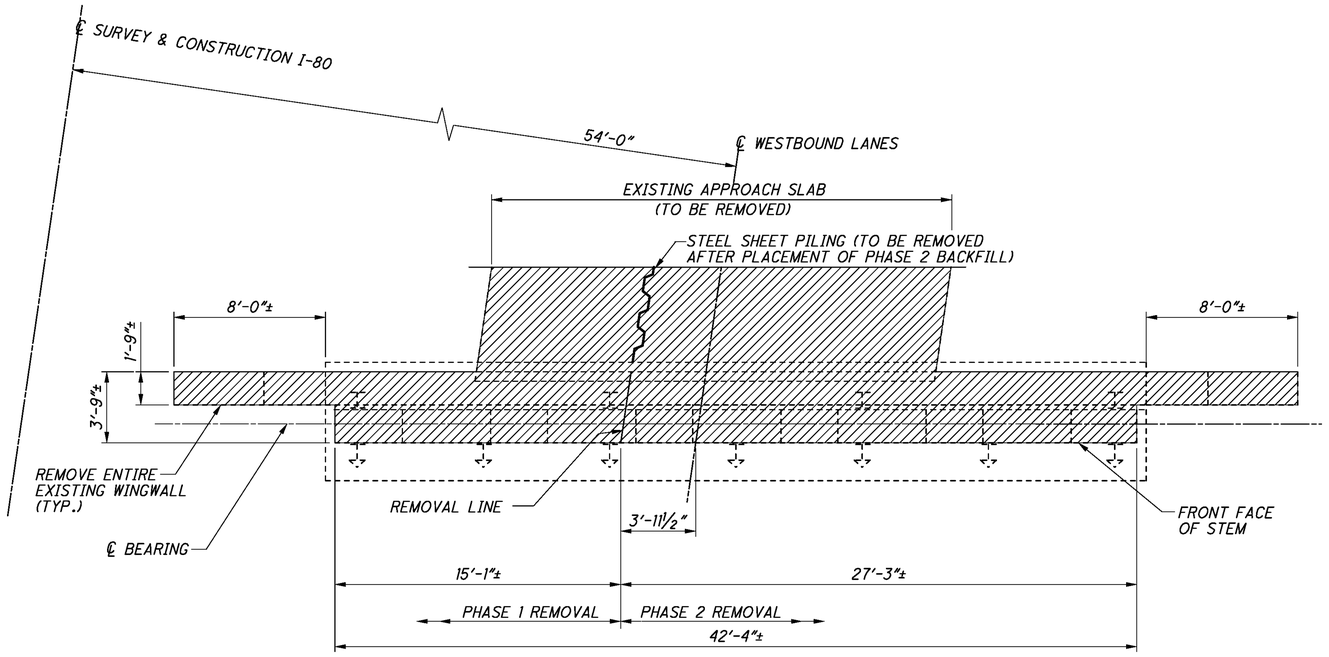

PLAN

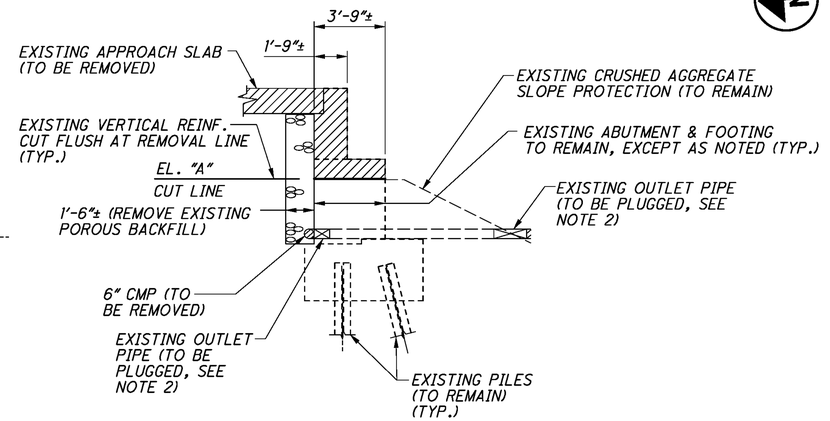

TYPICAL SECTION

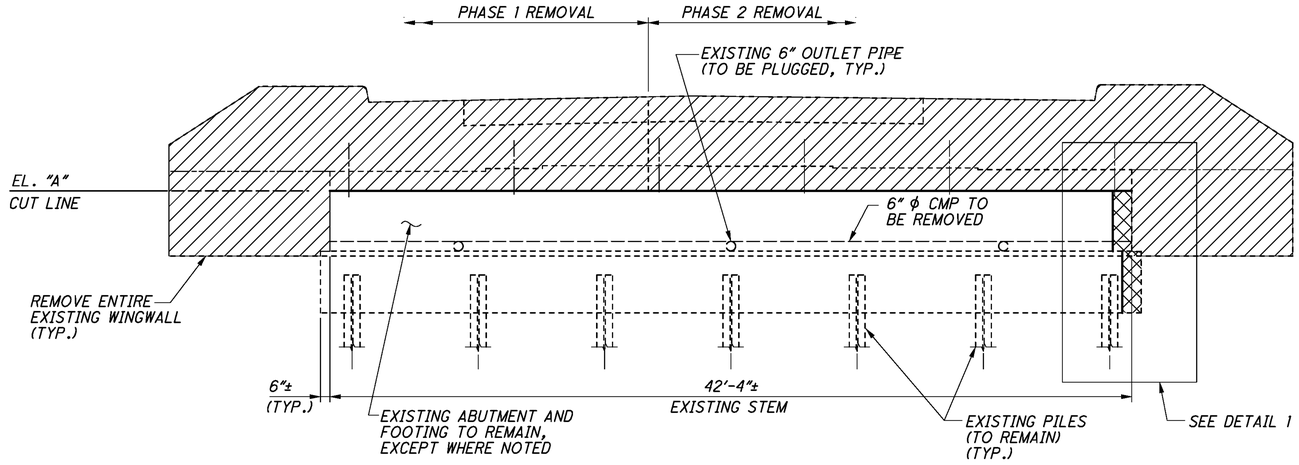

ELEVATION

(LEFT BRIDGE REAR ABUTMENT SHOWN,
FORWARD ABUTMENT OPPOSITE HAND,
RIGHT BRIDGE SIMILAR)

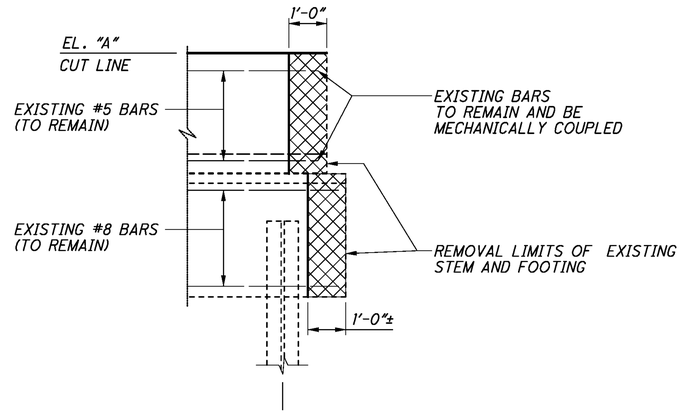

DETAIL 1

(ADDITIONAL STEM AND FOOTING REMOVAL)

ABUTMENT LOCATION	EL. "A"
LEFT REAR	1036.50
LEFT FORWARD	1033.25
RIGHT REAR	1036.00
RIGHT FORWARD	1032.75

NOTES:

1. REMOVE EXISTING ABUTMENT TO EL. "A" IN ABUTMENT LOCATION TABLE.
2. PLUG ALL OUTLET PIPES AT BOTH ENDS USING CEMENT GROUT COMPOSED OF ONE PART OF HYDRAULIC CEMENT (CMS 701) AND THREE PARTS OF SAND (CMS 703.03), BY VOLUME, AND WATER.

LEGEND:

DENOTES ADDITIONAL PORTION OF STEM & FOOTING TO BE REMOVED PER ITEM 202-PORTIONS OF STRUCTURE REMOVED, OVER 20 FOOT SPAN, AS PER PLAN.

DENOTES PORTION TO BE REMOVED PER ITEM 202-PORTIONS OF STRUCTURE REMOVED, OVER 20 FOOT SPAN, AS PER PLAN.

DENOTES STEEL SHEET PILING (TYP.)

AS-BUILT

THIS RECORD DRAWING HAS BEEN PREPARED IN PART BY THE ENGINEER OF RECORD TO DEPICT CHANGES MADE DURING CONSTRUCTION, BASED ON INFORMATION REPORTED BY THE CONSTRUCTION CONTRACTOR.

DESIGN AGENCY
ms consultants, inc.
engineers, architects & planners
2221 Schrock Road
Columbus, OH 43229
Tel 614.898.7100 Fax 614.898.7070
www.msconsultants.com

DESIGNED	DRAWN	REVIEWED	DATE
JRB	JR	JDH	1/2/2013
CHECKED	REVISED	STRUCTURE FILE NUMBER	
WER	WER	7803990/7804024	

ABUTMENT REMOVAL DETAILS
BRIDGE NO. TRU-80-0591L/R
OVER LOGAN WAY

TRU-80-4.70
PID No. 76411

ms consultants, inc.

PLOT.CEL

ms consultants, inc.
msconsultants.com

Ohio DOT Workspace
Marucci & Gaffney TRU-80 Design Build

www.msconsultants.com

1"
0.5"
0

UCF: ohdot1V8i
PCF: 60-08285_Youngstown

Batchplot Spec: \\youngstown-fs1\n\60\08285\standards\plotdrv\batchplt.spc
Pen Table: S:\std\plotting\usth\V8i\pen\V8i_ms_std.tbl
Plot Driver: S:\std\plotting\usth\V8i\PDF.pltcfg

Model: Sheet
Printed: 1/6/2014 @ 3:54:34 PM
File: \\youngstown-fs1\n\60\08285\structures\TRU-80-0591-Logan\sheets\080-0591LRE002.dgn

34" x 22"

View: SHEET
By: wruggles

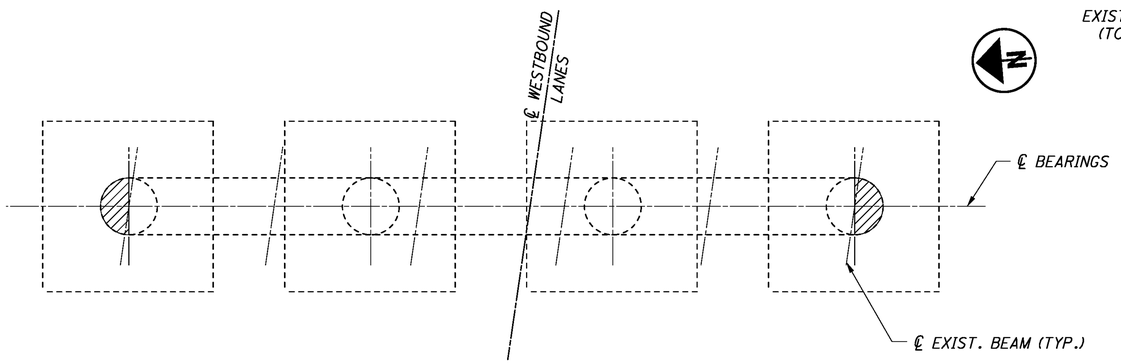

PLAN
(LEFT BRIDGE SHOWN, RIGHT BRIDGE SIMILAR)

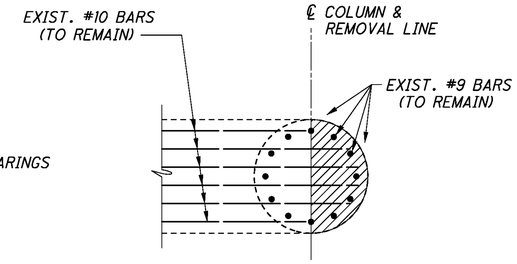

VIEW A-A

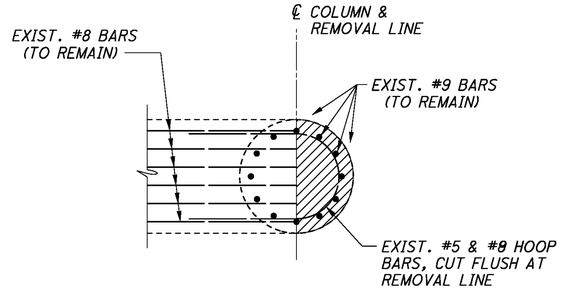

SECTION B-B

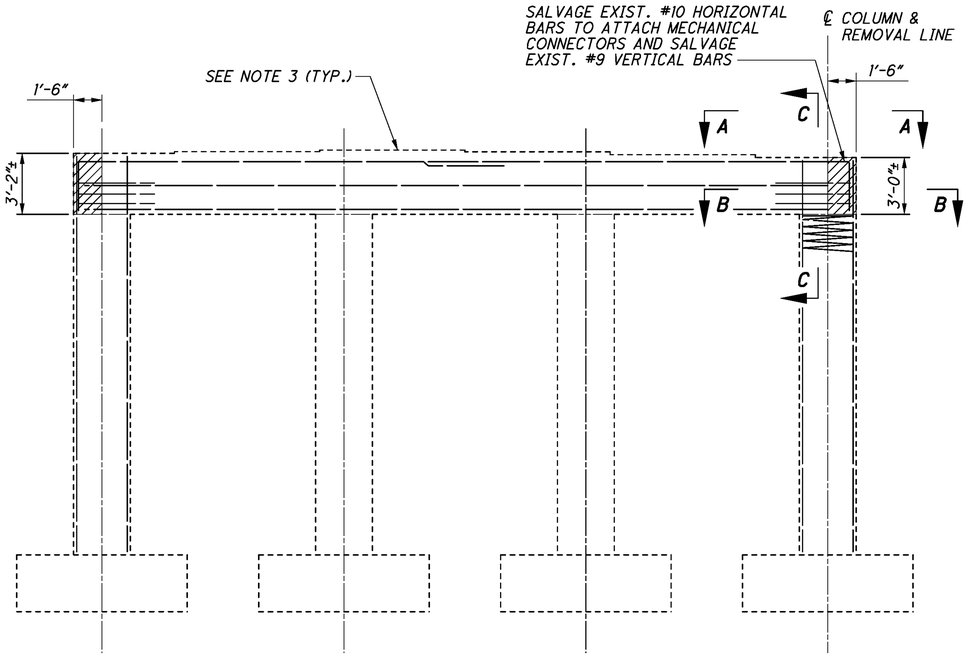

ELEVATION
(LEFT BRIDGE SHOWN, RIGHT BRIDGE SIMILAR)

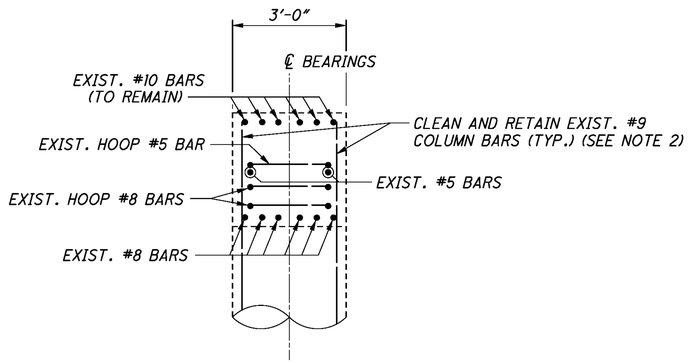

SECTION C-C

LEGEND:

PORTION OF STRUCTURE TO BE REMOVED PER ITEM 202

AS-BUILT

THIS RECORD DRAWING HAS BEEN PREPARED IN PART BY THE ENGINEER OF RECORD TO DEPICT CHANGES MADE DURING CONSTRUCTION, BASED ON INFORMATION REPORTED BY THE CONSTRUCTION CONTRACTOR.

NOTES:

1. PIER CAP REMOVAL SHALL BE COORDINATED WITH PHASE CONSTRUCTION SHEETS.
2. IF THE BOND BETWEEN THE EXISTING PIER CAP CONCRETE AND AN EXISTING VERTICAL COLUMN REINFORCING BAR HAS BEEN DESTROYED, OR IF MORE THAN ONE-HALF OF THE PERIPHERY OF A BAR HAS BEEN EXPOSED, THE CONTRACTOR SHALL REMOVE THE ADJACENT CONCRETE TO A DEPTH THAT WILL PROVIDE A MINIMUM ONE INCH CLEARANCE AROUND THE BAR.
3. SCARIFY THE TOP OF THE EXISTING PIER CAP TO A DEPTH OF 1/4 INCH.
4. PROVIDE TEMPORARY SUPPORT OF EXTERIOR BEAMS IF PIER REMOVALS OCCUR WHILE THE EXISTING DECK AND FASCIA BEAM ARE STILL IN PLACE. SUPPORT THE TEMPORARY COLUMN ON A BASE PLATE ON THE PIER FOOTING AND STRAP THE TEMPORARY COLUMN TO THE EXISTING PIER COLUMN AT 10'-0" MAXIMUM SPACING. PROVIDE A CAP PLATE AND BEARING. REFER TO CMS 501.05.
5. ITEM 509 REINFORCING STEEL, REPLACEMENT OF EXISTING REINFORCING STEEL, AS PER PLAN: REPLACE ALL EXISTING REINFORCING BARS DEEMED BY THE ENGINEER TO BE UNUSABLE BECAUSE OF CORROSION. REPLACE ALL EXISTING REINFORCING STEEL BARS WHICH ARE TO BE INCORPORATED INTO THE NEW WORK AND ARE DEEMED BY THE ENGINEER TO BE MADE UNUSABLE BY CONCRETE REMOVAL OPERATIONS WITH NEW EPOXY COATED REINFORCING STEEL OF THE SAME SIZE.

DESIGN AGENCY
ms consultants, inc.
engineers, architects & planners
225 Federal Street
Youngstown, OH 44503
Tel 330.744.5321 Fax 330.744.3321
www.msconsultants.com

DESIGNED	DRAWN	REVIEWED	DATE
WER	KRM	JDH	1/2/2013
CHECKED	REVISED	STRUCTURE FILE NUMBER	
RSW		7803990/7804024	

PIER REMOVAL DETAILS
BRIDGE NO. TRU-80-0591L/R
OVER LOGAN WAY

TRU-80-4.70
PID No. 76411

ms consultants, inc.

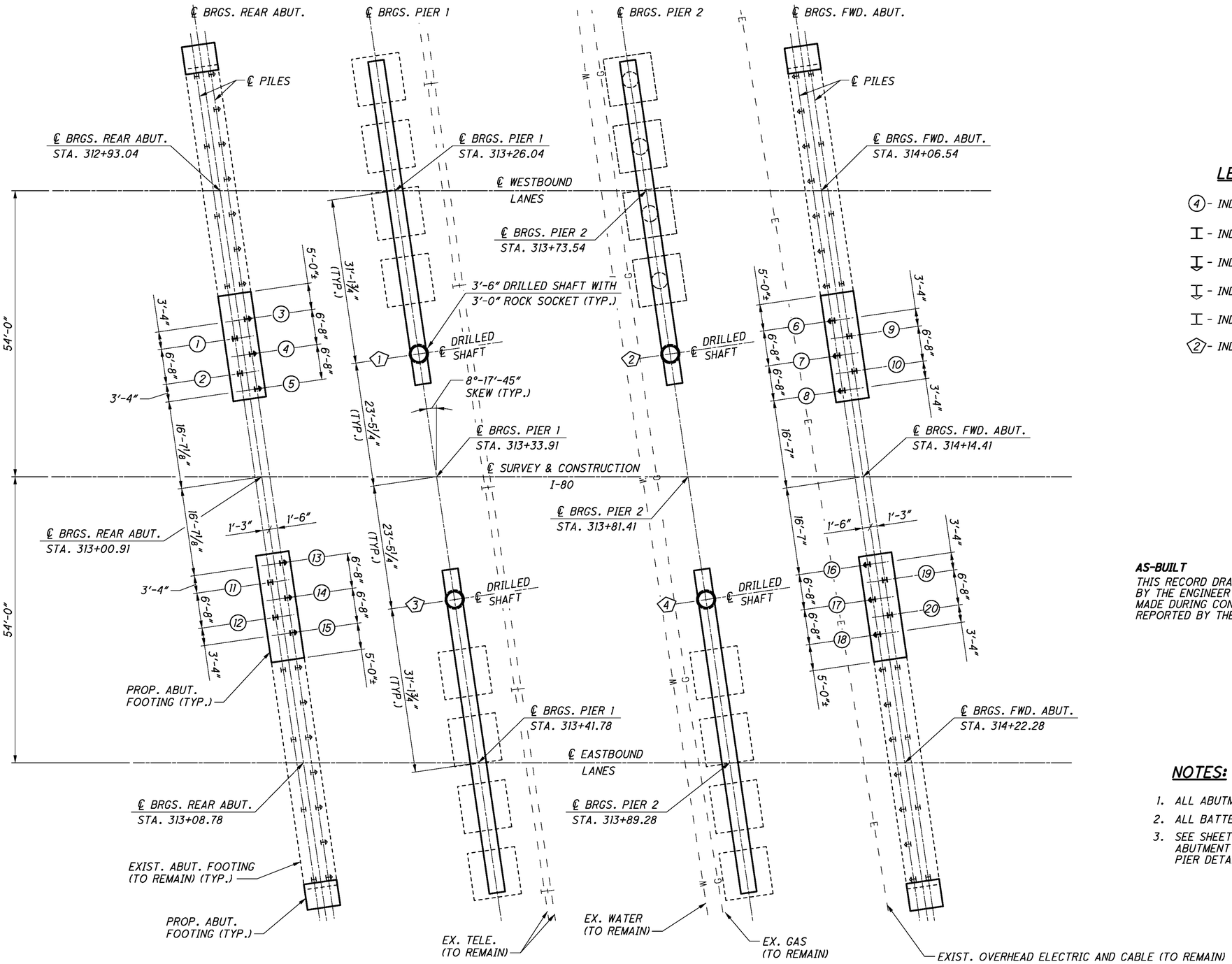

FOUNDATION LAYOUT PLAN

LEGEND

- (4) - INDICATES PILE NUMBER
- I - INDICATES PROPOSED VERTICAL PILE
- I - INDICATES PROPOSED BATTERED PILE
- I - INDICATES EXISTING BATTERED PILE
- I - INDICATES EXISTING VERTICAL PILE
- (2) - INDICATES DRILLED SHAFT NUMBER

AS-BUILT

THIS RECORD DRAWING HAS BEEN PREPARED IN PART BY THE ENGINEER OF RECORD TO DEPICT CHANGES MADE DURING CONSTRUCTION, BASED ON INFORMATION REPORTED BY THE CONSTRUCTION CONTRACTOR.

NOTES:

1. ALL ABUTMENT PILES SHALL BE HP10 X 42.
2. ALL BATTERED PILES SHALL HAVE 1:4 BATTER.
3. SEE SHEETS 8, 9, 10, 11 & 12 FOR ADDITIONAL ABUTMENT DETAILS. SEE SHEETS 13 & 14 FOR PIER DETAILS.

ESTIMATED AVERAGE PILE LENGTHS				
	REAR ABUT. RIGHT	REAR ABUT. LEFT	FORWARD ABUT. RIGHT	FORWARD ABUT. LEFT
ESTIMATED LENGTH	30'	30'	30'	30'

DESIGN AGENCY
ms consultants, inc.
engineers, architects & planners
2221 Schrock Road
Columbus, Ohio 43229-1547
Tel 614.898.7700 Fax 614.898.7570
www.msconsultants.com

DESIGNED	DRAWN	REVIEWED	DATE
WER	KRM	JDH	1/2/2013
CHECKED	REVISED	STRUCTURE FILE NUMBER	
RSW		7803990/7804024	

FOUNDATION LAYOUT PLAN
BRIDGE NO. TRU-80-0591L/R
OVER LOGAN WAY

TRU-80-4.70
PID No. 76411

ms consultants, inc.

PLOT.CEL
ms consultants, inc.
msconsultants.com
Ohio DOT Workspace
Marucci & Gaffney TRU-80 Design Build
www.msconsultants.com
UCF: ohdotV8i
PCF: 60-08285_Youngstown
Batchplot Spec: \\youngstown-fs1\n\60\08285\standards\plotdrv\batchplt.spc
Pen Table: S:\std\plotting\ustn\V8i\pen\V8i_ms_std.tbl
Plot Driver: S:\std\plotting\ustn\V8i\PDF.pltcfg
34" x 22"
Model: Sheet
Printed: 1/6/2014 @ 3:54:36 PM
File: \\youngstown-fs1\n\60\08285\structures\TRU-80-0591_Logan\sheets\080_0591LFP001.dgn
View: SHEET
By: wruggles

PLOT.CEL
ms consultants, inc.
msconsultants.com
Ohio DOT Workspace
Marucci & Gaffney TRU-80 Design Build
www.msconsultants.com
UCF: ohdotV8i
PCF: 60-08285_Youngstown
Batchplot Spec: \\youngstown-fs1\n\60\08285\standards\plotdrv\batchplt.spc
Pen Table: S:\std\plotting\ustn\V8\pen V8_ms_std.tbl
Plot Driver: S:\std\plotting\ustn\V8\PDP.pltcfg
Model: Sheet
Printed: 1/6/2014 @ 3:54:38 PM
File: \\youngstown-fs1\n\60\08285\structures\TRU-80-0591_Logan\sheets\080_059LAR001.dgn
View SHEET
By: wruggles
34" x 22"

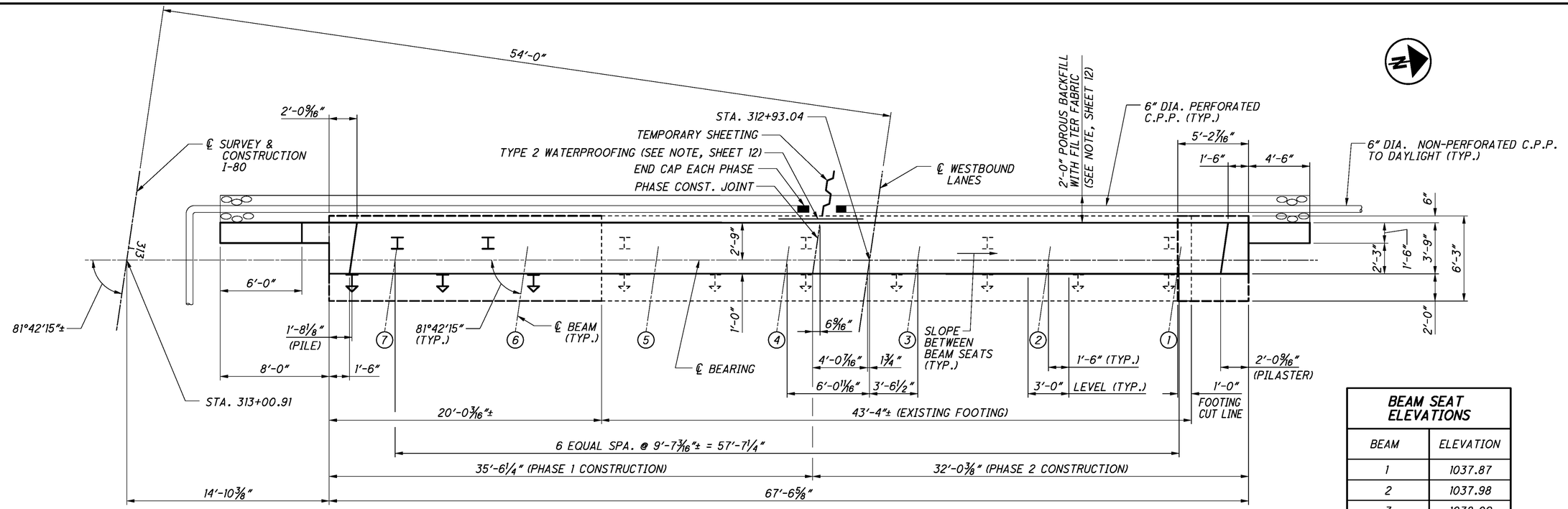

LEFT REAR ABUTMENT PLAN

BEAM SEAT ELEVATIONS	
BEAM	ELEVATION
1	1037.87
2	1037.98
3	1038.09
4	1038.01
5	1037.82
6	1037.62
7	1037.43

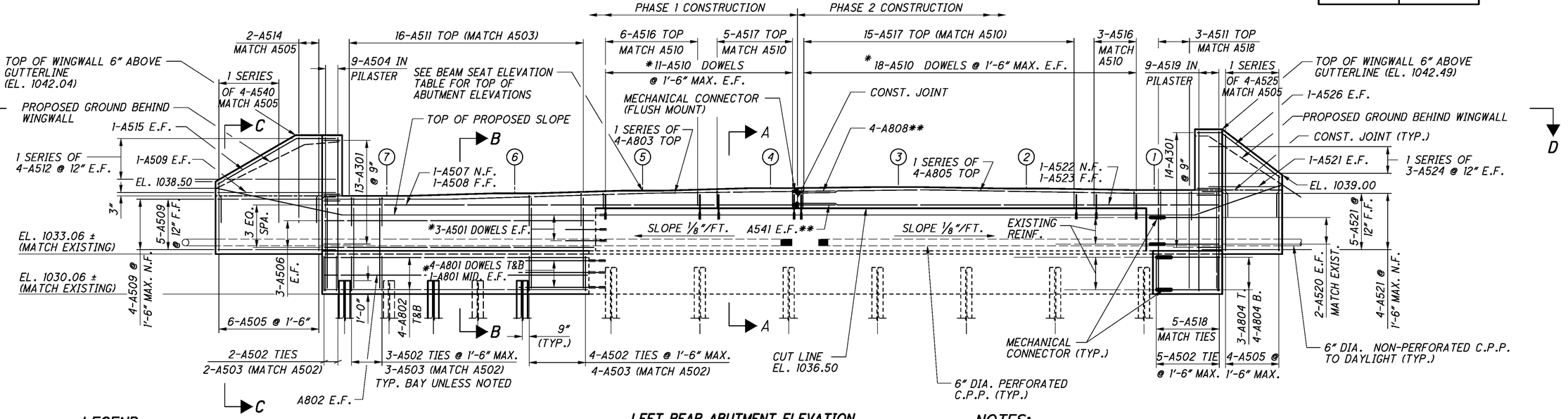

LEFT REAR ABUTMENT ELEVATION

LEGEND:

* DOWEL INTO THE EXISTING STRUCTURE USING HILTI HIT-HY 150 MAX. ADHESIVE ANCHORING SYSTEM, OR APPROVED EQUAL.

** INDICATES BAR WITH ONE END THREADED

MINIMUM DOWEL EMBEDMENT LENGTH:
9" FOR #5 DOWELS
15" FOR #8 DOWELS

AS-BUILT

THIS RECORD DRAWING HAS BEEN PREPARED IN PART BY THE ENGINEER OF RECORD TO DEPICT CHANGES MADE DURING CONSTRUCTION, BASED ON INFORMATION REPORTED BY THE CONSTRUCTION CONTRACTOR.

NOTES:

1. ELEVATIONS TAKEN ALONG CENTERLINE BEARINGS.
2. MINIMUM REBAR LAPS:
   #4 BARS = 1'-9"
   #5 BARS = 2'-0"
   #8 BARS = 5'-0"
3. FOR ABUTMENT REMOVAL, SEE SHEET 5.
4. FOR SECTIONS AND DETAILS, SEE SHEET 12.
5. FOR GENERAL NOTES, SEE SHEETS G1 & G2.
6. FOR REINFORCING STEEL LIST, SEE SHEET 31.
7. FOR FOUNDATION LAYOUT PLAN, SEE SHEET 7.

DESIGN AGENCY
ms consultants, inc.
engineers, architects & planners
225 Federal Street
Youngstown, Ohio 44503
Tel 330.744.5321 Fax 330.744.3070
www.msconsultants.com

DESIGNED	DRAWN	REVIEWED	DATE
SRM	JP	JDH	1/2/2013
CHECKED	REVISED	STRUCTURE FILE NUMBER	
WER		7803990/7804024	

LEFT BRIDGE REAR ABUTMENT PLAN AND ELEVATION

BRIDGE NO. TRU-80-0591L/R
OVER LOGAN WAY

TRU-80-4.70
PID No. 76411

ms consultants, inc.

PLOT.CEL
ms consultants, inc.
msconsultants.com
Ohio DOT Workspace
Marucci & Gaffney TRU-80 Design Build
www.msconsultants.com
1" 0 0.5"
UCF: ohdotV8i
PCF: 60-08285_Youngstown
Batchplot Spec: \\youngstown-fs1\n\60\08285\standards\plotdrv\batchplt.spc
Pen Table: S:\std\plotting\ustn\V8\pen\V8_ms_std.tbl
Plot Driver: S:\std\plotting\ustn\V8\PDP.pltcfg
Model: Sheet @ 3:54:39 PM View: SHEET
Plotted: 1/6/2014 By: wruggles
File: \\youngstown-fs1\n\60\08285\structures\TRU-80-0591L_Logan\sheets\080_0591LAF001.dgn
34" x 22"

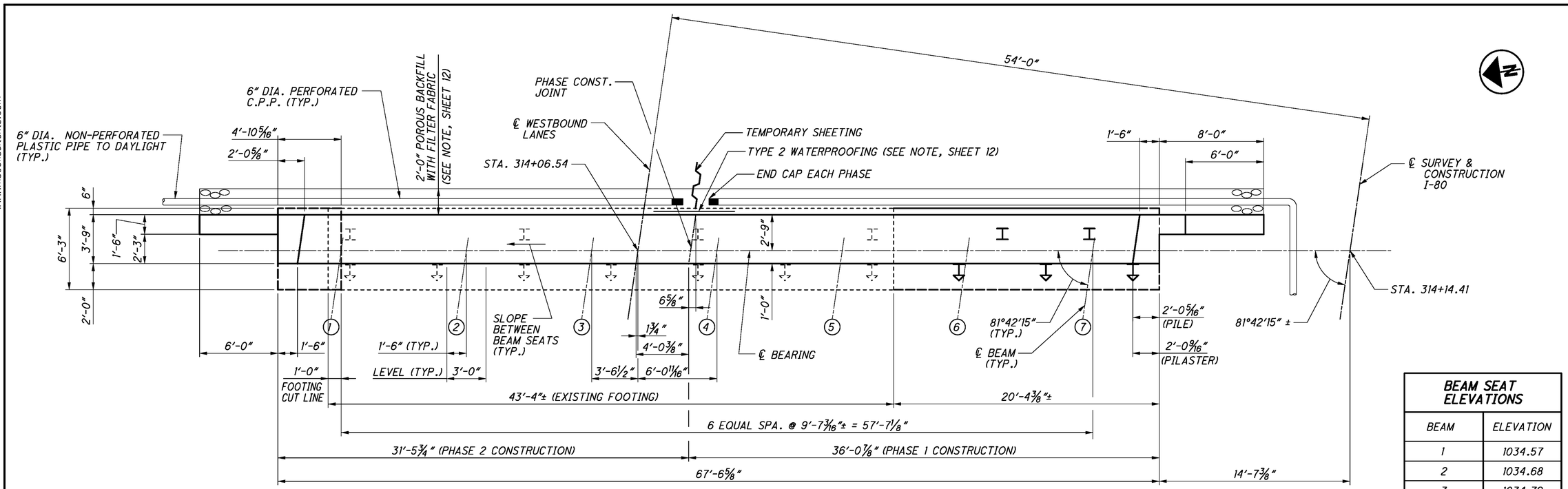

LEFT FORWARD ABUTMENT PLAN

BEAM SEAT ELEVATIONS	
BEAM	ELEVATION
1	1034.57
2	1034.68
3	1034.79
4	1034.71
5	1034.52
6	1034.32
7	1034.13

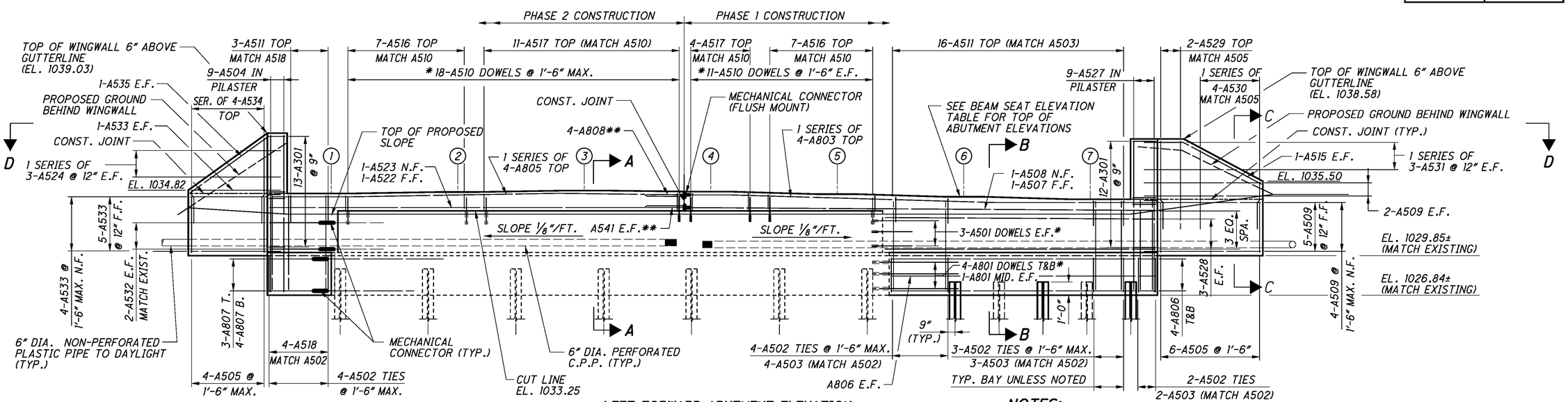

LEFT FORWARD ABUTMENT ELEVATION

LEGEND:

* DOWEL INTO THE EXISTING STRUCTURE USING HILTI HIT-HY 150 MAX. ADHESIVE ANCHORING SYSTEM, OR APPROVED EQUAL.

** INDICATES BAR WITH ONE END THREADED

MINIMUM DOWEL EMBEDMENT LENGTH:
9" FOR #5 DOWELS
15" FOR #8 DOWELS

AS-BUILT
THIS RECORD DRAWING HAS BEEN PREPARED IN PART BY THE ENGINEER OF RECORD TO DEPICT CHANGES MADE DURING CONSTRUCTION, BASED ON INFORMATION REPORTED BY THE CONSTRUCTION CONTRACTOR.

NOTES:

1. ELEVATIONS TAKEN ALONG CENTERLINE BEARINGS.
2. MINIMUM REBAR LAPS:
   #4 BARS = 1'-9"
   #5 BARS = 2'-0"
   #8 BARS = 5'-0"
3. FOR ABUTMENT REMOVAL, SEE SHEET 5.
4. FOR SECTIONS AND DETAILS, SEE SHEET 12.
5. FOR GENERAL NOTES, SEE SHEETS G1 & G2.
6. FOR REINFORCING STEEL LIST, SEE SHEET 31.
7. FOR FOUNDATION LAYOUT, SEE SHEET 7.

DESIGN AGENCY
ms consultants, inc.
engineers, architects & planners
2221 Schrock Road
Columbus, Ohio 43229
Tel 614.898.7100 Fax 614.898.7070
www.msconsultants.com

DESIGNED	DRAWN	REVIEWED	DATE
SRM	JP	JDH	1/2/2013
CHECKED	REVISED	STRUCTURE FILE NUMBER	
WER		7803990/7804024	

LEFT BRIDGE FORWARD ABUTMENT PLAN AND ELEVATION
BRIDGE NO. TRU-80-0591L/R
OVER LOGAN WAY

TRU-80-4.70
PID No. 76411

9 / 32
117 / 142

ms consultants, inc.

PLOT.CEL
ms consultants, inc.
msconsultants.com
Ohio DOT Workspace
Marucci & Gaffney TRU-80 Design Build
www.msconsultants.com
UCF: ohdotV8i
PCF: 60-08285_Youngstown
Batchplot Spec: \\youngstown-fs1\n\60\08285\standards\plotdrv\batchplt.spc
Pen Table: S:\std\plotting\usstn\V8\pen\V8i_ms_std.tbl
Plot Driver: S:\std\plotting\usstn\V8\PDP.pltcfg
Model: Sheet @ 3:54:41 PM View: SHEET
Printed: 1/6/2014 By: wruggles
File: \\youngstown-fs1\n\60\08285\structures\TRU-80-0591_Logan\sheets\080_0591LAR002.dgn
34" x 22"

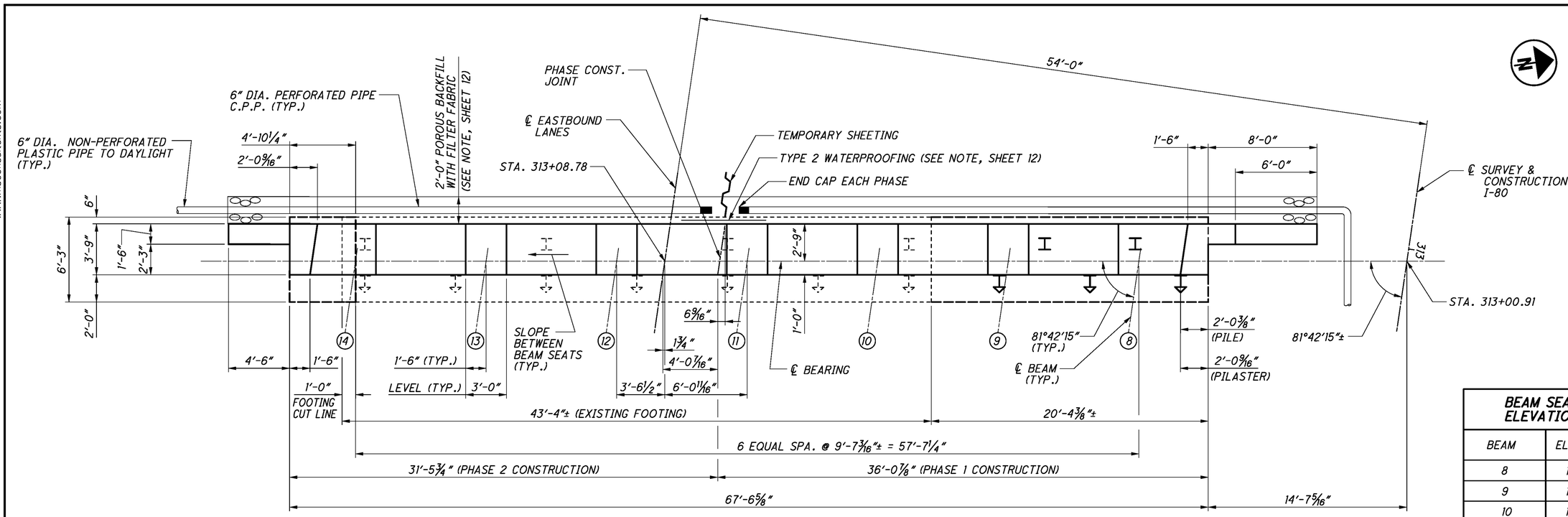

RIGHT REAR ABUTMENT PLAN

BEAM SEAT ELEVATIONS	
BEAM	ELEVATION
8	1037.09
9	1037.20
10	1037.32
11	1037.43
12	1037.43
13	1037.24
14	1037.05

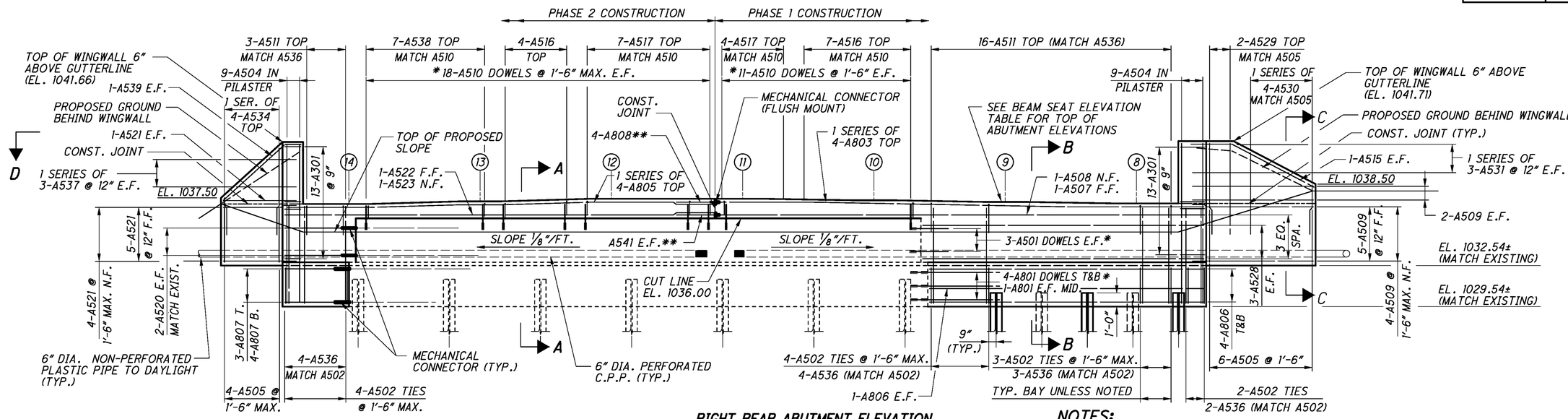

RIGHT REAR ABUTMENT ELEVATION

LEGEND:

* DOWEL INTO THE EXISTING STRUCTURE USING HILTI HIT-HY 150 MAX. ADHESIVE ANCHORING SYSTEM, OR APPROVED EQUAL.

** INDICATES BAR WITH ONE END THREADED

MINIMUM DOWEL EMBEDMENT LENGTH:
9" FOR #5 DOWELS
15" FOR #8 DOWELS

AS-BUILT
THIS RECORD DRAWING HAS BEEN PREPARED IN PART BY THE ENGINEER OF RECORD TO DEPICT CHANGES MADE DURING CONSTRUCTION, BASED ON INFORMATION REPORTED BY THE CONSTRUCTION CONTRACTOR.

NOTES:

1. ELEVATIONS TAKEN ALONG CENTERLINE BEARINGS.
2. MINIMUM REBAR LAPS:
   #4 BARS = 1'-9"
   #5 BARS = 2'-0"
   #8 BARS = 5'-0"
3. FOR ABUTMENT REMOVAL, SEE SHEET 5.
4. FOR SECTIONS AND DETAILS, SEE SHEET 12.
5. FOR GENERAL NOTES, SEE SHEETS G1 & G2.
6. FOR REINFORCING STEEL LIST, SEE SHEET 31A.
7. FOR FOUNDATION LAYOUT PLAN, SEE SHEET 7.

DESIGN AGENCY
ms consultants, inc.
engineers, architects & planners
2221 Schrock Road, Suite 100
Columbus, Ohio 43229
Tel 614.898.7100 Fax 614.898.7070
www.msconsultants.com

DESIGNED	DRAWN	REVIEWED	DATE
SRM	JP	JDH	1/2/2013
CHECKED	REVISED	STRUCTURE FILE NUMBER	
WER		7803990/7804024	

RIGHT REAR ABUTMENT PLAN AND ELEVATION
BRIDGE NO. TRU-80-0591L/R
OVER LOGAN WAY

TRU-80-4.70
PID No. 76411

ms consultants, inc.

PLOT.CEL
ms consultants, inc.
msconsultants.com
www.msconsultants.com
Ohio DOT Workspace
Marucci & Gaffney TRU-80 Design Build
1"
0.5"
0
UCF: ohdotV8i
PCF: 60-08285_Youngstown

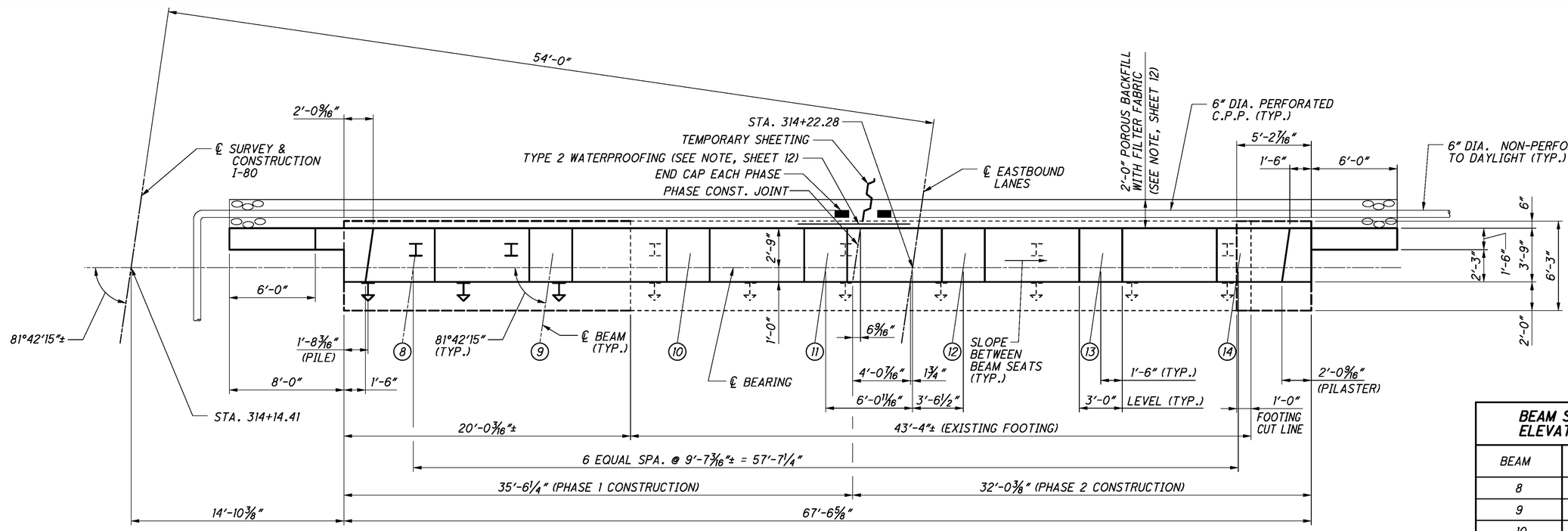

RIGHT FORWARD ABUTMENT PLAN

BEAM SEAT ELEVATIONS	
BEAM	ELEVATION
8	1033.88
9	1033.99
10	1034.10
11	1034.22
12	1034.22
13	1034.03
14	1033.84

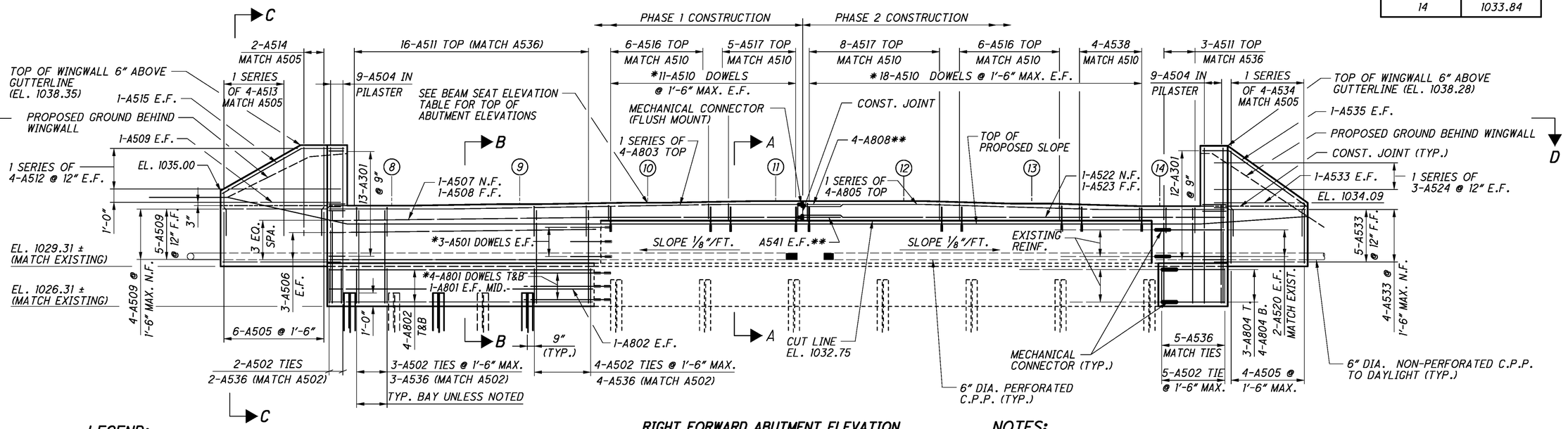

RIGHT FORWARD ABUTMENT ELEVATION

LEGEND:

* DOWEL INTO THE EXISTING STRUCTURE USING HILTI HIT-HY 150 MAX. ADHESIVE ANCHORING SYSTEM, OR APPROVED EQUAL.

** INDICATES BAR WITH ONE END THREADED

MINIMUM DOWEL EMBEDMENT LENGTH:
9" FOR #5 DOWELS
15" FOR #8 DOWELS

AS-BUILT

THIS RECORD DRAWING HAS BEEN PREPARED IN PART BY THE ENGINEER OF RECORD TO DEPICT CHANGES MADE DURING CONSTRUCTION, BASED ON INFORMATION REPORTED BY THE CONSTRUCTION CONTRACTOR.

NOTES:

1. ELEVATIONS TAKEN ALONG CENTERLINE BEARINGS.
2. MINIMUM REBAR LAPS:
   #4 BARS = 1'-9"
   #5 BARS = 2'-0"
   #8 BARS = 5'-0"
3. FOR ABUTMENT REMOVAL, SEE SHEET 5.
4. FOR SECTIONS AND DETAILS, SEE SHEET 12.
5. FOR GENERAL NOTES, SEE SHEETS G1 & G2.
6. FOR REINFORCING STEEL LIST, SEE SHEET 31A.
7. FOR FOUNDATION LAYOUT PLAN, SEE SHEET 7.

Batchplot Spec: \\youngstown-fs1\n\60\08285\standards\plotdrv\batchplt.spc
Pen Table: S:\std\plotting\astn\V8\pen\V8_ms_std.tbl
Plot Driver: S:\std\plotting\astn\V8\PDP.pltcfg
Model: Sheet @ 3:54:42 PM
Printed: 1/6/2014 By: wruggles
File: \\youngstown-fs1\n\60\08285\structures\TRU-80-0591_Logan\sheets\080_0591LAF002.dgn
34" x 22"
View: SHEET

DESIGN AGENCY
ms consultants, inc.
engineers, architects & planners
225 Second Street
Youngstown, Ohio 44503
Tel 330.743.1070
Fax 330.743.0208
www.msconsultants.com

DESIGNED	DRAWN	REVIEWED	DATE
SRM	JP	JDH	1/2/2013
CHECKED	REVISED	STRUCTURE FILE NUMBER	
WER		7803990/7804024	

RIGHT BRIDGE FORWARD ABUTMENT PLAN AND ELEVATION
BRIDGE NO. TRU-80-0591L/R
OVER LOGAN WAY

TRU-80-4.70
PID No. 76411

ms consultants, inc.

PLOT.CEL

ms consultants, inc.
msconsultants.com

Ohio DOT Workspace
Marucci & Gaffney, TRU-80 Design Build
www.msconsultants.com

1"
0.5"
0

UCF: ohdotV8i
PCF: 60-08285_Youngstown

Batchplot Spec: \\youngstown-fs1\n\60\08285\standards\plotdrv\batchplt.spc
Pen Table: S:\std\plotting\ustn\V8i\pen\V8i_ms_std.tbl
Plot Driver: S:\std\plotting\ustn\V8i\PDF.plt

Model: Sheet
Printed: 1/6/2014 @ 3:54:44 PM
File: \\youngstown-fs1\n\60\08285\structures\TRU-80-0591_Logan\sheets\080_0591LAR003.dgn
View: SHEET
By: wruggles

34" x 22"

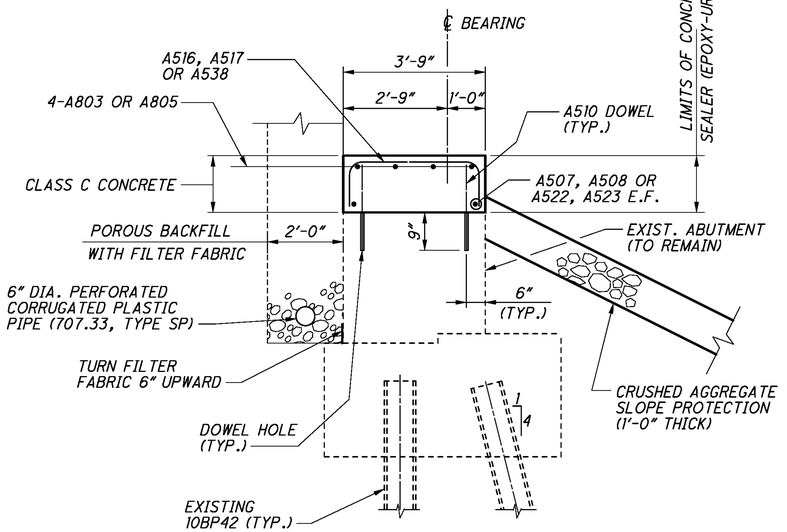

SECTION A-A

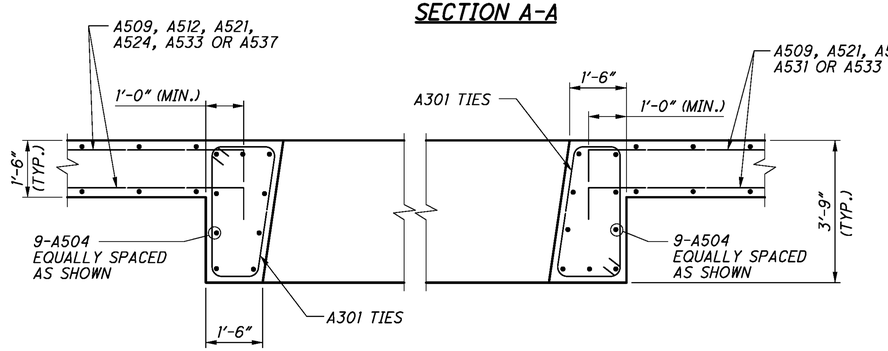

SECTION D-D

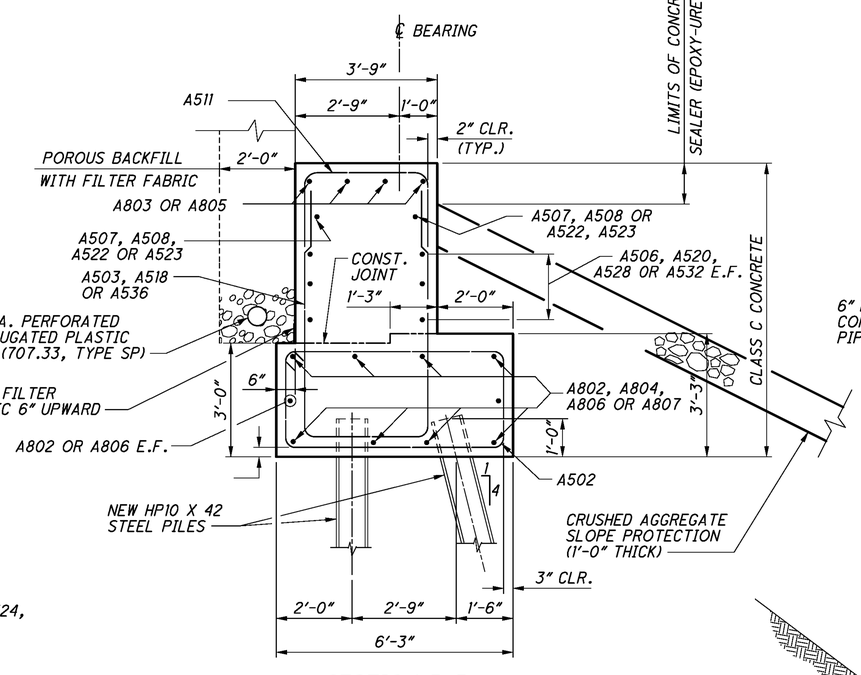

SECTION B-B

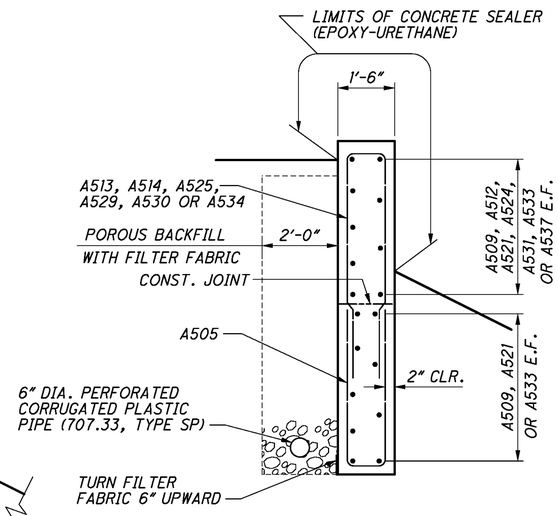

SECTION C-C

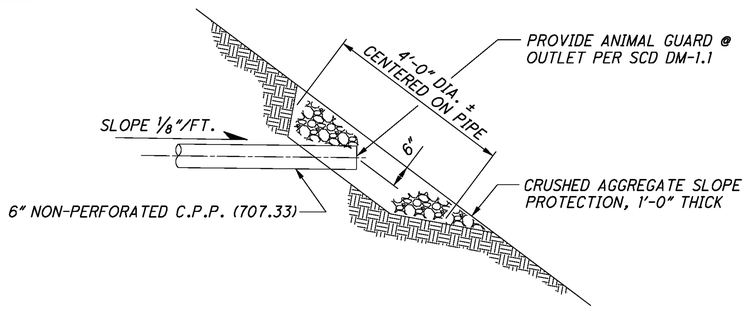

DRAIN PIPE OUTLET DETAIL

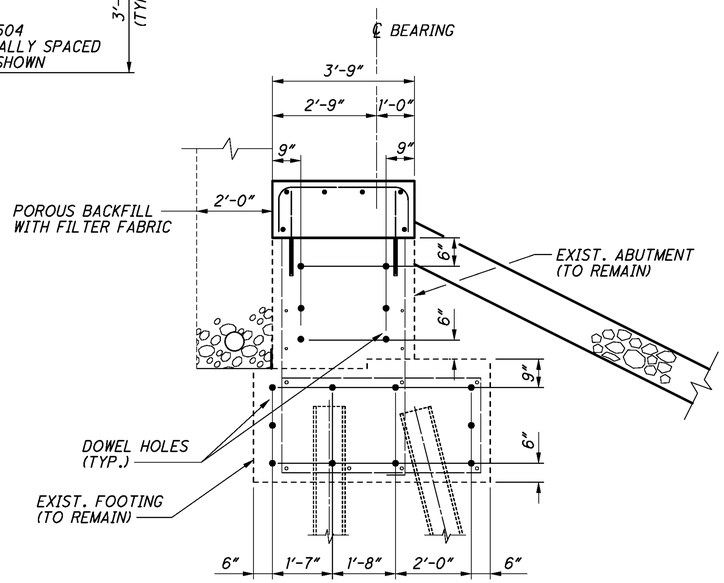

DOWEL HOLE LAYOUT DETAIL

AS-BUILT

THIS RECORD DRAWING HAS BEEN PREPARED IN PART BY THE ENGINEER OF RECORD TO DEPICT CHANGES MADE DURING CONSTRUCTION, BASED ON INFORMATION REPORTED BY THE CONSTRUCTION CONTRACTOR.

NOTES

1. *MECHANICAL CONNECTORS SHALL BE USED AT THE PHASE CONSTRUCTION JOINT. THE MECHANICAL CONNECTOR SHALL MEET THE REQUIREMENTS OF 509.07. REINFORCING BAR LENGTHS ARE DETAILED TO THE FACE OF JOINT.*
2. *POROUS BACKFILL WITH FILTER FABRIC, 2 FEET THICK SHALL EXTEND UP TO THE PLANE OF THE SUBGRADE, AND LATERALLY TO THE LIMITS SHOWN IN THE PLAN.*
3. *TYPE 2 WATERPROOFING, 3'-0" WIDE SHALL BE CENTERED ON THE JOINT AND EXTEND THE FULL LENGTH OF THE PHASE CONSTRUCTION JOINT FROM 1'-6" BELOW THE JOINT WITH EXISTING CONCRETE TO THE TOP OF THE DIAPHRAGM SEAT. INSTALL PRIOR TO NEOPRENE SHEETING.*

DESIGN AGENCY
ms consultants, inc.
engineers, architects & planners
225 Federal Street
Youngstown, OH 44503
Tel 330.744.5321 Fax 330.744.3574
www.msconsultants.com

DESIGNED	DRAWN	REVIEWED	DATE
SRM	JP	JDH	1/2/2013
CHECKED	REVISED	STRUCTURE FILE NUMBER	
WER		7803990/7804024	

ABUTMENT AND WINGWALL SECTIONS AND DETAILS

BRIDGE NO. TRU-80-0591L/R
OVER LOGAN WAY

TRU-80-4.70
PID No. 76411

ms consultants, inc.

PLOT.CEL
ms consultants, inc.
msconsultants.com
www.msconsultants.com
Ohio DOT Workspace
Marucci & Gaffney TRU-80 Design Build
0 0.5" 1"
UCF: ohdot\V8i
PCF: 60-08285_Youngstown
Batchplot Spec: \\youngstown-fs1\n\60\08285\standards\plotdrv\batchplt.spc
Pen Table: S:\std\plotting\ustn\V8\pen\V8_ms_std.tbl
Plot Driver: S:\std\plotting\ustn\V8\PDF.pltcfg
34" x 22"
View: SHEET
By: wruggles
Model: Sheet @ 3:54:49 PM
Printed: 1/6/2014
File: \\youngstown-fs1\n\60\08285\structures\TRU-80-0591_Logan\sheets\080_0591LP1001.dgn

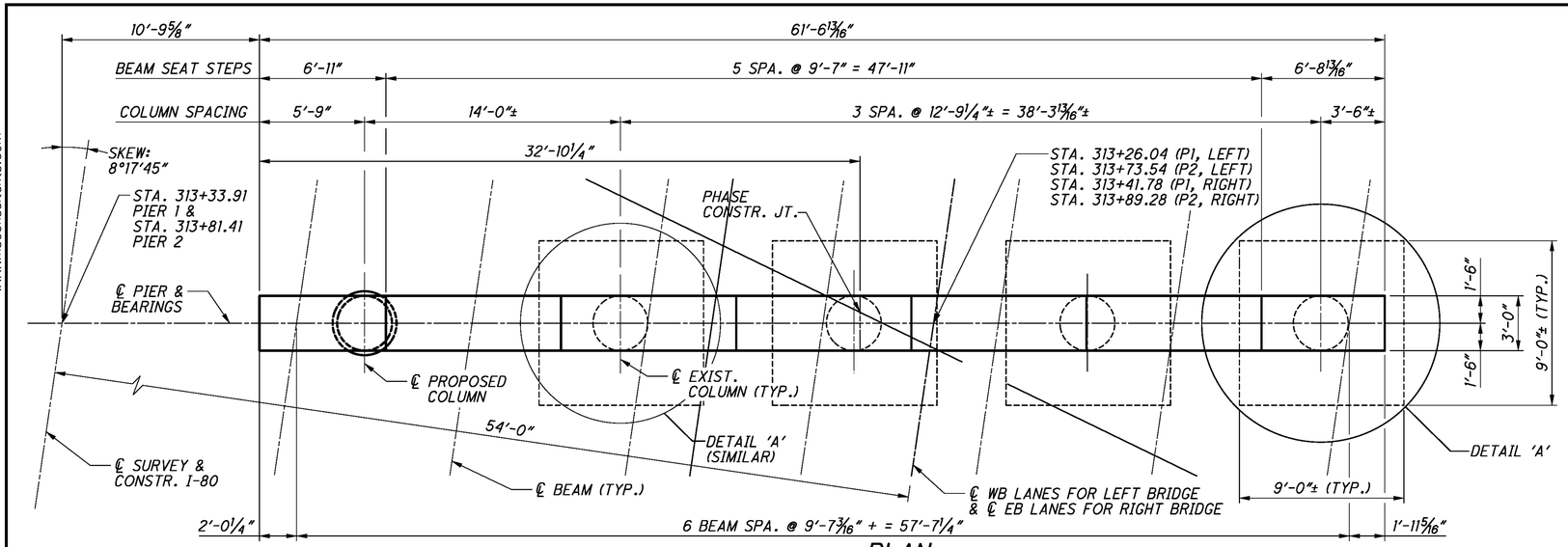

RIGHT BRIDGE

LEFT BRIDGE

PLAN

(RIGHT BRIDGE PIER 1 & 2 SHOWN, LEFT BRIDGE PIER 1 & 2 OPPOSITE HAND)

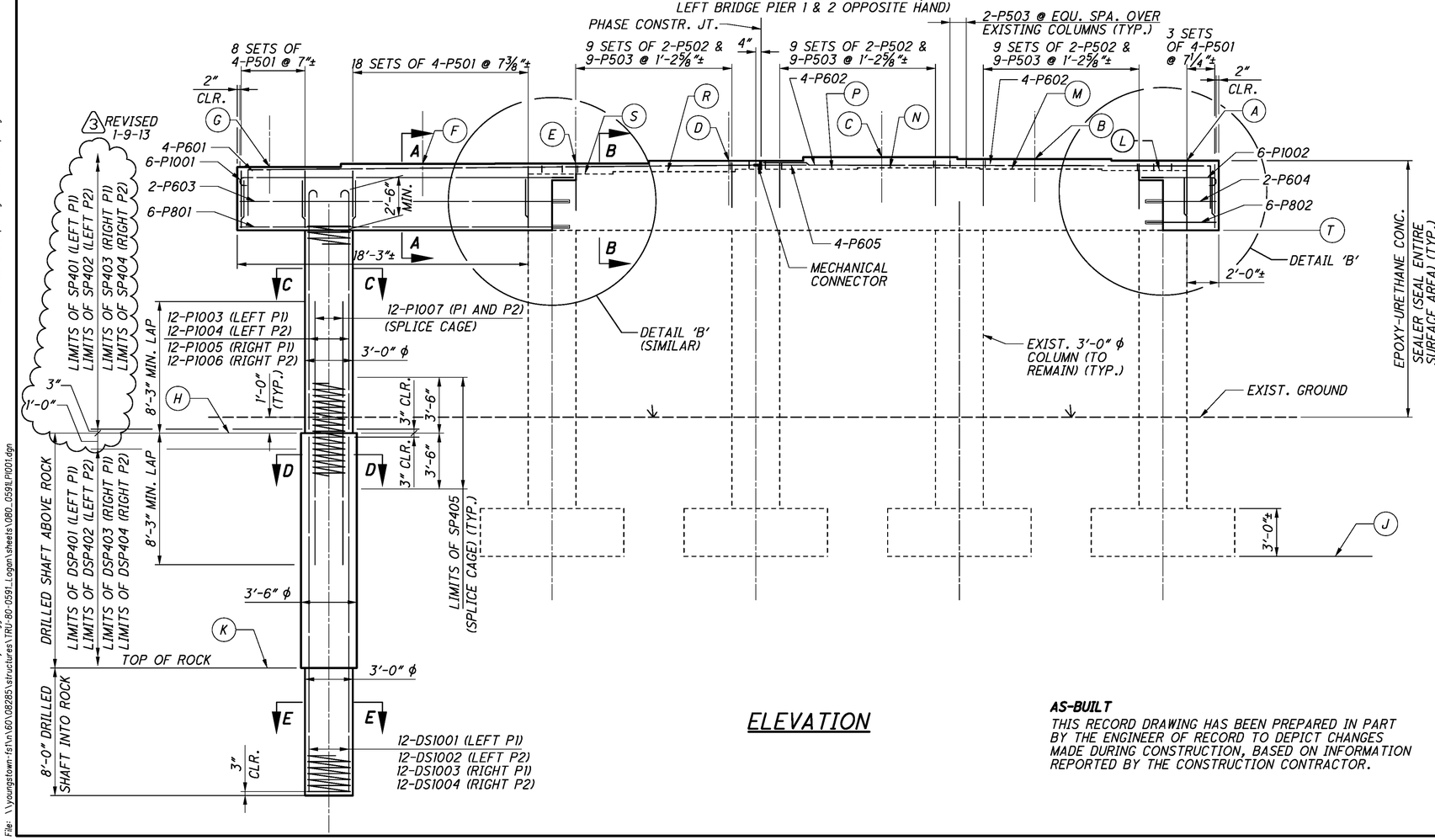

ELEVATION

MIN. REBAR LAP
#6 4'-1" U.N.O.

NOTES:

1. SPIRAL REINFORCEMENT AT TOP OF COLUMNS SHALL BE EMBEDDED 2" INTO PIER CAP CONCRETE.
2. FOR DETAILS 'A' & 'B' & SECTIONS A-A, B-B, C-C, D-D & E-E, SEE SHEET 13/32.
3. P1 INDICATES PIER 1. P2 INDICATES PIER 2.
4. EXISTING STEEL BEAMS MUST BE REMOVED OR TEMPORARILY SHORED DURING CONSTRUCTION OF PIERS.
5. FOR REMOVAL DETAILS, SEE SHEET 6/32.
6. THE GROUT USED FOR DOWELS SHALL BE PER HILTI HIT-HY150 MAX ADHESIVE ANCHORING SYSTEM, OR APPROVED EQUAL.

3 REVISED 1-9-13, PER RFI-02

AB REVISED 2-1-13. THE REINFORCEMENT IN THE ROCK SOCKET WAS SET 3'-0"± (PER CMS 524.09) FROM THE BOTTOM SINCE ROCK WAS ENCOUNTERED LOWER THAN THE SOIL BORINGS INDICATED.

AS-BUILT

THIS RECORD DRAWING HAS BEEN PREPARED IN PART BY THE ENGINEER OF RECORD TO DEPICT CHANGES MADE DURING CONSTRUCTION, BASED ON INFORMATION REPORTED BY THE CONSTRUCTION CONTRACTOR.

TABLE OF ELEVATIONS

POINTS	LEFT BRIDGE		RIGHT BRIDGE	
	PIER NO. 1	PIER NO. 2	PIER NO. 1	PIER NO. 2
A	1037.23	1035.84	1036.43	1035.09
B	1037.34	1035.96	1036.62	1035.28
C	1037.45	1036.07	1036.82	1035.47
D	1037.37	1035.99	1036.81	1035.47
E	1037.18	1035.80	1036.70	1035.36
F	1036.98	1035.60	1036.59	1035.24
G	1036.79	1035.41	1036.48	1035.13
H	1020.30	1020.20	1020.80	1019.40
J	1012.6±	1012.6±	1012.6±	1012.6±
K	1005.0±	1006.0±	1005.0±	(1003.0±) AB
L	1036.59±	1035.02±	1036.01±	1034.42±
M	1036.7±	1035.08±	1036.12±	1034.55±
N	1036.77±	1035.18±	1036.26±	1034.69±
P	1036.84±	1035.22±	1036.36±	1034.80±
R	1036.66±	1035.07±	1036.28±	1034.71±
S	1036.53±	1034.94±	1036.21±	1034.64±
T	1033.52±	1031.92±	1032.98±	1031.40±

DESIGN AGENCY
ms consultants, inc.
engineers, architects & planners
2221 Schrock Road
Columbus, OH 43229
Tel 614.898.7100 Fax 614.898.7070
www.msconsultants.com

DESIGNED	DRAWN	REVIEWED	DATE
WER	KRM	JDH	1/2/2013
CHECKED	REVISED	STRUCTURE FILE NUMBER	
RSW	WER	7803990/7804024	

PIER PLAN AND ELEVATION
BRIDGE NO. TRU-80-0591L/R
OVER LOGAN WAY

TRU-80-4.70
PID No. 76411

ms consultants, inc.

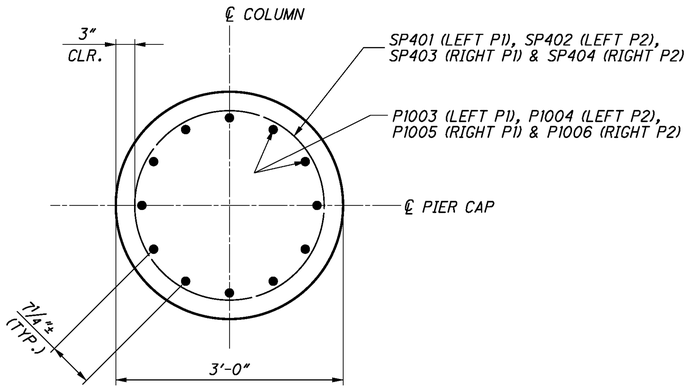

SECTION C-C

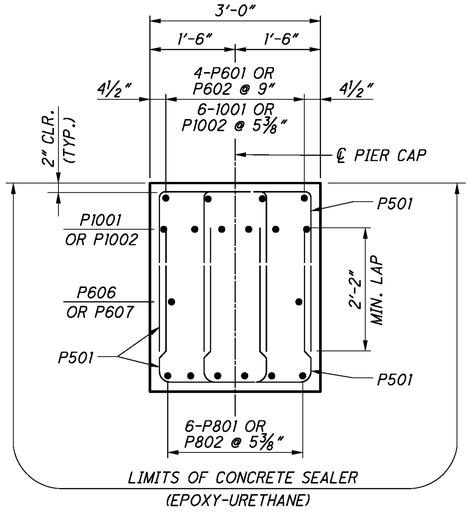

SECTION A-A

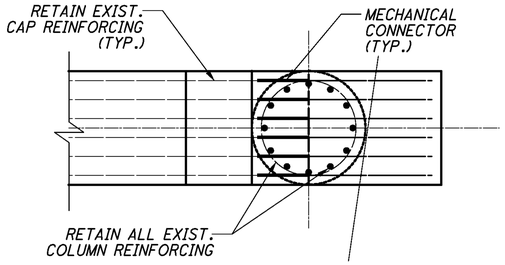

DETAIL 'A'

(#10 REINFORCING SHOWN)

AS-BUILT

THIS RECORD DRAWING HAS BEEN PREPARED IN PART BY THE ENGINEER OF RECORD TO DEPICT CHANGES MADE DURING CONSTRUCTION, BASED ON INFORMATION REPORTED BY THE CONSTRUCTION CONTRACTOR.

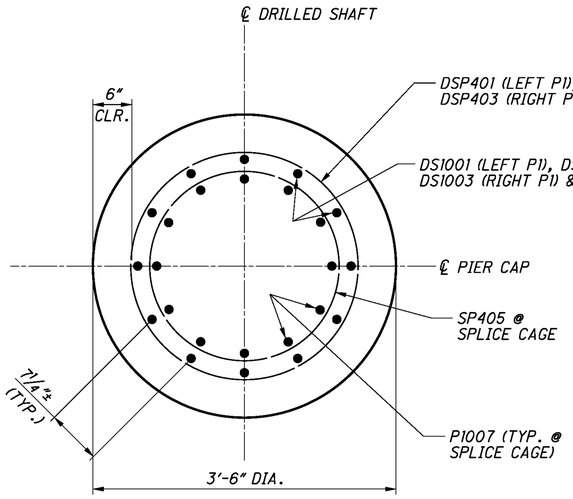

SECTION D-D

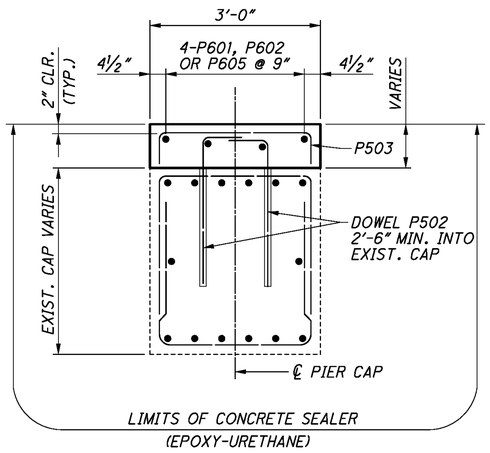

SECTION B-B

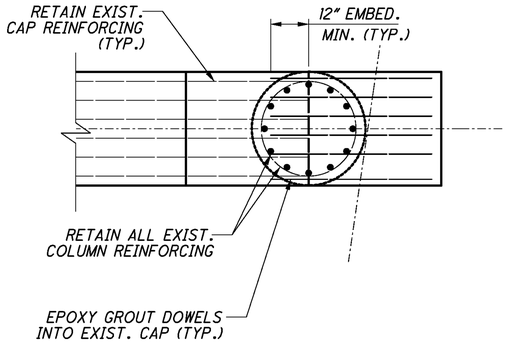

DETAIL 'A'

(BOTTOM & MIDDLE REINFORCING SHOWN)

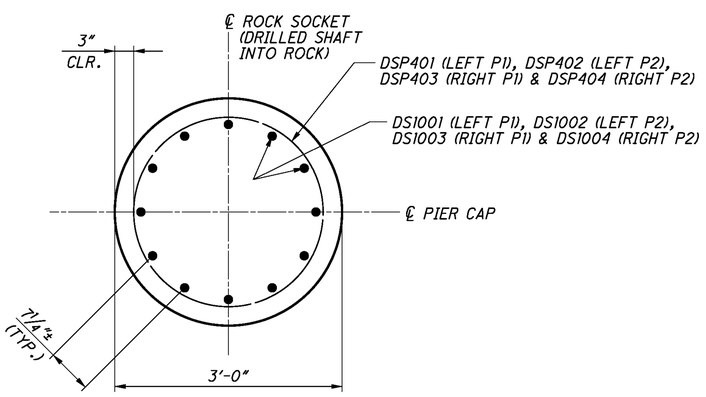

SECTION E-E

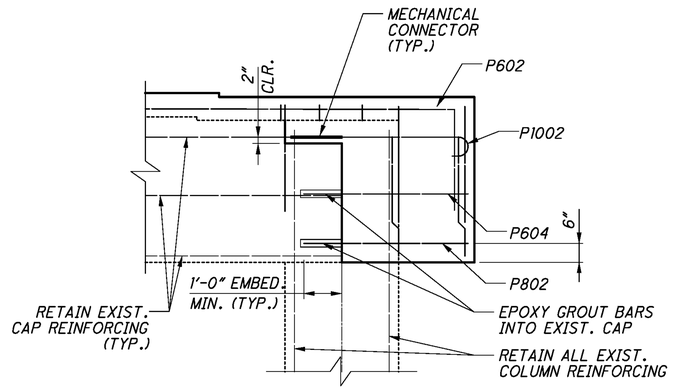

DETAIL 'B'

NOTES:

1. P1 INDICATES PIER 1.
   P2 INDICATES PIER 2.

DESIGN AGENCY
ms consultants, inc.
engineers, architects & planners
2221 Schrock Road
Columbus, OH 43229
Tel 614.895.7700 Fax 614.895.7070
www.msconsultants.com

DESIGNED	DRAWN	REVIEWED	DATE
MJM	JLR	JDH	1/2/2013
CHECKED	REVISED	STRUCTURE FILE NUMBER	
RSW		7803990/7804024	

PIER DETAILS
BRIDGE NO. TRU-80-0591L/R
OVER LOGAN WAY

TRU-80-4.70
PID No. 76411

14 / 32

122
142

PLOT.CEL
ms consultants, inc.
msconsultants.com
Ohio DOT Workspace
Marucci & Gaffney TRU-80 Design Build
www.msconsultants.com
1"
0.5"
0
UCF: ohdot\V8i
PCF: 60-08285_Youngstown
34" x 22"
Batchplot Spec: \\youngstown-fs1\vn\60\08285\standards\plotdrv\batchplt.spc
Pen Table: S:\std\plotting\astn\V8\pen\V8i_ms_std.tbl
Plot Driver: S:\std\plotting\astn\V8i\PDF.pltcfg
Model: Sheet
Printed: 1/6/2014 @ 3:54:52 PM
File: \\youngstown-fs1\vn\60\08285\structures\TRU-80-0591_Logan\sheets\080_0591LPI002.dgn
View: SHEET
By: wruggles
ms consultants, inc.

PLOT.CEL
ms consultants, inc.
msconsultants.com
Ohio DOT Workspace
Marucci & Gaffney TRU-80 Design Build
www.msconsultants.com
1"
0.5"
0
UCF: ohdotV8i
PCF: 60-08285_Youngstown
Batchplot Spec: \\youngstown-fs1\n\60\08285\standards\plotdrv\batchplt.spc
Pen Table: S:\std\plotting\usatn\V8\pen V8i_ms_std.tbl
Plot Driver: S:\std\plotting\usatn\V8\PDF.pltcfg
34" x 22"
View: SHEET
By: wruggles
Model: Sheet @ 3:54:53 PM
Printed: 1/6/2014
File: \\youngstown-fs1\n\60\08285\structures\TRU-80-0591L_Logan\sheets\080_0591LTS001.dgn

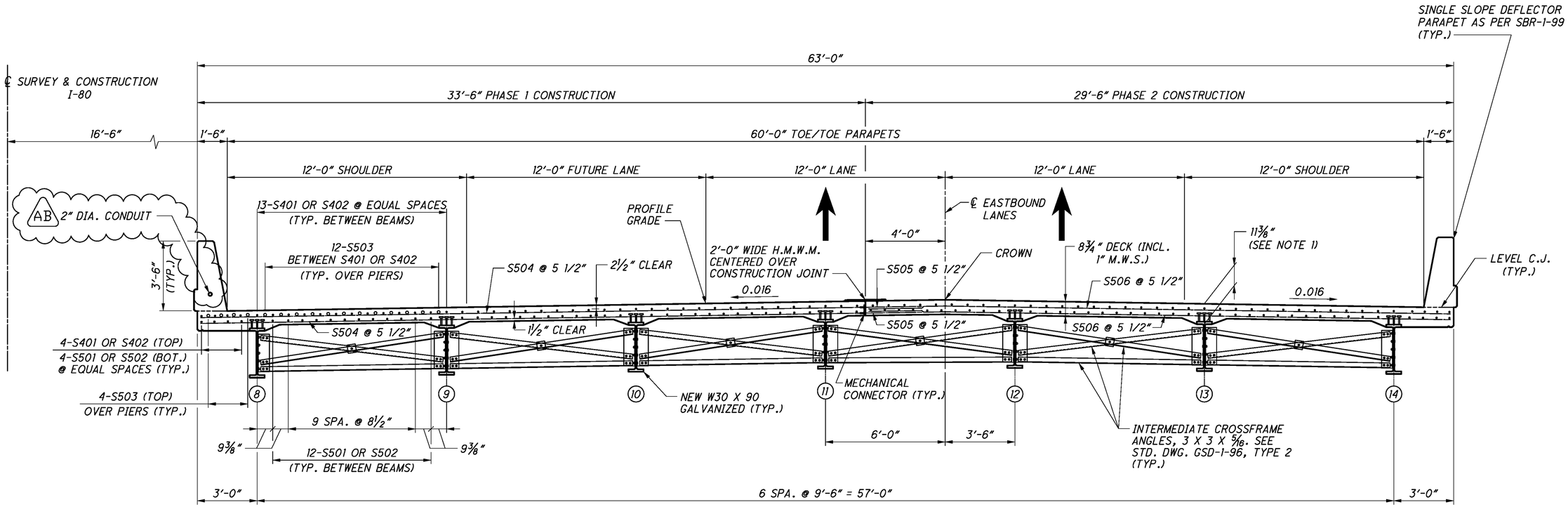

TRANSVERSE SECTION

(RIGHT BRIDGE SHOWN, LEFT BRIDGE OPPOSITE HAND)

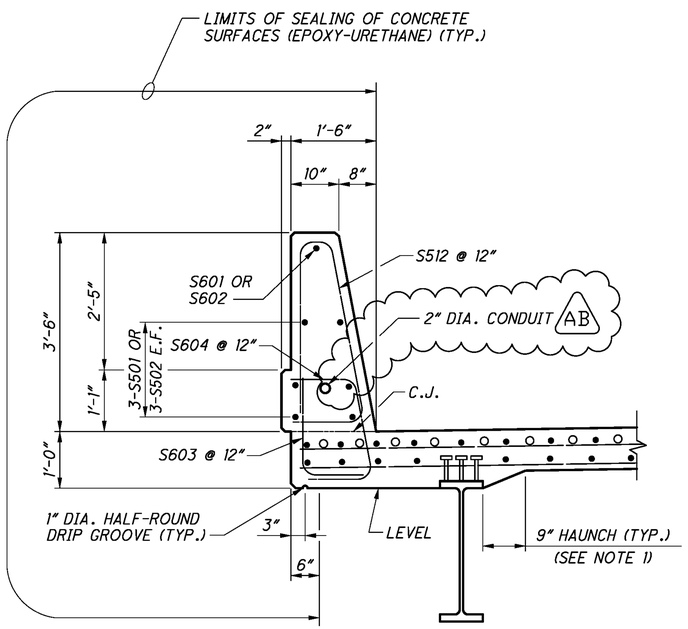

DECK PARAPET DETAIL

AB REVISED 12-9-13

AS-BUILT

THIS RECORD DRAWING HAS BEEN PREPARED IN PART BY THE ENGINEER OF RECORD TO DEPICT CHANGES MADE DURING CONSTRUCTION, BASED ON INFORMATION REPORTED BY THE CONSTRUCTION CONTRACTOR.

NOTES:

1) DECK SLAB CONCRETE: THE HAUNCH THICKNESS WILL VARY AS NECESSARY TO PLACE THE DECK SURFACE AT THE FINISHED GRADE. THE HAUNCH WIDTH IS NOMINALLY 9 INCHES WITH AN ALLOWABLE TOLERANCE OF ± 3 INCHES.

   THE HAUNCH THICKNESS IS MEASURED AT THE CENTERLINE OF THE BEAM, FROM THE SURFACE OF THE DECK TO THE BOTTOM OF THE TOP FLANGE MINUS THE DECK SLAB THICKNESS.

2) FOR ADDITIONAL PARAPET DETAILS, REFER TO O.D.O.T. STANDARD SBR-1-99, REV. 07-19-02.

DESIGN AGENCY
ms consultants, inc.
engineers, architects & planners
2221 Schrock Road
Columbus, Ohio 43229
Tel 614.898.7100 Fax 614.898.7070
www.msconsultants.com

DESIGNED	DRAWN	REVIEWED	DATE
WER	KRM	JDH	1/2/2013
CHECKED	REVISED	STRUCTURE FILE NUMBER	
RSW		7803990/7804024	

TRANSVERSE SECTION
BRIDGE NO. TRU-80-0591L/R
OVER LOGAN WAY

TRU-80-4.70
PID No. 76411

15 / 32

123
142

PLOT.CEL
ms consultants, inc.
msconsultants.com
www.msconsultants.com
Ohio DOT Workspace
Marucci & Gaffney TRU-80 Design Build
UCF: ohdotV8i
PCF: 60-08285_Youngstown
0 0.5" 1"
34" x 22"
Batchplot Spec: \\youngstown-fs1\v8\60\08285\standards\plotdrv\batchplt.spc
Pen Table: S:\std\plotting\astm\V8\pen V8i_ms_std.tbl
Plot Driver: S:\std\plotting\astm\V8\PDP.pltcfg
View: SHEET
By: wruggles
Model: Sheet @ 3:54:55 PM
Printed: 1/6/2014
File: \\youngstown-fs1\v8\60\08285\structures\TRU-80-0591_Logan\sheets\080_0591LSD001.dgn

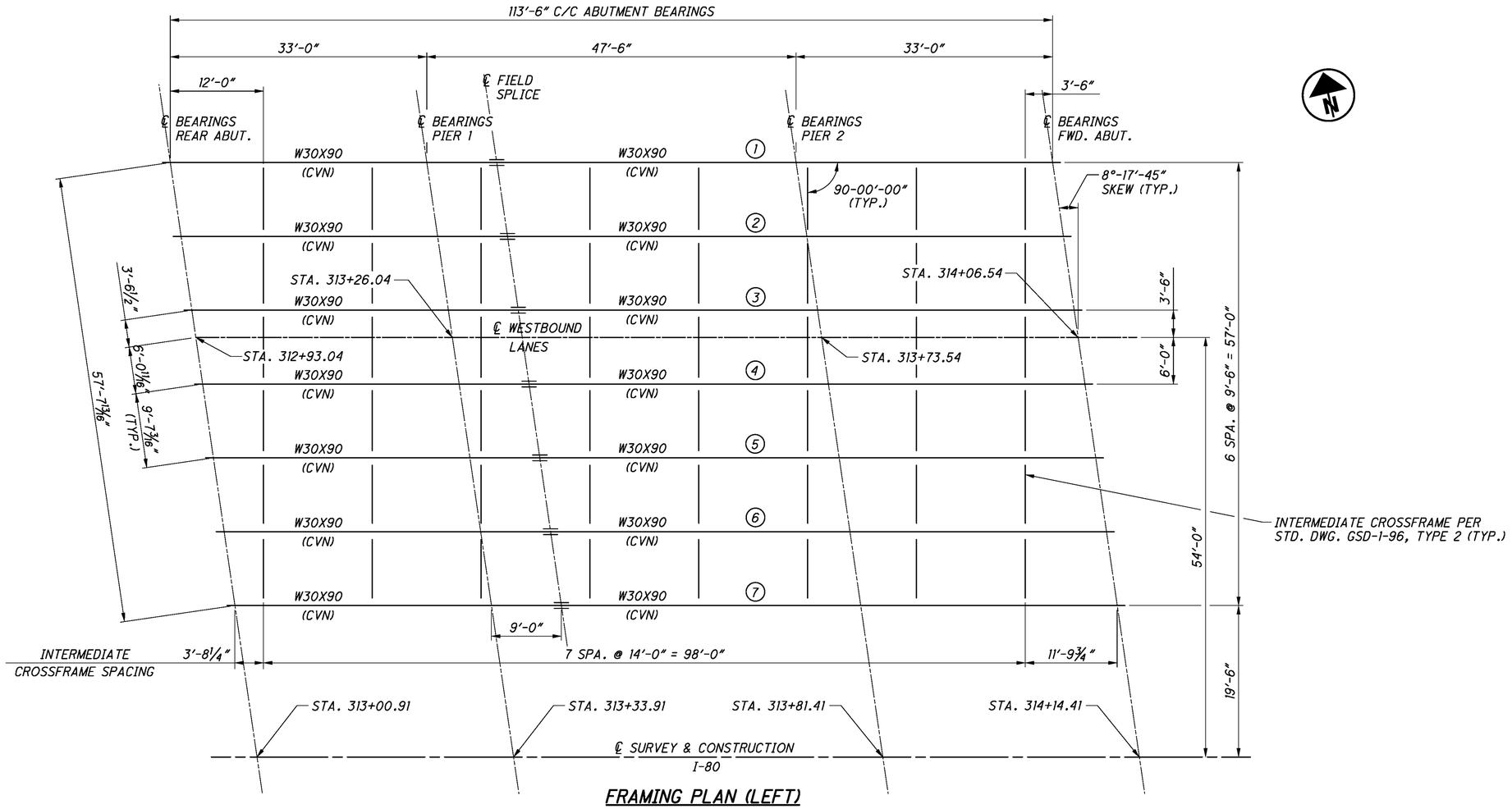

FRAMING PLAN (LEFT)

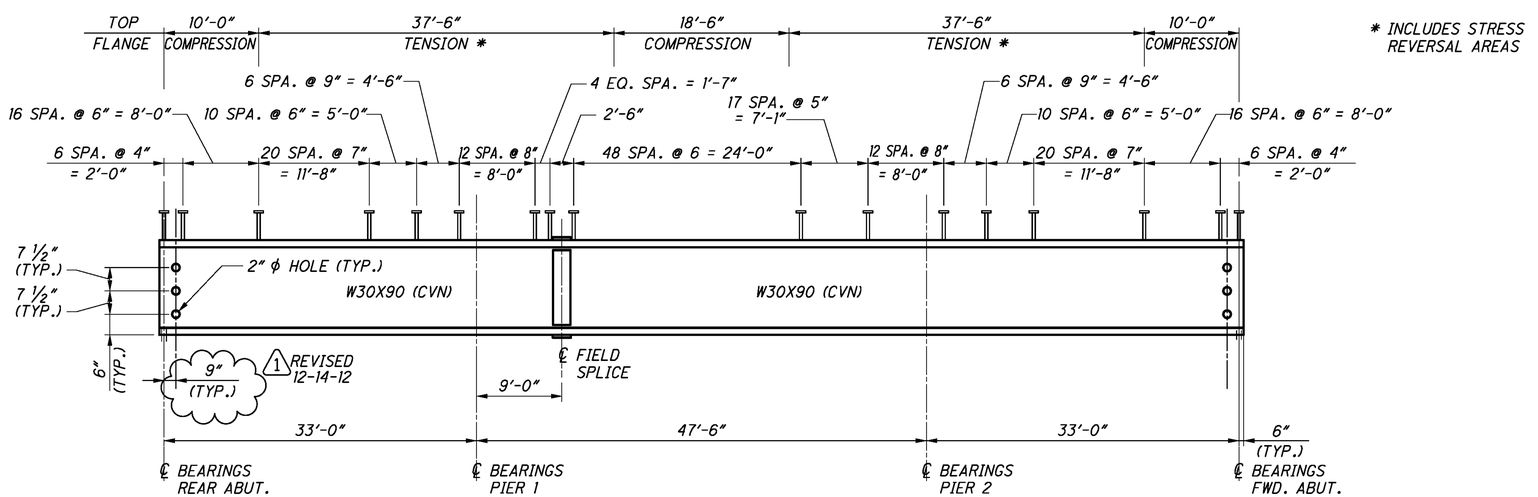

TYPICAL BEAM ELEVATION

NOTES:

1. FOR FRAMING PLAN (RIGHT) AND CAMBER DIAGRAM, SEE SHEET 17.
2. FOR TRANSVERSE SECTION, SEE SHEET 15.
3. FOR SPLICE DETAILS AND ADDITIONAL NOTES, SEE SHEET 18.
4. TEMPORARY INTERMEDIATE BRACINGS ARE REQUIRED MIDWAY BETWEEN EACH INTERMEDIATE CROSSFRAME IN THE FOLLOWING BAYS: BAY (BETWEEN BEAMS) 1-2 (PHASE 2), BAY 2-3 (PHASE 2), BAY 4-5, BAY 5-6 AND BAY 6-7. INTERMEDIATE BRACINGS SHALL CONSIST OF 4X4 TIMBER BLOCKING LOCATED JUST ABOVE THE BOTTOM FLANGE WEDGED TIGHT BETWEEN THE WEBS OF ADJACENT BEAMS. THE INTERMEDIATE BRACING SHALL BE IN PLACE DURING DECK POURING AND REMAIN IN PLACE UNTIL THE WET CONCRETE FULLY HARDENS.

AS-BUILT

THIS RECORD DRAWING HAS BEEN PREPARED IN PART BY THE ENGINEER OF RECORD TO DEPICT CHANGES MADE DURING CONSTRUCTION, BASED ON INFORMATION REPORTED BY THE CONSTRUCTION CONTRACTOR.

DESIGN AGENCY
ms consultants, inc.
engineers, architects & planners
225 Federal Street
Youngstown, Ohio 44503
Tel 330.744.8451 Fax 330.744.1915
www.msconsultants.com

DESIGNED	DRAWN	REVIEWED	DATE
WER	KRM	JDH	1/2/2013
CHECKED	REVISED	STRUCTURE FILE NUMBER	
LAW	WER	7803990/7804024	

FRAMING PLAN (LEFT) AND BEAM ELEVATION

BRIDGE NO. TRU-80-0591L/R
OVER LOGAN WAY

TRU-80-4.70
PID No. 76411

ms consultants, inc.

PLOT.CEL

ms consultants, inc.
msconsultants.com

Ohio DOT Workspace
Marucci & Gaffney TRU-80 Design Build
www.msconsultants.com

1"
0.5"
0

UCF: ohdot\V8i
PCF: 60-08285_Youngstown

Batchplot Spec: \\youngstown-fs1\n\60\08285\standards\plotdrv\batchplt.spc
Pen Table: S:\std\plotting\ustn\V8\pen\V8i_ms_std.tbl
Plot Driver: S:\std\plotting\ustn\V8\HPDP.pltcfg

34" x 22"

View: SHEET
By: wruggles

Model: Sheet @ 3:54:56 PM
Printed: 1/6/2014
File: \\youngstown-fs1\n\60\08285\structures\TRU-80-0591_Logan\sheets\080_0591LSD002.dgn

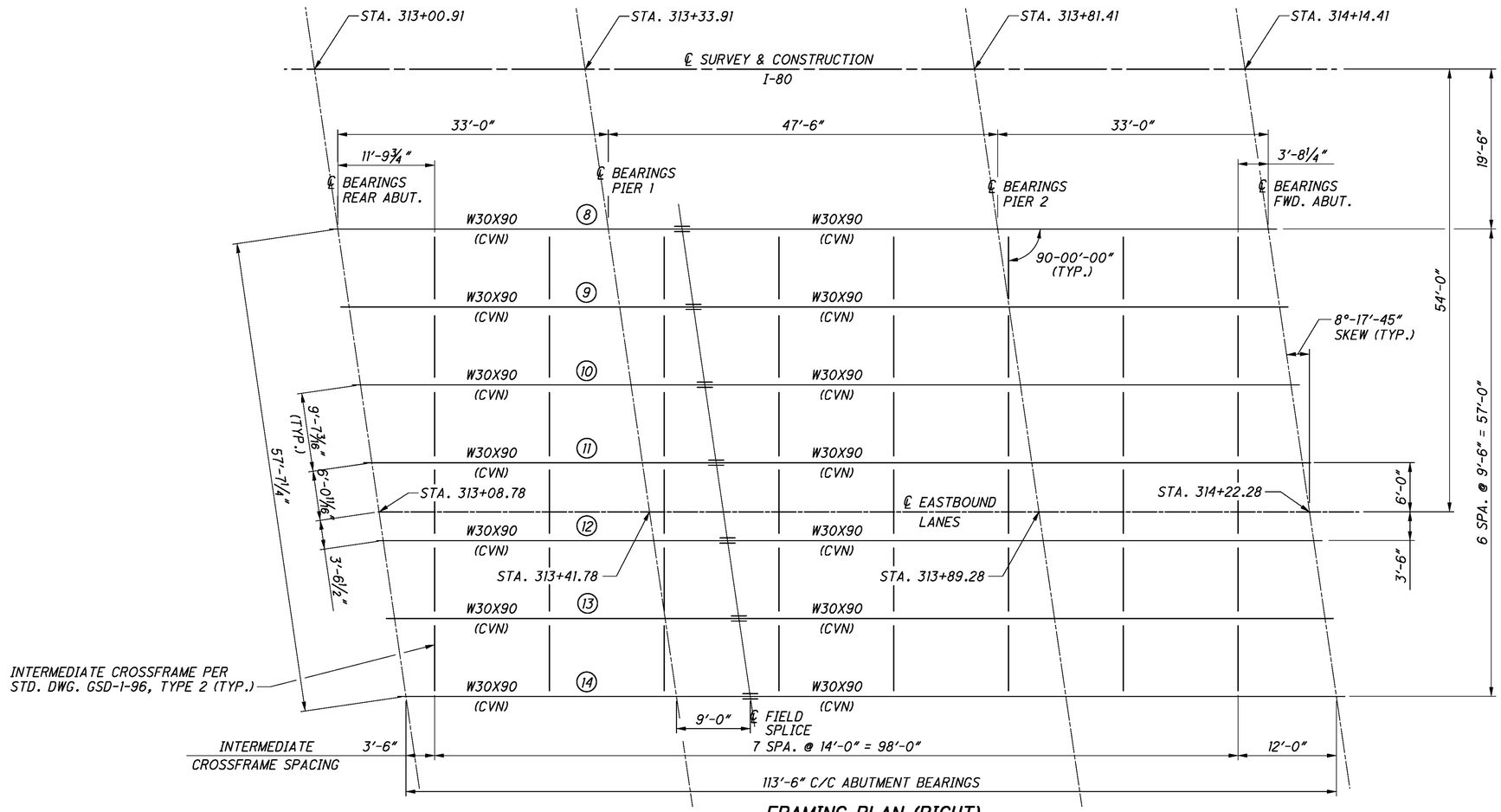

FRAMING PLAN (RIGHT)

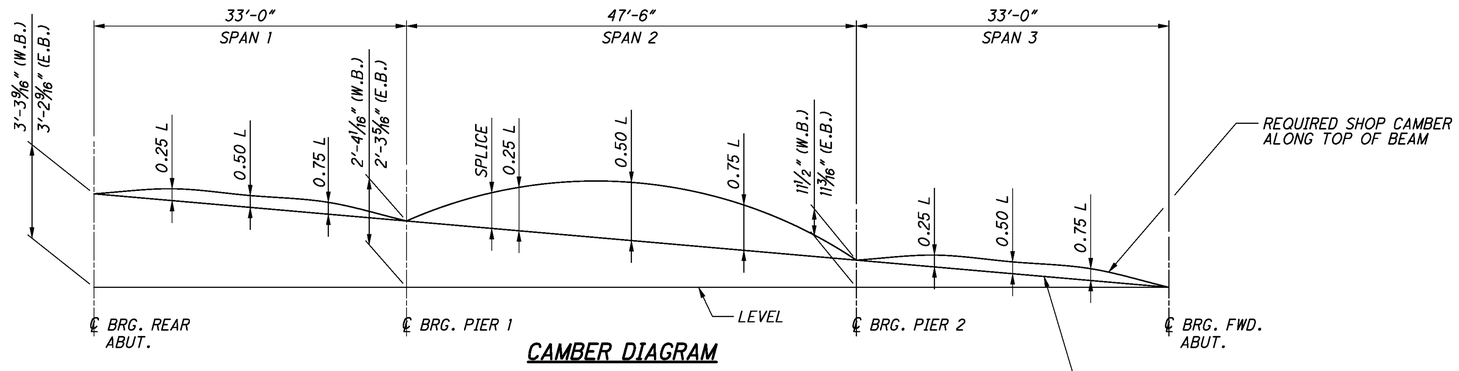

CAMBER DIAGRAM

DEFLECTION AND CAMBER (TYPICAL BEAMS 1-14)

	SPAN 1			SPAN 2				SPAN 3		
	0.25L	0.50L	0.75L	SPLICE	0.25L	0.50L	0.75L	0.25L	0.50L	0.75L
DEFLECTION DUE TO WEIGHT OF STEEL	0	0	0	0	0	1/16"	0	0	0	0
DEFLECTION DUE TO REMAINING DEAD LOAD	1/16"	1/16"	1/16"	3/16"	1/4"	5/16"	1/4"	1/16"	1/16"	1/16"
ADJUSTMENT DUE TO VERTICAL CURVE	0	0	0	0	0	0	0	0	0	0
TOTAL CAMBER	1/16"	1/16"	1/16"	3/16"	1/4"	3/8"	1/4"	1/16"	1/16"	1/16"

NOTES:

1. FOR FRAMING PLAN (LEFT) AND BEAM ELEVATION, SEE SHEET 16.
2. FOR TRANSVERSE SECTION, SEE SHEET 15.
3. FOR SPLICE DETAILS AND ADDITIONAL NOTES, SEE SHEET 18.
4. TEMPORARY INTERMEDIATE BRACINGS ARE REQUIRED MIDWAY BETWEEN EACH INTERMEDIATE CROSSFRAME IN THE FOLLOWING BAYS: BAY (BETWEEN BEAMS) 8-9, BAY 9-10, BAY 10-11 AND BAY 12-13 (PHASE 2), BAY 13-14 (PHASE 2). INTERMEDIATE BRACINGS SHALL CONSIST OF 4X4 TIMBER BLOCKING LOCATED JUST ABOVE THE BOTTOM FLANGE WEDGED TIGHT BETWEEN THE WEBS OF ADJACENT BEAMS. THE INTERMEDIATE BRACING SHALL BE IN PLACE DURING DECK POURING AND REMAIN IN PLACE UNTIL THE WET CONCRETE FULLY HARDENS.

AS-BUILT

THIS RECORD DRAWING HAS BEEN PREPARED IN PART BY THE ENGINEER OF RECORD TO DEPICT CHANGES MADE DURING CONSTRUCTION, BASED ON INFORMATION REPORTED BY THE CONSTRUCTION CONTRACTOR.

DESIGN AGENCY
ms consultants, inc.
engineers, architects & planners
222 Second Street
Columbus, Ohio 43267
Tel 614.228.1560 Fax 614.461.7070
www.msconsultants.com

DESIGNED	DRAWN	REVIEWED	DATE
WER	KRM	JDH	1/2/2013
CHECKED	REVISED	STRUCTURE FILE NUMBER	
LAW		7803990/7804024	

FRAMING PLAN (RIGHT) AND CAMBER DIAGRAM

BRIDGE NO. TRU-80-0591L/R
OVER LOGAN WAY

TRU-80-4.70
PID No. 76411

ms consultants, inc.

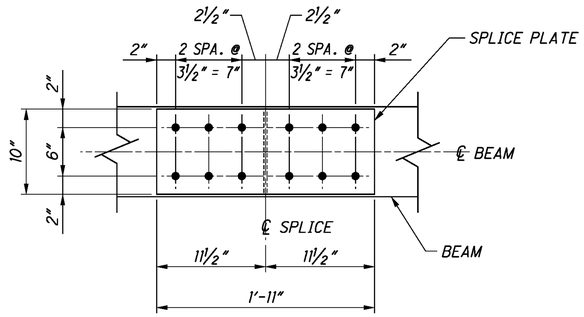

VIEW B-B

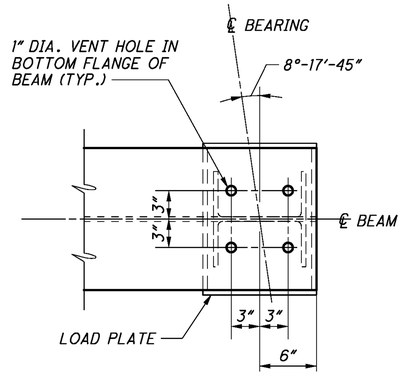

VENT HOLE DETAIL

AS-BUILT

THIS RECORD DRAWING HAS BEEN PREPARED IN PART BY THE ENGINEER OF RECORD TO DEPICT CHANGES MADE DURING CONSTRUCTION, BASED ON INFORMATION REPORTED BY THE CONSTRUCTION CONTRACTOR.

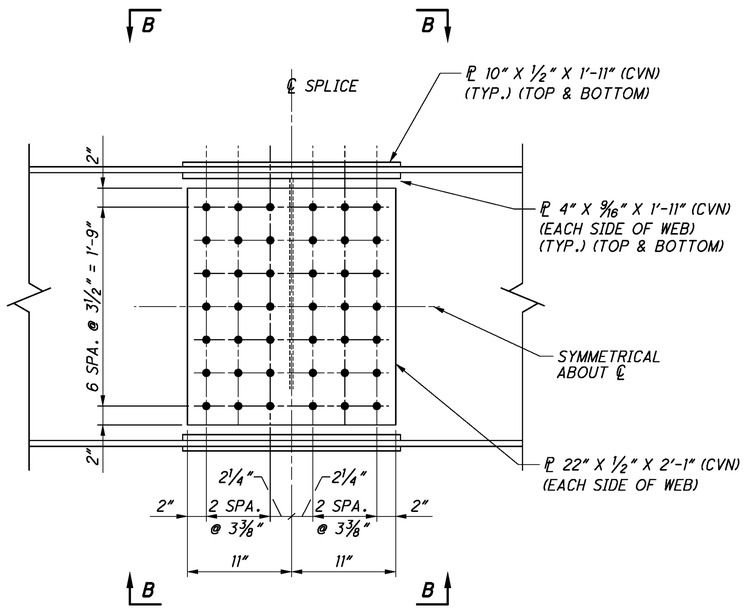

BEAM SPLICE DETAIL

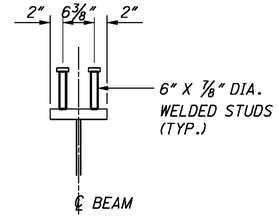

TYPICAL SHEAR CONNECTOR DETAIL

NOTE: SHEAR STUDS SHALL BE LOCATED NO CLOSER THAN 3" FROM EDGE OF BEAM SPLICE PLATE

NOTES:

1. ALL STRUCTURAL STEEL SHALL BE ASTM A709 GRADE 50, GALVANIZED AND SUBJECT TO LEVELTHREE (3) FABRICATION REQUIREMENTS OF ODOT CONSTRUCTION AND MATERIAL SPECIFICATION 513 UNLESS NOTED OTHERWISE.
2. CVN: WHERE A SHAPE OR PLATE IS DESIGNATED (CVN), FURNISH MATERIAL THAT MEETS THE MINIMUM NOTCH TOUGHNESS REQUIREMENTS AS SPECIFIED IN 711.01.
3. WELD ATTACHMENT OF SUPPORTS FOR CONCRETE DECK FINISHING MACHINE TO AREAS OF THE FASCIA STRINGER FLANGES DESIGNATED "COMPRESSION". DO NOT WELD ATTACHMENTS TO AREAS DESIGNATED "TENSION". FILLET WELDS TO COMPRESSION FLANGES SHALL BE AT LEAST 1" FROM EDGE OF FLANGE, BE AT LEAST 2" LONG, AND BE AT LEAST ¼" FOR THICKNESSES UP TO ¾" OR 5/16" FOR GREATER THAN ¾" THICK.
4. FOR INTERMEDIATE CROSSFRAME DETAILS, SEE STANDARD DRAWING GSD-1-96 REFER TO STANDARD DRAWING GSD-1-96, TYPE 2. HOLE DIAMETERS SHALL BE INCREASED BY 1/16". BOLTS SHALL BE ASTM A325 TYPE 1, GALVANIZED.
5. HIGH STRENGTH BOLTS FOR FIELD SPLICE SHALL BE 1" DIAMETER ASTM A-325, TYPE I GALVANIZED. PLACE BOLT HEADS ON BOTTOM SURFACE OF BOTTOM FLANGE SPLICE AND AND ON OUTER FACE OF WEB SPLICES. FLANGE AND WEB HOLE DIAMETERS SHALL BE 1⅛".

PLOT.CEL

ms consultants, inc.
msconsultants.com

Ohio DOT Workspace
Marucci & Gaffney TRU-80 Design Build
www.msconsultants.com

UCF: ohdotV8i
PCF: 60-08285_Youngstown

Batchplot Spec: \\youngstown-fs1\n\60\08285\standards\plotdrv\batchplt.spc
Pen Table: S:\std\plotting\ustn\V8i\pen\V8i_ms_std.tbl
Plot Driver: S:\std\plotting\ustn\V8i\PDF.pltcfg

34" x 22"

Model: Sheet
Printed: 1/6/2014 @ 3:54:58 PM
File: \\youngstown-fs1\n\60\08285\structures\TRU-80-0591_Logan\sheets\080_0591LSD003.dgn
View: SHEET
By: wruggles

DESIGN AGENCY
ms consultants, inc.
engineers, architects & planners
2221 Schrock Road
Columbus, Ohio 43229-1547
Tel 614.898.7700 Fax 614.898.7570
www.msconsultants.com

DESIGNED	DRAWN	REVIEWED	DATE
WER	KRM	JDH	12/12/2012
CHECKED	REVISED	STRUCTURE FILE NUMBER	
LAW		7803990/7804024	

SPLICE DETAILS
BRIDGE NO. TRU-80-0591L/R
OVER LOGAN WAY

TRU-80-4.70
PID No. 76411

ms consultants, inc.

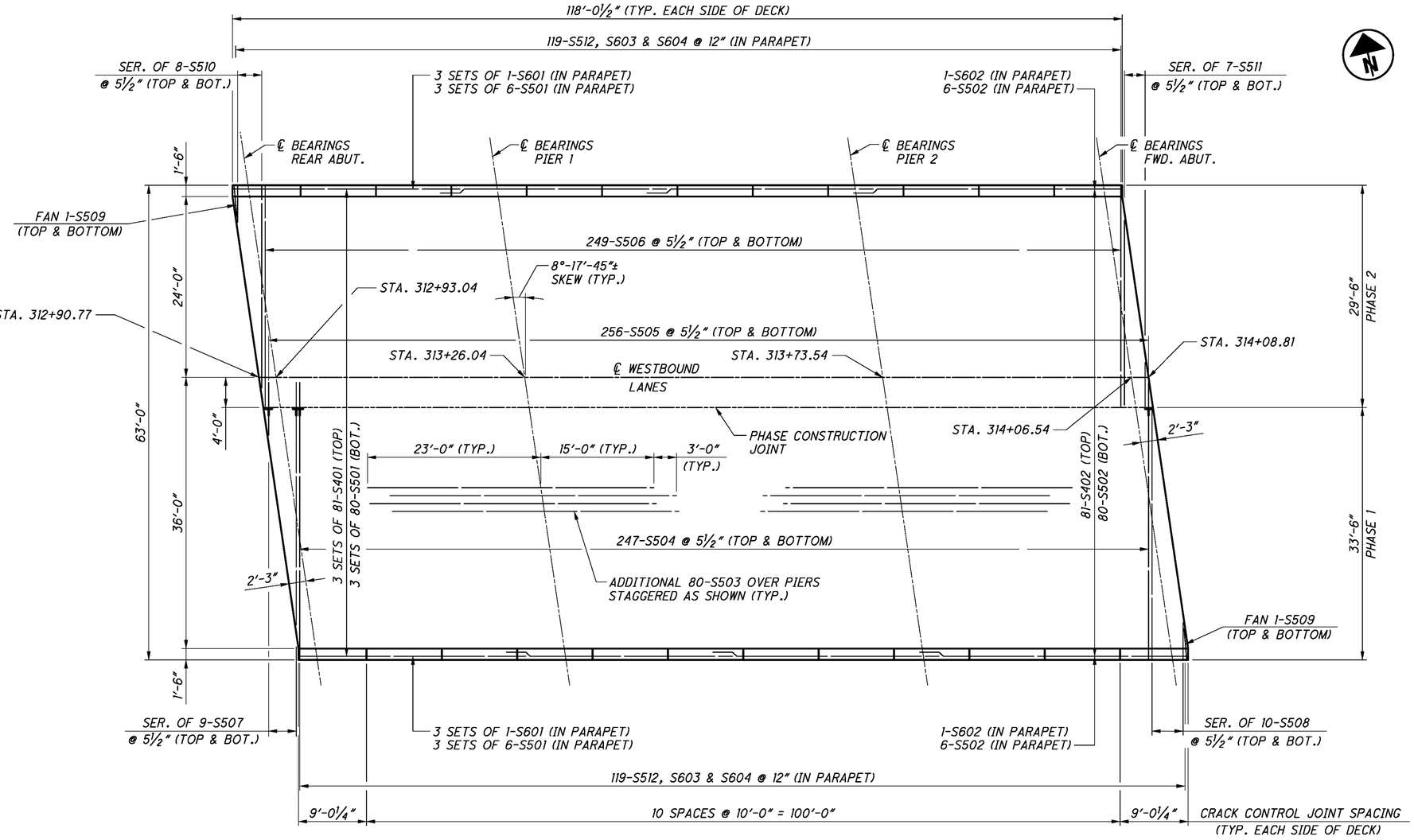

PLAN

(LEFT BRIDGE SHOWN, RIGHT BRIDGE OPPOSITE HAND)

AS-BUILT

THIS RECORD DRAWING HAS BEEN PREPARED IN PART BY THE ENGINEER OF RECORD TO DEPICT CHANGES MADE DURING CONSTRUCTION, BASED ON INFORMATION REPORTED BY THE CONSTRUCTION CONTRACTOR.

NOTES:

1. FOR REINFORCEMENT SCHEDULE, SEE SHEET 32.
2. MINIMUM REBAR LAPS:
   LONGITUDINAL
   #4 BARS = 2'-0"
   #5 BARS = 2'-6"
   #6 BARS = 3'-4"
   TRANSVERSE
   #5 BARS = 3'-2"
3. FOR SEMI-INTEGRAL ABUTMENT DIAPHRAGM DETAIL, SEE SHEETS 20 & 21.
4. FOR TRANSVERSE SECTION, SEE SHEET 15.

DESIGN AGENCY
ms consultants, inc.
engineers, architects & planners
2221 Schrock Road
Columbus, Ohio 43229-1547
Tel 614.898.7700 Fax 614.898.7570
www.msconsultants.com

DESIGNED	DRAWN	REVIEWED	DATE
WER	KRM	JDH	1/2/2013
CHECKED	REVISED	STRUCTURE FILE NUMBER	
RSW		7803990/7804024	

DECK PLAN

BRIDGE NO. TRU-80-0591L/R
OVER LOGAN WAY

TRU-80-4.70
PID No. 76411

PLOT.CEL
ms consultants, inc.
msconsultants.com
Ohio DOT Workspace
Marucci & Gaffney TRU-80 Design Build
www.msconsultants.com
UCF: ohdotV8i
PCF: 60-08285_Youngstown
Batchplot Spec: \\youngstown-fs1\n\60\08285\standards\plotdrv\batchplt.spc
Pen Table: S:\std\plotting\ustn\V8i\pen\V8i_ms_std.tbl
Plot Driver: S:\std\plotting\ustn\V8i\PDF.pltcfg
34" x 22"
Model: Sheet
Printed: 1/6/2014 @ 3:54:59 PM
File: \\youngstown-fs1\n\60\08285\structures\TRU-80-0591_Logan\sheets\080_0591LDP001.dgn
View: SHEET
By: wruggles
ms consultants, inc.

PLOT.CEL
ms consultants, inc.
msconsultants.com
www.msconsultants.com
Ohio DOT Workspace
Marucci & Gaffney TRU-80 Design Build
1" 0.5" 0
UCF: ohdot\V8i
PCF: 60-08285_Youngstown
Batchplot Spec: \\youngstown-fs1\n\60\08285\standards\plotdrv\batchplt.spc
Pen Table: S:\std\plotting\ustn\V8\pen\V8i_ms_std.tbl
Plot Driver: S:\std\plotting\ustn\V8\VPDF.pltcfg
Model: Sheet @ 3:55:01 PM
Printed: 1/6/2014 By: wruggles
File: \\youngstown-fs1\n\60\08285\structures\TRU-80-0591_Logan\sheets\080_0591LAR004.dgn
34" x 22"

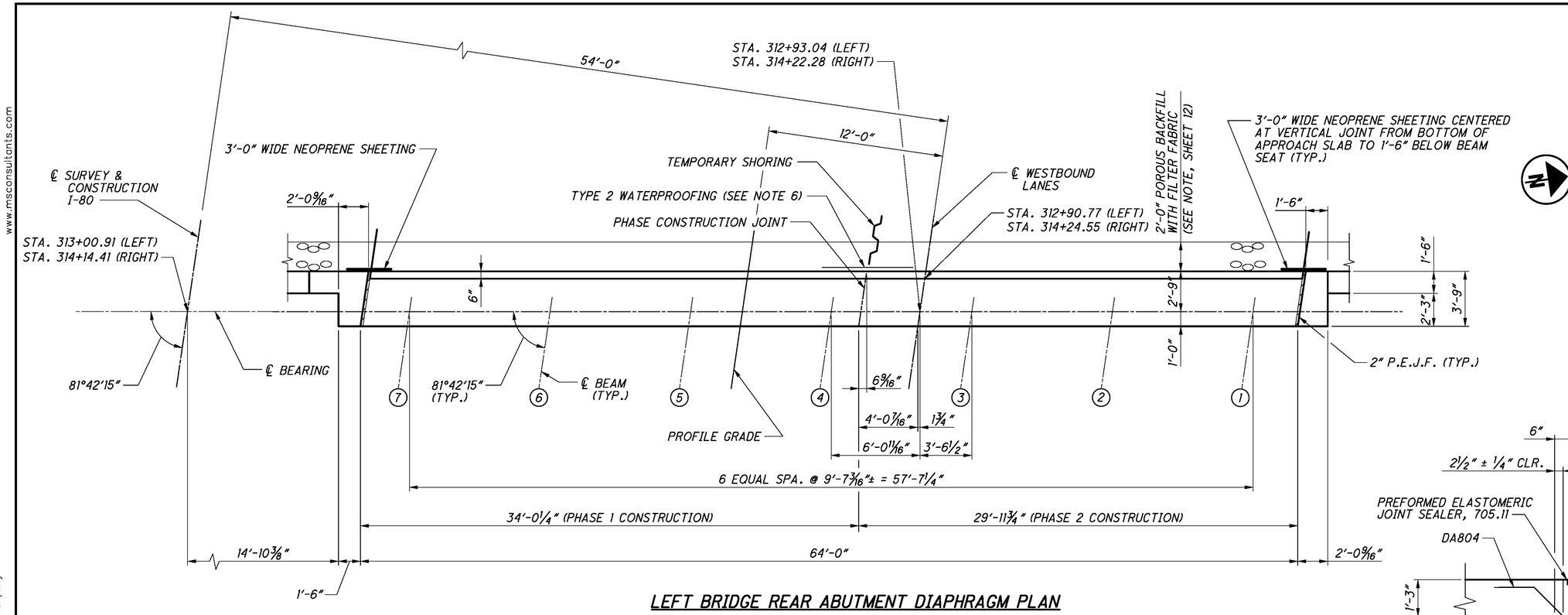

LEFT BRIDGE REAR ABUTMENT DIAPHRAGM PLAN

(APPROACH SLAB NOT SHOWN)
(RIGHT BRIDGE, FORWARD ABUTMENT DIAPHRAGM SIMILAR)

AS-BUILT
THIS RECORD DRAWING HAS BEEN PREPARED IN PART BY THE ENGINEER OF RECORD TO DEPICT CHANGES MADE DURING CONSTRUCTION, BASED ON INFORMATION REPORTED BY THE CONSTRUCTION CONTRACTOR.

AB REVISED 12-9-13

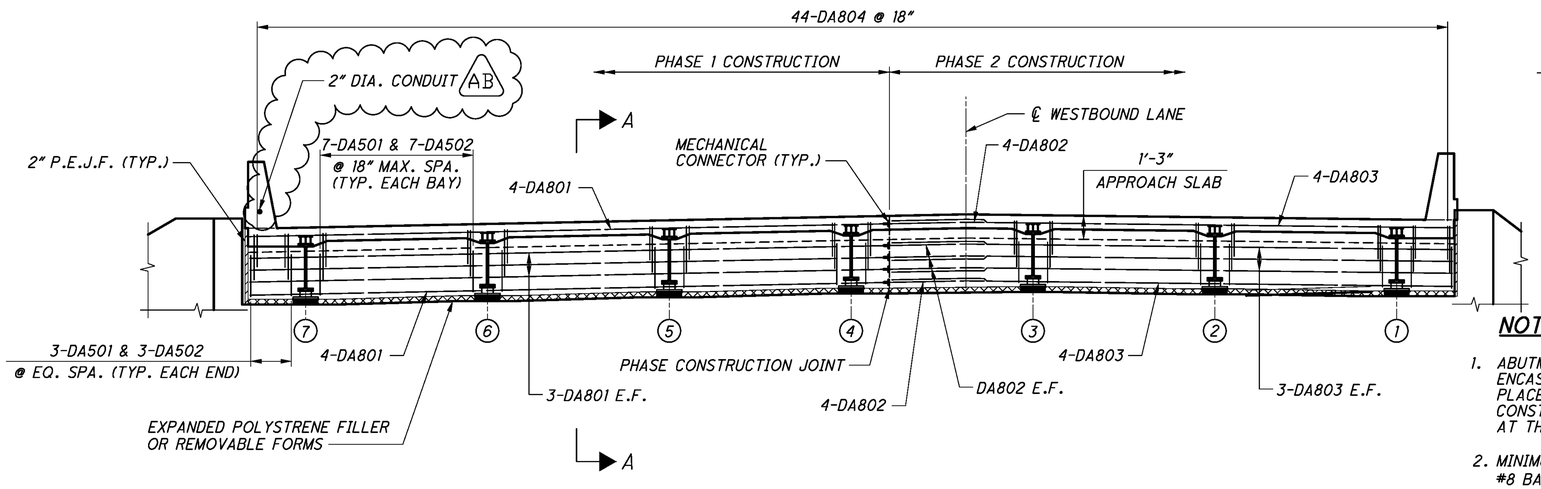

LEFT BRIDGE REAR ABUTMENT DIAPHRAGM ELEVATION

(RIGHT BRIDGE, FORWARD ABUTMENT DIAPHRAGM SIMILAR)

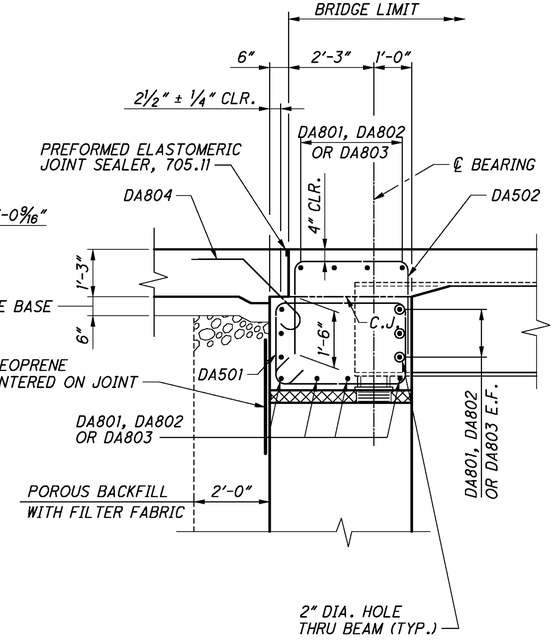

SECTION A-A

NOTES:

1. ABUTMENT DIAPHRAGM CONCRETE: PLACE THE DIAPHRAGM CONCRETE ENCASING THE STRUCTURAL MEMBER ENDS AT LEAST 48 HOURS BEFORE PLACEMENT OF THE DECK CONCRETE. LOCATE THE HORIZONTAL CONSTRUCTION JOINT BETWEEN THE DIAPHRAGM AND DECK CONCRETE AT THE APPROACH SLAB SEAT.
2. MINIMUM REBAR LAPS:
   #8 BARS = 5'-11"
3. FOR ABUTMENT REMOVAL, SEE SHEET 5.
4. FOR GENERAL NOTES, SEE SHEETS G1 & G2.
5. FOR REINFORCING STEEL LIST, SEE SHEET 32.
6. 3'-0" WIDE TYPE 2 WATERPROOFING CENTERED AT VERTICAL JOINT FROM TOP OF DIAPHRAGM TO BOTTOM OF POROUS BACKFILL.
7. FOR DECK PLAN, SEE SHEET 19.

DESIGN AGENCY
ms consultants, inc.
engineers, architects & planners
225 Second Street
Youngstown, Ohio 44503
Phone 330.743.2703
Fax 330.743.1070
www.msconsultants.com

DESIGNED	DRAWN	REVIEWED	DATE
WER	KRM	JDH	1/2/2013
CHECKED	REVISED	STRUCTURE FILE NUMBER	
RSW		7803990/7804024	

LEFT BRIDGE REAR ABUTMENT DIAPHRAGM DETAILS
BRIDGE NO. TRU-80-0591L/R
OVER LOGAN WAY

TRU-80-4.70
PID No. 76411

ms consultants, inc.

PLOT.CEL

ms consultants, inc.
msconsultants.com

Ohio DOT Workspace
Marucci & Gaffney TRU-80 Design Build
www.msconsultants.com

1"
0.5"
0

UCF: ohdotV8i
PCF: 60-08285_Youngstown

Batchplot Spec: \\youngstown-fs1\n\60\08285\standards\plotdrv\batchplt.spc
Pen Table: S:\std\plotting\usatn\V8\pen\V8_ms_std.tbl
Plot Driver: S:\std\plotting\usatn\V8\PDF.pltcfg

34" x 22"

Model: Sheet
Printed: 1/6/2014 @ 3:55:02 PM
File: \\youngstown-fs1\n\60\08285\structures\TRU-80-0591_Logan\sheets\080_0591LAF003.dgn
View: SHEET
By: wruggles

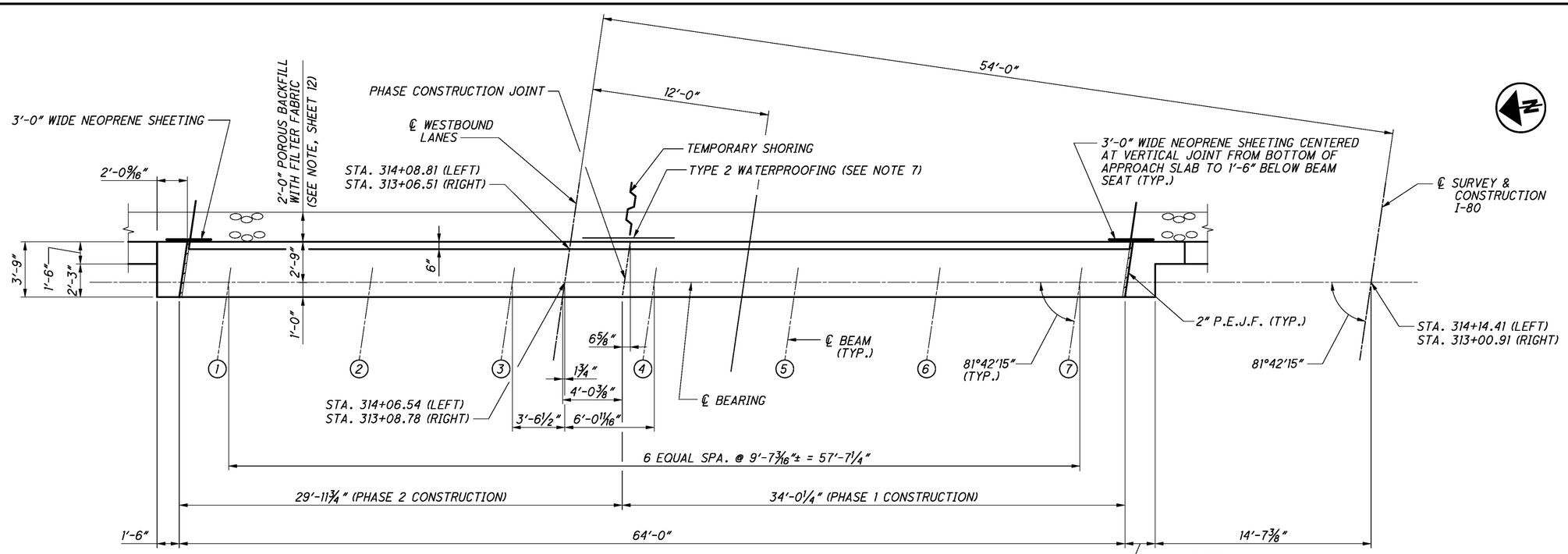

LEFT BRIDGE FORWARD ABUTMENT DIAPHRAGM PLAN

(APPROACH SLAB NOT SHOWN)
(RIGHT BRIDGE, REAR ABUTMENT DIAPHRAGM SIMILAR)

NOTES:

1. ABUTMENT DIAPHRAGM CONCRETE: PLACE THE DIAPHRAGM CONCRETE ENCASING THE STRUCTURAL MEMBER ENDS AT LEAST 48 HOURS BEFORE PLACEMENT OF THE DECK CONCRETE. LOCATE THE HORIZONTAL CONSTRUCTION JOINT BETWEEN THE DIAPHRAGM AND DECK CONCRETE AT THE APPROACH SLAB SEAT.
2. MINIMUM REBAR LAPS:
   #8 BARS = 5'-11"
3. FOR SECTION A-A, SEE SHEET 20.
4. FOR GENERAL NOTES, SEE SHEETS G1 & G2.
5. FOR REINFORCING STEEL LIST, SEE SHEET 32.
6. FOR ABUTMENT REMOVAL, SEE SHEET 5.
7. 3'-0" WIDE TYPE 2 WATERPROOFING CENTERED AT VERTICAL JOINT FROM TOP OF DIAPHRAGM TO BOTTOM OF POROUS BACKFILL.
8. FOR DECK PLAN, SEE SHEET 19.

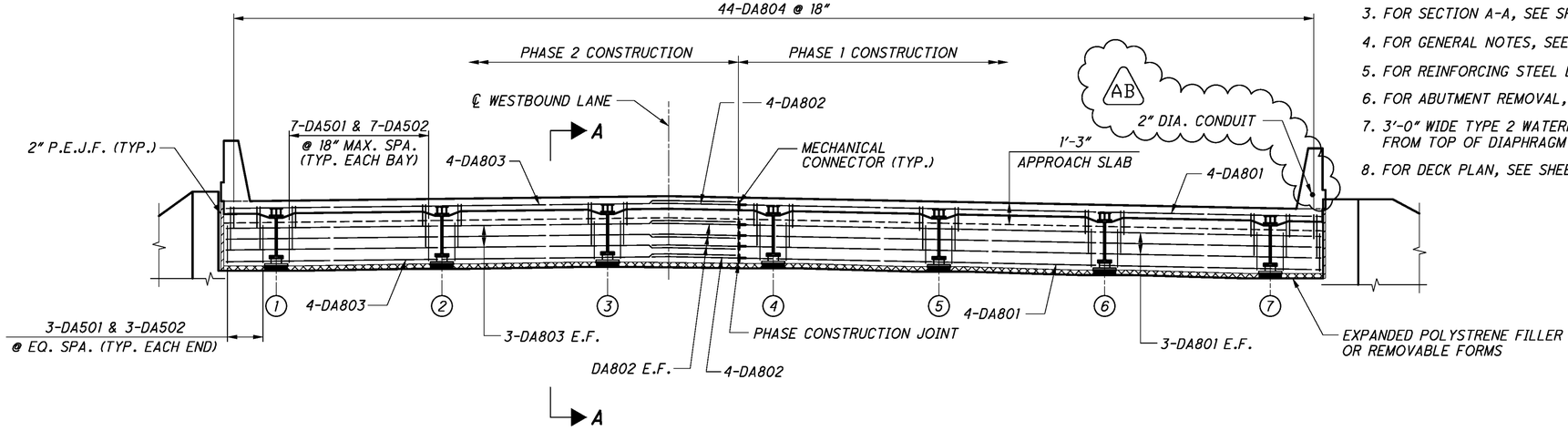

LEFT BRIDGE FORWARD ABUTMENT DIAPHRAGM ELEVATION

(RIGHT BRIDGE, REAR ABUTMENT DIAPHRAGM SIMILAR)

AB REVISED 12-9-13

AS-BUILT
THIS RECORD DRAWING HAS BEEN PREPARED IN PART BY THE ENGINEER OF RECORD TO DEPICT CHANGES MADE DURING CONSTRUCTION, BASED ON INFORMATION REPORTED BY THE CONSTRUCTION CONTRACTOR.

DESIGN AGENCY
ms consultants, inc.
engineers, architects & planners
225 Federal Street
Youngstown, OH 44503
Tel 330.744.5321 Fax 330.744.3574
www.msconsultants.com

DESIGNED	DRAWN	REVIEWED	DATE
SRM	JP	JDH	1/2/2013
CHECKED	REVISED	STRUCTURE FILE NUMBER	
WER		7803990/7804024	

LEFT BRIDGE FORWARD ABUTMENT DIAPHRAGM DETAILS
BRIDGE NO. TRU-80-0591L/R
OVER LOGAN WAY

TRU-80-4.70
PID No. 76411

ms consultants, inc.

PLOT.CEL

ms consultants, inc.
msconsultants.com

Ohio DOT Workspace
Marucci & Gaffney TRU-80 Design Build
www.msconsultants.com

1"
0.5"
0

UCF: ohdotV8i
PCF: 60-08285_Youngstown

34" x 22"

Batchplot Spec: \\youngstown-fs1\n\60\08285\standards\plotdrv\batchplt.spc
Pen Table: S:\std\plotting\astn\V8\pen\V8_ms_std.tbl
Plot Driver: S:\std\plotting\astn\V8\PDF.pltcfg

Model: Sheet
Printed: 1/6/2014 @ 3:55:04 PM
View: SHEET
By: wiggles
File: \\youngstown-fs1\n\60\08285\structures\TRU-80-0591_Logan\sheets\080_0591LS0004.dgn

TOP OF HAUNCH ELEVATIONS

		BEAM 1		BEAM 2		BEAM 3		BEAM 4		BEAM 5		BEAM 6		BEAM 7	
SPAN NO.	LOCATION	STATION	ELEVATION	STATION	ELEVATION	STATION	ELEVATION	STATION	ELEVATION	STATION	ELEVATION	STATION	ELEVATION	STATION	ELEVATION
1	0.00 L	312+89.76	1041.20	312+91.14	1041.31	312+92.53	1041.42	312+93.91	1041.34	312+95.30	1041.15	312+96.69	1040.96	312+98.07	1040.77
	0.25 L	312+98.01	1040.96	312+99.39	1041.08	313+00.78	1041.19	313+02.16	1041.11	313+03.55	1040.92	313+04.94	1040.72	313+06.32	1040.53
	0.50 L	313+06.26	1040.73	313+07.64	1040.84	313+09.03	1040.95	313+10.41	1040.87	313+11.80	1040.68	313+13.19	1040.48	313+14.57	1040.29
	0.75 L	313+14.51	1040.48	313+15.89	1040.59	313+17.28	1040.70	313+18.66	1040.62	313+20.05	1040.43	313+21.44	1040.24	313+22.82	1040.05
2	0.00 L	313+22.76	1040.24	313+24.14	1040.35	313+25.53	1040.46	313+26.91	1040.38	313+28.30	1040.19	313+29.69	1040.00	313+31.07	1039.81
	SPLICE	313+31.76	1039.99	313+33.14	1040.10	313+34.53	1040.21	313+35.91	1040.13	313+37.30	1039.94	313+38.69	1039.75	313+40.07	1039.56
	0.25 L	313+34.63	1039.91	313+36.02	1040.02	313+37.40	1040.13	313+38.79	1040.05	313+40.18	1039.86	313+41.56	1039.67	313+42.95	1039.48
	0.50 L	313+46.51	1039.58	313+47.89	1039.69	313+49.28	1039.80	313+50.66	1039.72	313+52.05	1039.53	313+53.44	1039.34	313+54.82	1039.14
	0.75 L	313+58.38	1039.22	313+59.77	1039.33	313+61.15	1039.44	313+62.54	1039.36	313+63.93	1039.17	313+65.31	1038.98	313+66.70	1038.79
3	0.00 L	313+70.26	1038.86	313+71.64	1038.97	313+73.03	1039.08	313+74.41	1039.00	313+75.80	1038.81	313+77.19	1038.62	313+78.57	1038.43
	0.25 L	313+78.51	1038.62	313+79.89	1038.73	313+81.28	1038.84	313+82.66	1038.76	313+84.05	1038.57	313+85.44	1038.38	313+86.82	1038.19
	0.50 L	313+86.76	1038.38	313+88.14	1038.50	313+89.53	1038.61	313+90.91	1038.53	313+92.30	1038.34	313+93.69	1038.14	313+95.07	1037.95
	0.75 L	313+95.01	1038.14	313+96.39	1038.26	313+97.78	1038.37	313+99.16	1038.29	314+00.55	1038.10	314+01.94	1037.90	314+03.32	1037.71
	1.00 L	314+03.26	1037.90	314+04.64	1038.01	314+06.03	1038.12	314+07.41	1038.04	314+08.80	1037.85	314+10.19	1037.66	314+11.57	1037.47

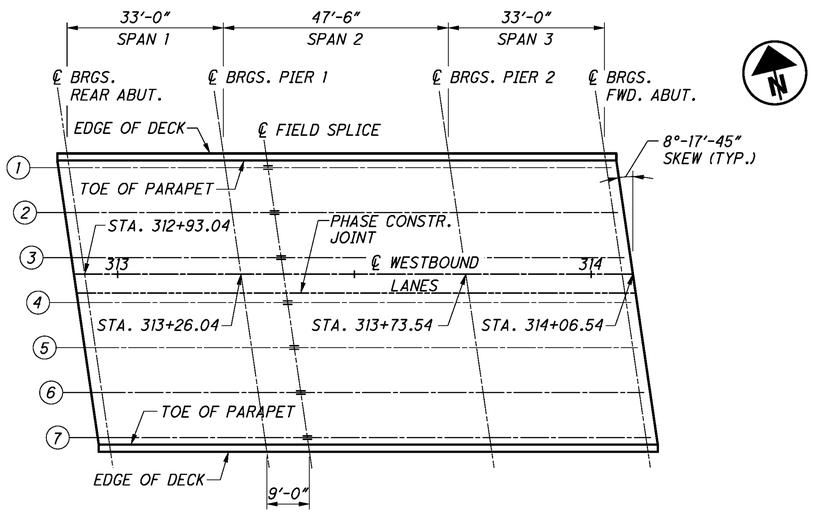

LOCATION PLAN

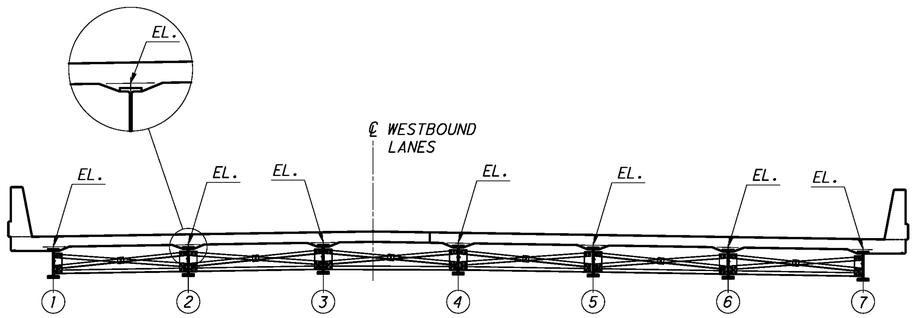

TOP OF HAUNCH LOCATIONS

AS-BUILT

THIS RECORD DRAWING HAS BEEN PREPARED IN PART BY THE ENGINEER OF RECORD TO DEPICT CHANGES MADE DURING CONSTRUCTION, BASED ON INFORMATION REPORTED BY THE CONSTRUCTION CONTRACTOR.

NOTE:

1. *TOP OF HAUNCH ELEVATIONS SHOWN REPRESENT THE THEORETICAL LOCATION OF THE BOTTOM OF THE DECK ABOVE THE BEAM HAUNCH PRIOR TO DEFLECTIONS CAUSED BY DECK PLACEMENT AND OTHER ANTICIPATED DEAD LOADS.*

L = SPAN LENGTH

DESIGN AGENCY
ms consultants, inc.
engineers, architects & planners
225 Second Street SW
Canton, Ohio 44702
Tel 330.438.3760 Fax 330.438.3070
www.msconsultants.com

DESIGNED	DRAWN	REVIEWED	DATE
RSW	KRM	JDH	1/2/2013
CHECKED	REVISED	STRUCTURE FILE NUMBER	
WER		7803990/7804024	

TOP OF HAUNCH ELEVATIONS (LEFT)
BRIDGE NO. TRU-80-0591L/R
OVER LOGAN WAY

TRU-80-4.70
PID No. 76411

ms consultants, inc.

PLOT.CEL

ms consultants, inc.
msconsultants.com

Ohio DOT Workspace
Marucci & Gaffney TRU-80 Design Build
www.msconsultants.com

1" 0 0.5"

UCF: ohdotV8i
PCF: 60-08285_Youngstown

34" x 22"

Batchplot Spec: \\youngstown-fs\fn\60\08285\standards\plotdrv\batchplt.spc
Pen Table: S:\std\plotting\usth\V8\pen\V8i_ms_std.tbl
Plot Driver: S:\std\plotting\usth\V8\PDP.pltcfg

Model: Sheet
Printed: 1/6/2014 @ 3:55:05 PM
File: \\youngstown-fs\fn\60\08285\structures\TRU-80-0591_Logan\sheets\080_0591LSD005.dgn
View: SHEET
By: wruggles

TOP OF HAUNCH ELEVATIONS

		BEAM 8		BEAM 9		BEAM 10		BEAM 11		BEAM 12		BEAM 13		BEAM 14	
SPAN NO.	LOCATION	STATION	ELEVATION	STATION	ELEVATION	STATION	ELEVATION	STATION	ELEVATION	STATION	ELEVATION	STATION	ELEVATION	STATION	ELEVATION
1	0.00 L	313+03.75	1040.42	313+05.13	1040.54	313+06.52	1040.65	313+07.91	1040.76	313+09.29	1040.76	313+10.68	1040.57	313+12.06	1040.38
	0.25 L	313+12.00	1040.20	313+13.38	1040.31	313+14.77	1040.42	313+16.16	1040.54	313+17.54	1040.54	313+18.93	1040.34	313+20.31	1040.15
	0.50 L	313+20.25	1039.96	313+21.63	1040.08	313+23.02	1040.19	313+24.41	1040.30	313+25.79	1040.30	313+27.18	1040.11	313+28.56	1039.92
	0.75 L	313+28.50	1039.73	313+29.88	1039.84	313+31.27	1039.95	313+32.66	1040.06	313+34.04	1040.06	313+35.43	1039.87	313+36.81	1039.68
2	0.00 L	313+36.75	1039.49	313+38.13	1039.60	313+39.52	1039.72	313+40.91	1039.83	313+42.29	1039.83	313+43.68	1039.64	313+45.06	1039.45
	SPLICE	313+45.75	1039.25	313+47.13	1039.36	313+48.52	1039.47	313+49.91	1039.59	313+51.29	1039.59	313+52.68	1039.40	313+54.06	1039.20
	0.25 L	313+48.62	1039.17	313+50.01	1039.28	313+51.39	1039.40	313+52.78	1039.51	313+54.17	1039.51	313+55.55	1039.32	313+56.94	1039.13
	0.50 L	313+60.50	1038.85	313+61.88	1038.96	313+63.27	1039.07	313+64.66	1039.19	313+66.04	1039.19	313+67.43	1038.99	313+68.81	1038.80
	0.75 L	313+72.37	1038.50	313+73.76	1038.61	313+75.14	1038.72	313+76.53	1038.84	313+77.92	1038.84	313+79.30	1038.65	313+80.69	1038.46
3	0.00 L	313+84.25	1038.15	313+85.63	1038.26	313+87.02	1038.37	313+88.41	1038.48	313+89.79	1038.49	313+91.18	1038.29	313+92.56	1038.10
	0.25 L	313+92.50	1037.91	313+93.88	1038.03	313+95.27	1038.14	313+96.66	1038.25	313+98.04	1038.25	313+99.43	1038.06	314+00.81	1037.87
	0.50 L	314+00.75	1037.69	314+02.13	1037.80	314+03.52	1037.91	314+04.91	1038.02	314+06.29	1038.02	314+07.68	1037.83	314+09.06	1037.64
	0.75 L	314+09.00	1037.45	314+10.38	1037.56	314+11.77	1037.68	314+13.16	1037.79	314+14.54	1037.79	314+15.93	1037.60	314+17.31	1037.41
	1.00 L	314+17.25	1037.21	314+18.63	1037.33	314+20.02	1037.44	314+21.41	1037.55	314+22.79	1037.55	314+24.18	1037.36	314+25.56	1037.17

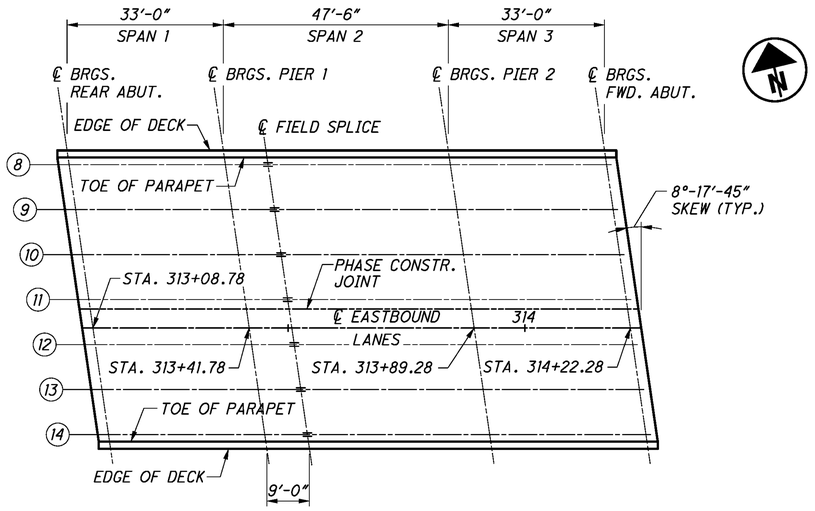

LOCATION PLAN

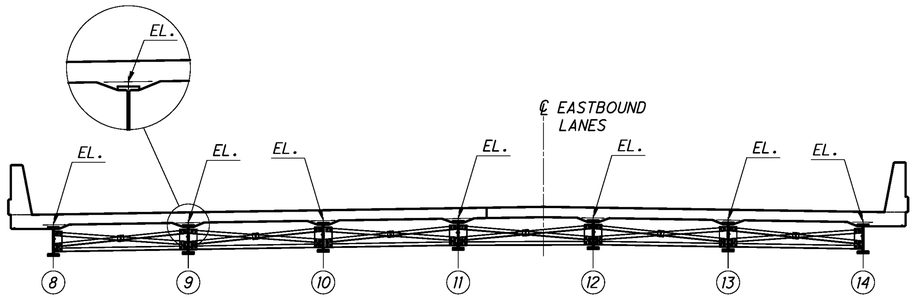

TOP OF HAUNCH LOCATIONS

AS-BUILT

THIS RECORD DRAWING HAS BEEN PREPARED IN PART BY THE ENGINEER OF RECORD TO DEPICT CHANGES MADE DURING CONSTRUCTION, BASED ON INFORMATION REPORTED BY THE CONSTRUCTION CONTRACTOR.

NOTE:

1. *TOP OF HAUNCH ELEVATIONS SHOWN REPRESENT THE THEORETICAL LOCATION OF THE BOTTOM OF THE DECK ABOVE THE BEAM HAUNCH PRIOR TO DEFLECTIONS CAUSED BY DECK PLACEMENT AND OTHER ANTICIPATED DEAD LOADS.*

L = SPAN LENGTH

DESIGN AGENCY
ms consultants, inc.
engineers, architects & planners
225 Second Street
Youngstown, OH 44503
Phone 330.744.5321
Fax 330.744.3321
www.msconsultants.com

DESIGNED	DRAWN	REVIEWED	DATE
RSW	KRM	JDH	1/2/2013
CHECKED	REVISED	STRUCTURE FILE NUMBER	
WER		7803990/7804024	

TOP OF HAUNCH ELEVATIONS (RIGHT)

BRIDGE NO. TRU-80-0591L/R
OVER LOGAN WAY

TRU-80-4.70
PID No. 76411

PLOT.CEL

ms consultants, inc.
msconsultants.com

Ohio DOT Workspace
Marucci & Gaffney TRU-80 Design Build
www.msconsultants.com

1"
0.5"
0

UCF: ohdotV8i
PCF: 60-08285_Youngstown

34" x 22"

Batchplot Spec: \\youngstown-fs1\n\60\08285\standards\plotdrv\batchplt.spc
Pen Table: S:\std\plotting\usatn\V8\pen\V8_ms_std.tbl
Plot Driver: S:\std\plotting\usatn\V8\PDP.pltcfg

Model: Sheet
Printed: 1/6/2014 @ 3:55:06 PM
File: \\youngstown-fs1\n\60\08285\structures\TRU-80-0591_Logan\sheets\080_0591SD006.dgn
View: SHEET
By: wruggles

SCREED ELEVATIONS

		A (TOE OF PARAPET)		B (CROWN)		C (CONSTRUCTION JOINT)		D (PROFILE GRADE)		E (TOE OF PARAPET)	
SPAN NO.	LOCATION	STATION	ELEVATION	STATION	ELEVATION	STATION	ELEVATION	STATION	ELEVATION	STATION	ELEVATION
1	0.00 L	312+89.54	1041.91	312+93.04	1042.19	312+93.62	1042.11	312+94.79	1041.95	312+98.29	1041.46
	0.25 L	312+97.79	1041.68	313+01.29	1041.96	313+01.87	1041.88	313+03.04	1041.72	313+06.54	1041.23
	0.50 L	313+06.04	1041.44	313+09.54	1041.72	313+10.12	1041.64	313+11.29	1041.48	313+14.79	1040.99
	0.75 L	313+14.29	1041.19	313+17.79	1041.47	313+18.37	1041.39	313+19.54	1041.23	313+23.04	1040.75
2	0.00 L	313+22.54	1040.95	313+26.04	1041.23	313+26.62	1041.15	313+27.79	1040.99	313+31.29	1040.50
	SPLICE	313+31.54	1040.70	313+35.04	1040.98	313+35.62	1040.90	313+36.79	1040.74	313+40.29	1040.26
	0.25 L	313+34.42	1040.62	313+37.92	1040.91	313+38.50	1040.82	313+39.66	1040.66	313+43.16	1040.18
	0.50 L	313+46.29	1040.29	313+49.79	1040.57	313+50.37	1040.49	313+51.54	1040.33	313+55.04	1039.84
	0.75 L	313+58.17	1039.93	313+61.67	1040.21	313+62.25	1040.13	313+63.41	1039.97	313+66.91	1039.49
3	0.00 L	313+70.04	1039.57	313+73.54	1039.85	313+74.12	1039.77	313+75.29	1039.61	313+78.79	1039.12
	0.25 L	313+78.29	1039.33	313+81.79	1039.61	313+82.37	1039.53	313+83.54	1039.37	313+87.04	1038.89
	0.50 L	313+86.54	1039.10	313+90.04	1039.38	313+90.62	1039.30	313+91.79	1039.14	313+95.29	1038.65
	0.75 L	313+94.79	1038.86	313+98.29	1039.14	313+98.87	1039.06	314+00.04	1038.90	314+03.54	1038.41
	1.00 L	314+03.04	1038.61	314+06.54	1038.89	314+07.12	1038.81	314+08.29	1038.65	314+11.79	1038.16

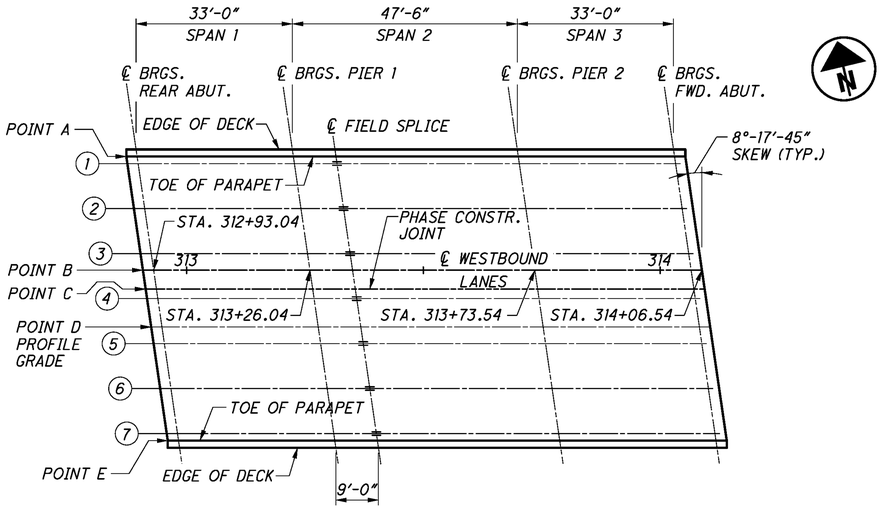

LOCATION PLAN

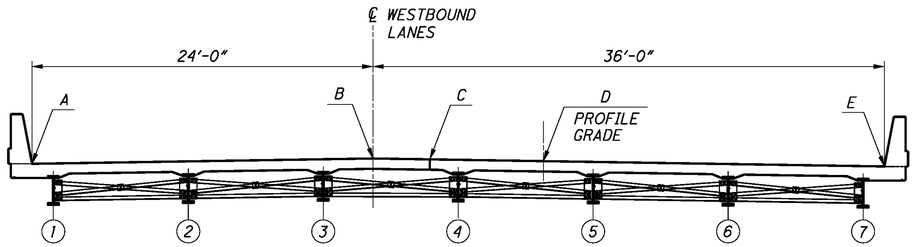

SCREED LINE LOCATIONS

AS-BUILT

THIS RECORD DRAWING HAS BEEN PREPARED IN PART BY THE ENGINEER OF RECORD TO DEPICT CHANGES MADE DURING CONSTRUCTION, BASED ON INFORMATION REPORTED BY THE CONSTRUCTION CONTRACTOR.

NOTE:

1. SCREED ELEVATIONS SHOWN REPRESENT THE THEORETICAL DECK SURFACE LOCATION PRIOR TO DEFLECTIONS CAUSED BY DECK PLACEMENT AND OTHER ANTICIPATED DEAD LOADS.

L = SPAN LENGTH

DESIGN AGENCY
ms consultants, inc.
engineers, architects & planners
2221 Schrock Road
Columbus, OH 43229
Tel 614.898.7100 Fax 614.898.7070
www.msconsultants.com

DESIGNED	DRAWN	REVIEWED	DATE
RSW	KRM	JDH	1/2/2013
CHECKED	REVISED	STRUCTURE FILE NUMBER	
WER		7803990/7804024	

SCREED ELEVATIONS (LEFT)
BRIDGE NO. TRU-80-0591L/R
OVER LOGAN WAY

TRU-80-4.70
PID No. 76411

ms consultants, inc.

PLOT.CEL

ms consultants, inc.
msconsultants.com

Ohio DOT Workspace
Marucci & Gaffney TRU-80 Design Build
www.msconsultants.com

0 0.5" 1"

UCF: ohdotV8i
PCF: 60-08285_Youngstown

Batchplot Spec: \\youngstown-fs1\n\60\08285\standards\plotdrv\batchplt.spc
Pen Table: S:\std\plotting\ustn\V8\pen\V8i_ms_std.tbl
Plot Driver: S:\std\plotting\ustn\V8\PDF.pltcfg

34" x 22"

View SHEET
By: wruggles

Model: Sheet @ 3:55:08 PM
Printed: 1/6/2014
File: \\youngstown-fs1\n\60\08285\structures\TRU-80-0591_Logan\sheets\080_0591SD007.dgn

SCREED ELEVATIONS

		F (TOE OF PARAPET)		G (PROFILE GRADE)		H (CONSTRUCTION JOINT)		J (CROWN)		K (TOE OF PARAPET)	
SPAN NO.	LOCATION	STATION	ELEVATION	STATION	ELEVATION	STATION	ELEVATION	STATION	ELEVATION	STATION	ELEVATION
1	0.00 L	313+03.53	1041.14	313+07.03	1041.42	313+08.20	1041.52	313+08.78	1041.56	313+12.28	1041.08
	0.25 L	313+11.78	1040.91	313+15.28	1041.19	313+16.45	1041.29	313+17.03	1041.34	313+20.53	1040.85
	0.50 L	313+20.03	1040.67	313+23.53	1040.96	313+24.70	1041.05	313+25.28	1041.10	313+28.78	1040.62
	0.75 L	313+28.28	1040.44	313+31.78	1040.72	313+32.95	1040.82	313+33.53	1040.86	313+37.03	1040.38
2	0.00 L	313+36.53	1040.20	313+40.03	1040.49	313+41.20	1040.58	313+41.78	1040.63	313+45.28	1040.15
	SPLICE	313+45.53	1039.96	313+49.03	1040.24	313+50.20	1040.34	313+50.78	1040.39	313+54.28	1039.90
	0.25 L	313+48.41	1039.88	313+51.91	1040.17	313+53.07	1040.26	313+53.66	1040.31	313+57.15	1039.83
	0.50 L	313+60.28	1039.56	313+63.78	1039.84	313+64.95	1039.94	313+65.53	1039.99	313+69.03	1039.50
	0.75 L	313+72.16	1039.21	313+75.66	1039.50	313+76.82	1039.59	313+77.41	1039.64	313+80.90	1039.16
3	0.00 L	313+84.03	1038.86	313+87.53	1039.14	313+88.70	1039.24	313+89.28	1039.29	313+92.78	1038.80
	0.25 L	313+92.28	1038.63	313+95.78	1038.91	313+96.95	1039.01	313+97.53	1039.05	314+01.03	1038.57
	0.50 L	314+00.53	1038.40	314+04.03	1038.68	314+05.20	1038.78	314+05.78	1038.82	314+09.28	1038.34
	0.75 L	314+08.78	1038.16	314+12.28	1038.45	314+13.45	1038.54	314+14.03	1038.59	314+17.53	1038.11
	1.00 L	314+17.03	1037.92	314+20.53	1038.21	314+21.70	1038.30	314+22.28	1038.35	314+25.78	1037.87

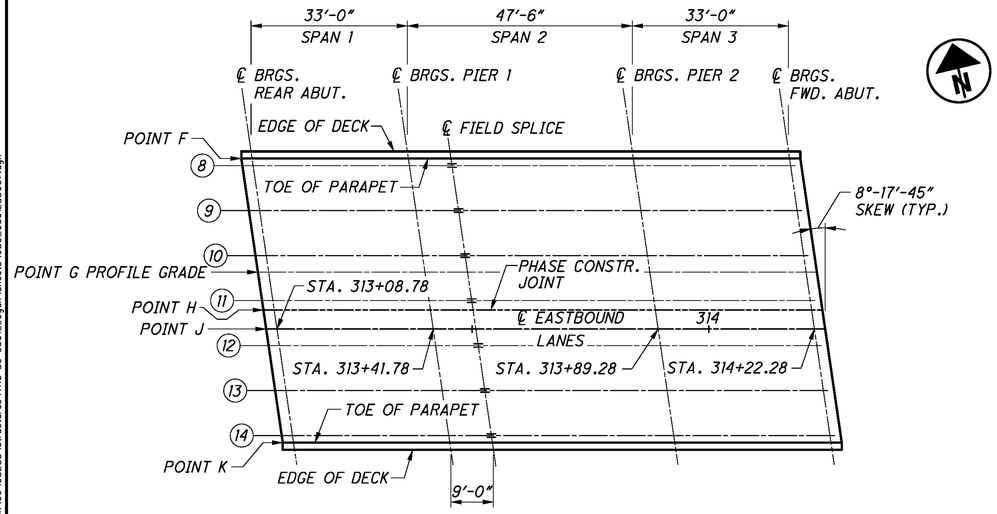

LOCATION PLAN

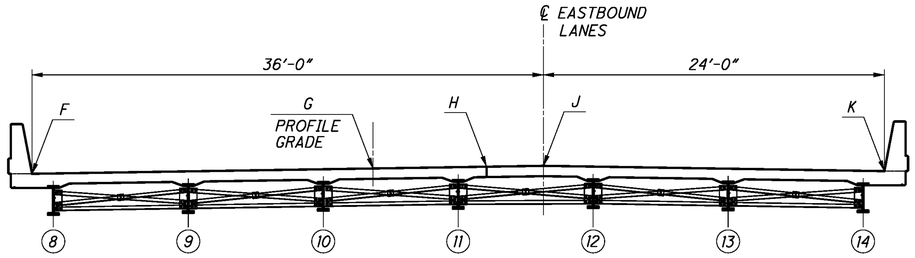

SCREED LINE LOCATIONS

AS-BUILT

THIS RECORD DRAWING HAS BEEN PREPARED IN PART BY THE ENGINEER OF RECORD TO DEPICT CHANGES MADE DURING CONSTRUCTION, BASED ON INFORMATION REPORTED BY THE CONSTRUCTION CONTRACTOR.

NOTE:

1. *SCREED ELEVATIONS SHOWN REPRESENT THE THEORETICAL DECK SURFACE LOCATION PRIOR TO DEFLECTIONS CAUSED BY DECK PLACEMENT AND OTHER ANTICIPATED DEAD LOADS.*

L = SPAN LENGTH

DESIGN AGENCY
ms consultants, inc.
engineers, architects & planners
225 Federal Street
Youngstown, OH 44503
Tel 330.744.5321
Fax 330.744.3070
www.msconsultants.com

DESIGNED RSW | DRAWN KRM | REVIEWED JDH | DATE 1/2/2013
CHECKED WER | REVISED | STRUCTURE FILE NUMBER 7803990/7804024

SCREED ELEVATIONS (RIGHT)

BRIDGE NO. TRU-80-0591L/R
OVER LOGAN WAY

TRU-80-4.70
PID No. 76411

ms consultants, inc.

PLOT.CEL

ms consultants, inc.
msconsultants.com

Ohio DOT Workspace
Marucci & Gaffney TRU-80 Design Build
www.msconsultants.com

0 0.5" 1"

UCF: ohdotV8i
PCF: 60-08285_Youngstown

34" x 22"

Batchplot Spec: \\youngstown-fs1\n\60\08285\standards\plotdrv\batchplt.spc
Pen Table: S:\std\plotting\usatn\V8i\pen\V8i_ms_std.tbl
Plot Driver: S:\std\plotting\usatn\V8i\PDF.pltcfg

View: SHEET
By: wruggles

Model: Sheet
Printed: 1/6/2014 @ 3:55:09 PM
File: \\youngstown-fs1\n\60\08285\structures\TRU-80-0591L_Logan\sheets\080_0591L_S0008.dgn

FINAL DECK SURFACE ELEVATIONS

		A (TOE OF PARAPET)		BEAM 1		BEAM 2		BEAM 3		B (CROWN)		C (CONSTRUCTION JOINT)	
SPAN NO.	LOCATION	STATION	ELEVATION	STATION	ELEVATION	STATION	ELEVATION	STATION	ELEVATION	STATION	ELEVATION	STATION	ELEVATION
1	0.00 L	312+89.54	1041.91	312+89.76	1041.93	312+91.14	1042.04	312+92.53	1042.15	312+93.04	1042.19	312+93.62	1042.11
	0.25 L	312+97.79	1041.67	312+98.01	1041.69	312+99.39	1041.80	313+00.78	1041.91	313+01.29	1041.95	313+01.87	1041.87
	0.50 L	313+06.04	1041.43	313+06.26	1041.45	313+07.64	1041.56	313+09.03	1041.67	313+09.54	1041.71	313+10.12	1041.63
	0.75 L	313+14.29	1041.19	313+14.51	1041.21	313+15.89	1041.32	313+17.28	1041.43	313+17.79	1041.47	313+18.37	1041.39
2	0.00 L	313+22.54	1040.95	313+22.76	1040.97	313+24.14	1041.08	313+25.53	1041.19	313+26.04	1041.23	313+26.62	1041.15
	SPLICE	313+31.54	1040.69	313+31.76	1040.71	313+33.14	1040.82	313+34.53	1040.93	313+35.04	1040.97	313+35.62	1040.89
	0.25 L	313+34.42	1040.61	313+34.63	1040.62	313+36.02	1040.74	313+37.40	1040.85	313+37.92	1040.89	313+38.50	1040.81
	0.50 L	313+46.29	1040.26	313+46.51	1040.28	313+47.89	1040.39	313+49.28	1040.50	313+49.79	1040.54	313+50.37	1040.46
	0.75 L	313+58.17	1039.92	313+58.38	1039.93	313+59.77	1040.04	313+61.15	1040.16	313+61.67	1040.20	313+62.25	1040.12
3	0.00 L	313+70.04	1039.57	313+70.26	1039.59	313+71.64	1039.70	313+73.03	1039.81	313+73.54	1039.85	313+74.12	1039.77
	0.25 L	313+78.29	1039.33	313+78.51	1039.35	313+79.89	1039.46	313+81.28	1039.57	313+81.79	1039.61	313+82.37	1039.53
	0.50 L	313+86.54	1039.09	313+86.76	1039.11	313+88.14	1039.22	313+89.53	1039.33	313+90.04	1039.37	313+90.62	1039.29
	0.75 L	313+94.79	1038.85	313+95.01	1038.87	313+96.39	1038.98	313+97.78	1039.09	313+98.29	1039.13	313+98.87	1039.05
	1.00 L	314+03.04	1038.61	314+03.26	1038.63	314+04.64	1038.74	314+06.03	1038.85	314+06.54	1038.89	314+07.12	1038.81

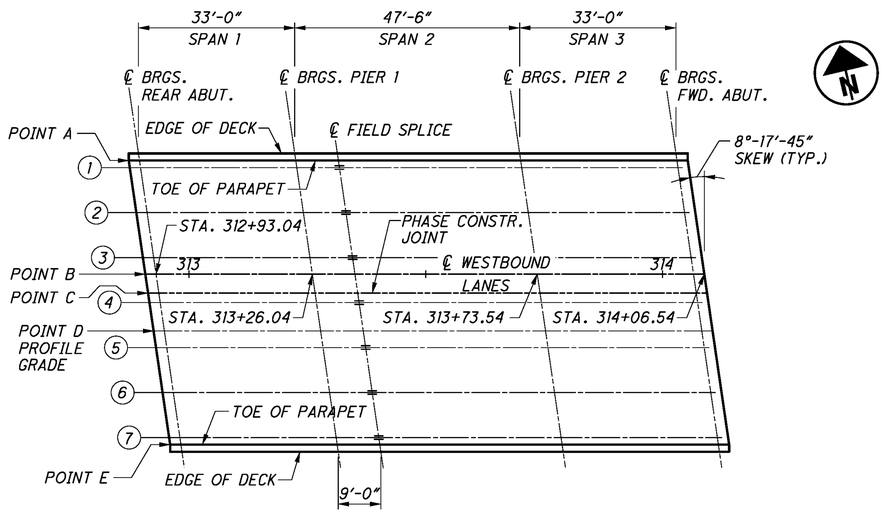

LOCATION PLAN

AS-BUILT

THIS RECORD DRAWING HAS BEEN PREPARED IN PART BY THE ENGINEER OF RECORD TO DEPICT CHANGES MADE DURING CONSTRUCTION, BASED ON INFORMATION REPORTED BY THE CONSTRUCTION CONTRACTOR.

NOTE:

1. *FINAL DECK SURFACE ELEVATIONS SHOWN REPRESENT THE DECK SURFACE LOCATION AFTER ALL ANTICIPATED DEAD PRIOR TO DEFLECTIONS CAUSED BY DECK PLACEMENT AND OTHER LOAD DEFLECTIONS HAVE OCCURRED.*

L = SPAN LENGTH

DESIGN AGENCY
ms consultants, inc.
engineers, architects & planners
225 Second Street SW
Canton, Ohio 44702
Tel 330.438.7760 Fax 330.438.7070
www.msconsultants.com

DESIGNED	DRAWN	REVIEWED	DATE
RSW	KRM	JDH	1/2/2013
CHECKED	REVISED	STRUCTURE FILE NUMBER	
WER		7803990/7804024	

FINAL DECK SURFACE ELEVATIONS (LEFT)
BRIDGE NO. TRU-80-0591L/R
OVER LOGAN WAY

TRU-80-4.70
PID No. 76411

ms consultants, inc.

PLOT.CEL

ms consultants, inc.
msconsultants.com

Ohio DOT Workspace
Marucci & Gaffney TRU-80 Design Build
www.msconsultants.com

1"
0.5"
0

UCF: ohdotV8i
PCF: 60-08285_Youngstown

34" x 22"

View: SHEET
By: wruggles

Model: Sheet
Printed: 1/6/2014 @ 3:55:10 PM
File: \\youngstown-fs1\n\60\08285\structures\TRU-80-0591_Logan\sheets\080_0591L_S0008A.dgn

Batchplot Spec: \\youngstown-fs1\n\60\08285\standards\plotdrv\batchplt.spc
Pen Table: S:\std\plotting\usatn\V8i\pen\V8i_ms_std.tbl
Plot Driver: S:\std\plotting\usatn\V8i\PDF.pltcfg

FINAL DECK SURFACE ELEVATIONS

		BEAM 4		D (PROFILE GRADE)		BEAM 5		BEAM 6		BEAM 7		E (TOE OF PARAPET)	
SPAN NO.	LOCATION	STATION	ELEVATION	STATION	ELEVATION	STATION	ELEVATION	STATION	ELEVATION	STATION	ELEVATION	STATION	ELEVATION
1	0.00 L	312+93.91	1042.07	312+94.79	1041.95	312+95.30	1041.88	312+96.69	1041.69	312+98.07	1041.49	312+98.29	1041.46
	0.25 L	313+02.16	1041.83	313+03.04	1041.71	313+03.55	1041.64	313+04.94	1041.45	313+06.32	1041.25	313+06.54	1041.22
	0.50 L	313+10.41	1041.59	313+11.29	1041.47	313+11.80	1041.40	313+13.19	1041.21	313+14.57	1041.01	313+14.79	1040.98
	0.75 L	313+18.66	1041.35	313+19.54	1041.23	313+20.05	1041.16	313+21.44	1040.97	313+22.82	1040.77	313+23.04	1040.74
2	0.00 L	313+26.91	1041.11	313+27.79	1040.99	313+28.30	1040.92	313+29.69	1040.73	313+31.07	1040.54	313+31.29	1040.50
	SPLICE	313+35.91	1040.85	313+36.79	1040.73	313+37.30	1040.66	313+38.69	1040.47	313+40.07	1040.27	313+40.29	1040.24
	0.25 L	313+38.79	1040.77	313+39.66	1040.65	313+40.18	1040.57	313+41.56	1040.38	313+42.95	1040.19	313+43.16	1040.16
	0.50 L	313+50.66	1040.42	313+51.54	1040.30	313+52.05	1040.23	313+53.44	1040.04	313+54.82	1039.84	313+55.04	1039.81
	0.75 L	313+62.54	1040.08	313+63.41	1039.95	313+63.93	1039.88	313+65.31	1039.69	313+66.70	1039.50	313+66.91	1039.47
3	0.00 L	313+74.41	1039.73	313+75.29	1039.61	313+75.80	1039.54	313+77.19	1039.35	313+78.57	1039.15	313+78.79	1039.12
	0.25 L	313+82.66	1039.49	313+83.54	1039.37	313+84.05	1039.30	313+85.44	1039.11	313+86.82	1038.91	313+87.04	1038.88
	0.50 L	313+90.91	1039.25	313+91.79	1039.13	313+92.30	1039.06	313+93.69	1038.87	313+95.07	1038.67	313+95.29	1038.64
	0.75 L	313+99.16	1039.01	314+00.04	1038.89	314+00.55	1038.82	314+01.94	1038.63	314+03.32	1038.43	314+03.54	1038.40
	1.00 L	314+07.41	1038.77	314+08.29	1038.65	314+08.80	1038.58	314+10.19	1038.39	314+11.57	1038.19	314+11.79	1038.16

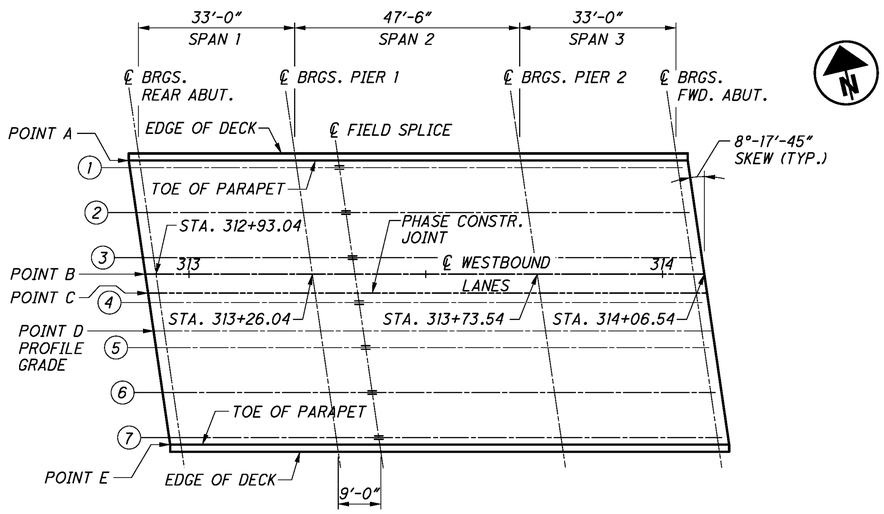

LOCATION PLAN

AS-BUILT
THIS RECORD DRAWING HAS BEEN PREPARED IN PART BY THE ENGINEER OF RECORD TO DEPICT CHANGES MADE DURING CONSTRUCTION, BASED ON INFORMATION REPORTED BY THE CONSTRUCTION CONTRACTOR.

NOTE:

1. *FINAL DECK SURFACE ELEVATIONS SHOWN REPRESENT THE DECK SURFACE LOCATION AFTER ALL ANTICIPATED DEAD PRIOR TO DEFLECTIONS CAUSED BY DECK PLACEMENT AND OTHER LOAD DEFLECTIONS HAVE OCCURRED.*

L = SPAN LENGTH

DESIGN AGENCY
ms consultants, inc.
engineers, architects & planners
Youngstown, Ohio 44503
Tel 330.743.1050 Fax 330.743.1070
www.msconsultants.com

DESIGNED	DRAWN	REVIEWED	DATE
RSW	KRM	JDH	1/2/2013
CHECKED	REVISED	STRUCTURE FILE NUMBER	
WER		7803990/7804024	

FINAL DECK SURFACE ELEVATIONS (LEFT)
BRIDGE NO. TRU-80-0591L/R
OVER LOGAN WAY

TRU-80-4.70
PID No. 76411

PLOT.CEL

ms consultants, inc.
msconsultants.com

Ohio DOT Workspace
Marucci & Gaffney TRU-80 Design Build
www.msconsultants.com

1"
0.5"
0

UCF: ohdotV8i
PCF: 60-08285_Youngstown

Batchplot Spec: \\youngstown-fs1\n\60\08285\standards\plotdrv\batchplt.spc
Pen Table: S:\std\plotting\usstn\V8\pen\V8_ms_std.tbl
Plot Driver: S:\std\plotting\usstn\V8\PDP.pltcfg

34" x 22"

View: SHEET
By: wruggles

Model: Sheet
Printed: 1/6/2014 @ 3:55:12 PM
File: \\youngstown-fs1\n\60\08285\structures\TRU-80-0591_Logan\sheets\080_0591LSD009.dgn

FINAL DECK SURFACE ELEVATIONS

		F (TOE OF PARAPET)		BEAM 8		BEAM 9		BEAM 10		G (PROFILE GRADE)		BEAM 11	
SPAN NO.	LOCATION	STATION	ELEVATION	STATION	ELEVATION	STATION	ELEVATION	STATION	ELEVATION	STATION	ELEVATION	STATION	ELEVATION
1	0.00 L	313+03.53	1041.14	313+03.75	1041.15	313+05.13	1041.27	313+06.52	1041.38	313+07.03	1041.42	313+07.91	1041.49
	0.25 L	313+11.78	1040.90	313+12.00	1040.92	313+13.38	1041.03	313+14.77	1041.15	313+15.28	1041.19	313+16.16	1041.26
	0.50 L	313+20.03	1040.67	313+20.25	1040.69	313+21.63	1040.80	313+23.02	1040.91	313+23.53	1040.95	313+24.41	1041.03
	0.75 L	313+28.28	1040.44	313+28.50	1040.45	313+29.88	1040.57	313+31.27	1040.68	313+31.78	1040.72	313+32.66	1040.79
2	0.00 L	313+36.53	1040.20	313+36.75	1040.22	313+38.13	1040.33	313+39.52	1040.45	313+40.03	1040.49	313+40.91	1040.56
	SPLICE	313+45.53	1039.95	313+45.75	1039.96	313+47.13	1040.08	313+48.52	1040.19	313+49.03	1040.23	313+49.91	1040.30
	0.25 L	313+48.41	1039.87	313+48.62	1039.88	313+50.01	1040.00	313+51.39	1040.11	313+51.91	1040.15	313+52.78	1040.22
	0.50 L	313+60.28	1039.53	313+60.50	1039.55	313+61.88	1039.66	313+63.27	1039.77	313+63.78	1039.81	313+64.66	1039.89
	0.75 L	313+72.16	1039.19	313+72.37	1039.21	313+73.76	1039.32	313+75.14	1039.44	313+75.66	1039.48	313+76.53	1039.55
3	0.00 L	313+84.03	1038.86	313+84.25	1038.88	313+85.63	1038.99	313+87.02	1039.10	313+87.53	1039.14	313+88.41	1039.21
	0.25 L	313+92.28	1038.62	313+92.50	1038.64	313+93.88	1038.75	313+95.27	1038.87	313+95.78	1038.91	313+96.66	1038.98
	0.50 L	314+00.53	1038.39	314+00.75	1038.41	314+02.13	1038.52	314+03.52	1038.63	314+04.03	1038.68	314+04.91	1038.75
	0.75 L	314+08.78	1038.16	314+09.00	1038.18	314+10.38	1038.29	314+11.77	1038.40	314+12.28	1038.44	314+13.16	1038.51
	1.00 L	314+17.03	1037.92	314+17.25	1037.94	314+18.63	1038.05	314+20.02	1038.17	314+20.53	1038.21	314+21.41	1038.28

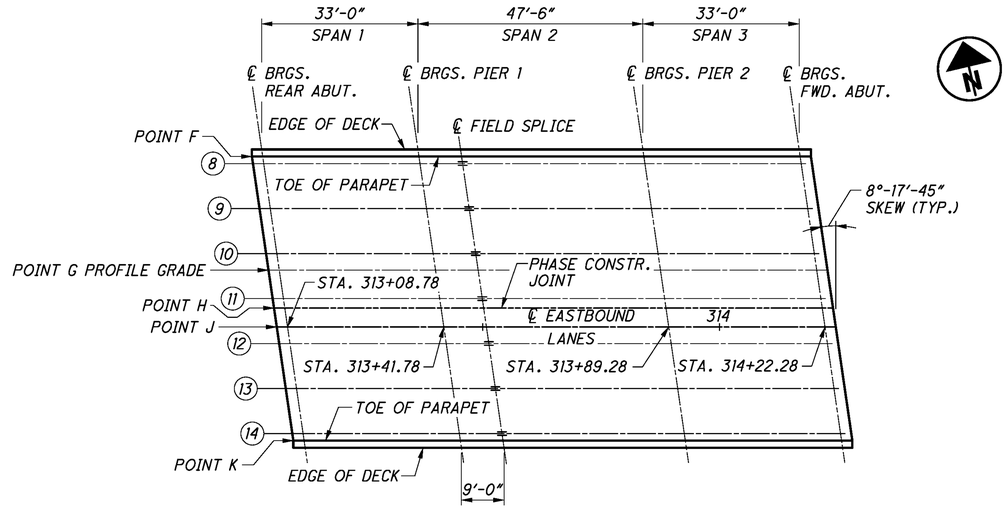

LOCATION PLAN

AS-BUILT

THIS RECORD DRAWING HAS BEEN PREPARED IN PART BY THE ENGINEER OF RECORD TO DEPICT CHANGES MADE DURING CONSTRUCTION, BASED ON INFORMATION REPORTED BY THE CONSTRUCTION CONTRACTOR.

NOTE:

1. *FINAL DECK SURFACE ELEVATIONS SHOWN REPRESENT THE DECK SURFACE LOCATION AFTER ALL ANTICIPATED DEAD PRIOR TO DEFLECTIONS CAUSED BY DECK PLACEMENT AND OTHER LOAD DEFLECTIONS HAVE OCCURRED.*

L = SPAN LENGTH

DESIGN AGENCY
ms consultants, inc.
engineers, architects & planners
225 Second Street SW
Canton, Ohio 44702
Tel 330.438.7760 Fax 330.438.7070
www.msconsultants.com

DESIGNED	DRAWN	REVIEWED	DATE
RSW	KRM	JDH	1/2/2013
CHECKED	REVISED	STRUCTURE FILE NUMBER	
WER		7803990/7804024	

FINAL DECK SURFACE ELEVATIONS (RIGHT)
BRIDGE NO. TRU-80-0591L/R
OVER LOGAN WAY

TRU-80-4.70
PID No. 76411

ms consultants, inc.

PLOT.CEL

ms consultants, inc.
msconsultants.com

Ohio DOT Workspace
Marucci & Gaffney TRU-80 Design Build

www.msconsultants.com

1"
0.5"
0

UCF: ohdotV8i
PCF: 60-08285_Youngstown

34" x 22"

Batchplot Spec: \\youngstown-fs1\n\60\08285\standards\plotdrv\batchplt.spc
Pen Table: S:\std\plotting\usatn\V8\pen\V8_ms_std.tbl
Plot Driver: S:\std\plotting\usatn\V8\PDP_pltcfg

Model: Sheet
Printed: 1/6/2014 @ 3:55:13 PM
View: SHEET
By: wruggles
File: \\youngstown-fs1\n\60\08285\structures\TRU-80-0591_Logan\sheets\080_0591LSD009A.dgn

FINAL DECK SURFACE ELEVATIONS

		H (CONSTRUCTION JOINT)		J (CROWN)		BEAM 12		BEAM 13		BEAM 14		K (TOE OF PARAPET)	
SPAN NO.	LOCATION	STATION	ELEVATION	STATION	ELEVATION	STATION	ELEVATION	STATION	ELEVATION	STATION	ELEVATION	STATION	ELEVATION
1	0.00 L	313+08.20	1041.52	313+08.78	1041.56	313+09.29	1041.49	313+10.68	1041.30	313+12.06	1041.11	313+12.28	1041.08
	0.25 L	313+16.45	1041.28	313+17.03	1041.33	313+17.54	1041.26	313+18.93	1041.07	313+20.31	1040.88	313+20.53	1040.85
	0.50 L	313+24.70	1041.05	313+25.28	1041.10	313+25.79	1041.03	313+27.18	1040.83	313+28.56	1040.64	313+28.78	1040.61
	0.75 L	313+32.95	1040.82	313+33.53	1040.86	313+34.04	1040.79	313+35.43	1040.60	313+36.81	1040.41	313+37.03	1040.38
2	0.00 L	313+41.20	1040.58	313+41.78	1040.63	313+42.29	1040.56	313+43.68	1040.37	313+45.06	1040.18	313+45.28	1040.15
	SPLICE	313+50.20	1040.33	313+50.78	1040.37	313+51.29	1040.30	313+52.68	1040.11	313+54.06	1039.92	313+54.28	1039.89
	0.25 L	313+53.07	1040.25	313+53.66	1040.29	313+54.17	1040.22	313+55.55	1040.03	313+56.94	1039.84	313+57.15	1039.81
	0.50 L	313+64.95	1039.91	313+65.53	1039.96	313+66.04	1039.89	313+67.43	1039.70	313+68.81	1039.50	313+69.03	1039.47
	0.75 L	313+76.82	1039.57	313+77.41	1039.62	313+77.92	1039.55	313+79.30	1039.36	313+80.69	1039.17	313+80.90	1039.14
3	0.00 L	313+88.70	1039.24	313+89.28	1039.29	313+89.79	1039.21	313+91.18	1039.02	313+92.56	1038.83	313+92.78	1038.80
	0.25 L	313+96.95	1039.00	313+97.53	1039.05	313+98.04	1038.98	313+99.43	1038.79	314+00.81	1038.60	314+01.03	1038.57
	0.50 L	314+05.20	1038.77	314+05.78	1038.82	314+06.29	1038.75	314+07.68	1038.56	314+09.06	1038.37	314+09.28	1038.34
	0.75 L	314+13.45	1038.54	314+14.03	1038.58	314+14.54	1038.51	314+15.93	1038.32	314+17.31	1038.13	314+17.53	1038.10
	1.00 L	314+21.70	1038.30	314+22.28	1038.35	314+22.79	1038.28	314+24.18	1038.09	314+25.56	1037.90	314+25.78	1037.87

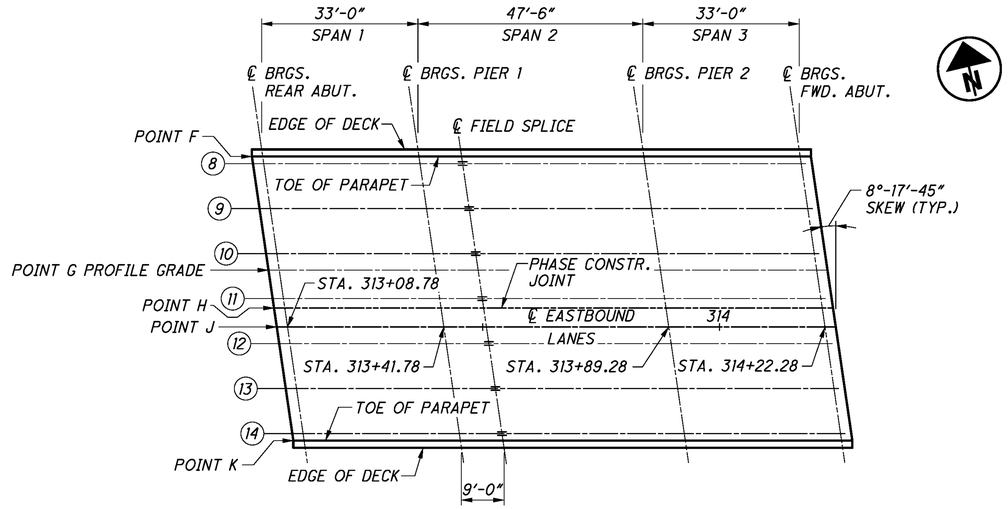

LOCATION PLAN

AS-BUILT
THIS RECORD DRAWING HAS BEEN PREPARED IN PART BY THE ENGINEER OF RECORD TO DEPICT CHANGES MADE DURING CONSTRUCTION, BASED ON INFORMATION REPORTED BY THE CONSTRUCTION CONTRACTOR.

NOTE:

1. *FINAL DECK SURFACE ELEVATIONS SHOWN REPRESENT THE DECK SURFACE LOCATION AFTER ALL ANTICIPATED DEAD PRIOR TO DEFLECTIONS CAUSED BY DECK PLACEMENT AND OTHER LOAD DEFLECTIONS HAVE OCCURRED.*

L = SPAN LENGTH

DESIGN AGENCY
ms consultants, inc.
engineers, architects & planners
225 Second Street
Youngstown, OH 44503
Tel 330.782.7750 Fax 330.782.7070
www.msconsultants.com

DESIGNED	DRAWN	REVIEWED	DATE
RSW	KRM	JDH	1/2/2013
CHECKED	REVISED	STRUCTURE FILE NUMBER	
WER		7803990/7804024	

FINAL DECK SURFACE ELEVATIONS (RIGHT)

BRIDGE NO. TRU-80-0591L/R
OVER LOGAN WAY

TRU-80-4.70
PID No. 76411

27A / 32

135A
142

PLOT.CEL
ms consultants, inc.
msconsultants.com
www.msconsultants.com
Ohio DOT Workspace
Marucci & Gaffney TRU-80 Design Build
UCF: ohdot\V8i
PCF: 60-08285_Youngstown
0 0.5" 1"
34" x 22"
Batchplot Spec: \\youngstown-fs1\n\60\08285\standards\plotdrv\batchplt.spc
Pen Table: S:\std\plotting\ustn\V8\pen\V8_ms_std.tbl
Plot Driver: S:\std\plotting\ustn\V8\PDF.pltcfg
Model: Sheet
Plotted: 1/6/2014 @ 3:55:15 PM
File: \\youngstown-fs1\n\60\08285\structures\TRU-80-0591_Logan\sheets\080_0591LBR001.dgn
View: SHEET
By: wruggles

REAR ABUT.

FWD. ABUT.

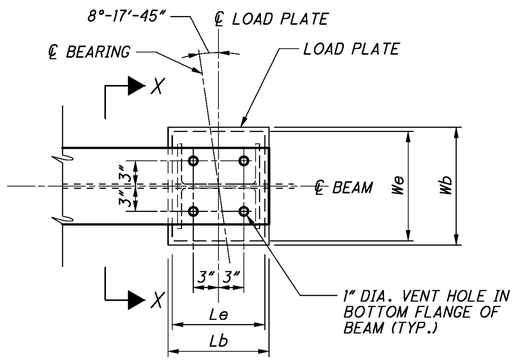

PLAN AT ABUTMENTS

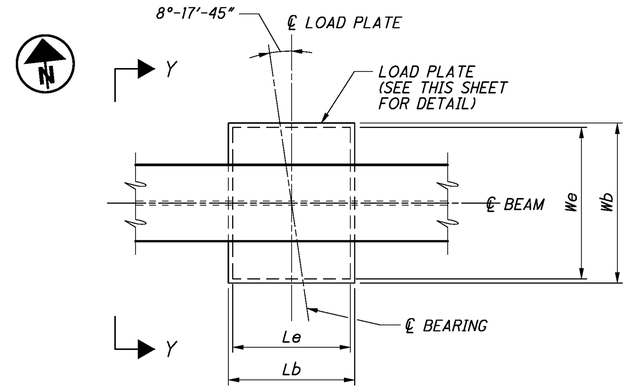

PLAN AT PIERS

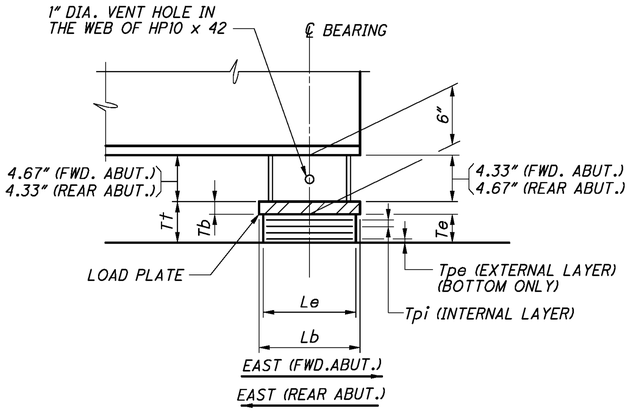

LAMINATED ELASTOMERIC EXPANSION BEARING

(FWD. ABUT. SHOWN)
(REAR ABUT. OPPOSITE HAND)

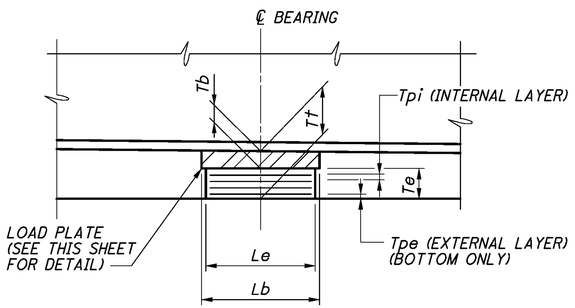

LAMINATED ELASTOMERIC EXPANSION BEARING

PIERS

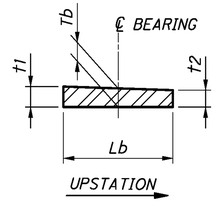

LOAD PLATE DETAIL

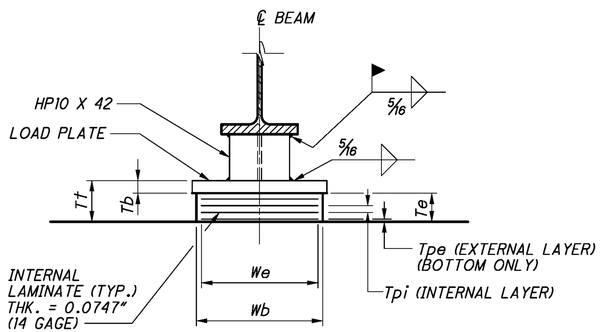

VIEW X-X

(AT ABUTMENTS)

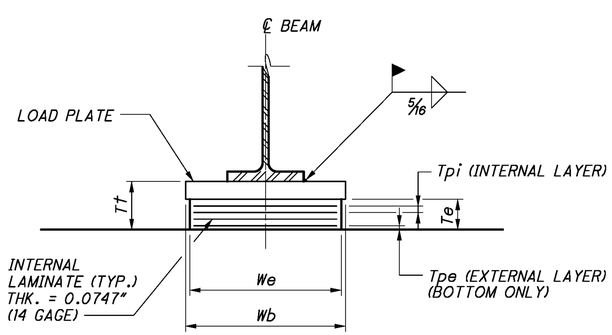

VIEW Y-Y

(AT PIERS)

NOTES:

1. THE STEEL LOAD PLATE AND HP SHAPE SHALL BE THE SAME MATERIAL AS THE ATTACHED STRUCTURAL STEEL AND SHALL BE GALVANIZED. THE HP SHAPE IS CONSIDERED A COMPONENT OF THE BEARING.
2. THE STEEL LOAD PLATE SHALL BE BONDED BY VULCANIZATION TO THE ELASTOMER DURING THE MOLDING PROCESS.
3. WELDING OF THE LOAD PLATE OR HP SHAPE TO THE SUPERSTRUCTURE SHALL BE CONTROLLED SO THAT THE PLATE TEMPERATURE AT THE ELASTOMER BONDED SURFACE SHALL NOT EXCEED 300° F. AS DETERMINED BY THE USE OF PYROMETRIC STICKS OR OTHER TEMPERATURE MONITORING DEVICES.
4. THE ELASTOMER SHALL HAVE A HARDNESS OF 50 DUROMETER. THE BEARINGS WERE DESIGNED UNDER DIVISION I, SECTION 14.6.6 (METHOD A) OF THE AASHTO STANDARD SPECIFICATIONS FOR HIGHWAY BRIDGES.
5. IF THE EXISTING STEEL IS RESET AT AN AMBIENT TEMPERATURE HIGHER THAN 80° F. OR LOWER THAN 40° F., AND THE BEARING SHEAR DEFLECTION EXCEEDS 1/6 OF THE BEARING HEIGHT AT 60° F. (± 10° F.), THE BEAMS SHALL BE RAISED TO ALLOW THE BEARINGS TO RETURN TO THEIR UNDEFORMED SHAPE AT 60° F. (± 10° F.).

AS-BUILT

THIS RECORD DRAWING HAS BEEN PREPARED IN PART BY THE ENGINEER OF RECORD TO DEPICT CHANGES MADE DURING CONSTRUCTION, BASED ON INFORMATION REPORTED BY THE CONSTRUCTION CONTRACTOR.

BEARING LOCATION	BEARING TYPE	NO. REQ'D. PER LOCATION	DEAD LOAD (KIPS)	LIVE LOAD (KIPS)	TOTAL LOAD (DL+LL) (KIPS)	Le (inches)	We (inches)	Tpi (inches)	NO. OF Tpi'S	Tpe (1 EA.) (inches)	NUMBER OF INTERNAL LAMINATES (14 GAGE)	Te (inches)	STEEL LOAD PLATE					Tt (inches)
													Lb (inches)	Wb (inches)	Tb (inches)	t1 (inches)	t2 (inches)	
REAR ABUTMENT	EXP.	14	53.9	45.6	99.5	9	16	0.375	5	0.250	5	2.499	11 (4)	17	1.50	1.50	1.50	3.999
PIER 1	EXP.	14	86.9	60.3	147.2	11	18	0.375	5	0.250	5	2.499	12	19	2.17	2.34	2.00	4.669
PIER 2	EXP.	14	86.9	60.3	147.2	11	18	0.375	5	0.250	5	2.499	12	19	2.17	2.34	2.00	4.669
FWD. ABUTMENT	EXP.	14	53.9	45.6	99.5	9	16	0.375	5	0.250	5	2.499	11 (4)	17	1.50	1.50	1.50	3.999

(4) REVISED 2-4-13

DESIGN AGENCY
ms consultants, inc.
engineers, architects & planners
225 Second Street SW
Canton, Ohio 44702
Tel 330.438.7760 Fax 330.438.7070
www.msconsultants.com

DESIGNED	DRAWN	REVIEWED	DATE
WER	KRM	JDH	1/2/2013
CHECKED	REVISED	STRUCTURE FILE NUMBER	
RSW		7803990/7804024	

ELASTOMERIC BEARING DETAILS
BRIDGE NO. TRU-80-0591L/R
OVER LOGAN WAY

TRU-80-4.70
PID No. 76411

28/32
136/142

ms consultants, inc.

PLOT.CEL

ms consultants, inc.
msconsultants.com

Ohio DOT Workspace
Marucci & Gaffney TRU-80 Design Build
www.msconsultants.com

1"
0.5"
0

UGF: ohdotV8i
PCF: 60-08285_Youngstown

Batchplot Spec: \\youngstown-fs1\n\60\08285\standards\plotdrv\batchplt.spc
Pen Table: S:\std\plotting\ustn\V8i\pen\V8i_ms_std.tbl
Plot Driver: S:\std\plotting\ustn\V8i\HPDP.pltcfg

Model: Sheet
Printed: 1/6/2014 @ 3:55:16 PM
File: \\youngstown-fs1\n\60\08285\structures\TRU-80-0591_Logan\sheets\080_0591LWD001.dgn
View: SHEET
By: wruggles

34" x 22"

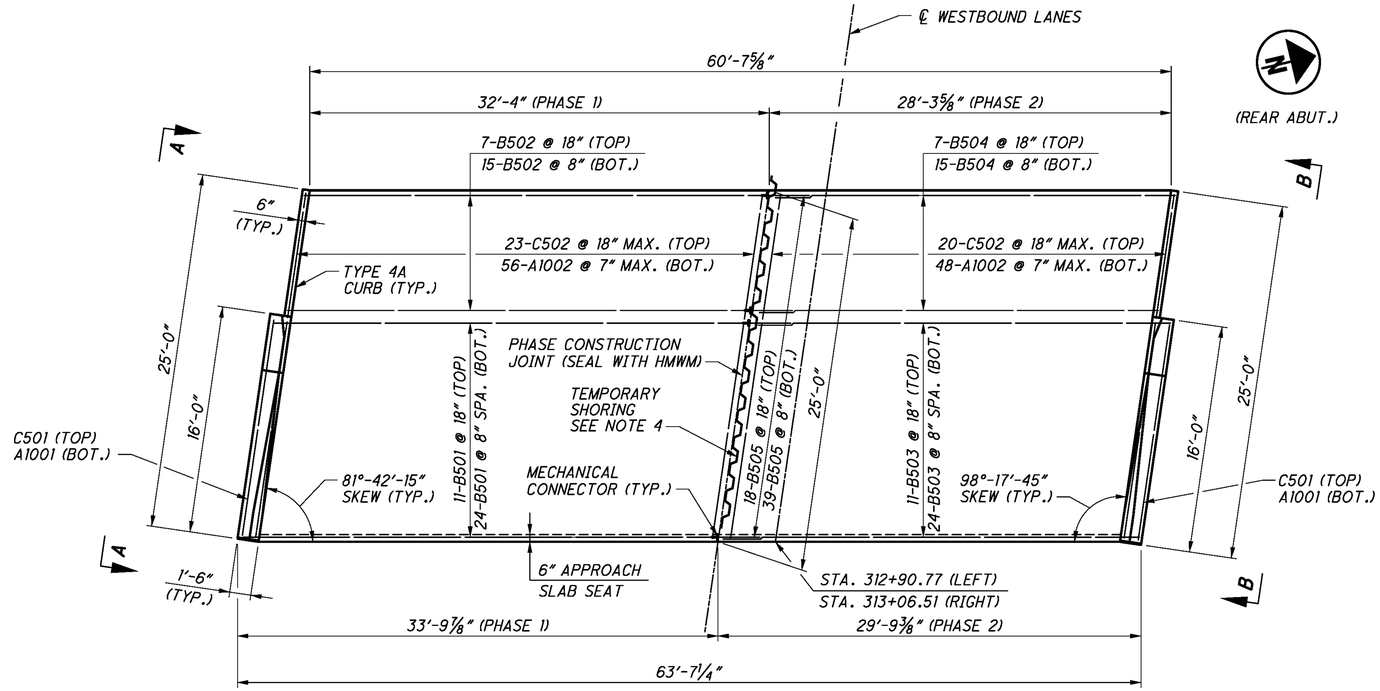

LEFT REAR APPROACH SLAB PLAN

(LEFT BRIDGE SHOWN, RIGHT BRIDGE OPPOSITE HAND)

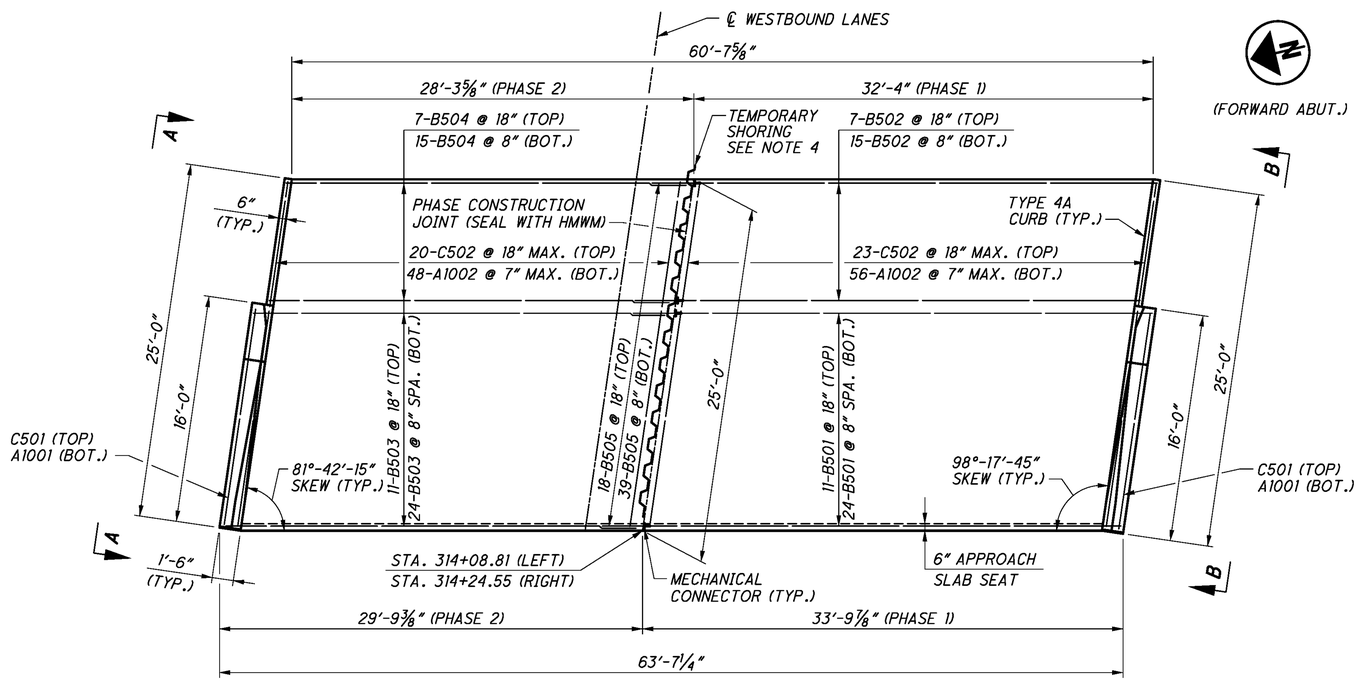

LEFT FORWARD APPROACH SLAB PLAN

(LEFT BRIDGE SHOWN, RIGHT BRIDGE OPPOSITE HAND)

AS-BUILT

THIS RECORD DRAWING HAS BEEN PREPARED IN PART BY THE ENGINEER OF RECORD TO DEPICT CHANGES MADE DURING CONSTRUCTION, BASED ON INFORMATION REPORTED BY THE CONSTRUCTION CONTRACTOR.

NOTES:

1. FOR ADDITIONAL APPROACH SLAB REINFORCEMENT & DETAILS, SEE STANDARD BRIDGE DRAWING AS-1-81.
2. FOR VIEW A-A AND VIEW B-B, SEE SHEET 30.
3. FOR REINFORCING STEEL LIST, SEE SHEET 32A.
4. THE CONTRACTOR SHALL BACKFILL AND REMOVE ALL TEMPORARY SHORING PRIOR TO PLACEMENT OF THE PHASE 2 PORTION OF THE APPROACH SLABS.

DESIGN AGENCY
ms consultants, inc.
engineers, architects & planners
2221 Schrock Road
Columbus, OH 43229
Tel 614.898.7100 Fax 614.898.7270
www.msconsultants.com

DESIGNED	DRAWN	REVIEWED	DATE
WER	KRM	JDH	1/2/2013
CHECKED	REVISED	STRUCTURE FILE NUMBER	
RSW		7803990/7804024	

APPROACH SLAB PLAN
BRIDGE NO. TRU-80-0591L/R
OVER LOGAN WAY

TRU-80-4.70
PID No. 76411

ms consultants, inc.

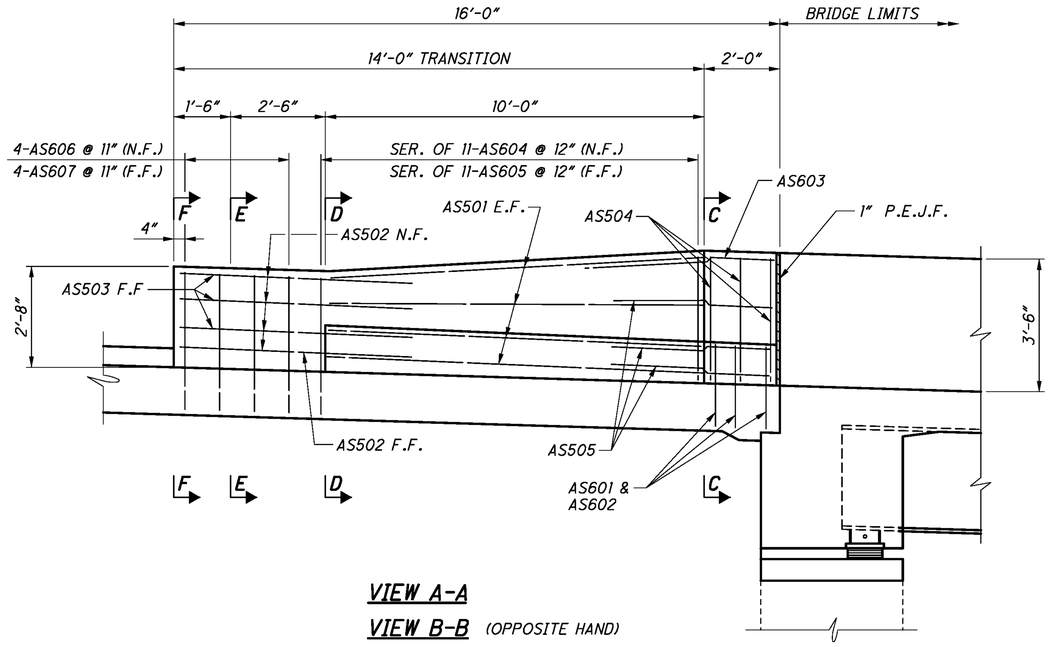

VIEW A-A

VIEW B-B (OPPOSITE HAND)

AS-BUILT

THIS RECORD DRAWING HAS BEEN PREPARED IN PART BY THE ENGINEER OF RECORD TO DEPICT CHANGES MADE DURING CONSTRUCTION, BASED ON INFORMATION REPORTED BY THE CONSTRUCTION CONTRACTOR.

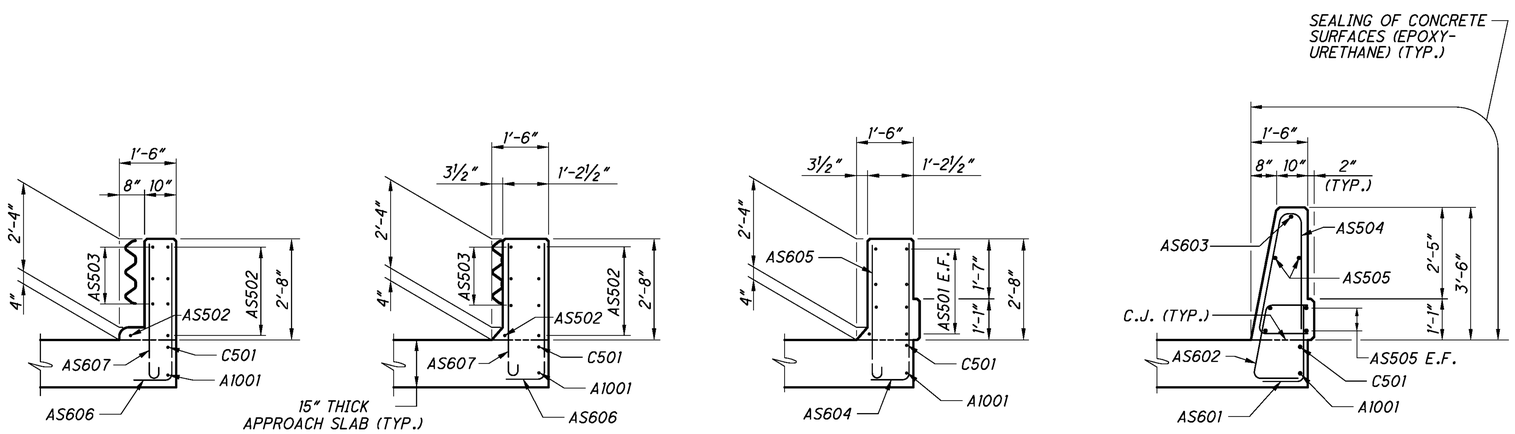

SECTION F-F

SECTION E-E

SECTION D-D

SECTION C-C

NOTES:

1. FOR ADDITIONAL NOTES AND PARAPET DETAILS, SEE STANDARD BRIDGE DRAWING BR-1.
2. FOR VIEWS A-A AND B-B, SEE SHEET 29.
3. FOR PARAPET REINFORCEMENT SCHEDULE, SEE SHEET 32A.
4. CONCRETE FOR PARAPET ON APPROACH SLABS SHALL BE CLASS HP.

DESIGN AGENCY
ms consultants, inc.
engineers, architects & planners
2221 Schrock Road
Columbus, Ohio 43229-1547
Tel 614.898.7700 Fax 614.898.7570
www.msconsultants.com

DESIGNED	DRAWN	REVIEWED	DATE
WER	KRM	JDH	1/2/2013
CHECKED	REVISED	STRUCTURE FILE NUMBER	
RSW		7803990/7804024	

APPROACH SLAB DETAILS
BRIDGE NO. TRU-80-0591L/R
OVER LOGAN WAY

TRU-80-4.70
PID No. 76411

ms consultants, inc.

PLOT.CEL
ms consultants, inc.
msconsultants.com
Ohio DOT Workspace
Marucci & Gaffney TRU-80 Design Build
www.msconsultants.com
UCF: ohdotV8i
PCF: 60-08285_Youngstown
Batchplot Spec: \\youngstown-fs1\n\60\08285\standards\plotdrv\batchplt.spc
Pen Table: S:\std\plotting\ustn\V8i\pen\V8i_ms_std.tbl
Plot Driver: S:\std\plotting\ustn\V8i\PDF.pltcfg
34" x 22"
View: SHEET
By: wruggles
Model: Sheet
Printed: 1/6/2014 @ 3:55:17 PM
File: \\youngstown-fs1\n\60\08285\structures\TRU-80-0591_Logan\sheets\080_0591LMD002.dgn

PLOT.CEL

ms consultants, inc.
msconsultants.com

www.msconsultants.com

Ohio DOT Workspace
Marucci & Gaffney TRU-80 Design Build

1"
0.5"
0

UCF: ohdot\V8i
PCF: 60-08285_Youngstown

34" x 22"

Batchplot Specs: \\youngstown-fs1\vn\60\08285\standards\plotdrv\batchplt.spc
Pen Table: S:\std\plotting\usitn\V8i\pen\V8i_ms_std.tbl
Plot Driver: S:\std\plotting\usitn\V8i\PDP.pltcfg

Model: Sheet
Printed: 1/6/2014 @ 3:55:19 PM
File: \\youngstown-fs1\vn\60\08285\structures\TRU-80-0591_Logan\sheets\080_0591LRL001.dgn
View: SHEET
By: wruggles

LEFT BRIDGE

MARK	NUMBER REAR	NUMBER FWD.	NUMBER TOTAL	LENGTH	TYPE	DIMENSIONS A	B	C	D	INC
A301	27	25	52	10′-1″	35	1′-2″	1′-8 ½″	3′-5″	0′-4 ½″	
A501	6	6	12	3′-0″	STR.					DOWEL
A502	23	22	45	17′-7″	3	5′-11″	2′-7″			
A503	18	18	36	16′-8″	2	6′-9″	3′-5″	6′-9″		
A504	9	9	18	11′-7″	STR.					
A505	10	10	20	8′-11″	2	4′-0″	1′-2″	4′-0″		
A506	6		6	20′-3″	STR.					
✳A507	1	1	2	35′-4″	STR.					
✳A508	1	1	2	35′-10″	STR.					
A509	11	13	24	9′-9″	1	0′-10″	9′-0″			
A510	58	58	116	1′-9″	STR.					DOWEL
A511	19	19	38	8′-2″	2	2′-6″	3′-5″	2′-6″		
A512	2 SER. OF 4		2 SER. OF 4	4′-0″ TO 9′-3″	1	0′-10″	3′-3″ TO 8′-6″			1′-9″
A514	2		2	13′-7″	2	6′-4″	1′-2″	6′-4″		
A515	2	2	4	10′-0″	19	3′-3″	5′-10″	3′-4″		
A516	9	14	23	5′-4″	2	1′-1″	3′-5″	1′-1″		
A517	20	15	35	5′-6″	2	1′-2″	3′-5″	1′-2″		
A518	5	4	9	17′-6″	2	7′-2″	3′-5″	7′-2″		
A519	9		9	12′-0″	STR.					
✳A520	4		4	4′-8″	STR.					
A521	11		11	6′-3″	1	0′-10″	5′-6″			
A522	1	1	2	31′-9″	STR.					
A523	1	1	2	31′-3″	STR.					
A524	2 SER. OF 3	2 SER. OF 3	4 SER. OF 3	3′-5″ TO 6′-1″	1	0′-10″	2′-8″ TO 5′-4″			1′-4″
A525	1 SER. OF 4		1 SER. OF 4	8′-11″ TO 14′-5″	2	4′-0″ TO 6′-9″	1′-2″	4′-0″ TO 6′-9″		1′-10″
A526	2		2	6′-9″	19	1′-3″	4′-4″	3′-4″		
A527		9	9	11′-4″	STR.					
A528		6	6	20′-6″	STR.					
A529		2	2	14′-5″	2	6′-9″	1′-2″	6′-9″		
A530		1 SER. OF 4	1 SER. OF 4	8′-5″ TO 12′-11″	2	3′-9″ TO 6′-0″	1′-2″	3′-9″ TO 6′-0″		1′-6″
A531		2 SER. OF 3	2 SER. OF 3	3′-9″ TO 7′-9″	1	0′-10″	3′-0″ TO 7′-0″			2′-0″
✳A532		4	4	4′-2″	STR.					
A533		11	11	7′-9″	1	0′-10″	7′-0″			
A534		1 SER. OF 4	1 SER. OF 4	6′-5″ TO 13′-11″	2	2′-9″ TO 6′-6″	1′-2″	2′-9″ TO 6′-6″		2′-6″

LEFT BRIDGE (CONTINUED)

MARK	NUMBER REAR	NUMBER FWD.	NUMBER TOTAL	LENGTH	TYPE	DIMENSIONS A	B	C	D	INC
A535		2	2	9′-0″	19	1′-10″	5′-10″	4′-2″		
A540	1 SER. OF 4		1 SER. OF 4	7′-7″ TO 12′-7″	2	3′-4″ TO 5′-10″	1′-2″	3′-4″ TO 5′-10″		1′-8″
✳✳A541	2		2	2′-6″	STR.					
A801	10	10	20	7′-6″	STR.					DOWEL
A802	10		10	19′-9″	STR.					
✳A803	1 SER. OF 4	1 SER. OF 4	2 SER. OF 4	35′-3″ TO 35′-9″	STR.					0′-2″
✳A804	7		7	4′-10″	STR.					
A805	1 SER. OF 4	1 SER. OF 4	2 SER. OF 4	31′-3″ TO 31′-9″	STR.					0′-2″
A806		10	10	20′-0″	STR.					
✳A807		7	7	4′-6″	STR.					
✳✳A808	4	4	8	5′-3″	STR.					

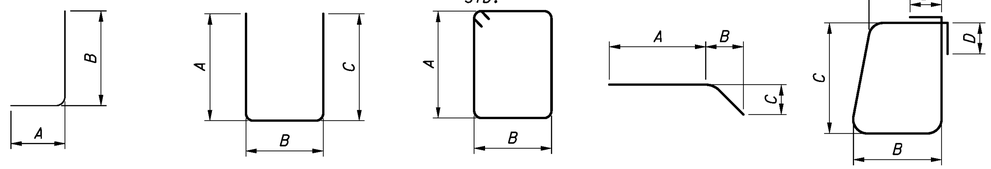

TYPE 1 TYPE 2 TYPE 3 TYPE-19 TYPE 35

✳ MECHANICAL CONNECTOR REQUIRED - BARS ARE SHOWN FULL LENGTH, NO ALLOWANCE WAS MADE FOR MECHANICAL CONNECTOR. FABRICATOR TO ADJUST BAR LENGTH BASED ON MECHANICAL CONNECTOR MANUFACTURER'S SPECIFICATION.

✳✳ INDICATES BAR WITH ONE END THREADED.

AS-BUILT

THIS RECORD DRAWING HAS BEEN PREPARED IN PART BY THE ENGINEER OF RECORD TO DEPICT CHANGES MADE DURING CONSTRUCTION, BASED ON INFORMATION REPORTED BY THE CONSTRUCTION CONTRACTOR.

NOTES:

BAR SIZE: THE BAR SIZE NUMBER IS SPECIFIED ON THE PLANS IN THE BAR MARK COLUMN. THE FIRST DIGIT WHERE THREE DIGITS ARE USED AND THE FIRST TWO DIGITS WHERE FOUR DIGITS ARE USED INDICATES THE BAR SIZE NUMBER. FOR EXAMPLE, AN A601 IS A #6 BAR. BAR DIMENSIONS SHOWN ARE OUT TO OUT UNLESS OTHERWISE INDICATED. R INDICATES INSIDE RADIUS, UNLESS OTHERWISE NOTED. "STD." WRITTEN IN PLACE OF A DIMENSION INDICATES A STANDARD BEND AT THE END OF THE BAR.

REINFORCING BAR SAMPLES: REFER TO C.M.S. SECTION 700, 709.01 THROUGH 709.05 AND 709.08. SUFFICIENT ADDITIONAL REINFORCING STEEL SHALL BE PROVIDED FOR SAMPLING FOR EACH BRIDGE. RANDOM SAMPLES SHALL BE REPLACED IN THE STRUCTURES BY THE ADDITIONAL STEEL, SPLICED IN ACCORDANCE WITH THE PROJECT PLANS.

ALL REINFORCING STEEL SHALL BE EPOXY COATED.

DESIGN AGENCY
ms consultants, inc.
engineers, architects & planners
2221 Schrock Road, Suite 100
Columbus, OH 43229
Tel 614.898.7100 Fax 614.898.7070
www.msconsultants.com

DESIGNED SRM | DRAWN TWS | REVIEWED WER | DATE 1/2/2013
CHECKED RSW | REVISED | STRUCTURE FILE NUMBER 7803990/7804024

REINFORCING STEEL LIST

BRIDGE NO. TRU-80-0591L/R
OVER LOGAN WAY

TRU-80-4.70
PID No. 76411

ms consultants, inc.

PLOT.CEL

ms consultants, inc.
msconsultants.com

www.msconsultants.com

Ohio DOT Workspace
Marucci & Gaffney TRU-80 Design Build

0 0.5" 1"

UCF: ohdot1V8i
PCF: 60-08285_Youngstown

Batchplot Spec: \\youngstown-fs1\vn\60\08285\standards\plotdrv\batchplt.spc
Pen Table: S:\std\plotting\ustn\V8\pen\V8_ms_std.tbl
Plot Driver: S:\std\plotting\ustn\V8\PDF.pltcfg

34" x 22"

View: SHEET
By: wruggles

Model: Sheet @ 3:55:20 PM
Printed: 1/6/2014
File: \\youngstown-fs1\vn\60\08285\structures\TRU-80-0591_Logan\sheets\080_0591RL001A.dgn

RIGHT BRIDGE

MARK	NUMBER			LENGTH	TYPE	DIMENSIONS				
	REAR	FWD.	TOTAL			A	B	C	D	INC
A301	26	25	51	10'-1"	35	1'-2"	1'-8 ½"	3'-5"	0'-4 ½"	
A501	6	6	12	3'-0"	STR.					DOWEL
A502	22	23	45	17'-7"	3	5'-11"	2'-7"			
A504	18	18	36	11'-7"	STR.					
A505	10	10	20	8'-11"	2	4'-0"	1'-2"	4'-0"		
A506		6	6	20'-3"	STR.					
*A507	1	1	2	35'-4"	STR.					
*A508	1	1	2	35'-10"	STR.					
A509	13	11	24	9'-9"	1	0'-10"	9'-0"			
A510	58	58	116	1'-9"	STR.					DOWEL
A511	19	19	38	8'-2"	2	2'-6"	3'-5"	2'-6"		
A512		2 SER. OF 4	2 SER. OF 4	4'-0" TO 9'-3"	1	0'-10"	3'-3" TO 8'-6"			1'-9"
A513		1 SER. OF 4	1 SER. OF 4	7'-1" TO 12'-3"	2	3'-1" TO 5'-8"	1'-2"	3'-1" TO 5'-8"		1'-10 11/16"
A514		2	2	13'-7"	2	6'-4"	1'-2"	6'-4"		
A515	2	2	4	10'-0"	19	3'-3"	5'-10"	3'-4"		
A516	11	12	23	5'-4"	2	1'-1"	3'-5"	1'-1"		
A517	11	13	24	5'-6"	2	1'-2"	3'-5"	1'-2"		
*A520	4		4	4'-8"	STR.					
A521	11		11	6'-3"	1	0'-10"	5'-6"			
A522	1	1	2	31'-9"	STR.					
A523	1	1	2	31'-3"	STR.					
A524		2 SER. OF 3	2 SER. OF 3	3'-5" TO 6'-1"	1	0'-10"	2'-8" TO 5'-4"			1'-4"
A528	6		6	20'-6"	STR.					
A529	2		2	14'-5"	2	6'-9"	1'-2"	6'-9"		
A530	1 SER. OF 4		1 SER. OF 4	8'-5" TO 12'-11"	2	3'-9" TO 6'-0"	1'-2"	3'-9" TO 6'-0"		1'-6"
A531	2 SER. OF 3		2 SER. OF 3	3'-9" TO 7'-9"	1	0'-10"	3'-0" TO 7'-0"			2'-0"
A533		11	11	7'-9"	1	0'-10"	7'-0"			
A534	1 SER. OF 4	1 SER. OF 4	2 SER. OF 4	6'-5" TO 13'-11"	2	2'-9" TO 6'-6"	1'-2"	2'-9" TO 6'-6"		2'-6"
A535		2	2	9'-0"	19	1'-10"	5'-10"	4'-2"		
A536	22	23	45	17'-2"	2	7'-0"	3'-5"	7'-0"		
A537	2 SER. OF 3		2 SER. OF 3	3'-0" TO 5'-2"	1	0'-10"	2'-3" TO 4'-5"			1'-1"

RIGHT BRIDGE (CONTINUED)

MARK	NUMBER			LENGTH	TYPE	DIMENSIONS				
	REAR	FWD.	TOTAL			A	B	C	D	INC
A538	7	4	11	5'-0"	2	0'-11"	3'-5"	0'-11"		
A539	2		2	7'-2"	19	1'-2"	4'-5"	4'-0"		
**A541	2	2	4	2'-6"	STR.					
A801	10	10	20	7'-6"	STR.					DOWEL
A802		10	10	19'-9"	STR.					
*A803	1 SER. OF 4	1 SER. OF 4	2 SER. OF 4	35'-3" TO 35'-9"	STR.					0'-2"
*A804		7	7	4'-10"	STR.					
A805	1 SER. OF 4	1 SER. OF 4	2 SER. OF 4	31'-3" TO 31'-9"	STR.					0'-2"
A806	10		10	20'-0"	STR.					
*A807		7	7	4'-6"	STR.					
**A808	4	4	8	5'-3"	STR.					

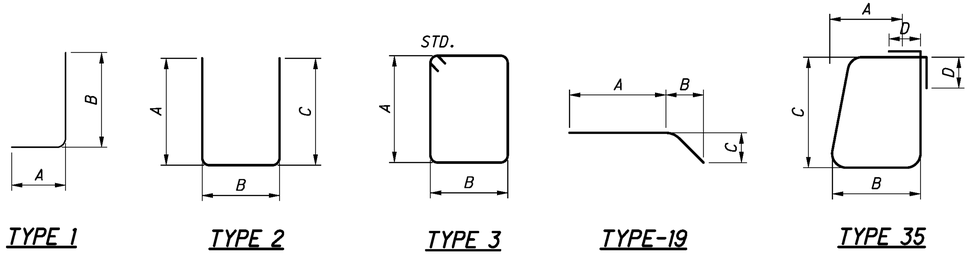

* MECHANICAL CONNECTOR REQUIRED - BARS ARE SHOWN FULL LENGTH, NO ALLOWANCE WAS MADE FOR MECHANICAL CONNECTOR. FABRICATOR TO ADJUST BAR LENGTH BASED ON MECHANICAL CONNECTOR MANUFACTURER'S SPECIFICATION.

** INDICATES BAR WITH ONE END THREADED.

AS-BUILT

THIS RECORD DRAWING HAS BEEN PREPARED IN PART BY THE ENGINEER OF RECORD TO DEPICT CHANGES MADE DURING CONSTRUCTION, BASED ON INFORMATION REPORTED BY THE CONSTRUCTION CONTRACTOR.

NOTES:

BAR SIZE: THE BAR SIZE NUMBER IS SPECIFIED ON THE PLANS IN THE BAR MARK COLUMN. THE FIRST DIGIT WHERE THREE DIGITS ARE USED AND THE FIRST TWO DIGITS WHERE FOUR DIGITS ARE USED INDICATES THE BAR SIZE NUMBER. FOR EXAMPLE, AN A601 IS A #6 BAR. BAR DIMENSIONS SHOWN ARE OUT TO OUT UNLESS OTHERWISE INDICATED. R INDICATES INSIDE RADIUS, UNLESS OTHERWISE NOTED. "STD." WRITTEN IN PLACE OF A DIMENSION INDICATES A STANDARD BEND AT THE END OF THE BAR.

REINFORCING BAR SAMPLES: REFER TO C.M.S. SECTION 700, 709.01 THROUGH 709.05 AND 709.08. SUFFICIENT ADDITIONAL REINFORCING STEEL SHALL BE PROVIDED FOR SAMPLING FOR EACH BRIDGE. RANDOM SAMPLES SHALL BE REPLACED IN THE STR.UCTURES BY THE ADDITIONAL STEEL, SPLICED IN ACCORDANCE WITH THE PROJECT PLANS.

ALL REINFORCING STEEL SHALL BE EPOXY COATED.

DESIGN AGENCY
ms consultants, inc.
engineers, architects & planners
2221 Schrock Road
Columbus, Ohio 43229
Tel 614.898.7100 Fax 614.898.7070
www.msconsultants.com

DESIGNED SRM | DRAWN TWS | CHECKED RSW | REVIEWED WER | DATE 1/2/2013 | REVISED | STRUCTURE FILE NUMBER 7803990/7804024

REINFORCING STEEL LIST
BRIDGE NO. TRU-80-0591L/R
OVER LOGAN WAY

TRU-80-4.70
PID No. 76411

PLOT.CEL

ms consultants, inc.
msconsultants.com

www.msconsultants.com

Ohio DOT Workspace
Marucci & Gaffney TRU-80 Design Build

0 0.5" 1"

UCF: ohdotV8i
PCF: 60-08285_Youngstown

Batchplot Spec: \\youngstown-fs1\n\60\08285\standards\plotdrv\batchplt.spc
Pen Table: S:\std\plotting\ustn\V8\pen\V8_ms_std.tbl
Plot Driver: S:\std\plotting\ustn\V8\PDF.pltcfg

Model: Sheet
Printed: 1/6/2014 @ 3:55:22 PM
File: \\youngstown-fs1\n\60\08285\structures\TRU-80-0591_Logan\sheets\080_0591RL002.dgn

34" x 22"

View: SHEET
By: wruggles

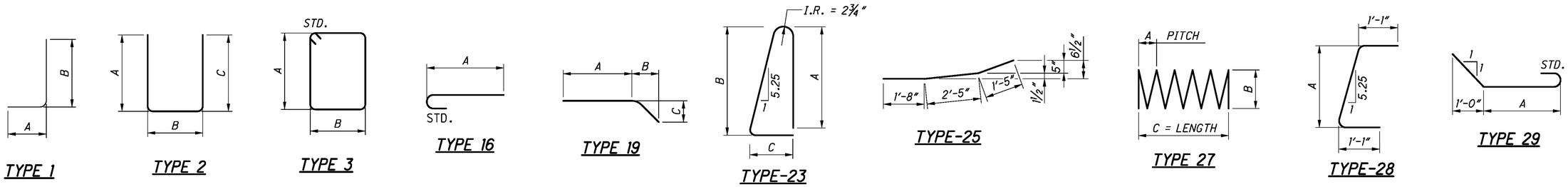

PIERS

MARK	NUMBER					LENGTH	TYPE	DIMENSIONS		
	PIER 1 LEFT	PIER 2 LEFT	PIER 1 RIGHT	PIER 2 RIGHT	TOTAL			A	B	C
DSP401	1				1	22'-0"	27	4½"	2'-6"	22'-0"
DSP402		1			1	21'-0"	27	4½"	2'-6"	21'-0"
DSP403			1		1	22'-7"	27	4½"	2'-6"	22'-7"
DSP404				1	1	20'-2"	27	4½"	2'-6"	20'-2"
SP401	1				1	13'-2"	27	4½"	2'-6"	13'-2"
SP402		1			1	11'-7"	27	4½"	2'-6"	11'-7"
SP403			1		1	12'-1"	27	4½"	2'-6"	12'-1"
SP404				1	1	11'-11"	27	4½"	2'-6"	11'-11"
SP405	1	1	1	1	4	7'-0"	27	4½"	2'-0"	7'-0"
P501	116	116	116	116	464	7'-6"	2	2'-11"	1'-11"	2'-11"
P502	54	54	54	54	216	3'-8"	1	10"	3'-0"	
P503	35	35	35	35	140	3'-1"	2	4"	2'-8"	4"
*P601	4	4	4	4	16	35'-5"	1	2'-11"	32'-8"	
P602	4	4	4	4	16	31'-1"	1	2'-11"	28'-4"	
P603	2	2	2	2	8	20'-7"	STR.			
P604	2	2	2	2	8	4'-4"	STR.			
**P605	4	4	4	4	16	4'-3"	STR.			
P801	6	6	6	6	24	20'-7"	STR.			
P802	6	6	6	6	24	4'-4"	STR.			
*P1001	6	6	6	6	24	22'-3"	16	20'-10"		
*P1002	6	6	6	6	24	6'-1"	16	4'-8"		
P1003	12				12	16'-11"	16	15'-6"		
P1004		12			12	15'-4"	16	13'-11"		
P1005			12		12	15'-10"	16	14'-5"		
P1006				12	12	15'-8"	16	14'-3"		
P1007	12	12	12	12	48	17'-0"	STR.			
DS1001	12				12	22'-9"	STR.			
DS1002		12			12	21'-8"	STR.			
DS1003			12		12	23'-4"	STR.			
DS1004				12	12	20'-11"	STR.			

SUPERSTRUCTURE AND ABUTMENT DIAPHRAGMS

MARK	NUMBER					LENGTH	TYPE	DIMENSIONS				
	LEFT (PH. 1)	LEFT (PH. 2)	RIGHT (PH. 1)	RIGHT (PH. 2)	TOTAL			A	B	C	D	INC
DA501	52	44	52	44	192	12'-5"	3	2'-6"	3'-5"			
DA502	52	44	52	44	192	7'-2"	2	2'-3"	2'-11"	2'-3"		
* DA801	28		28		56	33'-10"	STR					
** DA802		28		28	56	6'-1"	STR					
DA803		28		28	56	29'-8"	STR					
DA804	48	40	48	40	176	4'-11"	29	2'-8"				
S401	129	114	129	114	486	30'-0"	STR					
S402	43	38	43	38	162	33'-9"	STR					
S501	144	132	144	132	552	30'-0"	STR					
S502	48	44	48	44	184	35'-3"	STR					
S503	84	76	84	76	320	38'-0"	STR					
* S504	494		494		988	33'-4"	STR					
** S505		512		512	1024	3'-4"	STR					
S506		498		498	996	29'-2"	STR					
S507	2 SER. OF 9		2 SER. OF 9		4 SER. OF 9	3'-8" TO 28'-10"	STR					3'-1¾"
S508	2 SER. OF 10		2 SER. OF 10		4 SER. OF 10	4'-9" TO 33'-0"	STR					3'-1⅝"
S509	2	2	2	2	8	4'-0"	STR					
S510		2 SER. OF 8		2 SER. OF 8	4 SER. OF 8	4'-9" TO 26'-9"	STR					3'-1¾"
S511		2 SER. OF 7		2 SER. OF 7	4 SER. OF 7	5'-10" TO 24'-8"	STR					3'-1⅝"
S512	119	119	119	119	476	7'-5"	23	3'-0"	3'-2"	1'-1"		
S601	3	3	3	3	12	30'-0"	STR					
S602	1	1	1	1	4	37'-9"	STR					
S603	119	119	119	119	476	2'-10"	1	1'-1"	1'-11"			
S604	119	119	119	119	476	3'-11"	28	1'-11"				

5 REVISED 4-18-13

5 REVISED 4-18-13

* INDICATES BAR WITH MECHANICAL CONNECTOR REQUIRED. BARS ARE SHOWN FULL LENGTH, NO ALLOWANCE WAS MADE FOR MECHANICAL CONNECTOR. FABRICATOR TO ADJUST BAR LENGTH BASED ON MECHANICAL CONNECTOR MANUFACTURER'S SPECIFICATION.

** INDICATES BAR WITH ONE END THREADED

5 REVISED 4-18-13, PER RFI-03

AS-BUILT

THIS RECORD DRAWING HAS BEEN PREPARED IN PART BY THE ENGINEER OF RECORD TO DEPICT CHANGES MADE DURING CONSTRUCTION, BASED ON INFORMATION REPORTED BY THE CONSTRUCTION CONTRACTOR.

NOTES:

BAR SIZE: THE BAR SIZE NUMBER IS SPECIFIED ON THE PLANS IN THE BAR MARK COLUMN. THE FIRST DIGIT WHERE THREE DIGITS ARE USED AND THE FIRST TWO DIGITS WHERE FOUR DIGITS ARE USED INDICATES THE BAR SIZE NUMBER. FOR EXAMPLE, AN A601 IS A #6 BAR. BAR DIMENSIONS SHOWN ARE OUT TO OUT UNLESS OTHERWISE INDICATED. R INDICATES INSIDE RADIUS, UNLESS OTHERWISE NOTED. "STD." WRITTEN IN PLACE OF A DIMENSION INDICATES A STANDARD BEND AT THE END OF THE BAR.

REINFORCING BAR SAMPLES: REFER TO C.M.S. SECTION 700, 709.01 THROUGH 709.05 AND 709.08. SUFFICIENT ADDITIONAL REINFORCING STEEL SHALL BE PROVIDED FOR SAMPLING FOR EACH BRIDGE. RANDOM SAMPLES SHALL BE REPLACED IN THE STRUCTURES BY THE ADDITIONAL STEEL, SPLICED IN ACCORDANCE WITH THE PROJECT PLANS.

ALL REINFORCING STEEL SHALL BE EPOXY COATED.

DESIGN AGENCY
ms consultants, inc.
engineers, architects & planners
2221 Schrock Road
Columbus, Ohio 43229
Tel 614.898.7100 Fax 614.898.7070
www.msconsultants.com

DESIGNED WER | DRAWN KRM | CHECKED RSW | REVIEWED JDH | DATE 1/25/2013 | REVISED KRM | STRUCTURE FILE NUMBER 7803990/7804024

REINFORCING STEEL LIST
BRIDGE NO. TRU-80-0591L/R
OVER LOGAN WAY

TRU-80-4.70
PID No. 76411

32/32

140/142

PLOT.CEL

ms consultants, inc.
msconsultants.com

Ohio DOT Workspace
Marucci & Gaffney TRU-80 Design Build
www.msconsultants.com

1"
0.5"
0

UCF: ohdot1V8i
PCF: 60-08285_Youngstown

Batchplot Spec: \\youngstown-fs1\n\60\08285\standards\plotdrv\batchplt.spc
Pen Table: S:\std\plotting\ustn\V8\pen\V8i_ms_std.tbl
Plot Driver: S:\std\plotting\ustn\V8\PDF.pltcfg

34" x 22"

View: SHEET
By: wruggles

Model: Sheet @ 3:55:23 PM
Printed: 1/6/2014
File: \\youngstown-fs1\n\60\08285\structures\TRU-80-0591L-Logan\sheets\080-0591LRL002A.dgn

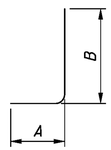

TYPE 1

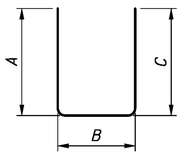

TYPE 2

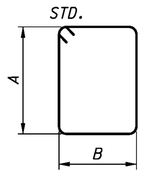

TYPE 3

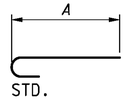

TYPE 16

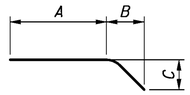

TYPE 19

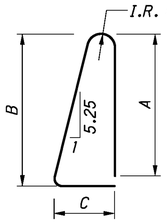

TYPE-23

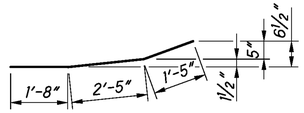

TYPE-25

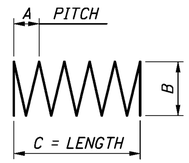

TYPE 27

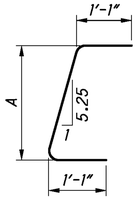

TYPE-28

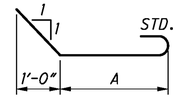

TYPE 29

APPROACH SLABS

MARK	NUMBER				TOTAL	LENGTH	TYPE	DIMENSIONS				
	LEFT (PH. 1)	LEFT (PH. 2)	RIGHT (PH. 1)	RIGHT (PH. 2)				A	B	C	D	INC
A1001	2	2	2	2	8	16'-11"	16	15'-6"				
A1002	112	96	112	96	416	25'-11"	16	24'-6"				
**B501	70		70		140	33'-7"	STR					
**B502	44		44		88	32'-1"	STR					
B503		70		70	140	29'-3"	STR					
B504		44		44	88	28'-0"	STR					
*B505		114		114	228	3'-8"	STR					
C501	2	2	2	2	8	15'-6"	STR					
C502	46	40	46	40	172	24'-6"	STR					
AS501	16	16	16	16	64	10'-0"	STR					
AS502	10	10	10	10	40	5'-6"	STR					
AS503	6	6	6	6	24	5'-6"	25					
AS504	6	6	6	6	24	7'-5"	23	3'-0"	3'-2"	1'-1"		
AS505	12	12	12	12	48	4'-6"	STR					
AS601	6	6	6	6	24	2'-10"	1	1'-1"	1'-11"			
AS602	6	6	6	6	24	3'-11"	28	1'-11"				
AS603	2	2	2	2	8	5'-4"	STR					
AS604	2 SER. OF 11	2 SER. OF 11	2 SER. OF 11	2 SER. OF 11	8 SER. OF 11	4'-5" TO 5'-3"	1	1'-1"	3'-6" TO 4'-4"			1"
AS605	2 SER. OF 11	2 SER. OF 11	2 SER. OF 11	2 SER. OF 11	8 SER. OF 11	4'-2" TO 5'-0"	16	3'-6" TO 4'-4"				1"
AS606	8	8	8	8	32	4'-5"	1	1'-1"	3'-6"			
AS607	8	8	8	8	32	3'-6"						

* INDICATES BAR WITH MECHANICAL CONNECTOR REQUIRED. BARS ARE SHOWN FULL LENGTH, NO ALLOWANCE WAS MADE FOR MECHANICAL CONNECTOR. FABRICATOR TO ADJUST BAR LENGTH BASED ON MECHANICAL CONNECTOR MANUFACTURER'S SPECIFICATION.

** INDICATES BAR WITH ONE END THREADED

AS-BUILT

THIS RECORD DRAWING HAS BEEN PREPARED IN PART BY THE ENGINEER OF RECORD TO DEPICT CHANGES MADE DURING CONSTRUCTION, BASED ON INFORMATION REPORTED BY THE CONSTRUCTION CONTRACTOR.

NOTES:

BAR SIZE: THE BAR SIZE NUMBER IS SPECIFIED ON THE PLANS IN THE BAR MARK COLUMN. THE FIRST DIGIT WHERE THREE DIGITS ARE USED AND THE FIRST TWO DIGITS WHERE FOUR DIGITS ARE USED INDICATES THE BAR SIZE NUMBER. FOR EXAMPLE, AN A601 IS A #6 BAR. BAR DIMENSIONS SHOWN ARE OUT TO OUT UNLESS OTHERWISE INDICATED. R INDICATES INSIDE RADIUS, UNLESS OTHERWISE NOTED. "STD." WRITTEN IN PLACE OF A DIMENSION INDICATES A STANDARD BEND AT THE END OF THE BAR.

REINFORCING BAR SAMPLES: REFER TO C.M.S. SECTION 700, 709.01 THROUGH 709.05 AND 709.08. SUFFICIENT ADDITIONAL REINFORCING STEEL SHALL BE PROVIDED FOR SAMPLING FOR EACH BRIDGE. RANDOM SAMPLES SHALL BE REPLACED IN THE STRUCTURES BY THE ADDITIONAL STEEL, SPLICED IN ACCORDANCE WITH THE PROJECT PLANS.

ALL REINFORCING STEEL SHALL BE EPOXY COATED.

DESIGN AGENCY
ms consultants, inc.
engineers, architects & planners
2221 Schrock Road
Columbus, Ohio 43229
Tel 614.898.7100 Fax 614.898.7070
www.msconsultants.com

DESIGNED WER | DRAWN KRM | REVIEWED JDH | DATE 1/25/2013
CHECKED RSW | REVISED | STRUCTURE FILE NUMBER 7803990/7804024

REINFORCING STEEL LIST

BRIDGE NO. TRU-80-0591L/R
OVER LOGAN WAY

TRU-80-4.70
PID No. 76411

ms consultants, inc.

EXISTING STRUCTURE VERIFICATION

DETAILS AND DIMENSIONS SHOWN ON THESE PLANS PERTAINING TO THE EXISTING STRUCTURE HAVE BEEN OBTAINED FROM PLANS OF THE EXISTING STRUCTURE AND FROM FIELD OBSERVATIONS AND MEASUREMENTS. CONSEQUENTLY, THEY ARE INDICATIVE OF THE EXISTING STRUCTURE AND THE PROPOSED WORK BUT THEY SHALL BE CONSIDERED TENTATIVE AND APPROXIMATE. THE CONTRACTOR IS REFERRED TO CMS SECTIONS 102.05 AND 105.02.

CLEARING AND GRUBBING

ALTHOUGH THERE ARE NO TREES SPECIFICALLY MARKED FOR REMOVAL WITHIN THE LIMITS OF THE PROJECT, ALL VEGETATION WITHIN 15 FT. OF ABUTMENTS SHALL BE REMOVED.

STRUCTURE IDENTIFICATION SIGNS

STRUCTURE IDENTIFICATION SIGNS (I-H25a) WILL BE PLACED ON EACH APPROACH OFF THE RIGHT SHOULDER, FACING TRAFFIC, AND BEHIND THE GUARDRAIL IF APPLICABLE. A QUANTITIY OF ONE SIGN PER APPROACH WILL BE INSTALLED. THE SIGNS WILL HAVE A NON-REFLECTIVE WHITE SHEETING BACKGROUND.

THE SIGNS WILL BE MOUNTED ON NEW NO. 2 POSTS AND WILL BE INSTALLED AS PER STANDARD CONSTRUCTION DRAWING TC-41.20, MOST CURRENT REVISION. EACH POST WILL BE 7.5' IN LENGTH.

INSTALL SIGNS FOR THE FOLLOWING STRUCTURES: TRU-80-0745 (2 APPROACHES), TRU-80-0801 (2 APPROACHES). THE FOLLOWING QUANTITIES HAVE BEEN INCLUDED FOR EACH APPROACH:
ITEM 630 - SIGN, FLAT SHEET, 730.20, 1 SQ FT
ITEM 630 - GROUND MOUNTED SUPPORT, NO. 2 POST, 7.5 FT
ITEM 630 - REMOVAL OF GROUND MOUNTED SIGN AND DISPOSAL, 1 EACH
ITEM 630 - REMOVAL OF GROUND MOUNTED POST SUPPORT AND DISPOSAL, 1 EACH

ITEM 519 - PATCHING CONCRETE STRUCTURES, AS PER PLAN

THE AREAS TO BE PATCHED WILL BE DESIGNATED BY THE PROJECT ENGINEER. PRIOR TO THE SURFACE CLEANING SPECIFIED IN 519.04 AND WITHIN 24 HOURS OF PLACING MATERIAL, BLAST CLEAN ALL SURFACES TO BE PATCHED INCLUDING THE EXPOSED REINFORCING STEEL. ACCEPTABLE METHODS INCLUDE HIGH-PRESSURE WATER BLASTING WITH OR WITHOUT ABRASIVES IN THE WATER, ABRASIVE BLASTING WITH CONTAINMENT, OR VACUUM ABRASIVE BLASTING.

AN ALLOWANCE OF 200 S.F. IS INCLUDED IN THE CONTRACT DOCUMENTS TO PATCH DEFICIENT AREAS OF THE CONCRETE SUBSTRUCTURES. AREAS REQUIRING PATCHING WILL BE DETERMINED IN THE FIELD BY THE PROJECT ENGINEER AND REPAIRED AS PER THE REQUIREMENTS OF ITEM 519 - PATCHING CONCRETE STRUCTURE.

ITEM SPECIAL - STRUCTURE MISC.: STRUCTURE CLEANING

THIS WORK WILL CONSIST OF CLEANING THE BEAMS AND BEARINGS OF STRUCTURES TRU-80-0745 & TRU-80-0801 AS PER CMS 514.14. ALSO, ALL DIRT AND DEBRIS FORM THE ABUTMENTS, BEAM SEATS, AND PIER CAPS WILL BE REMOVED AND WASHED WITH POTABLE WATER.

ITEM SPECIAL - MISC.: VERTICAL CLEARANCE

AFTER ALL CONSTRUCTION HAS BEEN COMPLETED, A REGISTERED SURVEYOR WILL TAKE VERTICAL CLEARANCE MEASUREMENTS AT LOCATIONS INDICATED ON THE APPROVED ODOT FORM (AVAILABLE IN THE DISTRICT 4 STRUCTURES AND PAVEMENT OFFICE). THE FINAL MEASUREMENTS SHALL BE RECORDED ON THE FORM AND SUBMITTED TO THE PROJECT ENGINEER AND THE DISTRICT 4 STRUCTURES AND PAVEMENT ENGINEER. THE RECORD SHALL BEAR THE SEAL OF THE LICENSED SURVEYOR WHO HAS TAKEN THE MEASUREMENTS. THIS WORK SHALL BE PERFORMED AT THE FOLLOWING STRUCTURES: TRU-80-0745 & TRU-80-0801.

PROPOSED WORK

STRUCTURES: TRU-80-0745 UNDER SEIFERT LEWIS
TRU-80-0801 UNDER BELLWICK ROAD

- SEAL CONCRETE BRIDGE DECK AND APPROACH SLABS WITH SOLUBLE REACTIVE SILICATE (SRS) CONCRETE TREATMENT, AS PER CMS 512.05 (TREATING OF CONCRETE BRIDGE DECKS WITH SRS).
- PATCH ALL UNSOUND AREAS OF THE SUBSTRUCTURE, AS PER ITEM 519 - PATCHING CONCRETE STRUCTURES, AS PER PLAN.
- CLEAN THE STRUCTURAL STEEL AS PER ITEM SPECIAL - STRUCTURE MISC.: STRUCTURE CLEANING.
- SEAL ALL EXPOSED CONCRETE OF THE PARAPETS, WINGWALLS, ABUTMENTS AND PIERS WITH EPOXY-URETHANE SEALER, AS PER CMS 512.03, SEALING OF CONCRETE SURFACES (EPOXY-URETHANE). FOR ADDITIONAL DETAILS SEE SHEET 2 OF 2.
- REMOVE ALL VEGETATION WITHIN 15 FEET OF THE ABUTMENTS.
- PROVIDE STRUCTURE IDENTIFICATION SIGNS.

AS-BUILT

THIS RECORD DRAWING HAS BEEN PREPARED IN PART BY THE ENGINEER OF RECORD TO DEPICT CHANGES MADE DURING CONSTRUCTION, BASED ON INFORMATION REPORTED BY THE CONSTRUCTION CONTRACTOR.

DESIGN AGENCY
ms consultants, inc.
CONSULTING ENGINEERS & PLANNERS
300 EAST FEDERAL STREET, YOUNGSTOWN, OHIO

DESIGNED	DRAWN	REVIEWED	DATE
WER	KRM	JDH	1-25-13
CHECKED	REVISED	STRUCTURE FILE NUMBER	
RSW	-	7804083/7804113	

GENERAL NOTES
BRIDGE NO. TRU-80-0745 UNDER SEIFERT LEWIS
BRIDGE NO. TRU-80-0801 UNDER BELLWICK ROAD

TRU-80-4.70
PID No. 76411

ms consultants, inc.
www.msconsultants.com
Ohio DOT Workspace
Marucci & Gaffney TRU-80 Design Build
UCF: ohdot\V8i
PCF: 60-08285_Youngstown
1" 0.5" 0
Batchplot Spec: \\youngstown-fs\fn\60\08285\standards\plotdrv\batchplt.spc
Pen Table: S:\std\plotting\usstn\V8\pen\V8i_ms_std.tbl
Plot Driver: S:\std\plotting\usstn\V8\PDF.plt
Model: Sheet
Printed: 12/12/2013 @ 3:38:45 PM
File: \\youngstown-fs\fn\60\08285\structures\TRU-80-0745_Seifert Lewis\080_07456N001.dgn
View: SHEET
By: wruggles
34" x 22"

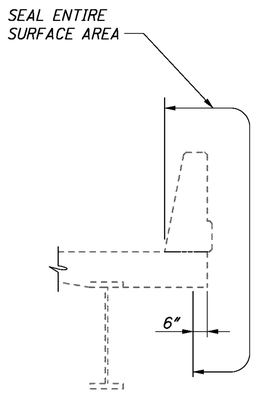

DETAIL A

CONCRETE DECK WITH
DEFLECTOR PARAPET

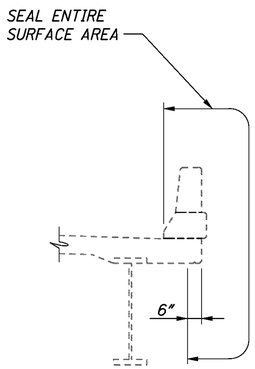

DETAIL B

CONCRETE DECK WITH
DEFLECTOR PARAPET

BRIDGE NO.	STRUCTURE TYPE	PROPOSED SEALING	FEDERAL COLOR NUMBER
TRU-80-0745	4 SPAN CONTINUOUS STEEL BEAM	SEAL PARAPETS PER DETAIL A SEAL ALL EXPOSED CONCRETE AT ABUTMENTS SEAL ALL EXPOSED CONCRETE AT WINGWALLS SEAL ALL EXPOSED CONCRETE AT PIER	PER CMS
TRU-80-0801	4 SPAN CONTINUOUS STEEL BEAM	SEAL PARAPETS PER DETAIL B SEAL ALL EXPOSED CONCRETE AT ABUTMENTS SEAL ALL EXPOSED CONCRETE AT WINGWALLS SEAL ALL EXPOSED CONCRETE AT PIER	PER CMS

NOTE:

- EPOXY-URETHANE SEALER SHALL BE USED.

AS-BUILT

THIS RECORD DRAWING HAS BEEN PREPARED IN PART BY THE ENGINEER OF RECORD TO DEPICT CHANGES MADE DURING CONSTRUCTION, BASED ON INFORMATION REPORTED BY THE CONSTRUCTION CONTRACTOR.

DESIGN AGENCY
ms consultants, inc.
CONSULTING ENGINEERS & PLANNERS
333 SOUTH PHELPS STREET, YOUNGSTOWN, OHIO

DESIGNED	DRAWN	REVIEWED	DATE
WER	KRM	JDH	1-25-13
CHECKED	REVISED	STRUCTURE FILE NUMBER	
RSW	-	7804083/7804113	

CONCRETE SEALING DETAILS

BRIDGE NO. TRU-80-0745 UNDER SEIFERT LEWIS
BRIDGE NO. TRU-80-0801 UNDER BELLWICK ROAD

TRU-80-4.70
PID No. 76411

2 / 2

142
142

Batchplot Spec: \\youngstown-fs1\n\60\08285\standards\plotdrv\batchplt.spc
Pen Table: S:\std\plotting\usatn\V8\pen\V8i_ms_std.tbl
Plot Driver: S:\std\plotting\usatn\V8\PDP.pltcfg
Model: Sheet
Printed: 12/13/2013 @ 10:41:59 AM
File: \\youngstown-fs1\n\60\08285\structures\TRU-80-0745_Seifert Lewis\080_0745MD001.dgn
View: SHEET
By: wruggles
34" x 22"
1" 0.5" 0
UCF: ohdot\V8i
PCF: 60-08285_Youngstown
Ohio DOT Workspace
Marucci & Gaffney TRU-80 Design Build
www.msconsultants.com

LEGEND KEY

Ohio Department of Transportation Soil Symbols

- A-1-a - Gravel and/or Stone Fragments
- A-1-b - Gravel and/or Stone Fragments with Sand
- A-2-4,A-2-5 - Gravel and/or Stone Fragments with Sand and Silt
- A-2-6,A-2-7 - Gravel and/or Stone Fragments with Sand, Silt and Clay
- A-3 - Fine Sand
- A-3a - Coarse and Fine Sand
- A-4a - Sandy Silt
- A-4b - Silt
- A-5 - Elastic Silt and Clay
- A-6a - Silt and Clay
- A-6b - Silty Clay
- A-7-5 - Elastic Clay
- A-7-6 - Clay
- A-8a - Organic Silt
- A-8b - Organic Clay
- Asphalt
- Sod and/or Topsoil
- Concrete
- Random Fill
- Peat
- Dolomite
- Weathered Dolomite
- Limestone
- Weathered Limestone
- Sandstone
- Weathered Sandstone
- Shale
- Weathered Shale

Sample Symbols

- SS - Split Spoon
- ST - Shelby Tube
- RC - Rock Core
- GS - Geoprobe Sleeve
- AU - Auger Cuttings
- GB - Grab

Notes:

1. Exploratory borings were drilled on December 19 and 20, 2011, using 3¼-inch inside diameter hollow-stem augers.
2. These logs are subject to the limitations, conclusions, and recommendations in the report and should not be interpreted separate from the report.
3. Borings were located and performed by TTL Associates, Inc. For additional information, see "Geotechnical Drilling and Laboratory Services, TRU-80-0496L&R, PID 76411 Bridge Replacement IR-80 over Sampson Road, Liberty Twp., Trumbull Co., Ohio" and "Geotechnical Drilling and Laboratory Services, TRU-80-0591L&R, PID 76411 Bridge Replacement IR-80 over Logan Way, Liberty Twp., Trumbull Co., Ohio" dated January 2012.

DRAWN | CHECKED

STRUCTURE FOUNDATION EXPLORATION
BRIDGE NO. TRU-80-0496L/R OVER SAMPSON RD.

TRU-80-4.70

PROJECT: 7270.13	DRILLING FIRM / OPERATOR: TTL / TB	DRILL RIG: CME 550X ATV	STATION / OFFSET:	EXPLORATION ID B-001-0-11	
TYPE: BRIDGE REPLACEMENT	SAMPLING FIRM / LOGGER: TTL / KKC	HAMMER: CME AUTOMATIC	ALIGNMENT:		
PID: 76411 BR ID: TRU-80-0496L_R	DRILLING METHOD: 3.25" HSA	CALIBRATION DATE: 12/28/09	ELEVATION: 1074.0 (MSL) EOB: 43.6 ft.	PAGE 1 OF 2	
START: 12/20/11 END: 12/20/11	SAMPLING METHOD: SPT	ENERGY RATIO (%): 66	LAT / LONG: Not Recorded		

MATERIAL DESCRIPTION AND NOTES	ELEV. 1074.0	DEPTHS	SPT/ RQD	N_{60}	REC (%)	SAMPLE ID	HP (tsf)	GRADATION (%) GR	CS	FS	SI	CL	ATTERBERG LL	PL	PI	WC	ODOT CLASS (GI)	ABAN-DONED
TOPSOIL - 2 INCHES	1073.8																	
VERY STIFF, GRAY/BROWN, **SANDY SILT**, SOME CLAY AND TRACE GRAVEL, MOIST **EMBANKMENT FILL**		1	5 9 9	20	78	SS-1	4.50	-	-	-	-	-	-	-	-	12	A-4a (V)	
-GRAY		4	5 7 10	19	67	SS-2	4.50	-	-	-	-	-	-	-	-	13	A-4a (V)	
-BROWN		6	9 11 12	25	78	SS-3	4.50	-	-	-	-	-	-	-	-	12	A-4a (V)	
		9	5 8 13	23	100	SS-4	4.50	-	-	-	-	-	-	-	-	12	A-4a (V)	
		11	5 8 10	20	100	SS-5	4.50	-	-	-	-	-	-	-	-	12	A-4a (V)	
-STIFF TO VERY STIFF LITTLE GRAVEL		14	8 7 7	15	100	SS-6	4.50	10	11	19	38	22	25	17	8	13	A-4a (5)	
-VERY STIFF GRAY LITTLE CLAY		17	6 8 11	21	100	SS-7	4.00	12	12	17	41	18	24	19	5	17	A-4a (5)	
-STIFF TO VERY STIFF, BROWN, SOME CLAY AND TRACE IRON OXIDE STAIN SEAM		19	5 5 6	12	100	SS-8	4.50	13	9	18	37	23	24	17	7	13	A-4a (5)	
-VERY STIFF, BROWN/GRAY		22	5 9 10	21	100	SS-9	4.50	-	-	-	-	-	-	-	-	16	A-4a (V)	
-BROWN, "AND" CLAY, TRACE GRAVEL		24	7 7 9	18	100	SS-10	4.50	1	3	7	45	44	27	22	5	20	A-4a (8)	
	1048.0																	

STANDARD ODOT SOIL BORING LOG (8.5 X 11) - OH DOT.GDT - 1/23/12 16:12 - S:\PROJECTS\7270.13.GPJ

PID: 76411	BR ID: TRU-80-0496L_R	PROJECT: 7270.13	STATION / OFFSET:	START: 12/20/11	END: 12/20/11	PG 2 OF 2	B-001-0-11

MATERIAL DESCRIPTION AND NOTES	ELEV. 1048.0	DEPTHS	SPT/ RQD	N_{60}	REC (%)	SAMPLE ID	HP (tsf)	GRADATION (%) GR	CS	FS	SI	CL	ATTERBERG LL	PL	PI	WC	ODOT CLASS (GI)	ABAN-DONED
VERY STIFF, GRAY, **SILT AND CLAY**, LITTLE SAND AND TRACE GRAVEL, MOIST		27	5 8 9	19	100	SS-11	4.00	8	2	9	21	60	37	25	12	30	A-6a (9)	
-BROWN/GRAY		29	10 10 17	30	100	SS-12	4.50	-	-	-	-	-	-	-	-	20	A-6a (V)	
	1043.0																	
VERY DENSE, GRAY, WEATHERED SHALE, MOIST		TR 31	15 40 50/3"	-	93	SS-13	NP	-	-	-	-	-	-	-	-	7	Rock (V)	
		34	50/4"	-	100	SS-14	NP	-	-	-	-	-	-	-	-	5	Rock (V)	
		39	50/2"	-	100	SS-15	NP	-	-	-	-	-	-	-	-	4	Rock (V)	
	1030.4	EOB 43	50/1"	-	100	SS-16	NP	-	-	-	-	-	-	-	-	6	Rock (V)	

STANDARD ODOT SOIL BORING LOG (8.5 X 11) - OH DOT.GDT - 1/23/12 16:12 - S:\PROJECTS\7270.13.GPJ

NOTES: AUGER REFUSAL ENCOUNTERED AT 43.6 FEET.

ABANDONMENT METHODS, MATERIALS, QUANTITIES: PUMPED 12 CF CEMENT-BENTONITE GROUT

PROJECT: 7270.13	DRILLING FIRM / OPERATOR: TTL / TB	DRILL RIG: CME 550X ATV	STATION / OFFSET:
TYPE: BRIDGE REPLACEMENT	SAMPLING FIRM / LOGGER: TTL / KKC	HAMMER: CME AUTOMATIC	ALIGNMENT:
PID: 76411 BR ID: TRU-80-0496L_R	DRILLING METHOD: 3.25" HSA / NQ2	CALIBRATION DATE: 12/28/09	ELEVATION: 1050.0 (MSL) EOB: 34.5 ft.
START: 12/19/11 END: 12/19/11	SAMPLING METHOD: SPT / NQ2	ENERGY RATIO (%): 66	LAT / LONG: Not Recorded

EXPLORATION ID B-002-0-11 | PAGE 1 OF 2

MATERIAL DESCRIPTION AND NOTES	ELEV.	DEPTHS	SPT/ RQD	N_{60}	REC (%)	SAMPLE ID	HP (tsf)	GRADATION (%) GR	CS	FS	SI	CL	ATTERBERG LL	PL	PI	WC	ODOT CLASS (GI)	ABAN-DONED
TOPSOIL - 5 INCHES	1050.0 / 1049.6																	
VERY STIFF, BROWN, **SILT AND CLAY**, LITTLE SAND AND TRACE GRAVEL, MOIST			10 11 15	29	67	SS-1	NI	-	-	-	-	-	-	-	-	12	A-6a (V)	
"AND" GRAVEL, TRACE SAND			3 7 8	16	100	SS-2	4.50	52	2	7	16	23	32	20	12	15	A-6a (1)	
VERY STIFF, BROWN, **SANDY SILT**, "AND" GRAVEL, LITTLE CLAY, MOIST	1044.0		6 8 15	25	100	SS-3	4.50	46	3	11	30	10	26	18	8	13	A-4a (1)	
HARD, BROWN/GRAY, **SILT AND CLAY**, SOME SHALE FRAGMENTS AND TRACE SAND, MOIST	1042.0		15 17 17	37	100	SS-4	4.50	29	1	7	17	46	39	27	12	15	A-6a (6)	
VERY DENSE, BROWN/GRAY, WEATHERED SHALE SOME CLAY, MOIST	1039.0	▼ 0 hr TR; W	10 25 49	81	100	SS-5	NP	-	-	-	-	-	-	-	-	14	Rock (V)	
-GRAY			21 32 40	79	100	SS-6	NP	-	-	-	-	-	-	-	-	7	Rock (V)	
			29 43 47	99	100	SS-7	NP	-	-	-	-	-	-	-	-	13	Rock (V)	
			50/5"	-	80	SS-8	NP	-	-	-	-	-	-	-	-	10	Rock (V)	
			50/2"	-	100	SS-9	NP	-	-	-	-	-	-	-	-	18	Rock (V)	
	1025.5		50/3"	-	100	SS-10	NP	-	-	-	-	-	-	-	-	14	Rock (V)	

STANDARD ODOT SOIL BORING LOG (8.5 X 11) - OH DOT.GDT - 1/23/12 16:13 - S:\PROJECTS\7270 13.GPJ

PID: 76411 | BR ID: TRU-80-0496L_R | PROJECT: 7270.13 | STATION / OFFSET: | START: 12/19/11 | END: 12/19/11 | PG 2 OF 2 | B-002-0-11

MATERIAL DESCRIPTION AND NOTES	ELEV.	DEPTHS	SPT/ RQD	N_{60}	REC (%)	SAMPLE ID	HP (tsf)	GRADATION (%) GR	CS	FS	SI	CL	ATTERBERG LL	PL	PI	WC	ODOT CLASS (GI)	ABAN-DONED
SHALE, GRAY, SLIGHTLY WEATHERED, STRONG, JOINTED - FRACTURED TO MODERATELY FRACTURED - TIGHT TO NARROW, CLAY SEAMS AT 28.3' AND 28.6'; RQD 68%, REC 100%. *(continued)*	1024.0		73		100	RC-1											CORE	
SANDSTONE, GRAY, SLIGHTLY WEATHERED, STRONG, FINE GRAINED, JOINTED - MODERATELY FRACTURED - TIGHT; RQD 100%, REC 100%.	1021.3																	
SHALE, GRAY, SLIGHTLY WEATHERED, STRONG, JOINTED - FRACTURED TO MODERATELY FRACTURED - TIGHT, CLAY SEAMS AT 30.3' TO 30.5'; RQD 78%, REC 100%.	1019.7		82		100	RC-2											CORE	
	1015.5	EOB																

STANDARD ODOT SOIL BORING LOG (8.5 X 11) - OH DOT.GDT - 1/23/12 16:13 - S:\PROJECTS\7270 13.GPJ

NOTES: AUGER REFUSAL ENCOUNTERED AT 24.5 FEET.

ABANDONMENT METHODS, MATERIALS, QUANTITIES: PUMPED 10 CF CEMENT-BENTONITE GROUT

PROJECT: 7270.13	DRILLING FIRM / OPERATOR: TTL / TB	DRILL RIG: CME 550X ATV	STATION / OFFSET:
TYPE: BRIDGE REPLACEMENT	SAMPLING FIRM / LOGGER: TTL / KKC	HAMMER: CME AUTOMATIC	ALIGNMENT:
PID: 76411 BR ID: TRU-80-0496L_R	DRILLING METHOD: 3.25" HSA	CALIBRATION DATE: 12/28/09	ELEVATION: 1052.0 (MSL) EOB: 30.5 ft.
START: 12/19/11 END: 12/19/11	SAMPLING METHOD: SPT	ENERGY RATIO (%): 66	LAT / LONG: Not Recorded

EXPLORATION ID B-003-0-11

PAGE 1 OF 2

MATERIAL DESCRIPTION AND NOTES	ELEV.	DEPTHS	SPT/ RQD	N_{60}	REC (%)	SAMPLE ID	HP (tsf)	GRADATION (%) GR	CS	FS	SI	CL	ATTERBERG LL	PL	PI	WC	ODOT CLASS (GI)	ABAN-DONED
TOPSOIL - 3 INCHES	1052.0 / 1051.7																	
STIFF TO VERY STIFF, BROWN, **SANDY SILT**, SOME CLAY,LITTLE GRAVEL,TRACE IRON OXIDE SEAM, MOIST **FILL**	1049.0		3 6 5	12	78	SS-1	4.25	17	10	15	36	22	26	19	7	14	A-4a (5)	
SOFT TO MEDIUM STIFF, GRAY, **SANDY SILT**, SOME CLAY AND LITTLE GRAVEL, MOIST **FILL**	1045.2		2 2 2	4	100	SS-2	0.75	13	9	16	39	23	26	18	8	21	A-4a (5)	
STIFF, GRAY/BROWN, **SANDY SILT**, SOME CLAY AND TRACE GRAVEL, MOIST	1044.0	▼ TR 0 hr	2 6 8	15	100	SS-3	4.50	5	8	17	42	28	29	22	7	14	A-4a (7)	
DENSE, BROWN, WEATHERED SHALE, MOIST		W	10 16 23	43	100	SS-4	NP	-	-	-	-	-	-	-	-	11	Rock (V)	
	1040.0		9 12 15	30	100	SS-5	NP	-	-	-	-	-	-	-	-	19	Rock (V)	
MEDIUM DENSE, BROWN/GRAY, WEATHERED SHALE SOME CLAY, MOIST	1039.0		16 23 30	58	100	SS-6	NP	-	-	-	-	-	-	-	-	12	Rock (V)	
VERY DENSE, BROWN/GRAY, WEATHERED SHALE, MOIST			21 40 50/1"	-	92	SS-7	NP	-	-	-	-	-	-	-	-	13	Rock (V)	
-GRAY			50/3"	-	100	SS-8	NP	-	-	-	-	-	-	-	-	3	Rock (V)	

STANDARD ODOT SOIL BORING LOGS (8.5 X 11) - OH DOT GDT - 1/23/12 16:13 - S:\PROJECTS\7270 13.GPJ

PID: 76411	BR ID: TRU-80-0496L_R	PROJECT: 7270.13	STATION / OFFSET:	START: 12/19/11	END: 12/19/11	PG 2 OF 2	B-003-0-11

MATERIAL DESCRIPTION AND NOTES	ELEV.	DEPTHS	SPT/ RQD	N_{60}	REC (%)	SAMPLE ID	HP (tsf)	GRADATION (%) GR	CS	FS	SI	CL	ATTERBERG LL	PL	PI	WC	ODOT CLASS (GI)	ABAN-DONED
VERY DENSE, BROWN/GRAY, WEATHERED SHALE, MOIST *(continued)*	1026.0																	
	1021.5	EOB	50/1"	-	100	SS-9	NP	-	-	-	-	-	-	-	-	7	Rock (V)	

NOTES: AUGER REFUSAL ENCOUNTERED AT 30.5 FEET.

ABANDONMENT METHODS, MATERIALS, QUANTITIES: PUMPED 9 CF CEMENT-BENTONITE GROUT

STANDARD ODOT SOIL BORING LOGS (8.5 X 11) - OH DOT GDT - 1/23/12 16:13 - S:\PROJECTS\7270 13.GPJ

PROJECT: 7270.13	DRILLING FIRM / OPERATOR: TTL / TB	DRILL RIG: CME 550X ATV	STATION / OFFSET:	EXPLORATION ID B-004-0-11	
TYPE: BRIDGE REPLACEMENT	SAMPLING FIRM / LOGGER: TTL / KKC	HAMMER: CME AUTOMATIC	ALIGNMENT:		
PID: 76411 BR ID: TRU-80-0496L_R	DRILLING METHOD: 3.25" HSA	CALIBRATION DATE: 12/28/09	ELEVATION: 1074.0 (MSL) EOB: 43.7 ft.	PAGE 1 OF 2	
START: 12/20/11 END: 12/20/11	SAMPLING METHOD: SPT	ENERGY RATIO (%): 66	LAT / LONG: Not Recorded		

MATERIAL DESCRIPTION AND NOTES	ELEV. 1074.0	DEPTHS	SPT/ RQD	N_{60}	REC (%)	SAMPLE ID	HP (tsf)	GRADATION (%) GR	CS	FS	SI	CL	ATTERBERG LL	PL	PI	WC	ODOT CLASS (GI)	ABAN-DONED
TOPSOIL - 2 INCHES	1073.8																	
STIFF TO VERY STIFF, GRAY/BROWN, **SANDY SILT**, SOME CLAY AND TRACE GRAVEL, MOIST **EMBANKMENT FILL**		1	4 4 8	13	100	SS-1	4.25	-	-	-	-	-	-	-	-	14	A-4a (V)	
-STIFF, GRAY/BROWN, TRACE GRAVEL AND IRON OXIDE STAIN SEAM		3	3 6 6	13	100	SS-2	3.50	-	-	-	-	-	-	-	-	18	A-4a (V)	
-VERY STIFF		6	4 9 11	22	56	SS-3	4.50	-	-	-	-	-	-	-	-	14	A-4a (V)	
-BROWN/GRAY		8	6 9 8	19	100	SS-4	4.50	-	-	-	-	-	-	-	-	16	A-4a (V)	
-GRAY/BROWN		11	5 8 9	19	100	SS-5	4.50	-	-	-	-	-	-	-	-	16	A-4a (V)	
-BROWN		14	11 8 7	16	100	SS-6	4.25	8	9	15	38	30	26	19	7	15	A-4a (7)	
-STIFF TO VERY STIFF		17	6 6 8	15	100	SS-7	4.50	-	-	-	-	-	-	-	-	13	A-4a (V)	
	1054.8	19	6 6 8	15	100	SS-8	4.50	5	4	10	40	41	28	21	7	18	A-4a (8)	
STIFF TO VERY STIFF, GRAY, **SANDY SILT**, "AND" CLAY, TRACE GRAVEL AND SHALE FRAGMENTS, MOIST																		
-GRAY/BROWN, "AND" SHALE FRAGMENTS, TRACE CLAY		22	5 7 8	16	100	SS-9	NI	51	5	8	32	4	26	23	3	10	A-4a (0)	
	1051.0																	
MEDIUM STIFF TO STIFF, BROWN/GRAY, **SANDY SILT**, SOME SHALE FRAGMENTS AND CLAY, MOIST		24	3 3 4	8	100	SS-10	1.75	32	2	8	34	24	25	21	4	17	A-4a (5)	

STANDARD ODOT SOIL BORING LOGS (8.5 X 11) - OH DOT.GDT - 1/23/12 16:13 - S:\PROJECTS\7270.13.GPJ

PID: 76411	BR ID: TRU-80-0496L_R	PROJECT: 7270.13	STATION / OFFSET:	START: 12/20/11	END: 12/20/11	PG 2 OF 2	B-004-0-11

MATERIAL DESCRIPTION AND NOTES	ELEV. 1048.0	DEPTHS	SPT/ RQD	N_{60}	REC (%)	SAMPLE ID	HP (tsf)	GRADATION (%) GR	CS	FS	SI	CL	ATTERBERG LL	PL	PI	WC	ODOT CLASS (GI)	ABAN-DONED
	1047.5																	
VERY STIFF, BROWN, **SANDY SILT**, "AND" SHALE FRAGMENTS, LITTLE CLAY, MOIST		27	5 8 8	18	100	SS-11	3.75	39	5	17	26	13	23	18	5	14	A-4a (1)	
		29	7 7 17	26	100	SS-12	NI	-	-	-	-	-	-	-	-	12	A-4a (V)	
	1043.0																	
VERY DENSE, BROWN, WEATHERED SHALE, MOIST		31	21 32 27	65	100	SS-13	NP	-	-	-	-	-	-	-	-	13	Rock (V)	
-BROWN/GRAY		34	40 50/2"	-	100	SS-14	NP	-	-	-	-	-	-	-	-	13	Rock (V)	
-GRAY		39	50/3"	-	100	SS-15	NP	-	-	-	-	-	-	-	-	13	Rock (V)	
	1030.3	43	50/2"	-	100	SS-16	NP	-	-	-	-	-	-	-	-	14	Rock (V)	

WL ▽ 0 hr

LOB

STANDARD ODOT SOIL BORING LOGS (8.5 X 11) - OH DOT.GDT - 1/23/12 16:13 - S:\PROJECTS\7270.13.GPJ

NOTES: AUGER REFUSAL ENCOUNTERED AT 43.7 FEET.

ABANDONMENT METHODS, MATERIALS, QUANTITIES: PUMPED 12 CF CEMENT-BENTONITE GROUT

PROJECT: 7270.14	DRILLING FIRM / OPERATOR: TTL / TB	DRILL RIG: CME 550X ATV	STATION / OFFSET:	EXPLORATION ID B-001-0-11	
TYPE: BRIDGE REPLACEMENT	SAMPLING FIRM / LOGGER: TTL / KKC	HAMMER: CME AUTOMATIC	ALIGNMENT:		
PID: 76411 BR ID: TRU-80-0591L_R	DRILLING METHOD: 3.25" HSA / NQ2	CALIBRATION DATE: 12/28/09	ELEVATION: 1041.0 (MSL) EOB: 44.5 ft.		PAGE 1 OF 2
START: 1/6/12 END: 1/6/12	SAMPLING METHOD: SPT / NQ2	ENERGY RATIO (%): 66	LAT / LONG: Not Recorded		

MATERIAL DESCRIPTION AND NOTES	ELEV. 1041.0	DEPTHS	SPT/ RQD	N_{60}	REC (%)	SAMPLE ID	HP (tsf)	GRADATION (%) GR	CS	FS	SI	CL	ATTERBERG LL	PL	PI	WC	ODOT CLASS (GI)	ABAN-DONED
TOPSOIL - 3 INCHES	1040.7																	
CRUSHED STONE - 15 INCHES	1039.5																	
STIFF, BROWN, **SILT AND CLAY**, SOME SAND,TRACE GRAVEL,AND ROOTS, MOIST **EMBANKMENT FILL**	1038.0	1	3 3 5	9	100	SS-1	4.00	-	-	-	-	-	-	-	-	13	A-6a (V)	
STIFF, BROWN, **SILT AND CLAY**, LITTLE SAND, MOIST **EMBANKMENT FILL**		2																
		3																
		4	3 5 6	12	100	SS-2	1.50	-	-	-	-	-	-	-	-	17	A-6a (V)	
		5																
		6																
		7	4 4 4	9	100	SS-3	1.25	-	-	-	-	-	-	-	-	18	A-6a (V)	
		8																
	1032.0	9	7 7 9	18	100	SS-4	4.25	-	-	-	-	-	-	-	-	18	A-6a (V)	
VERY STIFF, BROWN/GRAY, **SILT AND CLAY**, SOME SAND AND TRACE GRAVEL, MOIST		10																
-BROWN, "AND" GRAVEL, LITTLE SAND		11																
		12	10 10 12	24	100	SS-5	NI	49	4	10	18	19	29	18	11	12	A-8a (1)	
		13																
-STIFF		14	5 6 7	14	100	SS-6	3.00	-	-	-	-	-	-	-	-	16	A-6a (V)	
	1025.0	15																
STIFF, BROWN, **SANDY SILT**, SOME CLAY AND LITTLE GRAVEL, MOIST		16																
		17	5 6 8	15	100	SS-7	4.25	11	9	14	40	26	25	19	6	16	A-4a (6)	
	1022.5	18																
HARD, BROWN/GRAY, **SANDY SILT**, SOME CLAY AND TRACE GRAVEL, MOIST		19	15 23 32	60	100	SS-8	4.50	6	10	17	40	27	23	18	5	11	A-4a (6)	
		20																
-GRAY, LITTLE GRAVEL AND TRACE CLAY		21	50/5"	-	100	SS-9	NI	-	-	-	-	-	-	-	-	6	A-4a (V)	
		22																
		23																
		24	25 50/5"	-	100	SS-10	NI	15	11	16	49	9	19	16	3	9	A-4a (5)	
	1016.0	25																
GRAY **LIMESTONE COBBLE OR BOULDER**	1015.0																	

STANDARD ODOT SOIL BORING LOGS (8.5 X 11) - OH DOT GDT - 1/24/12 12:43 - S:\PROJECTS\7270.14.GPJ

PID: 76411	BR ID: TRU-80-0591L_R	PROJECT: 7270.14	STATION / OFFSET:	START: 1/6/12	END: 1/6/12	PG 2 OF 2	B-001-0-11

MATERIAL DESCRIPTION AND NOTES	ELEV. 1015.0	DEPTHS	SPT/ RQD	N_{60}	REC (%)	SAMPLE ID	HP (tsf)	GRADATION (%) GR	CS	FS	SI	CL	ATTERBERG LL	PL	PI	WC	ODOT CLASS (GI)	ABAN-DONED
HARD, GRAY, **SANDY SILT**, SOME GRAVEL AND TRACE CLAY, MOIST		27			44	RC-1	4.50	-	-	-	-	-	-	-	-	-	A-4a (V)	
		28																
		29																
		30	30 36 27	69	100	SS-11	4.50	26	14	22	37	1	17	16	1	10	A-4a (1)	
		31																
		32																
	1007.0	33																
DENSE, GRAY, WEATHERED SANDSTONE, MOIST	TR	34	35 20 18	42	100	SS-12	NP	-	-	-	-	-	-	-	-	8	Rock (V)	
		35																
		36																
		37																
		38																
-VERY DENSE		39	50/3"	-	100	SS-13	NP	-	-	-	-	-	-	-	-	7	Rock (V)	
	1001.5	40																
SANDSTONE, GRAY, SLIGHTLY WEATHERED, STRONG, FINE GRAINED, BRECCIATED, JOINTED - FRACTURED TO MODERATELY FRACTURED - TIGHT TO NARROW; RQD 32%, REC 97%.		41																
		42	32		97	RC-2											CORE	
		43																
	996.5	44																
	EOB																	

STANDARD ODOT SOIL BORING LOGS (8.5 X 11) - OH DOT GDT - 1/24/12 12:43 - S:\PROJECTS\7270.14.GPJ

NOTES: AUGER REFUSAL ENCOUNTERED AT 39.5 FEET.

ABANDONMENT METHODS, MATERIALS, QUANTITIES: PUMPED 13 CF CEMENT-BENTONITE GROUT

PROJECT: 7270.14	DRILLING FIRM / OPERATOR: TTL / TB	DRILL RIG: CME 550X ATV	STATION / OFFSET:
TYPE: BRIDGE REPLACEMENT	SAMPLING FIRM / LOGGER: TTL / KKC	HAMMER: CME AUTOMATIC	ALIGNMENT:
PID: 76411 BR ID: TRU-80-0591L_R	DRILLING METHOD: 3.25" HSA / NQ2	CALIBRATION DATE: 12/28/09	ELEVATION: 1021.0 (MSL) EOB: 29.5 ft.
START: 12/21/11 END: 12/21/11	SAMPLING METHOD: SPT / NQ2	ENERGY RATIO (%): 66	LAT / LONG: Not Recorded

EXPLORATION ID: B-002-0-11 | PAGE 1 OF 2

MATERIAL DESCRIPTION AND NOTES	ELEV.	DEPTHS	SPT/ RQD	N_{60}	REC (%)	SAMPLE ID	HP (tsf)	GRADATION (%) GR	CS	FS	SI	CL	ATTERBERG LL	PL	PI	WC	ODOT CLASS (GI)	ABAN-DONED
ASPHALT - 10 INCHES	1021.0																	
VERY DENSE, GRAY, CRUSHED STONE, MOIST (APPARENT PETROLEUM ODOR)	1020.2		50/5"	-	80	SS-1	NP	-	-	-	-	-	-	-	-	47		
HARD, BROWN, **SANDY SILT**, SOME CLAY, LITTLE GRAVEL, AND TRACE IRON OXIDE, MOIST	1018.5		15 22 25	52	100	SS-2	4.50	10	11	16	39	24	24	19	5	11	A-4a (6)	
-BROWN/GRAY			31 38 38	84	100	SS-3	4.50	-	-	-	-	-	-	-	-	13	A-4a (V)	
		▼ 0 hr																
-GRAY, SOME SANDSTONE FRAGMENTS AND TRACE CLAY			15 25 30	60	100	SS-4	3.00	33	10	20	36	1	NP	NP	NP	9	A-4a (0)	
			18 19 25	48	100	SS-5	NI	-	-	-	-	-	-	-	-	7	A-4a (V)	
-BROWN/GRAY			23 32 50/5"	-	82	SS-6	3.25	23	8	26	42	1	18	15	3	12	A-4a (2)	
	1005.0	TR																
VERY DENSE, GRAY, WEATHERED SANDSTONE, MOIST			50/2"	-	100	SS-7	NP	-	-	-	-	-	-	-	-	10	Rock (V)	
	1001.5		50/2"	-	100	SS-8	NP	-	-	-	-	-	-	-	-	8	Rock (V)	
SANDSTONE, GRAY, SLIGHTLY WEATHERED, STRONG, FINE GRAINED, BRECCIATED, JOINTED - FRACTURED TO MODERATELY FRACTURED - TIGHT TO NARROW; RQD 31%, REC 100%.			45		100	RC-1											CORE	
	997.5																	
SANDSTONE, GRAY, SLIGHTLY WEATHERED, STRONG, FINE GRAINED; RQD 100%, REC 100%.	996.5																	

STANDARD ODOT SOIL BORING LOGS (8.5 X 11) - OH DOT.GDT - 1/24/12 12:43 - S:\PROJECTS\7270 14.GPJ

PID: 76411	BR ID: TRU-80-0591L_R	PROJECT: 7270.14	STATION / OFFSET:	START: 12/21/11	END: 12/21/11	PG 2 OF 2	B-002-0-11

MATERIAL DESCRIPTION AND NOTES	ELEV.	DEPTHS	SPT/ RQD	N_{60}	REC (%)	SAMPLE ID	HP (tsf)	GRADATION (%) GR	CS	FS	SI	CL	ATTERBERG LL	PL	PI	WC	ODOT CLASS (GI)	ABAN-DONED
SANDSTONE, GRAY, SLIGHTLY WEATHERED, STRONG, FINE GRAINED, BRECCIATED, JOINTED - FRACTURED TO MODERATELY FRACTURED - TIGHT TO NARROW; RQD 25%, REC 100%. *(continued)*	995.0		25		100	RC-2											CORE	
	991.5	EOB																

STANDARD ODOT SOIL BORING LOGS (8.5 X 11) - OH DOT.GDT - 1/24/12 12:43 - S:\PROJECTS\7270 14.GPJ

NOTES: AUGER REFUSAL ENCOUNTERED AT 19.5 FEET.

ABANDONMENT METHODS, MATERIALS, QUANTITIES: PUMPED 8 CF CEMENT-BENTONITE GROUT

PROJECT: 7270.14	DRILLING FIRM / OPERATOR: TTL / TB	DRILL RIG: CME 550X ATV	STATION / OFFSET:
TYPE: BRIDGE REPLACEMENT	SAMPLING FIRM / LOGGER: TTL / KKC	HAMMER: CME AUTOMATIC	ALIGNMENT:
PID: 76411 BR ID: TRU-80-0591L_R	DRILLING METHOD: 3.25" HSA / NQ2	CALIBRATION DATE: 12/28/09	ELEVATION: 1021.0 (MSL) EOB: 29.5 ft.
START: 12/21/11 END: 12/21/11	SAMPLING METHOD: SPT / NQ2	ENERGY RATIO (%): 66	LAT / LONG: Not Recorded

EXPLORATION ID B-003-0-11 — PAGE 1 OF 2

MATERIAL DESCRIPTION AND NOTES	ELEV.	DEPTHS	SPT/ RQD	N_{60}	REC (%)	SAMPLE ID	HP (tsf)	GRADATION (%) GR	CS	FS	SI	CL	ATTERBERG LL	PL	PI	WC	ODOT CLASS (GI)	ABAN-DONED
ASPHALT - 10 INCHES	1021.0																	
VERY DENSE, GRAY, CRUSHED STONE, MOIST (APPARENT PETROLEUM ODOR)	1020.2		30 50/5"	-	91	SS-1	NP	-	-	-	-	-	-	-	-	47		
VERY STIFF, BROWN, **SANDY SILT**, SOME GRAVEL AND LITTLE CLAY, MOIST	1018.5		7 10 10	22	100	SS-2	2.50	20	8	13	40	19	19	17	2	12	A-4a (5)	
-GRAY/BROWN			9 11 15	29	100	SS-3	4.50	-	-	-	-	-	-	-	-	12	A-4a (V)	
		▼ 0 hr																
HARD, BROWN/GRAY, **SANDY SILT**, "AND" SANDSTONE FRAGMENTS, TRACE CLAY, MOIST	1011.5		23 34 39	80	100	SS-4	2.50	46	6	11	36	1	19	17	2	8	A-4a (0)	
-GRAY			20 25 36	67	100	SS-5	2.50	-	-	-	-	-	-	-	-	9	A-4a (V)	
VERY STIFF TO HARD, GRAY, **SANDY SILT**, SOME CLAY AND TRACE SANDSTONE FRAGMENTS, MOIST	1008.0		7 7 20	30	100	SS-6	4.50	7	6	17	40	30	22	17	5	14	A-4a (7)	
VERY DENSE, GRAY, WEATHERED SANDSTONE, MOIST	1006.0	TR	50/4"	-	100	SS-7	NP	-	-	-	-	-	-	-	-	17	Rock (V)	
			50/1"	-	100	SS-8	NP	-	-	-	-	-	-	-	-	11	Rock (V)	
SANDSTONE, GRAY, SLIGHTLY WEATHERED, STRONG, FINE GRAINED, JOINTED - FRACTURED TO MODERATELY FRACTURED - TIGHT TO NARROW; RQD 25%, REC 100%.	1001.5																	
SANDSTONE, GRAY, SLIGHTLY WEATHERED, STRONG, FINE GRAINED, BRECCIATED, JOINTED - FRACTURED TO MODERATELY FRACTURED - TIGHT TO NARROW; RQD 25%, REC 100%.	1000.2		25		100	RC-1											CORE	
	996.5																	

STANDARD ODOT SOIL BORING LOGS (8.5 X 11) - OH DOT GDT - 1/24/12 12:43 - S:\PROJECTS\7270.14.GPJ

PID: 76411	BR ID: TRU-80-0591L_R	PROJECT: 7270.14	STATION / OFFSET:	START: 12/21/11	END: 12/21/11	PG 2 OF 2	B-003-0-11

MATERIAL DESCRIPTION AND NOTES	ELEV.	DEPTHS	SPT/ RQD	N_{60}	REC (%)	SAMPLE ID	HP (tsf)	GRADATION (%) GR	CS	FS	SI	CL	ATTERBERG LL	PL	PI	WC	ODOT CLASS (GI)	ABAN-DONED
SANDSTONE, GRAY, SLIGHTLY WEATHERED, STRONG, FINE GRAINED, BRECCIATED, JOINTED - FRACTURED TO MODERATELY FRACTURED - TIGHT TO NARROW; RQD 52%, REC 100%. *(continued)*	995.0		52		100	RC-2											CORE	
	991.5	EOB																

NOTES: AUGER REFUSAL ENCOUNTERED AT 19.5 FEET

ABANDONMENT METHODS, MATERIALS, QUANTITIES: PUMPED 8 CF CEMENT-BENTONITE GROUT

STANDARD ODOT SOIL BORING LOGS (8.5 X 11) - OH DOT GDT - 1/24/12 12:43 - S:\PROJECTS\7270.14.GPJ

PROJECT: 7270.14	DRILLING FIRM / OPERATOR: TTL / TB	DRILL RIG: CME 550X ATV	STATION / OFFSET:	EXPLORATION ID B-004-0-11
TYPE: BRIDGE REPLACEMENT	SAMPLING FIRM / LOGGER: TTL / KKC	HAMMER: CME AUTOMATIC	ALIGNMENT:	
PID: 76411 BR ID: TRU-80-0591L_R	DRILLING METHOD: 3.25" HSA / NQ2	CALIBRATION DATE: 12/28/09	ELEVATION: 1036.0 (MSL) EOB: 44.5 ft.	PAGE 1 OF 2
START: 12/22/11 END: 12/22/11	SAMPLING METHOD: SPT / NQ2	ENERGY RATIO (%): 66	LAT / LONG: Not Recorded	

MATERIAL DESCRIPTION AND NOTES	ELEV. 1036.0	DEPTHS	SPT/ RQD	N_{60}	REC (%)	SAMPLE ID	HP (tsf)	GRADATION (%) GR	CS	FS	SI	CL	ATTERBERG LL	PL	PI	WC	ODOT CLASS (GI)	ABAN-DONED
TOPSOIL - 3 INCHES	1035.7																	
STIFF TO VERY STIFF, BROWN, **SILT AND CLAY**, LITTLE SAND AND TRACE GRAVEL, MOIST **EMBANKMENT FILL**			3 3 7	11	67	SS-1	3.50	-	-	-	-	-	-	-	-	14	A-6a (V)	
-VERY STIFF			2 7 10	19	78	SS-2	4.50	-	-	-	-	-	-	-	-	16	A-6a (V)	
			6 8 9	19	56	SS-3	3.50	-	-	-	-	-	-	-	-	20	A-6a (V)	
-STIFF TO VERY STIFF BROWN/GRAY		▼ 0 hr	4 4 8	13	100	SS-4	2.50	-	-	-	-	-	-	-	-	18	A-6a (V)	
-BROWN			5 6 7	14	100	SS-5	3.00	-	-	-	-	-	-	-	-	17	A-6a (V)	
	1022.5																	
HARD, BROWN, **SANDY SILT**, SOME SANDSTONE FRAGMENTS AND TRACE CLAY, MOIST **EMBANKMENT FILL**			8 15 18	36	100	SS-6	2.00	24	11	20	43	2	21	19	2	10	A-4a (2)	
-VERY STIFF, GRAY, LITTLE SAND AND TRACE GRAVEL	1018.0		11 9 9	20	100	SS-7	3.50	-	-	-	-	-	-	-	-	16	A-4a (V)	
MEDIUM DENSE, BROWN, **GRAVEL AND STONE FRAGMENTS WITH SAND AND SILT**, TRACE CLAY, MOIST **EMBANKMENT FILL**			8 8 9	19	100	SS-8	NP	55	8	9	26	2	27	21	6	11	A-2-4 (0)	
	1013.0		7 9 12	23	100	SS-9	NP	-	-	-	-	-	-	-	-	11	A-2-4 (V)	
VERY STIFF, BROWN, **SANDY SILT**, "AND" GRAVEL AND TRACE CLAY, MOIST			8 13 11	26	100	SS-10	NI	36	10	15	32	7	22	19	3	9	A-4a (1)	

PID: 76411	BR ID: TRU-80-0591L_R	PROJECT: 7270.14	STATION / OFFSET:	START: 12/22/11	END: 12/22/11	PG 2 OF 2	B-004-0-11

MATERIAL DESCRIPTION AND NOTES	ELEV. 1010.0	DEPTHS	SPT/ RQD	N_{60}	REC (%)	SAMPLE ID	HP (tsf)	GRADATION (%) GR	CS	FS	SI	CL	ATTERBERG LL	PL	PI	WC	ODOT CLASS (GI)	ABAN-DONED
VERY STIFF, BROWN, **SANDY SILT**, "AND" GRAVEL AND TRACE CLAY, MOIST *(continued)*			8 12 13	28	100	SS-11	4.50	-	-	-	-	-	-	-	-	12	A-4a (V)	
	1007.0																	
HARD, GRAY, **SANDY SILT**, SOME SANDSTONE FRAGMENTS AND TRACE CLAY, MOIST			25 33 42	82	100	SS-12	3.00	28	5	26	34	7	22	16	6	11	A-4a (1)	
	1003.6		27 50/5"	-	100	SS-13	NI	-	-	-	-	-	-	-	-	11	A-4a (V)	
VERY DENSE, GRAY, WEATHERED SANDSTONE, MOIST		TR	50/2"	-	100	SS-14	NP	-	-	-	-	-	-	-	-	8	Rock (V)	
	1001.5																	
SANDSTONE, BROWN, SLIGHTLY WEATHERED, STRONG, FINE GRAINED, BRECCIATED, JOINTED - FRACTURED TO MODERATELY FRACTURED - TIGHT TO NARROW; RQD 41%, REC 100%.	1000.1																	
SANDSTONE, GRAY, SLIGHTLY WEATHERED, STRONG, FINE GRAINED, BRECCIATED, JOINTED - FRACTURED TO MODERATELY FRACTURED - TIGHT TO NARROW; RQD 35%, REC 100%.	996.5		37		100	RC-1											CORE	
SANDSTONE, GRAY, SLIGHTLY WEATHERED, STRONG, FINE GRAINED, BRECCIATED, JOINTED - FRACTURED TO MODERATELY FRACTURED - TIGHT TO NARROW; RQD 7%, REC 100%.	991.5	EOB	7		100	RC-2											CORE	

NOTES: AUGER REFUSAL ENCOUNTERED AT 34.5 FEET.

ABANDONMENT METHODS, MATERIALS, QUANTITIES: PUMPED 13 CF CEMENT-BENTONITE GROUT

STANDARD ODOT SOIL BORING LOG (8.5 X 11) - OH DOT GDT - 1/24/12 12:43 - S:\PROJECTS\7270.14.GPJ

STANDARD ODOT SOIL BORING LOG (8.5 X 11) - OH DOT GDT - 1/24/12 12:43 - S:\PROJECTS\7270.14.GPJ