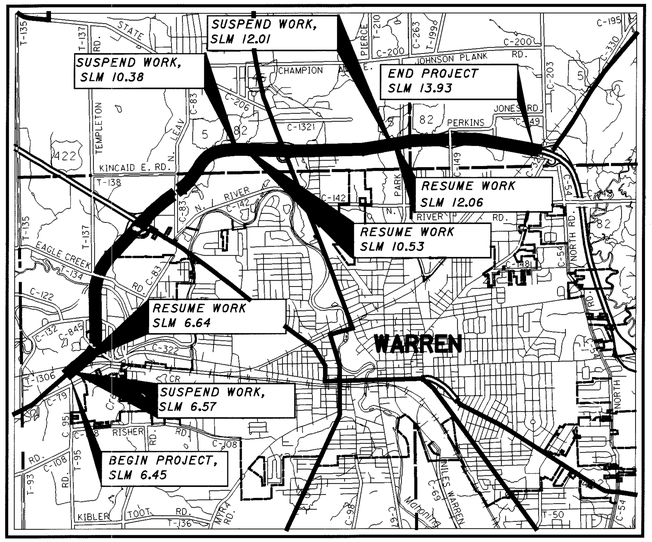


## LOCATION MAP

LATITUDE: N41°16′35″ LONGITUDE: 80°50′57″

SCALE IN MILES

0 1 2 3 4

N

PORTION TO BE IMPROVED
INTERSTATE & DIVIDED HIGHWAY
UNDIVIDED STATE & FEDERAL ROUTES
OTHER ROADS

## DESIGN DESIGNATION

| | |
|---|---|
| CURRENT ADT (2003) | 28,830 |
| DESIGN YEAR ADT (2023) | 41,690 |
| DESIGN HOURLY VOLUME (2023) | 3,750 |
| DIRECTIONAL DISTRIBUTION | 60% |
| TRUCKS (24 HOUR B&C) | 17% |
| DESIGN SPEED | 70 MPH |
| LEGAL SPEED | 55 MPH |

DESIGN FUNCTIONAL CLASSIFICATION -
URBAN FREEWAY (SLM 6.45 TO SLM 12.50)
RURAL ARTERIAL (SLM 12.50 TO SLM 13.93)

## DESIGN EXCEPTIONS

DESIGN FEATURE
VERTICAL CLEARANCE
APPROVAL DATES - 9-25-01

SHEET NO. 67,68,69,124,134,154

**UNDERGROUND UTILITIES**
TWO WORKING DAYS
**BEFORE YOU DIG**
CALL **1-800-362-2764** (TOLL FREE)
OHIO UTILITIES PROTECTION SERVICE
NON-MEMBERS
MUST BE CALLED DIRECTLY

PLAN PREPARED BY:

OHIO DEPARTMENT OF TRANSPORTATION
DISTRICT 4

# STATE OF OHIO
# DEPARTMENT OF TRANSPORTATION

# TRU-5-6.45

## BAZETTA, CHAMPION & WARREN TOWNSHIPS
## TRUMBULL COUNTY

### INDEX OF SHEETS:


| | |
|---|---|
| TITLE SHEET | 1 |
| TYPICAL SECTIONS | 2-5 |
| GENERAL NOTES | 6-9 |
| MAINTENCE OF TRAFFIC | 10-41 |
| GENERAL SUMMARY | 42-44 |
| SUB-SUMMARIES | 45-48 |
| CALCULATIONS | 49-59 |
| PLAN AND PROFILE | 60-69 |
| MISCELLANEOUS DETAILS | 70-80 |
| TRAFFIC CONTROL | 81-101 |
| STRUCTURES(OVER 20′ SPAN) | 102-164 |


| ENGINEERS SEAL: | ENGINEERS SEAL: | ENGINEERS SEAL: |
|---|---|---|
| STATE OF OHIO · LISA A. JAYNES · E-56841 · REGISTERED · PROFESSIONAL ENGINEER | STATE OF OHIO · JOHN T. HOLLERBAUGH · E-42128 · REGISTERED · PROFESSIONAL ENGINEER | STATE OF OHIO · RONALD A. BENDER · E-31777 · REGISTERED · PROFESSIONAL ENGINEER |
| SIGNED: Lisa A. Jaynes | SIGNED: John T. Hollerbaugh | SIGNED: Ronald A. Bender |
| DATE: 9/14/01 | DATE: 9/11/01 | DATE: 9/12/01 |

| STANDARD CONSTRUCTION DRAWINGS | | | | | | | | | | SUPPLEMENTAL SPECIFICATIONS | | SUPPLEMENTAL SPECIFICATIONS | |
|---|---|---|---|---|---|---|---|---|---|---|---|---|---|
| BP-2.3 | 7-28-00 | RM-4.3M | 10-21-97 | TC-51.11 | 4-20-01 | MT-98.14M | 6-24-93 | AS-1-81 | 4-20-01 | 806 | 9-9-97 | 910 | 7-11-00 |
| BP-3.1 | 7-28-00 | RM-4.5M | 10-21-97 | TC-52.10 | 4-20-01 | MT-98.15M | 6-24-93 | BR-1 | 1-6-99 | 814 | 6-2-98 | 954 | 9-9-97 |
| | | | | TC-52.20 | 4-20-01 | MT-98.16M | 6-24-93 | CS-1-93 | 6-30-95 | 815 | 2-22-00 | | |
| GR-1.1M | 10-21-97 | CB-2.2 | 7-20-01 | TC-65.10M | 11-01-95 | MT-98.17M | 4-25-94 | DS-1-92 | 12-15-94 | 830 | 10-21-98 | | |
| GR-1.2M | 1-3-96 | CB-3.3 | 7-20-01 | TC-65.11M | 11-01-95 | MT-98.18M | 4-25-94 | EXJ-4-87 | 4-20-01 | 842 | 1-6-99 | | |
| GR-1.3M | 11-30-94 | | | TC-65.12M | 11-01-95 | MT-99.20M | 1-30-95 | GSD-1-96 | 4-20-01 | 843 | 5-5-98 | | |
| GR-2.1M | 4-14-98 | HL-30.31M | 5-1-95 | TC-82.10 | 1-19-01 | MT-100.00M | 4-25-94 | IRJ-8-95 | 7-6-95 | 846 | 9-9-97 | | |
| GR-3.1M | 10-21-97 | | | | | MT-101.20M | 3-1-96 | SICD-1-96 | 4-20-01 | 848 | 6-30-98 | | |
| GR-3.2M | 10-21-97 | | | MT-35.10 | 4-20-01 | MT-101.60M | 4-25-94 | | | 858 | 11-7-00 | | |
| GR-4.2M | 10-21-97 | TC-7.65 | 1-19-01 | MT-95.30M | 4-25-94 | MT-105.10M | 4-25-94 | | | 863 | 10-12-99 | | |
| GR-4.3M | 10-21-97 | TC-21.10 | 1-19-01 | MT-95.70M | 1-30-95 | MT-105.11M | 4-25-94 | | | 864 | 7-11-00 | | |
| GR-4.4M | 11-30-94 | TC-22.10 | 1-19-01 | MT-95.82M | 3-1-96 | | | | | 870 | 3-27-01 | | |
| GR-5.1M | 4-21-95 | TC-22.20 | 1-19-01 | MT-96.10M | 1-30-95 | | | | | 877 | 4-13-99 | | |
| GR-5.2M | 11-30-94 | TC-31.21 | 4-20-01 | MT-96.20M | 1-30-95 | | | | | 893 | 10-12-99 | | |
| GR-5.3M | 11-30-94 | TC-32.10M | 3-31-94 | MT-96.25 | 4-20-01 | | | | | 899 | 10-21-98 | | |
| GR-6.1M | 1-3-96 | TC-32.11M | 3-31-94 | MT-97.10M | 4-25-94 | | | | | 905 | 4-1-98 | | |
| GR-6.2M | 1-3-96 | TC-41.20 | 1-19-01 | MT-97.11M | 1-30-95 | | | | | 906 | 5-5-98 | | |
| | | TC-41.40M | 3-31-94 | MT-98.12M | 6-24-93 | | | | | 907 | 10-21-98 | | |
| RM-4.1M | 10-21-97 | TC-42.20 | 4-20-01 | MT-98.13M | 6-24-93 | | | | | 908 | 11-7-00 | | |

**SPECIAL PROVISIONS**

**WATERWAY PERMIT**

NATIONWIDE PERMIT
No. 3 MAINTENANCE
12/13/2000

## PROJECT DESCRIPTION

THIS IMPROVEMENT SHALL CONSIST OF REPAIR AND RESURFACING OF 7.48 MILES OF EXISTING PAVEMENT ON SR 5 IN TRUMBULL COUNTY. THE PROJECT WILL BEGIN JUST PRIOR TO THE RAILROAD BRIDGES WEST OF THE WEST MARKET STREET INTERCHANGE AND WILL END AT THE RAILROAD BRIDGES WEST OF THE ELM ROAD INTERCHANGE. NUMEROUS BRIDGES WILL BE UPGRADED IN THIS SECTION. ALSO SOME MINOR GUARDRAIL WORK WILL BE PERFORMED THROUGHOUT THE PROJECT.

## LIMITED ACCESS

THIS IMPROVEMENT IS ESPECIALLY DESIGNED FOR THROUGH TRAFFIC AND HAS BEEN DECLARED A LIMITED ACCESS HIGHWAY OR FREEWAY BY ACTION OF THE DIRECTOR IN ACCORDANCE WITH THE PROVISIONS OF SECTION 5511.02 OF THE OHIO REVISED CODE.

## 1997 SPECIFICATIONS

THE STANDARD SPECIFICATIONS OF THE STATE OF OHIO, DEPARTMENT OF TRANSPORTATION, INCLUDING CHANGES AND SUPPLEMENTAL SPECIFICATIONS LISTED IN THE PROPOSAL SHALL GOVERN THIS IMPROVEMENT.

I HEREBY APPROVE THESE PLANS AND DECLARE THAT THE MAKING OF THIS IMPROVEMENT WILL NOT REQUIRE THE CLOSING TO TRAFFIC OF THE HIGHWAY EXCEPT AS NOTED ON SHEETS 10-40, AND THAT PROVISIONS FOR THE MAINTENANCE AND SAFETY OF TRAFFIC WILL BE AS SET FORTH ON THE PLANS AND ESTIMATES.

UNDER AUTHORITY OF SECTION 4511.21, DIVISION (I) OF THE OHIO REVISED CODE, THE REVISED PRIMA FACIE SPEED LIMITS AS INDICATED HEREIN ARE DETERMINED TO BE REASONABLE AND SAFE, AND ARE HEREBY ESTABLISHED FOR THE DURATION OF THIS PROJECT. THE PRIMA FACIE SPEED LIMIT OR LIMITS HEREBY ESTABLISHED SHALL BECOME EFFECTIVE WHEN APPROPRIATE SIGNS GIVING NOTICE THEREOF ARE ERECTED.

APPROVED Mohamed Darwish
DATE 9-13-01 DISTRICT DEPUTY DIRECTOR

APPROVED Gordon Proctor
DATE 10-5-01 DIRECTOR, DEPARTMENT OF TRANSPORTATION

FEDERAL PROJECT NO. TE21-G010(672)

PID NO. 18712

CONSTRUCTION PROJECT NO.

RAILROAD INVOLVEMENT NONE

TRU-5-6.45



TRU - SR 5-6.45
010543 PID - 18712
Dist 4 12/12/2001
j:\22126_Tru_5_6.45\Title Sheet.dgn 11-SEP-2001 8:41AM tperez

# TYPICAL SECTIONS

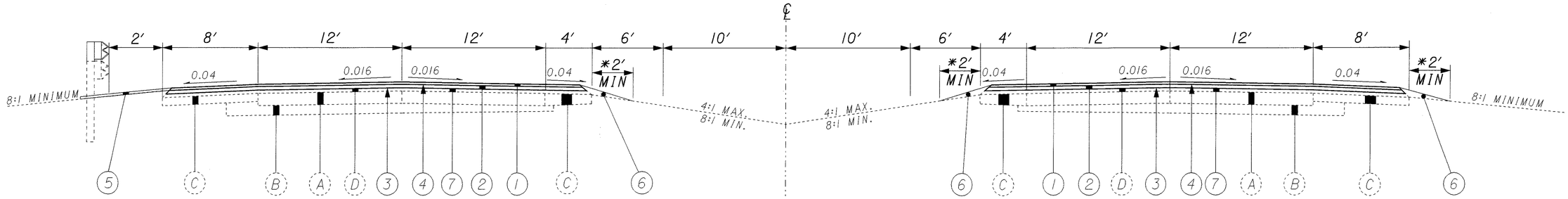


## TYPICAL SECTION #1
## NORMAL SECTION

SLM 6.45 TO SLM 10.38 = 3.93 MI.
**LESS: BR.NO. TRU-5-0657 L&R= -.07 MI.
**LESS: BR.NO. TRU-5-0764 L&R= -.05 MI
** LESS: BR.NO. TRU-5-0811 L&R= -.02 MI
** LESS: BR.NO. TRU-5-0861 L&R= -.05 MI
*** LESS: BR.NO. TRU-5-1044 L&R= -.15 MI
SLM 10.53 TO SLM 13.93 = 3.40 MI.
** LESS: BR.NO. TRU-5-1077 L&R= -.04 MI
*** LESS: BR.NO. TRU-5-1202 L&R= -.05 MI
** LESS: BR.NO. TRU-5-1226 L&R= -.03 MI

**TOTAL LENGTH = 6.87 MI.**

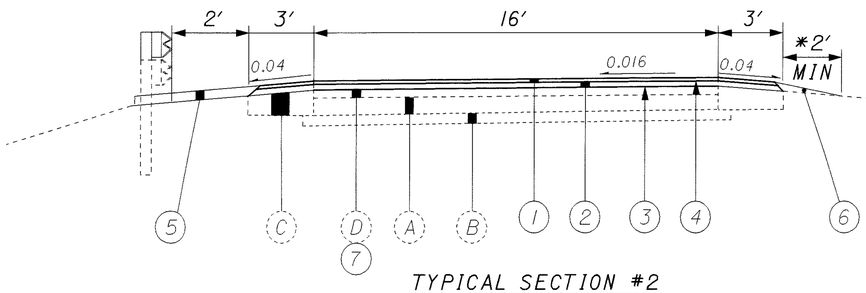


## TYPICAL SECTION #2
## NORMAL RAMP SECTION

RAMPS - A,B,C,D @ MARKET STREET
RAMPS - A,B,C,D, & E @ US 422
RAMPS - E,F,H, @ PERKINS JONES RD.

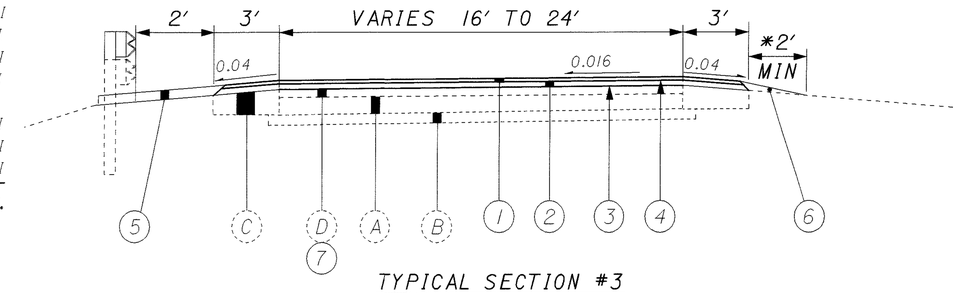


## TYPICAL SECTION #3
## NORMAL RAMP SECTION

RAMPS - A,B,C,D @ SR 45
RAMP - G @ (PERKINS JONES RD.)

### LEGEND

1. ITEM 858 - 1.50″ ASPHALT CONCRETE SURFACE COURSE, 12.5mm, TYPE B(446), AS PER PLAN
2. ITEM 858 - 1.75″ ASPHALT CONCRETE INTERMEDIATE COURSE, 19mm, TYPE B(446)
3. ITEM 407 - TACK COAT
4. ITEM 407 - TACK COAT FOR INTERMEDIATE COURSE
5. ITEM 203 - LINEAR GRADING - METHOD A
6. ITEM 617 - COMPACTED AGGREGATE, TYPE A
7. ITEM 254 - 1.25″ PAVEMENT PLANING, BITUMINOUS

- (A) ITEM 451 - 10″ REINFORCED PORTLAND CEMENT CONCRETE PAVEMENT
- (B) ITEM 310 - SUBBASE GRADING "A"
- (C) ITEM 301 - BITUMINOUS AGGREGATE BASE
- (D) EXISTING ASPHALT CONCRETE

* MINIMUM WIDTH UNLESS OTHERWISE DIRECTED BY THE ENGINEER.

** LENGTH INCLUDES BRIDGE PLUS BOTH APPROACH SLABS.

*** LENGTH INCLUDES BRIDGE BOTH APPROACH SLABS AND PORTION OF APPROACH PAVEMENT.





j:\22126_Tru_5_6.45\22126gya.dgn 10-SEP-2001 8:14AM tperez

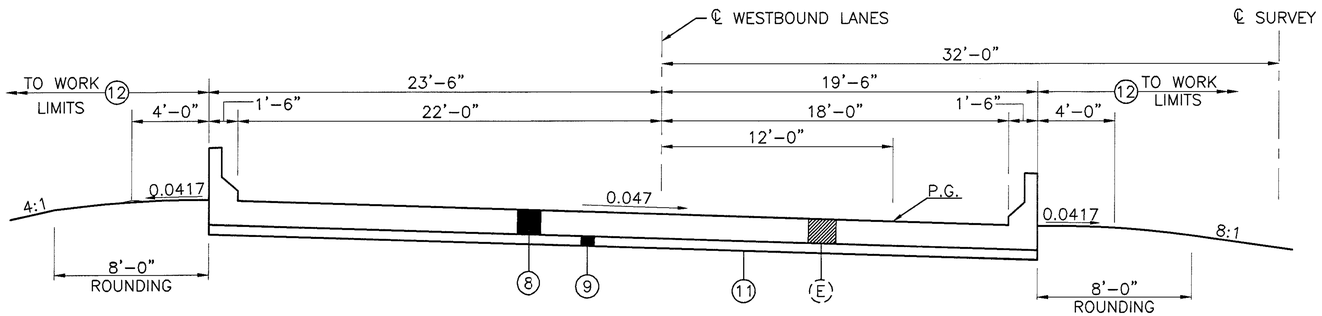


## APPROACH SLAB SECTION – S.R. 5

SECTION APPLIES:

TRU-5-0764 L&R (OVER MAHONING RIVER)

*STA. 1075+91.30 TO STA. 1076+07.30 (RT.) = 16.00 LIN. FT.
STA. 1075+93.15 TO STA. 1076+09.15 (LT.) = 16.00 LIN. FT.
STA. 1078+32.85 TO STA. 1078+48.85 (LT.) = 16.00 LIN. FT.
*STA. 1078+34.70 TO STA. 1078+50.70 (RT.) = 16.00 LIN. FT.

TOTAL LENGTH = 64.00 LIN. FT.

*EASTBOUND APPROACH SLAB SIMILAR TO WESTBOUND APPROACH SLAB SHOWN.

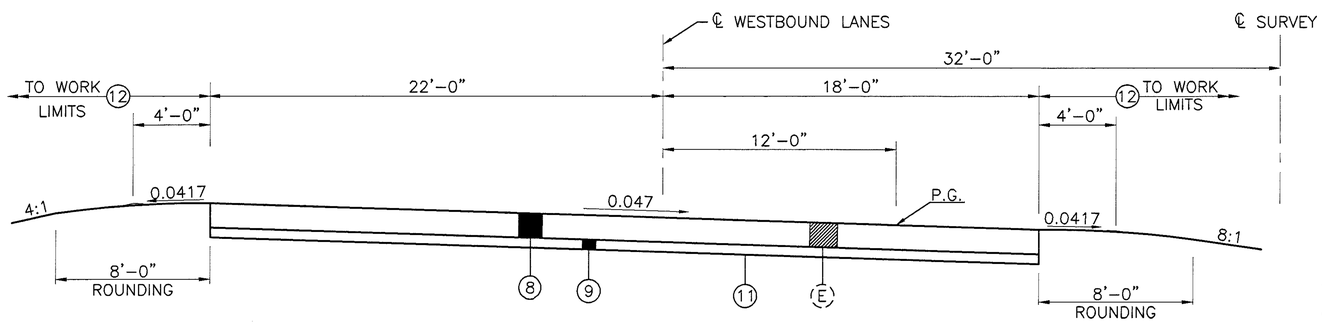


## APPROACH SLAB SECTION – S.R. 5

SECTION APPLIES:

TRU-5-0764 L&R (OVER MAHONING RIVER)

*STA. 1075+82.30 TO STA. 1075+91.30 (RT.) = 9.00 LIN. FT.
STA. 1075+84.15 TO STA. 1075+93.15 (LT.) = 9.00 LIN. FT.
STA. 1078+48.85 TO STA. 1078+57.85 (LT.) = 9.00 LIN. FT.
*STA. 1078+50.70 TO STA. 1078+59.70 (RT.) = 9.00 LIN. FT.

TOTAL LENGTH = 36.00 LIN. FT.

*EASTBOUND APPROACH SLAB SIMILAR TO WESTBOUND APPROACH SLAB SHOWN.

LEGEND

| | | |
|---|---|---|
| 1 | ITEM 858 | 1 1/2" ASPHALT CONCRETE SURFACE COURSE, 12.5 mm, TYPE B(446), AS PER PLAN |
| 3 | ITEM 407 | TACK COAT |
| 7 | ITEM 254 | PAVEMENT PLANING, BITUMINOUS (T=1 1/2" MIN.) |
| 8 | ITEM 611 | REINFORCED CONCRETE APPROACH SLAB (T=15"), AS PER PLAN |
| 9 | ITEM 304 | 6" AGGREGATE BASE |
| 10 | ITEM 830 | CURB TYPE 4-C |
| 11 | ITEM 203 | SUBGRADE COMPACTION |
| 12 | ITEM 870 | SEEDING AND MULCHING |
| 13 | ITEM 611 | REINFORCED CONCRETE APPROACH SLAB (T=15"), AS PER PLAN I |
| B | 4" SUBBASE | |
| C | 7" AGGREGATE BASE | |
| D | ASPHALT CONCRETE | |
| E | APPROACH SLAB, 15" (TO BE REMOVED) | |
| F | APPROACH SLAB, 15" (TO REMAIN) | |

TYPICAL SECTIONS

TRU-5-6.45



GY100.DWG [F:\JOBS\502\502TS01A.DWG] KJW 6/22/01 PLOT 1=4

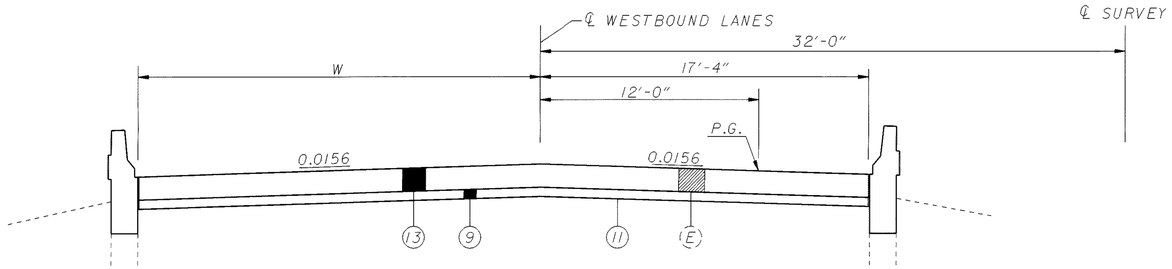


## APPROACH SLAB SECTION - S.R. 5

SECTION APPLIES:

TRU-5-0861 L&R (OVER U.S. 422)
STA. 1127+22.16 TO STA. 1127+36.16 (LT.) = 14.00 LIN. FT.; W=21-4"
*STA. 1127+35.46 TO STA. 1127+49.46 (RT.) = 14.00 LIN. FT.; W=VARIES 40'-11 7/16" TO 40'-7 1/4"
STA. 1129+28.76 TO STA. 1129+42.76 (LT.) = 14.00 LIN. FT.; W=21'-4"
*STA. 1129+42.06 TO STA. 1129+56.06 (RT.) = 14.00 LIN. FT.; W=VARIES 35'-6 1/2" TO 35'-10 7/16"

TOTAL LENGTH = 56.00 LIN. FT.

*EASTBOUND APPROACH SLAB SIMILAR TO WESTBOUND APPROACH SLAB SHOWN.

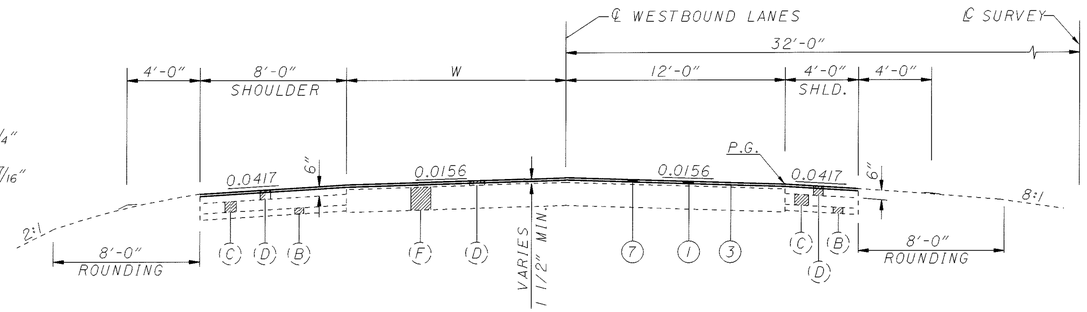


## APPROACH SLAB SECTION - S.R. 5

SECTION APPLIES:

TRU-5-1102 L&R (OVER YOUNGS RUN)
*STA. 558+31.91 TO STA. 558+56.91 (RT.) = 25.00 LIN. FT.; W= 12'-0"
STA. 558+62.43 TO STA. 558+87.43 (LT.) = 25.00 LIN. FT.; W= 24'-0"
*STA. 559+36.57 TO STA. 559+61.57 (RT.) = 25.00 LIN. FT.; W= 12'-0"
STA. 559+67.09 TO STA. 559+92.09 (LT.) = 25.00 LIN. FT.; W= 24'-0"

TOTAL LENGTH = 100.00 LIN. FT.

NOTE:
SEE ASPHALT TRANSITION DETAIL, SHEET 65.

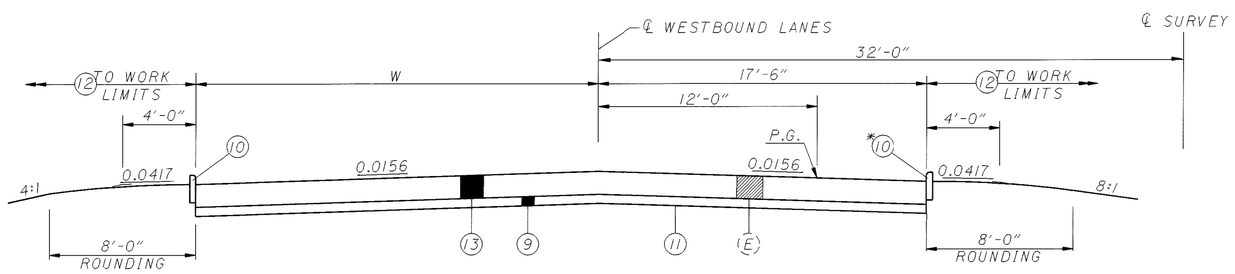


## APPROACH SLAB SECTION - S.R. 5

SECTION APPLIES:

TRU-5-0861 L&R (OVER U.S. 422)
STA. 1127+11.16 TO STA. 1127+22.16 (LT.) = 11.00 LIN. FT.; W= 21'-6"
*STA. 1127+24.46 TO STA. 1127+35.46 (RT.) = 11.00 LIN. FT.; W= VARIES 41'-10 5/8" TO 41'-6 7/16"
STA. 1129+42.76 TO STA. 1129+53.76 (LT.) = 11.00 LIN. FT.; W=21'-6"
*STA. 1129+56.06 TO STA. 1129+67.06 (RT.) = 11.00 LIN. FT.; W=VARIES 35' -4 1/2" TO 35'-1 3/16"

TOTAL LENGTH = 44.00 LIN. FT.

*EASTBOUND APPROACH SLAB SIMILAR TO WESTBOUND APPROACH SLAB SHOWN.

NOTES:
1. FOR LEGEND SEE SHEET 3.
2. W= WESTBOUND AND EASTBOUND OUTSIDE LANE WIDTH.





j:\8712\GY102.dgn 07-SEP-2001 1:28PM jlldle

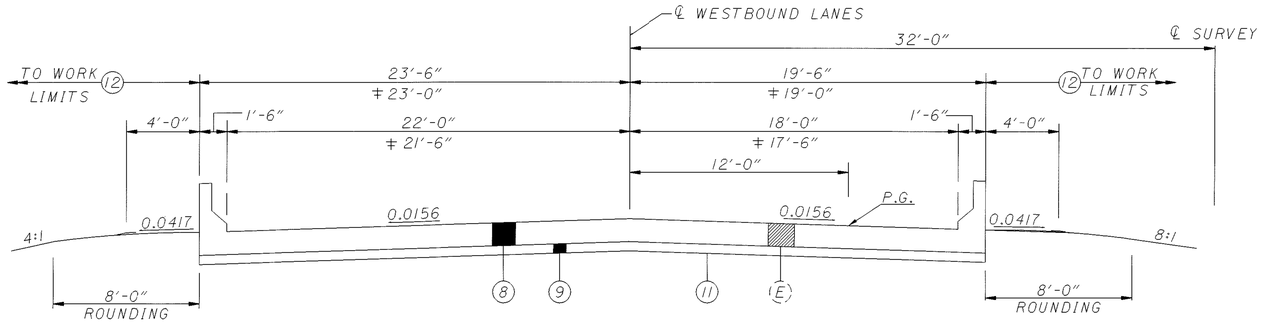


## APPROACH SLAB SECTION - S.R. 5

SECTION APPLIES:

TRU-5-0811 L&R (OVER CHOCOLATE RUN)
*STA. 1101+28.91 TO STA. 1101+44.91 (RT.) = 16.00 LIN. FT.
STA. 1101+65.86 TO STA. 1101+81.86 (LT.) = 16.00 LIN. FT.
*STA. 1102+18.14 TO STA. 1102+34.14 (RT.) = 16.00 LIN. FT.
STA. 1102+55.10 TO STA. 1102+71.10 (LT.) = 16.00 LIN. FT.

‡ TRU-5-1226 L&R (OVER NORTH PARK)
*STA. 624+12.86 TO STA. 624+28.86 (RT.) = 16.00 LIN. FT.
STA. 624+24.04 TO STA. 624+40.04 (LT.) = 16.00 LIN. FT.
*STA. 625+47.38 TO STA. 625+63.38 (RT.) = 16.00 LIN. FT.
STA. 625+58.56 TO STA. 625+74.56 (LT.) = 16.00 LIN. FT.

TOTAL LENGTH = 128.00 LIN. FT.

*EASTBOUND APPROACH SLAB SIMILAR TO WESTBOUND APPROACH SLAB SHOWN.

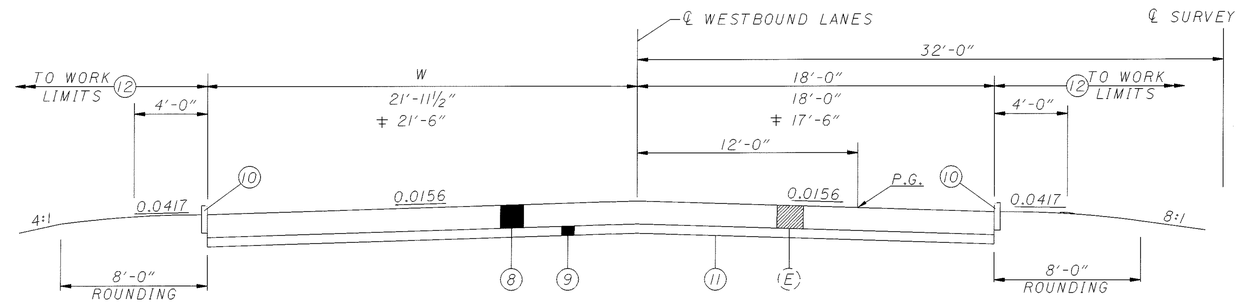


## APPROACH SLAB SECTION - S.R. 5

SECTION APPLIES:

TRU-5-0811 L&R (OVER CHOCOLATE RUN)
*STA. 1101+19.91 TO STA. 1101+28.91 (RT.) = 9.00 LIN. FT.
STA. 1101+56.86 TO STA. 1101+65.86 (LT.) = 9.00 LIN. FT.
*STA. 1102+34.14 TO STA. 1102+43.14 (RT.) = 9.00 LIN. FT.
STA. 1102+71.10 TO STA. 1102+80.10 (LT.) = 9.00 LIN. FT.

TRU-5-1077 L&R (OVER S.R. 45)
STA. 545+22.02 TO STA. 545+31.02 (LT.) = 9.00 LIN. FT.; W=22'-0"
*STA. 545+50.21 TO STA. 545+59.21 (RT.) = 9.00 LIN. FT.; W=VARIES 42'-5⅝" TO 42'-2"
STA. 547+26.36 TO STA. 547+35.36 (LT.) = 9.00 LIN. FT.; W=22'-0"
*STA. 547+53.69 TO STA. 547+62.69 (RT.) = 9.00 LIN. FT.; W=VARIES 37'-1/4" TO 36'-10¼"

TRU-5#226 L&R (OVER NORTH PARK)
*STA. 624+03.86 TO STA. 624+12.86 (RT.) = 9.00 LIN. FT.
STA. 624+15.04 TO STA. 624+24.04 (LT.) = 9.00 LIN. FT.
*STA. 625+63.38 TO STA. 625+72.38 (RT.) = 9.00 LIN. FT.
STA. 625+74.56 TO STA. 625+83.56 (LT.) = 9.00 LIN. FT.

TOTAL LENGTH = 108.00 LIN. FT.

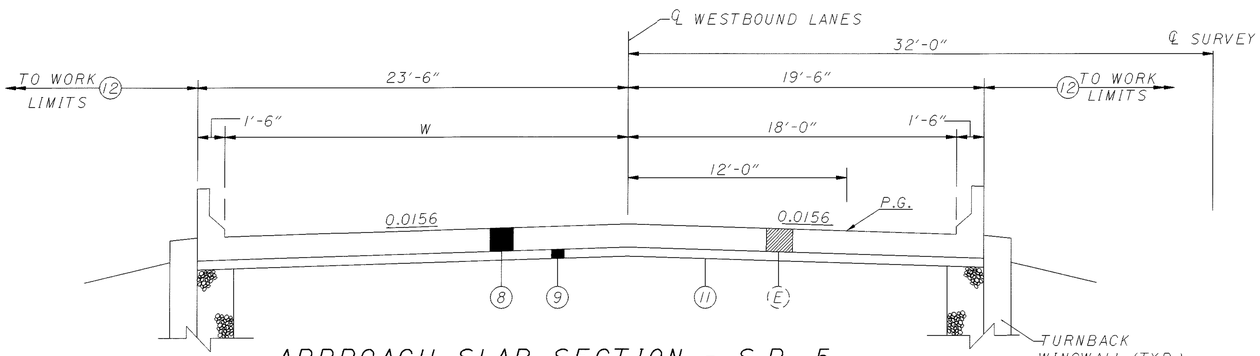


## APPROACH SLAB SECTION - S.R. 5

TRU-5-1077 L&R (OVER S.R. 45)
STA. 545+31.02 TO STA. 545+47.02 (LT.) = 16.00 LIN. FT.; W=22'-0"
*STA. 545+59.21 TO STA. 545+75.21 (RT.) = 16.00 LIN. FT.; W=VARIES 45'-2" TO 44'-7½"
STA. 547+10.36 TO STA. 547+26.36 (LT.) = 16.00 LIN. FT.; W=22'-0"
*STA. 547+37.69 TO STA. 547+53.69 (RT.) = 16.00 LIN. FT.; W=VARIES 40'-4" TO 40'-1/4"

TOTAL LENGTH = 64.00 LIN. FT.

*EASTBOUND APPROACH SLAB SIMILAR TO WESTBOUND APPROACH SLAB SHOWN.

## NOTES:

1. FOR LEGEND SEE SHEET 3.
2. W= WESTBOUND AND EASTBOUND OUTSIDE LANE WIDTH.

TYPICAL SECTIONS

TRU-5-6.45



j:\18712\GY103.dgn 07-SEP-2001 1:29PM jlladle

## UTILITIES

LISTED BELOW ARE ALL UTILITIES LOCATED WITHIN THE PROJECT CONSTRUCTION LIMITS TOGETHER WITH THEIR RESPECTIVE OWNERS:

QUEST COMMUNICATIONS
2770 LEXINGTON AVENUE
MANSFIELD, OHIO 44904
(419) 884-0400
ATTN: JAY BORAIAH

SPRINT
3801 ELM ROAD
WARREN, OHIO 44483
(330) 841-1214
ATTN: RON CRONENWETT

COLUMBIA GAS TRANSMISSION
8462 ST. RT 179
P.O. BOX 85
LAKEVILLE, OHIO 44638
(330) 287-6634
ATTN: JACK ROHRBAUGH

DOMINION EAST OHIO
1165 WEST RAYEN AVENUE
YOUNGSTOWN, OHIO 44502
(330) 742-8193
ATTN: SANDRA HALLER

TRUMBULL COUNTY SANITARY
7500 ANDERSON AVENUE NE
WARREN, OHIO 44484
(330) 675-2775
ATTN: TOM HALLOWAY

OHIO EDISON
730 SOUTH AVENUE
YOUNGSTOWN, OHIO 44502
(330) 740-7635
ATTN: BILL SPEECE

CITY OF WARREN
580 LAIRD AVENUE S.E.
WARREN, OHIO 44483
(330) 841-2652
ATTN: JIM GREGORY

AT&T
229 WEST 7TH STREET
10TH FLOOR
CINCINNATI, OHIO 45202
(513) 784-3238
ATTN: JEFF BALLINGER

BUCKEYE PIPE LINE
4911 EAST HIGH STREET
P.O. BOX 542
MANTUA, OHIO 44255
(330) 274-2234
ATTN: DAVID McKEE

* DUCK CREEK PETROLEUM
155 OLDMAN ROAD
WOOSTER, OHIO 44691
(330) 345-1151
ATTN: JIM OBERLE

* ORWELL NATURAL GAS
P.O. BOX 190
ORWELL, OHIO 44076
(800) 832-6164
ATTN: ANN YEAGER

* TRUMBULL COUNTY ENGINEER
650 NORTH RIVER ROAD
WARREN, OHIO 44482
(330) 675-2640
ATTN: JOHN LATELL

* DENOTES LIMITED-BASIS MEMBER - MUST BE CONTACTED DIRECT

THE LOCATION OF THE UNDERGROUND UTILITIES SHOWN ON THE PLANS ARE AS OBTAINED FROM THE OWNERS AS REQUIRED BY SECTION 153.64 O.R.C.

## CONTINGENCY QUANTITIES

THE CONTRACTOR SHALL NOT ORDER MATERIALS OR PERFORM WORK FOR ITEMS DESIGNATED BY PLAN NOTE TO BE USED "AS DIRECTED BY THE ENGINEER" UNLESS AUTHORIZED BY THE ENGINEER. THE ACTUAL WORK LOCATIONS AND QUANTITIES USED FOR SUCH ITEMS SHALL BE INCORPORATED INTO THE FINAL CHANGE ORDER GOVERNING COMPLETION OF THIS PROJECT.

## WORK LIMITS

THE WORK LIMITS SHOWN ON THESE PLANS ARE FOR PHYSICAL CONSTRUCTION ONLY. THE INSTALLATION AND OPERATION OF ALL TEMPORARY TRAFFIC CONTROL AND TEMPORARY TRAFFIC CONTROL DEVICES REQUIRED BY THESE PLANS SHALL BE PROVIDED BY THE CONTRACTOR WHETHER INSIDE OR OUTSIDE THESE WORK LIMITS.

## CONVERSION OF STANDARD CONSTRUCTION DRAWINGS

THE METRIC STANDARD DRAWINGS REFERENCED IN THIS PLAN SHALL BE CONVERTED TO ENGLISH UNITS USING THE SI (METRIC) TO ENGLISH CONVERSION FACTORS PROVIDED IN SECTION 109.011 OF THE 1997 CONSTRUCTION AND MATERIALS SPECIFICATIONS. THE APPENDIX OF ASTM E 380 SHALL BE UTILIZED FOR ANY ADDITIONAL CONVERSION FACTORS REQUIRED. CONVERSIONS SHALL BE APPROPRIATELY PRECISE AND SHALL REFLECT STANDARD INDUSTRY ENGLISH VALUES WHERE SUITABLE.

## PROFILE AND ALIGNMENT

THE PROPOSED PAVEMENT RESURFACING SHALL FOLLOW THE ALIGNMENT AND PROFILE OF THE EXISTING PAVEMENT. PREVIOUS CONSTRUCTION PLANS, PROJECT NOs. TRU-5-6.65, TRU-5-8.33 AND TRU-5-10.74 SHOWING THE ORIGINAL ALIGNMENT AND PROFILE, ARE AVAILABLE FOR INSPECTION AT THE ODOT DISTRICT FOUR OFFICE. THE PROPOSED ASPHALT CONCRETE OVERLAY SHALL BE AS SHOWN ON THE TYPICAL SECTIONS.

## ITEM 407 - TACK COAT AND ITEM 407 - TACK COAT FOR INTERMEDIATE COURSE

THE RATE OF APPLICATION OF THE 407 TACK COAT SHALL BE SUBJECT TO ADJUSTMENT AS DIRECTED BY THE ENGINEER. FOR ESTIMATING PURPOSES ONLY, THE PLAN QUANTITIES INDICATE AN AVERAGE APPLICATION RATE OF:

407, TACK COAT 0.15 GAL. PER SQ. YARD

407, TACK COAT FOR INTERMEDIATE COURSE
0.075 GAL. PER SQ. YARD

## ITEM 448 - ASPHALT CONCRETE SURFACE COURSE, TYPE 1, PG64-22, AS PER PLAN:

THE REQUIREMENTS OF 441 AND 448 SHALL APPLY; DEVIATIONS FROM THESE ARE AS FOLLOWS:

THE COMBINATION OF NEW AGGREGATES, NEW ASPHALT BINDER AND RECLAIMED MATERIAL SHALL BE AS REQUIRED TO PRODUCE A COMPOSITION CONTAINING A MINIMUM OF 5.0% NEW ASPHALT BINDER.

ANY PERCENTAGE OF RECLAIMED MATERIAL PROPOSED FOR USE SHALL BE INCLUDED IN THE MIX DESIGN PROCESS TO ESTABLISH THE JOB MIX FORMULA (JMF) IN ACCORDANCE WITH 441.02.

## ELEVATION DATUM

ALL ELEVATIONS ARE BASED ON U.S.G.S. DATUM.

## ROUNDING

THE ROUNDING AT SLOPE BREAKPOINTS SHOWN ON THE TYPICAL SECTIONS APPLY TO ALL CROSS SECTIONS EVEN THOUGH OTHERWISE SHOWN.

## GUARDRAIL REPLACEMENT

NO HAZARD SHALL BE LEFT UNPROTECTED EXCEPT FOR THE ACTUAL TIME NECESSARY TO REMOVE THE EXISTING GUARDRAIL, PREPARE THE SITE, AND INSTALL NEW GUARDRAIL IN A CONTINUOUS OPERATION. THE REMOVAL OF ALL GUARDRAIL SHALL AT ALL TIMES BE AS DIRECTED BY THE ENGINEER. NO GUARDRAIL SHALL BE REMOVED UNTIL THE REPLACEMENT MATERIAL IS ON THE SITE, READY FOR INSTALLATION. FAILURE TO COMPLY WITH THIS REQUIREMENT SHALL BE DEEMED SUFFICIENT CAUSE TO ORDER WORK SUSPENDED UNTIL SUCH TIME AS THE ENGINEER IS ASSURED OF COMPLIANCE.

LOCATIONS OF FIELD MEASURED GUARDRAIL RUNS HAVE BEEN PROVIDED IN STATIONS ON THE GUARDRAIL SUBSUMMARY. STATIONING AND STATION EQUATIONS ARE PROVIDED ON THE ASPHALT CONCRETE SHEET FOR REFERENCING GUARDRAIL LOCATIONS WITH THE PAVEMENT OPERATIONS. THE STATIONS SHOWN ARE FOR INFORMATIONAL PURPOSE AND MAY NOT REPRESENT THE ACTUAL LOCATIONS OF THE GUARDRAIL BOTH EXISTING AND PROPOSED. ALL GUARDRAIL LOCATIONS MUST BE APPROVED BY THE ENGINEER PRIOR TO INSTALLATION.

## ITEM 858 ASPHALT CONCRETE SURFACE COURSE, 12.5 mm, TYPE B (446), AS PER PLAN

THE REQUIREMENTS OF 441, 446 AND SUPPLEMENTAL SPECIFICATIONS 1055 SHALL APPLY; DEVIATIONS FROM THESE ARE AS FOLLOWS:

THE COMBINATION OF NEW AGGREGATES, NEW ASPHALT BINDER, AND RECLAIMED MATERIAL SHALL BE AS REQUIRED TO PRODUCE A COMPOSITION CONTAINING A MINIMUM OF 6.2% NEW ASPHALT BINDER RESULTING IN A MINIMUM TOTAL BINDER OF 6.9%.

ANY PERCENTAGE OF RECLAIMED MATERIAL PROPOSED FOR USE SHALL BE INCLUDED IN THE MIX DESIGN PROCESS TO ESTABLISH THE JOB MIX FORMULA (JMF) IN ACCORDANCE WITH 858.03.

THE MATERIALS SHALL BE:

| | |
|---|---|
| AGGREGATES | 703.5* |
| ASPHALT BINDER | SS-1055 |

*THE VIRGIN COARSE AGGREGATE PORTION OF THE MIXTURE SHALL BE AIR COOLED BLAST FURNACE SLAG AND MEET THE REQUIREMENTS OF 703.05.

ONLY RECLAIMED PAVEMENT FROM THIS PROJECT WILL BE PERMITTED FOR USE IN THIS ITEM.





j:\22126_Tru_5_6.45\22126gn.dgn 10-SEP-2001 8:11AM tperez

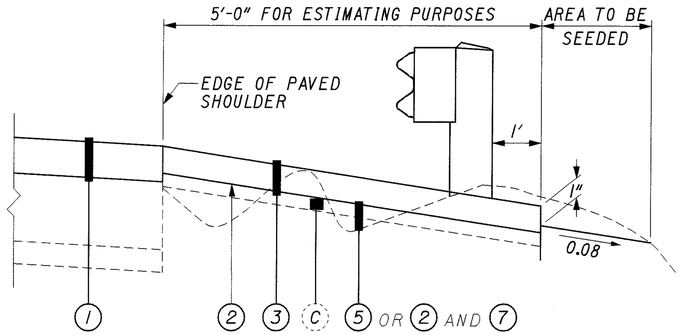


## LEGEND

| | | | |
|---|---|---|---|
| 1 | 858 | 3¼" | PROPOSED OVERLAY |
| 2 | | | HERBICIDE APPLICATION UNDER ASPHALT |
| 3 | 448 | 2" AVG. | ASPHALT CONCRETE INTERMEDIATE COURSE, TYPE I, PG64-22 (UNDER GUARDRAIL) |
| 4 | 617 | 2" AVG. | COMPACTED AGGREGATE, TYPE A |
| 5 | 203 | | LINEAR GRADING, METHOD A |
| 6 | 203 | | LINEAR GRADING, METHOD D |
| 7 | 203 | | EMBANKMENT, AS PER PLAN (if required, see note this sheet) |
| A | | | EXISTING COMPOSITE PAVEMENT |
| B | | | EXISTING SHOULDER |
| C | | | EXISTING PAVEMENT UNDER GUARDRAIL |

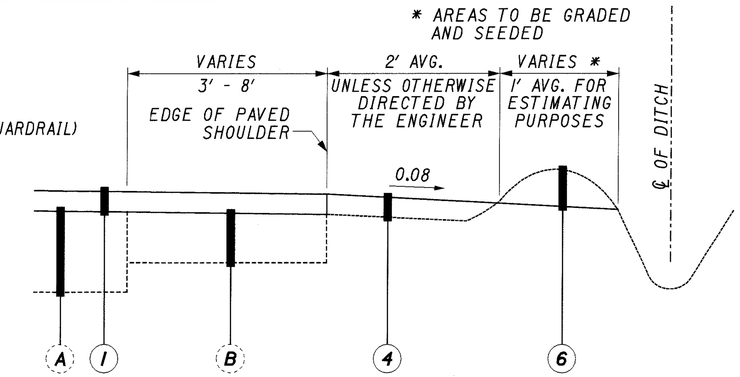


| ROUTE | FROM | TO | SIDE |
|---|---|---|---|
| S.R. 5 | 6.45 | 13.93 | BOTH |
| | | | |

### PAVING UNDER GUARDRAIL

THIS OPERATION SHALL INCLUDE PREPARATION OF THE GRADED SHOULDER USING 203, LINEAR GRADING, AND PAVING UNDER THE GUARDRAIL USING 448 ASPHALT CONCRETE INTERMEDIATE COURSE, TYPE I, UNDER GUARDRAIL, PG 64-22 OR PREPARATION OF THE EXISTING ASPHALT AND PAVING UNDER THE GUARDRAIL USING 448 ASPHALT CONCRETE INTERMEDIATE COURSE, TYPE I, UNDER GUARDRAIL, PG 64-22, TO PAVE OVER THE EXISTING ASPHALT UNDER THE EXISTING GUARDRAIL.

ITEM 203, LINEAR GRADING, SHALL CONSIST OF EXCAVATING TOPSOIL, PLACING GRANULAR MATERIAL AND APPLYING HERBICIDE AS SPECIFIED IN THE PLANS WHERE THERE IS NO EXISTING GUARDRAIL: ALL COLLECTED DEBRIS AND TOPSOIL, INCLUDING RHIZOMES, ROOTS AND OTHER VEGETATIVE PLANT MATERIAL SHALL BE REMOVED AND DISPOSED OF AS SPECIFIED IN 203.05.
THE REMOVED MATERIAL SHALL BE REPLACED WITH COMPACTABLE GRANULAR MATERIAL CONFORMING TO 203.02 PLACED TO GRADE AS DETAILED ON THE TYPICAL SECTION OR AS APPROVED BY THE ENGINEER.
HERBICIDE SHALL BE EPA APPROVED FOR PAVING UNDER GUARDRAIL. IT SHALL BE APPLIED TO THE PREPARED AREA AFTER FINAL LEVELING AND GRADING HAS BEEN COMPLETED. THE APPLICATION SHALL BE JUST PRIOR TO PAVING AND SHALL STRICTLY ADHERE TO THE MANUFACTURER'S INSTRUCTIONS.
EACH SUCCESSFUL BIDDER MUST BE LICENSED BY THE OHIO DEPARTMENT OF AGRICULTURE AS A COMMERCIAL APPLICATOR AND ALL PERSONS INVOLVED IN THE ACTUAL SPRAYING SHALL BE LICENSED AS COMMERCIAL OPERATORS IN THE APPROPRIATE SPRAY CATEGORY.
HERBICIDE LABEL, MATERIAL SAFETY DATA SHEET AND COPY OF APPLICATORS LICENSES SHALL BE SUBMITTED TO THE ENGINEER FOR VERIFICATION PRIOR TO COMMENCING WORK.

ITEM 203, LINEAR GRADING, SHALL CONSIST OF REMOVING DEBRIS AND TOPSOIL, INCLUDING ANY VEGETATIVE MATERIAL, FILLING ANY VOIDS WITH GRANULAR MATERIAL, AND PREPARING THE EXISTING ASPHALT CONCRETE PAVEMENT UNDER GUARDRAIL FOR THE APPLICATION OF THE ABOVE MENTIONED ITEM 448.

ALL EQUIPMENT, MATERIALS AND LABOR REQUIRED TO PERFORM THE WORK OUTLINED ABOVE SHALL BE INCLUDED FOR PAYMENT UNDER ITEM 203, LINEAR GRADING, METHOD A.

PAVING UNDER GUARDRAIL SHALL CONSIST OF PLACING ITEM 448 TO THE DEPTH SPECIFIED USING ONE OF THE FOLLOWING METHODS:
METHOD A: 1) SET GUARDRAIL POSTS

2) PLACE ITEM 448

METHOD B: 1) PLACE ITEM 448

2) BORE ASPHALT AT POST LOCATIONS (MAY BE OMITTED IF STEEL POSTS ARE USED)

3) SET GUARDRAIL POSTS

4) PATCH AROUND POSTS. THE MATERIALS USED FOR PATCHING SHALL BE A BITUMINOUS CONCRETE APPROVED BY THE ENGINEER. PATCHED AREAS SHALL BE COMPACTED USING EITHER HAND OR MECHANICAL METHODS. FINISHED SURFACES SHALL BE SMOOTH AND SLOPED TO DRAIN AWAY FROM THE POSTS.

ALL EQUIPMENT, MATERIALS AND LABOR REQUIRED TO PERFORM THE WORK OUTLINED ABOVE, WITH THE EXCEPTION OF SETTING GUARDRAIL POSTS, SHALL BE INCLUDED FOR PAYMENT UNDER ITEM 448, ASPHALT CONCRETE, INTERMEDIATE COURSE, TYPE I, UNDER GUARDRAIL, PG 64-22.

### ITEM 203 LINEAR GRADING METHOD D

UPON COMPLETION OF THE PAVING OPERATION, OR NO LONGER THAN 48 HOURS IN AREAS OF LOW BERM EXCEEDING 2 IN. FROM PLAN TYPICAL SECTION, THE CONTRACTOR SHALL PLACE ITEM 617 COMPACTED AGGREGATE, TYPE A, ADJACENT TO THE PAVED SHOULDER AS SHOWN ON THE DETAIL. THE REMAINING SHOULDER WIDTH BEYOND THE LIMITS OF THE COMPACTED AGGREGATE SHALL BE GRADED TO PROVIDE POSITIVE DRAINAGE INTO THE DITCH AND SHALL BE PERFORMED ONLY IN THE AREAS NECESSARY. RE-GRADING SHALL BE ACCOMPLISHED BY THE REMOVAL OF, OR ADDITION OF MATERIAL TO PROVIDE A 0.08 SLOPE TO THE DITCH BREAK POINT. EXCESS MATERIAL SHALL BE WINDROWED ON THE SHOULDER. THE RE-GRADED AREAS SHALL BE COMPACTED TO A SUFFICIENT DENSITY TO PREVENT EROSION UNTIL SEEDING AND MULCHING AS PER 870 IS PERFORMED. ALL EXCESS MATERIAL SHALL BE REMOVED FROM THE BERMS AND NOT ALLOWED TO ENTER THE DITCH LINE AND SHALL BE DISPOSED OF OFF THE PROJECT BY THE CONTRACTOR.

THE METHOD OF MEASUREMENT OF ITEM 203 LINEAR GRADING METHOD D SHALL BE STATIONS, WITH ONE STATION EQUAL TO 100 LIN. FT. STATIONS SHALL BE MEASURED ALONG EACH EDGE OF PAVEMENT.

ALL MATERIALS, LABOR, EQUIPMENT, TOOLS AND INCIDENTALS NECESSARY TO COMPLETE THE WORK SHALL BE INCLUDED IN THE UNIT BID PRICE FOR ITEM 203 LINEAR GRADING METHOD D, EXCLUDING ITEM 617 COMPACTED AGGREGATE, TYPE A, ITEM 870 SEEDING AND MULCHING, ITEM 870 COMMERCIAL FERTILIZER, ITEM 870 AGRICULTURAL LIMING AND ITEM 870 WATER, WHICH SHALL BE PAID FOR SEPARATELY. IN AREAS WHERE GRADING IS NOT REQUIRED BEYOND THE 617 LIMIT, THE LINEAR GRADING METHOD D SHALL BE NON-PERFORMED AS DIRECTED BY THE ENGINEER.

CALCULATED RCB
CHECKED TJP

GENERAL NOTES

TRU-5-6.45



j:\22126_Tru_5_6.45\22126gn.dgn 10-SEP-2001 8:11AM tperez

## ITEM 606 - ANCHOR ASSEMBLY, TYPE B-98

THIS ITEM SHALL CONSIST OF FURNISHING AND INSTALLING EITHER OF THE FOLLOWING GUARDRAIL END TERMINALS.

1) THE SRT-350, GUARDRAIL END TERMINAL AS MANUFACTURED BY SYRO INC., 1170 N. STATE STREET, GIRARD, OHIO 44420 (TELEPHONE: 330-545-4373).

THE LENGTH OF THE SRT-350 SYSTEM IS CONSIDERED TO BE 37'-6", INCLUSIVE OF THREE 12'-6" LONG RAIL ELEMENTS. INSTALLATION SHALL BE AT THE LOCATIONS SPECIFIED IN THE PLANS, IN ACCORDANCE WITH THE MANUFACTURER'S SPECIFICATIONS AS DETAILED ON THE FOLLOWING PRE-APPROVED SHOP DRAWINGS:

| DWG. NO. | DRAWING NAME | DWG./ REV. DATE | ODOT APPROVAL DATE |
|---|---|---|---|
| SS444 | SLOTTED RAIL TERMINAL POST LAYOUT AND ERECTION DETAILS SRT-350 (12.5, 8 POST) | 7/12/99 Rev. 1 | 8/27/99 |
| SS425M | SLOTTED RAIL TERMINAL SRT-350 POST LAYOUT AND ERECTION DETAILS (12.5, 9 POST) | 6/21/97 Rev. 1 | 3/6/98 |

2) THE FLEAT-350 MANUFACTURED BY ROAD SYSTEMS, INC., 7631 NEW CASTLE DRIVE, FRANKFORT, IL 60423 (TELEPHONE: 815-464-5917).

THE LENGTH OF THE FLEAT-350 IS CONSIDERED TO BE 37'-6", INCLUSIVE OF THREE 12'-6" LONG RAIL ELEMENTS. INSTALLATION SHALL BE AT THE LOCATIONS SPECIFIED IN THE PLANS, IN ACCORDANCE WITH THE MANUFACTURER'S SPECIFICATIONS AS DETAILED ON THE FOLLOWING PRE-APPROVED SHOP DRAWINGS:

| DWG. NO. | DRAWING NAME | DWG./ REV. DATE | ODOT APPROVAL DATE |
|---|---|---|---|
| FLT-M | FLARED ENERGY ABSORBING TERMINAL (FLEAT-350) ASSEMBLY | 4/16/98 | 7/31/98 |

GRADING SHALL BE IN ACCORDANCE WITH STANDARD CONSTRUCTION DRAWING GR-4.3M.

THE FACE OF THE TYPE B-98 IMPACT HEAD SHALL BE COVERED WITH TYPE G REFLECTIVE SHEETING, PER CMS 730.19: APPROXIMATELY 36" W X 12" H FOR THE SRT-350 AND 14" W X 20" H FOR THE FLEAT.

PAYMENT FOR THE ABOVE WORK SHALL BE MADE AT THE UNIT PRICE BID FOR ITEM 606, ANCHOR ASSEMBLY, TYPE B-98, EACH, AND SHALL INCLUDE ALL LABOR, TOOLS, EQUIPMENT AND MATERIALS NECESSARY TO CONSTRUCT A COMPLETE AND FUNCTIONAL ANCHOR ASSEMBLY SYSTEM, INCLUDING REFLECTIVE SHEETING AND ALL RELATED HARDWARE, GRADING, EMBANKMENT AND EXCAVATION NOT SEPARATELY SPECIFIED, AS REQUIRED BY THE MANUFACTURER.

## ITEM 606 - ANCHOR ASSEMBLY, TYPE E-98

THIS ITEM SHALL CONSIST OF FURNISHING AND INSTALLING EITHER OF THE FOLLOWING GUARDRAIL END TERMINALS.

1) THE ET-2000 (1997) MANUFACTURED BY SYRO, INC., 1170 N. STATE STREET, GIRARD, OHIO 44420 (TELEPHONE: 330-545-4373).

THE LENGTH OF THE ET-2000 (1997) SYSTEM IS CONSIDERED TO BE 50'-0", INCLUSIVE OF TWO 25'-0" LONG RAIL ELEMENTS. INSTALLATION SHALL BE AT THE LOCATIONS SPECIFIED IN THE PLANS, IN ACCORDANCE WITH THE MANUFACTURER'S SPECIFICATIONS AS DETAILED ON THE FOLLOWING PRE-APPROVED SHOP DRAWINGS:

| DWG. NO. | DRAWING NAME | DWG./ REV. DATE | ODOT APPROVAL DATE |
|---|---|---|---|
| SS265 | MET-2000 (1997) PLAN, ELEVATION AND SECTIONS | 6/20/97 | 3/6/98 |

2) THE SKT-350 MANUFACTURED BY ROAD SYSTEMS, INC., 7631 NEW CASTLE DRIVE, FRANKFORT, IL 60423 (TELEPHONE: 815-464-5917).

THE LENGTH OF THE SKT-350 SYSTEM IS CONSIDERED TO BE 50'-0", INCLUSIVE OF FOUR 12'-6" LONG RAIL ELEMENTS. INSTALLATION SHALL BE AT THE LOCATIONS SPECIFIED IN THE PLANS, IN ACCORDANCE WITH THE MANUFACTURER'S SPECIFICATIONS AS DETAILED ON THE FOLLOWING PRE-APPROVED SHOP DRAWINGS:

| DWG. NO. | DRAWING NAME | DWG./ REV. DATE | ODOT APPROVAL DATE |
|---|---|---|---|
| SKT-4M | SEQUENTIAL KINKING TERMINAL (SKT-350) ASSEMBLY WITH 4 FOUNDATION TUBES | 12/11/97 | 3/6/98 |

THE FACE OF THE TYPE E-98 IMPACT HEAD SHALL BE COVERED WITH A SHEET OF TYPE G REFLECTIVE SHEETING, PER CMS 730.19, APPROXIMATELY 18" X 18".

PAYMENT FOR THE ABOVE WORK SHALL BE MADE AT THE UNIT PRICE BID FOR ITEM 606, ANCHOR ASSEMBLY, TYPE E-98, EACH, AND SHALL INCLUDE ALL LABOR, TOOLS, EQUIPMENT AND MATERIALS NECESSARY TO CONSTRUCT A COMPLETE AND FUNCTIONAL ANCHOR ASSEMBLY SYSTEM, INCLUDING ALL RELATED TRANSITIONS, REFLECTIVE SHEETING, HARDWARE, GRADING, EMBANKMENT AND EXCAVATION NOT SEPARATELY SPECIFIED, AS REQUIRED BY THE MANUFACTURER.

## ITEM 606 - IMPACT ATTENUATOR, TYPE 1-98 [(UNIDIRECTIONAL OR BIDIRECTIONAL)]

THIS ITEM SHALL CONSIST OF FURNISHING AND INSTALLING EITHER OF THE FOLLOWING IMPACT ATTENUATORS:

1) THE C-A-T MANUFACTURED BY SYRO, INC., 1170 N. STATE STREET, GIRARD, OHIO 44420 (TELEPHONE: 330-545-4373).

THE LENGTH OF THE C-A-T SYSTEM IS CONSIDERED TO BE 31'-3" LONG. INSTALLATION SHALL BE AT THE LOCATIONS SPECIFIED IN THE PLANS, IN ACCORDANCE WITH THE MANUFACTURER'S SPECIFICATIONS AS DETAILED ON THE FOLLOWING PRE-APPROVED SHOP DRAWINGS:

| DWG. NO. | DRAWING NAME | DWG./ REV. DATE | ODOT APPROVAL DATE |
|---|---|---|---|
| SS245M | CRASH-CUSHION ATTENUATING TERMINAL PLAN, ELEVATION & SECTIONS FOR USE AS A LONGITUDINAL MEDIAN BARRIER TERMINAL OR CRASH CUSHION ATTENUATOR | 4/10/97 Rev. 4 | 3/6/98 |
| SS224M | C-A-T TRANSITION TO MEDIAN BARRIER GUARDRAIL PLAN, ELEVATION & SECTIONS | 4/26/96 | 3/6/98 |
| SS226M | C-A-T TRANSITION TO VERTICAL WALL OR PIER PLAN, ELEVATION & SECTIONS | 4/26/96 | 3/6/98 |

2) THE BRAKEMASTER MANUFACTURED BY ENERGY ABSORPTION SYSTEMS, INC., ONE EAST WACKER DRIVE, CHICAGO, IL 60601 (TELEPHONE: 312-467-6750).

THE LENGTH OF THE BRAKEMASTER SYSTEM IS CONSIDERED TO BE 32'-8" LONG. INSTALLATION SHALL BE AT THE LOCATIONS SPECIFIED IN THE PLANS, IN ACCORDANCE WITH THE MANUFACTURER'S SPECIFICATIONS AS DETAILED ON THE FOLLOWING PRE-APPROVED SHOP DRAWINGS:

| DWG. NO. | DRAWING NAME | DWG./ REV. DATE | ODOT APPROVAL DATE |
|---|---|---|---|
| 92-00-01 | BRAKEMASTER GENERAL ASSEMBLY (UNIDIRECTIONAL SYSTEM) | 3/6/97 Rev. K | 3/6/98 |
| 92-00-81 | BRAKEMASTER (UNIDIRECTIONAL) WITH FOUNDATION TUBES | 2/9/98 | 3/6/98 |
| 92-00-02 | BRAKEMASTER GENERAL ASSEMBLY (BIDIRECTIONAL SYSTEM) | 3/10/97 Rev. K | 3/6/98 |
| 92-00-82 | BRAKEMASTER (BIDIRECTIONAL) WITH FOUNDATION TUBES | 2/9/98 | 3/6/98 |
| 9202024 | ANCHOR ASSEMBLY, FOUNDATION TUBE, 6 1/2 FT., BRS | 6/12/97 Rev. D | 3/6/98 |

THE FACE OF THE TYPE 1-98 IMPACT HEAD SHALL BE COVERED WITH A SHEET OF TYPE G REFLECTIVE SHEETING, PER CMS 730.19, APPROXIMATELY 36" X 12". PAYMENT FOR THE ABOVE WORK SHALL BE MADE AT THE UNIT PRICE BID FOR ITEM 606, IMPACT ATTENUATOR, TYPE 1-98 (UNIDIRECTIONAL OR BIDIRECTIONAL), EACH, AND SHALL INCLUDE ALL LABOR, TOOLS, EQUIPMENT AND MATERIALS NECESSARY TO CONSTRUCT A COMPLETE AND FUNCTIONAL ANCHOR ASSEMBLY SYSTEM, INCLUDING ALL RELATED TRANSITIONS, HARDWARE, REFLECTIVE SHEETING AND GRADING, NOT SEPARATELY SPECIFIED, AS REQUIRED BY THE MANUFACTURER.





j:\22126_Tru_5_6.45\22126gn.dgn 10-SEP-2001 8:12AM tperez

**STREAM CHANNEL EXCAVATION**
THE CONTRACTOR SHALL TAKE ALL PRECAUTIONS NECESSARY TO PREVENT ANY INCIDENTAL DISCHARGES ASSOCIATED WITH THE EXCAVTION AND HAULING OF MATERIAL FROM THE STREAM CHANNEL. THIS PERTAINS TO ANY EXCAVATION OPERATIONS (i.e. FOUNDATION PIER OR ABUTMENT EXCAVATION, CHANNEL CLEAN-OUT, EXCAVATION FOR ROCK CHANNEL PROTECTION, AND REMOVAL OF ANY TEMPORARY FILL ASSOCIATED WITH CONSTRUCTION OPERATIONS).

**DEMOLITION DEBRIS**
THE CONTRACTOR SHALL TAKE PRECAUTIONS TO AND/OR LIMIT DEMOLITION DEBRIS FROM ENTERING THE STREAM. ANY MATERIAL THAT DOES FALL INTO THE STREAM SHALL BE REMOVED AS SOON AS POSSIBLE.

**INSTREAM WORK**
INSTREAM WORK WILL BE LIMITED WHERE PRACTICABLE AND ONLY CLEAN, NON-ERODIBLE MATERIAL WILL BE USED FOR FORDS, COFFERDAMS, OR OTHER EQUIPMENT ACCESS PADS. THIS TEMPORARY PLACED MATERIAL WILL BE REMOVED AND THE STREAM BOPTTOM RESTORED TO NEAR NATURAL CONDITIONS WHEN THE WORK IS COMPLETED

**MECHANICAL EQUIPMENT OPERATION AT STREAM CHANNEL**
THE MECHANICAL EQUIPMENT USED TO EXECUTE THE WORK AUTHORIZED HEREIN SHALL BE OPERATED IN SUCH A WAY AS TO MINIMIZE TURBIDITY THAT COULD DEGRADE WATER QUALITY AND ADVERSELY AFFECT AQUATIC PLANT AND ANIMAL LIFE.

**ENVIRONMENTAL IMPACT/AVOIDANCE MINIMIZATIOIN**
BEST MANAGEMENT PRACTICES SHALL BE UTILIZED DURING PROJECT CONSTRUCTION TO AVOID IMPACTS, WHERE POSSIBLE, AND MINIMIZE WATER QUALITY IMPPACTS AND IMPACTS TO HIGH QUALITY FISH AND WILDLIFE HABTAT IN THE VICINTY OF THE PROJECT.

**EQUIPMENT/MATERIAL STORAGE**
UNDER NO CIRCUMSTANCES SHALL THE CONTRACTOR STORE EQUIPMENT AND/OR MATERIALS IN ANY STREAMS OR WETLANDS.

**EROSION CONTROL**
ITEMS 601 AND 660 ARE PROVIDED IN THE PLANS FOR EROSION CONTROL. ROCK OF A STABLE NATURE SHALL NOT BE REMOVED IN ORDER TO PLACE ANY OF THESE ITEMS AND TURF OF A STABLE NATURE SHALL NOT BE REMOVED IN ORDER TO PLACE 660. THE ENGINEER SHALL CHECK AND NON-PERFORM QUANTITIES OR ADJUST LOCATIONS AND QUANTITIES OF THESE ITEMS WHERE INDICATED BY FIELD CONDITIONS DURING CONSTRUCTION. IN ADDITION, THESE ITEMS SHALL MEET THE REQUIREMENTS OF 108.04.

**REVIEW OF DRAINAGE FACILITIES**
BEFORE ANY WORK IS STARTED ON THE PROJECT AND AGAIN BEFORE FINAL ACCEPTANCE BY THE STATE, REPRESENTATIVES OF THE STATE AND THE CONTRACTOR, ALONG WITH LOCAL REPRESENTATIVES, SHALL MAKE AN INSPECTION OF ALL EXISTING SEWERS WHICH ARE TO REMAIN IN SERVICE AND WHICH MAY BE AFFECTED BY THE WORK. THE CONDITION OF THE EXISTING CONDUITS AND THEIR APPURTENANCE SHALL BE DETERMINED FROM FIELD OBSERVATIONS. RECORDS OF THE INSPECTION SHALL BE KEPT IN WRITING BY THE STATE.

ALL NEW CONDUITS, INLETS, CATCH BASINS, AND MANHOLES CONSTRUCTED AS A PART OF THE PROJECT SHALL BE FREE OF ALL FOREIGN MATTER AND IN A CLEAN CONDITION BEFORE THE PROJECT WILL BE ACCEPTED BY THE STATE.

ALL EXISTING SEWERS INSPECTED INITIALLY BY THE ABOVE MENTIONED PARTIES SHALL BE MAINTAINED AND LEFT IN A CONDITION REASONABLY COMPARABLE TO THAT DETERMINED BY THE ORIGINAL INSPECTION. ANY CHANGE IN THE CONDITION RESULTING FROM THE CONTRACTOR'S OPERATIONS SHALL BE CORRECTED BY THE CONTRACTOR TO THE SATISFACTION OF THE ENGINEER.

PAYMENT FOR ALL OPERATIONS DESCRIBED ABOVE SHALL BE INCLUDED IN THE CONTRACT PRICE FOR THE PERTINENT 603 CONDUIT ITEMS.

**TEMPORARY SOIL EROSION AND SEDIMENT CONTROL**
THE FOLLOWING ESTIMATED QUANTITIES ARE TO BE PLACED BY THE CONTRACTOR WITH THE ENGINEER'S CONCURRENCE FOR TEMPORARY EROSION AND SEDIMENT CONTROL MEASURES:

| | | |
|---|---|---|
| 877, TEMPORARY SEEDING AND MULCHING | 4180 | SQ. YD. |
| 870, COMMERCIAL FERTILIZER | 0.33 | TON |
| 870, REPAIR SEEDING AND MULCHING | 1045 | SQ. YD. |
| 870, WATER | 9 | M GAL. |
| 870, INTER-SEEDING | 1045 | SQ. YD. |

**ITEM 870 SEEDING AND MULCHING**
THE FOLLOWING QUANTITIES ARE PROVIDED TO PROMOTE GROWTH AND CARE OF PERMANENT SEEDED AREAS

| | |
|---|---|
| 870, SEEDING AND MULCHING | 20900 SQ. YD. |
| 870, SOIL ANALYSIS TEST | 2 EACH |
| 870, PLACING TOPSOIL | 2320 CU. YD. |
| 870, COMMERCIAL FERTILIZER | 2.82 TON |
| 870, AGRICULTURAL LIME | 8.65 TON |
| 870, WATER | 56.4 M GAL. |

SEEDING AND MULCHING SHALL BE APPLIED TO ALL AREAS OF EXPOSED SOIL BETWEEN THE RIGHT-OF-WAY LINES, AND WITHIN THE CONSTRUCTION LIMITS FOR AREAS OUTSIDE THE RIGHT-OF-WAY LINES COVERED BY WORK AGREEMENT OR SLOPE EASEMENT. QUANTITY CALCULATIONS FOR SEEDING AND MULCHING, ARE BASED ON THESE LIMITS.





j:\22126_Tru_5_6.45\22126gn.dgn 10-SEP-2001 8:10AM tperez

## ITEM 614, MAINTAINING TRAFFIC

THIS ITEM SHALL CONSIST OF MAINTENANCE OF TRAFFIC ON EXISTING ROADWAYS AND RAMPS IN ACCORDANCE WITH THE OHIO MANUAL OF UNIFORM TRAFFIC CONTROL DEVICES FOR STREETS AND HIGHWAYS, CURRENT EDITION, LATEST REVISION, THE SPECIFICATIONS AND THE FOLLOWING:

1. A MINIMUM OF ONE ELEVEN FOOT LANE IN EACH DIRECTION SHALL BE MAINTAINED ON THE EXSITING PAVEMENT DURING CONSTRUCTION OF THE WORK.

2. THE CONTRACTOR SHALL INFORM THE DISTRICT OFFICE (330) 297-0801, EXT. 209, EIGHTEEN (18) DAYS PRIOR TO THE BEGINNING OF WORK.

3. ONLY DURING OFF-PEAK PERIODS (ie. ANY PERIOD OTHER THAN 7-9 AM AND 4-6 PM) SHALL THE CONTRACTOR INSTALL AND SUBSEQUENTLY RESET ALL TRAFFIC CONTROL NECESSARY FOR MAINTAINING TRAFFIC EACH CONSTRUCTION PHASE.

4. UNDER NO CIRCUMSTANCES SHALL THE CONTRACTOR BE PERMITTED TO HAVE WORK ZONES THAT ALTERNATELY CLOSE BOTH THE PASSING LANE AND THE DRIVING LANE UNLESS THE DISTANCE BETWEEN THE DRUMS, BARRICADES OR CONES EXCEEDS TWO (2) MILES.

5. CONES SHALL NOT BE ACCEPTABLE TRAFFIC CONTROL DEVICES FOR LANE RESTRICTIONS OR LANE REDUCTIONS THAT ARE IN OPERATION ONE-HALF HOUR AFTER SUNSET OR ONE-HALF HOUR BEFORE SUNRISE. ALL NIGHTTIME LANE RESTRICTIONS SHALL REQUIRE DRUMS OR BARRICADES AT A MAXIMUM SPACING OF FIFTY (50) FEET.

6. ALL EXISTING LANES SHALL BE OPEN TO TRAFFIC BETWEEN DECEMBER 15 AND MARCH 15. NOVEMBER 18 SHALL BE CONSIDERED TO CONSTITUTE AN INTERIM COMPLETION DATE AND LIQUIDATED DAMAGES SHALL BE ASSESSED IN ACCORDANCE WITH 108.17 FOR EACH CALENDAR DAY THAT ALL LANES ARE NOT OPEN AND AVAILABLE TO TRAFFIC.

7. AN ESTIMATED QUANTITY OF 20,500 LIN. FT. OF ITEM 622 PORTABLE CONCRETE BARRIER, 50", AS PER PLAN HAVE BEEN PROVIDED FOR THIS PROJECT. THE BARRIER SHALL BE PLACED AS SHOWN ON S.C.D. MT-95.70M, WHEN TWO-WAY TRAFFIC IS BEING MAINTAINED.

8. PRIOR TO OPENING TO TRAFFIC EACH LANE SHALL BE IN A SAFE, PASSABLE CONDITION. ALL TRANSVERSE JOINTS SHALL EXTEND ACROSS THE FULL LANE AND SHOULDER WIDTH AND SHALL BE FREE FROM UNEVEN LONGITUDINAL JOINTS. THE CONTRACTOR SHALL PROVIDE ASPHALT WEDGES FOR TRANSVERSE JOINTS WHEREVER THERE ARE PAVEMENT ELEVATION DIFFERENCES.

9. NO WORK SHALL BE PERFORMED AND ALL EXISTING LANES SHALL BE OPEN TO TRAFFIC DURING THE FOLLOWING DESIGNATED HOLIDAYS OR EVENTS:

| | |
|---|---|
| CHRISTMAS | NEW YEARS |
| FOURTH OF JULY | THANKSGIVING |

THE PERIOD OF TIME THAT THE LANES ARE TO BE OPEN DEPENDS ON THE DAY OF THE WEEK ON WHICH THE HOLIDAY OR EVENT FALLS. THE FOLLOWING SCHEDULE SHALL BE USED TO DETERMINE THIS PERIOD:

| DAY | TIME ALL LANES MUST BE OPEN TO TRAFFIC |
|---|---|
| SUN | 12:00N FRI THROUGH 12:00N MON |
| MON | 12:00N FRI THROUGH 12:00N TUE |
| TUE | 12:00N MON THROUGH 12:00N WED |
| WED | 12:00N TUE THROUGH 12:00N THU |
| THU | 12:00N WED THROUGH 12:00N MON |
| FRI | 12:00N THU THROUGH 12:00N MON |
| SAT | 12:00N FRI THROUGH 12:00N MON |

NO EXTENSIONS OF TIME SHALL BE GRANTED FOR DELAYS IN MATERIAL DELIVERIES, UNLESS SUCH DELAYS ARE INDUSTRY-WIDE, OR FOR LABOR STRIKES, UNLESS SUCH STRIKES ARE AREA-WIDE.

SHOULD THE CONTRACTOR FAIL TO MEET ANY OF THESE REQUIREMENTS, THE CONTRACTOR SHALL BE ASSESSED LIQUIDATED DAMAGES IN ACCORDANCE WITH 108.07.

10. THE CONTRACTOR SHALL FURNISH, ERECT, MAINTAIN AND SUBSEQUENTLY REMOVE ALL FLAGS, BARRICADES, SIGNS, SIGN SUPPORTS AND FURNISH AND MAINTAIN ALL FLAGGERS, WATCHERS AND INCIDENTALS RELATED THERETO. THE ABOVE ITEMS SHALL BE UTILIZED IN CONFORMANCE WITH THE OHIO MANUAL OF UNIFORM TRAFFIC CONTROL DEVICES, CURRENT EDITION, LATEST REVISION.

11. NO FULL DEPTH BRIDGE REPAIR SHALL BE PERFORMED OVER AN OPEN LANE. A SAFETY NET OR PLATFORM SHALL BE REQUIRED TO PROTECT THE ROADWAY, RAILROAD OR STREAM DURING THE REMOVAL OF THE EXISTING CONCRETE PARAPET AND DECK. THE CONTRACTOR SHALL PROVIDE A SAFETY NET OR PLATFORM OF SUITABLE STRENGTH ON THE UNDERSIDE OF THE DECK. THE DESIGN OF THE NET OR PLATFORM SHALL CONFORM WITH OSHA REQUIREMENTS AND THE APPROVAL OF THE ENGINEER AND SHALL REMAIN IN PLACE UNTIL THE WORK HAS BEEN COMPLETED AND ACCEPTED OR AS DIRECTED BY THE ENGINEER. THE CONTRACTOR SHALL SUBMIT A DEMOLITION PLAN AND SAFETY NET OR PLATFORM DESIGN 10 DAYS PRIOR TO COMMENCING ANY DEMOLITION FOR APPROVAL BY THE ENGINEER. THE SUBMITTAL SHALL BE IN WRITING TO THE DISTRICT CONSTRUCTION ENGINEER WITH A COPY TO THE PROJECT ENGINEER.

12. LENGTH AND DURATION OF LANE CLOSURES AND RESTRICTIONS SHALL BE AT THE APPROVAL OF THE ENGINEER. IT IS THE INTENT TO MINIMIZE THE IMPACT TO THE TRAVELING PUBLIC. LANE CLOSURES OR RESTRICTIONS OVER SEGMENTS OF THE PROJECT IN WHICH NO WORK IS ANTICIPATED WITHIN A REASONABLE TIME FRAME, AS DETERMINED BY THE ENGINEER, SHALL NOT BE PERMITTED. THE LEVEL OF UTILIZATION OF MAINTENANCE OF TRAFFIC DEVICES SHALL BE COMMENSURATE WITH THE WORK IN PROGRESS.

13. NOTICE OF CLOSURE SIGNS [OC-60B] SHALL BE ERECTED BY THE CONTRACTOR AT LEAST ONE WEEK IN ADVANCE OF THE SCHEDULED ROAD OR RAMP CLOSURE. THE SIGNS SHALL BE ERECTED ON THE RIGHT HAND SIDE OF THE ROAD/RAMP FACING TRAFFIC. THEY SHALL BE PLACED SO AS NOT TO INTERFERE WITH THE VISIBILITY OF ANY OTHER TRAFFIC CONTROL SIGNS. ON ROADWAYS, THEY SHOULD BE ERECTED AT THE POINT OF CLOSURE. THE SIGNS MAY BE ERECTED ANYWHERE ON RAMPS AS LONG AS THEY ARE VISIBLE TO THE MOTORISTS USING THE RAMP. ON ENTRANCE RAMPS, THE SIGN SHALL BE ERECTED WELL IN ADVANCE OF THE MERGE AREA TO AVOID DISTRACTING MOTORISTS.

14. ALL WORK AND TRAFFIC CONTROL DEVICES SHALL BE IN ACCORDANCE WITH 614 AND OTHER APPLICABLE PORTIONS OF THE SPECIFICATIONS, AS WELL AS THE OHIO MANUAL OF UNIFORM TRAFFIC CONTROL DEVICES. PAYMENT FOR ALL LABOR, EQUIPMENT AND MATERIALS SHALL BE INCLUDED IN THE LUMP SUM CONTRACT PRICE FOR 614, MAINTAINING TRAFFIC, UNLESS SEPARATELY ITEMIZED IN THE PLAN.

15. IN ADDITION TO THE REQUIREMENTS OF 614 WORK ZONE PAVEMENT MARKINGS (614.10), AT THE END OF EACH DAY OF WORK, THE CONTRACTOR SHALL REPLACE (WITH TEMPORARY MARKINGS) ALL LANE, EDGE OR STOP LINES THAT WERE REMOVED OR COVERED DURING THE PAVEMENT REMOVAL OR PLACEMENT OPERATIONS. QUANTITIES FOR SUCH REPLACEMENT ARE CARRIED AS PART OF THE ITEMS LISTED UNDER 614 TEMPORARY PAVEMENT MARKINGS.

16. A QUANTITY OF ITEM 614 WORK ZONE MARKING SIGN HAS BEEN INCLUDED IN THE PLAN. THIS QUANTITY SHALL INCLUDE, BUT NOT BE LIMITED TO, THE FOLLOWING SIGNS:OW-62 [BUMP], OW-167 [NO EDGE LINES], R-33 [DO NOT PASS], R-34 [PASS WITH CARE], OW-171[UNEVEN LANES SYMBOL], OW-152-48 [PREPARE TO STOP]

THE FOLLOWING QUANTITIES SHALL BE USED FOR THE MAINTENANCE OF TRAFFIC ON THIS PROJECT:

| | |
|---|---|
| ITEM 614 TEMP. LANE LINE, CLASS 1 | 15.5 MILE |
| ITEM 614 TEMP. EDGE LINE, CLASS 1 | 5.6 MILE |
| ITEM 614 TEMP. EDGE LINE, CLASS 1, 740.06, TYPE 1 | 7.6 MILE |
| ITEM 614 TEMP. GORE MARKING, CLASS 2 | 2400 L.F. |
| ITEM 614 WORK ZONE MARKING SIGN | 30 EACH |

## METHOD OF PAYMENT

PAYMENT FOR ALL LABOR, EQUIPMENT, AND MATERIALS SHALL BE INCLUDED IN THE LUMP SUM CONTRACT PRICE FOR 614 - MAINTAINING TRAFFIC, UNLESS SEPARATELY ITEMIZED IN THE PLAN.

## LOOP DETECTOR REPLACEMENT

THE CONTRACTOR SHALL CONTACT THE DISTRICT OFFICE (330-297-0801 EXT 386) THREE WORKING DAYS PRIOR TO ANY PLANING OR TRENCHING AT THE INTERSECTIONS OF SR 5 EB OFF-RAMP AND ELM ROAD AND SR 5 WB OFF-RAMP AND SR 45. LOOP DETECTORS DISTURBED BY PAVEMENT PLANING OR TRENCHING SHALL BE ABANDONED IN PLACE. THE LOOP DETECTOR WIRE WILL BE CUT INTO THE PAVEMENT AFTER THE PROPOSED SURFACE COURSE HAS BEEN PLACED. EACH DETECTOR SHALL BE REPLACED IN KIND, AT THE SAME LOCATION AS EXISTING. THE QUANTITIES LISTED BELOW HAVE BEEN CARRIED TO THE GENERAL SUMMARY. THE NEW LOOP DETECTOR WIRES SHALL BE RUN INTO THE EXISTING CONTROL BOX OR THE EXISTING PULLBOX. INCLUDED IN THIS ITEM IS THE POURED EPOXY TYPE CABLE SPLICE KIT (CONFORMING TO 713.15) THAT MUST BE USED IN MAKING THESE CONNECTIONS.

ALL NECESSARY MATERIAL, LABOR, SPLICE KITS AND EQUIPMENT SHALL BE INCIDENTAL TO PAYMENT OF THESE ITEMS.

ITEM 632 DETECTOR LOOP 4 EACH
[3 EACH 6' x 8', 1 EACH 10' x 20']

## GUARDRAIL REPLACEMENT

NO HAZARD SHALL BE LEFT UNPROTECTED EXCEPT FOR THE ACTUAL TIME NECESSARY TO REMOVE THE EXISTING GUARDRAIL, PREPARE THE SITE, AND INSTALL NEW GUARDRAIL IN A CONTINUOUS OPERATION. THE REMOVAL OF ALL GUARDRAIL SHALL AT ALL TIMES BE AS DIRECTED BY THE ENGINEER. NO GUARDRAIL SHALL BE REMOVED UNTIL THE REPLACEMENT MATERIAL IS ON THE SITE, READY FOR INSTALLATION. FAILURE TO COMPLY WITH THIS REQUIREMENT SHALL BE DEEMED SUFFICIENT CAUSE TO ORDER WORK SUSPENDED UNTIL SUCH TIME AS THE ENGINEER IS ASSURED OF COMPLIANCE.





j:\22126_Tru_5_6.45\mot\mna.dgn 07-SEP-2001 1:54PM jlldle

## ITEM 622, PORTABLE CONCRETE BARRIER

IT IS ANTICIPATED THAT THE SAME BARRIER WILL BE USED IN VARIOUS PHASES OF CONSTRUCTION. MOVEMEMENT OF THE CONCRETE BARRIER BETWEEN PHASES SHALL BE ACCOMPLISHED IN ONE WORKING DAY. FLAGGERS SHALL BE UTILIZED FOR PROTECTION OF VEHICULAR TRAFFIC UNTIL MOVEMENT OF THE BARRIER IS COMPLETE.

ALL COSTS INVOLVED IN REMOVING AND REINSTALLING THE CONCRETE BARRIER WILL BE INCLUDED IN THE CONTRACT PRICE FOR ITEM 622, PORTABLE CONCRETE BARRIER.

## ITEM 622, PORTABLE CONCRETE BARRIER, 50", AS PER PLAN

THIS WORK SHALL CONSIST OF FURNISHING, INSTALLING, MAINTAINING AND SUBSEQUENTLY REMOVING A 50-INCH PORTABLE CONCRETE BARRIER AT THE LOCATIONS SHOWN ON THE PLANS. FOR DETAILS, SEE STANDARD CONSTRUCTION DRAWING RM-4.1M.

PORTABLE CONCRETE BARRIER, 32 INCHES HIGH WITH AN 18-INCH MINIMUM HEIGHT GLARE SCREEN MAY BE USED AT THE OPTION OF THE CONTRACTOR. THE GLARE SCREEN SHALL BE CONSTRUCTED USING ONE OF THE FOLLOWING SYSTEMS OR AN APPROVED EQUAL:

CARSONITE MODULAR GLARE SCREEN
CARSONITE INTERNATIONAL
2900 LOCKHEED WAY,CARSON CITY,NEVADA 89701
702-883-5104 OR 800-648-7974

FORWARD GLARE SCREEN
PROVEN PRODUCTS, INC.
7560 SW LAVIEW DRIVE,PORTLAND,OREGON 97219
503-244-9185

SYRO GLAREFOIL
SYRO STEEL COMPANY
1170 N. STATE ST.,GIRARD,OHIO 44420
216-545-4373

PADDLE OR INTERMITTENT TYPE GLARE SCREENS SHALL BE DESIGNED USING A 20 DEGREE CUT-OFF ANGLE BASED ON TANGENT ALIGNMENT. THAT SPACING SHALL BE USED THROUGHOUT THE BARRIER LENGTH WITHOUT REGARD TO BARRIER CURVATURE.

THE GLARE SCREEN SYSTEM SHALL BE SECURELY FASTENED TO THE 32-INCH PORTABLE CONCRETE BARRIER USING THE HARDWARE AND PROCEDURES SPECIFIED BY THE MANUFACTURER.

PAYMENT SHALL INCLUDE ALL LABOR, MATERIAL, AND EQUIPMENT NECESSARY TO PERFORM THE WORK AND SHALL BE PAID FOR AT THE CONTRACT PRICE PER LINEAL FOOT FOR ITEM 622, PORTABLE CONCRETE BARRIER, 50", AS PER PLAN.

## ITEM 614, BARRIER REFLECTORS

BARRIER REFLECTORS SHALL BE INSTALLED ON ALL PORTABLE CONCRETE BARRIER USED FOR TRAFFIC CONTROL. REFLECTORS AND THEIR MOUNTING SHALL CONFORM TO SUPPLEMENTAL SPECIFICATION 802 EXCEPT THAT SPACING SHALL BE AS SHOWN ON STANDARD CONSTRUCTION DRAWING MT-95.70M. AN ESTIMATED QUANTITY OF 1,640 EACH OF ITEM 614 BARRIER REFLECTOR, TYPE B HAS BEEN PROVIDED AND CARRIED TO THE GENERAL SUMMARY.

## ITEM 614 LAW ENFORCEMENT OFFICER WITH PATROL CAR

IN ADDITION TO THE REQUIREMENTS OF 614 AND THE LATEST EDITION OF THE OHIO MANUAL OF UNIFORM TRAFFIC CONTROL DEVICES (OMUTCD), A UNIFORMED LAW ENFORCEMENT OFFICER (AND OFFICIAL PATROL CAR WITH WORKING TOP MOUNTED EMERGENCY FLASHING LIGHTS) SHALL BE PROVIDED FOR CONTROLLING TRAFFIC FOR THE FOLLOWING TASKS:

FOR LANE CLOSURES: DURING INITIAL SET-UP PERIODS, TEAR DOWN PERIODS, SUBSTANTIAL SHIFTS OF A CLOSURE POINT OR WHEN NEW LANE CLOSURE ARRANGEMENTS ARE INITIATED.

DURING THE ENTIRE ADVANCE PREPARATION AND CLOSURE SEQUENCE WHERE COMPLETE BLOCKAGE OF TRAFFIC IS REQUIRED.

DURING A TEMP. TRAFFIC SIGNAL INSTALLATION

LAW ENFORCEMENT OFFICERS (L.E.O.'S) SHOULD NOT BE USED WHERE THE OMUTCD INTENDS THAT FLAGGERS BE USED. THE LEO'S ARE CONSIDERED TO BE EMPLOYED BY THE CONTRACTOR AND THE CONTRACTOR SHALL BE RESPONSIBLE FOR THEIR ACTIONS. ALTHOUGH THEY ARE EMPLOYED BY THE CONTRACTOR, THE PROJECT ENGINEER SHALL HAVE CONTROL OVER THEIR PLACEMENT. THE OFFICIAL PATROL CAR SHALL BE A PUBLIC SAFETY VEHICLE AS REQUIRED BY THE OHIO REVISED CODE.

THE CONTRACTOR SHALL MAKE ARRANGEMENTS FOR THESE SERVICES WITH:

OHIO HIGHWAY PATROL (WARREN PATROL POST)
3424 SR 422
WARREN, OH 44470
330-898-2311

LAW ENFORCEMENT OFFICERS WITH PATROL CAR REQUIRED BY THE TRAFFIC MAINTENANCE TASKS ABOVE SHALL BE PAID FOR ON A UNIT PRICE (HOURLY) BASIS UNDER ITEM SPECIAL-LAW ENFORCEMENT OFFICER (WITH PATROL CAR). THE FOLLOWING ESTIMATED QUANTITIES HAVE BEEN CARRIED TO THE GENERAL SUMMARY:

ITEM 614 LAW ENFORCEMENT OFFICER WITH PATROL CAR 200 HOURS

THE HOURS PAID SHALL INCLUDE MINIMUM SHOW-UP TIME REQUIRED BY THE LAW ENFORCEMENT AGENCY INVOLVED.

IF THE CONTRACTOR WISHES TO UTILIZE LEO'S FOR FLAGGING AND TRAFFIC CONTROL OTHER THAN FOR THAT REQUIRED IN THESE PLANS, HE MAY DO SO AT HIS OWN EXPENSE. PAYMENT FOR THE EXCESS ABOVE THE CONTRACT REQUIREMENTS WILL BE INCLUDED UNDER ITEM 614 MAINTAINING TRAFFIC.

## ITEM 614, WORK ZONE SPEED LIMIT SIGN

THE CONTRACTOR SHALL FURNISH, INSTALL, MAINTAIN, COVER DURING SUSPENSION OF WORK, AND SUBSEQUENTLY REMOVE WORK ZONE SPEED LIMIT SIGNS AND SUPPORTS (R-10-48, 55 MPH) (R-11B-48) WITHIN THE WORK LIMITS IN ACCORDANCE WITH THE FOLLOWING REQUIREMENTS.

THE CONTRACTOR SHALL COVER OR REMOVE ANY EXISTING SPEED LIMIT OR MINIMUM SPEED SIGNS WITHIN THE REDUCED SPEED ZONE. THESE SIGNS SHALL BE RESTORED DURING SUSPENSION OR TERMINATION OF THE REDUCED SPEED LIMIT. THE EXPENSE OF COVERING OR REMOVAL AND RESTORATION OF EXISTING SPEED LIMIT OR MINIMUM SPEED SIGNS SHALL BE INCLUDED IN THE PAY ITEM FOR THE WORK ZONE SPEED LIMIT SIGNS.

THE WORK ZONE SPEED LIMIT SIGNS MAY BE ERECTED OR UNCOVERED NO MORE THAN 4 HOURS BEFORE THE ACTUAL START OF WORK. THE SIGNS SHALL BE REMOVED OR COVERED NO LATER THAN 4 HOURS FOLLOWING RESTORATION OF ALL LANES TO TRAFFIC WITH NO RESTRICTIONS, OR SOONER AS DIRECTED BY THE ENGINEER.

THE CONTRACTOR SHALL ERECT A WORK ZONE SPEED LIMIT SIGN IN ADVANCE OF ANY LANE RESTRICTION EXPECTED TO LAST AT LEAST 30 DAYS, OR AS DIRECTED BY THE ENGINEER. THE SIGN SHALL BE MOUNTED ON BOTH SIDES OF DIVIDED HIGHWAYS, 500 FEET IN ADVANCE OF THE LANE REDUCTION TAPER. THE SIGN SHALL BE MOUNTED ON THE RIGHT SIDE, 250 FEET IN ADVANCE OF THE LANE REDUCTION TAPER ON UNDIVIDED HIGHWAYS. THE SIGN SHALL BE REPEATED, ON THE SIDE NEAREST TRAFFIC, EVERY 1 MILE FOR 55 MPH ZONES AND EVERY ½ MILE FOR 45 MPH ZONES. THESE SIGNS SHALL ALSO BE ERECTED IMMEDIATELY AFTER EACH OPEN ENTRANCE RAMP WITHIN THE ZONE.

THE R-11B-48 SIGNS SHALL BE ERECTED ON BOTH SIDES OF DIVIDED HIGHWAYS 1500 FEET IN ADVANCE OF THE REDUCTION TAPER. THE R-11B-48 SIGNS SHALL BE ERECTED ON THE RIGHT SIDE ON UNDIVIDED HIGHWAYS, 750 FEET IN ADVANCE OF THE REDUCTION TAPER ON UNDIVIDED HIGHWAYS. A R-8A SIGN SHALL BE ERECTED AT THE END OF ANY REDUCED SPEED ZONE TO INDICATE THE RESUMPTION OF THE STATUTORY SPEED LIMIT.

THE CONTRACTOR MAY USE SIGNS AND SUPPORTS IN USED BUT GOOD CONDITION PROVIDED THE SIGNS MEET CURRENT ODOT SPECIFICATIONS. SIGN FACES SHALL BE REFLECTORIZED WITH TYPE G SHEETING COMPLYING WITH THE REQUIREMENTS OF 730.19 AND U.S. DEPARTMENT OF TRANSPORTATION SUPPLEMENTAL SPECIFICATION FOR TYPE III-C SHEETING, FP-85. WORK ZONE SPEED LIMIT SIGNS SHALL BE MOUNTED ON TWO(2) ITEM 630 GROUND MOUNTED SUPPORTS, NO. 4 POSTS.

WORK ZONE SPEED LIMIT SIGNS AND SUPPORTS WILL BE MEASURED AS THE NUMBER OF SIGN INSTALLATIONS, INCLUDING THE SIGNS AND NECESSARY SUPPORTS. IF A SIGN AND SUPPORT COMBINATION IS REMOVED AND REERECTED AT ANOTHER LOCATION WITHIN THE PROJECT DUE TO CHANGES IN THE SPEED ZONE DIRECTED BY THE ENGINEER, IT SHALL BE CONSIDERED ANOTHER UNIT.

PAYMENT FOR ACCEPTED QUANTITIES, COMPLETE IN PLACE, WILL BE MADE AT THE CONTRACT UNIT PRICE. PAYMENT SHALL BE FULL COMPENSATION FOR ALL MATERIALS, LABOR, INCIDENTALS AND EQUIPMENT FOR FURNISHING, ERECTING, MAINTAINING, COVERING DURING SUSPENSION OF WORK, AND REMOVING THE SIGNS AND SUPPORTS.

ITEM 614 WORK ZONE SPEED LIMIT SIGN 50 EA.

## ITEM 614 TEMPORARY CROSSOVER LIGHTING SYSTEM

THIS WORK SHALL CONSIST OF FURNISHING, ERECTING, OPERATING, MAINTAINING AND REMOVING A TEMPORARY LIGHTING SYSTEM FOR A SINGLE CROSSOVER OR OVERLAPPING A PAIR OF CROSSOVERS ON A TLTWO. THE SYSTEM SHALL BE AS SHOWN ON STANDARD CONSTRUCTION DRAWING MT-100.00M. THE CONTRACTOR SHALL ARRANGE FOR AND PAY FOR POWER. ALL MATERIALS AND CONSTRUCTION SHALL COMPLY WITH APPLICABLE PORTIONS OF 625 AND 713 EXCEPT: THE PERFORMANCE TEST OF 625.22E, AND WORKING DRAWING REQUIREMENT OF 625.04, ARE WAIVED AND USED MATERIALS IN GOOD CONDITION ARE ACCEPTABLE.

POLES MAY BE LESS THAN 30 FEET FROM EDGE OF PAVEMENT WHEN BEHIND GUARDRAIL. ADDITIONAL POLE LINES, CABLES AND APPURTENANCES NECESSARY TO FURNISH POWER TO THE LIGHTING SYSTEM SHALL BE INCLUDED IN THIS ITEM. THE CONTRACTOR SHALL NOT SPLICE INTO EXISTING PERMANENT LIGHTING CIRCUITS WITHOUT WRITTEN CONSENT FROM THE DISTRICT TRAFFIC ENGINEER. SERVICE POLES SHALL BE POSITIONED WITH THE SAME CONSTRAINTS AS THE LIGHTING POLES AS A MINIMUM.

PAYMENT WILL BE MADE AT THE UNIT PRICE PER EACH TEMPORARY CROSSOVER LIGHTING SYSTEM THROUGHOUT ALL PHASES OF WORK WHEN THE CROSSOVER ROADWAYS ARE USED.

ITEM 614 TEMP. CROSSOVER LIGHTING SYS. 7 EACH





j:\22126_Tru_5_6.45\mot\mna.dgn 07-SEP-2001 11:55PM jliddle

## CONTRACTOR'S EQUIPMENT - OPERATION AND STORAGE

A QUALIFIED FLAGGER SHALL BE EMPLOYED WHERE THE CONTRACTOR'S EQUIPMENT MUST MERGE WITH THE TRAFFIC STREAM. THE CONTRACTOR'S EQUIPMENT SHALL BE EQUIPPED WITH AT LEAST ONE AMBER FLASHING LIGHT. PAVERS, ROLLERS AND OTHER EQUIPMENT MAY BE PARKED IN AREAS ALONG THE HIGHWAY WHEN PAVING OPERATIONS ARE SCHEDULED TO CONTINUE WITHIN THE NEXT WORKDAY: OTHERWISE THE EQUIPMENT SHALL BE STORED AT A STORAGE AREA OUTSIDE THE L/A, THE LOCATION OF WHICH SHALL HAVE PRIOR APPROVAL OF THE ENGINEER. WHEN PARKING ALONG THE HIGHWAY THE EQUIPMENT SHALL BE PLACED AND DELINEATED AS PER 614.03. NO EQUIPMENT SHALL BE PARKED IN THE MEDIAN OF THE HIGHWAY. ADEQUATE BARRICADES AND LIGHTS SHALL BE PLACED ON THE PAVEMENT SIDE OF THE EQUIPMENT TO IDENTIFY THE LIMITS OF THE EQUIPMENT. ALL OTHER EQUIPMENT, INCLUDING PRIVATE VEHICLES, SHALL BE STORED AT THE APPROVED CONTRACTOR'S STORAGE AREA. NO EQUIPMENT SHALL BE PARKED ON PRIVATE PROPERTY UNLESS PRIOR APPROVAL OF THE OWNER AND THE PROJECT ENGINEER/ SUPERVISOR HAS BEEN GRANTED.

## TRAFFIC CONTROL INSPECTOR

THE CONTRACTOR SHALL DESIGNATE AN INDIVIDUAL OTHER THAN THE SUPERINTENDENT AND SUBJECT TO THE APPROVAL OF THE ENGINEER, TO CONTINUOUSLY INSPECT ALL TRAFFIC CONTROL DEVICES WHENEVER CONSTRUCTION WORK IS BEING PERFORMED WITHIN THE WORK LIMITS OF THE PROJECT. THE DESIGNATED INDIVIDUAL SHALL ALSO INSPECT ALL TRAFFIC DEVICES AT THE BEGINNING AND AT THE END OF EACH WORK DAY. THE DESIGNATED INDIVIDUAL OR A QUALIFIED REPRESENTATIVE SHALL ALSO BE AVAILABLE ON AN AROUND THE CLOCK BASIS TO REPAIR AND/OR REPLACE DAMAGED OR MISSING TRAFFIC CONTROL DEVICES. THESE INDIVIDUALS SHALL BE EQUIPPED WITH CELLULAR PHONES AND THEIR NAMES AND PHONE NUMBERS SHALL BE GIVEN TO THE PROJECT ENGINEER AT THE PRE-CONSTRUCTION MEETING. THE DESIGNATED INDIVIDUAL MAY HAVE OTHER CONSTRUCTION RELATED DUTIES AS LONG AS IMMEDIATE ATTENTION IS GIVEN TO TRAFFIC CONTROL. PAYMENT FOR THE SERVICES OF THE TRAFFIC CONTROL INSPECTOR SHALL BE INCLUDED IN THE LUMP SUM PRICE BID FOR ITEM 614 MAINTAINING TRAFFIC.

## ALTERNATE MAINTENANCE OF TRAFFIC PLANS

IF THE CONTRACTOR SO ELECTS, HE MAY SUBMIT ALTERNATE METHODS FOR THE MAINTENANCE OF TRAFFIC, PROVIDED THE INTENT OF THE ABOVE PROVISIONS IS FOLLOWED AND NO ADDITIONAL INCONVENIENCE TO THE TRAVELING PUBLIC RESULTS THEREFROM. NO ALTERNATE PLAN SHALL BE PLACED IN EFFECT UNTIL APPROVAL HAS BEEN GRANTED IN WRITING BY THE ODOT DISTRICT CONSTRUCTION ENGINEER.

## COOPERATION BETWEEN CONTRACTORS

THE CONTRACTOR SHALL BE ADVISED THAT OTHER PROJECTS MAY BE ONGOING IN AREAS IMMEDIATELY ADJACENT TO AND WITHIN THE PROJECT LIMITS OF THIS PROJECT. THE CONTRACTOR SHALL SCHEDULE HIS WORK SO AS TO CAUSE A MINIMUM OF DELAY OR CONFLICT WITH THE OTHER PROJECT(S). IN ACCORDANCE WITH 105.07, THE CONTRACTOR SHALL ARRANGE WITH THE OTHER CONTRACTORS A MUTUALLY ACCEPTABLE WORK SCHEDULE SUBJECT TO THE APPROVAL OF THE ENGINEER. THE CONTRACTOR SHALL RECEIVE DAILY APPROVAL FROM THE ENGINEER PRIOR TO COMMENCING ANY OPERATIONS. ANY CONFLICT BETWEEN CONTRACTORS INVOLVING WORK SCHEDULES, WORK AREA OR COOPERATION SHALL BE RESOLVED BY THE ENGINEER. COMPENSATION FOR THE ABOVE COOPERATION SHALL BE INCIDENTAL TO THE VARIOUS PAY ITEMS INCLUDED WITHIN THIS PROJECT.

## ITEM 614 PORTABLE CHANGEABLE MESSAGE SIGN, AS PER PLAN

THE CONTRACTOR SHALL FURNISH, INSTALL, MAINTAIN AND REMOVE, WHEN NO LONGER NEEDED, 2 DIESEL POWERED CHANGEABLE MESSAGE SIGNS, ON SITE, FOR THE DURATION OF THE PROJECT. EACH SIGN SHALL BE EITHER A WINK-O-MATIC GENERATION 3, 4, 6, 10 OR 12, AMERICAN SIGNAL CO. CMS-T3000 OR AN ADDCO DIGI-DOT SIGN OR A TELE-SPOT SENTINAL SIGN OR AN APPROVED EQUAL.

EACH SIGN SHALL BE TRAILER MOUNTED AND EQUIPPED WITH A FUNCTIONAL DIMMING MECHANISM TO DIM THE SIGN DURING DARKNESS AND A TAMPER AND VANDAL PROOF ENCLOSURE. EACH SIGN SHALL BE PROVIDED WITH APPROPRIATE TRAINING AND OPERATION INSTRUCTIONS TO ENABLE ON-SITE PERSONNEL TO OPERATE AND TROUBLESHOOT THE UNIT. THE SIGN SHALL ALSO BE CAPABLE OF BEING POWERED BY AN ELECTRICAL SERVICE DROP FROM A LOCAL UTILITY COMPANY.

PLACEMENT, OPERATION, MAINTENANCE AND ALL ACTIVATION OF THE SIGNS BY THE CONTRACTOR SHALL BE AS DIRECTED BY THE ENGINEER. THE PCMS SHALL BE LOCATED IN A HIGHLY VISIBLE POSITION YET PROTECTED FROM TRAFFIC. THE PCMS SHOULD NOT BE LOCATED IN THE MEDIAN OF THE HIGHWAY UNLESS IT IS PROTECTED FROM BOTH DIRECTIONS OF TRAFFIC. THE PCMS SHOULD BE LOCATED BEHIND GUARDRAIL WHEREVER POSSIBLE. THE CONTRACTOR SHALL, AT THE DIRECTION OF THE ENGINEER, RELOCATE THE PCMS TO IMPROVE THE VISIBILITY OR ACCOMMODATE CHANGED CONDITIONS. WHEN NOT IN USE, THE PCMS WILL BE OFF, FACING AWAY FROM ALL TRAFFIC AND SHALL DISPLAY ONE OR MORE HIGH INTENSITY YELLOW REFLECTIVE SHEETING SURFACES OF 9 INCH BY 15-INCH MINIMUM SIZE FACING TRAFFIC.

THE ENGINEER SHALL BE PROVIDED ACCESS TO EACH SIGN UNIT AND SHALL BE PROVIDED WITH APPROPRIATE TRAINING AND OPERATION INSTRUCTIONS TO ENABLE PERSONNEL TO OPERATE AND TROUBLESHOOT THE UNIT AND TO REVISE SIGN MESSAGES, IF NECESSARY.

ALL MESSAGES TO BE DISPLAYED ON THE SIGN WILL BE PROVIDED BY THE CONTRACTOR. A LIST OF ALL PROPOSED PREPROGRAMMED MESSAGES WILL BE GIVEN TO THE ENGINEER PRIOR TO THE START OF CONSTRUCTION. THE SIGN SHALL HAVE TWO DIFFERENT MEMORIES [PROM AND RAM] AND CAPABILITY TO STORE UP TO 99 MESSAGES IN EACH MEMORY. SIGN MESSAGES SHALL BE LEGIBLE FROM 650 FT MINIMUM. THE SIGN LEGEND SHALL BE CAPABLE OF BEING CHANGED IN THE FIELD. IN ORDER TO CONVEY A MAXIMUM OF INFORMATION AT A SINGLE GLANCE, ONLY THREE LINE PRESENTATION FORMATS WITH A MAXIMUM OF SIX MESSAGE PHASES WILL BE PERMITTED. NORMALLY, ONLY A MAXIMUM OF THREE MESSAGE PHASES SHOULD BE EMPLOYED. PCMS FORMAT SHALL PERMIT THE COMPLETE MESSAGE FOR EACH PHASE TO BE READ AT LEAST ONCE.

THE PCMS SHALL CONTAIN AN ACCURATE CLOCK AND PROGRAMMING LOGIC WHICH WILL ALLOW THE SIGN TO BE ACTIVATED, DE-ACTIVATED OR MESSAGES CHANGED AUTOMATICALLY AT DIFFERENT TIMES OF THE DAY FOR DIFFERENT DAYS OF THE WEEK.

THE PCMS UNIT SHALL BE MAINTAINED IN GOOD WORKING ORDER BY THE CONTRACTOR IN ACCORDANCE WITH THE PROVISIONS OF 614.03(C). THE CONTRACTOR SHALL PRIOR TO ACTIVATING THE UNIT, MAKE ARRANGEMENTS WITH AN AUTHORIZED SERVICE AGENT FOR THE PCMS TO ASSURE PROMPT SERVICE IN THE EVENT OF FAILURE. ANY FAILURE SHALL NOT RESULT IN THE SIGN BEING OUT OF SERVICE FOR MORE THAN 12 HOURS INCLUDING WEEKENDS. FAILURE TO COMPLY MAY RESULT IN AN ORDER TO STOP WORK AND OPEN ALL TRAFFIC LANES AND/OR IN THE DEPARTMENT TAKING APPROPRIATE ACTION TO SAFELY CONTROL TRAFFIC AND THE ENTIRE COST TO CONTROL TRAFFIC ACCRUED BY THE DEPARTMENT WILL BE DEDUCTED FROM MONEYS DUE, OR TO BECOME DUE THE CONTRACTOR ON HIS CONTRACT.

THE CONTRACTOR SHALL BE RESPONSIBLE FOR 24 HOURS PER DAY OPERATION AND MAINTENANCE OF THESE SIGNS ON THE PROJECT FOR THE DURATION OF THE PHASES WHEN THE PLAN REQUIRES THEIR USE.

THE REQUIREMENT TO FURNISH, INSTALL, MAINTAIN AND REMOVE A PCMS UNIT ON THIS PROJECT SHALL NOT IN ANY WAY RELIEVE THE CONTRACTOR OF HIS RESPONSIBILITIES AS OUTLINED IN 104.04.

PAYMENT FOR THE ABOVE DESCRIBED ITEM SHALL BE AT THE CONTRACT UNIT PRICE BID FOR EACH SIGN MONTH OF ITEM 614 PORTABLE CHANGEABLE MESSAGE SIGN, AS PER PLAN AND SHALL INCLUDE ALL LABOR, MATERIALS, EQUIPMENT, FUELS, LUBRICATING OILS, SOFTWARE, HARDWARE AND INCIDENTALS TO PERFORM THE ABOVE DESCRIBED WORK.

| | |
|---|---|
| ITEM 614 PORTABLE CHANGEABLE MESSAGE SIGN, AS PER PLAN | 36 SIGN MONTH |

## ITEM 614 DOUBLED FINES IN WORK ZONES SIGNS

THE SIGNS POSTED SHALL BE DUAL MOUNTED, THE FIRST SIGNS SHALL BE PLACED BETWEEN THE "ROAD CONSTRUCTION AHEAD" (OW-128) SIGN AND THE NEXT SIGN IN THE SEQUENCE. SIGNS SHALL BE ERECTED ON EACH ENTRANCE RAMP AND EVERY TWO MILES THROUGH THE CONSTRUCTION WORK LIMITS.

THE SIGNS SHALL BE FURNISHED, ERECTED AND MAINTAINED IN GOOD CONDITION AND/OR REPLACED AS NECESSARY AND SUBSEQUENTLY REMOVED BY THE CONTRACTOR. THE SIGNS SHALL BE MOUNTED AT THE APPROPRIATE OFFSETS AND ELEVATIONS AS PRESCRIBED BY THE OHIO MANUAL OF UNIFORM TRAFFIC CONTROL DEVICES. THEY SHALL BE MAINTAINED ON SUPPORTS MEETING CURRENT SAFETY CRITERIA.

THE SIGNS SHALL BE COVERED OR REMOVED WHEN THE CONSTRUCTION ZONE IS DISCONTINUED FOR 30 DAYS OR MORE.

DOUBLED FINES IN WORK ZONES SIGNS AND SUPPORTS WILL BE MEASURED AS THE NUMBER OF SIGN INSTALLATIONS, INCLUDING THE SIGN AND THE NECESSARY SUPPORTS. IF A SIGN AND SUPPORT COMBINATION IS REMOVED AND REERECTED AT ANOTHER LOCATION AS DIRECTED BY THE ENGINEER, IT SHALL BE CONSIDERED ANOTHER UNIT.

PAYMENT FOR ACCEPTED QUANTITIES, COMPLETE AND IN PLACE WILL BE MADE AT THE CONTRACT UNIT PRICE. PAYMENT SHALL BE FULL COMPENSATION FOR ALL MATERIALS, LABOR, INCIDENTALS AND EQUIPMENT FOR FURNISHING, ERECTION, MAINTENANCE, COVERING DURING SUSPENSION OF WORK AND REMOVAL OF THE SIGN AND SUPPORT.

THE FOLLOWING QUANTITY HAS BEEN CARRIED TO THE GENERAL SUMMARY TO PERFORM THE WORK AS DESCRIBED ABOVE.

| | |
|---|---|
| ITEM 614 DOUBLED FINES IN WORK ZONES | 16 EACH |

BLACK ON ORANGE — CONSTRUCTION ZONE

BLACK ON WHITE — DOUBLE FINES

## COVERING OF SIGNS

WHERE THE PLANS CALL FOR A PERMANENT SIGN TO BE COVERED, THE CONTRACTOR SHALL DO SO IN SUCH A MANNER AS TO AVOID DAMAGING THE PERMANENT SIGN WHEN THE COVER IS REMOVED. THE COVER SHALL BE TOTALLY OPAQUE. THE USE OF ADHESIVE TAPE APPLIED DIRECTLY TO A SIGN FACE IS STRICTLY PROHIBITED.





j:\22126_Tru_5_6.45\mot\mna.dgn 07-SEP-2001 4:55PM jliddle

## ITEM 615 TEMPORARY PAV'T, CLASS A, A.P.P.

IN ADDITION TO THE REQUIREMENTS OF 615, THIS ITEM REPLACES THE 7 INCHES [178MM] OF ITEM 301 BITUMINOUS AGGREGATE BASE WITH 9 INCHES [229MM] OF ITEM 301 BITUMINOUS AGGREGATE BASE.

ON THIS PROJECT THE TEMPORARY CLASS A PAVEMENT SHALL BE 18 FEET [5.4M] WIDE AND THE ROADWAY WIDTH SHALL NOT BE LESS THEN 22 FEET [6.6M] OUT TO OUT OF SHOULDERS. THE ALIGNMENT AND PAVEMENT TYPICAL SECTION SHALL BE AS DETAILED BELOW AND ON SHEETS 10-41.

THE FOLLOWING ESTIMATED QUANTITIES HAVE BEEN INCLUDED IN THE GENERAL SUMMARY TO BE USED IN CONSTRUCTING THE TEMPORARY PAVEMENT, CLASS A, AS PER PLAN.

| | | |
|---|---|---|
| ITEM 615 | TEMPORARY ROADS | LUMP SUM |
| ITEM 615 | TEMP. PAV'T, CLASS A, A.P.P. | 10,025 S.Y. |
| ITEM 411 | STABILIZED CRUSHED AGG. | 245 CU.YD. |
| ITEM 616 | WATER | 5 MGAL |
| ITEM 616 | CALCIUM CHLORIDE | 1 TON |

UPON COMPLETION OF THE PROJECT, THE CONTRACTOR SHALL REMOVE THE TEMPORARY PAVEMENT INCLUDING ANY TEMPORARY DRAINAGE FACILITIES. THE AFFECTED EXISTING EARTH MEDIAN AND PAVED SHOULDERS SHALL BE RESTORED TO THEIR ORIGINAL CONDITION AS DIRECTED BY THE ENGINEER AND AS PER 615.08.

TEMPORARY PAVEMENTS SHALL NOT BE OPENED TO TRAFFIC UNTIL ALL TEMPORARY TRAFFIC CONTROL DEVICES, SIGNS, PAVEMENT MARKINGS AND PORTABLE CONCRETE BARRIERS HAVE BEEN ERECTED AND APPROVED BY THE ENGINEER.

ALTHOUGH ESTIMATES FOR TEMPORARY EXCAVATION, EMBANKMENT AND TEMPORARY DRAINAGE FACILITIES HAVE NOT BEEN SHOWN ON THE PLAN DETAILS, THESE ITEMS SHALL BE CONSIDERED INCIDENTAL TO, AND INCLUDED FOR PAYMENT WITH ITEM 615 TEMPORARY ROADS.

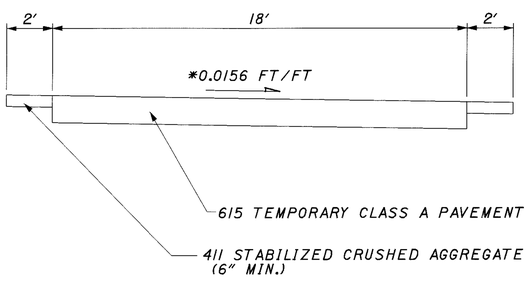


* TEMPORARY PAVEMENT SHALL SLOPE FROM THE EDGE OF THE EXISTING PAVEMENT TO THE CENTER OF THE MEDIAN.

## TEMPORARY TRAFFIC SIGNALS

THE 3 TEMPORARY TRAFFIC SIGNALS SHALL BE PLACED IN ACCORDANCE WITH STANDARD CONSTRUCTION DRAWINGS MT-96.10, 96.20, AND 96.25. A PRETIMED CONTROLLER IS NEEDED WITH THE INITIAL TIMING FOR EACH BRIDGE SHOWN ON SHEET 14. THE CONTRACTOR SHALL ARRANGE FOR AND PAY FOR POWER. ALL MATERIALS AND CONSTRUCTION SHALL COMPLY WITH APPLICABLE PORTIONS OF 630, 632, 633, 730, 732 AND 733 EXCEPT: THE WORKING DRAWING REQUIREMENT OF 632.03 IS WAIVED AND USED MATERIALS IN GOOD CONDITION ARE ACCEPTABLE. ALL LABOR, EQUIPMENT, AND INCIDENTALS NEEDED TO PERFORM THIS WORK SHALL BE PAID FOR UNDER ITEM 614 MAINTAINING TRAFFIC.

## SEQUENCE OF WORK

THE FOLLOWING SEQUENCE OF CONSTRUCTION IS INCLUDED TO INDICATE WHICH CROSSOVERS WILL BE USED WITH WHICH STRUCTURE(S). THE ORDER IN WHICH THE CROSSOVERS ARE BUILT AND THE STRUCTURE WORK TAKES PLACE MAY BE REVISED WITH THE APPROVAL OF THE PROJECT ENGINEER.

PHASE 1 - CONSTRUCT CROSSOVERS A AND B FOR WORK ON STR. TRU-5-0764 AND TRU-5-0811 AND SHIFT ALL TRAFFIC TO THE WESTBOUND LANES
- A -PERFORM WORK ON THE EASTBOUND STRUCTURES
- B -CROSS TRAFFIC OVER TO THE EASTBOUND LANES AND PERFORM WORK ON THE WESTBOUND STRUCTURES

PHASE 2 - CONSTRUCT CROSSOVER C FOR WORK ON STR. TRU-5-0861 AND SHIFT TRAFFIC OVER TO THE EASTBOUND LANES
- A -PERFORM WORK ON THE WESTBOUND STRUCTURE
- B -CROSS TRAFFIC OVER TO THE WESTBOUND LANES AND PERFORM WORK ON THE EASTBOUND STRUCTURE

PHASE 3 -REMOVE CROSSOVERS A, B AND C

PHASE 4 - CONSTRUCT CROSSOVERS D, E AND F FOR WORK ON STR. TRU-5-1077 AND TRU-5-1102
- A -CROSS TRAFFIC OVER TO THE EASTBOUND LANES AND PERFORM WORK ON THE WESTBOUND STRUCTURES
- B -CROSS TRAFFIC OVER THE WESTBOUND LANES AND PERFORM WORK ON THE EASTBOUND STRUCTURES

PHASE 5 - REMOVE CROSSOVERS D, E AND F

PHASE 6 - CONSTRUCT CROSSOVERS G AND H FOR WORK ON STR. TRU-5-1226
- A -SHIFT ALL TRAFFIC TO THE EASTBOUND LANES AND PERFORM WORK ON THE WESTBOUND STRUCTURE
- B -CROSS TRAFFIC OVER THE WESTBOUND LANES AND PERFORM WORK ON THE EASTBOUND STRUCTURE

PHASE 7 - REMOVE CROSSOVERS G AND H

PHASE 8 - ALL ROADWAY WORK SHALL BE COMPLETED AS THE CONTRACTOR SEES APPROPRIATE, AS LONG AS IT DOES NOT INTERFERE WITH THE ABOVE STATED PHASES AND SHALL BE AT THE APPROVAL OF THE ENGINEER.

CALCULATED TAK
CHECKED LAJ

MAINTENANCE OF TRAFFIC GENERAL NOTES

TRU-5-6.45



j:\22126_Tru_5_6.45\mot\mno.dgn 12-SEP-2001 9:26AM cturner1

## LEGEND

- ● SIGNAL SUPPORT POLE
- A ← SIGNAL HEAD
- ○ DRUM

# TEMPORARY TRAFFIC SIGNAL DETAIL FOR WORK ON STRUCTURES TRU-5-0688, TRU-5-0778 AND TRU-5-0921

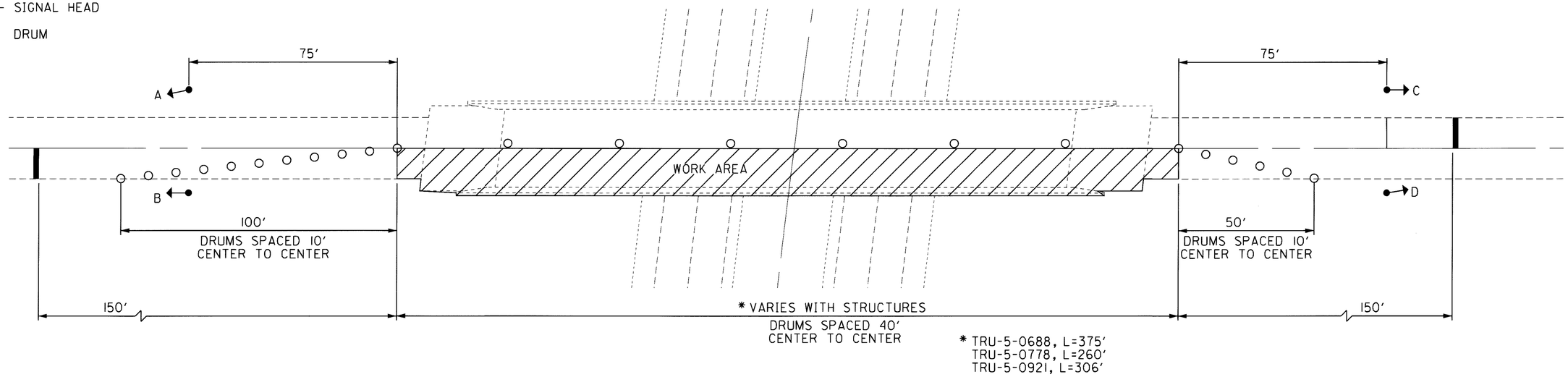


* TRU-5-0688, L=375'
TRU-5-0778, L=260'
TRU-5-0921, L=306'

## PHASE DIAGRAM

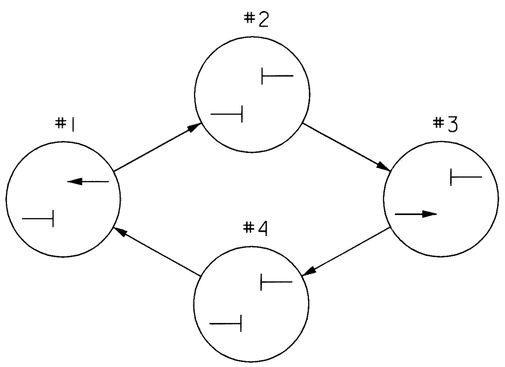


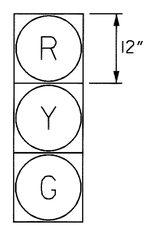


## SIGNAL HEADS

SIGNALS A,B,C & D

NOTES:

1. SEE STANDARD CONSTRUCTION DRAWINGS MT-96.10M, MT-96.20M AND MT-96.25M FOR ADDITIONAL DETAILS AND REQUIREMENTS.
2. SEE SHEET 13 FOR ADDITIONAL NOTES.
3. THIS TEMPORARY TRAFFIC SIGNAL SHALL BE USED FOR MAINTAINING TRAFFIC DURING THE REHABILITATION OF THE THREE STRUCTURES LISTED ON THIS SHEET.
4. PAYMENT FOR ALL WORK AND MATERIALS SHALL BE INCLUDED IN THE LUMP SUM PRICE BID FOR ITEM 614 MAINTAINING TRAFFIC.

### SIGNAL DISPLAY SEQUENCE CHART

| SIGNAL HEAD | 1 | | | 2 | | | 3 | | | 4 | | |
|---|---|---|---|---|---|---|---|---|---|---|---|---|
| | R/W | CLEAR | | R/W | CLEAR | | R/W | CLEAR | | R/W | CLEAR | |
| A | R | R | R | R | R | R | G | Y | R | R | R | R |
| B | R | R | R | R | R | R | G | Y | R | R | R | R |
| C | G | Y | R | R | R | R | R | R | R | R | R | R |
| D | G | Y | R | R | R | R | R | R | R | R | R | R |

### SIGNAL TIMING CHART FOR TRU-5-0688

| | PEAK | | | |
|---|---|---|---|---|
| SIGNAL PHASE | 1 | 2 | 3 | 4 |
| GREEN | 26 | - | 42 | - |
| YELLOW | 4 | - | 4 | - |
| RED | 2 | 10 | 2 | 10 |

CYCLE LENGTH = 100 SEC.

### SIGNAL TIMING CHART FOR TRU-5-0778

| | PEAK | | | |
|---|---|---|---|---|
| SIGNAL PHASE | 1 | 2 | 3 | 4 |
| GREEN | 17 | - | 17 | - |
| YELLOW | 4 | - | 4 | - |
| RED | 2 | 7 | 2 | 7 |

CYCLE LENGTH = 60 SEC.

### SIGNAL TIMING CHART FOR TRU-5-0921

| | PEAK | | | |
|---|---|---|---|---|
| SIGNAL PHASE | 1 | 2 | 3 | 4 |
| GREEN | 16 | - | 16 | - |
| YELLOW | 4 | - | 4 | - |
| RED | 2 | 8 | 2 | 8 |

CYCLE LENGTH = 60 SEC.

CALCULATED TAK
CHECKED LAJ

MAINTENANCE OF TRAFFIC
TEMPORARY TRAFFIC SIGNAL INSTALLATION

TRU-5-6.45



j:\22126_Tru_5_6.45\mot\mma.dgn 07-SEP-2001 11:52PM jliddle

*TRU-5-0657 L & R*

-TRAFFIC WILL BE MAINTAINED UTILIZING S.C.D. MT-95.30M.

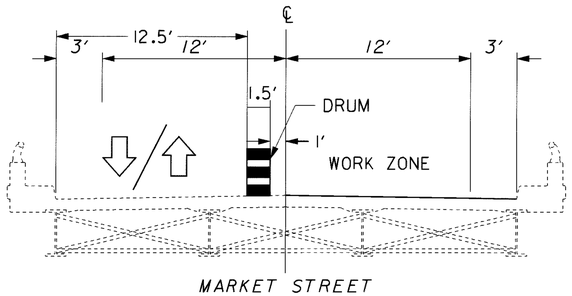


*TRU-5-0688*

*TRU-5-0688*

-WORK TO BE PERFORMED USING PART WIDTH CONSTRUCTION, WHILE MAINTAINING TRAFFIC FLOW WITH A TEMPORARY TRAFFIC SIGNAL.
-MIRROR M.O.T. DEVICES AND DIMENSIONS FOR WORK ON THE OPPOSITE SIDE OF THE BRIDGE.

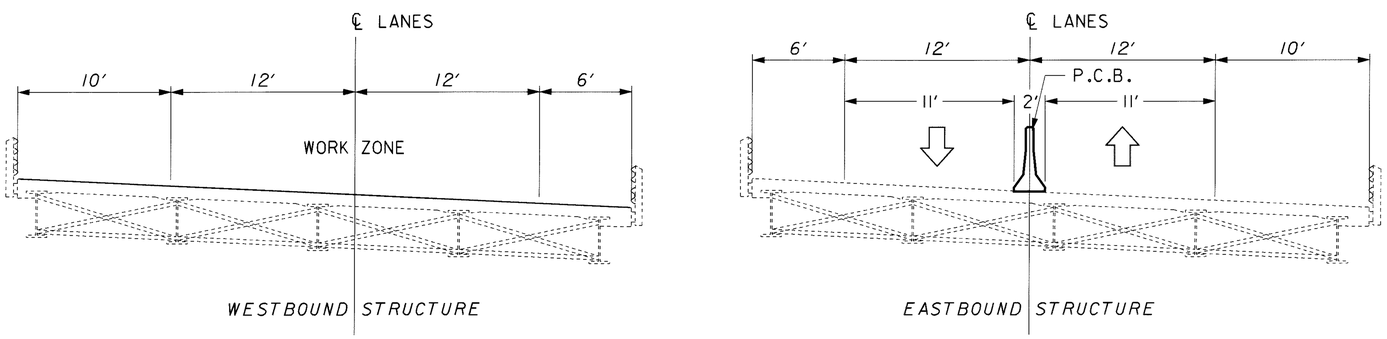


*TRU-5-0764 L & R*

*TRU-5-0764 L & R*

-TRAFFIC WILL BE MAINTAINED UTILIZING CROSSOVERS, SO WORK CAN BE PERFORMED FULL WIDTH.
-TRANSFER PCB AND TRAFFIC TO THE EASTBOUND STRUCTURE, SO WORK CAN BE PERFORMED ON THE WESTBOUND STRUCTURE. PLACE PCB ON THE ℄ OF LANES.

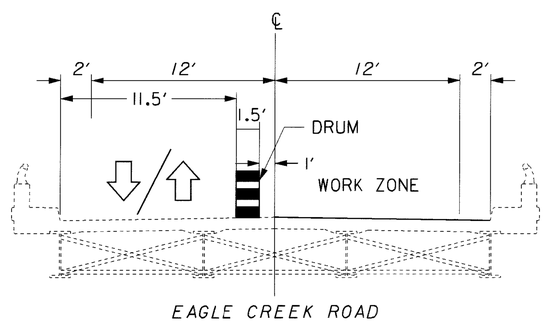


*TRU-5-0778*

*TRU-5-0778*

-WORK TO BE PERFORMED USING PART WIDTH CONSTRUCTION, WHILE MAINTAINING TRAFFIC FLOW WITH A TEMPORARY TRAFFIC SIGNAL.
-MIRROR M.O.T. DEVICES AND DIMENSIONS FOR WORK ON THE OPPOSITE SIDE OF THE BRIDGE.

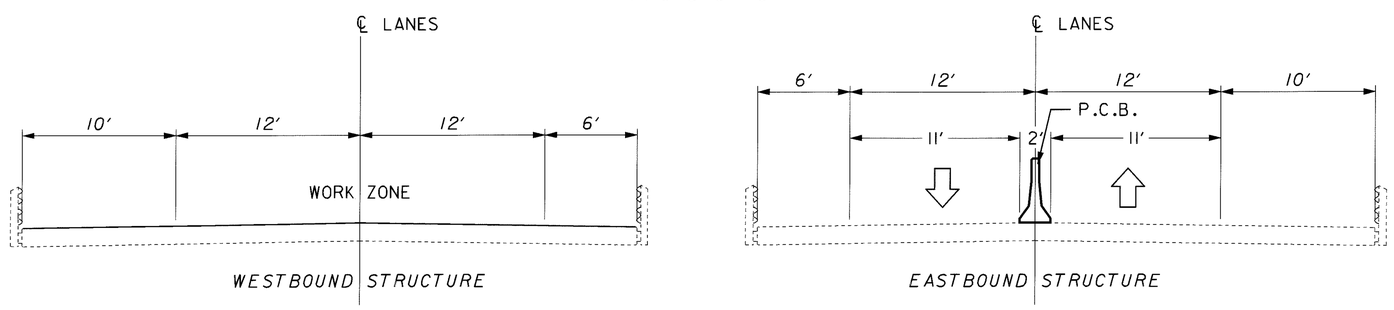


*TRU-5-0811 L & R*

*TRU-5-0811 L & R*

-TRAFFIC WILL BE MAINTAINED UTILIZING CROSSOVERS, SO WORK CAN BE PERFORMED FULL WIDTH.
-TRANSFER PCB AND TRAFFIC TO THE EASTBOUND STRUCTURE, SO WORK CAN BE PERFORMED ON THE WESTBOUND STRUCTURE. PLACE PCB ON THE ℄ OF LANES.

CALCULATED TAK
CHECKED LAJ

**MAINTENANCE OF TRAFFIC BRIDGE TYPICAL SECTIONS**

**TRU-5-6.45**

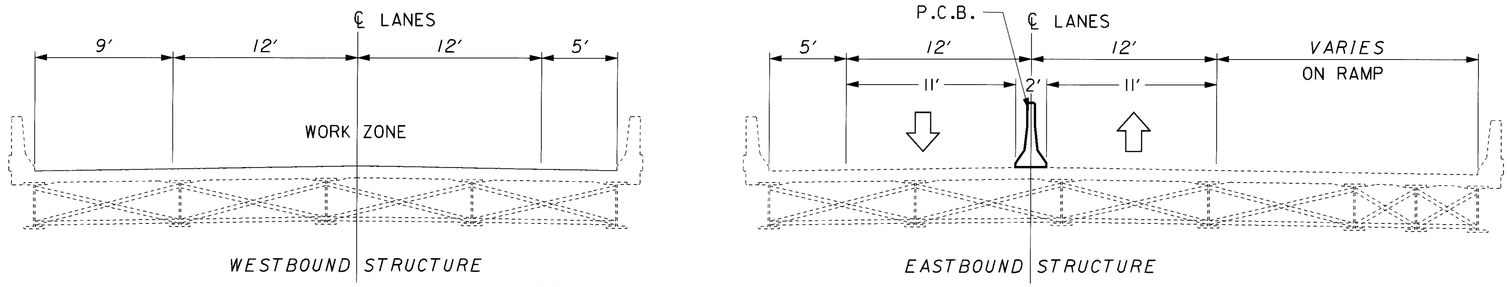


TRU-5-0861 L & R

### TRU-5-0861 L & R

-TRAFFIC WILL BE MAINTAINED UTILIZING CROSSOVERS, SO WORK CAN BE PERFORMED FULL WIDTH.
-EASTBOUND ON RAMP WILL BE CLOSED DURING THE RECONSTRUCTION OF THAT STRUCTURE. TRAFFIC WILL FOLLOW THE POSTED DETOUR.
-TRANSFER PCB AND TRAFFIC TO THE WESTBOUND STRUCTURE, SO WORK CAN BE PERFORMED ON THE EASTBOUND STRUCTURE. PLACE PCB ON ℄ OF LANES.

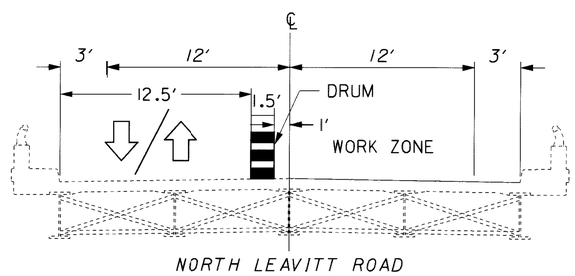


TRU-5-0921

### TRU-5-0921

-WORK TO BE PERFORMED USING PART WIDTH CONSTRUCTION, WHILE MAINTAINING TRAFFIC FLOW WITH A TEMPORARY TRAFFIC SIGNAL.
-MIRROR M.O.T. DEVICES AND DIMENSIONS FOR WORK ON THE OPPOSITE SIDE OF THE BRIDGE.

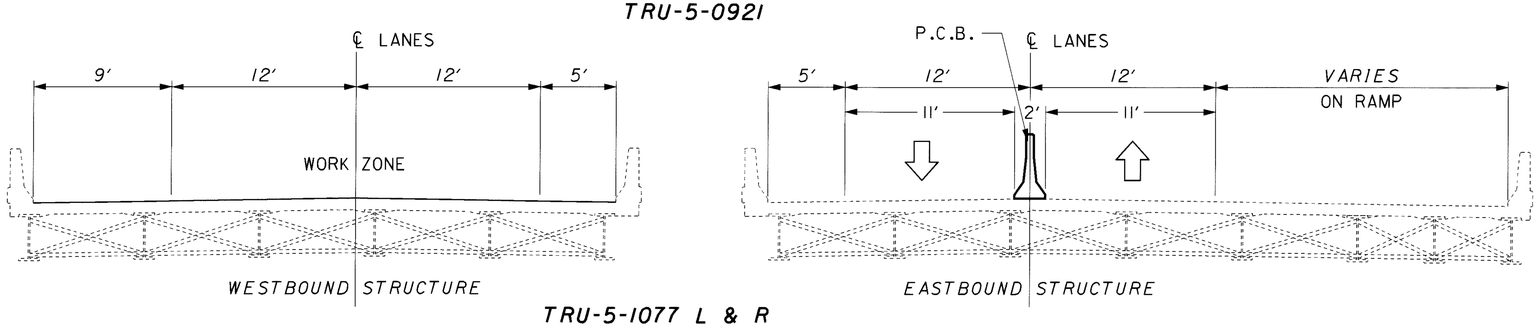


TRU-5-1077 L & R

### TRU-5-1077 L & R

-TRAFFIC WILL BE MAINTAINED UTILIZING CROSSOVERS, SO WORK CAN BE PERFORMED FULL WIDTH.
-EASTBOUND ON RAMP WILL BE CLOSED DURING THE RECONSTRUCTION OF THAT STRUCTURE. TRAFFIC WILL FOLLOW THE POSTED DETOUR.
-TRANSFER PCB AND TRAFFIC TO THE WESTBOUND STRUCTURE, SO WORK CAN BE PERFORMED ON THE EASTBOUND STRUCTURE. PLACE PCB ON ℄ OF LANES.
-STRUCTURES TRU-5-1077 L&R AND TRU-5-1102 L&R WILL BE REHABILITATED CONCURRENTLY. THAT IS BOTH WESTBOUND STRUCTURES AND BOTH EASTBOUND STRUCTURES.

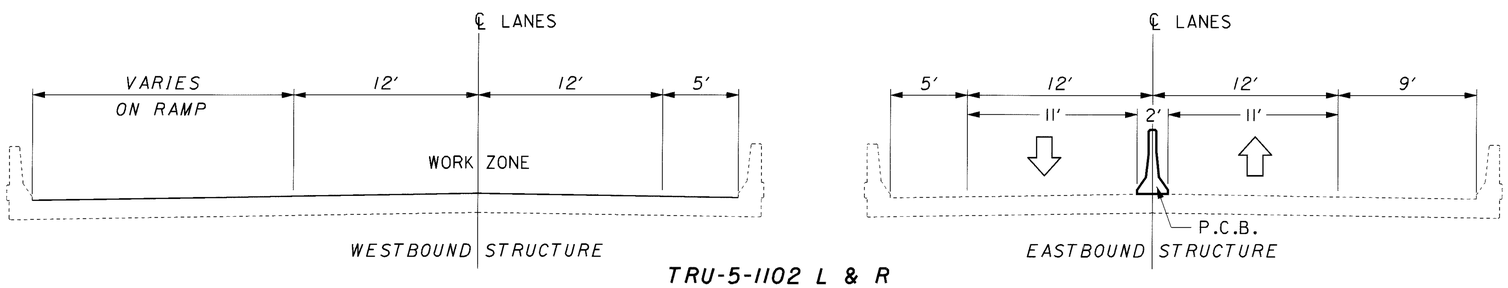


TRU-5-1102 L & R

### TRU-5-1102 L & R

-TRAFFIC WILL BE MAINTAINED UTILIZING CROSSOVERS, SO WORK CAN BE PERFORMED FULL WIDTH.
-WESTBOUND OFF RAMP WILL REMAIN OPEN DURING THE RECONSTRUCTION OF THAT STRUCTURE. RAMP TRAFFIC WILL UTILIZE A HALF CROSSOVER.
-TRANSFER PCB AND TRAFFIC TO THE EASTBOUND STRUCTURE, SO WORK CAN BE PERFORMED ON THE WESTBOUND STRUCTURE. PLACE PCB ON ℄ OF LANES.
-STRUCTURES TRU-5-1077 L&R AND TRU-5-1102 L&R WILL BE REHABILITATED CONCURRENTLY. THAT IS BOTH WESTBOUND STRUCTURES AND BOTH EASTBOUND STRUCTURES.

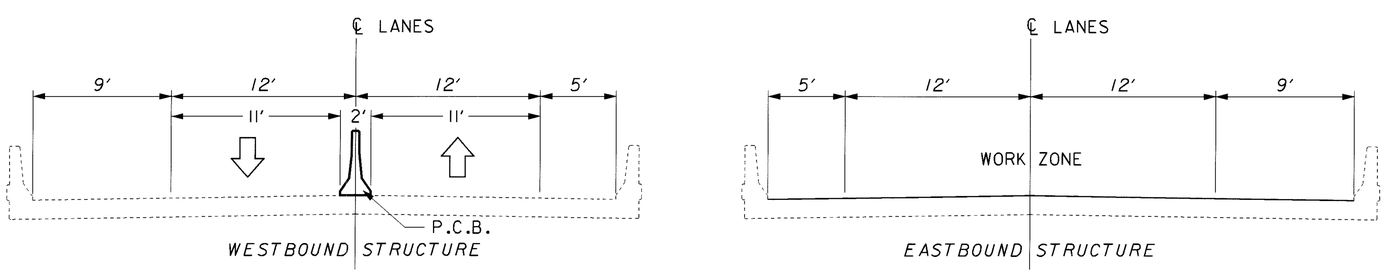


TRU-5-1226 L & R

### TRU-5-1226 L & R

-TRAFFIC WILL BE MAINTAINED UTILIZING CROSSOVERS, SO WORK CAN BE PERFORMED FULL WIDTH.
-TRANSFER PCB AND TRAFFIC TO THE EASTBOUND STRUCTURE, SO WORK CAN BE PERFORMED ON THE WESTBOUND STRUCTURE. PLACE PCB ON THE ℄ OF LANES.

CALCULATED TAK
CHECKED

MAINTENANCE OF TRAFFIC
BRIDGE TYPICAL SECTIONS

TRU-5-6.45

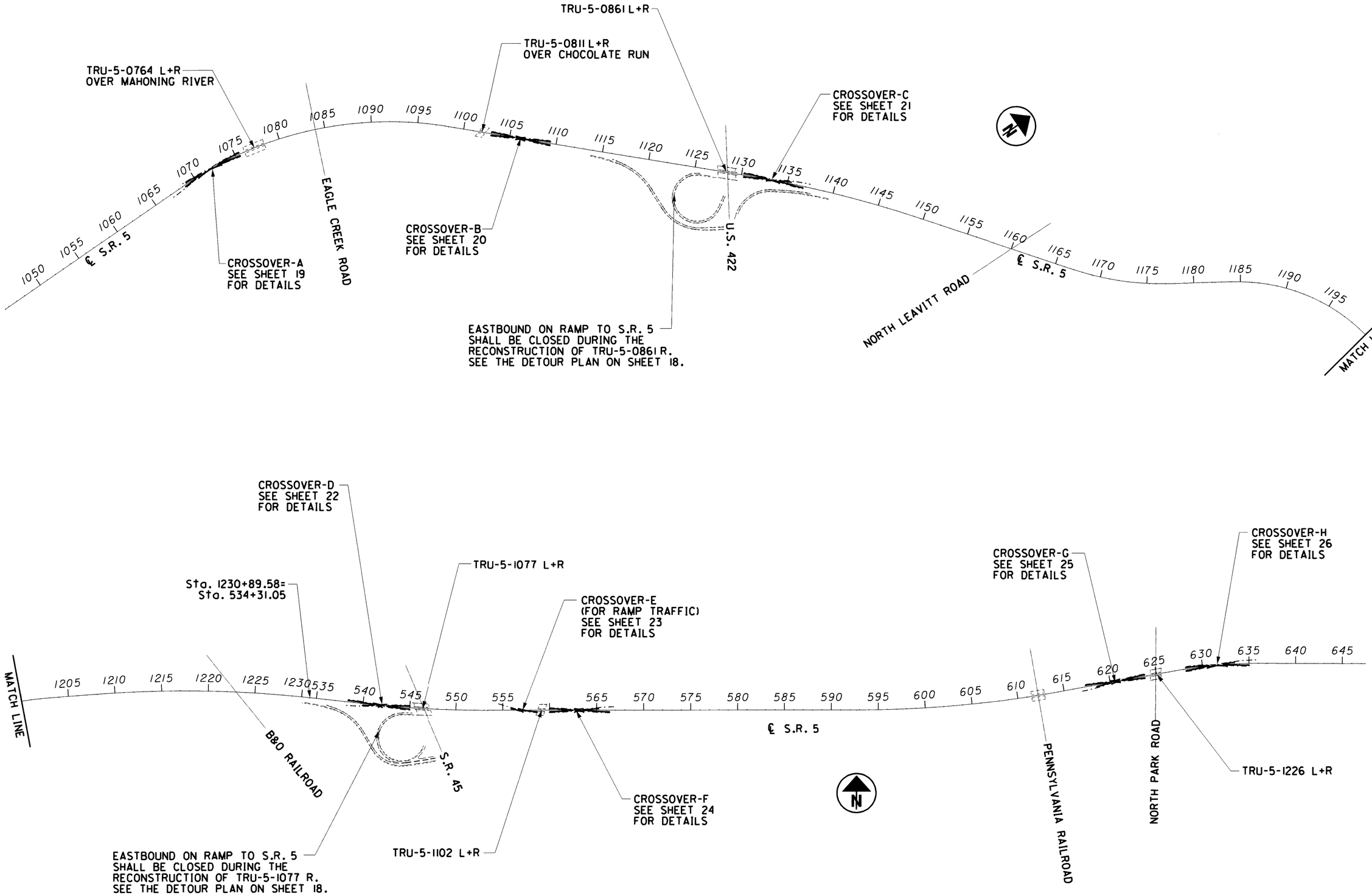


CALCULATED TAK
CHECKED LAJ

# MAINTENANCE OF TRAFFIC

TRU-5-6.45



j:\22126_Tru_5_6.45\mot\mb.dgn 07-SEP-2001 1:51PM jlddle

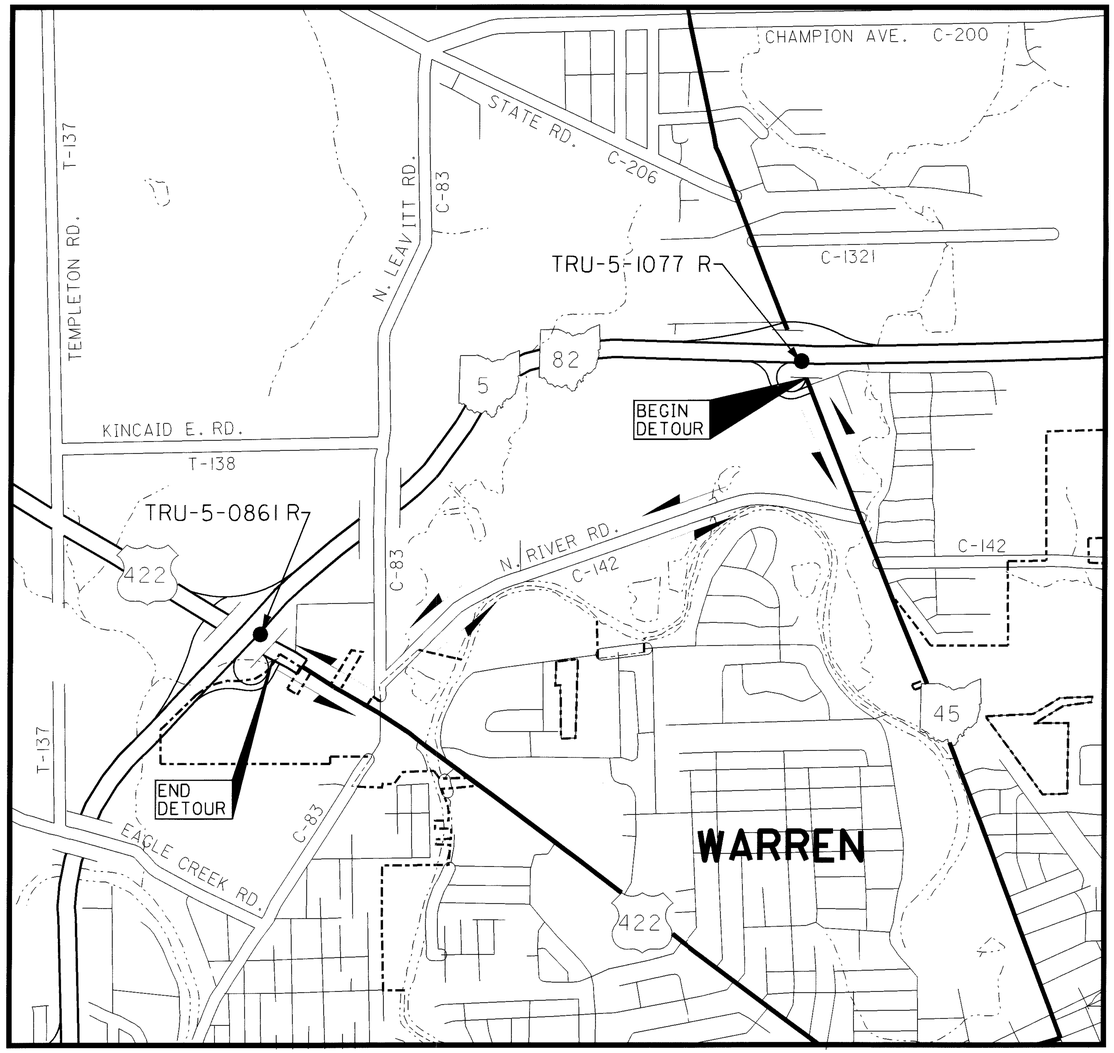


PROJECT LOCATION

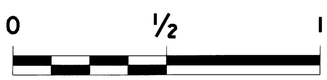


SCALE OF MILES

● TRAFFIC TO BE DETOURED

DETOUR ROUTE

DETOUR:
U.S. 422 / N. LEAVITT RD. / N. RIVER RD. / S.R. 45

DURATION: 60 CONSECUTIVE DAYS PER BRIDGE

DETOUR NOTIFICATION

THE CONTRACTOR SHALL ADVISE THE ODOT DISTRICT OFFICE (330-297-0801 EXT 339) EIGHTEEN (18) DAYS IN ADVANCE OF WHEN THE DETOUR ROUTE SHOULD BE IN EFFECT. ODOT SHALL THEN PROVIDE AND INSTALL ALL DEVICESNECESSARY TO DEFINE THE ROUTE OF THE DETOUR AND SHALL MAINTAIN THE SAME THROUGHOUT THE DETOUR LIMITATION DATES. ALL TRAFFIC CONTROL DEVICES REQUIRED, OTHER THAN FOR THE DETOUR, SHALL BE FURNISHED, ERECTED, MAINTAINED, AND SUBSEQUENTLY REMOVED BY THE CONTRACTOR

DETOUR DURATION

THE MAXIMUM LENGTH OF TIME FOR THE DETOUR ROUTE TO BE IN EFFECT SHALL BE SIXTY (60) CONSECUTIVE DAYS PER BRIDGE. CONSTRUCTION WORK MAY BE PERFORMED BEFORE AND AFTER THE DETOUR LIMITATION DATES, BUT THERE SHALL BE NO RESTRICTIONS (LANE WIDTH REDUCTIONS, TEMPORARY ROADWAYS, OR ONE WAY TRAFFIC) TO THROUGH OR LOCAL TRAFFIC. IT SHALL BE THE RESPONSIBILITY OF THE CONTRACTOR TO SCHEDULE AND PERFORM THE CONSTRUCTION WORK WITHIN THE DETOUR LIMITATION TIME. THE FAILURE OF THE CONTRACTOR TO MEET THE DETOUR LIMITATION DATES WILL CAUSE SEPARATE LIQUIDATED DAMAGES OF $1,000.00 PER CALENDAR DAY OF OVERRUN OF DETOUR LIMITATION TIME TO BE ASSESSED. THE CONTRACTOR WILL COMPLY WITH ALL PROVISIONS OF 108.07 OF THE DEPARTMENT OF TRANSPORTATION CONSTRUCTION AND MATERIAL SPECIFICATIONS.

CALCULATED TAK
CHECKED LAJ

MAINTENANCE OF TRAFFIC

TRU-5-6.45



j:\22126_Tru_5_6.45\mot\mnb.dgn 07-SEP-2001 1:57PM jliddle

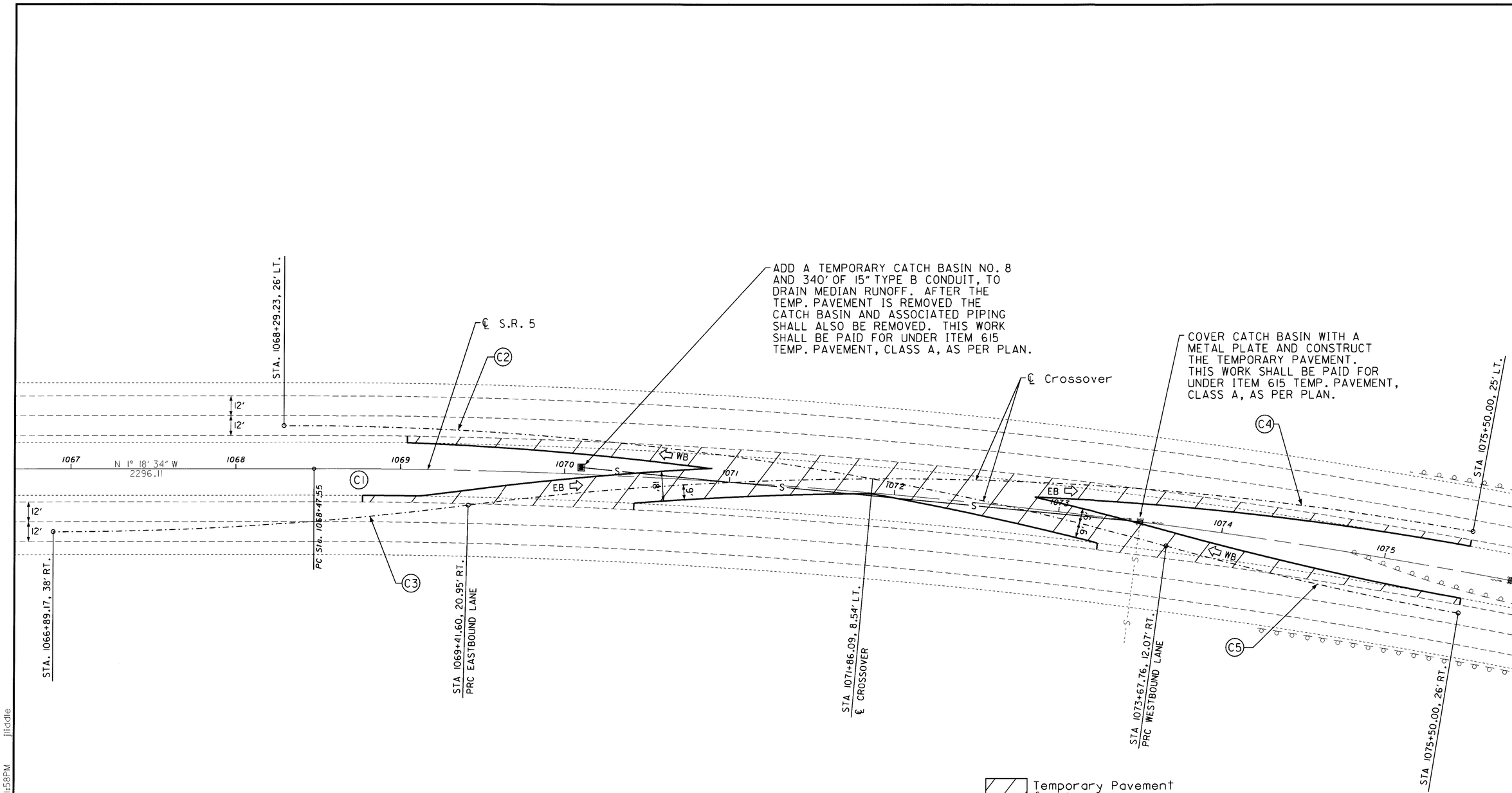


Temporary Pavement for Crossover
13,980 SQ.FT.

NOTES:

LIGHTING, TEMPORARY RAISED PAVEMENT MARKERS, SIGNS, PAVEMENT MARKINGS AND PORTABLE CONCRETE BARRIER, 50", AS PER PLAN SHALL BE PLACED AS PER MT-95.70M, MT-95.82M, MT-100.00M AND MT-101.20M.

REMOVE EXISTING PAVED SHOULDER TO A DEPTH TO ACCOMMODATE TEMPORARY PAVEMENT, CLASS A, AS PER PLAN, THAT WILL REMAIN IN PLACE WITHIN THE 4 FOOT WIDE SHOULDER AREA. SAWCUT OUTSIDE EDGE FOR REMOVAL OF INTERIOR TEMPORARY PAVEMENT FOR RESTORATION.

FOR CROSS SECTIONS SEE SHEETS 27 & 28.

CURVE DATA

| C1 | C2 | C3 | C4 | C5 |
|---|---|---|---|---|
| PC= 1068+47.55 | R= 2000.00' | R= 2000.00' | R= 2000.00' | R= 2000.00' |
| PT= 1098+37.32 | Dc= 2°51'53" | Dc= 2°51'53" | Dc= 2°51'53" | Dc= 2°51'53" |
| PI= 1084+19.95 | L= 541.71' | L= 252.58' | L= 612.21' | L= 182.08' |
| R= 3906.53' | T= 272.52' | T= 126.46' | T= 308.52' | T= 91.10' |
| Dc=1°28' | Δ= 15°31'08" Rt. | Δ= 7°14'10" Lt. | Δ= 17°32'19" Rt. | Δ= 5°12'58" Lt. |
| L= 2989.77' | | | | |
| T= 1572.40' | | | | |
| Δ= 43°51' Rt. | | | | |

N

0 15 30 60
HORIZONTAL SCALE

CALCULATED TAK
CHECKED LAJ

# MAINTENANCE OF TRAFFIC CROSSOVER-A DETAIL

TRU-5-6.45



I:\22126_Tru_5_6.45\mot\mpa.dgn 07-SEP-2001 1:58PM jlidde

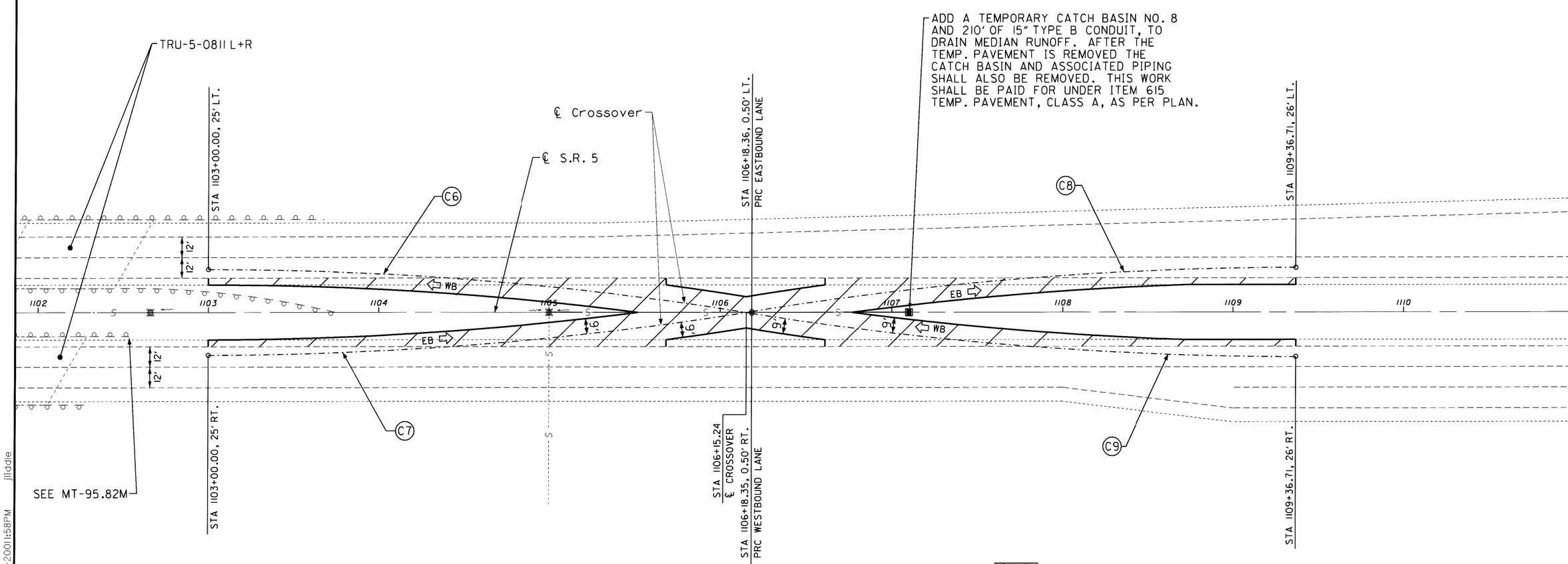


CURVE DATA

| C6 | C7 | C8 | C9 |
|---|---|---|---|
| R= 2000.00' | R= 2000.00' | R= 2000.00' | R= 2000.00' |
| Dc= 2°51'53" | Dc= 2°51'53" | Dc= 2°51'53" | Dc= 2°51'53" |
| L= 319.71' | L= 319.71' | L= 319.71' | L= 319.71' |
| T= 160.20' | T= 160.20' | T= 160.20' | T= 160.20' |
| Δ= 9°09'33" Rt. | Δ= 9°09'33" Lt. | Δ= 9°09'33" Rt. | Δ= 9°09'33" Lt. |

NOTES:

LIGHTING, TEMPORARY RAISED PAVEMENT MARKERS, SIGNS, PAVEMENT MARKINGS AND PORTABLE CONCRETE BARRIER, 50", AS PER PLAN SHALL BE PLACED AS PER MT-95.70M, MT-95.82M, MT-100.00M AND MT-101.20M.

REMOVE EXISTING PAVED SHOULDER TO A DEPTH TO ACCOMMODATE TEMPORARY PAVEMENT, CLASS A, AS PER PLAN, THAT WILL REMAIN IN PLACE WITHIN THE 4 FOOT WIDE SHOULDER AREA. SAWCUT OUTSIDE EDGE FOR REMOVAL OF INTERIOR TEMPORARY PAVEMENT FOR RESTORATION.

FOR CROSS SECTIONS SEE SHEETS 29 & 30.

0 15 30 60
HORIZONTAL SCALE IN FEET

CALCULATED TAK
CHECKED LAJ

# MAINTENANCE OF TRAFFIC CROSSOVER-B DETAIL

TRU-5-6.45



j:\22126_Tru_5_6.45\mot\mpb.dgn 07-SEP-2001 11:58PM jliddle

Temporary Pavement for Crossover 11,895 SQ.FT.

NOTES:

LIGHTING, TEMPORARY RAISED PAVEMENT MARKERS, SIGNS, PAVEMENT MARKINGS AND PORTABLE CONCRETE BARRIER, 50", AS PER PLAN SHALL BE PLACED AS PER MT-95.70M, MT-95.82M, MT-100.00M AND MT-101.20M.

REMOVE EXISTING PAVED SHOULDER TO A DEPTH TO ACCOMMODATE TEMPORARY PAVEMENT, CLASS A, AS PER PLAN, THAT WILL REMAIN IN PLACE WITHIN THE 4 FOOT WIDE SHOULDER AREA. SAWCUT OUTSIDE EDGE FOR REMOVAL OF INTERIOR TEMPORARY PAVEMENT FOR RESTORATION.

FOR CROSS SECTIONS SEE SHEETS 31 & 32.

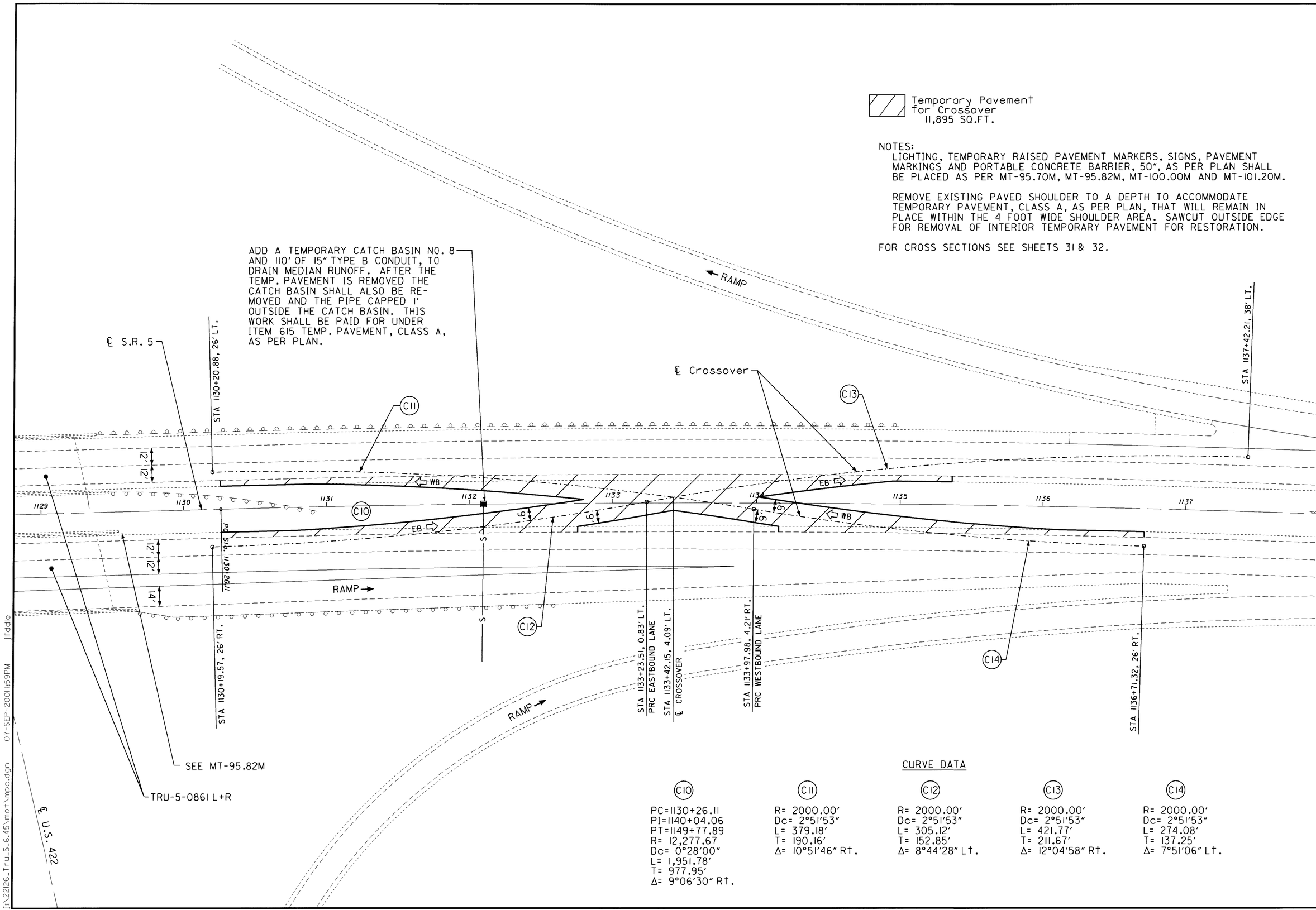


CURVE DATA

| C10 | C11 | C12 | C13 | C14 |
|---|---|---|---|---|
| PC=1130+26.11 | R= 2000.00' | R= 2000.00' | R= 2000.00' | R= 2000.00' |
| PI=1140+04.06 | Dc= 2°51'53" | Dc= 2°51'53" | Dc= 2°51'53" | Dc= 2°51'53" |
| PT=1149+77.89 | L= 379.18' | L= 305.12' | L= 421.77' | L= 274.08' |
| R= 12,277.67 | T= 190.16' | T= 152.85' | T= 211.67' | T= 137.25' |
| Dc= 0°28'00" | Δ= 10°51'46" Rt. | Δ= 8°44'28" Lt. | Δ= 12°04'58" Rt. | Δ= 7°51'06" Lt. |
| L= 1,951.78' | | | | |
| T= 977.95' | | | | |
| Δ= 9°06'30" Rt. | | | | |

HORIZONTAL SCALE IN FEET 0 15 30 60

CALCULATED TAK CHECKED LAJ

# MAINTENANCE OF TRAFFIC CROSSOVER-C DETAIL

TRU-5-6.45



j:\22126_Tru_5_6.45\mot\mpc.dgn 07-SEP-2001 1:59PM jliddle

## CURVE DATA

| C15 | C16 | C17 | C18 | C19 |
|---|---|---|---|---|
| PC=539+80.10 | R= 2000.00′ | R= 2000.00′ | R= 2000.00′ | R= 2000.00′ |
| PI=546+61.39 | Dc= 2°51′53″ | Dc= 2°51′53″ | Dc= 2°51′53″ | Dc= 2°51′53″ |
| PT=553+41.29 | L= 289.27′ | L= 389.91′ | L= 305.23′ | L= 373.96′ |
| R= 12,277.67′ | T= 144.88′ | T= 195.58′ | T= 152.91′ | T= 187.52′ |
| Dc= 0°28′00″ | Δ= 8°17′13″ Rt. | Δ= 11°10′13″ Lt. | Δ= 8°44′39″ Rt. | Δ= 10°42′47″ Lt. |
| L= 1,361.19′ | | | | |
| T= 681.29′ | | | | |
| Δ= 6°21′08″ Lt. | | | | |

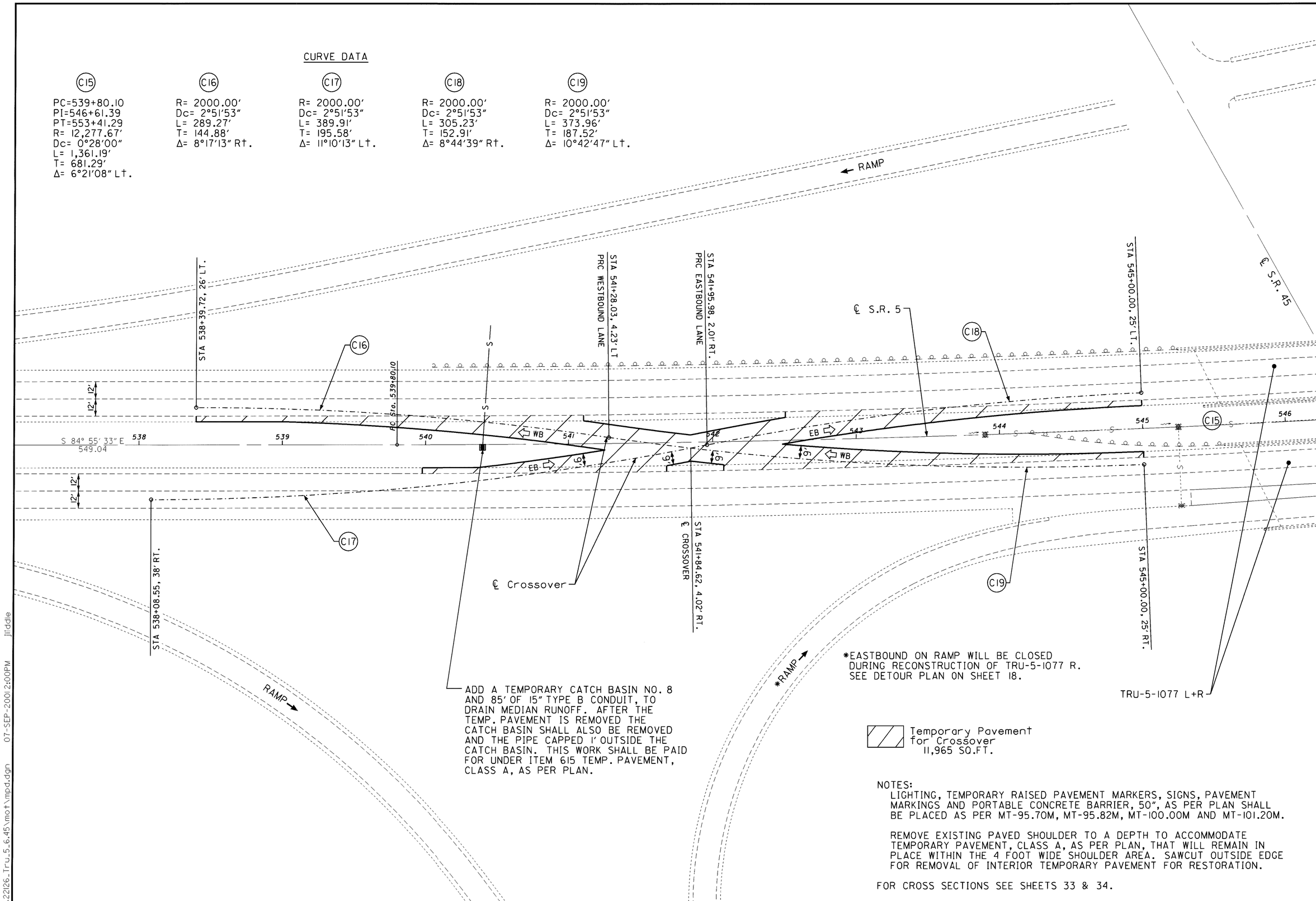


ADD A TEMPORARY CATCH BASIN NO. 8 AND 85′ OF 15″ TYPE B CONDUIT, TO DRAIN MEDIAN RUNOFF. AFTER THE TEMP. PAVEMENT IS REMOVED THE CATCH BASIN SHALL ALSO BE REMOVED AND THE PIPE CAPPED 1′ OUTSIDE THE CATCH BASIN. THIS WORK SHALL BE PAID FOR UNDER ITEM 615 TEMP. PAVEMENT, CLASS A, AS PER PLAN.

*EASTBOUND ON RAMP WILL BE CLOSED DURING RECONSTRUCTION OF TRU-5-1077 R. SEE DETOUR PLAN ON SHEET 18.

Temporary Pavement for Crossover 11,965 SQ.FT.

NOTES:

LIGHTING, TEMPORARY RAISED PAVEMENT MARKERS, SIGNS, PAVEMENT MARKINGS AND PORTABLE CONCRETE BARRIER, 50″, AS PER PLAN SHALL BE PLACED AS PER MT-95.70M, MT-95.82M, MT-100.00M AND MT-101.20M.

REMOVE EXISTING PAVED SHOULDER TO A DEPTH TO ACCOMMODATE TEMPORARY PAVEMENT, CLASS A, AS PER PLAN, THAT WILL REMAIN IN PLACE WITHIN THE 4 FOOT WIDE SHOULDER AREA. SAWCUT OUTSIDE EDGE FOR REMOVAL OF INTERIOR TEMPORARY PAVEMENT FOR RESTORATION.

FOR CROSS SECTIONS SEE SHEETS 33 & 34.

0 15 30 60
HORIZONTAL SCALE: 1 INCH = 30 FEET

CALCULATED TAK
CHECKED LAJ

# MAINTENANCE OF TRAFFIC CROSSOVER-D DETAIL

TRU-5-6.45



j:\22126_Tru_5_6.45\mot\mpd.dgn 07-SEP-2001 2:00PM jliddle

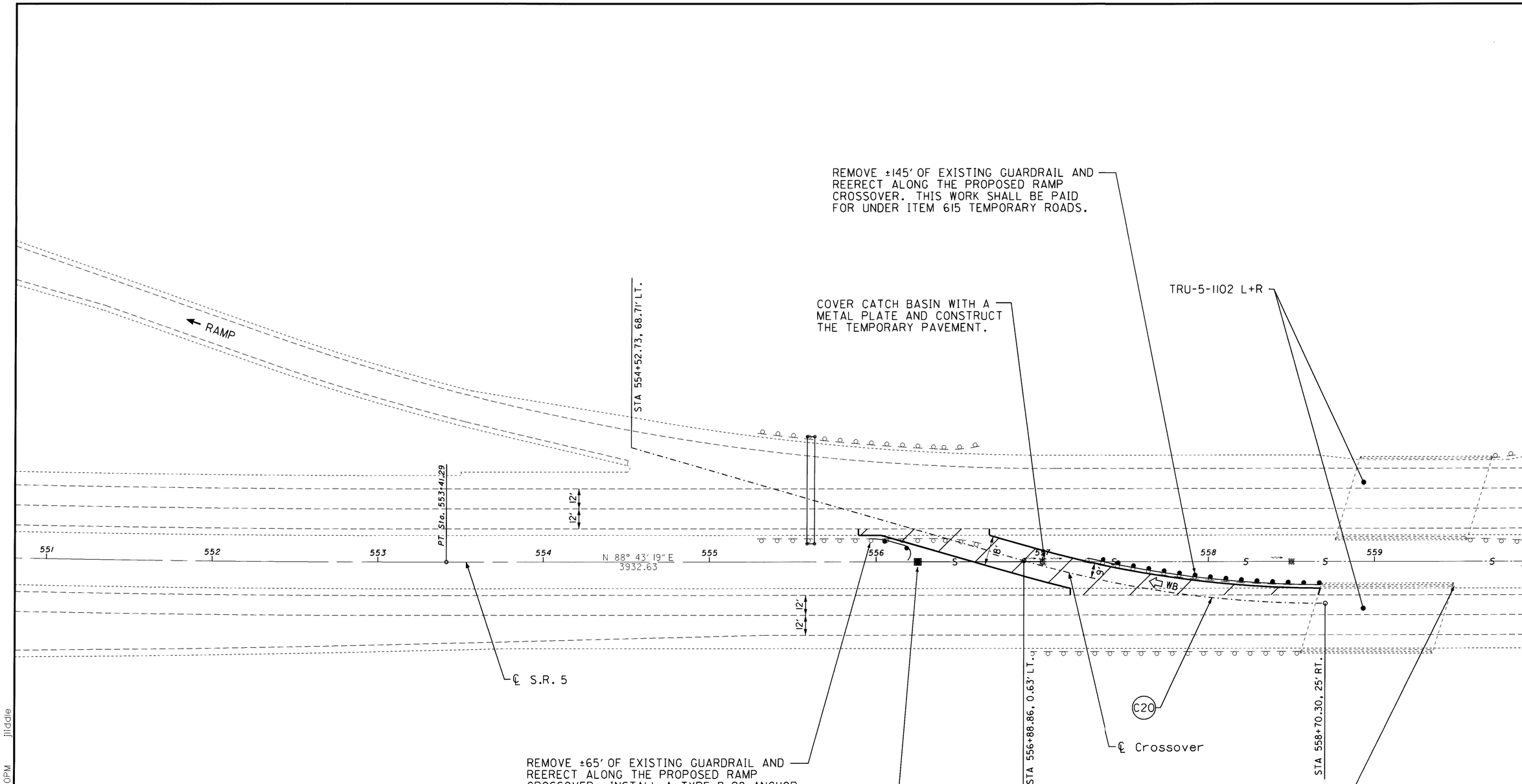


CURVE DATA

C20

R= 655.00'
Dc= 8°44'51"
L= 183.85'
T= 92.53'
Δ= 16°04'55" Lt.

NOTES:

LIGHTING, TEMPORARY RAISED PAVEMENT MARKERS, SIGNS, PAVEMENT MARKINGS AND PORTABLE CONCRETE BARRIER, 50", AS PER PLAN SHALL BE PLACED AS PER MT-95.70M, MT-95.82M, MT-100.00M AND MT-101.20M.

REMOVE EXISTING PAVED SHOULDER TO A DEPTH TO ACCOMMODATE TEMPORARY PAVEMENT, CLASS A, AS PER PLAN, THAT WILL REMAIN IN PLACE WITHIN THE 4 FOOT WIDE SHOULDER AREA. SAWCUT OUTSIDE EDGE FOR REMOVAL OF INTERIOR TEMPORARY PAVEMENT FOR RESTORATION.

FOR CROSS SECTIONS SEE SHEET 35.

N

0 15 30 60
HORIZONTAL SCALE IN FEET

CALCULATED TAK
CHECKED LAJ

# MAINTENANCE OF TRAFFIC CROSSOVER-E DETAIL

TRU-5-6.45



I:\22126_Tru_5_6.45\mot\mpe.dgn 07-SEP-2001 2:00PM jjiddle

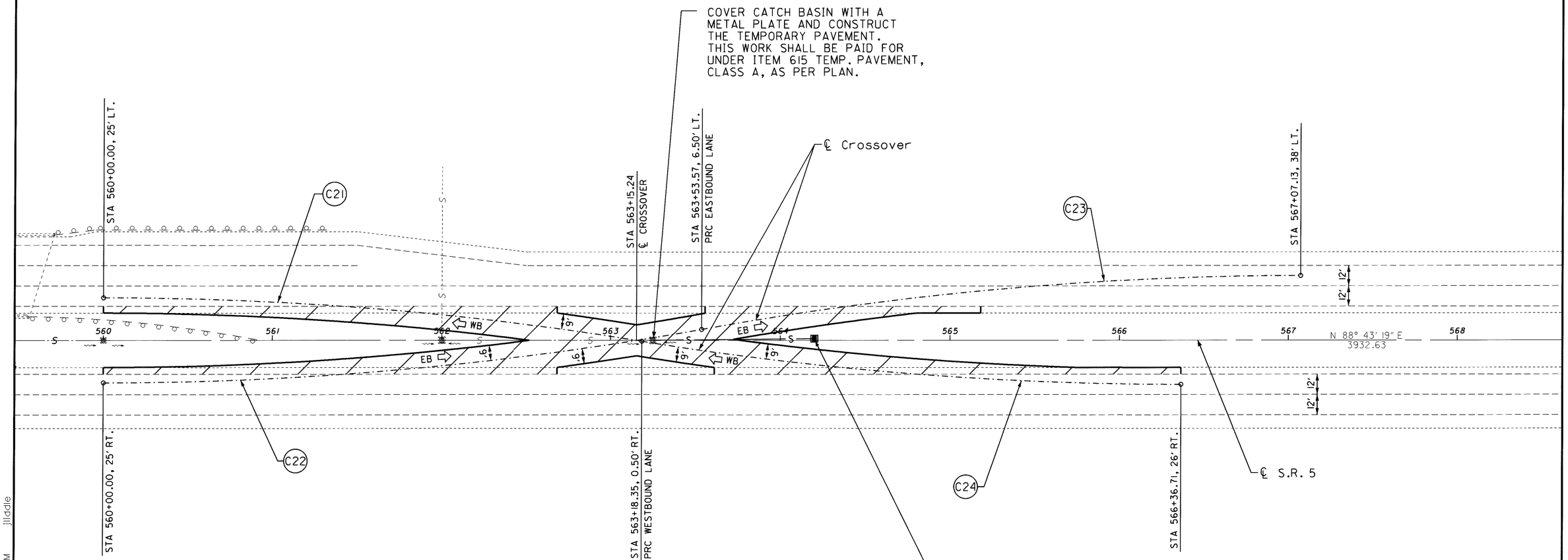


Temporary Pavement for Crossover 11,925 SQ.FT.

CURVE DATA

| C21 | C22 | C23 | C24 |
|---|---|---|---|
| R= 2000.00' | R= 2000.00' | R= 2000.00' | R= 2000.00' |
| Dc= 2°51'53" | Dc= 2°51'53" | Dc= 2°51'53" | Dc= 2°51'53" |
| L= 319.71' | L= 355.43' | L= 355.43' | L= 319.71' |
| T= 160.20' | T= 178.19' | T= 178.19' | T= 160.20' |
| Δ= 9°09'33" Rt. | Δ= 10°10'57" Lt. | Δ= 10°10'57" Rt. | Δ= 9°09'33" Lt. |

NOTES:

LIGHTING, TEMPORARY RAISED PAVEMENT MARKERS, SIGNS, PAVEMENT MARKINGS AND PORTABLE CONCRETE BARRIER, 50", AS PER PLAN SHALL BE PLACED AS PER MT-95.70M, MT-95.82M, MT-100.00M AND MT-101.20M.

REMOVE EXISTING PAVED SHOULDER TO A DEPTH TO ACCOMMODATE TEMPORARY PAVEMENT, CLASS A, AS PER PLAN, THAT WILL REMAIN IN PLACE WITHIN THE 4 FOOT WIDE SHOULDER AREA. SAWCUT OUTSIDE EDGE FOR REMOVAL OF INTERIOR TEMPORARY PAVEMENT FOR RESTORATION.

FOR CROSS SECTIONS SEE SHEETS 36 & 37.

0 15 30 60
HORIZONTAL

CALCULATED TAK
CHECKED LAJ

# MAINTENANCE OF TRAFFIC CROSSOVER-E DETAIL

TRU-5-6.45



j:\22126_Tru_5_6.45\mot\mpf.dgn 07-SEP-2001 2:01PM jliddle

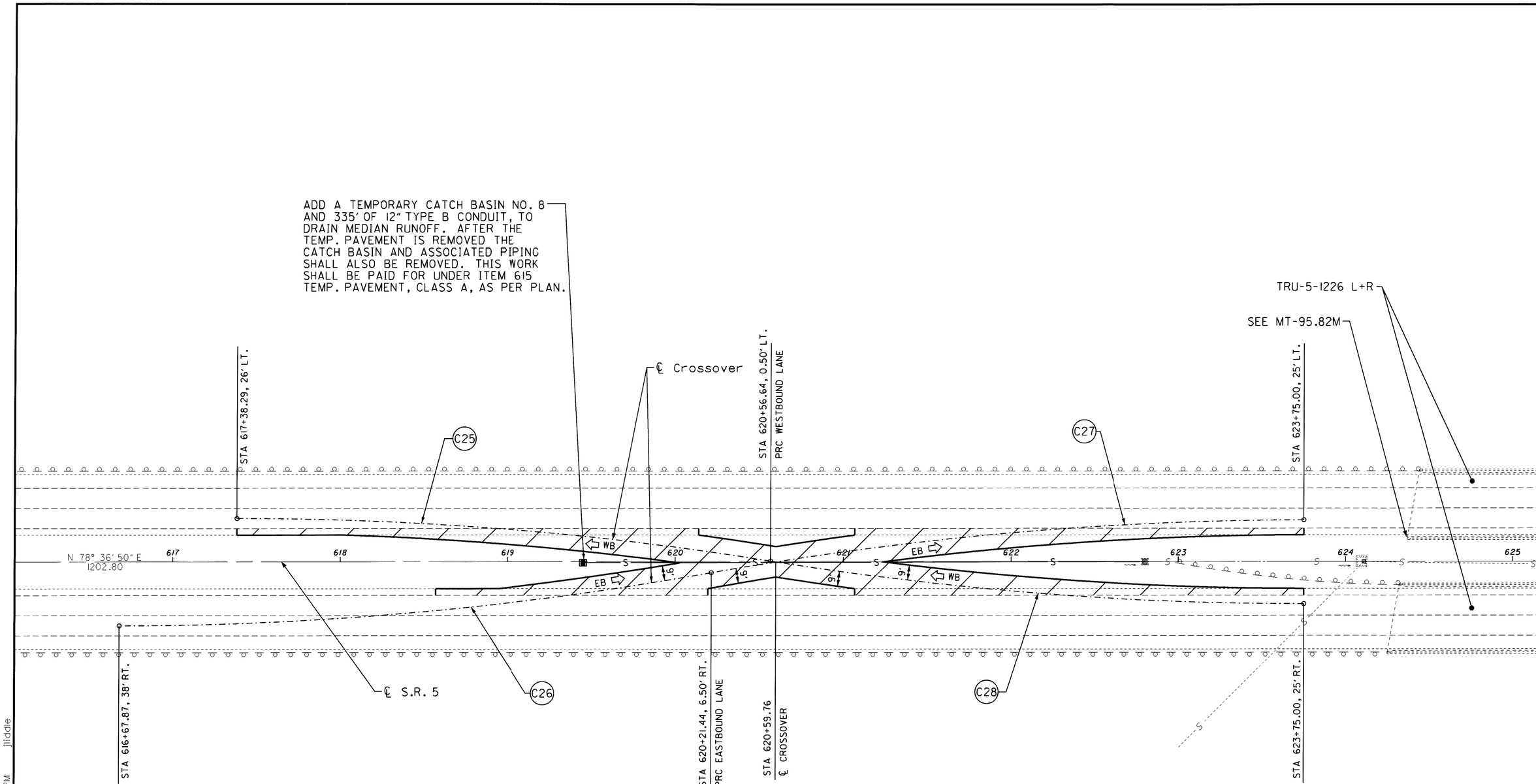


Temporary Pavement for Crossover 11,925 SQ.FT.

CURVE DATA

| C25 | C26 | C27 | C28 |
|---|---|---|---|
| R= 2000.00' | R= 2000.00' | R= 2000.00' | R= 2000.00' |
| Dc= 2°51'53" | Dc= 2°51'53" | Dc= 2°51'53" | Dc= 2°51'53" |
| L= 319.71' | L= 355.43' | L= 355.43 | L= 319.72' |
| T= 160.20' | T= 178.19' | T= 178.19' | T= 160.20' |
| Δ= 9°09'33" Rt. | Δ= 10°10'57" Lt. | Δ=10°10'57" Rt. | Δ= 09°09'33" Lt. |

NOTES:

LIGHTING, TEMPORARY RAISED PAVEMENT MARKERS, SIGNS, PAVEMENT MARKINGS AND PORTABLE CONCRETE BARRIER, 50", AS PER PLAN SHALL BE PLACED AS PER MT-95.70M, MT-95.82M, MT-100.00M AND MT-101.20M.

REMOVE EXISTING PAVED SHOULDER TO A DEPTH TO ACCOMMODATE TEMPORARY PAVEMENT, CLASS A, AS PER PLAN, THAT WILL REMAIN IN PLACE WITHIN THE 4 FOOT WIDE SHOULDER AREA. SAWCUT OUTSIDE EDGE FOR REMOVAL OF INTERIOR TEMPORARY PAVEMENT FOR RESTORATION.

FOR CROSS SECTIONS SEE SHEETS 38 & 39.

HORIZONTAL SCALE IN FEET 0 15 30 60

CALCULATED TAK
CHECKED LAJ

# MAINTENANCE OF TRAFFIC CROSSOVER-G DETAIL

TRU-5-6.45



j:\22126_Tru_5_6.45\mot\mpg.dgn 07-SEP-2001 2:01PM jliddle

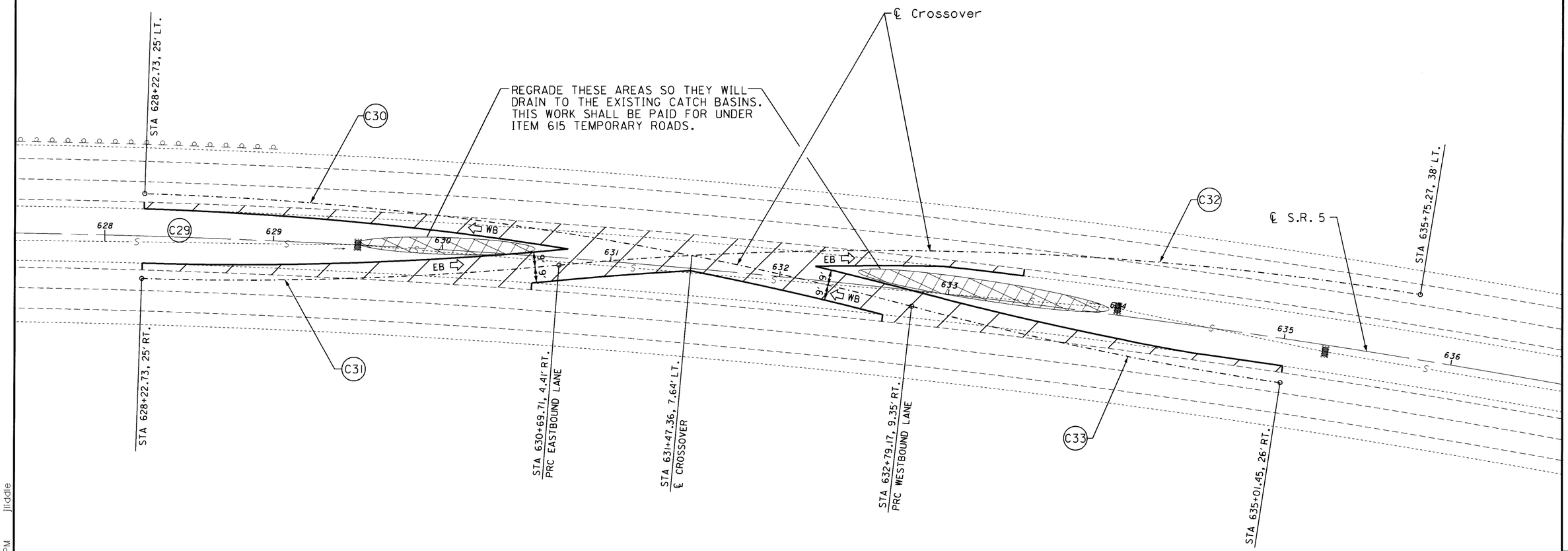


CURVE DATA

| C29 | C30 | C31 | C32 | C33 |
|---|---|---|---|---|
| PC=626+42.73 | R= 2000.00' | R= 2000.00' | R= 2000.00' | R= 2000.00' |
| PI=631+65.24 | Dc= 2°51'53" | Dc= 2°51'53" | Dc= 2°51'53" | Dc= 2°51'53" |
| PT=636+84.87 | L= 459.24' | L= 247.34' | L= 510.03' | L= 222.32' |
| R= 5,729.58' | T= 230.63' | T= 123.83' | T= 256.40' | T= 111.27' |
| Dc= 1°00'00" | Δ=13°09'22" Rt. | Δ= 7°05'09" Lt. | Δ=14°36'40" Rt. | Δ= 6°22'08" Lt. |
| L= 1,042.14' | | | | |
| T= 522.51' | | | | |
| Δ= 10°25'17" Rt. | | | | |

Temporary Pavement for Crossover 12,245 SQ.FT.

NOTES:

LIGHTING, TEMPORARY RAISED PAVEMENT MARKERS, SIGNS, PAVEMENT MARKINGS AND PORTABLE CONCRETE BARRIER, 50", AS PER PLAN SHALL BE PLACED AS PER MT-95.70M, MT-95.82M, MT-100.00M AND MT-101.20M.

REMOVE EXISTING PAVED SHOULDER TO A DEPTH TO ACCOMMODATE TEMPORARY PAVEMENT, CLASS A, AS PER PLAN, THAT WILL REMAIN IN PLACE WITHIN THE 4 FOOT WIDE SHOULDER AREA. SAWCUT OUTSIDE EDGE FOR REMOVAL OF INTERIOR TEMPORARY PAVEMENT FOR RESTORATION.

FOR CROSS SECTIONS SEE SHEETS 40 & 41.

HORIZONTAL SCALE IN FEET 0 15 30 60

CALCULATED TAK
CHECKED LAJ

# MAINTENANCE OF TRAFFIC CROSSOVER-H DETAIL

TRU-5-6.45



J:\22126_Tru_5_6.45\mot\mph.dgn 07-SEP-2001 2:02PM jliddle

| SEEDING | |
|---|---|
| END WIDTH | SQ. YDS. |

| END AREA | | VOLUME | |
|---|---|---|---|
| CUT | FILL | CUT | FILL |

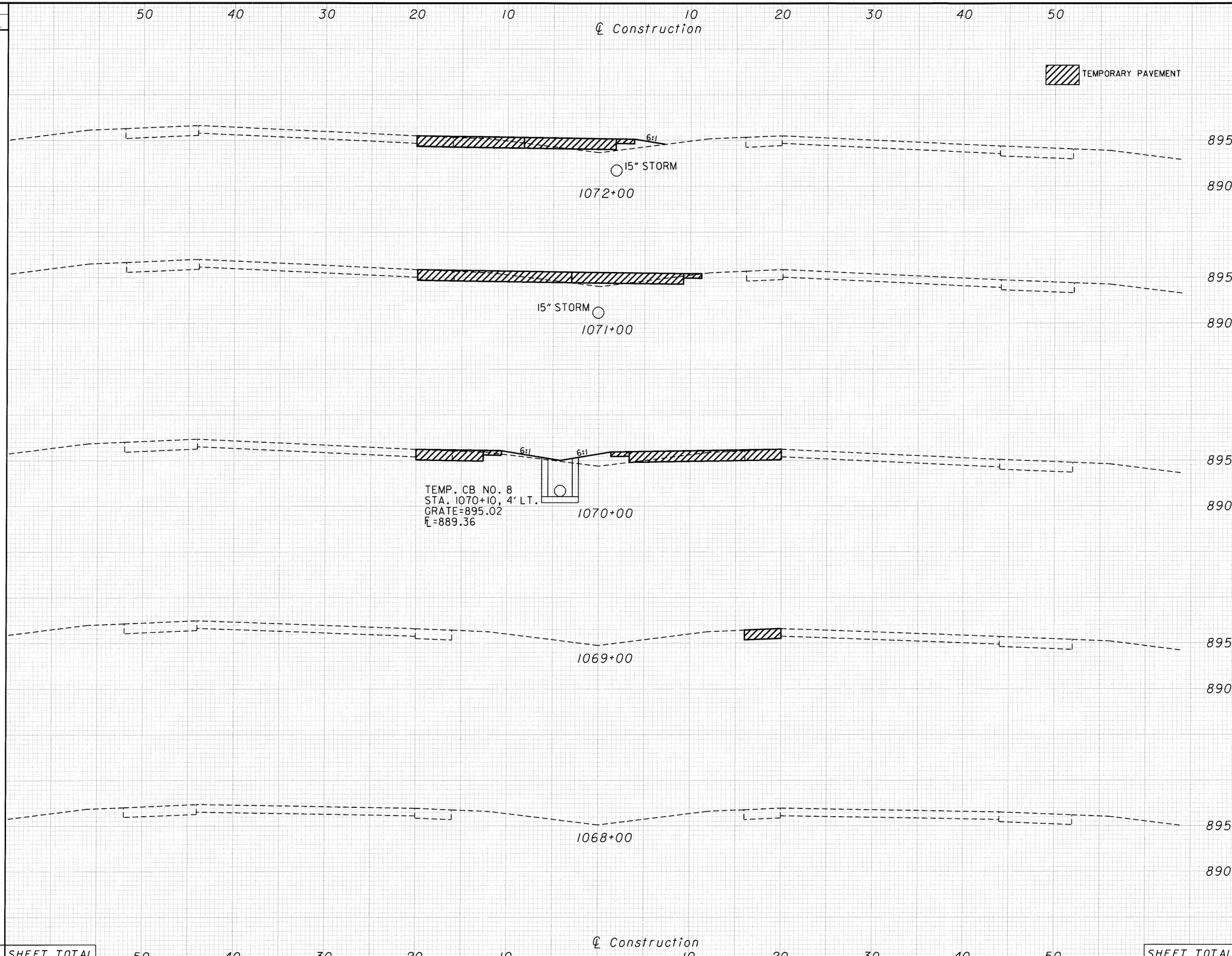


CALCULATED TAK
CHECKED JAL

# MAINTENANCE OF TRAFFIC CROSS SECTIONS
## STA. 1068+00 TO STA. 1072+00

TRU-5-6.45



i:\22126_Tru_5_6.45\mot\mxa.dgn 07-SEP-2001 2:03PM jlidle

| SEEDING | |
|---|---|
| END WIDTH | SQ. YDS. |

| END AREA | | VOLUME | |
|---|---|---|---|
| CUT | FILL | CUT | FILL |

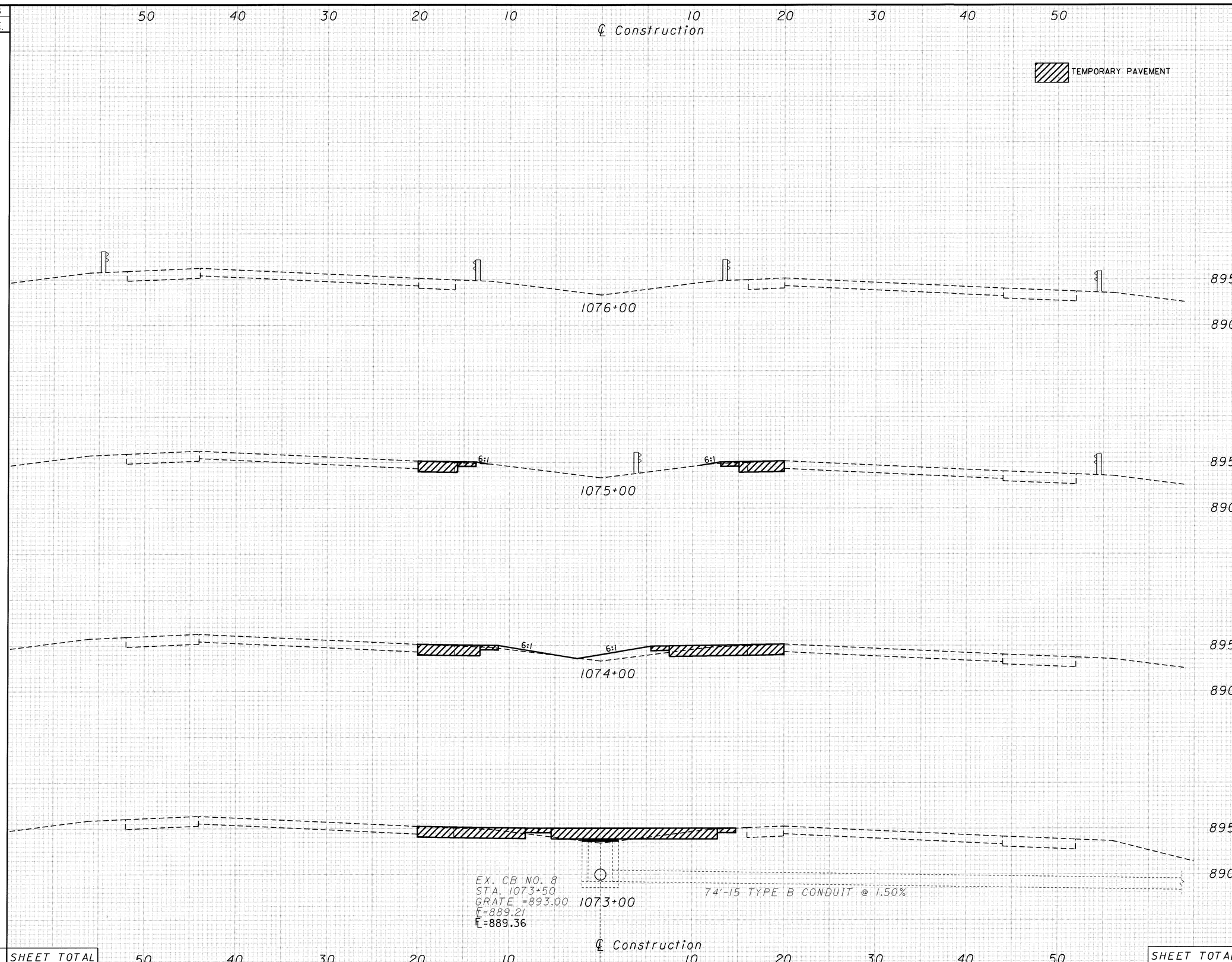


CALCULATED TAK

CHECKED LAJ

# MAINTENANCE OF TRAFFIC CROSS SECTIONS
## STA. 1073+00 TO STA. 1076+00

TRU-5-6.45



j:\22126_Tru_5_6.45\mot\mxa.dgn 07-SEP-2001 2:03PM jlidle

| SEEDING | |
|---|---|
| END WIDTH | SQ. YDS. |

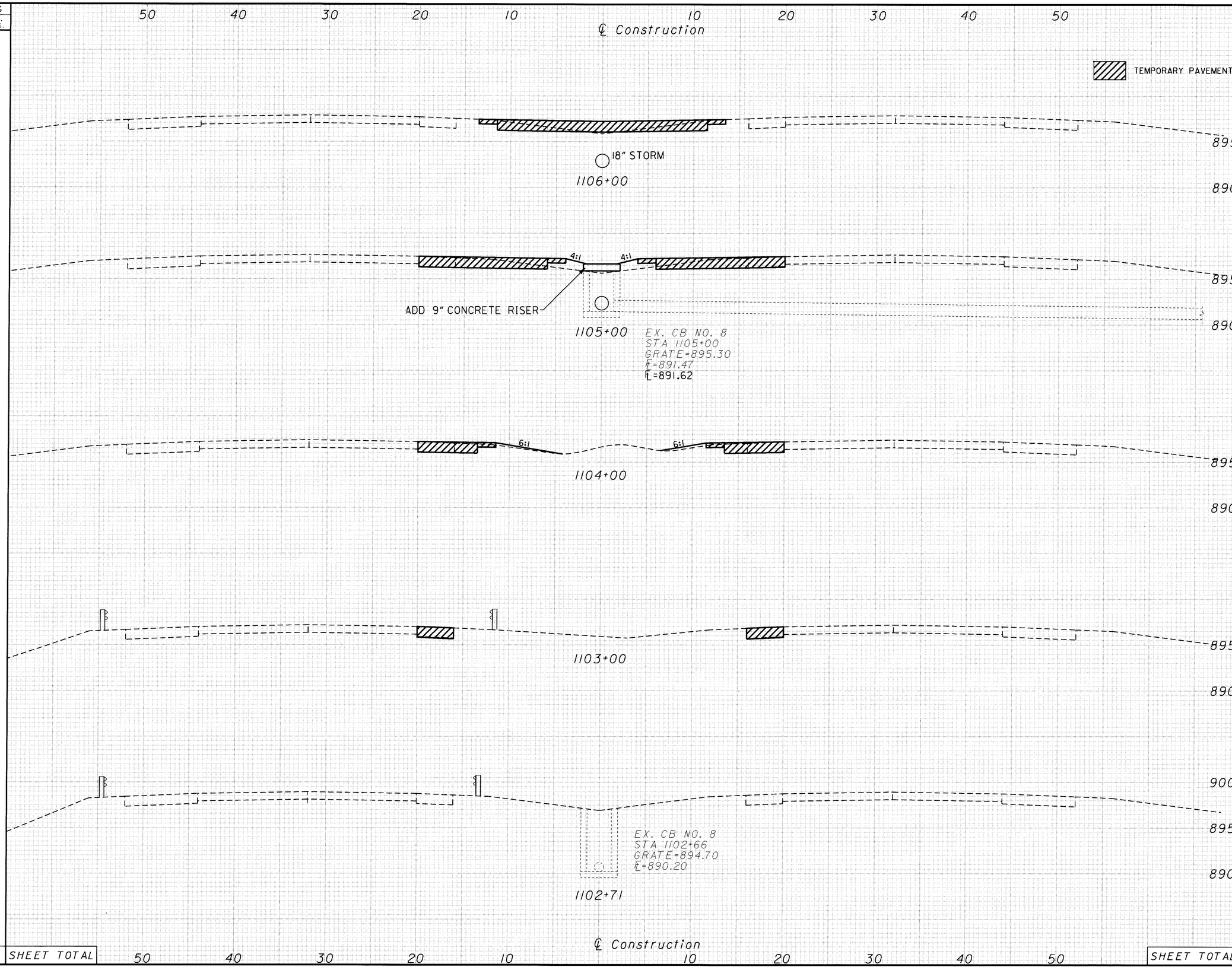


| END AREA | | VOLUME | |
|---|---|---|---|
| CUT | FILL | CUT | FILL |

CALCULATED TAK
CHECKED LAJ

# MAINTENANCE OF TRAFFIC CROSS SECTIONS
## STA. 1102+71 TO STA. 1106+00

TRU-5-6.45



J:\22126_Tru_5_6.45\mot\mxb.dgn 07-SEP-2001 2:03PM jliddle

| SEEDING | |
|---|---|
| END WIDTH | SQ. YDS. |

| END AREA | | VOLUME | |
|---|---|---|---|
| CUT | FILL | CUT | FILL |

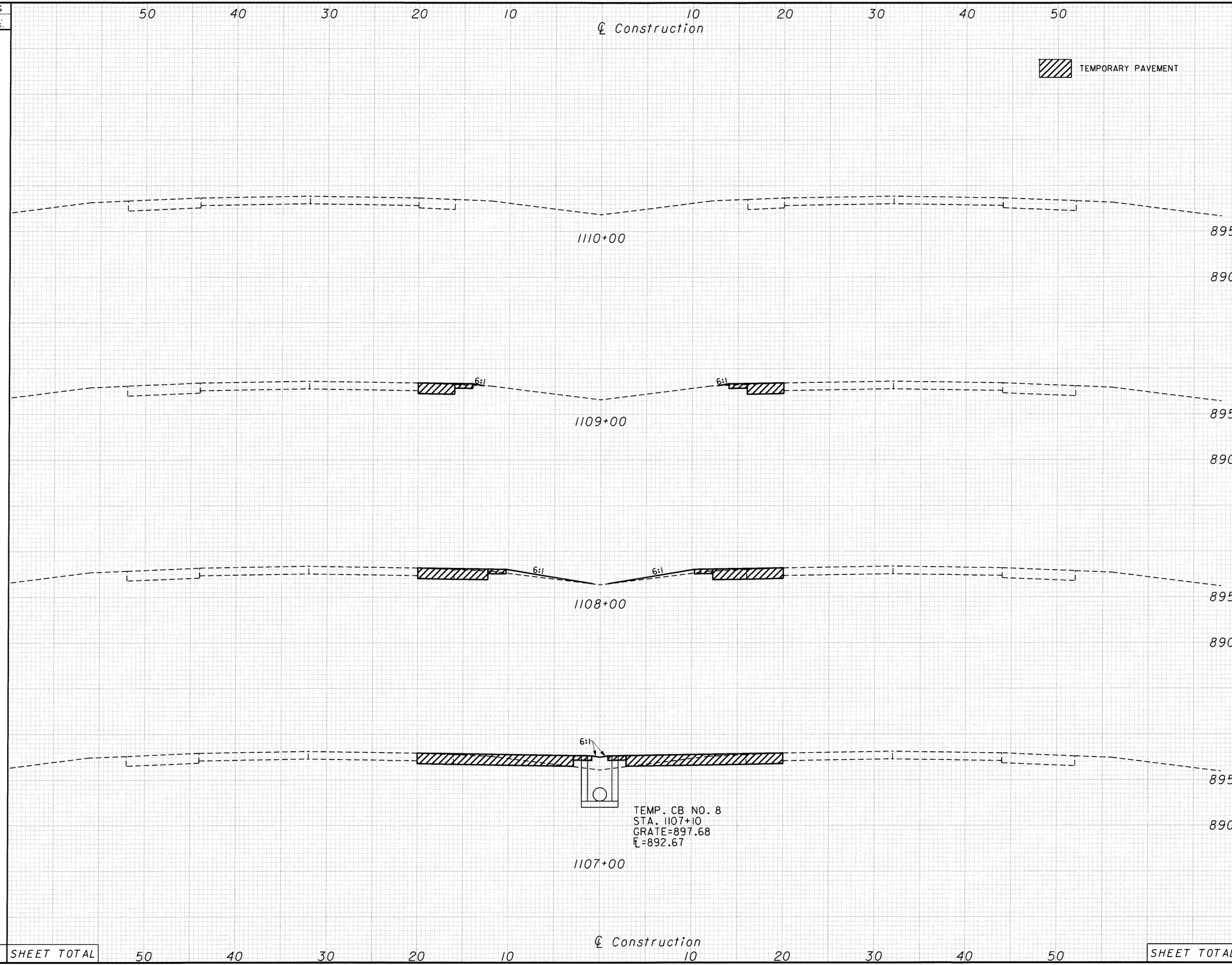


CALCULATED TAK
CHECKED JAL

# MAINTENANCE OF TRAFFIC CROSS SECTIONS STA. 1107+00 TO STA. 1110+00

TRU-5-6.45



j:\22126_Tru_5_6.45\mot\mxb.dgn 07-SEP-2001 2:04PM jlldle

| SEEDING | |
|---|---|
| END WIDTH | SQ. YDS. |

| END AREA | | VOLUME | |
|---|---|---|---|
| CUT | FILL | CUT | FILL |

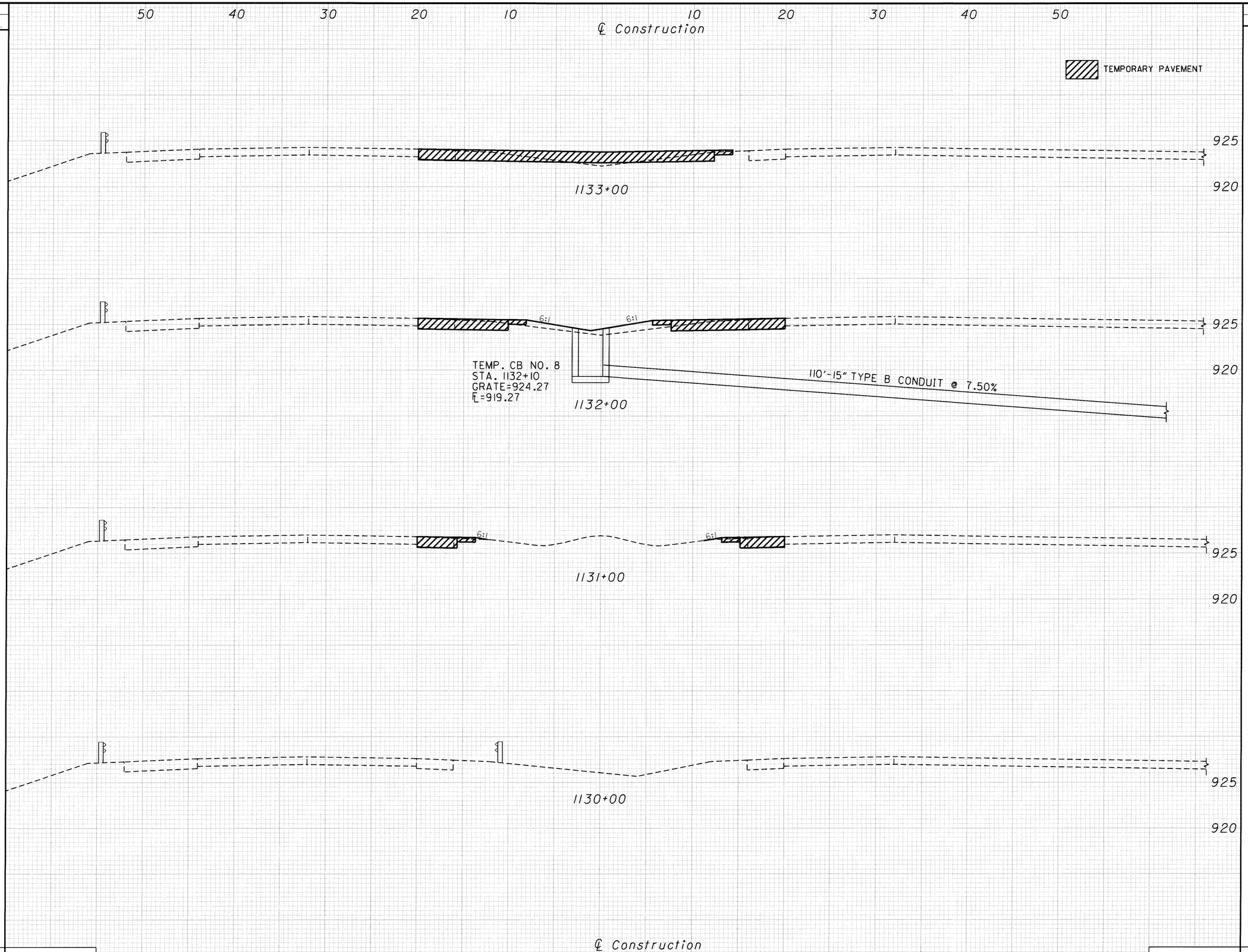


CALCULATED TAK
CHECKED JAL

# MAINTENANCE OF TRAFFIC CROSS SECTIONS
## STA. 1130+00 TO STA. 1133+00

TRU-5-6.45



i:\22126_Tru_5_6.45\mot\mxc.dgn 07-SEP-2001 2:04PM jliddle

| SEEDING | |
|---|---|
| END WIDTH | SQ. YDS. |

| END AREA | | VOLUME | |
|---|---|---|---|
| CUT | FILL | CUT | FILL |

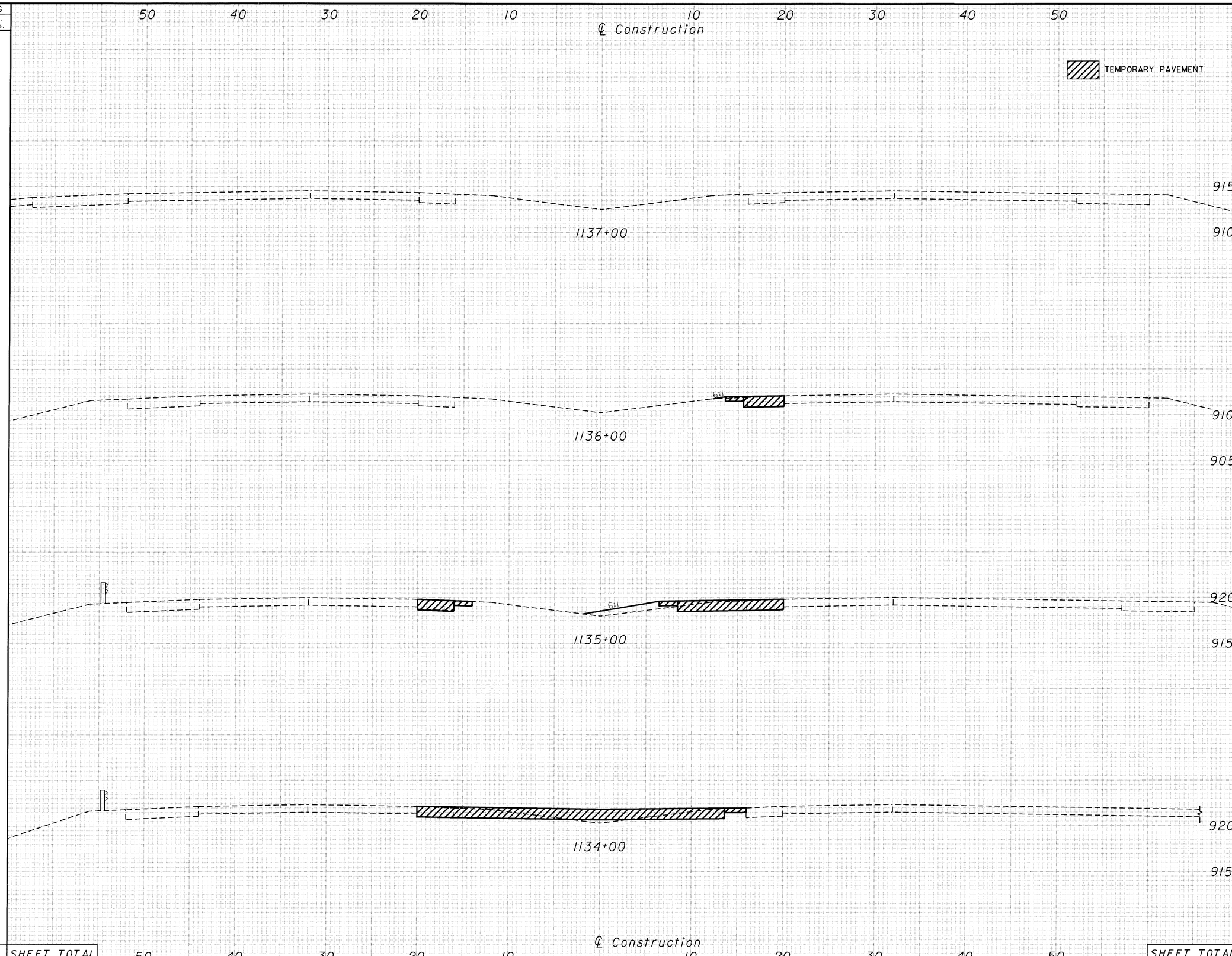


CALCULATED TAK

CHECKED LAJ

# MAINTENANCE OF TRAFFIC CROSS SECTIONS STA. 1134+00 TO STA. 1137+00

TRU-5-6.45



J:\22126_Tru_5_6.45\mot\mxc.dgn 07-SEP-2001 2:04PM jlidde

| SEEDING | |
|---|---|
| END WIDTH | SQ. YDS. |

| END AREA | | VOLUME | |
|---|---|---|---|
| CUT | FILL | CUT | FILL |

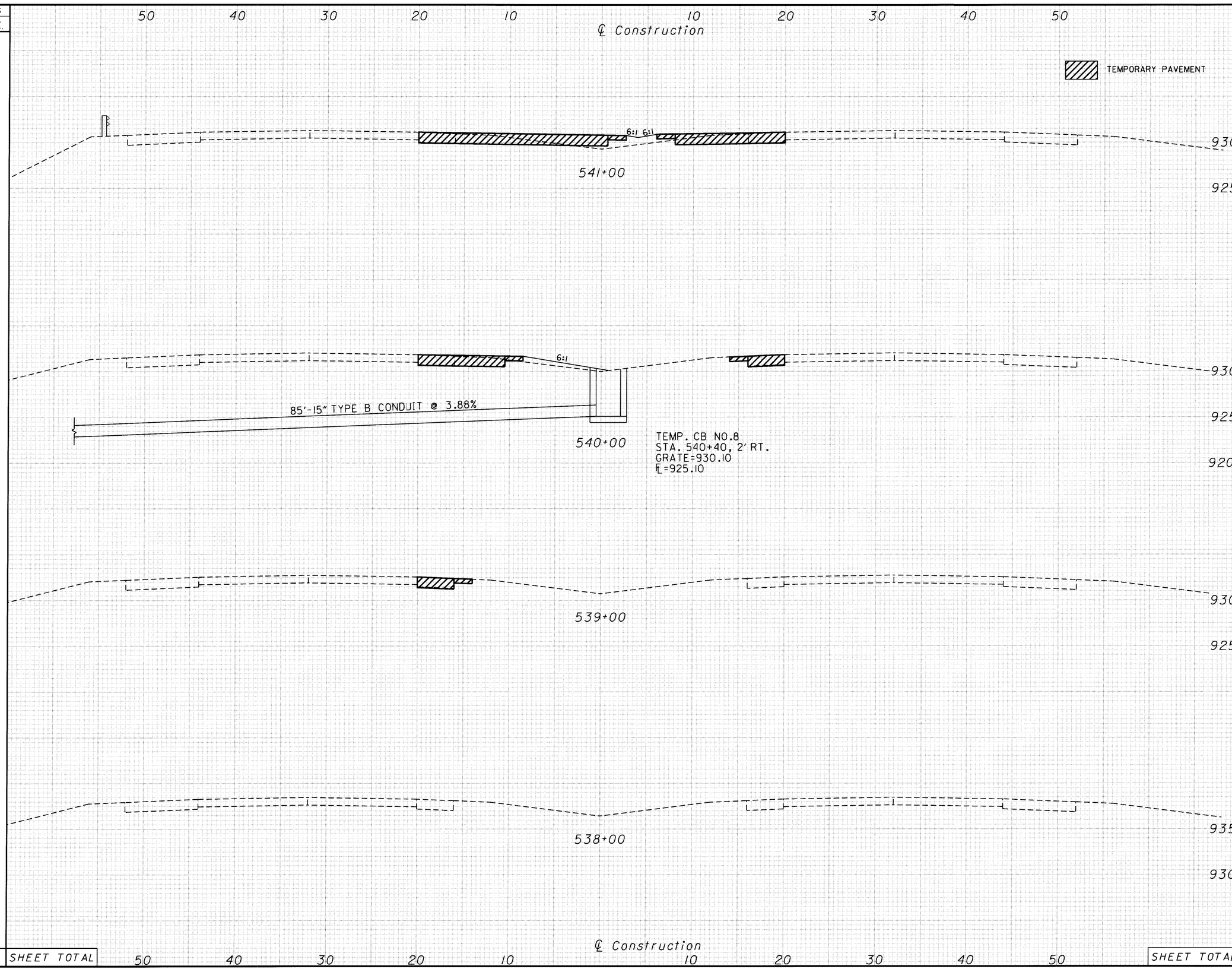


CALCULATED TAK

CHECKED LAJ

# MAINTENANCE OF TRAFFIC CROSS SECTIONS
## STA. 538+00 TO STA 541+00

TRU-5-6.45



j:\22126_Tru_5_6.45\mot\mxd.dgn 07-SEP-2001 2:05PM jlidale

| SEEDING | |
|---|---|
| END WIDTH | SQ. YDS. |

| END AREA | | VOLUME | |
|---|---|---|---|
| CUT | FILL | CUT | FILL |

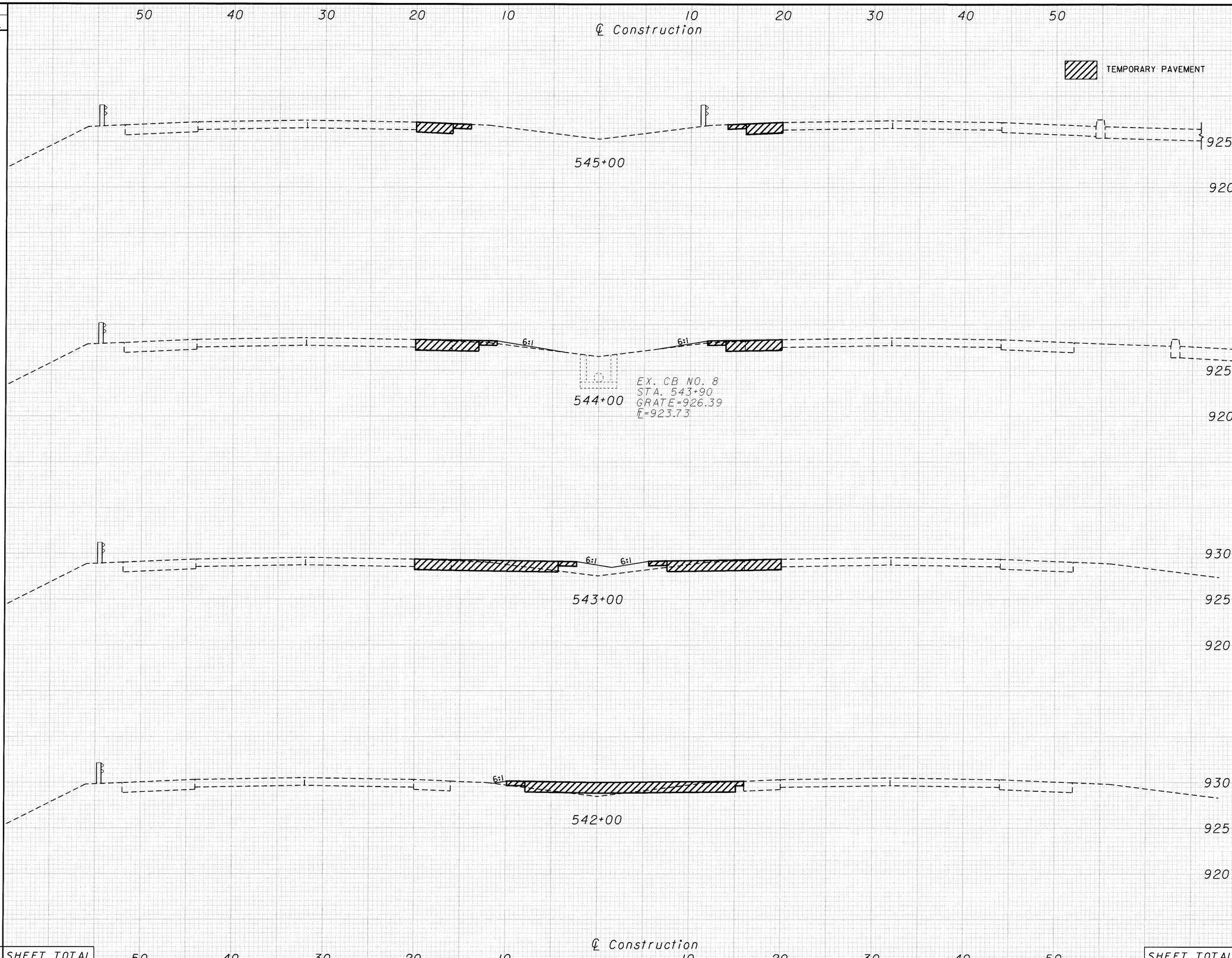


CALCULATED TAK

CHECKED

# MAINTENANCE OF TRAFFIC CROSS SECTIONS STA. 542+00 TO STA. 545+00

TRU-5-6.45



j:\22126_Tru_5_6.45\mot\mxd.dgn 07-SEP-2001 2:05PM jlliddle

| SEEDING | |
|---|---|
| END WIDTH | SQ. YDS. |

| END AREA | | VOLUME | |
|---|---|---|---|
| CUT | FILL | CUT | FILL |

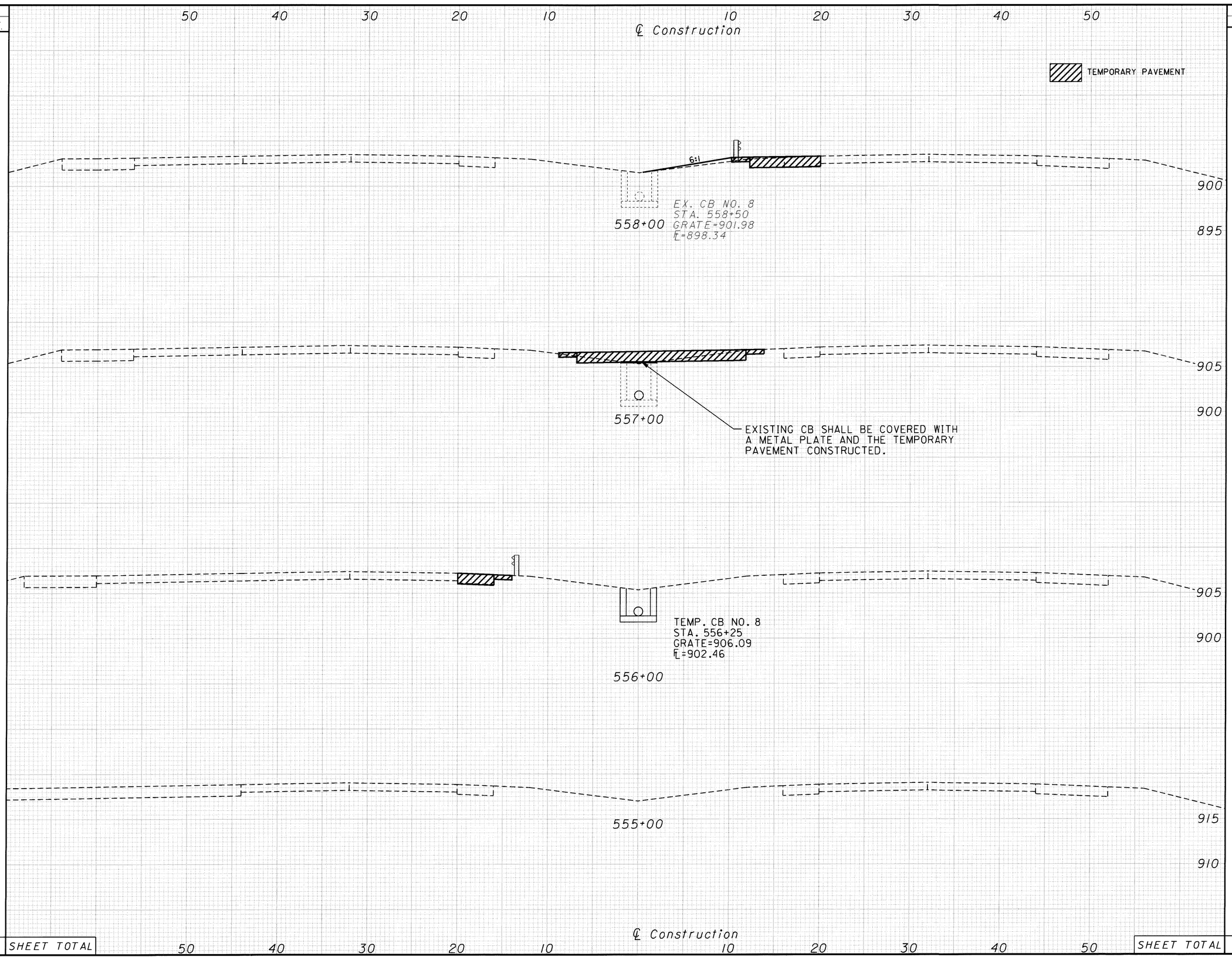


CALCULATED TAK
CHECKED

# MAINTENANCE OF TRAFFIC CROSS SECTIONS STA. 555+00 TO STA. 558+00

TRU-5-6.45



I:\22126_Tru_5_6.45\mot\mxe.dgn 07-SEP-2001 2:06PM jlldle

| SEEDING | |
|---|---|
| END WIDTH | SQ. YDS. |

| END AREA | | VOLUME | |
|---|---|---|---|
| CUT | FILL | CUT | FILL |

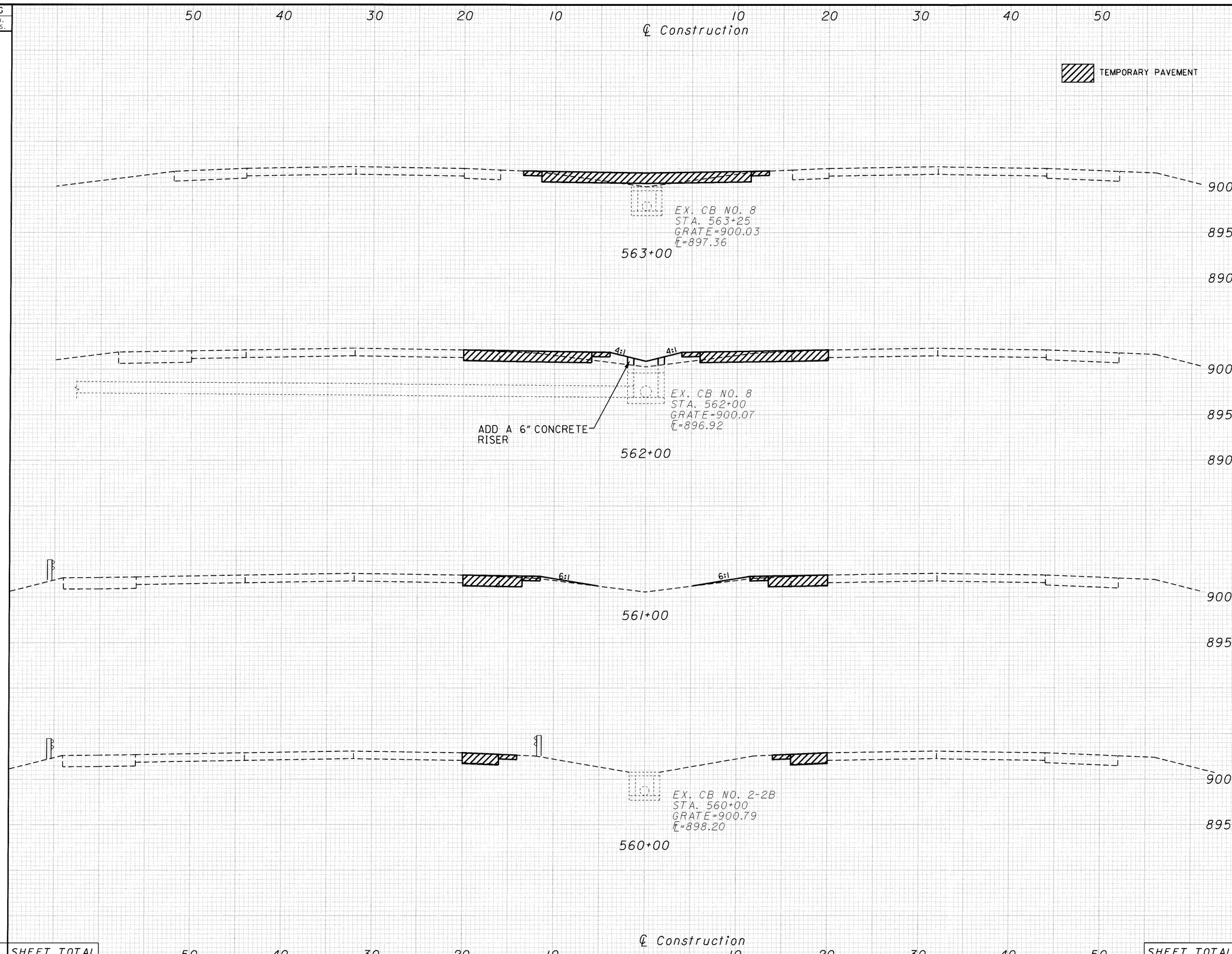


CALCULATED TAK
CHECKED LA

# MAINTENANCE OF TRAFFIC CROSS SECTIONS STA. 560+00 TO STA. 563+00

TRU-5-6.45



j:\22126_Tru_5_6.45\mot\mxe.dgn 07-SEP-2001 2:06PM jliddle

| SEEDING | |
|---|---|
| END WIDTH | SQ. YDS. |

| END AREA | | VOLUME | |
|---|---|---|---|
| CUT | FILL | CUT | FILL |

CALCULATED TAK

CHECKED LAJ

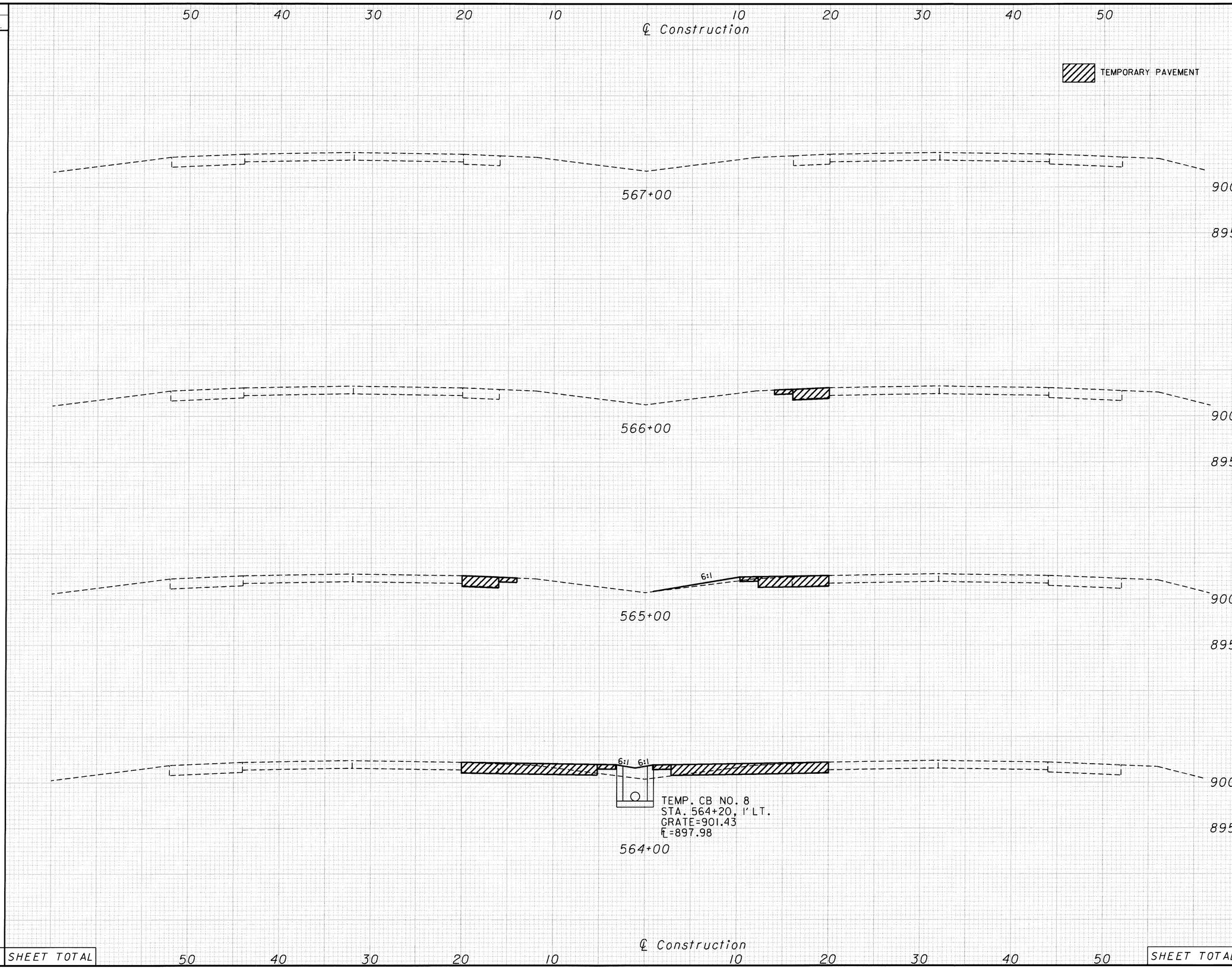


# MAINTENANCE OF TRAFFIC CROSS SECTIONS
## STA. 564+00 TO STA. 567+00

TRU-5-6.45



j:\22126_Tru_5_6.45\mot\mxe.dgn 07-SEP-2001 2:07PM jlidale

| SEEDING | |
|---|---|
| END WIDTH | SQ. YDS. |

| END AREA | | VOLUME | |
|---|---|---|---|
| CUT | FILL | CUT | FILL |

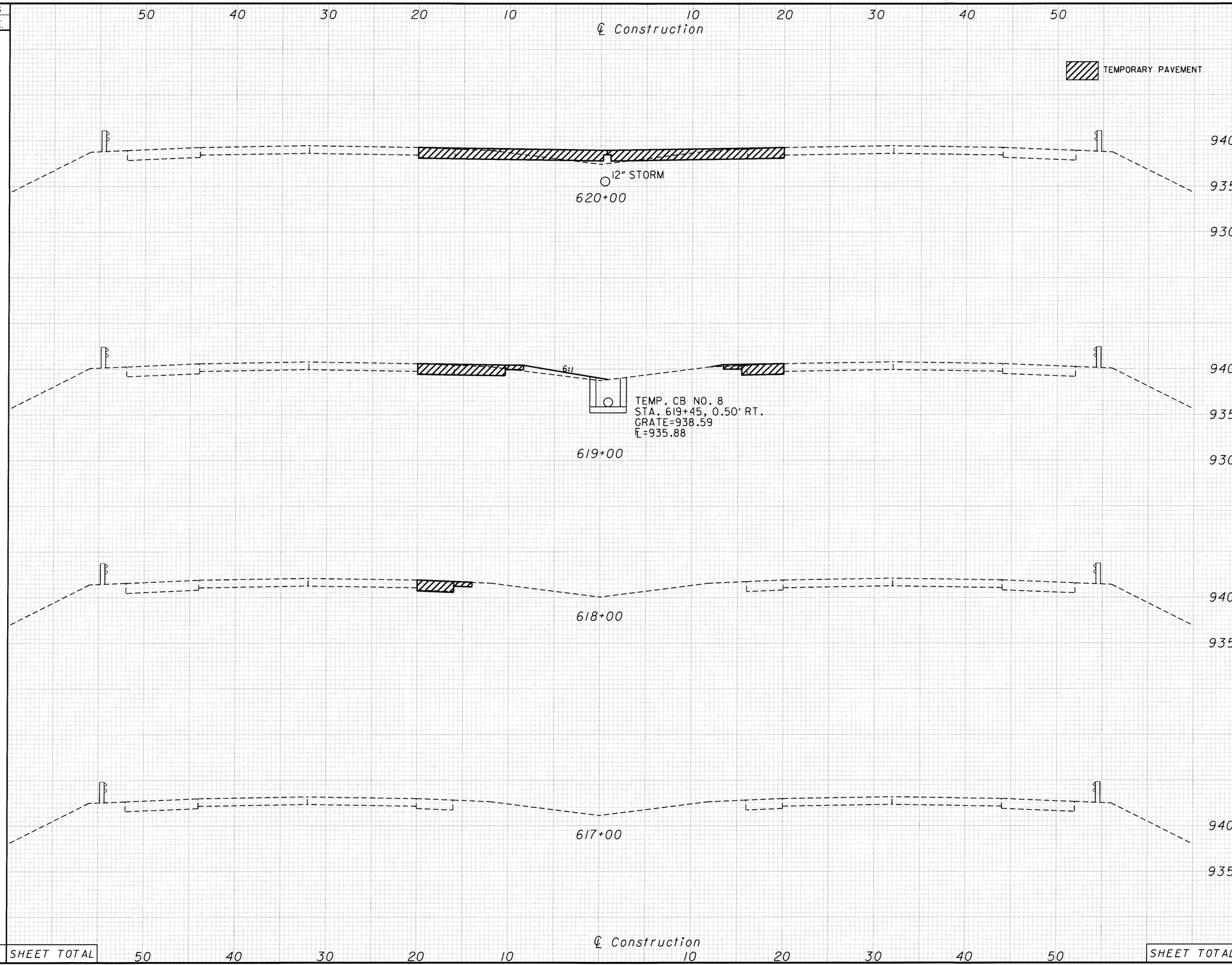


CALCULATED TAK

CHECKED LAJ

# MAINTENANCE OF TRAFFIC CROSS SECTIONS
## STA. 617+00 TO STA. 620+00

TRU-5-6.45



j:\22126_Tru_5_6.45\mot\mxf.dgn 07-SEP-2001 2:07PM jiddle

| SEEDING | |
|---|---|
| END WIDTH | SQ. YDS. |

| END AREA | | VOLUME | |
|---|---|---|---|
| CUT | FILL | CUT | FILL |

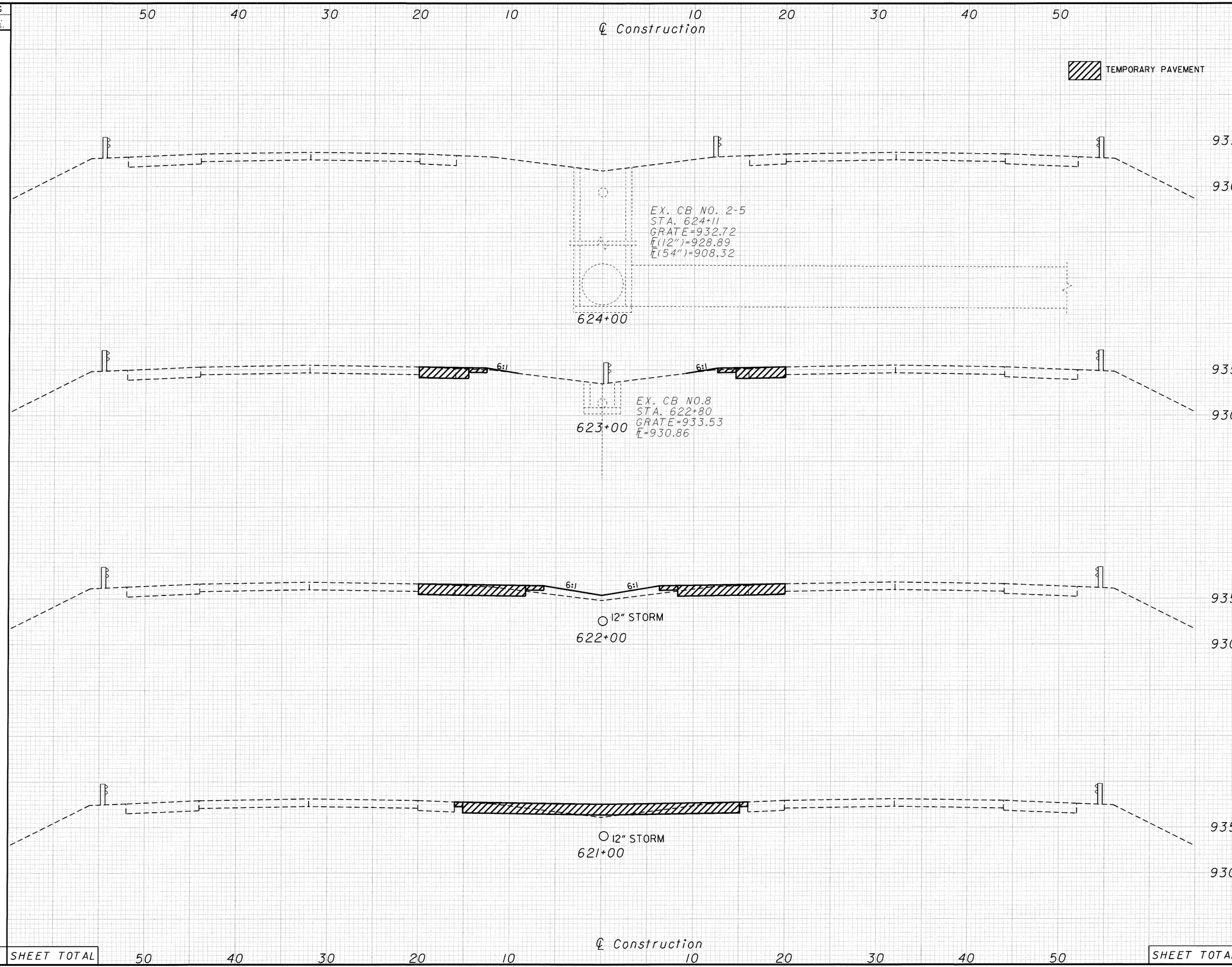


CALCULATED TAK

CHECKED LAJ

# MAINTENANCE OF TRAFFIC CROSS SECTIONS STA. 621+00 TO STA. 624+00

TRU-5-6.45



j:\22126_Tru_5_6.45\mot\mxf.dgn 07-SEP-2001 2:07PM jlidle

| SEEDING | |
|---|---|
| END WIDTH | SQ. YDS. |

| END AREA | | VOLUME | |
|---|---|---|---|
| CUT | FILL | CUT | FILL |

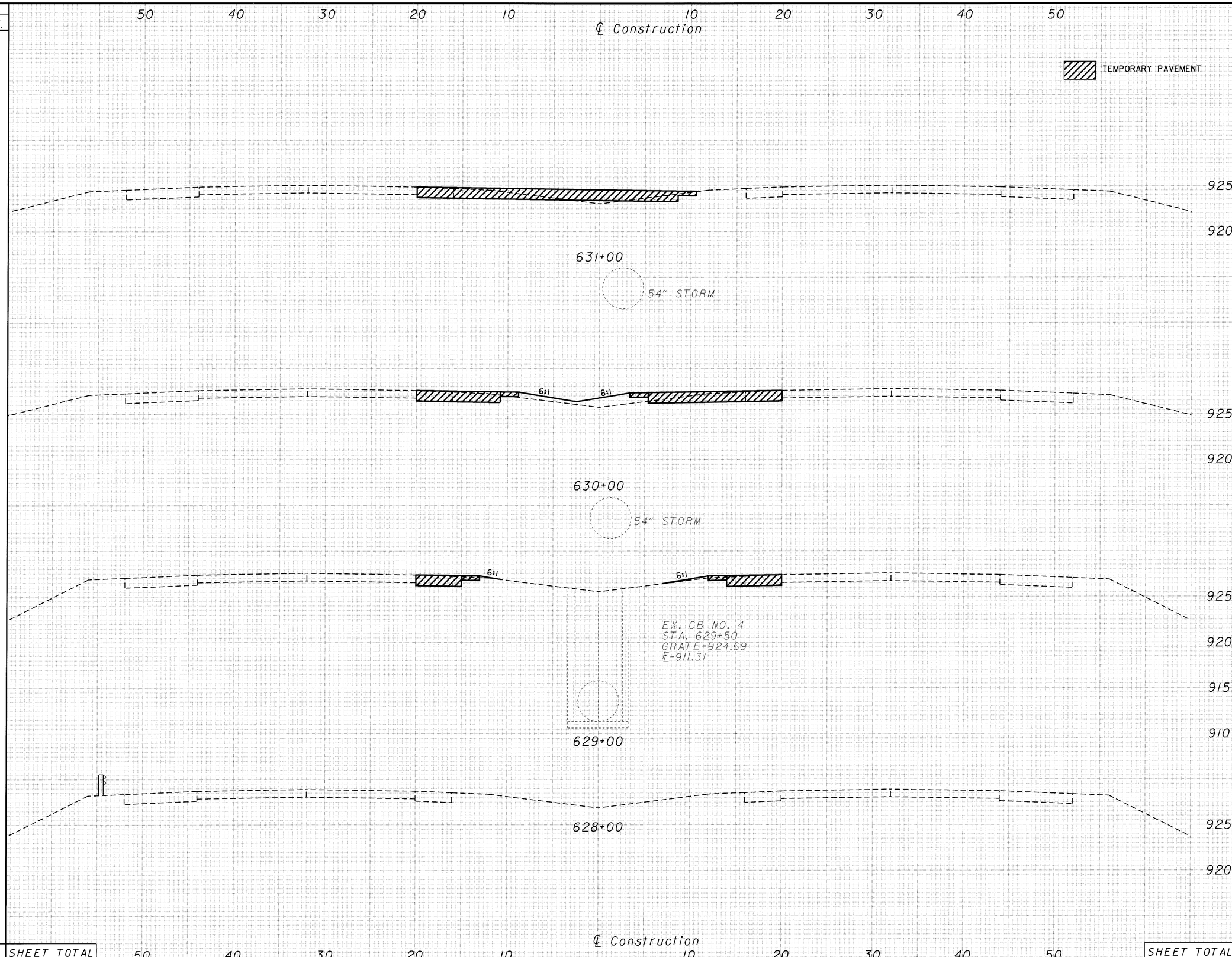


CALCULATED TAK
CHECKED LAJ

# MAINTENANCE OF TRAFFIC CROSS SECTIONS
## STA. 628+00 TO STA. 631+00

TRU-5-6.45



i:\22126_Tru_5_6.45\mot\mxg.dgn 07-SEP-2001 2:08PM jlidle

| SEEDING | |
|---|---|
| END WIDTH | SQ. YDS. |

| END AREA | | VOLUME | |
|---|---|---|---|
| CUT | FILL | CUT | FILL |

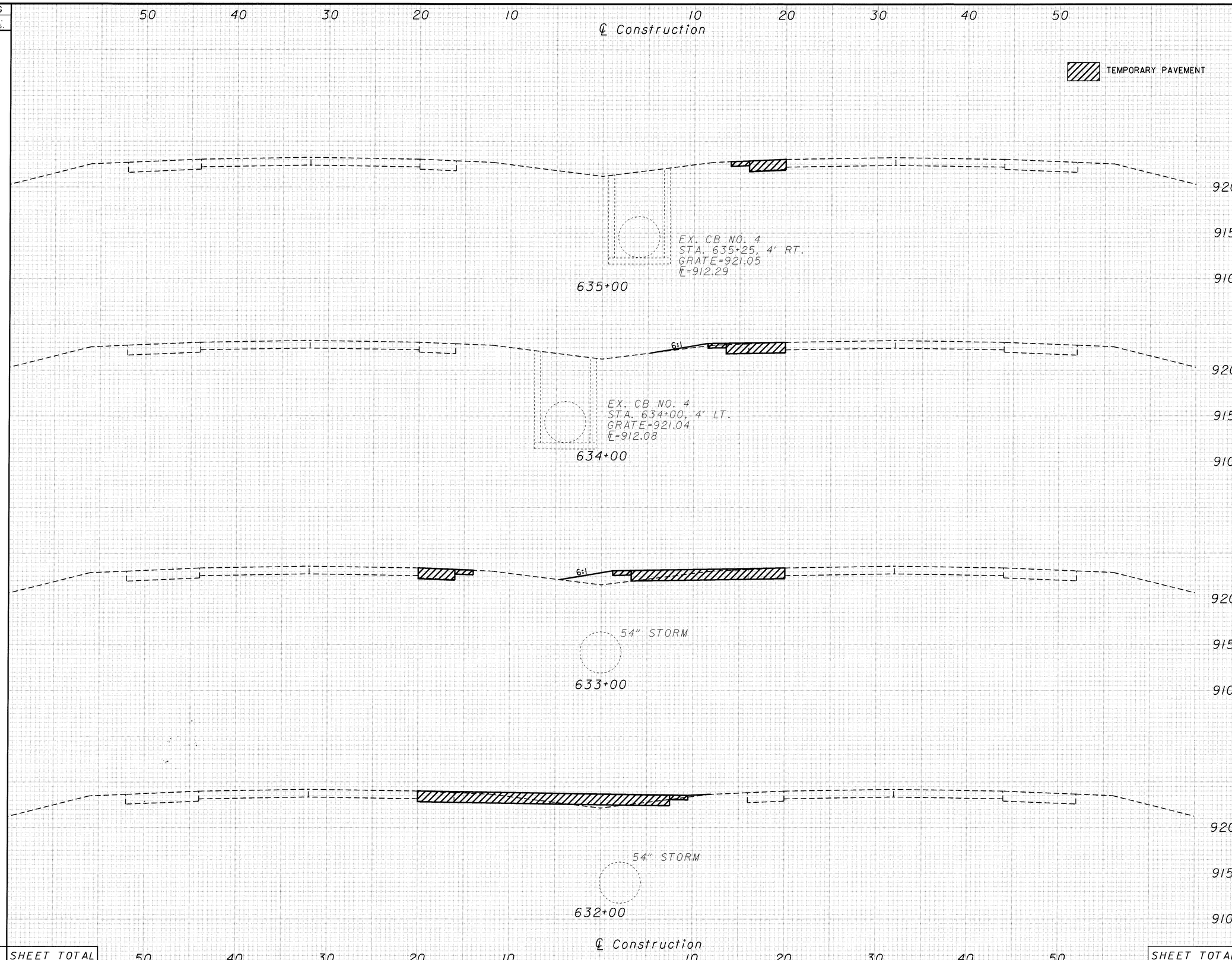


CALCULATED TAK

CHECKED JAL

# MAINTENANCE OF TRAFFIC CROSS SECTIONS STA. 632+00 TO STA. 635+00

TRU-5-6.45



J:\22126_Tru_5_6.45\mot\mxg.dgn 07-SEP-2001 2:08PM jlidle

| SHEET NUMBER | | | | | | | | | | | ITEM | ITEM EXT. | GRAND TOTAL | UNIT | DESCRIPTION | SEE SHEET NO. |
|---|---|---|---|---|---|---|---|---|---|---|---|---|---|---|---|---|
| 9 | 13 | 46 | 47 | 48 | 49 | 50 | 60 | 64 | 70 | 87 | | | | | | |
| | | | | | | | | | | | | | | | **ROADWAY** | |
| | | | 1568 | | | | | | | | 202 | 22900 | 1568 | SQ YD | APPROACH SLAB REMOVED | |
| | | | | | 200 | 200 | | | | | 202 | 23500 | 400 | SQ YD | WEARING COURSE REMOVED | |
| | | 1168 | | | | | | | | | 202 | 30700 | 1168 | LIN FT | CONCRETE BARRIER REMOVED | |
| | | | | | | | 19 | | | | 202 | 32000 | 19 | LIN FT | CURB REMOVED | |
| | | 25907.25 | | | | | | | | | 202 | 38000 | 25907.25 | LIN FT | GUARDRAIL REMOVED | |
| | | | | | | | | | | 1050 | 202 | 54100 | 1050 | EACH | RAISED PAVEMENT MARKER REMOVED FOR STORAGE | |
| | | | | | | | | | | | | | | | | |
| | | | 834 | | | | | | 84 | | 203 | 12000 | 918 | CU YD | EXCAVATION NOT INCLUDING EMBANKMENT CONSTRUCTION | |
| | | | | | | | 70 | | | | 203 | 20000 | 70 | CU YD | EMBANKMENT | |
| | | | 2479 | | | | | | | | 203 | 50000 | 2479 | SQ YD | SUBGRADE COMPACTION | |
| | | | | | 232 | 17 | | | | | 203 | 60200 | 249 | STATION | LINEAR GRADING, METHOD A | |
| | | | | | 1282 | 362 | | | | | 203 | 60400 | 1644 | STATION | LINEAR GRADING, METHOD D | |
| | | | | | | | | | | | | | | | | |
| | | 24487.5 | | | | | | | | | 606 | 13000 | 24487.5 | LIN FT | GUARDRAIL, TYPE 5 | |
| | | 25 | | | | | | | | | 606 | 13050 | 25 | LIN FT | GUARDRAIL, TYPE 5A | |
| | | 2925 | | | | | | | | | 606 | 15500 | 2925 | LIN FT | GUARDRAIL, BARRIER DESIGN, TYPE 5 | |
| | | 18 | | | | | | | | | 606 | 22000 | 18 | EACH | ANCHOR ASSEMBLY, TYPE B-98 | |
| | | 25 | | | | | | | | | 606 | 22010 | 25 | EACH | ANCHOR ASSEMBLY, TYPE E-98 | |
| | | 23 | | | | | | | | | 606 | 26500 | 23 | EACH | ANCHOR ASSEMBLY, TYPE T | |
| | | 65 | | | | | | | | | 606 | 35000 | 65 | EACH | BRIDGE TERMINAL ASSEMBLY, TYPE 1 | |
| | | 17 | | | | | | | | | 606 | 35100 | 17 | EACH | BRIDGE TERMINAL ASSEMBLY, TYPE 2 | |
| | | | | | | | | | | | | | | | | |
| | | 20 | | | | | | | | | 606 | 60010 | 20 | EACH | IMPACT ATTENUATOR, TYPE 1-98 (BIDIRECTIONAL) | |
| | | 328.5 | | | | | | | | | 622 | 24000 | 328.5 | LIN FT | CONCRETE BARRIER, TYPE D | |
| | | 165 | | | | | | | | | 622 | 24001 | 165 | LIN FT | CONCRETE BARRIER, TYPE D, AS PER PLAN | 71 |
| | | | | | | | | | | | | | | | | |
| | | | | | | | | | | | | | | | **EROSION CONTROL** | |
| | | | 461 | | | | | | | | 601 | 32101 | 461 | CU YD | ROCK CHANNEL PROTECTION, TYPE B WITH FILTER, AS PER PLAN | 104 |
| | | | | | | | 3 | 1 | | | 601 | 32200 | 4 | CU YD | ROCK CHANNEL PROTECTION, TYPE C WITH FILTER | |
| | | | 459 | | | | | | | | 601 | 52000 | 459 | SQ YD | CHANNEL PROTECTION, MISC.:ROCK CHANNEL PROTECTION TYPE B,WITH FILTER | |
| | | | | | | | 24 | | | | 660 | 20000 | 24 | SQ YD | SODDING REINFORCED | |
| | | | | | | | | | | | | | | | | |
| 2 | | | | | | | | | | | 870 | 00100 | 2 | EACH | SOIL ANALYSIS TEST | |
| 2320 | | | | | | | | | | | 870 | 00200 | 2320 | CU YD | PLACING TOPSOIL | |
| 20900 | | | 900 | | | | | | | | 870 | 10000 | 21800 | SQ YD | SEEDING AND MULCHING | |
| 1045 | | | | | | | | | | | 870 | 14000 | 1045 | SQ YD | REPAIR SEEDING AND MULCHING | |
| 1045 | | | | | | | | | | | 870 | 15000 | 1045 | SQ YD | INTER-SEEDING | |
| | | | | | | | | | | | | | | | | |
| 3.15 | | | 0.1 | | | | | | | | 870 | 20000 | 3.25 | TON | COMMERCIAL FERTILIZER | |
| 8.65 | | | 0.5 | | | | | | | | 870 | 30000 | 9.15 | TON | AGRICULTURAL LIME | |
| 65.4 | | | | | | | | | | | 870 | 35000 | 65.4 | M GAL | WATER | |
| 4180 | | | | | | | | | | | 877 | 10000 | 4180 | SQ YD | TEMPORARY SEEDING AND MULCHING | |
| | | | | | | | | | | | | | | | | |
| | | | | | | | | | | | | | | | **DRAINAGE** | |
| | | | | | | | | 64 | | | 603 | 01500 | 64 | LIN FT | 6" CONDUIT, TYPE F | |
| | | | | | | | 38 | 60 | | | 603 | 05200 | 98 | LIN FT | 12" CONDUIT, TYPE F 707.05 | |
| | | | | | | | 1 | 1 | | | 604 | 00800 | 2 | EACH | CATCH BASIN, NO. 3A | |
| | | | | | | | | 150 | | | 605 | 11100 | 150 | LIN FT | 6" SHALLOW PIPE UNDERDRAIN | |
| | | | | | | | | | | | | | | | | |
| | | | | | | | | | | | | | | | **PAVEMENT** | |
| | | | | | | | | | 500 | | 251 | 01000 | 500 | SQ YD | PARTIAL DEPTH PAVEMENT REPAIR | |
| | | | | | | | | | 500 | | 253 | 01000 | 500 | SQ YD | PAVEMENT REPAIR | |
| | | | 1867 | 1062 | 296110 | 75640 | | | | | 254 | 01000 | 374679 | SQ YD | PAVEMENT PLANING, BITUMINOUS | |
| | | | | | | | | | | | | | | | | |
| | | | 413 | 11 | | | | | 84 | | 304 | 20000 | 508 | CU YD | AGGREGATE BASE | |
| | | | 280 | 185 | 44417 | 5673 | | | | | 407 | 10000 | 50555 | GALLON | TACK COAT | |
| | | | 70 | 63 | 22209 | 11347 | | | | | 407 | 14000 | 33689 | GALLON | TACK COAT FOR INTERMEDIATE COURSE | |
| | | | | | | | | | | | | | | | | |
| | | | | 4 | | | | | | | 409 | 12000 | 4 | CU YD | SEAL COAT COVER AGGREGATE, NO. 8 | |
| | | | | 20 | | | | | | | 409 | 20000 | 20 | GALLON | SEAL COAT BITUMINOUS MATERIAL | |
| | 245 | | | | | | | | | | 411 | 10000 | 245 | CU YD | STABILIZED CRUSHED AGGREGATE | |
| | | | | 41 | | | | | | | 448 | 46020 | 41 | CU YD | ASPHALT CONCRETE INTERMEDIATE COURSE, TYPE 1, PG64-22 | |
| | | | | | 710 | 50 | | | | | 448 | 46060 | 760 | CU YD | ASPHALT CONCRETE INTERMEDIATE COURSE, TYPE 1, PG64-22 (UNDER GUARDRAIL) | |

CALCULATED CJT
CHECKED TJD

GENERAL SUMMARY

TRU-5-6.45



j:\22126_Tru_5_6.45\22126gg.dgn 12-SEP-2001 12:28PM cturner1

| SHEET NUMBER 46 | 47 | 48 | 49 | 50 | 60 | 64 | 81 | 82 | 83 | 87 | ITEM | ITEM EXT. | GRAND TOTAL | UNIT | DESCRIPTION | SEE SHEET NO. |
|---|---|---|---|---|---|---|---|---|---|---|---|---|---|---|---|---|
| | | | | | | | | | | | | | | | **PAVEMENT (CONT.)** | |
| | | 48 | | | | | | | | | 448 | 47021 | 48 | CU YD | ASPHALT CONCRETE SURFACE COURSE, TYPE I, PG64-22, AS PER PLAN | 6 |
| | | | | | | 159 | | | | | SPECIAL | 45130000 | 159 | LIN FT | PRESSURE RELIEF JOINT, TYPE A | |
| | 2479 | | | | | | | | | | 611 | 25001 | 2479 | SQ YD | REINFORCED CONCRETE APPROACH SLAB (T=15"), AS PER PLAN | 104 |
| | | | 1583 | 455 | | | | | | | 617 | 10100 | 2038 | CU YD | COMPACTED AGGREGATE, TYPE A | |
| | 89 | | | | | | | | | | 830 | 24510 | 89 | LIN FT | CURB, TYPE 4-C | |
| | | | | | 10 | 15 | | | | | 830 | 26000 | 25 | LIN FT | CURB, TYPE 6 | |
| | 100 | | 12338 | 3159 | | | | | | | 858 | 10051 | 15597 | CU YD | ASPHALT CONCRETE SURFACE COURSE, 12.5 MM, TYPE B (446), AS PER PLAN | 6 |
| | 45 | | 14394 | 3686 | | | | | | | 858 | 10150 | 18125 | CU YD | ASPHALT CONCRETE INTERMEDIATE COURSE, 19MM, TYPE B (446) | |
| | | | | | | | | | | | | | | | **TRAFFIC CONTROL** | |
| | | | | | | | | | | 1147 | 621 | 00200 | 1147 | EACH | RAISED PAVEMENT MARKER, INSTALLATION ONLY | |
| | | | | | | | | | 12 | | 625 | 01500 | 12 | EACH | CABLE SPLICING KIT | |
| | | | | | | | | | 6 | | 625 | 32000 | 6 | EACH | GROUND ROD | |
| 390 | | | | | | | | | | | 626 | 00100 | 390 | EACH | BARRIER REFLECTOR, TYPE A | |
| 18 | | | | | | | | | | | 626 | 00200 | 18 | EACH | BARRIER REFLECTOR, TYPE B | |
| | | | | | | | | | 3 | | 630 | 35500 | 3 | EACH | OVERHEAD SIGN SUPPORT, TYPE TC-7.65, DESIGN 6 | |
| | | | | | | | | | 2 | | 630 | 35501 | 2 | EACH | OVERHEAD SIGN SUPPORT, TYPE TC-7.65, DESIGN 6, AS PER PLAN | 81 |
| | | | | | | | | | 1 | | 630 | 45501 | 1 | EACH | OVERHEAD SIGN SUPPORT, TYPE TC-7.65, DESIGN 8, AS PER PLAN | 81 |
| | | | | | | | | 4 | | | 630 | 75106 | 4 | EACH | LUMINAIRE SUPPORT ASSEMBLY, TYPE TC-31.21 | |
| | | | | | | | | 2 | | | 630 | 77600 | 2 | EACH | OVERPASS STRUCTURE MOUNTED SIGN SUPPORT, TYPE TC-18.26, DESIGN 6 | |
| | | | | | | | | 120 | 2108 | | 630 | 80204 | 2228 | SQ FT | SIGN, EXTRUSHEET, TYPE G | |
| | | | | | | | | | 12 | | 630 | 84510 | 12 | EACH | RIGID OVERHEAD SIGN SUPPORT FOUNDATION | |
| | | | | | | | | 2 | | | 630 | 86310 | 2 | EACH | REMOVAL OF STRUCTURE MOUNTED SIGN AND DISPOSAL | |
| | | | | | | | | | 12 | | 630 | 87400 | 12 | EACH | REMOVAL OF OVERHEAD MOUNTED SIGN AND DISPOSAL | |
| | | | | | | | 2 | | | | 630 | 88901 | 2 | EACH | REMOVAL OF OVERHEAD SIGN SUPPORT AND REERECTION, AS PER PLAN | 81 |
| | | | | | | | | | 6 | | 630 | 89702 | 6 | EACH | REMOVAL OF OVERHEAD SIGN SUPPORT AND DISPOSAL | |
| | | | | | | | | 2 | | | 630 | 89808 | 2 | EACH | REMOVAL OF OVERHEAD SIGN SUPPORT AND DISPOSAL, TYPE TC-18.26 | |
| | | | | | | | | 2 | | | 631 | 70100 | 2 | EACH | BALLAST WIRING ENCLOSURE, TYPE B | |
| | | | | | | | | 2 | 6 | | 631 | 84000 | 8 | EACH | SIGN SERVICE | |
| | | | | | | | | | 12 | | 631 | 84300 | 12 | EACH | SIGN WIRED | |
| | | | | | | | | 2 | | | 631 | 84400 | 2 | EACH | SIGN WIRED, OVERPASS STRUCTURE MOUNTED | |
| | | | | | | | | | 6 | | 631 | 85100 | 6 | EACH | DISCONNECT SWITCH WITH ENCLOSURE, TYPE X | |
| | | | | | | | | 4 | | | 631 | 87100 | 4 | EACH | BALLAST, TYPE CMRI-100-480, REMOTE | |
| | | | | | | | | | 25 | | 631 | 87202 | 25 | EACH | BALLAST, TYPE CMRI-175-480, INTEGRAL | |
| | | | | | | | | | 4 | | 631 | 87302 | 4 | EACH | BALLAST, TYPE CMRI-250-480, INTEGRAL | |
| | | | | | | | | | 25 | | 631 | 89200 | 25 | EACH | MERCURY VAPOR LUMINAIRE, TYPE TC-31.21 WITH 175 WATT LAMP | |
| | | | | | | | | | 4 | | 631 | 89300 | 4 | EACH | MERCURY VAPOR LUMINAIRE, TYPE TC-31.21 WITH 250 WATT LAMP | |
| | | | | | | | | 3 | 27 | | 631 | 94200 | 30 | EACH | REMOVAL OF LUMINAIRE AND DISPOSAL | |
| | | | | | | | | 2 | 6 | | 631 | 94304 | 8 | EACH | REMOVAL OF DISCONNECT SWITCH AND DISPOSAL | |
| | | | | | | | | 3 | 27 | | 631 | 94404 | 30 | EACH | REMOVAL OF BALLAST AND DISPOSAL | |
| | | | | | | | | 2 | 12 | | 631 | 94408 | 14 | EACH | REMOVAL OF SIGN WIRING AND DISPOSAL | |
| | | | | | | | | 2 | 6 | | 631 | 94412 | 8 | EACH | REMOVAL OF SIGN SERVICE AND DISPOSAL | |
| | | | | | | | | 3 | | | 631 | 94420 | 3 | EACH | REMOVAL MISC.:LUMINAIRE SUPPORT ASSEMBLY AND DISPOSAL | |

CALCULATED CJT CHECKED TJP

GENERAL SUMMARY

TRU-5-6.45



j:\22126_Tru_5_6.45\22126gg.dgn 10-SEP-2001 8:03AM tperez

| SHEET NUMBER 10 | 11 | 12 | 13 | 48 | 88 | 90 | | | | | ITEM | ITEM EXT. | GRAND TOTAL | UNIT | DESCRIPTION | SEE SHEET NO. |
|---|---|---|---|---|---|---|---|---|---|---|---|---|---|---|---|---|
| | | | | | | | | | | | | | | | TRAFFIC CONTROL (CONT.) | |
| | | | | 0.46 | 25.89 | | | | | | 642 | 00102 | 25.35 | MILE | EDGE LINE, TYPE 2 | |
| | | | | | 7.83 | | | | | | 642 | 00202 | 7.83 | MILE | LANE LINE, TYPE 2 | |
| | | | | 0.24 | | | | | | | 642 | 00302 | 0.24 | MILE | CENTER LINE, TYPE 2 | |
| | | | | | | 7105 | | | | | 642 | 00402 | 7105 | LIN FT | CHANNELIZING LINE, TYPE 2 | |
| | | | | | | 449 | | | | | 642 | 00502 | 449 | LIN FT | STOP LINE, TYPE 2 | |
| | | | | | | 2252 | | | | | 642 | 00702 | 2252 | LIN FT | TRANSVERSE LINE, TYPE 2 | |
| | | | | | | 25 | | | | | 642 | 01302 | 25 | EACH | LANE ARROW, TYPE 2 | |
| | | | | | | 14 | | | | | 642 | 01412 | 14 | EACH | WORD ON PAVEMENT, 96", TYPE 2 | |
| | | | | | | | | | | | | | | | SIGNALS | |
| 4 | | | | | | | | | | | 632 | 26500 | 4 | EACH | DETECTOR LOOP | |
| | | | | | | | | | | | | | | | STRUCTURES | |
| | | | | | | | | | | | | | | | (SEE PAGES NO.'S 106,113,125,135,150,155,160,161,&162 FOR QUANTITIES) | |
| | | | | | | | | | | | | | | | MAINTENANCE OF TRAFFIC | |
| | 200 | | | | | | | | | | 614 | 11100 | 200 | HOUR | LAW ENFORCEMENT OFFICER WITH PATROL CAR | |
| 30 | | | | | | | | | | | 614 | 12460 | 30 | EACH | WORK ZONE MARKING SIGN | |
| | 50 | | | | | | | | | | 614 | 12470 | 50 | EACH | WORK ZONE SPEED LIMIT SIGN | |
| | | 16 | | | | | | | | | 614 | 12480 | 16 | EACH | DOUBLED FINES IN WORK ZONE SIGN | |
| | 7 | | | | | | | | | | 614 | 12756 | 7 | EACH | TEMPORARY CROSSOVER LIGHTING SYSTEM | |
| | 1640 | | | | | | | | | | 614 | 13300 | 1640 | EACH | BARRIER REFLECTOR, TYPE B | |
| | | 36 | | | | | | | | | 614 | 18511 | 36 | MONTH | PORTABLE CHANGEABLE MESSAGE SIGN, AS PER PLAN | 12 |
| 15.5 | | | | | | | | | | | 614 | 20000 | 15.5 | MILE | TEMPORARY LANE LINE, CLASS I | |
| 5.6 | | | | | | | | | | | 614 | 22000 | 5.6 | MILE | TEMPORARY EDGE LINE, CLASS I | |
| 7.6 | | | | | | | | | | | 614 | 22200 | 7.6 | MILE | TEMPORARY EDGE LINE, CLASS I, 740.06, TYPE I | |
| 2400 | | | | | | | | | | | 614 | 28000 | 2400 | LIN FT | TEMPORARY GORE MARKING, CLASS II | |
| | | | | | | | | | | | 615 | 10000 | LUMP | | TEMPORARY ROAD | |
| | | | 10025 | | | | | | | | 615 | 20001 | 10025 | SQ YD | TEMPORARY PAVEMENT, CLASS A, AS PER PLAN | 13 |
| | | | 5 | | | | | | | | 616 | 10000 | 5 | M GAL | WATER | |
| | | | 1 | | | | | | | | 616 | 20000 | 1 | TON | CALCIUM CHLORIDE | |
| 20500 | | | | | | | | | | | 622 | 40031 | 20500 | LIN FT | PORTABLE CONCRETE BARRIER, 50", AS PER PLAN | 11 |
| | | | | | | | | | | | 614 | 11000 | LUMP | | MAINTAINING TRAFFIC | |
| | | | | | | | | | | | 623 | 10000 | LUMP | | CONSTRUCTION LAYOUT STAKES | |
| | | | | | | | | | | | 624 | 10000 | LUMP | | MOBILIZATION | |
| | | | | | | | | | | | 806 | 16010 | 18 | MONTH | FIELD OFFICE, TYPE B | |

CALCULATED CJT
CHECKED TJP

GENERAL SUMMARY

TRU-5-6.45



j:\22126_Tru_5_6.45\22126gg.dgn 10-SEP-2001 8:03AM tperez

| REF NO. | STATION TO STATION | | SIDE | 202 CONCRETE BARRIER REMOVED | 202 GUARDRAIL REMOVED | 606 GUARDRAIL, TYPE 5 | 606 GUARDRAIL, BARRIER DESIGN, TYPE 5 | 606 ANCHOR ASSEMBLY, TYPE B-98 | 606 ANCHOR ASSEMBLY, TYPE E-98 | 606 ANCHOR ASSEMBLY, TYPE T | 606 BRIDGE TERMINAL ASSEMBLY, TYPE 1 | 606 BRIDGE TERMINAL ASSEMBLY, TYPE 2 | 606 IMPACT ATTENUATOR, TYPE 1-98 (BIDIRECTIONAL) | 622 CONCRETE BARRIER, TYPE D | 622 CONCRETE BARRIER, TYPE D, AS PER PLAN | 626 BARRIER REFLECTOR, TYPE A | 626 BARRIER REFLECTOR, TYPE B | REMARKS |
|---|---|---|---|---|---|---|---|---|---|---|---|---|---|---|---|---|---|---|
| | | | | LF | LF | LF | LF | EACH | EACH | EACH | EACH | EACH | EACH | LF | LF | EACH | EACH | * - Barrier Transition As Per SCD RM-4.5M |
| GR-1 | 1013+02.21 | 1020+39.71 | RT | | 737.5 | 700 | | | 1 | | 1 | | | | | 8 | | |
| GR-2 | 1017+94.55 | 1020+39.71 | RT MED | | 245.25 | 75 | 137.5 | | | | 1 | | 1 | | | 3 | | |
| GR-3 | 1014+25 | 1019+25 | LT | | 500 | 462.5 | | | 1 | | | 1 | | | | 6 | | |
| GR-4 | 1025+21 | 1040+21 RAMP A, MARKET ST. | RT | | 1500 | 1462.5 | | | 1 | | | 1 | | | | 16 | | |
| GR-5 | 1024+06 | 1026+43.50 | LT MED | | 275 | 250 | | 1 | | | 1 | | | | | 4 | | |
| GR-6 | 1023+64 | 1029+76.50 | LT | | 612.5 | 575 | | | 1 | | 1 | | | | | 7 | | |
| GR-7 | 1029+89.50 | 1031+14.50 | LT | | 162.5 | 112.5 | | 1 | | 1 | | | | | | 3 | | |
| GR-8 | 1035+38.50 | 1036+55 | RT | 120 | | 50 | | | 1 | | 1 | | | | 16.5 | 2 | 1 | See Sheet 71 For Details. |
| GR-9 | 1035+38.50 | 1036+55 | RT MED | 80 | | 50 | | 1 | | | 1 | | | | 16.5 | 2 | 1 | See Sheet 71 For Details. |
| GR-10 | 1036+80 | 1037+96.50 | LT MED | 120 | | 50 | | | 1 | | 1 | | | | 16.5 | 2 | 1 | See Sheet 71 For Details. |
| GR-11 | 1037+00 | 1038+16.50 | LT | 128 | | 50 | | 1 | | | 1 | | | | 16.5 | 2 | 1 | See Sheet 71 For Details. |
| GR-12 | RAMP B, MARKET ST. | | RT | | 450 | 425 | | | 1 | 1 | | | | | | 6 | | |
| GR-13 | 1074+33 | 1076+08 | RT | | 175 | 137.5 | | | 1 | | 1 | | | | | 3 | | |
| GR-14 | 1073+50.34 | 1076+08 | RT MED | | 125 | 62.5 | 162.5 | | | | 1 | | 1 | | | 4 | | |
| GR-15 | 1075+95.50 | 1076+08 | LT MED | | 12.5 | | | | | | | | | | | | | |
| GR-16 | 1074+95.50 | 1076+08 | LT | | 112.5 | 100 | | | | 1 | | 1 | | | | 3 | | |
| GR-17 | 1078+35 | 1078+97.50 | RT | | 62.5 | 50 | | | | 1 | | 1 | | | | 2 | | |
| GR-18 | 1078+35 | 1078+60 | RT MED | | 25 | | | | | | | | | | | | | |
| GR-19 | 1078+35 | 1080+92.66 | LT MED | | 125 | 62.5 | 162.5 | | | | 1 | | 1 | | | 4 | | |
| GR-20 | 1078+35 | 1080+10 | LT | | 175 | 137.5 | | | 1 | | 1 | | | | | 3 | | |
| GR-21 | 1082+20 | 1083+30 | RT | 120 | | 100 | | 1 | | | 1 | | | | 16.5 | 2 | 1 | See Sheet 71 For Details. |
| GR-22 | 1082+00 | 1083+96 | RT MED | | 196 | 37.5 | 112.5 | | | 1 | | | 1 | | | 3 | | |
| GR-23 | 1083+50 | 1085+46 | LT MED | | 196 | 37.5 | 112.5 | | | 1 | | | 1 | | | 3 | | |
| GR-24 | 1084+15 | 1085+25 | LT | 120 | | 100 | | 1 | | | 1 | | | | 16.5 | 2 | 1 | See Sheet 71 For Details. |
| GR-25 | 1099+60 | 1101+35 | RT | | 175 | 137.5 | | | 1 | | 1 | | | | | 3 | | |
| GR-26 | 1098+97.33 | 1101+55 | RT MED | | 125 | 62.5 | 162.5 | | | | 1 | | 1 | | | 4 | | |
| GR-27 | 1101+45 | 1101+70 | LT MED | | 25 | | | | | | | | | | | | | |
| GR-28 | 1101+00 | 1102+00 | LT | | 100 | 87.5 | | | | 1 | | 1 | | | | 3 | | |
| GR-29 | 1101+85 | 1102+47.50 | RT | | 25 | 50 | | | | 1 | | 1 | | | | 2 | | |
| GR-30 | 1102+10 | 1102+47.50 | RT MED | | 37.5 | | | | | | | | | | | | | |
| GR-31 | 1102+25 | 1104+82.66 | LT MED | | 125 | 62.5 | 162.5 | | | | 1 | | 1 | | | 4 | | |
| GR-32 | 1102+50 | 1104+37.50 | LT | | 187.5 | 150 | | | 1 | | 1 | | | | | 3 | | |
| GR-33 | 1112+52 | 1114+76 RAMP B, US 422 | RT | | 175 | 150 | | 1 | | | 1 | | | 36.5 * | | 3 | 1 | 87.5' FLARE @ 15:1 AS PER GR-5.1M |
| GR-34 | 1112+52 | 1114+76 | RT MED | | 175 | 137.5 | | | 1 | | 1 | | | 36.5 * | | 3 | 1 | |
| GR-35 | 1124+00 RAMP A, US 422 | 1127+50 | RT | | 350 | 312.5 | | | 1 | | 1 | | | | | 5 | | |
| GR-36 | 1124+80.34 | 1127+38 | RT MED | | 125 | 62.5 | 162.5 | | | | 1 | | 1 | | | 4 | | |
| GR-37 | 1122+09.50 | 1127+22 | LT | | 512.5 | 500 | | | | 1 | | 1 | | | | 6 | | |
| GR-38 | 1129+63 | 1132+75.50 | RT | | 312.5 | 300 | | | | 1 | | 1 | | | | 4 | | |
| GR-39 | 1129+46 | 1132+03.66 | LT MED | | 125 | 62.5 | 162.5 | | | | 1 | | 1 | | | 4 | | |
| GR-40 | 1129+38 | 1135+00.50 | LT | | 562.5 | 525 | | | 1 | | 1 | | | | | 7 | | |
| GR-41 | 1138+65 | 1140+89 | LT MED | | 175 | 137.5 | | | 1 | | 1 | | | 36.5 * | | 3 | 1 | |
| GR-42 | 1138+65 | 1140+89 | LT | | 175 | 150 | | 1 | | | 1 | | | 36.5 * | | 3 | 1 | 87.5' FLARE @ 15:1 AS PER GR-5.1M |
| GR-43 | 1157+38 | 1158+80 | RT | 120 | | 100 | | 1 | | | 1 | | | | 16.5 | 2 | 1 | See Sheet 71 For Details. |
| GR-44 | 1158+00 | 1160+08 | RT MED | | 208 | 50 | 112.5 | | | 1 | | | 1 | | | 3 | | |
| GR-45 | 1159+60 | 1161+68 | LT MED | | 208 | 50 | 112.5 | | | 1 | | | 1 | | | 3 | | |
| GR-46 | 1161+80 | 1163+22 | LT | 120 | | 100 | | 1 | | | 1 | | | | 16.5 | 2 | 1 | See Sheet 71 For Details. |
| GR-47 | 1210+12.50 | 1223+00 | RT | | 1287.5 | 1250 | | | 1 | | 1 | | | | | 13 | | |
| | | | | | | | | | | | | | | | | | | |
| GR-49 | 1210+65.50 | 1221+28 | LT | | 1063 | 1050 | | | | 1 | | 1 | | | | 12 | | |
| GR-50 | 1225+51 | 538+00 RAMP A, SR 45 | RT | | 1837.5 | 1825 | | | | 1 | | 1 | | | | 20 | | |
| | | | | | | | | | | | | | | | | | | |
| GR-52 | 1223+66 | 541+95 | LT | | 1487.5 | 1450 | | | 1 | | 1 | | | | | 16 | | |
| GR-53 | 1229+67 | 535+20 | RT MED | | 175 | 137.5 | | | 1 | | 1 | | | 36.5 * | | 4 | | |
| GR-54 | 540+10 | 545+85 | RT | | 575 | 537.5 | | | 1 | | 1 | | | | | 7 | | |
| GR-55 | 543+02.34 | 545+60 | RT MED | | 125 | 62.5 | 162.5 | | | | 1 | | 1 | | | 4 | | |
| GR-56 | 540+05 | 545+30 | LT | | 525 | 512.5 | | | | 1 | | 1 | | | | 7 | | |
| GR-57 | 547+50 | 552+87.50 | RT | | 537.5 | 525 | | | | 1 | | 1 | | | | 7 | | |
| GR-58 | 547+20 | 549+77.66 | LT MED | | 125 | 62.5 | 162.5 | | | | 1 | | 1 | | | 4 | | |
| GR-59 | 547+00 | 552+50 | LT | | 537.5 | 500 | | | 1 | | 1 | | | | | 7 | | |
| **SUBTOTALS CARRIED TO SHEET** | | | **46** | 928 | 17866.25 | 16187.25 | 1887.5 | 10 | 20 | 16 | 35 | 12 | 13 | 182.5 | 132 | 262 | 12 | |

CALCULATED RCB
CHECKED TJP

# GUARDRAIL SUBSUMMARY

TRU-5-6.45



j:\22126_Tru_5_6.45\22126gsa.dgn 10-SEP-2001 8:13AM tperez

| REF NO. | STATION | TO STATION | SIDE | 202 CONCRETE BARRIER REMOVED | 202 GUARDRAIL REMOVED | 606 GUARDRAIL, TYPE 5 | 606 GUARDRAIL, TYPE 5A | 606 GUARDRAIL, DESIGN, TYPE 5 | 606 ANCHOR ASSEMBLY, TYPE B-98 | 606 ANCHOR ASSEMBLY, TYPE E-98 | 606 ANCHOR ASSEMBLY, TYPE T | 606 BRIDGE TERMINAL ASSEMBLY, TYPE I | 606 BRIDGE TERMINAL ASSEMBLY, TYPE 2 | 606 IMPACT ATTENUATOR, TYPE I-98 (BIDIRECTIONAL) | 622 CONCRETE BARRIER, TYPE D | 622 CONCRETE BARRIER, TYPE D, AS PER PLAN | 626 BARRIER REFLECTOR, TYPE A | 626 BARRIER REFLECTOR, TYPE B | REMARKS |
|---|---|---|---|---|---|---|---|---|---|---|---|---|---|---|---|---|---|---|---|
| | | | | LF | LF | LF | LF | LF | EACH | EACH | EACH | EACH | EACH | EACH | LF | LF | EACH | EACH | * - Barrier Transition As Per SCD RM-4.5M |
| GR-60 | 555+55 | 557+79 | LT MED | | 175 | 137.5 | | | | 1 | | 1 | | | 36.5 * | | 3 | 1 | |
| GR-61 | 555+55 | 557+79 | LT | | 175 | 150 | | | 1 | | | 1 | | | 36.5 * | | 3 | 1 | 87.5' FLARE @ 15:1 AS PER GR-5.1M |
| GR-62 | 557+90 | 558+40 | RT | | 150 | 112.5 | | | | 1 | | 1 | | | | | 3 | | |
| GR-63 | 556+07.34 | 558+64 | RT MED | | 125 | 62.5 | | 162.5 | | | | 1 | | 1 | | | 4 | | |
| GR-64 | 559+60 | 562+17.66 | LT MED | | 125 | 62.5 | | 162.5 | | | | 1 | | 1 | | | 4 | | |
| GR-65 | 559+82 | 561+57 | LT | | 162.5 | 137.5 | | | 1 | | | 1 | | | | | 3 | | 87.5' FLARE @ 15:1 AS PER GR-5.1M |
| GR-66 | 600+50 | 611+50 | RT | | 1100 | 1075 | | | 1 | | | 1 | | | | | 12 | | 87.5' FLARE @ 15:1 AS PER GR-5.1M |
| GR-68 | 601+50 | 611+50 | LT | | 1000 | 987.5 | | | | | 1 | | 1 | | | | 11 | | |
| GR-69 | 612+90 | 624+27.50 | RT | | 1137.5 | 1137.5 | | | | | | 1 | 1 | | | | 13 | | |
| GR-71 | 612+90 | 624+40 | LT | | 1150 | 1150 | | | | | | 1 | 1 | | | | 13 | | |
| GR-72 | 621+73.34 | 624+31 | RT MED | | 125 | 62.5 | | 162.5 | | | | 1 | | 1 | | | 4 | | |
| GR-73 | 625+45 | 626+95 | RT | | 150 | 137.5 | | | | | 1 | | 1 | | | | 3 | | |
| GR-74 | 625+55 | 628+12.66 | LT MED | | 125 | 62.5 | | 162.5 | | | | 1 | | 1 | | | 4 | | |
| GR-75 | 625+62 | 628+87 | LT | | 325 | 300 | | | 1 | | | 1 | | | | | 5 | | 87.5' FLARE @ 15:1 AS PER GR-5.1M |
| GR-76 | 643+91 | 646+15 | RT | | 175 | 137.5 | | | | 1 | | 1 | | | 36.5 * | | 3 | 1 | |
| GR-77 | 643+91 | 646+15 | RT MED | | 175 | 137.5 | | | | 1 | | 1 | | | 36.5 * | | 3 | 1 | |
| GR-78 | 654+28 | 655+70 | RT | 120 | | 100 | | | 1 | | | 1 | | | | 16.5 | 2 | 1 | See Sheet 71 For Details. |
| GR-79 | 654+72 | 656+80 | RT MED | | 208 | 50 | | 112.5 | | | 1 | | | 1 | | | 3 | | |
| GR-80 | 656+10 | 658+18 | LT MED | | 208 | 50 | | 112.5 | | | 1 | | | 1 | | | 3 | | |
| GR-81 | 657+10 | 658+52 | LT | 120 | | 100 | | | 1 | | | 1 | | | | 16.5 | 2 | 1 | See Sheet 71 For Details. |
| GR-82 | RAMP H, PERKINS-JONES RD. | | RT | | 225 | 187.5 | | | | 1 | 1 | | | | | | 4 | | |
| GR-83 | 665+95 | 667+95 | LT | | 162.5 | 125 | 25 | | 1 | | 1 | | | | | | 3 | | 25' FLARE @ 15:1 AS PER GR-5.1M |
| GR-84 | 705+44.50 | 712+32 | RT | | 687.5 | 662.5 | | | 1 | | | 1 | | | | | 8 | | |
| GR-85 | 710+02.34 | 712+60 | RT MED | | 125 | 62.5 | | 162.5 | | | | 1 | | 1 | | | 4 | | |
| GR-86 | 705+55 | 713+05 | LT | | 750 | 737.5 | | | | | 1 | | 1 | | | | 8 | | |
| | ℄ STA 1036+94.25 S.R. 5 = ℄ STA 1029+87.10 MARKET ST. | | | | | | | | | | | | | | | | | | |
| GR-87 | 1028+15.25 | 1028+40.25 | LT | | 25 | 31.25 | | | | | | 1 | | | | | | | FLARE @ 10:1 TO EX. GUARDRAIL |
| GR-88 | 1028+28.15 | 1028+53.15 | RT | | 25 | 31.25 | | | | | | 1 | | | | | | | FLARE @ 10:1 TO EX. GUARDRAIL |
| GR-89 | 1031+81.35 | 1032+06.35 | LT | | 25 | 31.25 | | | | | | 1 | | | | | | | FLARE @ 10:1 TO EX. GUARDRAIL |
| GR-90 | 1031+84.25 | 1032+19.25 | RT | | 25 | 31.25 | | | | | | 1 | | | | | | | FLARE @ 10:1 TO EX. GUARDRAIL |
| | ℄ STA 1083+76.96 S.R. 5 = ℄ STA 54+74.12 EAGLE CREEK RD. | | | | | | | | | | | | | | | | | | |
| GR-91 | 52+31.25 | 52+56.25 | RT | | 25 | 31.25 | | | | | | 1 | | | | | | | FLARE @ 10:1 TO EX. GUARDRAIL |
| GR-92 | 52+36.25 | 52+61.25 | LT | | 25 | 31.25 | | | | | | 1 | | | | | | | FLARE @ 10:1 TO EX. GUARDRAIL |
| GR-93 | 54+80.95 | 55+05.95 | RT | | 25 | 31.25 | | | | | | 1 | | | | | | | FLARE @ 10:1 TO EX. GUARDRAIL |
| GR-94 | 54+85 | 55+10 | LT | | 25 | 31.25 | | | | | | 1 | | | | | | | FLARE @ 10:1 TO EX. GUARDRAIL |
| | ℄ STA 1159+83.50 S.R. 5 = ℄ STA 30+00 NORTH LEAVITT RD. | | | | | | | | | | | | | | | | | | |
| GR-95 | 28+22.75 | 28+47.75 | LT | | 25 | 31.25 | | | | | | 1 | | | | | | | FLARE @ 10:1 TO EX. GUARDRAIL |
| GR-96 | 28+50.45 | 28+75.45 | RT | | 25 | 31.25 | | | | | | 1 | | | | | | | FLARE @ 10:1 TO EX. GUARDRAIL |
| GR-97 | 31+24.55 | 28+75.45 | LT | | 25 | 31.25 | | | | | | 1 | | | | | | | FLARE @ 10:1 TO EX. GUARDRAIL |
| GR-98 | 31+52.55 | 31+77.25 | RT | | 25 | 31.25 | | | | | | 1 | | | | | | | FLARE @ 10:1 TO EX. GUARDRAIL |
| SUBTOTALS FROM THIS SHEET | | | | 240 | 9041 | 8300 | 25 | 1037.5 | 8 | 5 | 7 | 30 | 5 | 7 | 146 | 33 | 128 | 6 | |
| SUBTOTALS CARRIED FROM SHEET 45 | | | | 928 | 17866.25 | 16187.5 | | 1887.5 | 10 | 20 | 16 | 35 | 12 | 13 | 182.5 | 132 | 262 | 12 | |
| TOTALS CARRIED TO GENERAL SUMMARY | | | | 1168 | 26907.25 | 24487.5 | 25 | 2925 | 18 | 25 | 23 | 65 | 17 | 20 | 328.5 | 165 | 390 | 18 | |

CALCULATED RCB
CHECKED TJP

# GUARDRAIL SUBSUMMARY

TRU-5-6.45



jr:\22126_Tru_5_6.45\22126gsa.dgn 10-SEP-2018:13AM tperez

| REF NO. | SHEET NO. | STATION TO STATION | SIDE | 202 APPROACH SLAB REMOVED | 203 EXCAVATION, NOT INCLUDING EMBANKMENT CONSTRUCTION | 203 SUBGRADE COMPACTION | 254 PAVEMENT PLANING, BITUMINOUS | 304 AGGREGATE BASE | 407 TACK COAT (0.15 GAL/S.Y.) | 407 TACK COAT FOR INTERMEDIATE (0.075 GAL/S.Y.) | 601 ROCK CHANNEL PROTECTION, TYPE B WITH FILTER, AS PER PLAN | 601 CHANNEL PROTECTION MISC.: ROCK CHANNEL PROCTECTION, TYPE B WITH FILTER | 611 REINFORCED CONCRETE APPROACH SLABS, AS PER PLAN (T-15") | | 830 CURB TYPE 4-C | 858 ASPHALT CONCRETE SURFACE COURSE, 12.5 mm, TYPE B (446) AS PER PLAN | 858 ASPHALT CONCRETE INTERMEDIATE COURSE, 19 mm, TYPE B (446) | 870 SEEDING AND MULCHING | 870 COMMERCIAL FERTILIZER | 870 AGRICULTURAL LIME |
|---|---|---|---|---|---|---|---|---|---|---|---|---|---|---|---|---|---|---|---|---|
| | | | | SQ. YD. | CU. YD. | SQ. YD. | SQ. YD. | CU. YD. | GAL. | GAL. | CU. YD. | SQ. YD. | SQ. YD. | | LIN. FT. | CU. YD. | CU. YD. | SQ. YD. | TON | TON |
| | 51 | 1075 + 82.32 TO 1078 + 59.70 | LT/RT | | | | | | | | | | | | | | | 180 | 0.02 | 0.10 |
| | 51 | 1075 + 82.32 TO 1076 + 07.30 | RIGHT | 66.67 | 40.14 | 116.44 | | 19.41 | | | | | 116.44 | | | | | | | |
| | 51 | 1075 + 84.15 TO 1076 + 09.15 | LEFT | 66.67 | 40.14 | 116.44 | | 19.41 | | | | | 116.44 | | | | | | | |
| | 51 | 1076 + 10.00 TO 1076 + 17.00 | LT/RT | | | | | | | | 232.5 | | | | | | | | | |
| | 51 | 1078 + 11.00 TO 1078 + 31.00 | LT/RT | | | | | | | | 228.24 | | | | | | | | | |
| | 51 | 1078 + 32.85 TO 1078 + 57.85 | LEFT | 66.67 | 40.14 | 116.44 | | 19.41 | | | | | 116.44 | | | | | | | |
| | 51 | 1078 + 34.70 TO 1078 + 59.70 | RIGHT | 66.67 | 40.14 | 116.44 | | 19.41 | | | | | 116.44 | | | | | | | |
| | 52 | 1101 + 06.00 TO 1102 + 92.00 | LT/RT | | | | | | | | | | | | | | | 180 | 0.02 | 0.10 |
| | 52 | 1101 + 19.90 TO 1101 + 44.90 | RIGHT | 66.67 | 40.14 | 116.44 | | 19.41 | | | | | 116.44 | | 9 | | | | | |
| | 52 | 1101 + 47.00 TO 1101 + 66.00 | LT/RT | | | | | | | | | | | | | | | | | |
| | 52 | 1101 + 56.86 TO 1101 + 81.86 | LEFT | 66.67 | 40.14 | 116.44 | | 19.41 | | | | | 116.44 | | 9 | | | | | |
| | 52 | 1101 + 83.00 TO 1102 + 02.00 | LT/RT | | | | | | | | | | | | | | | | | |
| | 52 | 1101 + 96.00 TO 1102 + 15.00 | LT/RT | | | | | | | | | | | | | | | | | |
| | 52 | 1102 + 18.14 TO 1102 + 43.14 | RIGHT | 66.67 | 40.14 | 116.44 | | 19.41 | | | | | 116.44 | | | | | | | |
| | 52 | 1102 + 31.50 TO 1102 + 51.10 | LEFT | | | | | | | | | | | | | | | | | |
| | 52 | 1102 + 55.10 TO 1102 + 80.10 | LT/RT | 66.67 | 40.14 | 116.44 | | 19.41 | | | | | 116.44 | | | | | | | |
| | 53 | 1127 + 08.00 TO 1129 + 74.00 | LT/RT | | | | | | | | | | | | | | | 180 | 0.02 | 0.10 |
| | 53 | 1127 + 11.16 TO 1127 + 36.16 | LEFT | 66.67 | 35.42 | 107.82 | | 17.97 | | | | | 107.82 | | 11 | | | | | |
| | 53 | 1127 + 24.46 TO 1127 + 49.46 | RIGHT | 131 | 39.8 | 161.32 | | 26.89 | | | | | 161.32 | | 11 | | | | | |
| | 53 | 1129 + 28.76 TO 1129 + 53.76 | LEFT | 66.67 | 35.42 | 107.82 | | 17.97 | | | | | 107.82 | | 11 | | | | | |
| | 53 | 1129 + 42.06 TO 1129 + 67.06 | RIGHT | 116.00 | 37.25 | 146.34 | | 24.39 | | | | | 146.34 | | 11 | | | | | |
| | 54 | 545 + 13.00 TO 545 + 92.00 | LT/RT | | | | | | | | | | | | | | | 180 | 0.02 | 0.10 |
| | 54 | 545 + 22.02 TO 545 + 47.02 | LEFT | 66.67 | 40.14 | 174.78 | | 29.13 | | | | | 174.78 | | | | | | | |
| | 54 | 545 + 50.21 TO 545 + 75.21 | RIGHT | 133.33 | 46.39 | 161.81 | | 26.97 | | | | | 161.81 | | | | | | | |
| | 54 | 547 + 10.36 TO 547 + 35.36 | LEFT | 66.67 | 40.14 | 116.44 | | 19.41 | | | | | 116.44 | | 9 | | | | | |
| | 54 | 547 + 37.96 TO 547 + 62.99 | RIGHT | 120.83 | 44.04 | 116.44 | | 19.41 | | | | | 116.44 | | | | | | | |
| | 55 | 557 + 56.91 TO 558 + 56.91 | RIGHT | | | | 400 | | 60 | 15 | | | | | | 21.52 | 9.72 | | | |
| | 55 | 557 + 87.43 TO 558 + 87.43 | LEFT | | | | 533.33 | | 80 | 20 | | | | | | 28.7 | 12.96 | | | |
| | 55 | 558 + 50.00 TO 559 + 80.00 | LT/RT | | | | | | | | | 459 | | | | | | | | |
| | 55 | 559 + 36.57 TO 560 + 36.57 | RIGHT | | | | 400 | | 60 | 15 | | | | | | 21.52 | 9.72 | | | |
| | 55 | 559 + 67.09 TO 560 + 67.09 | LEFT | | | | 533.33 | | 80 | 20 | | | | | | 28.7 | 12.96 | | | |
| | 56 | 624 + 00.00 TO 625 + 88.00 | LT/RT | | | | | | | | | | | | | | | 180 | 0.02 | 0.10 |
| | 56 | 624 + 03.86 TO 624 + 28.06 | RIGHT | 66.67 | 38.53 | 113.67 | | 18.94 | | | | | 113.67 | | | | | | | |
| | 56 | 624 + 15.04 TO 624 + 40.04 | LEFT | 66.67 | 38.53 | 113.67 | | 18.94 | | | | | 113.67 | | | | | | | |
| | 56 | 625 + 47.38 TO 625 + 72.38 | RIGHT | 66.67 | 38.53 | 113.67 | | 18.94 | | | | | 113.67 | | 9 | | | | | |
| | 56 | 625 + 58.86 TO 625 + 83.56 | LEFT | 66.67 | 38.53 | 113.67 | | 18.94 | | | | | 113.67 | | 9 | | | | | |
| | | TOTALS (THIS SHEET) | | 1567.88 | 833.84 | 2478.97 | 1866.66 | 413.18 | 280 | 70 | 460.74 | 459 | 2478.97 | | 89 | 100.44 | 45.36 | 900 | 0.10 | 0.5 |
| | | **TOTALS CARRIED TO GENERAL SUMMARY** | | **1568** | **834** | **2479** | **1867** | **413** | **280** | **70** | **461** | **459** | **2479** | | **89** | **100** | **45** | **900** | **0.1** | **0.5** |

CALCULATED CET
CHECKED TJB

# SUBSUMMARY

TRU-5- 6.45



j:\8712\8712gta.dgn 12-SEP-2001 12:30PM cturner1

| REF NO. | SHEET NO. | STATION TO STATION | SIDE | 254 PAVEMENT PLANING, BITUMINOUS (SQ. YD.) | | 304 AGGREGATE BASE (CU. YD.) | 407 TACK COAT (0.15 GAL/S.Y.) (GAL.) | 407 TACK COAT FOR INTERMEDIATE (0.075 GAL/S.Y.) (GAL.) | 409 SEAL COAT COVER AGGREGATE No. 8 (CU. YD.) | 409 SEAL COAT BITUMINOUS MATERIAL (GAL.) | 448 ASPHALT CONCRETE SURFACE COURSE, TYPE 1 PG64-22 AS PER PLAN (CU. YD.) | 448 ASPHALT CONCRETE INTERMEDIATE COURSE, TYPE 1 PG64-22 (CU. YD.) | | 642 EDGE LINE, WHITE, TYPE 2 (MI.) | 642 CENTER LINE, DOUBLE SOLID, YELLOW, TYPE 2 (MI.) | | | | | |
|---|---|---|---|---|---|---|---|---|---|---|---|---|---|---|---|---|---|---|---|---|
| | 57 | 1027 + 85.00 TO 1032 + 49.00 | C/L | | | | | | | | | | | 0.18 | 0.09 | | | | | |
| | 57 | 1027 + 85.35 TO 1028 + 55.35 | C/L | 210.5 | | 1.5 | 31.6 | 15.8 | 0.5 | 2.5 | 7.31 | 10.23 | | | | | | | | |
| | 57 | 1031 + 79.15 TO 1032 + 49.15 | C/L | 210.5 | | 1.5 | 31.6 | 15.8 | 0.5 | 2.5 | 7.31 | 10.23 | | | | | | | | |
| | 58 | 51 + 96.00 TO 55 + 46.00 | C/L | | | | | | | | | | | 0.13 | 0.07 | | | | | |
| | 58 | 51 + 96.35 TO 52 + 66.35 | C/L | 110 | | 1.5 | 29.2 | | 0.5 | 2.5 | 9.47 | | | | | | | | | |
| | 58 | 54 + 75.89 TO 55 + 45.89 | C/L | 110 | | 1.5 | 29.2 | | 0.5 | 2.5 | 9.47 | | | | | | | | | |
| | 59 | 28 + 01.99 TO 28 + 71.97 | C/L | 210.5 | | 2.5 | 31.6 | 15.8 | 1.0 | 5.0 | 7.31 | 10.23 | | | | | | | | |
| | 59 | 28 + 02.00 TO 31 + 98.00 | C/L | | | | | | | | | | | 0.15 | 0.08 | | | | | |
| | 59 | 31 + 28.03 TO 31 + 98.03 | C/L | 210.5 | | 2.5 | 31.6 | 15.8 | 1.0 | 5.0 | 7.31 | 10.23 | | | | | | | | |
| | | TOTALS (THIS SHEET) | | 1062.0 | | 11.0 | 184.8 | 63.2 | 4.0 | 20.0 | 48.18 | 40.92 | | 0.46 | 0.24 | | | | | |
| | | **TOTALS CARRIED TO GENERAL SUMMARY** | | **1062** | | **11** | **185** | **63** | **4** | **20** | **48** | **41** | | **0.46** | **0.24** | | | | | |

CALCULATED CET
CHECKED TJP

SUBSUMMARY

TRU-5-6.45



j:\8712\8712gta.dgn 10-SEP-2001 9:37AM tperez

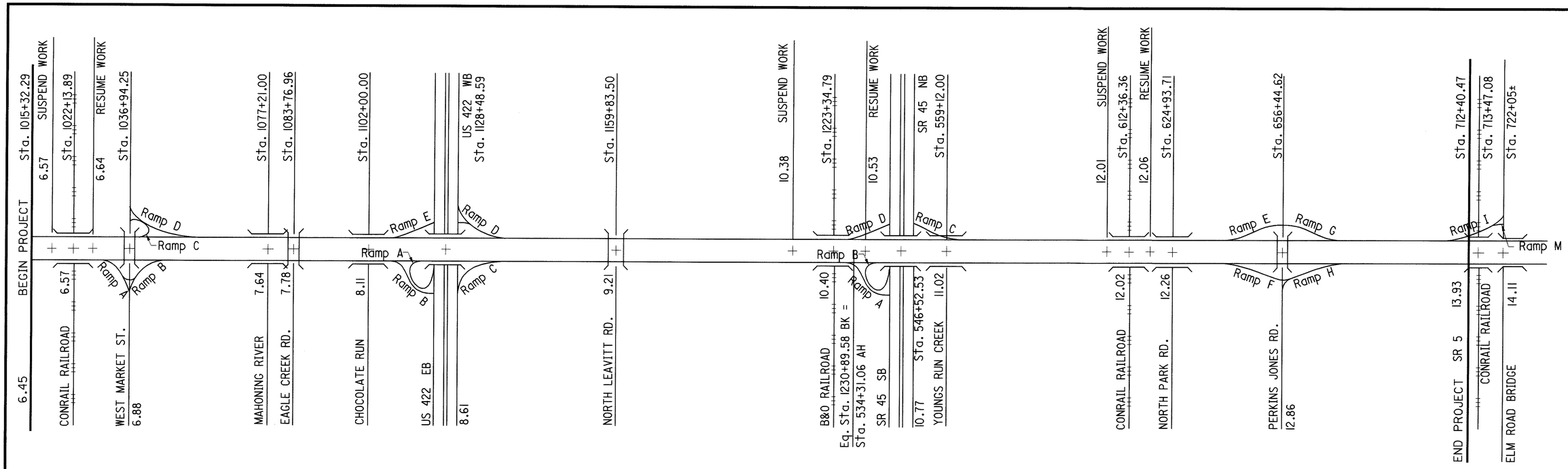


* - QUANTITY TO BE USED AS DIRECTED BY THE ENGINEER

NO SCALE

NOTE: BUTT JOINTS PROVIDED, AS PER BP-3.1 AT THE BEGINNING AND END OF PROJECT AS WELL AS AT SUSPEND AND RESUME LOCATIONS AND ALL RAMPS.

## PAVEMENT DATA

| PART | ROUTE | LOG POINT TO LOG POINT | LENGTH MILES | LENGTH LIN. FT. | WP FEET AVG. | TYPICAL # | EXISTING TYPE PAVEMENT | PAVEMENT AREA SQ.YDS. | 407 TACK COAT @ 0.15 gal./s.y. GAL. | 407 TACK COAT FOR INTERMEDIATE COURSE @ 0.075 gal./s.y. GAL. | ITEM 858 ASPHALT CONCRETE INTERMEDIATE COURSE, 19mm, TYPE B(446) AVG. THICK INCHES | INTERMEDIATE COURSE CU. YD. | SURFACE COURSE, 12.5mm, TYPE B (446), AS PER PLAN AVG. THICK INCHES | SURFACE COURSE CU. YD. | ITEM 448 ASPHALT CONCRETE INTER. COURSE, TYPE 1, PG64-22 (UNDER GUARDRAIL) AVG. THICK INCHES | INTER. COURSE CU. YD. | 202 WEARING COURSE REMOVED SQ. YD. | 203 LINEAR GRADING, METHOD A STATION | 203 LINEAR GRADING, METHOD D STATION | 254 PAVEMENT PLANING, BITUMINOUS SQ. YD. | 617 COMPACTED AGGREGATE, TYPE A CU. YD. |
|---|---|---|---|---|---|---|---|---|---|---|---|---|---|---|---|---|---|---|---|---|---|
| 1 | S.R. 5 | 6.45 - 6.50 | 0.05 | 276 | 69 | 1 | ASPHALT | 2116 | 317 | 159 | 1.75 | 102 | 1.50 | 87 | 2.00 | 18 | | 5 | 3 | 2116 | 3 |
| 1 | S.R. 5 | 6.50 - 6.57 | 0.07 | 370 | 72 | 1 | ASPHALT | 2960 | 444 | 222 | 1.75 | 144 | 1.50 | 123 | 2.00 | 23 | | 8 | 6 | 2960 | 8 |
| 1 | S.R. 5 | 6.64 - 7.64 | 1.00 | 5280 | 72 | 1 | ASPHALT | 42240 | 6336 | 3168 | 1.75 | 2053 | 1.50 | 1760 | 2.00 | 92 | | 30 | 182 | 42240 | 225 |
| 1 | S.R. 5 | 7.69 - 8.11 | 0.42 | 2218 | 72 | 1 | ASPHALT | 17741 | 2661 | 1331 | 1.75 | 863 | 1.50 | 740 | 2.00 | 26 | | 9 | 84 | 17741 | 104 |
| 1 | S.R. 5 | 8.13 - 8.61 | 0.48 | 2534 | 72 | 1 | ASPHALT | 20275 | 3041 | 1521 | 1.75 | 986 | 1.50 | 845 | 2.00 | 38 | | 12 | 82 | 20275 | 101 |
| 1 | S.R. 5 | 8.65 - 10.38 | 1.73 | 9134 | 72 | 1 | ASPHALT | 73072 | 10961 | 5480 | 1.75 | 3552 | 1.50 | 3045 | 2.00 | 118 | | 38 | 328 | 73072 | 405 |
| 1 | S.R. 5 | 10.53 - 10.77 | 0.24 | 1267 | 72 | 1 | ASPHALT | 10138 | 1521 | 760 | 1.75 | 493 | 1.50 | 423 | 2.00 | 128 | | 42 | 44 | 10138 | 54 |
| 1 | S.R. 5 | 10.81 - 11.02 | 0.21 | 1109 | 72 | 1 | ASPHALT | 8870 | 1331 | 665 | 1.75 | 432 | 1.50 | 370 | 2.00 | 49 | | 16 | 27 | 8870 | 33 |
| 1 | S.R. 5 | 11.04 - 12.01 | 0.97 | 5122 | 72 | 1 | ASPHALT | 40976 | 6147 | 3073 | 1.75 | 1992 | 1.50 | 1708 | 2.00 | 72 | | 24 | 184 | 40976 | 227 |
| 1 | S.R. 5 | 12.06 - 12.26 | 0.20 | 1056 | 72 | 1 | ASPHALT | 8448 | 1267 | 634 | 1.75 | 411 | 1.50 | 352 | 2.00 | 76 | | 25 | 22 | 8448 | 27 |
| 1 | S.R. 5 | 12.29 - 13.93 | 1.64 | 8659 | 72 | 1 | ASPHALT | 69274 | 10391 | 5196 | 1.75 | 3366 | 1.50 | 2885 | 2.00 | 70 | | 23 | 320 | 69274 | 396 |
| TOTALS CARRIED TO THE GENERAL SUMMARY | | | | | | | | 296110 | 44417 | 22209 | | 14394 | | 12338 | | 710 | 200* | 232 | 1282 | 296110 | 1583 |

CALCULATED CJT
CHECKED TJP

PLAN NO.

# ASPHALT CONCRETE

TRU-5-6.45



i:\22126_Tru_5_6.45\22126gpa.dgn 10-SEP-2001 8:12AM tperez

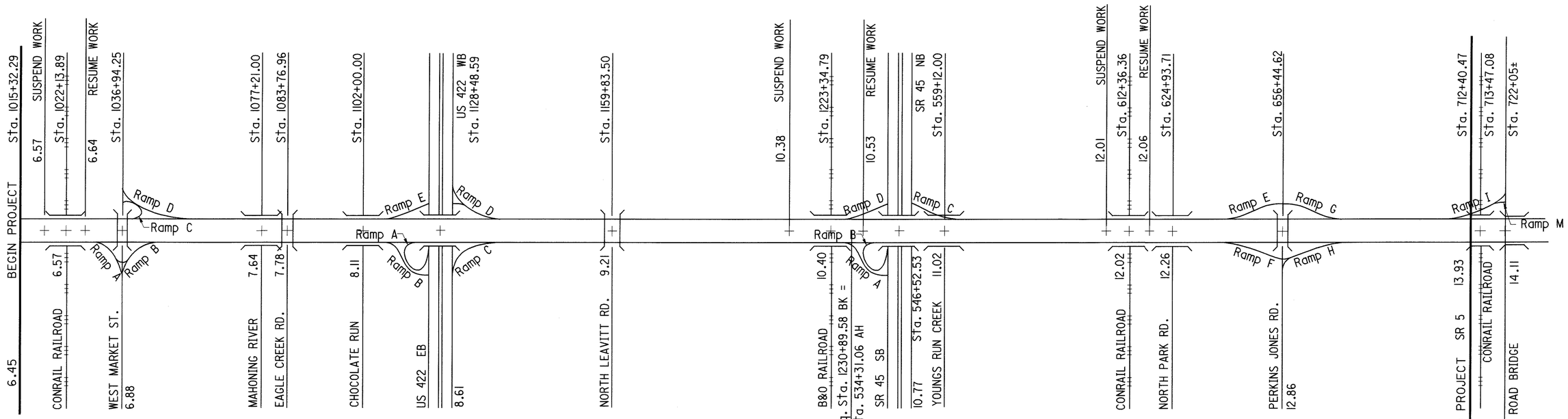


NOTE: BUTT JOINTS PROVIDED, AS PER BP-3.1 AT THE BEGINNING AND END OF PROJECT AS WELL AS AT SUSPEND AND RESUME LOCATIONS AND ALL RAMPS.

NO SCALE

* - QUANTITY TO BE USED AS DIRECTED BY THE ENGINEER

## RAMP PAVEMENT DATA

| DECELERATION, & ACCELERATION LANES, AND RAMPS | TYPICAL # | EXISTING TYPE PAVEMENT | PAVEMENT AREA SQ.YDS. | 407 TACK COAT @ 0.15 gal./s.y. GAL. | 407 TACK COAT FOR INTERMEDIATE COURSE @ 0.075 gal./s.y. GAL. | ITEM 858 ASPHALT CONCRETE INTERMEDIATE COURSE, 19mm, TYPE B(446) AVG. THICK INCHES | INTERMEDIATE COURSE CU. YD. | SURFACE COURSE, 12.5mm, TYPE B (446), AS PER PLAN AVG. THICK INCHES | SURFACE COURSE CU. YD. | ITEM 448 ASPHALT CONCRETE INTER. COURSE, TYPE I, PG64-22 (UNDER GUARDRAIL) AVG. THICK INCHES | INTER. COURSE CU. YD. | 202 WEARING COURSE REMOVED SQ.YD. | 203 LINEAR GRADING, METHOD A STATION | 203 LINEAR GRADING, METHOD D STATION | 254 PAVEMENT PLANING, BITUMINOUS SQ.YD. | 617 COMPACTED AGGREGATE, TYPE A CU. YD. |
|---|---|---|---|---|---|---|---|---|---|---|---|---|---|---|---|---|
| LOCATIONS WITH INTERSECTING ROUTES | | | | | | | | | | | | | | | | |
| RAMP "A" & DECELERATION LANE @ W. MARKET ST. | 2 | ASPHALT | 3841 | 576 | 288 | 1.75 | 187 | 1.50 | 160 | | | | | 11 | 3841 | 13 |
| RAMP "B" & ACCELERATION LANE @ W. MARKET ST. | 2 | ASPHALT | 4756 | 713 | 357 | 1.75 | 232 | 1.50 | 199 | 2.00 | 14 | | 5 | 29 | 4756 | 36 |
| RAMP "C" & ACCELERATION LANE @ W. MARKET ST. | 2 | ASPHALT | 4193 | 629 | 314 | 1.75 | 204 | 1.50 | 175 | | | | | 19 | 4193 | 24 |
| RAMP "D" & DECELERATION LANE @ W. MARKET ST. | 2 | ASPHALT | 3962 | 594 | 297 | 1.75 | 193 | 1.50 | 165 | | | | | 19 | 3962 | 24 |
| RAMP "B" & DECELERATION LANE @ SR 422 | 2 | ASPHALT | 5477 | 822 | 411 | 1.75 | 267 | 1.50 | 229 | | | | | 30 | 5477 | 37 |
| RAMP "E" & ACCELERATION LANE @ SR 422 | 2 | ASPHALT | 4879 | 732 | 366 | 1.75 | 238 | 1.50 | 204 | | | | | 23 | 4879 | 29 |
| RAMP "A" & ACCELERATION LANE @ SR 422 | 2 | ASPHALT | 4161 | 624 | 312 | 1.75 | 203 | 1.50 | 174 | 2.00 | 11 | | 4 | 24 | 4161 | 30 |
| RAMP "C" & ACCELERATION LANE @ SR 422 | 2 | ASPHALT | 4291 | 644 | 322 | 1.75 | 209 | 1.50 | 179 | | | | | 24 | 4291 | 30 |
| RAMP "D" & DECELERATION LANE @ SR 422 | 2 | ASPHALT | 4951 | 743 | 371 | 1.75 | 241 | 1.50 | 207 | | | | | 25 | 4951 | 32 |
| RAMP "A" & DECELERATION LANE @ SR 45 | 3 | ASPHALT | 5875 | 881 | 441 | 1.75 | 286 | 1.50 | 245 | | | | | 28 | 5875 | 36 |
| RAMP "D" & ACCELERATION LANE @ SR 45 | 3 | ASPHALT | 4058 | 609 | 304 | 1.75 | 198 | 1.50 | 169 | | | | | 20 | 4058 | 25 |
| RAMP "B" & ACCELERATION LANE @ SR 45 | 3 | ASPHALT | 4204 | 631 | 315 | 1.75 | 205 | 1.50 | 176 | 2.00 | 18 | | 6 | 17 | 4204 | 22 |
| RAMP "C" & DECELERATION LANE @ SR 45 | 3 | ASPHALT | 3900 | 585 | 293 | 1.75 | 190 | 1.50 | 163 | | | | | 17 | 3900 | 22 |
| RAMP "F" & DECELERATION LANE @ PERKINS JONES RD. | 2 | ASPHALT | 3618 | 543 | 271 | 1.75 | 176 | 1.50 | 151 | | | | | 15 | 3618 | 19 |
| RAMP "E" & ACCELERATION LANE @ PERKINS JONES RD. | 2 | ASPHALT | 3976 | 596 | 298 | 1.75 | 194 | 1.50 | 166 | | | | | 19 | 3976 | 24 |
| RAMP "G" & DECELERATION LANE @ PERKINS JONES RD. | 3 | ASPHALT | 4304 | 646 | 323 | 1.75 | 210 | 1.50 | 180 | | | | | 17 | 4304 | 21 |
| RAMP "H" & ACCELERATION LANE @ PERKINS JONES RD. | 2 | ASPHALT | 4720 | 708 | 354 | 1.75 | 230 | 1.50 | 197 | 2.00 | 7 | | 2 | 20 | 4720 | 25 |
| RAMP "N" @ PERKINS JONES RD. | 2 | ASPHALT | 474 | 71 | 36 | 1.75 | 23 | 1.50 | 20 | | | | | 5 | 474 | 6 |
| | | | | | | | | | | | | | | | | |
| | | | | | | | | | | | | | | | | |
| **TOTALS CARRIED TO THE GENERAL SUMMARY** | | | 75640 | 11347 | 5673 | | 3686 | | 3159 | | 50 | 200* | 17 | 362 | 75640 | 455 |

CALCULATED CJT
CHECKED TJP

PLAN NO.

# ASPHALT CONCRETE

TRU-5-6.45



j:\22126_Tru_5_6.45\22126gpa.dgn 10-SEP-2001 8:12AM tperez

## ITEM 202- APPROACH SLAB REMOVED

| STATION FROM | STATION TO | LENGTH x WIDTH ($FT.^2$) | AREA (SQ. YD.) |
|---|---|---|---|
| EASTBOUND | | | |
| 1075+82.30 | 1076+07.30 | 25.00x24.00 | 66.67 |
| 1078+34.70 | 1078+59.70 | 25.00x24.00 | 66.67 |
| WESTBOUND | | | |
| 1075+84.15 | 1076+09.15 | 25.00x24.00 | 66.67 |
| 1078+32.85 | 1078+57.85 | 25.00x24.00 | 66.67 |
| | | TOTAL | 266.68 |
| | | USE | 267 SQ. YD. |

## ITEM 203 - EXCAVATION, NOT INCLUDING EMBANKMENT CONSTRUCTION

| STATION FROM | STATION TO | AREA (SQ. FT.) | DEPTH (FT.) | VOLUME (CU. YD.) |
|---|---|---|---|---|
| **EASTBOUND** | | | | |
| 1075+82.30 | 1075+91.30 | 9.00X24.00 | 0.50 | 4.00 |
| | | 9.00X16.00 | 1.75 | 9.33 |
| 1075+91.30 | 1076+07.30 | 16.00X24.00 | 0.50 | 7.11 |
| | | 16.00X19.00 | 1.75 | 19.70 |
| 1078+34.70 | 1078+50.70 | 16.00X24.00 | 0.50 | 7.11 |
| | | 16.00X19.00 | 1.75 | 19.70 |
| 1078+50.70 | 1078+59.70 | 9.00X24.00 | 0.50 | 4.00 |
| | | 9.00X16.00 | 1.75 | 9.33 |
| **WESTBOUND** | | | | |
| 1075+84.15 | 1075+93.15 | 9.00X24.00 | 0.50 | 4.00 |
| | | 9.00X16.00 | 1.75 | 9.33 |
| 1075+93.15 | 1076+09.15 | 16.00X24.00 | 0.50 | 7.11 |
| | | 16.00X19.00 | 1.75 | 19.70 |
| 1078+32.85 | 1078+48.85 | 16.00X24.00 | 0.50 | 7.11 |
| | | 16.00X19.00 | 1.75 | 19.70 |
| 1078+48.85 | 1078+57.85 | 9.00X24.00 | 0.50 | 4.00 |
| | | 9.00X16.00 | 1.75 | 9.33 |
| | | | TOTAL | 160.56 |
| | | | USE | 161 CU.YD. |

## ITEM 203 - SUBGRADE COMPACTION

AREA SAME AS ITEM 611 = 466 SQ. YD.

## ITEM 304 - 6" AGGREGATE BASE

FROM ITEM 611 AREA=465.76 SQ.YD.

## ITEM 601 - ROCK CHANNEL PROTECTION TYPE B WITH FILTER, AS PER PLAN

TOTAL AREA=1266+1245+1246+1219=4976 SQ.FT.
VOLUME=4976x2.5/27=460.7 C.Y
USE 461 C.Y.

## ITEM 611 - REINFORCED CONCRETE APPROACH SLABS (T=15"), AS PER PLAN

| STATION FROM | STATION TO | LENGTH x WIDTH ($FT.^2$) | AREA (SQ. YD.) |
|---|---|---|---|
| **EASTBOUND** | | | |
| 1075+82.30 | 1075+91.30 | 9.00x40.00 | 40.00 |
| 1075+91.30 | 1076+07.30 | 16.00x43.00 | 76.44 |
| 1078+34.70 | 1078+50.70 | 16.00x43.00 | 76.44 |
| 1078+50.70 | 1078+59.70 | 9.00x40.00 | 40.00 |
| **WESTBOUND** | | | |
| 1075+84.15 | 1075+93.15 | 9.00x40.00 | 40.00 |
| 1075+93.15 | 1076+09.15 | 16.00x43.00 | 76.44 |
| 1078+32.85 | 1078+48.85 | 16.00x43.00 | 76.44 |
| 1078+48.85 | 1078+57.85 | 9.00x40.00 | 40.00 |
| | | TOTAL | 465.76 |
| | | USE | 466 SQ.YD. |

**NOTE:** THE FOLLOWING ESTIMATED QUANTITIES ARE TO BE USED AS DIRECTED BY THE ENGINEER.

| | | |
|---|---|---|
| ITEM 870- SEEDING AND MULCHING | - | 180 S.Y. |
| ITEM 870- COMMERCIAL FERTILIZER | - | 0.02 TON. |
| ITEM 870- AGRICULTURAL LIME | - | 0.10 TON. |

NOTES:

FOR QUANTITIES SUBSUMMARY SEE SHEET 47.

CALCULATED NNB CHECKED KRB

QUANTITY CALCULATIONS
TRU-5-0764 L & R OVER MAHONING RIVER

TRU-5-6.45



J:\1872\GC103.dgn 07-SEP-2001 11:20PM jlidle

## ITEM 202 - APPROACH SLAB REMOVED

| STATION FROM | STATION TO | LENGTH X WIDTH ($FT^2$.) | AREA (SQ. YD.) |
|---|---|---|---|
| **EASTBOUND** | | | |
| 1101+19.90 | 1101+44.90 | 25.00x24.00 | 66.67 |
| 1102+18.14 | 1102+43.14 | 25.00x24.00 | 66.67 |
| **WESTBOUND** | | | |
| 1101+56.86 | 1101+81.86 | 25.00x24.00 | 66.67 |
| 1102+55.10 | 1102+80.10 | 25.00x24.00 | 66.67 |
| | | TOTAL | 266.68 |
| | | USE | 267 SQ. YD. |

## ITEM 203 - EXCAVATION, NOT INCLUDING EMBANKMENT CONSTRUCTION

| STATION FROM | STATION TO | AREA (SQ. FT.) | DEPTH (FT.) | VOLUME (CU. YD.) |
|---|---|---|---|---|
| **EASTBOUND** | | | | |
| 1101+19.90 | 1101+28.90 | 9.00x24.00 | 0.50 | 4.00 |
| | | 9.00x16.00 | 1.75 | 9.33 |
| 1101+28.90 | 1101+44.90 | 16.00x24.00 | 0.50 | 7.11 |
| | | 16.00x19.00 | 1.75 | 19.70 |
| 1102+18.14 | 1102+34.14 | 16.00x24.00 | 0.50 | 7.11 |
| | | 16.00x19.00 | 1.75 | 19.70 |
| 1102+34.14 | 1102+43.14 | 9.00x24.00 | 0.50 | 4.00 |
| | | 9.00x16.00 | 1.75 | 9.33 |
| **WESTBOUND** | | | | |
| 1101+56.86 | 1101+65.86 | 9.00x24.00 | 0.50 | 4.00 |
| | | 9.00x16.00 | 1.75 | 9.33 |
| 1101+65.86 | 1101+81.86 | 16.00x24.00 | 0.50 | 7.11 |
| | | 16.00x19.00 | 1.75 | 19.70 |
| 1102+55.10 | 1102+71.10 | 16.00x24.00 | 0.50 | 7.11 |
| | | 16.00x19.00 | 1.75 | 19.70 |
| 1102+71.10 | 1102+80.10 | 9.00x24.00 | 0.50 | 4.00 |
| | | 9.00x16.00 | 1.75 | 9.33 |
| | | | | 160.56 |
| | | | | 161 CU.YD. |

## ITEM 203 - SUBGRADE COMPACTION

AREA SAME AS ITEM 611 - 466 SQ. YD.

## ITEM 304 - 6" AGGREGATE BASE

FROM ITEM 611 AREA =465.76 SQ. YD.

VOLUME =465.76x0.5/3=77.63 C.Y.

USE 78 C.Y.

## ITEM 611 - REINFORCED CONCRETE APPROACH SLABS (T=15"), AS PER PLAN

| STATION FROM | STATION TO | LENGTH X WIDTH (FT.) | AREA (SQ. YD.) |
|---|---|---|---|
| **EASTBOUND** | | | |
| 1101+19.90 | 1101+28.90 | 9.00x40.00 | 40.00 |
| 1101+28.90 | 1101+44.90 | 16.00x43.00 | 76.44 |
| 1102+18.14 | 1102+34.14 | 16.00x43.00 | 76.44 |
| 1102+34.14 | 1102+43.14 | 9.00x40.00 | 40.00 |
| **WESTBOUND** | | | |
| 1101+56.86 | 1101+65.86 | 9.00x40.00 | 40.00 |
| 1101+65.86 | 1101+81.86 | 16.00x43.00 | 76.44 |
| 1102+55.10 | 1102+71.10 | 16.00x43.00 | 76.44 |
| 1102+71.10 | 1102+80.10 | 9.00x40.00 | 40.00 |
| | | TOTAL | 465.76 |
| | | USE | 466 SQ. YD. |

## ITEM 830 - CURB, TYPE 4-C

2x9= 18 L.F

**NOTE:** THE FOLLOWING ESTIMATED QUANTITIES ARE TO BE USED AS DIRECTED BY THE ENGINEER

ITEM 870 - SEEDING AND MULCHING - 180 S.Y

ITEM 870 - COMMERCIAL FERTILIZER - 0.02 TON.

ITEM 870 - AGRICULTURAL LIME - 0.10 TON.

**NOTES:**

FOR QUANTITIES SUBSUMMARY SEE SHEET 47.

CALCULATED NNB CHECKED KRD

QUANTITY CALCULATIONS
TRU-5-0811 L & R OVER CHOCOLATE RUN

TRU-5-6.45



J:\18712\GC105.dgn 07-SEP-2001 4:26PM jliddle

## ITEM 202– APPROACH SLAB REMOVED

| STATION FROM | STATION TO | LENGTH x WIDTH ($FT^2$) | AREA (SQ. YD.) |
|---|---|---|---|
| EASTBOUND | | | |
| 1127+24.46 | 1127+49.46 | 25.00x47.16 | 131.00 |
| 1129+42.06 | 1129+67.06 | 25.00x41.76 | 116.00 |
| WESTBOUND | | | |
| 1127+11.16 | 1127+36.16 | 25.00x24.00 | 66.67 |
| 1129+28.76 | 1129+53.76 | 25.00x24.00 | 66.67 |
| | | TOTAL | 380.34 |
| | | USE | 380 SQ. YD. |

## ITEM 203 – EXCAVATION, NOT INCLUDING EMBANKMENT CONSTRUCTION

| STATION FROM | STATION TO | AREA (SQ. FT.) | DEPTH (FT.) | VOLUME (CU. YD.) |
|---|---|---|---|---|
| **EASTBOUND** | | | | |
| 1127+24.46 | 1127+49.46 | 25.00x47.16 | 0.50 | 21.83 |
| | | 25.00x11.09 | 1.75 | 17.97 |
| 1129+42.06 | 1129+67.06 | 25.00x41.76 | 0.50 | 19.33 |
| | | 25.00x11.06 | 1.75 | 17.92 |
| **WESTBOUND** | | | | |
| 1127+11.16 | 1127+36.16 | 25.00x24.00 | 0.50 | 11.11 |
| | | 25.00x15.00 | 1.75 | 24.31 |
| 1129+28.76 | 1129+53.76 | 25.00x24.00 | 0.50 | 11.11 |
| | | 25.00x15.00 | 1.75 | 24.31 |
| | | | TOTAL | 147.89 |
| | | | USE | 148 CU.YD. |

## ITEM 203 – SUBGRADE COMPACTION

AREA SAME AS ITEM 611 – 523 SQ.YD.

## ITEM 304 – 6" AGGREGATE BASE

FROM ITEM 611 AREA=523.30 SQ.YD.
VOLUME= 523.30x0.5/3=87.22 C.Y.
USE 87 C.Y.

## ITEM 611 – REINFORCED CONCRETE APPROACH SLABS (T=15"), AS PER PLAN I

| STATION FROM | STATION TO | LENGTH x WIDTH ($FT^2$) | AREA (SQ. YD.) |
|---|---|---|---|
| **EASTBOUND** | | | |
| 1127+24.46 | 1127+35.46 | 11.00x58.25 | 71.19 |
| 1127+35.46 | 1127+49.46 | 14.00x57.94 | 90.13 |
| 1129+42.06 | 1129+56.06 | 14.00x52.82 | 82.16 |
| 1129+56.06 | 1129+67.06 | 11.00x52.51 | 64.18 |
| **WESTBOUND** | | | |
| 1127+11.16 | 1127+22.16 | 11.00x39.00 | 47.67 |
| 1127+22.16 | 1127+36.16 | 14.00x38.67 | 60.15 |
| 1129+28.76 | 1129+42.76 | 14.00x38.67 | 60.15 |
| 1129+42.76 | 1129+53.76 | 11.00x39.00 | 47.67 |
| | | TOTAL | 523.30 |
| | | USE | 523 SQ.YD. |

## ITEM 830 – CURB, TYPE 4–C

4x11= 44 L.F.

**NOTE:** THE FOLLOWING ESTIMATED QUANTITIES ARE TO BE USED AS DIRECTED BY THE ENGINEER.

| | | |
|---|---|---|
| ITEM 870– SEEDING AND MULCHING | – | 180 S.Y. |
| ITEM 870– COMMERCIAL FERTILIZER | – | 0.02 TON. |
| ITEM 870– AGRICULTURAL LIME | – | 0.10 TON. |

**NOTES:**

FOR QUANTITIES SUBSUMMARY SEE SHEET 47.

CALCULATED NNB CHECKED KRD

**QUANTITY CALCULATIONS**
**TRU-5-0861 L & R OVER U.S. 422**

**TRU-5-6.45**



QC106.DWG F:\JOBS\502\BRIDGE\11\CALC\502qc11.dwg KJW 6/22/01 PLOT 1=20

## ITEM 202 – APPROACH SLAB REMOVED

| STATION FROM | STATION TO | LENGTH x WIDTH ($FT^2$) | AREA (SQ. YD.) |
|---|---|---|---|
| EASTBOUND | | | |
| 545+50.21 | 545+75.21 | 25.00x48.00 | 133.33 |
| 547+37.96 | 547+62.69 | 25.00x43.50 | 120.83 |
| WESTBOUND | | | |
| 545+22.02 | 545+47.02 | 25.00x24.00 | 66.67 |
| 547+10.36 | 547+35.36 | 25.00x24.00 | 66.67 |
| | | TOTAL | 387.50 |
| | | USE | 388 SQ. YD. |

## ITEM 203 – EXCAVATION, NOT INCLUDING EMBANKMENT CONSTRUCTION

| STATION FROM | STATION TO | AREA (SQ. FT.) | DEPTH (FT.) | VOLUME (CU. YD.) |
|---|---|---|---|---|
| **EASTBOUND** | | | | |
| 545+50.21 | 545+59.21 | 9.00x48.00 | 0.50 | 8.00 |
| | | 9.00x13.00 | 1.75 | 7.58 |
| 545+59.21 | 545+75.21 | 16.00x48.00 | 0.50 | 14.22 |
| | | 16.00x16.00 | 1.75 | 16.59 |
| 547+37.69 | 547+53.69 | 16.00x43.50 | 0.50 | 12.89 |
| | | 16.00x15.83 | 1.75 | 16.42 |
| 547+53.69 | 547+62.69 | 9.00x43.50 | 0.50 | 7.25 |
| | | 9.00x12.83 | 1.75 | 7.48 |
| **WESTBOUND** | | | | |
| 545+22.02 | 545+31.02 | 9.00x24.00 | 0.50 | 4.00 |
| | | 9.00x16.00 | 1.75 | 9.33 |
| 545+31.02 | 545+47.02 | 16.00x24.00 | 0.50 | 7.11 |
| | | 16.00x19.00 | 1.75 | 19.70 |
| 547+10.36 | 547+26.36 | 16.00x24.00 | 0.50 | 7.11 |
| | | 16.00x19.00 | 1.75 | 19.70 |
| 547+26.36 | 547+35.36 | 9.00x24.00 | 0.50 | 4.00 |
| | | 9.00x16.00 | 1.75 | 9.33 |
| | | | TOTAL | 170.71 |
| | | | USE | 171 CU.YD. |

## ITEM 203 – SUBGRADE COMPACTION

AREA SAME AS ITEM 611 – 570 SQ.YD.

## ITEM 304 – 6" AGGREGATE BASE

FROM ITEM 611 AREA= 569.47 SQ.YD.
VOLUME=569.47x0.5/3=94.91 C.Y.
USE 95 C.Y.

## ITEM 611 – REINFORCED CONCRETE APPROACH SLABS (T=15"), AS PER PLAN

| STATION FROM | STATION TO | LENGTH x WIDTH ($FT^2$) | AREA (SQ. YD.) |
|---|---|---|---|
| **EASTBOUND** | | | |
| 545+50.21 | 545+59.21 | 9.00x61.00 | 61.00 |
| 545+59.21 | 545+75.21 | 16.00x64.00 | 113.78 |
| 547+37.69 | 547+53.69 | 16.00x59.33 | 105.48 |
| 547+53.69 | 547+62.69 | 9.00x56.33 | 56.33 |
| **WESTBOUND** | | | |
| 545+22.02 | 545+31.02 | 9.00x40.00 | 40.00 |
| 545+31.02 | 545+47.02 | 16.00x43.00 | 76.44 |
| 547+10.36 | 547+26.36 | 16.00x43.00 | 76.44 |
| 547+26.36 | 547+35.36 | 9.00x40.00 | 40.00 |
| | | TOTAL | 569.47 |
| | | USE | 570 SQ. YD. |

## ITEM 830 – CURB, TYPE 4–C

1x9=9 L.F

**NOTE:** THE FOLLOWING ESTIMATED QUANTITIES ARE TO BE USED AS DIRECTED BY THE ENGINEER.

ITEM 870– SEEDING AND MULCHING – 180 S.Y.
ITEM 870– COMMERCIAL FERTILIZER – 0.02 TON.
ITEM 870– AGRICULTURAL LIME – 0.10 TON.

**NOTES:**

FOR QUANTITIES SUBSUMMARY SEE SHEET 47.

CALCULATED NNB CHECKED KRD

**QUANTITY CALCULATIONS**
**TRU-5-1077 L & R OVER S.R. 45**

**TRU-5-6.45**



GC108.DWG F:\JOBS\502\BRIDGE\13\CALC\502qc13.dwg KJW 6/22/01 PLOT 1=20

## ITEM 254- PAVEMENT PLANING, BITUMINOUS (T=1 1/4" TO 3")

| STATION FROM | STATION TO | LENGTH x WIDTH ($FT^2$) | AREA (SQ. YD.) |
|---|---|---|---|
| **EASTBOUND** | | | |
| 557+56.91 | 558+56.91 | 100.00x36.00 | 400.00 |
| 559+36.57 | 560+36.57 | 100.00x36.00 | 400.00 |
| **WESTBOUND** | | | |
| 557+87.43 | 558+87.43 | 100.00x48.00 | 533.33 |
| 559+67.09 | 560+67.09 | 100.00x48.00 | 533.33 |
| | | TOTAL | 1866.66 |
| | | USE | 1867 SQ.YD. |

## ITEM 858- 1 1/4" MIN. ASPHALT CONCRETE SURFACE COURSE, 12.5 mm TYPE B (446), AS PER PLAN

| STATION FROM | STATION TO | LENGTH x WIDTH ($FT^2$) | DEPTH (IN.) | VOLUME (C.Y.) |
|---|---|---|---|---|
| **EASTBOUND** | | | | |
| 557+56.91 | 558+06.91 | 50.00x36.00 | 1.50 | 8.33 |
| 558+06.91 | 558+56.91 | 50.00x36.00 | (3.25+1.50)/2 | 13.19 |
| 559+36.57 | 559+86.57 | 50.00x36.00 | (1.50+3.25)/2 | 13.19 |
| 559+86.57 | 560+36.57 | 50.00x36.00 | 1.50 | 8.33 |
| **WESTBOUND** | | | | |
| 557+87.43 | 558+37.43 | 50.00x48.00 | 1.50 | 11.11 |
| 558+37.43 | 558+87.43 | 50.00x48.00 | (3.25+1.50)/2 | 17.59 |
| 559+67.09 | 560+17.09 | 50.00x48.00 | (1.50+3.25)/2 | 17.59 |
| 560+17.09 | 560+67.09 | 50.00x48.00 | 1.50 | 11.11 |
| | | | TOTAL | 100.44 |
| | | | USE | 100 C.Y. |

## ITEM 858 - ASPHALT CONCRETE INTERMEDIATE COURSE, 19 mm TYPE B (446)

| STATION FROM | STATION TO | LENGTH x WIDTH ($FT^2$) | DEPTH (IN.) | VOLUME (C.Y.) |
|---|---|---|---|---|
| **EASTBOUND** | | | | |
| 557+56.91 | 558+06.91 | 50.00x36.00 | 1.75 | 9.72 |
| 559+86.57 | 560+36.57 | 50.00x36.00 | 1.75 | 9.72 |
| **WESTBOUND** | | | | |
| 557+87.43 | 558+37.43 | 50.00x48.00 | 1.75 | 12.96 |
| 560+17.09 | 560+67.09 | 50.00x48.00 | 1.75 | 12.96 |
| | | | TOTAL | 45.36 |
| | | | USE | 45 C.Y. |

## ITEM 407 - TACK COAT (RATE OF APPLICATION 0.15 GAL/SQ. YD.)

| STATION FROM | STATION TO | LENGTH x WIDTH ($FT^2$) | AREA (SQ. YD.) |
|---|---|---|---|
| **EASTBOUND** | | | |
| 557+56.91 | 558+06.91 | 50.00x36.00 | 200.00 |
| 558+06.91 | 558+56.91 | 50.00x36.00 | 200.00 |
| 559+36.57 | 559+86.57 | 50.00x36.00 | 200.00 |
| 559+86.57 | 560+36.57 | 50.00x36.00 | 200.00 |
| **WESTBOUND** | | | |
| 557+87.43 | 558+37.43 | 50.00x48.00 | 266.67 |
| 558+37.43 | 558+87.43 | 50.00x48.00 | 266.67 |
| 559+67.09 | 560+17.09 | 50.00x48.00 | 266.67 |
| 560+17.09 | 560+67.09 | 50.00x48.00 | 266.67 |
| | | TOTAL | 1866.68 |
| | | 1866.68x0.15=280.00 | |
| | | USE | 280 GALLONS |

## ITEM 407 - TACK COAT FOR INTERMEDIATE COURSE (RATE OF APPLICATION 0.075 GAL/SQ. YD.)

| STATION FROM | STATION TO | LENGTH x WIDTH ($FT^2$) | AREA (SQ. YD.) |
|---|---|---|---|
| **EASTBOUND** | | | |
| 557+56.91 | 558+06.91 | 50.00x36.00 | 200.00 |
| 559+86.57 | 560+36.57 | 50.00x36.00 | 200.00 |
| **WESTBOUND** | | | |
| 557+87.43 | 558+37.43 | 50.00x48.00 | 266.67 |
| 560+17.09 | 560+67.09 | 50.00x48.00 | 266.67 |
| | | TOTAL | 933.34 |
| | | 933.34x0.075=70.00 | |
| | | USE | 70 GALLONS |

NOTE: THE FOLLOWING ESTIMATED QUANTITIES ARE INCLUDED TO BE USED AS DIRECTED BY ENGINEER IN REPAIR OF SLOPE PROTECTION:
ITEM 601 - CHANNEL PROTECTION MISC.: ROCK CHANNEL PROTECTION TYPE B WITH FILTER - 459 S.Y.

**NOTES:**

FOR QUANTITIES SUBSUMMARY SEE SHEET 47.

CALCULATED NNB CHECKED KRD

**QUANTITY CALCULATIONS**
**TRU-5-1102 L & R OVER YOUNGS RUN CREEK**

**TRU-5-6.45**



J:\18712\GC109.dgn 07-SEP-2001 1:23PM JIIddle

## ITEM 202 – APPROACH SLAB REMOVED

| STATION FROM | STATION TO | LENGTH x WIDTH (FT.²) | AREA (SQ. YD.) |
|---|---|---|---|
| EASTBOUND | | | |
| 624+03.86 | 624+28.86 | 25.00x24.00 | 66.67 |
| 625+47.38 | 625+72.38 | 25.00x24.00 | 66.67 |
| WESTBOUND | | | |
| 624+15.04 | 624+40.04 | 25.00x24.00 | 66.67 |
| 625+58.56 | 625+83.56 | 25.00x24.00 | 66.67 |
| | | TOTAL | 266.68 |
| | | USE | 267 SQ. YD. |

## ITEM 203 – EXCAVATION, NOT INCLUDING EMBANKMENT CONSTRUCTION

| STATION FROM | STATION TO | AREA (SQ. FT.) | DEPTH (FT.) | VOLUME (CU. YD.) |
|---|---|---|---|---|
| **EASTBOUND** | | | | |
| 624+03.86 | 624+12.86 | 9.00x24.00 | 0.50 | 4.00 |
| | | 9.00x15.00 | 1.75 | 8.75 |
| 624+12.86 | 624+28.86 | 16.00x24.00 | 0.50 | 7.11 |
| | | 16.00x18.00 | 1.75 | 18.67 |
| 625+47.38 | 625+63.38 | 16.00x24.00 | 0.50 | 7.11 |
| | | 16.00x18.00 | 1.75 | 18.67 |
| 625+63.38 | 625+72.38 | 9.00x24.00 | 0.50 | 4.00 |
| | | 9.00x15.00 | 1.75 | 8.75 |
| **WESTBOUND** | | | | |
| 624+15.04 | 624+24.04 | 9.00x24.00 | 0.50 | 4.00 |
| | | 9.00x15.00 | 1.75 | 8.75 |
| 624+24.04 | 624+40.04 | 16.00x24.00 | 0.50 | 7.11 |
| | | 16.00x18.00 | 1.75 | 18.67 |
| 625+58.56 | 625+74.56 | 16.00x24.00 | 0.50 | 7.11 |
| | | 16.00x18.00 | 1.75 | 18.67 |
| 625+74.56 | 625+83.56 | 9.00x24.00 | 0.50 | 4.00 |
| | | 9.00x15.00 | 1.75 | 8.75 |
| | | | | 154.12 |
| | | | | 154 CU.YD. |

## ITEM 203 – SUBGRADE COMPACTION

AREA SAME AS ITEM 611 – 455 SQ.YD.

## ITEM 304 – 6" AGGREGATE BASE

FROM ITEM 611 AREA=454.68 SQ.YD.
VOLUME=454.68x0.5/3=75.78 C.Y.
USE 76 C.Y.

## ITEM 611 – REINFORCED CONCRETE APPROACH SLABS (T=15"), AS PER PLAN.

| STATION FROM | STATION TO | LENGTH x WIDTH (FT.²) | AREA (SQ. YD.) |
|---|---|---|---|
| **EASTBOUND** | | | |
| 624+03.86 | 624+12.86 | 9.00x39.00 | 39.00 |
| 624+12.86 | 624+28.86 | 16.00x42.00 | 74.67 |
| 625+47.38 | 625+63.38 | 16.00x42.00 | 74.67 |
| 625+63.38 | 625+72.38 | 9.00x39.00 | 39.00 |
| **WESTBOUND** | | | |
| 624+15.04 | 624+24.04 | 9.00x39.00 | 39.00 |
| 624+24.04 | 624+40.04 | 16.00x42.00 | 74.67 |
| 625+58.56 | 625+74.56 | 16.00x42.00 | 74.67 |
| 625+74.56 | 625+83.56 | 9.00x39.00 | 39.00 |
| | | TOTAL | 454.68 |
| | | USE | 455 SQ. YD. |

## ITEM 830 – CURB, TYPE 4–C

2x9=18 L.F

**NOTE:** THE FOLLOWING ESTIMATED QUANTITIES ARE TO BE USED AS DIRECTED BY THE ENGINEER.

ITEM 870– SEEDING AND MULCHING – 180 S.Y.
ITEM 870– COMMERCIAL FERTILIZER – 0.02 TON.
ITEM 870– AGRICULTURAL LIME – 0.10 TON.

**NOTES:**

FOR QUANTITIES SUBSUMMARY SEE SHEET 47.

CALCULATED NNB CHECKED KRD

# QUANTITY CALCULATIONS
# TRU-5-1226 L & R OVER NORTH PARK ROAD

TRU-5-6.45



QC110.DWG F:\JOBS\502\BRIDGE\15\CALC\502qc15.dwg KJW 6/22/01 PLOT 1=20

## ITEM 254 - PAVEMENT PLANING, BITUMINOUS (T=1 1/2" TO 3")

| STATION FROM | STATION TO | LENGTH x WIDTH ($FT^2$) | AREA (SQ. YD.) |
|---|---|---|---|
| 1027+85.35 | 1028+30.35 | 45.00x24.00 | 120.00 |
| 1028+30.35 | 1028+55.35 | 25.00x32.58 | 90.50 |
| 1031+79.15 | 1032+04.15 | 25.00x32.58 | 90.50 |
| 1032+04.15 | 1032+49.15 | 45.00x24.00 | 120.00 |
| | | TOTAL | 421.00 |
| | | USE | 421.00 SQ. YD. |

## ITEM 407 - TACK COAT (RATE OF APPLICATION 0.15 GAL/SQ. YD.)

| STATION FROM | STATION TO | LENGTH x WIDTH ($FT^2$) | AREA (SQ. YD.) |
|---|---|---|---|
| 1027+85.35 | 1028+30.35 | 45.00x24.00 | 120.00 |
| 1028+30.35 | 1028+55.35 | 25.00x32.58 | 90.50 |
| 1031+79.15 | 1032+04.15 | 25.00x32.58 | 90.50 |
| 1032+04.15 | 1032+49.15 | 45.00x24.00 | 120.00 |
| | | TOTAL | 421.00 |
| | | 421x0.15= | 63.15 |
| | | USE | 63.2 GALLONS |

## ITEM 407 - TACK COAT FOR INTERMEDIATE COURSE (RATE OF APPLICATION 0.075 GAL/SQ. YD.)

| STATION FROM | STATION TO | LENGTH x WIDTH ($FT^2$) | AREA (SQ. YD.) |
|---|---|---|---|
| 1027+85.35 | 1028+30.35 | 45.00x24.00 | 120.00 |
| 1028+30.35 | 1028+55.35 | 25.00x32.58 | 90.50 |
| 1031+79.15 | 1032+04.15 | 25.00x32.58 | 90.50 |
| 1032+04.15 | 1032+49.15 | 45.00x24.00 | 120.00 |
| | | TOTAL | 421.00 |
| | | 421.00 x 0.075 = | 31.58 |
| | | USE | 31.6 GALLONS |

## ITEM 448 - 1 1/4" ASPHALT CONCRETE SURFACE COURSE, TYPE 1 PG64-22, AS PER PLAN (THICKNESS 1 3/4")

| STATION FROM | STATION TO | LENGTH x WIDTH ($FT^2$) | DEPTH (IN.) | VOLUME (C.Y.) |
|---|---|---|---|---|
| 1027+85.35 | 1028+30.35 | 45.00x24.00 | 1.25 | 4.17 |
| 1028+30.35 | 1028+55.35 | 25.00x32.58 | 1.25 | 3.14 |
| 1031+79.15 | 1032+04.15 | 25.00x32.58 | 1.25 | 3.14 |
| 1032+04.15 | 1032+49.15 | 45.00x24.00 | 1.25 | 4.17 |
| | | | TOTAL | 14.62 |
| | | | USE | 15 C.Y. |

## ITEM 448 - ASPHALT CONCRETE INTERMEDIATE COURSE, TYPE 1 PG64-22 (THICKNESS 1 3/4")

| STATION FROM | STATION TO | LENGTH x WIDTH ($FT^2$) | DEPTH (IN.) | VOLUME (C.Y.) |
|---|---|---|---|---|
| 1027+85.35 | 1028+30.35 | 45.00x24.00 | 1.75 | 5.83 |
| 1028+30.35 | 1028+55.34 | 25.00x32.58 | 1.75 | 4.40 |
| 1031+79.15 | 1032+04.15 | 25.0x32.58 | 1.75 | 4.40 |
| 1032+04.15 | 1032+49.15 | 45.00x24.00 | 1.75 | 5.83 |
| | | | TOTAL | 20.46 |
| | | | USE | 20.46 C.Y. |

## ITEM 642 - EDGE LINE, WHITE, TYPE 2

| STATION FROM | STATION TO | CALCULATION | LIN. FT. | MILE |
|---|---|---|---|---|
| 1027+85 | 1032+49 | 2x464 | 928 | 0.18 |
| | | | TOTAL | 0.18 MILE |

## ITEM 642 - CENTER LINE, DOUBLE SOLID, TYPE 2 (YELLOW).

| STATION FROM | STATION TO | LIN. FT. | MILE |
|---|---|---|---|
| 1027+85 | 1032+49 | 464 | 0.09 |
| | | TOTAL | 0.09 MILE |

NOTE: THE FOLLOWING ESTIMATED QUANTITIES ARE INCLUDED TO BE USED AS DIRECTED BY ENGINEER IN REPAIR OF SHOULDER AREAS.

| | | |
|---|---|---|
| ITEM 304 - AGGREGATE BASE | 3 C.Y. |
| ITEM 409 - SEAL COAT COVER AGGREGATE NO. 8. | 1 C.Y. |
| SEAL COAT BITUMINOUS MATERIAL | 5 GALLONS |

**NOTES:**

FOR QUANTITIES SUBSUMMARY SEE SHEET 48.

CALCULATED NNB CHECKED KRD

**QUANTITY CALCULATIONS**
**TRU-5-0688 (W. MARKET ST.) OVER S.R. 5**

**TRU-5-6.45**



j:\18712\GC102.dgn 07-SEP-2001 1:24PM jliddle

## ITEM 254 - PAVEMENT PLANING, BITUMINOUS (T=0" TO 1 3/4")

| STATION FROM | STATION TO | LENGTH × WIDTH ($FT^2$) | AREA (SQ. YD.) |
|---|---|---|---|
| 51+96.35 | 52+41.35 | 45.00×22.00 | 110.00 |
| 55+00.89 | 55+45.89 | 45.00×22.00 | 110.00 |
| | | TOTAL | 220.00 |
| | | USE | 220.00 SQ. YD. |

## ITEM 407 - TACK COAT (RATE OF APPLICATION 0.15 GAL/SQ. YD.)

| STATION FROM | STATION TO | LENGTH × WIDTH ($FT^2$) | AREA (SQ. YD.) |
|---|---|---|---|
| 51+96.35 | 52+41.35 | 45.00×22.00 | 110.00 |
| 52+41.35 | 52+66.35 | 25.00×30.58 | 84.90 |
| 54+75.89 | 55+00.89 | 25.00×30.58 | 84.90 |
| 55+00.89 | 55+45.89 | 45.00×22.00 | 110.00 |
| | | TOTAL | 389.80 |

389.80×0.15= 58.47

USE 58.4 GALLONS

## ITEM 448 - 1¾" ASPHALT CONCRETE SURFACE COURSE, TYPE 1 PG64-22, AS PER PLAN

| STATION FROM | STATION TO | LENGTH × WIDTH ($FT^2$) | DEPTH (IN.) | VOLUME (C.Y.) |
|---|---|---|---|---|
| 51+96.35 | 52+41.35 | 45.00×22.00 | 1.75 | 5.34 |
| 52+41.35 | 52+66.35 | 25.00×30.58 | 1.75 | 4.13 |
| 54+75.89 | 55+00.89 | 25.00×30.58 | 1.75 | 4.13 |
| 55+00.89 | 55+45.89 | 45.00×22.00 | 1.75 | 5.34 |
| | | | TOTAL | 18.94 |
| | | | USE | 19 C.Y. |

## ITEM 642 - EDGE LINE, WHITE, TYPE 2

| FROM | TO | | | |
|---|---|---|---|---|
| 51+96 | 55+46 | 2×350 | 700 | 0.13 |
| | | | TOTAL | 0.13 MILE |

## ITEM 642 - CENTER LINE, DOUBLE SOLID, TYPE 2 YELLOW),

| FROM | TO | | |
|---|---|---|---|
| 51+96 | 55+46 | 350 | 0.07 |
| | | TOTAL | 0.07 MILE |

NOTE: THE FOLLOWING ESTIMATED QUANTITIES ARE INCLUDED TO BE USED AS DIRECTED BY ENGINEER IN REPAIR OF SHOULDER AREAS.

| | |
|---|---|
| ITEM 304 - AGGREGATE BASE | 3 C.Y. |
| ITEM 409 - SEAL COAT COVER AGGREGATE NO. 8. | 1 C.Y. |
| SEAL COAT BITUMINOUS MATERIAL | 5 GALLONS |

**NOTES:**

FOR QUANTITIES SUBSUMMARY SEE SHEET 48.

CALCULATED NNB CHECKED KRD

QUANTITY CALCULATIONS
TRU-5-0778 (EAGLE CREEK RD.) OVER S.R. 5

TRU-5-6.45



j:\1872\GC104.dgn 07-SEP-2001 1:25PM jliddle

## ITEM 254 - PAVEMENT PLANING, BITUMINOUS (T=1 1/2" TO 3")

| STATION FROM | STATION TO | LENGTH × WIDTH ($FT^2$) | AREA (SQ. YD.) |
|---|---|---|---|
| 28+01.97 | 28+46.97 | 45.00×24.00 | 120.00 |
| 28+46.97 | 28+71.97 | 25.00×32.58 | 90.50 |
| 31+28.03 | 31+53.03 | 25.00×32.58 | 90.50 |
| 31+53.03 | 31+98.03 | 45.00×24.00 | 120.00 |
| | | TOTAL | 421.00 |
| | | USE | 421 SQ.YD. |

## ITEM 407 - TACK COAT (RATE OF APPLICATION 0.15 GAL/SQ.YD.

| STATION FROM | STATION TO | LENGTH × WIDTH ($FT^2$) | AREA (SQ. YD.) |
|---|---|---|---|
| 28+01.97 | 28+46.97 | 45.00×24.00 | 120.00 |
| 28+46.97 | 28+71.97 | 25.00×32.58 | 90.50 |
| 31+28.03 | 31+53.03 | 25.00×32.58 | 90.50 |
| 31+53.03 | 31+98.03 | 45.00×24.00 | 120.00 |

TOTAL 421.00
421.00×0.15= 63.15
USE 63.2 GALLONS

## ITEM 407 - TACK COAT FOR INTERMEDIATE COURSE (RATE OF APPLICATION 0.075 GAL/SQ.YD)

| STATION FROM | STATION TO | LENGTH × WIDTH ($FT^2$) | AREA (SQ. YD.) |
|---|---|---|---|
| 28+01.97 | 28+46.97 | 45.00×24.00 | 120.00 |
| 28+46.97 | 28+71.97 | 25.00×32.58 | 90.50 |
| 31+28.03 | 31+53.03 | 25.00×32.58 | 90.50 |
| 31+53.03 | 31+98.03 | 45.00×24.00 | 120.00 |

TOTAL 421.00
421.00×0.075= 31.58
USE 31.6 GALLONS

## ITEM 448 - 1 1/4" ASPHALT CONCRETE SURFACE COURSE, TYPE 1 PG64-22, AS PER PLAN

| STATION FROM | STATION TO | LENGTH × WIDTH ($FT^2$) | DEPTH (IN.) | VOLUME (C.Y) |
|---|---|---|---|---|
| 28+01.97 | 28+46.97 | 45.00×24.00 | 1.25 | 4.17 |
| 28+46.97 | 28+71.97 | 25.00×32.58 | 1.25 | 3.14 |
| 31+28.03 | 31+53.03 | 25.00×32.58 | 1.25 | 3.14 |
| 31+53.03 | 31+98.03 | 45.00×24.00 | 1.25 | 4.17 |
| | | | TOTAL | 14.62 |
| | | | USE | 15 C.Y |

## ITEM 448 - ASPHALT CONCRETE INTERMEDIATE COURSE, TYPE 1 PG64-22 (THICKNESS 1 3/4")

| STATION FROM | STATION TO | LENGTH × WIDTH ($FT^2$) | DEPTH (IN.) | VOLUME (C.Y) |
|---|---|---|---|---|
| 28+01.97 | 28+46.97 | 45.00X24.00 | 1.75 | 5.83 |
| 28+46.97 | 28+71.97 | 25.00×32.58 | 1.75 | 4.40 |
| 31+28.03 | 31+53.03 | 25.00×32.58 | 1.75 | 4.40 |
| 31+53.03 | 31+98.03 | 45.00×24.00 | 1.75 | 5.83 |
| | | | TOTAL | 20.46 |
| | | | USE | 20 C.Y. |

## ITEM 642 - EDGE LINE, WHITE, TYPE 2

| STATION FROM | STATION TO | CALCULATION | LIN. FT. | MILE |
|---|---|---|---|---|
| 28+02 | 31+98 | 2×396 | 792 | 0.15 |
| | | | TOTAL | 0.15 MILE |

## ITEM 642 - CENTER LINE, DOUBLE SOLID, TYPE 2 (YELLOW),

| STATION FROM | STATION TO | LIN. FT. | MILE |
|---|---|---|---|
| 28+02 | 31+98 | 396 | 0.08 |
| | | TOTAL | 0.08 MILE |

**NOTE:** THE FOLLOWING ESTIMATED QUANTITIES ARE INCLUDED TO BE USED AS DIRECTED BY ENGINEER IN REPAIR OF SHOULDER AREAS.

| | |
|---|---|
| ITEM 304 - AGGREGATE BASE | 5 C.Y. |
| ITEM 409 - SEAL COAT COVER AGGREGATE NO.8. | 2 C.Y. |
| SEAL COAT BITUMINOUS MATERIAL | 10 GALLONS |

**NOTES:**

FOR QUANTITIES SUBSUMMARY SEE SHEET 48.

CALCULATED NNB CHECKED KRD

QUANTITY CALCULATIONS
TRU-5-0921 (NORTH LEAVITT RD.) OVER S.R. 5

TRU-5-6.45



I:\18712\GC107.dgn 07-SEP-2001 11:25PM jlldle

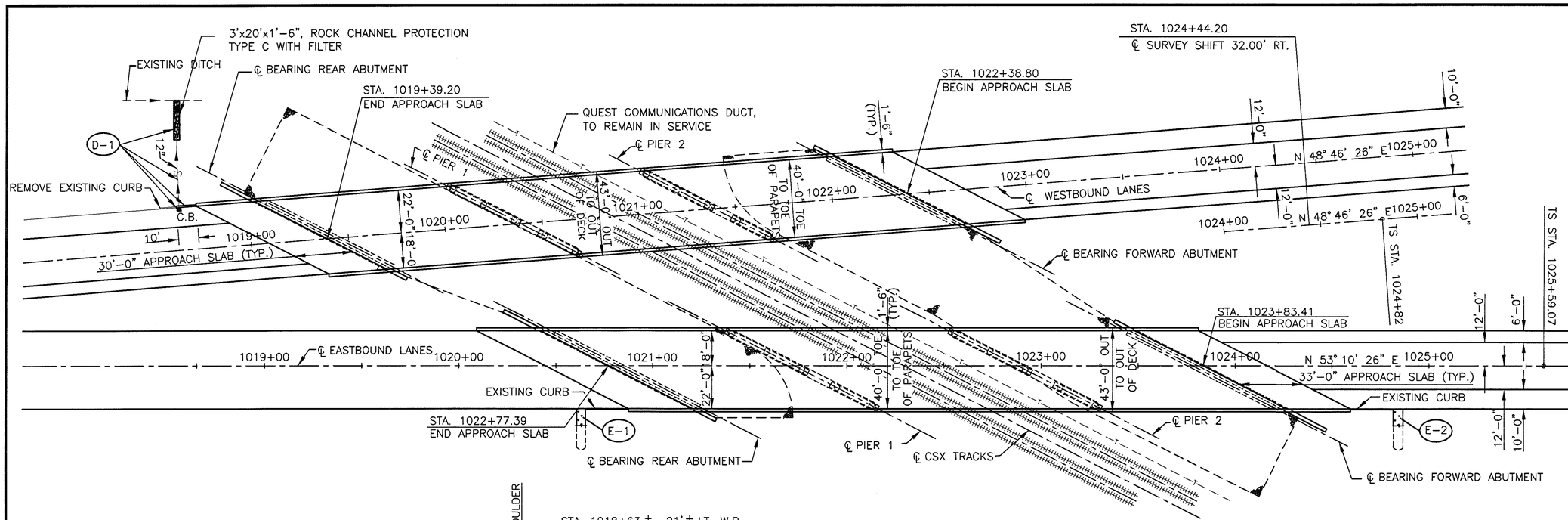


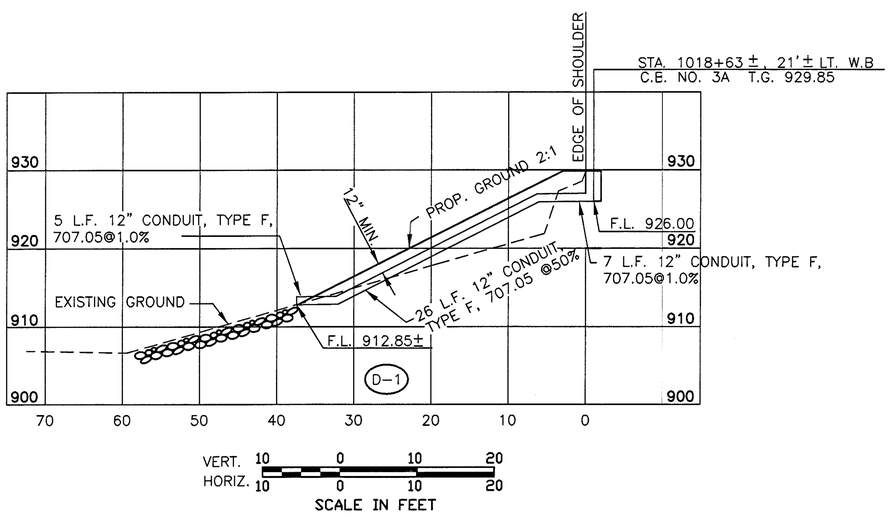


ITEM 203 – EMBANKMENT

STA. 1018+63 (D-1) 5'x5'x35'/27 =32 CU.YD.
STA. 1020+63 (E-1) 5'x5'x32'/27 =30 CU.YD.
STA. 1024+84 (E-2) 5'x5'x9'/27 = 8 CU.YD.

ESTIMATED QUANTITIES

| REF. NO. | STATION FROM | STATION TO | SIDE | 202 CURB REMOVED LIN. FT. | 203 EMBANKMENT C.Y. | 601 ROCK CHANNEL PROTECTION TYPE C, WITH FILTER C.Y. | 603 12" CONDUIT, TYPE F, 707.05** LIN. FT. | 604 CATCH BASIN, NO. 3A EACH | 660 REINFORCED SODDING SQ.YD. | 830 CURB, TYPE 6 LIN. FT. |
|---|---|---|---|---|---|---|---|---|---|---|
| WESTBOUND | | | | | | | | | | |
| D-1 | 1018+63± | | LT. | 19 | 32* | 3.0 | 38 | 1 | | 10 |
| EASTBOUND | | | | | | | | | | |
| E-1 | 1020+63± | | RT. | | 30* | | | | 20* | |
| E-2 | 1024+84± | | RT. | | 8* | | | | 4* | |
| TOTAL | | | | 19 | 70* | 3.0 | 38 | 1 | 24* | 10 |

* TO BE USED AS DIRECTED BY ENGINEER.

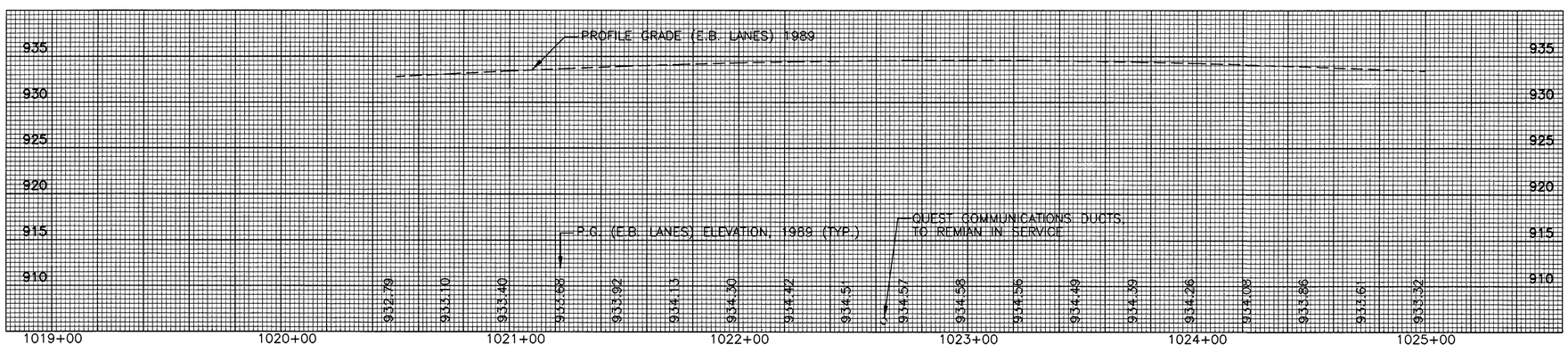


**NOTE: PAYMENT FOR REMOVAL AND REERECTION OF EXISTING GUARDRAIL FOR INSTALLATION OF 12" CONDUIT IS INCLUDED WITH THE UNIT PRICE BID FOR ITEM 603, 12"CONDUIT.

SCALE IN FEET 0 30 60

CALCULATED NNB CHECKED KRD

# PLAN AND PROFILE
# TRU-5-0657 L&R OVER CSX RAILROAD

TRU-5-6.45



GP101.DWG 502\BRIDGE\06\dwg\502PP06.dwg KJW 6/22/01 PLOT 1"=20'

| BENCH MARK NO. 1 | BENCH MARK NO. 2 |
|---|---|
| IRON PIN FOUND IN MEDIAN<br>STA. 1068+47.55<br>ELEV. 895.67 | IRON PIN FOUND IN MEDIAN<br>STA. 1080+00.00<br>ELEV. 893.26 |

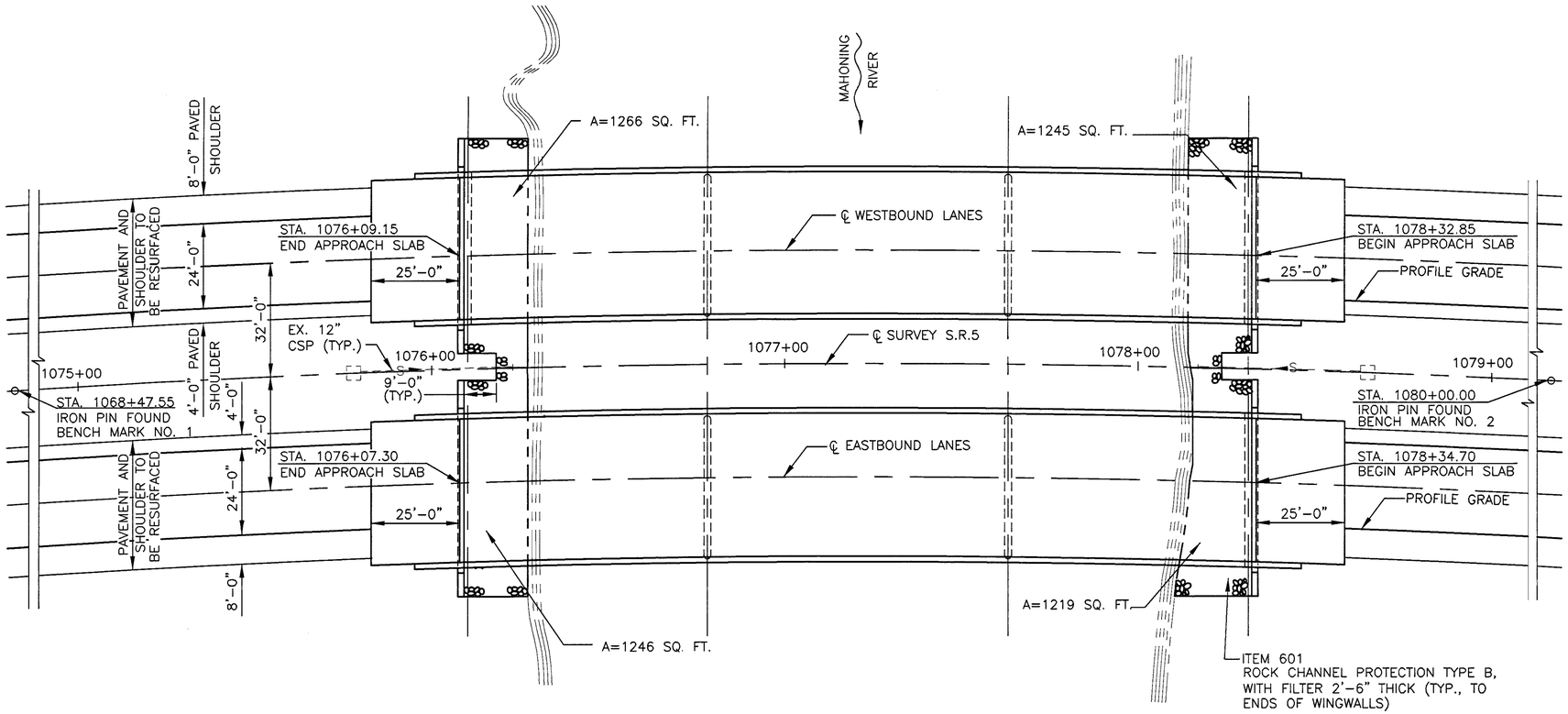


**S.R. 5**
**HORIZONTAL CURVE DATA**

P.I. = STA. 1084+19.95
P.C. = STA. 1068+47.55
P.T. = STA. 1098+37.32
R = 3,906.53'
Dc = 1° 28'00"
L = 2,989.77'
T = 1,572.40'

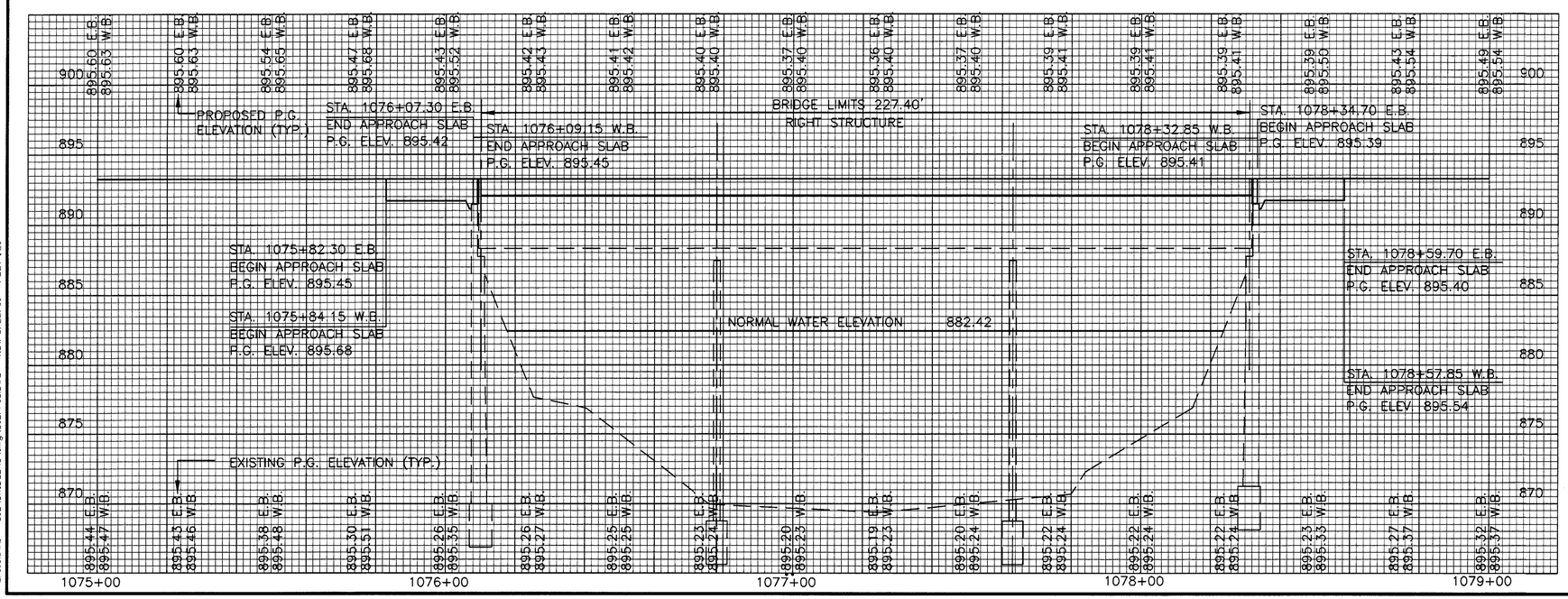


SCALE IN FEET 0 20 40

CALCULATED NNB
CHECKED KRD

# PLAN AND PROFILE
# TRU-5-0764 L & R OVER MAHONING RIVER

# TRU-5-6.45



GP103.DWG 502\BRIDGE\B\dwg\502PP08.DWG KJV 6/22/01 PLOT 1:20

| BENCH MARK NO. 1 | BENCH MARK NO. 2 |
|---|---|
| IRON PIN FD. IN MEDIAN<br>STA. 1098+37.32 ℄ SURVEY<br>ELEV. 894.95 | IRON PIN FD. IN MEDIAN<br>STA. 1104+00.00 ℄ SURVEY<br>ELEV. 896.55 |

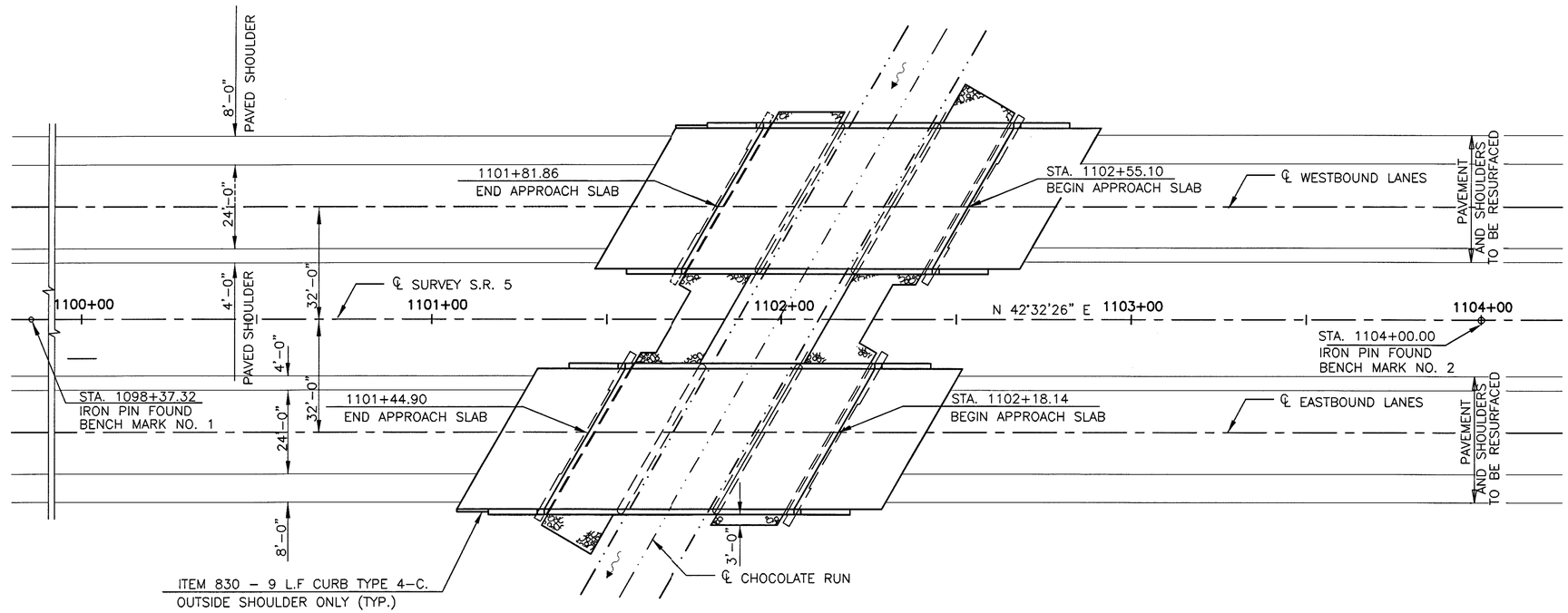


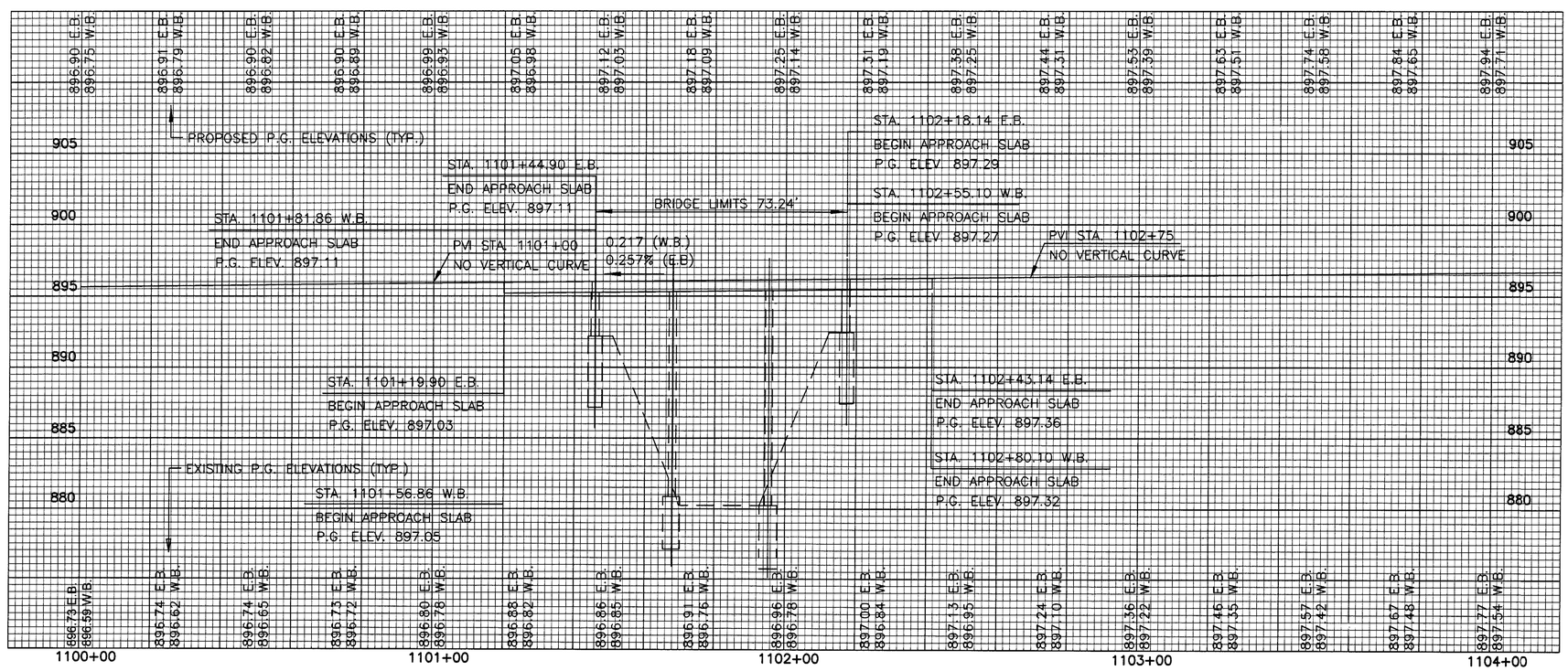


SCALE IN FEET 0 20 40

CALCULATED NNB
CHECKED KRD

# PLAN AND PROFILE
# TRU-5-0811 L&R OVER CHOCOLATE RUN

TRU-5-6.45



GP105.DWG 502\BRIDGE\10\dwg\502PP10.DWG KJW 6/22/01 PLOT 1"=20'

| BENCH MARK NO. 1 | BENCH MARK NO. 2 |
|---|---|
| IRON PIN FOUND IN MEDIAN<br>STA. 1127+00.00<br>ELEV. 927.39 | IRON PIN FOUND IN MEDIAN<br>STA. 1130+26.11<br>ELEV. 927.03 |

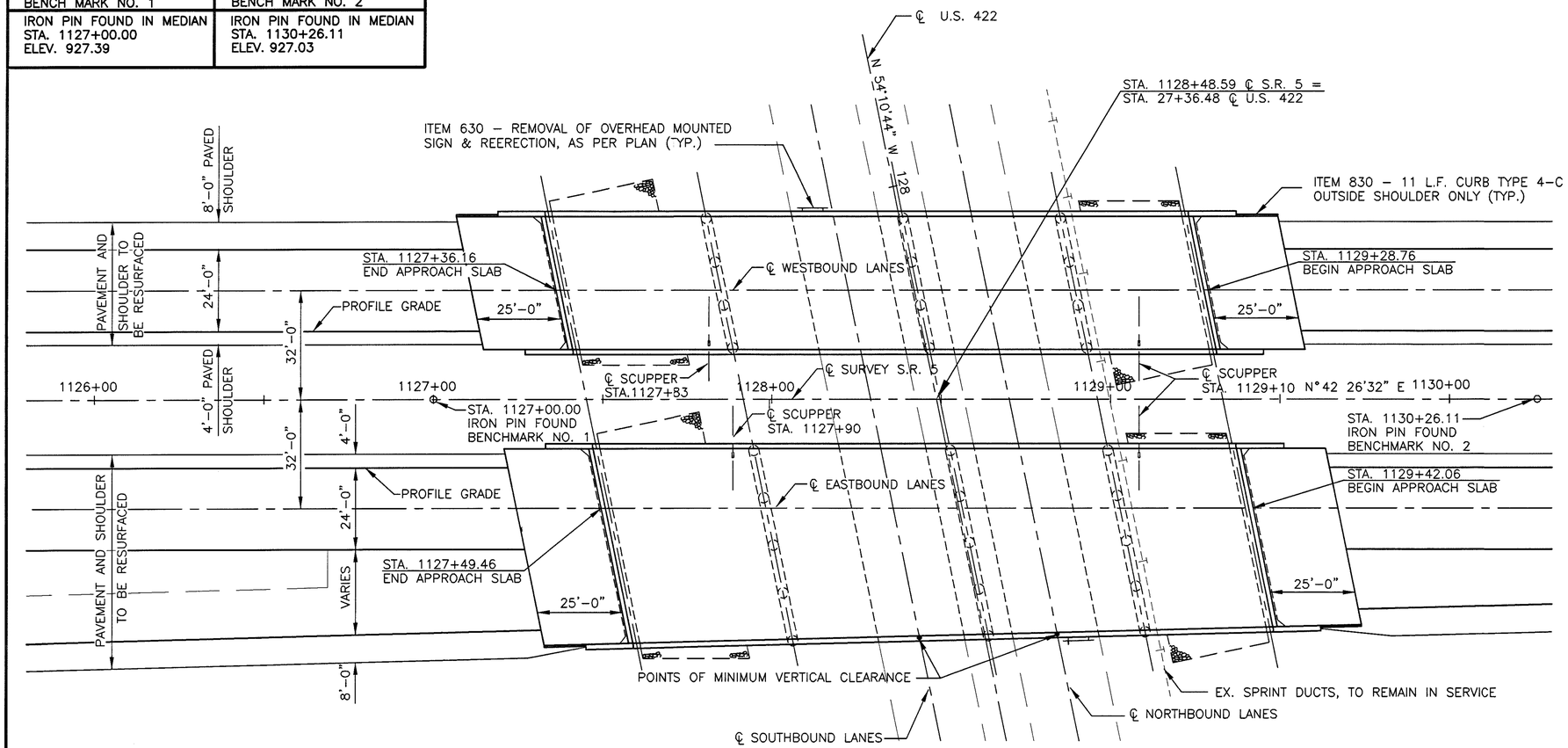


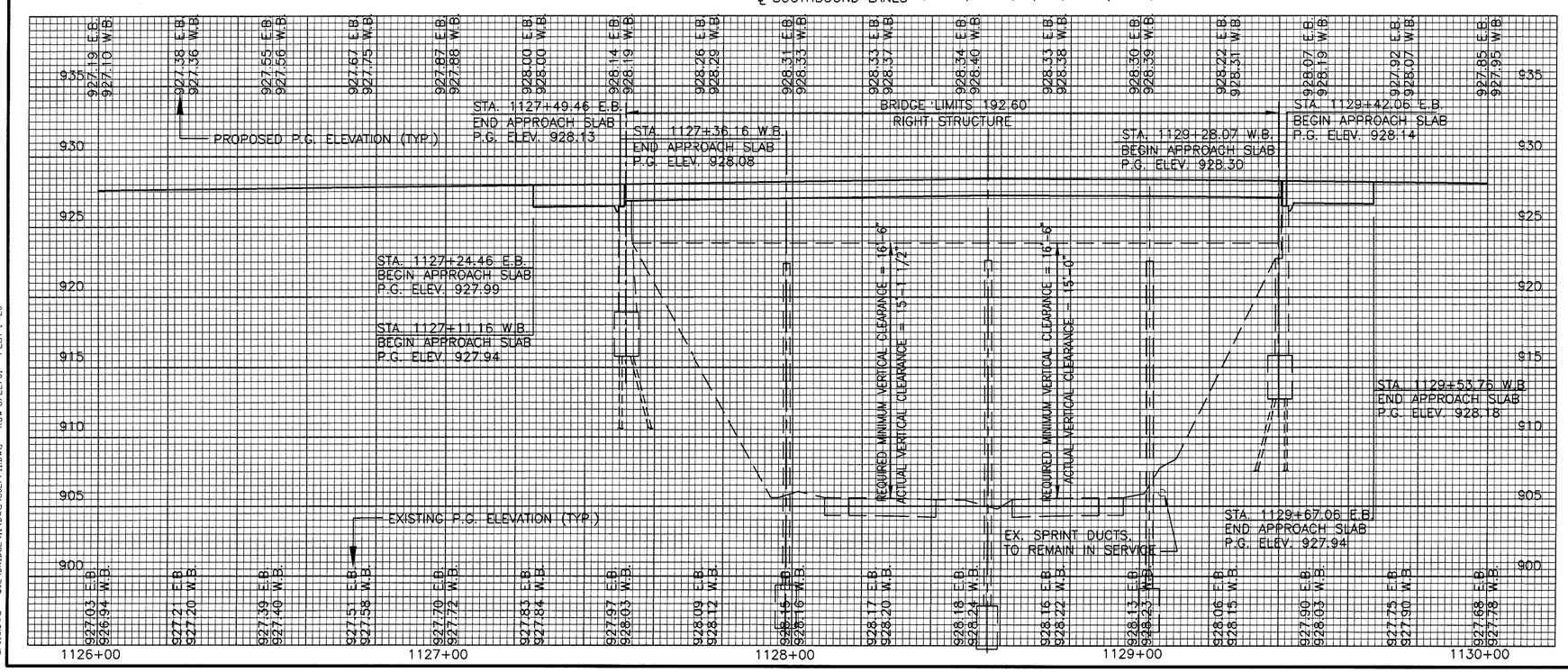


SCALE IN FEET 0 20 40

CALCULATED NNB CHECKED KRD

# PLAN AND PROFILE
## TRU-5-0861 L&R OVER U.S. 422

TRU-5-6.45



GP106.DWG 502\BRIDGE\11\DWG\502PP11.DWG KJW 6/22/01 PLOT 1=20'

| BENCH MARK NO. 1 | BENCH MARK NO. 2 |
|---|---|
| IRON PIN FD. IN MEDIAN<br>STA. 534+31.06<br>ELEV. 934.56 | IRON PIN FD. IN MEDIAN<br>STA. 553+41.29<br>ELEV. 909.66 |

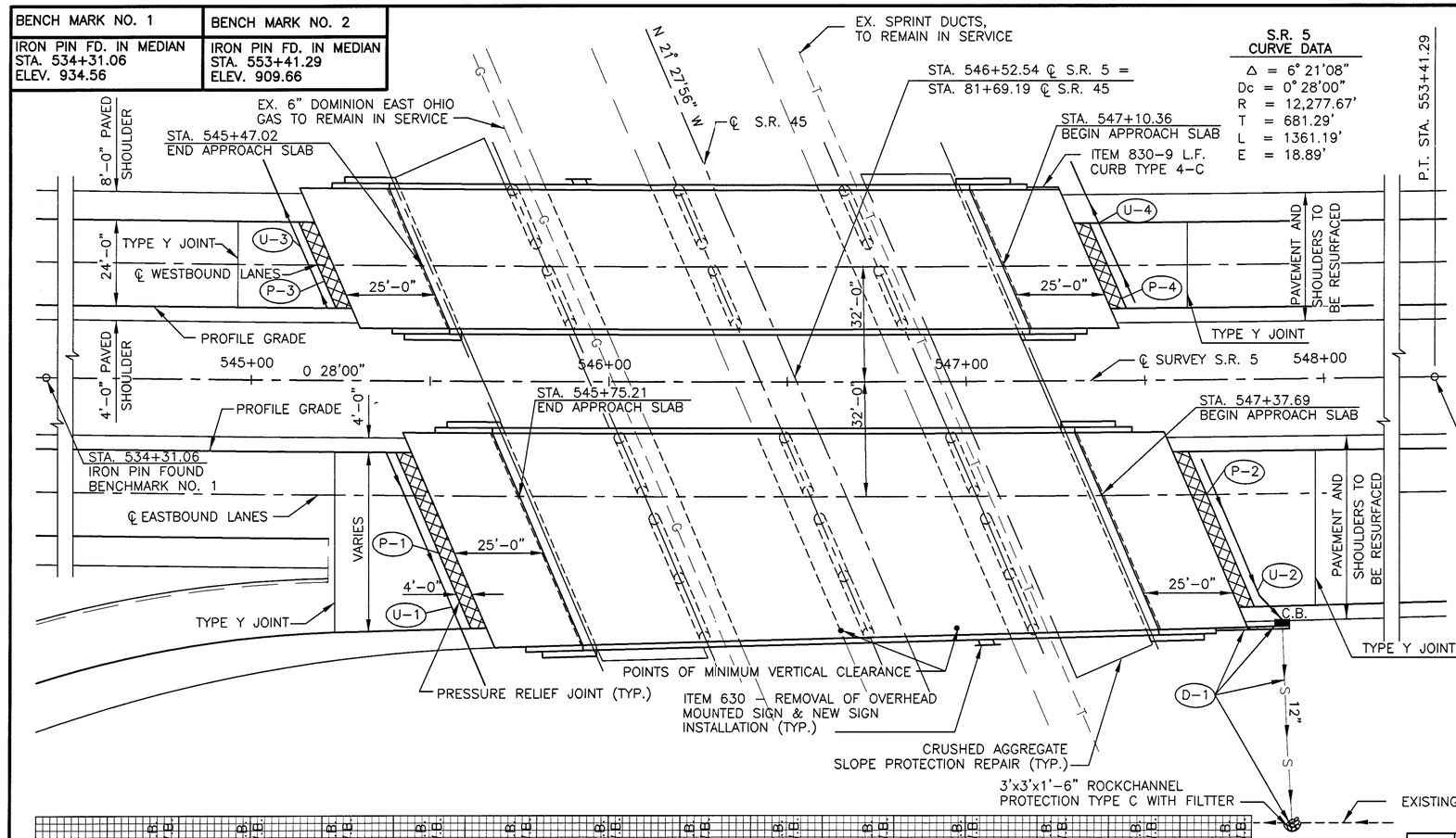


**S.R. 5 CURVE DATA**

| | |
|---|---|
| Δ | = 6° 21'08" |
| Dc | = 0° 28'00" |
| R | = 12,277.67' |
| T | = 681.29' |
| L | = 1361.19' |
| E | = 18.89' |

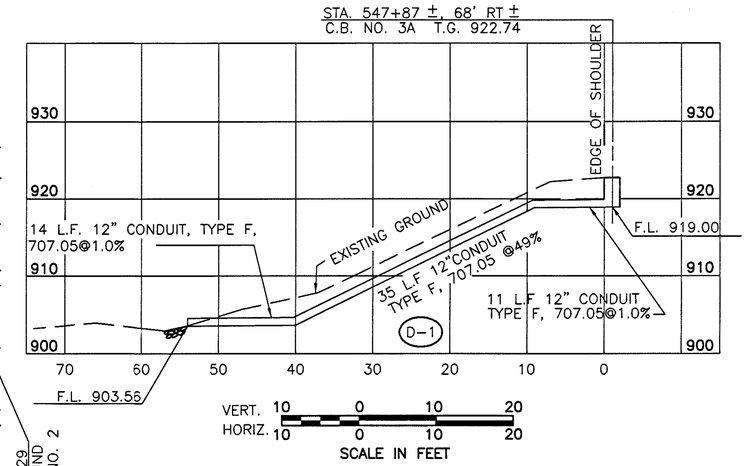


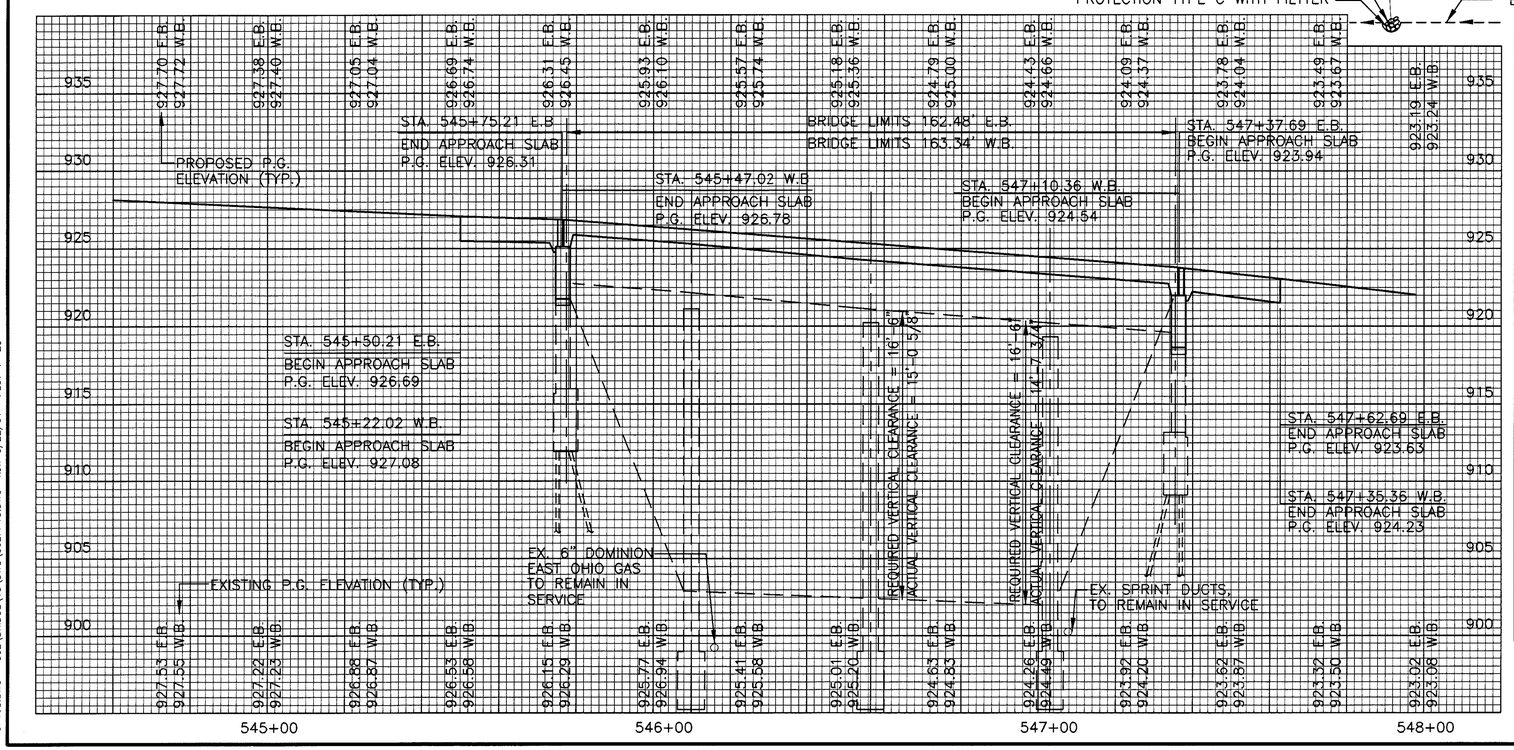


**ESTIMATED QUANTITIES**

| REF. NO. | STATION FROM | STATION TO | SIDE | 601 ROCK CHANNEL PROTECTION TYPE C, WITH FILTER | 603 6" CONDUIT, TYPE F | 603 12" CONDUIT, TYPE F, 707.05 | 604 CATCH BASIN, NO. 3A | 605 6" SHALLOW PIPE UNDERDRAIN 707.51 OR 707.41 | 830 CURB, TYPE 6 | SPECIAL PRESSURE RELIEF JOINT, TYPE A |
|---|---|---|---|---|---|---|---|---|---|---|
| | | | | C.Y. | LIN. FT. | LIN. FT. | EACH | LIN. FT. | LIN.FT. | LIN. FT. |
| EASTBOUND | | | | | | | | | | |
| D-1 | 547+80± | | RT. | 1.0 | | 60 | 1 | | 15 | |
| P-1 | 547+48± | | RT. | | | | | | | 54 |
| P-2 | 547+65± | | RT | | | | | | | 47 |
| U-1 | 547+44± | | RT. | | 16 | | | 53 | | |
| U-2 | 547+69± | | RT. | | 8 | | | 45 | | |
| WESTBOUND | | | | | | | | | | |
| P-3 | 545+20 ± | | LT. | | | | | | | 26 |
| P-4 | 547+37 ± | | LT. | | | | | | | 26 |
| U-3 | 545+16 ± | | LT. | | 20 | | | 26 | | |
| U-4 | 547+41 ± | | LT. | | 20 | | | 26 | | |
| TOTAL | | | | 1.0 | 64 | 60 | 1 | 150 | 15 | 159 |

SCALE IN FEET 0 20 40

CALCULATED NNB CHECKED KRD

# PLAN AND PROFILE
# TRU-5-1077 L & R OVER S.R. 45

TRU-5-6.45



GP108.DWG 502\BRIDGE\13\DWG\502PP13.DWG KJW 6/22/01 PLOT 1"=20'

| BENCH MARK NO. 1 | BENCH MARK NO. 2 |
|---|---|
| IRON PIN FD. IN MEDIAN<br>STA. 553+41.29<br>ELEV. 909.66 | IRON PIN FD. IN MEDIAN<br>STA. 570+00.00<br>ELEV. 903.03 |

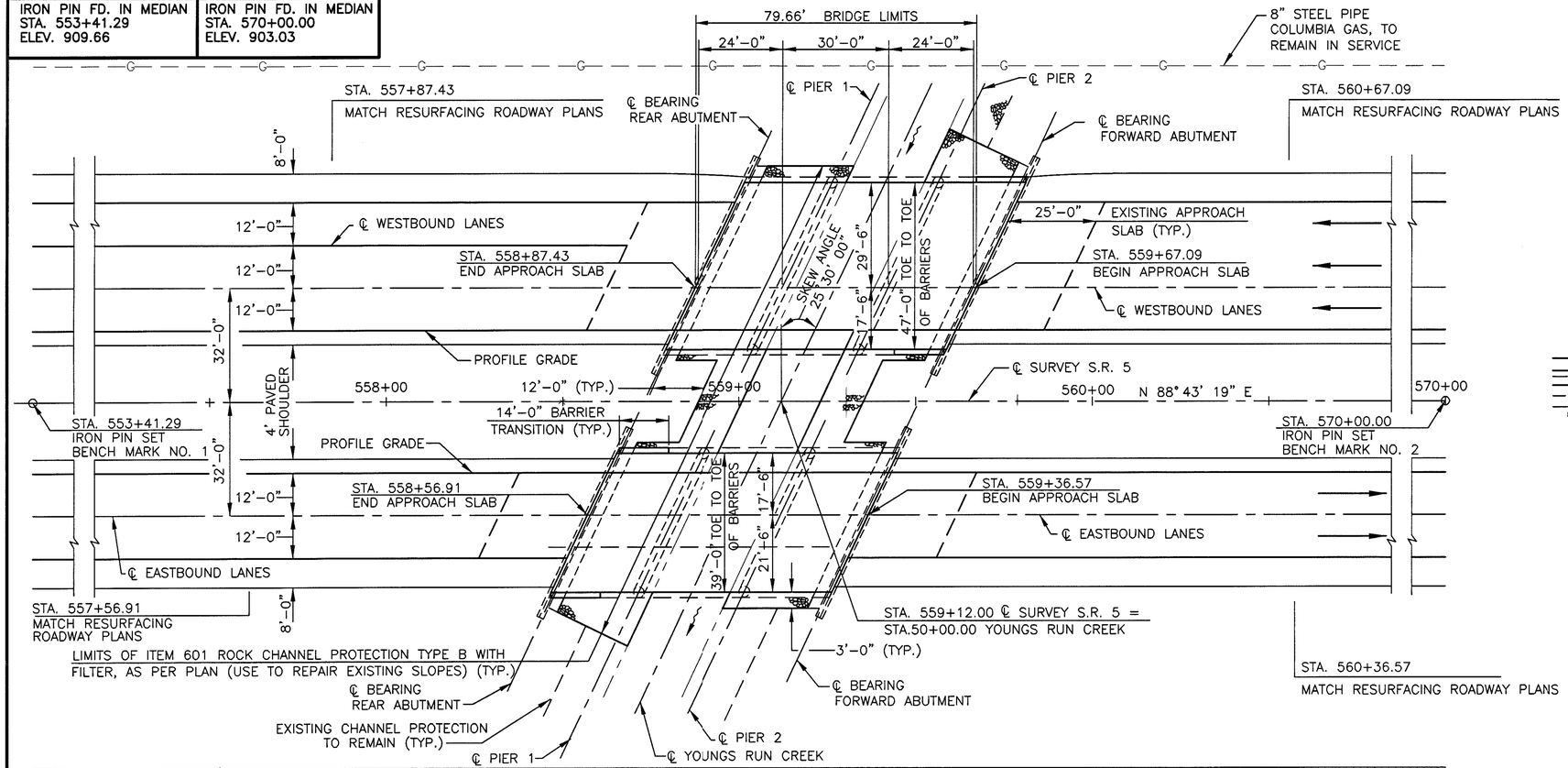


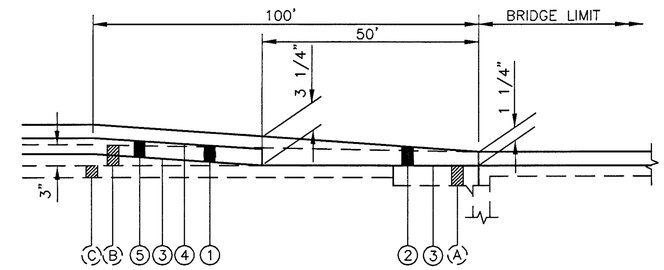


ASPHALT TRANSITION DETAIL

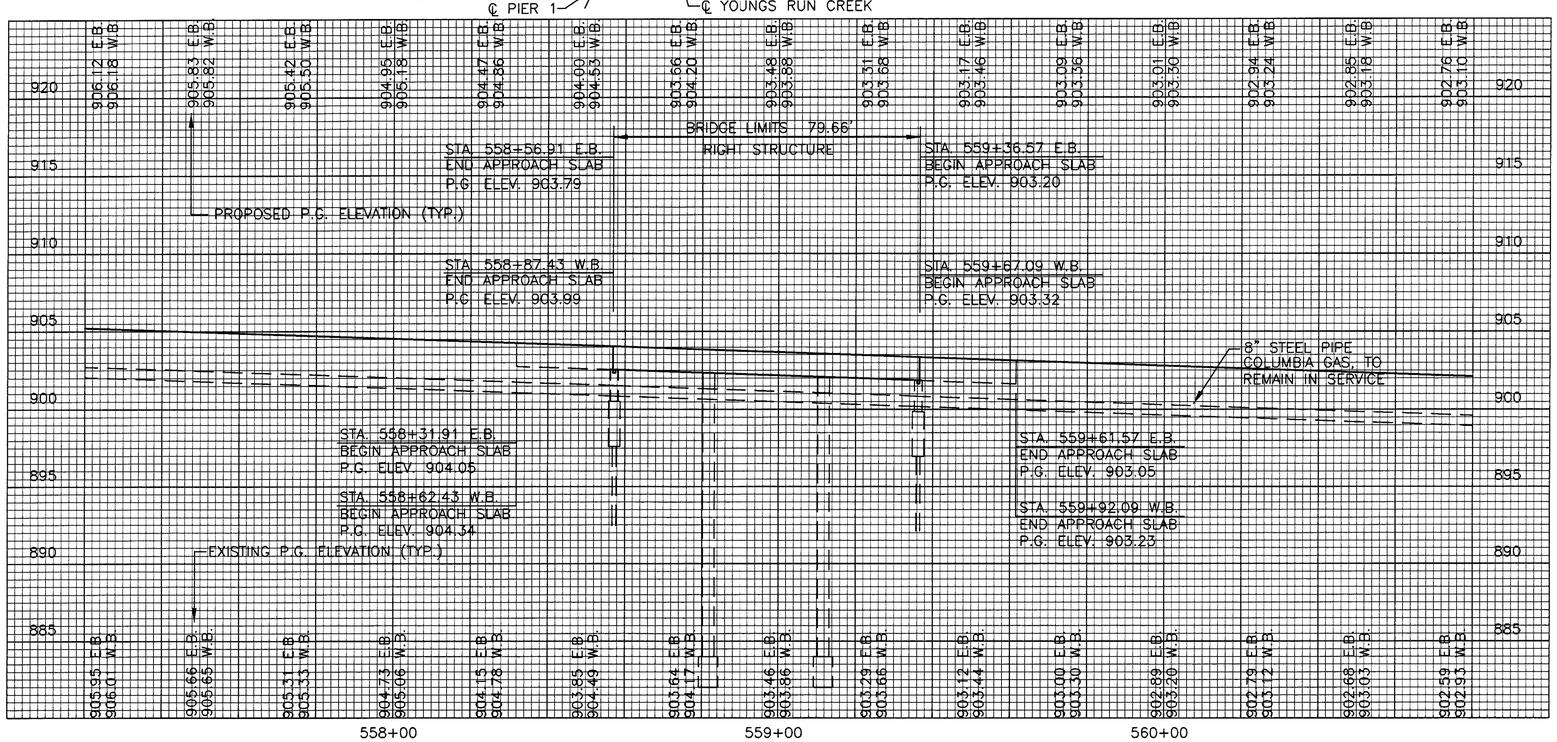


## LEGEND

1. ITEM 254 PAVEMENT PLANING, BITUMINOUS (T=1 1/4" TO 3")
2. ITEM 858 1 1/4" MIN. ASPHALT CONCRETE SURFACE COURSE, 12.5 mm TYPE B (446), AS PER PLAN
3. ITEM 407 TACK COAT
4. ITEM 407 TACK COAT FOR INTERMEDIATE COURSE
5. ITEM 858 1 3/4" ASPHALT CONCRETE INTERMEDIATE COURSE, 19 mm TYPE B (446)

(A) APPROACH SLAB, 15"
(B) ASPHALT CONCRETE
(C) 10" CONCRETE PAVEMENT

N
0 20 40 SCALE IN FEET
CALCULATED NNB
CHECKED KRD

# PLAN AND PROFILE
# TRU-5-1102 L & R OVER YOUNGS RUN CREEK

TRU-5-6.45



GP109.DWG 502\BRIDGE\14\DWG\502PP14.DWG KJW 6/22/01 PLOT 1"=20'

| BENCH MARK NO. 1 | BENCH MARK NO. 2 |
|---|---|
| IRON PIN FD. IN MEDIAN<br>STA. 614+39.93<br>ELEV. 943.14 | IRON PIN FD. IN MEDIAN<br>STA. 626+42.73<br>ELEV. 930.71 |

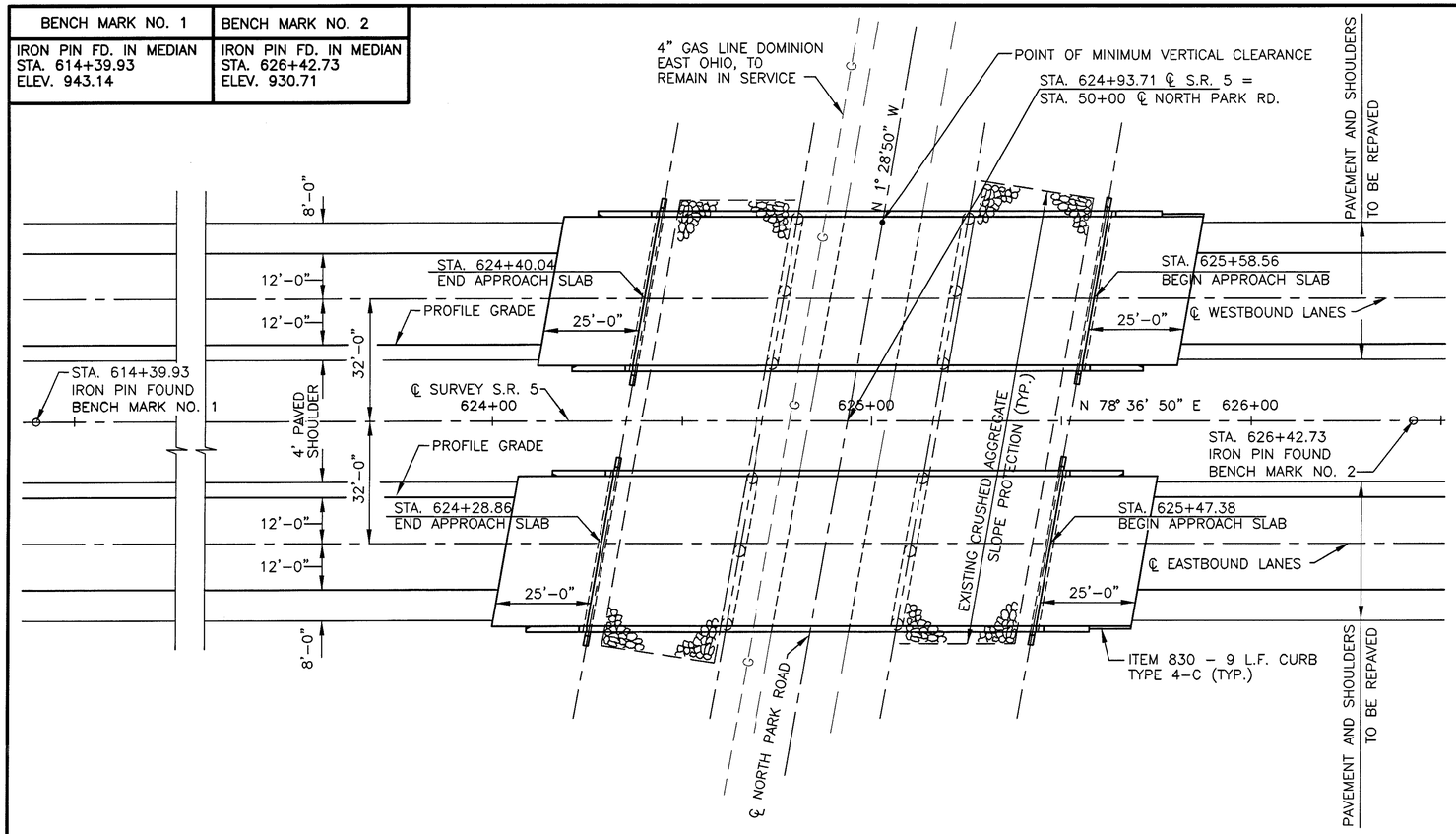


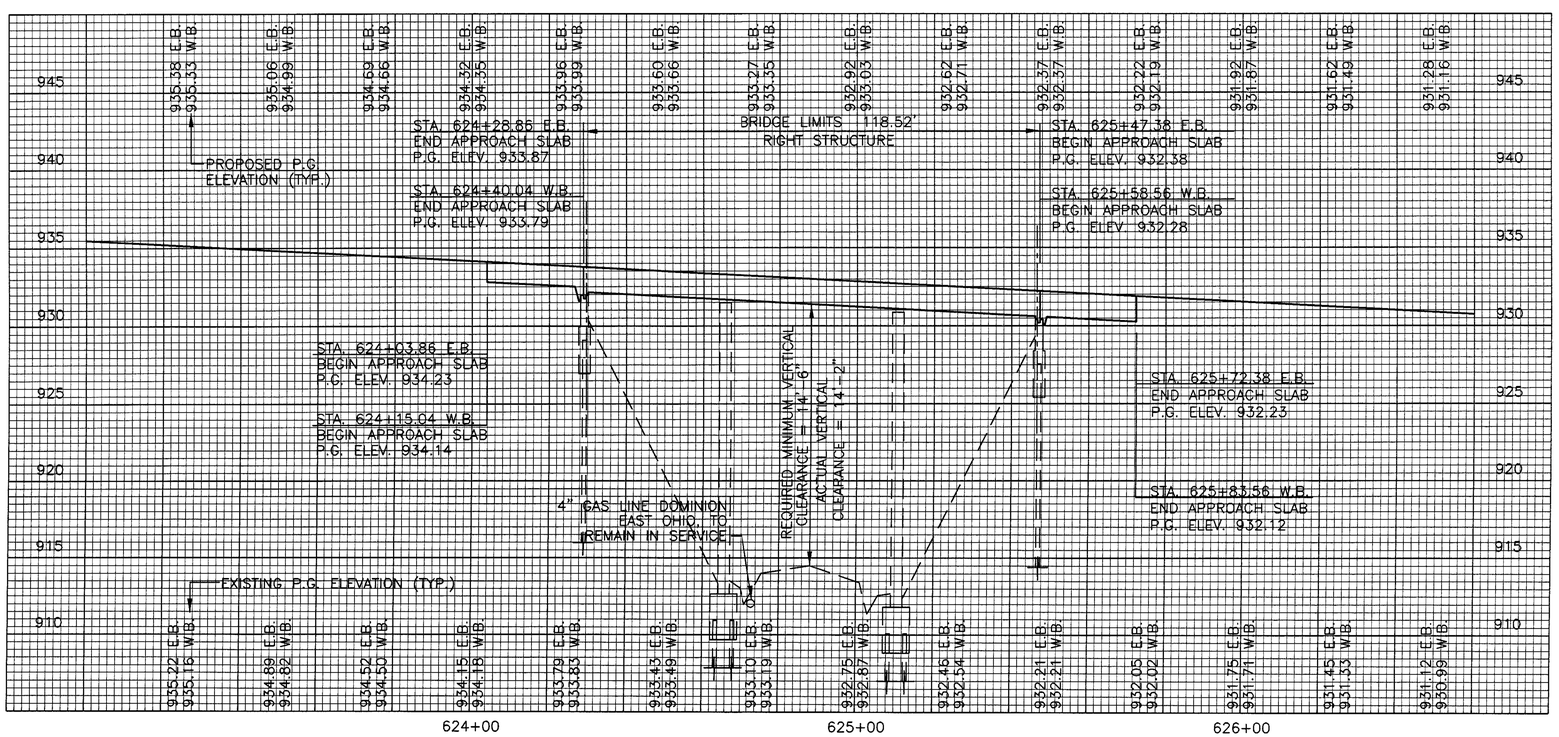


GP110.DWG 502\BRIDGE\15\DWG\502PP15.DWG KJW 6/22/01 PLOT 1"=20'

CALCULATED NNB
CHECKED KRD

0 20 40
SCALE IN FEET

# PLAN AND PROFILE
# TRU-5-1226 L & R OVER NORTH PARK ROAD

TRU-5-6.45

| BENCH MARK NO. 1 | BENCH MARK NO. 2 |
|---|---|
| DRILL HOLE IN CONCRETE CURB AT END OF PARAPET STA. 1028+35, 18' LEFT ELEV. 928.09 | DRILL HOLE IN CONCRETE CURB AT END OF PARAPET STA. 1031+84, 18' LEFT ELEV. 928.35 |

| CURVE DATA S.R. 5 | |
|---|---|
| ℄ SURVEY S.R. 5 | ℄ EASTBOUND LANES |
| P.I. = 1035+75.83 | P.I. = 1034+98.80 |
| Δ = 50°05'00" | Δ = 54°29'00" |
| $L_S$ = 400' | $L_S$ = 400' |
| $D_C$ = 3° | $D_C$ = 4° |
| $T_S$ = 1093.83' | $T_S$ = 939.73' |
| $L_C$ = 1269.44' | $L_C$ = 962.08' |
| $R_C$ = 1909.86' | $R_C$ = 1432.39' |

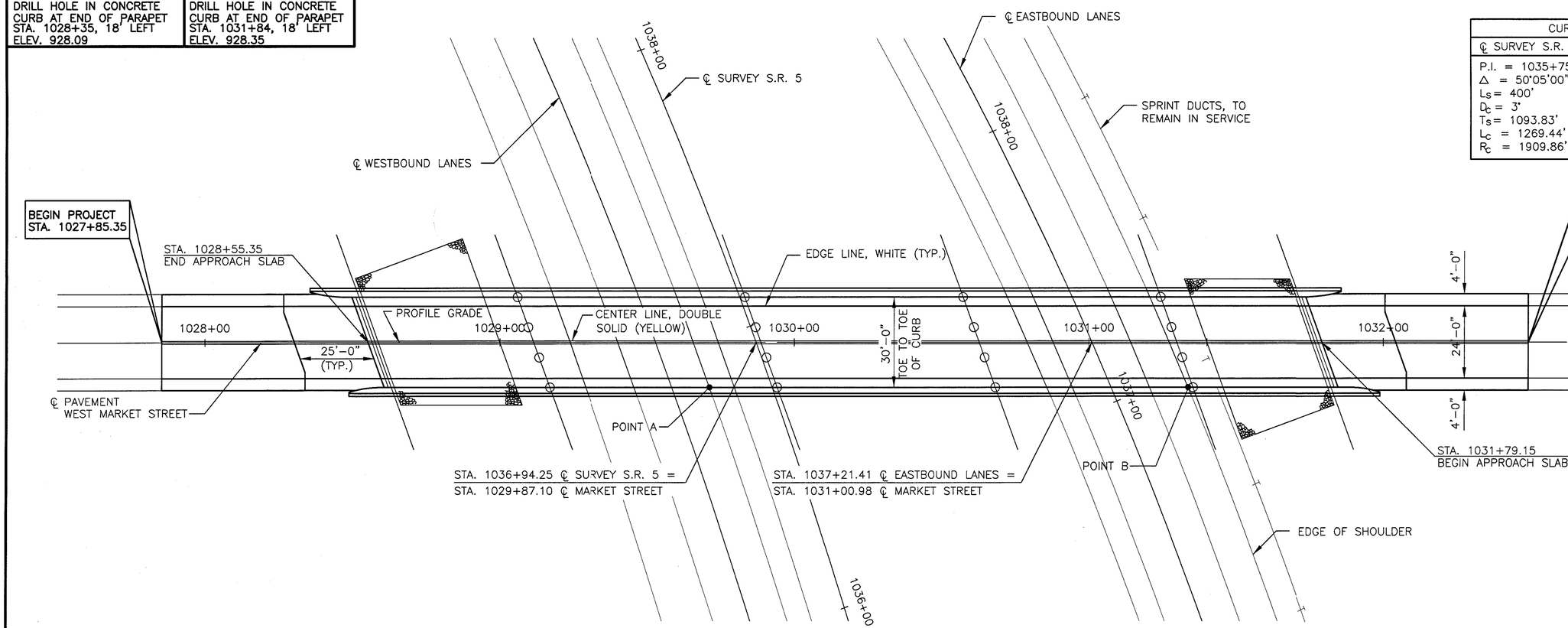


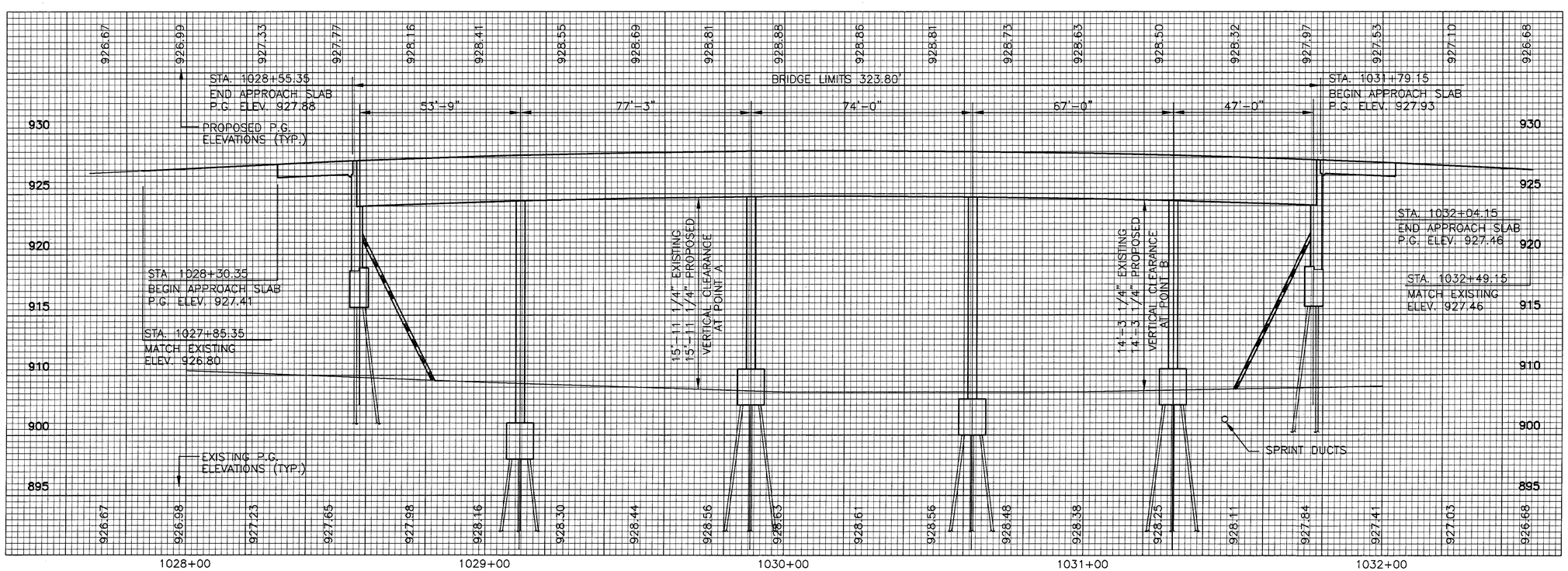


0 20 40 SCALE IN FEET

CALCULATED NNB
CHECKED KRD

# PLAN AND PROFILE
## TRU-5-0688 (W. MARKET ST.) OVER S.R. 5

TRU-5-6.45



GP102.DWG 502\BRIDGE\07\TSL\502PP07.DWG KJW 2/27/01 PLOT 1"=20'

| BENCH MARK NO. 1 | BENCH MARK NO. 2 |
|---|---|
| DRILL HOLE IN CONCRETE CURB AT END OF PARAPET STA. 52+52, 16' RIGHT ELEV. 915.89 | DRILL HOLE IN CONCRETE CURB AT END OF PARAPET STA. 54+85.5, 17' RIGHT ELEV. 916.04 |

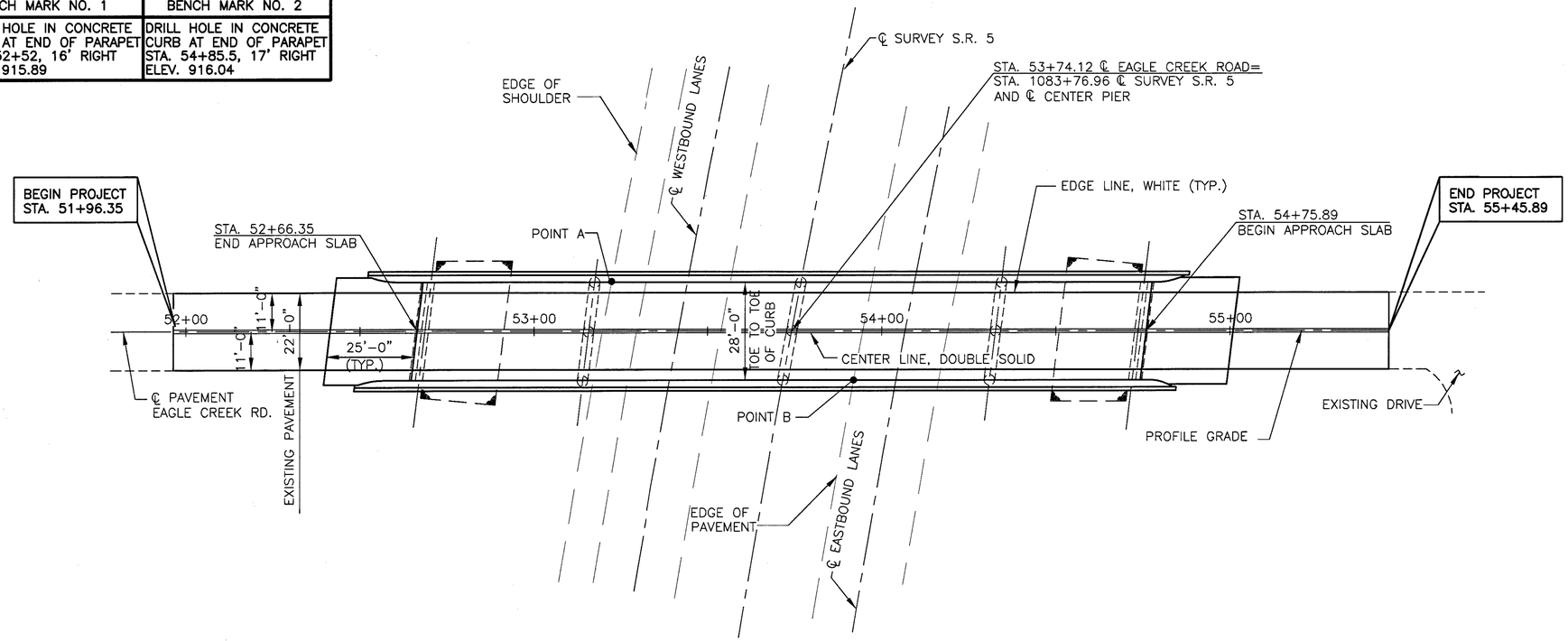


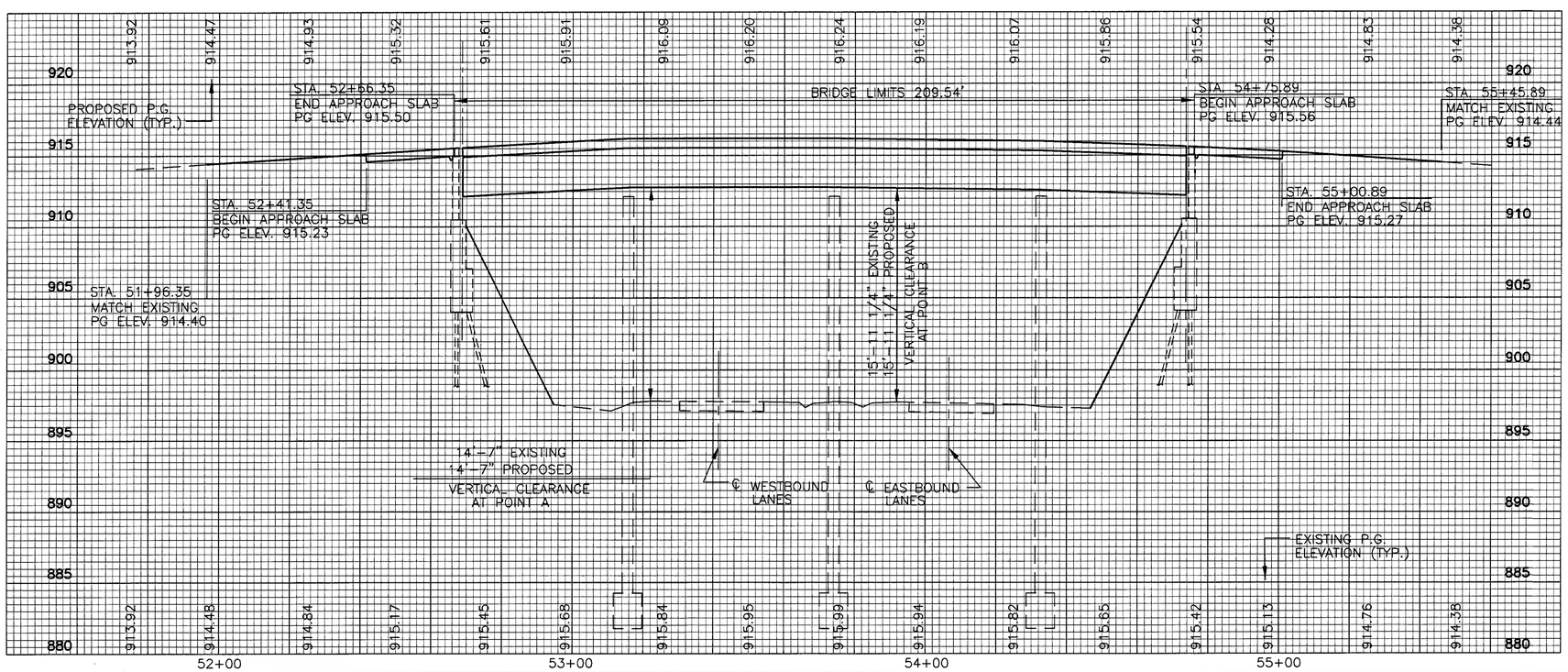


0 20 40 SCALE IN FEET

CALCULATED NNB
CHECKED KRD

# PLAN AND PROFILE
# TRU-5-0778 (EAGLE CREEK RD.) OVER S.R. 5

TRU-5-6.45



GP104.DWG 502\BRIDGE\9\TSL\502PP09.DWG KJW 2/27/01 PLOT 1"=20'

| BENCH MARK NO. 1 | BENCH MARK NO. 2 |
|---|---|
| CHISELED "X" IN CONCRETE CURB AT END OF PARAPET STA. 28+42.70, 16.75' LEFT ELEV. 923.92 | CHISELED "X" IN CONCRETE CURB AT END OF PARAPET STA. 31+28.50, 16.75' LEFT ELEV. 924.50 |

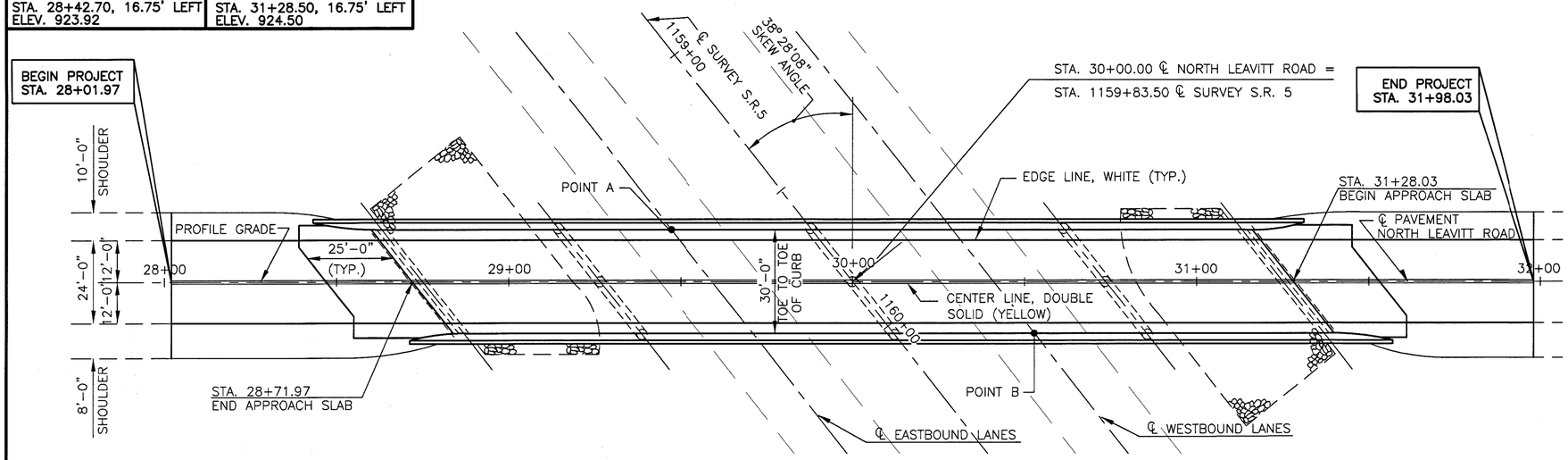


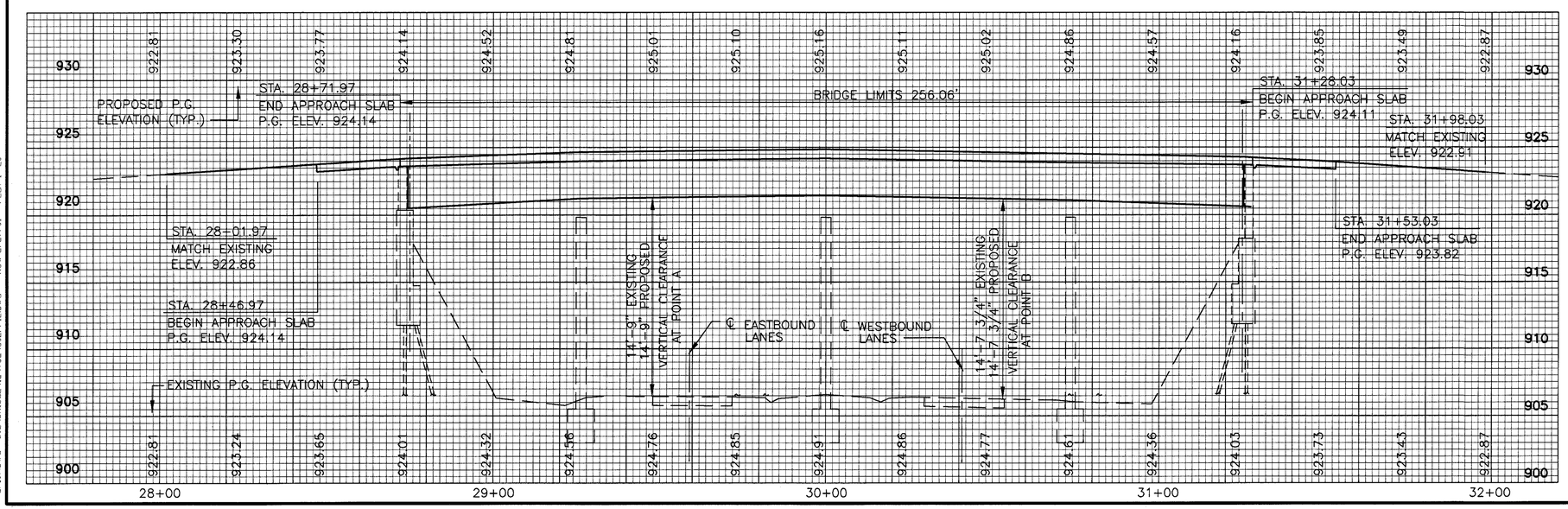


N

0 20 40
SCALE IN FEET

CALCULATED NNB
CHECKED KRD

# PLAN AND PROFILE
## TRU-5-0921 (NORTH LEAVITT RD.) OVER S.R. 5

## TRU-5-645



GP107.DWG 502\BRIDGE\12\TSL\502PP12.DWG KJW 2/27/01 PLOT 1"=20'

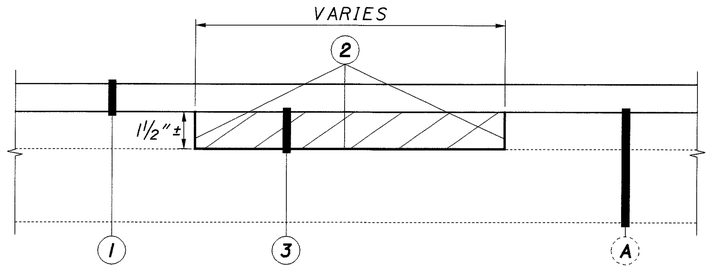


**LEGEND**

1 858 3¼" PROPOSED OVERLAY

2 407 TACK COAT

3 251 1½"± PARTIAL DEPTH PAVEMENT REPAIR

A EXISTING PAVEMENT

**PARTIAL DEPTH PAVEMENT REPAIR**
A QUANTITY OF THIS ITEM SHALL BE PROVIDED FOR USE AS DIRECTED BY THE ENGINEER. THE ITEM SHALL CONSIST OF REPAIRING EXISTING LOCATIONS EXHIBITING SURFACE DETERIORATION AND PLACING 1½"± OF ITEM 448 ASPHALT CONCRETE, TYPE 2. THE ASPHALT CONCRETE SHALL BE COMPACTED WITH A TYPE I PNEUMATIC TIRE ROLLER AND A STEEL WHEEL ROLLER AS PER 401.11.

PAYMENT SHALL BE BASED ON THE ACTUAL NUMBER OF SQUARE YARDS OF PAVEMENT REPAIR.

ITEM 251 PARTIAL DEPTH PAVEMENT REPAIR 500 SQ. YDS.

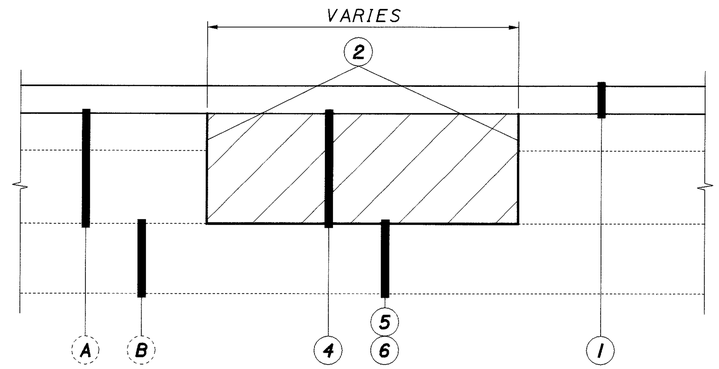


**LEGEND**

1 858 3¼" PROPOSED OVERLAY

2 407 TACK COAT

4 253 12"± PAVEMENT REPAIR

5 203 6" AVG. EXCAVATION NOT INCLUDING EMBANKMENT CONSTRUCTION

6 304 6" AVG. AGGREGATE BASE

A EXISTING ASPHALT PAVEMENT

B EXISTING SUBBASE

**ITEM 253 PAVEMENT REPAIR**
A QUANTITY OF THIS ITEM SHALL BE PROVIDED FOR USE AS DIRECTED BY THE ENGINEER. THIS ITEM SHALL CONSIST OF REMOVING DETERIORATED PAVEMENT FULL DEPTH AND PLACING 12"± 301 BITUMINOUS AGGREGATE BASE. THE MAXIMUM COMPACTED DEPTH OF ANY ONE LAYER SHALL BE 6".

PAYMENT SHALL BE BASED ON THE ACTUAL NUMBER OF SQUARE YARDS OF PAVEMENT REMOVED AND REPLACED TO THE LIMITS DESIGNATED BY THE ENGINEER. THE FOLLOWING ESTIMATED QUANTITY HAS BEEN CARRIED TO THE GENERAL SUMMARY:

ITEM 253 PAVEMENT REPAIR 500 SQ. YDS.

**ITEM 203 EXCAVATON NOT INCLUDING EMBANKMENT CONSTRUCTION**
THIS ITEM OF WORK SHALL CONSIST OF REMOVING AND DISPOSING OF ALL UNSUITABLE MATERIAL BY EXCAVATING THE EXISTING SUBGRADE AND SUBBASE TO AN AVERAGE DEPTH OF 6" OR AS DIRECTED BY THE ENGINEER. EXACT LIMITS OF REMOVAL SHALL BE DETERMINED BY THE ENGINEER. ALL EQUIPMENT, LABOR, TOOLS, AND INCIDENTIALS NECESSARY TO COMPLETE THIS ITEM SHALL BE INCLUDED IN THE UNIT PRICE BID FOR ITEM 203 EXCAVATION NOT INCLUDING EMBANKMENT CONSTRUCTION. THE FOLLOWING ESTIMATED QUANTITY HAS BEEN CARRIED TO THE GENERAL SUMMARY:

ITEM 203 EXCAVATON NOT INCLUDING EMBANKMENT CONSTRUCTION 84 CU. YDS.

**ITEM 304 AGGREGATE BASE**
THE FOLLOWING ESTIMATED QUANTITY HAS BEEN PROVIDED AND SHALL BE USED AS DIRECTED BY THE ENGINEER TO BACKFILL AREAS WHICH WERE EXCAVATED UNDER ITEM 203 EXCAVATION NOT INCLUDING EMBANKMENT CONSTRUCTION.

ITEM 304 AGGREGATE BASE 84 CU. YDS.

CALCULATED RCB CHECKED DAY

PAVEMENT DETAILS

TRU-5-6.45



j:\22126_1\tru_5_6.45\22126gn.dgn 10-SEP-2001 8:11AM tperez

## ITEM 622 CONCRETE BARRIER, TYPE D, AS PER PLAN

TRANSITION SECTIONS OF CONCRETE BARRIER, TYPE D, SHALL BE PLACED AT ALL LOCATIONS WHERE EXISTING BARRIERS TO REMAIN ARE TO BE ATTACHED TO GUARDRAIL TREATMENTS. TRANSITION SECTIONS SHALL MEET THE REQUIREMENTS OF STD DWG RM-4.5M EXCEPT FOR REBAR SHOWN (Y1603a SERIES & Y1604a SERIES) SHALL REPLACE Y1603 & Y1604, AND BARRIER HEIGHT SHALL BE TRANSITIONED AS SHOWN ON THIS SHEET.

EPOXY GROUT FOR DOWEL HOLES SHALL BE NON-SHRINKING, NON-METALLIC EPOXY GROUT AS PER 705.20 OF THE CMS.

PAYMENT FOR THIS WORK SHALL BE IN LIN. FT. OF ITEM 622 CONCRETE BARRIER, TYPE D, AS PER PLAN INCLUDING ALL LABOR, MATERIALS, REINFORCING STEEL, DOWELS, DOWEL HOLES AND INCIDENTALS NECESSARY TO COMPLETE THIS WORK. EXISTING TYPE A CONCRETE ANCHOR ASSEMBLIES AND CONCRETE BARRIER SHALL BE REMOVED UNDER ITEM 202 CONCRETE BARRIER REMOVED AT THE LIMITS DESIGNSTED ON THIS SHEET AND SHALL MEET THE REQUIREMENTS OF 202.05 OF THE CMS.

### LEGEND

1. ITEM 622 CONCRETE BARRIER, TYPE D, AS PER PLAN
2. EXPANSION JOINT, ¾" MIN. PREFORMED FILLER 705.03
3. EXISTING CONCRETE BARRIER, TYPE D

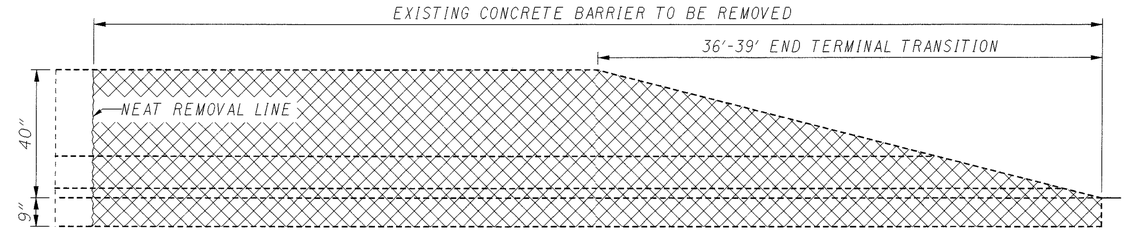


PROFILE VIEW

EXISTING END TERMINAL DETAIL

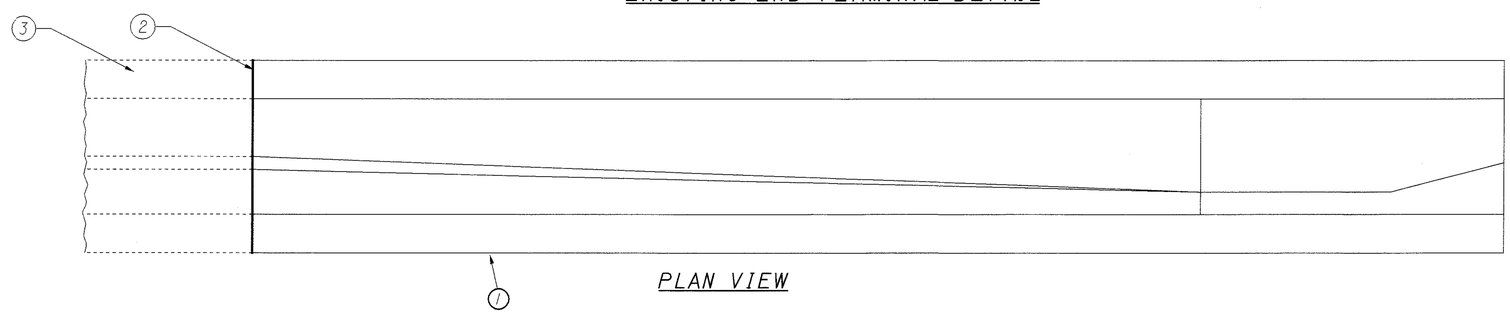


PLAN VIEW

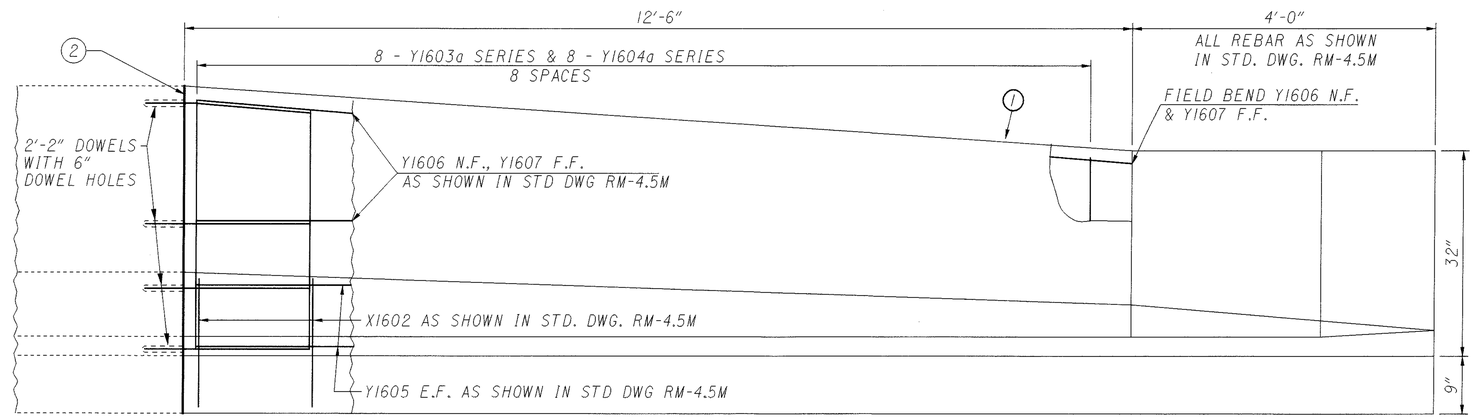


PROFILE VIEW

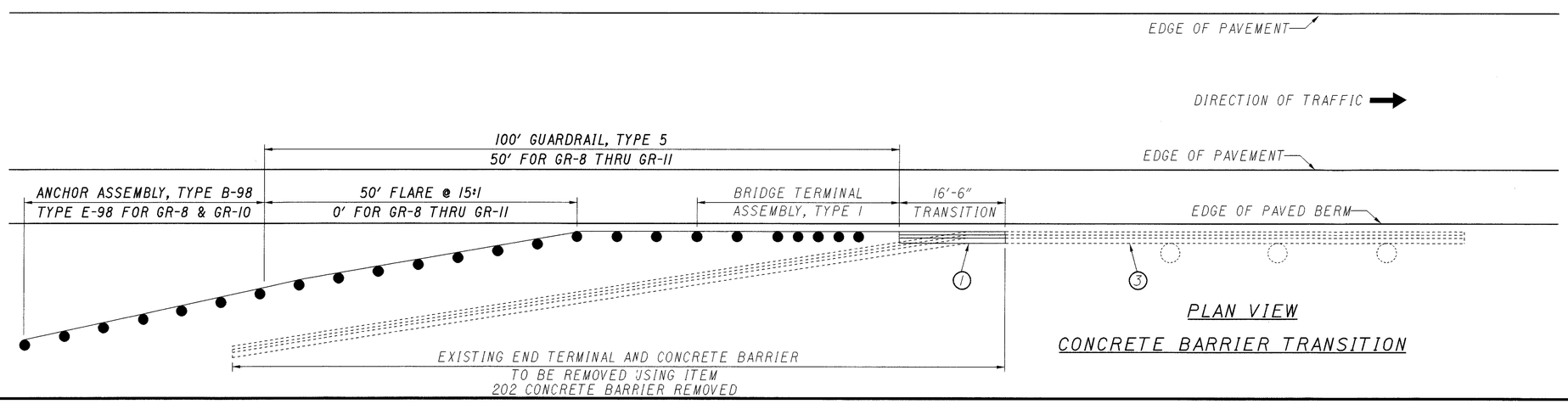


PLAN VIEW

CONCRETE BARRIER TRANSITION

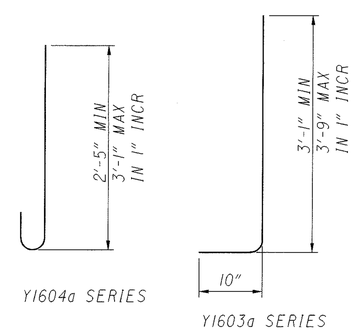


Y1604a SERIES

Y1603a SERIES

(FOR INFORMATION ONLY)

CONCRETE BARRIER OBSTRUCTION PROTECTION

TRU-5-6.45



j:\22126_Tru_5_6.45\22126gra.dgn 10-SEP-2001 8:13AM tperez

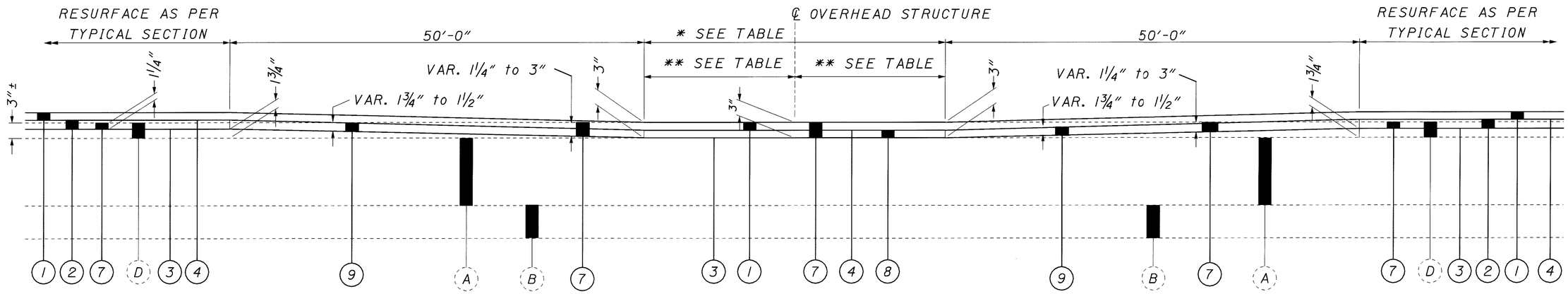


## PAVEMENT TRANSITION AT OVERHEAD BRIDGE

DETAIL APPLIES AT STRUCTURES:

TRU-5-0688 (MARKET ST.)
TRU-5-0778 (EAGLE CREEK RD.)
TRU-5-0921 (N. LEAVITT RD.)
TRU-5-1286 (JONES-PERKINS RD.)

| STRUCTURE | * | ** |
|---|---|---|
| TRU-5-0688 | 238.35' | 119.18' |
| TRU-5-0778 | 234.25' | 117.13' |
| TRU-5-0921 | 246.00' | 123.00' |
| TRU-5-1286 | 270.00' | 135.00' |

### PROPOSED LEGEND

1. ITEM 858 - 1.50" ASPHALT CONCRETE SURFACE COURSE, 12.5 mm, TYPE B (446), AS PER PLAN
2. ITEM 858 - 1.75" ASPHALT CONCRETE INTERMEDIATE COURSE, 19 mm, TYPE B (446)
3. TACK COAT
4. TACK COAT FOR INTERMEDIATE COURSE
5. LINEAR GRADING - METHOD A
6. COMPACT AGGREGATE
7. VAR. PAVEMENT PLANING, BITUMINOUS (1¼" TO 3" MAX)
8. 1.50" ASPHALT CONCRETE INTERMEDIATE COURSE, 19 mm, TYPE B (446)
9. VAR. THICK - ASPHALT CONCRETE INTERMEDIATE COURSE, 19 mm TYPE B (446)
10. VAR. THICK - ASPHALT CONCRETE SURFACE COURSE, 12.5 mm TYPE B (446), AS PER PLAN

### EXISTING LEGEND

A. ITEM 451 - 10" REINFORCED PORTLAND CEMENT CONCRETE PAVEMENT
B. ITEM 310 - SUBBASE GRADING "A"
C. ITEM 301 - BITUMINOUS AGGREGATE BASE
D. EXISTING ASPHALT CONCRETE

CALCULATED CET CHECKED TJP

PAVEMENT TRANSITION DETAILS

TRU-5-6.45



j:\8712\8712gta.dgn 10-SEP-2001 9:35AM tperez

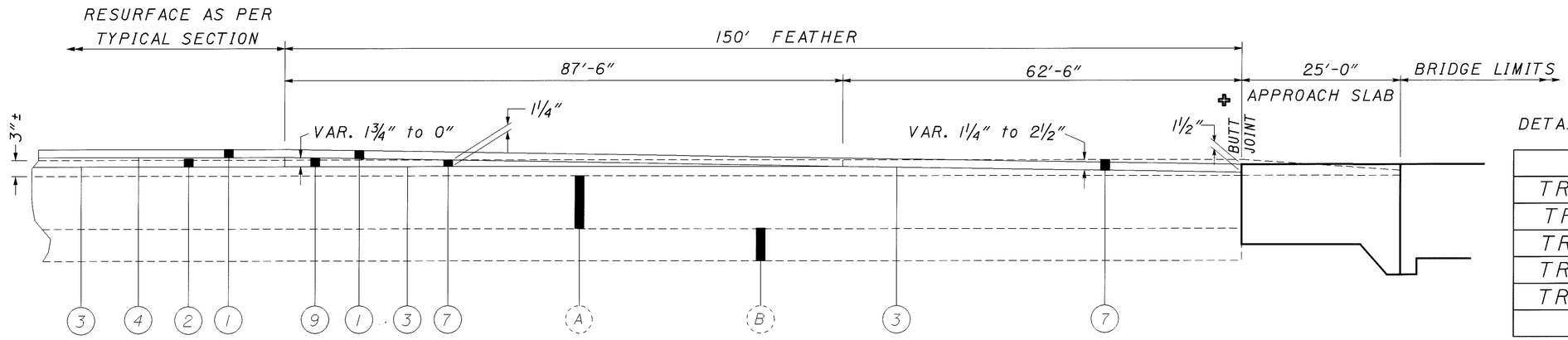


DETAIL APPLIES AT :

| STRUCTURE |
|---|
| TRU-5-0764 Left & Right |
| TRU-5-0811 Left & Right |
| TRU-5-0861 Left & Right |
| TRU-5-1077 Left & Right |
| TRU-5-1226 Left & Right |
| |

## PAVEMENT TRANSITION AT MAINLINE STRUCTURES

(APPROACH AS SHOWN TRAILING SIMILAR)

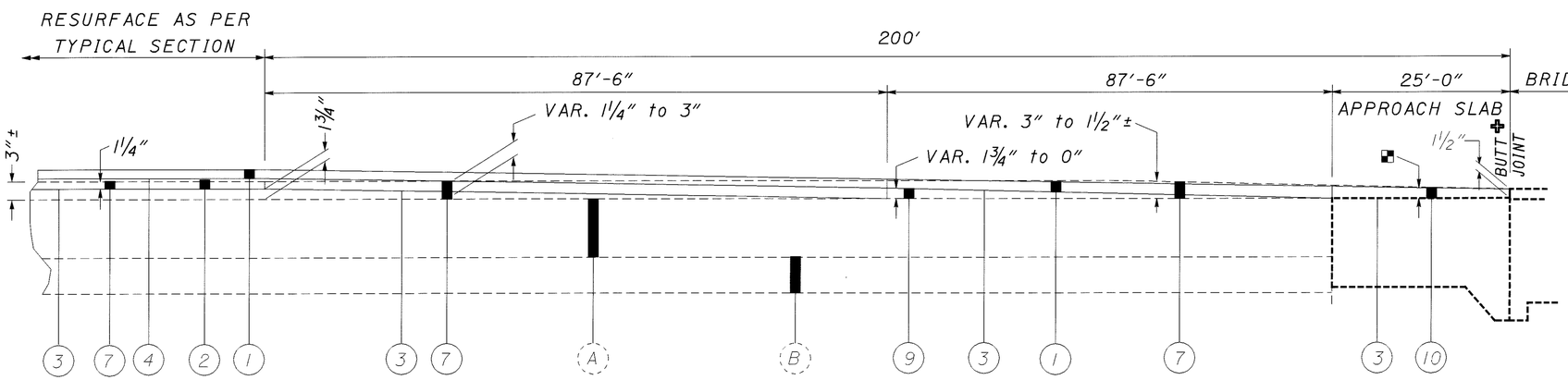


DETAIL APPLIES AT :

| STRUCTURE |
|---|
| TRU-5-1393 Left & Right |
| |

- VARIES 1½"±

## END PROJECT AT MAINLINE STRUCTURES

(APPROACH ONLY)

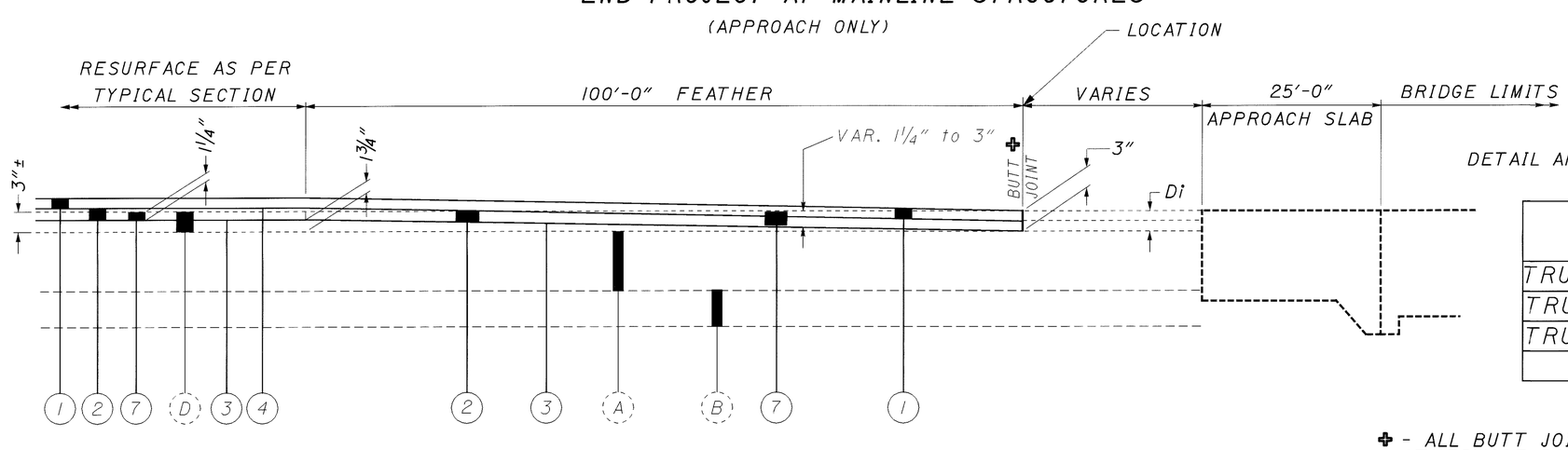


DETAIL APPLIES AT :

| STRUCTURE | LOCATION (SLM) | | |
|---|---|---|---|
| | REAR | FWD | Di |
| TRU-5-0657 Left & Right | 6.57 | 6.64 | 3" |
| TRU-5-1044 Left & Right | 10.38 | 10.53 | 3" |
| TRU-5-1202 Left & Right | 12.01 | 12.07 | 4¼" |
| | | | |

- ALL BUTT JOINTS SHALL BE AS PER STD. DWG. BP-3.1 UNLESS OTHERWISE DIRECTED BY THE ENGINEER.

## SUSPEND/RESUME PROJECT TRANSITION AT MAINLINE STRUCTURES

(APPROACH AS SHOWN TRAILING SIMILAR)

FOR LEGEND SEE SHEET 72/164.

CALCULATED CET CHECKED TJP

PAVEMENT TRANSITION DETAILS

TRU-5-6.45



j:\18712\18712gta.dgn 10-SEP-2001 9:36AM tperez

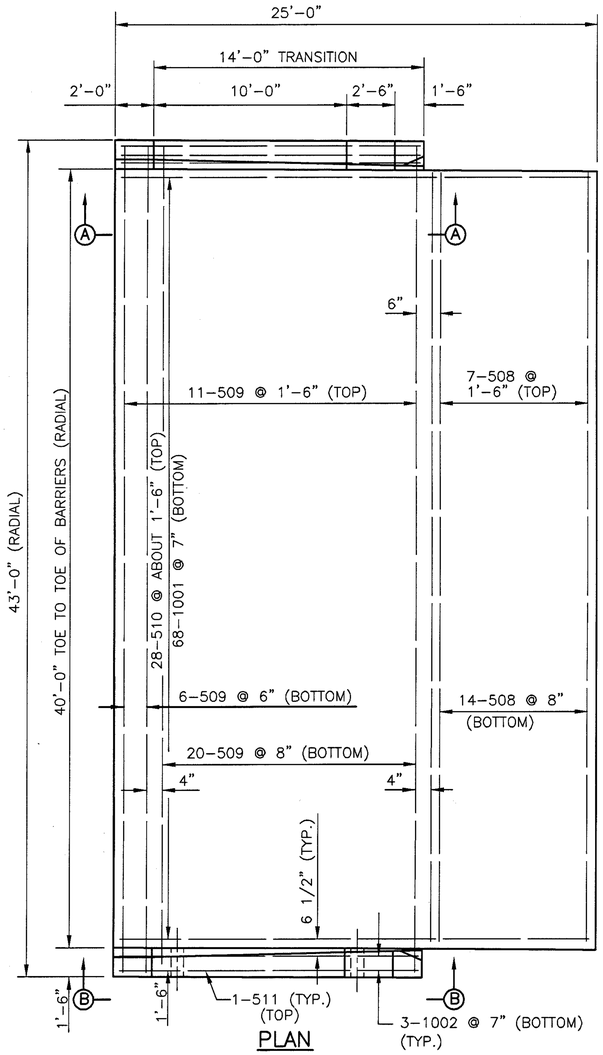


PLAN

FORWARD SHOWN, REAR OPPOSITE HAND

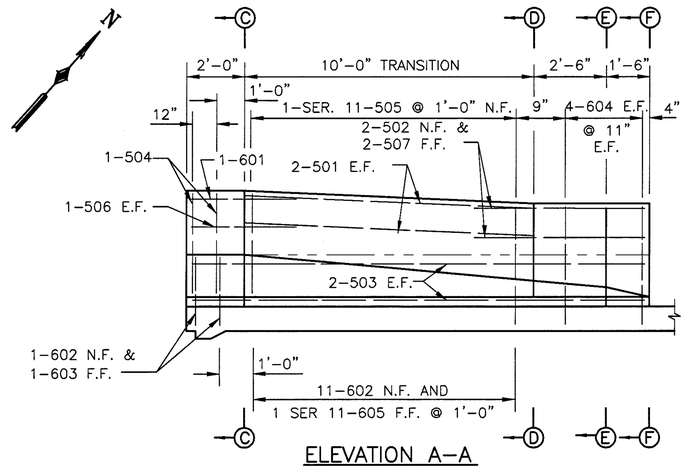


ELEVATION A-A

LEFT REAR
LEFT FORWARD

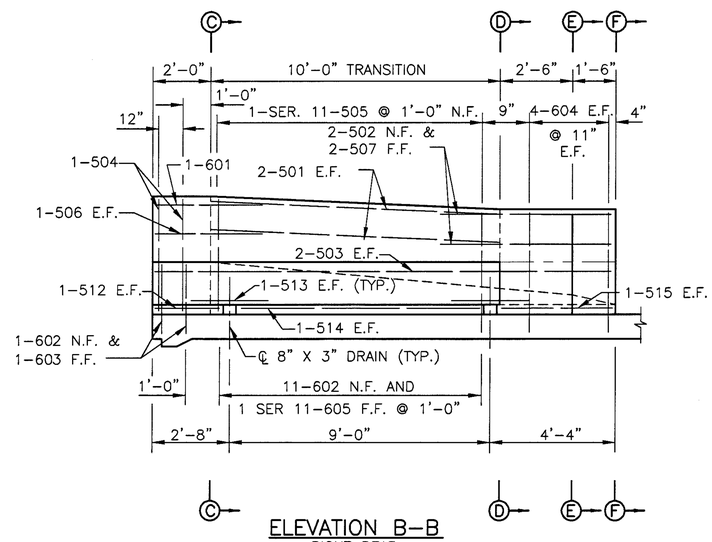


ELEVATION B-B

RIGHT REAR
RIGHT FORWARD

| MARK | NO. TOTAL | LENGTH | TYPE | WEIGHT (LBS.) | DIMENSIONS A | B | C | D | E | INCR. |
|---|---|---|---|---|---|---|---|---|---|---|
| APPROACH SLABS – WESTBOUND | | | | | | | | | | |
| AS501 | 16 | 10'-0" | STR | 167 | | | | | | |
| AS502 | 8 | 5'-8" | 1 | 47 | 1'-10" | 2'-5" | 1'-5" | 1 1/2" | 5" | |
| AS503 | 12 | 15'-8" | STR | 196 | | | | | | |
| AS504 | 8 | 7'-1" | 2 | 59 | 3'-3" | 3'-0" | 8" | | | |
| AS505 | 4 | 3'-0" | 3 | 157 | 2'-5" | | | | | 1" |
| | SER | TO | | | TO | | | | | |
| | 11 | 3'-10" | | | 3'-3" | | | | | |
| AS506 | 8 | 3'-10" | STR | 32 | | | | | | |
| AS507 | 8 | 5'-8" | STR | 47 | | | | | | |
| AS508 | 42 | 39'-6" | STR | 1730 | | | | | | |
| AS509 | 74 | 42'-6" | STR | 3280 | | | | | | |
| AS510 | 56 | 24'-6" | STR | 1431 | | | | | | |
| AS511 | 4 | 15'-6" | STR | 65 | | | | | | |
| AS512 | 4 | 2'-0" | STR | 8 | | | | | | |
| AS513 | 8 | 2'-8" | STR | 22 | | | | | | |
| AS514 | 4 | 8'-0" | STR | 33 | | | | | | |
| AS515 | 4 | 3'-8" | STR | 15 | | | | | | |
| | | | | | | | | | | |
| AS1001 | 136 | 25'-11" | 3 | 15,167 | 24'-6" | | | | | |
| AS1002 | 12 | 16'-11" | 3 | 874 | 15'-6" | | | | | |
| | | | | | | | | | | |
| TOTAL E.B. = 23,330 lbs. | | | | | | | | | | |
| TOTAL W.B = 23,330 lbs. | | | | | | | | | | |

## BENDING DIAGRAMS

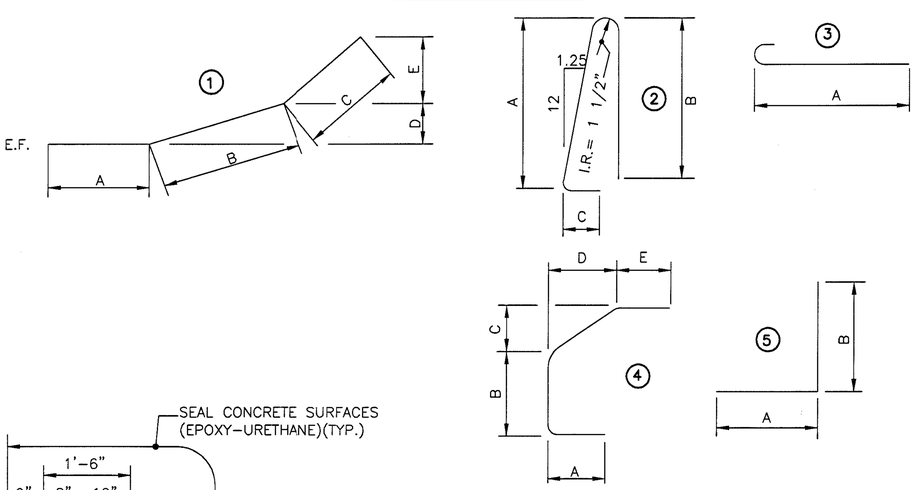


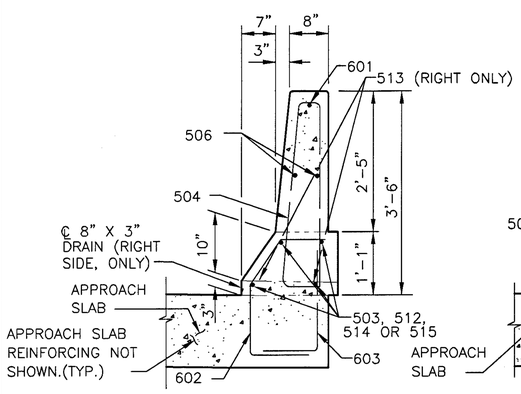


SECTION C-C

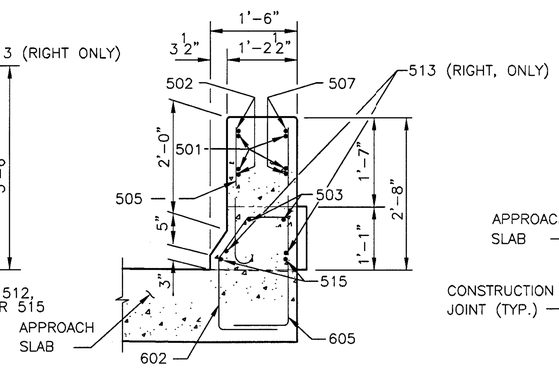


SECTION D-D

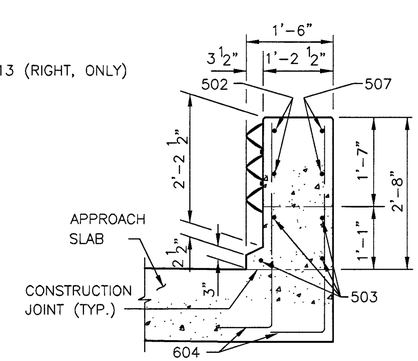


SECTION E-E

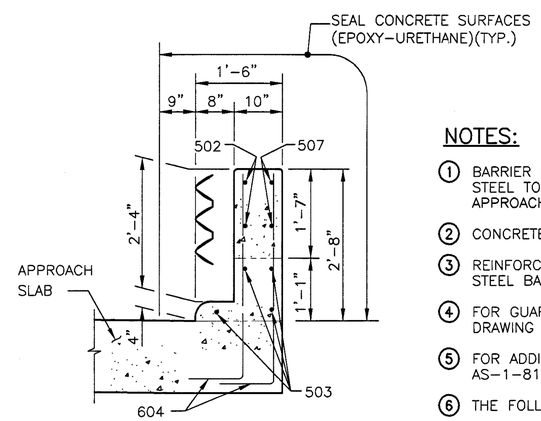


SECTION F-F

ITEM 611 – REINFORCED CONCRETE APPROACH SLAB, T=15", AS PER PLAN

## NOTES:

1. BARRIER CONCRETE, EPOXY-URETHANE SEALER AND REINFORCING STEEL TO BE INCLUDED FOR PAYMENT WITH ITEM 611, REINFORCED CONCRETE APPROACH SLAB, AS PER PLAN.
2. CONCRETE FOR THIS ITEM SHALL BE CLASS S, SS842 AND SS899.
3. REINFORCING STEEL WEIGHTS GIVEN FOR INFORMATION ONLY. ALL REINFORCING STEEL BAR MARKS SHALL BE PREFIXED AS (APPROACH SLAB).
4. FOR GUARDRAIL CONNECTION DETAIL TO PARAPET SEE OHIO STANDARD DRAWING GR-3.1M.
5. FOR ADDITIONAL NOTES AND DETAILS SEE OHIO STANDARD DRAWING AS-1-81, SHEETS 1 AND 2 OF 3.
6. THE FOLLOWING ABBREVIATIONS ARE USED:

TYP. = TYPICAL
E.F. = EACH FACE
N.F. = NEAR FACE
F.F. = FAR FACE

CALCULATED KJW
CHECKED KRD

# APPROACH SLAB DETAILS

TRU-5-0764 L&R
OVER MAHONING RIVER

TRU-5-6.45



F:\JOBS\502\BRIDGE\09\DWG\502AS08.DWG KJW 2/27/01 PLOT 1:4
GM103.DWG

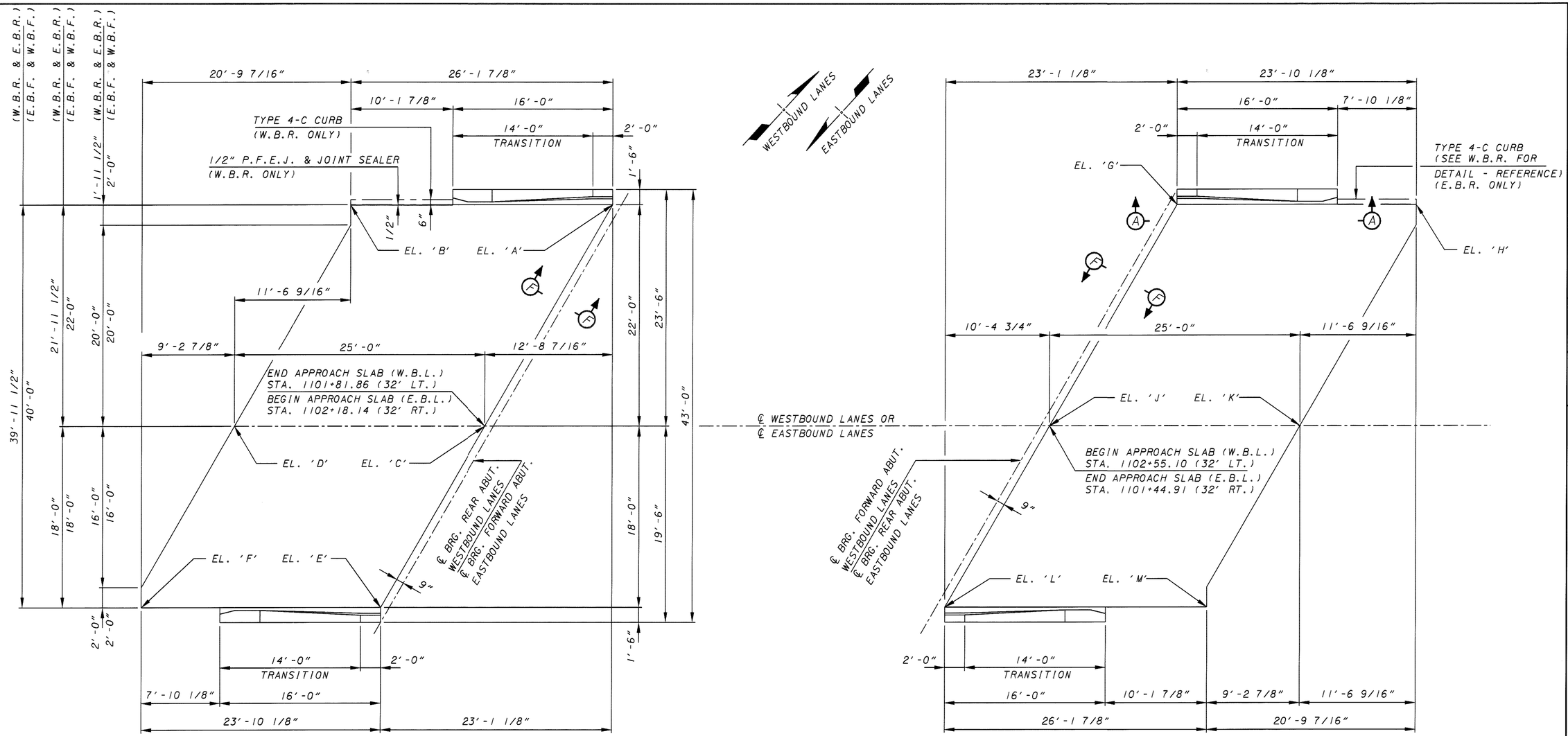


## PLAN -WESTBOUND LANES SHOWN

EASTBOUND - OPPOSITE AS SHOWN AND NOTED

| TABLE OF ELEVATIONS | | | | | | | | | | | | |
|---|---|---|---|---|---|---|---|---|---|---|---|---|
| LOCATION | EL. 'A' | EL. 'B' | EL. 'C' | EL. 'D' | EL. 'E' | EL. 'F' | EL. 'G' | EL. 'H' | EL. 'J' | EL. 'K' | EL. 'L' | EL. 'M' |
| | REAR APPROACH SLAB | | | | | | FORWARD APPROACH SLAB | | | | | |
| WESTBOUND LANES | EL. 896.975 | EL. 896.919 | EL. 897.292 | EL. 897.237 | EL. 896.988 | EL. 896.936 | EL. 897.134 | EL. 897.186 | EL. 897.450 | EL. 897.505 | EL. 897.142 | EL. 897.204 |
| | FORWARD APPROACH SLAB | | | | | | REAR APPROACH SLAB | | | | | |
| EASTBOUND LANES | EL. 897.105 | EL. 897.173 | EL. 897.482 | EL. 897.546 | EL. 897.227 | EL. 897.288 | EL. 896.917 | EL. 896.856 | EL. 897.293 | EL. 897.229 | EL. 897.039 | EL. 896.972 |

NOTES:

FOR TYPICAL DEFLECTION PARAPET DETAIL, PLAN VIEW A-A, ELEVATION VIEW A-A, SECTIONS B-B, C-C, D-D, E-E, F-F AND ADDITIONAL REINFORCING REQUIRED FOR THE APPROACH SLABS SEE SHEET 76 OF 164.

FOR ADDITIONAL DETAILS AND REINFORCING NOT SHOWN IN THE CONTRACT PLANS FOR THE APPROACH SLABS SEE STATE OF OHIO STANDARD DRAWING AS-1-81, 25' APPROACH SLABS.

THE COST OF THE DEFLECTOR PARAPETS SHALL BE INCLUDED WITH THE APPROACH SLABS FOR PAYMENT.

APPROACH SLAB AREAS ARE AS FOLLOWS:
WESTBOUND REAR ABUTMENT = 116.5 SQ. YDS.
EASTBOUND REAR ABUTMENT = 116.5 SQ. YDS.
WESTBOUND FORWARD ABUTMENT = 116.5 SQ. YDS.
EASTBOUNT FORWARD ABUTMENT = 116.5 SQ. YDS.

URS
AKRON CLEVELAND COLUMBUS
564 WHITE POND DRIVE
AKRON, OHIO 44320-1100
(330) 836-9111

| DESIGNED | DRAWN | REVIEWED | DATE |
|---|---|---|---|
| A.L.H. | A.L.H. | J.T.H. | 1/23/01 |
| CHECKED | REVISED | STRUCTURE FILE NUMBER | |
| L.M.P. | | 7800436 L / 7800460 R | |

APPROACH SLAB DETAILS
BRIDGE NO. TRU-5-0811 L & R
OVER CHOCOLATE RUN

TRU-5-6.45

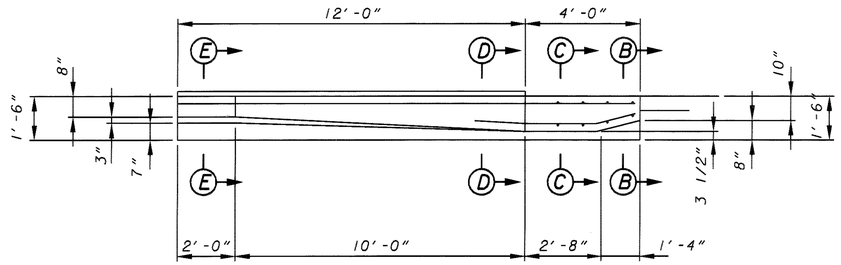


PLAN VIEW A-A

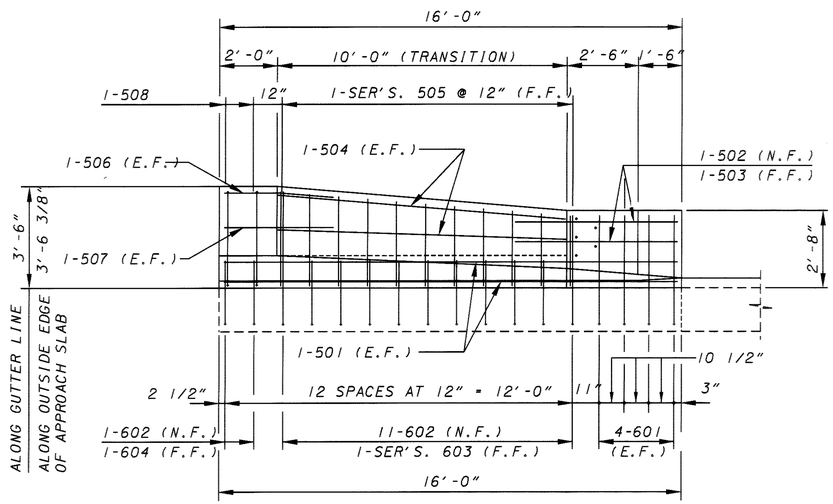


ELEVATION VIEW A-A

TYPICAL DEFLECTOR PARAPET DETAIL

## REINFORCING SCHEDULE

| MARK NUMBER | NUMBER REQUIRED | LENGTH | BAR TYPE | DIMENSIONS A | B | C | D | SERIES INCREMENT |
|---|---|---|---|---|---|---|---|---|
| | | | | | | | | |
| 501 | 32 | 15'-8" | ST | | | | | |
| 502 | 16 | 6'-3" | A | | | | | |
| 503 | 16 | 5'-8" | ST | | | | | |
| 504 | 32 | 10'-0" | ST | | | | | |
| SERIES OF 505 | 8 SETS OF 11 BARS = 88 BARS | 3'-10" TO 3'-0" | B | 3'-3" TO 2'-5" | | | | 0'-1" |
| 506 | 16 | 3'-10" | C | 1'-10" | 2'-0" | 0'-2" | | |
| 507 | 16 | 3'-10" | ST | | | | | |
| 508 | 16 | 7-0" | D | 3'-0" | 3'-3" | | | |
| | | | | | | | | |
| 601 | 64 | 4'-4" | E | 0'-9" | 3'-9" | | | |
| 602 | 104 | 3'-9" | F | 1'-6" | 0'-10" | 0'-6" | 0'-11" | |
| SERIES OF 603 | 8 SETS OF 11 BARS = 88 BARS | 4'-4" TO 5'-2" | E | 0'-9" | 3'-9" TO 4"-7" | | | 0'-1" |
| 604 | 16 | 2'-9" | E | 0'-9" | 2'-2" | | | |
| | | | | | | | | |

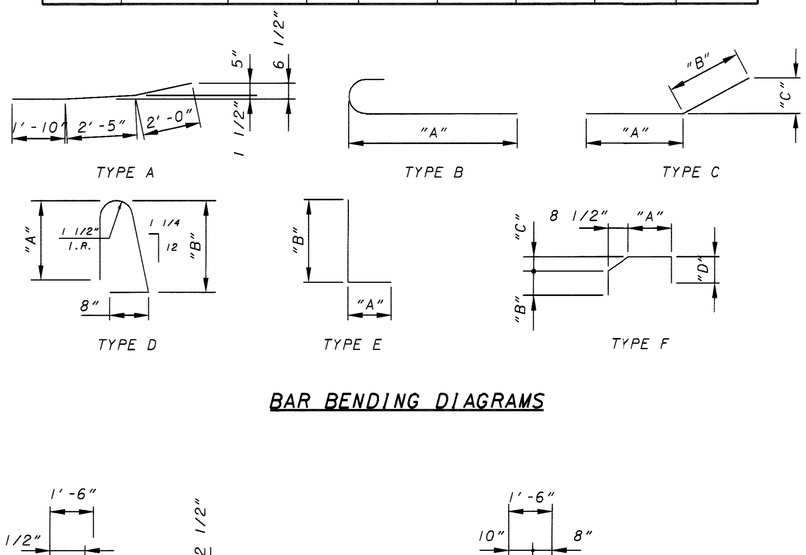


BAR BENDING DIAGRAMS

NOTES:

1. FOR ADDITIONAL INFORMATION, REFER TO STATE STANDARD DRAWING BR-1 DATED 1-06-99.
2. REINFORCING STEEL SHALL BE EPOXY COATED AND IS TO BE INCLUDED FOR PAYMENT WITH THE CONCRETE APPROACH SLAB ITEM.
3. FOR LOCATION OF ELEVATION VIEW A-A AND SECTION F-F, SEE SHEET 75 OF 164.
4. TYPE A WATERPROOFING ON VERTICAL FACE BETWEEN THE DECK AND APPROACH SLAB IS INCLUDED FOR PAYMENT WITH ITEM 611 - REINFORCED CONCRETE APPROACH SLAB (T=15"), AS PER PLAN.
   TYPE A WATERPROOFING ON THE HORIZONTAL FACE BETWEEN THE APPROACH SLAB AND ABUTMENT SHALL BE INCLUDED WITH ITEM 512 TYPE A WATERPROOFING.

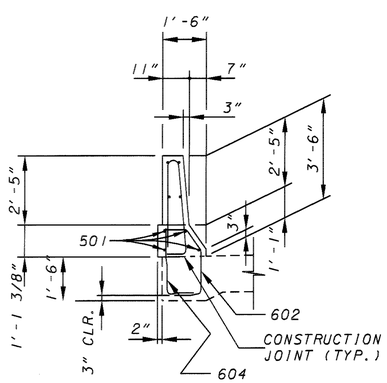


SECTION E-E

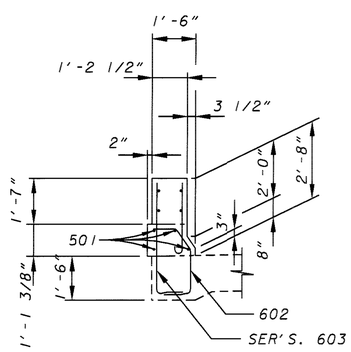


SECTION D-D

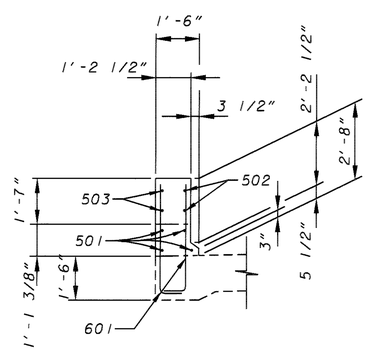


SECTION C-C

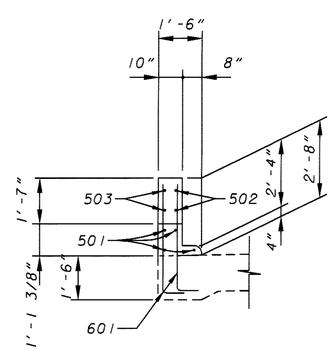


SECTION B-B

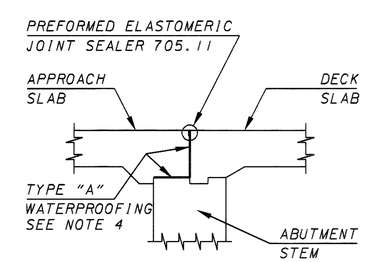


SECTION F-F

FOR ADDITIONAL INFORMATION SEE STATE STANDARD DRAWING AS-1-81, SHEET 2 OF 3.

URS
AKRON CLEVELAND COLUMBUS
344 WHITE POND DRIVE
AKRON, OHIO 44320-1100
330-867-5855 FAX 330-867-0123

| DESIGNED | DRAWN | REVIEWED | DATE |
|---|---|---|---|
| A.L.H. | A.L.H. | J.T.H. | 1/23/01 |
| CHECKED | REVISED | STRUCTURE FILE NUMBER | |
| M.D.P. | | 7800436 L / 7800460 R | |

APPROACH SLAB SECTIONS AND DETAILS
BRIDGE NO. TRU-5-0811 L & R
OVER CHOCOLATE RUN

TRU-5-6.45

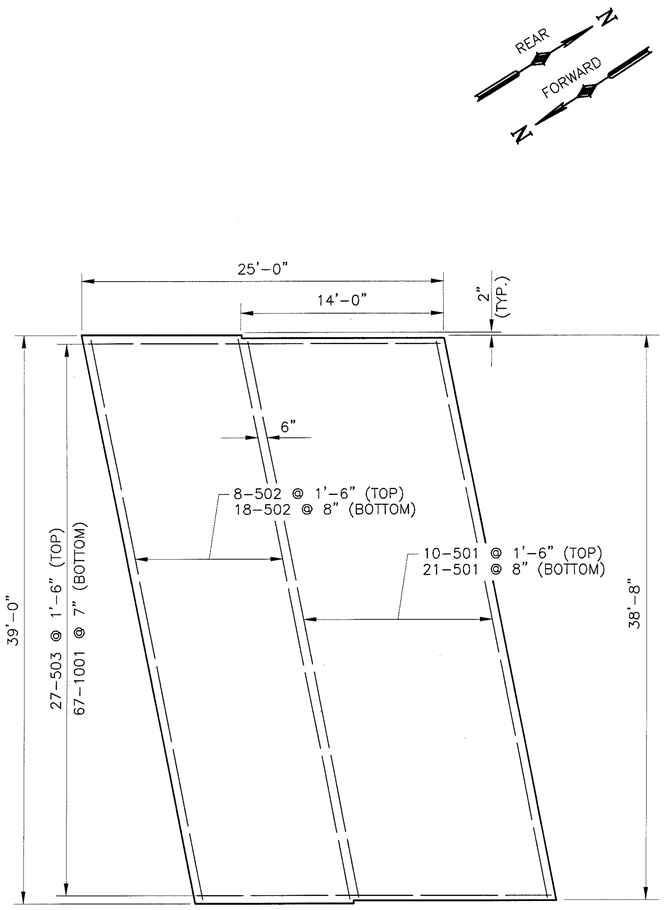


PLAN
WESTBOUND REAR
WESTBOUND FORWARD

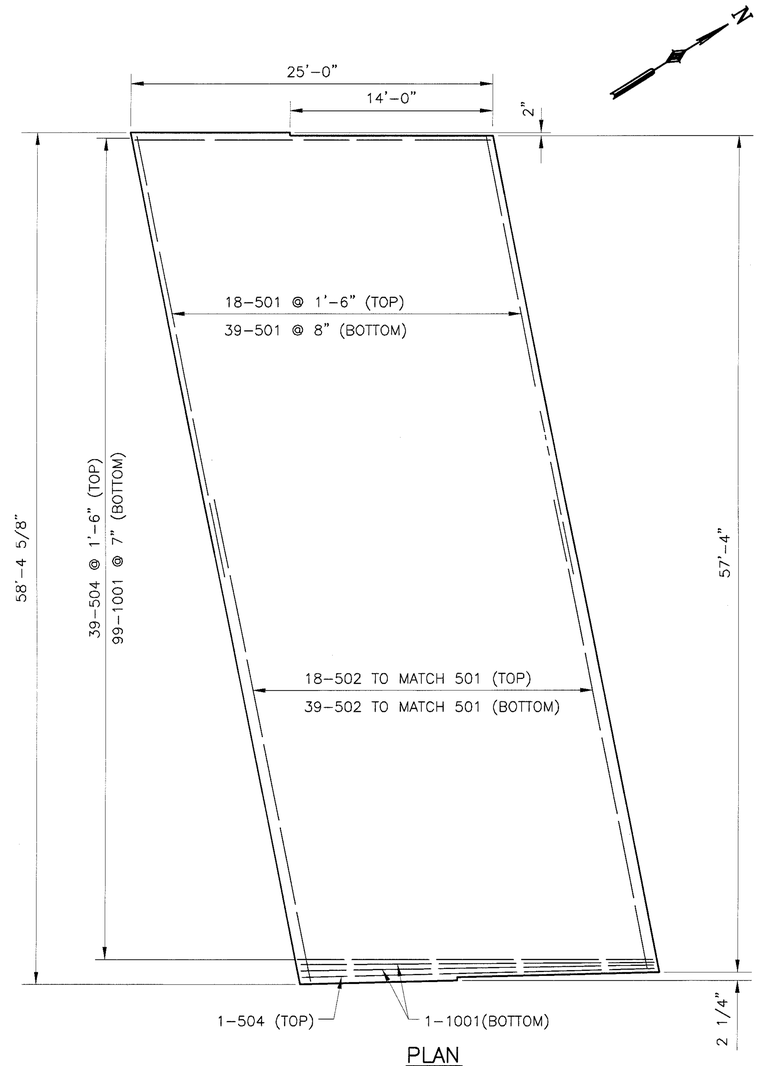


PLAN
EASTBOUND REAR

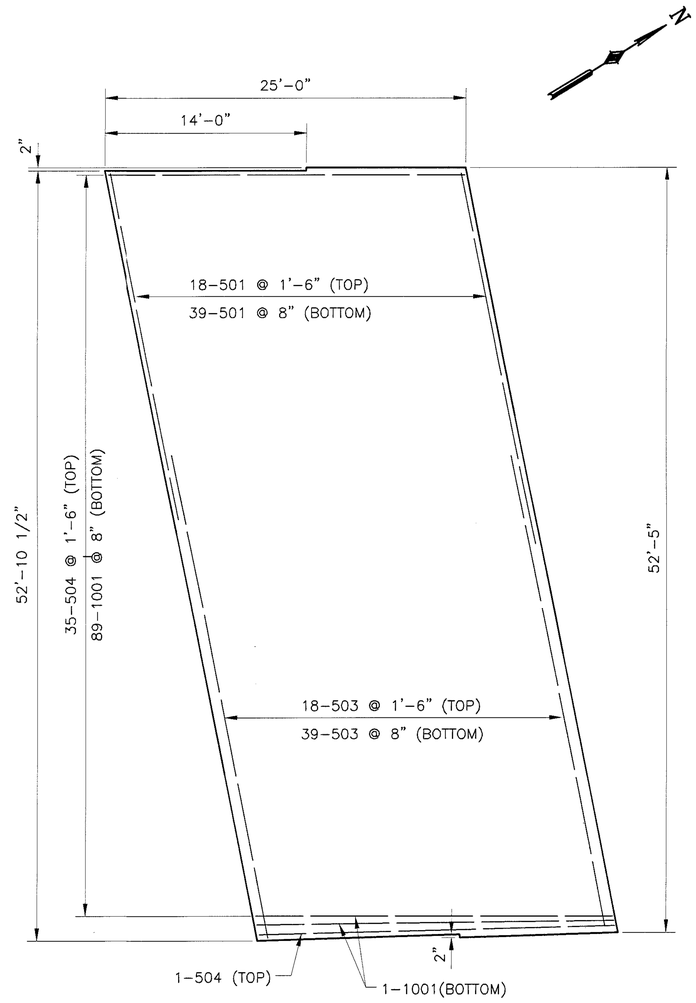


PLAN
EASTBOUND FORWARD

## ITEM 611 – REINFORCED CONCRETE APPROACH SLAB, T=15", AS PER PLAN 1

| MARK | NO. REAR | NO. FWD | NO. TOTAL | LENGTH | TYPE | WEIGHT (LBS.) | DIMENSIONS A | B | C | D | E | INCR. |
|---|---|---|---|---|---|---|---|---|---|---|---|---|
| APPROACH SLAB – WESTBOUND | | | | | | | | | | | | |
| AS501 | 31 | 31 | 62 | 38'-11" | STR | 2517 | | | | | | |
| AS502 | 26 | 26 | 52 | 39'-3" | STR | 2129 | | | | | | |
| AS503 | 27 | 27 | 54 | 24'-6" | STR | 1380 | | | | | | |
| AS1001 | 67 | 67 | 134 | 25'-11" | 1 | 14,944 | 24'-6" | | | | | |
| | | | | TOTAL | | 20,970 | lbs. | | | | | |

| MARK | NO. REAR | NO. FWD | NO. TOTAL | LENGTH | TYPE | WEIGHT (LBS.) | DIMENSIONS A | B | C | D | E | INCR. |
|---|---|---|---|---|---|---|---|---|---|---|---|---|
| APPROACH SLAB – EASTBOUND | | | | | | | | | | | | |
| AS501 | 57 | 57 | 114 | 30'-0" | STR | 3,567 | | | | | | |
| AS502 | 57 | | 57 | 30'-10" | STR | 1,833 | | | | | | |
| AS503 | | 57 | 57 | 25'-2" | STR | 1,496 | | | | | | |
| AS504 | 40 | 36 | 76 | 24'-6" | STR | 1,942 | | | | | | |
| AS1001 | 101 | 91 | 192 | 25'-11" | 1 | 21,412 | 24'-6" | | | | | |
| | | | | TOTAL | | 30,250 | lbs. | | | | | |

## BENDING DIAGRAMS

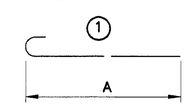


NOTES:

1. CONCRETE FOR THIS ITEM SHALL BE CLASS S, SS842 AND SS899.
2. REINFORCING STEEL WEIGHTS GIVEN FOR INFORMATION ONLY. ALL REINFORCING STEEL BAR MARKS SHALL BE PREFIXED AS (APPROACH SLAB).
3. FOR ADDITIONAL REINFORCING, NOTES AND DETAILS SEE OHIO STANDARD DRAWING AS-1-81, SHEETS 1 AND 2 OF 3.

CALCULATED KJW
CHECKED KRD

# APPROACH SLAB DETAILS

TRU-5-0861 L&R
OVER US 422

TRU-5-6.45



GM106.DWG 502\BRIDGE\11\DWG\502AS11.DWG KJW 2/27/01 PLOT 1:4

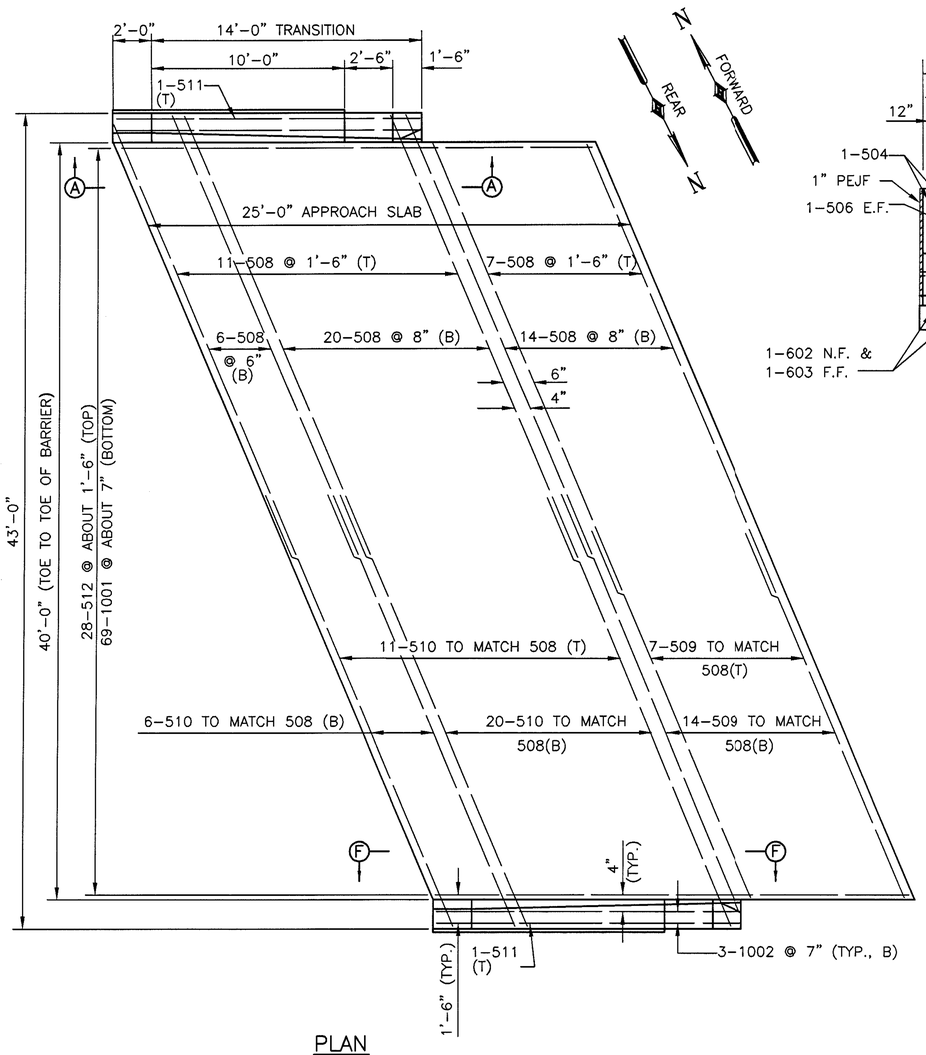


PLAN
WESTBOUND REAR
WESTBOUND FORWARD

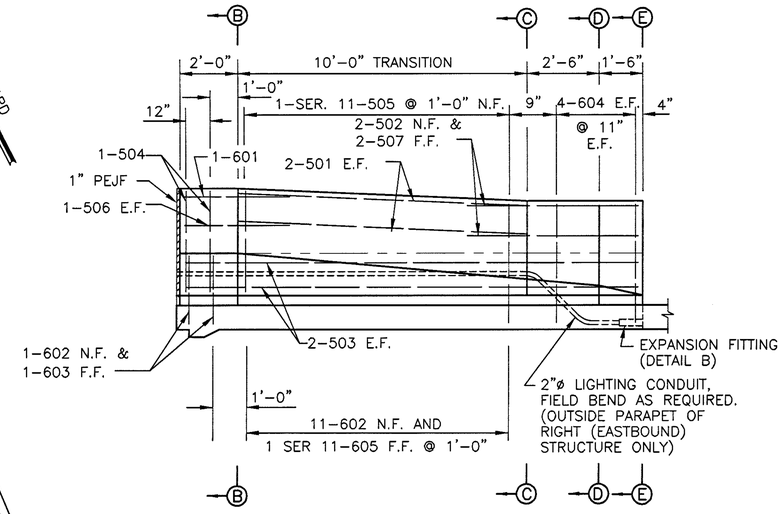


ELEVATION A–A (AS SHOWN)
ELEVATION F–F (OPPOSITE HAND)

| MARK | NO. REAR | NO. FWD | NO. TOTAL | LENGTH | TYPE | WEIGHT (LBS.) | DIMENSIONS A | B | C | D | E | INCR. |
|---|---|---|---|---|---|---|---|---|---|---|---|---|
| APPROACH SLAB – WESTBOUND | | | | | | | | | | | | |
| | | | | | | | | | | | | |
| AS501 | 8 | 8 | 16 | 10'-0" | STR | 167 | | | | | | |
| AS502 | 4 | 4 | 8 | 5'-8" | 1 | 47 | 1'-10" | 2'-5" | 1'-5" | 1 1/2" | 5" | |
| AS503 | 8 | 8 | 16 | 15'-8" | STR | 262 | | | | | | |
| AS504 | 4 | 4 | 8 | 7'-1" | 2 | 59 | 3'-3" | 3'-0" | 8" | | | |
| AS505 | 2 | 2 | 4 | 3'-0" | 3 | 157 | 2'-5" | | | | | 1" |
| | SER | SER | SER | TO | | | TO | | | | | |
| | 11 | 11 | 11 | 3'-10" | | | 3'-3" | | | | | |
| AS506 | 4 | 4 | 8 | 3'-10" | STR | 32 | | | | | | |
| AS507 | 4 | 4 | 8 | 5'-8" | STR | 47 | | | | | | |
| AS508 | 58 | 58 | 116 | 30'-0" | STR | 3,630 | | | | | | |
| AS509 | 21 | 21 | 42 | 14'-9" | STR | 646 | | | | | | |
| AS510 | 37 | 37 | 74 | 18'-0" | STR | 1,389 | | | | | | |
| AS511 | 2 | 2 | 4 | 15'-6" | STR | 65 | | | | | | |
| AS512 | 28 | 28 | 56 | 24'-6" | STR | 1,431 | | | | | | |
| | | | | | | | | | | | | |
| AS601 | 2 | 2 | 4 | 4'-11" | STR | 30 | | | | | | |
| AS602 | 26 | 26 | 52 | 3'-5" | 4 | 267 | 1'-0" | 1'-2" | 8 1/2" | 6" | 9" | |
| AS603 | 4 | 4 | 8 | 2'-9" | 5 | 33 | 1'-0" | 1'-11" | | | | |
| AS604 | 16 | 16 | 32 | 4'-4" | 5 | 208 | 1'-0" | 3'-6" | | | | |
| AS605 | 2 | 2 | 4 | 4'-3" | 5 | 308 | | 3'-5" | | | | 1" |
| | SER | SER | SER | TO | | | 1'-0" | TO | | | | |
| | 11 | 11 | 11 | 5'-1" | | | | 4'-3" | | | | |
| | | | | | | | | | | | | |
| AS1001 | 69 | 69 | 138 | 25'-11" | 3 | 15,390 | 24'-6" | | | | | |
| AS1002 | 6 | 6 | 12 | 16'-11" | 3 | 874 | 15'-6" | | | | | |
| | | | | | | | | | | | | |
| | | | | TOTAL | | 25,042 | lbs. | | | | | |

## BENDING DIAGRAMS

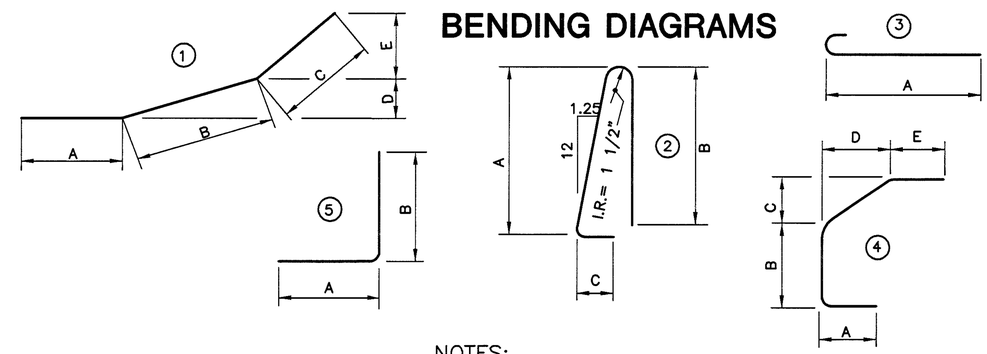


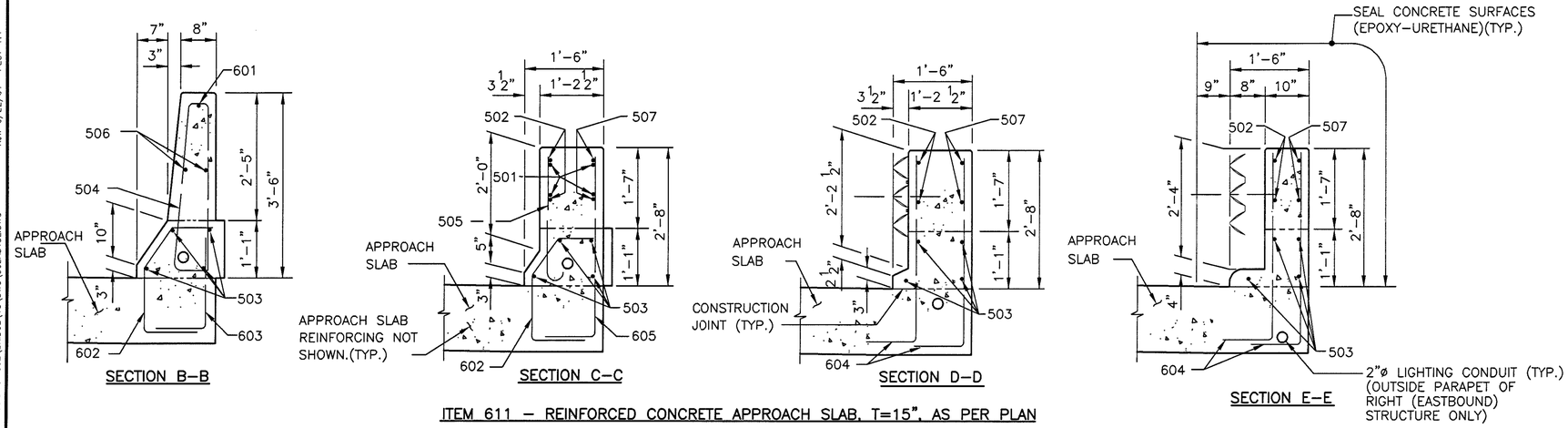


ITEM 611 – REINFORCED CONCRETE APPROACH SLAB, T=15", AS PER PLAN

NOTES:

1. CONCRETE FOR THIS ITEM SHALL BE CLASS S, SS842 AND SS899.
2. REINFORCING STEEL WEIGHTS GIVEN FOR INFORMATION ONLY. ALL REINFORCING STEEL BAR MARKS SHALL BE PREFIXED AS (APPROACH SLAB).
3. FOR ADDITIONAL NOTES AND DETAILS SEE OHIO STANDARD DRAWING AS–1–81, SHEETS 1 AND 2 OF 3.
4. FOR EASTBOUND APPROACH SLAB PLANS SEE SHEET 79/164 .
5. FOR DETAIL B AND ADDITIONAL LIGHTING CONDUIT NOTES AND DETAILS SEE OHIO STANDARD DRAWING HL–30.31M.
6. BARRIER CONCRETE, EPOXY–URETHANE SEALER AND REINFORCING STEEL TO BE INCLUDED FOR PAYMENT WITH ITEM 611, REIFORCED CONCRETE APPROACH SLAB, AS PER PLAN.
7. THE FOLLOWING ABBREVIATIONS ARE USED:
   TYP. = TYPICAL
   E.F. = EACH FACE
   PEJF = PREFORMED EXPANSION JOINT FILLER
   T = TOP
   B = BOTTOM
   N.F. = NEAR FACE
   F.F. = FAR FACE

CALCULATED KJW
CHECKED KRD

# APPROACH SLAB DETAILS

TRU–5–1077 L&R
OVER S.R. 45

TRU-5-6.45



GM108.DWG 502\BRIDGE\1:3\DWG\502AS13L.DWG KJW 6/22/01 PLOT 1:4

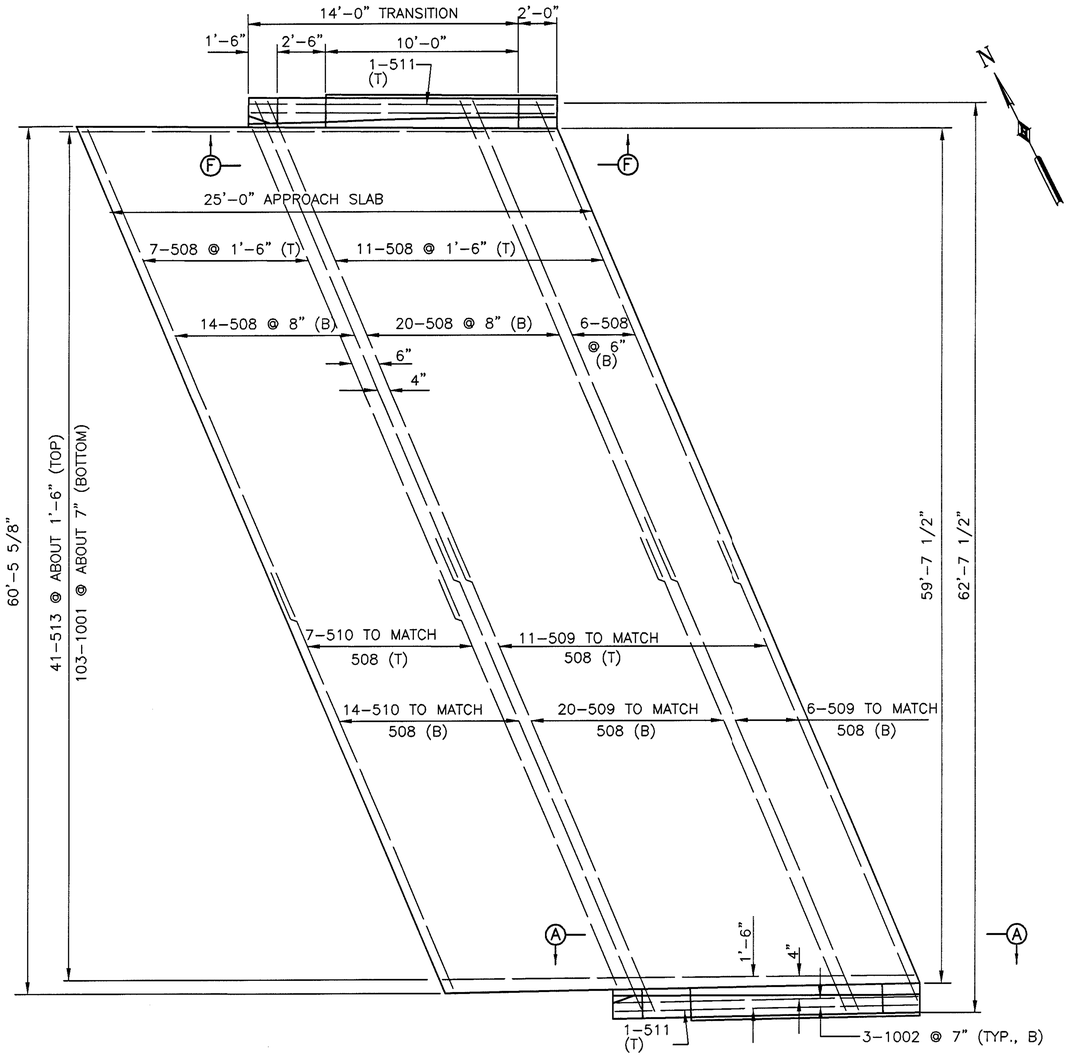


PLAN
EASTBOUND REAR

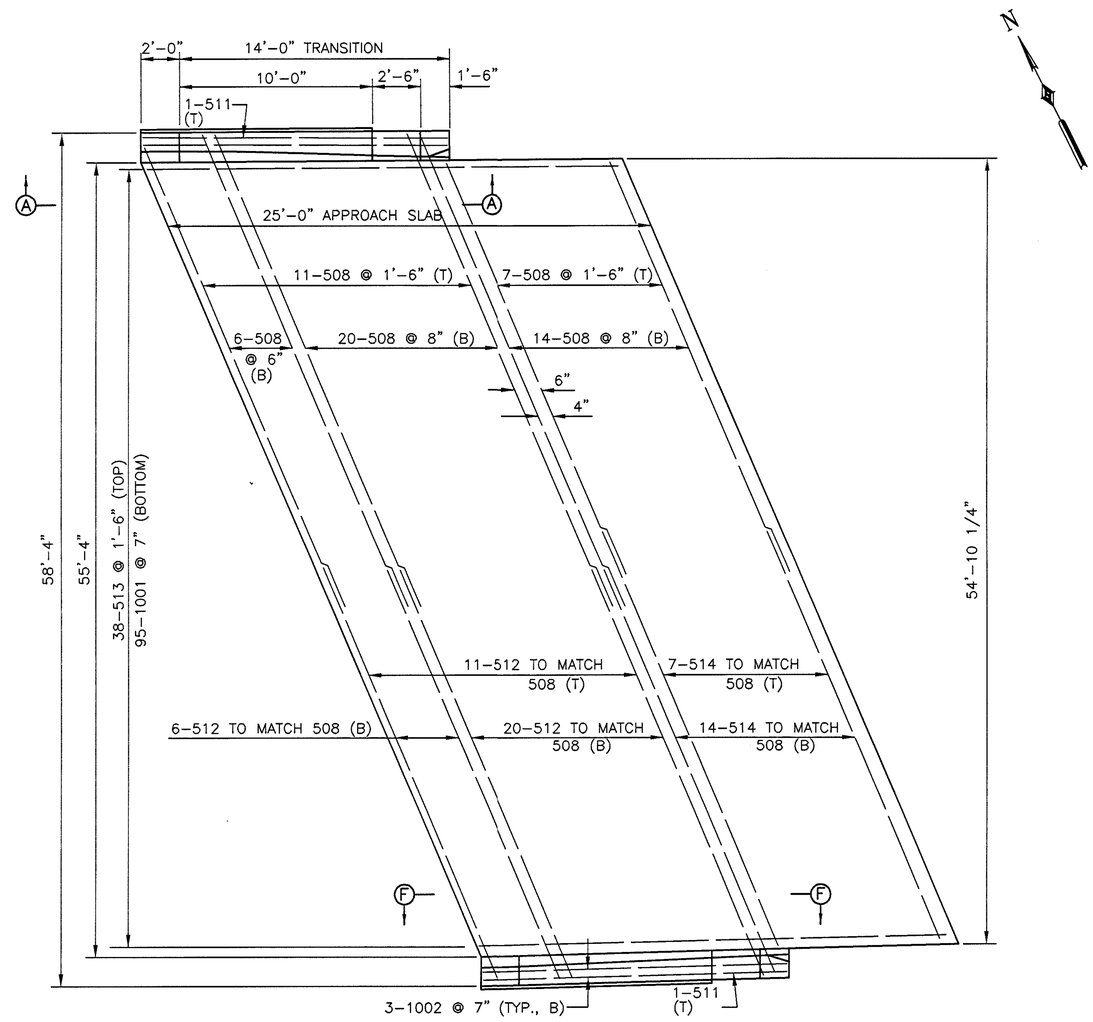


PLAN
EASTBOUND FORWARD

| MARK | NO. REAR | NO. FWD | NO. TOTAL | LENGTH | TYPE | WEIGHT (LBS.) | DIMENSIONS A | B | C | D | E | INCR. |
|---|---|---|---|---|---|---|---|---|---|---|---|---|
| APPROACH SLAB – EASTBOUND | | | | | | | | | | | | |
| | | | | | | | | | | | | |
| AS501 | 8 | 8 | 16 | 10'-0" | STR | 167 | | | | | | |
| AS502 | 4 | 4 | 8 | 5'-8" | 1 | 47 | 1'-10" | 2'-5" | 1'-5" | 1 1/2" | 5" | |
| AS503 | 8 | 8 | 16 | 15'-8" | STR | 262 | | | | | | |
| AS504 | 4 | 4 | 8 | 7'-1" | 2 | 59 | 3'-3" | 3'-0" | 8" | | | |
| AS505 | 2 | 2 | 4 | 3'-0" | 3 | 157 | 2'-5" | | | | | |
| | SER | SER | SER | TO | | | TO | | | | | |
| | 11 | 11 | 11 | 3'-10" | | | 3'-3" | | | | | |
| AS506 | 4 | 4 | 8 | 3'-10" | STR | 32 | | | | | | |
| AS507 | 4 | 4 | 8 | 5'-8" | STR | 47 | | | | | | |

| MARK | NO. REAR | NO. FWD | NO. TOTAL | LENGTH | TYPE | WEIGHT (LBS.) | DIMENSIONS A | B | C | D | E | INCR. |
|---|---|---|---|---|---|---|---|---|---|---|---|---|
| APPROACH SLAB – EASTBOUND | | | | | | | | | | | | |
| | | | | | | | | | | | | |
| AS508 | 58 | 58 | 116 | 30'-0" | STR | 3,630 | | | | | | |
| AS509 | 37 | | 37 | 39'-4" | STR | 1,518 | | | | | | |
| AS510 | 21 | | 21 | 37'-1" | STR | 812 | | | | | | |
| AS511 | 2 | 2 | 4 | 15'-6" | STR | 65 | | | | | | |
| AS512 | | 37 | 37 | 34'-8" | STR | 1,338 | | | | | | |
| AS513 | 41 | 38 | 79 | 24'-6" | STR | 2,019 | | | | | | |
| AS514 | | 21 | 21 | 31'-15" | STR | 688 | | | | | | |
| | | | | | | | | | | | | |
| AS1001 | 103 | 95 | 198 | 25'-11" | 3 | 22,081 | 24'-6" | | | | | |
| AS1002 | 6 | 6 | 12 | 16'-11" | STR | 874 | 15'-6" | | | | | |
| | | | | | | | | | | | | |
| | | | | TOTAL | | 33,796 | lbs. | | | | | |

NOTES:

1. FOR ELEVATION A–A, F–F AND ADDITIONAL NOTES SEE SHEET 78/164.

CALCULATED KJW
CHECKED KRD

# APPROACH SLAB DETAILS

TRU-5-1077 R
OVER S.R. 45

TRU-5-6.45



GM108A.DWG 502\BRIDGE\13\DWG\502AS13R.DWG KJW 6/22/01 PLOT 1:4

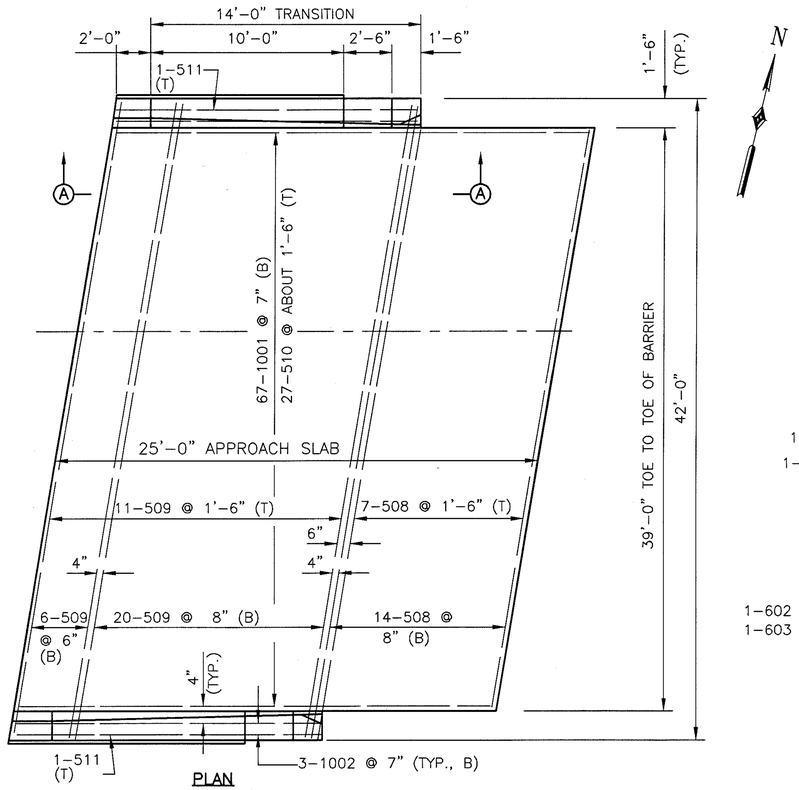


PLAN

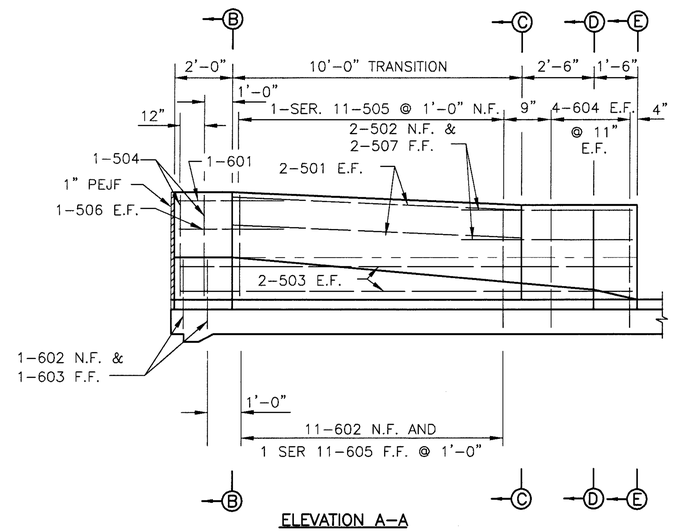


ELEVATION A-A

| MARK | NUMBER TOTAL | LENGTH | TYPE | WEIGHT (LBS.) | DIMENSIONS A | B | C | D | E | | SER. INCR. |
|---|---|---|---|---|---|---|---|---|---|---|---|
| | | | | APPROACH SLABS | | | | | | | |
| AS501 | 16 | 10'-0" | STR | 167 | | | | | | | |
| AS502 | 8 | 5'-8" | 1 | 47 | 1'-10" | 2'-5" | 1'-5" | 1 1/2" | 5" | | |
| AS503 | 16 | 15'-8" | STR | 262 | | | | | | | |
| AS504 | 8 | 7'-1" | 2 | 59 | 3'-3" | 3'-0" | 8" | | | | |
| AS505 | 4 | 3'-0" | 3 | | 2'-5" | | | | | | |
| | SER | TO | | 157 | TO | | | | | | 1" |
| | 11 | 3'-10" | | | 3'-3" | | | | | | |
| AS506 | 8 | 3'-10" | STR | 32 | | | | | | | |
| AS507 | 8 | 5'-8" | STR | 47 | | | | | | | |
| AS508 | 42 | 39'-1" | STR | 1,712 | | | | | | | |
| AS509 | 74 | 42'-1" | STR | 3,248 | | | | | | | |
| AS510 | 54 | 24'-6" | STR | 1,380 | | | | | | | |
| AS511 | 4 | 15'-6" | STR | 65 | | | | | | | |
| | | | | | | | | | | | |
| AS601 | 4 | 4'-11" | STR | 30 | | | | | | | |
| AS602 | 52 | 3'-5" | 4 | 267 | 1'-0" | 1'-2" | 8 1/2" | 6" | 9" | | |
| AS603 | 8 | 2'-9" | 5 | 33 | 1'-0" | 1'-11" | | | | | |
| AS604 | 32 | 4'-4" | 5 | 208 | 1'-0" | 3'-6" | | | | | |
| AS605 | 4 | 4'-3" | 5 | 308 | | 3'-5" | | | | | |
| | SER | TO | | | 1'-0" | TO | | | | | 1" |
| | 11 | 5'-1" | | | | 4'-3" | | | | | |
| | | | | | | | | | | | |
| AS1001 | 134 | 25'-11" | 3 | 14,944 | 24'-6" | | | | | | |
| AS1002 | 12 | 16'-11" | 3 | 874 | 15'-6" | | | | | | |
| | | TOTAL W.B. | | 23,840 | | | | | | | |
| | | TOTAL E.B. | | 23,840 | | | | | | | |

## BENDING DIAGRAMS

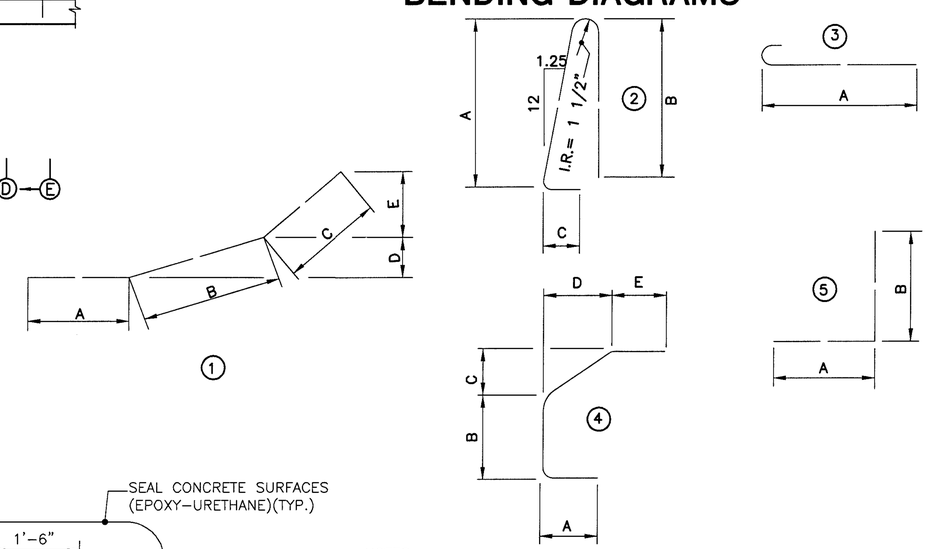


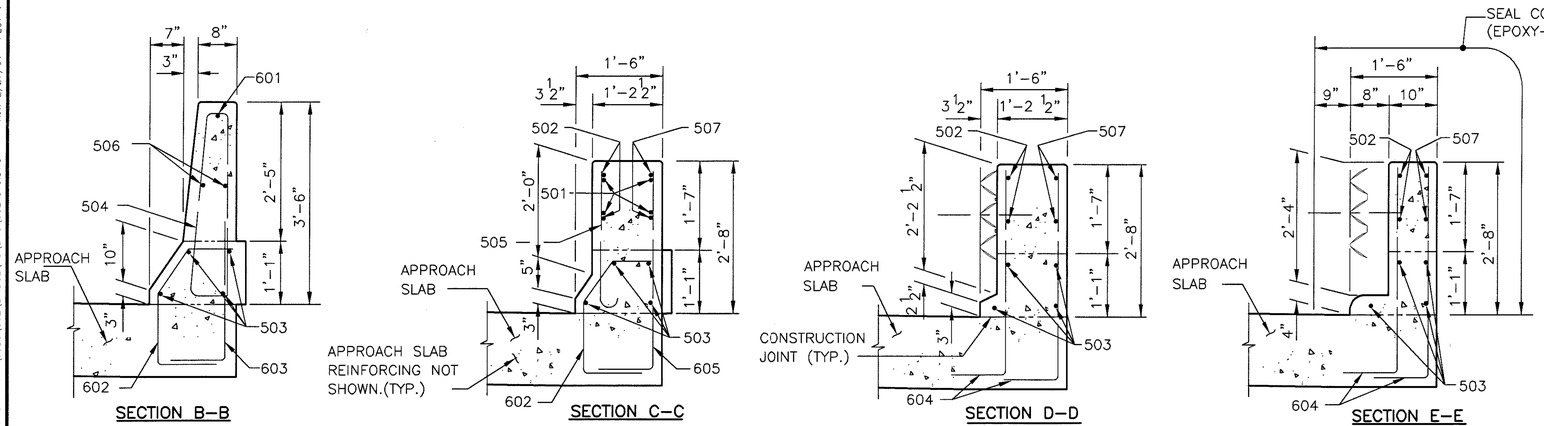


ITEM 611 - REINFORCED CONCRETE APPROACH SLAB, T=15", AS PER PLAN

NOTES:

1. BARRIER CONCRETE, 1" PEJF, EPOXY-URETHANE SEALER AND REINFORCING STEEL TO BE INCLUDED FOR PAYMENT WITH ITEM 611, REINFORCED CONCRETE APPROACH SLAB, AS PER PLAN.
2. CONCRETE FOR THIS ITEM SHALL BE CLASS S, SS842 AND SS899.
3. REINFORCING STEEL WEIGHTS GIVEN FOR INFORMATION ONLY. ALL REINFORCING STEEL BAR MARKS SHALL BE PREFIXED AS (APPROACH SLAB).
4. FOR GUARDRAIL CONNECTION DETAIL TO PARAPET SEE OHIO STANDARD DRAWING GR-3.1M.
5. FOR ADDITIONAL NOTES AND DETAILS SEE OHIO STANDARD DRAWING AS-1-81, SHEETS 1 AND 2 OF 3.
6. THE FOLLOWING ABBREVIATIONS ARE USED:

TYP. = TYPICAL
E.F. = EACH FACE
PEJF = PREFORMED EXPANSION JOINT FILLER
T = TOP
B = BOTTOM
N.F. = NEAR FACE
F.F. = FAR FACE

CALCULATED KJW
CHECKED GFH

# APPROACH SLAB DETAILS

TRU-5-1226 L&R
OVER NORTH PARK ROAD

TRU-5-6.45



GM110.DWG F:\JOBS\502\BRIDGE\15\DWG\502AS15.DWG KJW 2/27/01 PLOT 1"=1"

## SIGN PLACEMENT

THE EXACT LOCATION OF THE SIGNS ARE TO BE STAKED. THE LOCATIONS SHALL BE CHECKED BY THE ENGINEER PRIOR TO PLACEMENT TO INSURE CLEARANCE OF DRIVES, ROADWAYS AND OTHER OBSTACLES. IF THERE ARE ANY CONFLICTS, THEY ARE TO BE ADJUSTED BY THE ENGINEER. PAYMENT IS INCIDENTAL TO ALL 630 ITEMS.

## STOPPAGE OF MAINLINE TRAFFIC

ANY TIME TRAFFIC MUST BE COMPLETELY STOPPED ON A FREEWAY OR INTERSTATE, IT SHALL BE DONE IN THE FOLLOWING MANNER: THE COMPLETE TRAFFIC STOPPAGE ON ALL LANES OF ANY DIRECTIONAL ROADWAY SHALL BE NO MORE THAN 10 MINUTES IN ANY ONE CONSECUTIVE 30 MINUTE PERIOD.

A MINIMUM OF TWO (2) LAW ENFORCEMENT OFFICERS (LEO) WITH PATROL CARS SHALL BE USED TO PACE MOTORISTS TO A STOP. THERE SHALL BE ONE LEO FOR EACH LANE ON THE FREEWAY.

AFTER TRAFFIC HAS BEEN SLOWED, ONE (1) PATROL CAR SHALL TRAVEL ALONG THE ROADWAY SHOULDER 500 FEET BEHIND THE BACKUP OF STOPPED VEHICLES. WHERE STOPPAGE OCCURS IN THE VICINITY OF FREEWAY ENTRANCES, THE CONTRACTOR SHALL PLACE FLAGGERS ON THE RAMPS TO STOP TRAFFIC. PATROL CARS SHALL HAVE FLASHING BEACONS TO PROVIDE ADEQUATE VISIBILITY TO APPROACHING MOTORISTS.

THE CONTRACTOR SHALL ERECT AND MAINTAIN "ROAD WORK AHEAD" (OW-134), "PREPARE TO STOP" (OW-152), AND "STOP AHEAD" (OW-45) SIGNS WITH TWO (2) FLASHING 300 MM TRAFFIC SIGNAL HEADS IN ACCORDANCE WITH 632.05. THESE SIGNS SHALL BE ILLUMINATED DURING NIGHT OPERATIONS AND SHALL BE 48 INCH BY 48 INCH SIGNS. PATROL CARS AND SIGNS SHALL BE LOCATED IN ACCORDANCE WITH THE DETAIL BELOW. FLARES MAY BE SUBSTITUTED FOR THE FLASHING 12 INCH SIGNAL HEADS. THERE SHALL BE TWO (2) FLARES AT EACH SIGN ON BOTH SIDES OF THE ROADWAY. THE FLARES SHALL BE REPLACED IF THEY BURN OUT.

A PORTABLE CHANGEABLE MESSAGE SIGN, TYPE TO BE ON ODOT'S PREAPPROVED LIST, SHALL BE PLACED 1.5 TO 2 MILES IN ADVANCE OF THE CLOSURE OR AS DIRECTED BY THE ENGINEER.

THE CONTRACTOR SHALL NOTIFY THE ENGINEER AND THE ODOT PUBLIC INFORMATION OFFICE, 330-297-0801 EXT-211, THREE (3) DAYS PRIOR TO ANY MAINLINE TRAFFIC STOPPAGE.

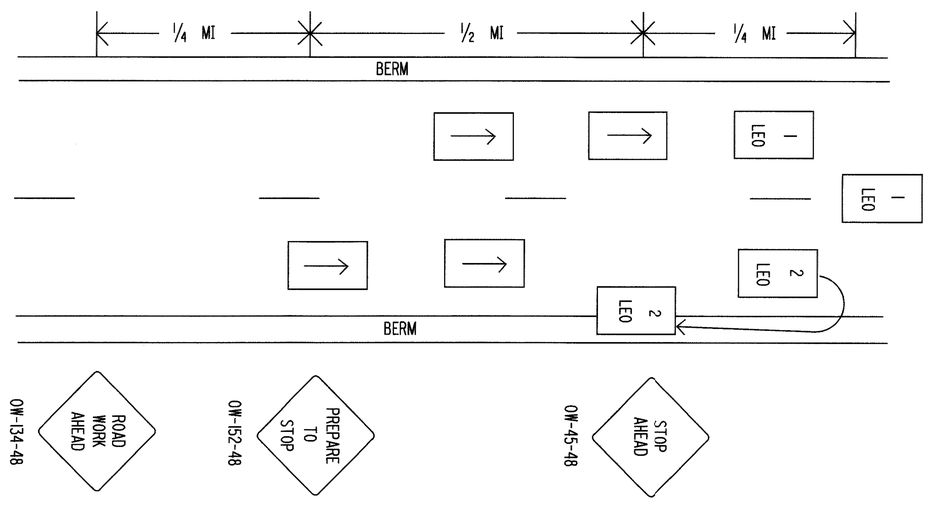


## ITEM 630 OVERHEAD SIGN SUPPORT, TYPE TC-7.65, BY DESIGN, AS PER PLAN

IN ADDITION TO THE REQUIREMENTS OF ITEM 630.06, THE END FRAME HEIGHTS SHALL BE AS SHOWN IN THE CROSS SECTIONS.

## FLOODLIGHTING

FLOODLIGHTING OF THE WORK SITE FOR OPERATIONS CONDUCTED DURING NIGHT TIME PERIODS SHALL BE ACCOMPLISHED SO THAT THE LIGHTS DO NOT CAUSE GLARE TO THE DRIVERS ON THE ROADWAY. TO ENSURE THE ADEQUACY OF THE FLOODLIGHT PLACEMENT, THE CONTRACTOR AND THE ENGINEER SHALL DRIVE THROUGH THE WORK SITE EACH NIGHT WHEN THE LIGHTING IS IN PLACE AND OPERATIVE PRIOR TO COMMENCING ANY WORK. IF GLARE IS DETECTED THE LIGHT PLACEMENT AND SHIELDING SHALL BE ADJUSTED TO THE SATISFACTION OF THE ENGINEER BEFORE WORK PROCEEDS.

PAYMENT FOR ALL LABOR, EQUIPMENT AND MATERIALS SHALL BE INCLUDED IN THE LUMP SUM CONTRACT PRICE FOR MAINTAINING TRAFFIC.

## ITEM 630 - REMOVAL OF OVERHEAD SIGN AND REERECTION, AS PER PLAN

INCLUDED IN THIS ITEM OF WORK PER SPECIFICATION 630 SHALL BE THE REMOVAL OF THE EXISTING SIGN INCLUDING SIGN LIGHTING AND RELATED ITEMS, AND SIGN ATTACHEMENT ASSEMBLIES, AND SUBSEQUENT REERECTION OF SIGN AND SIGN LIGHTING. PAYMENT SHALL BE PER EACH UNIT OF SIGN, LIGHTING, AND SIGN ATTACHMENT ASSEMBLY REMOVED AND REERECTION OF SAME, WHICH PRICE SHALL INCLUDE ALL NECESSARY EQUIPMENT, LABOR, MATERIAL AND HARDWARE TO PERFORM THIS ITEM OF WORK. ANY SIGN AND / OR SIGN LIGHTING DAMAGED BY THE CONTRACTOR DEEMED UNUSABLE BY THE ENGINEER SHALL BE REPLACED IN KIND WITH A NEW SIGN AND / OR LIGHTING AT NO EXPENSE TO THE STATE.

| | |
|---|---|
| ITEM 630 REMOVAL OF OVERHEAD SIGN AND REERECTION<br>BRIDGE NO. TRU - 0861 LT./RT. | 2 EACH |
| ITEM 630 REMOVAL OF OVERHEAD SIGN AND REERECTION<br>BRIDGE NO. TRU - 0861 LT./RT. | 2 EACH |

CALCULATED KAG
CHECKED LJ

TRAFFIC GENERAL NOTES

TRU-5-6.45

## SKEWED OVERPASS STRUCTURE MOUNTED SIGN SUPPORT

WITH THE WIDENING OF THE MAINLINE BRIDGES OVER S.R. 45, THE CONTRACTOR SHALL REMOVE THE EXISTING OVERPASS STRUCTURE MOUNTED SIGN AND SIGN SUPPORT ON THE EAST AND WEST SIDE OF S.R. 5. THE CONTRACTOR SHALL PROVIDE NEW SIGN AND SIGN SUPPORTS. THE FOLLOWING QUANTITIES HAVE BEEN CARRIED TO THE GENERAL SUMMARY TO BE USED BY THE ENGINEER TO COMPLETE THE WORK.

| | | |
|---|---|---|
| ITEM 630 | SIGN, EXTRUSHEET, TYPE G | 120 SQ. FT. |
| ITEM 630 | OVERPASS STRUCTURE MOUNTED SIGN SUPPORT, TYPE TC-18.26, DESIGN 6 | 2 EACH |
| ITEM 630 | LUMINAIRE SUPPORT ASSEMBLY, TYPE TC-31.21 | 4 EACH |
| ITEM 630 | REMOVAL OF STRUCTURE MOUNTED SIGN AND DISPOSAL | 2 EACH |
| ITEM 630 | REMOVAL OF OVERHEAD SIGN SUPPORT AND DISPOSAL, TYPE TC-18.26 | 2 EACH |
| ITEM 631 | REMOVAL MISC.: LUMINAIRE SUPPORT ASSEMBLY AND DISPOSAL | 3 EACH |
| ITEM 631 | BALLAST, TYPE CMRI-100-480, REMOTE | 4 EACH |
| ITEM 631 | BALLAST WIRING ENCLOSURE, TYPE B | 2 EACH |
| ITEM 631 | SIGN SERVICE | 2 EACH |
| ITEM 631 | SIGN WIRED, OVERPASS STRUCTUREMOUNTED | 2 EACH |
| ITEM 631 | REMOVAL OF DISCONNECT SWITCH AND DISPOSAL | 2 EACH |
| ITEM 631 | REMOVAL OF LUMINAIRE AND DISPOSAL | 3 EACH |
| ITEM 631 | REMOVAL OF BALLAST AND DISPOSAL | 3 EACH |
| ITEM 631 | REMOVAL OF SIGN WIRING AND DISPOSAL | 2 EACH |
| ITEM 631 | REMOVAL OF SIGN SERVICE AND DISPOSAL | 2 EACH |

## SIGN LEGEND




Level III

CALCULATED KAG
CHECKED LJ

TRAFFIC GENERAL NOTES

TRU-5-6.45

| SHEET NO. | LOCATION | SIDE | SIGN CODE AND SIZE (FEET) | ITEM 625 | ITEM 631 | | | | | | | | | | | | | | | | | | | | | |
|---|---|---|---|---|---|---|---|---|---|---|---|---|---|---|---|---|---|---|---|---|---|---|---|---|---|---|
| | | | | | CABLE SPLICING KIT | GROUND ROD | | SIGN SERVICE | SIGN WIRED | DISCONNECT SWITCH WITH ENCLOSURE TYPE X | BALLAST INTEGRAL TYPE CMRI-175-480 | BALLAST INTEGRAL TYPE CMRI-250-480 | MERCURY VAPOR LUMINAIRE, TYPE TC-31.21 WITH 175 WATT LAMP | MERCURY VAPOR LUMINAIRE, TYPE TC-31.21 WITH 250 WATT LAMP | | REMOVAL OF LUMINAIRE AND DISPOSAL | REMOVAL OF DISCONNECT SWITCH AND DISPOSAL | REMOVAL OF BALLAST AND DISPOSAL | REMOVAL OF SIGN WIRING AND DISPOSAL | REMOVAL OF SIGN SERVICE AND DISPOSAL | | | | | | | |
| | | | | | EACH | EACH | | EACH | EACH | EACH | EACH | EACH | EACH | EACH | | EACH | EACH | EACH | EACH | EACH | | | | | | | |
| | STA 1031+00 | RT | GG-16' X 12.5' | | 2 | 1 | | 1 | 1 | 1 | | 2 | | 2 | | 2 | 1 | 2 | 1 | 1 | | | | | | | |
| | STA 1031+00 | RT | GE-20' X 6.5' | | | | | | 1 | | 3 | | 3 | | | 2 | | 2 | 1 | | | | | | | | |
| | STA 1114+81 | RT | GG-16' X 10' | | 2 | 1 | | 1 | 1 | 1 | 2 | | 2 | | | 2 | 1 | 2 | 1 | 1 | | | | | | | |
| | STA 1114+81 | RT | GE-19' X 10' | | | | | | 1 | | 2 | | 2 | | | 2 | | 2 | 1 | | | | | | | | |
| | STA 535+15 | RT | GG-16' X 10' | | 2 | 1 | | 1 | 1 | 1 | 2 | | 2 | | | 2 | 1 | 2 | 1 | 1 | | | | | | | |
| | STA 535+15 | RT | GE-22' X 10' | | | | | | 1 | | 3 | | 3 | | | 3 | | 3 | 1 | | | | | | | | |
| | STA 555+50 | LT | GE-15' X 10' | | 2 | 1 | | 1 | 1 | 1 | 2 | | 2 | | | 2 | 1 | 2 | 1 | 1 | | | | | | | |
| | STA 555+50 | LT | GG-22' X 10' | | | | | | 1 | | 3 | | 3 | | | 3 | | 3 | 1 | | | | | | | | |
| | STA 646+10 | RT | GB-13' X 12.5' | | 2 | 1 | | 1 | 1 | 1 | | 2 | | 2 | | 2 | 1 | 2 | 1 | 1 | | | | | | | |
| | STA 646+10 | RT | GE-27' X 6.5' | | | | | | 1 | | 4 | | 4 | | | 3 | | 3 | 1 | | | | | | | | |
| | STA 1138+70 | LT | GG-15' X 10' | | 2 | 1 | | 1 | 1 | 1 | 2 | | 2 | | | 2 | 1 | 2 | 1 | 1 | | | | | | | |
| | STA 1138+70 | LT | GE-19' X 10' | | | | | | 1 | | 2 | | 2 | | | 2 | | 2 | 1 | | | | | | | | |
| **TOTALS CARRIED TO GENERAL SUMMARY** | | | | | 12 | 6 | | 6 | 12 | 6 | 25 | 4 | 25 | 4 | | 27 | 6 | 27 | 12 | 6 | | | | | | | |

NOTE:
FOR CROSS SECTIONS SEE SHEETS 84-86

| SHEET NO. | REFERENCE NO. | LOCATION | STATION | SIDE | CODE | SIZE (FEET) | ITEM 630 | | | | | | | | | | | | | |
|---|---|---|---|---|---|---|---|---|---|---|---|---|---|---|---|---|---|---|---|---|
| | | | | | | | RIGID OVERHEAD SIGN SUPPORT FOUNDATION | SIGN EXTRUSHEET TYPE G | OVERHEAD SIGN SUPPORT TYPE TC-7.65, DES.6 | OVERHEAD SIGN SUPPORT TYPE TC-7.65, DES.6 A.P.P. | OVERHEAD SIGN SUPPORT TYPE TC-7.65, DES.8 A.P.P. | | REMOVAL OF OVER-HEAD MOUNTED SIGN AND DISPOSAL | REMOVAL OF OVER-HEAD SIGN SUPPORT AND DISPOSAL | | | | | | |
| | | | | | | | EACH | SQ.FT. | EACH | EACH | EACH | | EACH | EACH | | | | | | |
| | | TRU-5 | 1031+00 | RT | GG | 16' X 12.5' | 2 | 200 | | | 1 | | 1 | 1 | | | | | | |
| | | TRU-5 | 1031+00 | RT | GE | 20' X 6.5' | | 130 | | | | | 1 | | | | | | | |
| | | TRU-5 | 1114+81 | RT | GG | 16' X 10' | 2 | 160 | 1 | | | | 1 | 1 | | | | | | |
| | | TRU-5 | 1114+81 | RT | GE | 19' X 10' | | 190 | | | | | 1 | | | | | | | |
| | | TRU-5 | 535+15 | RT | GG | 16' X 10' | 2 | 160 | | 1 | | | 1 | 1 | | | | | | |
| | | TRU-5 | 535+15 | RT | GE | 22' X 10' | | 220 | | | | | 1 | | | | | | | |
| | | TRU-5 | 555+50 | LT | GG | 15' x 10' | 2 | 150 | 1 | | | | 1 | 1 | | | | | | |
| | | TRU-5 | 555+50 | LT | GE | 22' x 10' | | 220 | | | | | 1 | | | | | | | |
| | | TRU-5 | 646+10 | RT | GB | 13' X 12.5' | 2 | 162.5 | | 1 | | | 1 | 1 | | | | | | |
| | | TRU-5 | 646+10 | RT | GE | 27' X 6.5' | | 175.5 | | | | | 1 | | | | | | | |
| | | TRU-5 | 1138+70 | LT | GG | 15' X 10' | 2 | 150 | 1 | | | | 1 | 1 | | | | | | |
| | | TRU-5 | 1138+70 | LT | GE | 19' X 10' | | 190 | | | | | 1 | | | | | | | |
| **TOTALS CARRIED TO GENERAL SUMMARY** | | | | | | | 12 | 2,108 | 3 | 2 | 1 | | 12 | 6 | | | | | | |

CALCULATED KAG
CHECKED LJ

**LIGHTING & SIGNING SUBSUMMARY**

**TRU-5-6.45**

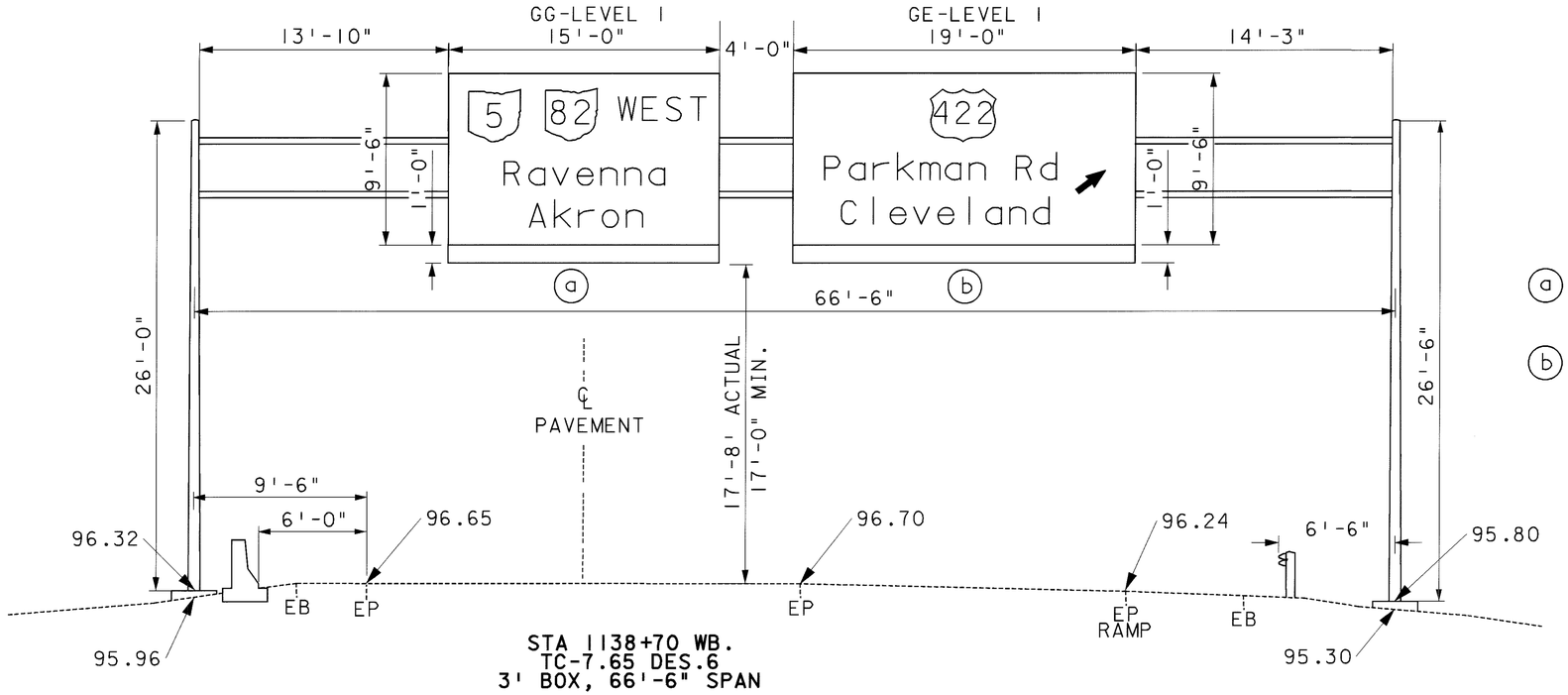


STA 1138+70 WB.
TC-7.65 DES.6
3' BOX, 66'-6" SPAN

ⓐ NO.OF BRACKETS 3
NO.OF LUMINAIRES 2
@ 175 WATTS

ⓑ NO.OF BRACKETS 3
NO.OF LUMINAIRES 2
@ 175 WATTS

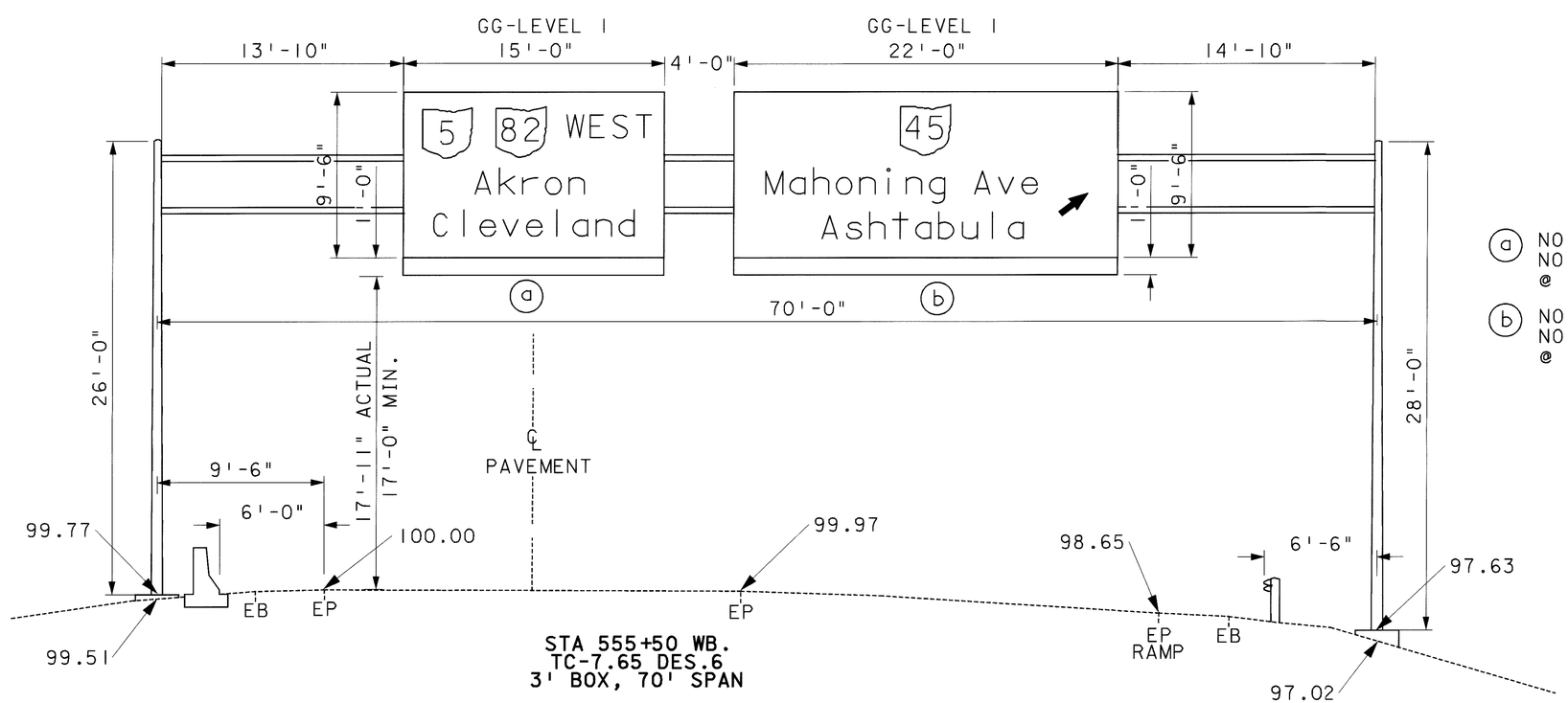


STA 555+50 WB.
TC-7.65 DES.6
3' BOX, 70' SPAN

ⓐ NO.OF BRACKETS 3
NO.OF LUMINAIRES 2
@ 175 WATTS

ⓑ NO.OF BRACKETS 4
NO.OF LUMINAIRES 3
@ 175 WATTS

CALCULATED KAG
CHECKED LJ

OVERHEAD SIGN SUPPORT DETAILS

TRU-5-6.45

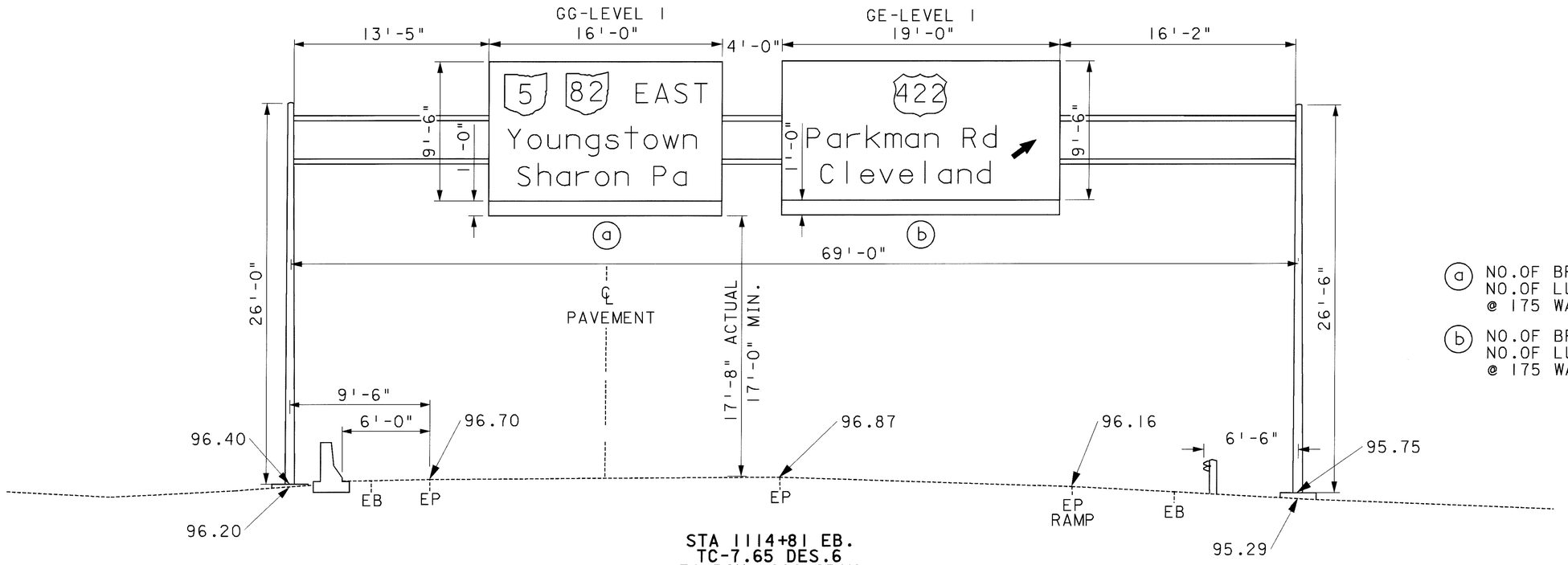


STA 1114+81 EB.
TC-7.65 DES.6
3' BOX, 69' SPAN

a NO.OF BRACKETS 3
NO.OF LUMINAIRES 2
@ 175 WATTS

b NO.OF BRACKETS 3
NO.OF LUMINAIRES 2
@ 175 WATTS

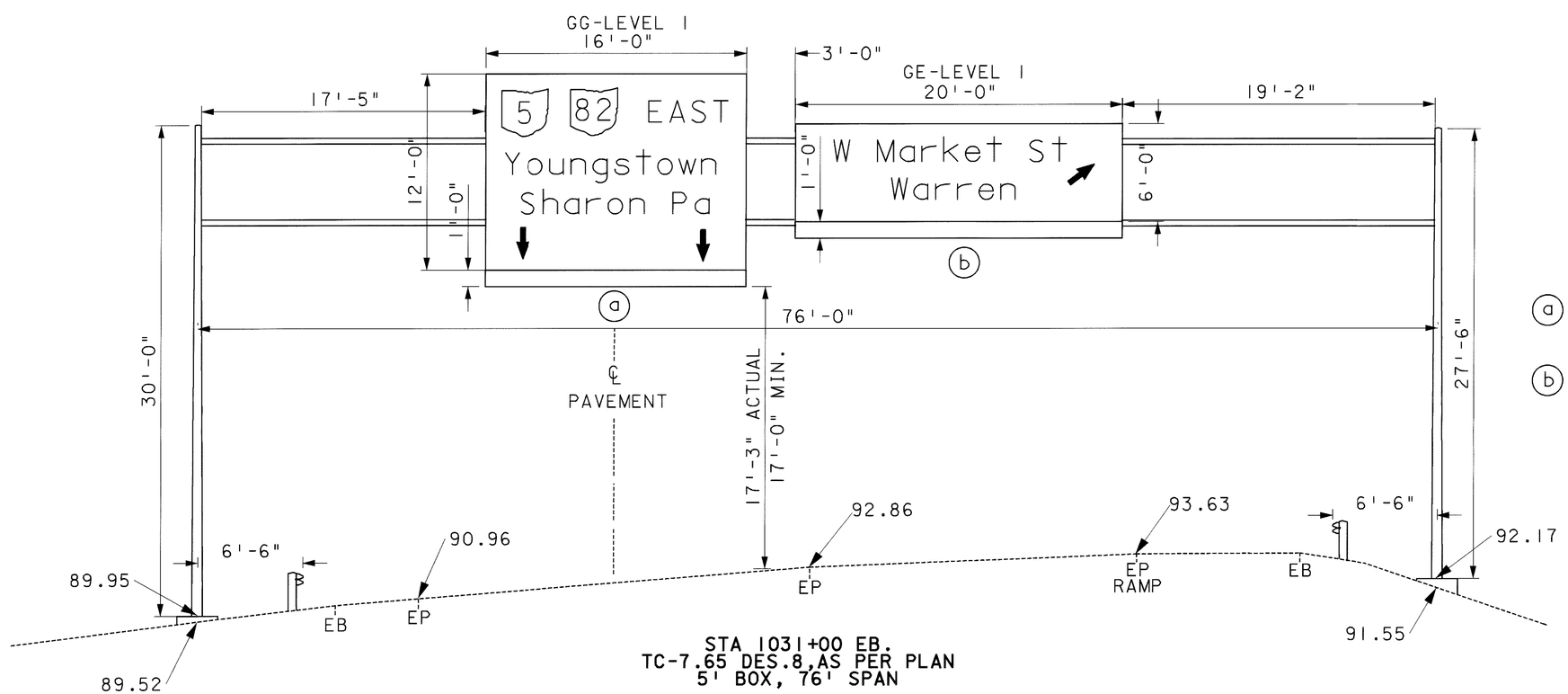


STA 1031+00 EB.
TC-7.65 DES.8,AS PER PLAN
5' BOX, 76' SPAN

a NO.OF BRACKETS 3
NO.OF LUMINAIRES 2
@ 250 WATTS

b NO.OF BRACKETS 4
NO.OF LUMINAIRES 3
@ 175 WATTS

CALCULATED KAG
CHECKED LJ

OVERHEAD SIGN SUPPORT DETAILS

TRU-5-6.45

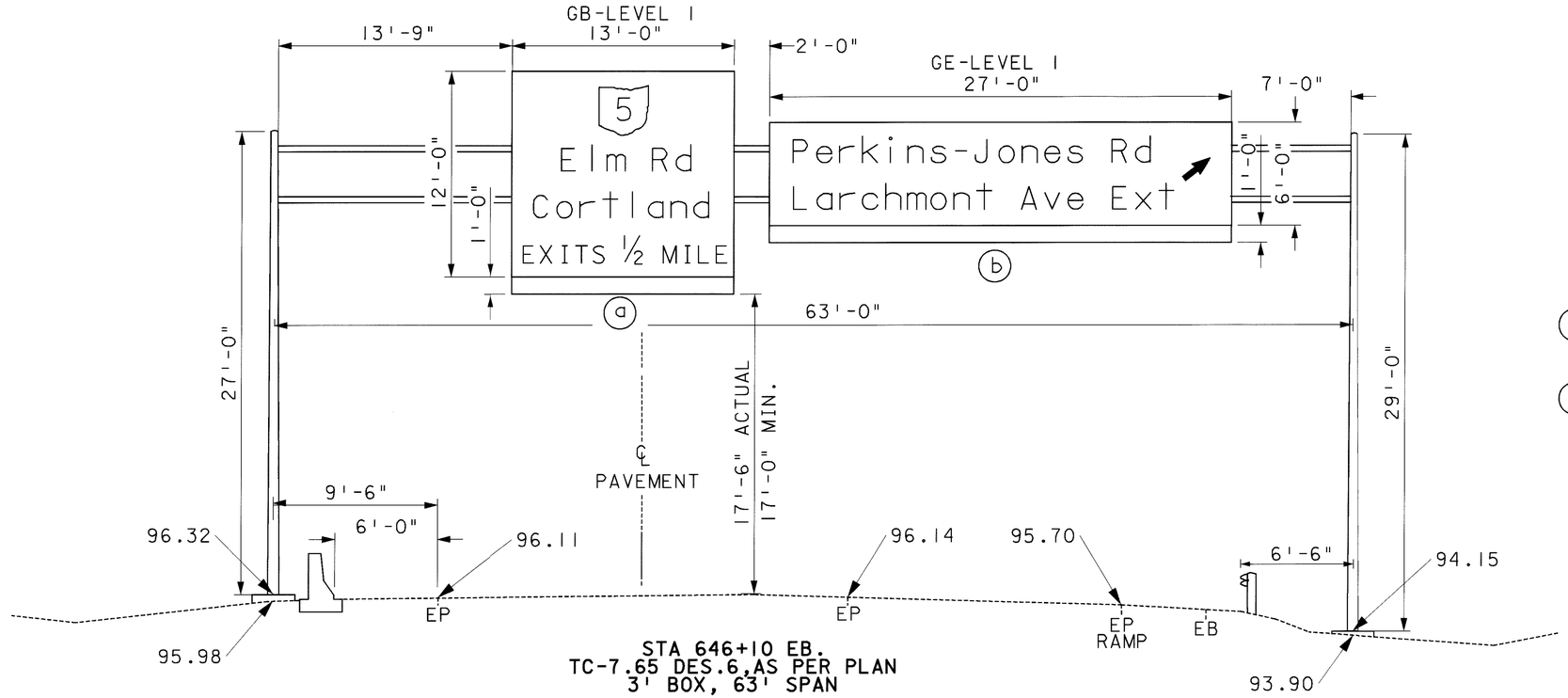


STA 646+10 EB.
TC-7.65 DES.6,AS PER PLAN
3' BOX, 63' SPAN

ⓐ NO.OF BRACKETS 3
NO.OF LUMINAIRES 2
@ 250 WATTS

ⓑ NO.OF BRACKETS 4
NO.OF LUMINAIRES 4
@ 175 WATTS

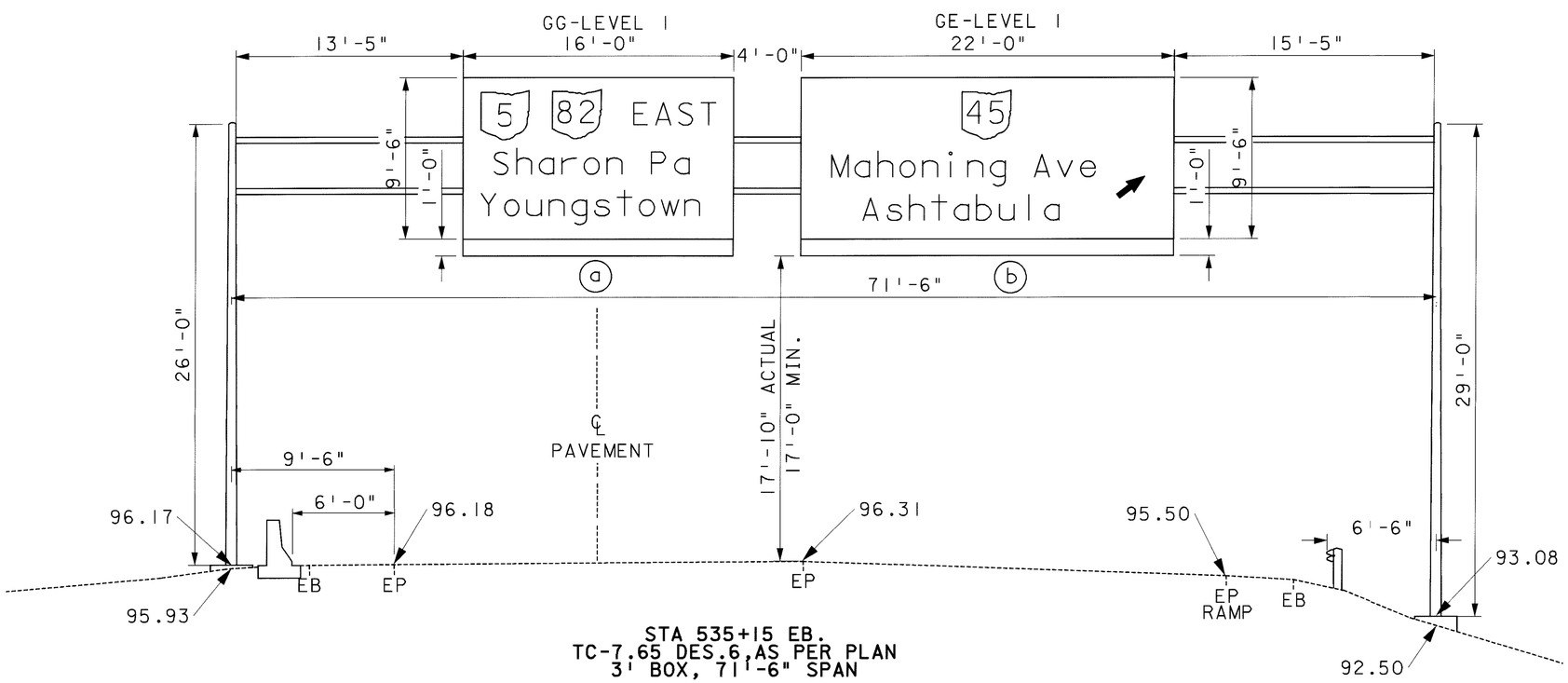


STA 535+15 EB.
TC-7.65 DES.6,AS PER PLAN
3' BOX, 71'-6" SPAN

ⓐ NO.OF BRACKETS 3
NO.OF LUMINAIRES 2
@ 175 WATTS

ⓑ NO.OF BRACKETS 4
NO.OF LUMINAIRES 3
@ 175 WATTS

CALCULATED KAG
CHECKED LJ

OVERHEAD SIGN SUPPORT DETAILS

TRU-5-6.45

RAISED PAVEMENT MARKER, INSTALLATION ONLY

The Department will supply the RPM castings with the yellow/yellow, one-way white, white/red and yellow/red retro-reflectors installed in the castings for Item 621, Raised Pavement Marker, Installation Only. The Contractor shall furnish all other material required to complete this item.

The Contractor will be informed at the pre-construction conference as to the location in Columbus of the Department supplied RPM materials. When specified, additional RPM materials will be stored within the District for use on this project. The Contractor shall pick up Department supplied materials at the specified location(s) for transport to the work site or to the Contractor's storage facility. An authorization for pick-up form is given in Supplemental Specification 1082 dated January 6, 1998. The contractor shall notify the District and/or the parties listed on the authorization form in writing at least 5 working days prior to pick-up of Department supplied materials. The materials shall be stored without damage or contamination with foreign matter. A deduction in the amount of the actual cost to the Department shall be made for the materials damaged by the Contractor or for castings received by the Contractor which were not installed or were not returned to the Department.

Loading of material supplied by the Department at the recycler's warehouse shall be done in accordance with supplemental specification 1082.

All castings shall be placed the same working day that the RPM slots are cut into the pavement.

NOTE:
Raised Pavement Markers supplied by the Department shall be the High Profile Type.

# RPM REPLACEMENT / REMOVAL

| STANDARD CONSTRUCTION DWG. | |
|---|---|
| TC-65.10M 11-01-95 | TC-65.12M 11-01-95 |
| TC-65.11M 11-01-95 | |

| LOCATION | | | | ITEM 202 | ITEM 621 | | | | REMARKS |
|---|---|---|---|---|---|---|---|---|---|
| | | | | | INSTALLATION ONLY | | | | |
| COUNTY | ROUTE | CENTER LINE LOG MILES | | RPM REMOVED FOR STORAGE | RPM WITH YELLOW/ YELLOW REFLECTOR | RPM WITH WHITE/ RED REFLECTOR | RPM WITH ONE-WAY WHITE REFLECTOR | RPM WITH YELLOW/ RED REFLECTOR | |
| | | FROM | TO | | | | | | |
| TRU | 5 | 6.45 | 13.93 | ↑ | | | 675 | | SR 5 WB & EB LANES (W. MARKET ST) TO WEST OF BRIDGES OVER CONRAIL R.R. |
| | | | | | | | | | |
| TRU | 5 | 6.88 | - | | | 62 | | 46 | RAMPS @ MARKET ST. |
| TRU | 5 | 8.61 | - | | | 52 | | 81 | RAMPS @ US 422 |
| TRU | 5 | 10.77 | - | | | 53 | | 60 | RAMPS @ SR 45 |
| TRU | 5 | 12.86 | - | ↓ | | 45 | | 48 | RAMPS @ PERKINS-JONES RD. |
| TOTAL | | | | 1050 | | 212 | 675 | 235 | **TOTALS CARRIED TO GENERAL SUMMARY** |

CALCULATED TP CHECKED KG

PLAN NO.

RAISED PAVEMENT MARKER SUB-SUMMARY

TRU-5-6.65

87/64

RPMTBL.DGN

GENERAL SPEC. 640
MATERIAL TYPE 642, TYPE 2, FAST DRY ALKYD

CALCULATED TJD
CHECKED JRB

## CENTER LINE

| COUNTY | ROUTE | TRU LOG | FROM | TRU LOG | TO | TOTAL MILES | DASHED | SOLID | COMMENTS |
|---|---|---|---|---|---|---|---|---|---|
| | | | | | | | | | |
| | | | | | | | | | |
| | | | | | | | | | |
| **TOTAL** | | | | | | | | | |

## LANE LINE

| COUNTY | ROUTE | TRU LOG | FROM | TRU LOG | TO | TOTAL MILES | 4" LANE LINE DASHED | 4" LANE LINE SOLID | COMMENTS |
|---|---|---|---|---|---|---|---|---|---|
| TRU | 5 | 6.45 | 0.4 MILE WEST OF WEST MARKET STREET | 13.93 | WEST OF BRIDGE OVER CONRAIL R.R. | 7.833 | 7.833 | | INCLUDES RAMPS |
| | | | | | | | | | |
| | | | | | | | | | |
| **TOTAL** | | | | | | 7.833 | 7.833 | | |

## EDGE LINE

| COUNTY | ROUTE | TRU LOG | FROM | TRU LOG | TO | WHITE EDGE LINE TOTAL MILES | WHITE EDGE LINE HIGHWAY | WHITE EDGE LINE RAMP | YELLOW EDGE LINE TOTAL MILES | YELLOW EDGE LINE HIGHWAY | YELLOW EDGE LINE RAMP | COMMENTS |
|---|---|---|---|---|---|---|---|---|---|---|---|---|
| TRU | 5 | 6.45 | 0.4 MILE WEST OF WEST MARKET STREET | 13.93 | WEST OF BRIDGE OVER CONRAIL R.R. | 15.22 | 6.945 | 8.275 | 10.67 | 6.945 | 3.725 | |
| | | | | | | | | | | | | |
| **TOTAL** | | | | | | 15.22 | 6.945 | 8.275 | 10.67 | 6.945 | 3.725 | |

## AUXILIARY

| COUNTY | ROUTE LOCATION | TRU LOG | 8" CHANNEL LINE (LIN FT) | 24" STOP LINE (LIN FT) | 24" TRANSVERSE LINE WHITE (LIN FT) | 24" TRANSVERSE LINE YELLOW (LIN FT) | WORD ON PAVEMENT "ONLY" 72" (EACH) | WORD ON PAVEMENT "ONLY" 96" (EACH) | LANE ARROWS TURN LEFT (EACH) | LANE ARROWS TURN RIGHT (EACH) | LANE ARROWS THRU (EACH) | LANE ARROWS COMB. (EACH) | COMMENTS |
|---|---|---|---|---|---|---|---|---|---|---|---|---|---|
| TRU | SR 5 E.B. OFF RAMP TO WEST MARKET ST | 6.777 | 532 | 39 | 284 | | | 2 | 1 | | 1 | | |
| TRU | SR 5 W.B. ON RAMP FROM WEST MARKET ST | 6.948 | 428 | | 150 | | | | | | | | |
| TRU | SR 5 E.B. OFF RAMP FROM WEST MARKET ST | 7.090 | 686 | | 327 | | | | | | | | |
| TRU | SR 5 W.B. OFF RAMP TO WEST MARKET ST | 7.309 | 412 | 76 | 242 | | | | | | | | |
| TRU | SR 5 E.B. OFF RAMP TO US 422 | 8.220 | 601 | 55 | 240 | | | 1 | 2 | | | | |
| TRU | SR 5 W.B. ON RAMP FROM US 422 | 8.331 | 220 | | | | | | | | | | |
| TRU | SR 5 E.B. ON RAMP FROM US 422 | 8.630 | 163 | | | | | | | | | | |
| **TOTAL** | | | | | | | | | | | | | |

PAVEMENT MARKING SUB-SUMMARY

TRU-5-6.45

## CENTER LINE

GENERAL SPEC. 640
MATERIAL TYPE 642, TYPE 2, FAST DRY ALKYD

| COUNTY | ROUTE | TRU LOG | FROM | TRU LOG | TO | TOTAL MILES | DASHED | SOLID | COMMENTS |
|---|---|---|---|---|---|---|---|---|---|
| | | | | | | | | | |
| | | | | | | | | | |
| | | | | | | | | | |
| **TOTAL** | | | | | | | | | |

## LANE LINE

| COUNTY | ROUTE | TRU LOG | FROM | TRU LOG | TO | TOTAL MILES | 4" LANE LINE | | COMMENTS |
|---|---|---|---|---|---|---|---|---|---|
| | | | | | | | DASHED | SOLID | |
| | | | | | | | | | |
| | | | | | | | | | |
| | | | | | | | | | |
| **TOTAL** | | | | | | | | | |

## EDGE LINE

| COUNTY | ROUTE | TRU LOG | FROM | TRU LOG | TO | WHITE EDGE LINE | | | YELLOW EDGE LINE | | | COMMENTS |
|---|---|---|---|---|---|---|---|---|---|---|---|---|
| | | | | | | TOTAL MILES | HIGHWAY | RAMP | TOTAL MILES | HIGHWAY | RAMP | |
| | | | | | | | | | | | | |
| | | | | | | | | | | | | |
| **TOTAL** | | | | | | | | | | | | |

## AUXILIARY

| COUNTY | ROUTE LOCATION | TRU LOG | 8" CHANNEL LINE | 24" STOP LINE | 24" TRANSVERSE LINE | | WORD ON PAVEMENT "ONLY" | | LANE ARROWS | | | | COMMENTS |
|---|---|---|---|---|---|---|---|---|---|---|---|---|---|
| | | | | | | | | | TURN | | THRU | COMB. | |
| | | | | | WHITE | YELLOW | 72' | 96' | LEFT | RIGHT | | | |
| | | | LIN FT | LIN FT | LIN FT | LIN FT | EACH | EACH | EACH | EACH | EACH | EACH | |
| TRU | SR 5 W.B. OFF RAMP TO US 422 | 8.915 | 668 | 18 | 317 | | | 2 | 2 | | 2 | | |
| TRU | SR 5 E.B. OFF RAMP TO SR 45 | 10.451 | 728 | 70 | 218 | | | 4 | 3 | 3 | | | |
| TRU | SR 5 W.B. ON RAMP FROM SR 45 | 10.536 | 155 | | | | | | | | | | |
| TRU | SR 5 E.B. ON RAMP FROM SR 45 | 10.805 | 153 | | | | | | | | | | |
| TRU | SR 5 W.B. OFF RAMP TO SR 45 | 11.091 | 795 | 42 | 262 | | | 2 | 3 | | | | |
| TRU | SR 5 E.B. OFF RAMP TO PERKINS/JONES RD | 12.566 | 340 | 72 | 222 | | | | | | | | |
| TRU | SR 5 W.B. ON RAMP FROM PERKINS/JONES RD | 12.674 | 160 | | | | | | | | | | |
| **TOTAL** | | | | | | | | | | | | | |

CALCULATED TJD
CHECKED JRB

PAVEMENT MARKING SUB-SUMMARY

TRU-5-6.45

## CENTER LINE

GENERAL SPEC. 640
MATERIAL TYPE 642, TYPE 2, FAST DRY ALKYD

| COUNTY | ROUTE | TRU LOG | FROM | TRU LOG | TO | TOTAL MILES | DASHED | SOLID | COMMENTS |
|---|---|---|---|---|---|---|---|---|---|
| | | | | | | | | | |
| | | | | | | | | | |
| | | | | | | | | | |
| **TOTAL** | | | | | | | | | |

## LANE LINE

| COUNTY | ROUTE | TRU LOG | FROM | TRU LOG | TO | TOTAL MILES | 4" LANE LINE | | COMMENTS |
|---|---|---|---|---|---|---|---|---|---|
| | | | | | | | DASHED | SOLID | |
| | | | | | | | | | |
| | | | | | | | | | |
| | | | | | | | | | |
| **TOTAL** | | | | | | | | | |

## EDGE LINE

| COUNTY | ROUTE | TRU LOG | FROM | TRU LOG | TO | WHITE EDGE LINE | | | YELLOW EDGE LINE | | | COMMENTS |
|---|---|---|---|---|---|---|---|---|---|---|---|---|
| | | | | | | TOTAL MILES | HIGHWAY | RAMP | TOTAL MILES | HIGHWAY | RAMP | |
| | | | | | | | | | | | | |
| | | | | | | | | | | | | |
| **TOTAL** | | | | | | | | | | | | |

## AUXILIARY

| COUNTY | ROUTE LOCATION | TRU LOG | 8" CHANNEL LINE | 24" STOP LINE | 24" TRANSVERSE LINE | | WORD ON PAVEMENT "ONLY" | | LANE ARROWS | | | | COMMENTS |
|---|---|---|---|---|---|---|---|---|---|---|---|---|---|
| | | | | | | | | | TURN | | THRU | COMB. | |
| | | | | | WHITE | YELLOW | 72' | 96' | LEFT | RIGHT | | | |
| | | | LIN FT | LIN FT | LIN FT | LIN FT | EACH | EACH | EACH | EACH | EACH | EACH | |
| TRU | SR 5 E.B. ON RAMP FROM PERKINS/JONES RD | 13.109 | 234 | | | | | | | | | | |
| TRU | SR 5 W.B. OFF RAMP TO PERKINS/JONES RD | 13.190 | 830 | 77 | | | | 3 | 4 | | | 4 | |
| | | | | | | | | | | | | | |
| | | | | | | | | | | | | | |
| | | | | | | | | | | | | | |
| | | | | | | | | | | | | | |
| | | | | | | | | | | | | | |
| **TOTAL** | | | 7105 | 449 | 2262 | | | 14 | 15 | 3 | 3 | 4 | |

CALCULATED TJD
CHECKED JRB

**PAVEMENT MARKING SUB-SUMMARY**

**TRU-5-6.45**

DISTRICT 4

N

COUNTY TRUMBULL ROUTE 5

Total This Route = Yellow: Solid _____, Yellow: Dash _____, White: Dash _____

Equivalent Yellow _____

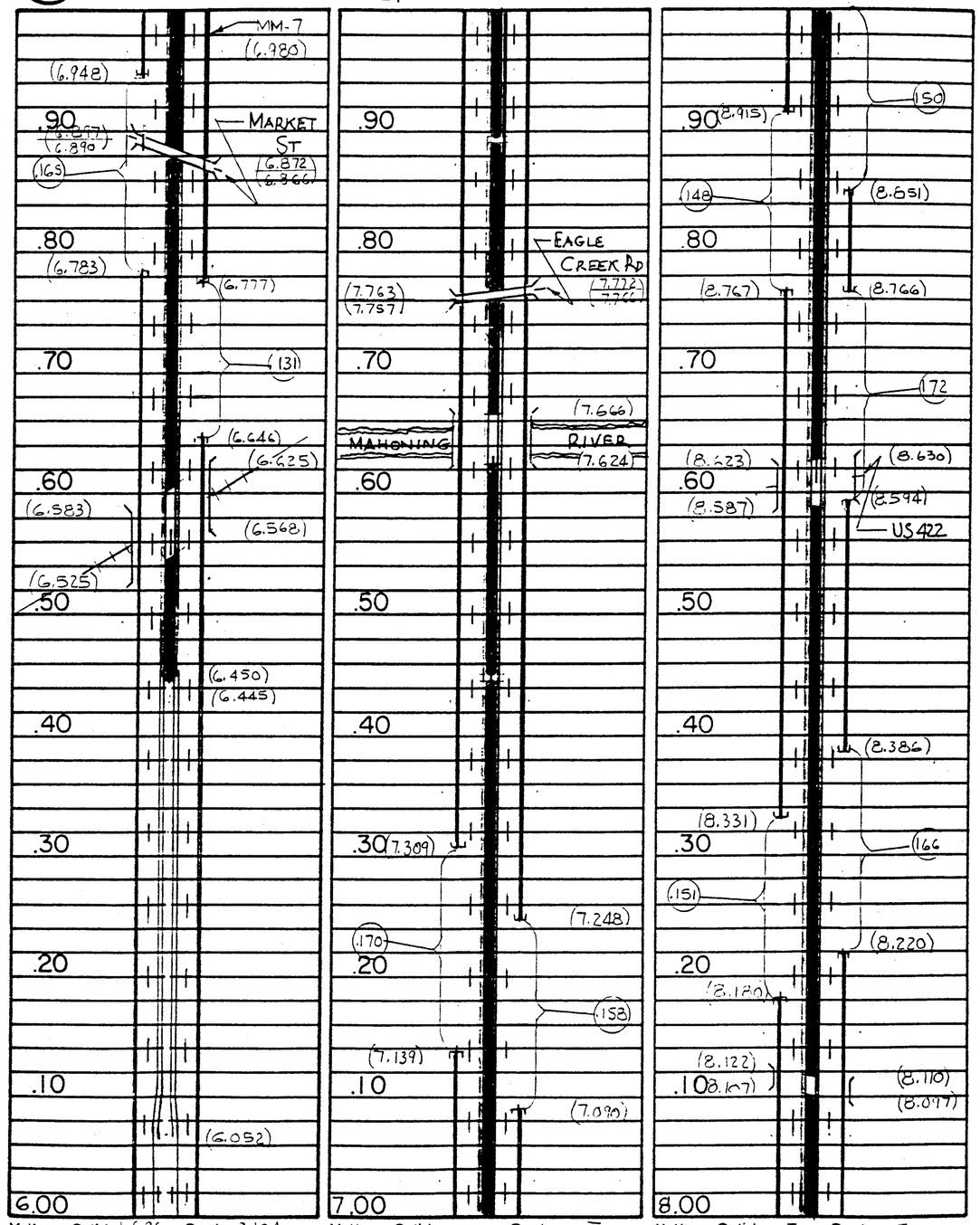


Yellow: Solid 1.696 Dash 0.104 Yellow: Solid _____ Dash _____ Yellow: Solid _____ Dash _____

TOTAL YELLOW THIS PAGE: SOLID 1.696, DASH 0.104, EQUIVALENT LINE 1.722

NOTE: THIS SHEET IS IN ENGLISH UNITS.

DISTRICT 4

N

COUNTY TRUMBULL ROUTE 5

Total This Route = Yellow: Solid _____, Yellow: Dash _____, White: Dash _____

Equivalent Yellow _____

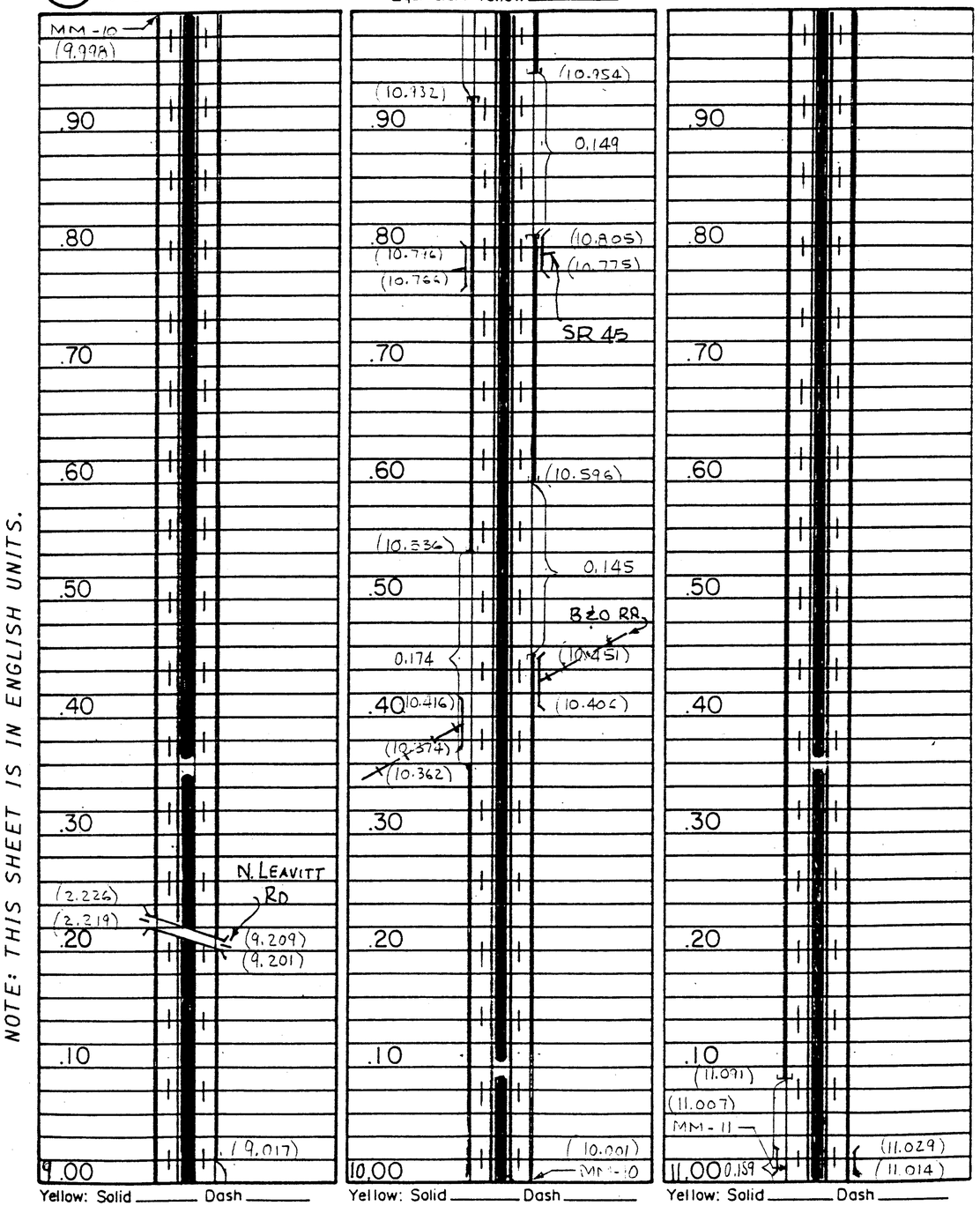


Yellow: Solid _____ Dash _____ Yellow: Solid _____ Dash _____ Yellow: Solid _____ Dash _____

TOTAL YELLOW THIS PAGE: SOLID _____, DASH _____, EQUIVALENT LINE _____

CALCULATED CJT CHECKED CET

# PAVEMENT MARKING DETAILS

TRU-5-6.45



jbruner@D04CD003 - Pavement Marking Details.m - Tuesday September 19 2000 12:29:59 PM EDT
I:\users\jbruner\EIT Program\Production\TRU-5-6.45\Pavement Marking Details.dgn 19-SEP-2000 12:28PM jbruner

TS 54
DISTRICT 4

N

Center Line Log Record and Field Sheet

SHEET 5 OF 12

COUNTY TRUMBULL ROUTE 5

Total This Route = Yellow: Solid _____, Yellow: Dash _____, White: Dash _____

Equivalent Yellow _____

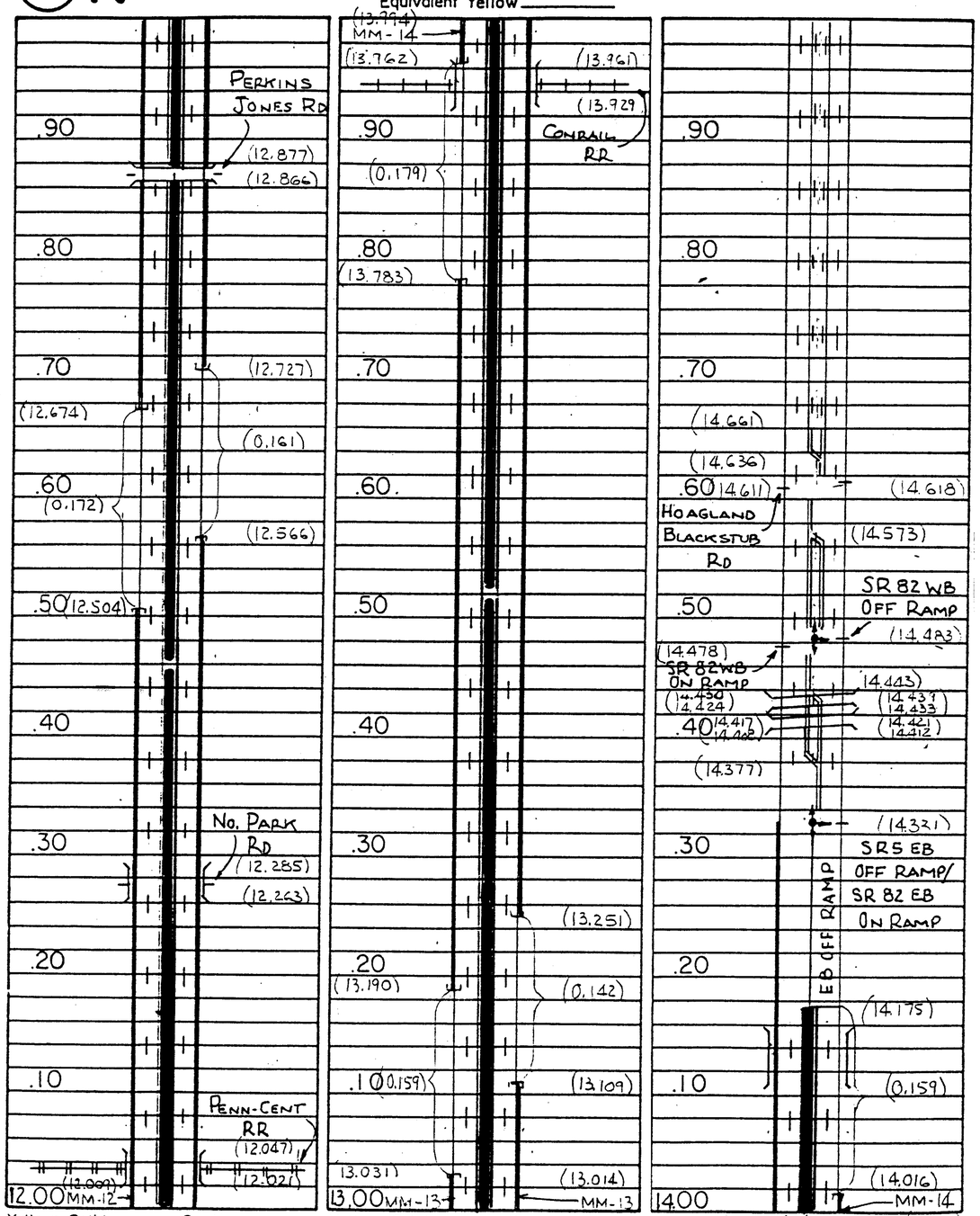


Yellow: Solid _____ Dash _____ | Yellow: Solid _____ Dash _____ | Yellow: Solid 1.614 Dash 0.678 (14.005)

TOTAL YELLOW THIS PAGE: SOLID 1.614, DASH 0.678, EQUIVALENT LINE 1.784

NOTE: THIS SHEET IS IN ENGLISH UNITS.

CALCULATED CJT CHECKED CCT

PAVEMENT MARKING DETAILS

TRU-5-6.45

92/164

jbruner@D04CD003 - Pavement Marking Details.m - Tuesday September 19 2000 12:29:24 PM EDT

h:\users\jbruner\EIT Program\Production\TRU-5-6.45\Pavement Marking Details.dgn 19-SEP-2000 12:28PM jbruner

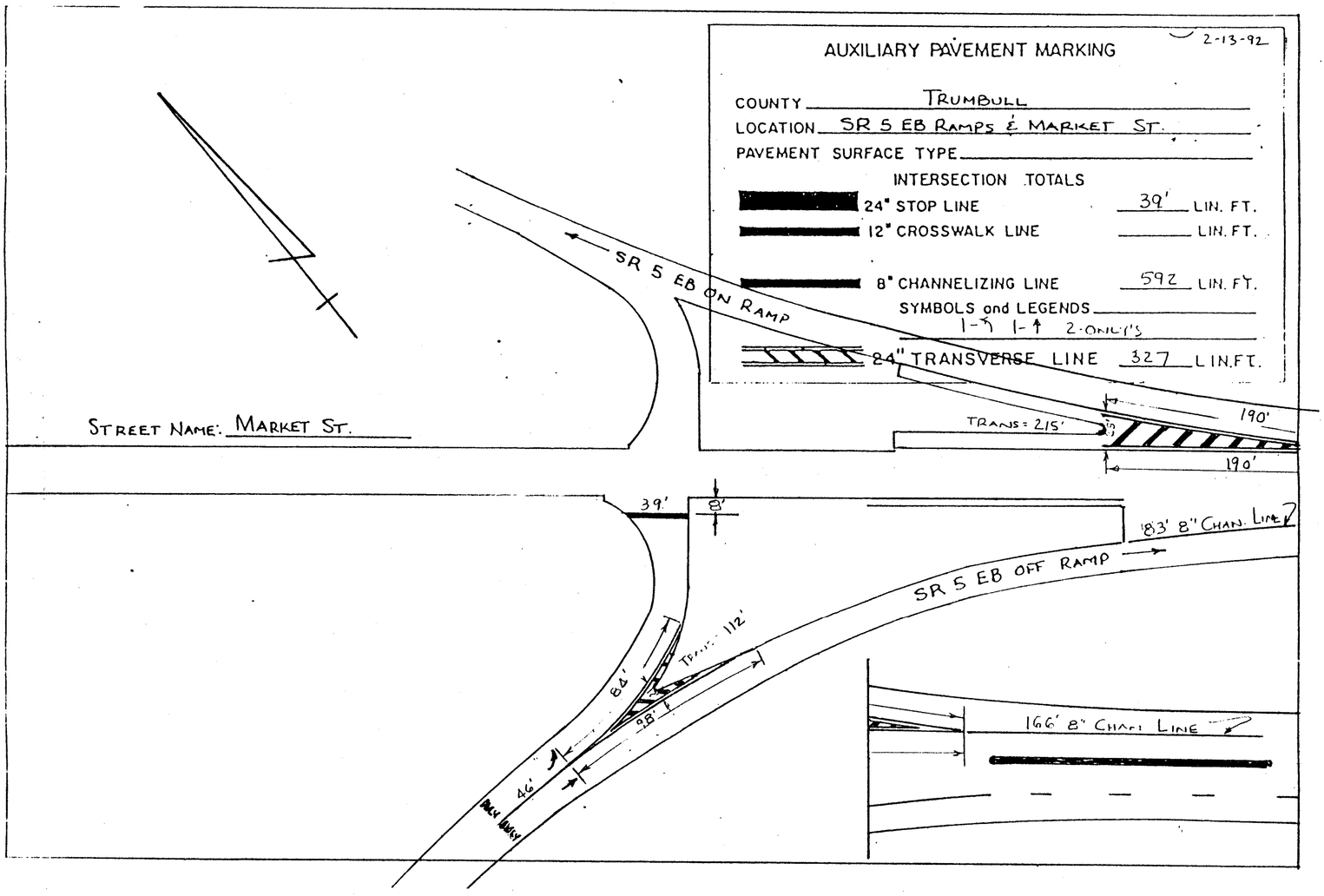


NOTE: THIS SHEET IS IN ENGLISH UNITS.

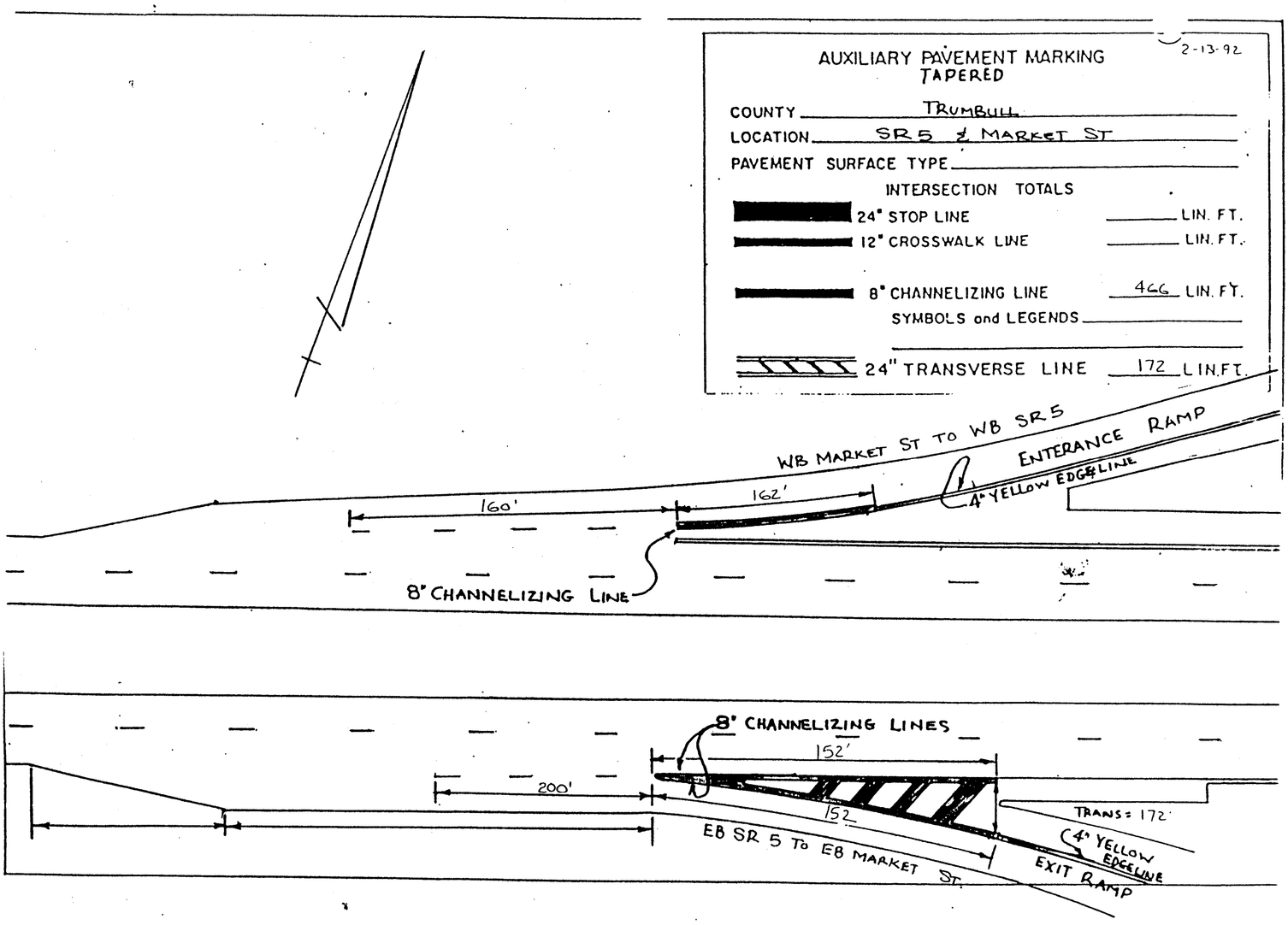


| | | | |
|---|---|---|---|
| 93/64 | TRU-5-6.45 | PAVEMENT MARKING DETAILS | CALCULATED CJT CHECKED CET |

jbruner@D04CD003 - Pavement Marking Details.m - Tuesday September 19 2000 12:28:13 PM EDT



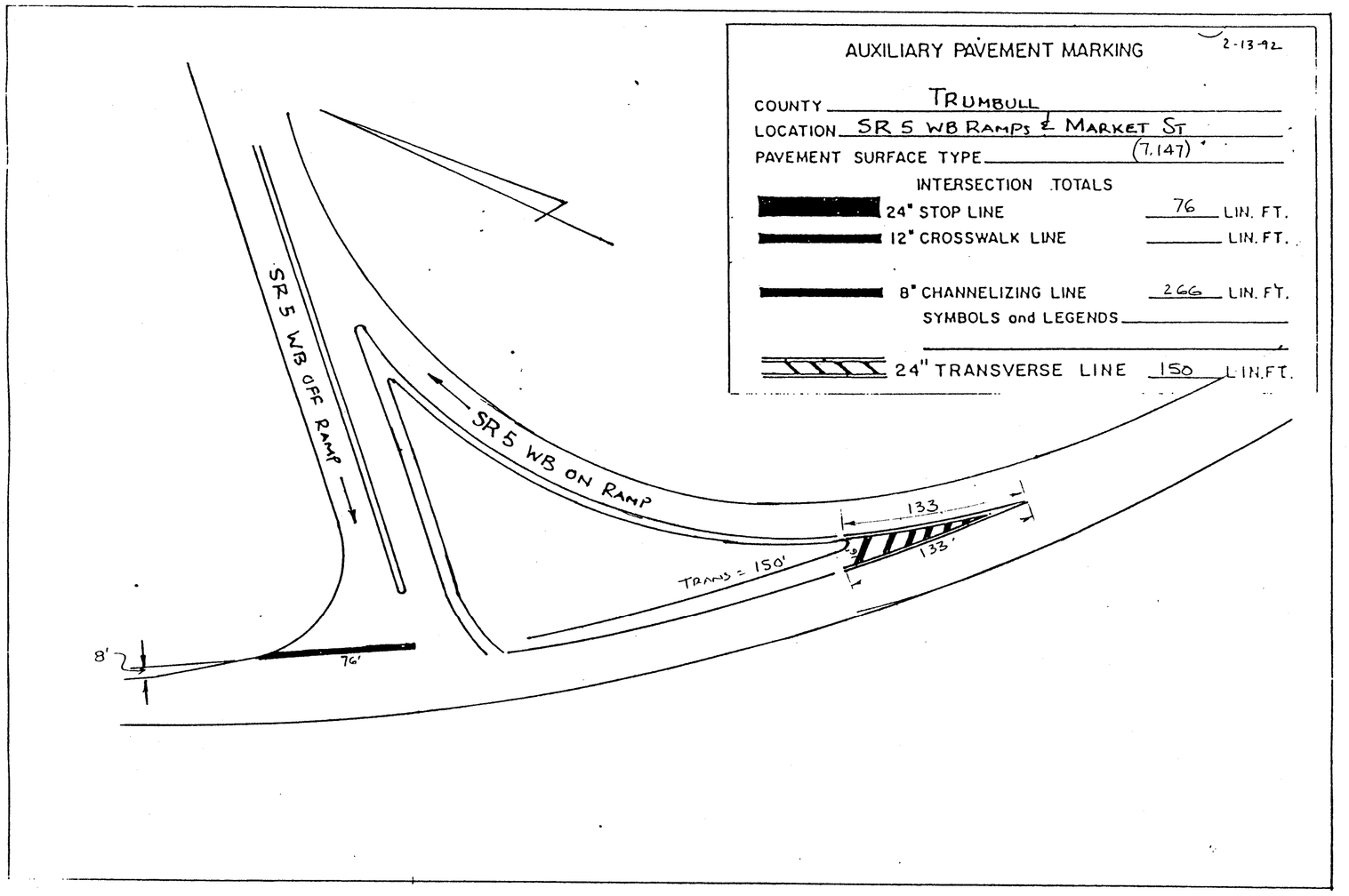


NOTE: THIS SHEET IS IN ENGLISH UNITS.

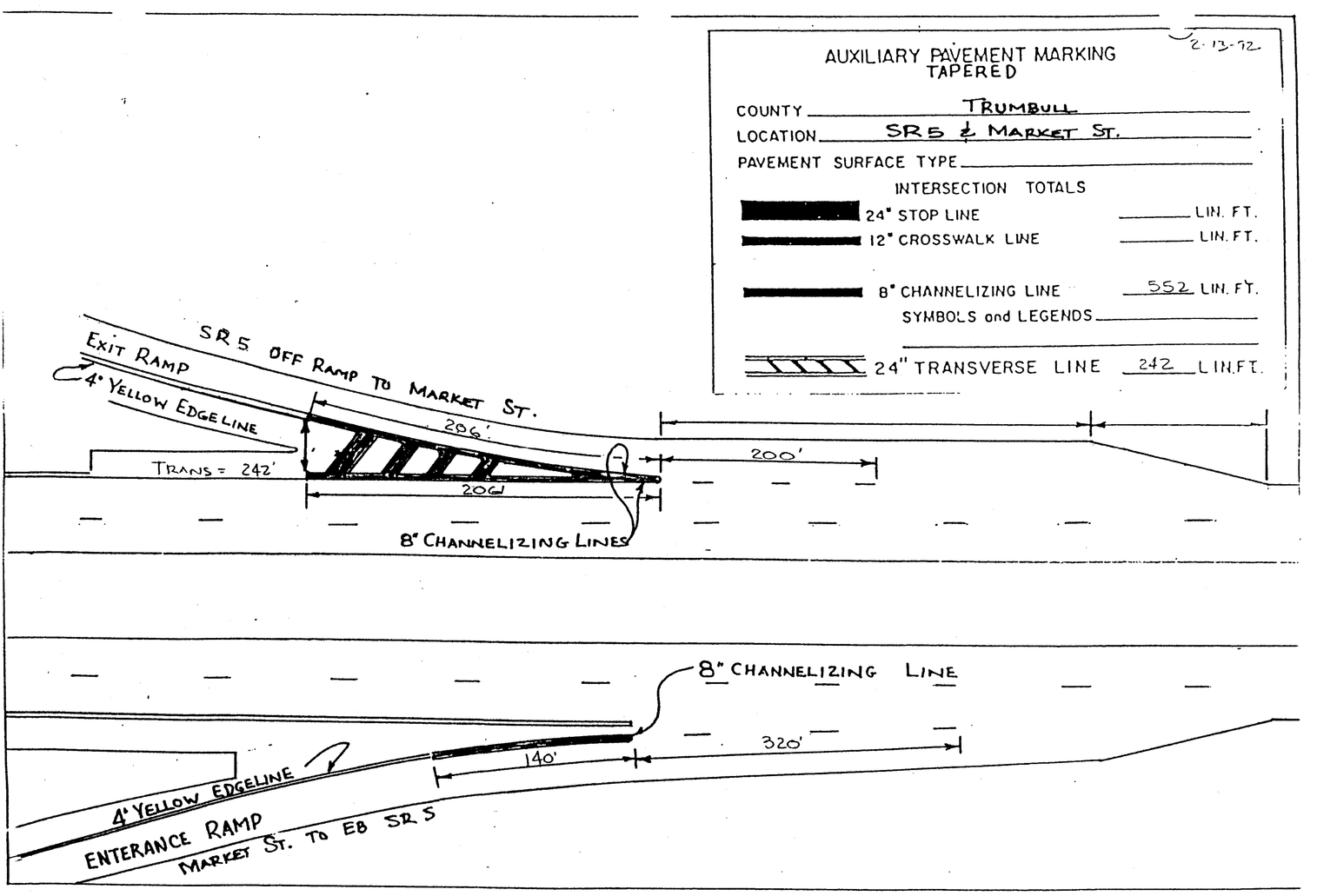


| | | | |
|---|---|---|---|
| 94/164 | TRU-5-6.45 | PAVEMENT MARKING DETAILS | CALCULATED CJT CHECKED CET |

jbruner@D04CD003 - Pavement Marking Details.m - Tuesday September 19 2000 12:28:13 PM EDT



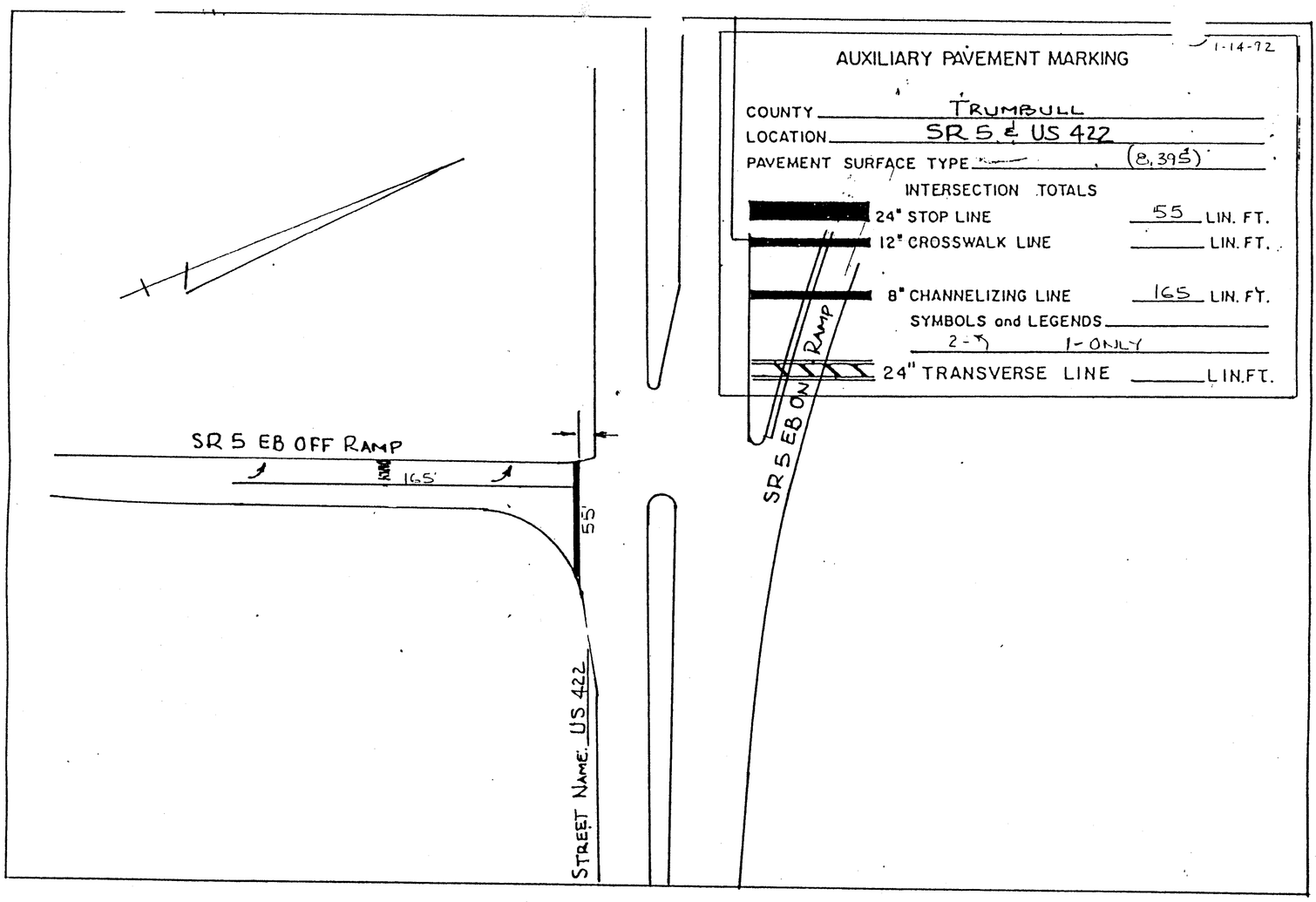


AUXILIARY PAVEMENT MARKING

1-14-92

COUNTY TRUMBULL

LOCATION SR 5 & US 422

PAVEMENT SURFACE TYPE (8,395)

INTERSECTION TOTALS

| | | |
|---|---|---|
| 24" STOP LINE | 55 | LIN. FT. |
| 12" CROSSWALK LINE | | LIN. FT. |
| 8" CHANNELIZING LINE | 165 | LIN. FT. |
| SYMBOLS and LEGENDS | | |
| 2-↰ 1-ONLY | | |
| 24" TRANSVERSE LINE | | LIN.FT. |

NOTE: THIS SHEET IS IN ENGLISH UNITS.

AUXILIARY PAVEMENT MARKING
TAPERED

2-14-92

COUNTY TRUMBULL

LOCATION SR 5 & US 422

PAVEMENT SURFACE TYPE

INTERSECTION TOTALS

| | | |
|---|---|---|
| 24" STOP LINE | | LIN. FT. |
| 12" CROSSWALK LINE | | LIN. FT. |
| 8" CHANNELIZING LINE | 656 | LIN. FT. |
| SYMBOLS and LEGENDS | | |
| 24" TRANSVERSE LINE | 240 | LIN.FT. |

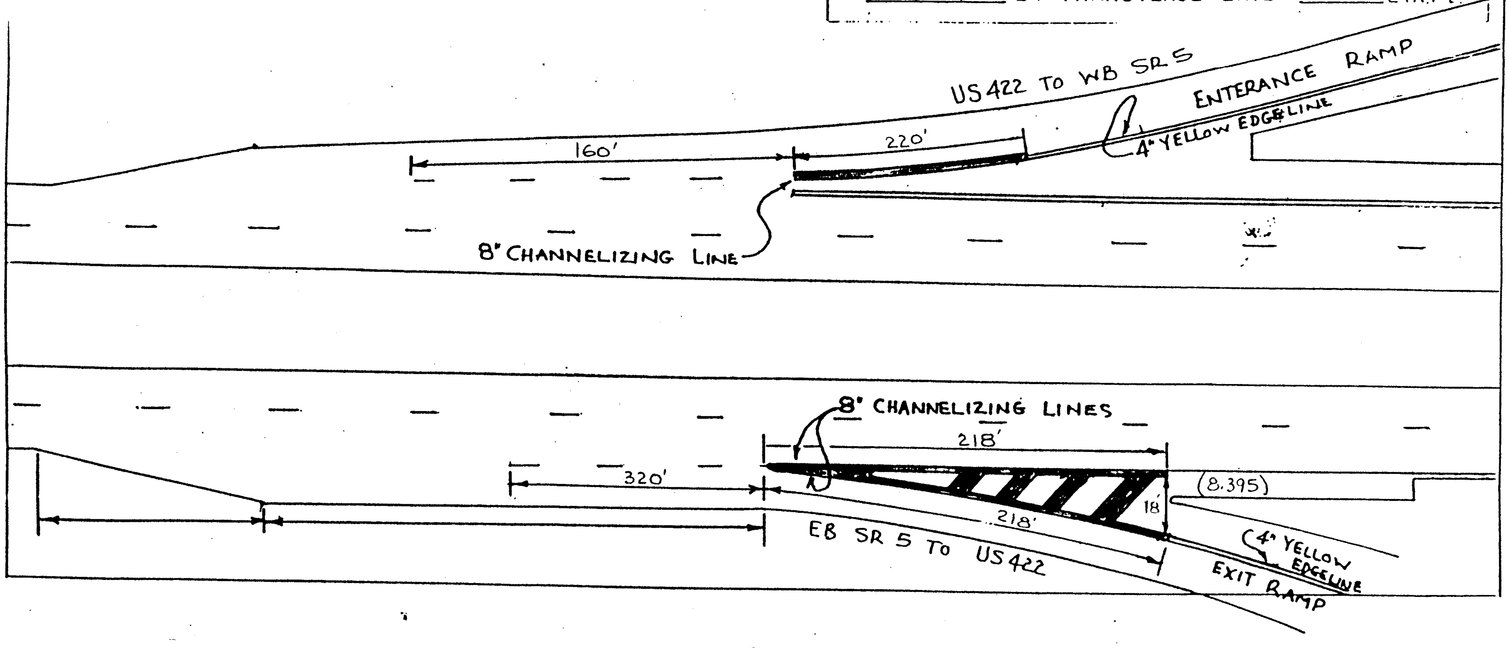


| | | | |
|---|---|---|---|
| 164 / 95 | TRU-5-6.45 | PAVEMENT MARKING DETAILS | CALCULATED CJT CHECKED CET |

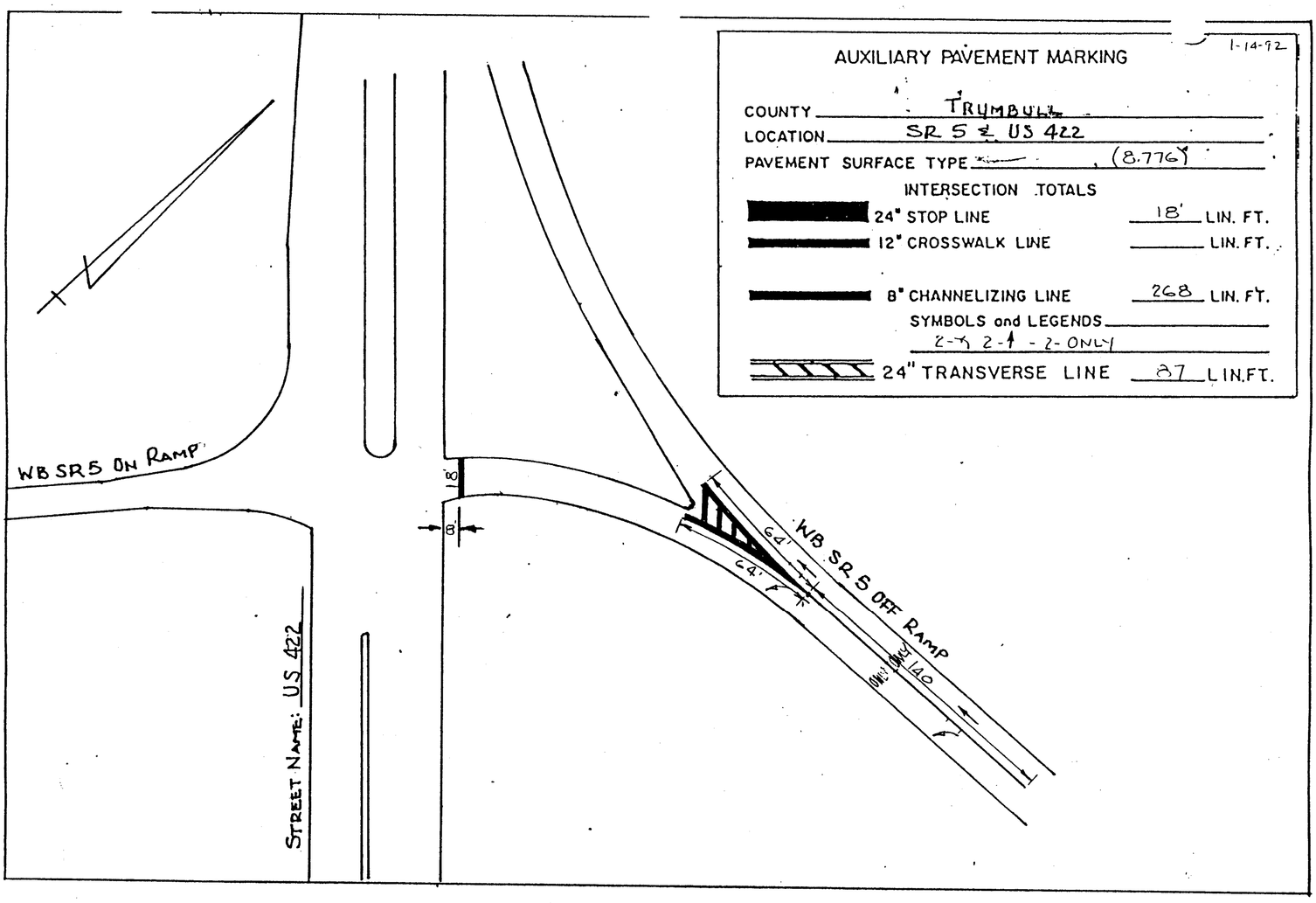


AUXILIARY PAVEMENT MARKING 1-14-92

COUNTY TRUMBULL
LOCATION SR 5 & US 422
PAVEMENT SURFACE TYPE (8.776)

INTERSECTION TOTALS

| | | |
|---|---|---|
| 24" STOP LINE | 18' | LIN. FT. |
| 12" CROSSWALK LINE | | LIN. FT. |
| 8" CHANNELIZING LINE | 268 | LIN. FT. |
| SYMBOLS and LEGENDS 2-Y 2-1 - 2-ONLY | | |
| 24" TRANSVERSE LINE | 87 | LIN.FT. |

NOTE: THIS SHEET IS IN ENGLISH UNITS.

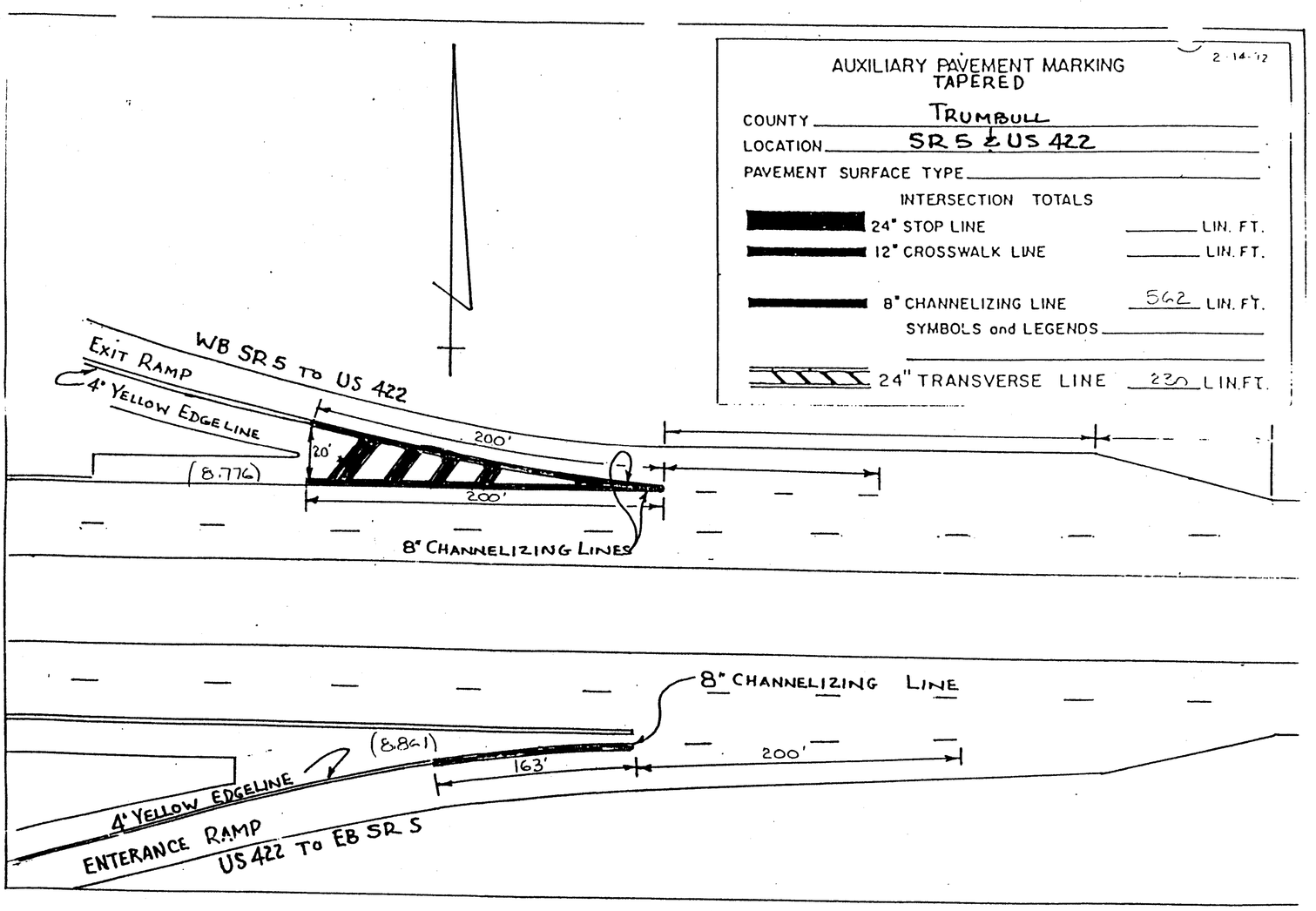


AUXILIARY PAVEMENT MARKING TAPERED 2-14-92

COUNTY TRUMBULL
LOCATION SR 5 & US 422
PAVEMENT SURFACE TYPE

INTERSECTION TOTALS

| | | |
|---|---|---|
| 24" STOP LINE | | LIN. FT. |
| 12" CROSSWALK LINE | | LIN. FT. |
| 8" CHANNELIZING LINE | 562 | LIN. FT. |
| SYMBOLS and LEGENDS | | |
| 24" TRANSVERSE LINE | 230 | LIN.FT. |

| | | |
|---|---|---|
| 96 / 164 | TRU-5-6.45 | PAVEMENT MARKING DETAILS |

CALCULATED CJT
CHECKED CET

NOTE: THIS SHEET IS IN ENGLISH UNITS.




CALCULATED CJT
CHECKED CET

PAVEMENT MARKING DETAILS

TRU-5-6.45

97/164

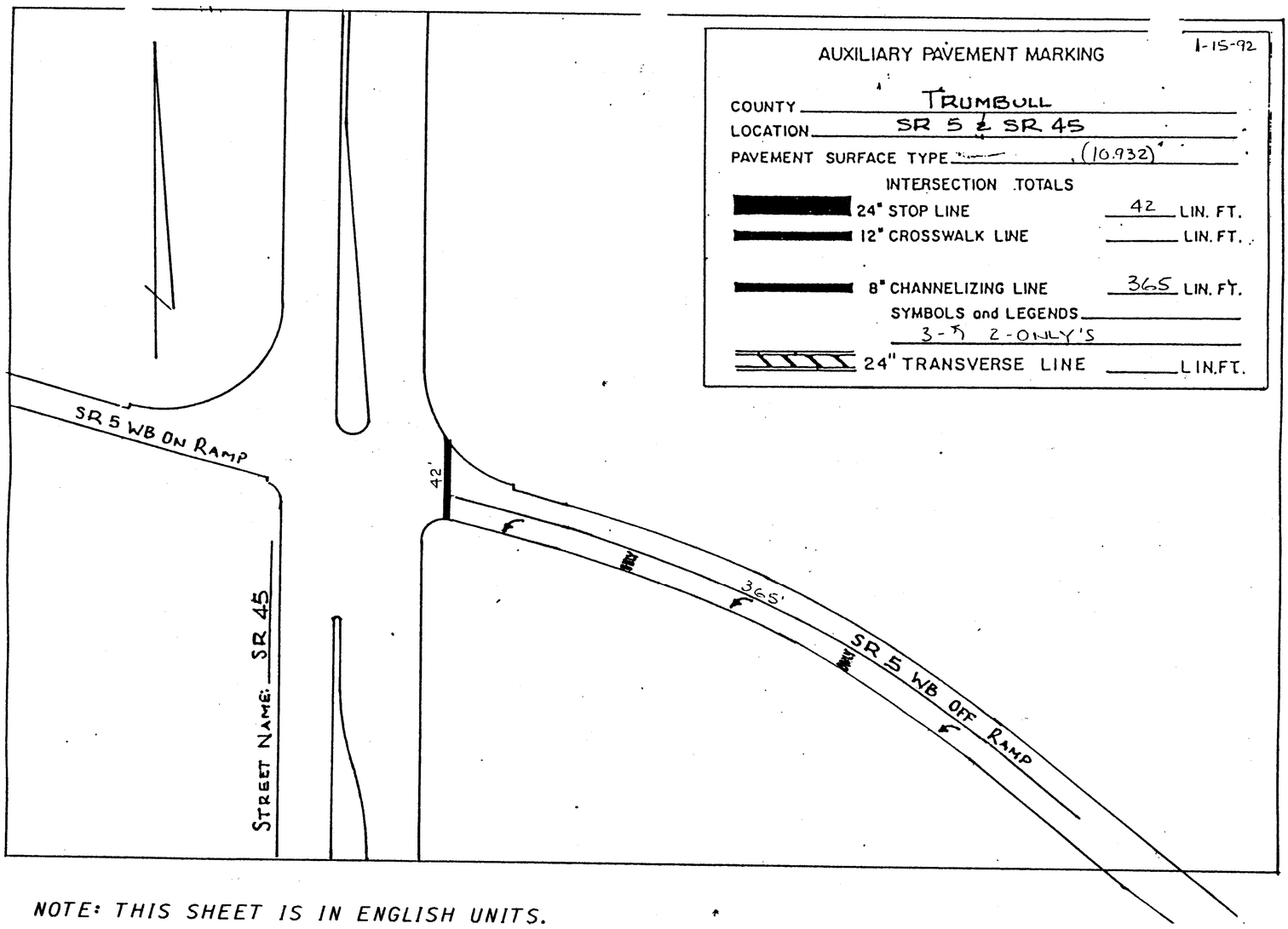


NOTE: THIS SHEET IS IN ENGLISH UNITS.

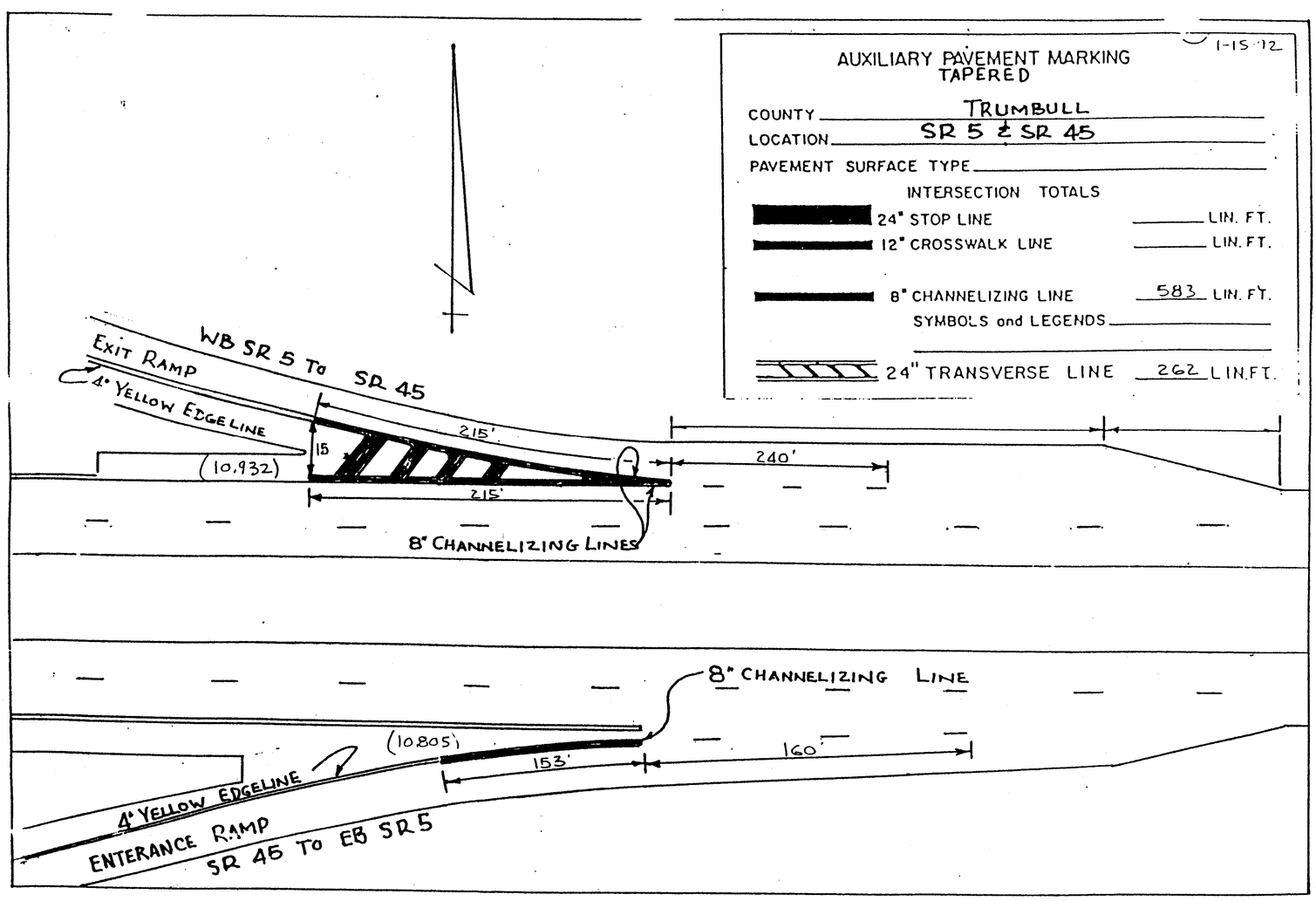




| TRU-5-6.45 | PAVEMENT MARKING DETAILS | CALCULATED CJT CHECKED CET |
|---|---|---|

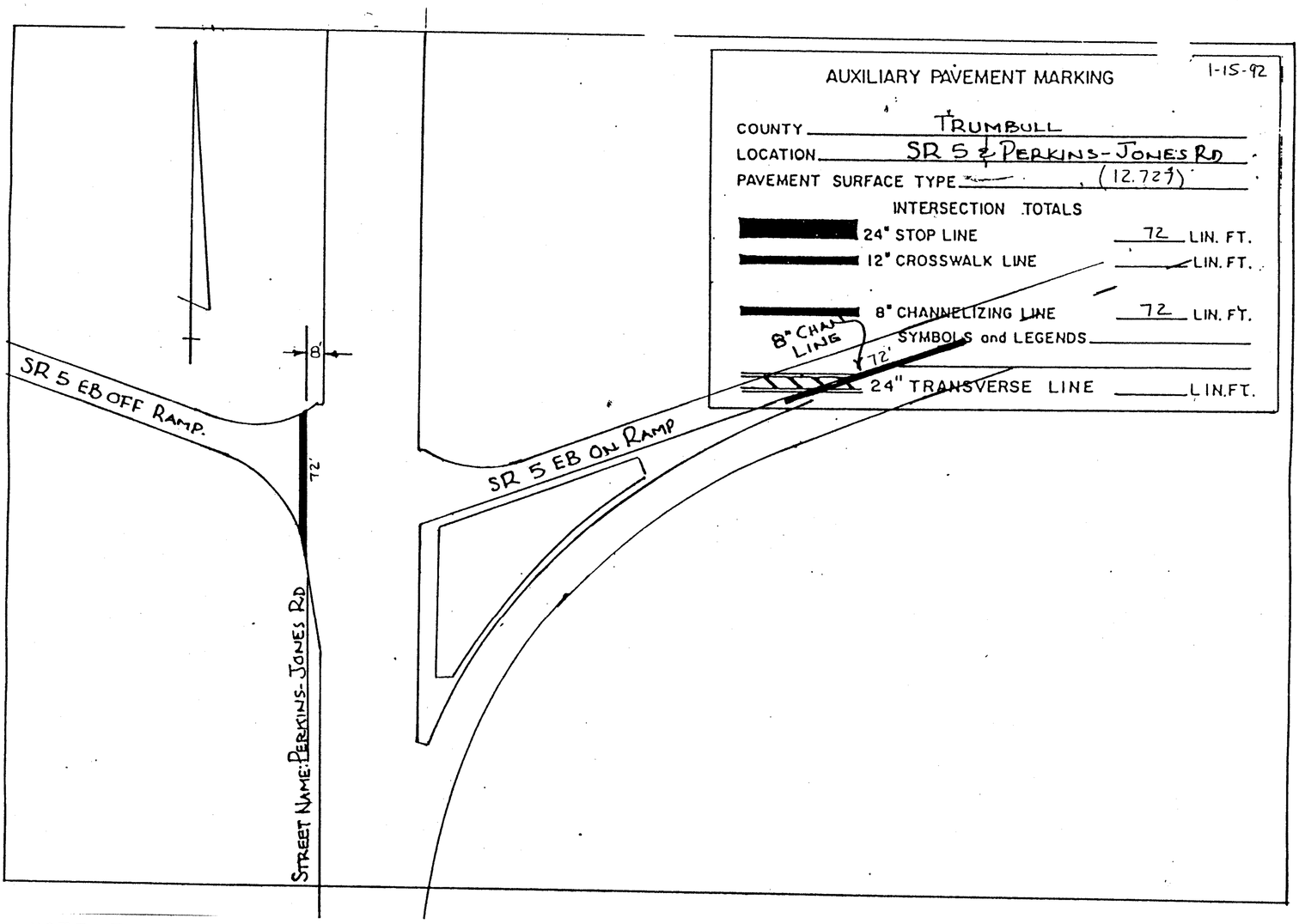


AUXILIARY PAVEMENT MARKING 1-15-92

COUNTY TRUMBULL
LOCATION SR 5 & PERKINS-JONES RD
PAVEMENT SURFACE TYPE (12.727)

INTERSECTION TOTALS

| | | |
|---|---|---|
| 24" STOP LINE | 72 | LIN. FT. |
| 12" CROSSWALK LINE | | LIN. FT. |
| 8" CHANNELIZING LINE | 72 | LIN. FT. |
| SYMBOLS and LEGENDS | | |
| 24" TRANSVERSE LINE | | LIN. FT. |

NOTE: THIS SHEET IS IN ENGLISH UNITS.

AUXILIARY PAVEMENT MARKING TAPERED 1-17-92

COUNTY TRUMBULL
LOCATION SR 5 & PERKINS-JONES RD
PAVEMENT SURFACE TYPE

INTERSECTION TOTALS

| | | |
|---|---|---|
| 24" STOP LINE | | LIN. FT. |
| 12" CROSSWALK LINE | | LIN. FT. |
| 8" CHANNELIZING LINE | 500 | LIN. FT. |
| SYMBOLS and LEGENDS | | |
| 24" TRANSVERSE LINE | 222 | LIN. FT. |

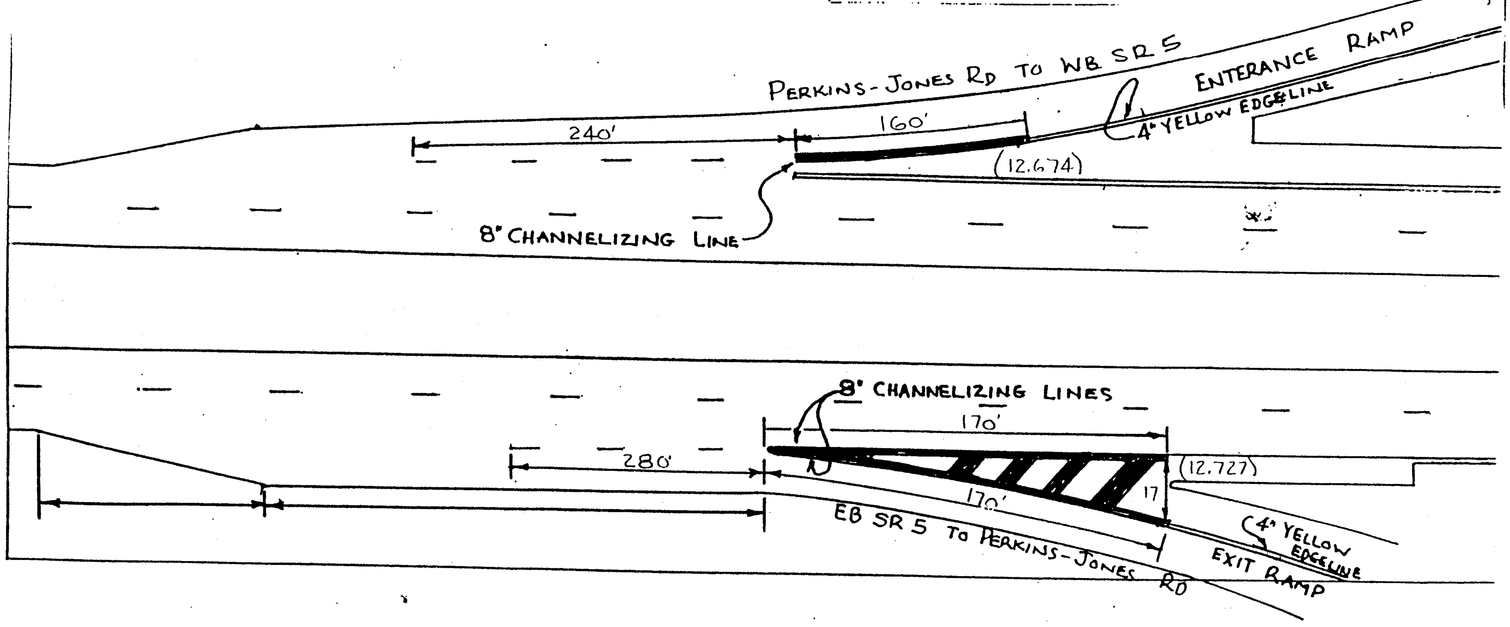


| | | |
|---|---|---|
| 99 / 164 | TRU-5-6.45 | PAVEMENT MARKING DETAILS |

CALCULATED CJT CHECKED CET

cturner1@D04CD118 - 18712gta.m - Monday September 10 2001 02:47:58 PM EDT

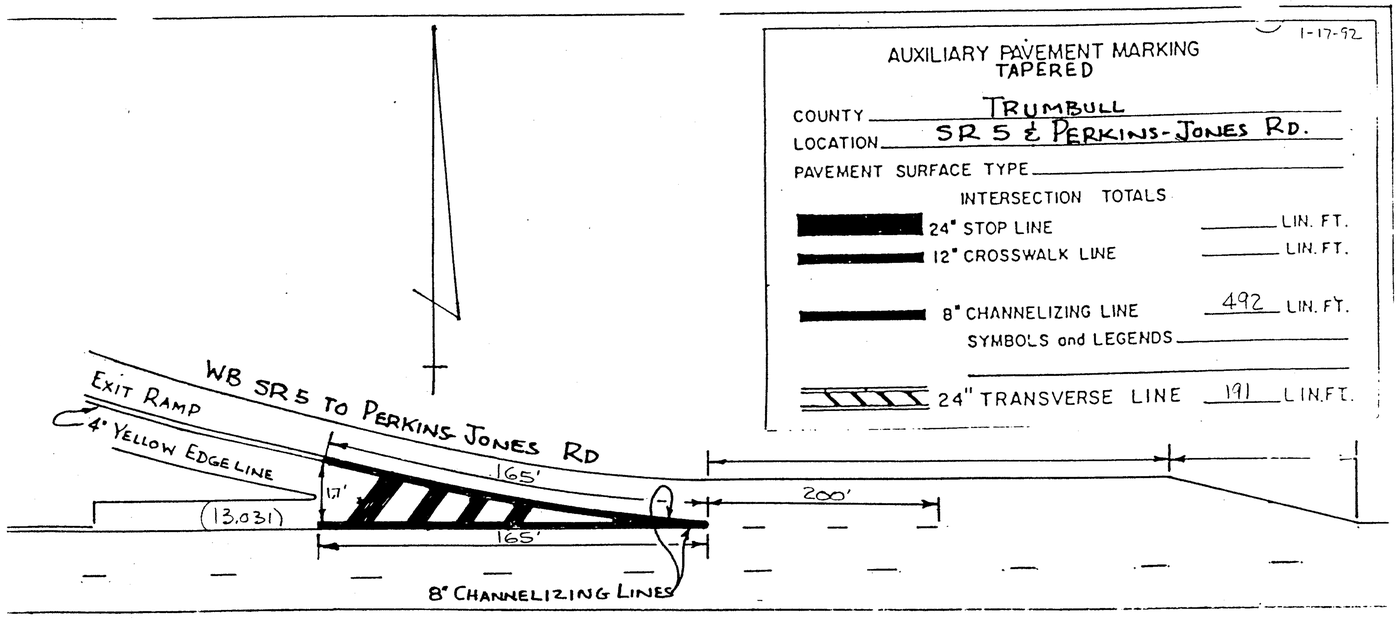


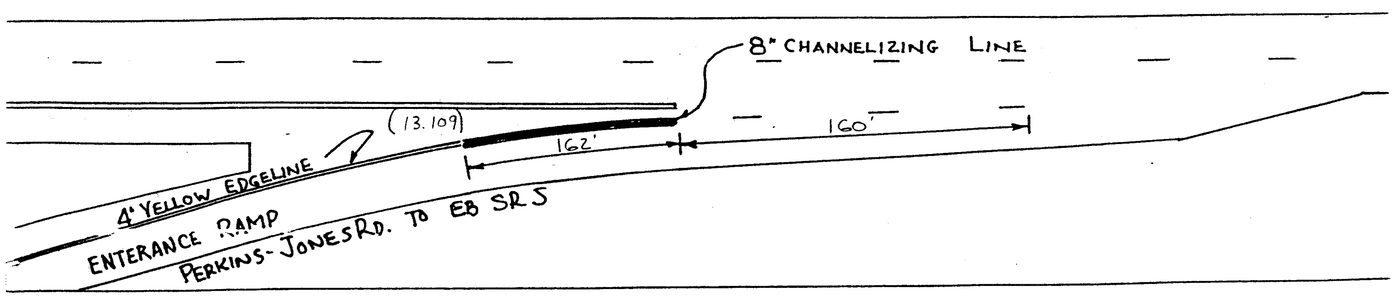


CALCULATED CET
CHECKED TJP

PAVEMENT MARKINGS SUB-SUMMARY

TRU-5-6.45

cturner1@D04CD118 - 18712gta.m - Monday September 10 2001 02:49:26 PM EDT

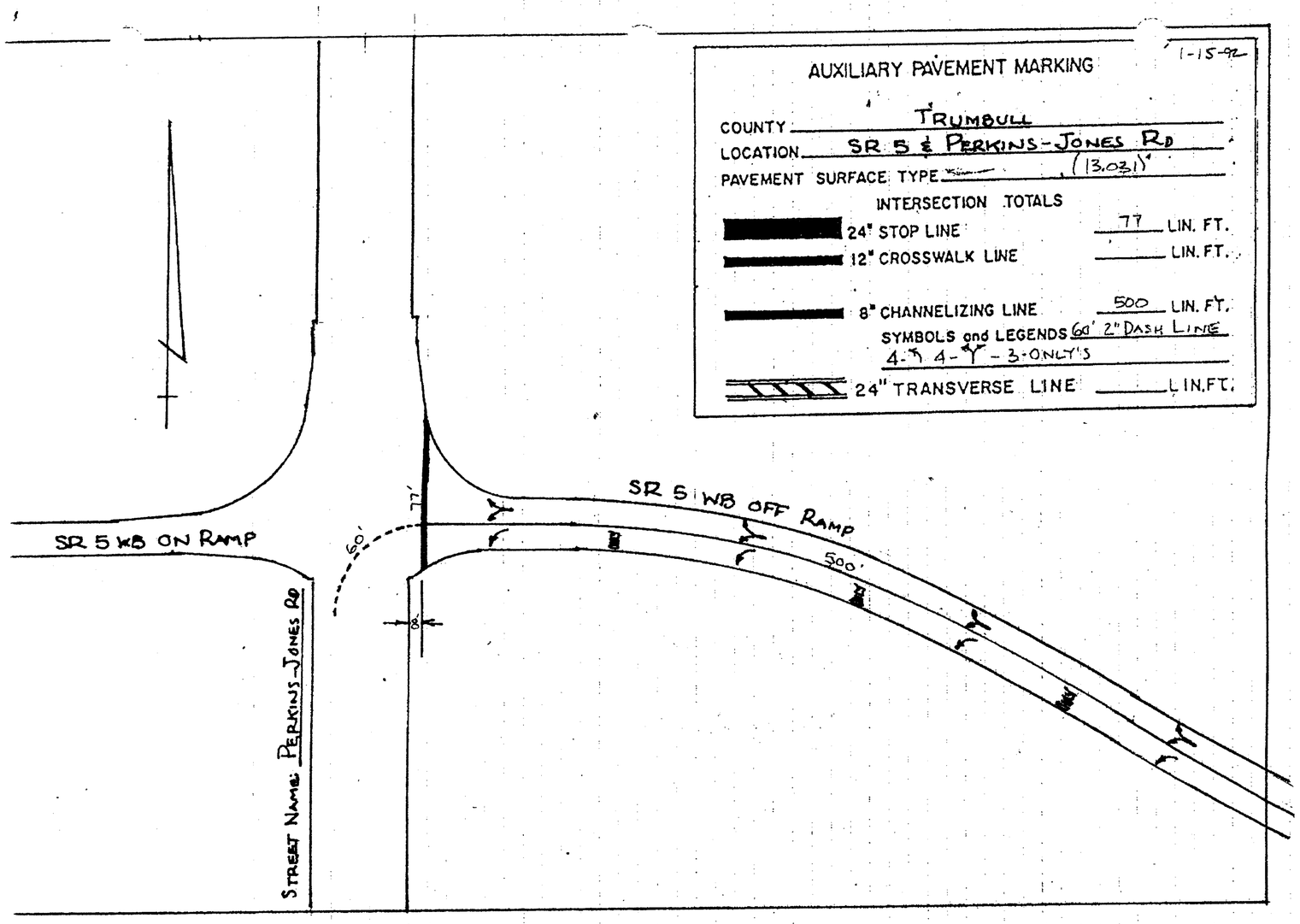


AUXILIARY PAVEMENT MARKING

1-15-92

COUNTY: TRUMBULL

LOCATION: SR 5 & PERKINS-JONES RD

PAVEMENT SURFACE TYPE: (13.031)

INTERSECTION TOTALS

24" STOP LINE: 77 LIN. FT.

12" CROSSWALK LINE: ____ LIN. FT.

8" CHANNELIZING LINE: 500 LIN. FT.

SYMBOLS and LEGENDS: 60' 2" DASH LINE
4-↰ 4-↱ - 3-ONLY'S

24" TRANSVERSE LINE: ____ LIN. FT.

CALCULATED CET
CHECKED TJP

PAVEMENT MARKINGS SUB-SUMMARY

TRU-5-6.45

# STRUCTURAL NOTES

## STANDARD DRAWINGS AND SUPPLEMENTAL SPECIFICATIONS

REFERENCE SHALL BE MADE TO STANDARD DRAWINGS

| | | | |
|---|---|---|---|
| AS-1-81 | REVISED 4-20-01 | GSD-1-96 | REVISED 4-20-01 |
| BR-1 | REVISED 1-6-99 | HL-30.31M | DATED 5-1-95 |
| CS-1-93 | REVISED 6-30-95 | IRJ-8-95 | DATED 7-6-95 |
| DS-1-92 | REVISED 12-15-94 | SICD-1-96 | REVISED 4-20-01 |
| EXJ-4-87 | REVISED 4-20-01 | TC-41.20 | DATED 1-19-01 |

AND TO SUPPLEMENTAL SPECIFICATIONS

| | | | |
|---|---|---|---|
| 815 | DATED 2-22-00 | 893 | DATED 10-12-99 |
| 842 | DATED 1-6-99 | 899 | DATED 10-21-98 |
| 843 | DATED 5-5-98 | 905 | DATED 4-1-98 |
| 848 | DATED 6-30-98 | 906 | DATED 5-5-98 |
| 864 | DATED 7-11-00 | 907 | DATED 10-21-98 |
| | | 910 | DATED 7-11-00 |

## DESIGN SPECIFICATIONS

THESE STRUCTURES CONFORM TO "STANDARD SPECIFICATION FOR HIGHWAY BRIDGES" ADOPTED BY THE AMERICAN ASSOCIATION OF STATE HIGHWAY AND TRANSPORTATION OFFICIALS, 1996, INCLUDING 1997, 1998 AND 1999 INTERIM SPECIFICATIONS AND THE ODOT BRIDGE DESIGN MANUAL.

THE DESIGN DATA IS AS FOLLOWS:

DESIGN LOADING
- -TRU-5-1226 AND 0811 L&R
  HS25 AND THE ALTERNATE MILITARY LOADING
- -TRU-5-0764, 0861 AND 1077 L&R
  HS25, CASE II AND THE ALTERNATE MILITARY LOADING
- -TRU-5-0657 L&R
  HS20, CASE II AND THE ALTERNATE MILITARY LOADING
- -TRU-5-0778
  CF 130 (57)
- -TRU-5-0921
  CF 400 (57)
- -TRU-5-1102 L&R
  CF 2000 (57)
- -TRU-5-0688
  HS20

FUTURE WEARING SURFACE
- -TRU-5-1226 L&R
  75 LBS / SQ. FT.
- -TRU-5-0764, 0861 and 1077 L&R
  60 LBS / SQ. FT.

CONCRETE CLASS S
- -COMPRESSIVE STRENGTH 4500 PSI (SUPERSTRUCTURE)

CONCRETE CLASS C
- -COMPRESSIVE STRENGTH 4000 PSI (SUBSTRUCTURE)

REINFORCING STEEL
- -ASTM A615, A616, OR A617
  GRADE 60 MINIMUM YIELD STRENGTH 60,000 PSI

DECK PROTECTION METHOD
- -TRU-5-0764, 0811, 0861, 1077 AND 1226 L&R
  EPOXY COATED REINFORCING STEEL, 2 1/2" CONCRETE COVER, AND SEALING OF CONCRETE SURFACES
- -TRU-5-1102 L&R
  STEEL FIBER REINFORCED CONCRETE OVERLAY
- -TRU-5-0688, 0778 AND 0921
  WATERPROOFING AND ASPHALT CONCRETE OVERLAY

MONOLITHIC WEARING SURFACE
- -MONOLITHIC WEARING SURFACE IS ASSUMED, FOR DESIGN PURPOSES TO BE 1 INCH THICK.

## PROPOSED WORK

THE WORK TO BE DONE UNDER THE CONTRACT IS AS SHOWN ON THE CONSTRUCTION PLANS AND, IN GENERAL, INCLUDES THE FOLLOWING:

TRU-5-0657 L&R

1. REPAIR EMBANKMENT EROSION
2. INSTALL CATCH BASIN AND SODDED FLUMES

TRU-5-0688, 0778 AND 0921

1. PATCH EXISTING CONCRETE WEARING SURFACE
2. INSTALL STEEL EXPANSION JOINT RISERS AND ELASTOMERIC STRIP SEALS
3. WATERPROOF BRIDGE DECK AND PLACE ASPHALT CONCRETE WEARING SURFACE

TRU-5-0811 L&R
1. FOR PROPOSED WORK NOTE SEE SHEET 113 OF 164.

TRU-5-0764 AND 0861 L&R

1. REMOVE EXISTING CONCRETE DECKS
2. INSTALL WELDED STUD SHEAR CONNECTORS ON EXISTING BEAMS
3. PATCH AND SEAL EXISTING CONCRETE SUBSTRUCTURE UNITS BRIDGE TRU-5-0861 L&R
4. INSTALL ELASTOMERIC STRIP SEALS
5. PLACE NEW REINFORCED CONCRETE DECK AND PARAPETS
6. REPLACE POROUS BACKFILL WITH FILTER FABRIC AND PIPE DRAINAGE SYSTEM
7. REPLACE REINFORCED CONCRETE APPROACH SLAB FULL WIDTH

TRU-5-1077 L&R

1. REMOVE EXISTING CONCRETE DECKS.
2. INSTALL WELDED STUD SHEAR CONNECTORS ON EXISTING BEAMS
3. PATCH AND SEAL EXISTING CONCRETE SUBSTRUCTURE UNITS
4. CONVERT ABUTMENTS TO SEMI-INTEGRAL
5. PLACE NEW REINFORCED CONCRETE DECK AND PARAPETS.
6. RESTORE EXISTING CRUSHED AGGREGATE SLOPE PROTECTION
7. REPLACE POROUS BACKFILL WITH FILTER FABRIC AND PIPE DRAINAGE SYSTEM
8. REPLACE REINFORCED CONCRETE APPROACH SLABS FULL WIDTH

TRU-5-1102 L&R

1. REMOVE EXISTING CONCRETE OVERLAY USING HYDRO-DEMOLITION METHODS
2. PLACE STEEL FIBER REINFORCED CONCRETE OVERLAY
3. PATCH AND SEAL EXISTING CONCRETE SUBSTRUCTURE UNITS
4. RESTORE EXISTING ROCK CHANNEL PROTECTION

TRU-5-1226 L&R

1. REMOVE EXISTING CONTINUOUS SLAB BRIDGE DECK
2. PATCH AND SEAL EXISTING CONCRETE SUBSTRUCTURE UNITS
3. PLACE NEW CONTINUOUS SLAB BRIDGE DECK.
4. PLACE POROUS BACKFILL WITH FILTER FABRIC AND PIPE DRAINAGE SYSTEM
5. REPLACE APPROACH SLABS WITH INTEGRAL PARAPET TRANSITIONS FULL WIDTH (ROADWAY)

## ITEM 202 - PORTIONS OF STRUCTURE REMOVED, OVER 20 FT. SPAN, AS PER PLAN

TRU-5-0764, 0861 AND 1077 L&R

DESCRIPTION: THIS WORK SHALL CONSIST OF THE REMOVAL OF CONCRETE DECKS INCLUDING PARAPETS, RAILINGS, DECK JOINTS AND OTHER APPURTENANCES FROM STEEL SUPPORTING SYSTEMS (BEAMS, GIRDERS, CROSS FRAMES, ETC.). CARE SHALL BE TAKEN DURING DECK REMOVALS TO PROTECT PORTIONS OF SUCH SYSTEMS THAT ARE TO BE SALVAGED AND INCORPORATED INTO THE PROPOSED STRUCTURE. IN THIS RESPECT, THE USE OF EXPLOSIVES, HEADACHE BALLS AND/OR HOE RAM TYPE OF EQUIPMENT IS PROHIBITED.

PROTECTION OF TRAFFIC: PRIOR TO DEMOLITION OF ANY PORTIONS OF THE EXISTING SUPERSTRUCTURE, THE CONTRACTOR SHALL SUBMIT PLANS FOR THE PROTECTION OF TRAFFIC (VEHICULAR, PEDESTRIAN, BOAT, ETC.) ADJACENT TO AND/OR UNDER THE STRUCTURE TO THE DIRECTOR FOR APPROVAL. THESE PLANS SHALL INCLUDE PROVISIONS FOR ANY DEVICES AND STRUCTURES THAT MAY BE NECESSARY TO ENSURE SUCH PROTECTION. TEMPORARY VERTICAL CLEARANCES SPECIFIED ON THE PLANS OR IN THE PROPOSAL SHALL BE MAINTAINED AT ALL TIMES EXCEPT AS OTHERWISE APPROVED BY THE DIRECTOR.

PROTECTION OF STEEL SUPPORT SYSTEMS: BEFORE DECK SLAB CUTTING IS PERMITTED, THE OUTLINE OF PRIMARY STEEL MEMBERS IN CONTACT WITH THE BOTTOM OF THE DECK SHALL BE DRAWN ON THE SURFACE OF DECK. SMALL DIAMETER PILOT HOLES SHALL BE DRILLED 2 INCHES OUTSIDE THESE LINES TO CONFIRM THE LOCATION OF FLANGE EDGES. DECK CUTS OVER OR WITHIN 2 INCHES OF FLANGE EDGES SHALL NOT EXTEND LOWER THAN THE BOTTOM LAYER OF DECK SLAB REINFORCING STEEL. CUTS MADE OUTSIDE 2 INCHES OF FLANGE EDGES MAY EXTEND THE FULL DEPTH OF THE DECK. DURING CUTTING OF THE DECK SLAB, CARE SHALL BE TAKEN NOT TO DAMAGE STEEL MEMBERS THAT ARE TO BE INCORPORATED INTO THE PROPOSED STRUCTURE.

REMOVAL METHODS: CONCRETE MAY BE REMOVED BY CUTTING AND BY MEANS OF HAND OPERATED PNEUMATIC HAMMERS EMPLOYING POINTED OR BLUNTED CHISEL TYPE TOOLS. FOR REMOVALS OVER BRIDGE MEMBERS (STEEL BEAMS), A HAMMER HEAVIER THAN 35 POUNDS BUT NOT TO EXCEED 90 POUNDS MAY BE USED AT THE APPROVAL OF THE ENGINEER. REMOVAL METHODS OVER BRIDGE MEMBERS SHALL ENSURE ADEQUATE DEPTH CONTROL AND PREVENT NICKING OR GOUGING THE PRIMARY STEEL MEMBERS.

DECK REMOVALS: DUE TO THE POSSIBLE PRESENCE OF WELDED ATTACHMENTS TO EXISTING STRUCTURAL STEEL (FINISHING MACHINE, SCUPPER AND FORM SUPPORTS, ETC.) CARE SHALL BE TAKEN DURING DECK REMOVAL TO AVOID DAMAGING STRINGERS WHICH ARE TO REMAIN. STRINGERS DAMAGED BY THE CONTRACTOR'S REMOVAL OPERATIONS SHALL, AT NO COST TO THE PROJECT, BE REPLACED OR REPAIRED. PROPOSED REPAIRS, DEVELOPED BY A OHIO REGISTERED PROFESSIONAL ENGINEER, SHALL BE SUBMITTED IN WRITING FOR REVIEW AND APPROVAL BY THE DIRECTOR.

EXTRANEOUS MEMBERS: EXISTING EXTRANEOUS MEMBERS (I.E., FINISHING MACHINE AND FORM SUPPORTS, ETC., AND THE SUPPORT FOR SCUPPERS AND BULB ANGLES WHICH ARE TO BE REMOVED) ATTACHED BY WELDED CONNECTION TO THE DESIGNATED TENSION PORTIONS OF THE TOP FLANGES OF EXISTING STEEL MEMBERS SHALL BE REMOVED AND THE FLANGE SURFACES GROUND SMOOTH. GRINDING SHALL BE CAREFULLY DONE AND PARALLEL TO THE FLANGES.

LOADING LIMITATIONS: NO PART OF THE STRUCTURE SHALL BE SUBJECTED TO UNIT STRESSES THAT EXCEED 136.5% OF ALLOWABLE STRESSES AS DEFINED IN THE AASHTO STANDARD SPECIFICATIONS FOR HIGHWAY BRIDGES DUE EITHER TO DEMOLITION, ERECTION OR CONSTRUCTION METHODS, OR TO THE USE OR MOVEMENT OF DEMOLITION OR ERECTION EQUIPMENT ON OR ACROSS THE STRUCTURE. STRUCTURAL ANALYSIS COMPUTATIONS, BY A OHIO REGISTERED PROFESSIONAL ENGINEER,

SHOWING THE ALLOWABLE STRESSES AND THE MAXIMUM STRESSES PRODUCED BY THE CONTRACTOR'S METHODS OR EQUIPMENT SHALL BE SUBMITTED TO THE DIRECTOR FOR REVIEW AND APPROVAL AT LEAST TWO WEEKS PRIOR TO THE START OF THE WORK.

PAYMENT: THIS WORK WILL BE PAID FOR AT THE CONTRACT LUMP SUM PRICE BID, WHICH PRICE AND PAYMENT SHALL BE FULL COMPENSATION FOR ALL LABOR, EQUIPMENT, MATERIALS AND INCIDENTALS NECESSARY TO COMPLETE THE WORK IN CONFORMANCE WITH THESE REQUIREMENTS, WITH PERTINENT PROVISIONS OF 202, AND TO THE SATISFACTION OF THE ENGINEER.

TRU-5-1226 L&R AND TRU-5-0811

WHEN NO LONGER NEEDED TO MAINTAIN TRAFFIC THE EXISTING DECK SHALL BE REMOVED UPON RECEIVING PERMISSION FROM THE ENGINEER.

PORTIONS OF STRUCTURE REMOVED, AS PER PLAN SHALL INCLUDE THE ELEMENTS INDICATED IN THE PLANS AND GENERAL NOTES AND THAT ARE NOT SEPARATELY LISTED FOR PAYMENT, EXCEPT FOR WEARING COURSE REMOVAL. ITEMS TO BE REMOVED INCLUDE ALL EXISTING MATERIALS BEING REPLACED BY NEW CONSTRUCTION AND MISCELLANEOUS ITEMS THAT ARE NOT SHOWN TO BE INCORPORATED INTO THE FINAL CONSTRUCTION AND ARE DIRECTED TO BE REMOVED BY THE ENGINEER. THE USE OF EXPLOSIVES, HEADACHE BALLS AND/OR HOE-RAMS WILL NOT BE PERMITTED. THE METHOD OF REMOVAL AND THE WEIGHT OF THE HAMMER SHALL BE APPROVED BY THE ENGINEER. ALL WORK SHALL BE DONE IN A MANNER THAT WILL NOT CUT, ELONGATE OR DAMAGE THE EXISTING REINFORCING STEEL TO BE PRESERVED. CHIPPING HAMMERS SHALL NOT BE HEAVIER THAN THE NOMINAL 90-POUND CLASS. PNEUMATIC HAMMERS SHALL NOT BE PLACED IN DIRECT CONTACT WITH REINFORCING STEEL THAT IS TO BE RETAINED IN THE REBUILT STRUCTURE.

THIS WORK WILL BE PAID FOR AT THE CONTRACT LUMP SUM PRICE BID, WHICH PRICE AND PAYMENT SHALL BE FULL COMPENSATION FOR ALL LABOR, EQUIPMENT, MATERIALS AND INCIDENTALS NECESSARY TO COMPLETE THE WORK IN CONFORMANCE WITH THESE REQUIREMENTS, WITH PERTINENT PROVISIONS OF 202, AND TO THE SATISFACTION OF THE ENGINEER.

## PILES DRIVEN TO BEDROCK - (TRU-5-1077 L&R)

PILES SHALL BE DRIVEN TO REFUSAL ON BEDROCK. REFUSAL SHALL BE CONSIDERED AS OBTAINED BY PENETRATING SOFT BEDROCK FOR SEVERAL INCHES WITH A MINIMUM RESISTANCE OF 20 BLOWS PER INCH OR REFUSAL SHALL BE CONSIDERED AS OBTAINED AFTER THE PILE HAS CONTACTED HARD BEDROCK AND THE PILE HAS THEN RECEIVED AT LEAST 20 BLOWS. THE CONTRACTOR IS RESPONSIBLE FOR SELECTING THE HAMMER SIZE TO ACHIEVE THE REQUIRED DEPTH TO BEDROCK AND REFUSAL.


DESIGN AGENCY
EUTHENICS INC.
CONSULTING ENGINEERS
CLEVELAND, OHIO

| DESIGNED | DRAWN | REVIEWED | DATE |
|---|---|---|---|
| KJW | KJW | RAB | 12/00 |
| CHECKED | REVISED | STRUCTURE FILE NUMBER | |
| KRD | | | |

GENERAL NOTES

TRU-5-6.45

GN/1

102/164

TR005GN1.DWG F:\JOBS\502\BRIDGE\DWG\5020N1.DWG KJW 6/22/01 PLOT 1:8

# STRUCTURAL NOTES

THE ULTIMATE BEARING VALUE IS 50 TONS PER PILE FOR THE HP10x42 ABUTMENT PILES.

WESTBOUND ABUTMENT PILES

REAR ABUTMENT:
4 PILES 37 FEET LONG, ESTIMATED LENGTH
4 PILES OF ORDER LENGTH 37 FEET LONG
2 SPLICES

FORWARD ABUTMENT:
4 PILES 34 FEET LONG, ESTIMATED LENGTH
4 PILES OF ORDER LENGTH 34 FEET LONG
2 SPLICES

EASTBOUND ABUTMENT PILES

REAR ABUTMENT:
4 PILES 36 FEET LONG, ESTIMATED LENGTH
4 PILES OF ORDER LENGTH 36 FEET LONG
2 SPLICES

FORWARD ABUTMENT:
4 PILES 33 FEET LONG, ESTIMATED LENGTH
4 PILES OF ORDER LENGTH 33 FEET LONG
2 SPLICES

## ITEM 507 STEEL POINTS, AS PER PLAN – (TRU-5-1077 L&R)

STEEL PILE POINTS SHALL BE USED TO PROTECT THE TIPS OF THE PROPOSED STEEL "H" PILING. THE STEEL POINTS SHALL BE FURNISHED BY ASSOCIATED PILE AND FITTING CORPORATION, 262 RUTHERFORD BLVD., CLIFTON, NEW JERSEY 07014; INTERNATIONAL CONSTRUCTION EQUIPMENT, INC., 301 WAREHOUSE DRIVE, MATTHEWS, NORTH CAROLINA 28015; HERTY FOUNDATION PRODUCTS, INC., P.O. BOX FRANKLIN LAKES, NEW JERSEY 07417; VERSA STEEL INC., 3601 NW YEON AVE., P.O. BOX 10559, PORTLAND, OREGON 97210; PILING ACCESSORIES, INC., 3467 GRIBBLE ROAD, MATHEWS, NORTH CAROLINA 28105; OR BY A MANUFACTURER THAT CAN FURNISH A STEEL POINT THAT IS ACCEPTABLE TO DIRECTOR. THE MATERIAL USED FOR THE MANUFACTURING OF PILE POINTS SHALL CONFORM TO ASTM A27/A27M 65/35 [450/240] – CLASS 2 – HEAT TREATED OR AASHTO M103/M103M 65/35 [450/240] – HEAT TREATED. WELDING OF THE PILE POINTS TO THE PILE SHALL BE IN ACCORDANCE WITH AWS D1.5 OR THE MANUFACTURER'S WRITTEN WELDING PROCEDURE SUPPLIED THE ENGINEER BEFORE THE WELDING IS PERFORMED. A NOTARIZED COPY OF THE MILL TEST REPORT SHALL BE SUBMITTED TO THE ENGINEER.

## ITEM 509 REINFORCING STEEL, REPLACEMENT OF EXISTING REINFORCING STEEL, AS PER PLAN – (TRU-5-0764, 0811, 0861, 1102 and 1226 L&R)

ANY EXISTING REINFORCING BARS DEEMED BY THE ENGINEER TO BE UNUSABLE BECAUSE OF CORROSION SHALL BE REPLACED WITH NEW REINFORCING STEEL. ANY EXISTING REINFORCING STEEL BARS WHICH ARE TO BE INCORPORATED INTO THE NEW WORK AND ARE MADE SABLE BY CONCRETE REMOVAL OPERATIONS SHALL BE REPLACED WITH NEW EPOXY COATED REINFORCING STEEL OF THE SAME SIZE AT THE ACTOR'S COST. ALL WORK SHALL BE TO THE SATISFACTION OF THE ENGINEER.

THE NUMBER OF POUNDS OF REINFORCING STEEL PAID FOR AT CONTRACT PRICES SHALL BE THE ACTUAL POUNDS OF REPLACEMENT REINFORCING STEEL SPECIFIED BY THE ENGINEER DUE TO CORROSION AND SHALL INCLUDE PLACEMENT, DOWELING, BENDING, SUPPORTING, TIE WIRES AND TYING OF THAT SPECIFIED REINFORCING STEEL.

## REHABILITATION OF EXISTING STRUCTURES

EXISTING STRUCTURE VERIFICATION: DETAILS AND DIMENSIONS SHOWN ON THESE PLANS PERTAINING TO THE EXISTING STRUCTURE HAVE BEEN OBTAINED FROM PLANS OF THE EXISTING STRUCTURE AND FROM FIELD OBSERVATIONS AND MEASUREMENTS. CONSEQUENTLY, THEY ARE INDICATIVE OF THE EXISTING STRUCTURE AND THE PROPOSED WORK BUT THEY SHALL BE CONSIDERED TENTATIVE AND APPROXIMATE. THE CONTRACTOR IS REFERRED TO CMS SECTIONS 102.05 AND 105.02.

CONTRACT BID PRICES SHALL BE BASED UPON A RECOGNITION OF THE UNCERTAINTIES DESCRIBED ABOVE AND UPON A PREBID EXAMINATION OF THE EXISTING STRUCTURE BY THE CONTRACTOR. HOWEVER, ALL PROJECT WORK SHALL BE BASED UPON ACTUAL DETAILS AND DIMENSIONS WHICH HAVE BEEN VERIFIED BY THE CONTRACTOR IN THE FIELD.

## ITEM 864 – SEALING OF CONCRETE SURFACES – (TRU-5-0764, 0811, 0861, 1077, 1102 and 1226 L&R)

EPOXY-URETHANE SHALL BE APPLIED TO ALL EXPOSED CONCRETE SURFACES AS SHOWN IN THE PLANS AND SHALL ALSO INCLUDE ALL EXPOSED SURFACES OF THE PIERS AND WINGWALLS. ALL SURFACES TO RECEIVE TREATMENT SHALL USE: FEDERAL COLOR NO. 17778-LIGHT NEUTRAL.

## ITEM 516, JACKING AND TEMPORARY SUPPORT OF SUPERSTRUCTURE, AS PER PLAN – (TRU-5-1077 L&R)

THIS ITEM SHALL CONSIST OF FURNISHING ALL NECESSARY LABOR, MATERIALS, AND EQUIPMENT TO RAISE BEAMS FOR THE PURPOSE OF REMOVING THE ABUTMENT BEARINGS AND INSTALLING NEW ELASTOMERIC EXPANSION BEARINGS AND PEDESTALS. NO PERMANENT SHIMMING IS REQUIRED AND THE HEIGHT OF THE LIFT SHALL NOT EXCEED 1/4 INCH.

THE CONTRACTOR SHALL BE RESPONSIBLE FOR THE DESIGN, INSTALLATION AND OPERATION OF AN ADEQUATE JACKING SYSTEM, INCLUDING ANY TEMPORARY SUPPORTS NECESSARY TO PERFORM THE WORK DESCRIBED IN THE PROJECT PLANS. THREE (3) SETS OF JACKING PLANS, WHICH INCLUDE THE INFORMATION DESCRIBED IN THIS NOTE, SHALL BE SUBMITTED TO THE DIRECTOR FOR APPROVAL AT LEAST THIRTY (30) DAYS BEFORE ACTUAL WORK IS TO BEGIN. THE PLANS SHALL BE PREPARED AND STAMPED BY AN OHIO REGISTERED PROFESSIONAL ENGINEER.

JACKING SUBMITTALS SHALL INCLUDE AT LEAST THE FOLLOWING:

1. THE SIGNATURE AND NUMBER, OR PROFESSIONAL SEAL, OF THE OHIO REGISTERED PROFESSIONAL ENGINEER WHO PREPARED THE SUBMITTAL.
2. CALCULATIONS AND ANALYSES OF THE STRUCTURE TO DETERMINE AND DEFINE THE ACTUAL LOADING APPLIED AT THE CONTRACTOR'S SELECTED JACKING POINTS.
3. A DRAWING SHOWING THE PHYSICAL AND DIMENSIONAL POSITION OF THE JACKS WITH RESPECT TO THE STRUCTURE INCLUDING CLEARANCES AND CENTER OF LIFT.
4. A SCHEMATIC LAYOUT OF JACKS, CHECK VALVES, PUMPS WITH 3 WAY RETRACTOR VALVE, PRESSURE GAGES, FLOW CONTROL VALVES, ETC. IN ACCORDANCE WITH MANUFACTURER'S RECOMMENDATIONS. ALL JACKS FOR EACH ABUTMENT SHALL BE CONNECTED TOGETHER. ALL JACKS AT EACH ABUTMENT SHALL BE THE SAME SIZE.
5. ANALYSIS AND CALCULATIONS OF THE STRESSES INDUCED OR CREATED IN THE STRUCTURE AND ANY TEMPORARY OR PERMANENT SUPPORTS. DESIGN CALCULATIONS FOR ANY TEMPORARY OR PERMANENT SUPPORTS.
6. PHYSICAL DIMENSIONS, MATERIALS, AND FABRICATION DETAILS OF ANY TEMPORARY OR PERMANENT SUPPORTS. HORIZONTAL AND VERTICAL MOVEMENT RESTRAINT SHALL BE PROVIDED.
7. A STEP BY STEP PROCEDURE DETAILING ALL STEPS IN THE JACKING OPERATION.
8. METHOD OF ATTACHMENT TO STRUCTURAL MEMBERS. WELDING TO TENSION AREAS WILL NOT BE PERMITTED.

THE ENTIRE SYSTEM INCLUDING JACKS SHALL HAVE 20% MORE CAPACITY THAN REQUIRED BASED ON CALCULATED LOADS.

JACKS SHALL HAVE A SWIVEL LOAD CAP, A DOMED PISTON HEAD OR SOME OTHER DEVICE TO PROTECT AGAINST THE EFFECTS OF SIDE LOAD ON THE JACK.

JACKS ALONE SHALL NOT BE USED TO SUPPORT LOADS EXCEPT DURING THE ACTUAL JACKING OPERATION. TEMPORARY SUPPORTS, BLOCKING OR OTHER METHODS APPROVED BY THE DIRECTOR SHALL BE USED.

SINGLE ACTING RAMS WITH NO OVER-TRAVEL PROTECTION SYSTEM SHALL NOT BE USED.

SPARE EQUIPMENT SHALL BE AVAILABLE ON SITE FOR THE REQUIRED STRUCTURE RAISING TO PROCEED IN THE EVENT OF BREAKDOWN. A LIST OF SPARE EQUIPMENT SHALL BE PROVIDED TO THE ENGINEER.

THE CONTRACTOR SHALL DEMONSTRATE TO THE ENGINEER THAT THE BRIDGE BEARINGS ARE FULLY SEATED AT ALL CONTACT AREAS. IF FULL SEATING IS NOT ATTAINED, SUITABLE MEANS OF REPAIR, SUBJECT TO THE ENGINEER'S

PAYMENT SHALL BE MADE AT THE LUMP SUM PRICE BID FOR ITEM 516, JACKING AND TEMPORARY SUPPORT OF SUPERSTRUCTURE, AS PER PLAN. THIS SHALL INCLUDE ALL NECESSARY TOOLS, LABOR, EQUIPMENT AND MATERIALS NECESSARY TO COMPLETE THIS ITEM OF WORK.

## ITEM 518 POROUS BACKFILL WITH FILTER FABRIC, AS PER PLAN – (TRU-5-0764, 0861, 1077 and 1226 L&R)

THIS ITEM SHALL INCLUDE THE REMOVAL AND DISPOSAL OF THE EXISTING POROUS BACKFILL, THE PLACING OF NEW POROUS BACKFILL, AND PLACING FILTER FABRIC MEETING THE REQUIREMENTS OF 712.09, TYPE A BETWEEN THE POROUS BACKFILL AND EXISTING GROUND.

ALL WORK SHALL BE DONE IN ACCORDANCE WITH THE REQUIREMENTS OF ITEM 518. PAYMENT FOR THE ABOVE WORK, INCLUDING EXCAVATION, POROUS BACKFILL, FILTER FABRIC, AND ALL INCIDENTALS SHALL BE INCLUDED IN THE CONTRACT PRICE BID FOR ITEM 518 POROUS BACKFILL WITH FILTER FABRIC, AS PER PLAN.

## ASBESTOS NOTIFICATION

AN ASBESTOS SURVEY OF THE SR 5 BRIDGES OVER THE MAHONING RIVER, CHOCOLATE RUN, US 422, MAHONING AVENUE (SR 45), YOUNG'S RUN, AND NORTH PARK ROAD WAS CONDUCTED BY A CERTIFIED ASBESTOS HAZARD EVALUATION SPECIALIST. THE SURVEY DETERMINED THAT NO ASBESTOS IS PRESENT ON THE BRIDGES.

HOWEVER UPON EVALUATION OF THE ORIGINAL CONSTRUCTIONS PLANS FOR BRIDGE NO. TRU-5-0811 LEFT & RIGHT OVER CHOCOLATE RUN, IT HAS BEEN DETERMINED THAT ASBESTOS WILL BE ENCOUNTERED DURING THE DECK REMOVAL OPERATION. APPROXIMATELY 115 SQ. FT. OF REMOVAL AREA SHALL CONTAIN ASBESTOS PACKING MATERIAL. THE REMOVAL AND DISPOSAL OF THE ASBESTOS CONTAINING MATERIAL MUST COMPLY WITH THE OHIO ADMINISTRATIVE CODE, THE OCCUPATIONAL SAFETY AND HEALTH ADMINISTRATIVE (OSHA) REGULATIONS AND THE NATIONAL EMISSION STANDARD FOR ASBESTOS.

THE CONTRACTOR SHALL PROVIDE AN INDIVIDUAL TRAINED IN THE PROVISIONS OF THE HAZARDOUS AIR POLLUTANTS (NESHAP) STANDARDS ON SITE, TO DIRECT THE REMOVAL OF THE ASBESTOS CONTAINING MATERIAL.

A COPY OF THE OHIO ENVIRONMENTAL PROTECTION AGENCY (OEPA) NOTIFICATION OF DEMOLITION AND RENOVATION FORMS, PARTIALLY COMPLETED AND SIGNED BY THE BRIDGE OWNER, WILL BE PROVIDED TO THE SUCCESSFUL BIDDER. THE CONTRACTOR SHALL COMPLETE THE FORM AND SUBMIT IT TO:

MAHONING-TRUMBULL AIR
POLLUTION CONTROL
9 WEST FRONT ST. ROOM 107
YOUNGSTOWN, OHIO 44503
ROBERT RAMHOFF, DIRECTOR
(330) 744-1928
FAX: (330) 744-1928

AT LEAST TEN (10) WORKING DAYS PRIOR TO THE START OF THE DEMOLITION OF THE BRIDGES, THE CONTRACTOR SHALL PROVIDE A COPY OF THE COMPLETED FORM TO THE ENGINEER.

INFORMATION REQUIRED ON THE FORM FOR TRU-5-0811 L&R OVER CHOCOLATE RUN WILL INCLUDE: 1) THE CONTRACTORS NAME AND ADDRESS, 2) THE ASBESTOS REMOVAL SUBCONTRACTOR'S NAME AND ADDRESS, 3) THE SCHEDULED DATES FOR THE START AND COMPLETION OF THE BRIDGE RENOVATION, 4) THE DATES AND HOURS OF OPERATION FOR THE ASBESTOS REMOVAL, 5) A DESCRIPTION OF THE PLANNED RENOVATION WORK AND THE METHOD(S) TO BE USED, 6) A DESCRIPTION OF WORK PRACTICES AND ENGINEERING CONTROLS TO BE USED TO PREVENT EMISSIONS OF ASBESTOS AT THE SITE, 7) THE NAME AND ADDRESSES OF WASTE TRANSPORTERS TO BE USED ON THE PROJECT, 8) THE NAME AND ADDRESS OF THE WASTE DISPOSAL FACILITY TO BE USED, 9) A DESCRIPTION OF PROCEDURES TO BE FOLLOWED IN THE EVENT THAT UNEXPECTED ASBESTOS IS FOUND OR PREVIOUSLY NON-FRIABLE ASBESTOS MATERIAL BECOMES CRUMBLED, PULVERIZED OR REDUCED TO POWDER.

A COPY OF THE OEPA FORM IS AVAILABLE FOR INSPECTION AT THE ODOT DISTRICT 4 OFFICE, 705 OAKWOOD STREET, RAVENNA, OHIO 44266.


DESIGN AGENCY
EUTHENICS INC.
CONSULTING ENGINEERS
CLEVELAND, OHIO

| DESIGNED | DRAWN | REVIEWED | DATE |
|---|---|---|---|
| KJW | KJW | RAB | 12/00 |
| CHECKED | REVISED | STRUCTURE FILE NUMBER | |
| KRD | | | |

GENERAL NOTES

TRU-5-6.45

GN/2

103/164

TR005GN2.DWG F:\JOBS\502\BRIDGE\DWG\502GN2.DWG KJW 6/22/01 PLOT 1:8

# STRUCTURAL NOTES

BASIS FOR PAYMENT
THE CONTRACTOR SHALL FURNISH ALL FEES, LABOR, EQUIPMENT AND MATERIALS NECESSARY TO COMPLETE AND SUBMIT THE OEPA NOTIFICATION FORM AND TO REMOVE, TRANSPORT AND DISPOSE OF THE ASBESTOS CONTAINING MATERIAL.

PAYMENT FOR THIS WORK SHALL BE INCLUDED IN UNIT PRICE FOR:
ITEM SPECIAL – MISC.: REMOVAL AND DISPOSAL OF 115 SQ. FT. NON–FRIABLE, ASBESTOS CONTAINING MATERIAL

OR

ITEM SPECIAL – MISC.: REMOVAL AND DISPOSAL OF 115 SQ. FT. FRIABLE, ASBESTOS CONTAINING MATERIAL.

INFORMATION REQUIRED ON THE FORM FOR ALL OTHER SR 5 BRIDGES OVER THE MAHONING RIVER, US 422, MAHONING AVENUE (SR 45), YOUNGS RUN, AND NORTH PARK ROAD WILL INCLUDE: 1) THE CONTRACTORS NAME AND ADDRESS, 2) THE SCHEDULED DATES FOR THE START AND COMPLETION OF THE BRIDGE REMOVAL AND 3) A DESCRIPTION OF THE PLANNED DEMOLITION WORK AND THE METHOD(S) TO BE USED.

A COPY OF THE OEPA FORM IS AVAILABLE THE ODOT DISTRICT 4 OFFICE, 705 OAKWOOD STREET, RAVENNA, OHIO, 44266.

BASIS FOR PAYMENT
THE CONTRACTOR SHALL FURNISH ALL FEES, LABOR, AND MATERIAL NECESSARY TO COMPLETE AND SUBMIT THE OEPA NOTIFICATION FORM. PAYMENT FOR THIS WORK SHALL BE INCLUDED IN ITEM 202 – PORTIONS OF STRUCTURE REMOVED, OVER 20 FT. SPAN, AS PER PLAN.

**MAINTENANCE OF TRAFFIC**

SEE ROADWAY PLANS FOR MAINTENANCE OF TRAFFIC DURING CONSTRUCTION

**INSPECTION OF EXISTING STRUCTURAL STEEL – (TRU–5–0764, 0861 and 1077 L&R)**

THE ENGINEER WILL VISUALLY INSPECT ALL EXISTING BUTT–WELDED SPLICES SPLICES AND/OR TOP FLANGE COVER PLATE FILLET WELDS TO ENSURE THE WELDS, PLATES AND BEAMS OR GIRDERS ARE FREE OF DEFECTS AND CRACKS. IF THE DECK SLAB HAUNCH FORMS IMMEDIATELY ADJACENT TO SUCH WELDS INTERFERE WITH THE ENGINEERS INSPECTION THEY SHALL BE REMOVED OR NOT BE ERECTED UNTIL AFTER THE INSPECTION . THE INSPECTION SHALL NOT TAKE PLACE UNTIL AFTER THE TOP FLANGES ARE CLEANED AS SPECIFIED IN SS 893. BUT IT SHALL BE DONE BEFORE THE DECK SLAB REINFORCEMENT IS INSTALLED. THE COST ASSOCIATED WITH THIS INSPECTION SHALL BE INCLUDED WITH ITEM SS 893 CLASS S CONCRETE, FOR BRIDGE DECKS WITH WARRANTY FOR PAYMENT. ANY CRACKS FOUND SHOULD BE REPORTED TO THE OFFICE OF STRUCTURAL ENGINEERING, BRIDGE CONSTRUCTION SPECIALIST, ALONG WITH SPECIFIC INFORMATION ON LOCATION OF THE CRACKS, LENGTH, AND DEPTH SO AN EVALUATION AND REPAIR OR REPLACEMENT RECOMMENDATION CAN BE MADE.

**ITEM 601 CRUSHED AGGREGATE SLOPE PROTECTION, AS PER PLAN – (TRU–5–1077 L&R)**

AFTER COMPLETION OF MAJOR MODIFICATION ITEMS, EXISTING EMBANKMENT SURFACES SHALL BE RESTORED TO A UNIFORM PLANE SURFACE WITH CRUSHED AGGREGATE SLOPE PROTECTION. THE SURFACES RESTORED SHALL BE AS DIRECTED BY THE ENGINEER AND SHALL INCLUDE THE PROPOSED ABUTMENT DRAINAGE OUTLETS. TOTAL THICKNESS OF PROPOSED PROTECTION (RESTORED AND/OR NEW) SHALL BE 12 INCHES.

**ITEM 601 ROCK CHANNEL PROTECTION, TYPE B WITH FILTER, AS PER PLAN – (TRU–5–1102 L&R)**

AFTER COMPLETION OF MAJOR MODIFICATION ITEMS, EXISTING EMBANKMENT SURFACES SHALL BE RESTORED TO A UNIFORM PLANE SURFACE WITH ROCK CHANNEL PROTECTION. THE SURFACES RESTORED SHALL BE AS DIRECTED BY THE ENGINEER. TOTAL THICKNESS OF PROPOSED PROTECTION (RESTORED AND/OR NEW) SHALL BE 2'–6".

**ITEM 611 REINFORCED CONCRETE APPROACH SLAB, T=15", AS PER PLAN – (TRU–5–0764, 0811, 0861, 1077 and 1226 L&R)**

CONCRETE FOR THIS ITEM SHALL BE CLASS S, SS842 AND SS899.

THE CONTRACTOR SHALL CONSTRUCT APPROACH SLABS WITH CONCRETE BARRIERS AT LOCATIONS INDICATED IN THE PLANS AND PER DETAILS SHOWN IN THE PLANS.

PAYMENT FOR THIS WORK SHALL BE INCLUDED IN THE CONTRACT UNIT PRICE BID PER SQUARE YARD FOR ITEM 611 REINFORCED CONCRETE APPROACH SLAB, T=15", AS PER PLAN, WHICH PRICE SHALL INCLUDE ALL BARRIER CONCRETE, REINFORCING STEEL, EPOXY–URETHANE SEALER, 1" PEJF AND ALL EQUIPMENT, LABOR, MATERIAL AND INCIDENTALS TO COMPLETE THE WORK.

**CONVERSION OF METRIC STANDARD BRIDGE DRAWINGS**

ANY CONVERSION OF DIMENSIONS REQUIRE TO CONSTRUCT THE ITEMS SHOWN ON THE STANDARDS SHALL BE THE RESPONSIBILITY OF THE CONTRACTOR. CONVERSIONS SHALL BE MADE USING THE SI (METRIC) TO ENGLISH CONVERSION FACTORS PROVIDED IN SECTION 109.011 OF THE 1997 CONSTRUCTION AND MATERIALS SPECIFICATIONS. THE APPENDIX OF ASTM E 380 SHALL BE UTILIZED FOR ANY ADDITIONAL CONVERSION FACTORS REQUIRED. CONVERSIONS SHALL BE APPROPRIATELY PRECISE AND SHALL REFLECT STANDARD INDUSTRY ENGLISH VALUES WHERE SUITABLE.

**STRUCTURE IDENTIFICATION SIGNS**

THESE ITEMS SHALL BE USED TO PLACE NEW STRUCTURE IDENTIFICATION SIGNS AT THE FOLLOWING LOCATIONS. SIGNS SHALL BE DIMENSIONED AS PER THE EXAMPLE. THEY WILL BE PLACED ON S.R. 5 OFF THE RIGHT SHOULDER, FACING TRAFFIC, AND BEHIND THE GUARDRAIL IF APPLICABLE. SIGNS SHALL BE ALUMINUM AND HAVE A NON–REFLECTIVE WHITE SHEETING BACKGROUND. LETTERS SHALL BE BLACK 2" HEIGHT, SERIES C STROKE WIDTH, AND SILK SCREENED AS PER 730.22. SIGNS SHALL BE BOLTED USING TWO 5/16" ALUMINUM BOLTS 2 1/2" IN LENGTH, AND TWO NUTS. NEW NO. 2 POSTS SHALL BE INSTALLED AS PER STANDARD CONSTRUCTION DRAWING TC–41.20 MOST CURRENT REVISION. EACH POST WILL BE 7 LIN. FT. LONG. THE FOLLOWING QUANTITIES HAVE BEEN CARRIED TO THE GENERAL SUMMARY TO PERFORM THIS WORK.

| STRUCTURE NUMBER | ITEM 630 GROUND MOUNTED SUPPORT, NO. 2 POST | ITEM 630 SIGN, FLAT SHEET |
|---|---|---|
| | LIN. FT. | SQ. FT. |
| TRU–5–0657 L&R | 14 | 1.40 |
| TRU–5–0688 | 14 | 1.40 |
| TRU–5–0764 L&R | 14 | 1.40 |
| TRU–5–0778 | 14 | 1.40 |
| TRU–5–0811 L&R | 14 | 1.40 |
| TRU–5–0861 L&R | 14 | 1.40 |
| TRU–5–0921 | 14 | 1.40 |
| TRU–5–1077 L&R | 14 | 1.40 |
| TRU–5–1102 L&R | 14 | 1.40 |
| TRU–5–1226 L&R | 14 | 1.40 |

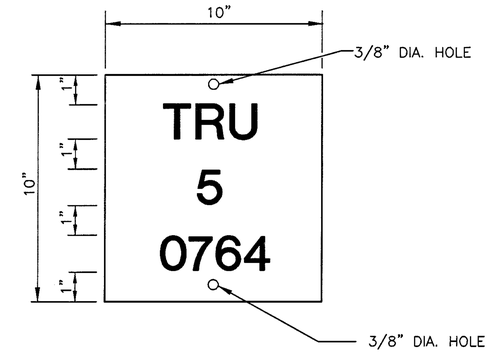


EXAMPLE

DESIGN AGENCY
EUTHENICS INC.
CONSULTING ENGINEERS
CLEVELAND, OHIO

DESIGNED KJW | CHECKED KRD | DRAWN KJW | REVISED | REVIEWED RAB | DATE 12/00 | STRUCTURE FILE NUMBER

GENERAL NOTES

TRU-5-6.45

GN/3

104/164

TR005GN3.DWG F:\JOBS\502\BRIDGE\DWG\502GN3.DWG KJW 6/22/01 PLOT 1:8

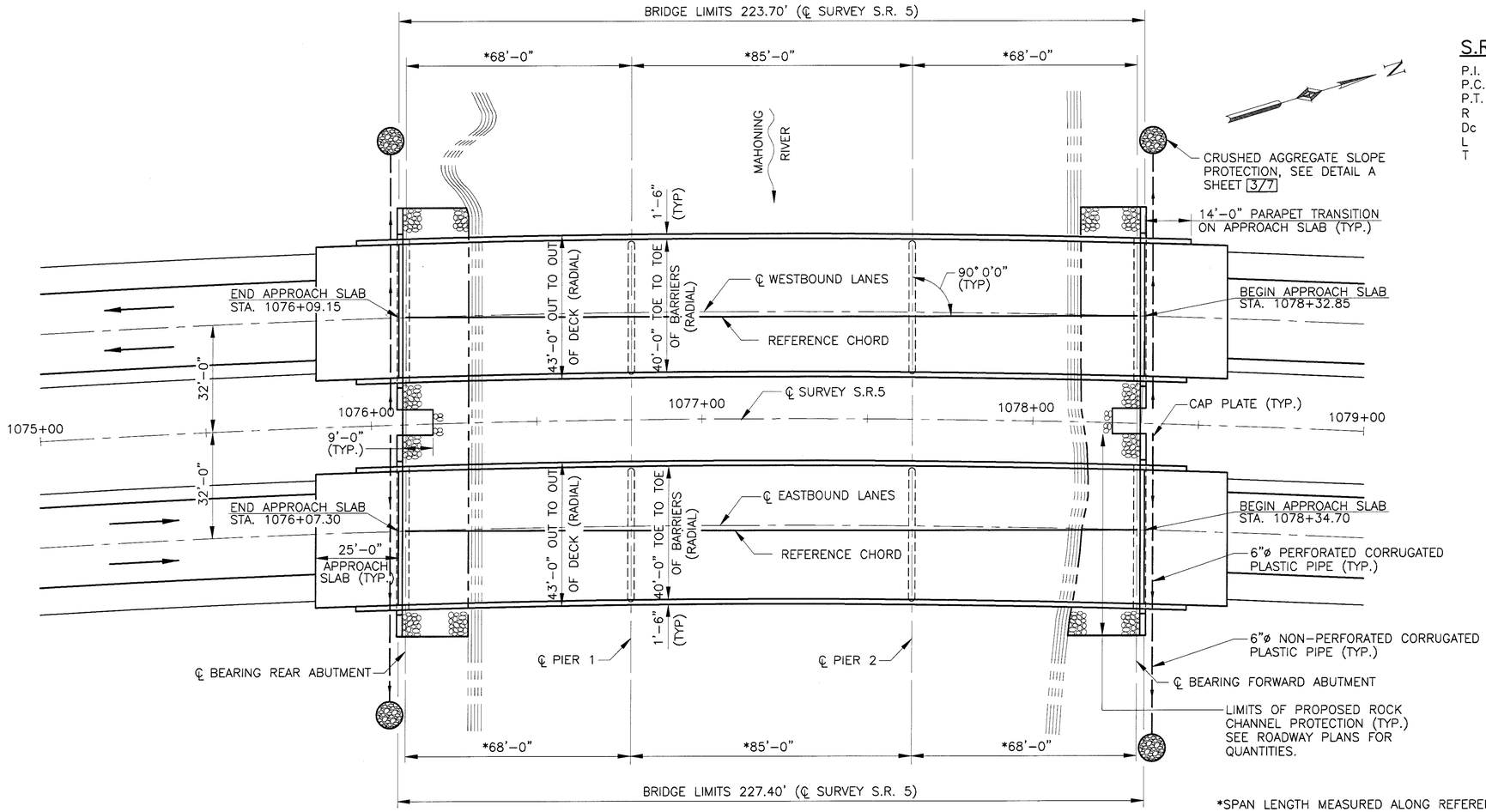


## GENERAL PLAN

## S.R. 5 CURVE DATA

P.I. = STA. 1084+19.95
P.C. = STA. 1068+47.55
P.T. = STA. 1098+37.32
R = 3,906.53'
Dc = 1° 28'00"
L = 2,989.77'
T = 1,572.40'

## TEMPORARY BENCH MARKS

**BENCH MARK NO. 1**
IRON PIN FOUND IN MEDIAN
STA. 1068+47.55
ELEV. 895.67

**BENCH MARK NO. 2**
IRON PIN FOUND IN MEDIAN
STA. 1080+00.00
ELEV. 893.26

## EXISTING STRUCTURE

| | |
|---|---|
| TYPE: | CONTINUOUS STEEL BEAM BRIDGE WITH REINFORCED CONCRETE DECK AND SUBSTRUCTURE |
| SPANS: | 68'-0"±, 85'-0"±, 68'-0"± C/C OF BEARINGS |
| ROADWAY: | 40'-0" FACE TO FACE OF GUARDRAILS |
| LOAD FREQUENCY: | CF = 2000 (57) |
| SKEW: | 0°-00'-00" TO TANGENT @ STA. 1077+21.00 |
| WEARING SURFACE: | MONOLITHIC CONCRETE |
| APPROACH SLABS: | 25'-0" LONG |
| ALIGNMENT: | 1°-28'-00" RIGHT |
| SUPERELEVATION: | 0.047 FT./FT. |
| DATE BUILT: | 1972 |
| STRUCTURE FILE NO: | 7800339 LEFT, 7800363 RIGHT |

## PROPOSED STRUCTURE

| | |
|---|---|
| PROPOSED WORK: | REPLACE REINFORCED CONCRETE DECK AND SEAL CONCRETE SURFACES |
| TYPE: | CONTINUOUS COMPOSITE STEEL BEAM BRIDGE WITH REINFORCED CONCRETE DECK AND SUBSTRUCTURE |
| SPANS: | 68'-0"±, 85'-0"±, 68'-0"± C/C OF BEARINGS |
| ROADWAY: | 40'-0" TOE TO TOE OF BARRIERS |
| LOADING: | HS 25, CASE II AND THE ALTERNATE MILITARY LOADING |
| SKEW: | 0°-00'-00" TO TANGENT @ STA. 1077+21.00 |
| WEARING SURFACE: | MONOLITHIC CONCRETE |
| APPROACH SLABS: | AS-1-81 (25'-0") |
| ALIGNMENT: | 1°-28'-00" RIGHT |
| SUPERELEVATION: | 0.047 FT./FT. |
| LATITUDE: | N 41°-15'-06" |
| LONGITUDE: | W 80°-52'-10" |

DESIGN AGENCY
EUTHENICS INC.
CONSULTING ENGINEERS
CLEVELAND, OHIO

| DESIGNED | DRAWN | REVIEWED | DATE |
|---|---|---|---|
| GFH | KJW | RAB | 10/00 |
| CHECKED | REVISED | STRUCTURE FILE NUMBER | |
| KRD | | 7800339L/7800363R | |

**GENERAL PLAN**
TRU-5-0764 L&R
OVER MAHONING RIVER

**TRU-5-6.45**

1/7

105/164

TR005GP1.DWG F:\JOBS\502\BRIDGE\08\502GP08.DWG KJW 2/27/01 PLOT 1:20

CALC. BY: JAM DATE: 1-01

## ESTIMATED QUANTITIES – WESTBOUND – TRU-5-0764 LEFT

CHK'D. BY: KRD DATE: 1-01

| | ITEM | ITEM EXT. | TOTAL | UNIT | DESCRIPTION | ABUT-MENTS | PIERS | SUPER-STRUCTURE | GENERAL | AS PER PLAN SHEET NUMBERS |
|---|---|---|---|---|---|---|---|---|---|---|
| | 202 | 11203 | LUMP | | PORTIONS OF STRUCTURE REMOVED, OVER 20 FOOT SPAN, AS PER PLAN | | | | LUMP | GN 1 4/7 |
| | 509 | 20001 | 100 | LBS. | REINFORCING STEEL, REPLACEMENT OF EXISTING REINFORCING STEEL, AS PER PLAN | 100 | | | | GN 2 |
| | 516 | 11210 | 85 | LIN. FT. | STRUCTURAL EXPANSION JOINT INCLUDING ELASTOMERIC STRIP SEAL** | | | 85 | | |
| | 518 | 21201 | 61 | CU. YD. | POROUS BACKFILL WITH FILTER FABRIC, AS PER PLAN | 61 | | | | GN 2 |
| | SPECIAL | 51822300 | 38.33 | LIN. FT. | STEEL DRIP STRIP | | | 38.33 | | |
| | 518 | 40000 | 121 | LIN. FT. | 6" PERFORATED CORRUGATED PLASTIC PIPE, 707.33 | 121 | | | | |
| | 518 | 40010 | 24 | LIN. FT. | 6" NON-PERFORATED CORRUGATED PLASTIC PIPE, INCLUDING SPECIALS, 707.33 | 24 | | | | |
| | 601 | 20000 | 3 | SQ. YD. | CRUSHED AGGREGATE SLOPE PROTECTION | | | | 3 | |
| * | 815 | 00050 | 4,891 | SQ. FT. | SURFACE PREPARATION OF EXISTING STEEL, SYSTEM OZEU | | | 4,891 | | |
| * | 815 | 00056 | 4,891 | SQ. FT. | FIELD PAINTING OF EXISTING STEEL, PRIME COAT, SYSTEM OZEU | | | 4,891 | | |
| * | 815 | 00060 | 4,891 | SQ. FT. | FIELD PAINTING OF EXISTING STEEL, INTERMEDIATE COAT, SYSTEM OZEU | | | 4,891 | | |
| * | 815 | 00066 | 4,891 | SQ. FT. | FIELD PAINTING OF EXISTING STEEL, FINISH COAT, SYSTEM OZEU | | | 4,891 | | |
| | 842 | 45700 | 6 | CU. YD. | CLASS C CONCRETE, ABUTMENT | 6 | | | | |
| | 863 | 10200 | 1,500 | POUND | STRUCTURAL STEEL MEMBERS, MISCELLANEOUS LEVEL FABRICATION | | | 1,500 | | |
| | 863 | 20000 | 3,030 | EACH | WELDED STUD SHEAR CONNECTORS | | | 3,030 | | |
| | 863 | 21000 | 10 | EACH | TRIMMING OF BEAM END | | | 10 | | |
| | 864 | 10100 | 880 | SQ. YD. | SEALING OF CONCRETE SURFACES (EPOXY-URETHANE) | 92 | 166 | 622 | | |
| | 893 | 10000 | 365 | CU. YD. | CLASS S CONCRETE, FOR BRIDGE DECK WITH WARRANTY | | | 365 | | |

CALC. BY: JAM DATE: 1-01

## ESTIMATED QUANTITIES – EASTBOUND – TRU-5-0764 RIGHT

CHK'D. BY: KRD DATE: 1-01

| | ITEM | ITEM EXT. | TOTAL | UNIT | DESCRIPTION | ABUT-MENTS | PIERS | SUPER-STRUCTURE | GENERAL | AS PER PLAN SHEET NUMBERS |
|---|---|---|---|---|---|---|---|---|---|---|
| | 202 | 11203 | LUMP | | PORTIONS OF STRUCTURE REMOVED, OVER 20 FOOT SPAN, AS PER PLAN | | | | LUMP | GN 1 4/7 |
| | 509 | 20001 | 100 | LBS. | REINFORCING STEEL, REPLACEMENT OF EXISTING REINFORCING STEEL, AS PER PLAN | 100 | | | | GN 2 |
| | 516 | 11210 | 85 | LIN. FT. | STRUCTURAL EXPANSION JOINT INCLUDING ELASTOMERIC STRIP SEAL** | | | 85 | | |
| | 518 | 21201 | 62 | CU. YD. | POROUS BACKFILL WITH FILTER FABRIC, AS PER PLAN | 62 | | | | GN 2 |
| | SPECIAL | 51822300 | 38.33 | LIN. FT. | STEEL DRIP STRIP | | | 38.33 | | |
| | 518 | 40000 | 121 | LIN. FT. | 6" PERFORATED CORRUGATED PLASTIC PIPE, 707.33 | 121 | | | | |
| | 518 | 40010 | 19 | LIN. FT. | 6" NON-PERFORATED CORRUGATED PLASTIC PIPE, INCLUDING SPECIALS, 707.33 | 19 | | | | |
| | 601 | 20000 | 3 | SQ. YD. | CRUSHED AGGREGATE SLOPE PROTECTION | | | | 3 | |
| * | 815 | 00050 | 4,891 | SQ. FT. | SURFACE PREPARATION OF EXISTING STEEL, SYSTEM OZEU | | | 4,891 | | |
| * | 815 | 00056 | 4,891 | SQ. FT. | FIELD PAINTING OF EXISTING STEEL, PRIME COAT, SYSTEM OZEU | | | 4,891 | | |
| * | 815 | 00060 | 4,891 | SQ. FT. | FIELD PAINTING OF EXISTING STEEL, INTERMEDIATE COAT, SYSTEM OZEU | | | 4,891 | | |
| * | 815 | 00066 | 4,891 | SQ. FT. | FIELD PAINTING OF EXISTING STEEL, FINISH COAT, SYSTEM OZEU | | | 4,891 | | |
| | 842 | 45700 | 6 | CU. YD. | CLASS C CONCRETE, ABUTMENT | 6 | | | | |
| | 863 | 10200 | 1,500 | POUND | SRUCTURAL STEEL MEMBERS, MISCELLANEOUS LEVEL FABRICATION | | | 1,500 | | |
| | 863 | 20000 | 3,030 | EACH | WELDED STUD SHEAR CONNECTORS | | | 3,030 | | |
| | 863 | 21000 | 10 | EACH | TRIMMING OF BEAM END | | | 10 | | |
| | 864 | 10100 | 856 | SQ. YD. | SEALING OF CONCRETE SURFACES (EPOXY-URETHANE) | 92 | 142 | 622 | | |
| | 893 | 10000 | 365 | CU. YD. | CLASS S CONCRETE, FOR BRIDGE DECK WITH WARRANTY | | | 365 | | |

* THE EXPOSED SURFACES OF THE EXISTING EXTERIOR BEAMS AND AREAS DAMAGED BY END CROSSFRAME REMOVAL OR REPLACEMENT SHALL BE PAINTED IN ACCORDANCE WITH SUPPLEMENTAL SPECIFICATION 815 USING A THREE COAT SYSTEM OF OZEU. PAYMENT FOR PAINTING THE NEW STEEL END CROSSFRAMES WITH AN INTERMEDIATE AND FINISH COAT OF SYSTEM OZEU SHALL BE INCLUDED IN THE APPROPRIATE 815 ITEM.

** SEE PROPOSAL NOTE

DESIGN AGENCY
EUTHENICS INC.
CONSULTING ENGINEERS
CLEVELAND, OHIO

| DESIGNED | DRAWN | REVIEWED | DATE |
|---|---|---|---|
| KJW | JAM | KRD | 12/00 |
| CHECKED | REVISED | STRUCTURE FILE NUMBER | |
| JAM | | 7800339/7800363 | |

**ESTIMATED QUANTITIES**
TRU-5-0764 L&R
OVER MAHONING RIVER

**TRU-5-6.45**



TR005E01.DWG F:\JOBS\502\BRIDGE\08\DWG\502E008.DWG KJW 2/27/01 PLOT 1:1

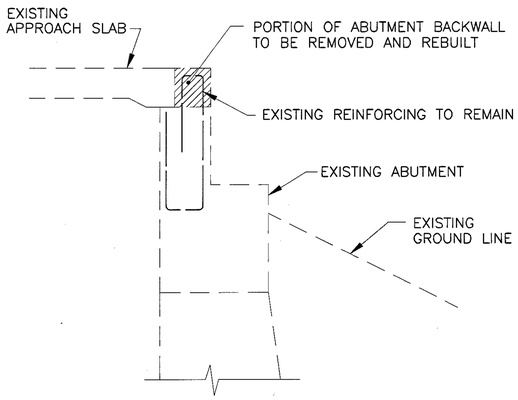


ABUTMENT REMOVAL LIMITS
AT EXISTING APPROACH SLAB

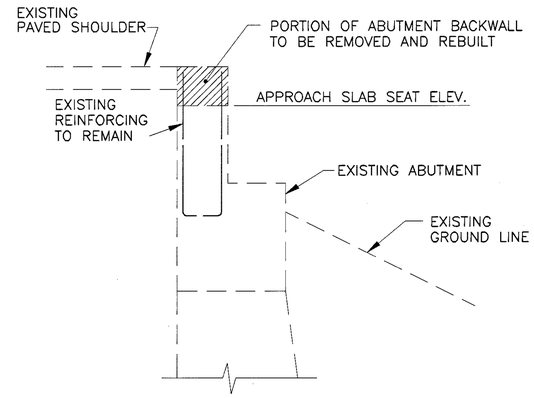


ABUTMENT REMOVAL LIMITS
AT EXISTING PAVED SHOULDER

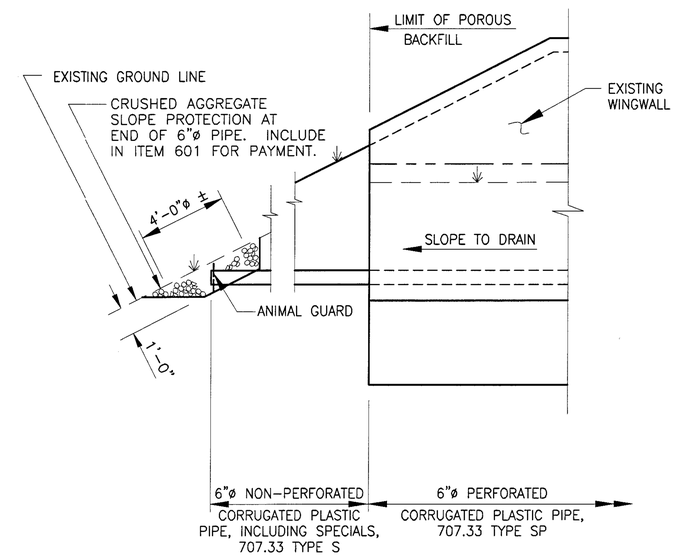


DETAIL A

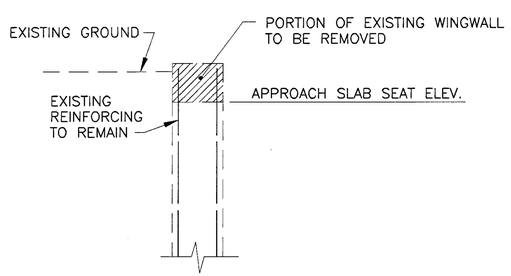


WINGWALL REMOVAL LIMITS

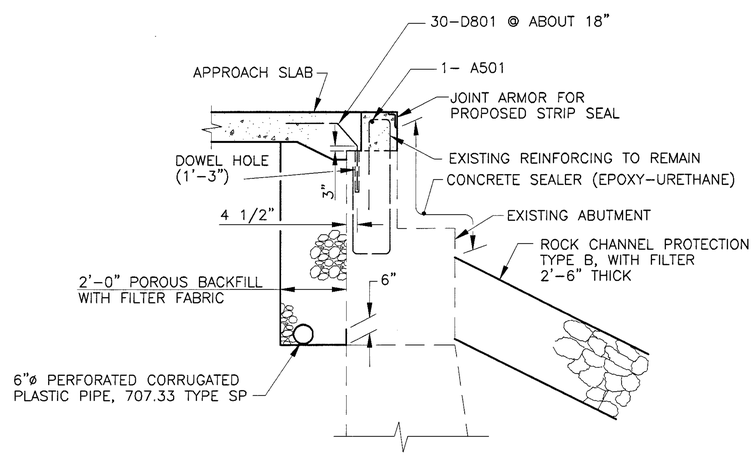


MODIFIED ABUTMENT

DESIGN AGENCY
EUTHENICS INC.
CONSULTING ENGINEERS
CLEVELAND, OHIO

| DESIGNED | DRAWN | REVIEWED | DATE |
|---|---|---|---|
| KJW | KJW | RAB | 2/01 |
| CHECKED | REVISED | STRUCTURE FILE NUMBER | |
| KRD | | 7800339J/7800363R | |

**ABUTMENT DETAILS**
TRU-5-0764 L&R
OVER MAHONING RIVER

**TRU-5-6.45**



TR005F42.DWG F:\JOBS\5021\BRIDGE\03\DWG\5020038.DWG KJW 2/21/01 PLOT 1:20

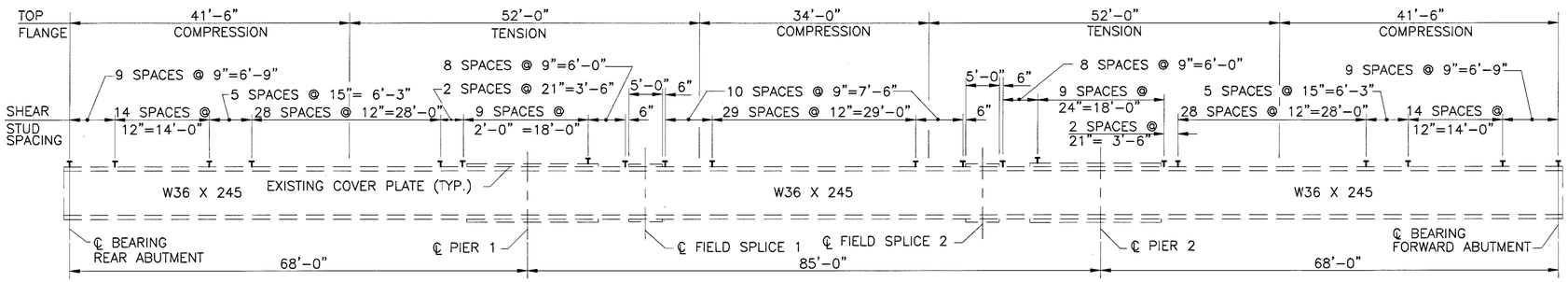


TYPICAL BEAM ELEVATION

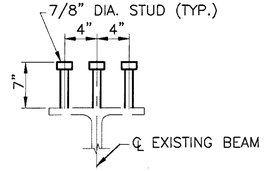


SHEAR CONNECTOR DETAIL

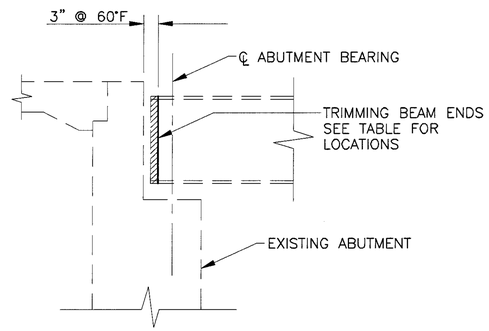


DETAIL A

| DIMENSION A⊙ E.B. AND W.B. | | |
|---|---|---|
| F° | REAR ABUTMENT | FORWARD ABUTMENT |
| 90° | 1 1/4" | 1 1/2" |
| 80° | 1 3/8" | 1 9/16" |
| 70° | 1 7/16" | 1 5/8" |
| 60° | 1 9/16" | 1 11/16" |
| 50° | 1 3/4" | 1 3/4" |
| 40° | 1 13/16" | 1 13/16" |
| 30° | 1 7/8" | 1 7/8" |

NOTE: DIMENSION A⊙ FOR 3" STRIP SEAL GLAND.
SEE OHIO STANDARD DRAWING EXJ-4-87 SHEET 2 OF 5.

| TRIMMING BEAM ENDS | |
|---|---|
| LOCATION | BEAMS |
| WESTBOUND | |
| REAR ABUTMENT | B1 THRU B5 |
| FORWARD ABUTMENT | B1 THRU B5 |
| EASTBOUND | |
| REAR ABUTMENT | B1 THRU B5 |
| FORWARD ABUTMENT | B1 THRU B5 |

NOTES:

1. WELDED ATTACHMENT OF SUPPORTS FOR CONCRETE DECK FINISHING MACHINE MAY BE MADE TO AREAS OF THE FASCIA BEAM FLANGES DESIGNATED "COMPRESSION". ATTACHMENTS SHALL NOT BE MADE TO AREAS DESIGNATED "TENSION". FILLET WELDS TO COMPRESSION FLANGES SHALL BE NOT CLOSER THAN 1 INCH FROM THE EDGE OF THE FLANGE, BE NOT MORE THAN 2 INCHES LONG, AND BE NOT SMALLER THAN THE MINIMUM SIZE REQUIRED BY AASHTO.

2. REMOVE EXISTING END CROSSFRAMES AND GRIND CONNECTIONS TO BEAM WEBS SMOOTH. PAYMENT FOR THIS WORK INCLUDED WITH ITEM 202.

3. FOR PROPOSED END CROSSFRAMES SEE OHIO STANDERD DRAWING EXJ-4-87 SHEET 1 OF 5

DESIGN AGENCY
EUTHENICS INC.
CONSULTING ENGINEERS
CLEVELAND, OHIO

| DESIGNED | DRAWN | REVIEWED | DATE |
|---|---|---|---|
| KJW | KJW | RAB | 1/01 |
| CHECKED | REVISED | STRUCTURE FILE NUMBER | |
| KRD | | 7800339/7800363 | |

BEAM ELEVATION AND DETAILS
TRU-5-0764 L&R
OVER MAHONING RIVER

TRU-5-6.45



TR005AD1.DWG F:\JOBS\502\BRIDGE\03\5025E008.DWG K.W. 2/27/01 PLOT 1:2.6667

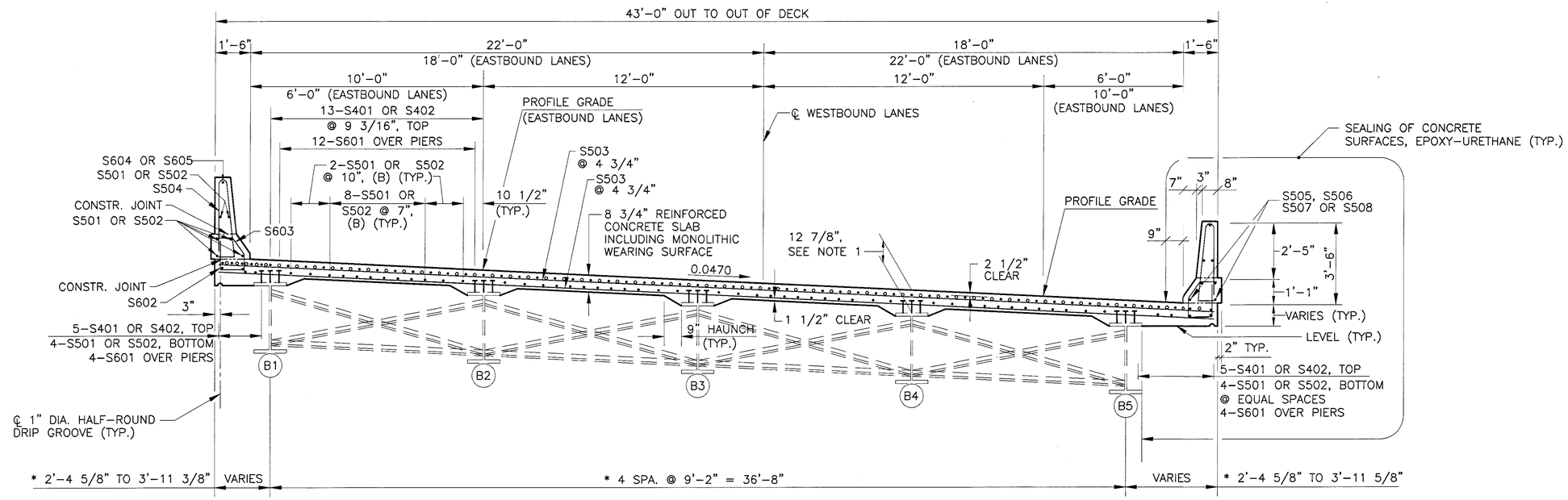


## TRANSVERSE SECTION

WESTBOUND LANES SHOWN, EASTBOUND LANES TYPICAL, EXCEPT AS NOTED

DIMENSIONS MEASURED RADIALLY EXCEPT AS NOTED.
* MEASURED PERPENDICULAR TO BEAMS

### DECK SCREED ELEVATIONS – WESTBOUND

| | SPAN 1 | | | | SPAN 2 | | | | | | SPAN 3 | | | |
|---|---|---|---|---|---|---|---|---|---|---|---|---|---|---|
| | R.A. ℄ BEARING | 1/4 | 1/2 | 3/4 | ℄ PIER 1 | FS1 | 1/4 | 1/2 | 3/4 | FS2 | ℄ PIER 2 | 1/4 | 1/2 | 3/4 | F.A. ℄ BEARING |
| LT TOE OF BARRIER | 897.08 | 897.06 | 897.05 | 897.02 | 897.00 | 897.01 | 897.02 | 897.04 | 897.02 | 897.01 | 897.01 | 897.02 | 897.04 | 897.04 | 897.03 |
| B1 | 897.04 | 897.00 | 896.97 | 896.93 | 896.89 | 896.90 | 896.91 | 896.93 | 896.91 | 896.90 | 896.90 | 896.93 | 896.96 | 896.98 | 896.99 |
| B2 | 896.61 | 896.57 | 896.54 | 896.50 | 896.46 | 896.46 | 896.47 | 896.49 | 896.47 | 896.40 | 896.47 | 896.50 | 896.53 | 896.55 | 896.56 |
| B3 | 896.18 | 896.14 | 896.11 | 896.07 | 896.03 | 896.04 | 896.04 | 896.06 | 896.04 | 896.04 | 896.04 | 896.07 | 896.10 | 896.12 | 896.13 |
| ℄ | 896.04 | 896.03 | 896.02 | 895.99 | 895.96 | 895.98 | 895.99 | 896.01 | 895.99 | 895.98 | 895.97 | 895.99 | 896.01 | 896.01 | 895.99 |
| B4 | 895.75 | 895.71 | 895.68 | 895.64 | 895.60 | 895.61 | 895.62 | 895.63 | 895.62 | 895.61 | 895.61 | 895.64 | 895.67 | 895.69 | 895.69 |
| B5 | 895.32 | 895.27 | 895.25 | 895.21 | 895.17 | 895.18 | 895.19 | 895.20 | 895.19 | 895.18 | 895.18 | 895.21 | 895.24 | 895.25 | 895.26 |
| RT TOE OF BARRIER | 895.20 | 895.18 | 895.17 | 895.14 | 895.12 | 895.13 | 895.14 | 895.16 | 895.14 | 895.13 | 895.13 | 895.14 | 895.16 | 895.16 | 895.15 |

### DECK SCREED ELEVATIONS – EASTBOUND

| | SPAN 1 | | | | SPAN 2 | | | | | | SPAN 3 | | | |
|---|---|---|---|---|---|---|---|---|---|---|---|---|---|---|
| | R.A. ℄ BEARING | 1/4 | 1/2 | 3/4 | ℄ PIER 1 | FS1 | 1/4 | 1/2 | 3/4 | FS2 | ℄ PIER 2 | 1/4 | 1/2 | 3/4 | F.A. ℄ BEARING |
| LT TOE OF BARRIER | 895.71 | 895.73 | 895.73 | 895.71 | 895.68 | 895.68 | 895.67 | 895.68 | 895.67 | 895.67 | 895.66 | 895.69 | 895.71 | 895.70 | 895.67 |
| B1 | 895.67 | 895.67 | 895.65 | 895.61 | 895.58 | 895.57 | 895.56 | 895.57 | 895.56 | 895.56 | 895.56 | 895.59 | 895.63 | 895.64 | 895.63 |
| B2 | 895.24 | 895.25 | 895.22 | 895.18 | 895.15 | 895.14 | 895.13 | 895.14 | 895.13 | 895.13 | 895.13 | 895.16 | 895.20 | 895.21 | 895.20 |
| ℄ | 894.86 | 894.89 | 894.88 | 894.86 | 894.84 | 894.83 | 894.83 | 894.84 | 894.83 | 894.82 | 894.82 | 894.84 | 894.86 | 894.86 | 894.83 |
| B3 | 894.81 | 894.81 | 894.79 | 894.75 | 894.72 | 894.71 | 894.70 | 894.71 | 894.70 | 894.70 | 894.70 | 894.73 | 894.77 | 894.78 | 894.77 |
| B4 | 894.38 | 894.38 | 894.36 | 894.32 | 894.29 | 894.28 | 894.27 | 894.28 | 894.27 | 894.27 | 894.27 | 894.31 | 894.34 | 894.35 | 894.34 |
| B5 | 893.95 | 893.95 | 893.92 | 893.89 | 893.85 | 893.84 | 893.84 | 893.84 | 893.84 | 893.83 | 893.83 | 893.87 | 893.90 | 893.92 | 893.91 |
| RT TOE OF BARRIER | 893.83 | 893.85 | 893.85 | 893.83 | 893.80 | 893.80 | 893.79 | 893.80 | 893.79 | 893.79 | 893.78 | 893.81 | 893.83 | 893.82 | 893.79 |

NOTE: SCREED ELEVATIONS SHOWN ARE FOR THE DECK SLAB SURFACE PRIOR TO CONCRETE PLACEMENT. ALLOWANCE HAS BEEN MADE FOR ANTICIPATED CALCULATED DEAD LOAD DEFLECTION.

## NOTES:

1. CONCRETE DECK SLAB DEPTH: THE DIMENSION SHOWN FROM THE TOP OF THE CONCRETE DECK TO THE TOP OF THE FLANGE, MINUS THE DESIGN HAUNCH THICKNESS OF 4 1/8 INCHES, HAS BEEN USED FOR COMPUTING THE DECK CONCRETE QUANTITIES. CONCRETE REQUIRED TO FILL THE HAUNCHES, INCLUDING ADDITIONAL OR LESS MATERIAL REQUIRED DUE TO HAUNCH CONSTRUCTION TOLERANCES, SHALL BE CONSIDERED AS INCIDENTAL AND WILL NOT BE INCLUDED IN THE QUANTITY CALCULATIONS FOR PAYMENT.

2. A HAUNCH WIDTH OF 9" SHALL BE USED. HOWEVER, THE HAUNCH WIDTH MAY VARY BETWEEN 6" AND 1'-0".

3. MINIMUM LAP LENGTHS:

   LAP NO. 4 BARS = 1'-7"
   LAP NO. 5 BARS = 2'-7"
   LAP NO. 6 BARS = 3'-5"

4. FOR PARAPET REINFORCING DETAILS SEE SHEET 6/7.

5. FOR ADDITIONAL REINFORCING OVER PIERS SEE SHEET 6/7.

DESIGN AGENCY
EUTHENICS INC.
CONSULTING ENGINEERS
CLEVELAND, OHIO

| DESIGNED | DRAWN | REVIEWED | DATE |
|---|---|---|---|
| KJW | KJW | KRD | 1/01 |
| CHECKED | REVISED | STRUCTURE FILE NUMBER | |
| KRD | | 7800339/7800363 | |

**TRANSVERSE SECTION AND DETAILS**
TRU-5-0764 L&R
OVER MAHONING RIVER

**TRU-5-6.45**

5/7

109/164

TR005151.DWG F:\JOBS\502\BRIDGE\08\5027XS08.DWG KJW 2/27/01 PLOT 1:2.6667

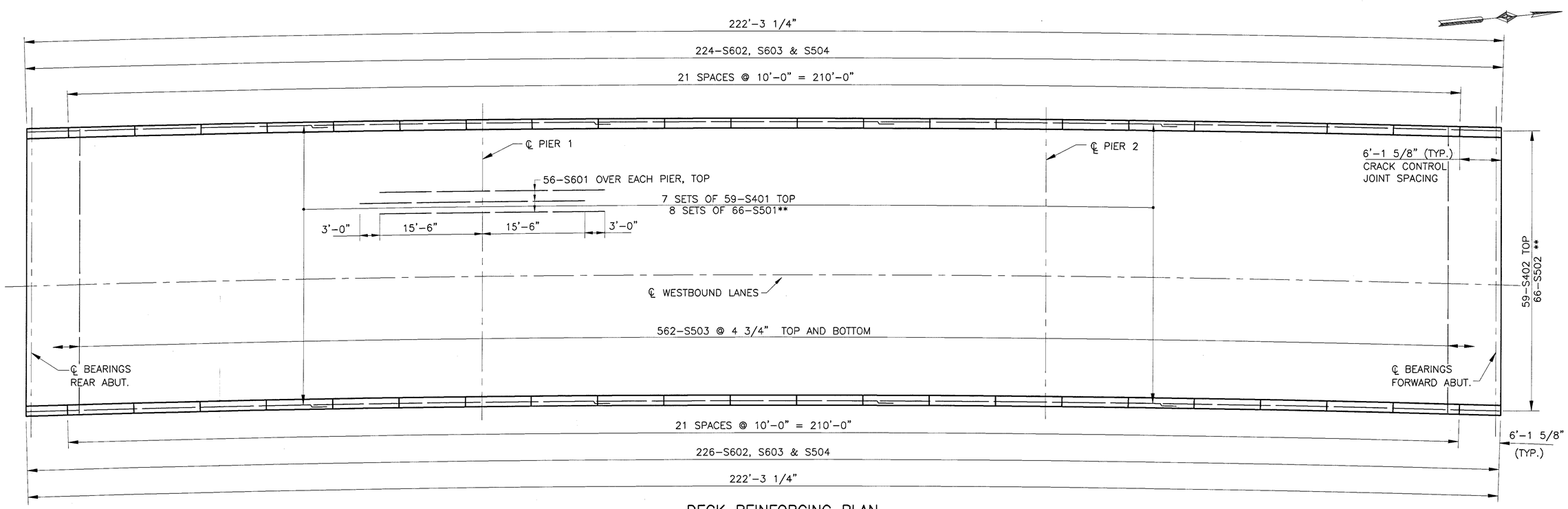


## DECK REINFORCING PLAN

** 53-S501 OR S502 IN BOTTOM MAT
6-S501 OR S502 IN LEFT PARAPET
4-S501 OR S502 IN RIGHT PARAPET

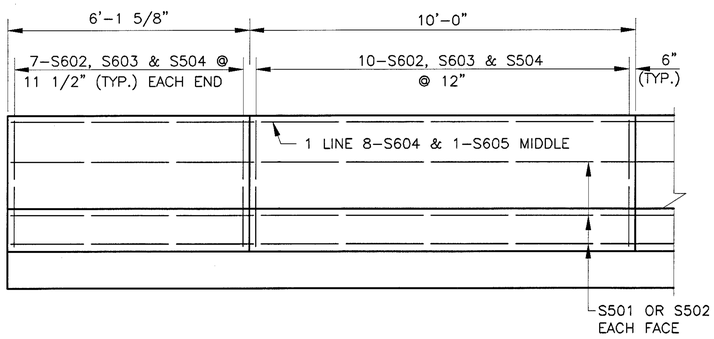


## LEFT PARAPET REINFORCING DETAIL

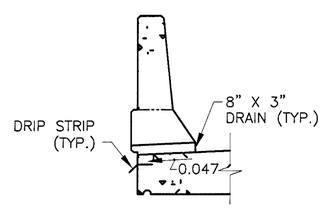


## SECTION A-A

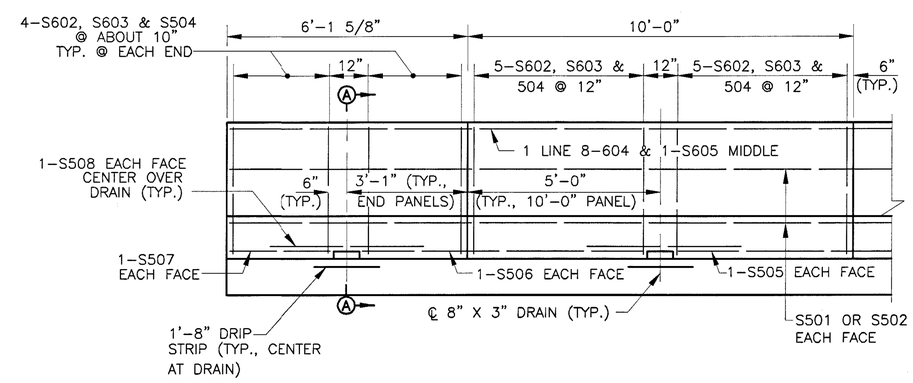


## RIGHT PARAPET REINFORCING DETAIL

## NOTE:

1. FOR ADDITIONAL DETAILS AND NOTES OF STEEL DRIP STRIP SEE OHIO STANDARD DRAWING DS-1-92.
2. ALL REINFORCING STEEL BAR MARKS SHALL BE PREFIXED "S" (SUPERSTRUCTURE) UNLESS NOTED.
3. FOR REINFORCEMENT SCHEDULE SEE SHEET 7/7. "S" (SUPERSTRUCTURE) UNLESS NOTED.

DESIGN AGENCY
EUTHENICS INC.
CONSULTING ENGINEERS
CLEVELAND, OHIO

| DESIGNED | DRAWN | REVIEWED | DATE |
|---|---|---|---|
| KJW | KJW | KRD | 1/01 |
| CHECKED | REVISED | STRUCTURE FILE NUMBER | |
| KRD | | 7800339/7800363 | |

**SLAB PLAN AND DETAILS**
BRIDGE NO. TRU-5-0764 L&R
OVER MAHONING RIVER

**TRU-5-6.45**



H0025031.DWG F:\JOBS\F\JOBS\502\BRIDGE\DB\DWG\502SLB208.DWG KJW 2/27/01 PLOT 1:8

# REINFORCING STEEL LIST

| MARK | NUMBER REAR | NUMBER FWD | NUMBER TOTAL | LENGTH | TYPE | WEIGHT (LBS.) | DIMENSIONS A | B | C | D | E | R | SER. INCR. |
|---|---|---|---|---|---|---|---|---|---|---|---|---|---|
| ABUTMENT – WESTBOUND | | | | | | | | | | | | | |
| A501 | 1 | 1 | 2 | 42'–8" | STR | 89 | | | | | | | |
| D801 | 30 | 30 | 60 | 4'–2" | 6 | 668 | 1'–6" | 1'–0" | 1'–0" | 1'–5" | | | |
| TOTAL ABUTMENT = 757 LBS. | | | | | | | | | | | | | |
| SUPERSTRUCTURE – WESTBOUND | | | | | | | | | | | | | |
| S401 | | | 413 | 30'–0" | STR | 8,277 | | | | | | | |
| S402 | | | 59 | 23'–1" | STR | 910 | | | | | | | |
| S501 | | | 528 | 30'–0" | STR | 16,521 | | | | | | | |
| S502 | | | 66 | 3'–0" | STR | 207 | | | | | | | |
| S503 | | | 1,124 | 42'–8" | STR | 50,019 | | | | | | | |
| S504 | | | 450 | 7'–1" | 9 | 3,325 | 3'–3" | 3'–0" | | | | | |
| S505 | | | 40 | 9'–0" | STR | 375 | | | | | | | |
| S506 | | | 4 | 7'–0" | STR | 29 | | | | | | | |
| S507 | | | 4 | 2'–5" | STR | 10 | | | | | | | |
| S508 | | | 46 | 4'–8" | STR | 224 | | | | | | | |
| S601 | | | 112 | 34'–0" | STR | 5,720 | | | | | | | |
| S602 | | | 450 | 2'–8" | 1 | 1,802 | 11" | 1'–11" | | | | | |
| S603 | | | 450 | 3'–4" | 10 | 2,253 | 1'–2" | | | | | | |
| S604 | | | 16 | 30'–0" | STR | 721 | | | | | | | |
| S605 | | | 2 | 9'–9" | STR | 28 | | | | | | | |
| TOTAL SUPERSTRUCTURE = 90,421 LBS. | | | | | | | | | | | | | |

| MARK | NUMBER REAR | NUMBER FWD | NUMBER TOTAL | LENGTH | TYPE | WEIGHT (LBS.) | DIMENSIONS A | B | C | D | E | R | SER. INCR. |
|---|---|---|---|---|---|---|---|---|---|---|---|---|---|
| ABUTMENT – EASTBOUND | | | | | | | | | | | | | |
| A501 | 1 | 1 | 2 | 42'–8" | STR | 89 | | | | | | | |
| D801 | 30 | 30 | 60 | 4'–2" | 6 | 668 | 1'–6" | 1'–0" | 1'–0" | 1'–5" | | | |
| * TOTAL ABUTMENT = 757 LBS. | | | | | | | | | | | | | |
| SUPERSTRUCTURE – EASTBOUND | | | | | | | | | | | | | |
| S401 | | | 413 | 30'–0" | STR | 8,277 | | | | | | | |
| S402 | | | 59 | 23'–1" | STR | 910 | | | | | | | |
| S501 | | | 528 | 30'–0" | STR | 16,521 | | | | | | | |
| S502 | | | 66 | 3'–0" | STR | 207 | | | | | | | |
| S503 | | | 1,124 | 42'–8" | STR | 50,019 | | | | | | | |
| S504 | | | 450 | 7'–1" | 9 | 3,325 | 3'–3" | 3'–0" | | | | | |
| S505 | | | 40 | 9'–0" | STR | 375 | | | | | | | |
| S506 | | | 4 | 7'–0" | STR | 29 | | | | | | | |
| S507 | | | 4 | 2'–5" | STR | 10 | | | | | | | |
| S508 | | | 46 | 4'–8" | STR | 224 | | | | | | | |
| S601 | | | 112 | 34'–0" | STR | 5,720 | | | | | | | |
| S602 | | | 450 | 2'–8" | 1 | 1,802 | 11' | 1'–11" | | | | | |
| S603 | | | 450 | 3'–4" | 10 | 2,253 | 1'–2" | | | | | | |
| S604 | | | 16 | 30'–0" | STR | 721 | | | | | | | |
| S605 | | | 2 | 9'–9" | STR | 28 | | | | | | | |
| TOTAL SUPERSTRUCTURE = 90,421 LBS. | | | | | | | | | | | | | |

## NOTES:

1. THE BAR SIZE NUMBER IS SPECIFIED ON THE PLANS IN THE BAR MARK COLUMN. THE FIRST DIGIT WHERE THREE DIGITS ARE USED, AND THE FIRST TWO DIGITS WHERE FOUR ARE USED, INDICATES THE BAR SIZE NUMBER. FOR EXAMPLE, S501 IS A NO. 5 BAR. BAR DIMENSIONS SHOWN ARE OUT TO OUT UNLESS OTHERWISE NOTED. R INDICATES INSIDE RADIUS, UNLESS OTHERWISE NOTED.
2. ALL REINFORCING STEEL SHALL BE EPOXY COATED. PAYMENT FOR REINFORCING BARS SHALL BE INCLUDED WITH APPROPRIATE ITEM 842 OR 893 CONCRETE ITEMS.
3. "STR" IN THE TYPE COLUMN INDICATES STRAIGHT BARS.
4. REFER TO C.M.S. SECTION 509.05 FOR STANDARD BEND DIMENSIONS.
5. ALL REINFORCING STEEL CLEARANCES ARE 2" UNLESS OTHERWISE NOTED.
6. REINFORCING STEEL WEIGHTS ARE GIVEN FOR INFORMATION ONLY.

## BENDING DIAGRAMS

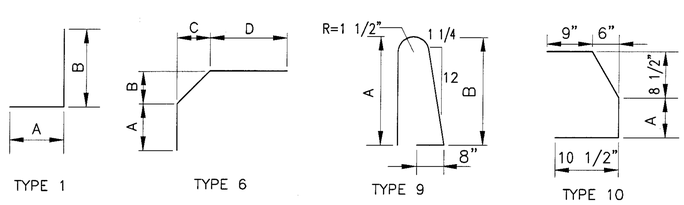


DESIGN AGENCY
EUTHENICS INC.
CONSULTING ENGINEERS
CLEVELAND, OHIO

| DESIGNED | DRAWN | REVIEWED | DATE |
|---|---|---|---|
| KJW | KJW | KRD | 1/01 |
| CHECKED | REVISED | STRUCTURE FILE NUMBER | |
| KRD | | 7800339/7800363 | |

**REINFORCING SCHEDULE**
TRU–5–0764 L&R
OVER MAHONING RIVER

**TRU-5-6.45**



TR0205RL1.DWG F:\JOBS\F\JOB5\502\BRIDGE\06\502R508.DWG KJW 2/27/01 PLOT 1:1

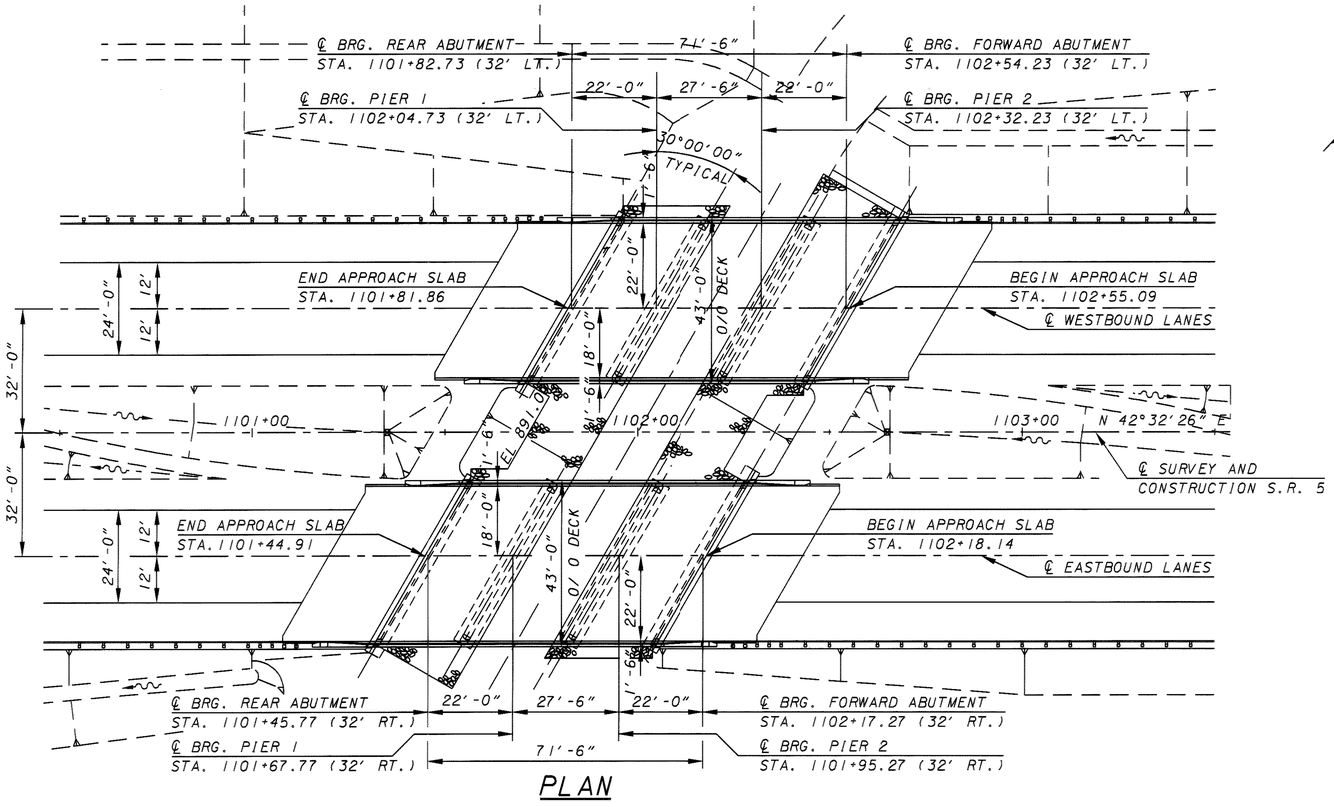


## PLAN

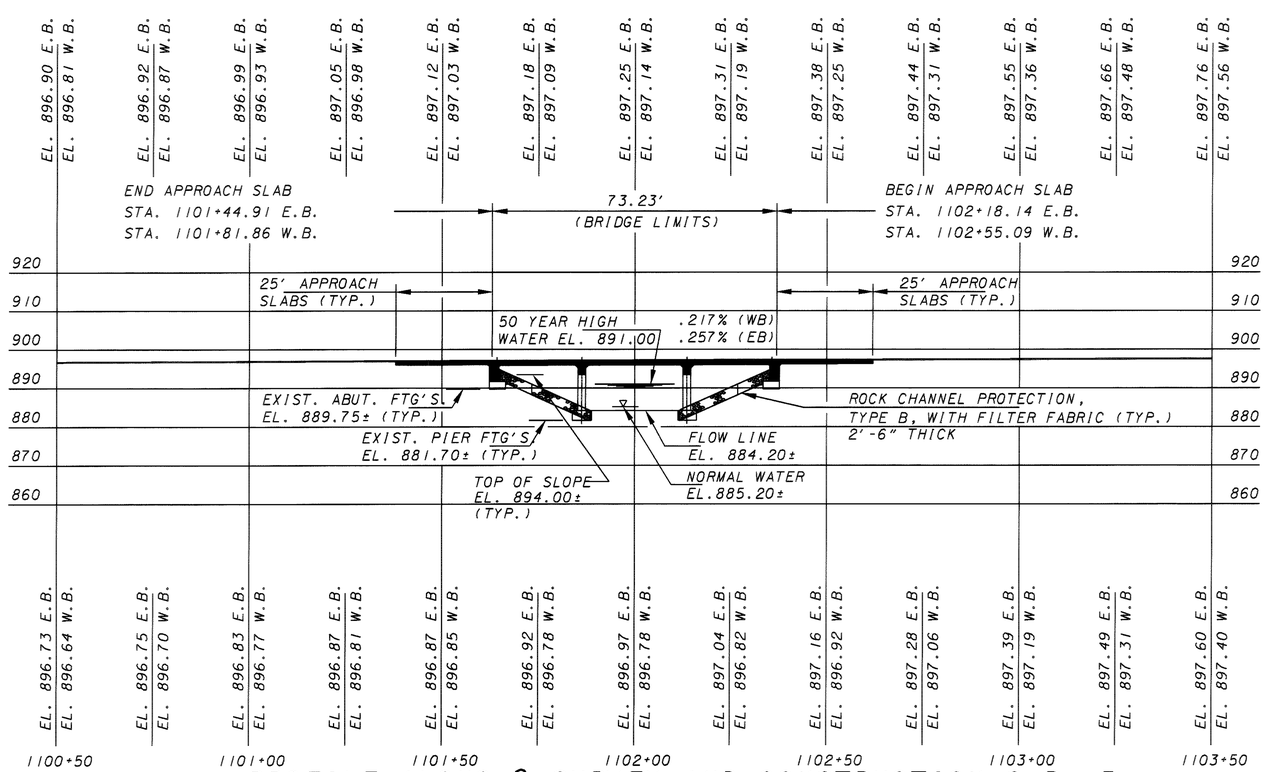


## PROFILE ALONG ℄ SURVEY AND CONSTRUCTION S.R. 5

## HYDRAULIC DATA

DRAINAGE AREA = 5.00 SQ. MI.
HW50 ELEV. = EL. 891.00

TAKEN FROM EXISTING PLANS DATED 1968

STRUCTURE CLEARS THE DESIGN (50 YR.) FLOOD BY 6 FEET.

## LEGEND

DENOTES ROCK CHANNEL PROTECTION, TYPE B, WITH FILTER FABRIC, 2'-6" THICK

## TEMPORARY BENCH MARKS:

BENCH MARK NUMBER 1:
IRON PIN FOUND IN MEDIAN - ℄ SURVEY S.R. 5, STA. 1098+37.32, ELEV. 894.95

BENCH MARK NUMBER 2:
IRON PIN FOUND IN MEDIAN - ℄ SURVEY S.R. 5, STA. 1104+00.00, ELEV. 896.55.

## TRAFFIC DATA

| | |
|---|---|
| CURRENT A.D.T. (2000) | = 28830 |
| DESIGN YEAR A.D.T. (2020) | = 41690 |
| D.H.V(2020) | = 3752 |
| D | = 60% |
| T | = 6% |

## EXISTING STRUCTURE (E.B. & W.B.)

TYPE: THREE SPAN, CONTINUOUS REINFORCED CONCRETE SLAB ON REFURBISHED REINFORCED CONCRETE SUBSTRUCTURES.

SPANS: 22'-0"±, 27'-6"±, 22'-0"± CENTERLINE TO CENTERLINE BEARINGS

ROADWAY: 40'-0" FACE TO FACE OF GUARDRAIL.

SKEW: 30°00' 00" L.F.

DESIGN LOADING: CF=2000 (57)

WEARING SURFACE: MONOLITHIC CONCRETE

APPROACH SLAB: AS-1-81, (25'-0")

ALIGNMENT: TANGENT

CROWN .0156 ft/ft

STRUCTURE FILE NUMBER: 7800428 L / 7800452 R

## PROPOSED STRUCTURE (E.B. & W.B.)

PROPOSED WORK: NEW WIDENED, THREE SPAN, REINFORCED CONCRETE SLAB ON WIDENED SUBSTRUCTURES

SPANS: 22'-0"±, 27'-6"±, 22'-0"± CENTERLINE TO CENTERLINE BEARINGS

ROADWAY: 43'-0" OUT TO OUT OF DECK SLAB, 40'-0" TOE TO TOE OF REINFORCED CONCRETE PARAPETS

SKEW: 30°00'00" L. F.

DESIGN LOADING: HS 25-44 AND ALTERNATE MILITARY LOADING

WEARING SURFACE: MONOLITHIC CONCRETE

APPROACH SLAB: AS-1-81, (25'-0") AS PER PLAN

ALIGNMENT: TANGENT

CROWN .0156 ft/ft

LATITUDE: N 41°15' 29"
LONGITUDE: W 80°52' 98"

STRUCTURE FILE NUMBER: 7800436 L / 7800460 R

URS
AKRON CLEVELAND COLUMBUS
344 WHITE POND DRIVE
AKRON, OHIO 44320-1100
330-869-3300

| DATE | REVIEWED | DRAWN | DESIGNED | TRUMBULL COUNTY |
|---|---|---|---|---|
| 1/23/01 | J.T.H. | A.L.H. | A.L.H. | STATION 1101+44.91 TO |
| | STRUCTURE FILE NUMBER | REVISED | CHECKED | STATION 1102+18.14 |
| | 7800436 L / 7800460 R | | L.W.P. | |

GENERAL PLAN
BRIDGE NO. TRU-5-0811 L & R
OVER CHOCOLATE RUN

TRU-5-6.45

# ESTIMATED QUANTITIES

CAL'D BY: M.D.P. DATE: 1/10/01
CHK'D BY: L.M.P. DATE: 1/17/01

| ITEM | ITEM EXT. | RIGHT BRIDGE (E.B.) TOTAL | LEFT BRIDGE (W.B.) TOTAL | UNIT | DESCRIPTION | RIGHT BRIDGE (EASTBOUND) ABUTMENTS | RIGHT BRIDGE (EASTBOUND) PIERS | RIGHT BRIDGE (EASTBOUND) SUPER STRU. | RIGHT BRIDGE (EASTBOUND) GEN'L | LEFT BRIDGE (WESTBOUND) ABUTMENTS | LEFT BRIDGE (WESTBOUND) PIERS | LEFT BRIDGE (WESTBOUND) SUPER STRU. | LEFT BRIDGE (WESTBOUND) GEN'L | REF. SHEET |
|---|---|---|---|---|---|---|---|---|---|---|---|---|---|---|
| 202 | 11203 | LUMP | LUMP | | PORTIONS OF STRUCTURE REMOVED, OVER 20 FOOT SPAN, AS PER PLAN | | | | LUMP | | | | LUMP | GN1 |
| 202 | 23500 | 326 | | SQ. YD. | WEARING COURSE REMOVED | | | 326 | | | | | | |
| 503 | 21301 | LUMP | LUMP | | UNCLASSIFIED EXCAVATION, AS PER PLAN | | | | LUMP | | | | LUMP | 2/12 & 3/12 |
| 509 | 20001 | 200 | 200 | POUND | REINFORCING STEEL, REPLACEMENT OF EXISTING REINFORCING STEEL, AS PER PLAN ✳ | | | | 200 | | | | 200 | GN2 |
| 512 | 33300 | 61 | 61 | SQ. YD. | TYPE A WATERPROOFING | 61 | | | | 61 | | | | |
| 518 | 21230 | LUMP | LUMP | | POROUS BACKFILL WITH FILTER FABRIC | | | | LUMP | | | | LUMP | |
| 518 | 40000 | 111 | 111 | LIN. FT. | 6" PERFORATED CORRUGATED PLASTIC PIPE, 707.33 | 111 | | | | 111 | | | | |
| 518 | 40010 | 32 | 32 | LIN. FT. | 6" NON-PERFORATED PIPE, INCLUDING SPECIALS, 707.33 | 32 | | | | 32 | | | | |
| 601 | 32104 | 466 | 466 | CU. YD. | ROCK CHANNEL PROTECTION, TYPE B WITH FABRIC FILTER | 466 | | | | 466 | | | | |
| 842 | 34000 | 21 | 21 | CU. YD. | CLASS S CONCRETE, SUPERSTRUCTURE (PARAPETS) | | | 21 | | | | 21 | | |
| 842 | 42501 | 3 | 3 | CU. YD. | CLASS C CONCRETE, PIER CAP, AS PER PLAN | | 3 | | | | 3 | | | 4/12 |
| 842 | 44101 | 19 | 19 | CU. YD. | CLASS C CONCRETE, ABUTMENT NOT INCLUDING FOOTING, AS PER PLAN | 19 | | | | 19 | | | | |
| 843 | 50000 | 99 | 84 | SQ. FT. | PATCHING CONCRETE STRUCTURES WITH TROWELABLE MORTAR | 72 | 27 | | | 70 | 14 | | | |
| 864 | 10100 | 356 | 356 | SQ. YD. | SEALING OF CONCRETE SURFACES (EPOXY-URETHANE) | 48 | 42 | 266 | | 48 | 42 | 266 | | |
| 893 | 10000 | 155 | 155 | CU. YD. | CLASS S CONCRETE, FOR BRIDGE DECK WITH WARRANTY | | | 155 | | | | 155 | | |

✳ CONTINGENY QUANTITY FOR REPLACEMENT OF DETERIORATED REINFORCING TO BE USED AS DIRECTED BY THE ENGINEER.

## STRUCTURE GENERAL NOTES

PROPOSED WORK: THE PROPOSED WORK SHALL CONSIST OF FOLLOWING: REMOVE EXISTING THREE SPAN CONCRETE SLAB AND GUARDRAIL. REMOVE EXISTING WINGWALLS AND A PORTION OF THE EXISTING ABUTMENTS AS REQUIRED FOR WIDENING. WIDEN THE EXISTING STUB ABUTMENTS AND WALL TYPE PIERS TO ACCOMMODATE A NEW REINFORCED CONCRETE THREE SPAN CONCRETE SLAB SUPERSTRUCTURE AND PARAPETS. PATCH THE EXISTING CONCRETE SUB-STRUCTURE AS REQUIRED. RESTORE SLOPES AT THE ABUTMENTS IN FRONT OF THE PIERS AND PLACE NEW ROCK CHANNEL PROTECTION. INSTALL NEW POROUS BACKFILL WITH DRAIN PIPE BEHIND ABUTMENTS AND WINGWALLS.

ITEM 503- UNCLASSIFIED EXCAVATION, AS PER PLAN
UNCLASSIFIED EXCAVATION SHALL BE IN ACCORDANCE WITH 503 EXCEPT THAT THE BACKFILL MATERIAL BEHIND ABUTMENTS SHALL BE 203 MATERIAL PLACED IN 6" LIFTS.

DEMOLITION DEBRIS
THE CONTRACTOR SHALL TAKE ALL PRECAUTIONS TO AVOID AND/OR LIMIT DEMOLITION DEBRIS FROM ENTERING THE STREAM. ANY MATERIAL THAT DOES FALL INTO THE STREAM SHALL BE REMOVED AS SOON AS POSSIBLE.

ITEM 842 - CLASS C CONCRETE ABUTMENT NOT INCLUDING FOOTING, AS PER PLAN
1 INCH PREFORMED EXPANSION JOINT FILLER, SHALL BE INSTALLED IN ACCORDANCE WITH CMS 516 AND SHALL BE INCLUDED WITH THIS ITEM FOR PAYMENT.

ABBREVIATIONS:

F.A.-FORWARD ABUTMENT
R.A.-REAR ABUTMENT
BRG.-BEARING
C.J.-CONSTRUCTION JOINT
E.F.-EACH FACE
N.F.-NEAR FACE
F.F.-FAR FACE

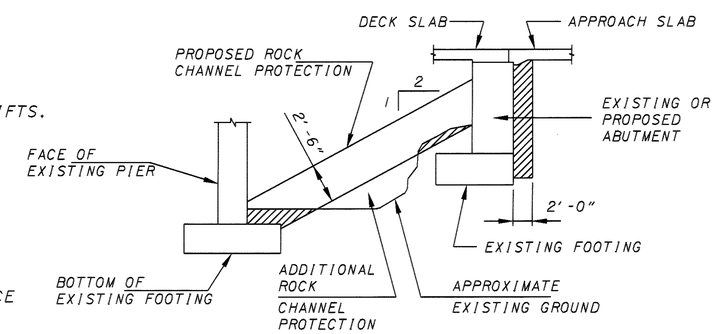


LIMITS OF EXCAVATION DIAGRAM

LEGEND

DENOTES EXCAVATION INCLUDED WITH ITEM 503, UNCLASSIFIED EXCAVATION

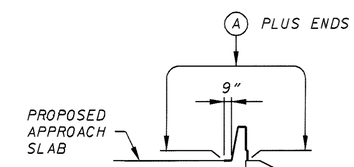


APPROACH SLAB BARRIER

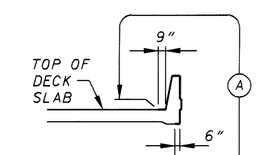


DECK SLAB

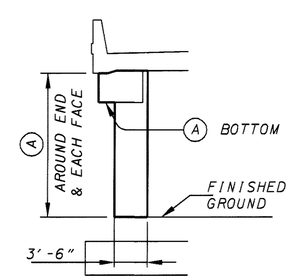


PIERS

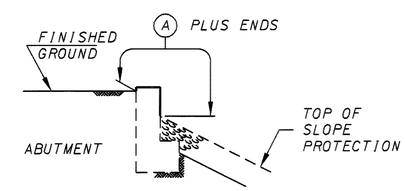


ABUTMENT WINGWALLS

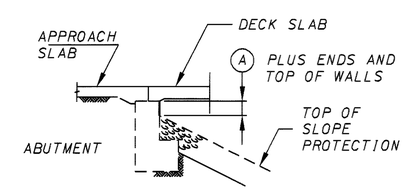


ABUTMENTS

LIMITS OF SEALING OF CONCRETE SURFACES DIAGRAMS

A DENOTES SEALING LIMITS

URS
AKRON CLEVELAND COLUMBUS
564 WHITE POND DRIVE
AKRON, OHIO 44320-1100
330-869-3300 FAX 330-869-3314

| DESIGNED | DRAWN | REVIEWED | DATE |
|---|---|---|---|
| M.P. | F.F.F. | J.T.H. | 1/23/01 |
| CHECKED | REVISED | STRUCTURE FILE NUMBER | |
| L.M.P. | | 7800436 L/7800460 R | |

ESTIMATED QUANTITIES, STRUCTURE GENERAL NOTES, EXCAVATION & SEALING DIAGRAMS
BRIDGE NO. TRU-5-0811 L & R
OVER CHOCOLATE RUN

TRU-5-6.45

2/12

113/164

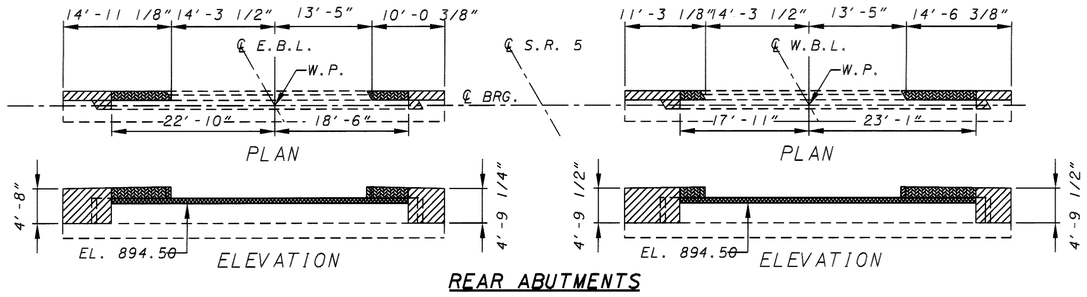


REAR ABUTMENTS

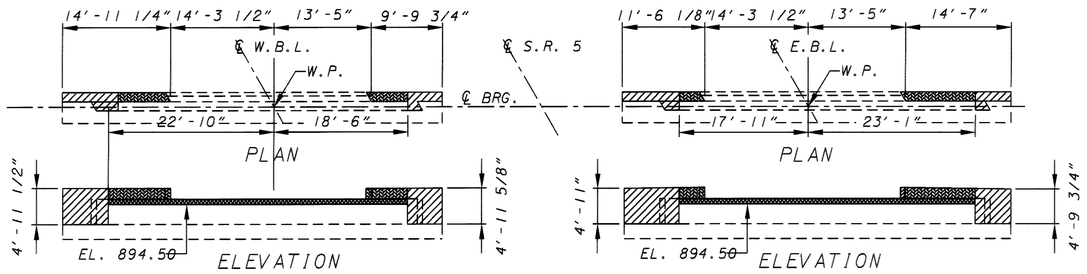


FORWARD ABUTMENTS

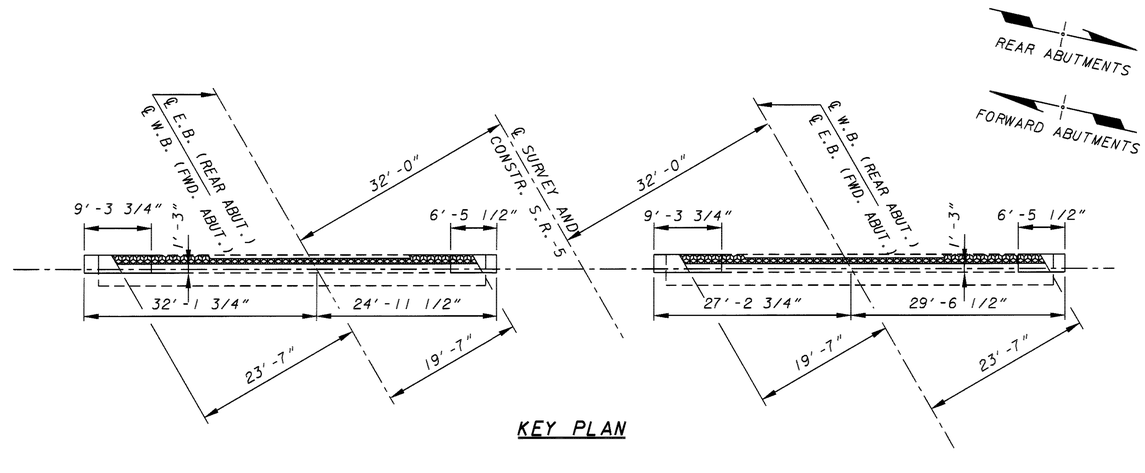


KEY PLAN

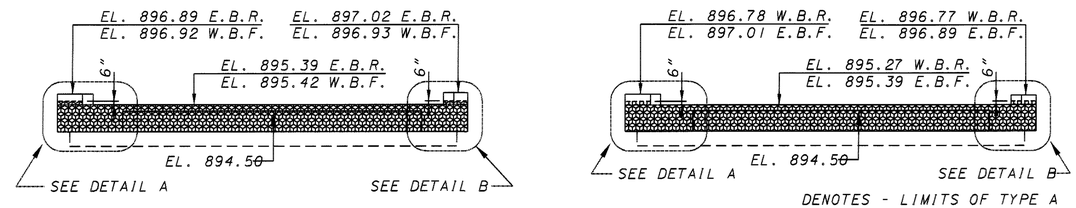


KEY ELEVATION

TYPICAL ABUTMENT LAYOUT

DENOTES ABUTMENT & WALL TO BE REMOVED DOWN TO THE TOP OF THE FOOTING. CARE SHALL BE TAKEN NOT TO DAMAGE VERTICAL REINFORCING, WHICH WILL BE CLEANED AND INCORPORATED INTO THE NEW CONSTRUCTION.

DENOTES 1'-3" THICK WALL TO BE REMOVED DOWN TO THE TOP OF THE EXISTING SLAB SEAT.

DENOTES PORTION OF THE EXISTING SLAB SEAT TO BE REMOVED.

DIMENSIONS SHOWN ARE APPROXIMATE AND WERE TAKEN FROM EXISTING PLANS.

DENOTES - LIMITS OF TYPE A WATERPROOFING ON BACK FACE OF THE ABUTMENT AND APPROACH SLAB SEAT (REFER TO C.M.S. 512.05)

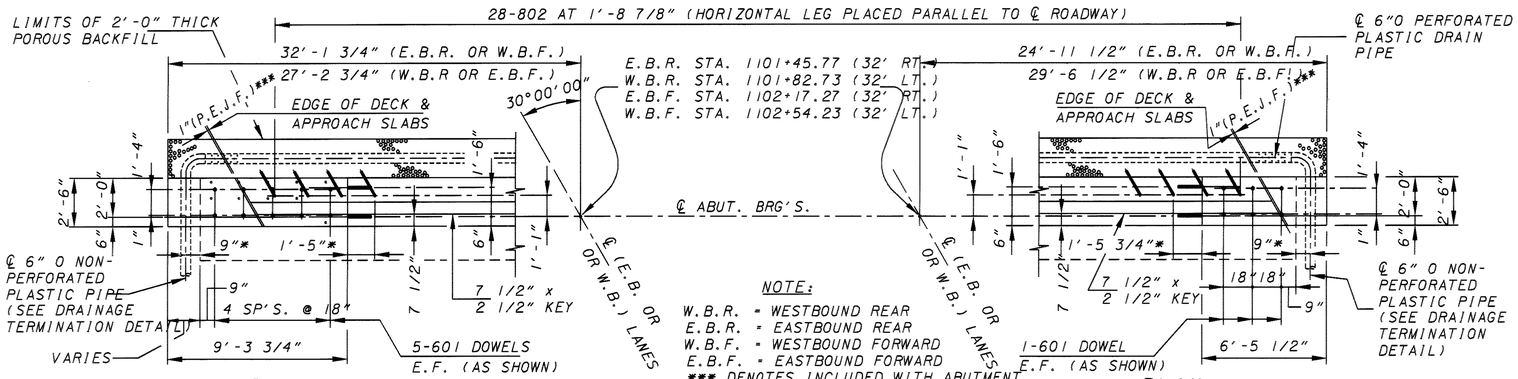


NOTE:

W.B.R. - WESTBOUND REAR
E.B.R. - EASTBOUND REAR
W.B.F. - WESTBOUND FORWARD
E.B.F. - EASTBOUND FORWARD
*** DENOTES INCLUDED WITH ABUTMENT CONCRETE FOR PAYMENT
REINFORCING STEEL MINIMUM LAP FOR NUMBER 8 BARS SHALL BE 3'-9"

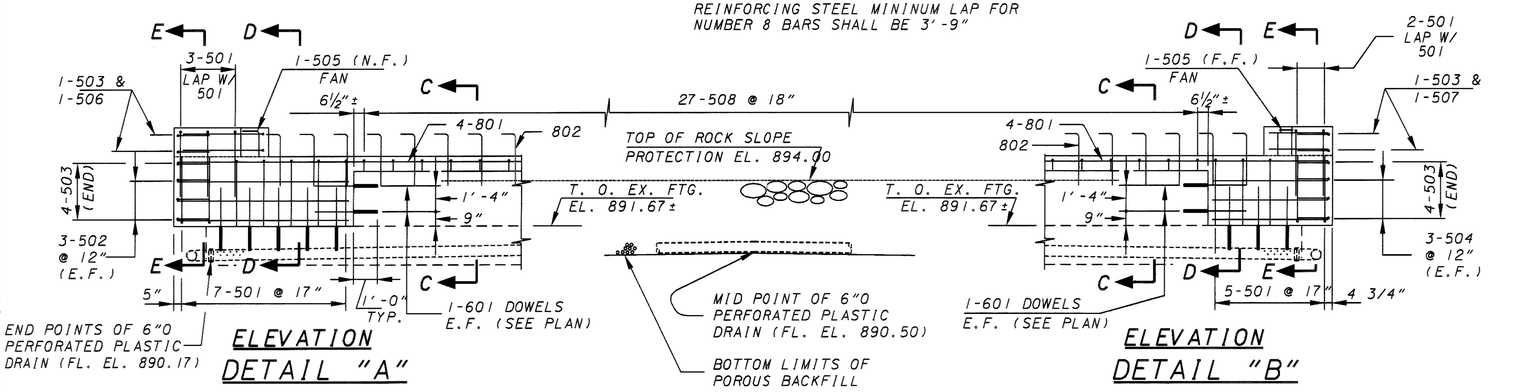


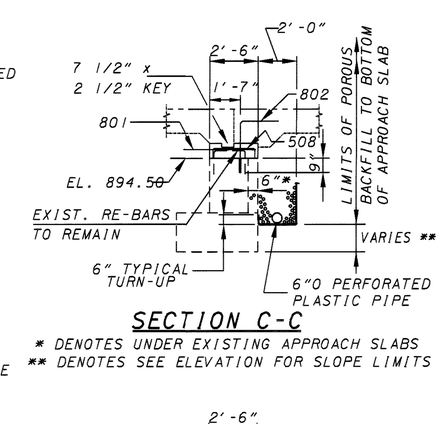


SECTION C-C

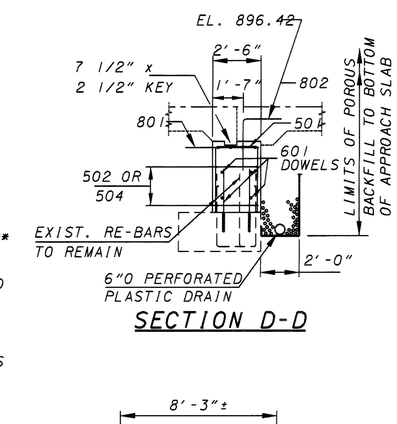


SECTION D-D

* DENOTES UNDER EXISTING APPROACH SLABS
** DENOTES SEE ELEVATION FOR SLOPE LIMITS

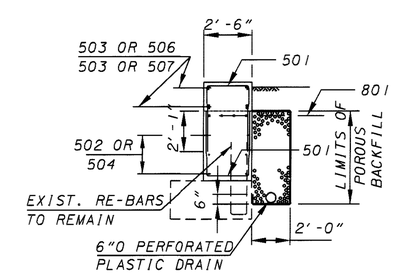


SECTION E-E

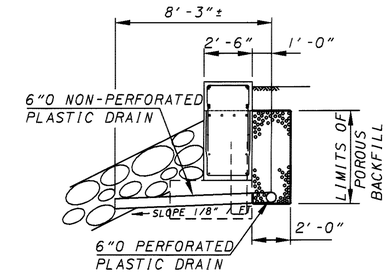


DRAINAGE TERMINATION DETAIL

NOTES:

THE PREFIX A (WESTBOUND AND EASTBOUND LANES) SHALL BE ADDED TO ALL REINFORCING BAR MARKS IN THE ABUTMENTS.

POROUS BACKFILL WITH FILTER FABRIC, 2 FEET THICK SHALL EXTEND UP TO THE PLANE OF THE SUBGRADE, TO 1 FOOT BELOW THE EMBANKMENT SURFACE, AND LATERALLY TO THE ENDS OF THE WINGWALLS.

FOR ADDITIONAL NOTES SEE STRUCTURAL GENERAL NOTES SHEET 2 OF 12.

URS
AKRON CLEVELAND COLUMBUS
344 WHITE POND DRIVE
AKRON, OHIO 44320-1190
TEL: 330-867-8111 FAX: 330-867-0123

| DESIGNED | DRAWN | REVIEWED | DATE |
|---|---|---|---|
| A.L.H. | A.L.H. | J.T.H. | 1/23/01 |
| CHECKED | REVISED | STRUCTURE FILE NUMBER | |
| L.M.P. | | 7800436 L / 7800460 R | |

ABUTMENT DETAILS
BRIDGE NO. TRU-5-0811 L & R
OVER CHOCOLATE RUN

TRU-5-6.45

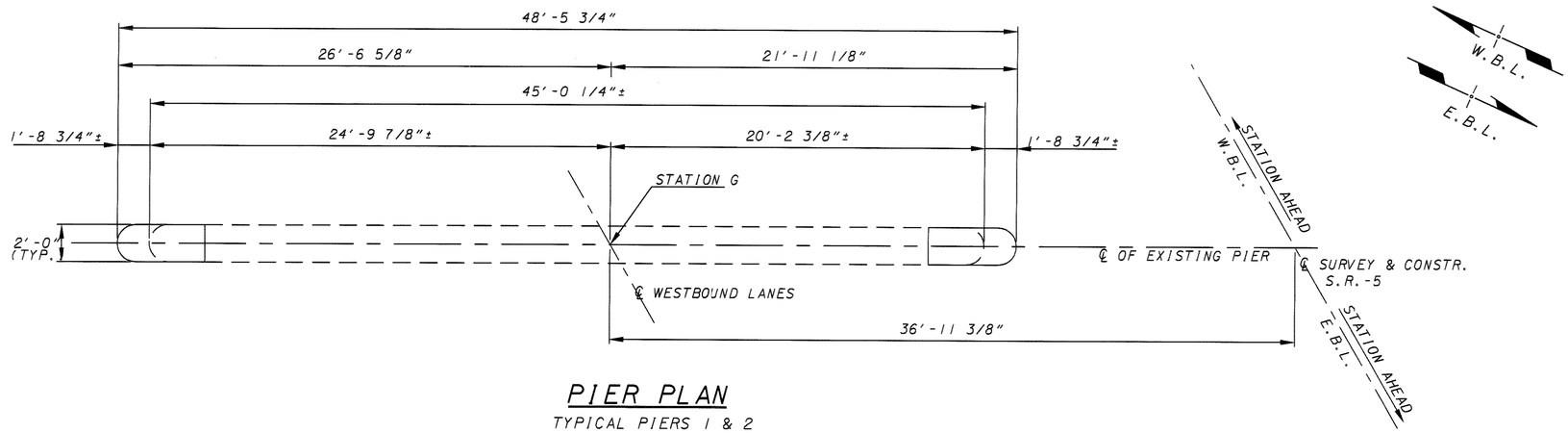


## PIER PLAN

TYPICAL PIERS 1 & 2
(WESTBOUND SHOWN, EASTBOUND SIMILAR)

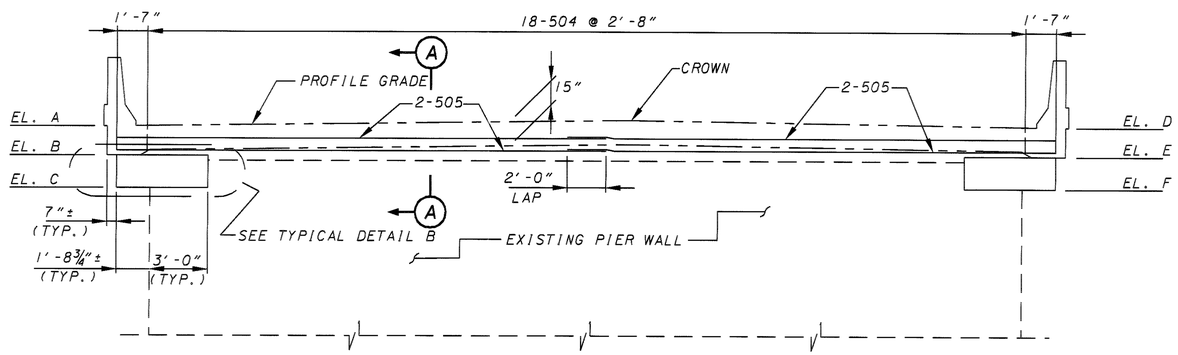


## PIER ELEVATION

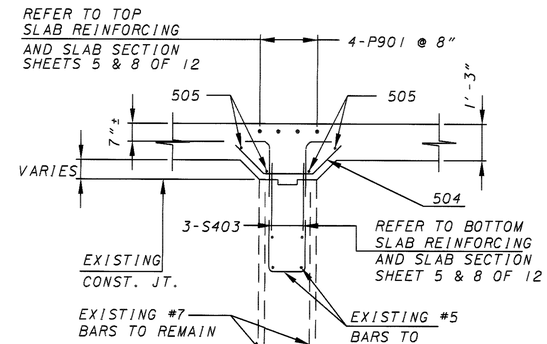


## SECTION A-A

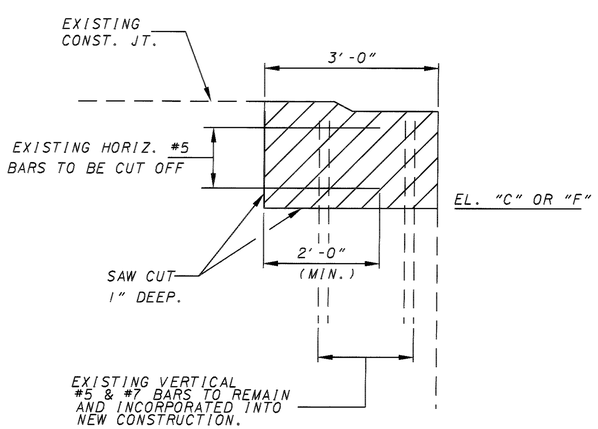


## PIER REMOVAL DETAIL

TYPICAL BOTH ENDS OF
PIERS 1 & 2, W.B.L. & E.B.L.

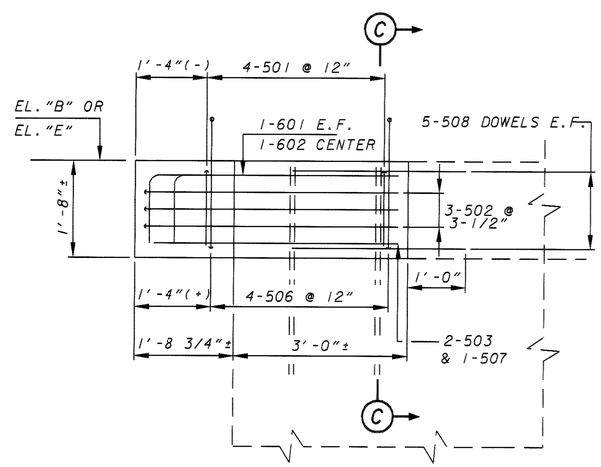


## TYPICAL DETAIL B

(TYPICAL EACH END ALL PIERS)

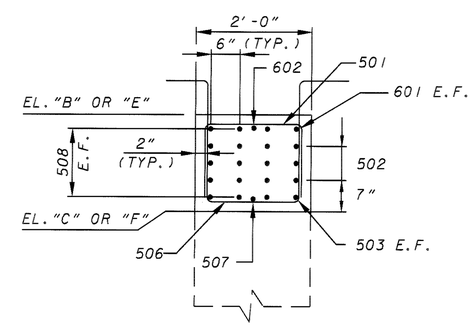


## SECTION C-C

| PIER ELEVATIONS | | | | |
|---|---|---|---|---|
| ELEVATIONS | WESTBOUND | | EASTBOUND | |
| | PIER 1 | PIER 2 | PIER 1 | PIER 2 |
| A | 897.00 | 897.11 | 896.95 | 897.02 |
| B | 895.50 | 895.61 | 895.45 | 895.52 |
| C | 893.83 | 893.94 | 893.78 | 893.85 |
| D | 897.01 | 897.12 | 897.07 | 897.14 |
| E | 895.51 | 895.62 | 895.57 | 895.64 |
| F | 893.84 | 893.95 | 893.90 | 893.97 |
| STATION G | 1102+04.73 (32' LT.) | 1102+32.23 (32' LT.) | 1101+67.77 (32' RT.) | 1101+95.27 (32' RT.) |

NOTES:

1. ▨ DENOTES PORTION OF EXISTING PIER TO BE REMOVED.
2. LAP LENGTH BETWEEN EXISTING AND NEW BARS SHALL BE A MINIMUM OF 2'-0".
3. PLACE EPOXY RESIN BONDING AGENT, PER AASHTO M235-91 (TYPE VI) AT INTERFACE OF THE NEW AND EXISTING PIER. TO BE INCLUDED FOR PAYMENT WITH ITEM 842 - CLASS C CONCRETE, PIER CAP, AS PER PLAN.
4. THE PREFIX P (WESTBOUND AND EASTBOUND LANES) SHALL BE ADDED TO ALL REINFORCING BAR MARKS IN THE PIERS.
5. FOR ADDITIONAL NOTES SEE STRUCTURAL GENERAL NOTES SHEET 2 OF 12.
6. DOWEL HOLES SHALL BE INCLUDED FOR PAYMENT WITH ITEM 842-CLASS C CONCRETE, PIER CAP, AS PER PLAN.

URS
AKRON CLEVELAND COLUMBUS
344 WHITE POND DRIVE
AKRON, OHIO 44320-1100

| DESIGNED | DRAWN | REVIEWED | DATE |
|---|---|---|---|
| L.M.P. | C.R.V. | J.T.H. | 1/23/01 |
| CHECKED | REVISED | STRUCTURE FILE NUMBER | |
| A.L.H. | | 7800436 L / 7800460 R | |

PIER DETAILS
BRIDGE NO. TRU-5-0811 L & R
OVER CHOCOLATE RUN

TRU-5-6.45

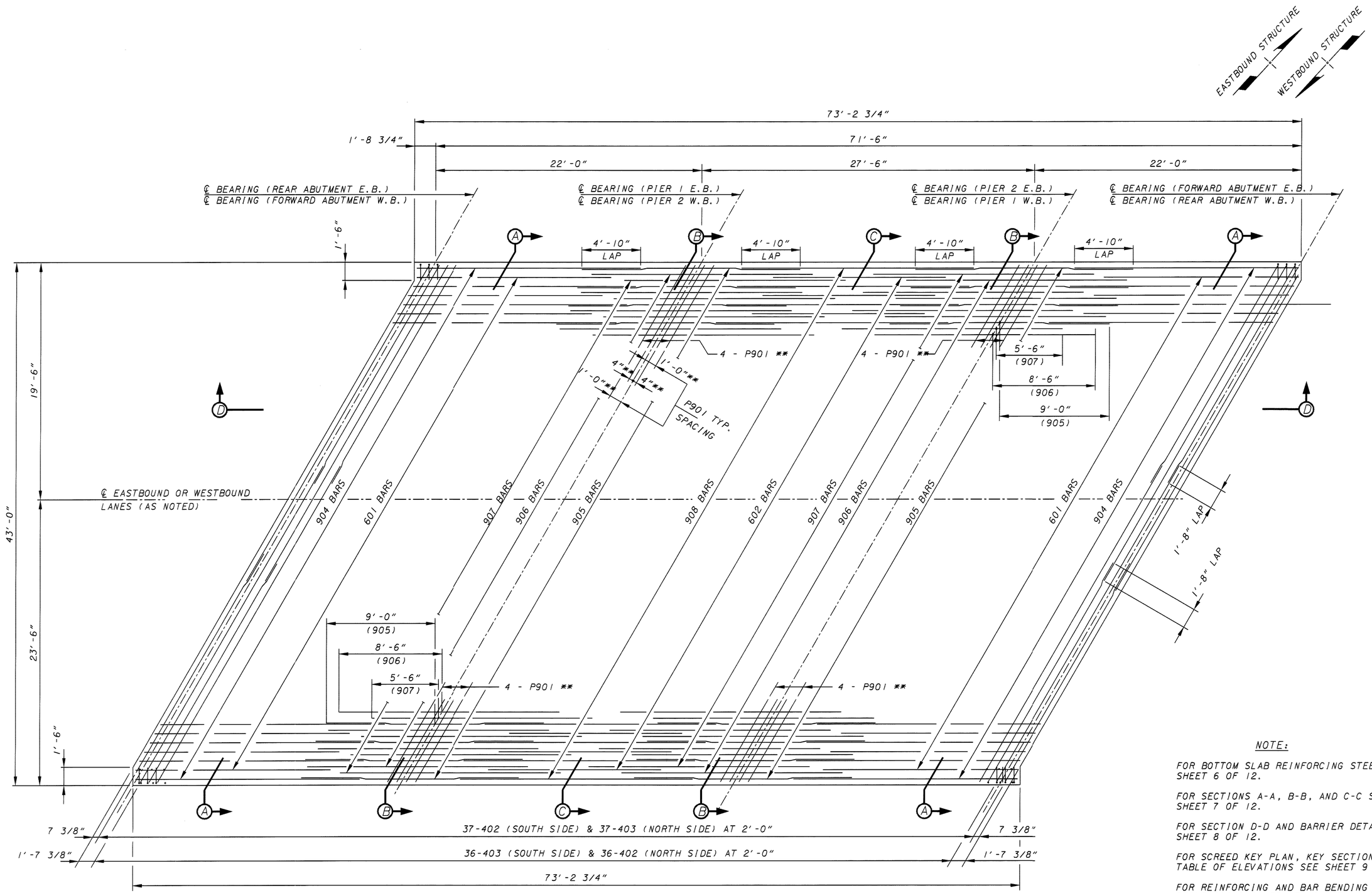


## PLAN - TOP OF SLAB REINFORCING

(EASTBOUND LANES SHOWN, WESTBOUND LANES OPPOSITE HAND AND AS NOTED)
( ** DENOTES - P901 BARS AND LOCATIONS TYPICAL EACH PIER )

NOTE:

FOR BOTTOM SLAB REINFORCING STEEL SEE SHEET 6 OF 12.

FOR SECTIONS A-A, B-B, AND C-C SEE SHEET 7 OF 12.

FOR SECTION D-D AND BARRIER DETAILS SEE SHEET 8 OF 12.

FOR SCREED KEY PLAN, KEY SECTION AND TABLE OF ELEVATIONS SEE SHEET 9 OF 12.

FOR REINFORCING AND BAR BENDING SEE REINFORCING SCHEDULE, SHEET 10 OF 12.

THE PREFIX S (WESTBOUND AND EASTBOUND LANES) TO ALL REINFORCING BAR MARKS IN THE DECK SLABS.

FOR ADDITIONAL NOTES SEE STRUCTURAL GENERAL NOTES, SHEET 2 OF 12.

URS
AKRON CLEVELAND COLUMBUS
564 WHITE POND DRIVE
AKRON, OHIO 44320-1100
(330) 867-8110 FAX (330) 867-0123

| DESIGNED | DRAWN | REVIEWED | DATE |
|---|---|---|---|
| A.L.H. | A.L.H. | J.T.H. | 1/23/01 |
| CHECKED | REVISED | STRUCTURE FILE NUMBER | |
| L.M.P. | | 7800436 L / 7800460 R | |

# TOP SLAB REINFORCING PLAN

BRIDGE NO. TRU-5-0811 L & R
OVER CHOCOLATE RUN

TRU-5-6.45

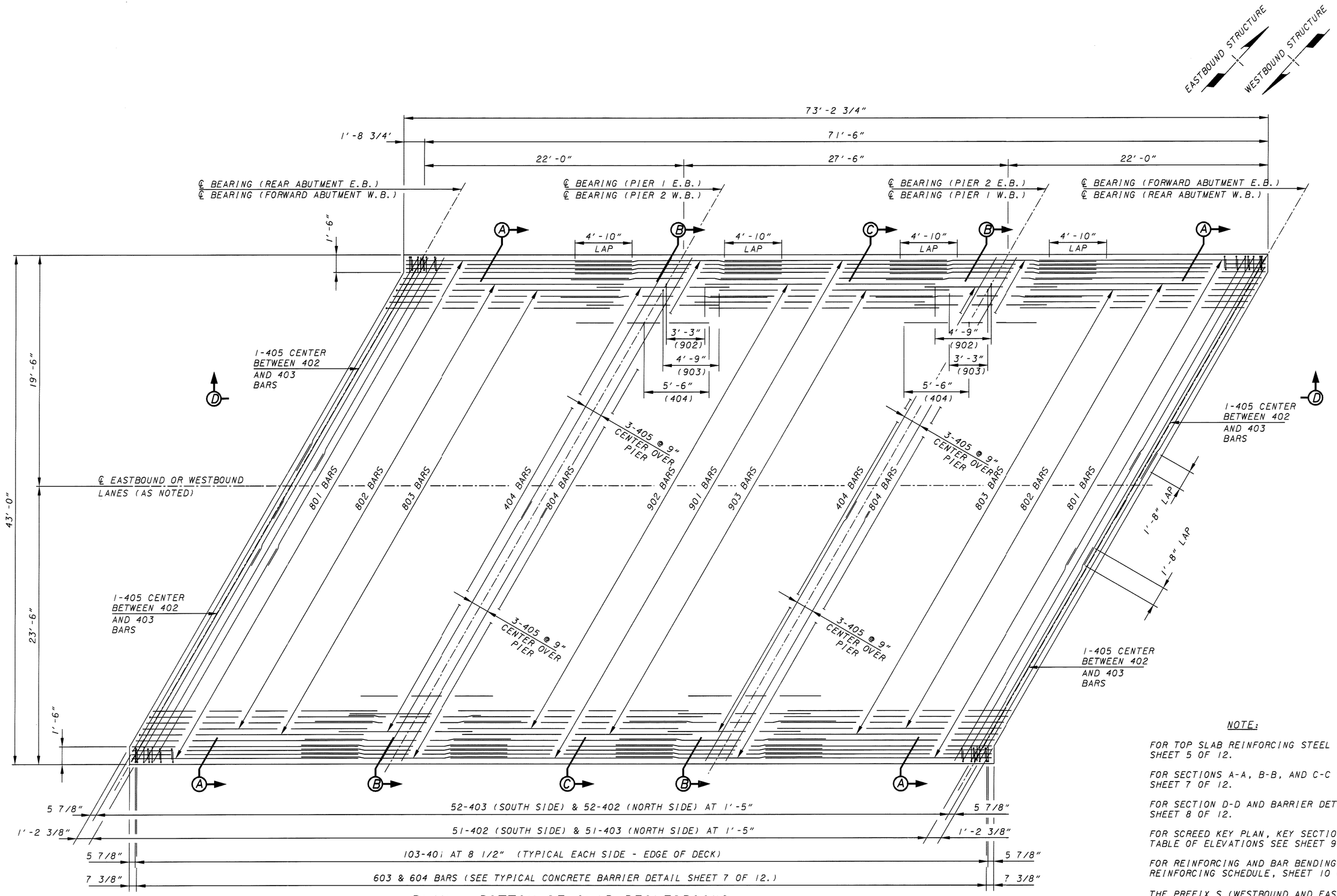


## PLAN - BOTTOM OF SLAB REINFORCING

(EASTBOUND LANES SHOWN, WESTBOUND LANES OPPOSITE HAND AND AS NOTED)

NOTE:

FOR TOP SLAB REINFORCING STEEL SEE SHEET 5 OF 12.

FOR SECTIONS A-A, B-B, AND C-C SEE SHEET 7 OF 12.

FOR SECTION D-D AND BARRIER DETAILS SEE SHEET 8 OF 12.

FOR SCREED KEY PLAN, KEY SECTION AND TABLE OF ELEVATIONS SEE SHEET 9 OF 12.

FOR REINFORCING AND BAR BENDING SEE REINFORCING SCHEDULE, SHEET 10 OF 12.

THE PREFIX S (WESTBOUND AND EASTBOUND LANES) SHALL BE ADDED TO ALL REINFORCING BAR MARKS IN THE DECK SLABS.

FOR ADDITIONAL NOTES SEE STRUCTURAL GENERAL NOTES, SHEET 2 OF 12.

URS
AKRON CLEVELAND COLUMBUS
564 WHITE POND DRIVE
AKRON, OHIO 44320-1100
TEL: 330.867.3111 FAX: 330.867.3320

| DESIGNED | DRAWN | REVIEWED | DATE |
|---|---|---|---|
| A.L.H. | A.L.H. | J.T.H. | 1/23/01 |
| CHECKED | REVISED | STRUCTURE FILE NUMBER | |
| L.M.P. | | 7800436 L / 7800460 R | |

BOTTOM SLAB REINFORCING PLAN
BRIDGE NO. TRU-5-0811 L & R
OVER CHOCOLATE RUN

TRU-5-6.45

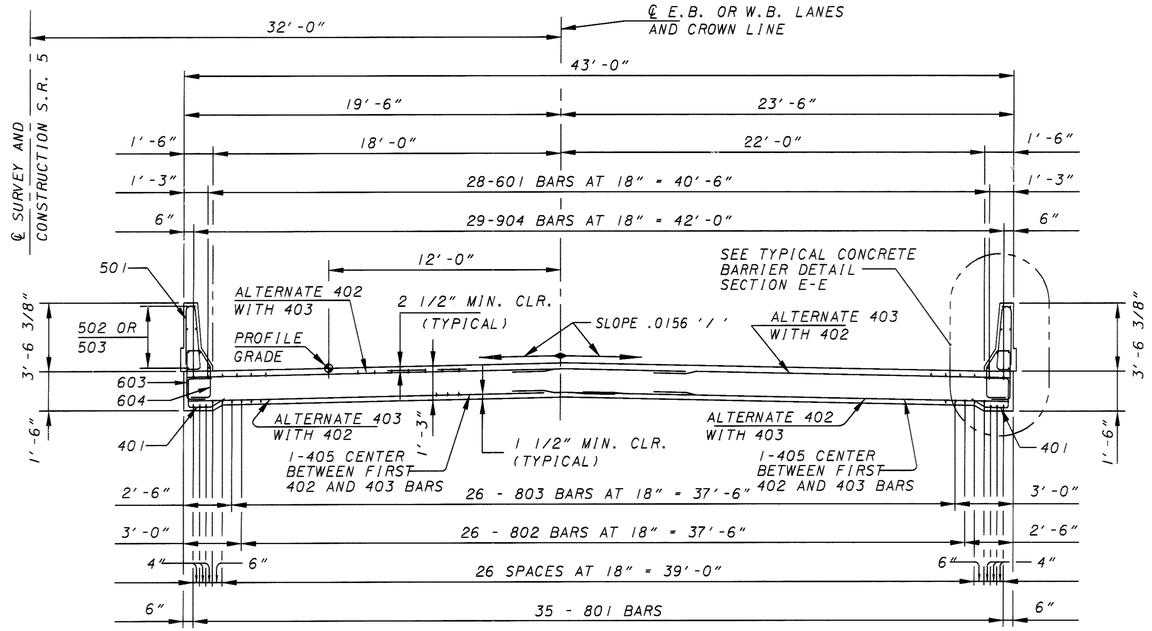


## SECTION A-A

(EASTBOUND LOOKING UP-STATION)
(WESTBOUND LOOKING DOWN- STATION)

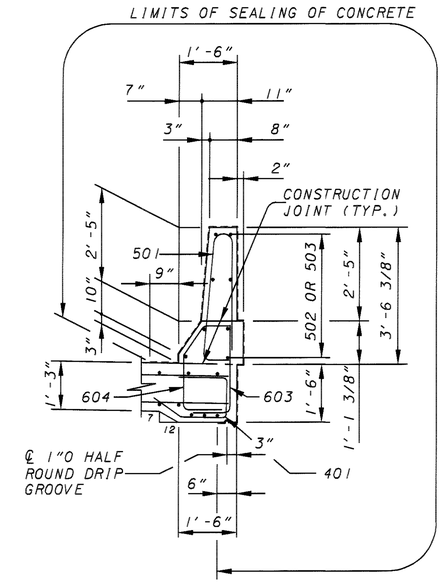


## TYPICAL CONCRETE BARRIER DETAIL
## SECTION E-E

NOTE:

FOR LOCATIONS OF SECTIONS A-A, B-B, AND C-C SEE SHEETS 5 OF 12 AND 6 OF 12.

FOR ADDITIONAL NOTES AND CROSS REFERENCES SEE SHEET 5 OF 12 AND 6 OF 12.

FOR ADDITIONAL CONCRETE BARRIER DETAILS REFER TO STD. DWG. BR-1 SHT. 2 OF 2.

FOR ADDITIONAL REINFORCING DETAILS AT THE PIERS SEE PIER DETAIL SHEET, SECTION A-A, SHEET 4 OF 12, AND SLAB SECTION D-D, SHEET 8 OF 12.

FOR ADDITIONAL NOTES SEE STRUCTURAL GENERAL NOTES SHEET 2 OF 12.

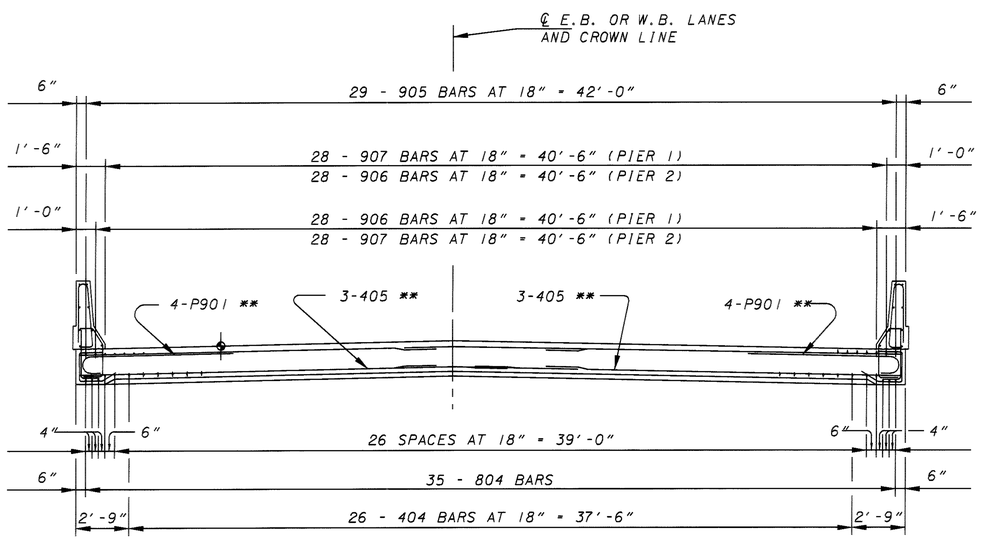


## SECTION B-B

FOR ADDITIONAL DETAIL NOT SHOWN HERE REFER TO SECTION A-A
** DENOTES ADDITIONAL BARS OVER PIERS
(EASTBOUND LOOKING UP-STATION)
(WESTBOUND LOOKING DOWN- STATION)

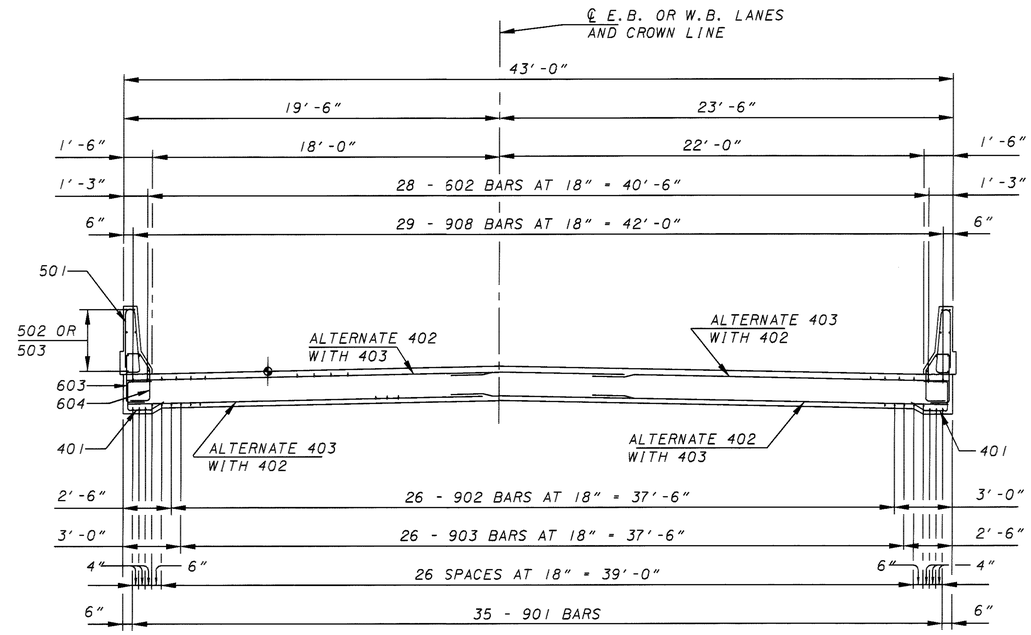


## SECTION C-C

(EASTBOUND LOOKING UP-STATION)
(WESTBOUND LOOKING DOWN- STATION)
FOR ADDITIONAL DETAIL NOT SHOWN HERE REFER TO SECTION A-A
(EASTBOUND LOOKING UP-STATION)
(WESTBOUND LOOKING DOWN- STATION)

URS
AKRON CLEVELAND COLUMBUS
564 WHITE POND DRIVE
AKRON, OHIO 44320-1100
(330) 867-8110

| DATE | REVIEWED | DRAWN | DESIGNED |
|---|---|---|---|
| 1/23/01 | J.T.H. | A.L.H. | A.L.H. |
| STRUCTURE FILE NUMBER | REVISED | | CHECKED |
| 7800436 L / 7800460 R | | | L.M.P. |

SLAB DECK DETAILS
BRIDGE NO. TRU-5-0811 L & R
OVER CHOCOLATE RUN

TRU-5-6.45

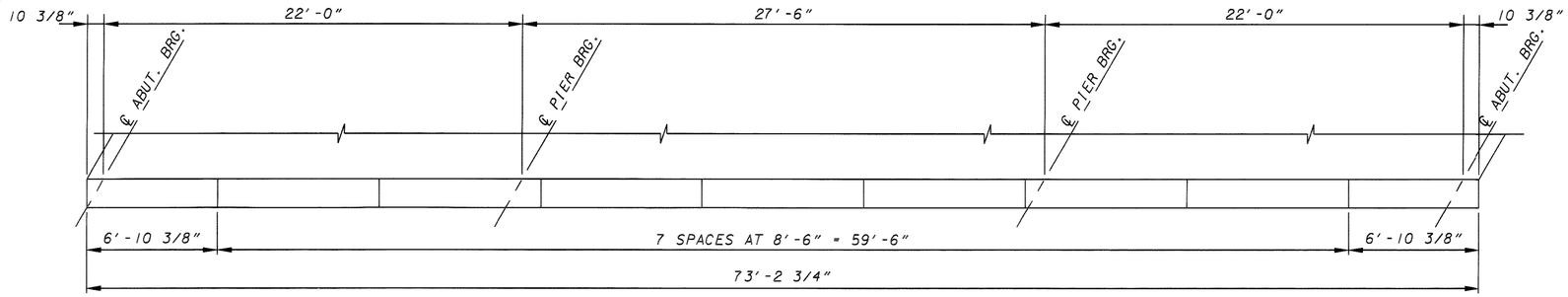


## TYPICAL CRACK CONTROL LOCATION DETAIL

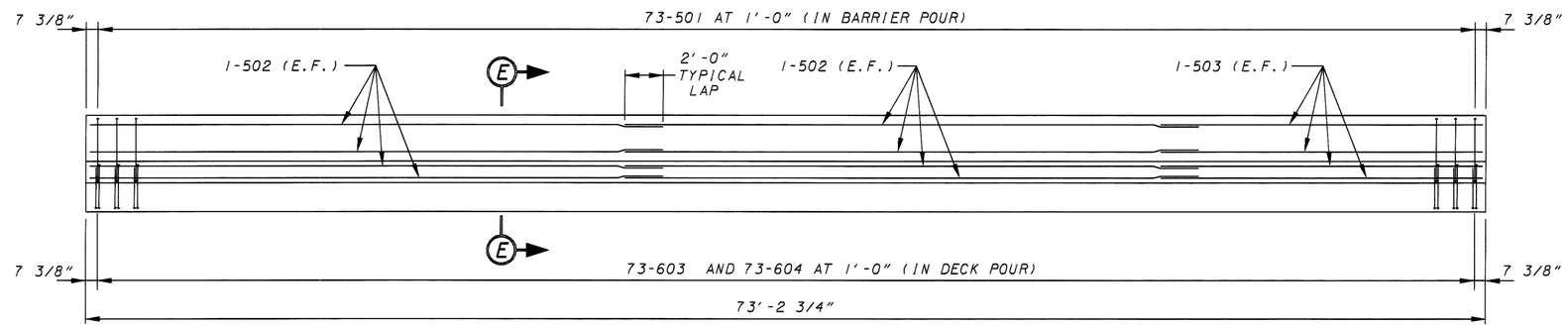


## TYPICAL CONCRETE BARRIER REINFORCING DETAIL

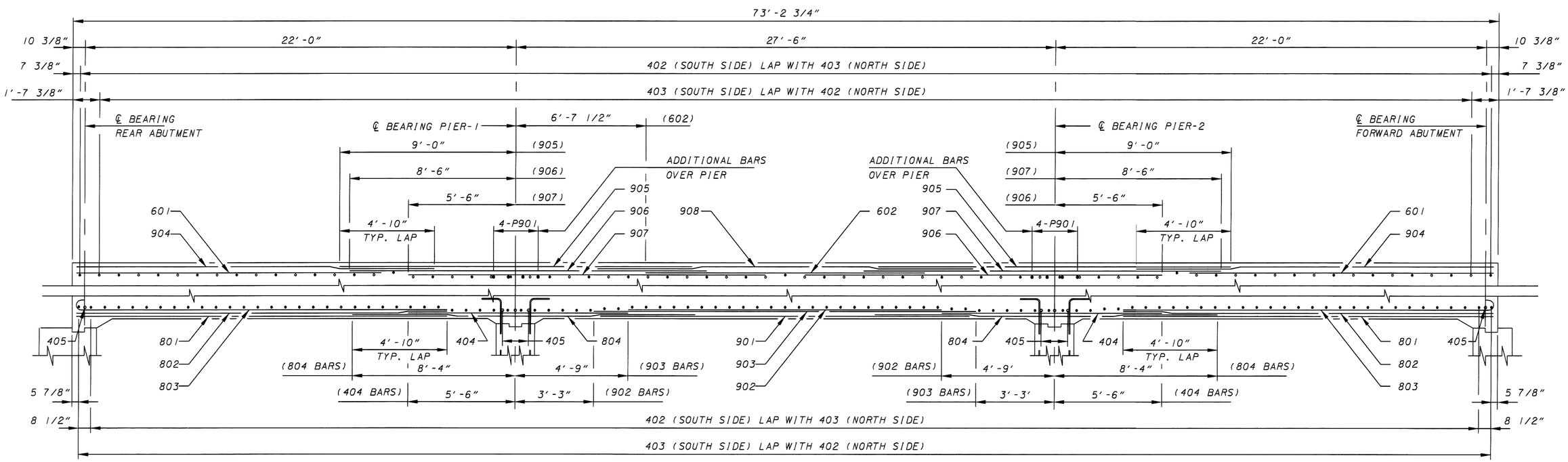


## LONGITUDINAL SECTION D-D

NOTE: ALL LONGITUDINAL DIMENSIONS MEASURED PARALLEL WITH ℄ ROADWAY

NOTE:

FOR SECTION E-E (TYPICAL CONCRETE BARRIER DETAIL) SEE SHEET 7 OF 12.

FOR ADDITIONAL DECK SLAB DETAILS AND SECTIONS SEE SHEETS 5, 6, AND 7 OF 12.

URS
AKRON CLEVELAND COLUMBUS
564 WHITE POND DRIVE
AKRON, OHIO 44320-1100

| DESIGNED | DRAWN | REVIEWED | DATE |
|---|---|---|---|
| A.L.H. | A.L.H. | J.T.H. | 1/23/01 |
| CHECKED | REVISED | STRUCTURE FILE NUMBER | |
| L.M.P. | | 7800436 L / 7800460 R | |

SLAB AND CONCRETE BARRIER DETAILS
BRIDGE NO. TRU-5-0811 L & R
OVER CHOCOLATE RUN

TRU-5-6.45

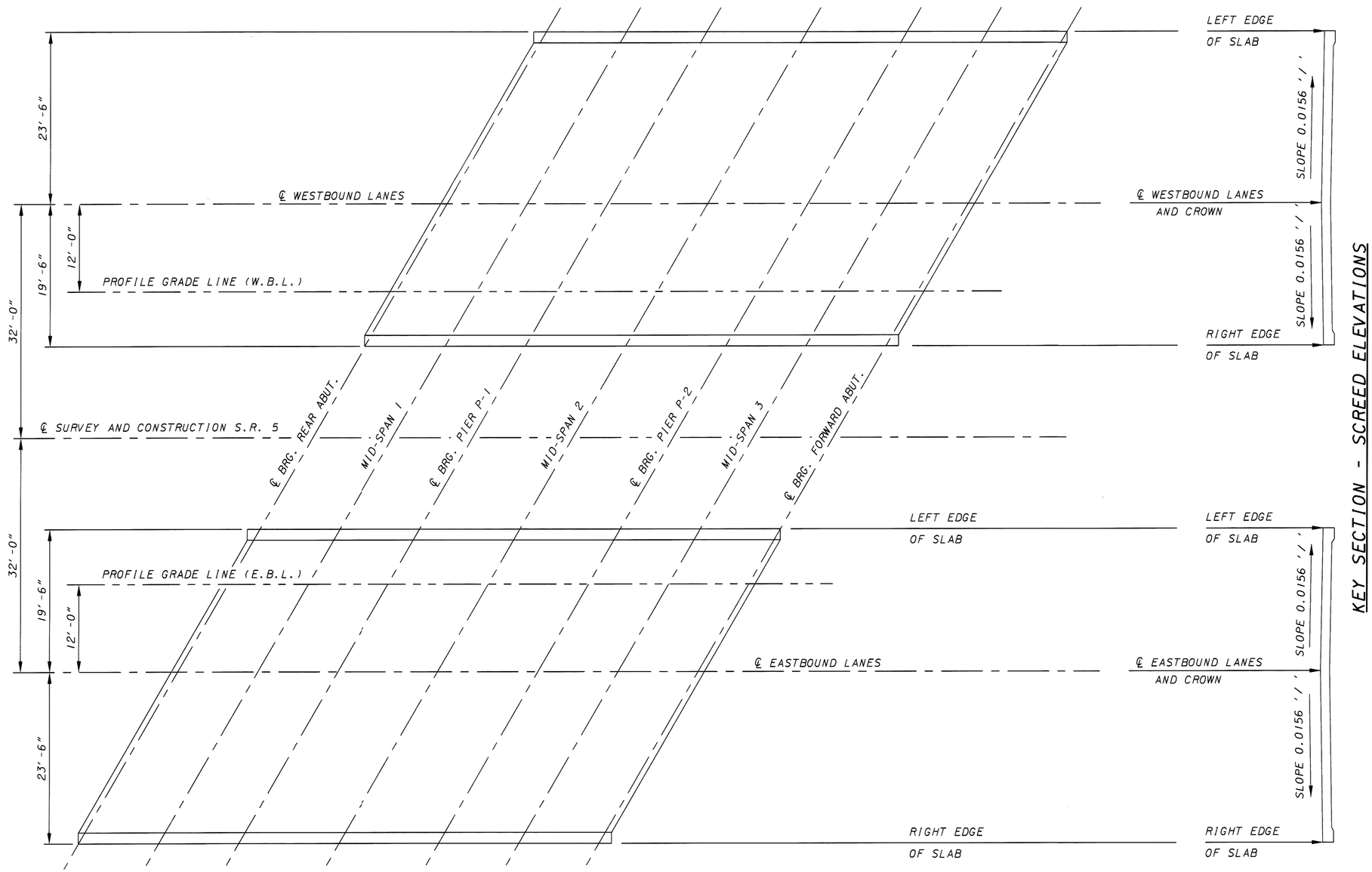


KEY SECTION - SCREED ELEVATIONS

## KEY PLAN - SCREED ELEVATIONS

### TABLE OF SCREED ELEVATIONS

| | LOCATION | REAR ABUTMENT | MID SPAN 1 | PIER P-1 | MID SPAN 2 | PIER P-2 | MID SPAN 3 | FORWARD ABUTMENT |
|---|---|---|---|---|---|---|---|---|
| WESTBOUND LANES | LEFT EDGE SLAB | EL. 896.955 | EL. 897.000 | EL. 897.003 | EL. 897.053 | EL. 897.063 | EL. 897.107 | EL. 897.110 |
| | CROWN LINE | EL. 897.293 | EL. 897.337 | EL. 897.341 | EL. 897.391 | EL. 897.400 | EL. 897.445 | EL. 897.448 |
| | RIGHT EDGE SLAB | EL. 896.964 | EL. 897.008 | EL. 897.011 | EL. 897.062 | EL. 897.071 | EL. 897.116 | EL. 897.119 |
| EASTBOUND LANES | LEFT EDGE SLAB | EL. 897.019 | EL. 897.069 | EL. 897.076 | EL. 897.132 | EL. 897.147 | EL. 897.196 | EL. 897.185 |
| | CROWN LINE | EL. 897.295 | EL. 897.344 | EL. 897.352 | EL. 897.408 | EL. 897.423 | EL. 897.472 | EL. 897.479 |
| | RIGHT EDGE SLAB | EL. 896.893 | EL. 896.942 | EL. 896.950 | EL. 897.006 | EL. 897.020 | EL. 897.069 | EL. 897.077 |

SCREED ELEVATIONS SHOWN ARE FOR THE DECK SLAB SURFACE PRIOR TO CONCRETE PLACEMENT. ALLOWANCE HAS BEEN MADE FOR ANTICIPATED DEAD LOAD DEFLECTIONS AT MID-SPANS. HOWEVER, DEPENDING ON THE METHOD OF CONSTRUCTION AN ADDITIONAL ADJUSTMENT MIGHT BE NECESSARY TO ACCOUNT FOR THE DEFLECTION OF FALSEWORK MEMBERS SUPPORTING THE ACTUAL CONCRETE PLACEMENT.

URS
AKRON CLEVELAND COLUMBUS
566 WHITE POND DRIVE
AKRON, OHIO 44320-1100
TEL: 330-867-8111
FAX: 330-867-0779

| DESIGNED | DRAWN | REVIEWED | DATE |
|---|---|---|---|
| A.L.H. | A.L.H. | J.T.H. | 1/23/01 |
| CHECKED | REVISED | STRUCTURE FILE NUMBER | |
| L.M.P. | | 7800436 L / 7800460 R | |

SCREED ELEVATION TABLE
BRIDGE NO. TRU-5-0811 L & R
OVER CHOCOLATE RUN

TRU-5-6.45

# REINFORCING SCHEDULE

## WESTBOUND

| MARK | No. REQD. | LGTH. | TYPE | DIMENSIONS A | B | C | D | INCRM. | WEIGHT LBS. |
|---|---|---|---|---|---|---|---|---|---|
| **ABUTMENTS** | | | | | | | | | |
| A 501 | 34 | 8- 9 | 2 | 3- 5 | 2- 2 | | | | 310 |
| A 502 | 12 | 9- 0 | ST | | | | | | 113 |
| A 503 | 24 | 4- 5 | 2 | 1- 3 | 2- 2 | | | | 111 |
| A 504 | 12 | 6- 0 | ST | | | | | | 75 |
| A 505 | 4 | 3- 6 | 1 | 2- 3 | 1- 4 | | | | 15 |
| A 506 | 4 | 10- 2 | 18 | 2- 2 | 4- 7 | 3- 4 | 1- 3 | | 42 |
| A 507 | 4 | 6- 6 | 18 | 2- 2 | 2- 9 | 1- 6 | 1- 3 | | 27 |
| A 508 | 54 | 2-11 | 2 | 0- 6 | 2- 2 | | | | 164 |
| A 601 | 48 | 3- 3 | ST | | | | | | 234 |
| A 801 | 16 | 30- 0 | ST | | | | | | 1282 |
| A 802 | 56 | 4- 6 | 1 | 2- 0 | 2- 8 | | | | 673 |
| | | | | TOTAL | | | ABUTMENT = | | 3046 |
| **PIERS** | | | | | | | | | |
| P 501 | 16 | 4- 1 | 2 | 1- 4 | 1- 8 | | | | 68 |
| P 502 | 12 | 9- 8 | 52 | | | | | | 121 |
| P 503 | 8 | 3- 7 | ST | | | | | | 30 |
| P 504 | 36 | 4- 5 | 17 | 1- 0 | 1- 0 | 1- 9 | | | 166 |
| P 505 | 16 | 25- 3 | ST | | | | | | 421 |
| P 506 | 16 | 7- 8 | 4 | 2- 3 | 1- 8 | 1- 0 | | | 128 |
| P 507 | 4 | 4- 3 | ST | | | | | | 18 |
| P 508 | 40 | 3- 0 | ST | | | | | | 125 |
| P 601 | 8 | 4-11 | 1 | 1- 2 | 3-11 | | | | 59 |
| P 602 | 4 | 5- 4 | 1 | 1- 2 | 4- 4 | | | | 32 |
| P 901 | 16 | 9- 1 | 6 | 7-10 | | | | | 494 |
| | | | | TOTAL | | | PIER = | | 1662 |
| **SUPERSTRUCTURE** | | | | | | | | | |
| S 401 | 206 | 4- 3 | 51 | | | | | | 585 |
| S 402 | 176 | 30- 0 | ST | | | | | | 3527 |
| S 403 | 176 | 20- 9 | ST | | | | | | 2440 |
| S 404 | 52 | 11- 3 | ST | | | | | | 391 |
| S 405 | 16 | 25- 6 | ST | | | | | | 273 |
| S 501 | 146 | 6-11 | 43 | 3- 0 | 3- 3 | | | | 1053 |
| S 502 | 32 | 30- 0 | ST | | | | | | 1001 |
| S 503 | 16 | 16-10 | ST | | | | | | 281 |
| S 601 | 56 | 16- 3 | ST | | | | | | 1367 |
| S 602 | 28 | 14- 3 | ST | | | | | | 599 |
| S 603 | 146 | 3- 3 | 1 | 1- 3 | 2- 2 | | | | 713 |
| S 604 | 146 | 3- 7 | 20 | 1- 6 | 0- 8 | 0- 6 | 0-11 | | 786 |
| S 801 | 70 | 19- 2 | ST | | | | | | 3582 |
| S 802 | 52 | 19- 0 | ST | | | | | | 2638 |
| S 803 | 52 | 19-11 | 6 | 19- 0 | | | | | 2765 |
| S 804 | 70 | 17- 6 | ST | | | | | | 3271 |
| S 901 | 35 | 18-10 | ST | | | | | | 2241 |
| S 902 | 26 | 19- 6 | ST | | | | | | 1724 |
| S 903 | 26 | 19- 6 | ST | | | | | | 1724 |
| S 904 | 58 | 18- 6 | ST | | | | | | 3648 |
| S 905 | 58 | 18- 0 | ST | | | | | | 3550 |
| S 906 | 56 | 18- 3 | ST | | | | | | 3475 |
| S 907 | 56 | 18- 3 | ST | | | | | | 3475 |
| S 908 | 29 | 19- 2 | ST | | | | | | 1890 |
| | | | | TOTAL | | | SUPERSTRUCTURE = | | 46999 |

## EASTBOUND

| MARK | No. REQD. | LGTH. | TYPE | DIMENSIONS A | B | C | D | INCRM. | WEIGHT LBS. |
|---|---|---|---|---|---|---|---|---|---|
| **ABUTMENTS** | | | | | | | | | |
| A 501 | 34 | 8- 9 | 2 | 3- 5 | 2- 2 | | | | 310 |
| A 502 | 12 | 9- 0 | ST | | | | | | 113 |
| A 503 | 24 | 4- 5 | 2 | 1- 3 | 2- 2 | | | | 111 |
| A 504 | 12 | 6- 0 | ST | | | | | | 75 |
| A 505 | 4 | 3- 6 | 1 | 2- 3 | 1- 4 | | | | 15 |
| A 506 | 4 | 10- 2 | 18 | 2- 2 | 4- 7 | 3- 4 | 1- 3 | | 42 |
| A 507 | 4 | 6- 6 | 18 | 2- 2 | 2- 9 | 1- 6 | 1- 3 | | 27 |
| A 508 | 54 | 2-11 | 2 | 0- 6 | 2- 2 | | | | 164 |
| A 601 | 48 | 3- 3 | ST | | | | | | 234 |
| A 801 | 16 | 30- 0 | ST | | | | | | 1282 |
| A 802 | 56 | 4- 6 | 1 | 2- 0 | 2- 8 | | | | 673 |
| | | | | TOTAL | | | ABUTMENT = | | 3046 |
| **PIERS** | | | | | | | | | |
| P 501 | 16 | 4- 1 | 2 | 1- 4 | 1- 8 | | | | 68 |
| P 502 | 12 | 9- 8 | 52 | | | | | | 121 |
| P 503 | 8 | 3- 7 | ST | | | | | | 30 |
| P 504 | 36 | 4- 5 | 17 | 1- 0 | 1- 0 | 1- 9 | | | 166 |
| P 505 | 16 | 25- 3 | ST | | | | | | 421 |
| P 506 | 16 | 7- 8 | 4 | 2- 3 | 1- 8 | 1- 0 | | | 128 |
| P 507 | 4 | 4- 3 | ST | | | | | | 18 |
| P 508 | 40 | 3- 0 | ST | | | | | | 125 |
| P 601 | 8 | 4-11 | 1 | 1- 2 | 3-11 | | | | 59 |
| P 602 | 4 | 5- 4 | 1 | 1- 2 | 4- 4 | | | | 32 |
| P 901 | 16 | 9- 1 | 6 | 7-10 | | | | | 494 |
| | | | | TOTAL | | | PIER = | | 1662 |
| **SUPERSTRUCTURE** | | | | | | | | | |
| S 401 | 206 | 4- 3 | 51 | | | | | | 585 |
| S 402 | 176 | 30- 0 | ST | | | | | | 3527 |
| S 403 | 176 | 20- 9 | ST | | | | | | 2440 |
| S 404 | 52 | 11- 3 | ST | | | | | | 391 |
| S 405 | 16 | 25- 6 | ST | | | | | | 273 |
| S 501 | 146 | 6-11 | 43 | 3- 0 | 3- 3 | | | | 1053 |
| S 502 | 32 | 30- 0 | ST | | | | | | 1001 |
| S 503 | 16 | 16-10 | ST | | | | | | 281 |
| S 601 | 56 | 16- 3 | ST | | | | | | 1367 |
| S 602 | 28 | 14- 3 | ST | | | | | | 599 |
| S 603 | 146 | 3- 3 | 1 | 1- 3 | 2- 2 | | | | 713 |
| S 604 | 146 | 3- 7 | 20 | 1- 6 | 0- 8 | 0- 6 | 0-11 | | 786 |
| S 801 | 70 | 19- 2 | ST | | | | | | 3582 |
| S 802 | 52 | 19- 0 | ST | | | | | | 2638 |
| S 803 | 52 | 19-11 | 6 | 19- 0 | | | | | 2765 |
| S 804 | 70 | 17- 6 | ST | | | | | | 3271 |
| S 901 | 35 | 18-10 | ST | | | | | | 2241 |
| S 902 | 26 | 19- 6 | ST | | | | | | 1724 |
| S 903 | 26 | 19- 6 | ST | | | | | | 1724 |
| S 904 | 58 | 18- 6 | ST | | | | | | 3648 |
| S 905 | 58 | 18- 0 | ST | | | | | | 3550 |
| S 906 | 56 | 18- 3 | ST | | | | | | 3475 |
| S 907 | 56 | 18- 3 | ST | | | | | | 3475 |
| S 908 | 29 | 19- 2 | ST | | | | | | 1890 |
| | | | | TOTAL | | | SUPERSTRUCTURE = | | 46999 |

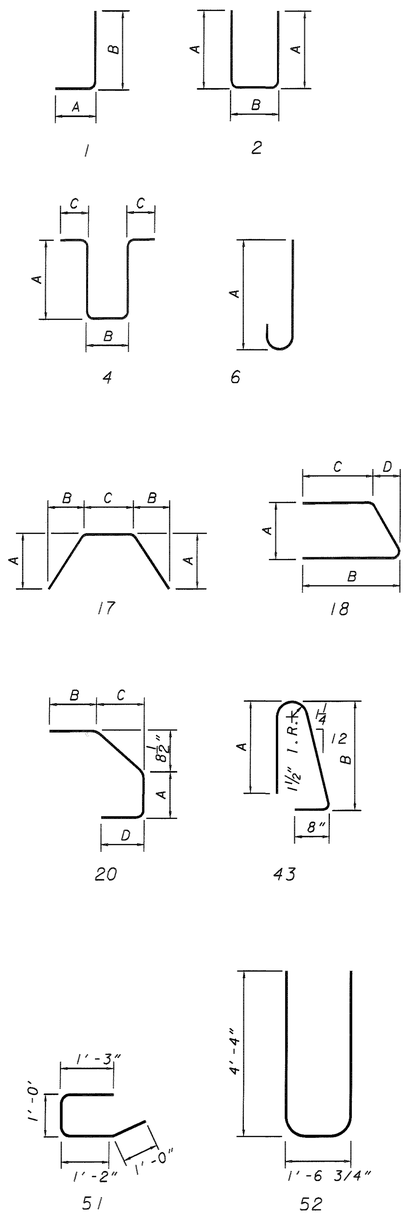


## NOTES

1. ALL REINFORCING STEEL SHALL BE EPOXY-COATED.
2. REINFORCING SAMPLES

   REFER TO CMS SECTIONS 106.03, 700, 709.01 THROUGH 709.05 AND 709.08. SUFFICIENT ADDITIONAL REINFORCING STEEL SHALL BE PROVIDED FOR SAMPLING. RANDOM SAMPLES SHALL BE REPLACED IN THE STRUCTURES BY THE ADDITIONAL STEEL. SPLICED IN ACCORDANCE WITH 509.08.
3. REINFORCING STEEL WEIGHTS ARE PROVIDED FOR INFORMATIONAL PURPOSES ONLY.

URS
AKRON CLEVELAND COLUMBUS
564 WHITE POND DRIVE
AKRON, OHIO 44320-1100

| DESIGNED | DRAWN | REVIEWED | DATE |
|---|---|---|---|
| A.L.H./L.M.P. | C.R.V. | J.T.H. | 1/23/01 |
| CHECKED | REVISED | STRUCTURE FILE NUMBER | |
| L.M.P./M.D.P. | | 7800436 L/7800460 R | |

REINFORCING SCHEDULE
BRIDGE NO. TRU-5-0811 L & R
CHOCOLATE RUN

TRU-5-6.45

WESTBOUND REAR PIER, SOUTH ELEVATION

EASTBOUND FORWARD PIER, SOUTH ELEVATION

WESTBOUND FORWARD PIER, SOUTH ELEVATION

LEGEND

ITEM 843 – PATCHING CONCRETE STRUCTURES WITH TROWELABLE MORTAR, NEAR FACE

PATCHING CONCRETE STRUCTURE WITH TROWELABLE MORTAR, FAR FACE

NOTE:

① NO PATCHING AREAS ON EASTBOUND REAR PIER

DESIGN AGENCY
EUTHENICS INC.
CONSULTING ENGINEERS
CLEVELAND, OHIO

| DESIGNED | DRAWN | REVIEWED | DATE |
|---|---|---|---|
| KJW | KJW | KRD | 12/00 |
| CHECKED | REVISED | STRUCTURE FILE NUMBER | |
| JAM | | 7800428/7800452 | |

**PIER PATCHING PLAN**
BRIDGE NO. TRU-5-0811 L&R
OVER CHOCOLATE RUN

**TRU-5-6.45**



TR005A01.DWG F:\JOBS\502\BRIDGE\10\DWG\502PCH108.DWG KJW 6/22/01 PLOT 1:4

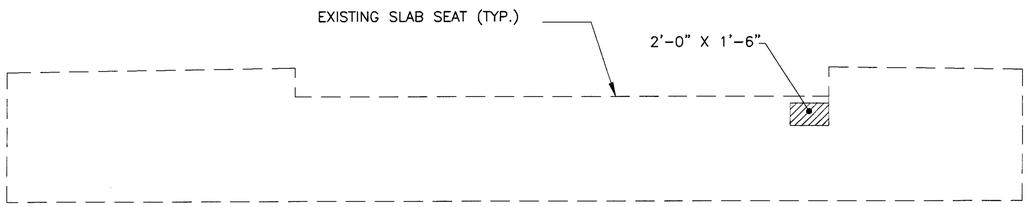


EASTBOUND REAR

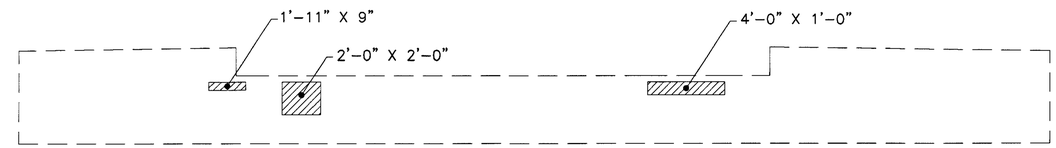


WESTBOUND REAR

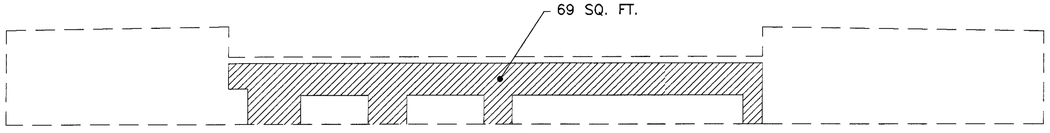


EASTBOUND FORWARD

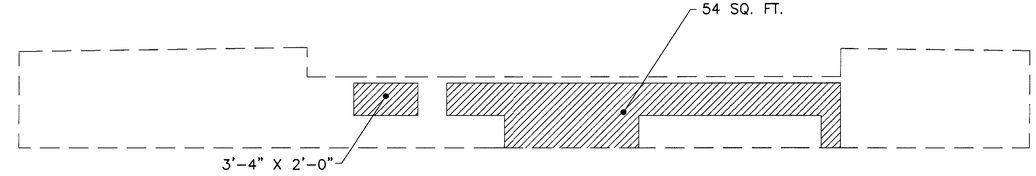


WESTBOUND FORWARD

LEGEND

ITEM 843 – PATCHING CONCRETE STRUCTURES WITH TROWELABLE MORTAR

DESIGN AGENCY
EUTHENICS INC.
CONSULTING ENGINEERS
CLEVELAND, OHIO

| DESIGNED | DRAWN | REVIEWED | DATE |
|---|---|---|---|
| KJW | KJW | KRD | 12/00 |
| CHECKED | REVISED | STRUCTURE FILE NUMBER | |
| JAM | | 7800428/7800452 | |

**ABUTMENT PATCHING PLAN**
BRIDGE NO. TRU-5-0811 L&R
OVER CHOCOLATE RUN

**TRU-5-6.45**

12/12

123/164

TR005M02.DWG F:\JOBS\502\BRIDGE\10\DWG\502PCH10A.DWG KJW 6/22/01 PLOT 1:4

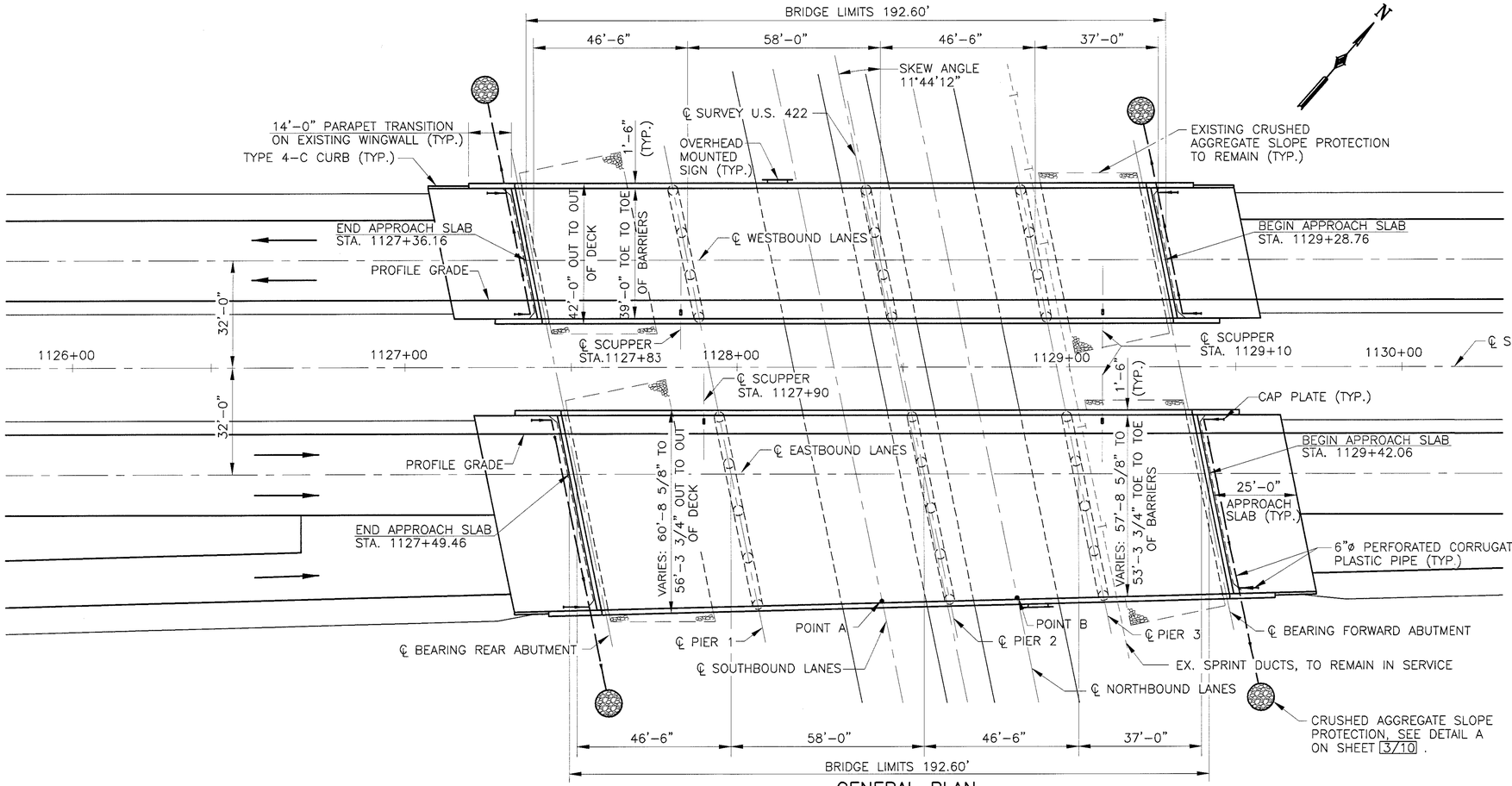


GENERAL PLAN

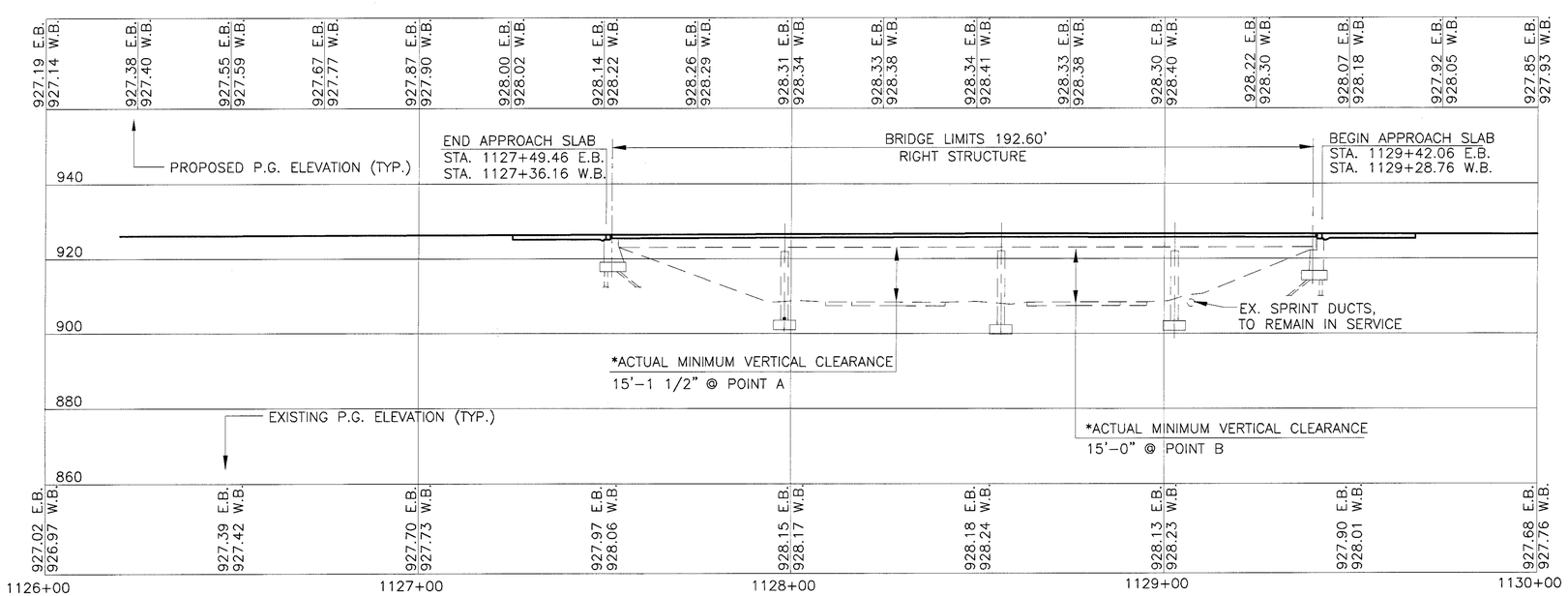


SECTION ON CENTERLINE EASTBOUND LANES

## TEMPORARY BENCH MARKS

**BENCH MARK NO. 1**
IRON PIN FOUND IN MEDIAN
STA. 1127+00.00
ELEV. 927.39

**BENCH MARK NO. 2**
IRON PIN FOUND IN MEDIAN
STA. 1130+26.11
ELEV. 927.03

## EXISTING STRUCTURE

| | |
|---|---|
| TYPE: | CONTINUOUS STEEL BEAM BRIDGE WITH REINFORCED CONCRETE DECK AND SUBSTRUCTURE |
| SPANS: | 46'-6"±, 58'-0"±, 46'-6"±, 37'-0"± C/C OF BEARINGS |
| ROADWAY: | LEFT STRUCTURE: 39'-0" TOE TO TOE OF BARRIERS<br>RIGHT STRUCTURE: VARIABLE |
| LOAD FREQUENCY: | CF = 2000 |
| SKEW: | 11°-44'-12" RIGHT FORWARD |
| WEARING SURFACE: | 1" MONOLITHIC CONCRETE |
| APPROACH SLABS: | 25'-0" LONG |
| ALIGNMENT: | TANGENT |
| CROWN: | 0.0156 FT./FT. |
| DATE BUILT: | 1968 |
| STRUCTURE FILE NO: | 7800487 LEFT, 7800517 RIGHT |

## PROPOSED STRUCTURE

| | |
|---|---|
| PROPOSED WORK: | REPLACE REINFORCED CONCRETE DECK, PATCH SUBSTRUCTURE UNITS AND SEAL CONCRETE SURFACES |
| TYPE: | CONTINUOUS COMPOSITE STEEL BEAM BRIDGE WITH REINFORCED CONCRETE DECK AND SUBSTRUCTURE |
| SPANS: | 46'-6"±, 58'-0"±, 46'-6"±, 37'-0"± C/C OF BEARINGS |
| ROADWAY: | LEFT STRUCTURE: 39'-0" TOE TO TOE OF BARRIERS<br>RIGHT STRUCTURE: VARIABLE |
| LOADING: | HS 25, CASE II AND THE ALTERNATE MILITARY LOADING |
| SKEW: | 11°-44'-12" RIGHT FORWARD |
| WEARING SURFACE: | 1" MONOLITHIC CONCRETE |
| APPROACH SLABS: | AS-1-81 (25'-0") |
| ALIGNMENT: | TANGENT |
| CROWN: | 0.0156 FT./FT. |
| LATITUDE: | N 41°-15'-48" |
| LONGITUDE: | W 80°-52'-34" |

## NOTES:

FOR REMOVAL AND REERECTION OF OVERHEAD MOUNTED SINGNS SEE ROADWAY PLANS FOR QUANTITIES.

*REQUIRED MINIMUM VERTICAL CLEARANCE IS 16'-6". ACTUAL MINIMUM VERTICAL CLEARANCE AT POINT A AND POINT B OCCURS AT THE INTERSECTION OF THE OUTSIDE EDGE OF THE RIGHT EXTERIOR BEAM AND THE CENTERLINE OF THE LANES OF U.S. 422.

DESIGN AGENCY
EUTHENICS INC.
CONSULTING ENGINEERS
CLEVELAND, OHIO

| DESIGNED | DRAWN | REVIEWED | DATE |
|---|---|---|---|
| KJW | KJW | KRD | 12/00 |
| CHECKED | REVISED | STRUCTURE FILE NUMBER | |
| JAM | | 7800487/7800517 | |

**GENERAL PLAN**
TRU-5-0861 L&R
OVER U.S. 422

**TRU-5-6.45**



IR005GP1.DWG F:\JOBS\502\BRIDGE\11\DWG\5020P11.DWG KJW 2/27/01 PLOT 1:20

CALC. BY: JAM DATE: 12-00

## ESTIMATED QUANTITIES – WESTBOUND – TRU-5-0861 LEFT

CHK'D. BY: KRD DATE: 12-00

| | ITEM | ITEM EXT. | TOTAL | UNIT | DESCRIPTION | ABUT-MENTS | PIERS | SUPER-STRUCTURE | GENERAL | AS PER PLAN SHEET NUMBERS |
|---|---|---|---|---|---|---|---|---|---|---|
| | 202 | 11203 | LUMP | | PORTIONS OF STRUCTURE REMOVED, OVER 20 FOOT SPAN, AS PER PLAN | | | | LUMP | GN 1 3/10 6/10 |
| | 509 | 20001 | 100 | LBS. | REINFORCING STEEL, REPLACEMENT OF EXISTING REINFORCING STEEL, AS PER PLAN | 100 | | | | GN 2 |
| | 516 | 11210 | 85 | LIN. FT. | STRUCTURAL EXPANSION JOINT INCLUDING ELASTOMERIC STRIP SEAL** | | | 85 | | |
| | 518 | 21201 | 67 | CU. YD. | POROUS BACKFILL WITH FILTER FABRIC, AS PER PLAN | 67 | | | | GN 2 |
| | 518 | 40000 | 93 | LIN. FT. | 6" PERFORATED CORRUGATED PLASTIC PIPE, 707.33 | 93 | | | | |
| | 518 | 40010 | 37 | LIN. FT. | 6" NON-PERFORATED CORRUGATED PLASTIC PIPE, INCLUDING SPECIALS, 707.33 | 37 | | | | |
| | 601 | 20000 | 3 | SQ. YD. | CRUSHED AGGREGATE SLOPE PROTECTION | | | | 3 | |
| | 625 | 25400 | 241 | LIN. FT. | CONDUIT, 2", 713.04 | | | | 241 | |
| | 625 | 31200 | 2 | EACH | PULL BOX, 713.081, 13" x 18" | | | | 2 | |
| * | 815 | 00050 | 200 | SQ. FT. | SURFACE PREPARATION OF EXISTING STEEL, SYSTEM OZEU | | | 200 | | |
| * | 815 | 00056 | 200 | SQ. FT. | FIELD PAINTING OF EXISTING STEEL, PRIME COAT, SYSTEM OZEU | | | 200 | | |
| * | 815 | 00060 | 200 | SQ. FT. | FIELD PAINTING OF EXISTING STEEL, INTERMEDIATE COAT, SYSTEM OZEU | | | 200 | | |
| * | 815 | 00066 | 200 | SQ. FT. | FIELD PAINTING OF EXISTING STEEL, FINISH COAT, SYSTEM OZEU | | | 200 | | |
| | 842 | 44100 | 18 | CU. YD. | CLASS C CONCRETE, ABUTMENT NOT INCLUDING FOOTING | 18 | | | | |
| | 843 | 50000 | 27 | SQ. FT. | PATCHING CONCRETE STRUCTURES WITH TROWELABLE MORTAR | 23 | 4 | | | |
| | 863 | 10200 | 1,600 | LBS. | STRUCTURAL STEEL MEMBERS, MISCELLANEDUS LEVEL FABRICATION | | | 1,600 | | |
| | 863 | 20000 | 2,745 | EACH | WELDED STUD SHEAR CONNECTORS | | | 2,745 | | |
| | 863 | 21000 | 5 | EACH | TRIMMING OF BEAM END | | | 5 | | |
| | 864 | 10100 | 936 | SQ. YD. | SEALING OF CONCRETE SURFACES (EPOXY-URETHANE) | 136 | 315 | 485 | | |
| | 893 | 10000 | 287 | CU. YD. | CLASS S CONCRETE, FOR BRIDGE DECK WITH WARRANTY | | | 287 | | |

CALC. BY: JAM DATE: 12-00

## ESTIMATED QUANTITIES – EASTBOUND – TRU-5-0861 RIGHT

CHK'D. BY: KRD DATE: 12-00

| | ITEM | ITEM EXT. | TOTAL | UNIT | DESCRIPTION | ABUT-MENTS | PIERS | SUPER-STRUCTURE | GENERAL | AS PER PLAN SHEET NUMBERS |
|---|---|---|---|---|---|---|---|---|---|---|
| | 202 | 11203 | LUMP | | PORTIONS OF STRUCTURE REMOVED, OVER 20 FOOT SPAN, AS PER PLAN | | | | LUMP | GN 1 3/10 6/10 |
| | 509 | 20001 | 100 | LBS. | REINFORCING STEEL, REPLACEMENT OF EXISTING REINFORCING STEEL, AS PER PLAN | 100 | | | | GN 2 |
| | 516 | 11210 | 118 | LIN. FT. | STRUCTURAL EXPANSION JOINT INCLUDING ELASTOMERIC STRIP SEAL** | | | 118 | | |
| | 518 | 21201 | 94 | CU. YD. | POROUS BACKFILL WITH FILTER FABRIC, AS PER PLAN | 94 | | | | GN 2 |
| | 518 | 40000 | 127 | LIN. FT. | 6" PERFORATED CORRUGATED PLASTIC PIPE, 707.33 | 127 | | | | |
| | 518 | 40010 | 37 | LIN. FT. | 6" NON-PERFORATED CORRUGATED PLASTIC PIPE, INCLUDING SPECIALS, 707.33 | 37 | | | | |
| | 601 | 20000 | 3 | SQ. YD. | CRUSHED AGGREGATE SLOPE PROTECTION | | | | 3 | |
| | 625 | 25400 | 241 | LIN. FT. | CONDUIT, 2", 713.04 | | | | 241 | |
| | 625 | 31200 | 2 | EACH | PULL BOX, 713.081, 13" x 18" | | | | 2 | |
| * | 815 | 00050 | 200 | SQ. FT. | SURFACE PREPARATION OF EXISTING STEEL, SYSTEM OZEU | | | 200 | | |
| * | 815 | 00056 | 200 | SQ. FT. | FIELD PAINTING OF EXISTING STEEL, PRIME COAT, SYSTEM OZEU | | | 200 | | |
| * | 815 | 00060 | 200 | SQ. FT. | FIELD PAINTING OF EXISTING STEEL, INTERMEDIATE COAT, SYSTEM OZEU | | | 200 | | |
| * | 815 | 00066 | 200 | SQ. FT. | FIELD PAINTING OF EXISTING STEEL, FINISH COAT, SYSTEM OZEU | | | 200 | | |
| | 842 | 44100 | 20 | CU. YD. | CLASS C CONCRETE, ABUTMENT NOT INCLUDING FOOTING | 20 | | | | |
| | 843 | 50000 | 38 | SQ. FT. | PATCHING CONCRETE STRUCTURES WITH TROWELABLE MORTAR | 23 | 15 | | | |
| | 863 | 10200 | 2,200 | LBS. | STRUCTURAL STEEL MEMBERS, MISCELLANEOUS LEVEL FABRICATION | | | 2,200 | | |
| | 863 | 20000 | 3,843 | EACH | WELDED STUD SHEAR CONNECTORS | | | 3,843 | | |
| | 863 | 21000 | 13 | EACH | TRIMMING OF BEAM END | | | 13 | | |
| | 864 | 10100 | 1,074 | SQ. YD. | SEALING OF CONCRETE SURFACES (EPOXY-URETHANE) | 165 | 424 | 485 | | |
| | 893 | 10000 | 379 | CU. YD. | CLASS S CONCRETE, FOR BRIDGE DECK WITH WARRANTY | | | 379 | | |

** SEE PROPOSAL NOTE

* ALL EXPOSED SURFACES OF THE EXISTING STRUCTURAL STEEL SHALL BE PRESSURE WASHED WITH POTABLE WATER AFTER COMPLETION OF THE MAJOR WORK ITEMS. THE CONTRACTOR SHALL REPAIR DAMAGED AREAS IN ACCORDANCE WITH SUPPLEMENTAL SPECIFICATION 815 USING A THREE COAT PAINT SYSTEM OF OZEU. THE CONTRACTOR SHALL BASE HIS UNIT BID ON AN ESTIMATED EXISTING STEEL REPAIR AREA OF 200 SQ. FT. PAYMENT FOR PAINTING THE NEW STEEL AND CROSS FRAMES SHALL BE INCLUDED WITH ITEM 815 AND SHALL CONSIST OF AN INTERMEDIATE AND FINISH COAT USING SYSTEM OZEU.


DESIGN AGENCY
EUTHENICS INC.
CONSULTING ENGINEERS
CLEVELAND, OHIO

REVIEWED KRD DATE 12/00
STRUCTURE FILE NUMBER 7800487/7800517
DRAWN JAM REVISED
DESIGNED KJW CHECKED JAM


ESTIMATED QUANTITIES
TRU-5-0861 L&R
OVER U.S. 422

TRU-5-6.45




TR005E01.DWG F:\JOBS\502\BRIDGE\11\DWG\5025E011.DWG KJW 6/22/01 PLOT 1:1

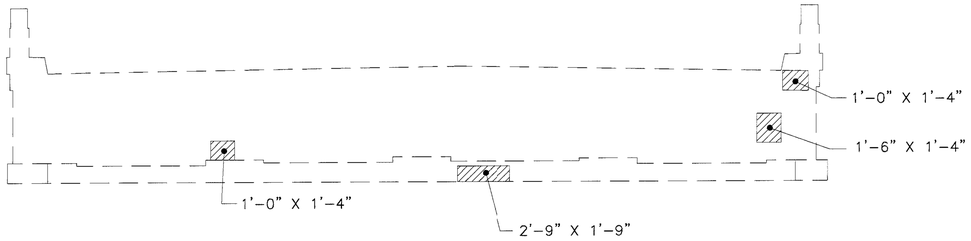


WESTBOUND FORWARD

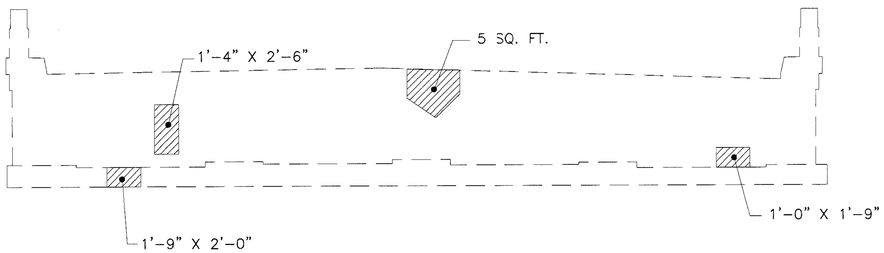


WESTBOUND REAR

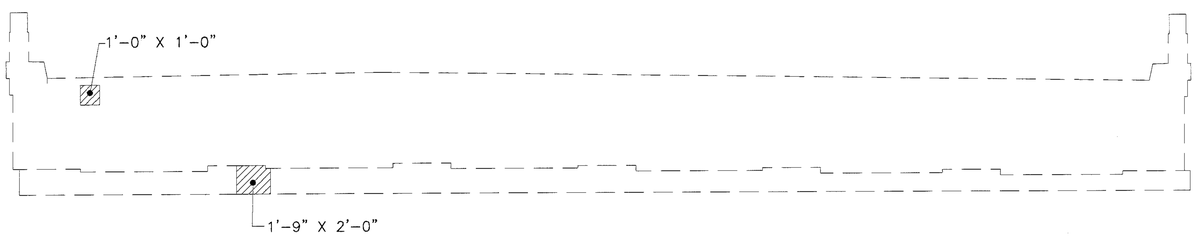


EASTBOUND REAR

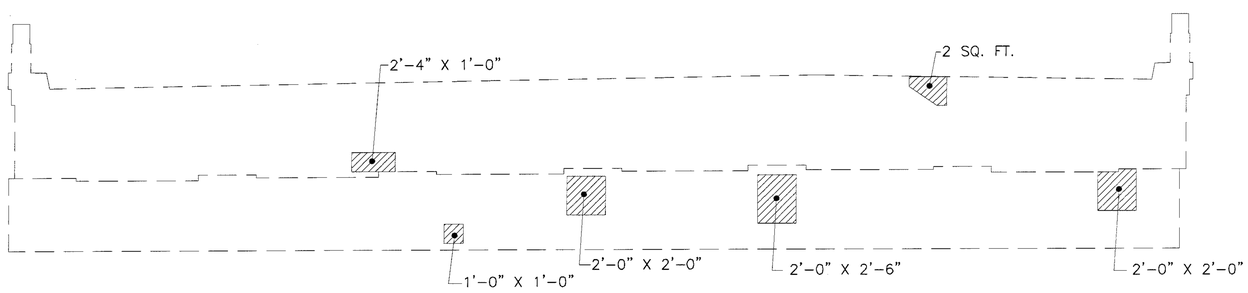


EASTBOUND FORWARD

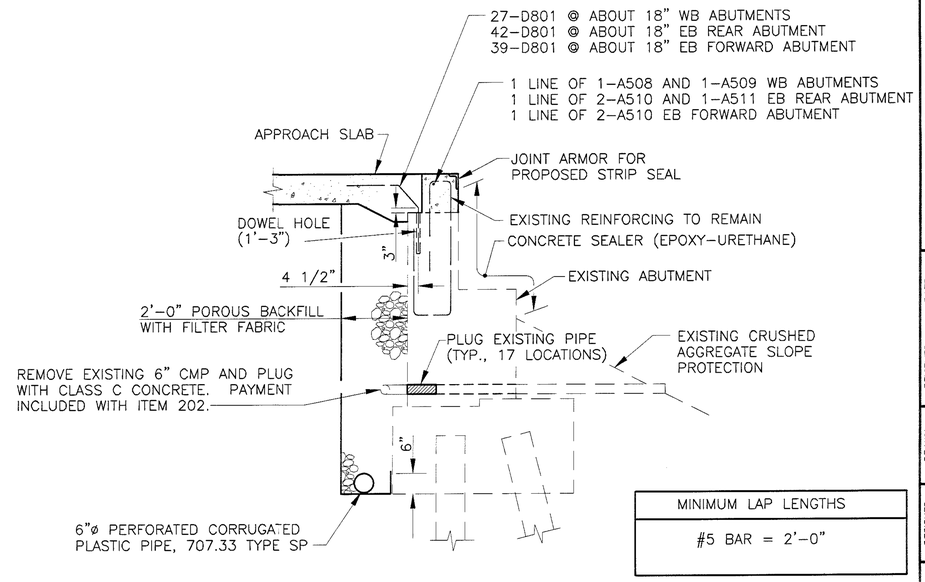


| MINIMUM LAP LENGTHS |
|---|
| #5 BAR = 2'-0" |

MODIFIED ABUTMENT

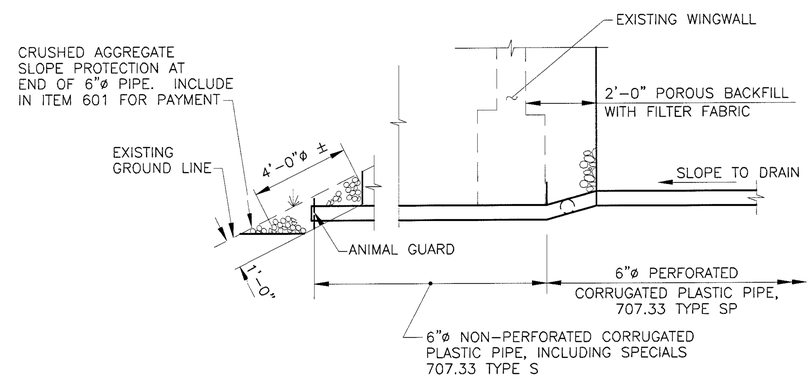


DETAIL A

## LEGEND

ITEM 843- PATCHING CONCRETE STRUCTURES WITH TROWELABLE MORTAR

## NOTES:

1. POROUS BACKFILL WITH FILTER FABRIC, 2 FEET THICK SHALL EXTEND UP TO THE PLANE OF THE SUBGRADE, TO 1 FOOT BELOW THE EMBANKMENT SURFACE, AND TO THE ENDS OF THE WINGWALLS.
2. FOR ABUTMENT REMOVAL DETAILS SEE SHEET 5/10 .

DESIGN AGENCY
EUTHENICS INC.
CONSULTING ENGINEERS
CLEVELAND, OHIO

| DATE | REVIEWED | STRUCTURE FILE NUMBER |
|---|---|---|
| 12/00 | KRD | 7800487/7800517 |

| DRAWN | REVISED |
|---|---|
| KJW | |

| DESIGNED | CHECKED |
|---|---|
| KJW | JAM |

**ABUTMENT PATCHING PLAN AND DETAILS**
BRIDGE NO. TRU-5-0861 L&R
OVER U.S. 422

**TRU-5-6.45**



TR005F401.DWG F:\JOBS\507\BRIDGE\11\DWG\502RCH11A.DWG KJW 2/27/01 PLOT 1:4

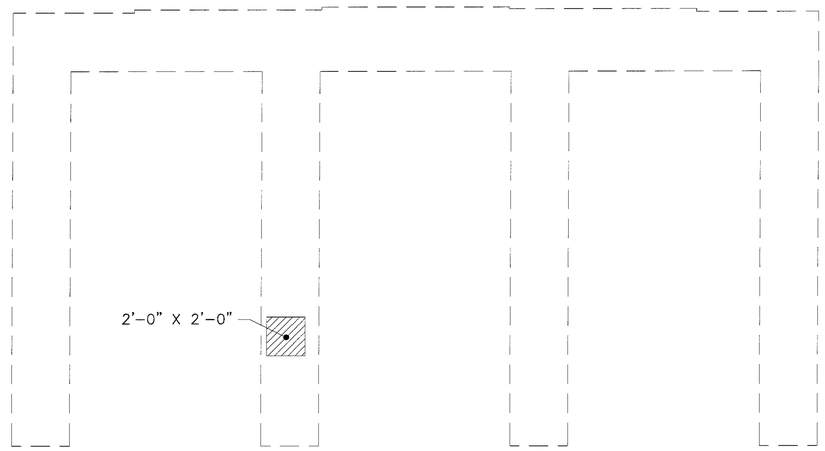


WESTBOUND PIER 2
SOUTH ELEVATION

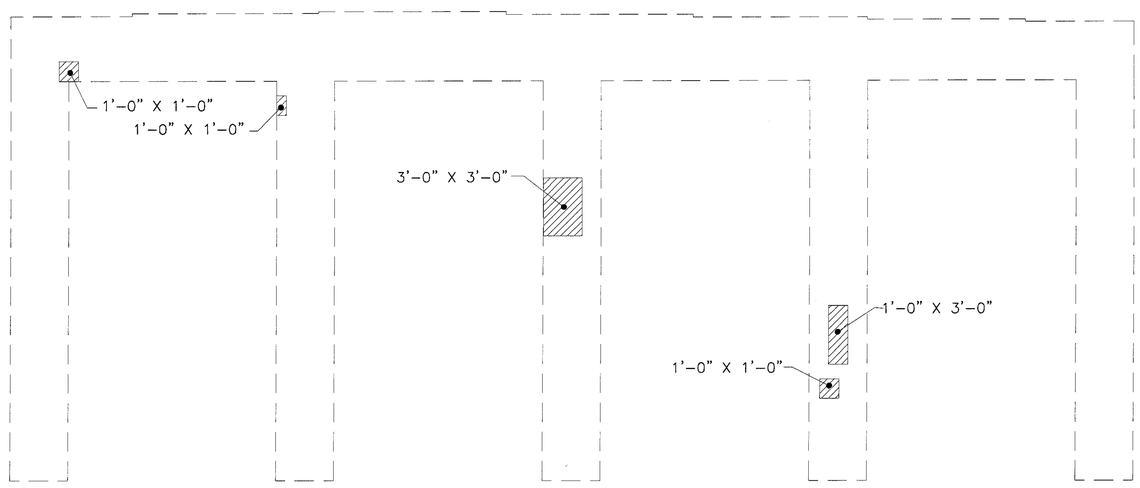


EASTBOUND PIER 2
SOUTH ELEVATION

LEGEND

ITEM 843- PATCHING CONCRETE STRUCTURES WITH TROWELABLE MORTAR

NOTE:

① NO PATCHING AREAS ON EASTBOUND OR WESTBOUND PIER NOS. 1 AND 3.

DESIGN AGENCY
EUTHENICS INC.
CONSULTING ENGINEERS
CLEVELAND, OHIO

| DESIGNED | DRAWN | REVIEWED | DATE |
|---|---|---|---|
| KJW | KJW | KRD | 12/00 |
| CHECKED | REVISED | STRUCTURE FILE NUMBER | |
| JAM | | 7800487/7800517 | |

**PIER PATCHING PLAN**
BRIDGE NO. TRU-5-0861 L&R
OVER U.S. 422

**TRU-5-0.45**



TR005P11.DWG F:\JOBS\502\BRIDGE\11\DWG\502PCH11B.DWG KJW 2/27/01 PLOT 1:4

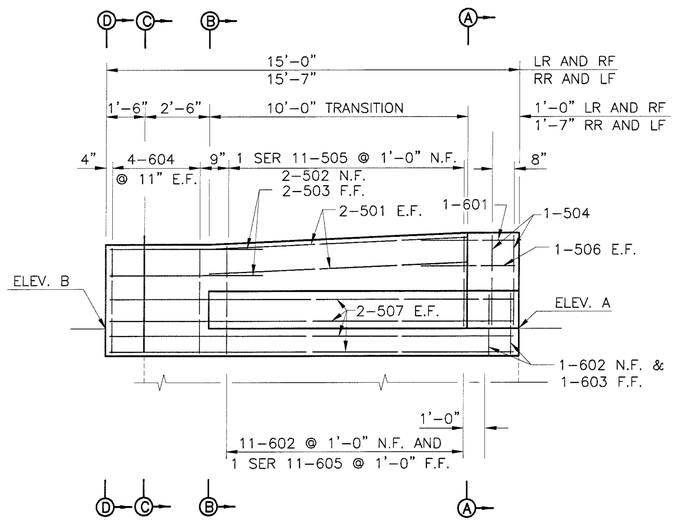


## WESTBOUND WINGWALLS

RR AND LF SHOWN, LR AND RF OPPOSITE HAND

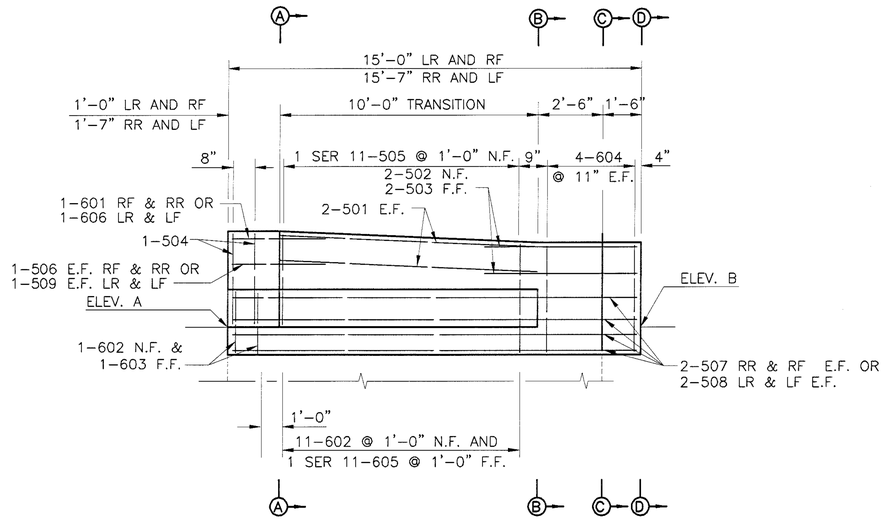


## EASTBOUND WINGWALLS

LR AND RF SHOWN, RR AND LF OPPOSITE HAND

| ELEVATIONS | | | | | | | | |
|---|---|---|---|---|---|---|---|---|
| ELEV. | WESTBOUND | | | | EASTBOUND | | | |
| | LR | RR | LF | RF | LR | RR | LF | RF |
| A | 927.90 | 928.03 | 928.17 | 928.20 | 928.03 | 927.75 | 928.09 | 927.71 |
| B | 927.82 | 927.93 | 928.11 | 928.13 | 927.95 | 927.67 | 927.97 | 927.59 |

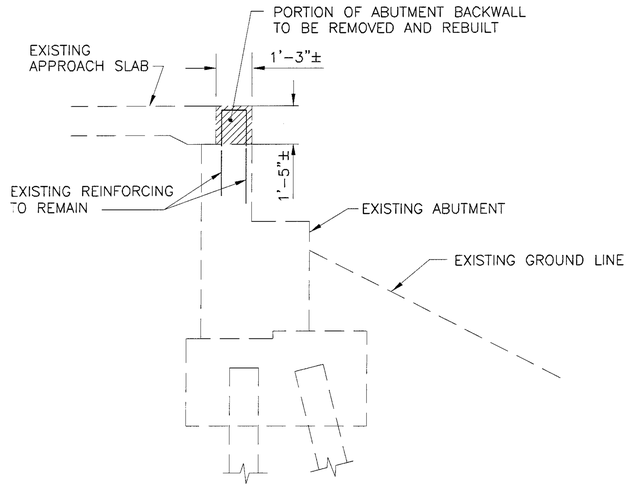


## ABUTMENT REMOVAL LIMITS AT EXISTING APPROACH SLAB

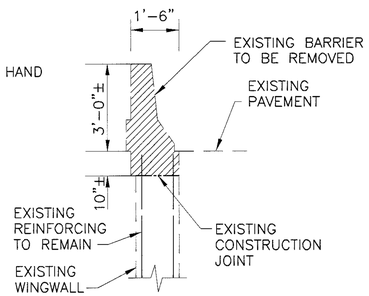


## WINGWALL REMOVAL LIMITS

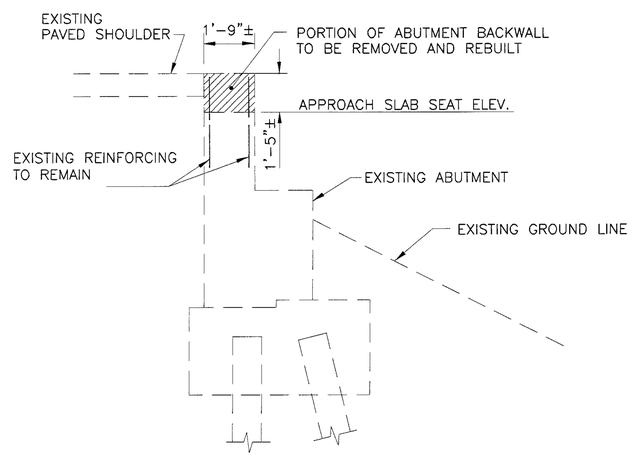


## ABUTMENT REMOVAL LIMITS AT EXISTING PAVED SHOULDER

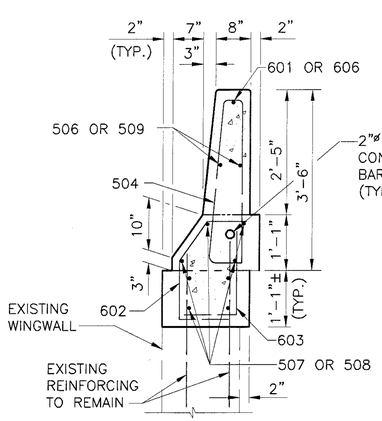


## SECTION A–A

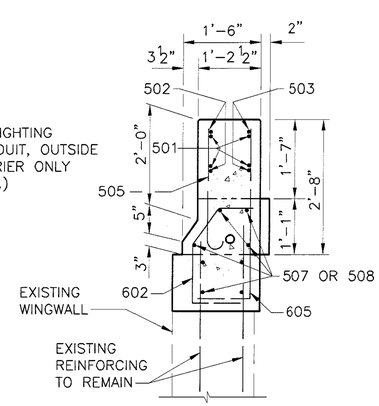


## SECTION B–B

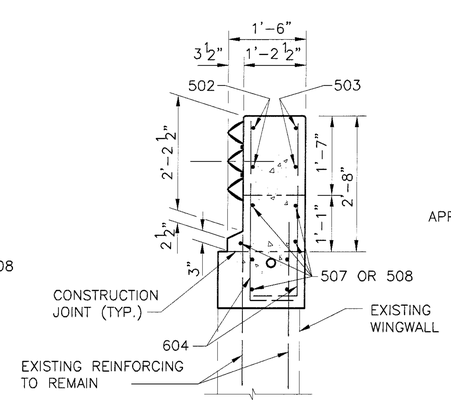


## SECTION C–C

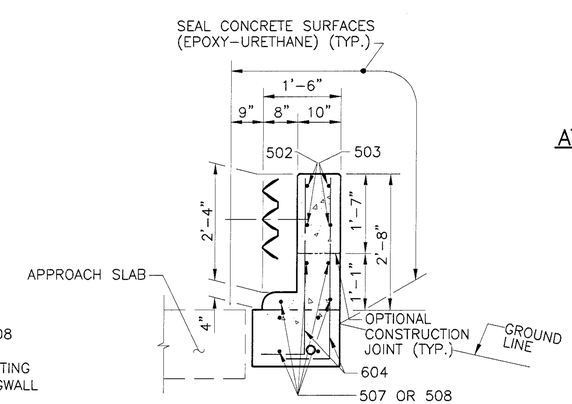


## SECTION D–D

## NOTES:

1. ALL REINFORCING STEEL BAR MARKS SHALL BE PREFIXED "A" (ABUTMENTS) UNLESS NOTED.
2. THE FOLLOWING ABBREVIATIONS ARE USED:

| | |
|---|---|
| TYP. = TYPICAL | LR = LEFT REAR |
| E.F. = EACH FACE | RF = RIGHT FORWARD |
| N.F. = NEAR FACE | RR = RIGHT REAR |
| F.F. = FAR FACE | LF = LEFT FORWARD |

3. FOR REINFORCING SCHEDULE SEE SHEET 10/10.

DESIGN AGENCY
EUTHENICS INC.
CONSULTING ENGINEERS
CLEVELAND, OHIO

| DESIGNED | DRAWN | REVIEWED | DATE |
|---|---|---|---|
| KJW | KJW | KRD | 12/00 |
| CHECKED | REVISED | STRUCTURE FILE NUMBER | |
| JAM | | 7800487/7800517 | |

**ABUTMENTS AND WINGWALLS**
BRIDGE NO. TRU-5-0861 L&R
OVER U.S. 422

**TRU-5-6.45**



TR005FA2.DWG F:\JOBS\502\BRIDGE\11\DWG\502AB11.DWG KJW 2/27/01 PLOT 1:2.6667

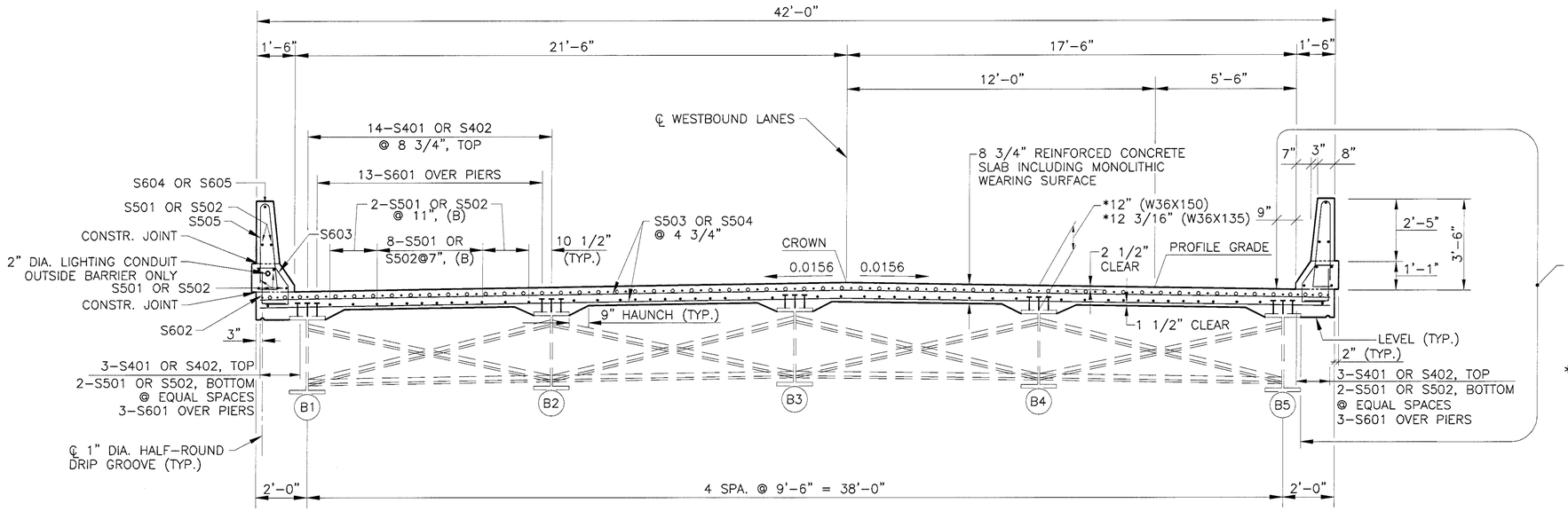


TRANSVERSE SECTION

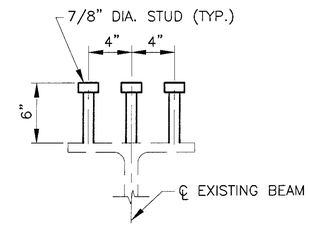


SHEAR CONNECTOR DETAIL

* DECK SLAB DEPTH FOR CONCRETE QUANTITY: THE DIMENSION SHOWN FROM THE TOP OF THE CONCRETE DECK TO THE TOP OF THE FLANGE, MINUS THE DESIGN HAUNCH THICKNESS OF 3 1/4 (W36X150) AND 3 7/16 (W36X135) INCHES, HAS BEEN USED FOR COMPUTING THE DECK CONCRETE QUANTITIES. CONCRETE REQUIRED TO FILL THE HAUNCHES, INCLUDING ADDITIONAL OR LESS MATERIAL REQUIRED DUE TO HAUNCH CONSTRUCTION TOLERANCES, SHALL BE CONSIDERED AS INCIDENTAL AND WILL NOT BE INCLUDED IN THE QUANTITY CALCULATIONS FOR PAYMENT.

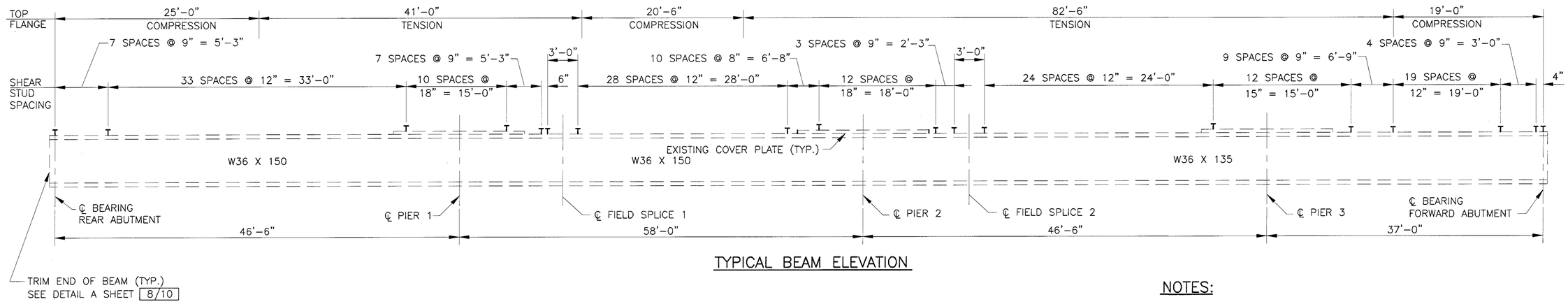


TYPICAL BEAM ELEVATION

## DECK SCREED ELEVATIONS – WESTBOUND

| | | SPAN 1 | | | | SPAN 2 | | | | SPAN 3 | | | | SPAN 4 | | | | |
|---|---|---|---|---|---|---|---|---|---|---|---|---|---|---|---|---|---|---|
| | R.A. ℄ BEARING | 1/4 | 1/2 | 3/4 | ℄ PIER 1 | 1/4 = FS1 | 1/2 | 3/4 | ℄ PIER 2 | 1/4 | FS2 | 1/2 | 3/4 | ℄ PIER 3 | 1/4 | 1/2 | 3/4 | F.A. ℄ BEARING |
| LT TOE OF BARRIER | 927.92 | 928.02 | 928.08 | 928.11 | 928.15 | 928.18 | 928.22 | 928.23 | 928.24 | 928.25 | 928.25 | 928.24 | 928.23 | 928.23 | 928.24 | 928.24 | 928.21 | 928.17 |
| B1 | 927.93 | 928.03 | 928.09 | 928.12 | 928.16 | 928.19 | 928.22 | 928.24 | 928.25 | 928.26 | 928.26 | 928.25 | 928.24 | 928.24 | 928.25 | 928.25 | 928.21 | 928.18 |
| B2 | 928.09 | 928.19 | 928.25 | 928.28 | 928.31 | 928.35 | 928.38 | 928.39 | 928.40 | 928.41 | 928.41 | 928.40 | 928.39 | 928.39 | 928.40 | 928.38 | 928.35 | 928.32 |
| B3 | 928.26 | 928.36 | 928.41 | 928.43 | 928.47 | 928.50 | 928.53 | 928.54 | 928.55 | 928.56 | 928.55 | 928.55 | 928.54 | 928.55 | 928.55 | 928.53 | 928.50 | 928.47 |
| ℄ | 928.29 | 928.39 | 928.44 | 928.47 | 928.50 | 928.53 | 928.56 | 928.57 | 928.58 | 928.59 | 928.58 | 928.58 | 928.57 | 928.58 | 928.58 | 928.55 | 928.52 | 928.49 |
| B4 | 928.18 | 928.28 | 928.32 | 928.37 | 928.38 | 928.41 | 928.44 | 928.46 | 928.46 | 928.47 | 928.46 | 928.46 | 928.45 | 928.46 | 928.46 | 928.44 | 928.41 | 928.37 |
| B5 | 928.05 | 928.13 | 928.18 | 928.22 | 928.23 | 928.26 | 928.30 | 928.31 | 928.32 | 928.31 | 928.31 | 928.30 | 928.30 | 928.31 | 928.30 | 928.28 | 928.25 | 928.21 |
| RT TOE OF BARRIER | 928.04 | 928.12 | 928.17 | 928.21 | 928.22 | 928.26 | 928.29 | 928.30 | 928.31 | 928.30 | 928.30 | 928.30 | 928.30 | 928.30 | 928.30 | 928.27 | 928.24 | 928.20 |

NOTE:
SCREED ELEVATIONS SHOWN ARE FOR THE DECK SLAB SURFACE PRIOR TO CONCRETE PLACEMENT. ALLOWANCE HAS BEEN MADE FOR ANTICIPATED CALCULATED DEAD LOAD DEFLECTION.

## NOTES:

1. WELDED ATTACHMENT OF SUPPORTS FOR CONCRETE DECK FINISHING MACHINE MAY BE MADE TO AREAS OF THE FASCIA BEAM FLANGES DESIGNATED "COMPRESSION". ATTACHMENTS SHALL NOT BE MADE TO AREAS DESIGNATED "TENSION". FILLET WELDS TO COMPRESSION FLANGES SHALL BE NOT CLOSER THAN 1 INCH FROM THE EDGE OF FLANGE, BE NOT MORE THAN 2 INCHES LONG, AND BE NOT SMALLER THAN THE MINIMUM SIZE REQUIRED BY AASHTO.
2. THE FOLLOWING ABBREVIATIONS ARE USED:
   DIA. = DIAMETER — LT = LEFT
   TYP. = TYPICAL — RT = RIGHT
   B = BEAM — CONSTR. = CONSTRUCTION
3. FOR ADDITIONAL NOTES SEE SHEET 8/10 .
4. FOR WESTBOUND SLAB PLAN AND PARAPET REINFORCING SEE SHEET 7/10.
5. REMOVE EXISTING END CROSSFRAMES AND GRIND CONNECTIONS TO BEAM WEBS SMOOTH. PAYMENT FOR THIS WORK INCLUDED WITH ITEM 202
6. FOR PROPOSED END CROSSFRAMES SEE OHIO STANDERD DRAWING EXJ-4-87 SHEET 1 OF 5

DESIGN AGENCY
EUTHENICS INC.
CONSULTING ENGINEERS
CLEVELAND, OHIO

| DESIGNED | DRAWN | REVIEWED | DATE |
|---|---|---|---|
| KJW | KJW | KRD | 12/00 |
| CHECKED | REVISED | STRUCTURE FILE NUMBER | |
| JAM | | 7800487 | |

**TRANSVERSE SECTION - WESTBOUND**
BRIDGE NO. TRU-5-0861 L
OVER U.S. 422

**TRU-5-6.45**



TR005TS1.DWG F:\JOBS\502\BRIDGE\11\DWG\502TSX11L.DWG KJW 2/27/01 PLOT 1:2.6667

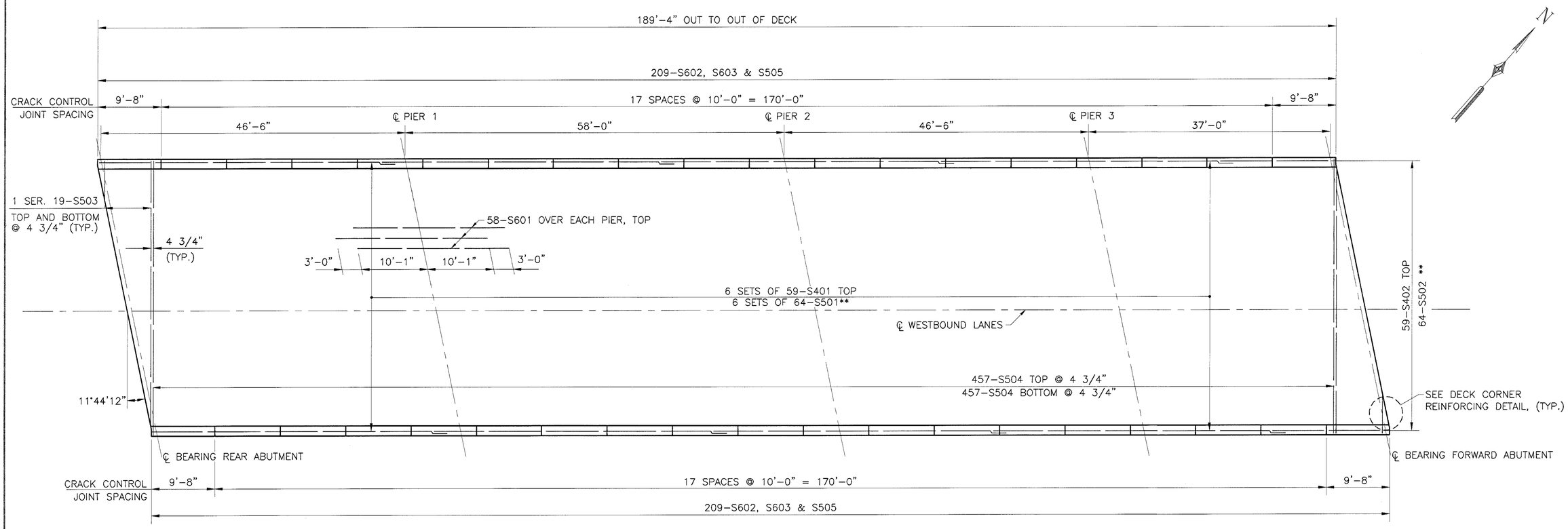


| MINIMUM LAP LENGTHS | |
|---|---|
| #4 BAR | = 1'-7" |
| #5 BAR | = 2'-7" |
| #6 BAR | = 3'-1" |

## SLAB PLAN

** 52-S501 OR S502 IN BOTTOM MAT
6-S501 OR S502 IN LEFT PARAPET
6-S501 OR S502 IN RIGHT PARAPET

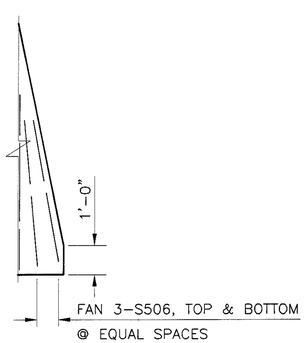


## DECK CORNER REINFORCING

(TYPICAL @ 2 LOCATIONS)

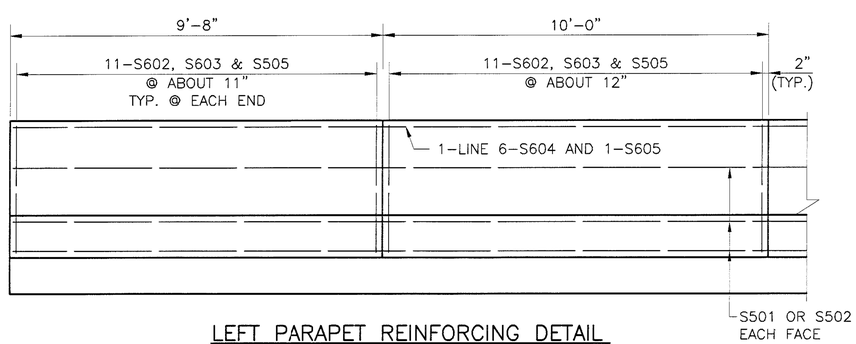


## LEFT PARAPET REINFORCING DETAIL

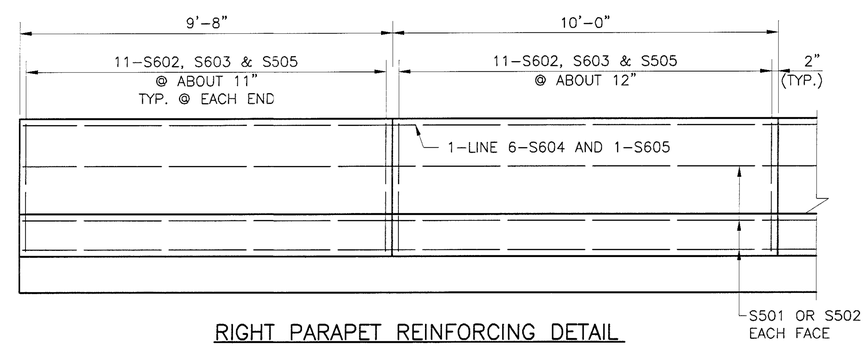


## RIGHT PARAPET REINFORCING DETAIL

NOTES:

1. FOR SPACING OF LONGITUDINAL REINFORCING STEEL IN THE SLAB SEE SHEET 6/10.
2. ALL REINFORCING STEEL BAR MARKS SHALL BE PREFIXED "S" (SUPERSTRUCTURE) UNLESS NOTED.
3. FOR REINFORCEMENT SCHEDULE SEE SHEET 10/10.

DESIGN AGENCY
EUTHENICS INC.
CONSULTING ENGINEERS
CLEVELAND, OHIO

| DESIGNED | DRAWN | REVIEWED | DATE |
|---|---|---|---|
| KJW | KJW | KRD | 12/00 |
| CHECKED | REVISED | STRUCTURE FILE NUMBER | |
| JAM | | 7800487 | |

**SLAB PLAN - WESTBOUND**
BRIDGE NO. TRU-5-0861 L
OVER U.S. 422

**TRU-5-6.45**



TR005S01.DWG F:\JOBS\502\BRIDGE\11\DWG\502S1B11.DWG KJW 2/27/01 PLOT

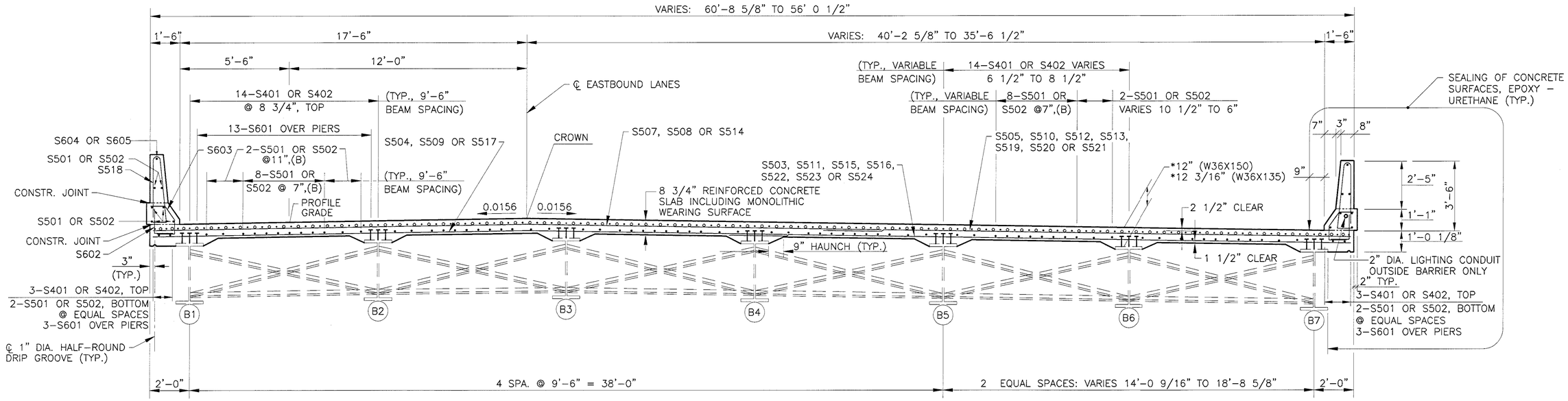


## TRANSVERSE SECTION

* DECK SLAB DEPTH FOR CONCRETE QUANTITY: THE DIMENSION SHOWN FROM THE TOP OF THE CONCRETE DECK TO THE TOP OF THE FLANGE, MINUS THE DESIGN HAUNCH THICKNESS OF 3 1/4 (W36X150) AND 3 7/16 (W36X135) INCHES, HAS BEEN USED FOR COMPUTING THE DECK CONCRETE QUANTITIES. CONCRETE REQUIRED TO FILL THE HAUNCHES, INCLUDING ADDITIONAL OR LESS MATERIAL REQUIRED DUE TO HAUNCH CONSTRUCTION TOLERANCES, SHALL BE CONSIDERED AS INCIDENTAL AND WILL NOT BE INCLUDED IN THE QUANTITY CALCULATIONS FOR PAYMENT.

### DECK SCREED ELEVATIONS – EASTBOUND

| | SPAN 1 | | | | | SPAN 2 | | | | SPAN 3 | | | | | SPAN 4 | | | |
|---|---|---|---|---|---|---|---|---|---|---|---|---|---|---|---|---|---|---|
| | R.A. ℄ BEARING | 1/4 | 1/2 | 3/4 | ℄ PIER 1 | 1/4 = FS1 | 1/2 | 3/4 | ℄ PIER 2 | 1/4 | FS2 | 1/2 | 3/4 | ℄ PIER 3 | 1/4 | 1/2 | 3/4 | F.A. ℄ BEARING |
| LT TOE OF BARRIER | 928.04 | 928.11 | 928.16 | 928.20 | 928.21 | 928.24 | 928.26 | 928.26 | 928.25 | 928.24 | 928.24 | 928.25 | 928.24 | 928.21 | 928.19 | 928.16 | 928.13 | 928.06 |
| B1 | 928.05 | 928.12 | 928.17 | 928.21 | 928.22 | 928.25 | 928.27 | 928.27 | 928.26 | 928.25 | 928.25 | 928.25 | 928.23 | 928.22 | 928.19 | 928.17 | 928.14 | 928.07 |
| B2 | 928.21 | 928.28 | 928.33 | 928.36 | 928.37 | 928.40 | 928.42 | 928.42 | 928.41 | 928.40 | 928.40 | 928.39 | 928.38 | 928.37 | 928.34 | 928.32 | 928.28 | 928.21 |
| ℄ | 928.34 | 928.40 | 928.46 | 928.47 | 928.50 | 928.52 | 928.54 | 928.54 | 928.53 | 928.52 | 928.52 | 928.51 | 928.50 | 928.48 | 928.45 | 928.42 | 928.38 | 928.32 |
| B3 | 928.31 | 928.38 | 928.43 | 928.44 | 928.47 | 928.49 | 928.51 | 928.51 | 928.49 | 928.49 | 928.49 | 928.48 | 928.47 | 928.45 | 928.42 | 928.39 | 928.34 | 928.29 |
| B4 | 928.18 | 928.24 | 928.28 | 928.30 | 928.32 | 928.34 | 928.36 | 928.36 | 928.34 | 928.34 | 928.34 | 928.33 | 928.32 | 928.29 | 928.26 | 928.23 | 928.18 | 928.13 |
| B5 | 928.03 | 928.10 | 928.14 | 928.16 | 928.17 | 928.19 | 928.21 | 928.21 | 928.20 | 928.19 | 928.19 | 928.18 | 928.17 | 928.14 | 928.11 | 928.09 | 928.02 | 927.97 |
| B6 | 927.89 | 927.96 | 928.00 | 928.03 | 928.03 | 928.07 | 928.08 | 928.08 | 928.07 | 928.07 | 928.07 | 928.06 | 928.04 | 928.01 | 927.99 | 927.96 | 927.90 | 927.85 |
| B7 | 927.76 | 927.82 | 927.87 | 927.89 | 927.91 | 927.93 | 927.94 | 927.95 | 927.94 | 927.94 | 927.94 | 927.94 | 927.92 | 927.90 | 927.87 | 927.84 | 927.78 | 927.73 |
| RT TOE OF BARRIER | 927.75 | 927.81 | 927.86 | 927.88 | 927.90 | 927.92 | 927.93 | 927.94 | 927.93 | 927.94 | 927.94 | 927.93 | 927.92 | 927.89 | 927.86 | 927.83 | 927.77 | 927.72 |

NOTE:
SCREED ELEVATIONS SHOWN ARE FOR THE DECK SLAB SURFACE PRIOR TO CONCRETE PLACEMENT. ALLOWANCE HAS BEEN MADE FOR ANTICIPATED CALCULATED DEAD LOAD DEFLECTION.

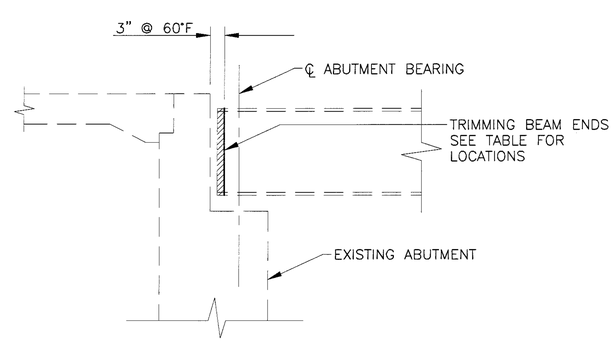


## DETAIL A

| TRIMMING BEAM ENDS | |
|---|---|
| LOCATION | BEAMS |
| WESTBOUND | |
| REAR ABUTMENT | B1 THRU B5 |
| FORWARD ABUTMENT | NONE |
| EASTBOUND | |
| REAR ABUTMENT | B1 THRU B7 |
| FORWARD ABUTMENT | B1 THRU B4, B6 AND B7 |

| DIMENSION A ⊙ | | |
|---|---|---|
| F° | REAR ABUTMENT | FORWARD ABUTMENT |
| 90° | 1 3/8" | 1 7/16" |
| 80° | 1 1/2" | 1 1/2" |
| 70° | 1 5/8" | 1 9/16" |
| 60° | 1 5/8" | 1 5/8" |
| 50° | 1 11/16" | 1 11/16" |
| 40° | 1 13/16" | 1 13/16" |
| 30° | 1 7/8" | 1 7/8" |

NOTE: DIMENSION A⊙ FOR 3" STRIP SEAL GLAND.
SEE OHIO STANDARD DRAWING EXJ-4-87 SHEET 2 OF 5.

## NOTES:

① A HAUNCH WIDTH OF 9 INCHES SHALL BE USED FOR COMPUTING QUANTITY OF CONCRETE. HOWEVER, THE HAUNCH WIDTH MAY VARY BETWEEN 6 INCHES AND 12 INCHES.

② FOR EASTBOUND SLAB PLAN AND PARAPET REINFORCING SEE SHEET 9/10.

③ FOR ADDITIONAL LIGHTING AND CONDUIT NOTES AND DETAILS SEE OHIO STANDARD DRAWING HL-30.31.

④ FOR ADDITIONAL NOTES SEE SHEET 6/10 .

⑤ FOR TYPICAL BEAM ELEVATION SEE SHEET 6/10 .

⑥ FOR SHEAR CONNECTOR DETAIL SEE SHEET 6/10.

⑦ INSTALLATION OF SEAL: DURING INSTALLATION OF THE SUPPORT/ARMOR FOR THE SUPERSTRUCTURE SIDE OF THE EXPANSION JOINT SEAL, THE SEATING OF BEAMS ON BEARINGS SHALL BE CAREFULLY OBSERVED TO ASSURE THAT POSITIVE BEARING IS MAINTAINED. PROPER ELEVATION OF THE SUPPORT/ARMOR SHALL BE ACHIEVED BY ADJUSTING THE CONNECTION ANGLES AND BOLTS BETWEEN BEAM AND EXPANSION JOINT.

DESIGN AGENCY
EUTHENICS INC.
CONSULTING ENGINEERS
CLEVELAND, OHIO

| DESIGNED | DRAWN | REVIEWED | DATE |
|---|---|---|---|
| KJW | KJW | KRD | 12/00 |
| CHECKED | REVISED | STRUCTURE FILE NUMBER | |
| JAM | | 7800517 | |

**TRANSVERSE SECTION - EASTBOUND**
BRIDGE NO. TRU-5-0861 R
OVER U.S. 422 .

**TRU-5-6.45**



TR0051S2.DWG F:\JOBS\.507\BRIDGE\11\DWG\507TSX11R.DWG K.JW 2/27/01 PLOT 1:2.6667

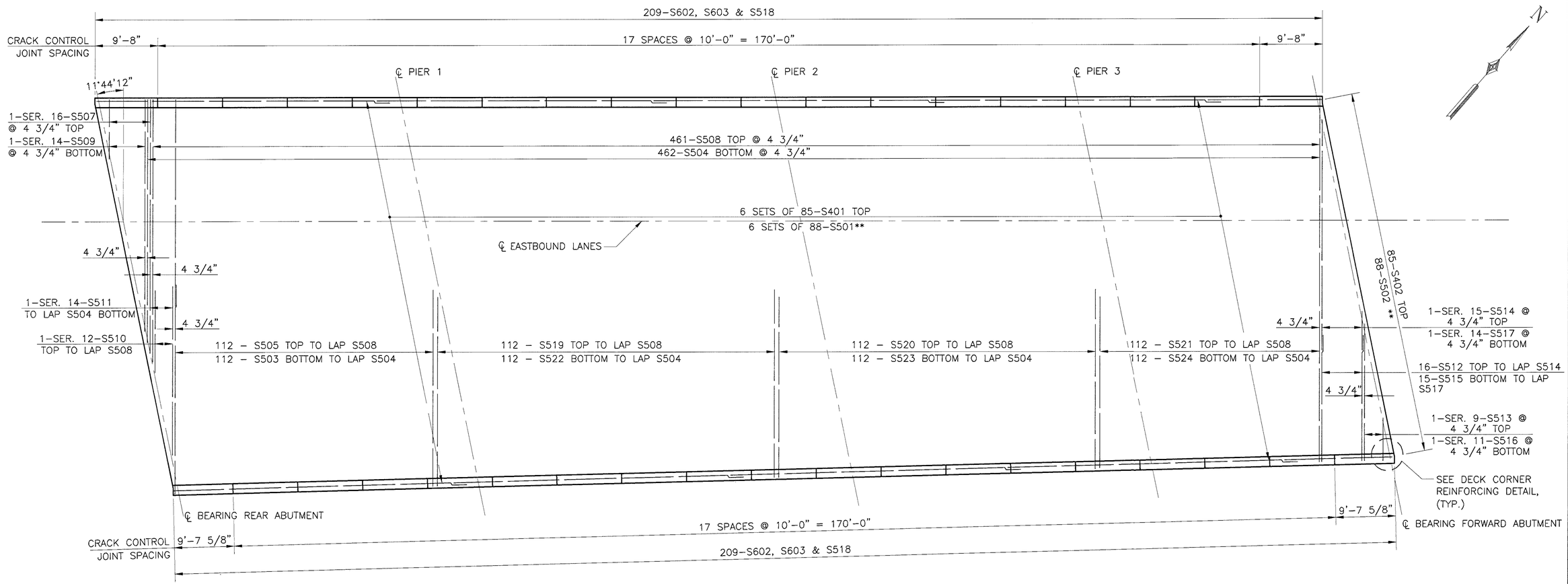


## DECK REINFORCING PLAN

** 76-S501 OR S502 IN BOTTOM MAT
6-S501 OR S502 IN LEFT PARAPET
6-S501 OR S502 IN RIGHT PARAPET

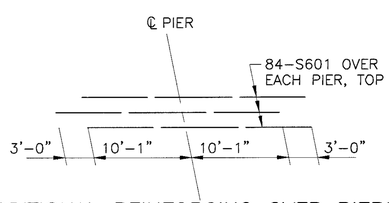


## ADDITIONAL REINFORCING OVER PIERS

| MINIMUM LAP LENGTHS | | |
|---|---|---|
| #4 BAR | = | 1'-7" |
| #5 BAR | = | 2'-7" |
| #6 BAR | = | 3'-1" |

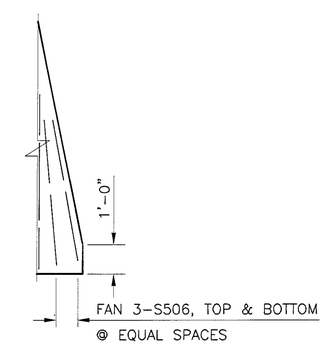


## DECK CORNER REINFORCING

(TYPICAL @ 2 LOCATIONS)

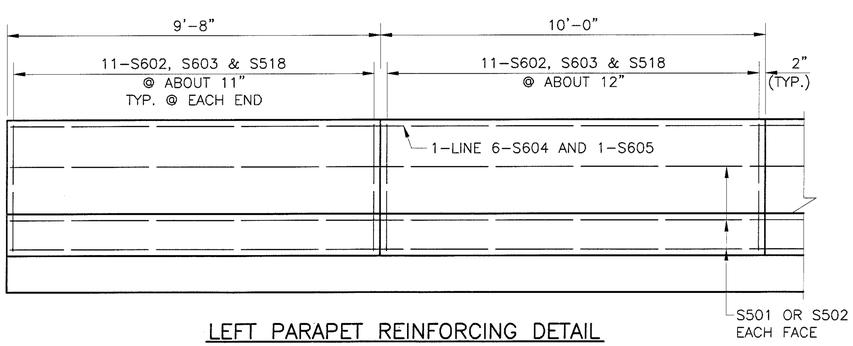


## LEFT PARAPET REINFORCING DETAIL

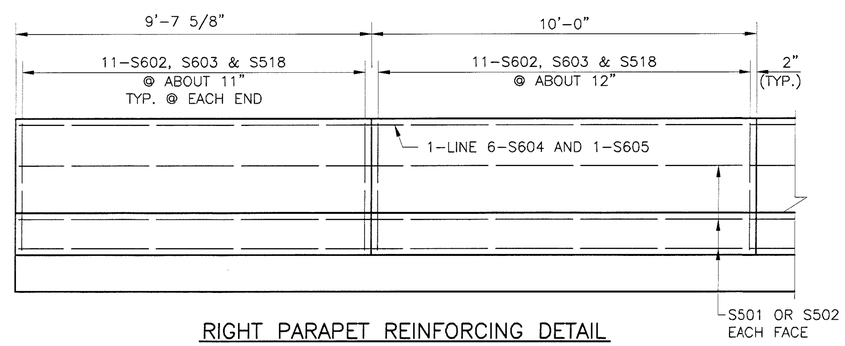


## RIGHT PARAPET REINFORCING DETAIL

## NOTES:

1. FOR SPACING OF LONGITUDINAL REINFORCING STEEL IN THE SLAB SEE SHEET 8/10.
2. ALL REINFORCING STEEL BAR MARKS SHALL BE PREFIXED "S" (SUPERSTRUCTURE) UNLESS NOTED.
3. FOR REINFORCEMENT SCHEDULE SEE SHEET 10/10.

DESIGN AGENCY
EUTHENICS INC.
CONSULTING ENGINEERS
CLEVELAND, OHIO

| DESIGNED | DRAWN | REVIEWED | DATE |
|---|---|---|---|
| KJW | KJW | KRD | 12/00 |
| CHECKED | REVISED | STRUCTURE FILE NUMBER | |
| JAM | | 7800517 | |

**SLAB PLAN - EASTBOUND**
BRIDGE NO. TRU-5-0861 R
OVER U.S. 422

**TRU-5-6.45**



TR005S02.DWG F:\JOBS\502\BRIDGE\11\DWG\502SLB11R.DWG KJW 2/27/01 PLOT 1:2

# REINFORCING SCHEDULE

| MARK | NO. | LENGTH | WEIGHT | TYPE | A | B | C | D | INCR. |
|---|---|---|---|---|---|---|---|---|---|
| SUPERSTRUCTURE – WESTBOUND | | | | | | | | | |
| S401 | 354 | 30'–0" | 7,094 | STR | | | | | |
| S402 | 59 | 18'–6" | 729 | STR | | | | | |
| S501 | 384 | 30'–0" | 12,015 | STR | | | | | |
| S502 | 64 | 24'–6" | 1,635 | STR | | | | | |
| | 4 | 5'–0" | | | | | | | |
| S503 | SER | TO | 1,784 | STR | | | | | 1'-11 3/8" |
| | 19 | 40'–0" | | | | | | | |
| S504 | 914 | 41'–8" | 39,721 | STR | | | | | |
| S505 | 418 | 7'–1" | 3,088 | 9 | 3'–3" | 3'–0" | | | |
| S506 | 12 | 3'–8" | 46 | STR | | | | | |
| S601 | 174 | 23'–2" | 6,055 | STR | | | | | |
| S602 | 418 | 2'–7" | 1,622 | 1 | 11" | 1'–10" | | | |
| S603 | 418 | 3'–4" | 2,093 | 10 | 1'–1" | | | | |
| S604 | 12 | 30'–0" | 541 | STR | | | | | |
| S605 | 2 | 27'–6" | 83 | STR | | | | | |
| | | TOTAL | 76,506 | lbs. | | | | | |

| MARK | NO. | | | LENGTH | TYPE | WEIGHT | DIMENSIONS | | | | | INCR. |
|---|---|---|---|---|---|---|---|---|---|---|---|---|
| | REAR | FWD | TOTAL | | | (LBS.) | A | B | C | D | E | |
| ABUTMENTS – WESTBOUND | | | | | | | | | | | | |
| A501 | 8 | 8 | 16 | 10'–0" | STR | 167 | | | | | | |
| A502 | 4 | 4 | 8 | 5'–8" | 1 | 47 | 1'–10" | 2'–5" | 1'–5" | 1 1/2" | 5" | |
| A503 | 4 | 4 | 8 | 5'–8" | STR | 47 | | | | | | |
| A504 | 4 | 4 | 8 | 7'–1" | 2 | 59 | 3'–3" | 3'–0" | 8" | | | |
| | 2 | 2 | 4 | 3'–0" | | | 2'–5" | | | | | |
| A505 | SER | SER | SER | TO | 3 | 157 | TO | | | | | 1" |
| | 11 | 11 | 11 | 3'–10" | | | 3'–3" | | | | | |
| A506 | 4 | 4 | 8 | 3'–10" | STR | 32 | | | | | | |
| A507 | 16 | 16 | 32 | 15'–3" | STR | 509 | | | | | | |
| A508 | 1 | 1 | 2 | 30'–0" | STR | 63 | | | | | | |
| A509 | 1 | 1 | 2 | 14'–7" | STR | 30 | | | | | | |
| A601 | 2 | 2 | 4 | 3'–10" | STR | 23 | | | | | | |
| A602 | 26 | 26 | 52 | 3'–5" | 4 | 267 | 1'–0" | 1'–2" | 8 1/2" | 6" | 9" | |
| A603 | 4 | 4 | 8 | 2'–9" | 5 | 33 | 1'–0" | 1'–11" | | | | |
| A604 | 16 | 16 | 32 | 4'–3" | 5 | 204 | 1'–0" | 3'–5" | | | | |
| | 2 | 2 | 4 | 4'–3" | | | | 3'–5" | | | | |
| A605 | SER | SER | SER | TO | 5 | 308 | 1'–0" | TO | | | | 1" |
| | 11 | 11 | 11 | 5'–1" | | | | 4'–3" | | | | |
| D801 | 27 | 27 | 54 | 4'–2" | 6 | 601 | 1"–6" | 1'–0" | 1'–0" | 1'–5" | | |
| | | | | TOTAL | | 2,547 | lbs. | | | | | |

| MARK | NO. | LENGTH | WEIGHT | TYPE | A | B | C | D | INCR. |
|---|---|---|---|---|---|---|---|---|---|
| SUPERSTRUCTURE – EASTBOUND | | | | | | | | | |
| S401 | 510 | 30'–0" | 10,220 | STR | | | | | |
| S402 | 85 | 18'–6" | 1,050 | STR | | | | | |
| S501 | 528 | 30'–0" | 16,521 | STR | | | | | |
| S502 | 88 | 24'–6" | 2,249 | STR | | | | | |
| S503 | 112 | 31'–0" | 3,621 | STR | | | | | |
| S504 | 462 | 32'–0" | 15,420 | STR | | | | | |
| S505 | 112 | 26'–3" | 3,066 | STR | | | | | |
| S506 | 12 | 4'–4" | 54 | STR | | | | | |
| | 1 | 6'–3" | | | | | | | |
| S507 | SER | TO | 343 | STR | | | | | 1'–10 7/8" |
| | 16 | 34'–10" | | | | | | | |
| S508 | 461 | 36'–9" | 17,670 | STR | | | | | |
| | 1 | 5'–3" | | | | | | | |
| S509 | SER | TO | 257 | STR | | | | | 1'–10 7/8" |
| | 14 | 30'–0" | | | | | | | |
| | 1 | 3'–9" | | | | | | | |
| S510 | SER | TO | 178 | STR | | | | | 1'–10 7/8" |
| | 12 | 24'–8" | | | | | | | |
| | 1 | 4'–8" | | | | | | | |
| S511 | SER | TO | 249 | STR | | | | | 1'–10 7/8" |
| | 14 | 29'–5" | | | | | | | |
| S512 | 16 | 22'–0" | 367 | STR | | | | | |
| | 1 | 4'–9" | | | | | | | |
| S513 | SER | TO | 116 | STR | | | | | 1'–10 7/8" |
| | 9 | 20'–0" | | | | | | | |
| | 1 | 6'–10" | | | | | | | |
| S514 | SER | TO | 316 | STR | | | | | 1'–10 7/8" |
| | 15 | 33'–6" | | | | | | | |
| S515 | 15 | 26'–9" | 419 | STR | | | | | |
| | 1 | 5'–9" | | | | | | | |
| S516 | SER | TO | 175 | STR | | | | | 1'–10 7/8" |
| | 11 | 24'–10" | | | | | | | |
| | 1 | 4'–5" | | | | | | | |
| S517 | SER | TO | 246 | STR | | | | | 1'–10 7/8" |
| | 14 | 29'–3" | | | | | | | |
| S518 | 418 | 7'–1" | 3,088 | STR | 3'–3" | 3'–0" | | | |
| S519 | 112 | 25'–3" | 2.950 | STR | | | | | |
| S520 | 112 | 24'–3" | 2.833 | STR | | | | | |
| S521 | 112 | 23'–3" | 2,716 | STR | | | | | |
| S522 | 112 | 30'–0" | 3,504 | STR | | | | | |
| S523 | 112 | 29'–0" | 3.388 | STR | | | | | |
| S524 | 112 | 28'–0" | 3,271 | STR | | | | | |
| S601 | 252 | 23'–2" | 8,769 | STR | | | | | |
| S602 | 418 | 2'–7" | 1,622 | 1 | 11" | 1'–10" | | | |
| S603 | 418 | 3'–4" | 2,093 | 10 | 1'–1" | | | | |
| S604 | 12 | 30'–0" | 541 | STR | | | | | |
| S605 | 2 | 27'–6" | 83 | STR | | | | | |
| | | TOTAL | 107,395 | lbs. | | | | | |

| MARK | NO. | | | LENGTH | TYPE | WEIGHT | DIMENSIONS | | | | | INCR. |
|---|---|---|---|---|---|---|---|---|---|---|---|---|
| | REAR | FWD | TOTAL | | | (LBS.) | A | B | C | D | E | |
| ABUTMENTS – EASTBOUND | | | | | | | | | | | | |
| A501 | 8 | 8 | 16 | 10'–0" | STR | 167 | | | | | | |
| A502 | 4 | 4 | 8 | 5'–8" | 1 | 47 | 1'–10" | 2'–5" | 1'–5" | 1 1/2" | 5" | |
| A503 | 4 | 4 | 8 | 5'–8" | STR | 47 | | | | | | |
| A504 | 4 | 4 | 8 | 7'–1" | 2 | 59 | 3'–3" | 3'–0" | 8" | | | |
| | 2 | 2 | 4 | 3'–0" | | | 2'–5" | | | | | |
| A505 | SER | SER | SER | TO | 3 | 157 | TO | | | | | 1" |
| | 11 | 11 | 11 | 3'–10" | | | 3'–3" | | | | | |
| A506 | 2 | 2 | 4 | 3'–10" | STR | 16 | | | | | | |
| A507 | 8 | 8 | 16 | 15'–3" | STR | 254 | | | | | | |
| A508 | 8 | 8 | 16 | 16'–0" | STR | 267 | | | | | | |
| A509 | 2 | 2 | 4 | 4'–4" | STR | 18 | | | | | | |
| A510 | 2 | 2 | 4 | 30'–0" | STR | 125 | | | | | | |
| A511 | 1 | | 1 | 6'–2" | STR | 6 | | | | | | |
| A601 | 1 | 1 | 2 | 3'–10" | STR | 12 | | | | | | |
| A602 | 26 | 26 | 52 | 3'–5" | 4 | 267 | 1'–0" | 1'–2" | 8 1/2" | 6" | 9" | |
| A603 | 4 | 4 | 8 | 2'–9" | 5 | 33 | 1'–0" | 1'–11" | | | | |
| A604 | 16 | 16 | 32 | 4'–3" | 5 | 204 | 1'–0" | 3'–5" | | | | |
| | 2 | 2 | 4 | 4'–3" | | | | 3'–5" | | | | |
| A605 | SER | SER | SER | TO | 5 | 308 | 1'–0" | TO | | | | 1" |
| | 11 | 11 | 11 | 5'–1" | | | | 4'–3" | | | | |
| A606 | 1 | 1 | 2 | 4'–4" | STR | 13 | | | | | | |
| D801 | 42 | 39 | 81 | 4'–2" | 6 | 901 | 1"–6" | 1'–0" | 1'–0" | 1'–5" | | |
| | | | | TOTAL | | 2,901 | lbs. | | | | | |

## BENDING DIAGRAMS

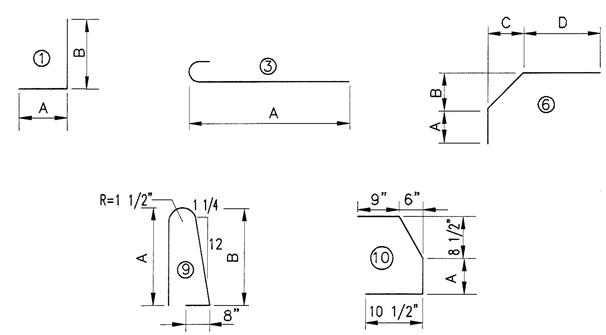


## NOTES:

① THE BAR SIZE NUMBER IS SPECIFIED ON THE PLANS IN THE BAR MARK COLUMN. THE FIRST DIGIT WHERE THREE DIGITS ARE USED, AND THE FIRST TWO DIGITS WHERE FOUR DIGITS ARE USED, INDICATES THE BAR SIZE NUMBER. FOR EXAMPLE, S601 IS A NO. 6 BAR. BAR DIMENSIONS SHOWN ARE OUT TO OUT UNLESS OTHERWISE INDICATED. R INDICATES INSIDE RADIUS, UNLESS OTHERWISE NOTED. "STD." WRITTEN IN PLACE OF A DIMENSION INDICATES A STANDARD BEND AT THE END OF A BAR.

② ALL REINFORCING STEEL TO BE EPOXY COATED.

③ REINFORCING STEEL WEIGHTS ARE GIVEN FOR INFORMATION ONLY.

DESIGN AGENCY
EUTHENICS INC.
CONSULTING ENGINEERS
CLEVELAND, OHIO

| DESIGNED | DRAWN | REVIEWED | DATE |
|---|---|---|---|
| KJW | KJW | KRD | 12/00 |
| CHECKED | REVISED | STRUCTURE FILE NUMBER | |
| JAM | | 7800487/7800517 | |

**REINFORCING SCHEDULE**
BRIDGE NO. TRU–5–0861 L&R
OVER U.S. 422

**TRU-5-6.45**



TR005RL1.DWG F:\JOBS\502\BRIDGE\11\DWG\502RS11.DWG KJW 2/27/01 PLOT 1:1

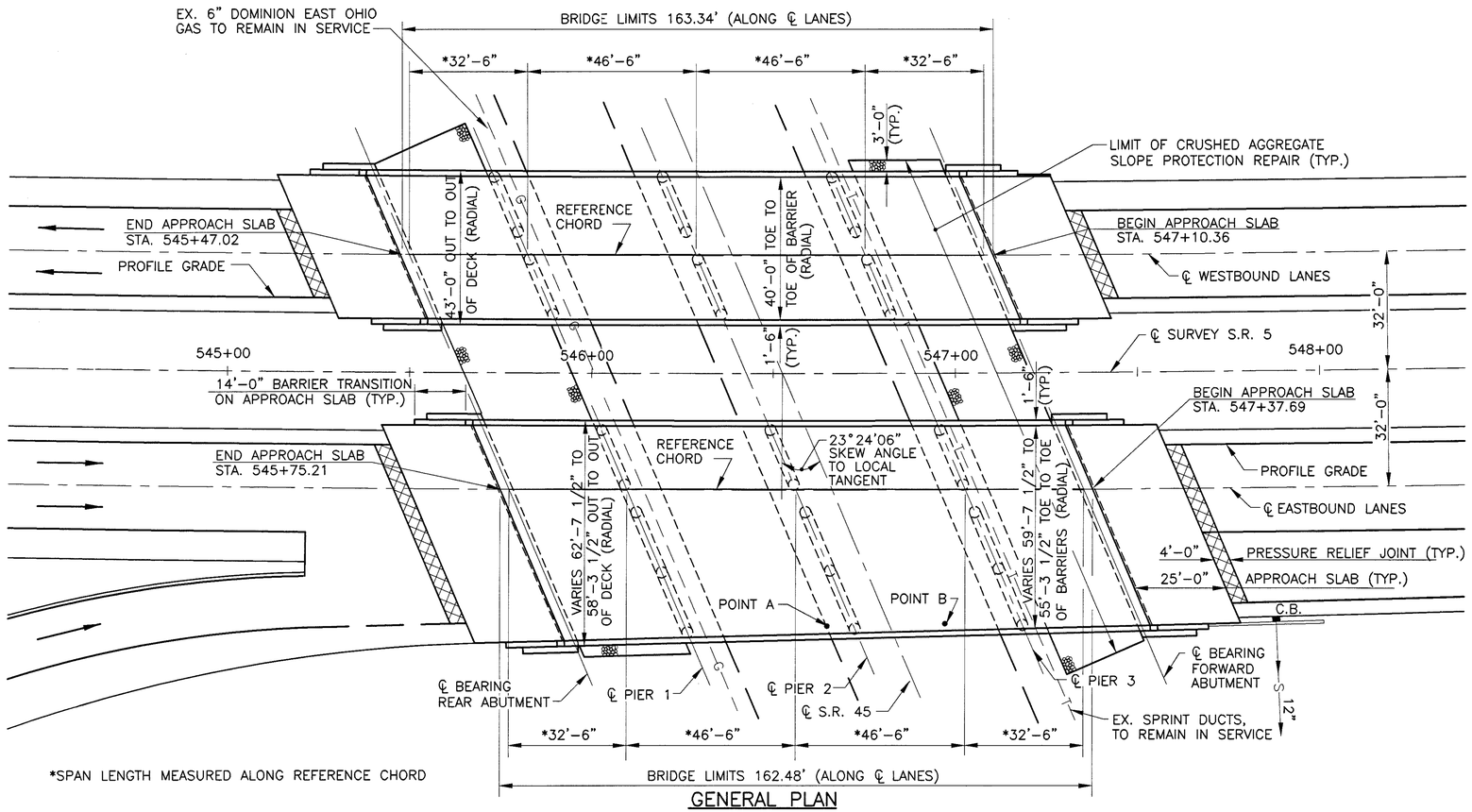


*SPAN LENGTH MEASURED ALONG REFERENCE CHORD

## GENERAL PLAN

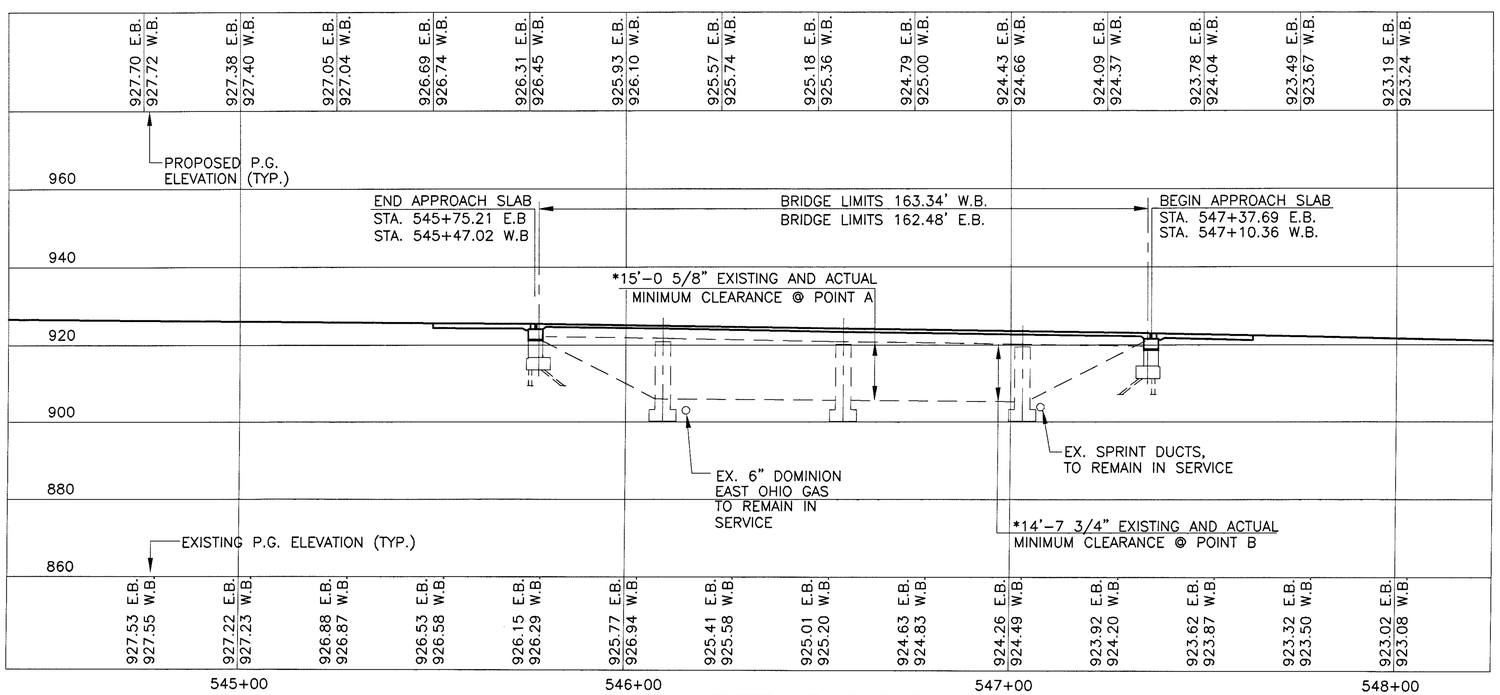


## SECTION ON CENTERLINE OF EASTBOUND LANES

N

### TEMPORARY BENCH MARKS

**BENCH MARK NO. 1**
IRON PIN FOUND IN MEDIAN
STA. 534+31.06
ELEV. 934.56

**BENCH MARK NO. 2**
IRON PIN FOUND IN MEDIAN
STA. 553+41.29
ELEV. 909.66

### S.R.5 CURVE DATA

△ = 6° 21'08"
Dc = 0° 28'00"
R = 12,277.67'
T = 681.29'
L = 1361.19'
E = 18.89'

### HP 10 X 42 PILES

| LOCATION | ESTIMATED LENGTH |
|---|---|
| WESTBOUND | |
| REAR ABUTMENT | 37 FEET |
| FORWARD ABUTMENT | 34 FEET |
| EASTBOUND | |
| REAR ABUTMENT | 36 FEET |
| FORWARD ABUTMENT | 33 FEET |

### EXISTING STRUCTURE

| | |
|---|---|
| TYPE: | CONTINUOUS STEEL BEAM BRIDGE WITH REINFORCED CONCRETE DECK AND SUBSTRUCTURE |
| SPANS: | 32'-6"±, 46'-6"±, 46'-6"±, 32'-6"± C/C OF BEARINGS |
| ROADWAY: | LEFT STRUCTURE: 39'-0" TOE TO TOE OF BARRIERS<br>RIGHT STRUCTURE: VARIABLE |
| LOAD FREQUENCY: | CF = 2000 (1957) |
| SKEW: | 23°-24'-06" RIGHT FORWARD, TO LOCAL TANGENT |
| WEARING SURFACE: | 1" MONOLITHIC CONCRETE |
| APPROACH SLABS: | 25'-0" LONG |
| ALIGNMENT: | 0°-28'-00" LEFT |
| CROWN: | 0.0156 FT./FT. |
| DATE BUILT: | 1970 |
| STRUCTURE FILE NO: | 7800630 LEFT, 7800665 RIGHT |

### PROPOSED STRUCTURE

| | |
|---|---|
| PROPOSED WORK: | REPLACE REINFORCED CONCRETE DECK, MODIFY ABUTMENTS, PATCH SUBSTRUCTURE UNITS AND SEAL CONCRETE SURFACES |
| TYPE: | CONTINUOUS COMPOSITE STEEL BEAM BRIDGE WITH REINFORCED CONCRETE DECK AND SUBSTRUCTURE |
| SPANS: | 32'-6"±, 46'-6"±, 46'-6"±, 32'-6"± C/C OF BEARINGS |
| ROADWAY: | LEFT STRUCTURE: 40'-0" TOE TO TOE OF BARRIERS<br>RIGHT STRUCTURE: VARIABLE |
| LOADING: | HS 25, CASE II AND THE ALTERNATE MILITARY LOADING |
| SKEW: | 23°-24'-06" RIGHT FORWARD, TO LOCAL TANGENT |
| WEARING SURFACE: | 1" MONOLITHIC CONCRETE |
| APPROACH SLABS: | AS-1-81 (25'-0") |
| ALIGNMENT: | TANGENT |
| CROWN: | 0.0156 FT./FT. |
| LATITUDE: | N 41°-16'-49" |
| LONGITUDE: | W 80°-50'-30" |

* REQUIRED MINIMUM VERTICAL CLEARANCE IS 16'-6". ACTUAL MINIMUM VERTICAL CLEARANCE AT POINT A OCCURS AT THE INTERSECTION OF THE RIGHT EDGE OF THE RIGHT EXTERIOR BEAM OF EASTBOUND S.R. 5 AND THE WEST EDGE OF PAVEMENT OF SOUTHBOUND S.R. 45. ACTUAL MINIMUM VERTICAL CLEARANCE AT POINT B OCCURS AT THE INTERSECTION OF THE RIGHT EDGE OF THE RIGHT EXTERIOR BEAM OF EASTBOUND S.R. 5 AND THE CENTERLINE OF NORTHBOUND S.R. 45.

DESIGN AGENCY
EUTHENICS INC.
CONSULTING ENGINEERS
CLEVELAND, OHIO

| DESIGNED | DRAWN | REVIEWED | DATE |
|---|---|---|---|
| GFH | KJW | RAB | 1-01 |
| CHECKED | REVISED | STRUCTURE FILE NUMBER | |
| KRD | | 7800630L/7800665R | |

**GENERAL PLAN**
TRU-5-1077 L&R
OVER S.R. 45

**TRU-5-6.45**



TR005GP1.DWG F:\JOBS\502\BRIDGE\13\DWG\502GP13.DWG KJW 6/22/01 PLOT 1:20

CALC. BY: GFH DATE: 01-30-01

## ESTIMATED QUANTITIES – WESTBOUND – TRU-5-1077 LEFT

CHK'D. BY: KJW DATE: 01-31-01

| | ITEM | ITEM EXT. | TOTAL | UNIT | DESCRIPTION | ABUT-MENTS | PIERS | SUPER-STRUCTURE | GENERAL | AS PER PLAN SHEET NUMBERS |
|---|---|---|---|---|---|---|---|---|---|---|
| | 202 | 11203 | LUMP | | PORTIONS OF STRUCTURE REMOVED, OVER 20 FOOT SPAN, AS PER PLAN | | | | LUMP | GN 1 14/15 |
| | 503 | 21100 | 82 | CU. YD. | UNCLASSIFIED EXCAVATION | 82 | | | | |
| | | | | | | | | | | |
| | 505 | 11100 | LUMP | | PILE DRIVING EQUIPMENT MOBILIZATION | | | | LUMP | |
| | 507 | 00100 | 284 | LIN. FT. | STEEL PILES HP10X42, FURNISHED | 284 | | | | |
| | 507 | 00150 | 244 | LIN. FT. | STEEL PILES HP10X42, DRIVEN | 244 | | | | |
| | 507 | 50500 | 4 | EACH | STEEL PILE SPLICES | 4 | | | | |
| | 507 | 93301 | 8 | EACH | STEEL POINT (OR SHOE), AS PER PLAN | 8 | | | | GN 1 |
| | | | | | | | | | | |
| | 516 | 13900 | 122 | SQ. FT. | 2" PREFORMED EXPANSION JOINT FILLER | 122 | | | | |
| | 516 | 44001 | 12 | EACH | ELASTOMERIC BEARING WITH INTERNAL LAMINATES AND LOAD PLATE (NEOPRENE), AS PER PLAN, 8 1/2" X 11 1/2" X 1 11/16" WITH 1 1/2" X 9 1/2" X 12 1/2" LOAD PLATE, (SEE PROPOSAL NOTE) | 12 | | | | 14/15 |
| | 516 | 47001 | LUMP | | JACKING AND TEMPORARY SUPPORT OF SUPERSTRUCTURE, AS PER PLAN | | | | LUMP | GN 2 |
| | | | | | | | | | | |
| | 518 | 21201 | 51 | CU. YD. | POROUS BACKFILL WITH FILTER FABRIC, AS PER PLAN | 51 | | | | GN 2 |
| | 518 | 40000 | 91 | LIN. FT. | 6" PERFORATED CORRUGATED PLASTIC PIPE, 707.33 | 91 | | | | |
| | 518 | 40010 | 25 | LIN. FT. | 6" NON-PERFORATED CORRUGATED PLASTIC PIPE, INCLUDING SPECIALS, 707.33 | 25 | | | | |
| | 520 | 11100 | 171 | SQ. FT. | PNEUMATICALLY PLACED MORTAR | 151 | 20 | | | |
| | | | | | | | | | | |
| | 601 | 20001 | 308 | SQ. YD. | CRUSHED AGGREGATE SLOPE PROTECTION, AS PER PLAN | 305 | | | 3 | GN 3 |
| | | | | | | | | | | |
| * | 815 | 00050 | 200 | SQ. FT. | SURFACE PREPARATION OF EXISTING STEEL, SYSTEM OZEU | | | 200 | | |
| * | 815 | 00056 | 200 | SQ. FT. | FIELD PAINTING OF EXISTING STEEL, PRIME COAT, SYSTEM OZEU | | | 200 | | |
| * | 815 | 00060 | 200 | SQ. FT. | FIELD PAINTING OF EXISTING STEEL, INTERMEDIATE COAT, SYSTEM OZEU | | | 200 | | |
| * | 815 | 00066 | 200 | SQ. FT. | FIELD PAINTING OF EXISTING STEEL, FINISH COAT, SYSTEM OZEU | | | 200 | | |
| | | | | | | | | | | |
| | 842 | 43501 | 38 | CU. YD. | CLASS C CONCRETE, ABUTMENT INCLUDING FOOTING, AS PER PLAN | 38 | | | | 7/15 |
| | 863 | 20000 | 2,826 | EACH | WELDED STUD SHEAR CONNECTORS | | | 2,826 | | |
| | 864 | 10100 | 806 | SQ. YD. | SEALING OF CONCRETE SURFACES (EPOXY-URETHANE) | 67 | 290 | 449 | | |
| | 893 | 10000 | 293 | CU. YD. | CLASS S CONCRETE, FOR BRIDGE DECK WITH WARRANTY | | | 293 | | |

CALC. BY: GFH DATE: 01-01-01

## ESTIMATED QUANTITIES – EASTBOUND – TRU-5-1077 RIGHT

CHK'D. BY: KJW DATE: 01-01-01

| | ITEM | ITEM EXT. | TOTAL | UNIT | DESCRIPTION | ABUT-MENTS | PIERS | SUPER-STRUCTURE | GENERAL | AS PER PLAN SHEET NUMBERS |
|---|---|---|---|---|---|---|---|---|---|---|
| | 202 | 11203 | LUMP | | PORTIONS OF STRUCTURE REMOVED, OVER 20 FOOT SPAN, AS PER PLAN | | | | LUMP | GN 1 |
| | 503 | 21100 | 85 | CU. YD. | UNCLASSIFIED EXCAVATION | 85 | | | | |
| | | | | | | | | | | |
| | 505 | 11100 | LUMP | | PILE DRIVING EQUIPMENT MOBILIZATION | | | | LUMP | |
| | 507 | 00100 | 276 | LIN. FT. | STEEL PILES HP10X42, FURNISHED | 276 | | | | |
| | 507 | 00150 | 236 | LIN. FT. | STEEL PILES HP10X42, DRIVEN | 236 | | | | |
| | 507 | 50500 | 4 | EACH | STEEL PILE SPLICES | 4 | | | | |
| | 507 | 93301 | 8 | EACH | STEEL POINT (OR SHOE), AS PER PLAN | 8 | | | | GN 1 |
| | | | | | | | | | | |
| | 516 | 13900 | 122 | SQ. FT. | 2" PREFORMED EXPANSION JOINT FILLER | 122 | | | | |
| | 516 | 44001 | 16 | EACH | ELASTOMERIC BEARING WITH INTERNAL LAMINATES AND LOAD PLATE (NEOPRENE), AS PER PLAN, 8 1/2" X 11 1/2" X 1 11/16" WITH 1 1/2" X 9 1/2" X 12 1/2" LOAD PLATE, (SEE PROPOSAL NOTE) | 16 | | | | 14/15 |
| | 516 | 47001 | LUMP | | JACKING AND TEMPORARY SUPPORT OF SUPERSTRUCTURE, AS PER PLAN | | | | LUMP | GN 2 |
| | | | | | | | | | | |
| | 518 | 21201 | 75 | CU. YD. | POROUS BACKFILL WITH FILTER FABRIC, AS PER PLAN | 75 | | | | GN 2 |
| | 518 | 40000 | 129 | LIN. FT. | 6" PERFORATED CORRUGATED PLASTIC PIPE, 707.33 | 129 | | | | |
| | 518 | 40010 | 29 | LIN. FT. | 6" NON-PERFORATED CORRUGATED PLASTIC PIPE, INCLUDING SPECIALS, 707.33 | 29 | | | | |
| | 520 | 11100 | 220 | SQ. FT. | PNEUMATICALLY PLACED MORTAR | 216 | 4 | | | |
| | 601 | 20001 | 310 | SQ. YD. | CRUSHED AGGREGATE SLOPE PROTECTION, AS PER PLAN | 307 | | | 3 | GN 3 |
| | | | | | | | | | | |
| | 625 | 25400 | 213 | LIN. FT. | CONDUIT, 2", 713.04 | | | | 213 | |
| | 625 | 31200 | 2 | EACH | PULLBOX, 713.081, 13" X 18" | | | | 2 | |
| | 842 | 43501 | 38 | CU. YD. | CLASS C CONCRETE, ABUTMENT INCLUDING FOOTING, AS PER PLAN | 38 | | | | 7/15 |
| | 863 | 20000 | 3,768 | EACH | WELDED STUD SHEAR CONNECTORS | | | 3,768 | | |
| | | | | | | | | | | |
| * | 815 | 00050 | 200 | SQ. FT | SURFACE PREPARATION OF EXISTING STEEL, SYSTEM OZEU | | | 200 | | |
| * | 815 | 00056 | 200 | SQ. FT | FIELD PAINTING OF EXISTING STEEL, PRIME COAT, SYSTEM OZEU | | | 200 | | |
| * | 815 | 00060 | 200 | SQ. FT | FIELD PAINTING OF EXISTING STEEL, INTERMEDIATE COAT, SYSTEM OZEU | | | 200 | | |
| * | 815 | 00066 | 200 | SQ. FT | FIELD PAINTING OF EXISTING STEEL, FINISH COAT, SYSTEM OZEU | | | 200 | | |
| | | | | | | | | | | |
| | 864 | 10100 | 937 | SQ. YD. | SEALING OF CONCRETE SURFACES (EPOXY-URETHANE) | 84 | 394 | 459 | | |
| | 893 | 10000 | 418 | CU. YD. | CLASS S CONCRETE, FOR BRIDGE DECK WITH WARRANTY | | | 418 | | |

* THE CONTRACTOR SHALL REPAIR DAMAGED AREAS IN ACCORDANCE WITH SUPPLEMENTAL SPECIFICATION 815 USING A THREE COAT PAINT SYSTEM OF OZEU. THE CONTRACTOR SHALL BASE HIS UNIT BID ON AN ESTIMATED EXISTING STEEL REPAIR AREA OF 200 SQ. FT.


DESIGN AGENCY
EUTHENICS INC.
CONSULTING ENGINEERS
CLEVELAND, OHIO


| DESIGNED | DRAWN | REVIEWED | DATE |
|---|---|---|---|
| GFH | GFH | KRD | 1-01 |
| CHECKED | REVISED | STRUCTURE FILE NUMBER | |
| KJW | | 7800630/7800665 | |

**ESTIMATED QUANTITIES**
TRU-5-1077 L & R
OVER S.R. 45

**TRU-5-6.45**




TR005EQ1.DWG F:\JOBS\502\BRIDGE\13\DWG\502eq13.dwg KJW 6/22/01 PLOT 1:1

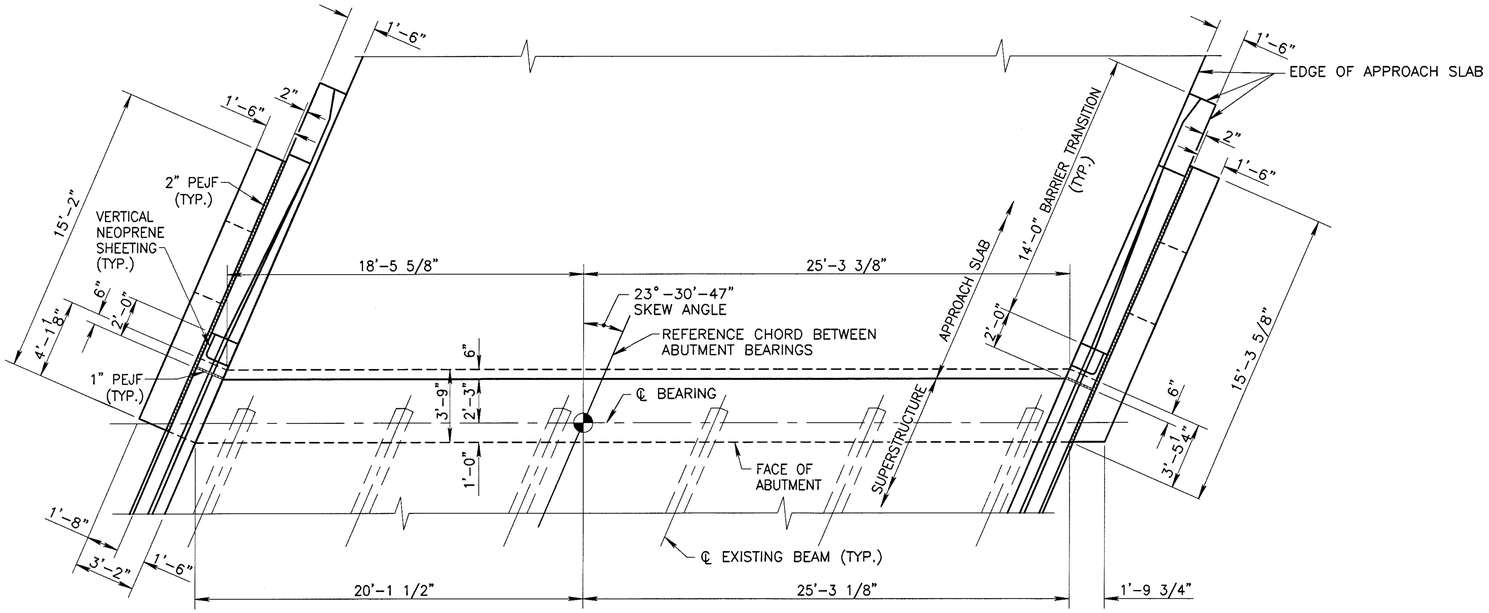


PLAN

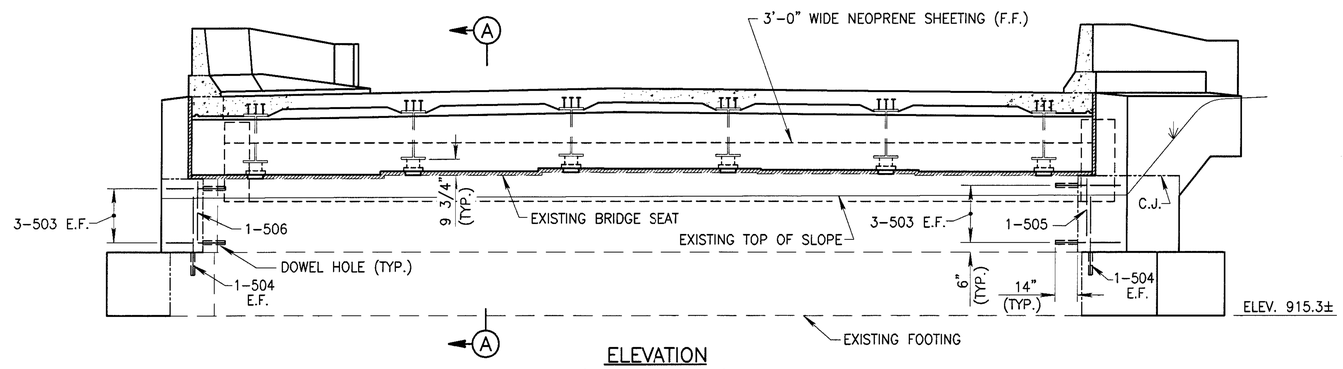


ELEVATION
(PILES NOT SHOWN)

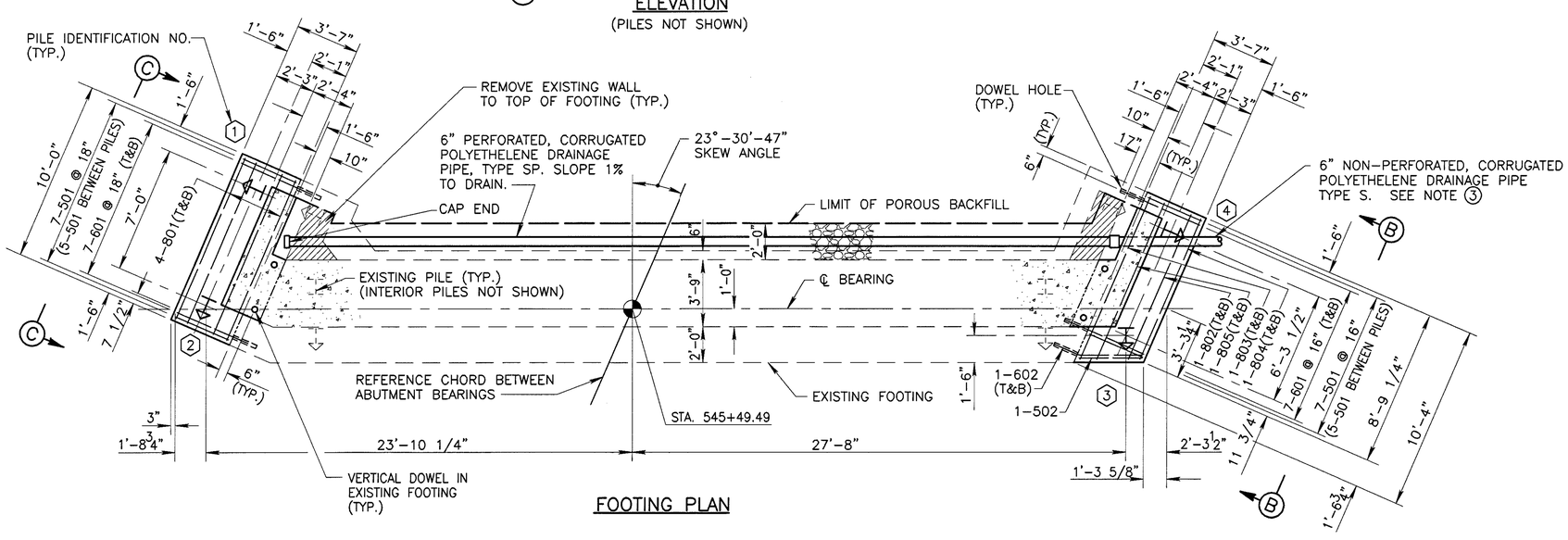


FOOTING PLAN

CONCRETE REMOVAL

| MINIMUM LAP LENGTHS |
|---|
| NO. 5 BARS = 24" |

## NOTES:

1. ALL PILES SHALL BE HP 10 X 42
2. DENOTES PILE BATTERED 3 IN 12 IN THE DIRECTION SHOWN.
3. TERMINATE PIPE AS SHOWN ON OHIO STANDARD DRAWING SICD-1-96, SHEET 4 OF 7. PAYMENT FOR CRUSHED AGGREGATE INCLUDED WITH ITEM 601, CRUSHED AGGRGATE SLOPE PROTECTION, AS PER PLAN.
4. ALL REINFORCING STEEL BAR MARKS SHALL BE PREFIXED "A" (ABUTMENT). FOR REINFORCING SCHEDULE SEE SHEET 15/15.
5. POROUS BACKFILL 2 FEET THICK WITH FILTER FABRIC SHALL EXTEND UP TO THE PLANE OF THE SUBGRADE AND TO THE ENDS OF THE WINGWALLS.
6. FOR TOP OF PAVEMENT ELEVATIONS ALONG CENTERLINE BEARING SEE DECK SCREED ELEVATION TABLE ON SHEET 10/15.
7. FOR APPROACH SLAB DETAILS AND NOTES, SEE ROADWAY PLANS.
8. FOR SECTION A-A, VIEW B-B AND VIEW C-C SEE SHEET 7/15.
9. THE FOLLOWING ABBREVIATIONS ARE USED:

PEJF = PREFORMED EXPANSION JOINT FILLER
TYP. = TYPICAL
E.F. = EACH FACE
N.F. = NEAR FACE
F.F. = FAR FACE
ELEV. = ELEVATION
T = TOP
B = BOTTOM
C.J. = CONSTRUCTION JOINT
EB = EASTBOUND
WB = WESTBOUND

DESIGN AGENCY
EUTHENICS INC.
CONSULTING ENGINEERS
CLEVELAND, OHIO

| DESIGNED | DRAWN | REVIEWED | DATE |
|---|---|---|---|
| GFH | GFH | RAB | 1-01 |
| CHECKED | REVISED | STRUCTURE FILE NUMBER | |
| KRD | | 7800630 | |

**WESTBOUND REAR ABUTMENT**
TRU-5-1077 L & R
OVER S.R. 45

**TRU-5-6.45**

3/15

136/164

TR005RA1.DWG F:\JOBS\F\JOBS\502\BRIDGE\13\DWG\502ea013_WBR.dwg KJW 6-22-01 PLOT14

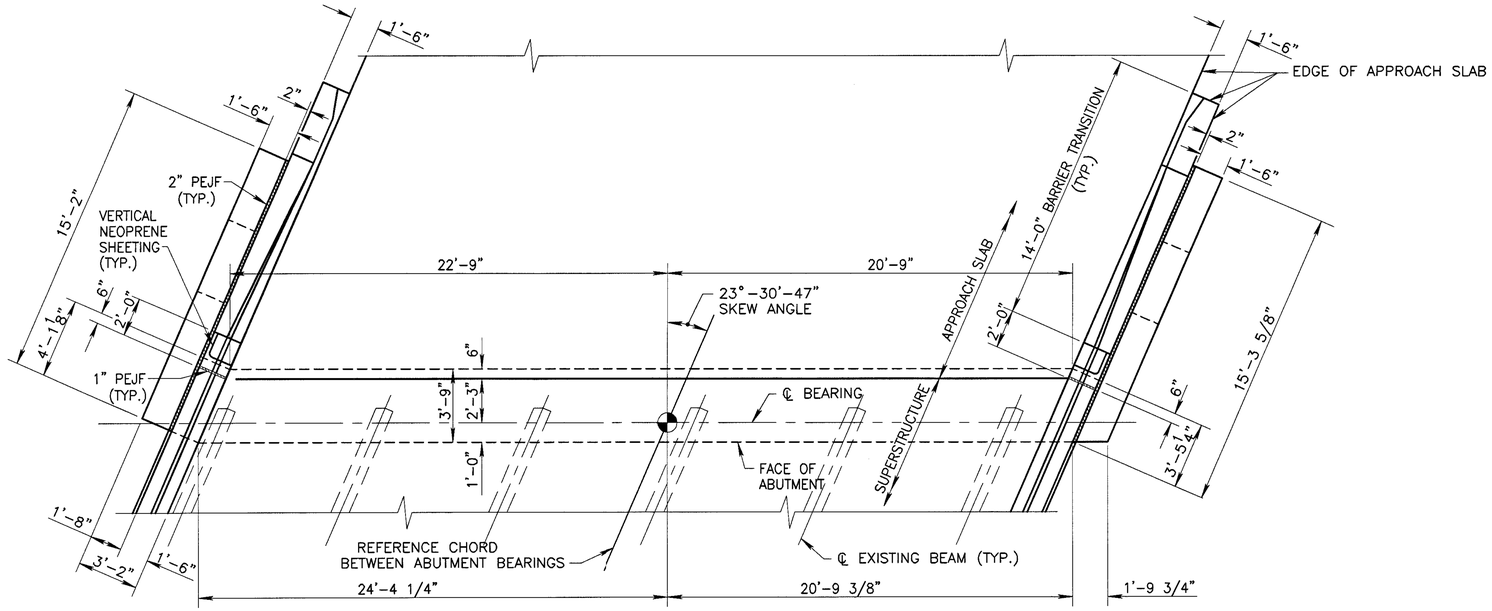


PLAN

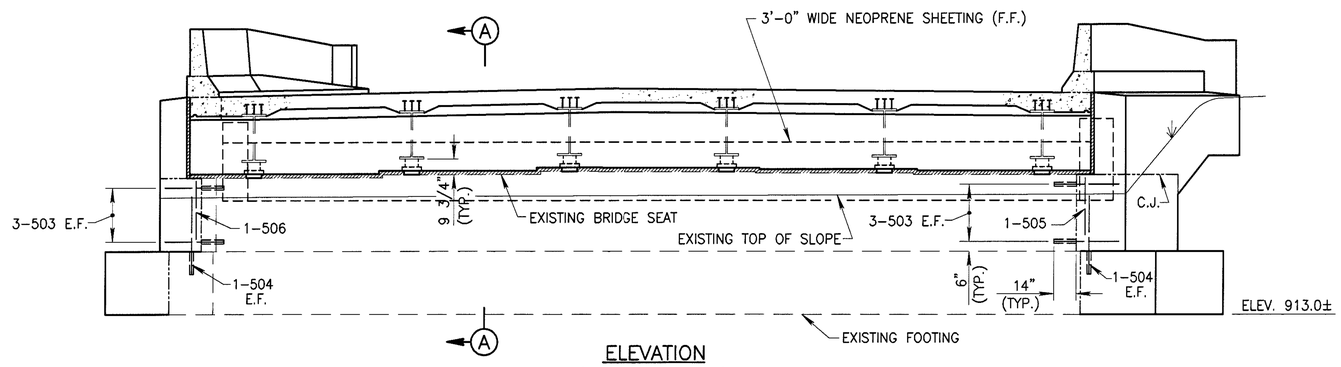


ELEVATION
(PILES NOT SHOWN)

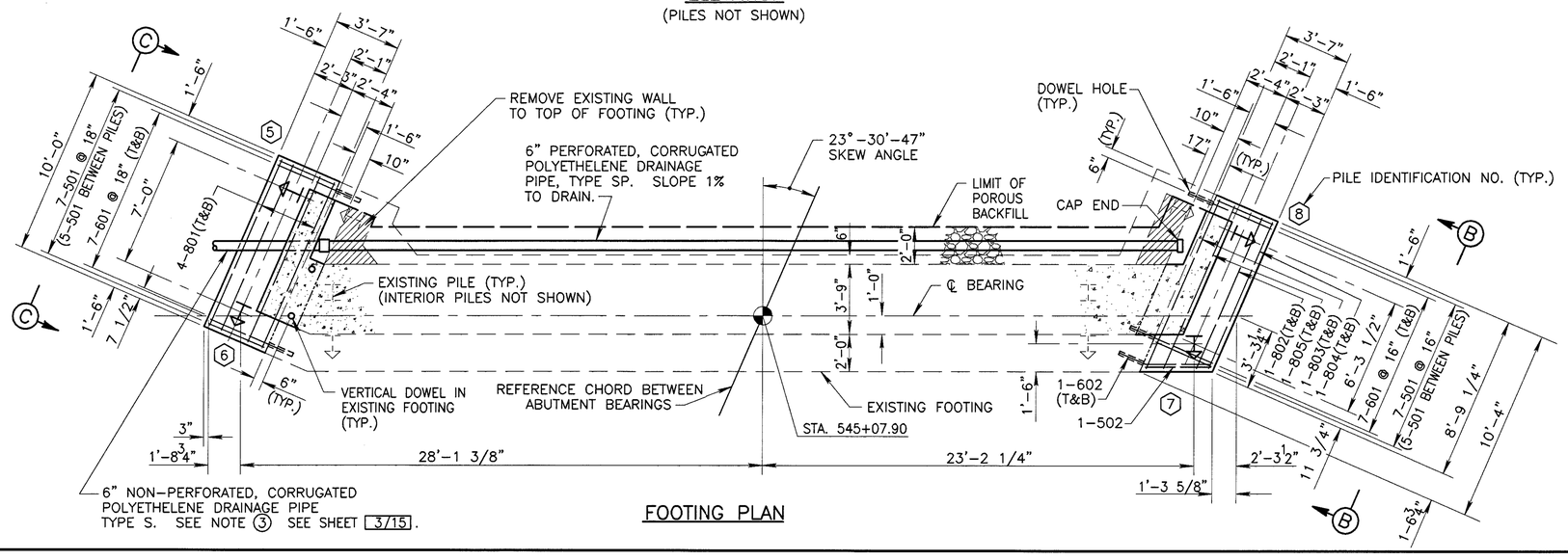


FOOTING PLAN

CONCRETE REMOVAL

NOTES:

1. FOR SECTION A–A, VIEW B–B AND VIEW C–C SEE SHEET 7/15.
2. FOR ADDITIONAL NOTES SEE SHEET 3/15.

| MINIMUM LAP LENGTHS |
|---|
| NO. 5 BARS = 24" |

DESIGN AGENCY
EUTHENICS INC.
CONSULTING ENGINEERS
CLEVELAND, OHIO

| DESIGNED | DRAWN | REVIEWED | DATE |
|---|---|---|---|
| GFH | GFH | RAB | 1-01 |
| CHECKED | REVISED | STRUCTURE FILE NUMBER | |
| KRD | | 7800630 | |

WESTBOUND FORWARD ABUTMENT
TRU-5-1077 L & R
OVER S.R. 45

TRU-5-6.45



TR005FALD.DWG F:\JOBS\F\JOBS\502\BRIDGE\13\DWG\502obs13_WBF.dwg KJW 6-22-01 PLOT1-4

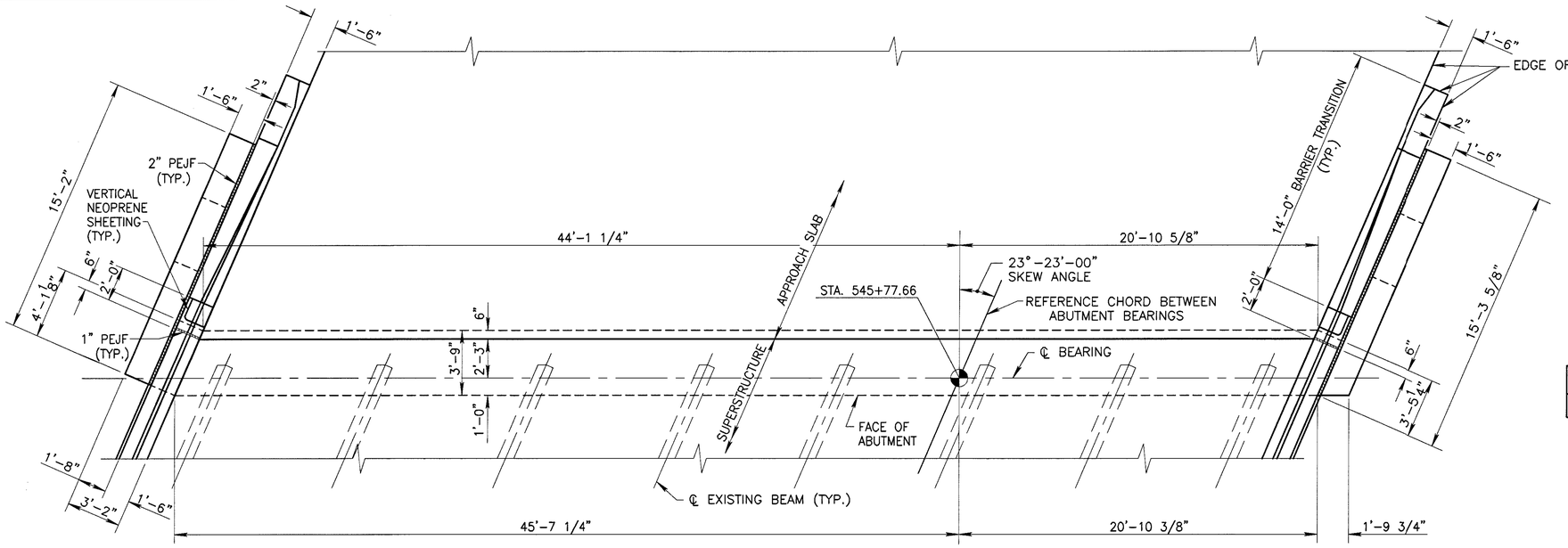


PLAN

| MINIMUM LAP LENGTHS |
|---|
| NO. 5 BARS = 24" |

CONCRETE REMOVAL

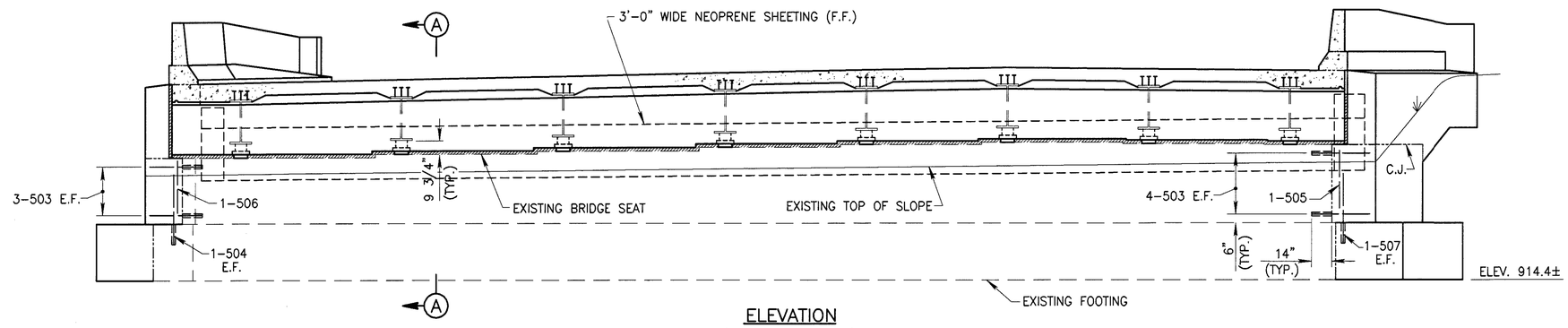


ELEVATION
(PILES NOT SHOWN)

NOTES:

1. FOR SECTION A–A, VIEW B–B AND VIEW C–C SEE SHEET 7/15.
2. FOR ADDITIONAL NOTES SEE SHEET 3/15.

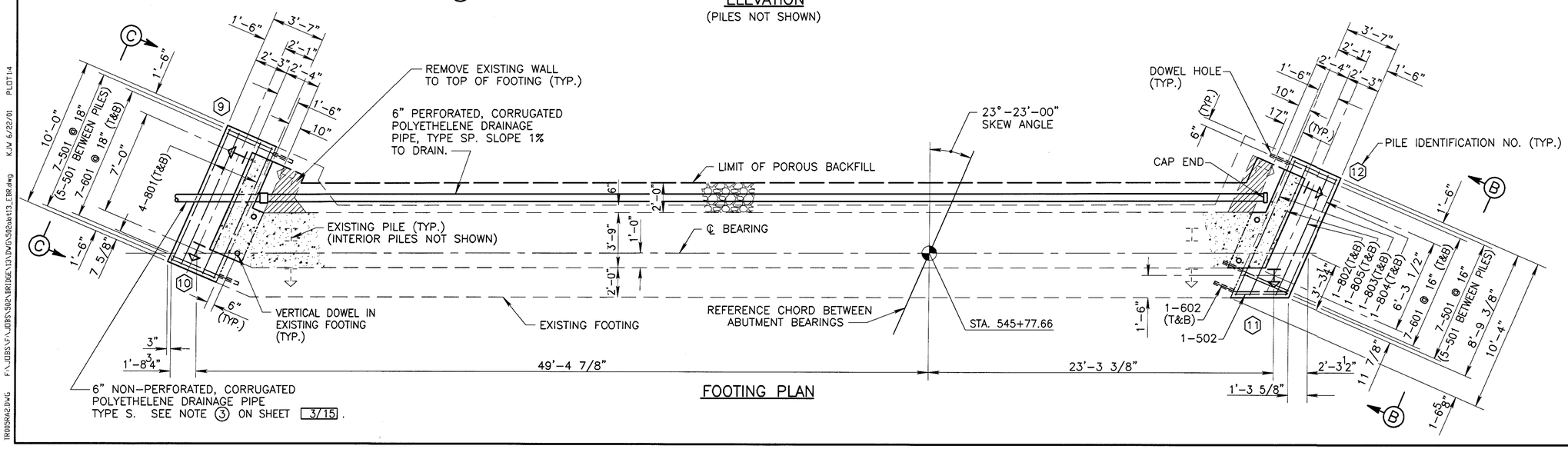


FOOTING PLAN

DESIGN AGENCY
EUTHENIES INC.
CONSULTING ENGINEERS
CLEVELAND, OHIO

| DESIGNED | DRAWN | REVIEWED | DATE |
|---|---|---|---|
| KRD | GFH | RAB | 1-6-01 |
| CHECKED | REVISED | STRUCTURE FILE NUMBER | |
| KJW | | 7800665 | |

EASTBOUND REAR ABUTMENT
TRU-5-1077 R
OVER S.R. 45

TRU-5-6.45



TR005R42.DWG F:\JOBS\F\JOBS\362\BRIDGE\13\DWG\362ab413_EBR.dwg KJW 6/22/01 PLOT1:4

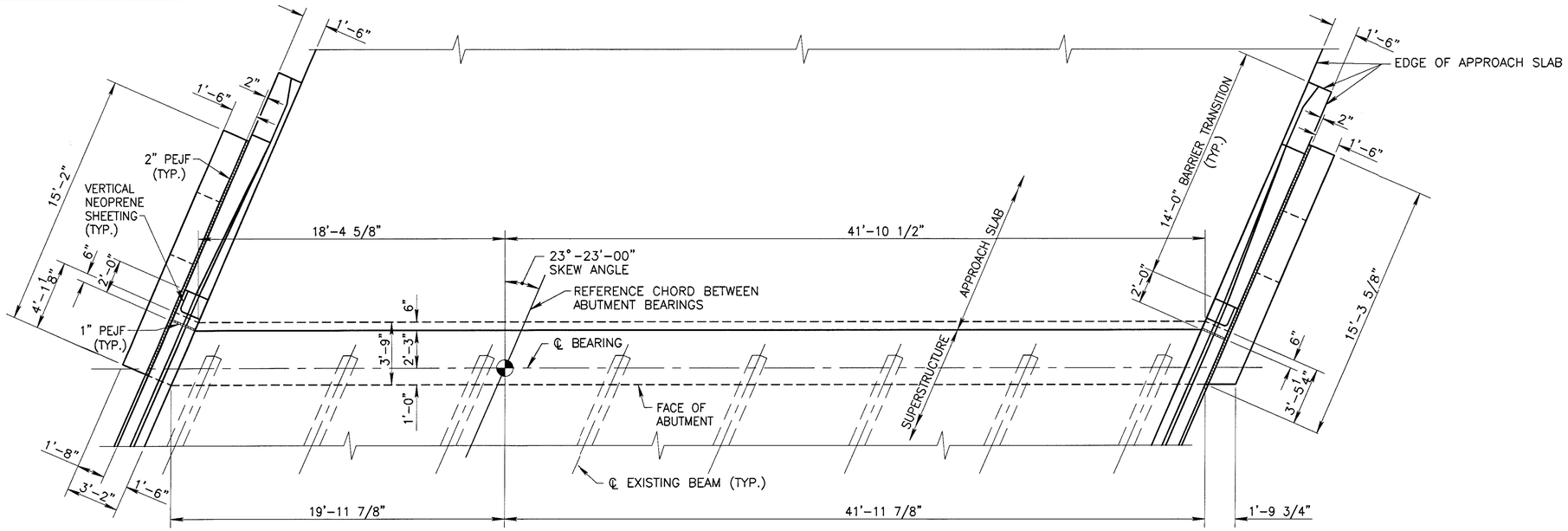


PLAN

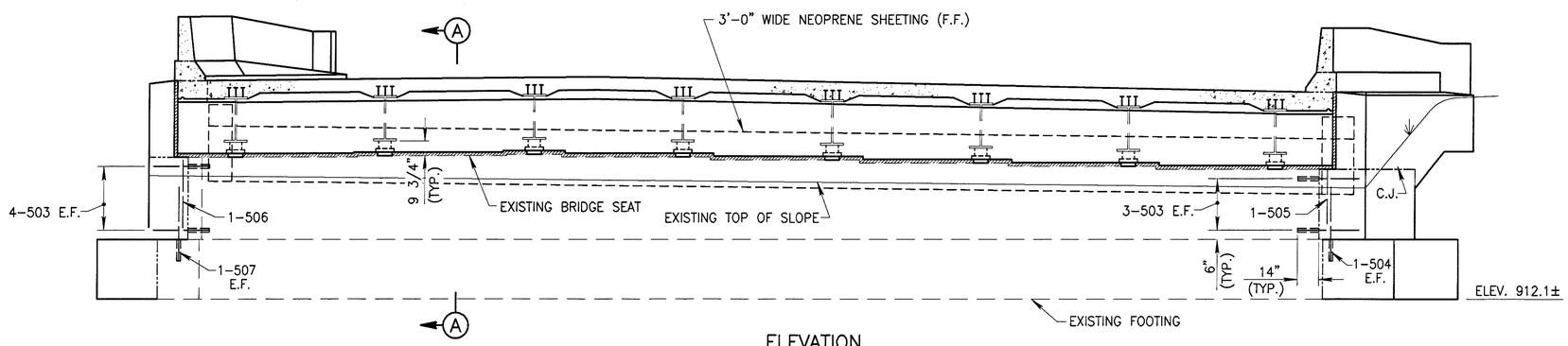


ELEVATION
(PILES NOT SHOWN)

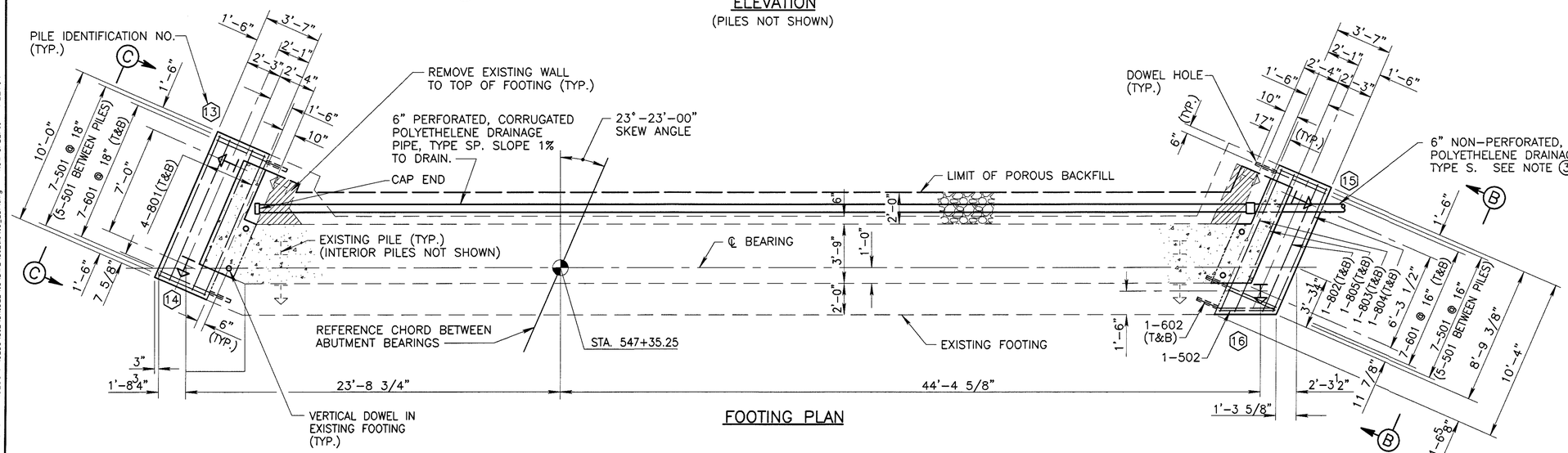


FOOTING PLAN

N

| MINIMUM LAP LENGTHS |
|---|
| NO. 5 BARS = 24" |

CONCRETE REMOVAL

NOTES:

1. FOR SECTION A-A, VIEW B-B AND VIEW C-C SEE SHEET 7/15.
2. FOR ADDITIONAL NOTES SEE SHEET 3/15.

DESIGN AGENCY
EUTHENICS INC.
CONSULTING ENGINEERS
CLEVELAND, OHIO

| DESIGNED | DRAWN | REVIEWED | DATE |
|---|---|---|---|
| KRD | GFH | RAB | 1--01 |
| CHECKED | REVISED | STRUCTURE FILE NUMBER | |
| KJW | | 7800665 | |

EASTBOUND FORWARD ABUTMENT
TRU-5-1077 R
OVER S.R. 45

TRU-5-6.45



TR005FA2.DWG F:\JOBS\F\JOBS\S02\BRIDGE\13\DWG\S02ab13_EBF.dwg KJW 6/22/01 PLOT 1:4

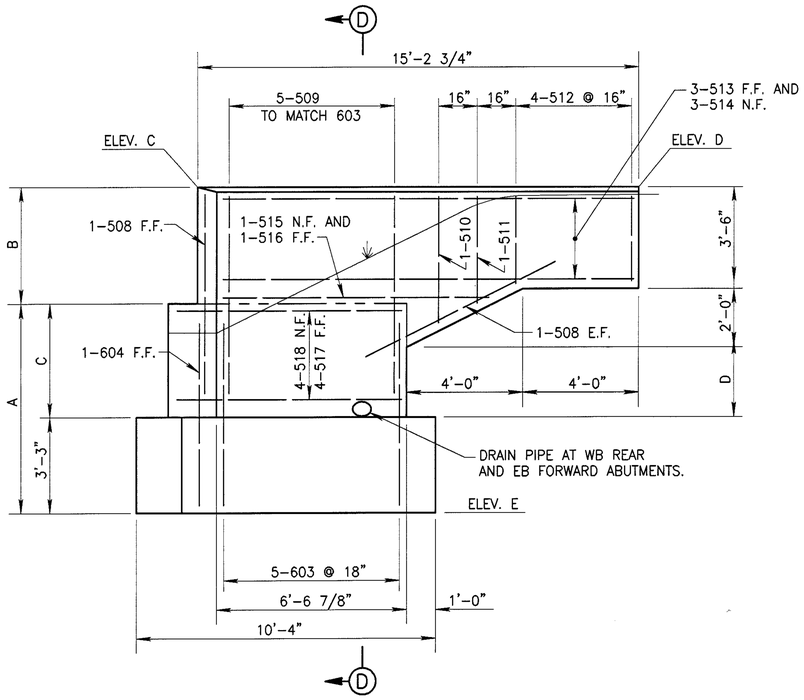


VIEW B-B
(PILES NOT SHOWN)

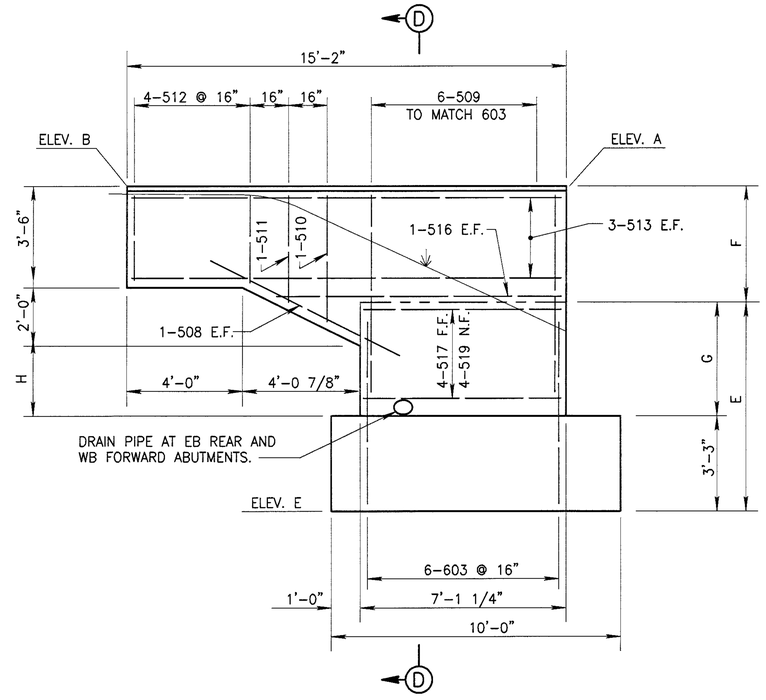


VIEW C-C
(PILES NOT SHOWN)

| ELEVATION TABLE | | | | | |
|---|---|---|---|---|---|
| | A | B | C | D | E |
| WB REAR | 926.55 | 926.73 | 926.70 | 926.88 | 915.3± |
| WB FORWARD | 924.54 | 924.36 | 924.39 | 924.20 | 913.0± |
| EB REAR | 925.52 | 925.75 | 926.29 | 926.52 | 914.4± |
| EB FORWARD | 923.98 | 923.79 | 923.38 | 923.20 | 912.1± |

| DIMENSION TABLE | | | | | |
|---|---|---|---|---|---|
| | | A | B | C | D |
| VIEW B-B | WB REAR | 7'-2 1/8" | 4'-3" | 3'-11 1/8" | 2'-10 3/8" |
| | WB FORWARD | 7'-0 3/8" | 4'-4 1/2" | 3'-9 3/8" | 2'-5 5/8" |
| | EB REAR | 7'-9" | 4'-2" | 4'-6" | 3'-4 3/4" |
| | EB FORWARD | 7'-0 3/8" | 4'-2 3/4" | 3'-9 3/8" | 2'-4" |

| DIMENSION TABLE | | | | | |
|---|---|---|---|---|---|
| | | E | F | G | H |
| VIEW C-C | WB REAR | 7'-0 3/8" | 4'-3" | 3'-9 3/8" | 2'-8 1/2" |
| | WB FORWARD | 7'-2 1/2" | 4'-4 1/4" | 3'-11 1/2" | 2'-7 1/2" |
| | EB REAR | 7'-0 3/8" | 4'-1 3/8" | 3'-9 3/8" | 2'-7 1/2" |
| | EB FORWARD | 7'-8 1/4" | 4'-2 1/8" | 4'-5 1/4" | 2'-11" |

| MINIMUM LAP LENGTHS |
|---|
| NO. 5 BARS = 2'-0" |

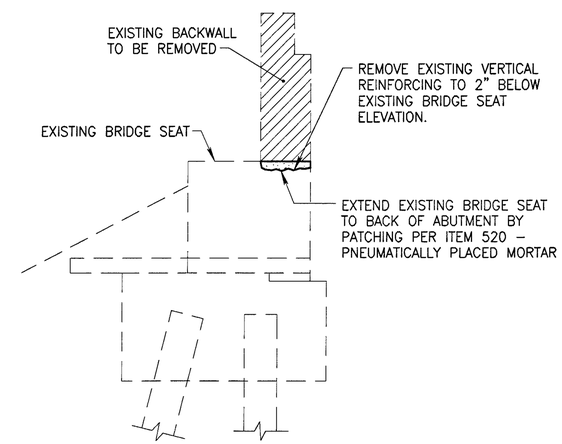


ABUTMENT BACKWALL REMOVAL LIMITS

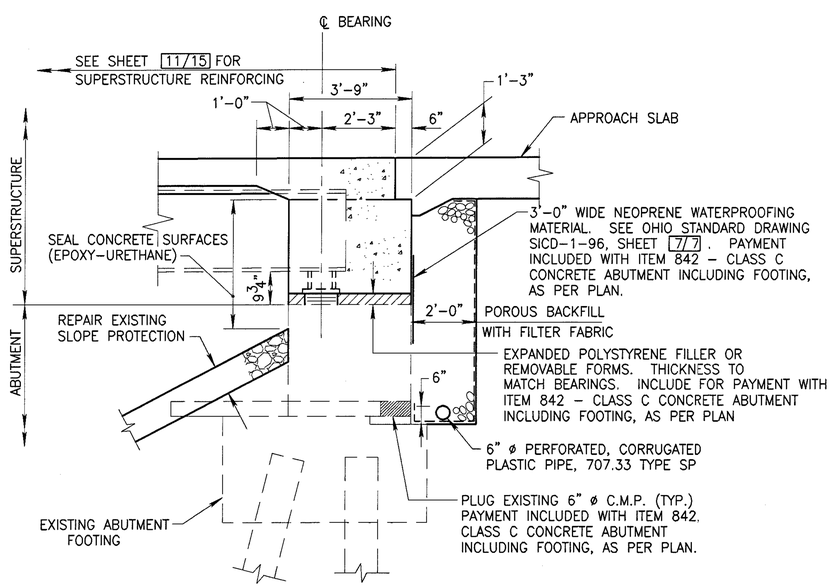


SECTION A-A

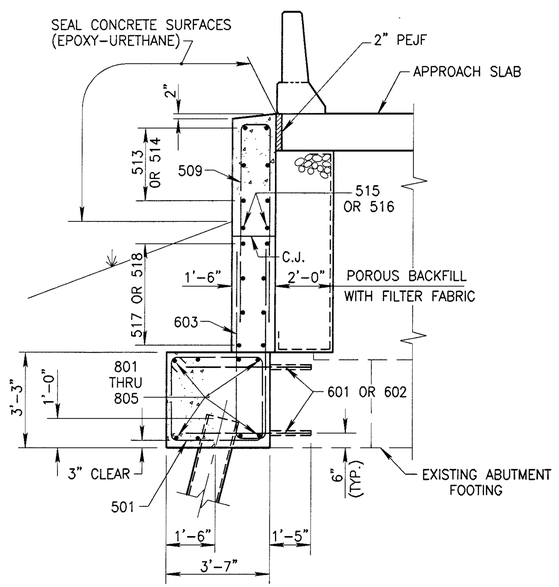


SECTION D-D

## NOTES:

1. FOR LOCATION OF SECTION A-A, VIEW B-B AND VIEW C-C SEE SHEETS 3/15, 4/15, 5/15 AND 6/15.
2. ALL REINFORCING STEEL BAR MARKS SHALL BE PREFIXED "A" (ABUTMENT).
3. FOR REINFORCING SCHEDULE SEE SHEET 15/15.
4. FOR ADDITIONAL NOTES SEE SHEET 3/15.

DESIGN AGENCY
EUTHENICS INC.
CONSULTING ENGINEERS
CLEVELAND, OHIO

DATE 1-01 | REVIEWED RAB | STRUCTURE FILE NUMBER 7800630/7800665
DRAWN GFH | REVISED
DESIGNED GFH | CHECKED KRD

**WINGWALLS AND ABUTMENT DETAILS**
TRU-5-1077 L & R
OVER S.R. 45

**TRU-5-6.45**



F:\JOBS\F\JOBS\502\BRIDGE\13\DWG\502sol3.dwg KJW 6-22-01 PLOT 3:8
TR005FA3

WESTBOUND REAR

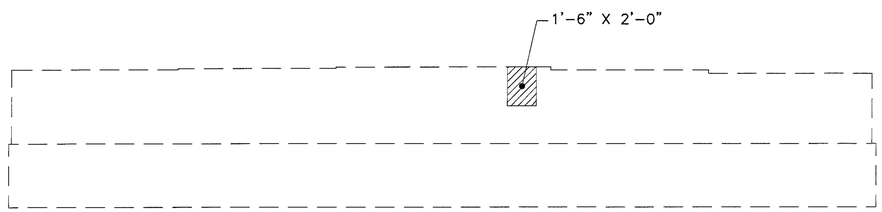


WESTBOUND FORWARD

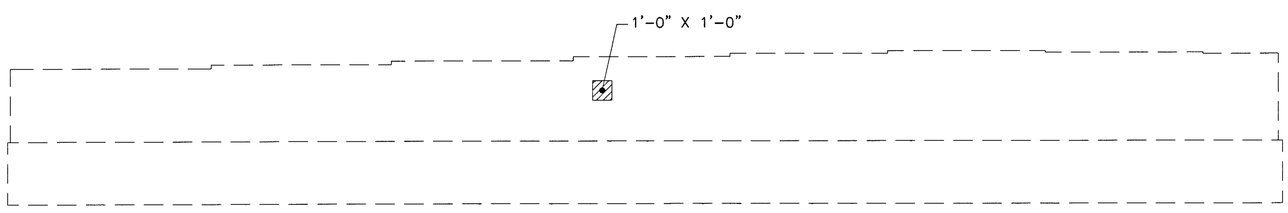


EASTBOUND REAR

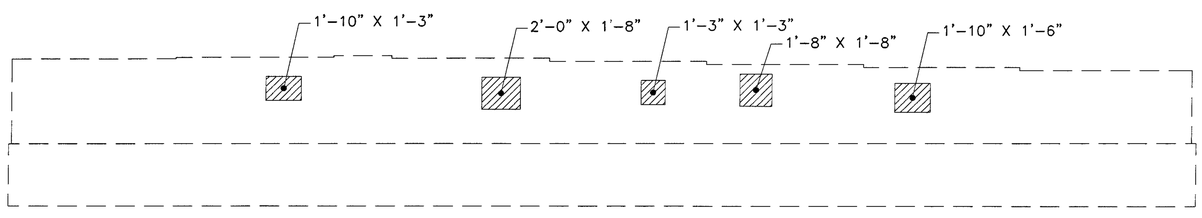


EASTBOUND FORWARD

LEGEND

ITEM 520 – PNEUMATICALLY PLACED MORTAR, NEAR FACE

DESIGN AGENCY
EUTHENICS INC
CONSULTING ENGINEERS
CLEVELAND, OHIO

| DESIGNED | DRAWN | REVIEWED | DATE |
|---|---|---|---|
| GFH | JAM | KRD | 12/00 |
| CHECKED | REVISED | STRUCTURE FILE NUMBER | |
| KJW | | 7800630/7800665 | |

**ABUTMENT PATCHING PLAN**
BRIDGE NO. TRU-5-1077 L&R
OVER S.R. 45

**TRU-5-6.45**



TR005144.DWG F:\JOBS\502\BRIDGE\13\DWG\502pch13a.DWG KJW 6/22/01 PLOT 1:4

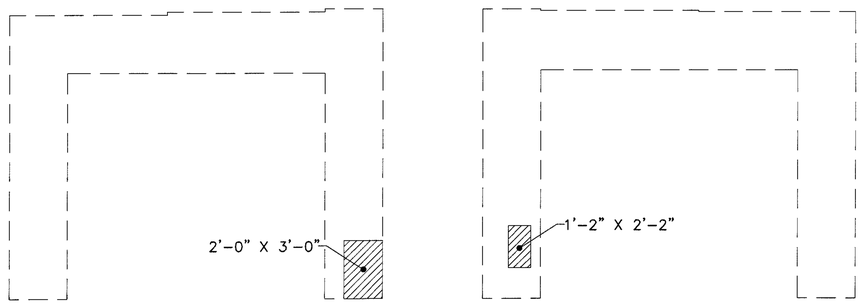


WESTBOUND PIER 1
EAST ELEVATION

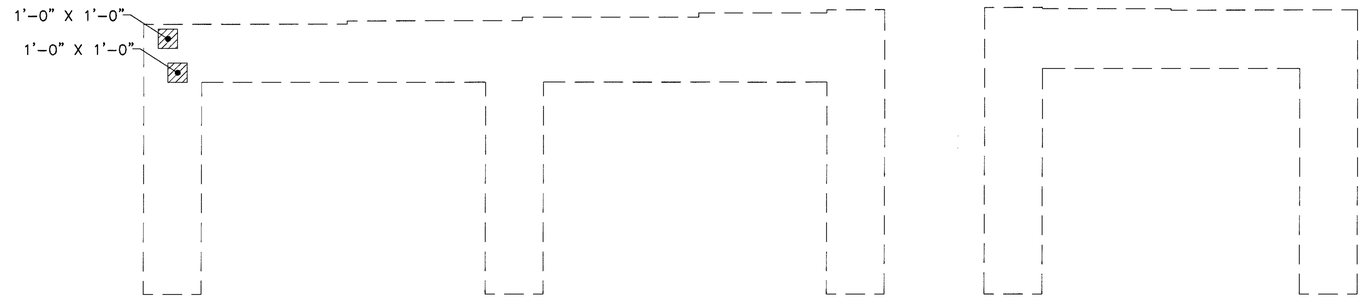


EASTBOUND PIER 1
EAST ELEVATION

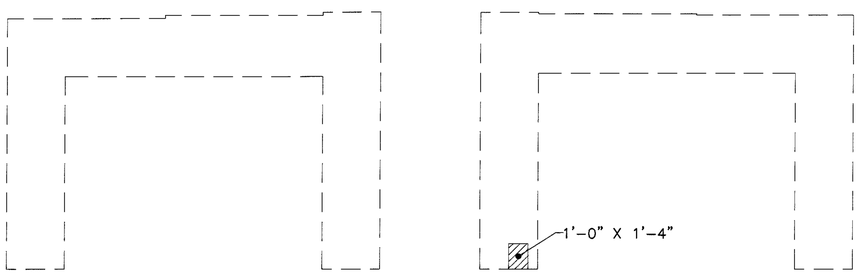


WESTBOUND PIER 2
EAST ELEVATION

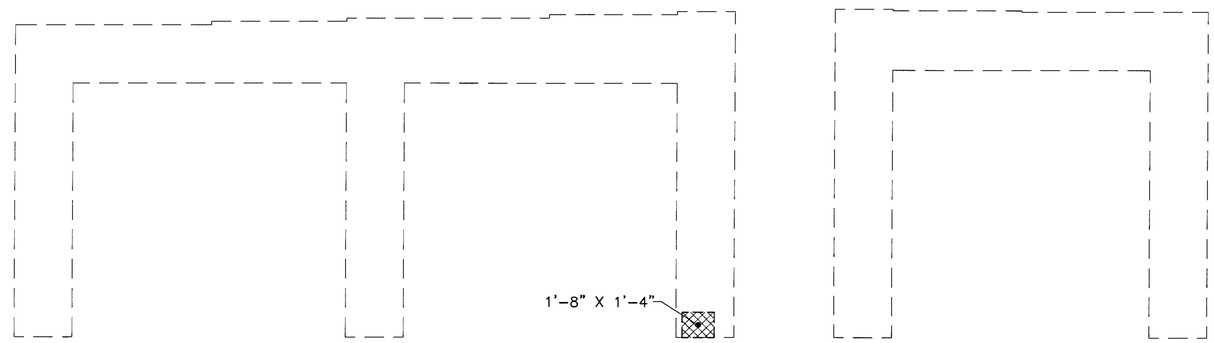


EASTBOUND PIER 2
EAST ELEVATION

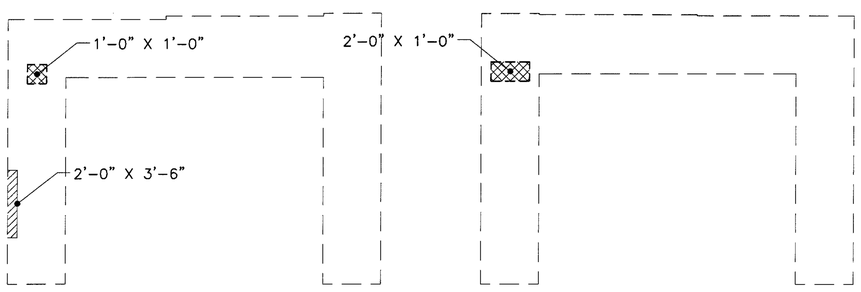


WESTBOUND PIER 3
EAST ELEVATION

LEGEND

ITEM 520 – PNEUMATICALLY PLACED MORTAR, NEAR FACE

ITEM 520 – PNEUMATICALLY PLACED MORTAR, FAR FACE

NOTE:

① NO PATCHING AREAS ON EASTBOUND PIER 3

DESIGN AGENCY
EUTHENICS INC.
CONSULTING ENGINEERS
CLEVELAND, OHIO

| DESIGNED | DRAWN | REVIEWED | DATE |
|---|---|---|---|
| GHF | JAM | KRD | 12/00 |
| CHECKED | REVISED | STRUCTURE FILE NUMBER | |
| KJW | | 7800630/7800665 | |

**PIER PATCHING PLAN**
BRIDGE NO. TRU-5-1077 L&R
OVER S.R. 45

**TRU-5-6.45**



TR005P11.DWG F:\JOBS\502\BRIDGE\13\DWG\502pch13b.DWG K.W 6/22/01 PLOT 1:4

## DECK SCREED ELEVATIONS

| | | SPAN 1 | | | | SPAN 2 | | | | | SPAN 3 | | | | | SPAN 4 | | | |
|---|---|---|---|---|---|---|---|---|---|---|---|---|---|---|---|---|---|---|---|
| | REAR ABUT. ℄ BEARING | 1/4 | 1/2 | 3/4 | ℄ PIER 1 | FS1 | 1/4 | 1/2 | 3/4 | ℄ PIER 2 | 1/4 | 1/2 | 3/4 | FS2 | ℄ PIER 3 | 1/4 | 1/2 | 3/4 | FWD. ABUT. ℄ BEARING |
| ELEV. A | 926.70 | 926.61 | 926.53 | 926.43 | 926.33 | 926.22 | 926.20 | 926.02 | 925.84 | 925.67 | 925.50 | 925.34 | 925.16 | 925.10 | 924.97 | 924.86 | 924.75 | 924.64 | 924.53 |
| B1 | 926.71 | 926.62 | 926.53 | 926.44 | 926.34 | 926.23 | 926.20 | 926.03 | 925.85 | 925.68 | 925.51 | 925.34 | 925.16 | 925.11 | 924.98 | 924.87 | 924.75 | 924.64 | 924.53 |
| B2 | 926.79 | 926.70 | 926.62 | 926.51 | 926.41 | 926.30 | 926.27 | 926.10 | 925.91 | 925.75 | 925.58 | 925.41 | 925.23 | 925.17 | 925.05 | 924.94 | 924.83 | 924.72 | 924.61 |
| B3 | 926.87 | 926.78 | 926.69 | 926.59 | 926.49 | 926.37 | 926.34 | 926.17 | 925.98 | 925.82 | 925.65 | 925.47 | 925.30 | 925.25 | 925.12 | 925.01 | 924.90 | 924.79 | 924.68 |
| CROWN | 926.94 | 926.85 | 926.76 | 926.65 | 926.55 | 926.43 | 926.40 | 926.22 | 926.05 | 925.88 | 925.70 | 925.53 | 925.36 | 925.31 | 925.18 | 925.07 | 924.96 | 924.85 | 924.74 |
| B4 | 926.91 | 926.83 | 926.73 | 926.63 | 926.53 | 926.41 | 926.37 | 926.20 | 926.02 | 925.86 | 925.68 | 925.51 | 925.33 | 925.28 | 925.16 | 925.05 | 924.94 | 924.82 | 924.71 |
| B5 | 926.76 | 926.67 | 926.57 | 926.47 | 926.37 | 926.24 | 926.21 | 926.04 | 925.86 | 925.69 | 925.51 | 925.34 | 925.17 | 925.12 | 925.00 | 924.89 | 924.77 | 924.66 | 924.56 |
| B6 | 926.61 | 926.52 | 926.42 | 926.32 | 926.20 | 926.07 | 926.04 | 925.87 | 925.70 | 925.53 | 925.34 | 925.17 | 925.01 | 924.96 | 924.84 | 924.72 | 924.61 | 924.50 | 924.41 |
| ELEV. B | 926.58 | 926.48 | 926.38 | 926.28 | 926.16 | 926.03 | 926.00 | 925.83 | 925.65 | 925.48 | 925.30 | 925.13 | 924.97 | 924.92 | 924.80 | 924.69 | 924.57 | 924.46 | 924.37 |

SCREED ELEVATIONS SHOWN ARE FOR THE DECK SLAB SURFACE PRIOR TO CONCRETE PLACEMENT.
ALLOWANCE HAS BEEN MADE FOR ANTICIPATED CALCULATED DEAD LOAD DEFLECTION.

## HORIZONTAL OFFSETS TO EDGE OF SLAB (PERPENDICULAR TO BEAMS)

| | | SPAN 1 | | | | SPAN 2 | | | | SPAN 3 | | | | | SPAN 4 | | | |
|---|---|---|---|---|---|---|---|---|---|---|---|---|---|---|---|---|---|---|
| | REAR ABUT. ℄ BEARING | 1/4 | 1/2 | 3/4 | ℄ PIER 1 | 1/4 | 1/2 | 3/4 | ℄ PIER 2 | 1/4 | 1/2 | 3/4 | ℄ PIER 3 | 1/4 | 1/2 | 3/4 | FWD. ABUT. ℄ BEARING |
| LEFT | 2'-3 3/4" | 2'-3 1/8" | 2'-2 1/2" | 2'-2" | 2'-1 1/2" | 2'-0 7/8 | 2'-0 1/2" | 2'-0 1/8" | 2'-0" | 2'-0" | 2'-0" | 2'-0 1/4" | 2'-0 5/8" | 2'-1" | 2'-1 3/8" | 2'-1 3/4" | 2'-2 3/8" |
| RIGHT | 3'-3 1/2" | 3'-4 1/8" | 3'-4 1/2" | 3'-5" | 3'-5 1/4" | 3'-5 5/8" | 3'-5 7/8" | 3'-6" | 3'-6" | 3'-5 7/8" | 3'-5 5/8" | 3'-5 1/4" | 3'-4 5/8" | 3'-4 1/4" | 3'-3 5/8" | 3'-3 1/8" | 3'-2 3/8" |

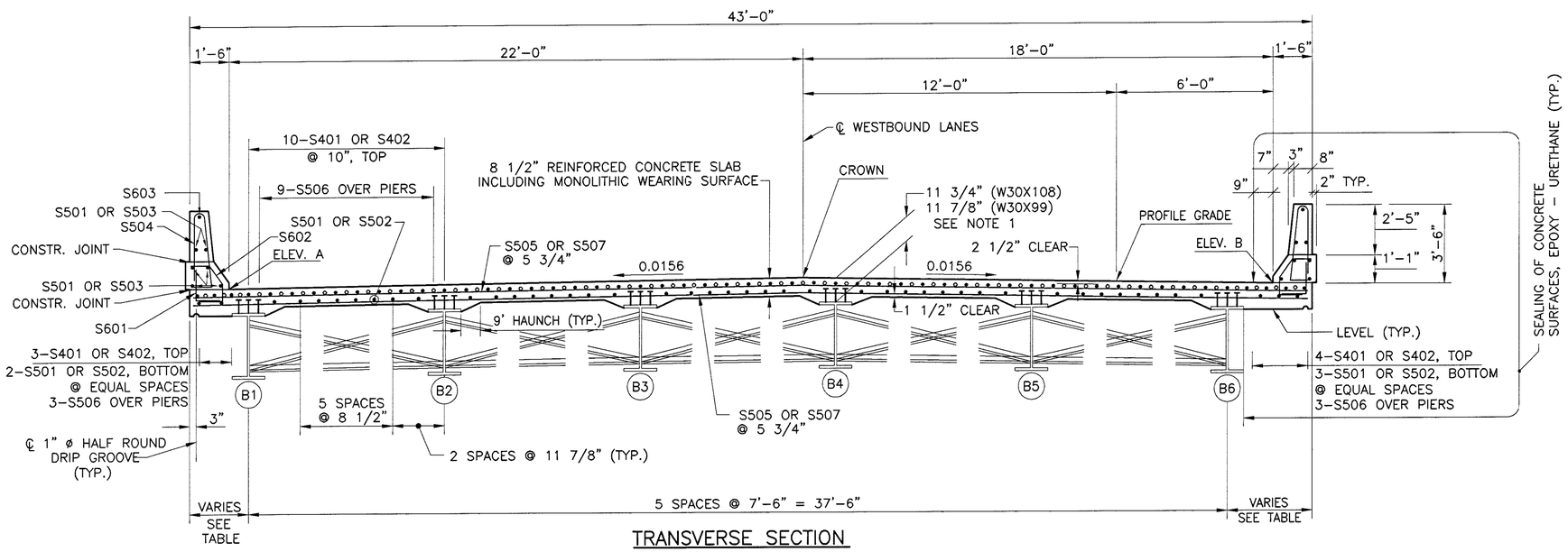


TRANSVERSE SECTION

## NOTES:

① DECK SLAB DEPTH FOR CONCRETE QUANTITY:

THE DIMENSION SHOWN FROM TO TOP OF THE CONCRETE DECK TO THE TOP OF THE FLANGE, MINUS THE DESIGN HAUNCH THICKNESS OF 3 1/4" (W30X108) AND 3 3/8" (W30X99) HAS BEEN USED FOR COMPUTING THE DECK CONCRETE QUANTITIES. CONCRETE REQUIRED TO FILL THE HAUNCHES, INCLUDING ADDITIONAL OR LESS MATERIAL REQUIRED DUE TO HAUNCH CONSTRUCTION TOLERANCES, SHALL BE CONSIDERED AS INCIDENTAL AND WILL NOT BE INCLUDED IN THE QUANTITY CALCULATIONS FOR PAYMENT.

② CONCRETE DECK HAUNCH WIDTH

A HAUNCH WIDTH OF 9" SHALL BE USED FOR COMPUTING QUANTITY OF CONCRETE. HOWEVER, THE HAUNCH WIDTH MAY VARY BETWEEN 6" AND 1'-0".

③ FOR WESTBOUND SLAB PLAN AND PARAPET REINFORCING DETAILS SEE SHEET 11/15 .

④ FOR ADDITIONAL NOTES SEE SHEET 11/15 .

DESIGN AGENCY
EUTHENICS INC.
CONSULTING ENGINEERS
CLEVELAND, OHIO

| DESIGNED | DRAWN | REVIEWED | DATE |
|---|---|---|---|
| GFH | GFH | RAB | 1-01 |
| CHECKED | REVISED | STRUCTURE FILE NUMBER | |
| KRD | | 7800630 | |

**TRNASVERSE SECTION - WESTBOUND**
BRIDGE NO. TRU-5-1077 L
OVER S.R. 45

**TRU-5-6.45**



TR005TS1.DWG F:\JOBS\502\BRIDGE\13\DWG\502tsx13L.dwg KJW 6/22/01 PLOT 1:2.6667

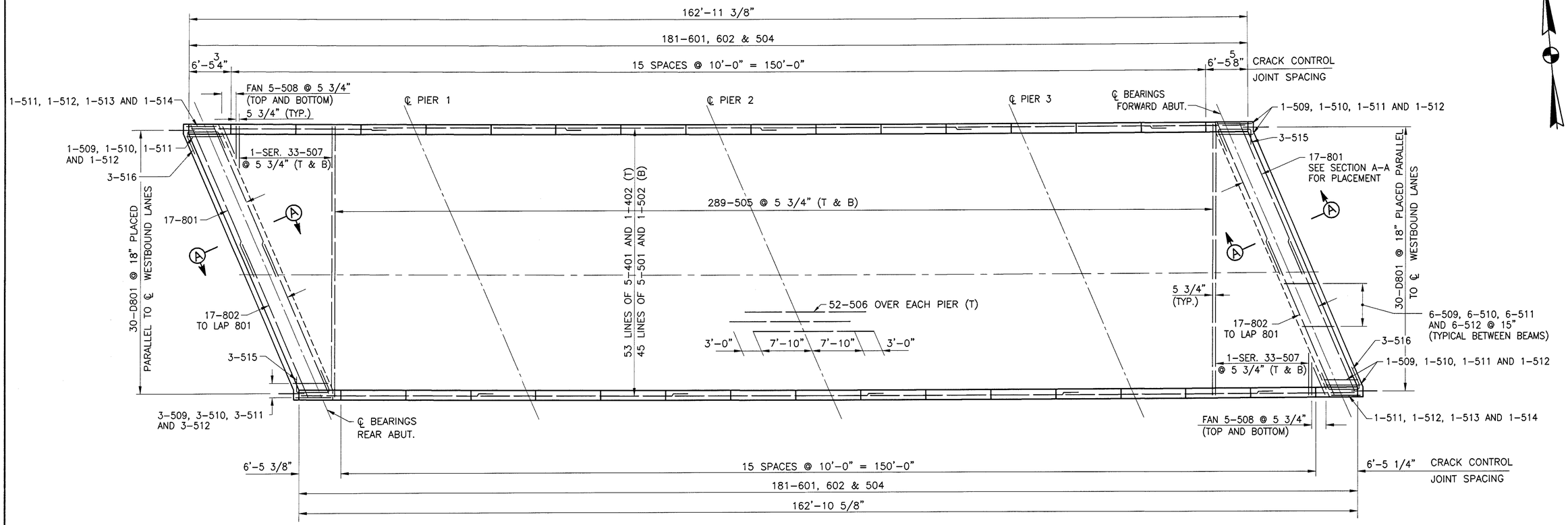


DECK REINFORCING PLAN

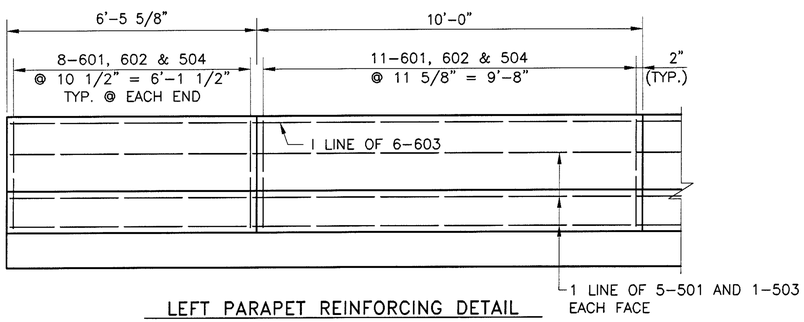


LEFT PARAPET REINFORCING DETAIL

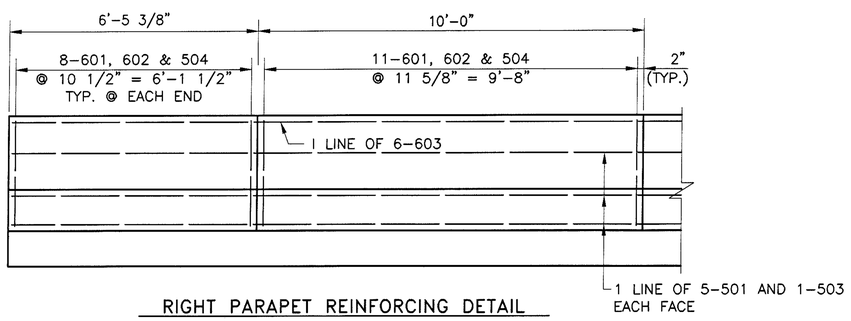


RIGHT PARAPET REINFORCING DETAIL

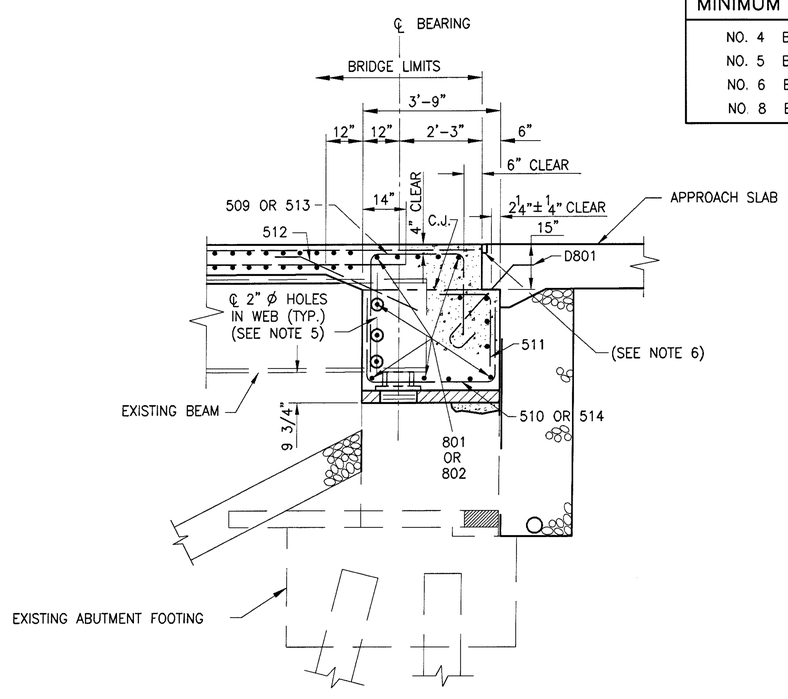


SECTION A-A

| MINIMUM LAP LENGTHS |
|---|
| NO. 4 BAR = 1'-7" |
| NO. 5 BAR = 2'-7" |
| NO. 6 BAR = 3'-5" |
| NO. 8 BAR = 5'-10" |

## NOTES:

1. FOR SPACING OF LONGITUDINAL REINFORCING STEEL IN THE SLAB SEE SHEET 10/15.
2. ALL REINFORCING STEEL BAR MARKS SHALL BE PREFIXED "S" (SUPERSTRUCTURE) UNLESS NOTED.
3. FOR REINFORCEMENT SCHEDULE SEE SHEET 15/15.
4. PAYMENT FOR DRILLING OF 2" ø HOLES IN BEAM WEBS SHALL BE INCLUDED WITH ITEM 202, PORTIONS OF STRUCTURE REMOVED, OVER 20 FOOT SPAN, AS PER PLAN. FOR LOCATION OF HOLES SEE SHEET 14/15.
5. DIAPHRAGM CONCRETE ENCASING THE STRUCTURAL MEMBER SECTIONS SUPPORTED IN SEMI-INTEGRAL TYPE ABUTMENTS SHALL BE PLACED AT LEAST 48 HOURS BEFORE THE ACTUAL DECK CONCRETE IS PLACED.
6. FOR APPROACH SLAB NOTES AND DETAILS SEE ROADWAY PLANS AND STANDARD DRAWING AS-1-81 SHEET 2/3, DETAIL B.

THE FOLLOWING ABBREVIATIONS ARE USED:
T = TOP
B = BOTTOM
TYP. = TYPICAL
C.J. = CONSTRUCTION JOINT

DESIGN AGENCY
EUTHENICS INC.
CONSULTING ENGINEERS
CLEVELAND, OHIO

| DESIGNED | DRAWN | REVIEWED | DATE |
|---|---|---|---|
| GFH | GFH | RAB | 1-01 |
| CHECKED | REVISED | STRUCTURE FILE NUMBER | |
| KRD | | 7800630 | |

**SLAB PLAN AND PARAPET ELEVATIONS - WESTBOUND**

BRIDGE NO. TRU-5-1077 L
OVER S.R. 45

**TRU-5-6.45**

11/15

144/164

TR005D1.DWG F:_JOBS\5302\BRIDGE\13\DWG\5302s1b13L.dwg KJW 6/22/01 PLOT1:8

## DECK SCREED ELEVATIONS

| | | SPAN 1 | | | | SPAN 2 | | | | | SPAN 3 | | | | | SPAN 4 | | | |
|---|---|---|---|---|---|---|---|---|---|---|---|---|---|---|---|---|---|---|---|
| | REAR ABUT. ℄ BEARING | 1/4 | 1/2 | 3/4 | ℄ PIER 1 | FS1 | 1/4 | 1/2 | 3/4 | ℄ PIER 2 | 1/4 | 1/2 | 3/4 | FS2 | ℄ PIER 3 | 1/4 | 1/2 | 3/4 | ℄ BEARING |
| ELEV. A | 926.31 | 926.18 | 926.05 | 925.93 | 925.81 | 925.68 | 925.65 | 925.49 | 925.31 | 925.11 | 924.92 | 924.76 | 924.59 | 924.54 | 924.54 | 924.29 | 924.17 | 924.07 | 923.97 |
| B1 | 926.32 | 926.19 | 926.06 | 925.94 | 925.83 | 925.70 | 925.67 | 925.50 | 925.32 | 925.12 | 924.93 | 924.76 | 924.61 | 924.56 | 924.56 | 924.30 | 924.18 | 924.08 | 923.99 |
| B2 | 926.39 | 926.26 | 926.13 | 926.01 | 925.90 | 925.77 | 925.74 | 925.57 | 925.38 | 925.19 | 925.00 | 924.84 | 924.68 | 924.62 | 924.62 | 924.37 | 924.26 | 924.16 | 924.07 |
| B3 | 926.45 | 926.32 | 926.20 | 926.08 | 925.96 | 925.84 | 925.81 | 925.64 | 925.44 | 925.25 | 925.07 | 924.91 | 924.75 | 924.69 | 924.69 | 924.44 | 924.34 | 924.24 | 924.14 |
| CROWN | 926.46 | 926.33 | 926.21 | 926.09 | 925.98 | 925.85 | 925.82 | 925.65 | 925.46 | 925.26 | 925.08 | 924.93 | 924.76 | 924.71 | 924.71 | 924.45 | 924.35 | 924.26 | 924.16 |
| B4 | 926.32 | 926.19 | 926.08 | 925.96 | 925.84 | 925.72 | 925.69 | 925.52 | 925.32 | 925.12 | 924.99 | 924.83 | 924.63 | 924.57 | 924.57 | 924.32 | 924.23 | 924.13 | 924.03 |
| B5 | 926.15 | 926.03 | 925.91 | 925.79 | 925.67 | 925.55 | 925.52 | 925.35 | 925.15 | 924.96 | 924.86 | 924.71 | 924.46 | 924.41 | 924.41 | 924.17 | 924.07 | 923.97 | 923.87 |
| B6 | 925.96 | 925.84 | 925.73 | 925.61 | 925.50 | 925.37 | 925.34 | 925.16 | 924.96 | 924.81 | 924.73 | 924.56 | 924.29 | 924.24 | 924.24 | 924.01 | 923.91 | 923.82 | 923.71 |
| B7 | 925.77 | 925.65 | 925.54 | 925.43 | 925.31 | 925.19 | 925.16 | 924.98 | 924.78 | 924.66 | 924.60 | 924.40 | 924.13 | 924.07 | 924.07 | 923.85 | 923.76 | 923.66 | 923.56 |
| B8 | 925.58 | 925.47 | 925.36 | 925.24 | 925.13 | 925.01 | 924.98 | 924.79 | 924.59 | 924.52 | 924.45 | 924.24 | 923.98 | 923.90 | 923.90 | 923.69 | 923.60 | 923.50 | 923.40 |
| ELEV. B | 925.54 | 925.43 | 925.32 | 925.20 | 925.09 | 924.97 | 924.93 | 924.75 | 924.55 | 924.48 | 924.42 | 924.20 | 923.94 | 923.87 | 923.75 | 923.66 | 923.57 | 923.47 | 923.38 |

SCREED ELEVATIONS SHOWN ARE FOR THE DECK SLAB SURFACE PRIOR TO CONCRETE PLACEMENT.
ALLOWANCE HAS BEEN MADE FOR ANTICIPATED CALCULATED DEAD LOAD DEFLECTION.

## HORIZONTAL OFFSETS TO EDGE OF SLAB (PERPENDICULAR TO BEAMS)

| | | SPAN 1 | | | | SPAN 2 | | | | SPAN 3 | | | | SPAN 4 | | | |
|---|---|---|---|---|---|---|---|---|---|---|---|---|---|---|---|---|---|
| | REAR ABUT. ℄ BEARING | 1/4 | 1/2 | 3/4 | ℄ PIER 1 | 1/4 | 1/2 | 3/4 | ℄ PIER 2 | 1/4 | 1/2 | 3/4 | ℄ PIER 3 | 1/4 | 1/2 | 3/4 | FWD. ABUT. ℄ BEARING |
| LEFT | 3'-3 5/8" | 3'-2 7/8" | 3'-2 3/8" | 3'-1 7/8" | 3'-1 3/8" | 3'-0 7/8" | 3'-0 3/8" | 3'-0 1/8" | 3'-0" | 3'-0" | 3'-0 1/8" | 3'-0 3/8" | 3'-0 3/4" | 3'-1 1/8" | 3'-1 1/2" | 3'-2" | 3'-2 1/2" |
| RIGHT | 3'-6 1/4" | 3'-6 1/2" | 3'-6 1/2" | 3'-6 5/8" | 3'-6 5/8" | 3'-6 1/2" | 3'-6 3/8" | 3'-5 7/8" | 3'-5 3/8" | 3'-4 3/4" | 3'-4" | 3'-3 1/8" | 3'-2 1/8" | 3'-1 3/8" | 3'-0 1/2" | 2'-11 5/8" | 2'-10 3/4" |

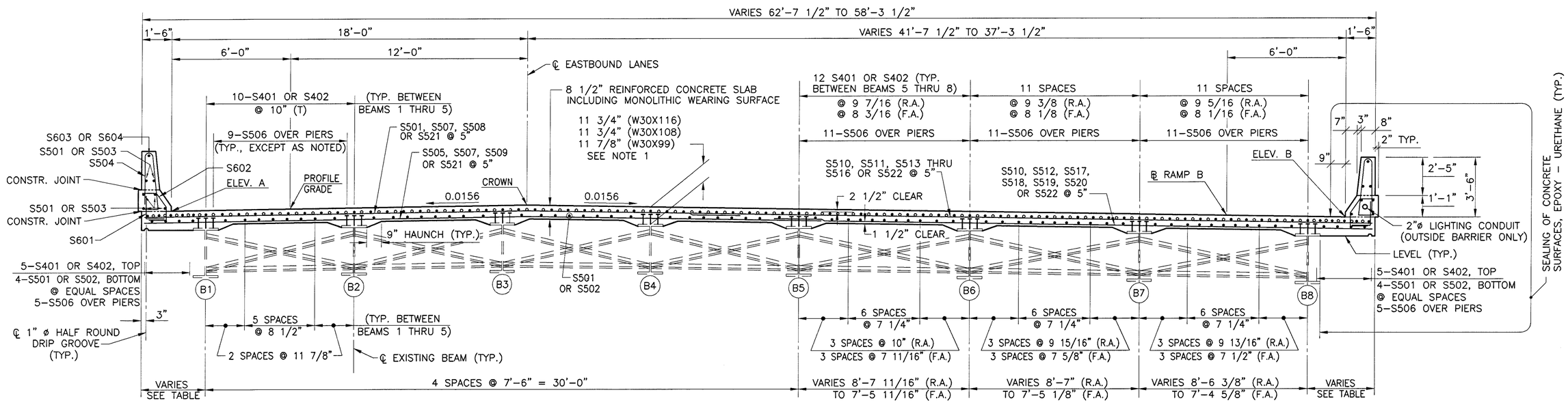


## TRANSVERSE SECTION

## NOTES:

① DECK SLAB DEPTH FOR CONCRETE QUANTITY:

THE DIMENSION SHOWN FROM TO TOP OF THE CONCRETE DECK TO THE TOP OF THE FLANGE, MINUS THE DESIGN HAUNCH THICKNESS OF 3 1/4" (W30X116), 3 1/4" (W30X108) AND 3 3/8" (W30X99) HAS BEEN USED FOR COMPUTING THE DECK CONCRETE QUANTITIES. CONCRETE REQUIRED TO FILL THE HAUNCHES, INCLUDING ADDITIONAL OR LESS MATERIAL REQUIRED DUE TO HAUNCH CONSTRUCTION TOLERANCES, SHALL BE CONSIDERED AS INCIDENTAL AND WILL NOT BE INCLUDED IN THE QUANTITY CALCULATIONS FOR PAYMENT.

② CONCRETE DECK HAUNCH WIDTH:

A HAUNCH WIDTH OF 9" SHALL BE USED FOR COMPUTING QUANTITY OF CONCRETE. HOWEVER, THE HAUNCH WIDTH MAY VARY BETWEEN 6" AND 1'-0".

③ FOR EASTBOUND SLAB PLAN AND PARAPET REINFORCING DETAILS SEE SHEET 13/15 .

④ FOR ADDITIONAL NOTES SEE SHEET 13/15 .

⑤ FOR ADDITIONAL LIGHTING AND CONDUIT NOTES AND DETAILS SEE OHIO STANDARD DRAWING HL-30.31M.

⑥ THE FOLLOWING ABBREVIATIONS ARE USED:

TYP. = TYPICAL
CONSTR. = CONSTRUCTION
R.A. = REAR ABUTMENT
F.A. = FORWARD ABUTMENT
ELEV. = ELEVATION

DESIGN AGENCY
EUTHENICS INC.
CONSULTING ENGINEERS
CLEVELAND, OHIO

| DESIGNED | DRAWN | REVIEWED | DATE |
|---|---|---|---|
| GFH | GFH | RAB | 1-01 |
| CHECKED | REVISED | STRUCTURE FILE NUMBER | |
| KRD | | 7800665 | |

**TRANSVERSE SECTION - EASTBOUND**
BRIDGE NO. TRU-5-1077 R
OVER S.R. 45

**TRU-5-6.45**

12/15

145/164

TR005TS2.DWG F:\JOBS\302\BRIDGE\13\DWG\302tsx13R.dwg KJW 6/22/01 PLOT 1:32

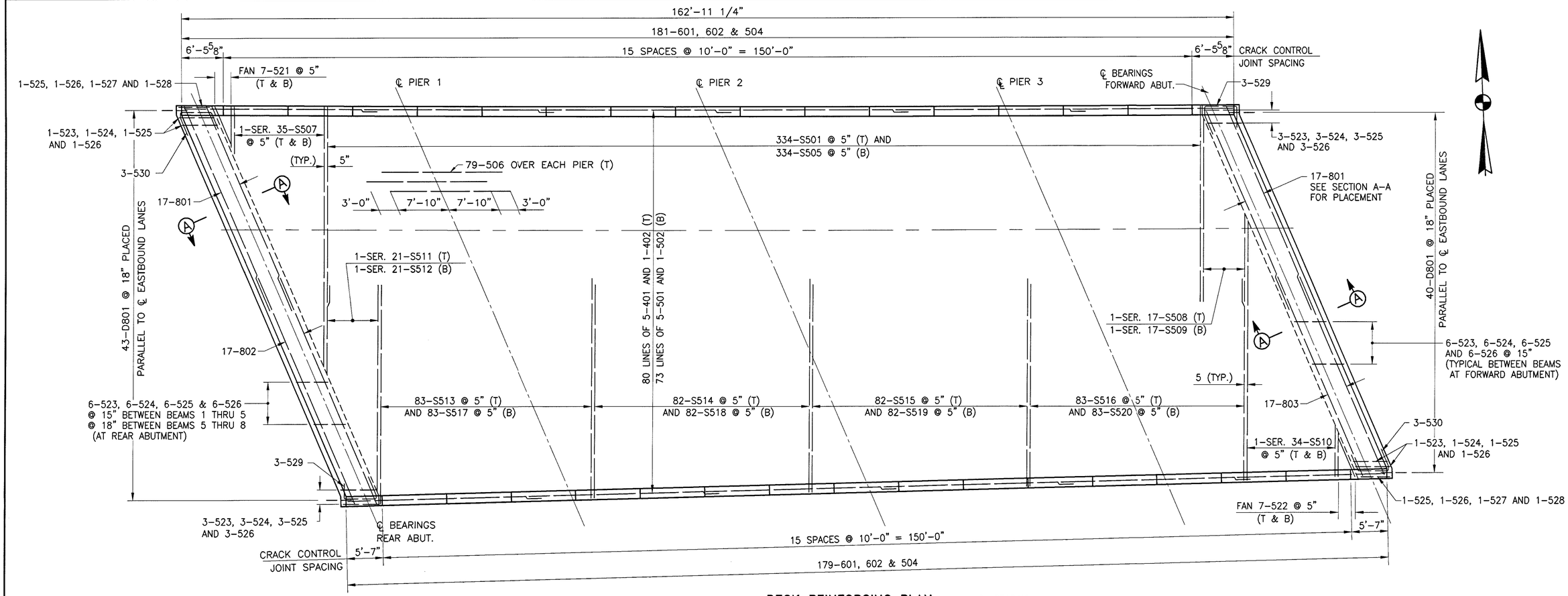


## DECK REINFORCING PLAN

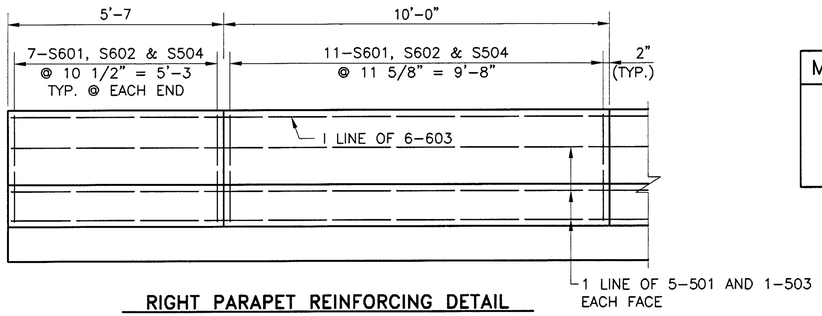


## RIGHT PARAPET REINFORCING DETAIL

| MINIMUM LAP LENGTHS |
|---|
| NO. 4 BAR = 1'-7" |
| NO. 5 BAR = 2'-7" |
| NO. 6 BAR = 3'-5" |
| NO. 8 BAR = 5'-10" |

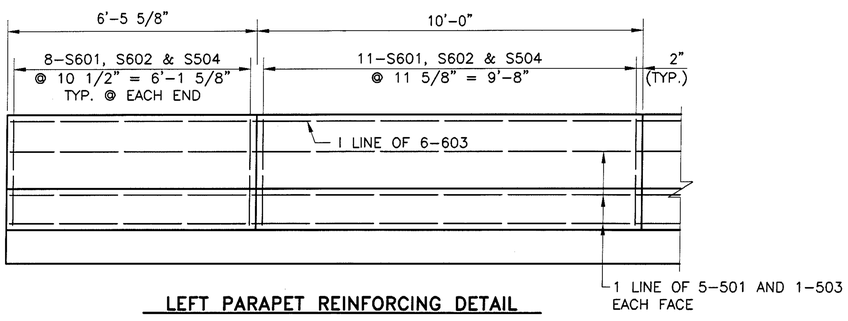


## LEFT PARAPET REINFORCING DETAIL

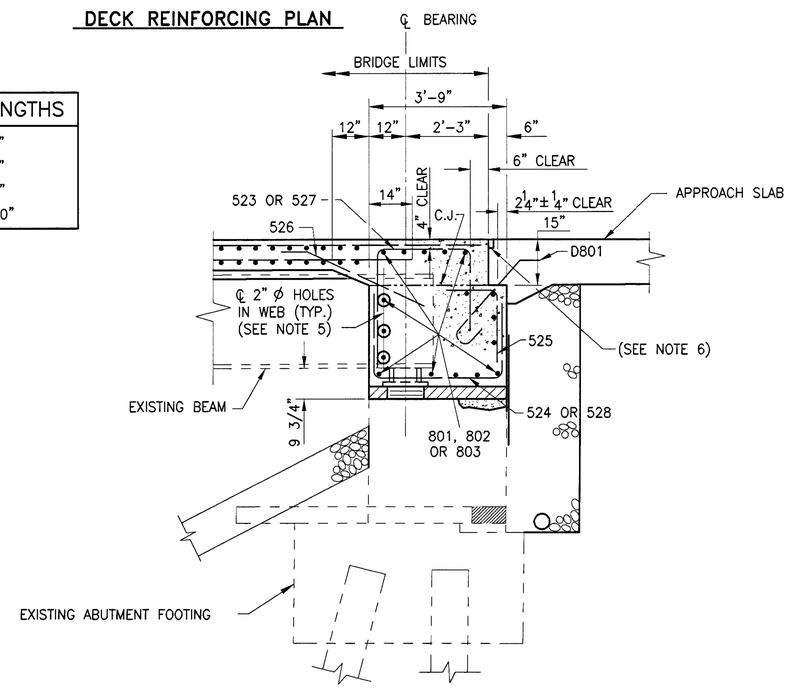


## SECTION A-A

## NOTES:

1. FOR SPACING OF LONGITUDINAL REINFORCING STEEL IN THE SLAB SEE SHEET 12/15.
2. ALL REINFORCING STEEL BAR MARKS SHALL BE PREFIXED "S" (SUPERSTRUCTURE) UNLESS OTHERWISE NOTED.
3. FOR REINFORCEMENT SCHEDULE SEE SHEET 15/15.
4. PAYMENT FOR DRILLING OF 2" ø HOLES IN BEAM WEBS SHALL BE INCLUDED WITH ITEM 202, PORTIONS OF STRUCTURE REMOVED, OVER 20 FOOT SPAN, AS PER PLAN. FOR LOCATION OF HOLES SEE SHEET 14/15.
5. DIAPHRAGM CONCRETE ENCASING THE STRUCTURAL MEMBER SECTIONS SUPPORTED IN SEMI-INTEGRAL TYPE ABUTMENTS SHALL BE PLACED AT LEAST 48 HOURS BEFORE THE ACTUAL DECK CONCRETE IS PLACED.
6. FOR APPROACH SLAB NOTES AND DETAILS SEE ROADWAY PLANS AND STANDARD DRAWING AS-1-81 SHEET 2/3, DETAIL B.

THE FOLLOWING ABBREVIATIONS ARE USED:
T = TOP
B = BOTTOM
TYP. = TYPICAL
C.J. = CONSTRUCTION JOINT

DESIGN AGENCY
EUTHENICS INC.
CONSULTING ENGINEERS
CLEVELAND, OHIO

| DESIGNED | DRAWN | REVIEWED | DATE |
|---|---|---|---|
| GFH | GFH | RAB | 1-01 |
| CHECKED | REVISED | STRUCTURE FILE NUMBER | |
| KRD | | 7800665 | |

**SLAB PLAN AND PARAPET ELEVATIONS - EASTBOUND**

BRIDGE NO. TRU-5-1077 R
OVER S.R. 45

**TRU-5-6.45**



TR005S02.DWG F:\JOBS\F\JOBS\S02\Bridge\13\DWG\S02sht03R.dwg KJW 6/22-01 PLOT 1:8

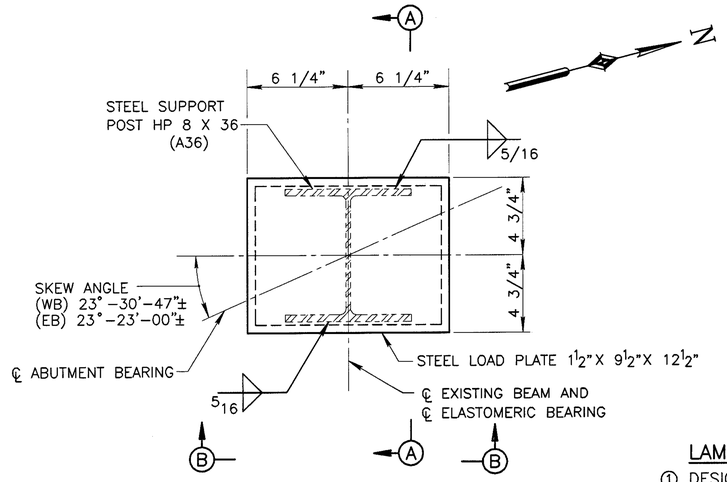


EXPANSION BEARING AT ABUTMENTS

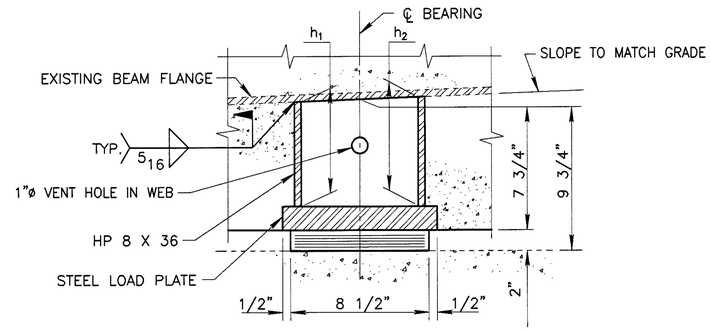


SECTION A–A

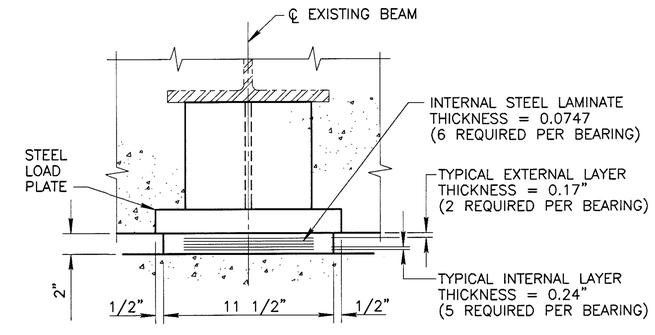


VIEW B–B

## LAMINATED ELASTOMERIC BEARING NOTES:

① DESIGN LOADING: SERVICE LOAD REACTIONS – kips

| WESTBOUND LANES | | | | | | | |
|---|---|---|---|---|---|---|---|
| | | | | LIVE LOAD | | PEDESTAL DIMENSIONS | |
| LOCATION | TYPE | NO. | DEAD LOAD | WITHOUT IMPACT | TOTAL | h1 | h2 |
| REAR ABUTMENT | EXP. | 6 | 32.6 | 48.0 | 80.6 | 6 1/4" | 6 5/16" |
| FORWARD ABUTMENT | EXP. | 6 | 32.6 | 48.0 | 80.6 | 6 3/16" | 6 5/16" |

| EASTBOUND LANES | | | | | | | |
|---|---|---|---|---|---|---|---|
| | | | | LIVE LOAD | | PEDESTAL DIMENSIONS | |
| LOCATION | TYPE | NO. | DEAD LOAD | WITHOUT IMPACT | TOTAL | h1 | h2 |
| REAR ABUTMENT | EXP. | 8 | 36.2 | 53.5 | 90.7 | 6 3/16" | 6 5/16" |
| FORWARD ABUTMENT | EXP. | 8 | 36.2 | 53.5 | 90.7 | 6 3/16" | 6 5/16" |

② ELASTOMERIC BEARINGS: ELASTOMERIC BEARINGS SHALL COMPLY WITH ITEM 516 AND AASHTO STANDARD SPECIFICATION FOR HIGHWAY BRIDGES, SECTION 18, BEARING DEVICES, DIVISION II, CONSTRUCTION ARTICLES 18.4.5.1 AND 18.5.6.2. BEARINGS SHALL BE GRADES 50 DUROMETER ELASTOMER, AND SHALL BE SUBJECTED TO LOAD TESTING REQUIREMENTS DEFINED IN ARTICLE 18.7.4.5 OF THE AASHTO DOCUMENT LISTED ABOVE. BEARINGS WERE DESIGNED UNDER SECTION 14.6.6 OF SECTION 14, BEARINGS, DIVISION I, DESIGN. TESTING SHALL BE INCLUDED IN THE UNIT PRICE BID FOR THE BEARINGS, EACH.

③ LOAD PLATE: THE STEEL LOAD PLATE (ASTM A709, GRADE 36) SHALL BE BONDED BY VULCANIZATION TO THE ELASTOMER DURING THE MOLDING PROCESS. WELDING OF THE LOAD PLATE TO THE STEEL SUPPORT POST OR SUPERSTRUCTURE SHALL BE CONTROLLED SO THAT THE PLATE TEMPERATURE AT THE ELASTOMETER BONDED SURFACE SHALL NOT EXCEED 300°F AS DETERMINED BY THE USE OF PYROMETRIC STICKS OR OTHER TEMPERATURE MONITORING DEVICES.

④ BASIS OF PAYMENT: THE UNIT PRICE BID SHALL INCLUDE ALL MATERIALS, LABOR, TESTING, PAINTING, STEEL SUPPORT POST, FILL PLATES AND INCIDENTALS NECESSARY TO FURNISH AND INSTALL LAMINATED ELASTOMERIC BEARINGS. PAYMENT WILL BE MADE AT THE CONTRACT PRICE FOR THE APPROPRIATE ITEM 516, ELASTOMERIC BEARING WITH INTERNAL LAMINATES AND LOAD PLATE (NEOPRENE), AS PER PLAN.

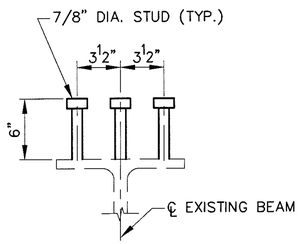


SHEAR CONNECTOR DETAIL

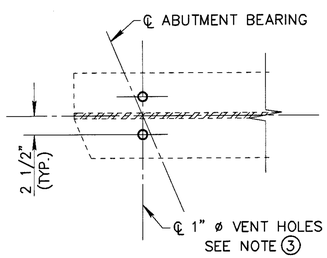


SECTION C–C

| BEAM DIMENSIONS | | | | | | | |
|---|---|---|---|---|---|---|---|
| | A | B | C | D | E | F | G |
| ALL WESTBOUND BEAMS AND EASTBOUND BEAMS 1 THRU 5 | 79'-0" | 32'-6" | 46'-6" | 14'-9" | 30'-0" | 17'-10" | 16'-5" |
| EASTBOUND BEAM 6 | 78'-9" | 32'-4 3/4" | 46'-4 1/4" | 13'-11 3/4" | 31'-1" | 16'-8 1/4" | 17'-0" |
| EASTBOUND BEAM 7 | 78'-6 1/16" | 32'-3 9/16" | 46'-2 1/2" | 13'-10 9/16" | 31'-1" | 16'-6 1/2" | 17'-0" |
| EASTBOUND BEAM 8 | 78'-3 1/4" | 32'-2 3/8" | 46'-0 7/8" | 13'-9 3/8" | 31'-1" | 16'-4 7/8" | 17'-0" |

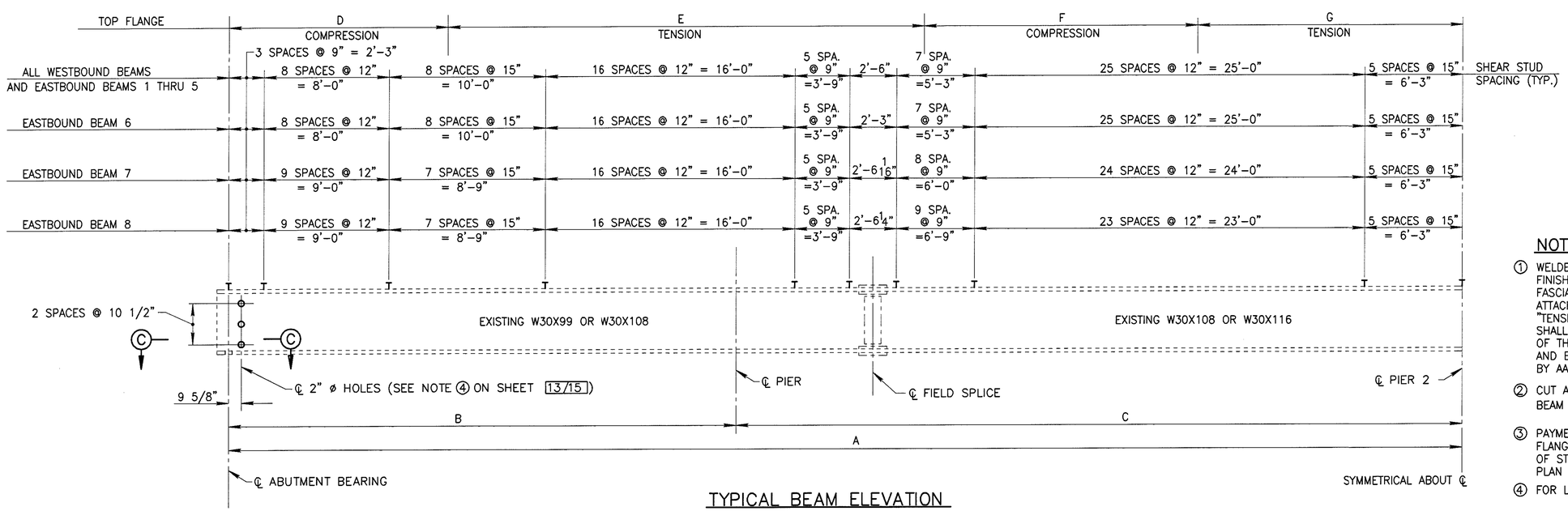


TYPICAL BEAM ELEVATION

## NOTES:

① WELDED ATTACHMENT OF SUPPORTS FOR CONCRETE DECK FINISHING MACHINE MAY BE MADE TO AREAS OF THE FASCIA BEAM FLANGES DESIGNATED "COMPRESSION". ATTACHMENTS SHALL NOT BE MADE TO AREAS DESIGNATED "TENSION". FILLET WELDS TO COMPRESSION FLANGES SHALL NOT BE CLOSER THAN 1 INCH FROM THE EDGE OF THE FLANGE, BE NOT MORE THAN 2 INCHES LONG, AND BE NOT SMALLER THAN THE MINIMUM SIZE REQUIRED BY AASHTO.

② CUT AND REMOVE EXISTING END CROSSFRAMES 2" FROM BEAM WEBS.

③ PAYMENT FOR DRILLING 1" ø VENT HOLES IN BEAM FLANGES SHALL BE INCLUDED WITH ITEM 202, PORTIONS OF STRUCTURE REMOVED, OVER 20 FOOT SPAN, AS PER PLAN

④ FOR LOCATION OF NUMBERED BEAMS SEE SHEET 12/15 .

DESIGN AGENCY
EUTHENICS INC.
CONSULTING ENGINEERS
CLEVELAND, OHIO

| DESIGNED | DRAWN | REVIEWED | DATE |
|---|---|---|---|
| GFH | GFH | RAB | 1-01 |
| CHECKED | REVISED | STRUCTURE FILE NUMBER | |
| KRD | | 7800630/7800665 | |

**SUPERSTRUCTURE DETAILS**
TRU-5-1077 L & R
OVER S.R.45

**TRU-5-6.45**



TR005S03.DWG F:\JOBS\502\Bridge\13\DWG\502ssd13.dwg KJW 6/22/01 PLOT 1:1

| MARK | NO. REAR | NO. FWD | NO. TOTAL | LENGTH | TYPE | WEIGHT (LBS.) | DIMENSIONS A | B | C | D | E | INCR. |
|---|---|---|---|---|---|---|---|---|---|---|---|---|
| ABUTMENTS – WESTBOUND | | | | | | | | | | | | |
| A501 | 14 | 14 | 28 | 12'–8" | 10 | 370 | 2'–10" | 3'–3" | | | | |
| A502 | 1 | 1 | 2 | 13'–2" | 10 | 27 | 2'–10" | 3'–6" | | | | |
| A503 | 12 | 12 | 24 | 3'–4" | STR | 83 | | | | | | |
| A504 | 4 | 4 | 8 | 4'–0" | STR | 33 | | | | | | |
| A505 | 1 | 1 | 2 | 9'–4" | 6 | 19 | 3'–7" | 3'–0" | | | | |
| A506 | 1 | 1 | 2 | 9'–1" | 6 | 19 | 3'–4" | 3'–0" | | | | |
| A507 | | | NOT USED | | | | | | | | | |
| A508 | 5 | 5 | 10 | 7'–5" | STR | 77 | | | | | | |
| A509 | 11 | 11 | 22 | 15'–9" | 6 | 361 | 1'–2" | 7'–5" | | | | |
| A510 | 2 | 2 | 4 | 9'–5" | 6 | 39 | 1'–2" | 4'–3" | | | | |
| A511 | 2 | 2 | 4 | 8'–1" | 6 | 34 | 1'–2" | 3'–7" | | | | |
| A512 | 8 | 8 | 16 | 6'–9" | 6 | 113 | 1'–2" | 2'–11" | | | | |
| A513 | 9 | 9 | 18 | 14'–10" | STR | 278 | | | | | | |
| A514 | 3 | 3 | 6 | 14'–2" | STR | 89 | | | | | | |
| A515 | 1 | 1 | 2 | 8'–6" | STR | 18 | | | | | | |
| A516 | 3 | 3 | 6 | 9'–2" | STR | 57 | | | | | | |
| A517 | 8 | 8 | 16 | 6'–9" | STR | 113 | | | | | | |
| A518 | 4 | 4 | 8 | 8'–4" | 11 | 70 | 6'–3" | 2'–2" | 5 1/4 | | | |
| A519 | 4 | 4 | 8 | 8'–7" | 5 | 72 | 2'–0" | 6'–9" | | | | |
| | | | | | | | | | | | | |
| A601 | 28 | 28 | 56 | 4'–10" | STR | 407 | | | | | | |
| A602 | 2 | 2 | 4 | 5'–0" | 9 | 30 | 1'–7" | 3'–6" | 5 1/4 | | | |
| A603 | 11 | 11 | 22 | 13'–10" | 6 | 457 | 1'–1" | 6'–6" | | | | |
| A604 | 1 | 1 | 2 | 7'–4" | 5 | 22 | 1'–0" | 6'–6" | | | | |
| | | | | | | | | | | | | |
| A801 | 8 | 8 | 16 | 9'–8" | STR | 413 | | | | | | |
| A802 | 2 | 2 | 4 | 8'–9" | STR | 93 | | | | | | |
| A803 | 2 | 2 | 4 | 9'–10" | STR | 105 | | | | | | |
| A804 | 2 | 2 | 4 | 8'–5" | STR | 90 | | | | | | |
| A805 | 2 | 2 | 4 | 9'–5" | STR | 101 | | | | | | |
| | | | | TOTAL | | 3,590 | lbs. | | | | | |

| MARK | NO. REAR | NO. FWD | NO. TOTAL | LENGTH | TYPE | WEIGHT (LBS.) | DIMENSIONS A | B | C | D | E | INCR. |
|---|---|---|---|---|---|---|---|---|---|---|---|---|
| ABUTMENTS – EASTBOUND | | | | | | | | | | | | |
| A501 | 14 | 14 | 28 | 12'–8" | 10 | 370 | 2'–10" | 3'–3" | | | | |
| A502 | 1 | 1 | 2 | 13'–2" | 10 | 27 | 2'–10" | 3'–6" | | | | |
| A503 | 14 | 14 | 28 | 3'–4" | STR | 97 | | | | | | |
| A504 | 2 | 2 | 4 | 4'–0" | STR | 17 | | | | | | |
| A505 | 1 | 1 | 2 | 9'–4" | 6 | 19 | 3'–7" | 3'–0" | | | | |
| A506 | 1 | 1 | 2 | 9'–1" | 6 | 19 | 3'–4" | 3'–0" | | | | |
| A507 | 2 | 2 | 4 | 4'–6" | STR | 19 | | | | | | |
| A508 | 5 | 5 | 10 | 7'–5" | STR | 77 | | | | | | |
| A509 | 11 | 11 | 22 | 15'–9" | 6 | 361 | 1'–2" | 7'–5" | | | | |
| A510 | 2 | 2 | 4 | 9'–5" | 6 | 39 | 1'–2" | 4'–3" | | | | |
| A511 | 2 | 2 | 4 | 8'–1" | 6 | 34 | 1'–2" | 3'–7" | | | | |
| A512 | 8 | 8 | 16 | 6'–9" | 6 | 113 | 1'–2" | 2'–11" | | | | |
| A513 | 9 | 9 | 18 | 14'–10" | STR | 278 | | | | | | |
| A514 | 3 | 3 | 6 | 14'–2" | STR | 89 | | | | | | |
| A515 | 1 | 1 | 2 | 8'–6" | STR | 18 | | | | | | |
| A516 | 3 | 3 | 6 | 9'–2" | STR | 57 | | | | | | |
| A517 | 8 | 8 | 16 | 6'–9" | STR | 113 | | | | | | |
| A518 | 4 | 4 | 8 | 8'–4" | 11 | 70 | 6'–3" | 2'–2" | 5 1/4 | | | |
| A519 | 4 | 4 | 8 | 8'–7" | 5 | 72 | 2'–0" | 6'–9" | | | | |
| | | | | | | | | | | | | |
| A601 | 28 | 28 | 56 | 4'–10" | STR | 407 | | | | | | |
| A602 | 2 | 2 | 4 | 5'–0" | 9 | 30 | 1'–7" | 3'–6" | 5 1/4 | | | |
| A603 | 11 | 11 | 22 | 13'–10" | 6 | 457 | 1'–1" | 6'–6" | | | | |
| A604 | 1 | 1 | 2 | 7'–4" | 5 | 22 | 1'–0" | 6'–6" | | | | |
| | | | | | | | | | | | | |
| A801 | 8 | 8 | 16 | 9'–8" | STR | 413 | | | | | | |
| A802 | 2 | 2 | 4 | 8'–9" | STR | 93 | | | | | | |
| A803 | 2 | 2 | 4 | 9'–10" | STR | 105 | | | | | | |
| A804 | 2 | 2 | 4 | 8'–5" | STR | 90 | | | | | | |
| A805 | 2 | 2 | 4 | 9'–5" | STR | 101 | | | | | | |
| | | | | TOTAL | | 3,607 | lbs. | | | | | |

| MARK | NO. | LENGTH | TYPE | WEIGHT (LBS.) | DIMENSIONS A | B | C | D | E | INCR. |
|---|---|---|---|---|---|---|---|---|---|---|
| SUPERSTRUCTURE – WESTBOUND | | | | | | | | | | |
| | | | | | | | | | | |
| S401 | 265 | 30'–0" | STR | 5,311 | | | | | | |
| S402 | 53 | 20'–7" | STR | 729 | | | | | | |
| | | | | | | | | | | |
| S501 | 285 | 30'–0" | STR | 8,918 | | | | | | |
| S502 | 45 | 21'–2" | STR | 993 | | | | | | |
| S503 | 12 | 25'–6" | STR | 319 | | | | | | |
| S504 | 362 | 7'–1" | 58 | 2,674 | 3'–0" | 3'–3" | | | | |
| S505 | 578 | 42'–8" | STR | 25,722 | | | | | | |
| S506 | 156 | 18'–8" | STR | 3,037 | | | | | | |
| | 4 | 5'–7" | | | | | | | | |
| S507 | SER | TO | STR | 3,201 | | | | | | 1'–1 1/4" |
| | 33 | 40'–11" | | | | | | | | |
| S508 | 20 | 4'–6" | STR | 94 | | | | | | |
| S509 | 68 | 8'–7" | 27 | 609 | 3'–7" | 2'–9" | 2'–6" | | | |
| S510 | 68 | 8'–9" | 6 | 621 | 3'–8" | 2'–8" | | | | |
| S511 | 70 | 4'–11" | 5 | 359 | 2'–6" | 2'–6" | | | | |
| S512 | 70 | 4'–6" | 9 | 329 | 3'–8" | 10" | 6" | | | |
| S513 | 2 | 8'–5" | 27 | 18 | 3'–7" | 2'–7" | 2'–6" | | | |
| S514 | 2 | 8'–2" | 6 | 17 | 3'–1" | 2'–8" | | | | |
| S515 | 6 | 10'–0" | 50 | 63 | 2'–8" | 3'–9" | 1'–4" | 2'–7" | 5 1/4" | |
| S516 | 6 | 9'–3" | 52 | 58 | 2'–7" | 3'–1" | 1'–4" | 2'–7" | 5 1/4" | |
| | | | | | | | | | | |
| S601 | 362 | 2'–7" | 5 | 1,405 | 11" | 1'–10" | | | | |
| S602 | 362 | 3'–3" | 43 | 1,767 | 1'–1" | | | | | |
| S603 | 12 | 30'–0" | STR | 541 | | | | | | |
| | | | | | | | | | | |
| S801 | 34 | 25'–0" | STR | 2,270 | | | | | | |
| S802 | 34 | 27'–5" | STR | 2,489 | | | | | | |
| | | | | | | | | | | |
| D801 | 60 | 5'–2" | 8 | 827 | 2'–10" | 1'–5" | 12 | | | |
| | | TOTAL | | 62,371 | lbs. | | | | | |

BENDING DIAGRAMS

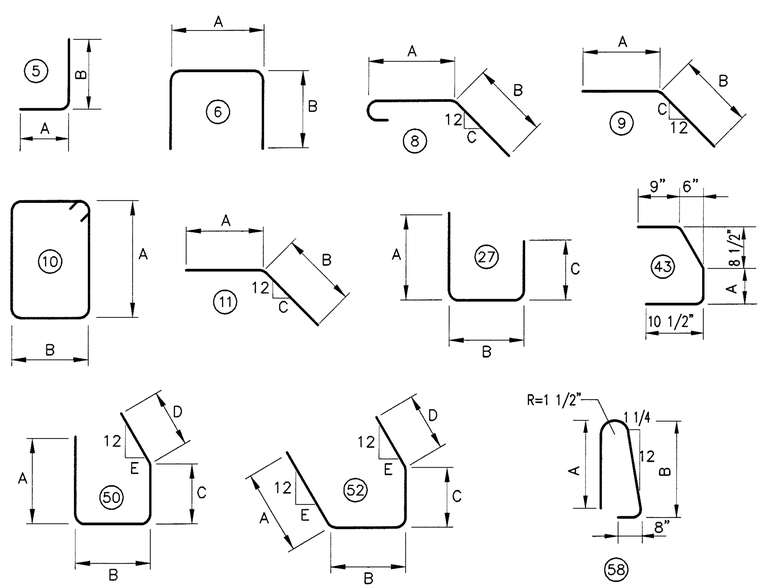


| MARK | NO. | LENGTH | TYPE | WEIGHT (LBS.) | DIMENSIONS A | B | C | D | E | INCR. |
|---|---|---|---|---|---|---|---|---|---|---|
| SUPERSTRUCTURE – EASTBOUND | | | | | | | | | | |
| S401 | 400 | 30'–0" | STR | 8,016 | | | | | | |
| S402 | 80 | 20'–7" | STR | 1,100 | | | | | | |
| | | | | | | | | | | |
| S501 | 759 | 30'–0" | STR | 23,749 | | | | | | |
| S502 | 73 | 21'–2" | STR | 1,612 | | | | | | |
| S503 | 12 | 25'–7" | STR | 320 | | | | | | |
| S504 | 360 | 7'–1" | 58 | 2,660 | 3'–0" | 3'–3" | | | | |
| S505 | 334 | 34'–5" | STR | 11,989 | | | | | | |
| S506 | 237 | 18'–8" | STR | 4,614 | | | | | | |
| | 2 | 7'–1" | | | | | | | | |
| S507 | SER | TO | STR | 1,713 | | | | | | 11 9/16" |
| | 35 | 39'–10" | | | | | | | | |
| | 1 | 12'–3" | | | | | | | | |
| S508 | SER | TO | STR | 354 | | | | | | 11 9/16" |
| | 17 | 27'–8" | | | | | | | | |
| | 1 | 16'–8" | | | | | | | | |
| S509 | SER | TO | STR | 432 | | | | | | 11 9/16" |
| | 17 | 32'–1" | | | | | | | | |
| | 2 | 8'–1" | | | | | | | | |
| S510 | SER | TO | STR | 1,702 | | | | | | 11 9/16" |
| | 34 | 39'–11" | | | | | | | | |
| | 1 | 13'–5" | | | | | | | | |
| S511 | SER | TO | STR | 505 | | | | | | 11 9/16" |
| | 21 | 32'–8" | | | | | | | | |
| | 1 | 9'–0" | | | | | | | | |
| S512 | SER | TO | STR | 408 | | | | | | 11 9/16" |
| | 21 | 28'–3" | | | | | | | | |
| S513 | 83 | 34'–8" | STR | 3,001 | | | | | | |
| S514 | 82 | 33'–9" | STR | 2,887 | | | | | | |
| S515 | 82 | 32'–11" | STR | 2,815 | | | | | | |
| S516 | 83 | 32'–1" | STR | 2,777 | | | | | | |
| S517 | 83 | 30'–3" | STR | 2,619 | | | | | | |
| S518 | 82 | 29'–4" | STR | 2,509 | | | | | | |
| S519 | 82 | 28'–6" | STR | 2,437 | | | | | | |
| S520 | 83 | 27'–8" | STR | 2,395 | | | | | | |
| S521 | 14 | 6'–2" | STR | 90 | | | | | | |
| S522 | 14 | 6'–8" | STR | 97 | | | | | | |
| S523 | 94 | 8'–7" | 27 | 842 | 3'–7" | 2'–9" | 2'–6" | | | |
| S524 | 94 | 8'–9" | 6 | 858 | 3'–8" | 2'–8" | | | | |
| S525 | 96 | 4'–11" | 5 | 492 | 2'–6" | 2'–6" | | | | |
| S526 | 96 | 4'–6" | 9 | 451 | 3'–8" | 10" | 6" | | | |
| S527 | 2 | 8'–5" | 27 | 18 | 3'–7" | 2'–7" | 2'–6" | | | |
| S528 | 2 | 8'–2" | 6 | 17 | 3'–1" | 2'–8" | | | | |
| S529 | 6 | 10'–0" | 50 | 63 | 2'–8" | 3'–9" | 1'–4" | 2'–7" | 5 1/4" | |
| S530 | 6 | 9'–3" | 52 | 58 | 2'–7" | 3'–1" | 1'–4" | 2'–7" | 5 1/4" | |
| | | | | | | | | | | |
| S601 | 360 | 2'–7" | 5 | 1,397 | 11" | 1'–10" | | | | |
| S602 | 360 | 3'–3" | 43 | 1,757 | 1'–1" | | | | | |
| S603 | 12 | 30'–0" | STR | 541 | | | | | | |
| | | | | | | | | | | |
| S801 | 34 | 35'–0" | STR | 3,177 | | | | | | |
| S802 | 17 | 38'–8" | STR | 1,755 | | | | | | |
| S803 | 17 | 34'–1" | STR | 1,547 | | | | | | |
| | | | | | | | | | | |
| D801 | 83 | 5'–2" | 8 | 1,145 | 2'–10" | 1'–5" | 12 | | | |
| | | TOTAL | | 94,919 | lbs. | | | | | |

NOTES:

① THE BAR SIZE NUMBER IS SPECIFIED ON THE PLANS IN THE BAR MARK COLUMN. THE FIRST DIGIT WHERE THREE DIGITS ARE USED, AND THE FIRST TWO DIGITS WHERE FOUR DIGITS ARE USED, INDICATES THE BAR SIZE NUMBER. FOR EXAMPLE, S601 IS A NO. 6 BAR. BAR DIMENSIONS SHOWN ARE OUT TO OUT UNLESS OTHERWISE INDICATED. R INDICATES INSIDE RADIUS, UNLESS OTHERWISE NOTED. "STD." WRITTEN IN PLACE OF A DIMENSION INDICATES A STANDARD BEND AT THE END OF A BAR.

② ALL REINFORCING STEEL TO BE EPOXY COATED.

③ REINFORCING STEEL WEIGHTS ARE GIVEN FOR INFORMATION ONLY.


DESIGN AGENCY
EUTHEMICS INC.
CONSULTING ENGINEERS
CLEVELAND, OHIO


| DESIGNED | DRAWN | REVIEWED | DATE |
|---|---|---|---|
| GFH | GFH | RAB | 1-01 |
| CHECKED | REVISED | STRUCTURE FILE NUMBER | |
| KRD | | 7800630/7800665 | |

**REINFORCING SCHEDULE**
TRU-5-1077 L & R
OVER S.R. 45

**TRU-5-6.45**




TR005RL1.DWG F:\JOBS\F-\JOBS\502\BRIDGE\13\DWG\502rs13.dwg KJW 6-22-01 PLOT 1:1

| TEMPORARY BENCH MARKS |
|---|
| **BENCH MARK NO. 1**<br>IRON PIN FOUND IN MEDIAN<br>STA. 553+41.29<br>ELEV. 909.66 |
| **BENCH MARK NO. 2**<br>IRON PIN FOUND IN MEDIAN<br>STA. 570+00.00<br>ELEV. 903.03 |

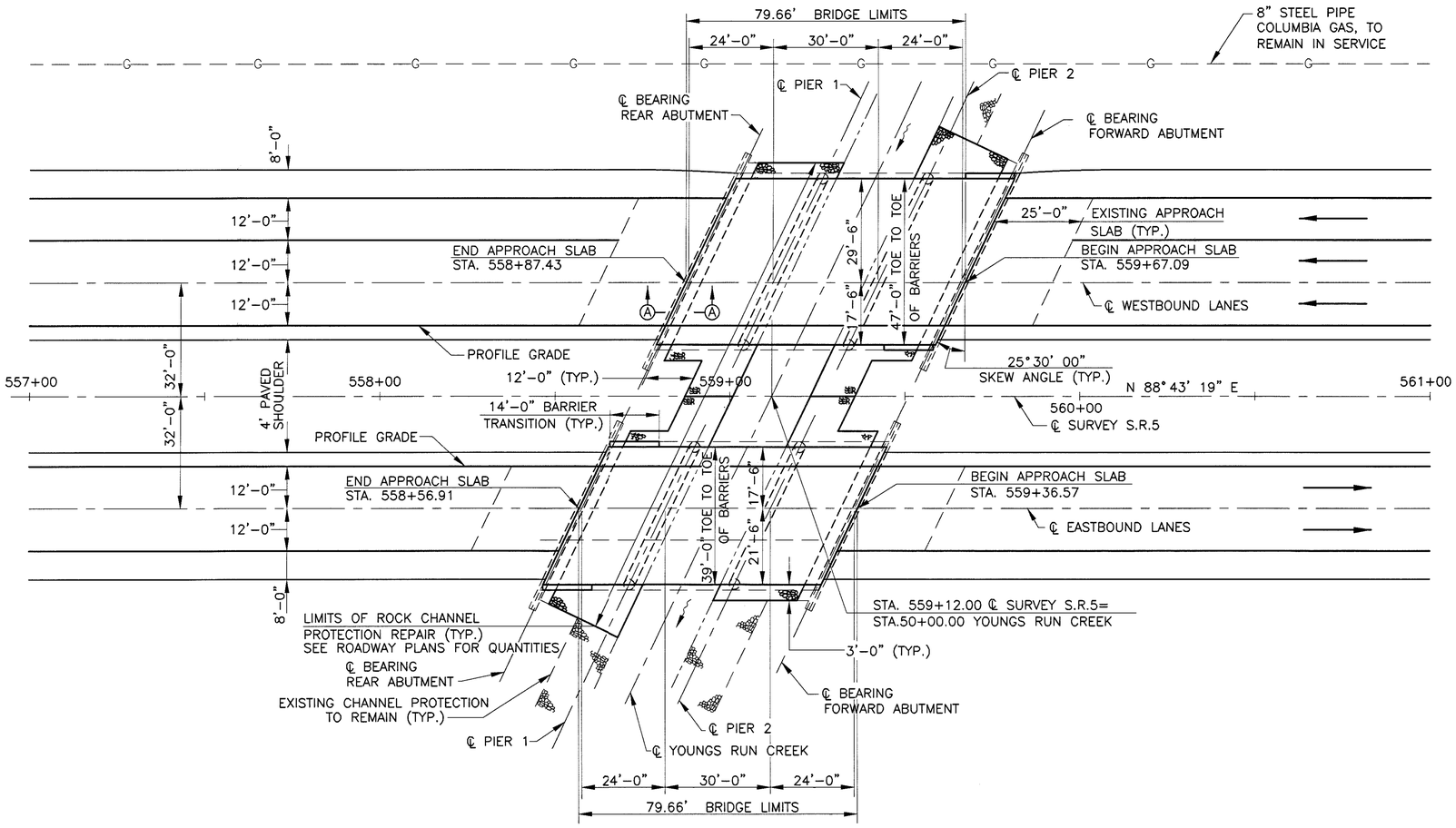


## GENERAL PLAN

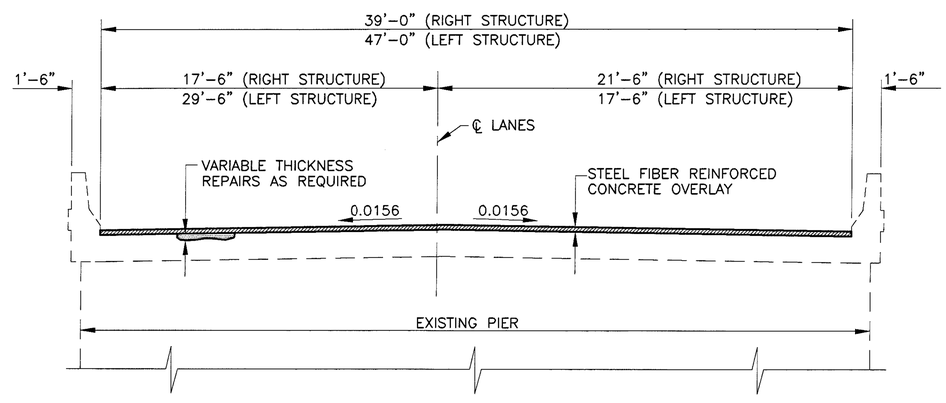


## TYPICAL TRANSVERSE SECTION

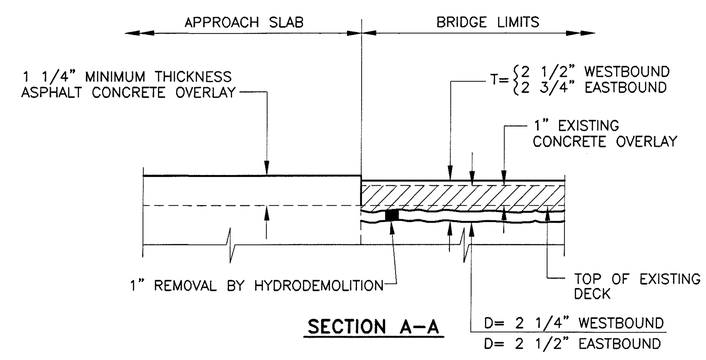


## SECTION A–A

DESIGN AGENCY
EUTHENICS INC.
CONSULTING ENGINEERS
CLEVELAND, OHIO

| DESIGNED | DRAWN | REVIEWED | DATE |
|---|---|---|---|
| KRD | RDJ | RAB | 1/01 |
| CHECKED | REVISED | STRUCTURE FILE NUMBER | |
| KJW | | 7800754 | 7800789 |

**GENERAL PLAN**
TRU–5–1102 L&R
OVER YOUNGS RUN CREEK

**TRU-5-6.45**

1/5

149/164

TR005GP1.DWG F:\JOBS\F-\JOBS\502\BR00E\14\502GP14.DWG KJW 6/22/01 PLOT 1:20

CALC. BY: NNB DATE: 12-00

## ESTIMATED QUANTITIES – WESTBOUND – TRU-5-1102 LEFT

CHK'D. BY: JAM DATE: 1-01

| ITEM | ITEM EXT. | TOTAL | UNIT | DESCRIPTION | ABUT-MENTS | PIERS | SUPER-STRUCTURE | GENERAL | AS PER PLAN SHEET NUMBERS |
|---|---|---|---|---|---|---|---|---|---|
| 202 | 11203 | LUMP | | PORTIONS OF STRUCTURE REMOVED, OVER 20 FOOT SPAN, AS PER PLAN | | | | LUMP | GN 1 |
| 509 | 20001 | 50 | LBS | REINFORCING STEEL REPLACEMENT OF EXISTING REINFORCING STEEL, AS PER PLAN | | | 50 | | GN 2 |
| 625 | 25400 | 24 | LIN.FT. | CONDUIT, 2", 713.04 | | | | 24 | |
| 625 | 31200 | 1 | EACH | PULL BOX, 713.081, 13"x18" | | | | 1 | |
| 842 | 34400 | 4 | CU.YD. | CLASS S CONCRETE, SUPERSTRUCTURE (PARAPET TRANSITION) | | | 4 | | |
| 843 | 50000 | 51 | SQ. FT. | PATCHING CONCRETE STRUCTURES WITH TROWELABLE MORTAR | 51 | | | | |
| 848 | 20000 | 416 | SQ. YD. | SURFACE PREPARATION USING HYDRODEMOLITION | | | 416 | | |
| 848 | 50000 | 42 | SQ. YD | HAND CHIPPING | | | 42 | | |
| 848 | 50100 | LUMP | | TEST SLAB, AS PER PLAN | | | LUMP | | 3/5 |
| 848 | 50320 | 416 | SQ. YD. | EXISTING CONCRETE OVERLAY REMOVED, 1 1/4" NOMINAL THICKNESS | | | 416 | | |
| 848 | 50340 | 28 | SQ. YD | REMOVAL OF DEBONDED OR DETERIORATED EXISTING VARIABLE THICKNESS CONCRETE OVERLAY | | | 28 | | |
| 848 | 90000 | 416 | SQ. YD. | OVERLAY, MISC.: STEEL FIBER REINFORCED SUPERPLASTICIZED DENSE CONCRETE OVERLAY USING HYDRODEMOLTION 2 1/2" THICK. | | | 416 | | |
| 848 | 91000 | 9 | CU. YD. | OVERLAY, MISC. : STEEL FIBER REINFORCED SUPERPLASTICIZED DENSE CONCRETE OVERLAY (VARIABLE THICKNESS), MATERIAL ONLY | | | 9 | | |
| 864 | 10100 | 564 | SQ. YD. | SEALING OF CONCRETE STRUCTURES (EPOXY-URETHANE) | 43 | 347 | 174 | | |

CALC. BY: NNB DATE: 12-00

## ESTIMATED QUANTITIES – EASTBOUND – TRU-5-1102 RIGHT

CHK'D. BY: JAM DATE: 1-01

| ITEM | ITEM EXT. | TOTAL | UNIT | DESCRIPTION | ABUT-MENTS | PIERS | SUPER-STRUCTURE | GENERAL | AS PER PLAN SHEET NUMBERS |
|---|---|---|---|---|---|---|---|---|---|
| 202 | 11203 | LUMP | | PORTIONS OF STRUCTURE REMOVED, OVER 20 FOOT SPAN, AS PER PLAN | | | | LUMP | GN 1 |
| 509 | 20001 | 75 | LBS | REINFORCING STEEL REPLACEMENT OF EXISTING REINFORCING STEEL, AS PER PLAN | 25 | | 50 | | GN 2 |
| 625 | 25400 | 24 | LIN.FT. | CONDUIT, 2", 713.04 | | | | 24 | |
| 625 | 31200 | 1 | EACH | PULL BOX, 713.081, 13"x18" | | | | 1 | |
| 842 | 34400 | 4 | CU. YD. | CLASS S CONCRETE, SUPERSTRUCTURE (PARAPET TRANSITION) | | | 4 | | |
| 842 | 45700 | 1 | CU. YD. | CLASS C CONCRETE, ABUTMENT | 1 | | | | |
| 843 | 50000 | 5 | SQ. FT. | PATCHING CONCRETE STRUCTURES WITH TROWELABLE MORTAR | 5 | | | | |
| 848 | 20000 | 345 | SQ. YD. | SURFACE PREPARATION USING HYDRODEMOLITION | | | 345 | | |
| 848 | 50000 | 35 | SQ. YD | HAND CHIPPING | | | 35 | | |
| 848 | 50100 | LUMP | | TEST SLAB, AS PER PLAN | | | LUMP | | 3/5 |
| 848 | 50320 | 345 | SQ. YD. | EXISTING CONCRETE OVERLAY REMOVED 1 1/2" NOMINAL THICKNESS | | | 345 | | |
| 848 | 50340 | 23 | SQ. YD | REMOVAL OF DEBONDED OR DETERIORATED EXISTING VARIABLE THICKNESS. CONCRETE OVERLAY | | | 23 | | |
| 848 | 90000 | 345 | SQ. YD. | OVERLAY MISC. : STEEL FIBER REINFORCED SUPERPLASTICIZED DENSE CONCRETE OVERLAY USING HYDRODEMOLTION 2 3/4" THICK | | | 345 | | |
| 848 | 91000 | 15 | CU. YD. | OVERLAY, MISC. : STEEL FIBER REINFORCED SUPERPLASTICIZED DENSE CONCRETE OVERLAY (VARIABLE THICKNESS), MATERIAL ONLY | | | 15 | | |
| 864 | 10100 | 479 | SQ. YD. | SEALING OF CONCRETE STRUCTURES (EPOXY-URETHANE) | 34 | 271 | 174 | | |

DESIGN AGENCY
EUTHENICS INC.
CONSULTING ENGINEERS
CLEVELAND, OHIO

| DESIGNED | DRAWN | REVIEWED | DATE |
|---|---|---|---|
| NNB | JAM | KRD | 1/01 |
| CHECKED | REVISED | STRUCTURE FILE NUMBER | |
| JAM | | 7800754/7800789 | |

**ESTIMATED QUANTITIES**
TRU-5-1102 L&R
OVER YOUNGS RUN CREEK

**TRU-5-6.45**



TR005E01.DWG F:\JOBS\502\BRIDGE\14\DWG\502E014.DWG KJW 6/22/01 PLOT 1:1

## ITEM 848 - OVERLAY MISC: STEEL FIBER REINFORCED SUPERPLASTICIZED DENSE CONCRETE (SFR-SDC) OVERLAY, USING HYDRODEMOLITION

## ITEM 848 - OVERLAY MISC.: STEEL FIBER REINFORCED SUPERPLASTICIZED DENSE CONCRETE (SFR-SDC)OVERLAY (VARIABLE THICKNESS), MATERIAL ONLY

### 1) DESCRIPTION

THIS ITEM SHALL BE IN ACCORDANCE WITH SUPPLEMENTAL SPECIFICATION 848 WITH THE FOLLWING MODIFICATIONS: STEEL FIBER REINFORCED SUPERPLASTICIZED DENSE CONCRETE (SFR-SDC) IS A COMPOSITE MATERIAL CONSISTING OF SUPERPLASTICIZED CONCRETE(SDC) CONTAINING A RANDOM DISPERSION OF DISCONTINUOUS DISCRETE STEEL FIBERS.

### 2) STEEL FIBER REINFORCED SUPERPLASTICIZED DENSE CONCRETE MATERIALS

THE MATERIALS SHALL CONFORM TO SUPPLEMENTAL SPECIFICATION NUMBER 848.06 FOR THE SUPERPLASTICIZED DENSE CONCRETE AND SUPPLEMENTAL SPECIFICATION NUMBER 852.02 FOR THE STEEL FIBER INCLUSIONS THE STEEL FIBERS SHALL BE IN CONFORMANCE TO ASTM C1116 AND BE ASTM A 820 MATERIAL WITH A MINIMUM ULTIMATE TENSILE STRENGTH OF 120,000 PSI (827 MPA). THE LENGTH SHALL BE 2-INCHES (50 MM) +/- 5 PERCENT. THE AVERAGE EQUIVALENT DIAMETER SHALL BE 0.899 MM WITH AN ASPECT RATIO OF 57 +/- 15 PERCENT. THE MATERIAL SHALL BE CONTINUOUSLY DEFORMED CIRCULAR SEGMENT WITH EITHER A ROUND OR CRESCENT SHAPED CROSS SECTION, CLEAN AND FREE OF RUST, OIL AND DELETERIOUS MATERIALS AND CORRUGATED FULL LENGTH OR CRIMPED AT EACH END FOR INCREASED MECHANICAL ANCHORAGE. STRAIGHT STEEL FIBERS WILL NOT BE PERMITTED FOR USE.

### 3) PROPORTIONING AND MIXING OF STEEL FIBER REINFORCED SUPERPLASTICIZED DENSE CONCRETE

THE SFR-SDC MIX SHALL BE PROPORTIONED AND MIXED IN ACCORDANCE WITH SUPPLEMENTAL SPECIFICATION NUMBER 899 AND 848.14, EXCEPT AS MODIFIED HEREIN. THE STEEL FIBER DOSAGE RATE SHALL BE 75 POUNDS PER CUBIC YARD OF SFR-SDC. IF ENCOUNTERED, ALL STEEL FIBER CLUMPS (OR BALLS) SHALL NOT BE USED IN THE NEW BRIDGE DECK OVERLAY. THE STEEL FIBERS SHALL BE BATCHED INTO EACH LOAD OF CONCRETE SUCH THAT THEY ARE UNIFORMLY DISTRIBUTED THROUGHOUT THE LOAD.

### 4) PLACING, CONSOLIDATING AND FINISHING

THIS WORK SHALL CONFORM TO SUPPLEMENTAL SPECIFICATION NUMBER 848.26, EXCEPT AS MODIFIED HEREIN. AFTER THE SFR-SDC OVERLAY HAS BEEN CONSILIDATED AND FINISHED FROM THE SMOOTH PAN DRAG THAT EXTENDS BEYOND THE FINISHING MACHINE'S ROLLERS A BROOM FINISH AS PER 842.16 WILL BE REQUIRED. NO TINNING OPERATION TO INDUCE TRANSVERSE STRIATIONS ON THE FRESH SFR-SDC SURFACE WILL BE PERMITTED. THE SFR-SDC SURFACE SHALL BE TEXTURED BY SAWING TRANSVERSE GROOVES INTO THE HARDENED OVERLAY AFTER IT HAS COMPLETELY CURED.

### 5) BRIDGE DECK GROOVING

AFTER THE SFR-SDC OVERLAY HAS CURED, TRANSVERSE GROOVES SHALL BE SAWED INTO THE SURFACE. THE GROOVING SHALL CONFORM TO THE REQUIREMENTS SET FORTH IN SUPPLEMENTAL SPECIFICAT!ON NUMBER 842.161.

### 6) TEST SLAB

THE TEST SLAB FOR SFR-SDC SHALL BE THE SAME AS SUPPLEMENTAL SPECIFICATION NUMBER 848.15, EXCEPT THE THICKNESS OF THE SLAB SHALL BE THE SAME AS THE PLAN OVERLAY THICKNESS AND NO TEXTURING IS REQUIRED.

### 7) METHOD OF MEASUREMENT

SAME AS SUPPLEMENTAL SPECIFICATION NUMBER 848.32, EXCEPT THAT THE COSTS ASSOCIATED WITH GROOVING THE SFR-SDC OVERLAY SURFACE ARE CONSIDERED TO BE INCIDENTAL AND INCLUDED IN THE UPPER PART OF THE UNIFORM THICKNESS BID ITEM.

### 8) BASIS OF PAYMENT

PAYMENT FOR THE ABOVE MENTIONED WORK SHALL BE THE COMPLETED AND ACCEPTED QUANTITIES AT THE CONTRACT PRICE BID FOR:

ITEM 848 - OVERLAY MISC.: STEEL FIBER REINFORCED SUPERPLASTICIZED DENSE CONCRETE (SFR-SDC) OVERLAY, USING HYDRODEMOLITION.

ITEM 848 - OVERLAY MISC.: STEEL FIBER REINFORCED SUPERPLASTICIZED DENSE CONCRETE (SFR-SDC) OVERLAY (VARIABLE THICKNESS), MATERIAL ONLY.

STEEL FIBER REINFORCED SUPERPLASTICIZED DENSE CONCRETE, AS WELL AS THE OTHER INCIDENTAL ASSOCIATED COSTS, FOR THE TEST SLAB(S) REQUIRED UNDER SUPPLEMENTAL SPECIFICATION NUMBER 848.15 SHALL BE PAID FOR ON A LUMP SUM BASIS FOR ITEM 848 - TEST SLAB, AS PER PLAN.

ALL OTHER 848 ITEMS SHALL BE AS SHOWN IN THE PLANS AND AS INDICATED IN 848.32 AND 848.33

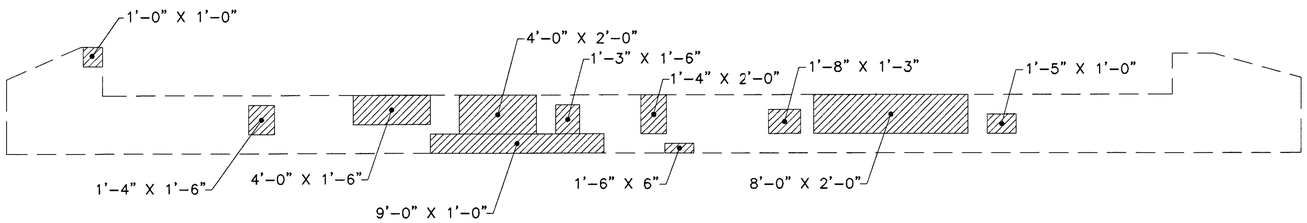


WESTBOUND REAR

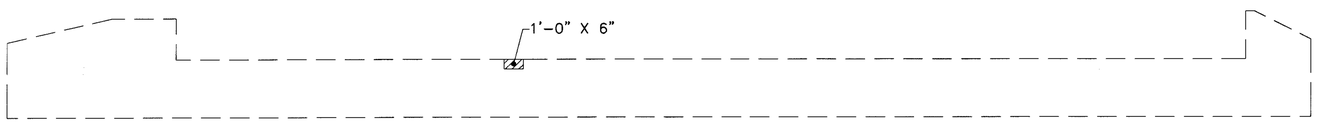


WESTBOUND FORWARD

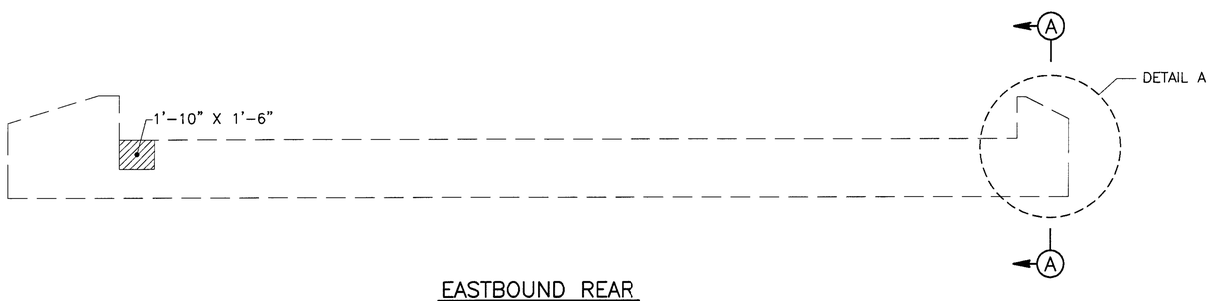


EASTBOUND REAR

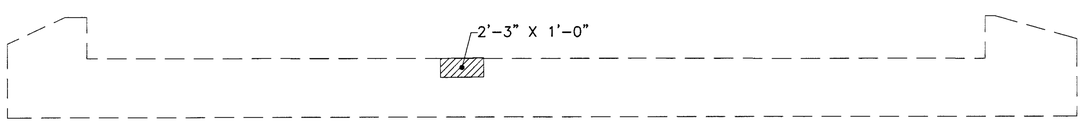


EASTBOUND FORWARD

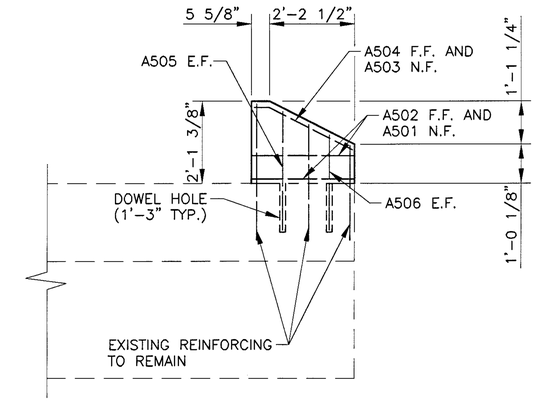


DETAIL A

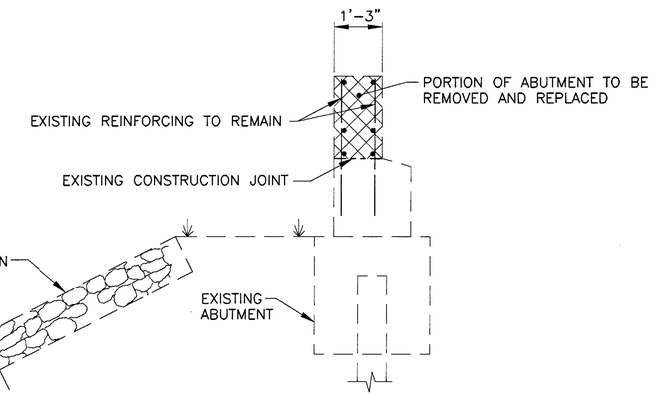


SECTION A–A

| MARK | NUMBER | | | LENGTH | TYPE | WEIGHT | DIMENSIONS | | | | | | SER. INCR. |
|---|---|---|---|---|---|---|---|---|---|---|---|---|---|
| | REAR | FWD | TOTAL | | | (LBS.) | A | B | C | D | E | | |
| EASTBOUND ABUTMENTS AND WINGWALLS | | | | | | | | | | | | | |
| A501 | 2 | 0 | 2 | 2'-4" | STR | 5 | | | | | | | |
| A502 | 2 | 0 | 2 | 2'-11" | STR | 6 | | | | | | | |
| A503 | 1 | 0 | 1 | 2'-6" | 9 | 3 | 3" | 2'-3" | 11" | | | | |
| A504 | 1 | 0 | 1 | 3'-1" | 9 | 3 | 10" | 2'-3" | 11" | | | | |
| A505 | 2 | 0 | 2 | 3'-1" | STR | 6 | | | | | | | |
| A506 | 2 | 0 | 2 | 2'-5" | STR | 5 | | | | | | | |
| | | | | | | | | | | | | | |
| | | | | | TOTAL | 28 | lbs. | | | | | | |

## LEGEND

ITEM 843 – PATCHING CONCRETE STRUCTURES WITH TROWELABLE MORTAR, NEAR FACE

ITEM 202– PORTIONS OF STRUCTURE REMOVED, OVER 20 FOOT SPAN, AS PER PLAN

## BENDING DIAGRAMS

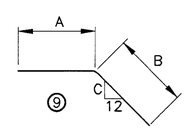


## NOTES

1. PAYMENT FOR REMOVAL OF ABUTMENT CONCRETE INCLUDED WITH ITEM 202 – PORTIONS OF STRUCTURE REMOVED, OVER 20 FOOT SPAN, AS PER PLAN
2. REINFORCING STEEL WEIGHTS GIVEN FOR INFORMATION ONLY. ALL REINFORCING STEEL BAR MARKS SHALL BE PREFIXED A (ABUTMENT). ALL REINFORCING STEEL SHALL BE EPOXY COATED.
3. THE FOLLOWING ABBREVIATIONS ARE USED:
   E.F. = EACH FACE
   N.F. = NEAR FACE
   F.F. = FAR FACE

DESIGN AGENCY
EUTHENICS INC.
CONSULTING ENGINEERS
CLEVELAND, OHIO

| DESIGNED | DRAWN | REVIEWED | DATE |
|---|---|---|---|
| KRD | JAM | RAB | 1/01 |
| CHECKED | REVISED | STRUCTURE FILE NUMBER | |
| KJW | | 7800754/7800789 | |

**ABUTMENT PATCHING PLAN AND DETAILS**

BRIDGE NO. TRU-5-1102 L&R
OVER YOUNGS RUN CREEK

**TRU-5-6.45**



TR0528A1.DWG F:\JOBS\502\BRIDGE\14\DWG\502PCH14.DWG KJW 6/22/01 PLOT 1:4

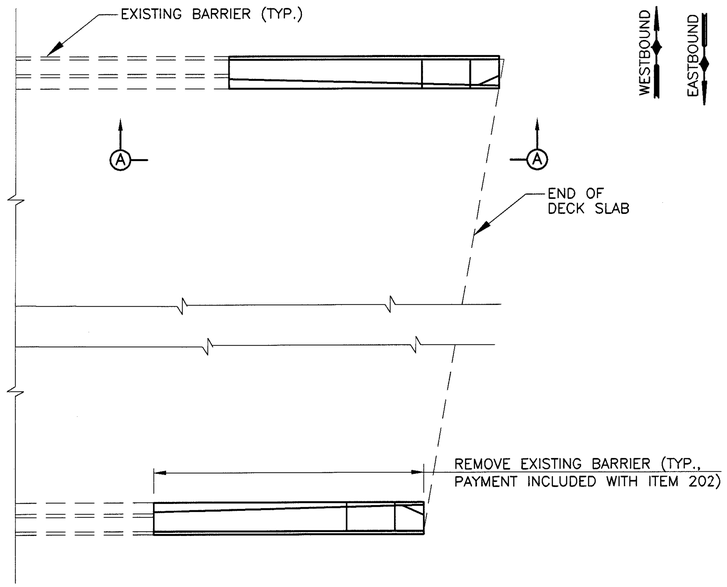


PLAN–BARRIER TRANSITION

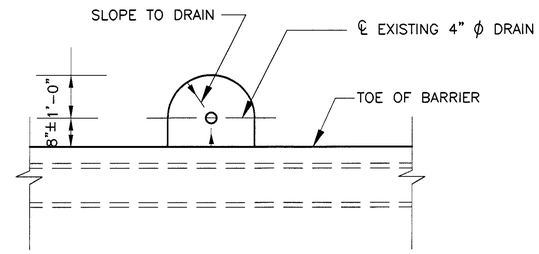


OVERLAY DETAIL AT DRAINS

| MARK | NUMBER E.B. REAR | NUMBER W.B. FWD | NUMBER TOTAL | LENGTH | TYPE | WEIGHT (LBS.) | DIMENSIONS A | B | C | D | E | | SER. INCR. |
|---|---|---|---|---|---|---|---|---|---|---|---|---|---|
| CONCRETE BARRIER | | | | | | | | | | | | | |
| S501 | 8 | 8 | 16 | 10'–0" | STR | 167 | | | | | | | |
| S502 | 4 | 4 | 8 | 5'–8" | 1 | 47 | 1'–10" | 2'–5" | 1'–5" | 1 1/2" | 5" | | |
| S503 | 8 | 8 | 16 | 13'–8" | STR | 228 | | | | | | | |
| S504 | 22 | 22 | 44 | 3'–0" | 3 | 138 | 2'–5" | | | | | | |
| S505 | 4 | 4 | 8 | 5'–8" | STR | 47 | | | | | | | |
| | | | | | | | | | | | | | |
| S601 | 22 | 22 | 44 | 2'–6" | 4 | 165 | 1'–1" | 8 1/2" | 6" | 8" | | | |
| S602 | 2 | 2 | 4 | 3'–5" | STR | 237 | | | | | | | |
| | SER | SER | SER | TO | | | | | | | | | 3/8" |
| | 11 | 11 | 11 | 3'–9" | | | | | | | | | |
| S603 | 16 | 16 | 32 | 3'–5" | STR | 164 | | | | | | | |
| | | | | | | | | | | | | | |

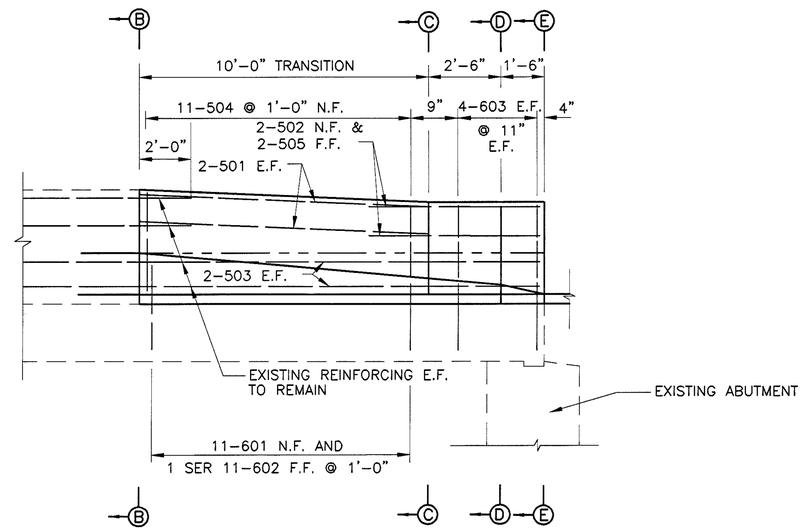


ELEVATION A–A

BENDING DIAGRAMS

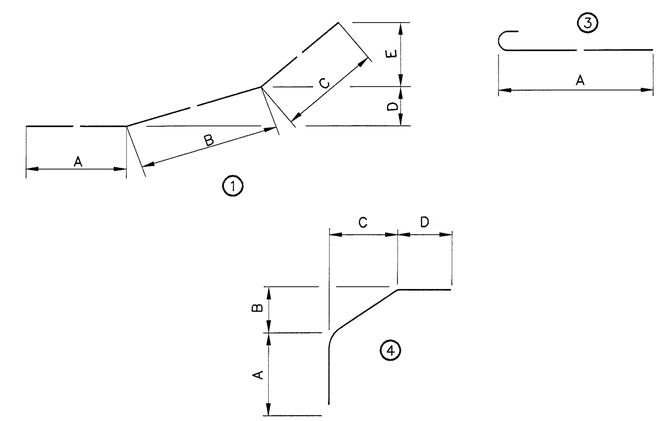


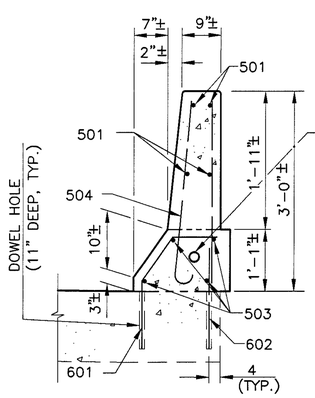


SECTION B–B
(MATCH EXISTING BARRIER)

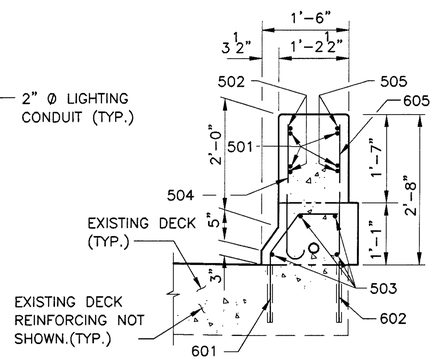


SECTION C–C

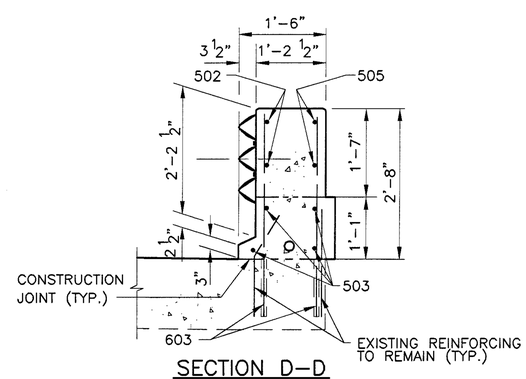


SECTION D–D

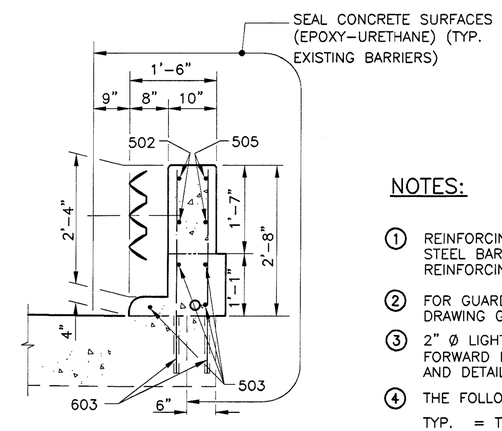


SECTION E–E

NOTES:

1. REINFORCING STEEL WEIGHTS GIVEN FOR INFORMATION ONLY. ALL REINFORCING STEEL BAR MARKS SHALL BE PREFIXED S (SUPERSTRUCTURE). ALL REINFORCING STEEL SHALL BE EPOXY COATED.
2. FOR GUARDRAIL CONNECTION DETAIL TO PARAPET SEE OHIO STANDARD DRAWING GR–3.1M.
3. 2" Ø LIGHTING CONDUIT IN EASTBOUND RIGHT REAR AND WESTBOUND LEFT FORWARD BARRIERS, ONLY. FOR ADDITIONAL LIGHTING AND CONDUIT NOTES AND DETAILS SEE OHIO STANDARD DRAWING HL–30.31M.
4. THE FOLLOWING ABBREVIATIONS ARE USED:

TYP. = TYPICAL
E.F. = EACH FACE
N.F. = NEAR FACE
F.F. = FAR FACE
E.B. =EASTBOUND
W.B. =WESTBOUND

DESIGN AGENCY
EUTHENICS INC.
CONSULTING ENGINEERS
CLEVELAND, OHIO

| DESIGNED | DRAWN | REVIEWED | DATE |
|---|---|---|---|
| KRD | KJW | RAB | 1/01 |
| CHECKED | REVISED | STRUCTURE FILE NUMBER | |
| KJW | | 7800754/7800789 | |

**BARRIER TRANSITION**
TRU–5–1102 L&R
OVER YOUNGS RUN CREEK

**TRU-5-6.45**

5/5

153/164

TR005M01.DWG F:\JOBS\502\BRIDGE\14\DWG\502B114.DWG KJW 6/22/01 PLOT 1:1

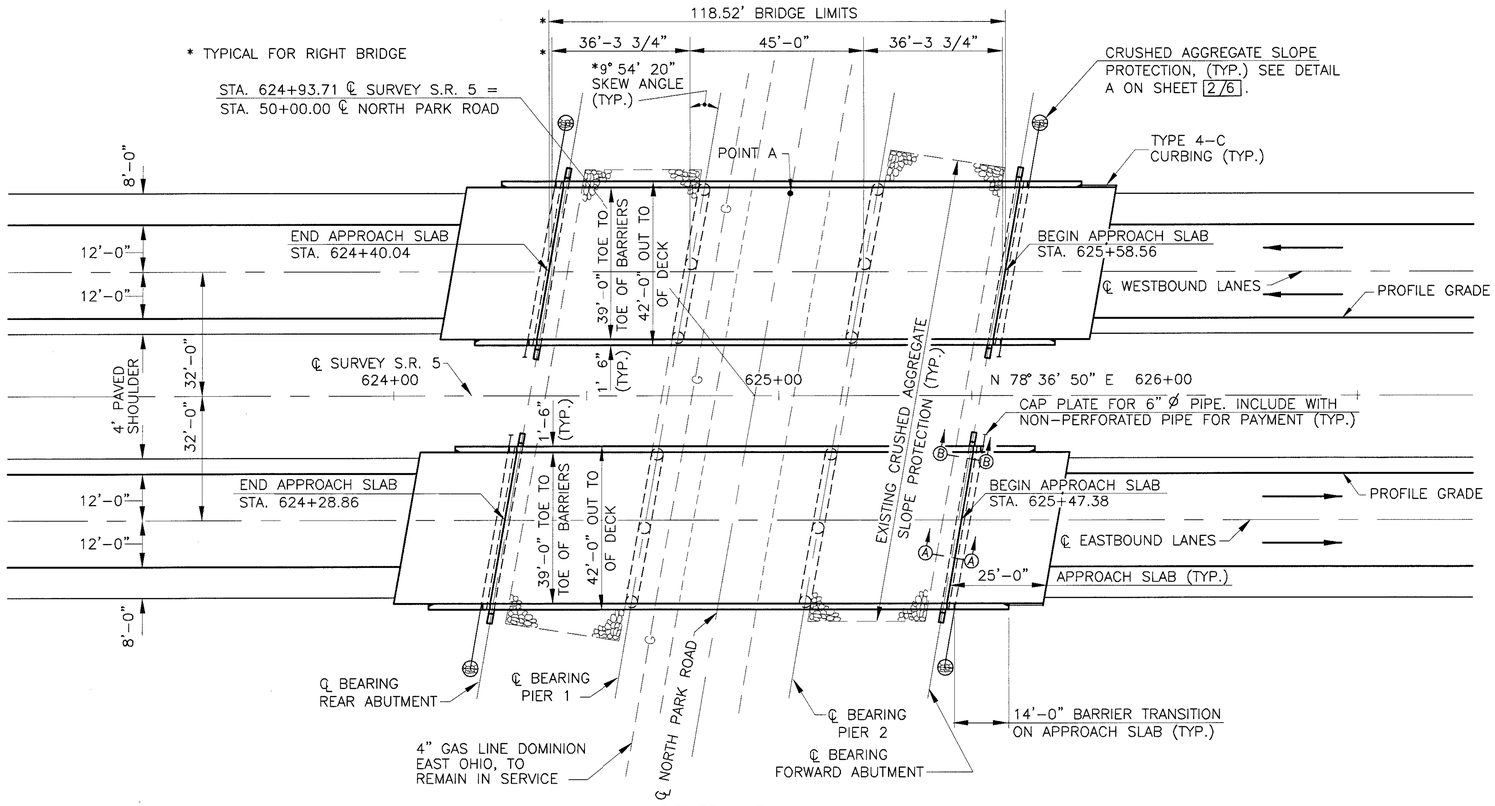


## GENERAL PLAN

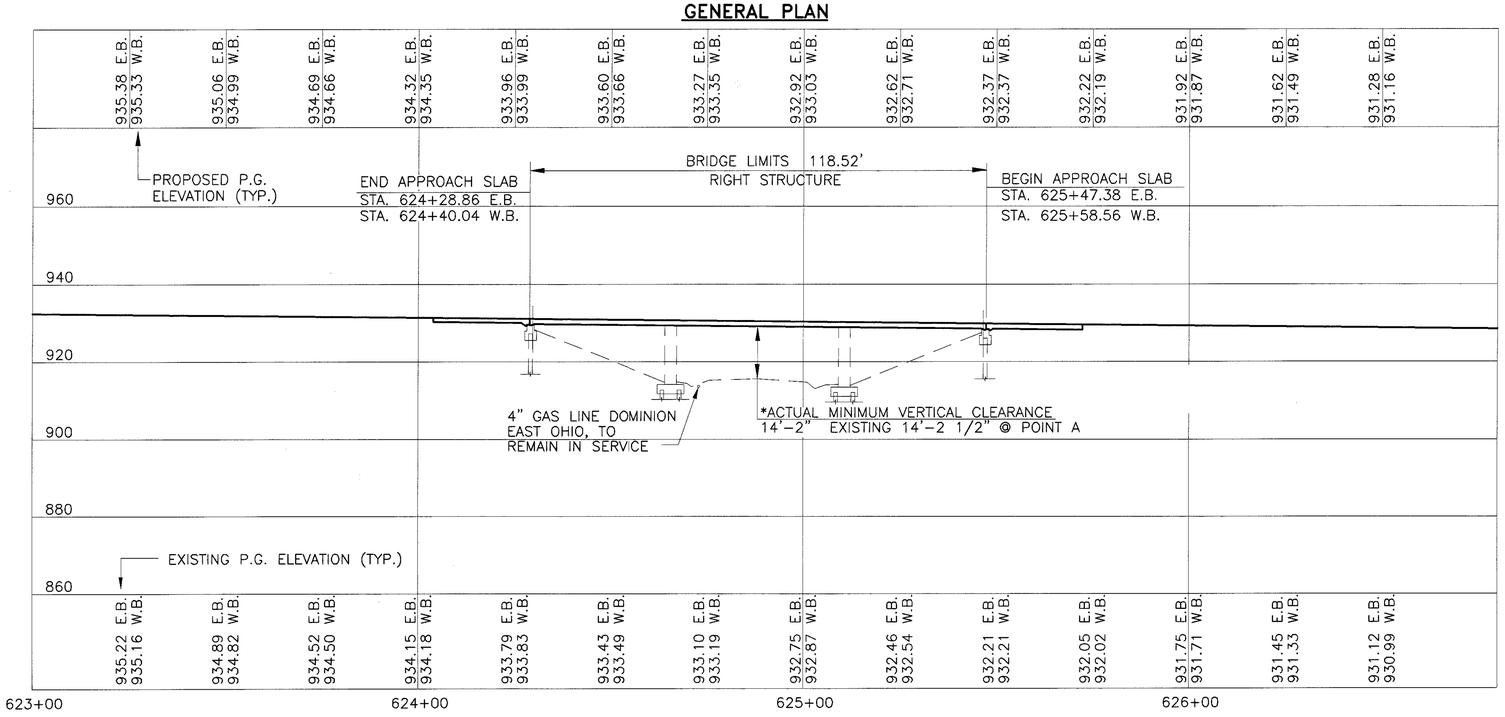


## SECTION ON CENTERLINE EASTBOUND LANES

## TEMPORARY BENCH MARKS

**BENCH MARK NO. 1**
IRON PIN FOUND IN MEDIAN
STA. 614+39.93
ELEV. 943.14

**BENCH MARK NO. 2**
IRON PIN FOUND IN MEDIAN
STA. 626+42.73
ELEV. 930.71

## EXISTING STRUCTURE

| | |
|---|---|
| TYPE: | CONTINUOUS SLAB BRIDGE WITH REINFORCED CONCRETE DECK AND SUBSTRUCTURE |
| SPANS: | 36'-0"±, 45'-0"±, 36'-0"± C/C OF ASSUMED REACTION |
| ROADWAY: | 39'-0" TOE TO TOE OF BARRIERS |
| LOAD FREQUENCY: | CF = 2000 |
| SKEW: | 9°-54'-20" LEFT FORWARD |
| WEARING SURFACE: | 1" MONOLITHIC CONCRETE |
| APPROACH SLABS: | 25'-0" LONG |
| ALIGNMENT: | TANGENT |
| CROWN: | 0.0156 FT./FT. |
| DATE BUILT: | 1970 |
| STRUCTURE FILE NO: | 7800878 LEFT, 7800908 RIGHT |

## PROPOSED STRUCTURE

| | |
|---|---|
| PROPOSED WORK: | REPLACE REINFORCED CONCRETE DECK, PATCH SUBSTRUCTURE UNITS AND SEAL CONCRETE SURFACES |
| TYPE: | CONTINUOUS SLAB BRIDGE WITH REINFORCED CONCRETE DECK AND SUBSTRUCTURE |
| SPANS: | 36'-3 3/4"±, 45'-0"±, 36'-3 3/4"± C/C OF SLAB BEARINGS |
| ROADWAY: | 39'-0" TOE TO TOE OF BARRIERS |
| LOADING: | HS25 AND THE ALTERNATE MILITARY LOADING |
| SKEW: | 9°-54'-20" LEFT FORWARD |
| WEARING SURFACE: | 1" MONOLITHIC CONCRETE |
| APPROACH SLABS: | AS-1-81 (25'-0") |
| ALIGNMENT: | TANGENT |
| CROWN: | 0.0156 FT./FT. |
| LATITUDE: | N 41°-16'-36" |
| LONGITUDE: | W 80°-48'-01" |

**NOTES:**

(1) FOR SECTION A-A AND B-B SEE SHEET 2/6.

* REQUIRED MINIMUM VERTICAL CLEARANCE IS 14'-6". ACTUAL MINIMUM VERTICAL CLEARANCE AT POINT A OCCURS AT THE INTERSECTION OF THE OUTSIDE EDGE OF THE LEFT EXTERIOR BEAM OF WESTBOUND S.R. 5 AND THE CENTERLINE OF NORTH PARK ROAD.

DESIGN AGENCY
EUTHENICS INC.
CONSULTING ENGINEERS
CLEVELAND, OHIO

| DESIGNED | DRAWN | REVIEWED | DATE |
|---|---|---|---|
| GFH | KJW | RAB | 12/00 |
| CHECKED | REVISED | STRUCTURE FILE NUMBER | |
| KRD | | 7800878L/7800908R | |

**GENERAL PLAN**
TRU-5-1226 L&R
OVER NORTH PARK ROAD

**TRU-5-6.45**

1/6

154/164

TR0056P1.DWG F:\JOBS\F:\JOBS\502\BRIDGE\15\DWG\5020P15.DWG KJW 2/27/01 PLOT 1:20

CALC. BY: KJW DATE: 12-11-00 **ESTIMATED QUANTITIES – WESTBOUND – TRU-5-1226 LEFT** CHK'D. BY: KRD DATE: 12-11-00

| ITEM | ITEM EXT. | TOTAL | UNIT | DESCRIPTION | ABUT-MENTS | PIERS | SUPER-STRUCTURE | GENERAL | AS PER PLAN SHEET NUMBERS |
|---|---|---|---|---|---|---|---|---|---|
| 202 | 11203 | LUMP | LUMP | PORTIONS OF STRUCTURE REMOVED, OVER 20 FOOT SPAN, AS PER PLAN | | | | LUMP | GN 1 |
| 509 | 20001 | 200 | LBS. | REINFORCING STEEL, REPLACEMENT OF EXISTING REINFORCING STEEL, | | 200 | | | GN 2 |
| | | | | AS PER PLAN | | | | | |
| | | | | | | | | | |
| 518 | 21201 | 47 | CU. YD. | POROUS BACKFILL WITH FILTER FABRIC, AS PER PLAN | 47 | | | | GN 2 |
| 518 | 40000 | 99 | LIN. FT. | 6" PERFORATED CORRUGATED PLASTIC PIPE, 707.33 | 99 | | | | |
| 518 | 40010 | 23 | LIN. FT. | 6" NON-PERFORATED CORRUGATED PLASTIC PIPE, INCLUDING SPECIALS, | 23 | | | | |
| | | | | 707.33 | | | | | |
| 601 | 20001 | 30 | SQ. YD. | CRUSHED AGGREGATE SLOPE PROTECTION, AS PER PLAN | | | | 30 | GN 3 |
| | | | | | | | | | |
| 843 | 50000 | 7 | SQ. FT. | PATCHING CONCRETE STRUCTURE WITH TROWELABLE MORTAR | 7 | | | | |
| | | | | | | | | | |
| 864 | 10100 | 503 | SQ. YD. | SEALING OF CONCRETE SURFACES (EPOXY-URETHANE) | 31 | 175 | 297 | | |
| 893 | 10000 | 372 | CU. YD. | CLASS S CONCRETE FOR BRIDGE DECK WITH WARRANTY | | | 372 | | |

CALC. BY: KJW DATE: 12-11-00 **ESTIMATED QUANTITIES – EASTBOUND – TRU-5-1226 RIGHT** CHK'D. BY: KRD DATE: 12-11-00

| ITEM | ITEM EXT. | TOTAL | UNIT | DESCRIPTION | ABUT-MENTS | PIERS | SUPER-STRUCTURE | GENERAL | AS PER PLAN SHEET NUMBERS |
|---|---|---|---|---|---|---|---|---|---|
| 202 | 11203 | LUMP | LUMP | PORTIONS OF STRUCTURE REMOVED, OVER 20 FOOT SPAN, AS PER PLAN | | | | LUMP | GN 1 |
| 509 | 20001 | 200 | LBS. | REINFORCING STEEL, REPLACEMENT OF EXISTING REINFORCING STEEL, | | 200 | | | GN 2 |
| | | | | AS PER PLAN | | | | | |
| | | | | | | | | | |
| 518 | 21201 | 47 | CU. YD. | POROUS BACKFILL WITH FILTER FABRIC, AS PER PLAN | 47 | | | | GN 2 |
| 518 | 40000 | 99 | LIN. FT. | 6" PERFORATED CORRUGATED PLASTIC PIPE, 707.33 | 99 | | | | |
| 518 | 40010 | 23 | LIN. FT. | 6" NON-PERFORATED CORRUGATED PLASTIC PIPE, INCLUDING SPECIALS, | 23 | | | | |
| | | | | 707.33 | | | | | |
| 601 | 20001 | 30 | SQ. YD. | CRUSHED AGGREGATE SLOPE PROTECTION, AS PER PLAN | | | | 30 | GN 3 |
| | | | | | | | | | |
| 864 | 10100 | 503 | SQ. YD. | SEALING OF CONCRETE SURFACES (EPOXY-URETHANE) | 31 | 175 | 297 | | |
| 893 | 10000 | 372 | CU. YD. | CLASS S CONCRETE FOR NEW BRIDGE DECK WITH WARRANTY | | | 372 | | |

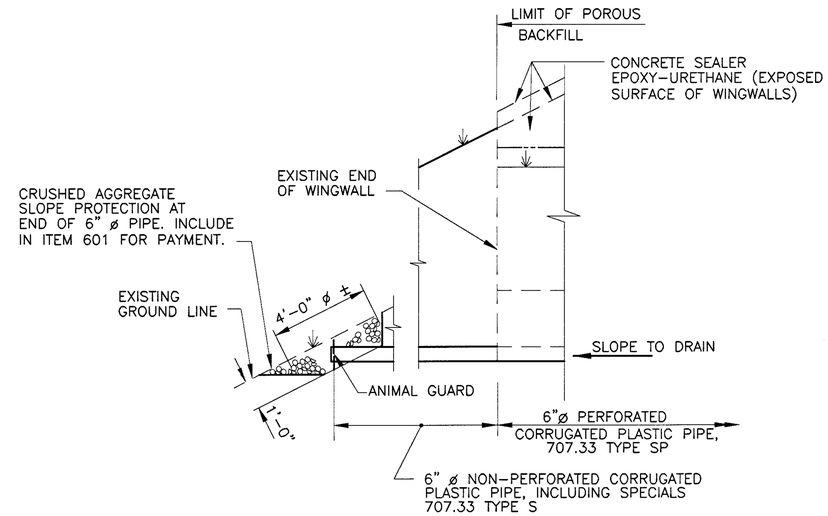


**DETAIL A**

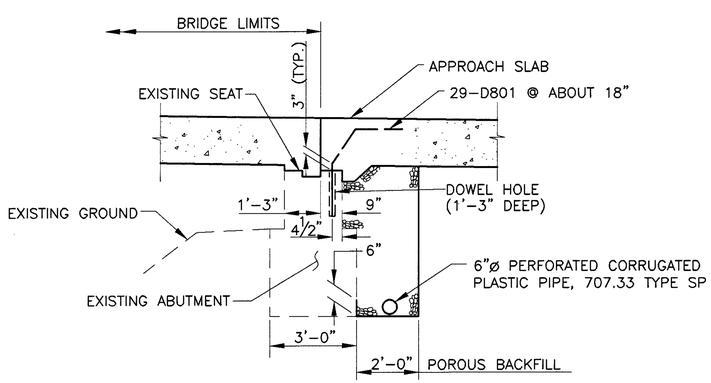


**SECTION A–A**

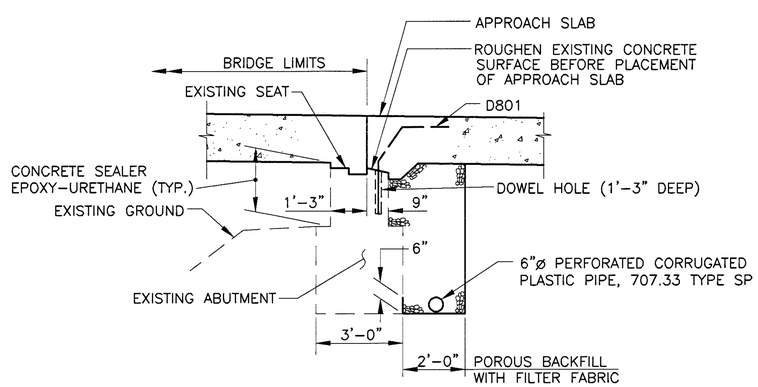


**SECTION B–B**

NOTES:

1. POROUS BACKFILL WITH FILTER FABRIC, 2 FEET THICK SHALL EXTEND UP TO THE PLANE OF THE SUBGRADE, TO 1 FOOT BELOW THE EMBANKMENT SURFACE, AND LATERALLY TO THE ENDS OF THE WINGWALLS.

DESIGN AGENCY
EUTHENICS INC.
CONSULTING ENGINEERS
CLEVELAND, OHIO

| DESIGNED | DRAWN | REVIEWED | DATE |
|---|---|---|---|
| KJW | KJW | RAB | 12/00 |
| CHECKED | REVISED | STRUCTURE FILE NUMBER | |
| KRD | | 7800878L/7800908R | |

**ESTIMATED QUANTITIES AND ABUTMENT DETAILS**

TRU-5-1226 L&R
OVER NORTH PARK ROAD

**TRU-5-6.45**



TRD5D501.DWG F:\JOBS\F:\JOBS\502\BRIDGE\125\DWG\502C015.DWG KJW 6/22/01 PLOT 1:8

WESTBOUND REAR ABUTMENT

WESTBOUND FORWARD ABUTMENT

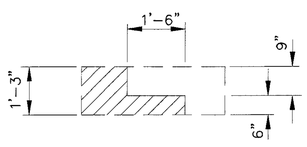


SECTION A-A

## LEGEND

ITEM 843- PATCHING CONCRETE STRUCTURES WITH TROWELABLE MORTAR, NEAR FACE

PATCHING CONCRETE STRUCTURE WITH TROWELABLE MORTAR, FAR FACE

NOTE:

1. NO PATCHING AREAS ON EASTBOUND ABUTMENTS
2. NO PATCHING AREAS ON EASTBOUND OR WESTBOUND PIERS

DESIGN AGENCY
EUTHENICS INC.
CONSULTING ENGINEERS
CLEVELAND, OHIO

| DESIGNED | DRAWN | REVIEWED | DATE |
|---|---|---|---|
| KJW | MW | RAB | 12/00 |
| CHECKED | REVISED | STRUCTURE FILE NUMBER | |
| KRD | | 7300878L/7300908R | |

**PATCHING PLAN**
TRU-5-1226 L&R
OVER NORTH PARK ROAD

**TRU-5-6.45**



TR0258A1.DWG F:\JOBS\F\JOBS\502\BRIDGE\15\DWG\502pch15.DWG KJW 11/16/00 PLOT 1:4

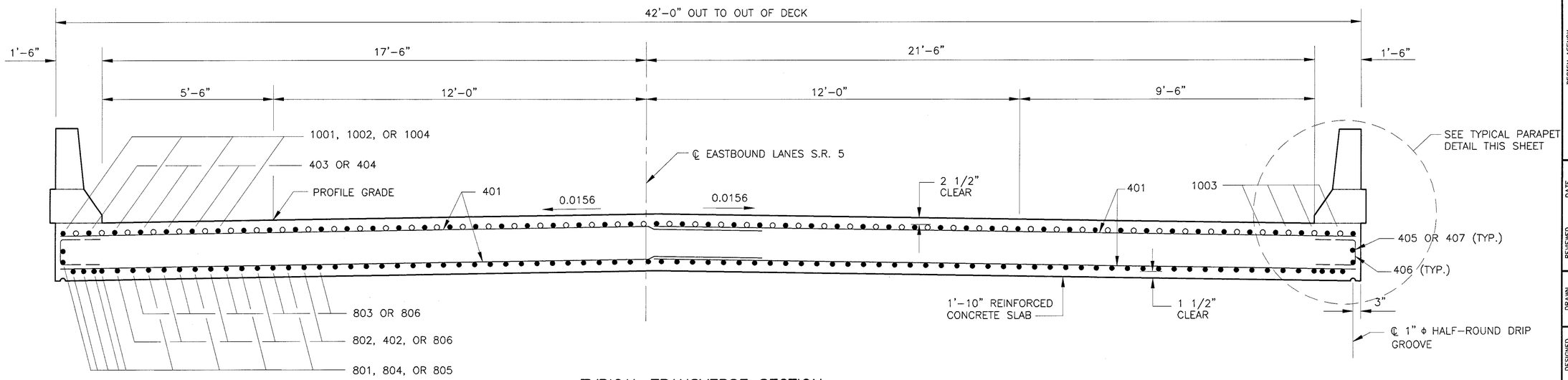


## TYPICAL TRANSVERSE SECTION

(EASTBOUND SHOWN, WESTBOUND, OPPOSITE HAND)

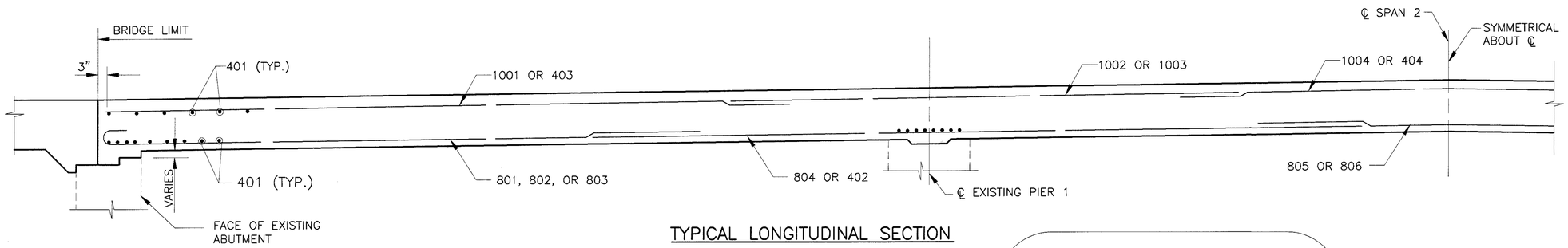


## TYPICAL LONGITUDINAL SECTION

| DECK SCREED ELEVATIONS | | | | | | | |
|---|---|---|---|---|---|---|---|
| | REAR ABUTMENT ℄ SLAB BEARING | ℄ SPAN 1 | ℄ PIER 1 | ℄ SPAN 2 | ℄ PIER 2 | ℄ SPAN 3 | FORWARD ABUTMENT ℄ SLAB BEARING |
| EASTBOUND | | | | | | | |
| LEFT TOE OF BARRIER | 933.76 | 933.54 | 933.27 | 933.02 | 932.67 | 932.51 | 932.29 |
| ℄ LANES | 934.08 | 933.87 | 933.58 | 933.34 | 932.98 | 932.82 | 932.59 |
| RIGHT TOE OF BARRIER | 933.80 | 933.58 | 933.30 | 933.05 | 932.69 | 932.52 | 932.30 |
| | | | | | | | |
| WESTBOUND | | | | | | | |
| LEFT TOE OF BARRIER | 933.58 | 933.40 | 933.14 | 932.91 | 932.56 | 932.36 | 932.11 |
| ℄ LANES | 933.96 | 933.78 | 933.52 | 933.30 | 932.93 | 932.75 | 932.46 |
| RIGHT TOE OF BARRIER | 933.73 | 933.54 | 933.28 | 933.06 | 932.70 | 932.51 | 932.22 |

NOTE:

THE TOP OF CONCRETE DECK ELEVATIONS ABOVE ARE THOSE WHICH ARE REQUIRED BEFORE CONCRETE IS PLACED. PROPER ALLOWANCES HAVE BEEN MADE FOR DEAD LOAD DEFLECTIONS CAUSED BY THE WEIGHT OF THE CONCRETE. ADDITIONAL ALLOWANCE SHALL BE MADE FOR THE DEFLECTION OF ANY FALSEWORK MEMBERS SUPPORTING THE ACTUAL CONCRETE DURING PLACEMENT.

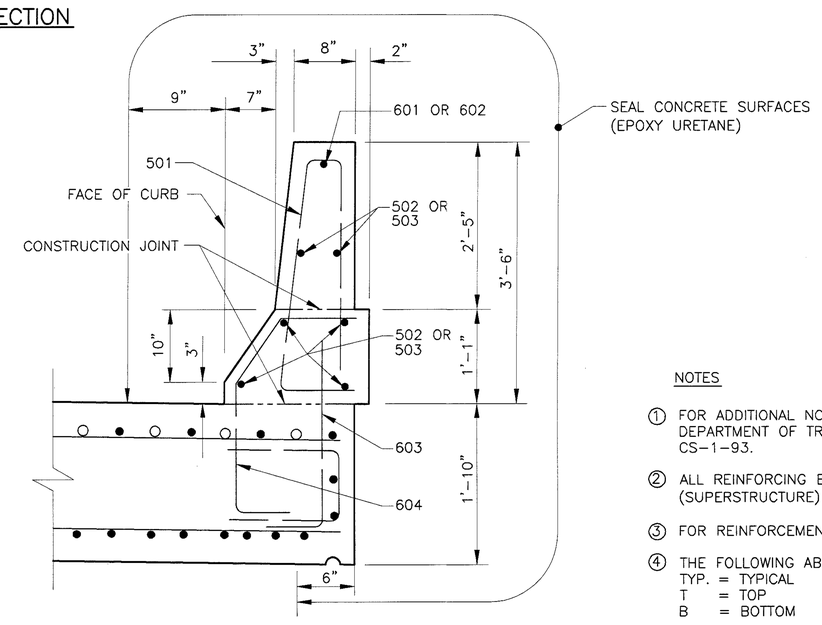


## TYPICAL PARAPET DETAIL

NOTES

1. FOR ADDITIONAL NOTES AND DETAILS SEE OHIO DEPARTMENT OF TRANSPORTATION STANDARD DRAWING CS-1-93.
2. ALL REINFORCING BARS SHALL BE PREFIXED S (SUPERSTRUCTURE)
3. FOR REINFORCEMENT SCHEDULE SEE SHEET 6/6.
4. THE FOLLOWING ABBREVIATIONS ARE USED:
   TYP. = TYPICAL
   T = TOP
   B = BOTTOM
5. FOR SLAB PLAN SEE SHEET 5/6.

DESIGN AGENCY
EUTHENICS INC
CONSULTING ENGINEERS
CLEVELAND, OHIO

| DESIGNED | DRAWN | REVIEWED | DATE |
|---|---|---|---|
| KJW | KJW | RAB | 12/00 |
| CHECKED | REVISED | STRUCTURE FILE NUMBER | |
| KRD | | 7800878L/7800908R | |

**TRANSVERSE SECTION**
TRU-5-1226 L&R
OVER NORTH PARK ROAD

**TRU-5-6.45**



TR0051L.DWG F:\JOBS\7\JOBS\5&2BRIDGE\5\DWG\5&2TS15.DWG KJV 2/27/01 PLOT 1:8

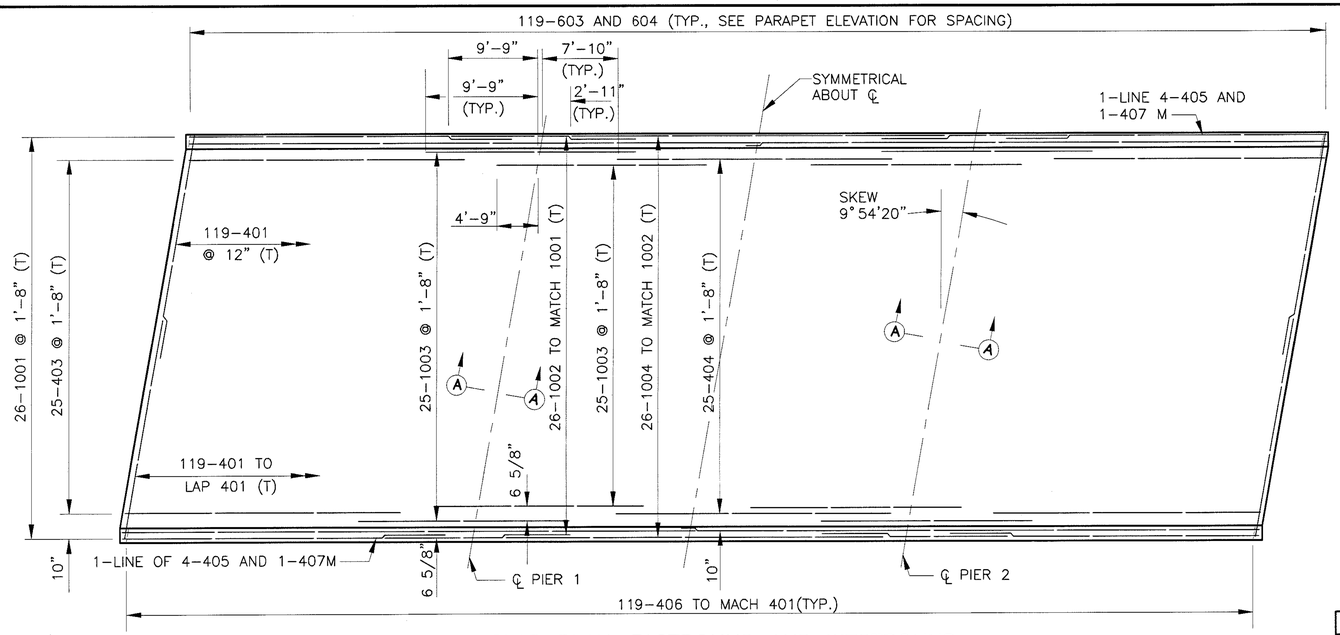


## SLAB PLAN-EASTBOUND AND WESTBOUND

TOP SLAB REINFORCEMENT

| MINIMUM LAP LENGTHS | |
|---|---|
| #4 BAR = | 2'-3" |
| #5 BAR = | 2'-0" |
| #6 BAR = | 2'-4" |

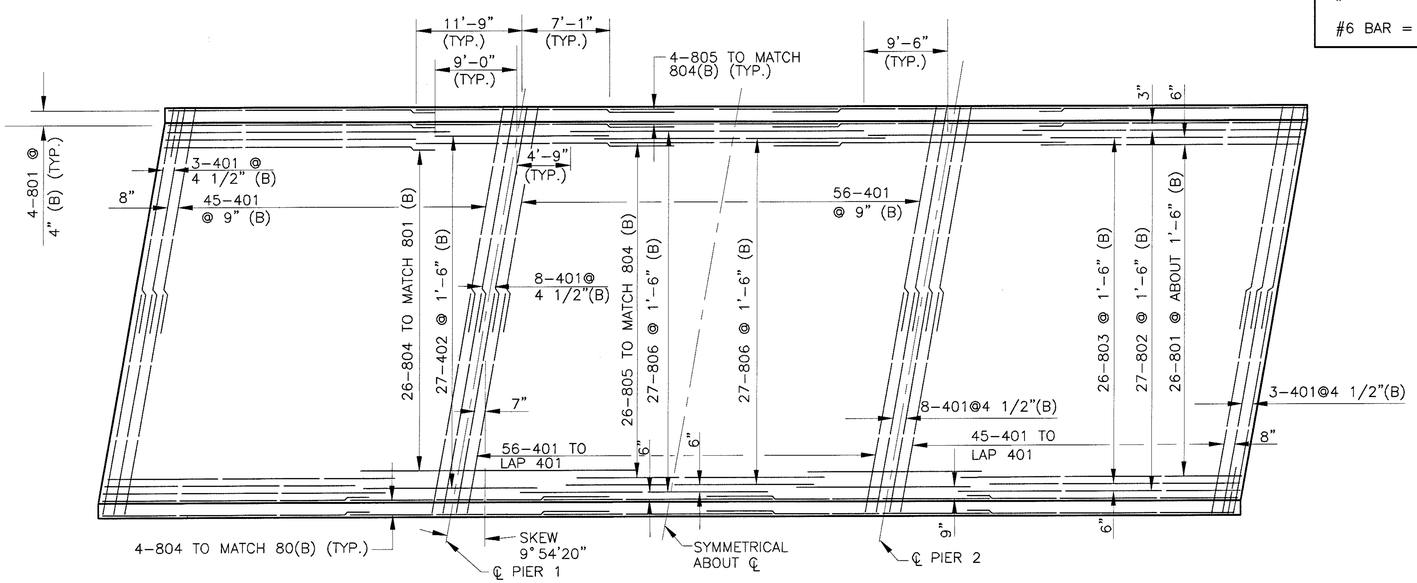


## SLAB PLAN-EASTBOUND AND WESTBOUND

BOTTOM SLAB REINFORCEMENT

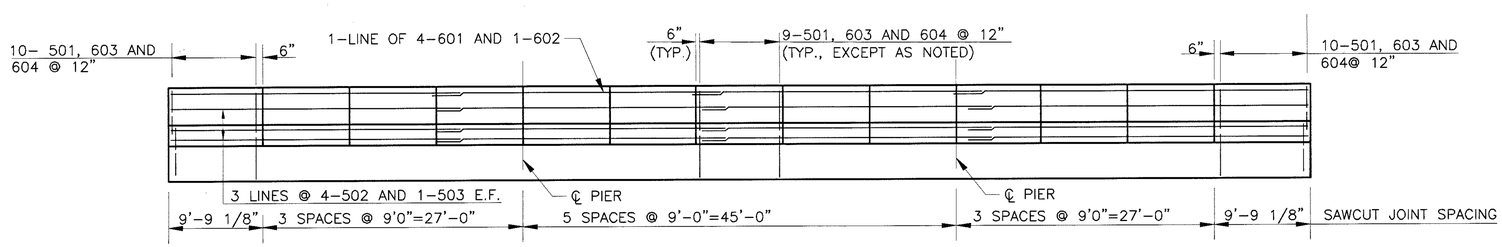


## PARAPET ELEVATION

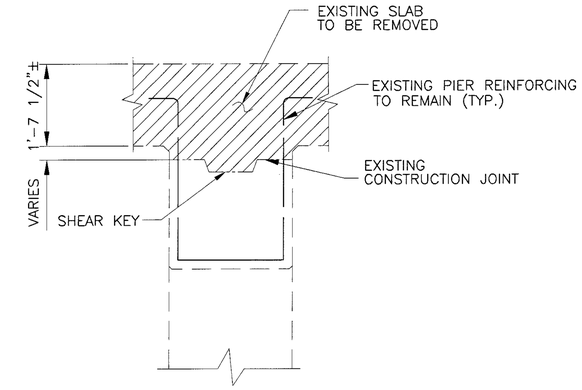


## SLAB REMOVAL LIMITS OVER PIERS

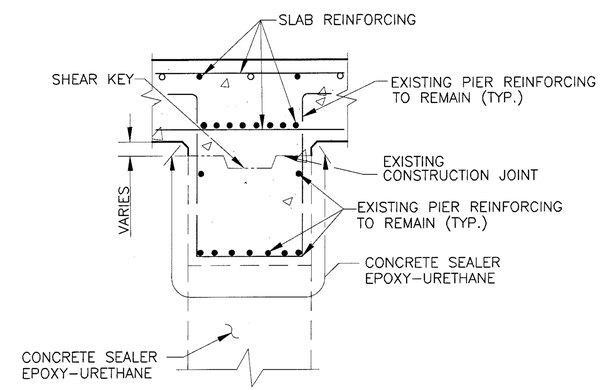


## SECTION A-A

NOTES

1. FOR ADDITIONAL SLAB BRIDGE NOTES AND DETAILS SEE OHIO DEPARTMENT OF TRANSPORTATION STANDARD DRAWINGS CS-1-93.
2. ALL REINFORCING BARS SHALL BE PREFIXED S (SUPERSTRUCTURE)
3. FOR REINFORCEMENT SCHEDULE SEE SHEET 6/6.
4. FOR ADDITIONAL PARAPET NOTES AND DETAILS SEE OHIO DEPARTMENT OF TRANSPORTATION STANDARD DRAWING BR-1 SHEET 2 OF 2.
5. THE FOLLOWING ABBREVIATIONS ARE USED:
   TYP. = TYPICAL
   T = TOP
   B = BOTTOM
   M = MIDDLE

DESIGN AGENCY
EUTHENICS INC.
CONSULTING ENGINEERS
CLEVELAND, OHIO

| DESIGNED | DRAWN | REVIEWED | DATE |
|---|---|---|---|
| KJW | KJW | RAB | 12/00 |
| CHECKED | REVISED | STRUCTURE FILE NUMBER | |
| KRD | | 7800878L/7800908R | |

**SLAB PLAN**
TRU-5-1226 L&R
OVER NORTH PARK ROAD

**TRU-5-6.45**

5/6

158/164

TRUSSPT1.DWG F:_JOBS\AJ\JOBS\306\BRIDGE\15\DWG\306SP15.DWG KJW 2/27/01 PLOT 1:8

| MARK | NUMBER REAR | NUMBER FWD | NUMBER TOTAL | LENGTH | TYPE | WEIGHT (LBS.) | DIMENSIONS A | B | C | D | E | R | SER. INCR. |
|---|---|---|---|---|---|---|---|---|---|---|---|---|---|
| ABUTMENT-WESTBOUND | | | | | | | | | | | | | |
| D801 | 29 | 29 | 58 | 4'-6" | 6 | 697 | 1'-6" | 1'-3" | 1'-3" | 1'-5" | | | |
| * TOTAL ABUTMENT=697 LBS. | | | | | | | | | | | | | |
| SUPERSTRUCTURE-WESTBOUND | | | | | | | | | | | | | |
| S401 | | | 574 | 22'-3" | STR | 8,532 | | | | | | | |
| S402 | | | 54 | 18'-0" | STR | 649 | | | | | | | |
| S403 | | | 50 | 28'-7" | STR | 955 | | | | | | | |
| S404 | | | 25 | 29'-4" | STR | 490 | | | | | | | |
| S405 | | | 8 | 30'-0" | STR | 160 | | | | | | | |
| S406 | | | 238 | 3'-7" | 2 | 570 | 1'-3" | 1'-4" | | | | | |
| S407 | | | 2 | 7'-1" | STR | 9 | | | | | | | |
| S501 | | | 238 | 7'-1" | 3 | 1,758 | 3'-3" | 3'-0" | 8" | 1 1/4" | | | |
| S502 | | | 48 | 30'-0" | STR | 1,502 | | | | | | | |
| S503 | | | 12 | 6'-1" | STR | 76 | | | | | | | |
| S601 | | | 8 | 30'-0" | STR | 361 | | | | | | | |
| S602 | | | 2 | 7'-5" | STR | 22 | | | | | | | |
| S603 | | | 238 | 3'-4" | 4 | 1,192 | 11" | 2'-6" | | | | | |
| S604 | | | 238 | 4'-3" | 5 | 1,519 | 1'-8" | 8 1/2" | 6" | 9" | 10 1/2" | 1 1/2" | |
| S801 | | | 68 | 29'-8" | STR | 5,386 | | | | | | | |
| S802 | | | 54 | 31'-3" | STR | 4,505 | | | | | | | |
| S803 | | | 52 | 27'-11" | 1 | 3,876 | 26'-9" | | | | | | |
| S804 | | | 68 | 23'-9" | STR | 4,312 | | | | | | | |
| S805 | | | 34 | 31'-10" | STR | 2,890 | | | | | | | |
| S806 | | | 54 | 30'-9" | STR | 4,433 | | | | | | | |
| S1001 | | | 52 | 33'-6" | STR | 7,496 | | | | | | | |
| S1002 | | | 52 | 19'-6" | STR | 4,363 | | | | | | | |
| S1003 | | | 100 | 21'-10" | STR | 9,394 | | | | | | | |
| S1004 | | | 26 | 39'-2" | STR | 4,382 | | | | | | | |
| * TOTAL SUPERSTRUCTURE=68,832 LBS. | | | | | | | | | | | | | |

| MARK | NUMBER REAR | NUMBER FWD | NUMBER TOTAL | LENGTH | TYPE | WEIGHT (LBS.) | DIMENSIONS A | B | C | D | E | R | SER. INCR. |
|---|---|---|---|---|---|---|---|---|---|---|---|---|---|
| ABUTMENT-EASTBOUND | | | | | | | | | | | | | |
| D801 | 29 | 29 | 58 | 4'-6" | 6 | 697 | 1'-6" | 1'-3" | 1'-3" | 1'-5" | | | |
| * TOTAL ABUTMENT=697 LBS. | | | | | | | | | | | | | |
| SUPERSTRUCTURE-EASTBOUND | | | | | | | | | | | | | |
| S401 | | | 574 | 22'-3" | STR | 8,532 | | | | | | | |
| S402 | | | 54 | 18'-0" | STR | 649 | | | | | | | |
| S403 | | | 50 | 28'-7" | STR | 955 | | | | | | | |
| S404 | | | 25 | 29'-4" | STR | 490 | | | | | | | |
| S405 | | | 8 | 30'-0" | STR | 160 | | | | | | | |
| S406 | | | 238 | 3'-7" | 2 | 570 | 1'-3" | 1'-4" | | | | | |
| S407 | | | 2 | 7'-1" | STR | 9 | | | | | | | |
| S501 | | | 238 | 7'-1" | 3 | 1,758 | 3'-3" | 3'-0" | 8" | 1 1/4" | | | |
| S502 | | | 48 | 30'-0" | STR | 1,502 | | | | | | | |
| S503 | | | 12 | 6'-1" | STR | 76 | | | | | | | |
| S601 | | | 8 | 30'-0" | STR | 361 | | | | | | | |
| S602 | | | 2 | 7'-5" | STR | 22 | | | | | | | |
| S603 | | | 238 | 3'-4" | 4 | 1,192 | 11" | 2'-6" | | | | | |
| S604 | | | 238 | 4'-3" | 5 | 1,519 | 1'-8" | 8 1/2" | 6" | 9" | 10 1/2" | 1 1/2" | |
| S801 | | | 68 | 29'-8" | STR | 5,386 | | | | | | | |
| S802 | | | 54 | 31'-3" | STR | 4,505 | | | | | | | |
| S803 | | | 52 | 27'-11" | 1 | 3,876 | 26'-9" | | | | | | |
| S804 | | | 68 | 23'-9" | STR | 4,312 | | | | | | | |
| S805 | | | 34 | 31'-10" | STR | 2,890 | | | | | | | |
| S806 | | | 54 | 30'-9" | STR | 4,433 | | | | | | | |
| S1001 | | | 52 | 33'-6" | STR | 7,496 | | | | | | | |
| S1002 | | | 52 | 19'-6" | STR | 4,363 | | | | | | | |
| S1003 | | | 100 | 21'-10" | STR | 9,394 | | | | | | | |
| S1004 | | | 26 | 39'-2" | STR | 4,382 | | | | | | | |
| * TOTAL SUPERSTRUCTURE=68,832 LBS. | | | | | | | | | | | | | |

## BENDING DIAGRAMS

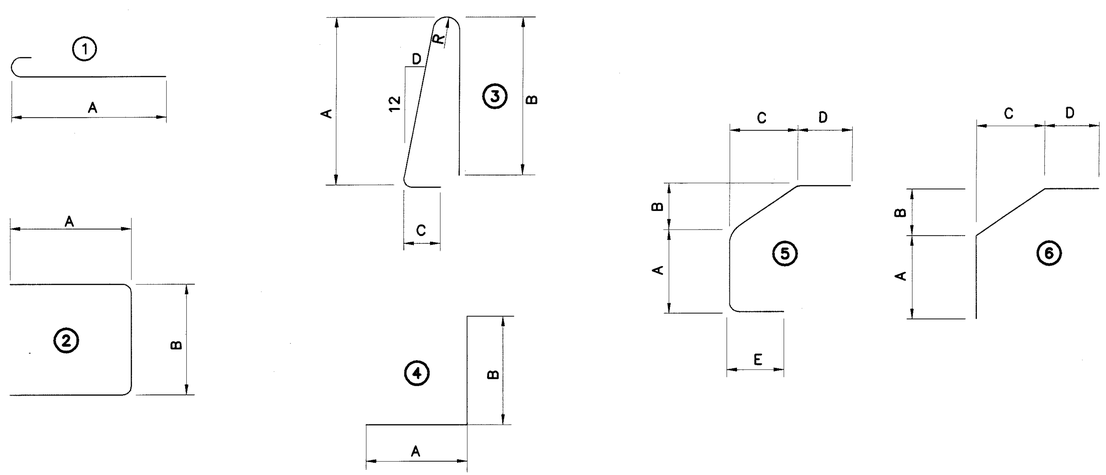


## NOTES:

1. THE BAR SIZE NUMBER IS SPECIFIED ON THE PLANS IN THE BAR MARK COLUMN. THE FIRST DIGIT WHERE THREE DIGITS ARE USED, AND THE FIRST TWO DIGITS WHERE FOUR DIGITS ARE USED, INDICATES THE BAR SIZE NUMBER. FOR EXAMPLE, S601 IS A NO. 6 BAR. BAR DIMENSIONS SHOWN ARE OUT TO OUT UNLESS OTHERWISE INDICATED. R INDICATES INSIDE RADIUS, UNLESS OTHERWISE NOTED.

2. ALL REINFORCING STEEL TO BE EPOXY COATED.

3. REINFORCING SAMPLES:
REFER TO CMS SECTIONS 106.03, 700, 709.01 THROUGH 709.05 AND 709.08. SUFFICIENT ADDITIONAL REINFORCING STEEL SHALL BE PROVIDED FOR SAMPLING. RANDOM SAMPLES SHALL BE REPLACED IN THE STRUCTURES BY THE ADDITIONAL STEEL SPLICED IN ACCORDANCE WITH 509.08

* WEIGHT OF REINFORCING STEEL IS PROVIDED FOR INFORMATIONAL PURPOSES ONLY

DESIGN AGENCY
EUTHENICS INC.
CONSULTING ENGINEERS
CLEVELAND, OHIO

| DESIGNED | DRAWN | REVIEWED | DATE |
|---|---|---|---|
| KJW | KJW | RAB | 12/00 |
| CHECKED | REVISED | STRUCTURE FILE NUMBER | |
| KRD | | 7800878L/7800908R | |

**REINFORCING SCHEDULE**
TRU-5-1226 L&R
OVER NORTH PARK ROAD

**TRU-5-6.45**



TR005RK1.DWG F:\JOBS\F:\JOBS\502\BRIDGE\15\DWG\5029515.DWG KJW 2/27/01 PLOT 1:8

CALC. BY: NNB DATE: 1-01

## ESTIMATED QUANTITIES - TRU-5-0688 (W. MARKET ST.)

CHK'D. BY: KRD DATE: 1-01

| ITEM | ITEM EXT. | TOTAL | UNIT | DESCRIPTION | ABUT-MENTS | PIERS | SUPER-STRUCTURE | GENERAL | AS PER PLAN SHEET NUMBERS |
|---|---|---|---|---|---|---|---|---|---|
| 407 | 14000 | 60 | GAL. | TACK COAT FOR INTERMEDIATE COURSE | | | 60 | | |
| | | | | (RATE OF APPLICATION 0.075 GAL/SQ. YD.) | | | | | |
| 448 | 46020 | 39 | CU. YD. | ASPHALT CONCRETE INTERMEDIATE COURSE, TYPE 1PG64-22, | | | 39 | | |
| | | | | (THICKNESS 1 3/4") | | | | | |
| 448 | 47021 | 45 | CU. YD. | ASPHALT CONCRETE SURFACE COURSE, TYPE 1PG64-22, | | | 45 | | 5/5 |
| | | | | AS PER PLAN | | | | | |
| | | | | | | | | | |
| 512 | 33010 | 1069 | SQ. YD. | TYPE 3 WATERPROOFING | | | 1069 | | |
| 516 | 11211 | 64 | LIN. FT. | STRUCTURAL EXPANSION JOINT INCLUDING ELASTOMERIC STRIP SEAL, AS | | | 64 | | 4/5 |
| | | | | PER PLAN (SEE PROPOSAL NOTE) | | | | | |
| 518 | 12701 | 12 | EACH | SCUPPER VERTICAL EXTENSION, AS PER PLAN | | | 12 | | 5/5 |
| SPECIAL | 51912200 | 485 | SQ. YD. | PATCHING CONCRETE BRIDE DECK - TYPE A (SEE PROPOSAL NOTE) | | | 485 | | |

## QUANTITY CALCULATIONS - TRU-5-0688 (W. MARKET ST.)

**ITEM 407 - TACK COAT FOR INTERMEDIATE COURSE (RATE OF APPLICATION 0.075 GAL/SQ. YD.)**

| STATION FROM | STATION TO | LENGTH x WIDTH ($FT^2$.) | AREA (SQ. YD.) |
|---|---|---|---|
| 1028+96.85 | 1031+37.65 | 240.80X30.00 | 802.67 |

TOTAL 802.67
802.67 x 0.075 = 60.2
USE 60 GALLONS

**ITEM 448 - ASPHALT CONCRETE SURFACE COURSE, TYPE 1PG64-22, AS PER PLAN**

| STATION FROM | STATION TO | LENGTH x WIDTH ($FT^2$.) | DEPTH (IN.) | VOLUME (CU. YD.) |
|---|---|---|---|---|
| 1028+56.85 | 1028+96.85 | 40.00X30.00 | (1.5+3.0)/2 | 8.33 |
| 1028+96.85 | 1031+37.65 | 240.80X30.00 | 1.25 | 27.87 |
| 1031+37.65 | 1031+77.65 | 40.00X30.00 | (1.5+3.0)/2 | 8.33 |
| | | | TOTAL | 44.53 |
| | | | USE | 45 |

**ITEM 448 - ASPHALT CONCRETE INTERMEDIATE COURSE, TYPE 1PG64-22, (THICKNESS 1¾")**

| STATION FROM | STATION TO | LENGTH x WIDTH ($FT^2$.) | DEPTH (IN.) | VOLUME (CU. YD.) |
|---|---|---|---|---|
| 1028+96.85 | 1031+37.65 | 240.80X30.00 | 1.75 | 39.02 |
| | | | TOTAL | 39.02 |
| | | | USE | 39 |

**ITEM 512 - TYPE 3 WATERPROOFING**

| STATION FROM | STATION TO | LENGTH x WIDTH ($FT^2$.) | AREA (SQ. YD.) |
|---|---|---|---|
| 1028+56.85 | 1031+77.65 | 320.80x30.00 | 1069.3 |
| | | TOTAL | 1069.3 |
| | | USE | 1069 S.Y. |

**ITEM 516 - STRUCTURAL EXPANSION JOINT INCLUDING ELASTOMERIC STRIP SEAL, AS PER PLAN**

2x30/Cos 20°10'00" = 63.92 USE 64 L.F.

**ITEM 518 - SCUPPER VERTICAL EXTENSION, AS PER PLAN**

12 EACH

**ITEM SPECIAL- PATCHING CONCRETE BRIDGE DECK- TYPE A**

QUANTITY = 485 S.Y.

DESIGN AGENCY
EUTHENICS INC.
CONSULTING ENGINEERS
CLEVELAND, OHIO

| DESIGNED | DRAWN | REVIEWED | DATE |
|---|---|---|---|
| NNB | JAM | KRD | 2/9/01 |
| CHECKED | REVISED | STRUCTURE FILE NUMBER | 7800274 |

ESTIMATED QUANTITIES
TRU-5-0688
(W. MARKET ST.) OVER S.R. 5

TRU-5-6.45



j:\18712\TRE00688.dgn 07-SEP-2001 11:30PM jiliddle

CALC. BY: NNB DATE: 1-01

## ESTIMATED QUANTITIES - TRU-5-0778 (EAGLE CREEK RD.)

CHK'D. BY: KRD DATE: 1-01

| ITEM | ITEM EXT. | TOTAL | UNIT | DESCRIPTION | ABUT-MENTS | PIERS | SUPER-STRUCTURE | GENERAL | AS PER PLAN SHEET NUMBERS |
|---|---|---|---|---|---|---|---|---|---|
| 407 | 14000 | 30 | GAL. | TACK COAT FOR INTERMEDIATE COURSE | | | 30 | | |
| | | | | (RATE OF APPLICATION 0.075 GAL/SQ. YD.) | | | | | |
| | | | | | | | | | |
| 448 | 47021 | 30 | CU. YD. | ASPHALT CONCRETE SURFACE COURSE, TYPE 1PG64-22, | | | 30 | | 5/5 |
| | | | | AS PER PLAN | | | | | |
| 448 | 46020 | 19 | CU. YD. | ASPHALT CONCRETE INTERMEDIATE COURSE, TYPE 1PG64-22, | | | 19 | | |
| | | | | (THICKNESS 1 3/4") | | | | | |
| | | | | | | | | | |
| 512 | 33010 | 643 | SQ. YD. | TYPE 3 WATERPROOFING | | | 643 | | |
| 516 | 11211 | 56 | LIN. FT. | STRUCTURAL EXPANSION JOINT INCLUDING ELASTOMERIC STRIP SEAL, AS | | | 56 | | 4/5 |
| | | | | PER PLAN (SEE PROPOSAL NOTE) | | | | | |
| SPECIAL | 51912200 | 221 | SQ. YD. | PATCHING CONCRETE BRIDE DECK - TYPE A (SEE PROPOSAL NOTE) | | | 221 | | |

## QUANTITY CALCULATIONS - TRU-5-0778 (EAGLE CREEK RD.)

**ITEM 407 - TACK COAT FOR INTERMEDIATE COURSE (RATE OF APPLICATION 0.075 GAL/SQ. YD)**

| STATION FROM | STATION TO | LENGTH x WIDTH ($FT^2$.) | AREA (SQ. YD.) |
|---|---|---|---|
| 53+07.85 | 54+34.39 | 126.54x28.00 | 393.68 |
| | | TOTAL | 393.68 |

393.68x0.075=29.63

USE 30 GALLONS

**ITEM 448 - ASPHALT CONCRETE SURFACE COURSE, TYPE 1PG64-22, AS PER PLAN**

| STATION FROM | STATION TO | LENGTH x WIDTH ($FT^2$.) | DEPTH (IN.) | VOLUME (C.Y.) |
|---|---|---|---|---|
| 52+67.85 | 53+07.85 | 40.00x28.00 | (1.75+3.0)/2 | 8.21 |
| 53+07.85 | 54+34.39 | 126.54x28.00 | 1.25 | 13.67 |
| 54+34.39 | 54+74.39 | 40.00x28.00 | (3.0+1.75/2) | 8.21 |
| | | | TOTAL | 30.09 |
| | | | USE | 30 C.Y. |

**ITEM 448 - ASPHALT CONCRETE INTERMEDIATE COURSE, TYPE 1PG64-22 (THICKNESS 1¾")**

| STATION FROM | STATION TO | LENGTH x WIDTH ($FT^2$.) | DEPTH (IN.) | VOLUME (C.Y.) |
|---|---|---|---|---|
| 53+07.85 | 54+34.39 | 126.54x28.00 | 1.75 | 19.13 |
| | | | TOTAL | 19.13 |
| | | | USE | 19 C.Y. |

**ITEM 512 - TYPE 3 WATERPROOFING**

| STATION FROM | STATION TO | LENGTH x WIDTH ($FT^2$.) | AREA (SQ. YD.) |
|---|---|---|---|
| 52+67.85 | 54+74.39 | 206.54x28.00 | 642.57 |
| | | TOTAL | 642.57 |
| | | USE | 643 S.Y. |

**ITEM 516 - STRUCTURAL EXPANSION JOINT INCLUDING ELASTOMERIC STRIP SEAL, AS PER PLAN**

2x28/Cos 6°58'15" = 56.42 USE 56 L.F.

**ITEM SPECIAL- PATCHING CONCRETE BRIDGE DECK- TYPE A**

QUANTITY= 221 S.Y.

DESIGN AGENCY
EUTHENIES INC.
CONSULTING ENGINEERS

| DESIGNED | DRAWN | REVIEWED | DATE |
|---|---|---|---|
| NNB | JAM | KRD | 2/9/01 |
| CHECKED | REVISED | STRUCTURE FILE NUMBER | |
| JAM | | 7800398 | |

ESTIMATED QUANTITIES
TRU-5-0778
(EAGLE CREEK RD.) OVER S.R.5

TRU-5-6.45



j:\1871\2\Tr5eq0778.dgn 07-SEP-2001 1:31PM jjiddle

CALC. BY: NNB DATE: 1-01

## ESTIMATED QUANTITIES - TRU-5-0921 (N. LEAVITT RD.)

CHK'D. BY: KRD DATE: 1-01

| ITEM | ITEM EXT. | TOTAL | UNIT | DESCRIPTION | ABUT-MENTS | PIERS | SUPER-STRUCTURE | GENERAL | AS PER PLAN SHEET NUMBERS |
|---|---|---|---|---|---|---|---|---|---|
| 407 | 14000 | 43 | GAL. | TACK COAT FOR INTERMEDIATE COURSE | | | 43 | | |
| | | | | (RATE OF APPLICATION 0.075 GAL/SQ. YD.) | | | | | |
| | | | | | | | | | |
| 448 | 47021 | 37 | CU. YD. | ASPHALT CONCRETE SURFACE COURSE, TYPE 1PG64-22, | | | 37 | | |
| | | | | AS PER PLAN | | | | | |
| 448 | 46020 | 28 | CU. YD. | ASPHALT CONCRETE INTERMEDIATE COURSE, TYPE 1PG64-22, | | | 28 | | |
| | | | | (THICKNESS 1 3/4") | | | | | |
| | | | | | | | | | |
| 512 | 33010 | 844 | SQ. YD. | TYPE 3 WATERPROOFING | | | 844 | | |
| 516 | 11211 | 77 | LIN. FT. | STRUCTURAL EXPANSION JOINT INCLUDING ELASTOMERIC STRIP SEAL, AS | | | 77 | | 5/5 |
| | | | | PER PLAN (SEE PROPOSAL NOTE) | | | | | |
| 518 | 12701 | 8 | EACH | SCUPPER VERTICAL EXTENSION, AS PER PLAN | | | 8 | | 4/5 |
| SPECIAL | 51912200 | 225 | SQ. YD. | PATCHING CONCRETE BRIDE DECK - TYPE A (SEE PROPOSAL NOTE) | | | 225 | | |

## QUANTITY CALCULATIONS - TRU-5-0921 (N. LEAVITT RD.)

**ITEM 407 - TACK COAT FOR INTERMEDIATE COURSE (RATE OF APPLICATION 0.075 GAL/SQ.YD)**

| STATION FROM | STATION TO | LENGTH x WIDTH ($FT^2$) | AREA (SQ. YD.) |
|---|---|---|---|
| 29+13.47 | 30+86.53 | 173.06x30.00 | 576.87 |
| | | TOTAL | 576.87 |
| | | 576.87x0.075= | 43.27 |
| | | USE | 43 GALLONS |

**ITEM 448 - ASPHALT CONCRETE SURFACE COURSE, TYPE 1PG64-22, AS PER PLAN**

| STATION FROM | STATION TO | LENGTH x WIDTH ($FT^2$) | DEPTH (IN.) | VOLUME (C.Y) |
|---|---|---|---|---|
| 28+73.47 | 29+13.47 | 40.00x30.00 | (1.5+3.0)/2 | 8.33 |
| 29+13.47 | 30+86.53 | 173.06x30.00 | 1.25 | 20.03 |
| 30+86.53 | 31+26.53 | 40.00x30.00 | (3.0+1.5/2) | 8.33 |
| | | | TOTAL | 36.69 |
| | | | USE | 37 C.Y |

**ITEM 448 - ASPHALT CONCRETE INTERMEDIATE COURSE, TYPE 1PG64-22 (THICKNESS 1¾")**

| STATION FROM | STATION TO | LENGTH x WIDTH ($FT^2$) | DEPTH (IN.) | VOLUME (C.Y) |
|---|---|---|---|---|
| 29+13.47 | 30+86.53 | 173.06x30.00 | 1.75 | 28.04 |
| | | | TOTAL | 28.04 |
| | | | USE | 28 C.Y. |

**ITEM 512 - TYPE 3 WATERPROOFING**

| STATION FROM | STATION TO | LENGTH x WIDTH ($FT^2$) | AREA (SQ. YD.) |
|---|---|---|---|
| 28+73.47 | 31+26.53 | 253.06x30.00 | 843.53 |
| | | TOTAL | 843.53 |
| | | USE | 844 S.Y. |

**ITEM 516 - STRUCTURAL EXPANSION JOINT INCLUDING ELASTOMERIC STRIP SEAL, AS PER PLAN**

2x30/Cos 38°28'08" = 76.63 USE 77 L.F

**ITEM 518 - SCUPPER VERTICAL EXTENSION, AS PER PLAN**

8 EACH

**ITEM SPECIAL-PATCHING CONCRETE BRIDGE DECK- TYPE A**

QUANTITY= 225 S.Y.

DESIGN AGENCY
EUTHENICS INC.
CONSULTING ENGINEERS
CLEVELAND, OHIO

| DESIGNED | DRAWN | REVIEWED | DATE |
|---|---|---|---|
| NNB | JAM | KRD | 2/9/01 |
| CHECKED | REVISED | STRUCTURE FILE NUMBER | |
| JAM | | 7800541 | |

ESTIMATED QUANTITIES
TRU-5-0921
(N. LEAVITT RD.) OVER S.R.5

TRU-5-6.5



i:\18712\Tr5eq0921.dgn 07-SEP-2001 1:32PM jjiddle

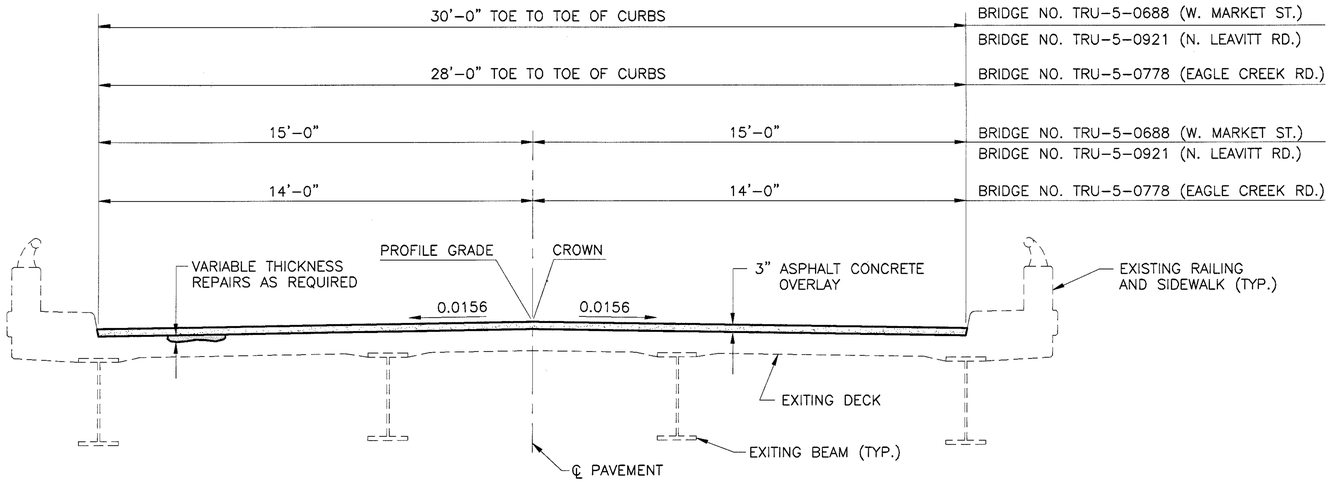


**TYPICAL TRANSVERSE SECTION**

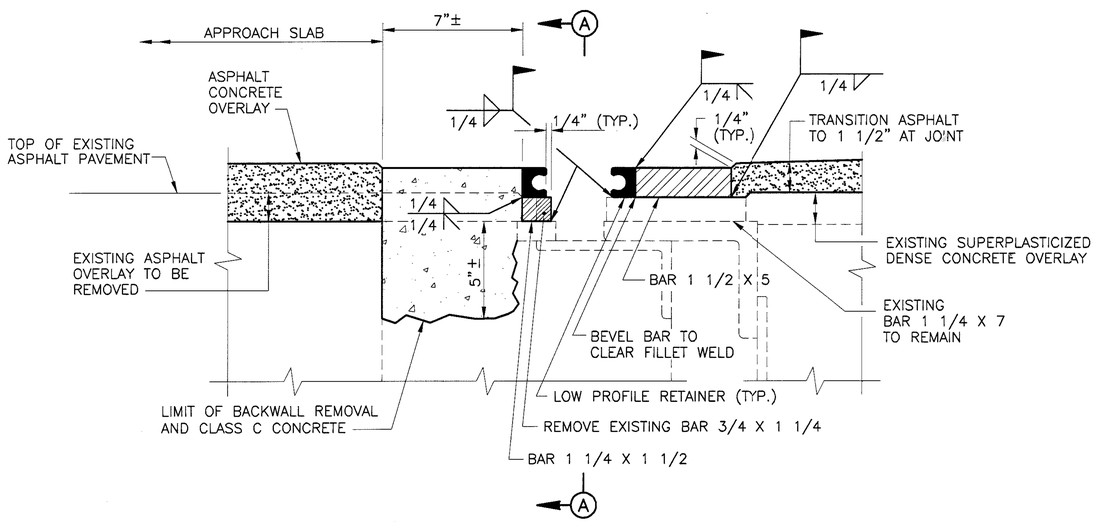


**VERTICAL EXTENSION**
**STRIP SEAL EXPANSION JOINT**
(5" STRIP SEAL GLAND NOT SHOWN)
(BRIDGE NO. TRU-5-0688 (W. MARKET ST.)
AND BRIDGE NO. TRU-5-0921 (N. LEAVITT RD.))

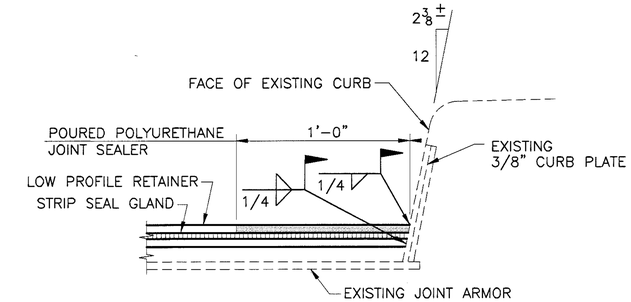


**SECTION A-A**
(TRU-5-0778 SHOWN, TRU-5-0688
AND 0921 SIMILAR)

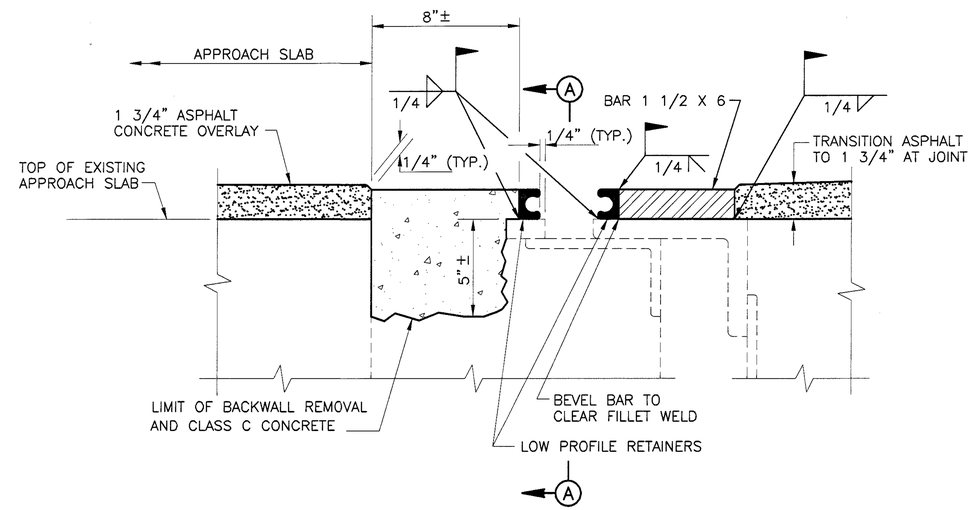


**VERTICAL EXTENSION**
**STRIP SEAL EXPANSION JOINT**
(4" STRIP SEAL GLAND NOT SHOWN)
(BRIDGE NO. TRU-5-0778 (EAGLE CREEK RD.))

## NOTES:

1. DECK JOINT PLATES SHALL BE A36 STEEL METALLIZED AS PER STD. DWG. EXJ-4-87. SHOP PAINTING IS NOT REQUIRED.
2. ELASTOMERIC STRIP SEAL SHALL BE INSTALLED IN ONE CONTINUOUS PIECE.
3. POURED POLYURETHANE JOINT SEAL IS A TWO-PART, COLD APPLIED, CHEMICALLY CURING SELF LEVELING ELASTOMERIC, POLYURETHANE JOINT SEALANT. THE SEALANT SHALL BE "FX-551" AS MANUFACTURED BY FOX INDUSTRIES INCORPORATED. "UREXPAN NR-200" AS MANUFACTURED BY PECORA CORPORATION OR AN APPROVED EQUAL. THE INSTALLED AND CURED MATERIAL SHALL BE BONDED TO THE SIDES OF THE JOINT. ANY UNBONDED SECTION SHALL BE REMOVED AND REPLACED AT THE CONTRACTORS EXPENSE.
4. THE POLYURETHANE SEAL SHALL BE POURED ON TOP OF THE ELASTOMERIC STRIP SEAL TO THE TOP OF THE RETAINER FOR A LENGTH OF ONE FOOT FROM THE CURB. DAMS SHALL BE PROVIDED TO CONTAIN THE POURED SEALER. COST FOR THE POURED SEALER AND DAMS SHALL BE INCLUDED IN THE PRICE BID PER LINEAL FOOT FOR THE DECK EXPANSION JOINTS.
5. COST FOR REMOVAL OF BACKWALL CONCRETE, FURNISHING AND PLACING OF CLASS C CONCRETE SHALL BE INCLUDED IN THE PRICE BID PER LINEAL FOOT FOR THE DECK EXPANSION JOINTS

DESIGN AGENCY
EUTHENICS INC.
CONSULTING ENGINEERS
CLEVELAND, OHIO

| DESIGNED | DRAWN | REVIEWED | DATE |
|---|---|---|---|
| GFH | GFH | RAB | 02/01 |
| CHECKED | REVISED | STRUCTURE FILE NUMBER | |
| KRD | | 7800274, 7800398 AND 7800541 | |

**TYPICAL TRANSVERSE SECTION AND JOINT DETAILS**
BRIDGE NOS. TRU-5-0688, TRU-5-0778 AND TRU-5-0921
OVER S.R.5

**TRU-5-6.45**



F:\JOBS\5621\BRIDGE\5621VERLAY.DWG KJW 02/27/01 PLOT VIEW
TRU05M01.DWG

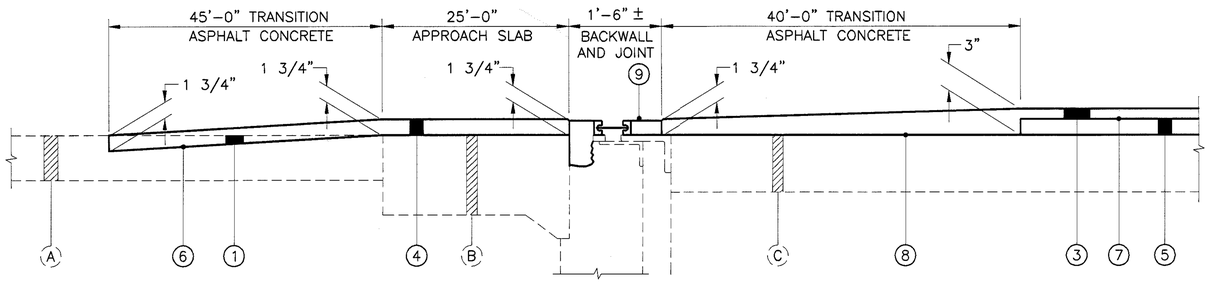


## LONGITUDINAL ASPHALT TRANSITION DETAIL ALONG CENTERLINE

(BRIDGE NO. TRU-5-0778 (EAGLE CREEK RD.))

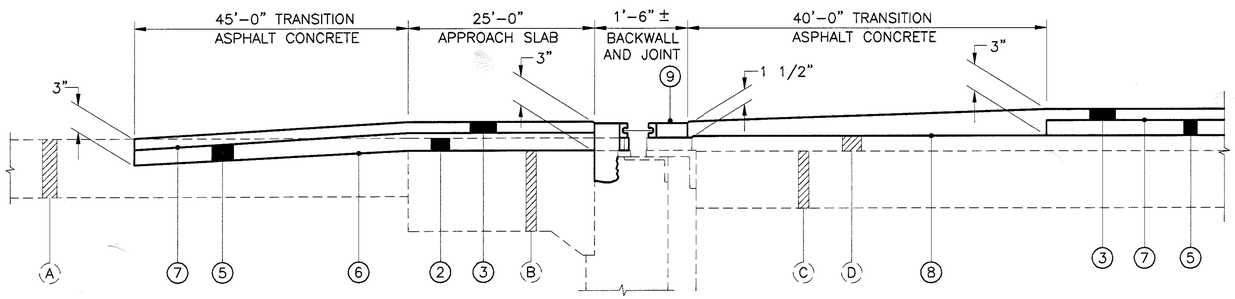


## LONGITUDINAL ASPHALT TRANSITION DETAIL ALONG CENTERLINE

(BRIDGE NO. TRU-5-0688 (W. MARKET ST.)
AND BRIDGE NO. TRU-5-0921 (N. LEAVITT RD.))

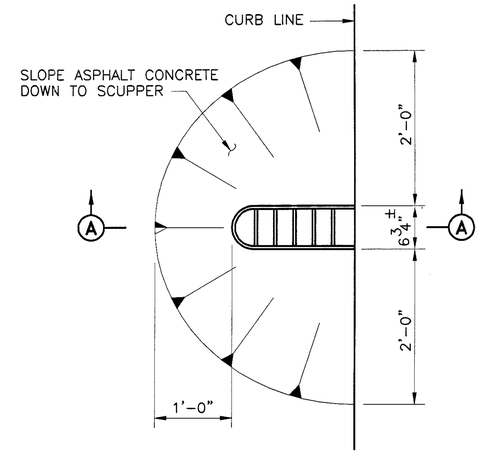


## PLAN VIEW – SCUPPER EXTENSION

ITEM 518 – SCUPPER VERTICAL EXTENSION,
AS PER PLAN

## LEGEND

1. ITEM 254 – PAVEMENT PLANING, BITUMINOUS (T = 0" TO 1 3/4" )
2. ITEM 254 – PAVEMENT PLANING, BITUMINOUS (T = 1 1/2" TO 3")
3. ITEM 448 – 1 1/4" MIN. ASPHALT CONCRETE SURFACE COURSE, TYPE 1, PG64-22, AS PER PLAN
4. ITEM 448 – 1 3/4" ASPHALT CONCRETE SURFACE COURSE, TYPE 1, PG64-22, AS PER PLAN
5. ITEM 448 – 1 3/4" ASPHALT CONCRETE INTERMEDIATE COURSE, TYPE I, PG64-22
6. ITEM 407 TACK COAT
7. ITEM 407 – TACK COAT FOR INTERMEDIATE COURSE
8. ITEM 512 – TYPE 3 WATERPROOFING
9. ITEM 516 – STRUCTURAL EXPANSION JOINT, INCLUDING ELASTOMERIC STRIP SEAL, AS PER PLAN

(A) ASPHALT CONCRETE
(B) APPROACH SLAB, 15"
(C) CONCRETE BRIDGE DECK
(D) CONCRETE OVERLAY, 1 3/4"

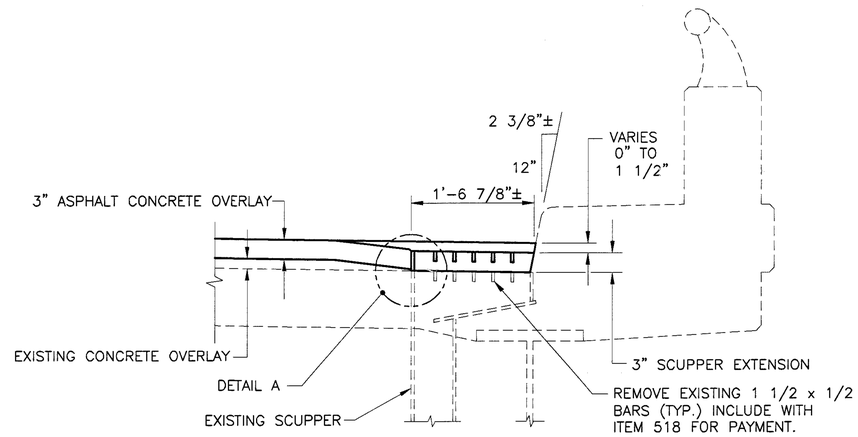


## SECTION A–A

(BRIDGE NO. TRU-5-0688 (W. MARKET ST.)
AND BRIDGE NO. TRU-5-0921 (N. LEAVITT RD.))

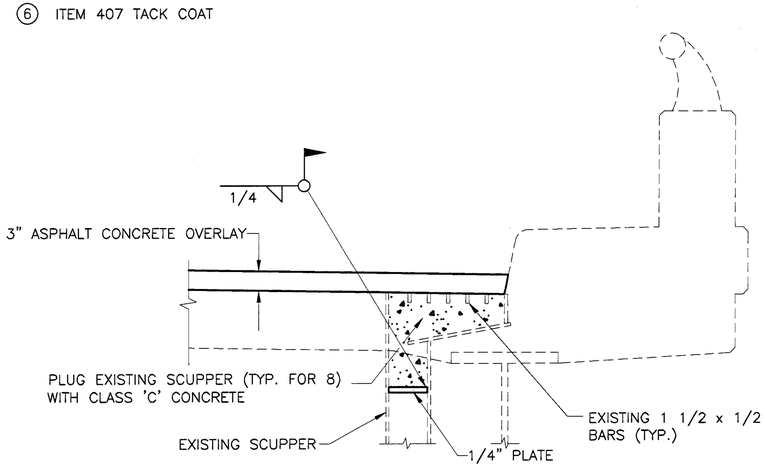


## PLUG EXISTING SCUPPER

(BRIDGE NO. TRU-5-0778 (EAGLE CREEK RD.))

PAYMENT FOR PLUGGING SCUPPERS INCLUDED UNDER ITEM 448 –
ASPHALT CONCRETE SURFACE COURSE, TYPE 1, PG64-22, AS PER PLAN

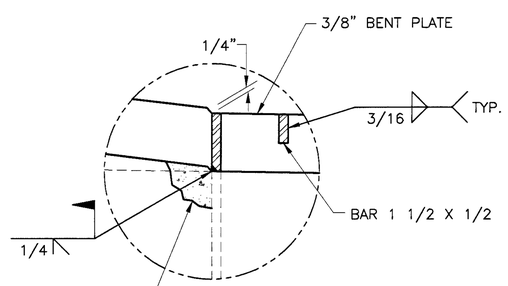


REMOVE EXISTING CONCRETE AROUND SCUPPER AS REQ'D FOR WELDING EXTENSION.

PATCH WITH TROWELABLE MORTAR. PAYMENT FOR CONCRETE REMOVAL AND WELDING INCLUDED WITH ITEM 518 – SCUPPER VERTICAL EXTENSION, AS PER PLAN.

## DETAIL A

NOTES:

1. SCUPPER EXTENSION PLATES SHALL BE A36 STEEL METALLIZED AS PER STD. DWG. EXJ-4-87. THE PLATES SHALL BE ABRASIVELY CLEANED IN THE SHOP. SHOP PAINTING IS NOT REQUIRED.
2. THE REQUIREMENTS OF 441 AND 448 SHALL APPLY; DEVIATIONS FROM THESE ARE AS FOLLOWS: ANY PERCENTAGE OF RECLAIMED MATERIAL PROPOSED FOR USE SHALL BE INCLUDED IN THE MIX DESIGN PROCESS TO ESTABLISH THE JOB MIX FORMULA (JMF) IN ACCORDANCE WITH 441.02.

DESIGN AGENCY
EUTHENICS INC.
CONSULTING ENGINEERS
CLEVELAND, OHIO

| DESIGNED | DRAWN | REVIEWED | DATE |
|---|---|---|---|
| GFH | GFH | RAB | 02/01 |
| CHECKED | REVISED | STRUCTURE FILE NUMBER | |
| KRD | | 7800274, 7800398 AND 7800341 | |

**ASPHALT TRANSITION AND SCUPPER EXTENSION DETAILS**
BRIDGE NOS. TRU-5-0688, TRU-5-0778 AND TRU-5-0921
OVER S.R.5

**TRU-5-6.45**

5 / 5

164 / 164

TRU05MDE.DWG F:\JOBS\502\BRIDGE\DWG\SCUPPER.DWG KJW 2/27/01 PLOT VIEW

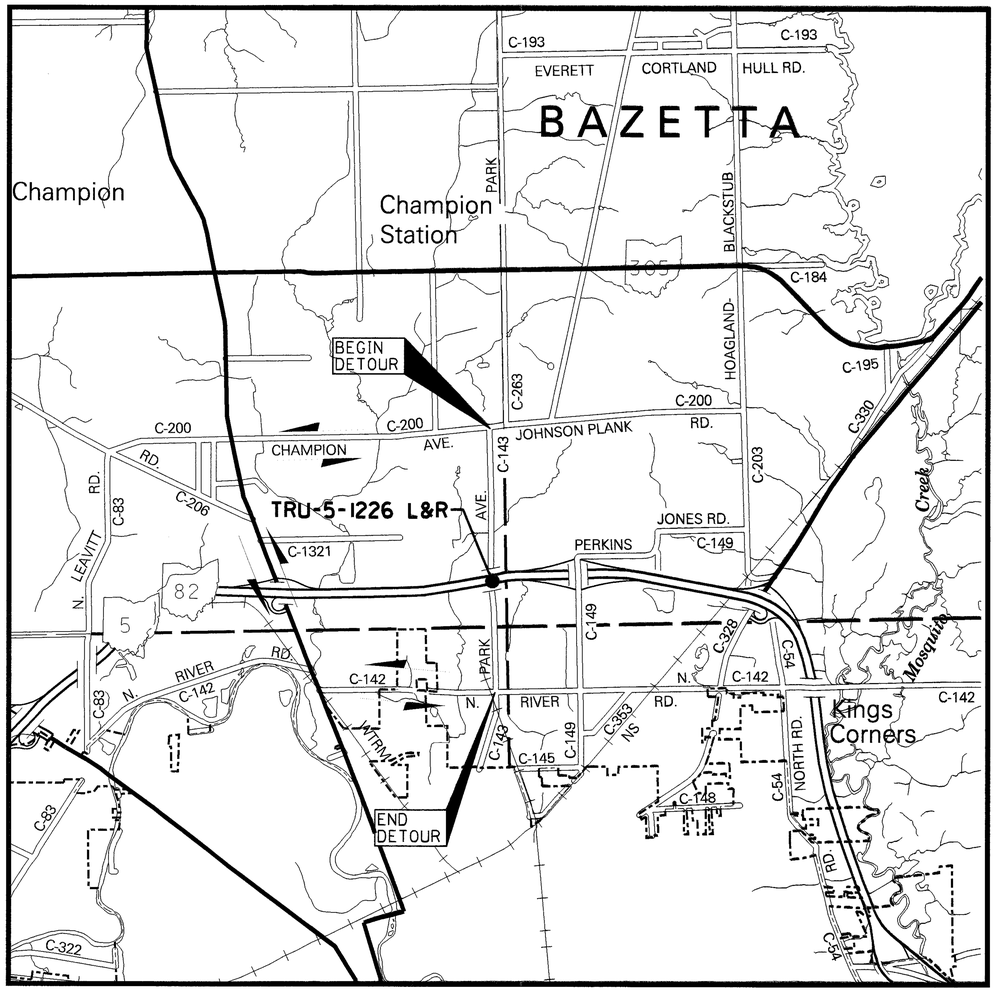


0 1 2

**SCALE OF MILES**

PROJECT LOCATION

● TRAFFIC TO BE DETOURED

DETOUR ROUTE

DETOUR:
CHAMPION AVE. / S.R. 45 / N. RIVER RD.

DURATION: 120 CONSECUTIVE DAYS

PHASE DIAGRAM

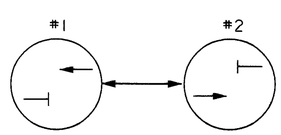


| SIGNAL TIMING CHART FOR TRU-5-1226 L&R | | |
|---|---|---|
| | PEAK | |
| SIGNAL PHASE | 1 | 2 |
| GREEN | 17 | 17 |
| YELLOW | 4 | 4 |
| RED | 9 | 9 |

CYCLE LENGTH = 60 SEC.

## NORTH PARK AVENUE MAINTENANCE OF TRAFFIC

DURING THE REPLACEMENT OF STRUCTURES TRU-5-1226 L&R, ONE-WAY TRAFFIC SHALL BE MAINTAINED AS PER STANDARD CONSTRUCTION DRAWINGS MT-96.11M, MT-96.20M AND MT-96.25. THE CONTRACTOR SHALL MAINTAIN ONE 18 FOOT WIDE OPENING IN THE TEMPORARY PROTECTIVE STRUCTURE AND AN MINIMUM UNDERCLEARANCE OF ELEVEN (11) FEET. THE OPENING SHALL ACCOMODATE TWO INSTALLATIONS OF PORTABLE CONCRETE BARRIER, 32", A 1 FOOT SHY DISTANCE FROM THE BARRIER AND A 12 FOOT LANE OF TRAFFIC. AN ESTIMATED QUANTITY OF 350 LIN. FT. OF ITEM 622 PORTABLE CONCRETE BARRIER, 32" HAS BEEN CARRIED TO THE GENERAL SUMMARY FOR THIS PURPOSE. ALL ENDS OF EACH BARRIER INSTALLATION SHALL INCLUDE A TAPERED END SECTION. THE BARRIER SHALL TAPER AWAY FROM ON-COMING TRAFFIC AT A TAPER RATE OF 11:1. IN ADDITION TO THE ONE-WAY TRAFFIC A SIGNED DETOUR SHALL BE ESTABLISHED ACCORDING TO THE DETOUR MAP TO THE LEFT, FOR ALL VEHICULAR TRAFFIC OVER 11 FEET IN HEIGHT. LOW CLEARANCE SIGNS (OW-42-36) SHALL BE PLACED AT 1500 FEET AND ½ MILE IN ADVANCE OF THE WORK AREA, ALONG NORTH PARK AVENUE. THE CONTRACTOR SHALL PROVIDE THE OHIO DEPARTMENT OF TRANSPORTATION WITH A QUANTITY OF 6 EACH OF THE TWO SIGNS DETAILED BELOW. NORTH PARK AVENUE MAINTENANCE OF TRAFFIC SHALL BE PAID FOR AT THE CONTRACT LUMP SUM PRICE BID FOR ITEM 614 MAINTAINING TRAFFIC. THIS SHALL BE PAYMENT IN FULL FOR ALL MATERIALS, EQUIPMENT, LABOR AND INCIDENTIALS NECESSARY TO COMPLETE THIS WORK.

## TEMPORARY PROTECTIVE STRUCTURES FOR STRUCTURE TRU-5-1226 L&R

IN ORDER TO PROTECT VEHICULAR TRAFFIC AND PAVEMENTS AGAINST DAMAGE FROM FALLING MATERIAL, DEBRIS AND OTHER DEMOLITION OPERATIONS, WHILE SUPERSTRUCTURE CONCRETE IS BEING REMOVED OR WHILE THE CONTRACTOR IS WORKING OVERHEAD, THE CONTRACTOR SHALL FURNISH AND ERECT TEMPORARY PROTECTIVE STRUCTURE UNDER THE SPANS THAT ARE DIRECTLY OVER THE AREA TO PREVENT ANY FALLING MATERIAL FROM ANY SPAN FROM REACHING THESE AREAS.

IN ADDITION TO THE TEMPORARY PROTECTIVE STRUCTURE, THE CONTRACTOR SHALL PROVIDE PLASTIC SHEETING OR OTHER APPROVED METHODS TO CONTROL WATER USED IN THE SAW CUTTING OPERATION FROM FALLING ON VEHICULAR TRAFFIC.

THE PROTECTIVE STRUCTURES SHALL MEET WITH APPROVAL OF THE ENGINEER. THE FLOORING AND SIDING OF THESE STRUCTURES SHALL HAVE NO CRACKS OR OPENINGS THROUGH MATERIAL PARTICLES MAY FALL. AS A MINIMUM, TWO LAYERS OF ¾ INCH PLYWOOD WITH LAPPED JOINTS OR AN EQUIVALENT DESIGN SHALL BE PLACED BETWEEN THE LOWER FLANGES OF THE STRUCTURAL STEEL BEAMS ABOVE THE PAVEMENT AND SHOULDERS OF ROADWAYS ON WHICH VEHICULAR TRAFFIC IS BEING MAINTAINED ON THE EXISTING LANES OR PARTIAL LANE CLOSURES. THE PROTECTION IN ALL CASES SHALL EXTEND BEYOND THE EXISTING AND/OR NEW EXTERIOR STRUCTURAL BEAMS A SUFFICIENT DISTANCE TO PROTECT UNDER THE EXISTING AND PROPOSED PARAPETS, AND SHALL HAVE SIDE WALLS EXTENDING UP 4 FEET MINIMUM.

SIDEWALLS SHALL BE BRACED SUBSTANTIALLY TO RESIST WIND LOADS. DURING SAW-CUTTING AND DECK REMOVAL OPERATIONS, TEMPORARY SHIELDS ATTACHED TO THE SIDE WALLS AND EXTENDING 1 FOOT ABOVE THE TOP OF PARAPET, SHALL BE INSTALLED TO LIMITS AS DIRECTED BY THE ENGINEER. TEMPORARY SHIELDS SHALL BE REMOVED IMMEDIATELY AFTER THEY HAVE SERVED THEIR PURPOSE. DEBRISE SHALL NOT BE PERMITTED TO COLLECT ON THE PROTECTIVE STRUCTURES.

THE PROTECTIVE STRUCTURES SHALL BE SUPPORTED/BRACED BY THEIR OWN MEMBERS. NO ATTACHMENT TO THE EXISTING STRUCTURES WILL BE PERMITTED. A VERTICAL CLEARANCE ABOVE THE PAVEMENT OF NORTH PARK AVENUE OF 11 FEET SHALL BE MAINTAINED AT ALL TIMES.

AFTER THE FALSEWORK, TEMPORAY BRACING AND PROTECTIVE STRUCTURES HAVE SERVED THEIR PURPOSE, AND WHEN SO DIRECTED BY THE ENGINEER, THEY SHALL BE REMOVED. PROTECTIVE STRUCTURES, INCLUDING SIDEWALLS, SHALL NOT BE REMOVED UNTIL THE PARAPETS ARE COMPLETED. ALL MATERIAL SHALL BECOME THE PROPERTY OF THE CONTRACTOR AND SHALL BE REMOVED FROM THE SITE AND DISPOSED OF BY THE CONTRACTOR AT HIS OWN EXPENSE.

DETAILS OF THE FALSEWORK, TEMPORARY BRACING AND PROTECTIVE STRUCTURES FOR CATCHING BROKEN CONCRETE AND OTHER MATERIALS SHALL BE SUBMITTED, IN QUADRUPLET, TO THE ENGINEER FOR APPROVAL. DETAILS SHALL INCLUDE THE EXISTING AND PROPOSED TEMPORARY UNDERCLEARANCES TO THE TRAVELED WAY.

TEMPORARY PROTECTIVE STRUCTURES, SHALL BE PAID FOR AT THE CONTRACT LUMP SUM PRICE BID FOR ITEM 614 MAINTAINING TRAFFIC. THIS SHALL BE PAYMENT IN FULL FOR ALL MATERIALS, EQUIPMENT, LABOR AND INCIDENTALS NECESSARY TO COMPLETE THIS WORK.

## DETOUR NOTIFICATION

THE CONTRACTOR SHALL ADVISE THE ODOT DISTRICT OFFICE (330-297-0801 EXT 339) EIGHTEEN (18) DAYS IN ADVANCE OF WHEN THE DETOUR ROUTE SHOULD BE IN EFFECT. ODOT SHALL THEN PROVIDE AND INSTALL ALL DEVICES NECESSARY TO DEFINE THE ROUTE OF THE DETOUR AND SHALL MAINTAIN THE SAME THROUGHOUT THE DETOUR LIMITATION DATES. ALL TRAFFIC CONTROL DEVICES REQUIRED, OTHER THAN FOR THE DETOUR, SHALL BE FURNISHED, ERECTED, MAINTAINED, AND SUBSEQUENTLY REMOVED BY THE CONTRACTOR.

## DETOUR DURATION

THE MAXIMUM LENGTH OF TIME FOR THE DETOUR ROUTE TO BE IN EFFECT SHALL BE ONE HUNDRED TWENTY (120) CONSECUTIVE DAYS. CONSTRUCTION WORK MAY BE PERFORMED BEFORE AND AFTER THE DETOUR LIMITATION DATES, BUT THERE SHALL BE NO RESTRICTIONS (LANE WIDTH REDUCTIONS, TEMPORARY ROADWAYS, OR ONE-WAY TRAFFIC) TO THROUGH OR LOCAL TRAFFIC. IT SHALL BE THE RESPONSIBILITY OF THE CONTRACTOR TO SCHEDULE AND PERFORM THE CONSTRUCTION WORK WITHIN THE DETOUR LIMITATION TIME. THE FAILURE OF THE CONTRACTOR TO MEET THE DETOUR LIMITATION DATES WILL CAUSE SEPARATE LIQUIDATED DAMAGES PER 108.07 PER CALENDAR DAY OF OVERRUN OF DETOUR LIMITATION TIME TO BE ASSESSED. THE CONTRACTOR WILL COMPLY WITH ALL PROVISIONS OF 108.07 OF THE DEPARTMENT OF TRANSPORTATION CONSTRUCTION AND MATERIAL SPECIFICATIONS.

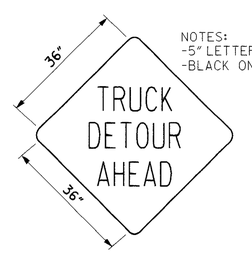


NOTES:
-5" LETTERING
-BLACK ON ORANGE

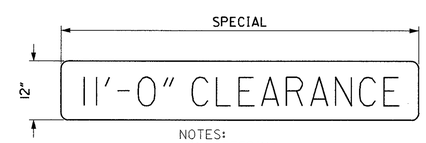


NOTES:
-6" LETTERING
-BLACK ON ORANGE

CALCULATED TAK
CHECKED LAJ

MAINTENANCE OF TRAFFIC

TRU-5-6.45



J:\22126_Tru_5_6.45\mot\mmc.dgn 03-DEC-2001 4:13PM cturner1

| SHEET NUMBER 46 | 47 | 48 | 49 | 50 | 60 | 64 | 81 | 82 | 83 | 87 | ITEM | ITEM EXT. | GRAND TOTAL | UNIT | DESCRIPTION | SEE SHEET NO. |
|---|---|---|---|---|---|---|---|---|---|---|---|---|---|---|---|---|
| | | | | | | | | | | | | | | | **PAVEMENT (CONT.)** | |
| | | 48 | | | | | | | | | 448 | 47021 | 48 | CU YD | ASPHALT CONCRETE SURFACE COURSE, TYPE 1, PG64-22, AS PER PLAN | 6 |
| | | | | | | 159 | | | | | SPECIAL | 45130000 | 159 | LIN FT | PRESSURE RELIEF JOINT, TYPE A | |
| | 2479 | | | | | | | | | | 611 | 25001 | 2479 | SQ YD | REINFORCED CONCRETE APPROACH SLAB (T=15"), AS PER PLAN | 104 |
| | | | 1583 | 455 | | | | | | | 617 | 10100 | 2038 | CU YD | COMPACTED AGGREGATE, TYPE A | |
| | 89 | | | | | | | | | | 830 | 24510 | 89 | LIN FT | CURB, TYPE 4-C | |
| | | | | | 10 | 15 | | | | | 830 | 25000 | 25 | LIN FT | CURB, TYPE 6 | |
| | 100 | | 12338 | 3159 | | | | | | | 858 | 10051 | 15597 | CU YD | ASPHALT CONCRETE SURFACE COURSE, 12.5 MM, TYPE B (446), AS PER PLAN | 6 |
| | 45 | | 14394 | 3686 | | | | | | | 858 | 10150 | 18125 | CU YD | ASPHALT CONCRETE INTERMEDIATE COURSE, 19MM, TYPE B (446) | |
| | | | | | | | | | | | | | | | **TRAFFIC CONTROL** | |
| | | | | | | | | | | 1147 | 621 | 00200 | 1147 | EACH | RAISED PAVEMENT MARKER, INSTALLATION ONLY | |
| | | | | | | | | | 12 | | 625 | 01500 | 12 | EACH | CABLE SPLICING KIT | |
| | | | | | | | | | 6 | | 625 | 32000 | 6 | EACH | GROUND ROD | |
| 390 | | | | | | | | | | | 626 | 00100 | 390 | EACH | BARRIER REFLECTOR, TYPE A | |
| 18 | | | | | | | | | | | 626 | 00200 | 18 | EACH | BARRIER REFLECTOR, TYPE B | |
| | | | | | | | | | 3 | | 630 | 35500 | 3 | EACH | OVERHEAD SIGN SUPPORT, TYPE TC-7.65, DESIGN 6 | |
| | | | | | | | | | 2 | | 630 | 35501 | 2 | EACH | OVERHEAD SIGN SUPPORT, TYPE TC-7.65, DESIGN 6, AS PER PLAN | 81 |
| | | | | | | | | | 1 | | 630 | 45501 | 1 | EACH | OVERHEAD SIGN SUPPORT, TYPE TC-7.65, DESIGN 8, AS PER PLAN | 81 |
| | | | | | | | | 6 | | | 630 | 75106 | 6 | EACH | LUMINAIRE SUPPORT ASSEMBLY, TYPE TC-31.21 | |
| | | | | | | | | 1 | | | 630 | 77000 | 1 | EACH | OVERPASS STRUCTURE MOUNTED SIGN SUPPORT, TYPE TC-18.24 | |
| | | | | | | | | 2 | | | 630 | 77600 | 2 | EACH | OVERPASS STRUCTURE MOUNTED SIGN SUPPORT, TYPE TC-18.26, DESIGN 6 | |
| | | | | | | | | 180 | 2108 | | 630 | 80204 | 2288 | SQ FT | SIGN, EXTRUSHEET, TYPE G | |
| | | | | | | | | | 12 | | 630 | 84510 | 12 | EACH | RIGID OVERHEAD SIGN SUPPORT FOUNDATION | |
| | | | | | | | | 2 | | | 630 | 86310 | 2 | EACH | REMOVAL OF STRUCTURE MOUNTED SIGN AND DISPOSAL | |
| | | | | | | | | | 12 | | 630 | 87400 | 12 | EACH | REMOVAL OF OVERHEAD MOUNTED SIGN AND DISPOSAL | |
| | | | | | | | 1 | | | | 630 | 88901 | 1 | EACH | REMOVAL OF OVERHEAD SIGN SUPPORT AND REERECTION, AS PER PLAN | 81 |
| | | | | | | | | | 6 | | 630 | 89702 | 6 | EACH | REMOVAL OF OVERHEAD SIGN SUPPORT AND DISPOSAL | |
| | | | | | | | | 1 | | | 630 | 89806 | 1 | EACH | REMOVAL OF OVERHEAD SIGN SUPPORT AND DISPOSAL, TYPE TC-18.24 | |
| | | | | | | | | 2 | | | 630 | 89808 | 2 | EACH | REMOVAL OF OVERHEAD SIGN SUPPORT AND DISPOSAL, TYPE TC-18.26 | |
| | | | | | | | | 2 | | | 631 | 70100 | 2 | EACH | BALLAST WIRING ENCLOSURE, TYPE B | |
| | | | | | | | | 2 | 6 | | 631 | 84000 | 8 | EACH | SIGN SERVICE | |
| | | | | | | | | | 12 | | 631 | 84300 | 12 | EACH | SIGN WIRED | |
| | | | | | | | | 3 | | | 631 | 84400 | 3 | EACH | SIGN WIRED, OVERPASS STRUCTURE MOUNTED | |
| | | | | | | | | 2 | 6 | | 631 | 85100 | 8 | EACH | DISCONNECT SWITCH WITH ENCLOSURE, TYPE X | |
| | | | | | | | | 4 | | | 631 | 87100 | 4 | EACH | BALLAST, TYPE CMRI-100-480, REMOTE | |
| | | | | | | | | | 25 | | 631 | 87202 | 25 | EACH | BALLAST, TYPE CMRI-175-480, INTEGRAL | |
| | | | | | | | | | 4 | | 631 | 87302 | 4 | EACH | BALLAST, TYPE CMRI-250-480, INTEGRAL | |
| | | | | | | | | 6 | | | 631 | 89100 | 6 | EACH | MERCURY VAPOR LUMINAIRE, TYPE TC-31.21 WITH 100 WATT LAMP | |
| | | | | | | | | | 25 | | 631 | 89200 | 25 | EACH | MERCURY VAPOR LUMINAIRE, TYPE TC-31.21 WITH 175 WATT LAMP | |
| | | | | | | | | | 4 | | 631 | 89300 | 4 | EACH | MERCURY VAPOR LUMINAIRE, TYPE TC-31.21 WITH 250 WATT LAMP | |
| | | | | | | | | 3 | 27 | | 631 | 94200 | 30 | EACH | REMOVAL OF LUMINAIRE AND DISPOSAL | |
| | | | | | | | | 2 | 6 | | 631 | 94304 | 8 | EACH | REMOVAL OF DISCONNECT SWITCH AND DISPOSAL | |
| | | | | | | | | 3 | 27 | | 631 | 94404 | 30 | EACH | REMOVAL OF BALLAST AND DISPOSAL | |
| | | | | | | | | 2 | 12 | | 631 | 94408 | 14 | EACH | REMOVAL OF SIGN WIRING AND DISPOSAL | |
| | | | | | | | | 2 | 6 | | 631 | 94412 | 8 | EACH | REMOVAL OF SIGN SERVICE AND DISPOSAL | |
| | | | | | | | | 3 | | | 631 | 94420 | 3 | EACH | REMOVAL MISC.:LUMINAIRE SUPPORT ASSEMBLY AND DISPOSAL | |

CALCULATED CJT
CHECKED TJP

GENERAL SUMMARY

TRU-5-6.45



J:\22126_Tru_5_6.45\22126gg.dgn 03-DEC-2001 4:14PM cturner1

| SHEET NUMBER 10 | 11 | 12 | 13 | 13A | 48 | 88 | 90 | | | | ITEM | ITEM EXT. | GRAND TOTAL | UNIT | DESCRIPTION | SEE SHEET NO. |
|---|---|---|---|---|---|---|---|---|---|---|---|---|---|---|---|---|
| | | | | | | | | | | | | | | | TRAFFIC CONTROL (CONT.) | |
| | | | | | 0.46 | 25.89 | | | | | 642 | 00102 | 25.35 | MILE | EDGE LINE, TYPE 2 | |
| | | | | | | 7.83 | | | | | 642 | 00202 | 7.83 | MILE | LANE LINE, TYPE 2 | |
| | | | | | 0.24 | | | | | | 642 | 00302 | 0.24 | MILE | CENTER LINE, TYPE 2 | |
| | | | | | | | 7105 | | | | 642 | 00402 | 7105 | LIN FT | CHANNELIZING LINE, TYPE 2 | |
| | | | | | | | 449 | | | | 642 | 00502 | 449 | LIN FT | STOP LINE, TYPE 2 | |
| | | | | | | | 2252 | | | | 642 | 00702 | 2252 | LIN FT | TRANSVERSE LINE, TYPE 2 | |
| | | | | | | | 25 | | | | 642 | 01302 | 25 | EACH | LANE ARROW, TYPE 2 | |
| | | | | | | | 14 | | | | 642 | 01412 | 14 | EACH | WORD ON PAVEMENT, 96", TYPE 2 | |
| | | | | | | | | | | | | | | | SIGNALS | |
| 4 | | | | | | | | | | | 632 | 25500 | 4 | EACH | DETECTOR LOOP | |
| | | | | | | | | | | | | | | | STRUCTURES | |
| | | | | | | | | | | | | | | | (SEE PAGES NO.'S 106,113,125,135,150,155,160,161,&162 FOR QUANTITIES) | |
| | | | | | | | | | | | | | | | MAINTENANCE OF TRAFFIC | |
| | 200 | | | | | | | | | | 614 | 11100 | 200 | HOUR | LAW ENFORCEMENT OFFICER WITH PATROL CAR | |
| 30 | | | | | | | | | | | 614 | 12460 | 30 | EACH | WORK ZONE MARKING SIGN | |
| | 50 | | | | | | | | | | 614 | 12470 | 50 | EACH | WORK ZONE SPEED LIMIT SIGN | |
| | | 16 | | | | | | | | | 614 | 12480 | 16 | EACH | DOUBLED FINES IN WORK ZONE SIGN | |
| | 8 | | | | | | | | | | 614 | 12756 | 8 | EACH | TEMPORARY CROSSOVER LIGHTING SYSTEM | |
| | 1640 | | | | | | | | | | 614 | 13300 | 1640 | EACH | BARRIER REFLECTOR, TYPE B | |
| | | 36 | | | | | | | | | 614 | 18511 | 36 | MONTH | PORTABLE CHANGEABLE MESSAGE SIGN, AS PER PLAN | 12 |
| 15.5 | | | | | | | | | | | 614 | 20000 | 15.5 | MILE | TEMPORARY LANE LINE, CLASS I | |
| 5.6 | | | | | | | | | | | 614 | 22000 | 5.6 | MILE | TEMPORARY EDGE LINE, CLASS I | |
| 7.6 | | | | | | | | | | | 614 | 22200 | 7.6 | MILE | TEMPORARY EDGE LINE, CLASS I, 740.06, TYPE I | |
| 2400 | | | | | | | | | | | 614 | 28000 | 2400 | LIN FT | TEMPORARY GORE MARKING, CLASS II | |
| | | | | | | | | | | | 615 | 10000 | LUMP | | TEMPORARY ROAD | |
| | | | 10025 | | | | | | | | 615 | 20001 | 10025 | SQ YD | TEMPORARY PAVEMENT, CLASS A, AS PER PLAN | 13 |
| | | | 5 | | | | | | | | 616 | 10000 | 5 | M GAL | WATER | |
| | | | 1 | | | | | | | | 616 | 20000 | 1 | TON | CALCIUM CHLORIDE | |
| | | | | 350 | | | | | | | 622 | 40020 | 350 | LIN FT | PORTABLE CONCRETE BARRIER, 32" | |
| 20500 | | | | | | | | | | | 622 | 40031 | 20500 | LIN FT | PORTABLE CONCRETE BARRIER, 50", AS PER PLAN | 11 |
| | | | | | | | | | | | 614 | 11000 | LUMP | | MAINTAINING TRAFFIC | |
| | | | | | | | | | | | 623 | 10000 | LUMP | | CONSTRUCTION LAYOUT STAKES | |
| | | | | | | | | | | | 624 | 10000 | LUMP | | MOBILIZATION | |
| | | | | | | | | | | | 806 | 16010 | 18 | MONTH | FIELD OFFICE, TYPE B | |

CALCULATED CJT
CHECKED TJP

GENERAL SUMMARY

TRU-5-6.45



J:\22126_Tru_5_6.45\22126gg.dgn 03-DEC-2001 4:12PM cturner1

## SKEWED OVERPASS STRUCTURE MOUNTED SIGN SUPPORT

THE CONTRACTOR SHALL REMOVE THE EXISTING OVERPASS STRUCTURE MOUNTED SIGNS AND SIGN SUPPORTS. THE CONTRACTOR SHALL PROVIDE NEW SIGNS AND SIGN SUPPORTS. THE FOLLOWING QUANTITIES HAVE BEEN CARRIED TO THE GENERAL SUMMARY TO BE USED BY THE ENGINEER TO COMPLETE THE WORK.

| | | |
|---|---|---|
| ITEM 630 | SIGN, EXTRUSHEET, TYPE G | 180 SQ. FT. |
| ITEM 630 | OVERPASS STRUCTURE MOUNTED SIGN SUPPORT, TYPE TC-18.26, DESIGN 6 | 2 EACH |
| ITEM 630 | OVERPASS STRUCTURE MOUNTED SIGN SUPPORT, TYPE TC-18.24 | 1 EACH |
| ITEM 630 | LUMINAIRE SUPPORT ASSEMBLY, TYPE TC-31.21 | 6 EACH |
| ITEM 630 | REMOVAL OF STRUCTURE MOUNTED SIGN AND DISPOSAL | 2 EACH |
| ITEM 630 | REMOVAL OF OVERHEAD SIGN SUPPORT AND DISPOSAL, TYPE TC-18.26 | 2 EACH |
| ITEM 630 | REMOVAL OF OVERHEAD SIGN SUPPORT AND DISPOSAL, TYPE TC-18.24 | 1 EACH |
| ITEM 631 | REMOVAL MISC.: LUMINAIRE SUPPORT ASSEMBLY AND DISPOSAL | 3 EACH |
| ITEM 631 | BALLAST, TYPE CMRI-100-480, REMOTE | 4 EACH |
| ITEM 631 | BALLAST WIRING ENCLOSURE, TYPE B | 2 EACH |
| ITEM 631 | SIGN SERVICE | 2 EACH |
| ITEM 631 | SIGN WIRED, OVERPASS STRUCTURE MOUNTED | 3 EACH |
| ITEM 631 | REMOVAL OF DISCONNECT SWITCH AND DISPOSAL | 2 EACH |
| ITEM 631 | REMOVAL OF LUMINAIRE AND DISPOSAL | 3 EACH |
| ITEM 631 | REMOVAL OF BALLAST AND DISPOSAL | 3 EACH |
| ITEM 631 | REMOVAL OF SIGN WIRING AND DISPOSAL | 2 EACH |
| ITEM 631 | REMOVAL OF SIGN SERVICE AND DISPOSAL | 2 EACH |
| ITEM 631 | MERCURY VAPOR LUMINAIRE, TYPE TC-31.21 WITH 100-WATT LAMP | 6 EACH |
| ITEM 631 | DISCONNECT SWITCH WITH ENCLOSURE, TYPE X | 2 EACH |

## SIGN LEGEND

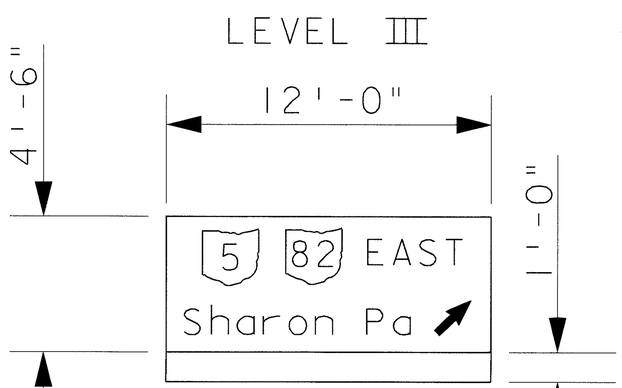


MOUNTED ON WESTBOUND BRIDGE NO.1077L

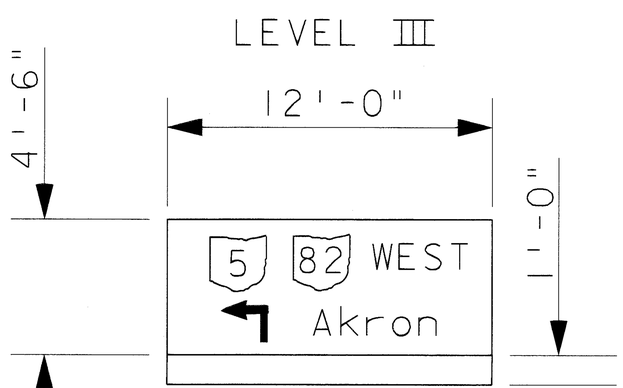


MOUNTED ON EASTBOUND BRIDGE NO.1077R

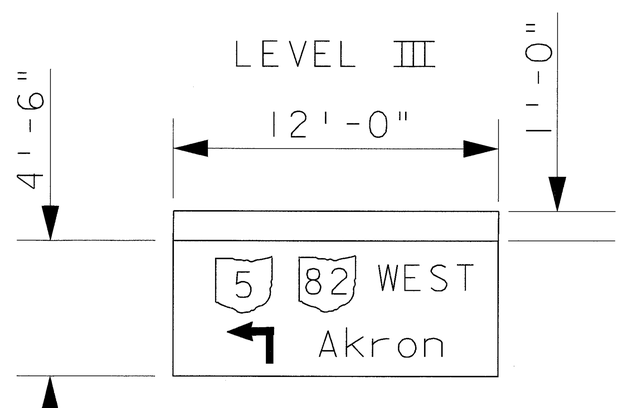


MOUNTED ON EASTBOUND BRIDGE NO.0861R

* OFFSET NEW STRUCTURE 6" TO 1' RT. OF PREVIOUSE STRUCTURE TO AVOID PREVIOUSE ANCHOR STUDS.

** EXISTING REMOTE BALLASTS, DISCONNECT SWITCH, WIRE ENCLOSURE AND SIGN SERVICE TO BE REUSED.

CALCULATED KAG CHECKED LJ

TRAFFIC GENERAL NOTES

TRU-5-6.45